Service Manual: 01 - SALES CHECK -- (95B) - MACAN

WM 010100 SALES CHECK (ALL MODELS) > SALES CHECK

Information

- The term "checking" includes all necessary subsequent work such as adjusting, readjusting, correcting and topping up, but does not include repairing, replacing and reconditioning parts or assemblies.

Work instruction for order no.								
Dealer No.								

Vehicle Ident. No.

	OK (1)	Not OK (2)
Check PIWIS information system for open workshop campaigns and recall campaigns for the vehicle		
Check conformity of vehicle identification number on the vehicle, on the data carrier, in the vehicle registration documents and on-board literature → 0X01IN CHECKING VEHICLE IDENTIFICATION NUMBER		
Activate PCC/PVTS - vehicles with Vehicle Tracking System (VTS) → 906425 ACTIVATING PCC/PVTS		
Remove transport locks and transport protection → 0X01IN REMOVING TRANSPORT PROTECTION		
Diagnostic system: Perform vehicle handover; read out and erase fault memory. → 0X01IN DIAGNOSTIC SYSTEM: PERFORMING VEHICLE HANDOVER		

Windscreen wiper/washer system, headlight cleaning system: Check function, fluid level and nozzle settings; check window cleaner and antifreeze, depending on the season; check wiper blades → 0X03IN ELECTRICS MAINTENANCE: CHECKING WINDSCREEN WIPER AND WASHER SYSTEM		
Vehicle lights: check function. All headlights: check adjustment. Horn and clock: check function		
Electrical equipment, warning and indicator lights: check function → 0X01IN CHECKING OPERATION OF ELECTRICAL EQUIPMENT AS WELL AS WARNING AND INDICATOR LIGHTS		
Mobile roofs: check function → 0X01IN MOBILE ROOFS: CHECKING OPERATION		
Check engine-oil level → 170101 CHECKING ENGINE-OIL LEVEL		
Check comfort tire pressure → 0X03IN RUNNING GEAR MAINTENANCE: TIRES AND SPARE WHEEL: CHECKING CONDITION AND TYRE PRESSURE		
Wheels, tires: visual inspection for damage → 0X03IN RUNNING GEAR MAINTENANCE: TIRES AND SPARE WHEEL: CHECKING CONDITION AND TYRE PRESSURE		
Check wheel mounting → 0X03IN CHECKING WHEEL MOUNTING		
Brake hoses and lines: visual inspection for damage in wheel area → 0X03IN RUNNING GEAR MAINTENANCE: VISUAL		

INSPECTION - BRAKE LINES/BRAKE PADS/BRAKE DISCS		
Check brake fluid level → 0X03IN RUNNING GEAR MAINTENANCE: CHECKING BRAKE FLUID LEVEL AND CHANGING BRAKE FLUID		
Visual inspection for leaks: oils, fluids		
Exterior equipment and paint finish: visual inspection for damage → 0X01IN CHECKING EXTERIOR EQUIPMENT AND PAINTWORK		
Glazing: visual inspection for damage → 0X01IN CHECKING GLAZING		
Interior equipment: visual inspection for damage and soiling → 0X01IN INTERIOR EQUIPMENT: VISUAL INSPECTION FOR DAMAGE AND SOILING		
Door and lid locks: check function → 0X01IN CHECKING LIDS AND DOORS		
Alarm system: check function and monitoring devices → 0X01IN ALARM SYSTEM: CHECKING FUNCTION OF MONITORING DEVICES		
Complete the vehicle and check that all vehicle equipment is present → 0X01IN CHECKING VEHICLE EQUIPMENT FOR COMPLETENESS		
Insert control panel into the ignition lock (vehicles with Entry & Drive)		

(1)	OK = okay
(2)	Not OK = not okay

Test drive	OK (1)	Not OK (2)
Foot and parking brakes, steering, cruise control, ParkAssist, heating, sports exhaust system, air conditioning and instruments: check function → 0X01IN TEST DRIVE - SALES CHECK		
Transmission: check function		
Check vehicle for unusual handling behavior, vibration and noise		
Diagnostic system: read out and erase fault memory → 033500 FAULT MEMORY FOR ON-BOARD DIAGNOSIS		

(1)	OK = okay
(2)	Not OK = not okay

Stamp of Official Porsche Centre

WM 0X00IN OVERVIEW OF A, B AND C MARKETS (MACAN, MACAN S, MACAN TURBO) > INFORMATION > OVERVIEW OF A, B AND C MARKETS

Information

For vehicles as of model year 2011

Because of different fuel octane ratings, the change intervals for oil, spark plugs and air cleaner have been adapted to suit the various markets.

Markets	Countries
A markets	Andorra Belgium Germany Denmark Estonia Finland, France Greece, Great Britain Ireland, Iceland, Italy Japan Latvia Liechtenstein, Lithuania, Luxembourg Malta Netherlands, Norway Austria Poland, Portugal Sweden, Switzerland, Slovakia, Spain Czech Republic Hungary Cyprus
B markets	Egypt, Algeria, Angola, Argentina, Armenia, Aruba (itc Caribbean), Azerbaijan, Australia Bahamas, Bahrain, Bangladesh, Barbados, Bosnia and Herzegovina, Brazil, Brunei, Bulgaria Chile, Costa Rica Dominican Republic Ecuador, El Salvador French Guiana, French Polynesia Ghana, Guadeloupe, Guatemala Haiti, Dutch Antilles, Honduras, Hong Kong India, Iraq, Iran, Israel Jamaica (itc Caribbean), Yemen, Jordan Cameroon, Canada, Kazakhstan, Qatar, Cayman Islands, Kenya, Columbia, Croatia, Kuwait Lesotho, Lebanon, Libya Malaysia, Morocco, Martinique (F), Mauritius, Mexico, Moldova, Monaco

	Namibia, New Caledonia, New Zealand, Nigeria, Nicaragua Oman Pakistan, Panama, Paraguay, Peru, Philippines, Puerto Rico Reunion, Romania, Russia Saudi Arabia, Serbia and Montenegro, Zimbabwe, Singapore, Slovenia, Sri Lanka, South Africa, South Korea, Swaziland, Syria Taiwan, Thailand, Trinidad and Tobago, Turkey, Tunisia Ukraine, Uruguay, USA UAE (Abu Dhabi, Dubai), Venezuela, Vietnam Belarus, Western Sahara
C markets	China, Indonesia

WM 0X01IN ALARM SYSTEM: CHECKING OPERATION OF MONITORING DEVICES (MACAN, MACAN S, MACAN TURBO) > ALARM SYSTEM: CHECKING OPERATION OF MONITORING DEVICES

1. Read out the fault memory and activate systems on the unlocked vehicle (see previous point in sales check).
2. Lock the vehicle using the remote control (key fob). A warning tone must not be emitted by the alarm system horn shortly after locking the vehicle (not relevant for USA).
3. If a warning tone is emitted, open and close all doors and outer lids one after the other (not relevant for USA).
4. As soon as the vehicle is locked, the LED in the driver's door panel must flash quickly for 2 seconds and then start to flash slowly.

   Fault indicator:

5. LED flashes quickly for 2 seconds, lights up for 28 seconds and then flashes slowly: Connect the System Tester and read out the fault memory.

WM 0X01IN CHECKING EXTERIOR EQUIPMENT AND PAINTWORK (MACAN, MACAN S, MACAN TURBO) > CHECKING EXTERIOR EQUIPMENT AND PAINTWORK

Information

- The following items can be checked by simple visual inspection, no assembly work required.

  1. Check whether transport protection has been completely removed and ensure that no film remains in the body joints or under seals.

WM 0X01IN CHECKING EXTERIOR EQUIPMENT AND PAINTWORK (MACAN, MACAN S, MACAN TURBO) > CHECKING EXTERIOR EQUIPMENT AND PAINTWORK > CHECKING EXTERIOR EQUIPMENT

1. Check vehicle for secure fit of accessories such as trim strips, doors mirrors, front and rear spoilers.
2. Check underbody for noticeable areas where undersealing material is missing (e.g. scrapes).
3. Check side member of body flange for deformation of jacking points.
4. Check outer shell of vehicle for noticeable soiling with cavity sealing wax.

WM 0X01IN CHECKING EXTERIOR EQUIPMENT AND PAINTWORK (MACAN, MACAN S, MACAN TURBO) > CHECKING EXTERIOR EQUIPMENT AND PAINTWORK > CHECKING PAINTWORK

1. Check outer shell of vehicle for noticeable sheetmetal damage such as dents and bulges.
2. Check painted surfaces of vehicle for noticeable defects such as scores, scratches, notches, scrapes, pores, bubbles or signs that the bodywork is coming through the paint.

WM 0X01IN CHECKING GLAZING (MACAN S, MACAN TURBO) > CHECKING GLAZING

Information

- The following items can be checked by simple visual inspection, no assembly work required.
    1. Check whether transport protection has been completely removed and ensure that no film remains in the body joints or under seals.
    2. Check vehicle glazing for stone damage and scratches.
    3. Check surrounds and rubber sections of vehicle glazing for damage and cracks.

WM 0X01IN CHECKING LIDS AND DOORS (MACAN, MACAN S, MACAN TURBO) > CHECKING LIDS AND DOORS > FUNCTION TEST ON FRONT LID LOCK

Information

The lid lock does not have an emergency release.

When working close to the front apron and on the various parts of the lock, carry out the following function test before closing the lid:

1. Check that the release cable is clipped fully into the bracket provided.

2. Lock lower part of lid lock using a screwdriver.
3. Release the lid lock using the lever in the passenger compartment.
4. Perform a visual inspection to check that the lock releases correctly.

WM 0X01IN CHECKING LIDS AND DOORS (MACAN, MACAN S, MACAN TURBO) > CHECKING LIDS AND DOORS > CHECKING LID LOCK AT FRONT AND REAR

- Check that the lid locks engage when the lids (front and rear) are closed by engaging the upper parts of the lock and that they disengage again when the lid releases are activated.

WM 0X01IN CHECKING LIDS AND DOORS (MACAN, MACAN S, MACAN TURBO) > CHECKING LIDS AND DOORS > CHECKING SAFETY HOOK ON FRONT LID

- Check that the front lid is held down by the safety hook (locking hook) after the lid lock is opened.
- Check that the return spring on the upper part of the lock pulls the safety hook back as far as the stop.

WM 0X01IN CHECKING LIDS AND DOORS (MACAN, MACAN S, MACAN TURBO) > CHECKING LIDS AND DOORS > FUNCTION TEST ON DOOR LOCKS

- Check that the door locks engage in two stages when the doors are closed and that they disengage again when the door openers are actuated (inside and outside).

WM 0X01IN CHECKING LIDS AND DOORS (MACAN, MACAN S, MACAN TURBO) > CHECKING LIDS AND DOORS > FUNCTION TEST ON FUEL TANK CAP LOCK

- Lock the vehicle.
- Check that the fuel tank cap is locked by the fuel tank cap lock in the closed position.

WM 0X01IN CHECKING OPERATION OF ELECTRICAL EQUIPMENT AS WELL AS WARNING AND INDICATOR LIGHTS (MACAN, MACAN S, MACAN TURBO) > CHECKING OPERATION OF ELECTRICAL EQUIPMENT AS WELL AS WARNING AND INDICATOR LIGHTS

- Turn ignition key and check function of warning and indicator lights (visual inspection).
- Actuate power windows and check that they are working correctly.

- Check that rear window heating is working.
- Adjust heater blower and fans to high and low and check the air vents for air throughput.
- Front seats and back seats: check function.
- Check audio function.
- Check function of exterior mirrors, check adjustment options.
- Check function of orientation lights.
- Check function of luggage compartment lamps.
- Check function of interior lights.
- Actuate central locking and check function.
- Operate cigarette lighter and check that it is working.

WM 0X01IN CHECKING VEHICLE EQUIPMENT FOR COMPLETENESS (MACAN, MACAN S, MACAN TURBO) > VEHICLE EQUIPMENT

Check that the items listed below are in the vehicle.

Designation	Qty.	Restrictions	Position in the vehicle
Warning triangle	1 x	Country-specific (1)	Trim panel for rear lock support
Addition warning triangle	1 x	Country-specific (2)	Stored in luggage compartment
First-aid kit and warning triangle	1 x	Country-specific (3)	Trim panel for rear lock support
On-board folder containing technical information (4) Driver's Manual, PCM/CDR operating instructions, Warranty and Maintenance booklet (5)	1 x	Standard	Glove compartment
18-inch spare wheel	1 x	Only with vehicle spare wheel (I-no.: 1G1)	Luggage compartment (under the loadspace floor)
Bottle of sealing compound for tyres, Tire Fit	1 x	Only with vehicle flat-tyre set (I-no.: 1G8)	
Compressor	1 x		
Tyre inflation hose	1 x	Only with vehicle flat-tyre set (I-no.: 1G8)	Contained in Tire Fit bag

Torch and torch holder	1 x	Japan only	A-pillar trim
Front number plate carrier, including fastening material	1 x	USA only (6)	Stored in luggage compartment
Wiper blades, front (7)	2 x		

(1)	All countries except USA, Canada, Japan, Greece and Germany
(2)	The dealer or importer must supply the additional warning triangle.
(3)	Only in Germany and Greece.
(4)	Except for German-speaking countries, the on-board folder containing technical information (Driver's Manual and Guarantee and Maintenance booklet) must be supplied by the dealer or importer.
(5)	The PCM/CDR operating instructions must be supplied by the dealer or importer in all non-German-speaking countries.
(6)	Only in states in the USA that require a number plate at the front of the vehicle. → 668319 REMOVING AND INSTALLING NUMBER PLATE COVER .
(7)	Replace the one-way wiper blades with the enclosed wiper blades → 922719 REMOVING AND INSTALLING WIPER BLADE.

WM 0X01IN CHECKING VEHICLE EQUIPMENT FOR COMPLETENESS (MACAN, MACAN S, MACAN TURBO) > VEHICLE EQUIPMENT > TOOL KIT

Designation	Qty.	Restrictions	Position in the vehicle
Open-ended wrench	1 x	Standard	Luggage compartment (under the loadspace floor)
Towing lug	1 x		
Screwdriver	1 x		
Socket wrench	1 x		
Socket for security wheel bolts	1 x		
Wheel wrench	1 x	Only for vehicles with spare wheel (I-no.: 1G1)	
Jack with ratchet	1 x		
Assembly pin	1 x		
Puller hook	1 x		
Additional assembly pin and holder	1 x	Only for vehicles with spare wheel (I-no.: 1G1)	
Allen key for emergency operation of sliding roof panel	1 x	Vehicles with sliding roof	

Additional jack with ratchet in bag	1 x	Only for Australia (I-no.: +479)	

WM 0X01IN CHECKING VEHICLE EQUIPMENT FOR COMPLETENESS (MACAN, MACAN S, MACAN TURBO) > VEHICLE EQUIPMENT > VEHICLE KEY

Designation	Qty.	Restrictions
Key ring	1 x	Standard
Key tag	1 x	Standard
Remote control	2 x	Standard
Emergency key (contained in remote control)	2 x	Standard
Control element	1 x	Only for vehicles with Porsche Entry & Drive

WM 0X01IN CHECKING VEHICLE IDENTIFICATION NUMBER FOR CONFORMITY (MACAN S, MACAN TURBO) > CHECKING VEHICLE IDENTIFICATION NUMBER FOR CONFORMITY

Information

- The sticker for the on-board literature is included with the vehicle registration documents and can be found in the glove compartment.

Fig 1: Identifying Vehicle Identification Sticker

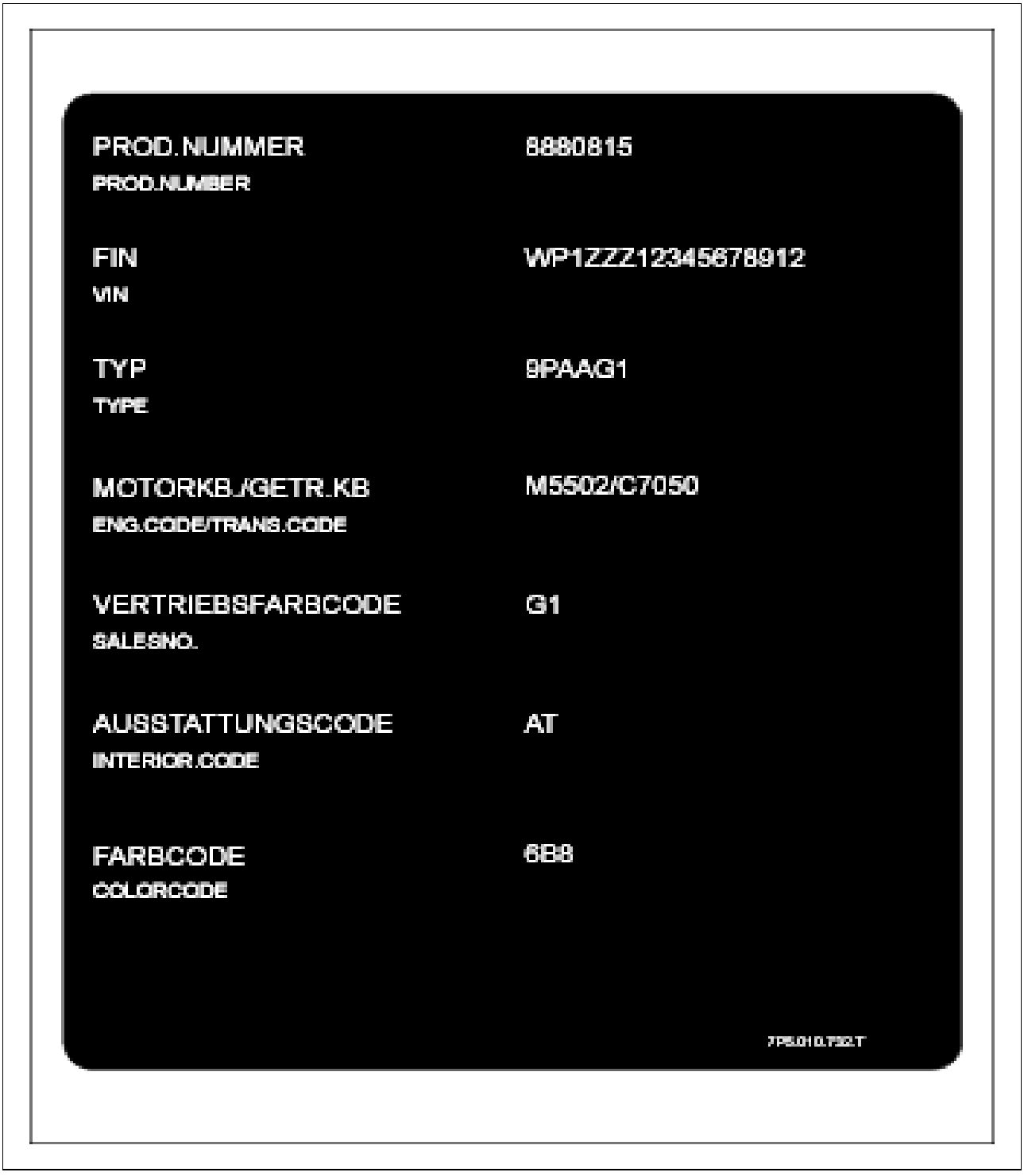

Courtesy of PORSCHE CARS NORTH AMERICA, INC.

Check that the following vehicle identification numbers are identical. Then stick the vehicle data carrier sticker supplied with the vehicle in the on-board literature (Warranty and Maintenance booklet).

- Vehicle identification number on lower left of the windscreen.
- Vehicle identification number stamped on the bodyshell in the front right footwell.
- Vehicle identification number on the vehicle data carrier sticker.

- Vehicle identification number in the vehicle registration documents.

WM 0X01IN DIAGNOSTIC SYSTEM: PERFORMING VEHICLE HANDOVER (MACAN S, MACAN TURBO) > TOOLS

Designation	Type	Number	Description	
PIWIS Tester II	Special tool	9818		

WM 0X01IN DIAGNOSTIC SYSTEM: PERFORMING VEHICLE HANDOVER (MACAN S, MACAN TURBO) > TECHNICAL VALUES

Location	Description	Type	Basic value	Tolerance 1	Tolerance 2
Current rating		Nominal value	40 A		

WM 0X01IN DIAGNOSTIC SYSTEM: PERFORMING VEHICLE HANDOVER (MACAN S, MACAN TURBO) > DIAGNOSTIC SYSTEM: PERFORMING VEHICLE HANDOVER

NOTE: Voltage drop

- *Risk of irreparable damage to control unit*
- *Risk of damage to control unit*
- *Fault entries in the control unit*
- *Coding in the control unit is aborted*
- *Malfunctions in control unit, even during programming*

→ Prior to disconnecting the control unit, switch off ignition and remove ignition key.

→ Ensure that the power supply is not interrupted during programming.

→ Connect a battery charger with a current rating of at least → **Nominal value: 40 A** to the vehicle battery.

1. **PIWIS Tester II 9818** must be connected to the vehicle. Then start the Tester.
    1. 1.1. **Switch on ignition.**
2. Select the required vehicle.
3. When the **overview of control units** is displayed, press [F7] to continue.
4. Select **Vehicle handover log** menu and press [F12].
5. When **Remove transport protection** is displayed, press [F12] to continue.
6. The control units are activated and the status is displayed. Compare the chassis number displayed on the Tester with the chassis number of the vehicle. Press [F12] to continue.
7. **If the vehicle is a new vehicle** , press [F8] (Yes) to continue.
8. **Select the relevant country** and press [F12] to continue.
9. The Tester displays the message **Write service interval** . Press [F8] to confirm.
10. Service intervals will be written. Press [F12] to continue.
11. **Chassis number is correct?** . Press [F12] to confirm and then press [F11] to return to the data entry screen.
12. Archive the vehicle handover log file. Press [F12] to continue.
13. Carry out a test drive and read out the fault memory.
    1. 13.1. Check faults following diagnosis if necessary and erase the fault memory before delivering the vehicle.

WM 0X01IN INTERIOR EQUIPMENT: VISUAL INSPECTION FOR DAMAGE AND SOILING (MACAN S, MACAN TURBO) > CHECKING INTERIOR EQUIPMENT

Information

- The following items can be checked by simple visual inspection, no assembly work required.

1. Check that transport protection has been completely removed and ensure that no film remains in the component joints or under seals.
2. Check interior equipment of vehicle for noticeable damage such as scores, scratches, notches and scrapes.
3. Check interior equipment of vehicle for soiling.

WM 0X01IN INTERIOR EQUIPMENT: VISUAL INSPECTION FOR DAMAGE AND

SOILING (MACAN S, MACAN TURBO) > CHECKING SEAT BELTS > FUNCTION TEST

- The following requirements must be met when fitting the seat belt.
- If one of the requirements listed below is not met, the seat belt or seat-belt buckle must be replaced.

It must be possible to unroll the belt strap smoothly from the belt retractor via the deflector fitting by pulling evenly.

The tongue of the seat belt must engage audibly in the buckle.

An abrupt pull on the belt strap must lock the belt retractor.

WM 0X01IN INTERIOR EQUIPMENT: VISUAL INSPECTION FOR DAMAGE AND SOILING (MACAN S, MACAN TURBO) > CHECKING SEAT BELTS > CONDITION INSPECTION

Visually inspect the belt strap for damage by unrolling it completely.

If there are signs of damage on the belt strap in the form of cuts, fraying, seam tears, etc., the seat belt must be replaced.

WM 0X01IN MOBILE ROOFS: CHECKING FUNCTION (MACAN S, MACAN TURBO) > CHECKING SLIDING ROOF AND PANORAMA ROOF SYSTEM

1. By operating the control switch, return to original tilting, opening and closing positions. During operation, check for malfunctions and noises.
2. Completely open and close trim panel/sun blinds for roof systems. During operation, check for noise and stiffness.

WM 0X01IN REMOVING TRANSPORT PROTECTION (MACAN, MACAN S, MACAN TURBO) > REMOVING OUTER TRANSPORT PROTECTION

- **Installation position:** Body
- **Material:** Plastic film
- **Installation position:** Doors
- **Material:** Foam strips with adhesive film
- **Installation position:** Front bumper
- **Material:** Foam strips with adhesive film
- **Installation position:** Rims

- **Material:** Self-adhesive rim protection
- **Installation position:** Mirrors
- **Material:** Plastic bag

WM 0X01IN REMOVING TRANSPORT PROTECTION (MACAN, MACAN S, MACAN TURBO) > REMOVING INNER TRANSPORT PROTECTION

- **Installation position:** Seats (front)
- **Material:** Fleece
- **Installation position:** Centre console cover
- **Material:** Fleece
- **Installation position:** Door sill
- **Material:** Plastic film
- **Installation position:** Lower door trim panel
- **Material:** Cardboard protection
- **Installation position:** Inner door handle
- **Material:** Plastic film
- **Installation position:** Footwell
- **Material:** Cardboard protection

WM 0X01IN REPLACING TRANSPORT WIPER (MACAN S, MACAN TURBO) > REPLACING TRANSPORT WIPER

1. Fold out wiper arm.
2. Break off bar on transport wiper **-1-** by moving the transport wiper with force. Make sure that the wiper arm is not deformed in the process.

Fig 1: Removing Transport Wiper

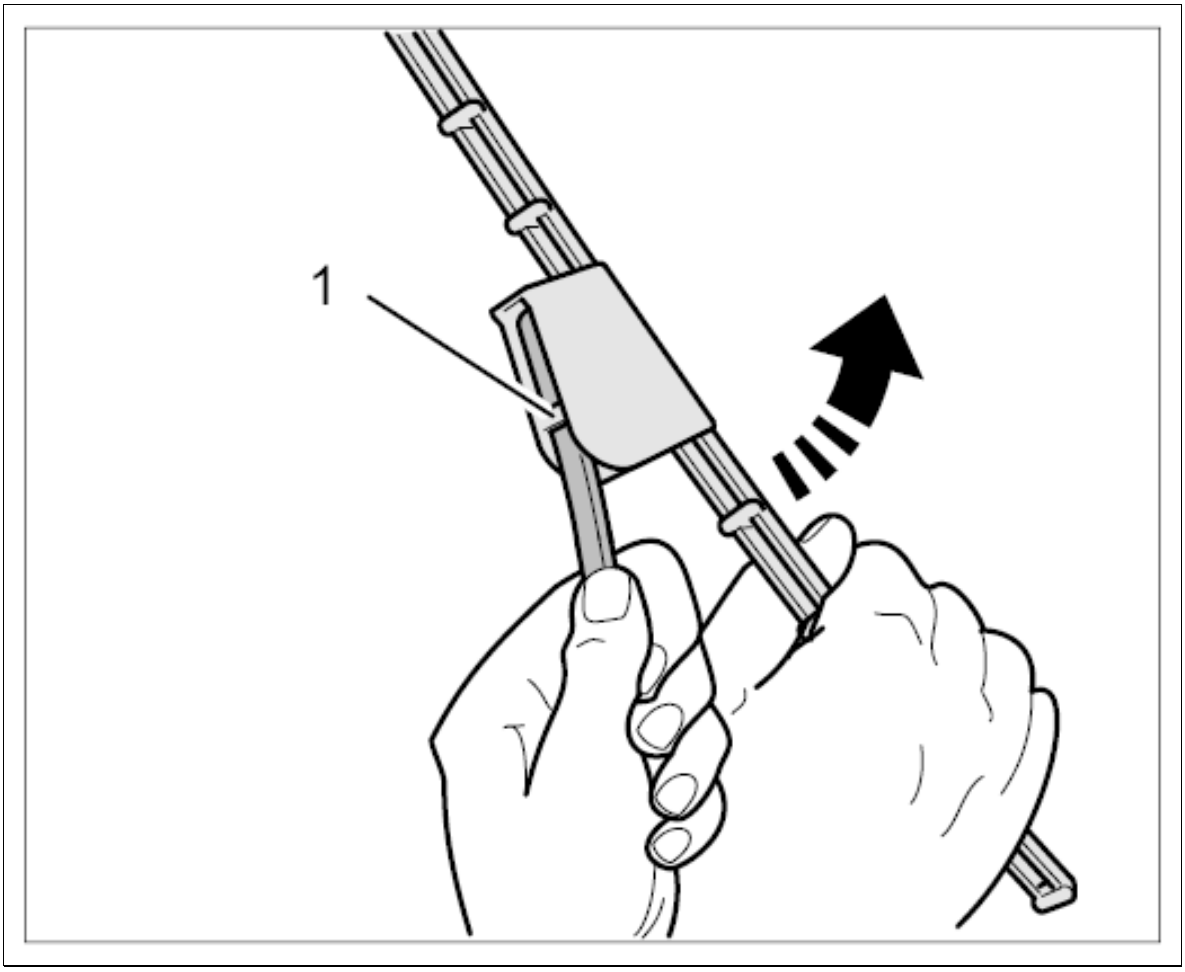

Courtesy of PORSCHE CARS NORTH AMERICA, INC.

3. Fit wiper blade. → INSTALLING WIPER BLADE .

WM 0X01IN TEST DRIVE - SALES CHECK (MACAN, MACAN S, MACAN TURBO) > TEST DRIVE - SALES CHECK

Information

- The following test items are included in the test drive.
  - Check electric parking brake and footbrake operation and actuation travel.
  - Actuate steering and check operation.
  - Change gears and check gearshift operation.
  - ParkAssist: select reverse gear and check operation.
  - Activate automatic cruise control during the test drive and check operation.
  - Check operation of heating adjustment when engine is warm.

- Check operation of sports exhaust system.
- Check operation of air-conditioning system when engine is running.
- Check operation of instruments.

WM 0X01IN WINDSCREEN WASHER/HEADLIGHT CLEANING SYSTEM: CHECKING OPERATION, NOZZLE SETTINGS (MACAN, MACAN S, MACAN TURBO) > WINDSCREEN WASHER/HEADLIGHT CLEANING SYSTEM: CHECKING OPERATION, NOZZLE SETTINGS

NOTE: Headlight surface not cleaned properly

- *Scratches*

→ Use only soapy water to clean the exterior lights and the plastic headlight lenses.

→ Never use chemical cleaning agents.

→ To avoid scratches, do not rub with dry or slightly damp cloths, paper towels or insect-removal sponges.

Information

- The headlight washer nozzles are pre-set!
- Generally, it is not necessary to adjust them!

Information

Check operation, fluid level indicator and nozzle settings. If the spray nozzle settings for the windscreen washer system are not OK, the nozzles need to be adjusted:

- Insert a sharp object (needle) into the nozzle hole.
- Align the spray nozzles using the sharp object.

Fig 1: Aligning Spray Nozzle

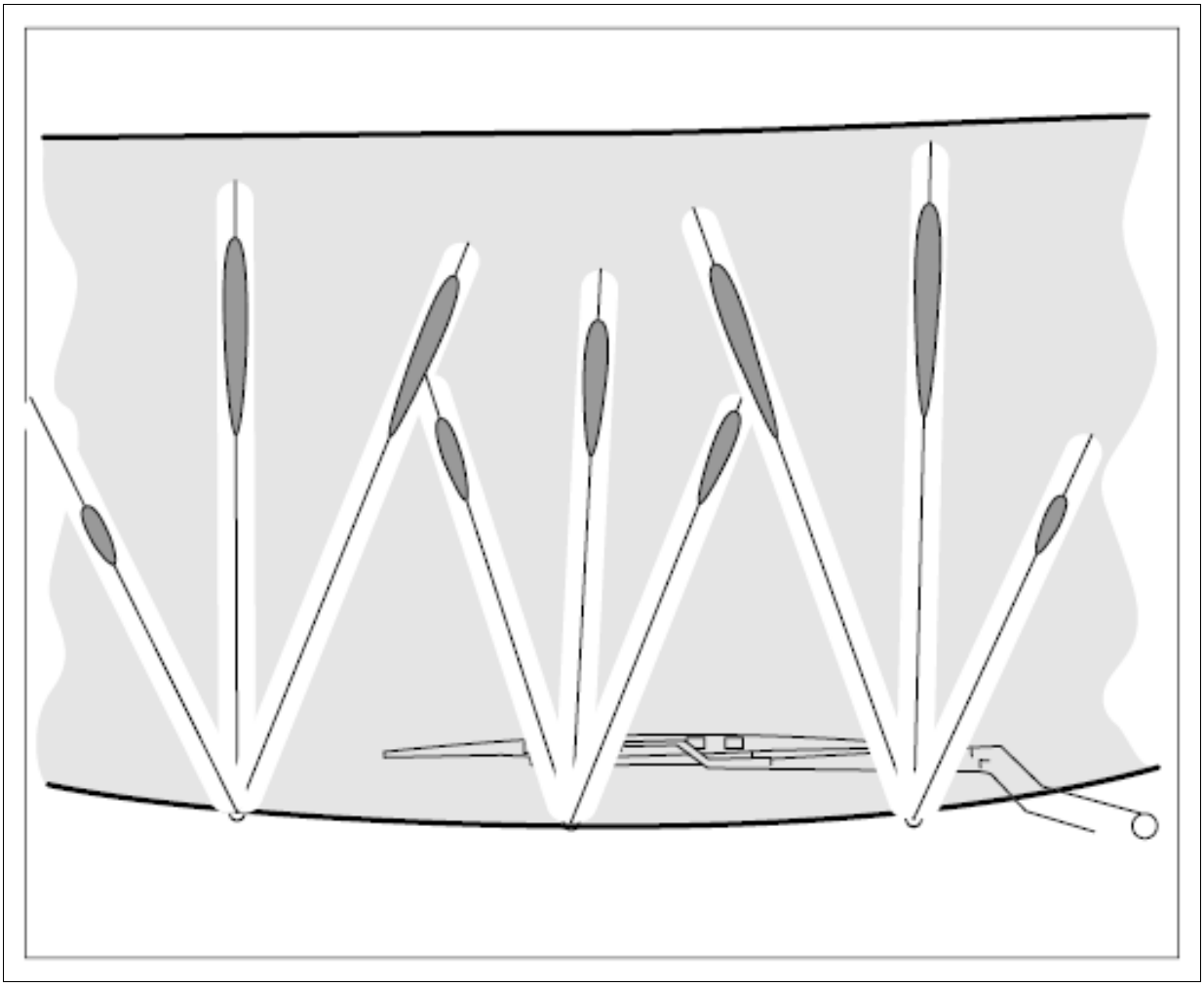

Courtesy of PORSCHE CARS NORTH AMERICA, INC.

WM 0X01IN WINDSCREEN WASHER/HEADLIGHT CLEANING SYSTEM: CHECKING OPERATION, NOZZLE SETTINGS (MACAN, MACAN S, MACAN TURBO) > WINDSCREEN WASHER/HEADLIGHT CLEANING SYSTEM: CHECKING OPERATION, NOZZLE SETTINGS > MIXTURE RATIO OF FLUIDS FOR THE WINDSCREEN WASHER SYSTEM

Fluid:	Mixture ratio:
Water	Undiluted
Water/isopropanol	1: 1
	2: 1
	3: 1
Water/ethanol	1: 1

	2: 1
	3: 1

WM 0X01IN WINDSCREEN WASHER/HEADLIGHT CLEANING SYSTEM: CHECKING OPERATION, NOZZLE SETTINGS (MACAN, MACAN S, MACAN TURBO) > WINDSCREEN WASHER/HEADLIGHT CLEANING SYSTEM: CHECKING OPERATION, NOZZLE SETTINGS > CHECKING WIPER BLADES

Check the wiper blades for any deformities and tears.

1. Switch on ignition, operate the spray nozzles and check the quality of the wiper action.

WM 0X03IN CHECKING WHEEL MOUNTING (MACAN, MACAN S, MACAN TURBO) > TECHNICAL VALUES

Location	Description	Type	Basic value	Tolerance 1	Tolerance 2
Wheel to wheel hub		Tightening torque	160 Nm (118 ftlb.)		

WM 0X03IN CHECKING WHEEL MOUNTING (MACAN, MACAN S, MACAN TURBO) > CHECKING > CHECKING WHEEL MOUNTING

Information

Use a suitable commercially available tool together with a tested torque wrench, covering the range from 40 to 200 Nm (30-148 ftlb.). Never use an impact bolter.

- Do not loosen the wheel bolts to check whether they are secure.
- Re-tighten wheel bolts and check that they are seated securely. **Tightening torque 160 Nm (118 ftlb.)**

WM 0X03IN CREATING VEHICLE ANALYSIS LOG (VAL) (MACAN, MACAN S, MACAN TURBO) > TOOLS

Designation	Type	Number	Description	

PIWIS Tester II	Special tool	9818		

WM 0X03IN CREATING VEHICLE ANALYSIS LOG (VAL) (MACAN, MACAN S, MACAN TURBO) > CREATING VEHICLE ANALYSIS LOG (VAL)

Information

When creating the FAP, it is essential to guarantee the power supply for the Porsche System Tester. A battery charger with a current rating of at least 40 A must be connected to the vehicle battery.

The Porsche System Tester instructions take precedence and in the event of a discrepancy, these are the instructions that must be followed. Deviations may occur with later software versions.

The procedure described here has been structured in general terms; different text or additions may appear in the Porsche System Tester.

1. **PIWIS Tester II 9818** must be connected to the vehicle. Then start the Tester.
2. Switch on ignition.
3. **Select "Diagnosis".**
4. Select vehicle type.
5. **Select "Additional menu"** by pressing [F7].
6. **Select VAL** by pressing [F12].
7. **Select AS VAL** or **OBD VAL** . Then press [F8] to start.
8. Check the chassis number and correct it if necessary.
9. If you want to print the data, connect the printer to **PIWIS Tester II 9818.**
10. Switch on the printer.
11. Press [F10] to display the VAL.
12. If there is a printer connected, the print job can be started using the menu bar.
13. Then **save** or **delete** the VAL using the touchpad.
14. Shut down the Tester, switch it off and disconnect it from the vehicle.

WM 0X03IN ELECTRICS MAINTENANCE: CHECKING WINDSCREEN WIPER AND WASHER SYSTEM (MACAN, MACAN S, MACAN TURBO) > TOOLS

Designation	Type	Number	Description	
adjusting tool	VW tool	T40187		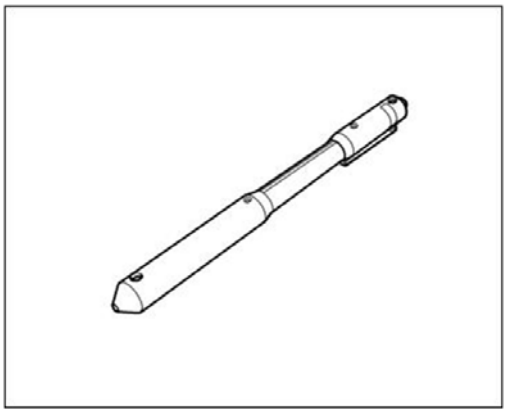

WM 0X03IN ELECTRICS MAINTENANCE: CHECKING WINDSCREEN WIPER AND WASHER SYSTEM (MACAN, MACAN S, MACAN TURBO) > WINDSCREEN WASHER/HEADLIGHT CLEANING SYSTEM: CHECKING OPERATION, NOZZLE SETTINGS > CHECKING AND ADJUSTING SPRAY NOZZLES FOR WINDSCREEN WASHER SYSTEM

Information

Only use windscreen cleaning agents and antifreeze approved by Porsche.

Observe the required mixture ratio in accordance with manufacturer's specifications and season.

1. Fill the windscreen-washer reservoir with a mixture of water and window cleaner or antifreeze, depending on the season.
2. Actuate the windscreen washer system and align spray nozzles for the windscreen washer system as required using **adjusting tool T40187.** → 926619 REMOVING AND INSTALLING SPRAY NOZZLE FOR WINDSCREEN WASHER SYSTEM .

WM 0X03IN ELECTRICS MAINTENANCE: CHECKING WINDSCREEN WIPER AND WASHER SYSTEM (MACAN, MACAN S, MACAN TURBO) > WINDSCREEN WASHER/HEADLIGHT CLEANING SYSTEM: CHECKING OPERATION, NOZZLE SETTINGS > CHECKING WIPER BLADES

Check condition of wiper blades on windscreen and rear window for wear, deformities and tears.

1. Switch on ignition, operate the windscreen-washer system spray nozzles and check wiping

quality.

1. 1.1. Replace windscreen wiper blades if necessary. → 922719 REMOVING AND INSTALLING WIPER BLADE .
2. 1.2. Replace wiper blade for rear window washer as required. → 924319 REMOVING AND INSTALLING WIPER BLADE FOR REAR WINDOW WASHER .

WM 0X03IN ELECTRICS MAINTENANCE: CHECKING WINDSCREEN WIPER AND WASHER SYSTEM (MACAN, MACAN S, MACAN TURBO) > WINDSCREEN WASHER/HEADLIGHT CLEANING SYSTEM: CHECKING OPERATION, NOZZLE SETTINGS > WINDSCREEN WASHER/HEADLIGHT CLEANING SYSTEM: CHECKING OPERATION, NOZZLE SETTINGS

NOTE: Headlight surface not cleaned properly

- *Scratches*

→ Use only soapy water to clean the exterior lights and the plastic headlight lenses.

→ Never use chemical cleaning agents.

→ To avoid scratches, do not rub with dry or slightly damp cloths, paper towels or insect-removal sponges.

Information

- The headlight washer nozzles are pre-set!
- Generally, it is not necessary to adjust them!

1. Check function and adjustment of spray nozzles for headlight washer system.

WM 0X03IN RUNNING GEAR MAINTENANCE: BALL JOINTS/DRIVE SHAFTS (MACAN S, MACAN TURBO) > PRELIMINARY WORK

WARNING: Vehicle can fall down

- *Risk of squashing or crushing*
- *Risk of damage to the vehicle*

→ Do not place any solid objects under the raised vehicle.

→ Ensure that the lifting platform is prevented from lowering.

→ Remove solid objects before lowering the vehicle.

→ Raise the vehicle only at the jacking points provided.

→ The outer jacking points should be used primarily.

1. Jack and raise the vehicle at the prescribed jacking points.

   → 4X00IN LIFTING THE VEHICLE .

WM 0X03IN RUNNING GEAR MAINTENANCE: BALL JOINTS/DRIVE SHAFTS (MACAN S, MACAN TURBO) > INFORMATION > AXLE JOINTS: CHECKING PLAY AND DUST BELLOWS

1. Check joint clearance.

   Information

   1. When doing so, press the rubber dust boots down with your fingers to reveal any hidden cracks.
   2. If a rubber dust boot is leaking, the corresponding joint or control arm must be replaced because any dirt or moisture that seeps in will cause irreparable damage to the joint.

2. Visually inspect the dust boots for damage.
3. Inspect the dust boots of the axle joints (ball joints) on the wheel suspension as follows:

   1. Place the vehicle on a lifting platform with the steering lock disengaged.
   2. Perform a visual inspection after cleaning.

The procedure for the front axle is as follows:

> ⚠ *CAUTION: Turning steering too sharply using the steering wheel.*
>
> - *Risk of squashing arms.*

→ Only turn the steering wheel as far to the left and right as required in order to check the amount of play on the tie rod.

- Turn the front wheels as far as they will go
- Perform a visual inspection of the visible surfaces on the left and right
- After turning the front wheels to the other steering stop, check the other half of each rubber dust boot.

WM 0X03IN RUNNING GEAR MAINTENANCE: BALL JOINTS/DRIVE SHAFTS (MACAN

S, MACAN TURBO) > INFORMATION > DRIVE SHAFTS: VISUAL INSPECTION OF BOOTS

- Perform a visual inspection of the boots for leaks and damage.

WM 0X03IN RUNNING GEAR MAINTENANCE: CHASSIS ADJUSTMENT/STORAGE OF ASSEMBLIES (MACAN S, MACAN TURBO) > INFORMATION > CHASSIS ADJUSTMENT (WHEEL ALIGNMENT VALUES)

- Check that threaded connections for chassis adjustment (wheel alignment values) at front and rear are secure.

WM 0X03IN RUNNING GEAR MAINTENANCE: CHASSIS ADJUSTMENT/STORAGE OF ASSEMBLIES (MACAN S, MACAN TURBO) > INFORMATION > STORAGE OF ASSEMBLIES AND CHASSIS

- Visual inspection of all rubber mountings for damage.

WM 0X03IN RUNNING GEAR MAINTENANCE: CHECKING BRAKE FLUID LEVEL AND CHANGING BRAKE FLUID (MACAN S, MACAN TURBO) > CHECKING

Visually check the brake fluid level. The brake fluid reservoir is located under the left plenum panel cover **-arrow-** .

Fig 1: Locating Brake Fluid Reservoir

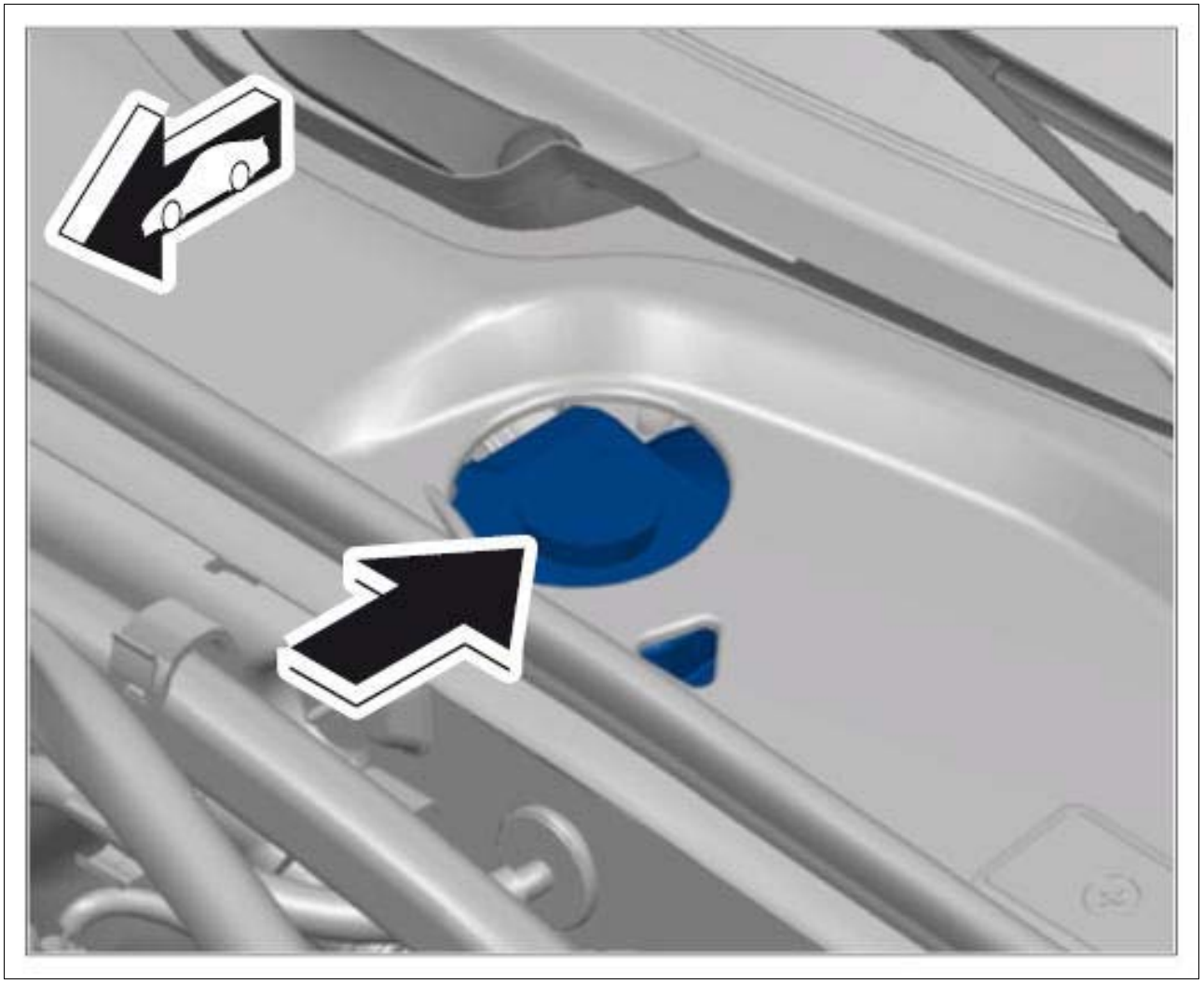

Courtesy of PORSCHE CARS NORTH AMERICA, INC.

Information

- The brake fluid level must not exceed the MAX mark.
- Observe brake fluid quality. Use only new DOT 4 brake fluid.
- This brake fluid is available under the following part numbers: Quantity supplied: 1 litre = 000.043.203.66; 30 litres = 000.043.203.67.

MAX marking on brake fluid reservoir. The brake fluid level must be between the MIN and MAX markings.

WM 0X03IN RUNNING GEAR MAINTENANCE: CHECKING BRAKE FLUID LEVEL AND CHANGING BRAKE FLUID (MACAN S, MACAN TURBO) > CHANGING BRAKE FLUID

Information

- Observe brake fluid quality. Use only new DOT 4 brake fluid.

- The brake fluid change interval is two years using Super DOT 4 brake fluid.
- This brake fluid is available under the following part numbers: Quantity supplied: 1 litre = 000.043.203.66; 30 litres = 000.043.203.67.
- Drain brake fluid from every brake calliper at both bleeder valves.
- There are two bleeder valves on the brake calliper. Brake fluid must be drained at both bleeder valves. Observe specified sequence: Bleed the outer bleeder valve first.

1. Open threaded cover on brake fluid reservoir **-arrow-** .

   Fig 1: Locating Brake Fluid Reservoir

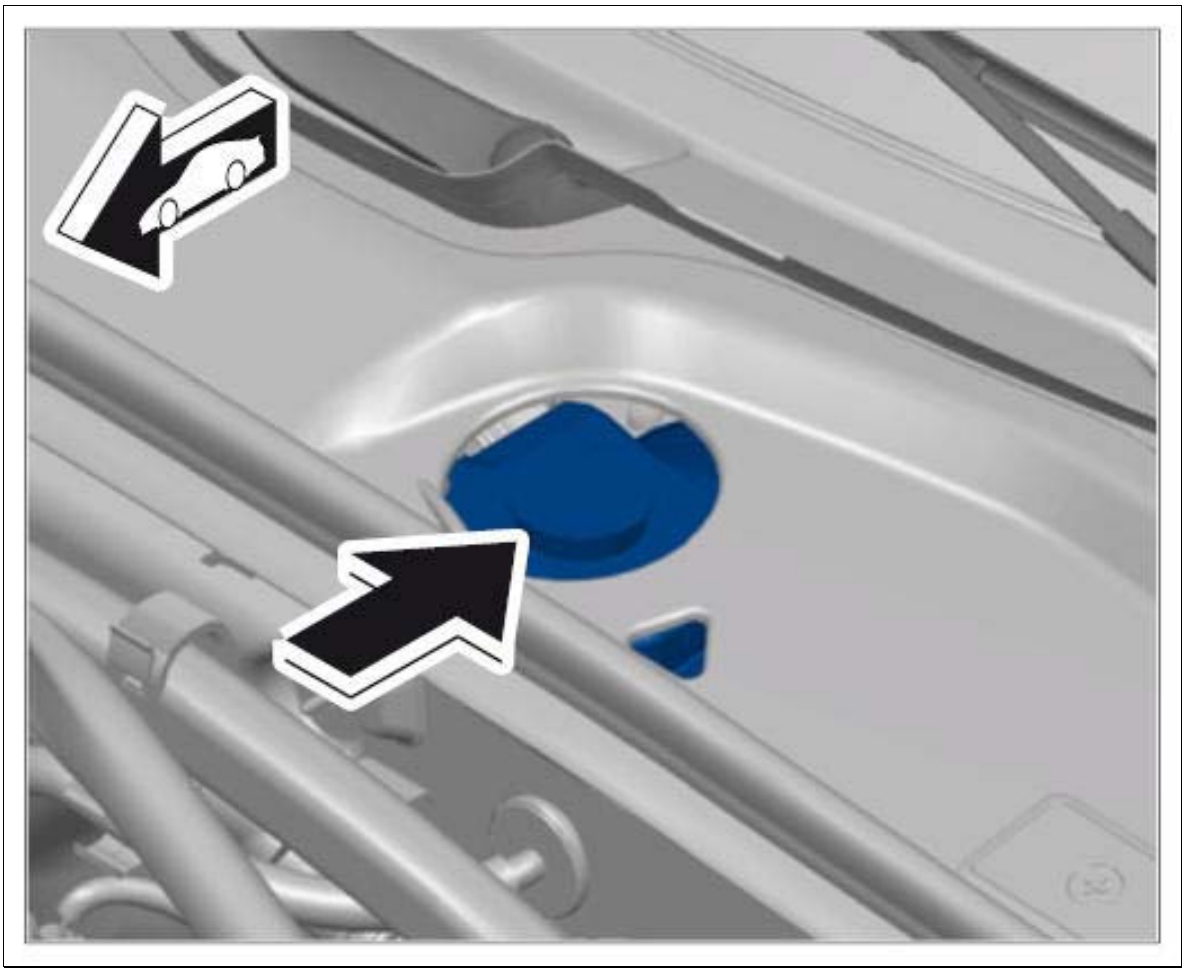

Courtesy of PORSCHE CARS NORTH AMERICA, INC.

2. Connect bleeding device to the brake fluid reservoir.
3. Switch on the bleeding device. Bleeding pressure is approx. 2.0 bar.
4. Continue changing the brake fluid at the brake callipers. Do so in the following sequence: rear right/rear left/front right/front left.
5. Open every bleeder valve until clear, bubble-free brake fluid emerges and until the corresponding change quantity per brake calliper is reached (approx. 250 cm^3).
6. Use a transparent hose and a collecting bottle to check the escaping brake fluid for cleanliness, absence of air bubbles and to determine the amount of brake fluid used.

7. Tighten the bleeder valves to the specified tightening torque → Tightening torques for brake hydraulic system → 47 - BRAKES - HYDRAULIC BRAKE SYSTEM, REGULATOR -- (95B) - MACAN - "Technical values" and remove the bleeder hoses.

8. Switch off the bleeding device and remove the adapter at the reservoir. The brake fluid level in the reservoir must be between the MIN and MAX markings once the vehicle has been filled and bled. Correct the brake fluid level if necessary.

WM 0X03IN RUNNING GEAR MAINTENANCE: STEERING GEAR - VISUAL INSPECTION OF BELLOWS AND TIE ROD JOINTS (MACAN S, MACAN TURBO) > CHECKING > CHECKING BELLOWS

Information

- The bellows on the steering gear can be damaged by external influences for example, by stone damage or during assembly work!
- The steering gear can become damaged if dirt or moisture leaks into it as a result of a leaky bellows!

- Visually inspect the bellows for damage.

WM 0X03IN RUNNING GEAR MAINTENANCE: STEERING GEAR - VISUAL INSPECTION OF BELLOWS AND TIE ROD JOINTS (MACAN S, MACAN TURBO) > CHECKING > TIE ROD ENDS: CHECKING PLAY AND DUST BELLOWS

1. Raise the vehicle → 4X00IN LIFTING THE VEHICLE .

   Information

   1. The rubber dust bellows and tie rods can be damaged by external influences, e.g. stone impact, or during assembly work.

   2. If a rubber dust boot leaks, the joint or tie rod must be replaced, because any dirt or moisture that seeps in will destroy the joint.

2. Check joint clearance and dust boots.

3. Check that the dust boots and joints are working perfectly and have no leaks.

WM 0X03IN RUNNING GEAR MAINTENANCE: TIRES AND SPARE WHEEL: CHECKING CONDITION AND TIRE PRESSURE (MACAN S, MACAN TURBO) > CHECKING > CHECK CONDITION

For vehicles with Tyre Pressure Monitoring (TPM), which can be identified by aluminium valves, the tire pressure must be adjusted according to the >> Filling information << on the multi-function display. To do this, select >> Main menu >> Tyre pressure >> Filling information <<. Adjust the deviation values so that

they range from 0.0 bar to +0.1 bar. Fill the tires according to the display using the tire-inflating device. Example: If the tire pressure display >> Filling information << shows - 0.2 bar, 0.2 bar pressure must be added.

Fig 1: Display - Tyre Pressure Information Screen



Courtesy of PORSCHE CARS NORTH AMERICA, INC.

Information

The >> Tyre pressure << display is for information purposes only.

- Tyre pressure settings can only be entered according to the values in >> Filling information <<.

Due to the pressure and temperature relationship (approx. 0.1 bar/10° C), the actual pressure values displayed under >> Tyre pressure << on the multi-function display, or on the pressure gauge of the tire-inflating device, can deviate from the required pressure specified at 20° C on the tire pressure plate if the air temperature in the tire is significantly above (higher values) or significantly below 20° C (lower values). Changes in tire pressure are displayed after max. 1 minute under >> Filling information << after switching on the ignition. A series of dashes (-.-) will appear instead of the tire pressure during this time.

Fig 2: Display - Tyre Pressure Information Screen



Courtesy of PORSCHE CARS NORTH AMERICA, INC.

For vehicles with Tyre Pressure Monitoring (TPM), always use plastic valve caps. Plastic valve caps protect against dust, dirt and humidity, and therefore against damage (corrosion).

Tyres are a safety element that meet the demands placed on them only if they have the correct air pressure and sufficient tread depth.

> *WARNING: Risk of accidents if the air pressure in the tires falls below the minimum pressure, if the tread depth is insufficient or if there are foreign bodies, pricks, cracks and bulges in the sidewall (ply breakage).*
>
> - *Modified handling behaviour can cause accidents and significant material damage.*

→ The tire pressure must never fall below the values specified (these are minimum pressures).

→ The tread depth must never fall below the minimum value.

→ A visual inspection of the tires (for cracks, pricks, bulges in the sidewall and/or foreign bodies) must

be carried out.

1. Check condition and tire pressure.
2. Always screw on valve caps tightly and replace missing valve caps.

> *NOTE: Tyre pressure for cold tires (approx. 20 °C)*

Information

The currently applicable air pressure values and comfort tire pressure values in the individual countries can be found in the Manufacturer Approval >>Approved wheels and tires<< in the >>Manufacturer Approvals<< .

Tyre pressures apply to all-season, winter and summer tires. They also apply only to tires approved by Porsche.

Part load = payload < 260 kg

Full load = payload > 260 kg

The collapsible spare wheel is an optional extra (tire sealing compound comes as standard).

WM 0X03IN RUNNING GEAR MAINTENANCE: VISUAL INSPECTION - BRAKE LINES/BRAKE PADS/BRAKE DISCS (MACAN S, MACAN TURBO) > CHECKING > BRAKE HOSES AND LINES

- Carry out visual inspection for leaks, damage, routing and corrosion.

WM 0X03IN RUNNING GEAR MAINTENANCE: VISUAL INSPECTION - BRAKE LINES/BRAKE PADS/BRAKE DISCS (MACAN S, MACAN TURBO) > CHECKING > BRAKE SYSTEM: VISUAL INSPECTION OF BRAKE PADS AND BRAKE DISCS FOR WEAR

> *WARNING: Risk of accidents if brake pads and brake discs are not replaced in time.*
>
> - *Risk of injury and material damage due to impaired braking effect.*

→ The brake pads must be replaced when the brake pad warning indicator lights up, but no later than when there is a residual pad thickness of 2 mm.

→ Brake discs must be replaced on reaching the wear limits.

Information

- If brake pad wear is indicated by the warning light, the warning contact (sender including line and

plug connection) must also be replaced.

- Replacing the warning contact can be avoided by replacing the brake pads no later than when the pad thickness is approx. 2.5 mm.
- Warning contacts must be replaced if the core of the wire is worn. Worn insulation is not important.
- However, if only the plastic part of the warning contact is worn, there is no need to replace it.

1. Visually inspect the brake pads for wear (wear limit: 2 mm).

   See:

   → 463602 CHECKING THICKNESS OF FRONT BRAKE PADS

   → 463802 CHECKING THICKNESS OF REAR BRAKE PADS

2. Visually inspect the brake discs for wear → 4650TW TECHNICAL DATA/BRAKE WEAR LIMIT .

WM 0X03IN TEST DRIVE - MAINTENANCE (MACAN, MACAN S, MACAN TURBO) > TEST DRIVE - MAINTENANCE

Information

- The following test items are included in the test drive.
  - Actuate remote control for central locking and check operation.
  - Seats: check operation of adjustment options.
  - Check electric parking brake and footbrake operation and actuation travel.
  - Start engine, check operation.
  - Actuate steering and check operation.
  - Change gears and check gearshift operation.
  - ParkAssist: select reverse gear and check operation.
  - Activate automatic cruise control during the test drive and check operation.
  - Actuate PSM switch during the test drive and check operation.
  - Check operation of heating adjustment when engine is warm.
  - Check operation of sports exhaust system.
  - Check operation of air-conditioning system when engine is running.
  - Check operation of instruments.

WM 0X03IN TRAILER HITCH MAINTENANCE: CHECKING FUNCTION (MACAN, MACAN S, MACAN TURBO) > TOOLS

Designation	Type	Number	Description	
socket tester V.A.G. 1537 A	Workshop equipment	WE 1180		

WM 0X03IN TRAILER HITCH MAINTENANCE: CHECKING FUNCTION (MACAN, MACAN S, MACAN TURBO) > INFORMATION > TRAILER HITCH MAINTENANCE: CHECKING FUNCTION

Information

The function test on the electrical components of the trailer hitch can be performed using a trailer with no faults in the wiring and lights or using the **socket tester V.A.G. 1537 A WE 1180** . The procedure for testing using the **socket tester V.A.G. 1537 A WE 1180** is described below.

The **socket tester V.A.G. 1537 A WE 1180** can only be used to test 13-pin plug sockets. An adapter is required for testing 7-pin sockets.

Thermal cut-off can occur on the **socket tester V.A.G. 1537 A WE 1180** as a result of the build-up of heat.

Fig 1: Identifying Socket Tester - V.A.G. 1537 A

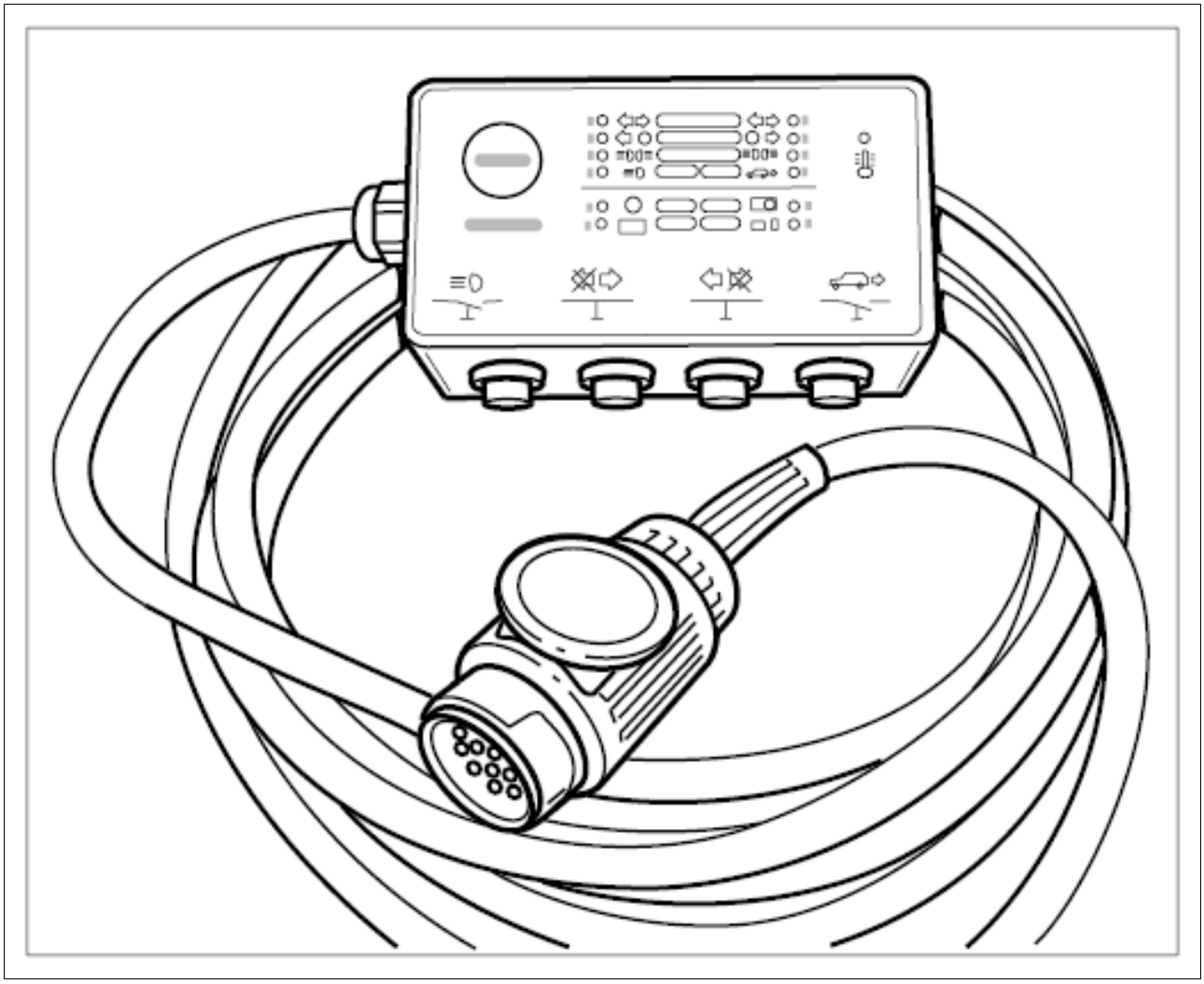

Courtesy of PORSCHE CARS NORTH AMERICA, INC.

WM 0X03IN TRAILER HITCH MAINTENANCE: CHECKING FUNCTION (MACAN, MACAN S, MACAN TURBO) > INFORMATION > CHECKING FUNCTION OF THE TRAILER HITCH PLUG SOCKET

WARNING: Risk of injury and damage when retracting and extending the ball hitch.

- *Make sure that no persons, animals or obstacles are in the movement range of the ball hitch.*
- *To interrupt the swivel action of the ball hitch in the event of danger, touch the rocker switch again.*

→ Never swivel the ball hitch when a trailer is coupled or when, for example, bicycle racks are mounted or supported on the ball hitch.

→ Only use the trailer coupling when the ball hitch is extended fully.

→ Never insert tools of any kind into the ball hitch swivel mechanism. This could damage the locking mechanism; safe operation of the trailer hitch can then no longer be assured.

→ Check that the ball hitch locks into position correctly before every journey.

Vehicles with electrically extendable trailer hitch

1. Unfold coupling.

   All vehicles

2. Plug test cable of **socket tester V.A.G. 1537 A WE 1180** into the plug socket for the trailer hitch and route it towards the driver's seat.

   Fig 1: Connecting Test Cable (Cayenne)

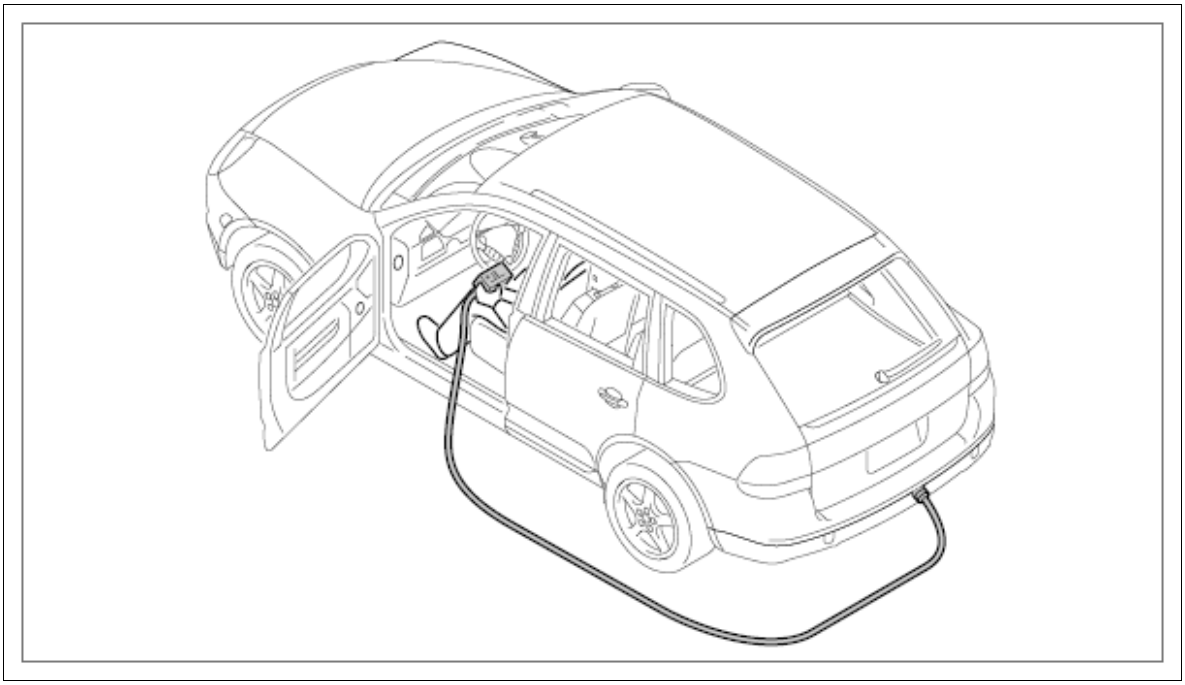

Courtesy of PORSCHE CARS NORTH AMERICA, INC.

Fig 2: Identifying Tester Marking

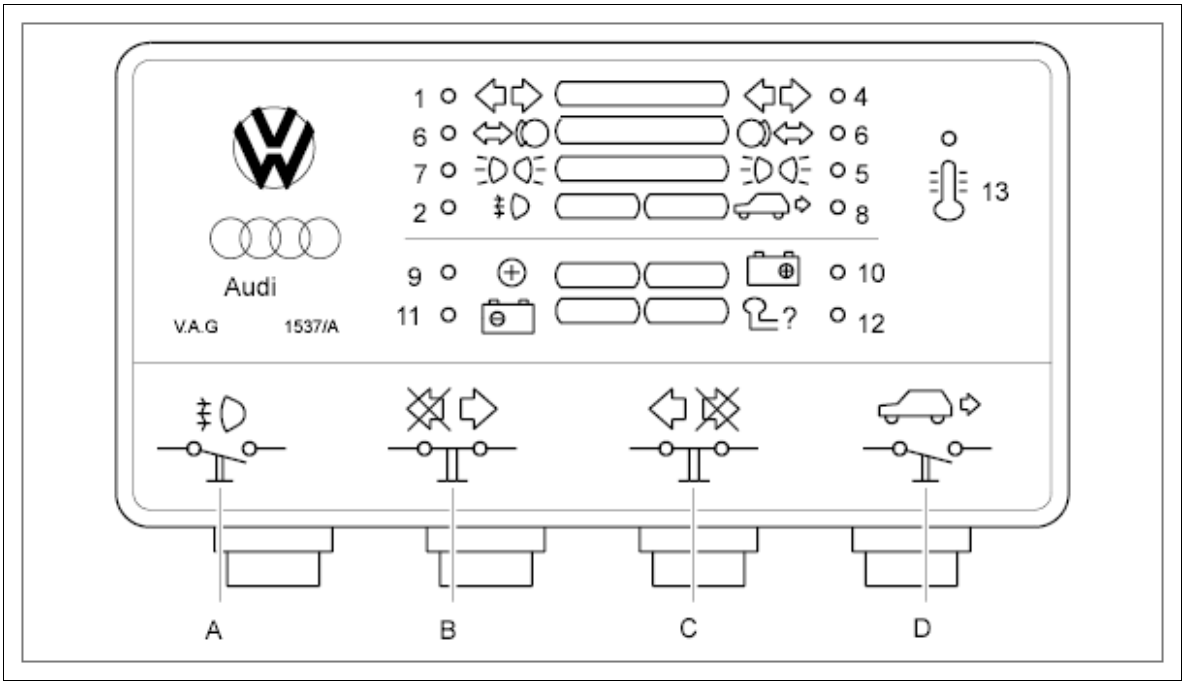

Courtesy of PORSCHE CARS NORTH AMERICA, INC.

1. **1** - Left direction indicator
2. **2** - Rear fog light
3. **4** - Right direction indicator
4. **5** - Right parking light
5. **6** - Left and right brake lights
6. **7** - Left parking light
7. **8** - Reversing light
8. **9** - Permanent positive
9. **10** - Charge positive
10. **11** - Ground for charge positive
11. **12** - Trailer detection
12. **13** - Socket Tester overheats

3. Switch on ignition.
4. Check permanent positive function.
    1. 4.1. LED **-9-** must light up continuously.
5. Check function of left direction indicator.
    1. 5.1. Switch on left direction indicator. The LED **-1-** and the left direction of travel

arrow in the instrument cluster must flash.

2. 5.2. Press button **-B-** . The LED **-1-** and the left direction of travel arrow in the instrument cluster must not flash.

6. Check function of right direction indicator.

    1. 6.1. Switch on right direction indicator. The LED **-4-** and the right direction of travel arrow in the instrument cluster must flash.

    2. 6.2. Press button **-C-** . The LED **-4-** and the right direction of travel arrow in the instrument cluster must not flash.

7. Check function of brake lights.

    1. 7.1. Press the brake pedal. The LED **-6-** must light up.

8. Check function of reversing light.

    1. 8.1. Engage reverse gear. The LED **-8-** must light up.

9. Check function of parking light.

    1. 9.1. Switch on the parking light. The LEDs -5, 7- must light up.

10. Check function of rear fog lights.

    1. 10.1. Switch on dipped beam headlights and rear fog light. The LEDs -5, 7- and the LED **-2-** must light up. The rear fog lights on the vehicle must not light up.

    2. 10.2. Unplug test cable of **socket tester V.A.G. 1537 A WE 1180** from the trailer hitch plug socket, the rear fog lights on the vehicle must light up.

11. Switch off parking light.

12. Shift the transmission to position P.

WM 0X03IN TRAILER HITCH MAINTENANCE: CHECKING FUNCTION (MACAN, MACAN S, MACAN TURBO) > INFORMATION > CHECKING ELECTRICALLY EXTENDABLE TRAILER HITCH

Information

- The swivel action of the ball hitch is interrupted in the one-touch function of the rocker switch if resistance interferes with the movement sequence. The interruption is indicated by the rapid flashing of the red LED in the rocker switch.
- Overload protection is switched off by pressing the rocker switch for at least two seconds.

WARNING: Risk of injury and damage when retracting and extending the ball hitch.

- *Make sure that no persons, animals or obstacles are in the movement range of the ball hitch.*

- *To interrupt the swivel action of the ball hitch in the event of danger, touch the rocker switch again.*

→ Never swivel the ball hitch when a trailer is coupled or when, for example, bicycle racks are mounted or supported on the ball hitch.

→ Only use the trailer coupling when the ball hitch is extended fully.

→ Never insert tools of any kind into the ball hitch swivel mechanism. This could damage the locking mechanism; safe operation of the trailer hitch can then no longer be assured.

→ Check that the ball hitch locks into position correctly before every journey.

WM 0X03IN TRAILER HITCH MAINTENANCE: CHECKING FUNCTION (MACAN, MACAN S, MACAN TURBO) > INFORMATION > OVERLOAD PROTECTION

Information

- The vehicle must be stationary.
- Rear lid or rear window must be open.
- The trailer must be unhitched.
- Connectors (and any adapters) must be removed from the socket.
- There must not be any accessories on the ball hitch (e.g. ball protection cap, bicycle rack, etc.).

1. **Swivelling out the trailer coupling**

   Information

   1. The vehicle must be stationary.
   2. Rear lid or rear window must be open.

      1. 1.1.
      2. 1.2. **To swivel out:**
      3. 1.3. Touch rocker switch **-A-** .
      4. 1.4. >> The ball hitch moves automatically into operating position.
      5. 1.5. The red LED in the rocker switch flashes until the operating position is reached.

Fig 1: Identifying Rocker Switch

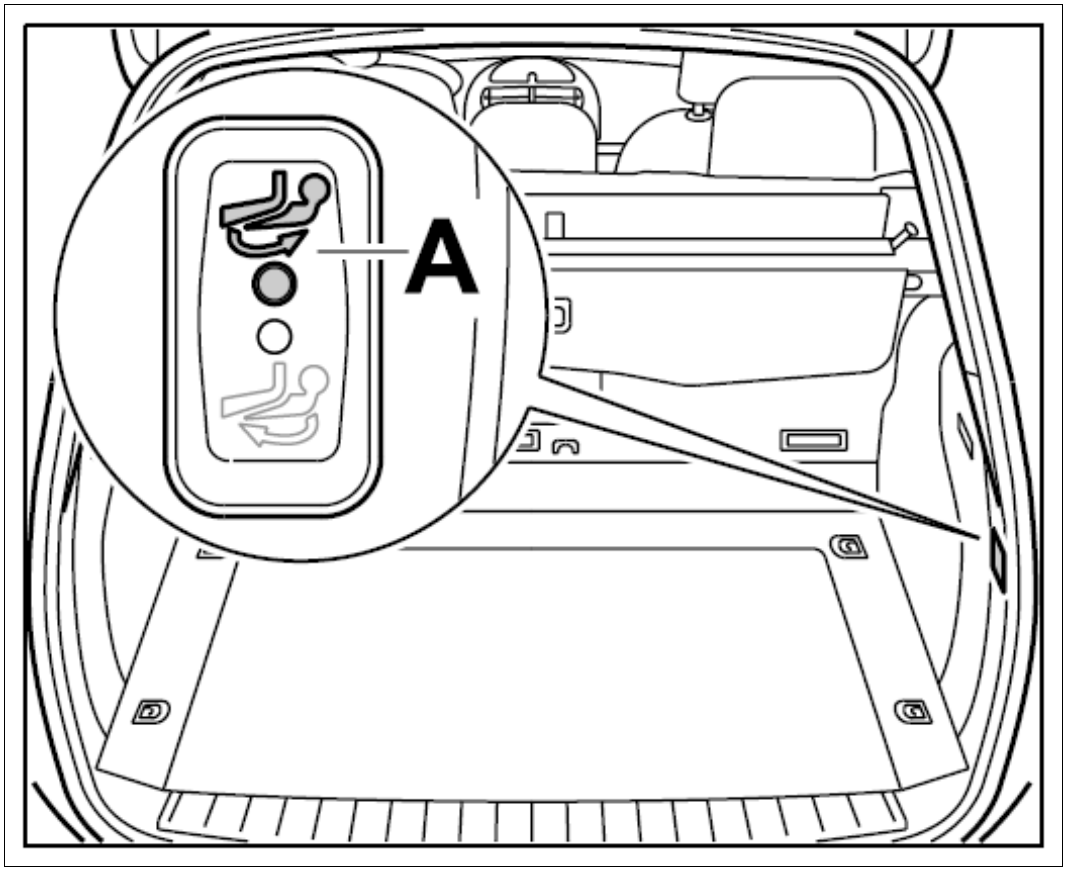

Courtesy of PORSCHE CARS NORTH AMERICA, INC.

2. **Retracting the trailer hitch**

Information

1. The vehicle must be stationary.
2. Rear lid or rear window must be open.
3. The trailer must be unhitched.
4. Connectors (and any adapters) must be removed from the socket.
5. There must not be any accessories on the ball hitch (e.g. ball protection cap, bicycle rack, etc.).

1. 2.1.
2. 2.2. **To retract:**
3. 2.3. Touch rocker switch **-A-** .
4. 2.4. >> The ball hitch moves automatically into operating position.
5. 2.5. The red LED in the rocker switch flashes until the operating position is reached.

Fig 2: Identifying Rocker Switch

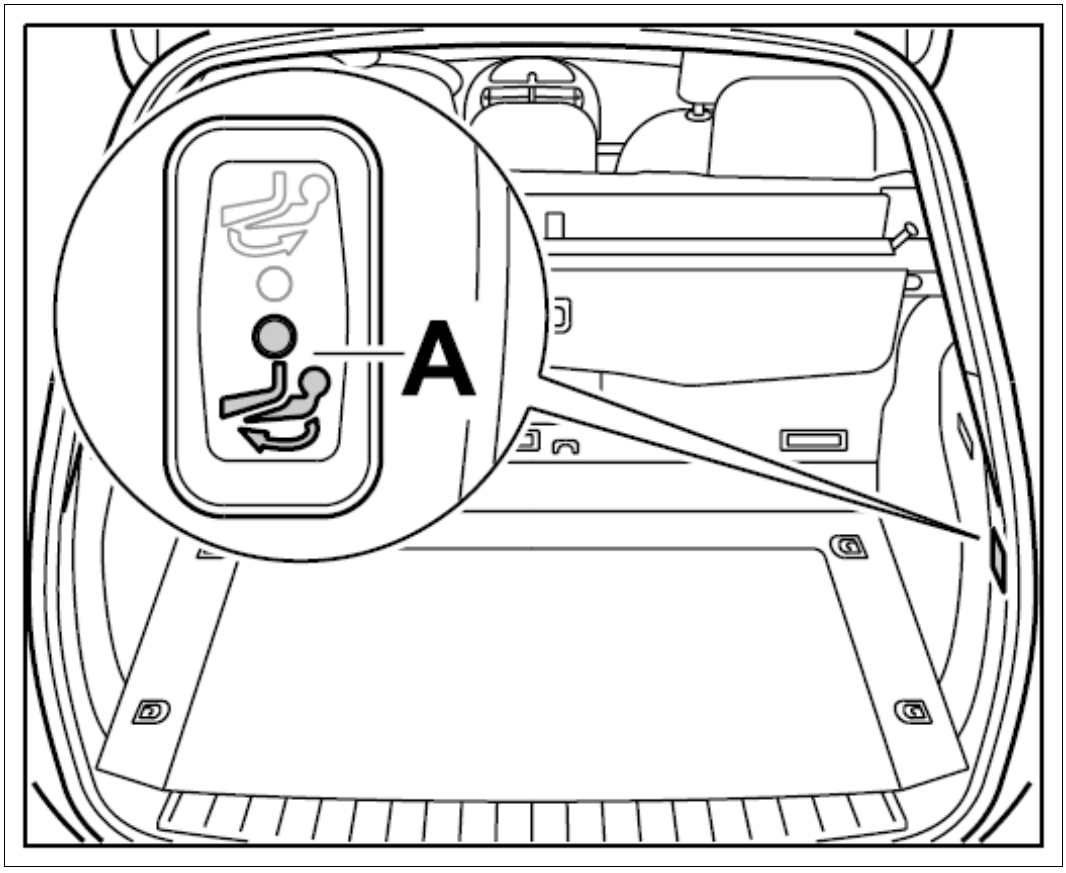

Courtesy of PORSCHE CARS NORTH AMERICA, INC.

WM 6X00IN GAP DIMENSIONS (ALL MODELS) > TECHNICAL VALUES

Location	Description	Type	Basic value	Tolerance 1	Tolerance 2
Roof to front lid	D3	Gap dimension	10 mm	+/-1.2 mm	
Roof to front lid	D4	Gap dimension	1.7 mm	+/-0.5 mm	

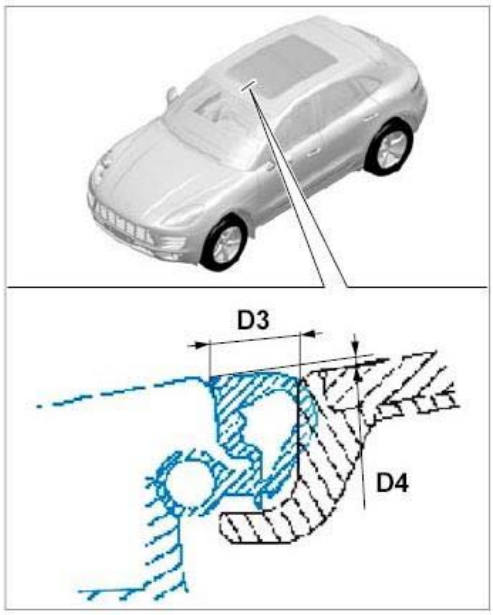

Roof to front lid

Front lid to rear lid	D5	Gap dimension	2.1 mm	+/-0.5 mm	
Front lid to rear lid	D6	Gap dimension	1 mm	+/-0.5 mm	

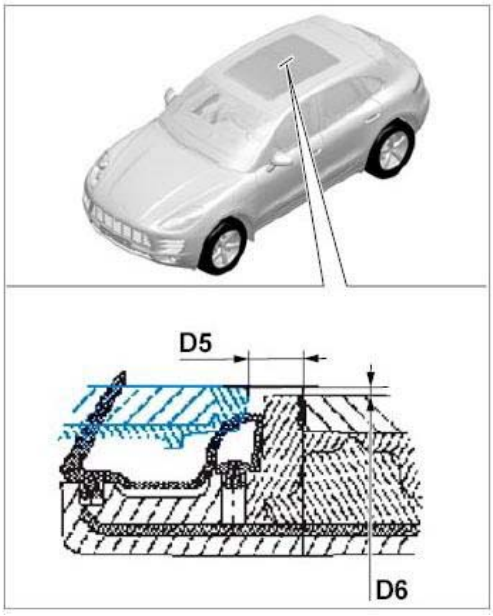

Front lid to rear lid					
Rear lid to roof	D7	Gap dimension	10 mm	+/-1.2 mm	
Rear lid to roof	D8	Gap dimension	0.8 mm	+/-0.5 mm	

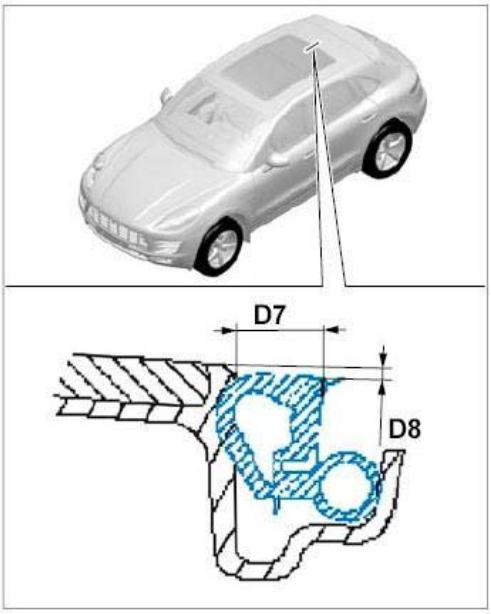

Lid to rear of roof

WM 6X00IN GAP DIMENSIONS (ALL MODELS) > GAP DIMENSIONS - 60 - ROOF ASSEMBLY

Location	Description	Type	Basic value	Tolerance 1	Tolerance 2
Roof to front lid	D3	Gap dimension	10 mm	+/-1.2 mm	
Roof to front lid	D4	Gap dimension	1.7 mm	+/-0.5 mm	

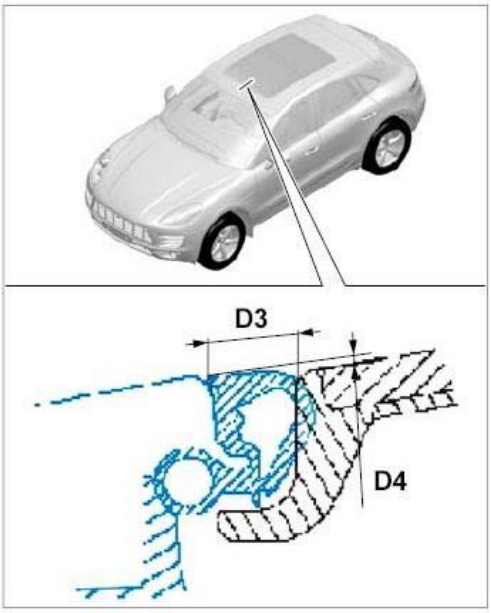

Roof to front lid					
Front lid to rear lid	D5	Gap dimension	2.1 mm	+/-0.5 mm	
Front lid to rear lid	D6	Gap dimension	1 mm	+/-0.5 mm	

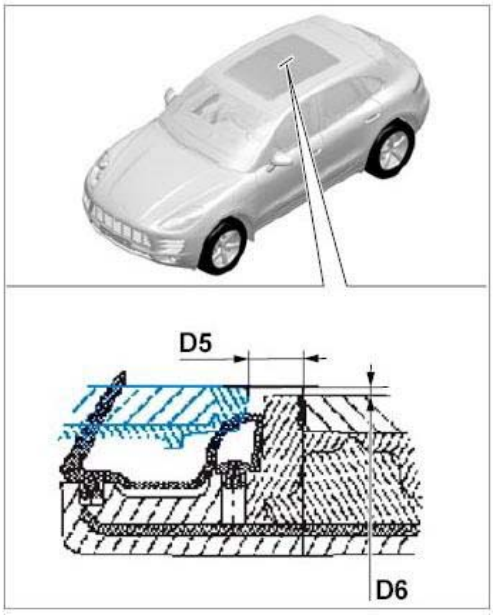

Front lid to rear lid

Rear lid to roof	D7	Gap dimension	10 mm	+/-1.2 mm	
Rear lid to roof	D8	Gap dimension	0.8 mm	+/-0.5 mm	

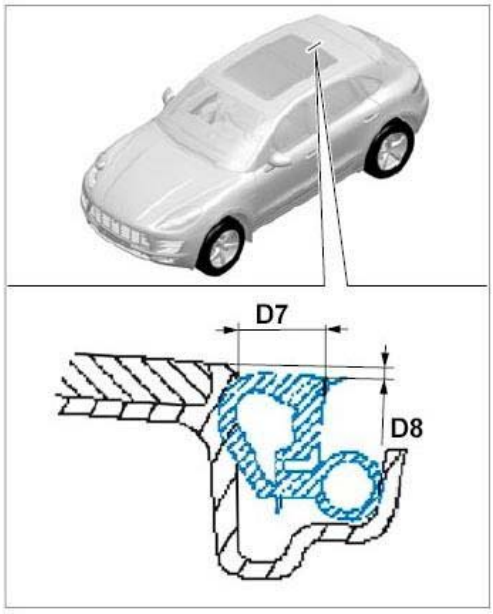

Lid to rear of roof

WM 6X00IN DISPOSAL OF AIRBAG AND SEAT-BELT PRETENSIONER UNITS (ALL MODELS) > TOOLS

Designation	Type	Number	Description	
Detonator (ignition device)	Special tool	9257		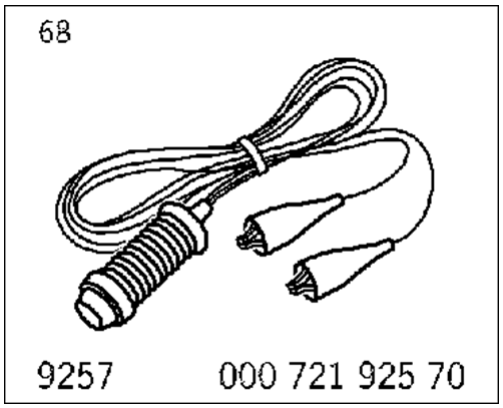
Ignition cable	Special tool	9257/1		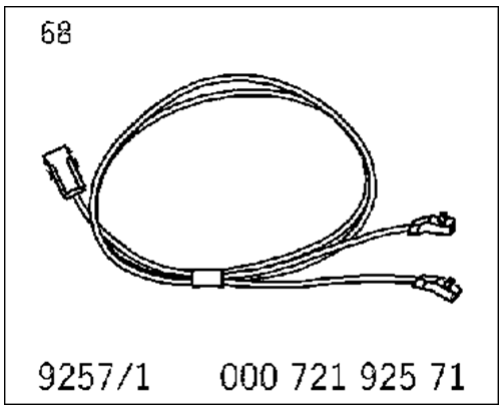
Adapter cable	Special tool	9257/4		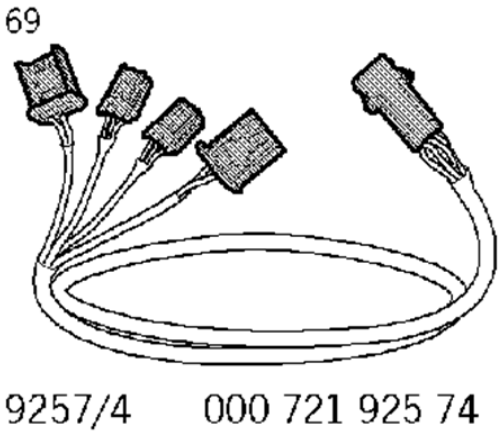
Adapter cable	Special tool	9257/6		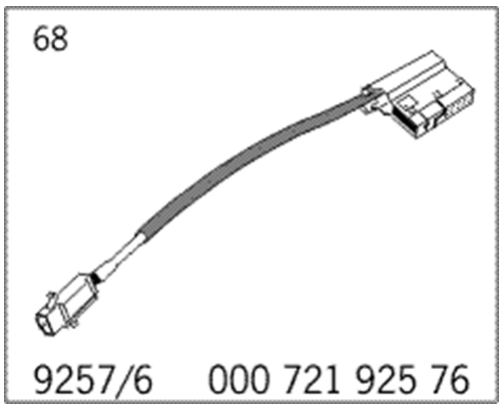

Adapter cable	Special tool	9257/7		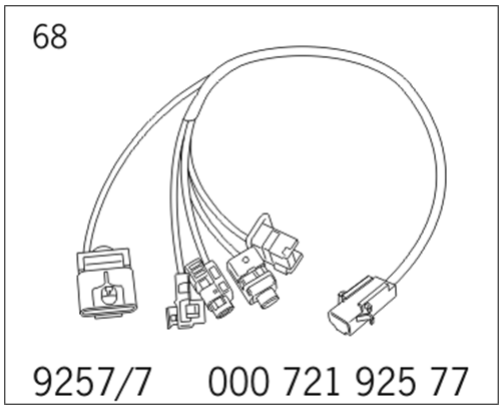

WM 6X00IN DISPOSAL OF AIRBAG AND SEAT-BELT PRETENSIONER UNITS (ALL MODELS) > DISPOSAL OF AIRBAG AND SEAT-BELT PRETENSIONER UNITS

WARNING: Incorrect handling of airbag units

- *Triggering of airbag unit.*
- *System faults can occur.*

→ Switch off ignition and remove ignition key or remote control (hand-held transmitter).

→ A power supply (e.g. battery charger) must not be connected to the external power supply/jump-lead starting terminals.

→ Disconnect the battery and insulate the ground strap so that all contact with a ground carrier is avoided.

→ Wait 1 minute after disconnecting the battery.

→ Only pull off connector on the triggering unit after the waiting time has elapsed.

→ Make sure that no foreign objects are located in front of the airbag unit during installation.

→ Replace damaged parts during removal.

→ Always position airbag units so that the blow-out opening is facing upwards, e.g. crest on driver's airbag.

→ Do not position anything on the airbag units.

→ If removed for an extended period, the airbag units must be stored in a safe place.

→ Airbag units must not come into contact with grease, oil, detergents, liquids, or similar substances.

→ Do not expose airbag units to temperatures above 90°.

→ Do not remove the short-circuit spring on the plug-in contacts.

→ Ignition and preparations may only be carried out by skilled staff, supervised by a second responsible person.

→ Before disposal, the airbag unit must be rendered harmless by electrical ignition performed in accordance with all precautionary measures, thereby preventing it from being used incorrectly.

Information

- Country-specific statutory regulations and legislation based on them which go beyond these instructions must always be observed and take precedence over these instructions!

Information

- Airbag units are pyrotechnical items and can pose an environmental hazard!
- For this reason, non-ignited airbag units or entire vehicles must not be disposed of as normal scrap, refuse or in other final storage facilities!
- If the vehicle suffered fire damage which caused one or several airbags or belt tensioners to be triggered, additional ignition with the adapter cable must be carried out in order to ensure that only parts without pyrotechnical contents are scrapped!
- In the case of airbag units which cannot be ignited or if the conditions for safe ignition are insufficient, always return the airbag units to Porsche or the respective importer in their original packaging!

WM 6X00IN DISPOSAL OF AIRBAG AND SEAT-BELT PRETENSIONER UNITS (ALL MODELS) > SAFETY PROCEDURES WHEN IGNITING AIRBAG UNITS

WARNING: Incorrect handling of airbag units

- *Triggering of airbag unit.*
- *System faults can occur.*

→ Switch off ignition and remove ignition key or remote control (hand-held transmitter).

→ A power supply (e.g. battery charger) must not be connected to the external power supply/jump-lead starting terminals.

→ Disconnect the battery and insulate the ground strap so that all contact with a ground carrier is avoided.

→ Wait 1 minute after disconnecting the battery.

→ Only pull off connector on the triggering unit after the waiting time has elapsed.

→ Make sure that no foreign objects are located in front of the airbag unit during installation.

→ Replace damaged parts during removal.

→ Always position airbag units so that the blow-out opening is facing upwards, e.g. crest on driver's

airbag.

→ Do not position anything on the airbag units.

→ If removed for an extended period, the airbag units must be stored in a safe place.

→ Airbag units must not come into contact with grease, oil, detergents, liquids, or similar substances.

→ Do not expose airbag units to temperatures above 90°.

→ Do not remove the short-circuit spring on the plug-in contacts.

→ Ignition and preparations may only be carried out by skilled staff, supervised by a second responsible person.

→ Before disposal, the airbag unit must be rendered harmless by electrical ignition performed in accordance with all precautionary measures, thereby preventing it from being used incorrectly.

Information

Only ignite airbag units that are securely installed in the vehicle and in the original condition. Use only the ignition tool intended for this purpose.

Carry out ignition only in suitable, open areas.

First remove all loose objects from the expansion area of the airbag.

Each ignition circuit for all airbag units and seat-belt tensioners must be ignited individually.

Persons possibly affected must be informed of the resulting noise beforehand.

Wear ear protectors. Keep a safe distance by utilizing the entire cable length of the ignition tool.

Connect power source only just prior to igniting.

If ignition fails, wait for approx. 3 minutes before approaching the vehicle.

Allow airbag units to cool down under observation following ignition.

Avoid skin contact with ignited airbag units.

WM 6X00IN DISPOSAL OF AIRBAG AND SEAT-BELT PRETENSIONER UNITS (ALL MODELS) > TOOLS AND MATERIALS > DETONATOR (IGNITION DEVICE) 9257

Fig 1: Overview Of Ignition Device 92570

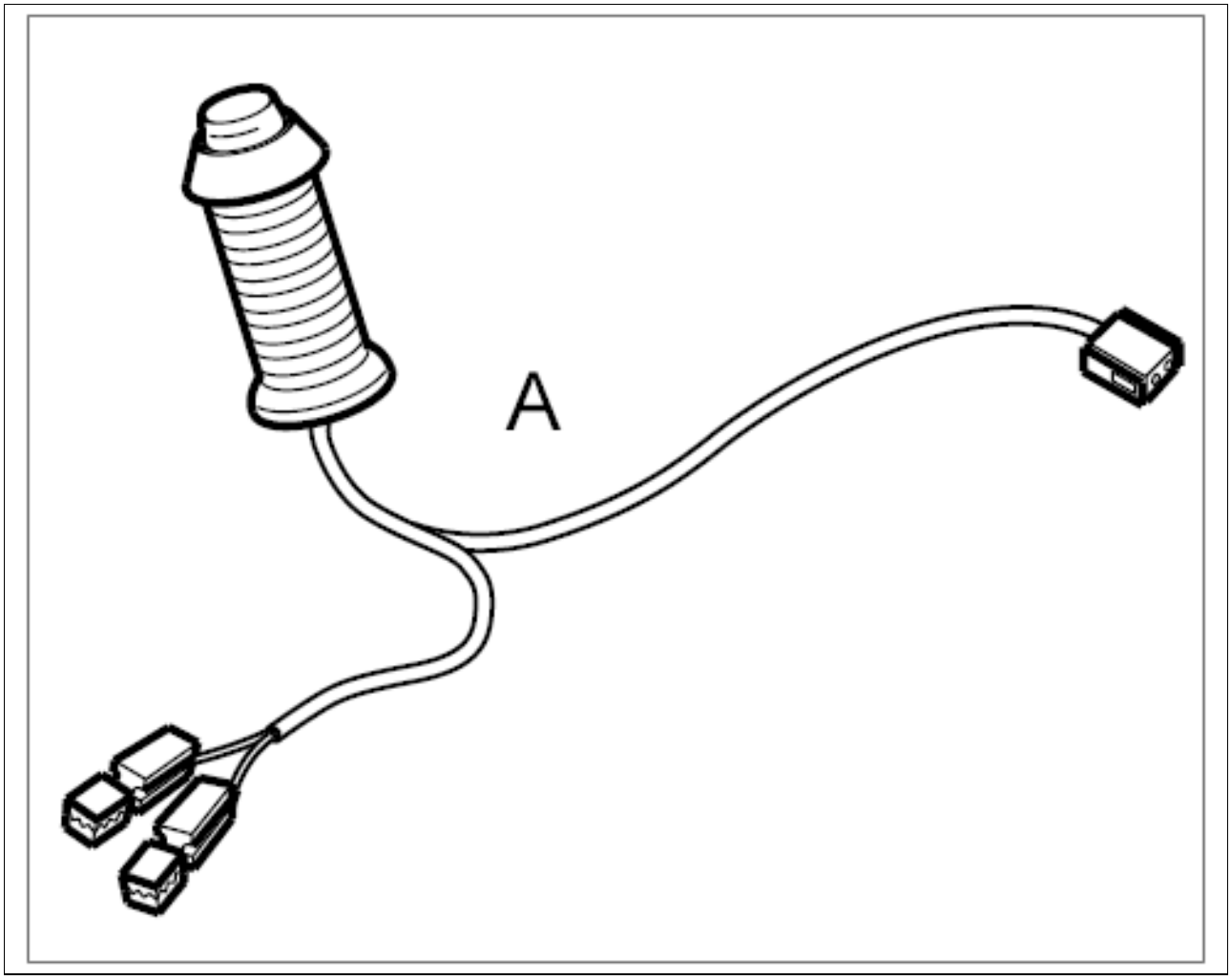

Courtesy of PORSCHE CARS NORTH AMERICA, INC.

A. Ignition device 9257

WM 6X00IN DISPOSAL OF AIRBAG AND SEAT-BELT PRETENSIONER UNITS (ALL MODELS) > TOOLS AND MATERIALS > ADAPTER CABLE 9257/4

Fig 1: Overview Of Adapter Cable 9257/4

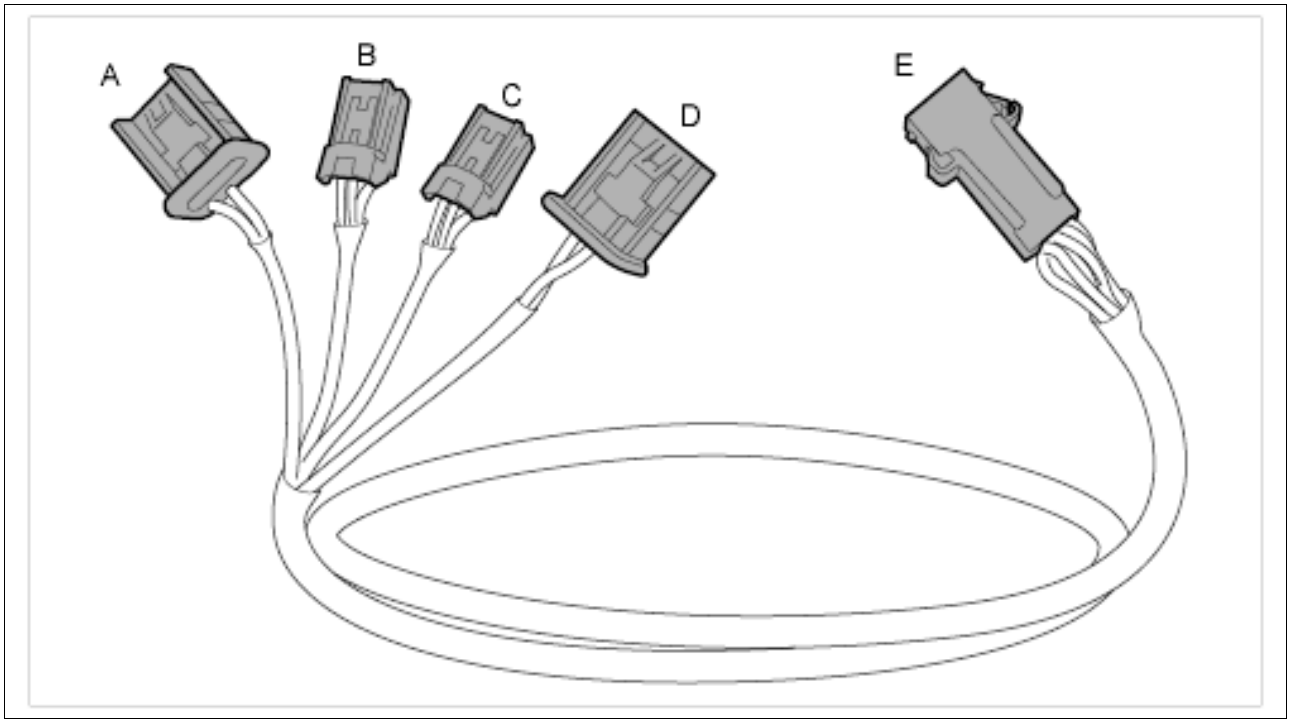

Courtesy of PORSCHE CARS NORTH AMERICA, INC.

A. Purple marking on the connector - adapter for knee airbag

B. Marking A - adapter for 1st stage of driver's airbag unit

C. Marking B - adapter for 2nd stage of driver's airbag unit

D. Green marking on the connector - adapter not required

E. Adapter for ignition device

WM 6X00IN DISPOSAL OF AIRBAG AND SEAT-BELT PRETENSIONER UNITS (ALL MODELS) > TOOLS AND MATERIALS > ADAPTER CABLE 9257/7

Fig 1: Overview Of Adapter Cable 9257/7

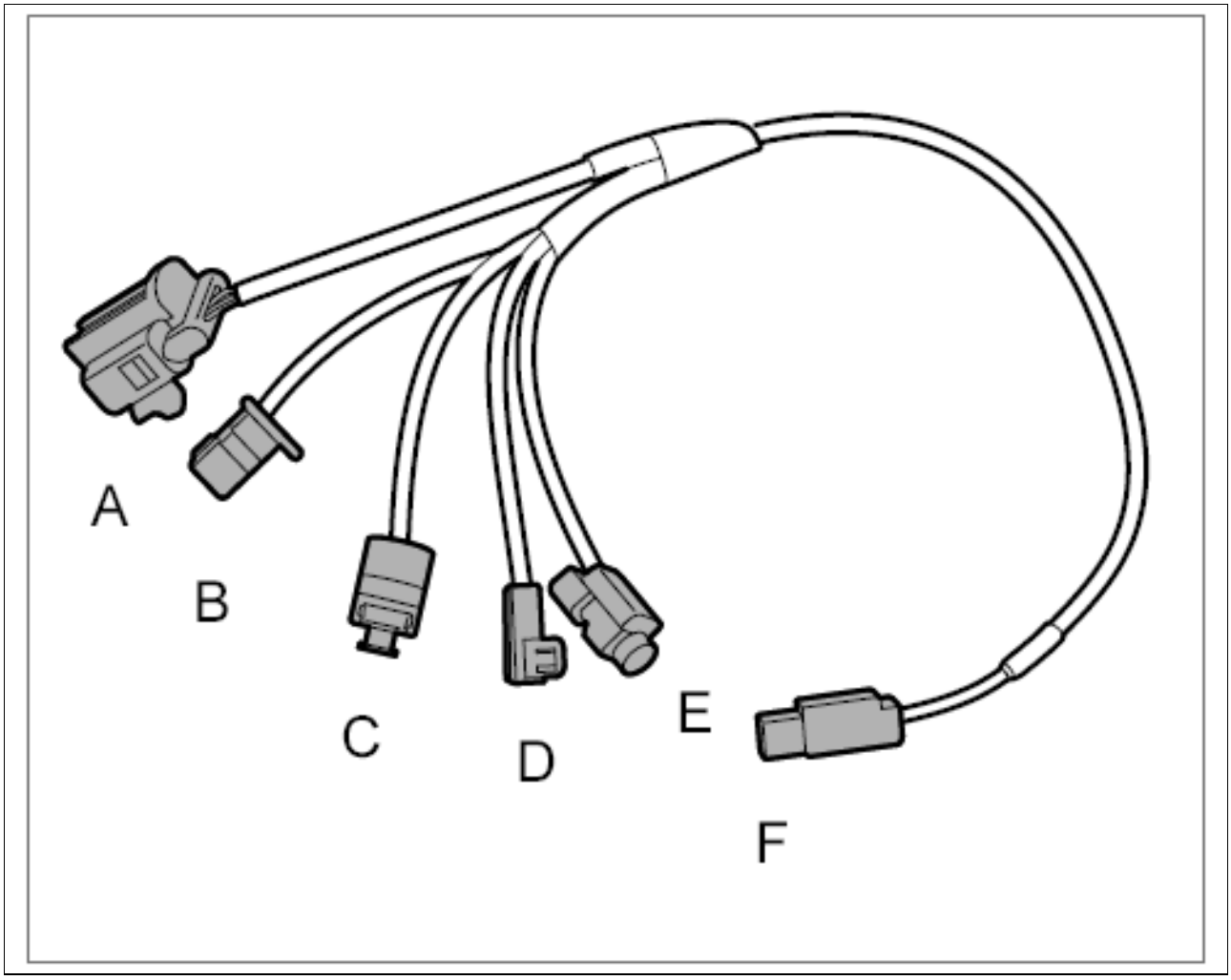

Courtesy of PORSCHE CARS NORTH AMERICA, INC.

A. Purple marking on the connector - adapter for ignition module of front lid

B. Blue marking - adapter for 1st stage of driver's airbag unit

C. Black marking on the connector - adapter for head airbag

D. Turquoise marking on the connector - adapter for 1st stage of passenger's airbag unit

E. Yellow marking on the connector - adapter for 2nd stage of passenger's airbag unit and seat-belt tensioner

F. Adapter for ignition device

WM 6X00IN DISPOSAL OF AIRBAG AND SEAT-BELT PRETENSIONER UNITS (ALL MODELS) > TOOLS AND MATERIALS > ADAPTER CABLE 9257/6

Fig 1: Overview Of Adapter Cable 9257/6

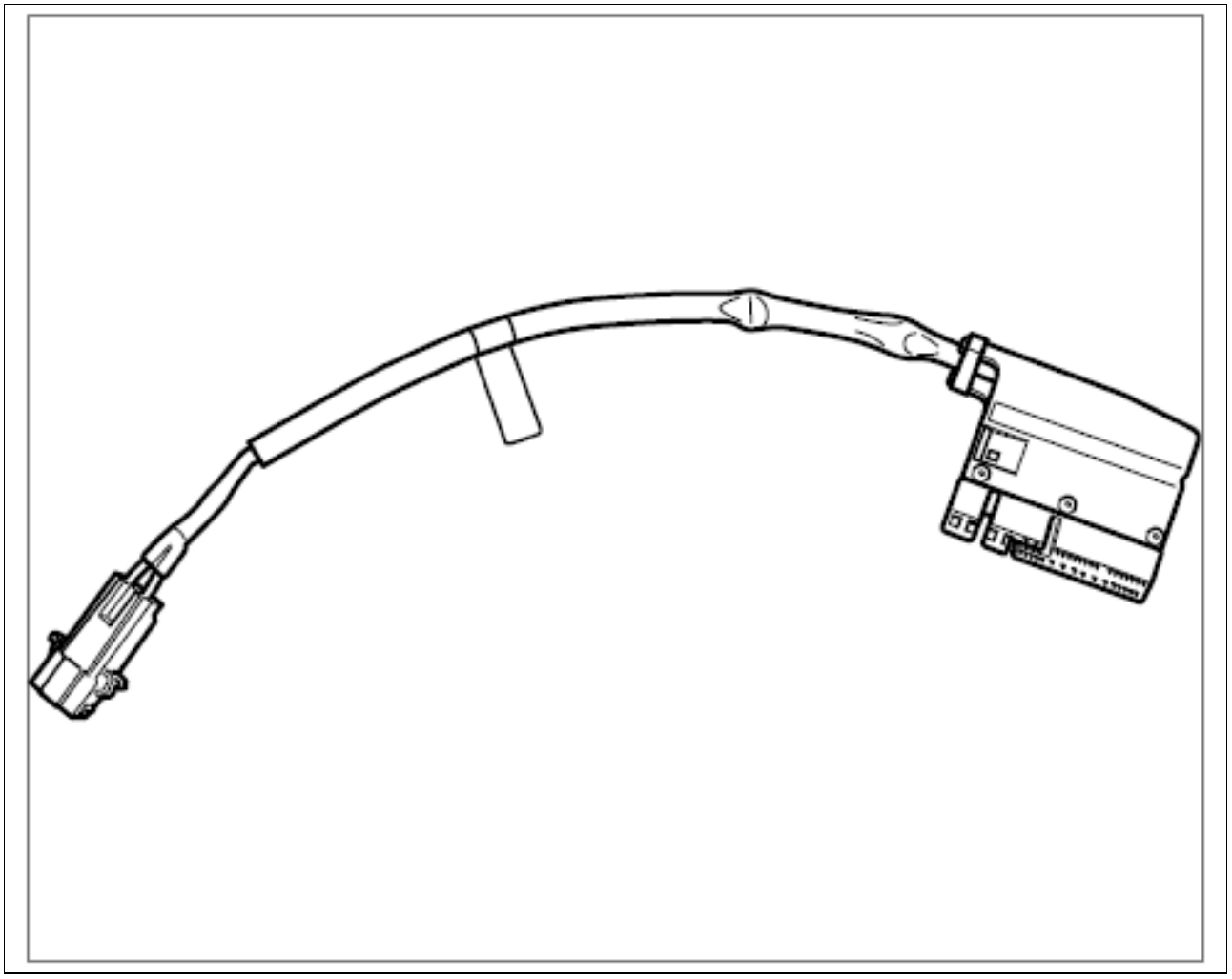

Courtesy of PORSCHE CARS NORTH AMERICA, INC.

WM 6X00IN DISPOSAL OF AIRBAG AND SEAT-BELT PRETENSIONER UNITS (ALL MODELS) > TOOLS AND MATERIALS > IGNITION CABLE 9257/1

Fig 1: Overview Of Adapter Cable 9257/1

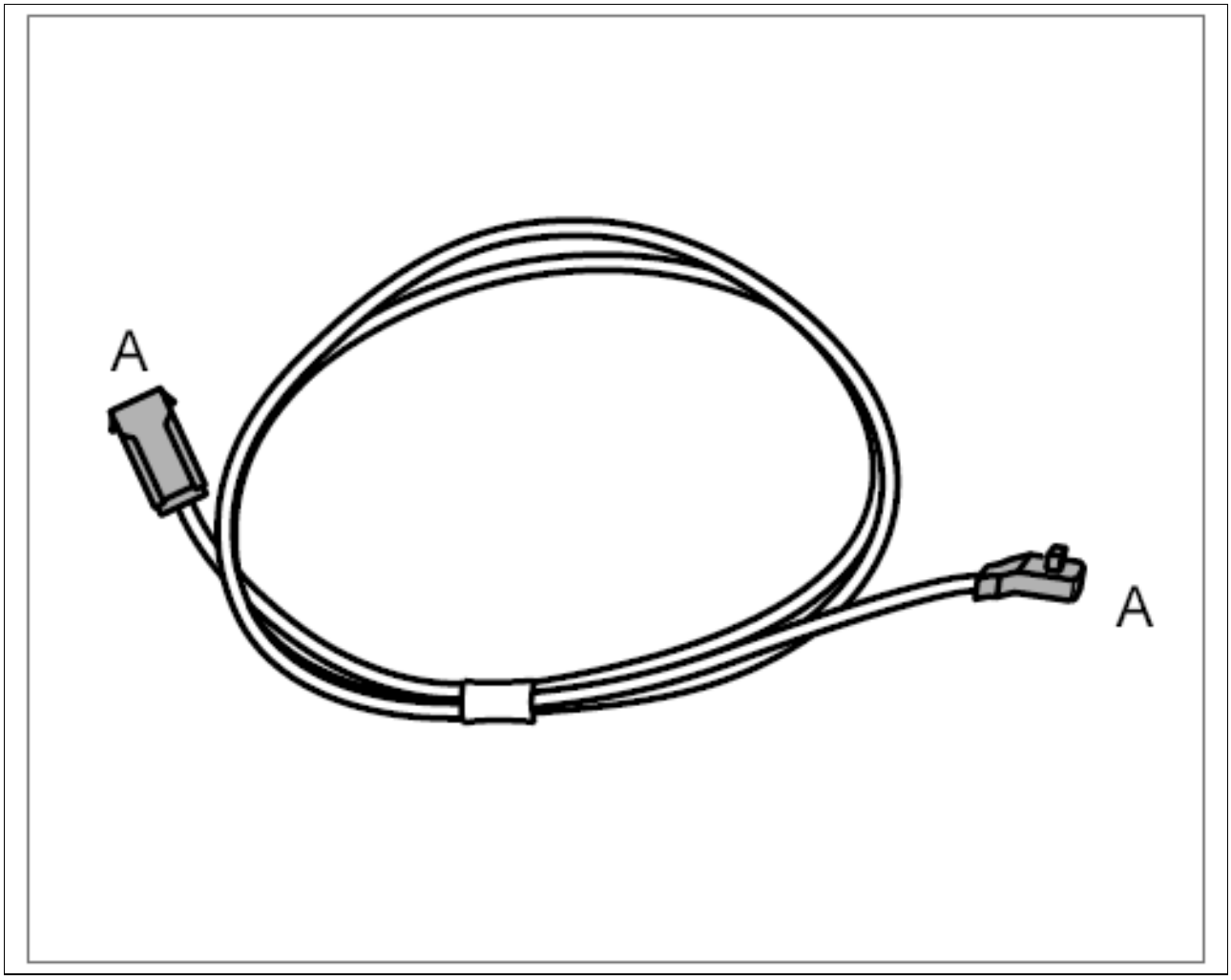

Courtesy of PORSCHE CARS NORTH AMERICA, INC.

A. Black connector - adapter for cutoff relay at power distributor

WM 6X00IN DISPOSAL OF AIRBAG AND SEAT-BELT PRETENSIONER UNITS (ALL MODELS) > CONNECTING IGNITION TOOL > DRIVER'S SIDE

WARNING: Incorrect handling of airbag units

- *Triggering of airbag unit.*
- *System faults can occur.*

→ Switch off ignition and remove ignition key or remote control (hand-held transmitter).

→ A power supply (e.g. battery charger) must not be connected to the external power supply/jump-lead starting terminals.

→ Disconnect the battery and insulate the ground strap so that all contact with a ground carrier is avoided.

→ Wait 1 minute after disconnecting the battery.

→ Only pull off connector on the triggering unit after the waiting time has elapsed.

→ Make sure that no foreign objects are located in front of the airbag unit during installation.

→ Replace damaged parts during removal.

→ Always position airbag units so that the blow-out opening is facing upwards, e.g. crest on driver's airbag.

→ Do not position anything on the airbag units.

→ If removed for an extended period, the airbag units must be stored in a safe place.

→ Airbag units must not come into contact with grease, oil, detergents, liquids, or similar substances.

→ Do not expose airbag units to temperatures above 90°.

→ Do not remove the short-circuit spring on the plug-in contacts.

→ Ignition and preparations may only be carried out by skilled staff, supervised by a second responsible person.

→ Before disposal, the airbag unit must be rendered harmless by electrical ignition performed in accordance with all precautionary measures, thereby preventing it from being used incorrectly.

Information

Only ignite airbag units that are securely installed and in original condition in the vehicle. Allow airbag units to cool down under observation following ignition.

- Use only the ignition tool intended for this purpose. First remove all loose objects from the expansion area of the airbag.
- Every ignition circuit for all airbag units and seat-belt pretensioners must be ignited individually.
- Persons who may be affected must be informed of the resulting noise beforehand.
- Wear ear protectors.
- Keep a safe distance by utilizing the entire cable length of the ignition tool. Do not connect the voltage source until all other preparations are complete.
- If ignition fails, wait for approx. 3 minutes before approaching the vehicle.
- Carry out ignition only in suitable, open areas.
- Do not allow ignited airbag units to come into contact with the skin.

Fig 1: Overview Of Adapter Cable 9257/4

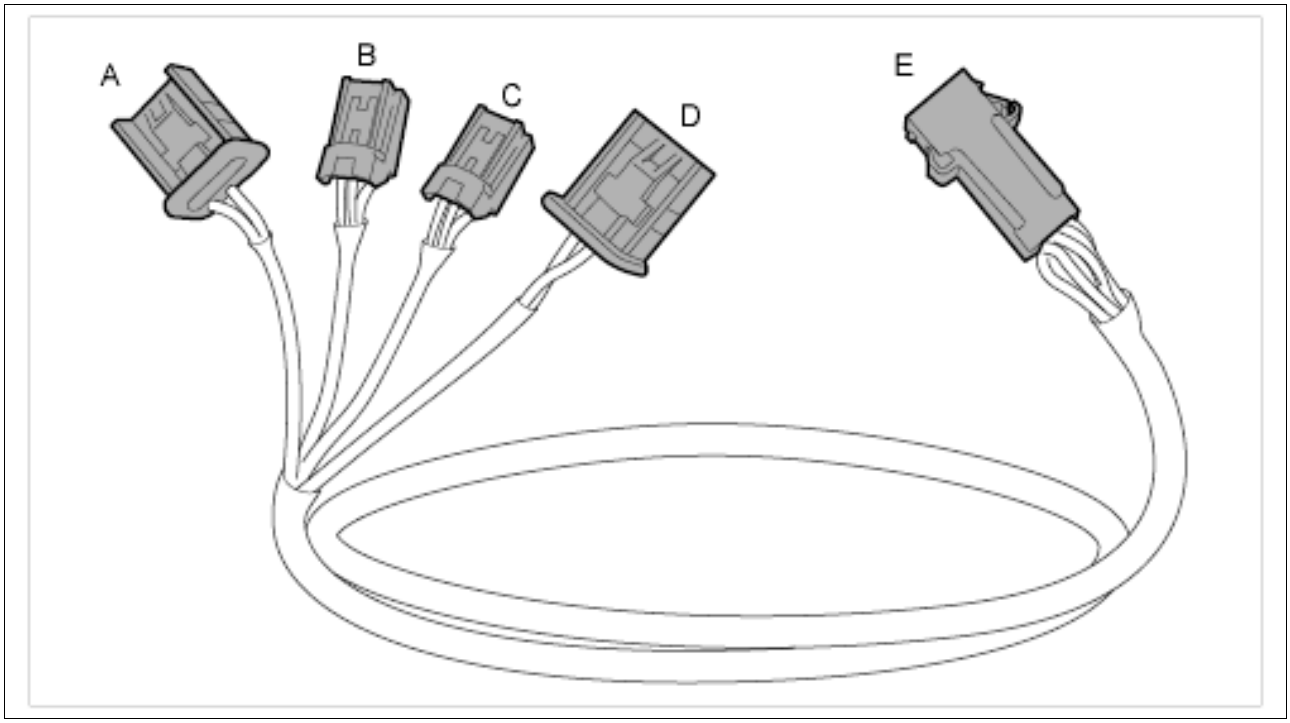

Courtesy of PORSCHE CARS NORTH AMERICA, INC.

B - Marking A - adapter for 1st stage of driver's airbag unit

C - Marking B - adapter for 2nd stage of driver's airbag unit

E - Adapter for ignition device

1. Remove steering column trim. → Removing Steering Column Casing
2. Unplug connector from the airbag at the steering-column switch and plug in connector **-B-** - 1st stage - of the **adapter cable 9257/4** first.
3. Connect the **ignition device 9257** to the 2-pin connector **-E-** of the **adapter cable 9257/4** .
4. Place the ignition device in front of the vehicle through the door gap.
5. After triggering, repeat the work step with the connector **-C-** - 2nd stage.

Fig 2: Installing Adapter Plug For Driver

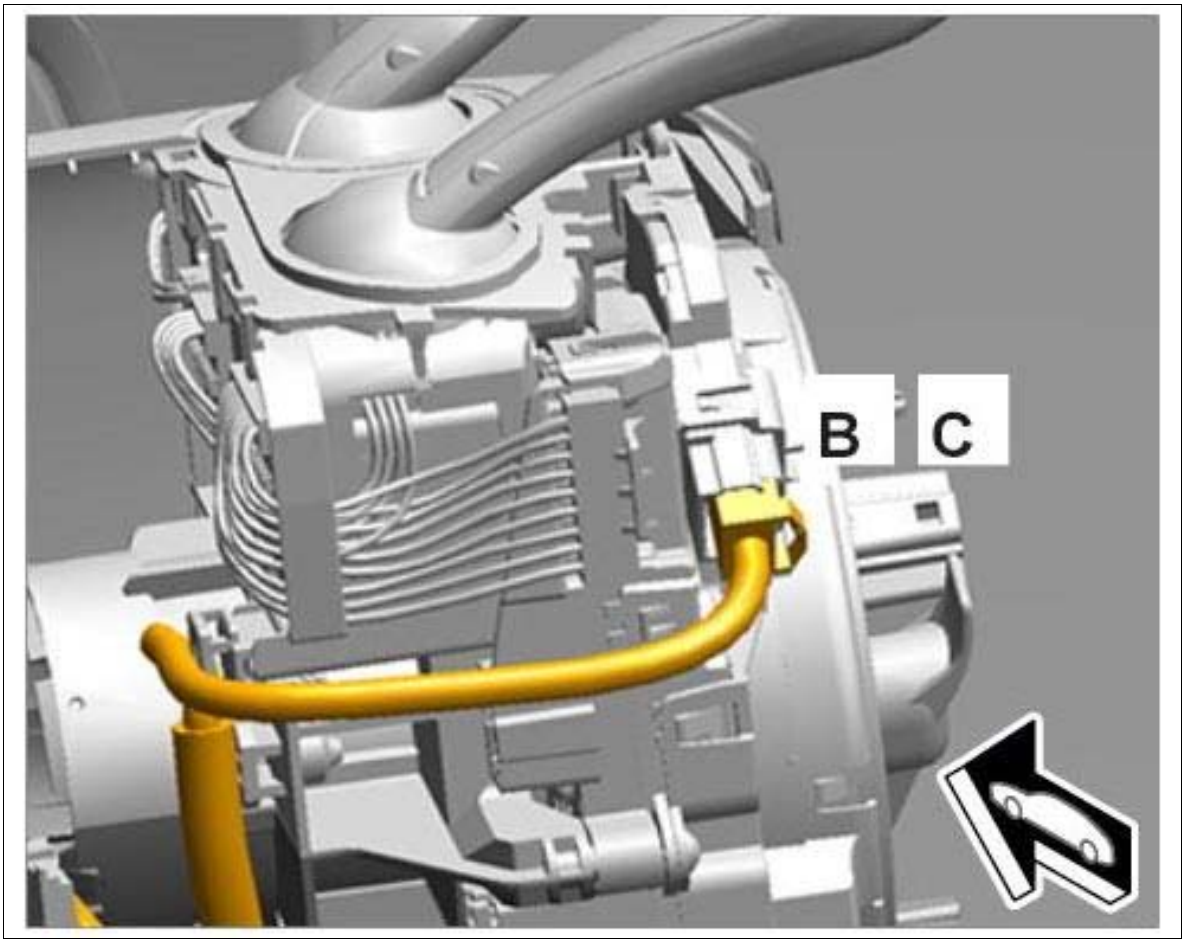

Courtesy of PORSCHE CARS NORTH AMERICA, INC.

WM 6X00IN DISPOSAL OF AIRBAG AND SEAT-BELT PRETENSIONER UNITS (ALL MODELS) > CONNECTING IGNITION TOOL > PASSENGER'S SIDE

WARNING: Incorrect handling of airbag units

- *Triggering of airbag unit.*
- *System faults can occur.*

→ Switch off ignition and remove ignition key or remote control (hand-held transmitter).

→ A power supply (e.g. battery charger) must not be connected to the external power supply/jump-lead starting terminals.

→ Disconnect the battery and insulate the ground strap so that all contact with a ground carrier is avoided.

→ Wait 1 minute after disconnecting the battery.

→ Only pull off connector on the triggering unit after the waiting time has elapsed.

→ Make sure that no foreign objects are located in front of the airbag unit during installation.

→ Replace damaged parts during removal.

→ Always position airbag units so that the blow-out opening is facing upwards, e.g. crest on driver's airbag.

→ Do not position anything on the airbag units.

→ If removed for an extended period, the airbag units must be stored in a safe place.

→ Airbag units must not come into contact with grease, oil, detergents, liquids, or similar substances.

→ Do not expose airbag units to temperatures above 90°.

→ Do not remove the short-circuit spring on the plug-in contacts.

→ Ignition and preparations may only be carried out by skilled staff, supervised by a second responsible person.

→ Before disposal, the airbag unit must be rendered harmless by electrical ignition performed in accordance with all precautionary measures, thereby preventing it from being used incorrectly.

Information

Only ignite airbag units that are securely installed and in original condition in the vehicle. Allow airbag units to cool down under observation following ignition.

- Use only the ignition tool intended for this purpose. First remove all loose objects from the expansion area of the airbag.
- Every ignition circuit for all airbag units and seat-belt pretensioners must be ignited individually.
- Persons who may be affected must be informed of the resulting noise beforehand.
- Wear ear protectors.
- Keep a safe distance by utilizing the entire cable length of the ignition tool. Do not connect the voltage source until all other preparations are complete.
- If ignition fails, wait for approx. 3 minutes before approaching the vehicle.
- Carry out ignition only in suitable, open areas.
- Do not allow ignited airbag units to come into contact with the skin.

Fig 1: Overview Of Adapter Cable 9257/7

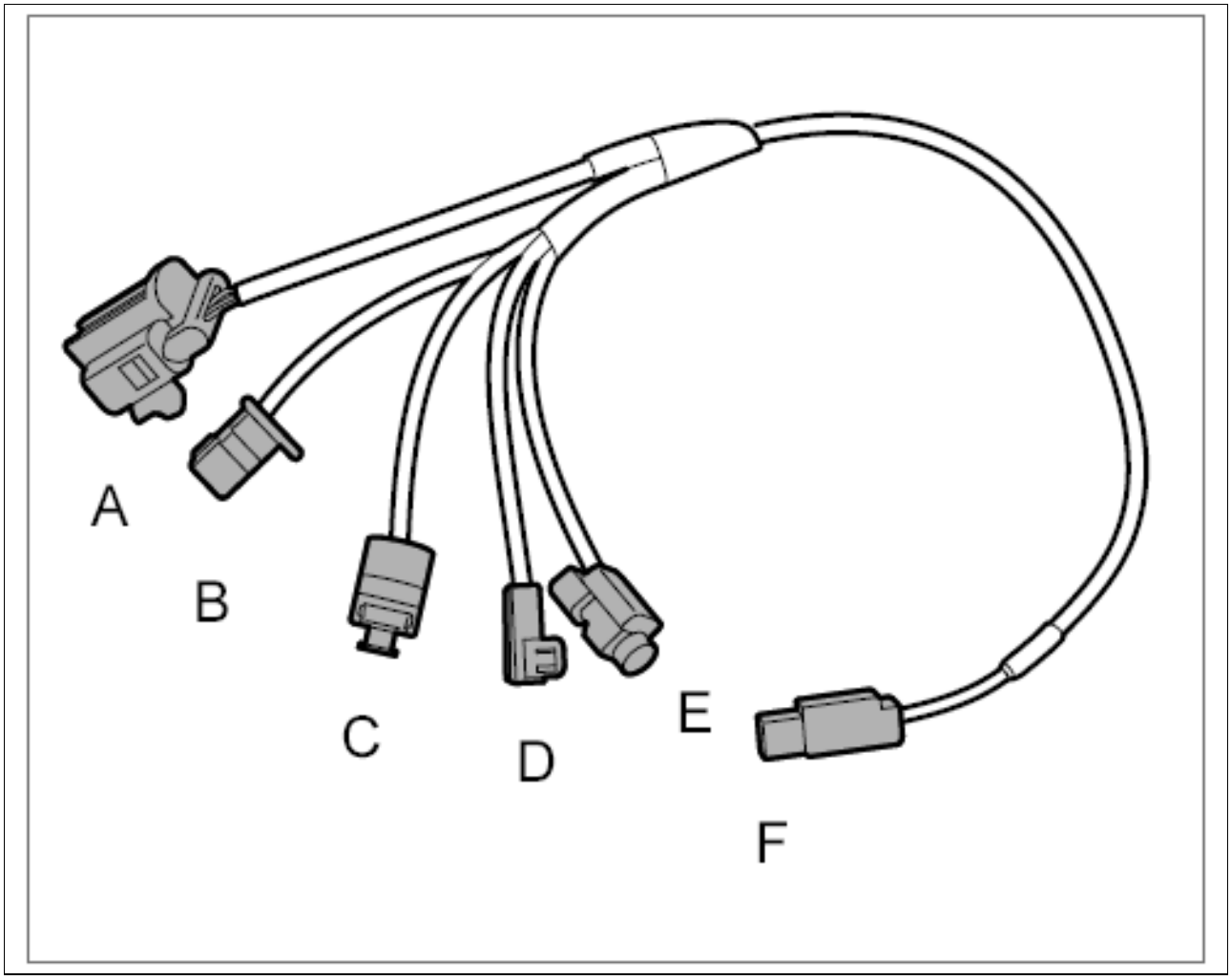

Courtesy of PORSCHE CARS NORTH AMERICA, INC.

D - Turquoise marking on connector - adapter for 1st stage of passenger's airbag unit.

E - Yellow marking on connector - adapter for 2nd stage of passenger's airbag unit.

F - Adapter for detonator (ignition device).

1. Remove glove compartment. → Removing Glove Compartment
2. Unplug both connectors at the airbag unit and plug in connector **-D-** - 1st stage - from **adapter cable 9257/7** at the airbag unit first.

Fig 2: Installing Adapter Cable For Passenger Airbag Unit

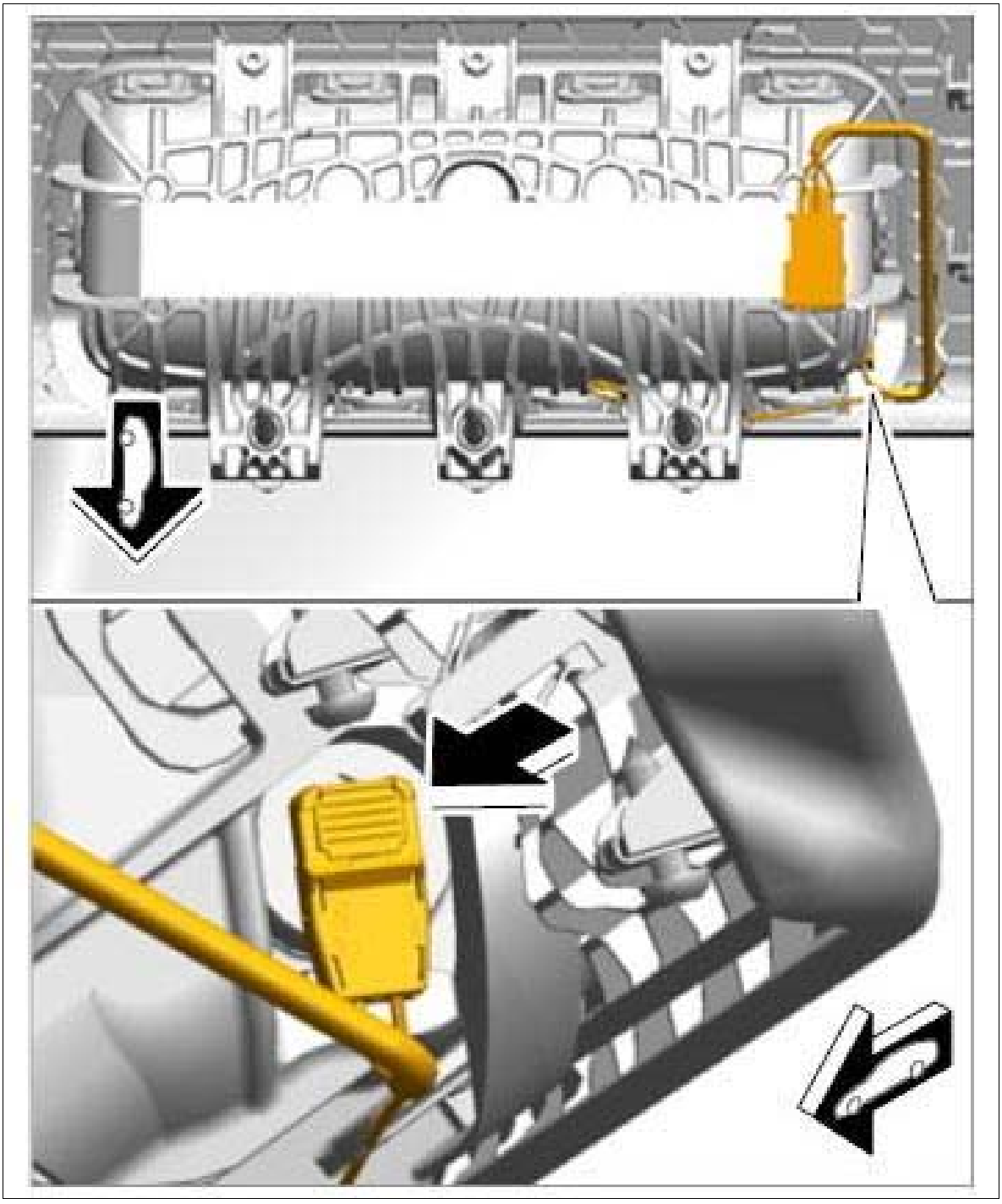

Courtesy of PORSCHE CARS NORTH AMERICA, INC.

Information

1. This is a two-stage airbag module with a connection for the 1st stage at the left in direction of travel and a connection for the 2nd stage at the right in direction of travel.

3. Connect the **detonator 9257** to the 2-pin connector **-F-** of the **adapter cable 9257/7** .

4. Place detonator in front of the vehicle through the door gap.

5. After the airbag is triggered, repeat the step on the second connection of the airbag unit with connector **-E-** - 2nd stage.

WM 6X00IN DISPOSAL OF AIRBAG AND SEAT-BELT PRETENSIONER UNITS (ALL MODELS) > CONNECTING IGNITION TOOL > SIDE AIRBAG

WARNING: Incorrect handling of airbag units

- *Triggering of airbag unit.*
- *System faults can occur.*

→ Switch off ignition and remove ignition key or remote control (hand-held transmitter).

→ A power supply (e.g. battery charger) must not be connected to the external power supply/jump-lead starting terminals.

→ Disconnect the battery and insulate the ground strap so that all contact with a ground carrier is avoided.

→ Wait 1 minute after disconnecting the battery.

→ Only pull off connector on the triggering unit after the waiting time has elapsed.

→ Make sure that no foreign objects are located in front of the airbag unit during installation.

→ Replace damaged parts during removal.

→ Always position airbag units so that the blow-out opening is facing upwards, e.g. crest on driver's airbag.

→ Do not position anything on the airbag units.

→ If removed for an extended period, the airbag units must be stored in a safe place.

→ Airbag units must not come into contact with grease, oil, detergents, liquids, or similar substances.

→ Do not expose airbag units to temperatures above 90°.

→ Do not remove the short-circuit spring on the plug-in contacts.

→ Ignition and preparations may only be carried out by skilled staff, supervised by a second responsible person.

→ Before disposal, the airbag unit must be rendered harmless by electrical ignition performed in accordance with all precautionary measures, thereby preventing it from being used incorrectly.

Information

Only ignite airbag units that are securely installed and in original condition in the vehicle. Allow airbag units to cool down under observation following ignition.

- Use only the ignition tool intended for this purpose. First remove all loose objects from the expansion area of the airbag.
- Every ignition circuit for all airbag units and seat-belt pretensioners must be ignited individually.
- Persons who may be affected must be informed of the resulting noise beforehand.
- Wear ear protectors.
- Keep a safe distance by utilizing the entire cable length of the ignition tool. Do not connect the voltage source until all other preparations are complete.
- If ignition fails, wait for approx. 3 minutes before approaching the vehicle.
- Carry out ignition only in suitable, open areas.
- Do not allow ignited airbag units to come into contact with the skin.

WM 6X00IN DISPOSAL OF AIRBAG AND SEAT-BELT PRETENSIONER UNITS (ALL MODELS) > CONNECTING IGNITION TOOL > ADAPTER CABLE 9257/6

Fig 1: Overview Of Adapter Cable 9257/6

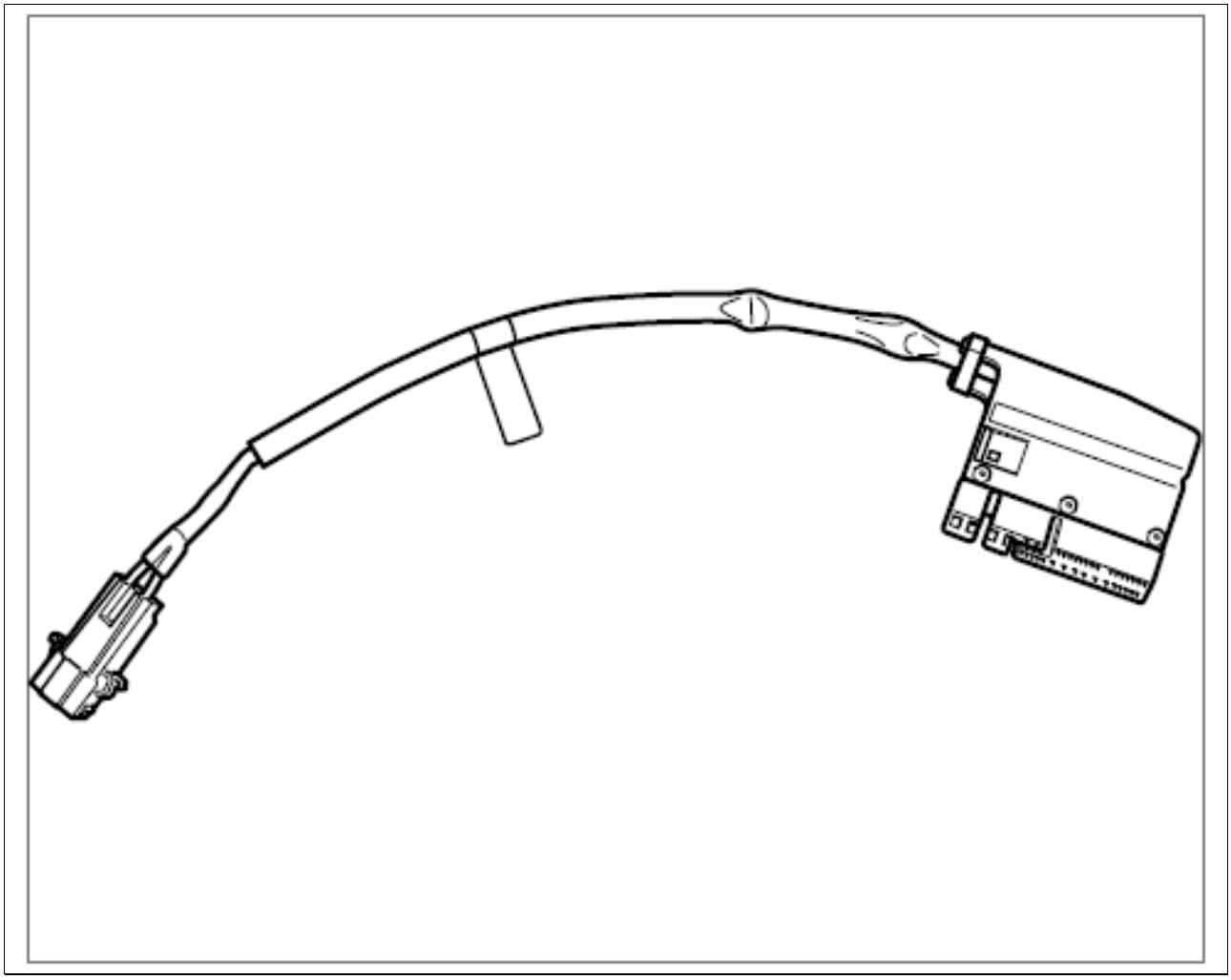

Courtesy of PORSCHE CARS NORTH AMERICA, INC.

1. Unscrew seat from the seat rails. → Removing front seat
2. Unplug central connector for seat.
3. Plug connector **-2-** from **adapter cable 9257/6 -1-** into the central connector for the seat.

Fig 2: Installing Adapter Cable For Seat

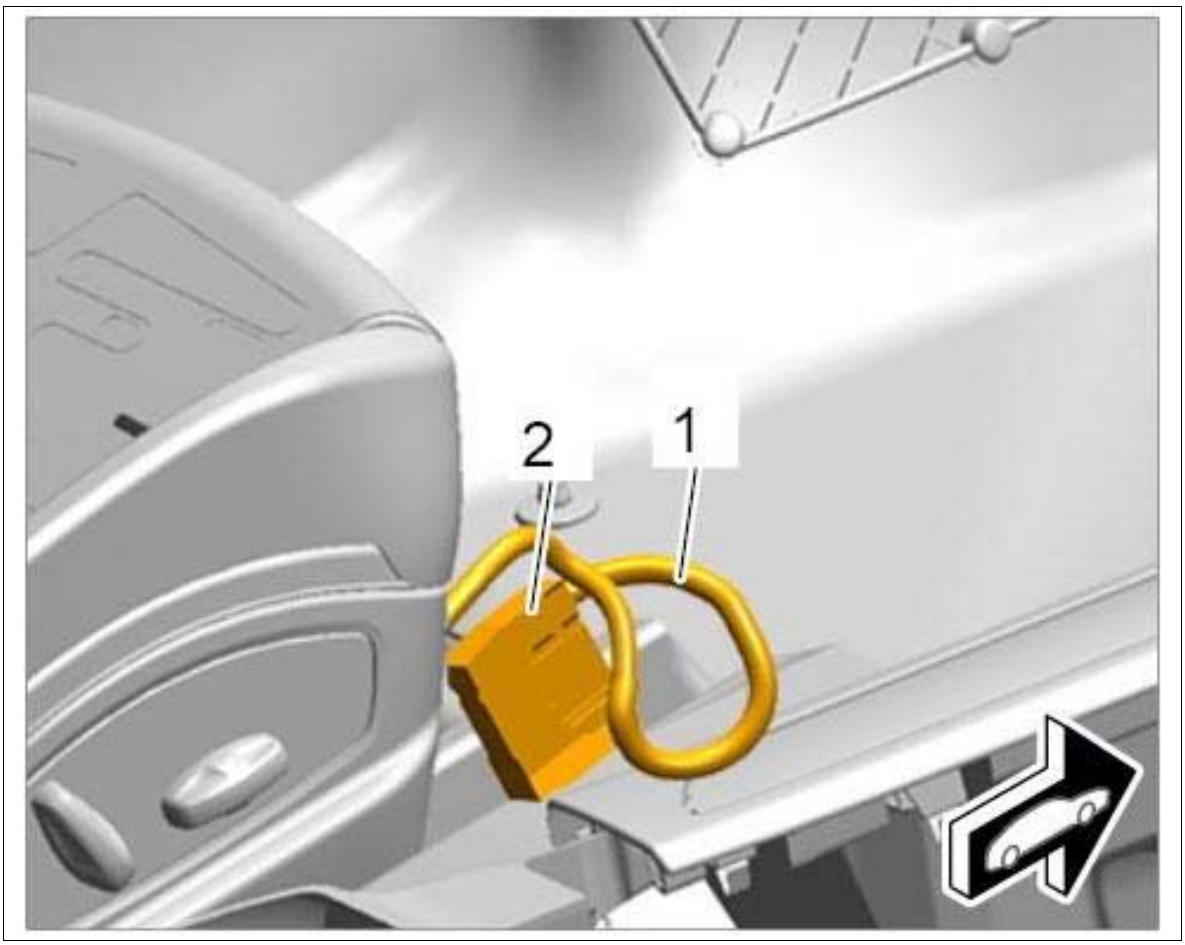

Courtesy of PORSCHE CARS NORTH AMERICA, INC.

4. Connect the **ignition device 9257** to the 2-pin connector of the **adapter cable 9257/6** .
5. Place the ignition device in front of the vehicle through the door gap.

WM 6X00IN DISPOSAL OF AIRBAG AND SEAT-BELT PRETENSIONER UNITS (ALL MODELS) > CONNECTING IGNITION TOOL > HEAD AIRBAG

WARNING: Incorrect handling of airbag units

- *Triggering of airbag unit.*
- *System faults can occur.*

→ Switch off ignition and remove ignition key or remote control (hand-held transmitter).

→ A power supply (e.g. battery charger) must not be connected to the external power supply/jump-lead starting terminals.

→ Disconnect the battery and insulate the ground strap so that all contact with a ground carrier is avoided.

→ Wait 1 minute after disconnecting the battery.

→ Only pull off connector on the triggering unit after the waiting time has elapsed.

→ Make sure that no foreign objects are located in front of the airbag unit during installation.

→ Replace damaged parts during removal.

→ Always position airbag units so that the blow-out opening is facing upwards, e.g. crest on driver's airbag.

→ Do not position anything on the airbag units.

→ If removed for an extended period, the airbag units must be stored in a safe place.

→ Airbag units must not come into contact with grease, oil, detergents, liquids, or similar substances.

→ Do not expose airbag units to temperatures above 90°.

→ Do not remove the short-circuit spring on the plug-in contacts.

→ Ignition and preparations may only be carried out by skilled staff, supervised by a second responsible person.

→ Before disposal, the airbag unit must be rendered harmless by electrical ignition performed in accordance with all precautionary measures, thereby preventing it from being used incorrectly.

Information

Only ignite airbag units that are securely installed and in original condition in the vehicle. Allow airbag units to cool down under observation following ignition.

- Use only the ignition tool intended for this purpose. First remove all loose objects from the expansion area of the airbag.
- Every ignition circuit for all airbag units and seat-belt pretensioners must be ignited individually.
- Persons who may be affected must be informed of the resulting noise beforehand.
- Wear ear protectors.
- Keep a safe distance by utilizing the entire cable length of the ignition tool. Do not connect the voltage source until all other preparations are complete.
- If ignition fails, wait for approx. 3 minutes before approaching the vehicle.
- Carry out ignition only in suitable, open areas.
- Do not allow ignited airbag units to come into contact with the skin.

Fig 1: Overview Of Adapter Cable 9257/7

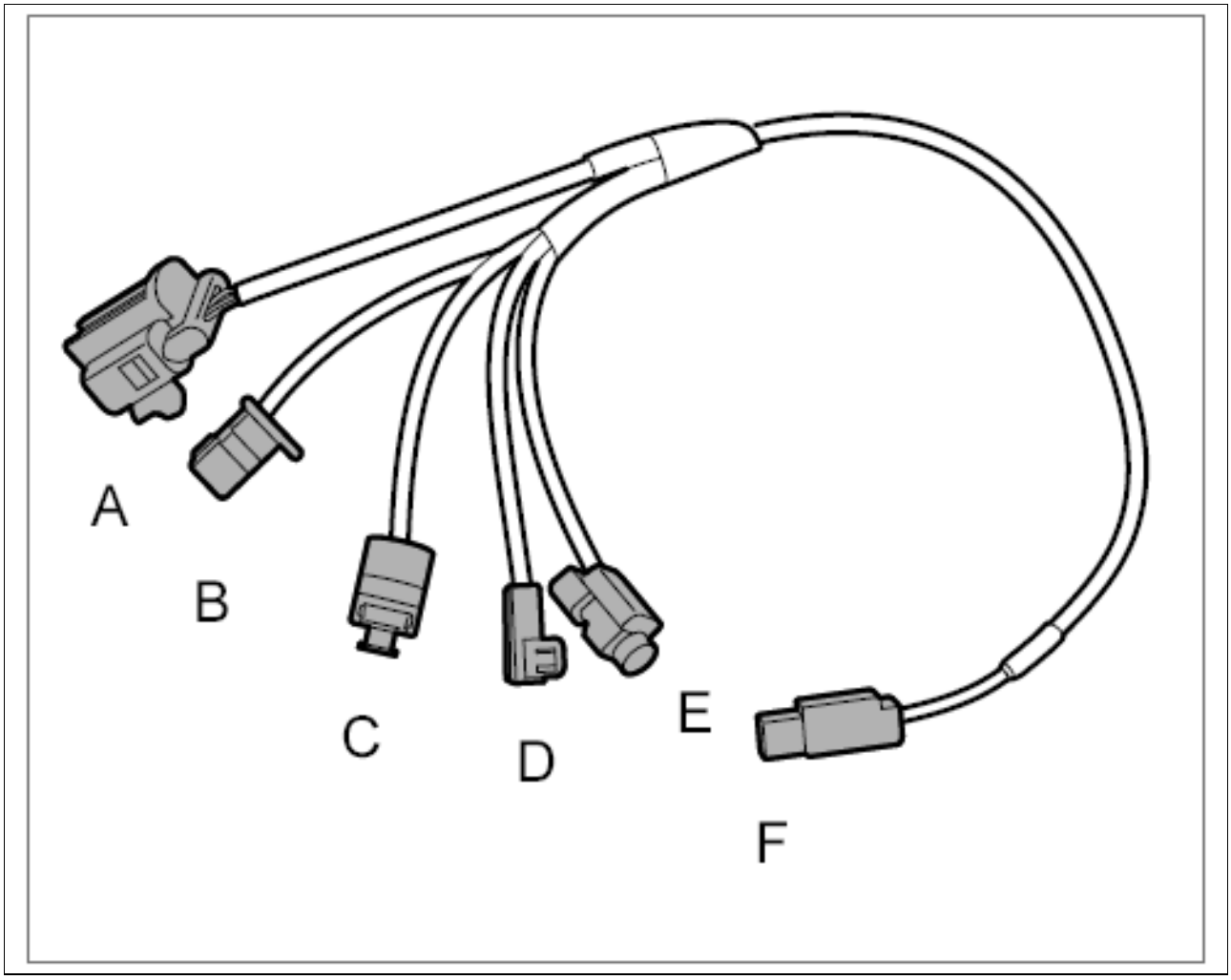

Courtesy of PORSCHE CARS NORTH AMERICA, INC.

C - Black marking on the connector - adapter for head airbag

F - Adapter for ignition device

1. Remove D-pillar trim panel → Removing D-pillar trim panel
2. Unplug connector at the head airbag and plug in connector **-C-** from the ↓**adapter cable 9257/7** .

Fig 2: Removing Adapter Cable For Head Airbag Unit

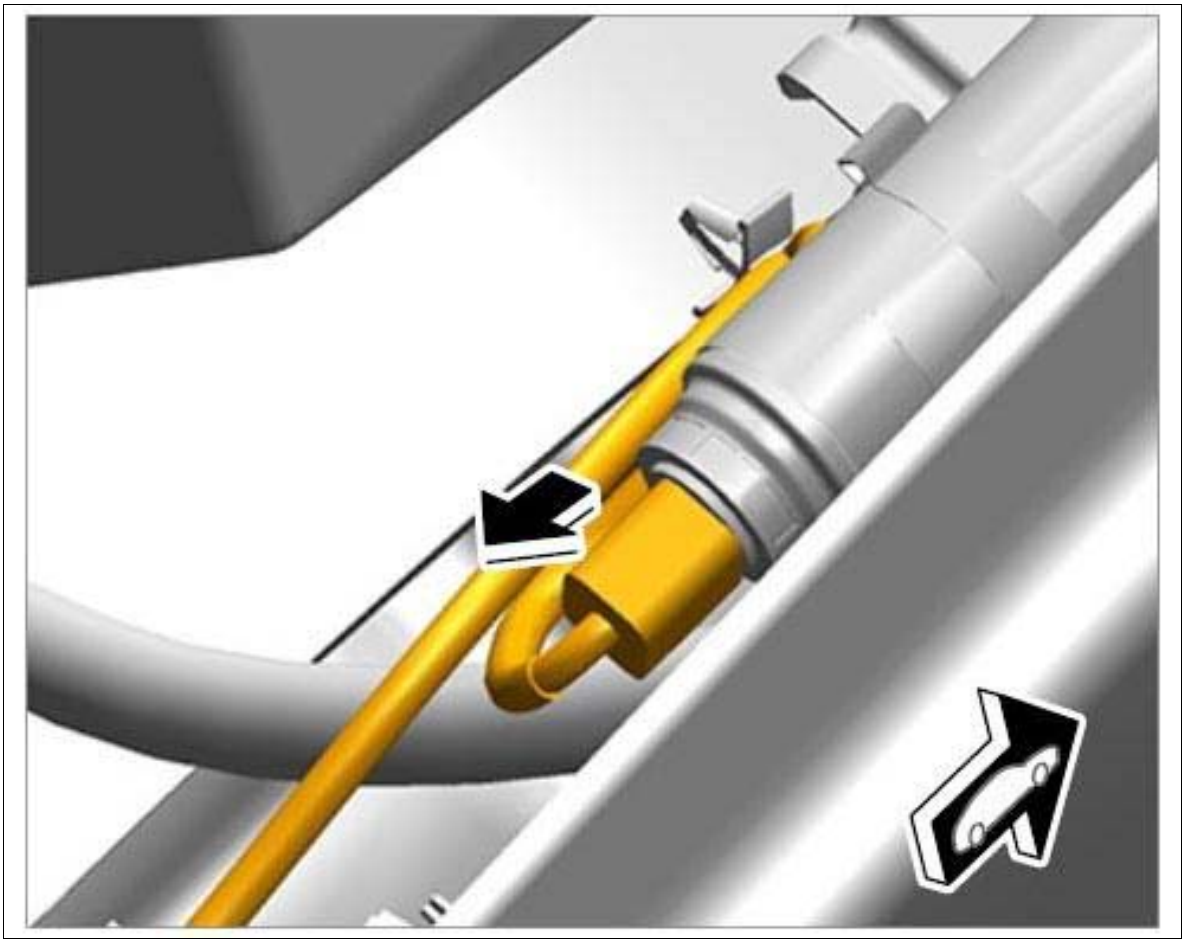

Courtesy of PORSCHE CARS NORTH AMERICA, INC.

3. Connect the **ignition device 9257** to the 2-pin connector **-F-** of the **adapter cable 9257/7** .
4. Place the ignition device in front of the vehicle through the door gap.

WM 6X00IN DISPOSAL OF AIRBAG AND SEAT-BELT PRETENSIONER UNITS (ALL MODELS) > CONNECTING IGNITION TOOL > SEAT-BELT PRETENSIONERS

WARNING: Incorrect handling of airbag units

- *Triggering of airbag unit.*
- *System faults can occur.*

→ Switch off ignition and remove ignition key or remote control (hand-held transmitter).

→ A power supply (e.g. battery charger) must not be connected to the external power supply/jump-lead starting terminals.

→ Disconnect the battery and insulate the ground strap so that all contact with a ground carrier is avoided.

→ Wait 1 minute after disconnecting the battery.

→ Only pull off connector on the triggering unit after the waiting time has elapsed.

→ Make sure that no foreign objects are located in front of the airbag unit during installation.

→ Replace damaged parts during removal.

→ Always position airbag units so that the blow-out opening is facing upwards, e.g. crest on driver's airbag.

→ Do not position anything on the airbag units.

→ If removed for an extended period, the airbag units must be stored in a safe place.

→ Airbag units must not come into contact with grease, oil, detergents, liquids, or similar substances.

→ Do not expose airbag units to temperatures above 90°.

→ Do not remove the short-circuit spring on the plug-in contacts.

→ Ignition and preparations may only be carried out by skilled staff, supervised by a second responsible person.

→ Before disposal, the airbag unit must be rendered harmless by electrical ignition performed in accordance with all precautionary measures, thereby preventing it from being used incorrectly.

Information

Only ignite airbag units that are securely installed and in original condition in the vehicle. Allow airbag units to cool down under observation following ignition.

- Use only the ignition tool intended for this purpose. First remove all loose objects from the expansion area of the airbag.
- Every ignition circuit for all airbag units and seat-belt pretensioners must be ignited individually.
- Persons who may be affected must be informed of the resulting noise beforehand.
- Wear ear protectors.
- Keep a safe distance by utilizing the entire cable length of the ignition tool. Do not connect the voltage source until all other preparations are complete.
- If ignition fails, wait for approx. 3 minutes before approaching the vehicle.
- Carry out ignition only in suitable, open areas.
- Do not allow ignited airbag units to come into contact with the skin.

Fig 1: Overview Of Adapter Cable 9257/7

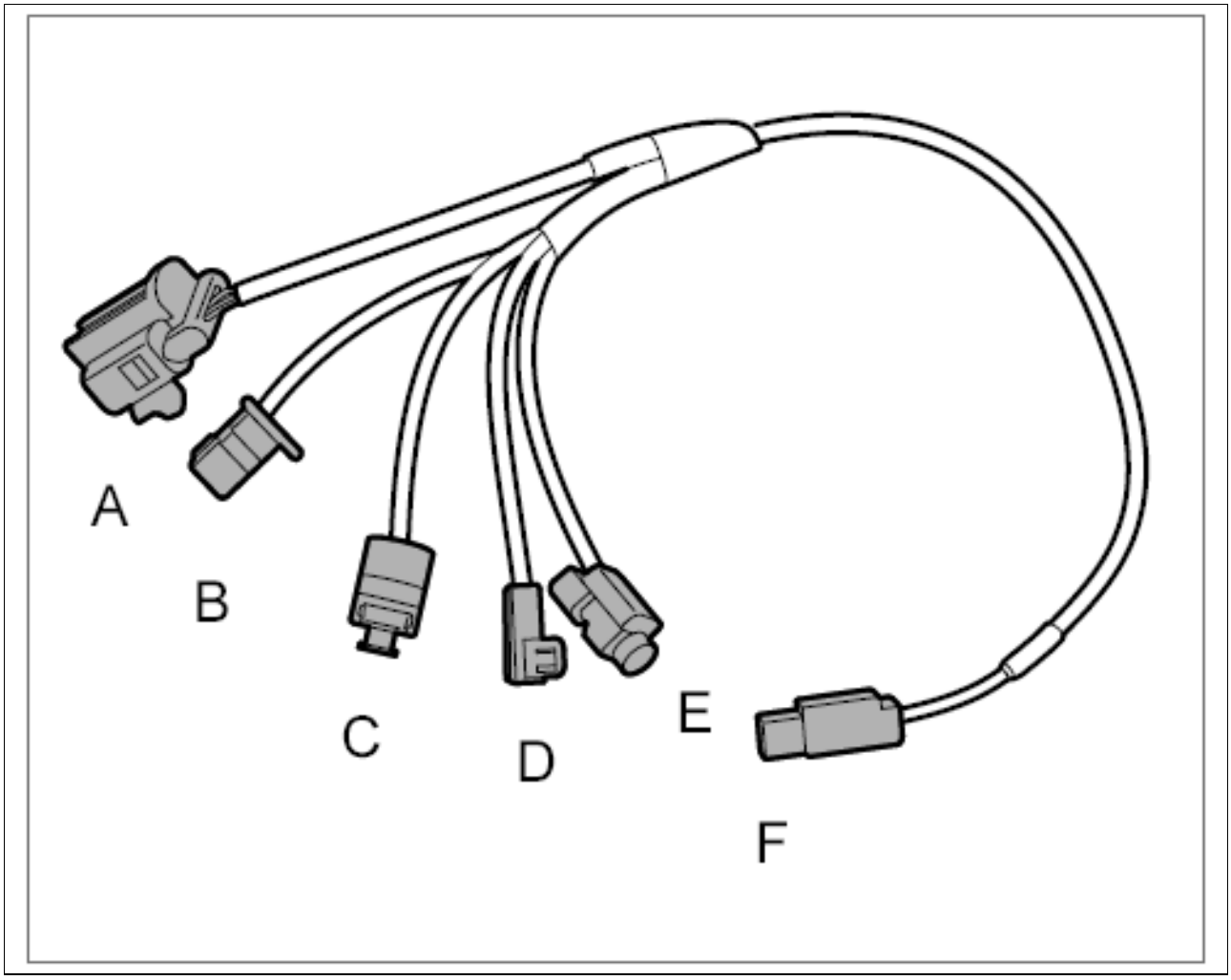

Courtesy of PORSCHE CARS NORTH AMERICA, INC.

E - Yellow marking on connector - adapter for seat-belt pretensioner

F - Adapter for ignition device

1. For the front seat-belt pretensioners, remove the B-pillar trim panel. → Removing lower part of B-pillar trim panel
2. For the rear seat-belt pretensioners, remove the C-pillar trim panel and the rear side trim panel.

   → Removing C-pillar trim panel

   → Removing side trim panel for rear luggage compartment
3. Unplug the connector at the seat-belt pretensioner and insert connector **-E-** from **adapter cable 9257/7** .

Fig 2: Removing Adapter For Seat-Belt Pretensioner

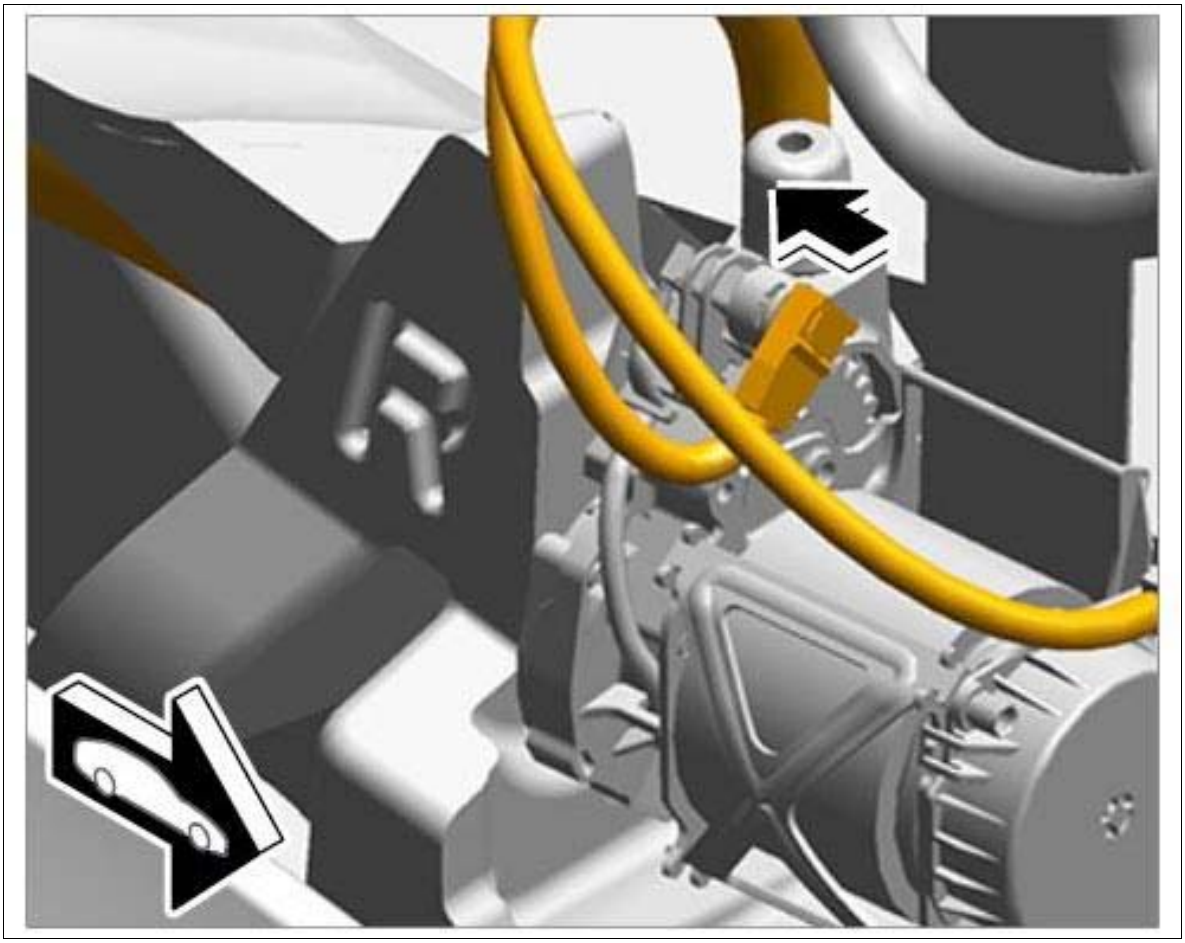

Courtesy of PORSCHE CARS NORTH AMERICA, INC.

4. Connect the ignition device 9257 to the 2-pin connector **-F-** of the **adapter cable 9257/7** .
5. Place ignition device in front of the vehicle through the door gap.

WM 6X00IN DISPOSAL OF AIRBAG AND SEAT-BELT PRETENSIONER UNITS (ALL MODELS) > CONNECTING IGNITION TOOL > IGNITION MODULE FOR FRONT LID

WARNING: Incorrect handling of airbag units

- *Triggering of airbag unit.*
- *System faults can occur.*

→ Switch off ignition and remove ignition key or remote control (hand-held transmitter).

→ A power supply (e.g. battery charger) must not be connected to the external power supply/jump-lead starting terminals.

→ Disconnect the battery and insulate the ground strap so that all contact with a ground carrier is avoided.

→ Wait 1 minute after disconnecting the battery.

→ Only pull off connector on the triggering unit after the waiting time has elapsed.

→ Make sure that no foreign objects are located in front of the airbag unit during installation.

→ Replace damaged parts during removal.

→ Always position airbag units so that the blow-out opening is facing upwards, e.g. crest on driver's airbag.

→ Do not position anything on the airbag units.

→ If removed for an extended period, the airbag units must be stored in a safe place.

→ Airbag units must not come into contact with grease, oil, detergents, liquids, or similar substances.

→ Do not expose airbag units to temperatures above 90°.

→ Do not remove the short-circuit spring on the plug-in contacts.

→ Ignition and preparations may only be carried out by skilled staff, supervised by a second responsible person.

→ Before disposal, the airbag unit must be rendered harmless by electrical ignition performed in accordance with all precautionary measures, thereby preventing it from being used incorrectly.

Information

Only ignite airbag units that are securely installed and in original condition in the vehicle. Allow airbag units to cool down under observation following ignition.

- Use only the ignition tool intended for this purpose. First remove all loose objects from the expansion area of the airbag.
- Every ignition circuit for all airbag units and seat-belt pretensioners must be ignited individually.
- Persons who may be affected must be informed of the resulting noise beforehand.
- Wear ear protectors.
- Keep a safe distance by utilizing the entire cable length of the ignition tool. Do not connect the voltage source until all other preparations are complete.
- If ignition fails, wait for approx. 3 minutes before approaching the vehicle.
- Carry out ignition only in suitable, open areas.
- Do not allow ignited airbag units to come into contact with the skin.

Fig 1: Overview Of Adapter Cable 9257/7

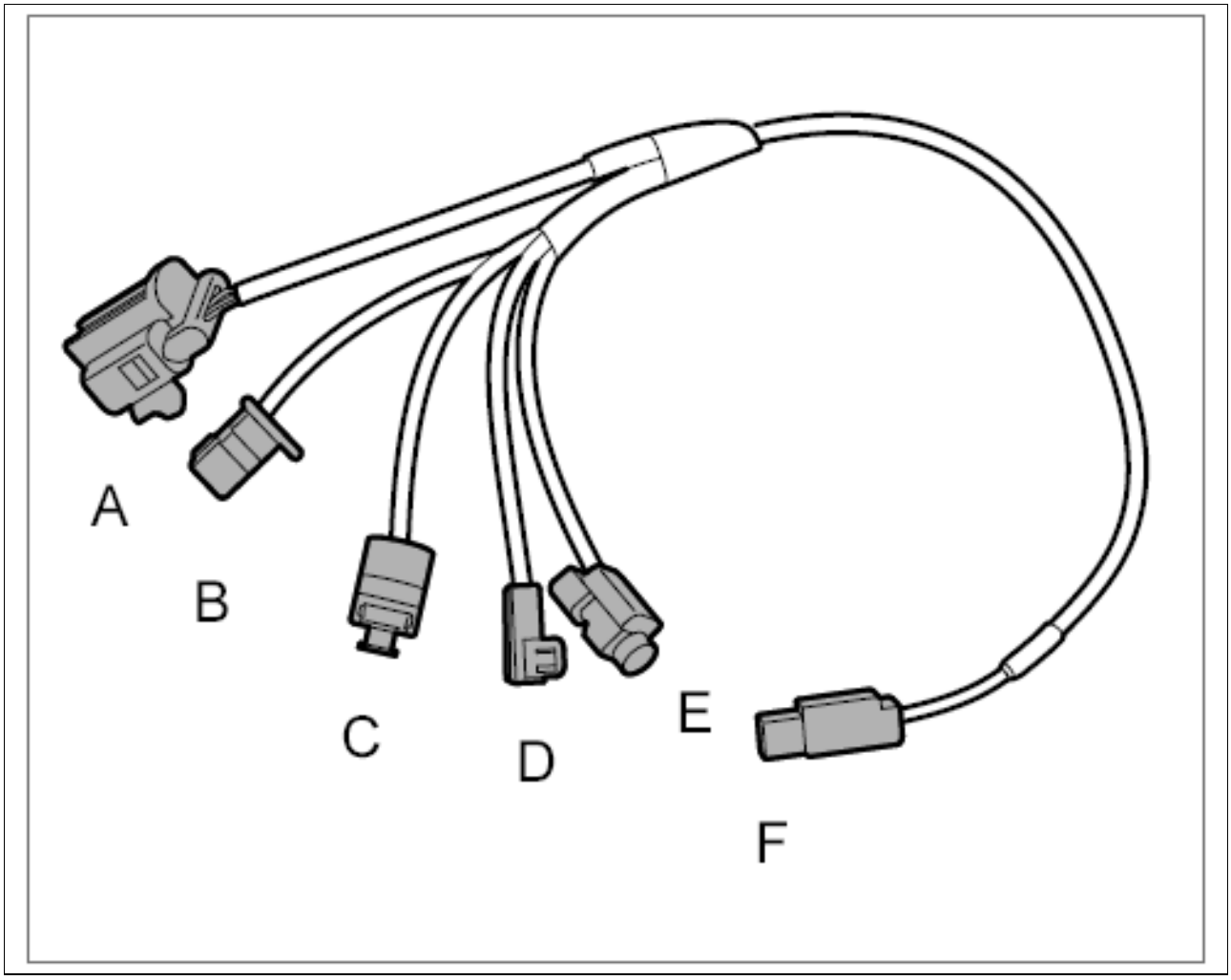

Courtesy of PORSCHE CARS NORTH AMERICA, INC.

A - Purple marking on connector - adapter for ignition module for front lid

F - Adapter for detonator (ignition device)

1. Open engine cover.
2. Remove cowl panel cover. → Removing cowl panel cover
3. Unplug connector for the ignition module and plug in connector **-A-** from the **adapter cable 9257/7** .

Fig 2: Installing Adapter For Lid Ignition Module

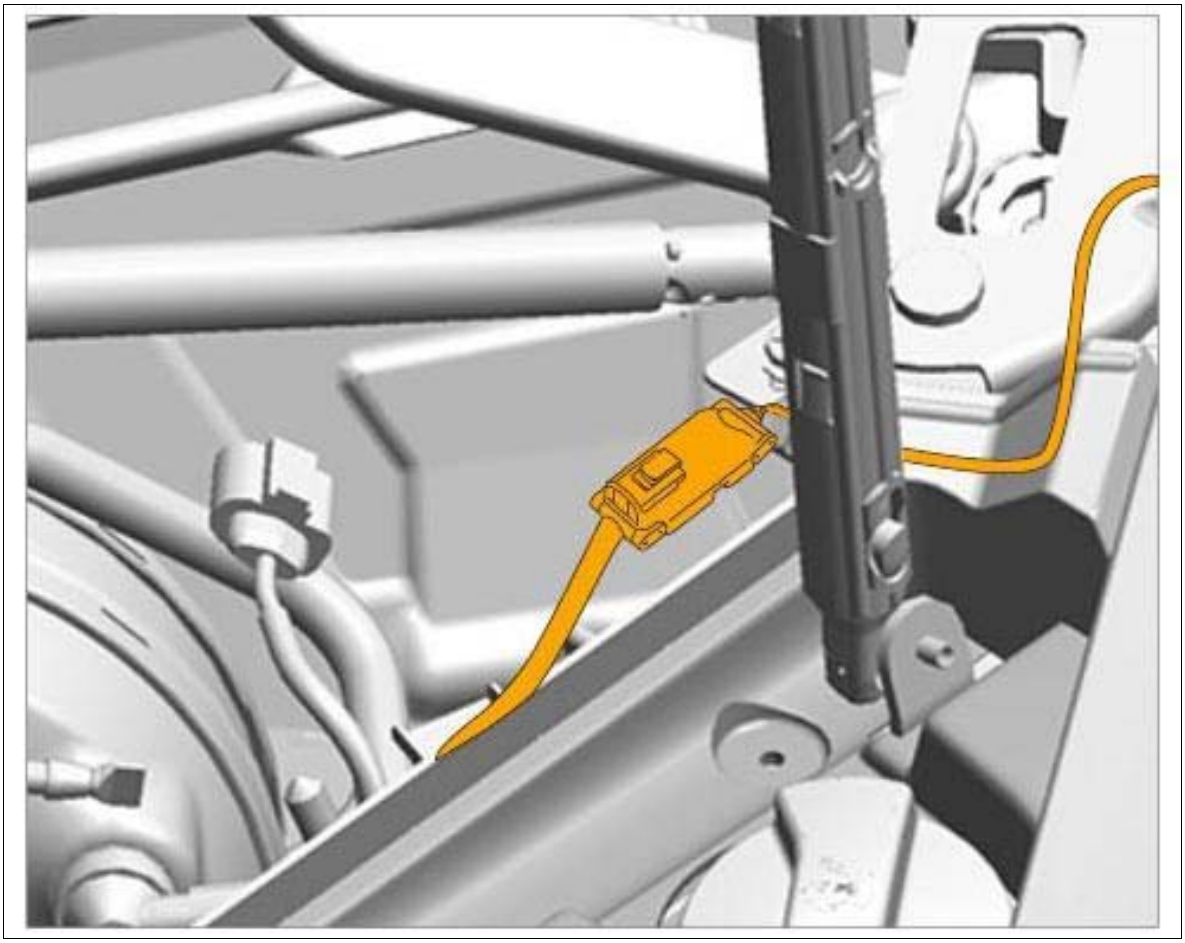

Courtesy of PORSCHE CARS NORTH AMERICA, INC.

4. Connect the detonator 9257 to the 2-pin connector **-F-** of the **adapter cable 9257/7** .
5. Place detonator from the engine compartment in front of the vehicle.
6. Carefully close the engine cover to its first close setting - the hook on the lid must be engaged.

WM 6X00IN DISPOSAL OF AIRBAG AND SEAT-BELT PRETENSIONER UNITS (ALL MODELS) > CONNECTING IGNITION TOOL > KNEE AIRBAG

WARNING: Incorrect handling of airbag units

- *Triggering of airbag unit.*
- *System faults can occur.*

→ Switch off ignition and remove ignition key or remote control (hand-held transmitter).

→ A power supply (e.g. battery charger) must not be connected to the external power supply/jump-lead

starting terminals.

→ Disconnect the battery and insulate the ground strap so that all contact with a ground carrier is avoided.

→ Wait 1 minute after disconnecting the battery.

→ Only pull off connector on the triggering unit after the waiting time has elapsed.

→ Make sure that no foreign objects are located in front of the airbag unit during installation.

→ Replace damaged parts during removal.

→ Always position airbag units so that the blow-out opening is facing upwards, e.g. crest on driver's airbag.

→ Do not position anything on the airbag units.

→ If removed for an extended period, the airbag units must be stored in a safe place.

→ Airbag units must not come into contact with grease, oil, detergents, liquids, or similar substances.

→ Do not expose airbag units to temperatures above 90°.

→ Do not remove the short-circuit spring on the plug-in contacts.

→ Ignition and preparations may only be carried out by skilled staff, supervised by a second responsible person.

→ Before disposal, the airbag unit must be rendered harmless by electrical ignition performed in accordance with all precautionary measures, thereby preventing it from being used incorrectly.

Information

Only ignite airbag units that are securely installed and in original condition in the vehicle. Allow airbag units to cool down under observation following ignition.

- Use only the ignition tool intended for this purpose. First remove all loose objects from the expansion area of the airbag.
- Every ignition circuit for all airbag units and seat-belt pretensioners must be ignited individually.
- Persons who may be affected must be informed of the resulting noise beforehand.
- Wear ear protectors.
- Keep a safe distance by utilizing the entire cable length of the ignition tool. Do not connect the voltage source until all other preparations are complete.
- If ignition fails, wait for approx. 3 minutes before approaching the vehicle.
- Carry out ignition only in suitable, open areas.
- Do not allow ignited airbag units to come into contact with the skin.

Fig 1: Overview Of Adapter Cable 9257/4

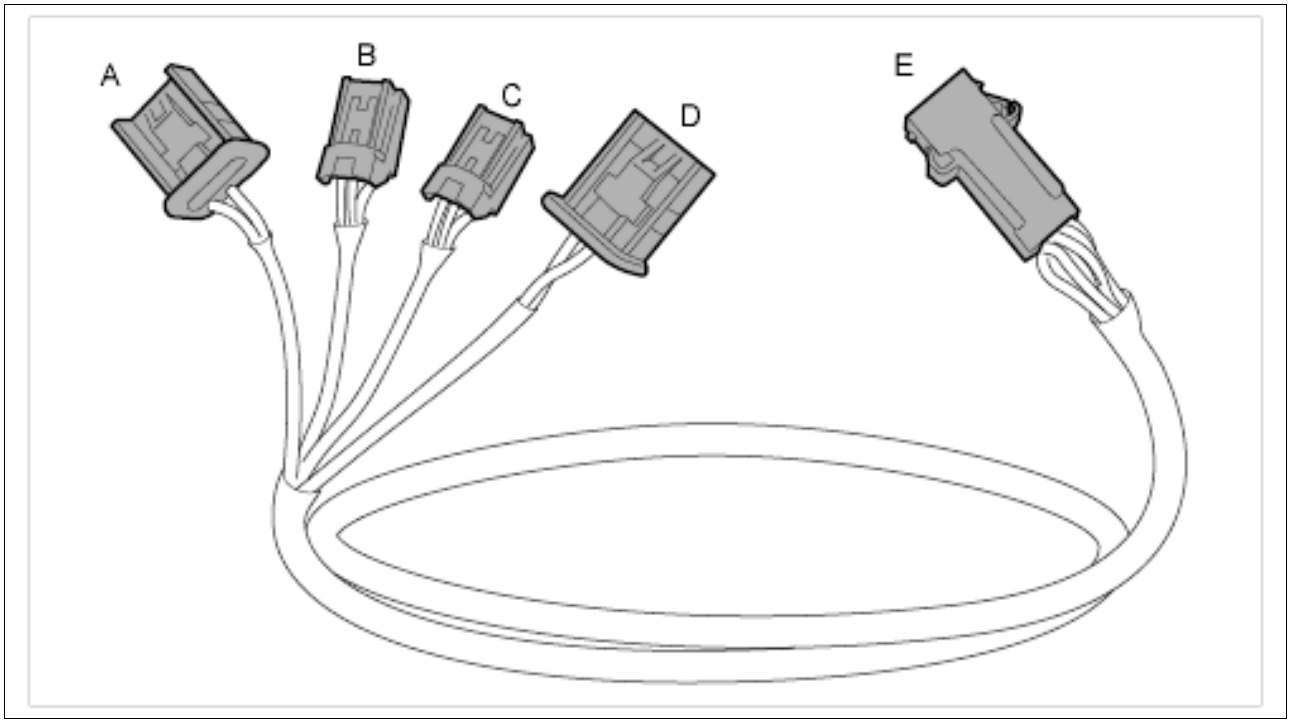

Courtesy of PORSCHE CARS NORTH AMERICA, INC.

A - Purple marking on the connector - adapter for knee airbag

E - Adapter for ignition device

1. Remove cold air bulkhead. .
2. Unplug connector for the ignition module and plug in connector **-A-** from the **adapter cable 9257/4** .

Fig 2: Installing Adapter For Knee Airbag

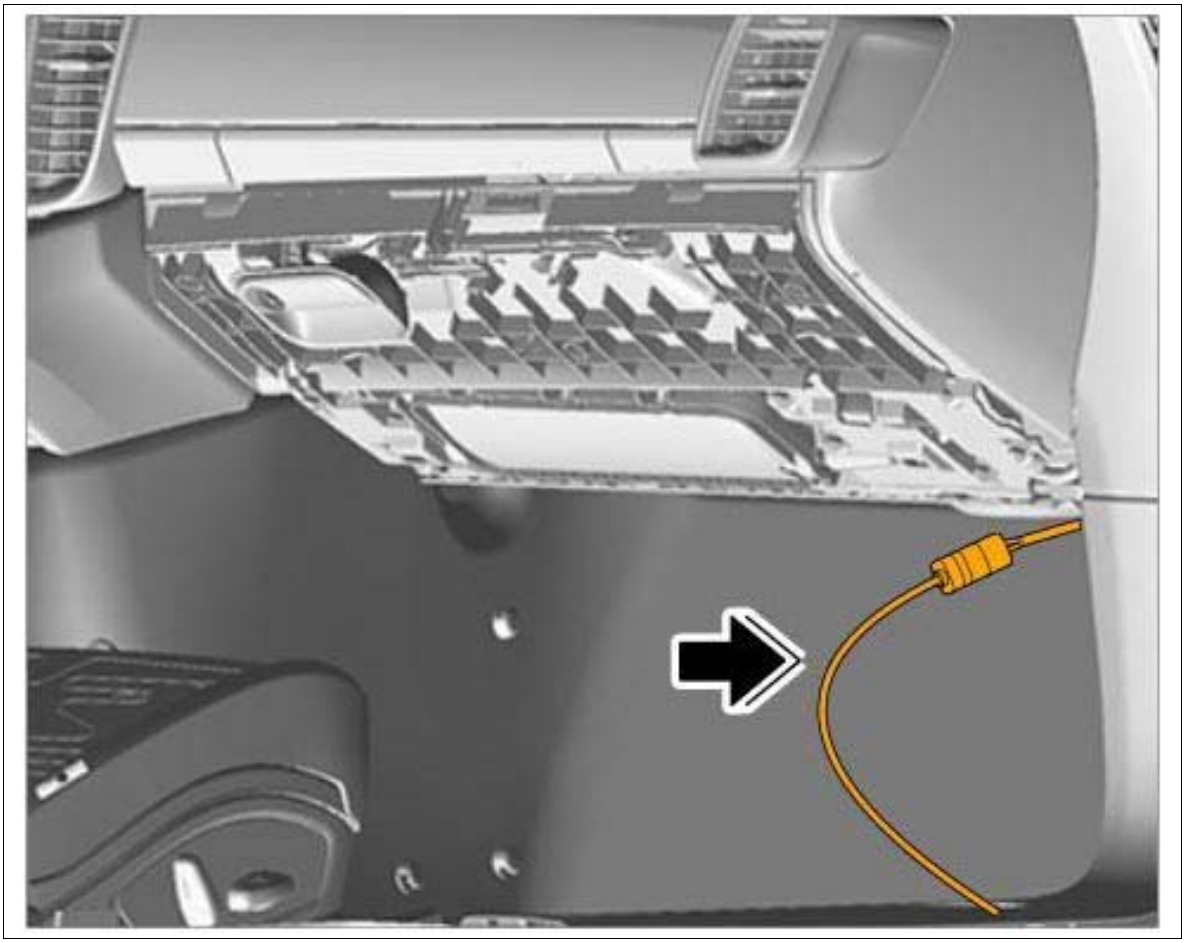

Courtesy of PORSCHE CARS NORTH AMERICA, INC.

3. Connect the ignition device 9257 to the 2-pin connector **-A-** of the **adapter cable 9257/4** .
4. Place the ignition device in front of the vehicle through the door gap.

WM 6X00IN DISPOSAL OF AIRBAG AND SEAT-BELT PRETENSIONER UNITS (ALL MODELS) > CONNECTING IGNITION TOOL > PYROTECHNICAL CUTOFF RELAY

WARNING: Incorrect handling of airbag units

- *Triggering of airbag unit.*
- *System faults can occur.*

→ Switch off ignition and remove ignition key or remote control (hand-held transmitter).

→ A power supply (e.g. battery charger) must not be connected to the external power supply/jump-lead starting terminals.

→ Disconnect the battery and insulate the ground strap so that all contact with a ground carrier is avoided.

→ Wait 1 minute after disconnecting the battery.

→ Only pull off connector on the triggering unit after the waiting time has elapsed.

→ Make sure that no foreign objects are located in front of the airbag unit during installation.

→ Replace damaged parts during removal.

→ Always position airbag units so that the blow-out opening is facing upwards, e.g. crest on driver's airbag.

→ Do not position anything on the airbag units.

→ If removed for an extended period, the airbag units must be stored in a safe place.

→ Airbag units must not come into contact with grease, oil, detergents, liquids, or similar substances.

→ Do not expose airbag units to temperatures above 90°.

→ Do not remove the short-circuit spring on the plug-in contacts.

→ Ignition and preparations may only be carried out by skilled staff, supervised by a second responsible person.

→ Before disposal, the airbag unit must be rendered harmless by electrical ignition performed in accordance with all precautionary measures, thereby preventing it from being used incorrectly.

Information

Only ignite airbag units that are securely installed and in original condition in the vehicle. Allow airbag units to cool down under observation following ignition.

- Use only the ignition tool intended for this purpose. First remove all loose objects from the expansion area of the airbag.
- Every ignition circuit for all airbag units and seat-belt pretensioners must be ignited individually.
- Persons who may be affected must be informed of the resulting noise beforehand.
- Wear ear protectors.
- Keep a safe distance by utilizing the entire cable length of the ignition tool. Do not connect the voltage source until all other preparations are complete.
- If ignition fails, wait for approx. 3 minutes before approaching the vehicle.
- Carry out ignition only in suitable, open areas.
- Do not allow ignited airbag units to come into contact with the skin.

Fig 1: Overview Of Adapter Cable 9257/1

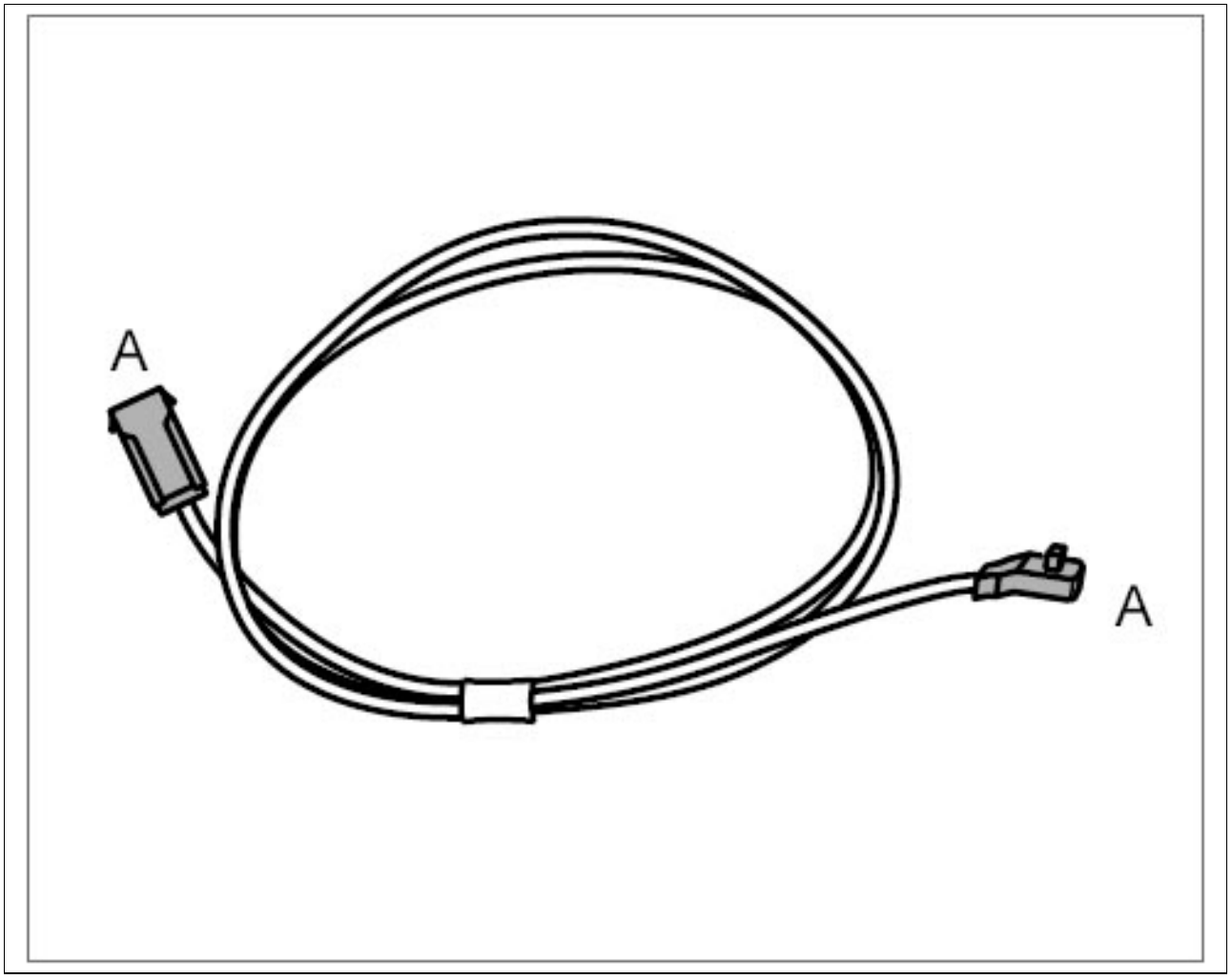

Courtesy of PORSCHE CARS NORTH AMERICA, INC.

A. Black connector - adapter for cutoff relay at power distributor

1. Open rear lid and open luggage compartment floor.
2. Remove tool kit tray.
3. Unplug connector for the ignition module and plug in connector **-A-** from the **ignition cable 9257/1** .

Fig 2: Identifying Adapter For Cutoff Relay

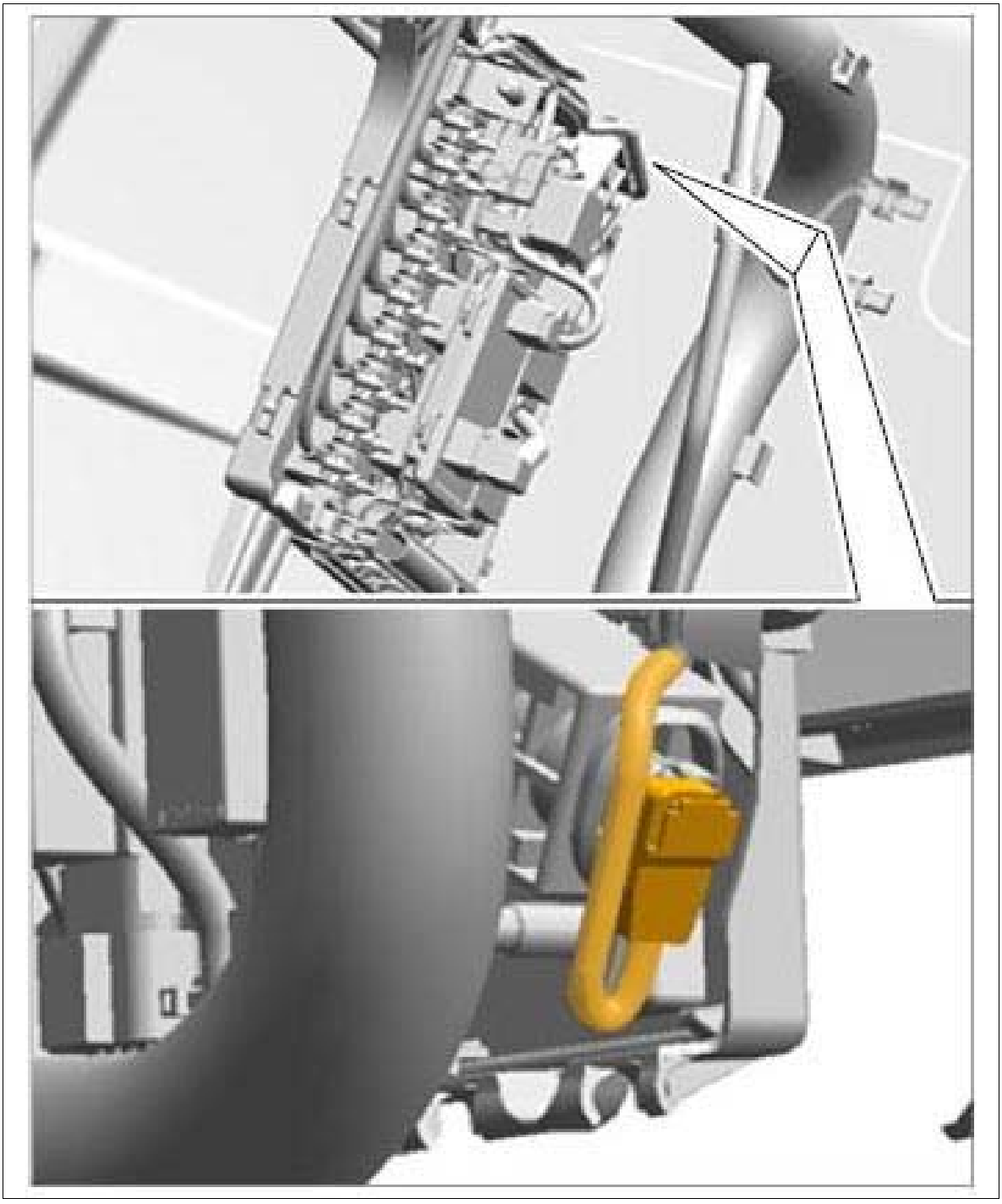

Courtesy of PORSCHE CARS NORTH AMERICA, INC.

4. Connect the **detonator 9257** to the 2-pin connector **-F-** of the **ignition cable 9257/1** .
5. Place the detonator from the luggage compartment behind the vehicle.
6. Carefully close the rear lid to its first close setting - the hook on the lid must be engaged.

WM 6X00IN GENERAL INFORMATION ON REMOVING CAR WINDOWS (ALL

MODELS) > TOOLS

Designation	Type	Number	Description	
Cutting thread	Commercially available tool			
Removal kit for flush bonded windows	Commercially available tool	vag 1474 b		
Removal kit for flush bonded windows	Commercially available tool	VAG 1474 B		

WM 6X00IN GENERAL INFORMATION ON REMOVING CAR WINDOWS (ALL MODELS) > TOOLS AND MATERIALS

Fig 1: Identifying Tools And Materials

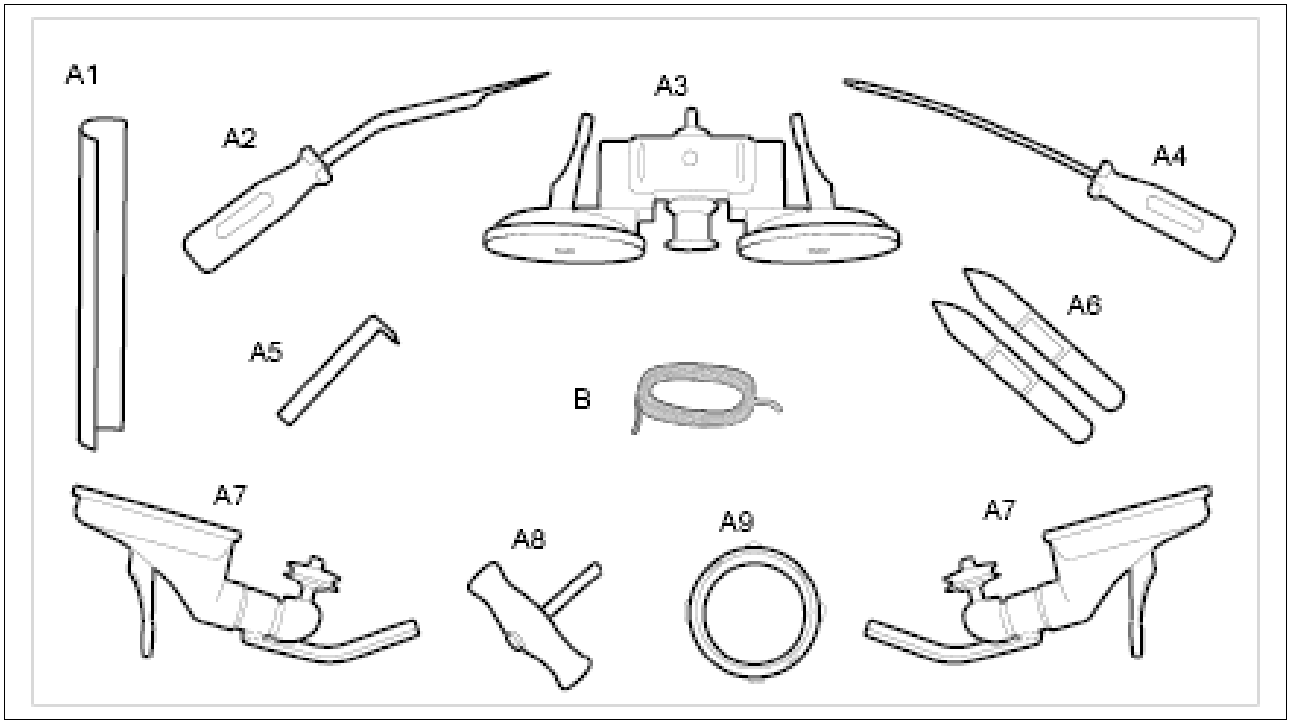

Courtesy of PORSCHE CARS NORTH AMERICA, INC.

Item	Designation	Source	Explanation
-A-	**Removal kit for flush bonded windows vag 1474 b**	Contains set components A1-A9	
-B-	**Cutting thread**		

Item	Designation
-A1-	Guide rail
-A2-	Cutting tool (wire holder)
-A3-	Spooling device
-A4-	Awl
-A5-	Guide rail
-A6-	Spatula
-A7-	Steering roller with arm bracket
-A8-	Handle
-A9-	Square cutting wire

WM 6X00IN GENERAL INFORMATION ON REMOVING CAR WINDOWS (ALL MODELS) > REMOVING GLASS WITH CUTTING-WIRE SEPARATING DEVICE

Information

- The following instructions describe the general procedure for removing car windows with the glass separating tool VAG 1474 B.
- Information on procedures relating to specific vehicles can be obtained from the instructions in the corresponding chapters in the Technical Information.

Fig 1: Identifying Flush Bonded Windows Removal Kit

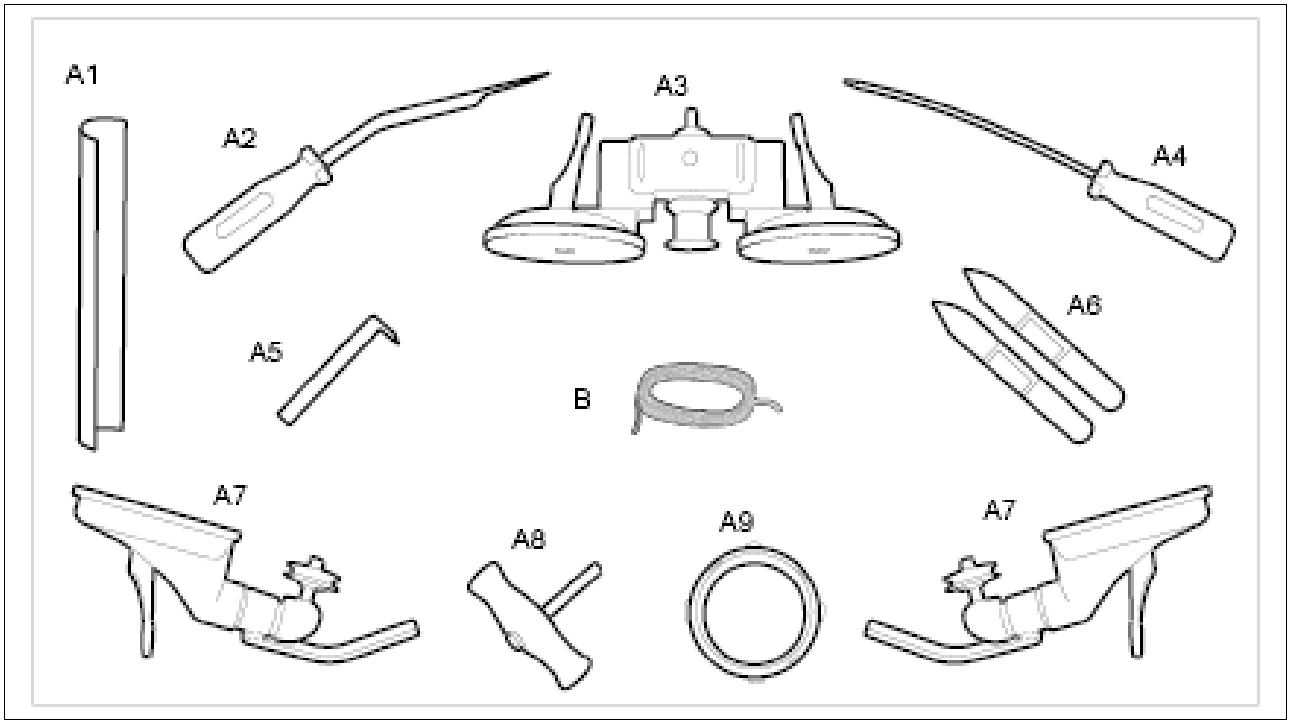

Courtesy of PORSCHE CARS NORTH AMERICA, INC.

A - Removal kit for flush bonded windows VAG 1474 B [1)]

B - Cutting thread

A1 - Guide rail

A2 - Cutting tool (wire holder)

A3 - Spooling device

A4 - Awl

A5 - Guide rail

A6 - Spatula

A7 - Steering roller with arm bracket

A8 - Handle

A9 - Square cutting wire

[1)] Contains set components A1-A9 and protective film for dashboard

Information

- It is generally possible to remove the windscreen with the cutting wire and the optional cutting thread contained in the tool set.
- In contrast to cutting threads, however, the cutting wire has the following disadvantages:
- Danger of injury when tearing off the cutting wire.
- Danger of damage to materials on paint surfaces and interior equipment parts.
- For the reasons outlined above we recommend using the cutting thread.

WARNING: Vehicle windows removed and installed incorrectly

- *Danger of cuts*
- *Risk of eye injuries*

→ Wear personal protective gear.

→ Always shut off power supply when replacing cutting knife.

NOTE: Windscreen removed incorrectly

- *Risk of damage to vehicle identification number (VIN) label*
- *Risk of damage to paintwork*

→ When cutting out the windscreen, make sure that the label with the vehicle identification number (VIN) is not damaged.

Information

- In order to guarantee an optimum fastening intake grip, it is advisable to clean the inside of the glass before removal.

1. Clean inside of glass.

   Information

   1. The film protects the damping mat against damage when removing the glass.

2. Affix protective film on the dashboard.

   1. 2.1. Select the appropriate film **-1-** and insert between windscreen and damping mat.

Fig 2: Inserting Windscreen And Damping Mat

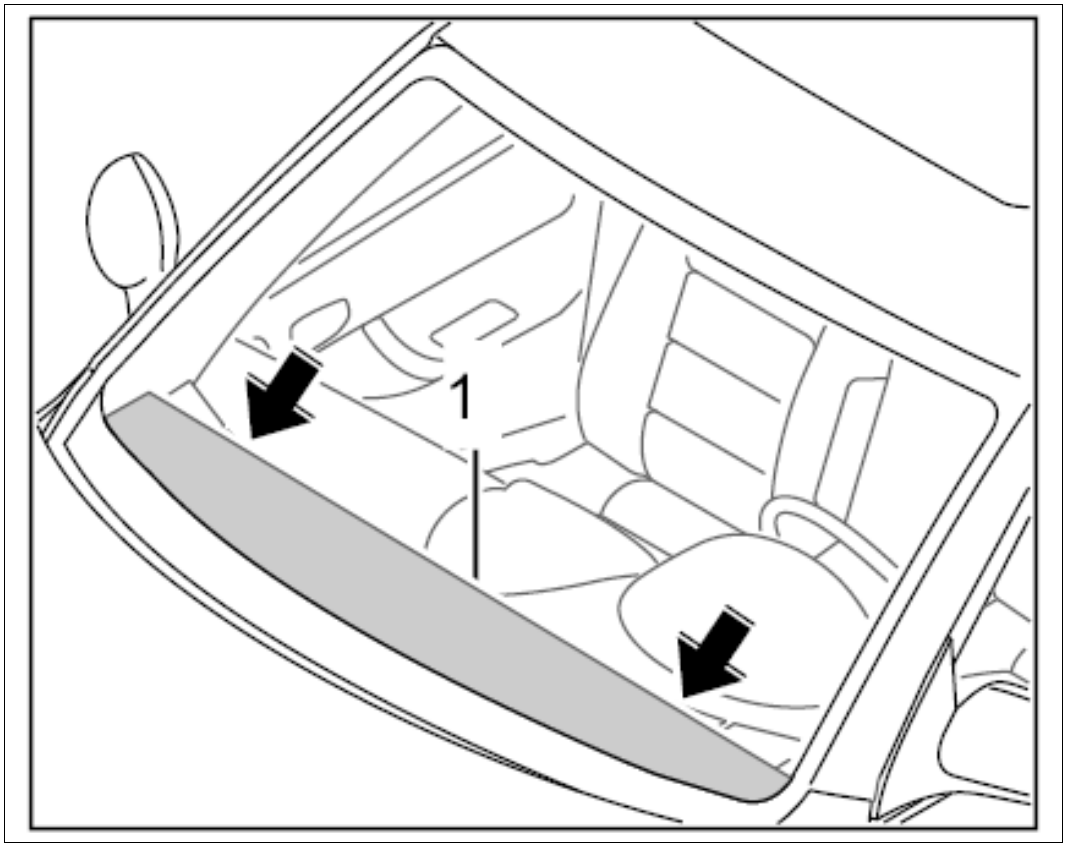

Courtesy of PORSCHE CARS NORTH AMERICA, INC.

Information

1. In order to prevent damage, make sure that the vehicle identification number is completely covered by the protective film when pushing through the adhesive bead.

3. Insert cutting thread into the passenger compartment.

    1. 3.1. Push through adhesive bead on the glass on the edge of the vehicle identification number **-C-** with the awl **-A4-** from the inside to the outside.
    2. 3.2. Pass cutting thread **-B-** through the eyelet on the awl **-A4-** .
    3. 3.3. Pull cutting thread **-B-** into the passenger compartment.
    4. 3.4. Pull cutting thread **-B-** out of the awl **-A4-** .
    5. 3.5. Pull cutting thread **-B-** approx. 1 m into the passenger compartment.

Fig 3: Pulling Cutting Thread

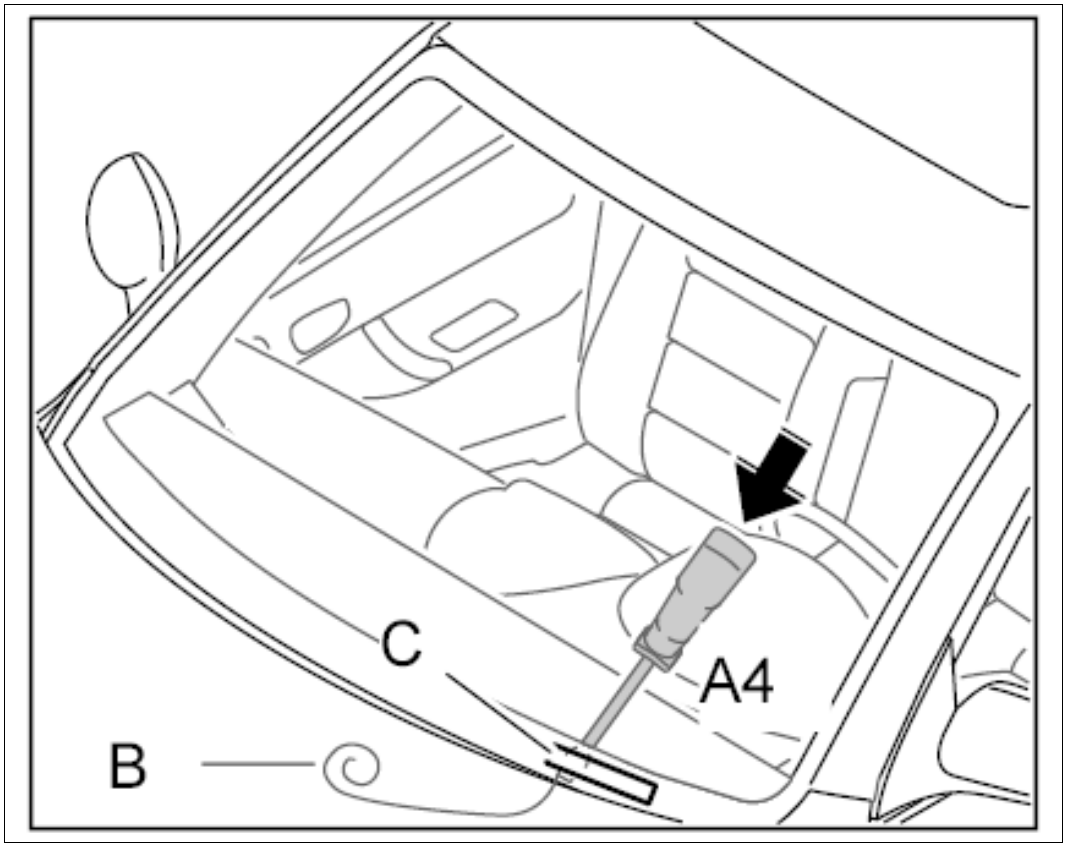

Courtesy of PORSCHE CARS NORTH AMERICA, INC.

Information

1. The cutting thread should be positioned under the rim as far as possible. The sealing lip must be raised slightly in the upper part of the glass in order to pull the cutting thread through.

4. Insert cutting thread into the gap in the glass.

    1. 4.1. Pull the cutting thread **-B-** all the way around in direction of arrow and into the gap between the window and body; use a spatula **-A6-** if necessary.

Fig 4: Inserting Cutting Thread

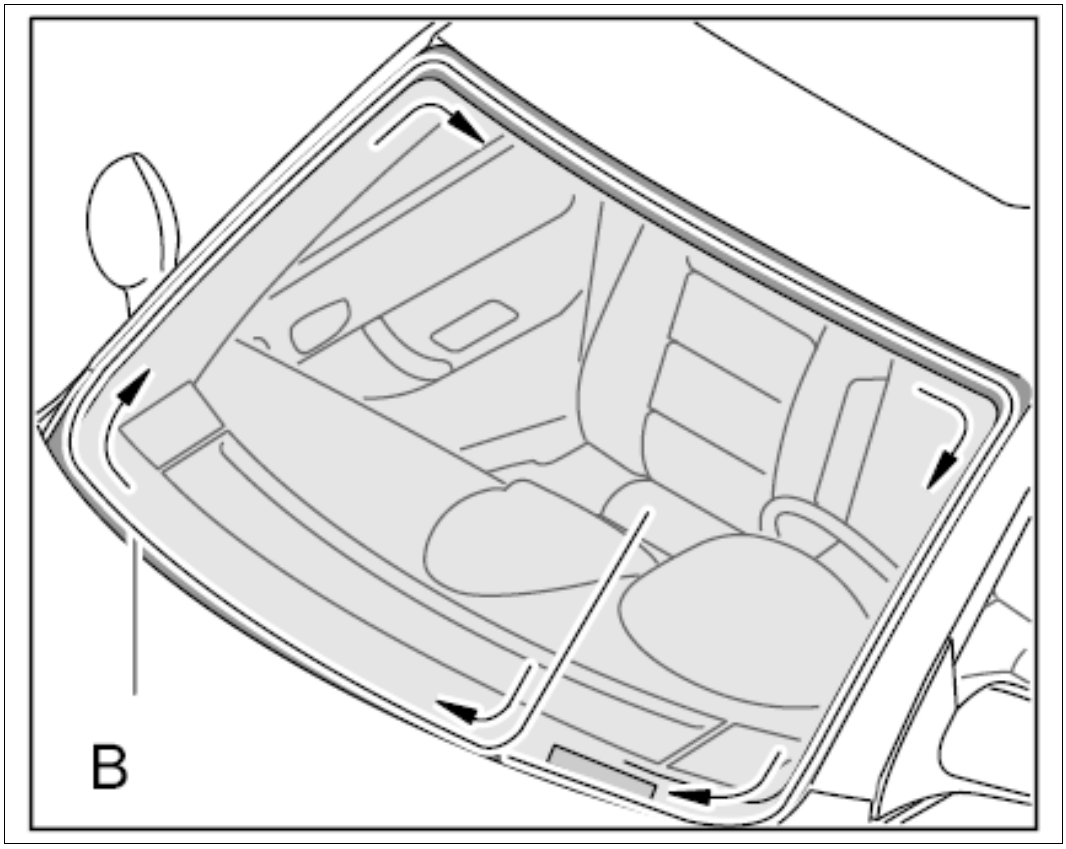

Courtesy of PORSCHE CARS NORTH AMERICA, INC.

5. Secure cutting thread to the body.

    1. 5.1. Secure the loose end of the cutting thread **-B-** at a suitable point on the body using the fastening screw **-2-** on a component (e.g. wiper motor fastening screw). Loosen the fastening screw, wind the cutting thread **-B-** once around the screw and then tighten the fastening screw again.

Fig 5: Loosening Car Windows Screw

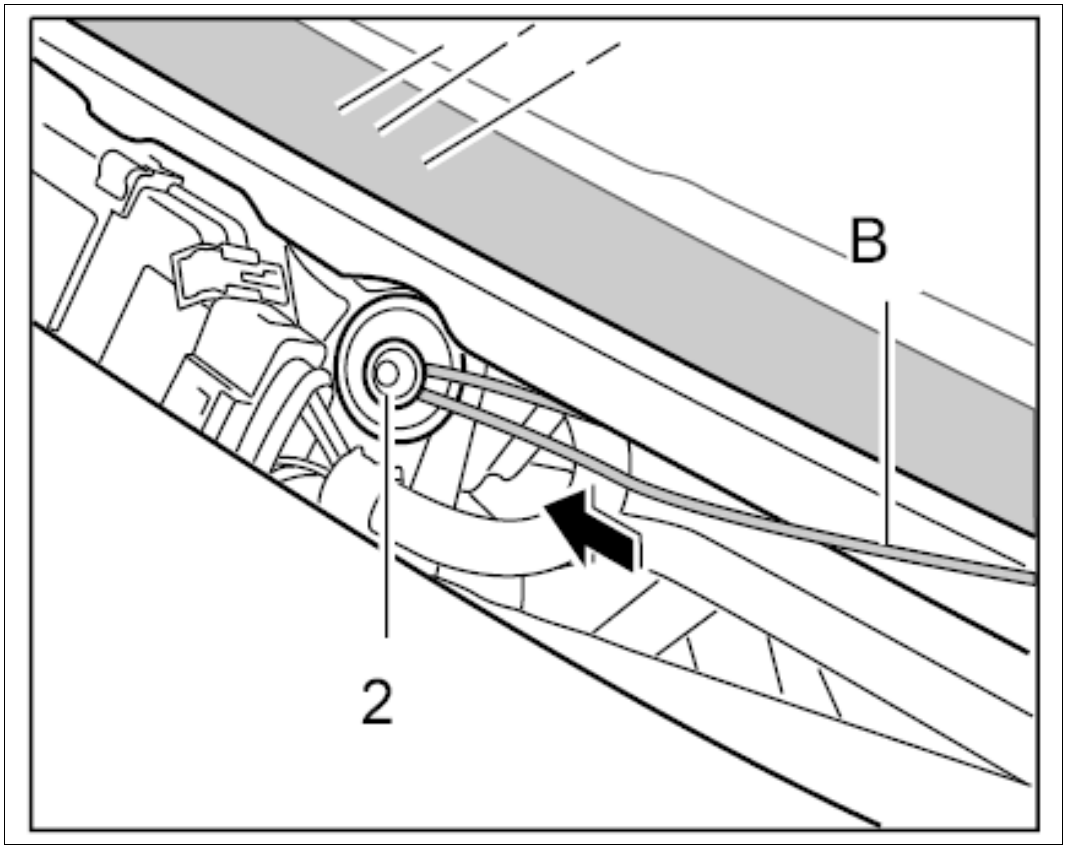

Courtesy of PORSCHE CARS NORTH AMERICA, INC.

6. Fit cutting thread to the spooling device.
    1. 6.1. Loosen clamping screw **-3-** .
    2. 6.2. Insert the cutting thread **-B-** into the bore on the spooling device **-A3-** .
    3. 6.3. Attach cutting thread **-B-** firmly with the clamping screw **-3-** .

Fig 6: Inserting Cutting Thread Into Bore On Spooling Device

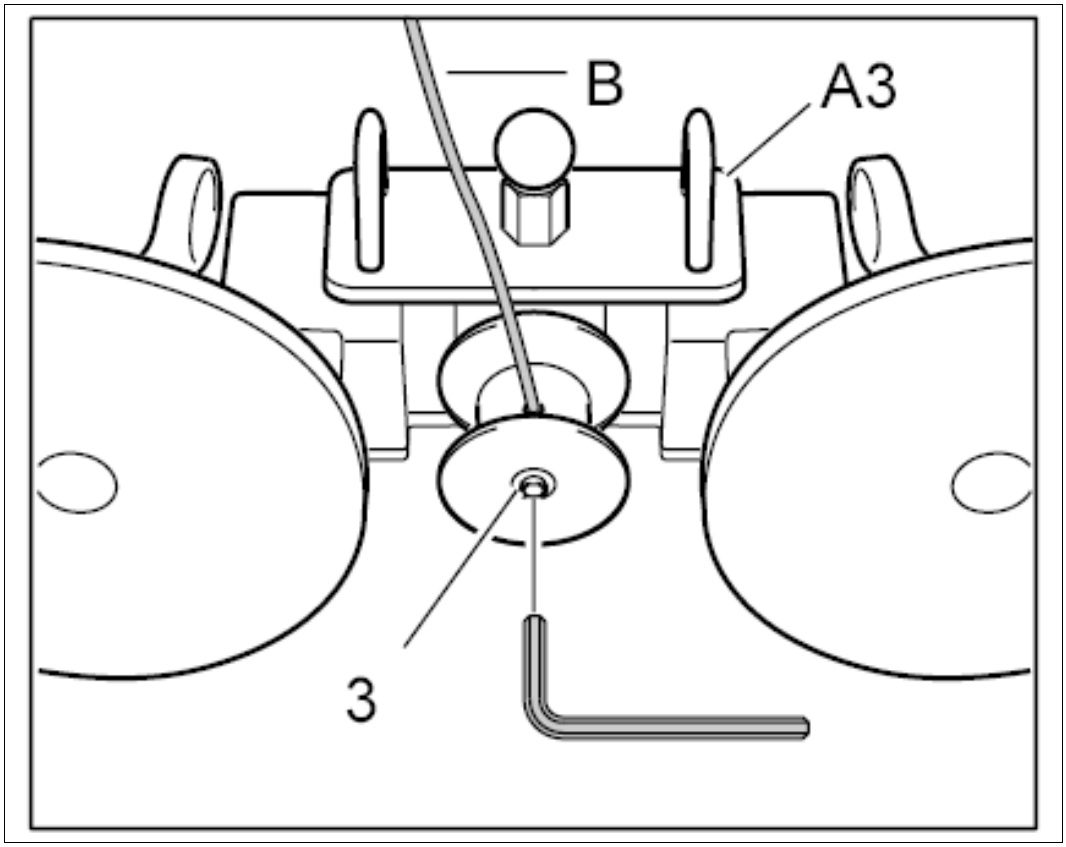

Courtesy of PORSCHE CARS NORTH AMERICA, INC.

Information

1. The fastening force can be increased by moistening the fastening intake.

7. Fit spooling device and deflection rollers on the glass.
    1. 7.1. Position spooling device **-A3-** diagonally in the center of the glass.
    2. 7.2. Press spooling device **-A3-** firmly against the glass using the suction cups.
    3. 7.3. Secure suction cup onto the glass by moving the actuating lever.

Fig 7: Pressing Spooling Device

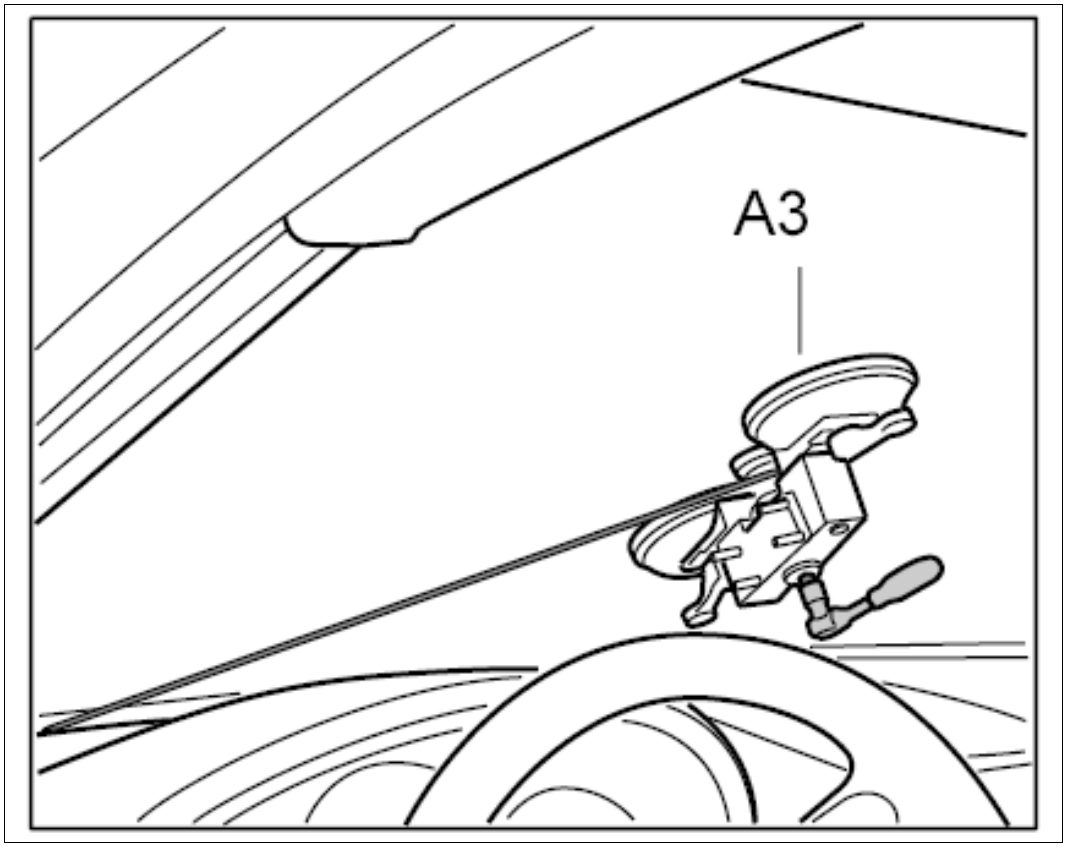

Courtesy of PORSCHE CARS NORTH AMERICA, INC.

8. Separate glass as far as P1.

    1. 8.1. Separate glass by spooling the cutting thread on the spooling device as far as point **-P1-** .

Fig 8: Separating Glass Of Windows

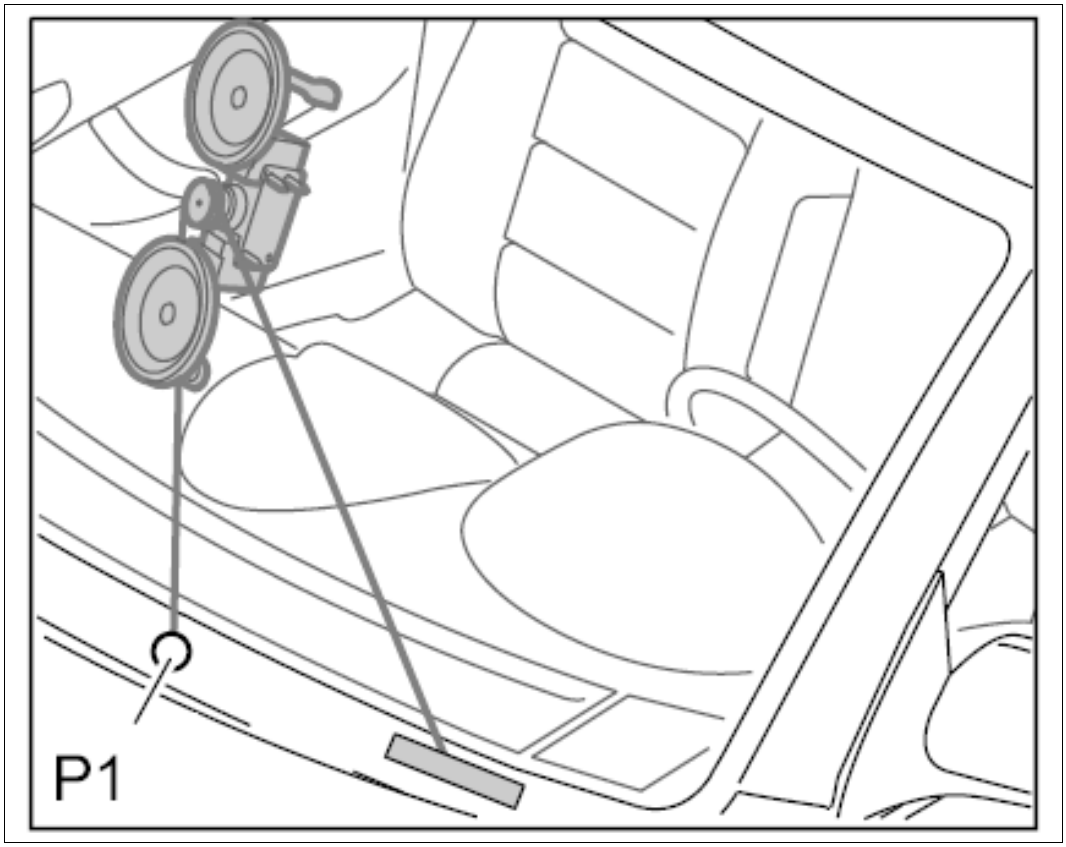

Courtesy of PORSCHE CARS NORTH AMERICA, INC.

Information

1. The fastening force can be increased by moistening the fastening intake.

9. Reposition spooling device.
    1. 9.1. Release spooling device.
    2. 9.2. Release the lower suction cup on the spooling device.
    3. 9.3. Pull cutting thread through onto the other side of the suction cup.
    4. 9.4. Secure suction cup onto the glass by moving the actuating lever.

Fig 9: Securing Suction Cup

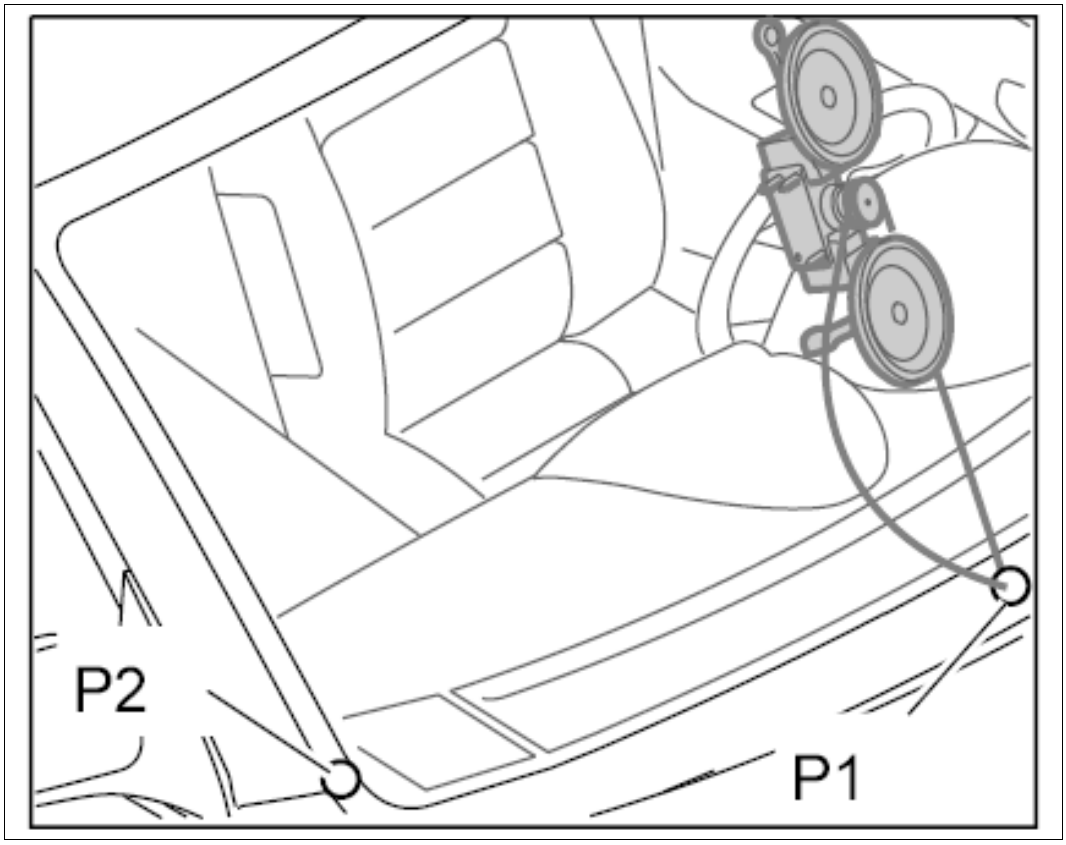

Courtesy of PORSCHE CARS NORTH AMERICA, INC.

Information

1. The fastening force can be increased by moistening the fastening intake.

10. Separate glass as far as P2.
    1. 10.1. Position deflection roller in the lower right corner.
    2. 10.2. Press deflection roller with suction cup firmly against the glass.
    3. 10.3. Secure suction cup onto the glass by moving the actuating lever.
    4. 10.4. Pass cutting thread over the deflection roller onto the spooling device.
    5. 10.5. Separate glass by spooling the cutting thread on the spooling device as far as point **-P2-** .

Fig 10: Separating Glass Of Windows

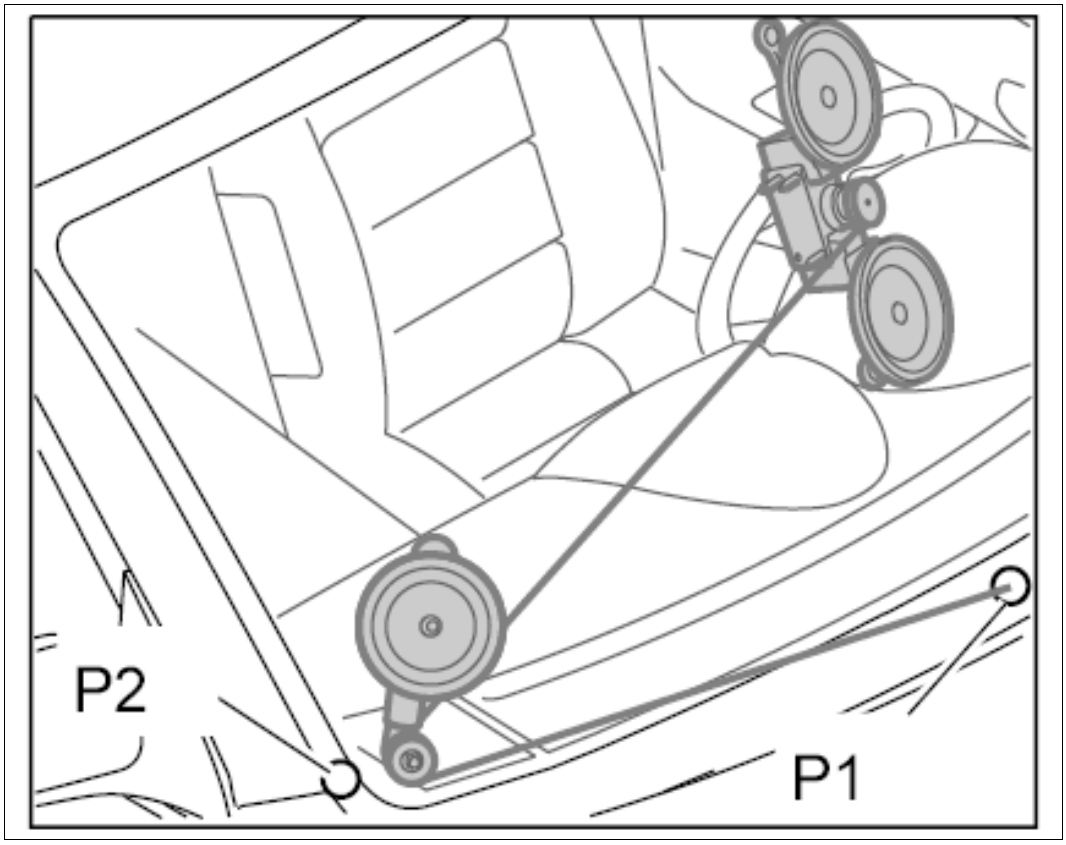

Courtesy of PORSCHE CARS NORTH AMERICA, INC.

Information

1. The fastening force can be increased by moistening the fastening intake.

11. Separate glass as far as P3.
    1. 11.1. Release spooling device.
    2. 11.2. Position deflection roller in the upper right corner.
    3. 11.3. Press deflection roller with suction cup firmly against the glass.
    4. 11.4. Secure suction cup onto the glass by moving the actuating lever.
    5. 11.5. Pass cutting thread over the deflection roller onto the spooling device.
    6. 11.6. Separate glass by spooling the cutting thread on the spooling device as far as point **-P3-** .

Fig 11: Releasing Spooling Device

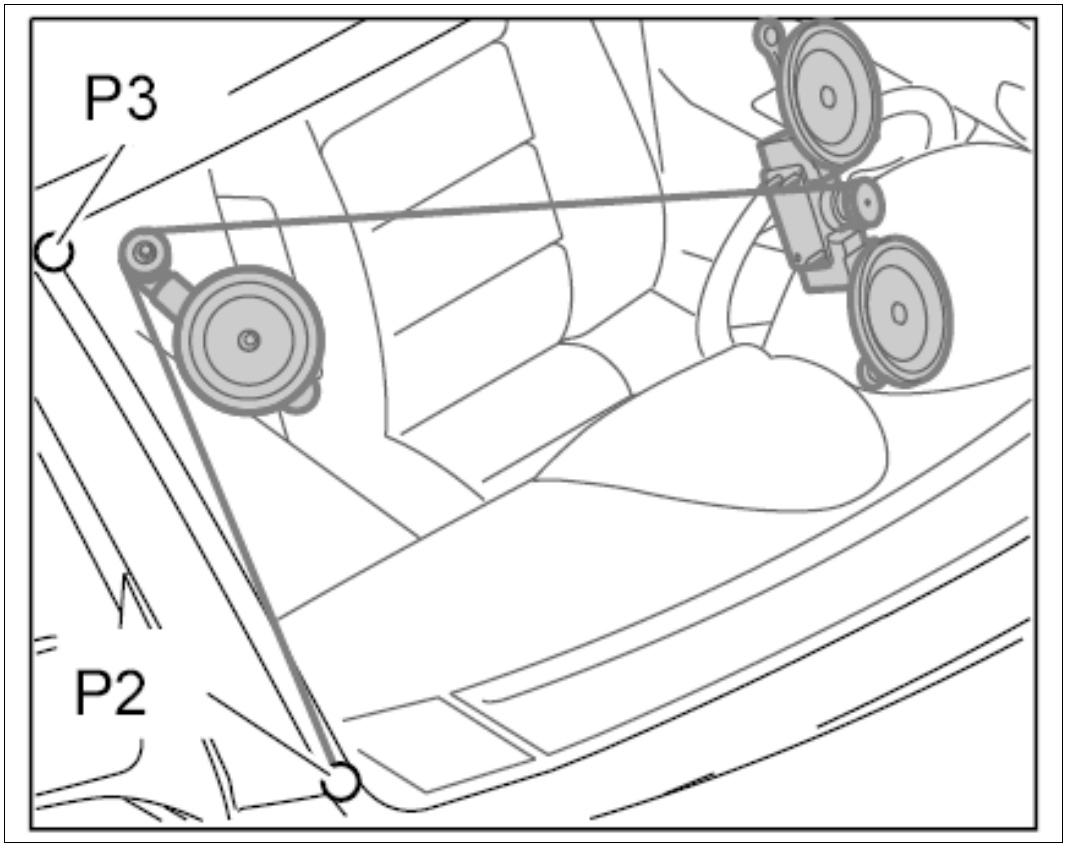

Courtesy of PORSCHE CARS NORTH AMERICA, INC.

Information

1. The fastening force can be increased by moistening the fastening intake.

12. Reposition spooling device.
    1. 12.1. Release spooling device.
    2. 12.2. Loosen the upper suction cup on the spooling device.
    3. 12.3. Pull cutting thread through onto the other side of the suction cup.
    4. 12.4. Secure suction cup onto the glass by moving the actuating lever.

Fig 12: Securing Suction Cup Onto Glass

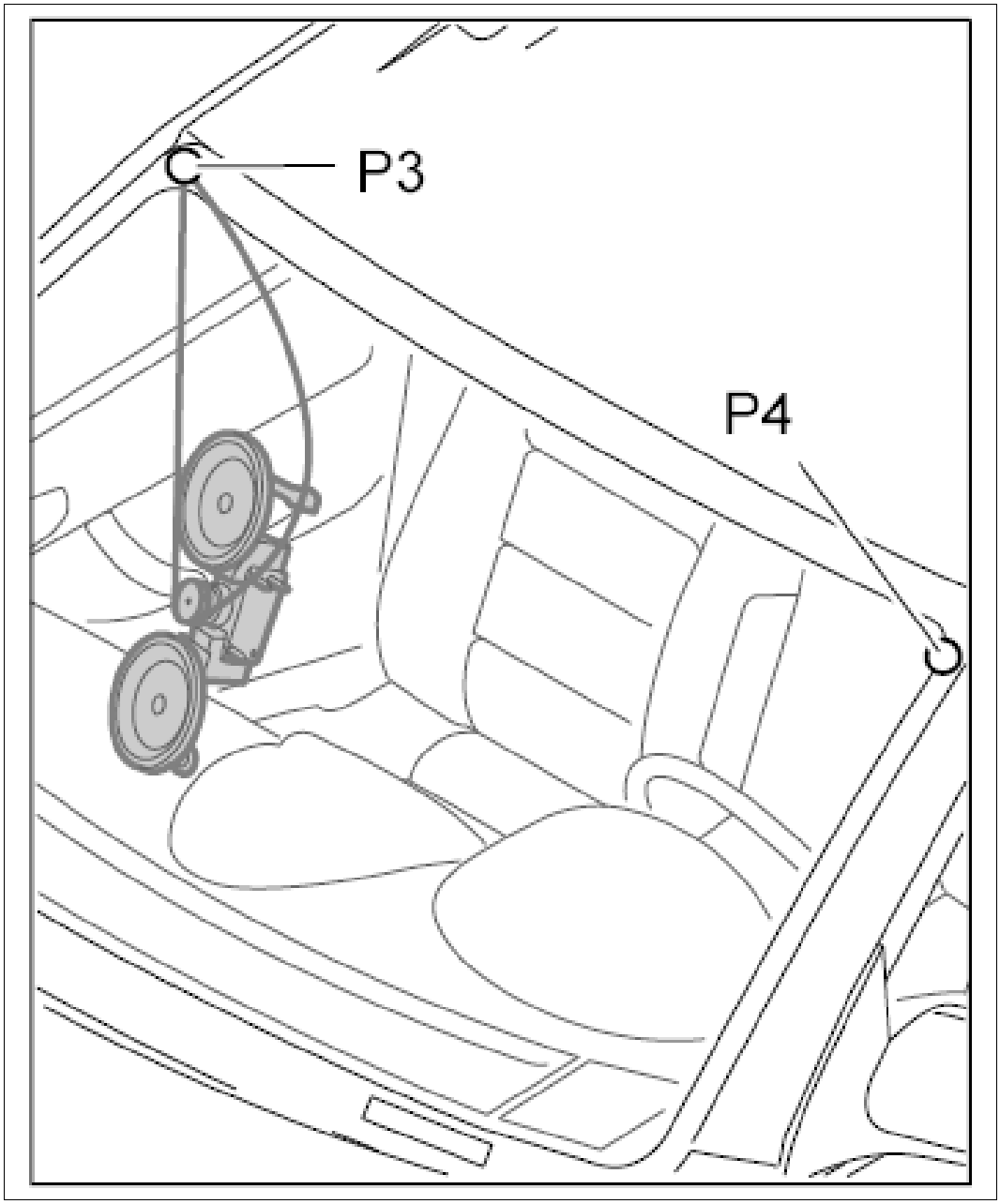

Courtesy of PORSCHE CARS NORTH AMERICA, INC.

Information

1. The fastening force can be increased by moistening the fastening intake.

13. Separate glass as far as P4.
    1. 13.1. Position deflection roller in the upper left corner.
    2. 13.2. Press deflection roller with suction cup firmly against the glass.
    3. 13.3. Secure suction cup onto the glass by moving the actuating lever.
    4. 13.4. Pass cutting thread over the deflection roller onto the spooling device.

5. 13.5. Separate glass by spooling the cutting thread on the spooling device as far as point **-P4-** .

   Fig 13: Separating Glass (P4)

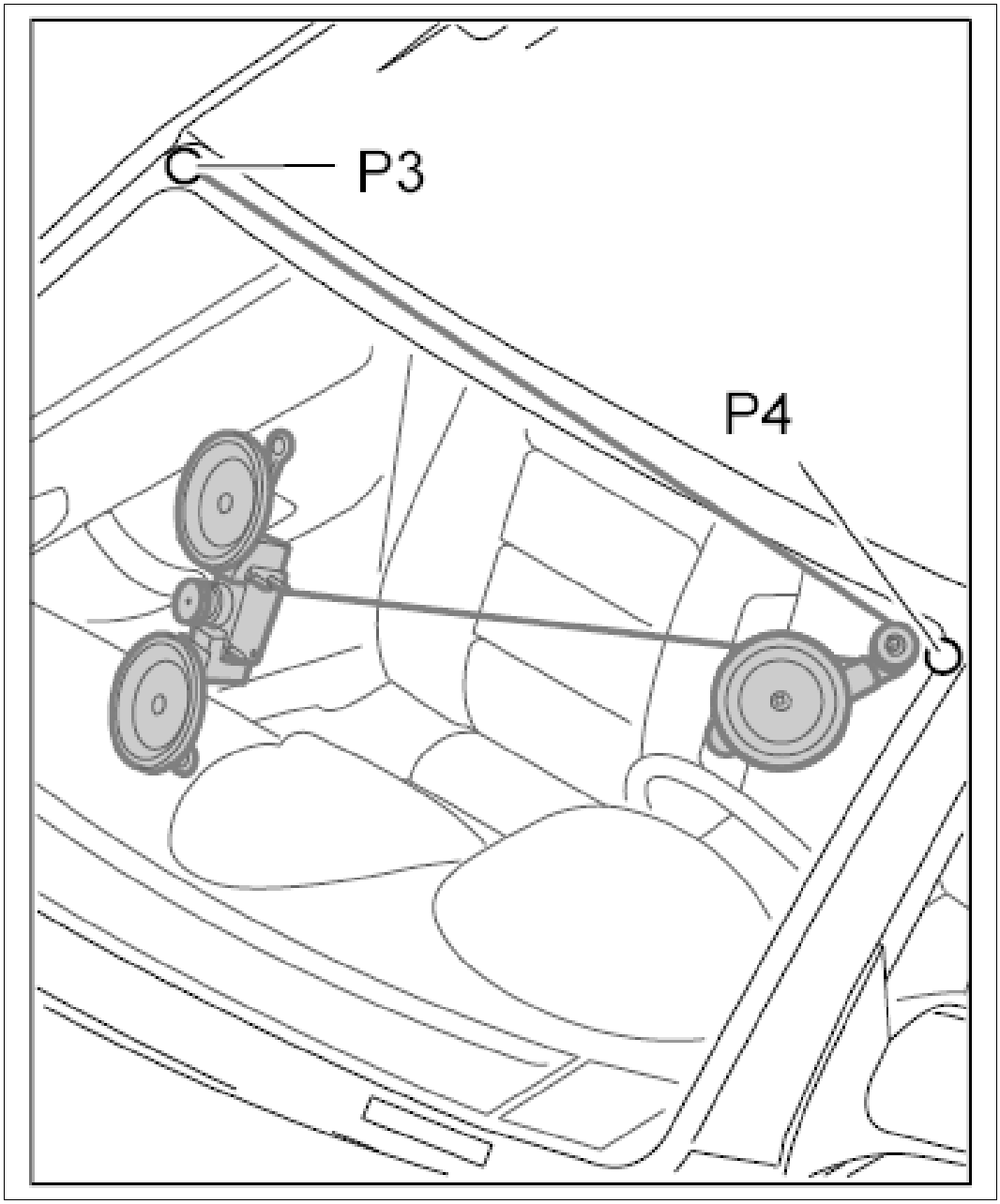

Courtesy of PORSCHE CARS NORTH AMERICA, INC.

Information

1. The fastening force can be increased by moistening the fastening intake.

14. Separate glass as far as P5.

    1. 14.1. Release spooling device.
    2. 14.2. Position deflection roller in the lower left corner.
    3. 14.3. Press deflection roller with suction cup firmly against the glass.

4. 14.4. Secure suction cup onto the glass by moving the actuating lever.
5. 14.5. Pass cutting thread over the deflection roller onto the spooling device.
6. 14.6. Separate glass by spooling the cutting thread on the spooling device as far as point **-P5-** .

Fig 14: Separating Glass (P5)

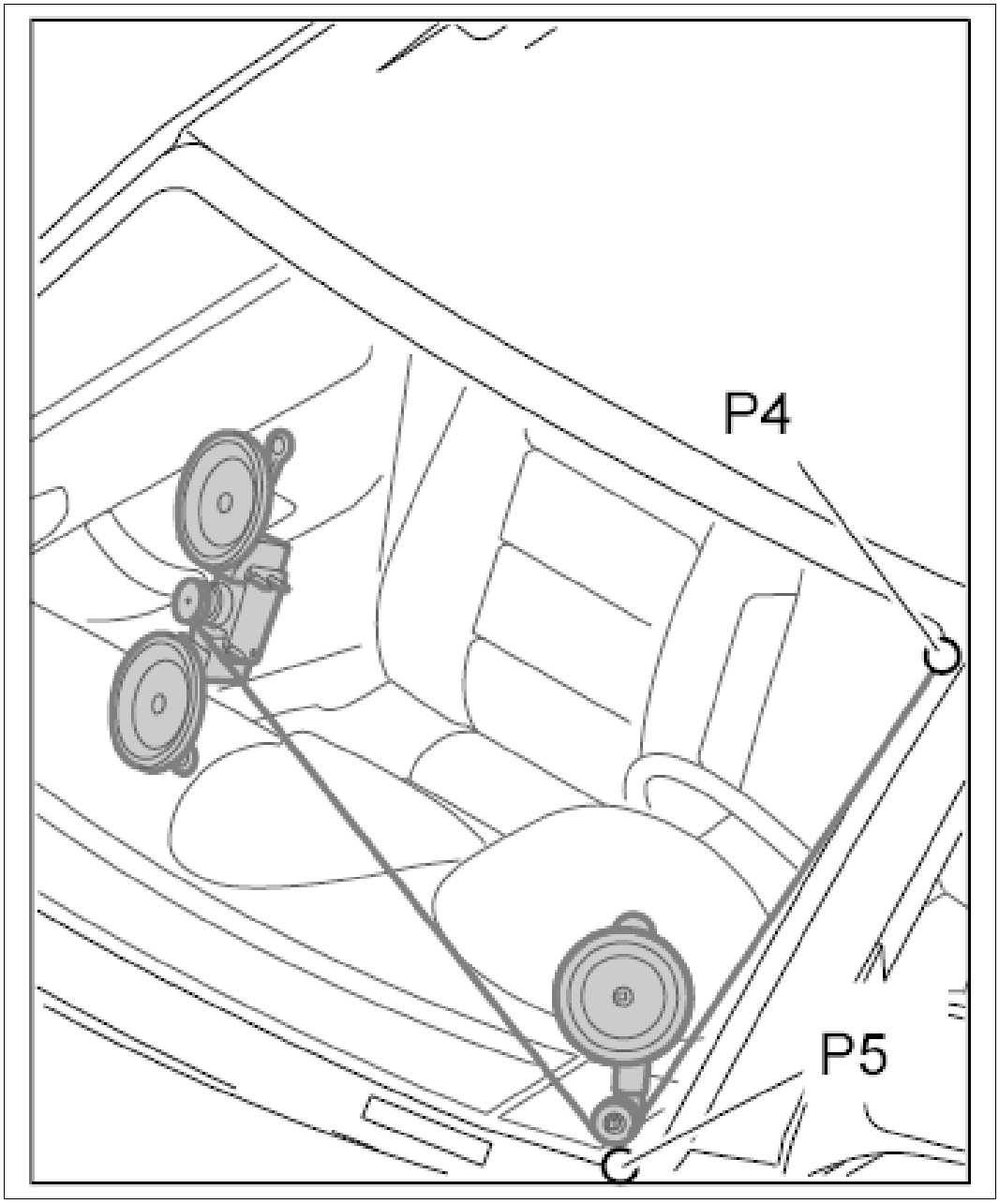

Courtesy of PORSCHE CARS NORTH AMERICA, INC.

15. Separate glass as far as P6.
    1. 15.1. Separate glass by spooling the cutting thread on the spooling device as far as point **-P6-** .

Fig 15: Separating Glass (P6)

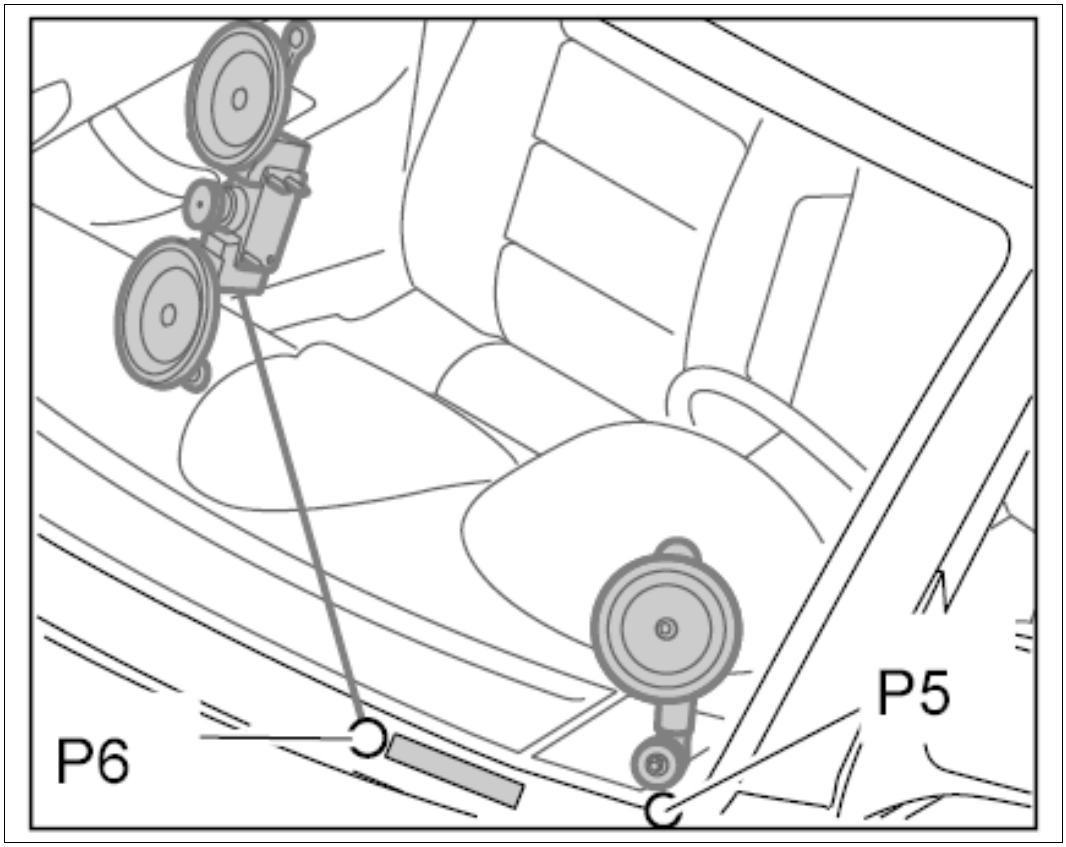

Courtesy of PORSCHE CARS NORTH AMERICA, INC.

16. Remove glass.

WM 6X00IN GENERAL INFORMATION ON REMOVING CAR WINDOWS (ALL MODELS) > CUTTING FORCE FOR REMOVING GLASS WITH CUTTING WIRE

Information

- The force required for separating the glass is lower when the cutting thread is deflected to its maximum point. An angle greater than 90° should be avoided.

Unfavourable angle (strong pulling force required)

Fig 1: Identifying Glass High Cutting Force

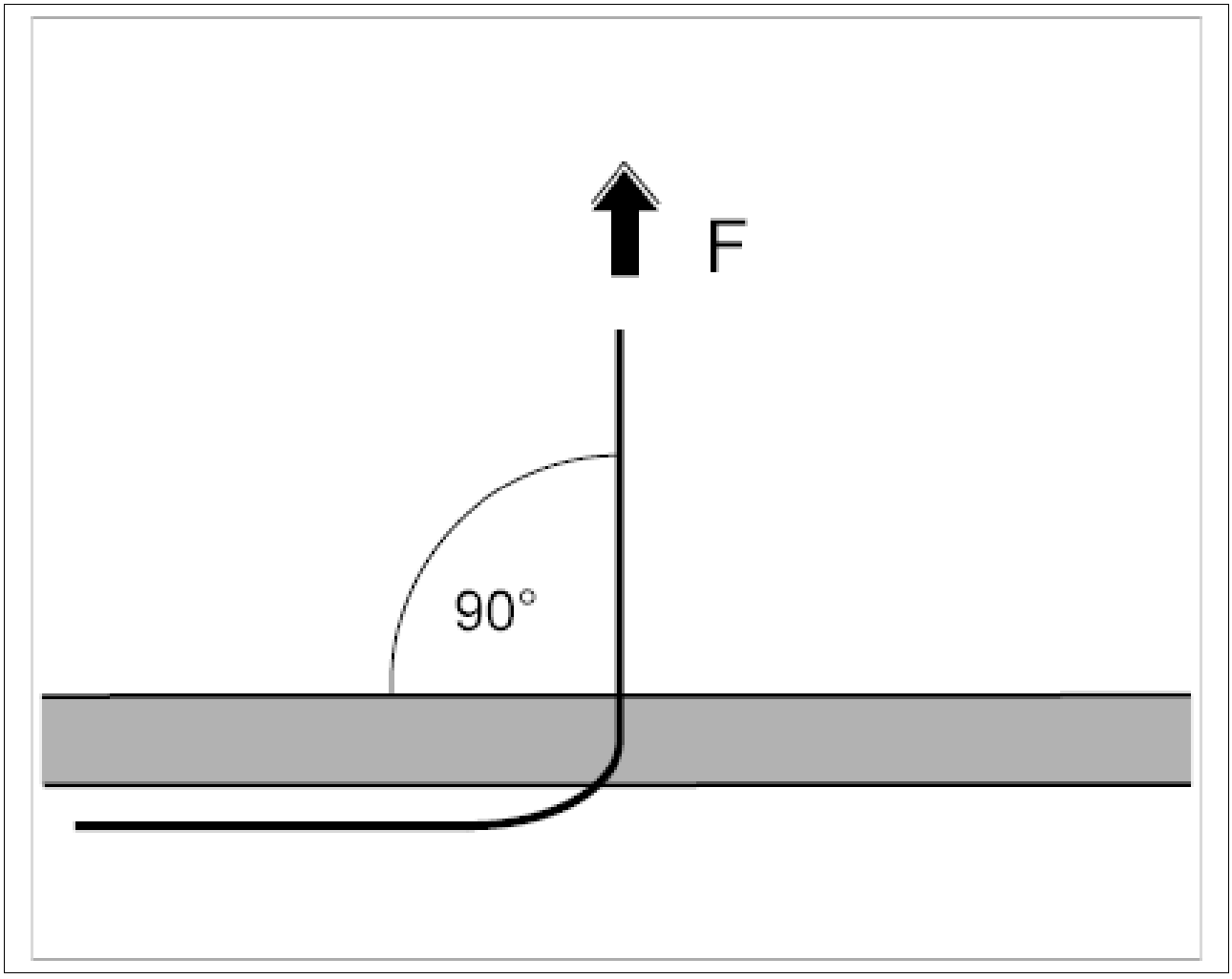

Courtesy of PORSCHE CARS NORTH AMERICA, INC.

Favourable angle (average pulling force required)

Fig 2: Identifying Glass Average Cutting Force

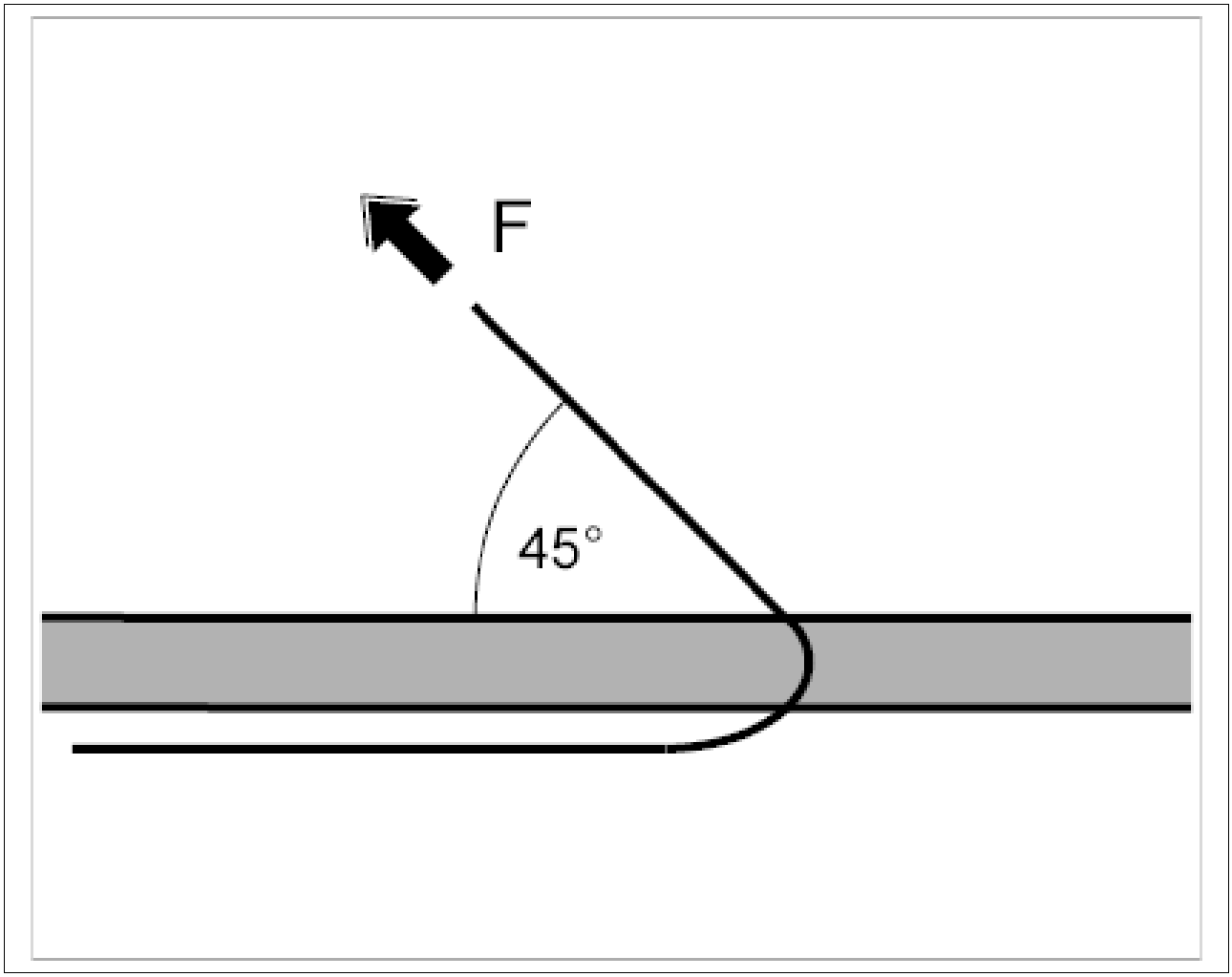

Courtesy of PORSCHE CARS NORTH AMERICA, INC.

Optimum angle (minimum pulling force required)

Fig 3: Identifying Glass Low Cutting Force

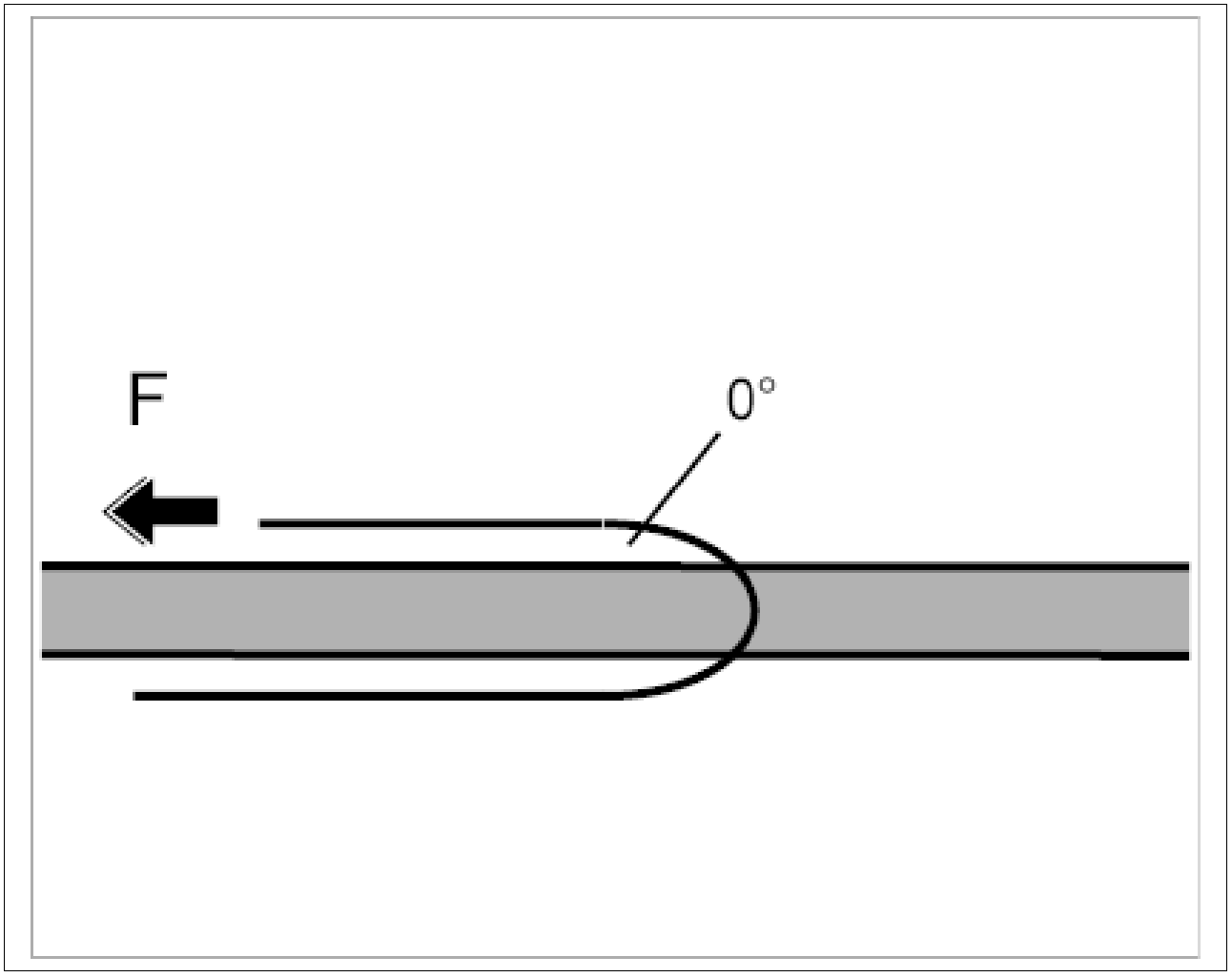

Courtesy of PORSCHE CARS NORTH AMERICA, INC.

WM 6X00IN HANDLING AND REPLACING AIRBAG AND SEAT-BELT PRETENSIONER UNITS (ALL MODELS) > TOOLS

Designation	Type	Number	Description	
2nd generation PIWIS Tester	Special tool	9818		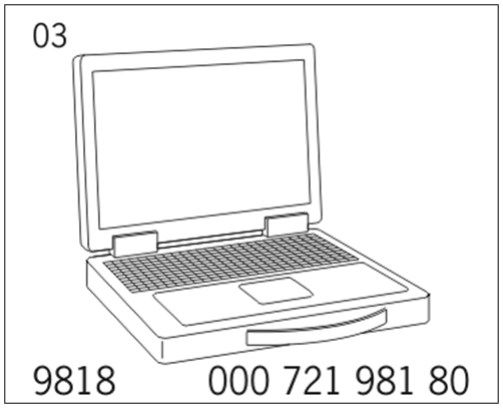

WM 6X00IN HANDLING AND REPLACING AIRBAG AND SEAT-BELT PRETENSIONER UNITS (ALL MODELS) > TOOLS AND MATERIALS > MATERIALS

- Use Porsche work clothing.

WM 6X00IN HANDLING AND REPLACING AIRBAG AND SEAT-BELT PRETENSIONER UNITS (ALL MODELS) > GENERAL WARNING NOTES > GENERAL WARNINGS FOR HANDLING AIRBAG AND SEAT-BELT PRETENSIONER UNITS

> ⚠ *CAUTION: Danger of injury and material damage if the airbag unit is not handled correctly!*
>
> - *Triggering of the airbag unit!*

→ The airbag units are pyrotechnical items in hazard class T 1!

→ Handling, transport and storage of these units must conform to hazardous goods regulation and explosives legislation!

→ The listed statutory requirements . The relevant valid regulations must be observed in all other countries. Consult the importer for the country concerned!

→ The commencement of work with pyrotechnical items must be reported to the Trade Supervisory Office (responsible authority) 14 days in advance!

→ The airbag units may only be shipped in transport packaging officially approved for this purpose!

→ Internally and otherwise, they must always be transported in the luggage compartment or loadspace of a vehicle using the above-mentioned transport packaging!

→ They must never be transported in the passenger compartment!

→ Airbag units must be stored in accordance with the explosives legislation SprengLR 240 - Storage of airbag and seat-belt pretensioner units!

→ This ordinance stipulates that small quantities of materials and items may be stored at certain locations without special storage approval!

→ The airbag units must be kept in a locked place!

→ When storing airbag units, ensure that the blow-out opening is facing upwards (risk of injury as a result of inflation of the airbag units in the event of accidental ignition)!

→ The airbag units must be stored in a dry place and must not be stored together with other hazardous goods (lacquers, etc.)!

→ Loose airbag units or airbag units in a removed steering wheel must never become the actual (physical) property of the customer!

→ The possession of loose airbag units not installed in the vehicle is not permitted in the private sector!

→ Airbag units may become the property of the customer only when installed in the vehicle!

WM 6X00IN HANDLING AND REPLACING AIRBAG AND SEAT-BELT PRETENSIONER UNITS (ALL MODELS) > GENERAL WARNING NOTES > WARNINGS ABOUT ASSEMBLY AND STRAIGHTENING WORK

WARNING: Incorrect handling of airbag triggering unit

- *Malfunction in airbag system*

→ Never drive with an untaught or unlocked airbag triggering unit.

→ Teach and lock the airbag triggering unit using the **2nd generation PIWIS Tester 9818** . The warning light will flash continuously until such a time as you teach and lock the airbag triggering unit.

→ Inspection and assembly work may only be carried out by specialist staff.

WM 6X00IN HANDLING AND REPLACING AIRBAG AND SEAT-BELT PRETENSIONER UNITS (ALL MODELS) > INFORMATION FOR HANDLING AIRBAG AND SEAT-BELT PRETENSIONER UNITS > DANGERS FOR PERSONS AND THE ENVIRONMENT

Information

Dangers for persons and the environment

Injury caused by incorrect triggering of the installed unit.

Injury caused by spinning away, e.g. of the entire unit.

Burns caused by touching the hot surfaces of a triggered unit.

Damage to hearing due to the explosion when gas is released.

Irritation caused by breathing in fuel particles.

Irritation caused by skin and eye contact with fuel particles.

Airbag/seat-belt pretensioner components must not be opened or repaired; always use new parts.

Injury caused by incorrect triggering due to tampering with the short circuit bridges.

WM 6X00IN HANDLING AND REPLACING AIRBAG AND SEAT-BELT PRETENSIONER UNITS (ALL MODELS) > INFORMATION FOR HANDLING AIRBAG AND SEAT-BELT

PRETENSIONER UNITS > PROTECTIVE MEASURES AND RULES OF BEHAVIOR

Information

Protective measures and rules of behavior

Assembly work must only be carried out by trained staff.

Carry out tests only using the diagnostic tester **PIWIS Tester II 9818** ; do not use test lamps, voltmeters or ohmmeters.

Avoid contact with grease, solvents, cleaning agents or liquids.

Do not expose to temperatures above 90 °C.

Keep the deployment area of the blow-out opening clear; e.g. do not hang test devices over the steering wheel. When carrying the airbag, hold it with the blow-out opening facing away from the body. Set the airbag unit down with the blow-out opening facing upwards.

Electrostatic charge: Always wear appropriate work clothing and footwear.

Do not remove the short-circuit spring of the plug contacts.

An airbag unit must never be connected incorrectly to electric power sources (danger of ignition). Only use testers prescribed by the manufacturer.

During installation/removal or work on the vehicle involving vibrations: switch off ignition, disconnect and cover the negative terminal of the battery, wait 1 minute and only then should you disconnect the plug connection.

Transport: In transport packaging. Never in the passenger compartment!

Storage in the workshop: Max. 10 kg (=> 100 driver or 50 passenger airbags); protect against theft!

The airbag/seat-belt pretensioner unit must be installed immediately after removal from the transport container.

If work is interrupted, the airbag/seat-belt pretensioner unit must be stored in the transport container again.

Never leave the airbag/seat-belt pretensioner unit unattended.

WM 6X00IN HANDLING AND REPLACING AIRBAG AND SEAT-BELT PRETENSIONER UNITS (ALL MODELS) > INFORMATION FOR HANDLING AIRBAG AND SEAT-BELT PRETENSIONER UNITS > BEHAVIOR IN CASES OF MALFUNCTION OR DANGER

Information

Behavior in cases of malfunction or danger

Protect from flames and heat.

In case of fire, inform the fire brigade on arrival about the units present.

Do not install mechanically damaged units or units that have fallen, even from a low height.

Always replace units that are mechanically damaged (bulges, cracks).

Because of the irritating combustion residues, always use protective gloves and goggles when handling triggered airbags.

In the event of contact with combustion residues, wash the affected skin with soap and water.

In the event of eye contact, wash the eyes out with water.

WM 6X00IN HANDLING AND REPLACING AIRBAG AND SEAT-BELT PRETENSIONER UNITS (ALL MODELS) > GENERAL INFORMATION

Information

Airbags - general information

A period of 10 seconds is required to enable the triggering unit to identify all faults in the system!

In order to guarantee that every possible fault source is checked during the vehicle test, the ignition must be switched on for at least 10 seconds!

The fault memory must be cleared following a fault in the airbag system and after it has been corrected!

The replacement of a component must be noted in the Guarantee and Maintenance booklet!

To do this, stick or enter the documentation number in a free panel intended for this purpose!

The documentation number is attached to the replacement part as a tear-off sticker or is stored in **PIWIS Tester II 9818!**

Replaced airbag units or airbag modules must be retained by the Porsche Centre or authorised Porsche dealer and must not be handed over to the customer (customer has no right to keep them). They must be destroyed or disposed of in accordance with the explosives ordinance and the hazardous materials ordinance, or returned to the manufacturer!

When the steering wheel is replaced, e.g. in order to install a steering wheel from the Tequipment range, the airbag unit of the replaced steering wheel must be removed and destroyed, disposed of or returned to the manufacturer before the steering wheel that was replaced is handed over to the customer!

The airbag system is constantly monitored by a diagnosis unit in the triggering unit. Any fault is signalled by a warning light. The warning light for the airbag system comes on in the event of a fault. The airbag warning light comes on for approx. 3 seconds after the ignition is switched on and goes out if no fault has been entered in the fault memory. If it comes on again, this indicates a fault in the system. The fault can be read out using **PIWIS Tester II 9818** .

WM 6X00IN HANDLING AND REPLACING AIRBAG AND SEAT-BELT PRETENSIONER UNITS (ALL MODELS) > GENERAL INFORMATION > REPLACING COMPONENTS AFTER AIRBAG/SEAT-BELT PRETENSIONER TRIGGERING

The following components must be removed and replaced after the airbag system is triggered:

Airbag unit on driver's side:

1. Contact unit.
2. Airbag unit on driver's side.
3. Triggering unit after the system is triggered for the third time.
4. Airbag sensors: see below → 1. → 14.

Airbag unit on passenger's side:

1. Airbag unit on passenger's side.
2. Triggering unit after the system is triggered for the third time.
3. Dashboard.
4. Check dashboard bracket for deformation and replace it if necessary.
5. Airbag sensors: see below → 1. → 14.

Side airbag unit, seat:

1. Side airbag unit, seat.
2. Seat covering, deformed seat components.
3. Triggering unit after the system is triggered for the third time.
4. Airbag sensors: see below → 1. → 14.

Head airbag unit:

1. Replace roof lining.
2. Airbag sensors: see below → 1. → 14.
3. Triggering unit after the system is triggered for the third time.

Airbag sensor:

1. All airbag sensors in damaged/deformed areas of the vehicle must always be replaced.
2. Otherwise (i.e. even if the vehicle was not crashed), the airbag sensors must be replaced if they show signs of mechanical damage and/or if the airbag control unit detects that the airbag sensor is defective (use **PIWIS Tester II 9818** to read out the fault memory).
3. Triggering unit after the system is triggered for the third time.

Seat-belt pretensioner:

1. All seat-belt pretensioner units.
2. Triggering unit after the system is triggered for the third time.

Because it is difficult to visually determine if one or more seat-belt pretensioners has been

triggered, check the following points:

- Use **PIWIS Tester II 9818** to read out the fault memory.
- Check plug connection on the seat-belt pretensioner for damage.
- Pull out the belt strap as far as possible and check for wear.
- Perform a function test on the automatic belt device.

WM 6X00IN WORKING WITH PORSCHE 2-COMPONENT WINDOW ADHESIVE (ALL MODELS) > TECHNICAL VALUES

Location	Description	Type	Basic value	Tolerance 1	Tolerance 2
Porsche 2-component window adhesive		working time	15 min		

WM 6X00IN WORKING WITH PORSCHE 2-COMPONENT WINDOW ADHESIVE (ALL MODELS) > OVERVIEW OF TOOLS AND MATERIALS

Fig 1: Overview Of Tools And Materials

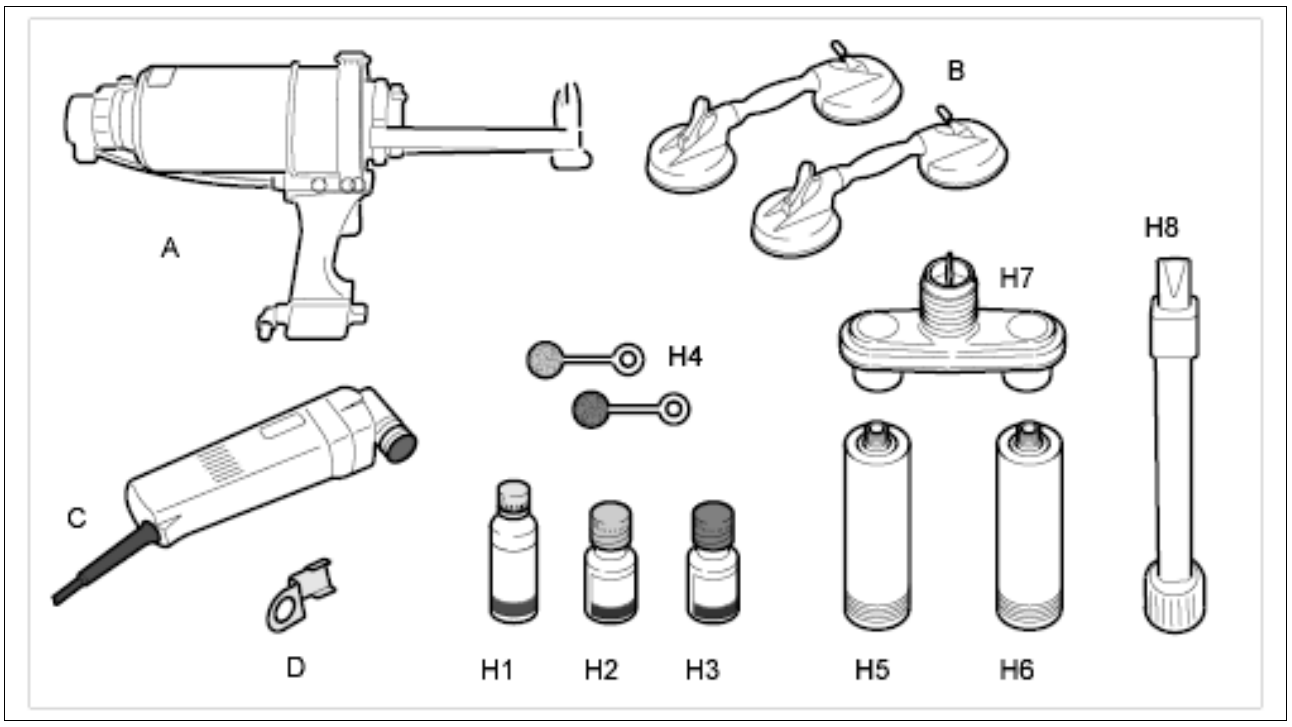

Courtesy of PORSCHE CARS NORTH AMERICA, INC.

A - Double cartridge gun VAS 5237

B - Suction cups VAG 1344

C - Special electric cutter (fine) VAG 1561 A

D - Flashing knife, U-shape 639.031.130.22

H - 2-component window adhesive, contains set components H1-H8

H1 - Cleaning solution

H2 - Primer

H3 - Activator

H4 - Swab

H5 - Cartridge, component A

H6 - Cartridge, component B

H7 - Mixing nozzle

H8 - Processing nozzle

WM 6X00IN WORKING WITH PORSCHE 2-COMPONENT WINDOW ADHESIVE (ALL MODELS) > PREPARING BONDING SURFACES

Information

- The table below shows how to use cleaners, primers and activators when preparing the bonding surface.

Fig 1: Identifying Tools And Materials Of Window Adhesive

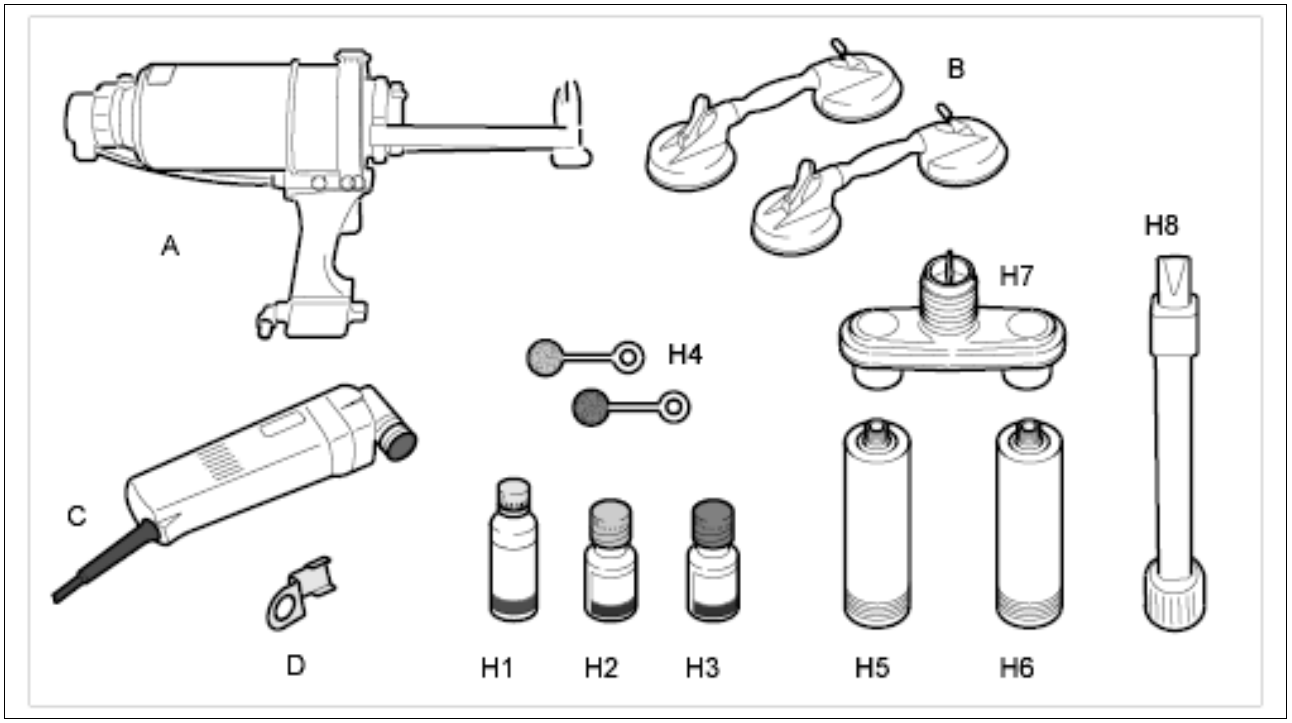

Courtesy of PORSCHE CARS NORTH AMERICA, INC.

Preparing car windows for installation	
Old glass	**New glass**
	with preliminary coat (durable primer)
Cut back adhesive bead ↓	**-cleaner-** ↓
	Clean rim (ceramic layer with durable primer) ↓
-activator- ↓	**-primer-** ↓
Activate adhesive bead (only necessary after idle times > 24 h) ↓	Apply primer from the adhesive kit over the durable primer on the spare part ↓
Apply adhesive	
Install glass	

Prepare car window flange for installation	
Old flange (old paintwork)	**New flange (new paintwork)**
Cut back adhesive bead ↓	**-cleaner-** ↓
	Clean flange surface ↓
-activator- ↓	**-primer-** ↓
Activate adhesive bead (only necessary after idle times > 24 h) ↓	Prime flange surface ↓
Apply adhesive	
Install glass	

WM 6X00IN WORKING WITH PORSCHE 2-COMPONENT WINDOW ADHESIVE (ALL MODELS) > MIXING PROCEDURE (HANDLING DOUBLE CARTRIDGE PRESS)

⚠ *CAUTION: → Observe the safety instructions of the individual adhesive set components.*

Information

- In addition to this information, observe the relevant job descriptions for body repairs!

1. Prepare cartridge components A and B **-H5, H6-** .

    1. 1.1. Pierce the membrane in the nozzle connection of components A and B (aluminum cartridge) **-H5-** with a screwdriver and widen the opening. Remove flanged cover on end of cartridge.

        Fig 1: Removing Flanged Cover On End Cartridge

        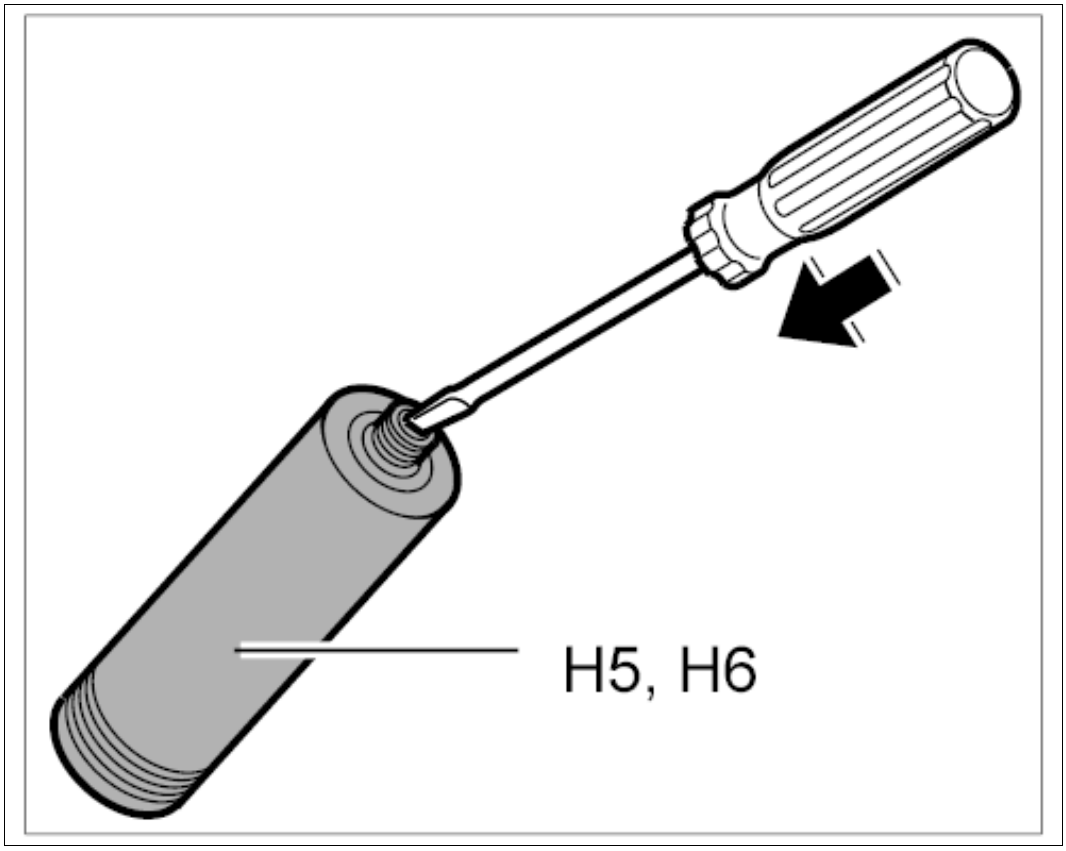

        Courtesy of PORSCHE CARS NORTH AMERICA, INC.

2. Screw on mixing nozzle **-H7-** .

    1. 2.1. Screw both cartridges onto the mixing nozzle.

3. Insert mixing cartridge into the double cartridge gun.

    1. 3.1. Move pressure pistons back fully.

    2. 3.2. Insert double cartridge **-H5, H6-** into the bonding gun **-A-** .

4. Press out adhesive.

    1. 4.1. Actuate the valve **-arrow-** to move the pressure pistons out slowly until both components of the bonding material emerge at the mixing tube.

    2. 4.2. Wipe off emerging adhesive.

5. Screw on processing nozzle **-H8-** .

1. 5.1. Screw processing nozzle **-H8-** onto the mixing nozzle **-H7-** .

6. Align processing nozzle.

    1. 6.1. Turn the processing nozzle on the mixing nozzle until the illustrated position is reached.

        Information

        1. In this position, the closed surfaces must be visible at the horizontal mixing nozzle from above and below and the mixing blade of the mixer insert from the sides.

    2. 6.2.

7. Mix adhesive components.

    1. 7.1. Actuate the valve **-arrow-** to move the pressure pistons out slowly until the adhesive is visible in the processing pipe.

        Fig 2: Locating Adhesive Bead

        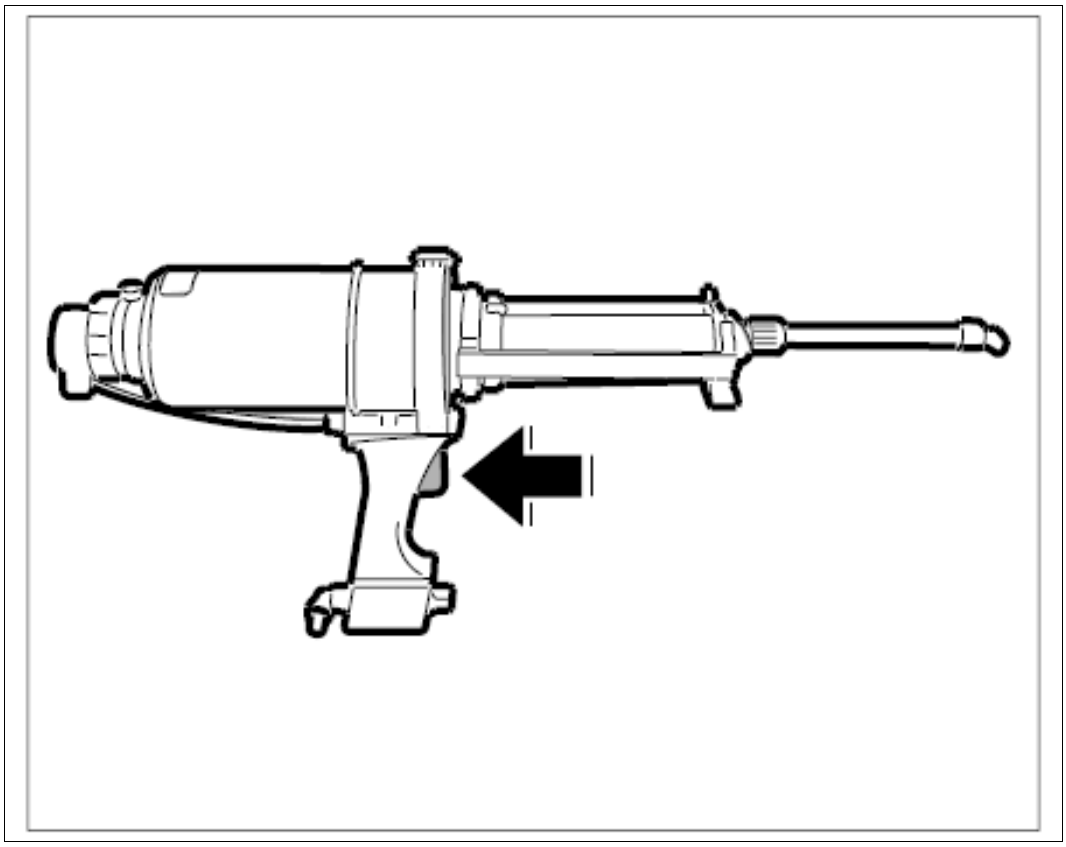

        Courtesy of PORSCHE CARS NORTH AMERICA, INC.

8. Affix car window.

    Information

    1. In order to ensure that the substance is completely mixed, apply a 30 mm long adhesive bead of fresh adhesive to a piece of cardboard before processing.

    2. The bonding material has an open time of → working time: 15 min , the bonding material

must be applied and the window must be assembled within this time.

3. Do not load bonded parts until hardening is complete!
4. If the contents of the cartridge is not completely used up, the processing nozzle should not be removed until the adhesive has hardened on the cartridge. A new processing nozzle must be used for subsequent bonding work.

1. 8.1.

Fig 3: Identifying Adhesive Bead

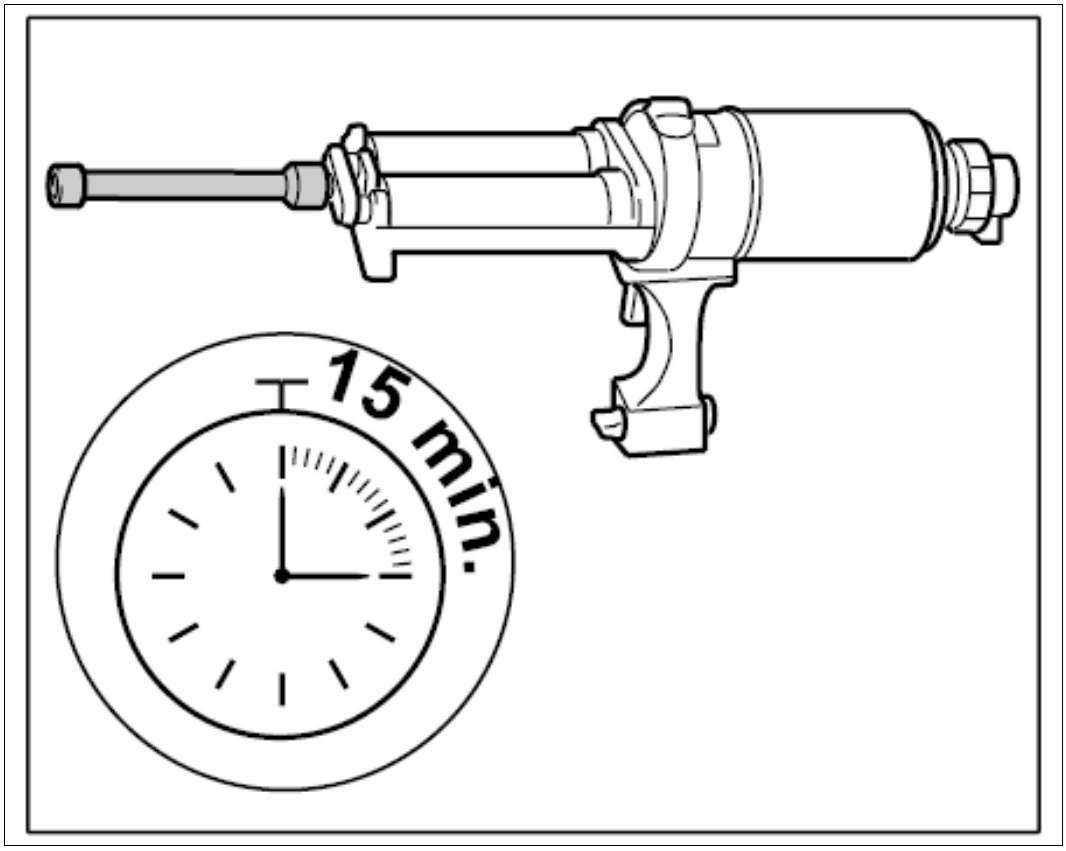

Courtesy of PORSCHE CARS NORTH AMERICA, INC.

WM 0X00IN OVERVIEW OF A, B AND C MARKETS (MACAN, MACAN S, MACAN TURBO) > INFORMATION > OVERVIEW OF A, B AND C MARKETS

Information

For vehicles as of model year 2011

Because of different fuel octane ratings, the change intervals for oil, spark plugs and air cleaner have been adapted to suit the various markets.

Markets	Countries
A markets	Andorra Belgium Germany Denmark Estonia Finland, France Greece, Great Britain Ireland, Iceland, Italy Japan Latvia Liechtenstein, Lithuania, Luxembourg Malta Netherlands, Norway Austria Poland, Portugal Sweden, Switzerland, Slovakia, Spain Czech Republic Hungary Cyprus
B markets	Egypt, Algeria, Angola, Argentina, Armenia, Aruba (itc Caribbean), Azerbaijan, Australia Bahamas, Bahrain, Bangladesh, Barbados, Bosnia and Herzegovina, Brazil, Brunei, Bulgaria Chile, Costa Rica Dominican Republic Ecuador, El Salvador French Guiana, French Polynesia Ghana, Guadeloupe, Guatemala Haiti, Dutch Antilles, Honduras, Hong Kong India, Iraq, Iran, Israel Jamaica (itc Caribbean), Yemen, Jordan Cameroon, Canada, Kazakhstan, Qatar, Cayman Islands, Kenya, Columbia, Croatia, Kuwait Lesotho, Lebanon, Libya Malaysia, Morocco, Martinique (F), Mauritius, Mexico, Moldova, Monaco

	Namibia, New Caledonia, New Zealand, Nigeria, Nicaragua Oman Pakistan, Panama, Paraguay, Peru, Philippines, Puerto Rico Reunion, Romania, Russia Saudi Arabia, Serbia and Montenegro, Zimbabwe, Singapore, Slovenia, Sri Lanka, South Africa, South Korea, Swaziland, Syria Taiwan, Thailand, Trinidad and Tobago, Turkey, Tunisia Ukraine, Uruguay, USA UAE (Abu Dhabi, Dubai), Venezuela, Vietnam Belarus, Western Sahara
C markets	China, Indonesia

WM 0X01IN ALARM SYSTEM: CHECKING OPERATION OF MONITORING DEVICES (MACAN, MACAN S, MACAN TURBO) > ALARM SYSTEM: CHECKING OPERATION OF MONITORING DEVICES

1. Read out the fault memory and activate systems on the unlocked vehicle (see previous point in sales check).
2. Lock the vehicle using the remote control (key fob). A warning tone must not be emitted by the alarm system horn shortly after locking the vehicle (not relevant for USA).
3. If a warning tone is emitted, open and close all doors and outer lids one after the other (not relevant for USA).
4. As soon as the vehicle is locked, the LED in the driver's door panel must flash quickly for 2 seconds and then start to flash slowly.

   Fault indicator:

5. LED flashes quickly for 2 seconds, lights up for 28 seconds and then flashes slowly: Connect the System Tester and read out the fault memory.

WM 0X01IN CHECKING EXTERIOR EQUIPMENT AND PAINTWORK (MACAN, MACAN S, MACAN TURBO) > CHECKING EXTERIOR EQUIPMENT AND PAINTWORK

Information

- The following items can be checked by simple visual inspection, no assembly work required.

  1. Check whether transport protection has been completely removed and ensure that no film remains in the body joints or under seals.

WM 0X01IN CHECKING EXTERIOR EQUIPMENT AND PAINTWORK (MACAN, MACAN S, MACAN TURBO) > CHECKING EXTERIOR EQUIPMENT AND PAINTWORK > CHECKING EXTERIOR EQUIPMENT

1. Check vehicle for secure fit of accessories such as trim strips, doors mirrors, front and rear spoilers.
2. Check underbody for noticeable areas where undersealing material is missing (e.g. scrapes).
3. Check side member of body flange for deformation of jacking points.
4. Check outer shell of vehicle for noticeable soiling with cavity sealing wax.

WM 0X01IN CHECKING EXTERIOR EQUIPMENT AND PAINTWORK (MACAN, MACAN S, MACAN TURBO) > CHECKING EXTERIOR EQUIPMENT AND PAINTWORK > CHECKING PAINTWORK

1. Check outer shell of vehicle for noticeable sheetmetal damage such as dents and bulges.
2. Check painted surfaces of vehicle for noticeable defects such as scores, scratches, notches, scrapes, pores, bubbles or signs that the bodywork is coming through the paint.

WM 0X01IN CHECKING GLAZING (MACAN S, MACAN TURBO) > CHECKING GLAZING

Information

- The following items can be checked by simple visual inspection, no assembly work required.
    1. Check whether transport protection has been completely removed and ensure that no film remains in the body joints or under seals.
    2. Check vehicle glazing for stone damage and scratches.
    3. Check surrounds and rubber sections of vehicle glazing for damage and cracks.

WM 0X01IN CHECKING LIDS AND DOORS (MACAN, MACAN S, MACAN TURBO) > CHECKING LIDS AND DOORS > FUNCTION TEST ON FRONT LID LOCK

Information

The lid lock does not have an emergency release.

When working close to the front apron and on the various parts of the lock, carry out the following function test before closing the lid:

1. Check that the release cable is clipped fully into the bracket provided.

2. Lock lower part of lid lock using a screwdriver.
3. Release the lid lock using the lever in the passenger compartment.
4. Perform a visual inspection to check that the lock releases correctly.

WM 0X01IN CHECKING LIDS AND DOORS (MACAN, MACAN S, MACAN TURBO) > CHECKING LIDS AND DOORS > CHECKING LID LOCK AT FRONT AND REAR

- Check that the lid locks engage when the lids (front and rear) are closed by engaging the upper parts of the lock and that they disengage again when the lid releases are activated.

WM 0X01IN CHECKING LIDS AND DOORS (MACAN, MACAN S, MACAN TURBO) > CHECKING LIDS AND DOORS > CHECKING SAFETY HOOK ON FRONT LID

- Check that the front lid is held down by the safety hook (locking hook) after the lid lock is opened.
- Check that the return spring on the upper part of the lock pulls the safety hook back as far as the stop.

WM 0X01IN CHECKING LIDS AND DOORS (MACAN, MACAN S, MACAN TURBO) > CHECKING LIDS AND DOORS > FUNCTION TEST ON DOOR LOCKS

- Check that the door locks engage in two stages when the doors are closed and that they disengage again when the door openers are actuated (inside and outside).

WM 0X01IN CHECKING LIDS AND DOORS (MACAN, MACAN S, MACAN TURBO) > CHECKING LIDS AND DOORS > FUNCTION TEST ON FUEL TANK CAP LOCK

- Lock the vehicle.
- Check that the fuel tank cap is locked by the fuel tank cap lock in the closed position.

WM 0X01IN CHECKING OPERATION OF ELECTRICAL EQUIPMENT AS WELL AS WARNING AND INDICATOR LIGHTS (MACAN, MACAN S, MACAN TURBO) > CHECKING OPERATION OF ELECTRICAL EQUIPMENT AS WELL AS WARNING AND INDICATOR LIGHTS

- Turn ignition key and check function of warning and indicator lights (visual inspection).
- Actuate power windows and check that they are working correctly.

- Check that rear window heating is working.
- Adjust heater blower and fans to high and low and check the air vents for air throughput.
- Front seats and back seats: check function.
- Check audio function.
- Check function of exterior mirrors, check adjustment options.
- Check function of orientation lights.
- Check function of luggage compartment lamps.
- Check function of interior lights.
- Actuate central locking and check function.
- Operate cigarette lighter and check that it is working.

WM 0X01IN CHECKING VEHICLE EQUIPMENT FOR COMPLETENESS (MACAN, MACAN S, MACAN TURBO) > VEHICLE EQUIPMENT

Check that the items listed below are in the vehicle.

Designation	Qty.	Restrictions	Position in the vehicle
Warning triangle	1 x	Country-specific (1)	Trim panel for rear lock support
Addition warning triangle	1 x	Country-specific (2)	Stored in luggage compartment
First-aid kit and warning triangle	1 x	Country-specific (3)	Trim panel for rear lock support
On-board folder containing technical information (4) Driver's Manual, PCM/CDR operating instructions, Warranty and Maintenance booklet (5)	1 x	Standard	Glove compartment
18-inch spare wheel	1 x	Only with vehicle spare wheel (I-no.: 1G1)	Luggage compartment (under the loadspace floor)
Bottle of sealing compound for tyres, Tire Fit	1 x	Only with vehicle flat-tyre set (I-no.: 1G8)	
Compressor	1 x		
Tyre inflation hose	1 x	Only with vehicle flat-tyre set (I-no.: 1G8)	Contained in Tire Fit bag

Torch and torch holder	1 x	Japan only	A-pillar trim
Front number plate carrier, including fastening material	1 x	USA only (6)	Stored in luggage compartment
Wiper blades, front (7)	2 x		

(1)	All countries except USA, Canada, Japan, Greece and Germany
(2)	The dealer or importer must supply the additional warning triangle.
(3)	Only in Germany and Greece.
(4)	Except for German-speaking countries, the on-board folder containing technical information (Driver's Manual and Guarantee and Maintenance booklet) must be supplied by the dealer or importer.
(5)	The PCM/CDR operating instructions must be supplied by the dealer or importer in all non-German-speaking countries.
(6)	Only in states in the USA that require a number plate at the front of the vehicle. → 668319 REMOVING AND INSTALLING NUMBER PLATE COVER .
(7)	Replace the one-way wiper blades with the enclosed wiper blades → 922719 REMOVING AND INSTALLING WIPER BLADE.

WM 0X01IN CHECKING VEHICLE EQUIPMENT FOR COMPLETENESS (MACAN, MACAN S, MACAN TURBO) > VEHICLE EQUIPMENT > TOOL KIT

Designation	Qty.	Restrictions	Position in the vehicle
Open-ended wrench	1 x	Standard	Luggage compartment (under the loadspace floor)
Towing lug	1 x		
Screwdriver	1 x		
Socket wrench	1 x		
Socket for security wheel bolts	1 x		
Wheel wrench	1 x	Only for vehicles with spare wheel (I-no.: 1G1)	
Jack with ratchet	1 x		
Assembly pin	1 x		
Puller hook	1 x		
Additional assembly pin and holder	1 x	Only for vehicles with spare wheel (I-no.: 1G1)	
Allen key for emergency operation of sliding roof panel	1 x	Vehicles with sliding roof	

Additional jack with ratchet in bag	1 x	Only for Australia (I-no.: +479)	

WM 0X01IN CHECKING VEHICLE EQUIPMENT FOR COMPLETENESS (MACAN, MACAN S, MACAN TURBO) > VEHICLE EQUIPMENT > VEHICLE KEY

Designation	Qty.	Restrictions
Key ring	1 x	Standard
Key tag	1 x	Standard
Remote control	2 x	Standard
Emergency key (contained in remote control)	2 x	Standard
Control element	1 x	Only for vehicles with Porsche Entry & Drive

WM 0X01IN CHECKING VEHICLE IDENTIFICATION NUMBER FOR CONFORMITY (MACAN S, MACAN TURBO) > CHECKING VEHICLE IDENTIFICATION NUMBER FOR CONFORMITY

Information

- The sticker for the on-board literature is included with the vehicle registration documents and can be found in the glove compartment.

Fig 1: Identifying Vehicle Identification Sticker

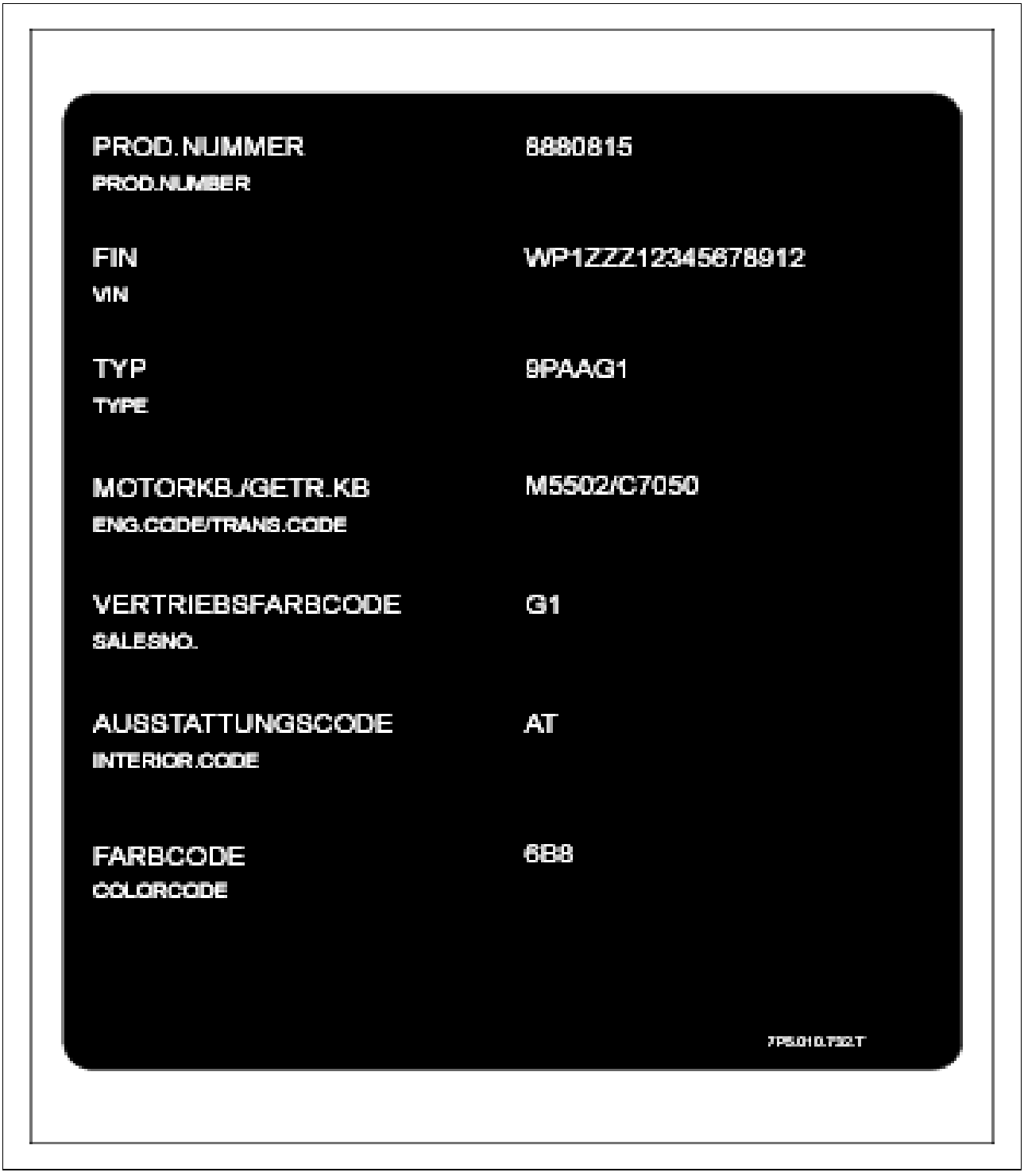

Courtesy of PORSCHE CARS NORTH AMERICA, INC.

Check that the following vehicle identification numbers are identical. Then stick the vehicle data carrier sticker supplied with the vehicle in the on-board literature (Warranty and Maintenance booklet).

- Vehicle identification number on lower left of the windscreen.
- Vehicle identification number stamped on the bodyshell in the front right footwell.
- Vehicle identification number on the vehicle data carrier sticker.

- Vehicle identification number in the vehicle registration documents.

WM 0X01IN DIAGNOSTIC SYSTEM: PERFORMING VEHICLE HANDOVER (MACAN S, MACAN TURBO) > TOOLS

Designation	Type	Number	Description	
PIWIS Tester II	Special tool	9818		

WM 0X01IN DIAGNOSTIC SYSTEM: PERFORMING VEHICLE HANDOVER (MACAN S, MACAN TURBO) > TECHNICAL VALUES

Location	Description	Type	Basic value	Tolerance 1	Tolerance 2
Current rating		Nominal value	40 A		

WM 0X01IN DIAGNOSTIC SYSTEM: PERFORMING VEHICLE HANDOVER (MACAN S, MACAN TURBO) > DIAGNOSTIC SYSTEM: PERFORMING VEHICLE HANDOVER

NOTE: Voltage drop

- *Risk of irreparable damage to control unit*
- *Risk of damage to control unit*
- *Fault entries in the control unit*
- *Coding in the control unit is aborted*
- *Malfunctions in control unit, even during programming*

→ Prior to disconnecting the control unit, switch off ignition and remove ignition key.

→ Ensure that the power supply is not interrupted during programming.

→ Connect a battery charger with a current rating of at least → **Nominal value: 40 A** to the vehicle battery.

1. **PIWIS Tester II 9818** must be connected to the vehicle. Then start the Tester.
    1. 1.1. **Switch on ignition.**
2. Select the required vehicle.
3. When the **overview of control units** is displayed, press [F7] to continue.
4. Select **Vehicle handover log** menu and press [F12].
5. When **Remove transport protection** is displayed, press [F12] to continue.
6. The control units are activated and the status is displayed. Compare the chassis number displayed on the Tester with the chassis number of the vehicle. Press [F12] to continue.
7. **If the vehicle is a new vehicle** , press [F8] (Yes) to continue.
8. **Select the relevant country** and press [F12] to continue.
9. The Tester displays the message **Write service interval** . Press [F8] to confirm.
10. Service intervals will be written. Press [F12] to continue.
11. **Chassis number is correct?** . Press [F12] to confirm and then press [F11] to return to the data entry screen.
12. Archive the vehicle handover log file. Press [F12] to continue.
13. Carry out a test drive and read out the fault memory.
    1. 13.1. Check faults following diagnosis if necessary and erase the fault memory before delivering the vehicle.

WM 0X01IN INTERIOR EQUIPMENT: VISUAL INSPECTION FOR DAMAGE AND SOILING (MACAN S, MACAN TURBO) > CHECKING INTERIOR EQUIPMENT

Information

- The following items can be checked by simple visual inspection, no assembly work required.

1. Check that transport protection has been completely removed and ensure that no film remains in the component joints or under seals.
2. Check interior equipment of vehicle for noticeable damage such as scores, scratches, notches and scrapes.
3. Check interior equipment of vehicle for soiling.

WM 0X01IN INTERIOR EQUIPMENT: VISUAL INSPECTION FOR DAMAGE AND

SOILING (MACAN S, MACAN TURBO) > CHECKING SEAT BELTS > FUNCTION TEST

- The following requirements must be met when fitting the seat belt.
- If one of the requirements listed below is not met, the seat belt or seat-belt buckle must be replaced.

It must be possible to unroll the belt strap smoothly from the belt retractor via the deflector fitting by pulling evenly.

The tongue of the seat belt must engage audibly in the buckle.

An abrupt pull on the belt strap must lock the belt retractor.

WM 0X01IN INTERIOR EQUIPMENT: VISUAL INSPECTION FOR DAMAGE AND SOILING (MACAN S, MACAN TURBO) > CHECKING SEAT BELTS > CONDITION INSPECTION

Visually inspect the belt strap for damage by unrolling it completely.

If there are signs of damage on the belt strap in the form of cuts, fraying, seam tears, etc., the seat belt must be replaced.

WM 0X01IN MOBILE ROOFS: CHECKING FUNCTION (MACAN S, MACAN TURBO) > CHECKING SLIDING ROOF AND PANORAMA ROOF SYSTEM

1. By operating the control switch, return to original tilting, opening and closing positions. During operation, check for malfunctions and noises.
2. Completely open and close trim panel/sun blinds for roof systems. During operation, check for noise and stiffness.

WM 0X01IN REMOVING TRANSPORT PROTECTION (MACAN, MACAN S, MACAN TURBO) > REMOVING OUTER TRANSPORT PROTECTION

- **Installation position:** Body
- **Material:** Plastic film
- **Installation position:** Doors
- **Material:** Foam strips with adhesive film
- **Installation position:** Front bumper
- **Material:** Foam strips with adhesive film
- **Installation position:** Rims

- **Material:** Self-adhesive rim protection
- **Installation position:** Mirrors
- **Material:** Plastic bag

WM 0X01IN REMOVING TRANSPORT PROTECTION (MACAN, MACAN S, MACAN TURBO) > REMOVING INNER TRANSPORT PROTECTION

- **Installation position:** Seats (front)
- **Material:** Fleece
- **Installation position:** Centre console cover
- **Material:** Fleece
- **Installation position:** Door sill
- **Material:** Plastic film
- **Installation position:** Lower door trim panel
- **Material:** Cardboard protection
- **Installation position:** Inner door handle
- **Material:** Plastic film
- **Installation position:** Footwell
- **Material:** Cardboard protection

WM 0X01IN REPLACING TRANSPORT WIPER (MACAN S, MACAN TURBO) > REPLACING TRANSPORT WIPER

1. Fold out wiper arm.
2. Break off bar on transport wiper **-1-** by moving the transport wiper with force. Make sure that the wiper arm is not deformed in the process.

Fig 1: Removing Transport Wiper

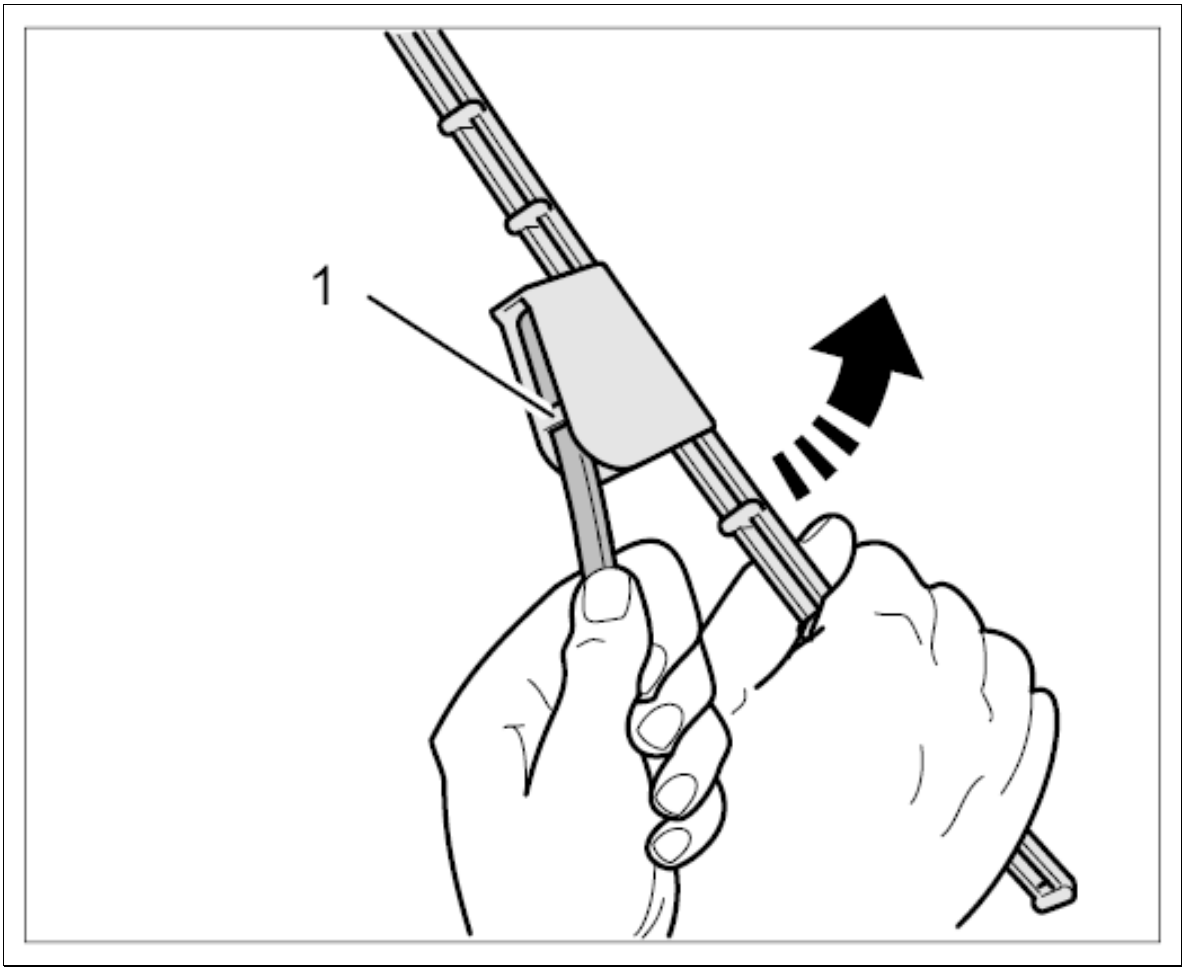

Courtesy of PORSCHE CARS NORTH AMERICA, INC.

3. Fit wiper blade. → INSTALLING WIPER BLADE .

WM 0X01IN TEST DRIVE - SALES CHECK (MACAN, MACAN S, MACAN TURBO) > TEST DRIVE - SALES CHECK

Information

- The following test items are included in the test drive.
  - Check electric parking brake and footbrake operation and actuation travel.
  - Actuate steering and check operation.
  - Change gears and check gearshift operation.
  - ParkAssist: select reverse gear and check operation.
  - Activate automatic cruise control during the test drive and check operation.
  - Check operation of heating adjustment when engine is warm.

- Check operation of sports exhaust system.
- Check operation of air-conditioning system when engine is running.
- Check operation of instruments.

WM 0X01IN WINDSCREEN WASHER/HEADLIGHT CLEANING SYSTEM: CHECKING OPERATION, NOZZLE SETTINGS (MACAN, MACAN S, MACAN TURBO) > WINDSCREEN WASHER/HEADLIGHT CLEANING SYSTEM: CHECKING OPERATION, NOZZLE SETTINGS

NOTE: Headlight surface not cleaned properly

- *Scratches*

→ Use only soapy water to clean the exterior lights and the plastic headlight lenses.

→ Never use chemical cleaning agents.

→ To avoid scratches, do not rub with dry or slightly damp cloths, paper towels or insect-removal sponges.

Information

- The headlight washer nozzles are pre-set!
- Generally, it is not necessary to adjust them!

Information

Check operation, fluid level indicator and nozzle settings. If the spray nozzle settings for the windscreen washer system are not OK, the nozzles need to be adjusted:

- Insert a sharp object (needle) into the nozzle hole.
- Align the spray nozzles using the sharp object.

Fig 1: Aligning Spray Nozzle

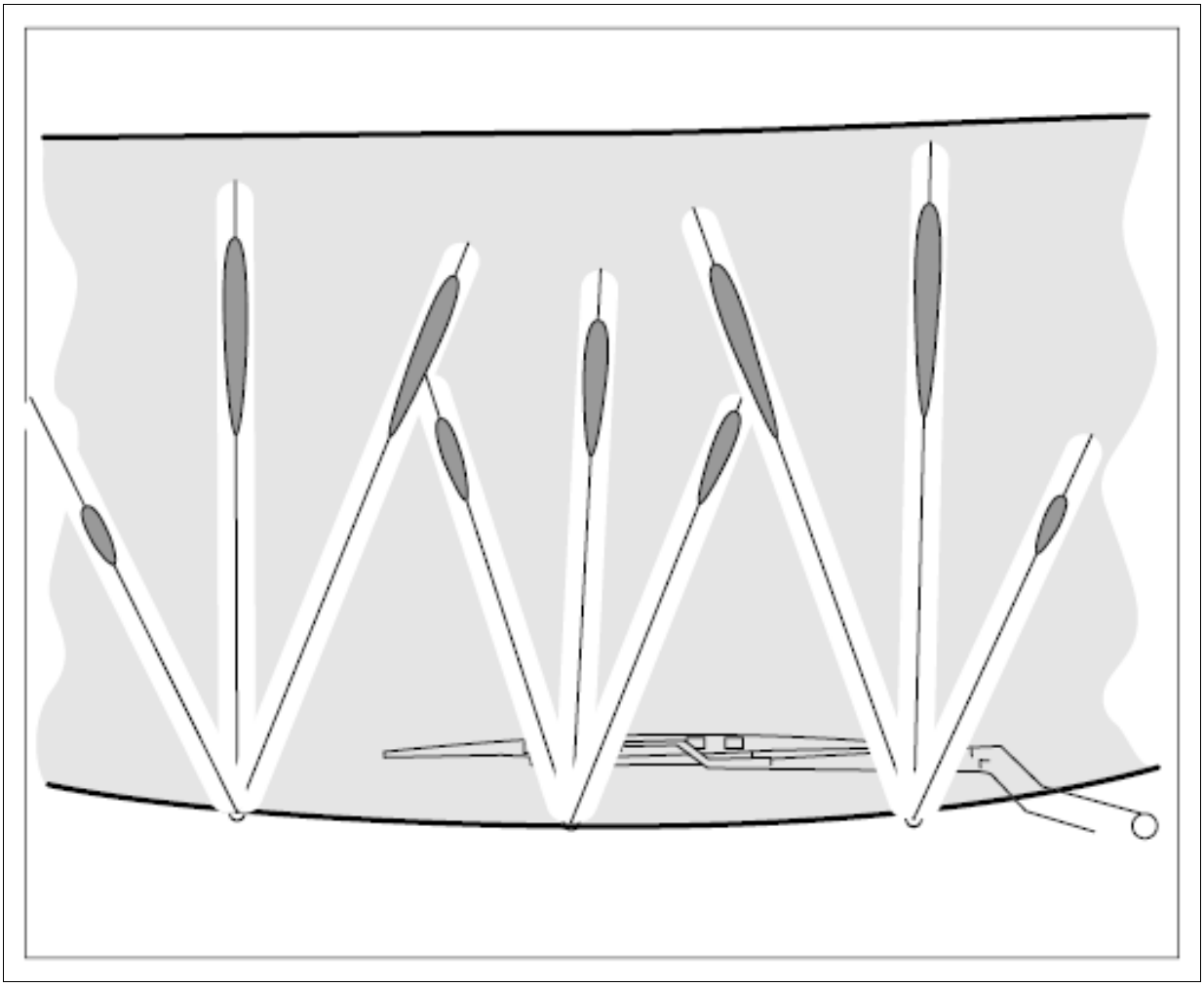

Courtesy of PORSCHE CARS NORTH AMERICA, INC.

WM 0X01IN WINDSCREEN WASHER/HEADLIGHT CLEANING SYSTEM: CHECKING OPERATION, NOZZLE SETTINGS (MACAN, MACAN S, MACAN TURBO) > WINDSCREEN WASHER/HEADLIGHT CLEANING SYSTEM: CHECKING OPERATION, NOZZLE SETTINGS > MIXTURE RATIO OF FLUIDS FOR THE WINDSCREEN WASHER SYSTEM

Fluid:	Mixture ratio:
Water	Undiluted
Water/isopropanol	1: 1
	2: 1
	3: 1
Water/ethanol	1: 1

	2: 1
	3: 1

WM 0X01IN WINDSCREEN WASHER/HEADLIGHT CLEANING SYSTEM: CHECKING OPERATION, NOZZLE SETTINGS (MACAN, MACAN S, MACAN TURBO) > WINDSCREEN WASHER/HEADLIGHT CLEANING SYSTEM: CHECKING OPERATION, NOZZLE SETTINGS > CHECKING WIPER BLADES

Check the wiper blades for any deformities and tears.

1. Switch on ignition, operate the spray nozzles and check the quality of the wiper action.

WM 0X03IN CHECKING WHEEL MOUNTING (MACAN, MACAN S, MACAN TURBO) > TECHNICAL VALUES

Location	Description	Type	Basic value	Tolerance 1	Tolerance 2
Wheel to wheel hub		Tightening torque	160 Nm (118 ftlb.)		

WM 0X03IN CHECKING WHEEL MOUNTING (MACAN, MACAN S, MACAN TURBO) > CHECKING > CHECKING WHEEL MOUNTING

Information

Use a suitable commercially available tool together with a tested torque wrench, covering the range from 40 to 200 Nm (30-148 ftlb.). Never use an impact bolter.

- Do not loosen the wheel bolts to check whether they are secure.
- Re-tighten wheel bolts and check that they are seated securely. **Tightening torque 160 Nm (118 ftlb.)**

WM 0X03IN CREATING VEHICLE ANALYSIS LOG (VAL) (MACAN, MACAN S, MACAN TURBO) > TOOLS

Designation	Type	Number	Description	

PIWIS Tester II	Special tool	9818		

WM 0X03IN CREATING VEHICLE ANALYSIS LOG (VAL) (MACAN, MACAN S, MACAN TURBO) > CREATING VEHICLE ANALYSIS LOG (VAL)

Information

When creating the FAP, it is essential to guarantee the power supply for the Porsche System Tester. A battery charger with a current rating of at least 40 A must be connected to the vehicle battery.

The Porsche System Tester instructions take precedence and in the event of a discrepancy, these are the instructions that must be followed. Deviations may occur with later software versions.

The procedure described here has been structured in general terms; different text or additions may appear in the Porsche System Tester.

1. **PIWIS Tester II 9818** must be connected to the vehicle. Then start the Tester.
2. Switch on ignition.
3. **Select "Diagnosis".**
4. Select vehicle type.
5. **Select "Additional menu"** by pressing [F7].
6. **Select VAL** by pressing [F12].
7. **Select AS VAL** or **OBD VAL** . Then press [F8] to start.
8. Check the chassis number and correct it if necessary.
9. If you want to print the data, connect the printer to **PIWIS Tester II 9818.**
10. Switch on the printer.
11. Press [F10] to display the VAL.
12. If there is a printer connected, the print job can be started using the menu bar.
13. Then **save** or **delete** the VAL using the touchpad.
14. Shut down the Tester, switch it off and disconnect it from the vehicle.

WM 0X03IN ELECTRICS MAINTENANCE: CHECKING WINDSCREEN WIPER AND WASHER SYSTEM (MACAN, MACAN S, MACAN TURBO) > TOOLS

Designation	Type	Number	Description	
adjusting tool	VW tool	T40187		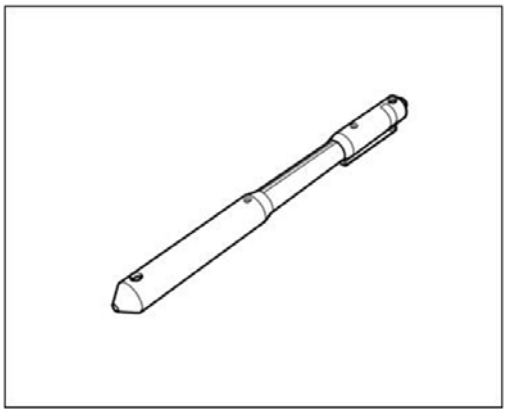

WM 0X03IN ELECTRICS MAINTENANCE: CHECKING WINDSCREEN WIPER AND WASHER SYSTEM (MACAN, MACAN S, MACAN TURBO) > WINDSCREEN WASHER/HEADLIGHT CLEANING SYSTEM: CHECKING OPERATION, NOZZLE SETTINGS > CHECKING AND ADJUSTING SPRAY NOZZLES FOR WINDSCREEN WASHER SYSTEM

Information

Only use windscreen cleaning agents and antifreeze approved by Porsche.

Observe the required mixture ratio in accordance with manufacturer's specifications and season.

1. Fill the windscreen-washer reservoir with a mixture of water and window cleaner or antifreeze, depending on the season.
2. Actuate the windscreen washer system and align spray nozzles for the windscreen washer system as required using **adjusting tool T40187.** → 926619 REMOVING AND INSTALLING SPRAY NOZZLE FOR WINDSCREEN WASHER SYSTEM .

WM 0X03IN ELECTRICS MAINTENANCE: CHECKING WINDSCREEN WIPER AND WASHER SYSTEM (MACAN, MACAN S, MACAN TURBO) > WINDSCREEN WASHER/HEADLIGHT CLEANING SYSTEM: CHECKING OPERATION, NOZZLE SETTINGS > CHECKING WIPER BLADES

Check condition of wiper blades on windscreen and rear window for wear, deformities and tears.

1. Switch on ignition, operate the windscreen-washer system spray nozzles and check wiping

quality.

1. 1.1. Replace windscreen wiper blades if necessary. → 922719 REMOVING AND INSTALLING WIPER BLADE .
2. 1.2. Replace wiper blade for rear window washer as required. → 924319 REMOVING AND INSTALLING WIPER BLADE FOR REAR WINDOW WASHER .

WM 0X03IN ELECTRICS MAINTENANCE: CHECKING WINDSCREEN WIPER AND WASHER SYSTEM (MACAN, MACAN S, MACAN TURBO) > WINDSCREEN WASHER/HEADLIGHT CLEANING SYSTEM: CHECKING OPERATION, NOZZLE SETTINGS > WINDSCREEN WASHER/HEADLIGHT CLEANING SYSTEM: CHECKING OPERATION, NOZZLE SETTINGS

NOTE: Headlight surface not cleaned properly

- *Scratches*

→ Use only soapy water to clean the exterior lights and the plastic headlight lenses.

→ Never use chemical cleaning agents.

→ To avoid scratches, do not rub with dry or slightly damp cloths, paper towels or insect-removal sponges.

Information

- The headlight washer nozzles are pre-set!
- Generally, it is not necessary to adjust them!

1. Check function and adjustment of spray nozzles for headlight washer system.

WM 0X03IN RUNNING GEAR MAINTENANCE: BALL JOINTS/DRIVE SHAFTS (MACAN S, MACAN TURBO) > PRELIMINARY WORK

WARNING: Vehicle can fall down

- *Risk of squashing or crushing*
- *Risk of damage to the vehicle*

→ Do not place any solid objects under the raised vehicle.

→ Ensure that the lifting platform is prevented from lowering.

→ Remove solid objects before lowering the vehicle.

→ Raise the vehicle only at the jacking points provided.

→ The outer jacking points should be used primarily.

1. Jack and raise the vehicle at the prescribed jacking points.

   → 4X00IN LIFTING THE VEHICLE .

WM 0X03IN RUNNING GEAR MAINTENANCE: BALL JOINTS/DRIVE SHAFTS (MACAN S, MACAN TURBO) > INFORMATION > AXLE JOINTS: CHECKING PLAY AND DUST BELLOWS

1. Check joint clearance.

   Information

   1. When doing so, press the rubber dust boots down with your fingers to reveal any hidden cracks.
   2. If a rubber dust boot is leaking, the corresponding joint or control arm must be replaced because any dirt or moisture that seeps in will cause irreparable damage to the joint.

2. Visually inspect the dust boots for damage.
3. Inspect the dust boots of the axle joints (ball joints) on the wheel suspension as follows:

   1. Place the vehicle on a lifting platform with the steering lock disengaged.
   2. Perform a visual inspection after cleaning.

The procedure for the front axle is as follows:

> ⚠ *CAUTION: Turning steering too sharply using the steering wheel.*
>
> - *Risk of squashing arms.*

→ Only turn the steering wheel as far to the left and right as required in order to check the amount of play on the tie rod.

- Turn the front wheels as far as they will go
- Perform a visual inspection of the visible surfaces on the left and right
- After turning the front wheels to the other steering stop, check the other half of each rubber dust boot.

WM 0X03IN RUNNING GEAR MAINTENANCE: BALL JOINTS/DRIVE SHAFTS (MACAN

S, MACAN TURBO) > INFORMATION > DRIVE SHAFTS: VISUAL INSPECTION OF BOOTS

- Perform a visual inspection of the boots for leaks and damage.

WM 0X03IN RUNNING GEAR MAINTENANCE: CHASSIS ADJUSTMENT/STORAGE OF ASSEMBLIES (MACAN S, MACAN TURBO) > INFORMATION > CHASSIS ADJUSTMENT (WHEEL ALIGNMENT VALUES)

- Check that threaded connections for chassis adjustment (wheel alignment values) at front and rear are secure.

WM 0X03IN RUNNING GEAR MAINTENANCE: CHASSIS ADJUSTMENT/STORAGE OF ASSEMBLIES (MACAN S, MACAN TURBO) > INFORMATION > STORAGE OF ASSEMBLIES AND CHASSIS

- Visual inspection of all rubber mountings for damage.

WM 0X03IN RUNNING GEAR MAINTENANCE: CHECKING BRAKE FLUID LEVEL AND CHANGING BRAKE FLUID (MACAN S, MACAN TURBO) > CHECKING

Visually check the brake fluid level. The brake fluid reservoir is located under the left plenum panel cover **-arrow-** .

Fig 1: Locating Brake Fluid Reservoir

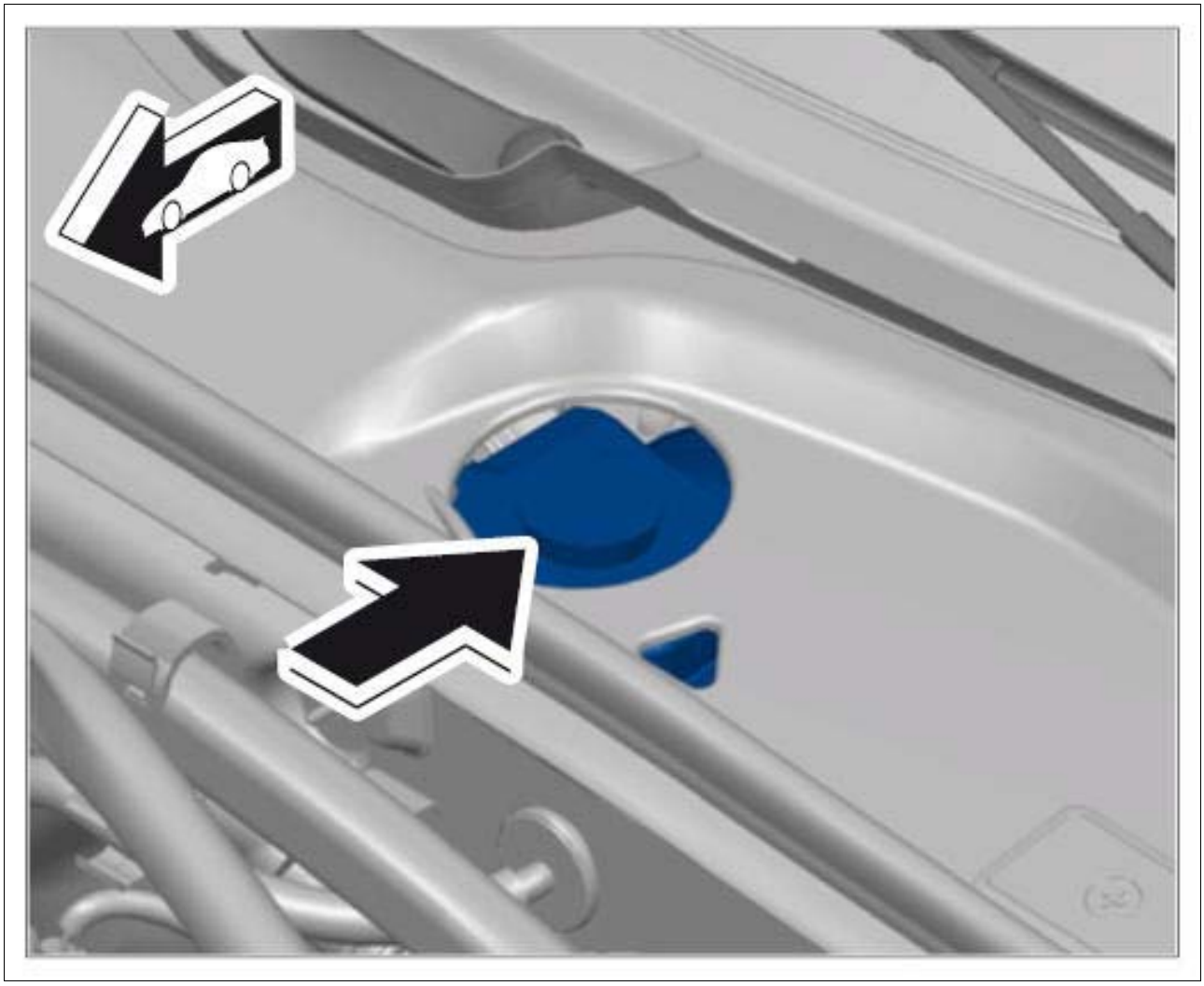

Courtesy of PORSCHE CARS NORTH AMERICA, INC.

Information

- The brake fluid level must not exceed the MAX mark.
- Observe brake fluid quality. Use only new DOT 4 brake fluid.
- This brake fluid is available under the following part numbers: Quantity supplied: 1 litre = 000.043.203.66; 30 litres = 000.043.203.67.

MAX marking on brake fluid reservoir. The brake fluid level must be between the MIN and MAX markings.

WM 0X03IN RUNNING GEAR MAINTENANCE: CHECKING BRAKE FLUID LEVEL AND CHANGING BRAKE FLUID (MACAN S, MACAN TURBO) > CHANGING BRAKE FLUID

Information

- Observe brake fluid quality. Use only new DOT 4 brake fluid.

- The brake fluid change interval is two years using Super DOT 4 brake fluid.
- This brake fluid is available under the following part numbers: Quantity supplied: 1 litre = 000.043.203.66; 30 litres = 000.043.203.67.
- Drain brake fluid from every brake calliper at both bleeder valves.
- There are two bleeder valves on the brake calliper. Brake fluid must be drained at both bleeder valves. Observe specified sequence: Bleed the outer bleeder valve first.

1. Open threaded cover on brake fluid reservoir **-arrow-** .

   Fig 1: Locating Brake Fluid Reservoir

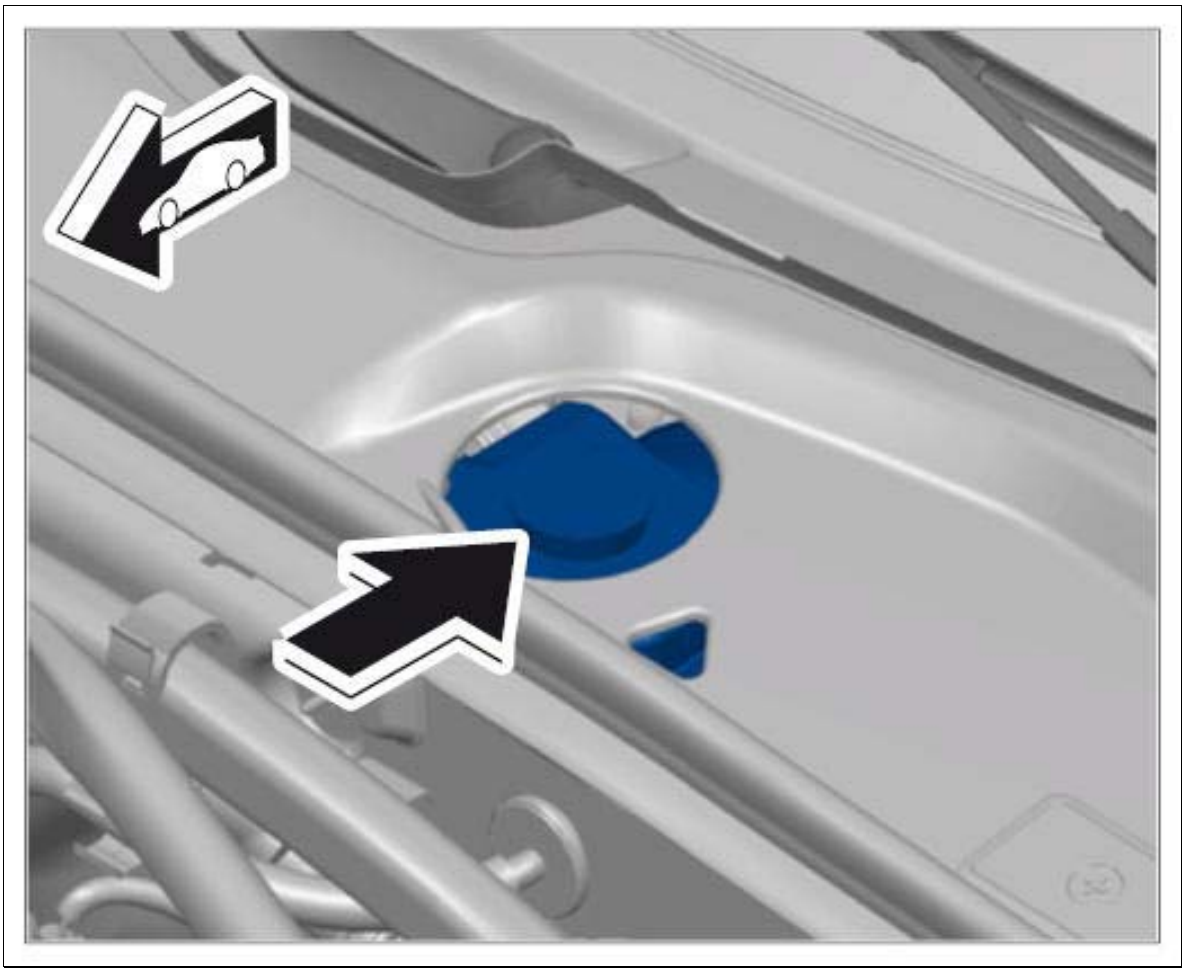

Courtesy of PORSCHE CARS NORTH AMERICA, INC.

2. Connect bleeding device to the brake fluid reservoir.
3. Switch on the bleeding device. Bleeding pressure is approx. 2.0 bar.
4. Continue changing the brake fluid at the brake callipers. Do so in the following sequence: rear right/rear left/front right/front left.
5. Open every bleeder valve until clear, bubble-free brake fluid emerges and until the corresponding change quantity per brake calliper is reached (approx. 250 cm^3).
6. Use a transparent hose and a collecting bottle to check the escaping brake fluid for cleanliness, absence of air bubbles and to determine the amount of brake fluid used.

7. Tighten the bleeder valves to the specified tightening torque → Tightening torques for brake hydraulic system → 47 - BRAKES - HYDRAULIC BRAKE SYSTEM, REGULATOR -- (95B) - MACAN - "Technical values" and remove the bleeder hoses.

8. Switch off the bleeding device and remove the adapter at the reservoir. The brake fluid level in the reservoir must be between the MIN and MAX markings once the vehicle has been filled and bled. Correct the brake fluid level if necessary.

WM 0X03IN RUNNING GEAR MAINTENANCE: STEERING GEAR - VISUAL INSPECTION OF BELLOWS AND TIE ROD JOINTS (MACAN S, MACAN TURBO) > CHECKING > CHECKING BELLOWS

Information

- The bellows on the steering gear can be damaged by external influences for example, by stone damage or during assembly work!
- The steering gear can become damaged if dirt or moisture leaks into it as a result of a leaky bellows!

- Visually inspect the bellows for damage.

WM 0X03IN RUNNING GEAR MAINTENANCE: STEERING GEAR - VISUAL INSPECTION OF BELLOWS AND TIE ROD JOINTS (MACAN S, MACAN TURBO) > CHECKING > TIE ROD ENDS: CHECKING PLAY AND DUST BELLOWS

1. Raise the vehicle → 4X00IN LIFTING THE VEHICLE .

   Information

   1. The rubber dust bellows and tie rods can be damaged by external influences, e.g. stone impact, or during assembly work.

   2. If a rubber dust boot leaks, the joint or tie rod must be replaced, because any dirt or moisture that seeps in will destroy the joint.

2. Check joint clearance and dust boots.

3. Check that the dust boots and joints are working perfectly and have no leaks.

WM 0X03IN RUNNING GEAR MAINTENANCE: TIRES AND SPARE WHEEL: CHECKING CONDITION AND TIRE PRESSURE (MACAN S, MACAN TURBO) > CHECKING > CHECK CONDITION

For vehicles with Tyre Pressure Monitoring (TPM), which can be identified by aluminium valves, the tire pressure must be adjusted according to the >> Filling information << on the multi-function display. To do this, select >> Main menu >> Tyre pressure >> Filling information <<. Adjust the deviation values so that

they range from 0.0 bar to +0.1 bar. Fill the tires according to the display using the tire-inflating device. Example: If the tire pressure display >> Filling information << shows - 0.2 bar, 0.2 bar pressure must be added.

Fig 1: Display - Tyre Pressure Information Screen



Courtesy of PORSCHE CARS NORTH AMERICA, INC.

Information

The >> Tyre pressure << display is for information purposes only.

- Tyre pressure settings can only be entered according to the values in >> Filling information <<.

Due to the pressure and temperature relationship (approx. 0.1 bar/10° C), the actual pressure values displayed under >> Tyre pressure << on the multi-function display, or on the pressure gauge of the tire-inflating device, can deviate from the required pressure specified at 20° C on the tire pressure plate if the air temperature in the tire is significantly above (higher values) or significantly below 20° C (lower values). Changes in tire pressure are displayed after max. 1 minute under >> Filling information << after switching on the ignition. A series of dashes (-.-) will appear instead of the tire pressure during this time.

Fig 2: Display - Tyre Pressure Information Screen



Courtesy of PORSCHE CARS NORTH AMERICA, INC.

For vehicles with Tyre Pressure Monitoring (TPM), always use plastic valve caps. Plastic valve caps protect against dust, dirt and humidity, and therefore against damage (corrosion).

Tyres are a safety element that meet the demands placed on them only if they have the correct air pressure and sufficient tread depth.

> *WARNING: Risk of accidents if the air pressure in the tires falls below the minimum pressure, if the tread depth is insufficient or if there are foreign bodies, pricks, cracks and bulges in the sidewall (ply breakage).*
>
> - *Modified handling behaviour can cause accidents and significant material damage.*

→ The tire pressure must never fall below the values specified (these are minimum pressures).

→ The tread depth must never fall below the minimum value.

→ A visual inspection of the tires (for cracks, pricks, bulges in the sidewall and/or foreign bodies) must

be carried out.

1. Check condition and tire pressure.
2. Always screw on valve caps tightly and replace missing valve caps.

> *NOTE: Tyre pressure for cold tires (approx. 20 °C)*

Information

The currently applicable air pressure values and comfort tire pressure values in the individual countries can be found in the Manufacturer Approval >>Approved wheels and tires<< in the >>Manufacturer Approvals<< .

Tyre pressures apply to all-season, winter and summer tires. They also apply only to tires approved by Porsche.

Part load = payload < 260 kg

Full load = payload > 260 kg

The collapsible spare wheel is an optional extra (tire sealing compound comes as standard).

WM 0X03IN RUNNING GEAR MAINTENANCE: VISUAL INSPECTION - BRAKE LINES/BRAKE PADS/BRAKE DISCS (MACAN S, MACAN TURBO) > CHECKING > BRAKE HOSES AND LINES

- Carry out visual inspection for leaks, damage, routing and corrosion.

WM 0X03IN RUNNING GEAR MAINTENANCE: VISUAL INSPECTION - BRAKE LINES/BRAKE PADS/BRAKE DISCS (MACAN S, MACAN TURBO) > CHECKING > BRAKE SYSTEM: VISUAL INSPECTION OF BRAKE PADS AND BRAKE DISCS FOR WEAR

> *WARNING: Risk of accidents if brake pads and brake discs are not replaced in time.*
>
> - *Risk of injury and material damage due to impaired braking effect.*

→ The brake pads must be replaced when the brake pad warning indicator lights up, but no later than when there is a residual pad thickness of 2 mm.

→ Brake discs must be replaced on reaching the wear limits.

Information

- If brake pad wear is indicated by the warning light, the warning contact (sender including line and

plug connection) must also be replaced.

- Replacing the warning contact can be avoided by replacing the brake pads no later than when the pad thickness is approx. 2.5 mm.
- Warning contacts must be replaced if the core of the wire is worn. Worn insulation is not important.
- However, if only the plastic part of the warning contact is worn, there is no need to replace it.

1. Visually inspect the brake pads for wear (wear limit: 2 mm).

   See:

   → 463602 CHECKING THICKNESS OF FRONT BRAKE PADS

   → 463802 CHECKING THICKNESS OF REAR BRAKE PADS

2. Visually inspect the brake discs for wear → 4650TW TECHNICAL DATA/BRAKE WEAR LIMIT .

WM 0X03IN TEST DRIVE - MAINTENANCE (MACAN, MACAN S, MACAN TURBO) > TEST DRIVE - MAINTENANCE

Information

- The following test items are included in the test drive.
  - Actuate remote control for central locking and check operation.
  - Seats: check operation of adjustment options.
  - Check electric parking brake and footbrake operation and actuation travel.
  - Start engine, check operation.
  - Actuate steering and check operation.
  - Change gears and check gearshift operation.
  - ParkAssist: select reverse gear and check operation.
  - Activate automatic cruise control during the test drive and check operation.
  - Actuate PSM switch during the test drive and check operation.
  - Check operation of heating adjustment when engine is warm.
  - Check operation of sports exhaust system.
  - Check operation of air-conditioning system when engine is running.
  - Check operation of instruments.

WM 0X03IN TRAILER HITCH MAINTENANCE: CHECKING FUNCTION (MACAN, MACAN S, MACAN TURBO) > TOOLS

Designation	Type	Number	Description	
socket tester V.A.G. 1537 A	Workshop equipment	WE 1180		

WM 0X03IN TRAILER HITCH MAINTENANCE: CHECKING FUNCTION (MACAN, MACAN S, MACAN TURBO) > INFORMATION > TRAILER HITCH MAINTENANCE: CHECKING FUNCTION

Information

The function test on the electrical components of the trailer hitch can be performed using a trailer with no faults in the wiring and lights or using the **socket tester V.A.G. 1537 A WE 1180** . The procedure for testing using the **socket tester V.A.G. 1537 A WE 1180** is described below.

The **socket tester V.A.G. 1537 A WE 1180** can only be used to test 13-pin plug sockets. An adapter is required for testing 7-pin sockets.

Thermal cut-off can occur on the **socket tester V.A.G. 1537 A WE 1180** as a result of the build-up of heat.

Fig 1: Identifying Socket Tester - V.A.G. 1537 A

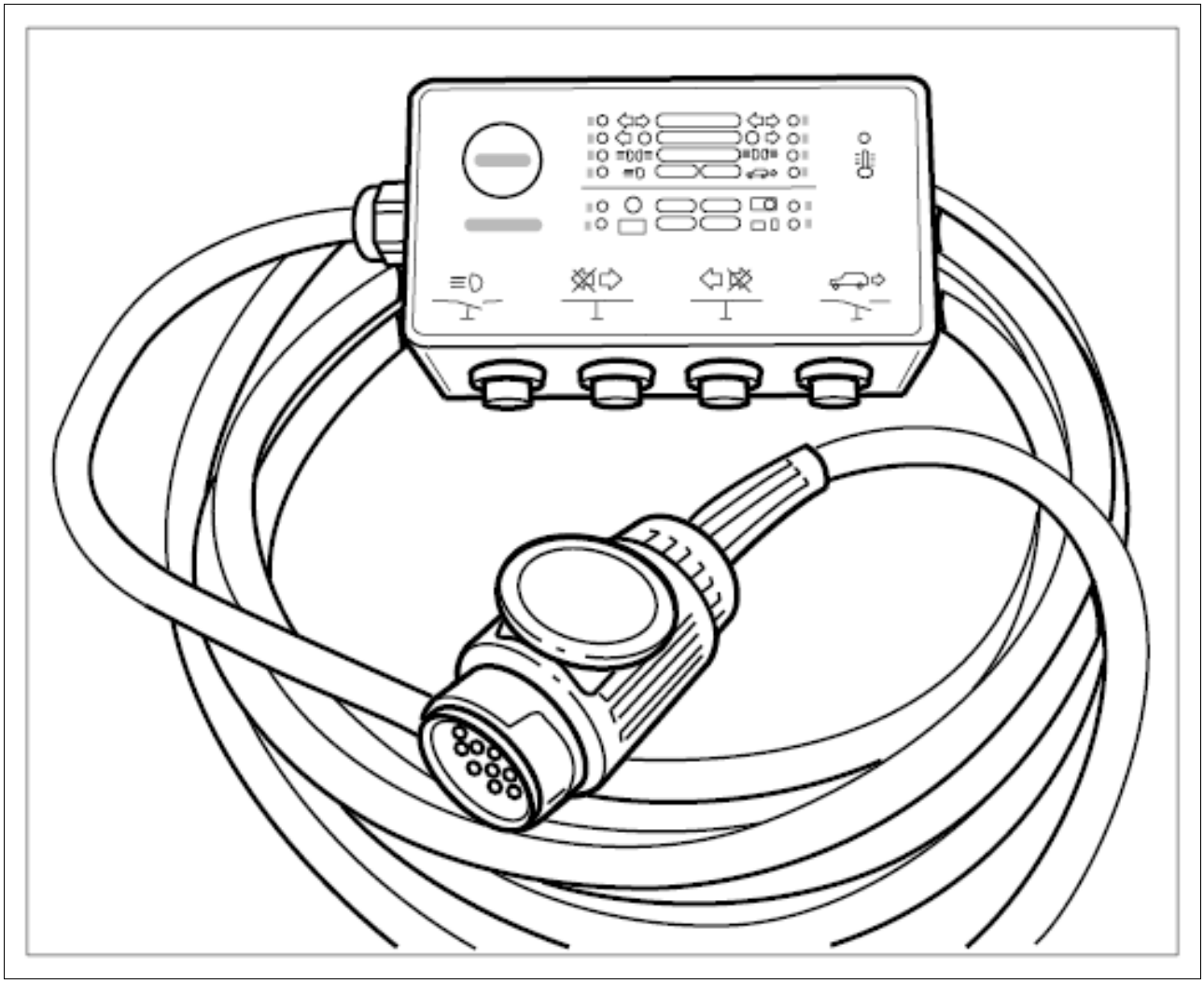

Courtesy of PORSCHE CARS NORTH AMERICA, INC.

WM 0X03IN TRAILER HITCH MAINTENANCE: CHECKING FUNCTION (MACAN, MACAN S, MACAN TURBO) > INFORMATION > CHECKING FUNCTION OF THE TRAILER HITCH PLUG SOCKET

WARNING: Risk of injury and damage when retracting and extending the ball hitch.

- *Make sure that no persons, animals or obstacles are in the movement range of the ball hitch.*
- *To interrupt the swivel action of the ball hitch in the event of danger, touch the rocker switch again.*

→ Never swivel the ball hitch when a trailer is coupled or when, for example, bicycle racks are mounted or supported on the ball hitch.

→ Only use the trailer coupling when the ball hitch is extended fully.

→ Never insert tools of any kind into the ball hitch swivel mechanism. This could damage the locking mechanism; safe operation of the trailer hitch can then no longer be assured.

→ Check that the ball hitch locks into position correctly before every journey.

Vehicles with electrically extendable trailer hitch

1. Unfold coupling.

   All vehicles

2. Plug test cable of **socket tester V.A.G. 1537 A WE 1180** into the plug socket for the trailer hitch and route it towards the driver's seat.

   Fig 1: Connecting Test Cable (Cayenne)

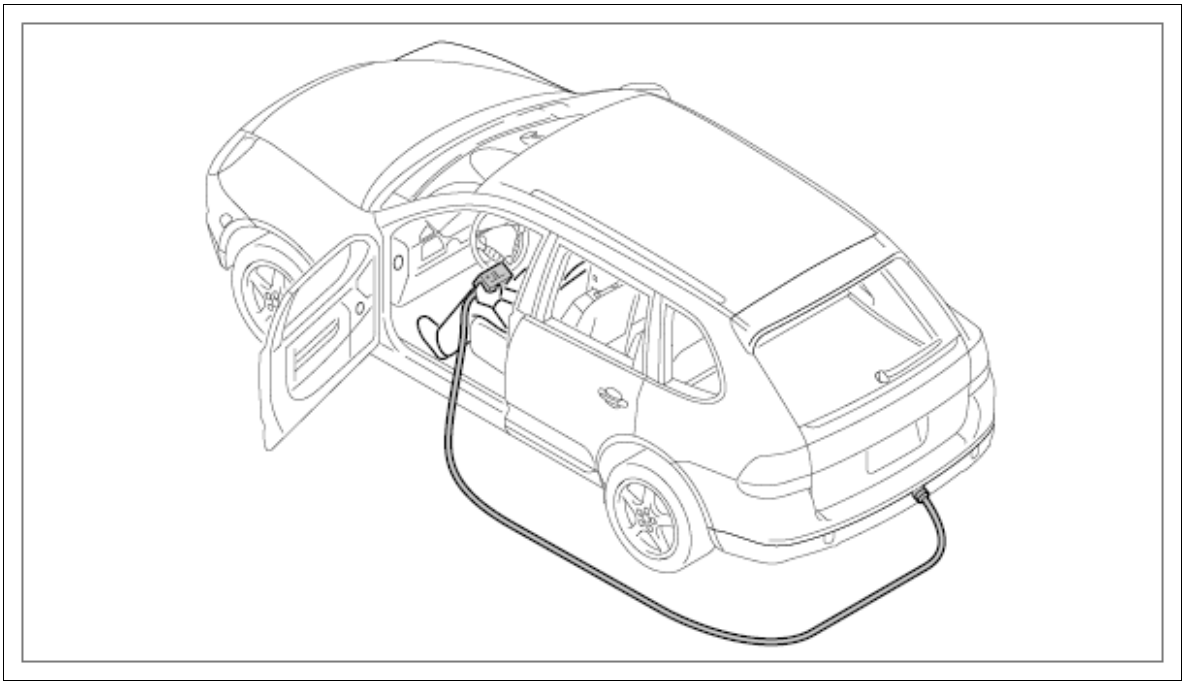

Courtesy of PORSCHE CARS NORTH AMERICA, INC.

Fig 2: Identifying Tester Marking

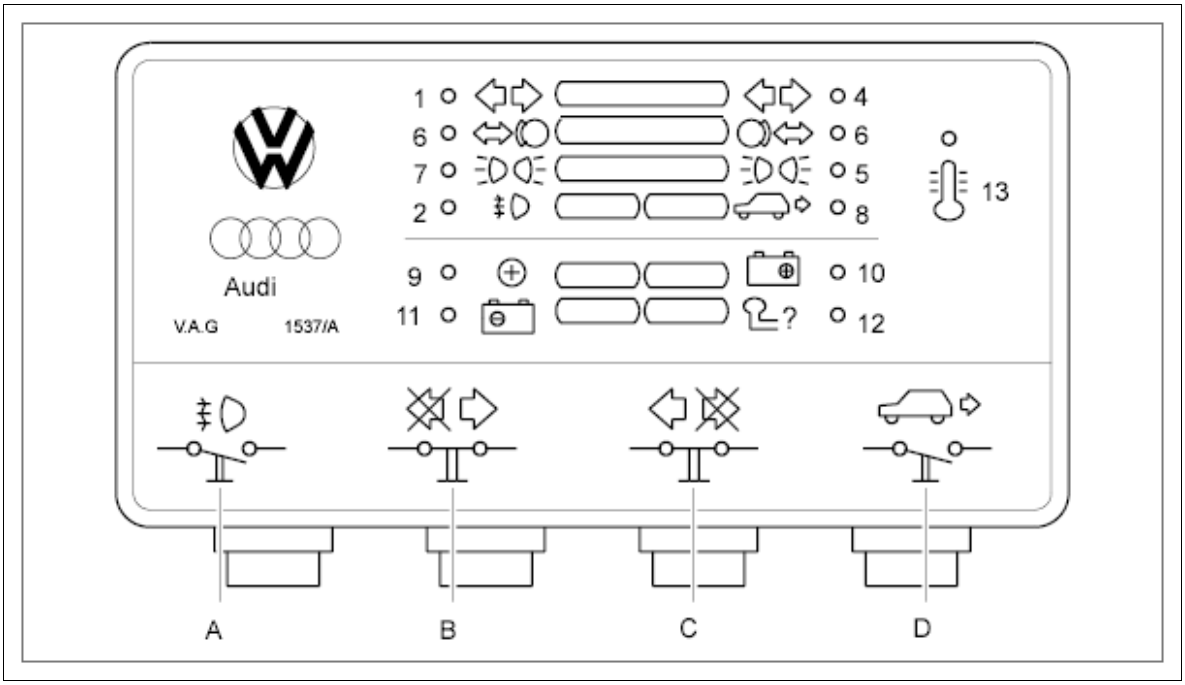

Courtesy of PORSCHE CARS NORTH AMERICA, INC.

1. **1** - Left direction indicator
2. **2** - Rear fog light
3. **4** - Right direction indicator
4. **5** - Right parking light
5. **6** - Left and right brake lights
6. **7** - Left parking light
7. **8** - Reversing light
8. **9** - Permanent positive
9. **10** - Charge positive
10. **11** - Ground for charge positive
11. **12** - Trailer detection
12. **13** - Socket Tester overheats

3. Switch on ignition.
4. Check permanent positive function.
    1. 4.1. LED **-9-** must light up continuously.
5. Check function of left direction indicator.
    1. 5.1. Switch on left direction indicator. The LED **-1-** and the left direction of travel

arrow in the instrument cluster must flash.

2. 5.2. Press button **-B-** . The LED **-1-** and the left direction of travel arrow in the instrument cluster must not flash.

6. Check function of right direction indicator.

    1. 6.1. Switch on right direction indicator. The LED **-4-** and the right direction of travel arrow in the instrument cluster must flash.

    2. 6.2. Press button **-C-** . The LED **-4-** and the right direction of travel arrow in the instrument cluster must not flash.

7. Check function of brake lights.

    1. 7.1. Press the brake pedal. The LED **-6-** must light up.

8. Check function of reversing light.

    1. 8.1. Engage reverse gear. The LED **-8-** must light up.

9. Check function of parking light.

    1. 9.1. Switch on the parking light. The LEDs -5, 7- must light up.

10. Check function of rear fog lights.

    1. 10.1. Switch on dipped beam headlights and rear fog light. The LEDs -5, 7- and the LED **-2-** must light up. The rear fog lights on the vehicle must not light up.

    2. 10.2. Unplug test cable of **socket tester V.A.G. 1537 A WE 1180** from the trailer hitch plug socket, the rear fog lights on the vehicle must light up.

11. Switch off parking light.

12. Shift the transmission to position P.

WM 0X03IN TRAILER HITCH MAINTENANCE: CHECKING FUNCTION (MACAN, MACAN S, MACAN TURBO) > INFORMATION > CHECKING ELECTRICALLY EXTENDABLE TRAILER HITCH

Information

- The swivel action of the ball hitch is interrupted in the one-touch function of the rocker switch if resistance interferes with the movement sequence. The interruption is indicated by the rapid flashing of the red LED in the rocker switch.
- Overload protection is switched off by pressing the rocker switch for at least two seconds.

WARNING: Risk of injury and damage when retracting and extending the ball hitch.

- *Make sure that no persons, animals or obstacles are in the movement range of the ball hitch.*

- *To interrupt the swivel action of the ball hitch in the event of danger, touch the rocker switch again.*

→ Never swivel the ball hitch when a trailer is coupled or when, for example, bicycle racks are mounted or supported on the ball hitch.

→ Only use the trailer coupling when the ball hitch is extended fully.

→ Never insert tools of any kind into the ball hitch swivel mechanism. This could damage the locking mechanism; safe operation of the trailer hitch can then no longer be assured.

→ Check that the ball hitch locks into position correctly before every journey.

WM 0X03IN TRAILER HITCH MAINTENANCE: CHECKING FUNCTION (MACAN, MACAN S, MACAN TURBO) > INFORMATION > OVERLOAD PROTECTION

Information

- The vehicle must be stationary.
- Rear lid or rear window must be open.
- The trailer must be unhitched.
- Connectors (and any adapters) must be removed from the socket.
- There must not be any accessories on the ball hitch (e.g. ball protection cap, bicycle rack, etc.).

1. **Swivelling out the trailer coupling**

   Information

   1. The vehicle must be stationary.
   2. Rear lid or rear window must be open.

      1. 1.1.
      2. 1.2. **To swivel out:**
      3. 1.3. Touch rocker switch **-A-** .
      4. 1.4. >> The ball hitch moves automatically into operating position.
      5. 1.5. The red LED in the rocker switch flashes until the operating position is reached.

Fig 1: Identifying Rocker Switch

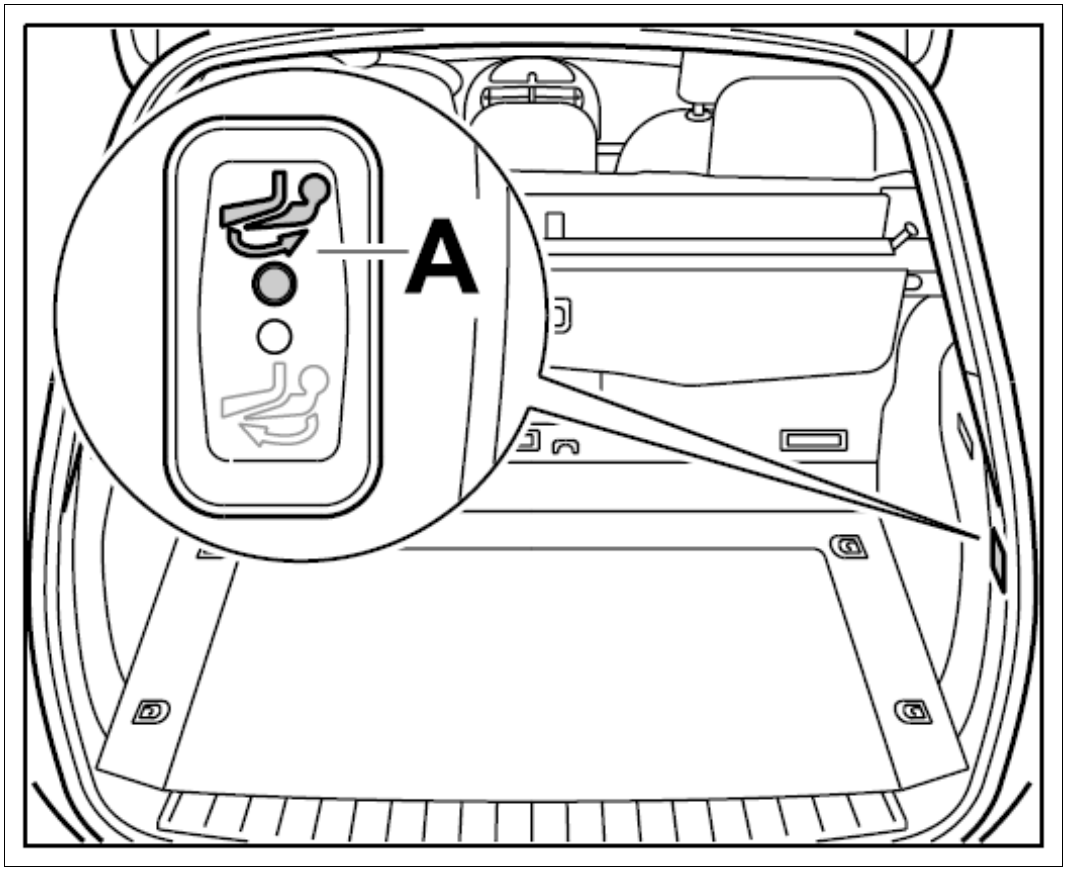

Courtesy of PORSCHE CARS NORTH AMERICA, INC.

2. **Retracting the trailer hitch**

Information

1. The vehicle must be stationary.
2. Rear lid or rear window must be open.
3. The trailer must be unhitched.
4. Connectors (and any adapters) must be removed from the socket.
5. There must not be any accessories on the ball hitch (e.g. ball protection cap, bicycle rack, etc.).

1. 2.1.
2. 2.2. **To retract:**
3. 2.3. Touch rocker switch **-A-** .
4. 2.4. >> The ball hitch moves automatically into operating position.
5. 2.5. The red LED in the rocker switch flashes until the operating position is reached.

Fig 2: Identifying Rocker Switch

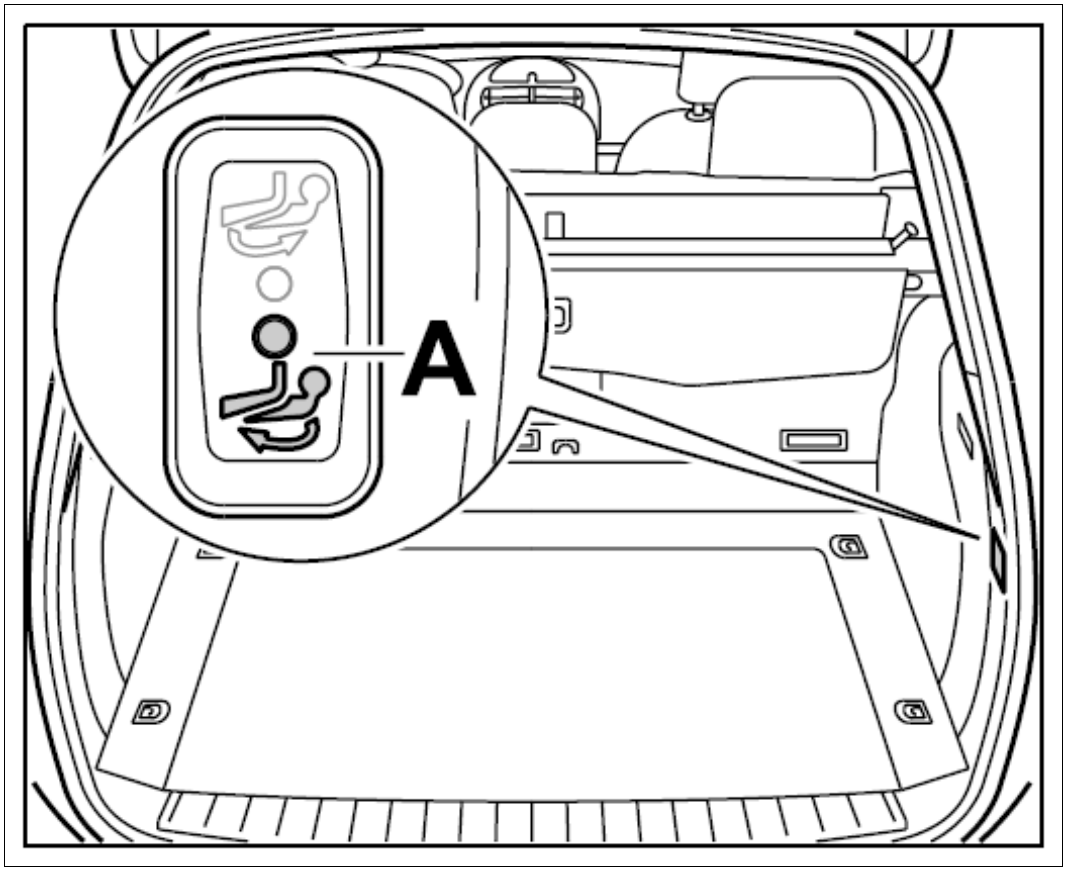

Courtesy of PORSCHE CARS NORTH AMERICA, INC.

WM 911019 REMOVING AND INSTALLING PCM DISPLAY AND OPERATOR CONTROL UNIT (ALL MODELS) > TOOLS

Designation	Type	Number	Description	
PIWIS Tester II	Special tool	9818		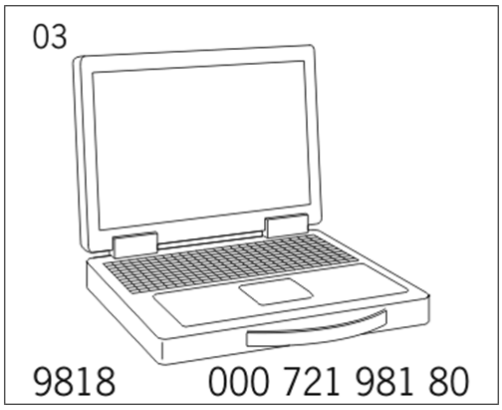

WM 911019 REMOVING AND INSTALLING PCM DISPLAY AND OPERATOR CONTROL UNIT (ALL MODELS) > TECHNICAL VALUES

Location	Description	Type	Basic value	Tolerance 1	Tolerance 2
PCM display and operator control unit to the instrument panel	Internal Torx screw, M5 x 16	Tightening torque	4 Nm (3 ftlb.)		

WM 911019 REMOVING AND INSTALLING PCM DISPLAY AND OPERATOR CONTROL UNIT (ALL MODELS) > PRELIMINARY WORK

1. Remove dashboard molding on driver's side at the right. → Removing Dashboard Molding On Driver's Side At The Right
2. Remove dashboard molding on passenger's side. → Removing Dashboard Molding On Passenger's Side

WM 911019 REMOVING AND INSTALLING PCM DISPLAY AND OPERATOR CONTROL UNIT (ALL MODELS) > REMOVING PCM DISPLAY AND OPERATOR CONTROL UNIT

NOTE: Incorrect handling of optical waveguides

- *Risk of damage to optical waveguide*

→ Observe the requirements for working with and installing optical waveguides.

Information

Always comply with the regulations for handling ESD-sensitive components!

- Assembly work may only be carried out if the mechanic is wearing the working clothes and shoes approved by Porsche.
- The new part must only be removed from the ESD (electrostatic discharge) protective packaging just before installation and at the position at which the part is to be installed.
- Never touch the electric pins and plug contacts.

1. Move PDK selector lever to position D.
2. Switch off ignition.
3. Cover the switch console and PDK selector lever with clean, soft cloths.
4. Unscrew fastening screws **-1-** .
5. Remove flap **-2-** on the DVD autochanger.
6. Carefully pull the PCM display and operator control unit **-3-** out of the instrument panel and set it down on the padded switch console.

Fig 1: Removing Display And Operator Control Unit

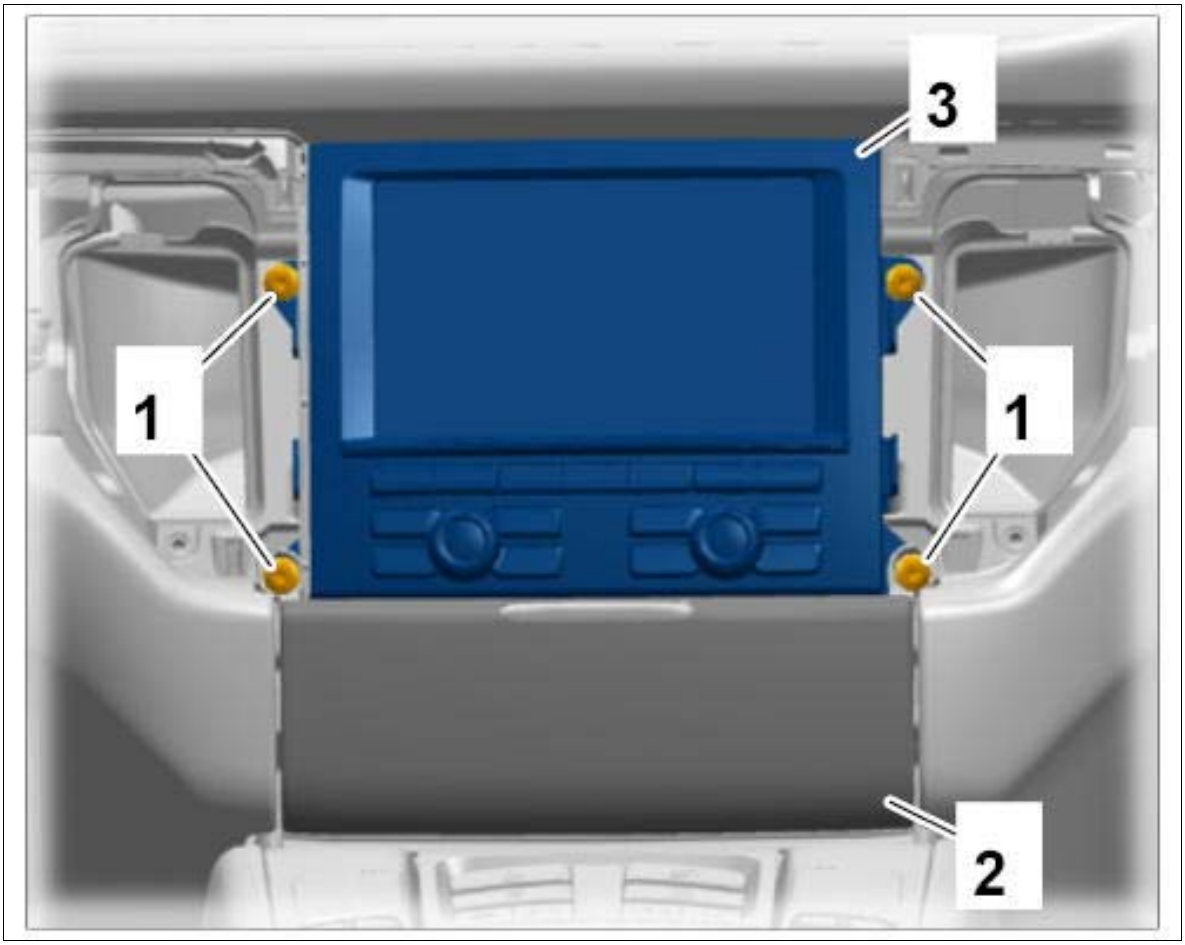

Courtesy of PORSCHE CARS NORTH AMERICA, INC.

7. Disconnect antenna lines **-1-** on the PCM display and operator control unit **-2-** .
    1. 7.1. Pull the slide locks about 2 mm out of the plug connections.
    2. 7.2. Press the slide locks **-arrows-** and pull off antenna lines.

Fig 2: Disconnecting Antenna Lines

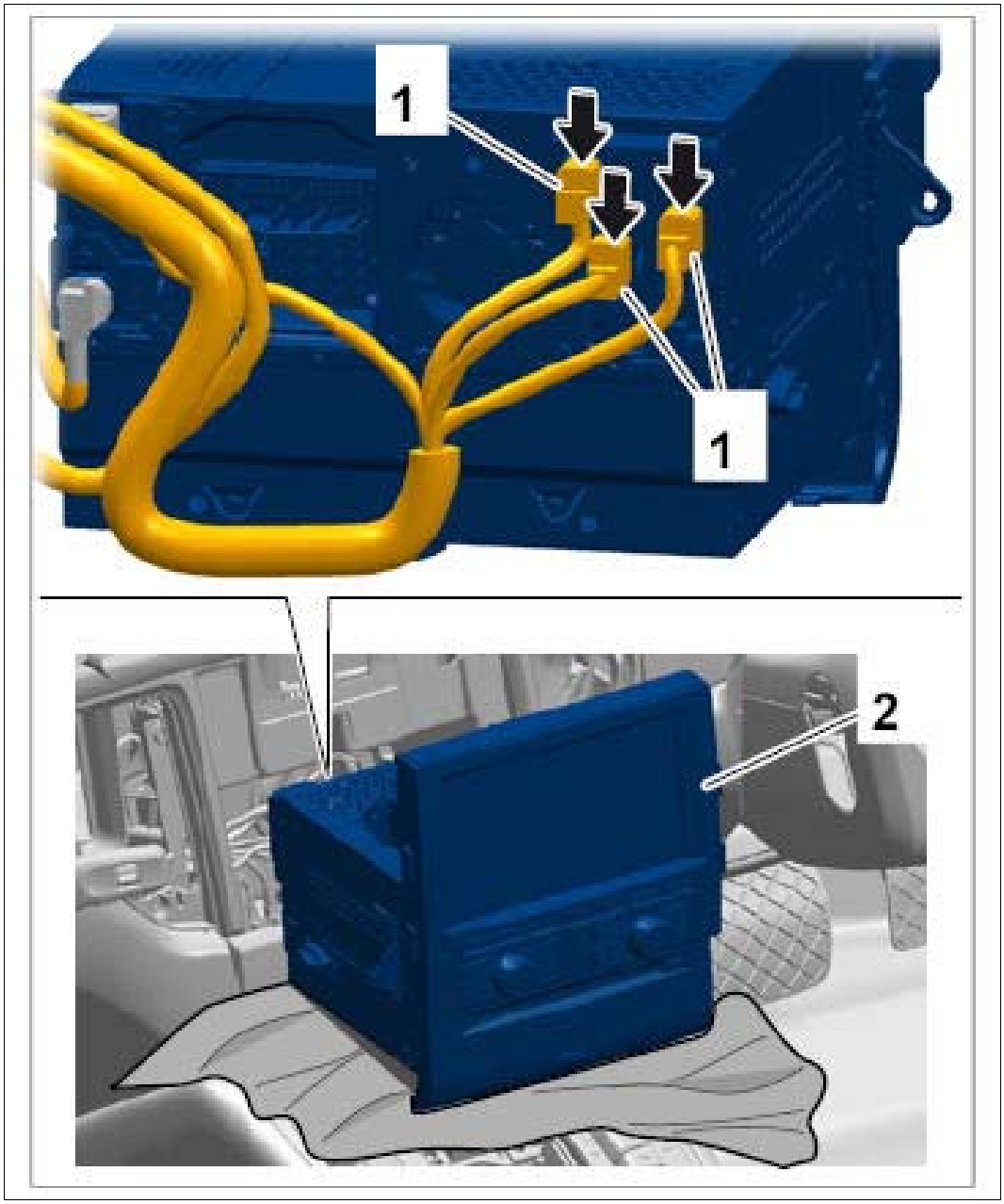

Courtesy of PORSCHE CARS NORTH AMERICA, INC.

8. Disconnect central connector **-1-** on the PCM display and operator control unit **-2-** .
    1. 8.1. Release the locking clip **-a-** .
    2. 8.2. Swivel the locking clip down **-b-** and remove central connector from the PCM display and operator control unit.

Fig 3: Disconnecting Central Connector

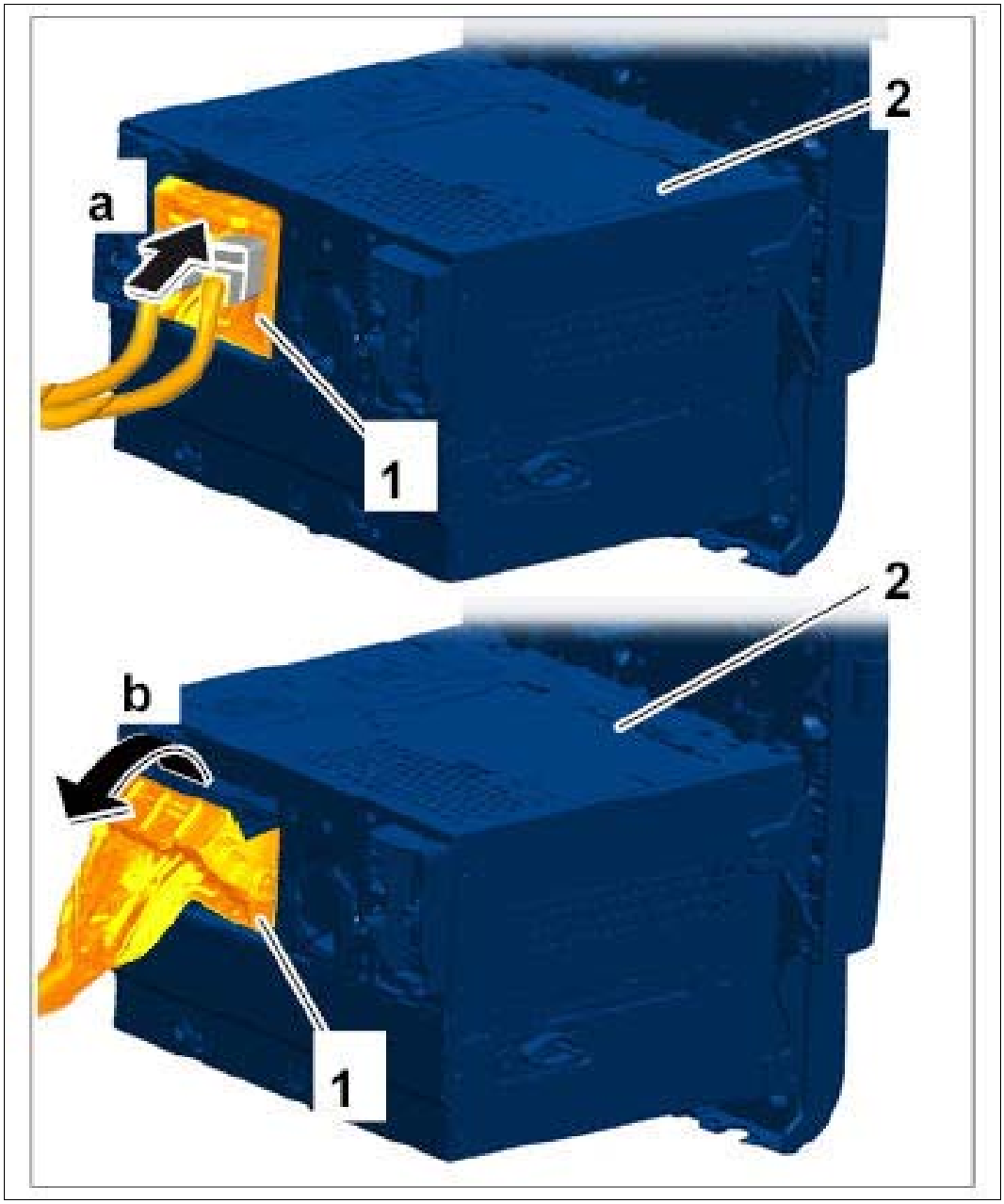

Courtesy of PORSCHE CARS NORTH AMERICA, INC.

9. Disconnect antenna line **-1-** at the telephone control unit in the PCM display and operator control unit **-2-** .
    1. 9.1. Pull the slide lock about 2 mm out of the plug connection.
    2. 9.2. Press the slide lock **-a-** and pull off antenna line.
10. Press the locks **-b-** and pull antenna lines **-3-** off the PCM display and operator control unit.

Fig 4: Disconnecting Antenna Lines

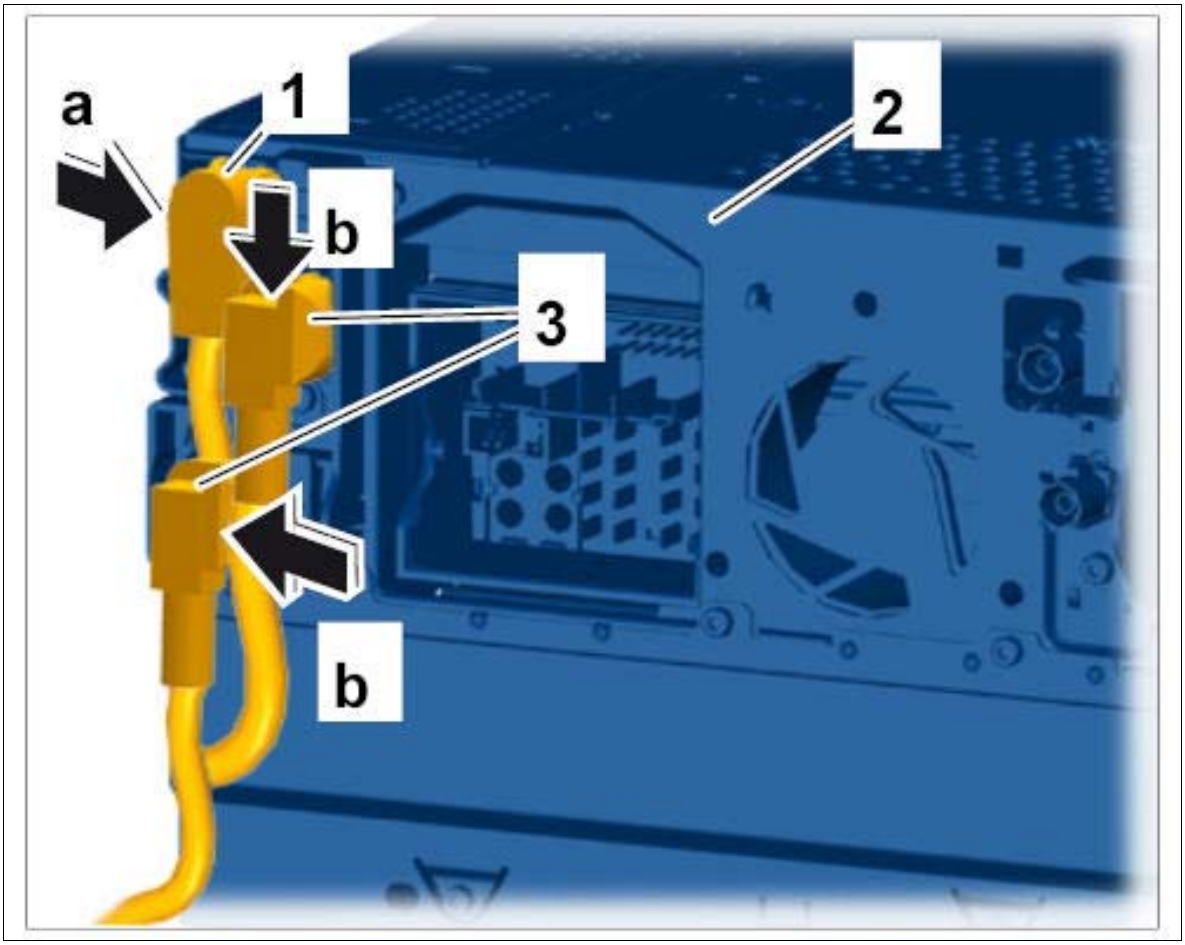

Courtesy of PORSCHE CARS NORTH AMERICA, INC.

WM 911019 REMOVING AND INSTALLING PCM DISPLAY AND OPERATOR CONTROL UNIT (ALL MODELS) > INSTALLING PCM DISPLAY AND OPERATOR CONTROL UNIT

1. Installation is performed in reverse order to removal.
2. Tighten fastening screws securing PCM display and operator control unit to the instrument panel. **Tightening torque 4 Nm (3 ftlb.)**

WM 911019 REMOVING AND INSTALLING PCM DISPLAY AND OPERATOR CONTROL UNIT (ALL MODELS) > SUBSEQUENT WORK

1. Install dashboard molding on passenger's side. → Installing Dashboard Molding On Passenger's Side
2. Install dashboard molding on driver's side at the right. → Installing Dashboard Molding On Driver's Side At The Right
3. If the PCM display and operator control unit was replaced, teach the new PCM display and

operator control unit to suit the vehicle using **PIWIS Tester II 9818** . → 911055 REPLACING PCM DISPLAY AND OPERATOR CONTROL UNIT

WM 911055 REPLACING PCM DISPLAY AND OPERATOR CONTROL UNIT (ALL MODELS) > TOOLS

Designation	Type	Number	Description	
PIWIS Tester II	Special tool	9818		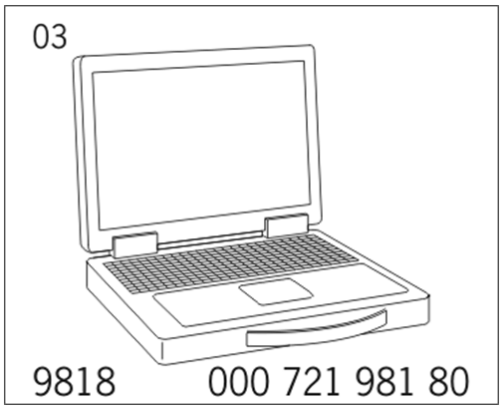

WM 911055 REPLACING PCM DISPLAY AND OPERATOR CONTROL UNIT (ALL MODELS) > TECHNICAL VALUES

Location	Description	Type	Basic value	Tolerance 1	Tolerance 2
Current rating		Nominal value	40 A		

WM 911055 REPLACING PCM DISPLAY AND OPERATOR CONTROL UNIT (ALL MODELS) > REPLACING PCM DISPLAY AND OPERATOR CONTROL UNIT > WRITING VALUES

NOTE: Voltage drop

- *Risk of irreparable damage to control unit*
- *Risk of damage to control unit*
- *Fault entries in the control unit*
- *Coding in the control unit is aborted*
- *Malfunctions in control unit, even during programming*

→ Prior to disconnecting the control unit, switch off ignition and remove ignition key.

→ Ensure that the power supply is not interrupted during programming.

→ Connect a battery charger with a current rating of at least → **Nominal value: 40 A** to the vehicle battery.

Information

- If a new PCM/CDR is to be installed in a vehicle, the enabling code specified in the PIWIS information system must be used.
- You can get the codes from the PIWIS Infosystem or from your importer by specifying the vehicle identification number.
- During coding, it is essential to guarantee the power supply for the PIWIS Tester II 9818 . A battery charger with a current rating of at least 40 A must be connected to the vehicle battery.
- The PIWIS Tester II 9818 instructions take precedence and in the event of a discrepancy, these are the instructions that must be followed. Deviations may occur with later software versions.
- The procedure described here has been structured in general terms; different text may appear in the PIWIS Tester II 9818 or additional information/steps may be displayed or required.

Information

If the PCM unit is to be replaced with a new unit, the navigation data must be installed using a **Software Update navigation CD/DVD** .

- To enable you to actually install the Software Update navigation data , you must read out the enabling code from the PIWIS information system. Additional enabling codes, e.g. customer has navigation system for Europe and Russia, or customer has already obtained navigation updates, must be queried by customer service personnel at the customer site.
- The PCM maps software version can be read from the PIWIS information system (electrics/electronics information)
- The required Software Update navigation CD/DVD must be ordered via PET.
- The Software Update navigation CD/DVD must not be handed over to the customer. This CD/DVD can only be used with PIWIS Tester II 9818 .
- The Software Update navigation CD/DVD that corresponds to the relevant vehicle model year must always be used for the required PCM system, e.g. if the vehicle model year is 2010, the CD/DVD for 2010 must be used. This applies even if CDs/DVDs for 2011 are available.
- The model year-based Software Update navigation CD/DVD must always be archived in the Porsche Centre.
- Further changes/supplements to the Software Update navigation CD/DVD can also be obtained. These will have to be used later for older vehicles. For example, CDs/DVDs for 2011 are already available, but an error was found on the 2010 version, so the old CD/DVD for 2010 will have to be replaced with an updated CD/DVD for 2010. This process will be announced in a TI.
- Current compatibility with Bluetooth telephones can be checked at http://www.porsche.com /germany/accessoriesandservices/porscheservice/vehicleinformation/documents/

1. Switch off ignition and replace control unit. → 911019 REMOVING AND INSTALLING PCM DISPLAY AND OPERATOR CONTROL UNIT .
2. Connect the PIWIS Tester to the vehicle and start the PIWIS Tester. Switch on ignition.
3. Select the vehicle type and start the diagnostic application.
4. Select the required control unit **PCM 3.1** in the **overview** .
5. **Extended identification** must now be selected.
6. Select the **Vehicle identification number** field.
7. **Enter the vehicle identification number** and press [F8] to write data.
8. **Maintenance/repairs** must then be selected.
9. **Control unit replacement** must now be selected. Then press [F12].
10. **Select Write data** , press [F12] and then press [F8] to start.
11. The Tester displays the message **Data has been written** . Press [F12] to continue.
12. **Read out the fault memory** and erase it if necessary.
13. Select **Function activation** in the **Maintenance/repairs** menu and press [F12].
    1. 13.1. The PIWIS Tester displays all the possible enabling codes.
    2. 13.2. Using the vehicle-specific codes from the PIWIS information system, click on the menus, enter the relevant **enabling code** and press [F8] to start coding.
14. Exit the **PCM 3.1** control unit. PCM 3.1 goes out of **Service** mode.
15. Insert the **Software Update navigation CD/DVD** into the PCM3.1 unit .
16. Confirm the messages on the PCM unit, start the **update** according to instructions and leave it running.
17. PCM then displays the message **Update to version completed successfully** . Confirm this info on the touchscreen.
18. Check the audio, telephone, TV and navigation functions, depending on vehicle equipment.

    Only for equipment variant XM radio

19. Drive the vehicle to a free area outside. Leave the engine switched on.
20. Adjust the radio to Station preview.
21. Contact SiriusXM OEM Call Centre at 1-800-852-9696. Press button 2 for "Other enquiries" in the selection menu.
22. Give the customer advisor the radio ID/ESN of both the original and new PCM systems.
23. Once you have successfully registered the system, check that all PCM functions are working.

    All vehicles

24. Read out the fault memory on the **PCM 3.1** system.

WM 911319 REMOVING AND INSTALLING GPS ANTENNA (ALL MODELS) > PRELIMINARY WORK

1. Remove cover over interior rear-view mirror. → Removing Interior Rear-View Mirror

WM 911319 REMOVING AND INSTALLING GPS ANTENNA (ALL MODELS) > REMOVING GPS ANTENNA

1. Disconnect antenna line **-1-** at the GSM antenna.
    1. 1.1. Release electric plug connection **-a-** and pull it off.
    2. 1.2. Move antenna line aside.
2. Disconnect antenna line **-2-** at the GPS antenna.
    1. 2.1. Pull slide lock approx. 2 mm out of the connector.
    2. 2.2. Press slide lock **-b-** and disconnect electric plug connection.
    3. 2.3. Move antenna line aside.

Fig 1: Disconnecting Antenna Lines

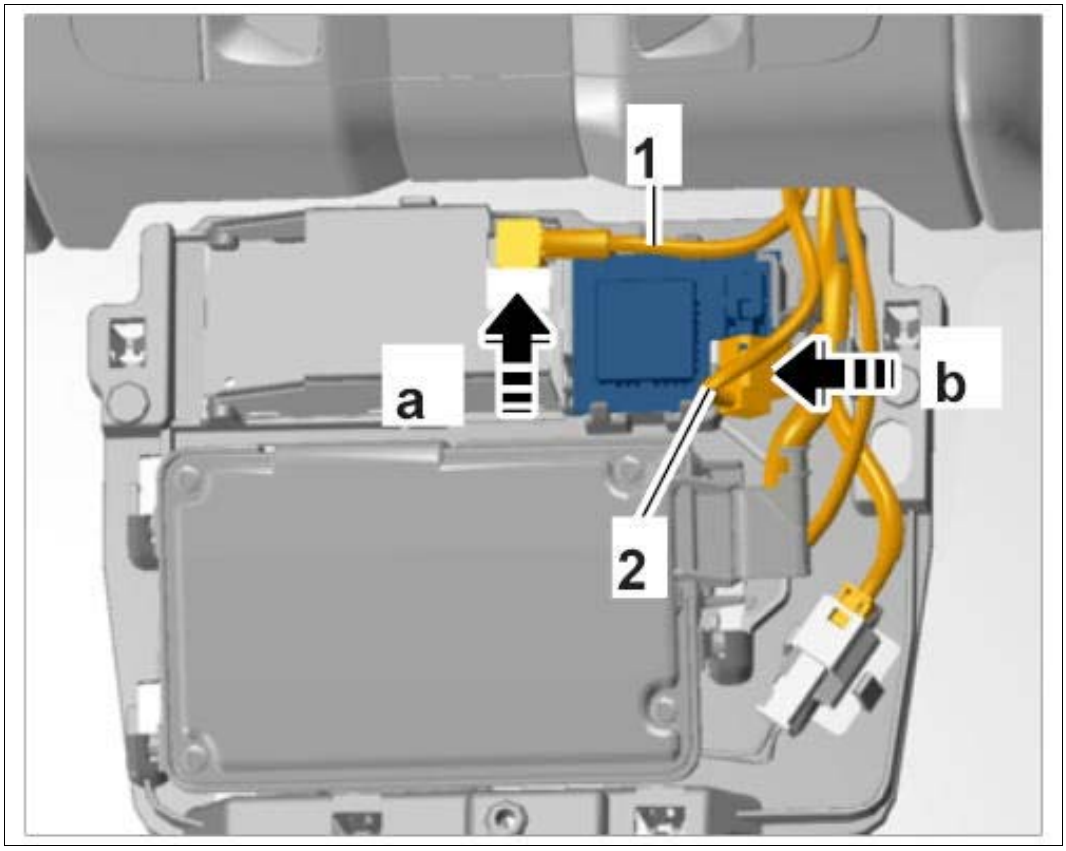

Courtesy of PORSCHE CARS NORTH AMERICA, INC.

3. Remove GPS antenna **-1-** from its holder.

    1. 3.1. Carefully release locking mechanisms at the top **-a-** .
    2. 3.2. Remove GPS antenna from the retaining lugs **-2-** .

    Fig 2: Removing GPS Antenna

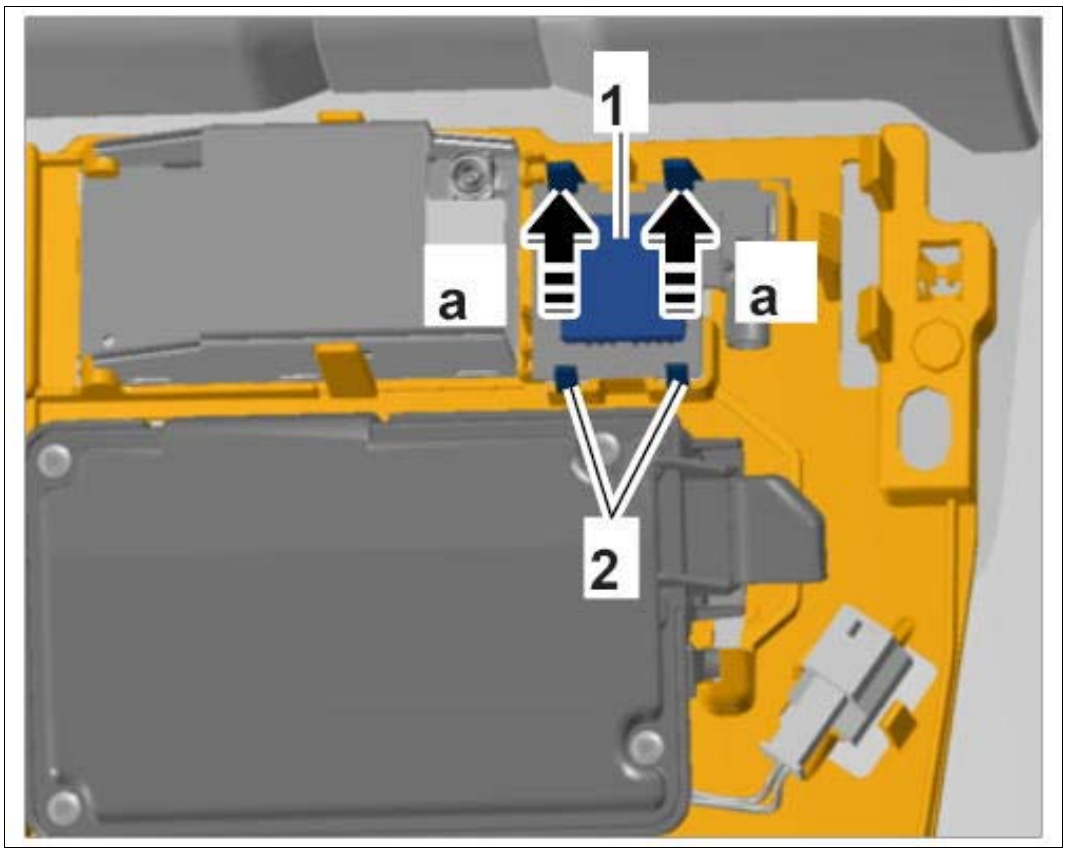

Courtesy of PORSCHE CARS NORTH AMERICA, INC.

WM 911319 REMOVING AND INSTALLING GPS ANTENNA (ALL MODELS) > INSTALLING GPS ANTENNA

1. Installation is performed in reverse order to removal.

WM 911319 REMOVING AND INSTALLING GPS ANTENNA (ALL MODELS) > SUBSEQUENT WORK

1. Remove cover over interior rear-view mirror. → Removing Interior Rear-View Mirror

WM 911719 REMOVING AND INSTALLING TV TUNER (ALL MODELS) > TOOLS

Designation	Type	Number	Description	
PIWIS Tester II	Special tool	9818		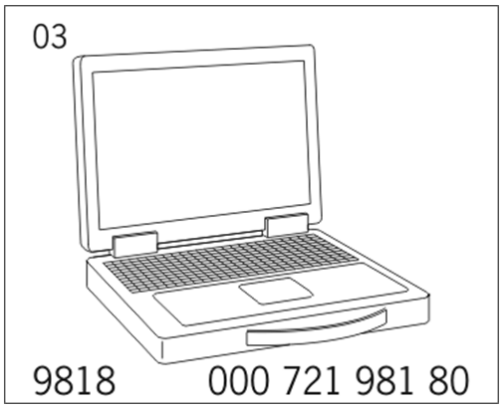

WM 911719 REMOVING AND INSTALLING TV TUNER (ALL MODELS) > TECHNICAL VALUES

Location	Description	Type	Basic value	Tolerance 1	Tolerance 2
TV tuner to holder	Internal Torx screw, M6 x 12	Tightening torque	6 Nm (4.5 ftlb.)		
Holder for loudspeaker booster and TV tuner to body	Nut, M6	Tightening torque	9 Nm (6.5 ftlb.)		

WM 911719 REMOVING AND INSTALLING TV TUNER (ALL MODELS) > PRELIMINARY WORK

1. Remove inner part of side trim panel for rear luggage compartment at the left. → Removing Side Trim Panel For Rear Luggage Compartment

WM 911719 REMOVING AND INSTALLING TV TUNER (ALL MODELS) > REMOVING TV TUNER

NOTE: Incorrect handling of optical waveguides

- *Risk of damage to optical waveguide*

→ Observe the requirements for working with and installing optical waveguides.

NOTE: Voltage peaks

- *Risk of damage to load or to the control unit*

→ Remove the ignition key and switch off load before disconnecting or removing load.

Information

Always comply with the regulations for handling ESD-sensitive components!

- Assembly work may only be carried out if the mechanic is wearing the working clothes and shoes approved by Porsche.
- The new part must only be removed from the ESD (electrostatic discharge) protective packaging just before installation and at the position at which the part is to be installed.
- Never touch the electric pins and plug contacts.

1. Switch off ignition and pull remote control out of ignition lock.
2. Release electric plug connection **-1-** (**-a-**) and disconnect it from the loudspeaker booster **-2-** .
3. Unscrew fastening nuts **-3-** and remove holder **-4-** from the body.

Fig 1: Loosening Holder

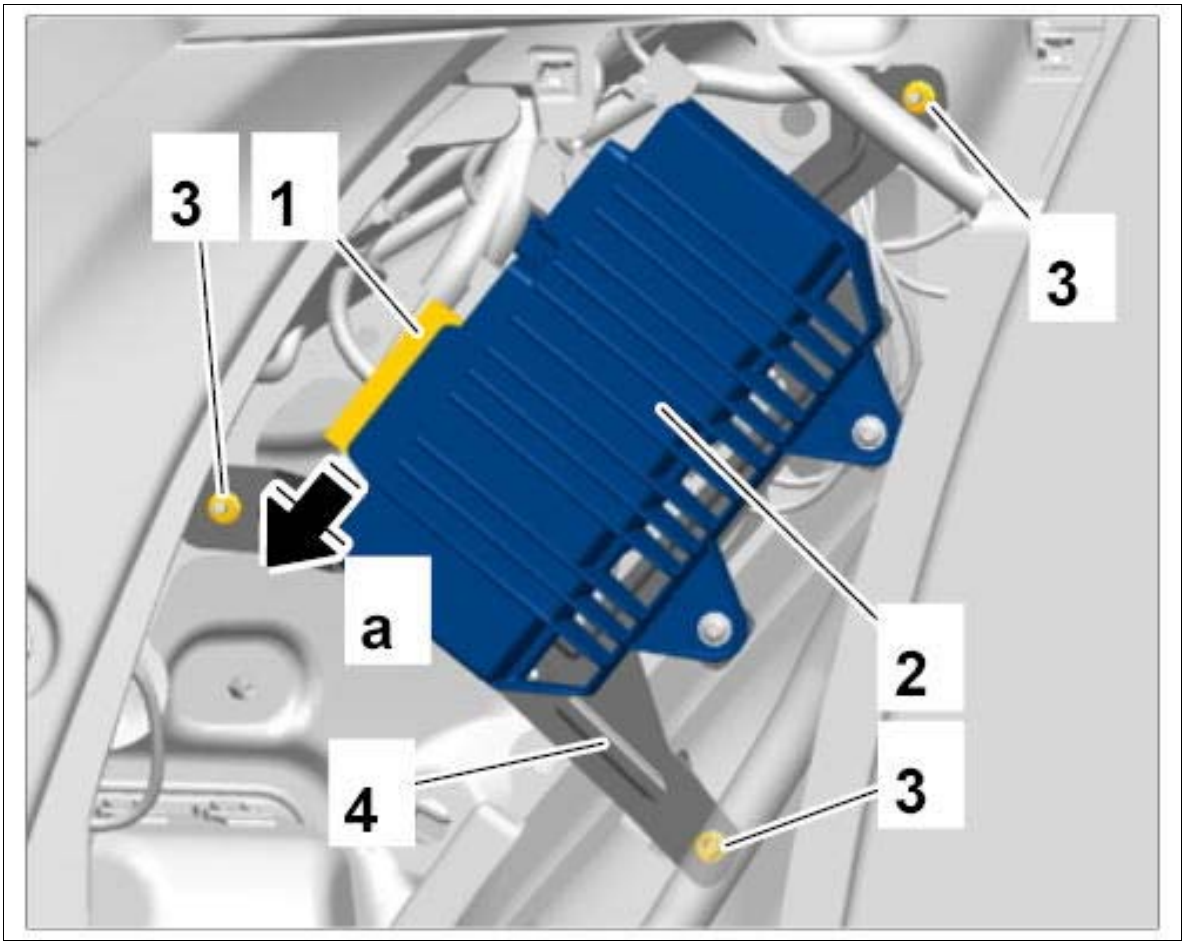

Courtesy of PORSCHE CARS NORTH AMERICA, INC.

4. Release and disconnect electric plug connections **-1-** .

Fig 2: Disconnecting Electric Plug Connections

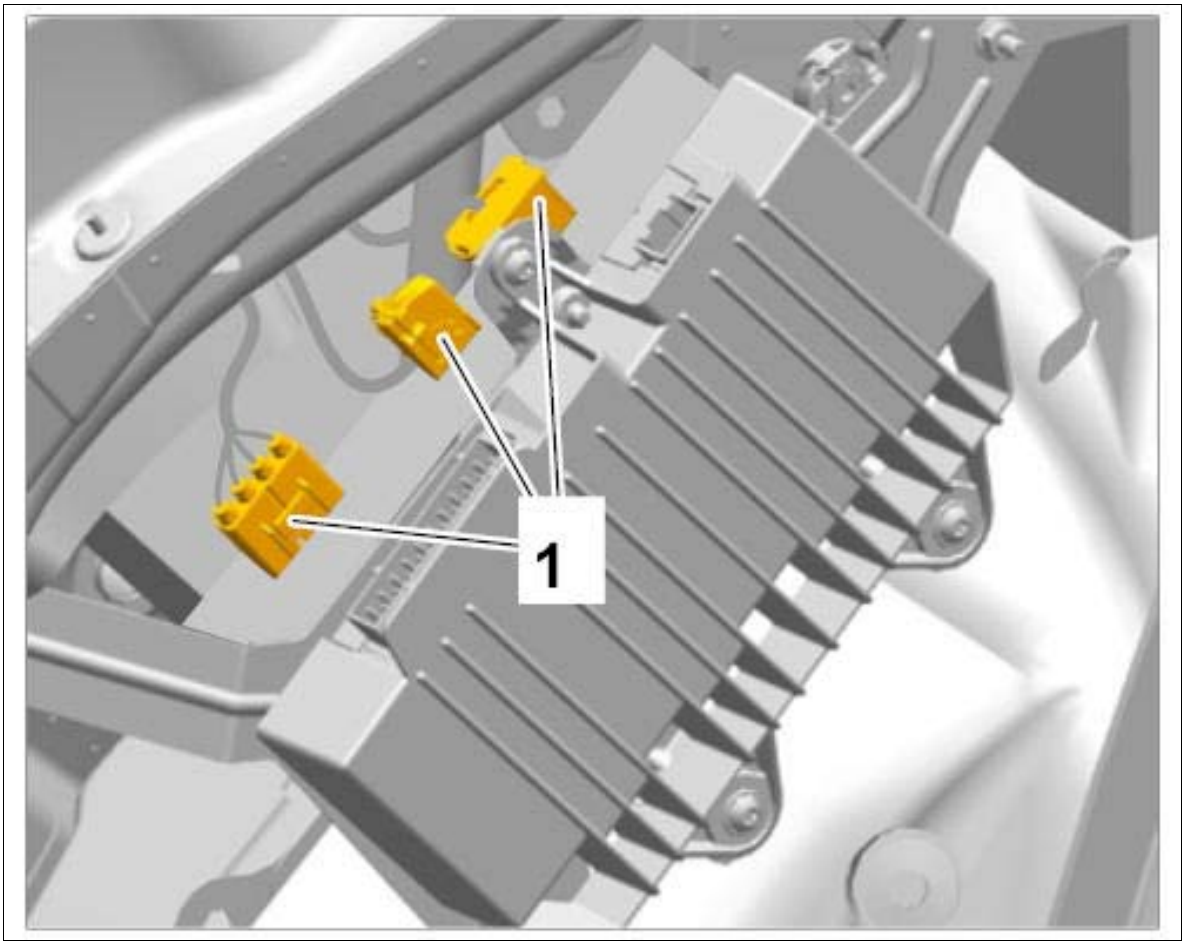

Courtesy of PORSCHE CARS NORTH AMERICA, INC.

5. Unscrew fastening screws **-1-** and remove TV tuner **-2-** from the holder.

Fig 3: Removing TV Tuner

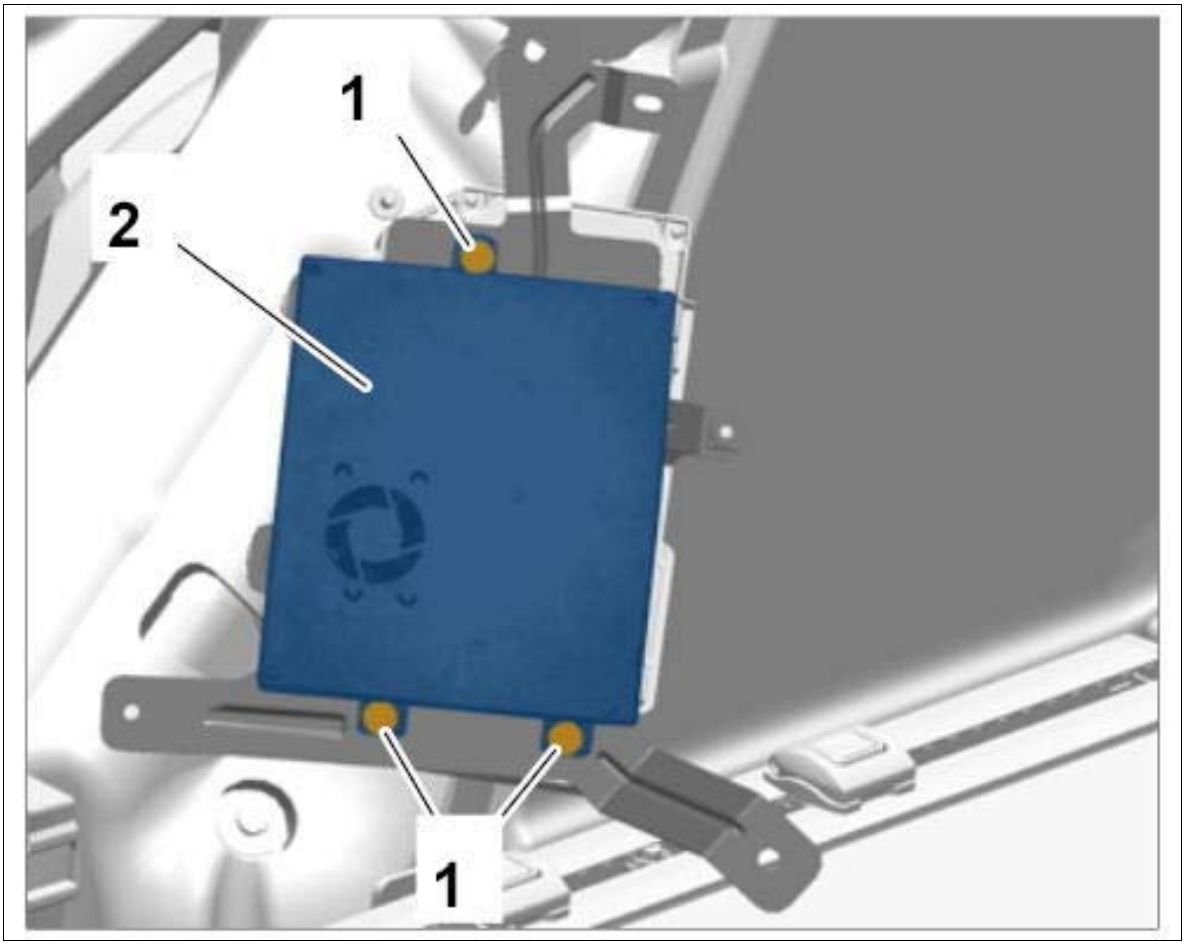

Courtesy of PORSCHE CARS NORTH AMERICA, INC.

WM 911719 REMOVING AND INSTALLING TV TUNER (ALL MODELS) > INSTALLING TV TUNER

NOTE: Incorrect handling of optical waveguides

- *Risk of damage to optical waveguide*

→ Observe the requirements for working with and installing optical waveguides.

Information

Always comply with the regulations for handling ESD-sensitive components!

- Assembly work may only be carried out if the mechanic is wearing the working clothes and shoes approved by Porsche.
- The new part must only be removed from the ESD (electrostatic discharge) protective packaging just before installation and at the position at which the part is to be installed.

- Never touch the electric pins and plug contacts.

1. Installation is performed in reverse order to removal.
2. Tighten fastening screws securing TV tuner to holder. **Tightening torque 6 Nm (4.5 ftlb.)**
3. Tighten fastening nuts securing TV tuner holder to the body. **Tightening torque 9 Nm (6.5 ftlb.)**

WM 911719 REMOVING AND INSTALLING TV TUNER (ALL MODELS) > SUBSEQUENT WORK

1. If the TV tuner was replaced, teach the new TV tuner to suit the vehicle using **PIWIS Tester II 9818** . → 911755 REPLACING TV TUNER

WM 911755 REPLACING TV TUNER (ALL MODELS) > TOOLS

Designation	Type	Number	Description	
PIWIS Tester II	Special tool	9818		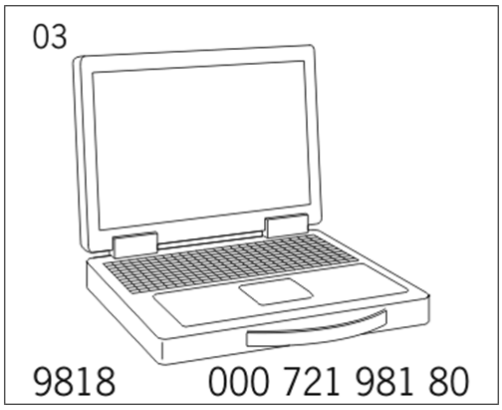

WM 911755 REPLACING TV TUNER (ALL MODELS) > TECHNICAL VALUES

Location	Description	Type	Basic value	Tolerance 1	Tolerance 2
Current rating		Nominal value	40 A		

WM 911755 REPLACING TV TUNER (ALL MODELS) > PRELIMINARY WORK

Information

If a new TV tuner is installed, there must be no signals at the optical waveguide connector (disconnected optical waveguide connector does not light up).

Given this, the battery must be disconnected before installing a new TV tuner.

Information

If a new TV tuner is installed, there must be no signals at the optical waveguide connector (disconnected optical waveguide connector does not light up).

Given this, the battery must be disconnected before installing a new TV tuner.

1. Switch off ignition.
2. Disconnect the battery. → 2X00IN WORK INSTRUCTIONS AFTER DISCONNECTING THE BATTERY .
3. Replace control unit. → 911719 REMOVING AND INSTALLING TV TUNER .
4. Connect the battery.

WM 911755 REPLACING TV TUNER (ALL MODELS) > REPLACING TV TUNER > CODING TV TUNER

NOTE: Voltage drop

- *Risk of irreparable damage to control unit*
- *Risk of damage to control unit*
- *Fault entries in the control unit*
- *Coding in the control unit is aborted*
- *Malfunctions in control unit, even during programming*

→ Prior to disconnecting the control unit, switch off ignition and remove ignition key.

→ Ensure that the power supply is not interrupted during programming.

→ Connect a battery charger with a current rating of at least → **Nominal value: 40 A** to the vehicle battery.

Information

The **PIWIS Tester II 9818** instructions take precedence since the description may be different with later Tester releases.

The procedure described here has been structured in general terms; different text or additions may appear in **PIWIS Tester II 9818** .

1. Connect the PIWIS Tester to the vehicle and start the Tester. Switch on ignition.
2. Select the vehicle type and start the diagnostic application.
3. Select the required control unit **TV tuner** in the **overview** .
4. **Codings/adaptations** must now be selected.

5. **Automatic coding** must now be selected. Then press [F12] to continue.
6. The Tester displays the message **Coding has been completed successfully** . Press [F12] to continue.
7. **Read out the fault memory** and erase it if necessary.
8. Carry out a function test on the TV tuner.

WM 911755 REPLACING TV TUNER (ALL MODELS) > SUBSEQUENT WORK

Follow instructions after disconnecting the battery during the test drive. → 2X00IN WORK INSTRUCTIONS AFTER DISCONNECTING THE BATTERY .

WM 913619 REMOVING AND INSTALLING SUBWOOFER (ALL MODELS) > TOOLS

Designation	Type	Number	Description	
PIWIS Tester II	Special tool	9818		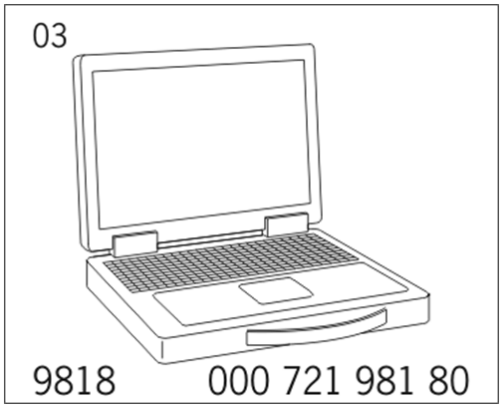

WM 913619 REMOVING AND INSTALLING SUBWOOFER (ALL MODELS) > TECHNICAL VALUES

Location	Description	Type	Basic value	Tolerance 1	Tolerance 2
Subwoofer to body	Hexagon-head bolt, M6 x 16	Tightening torque	9 Nm (6.5 ftlb.)		

WM 913619 REMOVING AND INSTALLING SUBWOOFER (ALL MODELS) > REMOVING SUBWOOFER

NOTE: Voltage peaks

- *Risk of damage to load or to the control unit*

→ Remove the ignition key and switch off load before disconnecting or removing load.

Information

Always comply with the regulations for handling ESD-sensitive components!

- Assembly work may only be carried out if the mechanic is wearing the working clothes and shoes approved by Porsche.
- The new part must only be removed from the ESD (electrostatic discharge) protective packaging just before installation and at the position at which the part is to be installed.
- Never touch the electric pins and plug contacts.

1. Switch off ignition and pull remote control out of ignition lock.
2. Unscrew fastening screws **-1-** and carefully move subwoofer **-2-** up into the luggage compartment.

   Fig 1: Loosening Subwoofer

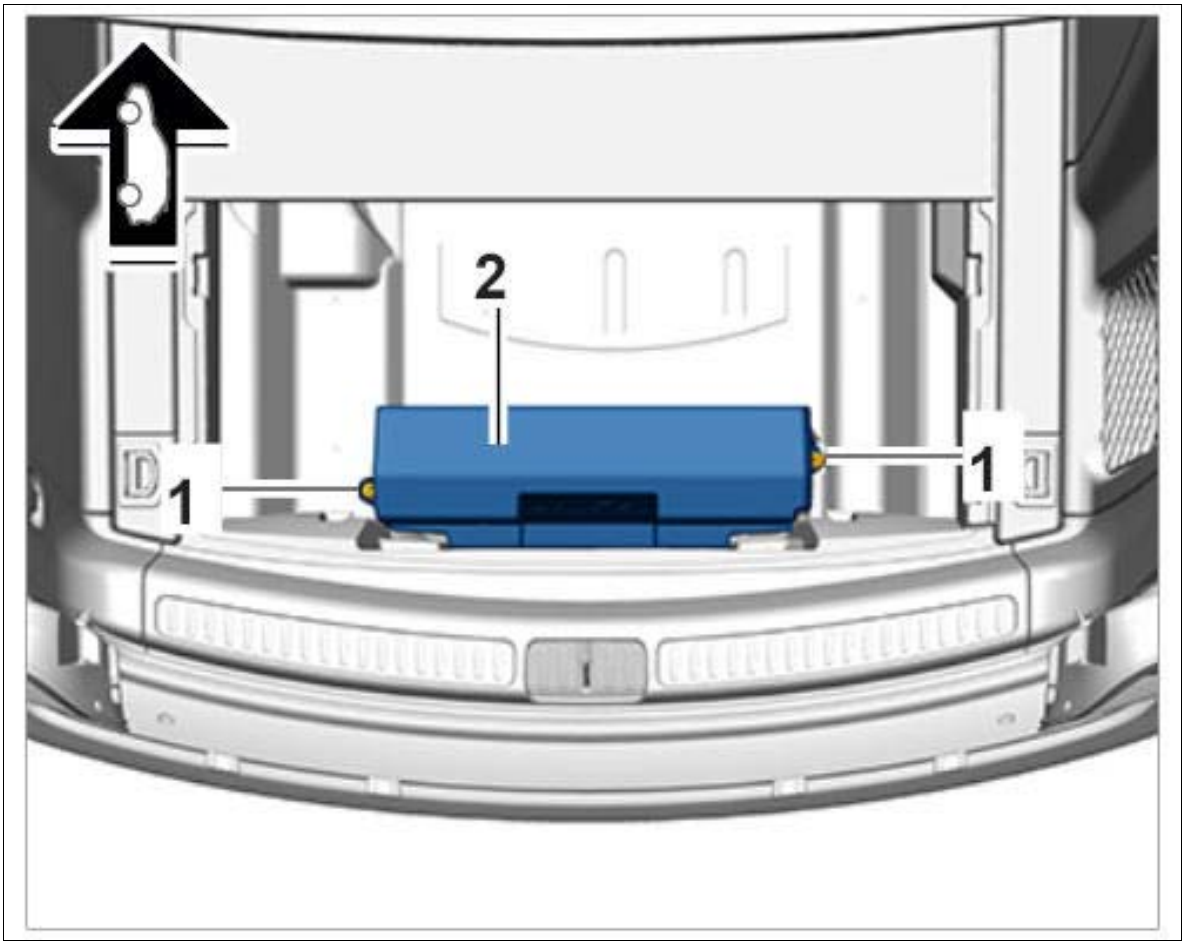

Courtesy of PORSCHE CARS NORTH AMERICA, INC.

3. Release electric plug connection **-1-** (**-a-**) and disconnect it.

Fig 2: Disconnecting Electric Plug Connection

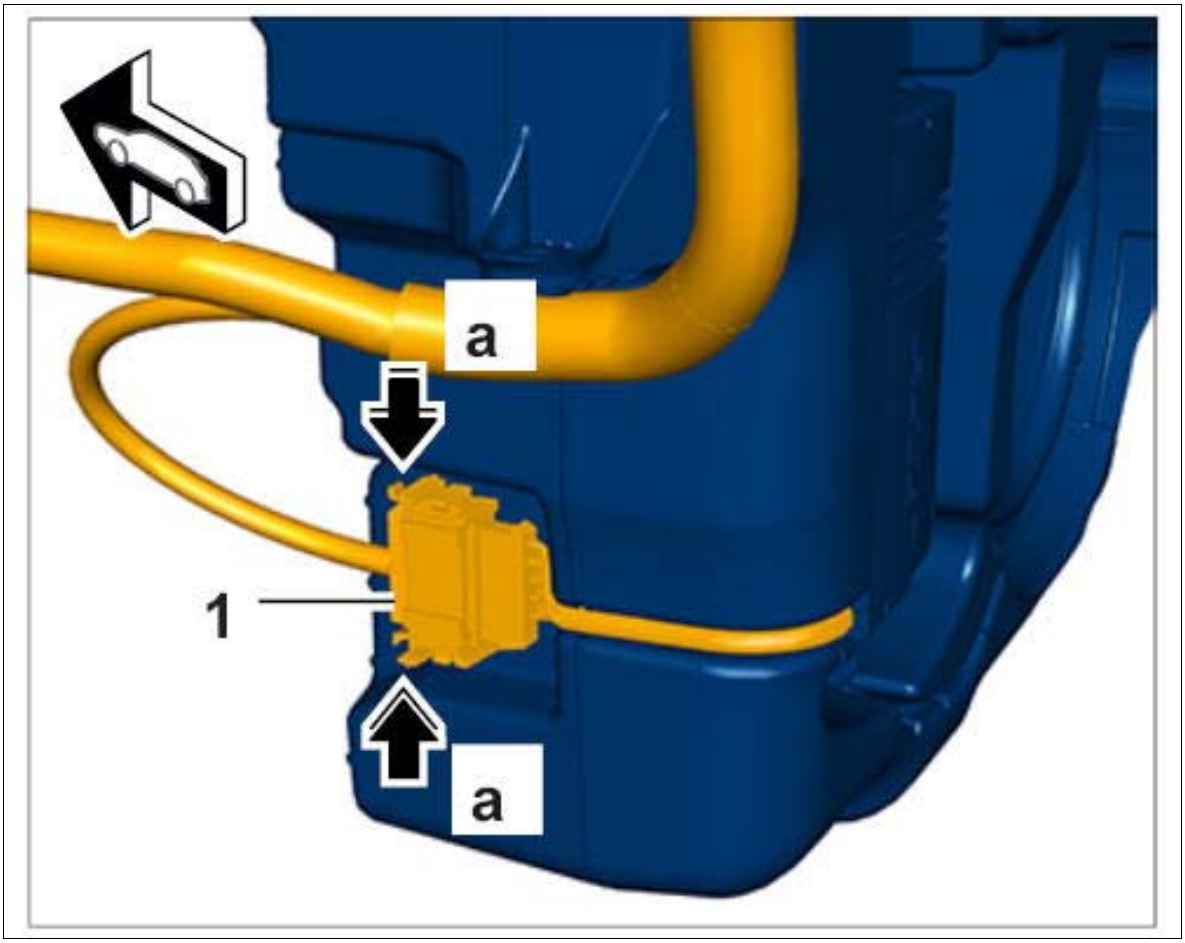

Courtesy of PORSCHE CARS NORTH AMERICA, INC.

WM 913619 REMOVING AND INSTALLING SUBWOOFER (ALL MODELS) > INSTALLING SUBWOOFER

Information

Always comply with the regulations for handling ESD-sensitive components!

- Assembly work may only be carried out if the mechanic is wearing the working clothes and shoes approved by Porsche.
- The new part must only be removed from the ESD (electrostatic discharge) protective packaging just before installation and at the position at which the part is to be installed.
- Never touch the electric pins and plug contacts.

1. Installation is performed in reverse order to removal.
2. Tighten fastening screws securing subwoofer to body. **Tightening torque 9 Nm (6.5 ftlb.)**

WM 913619 REMOVING AND INSTALLING SUBWOOFER (ALL MODELS) > SUBSEQUENT WORK

1. If the subwoofer was replaced, teach the new subwoofer to suit the vehicle using **PIWIS Tester II 9818** . → WM 913619 REMOVING AND INSTALLING SUBWOOFER

WM 913819 REMOVING AND INSTALLING SDARS ANTENNA (ALL MODELS) > TECHNICAL VALUES

Location	Description	Type	Basic value	Tolerance 1	Tolerance 2
SDARS antenna to vehicle roof	Hexagon nut	Tightening torque	7 Nm (5 ftlb.)	+1 Nm (+0.5 ftlb.)	

WM 913819 REMOVING AND INSTALLING SDARS ANTENNA (ALL MODELS) > PRELIMINARY WORK

1. Remove headliner. → Removing Headliner

WM 913819 REMOVING AND INSTALLING SDARS ANTENNA (ALL MODELS) > REMOVING SDARS ANTENNA

1. Release electric plug connection **-1-** (**-a-**) and disconnect it.
2. Loosen fastening nut **-2-** and remove SDARS antenna **-3-** .

Fig 1: Removing SDARS Antenna

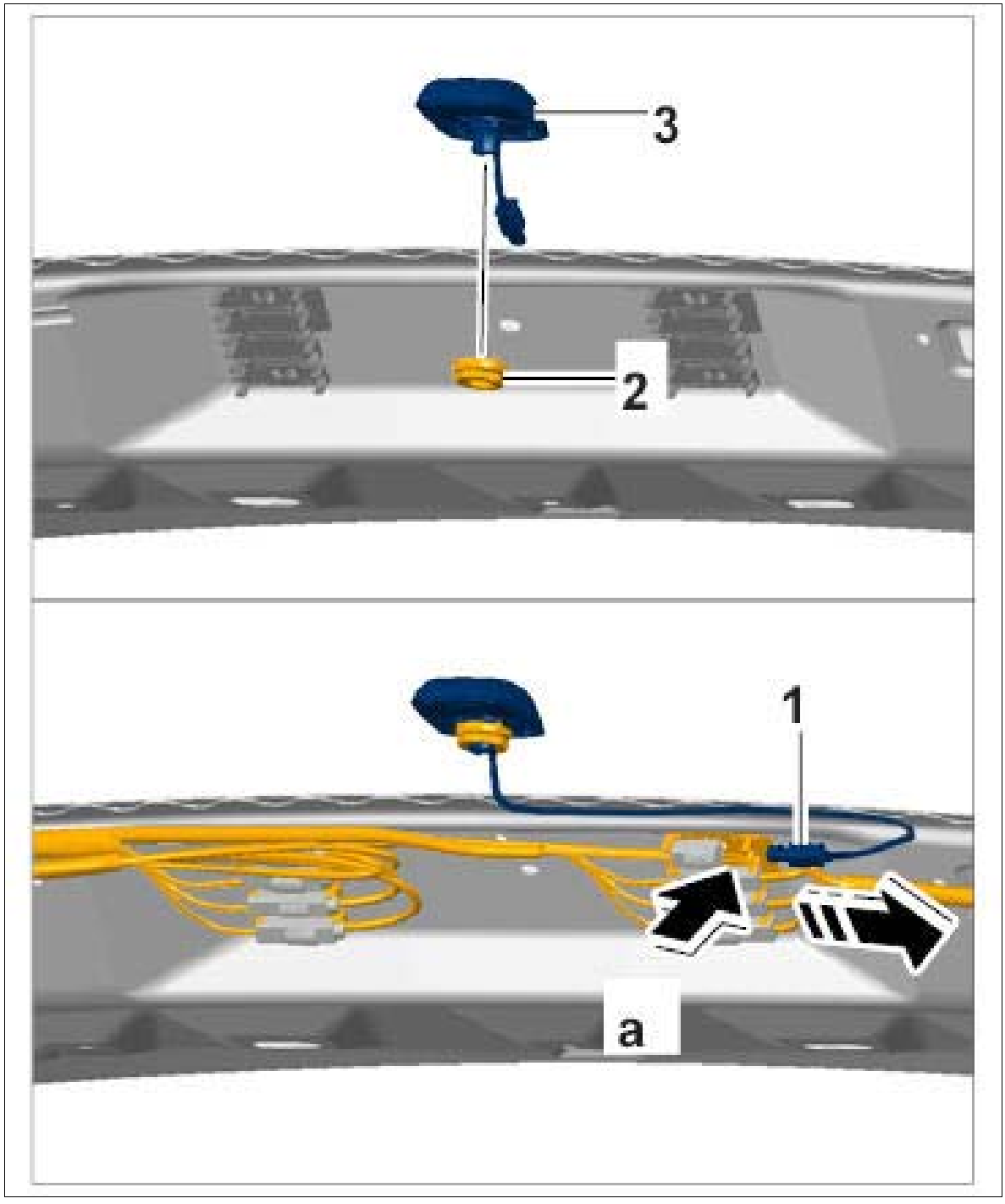

Courtesy of PORSCHE CARS NORTH AMERICA, INC.

WM 913819 REMOVING AND INSTALLING SDARS ANTENNA (ALL MODELS) > INSTALLING SDARS ANTENNA

1. Place SDARS antenna **-3-** in position and screw down with fastening nut **-2-** . **Tightening torque 7 Nm (5 ftlb.) +1 Nm (+0.5 ftlb.)**

2. Connect electric plug connection **-1-** until the connector engages securely.

Fig 1: Installing SDARS Antenna

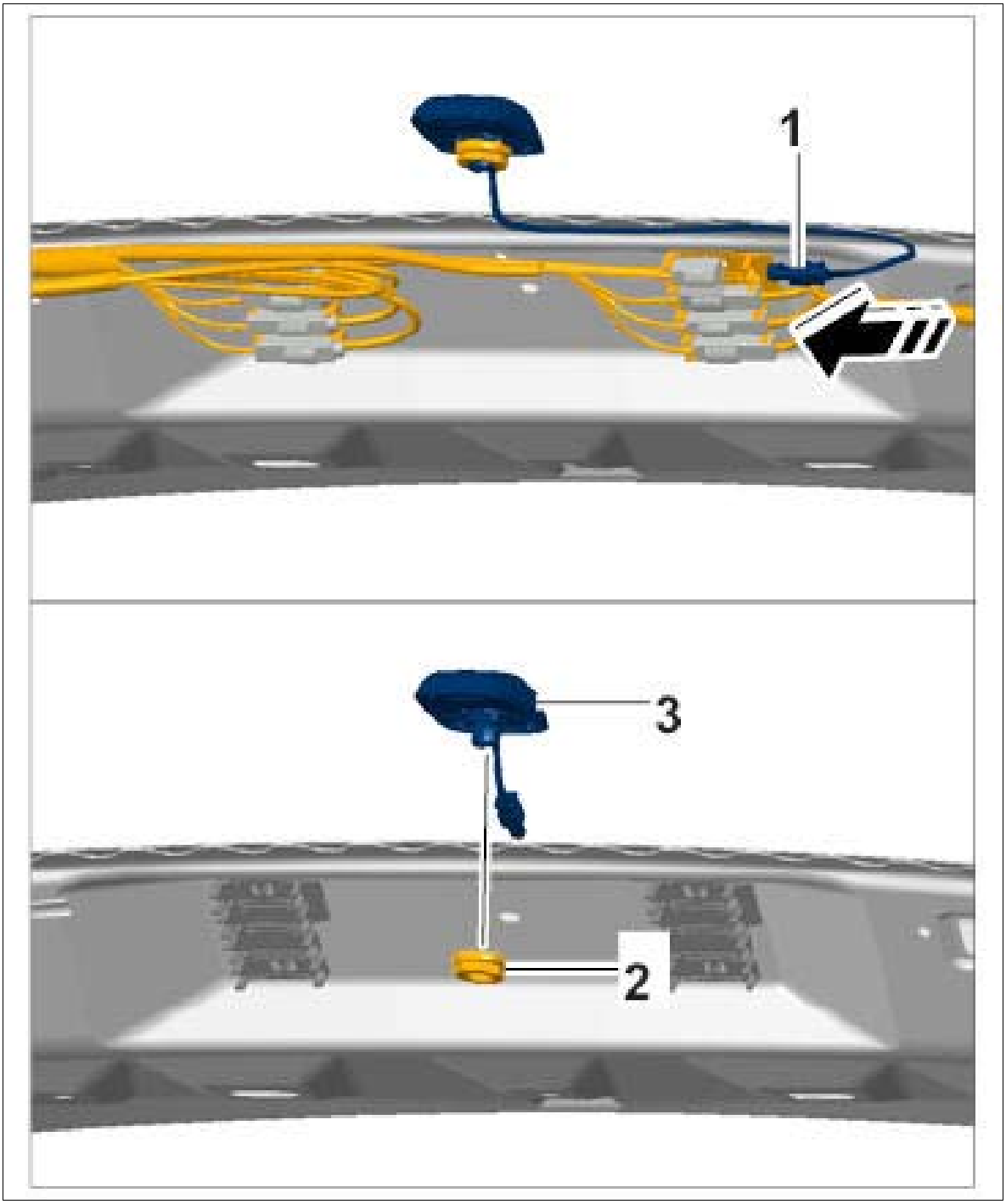

Courtesy of PORSCHE CARS NORTH AMERICA, INC.

WM 913819 REMOVING AND INSTALLING SDARS ANTENNA (ALL MODELS) > SUBSEQUENT WORK

1. Install headliner. → Installing Headliner

WM 914019 REMOVING AND INSTALLING FRONT LOUDSPEAKERS (DASHBOARD) (ALL MODELS) > INFORMATION > COMPONENT OVERVIEW

Fig 1: Identifying Front Loudspeakers Dashboard Installation Position (Shown On Cayenne)

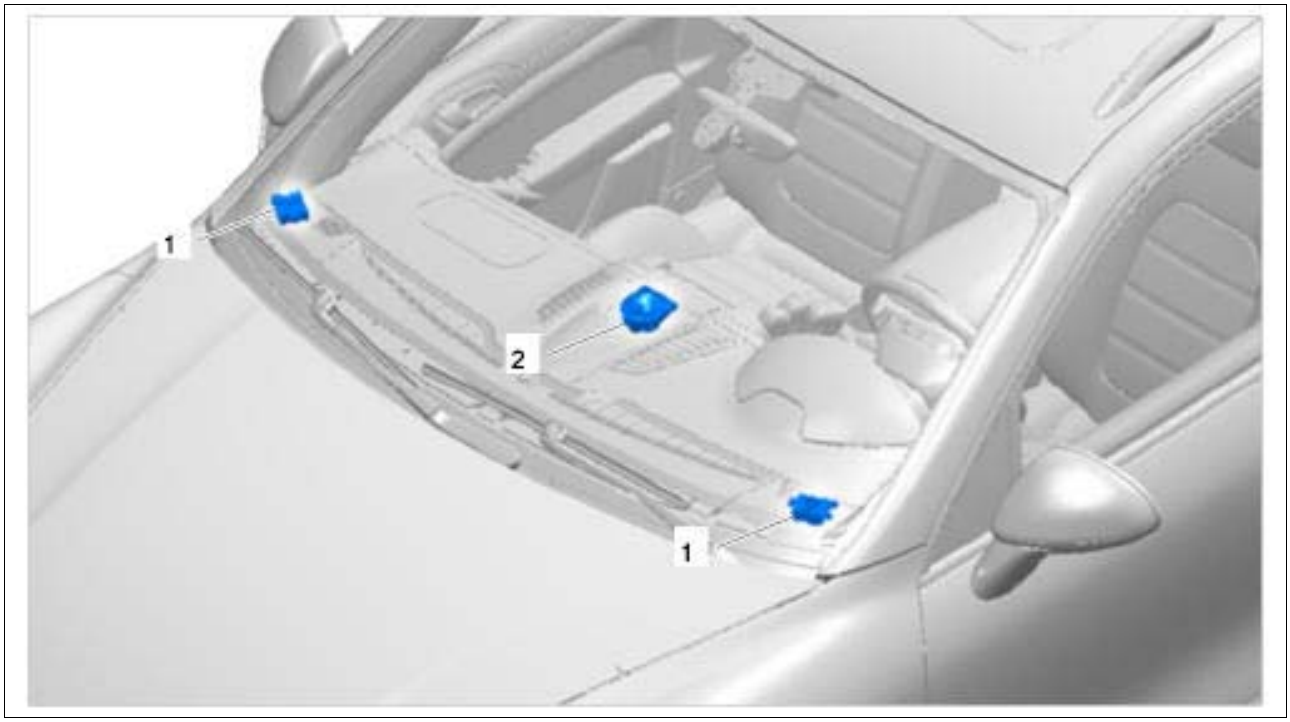

Courtesy of PORSCHE CARS NORTH AMERICA, INC.

1. Front loudspeakers (switch panel) at the left and right
2. Front loudspeaker (dashboard) at the center

WM 914019 REMOVING AND INSTALLING FRONT LOUDSPEAKERS (DASHBOARD) (ALL MODELS) > PRELIMINARY WORK > PRELIMINARY WORK FOR FRONT LOUDSPEAKERS (DASHBOARD) AT THE LEFT AND RIGHT

Remove cover for loudspeaker at the left and right. → Removing Cover For Centre Loudspeaker

WM 914019 REMOVING AND INSTALLING FRONT LOUDSPEAKERS (DASHBOARD) (ALL MODELS) > PRELIMINARY WORK > PRELIMINARY WORK FOR FRONT CENTRE LOUDSPEAKER (DASHBOARD)

Remove cover for center loudspeaker. → Removing Cover For Centre Loudspeaker .

WM 914019 REMOVING AND INSTALLING FRONT LOUDSPEAKERS (DASHBOARD) (ALL MODELS) > REMOVING FRONT LOUDSPEAKERS (DASHBOARD) > REMOVING FRONT LOUDSPEAKERS (DASHBOARD) AT THE LEFT AND RIGHT

NOTE: Incorrect handling of components

- *Risk of irreparable damage to electric and electronic components*
- *Reduced functionality*

→ Switch off the ignition, remove the ignition key and switch off the audio system before removing the loudspeakers.

Information

- Some of the repair illustrations show only one side of the vehicle.
- Naturally, some steps also have to be performed on the opposite side of the vehicle as well.

1. Unclip loudspeaker using a small screwdriver **-a-** and remove it **-A-** .

Fig 1: Removing Loudspeaker

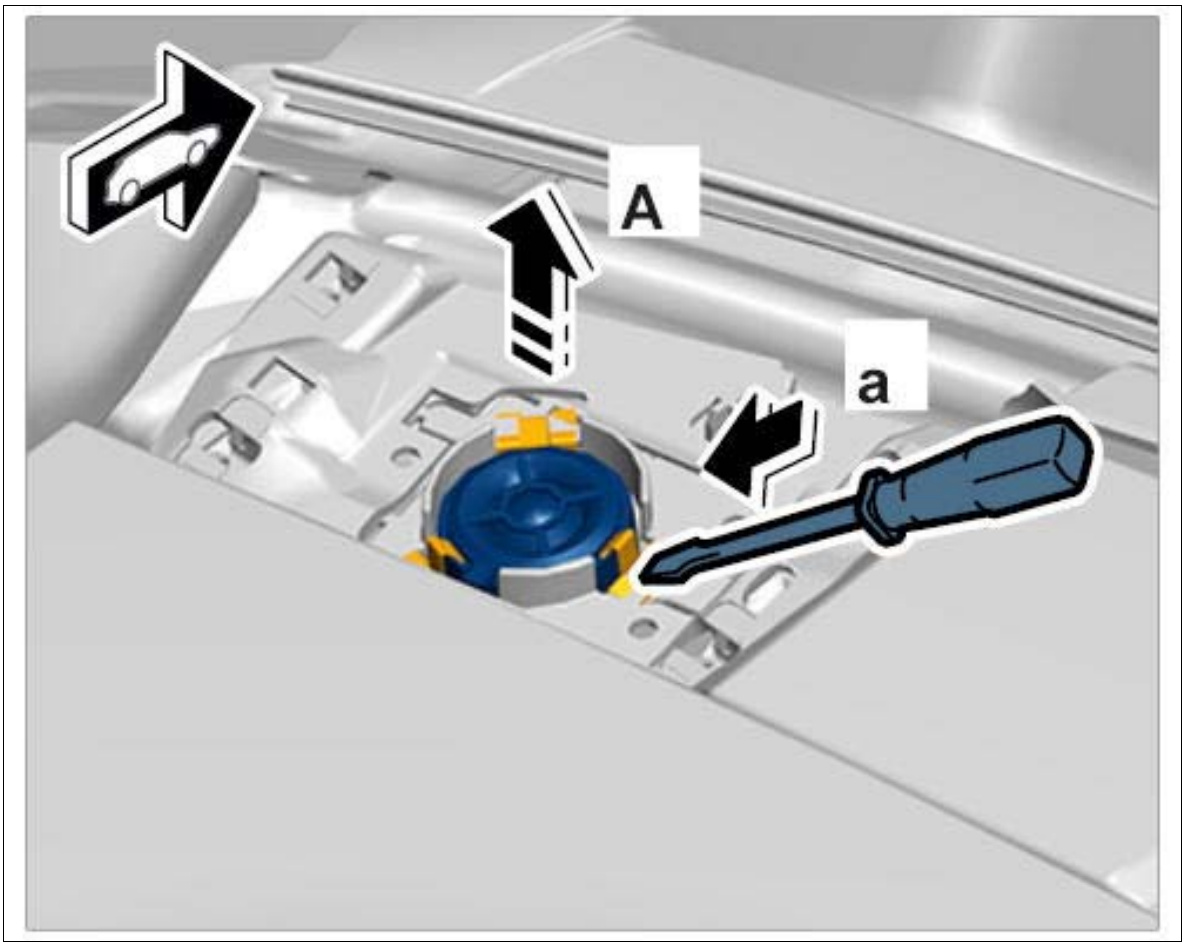

Courtesy of PORSCHE CARS NORTH AMERICA, INC.

2. Disconnect electric plug connection.

Fig 2: Disconnecting Electric Plug Connection

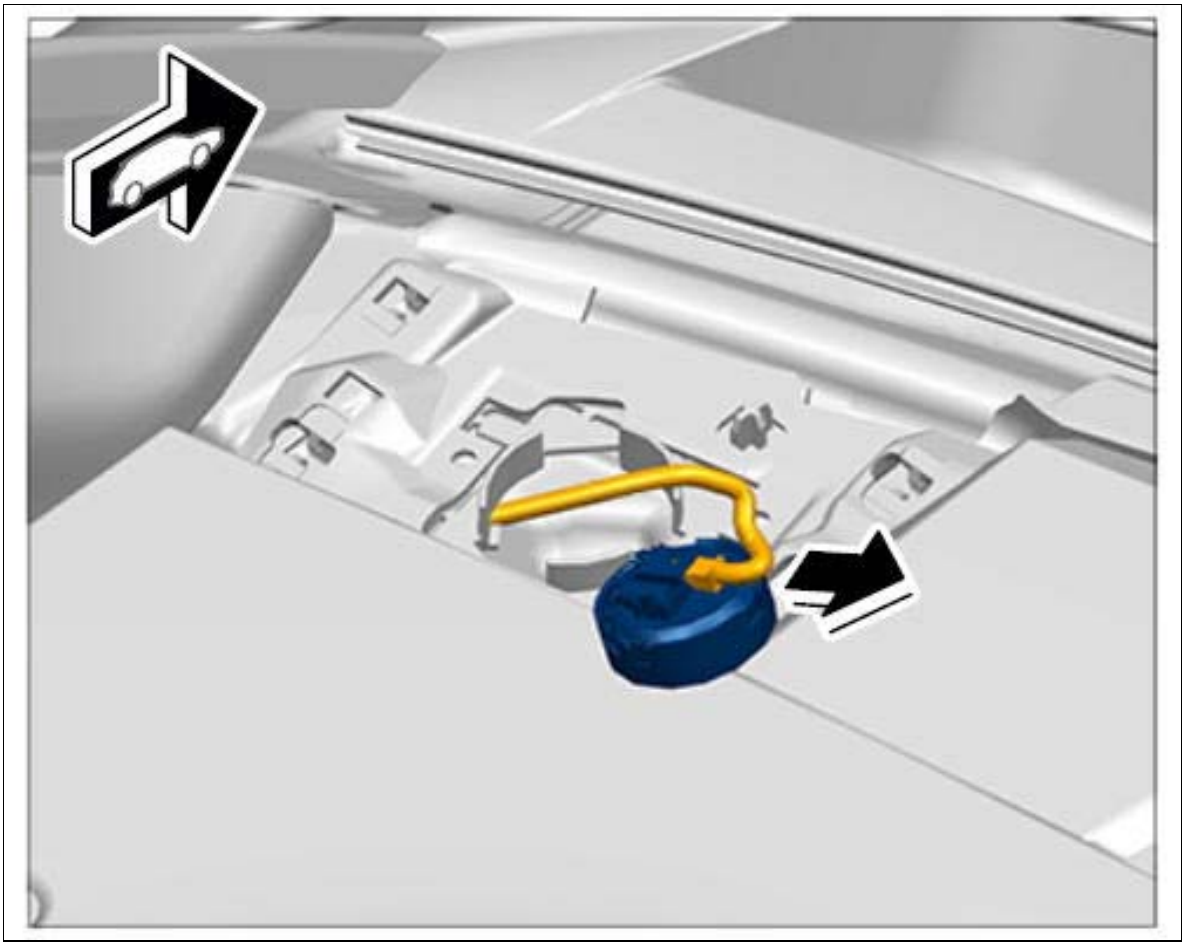

Courtesy of PORSCHE CARS NORTH AMERICA, INC.

WM 914019 REMOVING AND INSTALLING FRONT LOUDSPEAKERS (DASHBOARD) (ALL MODELS) > REMOVING FRONT LOUDSPEAKERS (DASHBOARD) > REMOVING FRONT CENTRE LOUDSPEAKER (DASHBOARD)

NOTE: Incorrect handling of components

- *Risk of irreparable damage to electric and electronic components*
- *Reduced functionality*

→ Switch off the ignition, remove the ignition key and switch off the audio system before removing the loudspeakers.

1. Unscrew fastening screws **-1-** on the loudspeaker and remove loudspeaker.

Fig 1: Removing Fastening Screws

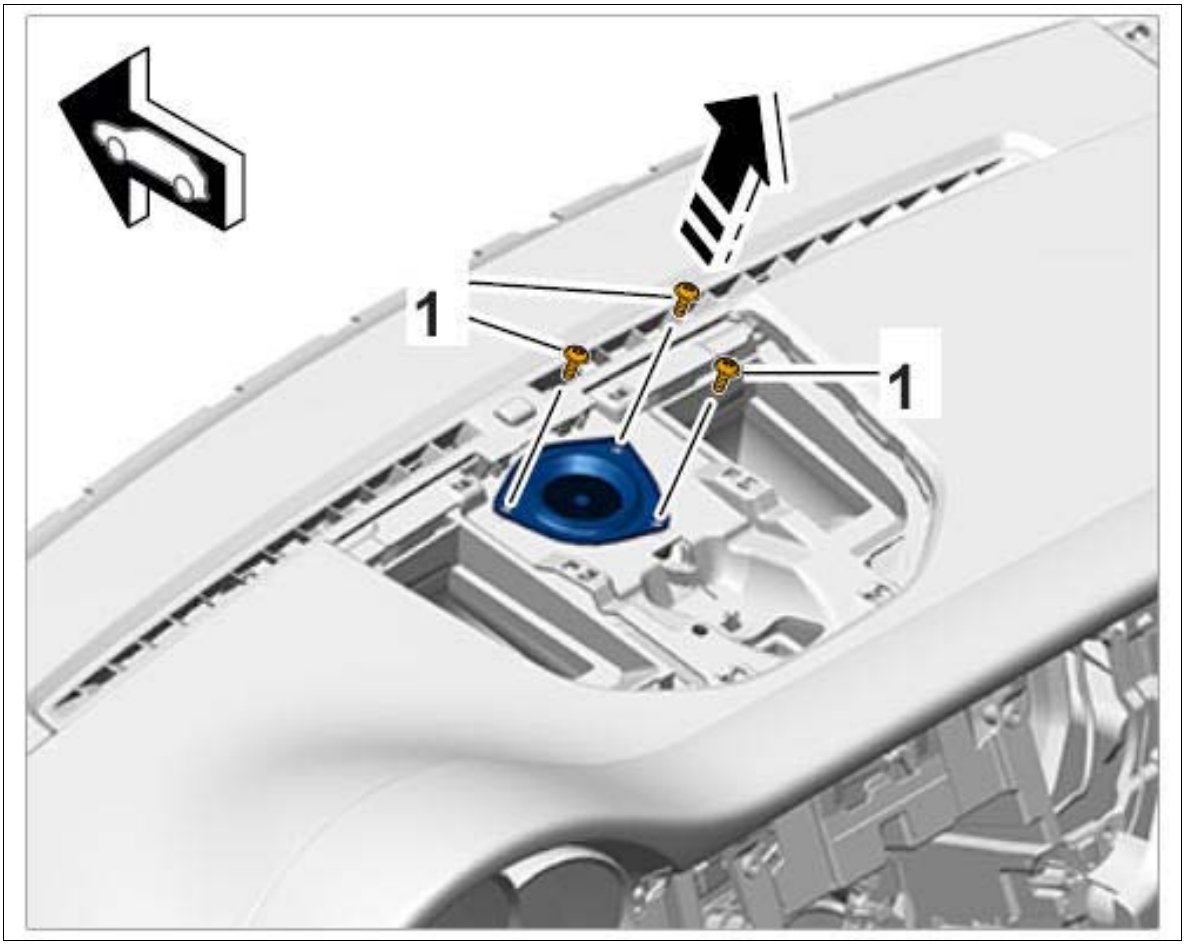

Courtesy of PORSCHE CARS NORTH AMERICA, INC.

2. Release electric plug connection **-a-** and disconnect it **-A-** .

Fig 2: Disconnecting Electric Plug Connection

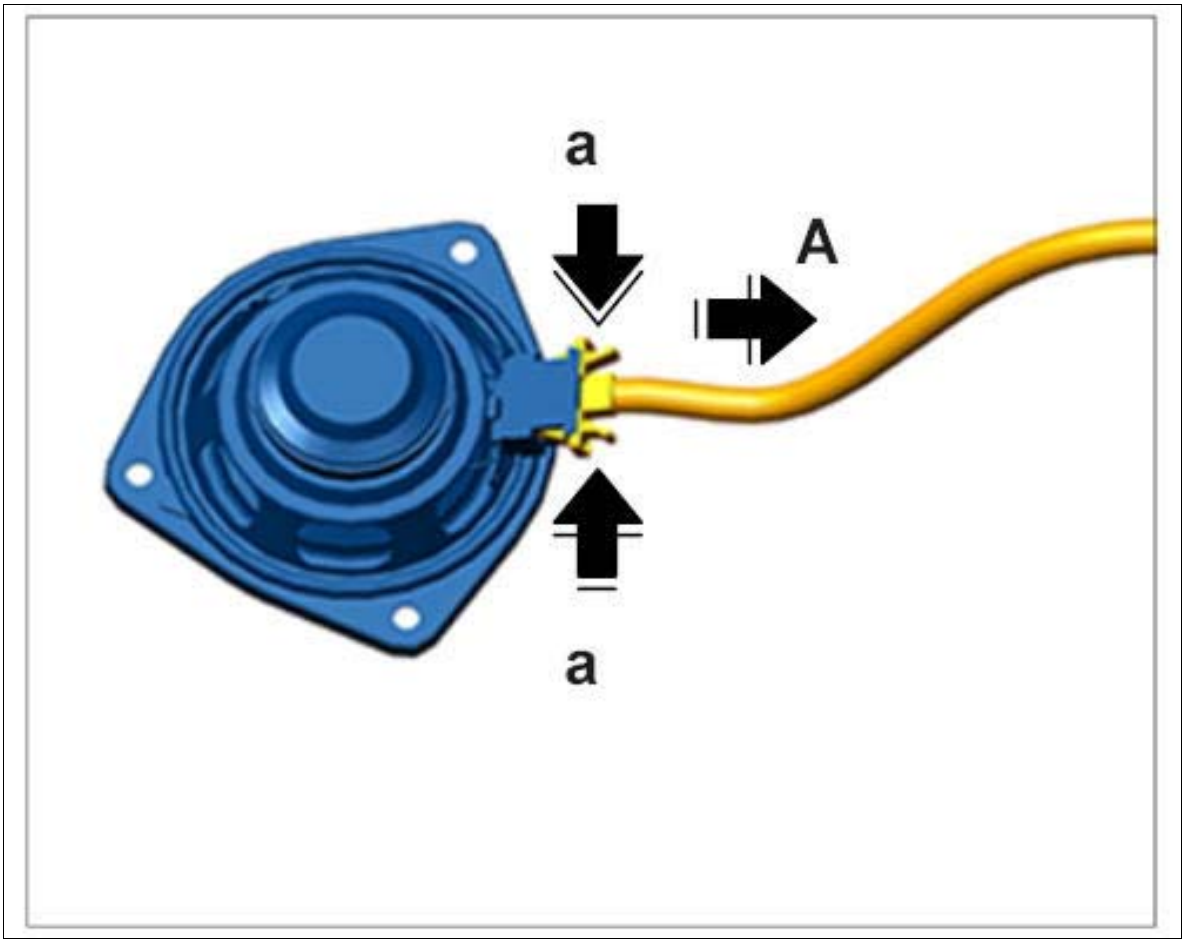

Courtesy of PORSCHE CARS NORTH AMERICA, INC.

WM 914019 REMOVING AND INSTALLING FRONT LOUDSPEAKERS (DASHBOARD) (ALL MODELS) > INSTALLING FRONT LOUDSPEAKERS (DASHBOARD) > INSTALLING FRONT LOUDSPEAKERS (DASHBOARD) AT THE LEFT AND RIGHT

1. Plug in electric plug connection on loudspeaker until it engages securely.

Fig 1: Connecting Electric Plug Connection



Courtesy of PORSCHE CARS NORTH AMERICA, INC.

2. Clip loudspeaker into the dashboard. Check that the clips are fitted securely.

Fig 2: Clipping Loudspeaker

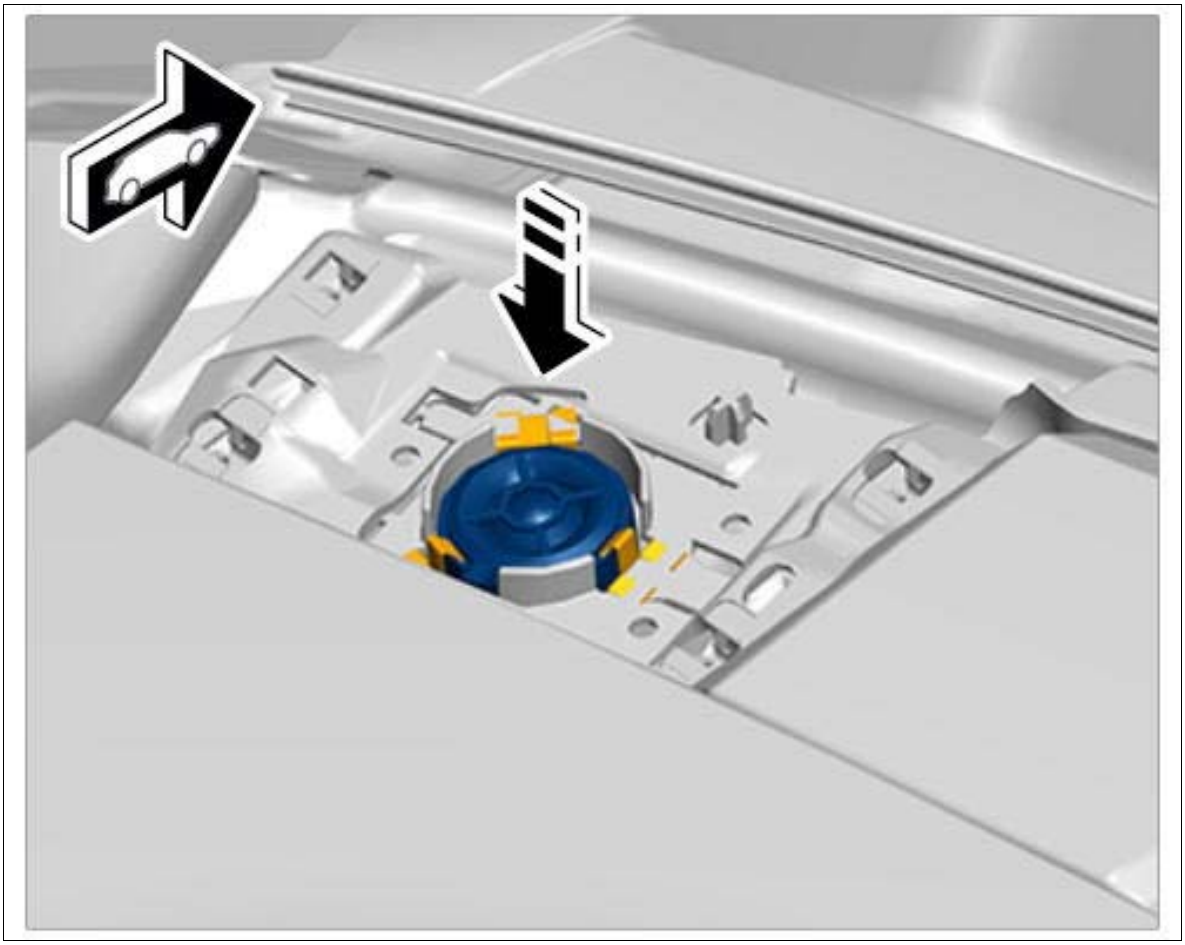

Courtesy of PORSCHE CARS NORTH AMERICA, INC.

WM 914019 REMOVING AND INSTALLING FRONT LOUDSPEAKERS (DASHBOARD) (ALL MODELS) > INSTALLING FRONT LOUDSPEAKERS (DASHBOARD) > INSTALLING FRONT CENTRE LOUDSPEAKER (DASHBOARD)

1. Plug in electric plug connection on loudspeaker until it engages securely.

Fig 1: Screwing Electric Plug Connection

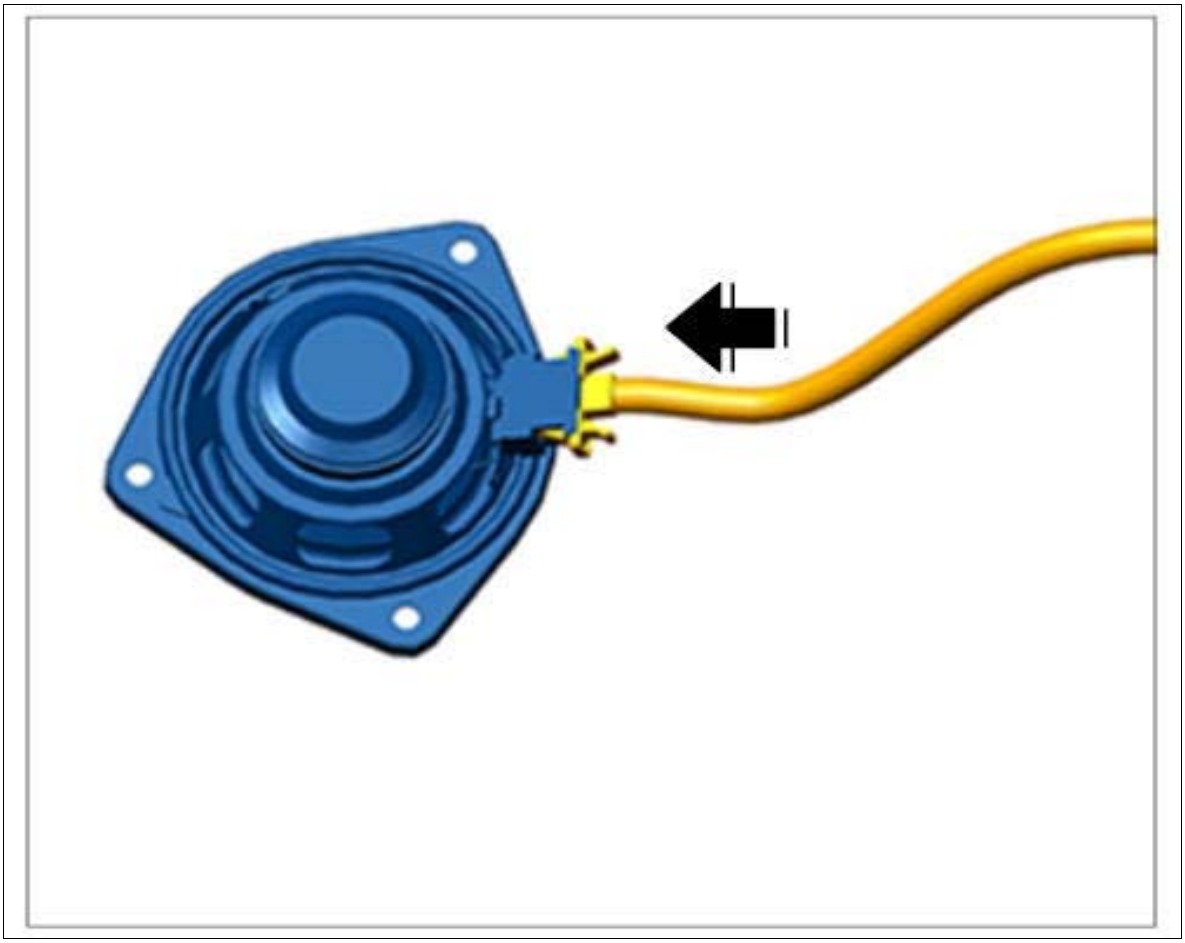

Courtesy of PORSCHE CARS NORTH AMERICA, INC.

2. Position the loudspeaker on the dashboard and secure it with fastening screws **-1-** .

Fig 2: Installing Loudspeaker

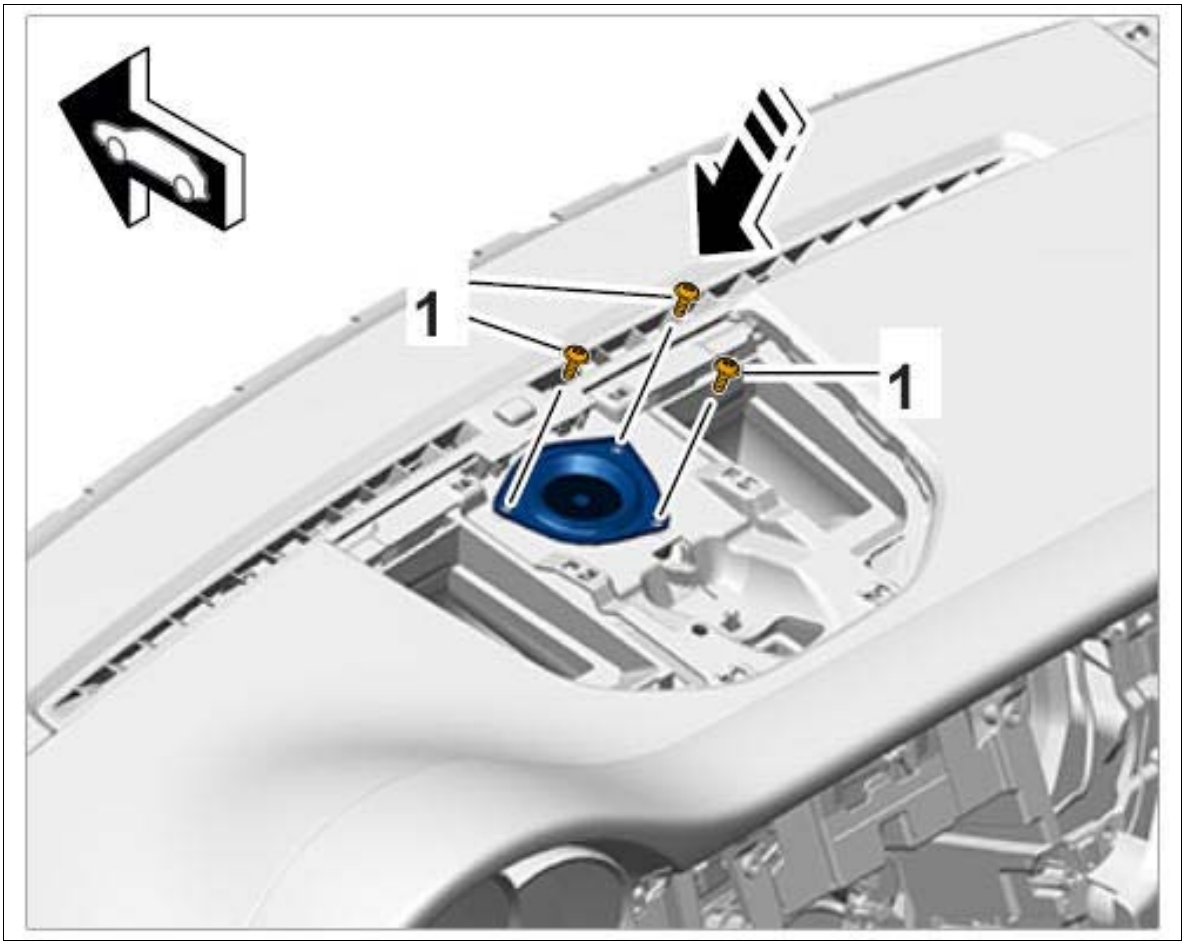

Courtesy of PORSCHE CARS NORTH AMERICA, INC.

WM 914019 REMOVING AND INSTALLING FRONT LOUDSPEAKERS (DASHBOARD) (ALL MODELS) > SUBSEQUENT WORK > SUBSEQUENT WORK FOR FRONT LOUDSPEAKERS (DASHBOARD) AT THE LEFT AND RIGHT

Install cover for front loudspeakers (dashboard) at the left and right. → Installing Cover For Centre Loudspeaker

WM 914019 REMOVING AND INSTALLING FRONT LOUDSPEAKERS (DASHBOARD) (ALL MODELS) > SUBSEQUENT WORK > SUBSEQUENT WORK FOR FRONT CENTRE LOUDSPEAKER (DASHBOARD)

Remove cover for front center loudspeaker (dashboard). → Removing Cover For Centre Loudspeaker

WM 914119 REMOVING AND INSTALLING FRONT LOUDSPEAKERS (ALL MODELS) >

TECHNICAL VALUES

Location	Description	Type	Basic value	Tolerance 1	Tolerance 2
Fastening screws for woofer		Tightening torque	3.5 Nm (2.5 ftlb.)		
Fastening screw for mid-range loudspeaker		Tightening torque	1.5 Nm (1 ftlb.)		

WM 914119 REMOVING AND INSTALLING FRONT LOUDSPEAKERS (ALL MODELS) > INFORMATION

Fig 1: Identifying Front Loudspeakers Installation Position (Shown On Cayenne)

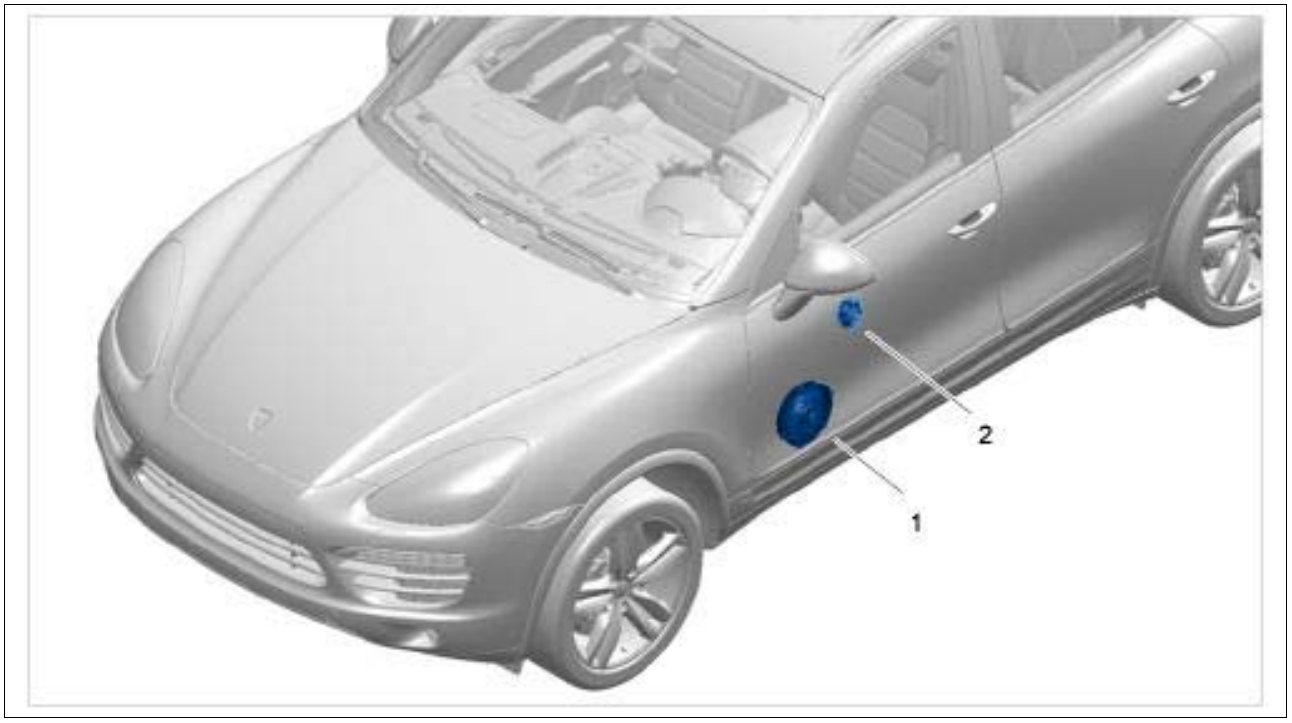

Courtesy of PORSCHE CARS NORTH AMERICA, INC.

1. Woofer
2. Mid-range loudspeaker

WM 914119 REMOVING AND INSTALLING FRONT LOUDSPEAKERS (ALL MODELS) > PRELIMINARY WORK

1. Remove front door panel. → Removing Front Door Panel

WM 914119 REMOVING AND INSTALLING FRONT LOUDSPEAKERS (ALL MODELS) > REMOVING FRONT LOUDSPEAKERS > REMOVING WOOFER FROM DOOR SUB-FRAME

NOTE: Voltage peaks

- *Risk of damage to load or to the control unit*

→ Switch off ignition and remove remote control before disconnecting or removing load.

Information

- Some of the repair illustrations show only one side of the vehicle.
- Naturally, some steps also have to be performed on the opposite side of the vehicle as well.

1. Release electric plug connection for woofer **-a-** and disconnect it **-B-** .

   Fig 1: Disconnecting Electric Plug Connection

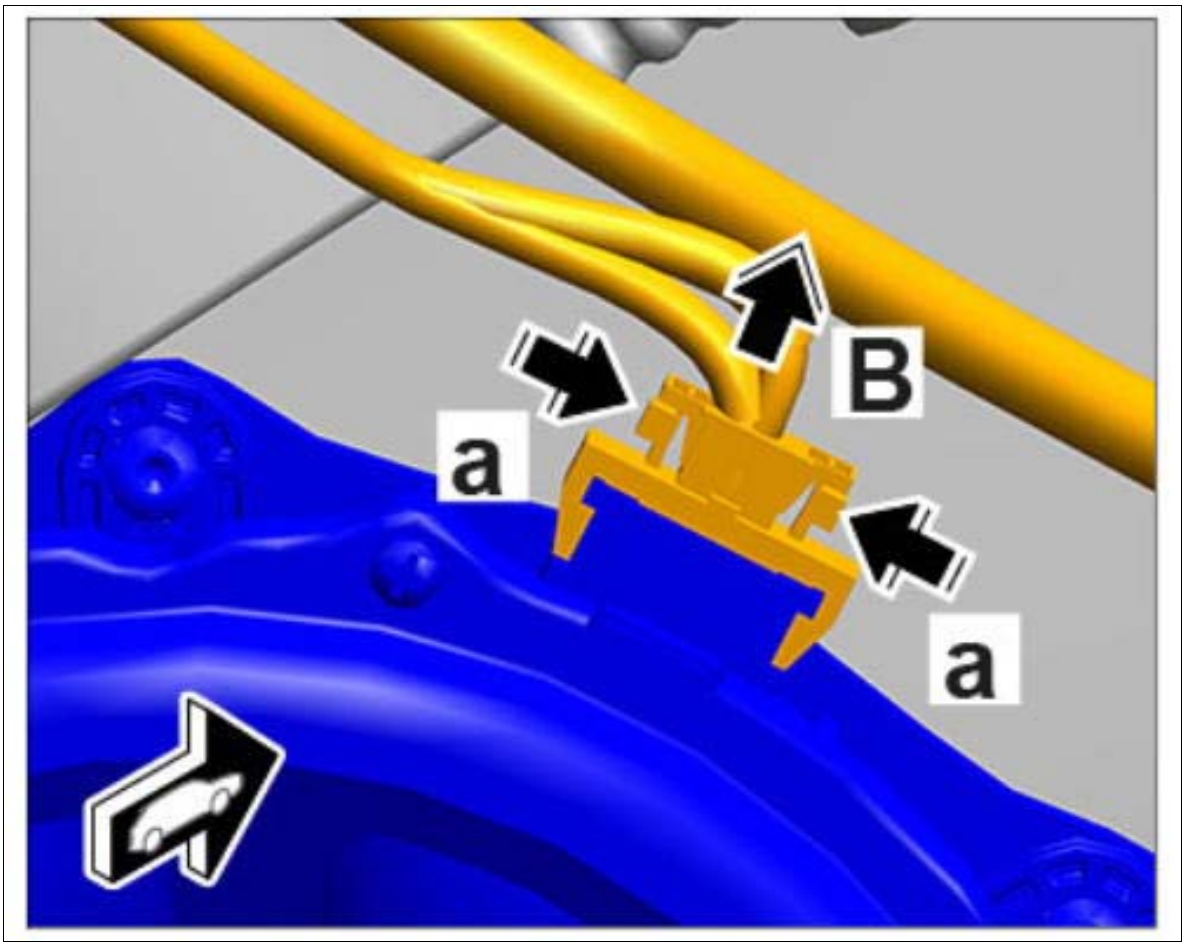

Courtesy of PORSCHE CARS NORTH AMERICA, INC.

2. Unscrew and remove fastening screws for woofer **-3-** .

Fig 2: Removing Woofer Fastening Screws

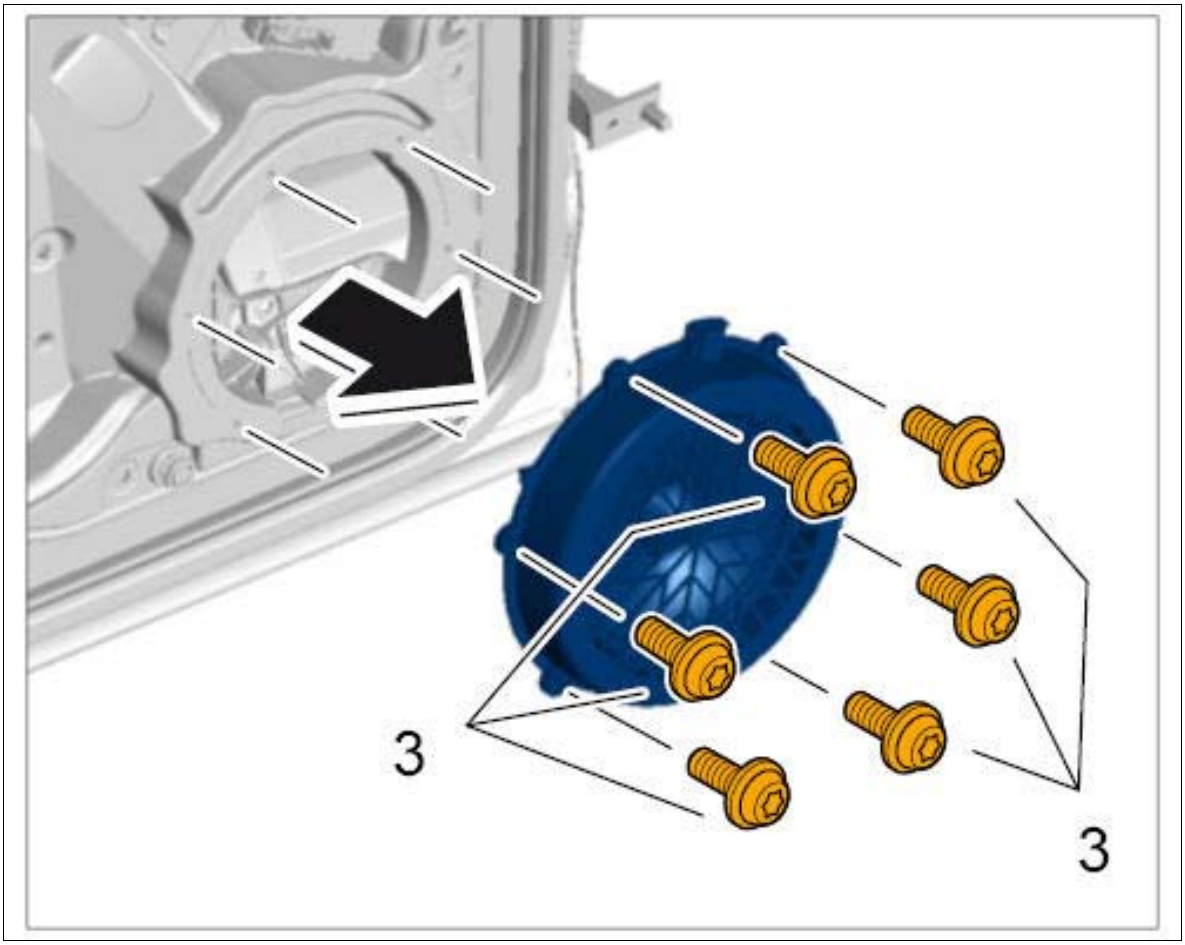

Courtesy of PORSCHE CARS NORTH AMERICA, INC.

3. Remove woofer.

WM 914119 REMOVING AND INSTALLING FRONT LOUDSPEAKERS (ALL MODELS) > REMOVING FRONT LOUDSPEAKERS > REMOVING MID-RANGE LOUDSPEAKER FROM DOOR PANEL

NOTE: Voltage peaks

- *Risk of damage to load or to the control unit*

→ Switch off ignition and remove remote control before disconnecting or removing load.

Information

- Some of the repair illustrations show only one side of the vehicle.
- Naturally, some steps also have to be performed on the opposite side of the vehicle as well.

1. Release and disconnect electric plug connection for mid-range loudspeaker.

Fig 1: Disconnecting Electric Plug Connection



Courtesy of PORSCHE CARS NORTH AMERICA, INC.

2. Unscrew and remove fastening screws for mid-range loudspeaker **-1-** .

Fig 2: Removing Fastening Screws

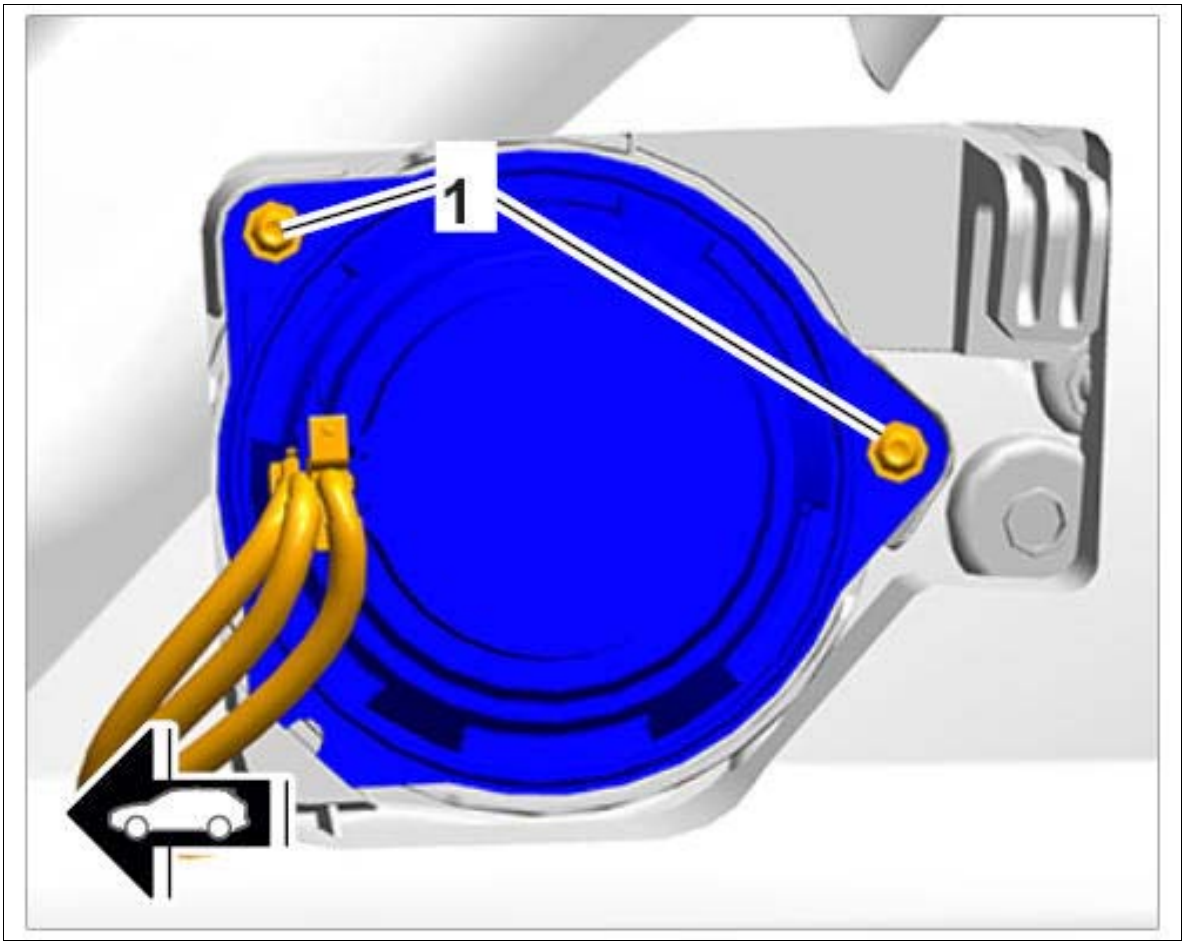

Courtesy of PORSCHE CARS NORTH AMERICA, INC.

3. Remove mid-range loudspeaker from the door panel.

WM 914119 REMOVING AND INSTALLING FRONT LOUDSPEAKERS (ALL MODELS) > INSTALLING FRONT LOUDSPEAKERS

1. The front loudspeakers are installed in reverse order to removal.
2. Tighten fastening screws for the woofer to → **Tightening torque: 3.5 Nm (2.5 ftlb.)** .
3. Tighten fastening screws for the mid-range speaker to → **Tightening torque: 1.5 Nm (1 ftlb.)** .

WM 914119 REMOVING AND INSTALLING FRONT LOUDSPEAKERS (ALL MODELS) > SUBSEQUENT WORK

1. Install front door panel. → Installing Front Door Panel

WM 914219 REMOVING AND INSTALLING REAR LOUDSPEAKERS (ALL MODELS) > TECHNICAL VALUES

Location	Description	Type	Basic value	Tolerance 1	Tolerance 2
Rear woofer to rear door	Internal Torx screw, M5 x 20	Tightening torque	4 Nm (3 ftlb.)		

WM 914219 REMOVING AND INSTALLING REAR LOUDSPEAKERS (ALL MODELS) > PRELIMINARY WORK > PRELIMINARY WORK FOR REAR WOOFER

1. Remove rear door panel. → Removing Rear Door Panel

WM 914219 REMOVING AND INSTALLING REAR LOUDSPEAKERS (ALL MODELS) > PRELIMINARY WORK > PRELIMINARY WORK FOR MID-RANGE LOUDSPEAKER

1. Remove D-pillar trim panel. → Removing D-Pillar Trim Panel

WM 914219 REMOVING AND INSTALLING REAR LOUDSPEAKERS (ALL MODELS) > PRELIMINARY WORK > PRELIMINARY WORK FOR REAR TWEETER

1. Remove cover for loudspeaker in rear door. → Removing Cover For Centre Loudspeaker

WM 914219 REMOVING AND INSTALLING REAR LOUDSPEAKERS (ALL MODELS) > REMOVING REAR LOUDSPEAKERS > REMOVING REAR WOOFER

NOTE: Voltage peaks

- *Risk of damage to load or to the control unit*

→ Remove the ignition key and switch off load before disconnecting or removing load.

1. Release electric plug connection **-1-** (**-a-**) and disconnect it from the rear woofer **-2-** .
2. Unscrew fastening screws **-3-** and remove rear woofer.

Fig 1: Removing Rear Woofer

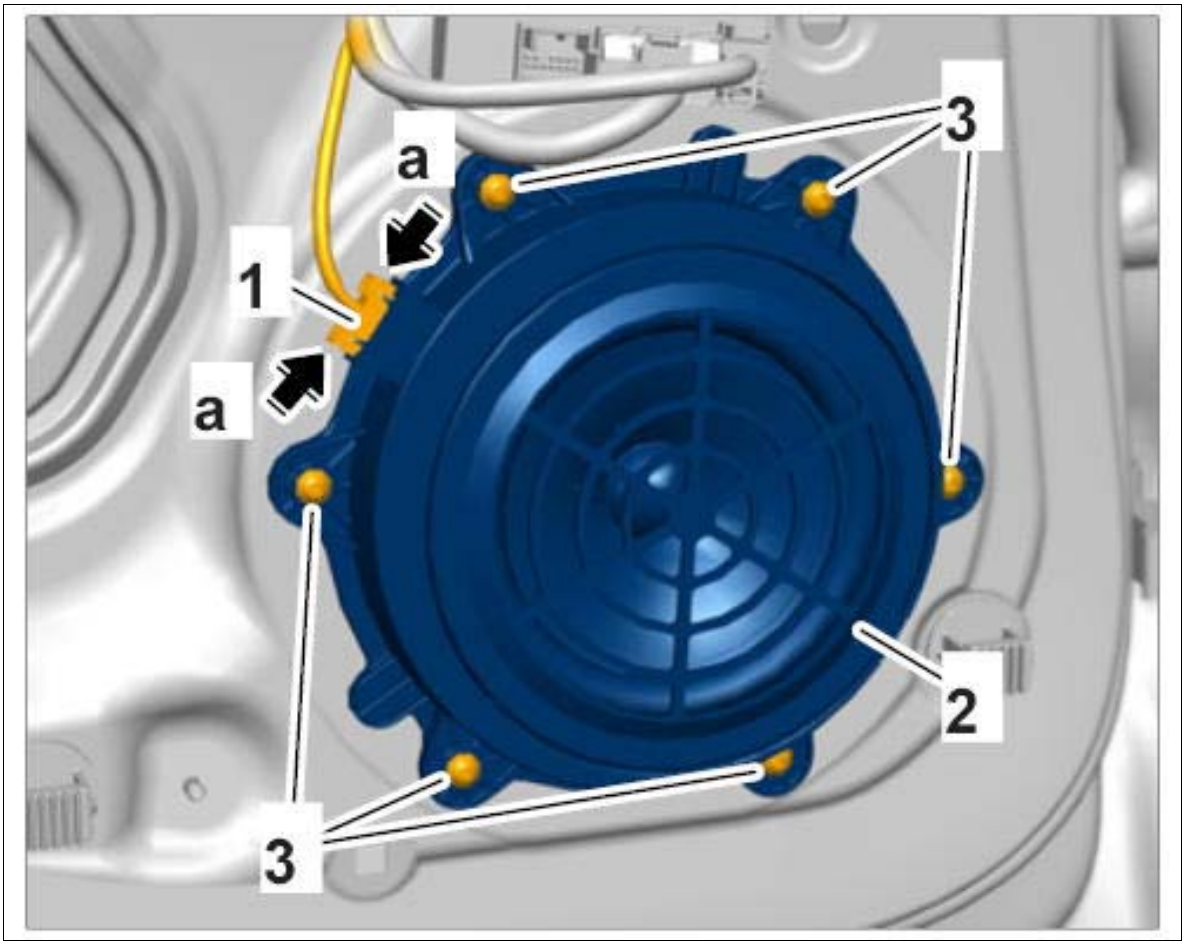

Courtesy of PORSCHE CARS NORTH AMERICA, INC.

WM 914219 REMOVING AND INSTALLING REAR LOUDSPEAKERS (ALL MODELS) > REMOVING REAR LOUDSPEAKERS > REMOVING REAR MID-RANGE LOUDSPEAKER

NOTE: Voltage peaks

- *Risk of damage to load or to the control unit*

→ Remove the ignition key and switch off load before disconnecting or removing load.

1. Unscrew fastening screws **-1-** and remove rear mid-range loudspeaker **-2-** .

Fig 1: Removing Rear Mid-Range Loudspeaker

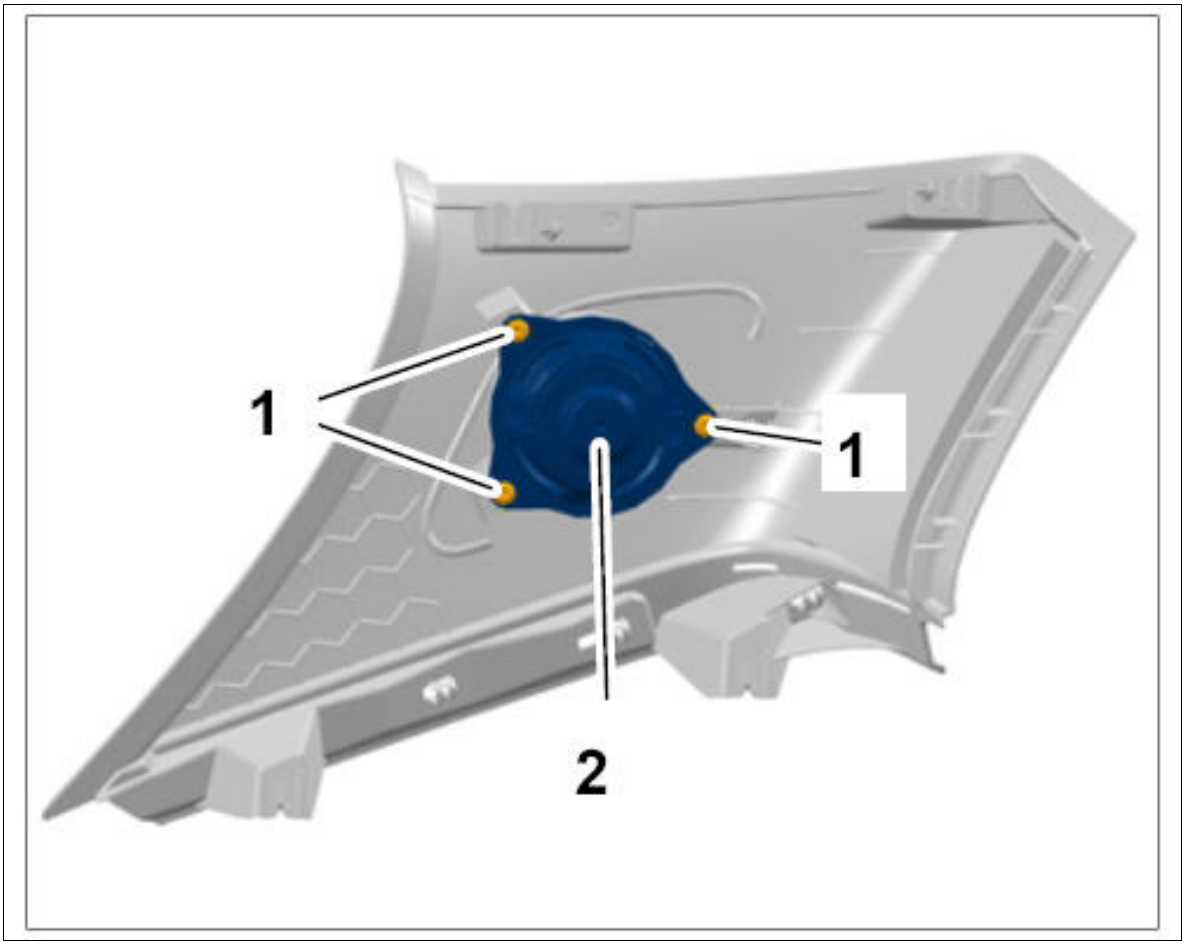

Courtesy of PORSCHE CARS NORTH AMERICA, INC.

WM 914219 REMOVING AND INSTALLING REAR LOUDSPEAKERS (ALL MODELS) > REMOVING REAR LOUDSPEAKERS > REMOVING REAR TWEETER

NOTE: Voltage peaks

- *Risk of damage to load or to the control unit*

→ Remove the ignition key and switch off load before disconnecting or removing load.

1. Disengage locking mechanisms **-a-** and remove rear tweeter **-1-** from the rear door panel.

Fig 1: Removing Rear Tweeter

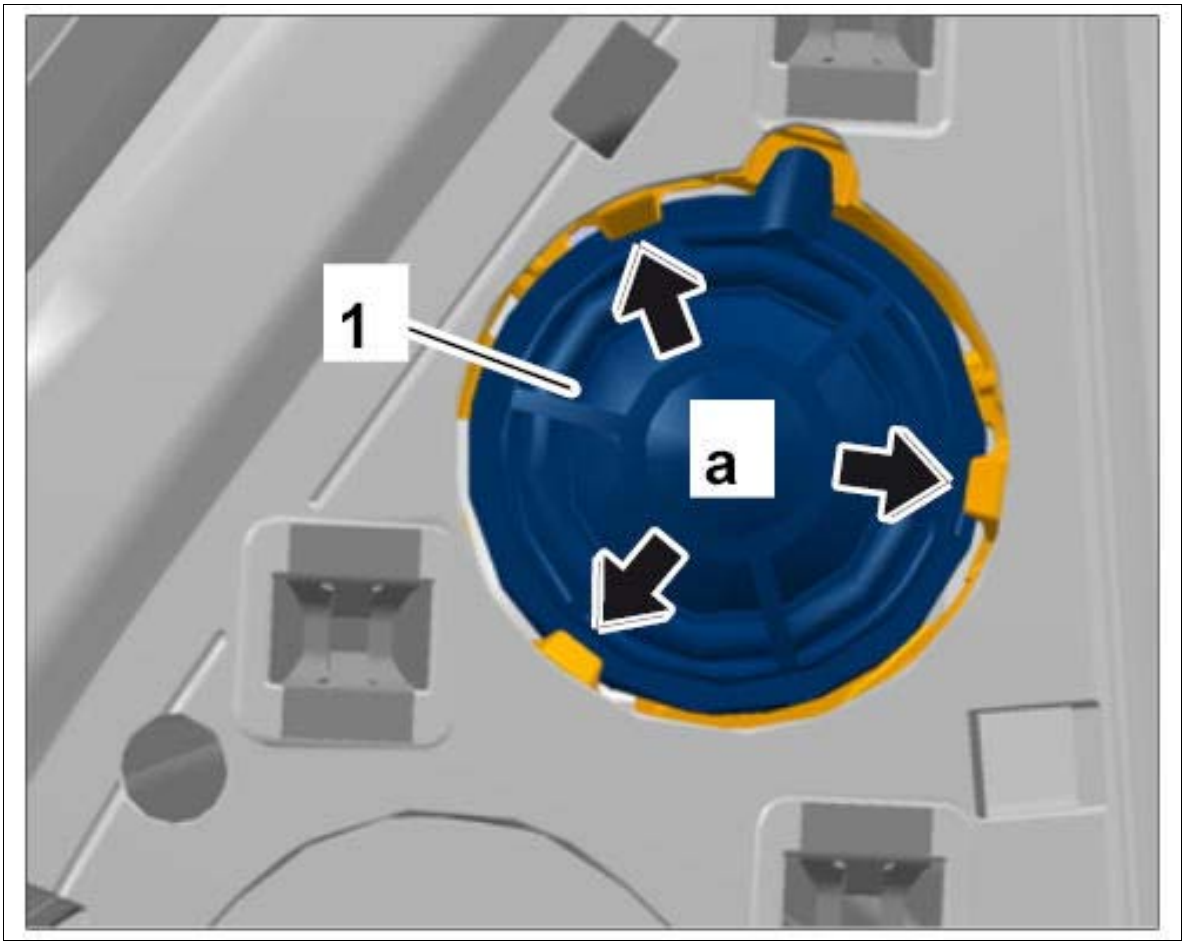

Courtesy of PORSCHE CARS NORTH AMERICA, INC.

2. Release electric plug connection **-1-** (**-a-**) and disconnect it from the tweeter **-2-** .

Fig 2: Disconnecting Electric Plug Connection

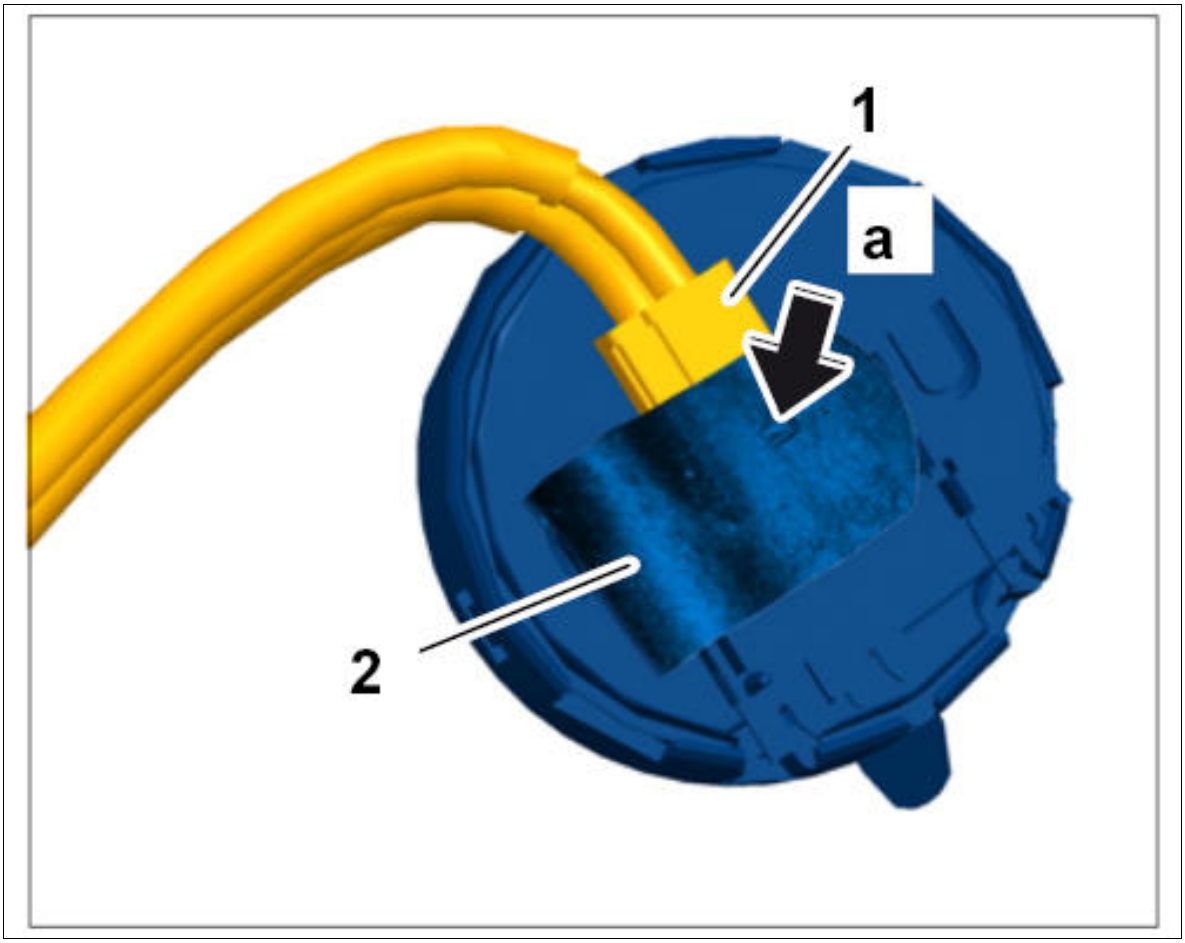

Courtesy of PORSCHE CARS NORTH AMERICA, INC.

WM 914219 REMOVING AND INSTALLING REAR LOUDSPEAKERS (ALL MODELS) > INSTALLING REAR LOUDSPEAKERS > INSTALLING REAR WOOFER

1. Installation is performed in reverse order to removal.
2. Tighten fastening screws for rear woofer on the rear door. **Tightening torque 4 Nm (3 ftlb.)**

WM 914219 REMOVING AND INSTALLING REAR LOUDSPEAKERS (ALL MODELS) > INSTALLING REAR LOUDSPEAKERS > INSTALLING REAR MID-RANGE LOUDSPEAKER

1. Installation is performed in reverse order to removal.
2. Tighten fastening screws securing rear mid-range loudspeaker to D-pillar trim panel.

WM 914219 REMOVING AND INSTALLING REAR LOUDSPEAKERS (ALL MODELS) > INSTALLING REAR LOUDSPEAKERS > INSTALLING REAR TWEETER

1. Installation is performed in reverse order to removal.

WM 914219 REMOVING AND INSTALLING REAR LOUDSPEAKERS (ALL MODELS) > SUBSEQUENT WORK > SUBSEQUENT WORK FOR REAR WOOFER

1. Install rear door panel. → Installing Rear Door Panel

WM 914219 REMOVING AND INSTALLING REAR LOUDSPEAKERS (ALL MODELS) > SUBSEQUENT WORK > SUBSEQUENT WORK FOR REAR MID-RANGE LOUDSPEAKER

1. Install D-pillar trim panel. → Installing D-Pillar Trim Panel

WM 914219 REMOVING AND INSTALLING REAR LOUDSPEAKERS (ALL MODELS) > SUBSEQUENT WORK > SUBSEQUENT WORK FOR REAR TWEETER

1. Install cover for loudspeaker in rear door. → Installing Cover For Centre Loudspeaker

WM 914319 REMOVING AND INSTALLING REVERSING CAMERA (ALL MODELS) > PRELIMINARY WORK

1. Remove rear apron. → REMOVING REAR APRON

WM 914319 REMOVING AND INSTALLING REVERSING CAMERA (ALL MODELS) > REMOVING REVERSING CAMERA

1. Remove wire harness **-1-** from holders **-2-** .
2. Cut and remove the tie-wraps **-3-** .

Fig 1: Disconnecting Wire Harness

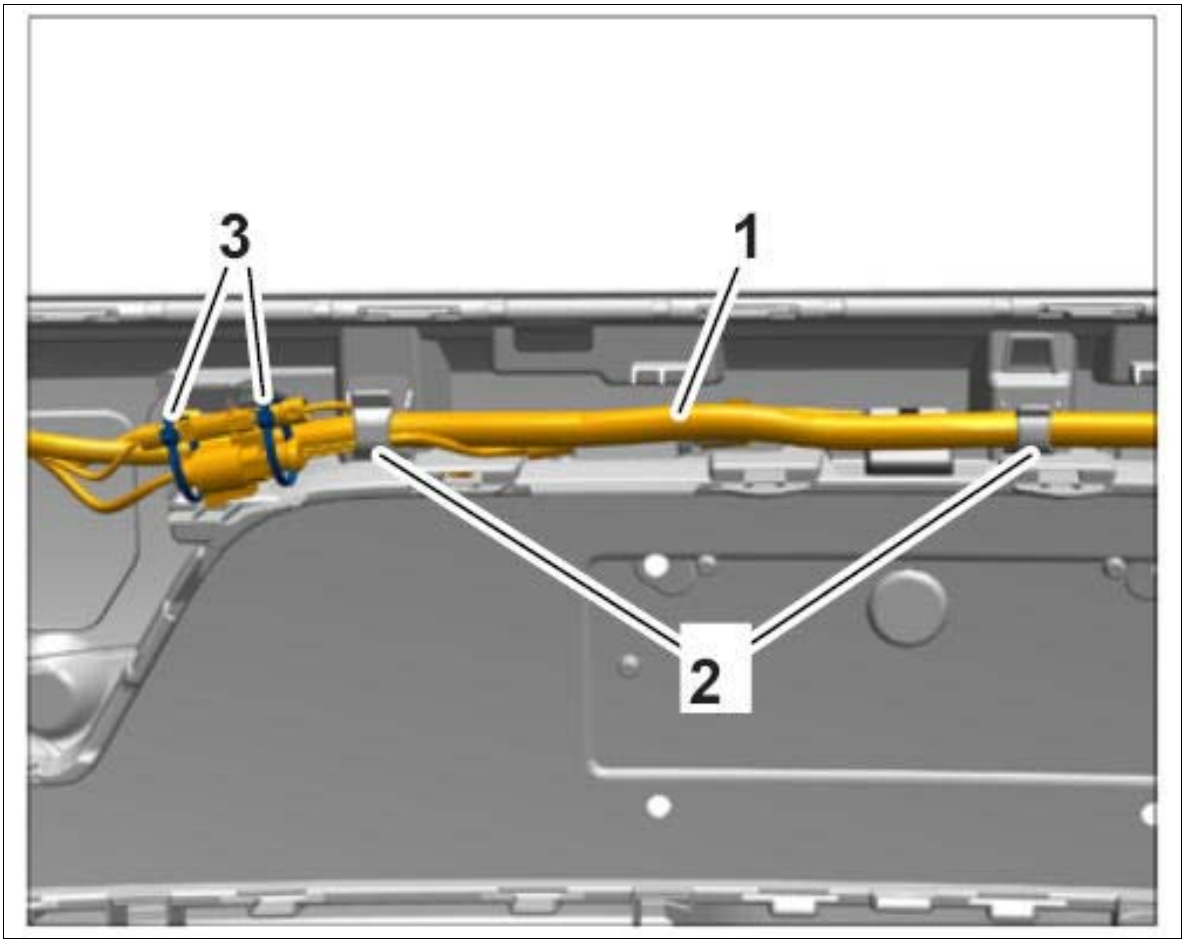

Courtesy of PORSCHE CARS NORTH AMERICA, INC.

3. Release electric plug connections **-1-** (**-a-**) and disconnect them.

Fig 2: Disconnecting Electric Plug Connections

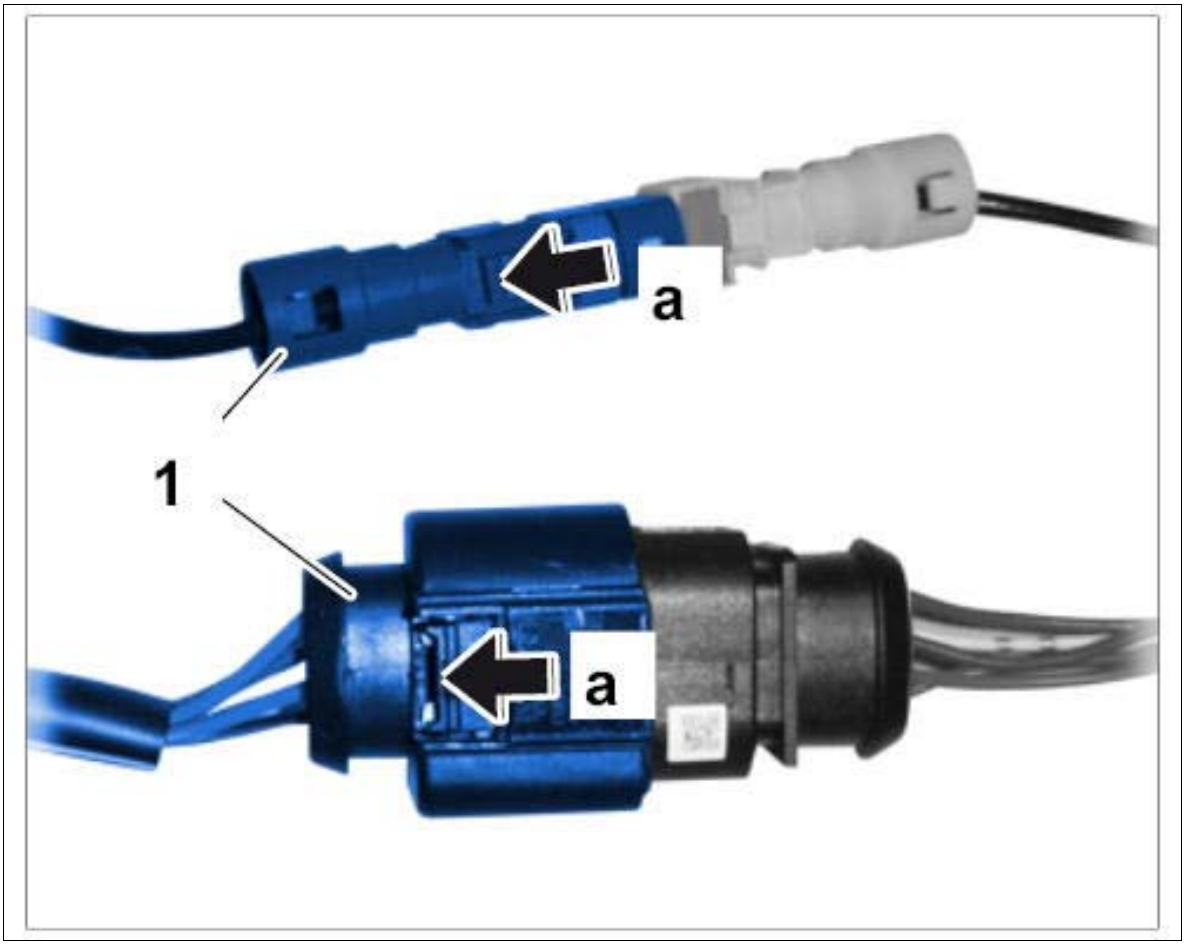

Courtesy of PORSCHE CARS NORTH AMERICA, INC.

4. Disengage locking mechanisms **-1-** on the cap **-2-** in direction of arrow and remove cap.

Fig 3: Removing Cap

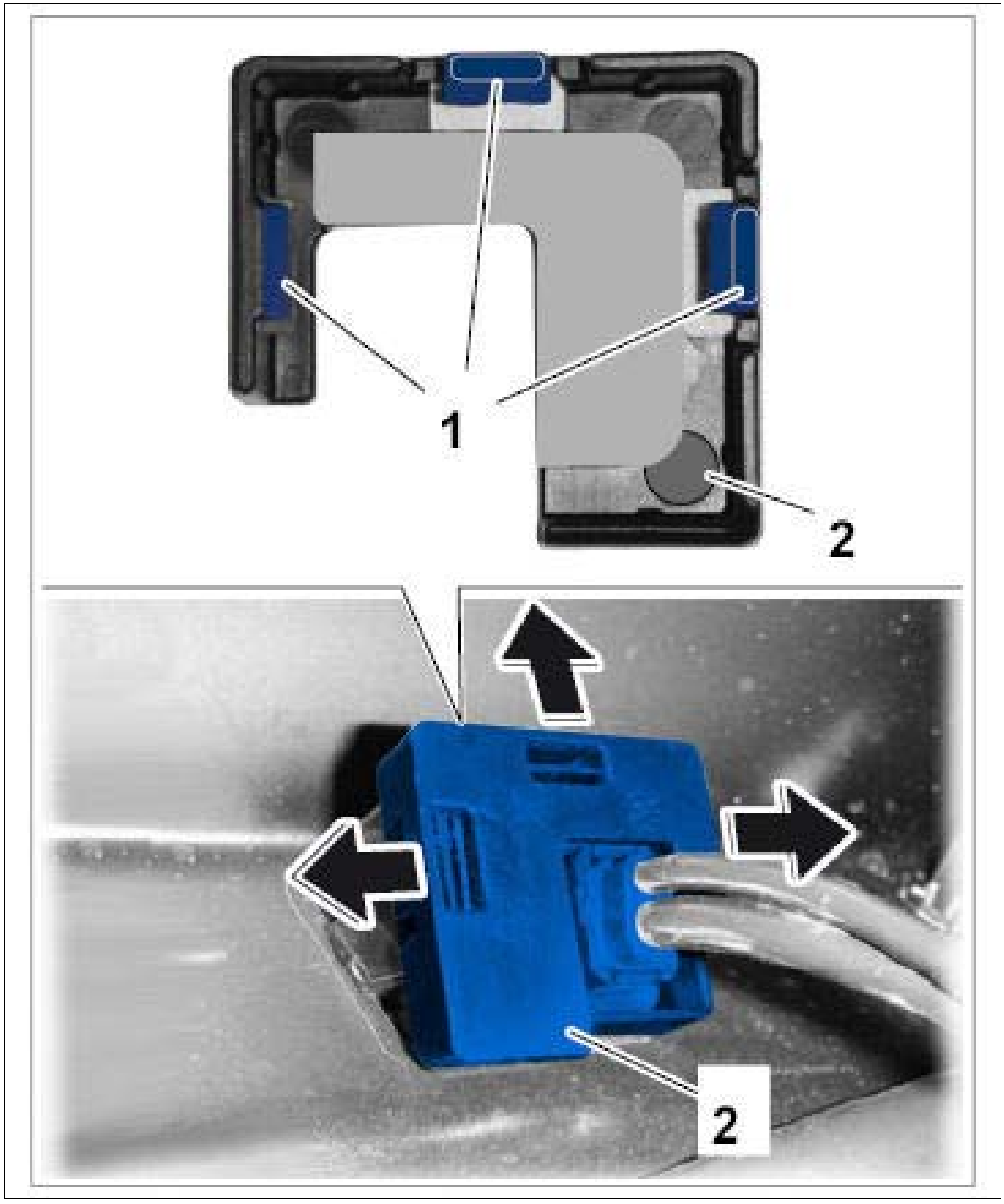

Courtesy of PORSCHE CARS NORTH AMERICA, INC.

5. Remove reversing camera **-1-** from the bracket **-2-** .

Fig 4: Removing Reversing Camera

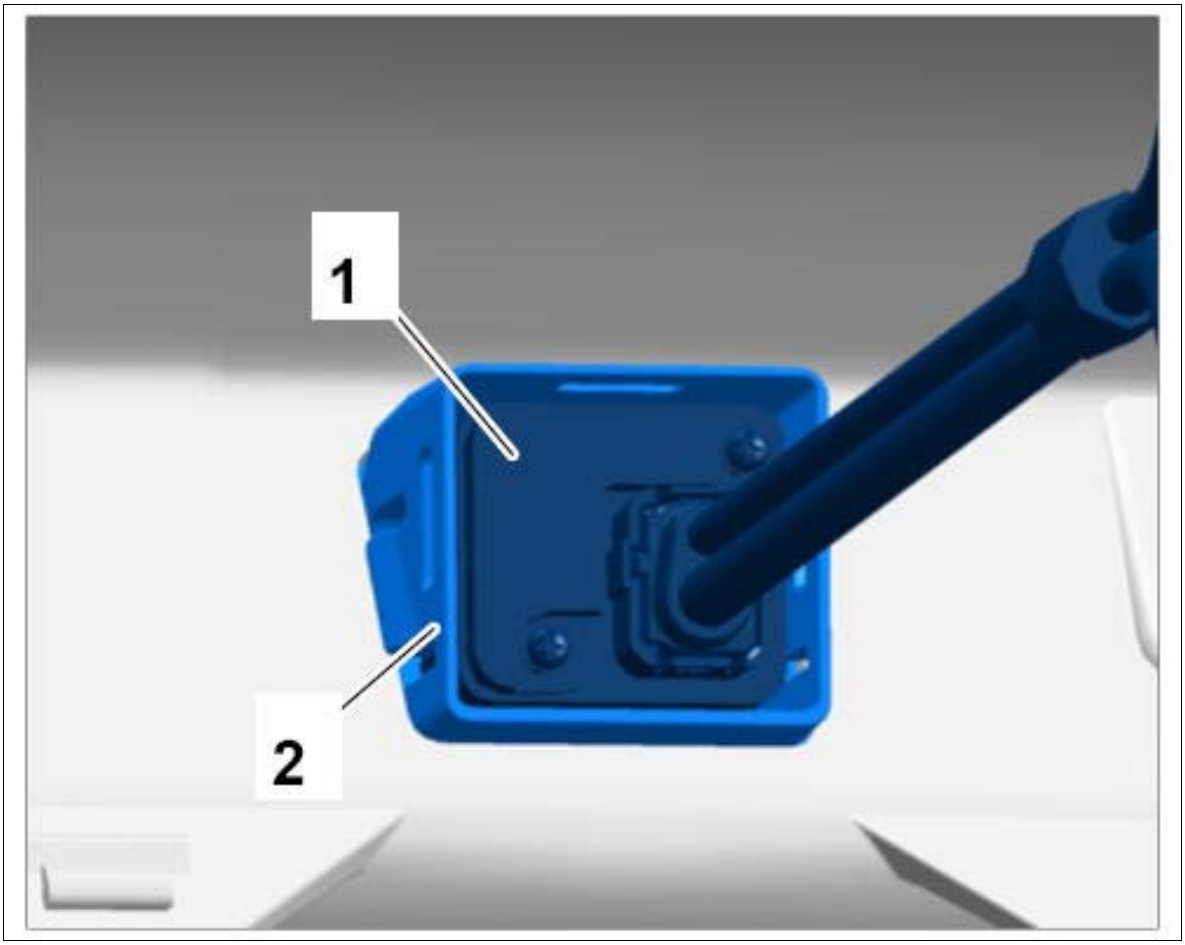

Courtesy of PORSCHE CARS NORTH AMERICA, INC.

6. Release bracket **-1-** if necessary **-a-** and press it to the rear and out of the rear apron.

Fig 5: Removing Bracket

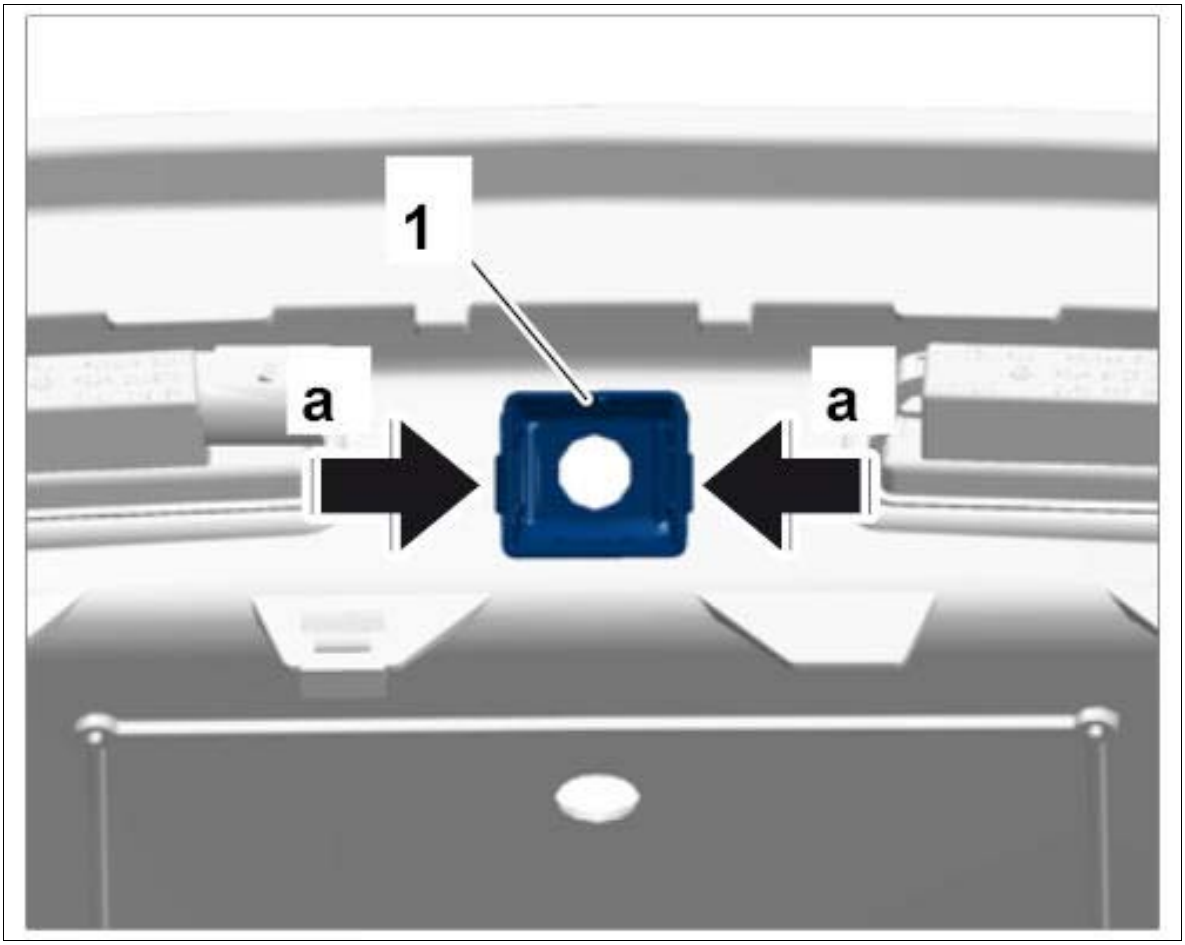

Courtesy of PORSCHE CARS NORTH AMERICA, INC.

WM 914319 REMOVING AND INSTALLING REVERSING CAMERA (ALL MODELS) > INSTALLING REVERSING CAMERA

Information

Check installation position: Insert reversing camera into the bracket as shown - the electric lines must be at the bottom left.

Fig 1: Identifying Reversing Camera Installation Position

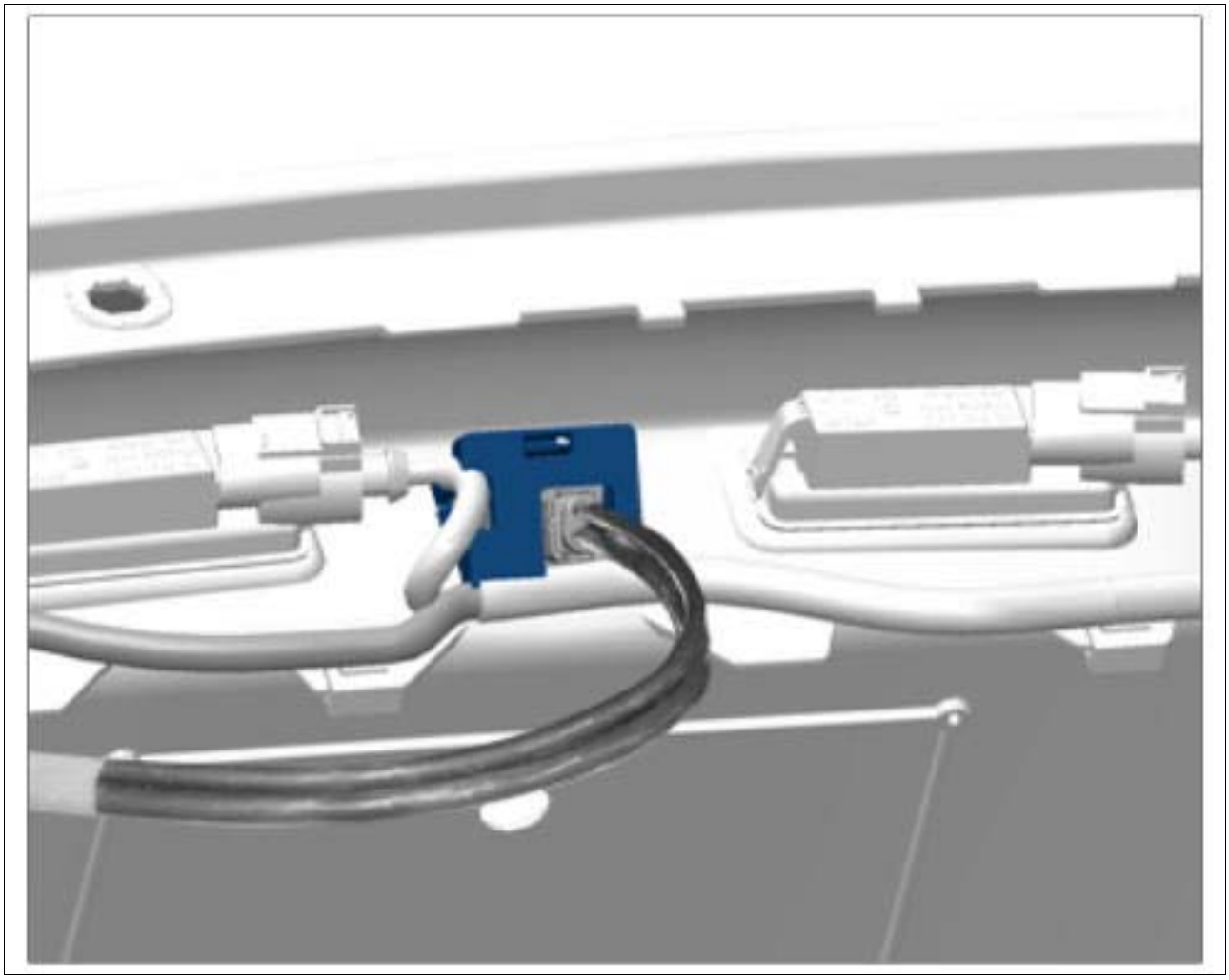

Courtesy of PORSCHE CARS NORTH AMERICA, INC.

1. Installation is performed in reverse order to removal.

WM 914319 REMOVING AND INSTALLING REVERSING CAMERA (ALL MODELS) > SUBSEQUENT WORK

1. Install rear apron. → INSTALLING REAR APRON
2. Clean the reversing camera lens with a soft, clean cloth.
3. Calibrate reversing camera. → 9143K2 CALIBRATING REVERSING CAMERA

WM 9143K2 CALIBRATING REVERSING CAMERA (ALL MODELS) > TOOLS

Designation	Type	Number	Description	

calibration unit VAS 6350	Service equipment	WE 1368		
spacing laser VAS 6350/2	Service equipment	WE 1369		
PIWIS Tester II	Special tool	9818		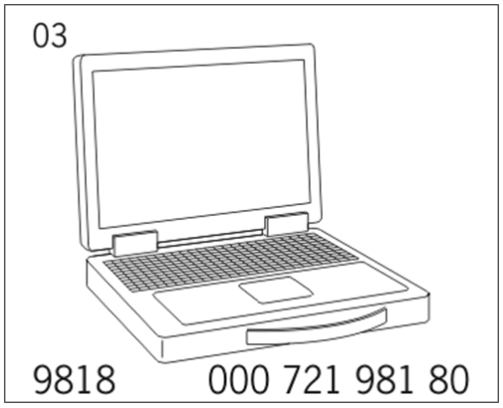

WM 9143K2 CALIBRATING REVERSING CAMERA (ALL MODELS) > TECHNICAL VALUES

Location	Description	Type	Basic value	Tolerance 1	Tolerance 2
Current rating		Nominal value	40 A		

WM 9143K2 CALIBRATING REVERSING CAMERA (ALL MODELS) > INFORMATION

When does reversing camera need to be calibrated?

The reversing camera must be re-calibrated in the following situations:

- When removing and installing the reversing camera.
- When changing the height of the chassis.

- When removing and installing the rear apron.

WM 9143K2 CALIBRATING REVERSING CAMERA (ALL MODELS) > PRELIMINARY WORK

Information

Calibrating the reversing camera balances the tires, chassis tolerances and installation tolerances of the camera.

- The calibration unit VAS 6350 WE 1368 and the spacing laser VAS 6350/2 WE 1369 are needed for calibration.
- During calibration, the control unit for the reversing camera calculates the vehicle-specific adjustment values (e.g. image rectification) for the camera image.
- After the actual calibration process, which takes approx. 2 minutes, the rectified image is shown on the vehicle display.

Information

Calibration must only be performed on level ground.

1. Park the vehicle on a level surface and set up the **calibration unit VAS 6350 WE 1368** behind the vehicle in accordance with the operating instructions.

   Fig 1: Overview Of Vehicle (Shown On 911 Carerra)

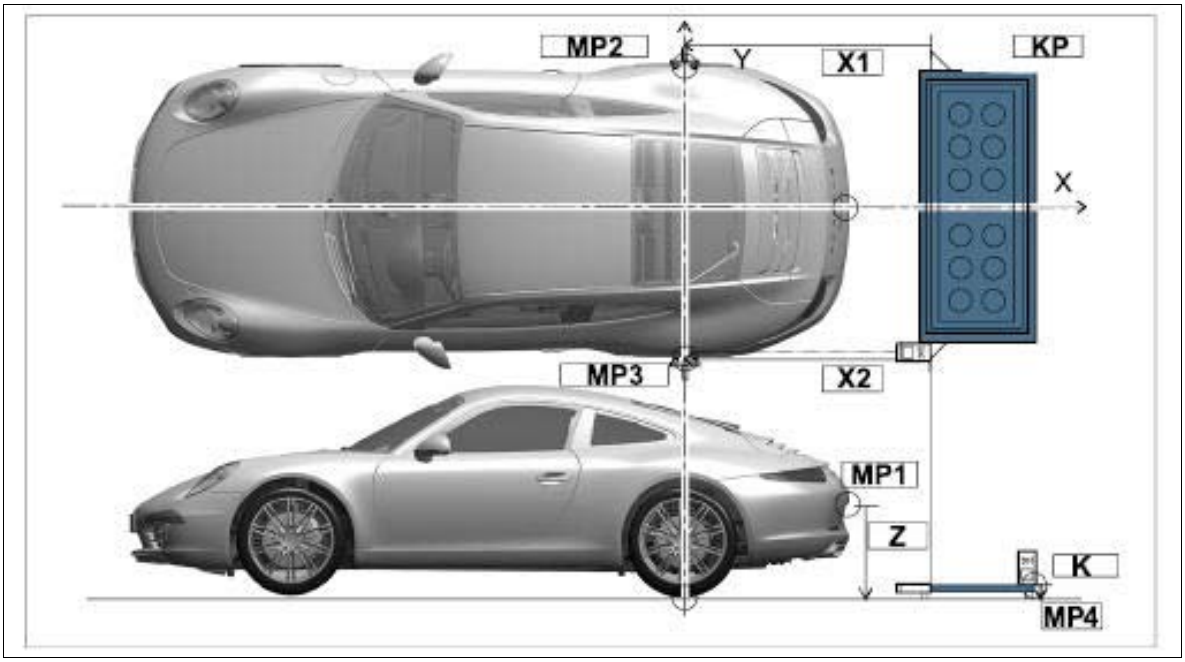

Courtesy of PORSCHE CARS NORTH AMERICA, INC.

1. **MP1 - MP4** - Measuring points
2. **X1** - Distance from calibration board to right reflector

3. **X2** - Distance from calibration board to left reflector
4. **Z** - Distance from reversing camera to floor
5. **K** - Calibration board height

2. Fit the wheel nut support with the right reflector and the wheel nut support with the left reflector on the vehicle in accordance with the operating instructions for **calibration unit VAS 6350 WE 1368** . The reflectors must be hanging freely.

Fig 2: Fitting Reflectors

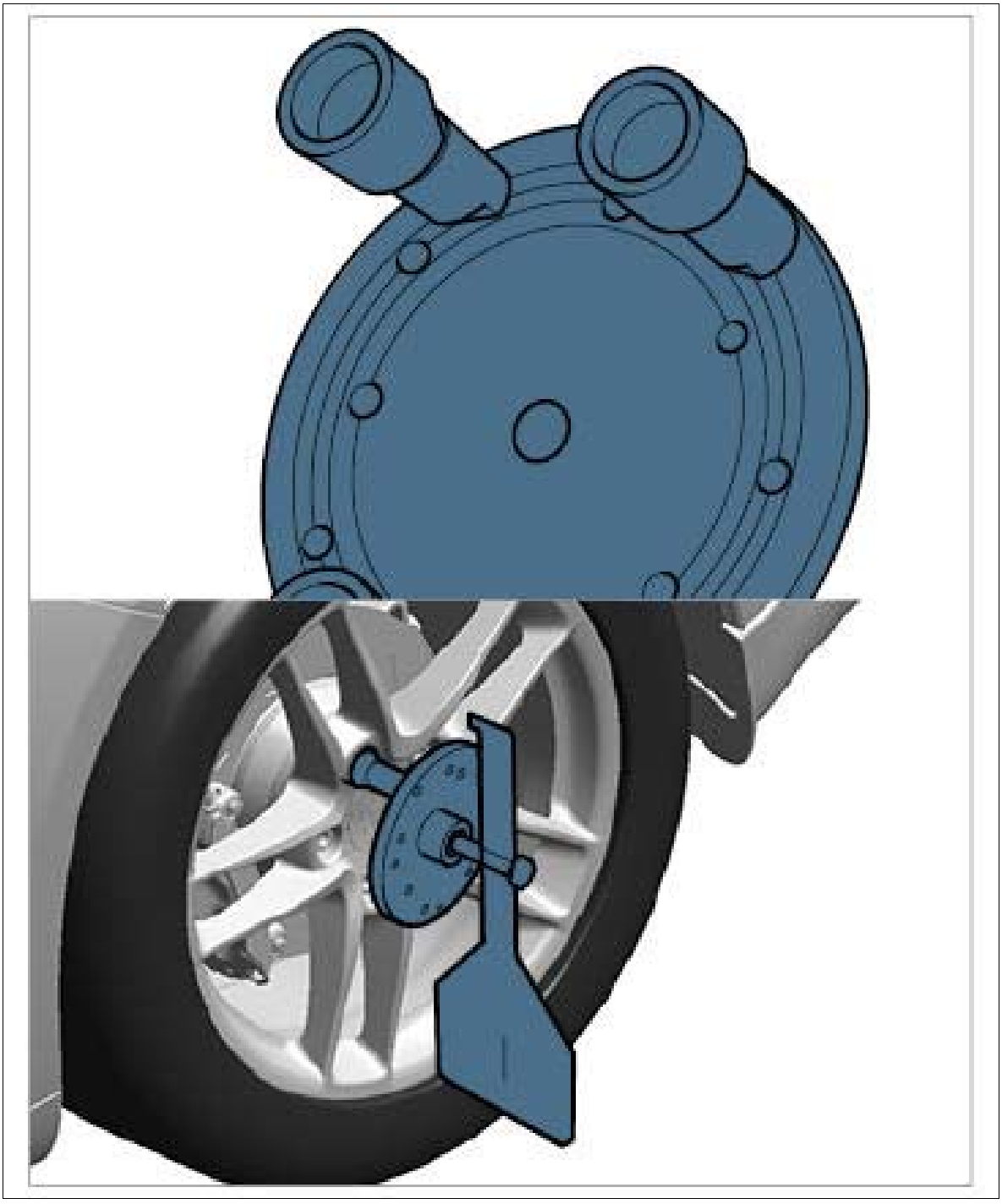

Courtesy of PORSCHE CARS NORTH AMERICA, INC.

3. Align the calibration board with the center of the vehicle and adjust the linear laser on the calibration board in accordance with the operating instructions for **calibration unit VAS 6350 WE 1368** .

WM 9143K2 CALIBRATING REVERSING CAMERA (ALL MODELS) > CALIBRATING REVERSING CAMERA

NOTE: Voltage drop

- *Risk of irreparable damage to control unit*
- *Risk of damage to control unit*
- *Fault entries in the control unit*
- *Coding in the control unit is aborted*
- *Malfunctions in control unit, even during programming*

→ Prior to disconnecting the control unit, switch off ignition and remove ignition key.

→ Ensure that the power supply is not interrupted during programming.

→ Connect a battery charger with a current rating of at least → **Nominal value: 40 A** to the vehicle battery.

Information

The **PIWIS Tester II 9818** instructions take precedence since the description may be different with later Tester releases.

The procedure described here has been structured in general terms. Different text or additional information may appear in **PIWIS Tester II 9818** .

Information

When you calibrate the reversing camera by selecting **Calibrate reversing camera** in the PIWIS Tester, the reversing camera control unit is then coded automatically. To do this, follow the relevant instructions on the PIWIS Tester.

Fig 1: Identifying Explanation Of Terms (Shown On 911 Carerra)

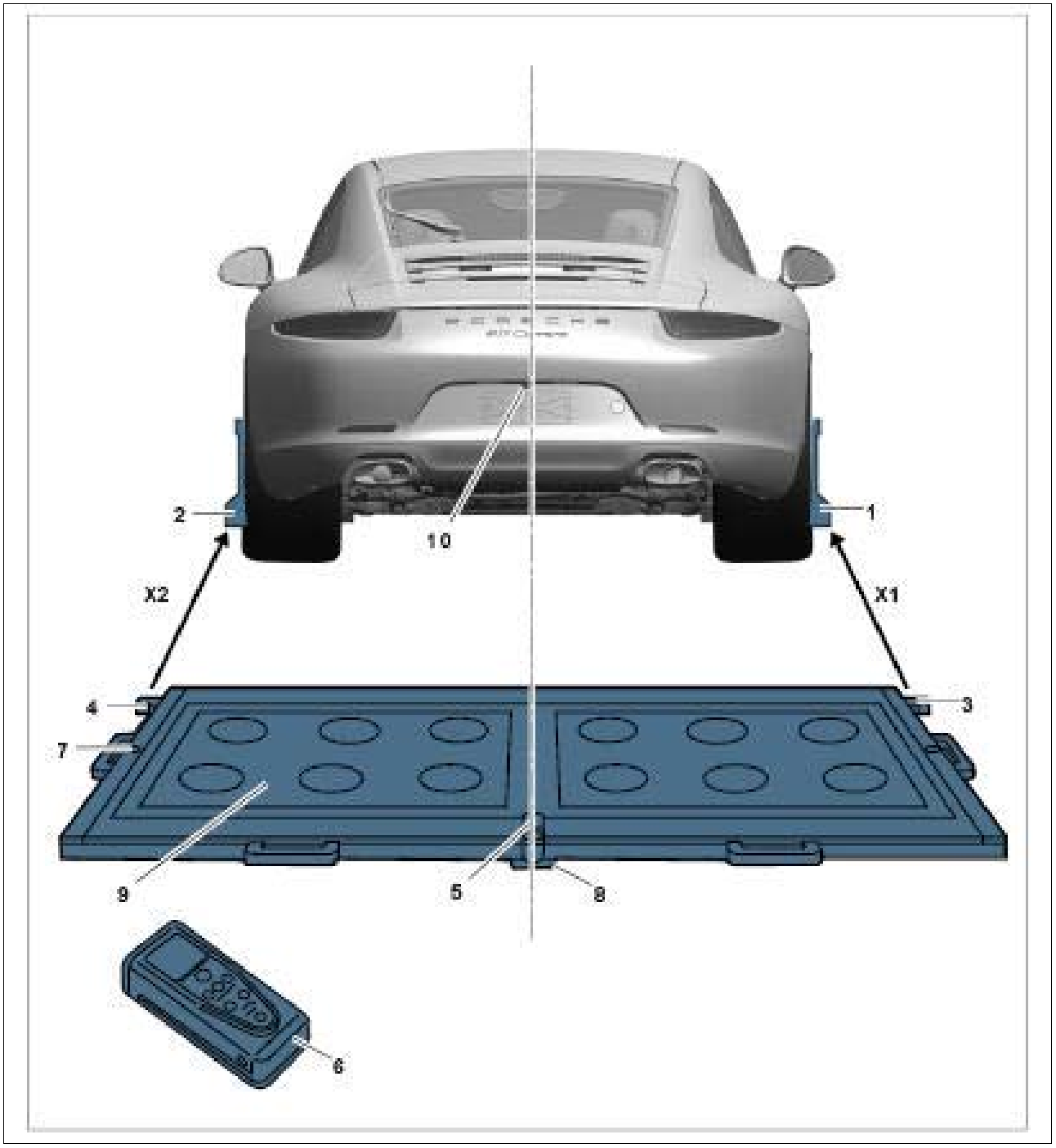

Courtesy of PORSCHE CARS NORTH AMERICA, INC.

1 - Wheel center support with right reflector

2 - Wheel center support with left reflector

3 - Right stop bracket for distance measuring unit

4 - Left stop bracket for distance measuring unit

5 - Linear laser

6 - Distance measuring unit

8 - Spirit level for adjusting calibration board in X and Y direction and cut-out for measuring calibration board height

8 - Height-adjustable calibration board base

9 - Calibration pattern

10 - Reversing camera

X1 - Distance from calibration board to right reflector

X2 - Distance from calibration board to left reflector

Information

The surface of the calibration board must be clean and free of objects.

1. Align the linear laser **-5-** .
    1. 1.1. Position the distance measuring unit **-6-** at the right stop bracket **-3-** of the calibration board and measure the distance **-X1-** to the right reflector **-1-** . The distance must be approx. 1, 400 mm.
    2. 1.2. Position the distance measuring unit **-6-** at the left stop bracket **-4-** of the calibration board and measure the distance **-X2-** to the left reflector **-2-** . The distance must be approx. 1, 400 mm.
    3. 1.3. The difference between distance **-X1-** and distance **-X2-** can be max. 1 mm.
2. **PIWIS Tester II 9818** must be connected to the vehicle before starting **PIWIS Tester II 9818** . Switch on ignition.
3. Start the diagnostic application and select the required vehicle type.
4. Select **Reversing camera** control unit in the **overview** .
5. **Maintenance/repairs** must then be selected.
6. **Select Calibrate reversing camera** and press [F12] to continue.
7. In the **Code control unit** phase display, press [F12] to continue.
8. Wait until the **Code control unit** phase has finished and then press [F12] to continue.
9. Follow the **calibration** instructions on the Tester, then press [F12].
10. **PIWIS Tester II 9818** confirms that the **calibration was completed successfully.**
11. Check the function and image quality of the reversing camera.
12. Read out the fault memory.

WM 914419 REMOVING AND INSTALLING LOUDSPEAKER BOOSTER (ALL MODELS) > TECHNICAL VALUES

Location	Description	Type	Basic value	Tolerance 1	Tolerance 2
Loudspeaker booster to holder	Internal Torx screw, M6 x 12	Tightening torque	6 Nm (4.5 ftlb.)		

WM 914419 REMOVING AND INSTALLING LOUDSPEAKER BOOSTER (ALL MODELS) > PRELIMINARY WORK

1. Remove left side trim panel in the luggage compartment. → Removing Side Trim Panel For Rear Luggage Compartment

WM 914419 REMOVING AND INSTALLING LOUDSPEAKER BOOSTER (ALL MODELS) > REMOVING LOUDSPEAKER BOOSTER

NOTE: Voltage peaks

- *Risk of damage to load or to the control unit*

→ Remove the ignition key and switch off load before disconnecting or removing load.

Information

Always comply with the regulations for handling ESD-sensitive components!

- Assembly work may only be carried out if the mechanic is wearing the working clothes and shoes approved by Porsche.
- The new part must only be removed from the ESD (electrostatic discharge) protective packaging just before installation and at the position at which the part is to be installed.
- Never touch the electric pins and plug contacts.

1. Switch off ignition and pull remote control out of ignition lock.
2. Unscrew fastening screws **-1-** and remove loudspeaker booster **-2-** from the holder.

Fig 1: Removing Loudspeaker Booster

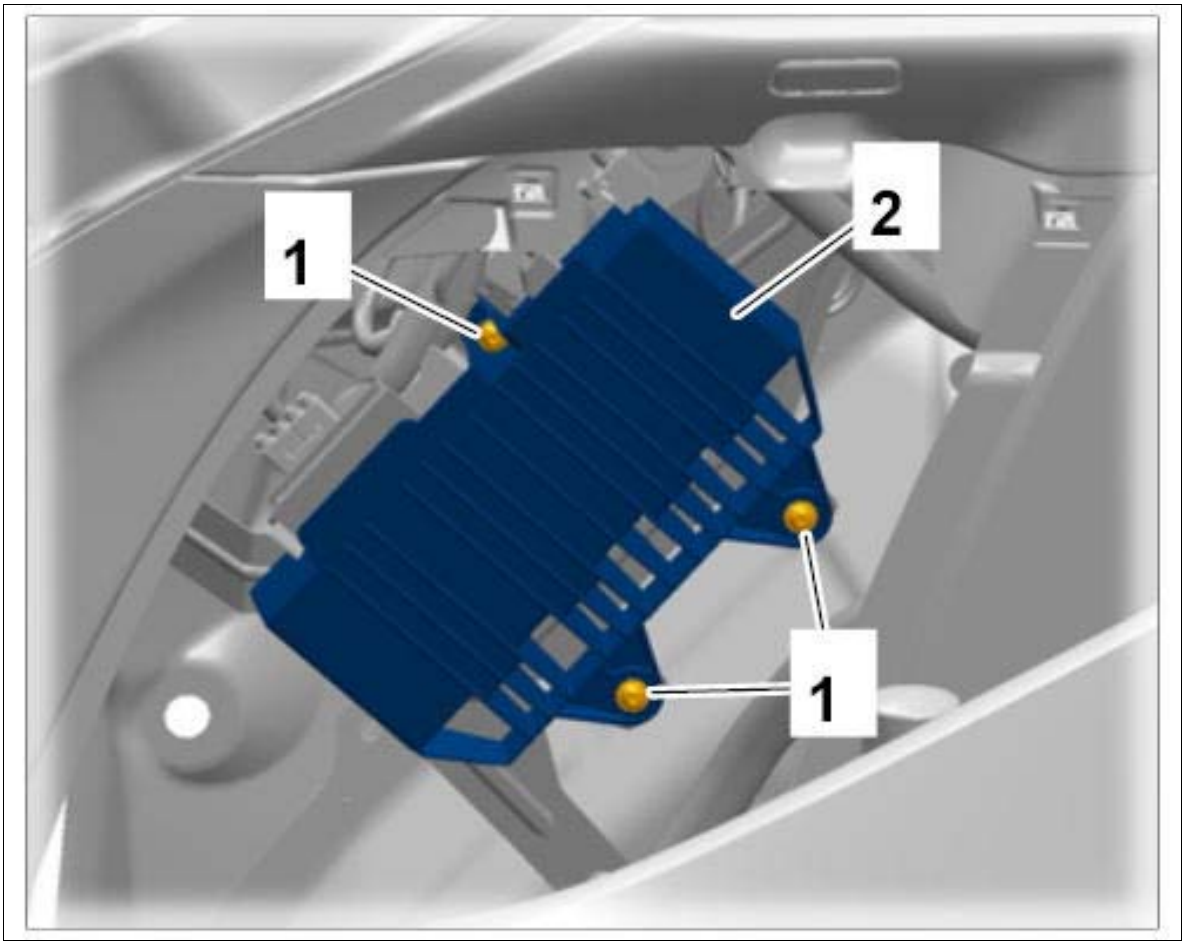

Courtesy of PORSCHE CARS NORTH AMERICA, INC.

3. Release electric plug connection **-1-** (**-a-**) and pull it off the loudspeaker booster.

> *NOTE: Incorrect handling of optical waveguides*
>
> *1. Risk of damage to optical waveguide*

→ Observe the requirements for working with and installing optical waveguides.

4. Release electric plug connection **-2-** (**-b-**), pull it off the loudspeaker booster and remove loudspeaker booster.

Fig 2: Disconnecting Electric Plug Connections

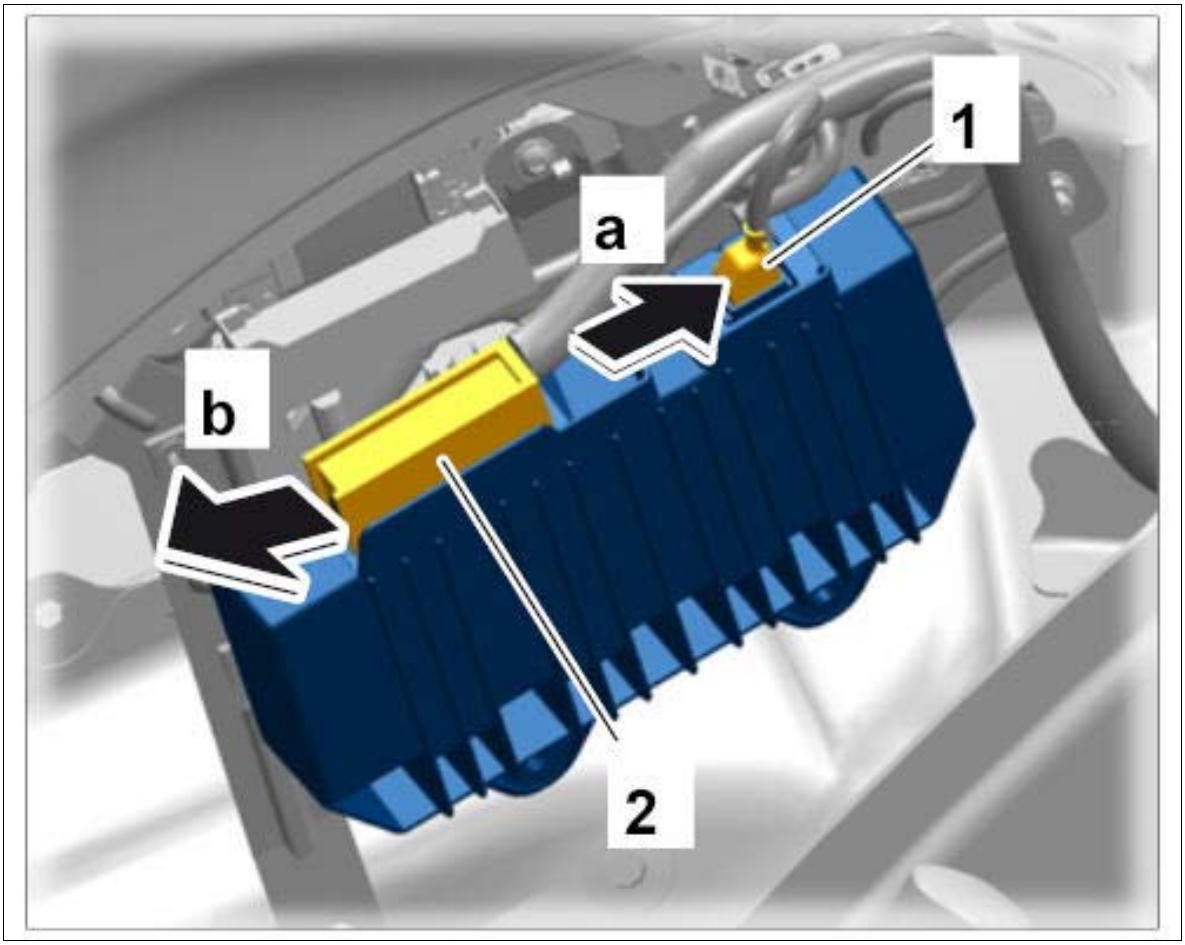

Courtesy of PORSCHE CARS NORTH AMERICA, INC.

WM 914419 REMOVING AND INSTALLING LOUDSPEAKER BOOSTER (ALL MODELS) > INSTALLING LOUDSPEAKER BOOSTER

NOTE: Incorrect handling of optical waveguides

- *Risk of damage to optical waveguide*

→ Observe the requirements for working with and installing optical waveguides.

Information

Always comply with the regulations for handling ESD-sensitive components!

- Assembly work may only be carried out if the mechanic is wearing the working clothes and shoes approved by Porsche.
- The new part must only be removed from the ESD (electrostatic discharge) protective packaging just before installation and at the position at which the part is to be installed.

- Never touch the electric pins and plug contacts.

1. Installation is performed in reverse order to removal.
2. Tighten fastening screws securing loudspeaker booster to holder. **Tightening torque 6 Nm (4.5 ftlb.)**

WM 914419 REMOVING AND INSTALLING LOUDSPEAKER BOOSTER (ALL MODELS) > SUBSEQUENT WORK

1. Install left side trim panel in the luggage compartment. →Installing Side Trim Panel For Rear Luggage Compartment

WM 914719 REMOVING AND INSTALLING MOBILE COMMUNICATION ANTENNA (ALL MODELS) > PRELIMINARY WORK

1. Remove cover over interior rear-view mirror. → Removing Interior Rear-View Mirror

WM 914719 REMOVING AND INSTALLING MOBILE COMMUNICATION ANTENNA (ALL MODELS) > REMOVING MOBILE COMMUNICATION ANTENNA

1. Release electric plug connection **-1-** and pull antenna line off the mobile communication antenna **-2-** .

Fig 1: Disconnecting Antenna Line Electric Plug Connection

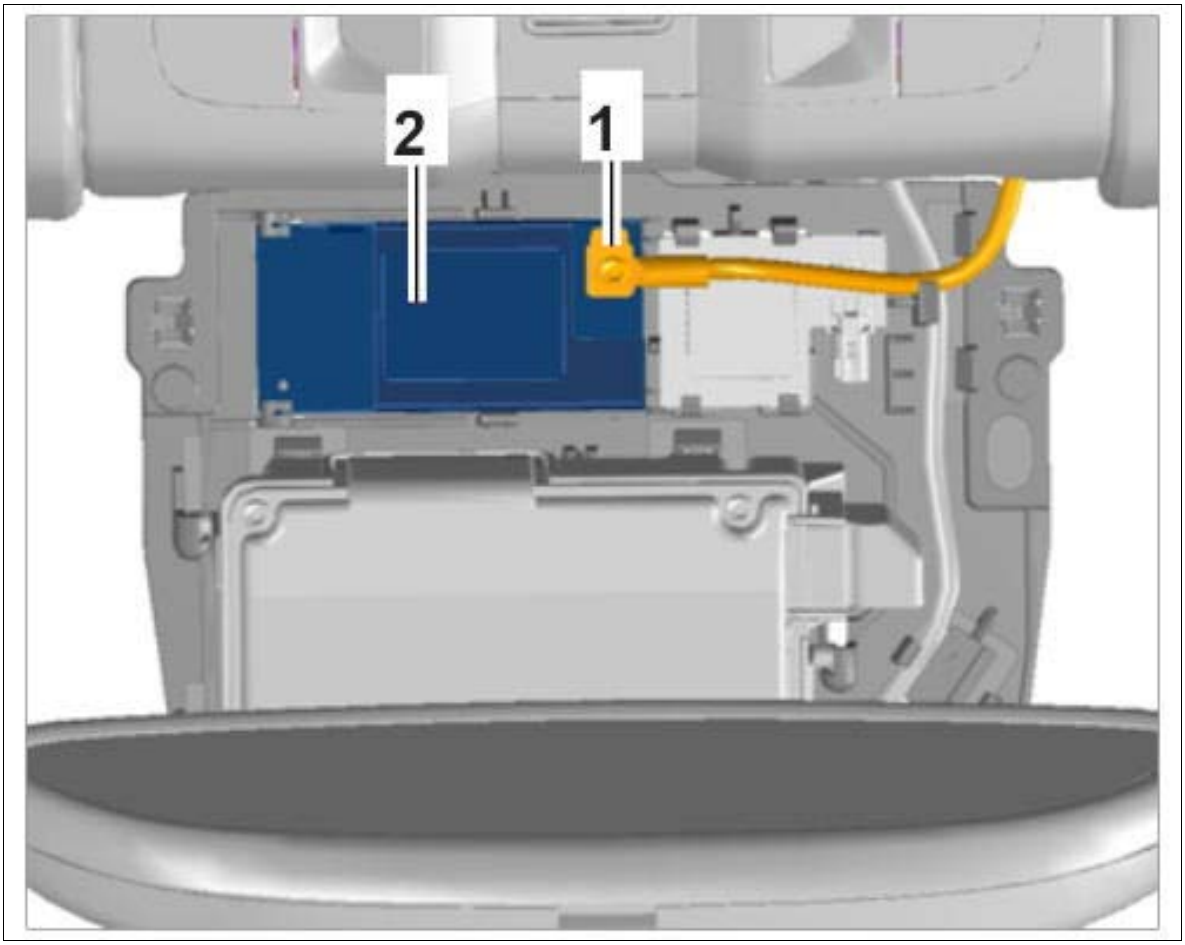

Courtesy of PORSCHE CARS NORTH AMERICA, INC.

2. Carefully disengage locking mechanisms at the left and right of the mobile communication antenna **-1-** (**-a-**) and swivel mobile communication antenna down by approx. 45°.

3. Remove mobile communication antenna from the holders **-2-** .

Fig 2: Removing Mobile Communication Antenna

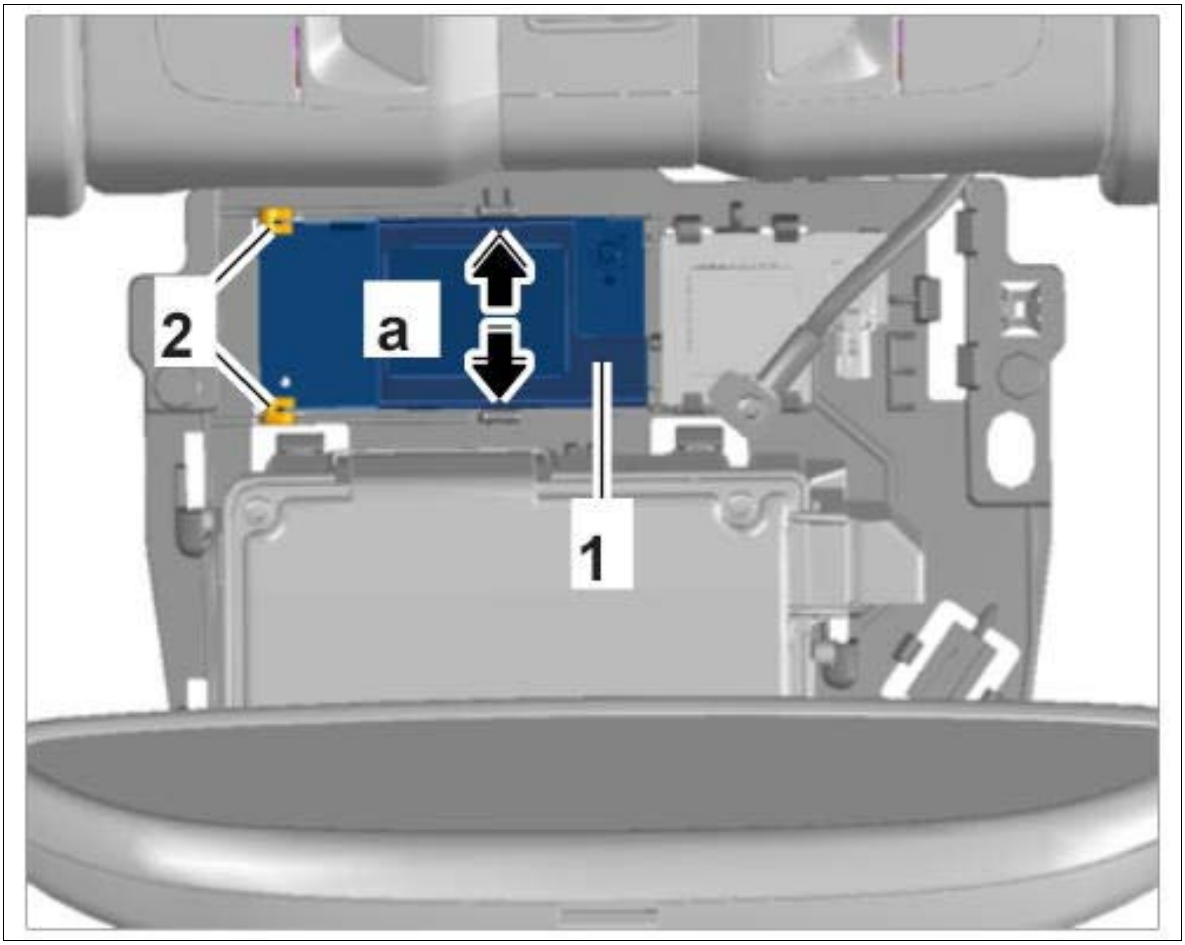

Courtesy of PORSCHE CARS NORTH AMERICA, INC.

WM 914719 REMOVING AND INSTALLING MOBILE COMMUNICATION ANTENNA (ALL MODELS) > INSTALLING MOBILE COMMUNICATION ANTENNA

1. Installation is performed in reverse order to removal.

WM 914719 REMOVING AND INSTALLING MOBILE COMMUNICATION ANTENNA (ALL MODELS) > SUBSEQUENT WORK

Install cover over interior rear-view mirror. → Installing Interior Rear-View Mirror

WM 916219 REMOVING AND INSTALLING CONTROL UNIT FOR STEERING WHEEL ELECTRONICS (ALL MODELS) > TOOLS

Designation	Type	Number	Description	

PIWIS Tester II	Special tool	9818		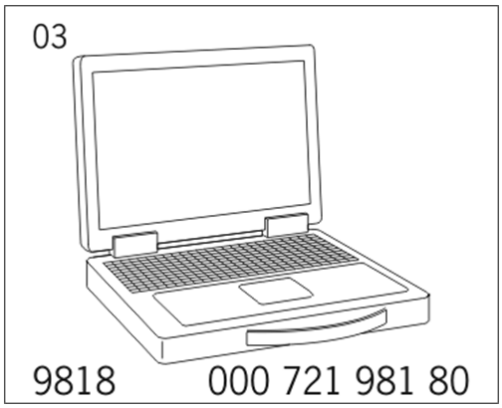

WM 916219 REMOVING AND INSTALLING CONTROL UNIT FOR STEERING WHEEL ELECTRONICS (ALL MODELS) > TECHNICAL VALUES

Location	Description	Type	Basic value	Tolerance 1	Tolerance 2
Steering wheel electronics control unit to steering-column switch	Internal Torx screw, Ø 2.5 x 12	Tightening torque	0.5 Nm (0.5 ftlb.)		

WM 916219 REMOVING AND INSTALLING CONTROL UNIT FOR STEERING WHEEL ELECTRONICS (ALL MODELS) > PRELIMINARY WORK

1. Move steering wheel to straight-ahead position and adjust it down and back as far as possible.
2. Remove steering wheel. → Removing And Installing Steering Wheel
3. Remove steering column casing. → Removing Steering Column Casing

WM 916219 REMOVING AND INSTALLING CONTROL UNIT FOR STEERING WHEEL ELECTRONICS (ALL MODELS) > REMOVING CONTROL UNIT FOR STEERING WHEEL ELECTRONICS

WARNING: Airbag contact unit not set correctly

- *Malfunction in driver's airbag unit*

→ When removing and installing the steering column switch, turn the steering wheel so that the wheels are in straight-ahead position. This ensures that the airbag contact unit is locked in the central position.

→ Do not trap the cable of the airbag contact unit.

→ Check that the cable is routed correctly.

1. Release electric plug connections **-1-** and disconnect them from the steering wheel electronics control unit **-2-** .
2. Unscrew fastening screw **-3-** .

Fig 1: Disconnecting Steering Wheel Electronics Control Unit

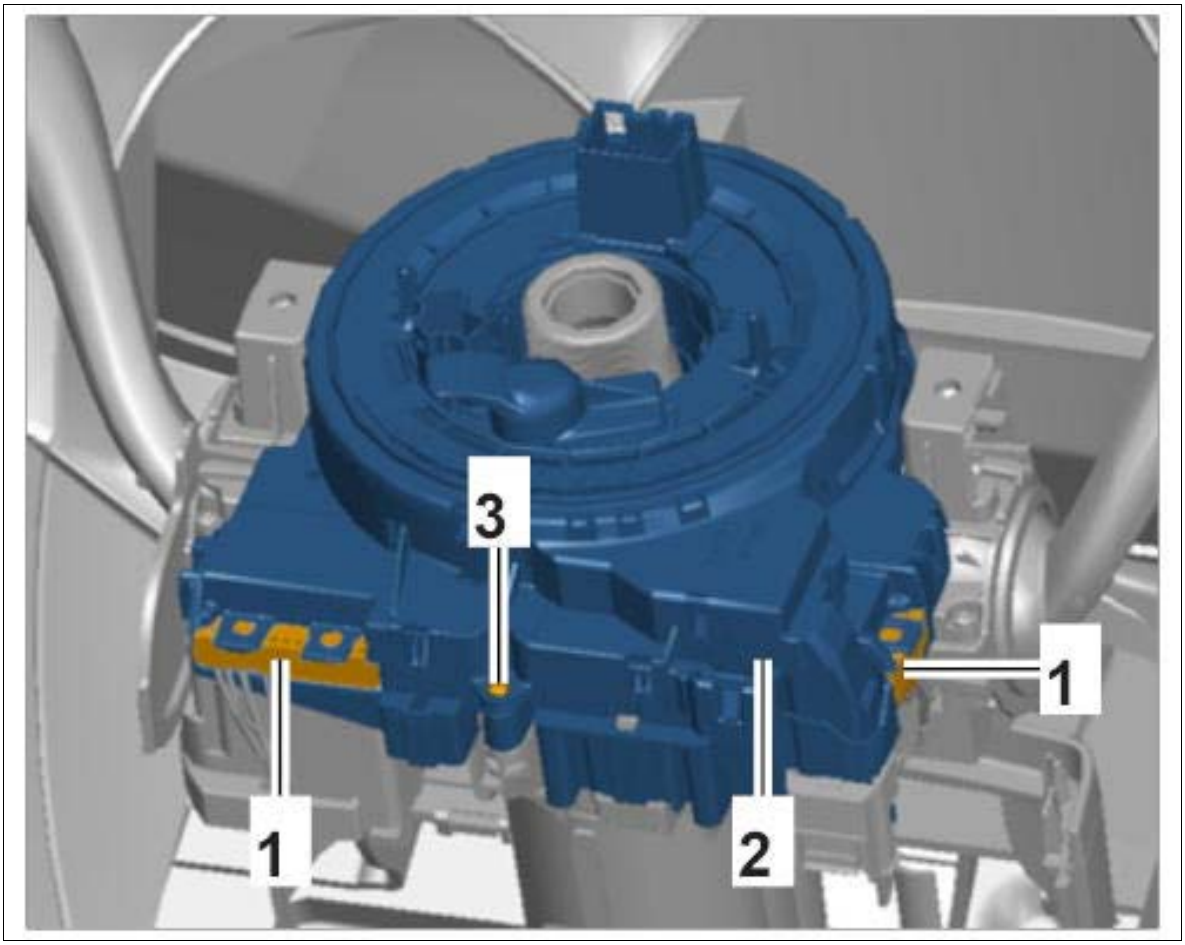

Courtesy of PORSCHE CARS NORTH AMERICA, INC.

3. Carefully disengage locking mechanisms **-1-** on the steering wheel electronics control unit **-2-** and remove steering wheel electronics control unit from the steering-column switch **-3-** .

Fig 2: Removing Steering Wheel Electronics Control Unit

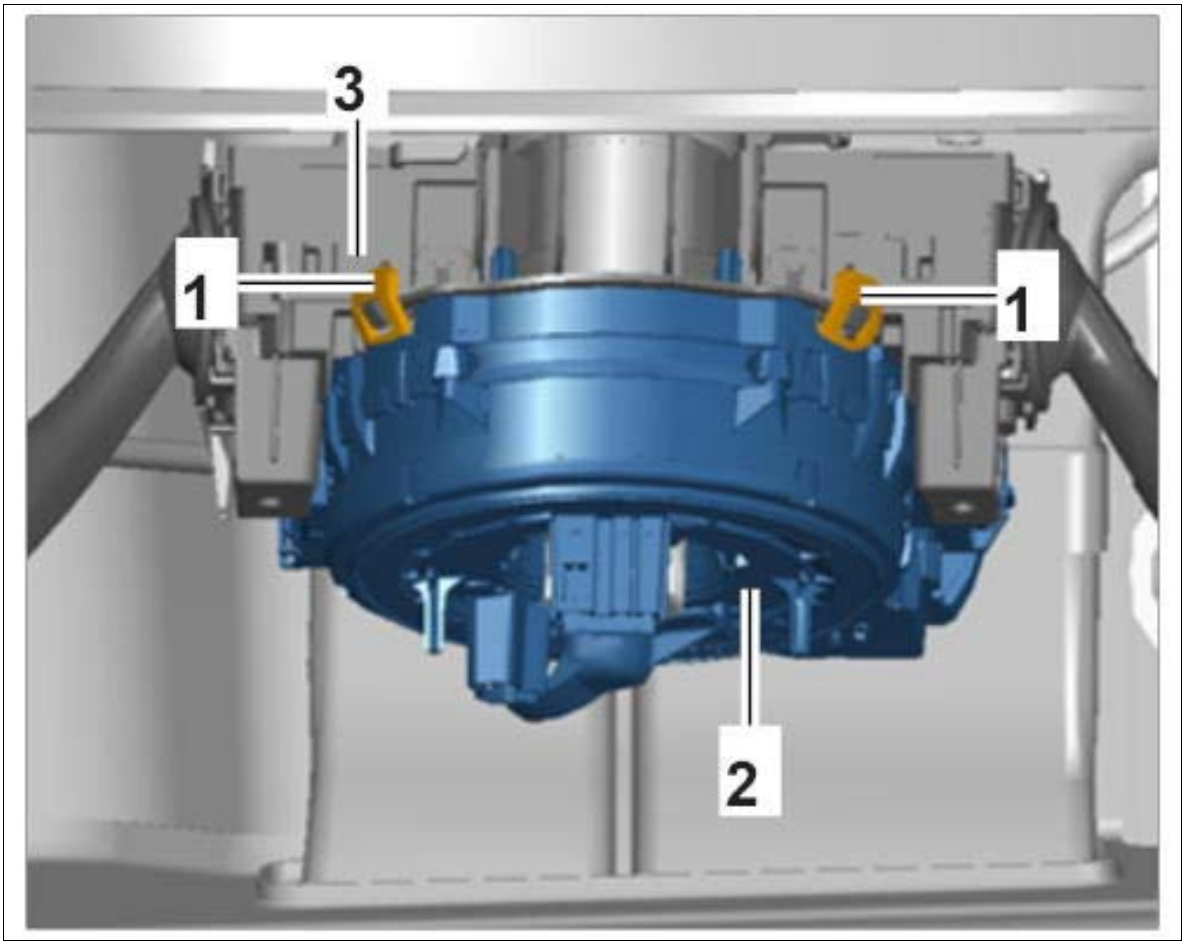

Courtesy of PORSCHE CARS NORTH AMERICA, INC.

WM 916219 REMOVING AND INSTALLING CONTROL UNIT FOR STEERING WHEEL ELECTRONICS (ALL MODELS) > INSTALLING CONTROL UNIT FOR STEERING WHEEL ELECTRONICS

WARNING: Airbag contact unit not set correctly

- *Malfunction in driver's airbag unit*

→ When removing and installing the steering column switch, turn the steering wheel so that the wheels are in straight-ahead position. This ensures that the airbag contact unit is locked in the central position.

→ Do not trap the cable of the airbag contact unit.

→ Check that the cable is routed correctly.

1. Installation is performed in reverse order to removal.
2. Tighten fastening screw used to secure the steering wheel electronics control unit to the

steering-column switch. **Tightening torque 0.5 Nm (0.5 ftlb.)**

WM 916219 REMOVING AND INSTALLING CONTROL UNIT FOR STEERING WHEEL ELECTRONICS (ALL MODELS) > SUBSEQUENT WORK

1. Install steering column casing. → Installing Steering Column Casing
2. Install steering wheel. → Installing Steering Wheel
3. After replacing the steering wheel electronics control unit, teach the rear-end electronics control unit to suit the vehicle again using **PIWIS Tester II 9818** .

WM 916255 REPLACING CONTROL UNIT FOR STEERING WHEEL ELECTRONICS (ALL MODELS) > TOOLS

Designation	Type	Number	Description	
PIWIS Tester II	Special tool	9818		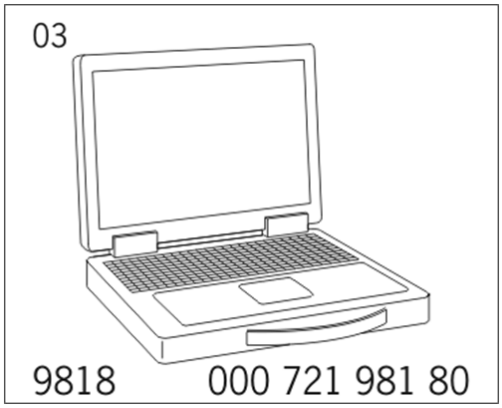

WM 916255 REPLACING CONTROL UNIT FOR STEERING WHEEL ELECTRONICS (ALL MODELS) > TECHNICAL VALUES

Location	Description	Type	Basic value	Tolerance 1	Tolerance 2
Current rating		Nominal value	40 A		

WM 916255 REPLACING CONTROL UNIT FOR STEERING WHEEL ELECTRONICS (ALL MODELS) > PRELIMINARY WORK

1. Replace control unit for steering wheel electronics. → 916219 REMOVING AND INSTALLING CONTROL UNIT FOR STEERING WHEEL ELECTRONICS .

WM 916255 REPLACING CONTROL UNIT FOR STEERING WHEEL ELECTRONICS (ALL MODELS) > REPLACING CONTROL UNIT FOR STEERING WHEEL ELECTRONICS

NOTE: Voltage drop

- *Risk of irreparable damage to control unit*
- *Risk of damage to control unit*
- *Fault entries in the control unit*
- *Coding in the control unit is aborted*
- *Malfunctions in control unit, even during programming*

→ Prior to disconnecting the control unit, switch off ignition and remove ignition key.

→ Ensure that the power supply is not interrupted during programming.

→ Connect a battery charger with a current rating of at least → **Nominal value: 40 A** to the vehicle battery.

Information

The **PIWIS Tester II 9818** instructions take precedence since the description may be different with later Tester releases.

The procedure described here has been structured in general terms. Different text or additional information may appear in **PIWIS Tester II 9818** .

Information

On vehicles with the equipment variant multi-function steering wheel, a function enable process must be carried out after replacing the steering wheel electronics control unit.

1. Connect the PIWIS Tester to the vehicle and start the PIWIS Tester. Switch on ignition.
2. Select the vehicle type and start the diagnostic application.
3. Select the **steering wheel electronics** control unit in the **overview** .
4. **Codings/adaptations** must now be selected.
5. **Automatic coding** must be selected and then press [F12].
6. The Tester displays the message **Coding has been completed successfully** . Press [F12] to continue.
7. Select **Steering-angle sensor calibration** in the **Maintenance/repairs** menu.
8. Follow the instructions on the Tester and press [F8] to start.
9. The Tester indicates that the **calibration was completed successfully** . Press [F12] to

continue.

10. Read out the fault memory and erase it if necessary.
11. Function test: Perform a test drive.
12. Read out the fault memory.

WM 916255 REPLACING CONTROL UNIT FOR STEERING WHEEL ELECTRONICS (ALL MODELS) > REPLACING CONTROL UNIT FOR STEERING WHEEL ELECTRONICS > ENABLING FUNCTIONS

Information

On vehicles with the equipment variant heated steering wheel, multi-function steering wheel, cruise control or onboard computer, a function enable process must be carried out after replacing the steering wheel electronics control unit.

1. Determine function enabling code in PIWIS
2. Connect the PIWIS Tester to the vehicle and start the PIWIS Tester. Switch on ignition.
3. Select the vehicle type and start the diagnostic application.
4. Select **Steering wheel electronics** using the cursor keys and press [F12].
5. **Select Maintenance/repairs.**
6. Select **Function enable** using the cursor keys and press [F12].
7. Select the function, enter the function enabling code and press [F8] to save your entries.
8. Repeat the process for other functions.
9. Read out the fault memory and erase it if necessary.
10. Function test: Perform a test drive.
11. Read out the fault memory.

WM 916255 REPLACING CONTROL UNIT FOR STEERING WHEEL ELECTRONICS (ALL MODELS) > SUBSEQUENT WORK

1. Initialize and calibrate the steering-angle sensor. → 456005 INITIALIZING AND CALIBRATING STEERING-ANGLE SENSOR

WM 916819 REMOVING AND INSTALLING OUTSIDE TEMPERATURE SENSOR (ALL MODELS) > PRELIMINARY WORK

1. Remove right horn. → Removing Horn

WM 916819 REMOVING AND INSTALLING OUTSIDE TEMPERATURE SENSOR (ALL MODELS) > REMOVING OUTSIDE TEMPERATURE SENSOR

1. Switch off ignition and pull remote control out of ignition lock.

   Turbo vehicles only

2. Swivel right flap **-1-** of the air guide forward.

   All vehicles

3. Pull outside temperature sensor **-2-** out of the right flap.

4. Release and disconnect electric plug connection **-3-** .

   Fig 1: Removing Outside Temperature Sensor

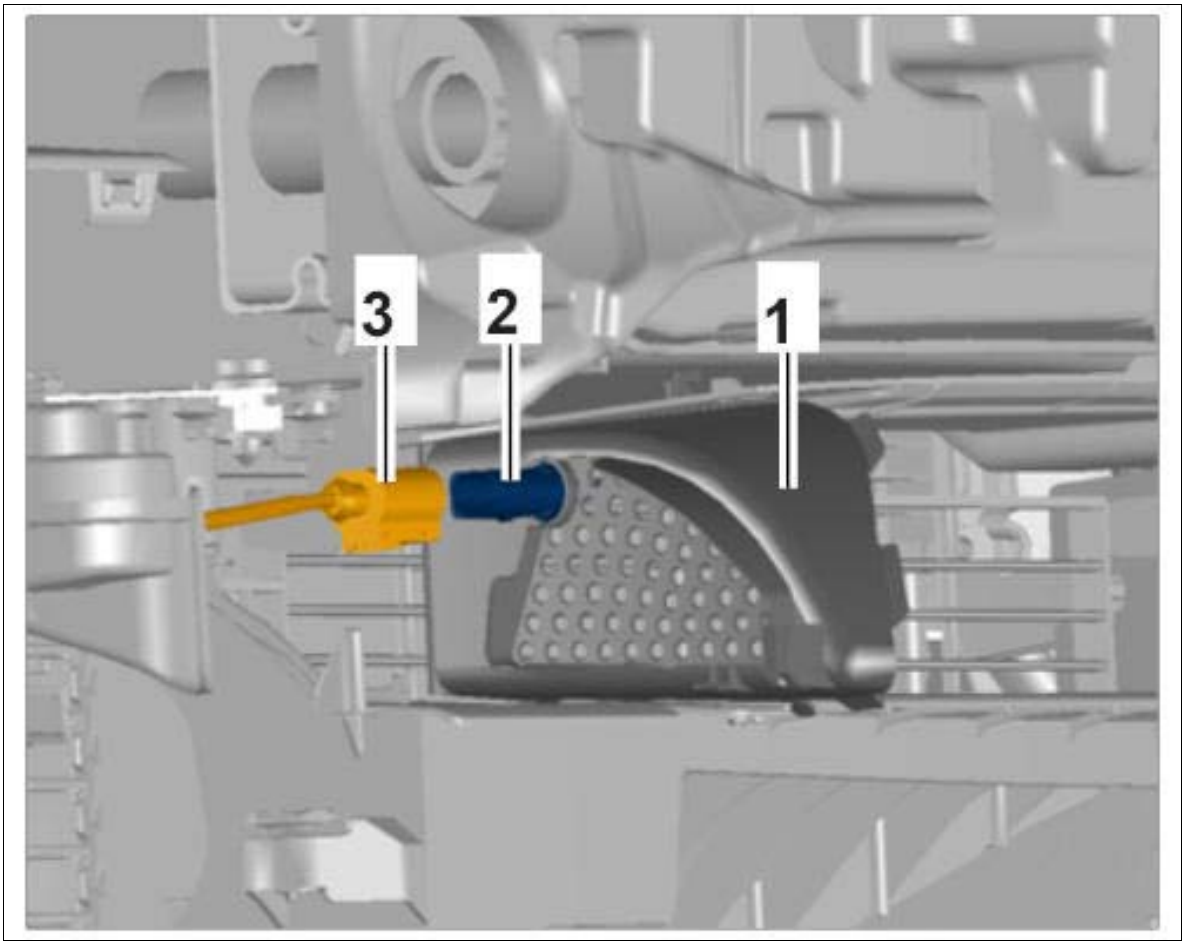

Courtesy of PORSCHE CARS NORTH AMERICA, INC.

WM 916819 REMOVING AND INSTALLING OUTSIDE TEMPERATURE SENSOR (ALL MODELS) > INSTALLING OUTSIDE TEMPERATURE SENSOR

1. Installation is performed in reverse order to removal.

WM 916819 REMOVING AND INSTALLING OUTSIDE TEMPERATURE SENSOR (ALL MODELS) > SUBSEQUENT WORK

1. Install horn. → Installing Horn

WM 917019 REMOVING AND INSTALLING CONTROL UNIT FOR LANE CHANGE ASSIST (ALL MODELS) > TECHNICAL VALUES

Location	Description	Type	Basic value	Tolerance 1	Tolerance 2
Lane Change Assist control unit to holder	Internal Torx screw, M5 x 14	Tightening torque	3 Nm (2 ftlb.)		

WM 917019 REMOVING AND INSTALLING CONTROL UNIT FOR LANE CHANGE ASSIST (ALL MODELS) > PRELIMINARY WORK

1. Remove rear apron. → REMOVING REAR APRON

WM 917019 REMOVING AND INSTALLING CONTROL UNIT FOR LANE CHANGE ASSIST (ALL MODELS) > REMOVING CONTROL UNIT FOR LANE CHANGE ASSIST

NOTE: Voltage peaks

- *Risk of damage to load or to the control unit*

→ Remove the ignition key and switch off load before disconnecting or removing load.

Information

Always comply with the regulations for handling ESD-sensitive components!

- Assembly work may only be carried out if the mechanic is wearing the working clothes and shoes approved by Porsche.
- The new part must only be removed from the ESD (electrostatic discharge) protective packaging just before installation and at the position at which the part is to be installed.
- Never touch the electric pins and plug contacts.

1. Switch off ignition and pull remote control out of ignition lock.

2. Release electric plug connection **-1-** (**-a-**) and disconnect it from the Lane Change Assist control unit **-2-** .
3. Unscrew fastening screws **-3-** and remove Lane Change Assist control unit.

Fig 1: Removing Lane Change Assist Control Unit

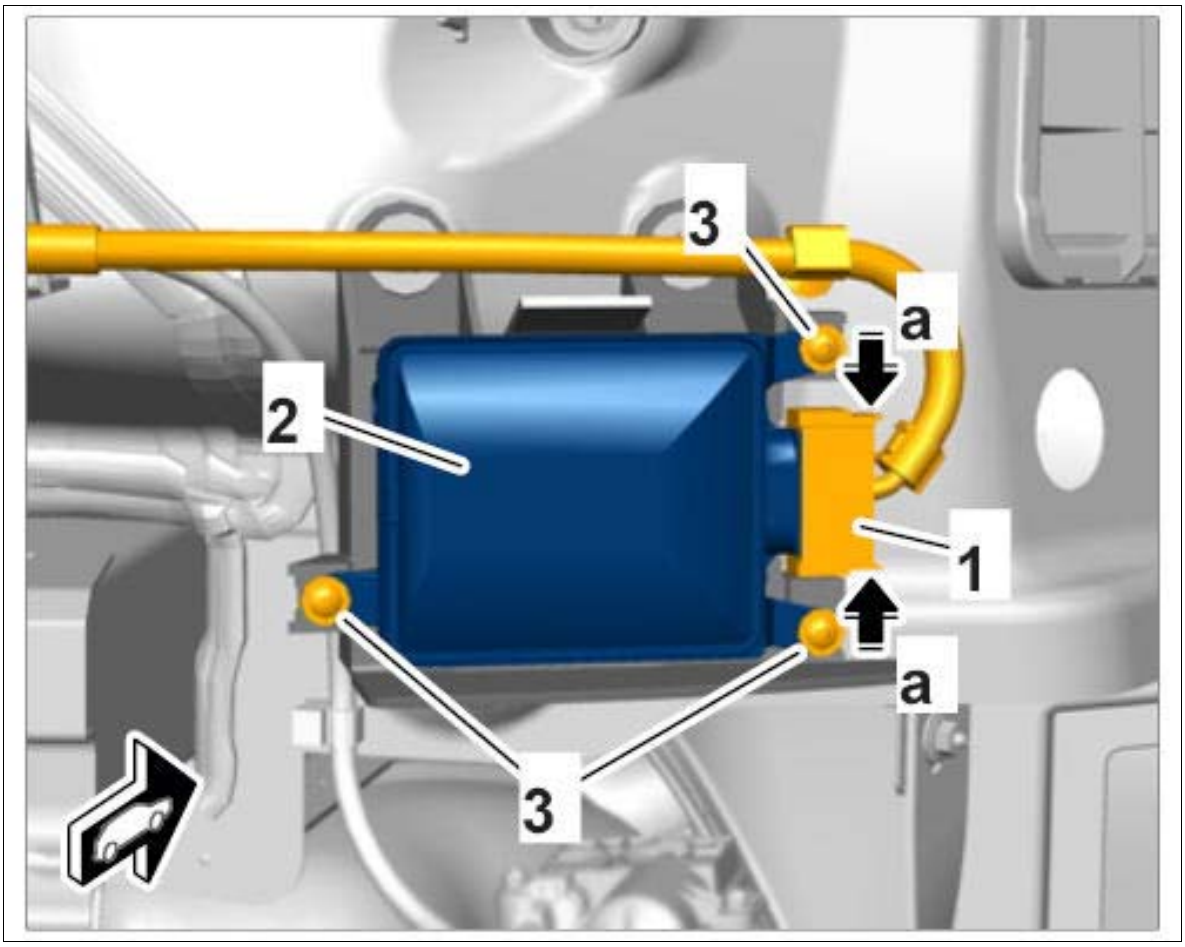

Courtesy of PORSCHE CARS NORTH AMERICA, INC.

WM 917019 REMOVING AND INSTALLING CONTROL UNIT FOR LANE CHANGE ASSIST (ALL MODELS) > INSTALLING CONTROL UNIT FOR LANE CHANGE ASSIST

1. Installation is performed in reverse order to removal.
2. Tighten fastening screws for Lane Change Assist control unit on the retaining strip. **Tightening torque 3 Nm (2 ftlb.)**

WM 917019 REMOVING AND INSTALLING CONTROL UNIT FOR LANE CHANGE ASSIST (ALL MODELS) > SUBSEQUENT WORK

1. Install rear apron. → Installing Rear Apron
2. Calibrate control unit for Lane Change Assist. → Calibrating Control Unit For Lane Change

WM 917025 PROGRAMMING CONTROL UNIT FOR LANE CHANGE ASSIST (ALL MODELS) > TOOLS

Designation	Type	Number	Description	
Calibration unit VAS 6350	Service equipment	WE 1368		
Spacing laser VAS 6350/2	Service equipment	WE 1369		

Calibration unit for Lane Change Assist VAS 6350/4	Service equipment	WE 1375		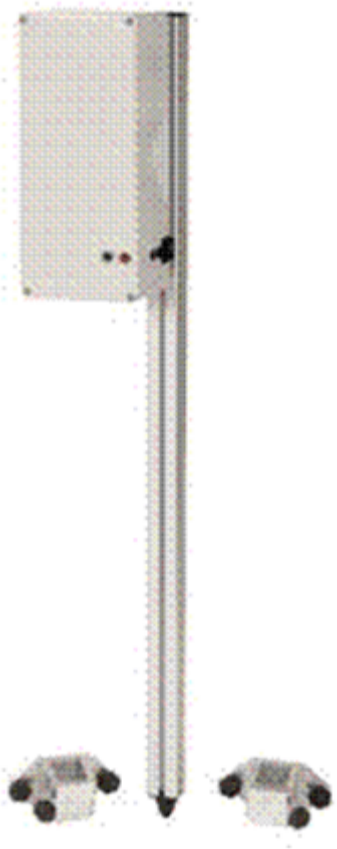
PIWIS Tester II	Special tool	9818		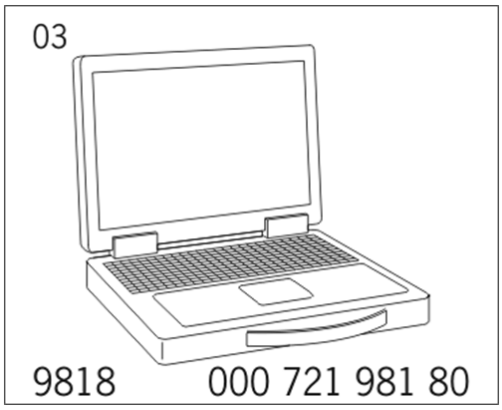

WM 917025 PROGRAMMING CONTROL UNIT FOR LANE CHANGE ASSIST (ALL MODELS) > TECHNICAL VALUES

Location	Description	Type	Basic value	Tolerance 1	Tolerance 2
Current rating		Nominal value	40 A		

WM 917025 PROGRAMMING CONTROL UNIT FOR LANE CHANGE ASSIST (ALL MODELS) > INFORMATION

The Lane Change Assist control units must be re-calibrated in the following situations:

- When one or both Lane Change Assist control units are replaced.
- When the installation position of one or both Lane Change Assist control units is changed.
- When body repairs are carried out on the rear of the vehicle.
- When the rear bumper/rear apron is removed or moved out of position.

WM 917025 PROGRAMMING CONTROL UNIT FOR LANE CHANGE ASSIST (ALL MODELS) > PRELIMINARY WORK

Information

The calibration process sends out radar beams, which the Doppler generator reflects. This simulates a vehicle.

A certain number of radar beams are expected in a defined time due to the defined position of the Doppler generator.

Deviations indicate that the control units are not at the correct installation position.

These deviations are displayed on the Porsche System Tester.

Information

The following tools are required for calibration:

- Calibration plates and wheel center mountings: Calibration unit VAS 6350 WE 1368 .
- Doppler generator: Calibration unit for Lane Change Assist VAS 6350/4 WE 1375
- Spacing laser: Spacing laser VAS 6350/2 WE 1369

Information

The following conditions must be observed in order to perform calibration:

- Calibration must only be performed on level ground.
- The vehicle must be empty.
- Wheels must be positioned straight ahead.
- Vehicle doors must be closed.
- Tires must have the specified air pressure.
- On vehicles with air suspension, the chassis must be set to ↓Normal Level and suspension levelling (air suspension) must be completed.
- The retractable trailer hitch must be retracted.
- The engine must not be running during calibration.

- Check that there is adequate space behind the vehicle and that there are no metal objects/obstacles within 5 meters of the rear of the vehicle.
- Make sure that no objects are moved or no-one moves behind the vehicle during calibration.
- There must be no heavy soiling in the sensor area on the rear apron.
- There must be no stickers in the sensor area on the rear apron.
- The calibration plates, wheel center mountings and the Doppler generators must be fitted, centered/aligned in accordance with the operating instructions.

Workshop conditions

- The system must only be calibrated in a suitable area of the workshop.
- This area of the workshop must be sheltered from all environmental influences, such as rain, snow and swirling dust.
- The workshop must be at room temperature.

1. Park the vehicle on a level surface and set up the **calibration unit VAS 6350 WE 1368** behind the vehicle in accordance with the operating instructions for VAS 6350.

   Fig 1: Overview Of Vehicle (Shown On Panamera)

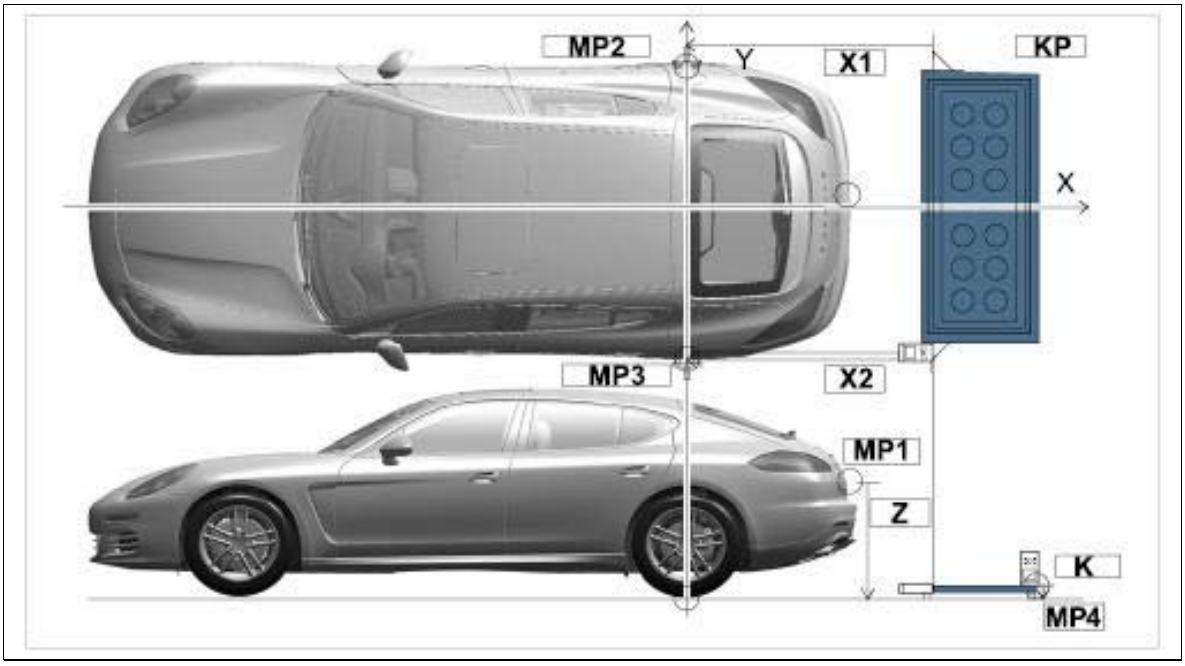

Courtesy of PORSCHE CARS NORTH AMERICA, INC.

1. **MP 1 to 4** - Measuring points
2. **X1** - Distance from calibration board to right reflector
3. **X2** - Distance from calibration board to left reflector
4. **Z** - Height of camera from floor
5. **K** - Calibration plate height

2. Fit the wheel center mountings and reflectors on the vehicle in accordance with the operating instructions for **VAS 6350** . The reflectors must be hanging freely.

Fig 2: Fitting Reflectors

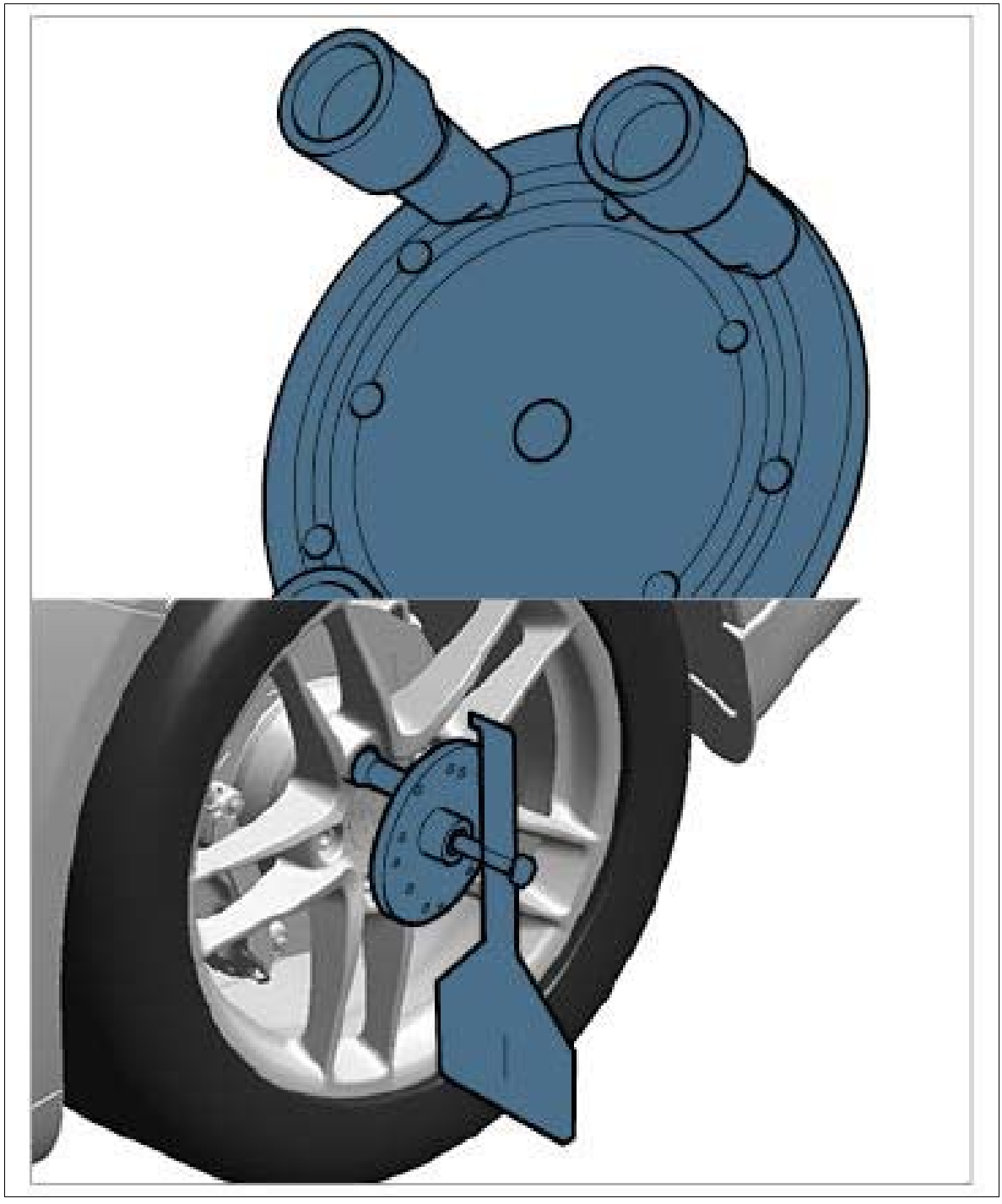

Courtesy of PORSCHE CARS NORTH AMERICA, INC.

Fig 3: Identifying Reflector Hanging Freely

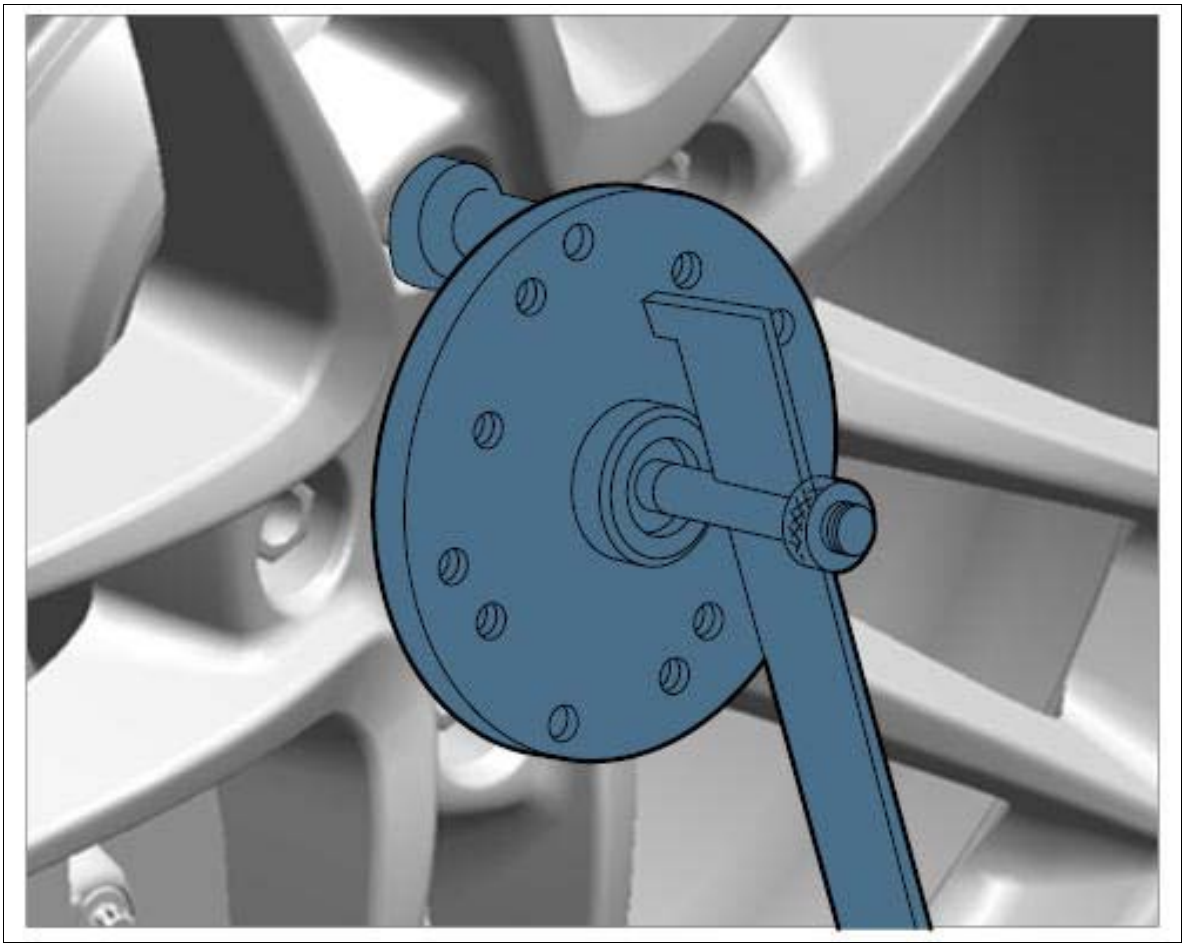

Courtesy of PORSCHE CARS NORTH AMERICA, INC.

3. Align the work surface with the center of the vehicle and adjust the line laser to suit the calibration plate in accordance with the operating instructions for VAS 6350.

WM 917025 PROGRAMMING CONTROL UNIT FOR LANE CHANGE ASSIST (ALL MODELS) > CALIBRATING CONTROL UNIT FOR LANE CHANGE ASSIST > LANE CHANGE ASSIST CONTROL UNIT

NOTE: Voltage drop

- *Risk of irreparable damage to control unit*
- *Risk of damage to control unit*
- *Fault entries in the control unit*
- *Coding in the control unit is aborted*
- *Malfunctions in control unit, even during programming*

→ Prior to disconnecting the control unit, switch off ignition and remove ignition key.

→ Ensure that the power supply is not interrupted during programming.

→ Connect a battery charger with a current rating of at least → **Nominal value: 40 A** to the vehicle battery.

Information

The **PIWIS Tester II 9818** instructions take precedence since the description may be different with later Tester releases.

The procedure described here has been structured in general terms. Different text or additional information may appear in **PIWIS Tester II 9818** .

Fig 1: Overview Of Vehicle (Shown On Panamera)

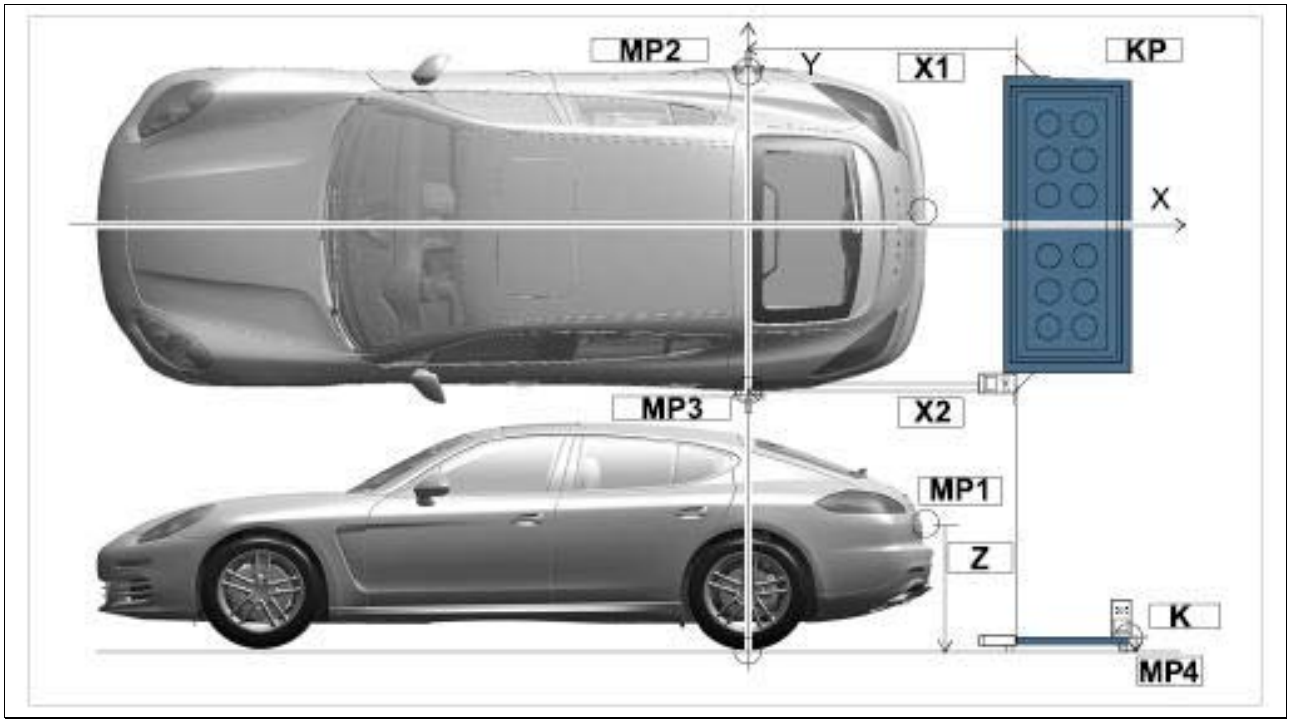

Courtesy of PORSCHE CARS NORTH AMERICA, INC.

MP 1 to 4 - Measuring points

X1 - Distance from calibration board to right reflector

X2 - Distance from calibration board to left reflector

Z - Height of camera from floor

K - Calibration plate height

1. The following tools are required:
    1. 1.1. **Calibration unit VAS 6350 WE 1368**
    2. 1.2. **Spacing laser VAS 6350/2 WE 1369**
    3. 1.3. **Calibration unit for Lane Change Assist VAS 6350/4 WE 1375**
2. Connect the Porsche System Tester to the vehicle and start the System Tester. Switch on ignition and press [F12] to continue.
3. Select the vehicle type and start the Tester.
4. Select the **Lane Change Assist** control unit in the **overview** .
5. **Maintenance and repairs** must now be selected.
6. **Calibrate Lane Change Assist** must be selected, then press [F12] to continue.
7. Proceed according to the instructions provided on the Tester and press [F12] to continue.
8. Once you have calibrated Lane Change Assist, test-drive the vehicle and check the Lane Change Assist function.
9. After the test, read out the fault memory. If there are faults stored, correct the faults in accordance with the fault-finding strategy.

WM 917119 REMOVING AND INSTALLING LANE CHANGE ASSIST DISPLAY (ALL MODELS) > PRELIMINARY WORK

1. Remove mirror glass. → Removing Mirror Glass

WM 917119 REMOVING AND INSTALLING LANE CHANGE ASSIST DISPLAY (ALL MODELS) > REMOVING LANE CHANGE ASSIST DISPLAY

1. Remove Lane Change Assist display.
    1. 1.1. Press the display out of the housing from the inside **-A-** .
    2. 1.2. Release and disconnect electric plug connection.

Fig 1: Removing Lane Change Assist Display

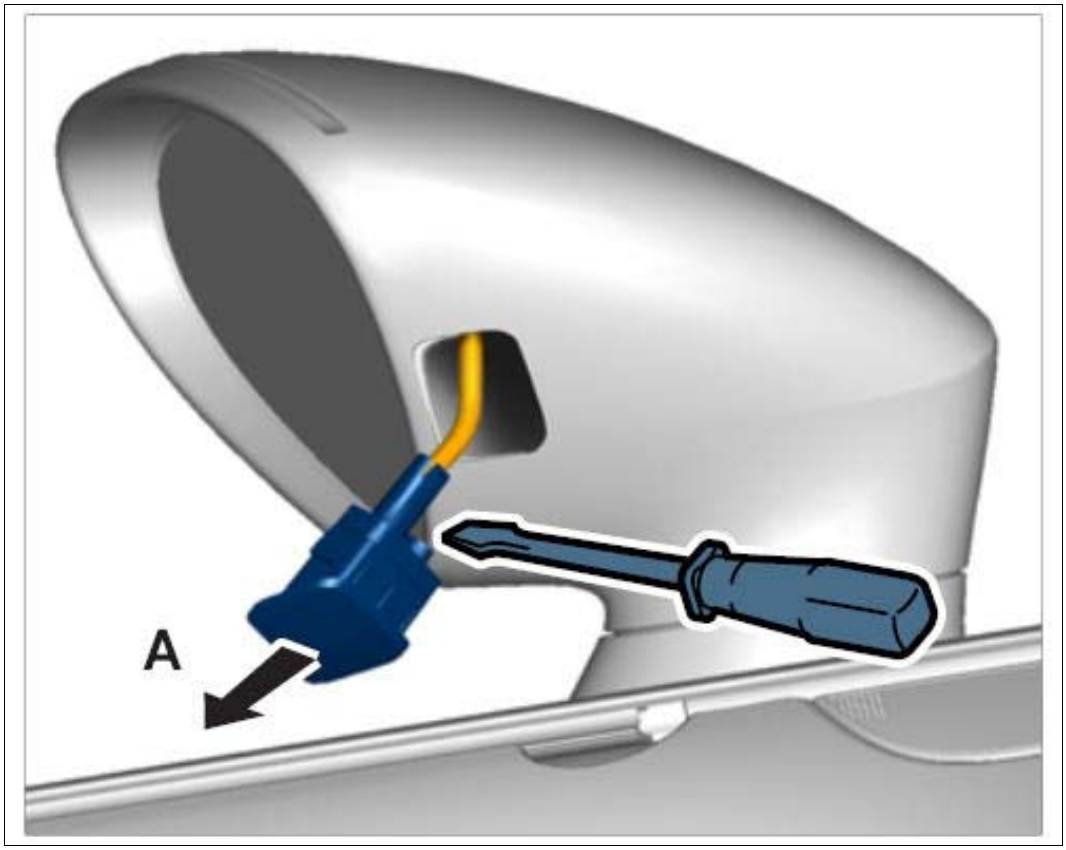

Courtesy of PORSCHE CARS NORTH AMERICA, INC.

WM 917119 REMOVING AND INSTALLING LANE CHANGE ASSIST DISPLAY (ALL MODELS) > INSTALLING LANE CHANGE ASSIST DISPLAY

1. Connect electric plug connection until it engages securely.
2. Clip display into the exterior mirror bracket.
3. Carry out a function test.

WM 917119 REMOVING AND INSTALLING LANE CHANGE ASSIST DISPLAY (ALL MODELS) > SUBSEQUENT WORK

1. Install mirror glass. → Installing Mirror Glass

WM 917219 REMOVING AND INSTALLING SURROUND VIEW CAMERA CONTROL UNIT (ALL MODELS) > TECHNICAL VALUES

Location	Description	Type	Basic value	Tolerance 1	Tolerance 2
Holder to body	Hexagon nut, M6	Tightening torque	9 Nm (6.5 ftlb.)		

WM 917219 REMOVING AND INSTALLING SURROUND VIEW CAMERA CONTROL UNIT (ALL MODELS) > PRELIMINARY WORK

1. Remove side trim panel for luggage compartment at the left. → Removing Side Trim Panel For Rear Luggage Compartment

WM 917219 REMOVING AND INSTALLING SURROUND VIEW CAMERA CONTROL UNIT (ALL MODELS) > REMOVING SURROUND VIEW CAMERA CONTROL UNIT

1. Release and disconnect electric plug connections **-1-** .

   Fig 1: Disconnecting Electric Plug Connections

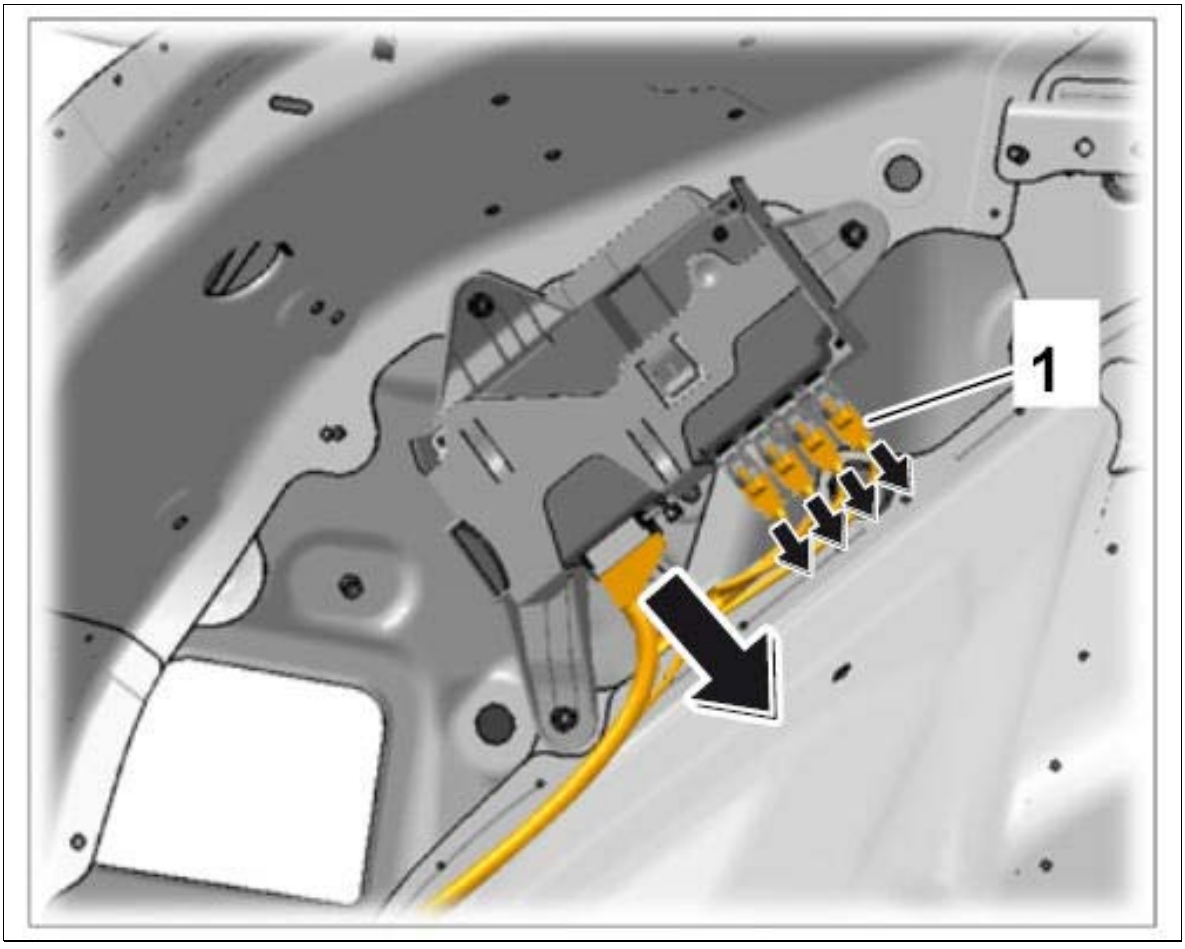

Courtesy of PORSCHE CARS NORTH AMERICA, INC.

2. Unclip Surround View camera control unit **-1-** from its holder and remove it in an upward direction.

Fig 2: Removing Control Unit

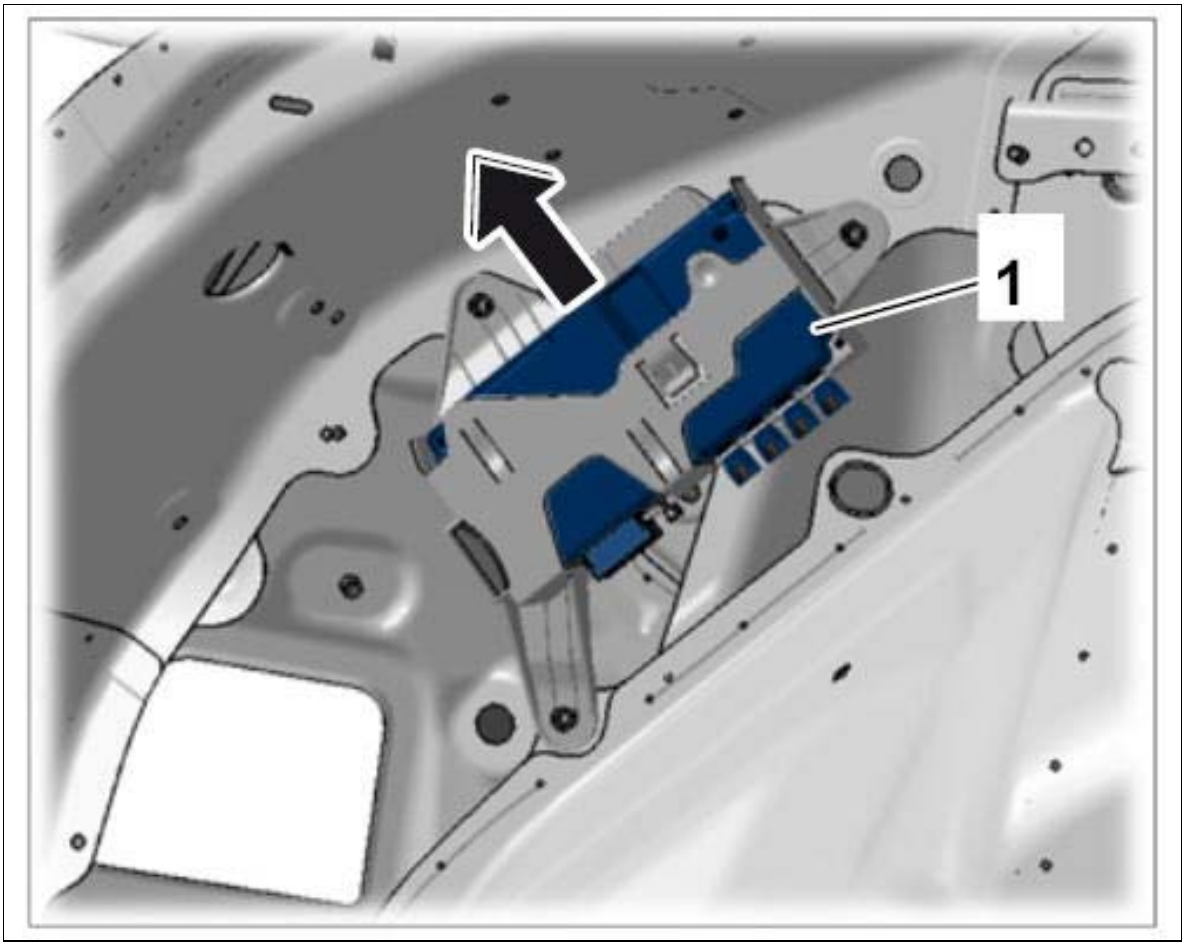

Courtesy of PORSCHE CARS NORTH AMERICA, INC.

WM 917219 REMOVING AND INSTALLING SURROUND VIEW CAMERA CONTROL UNIT (ALL MODELS) > INSTALLING SURROUND VIEW CAMERA CONTROL UNIT

1. Installation is performed in reverse order to removal.

If a new holder has to be installed: Secure holder with fastening nuts. **Tightening torque 9 Nm (6.5 ftlb.)**

WM 917219 REMOVING AND INSTALLING SURROUND VIEW CAMERA CONTROL UNIT (ALL MODELS) > SUBSEQUENT WORK

1. Install side trim panel for luggage compartment at the left. → Installing Side Trim Panel For Rear Luggage Compartment

WM 917419 REMOVING AND INSTALLING CONTROL UNIT FOR PARKASSIST (ALL

MODELS) > TOOLS

Designation	Type	Number	Description	
PIWIS Tester II	Special tool	9818		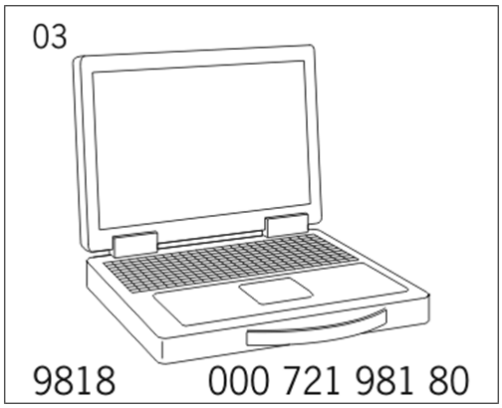

WM 917419 REMOVING AND INSTALLING CONTROL UNIT FOR PARKASSIST (ALL MODELS) > TECHNICAL VALUES

Location	Description	Type	Basic value	Tolerance 1	Tolerance 2
ParkAssist control unit to body	Nut, M6	Tightening torque	3 Nm (2 ftlb.)		

WM 917419 REMOVING AND INSTALLING CONTROL UNIT FOR PARKASSIST (ALL MODELS) > PRELIMINARY WORK

1. Move inner part of side trim panel for rear luggage compartment on the right and connected lines aside. → Removing Side Trim Panel For Rear Luggage Compartment

WM 917419 REMOVING AND INSTALLING CONTROL UNIT FOR PARKASSIST (ALL MODELS) > REMOVING CONTROL UNIT FOR PARKASSIST

NOTE: Voltage peaks

- *Risk of damage to load or to the control unit*

→ Remove the ignition key and switch off load before disconnecting or removing load.

1. Switch off ignition and pull remote control out of ignition lock.
2. Screw off fastening nuts **-arrow-** and remove ParkAssist control unit **-1-** .

Information

Always comply with the regulations for handling ESD-sensitive components!

1. Assembly work may only be carried out if the mechanic is wearing the working clothes and shoes approved by Porsche.
2. The new part must only be removed from the ESD (electrostatic discharge) protective packaging just before installation and at the position at which the part is to be installed.
3. Never touch the electric pins and plug contacts.

3. Release electric plug connections **-2, 3, 4-** and disconnect them from the ParkAssist control unit.

Fig 1: Removing Parkassist Control Unit

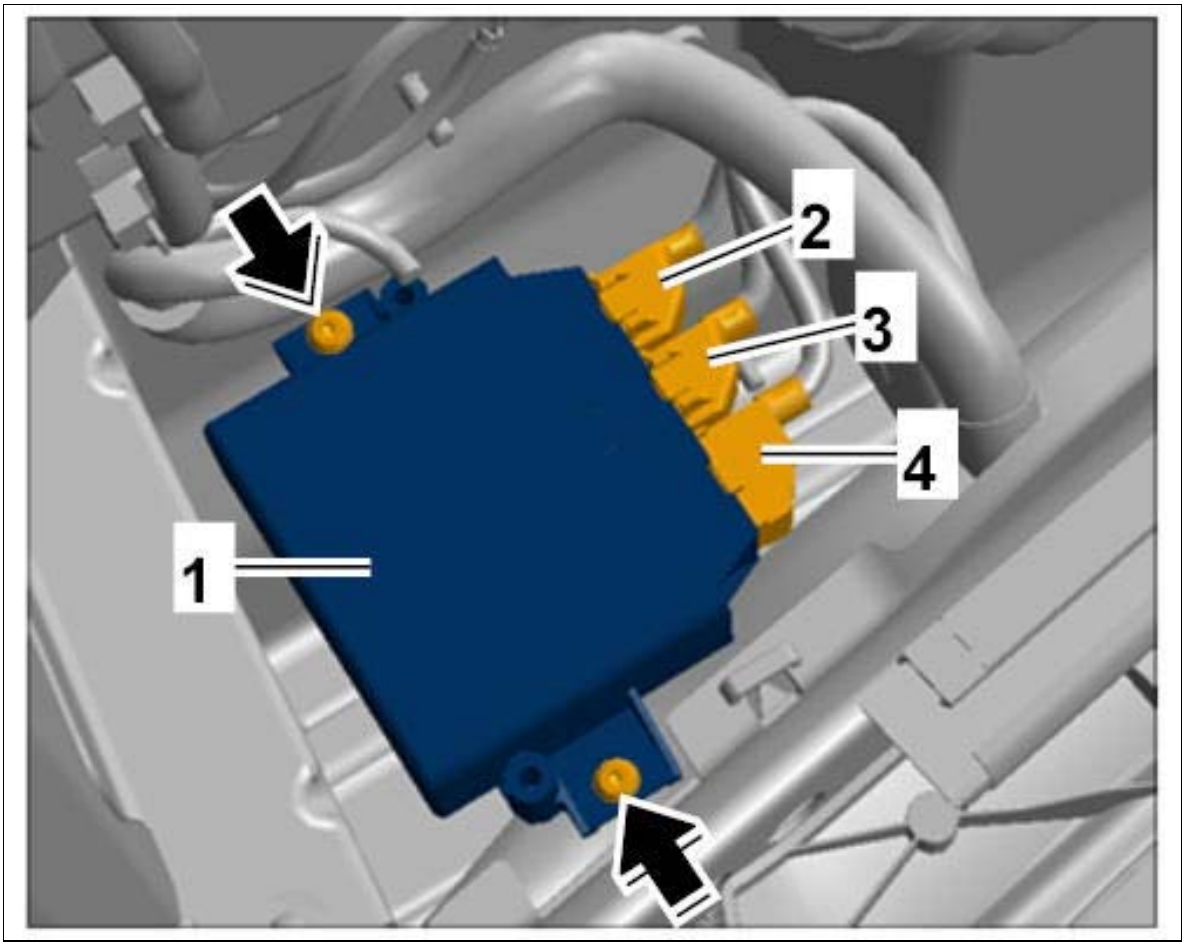

Courtesy of PORSCHE CARS NORTH AMERICA, INC.

WM 917419 REMOVING AND INSTALLING CONTROL UNIT FOR PARKASSIST (ALL MODELS) > INSTALLING CONTROL UNIT FOR PARKASSIST

Information

Always comply with the regulations for handling ESD-sensitive components!

- Assembly work may only be carried out if the mechanic is wearing the working clothes and shoes approved by Porsche.
- The new part must only be removed from the ESD (electrostatic discharge) protective packaging just before installation and at the position at which the part is to be installed.
- Never touch the electric pins and plug contacts.

1. Installation is performed in reverse order to removal.
2. Tighten fastening nuts used to secure the ParkAssist control unit to the body. **Tightening torque 3 Nm (2 ftlb.)**

WM 917419 REMOVING AND INSTALLING CONTROL UNIT FOR PARKASSIST (ALL MODELS) > SUBSEQUENT WORK

1. Install inner part of side trim panel for rear luggage compartment at the right. → Installing Side Trim Panel For Rear Luggage Compartment
2. If the ParkAssist control unit was replaced, teach the new ParkAssist control unit to suit the vehicle using **PIWIS Tester II 9818** . → 917455 REPLACING CONTROL UNIT FOR PARKASSIST

WM 917455 REPLACING CONTROL UNIT FOR PARKASSIST (ALL MODELS) > TOOLS

Designation	Type	Number	Description	
PIWIS Tester II	Special tool	9818		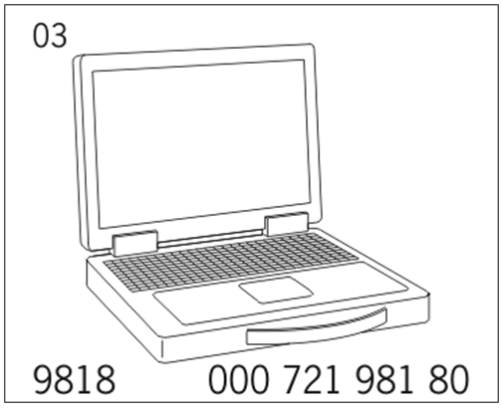

WM 917455 REPLACING CONTROL UNIT FOR PARKASSIST (ALL MODELS) > TECHNICAL VALUES

Location	Description	Type	Basic value	Tolerance 1	Tolerance 2
Current rating		Nominal value	40 A		

WM 917455 REPLACING CONTROL UNIT FOR PARKASSIST (ALL MODELS) > REPLACING CONTROL UNIT FOR PARKASSIST > CODING CONTROL UNIT FOR PARKASSIST

NOTE: Voltage drop

- *Risk of irreparable damage to control unit*
- *Risk of damage to control unit*
- *Fault entries in the control unit*
- *Coding in the control unit is aborted*
- *Malfunctions in control unit, even during programming*

→ Prior to disconnecting the control unit, switch off ignition and remove ignition key.

→ Ensure that the power supply is not interrupted during programming.

→ Connect a battery charger with a current rating of at least → **Nominal value: 40 A** to the vehicle battery.

Information

The **PIWIS Tester II 9818** instructions take precedence since the description may be different with later Tester releases.

The procedure described here has been structured in general terms. Different text or additional information may appear in **PIWIS Tester II 9818** .

1. Switch off ignition and replace control unit. → 917419 REMOVING AND INSTALLING CONTROL UNIT FOR PARKASSIST .
2. Connect the Porsche System Tester to the vehicle and start the System Tester. Switch on ignition.
3. Select vehicle type.
4. Select the **ParkAssist** control unit in the **overview** .
5. **Codings/adaptations** must now be selected.
6. **Automatic coding** must now be selected. Then press [F12] to continue.
7. The System Tester displays the message **Coding has been completed successfully** . Press [F12] to continue.
8. Read out the fault memory and erase it if necessary.
9. Function test: Manoeuvre the vehicle.

WM 917519 REMOVING AND INSTALLING PARKASSIST SENSOR (ALL MODELS) > PRELIMINARY WORK FOR FRONT PARKASSIST SENSOR

Outer ParkAssist sensors

1. Loosen trim **-1-** .

    1. 1.1. Carefully pry locking lugs **-2-** on the trim out of the front apron using a plastic wedge.

        Fig 1: Loosening Trim

        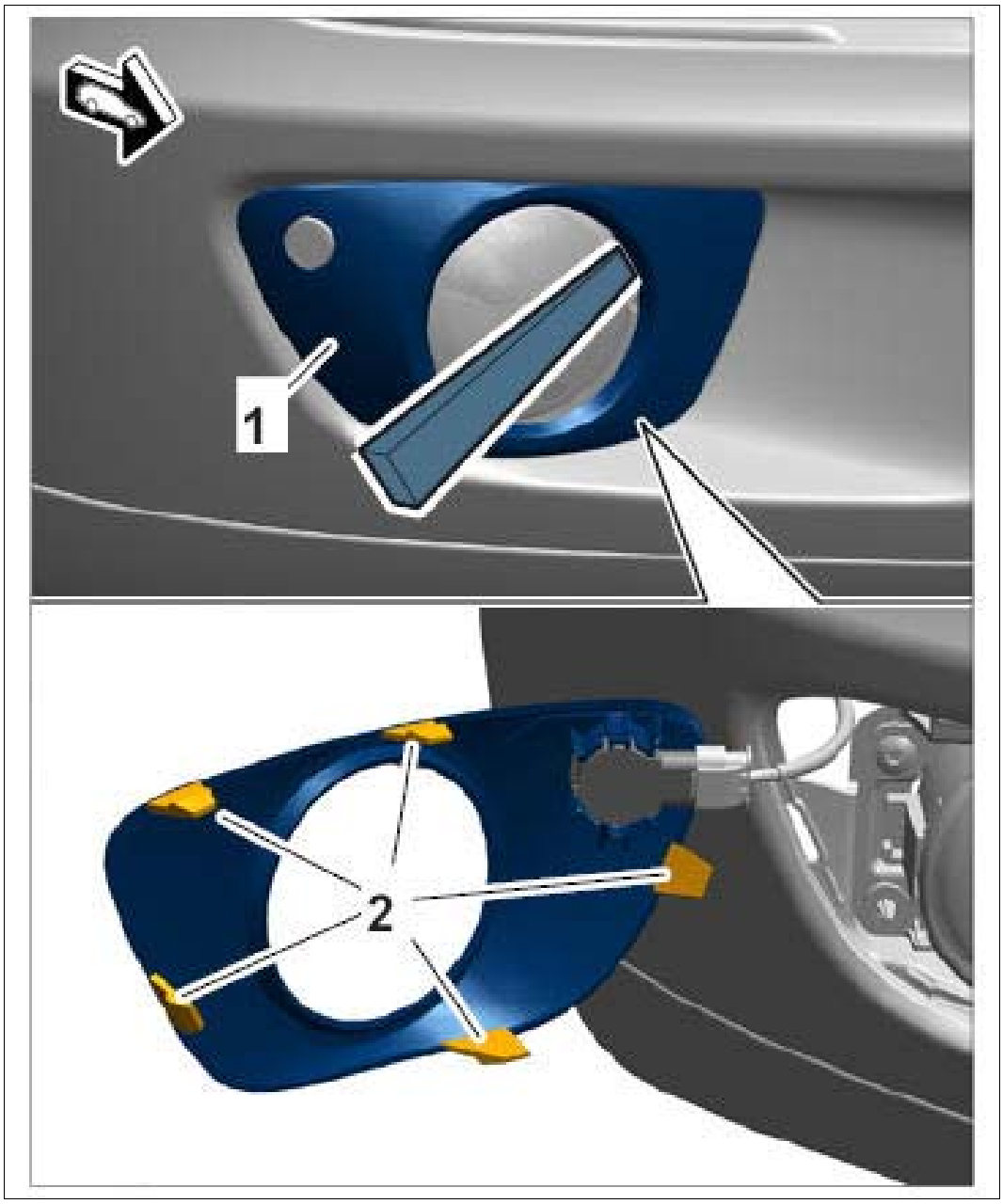

        Courtesy of PORSCHE CARS NORTH AMERICA, INC.

Inner ParkAssist sensors

2. Remove front apron. → Removing Front Apron

WM 917519 REMOVING AND INSTALLING PARKASSIST SENSOR (ALL MODELS) > PRELIMINARY WORK FOR REAR PARKASSIST SENSOR

1. Remove rear apron. → Removing Rear Apron

WM 917519 REMOVING AND INSTALLING PARKASSIST SENSOR (ALL MODELS) > REMOVING PARKASSIST SENSOR

Information

- Some of the repair illustrations show only one side of the vehicle.
- Naturally, some steps also have to be performed on the opposite side of the vehicle as well.

Fig 1: Identifying Parkassist Sensors (Shown On Rear Apron)

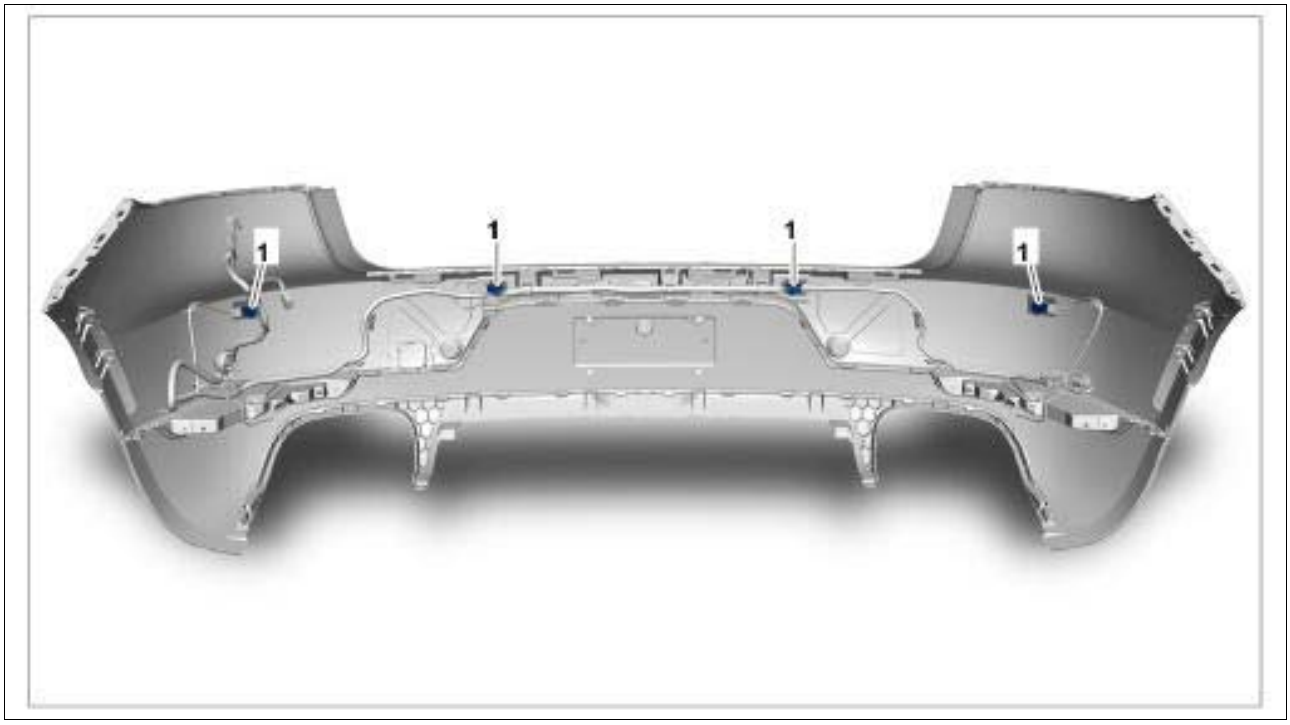

Courtesy of PORSCHE CARS NORTH AMERICA, INC.

1. Remove ParkAssist sensor **-1-** .
    1. 1.1. Disengage locking mechanisms **-2-** and take ParkAssist sensor out of the holder.
    2. 1.2. Disengage locking mechanism for electric plug connection to the side **-3-** .
    3. 1.3. Press locking mechanism **-4-** and disconnect electric plug connection from the ParkAssist sensor.

Fig 2: Removing Parkassist Sensor

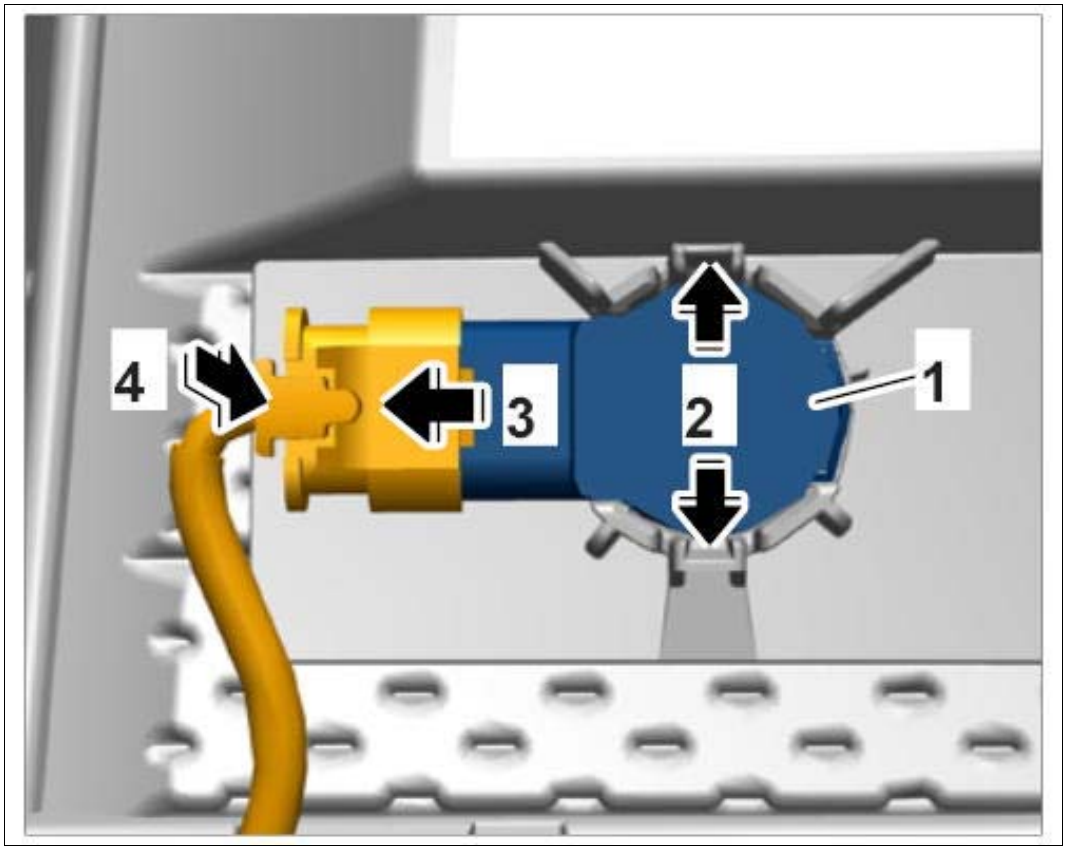

Courtesy of PORSCHE CARS NORTH AMERICA, INC.

WM 917519 REMOVING AND INSTALLING PARKASSIST SENSOR (ALL MODELS) > INSTALLING PARKASSIST SENSOR

1. Installation is performed in reverse order to removal.

WM 917519 REMOVING AND INSTALLING PARKASSIST SENSOR (ALL MODELS) > SUBSEQUENT WORK FOR REAR PARKASSIST SENSOR

1. Install rear apron. → Installing Rear Apron

WM 917519 REMOVING AND INSTALLING PARKASSIST SENSOR (ALL MODELS) > SUBSEQUENT WORK FOR FRONT PARKASSIST SENSOR

Inner ParkAssist sensors

1. Install front apron. → Installing Front Apron

Outer ParkAssist sensors

2. Engage trim in the front apron.

WM 917719 REMOVING AND INSTALLING MULTI-FUNCTION CONTROL UNIT (ALL MODELS) > PRELIMINARY WORK

1. Remove driver's airbag unit. → Removing driver's airbag unit

WM 917719 REMOVING AND INSTALLING MULTI-FUNCTION CONTROL UNIT (ALL MODELS) > REMOVING MULTI-FUNCTION CONTROL UNIT

NOTE: Voltage peaks

- *Risk of damage to load or to the control unit*

→ Remove the ignition key and switch off load before disconnecting or removing load.

Information

Always comply with the regulations for handling ESD-sensitive components!

- Assembly work may only be carried out if the mechanic is wearing the working clothes and shoes approved by Porsche.
- The new part must only be removed from the ESD (electrostatic discharge) protective packaging just before installation and at the position at which the part is to be installed.
- Never touch the electric pins and plug contacts.

Fig 1: Identifying Multi-Function Control Unit Position

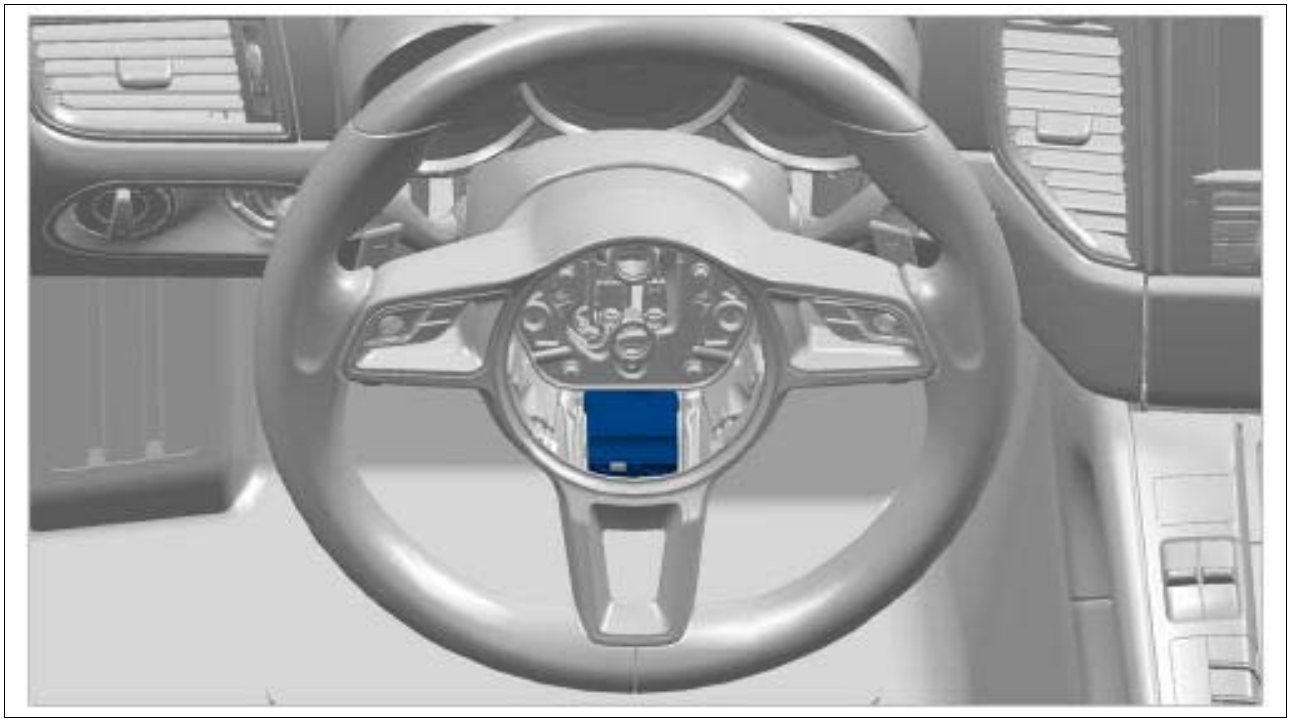

Courtesy of PORSCHE CARS NORTH AMERICA, INC.

1. Disengage multi-function control unit **-1-** (**-a-**) and pull it to the rear and out of the holder **-2-** .

Fig 2: Disengaging Multi-Function Control Unit

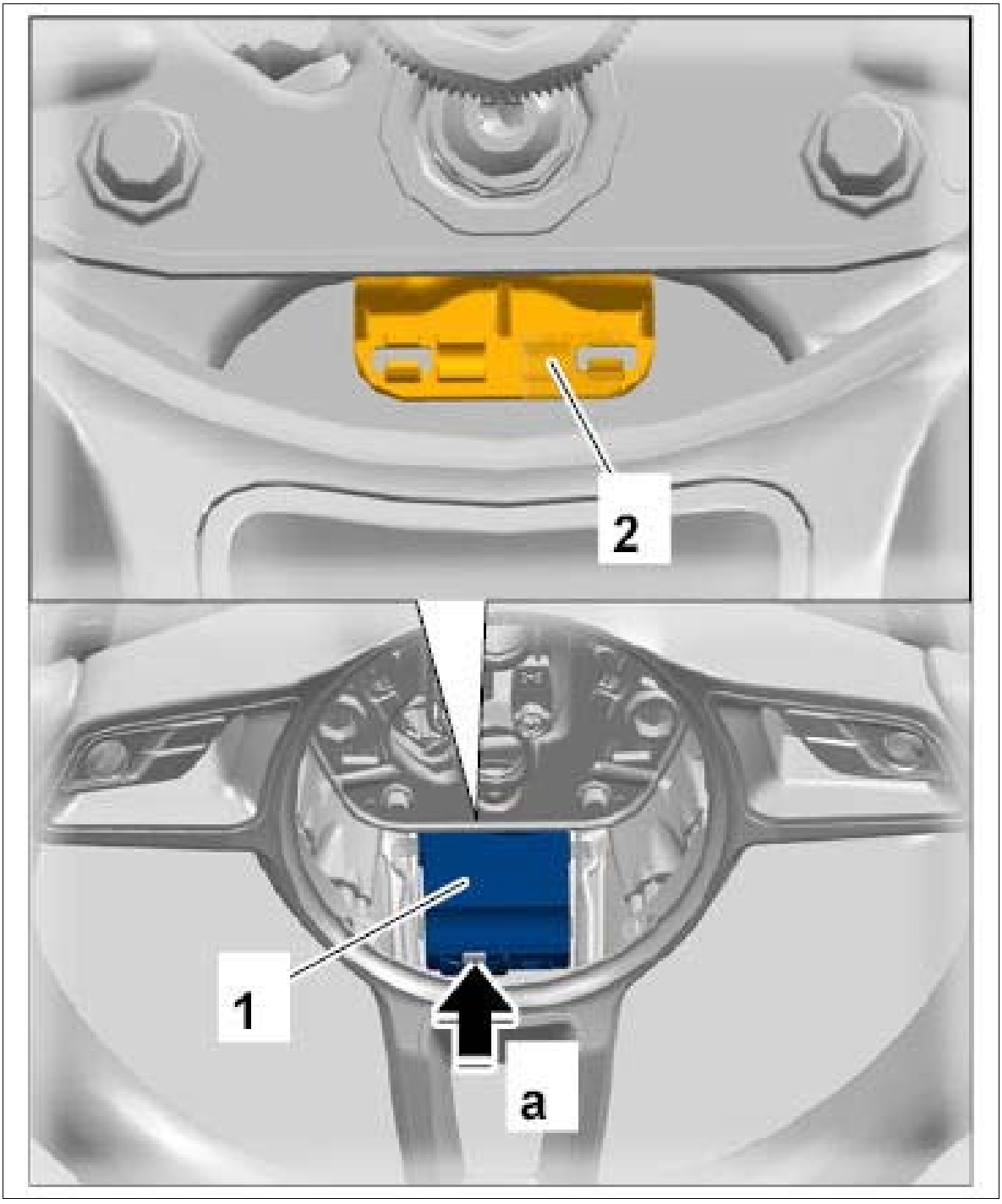

Courtesy of PORSCHE CARS NORTH AMERICA, INC.

2. Release electric plug connections **-1-** (**-a-**) and disconnect them from the multi-function control unit **-2-** .

Fig 3: Disconnecting Electric Plug Connections

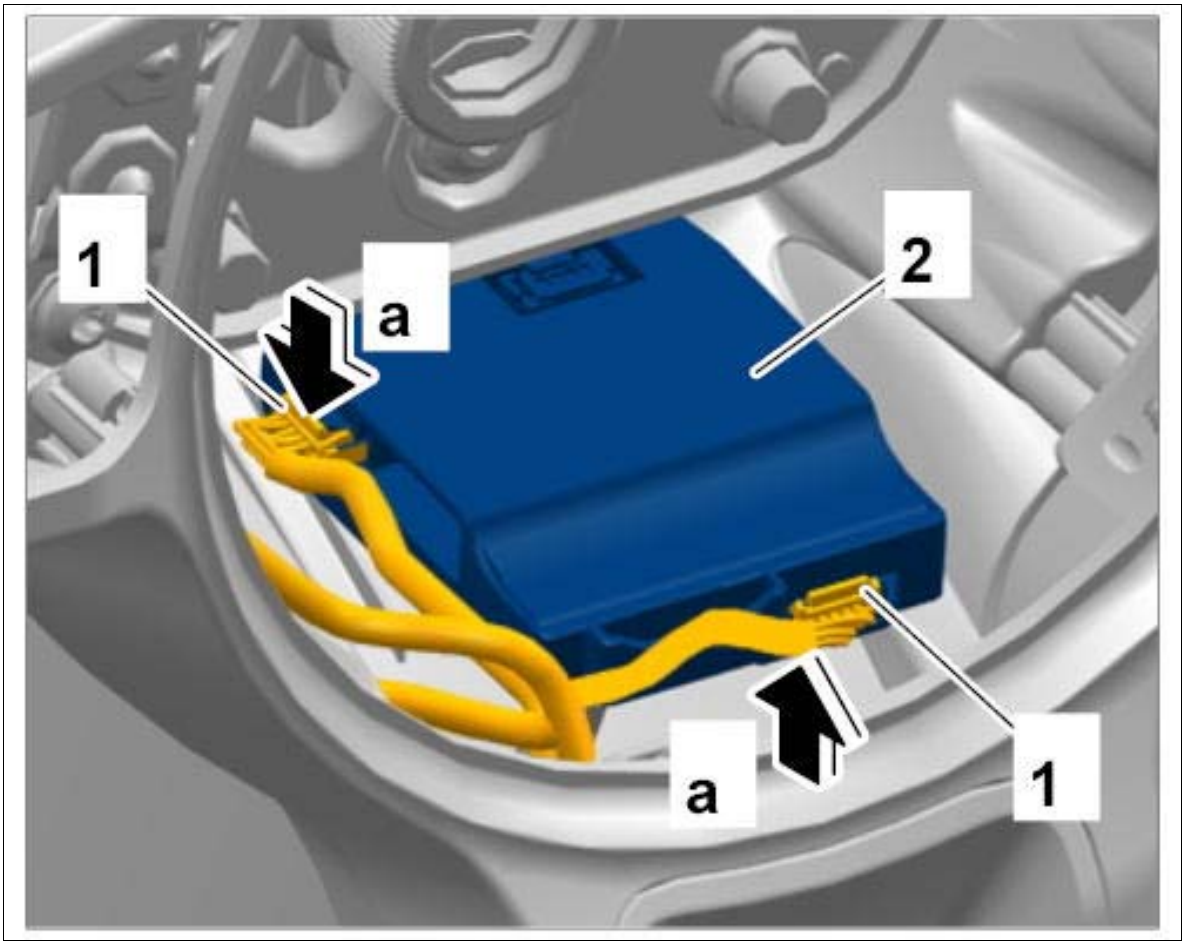

Courtesy of PORSCHE CARS NORTH AMERICA, INC.

3. Release electric plug connections **-1-** (**-a-**) and disconnect them from the multi-function control unit **-2-** .

Fig 4: Disconnecting Electric Plug Connections

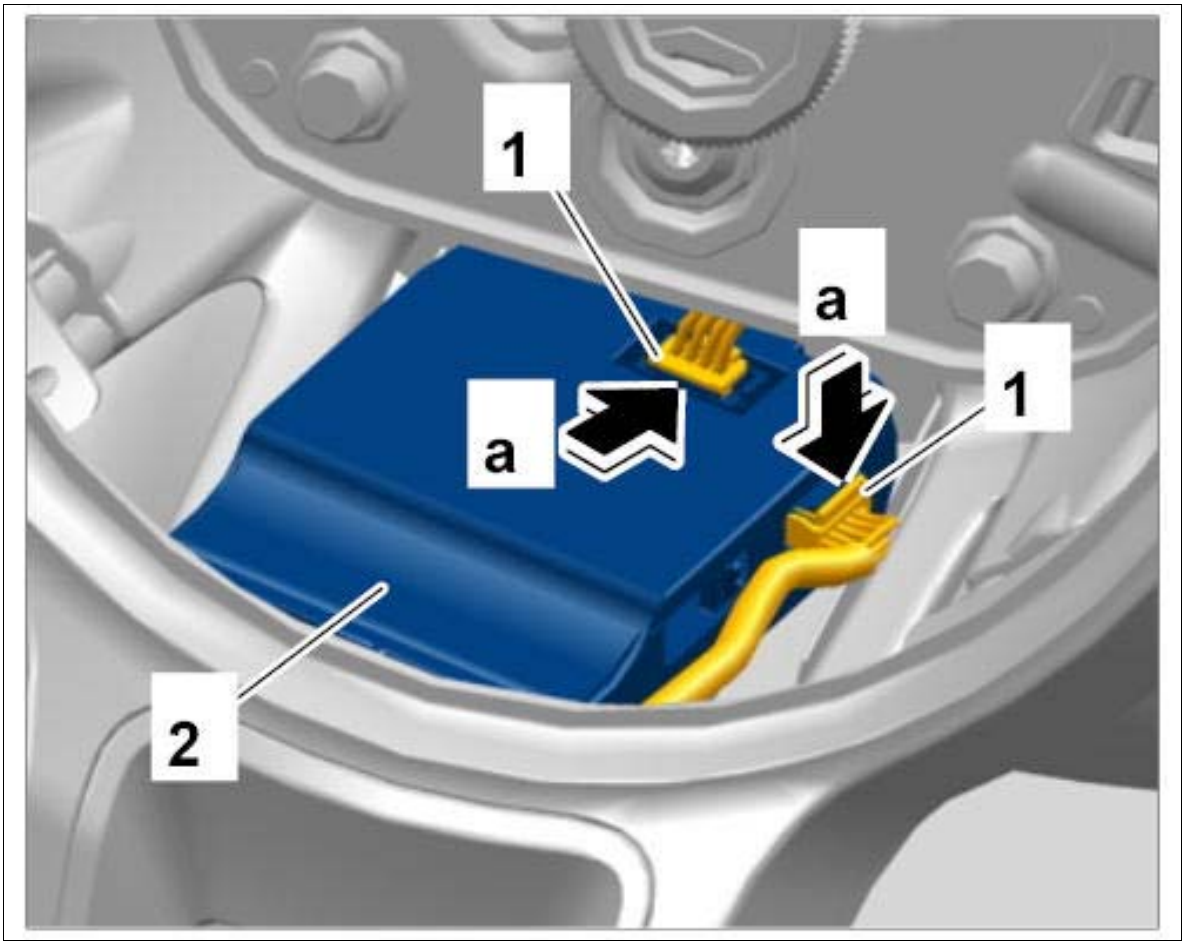

Courtesy of PORSCHE CARS NORTH AMERICA, INC.

WM 917719 REMOVING AND INSTALLING MULTI-FUNCTION CONTROL UNIT (ALL MODELS) > INSTALLING MULTI-FUNCTION CONTROL UNIT

Information

Always comply with the regulations for handling ESD-sensitive components!

- Assembly work may only be carried out if the mechanic is wearing the working clothes and shoes approved by Porsche.
- The new part must only be removed from the ESD (electrostatic discharge) protective packaging just before installation and at the position at which the part is to be installed.
- Never touch the electric pins and plug contacts.

1. Installation is performed in reverse order to removal.

WM 917719 REMOVING AND INSTALLING MULTI-FUNCTION CONTROL UNIT (ALL

MODELS) > SUBSEQUENT WORK

1. Install driver's airbag unit. → Installing driver's airbag unit

WM 918419 REMOVING AND INSTALLING ANTENNA AMPLIFIER (ALL MODELS) > TECHNICAL VALUES

Location	Description	Type	Basic value	Tolerance 1	Tolerance 2
Antenna amplifier to tailgate	Hexagon-head bolt, M6 x 20	Tightening torque	9 Nm (6.5 ftlb.)		

WM 918419 REMOVING AND INSTALLING ANTENNA AMPLIFIER (ALL MODELS) > PRELIMINARY WORK

1. Remove tailgate trim panel. → Removing Tailgate Trim Panel

WM 918419 REMOVING AND INSTALLING ANTENNA AMPLIFIER (ALL MODELS) > REMOVING ANTENNA AMPLIFIER

1. Switch off ignition and pull remote control out of ignition lock.
2. Release antenna connector **-1-** (**-a-**) and pull it off the antenna amplifier **-2-** .

   Information

   The number of plug connections can vary, depending on equipment.
3. Pull locking mechanism for antenna connector **-3-** out slightly, press it **-b-** and pull antenna line off the antenna amplifier.
4. Unscrew fastening screw **-4-** .
5. Swivel antenna amplifier out and pull it to the right and out of the tailgate.

Fig 1: Removing Antenna Amplifier

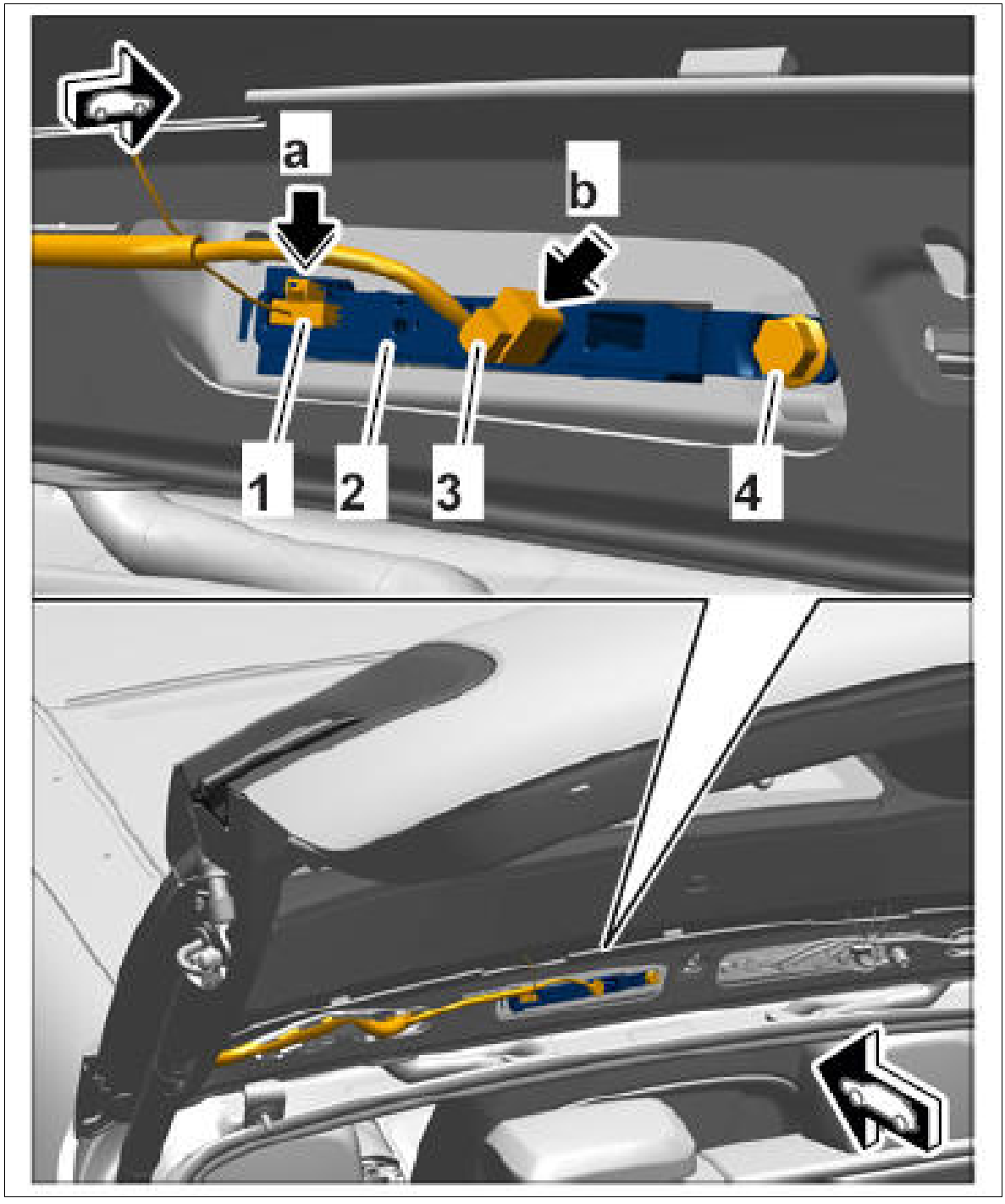

Courtesy of PORSCHE CARS NORTH AMERICA, INC.

WM 918419 REMOVING AND INSTALLING ANTENNA AMPLIFIER (ALL MODELS) > INSTALLING ANTENNA AMPLIFIER

1. Installation is performed in reverse order to removal.
2. Tighten fastening screw on the antenna amplifier. **Tightening torque 9 Nm (6.5 ftlb.)**

WM 918619 REMOVING AND INSTALLING ANTENNA CONTROL UNIT (ALL MODELS) > TECHNICAL VALUES

Location	Description	Type	Basic value	Tolerance 1	Tolerance 2
Antenna control unit to tailgate	Hexagon-head bolt, M6 x 20	Tightening torque	9 Nm (6.5 ftlb.)		

WM 918619 REMOVING AND INSTALLING ANTENNA CONTROL UNIT (ALL MODELS) > PRELIMINARY WORK

1. Remove tailgate trim panel. → Removing Tailgate Trim Panel

WM 918619 REMOVING AND INSTALLING ANTENNA CONTROL UNIT (ALL MODELS) > REMOVING ANTENNA CONTROL UNIT

Information

Always comply with the regulations for handling ESD-sensitive components!

- Assembly work may only be carried out if the mechanic is wearing the working clothes and shoes approved by Porsche.
- The new part must only be removed from the ESD (electrostatic discharge) protective packaging just before installation and at the position at which the part is to be installed.
- Never touch the electric pins and plug contacts.

1. Switch off ignition and pull remote control out of ignition lock.
2. Pull antenna connector **-1-** off the antenna control unit **-2-** .

   Information

   The number of plug connections can vary, depending on equipment.
3. Pull locking mechanisms on the antenna connectors **-3-** out slightly, press them **-a-** and pull antenna lines off the antenna control unit.
4. Release antenna connectors **-4-** (**-b-**) and pull them off the antenna control unit.
5. Unscrew fastening screw **-5-** .
6. Swivel antenna control unit out and pull it to the left and out of the tailgate.

Fig 1: Removing Antenna Control Unit

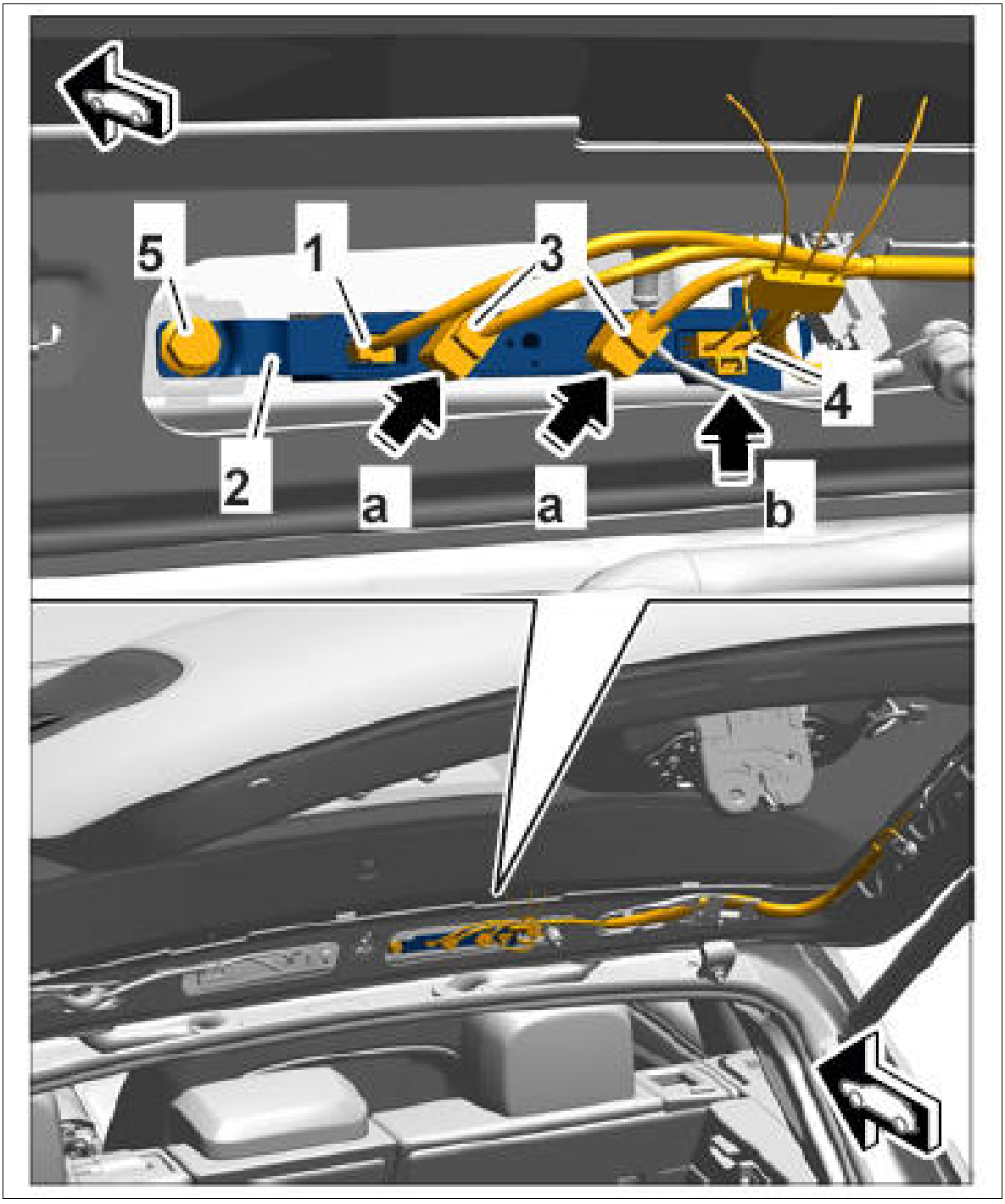

Courtesy of PORSCHE CARS NORTH AMERICA, INC.

WM 918619 REMOVING AND INSTALLING ANTENNA CONTROL UNIT (ALL MODELS) > INSTALLING ANTENNA CONTROL UNIT

1. Installation is performed in reverse order to removal.
2. Tighten fastening screw on the antenna control unit. **Tightening torque 9 Nm (6.5 ftlb.)**

WM 918819 REMOVING AND INSTALLING TELEPHONE CONSOLE (ALL MODELS) > TECHNICAL VALUES

Location	Description	Type	Basic value	Tolerance 1	Tolerance 2
Telephone bracket to center console	Internal Torx screw, Ø 3 x 7	Tightening torque	0.5 Nm (0.5 ftlb.)		

WM 918819 REMOVING AND INSTALLING TELEPHONE CONSOLE (ALL MODELS) > REMOVING TELEPHONE CONSOLE

1. Open the cover on the armrest and remove handset.

   Fig 1: Removing Handset (Shown On 991)



Courtesy of PORSCHE CARS NORTH AMERICA, INC.

2. Lever out stopper **-1-** .
3. Unscrew fastening screws **-2-** .

Fig 2: Loosening Telephone Console (Shown On 991)

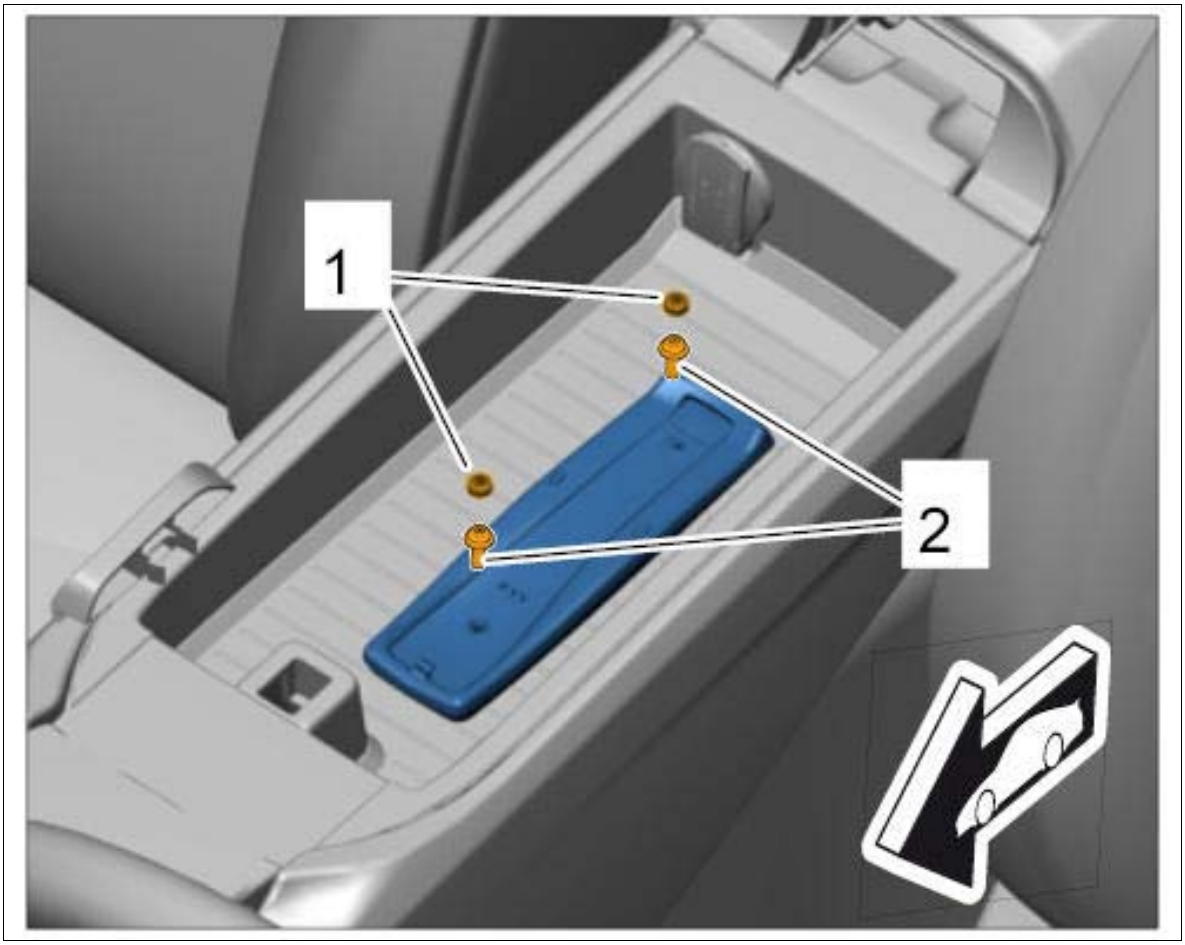

Courtesy of PORSCHE CARS NORTH AMERICA, INC.

4. Lift up telephone console and disconnect electric plug connection **-arrow-** .

Fig 3: Disconnecting Electric Plug Connection (Shown On 991)

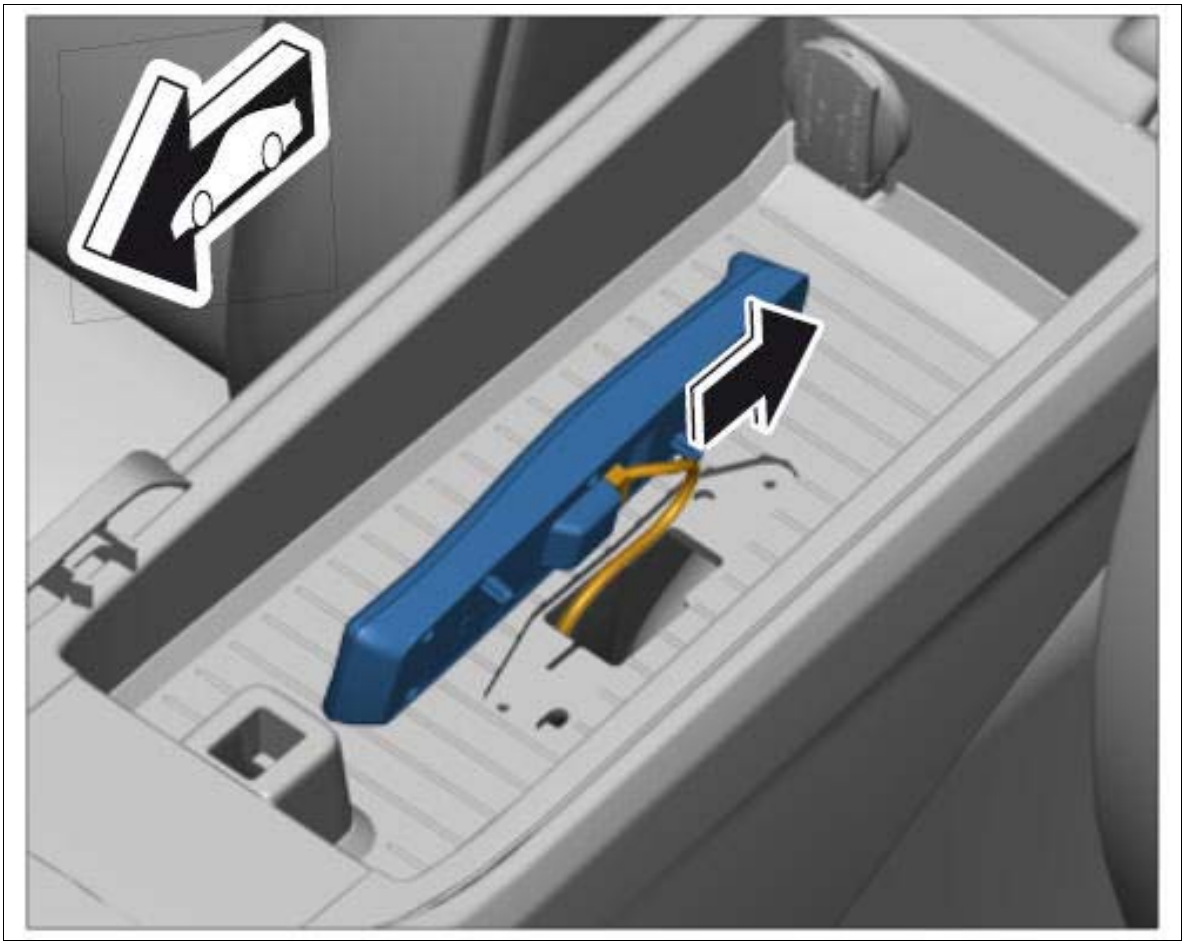

Courtesy of PORSCHE CARS NORTH AMERICA, INC.

WM 918819 REMOVING AND INSTALLING TELEPHONE CONSOLE (ALL MODELS) > INSTALLING TELEPHONE CONSOLE

1. Installation is performed in reverse order to removal.
2. Tighten fastening screws securing telephone console to center console. **Tightening torque 0.5 Nm (0.5 ftlb.)**

WM 919119 REMOVING AND INSTALLING ADDITIONAL HANDSET (ALL MODELS) > REMOVING ADDITIONAL HANDSET

1. Open the cover on the oddments tray.
2. Disengage additional handset **-1-** by pulling it forward and lift it up slightly **-a-** .
3. Pull additional handset forward **-b-** and remove it from the telephone console **-2-** .

Fig 1: Removing Additional Handset

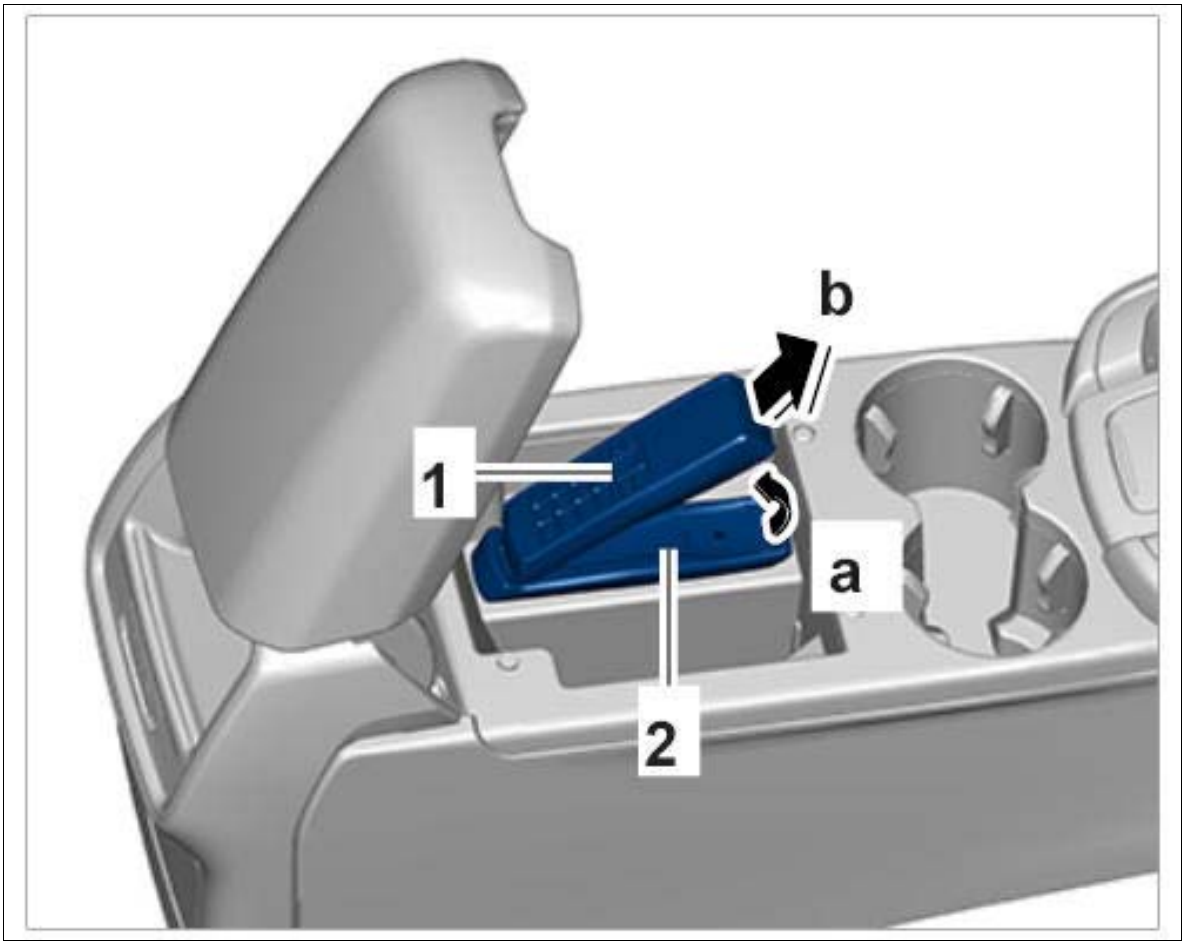

Courtesy of PORSCHE CARS NORTH AMERICA, INC.

WM 919119 REMOVING AND INSTALLING ADDITIONAL HANDSET (ALL MODELS) > INSTALLING ADDITIONAL HANDSET

Installation is performed in reverse order to removal.

WM 919125 TEACHING ADDITIONAL HANDSET (ALL MODELS) > TOOLS

Designation	Type	Number	Description	

PIWIS Tester II	Special tool	9818		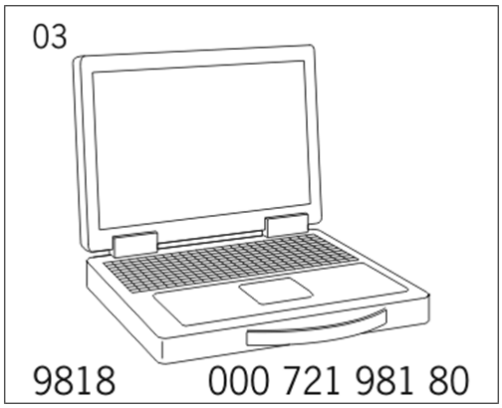

WM 919125 TEACHING ADDITIONAL HANDSET (ALL MODELS) > TECHNICAL VALUES

Location	Description	Type	Basic value	Tolerance 1	Tolerance 2
Current rating		Nominal value	40 A		

WM 919125 TEACHING ADDITIONAL HANDSET (ALL MODELS) > TEACHING ADDITIONAL HANDSET > TEACHING ADDITIONAL HANDSET/TELEPHONE HANDSET

⚠ *CAUTION: Voltage drop*

- *Risk of damage to control unit*
- *Fault entries in the control unit*
- *Coding in the control unit is aborted*
- *Malfunctions in control unit, even during programming*

→ Ensure that the power supply is not interrupted during programming.

→ Connect a battery charger with a current rating of at least → **Nominal value: 40 A** to the vehicle battery.

Information

Later versions of the software may display slightly different text or require a slightly different procedure. The instructions you receive from the Tester itself take precedence over this description.

1. **PIWIS Tester II 9818** must be connected to the vehicle before starting the Tester. Switch on ignition.

2. Select the vehicle type and start the diagnostic application.

3. Select **PCM** control unit.

4. **Select Drive links/checks** and press [F12] to continue.

5. Engage telephone handset in the charging cradle.

6. Select **Teach handset** and press [F12] to continue.

7. Set **Activation: Value = on** and press [F8] to start the teaching process.

8. Check the function of the handset.

9. Read out the fault memory and erase it if necessary.

WM 921219 REMOVING AND INSTALLING RAIN SENSOR (ALL MODELS) > PRELIMINARY WORK

1. Remove interior rear-view mirror. → Removing Interior Rear-View Mirror

WM 921219 REMOVING AND INSTALLING RAIN SENSOR (ALL MODELS) > REMOVING RAIN SENSOR

Information

Do not touch or soil the sensor surface of the rain sensor.

1. Carefully lever the rain sensor **-1-** out of the adhesive plate **-2-** using a plastic wedge.

   Fig 1: Removing Rain Sensor

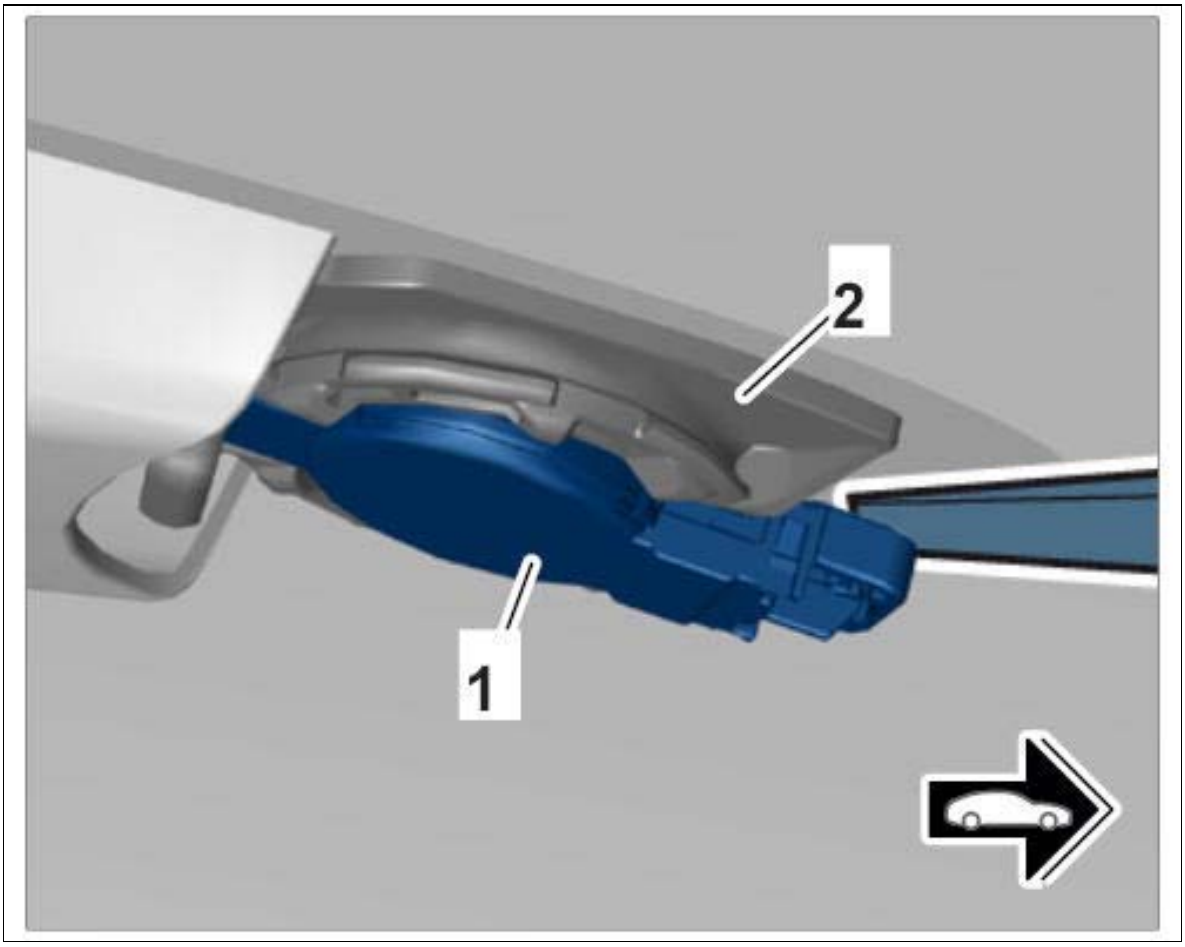

Courtesy of PORSCHE CARS NORTH AMERICA, INC.

2. Unplug electric plug connection **-1-** .

Fig 2: Disconnecting Electric Plug Connection

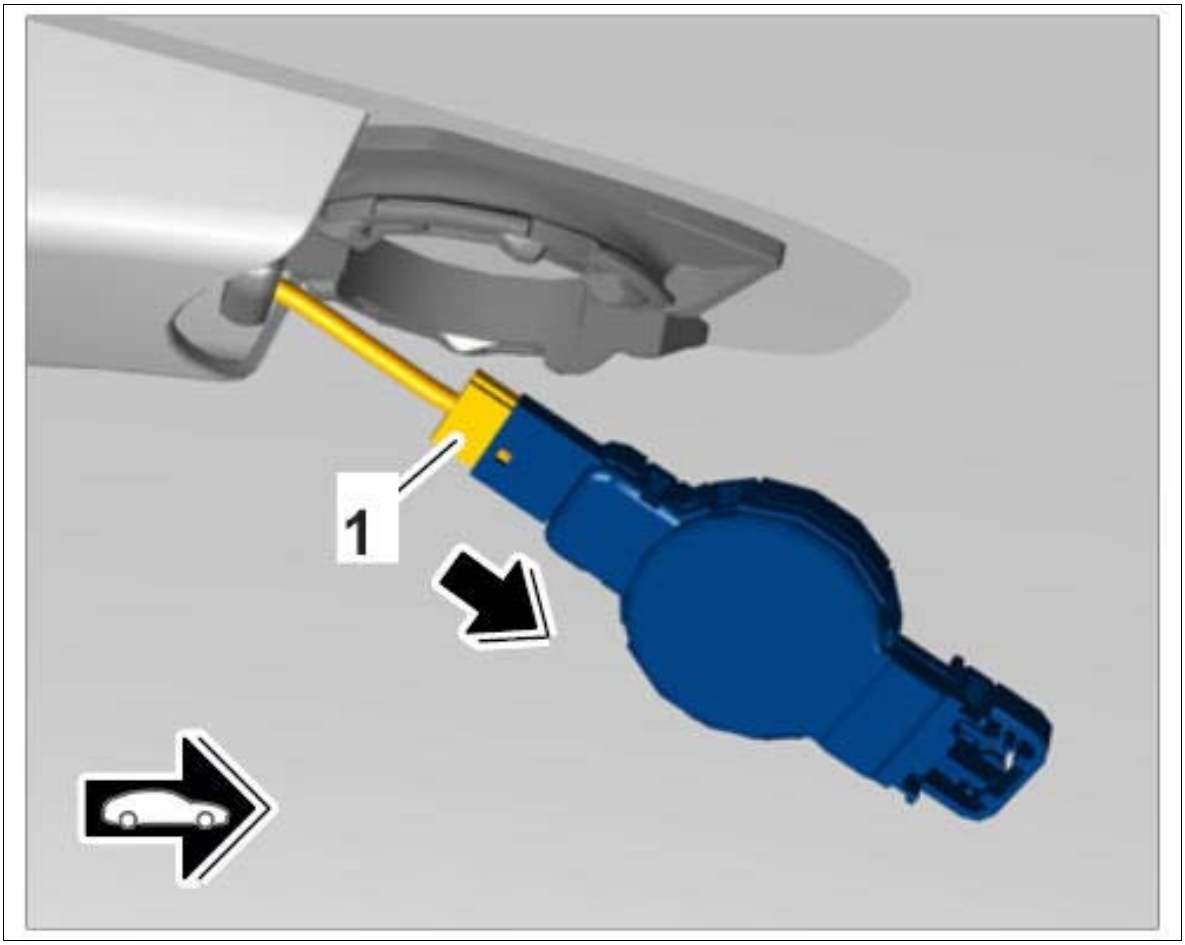

Courtesy of PORSCHE CARS NORTH AMERICA, INC.

WM 921219 REMOVING AND INSTALLING RAIN SENSOR (ALL MODELS) > INSTALLING RAIN SENSOR

Information

Limited rain sensor function if the following points are not observed:

- There must be no air trapped between the windscreen and silicone layer on the rain sensor.
- The temperature of the windscreen and rain sensor must be approx. 20 °C during assembly. Carefully heat the windscreen and rain sensor using a hot-air gun if necessary.
- The contact surfaces must be free of grease and dirt.
- Do not touch silicone layer on the rain sensor.
- Do not remove the protection cap from a new rain sensor until immediately before pressing the rain sensor onto the windscreen.

1. Clean the contact area for the rain sensor on the inside of the windscreen.

2. Plug electric plug connection **-1-** into the rain sensor until it engages securely.

Fig 1: Connecting Electric Plug Connection

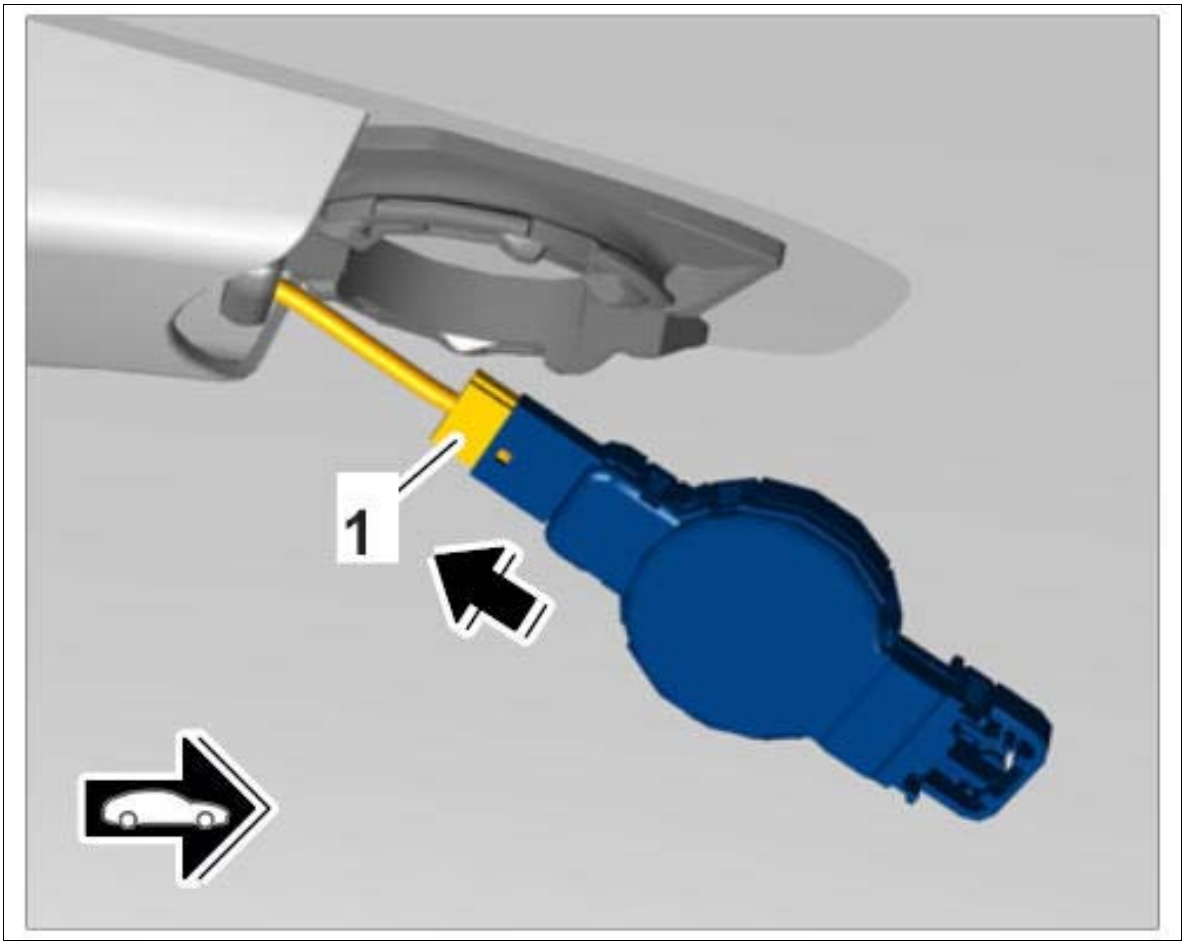

Courtesy of PORSCHE CARS NORTH AMERICA, INC.

3. Remove protection cap from the rain sensor.
4. Position rain sensor **-1-** and insert it into the adhesive plate **-2-** .

Fig 2: Fitting Rain Sensor

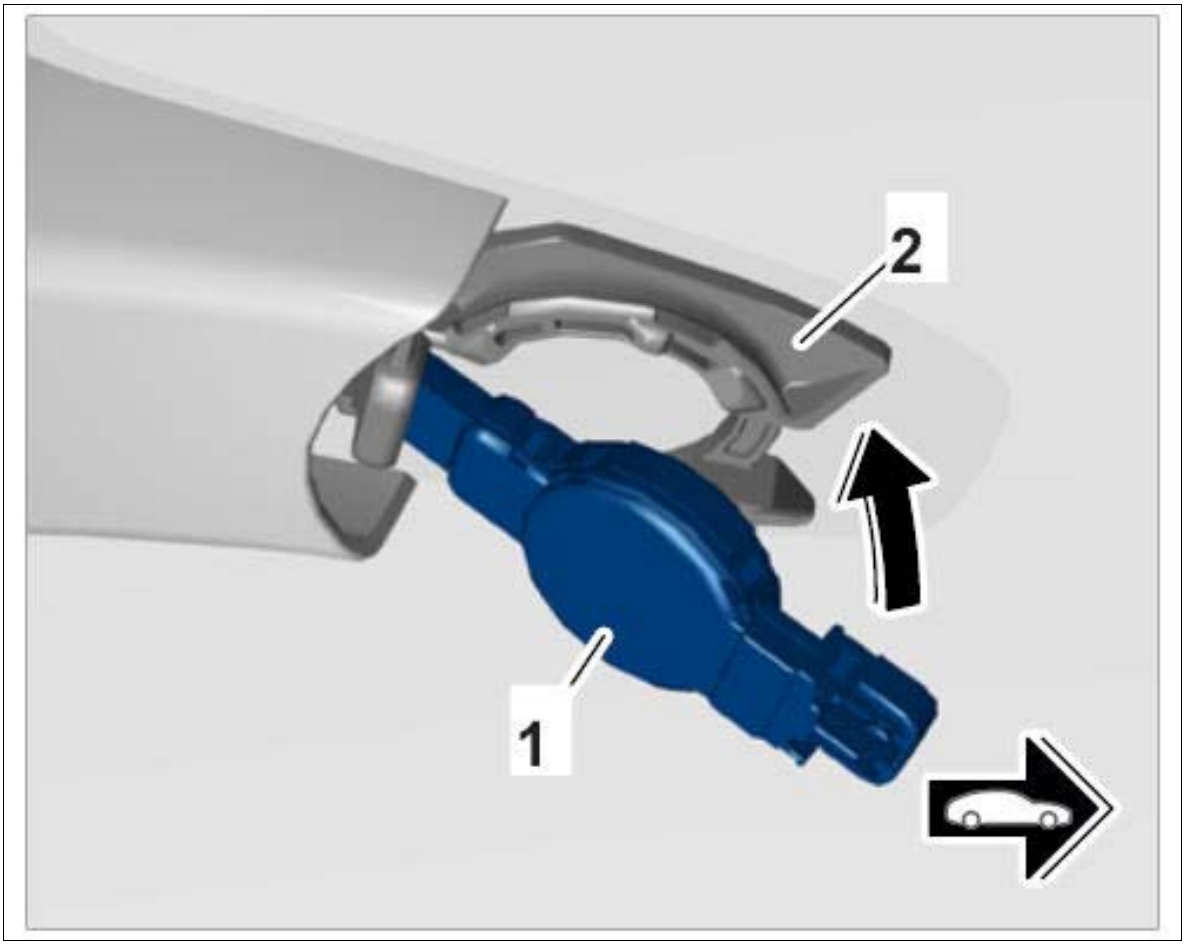

Courtesy of PORSCHE CARS NORTH AMERICA, INC.

WM 921219 REMOVING AND INSTALLING RAIN SENSOR (ALL MODELS) > SUBSEQUENT WORK

1. Install interior rear-view mirror. → Installing Interior Rear-View Mirror

WM 921519 REMOVING AND INSTALLING WIPER MOTOR (ALL MODELS) > TECHNICAL VALUES

Location	Description	Type	Basic value	Tolerance 1	Tolerance 2
Wiper linkage to body	Internal Torx screw, M6 x 28	Tightening torque	8 Nm (6 ftlb.)		
Wiper motor to wiper linkage	Internal Torx screw, M6 x 16	Tightening torque	12 Nm (9 ftlb.)	+/-1 Nm (+/-0.5 ftlb.)	

WM 921519 REMOVING AND INSTALLING WIPER MOTOR (ALL MODELS) > PRELIMINARY WORK

1. Remove wiper arms. → Removing Wiper Arm
2. Remove cowl panel cover. → Removing cowl panel cover

WM 921519 REMOVING AND INSTALLING WIPER MOTOR (ALL MODELS) > REMOVING WIPER MOTOR

> *WARNING: Electrically moved components*
>
> - *Danger of limbs being trapped or severed*

→ Switch off electric power to drive motor.

→ Make sure it does not switch on again.

→ Check that there is no electric charge.

1. Switch off ignition and pull remote control out of ignition lock.
2. Release electric plug connection **-1-** and pull it off the wiper motor **-2-** .
3. Unscrew fastening screws **-3-** .
4. Unclip the holder **-4-** for the electric line at the holder **-5-** .
5. Remove wiper motor with wiper linkage.

Fig 1: Removing Wiper Motor With Wiper Linkage

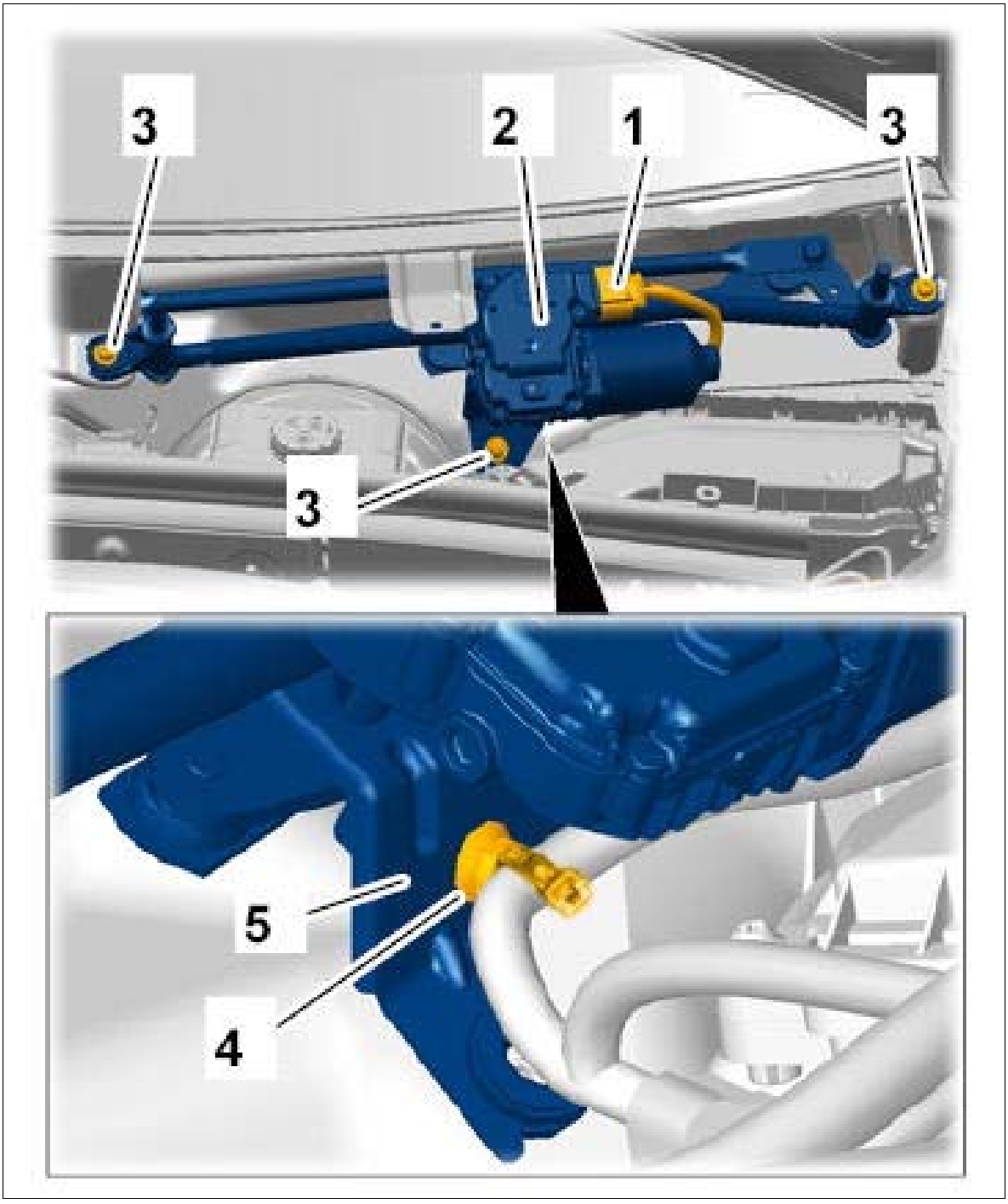

Courtesy of PORSCHE CARS NORTH AMERICA, INC.

6. Pry wiper linkage **-1-** off the lever **-2-** for the wiper motor.
7. Unscrew fastening screws **-3-** and remove holder **-4-** .
8. Remove wiper motor **-5-** from the wiper linkage.

Fig 2: Removing Wiper Motor From Wiper Linkage

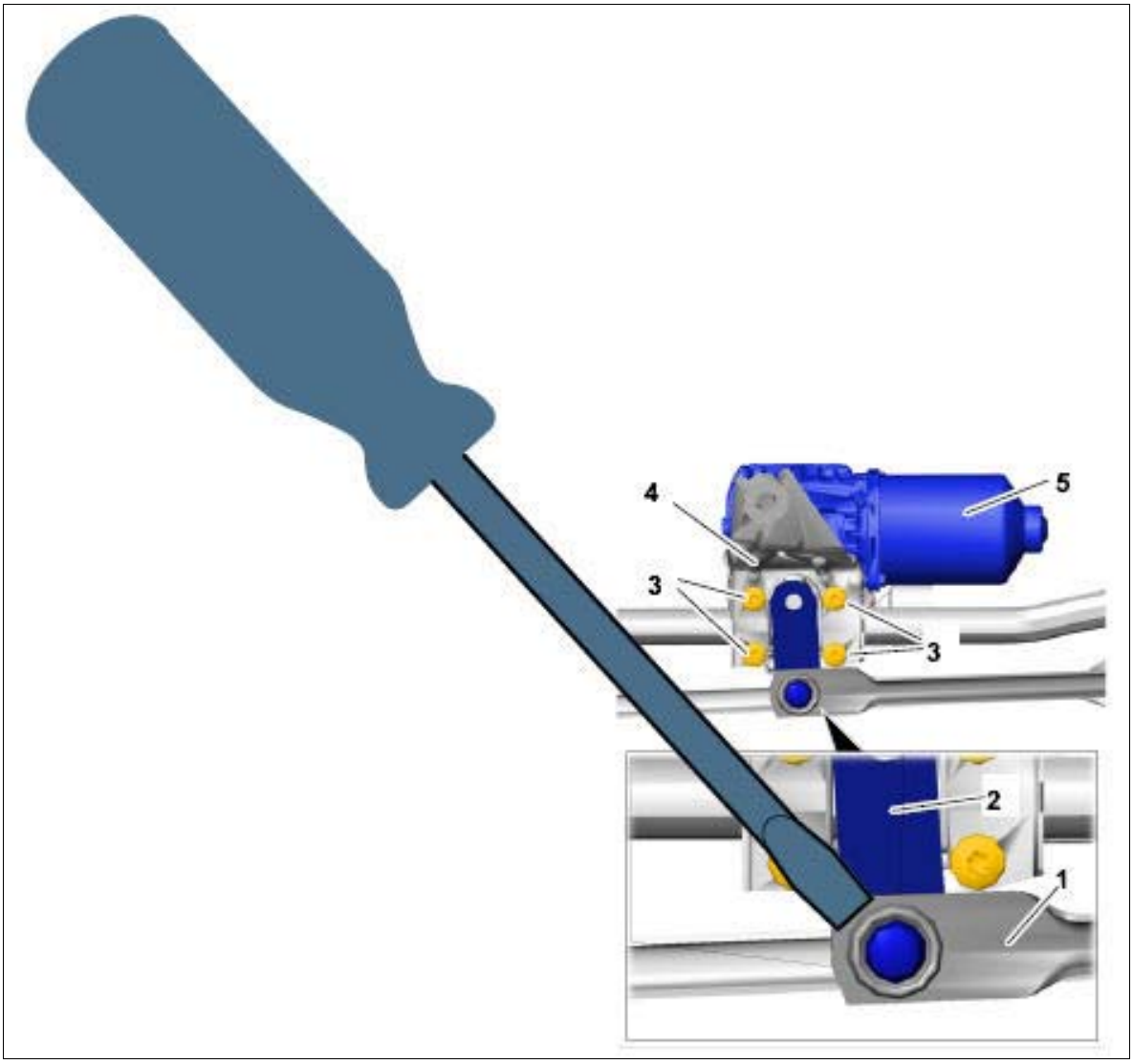

Courtesy of PORSCHE CARS NORTH AMERICA, INC.

WM 921519 REMOVING AND INSTALLING WIPER MOTOR (ALL MODELS) > INSTALLING WIPER MOTOR

WARNING: Electrically moved components

- *Danger of limbs being trapped or severed*

→ Switch off electric power to drive motor.

→ Make sure it does not switch on again.

→ Check that there is no electric charge.

1. Installation is performed in reverse order to removal.
2. Tighten fastening screws for the wiper motor. **Tightening torque 12 Nm (9 ftlb.) +/-1 Nm (+/-0.5 ftlb.)**
3. Tighten fastening screws on the wiper linkage in the sequence **-1, 2, 3-** . **Tightening torque 8 Nm (6 ftlb.)**

   Fig 1: Wiper Linkage Fastening Screws Tightening Sequence

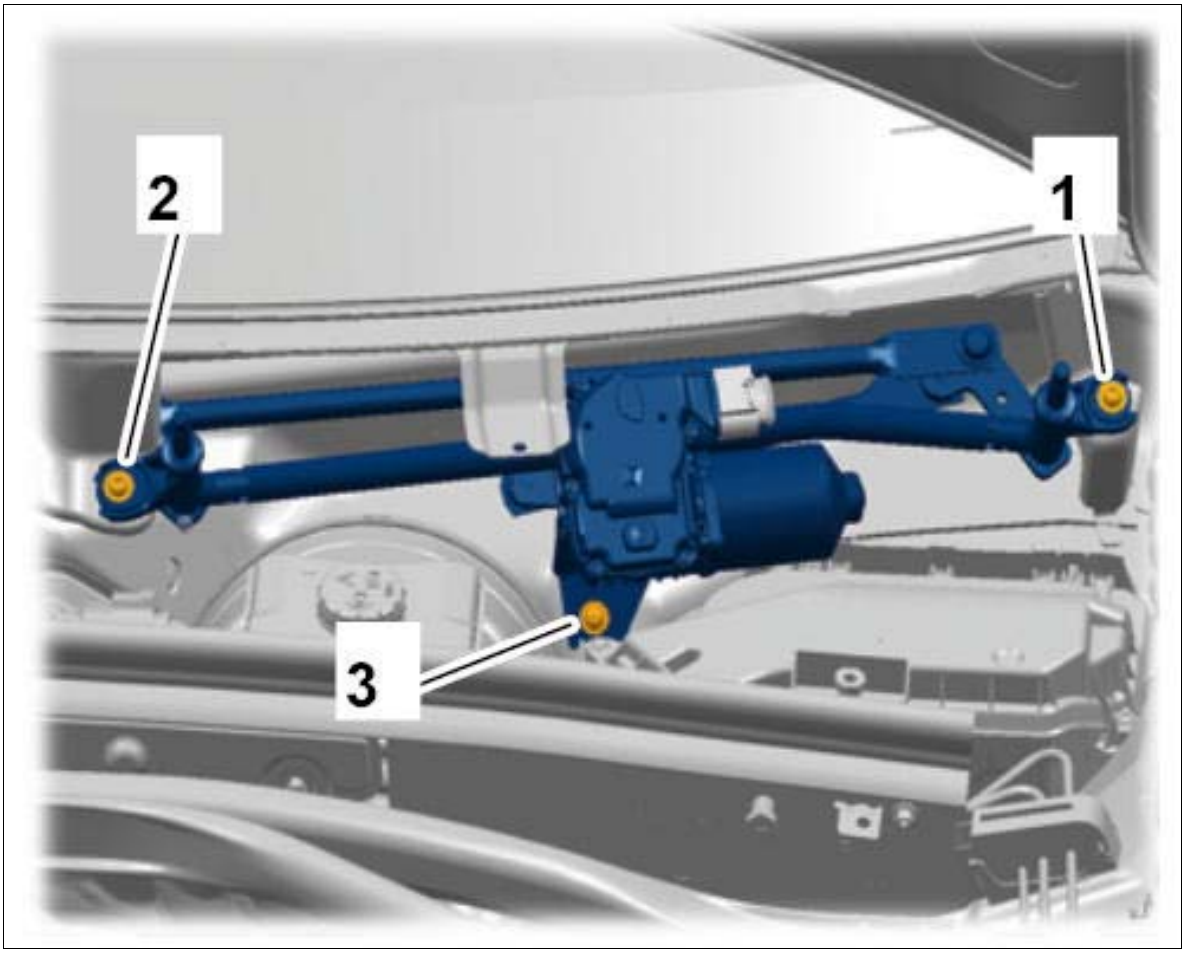

Courtesy of PORSCHE CARS NORTH AMERICA, INC.

WM 921519 REMOVING AND INSTALLING WIPER MOTOR (ALL MODELS) > SUBSEQUENT WORK

1. Install cowl panel cover. → Installing cowl panel cover
2. Install wiper arms. → Installing Wiper Arm

WM 921919 REMOVING AND INSTALLING WIPER LINKAGE (ALL MODELS) > TECHNICAL VALUES

Location	Description	Type	Basic value	Tolerance 1	Tolerance 2
Wiper linkage to body	Internal Torx screw, M6 x 28	Tightening torque	8 Nm (6 ftlb.)		
Wiper motor to wiper linkage	Internal Torx screw, M6 x 16	Tightening torque	12 Nm (9 ftlb.)	+/-1 Nm (+/-0.5 ftlb.)	

WM 921919 REMOVING AND INSTALLING WIPER LINKAGE (ALL MODELS) > PRELIMINARY WORK

1. Remove wiper arms. → Removing Wiper Arm
2. Remove cowl panel cover. → Removing cowl panel cover

WM 921919 REMOVING AND INSTALLING WIPER LINKAGE (ALL MODELS) > REMOVING WIPER LINKAGE

WARNING: Electrically moved components

- *Danger of limbs being trapped or severed*

→ Switch off electric power to drive motor.

→ Make sure it does not switch on again.

→ Check that there is no electric charge.

1. Switch off ignition and pull remote control out of ignition lock.
2. Release electric plug connection **-1-** and pull it off the wiper motor **-2-** .
3. Unscrew fastening screws **-3-** .
4. Unclip the holder **-4-** for the electric line at the holder **-5-** .
5. Remove wiper motor with wiper linkage.

Fig 1: Removing Wiper Motor With Wiper Linkage

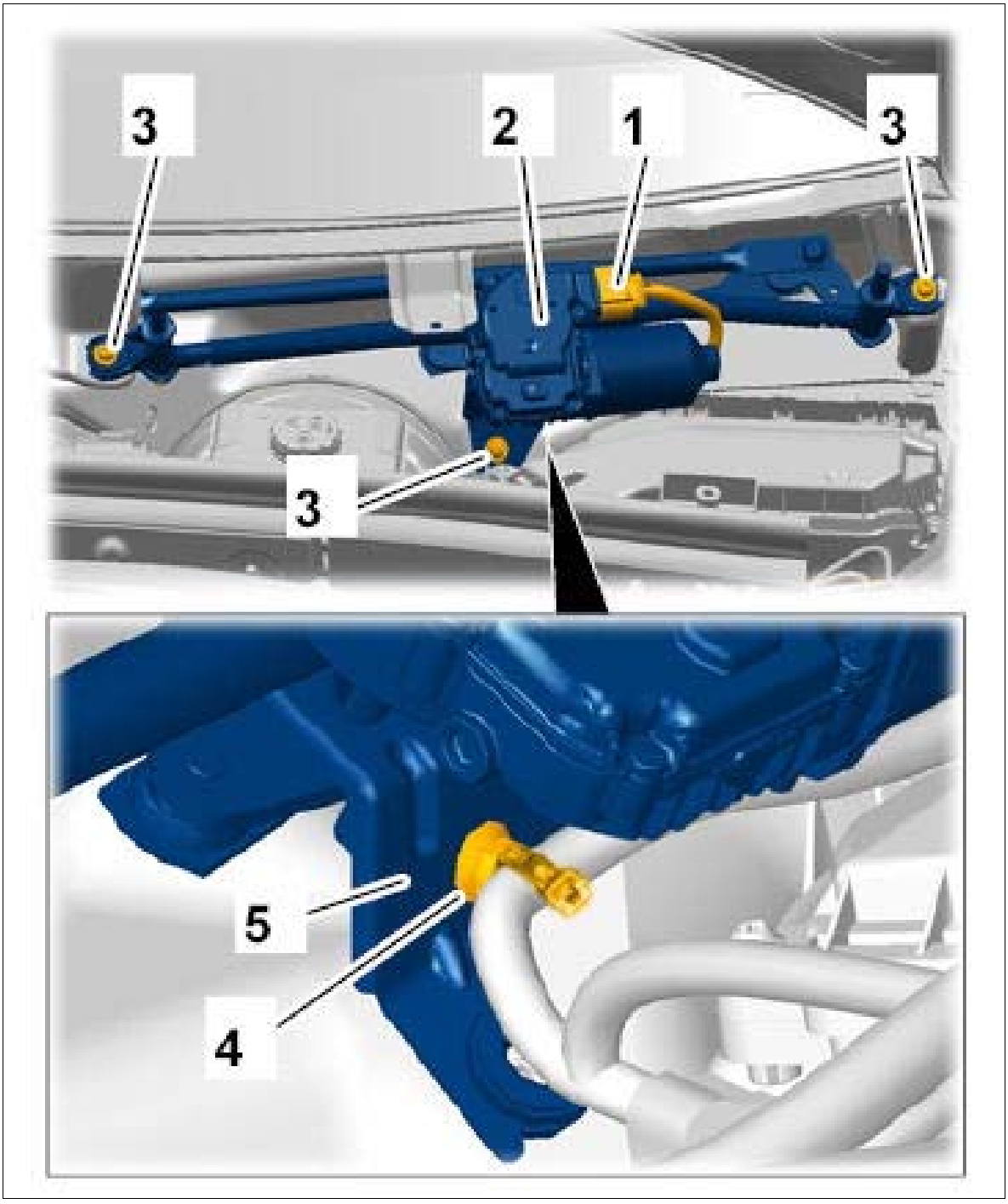

Courtesy of PORSCHE CARS NORTH AMERICA, INC.

6. Pry wiper linkage **-1-** off the lever **-2-** for the wiper motor.
7. Unscrew fastening screws **-3-** and remove holder **-4-** .
8. Remove wiper linkage **-1-** from the wiper motor **-5-** .

Fig 2: Removing Wiper Linkage From Wiper Motor

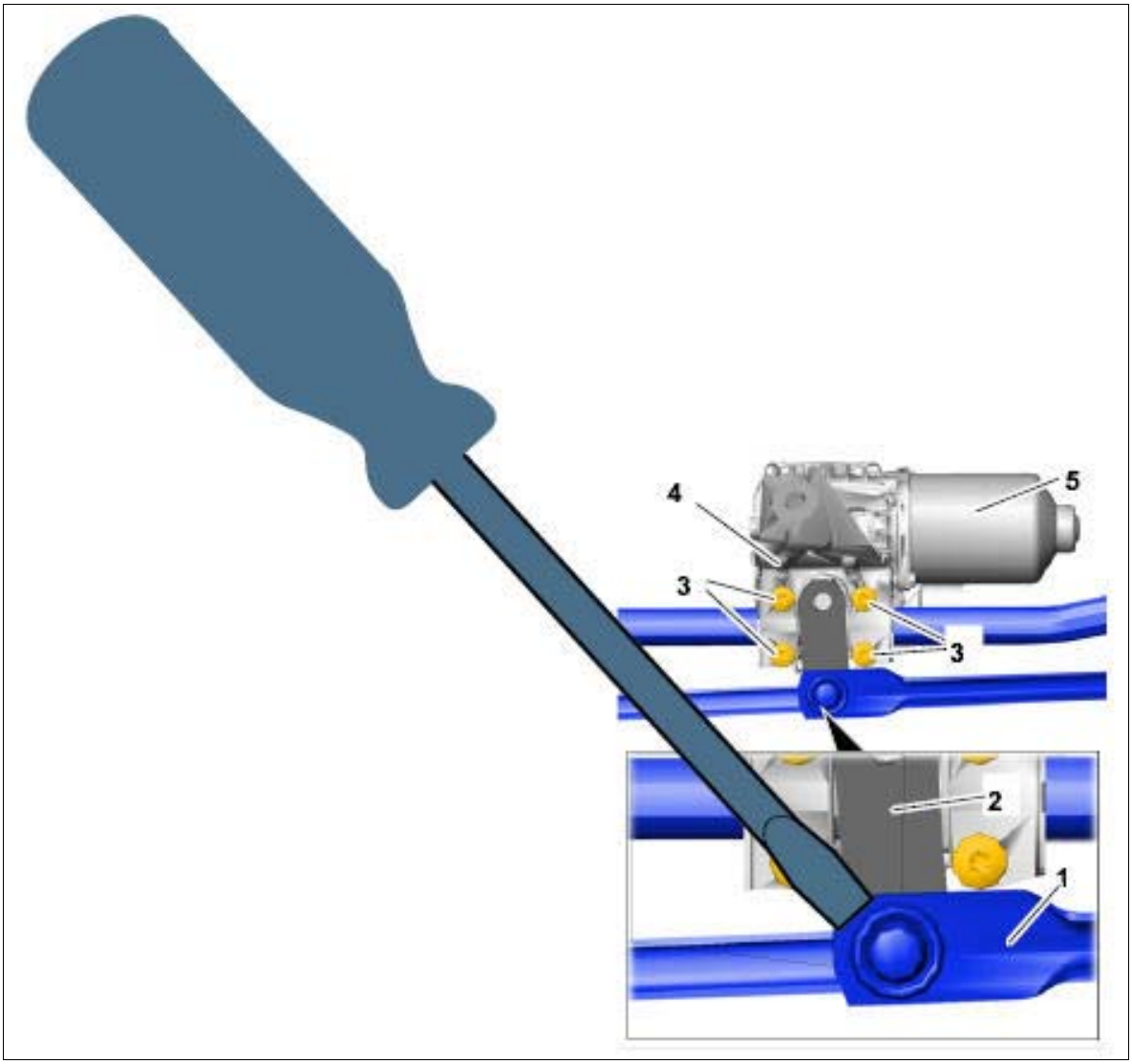

Courtesy of PORSCHE CARS NORTH AMERICA, INC.

WM 921919 REMOVING AND INSTALLING WIPER LINKAGE (ALL MODELS) > INSTALLING WIPER LINKAGE

WARNING: Electrically moved components

- *Danger of limbs being trapped or severed*

→ Switch off electric power to drive motor.

→ Make sure it does not switch on again.

→ Check that there is no electric charge.

1. Installation is performed in reverse order to removal.
2. Tighten fastening screws for the wiper motor. **Tightening torque 12 Nm (9 ftlb.) +/-1 Nm (+/-0.5 ftlb.)**
3. Tighten fastening screws on the wiper linkage in the sequence **-1, 2, 3-** . **Tightening torque 8 Nm (6 ftlb.)**

   Fig 1: Wiper Linkage Fastening Screws Tightening Sequence

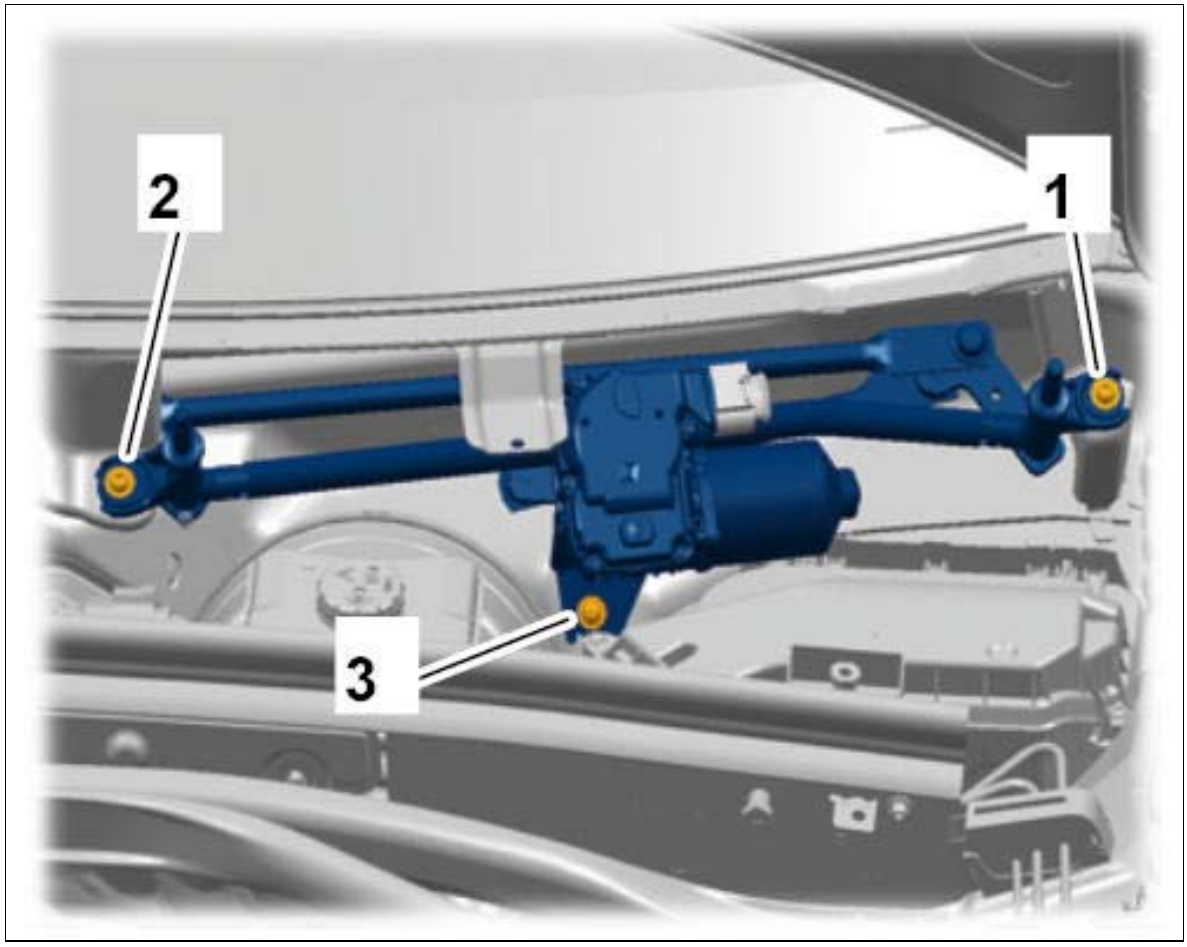

Courtesy of PORSCHE CARS NORTH AMERICA, INC.

WM 921919 REMOVING AND INSTALLING WIPER LINKAGE (ALL MODELS) > SUBSEQUENT WORK

1. Install cowl panel cover. → Installing cowl panel cover
2. Install wiper arms. → Installing Wiper Arm

WM 922519 REMOVING AND INSTALLING WIPER ARM (ALL MODELS) > TOOLS

Designation	Type	Number	Description	

pole terminal puller	Commercially available tool	Nr.99		

WM 922519 REMOVING AND INSTALLING WIPER ARM (ALL MODELS) > TECHNICAL VALUES

Location	Description	Type	Basic value	Tolerance 1	Tolerance 2
Wiper arm to wiper linkage	Hexagon nut, M10	Tightening torque	32 Nm (24 ftlb.)		
Distance from left wiper arm to cowl panel cover	Dimension a	Nominal value	30 mm		
Distance from right wiper arm to cowl panel cover	Dimension b	Nominal value	34 mm		

WM 922519 REMOVING AND INSTALLING WIPER ARM (ALL MODELS) > REMOVING WIPER ARM

WARNING: Electrically moved components

- *Danger of limbs being trapped or severed*

→ Switch off electric power to drive motor.

→ Make sure it does not switch on again.

→ Check that there is no electric charge.

Information

To counteract the deformation of the wiper rubber that occurs when it is at rest, the wiper arm is alternately moved to two different parked positions. However, the wiper arm may only be removed and

installed in the lower parked position. Before removing or installing the wiper arm, operate the wiper once and watch whether the wiper is moved up again slightly into the upper parked position after it has reached the lower parked position. In this case, operate the wiper again so that the wiper arm is moved into the lower parked position.

1. Move the windscreen wiper to its lower parked position using the one-touch wipe function.
2. Switch off ignition and pull remote control out of ignition lock.
3. Lever off cap **-1-** .
4. Screw off fastening nut **-2-** .

Fig 1: Removing Windscreen Wiper Arm

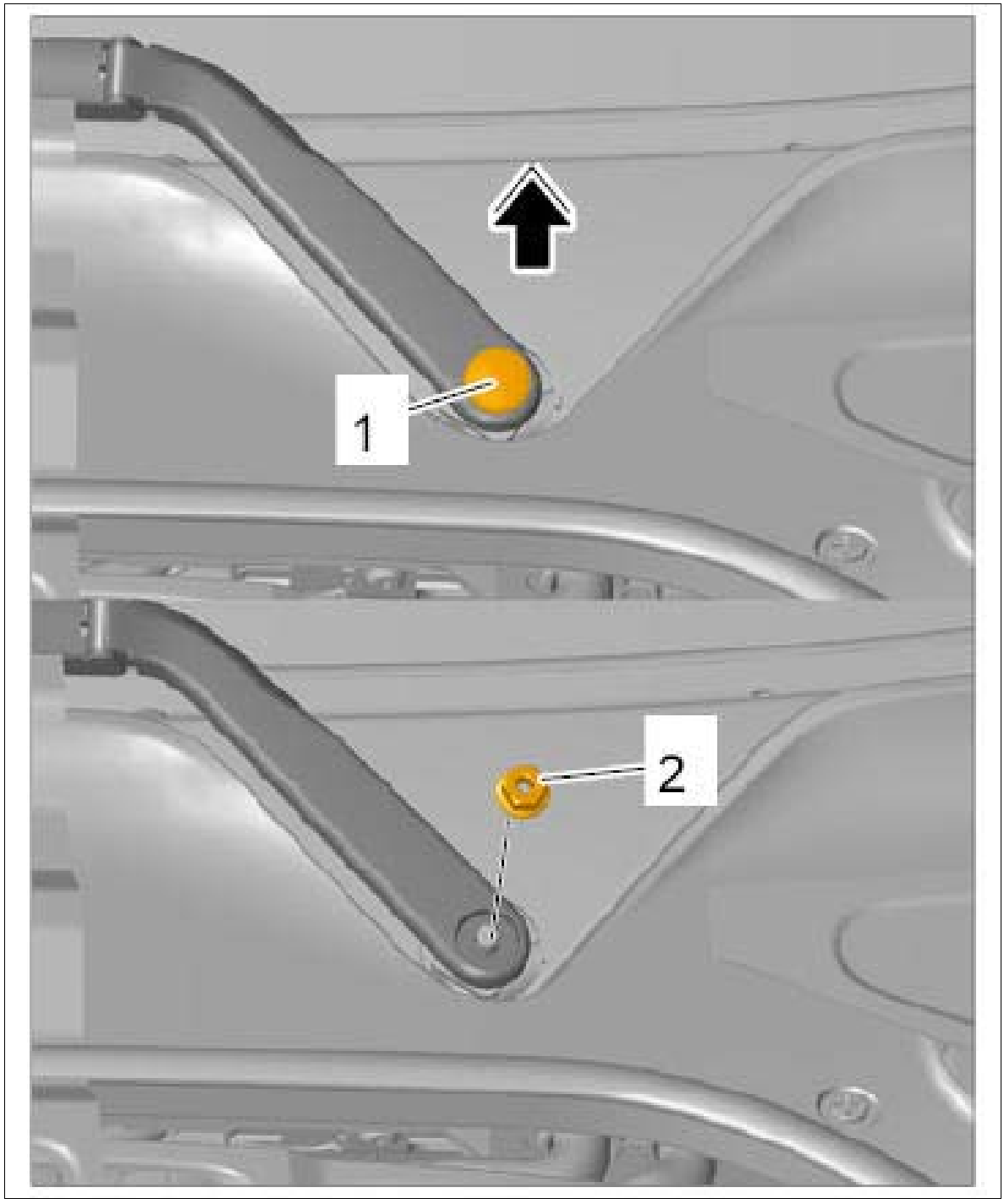

Courtesy of PORSCHE CARS NORTH AMERICA, INC.

5. Loosen windscreen wiper arm **-2-** using **pole terminal puller Nr.99 -1-** and remove it from the windscreen wiper linkage **-3-** .

Fig 2: Removing Windscreen Wiper Arm

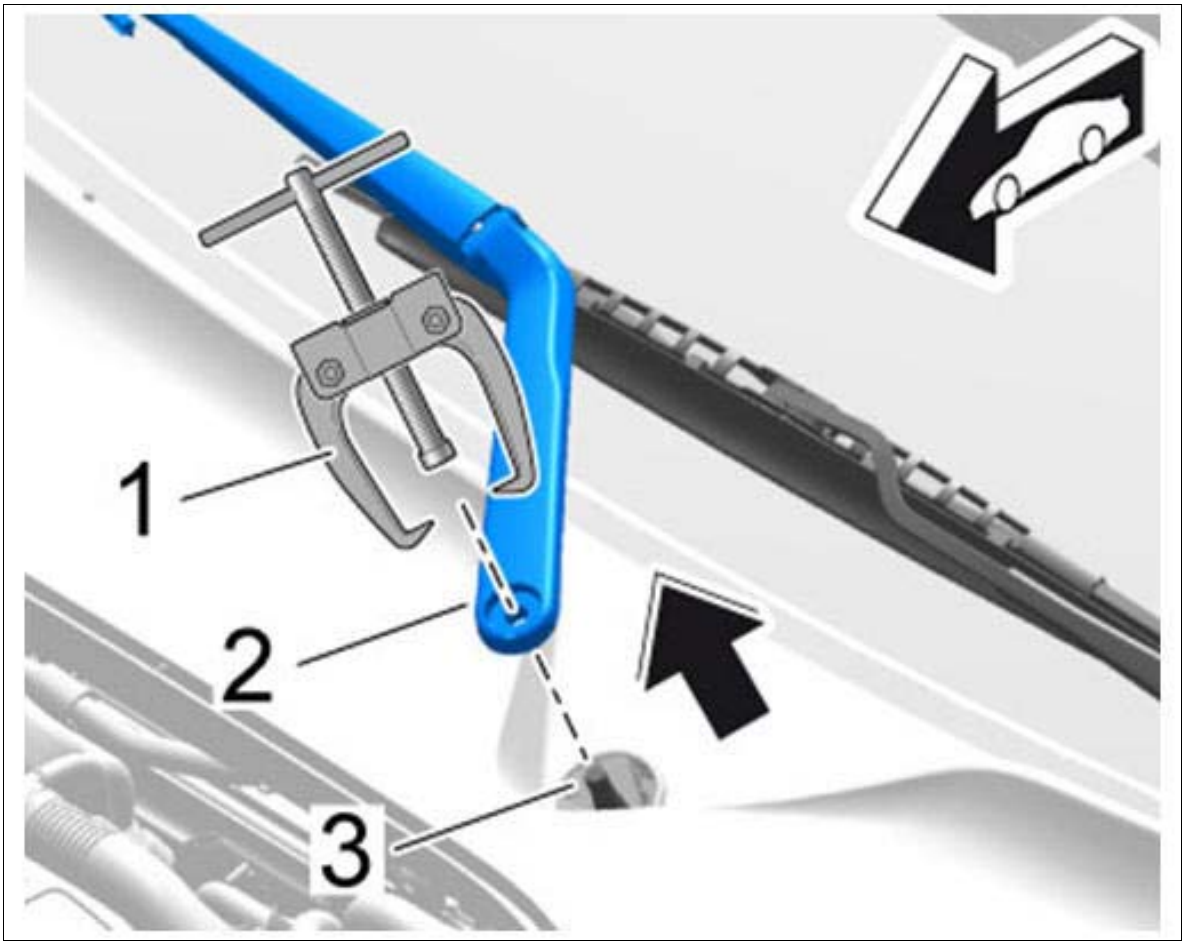

Courtesy of PORSCHE CARS NORTH AMERICA, INC.

WM 922519 REMOVING AND INSTALLING WIPER ARM (ALL MODELS) > INSTALLING WIPER ARM

WARNING: Electrically moved components

- *Danger of limbs being trapped or severed*

→ Switch off electric power to drive motor.

→ Make sure it does not switch on again.

→ Check that there is no electric charge.

Information

To counteract the deformation of the wiper rubber that occurs when it is at rest, the wiper arm is alternately moved to two different parked positions. However, the wiper arm may only be removed and installed in the lower parked position. Before removing or installing the wiper arm, operate the wiper

once and watch whether the wiper is moved up again slightly into the upper parked position after it has reached the lower parked position. In this case, operate the wiper again so that the wiper arm is moved into the lower parked position.

Information

After removing both windscreen wiper arms, fit the shorter wiper arm on the left side!

1. Fit wiper arm on the wiper linkage so that dimension **-a- Nominal value 30 mm** and dimension **-b- Nominal value 34 mm** is guaranteed.

   Fig 1: Connecting Windscreen Wiper Arm

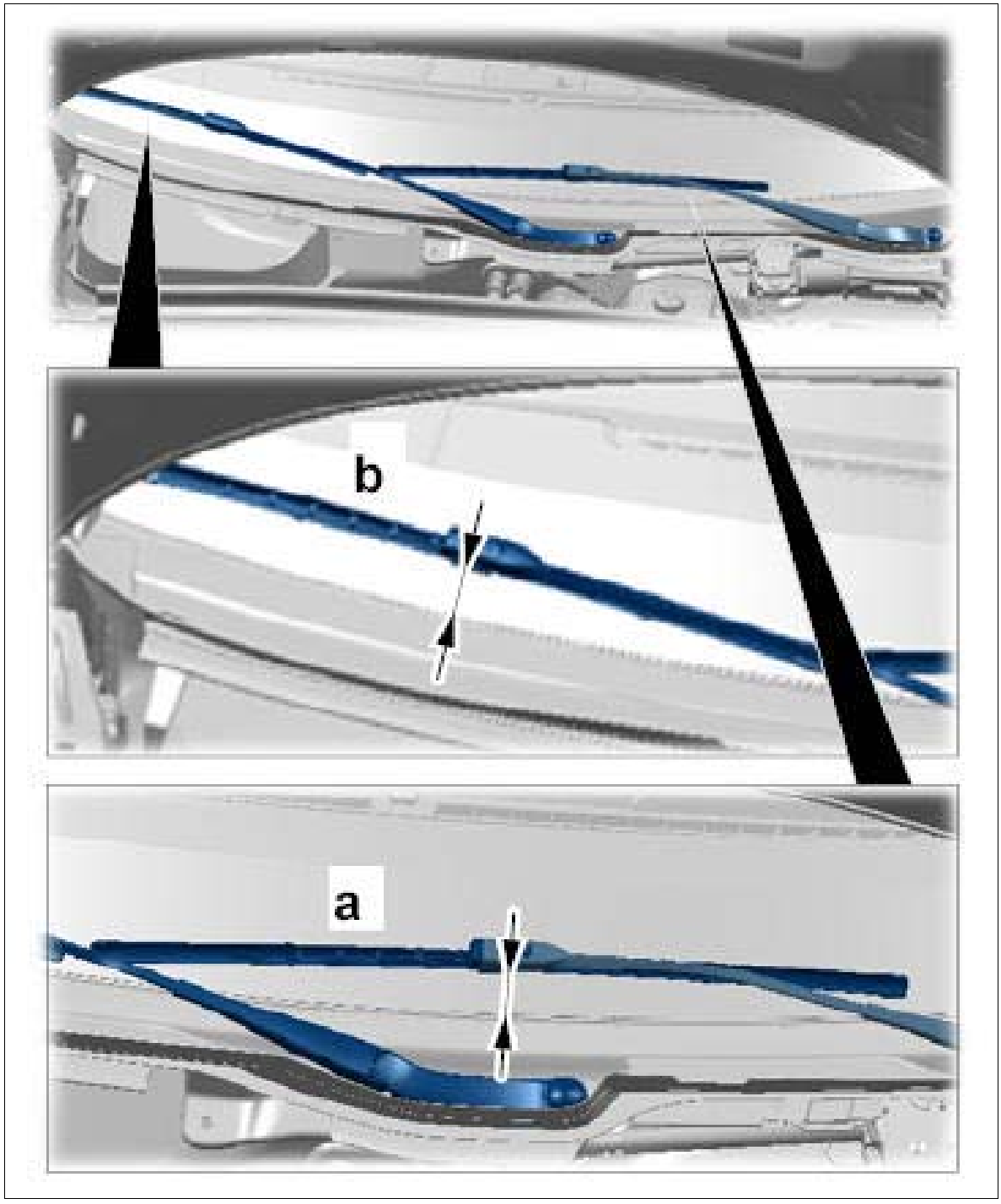

Courtesy of PORSCHE CARS NORTH AMERICA, INC.

2. Tighten fastening nut **-2-** . **Tightening torque 32 Nm (24 ftlb.)**

3. Press on the cap **-1-** .

Fig 2: Securing Windscreen Wiper Arm

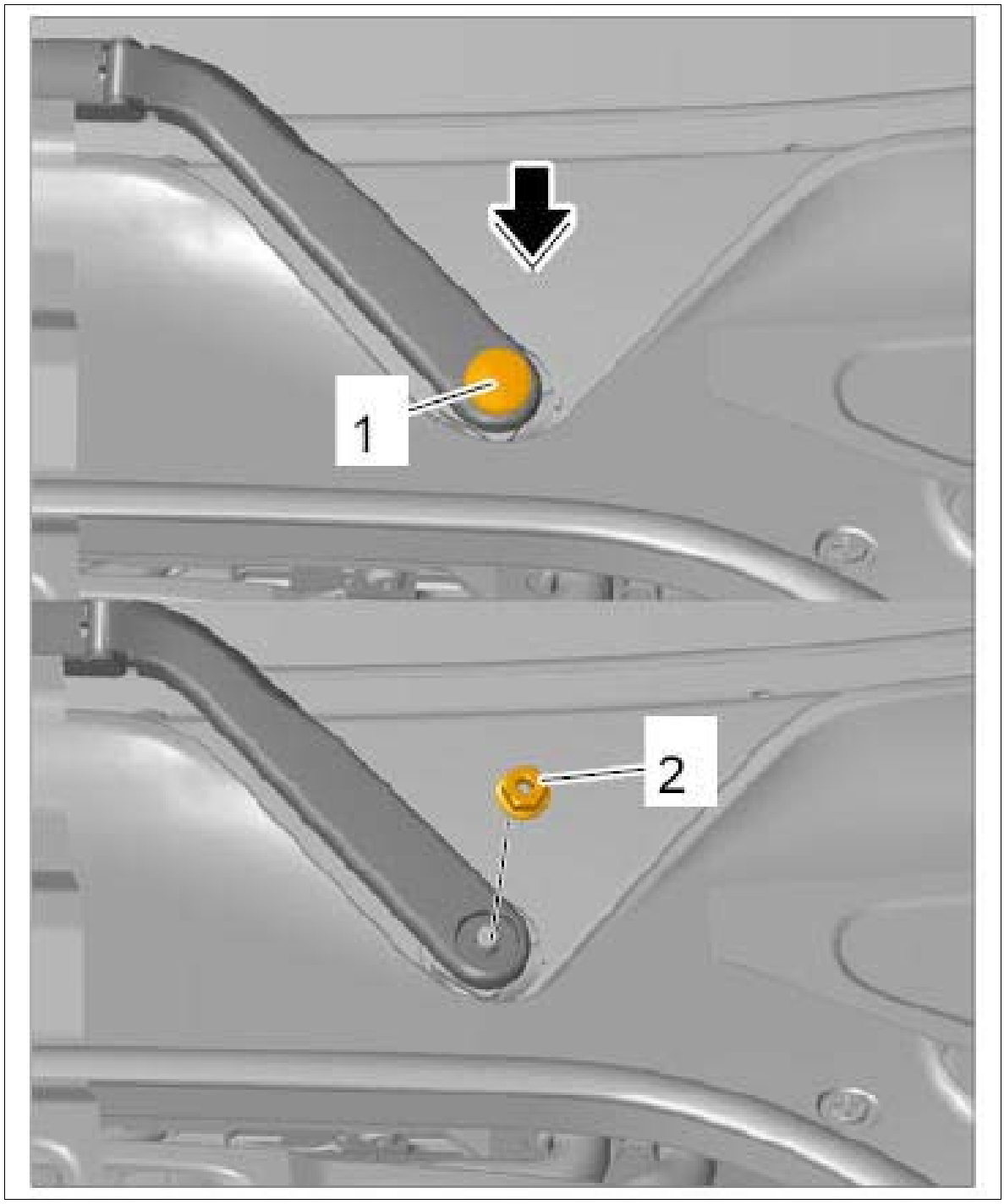

Courtesy of PORSCHE CARS NORTH AMERICA, INC.

4. Switch on the windscreen wipers, switch them off again and wait until they come to a stop.

5. Switch off ignition and pull remote control out of the ignition lock.

6. Measure dimension **-a- Nominal value 30 mm** and dimension **-b- Nominal value 34 mm** again.

WM 922719 REMOVING AND INSTALLING WIPER BLADE (ALL MODELS) > REMOVING WIPER BLADE

WARNING: Electrically moved components

- *Danger of limbs being trapped or severed*

→ Switch off electric power to drive motor.

→ Make sure it does not switch on again.

→ Check that there is no electric charge.

1. Switch off ignition and pull remote control out of ignition lock.
2. Lift up wiper arm, release wiper blade **-A-** and pull it out of the guide **-B-** .

Fig 1: Removing Wiper Blade

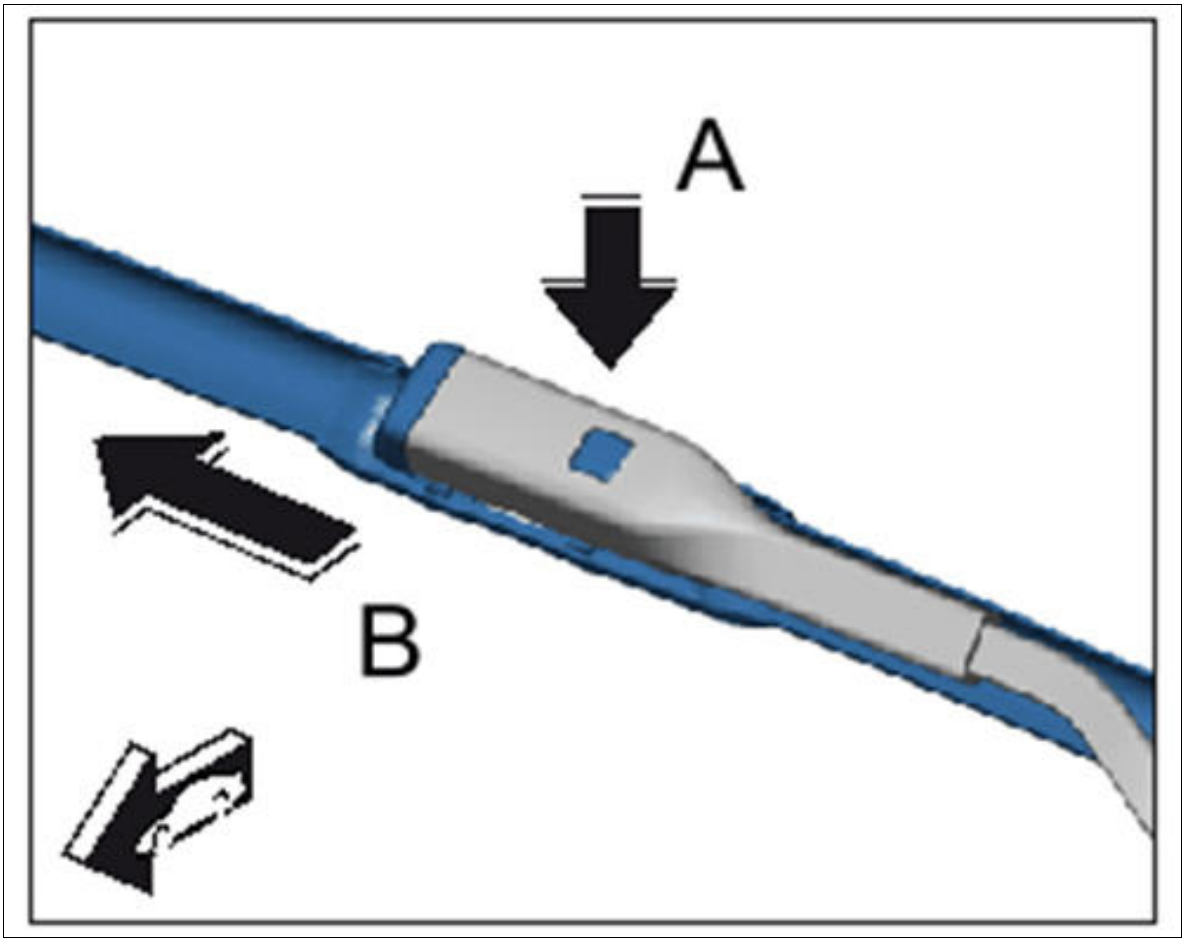

Courtesy of PORSCHE CARS NORTH AMERICA, INC.

WM 922719 REMOVING AND INSTALLING WIPER BLADE (ALL MODELS) > INSTALLING WIPER BLADE

WARNING: Electrically moved components

- *Danger of limbs being trapped or severed*

→ Switch off electric power to drive motor.

→ Make sure it does not switch on again.

→ Check that there is no electric charge.

1. Installation is performed in reverse order to removal.

WM 923419 REMOVING AND INSTALLING WIPER MOTOR FOR REAR WINDOW WASHER (ALL MODELS) > TECHNICAL VALUES

Location	Description	Type	Basic value	Tolerance 1	Tolerance 2
Wiper motor for rear window washer to rear lid	Hexagon nut, M6	Tightening torque	8 Nm (6 ftlb.)		

WM 923419 REMOVING AND INSTALLING WIPER MOTOR FOR REAR WINDOW WASHER (ALL MODELS) > PRELIMINARY WORK

1. Remove wiper arm for rear window washer. → Removing Wiper Arm For Rear Window Washer
2. Remove trim panel for rear lid. → 708719 TRIM PANEL FOR REAR LID

WM 923419 REMOVING AND INSTALLING WIPER MOTOR FOR REAR WINDOW WASHER (ALL MODELS) > REMOVING WIPER MOTOR FOR REAR WINDOW WASHER

1. Release electric plug connection **-1-** (**-a-**) and disconnect it.
2. Release electric plug connection **-2-** (**-b-**) and disconnect it.
3. Release connector **-c-** and pull it off the retaining clip.

Fig 1: Disconnecting Electric Plug Connections

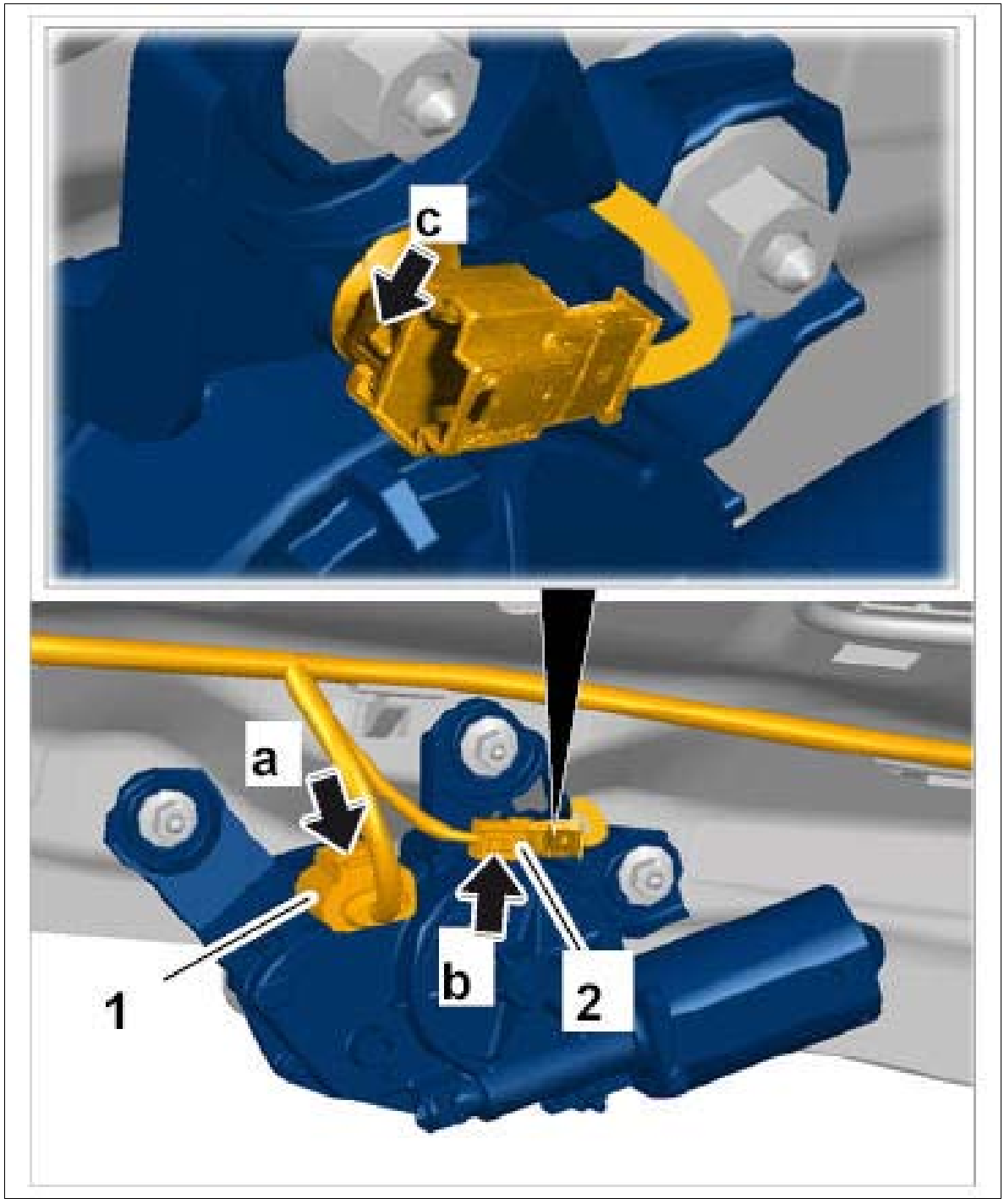

Courtesy of PORSCHE CARS NORTH AMERICA, INC.

4. Screw off fastening nuts **-1-** .
5. Remove wiper motor for rear window washer **-2-** .

Fig 2: Removing Rear Window Washer Wiper Motor

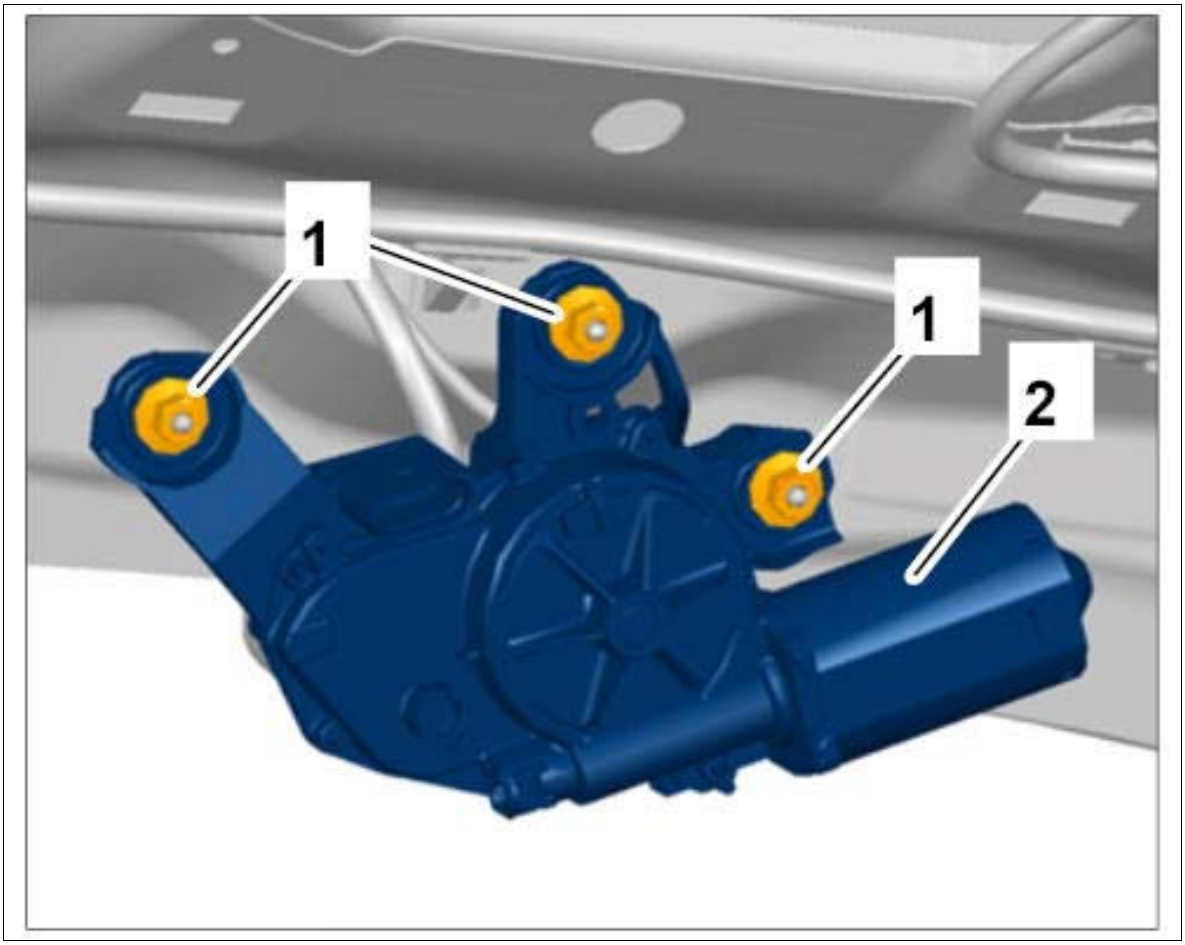

Courtesy of PORSCHE CARS NORTH AMERICA, INC.

WM 923419 REMOVING AND INSTALLING WIPER MOTOR FOR REAR WINDOW WASHER (ALL MODELS) > INSTALLING WIPER MOTOR FOR REAR WINDOW WASHER

1. Install wiper motor for rear window washer **-1-** .
    1. 1.1. Apply sliding compound to wiper axle **-2-** .
    2. 1.2. Carefully insert wiper axle into the grommet at the rear window.
    3. 1.3. Tighten fastening nuts **-3-** . **Tightening torque 8 Nm (6 ftlb.)**

Fig 1: Installing Wiper Motor For Rear Window Washer

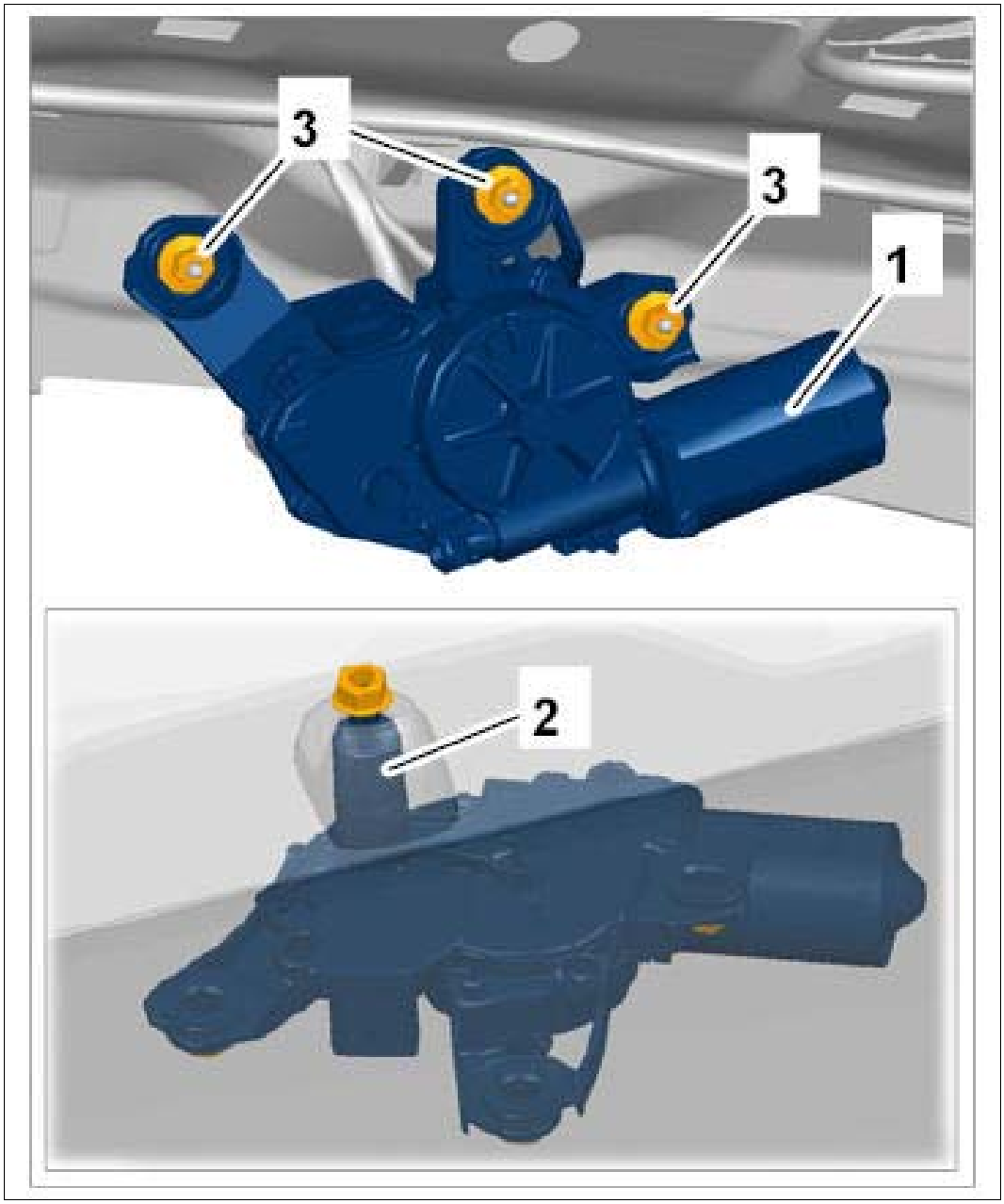

Courtesy of PORSCHE CARS NORTH AMERICA, INC.

WM 923419 REMOVING AND INSTALLING WIPER MOTOR FOR REAR WINDOW WASHER (ALL MODELS) > SUBSEQUENT WORK

1. Install trim panel for rear lid. → Installing trim panel for rear lid
2. Install wiper arm for rear window washer. → Installing Wiper Arm For Rear Window Washer

WM 924119 REMOVING AND INSTALLING WIPER ARM FOR REAR WINDOW

WASHER (ALL MODELS) > TECHNICAL VALUES

Location	Description	Type	Basic value	Tolerance 1	Tolerance 2
Wiper arm for rear window washer to wiper axle	Hexagon nut, M8	Tightening torque	19 Nm (14 ftlb.)		
Distance from center wiper lip to lower edge of windscreen	Dimension a	Nominal value	25 mm		

WM 924119 REMOVING AND INSTALLING WIPER ARM FOR REAR WINDOW WASHER (ALL MODELS) > REMOVING WIPER ARM FOR REAR WINDOW WASHER

WARNING: Electrically moved components

- *Danger of limbs being trapped or severed*

→ Switch off electric power to drive motor.

→ Make sure it does not switch on again.

→ Check that there is no electric charge.

1. Switch off ignition and pull remote control out of ignition lock.
2. Lift up cover **-1-** and pull it off the wiper arm for the rear window washer **-2-** .
3. Screw off fastening nut **-3-** .
4. Pull wiper arm for rear window washer **-2-** off the wiper axle.

Fig 1: Removing Wiper Arm For Rear Window Washer

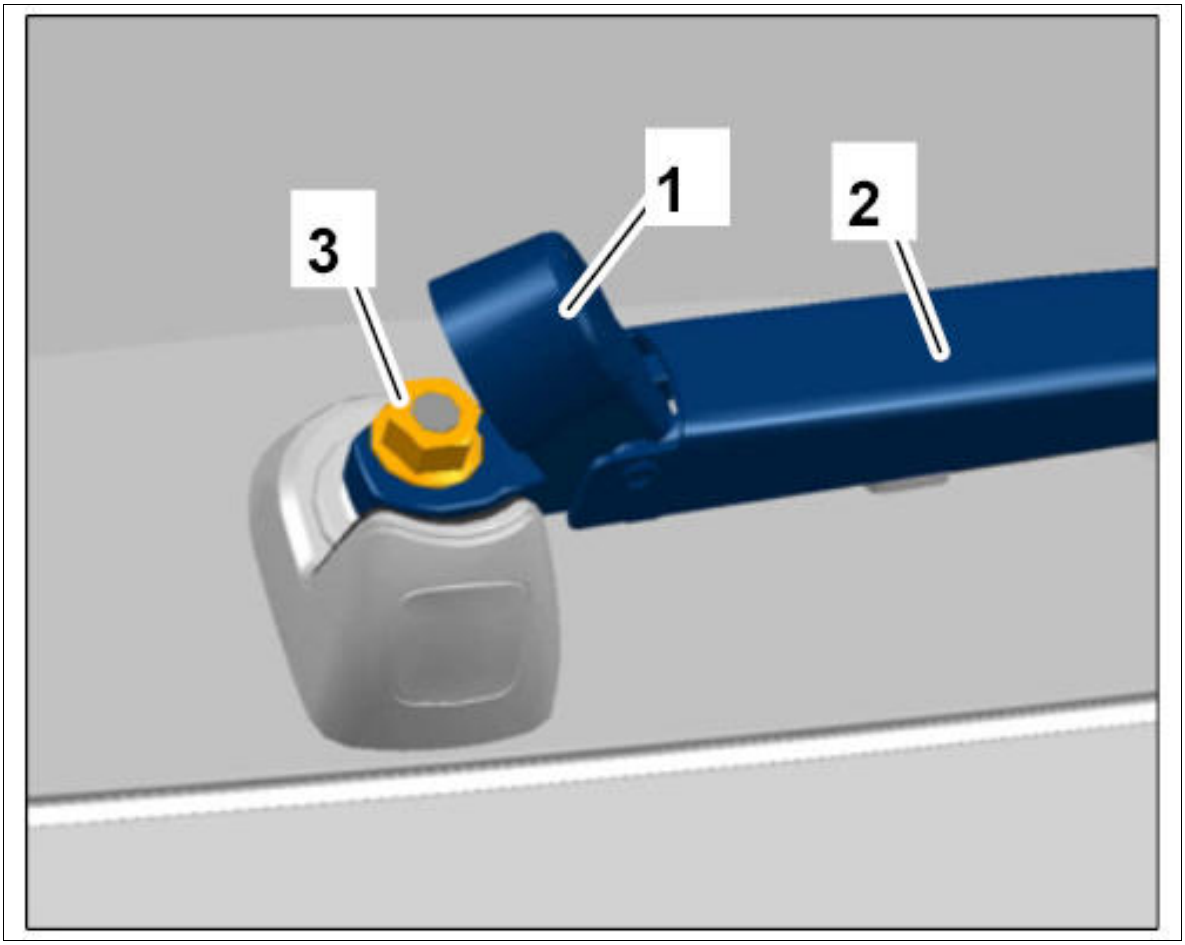

Courtesy of PORSCHE CARS NORTH AMERICA, INC.

WM 924119 REMOVING AND INSTALLING WIPER ARM FOR REAR WINDOW WASHER (ALL MODELS) > INSTALLING WIPER ARM FOR REAR WINDOW WASHER

WARNING: Electrically moved components

- *Danger of limbs being trapped or severed*

→ Switch off electric power to drive motor.

→ Make sure it does not switch on again.

→ Check that there is no electric charge.

1. Switch wiper motor for rear window washer on and off and allow wiper motor for rear window washer to move to its end position.
2. Switch off ignition and pull remote control out of ignition lock.

3. Fit wiper arm for rear window washer on the wiper axle so that dimension **-a- Nominal value 25 mm** is set on the wiper blade.

Fig 1: Fitting Wiper Arm For Rear Window Washer

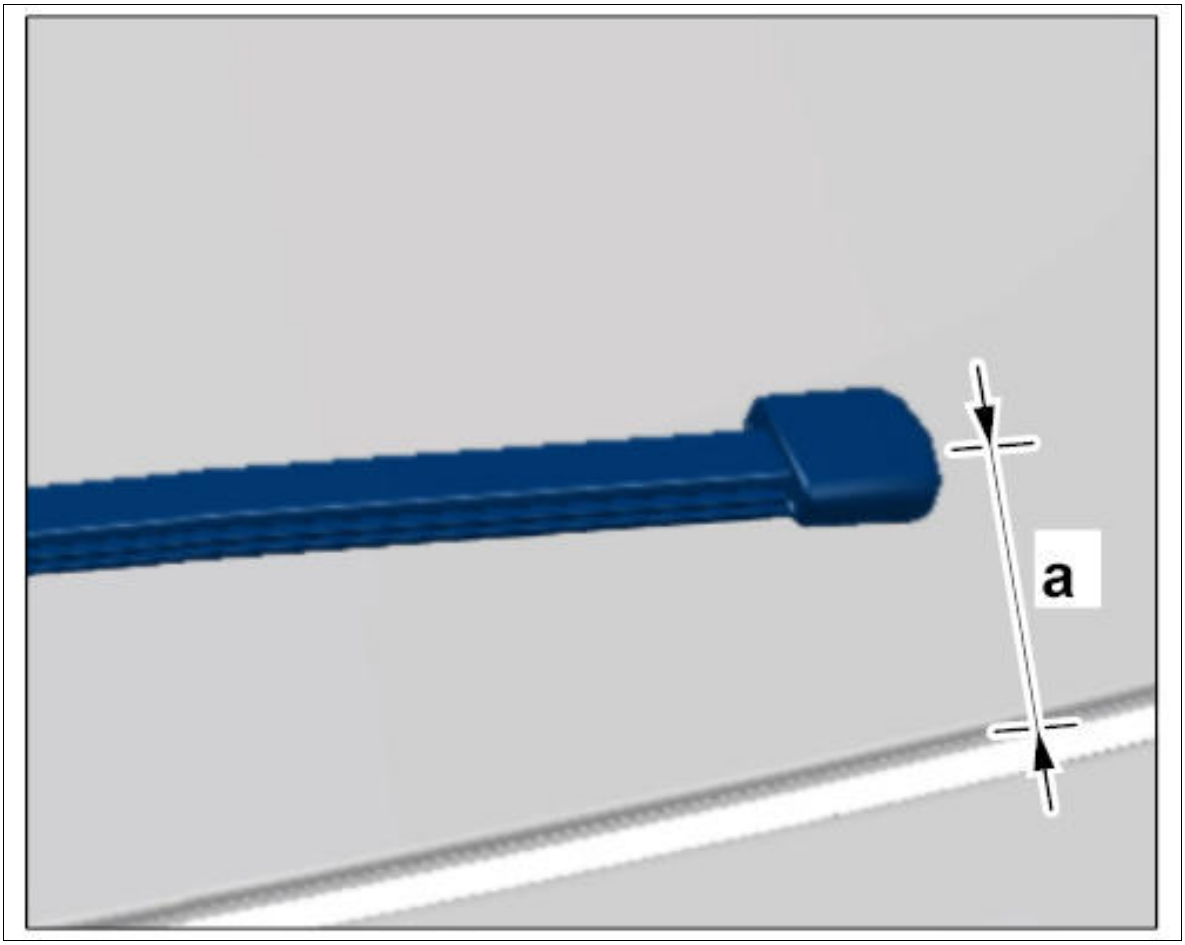

Courtesy of PORSCHE CARS NORTH AMERICA, INC.

4. Tighten fastening nut **-3-** . **Tightening torque 19 Nm (14 ftlb.)**

5. Fit cover **-1-** on wiper arm for rear window **-2-** until it engages securely.

Fig 2: Installing Wiper Arm For Rear Window Washer

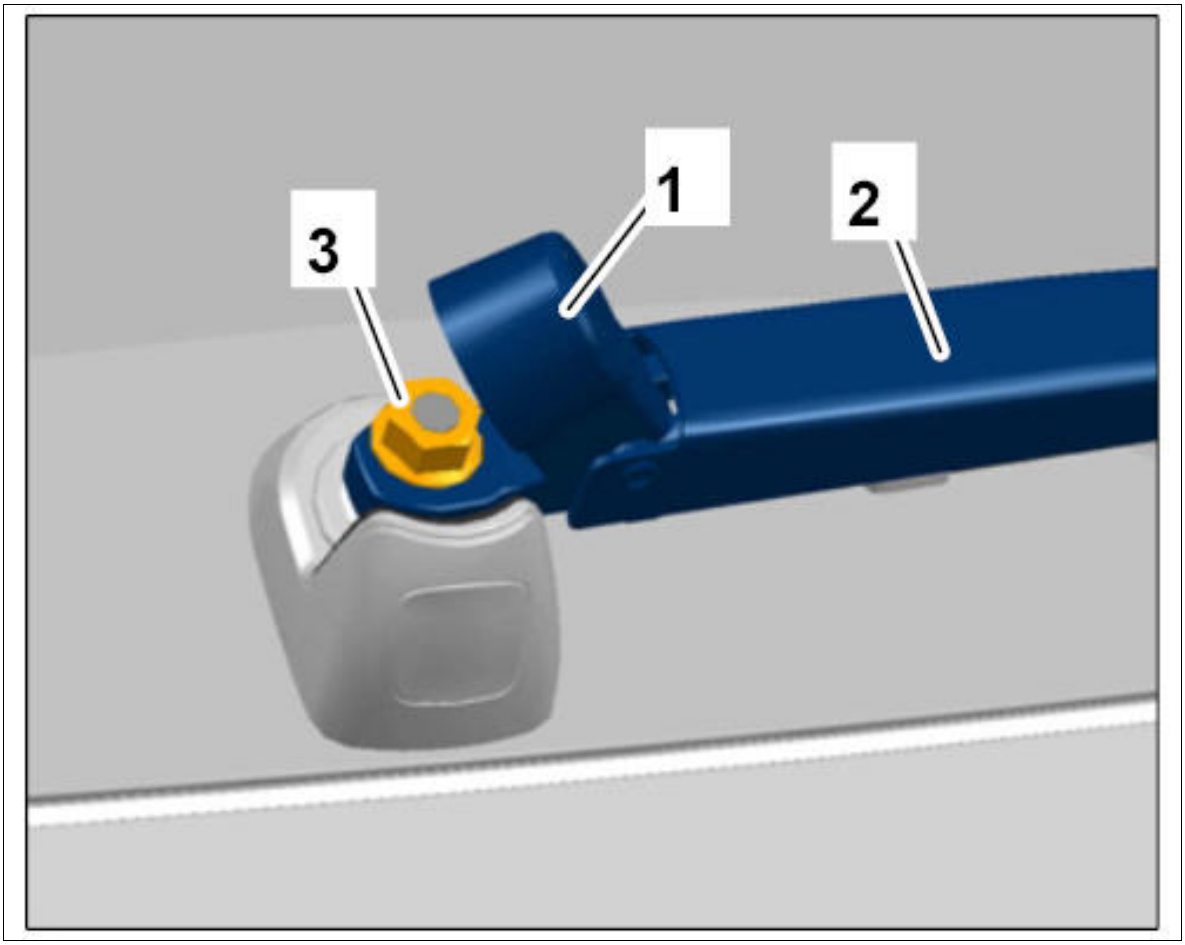

Courtesy of PORSCHE CARS NORTH AMERICA, INC.

WM 924319 REMOVING AND INSTALLING WIPER BLADE FOR REAR WINDOW WASHER (ALL MODELS) > REMOVING WIPER BLADE FOR REAR WINDOW WASHER

WARNING: Electrically moved components

- *Danger of limbs being trapped or severed*

→ Switch off electric power to drive motor.

→ Make sure it does not switch on again.

→ Check that there is no electric charge.

1. Switch off ignition and pull remote control out of ignition lock.
2. Remove wiper blade for rear window washer **-1-** .

1. 2.1. Lift up wiper arm for rear window washer **-2-** .
2. 2.2. Disengage locking mechanisms **-a-** , press them down slightly **-b-** and pull wiper blade for rear window washer **-1-** off wiper arm for rear window washer **-2-** (**-c-**).
3. 2.3. Carefully place wiper arm for rear window washer **-2-** on the rear window.

Fig 1: Removing Wiper Blade For Rear Window Washer

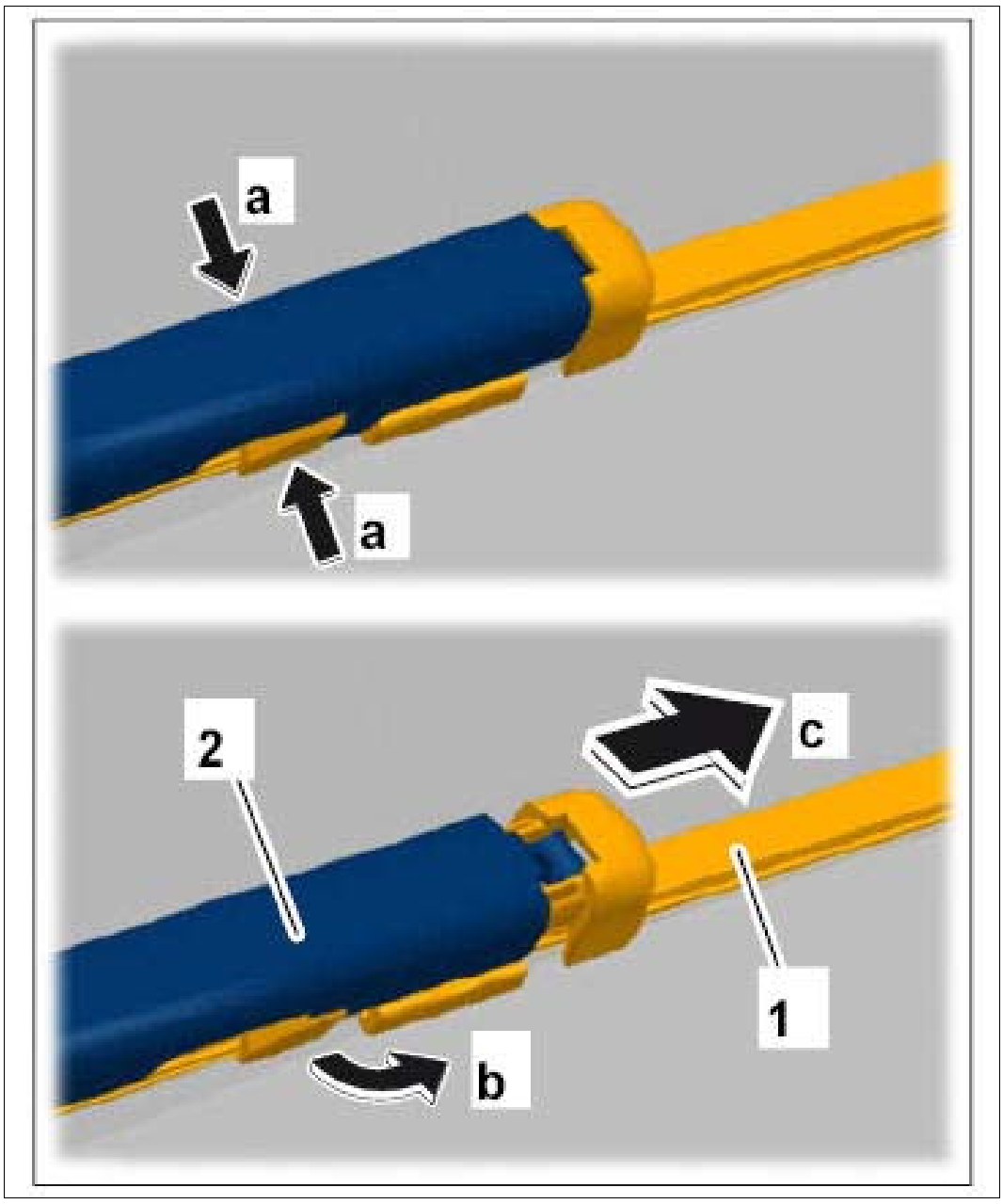

Courtesy of PORSCHE CARS NORTH AMERICA, INC.

WM 924319 REMOVING AND INSTALLING WIPER BLADE FOR REAR WINDOW WASHER (ALL MODELS) > INSTALLING WIPER BLADE FOR REAR WINDOW WASHER

WARNING: Electrically moved components

- *Danger of limbs being trapped or severed*

→ Switch off electric power to drive motor.

→ Make sure it does not switch on again.

→ Check that there is no electric charge.

1. Installation is performed in reverse order to removal.

WM 925619 REMOVING AND INSTALLING PUMP FOR WINDSCREEN WASHER SYSTEM (ALL MODELS) > PRELIMINARY WORK

1. Detach windscreen-washer reservoir and set it down with connected lines and hoses on the left front wheel. → Removing Windscreen-Washer Reservoir

WM 925619 REMOVING AND INSTALLING PUMP FOR WINDSCREEN WASHER SYSTEM (ALL MODELS) > REMOVING PUMP FOR WINDSCREEN WASHER SYSTEM

1. Release hoses **-1-** on the windscreen washer system pump **-2-** (**-arrows-**) and pull them off. Collect any fluid that leaks out in a suitable container.
2. Lever pump for windscreen washer system out of the washer-fluid reservoir.
3. Release and unplug electric plug connection **-3-** .
4. Check condition of seal **-4-** and check that it is seated correctly on the windscreen-washer reservoir. Replace seal if necessary.

Fig 1: Removing Windscreen Washer System Pump

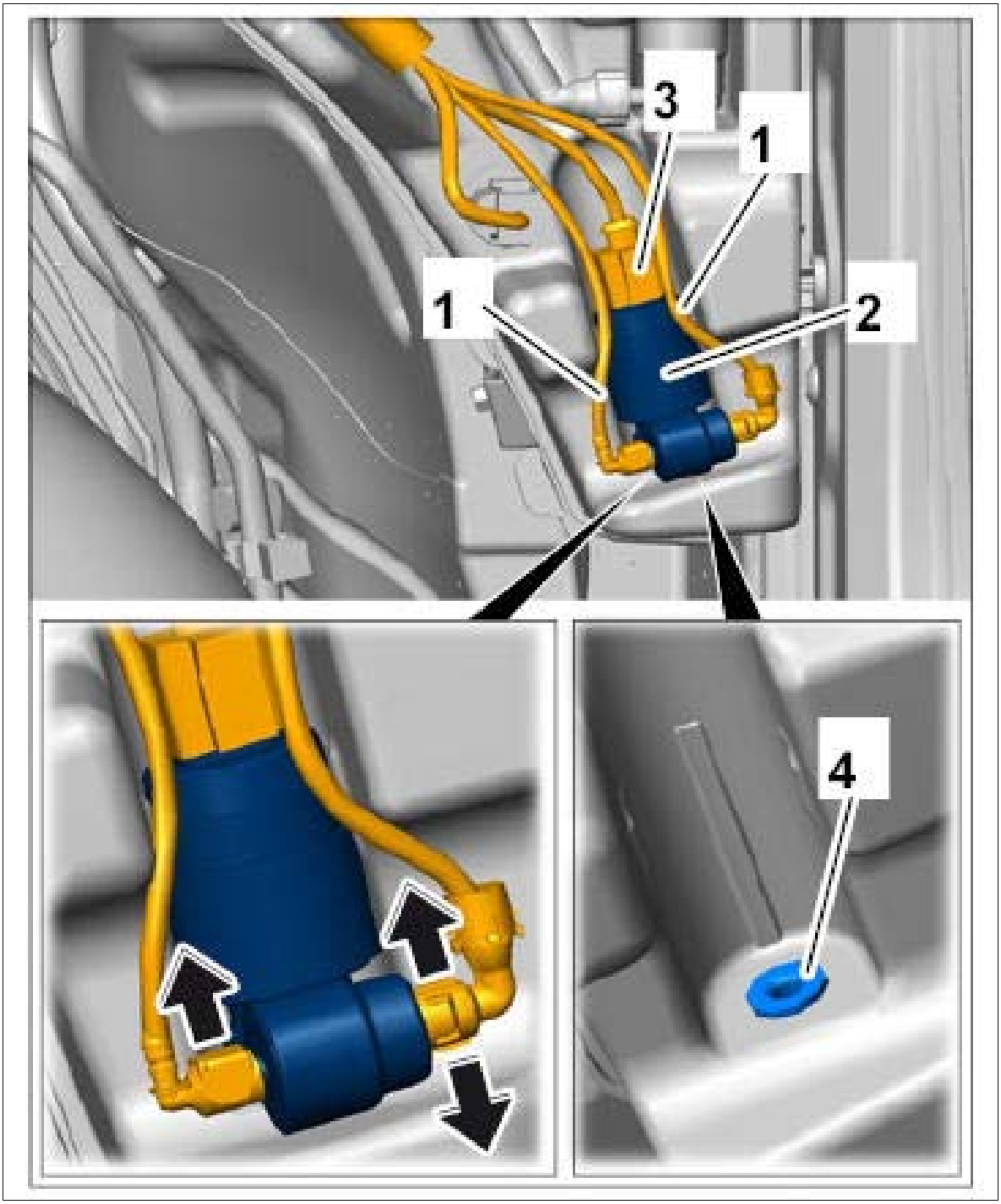

Courtesy of PORSCHE CARS NORTH AMERICA, INC.

WM 925619 REMOVING AND INSTALLING PUMP FOR WINDSCREEN WASHER SYSTEM (ALL MODELS) > INSTALLING PUMP FOR WINDSCREEN WASHER SYSTEM

1. Installation is performed in reverse order to removal.

WM 925619 REMOVING AND INSTALLING PUMP FOR WINDSCREEN WASHER SYSTEM (ALL MODELS) > SUBSEQUENT WORK

1. Install windscreen-washer reservoir. → Installing Windscreen-Washer Reservoir

   Information

   Only use windscreen cleaning agents and antifreeze approved by Porsche.

   Observe the required mixture ratio in accordance with manufacturer's specifications and season.

2. Fill the windscreen-washer reservoir with window cleaner or antifreeze, depending on the season.

3. Actuate the windscreen washer system at the front and rear in order to bleed the hoses and spray nozzles.

WM 926019 REMOVING AND INSTALLING WINDSCREEN-WASHER RESERVOIR (ALL MODELS) > TECHNICAL VALUES

Location	Description	Type	Basic value	Tolerance 1	Tolerance 2
Filler neck for windscreen washer system to body	Internal Torx screw, M6 x 14	Tightening torque	7 Nm (5 ftlb.)		
Windscreen-washer reservoir to body	Internal Torx screw, M6 x 16	Tightening torque	7 Nm (5 ftlb.)		

WM 926019 REMOVING AND INSTALLING WINDSCREEN-WASHER RESERVOIR (ALL MODELS) > PRELIMINARY WORK

1. Remove cowl panel cover. → Removing cowl panel cover

2. Remove front left wheel housing liner. → Removing front wheel housing liner

WM 926019 REMOVING AND INSTALLING WINDSCREEN-WASHER RESERVOIR (ALL MODELS) > REMOVING WINDSCREEN-WASHER RESERVOIR

1. Remove filler neck **-1-** .

    1. 1.1. Unscrew fastening screws **-2-** .

    2. 1.2. Pull filler neck out of the windscreen-washer reservoir and remove it.

Fig 1: Removing Filler Neck

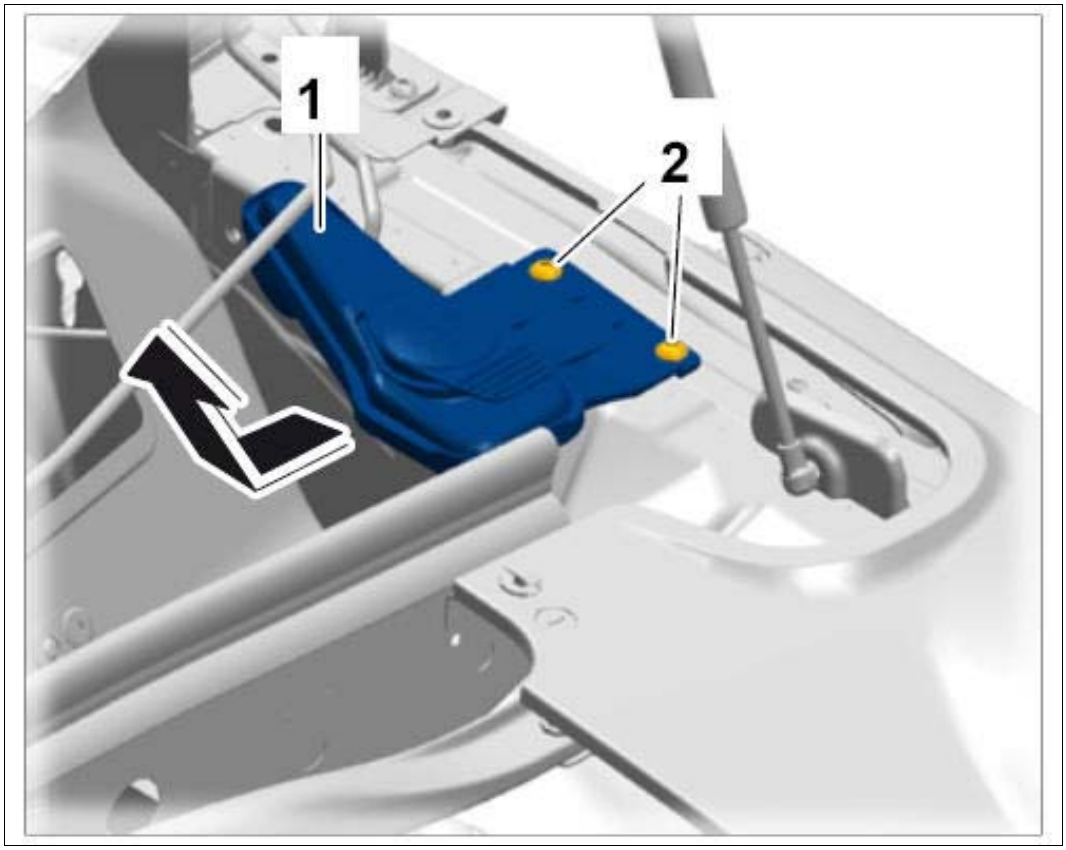

Courtesy of PORSCHE CARS NORTH AMERICA, INC.

2. Remove windscreen-washer reservoir **-1-** .

    1. 2.1. Unscrew fastening screws **-2-** .
    2. 2.2. Pull windscreen-washer reservoir out of the guides on the A-pillar and remove it under the wing.
    3. 2.3. Remove hoses and lines **-3-** from the guides at the windscreen-washer reservoir.

Fig 2: Detaching Windscreen-Washer Reservoir

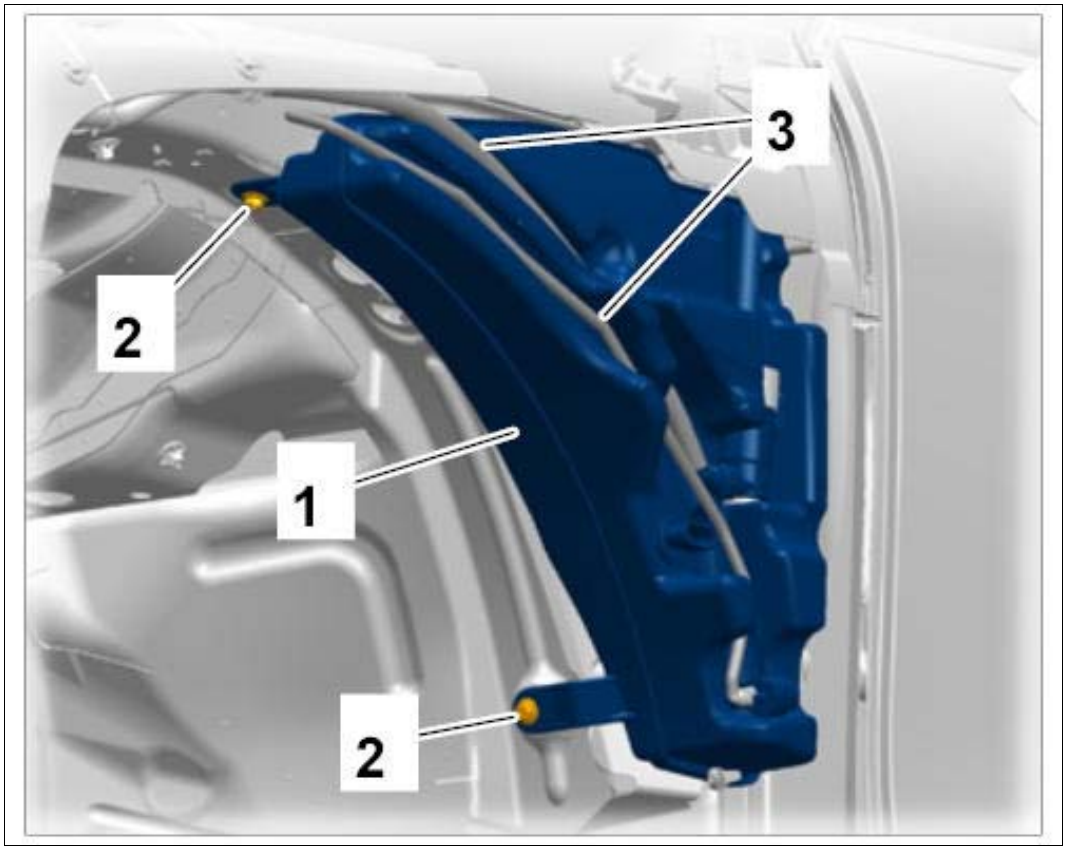

Courtesy of PORSCHE CARS NORTH AMERICA, INC.

3. Release and disconnect electric plug connection **-1-** at the fill level sensor.
4. Release and disconnect electric plug connection **-2-** at the pump for the windscreen washer system.
5. Release and disconnect electric plug connection **-3-** at the pump for the headlight cleaning system.

Fig 3: Disconnecting Electric Plug Connections

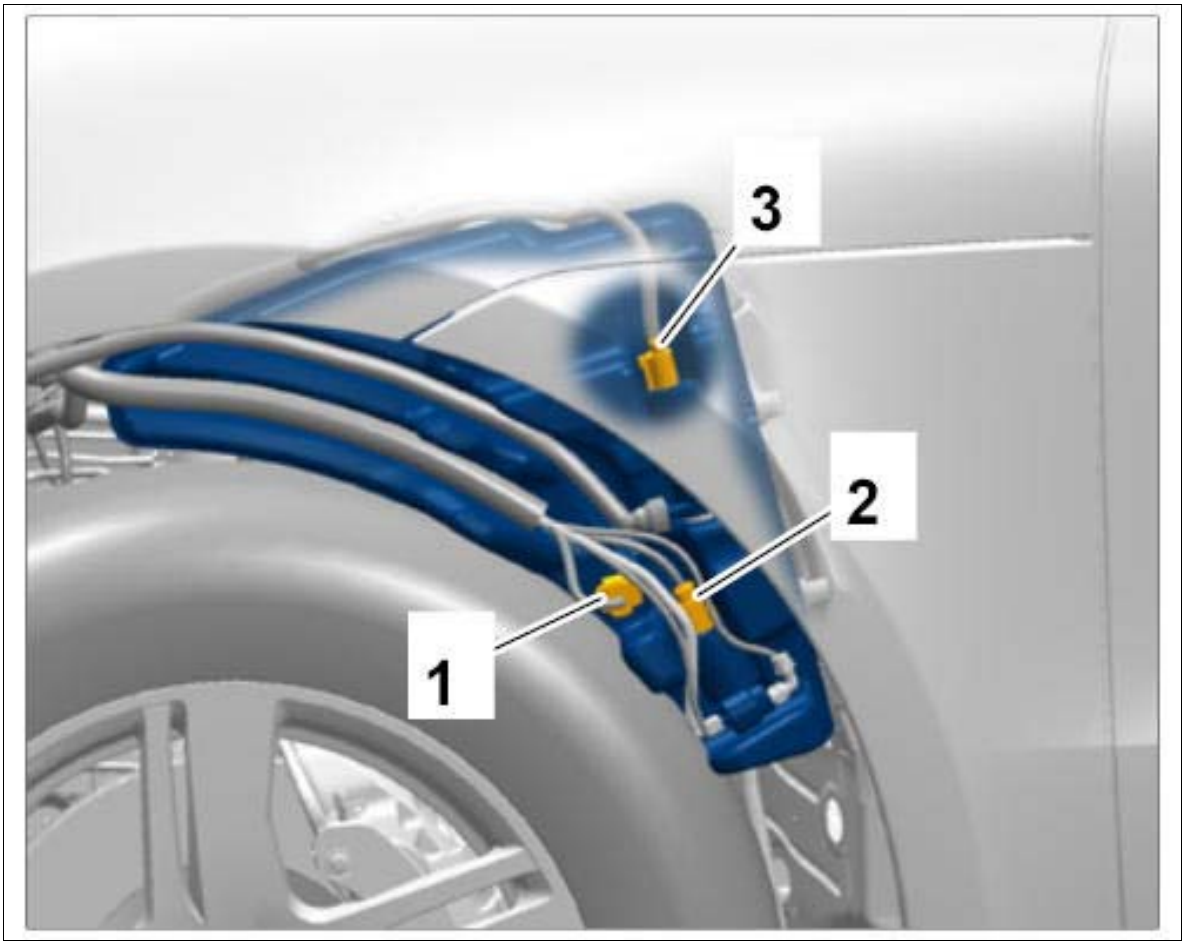

Courtesy of PORSCHE CARS NORTH AMERICA, INC.

6. Release hoses for the windscreen washer system **-1-** at the pump for the windscreen washer system **-2-** and pull them off. Collect any fluid that leaks out in a suitable container.

7. Release hose for headlight cleaning system **-3-** at the pump for the headlight cleaning system **-4-** and pull it off.

8. Remove windscreen-washer reservoir **-5-** .

Fig 4: Disconnecting Hoses

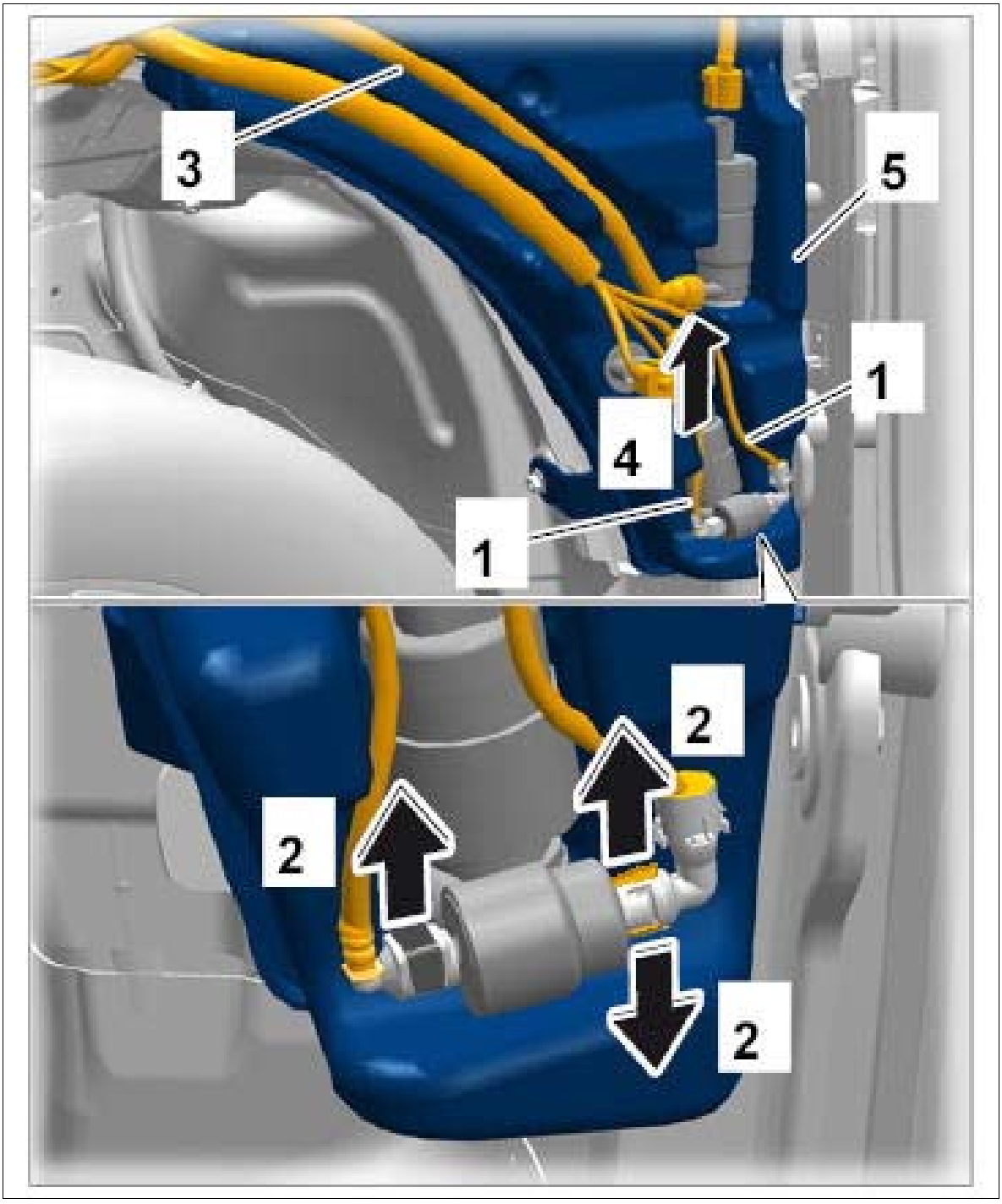

Courtesy of PORSCHE CARS NORTH AMERICA, INC.

9. Check condition and correct seating of rubber mountings **-1-** and seal **-2-** on the windscreen-washer reservoir **-3-** . Replace rubber mountings and seal if necessary.

Fig 5: Checking Rubber Mountings And Seal

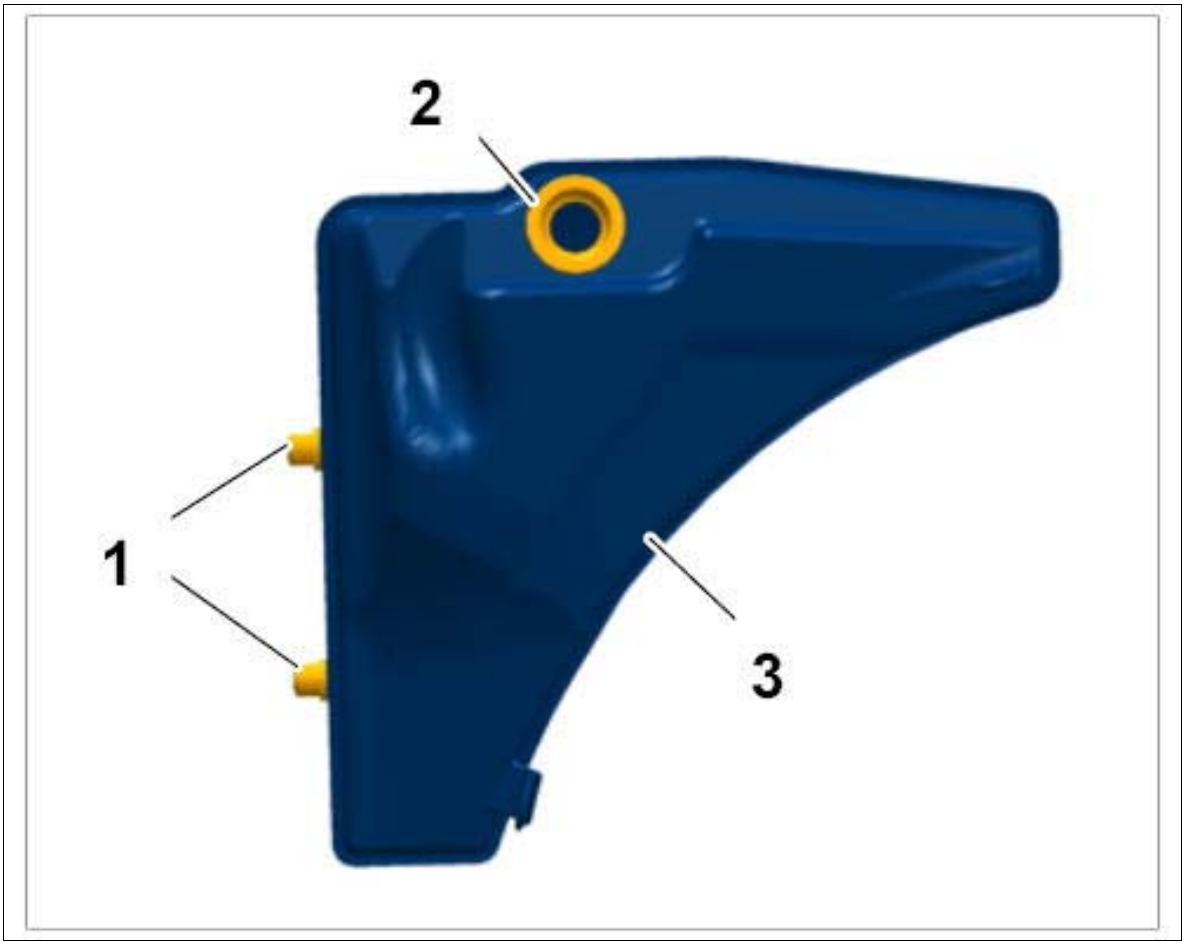

Courtesy of PORSCHE CARS NORTH AMERICA, INC.

When replacing the windscreen-washer reservoir:

10. Pry sender for washer fluid-level indicator **-1-** out of the windscreen-washer reservoir **-4-** .
11. Lever pump for windscreen washer system **-2-** out of the windscreen-washer reservoir **-4-** .
12. Lever pump for headlight cleaning system **-3-** out of the windscreen-washer reservoir **-4-** .
13. Prise seals **-5-** out of the windscreen-washer reservoir and check their condition. Replace seals if necessary.

Fig 6: Removing Pumps And Sender

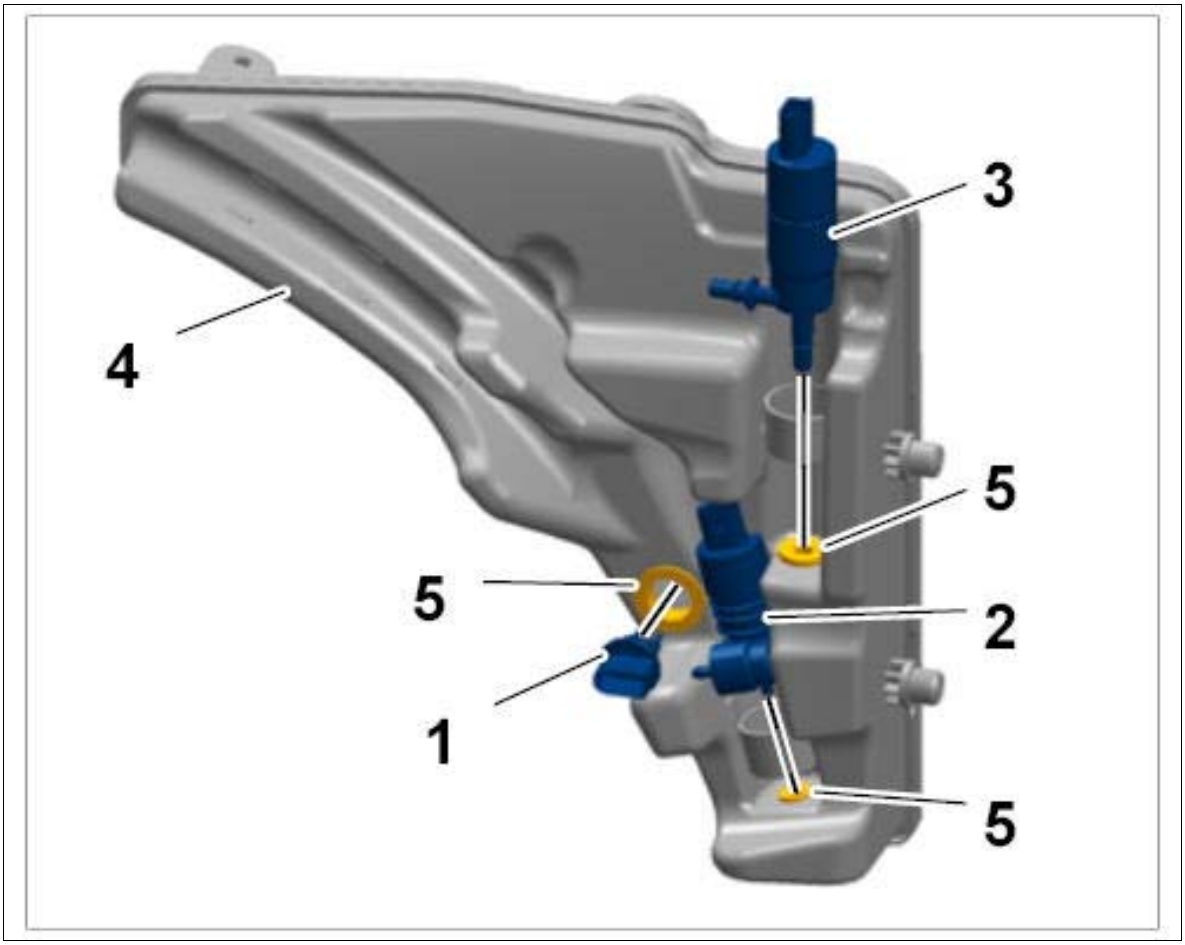

Courtesy of PORSCHE CARS NORTH AMERICA, INC.

WM 926019 REMOVING AND INSTALLING WINDSCREEN-WASHER RESERVOIR (ALL MODELS) > INSTALLING WINDSCREEN-WASHER RESERVOIR

1. Installation is performed in reverse order to removal.
2. Tighten fastening screws for the windscreen-washer reservoir. **Tightening torque 7 Nm (5 ftlb.)**
3. Tighten fastening screws for the filler neck. **Tightening torque 7 Nm (5 ftlb.)**

WM 926019 REMOVING AND INSTALLING WINDSCREEN-WASHER RESERVOIR (ALL MODELS) > SUBSEQUENT WORK

1. Fill the windscreen-washer reservoir with window cleaner or antifreeze, depending on the season. Only use windscreen cleaning agents and antifreeze approved by Porsche.
2. Actuate the headlight cleaning system several times in order to bleed the hoses and spray nozzles.

3. Actuate the windscreen washer system at the front and rear in order to bleed the hoses and spray nozzles.
4. Install front left wheel housing liner. → Installing front wheel housing liner
5. Install cowl panel cover. → Installing cowl panel cover

WM 926619 REMOVING AND INSTALLING SPRAY NOZZLE FOR WINDSCREEN WASHER SYSTEM (ALL MODELS) > TOOLS

Designation	Type	Number	Description	
adjusting tool	VW tool	T40187		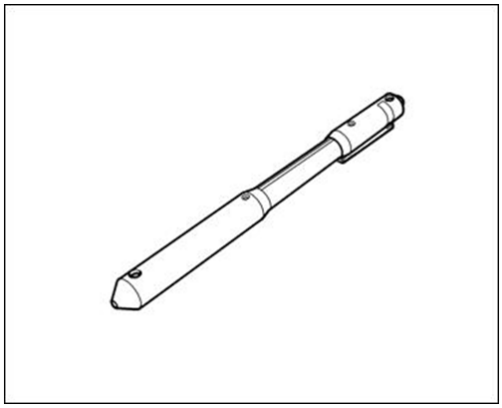

WM 926619 REMOVING AND INSTALLING SPRAY NOZZLE FOR WINDSCREEN WASHER SYSTEM (ALL MODELS) > TECHNICAL VALUES

Location	Description	Type	Basic value	Tolerance 1	Tolerance 2
Distance from upper edge of windscreen to spray point of inner spray jet	Dimension a	Length	200 mm		
Distance from side edge of windscreen to spray point of inner spray jet	Dimension b	Length	535 mm		
Distance from upper edge of windscreen to spray point of center spray jet	Dimension c	Length	325 mm		

Distance from side edge of windscreen to spray point of center spray jet	Dimension d	Length	335 mm		
Distance from upper edge of windscreen to spray point of outer spray jet	Dimension e	Length	480 mm		
Distance from side edge of windscreen to spray point of outer spray jet	Dimension f	Length	165 mm		

WM 926619 REMOVING AND INSTALLING SPRAY NOZZLE FOR WINDSCREEN WASHER SYSTEM (ALL MODELS) > REMOVING SPRAY NOZZLE FOR WINDSCREEN WASHER SYSTEM

1. Lever spray nozzle **-1-** out of the bonnet using a plastic wedge.

Fig 1: Removing Spray Nozzle

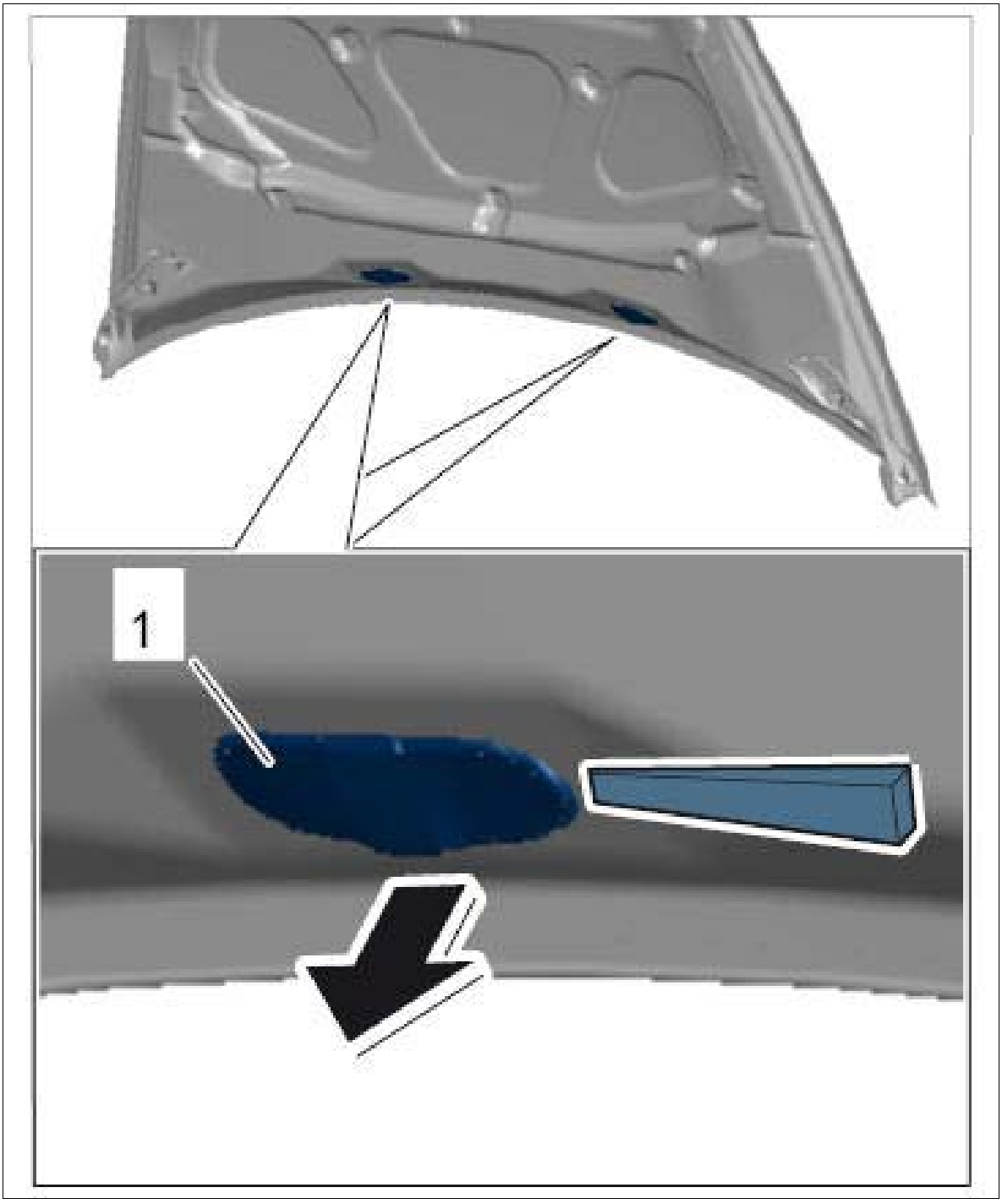

Courtesy of PORSCHE CARS NORTH AMERICA, INC.

2. Release electric plug connection **-1-** for the spray nozzle **-A-** and pull it off **-B-** .

Fig 2: Disconnecting Electric Plug Connection

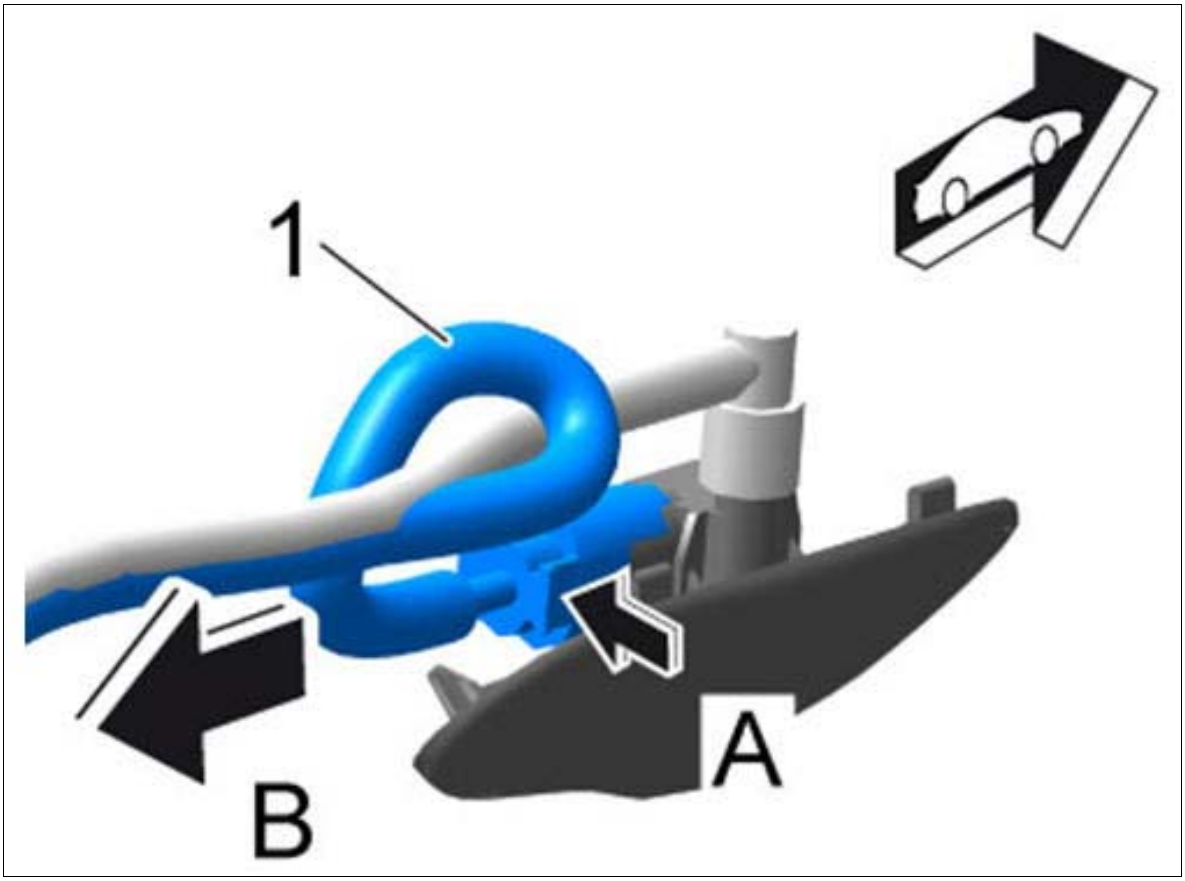

Courtesy of PORSCHE CARS NORTH AMERICA, INC.

3. Release washer-fluid hose **-1-** (**-A-**) and pull it off **-B-** .

Fig 3: Removing Washer-Fluid Hose

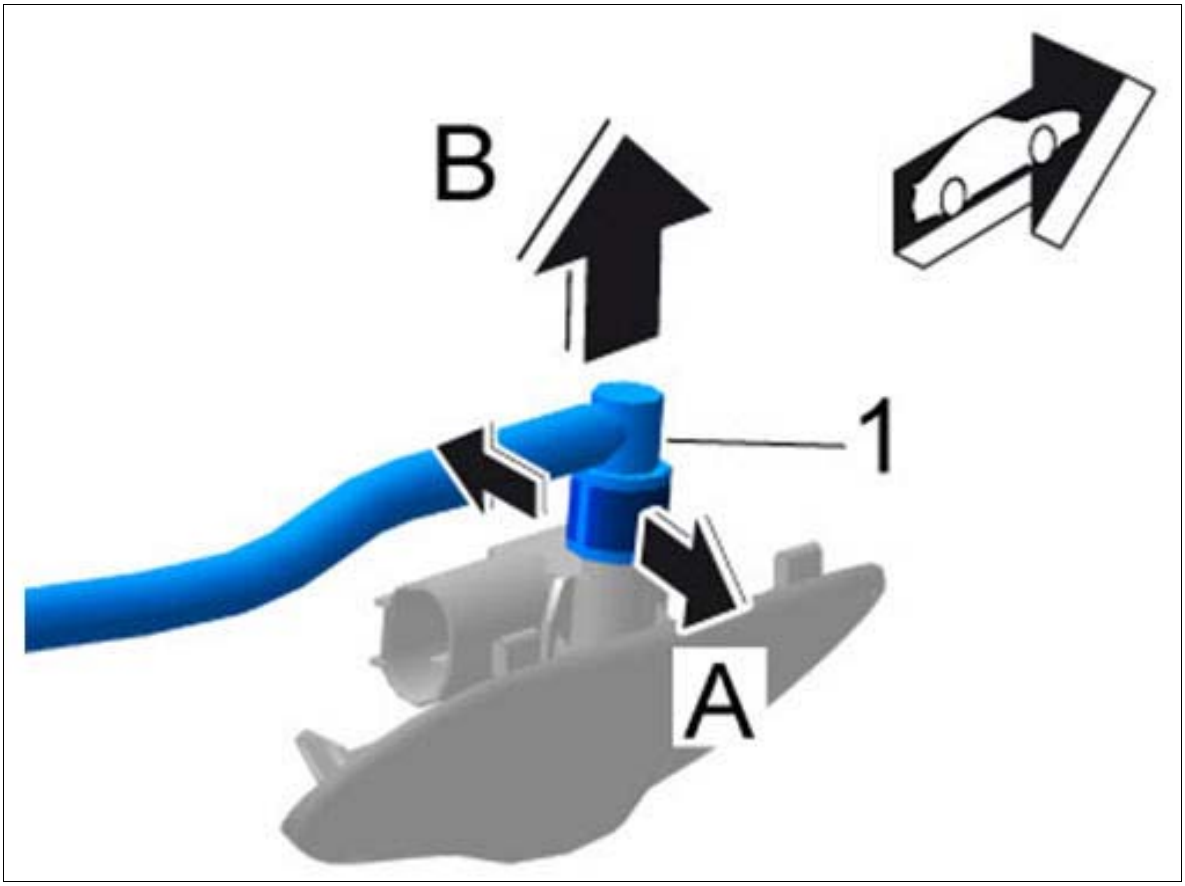

Courtesy of PORSCHE CARS NORTH AMERICA, INC.

WM 926619 REMOVING AND INSTALLING SPRAY NOZZLE FOR WINDSCREEN WASHER SYSTEM (ALL MODELS) > INSTALLING SPRAY NOZZLE FOR WINDSCREEN WASHER SYSTEM

Information

Observe marking for installation position ("L" for left, "R" for right) on the spray nozzle for the windscreen washer system.

1. Installation is performed in reverse order to removal.

WM 926619 REMOVING AND INSTALLING SPRAY NOZZLE FOR WINDSCREEN WASHER SYSTEM (ALL MODELS) > CHECKING AND ADJUSTING SPRAY NOZZLE FOR WINDSCREEN WASHER SYSTEM > CHECKING AND ADJUSTING SPRAY NOZZLES FOR WINDSCREEN WASHER SYSTEM

Information

Only use windscreen cleaning agents and antifreeze approved by Porsche.

Observe the required mixture ratio in accordance with manufacturer's specifications and season.

1. Fill the windscreen-washer reservoir with a mixture of water and window cleaner or antifreeze, depending on the season.
2. Mark the points at which you want the jet sprays to hit the windscreen.
    1. 2.1. For the inner spray nozzles: Mark off dimensions **-a- Length 200 mm** and dimensions **-b- Length 535 mm** and mark the intersection point on the windscreen using commercially available adhesive tape.
    2. 2.2. For the center spray nozzles: Mark off dimensions **-c- Length 325 mm** and dimensions **-d- Length 335 mm** and mark the intersection point on the windscreen using commercially available adhesive tape.
    3. 2.3. For the outer spray nozzles: Mark off dimensions **-e- Length 480 mm** and dimensions **-f- Length 165 mm** and mark the intersection point on the windscreen using commercially available adhesive tape.

    Fig 1: Setting Spray Nozzles

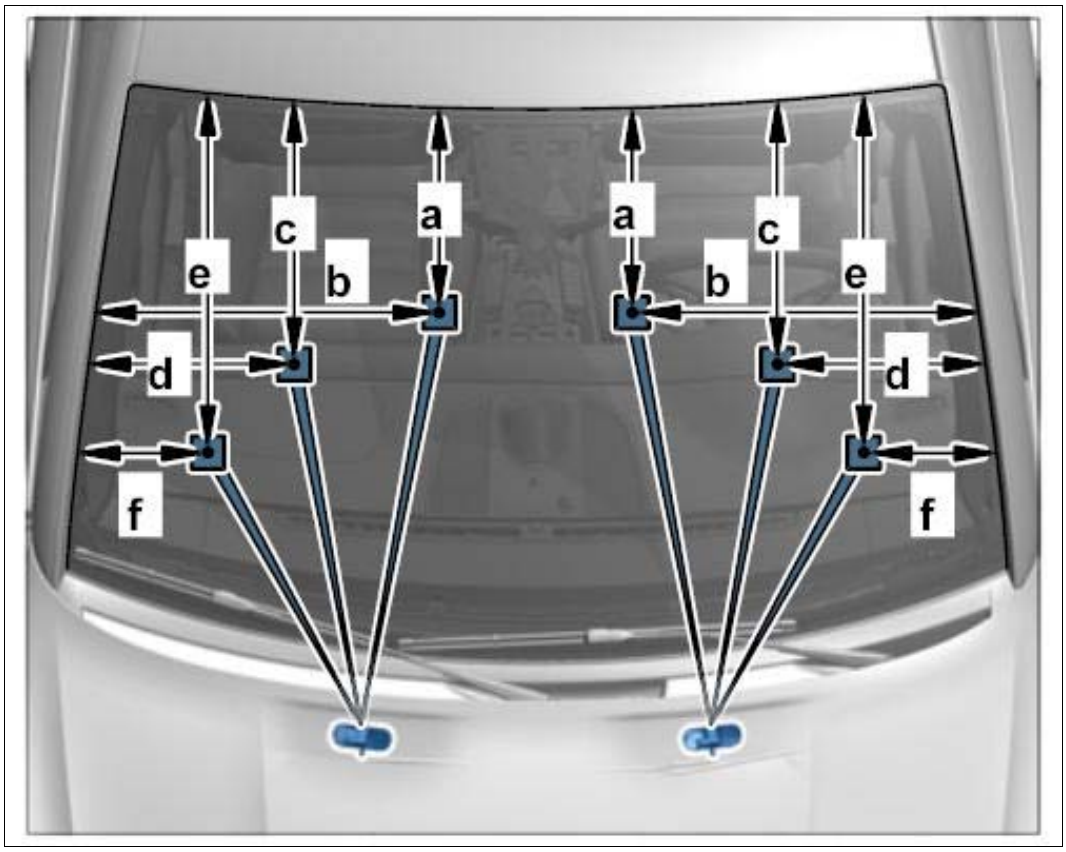

Courtesy of PORSCHE CARS NORTH AMERICA, INC.

3. Actuate the windscreen washer system and align the spray nozzles for the windscreen washer system to the marked spray points as required using **adjusting tool T40187** .
4. Remove adhesive tape and any adhesive residues from the windscreen.

WM 926719 REMOVING AND INSTALLING SENDER FOR WASHER FLUID-LEVEL INDICATOR (ALL MODELS) > PRELIMINARY WORK

1. Remove front left wheel housing liner. → Removing front wheel housing liner

WM 926719 REMOVING AND INSTALLING SENDER FOR WASHER FLUID-LEVEL INDICATOR (ALL MODELS) > REMOVING SENDER FOR WASHER FLUID-LEVEL INDICATOR

1. Release and disconnect electric plug connection **-1-** (**-2-**).

   Fig 1: Disconnecting Electric Plug Connection

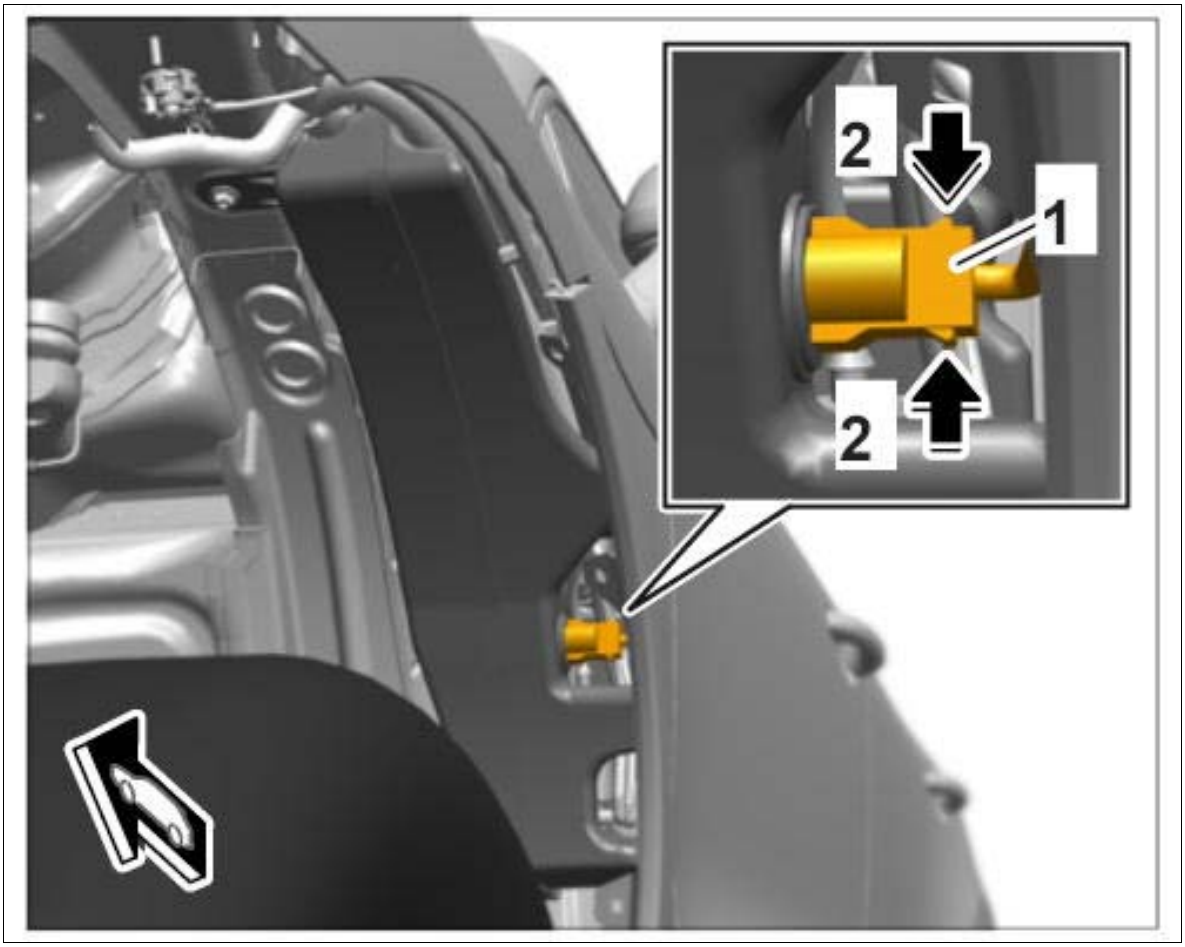

Courtesy of PORSCHE CARS NORTH AMERICA, INC.

2. Lever sender for washer fluid-level indicator **-1-** out of the windscreen-washer reservoir **-2-** . Collect any fluid that leaks out in a suitable container.

3. Check condition of seal **-3-** and check that it is seated correctly in the windscreen-washer reservoir. Replace seal if necessary.

Fig 2: Removing Washer Fluid-Level Indicator Sender

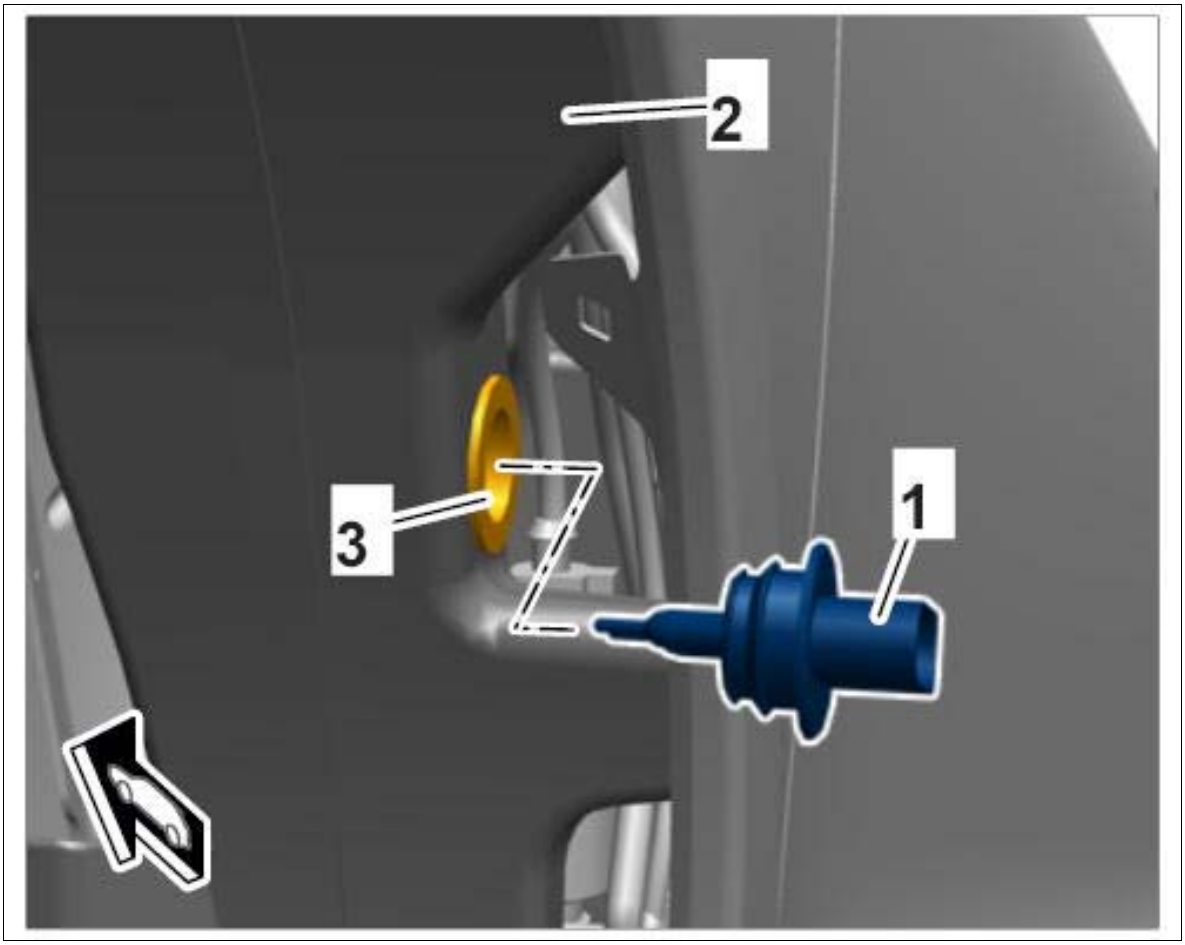

Courtesy of PORSCHE CARS NORTH AMERICA, INC.

WM 926719 REMOVING AND INSTALLING SENDER FOR WASHER FLUID-LEVEL INDICATOR (ALL MODELS) > INSTALLING SENDER FOR WASHER FLUID-LEVEL INDICATOR

1. Installation is performed in reverse order to removal.

WM 926719 REMOVING AND INSTALLING SENDER FOR WASHER FLUID-LEVEL INDICATOR (ALL MODELS) > SUBSEQUENT WORK

1. Fill windscreen-washer reservoir and check for leaks.
2. Install front left wheel housing liner. → Installing front wheel housing liner

WM 927219 REMOVING AND INSTALLING SPRAY NOZZLE FOR HEADLIGHT WASHER SYSTEM (ALL MODELS) > PRELIMINARY WORK

Remove wheel housing liner. → Removing front wheel housing liner

WM 927219 REMOVING AND INSTALLING SPRAY NOZZLE FOR HEADLIGHT WASHER SYSTEM (ALL MODELS) > REMOVING SPRAY NOZZLE FOR HEADLIGHT WASHER SYSTEM

Information

- Some of the repair illustrations show only one side of the vehicle.
- Naturally, some steps also have to be performed on the opposite side of the vehicle as well.

1. Loosen seal **-1-** on the headlight.
    1. 1.1. Unscrew fastening screw **-2-** .
    2. 1.2. Unclip seal close to the spray nozzle for the headlight washer system on the main headlight using a plastic wedge and lift it up carefully.

    Fig 1: Loosening Seal On Headlight

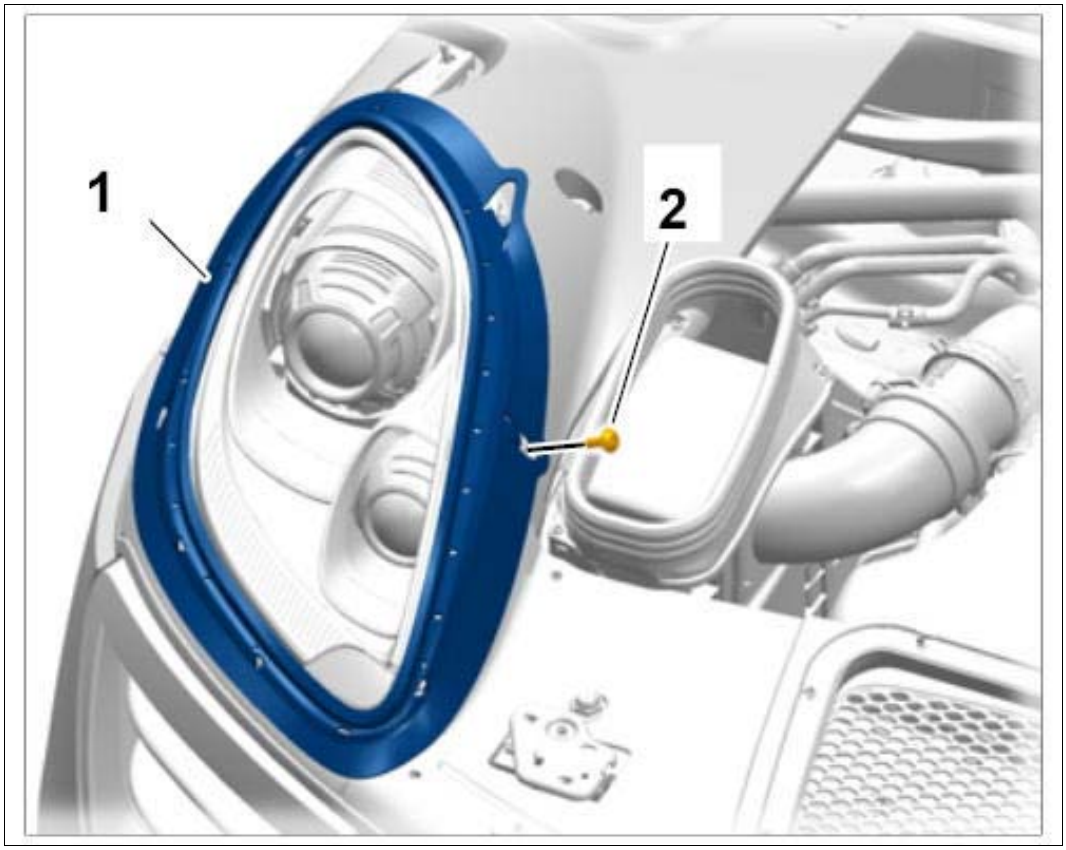

Courtesy of PORSCHE CARS NORTH AMERICA, INC.

2. Disconnect hose for headlight washer system.
3. Release hose connection **-1-** at the spray nozzle for the headlight washer system **-2-** and pull it off.

Fig 2: Loosening Hose Connection

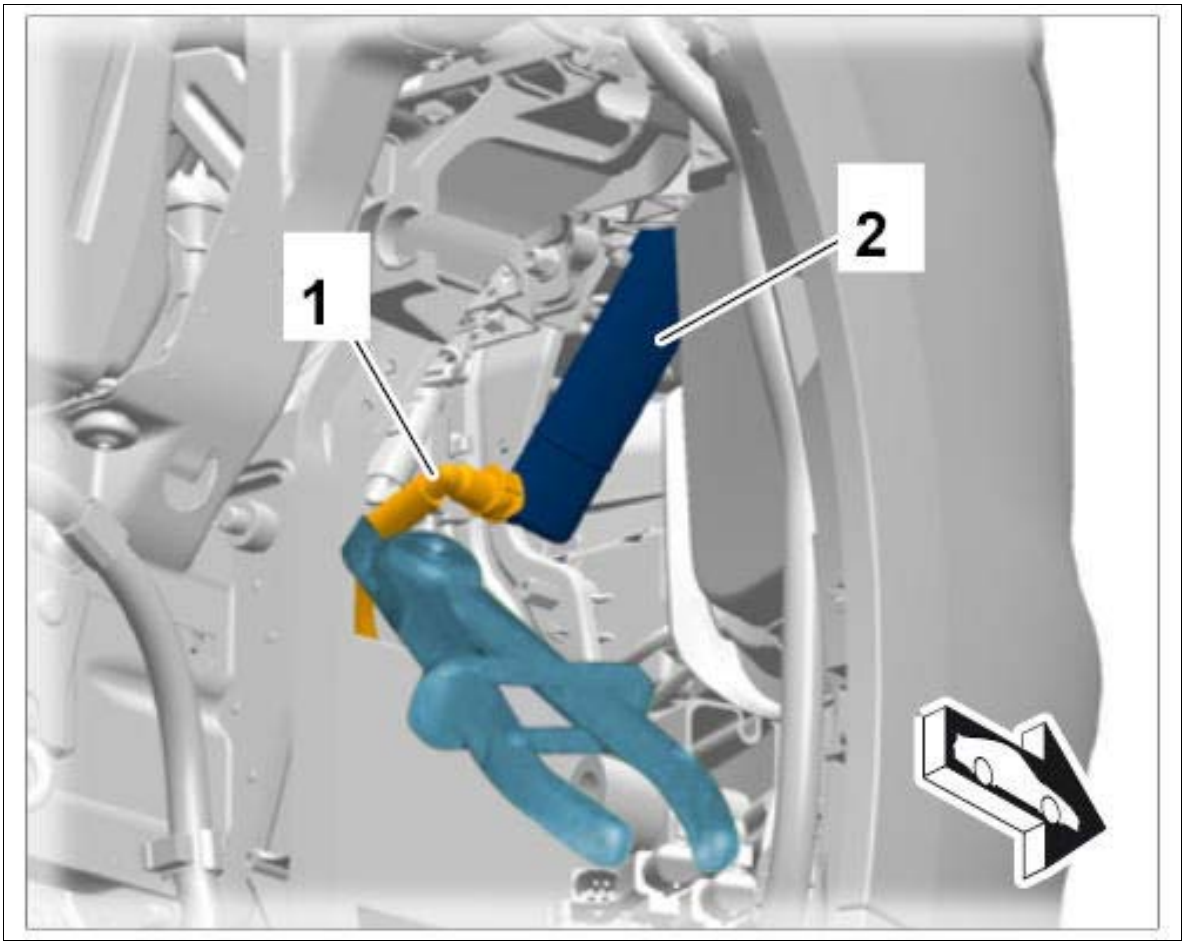

Courtesy of PORSCHE CARS NORTH AMERICA, INC.

4. Release spray nozzle for headlight washer system **-1-** (**-2-**) and slide it sideways out of the guides **-3-** on the headlight.

Fig 3: Removing Headlight Washer System Spray Nozzle

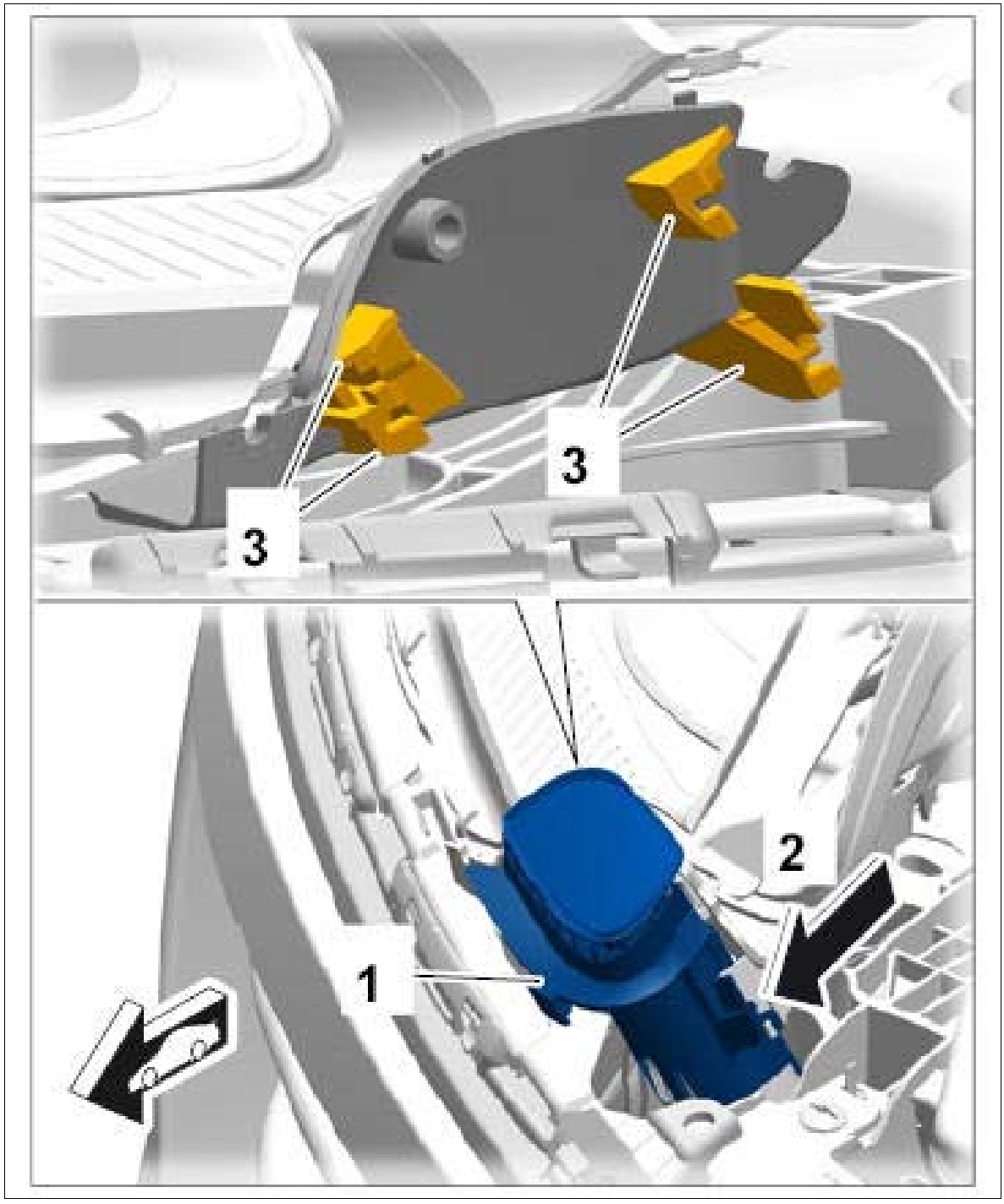

Courtesy of PORSCHE CARS NORTH AMERICA, INC.

WM 927219 REMOVING AND INSTALLING SPRAY NOZZLE FOR HEADLIGHT WASHER SYSTEM (ALL MODELS) > INSTALLING SPRAY NOZZLE FOR HEADLIGHT WASHER SYSTEM

1. Installation is performed in reverse order to removal.

WM 927219 REMOVING AND INSTALLING SPRAY NOZZLE FOR HEADLIGHT WASHER SYSTEM (ALL MODELS) > SUBSEQUENT WORK

1. Install wheel housing liner. → Installing front wheel housing liner

WM 927719 REMOVING AND INSTALLING HOSE FOR HEADLIGHT CLEANING SYSTEM - SECTION FROM RESERVOIR TO WING CONNECTION POINT (ALL MODELS) > PRELIMINARY WORK

1. Detach windscreen-washer reservoir and set it down with connected lines and hoses on the left front wheel. → Removing Windscreen-Washer Reservoir

WM 927719 REMOVING AND INSTALLING HOSE FOR HEADLIGHT CLEANING SYSTEM - SECTION FROM RESERVOIR TO WING CONNECTION POINT (ALL MODELS) > REMOVING HOSE FOR HEADLIGHT CLEANING SYSTEM - SECTION FROM RESERVOIR TO WING CONNECTION POINT

1. Release hose for headlight cleaning system **-1-** at the wing connection point **-2-** pump for headlight cleaning system **-3-** (**-4-**) and disconnect it. Collect any fluid that leaks out in a suitable container.

Fig 1: Removing Headlight Cleaning System Hose

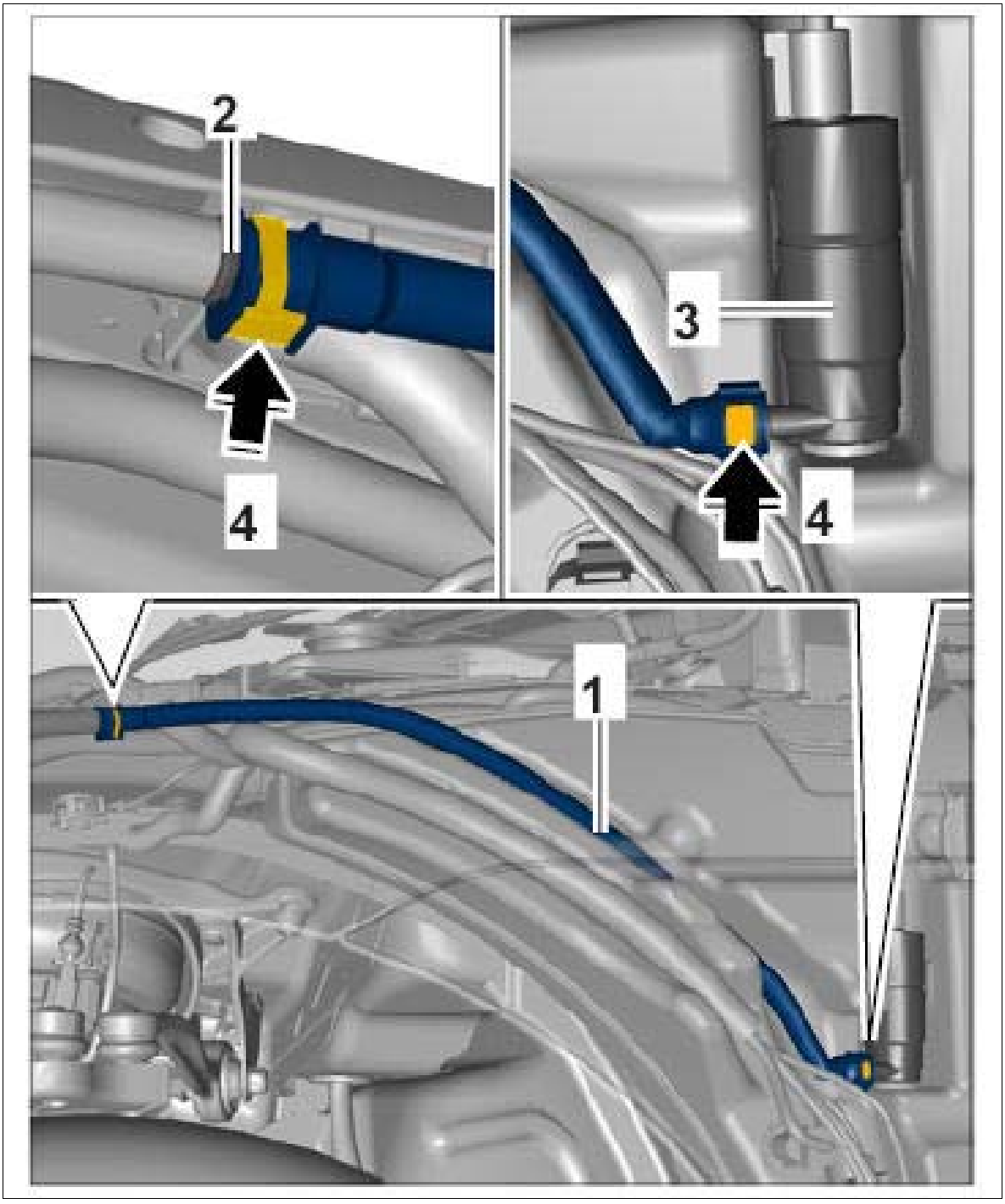

Courtesy of PORSCHE CARS NORTH AMERICA, INC.

WM 927719 REMOVING AND INSTALLING HOSE FOR HEADLIGHT CLEANING SYSTEM - SECTION FROM RESERVOIR TO WING CONNECTION POINT (ALL MODELS) > INSTALLING HOSE FOR HEADLIGHT CLEANING SYSTEM - SECTION FROM RESERVOIR TO WING CONNECTION POINT

1. Installation is performed in reverse order to removal.

WM 927719 REMOVING AND INSTALLING HOSE FOR HEADLIGHT CLEANING SYSTEM - SECTION FROM RESERVOIR TO WING CONNECTION POINT (ALL MODELS) > SUBSEQUENT WORK

1. Install windscreen-washer reservoir. → Installing Windscreen-Washer Reservoir

   Information

   Only use windscreen cleaning agents and antifreeze approved by Porsche.

   Observe the required mixture ratio in accordance with manufacturer's specifications and season.

2. Fill the windscreen-washer reservoir with window cleaner or antifreeze, depending on the season, and check for leaks.

3. Actuate the headlight cleaning system several times in order to bleed the hoses and spray nozzles.

WM 927719 REMOVING AND INSTALLING HOSE FOR HEADLIGHT CLEANING SYSTEM - SECTION FROM WING CONNECTION POINT TO LEFT SPRAY NOZZLE (ALL MODELS) > PRELIMINARY WORK

1. Remove front left wheel housing liner. → Removing front wheel housing liner

WM 927719 REMOVING AND INSTALLING HOSE FOR HEADLIGHT CLEANING SYSTEM - SECTION FROM WING CONNECTION POINT TO LEFT SPRAY NOZZLE (ALL MODELS) > REMOVING HOSE FOR HEADLIGHT CLEANING SYSTEM - SECTION FROM WING CONNECTION POINT TO LEFT SPRAY NOZZLE

1. Release hose connection at the connection point **-1-** (**-2-**) and pull it off. Collect any fluid that leaks out in a suitable container.

2. Release hose connection at the spray nozzle **-3-** for the headlight washer system at the left **-4-** and pull it off.

3. Release hose connection at the Y-piece **-5-** (**-6-**) and pull it off.

4. Unclip the holder **-7-** for the headlight cleaning system hose **-8-** and remove hose for headlight cleaning system.

Fig 1: Removing Headlight Cleaning System Hose

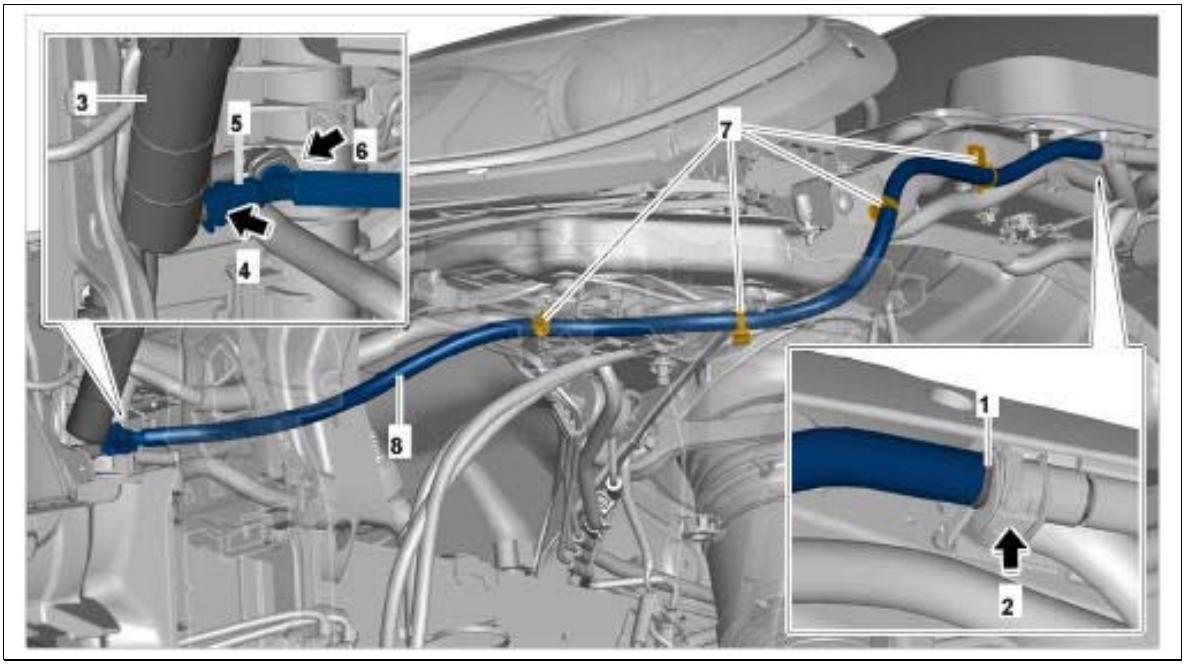

Courtesy of PORSCHE CARS NORTH AMERICA, INC.

WM 927719 REMOVING AND INSTALLING HOSE FOR HEADLIGHT CLEANING SYSTEM - SECTION FROM WING CONNECTION POINT TO LEFT SPRAY NOZZLE (ALL MODELS) > INSTALLING HOSE FOR HEADLIGHT CLEANING SYSTEM - SECTION FROM WING CONNECTION POINT TO LEFT SPRAY NOZZLE

1. Installation is performed in reverse order to removal.

WM 927719 REMOVING AND INSTALLING HOSE FOR HEADLIGHT CLEANING SYSTEM - SECTION FROM WING CONNECTION POINT TO LEFT SPRAY NOZZLE (ALL MODELS) > SUBSEQUENT WORK

1. Install front left wheel housing liner. → Installing front wheel housing liner

   Information

   Only use windscreen cleaning agents and antifreeze approved by Porsche.

   Observe the required mixture ratio in accordance with manufacturer's specifications and season.

2. Fill the windscreen-washer reservoir with window cleaner or antifreeze, depending on the season.

3. Actuate the headlight cleaning system several times in order to bleed the hoses and spray nozzles.

WM 927719 REMOVING AND INSTALLING HOSE FOR HEADLIGHT CLEANING SYSTEM - SECTION FROM LEFT SPRAY NOZZLE TO RIGHT SPRAY NOZZLE (ALL MODELS) > PRELIMINARY WORK

1. Remove front bumper. → Removing Front Bumper

WM 927719 REMOVING AND INSTALLING HOSE FOR HEADLIGHT CLEANING SYSTEM - SECTION FROM LEFT SPRAY NOZZLE TO RIGHT SPRAY NOZZLE (ALL MODELS) > REMOVING HOSE FOR HEADLIGHT CLEANING SYSTEM - SECTION FROM LEFT SPRAY NOZZLE TO RIGHT SPRAY NOZZLE

1. Release hose connection at the spray nozzle for the headlight washer system at the right **-1-** (**-2-**) and pull it off. Collect any fluid that leaks out in a suitable container.
2. Release hose connection at the Y-piece on the left **-3-** (**-4-**) and pull it off. Collect any fluid that leaks out in a suitable container.
3. Unclip the holder **-5-** for the headlight cleaning system hose **-6-** on the air guide and remove hose for headlight cleaning system.

Fig 1: Removing Headlight Cleaning System Hose

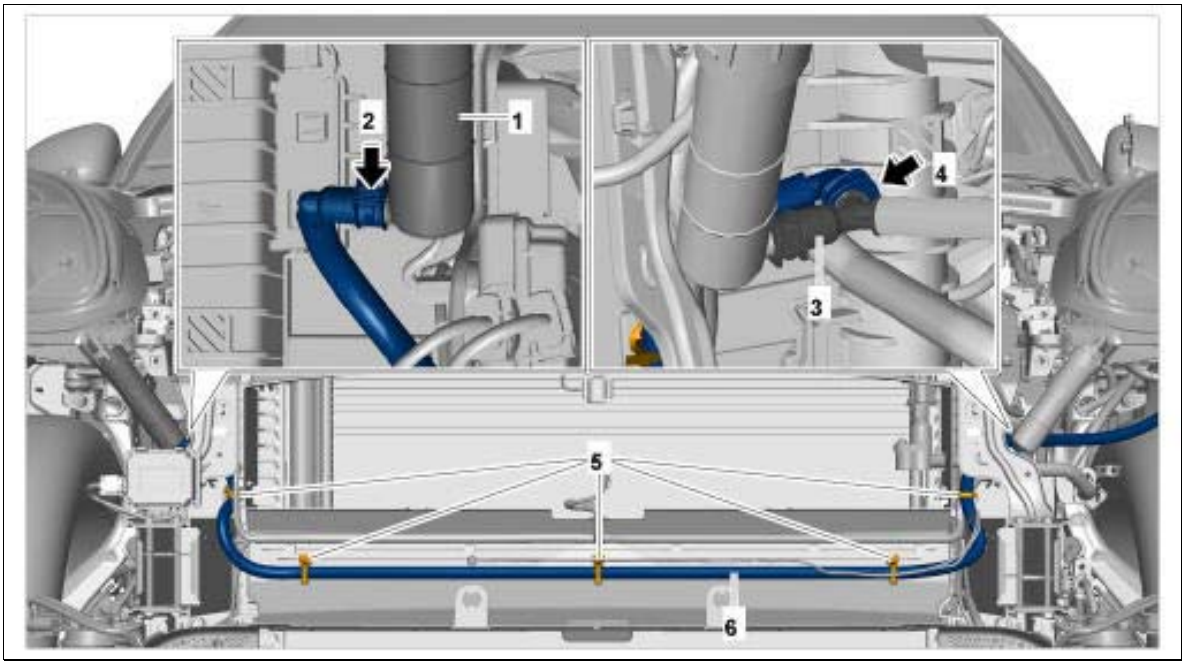

Courtesy of PORSCHE CARS NORTH AMERICA, INC.

WM 927719 REMOVING AND INSTALLING HOSE FOR HEADLIGHT CLEANING SYSTEM - SECTION FROM LEFT SPRAY NOZZLE TO RIGHT SPRAY NOZZLE (ALL

MODELS) > INSTALLING HOSE FOR HEADLIGHT CLEANING SYSTEM - SECTION FROM LEFT SPRAY NOZZLE TO RIGHT SPRAY NOZZLE

1. Installation is performed in reverse order to removal.

WM 927719 REMOVING AND INSTALLING HOSE FOR HEADLIGHT CLEANING SYSTEM - SECTION FROM LEFT SPRAY NOZZLE TO RIGHT SPRAY NOZZLE (ALL MODELS) > SUBSEQUENT WORK

1. Install front bumper. → Installing Front Bumper

   Information

   Only use windscreen cleaning agents and antifreeze approved by Porsche.

   Observe the required mixture ratio in accordance with manufacturer's specifications and season.

2. Fill the windscreen-washer reservoir with window cleaner or antifreeze, depending on the season.

3. Actuate the headlight cleaning system several times in order to bleed the hoses and spray nozzles.

WM 927819 REMOVING AND INSTALLING PUMP FOR HEADLIGHT CLEANING SYSTEM (ALL MODELS) > PRELIMINARY WORK

1. Detach windscreen-washer reservoir and set it down with connected lines and hoses on the left front wheel. → Removing Windscreen-Washer Reservoir

WM 927819 REMOVING AND INSTALLING PUMP FOR HEADLIGHT CLEANING SYSTEM (ALL MODELS) > REMOVING PUMP FOR HEADLIGHT CLEANING SYSTEM

1. Release hose for headlight cleaning system **-1-** at the headlight cleaning system pump **-2-** (**-3-**) and pull it off. Collect any fluid that leaks out in a suitable container.

2. Lever headlight cleaning system pump out of the washer-fluid reservoir.

3. Release and unplug electric plug connection **-4-** .

4. Check condition of seal **-5-** and check that it is seated correctly on the windscreen-washer reservoir. Replace seal if necessary.

Fig 1: Removing Headlight Cleaning System Pump

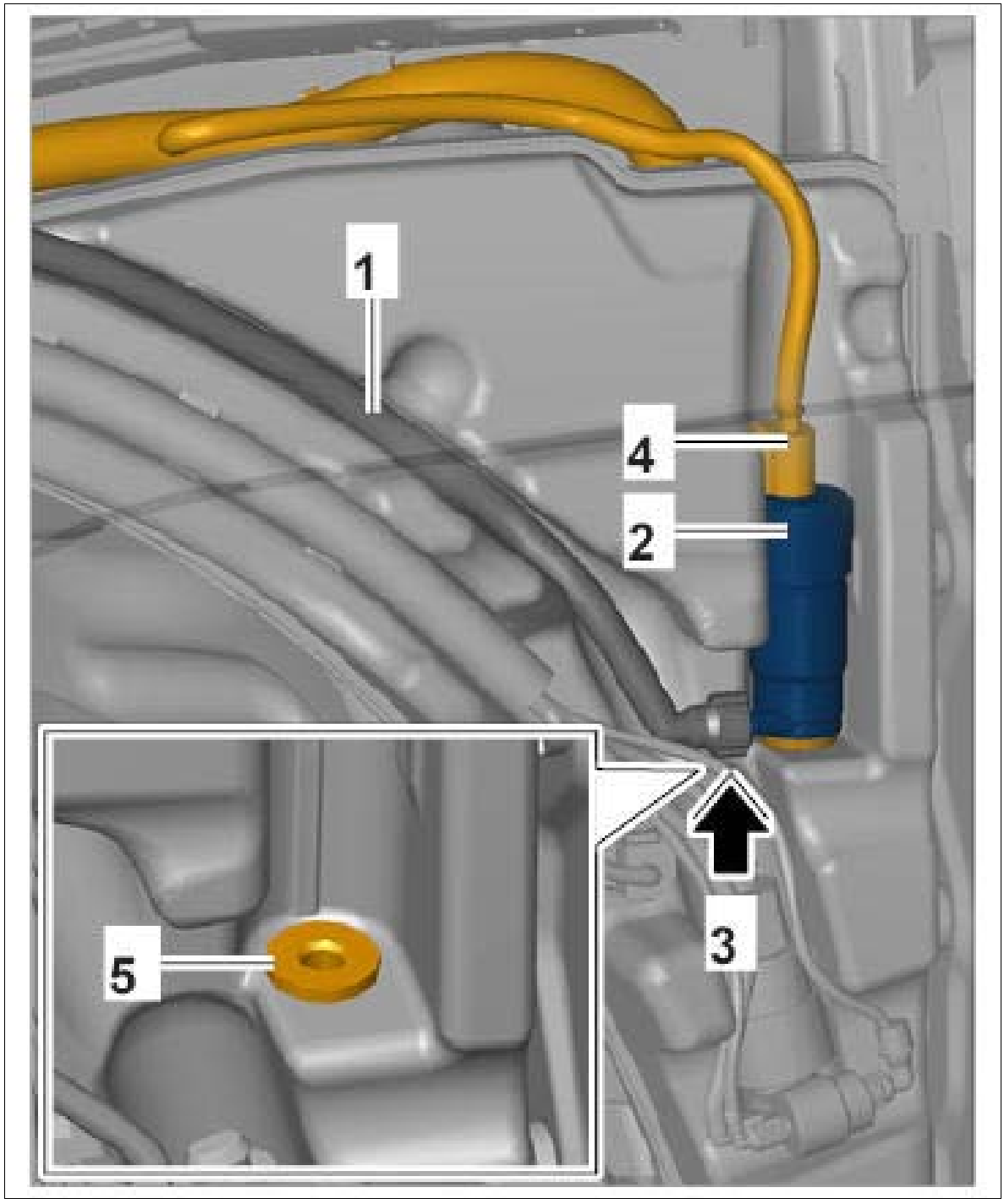

Courtesy of PORSCHE CARS NORTH AMERICA, INC.

WM 927819 REMOVING AND INSTALLING PUMP FOR HEADLIGHT CLEANING SYSTEM (ALL MODELS) > INSTALLING PUMP FOR HEADLIGHT CLEANING SYSTEM

1. Installation is performed in reverse order to removal.

WM 927819 REMOVING AND INSTALLING PUMP FOR HEADLIGHT CLEANING SYSTEM (ALL MODELS) > SUBSEQUENT WORK

1. Install windscreen-washer reservoir. → Installing Windscreen-Washer Reservoir
2. Fill the windscreen-washer reservoir with window cleaner or antifreeze, depending on the season, and check for leaks. Only use windscreen cleaning agents and antifreeze approved by Porsche.
3. Actuate the headlight cleaning system several times in order to bleed the hoses and spray nozzles.

WM 929419 REMOVING AND INSTALLING SPRAY NOZZLE FOR REAR WINDOW WASHER SYSTEM (ALL MODELS) > PRELIMINARY WORK

1. Remove additional brake light. → Removing additional brake light

WM 929419 REMOVING AND INSTALLING SPRAY NOZZLE FOR REAR WINDOW WASHER SYSTEM (ALL MODELS) > PRELIMINARY WORK > REMOVING SPRAY NOZZLE

1. Release washer fluid line from spray nozzle using a screwdriver **-1-** and remove it.

Fig 1: Releasing Washer Fluid Line From Spray Nozzle

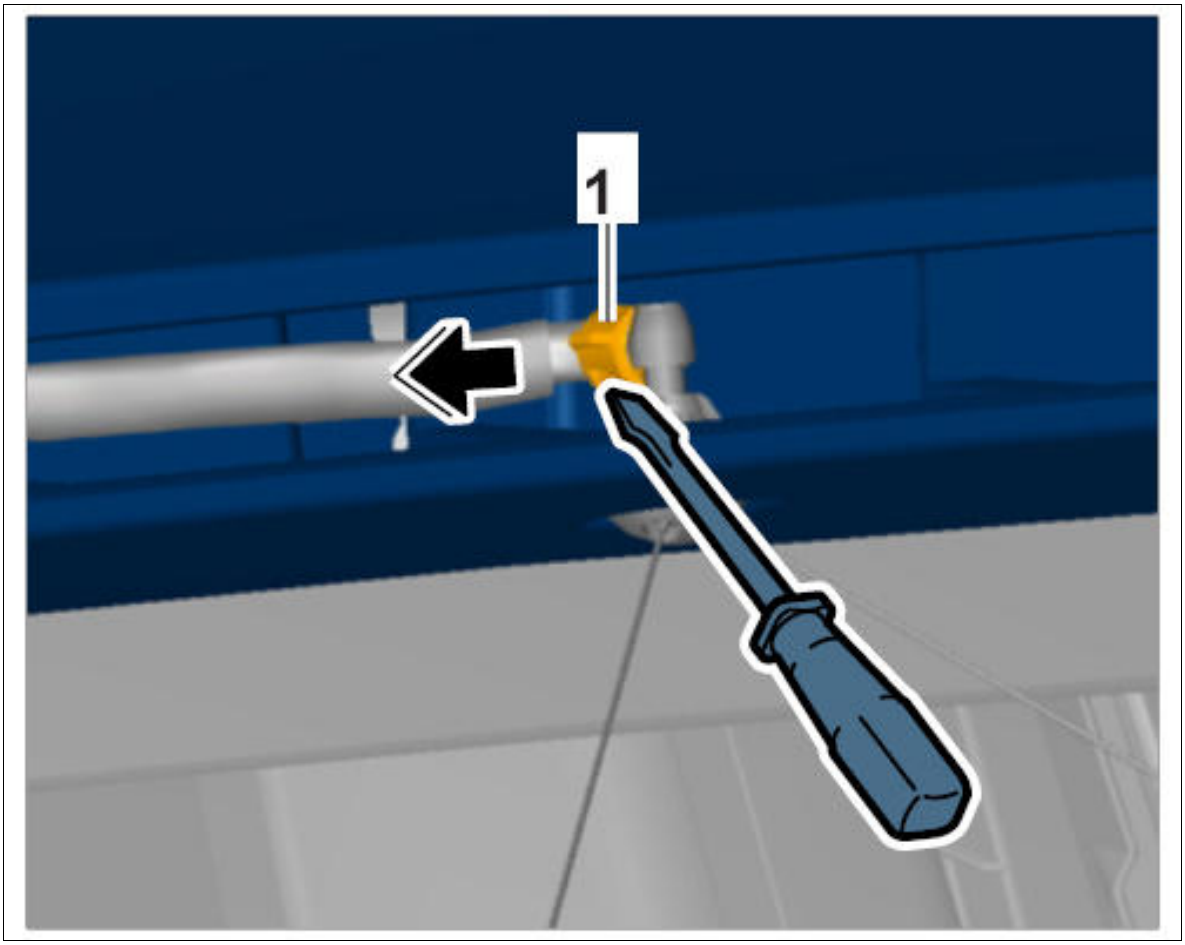

Courtesy of PORSCHE CARS NORTH AMERICA, INC.

2. Press spray nozzle down and remove it.

WM 929419 REMOVING AND INSTALLING SPRAY NOZZLE FOR REAR WINDOW WASHER SYSTEM (ALL MODELS) > PRELIMINARY WORK > INSTALLING SPRAY NOZZLE

1. Installation is performed in reverse order to removal.

WM 929419 REMOVING AND INSTALLING SPRAY NOZZLE FOR REAR WINDOW WASHER SYSTEM (ALL MODELS) > PRELIMINARY WORK > SUBSEQUENT WORK

1. Install additional brake light. → Installing additional brake light

WM 940519 REMOVING AND INSTALLING MAIN HEADLIGHT SWITCH (ALL MODELS) > PRELIMINARY WORK

1. Carefully detach trim panel under dashboard at the left with lines connected from the dashboard. → Removing trim panel under dashboard at the left

WM 940519 REMOVING AND INSTALLING MAIN HEADLIGHT SWITCH (ALL MODELS) > REMOVING MAIN HEADLIGHT SWITCH

1. Remove trim panel **-1-** on main headlight switch and ignition starter switch.
    1. 1.1. Disconnect electric plug connection **-2-** for the ignition starter switch light.
    2. 1.2. Unclip locking lugs **-a-** and remove trim panel.
2. Disconnect electric plug connection **-3-** for the main headlight switch.

Fig 1: Removing Trim Panel On Main Headlight Switch And Ignition Starter Switch

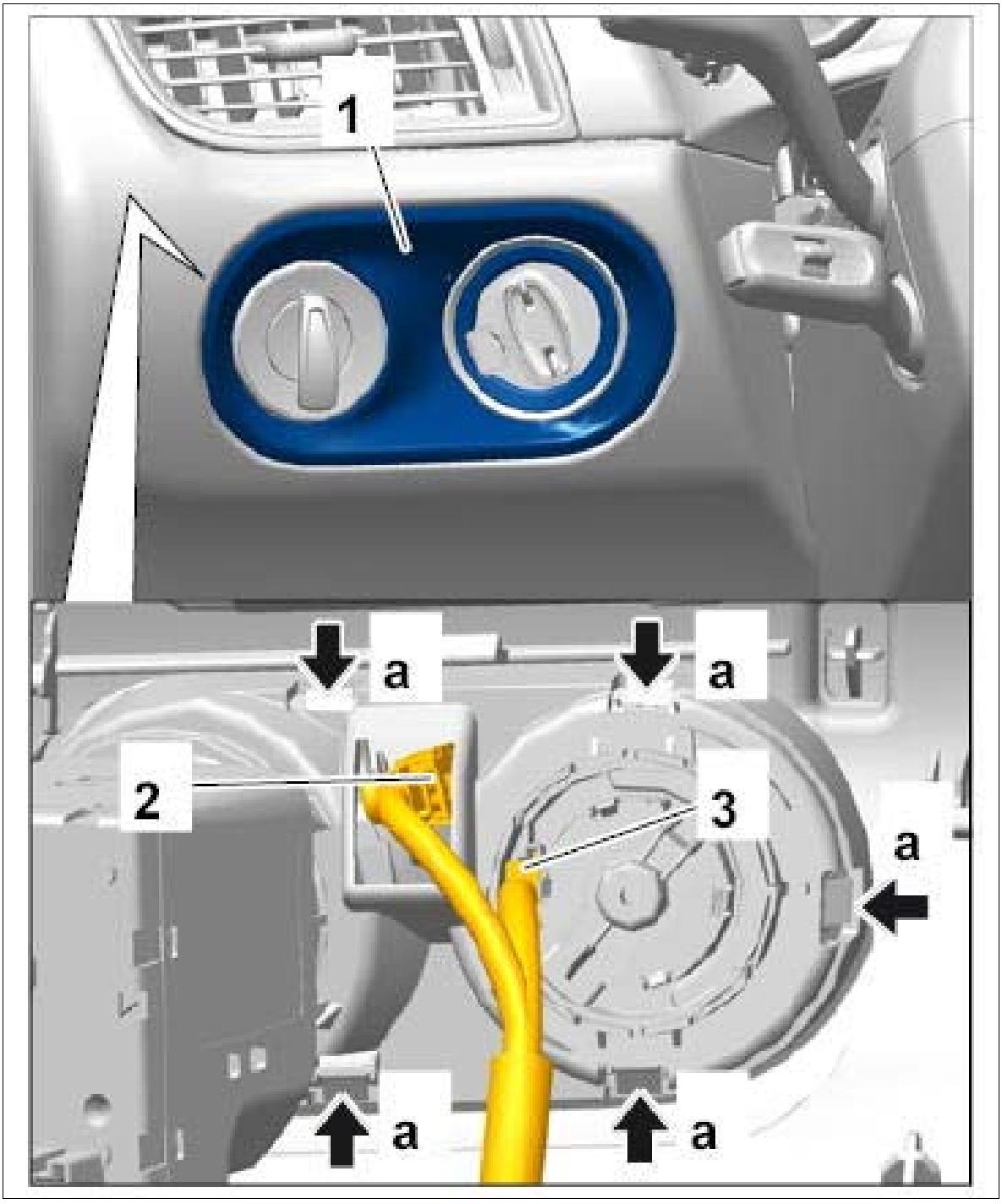

Courtesy of PORSCHE CARS NORTH AMERICA, INC.

3. Turn main headlight switch housing **-1-** approx. 40° anti-clockwise **-a-** and remove it from the trim panel under the dashboard at the left.

Fig 2: Removing Main Headlight Switch

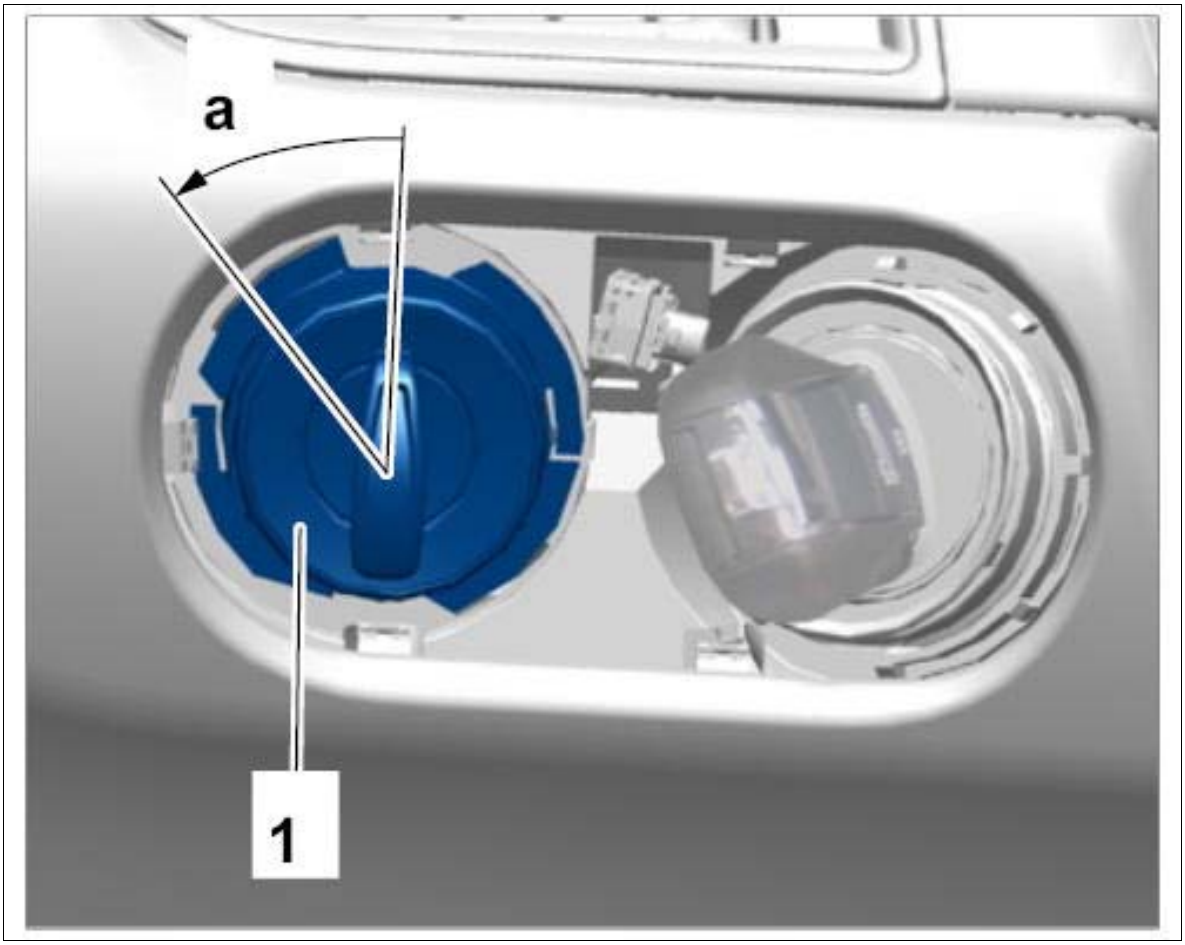

Courtesy of PORSCHE CARS NORTH AMERICA, INC.

WM 940519 REMOVING AND INSTALLING MAIN HEADLIGHT SWITCH (ALL MODELS) > INSTALLING MAIN HEADLIGHT SWITCH

Installation is performed in reverse order to removal.

WM 940519 REMOVING AND INSTALLING MAIN HEADLIGHT SWITCH (ALL MODELS) > SUBSEQUENT WORK

Install trim panel under dashboard at the left. → Installing trim panel under dashboard at the left

WM 941415 ADJUSTING HEADLIGHT MOUNTING (ALL MODELS) > TOOLS

Designation	Type	Number	Description	

star gauge	Commercially available tool	Nr.127-1 Pos.1		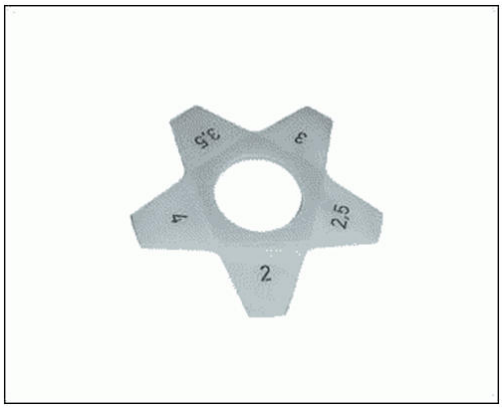
star gauge	Commercially available tool	Nr.127-1 Pos.2		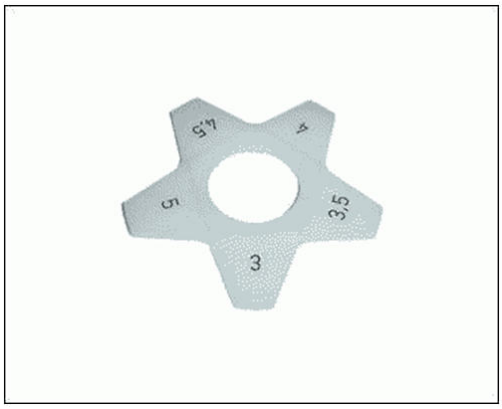

WM 941415 ADJUSTING HEADLIGHT MOUNTING (ALL MODELS) > TECHNICAL VALUES

Location	Description	Type	Basic value	Tolerance 1	Tolerance 2
Headlight to headlight mounting	Hexagon-head bolt, M6 x 20	Tightening torque	8 Nm (6 ftlb.)		

WM 941415 ADJUSTING HEADLIGHT MOUNTING (ALL MODELS) > PRELIMINARY WORK

1. Remove headlight. → Removing Headlights
2. Remove headlight mounting. → Removing Headlight Mounting

WM 941415 ADJUSTING HEADLIGHT MOUNTING (ALL MODELS) > ADJUSTING HEADLIGHT MOUNTING > CHECKING ADJUSTING ELEMENTS

Information

To restore the original installation position, thereby minimizing the amount of adjustment work required, the following steps must be carried out prior to removal:

- Mark the position of the headlight mounting with respect to fastening screws.
- Measure and take note of the height of the headlight mounting with respect to the body.

1. Check adjusting elements.

    1. 1.1. Check adjusting elements **-1-** for damage and make sure they are seated securely. If an adjusting element **-1-** is damaged, it must be replaced. Check that the adjusting elements **-1-** are fitted correctly in the body.
    2. 1.2. Measure the height **-A-** of the adjusting elements **-1-** using a calliper gauge and write it down so that you can set the original adjustment height again after the next test step.
    3. 1.3. Check that the adjusting rings **-2-** are not stiff. **Important: Left thread!** It must be possible to turn adjusting ring **-2-** without resistance over the entire thread length, otherwise replace adjusting element **-1-** .
    4. 1.4. Set original height **-A-** of the adjusting elements **-1-** again.

    Fig 1: Checking Adjusting Elements

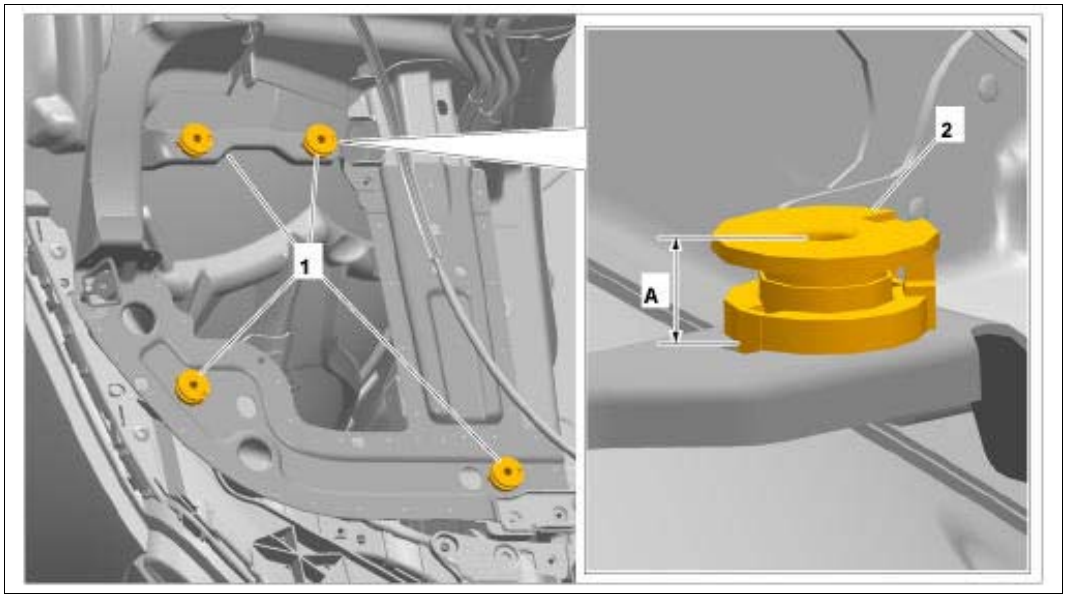

Courtesy of PORSCHE CARS NORTH AMERICA, INC.

WM 941415 ADJUSTING HEADLIGHT MOUNTING (ALL MODELS) > ADJUSTING HEADLIGHT MOUNTING > INSTALLING HEADLIGHT MOUNTING

Information

If work is carried out on the headlight or retainer plate, the installed fastening screws must be replaced by microencapsulated fastening screws .

Micro-encapsulated fastening screws must be tightened only once to the specified torque.

Micro-encapsulated fastening screws must be replaced after loosening them.

Left headlight mounting:

1. Clip antenna line holder **-1-** into the headlight mounting **-2-** .
2. Clip holders for electric plug connections **-3-** and headlight cleaning system hose **-4-** into the headlight mounting **-2-** .

   Headlight mounting at the left and right:

3. Position headlight mounting **-2-** on the adjusting elements.

   Fig 1: Clipping Holders And Electric Plug Connections

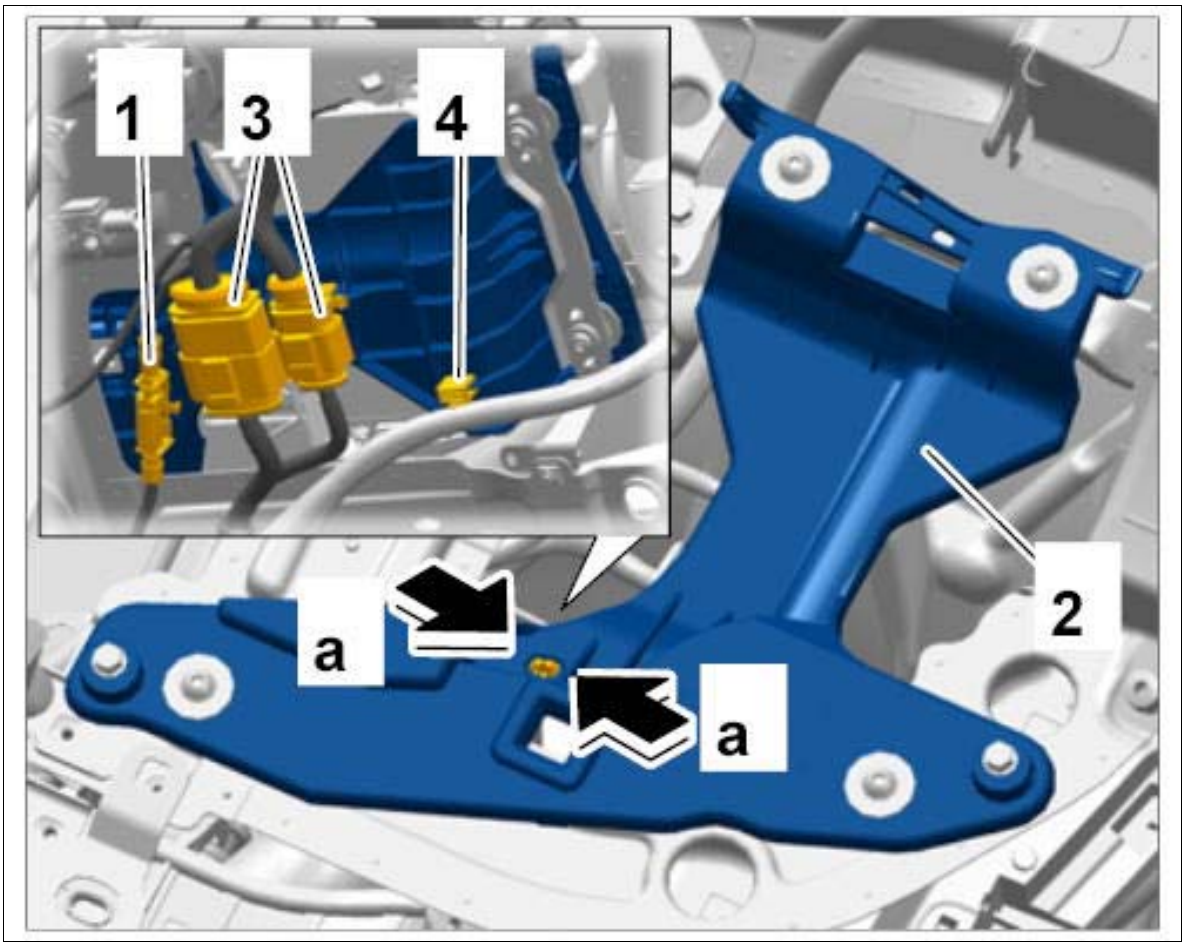

Courtesy of PORSCHE CARS NORTH AMERICA, INC.

4. Fit fastening screws **-1-** .
   1. 4.1. Press fastening screw **-1-** into adjusting element.
   2. 4.2. Press headlight mounting **-2-** in the adjusting element area down **-arrow F-** and screw fastening screw **-1-** into adjusting element.
   3. 4.3. Align markings on the headlight mounting **-2-** - if markings were made - with the washers, press headlight mounting **-2-** down in the adjusting element area **-arrow F-** and tighten fastening screws **-1-** .

Fig 2: Screwing Fastening Screws

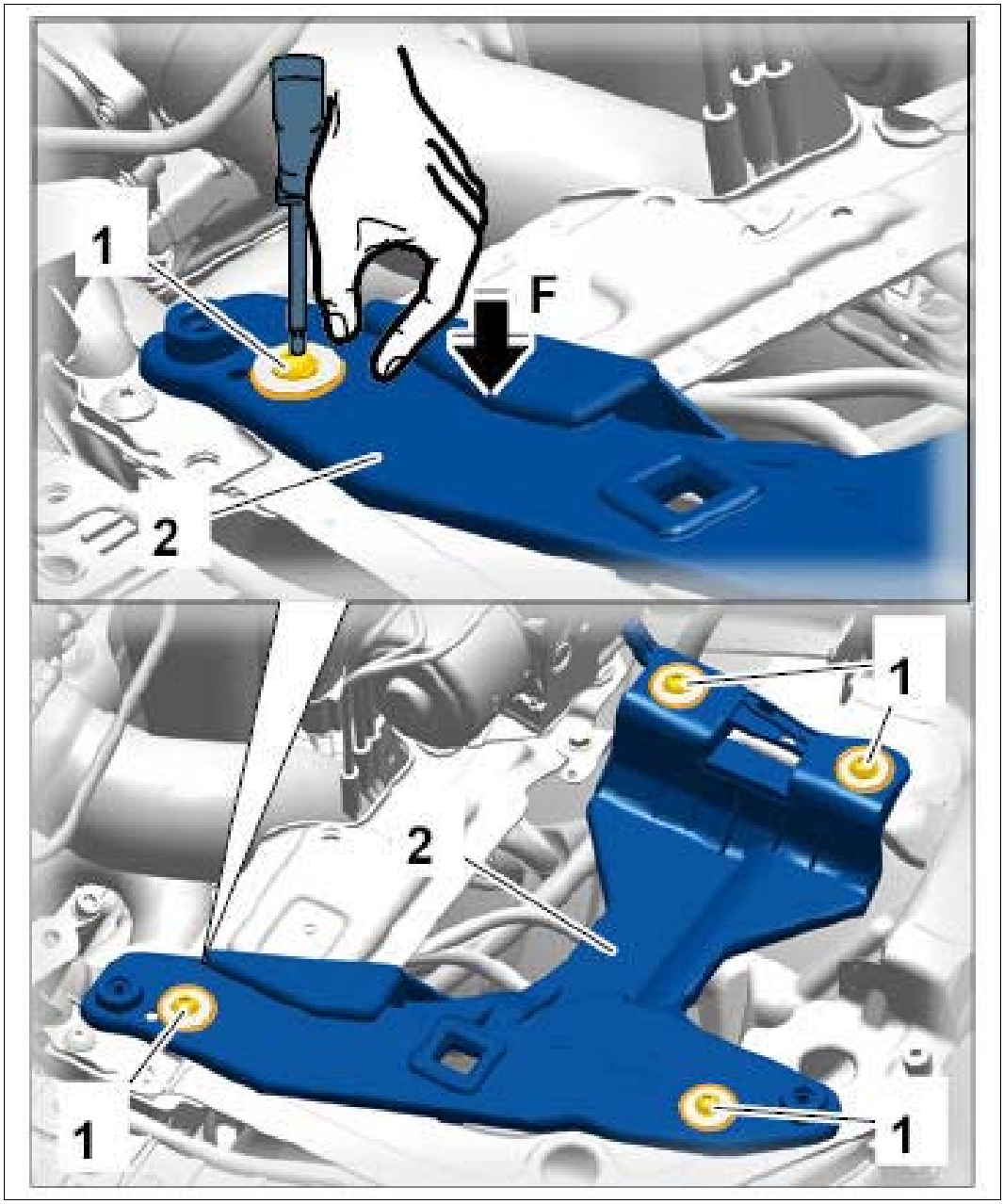

Courtesy of PORSCHE CARS NORTH AMERICA, INC.

WM 941415 ADJUSTING HEADLIGHT MOUNTING (ALL MODELS) > ADJUSTING HEADLIGHT MOUNTING > ADJUSTING HEADLIGHT MOUNTING TOWARDS Z-AXIS AND X-AXIS

Information

- Do not adjust gap dimensions between the headlight mounting and front lid until you have adjusted the gap dimensions of the front lid with respect to all other add-on parts.
- Adjust gap dimensions between the headlights and front lid in accordance with the specified

dimensions.

- The specified gap dimensions are guidelines and are relevant for repair work and assembly work.
- The gaps must not taper off or become narrow in places.
- Use star gauge Nr.127-1 Pos.1 and star gauge Nr.127-1 Pos.2 to check the gap dimensions.
- The gap dimensions and offset positions of the headlights are adjusted by moving the headlight mountings and by screwing the adjusting elements in and out.

1. Insert headlight into the mounting.
2. Close the front lid and check the gap dimensions between the headlight and front lid. → 5X00IN41 GAP DIMENSIONS

Location	Description	Type	Basic value	Tolerance 1	Tolerance 2
Gap dimension between headlight and front lid	Gap dimension on headlight is the same all the way around	Gap dimension	4.7 mm	+/-0.8 mm	

3. Remove headlight.
4. Loosen fastening screws **-1-** .
    1. 4.1. Press headlight mounting **-2-** in the adjusting element area down **-arrow F-** to ensure that the position of the adjusting element cannot be changed.

Fig 1: Loosening Fastening Screws

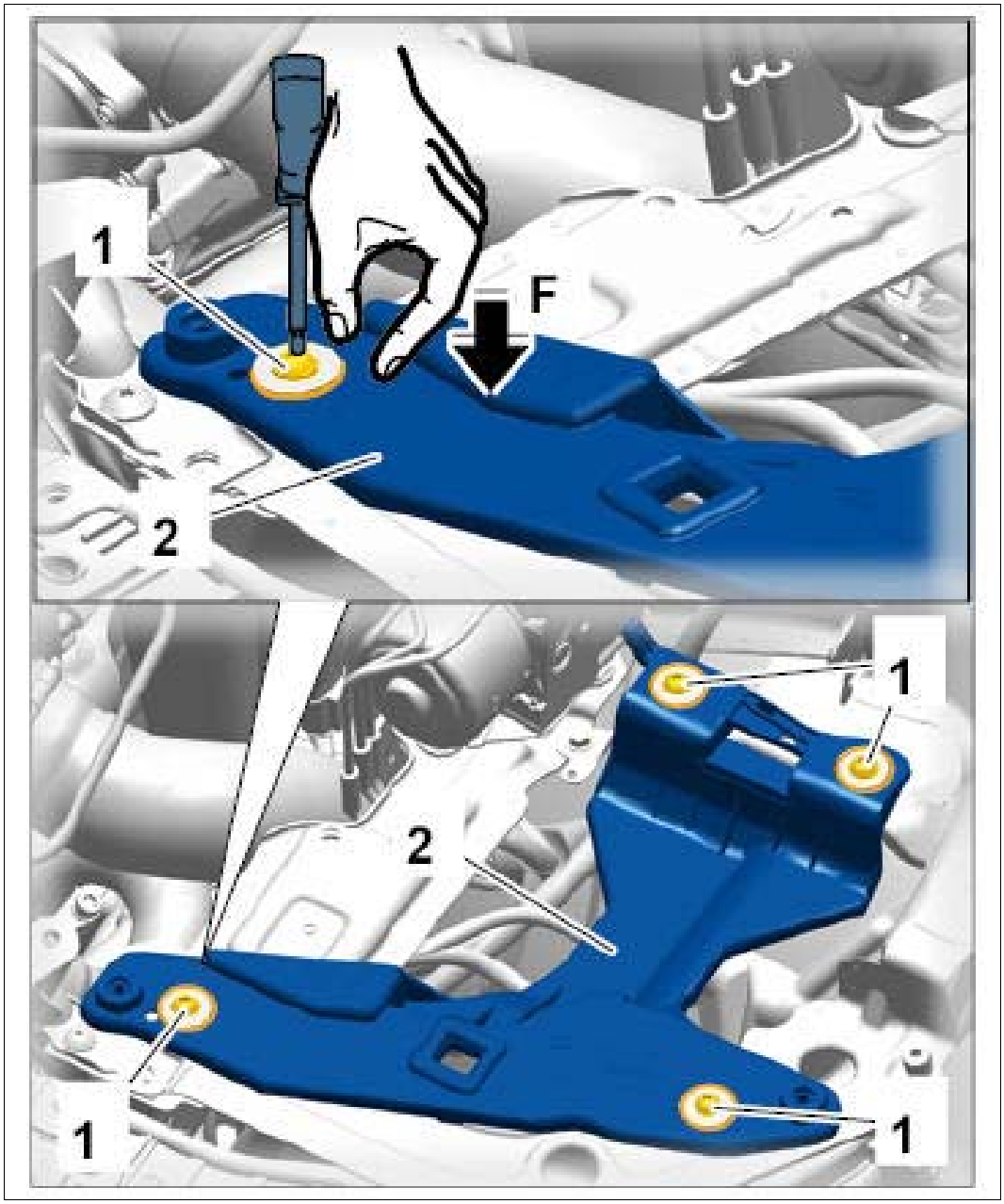

Courtesy of PORSCHE CARS NORTH AMERICA, INC.

5. Move headlight mounting **-2-** in the required direction **-X, Z-** .

   A scale is visible close to the fastening screws on the headlight mounting. The scale serves as a guide when the headlight is removed and makes adjustments easier.

6. Tighten fastening screws **-1-** .

   1. 6.1. Press headlight mounting **-2-** in the adjusting element area down to ensure that the position of the adjusting element cannot be changed.

Fig 2: Positioning Headlight Mounting

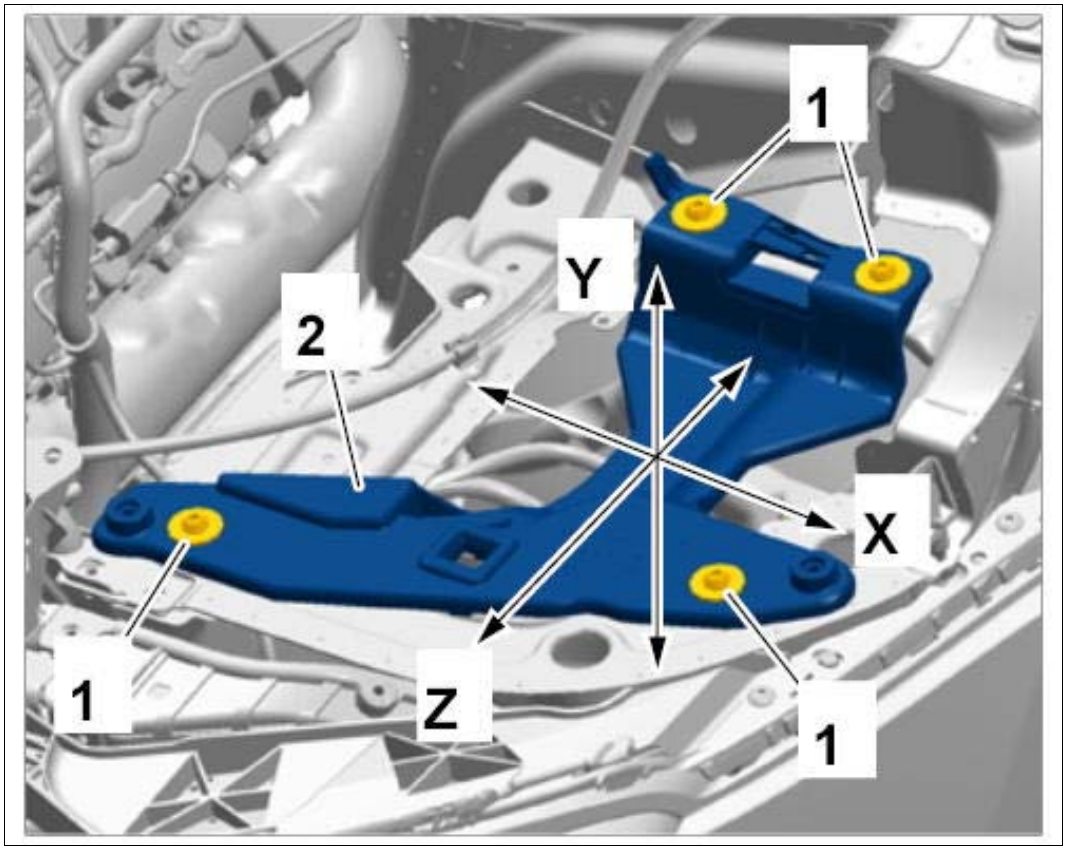

Courtesy of PORSCHE CARS NORTH AMERICA, INC.

7. Insert headlight into the mounting.
8. Close the front lid and check the gap dimensions between the headlight and front lid.
9. Repeat the adjustment procedure if necessary.

WM 941415 ADJUSTING HEADLIGHT MOUNTING (ALL MODELS) > ADJUSTING HEADLIGHT MOUNTING > ADJUSTING HEADLIGHT MOUNTING TOWARDS Y-AXIS

Information

If work is carried out on the headlight or retainer plate, the installed fastening screws must be replaced by microencapsulated fastening screws .

Micro-encapsulated fastening screws must be tightened only once to the specified torque.

Micro-encapsulated fastening screws must be replaced after loosening them.

1. Insert headlight into the mounting.
2. Close the front lid and check the gap dimensions between the headlight and front lid. → 5X00IN41 GAP DIMENSIONS
3. Remove headlight.

Fig 1: Positioning Headlight Mounting

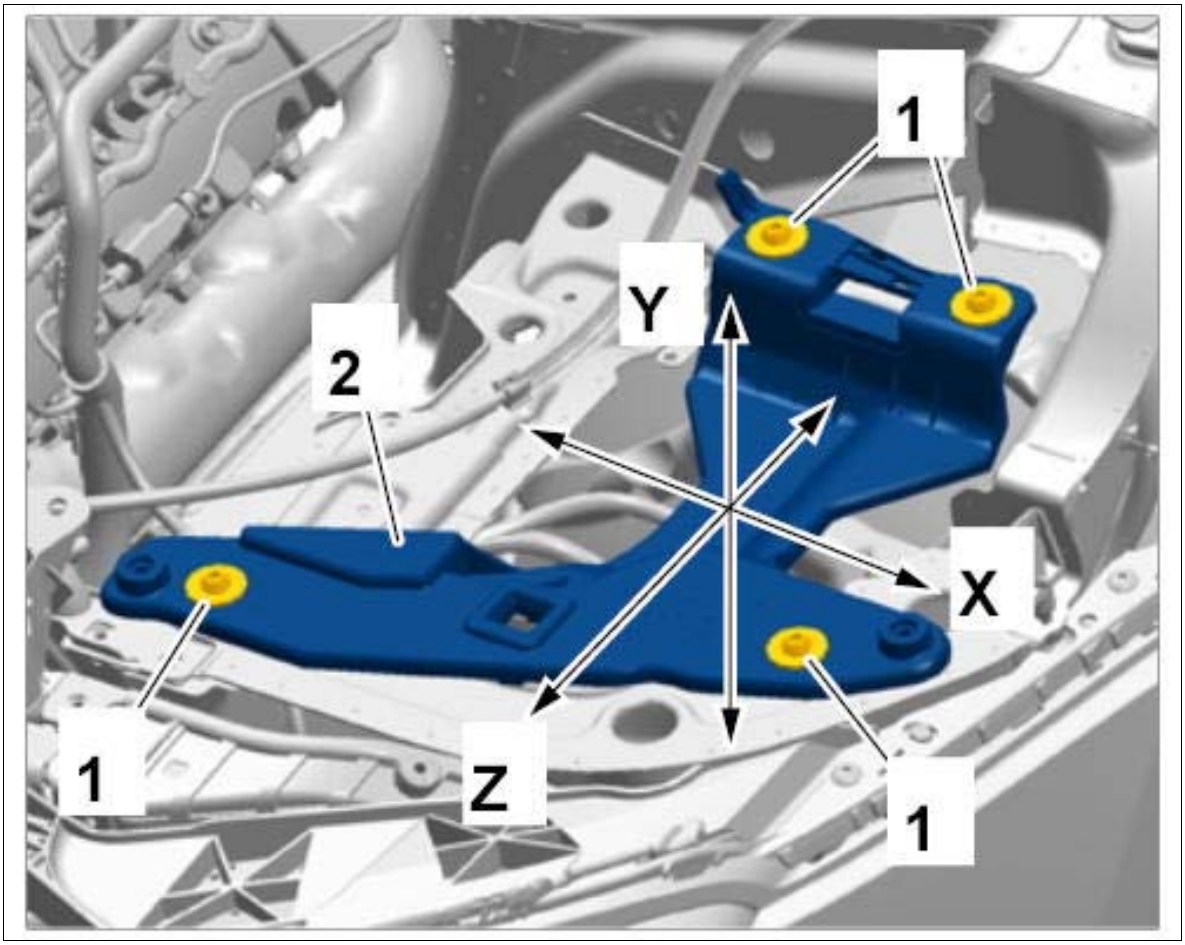

Courtesy of PORSCHE CARS NORTH AMERICA, INC.

Procedure for lowering the headlight:

4. Loosen fastening screws **-1-** .

    1. 4.1. Press headlight mounting **-2-** in the adjusting element area down **-arrow F-** to ensure that the position of the adjusting element cannot be changed.

Fig 2: Loosening Fastening Screws

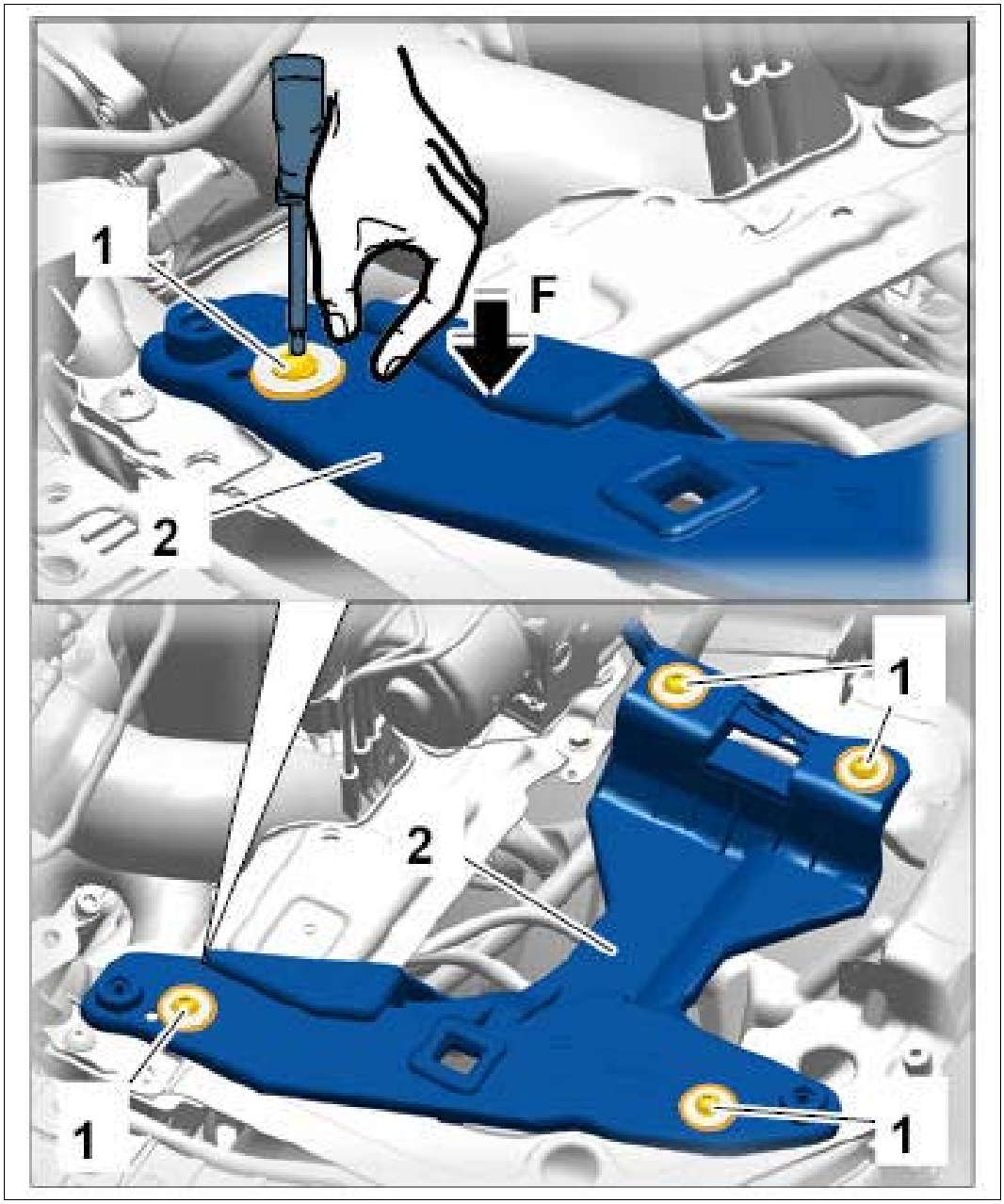

Courtesy of PORSCHE CARS NORTH AMERICA, INC.

5. Screw in the adjusting ring **-3-** on the adjusting element to lower the headlight mounting **-2-** .
    1. 5.1. Screw fastening screw **-1-** anti-clockwise.
    2. 5.2. Do not exert pressure on the headlight mounting **-2-** during the adjustment process.

Fig 3: Identifying Lower Headlight Mounting

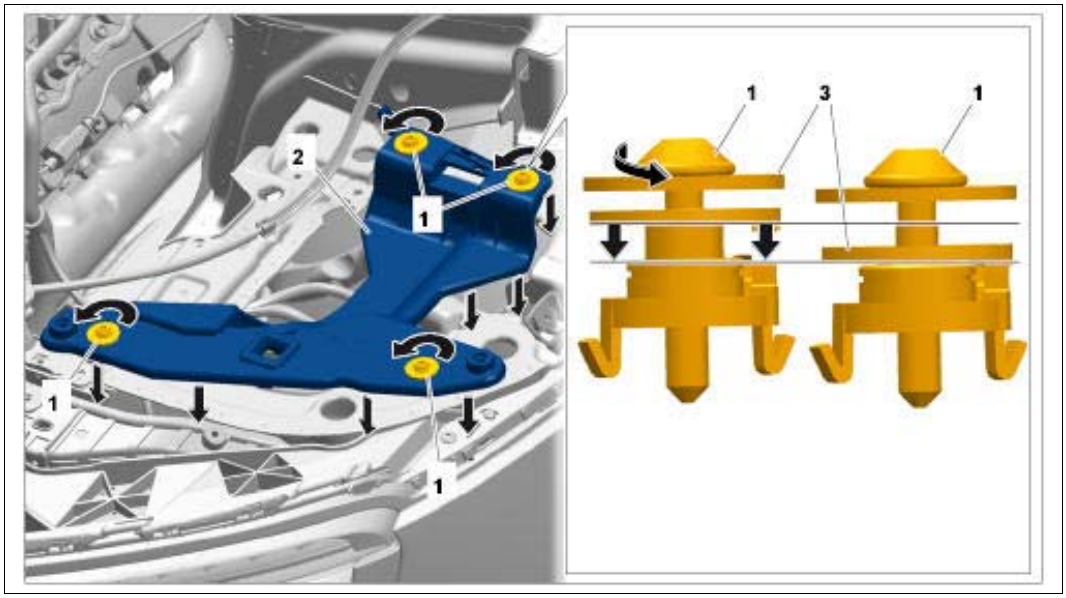

Courtesy of PORSCHE CARS NORTH AMERICA, INC.

Once the required adjustment height is reached:

6. Tighten fastening screws.

    1. 6.1. Press headlight mounting in the adjusting element area down to ensure that the position of the adjusting element cannot be changed.

Procedure for raising the headlight:

7. Loosen fastening screws **-1-** .

    1. 7.1. Press headlight mounting **-2-** in the adjusting element area down to ensure that the position of the adjusting element cannot be changed.

8. Screw out the adjusting ring **-3-** on the adjusting element to raise the headlight mounting **-2-** .

    1. 8.1. Screw fastening screw **-1-** clockwise.

    2. 8.2. Do not exert pressure on the headlight mounting **-2-** during the adjustment process.

Fig 4: Raising Headlight Mounting

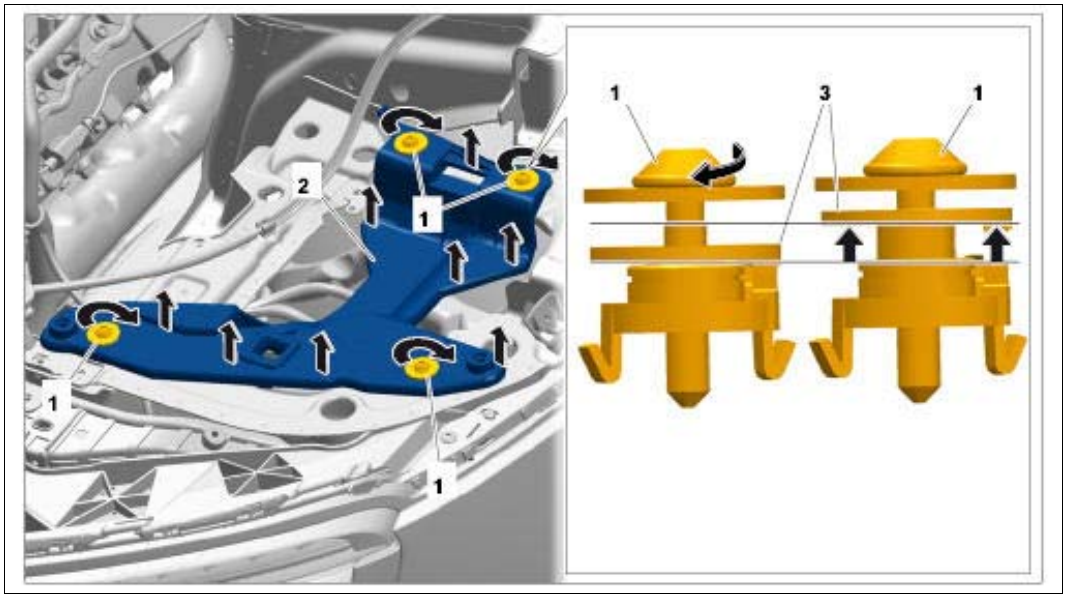

Courtesy of PORSCHE CARS NORTH AMERICA, INC.

Once the required adjustment height is reached:

9. Tighten fastening screws.
    1. 9.1. Press headlight mounting in the adjusting element area down to ensure that the position of the adjusting element cannot be changed.
10. Insert headlight into the mounting.
11. Close the front lid and check the gap dimensions between the headlight and front lid.
12. Repeat the adjustment procedure if necessary.
13. Remove headlight.
14. Tighten fastening screws to the specified torque. **Tightening torque 8 Nm (6 ftlb.)**

WM 941419 REMOVING AND INSTALLING HEADLIGHT MOUNTING (ALL MODELS) > PRELIMINARY WORK

1. Remove headlights. → Removing Headlights

WM 941419 REMOVING AND INSTALLING HEADLIGHT MOUNTING (ALL MODELS) > REMOVING HEADLIGHT MOUNTING

Information

To restore the original installation position, thereby minimizing the amount of adjustment work required, the following steps must be carried out prior to removal:

- Mark the position of the headlight mounting with respect to fastening screws.
- Measure and take note of the height of the headlight mounting with respect to the body.

Information

If work is carried out on the headlight or retainer plate, the installed fastening screws must be replaced by microencapsulated fastening screws .

Micro-encapsulated fastening screws must be tightened only once to the specified torque.

Micro-encapsulated fastening screws must be replaced after loosening them.

1. Mark the position of the washers **-1-** on the headlight mounting **-2-** using a water-resistant pen to make it easier to adjust the gap dimensions on the front lid when re-installing the headlight mounting.

   Fig 1: Identifying Washers Mark Position

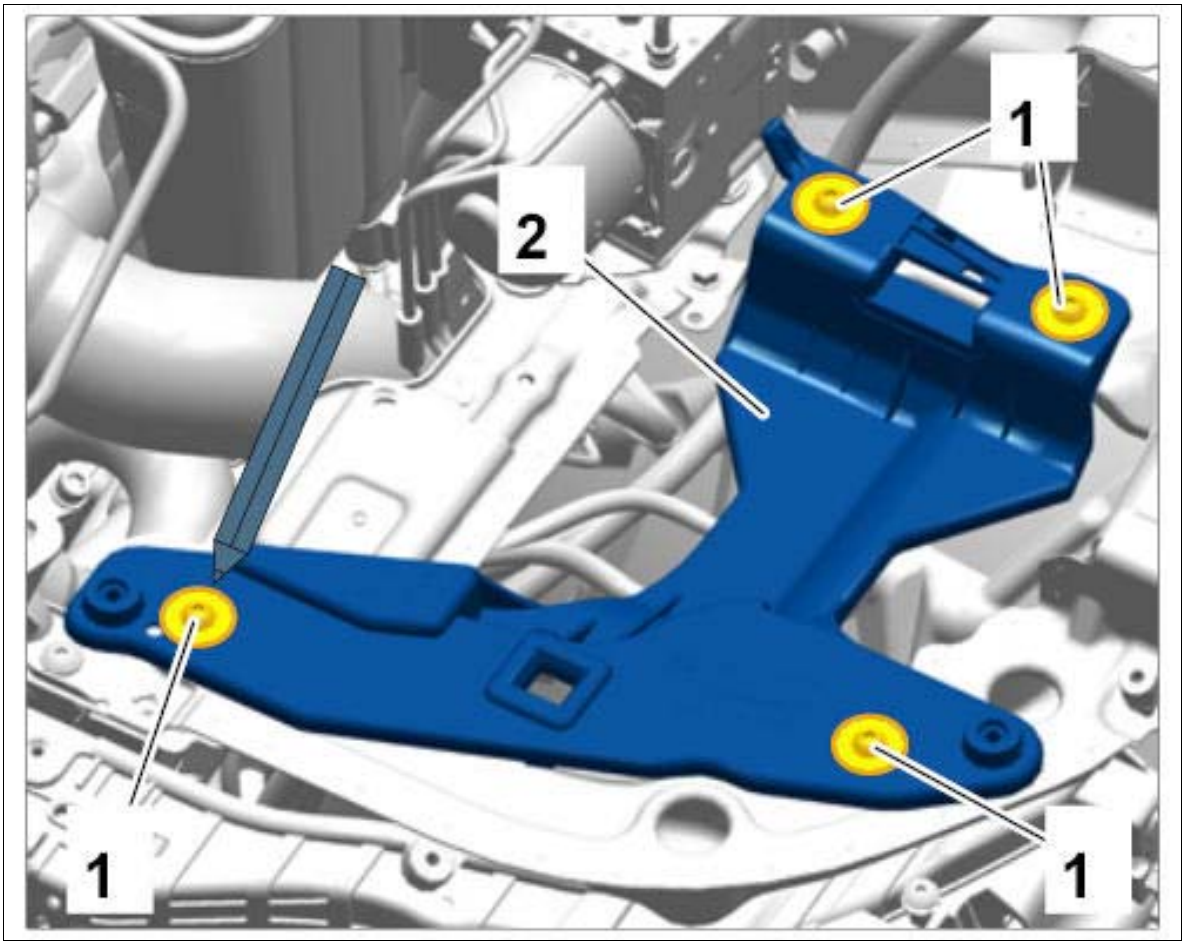

Courtesy of PORSCHE CARS NORTH AMERICA, INC.

2. Unscrew fastening screws **-1-** .

    1. 2.1. Press the headlight mounting **-2-** down close to each fastening screw **-F-** (to prevent the adjusting elements from turning) and unscrew fastening screws from the body.

    2. 2.2. Remove fastening screws from the adjusting elements.

Fig 2: Removing Fastening Screws

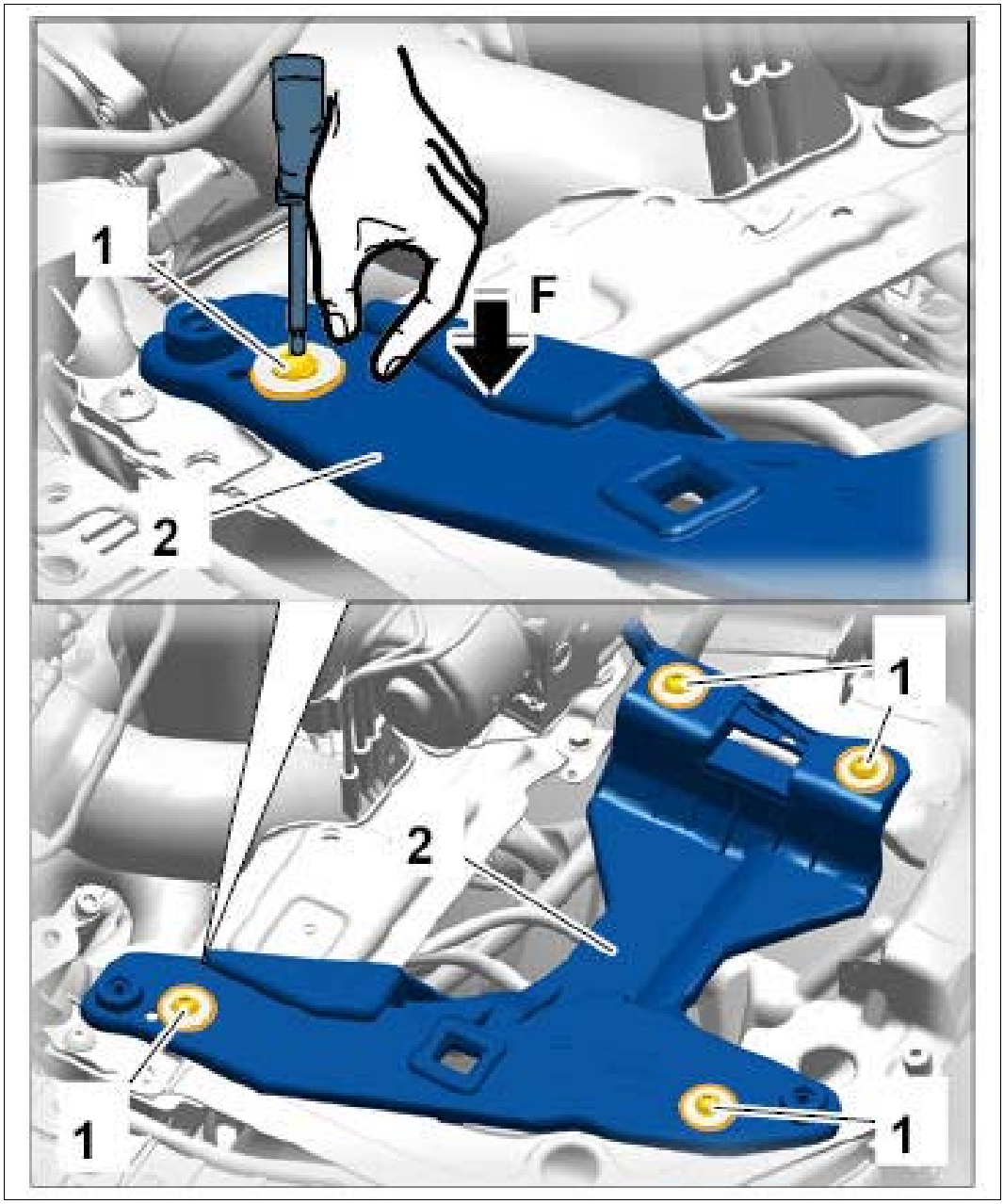

Courtesy of PORSCHE CARS NORTH AMERICA, INC.

Left headlight mounting

3. Unclip the antenna line holder **-1-** from the headlight mounting **-2-** in a downward direction **-a-** .

4. Unclip electric plug connections **-3-** and holder **-4-** for the headlight cleaning system hose from the headlight mounting.

Fig 3: Removing Holder And Electric Plug Connections

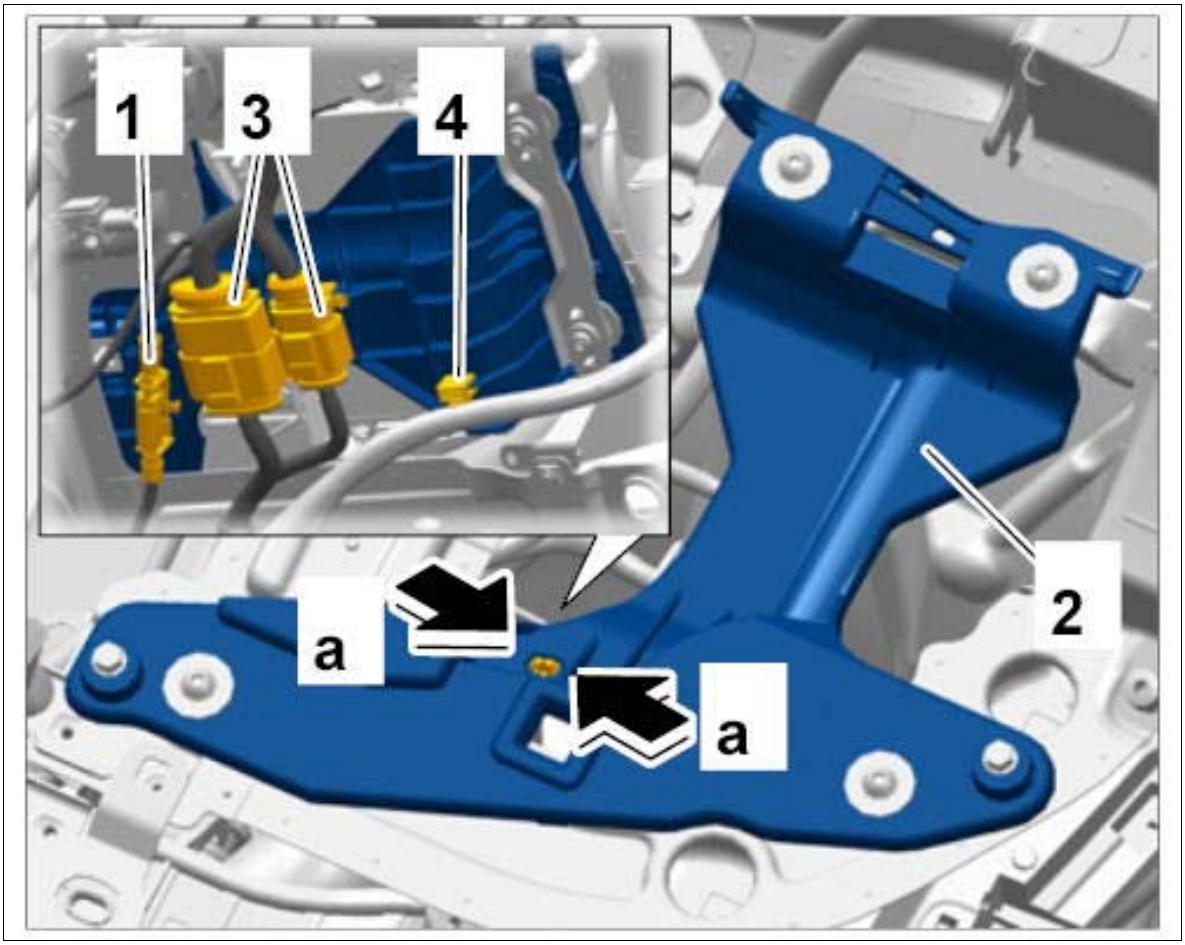

Courtesy of PORSCHE CARS NORTH AMERICA, INC.

Headlight mounting at the left and right

5. Remove headlight mounting.

WM 941419 REMOVING AND INSTALLING HEADLIGHT MOUNTING (ALL MODELS) > INSTALLING HEADLIGHT MOUNTING

1. Copy markings for the washers from the faulty headlight mounting to the new headlight mounting.
2. Installation is performed in reverse order to removal.
3. Tighten fastening screws securing headlight mounting to body.

WM 941419 REMOVING AND INSTALLING HEADLIGHT MOUNTING (ALL MODELS) > SUBSEQUENT WORK

1. Install headlights. → Installing Headlights

2. Close the front lid carefully and check gap dimensions between the headlights and front lid. Adjust gap dimensions if necessary. → 941415 ADJUSTING HEADLIGHT MOUNTING

3. Check headlight adjustment and correct it if necessary. → 941516 ADJUSTING HEADLIGHTS AND FOG LIGHTS

WM 941516 ADJUSTING HEADLIGHTS AND FOG LIGHTS (ALL MODELS) > ADJUSTING HEADLIGHTS

Information

- Some of the repair illustrations show only one side of the vehicle.
- Naturally, some steps also have to be performed on the opposite side of the vehicle as well.

Information

Read the operating instructions for the headlight aiming device and observe the following test and adjustment conditions:

- Vehicle and headlight aiming device positioned on a horizontal, clean surface.
- Vehicle parked safely and ready to drive, empty, including all fluids and fuel.
- All doors and rear lid closed.
- Tyre pressure corresponds to the specified values.
- Driver's seat occupied by one person or a weight of 75 kg.
- Steering in straight-ahead position.
- For vehicles with air suspension: Vehicle level in center position.
- Vehicle and chassis have been bounced.

1. Align the headlight aiming device **-1-** at a 90° angle to the longitudinal axis of the vehicle and position it at a distance of **-a-** in front of the left headlight.

2. Set the tilt angle of the light/dark limit of the dipped beam headlight on the headlight aiming device and align the collecting box with the center axis **-b-** of the dipped beam headlight.

Fig 1: Positioning Headlight Aiming Device

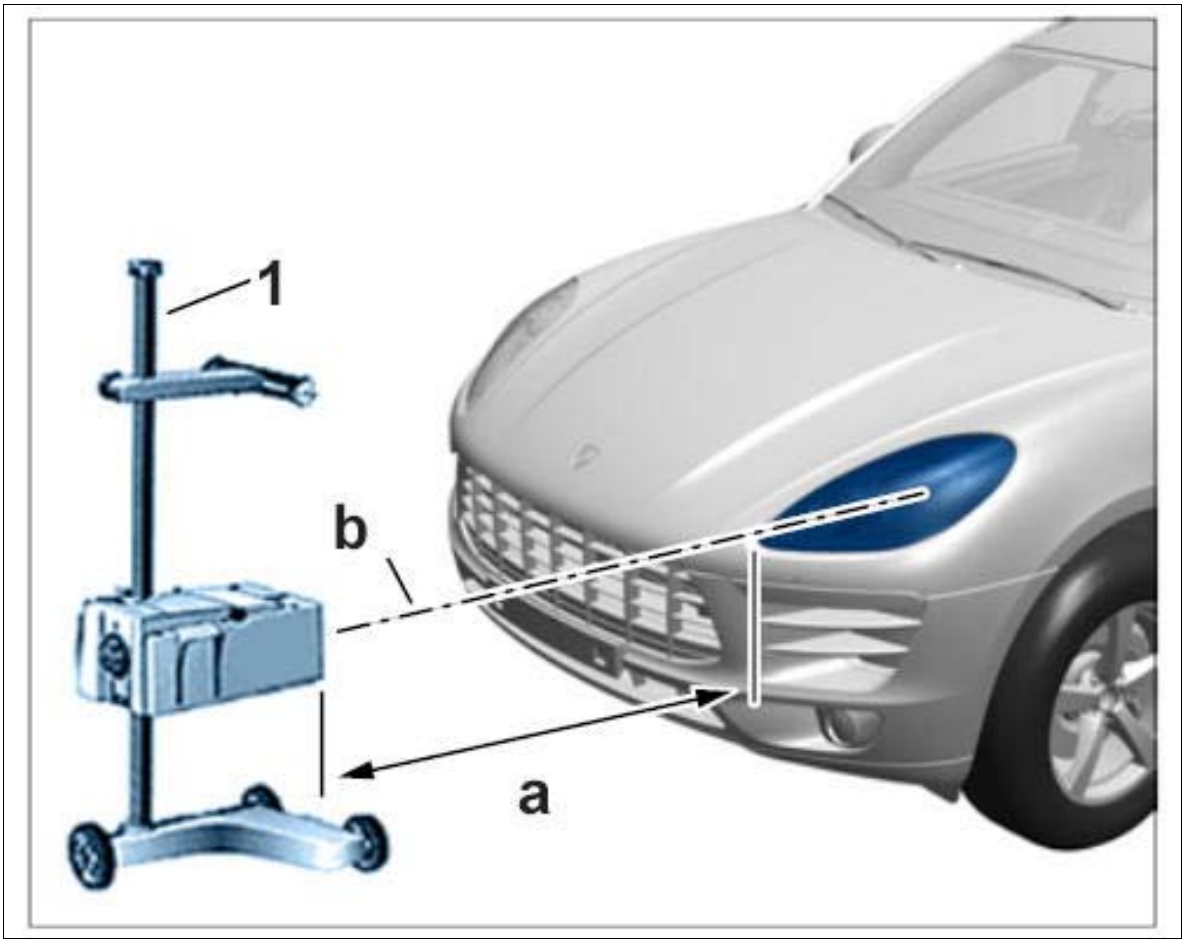

Courtesy of PORSCHE CARS NORTH AMERICA, INC.

3. Switch on ignition and dipped beam headlights.
4. Check the headlight setting.
    1. 4.1. The horizontal part of the light/dark limit must run along the dividing line **-1-** .
    2. 4.2. The salient point **-2-** of the horizontal part and right-elevated part of the light/dark limit must be positioned along the vertical line running through the central mark **-3-** . The bright core of the light beam is at the right of this vertical line.

Fig 2: Identifying Light Distribution Of Dipped Beam Headlight

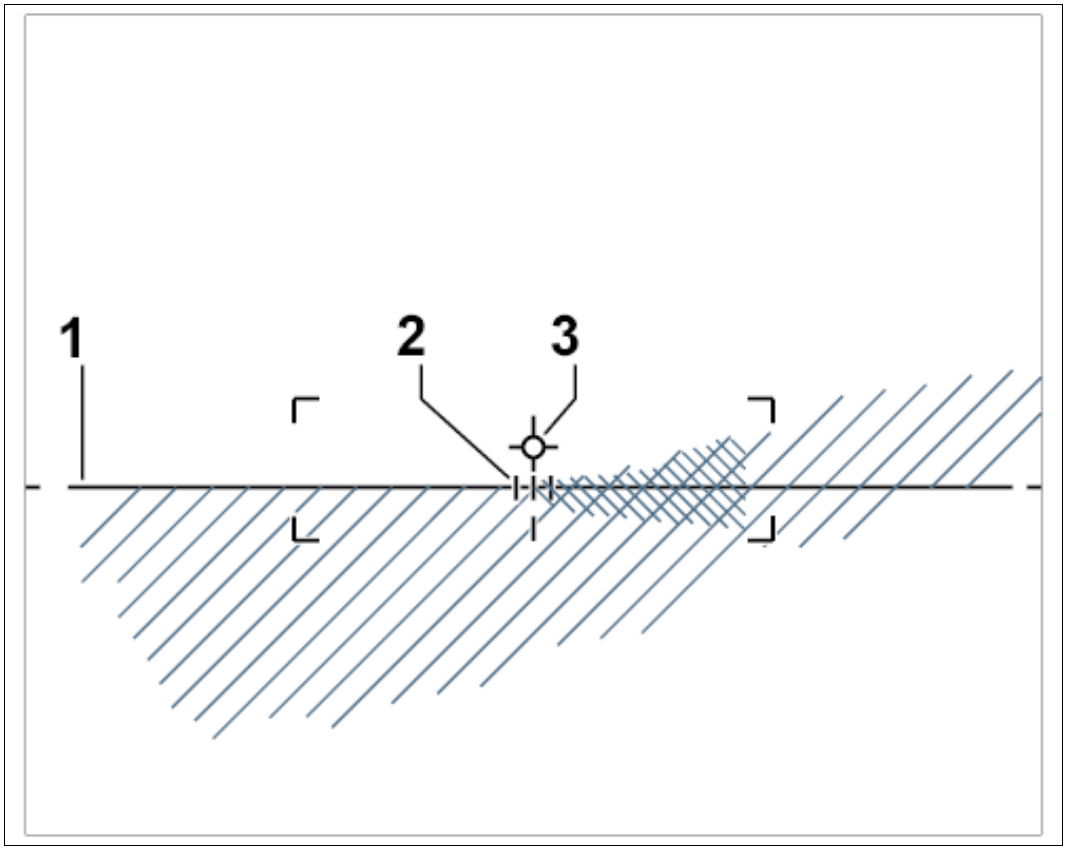

Courtesy of PORSCHE CARS NORTH AMERICA, INC.

5. Correct the headlight setting if necessary.

    1. 5.1. Adjust the height of the light/dark limit at the inner adjusting screw **-1-** using a 6-mm Allen key.

    2. 5.2. Adjust the lateral setting of the light/dark limit at the outer adjusting screw **-2-** using a long 6-mm Allen key.

Fig 3: Turning Headlight Adjusting Screws



Courtesy of PORSCHE CARS NORTH AMERICA, INC.

For vehicles with Xenon headlights:

6. Switch the ignition off and on again with the dipped beam headlights on.
7. Check the headlight setting again.

All vehicles:

8. Repeat the test and adjustment procedure on the right headlight.
9. Switch off dipped beam headlights and ignition.

WM 941516 ADJUSTING HEADLIGHTS AND FOG LIGHTS (ALL MODELS) > ADJUSTING FOG LIGHTS

Information

- Some of the repair illustrations show only one side of the vehicle.
- Naturally, some steps also have to be performed on the opposite side of the vehicle as well.

Information

Read the operating instructions for the headlight aiming device and observe the following test and adjustment conditions:

- Vehicle and headlight aiming device positioned on a horizontal, clean surface.
- Vehicle parked safely and ready to drive, empty, including all fluids and fuel.
- All doors and rear lid closed.
- Tyre pressure corresponds to the specified values.
- Driver's seat occupied by one person or a weight of 75 kg.
- Steering in straight-ahead position.
- For vehicles with air suspension: Vehicle level in center position.
- Vehicle and chassis have been bounced.
- For vehicles with halogen headlights: Switch for headlight levelling system at position "0".

1. Align the headlight aiming device **-1-** at a 90° angle to the longitudinal axis of the vehicle and position it at a distance of **-a-** in front of the left fog light.
2. Set the tilt angle of the light/dark limit of the fog light on the headlight aiming device and align the collecting box with the center axis **-b-** of the fog light.

Fig 1: Positioning Headlight Aiming Device

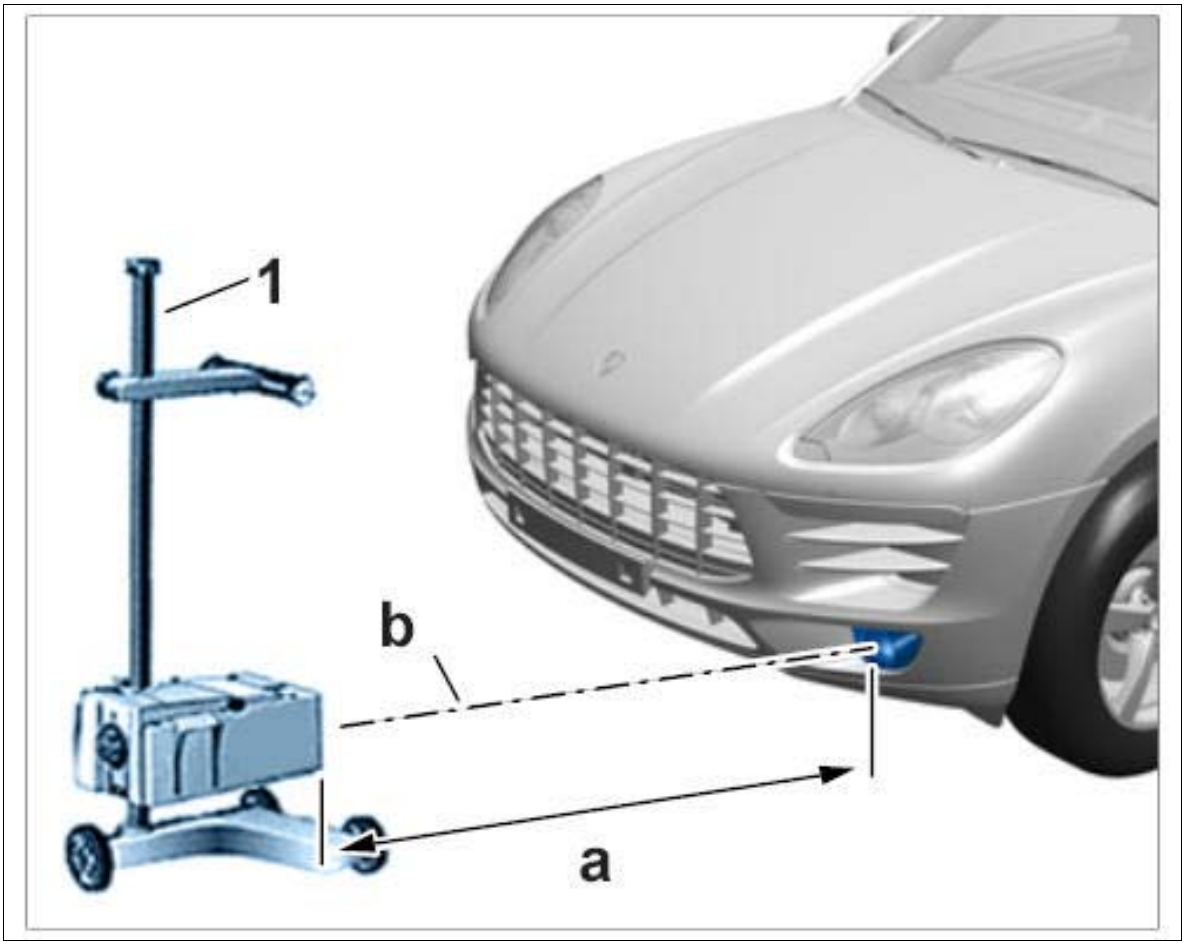

Courtesy of PORSCHE CARS NORTH AMERICA, INC.

3. Switch on ignition and fog light.
4. Check the fog light setting.
    1. 4.1. The light/dark limit must run along the dividing line **-1-** .

Fig 2: Identifying Light Distribution Of Fog Light

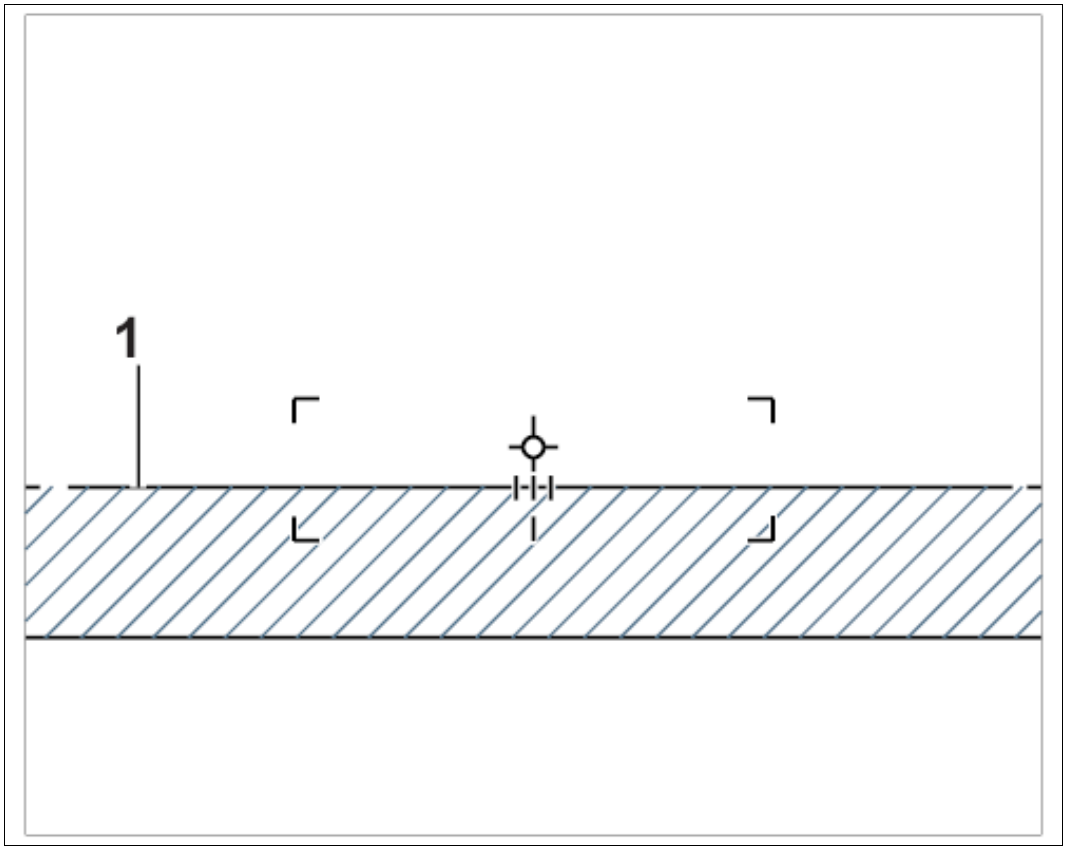

Courtesy of PORSCHE CARS NORTH AMERICA, INC.

5. Correct the fog light setting if necessary.

    1. 5.1. Adjust the height of the light/dark limit at the adjusting screw **-1-** by inserting a long 6-mm Allen key through the front apron from below.

Fig 3: Turning Fog Light Adjusting Screw (Halogen Light Shown)

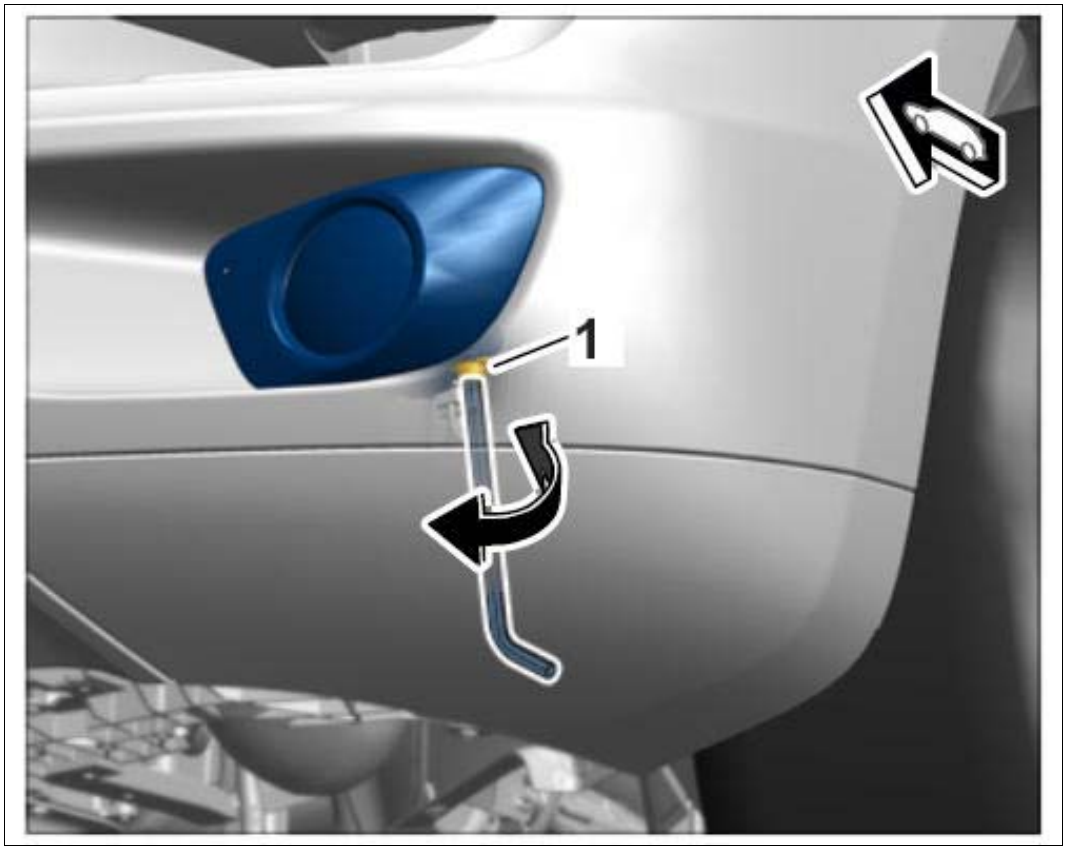

Courtesy of PORSCHE CARS NORTH AMERICA, INC.

6. Repeat the test and adjustment procedure on the right fog light.
7. Switch off fog light and ignition.

WM 941516 HEADLIGHTS - BASIC SETTING IN THE BODY (ALL MODELS) > TOOLS

Designation	Type	Number	Description	
Star gauges for body gap dimensions	Special tool	NR.127-1		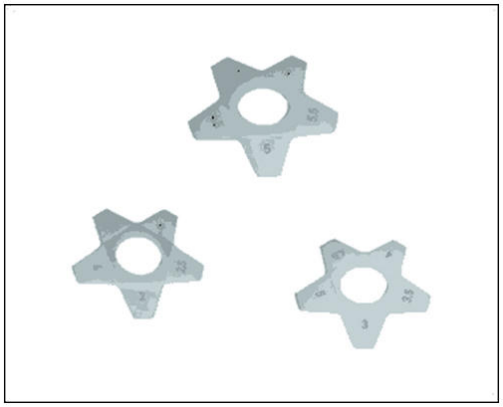

WM 941516 HEADLIGHTS - BASIC SETTING IN THE BODY (ALL MODELS) > ADJUSTING HEADLIGHTS (BASIC SETTING IN THE BODY)

Information

- The headlights are fitted into the body at the factory!
- The headlights must only be re-adjusted during accident repairs or if the headlights are being replaced!

Information

If work is carried out on the headlight or retainer plate, the installed fastening screws must be replaced by microencapsulated fastening screws .

Micro-encapsulated fastening screws must be tightened only once to the specified torque.

Micro-encapsulated fastening screws must be replaced after loosening them.

Information

- Set gap dimensions on lid and accessories in accordance with the gap specifications.
- Given a clearance in the opening that is too great or too small, the accessories must be centered with respect to the body.
- Ensure that the gaps do not run in a wedge-shaped fashion or do not narrow at local points.
- The given values are guidelines, which should be observed as far as possible.
- The guidelines apply to repair and assembly work.
- Use star gauges to check the gap dimensions. Star gauges for body gap dimensions NR.127-1

The headlight is aligned in the body by adjusting the headlight mounting points. → 941415 ADJUSTING HEADLIGHT MOUNTING

WM 941519 REMOVING AND INSTALLING HEADLIGHTS (ALL MODELS) > PRELIMINARY WORK

1. Remove cover on front lock support. → Removing cover for front lock support
2. Remove rear and side trim panel on the headlight. → Removing front trim panel
3. Detach spray nozzle for headlight washer system with connected spray water hose at the headlight. → Removing Spray Nozzle For Headlight Washer System

WM 941519 REMOVING AND INSTALLING HEADLIGHTS (ALL MODELS) > REMOVING HEADLIGHTS

NOTE: Voltage peaks

- *Risk of damage to load or to the control unit*

→ Remove the ignition key and switch off load before disconnecting or removing load.

1. Switch off position lights.
2. Switch off ignition and pull remote control out of ignition lock.
3. Release hose connection for the breather hose **-1-** (**-a-**) and pull it off the headlight **-2-** .
4. Release electric plug connection **-3-** (**-b-**) and pull it off the headlight.

Fig 1: Disconnecting Hose Connection And Electric Plug Connection

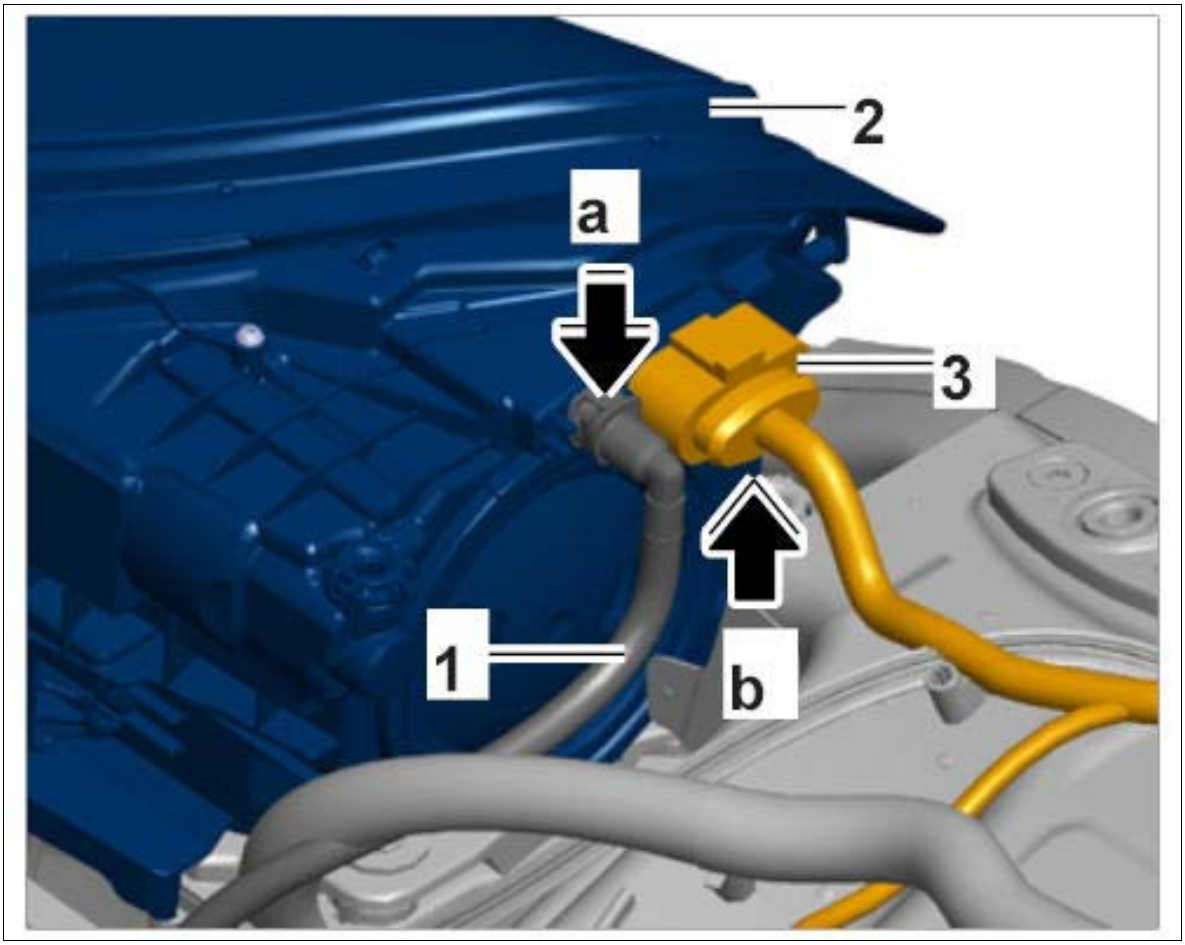

Courtesy of PORSCHE CARS NORTH AMERICA, INC.

5. Unscrew fastening screws **-1-** .
6. Remove headlight **-2-** from the headlight mounting point **-3-** .

Fig 2: Removing Headlights

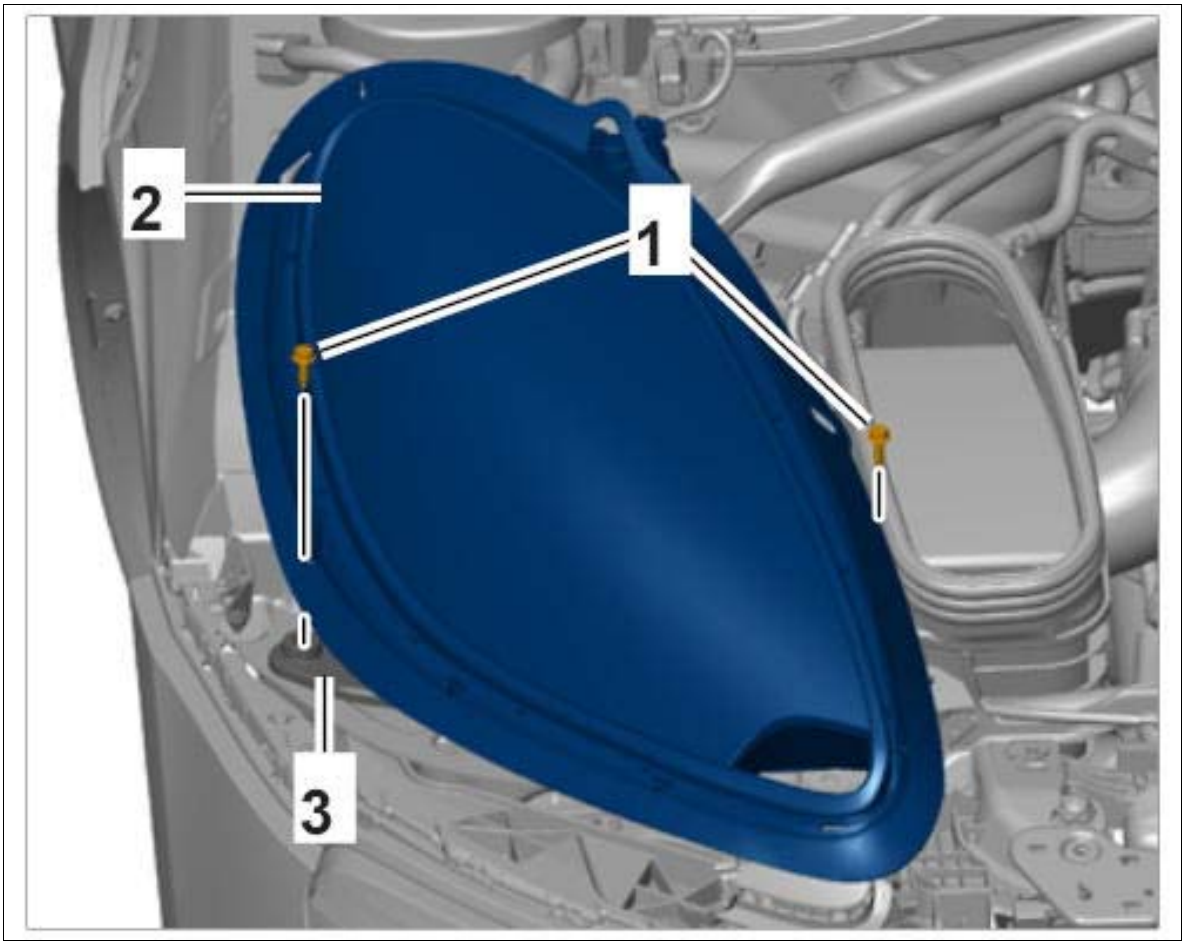

Courtesy of PORSCHE CARS NORTH AMERICA, INC.

WM 941519 REMOVING AND INSTALLING HEADLIGHTS (ALL MODELS) > INSTALLING HEADLIGHTS

1. Guide the headlight **-2-** back into the cut-out for the headlight mounting point **-3-** .
2. Tighten fastening screws **-1-** .

Fig 1: Removing Headlights

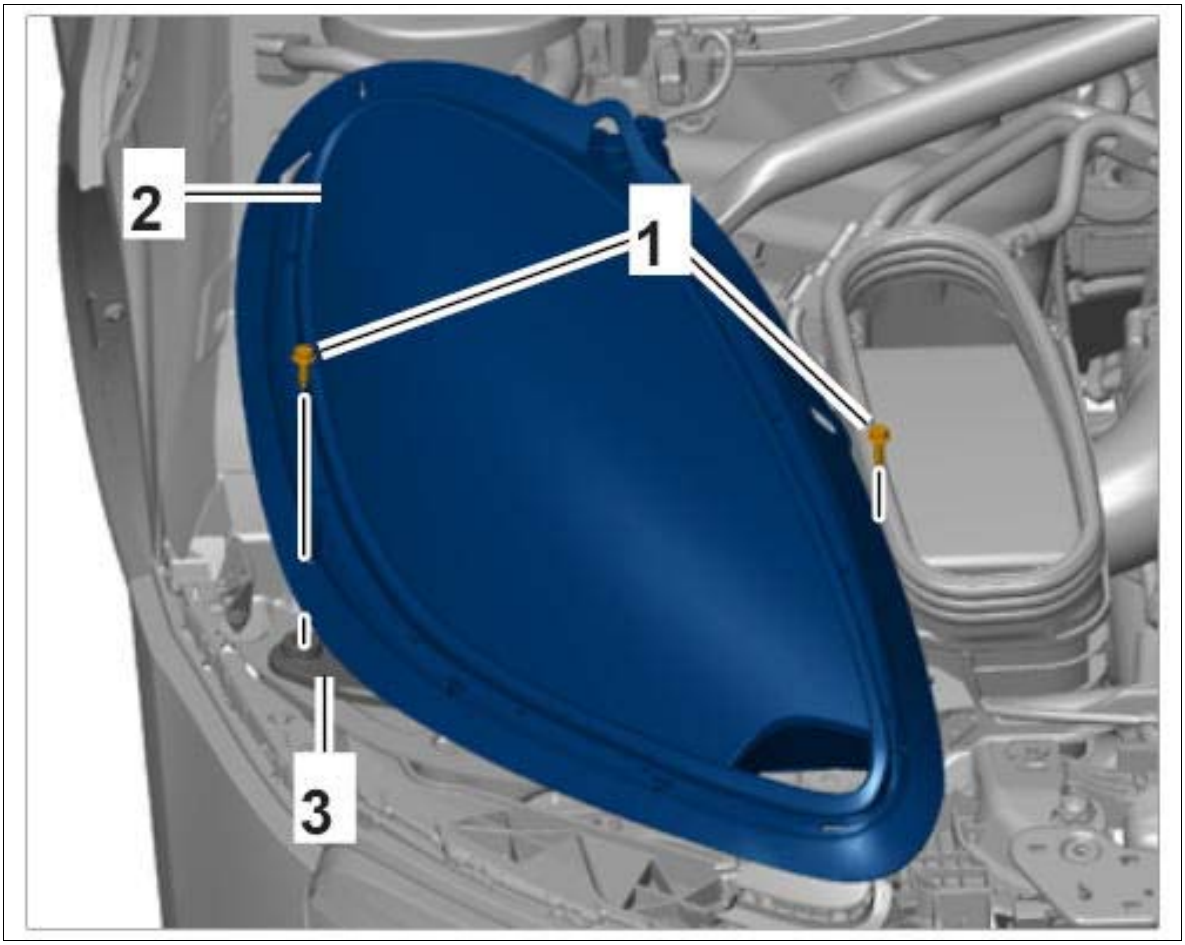

Courtesy of PORSCHE CARS NORTH AMERICA, INC.

3. Plug in electric plug connection **-1-** on the headlight **-2-** until it engages securely.
4. Check condition of O-ring **-3-** and check that it is seated correctly.
5. Connect hose connection for the breather hose **-4-** at the headlight until it engages securely.

Fig 2: Securing Hose Connection And Electric Plug Connection

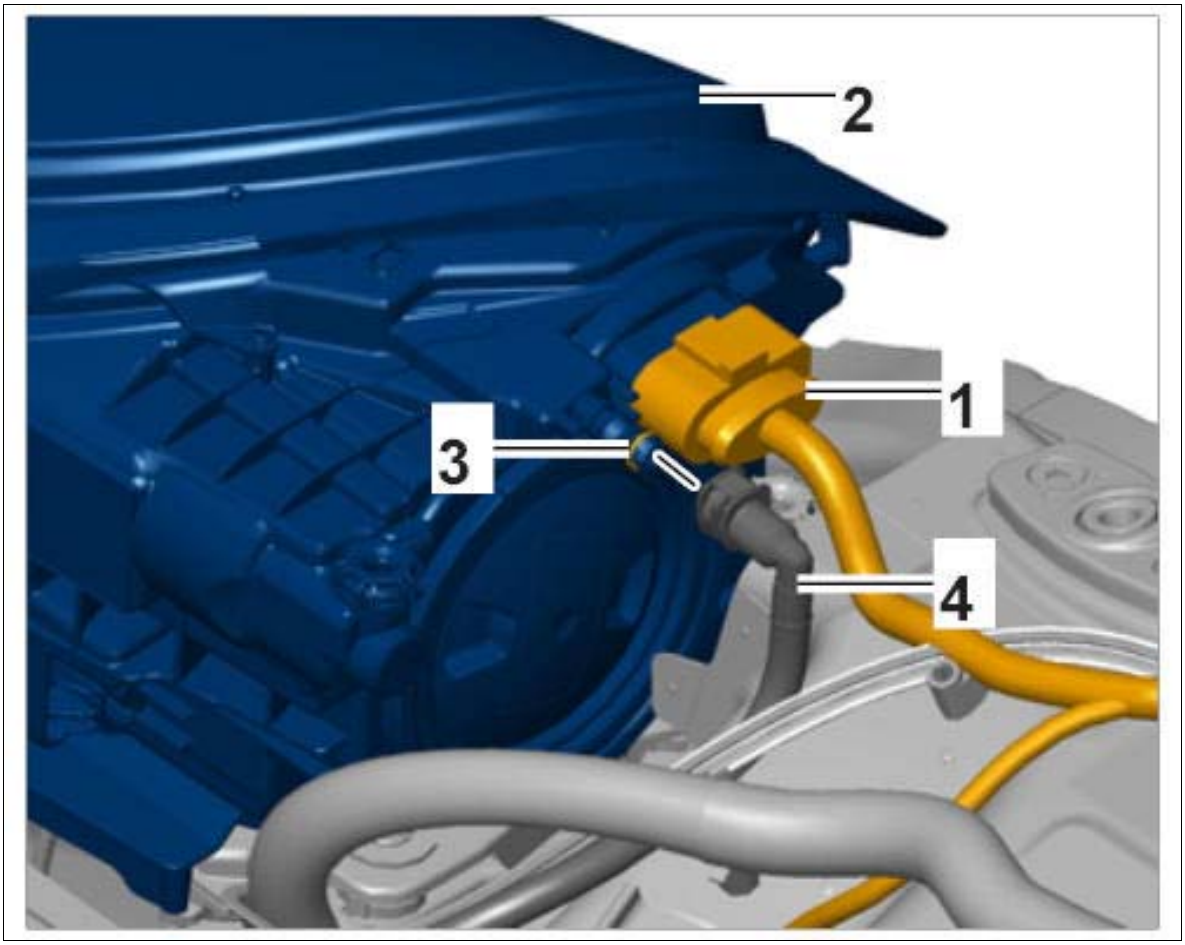

Courtesy of PORSCHE CARS NORTH AMERICA, INC.

WM 941519 REMOVING AND INSTALLING HEADLIGHTS (ALL MODELS) > SUBSEQUENT WORK

1. Secure spray nozzle for headlight washer system at the main headlight. → Installing Spray Nozzle For Headlight Washer System
2. Install rear and side trim panels on the headlight. → Installing front trim panel
3. Install cover for front lock support. → Installing cover for front lock support

WM 941555 REPLACING BI-XENON HEADLIGHTS (ALL MODELS) > PRELIMINARY WORK

1. Remove headlights. → Removing Headlights

WM 941555 REPLACING BI-XENON HEADLIGHTS (ALL MODELS) > DISASSEMBLING BI-XENON HEADLIGHTS

1. Remove light bulb control unit. → Removing Light Bulb Control Unit
2. Remove light bulb igniter. → Removing Light Bulb Igniter
3. Remove gas-discharge headlight. → Removing Gas-Discharge Headlight

WM 941555 REPLACING BI-XENON HEADLIGHTS (ALL MODELS) > ASSEMBLING BI-XENON HEADLIGHTS

1. Assembly is performed in reverse order to disassembly.

WM 941555 REPLACING BI-XENON HEADLIGHTS (ALL MODELS) > SUBSEQUENT WORK

1. Install headlights. → Installing Headlights

WM 941555 REPLACING HALOGEN HEADLIGHTS (ALL MODELS) > PRELIMINARY WORK

1. Remove headlights. → Removing Headlights

WM 941555 REPLACING HALOGEN HEADLIGHTS (ALL MODELS) > DISASSEMBLING HALOGEN HEADLIGHTS

1. Remove light bulb control unit. → Removing Light Bulb Control Unit
2. Remove light bulb igniter. → Removing Light Bulb Igniter

WM 941555 REPLACING HALOGEN HEADLIGHTS (ALL MODELS) > ASSEMBLING HALOGEN HEADLIGHTS

1. Assembly is performed in reverse order to disassembly.

WM 941555 REPLACING HALOGEN HEADLIGHTS (ALL MODELS) > SUBSEQUENT WORK

1. Install headlights. → Installing Headlights

WM 941555 REPLACING BULB FOR CORNERING LIGHT (ALL MODELS) > PRELIMINARY WORK > PRELIMINARY WORK FOR REPLACING BULB FOR CORNERING LIGHT AT THE RIGHT

1. Remove front trim panel behind headlight. → Removing front trim panel
2. Remove air cleaner housing cover. → Removing air cleaner housing

WM 941555 REPLACING BULB FOR CORNERING LIGHT (ALL MODELS) > REMOVING BULB FOR CORNERING LIGHT

NOTE: Voltage peaks

- *Risk of damage to load or to the control unit*

→ Remove the ignition key and switch off load before disconnecting or removing load.

NOTE: Incorrect handling of bulbs

- *Risk of damage to bulbs and the bulb housing*

→ Switch off ignition and remove ignition key.

→ Switch off the relevant loads when changing bulbs.

→ Only use bulbs listed in the bulb table.

→ Only install clean bulbs that are free of grease.

→ Always use a cloth or soft paper when working with bulbs.

→ Observe the safety instructions when changing a bulb in a Bi-Xenon headlight.

→ In certain states, it is compulsory to carry spare light bulbs.

1. Switch off position lights.
2. Switch off ignition and pull remote control out of ignition lock.
3. Release cover **-1-** and remove it from the headlight.
4. Check condition of seal **-2-** and check that it is seated correctly.
5. Pull electric plug connection **-3-** off the cornering light bulb.

Fig 1: Disconnecting Electric Plug Connection

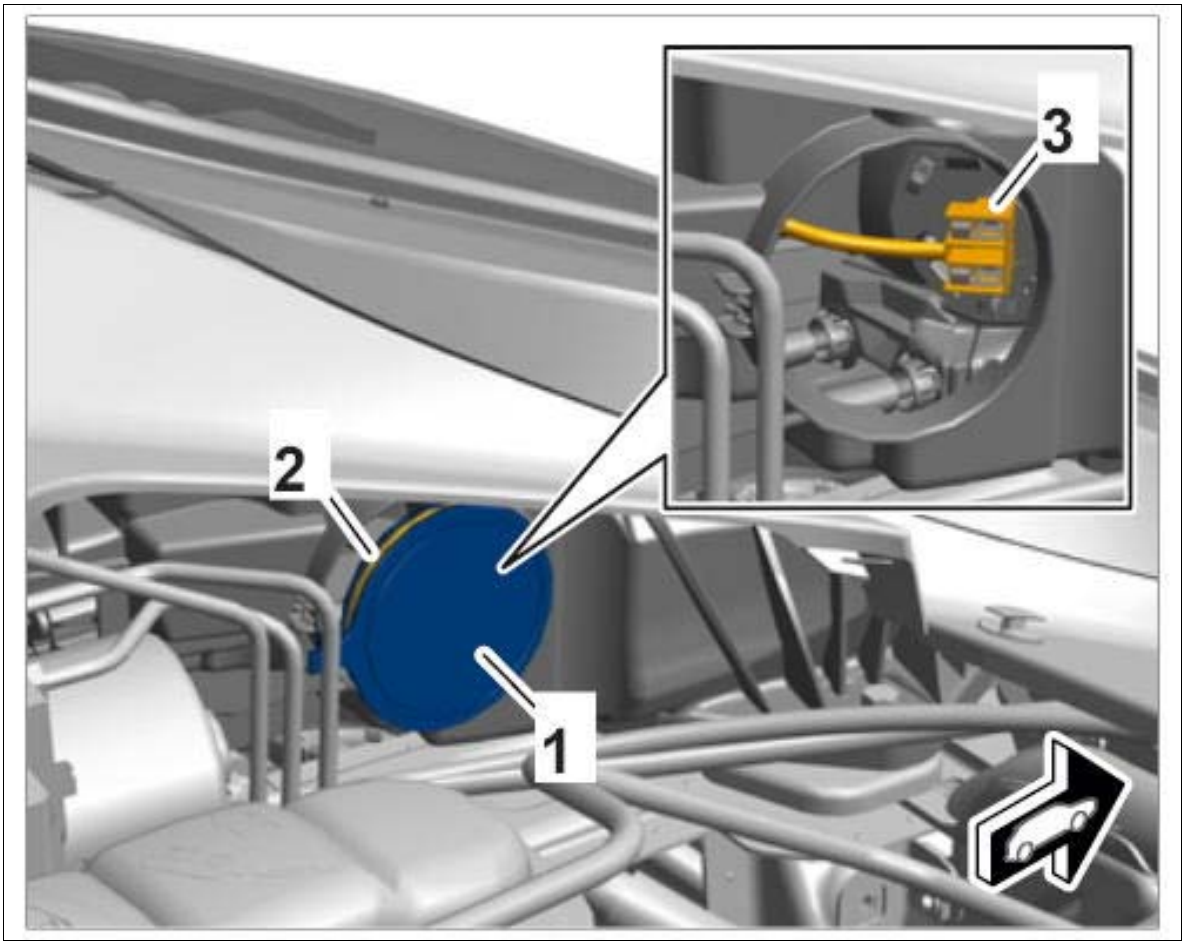

Courtesy of PORSCHE CARS NORTH AMERICA, INC.

6. Disengage bulb for cornering light **-1-** at the bottom on both sides **-a-** .
7. Pull bulb for cornering light at the top out of the bracket **-b-** and remove it.

Fig 2: Removing Cornering Light Bulb

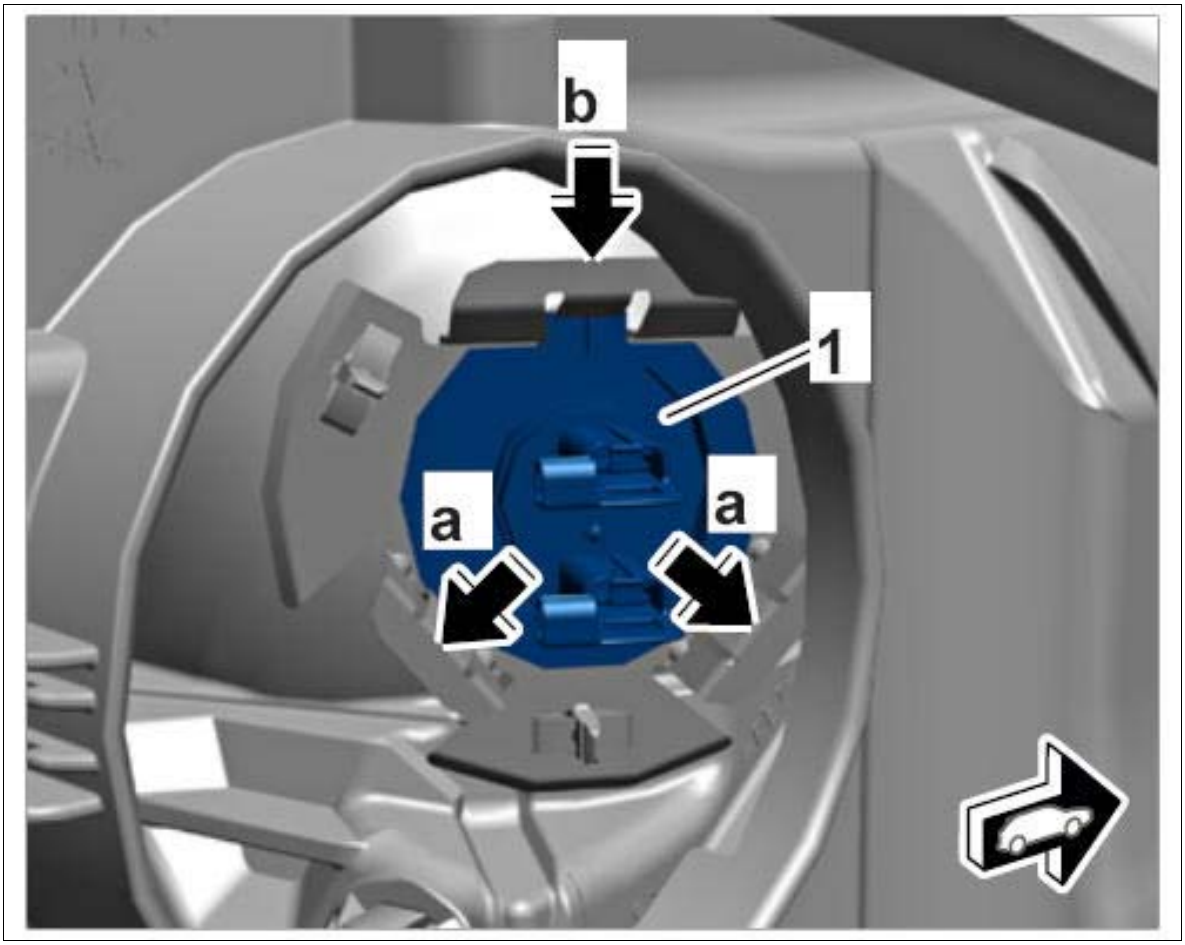

Courtesy of PORSCHE CARS NORTH AMERICA, INC.

WM 941555 REPLACING BULB FOR CORNERING LIGHT (ALL MODELS) > INSTALLING BULB FOR CORNERING LIGHT

NOTE: Incorrect handling of bulbs

- *Risk of damage to bulbs and the bulb housing*

→ Switch off ignition and remove ignition key.

→ Switch off the relevant loads when changing bulbs.

→ Only use bulbs listed in the bulb table.

→ Only install clean bulbs that are free of grease.

→ Always use a cloth or soft paper when working with bulbs.

→ Observe the safety instructions when changing a bulb in a Bi-Xenon headlight.

→ In certain states, it is compulsory to carry spare light bulbs.

1. Installation is performed in reverse order.

WM 941555 REPLACING BULB FOR CORNERING LIGHT (ALL MODELS) > SUBSEQUENT WORK > SUBSEQUENT WORK FOR REPLACING BULB FOR CORNERING LIGHT AT THE RIGHT

1. Install front trim panel behind headlight. → Installing front trim panel
2. Install air cleaner housing cover. → Installing air cleaner housing

WM 9415IN CONVERTING HEADLIGHTS FOR LEFT/RIGHT-HAND DRIVING (ALL MODELS) > CONVERTING HEADLIGHTS FOR LEFT/RIGHT-HAND DRIVING > INFORMATION

Information

For driving in countries in which vehicles drive on the other side of the road, it is important to adapt the headlights as soon as you cross the border. The dipped beam headlight then lights symmetrically so that oncoming traffic is not dazzled.

Headlights with dynamic cornering light must be adapted in the multi-function display. The message "Headlights adapted for LHD/RHD" appears in the multi-function display every time the ignition is switched on. Don't forget to reset the headlights for the return journey.

WM 9415IN CONVERTING HEADLIGHTS FOR LEFT/RIGHT-HAND DRIVING (ALL MODELS) > CONVERTING HEADLIGHTS FOR LEFT/RIGHT-HAND DRIVING > CONVERTING HEADLIGHTS WITHOUT DYNAMIC CORNERING LIGHT

1. Remove headlight.

   → Removing Headlights

   1. 1.1. Remove cover.

Fig 1: Removing Headlights (Shown On Panamera)

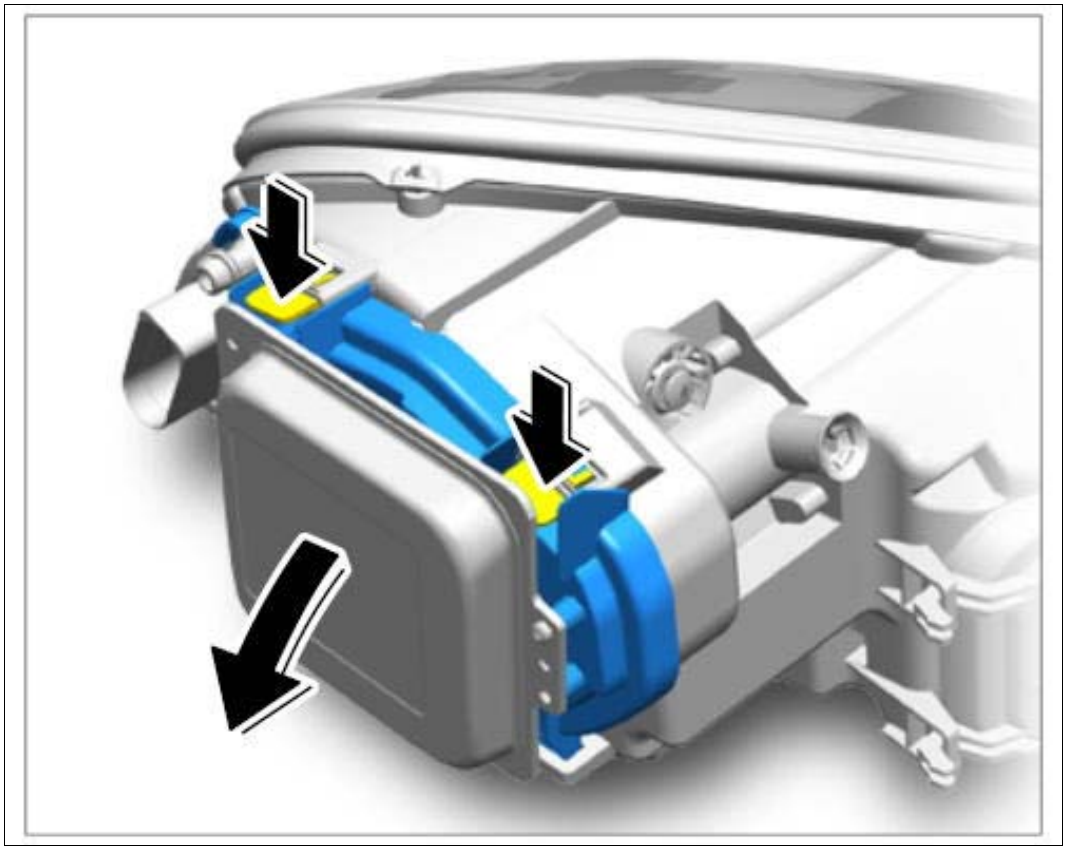

Courtesy of PORSCHE CARS NORTH AMERICA, INC.

2. Turn the lever down as far as it will go.

Fig 2: Turning Halogen Headlights (Shown On Panamera)

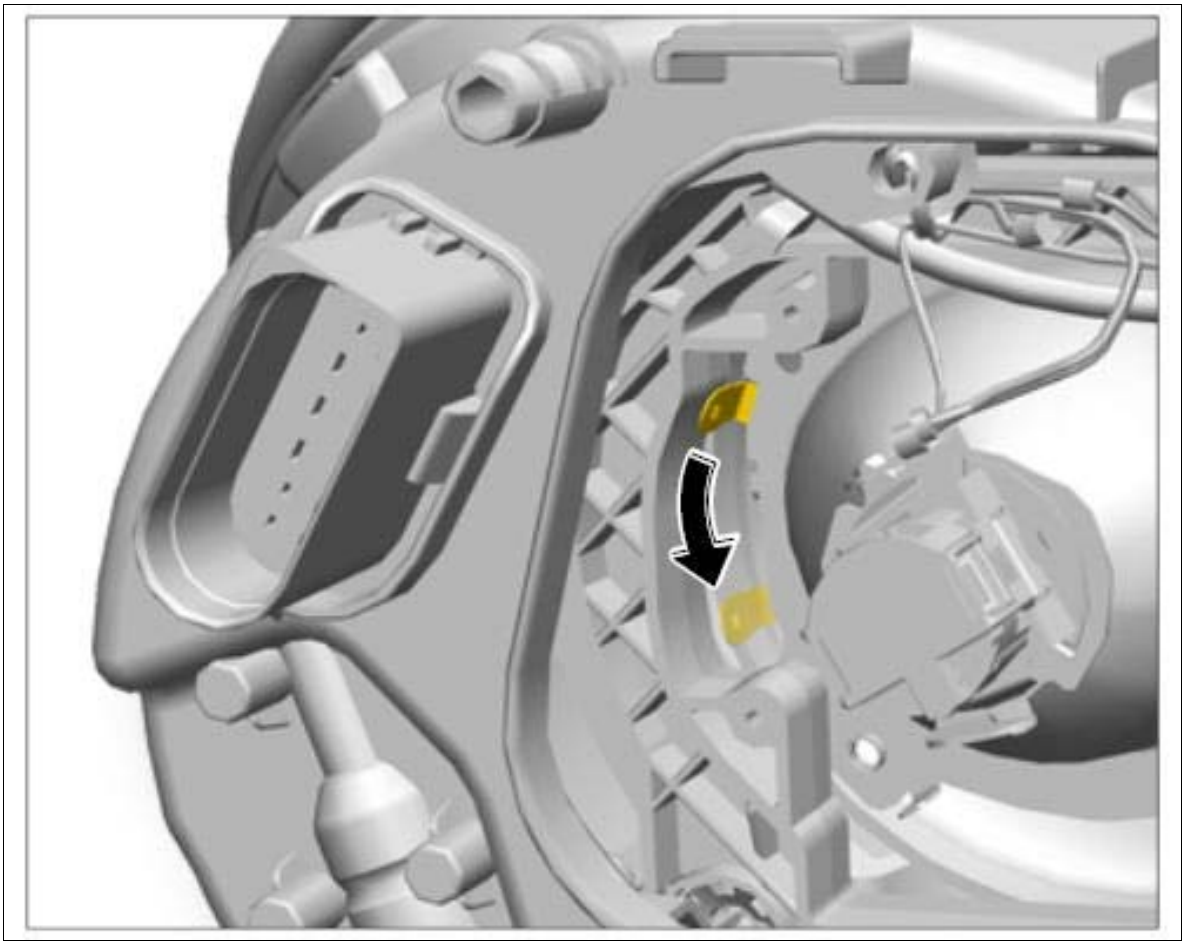

Courtesy of PORSCHE CARS NORTH AMERICA, INC.

Fig 3: Removing BI-Xenon Headlights (Shown On Panamera)

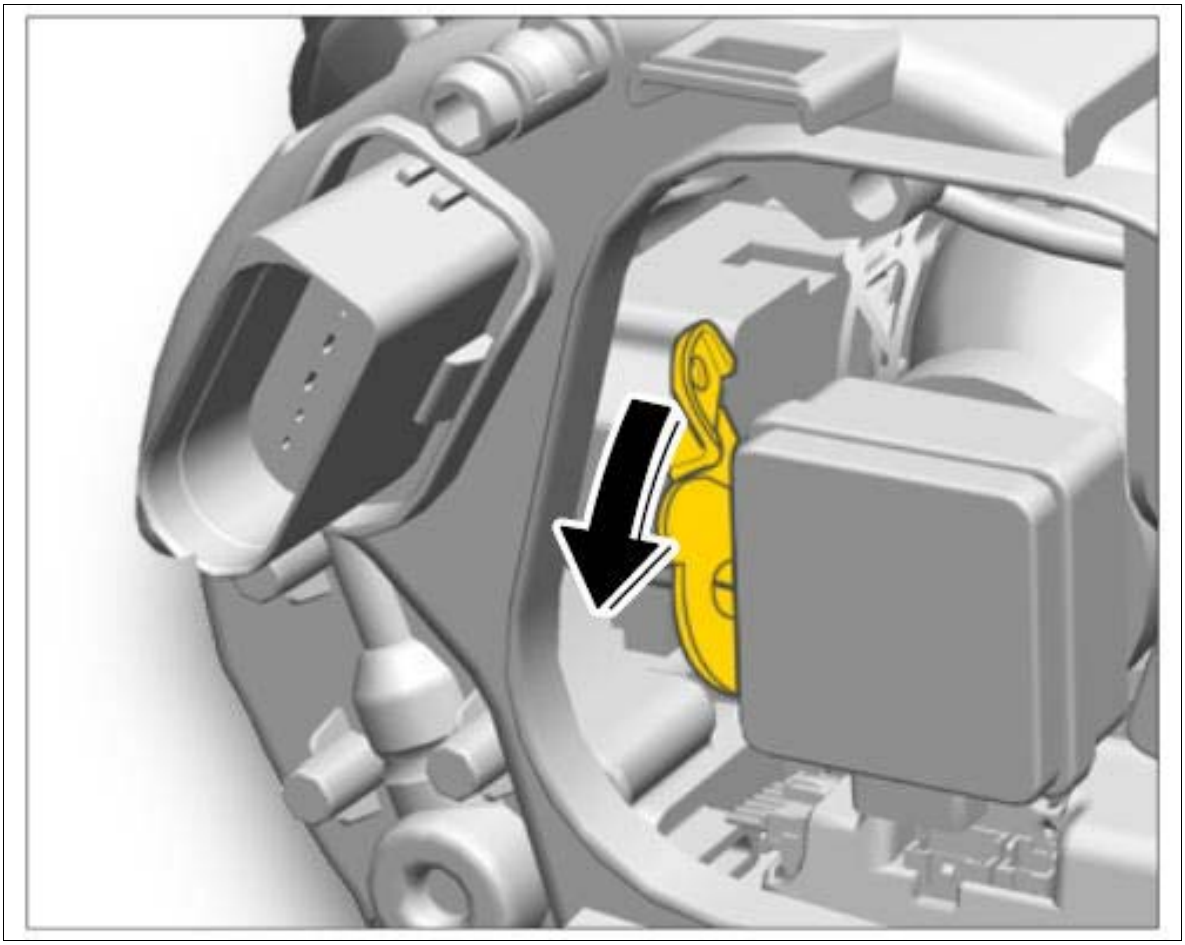

Courtesy of PORSCHE CARS NORTH AMERICA, INC.

3. Close the cover on the headlight. Both brackets must be fully engaged.
4. Install headlight.

   → Installing Headlights
5. Repeat conversion for the other headlight.

WM 941619 REMOVING AND INSTALLING (CENTRAL) HEADLIGHT CONTROL UNIT (ALL MODELS) > PRELIMINARY WORK

1. Remove rear seat. → Removing rear seat

WM 941619 REMOVING AND INSTALLING (CENTRAL) HEADLIGHT CONTROL UNIT (ALL MODELS) > REMOVING (CENTRAL) HEADLIGHT CONTROL UNIT

NOTE: Voltage peaks

- *Risk of damage to load or to the control unit*

→ Remove the ignition key and switch off load before disconnecting or removing load.

Information

Always comply with the regulations for handling ESD-sensitive components!

- Assembly work may only be carried out if the mechanic is wearing the working clothes and shoes approved by Porsche.
- The new part must only be removed from the ESD (electrostatic discharge) protective packaging just before installation and at the position at which the part is to be installed.
- Never touch the electric pins and plug contacts.

1. Switch off position lights.
2. Switch off ignition and pull remote control out of ignition lock.
3. Remove (central) headlight control unit **-1-** .
    1. 3.1. Press back locking lug on the holder **-2-** using a plastic wedge.
    2. 3.2. Carefully lift up (central) headlight control unit at the left and pull it out of the right tab **-3-** on the holder.

Fig 1: Removing Central Headlight Control Unit

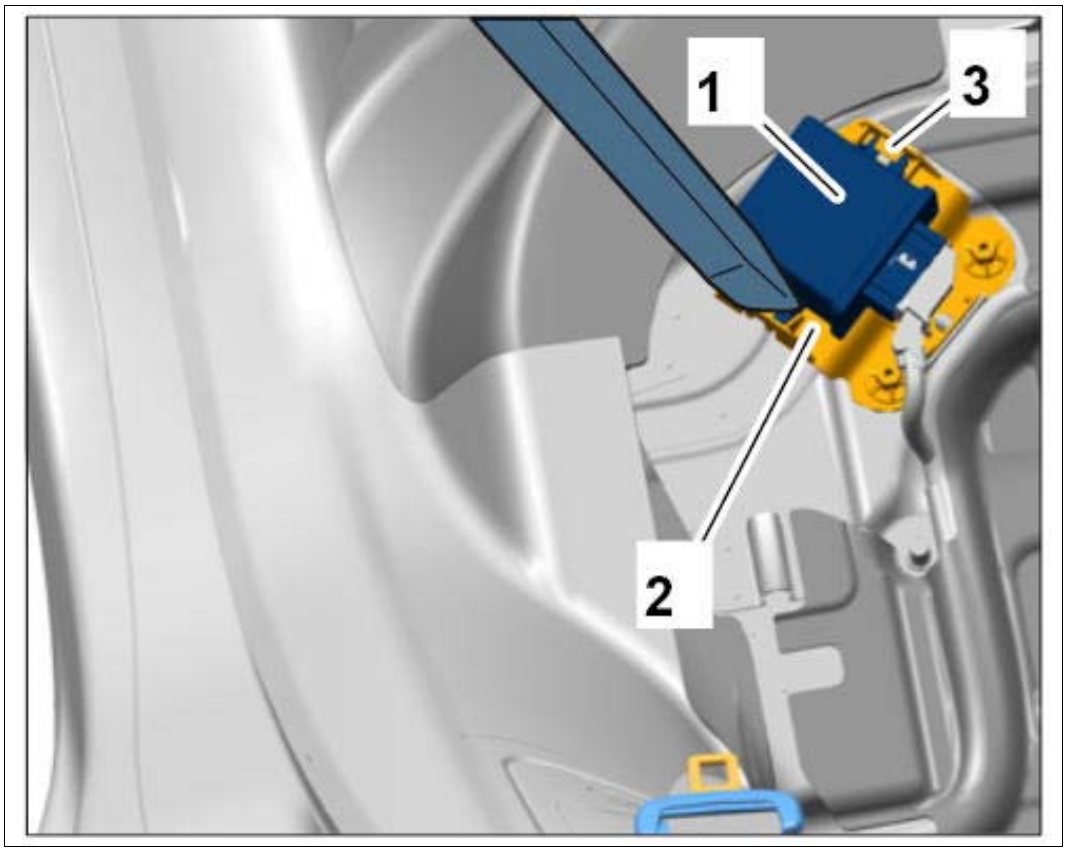

Courtesy of PORSCHE CARS NORTH AMERICA, INC.

4. Release clip **-1-** (**-a-**), swivel it aside **-b-** and remove electric plug connection from the (central) headlight control unit **-2-** .

Fig 2: Disconnecting Electric Plug Connection

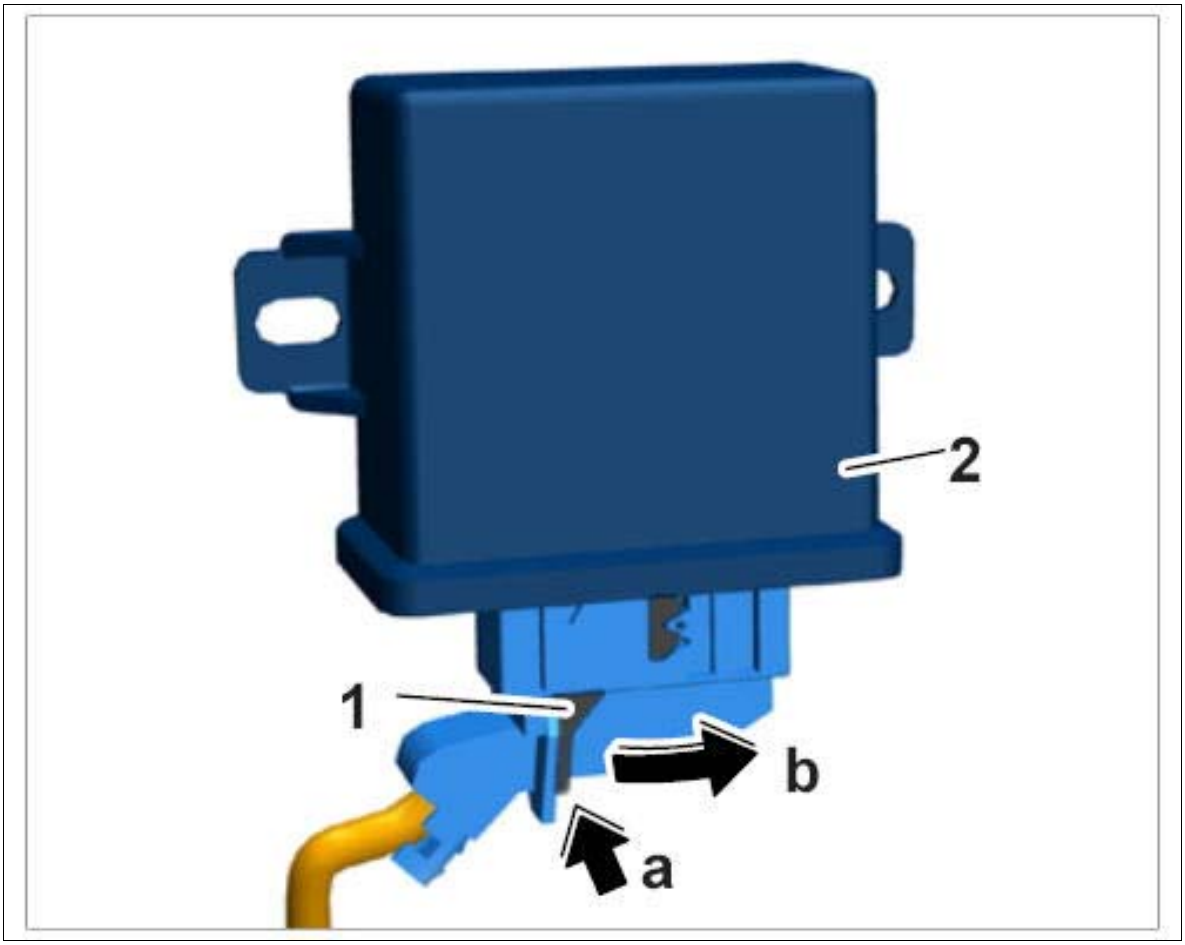

Courtesy of PORSCHE CARS NORTH AMERICA, INC.

WM 941619 REMOVING AND INSTALLING (CENTRAL) HEADLIGHT CONTROL UNIT (ALL MODELS) > INSTALLING (CENTRAL) HEADLIGHT CONTROL UNIT

1. Installation is performed in reverse order to removal.

WM 941619 REMOVING AND INSTALLING (CENTRAL) HEADLIGHT CONTROL UNIT (ALL MODELS) > SUBSEQUENT WORK

1. Install rear seat. → Installing rear seat
2. Re-program (central) headlight control unit. → 941625 PROGRAMMING (CENTRAL) HEADLIGHT CONTROL UNIT

WM 941625 PROGRAMMING (CENTRAL) HEADLIGHT CONTROL UNIT (ALL MODELS) > TOOLS

Designation	Type	Number	Description	
PIWIS Tester II	Special tool	9818		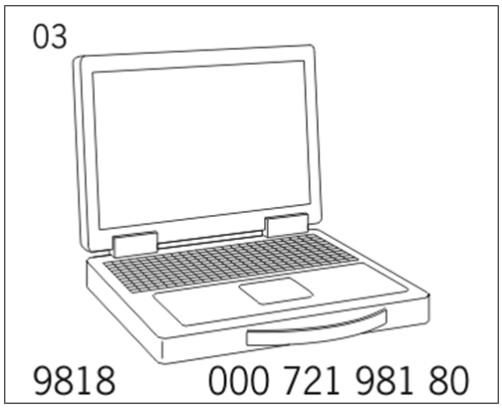

WM 941625 PROGRAMMING (CENTRAL) HEADLIGHT CONTROL UNIT (ALL MODELS) > TECHNICAL VALUES

Location	Description	Type	Basic value	Tolerance 1	Tolerance 2
Current rating		Nominal value	40 A		

WM 941625 PROGRAMMING (CENTRAL) HEADLIGHT CONTROL UNIT (ALL MODELS) > PROGRAMMING (CENTRAL) HEADLIGHT CONTROL UNIT

NOTE: Voltage drop

- *Risk of irreparable damage to control unit*
- *Risk of damage to control unit*
- *Fault entries in the control unit*
- *Coding in the control unit is aborted*
- *Malfunctions in control unit, even during programming*

→ Prior to disconnecting the control unit, switch off ignition and remove ignition key.

→ Ensure that the power supply is not interrupted during programming.

→ Connect a battery charger with a current rating of at least → **Nominal value: 40 A** to the vehicle battery.

Information

The **PIWIS Tester II 9818** instructions take precedence since the description may be different with later Tester releases.

The procedure described here has been structured in general terms. Different text or additional information may appear in **PIWIS Tester II 9818** .

1. **PIWIS Tester II 9818** must be connected to the vehicle and ignition switched on.
2. Start the diagnostic application and select the required vehicle type.
3. Select the **central headlight** control unit in the **overview** .
4. **Extended identification** must now be selected.
5. **Enter the vehicle identification number** and press [Enter].
6. **Maintenance/repairs** must then be selected.
7. **Control unit replacement** must now be selected. Then press [F12].
8. **Select Write data,** press [F12] and then press [F8] to start. The data is now loaded.
9. The Tester displays the message **Data has been written.** Press [F12] to continue.
10. **Maintenance/repairs** must now be selected.
11. **Select Headlight start-up** and press [F12] to continue.
12. **Read the preconditions** for start-up and press [F12] to continue.
13. **Headlight start-up** can now be started by pressing [F8].
14. Wait for confirmation that **coding was completed successfully.** Then press [F12] to continue.
15. Wait for confirmation that **start-up was completed successfully.** Press [F12] to continue.
16. Read out the fault memory and erase it if necessary.
17. Perform a function test on the control unit.

WM 942355 REPLACING HALOGEN BULB (ALL MODELS) > PRELIMINARY WORK

1. Remove trim panel behind headlight. → Removing front trim panel

WM 942355 REPLACING HALOGEN BULB (ALL MODELS) > REMOVING HALOGEN BULB

NOTE: Incorrect handling of bulbs

- *Risk of damage to bulbs and the bulb housing*

→ Switch off ignition and remove ignition key.

→ Switch off the relevant loads when changing bulbs.

→ Only use bulbs listed in the bulb table.

→ Only install clean bulbs that are free of grease.

→ Always use a cloth or soft paper when working with bulbs.

→ Observe the safety instructions when changing a bulb in a Bi-Xenon headlight.

→ In certain states, it is compulsory to carry spare light bulbs.

1. Switch off position lights.
2. Switch off ignition and pull remote control out of ignition lock.
3. Release hose connection for the breather hose **-1-** (**-a-**) and pull it off the headlight.
4. Turn the rear cover **-2-** in direction of arrow and remove it.

Fig 1: Removing Rear Cover

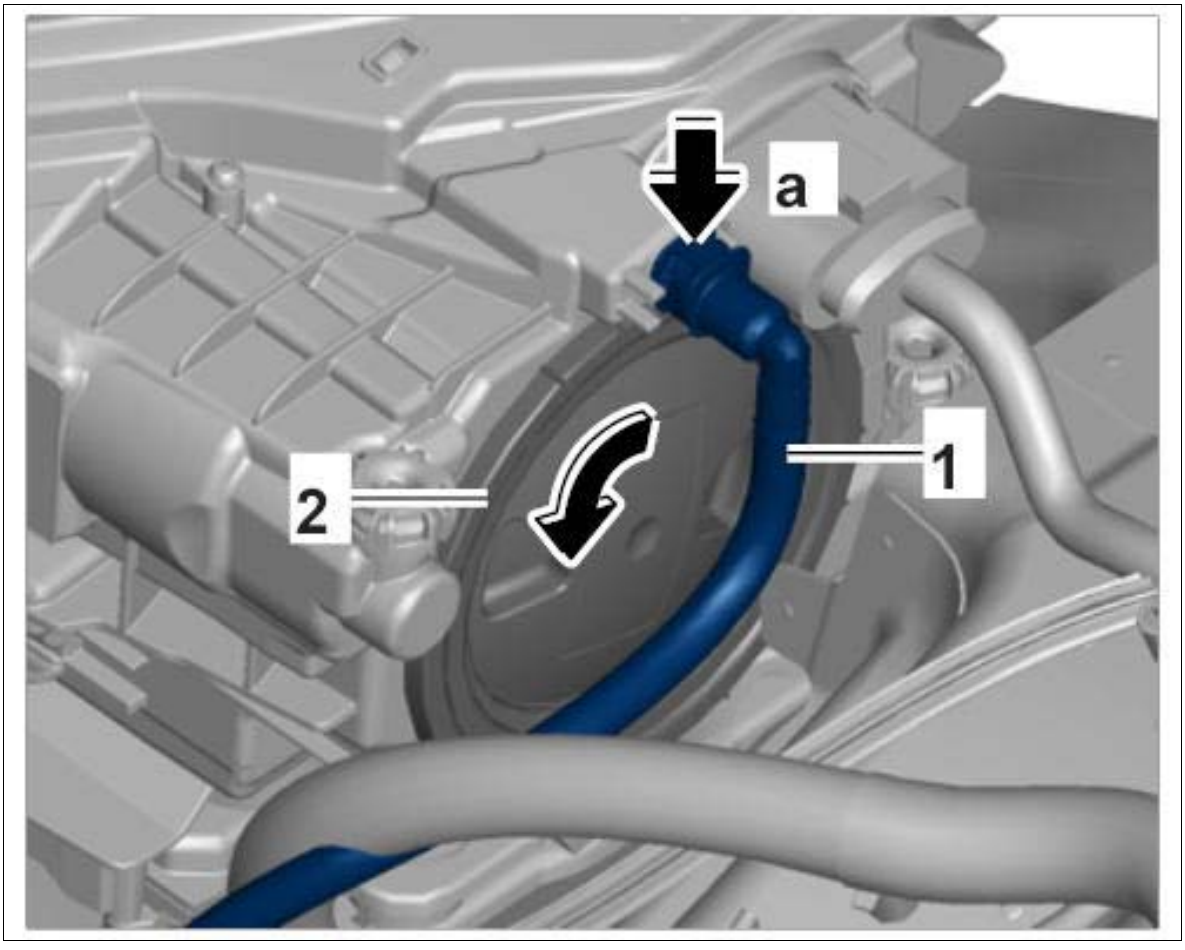

Courtesy of PORSCHE CARS NORTH AMERICA, INC.

5. Pull electric plug connection **-1-** off the halogen bulb **-2-** .

Fig 2: Disconnecting Electric Plug Connection

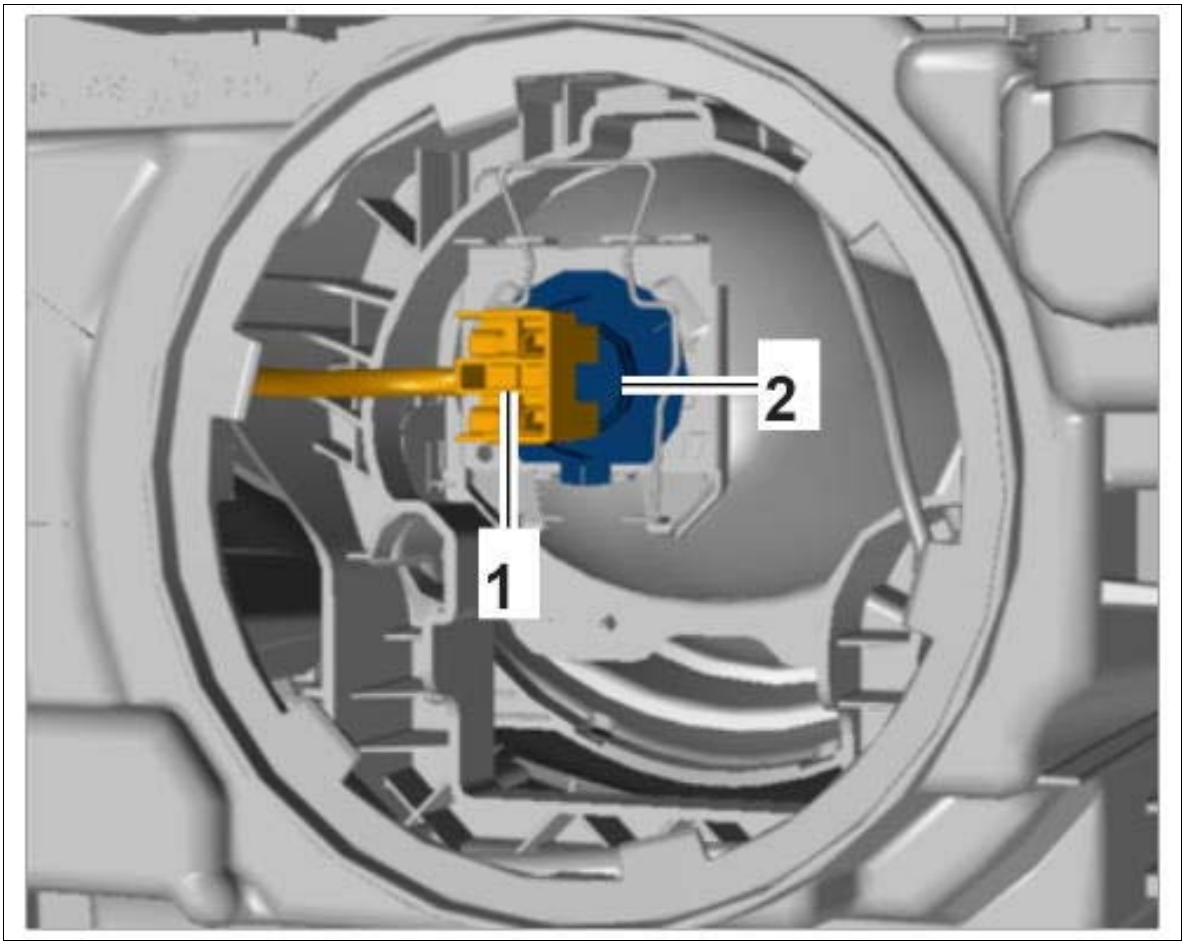

Courtesy of PORSCHE CARS NORTH AMERICA, INC.

6. Press clip **-1-** at the top forward, unhook at the sides **-a-** and bend it down **-b-** .

7. Remove halogen bulb **-2-** from the headlight.

Fig 3: Removing Halogen Bulb

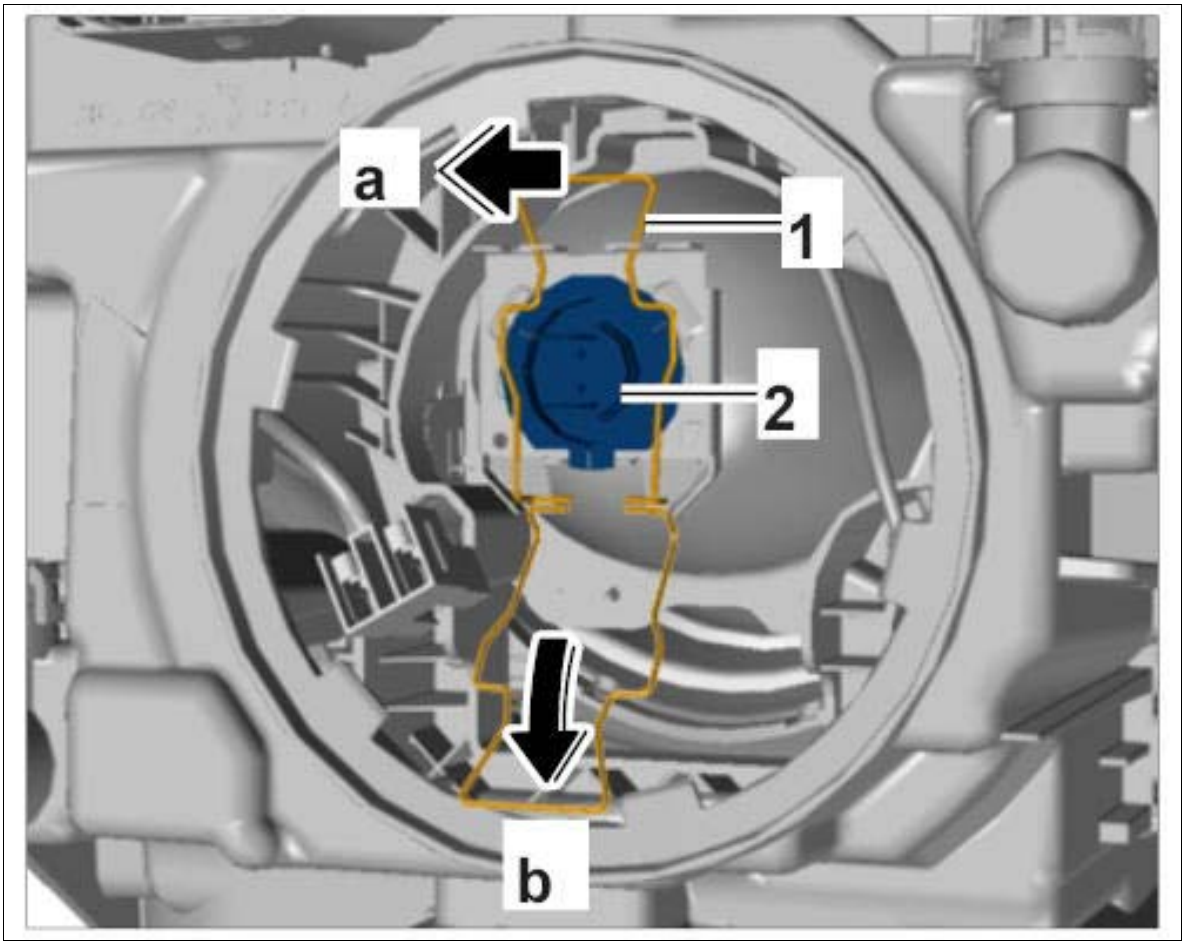

Courtesy of PORSCHE CARS NORTH AMERICA, INC.

WM 942355 REPLACING HALOGEN BULB (ALL MODELS) > INSTALLING HALOGEN BULB

NOTE: Incorrect handling of bulbs

- *Risk of damage to bulbs and the bulb housing*

→ Switch off ignition and remove ignition key.

→ Switch off the relevant loads when changing bulbs.

→ Only use bulbs listed in the bulb table.

→ Only install clean bulbs that are free of grease.

→ Always use a cloth or soft paper when working with bulbs.

→ Observe the safety instructions when changing a bulb in a Bi-Xenon headlight.

→ In certain states, it is compulsory to carry spare light bulbs.

1. Install halogen bulb **-1-** in the headlight.

    1. 1.1. Position halogen bulb in the socket on the headlight in such a way that the guide **-2-** is pointing downwards.

    2. 1.2. Bend clip **-3-** up **-a-** and unhook it **-b-** .

    Fig 1: Installing Halogen Bulb

    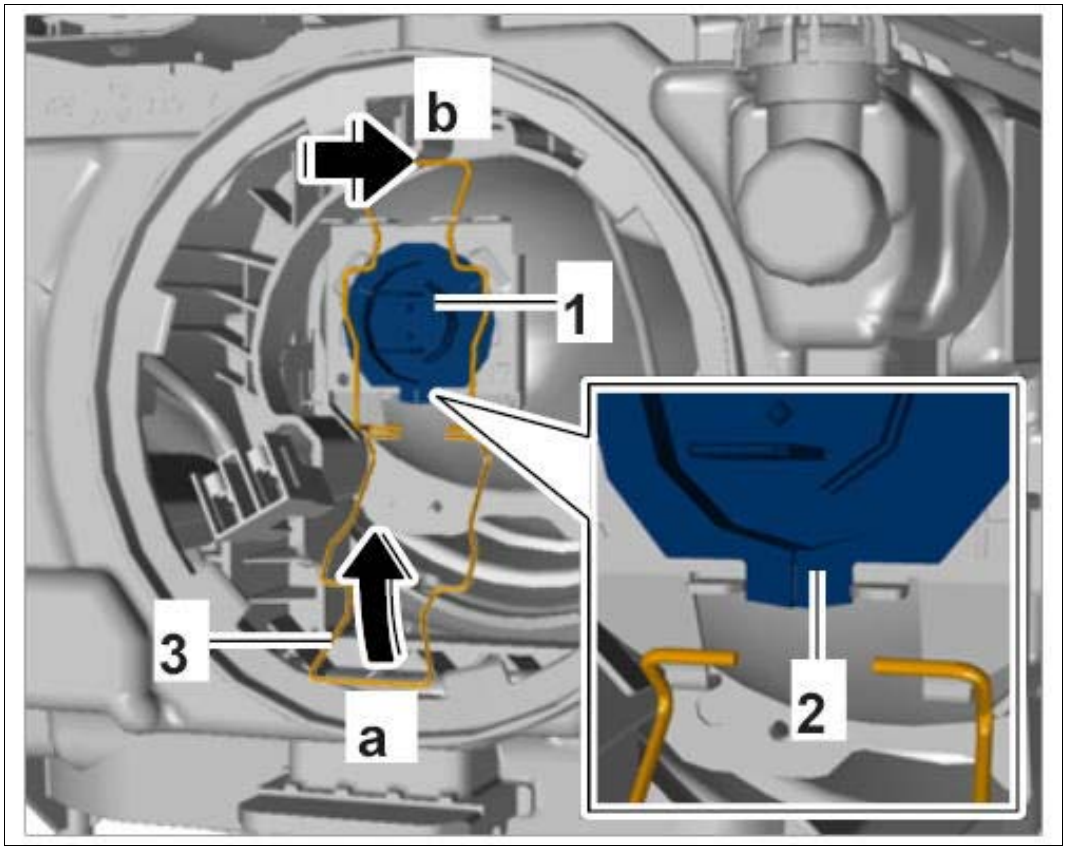

    Courtesy of PORSCHE CARS NORTH AMERICA, INC.

2. Connect electric plug connection **-1-** to the halogen bulb **-2-** .

Fig 2: Connecting Electric Plug Connection

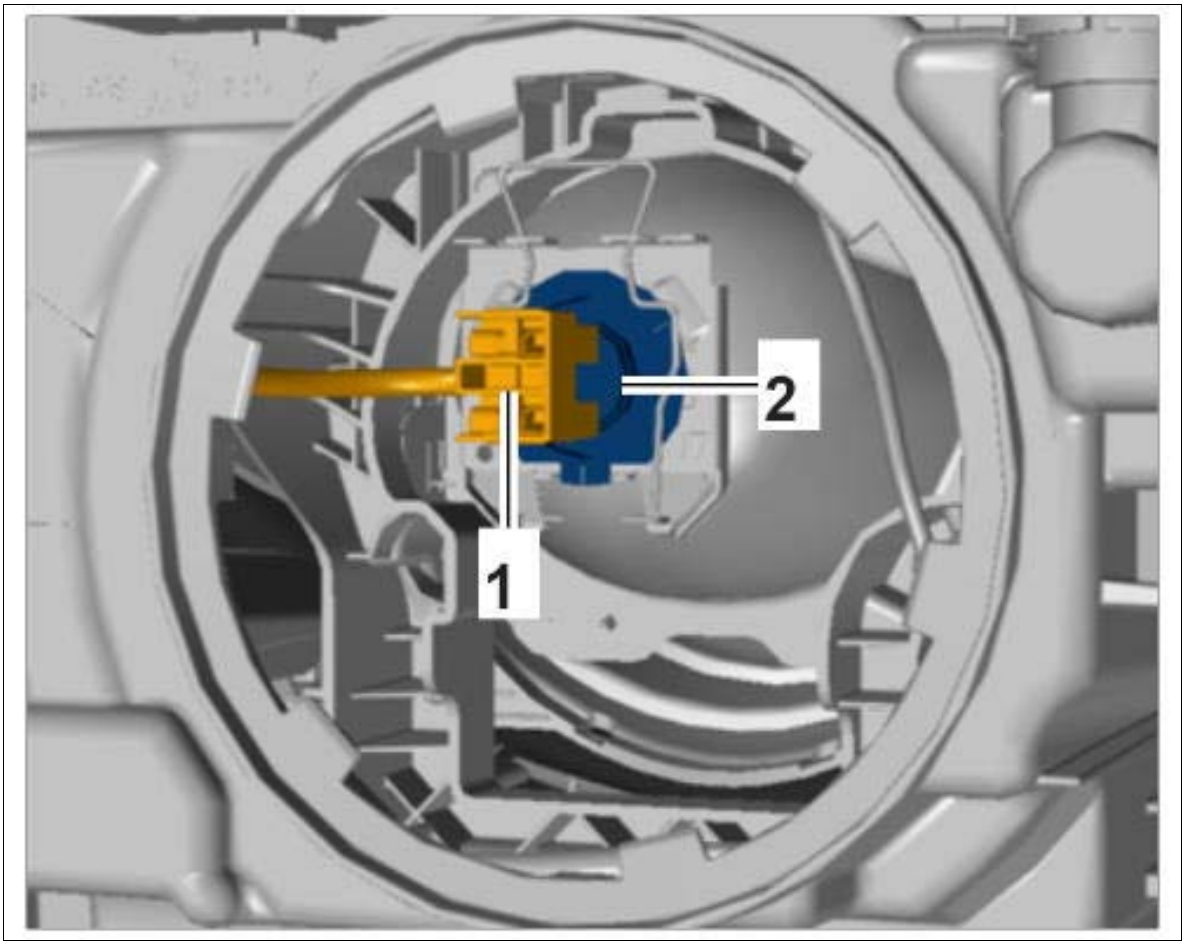

Courtesy of PORSCHE CARS NORTH AMERICA, INC.

3. Check condition of the seal **-1-** and check that it is fitted correctly on the rear cover **-2-** .
4. Position rear cover on the headlight and lock it by turning it in direction of arrow.
5. Check condition of O-ring **-3-** and check that it is seated correctly.
6. Connect hose connection **-4-** for the breather hose at the headlight until it engages securely.

Fig 3: Installing Rear Cover

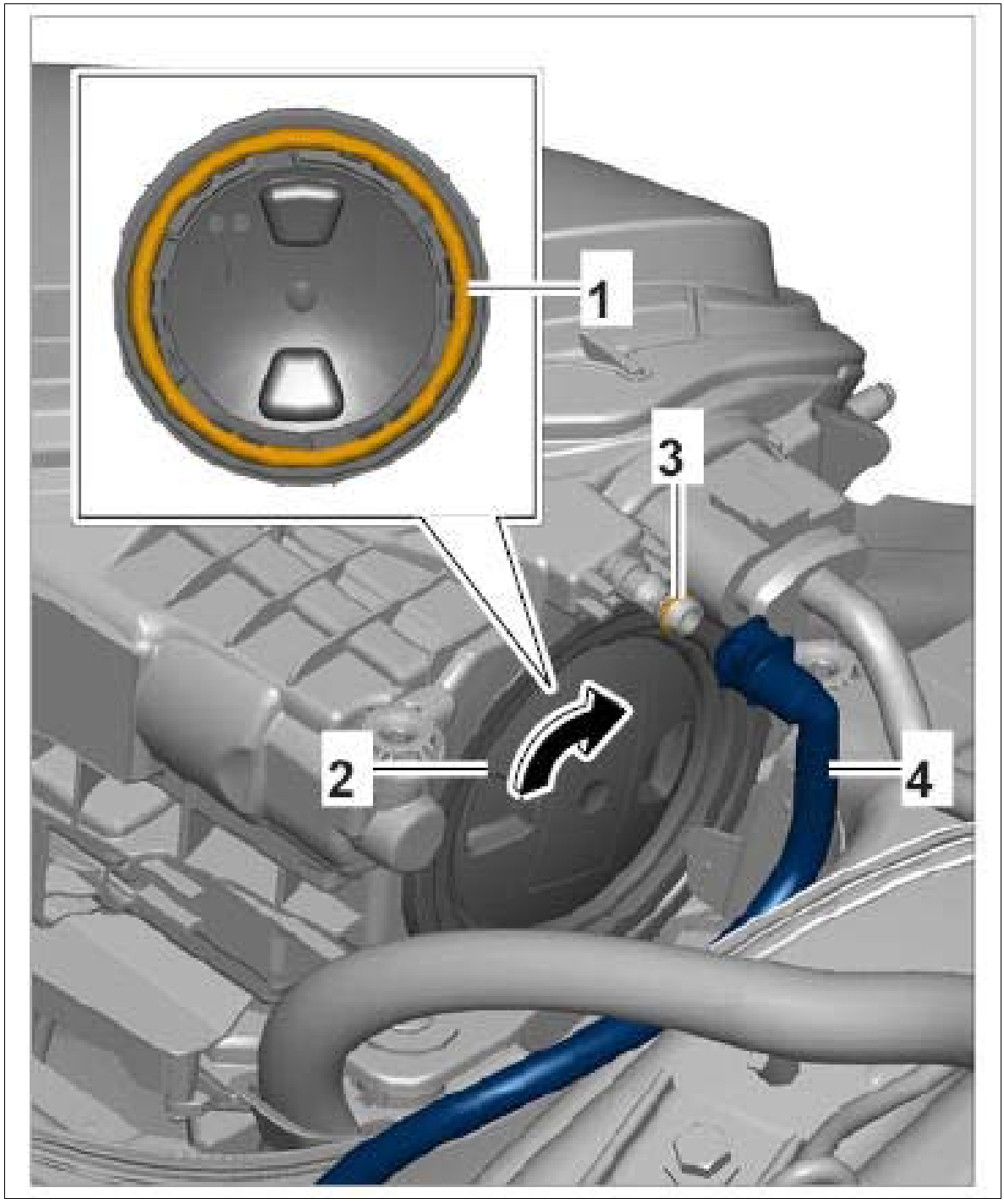

Courtesy of PORSCHE CARS NORTH AMERICA, INC.

WM 942355 REPLACING HALOGEN BULB (ALL MODELS) > SUBSEQUENT WORK

1. Install trim panel behind headlight. → Installing front trim panel

WM 942919 REMOVING AND INSTALLING NUMBER PLATE LIGHT (ALL MODELS) > REMOVING NUMBER PLATE LIGHT

NOTE: Voltage peaks

- *Risk of damage to load or to the control unit*

→ Switch off ignition and remove remote control before disconnecting or removing load.

1. Insert a screwdriver at the recess for the number plate light **-1-** and press in direction of arrow, then remove the number plate light.

   Fig 1: Removing Number Plate Light

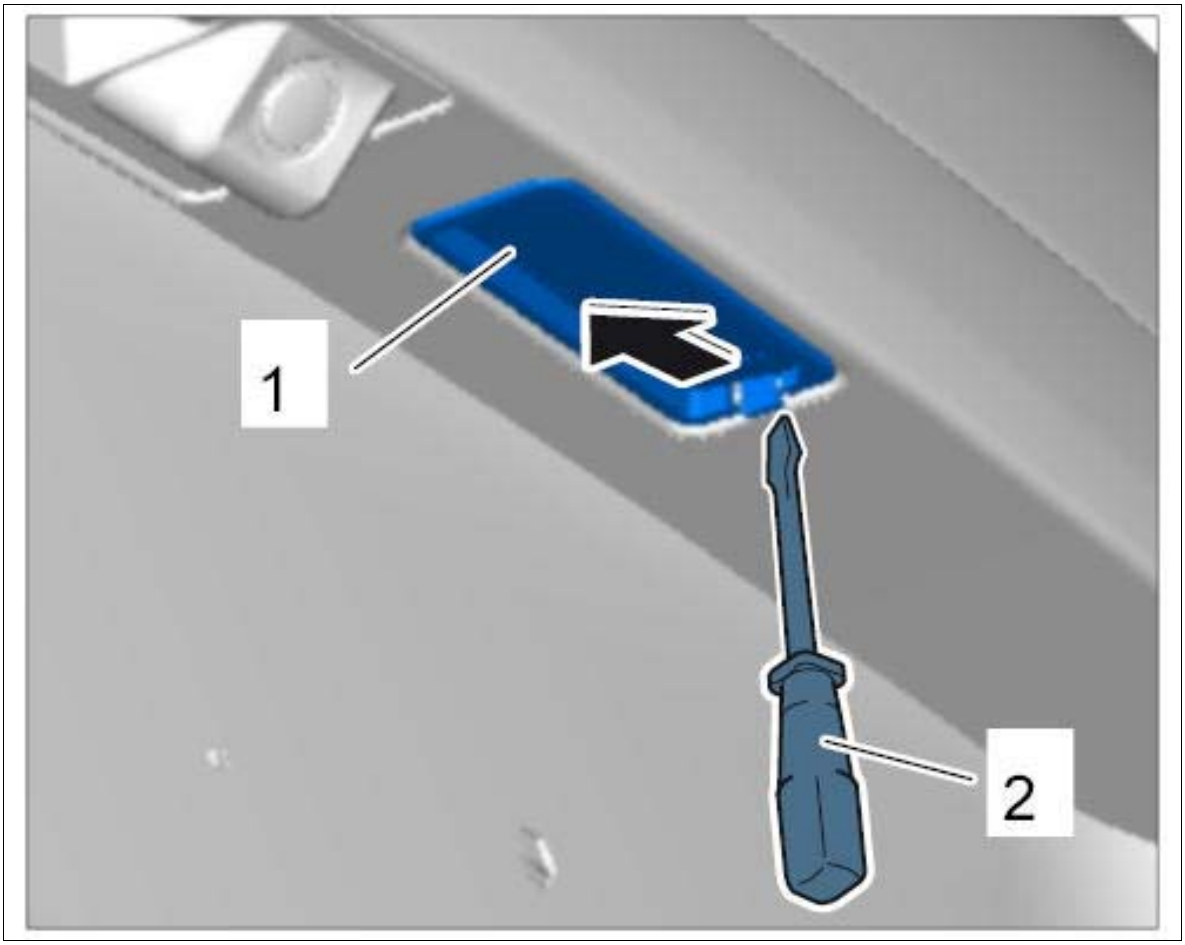

Courtesy of PORSCHE CARS NORTH AMERICA, INC.

2. Release plug connection **-2-** for number plate light **-A-** and pull it off **-B-** .

Fig 2: Releasing Number Plate Light Plug Connection

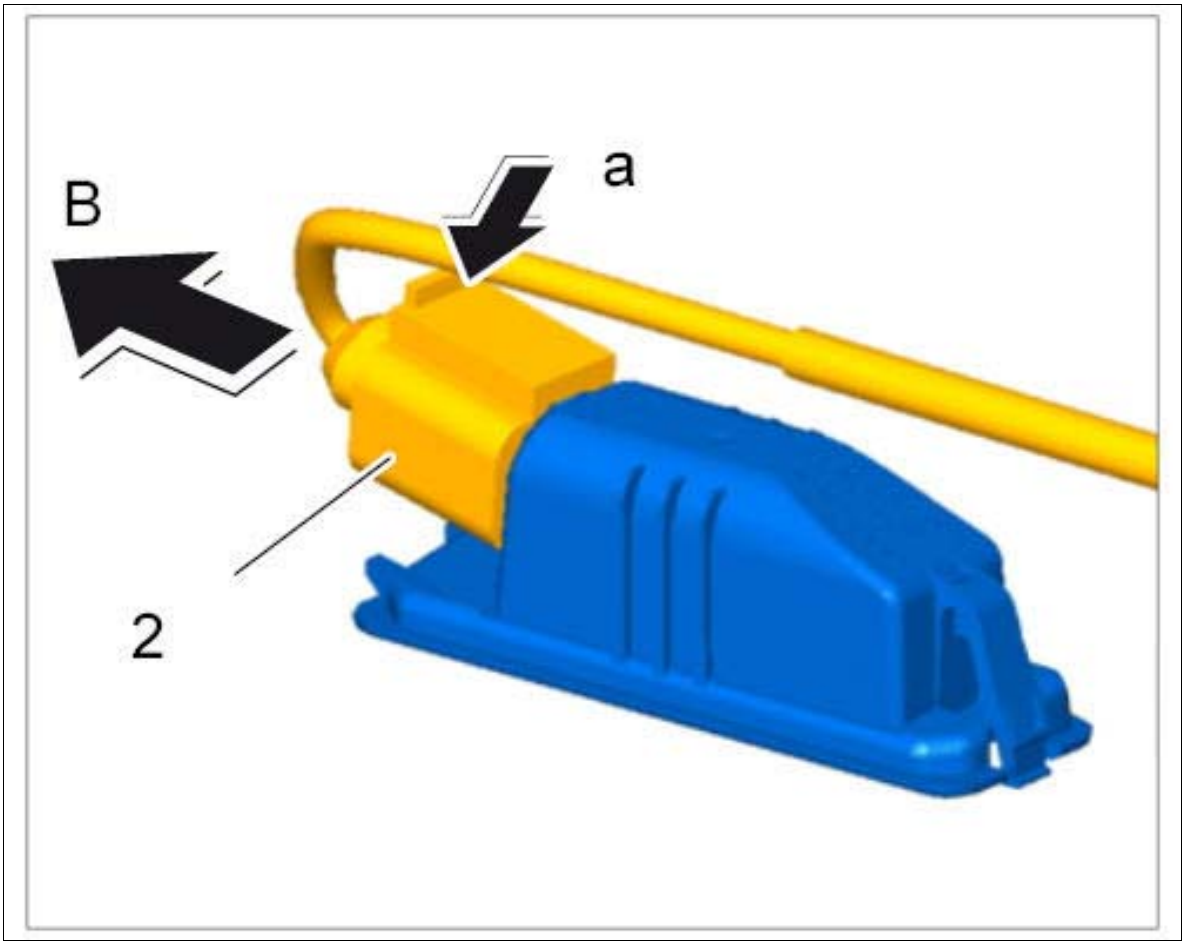

Courtesy of PORSCHE CARS NORTH AMERICA, INC.

WM 942919 REMOVING AND INSTALLING NUMBER PLATE LIGHT (ALL MODELS) > INSTALLING NUMBER PLATE LIGHT

1. The number plate light is installed in reverse order to removal.

WM 943119 REMOVING AND INSTALLING TAIL LIGHT (ALL MODELS) > PRELIMINARY WORK

1. Remove rear apron. → REMOVING REAR APRON
2. Remove side trim panel for rear luggage compartment. → Removing side trim panel for rear luggage compartment

WM 943119 REMOVING AND INSTALLING TAIL LIGHT (ALL MODELS) > REMOVING TAIL LIGHT

1. Unclip electric plug connection **-1-** at the body. Then release **-2-** and disconnect it.
2. Remove connector holder **-3-** from the connector.

Fig 1: Disconnecting Electric Plug Connection

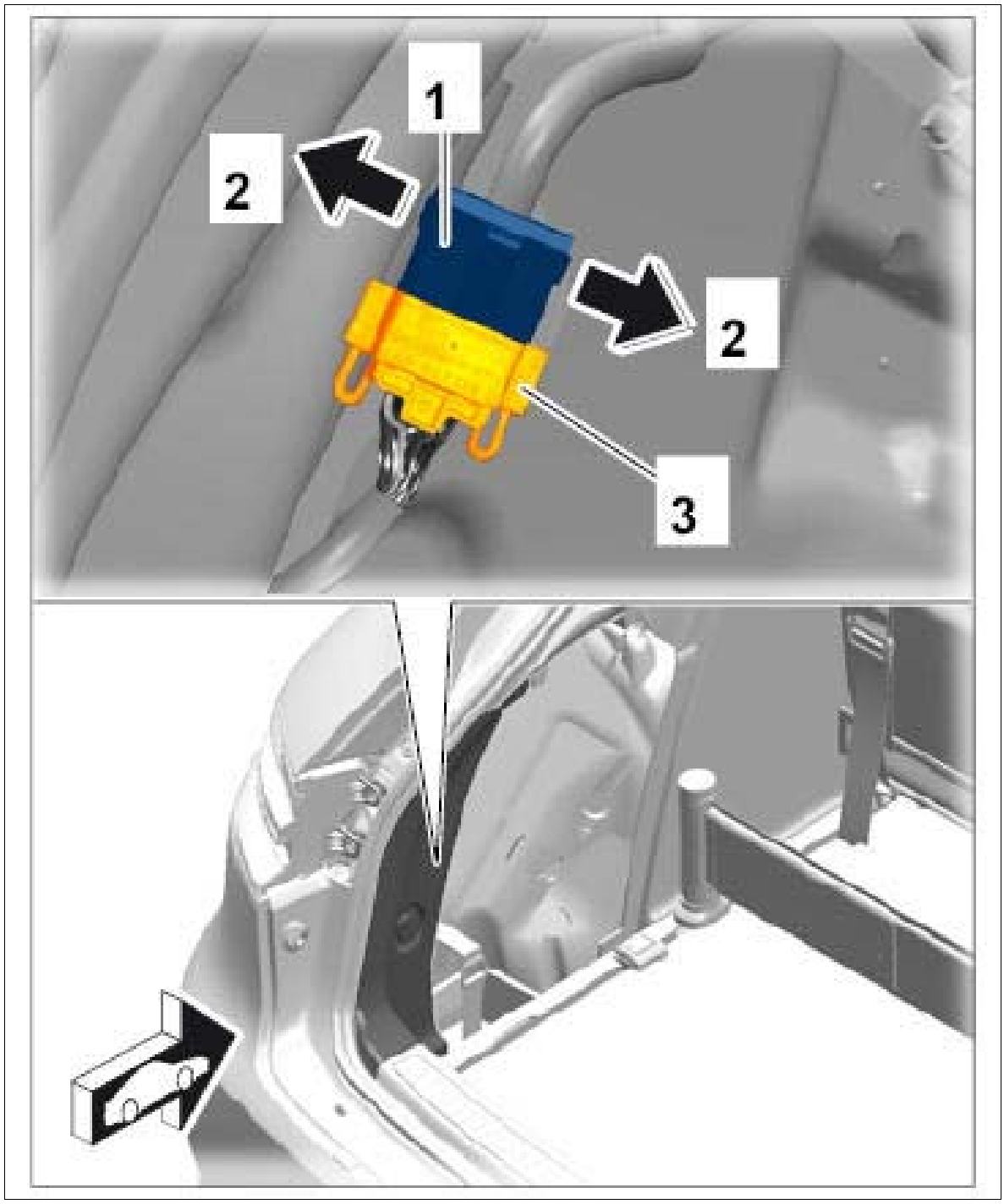

Courtesy of PORSCHE CARS NORTH AMERICA, INC.

3. Pull seal **-1-** in the tail light area off the body seam.
4. Disengage cover **-2-** at the sides **-3-** from the two clamps **-4-** .
5. Disengage cover by pulling it forward **-5-** out of the tail light seam **-6-** .

Fig 2: Removing Cover

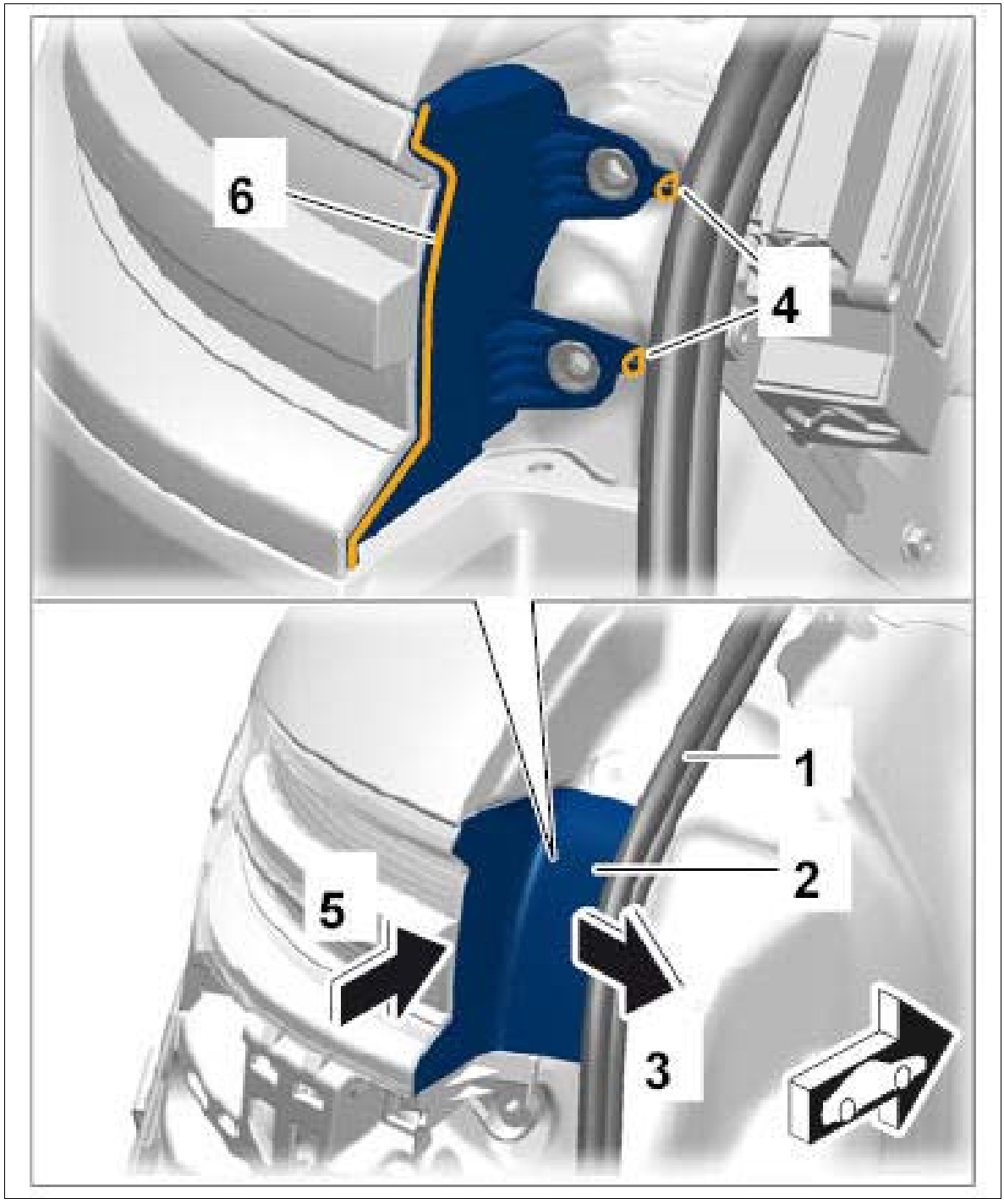

Courtesy of PORSCHE CARS NORTH AMERICA, INC.

When removing the left tail light:

6. Loosen holder **-1-** for the line from the rear retaining strip **-2-** .
7. Disengage holder **-3-** (**-4-**), remove it from the rear retaining strip and leave it hanging with the line connected.

Fig 3: Loosening Holder

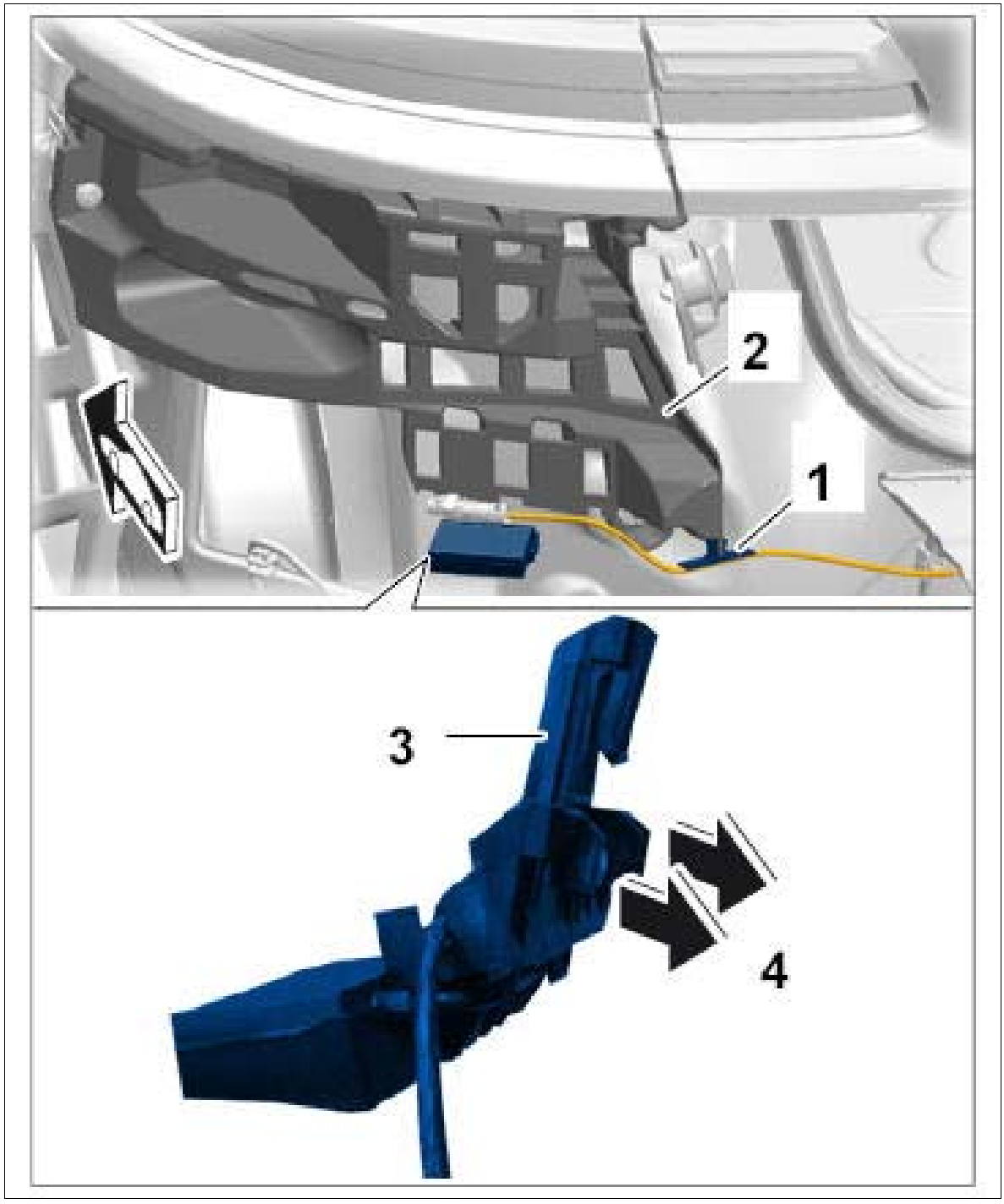

Courtesy of PORSCHE CARS NORTH AMERICA, INC.

All vehicles

8. Unscrew fastening nuts **-1-** on the rear retaining strip **-2-** and unscrew fastening screw **-3-** .

Fig 4: Loosening Rear Retaining Strip

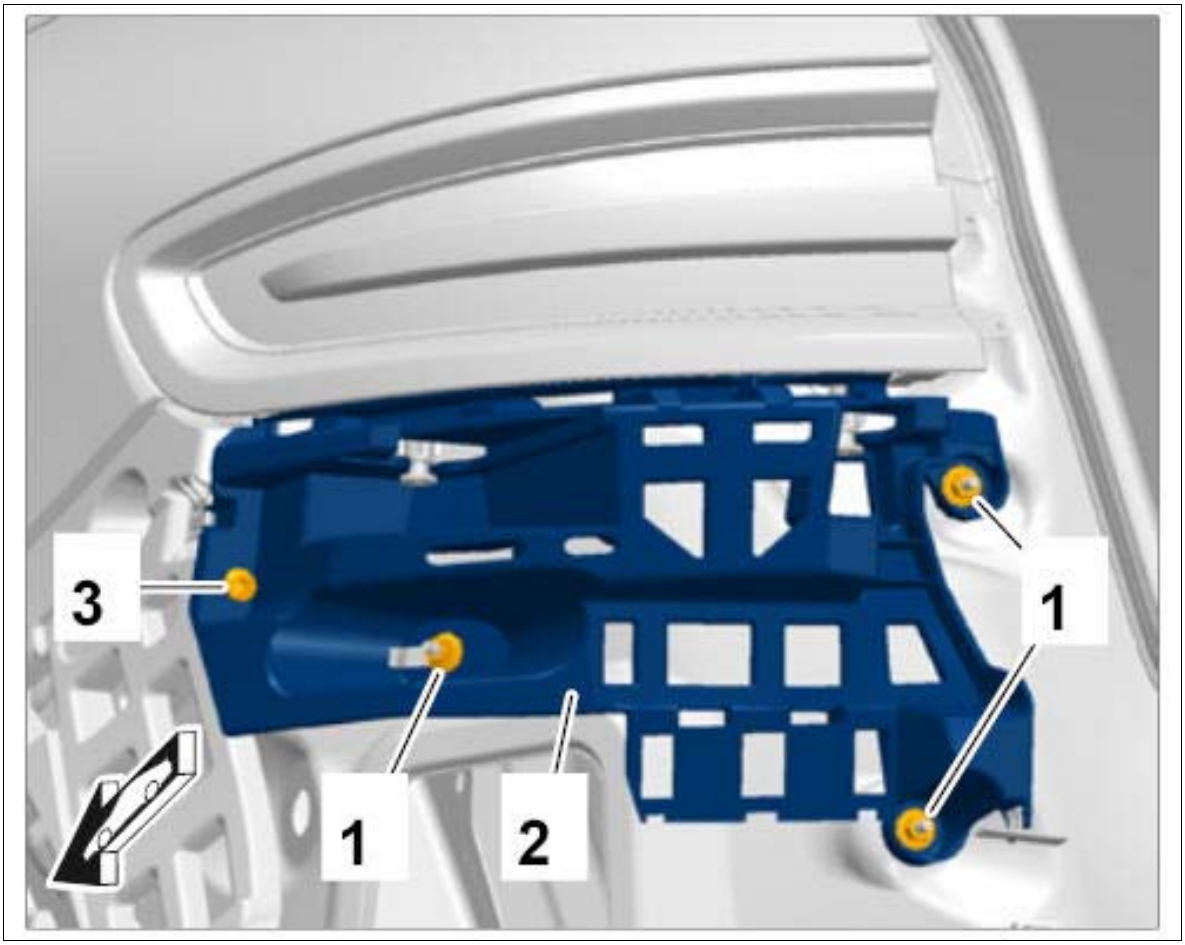

Courtesy of PORSCHE CARS NORTH AMERICA, INC.

9. Unscrew fastening screws **-1-** on the tail light **-2-** .
10. Remove tail light with rear retaining strip.

Fig 5: Removing Tail Light

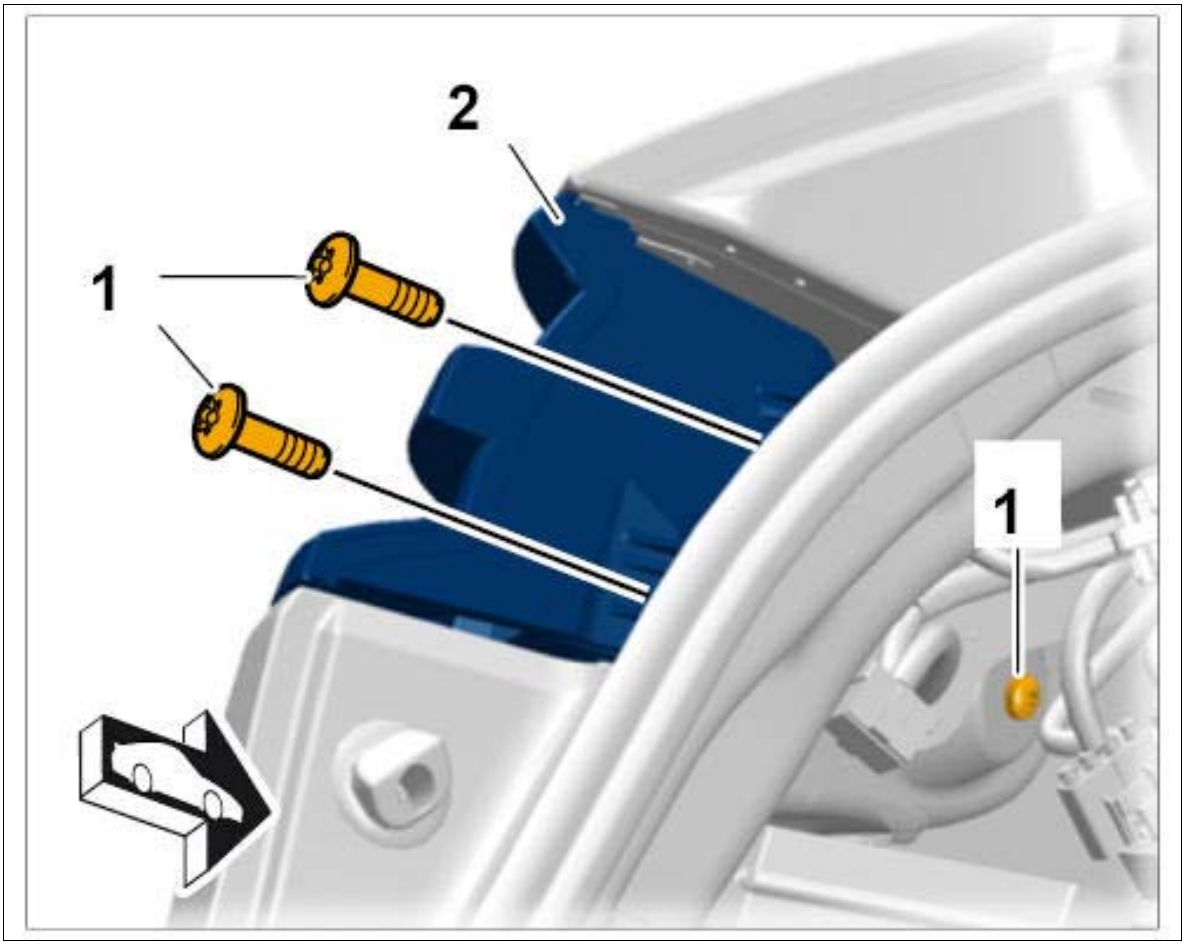

Courtesy of PORSCHE CARS NORTH AMERICA, INC.

11. Disengage locking mechanism **-1-** and remove rear retaining strip **-2-** from the tail light **-3-** .
12. If you are replacing the tail light, pull adjustment device **-4-** off the tail light.

Fig 6: Loosening Rear Retaining Strip From Tail Light

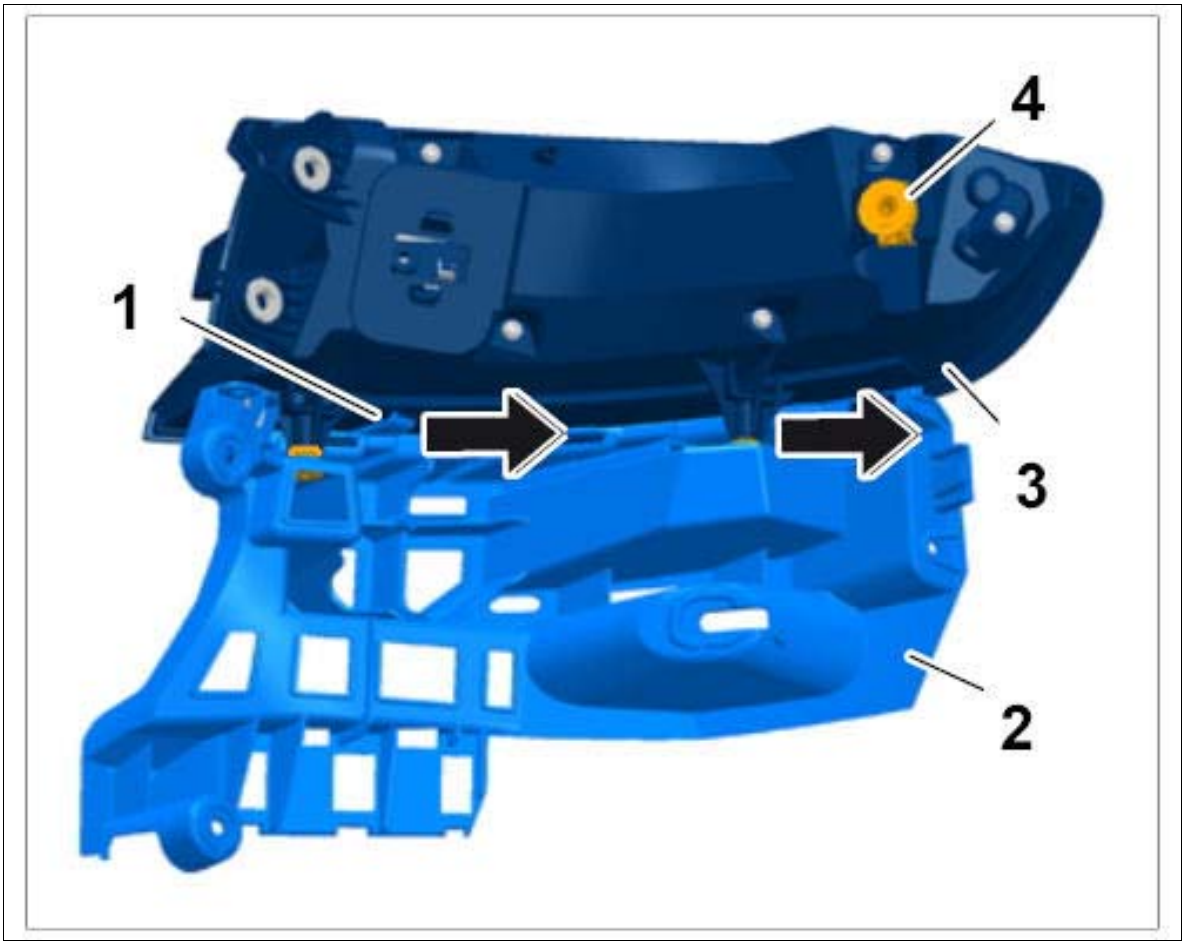

Courtesy of PORSCHE CARS NORTH AMERICA, INC.

WM 943119 REMOVING AND INSTALLING TAIL LIGHT (ALL MODELS) > INSTALLING TAIL LIGHT

1. Installation is performed in reverse order to removal.
2. If the tail light was replaced, set the gap dimensions by turning the adjustment device.
3. Tighten fastening screws on the tail light.
4. Screw on and tighten fastening nuts on the rear retaining strip.
5. Tighten fastening screw used to secure the rear retaining strip to the front retaining strip.

WM 943119 REMOVING AND INSTALLING TAIL LIGHT (ALL MODELS) > SUBSEQUENT WORK

1. Install side trim panel for rear luggage compartment. → Installing side trim panel for rear luggage compartment

2. Install rear apron. → INSTALLING REAR APRON

WM 943119 REMOVING AND INSTALLING TAIL LIGHT IN REAR LID (ALL MODELS) > PRELIMINARY WORK

1. Remove trim panel for rear lid. → Removing trim panel for rear lid

WM 943119 REMOVING AND INSTALLING TAIL LIGHT IN REAR LID (ALL MODELS) > REMOVING TAIL LIGHT IN REAR LID

1. Switch off ignition and pull remote control out of ignition lock.
2. Disengage locking lugs **-1-** on the cover **-2-** using a small screwdriver and pull cover off the tail light **-3-** in direction of arrow.

Fig 1: Removing Cover

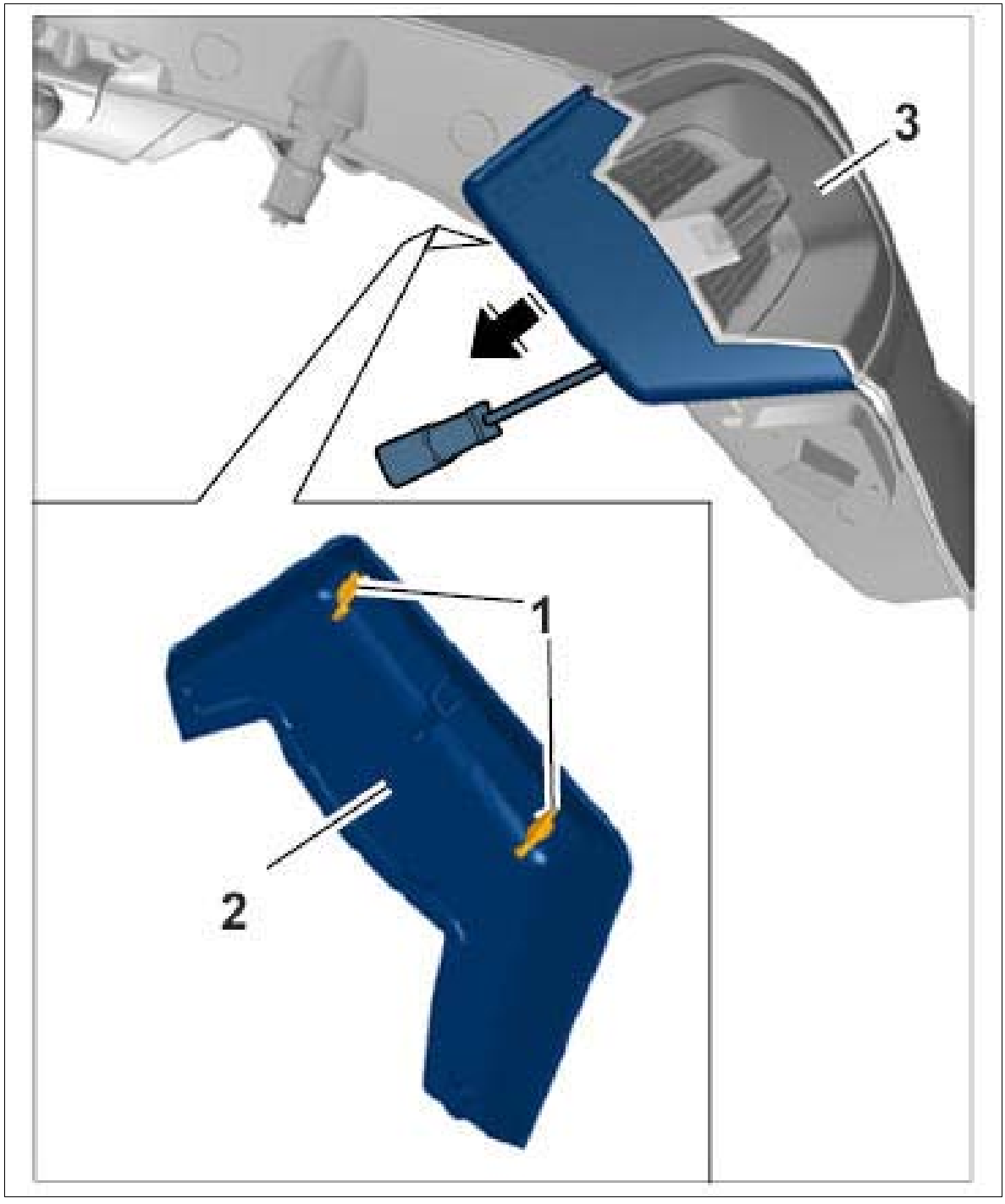

Courtesy of PORSCHE CARS NORTH AMERICA, INC.

3. Release electric plug connection **-1-** (**-a-**) and disconnect it.

4. Screw off fastening nuts **-2-** .

Fig 2: Disconnecting Electric Plug Connection

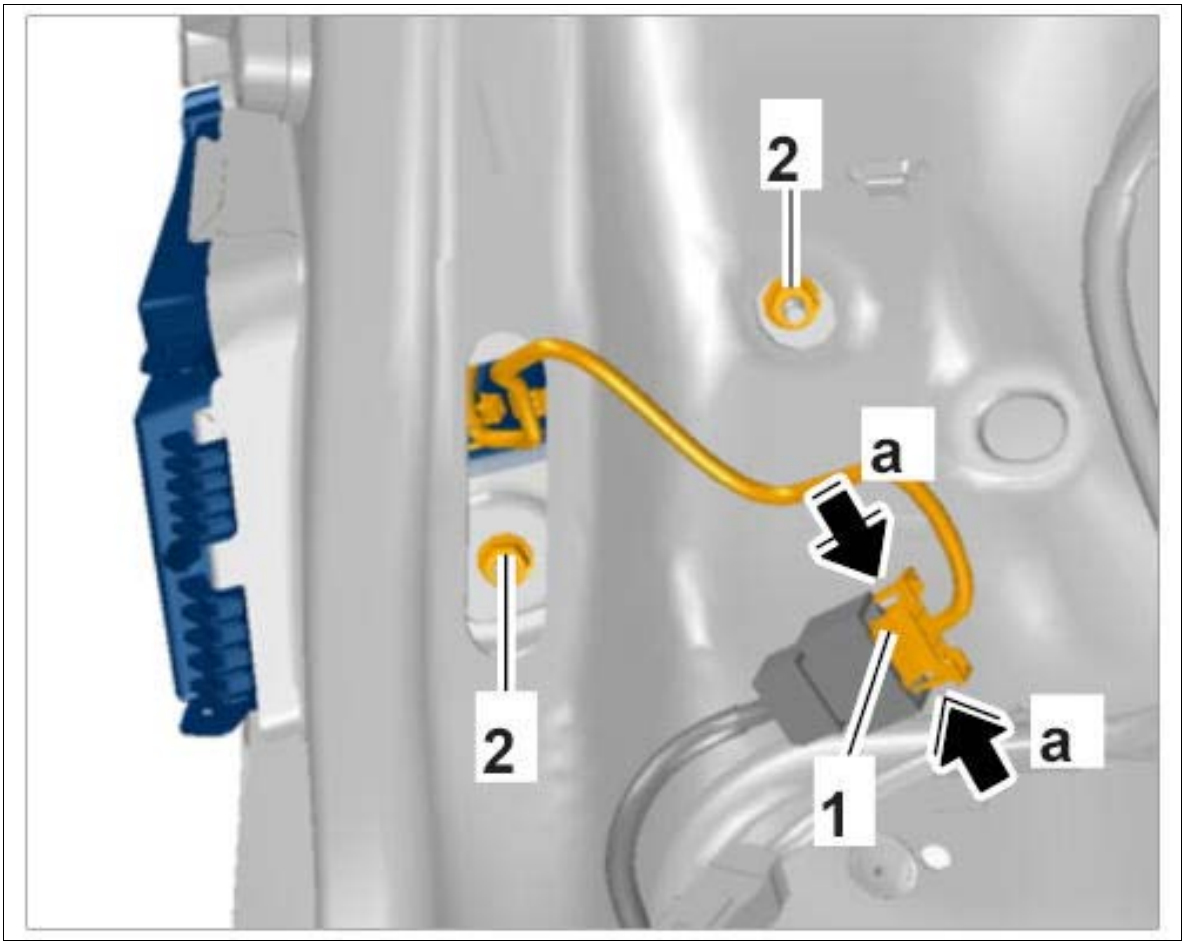

Courtesy of PORSCHE CARS NORTH AMERICA, INC.

5. Remove tail light **-1-** .
    1. 5.1. Swivel the tail light out of the rear lid slightly **-a-** .
    2. 5.2. Carefully unhook the tail light at the sides from the seam of the rear lid **-b-** .
    3. 5.3. Remove tail light and guide electric line out through the opening in the rear lid.

Fig 3: Removing Tail Light From Rear Lid

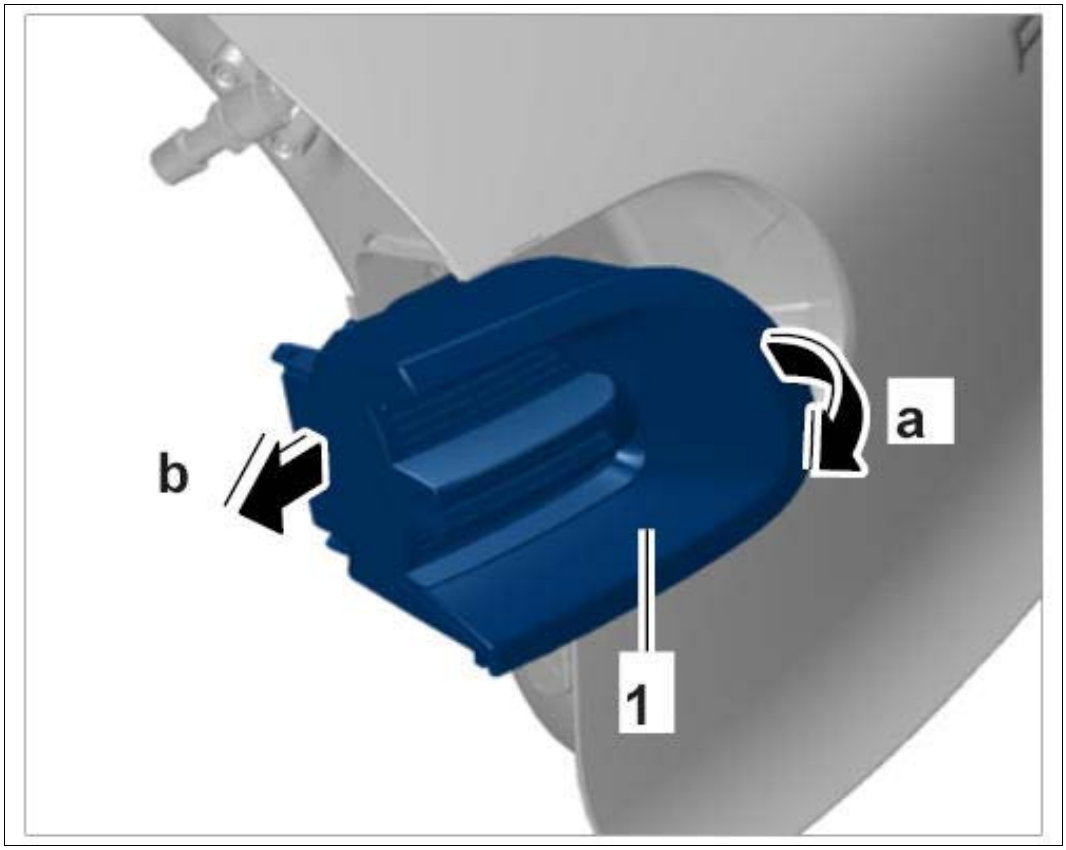

Courtesy of PORSCHE CARS NORTH AMERICA, INC.

WM 943119 REMOVING AND INSTALLING TAIL LIGHT IN REAR LID (ALL MODELS) > INSTALLING TAIL LIGHT IN REAR LID

1. Installation is performed in reverse order to removal.
2. Tighten fastening nuts.

WM 943119 REMOVING AND INSTALLING TAIL LIGHT IN REAR LID (ALL MODELS) > SUBSEQUENT WORK

1. Install trim panel for rear lid. → Installing trim panel for rear lid

WM 943619 REMOVING AND INSTALLING BRAKE LIGHT SWITCH (ALL MODELS) > PRELIMINARY WORK

1. Remove trim panel under dashboard at the left. → Removing trim panel under dashboard at the left

WM 943619 REMOVING AND INSTALLING BRAKE LIGHT SWITCH (ALL MODELS) > REMOVING BRAKE LIGHT SWITCH

1. Release electric plug connection **-1-** (**-a-**) and pull it off the brake light switch **-2-** .

   Fig 1: Loosening Brake Light Switch

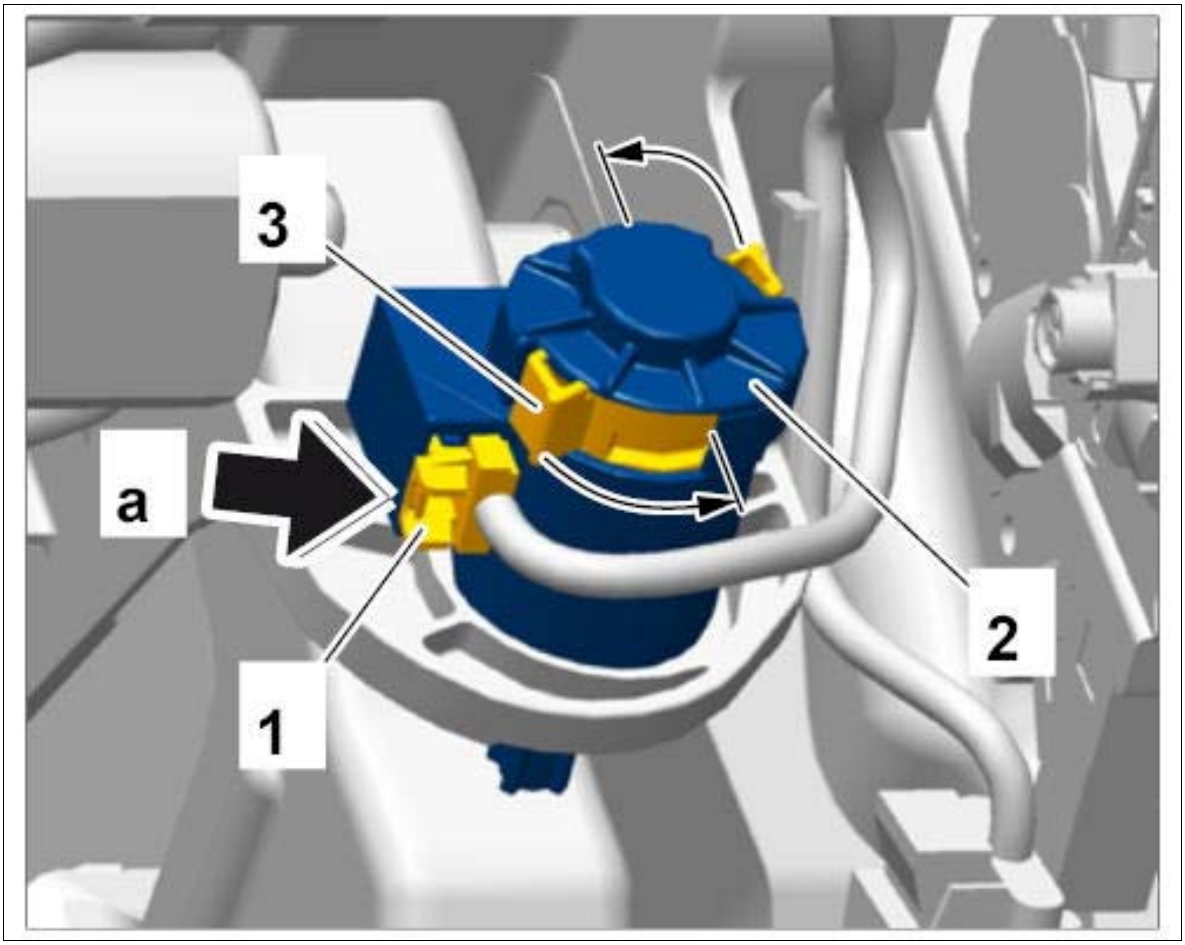

Courtesy of PORSCHE CARS NORTH AMERICA, INC.

2. Press tappet **-1-** fully into the brake light switch **-2-** (**-a-**).

Fig 2: Pressing Brake Light Switch Tappets

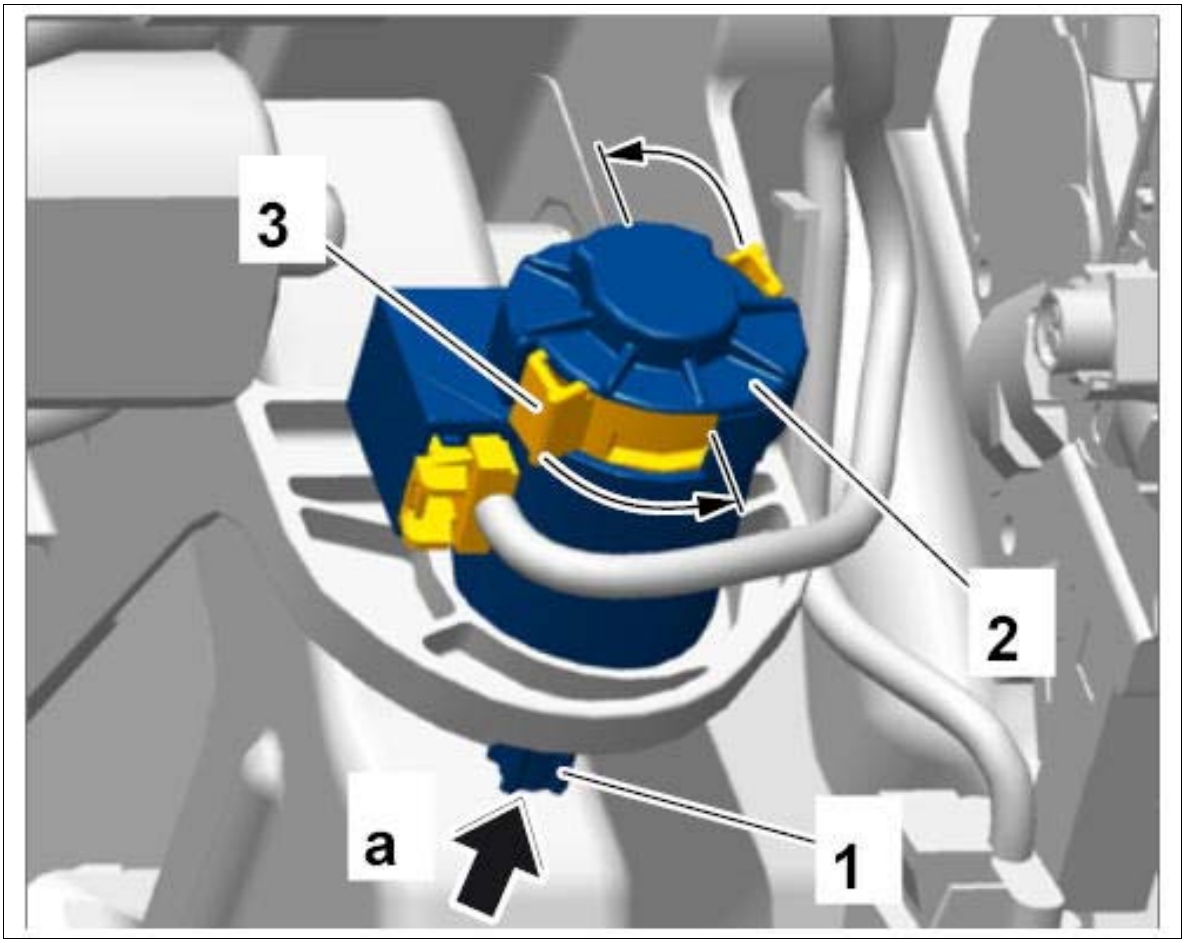

Courtesy of PORSCHE CARS NORTH AMERICA, INC.

3. Disengage locking ring **-3-** and turn it approx. 60° anti-clockwise until it engages.
4. Press locking lugs **-a-** and pull the brake light switch **-1-** to the rear and out of the pedal bearing block.

Fig 3: Removing Brake Light Switch

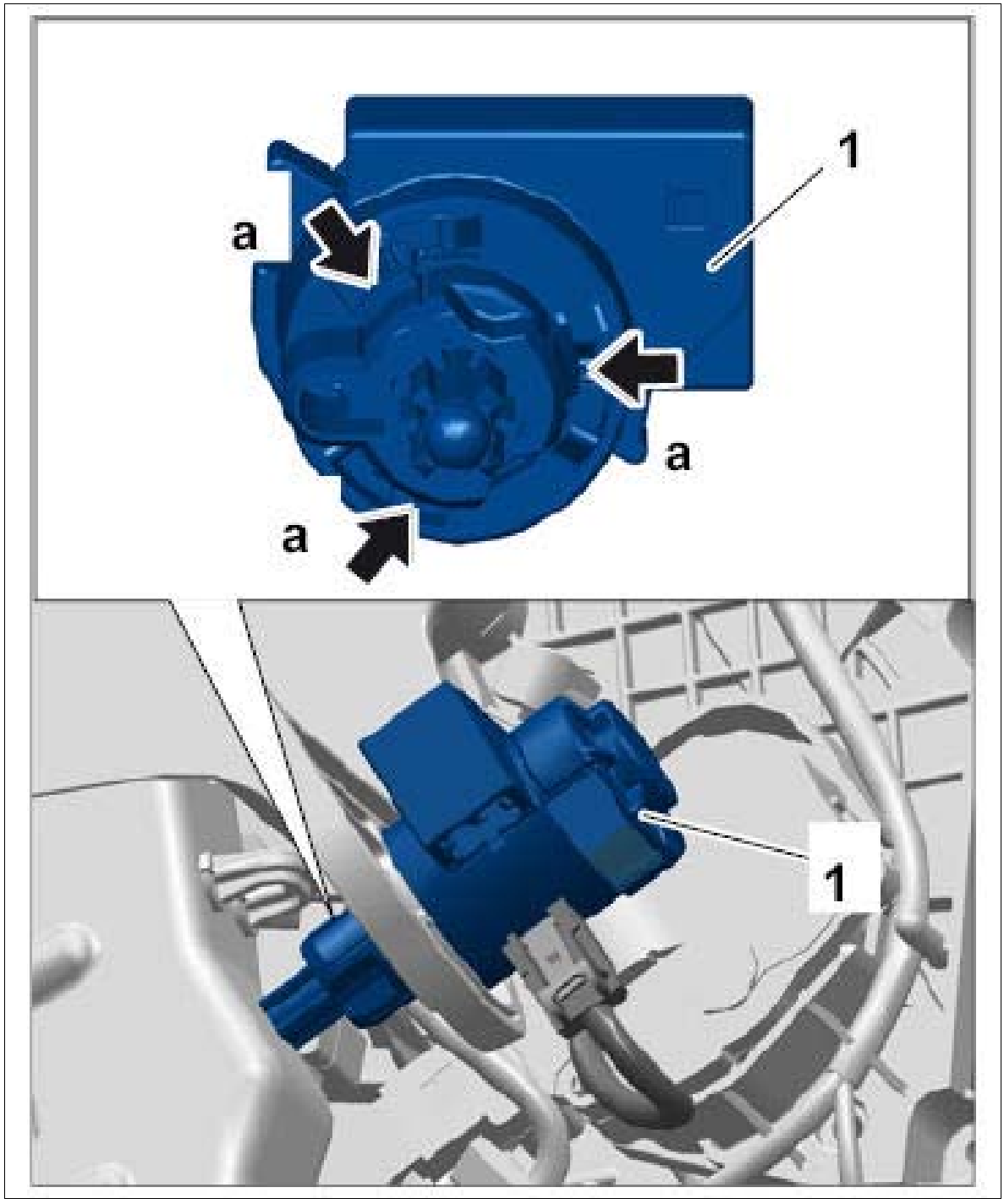

Courtesy of PORSCHE CARS NORTH AMERICA, INC.

WM 943619 REMOVING AND INSTALLING BRAKE LIGHT SWITCH (ALL MODELS) > INSTALLING BRAKE LIGHT SWITCH

Information

The brake light switch must only be installed when the brake pedal is not actuated. The brake booster,

brake master cylinder and brake pedal must be ready to drive.

1. Installation is performed in reverse order to removal.

WM 943619 REMOVING AND INSTALLING BRAKE LIGHT SWITCH (ALL MODELS) > ADJUSTING BRAKE LIGHT SWITCH

Information

The brake light switch must be re-adjusted if the position of the brake pedal is changed after adjusting the brake light switch. The brake pedal must be unactuated at its end position when adjusting the brake light switch.

1. Press tappet **-1-** fully into the brake light switch **-2-** .
2. Disengage locking ring **-3-** and turn it approx. 60° anti-clockwise until it engages.

Fig 1: Adjusting Brake Light Switch

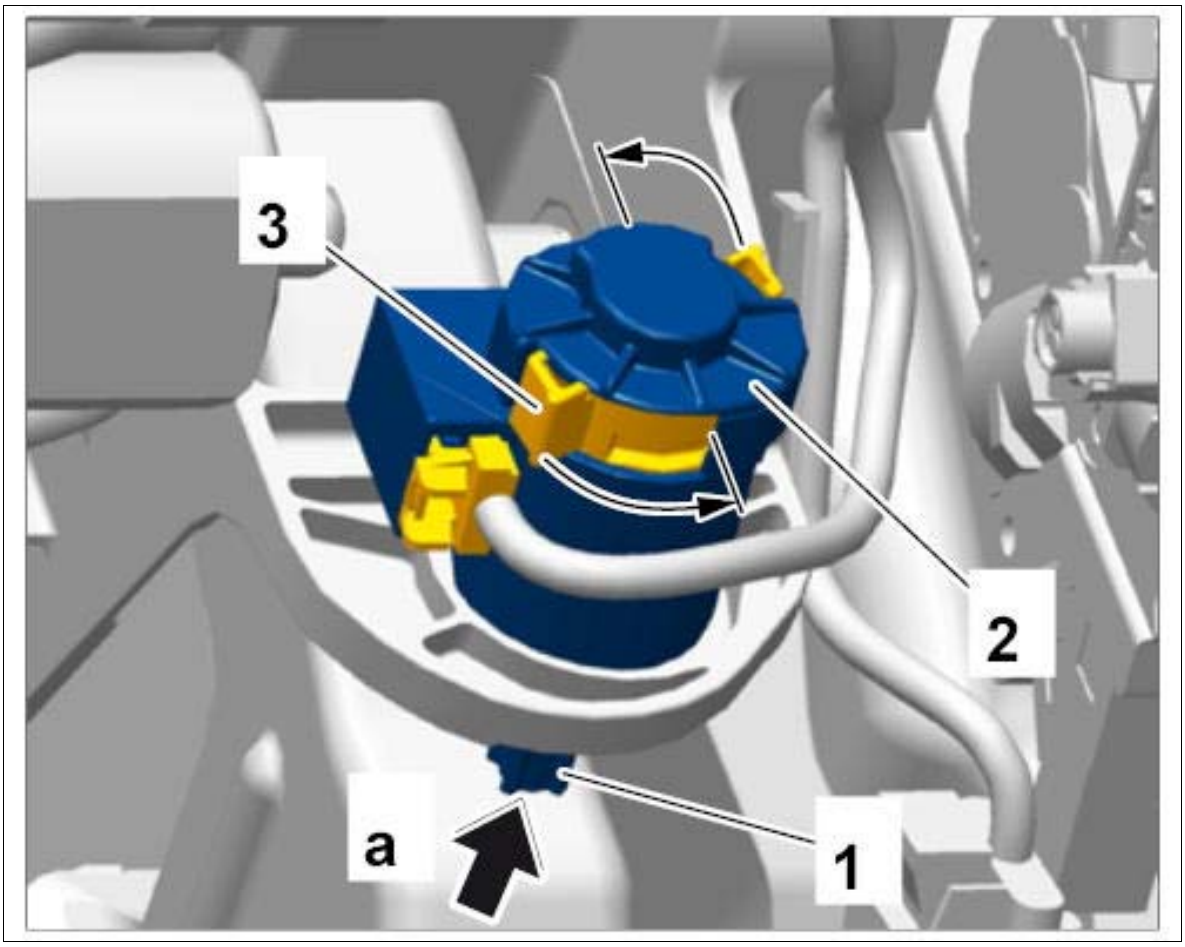

Courtesy of PORSCHE CARS NORTH AMERICA, INC.

3. Release tappet **-1-** on the brake light switch **-2-** .
4. Disengage locking ring **-3-** and turn it approx. 60° clockwise until it engages.

Fig 2: Adjusting Brake Light Switch

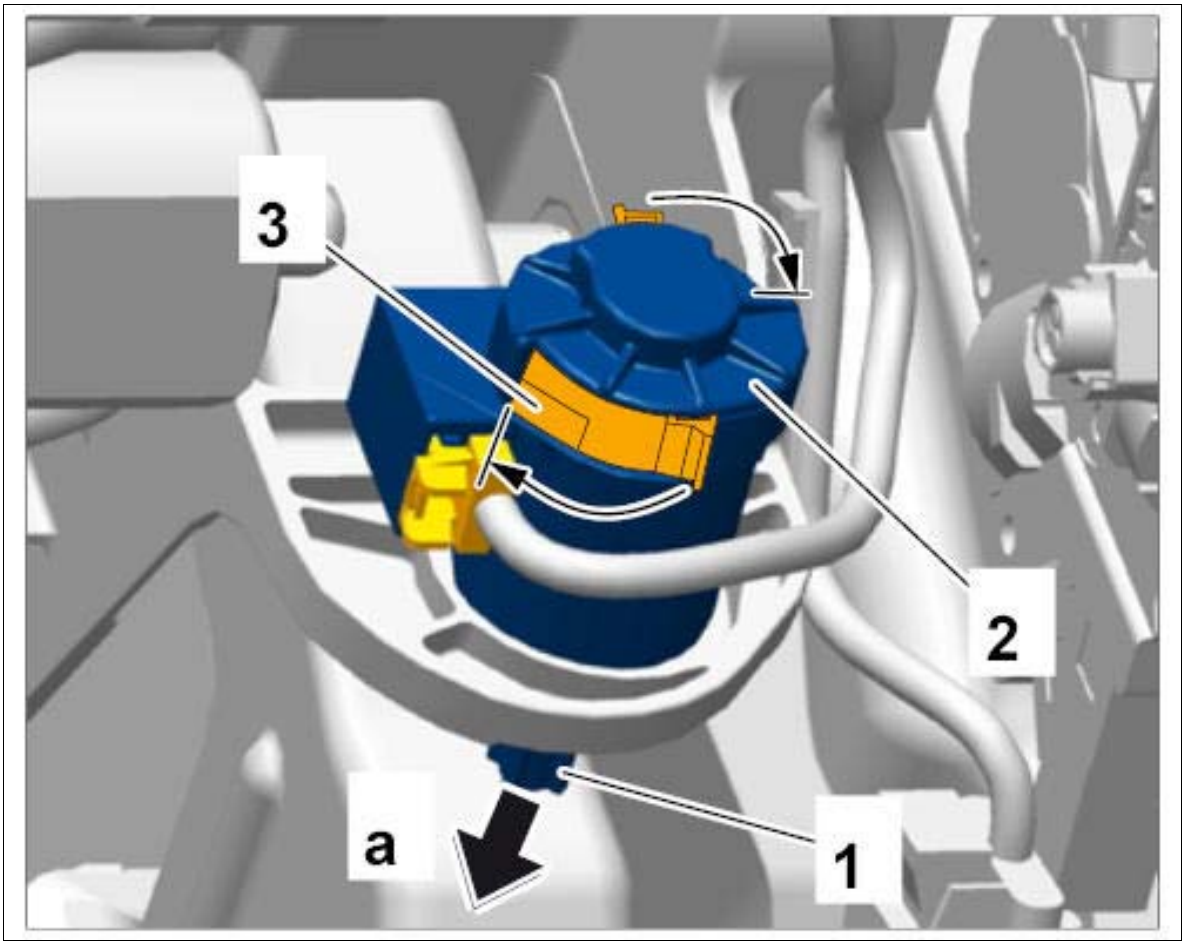

Courtesy of PORSCHE CARS NORTH AMERICA, INC.

WM 943619 REMOVING AND INSTALLING BRAKE LIGHT SWITCH (ALL MODELS) > SUBSEQUENT WORK

1. Install trim panel under dashboard at the left. → Removing trim panel under dashboard at the left

WM 944919 REMOVING AND INSTALLING CONTROL UNIT FOR FRONT-END ELECTRONICS (ALL MODELS) > TOOLS

Designation	Type	Number	Description	

PIWIS Tester II	Special tool	9818		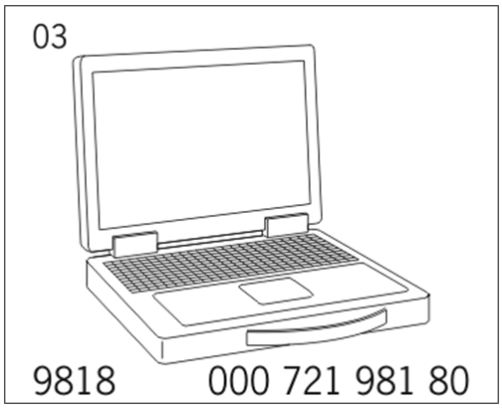

WM 944919 REMOVING AND INSTALLING CONTROL UNIT FOR FRONT-END ELECTRONICS (ALL MODELS) > PRELIMINARY WORK

1. Remove trim panel under dashboard at the left. → Removing trim panel under dashboard at the left

WM 944919 REMOVING AND INSTALLING CONTROL UNIT FOR FRONT-END ELECTRONICS (ALL MODELS) > REMOVING CONTROL UNIT FOR FRONT-END ELECTRONICS

NOTE: Voltage peaks

- *Risk of damage to load or to the control unit*

→ Remove the ignition key and switch off load before disconnecting or removing load.

Information

Always comply with the regulations for handling ESD-sensitive components!

- Assembly work may only be carried out if the mechanic is wearing the working clothes and shoes approved by Porsche.
- The new part must only be removed from the ESD (electrostatic discharge) protective packaging just before installation and at the position at which the part is to be installed.
- Never touch the electric pins and plug contacts.

1. Switch off ignition and pull remote control out of ignition lock.
2. Loosen relay carrier **-1-** .
    1. 2.1. Release the relay carrier **-a-** and swivel it down **-b-** .
    2. 2.2. Pull the relay carrier out of the holder **-2-** (**-c-**) and set it aside with lines

connected.

Fig 1: Loosening Relay Carrier

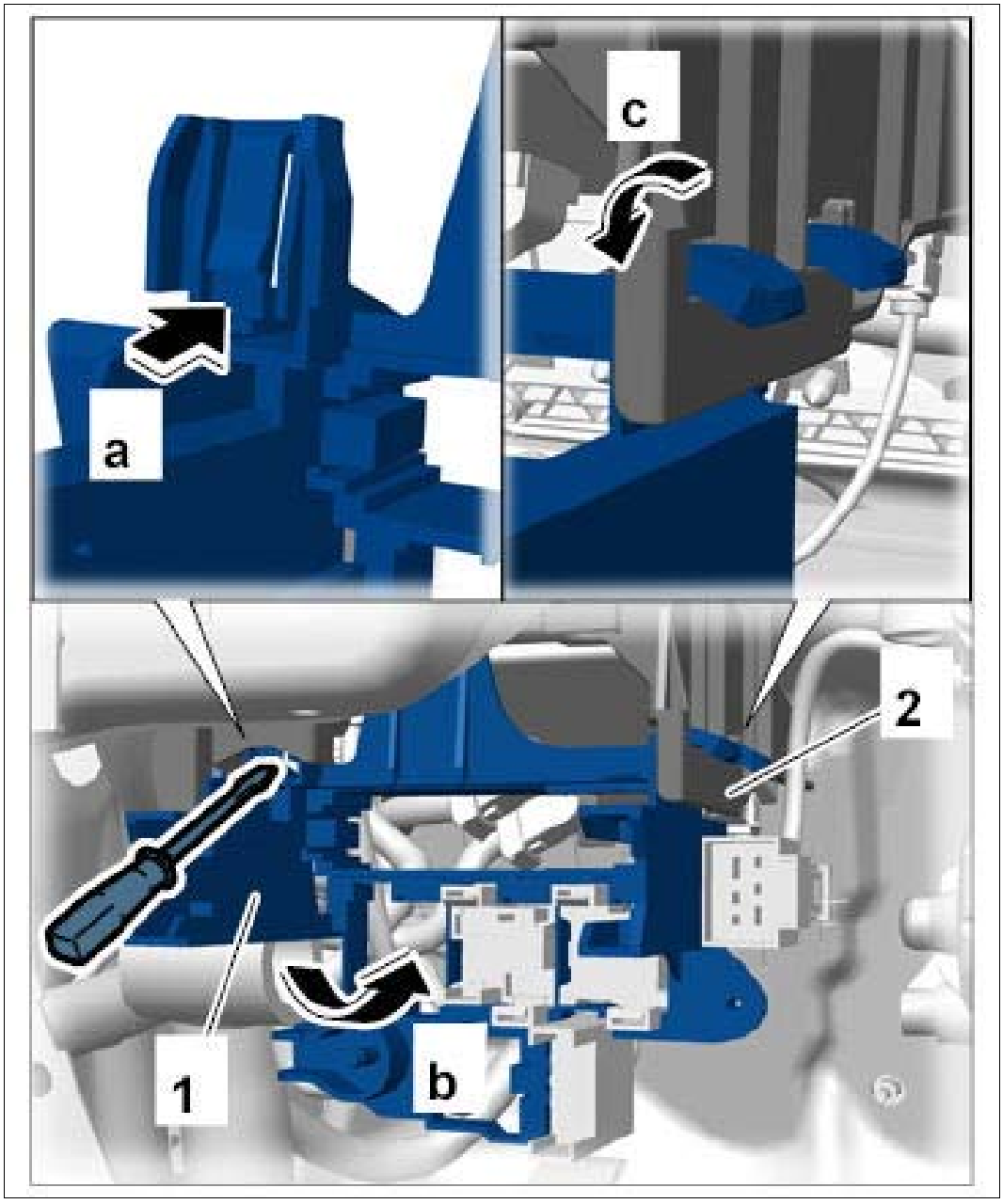

Courtesy of PORSCHE CARS NORTH AMERICA, INC.

3. Press release **-a-** , swivel the front-end electronics control unit **-1-** down at the front **-b-** and remove it from the holder **-2-** at the rear.

Fig 2: Loosening Front-End Electronics Control Unit

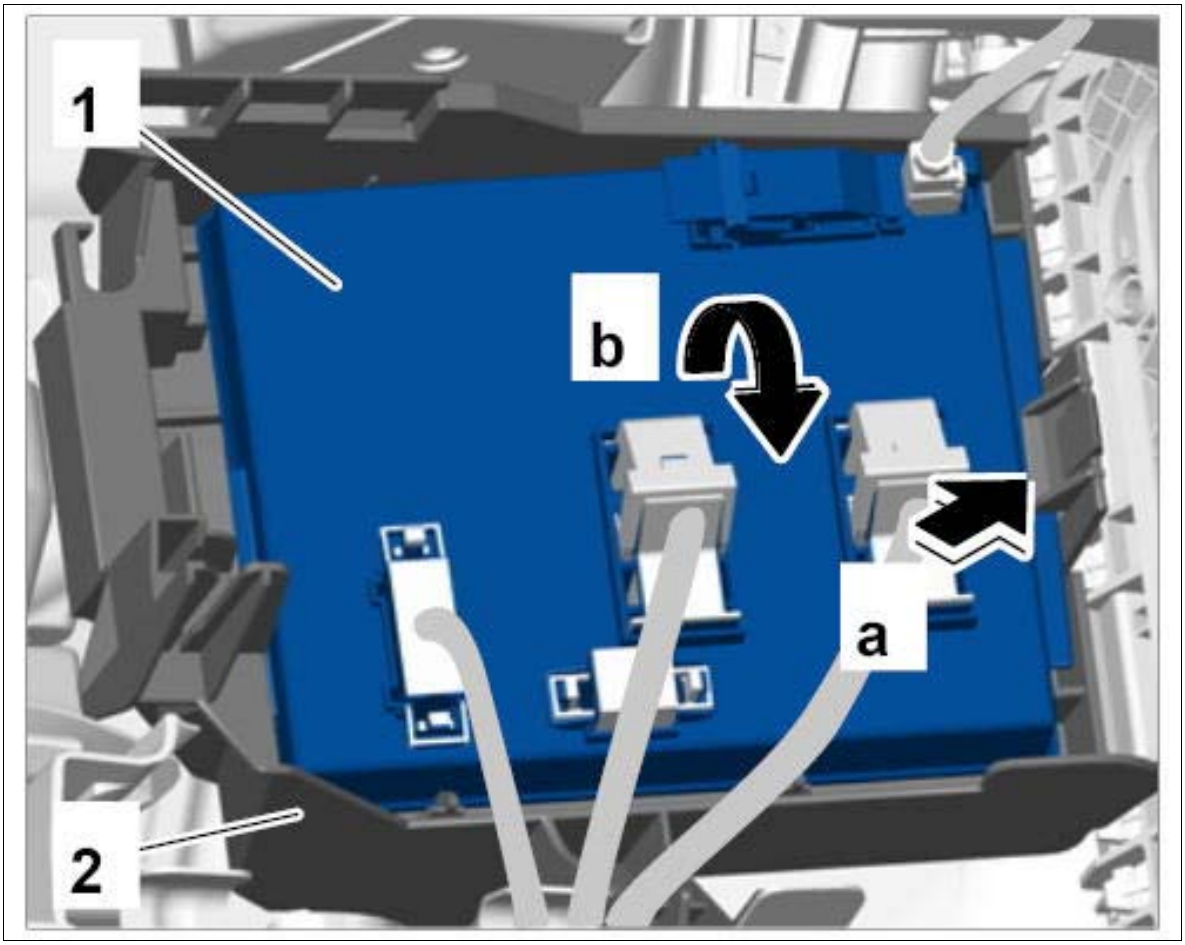

Courtesy of PORSCHE CARS NORTH AMERICA, INC.

4. Release electric plug connections **-1-** (**-arrows-**) and disconnect them from the rear-end electronics control unit **-2-** .

Fig 3: Disconnecting Electric Plug Connections

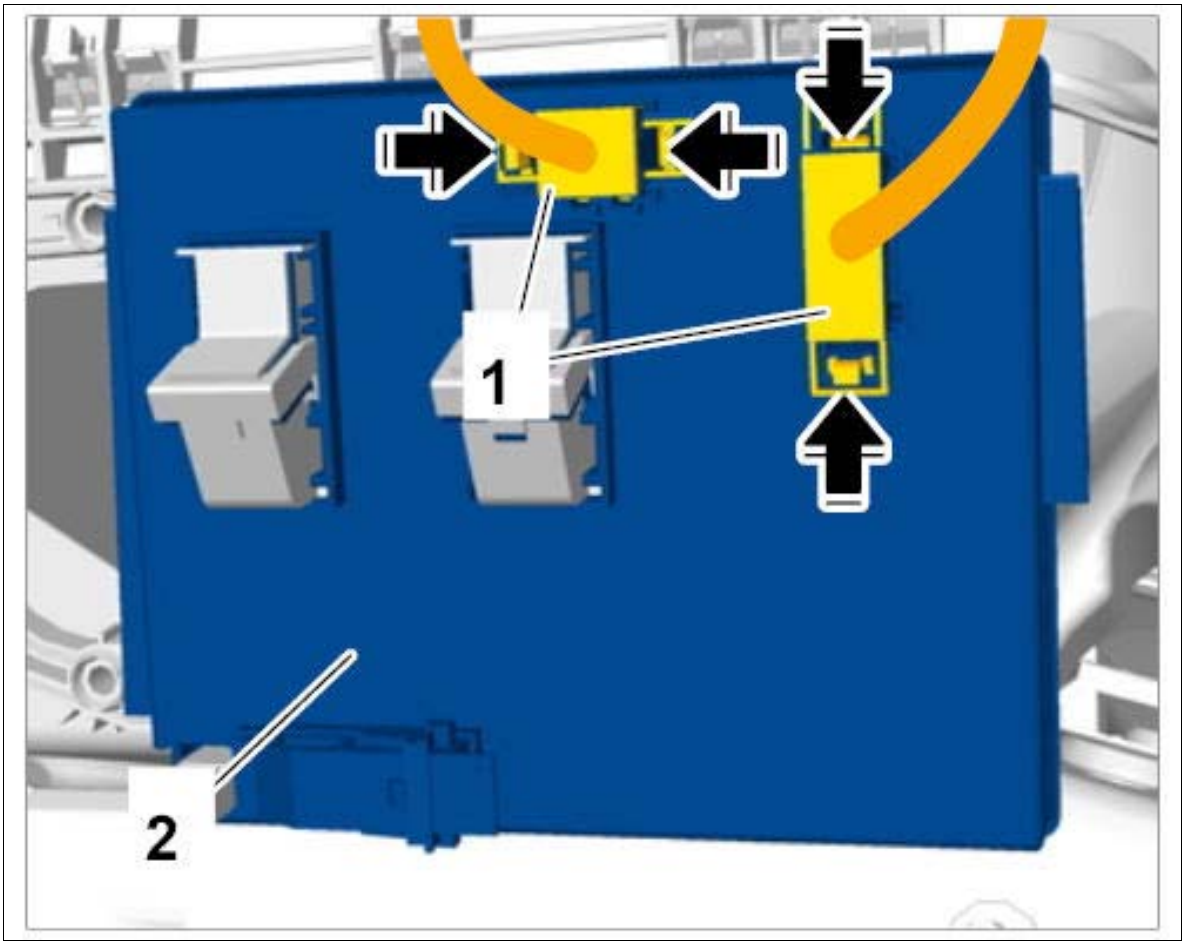

Courtesy of PORSCHE CARS NORTH AMERICA, INC.

5. Release the swivel bar **-1-** (**-a-**), swivel it down and disconnect electric plug connections from the rear-end electronics control unit **-2-** .
6. Release electric plug connection **-3-** (**-b-**) and disconnect it from the rear-end electronics control unit.

Fig 4: Disconnecting Electric Plug Connections

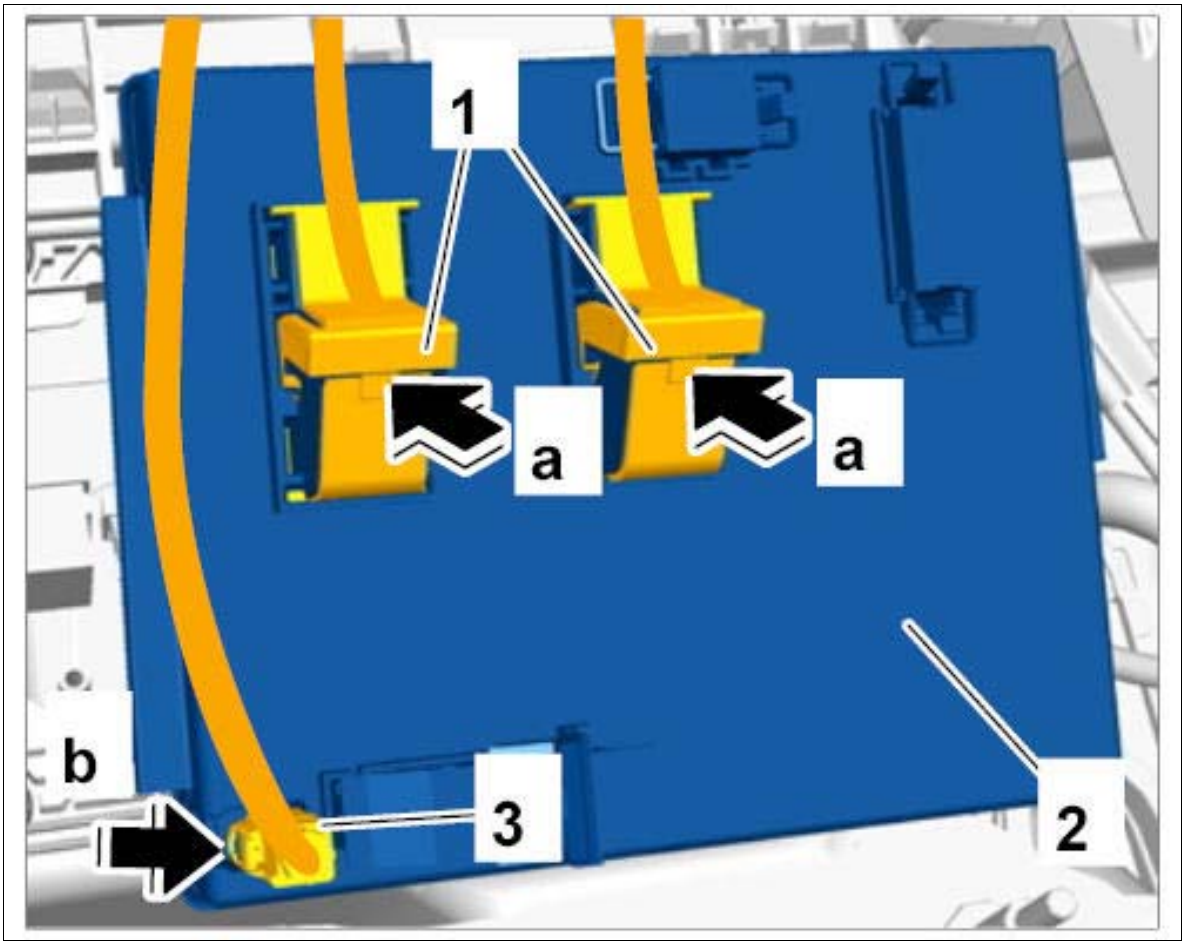

Courtesy of PORSCHE CARS NORTH AMERICA, INC.

WM 944919 REMOVING AND INSTALLING CONTROL UNIT FOR FRONT-END ELECTRONICS (ALL MODELS) > INSTALLING CONTROL UNIT FOR FRONT-END ELECTRONICS

Information

Always comply with the regulations for handling ESD-sensitive components!

- Assembly work may only be carried out if the mechanic is wearing the working clothes and shoes approved by Porsche.
- The new part must only be removed from the ESD (electrostatic discharge) protective packaging just before installation and at the position at which the part is to be installed.
- Never touch the electric pins and plug contacts.

1. Installation is performed in reverse order to removal.

WM 944919 REMOVING AND INSTALLING CONTROL UNIT FOR FRONT-END ELECTRONICS (ALL MODELS) > SUBSEQUENT WORK

1. Install trim panel under dashboard at the left. → Installing trim panel under dashboard at the left
2. If the front-end electronics control unit was replaced, teach the new front-end electronics control unit to suit the vehicle using **PIWIS Tester II 9818.** → 944955 REPLACING CONTROL UNIT FOR FRONT-END ELECTRONICS

WM 944955 REPLACING CONTROL UNIT FOR FRONT-END ELECTRONICS (ALL MODELS) > TOOLS

Designation	Type	Number	Description	
PIWIS Tester II	Special tool	9818		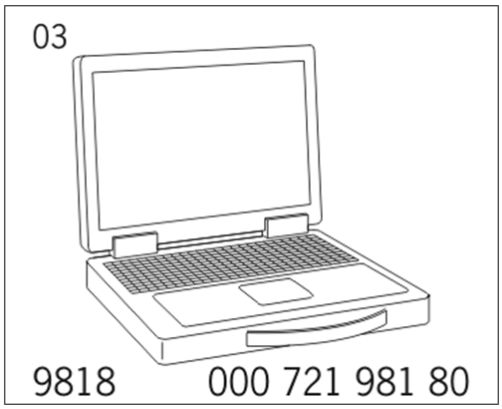

WM 944955 REPLACING CONTROL UNIT FOR FRONT-END ELECTRONICS (ALL MODELS) > TECHNICAL VALUES

Location	Description	Type	Basic value	Tolerance 1	Tolerance 2
Current rating		Nominal value	40 A		

WM 944955 REPLACING CONTROL UNIT FOR FRONT-END ELECTRONICS (ALL MODELS) > PRELIMINARY WORK

1. Switch off ignition and replace control unit. → 944919 REMOVING AND INSTALLING CONTROL UNIT FOR FRONT-END ELECTRONICS .

WM 944955 REPLACING CONTROL UNIT FOR FRONT-END ELECTRONICS (ALL MODELS) > REPLACING CONTROL UNIT FOR FRONT-END ELECTRONICS

Information

All remote controls (keys) are required for teaching a DME, front-end electronics (front BCM), rear-end electronics (rear BCM), electronic steering lock (ELV) control unit or remote controls (keys) for example.

Remote controls (keys) that are not taught during this teaching procedure will no longer be recognized by the vehicle.

NOTE: Voltage drop

- *Risk of irreparable damage to control unit*
- *Risk of damage to control unit*
- *Fault entries in the control unit*
- *Coding in the control unit is aborted*
- *Malfunctions in control unit, even during programming*

→ Prior to disconnecting the control unit, switch off ignition and remove ignition key.

→ Ensure that the power supply is not interrupted during programming.

→ Connect a battery charger with a current rating of at least → **Nominal value: 40 A** to the vehicle battery.

Information

The **PIWIS Tester II 9818** instructions take precedence since the description may be different with later Tester releases.

The procedure described here has been structured in general terms; different text or additions may appear in **PIWIS Tester II 9818.**

1. **PIWIS Tester II 9818** must be connected to the vehicle before starting the Tester. Switch on ignition.
2. Select the vehicle type and start the diagnostic application.
3. **Select Front-end electronics.**
4. **Extended identification** must now be selected.
5. **Enter the vehicle identification number** and press [Enter] to confirm your entry.
6. **Maintenance/repairs** must then be selected.
7. **Control unit replacement** must now be selected. Then press [F12] to continue.
8. **Select Write values** and press [F12] to continue.
9. Press [F8] to start writing values.
10. When a message appears confirming that the **values were written and coded successfully,** press [F12] to continue.

11. Go back to the Start page on the Tester.
12. To activate the control units, switch on the hazard warning lights.
13. Select the menu **Diagnostics --> Online teaching function --> Engine immobilizer** on the Start page.
14. **Vehicle** must now be selected. Then press [F12] to continue. Vehicle data will be read out.
15. Follow the instructions on the Tester.
16. The vehicle identification number (VIN) is displayed. Change the vehicle identification number if necessary.
17. Enter the repair order number and press [F12] to continue.
18. Enter the PPN user name and password and press [F12] to continue.
19. Login is performed.
20. The Tester displays the message **Login successful** . Press [F12] to continue.
21. Follow the instructions on the Tester to select the required menu.
22. Once the teaching process is completed successfully, the Tester shows the following status, for example:

    2 keys taught

    Front BCM: taught

    ELV: taught

    Rear BCM: taught

    DME: taught

    Overall vehicle status: taught. Press [F12] to continue.
23. Press [ESC] to exit the **Online teaching function** and select the **vehicle type** on the Start page.
24. Read out the fault memory and erase it if necessary.
25. Function test: Lock, open and start the vehicle using all remote controls (hand-held transmitters).

WM 945019 REMOVING AND INSTALLING STEERING-COLUMN SWITCH (ALL MODELS) > TECHNICAL VALUES

Location	Description	Type	Basic value	Tolerance 1	Tolerance 2
Clamp securing steering-column switch	Hexagon socket head bolt, M6 x 15	Tightening torque	4 Nm (3 ftlb.)		

to steering column					

WM 945019 REMOVING AND INSTALLING STEERING-COLUMN SWITCH (ALL MODELS) > PRELIMINARY WORK

1. Remove steering wheel. → Removing And Installing Steering Wheel
2. Remove steering column casing. → Removing Steering Column Casing

WM 945019 REMOVING AND INSTALLING STEERING-COLUMN SWITCH (ALL MODELS) > REMOVING STEERING-COLUMN SWITCH

1. Release and disconnect electric plug connections **-1-** .
2. Loosen clamping screw **-2-** .
3. Remove steering-column switch **-3-** with control unit for steering wheel electronics from the steering column.

Fig 1: Removing Steering-Column Switch

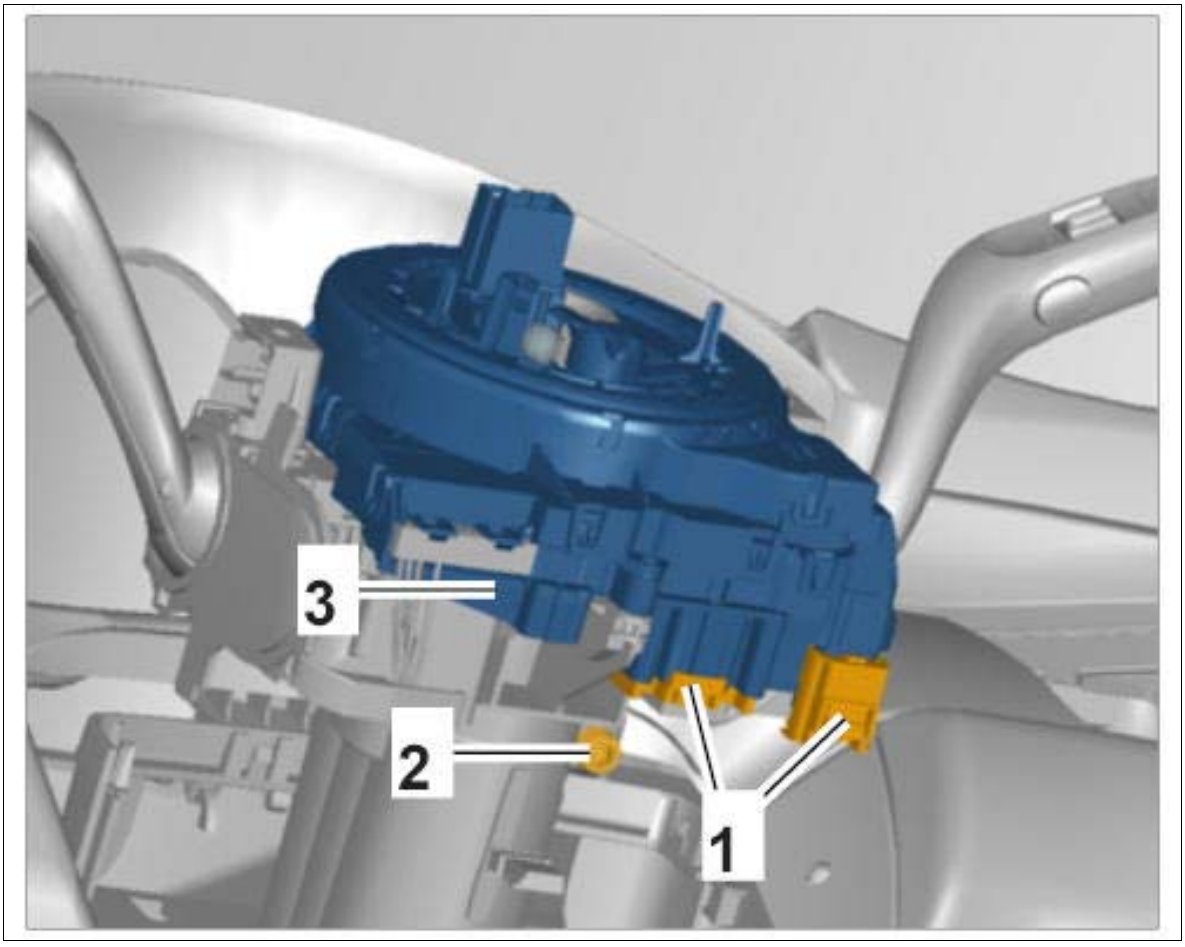

Courtesy of PORSCHE CARS NORTH AMERICA, INC.

When replacing the steering-column switch:

4. Remove steering wheel electronics control unit from the steering-column switch. → Removing Steering Column Casing

WM 945019 REMOVING AND INSTALLING STEERING-COLUMN SWITCH (ALL MODELS) > INSTALLING STEERING-COLUMN SWITCH

1. Installation is performed in reverse order to removal.
2. Tighten screw for the clamp on the steering-column switch. **Tightening torque 4 Nm (3 ftlb.)**

WM 945019 REMOVING AND INSTALLING STEERING-COLUMN SWITCH (ALL MODELS) > SUBSEQUENT WORK

1. Install steering column casing. → Installing Steering Column Casing
2. Install steering wheel. → Installing Steering Wheel

WM 945319 REMOVING AND INSTALLING SIDE DIRECTION INDICATOR LIGHT (ALL MODELS) > PRELIMINARY WORK

1. Remove rear-view mirror housing (upper part). → Removing Rear-View Mirror Housing (Upper Part)

WM 945319 REMOVING AND INSTALLING SIDE DIRECTION INDICATOR LIGHT (ALL MODELS) > REMOVING SIDE DIRECTION INDICATOR LIGHT

NOTE: Voltage peaks

- *Risk of damage to load or to the control unit*

→ Switch off ignition and remove remote control before disconnecting or removing load.

Information

- Some of the repair illustrations show only one side of the vehicle.
- Naturally, some steps also have to be performed on the opposite side of the vehicle as well.

Fig 1: Identifying Side Direction Indicator Light Installation Position

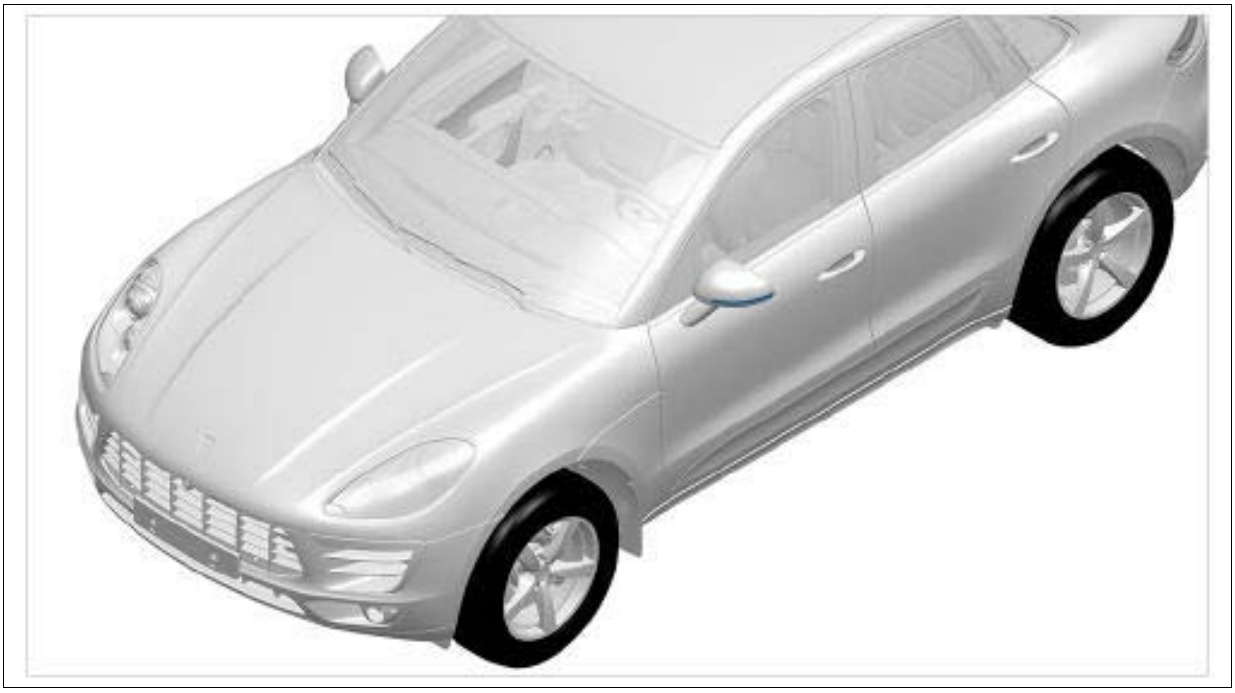

Courtesy of PORSCHE CARS NORTH AMERICA, INC.

1. Loosen fastening screws **-1-** on side direction indicator light.

Fig 2: Loosening Side Direction Indicator Light

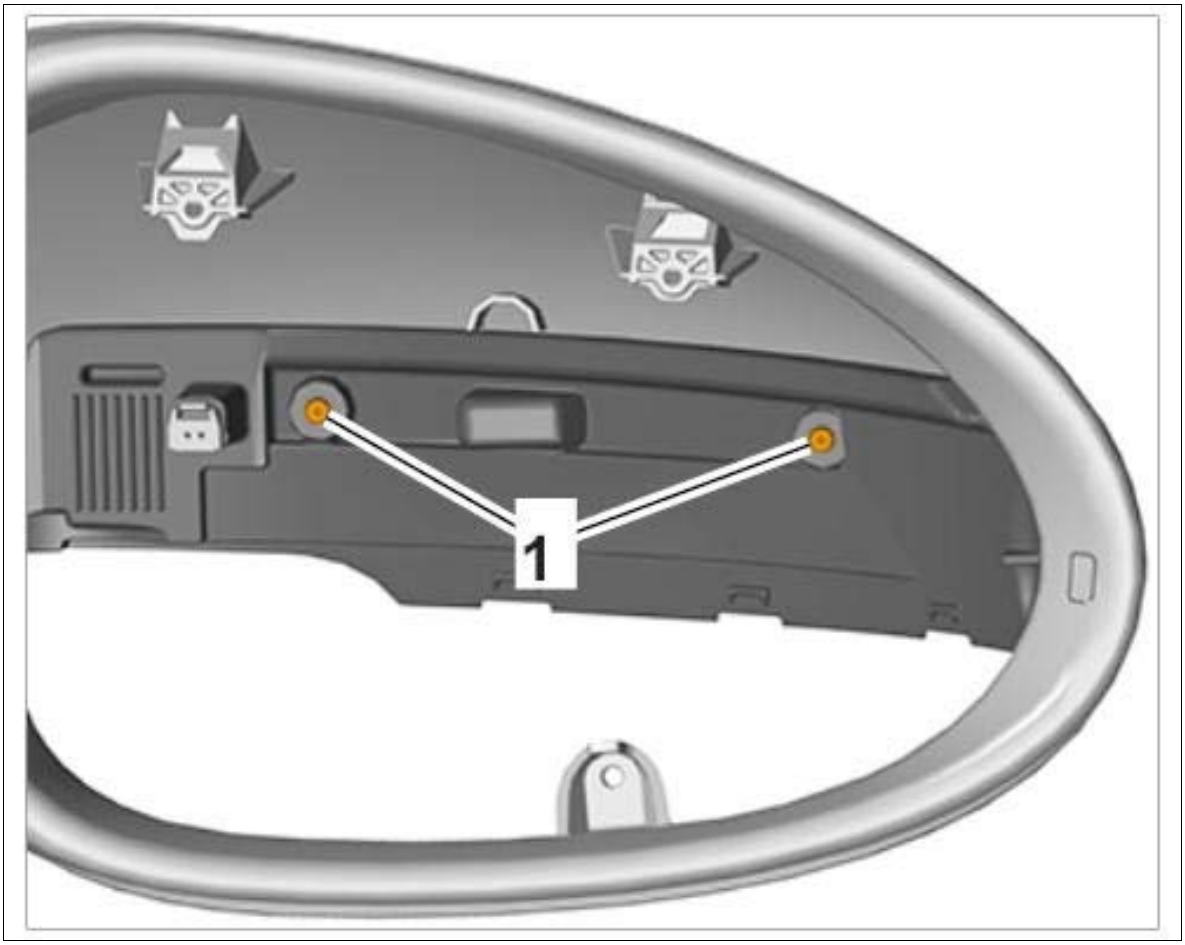

Courtesy of PORSCHE CARS NORTH AMERICA, INC.

2. Unclip side direction indicator light **-arrow-** and remove it from the rear-view mirror housing (upper part).

Fig 3: Removing Side Direction Indicator Light



Courtesy of PORSCHE CARS NORTH AMERICA, INC.

WM 945319 REMOVING AND INSTALLING SIDE DIRECTION INDICATOR LIGHT (ALL MODELS) > INSTALLING SIDE DIRECTION INDICATOR LIGHT

Information

- Some of the repair illustrations show only one side of the vehicle.
- Naturally, some steps also have to be performed on the opposite side of the vehicle as well.

1. Push side direction indicator light into the rear-view mirror housing (upper part) **-a-** and clip it in **-A-** .

Fig 1: Installing Side Direction Indicator Light

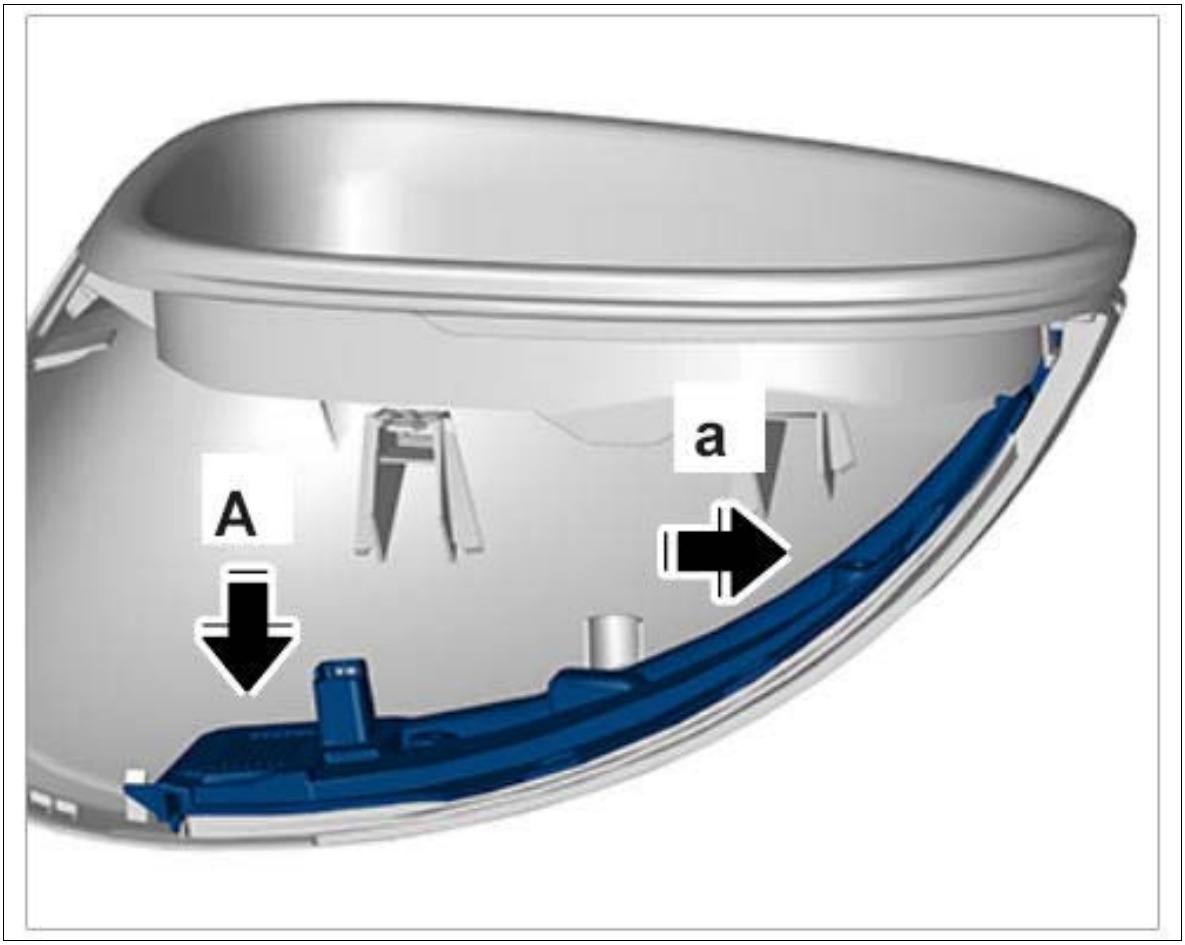

Courtesy of PORSCHE CARS NORTH AMERICA, INC.

2. Tighten fastening screws **-1-** for side direction indicator light.

Fig 2: Installing Side Direction Indicator Light

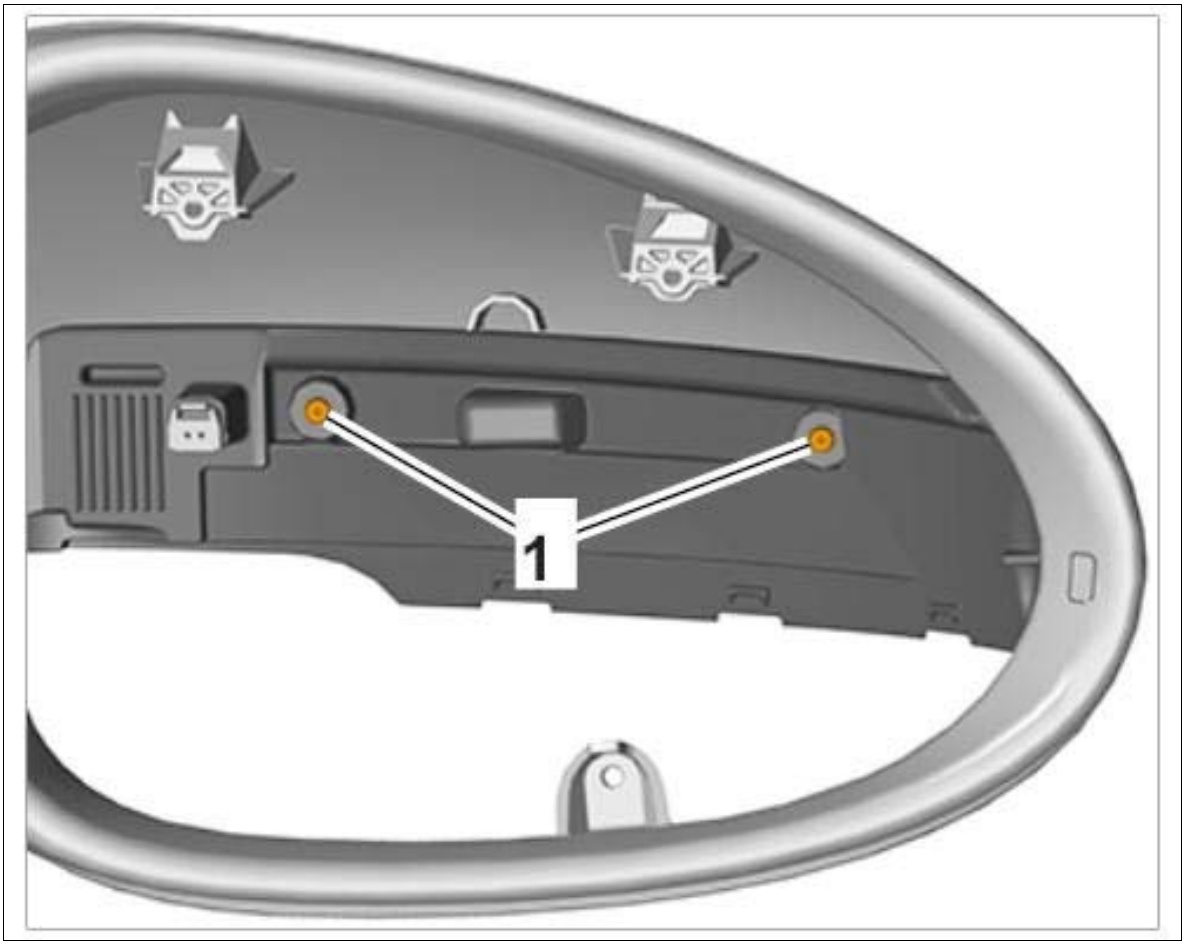

Courtesy of PORSCHE CARS NORTH AMERICA, INC.

WM 945319 REMOVING AND INSTALLING SIDE DIRECTION INDICATOR LIGHT (ALL MODELS) > SUBSEQUENT WORK

Install rear-view mirror housing (upper part). → Installing Rear-View Mirror Housing (Upper Part)

WM 945719 REMOVING AND INSTALLING LIGHT BULB CONTROL UNIT (ALL MODELS) > PRELIMINARY WORK

1. Remove headlights. → Removing Headlights

WM 945719 REMOVING AND INSTALLING LIGHT BULB CONTROL UNIT (ALL MODELS) > REMOVING LIGHT BULB CONTROL UNIT

Information

Always comply with the regulations for handling ESD-sensitive components!

- Assembly work may only be carried out if the mechanic is wearing the working clothes and shoes approved by Porsche.
- The new part must only be removed from the ESD (electrostatic discharge) protective packaging just before installation and at the position at which the part is to be installed.
- Never touch the electric pins and plug contacts.

1. Unscrew fastening screws **-1-** .
2. Carefully remove light bulb control unit **-2-** from the headlight.

Fig 1: Removing Light Bulb Control Unit

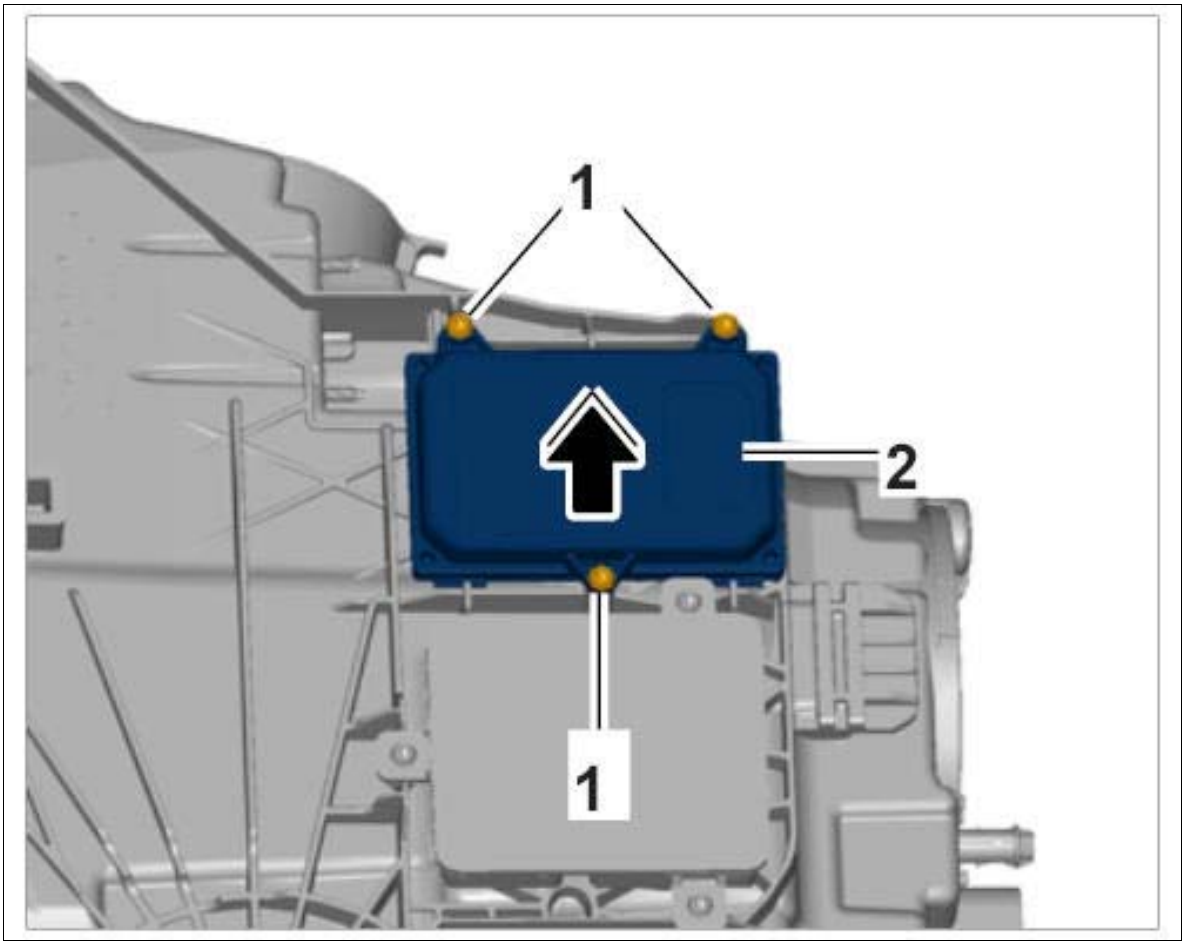

Courtesy of PORSCHE CARS NORTH AMERICA, INC.

WM 945719 REMOVING AND INSTALLING LIGHT BULB CONTROL UNIT (ALL MODELS) > INSTALLING LIGHT BULB CONTROL UNIT

Information

Always comply with the regulations for handling ESD-sensitive components!

- Assembly work may only be carried out if the mechanic is wearing the working clothes and shoes

approved by Porsche.

- The new part must only be removed from the ESD (electrostatic discharge) protective packaging just before installation and at the position at which the part is to be installed.
- Never touch the electric pins and plug contacts.

1. Check that the seal **-1-** is fitted correctly on the light bulb control unit **-2-** .
2. Carefully insert light bulb control unit into the headlight.
3. Tighten fastening screws **-3-** .

Fig 1: Installing Light Bulb Control Unit

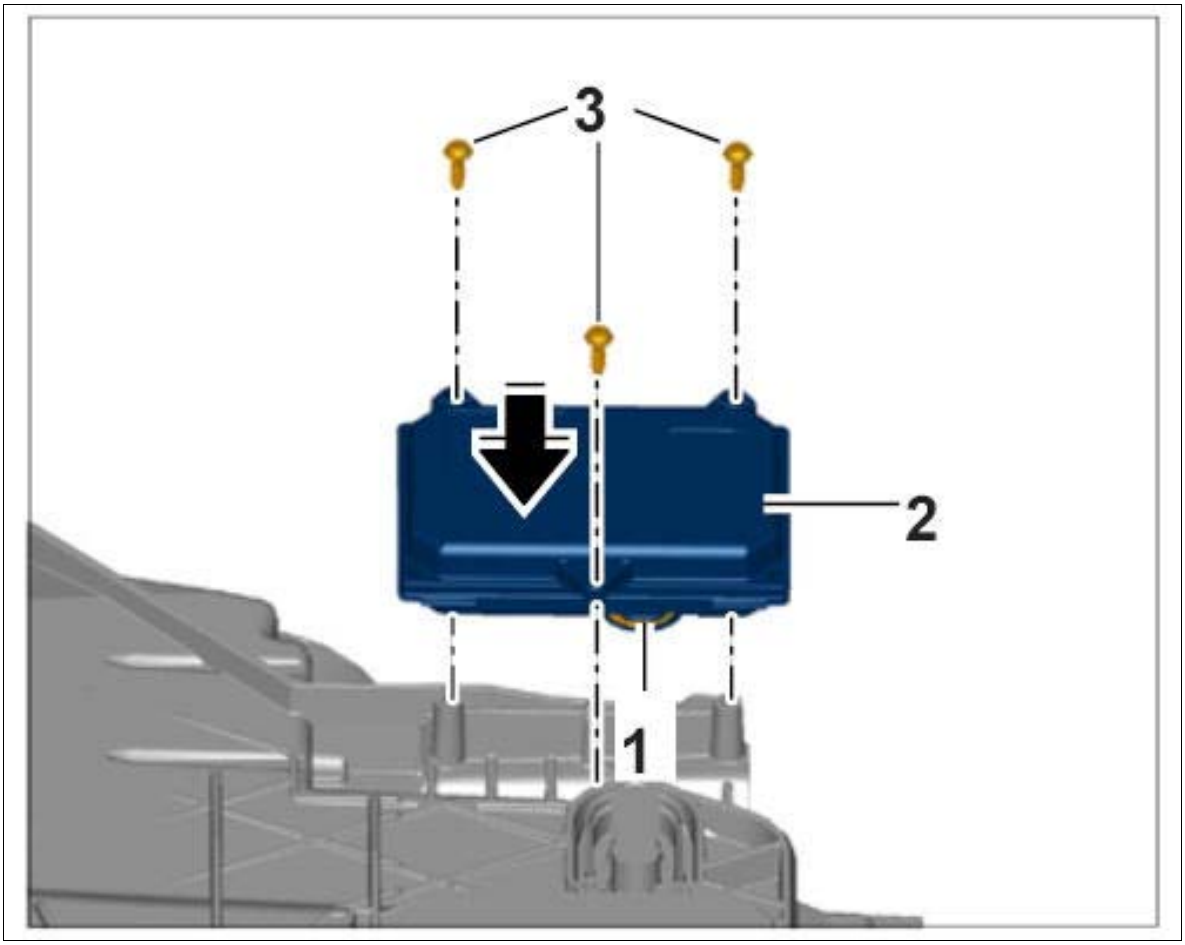

Courtesy of PORSCHE CARS NORTH AMERICA, INC.

WM 945719 REMOVING AND INSTALLING LIGHT BULB CONTROL UNIT (ALL MODELS) > SUBSEQUENT WORK

1. Install headlights. → Installing Headlights
2. After replacing the light bulb control unit, re-program the (central) headlight control unit. → 941625 PROGRAMMING (CENTRAL) HEADLIGHT CONTROL UNIT

WM 945819 REMOVING AND INSTALLING LIGHT BULB IGNITER (ALL MODELS) > PRELIMINARY WORK

1. Remove headlights. → Removing Headlights

WM 945819 REMOVING AND INSTALLING LIGHT BULB IGNITER (ALL MODELS) > REMOVING LIGHT BULB IGNITER

Information

Always comply with the regulations for handling ESD-sensitive components!

- Assembly work may only be carried out if the mechanic is wearing the working clothes and shoes approved by Porsche.
- The new part must only be removed from the ESD (electrostatic discharge) protective packaging just before installation and at the position at which the part is to be installed.
- Never touch the electric pins and plug contacts.

1. Unscrew fastening screws **-1-** .
2. Carefully remove light bulb igniter **-2-** from the headlight.

Fig 1: Removing Light Bulb Igniter

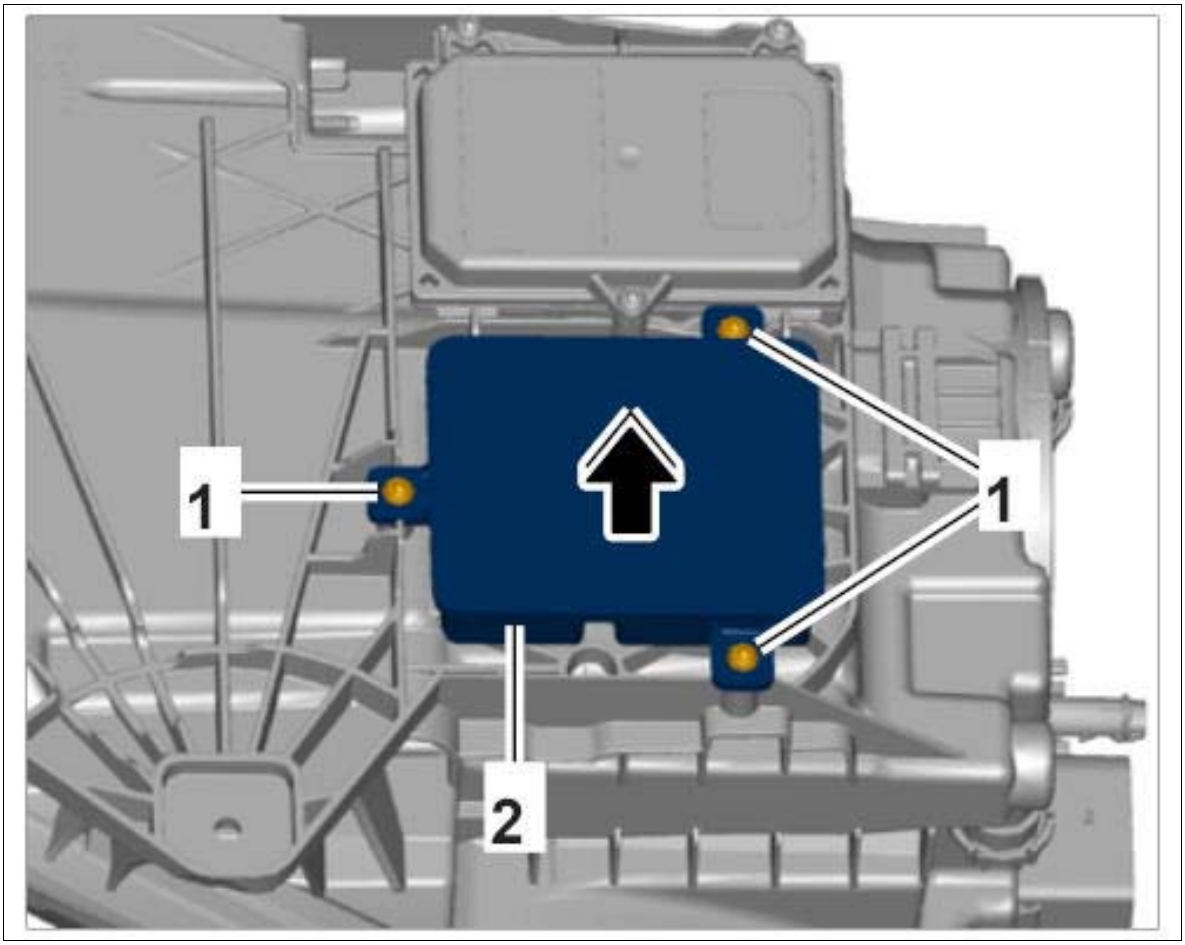

Courtesy of PORSCHE CARS NORTH AMERICA, INC.

3. Release electric plug connection **-1-** (**-a-**) and pull it off the light bulb igniter **-2-** .
4. Pull electric plug connection **-3-** off the light bulb igniter.

Fig 2: Disconnecting Electric Plug Connections

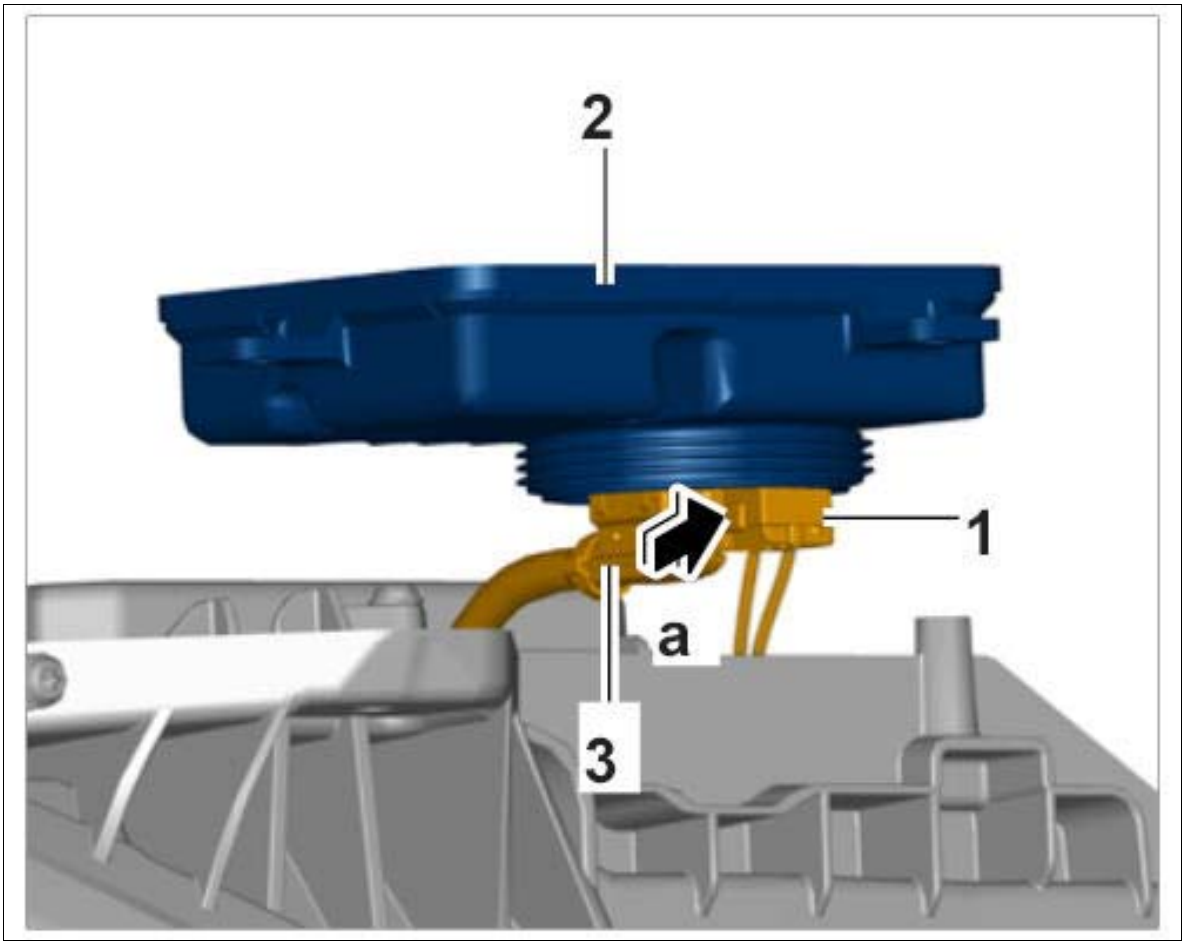

Courtesy of PORSCHE CARS NORTH AMERICA, INC.

WM 945819 REMOVING AND INSTALLING LIGHT BULB IGNITER (ALL MODELS) > INSTALLING LIGHT BULB IGNITER

Information

Always comply with the regulations for handling ESD-sensitive components!

- Assembly work may only be carried out if the mechanic is wearing the working clothes and shoes approved by Porsche.
- The new part must only be removed from the ESD (electrostatic discharge) protective packaging just before installation and at the position at which the part is to be installed.
- Never touch the electric pins and plug contacts.

1. Check the condition of the seal **-1-** and check that it is fitted correctly on the light bulb igniter **-2-** .
2. Connect electric plug connections **-3-** on the light bulb igniter until they engage securely.

Fig 1: Connecting Electric Plug Connections

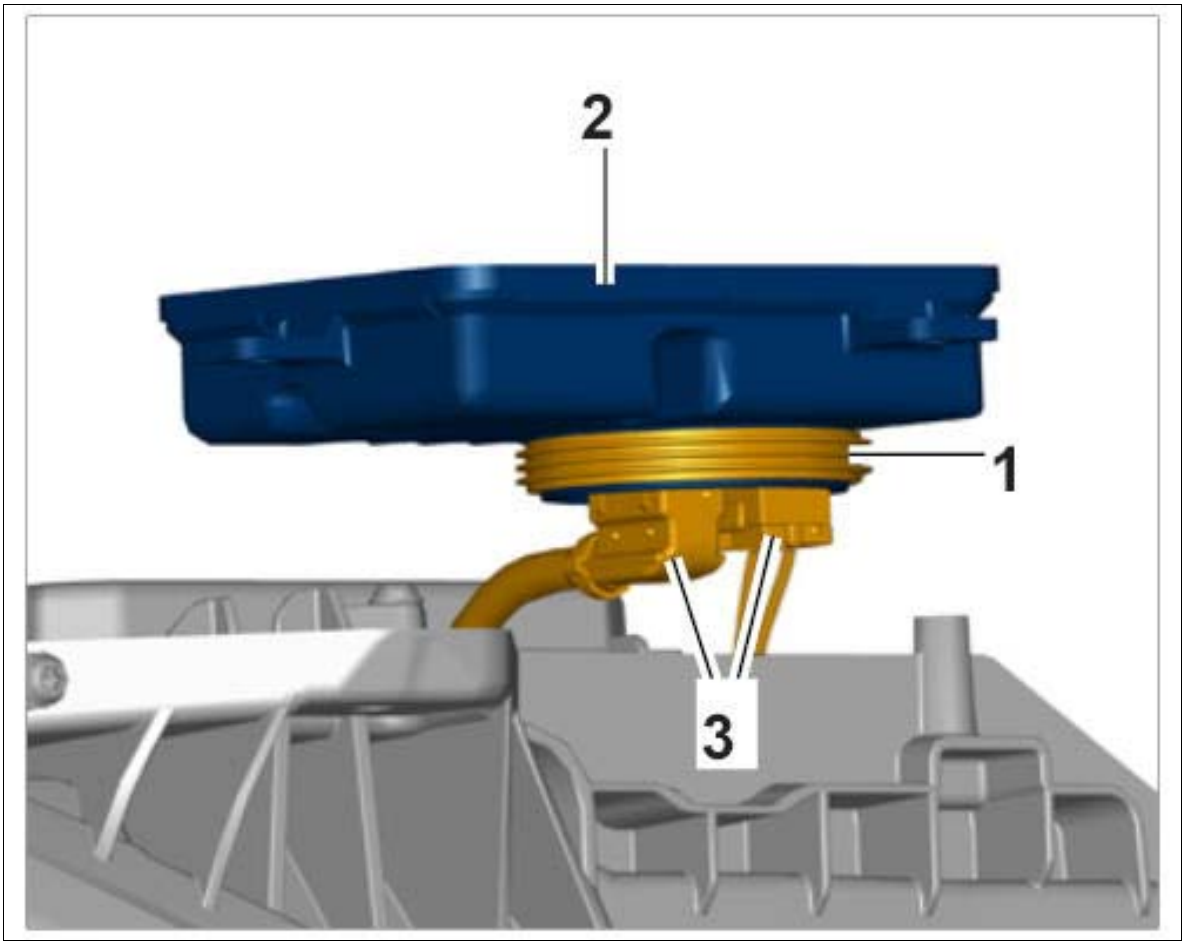

Courtesy of PORSCHE CARS NORTH AMERICA, INC.

3. Carefully insert light bulb igniter **-1-** into the headlight.
4. Tighten fastening screws **-2-** .

Fig 2: Installing Light Bulb Igniter

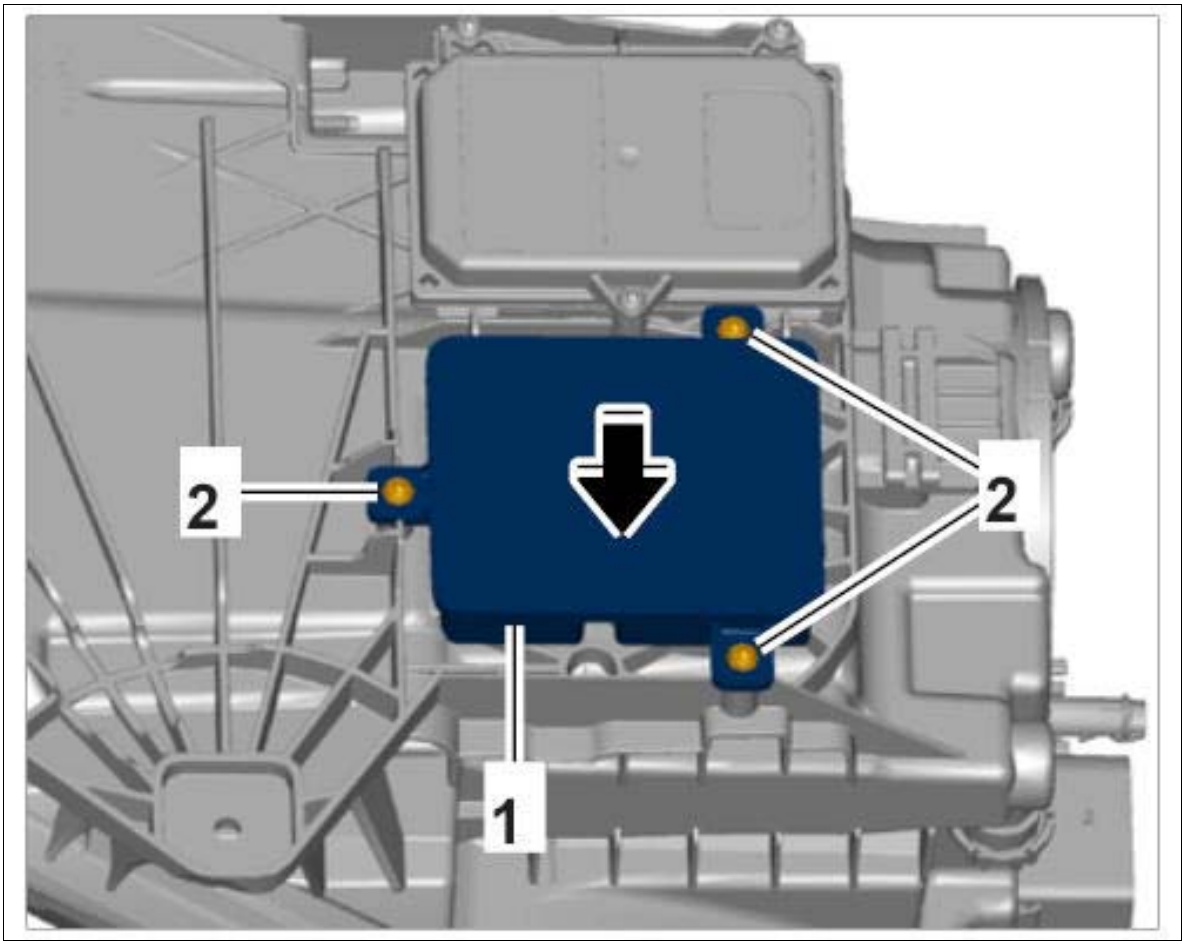

Courtesy of PORSCHE CARS NORTH AMERICA, INC.

WM 945819 REMOVING AND INSTALLING LIGHT BULB IGNITER (ALL MODELS) > SUBSEQUENT WORK

1. Install headlights. → Installing Headlights
2. After replacing the light bulb igniter, re-program the (central) headlight control unit. → 941625 PROGRAMMING (CENTRAL) HEADLIGHT CONTROL UNIT

WM 945955 REPLACING GAS-DISCHARGE HEADLIGHT (ALL MODELS) > PRELIMINARY WORK

1. Remove trim panel behind headlight. → Removing front trim panel

WM 945955 REPLACING GAS-DISCHARGE HEADLIGHT (ALL MODELS) > REMOVING GAS-DISCHARGE HEADLIGHT

NOTE: Incorrect handling of bulbs

- *Risk of damage to bulbs and the bulb housing*

→ Switch off ignition and remove ignition key.

→ Switch off the relevant loads when changing bulbs.

→ Only use bulbs listed in the bulb table.

→ Only install clean bulbs that are free of grease.

→ Always use a cloth or soft paper when working with bulbs.

→ Observe the safety instructions when changing a bulb in a Bi-Xenon headlight.

→ In certain states, it is compulsory to carry spare light bulbs.

1. Switch off position lights.
2. Switch off ignition and pull remote control out of ignition lock.
3. Release hose connection for the breather hose **-1-** (**-a-**) and pull it off the headlight.
4. Turn the rear cover **-2-** in direction of arrow and remove it.

Fig 1: Removing Rear Cover

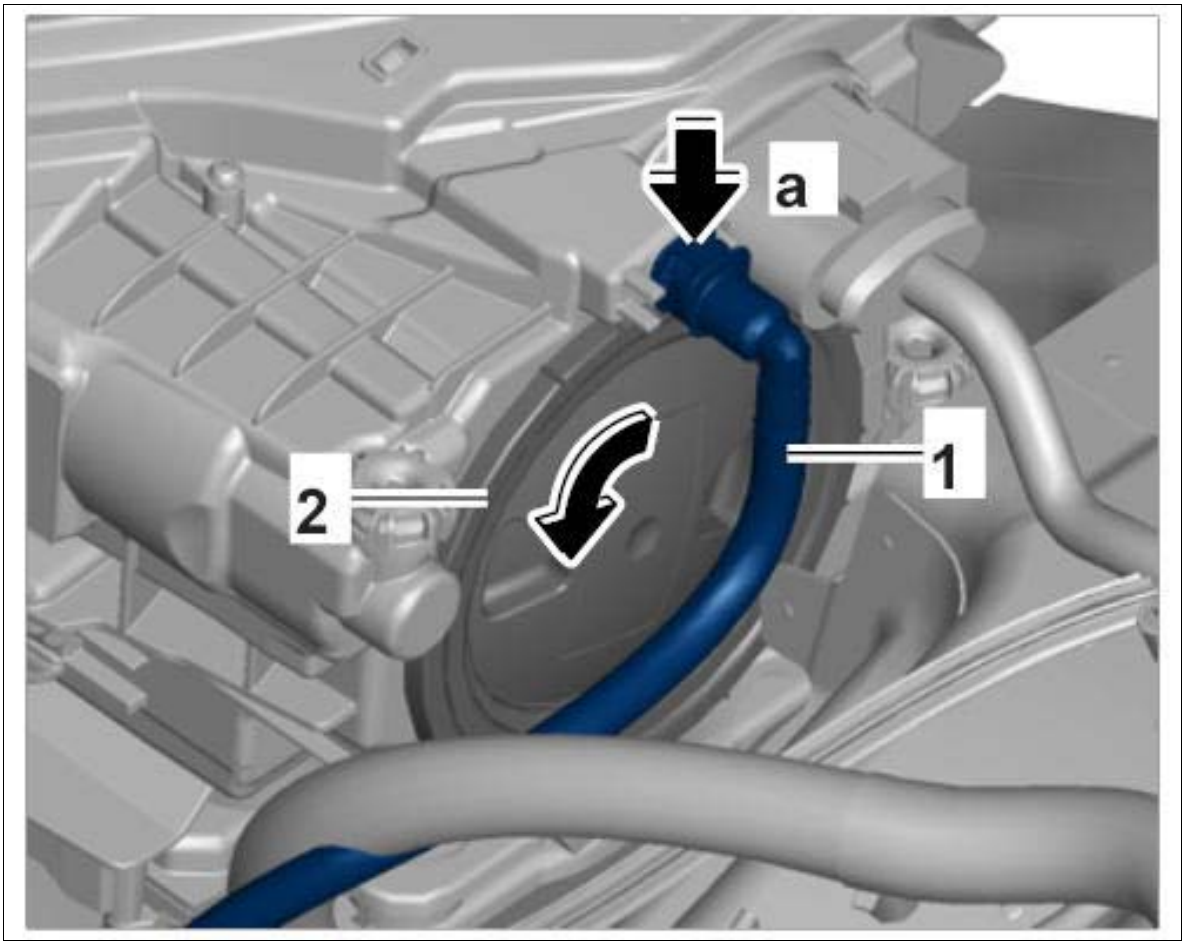

Courtesy of PORSCHE CARS NORTH AMERICA, INC.

5. Turn gas-discharge headlight **-1-** in direction of arrow and carefully remove it from the headlight.
6. Disconnect electric plug connection **-2-** from the gas-discharge headlight.

Fig 2: Removing Gas-Discharge Headlight

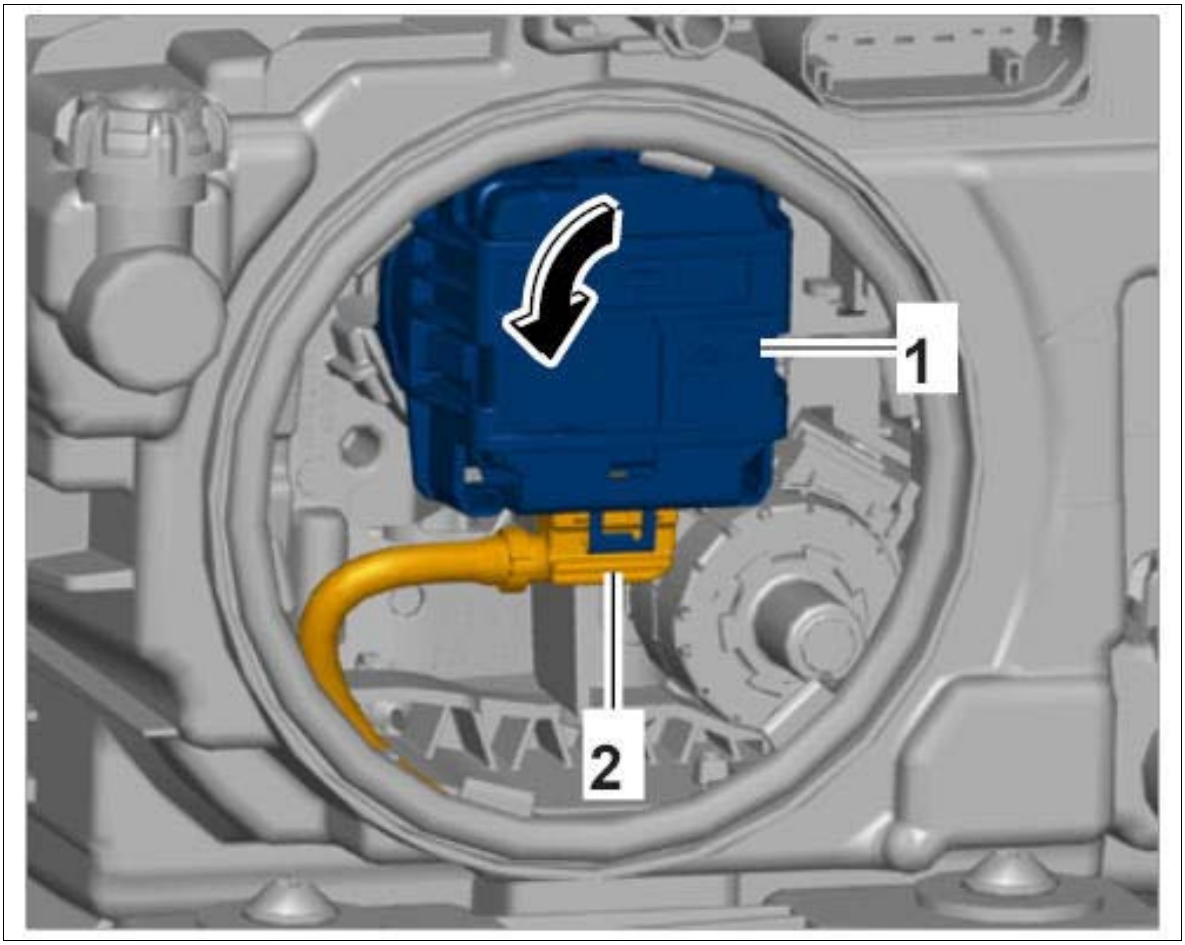

Courtesy of PORSCHE CARS NORTH AMERICA, INC.

WM 945955 REPLACING GAS-DISCHARGE HEADLIGHT (ALL MODELS) > INSTALLING GAS-DISCHARGE HEADLIGHT

NOTE: Incorrect handling of bulbs

- *Risk of damage to bulbs and the bulb housing*

→ Switch off ignition and remove ignition key.

→ Switch off the relevant loads when changing bulbs.

→ Only use bulbs listed in the bulb table.

→ Only install clean bulbs that are free of grease.

→ Always use a cloth or soft paper when working with bulbs.

→ Observe the safety instructions when changing a bulb in a Bi-Xenon headlight.

→ In certain states, it is compulsory to carry spare light bulbs.

1. Connect electric plug connection **-1-** on the gas-discharge headlight **-2-** until it engages securely.
2. Position gas-discharge headlight in the headlight and lock it by turning it in direction of arrow.

   Fig 1: Installing Gas-Discharge Headlight

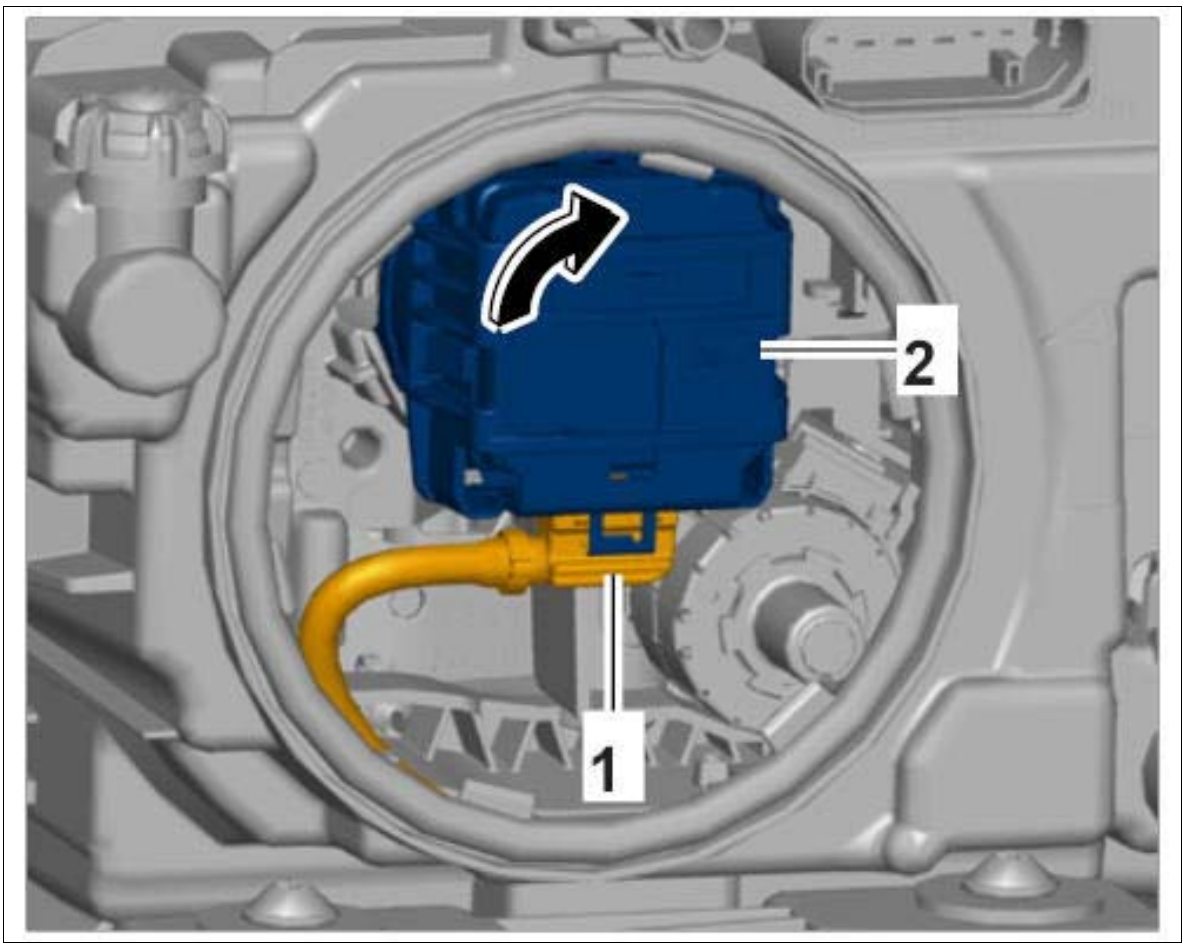

Courtesy of PORSCHE CARS NORTH AMERICA, INC.

3. Check condition of the seal **-1-** and check that it is fitted correctly on the rear cover **-2-** .
4. Position rear cover on the headlight and lock it by turning it in direction of arrow.
5. Check condition of O-ring **-3-** and check that it is seated correctly.
6. Connect hose connection **-4-** for the breather hose at the headlight until it engages securely.

Fig 2: Installing Rear Cover

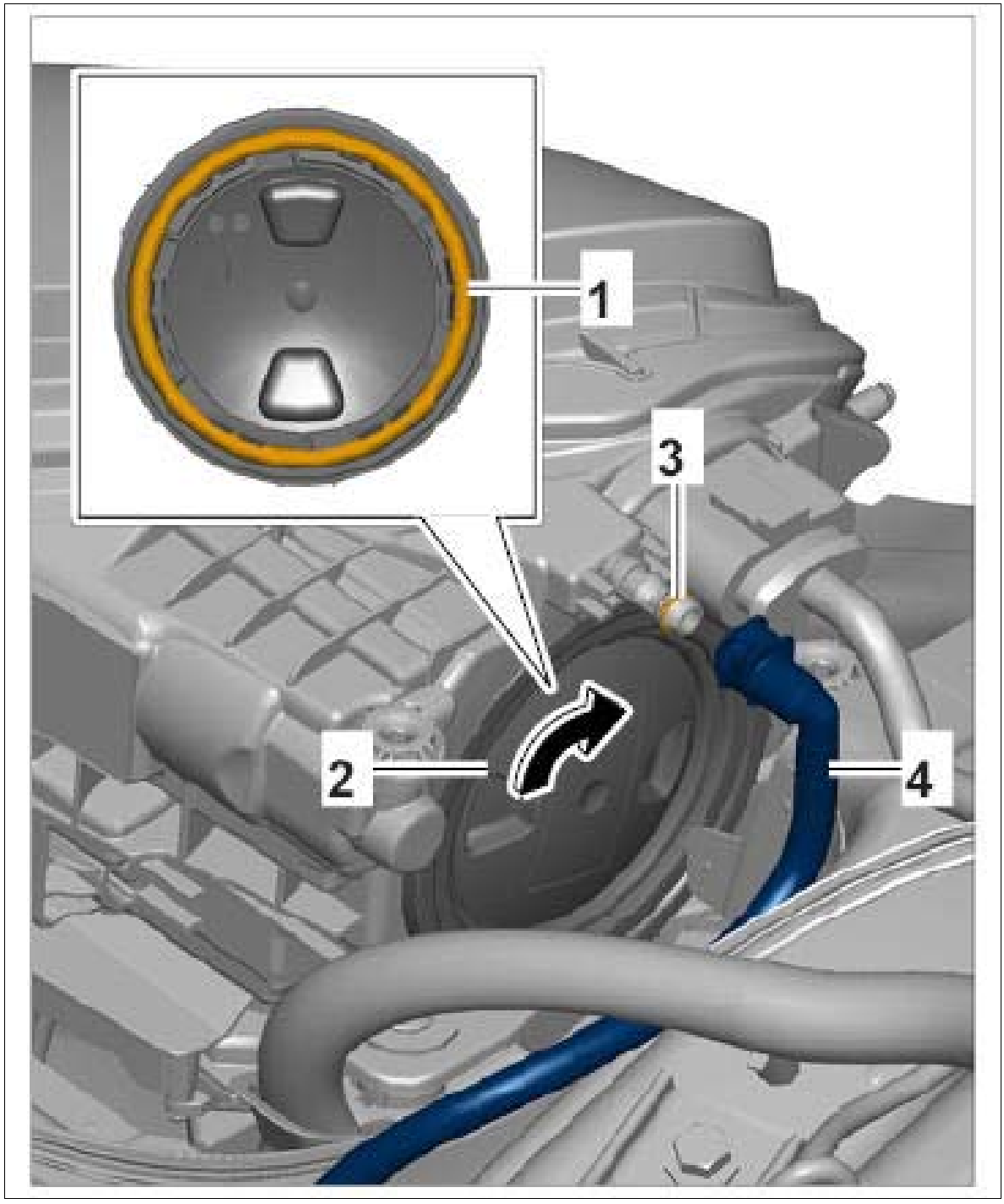

Courtesy of PORSCHE CARS NORTH AMERICA, INC.

WM 945955 REPLACING GAS-DISCHARGE HEADLIGHT (ALL MODELS) > SUBSEQUENT WORK

1. Install trim panel behind headlight. → Installing front trim panel

WM 946419 REMOVING AND INSTALLING FOG LIGHTS (EXCEPT MACAN) > PRELIMINARY WORK

1. Remove front apron. → Removing Front Apron

WM 946419 REMOVING AND INSTALLING FOG LIGHTS (EXCEPT MACAN) > REMOVING FOG LIGHTS

1. Remove fog light **-1-** .
    1. 1.1. Release and disconnect electric plug connection **-2-** .
    2. 1.2. Pull off holder **-3-** for the electric line at the fog light.
    3. 1.3. Unscrew fastening screws **-4-** and remove fog light.

Fig 1: Removing Fog Lights

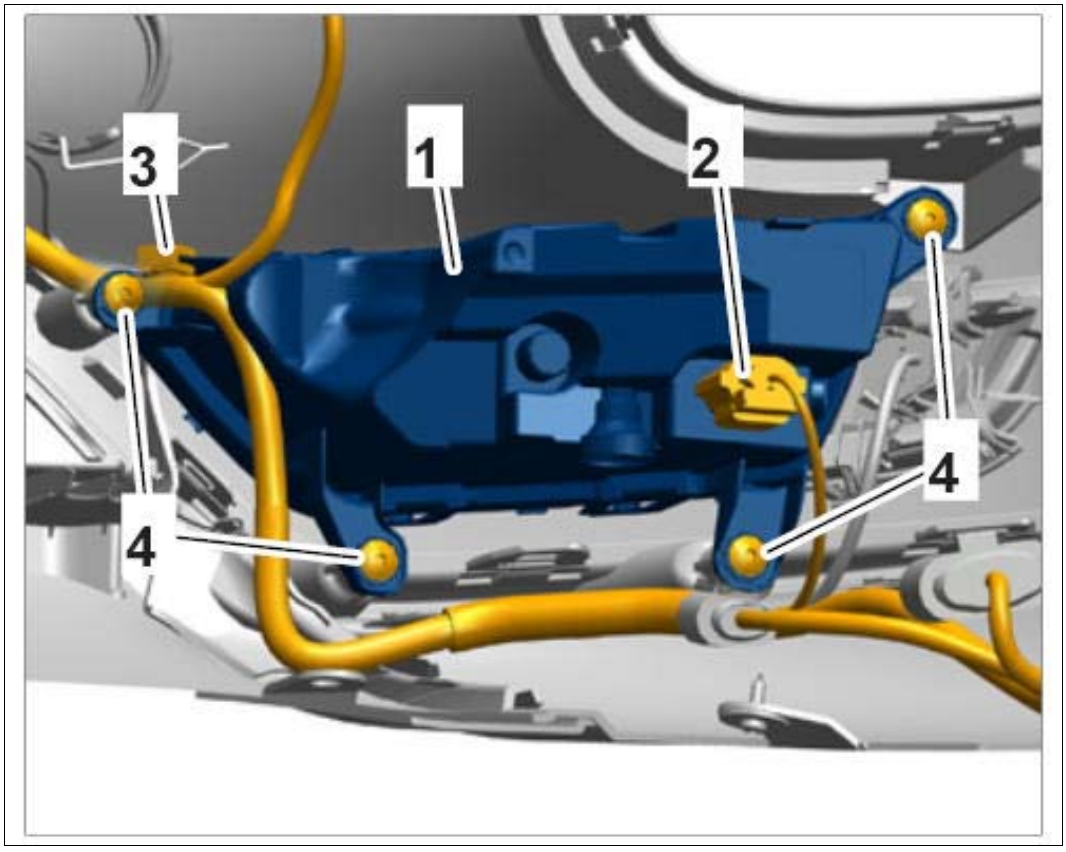

Courtesy of PORSCHE CARS NORTH AMERICA, INC.

WM 946419 REMOVING AND INSTALLING FOG LIGHTS (EXCEPT MACAN) > INSTALLING FOG LIGHTS

1. Installation is performed in reverse order to removal.

2. Tighten fastening screws for the fog light.

WM 946419 REMOVING AND INSTALLING FOG LIGHTS (EXCEPT MACAN) > SUBSEQUENT WORK

1. Install front apron. → Installing Front Apron
2. Check fog light setting. → WM 941516 ADJUSTING HEADLIGHTS AND FOG LIGHTS

WM 946419 REMOVING AND INSTALLING FOG LIGHTS (EXCEPT MACAN TURBO) > REMOVING FOG LIGHTS

1. Loosen trim **-1-** .
    1. 1.1. Carefully prise locking lugs **-2-** on the trim out of the front apron using a plastic wedge.
    2. 1.2. Leave electric plug connection on the ParkAssist sensor **-3-** .

Fig 1: Loosening Trim

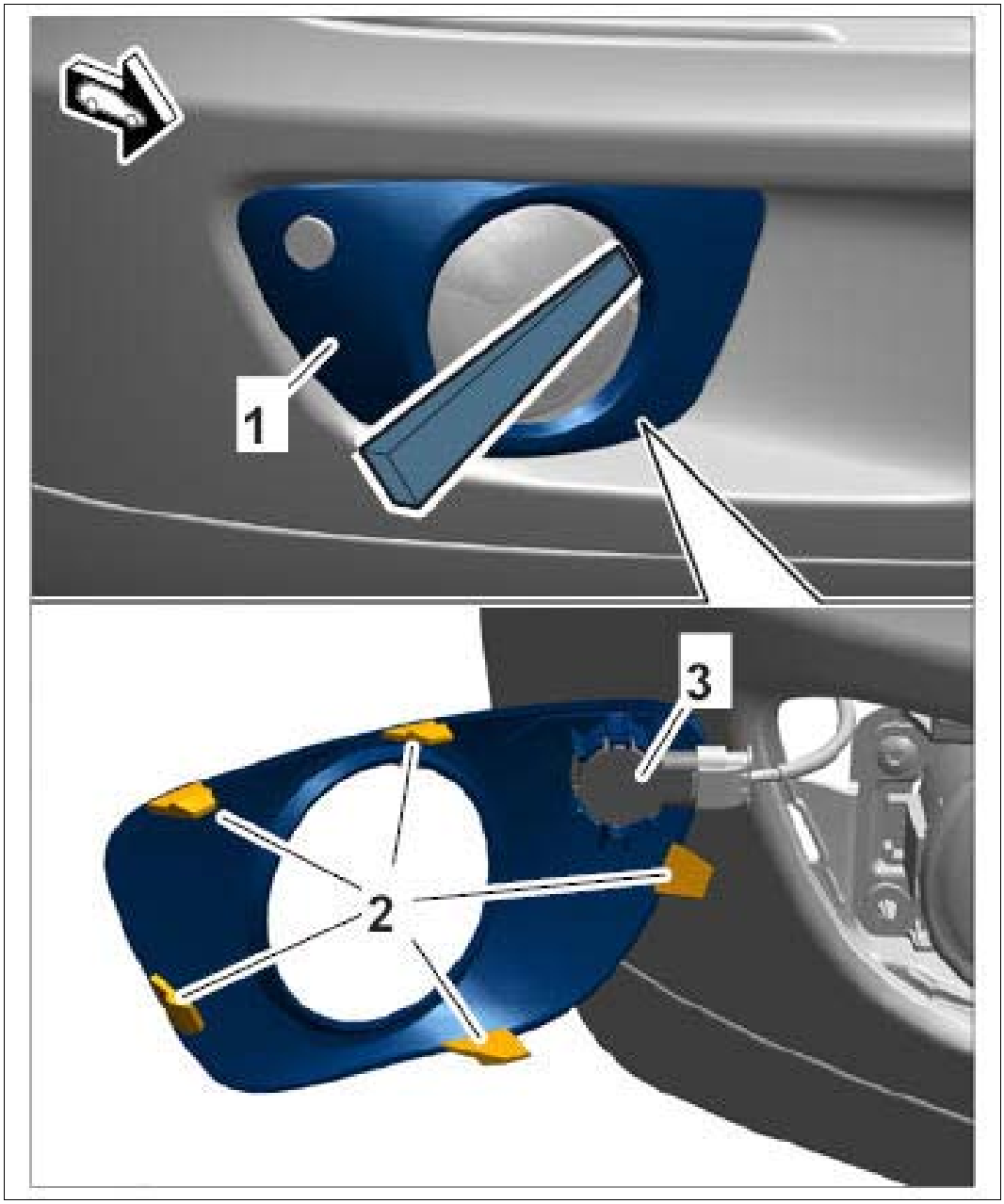

Courtesy of PORSCHE CARS NORTH AMERICA, INC.

2. Unscrew fastening screws **-1-** and remove fog light **-2-** .

Fig 2: Loosening Fog Light

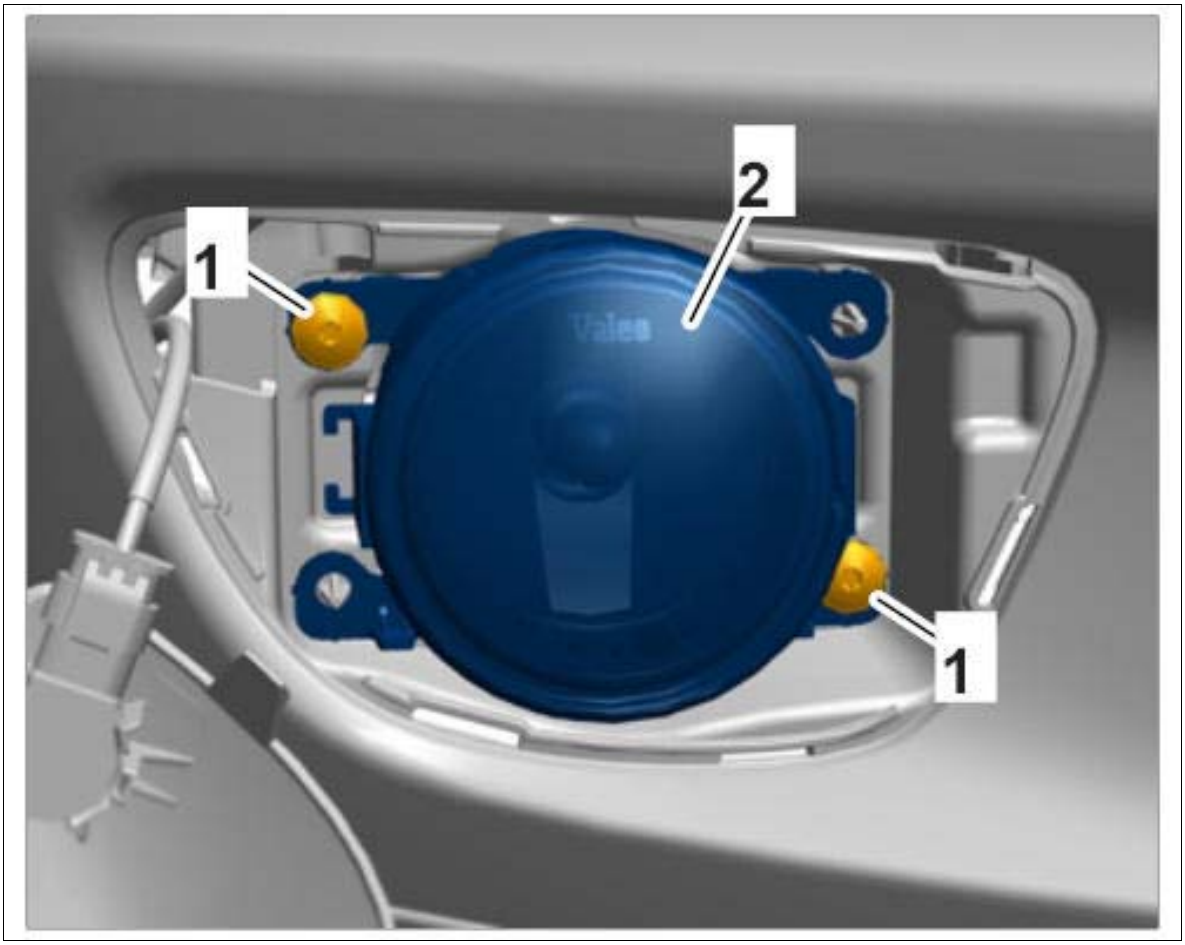

Courtesy of PORSCHE CARS NORTH AMERICA, INC.

3. Release and disconnect electric plug connection **-1-** .

Fig 3: Disconnecting Electric Plug Connection

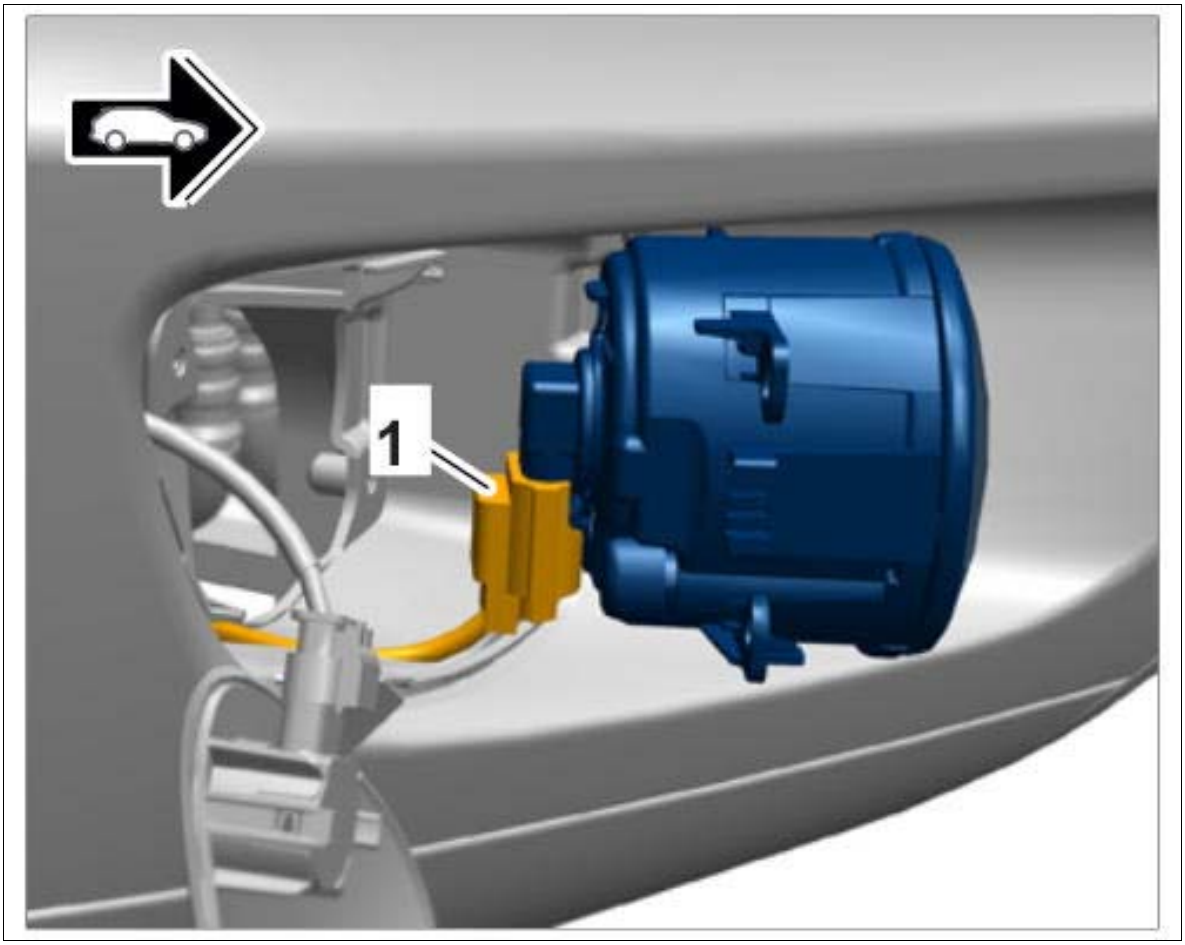

Courtesy of PORSCHE CARS NORTH AMERICA, INC.

WM 946419 REMOVING AND INSTALLING FOG LIGHTS (EXCEPT MACAN TURBO) > INSTALLING FOG LIGHTS

1. Installation is performed in reverse order to removal.
2. Tighten fastening screws for the fog light.

WM 946419 REMOVING AND INSTALLING FOG LIGHTS (EXCEPT MACAN TURBO) > SUBSEQUENT WORK

1. Check fog light setting. → WM 941516 ADJUSTING HEADLIGHTS AND FOG LIGHTS

WM 947019 REMOVING AND INSTALLING ADDITIONAL BRAKE LIGHT (ALL MODELS) > REMOVING ADDITIONAL BRAKE LIGHT

1. Remove additional brake light.

Fig 1: Masking Rear Spoiler

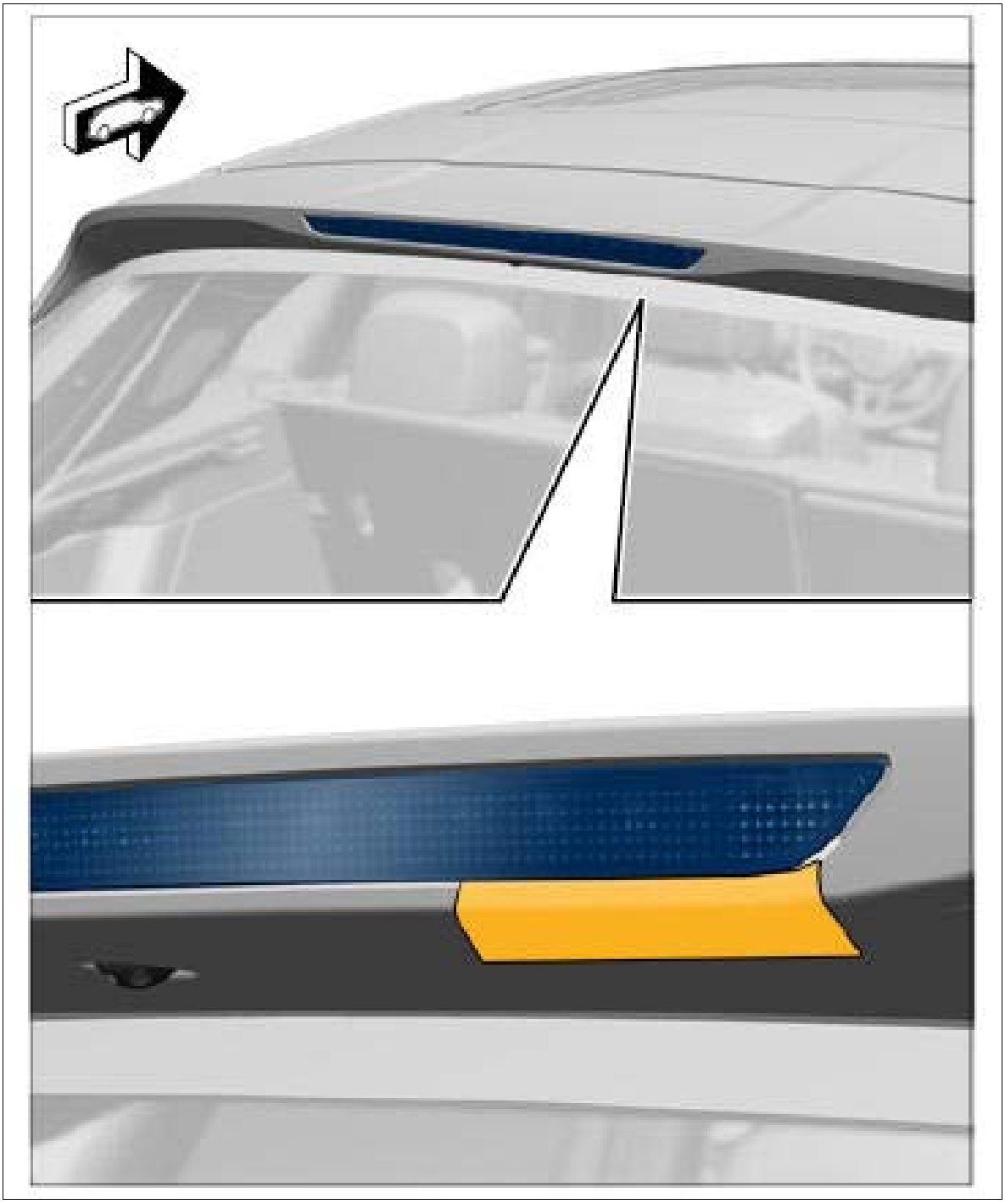

Courtesy of PORSCHE CARS NORTH AMERICA, INC.

1. 1.1. Mask the right-hand side of the rear spoiler underneath the additional brake light as shown → Masking rear spoiler using fabric adhesive tape.

   Information

   To **prevent damage** to the **additional brake light,** always observe the following installation sequence and **never** use a plastic wedge or slotted screwdriver to **lever the additional brake light out of the rear spoiler.**

You will find a **video clip** showing how to remove the additional brake light as a PDF file in the PIWIS information system in the "Workshop Manual" information medium under **==> "947019 Removing additional brake light - video clip".**

2. 1.2. Carefully insert a plastic wedge at a horizontal position between the rear spoiler and additional brake light **-arrow A-** until there is a gap of approx. **X = 3 mm** between the lower edge of the additional brake light and rear spoiler.

Fig 2: Removing Additional Brake Light

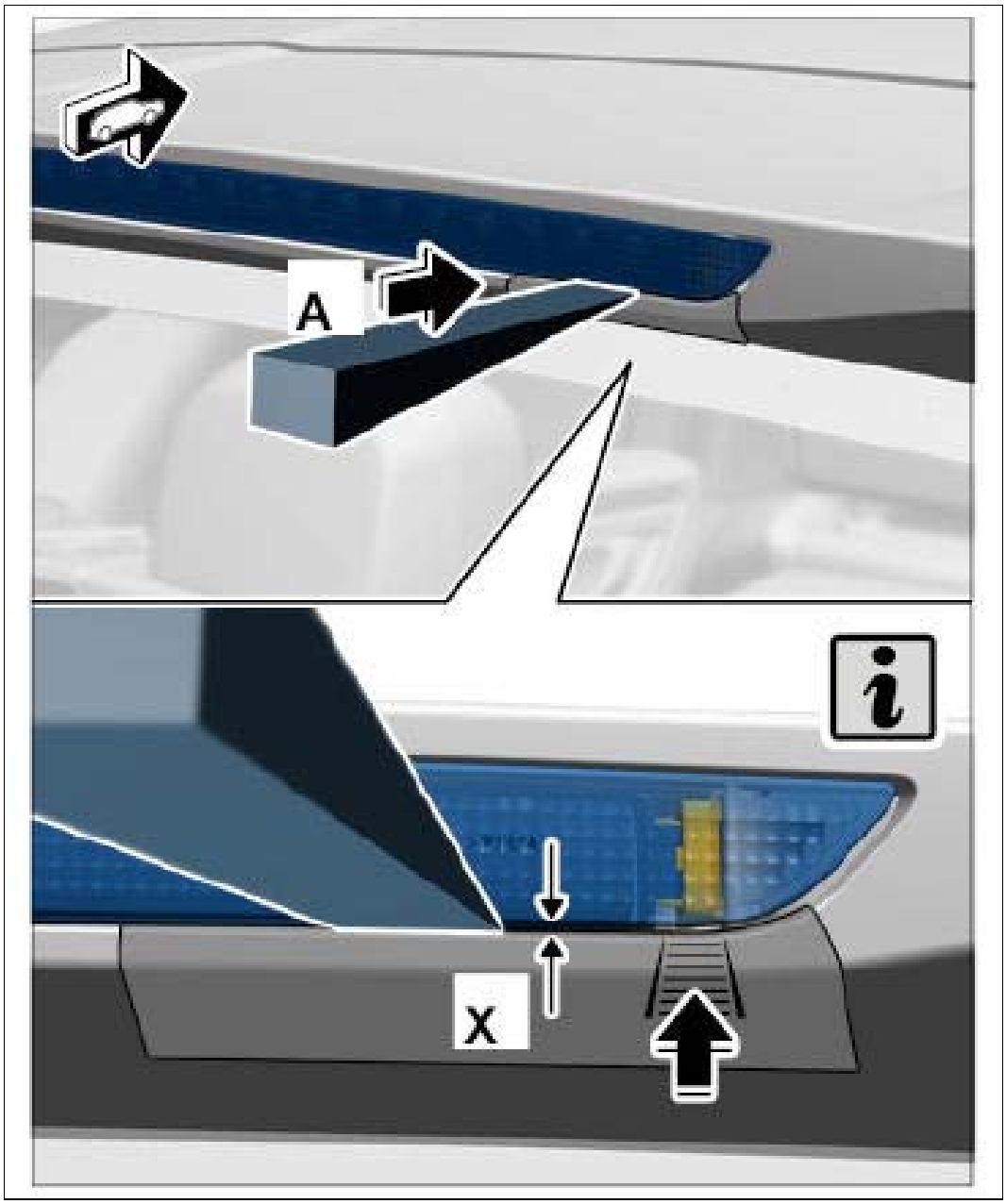

Courtesy of PORSCHE CARS NORTH AMERICA, INC.

Information

When removing the additional brake light, always use a small slotted screwdriver to move the locking lug to the left and unlock it through the widened gap.

Only release the additional brake light when part of the locking lug is visible through

the gap. Use a hand lamp to check this if necessary.

3. 1.3. Insert a narrow screwdriver in the marked area of the gap and push the additional brake light locking lug lying behind it to the left to unlock it **-arrow A-** until the additional brake light pops out slightly.

   Fig 3: Removing Additional Brake Light

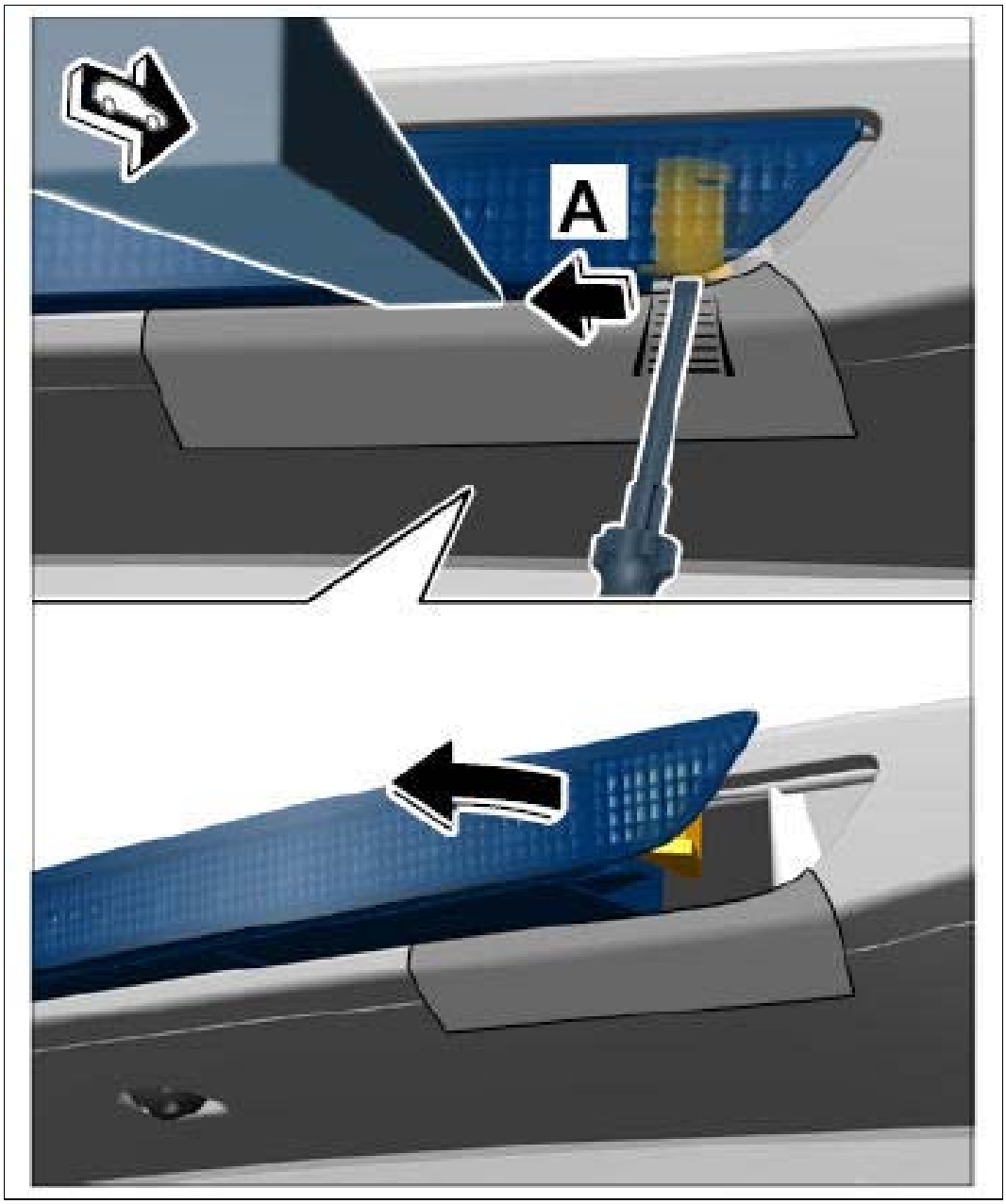

Courtesy of PORSCHE CARS NORTH AMERICA, INC.

4. 1.4. Carefully pull the plastic wedge and additional brake light out of the rear spoiler **-arrow-** and leave the additional brake light hanging on the wire harness at the left.
5. 1.5. Remove the fabric tape you affixed to the rear spoiler earlier.

2. Remove additional brake light.
3. Release electric plug connection **-1-** and pull it off the additional brake light **-2-** .

Fig 4: Identifying Electric Plug Connection

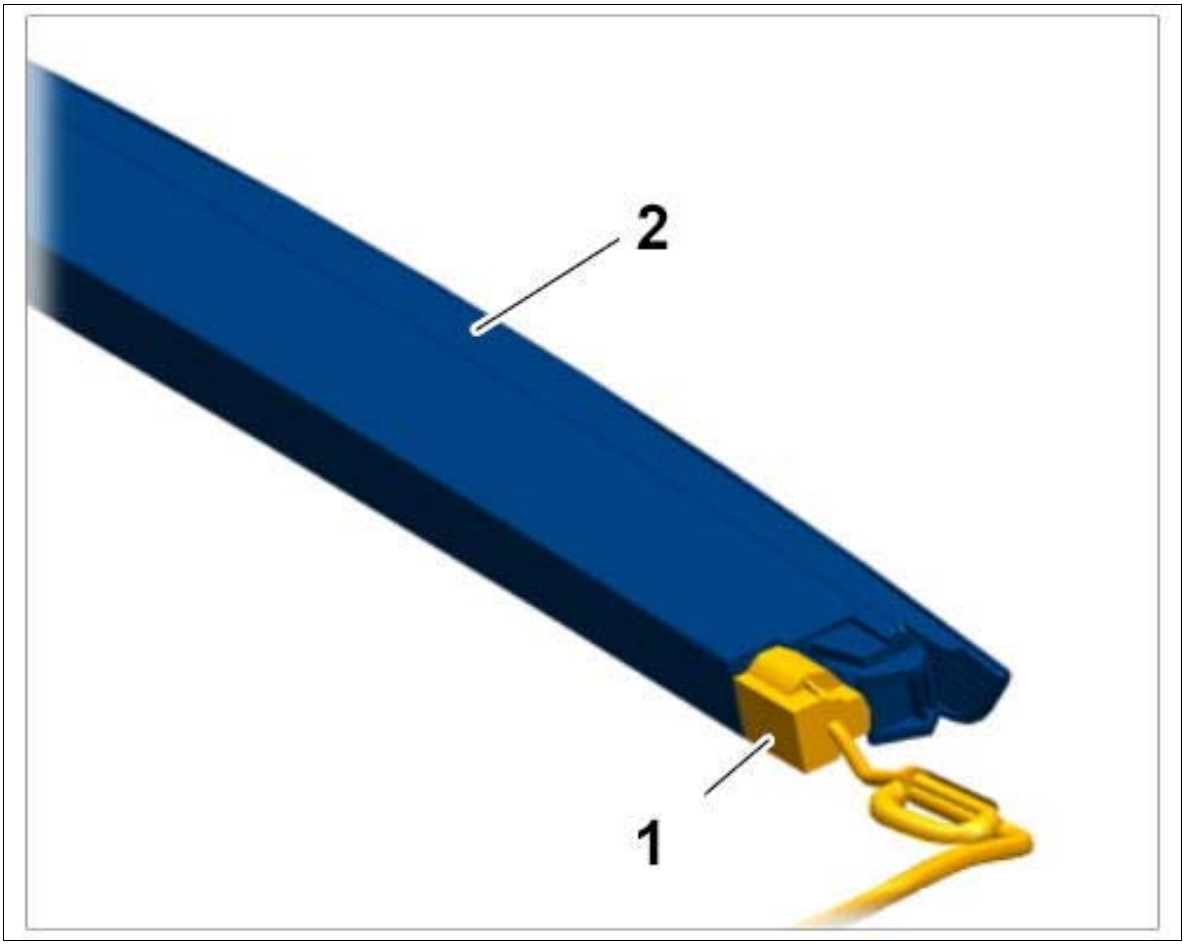

Courtesy of PORSCHE CARS NORTH AMERICA, INC.

WM 947019 REMOVING AND INSTALLING ADDITIONAL BRAKE LIGHT (ALL MODELS) > INSTALLING ADDITIONAL BRAKE LIGHT

1. Installation is performed in reverse order to removal.

WM 947119 REMOVING AND INSTALLING AUXILIARY HEADLIGHTS (ALL MODELS) > TECHNICAL VALUES

Location	Description	Type	Basic value	Tolerance 1	Tolerance 2
Auxiliary headlight to front apron	Internal Torx screw, Ø 5 x 16	Tightening torque	6 Nm (4.5 ftlb.)		

WM 947119 REMOVING AND INSTALLING AUXILIARY HEADLIGHTS (ALL MODELS) >

PRELIMINARY WORK

1. Remove front apron. → Removing Front Apron

WM 947119 REMOVING AND INSTALLING AUXILIARY HEADLIGHTS (ALL MODELS) > REMOVING AUXILIARY HEADLIGHTS

1. Release and disconnect electric plug connection **-1-** .
2. Unscrew fastening screws **-2-** .
3. Carefully disengage clips **-arrows-** and remove auxiliary headlight **-3-** by pulling it forward out of the front apron.

Fig 1: Removing Auxiliary Headlights

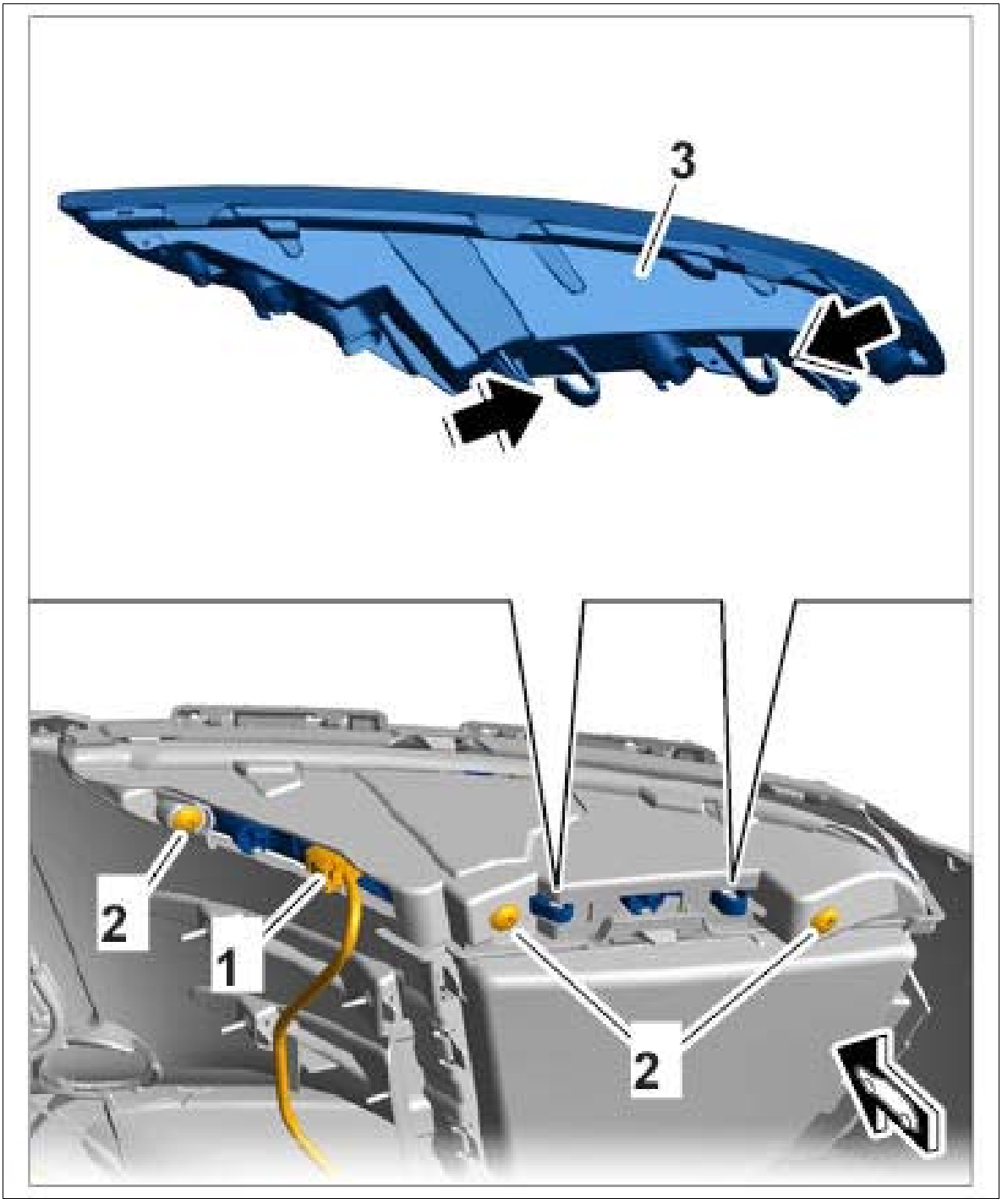

Courtesy of PORSCHE CARS NORTH AMERICA, INC.

WM 947119 REMOVING AND INSTALLING AUXILIARY HEADLIGHTS (ALL MODELS) > INSTALLING AUXILIARY HEADLIGHTS

1. Installation is performed in reverse order to removal.
2. Tighten fastening screws on the auxiliary headlights. **Tightening torque 6 Nm (4.5 ftlb.)**

WM 947119 REMOVING AND INSTALLING AUXILIARY HEADLIGHTS (ALL MODELS) > SUBSEQUENT WORK

1. Install front apron. → Installing Front Apron

WM 947419 REMOVING AND INSTALLING REVERSING LIGHT (ALL MODELS) > PRELIMINARY WORK

1. Remove rear apron. → REMOVING REAR APRON

WM 947419 REMOVING AND INSTALLING REVERSING LIGHT (ALL MODELS) > REMOVING REVERSING LIGHT

1. Disconnect electric plug connection **-1-** for reversing light **-2-** .
    1. 1.1. Cut the tie-wraps **-3-** .
    2. 1.2. Release and disconnect electric plug connection.

Fig 1: Disconnecting Reversing Light Electric Plug Connection

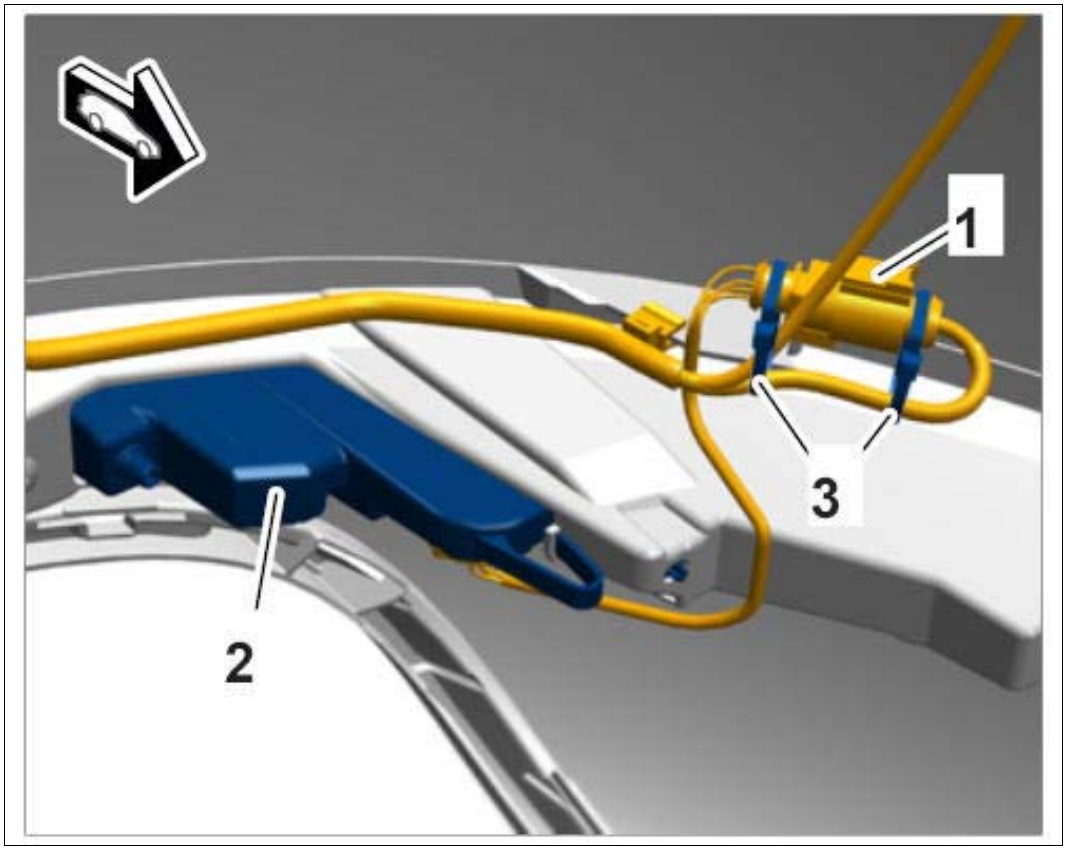

Courtesy of PORSCHE CARS NORTH AMERICA, INC.

2. Unscrew fastening screws **-1-** and remove reversing light **-2-** from the rear apron.

Fig 2: Removing Reversing Light

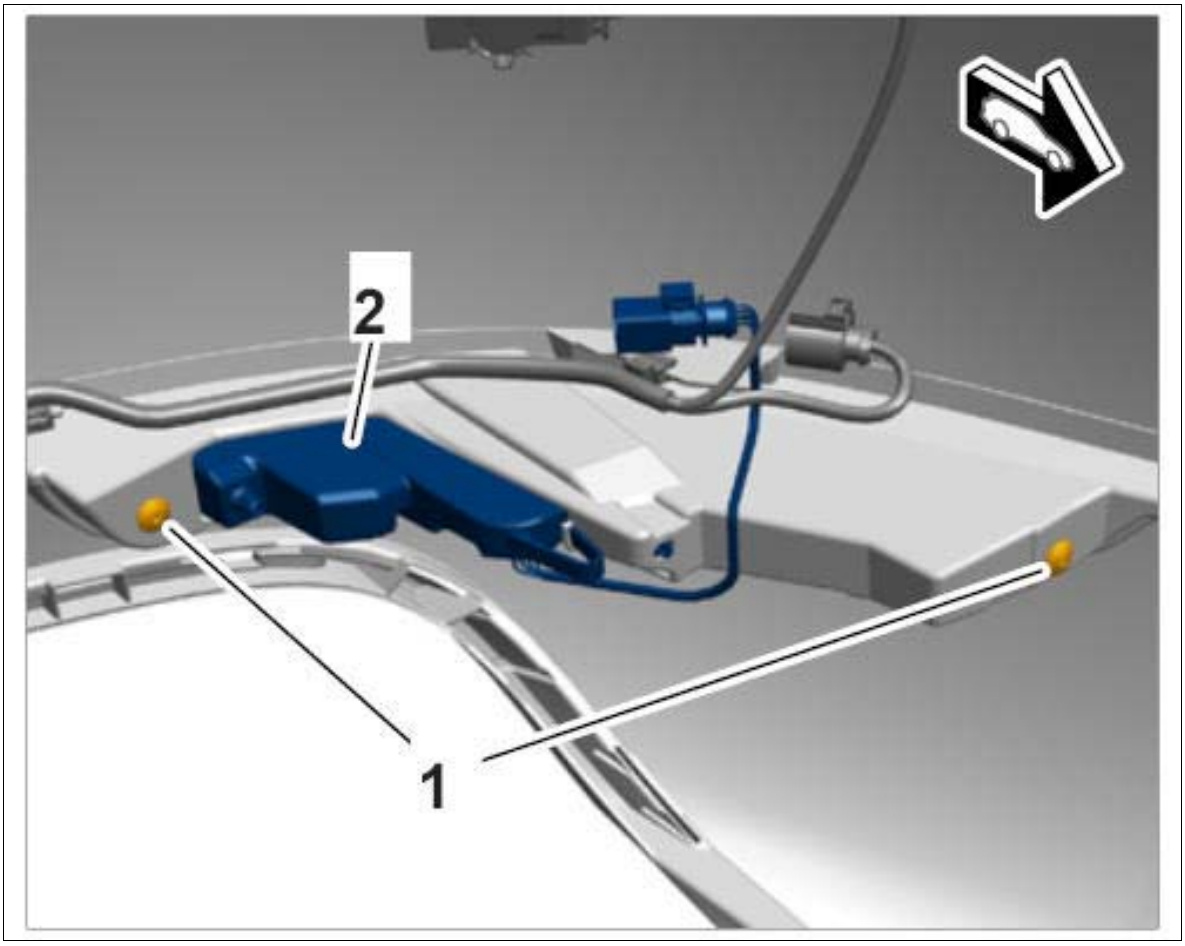

Courtesy of PORSCHE CARS NORTH AMERICA, INC.

WM 947419 REMOVING AND INSTALLING REVERSING LIGHT (ALL MODELS) > INSTALLING REVERSING LIGHT

1. Installation is performed in reverse order to removal.
2. Tighten fastening screws on the reversion light.

WM 947419 REMOVING AND INSTALLING REVERSING LIGHT (ALL MODELS) > SUBSEQUENT WORK

1. Install rear apron. → INSTALLING REAR APRON

WM 947819 REMOVING AND INSTALLING FRONT ANGLE SENSOR FOR HEADLIGHT BEAM ADJUSTMENT (ALL MODELS) > INFORMATION

1. The procedure for removing and installing the front angle sensor for headlight beam adjustment is described under → 431855 REPLACING FRONT LEVEL SENSOR .

WM 947919 REMOVING AND INSTALLING REAR ANGLE SENSOR FOR HEADLIGHT BEAM ADJUSTMENT (ALL MODELS) > INFORMATION

1. The procedure for removing and installing the rear angle sensor for headlight beam adjustment is described under → 431955 REPLACING REAR LEVEL SENSOR .

WM 949419 REMOVING AND INSTALLING SERVO MOTOR FOR HEADLIGHT BEAM ADJUSTMENT (ALL MODELS) > PRELIMINARY WORK

1. Remove headlights. → Removing Headlights

WM 949419 REMOVING AND INSTALLING SERVO MOTOR FOR HEADLIGHT BEAM ADJUSTMENT (ALL MODELS) > REMOVING SERVO MOTOR FOR HEADLIGHT BEAM ADJUSTMENT

1. Turn the rear cover **-1-** in direction of arrow and remove it.

Fig 1: Removing Rear Cover



Courtesy of PORSCHE CARS NORTH AMERICA, INC.

2. Disconnect electric plug connection **-1-** on servo motor for headlight beam adjustment **-2-** .

3. Turn servo motor for headlight beam adjustment in direction of arrow, pull it off and remove it

Fig 2: Removing Headlight Beam Adjustment Servo Motor

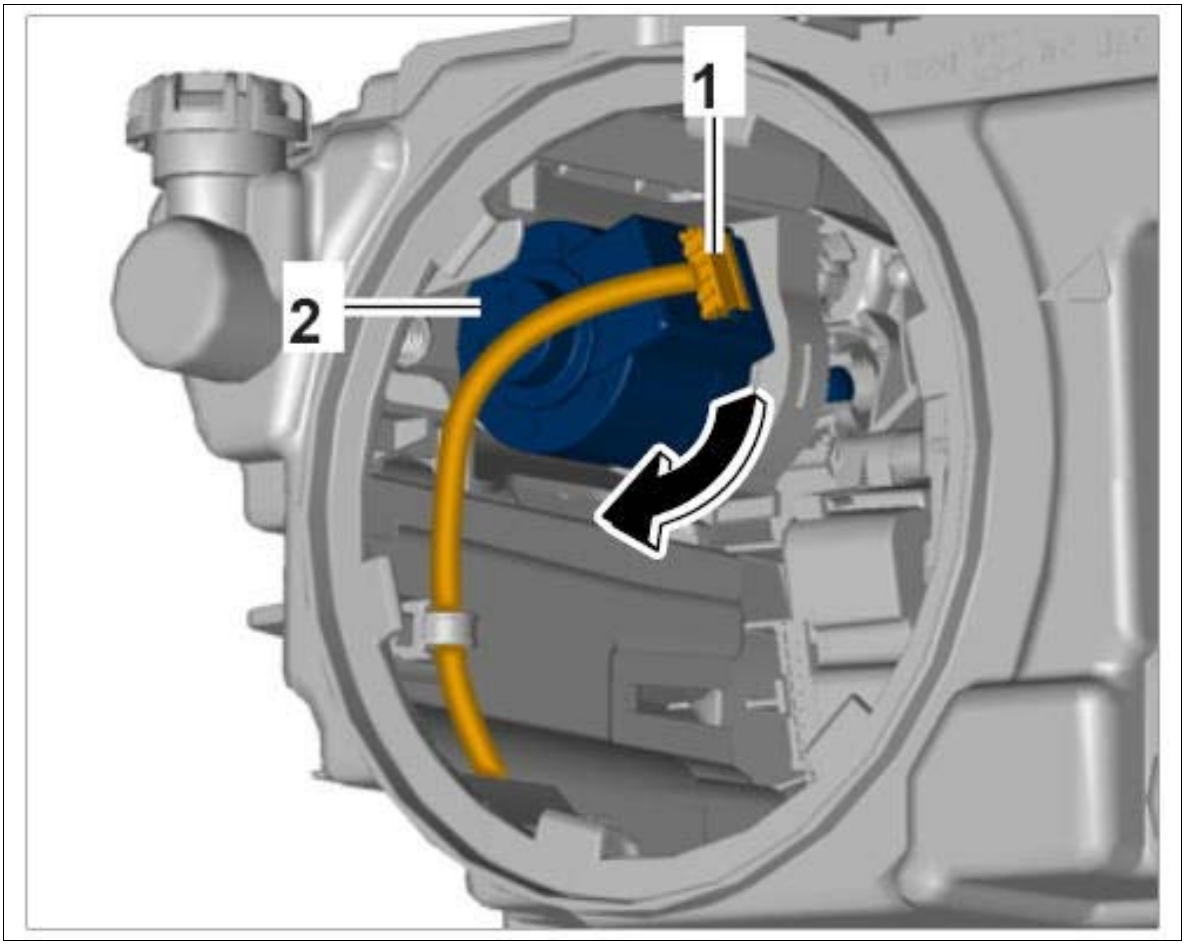

Courtesy of PORSCHE CARS NORTH AMERICA, INC.

WM 949419 REMOVING AND INSTALLING SERVO MOTOR FOR HEADLIGHT BEAM ADJUSTMENT (ALL MODELS) > INSTALLING SERVO MOTOR FOR HEADLIGHT BEAM ADJUSTMENT

1. Insert servo motor for headlight beam adjustment **-1-** into the mounting in the headlight and engage the ball joint in the mounting.
2. Lock servo motor for headlight beam adjustment by turning it in direction of arrow.
3. Plug in electric plug connection **-2-** on servo motor for headlight beam adjustment.

Fig 1: Installing Headlight Beam Adjustment Servo Motor

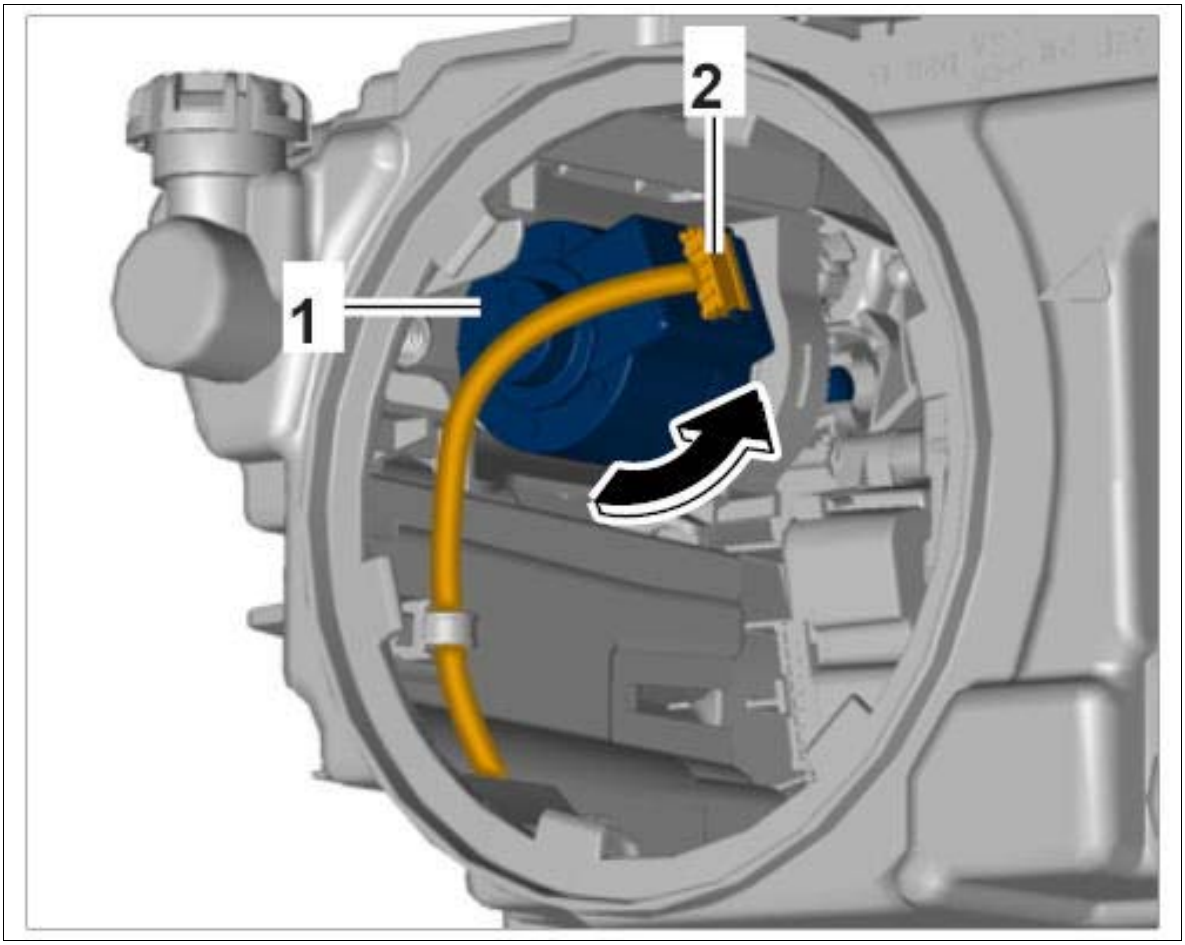

Courtesy of PORSCHE CARS NORTH AMERICA, INC.

4. Check condition of the seal **-1-** and check that it is fitted correctly on the rear cover **-2-** .
5. Position rear cover on the headlight and lock it by turning it in direction of arrow.

Fig 2: Installing Rear Cover

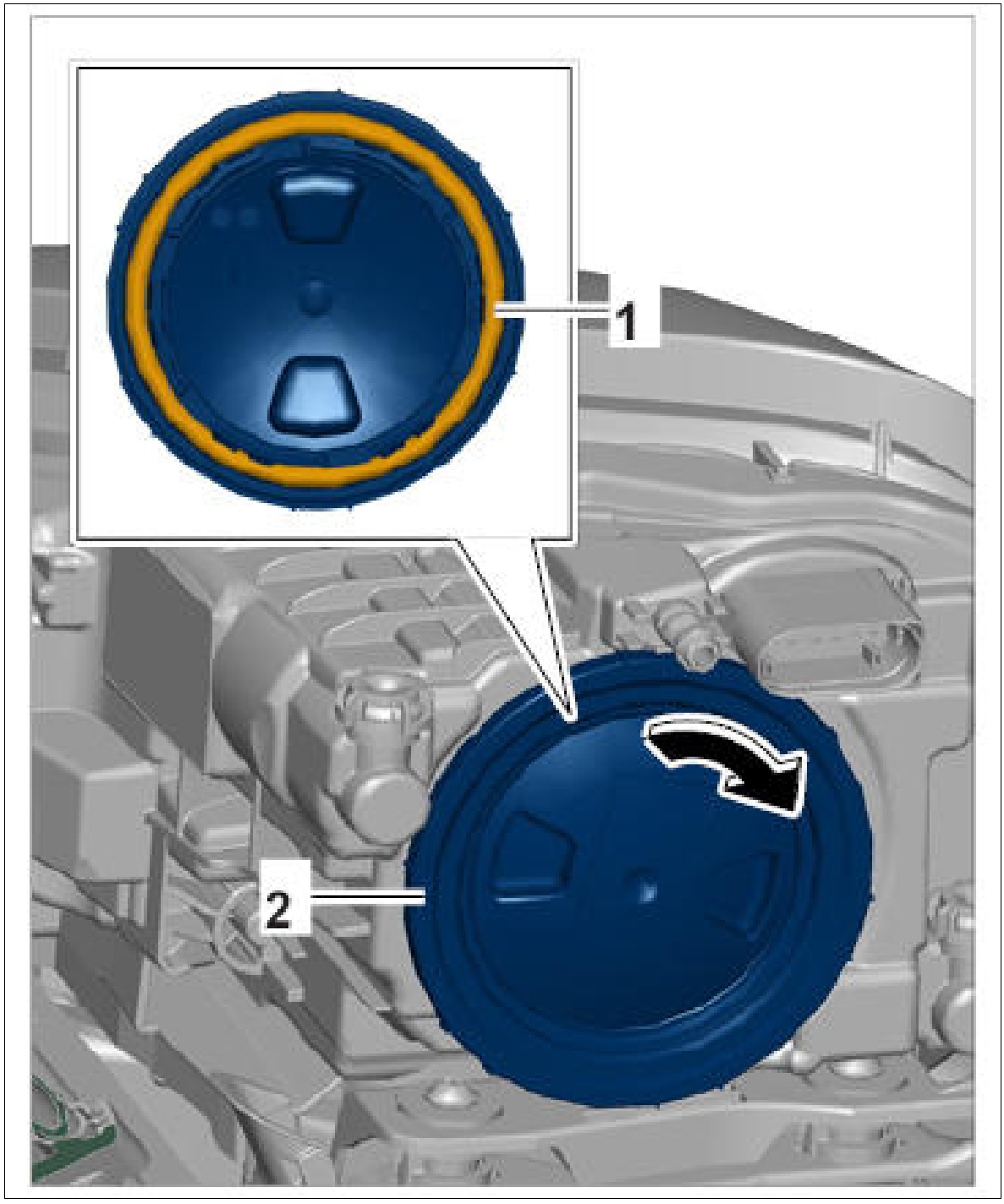

Courtesy of PORSCHE CARS NORTH AMERICA, INC.

WM 949419 REMOVING AND INSTALLING SERVO MOTOR FOR HEADLIGHT BEAM ADJUSTMENT (ALL MODELS) > SUBSEQUENT WORK

1. Install headlights. → Installing Headlights
2. If the servo motor for headlight beam adjustment was replaced, check the setting of the

headlights and correct it if necessary. → 941516 ADJUSTING HEADLIGHTS AND FOG LIGHTS

WM 960719 REMOVING AND INSTALLING CONTACT SWITCH FOR GLOVE COMPARTMENT LIGHT (ALL MODELS) > INFORMATION

1. The contact switch for the glove compartment light is integrated in the damper for the glove compartment and cannot be replaced separately.

WM 961619 REMOVING AND INSTALLING DOOR WARNING LIGHT (ALL MODELS) > REMOVING DOOR WARNING LIGHT

1. Release door warning light **-1-** using a small screwdriver **-a-** and pull it out of the door panel horizontally.

   Fig 1: Removing Door Warning Light

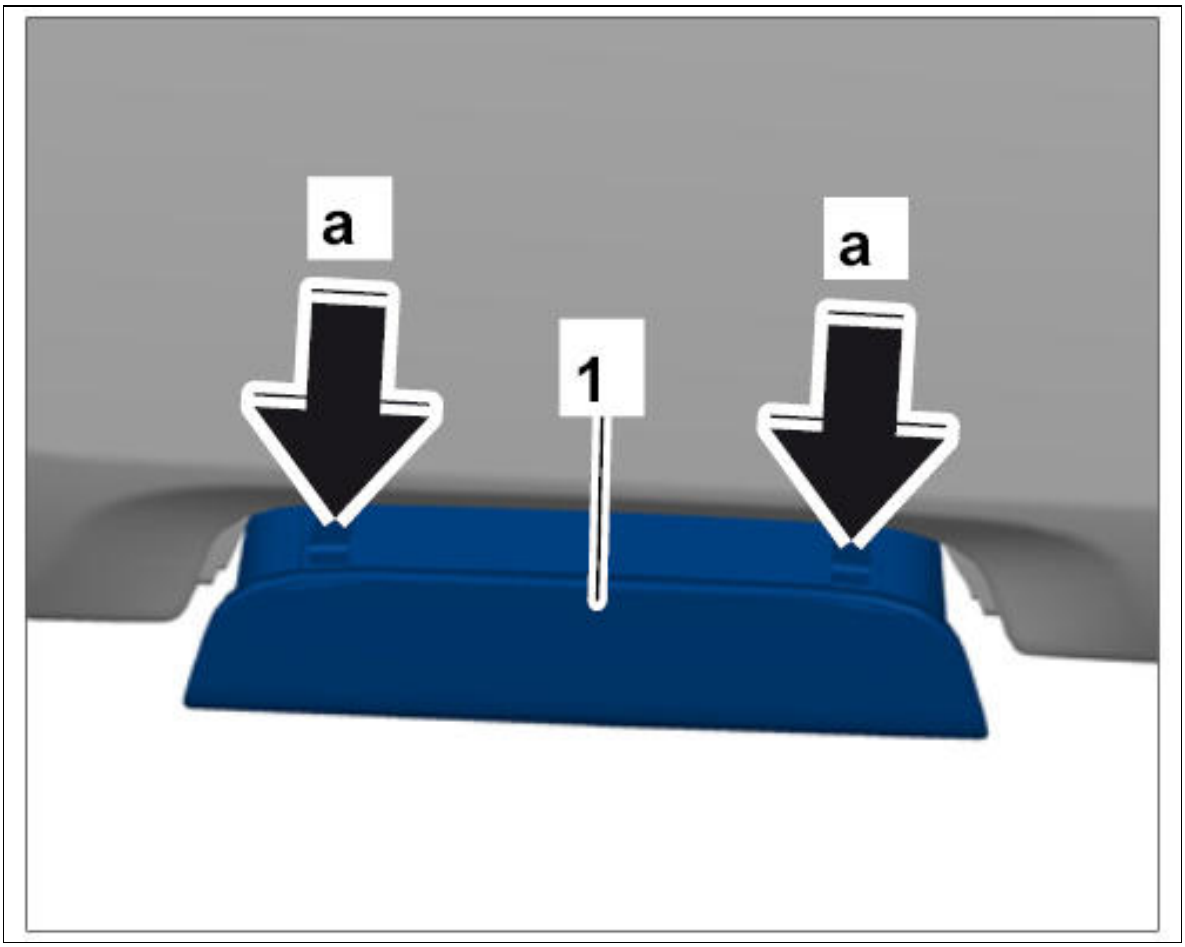

Courtesy of PORSCHE CARS NORTH AMERICA, INC.

2. Release electric plug connection **-1-** (**-a-**) and pull it off the door warning light **-2-** .

Fig 2: Disconnecting Electric Plug Connection

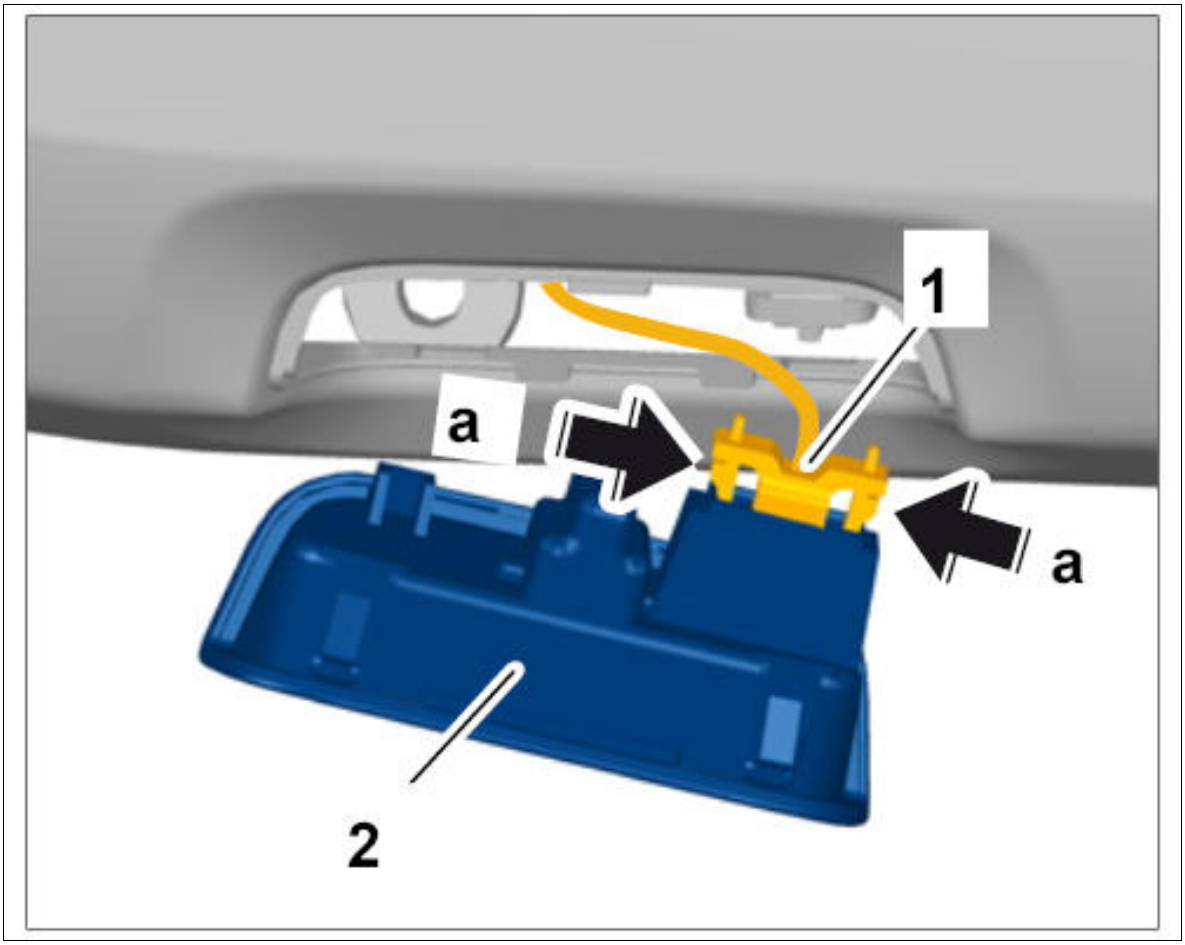

Courtesy of PORSCHE CARS NORTH AMERICA, INC.

WM 961619 REMOVING AND INSTALLING DOOR WARNING LIGHT (ALL MODELS) > INSTALLING DOOR WARNING LIGHT

1. Installation is performed in reverse order to removal.

WM 962255 REPLACING LIGHT BULB FOR INTERIOR LIGHT (ALL MODELS) > PRELIMINARY WORK

1. Loosen front roof trim panel and swivel it downwards with the supply lines connected. → Removing front roof trim panel

WM 962255 REPLACING LIGHT BULB FOR INTERIOR LIGHT (ALL MODELS) > REMOVING LIGHT BULB FOR INTERIOR LIGHT

1. Turn socket **-1-** 90° in direction of arrow and pull out front roof trim panel **-2-** .

2. Remove bulb **-3-** from its socket.

Fig 1: Removing Bulb

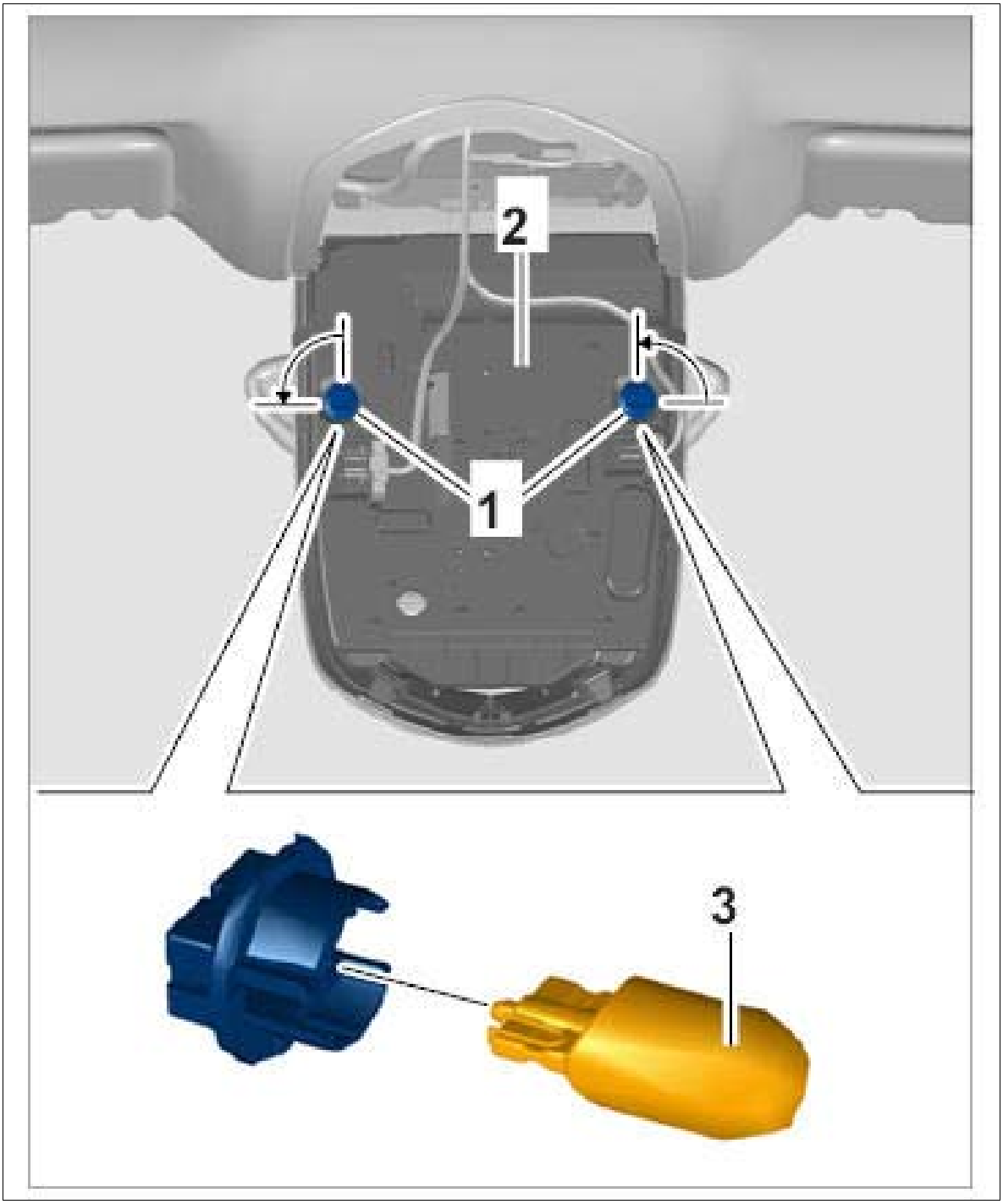

Courtesy of PORSCHE CARS NORTH AMERICA, INC.

WM 962255 REPLACING LIGHT BULB FOR INTERIOR LIGHT (ALL MODELS) > INSTALLING LIGHT BULB FOR INTERIOR LIGHT

1. Installation is performed in reverse order to removal.

WM 962255 REPLACING LIGHT BULB FOR INTERIOR LIGHT (ALL MODELS) > SUBSEQUENT WORK

1. Install front roof trim panel. → Installing front roof trim panel

WM 962719 REMOVING AND INSTALLING SWITCH CONSOLE (ALL MODELS) > TOOLS

Designation	Type	Number	Description	
PIWIS Tester II	Special tool	9818		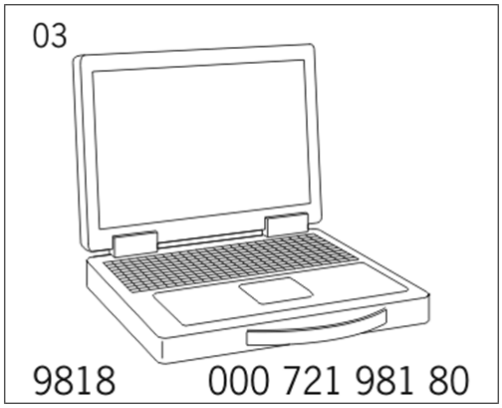

WM 962719 REMOVING AND INSTALLING SWITCH CONSOLE (ALL MODELS) > TECHNICAL VALUES

Location	Description	Type	Basic value	Tolerance 1	Tolerance 2
Switch console to center console	Internal Torx screw, M5 x 20	Tightening torque	4 Nm (3 ftlb.)		

WM 962719 REMOVING AND INSTALLING SWITCH CONSOLE (ALL MODELS) > PRELIMINARY WORK

1. Remove upper part of center console cover. → Removing Upper Part Of Center Console Cover

WM 962719 REMOVING AND INSTALLING SWITCH CONSOLE (ALL MODELS) > REMOVING SWITCH CONSOLE

NOTE: Voltage peaks

- *Risk of damage to load or to the control unit*

→ Remove the ignition key and switch off load before disconnecting or removing load.

1. Unscrew fastening screws **-1-** .
2. Carefully disengage switch console **-2-** from the center console in an upward direction **-a, b-** and pull it out under the flap on the DVD autochanger.

Fig 1: Loosening Switch Console

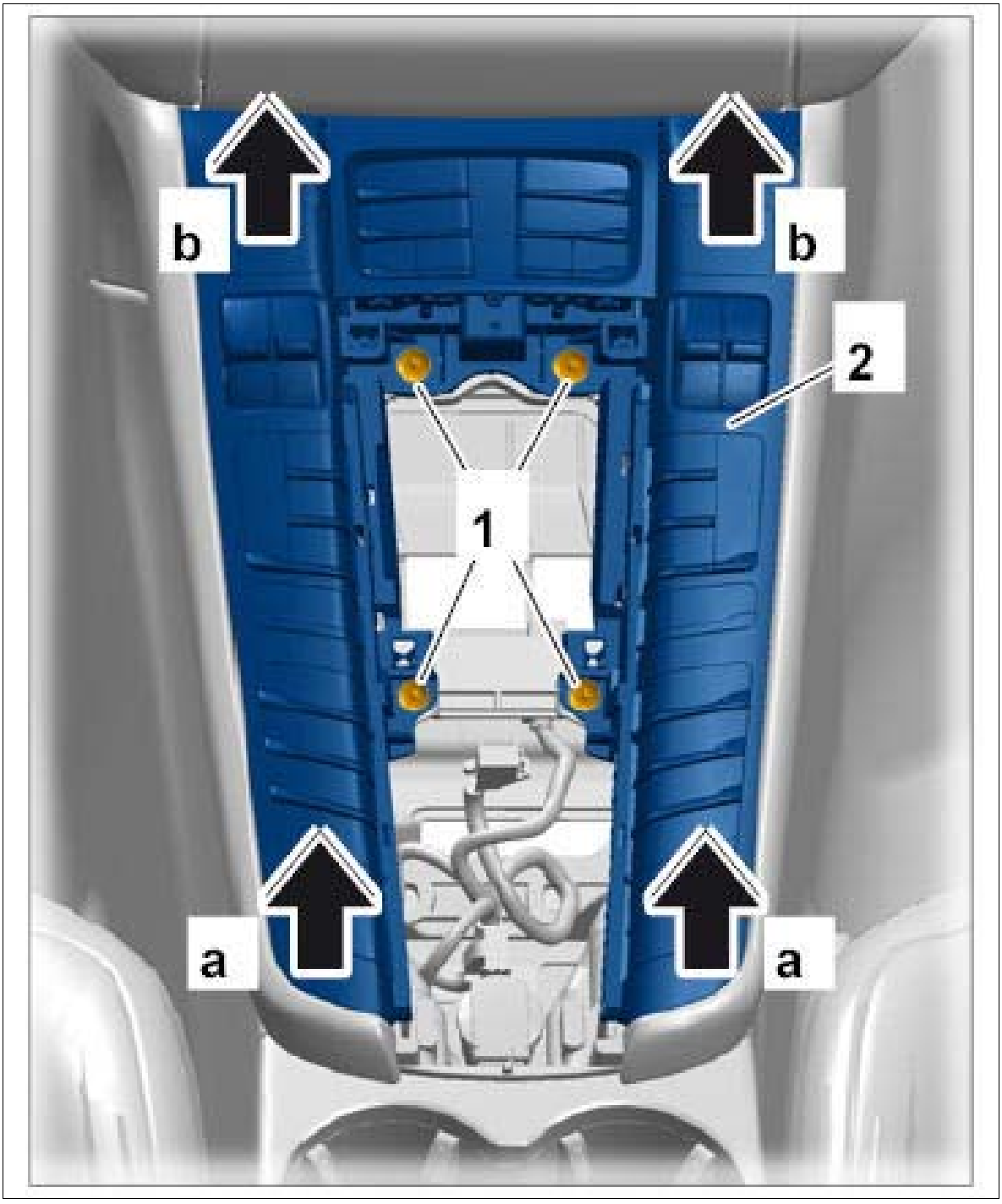

Courtesy of PORSCHE CARS NORTH AMERICA, INC.

Information

Always comply with the regulations for handling ESD-sensitive components!

1. Assembly work may only be carried out if the mechanic is wearing the working clothes and shoes approved by Porsche.
2. The new part must only be removed from the ESD (electrostatic discharge) protective packaging just before installation and at the position at which the part is to be installed.

3. Never touch the electric pins and plug contacts.

Information

The number of plug connections can vary, depending on equipment.

3. Release electric plug connections **-1-** (**-a-**) and disconnect them from the switch console **-2-** .

Fig 2: Disconnecting Electric Plug Connections

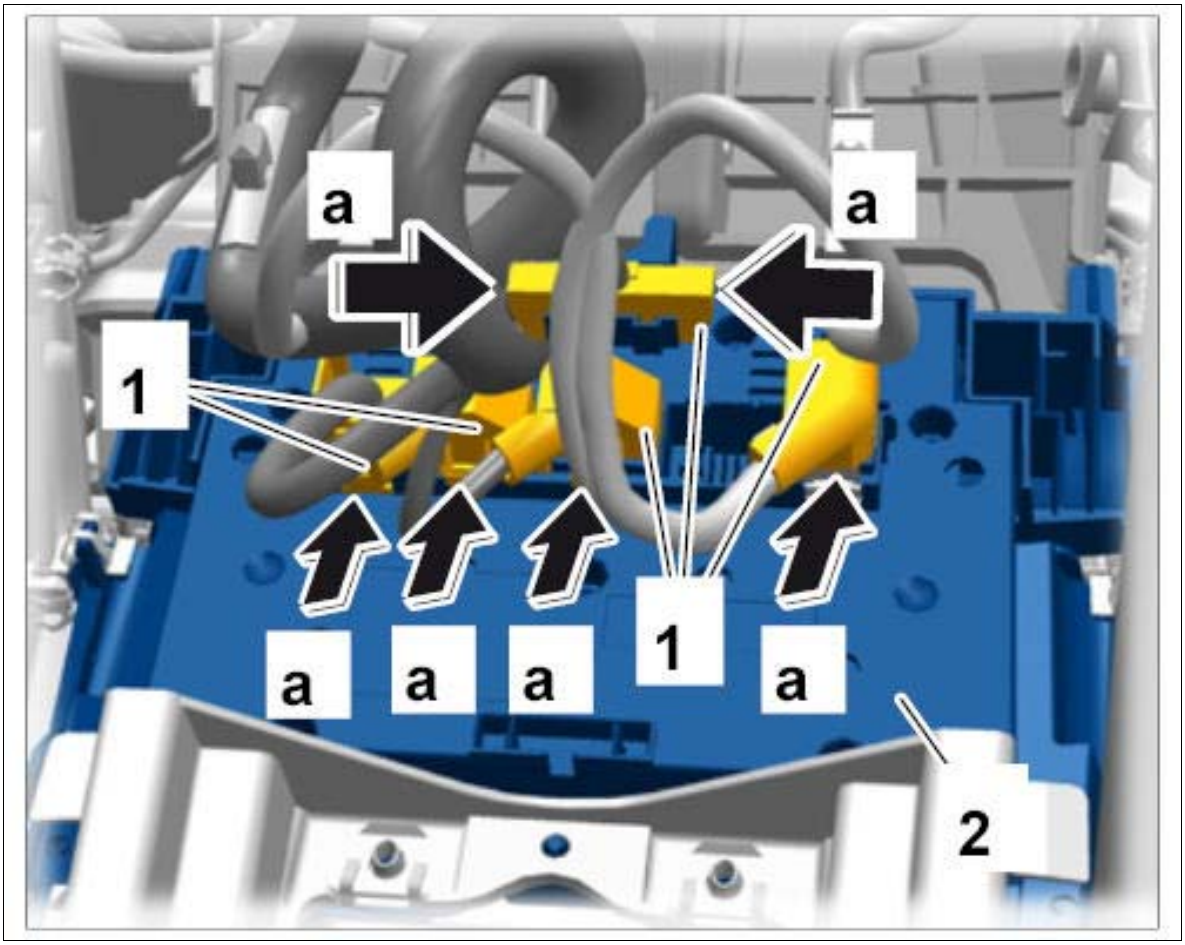

Courtesy of PORSCHE CARS NORTH AMERICA, INC.

WM 962719 REMOVING AND INSTALLING SWITCH CONSOLE (ALL MODELS) > INSTALLING SWITCH CONSOLE

Information

Always comply with the regulations for handling ESD-sensitive components!

- Assembly work may only be carried out if the mechanic is wearing the working clothes and shoes approved by Porsche.
- The new part must only be removed from the ESD (electrostatic discharge) protective packaging just before installation and at the position at which the part is to be installed.

- Never touch the electric pins and plug contacts.

1. Installation is performed in reverse order to removal.
2. Tighten fastening screws securing switch console to center console. **Tightening torque 4 Nm (3 ftlb.)**

WM 962719 REMOVING AND INSTALLING SWITCH CONSOLE (ALL MODELS) > SUBSEQUENT WORK

1. Install upper part of center console cover. → Installing Upper Part Of Center Console Cover
2. If the switch console was replaced, teach the new switch console to suit the vehicle using **PIWIS Tester II 9818.** → 962755 REPLACING SWITCH CONSOLE

WM 962755 REPLACING SWITCH CONSOLE (ALL MODELS) > TOOLS

Designation	Type	Number	Description	
PIWIS Tester II	Special tool	9818		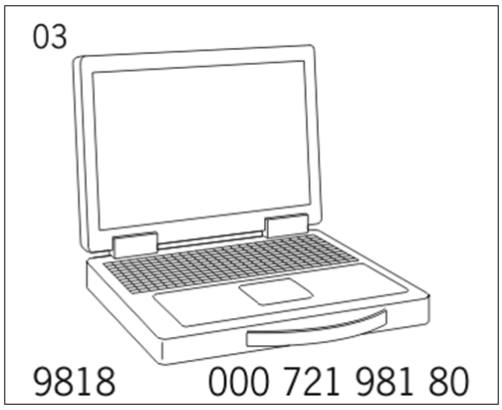

WM 962755 REPLACING SWITCH CONSOLE (ALL MODELS) > TECHNICAL VALUES

Location	Description	Type	Basic value	Tolerance 1	Tolerance 2
Current rating		Nominal value	40 A		

WM 962755 REPLACING SWITCH CONSOLE (ALL MODELS) > PRELIMINARY WORK

1. Replace control unit for switch console. → 962719 REMOVING AND INSTALLING SWITCH CONSOLE

WM 962755 REPLACING SWITCH CONSOLE (ALL MODELS) > REPLACING SWITCH

CONSOLE

NOTE: Voltage drop

- *Risk of irreparable damage to control unit*
- *Risk of damage to control unit*
- *Fault entries in the control unit*
- *Coding in the control unit is aborted*
- *Malfunctions in control unit, even during programming*

→ Prior to disconnecting the control unit, switch off ignition and remove ignition key.

→ Ensure that the power supply is not interrupted during programming.

→ Connect a battery charger with a current rating of at least → **Nominal value: 40 A** to the vehicle battery.

Information

The **PIWIS Tester II 9818** instructions take precedence since the description may be different with later Tester releases.

The procedure described here has been structured in general terms. Different text or additional information may appear in **PIWIS Tester II 9818** .

1. Connect the PIWIS Tester to the vehicle and start the diagnostic application. Switch on ignition.
2. Select vehicle type.
3. Select the **Air conditioning** control unit in the **overview** .
4. **Codings/adaptations** must now be selected.
5. **Automatic coding** must then be selected and press [F12] to start coding.
6. The Tester displays the message **Coding completed successfully.**
7. Select the **Drive links/checks** menu.
8. Select **General** group and press [F12].

   Information

   1. The Compressor run-in function can only be carried out when the engine is running.
   2. Prerequisites for compressor run-in can be displayed in the Porsche System Tester by pressing the [F1] Help button for the air-conditioning system control unit.
   3. Specifications in the Porsche System Tester have priority and take precedence over the specifications in the description.

4. If the Compressor run-in function cannot be activated, then the Reset compressor run-in function must be carried out first.

5. Then start the Compressor run-in function again.

9. Start the engine.

10. Select the **Reset compressor run-in** function by pressing [F12] and then press [F8] to start the reset process.

    1. 10.1. A **compressor run-in remaining time of 150 s** must be set.

11. Select the **Compressor run-in** function, press [F12] and then [F8] to start.

12. Read out the fault memory and erase it if necessary.

13. Check the function of the switch console during a test drive and read out the fault memory.

WM 963819 REMOVING AND INSTALLING FRONT CAMERA (ALL MODELS) > PRELIMINARY WORK

1. Remove trim panels over interior rear-view mirror. → Removing Interior Rear-View Mirror

WM 963819 REMOVING AND INSTALLING FRONT CAMERA (ALL MODELS) > REMOVING FRONT CAMERA

NOTE: Voltage peaks

- *Risk of damage to load or to the control unit*

→ Remove the ignition key and switch off load before disconnecting or removing load.

Information

Always comply with the regulations for handling ESD-sensitive components!

- Assembly work may only be carried out if the mechanic is wearing the working clothes and shoes approved by Porsche.
- The new part must only be removed from the ESD (electrostatic discharge) protective packaging just before installation and at the position at which the part is to be installed.
- Never touch the electric pins and plug contacts.

Information

Do not touch the front camera lens!

1. Switch off ignition and pull remote control out of ignition lock.

2. Carefully disengage locks **-1-** at the left and right using two plastic wedges **-a-** and press front camera **-2-** to the rear and out of the holder **-b-** .

Fig 1: Removing Front Camera

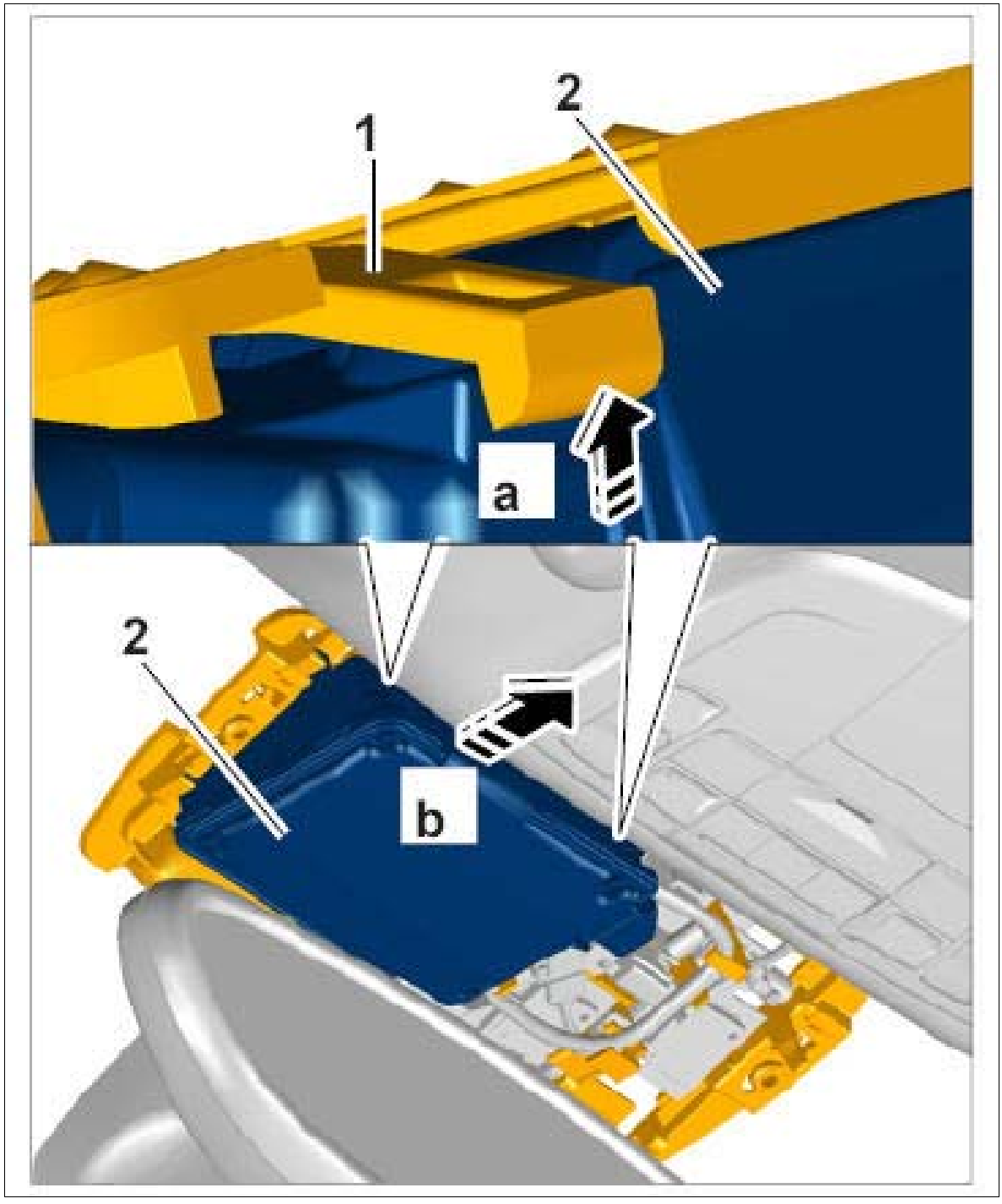

Courtesy of PORSCHE CARS NORTH AMERICA, INC.

3. Release electric plug connection **-1-** (**-a-**) and pull it off the front camera **-2-** .

Fig 2: Disconnecting Electric Plug Connection

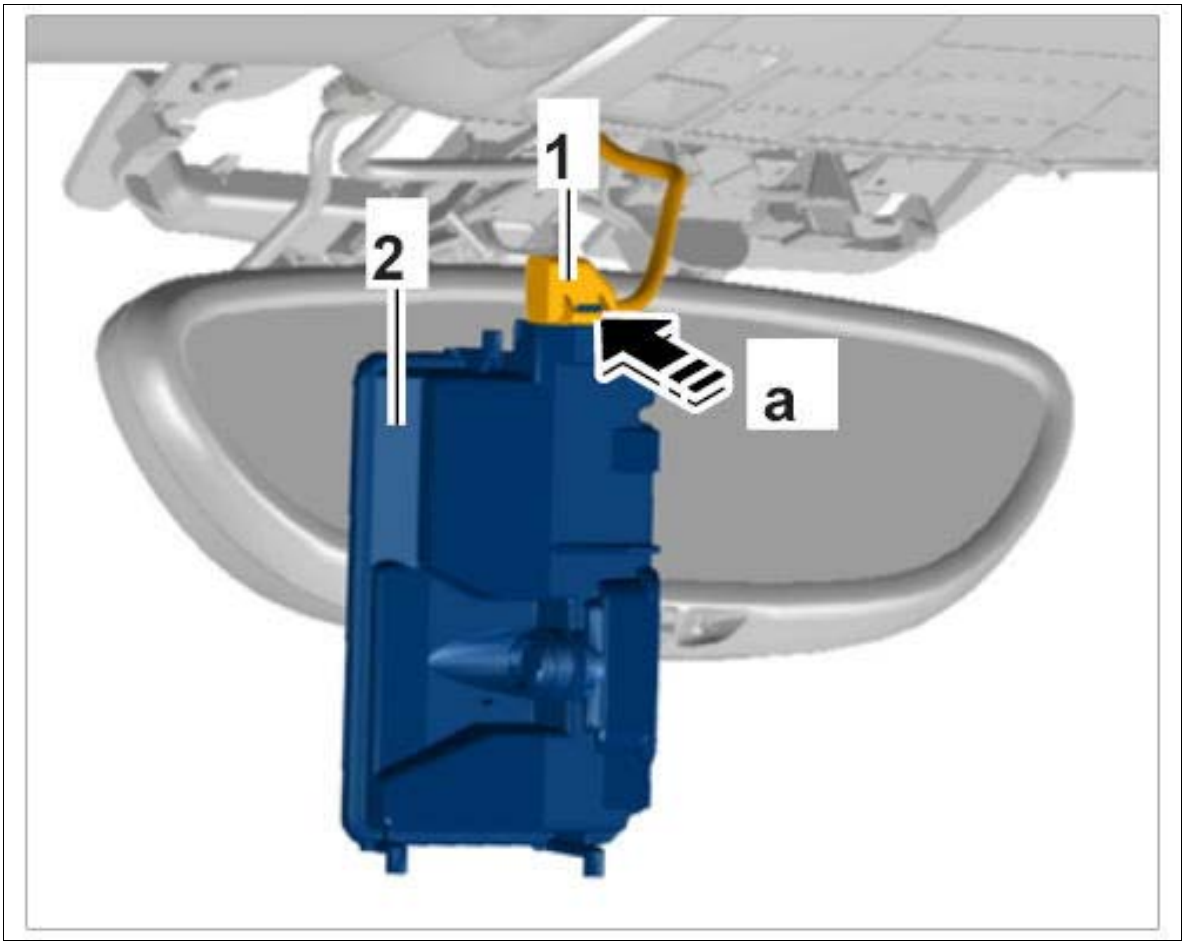

Courtesy of PORSCHE CARS NORTH AMERICA, INC.

WM 963819 REMOVING AND INSTALLING FRONT CAMERA (ALL MODELS) > INSTALLING FRONT CAMERA

Information

Always comply with the regulations for handling ESD-sensitive components!

- Assembly work may only be carried out if the mechanic is wearing the working clothes and shoes approved by Porsche.
- The new part must only be removed from the ESD (electrostatic discharge) protective packaging just before installation and at the position at which the part is to be installed.
- Never touch the electric pins and plug contacts.

Information

Do not touch the front camera lens!

1. Connect electric plug connection **-1-** on the front camera **-2-** (**-a-**) until it engages securely.

Fig 1: Connecting Electric Plug Connection

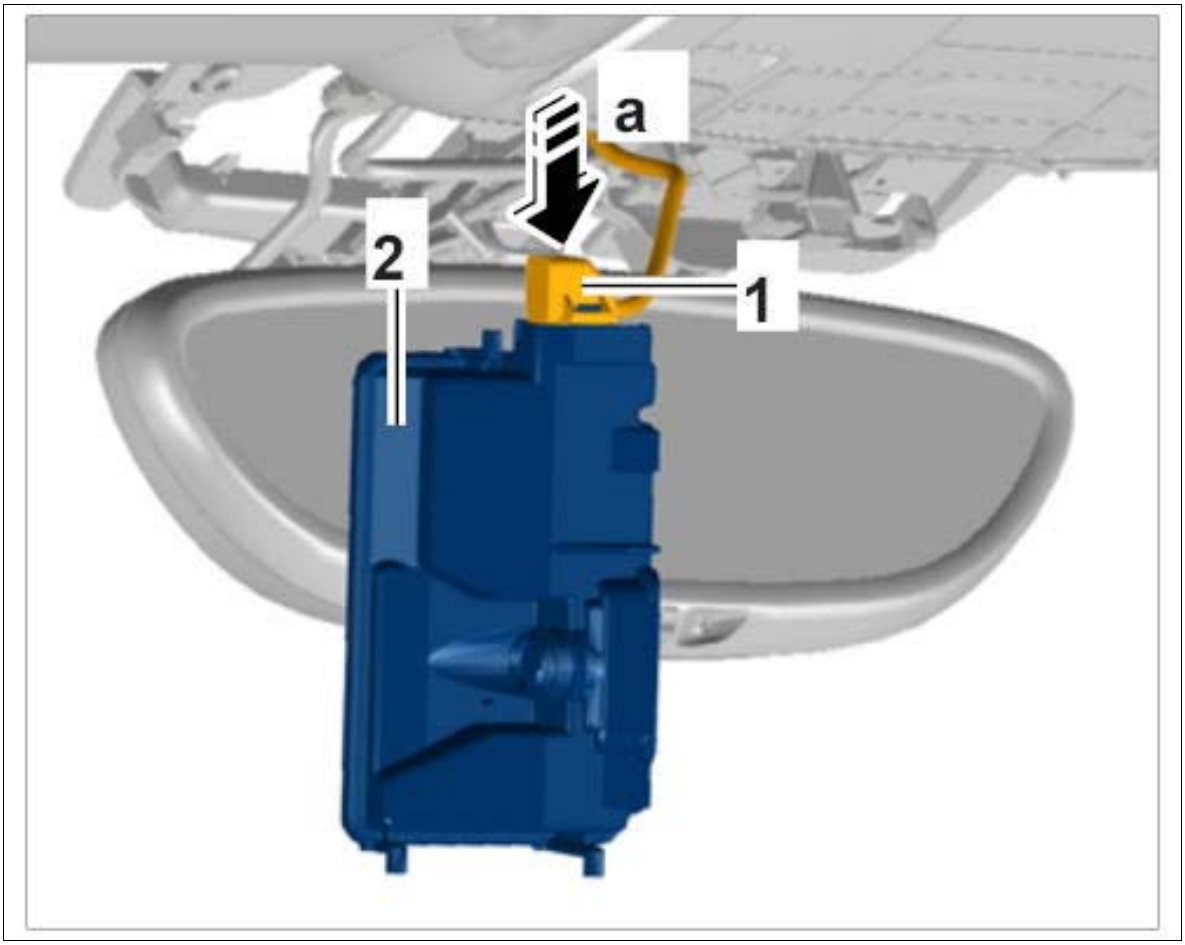

Courtesy of PORSCHE CARS NORTH AMERICA, INC.

2. Install front camera.

    1. 2.1. Position front camera **-1-** on the holder in such a way that the two retaining pins at the left **-a-** and the retaining pin at the right **-b-** make contact with the mounting points.

    2. 2.2. Press front camera forward into the mounting points until the locks **-2-** engage securely.

Fig 2: Installing Front Camera

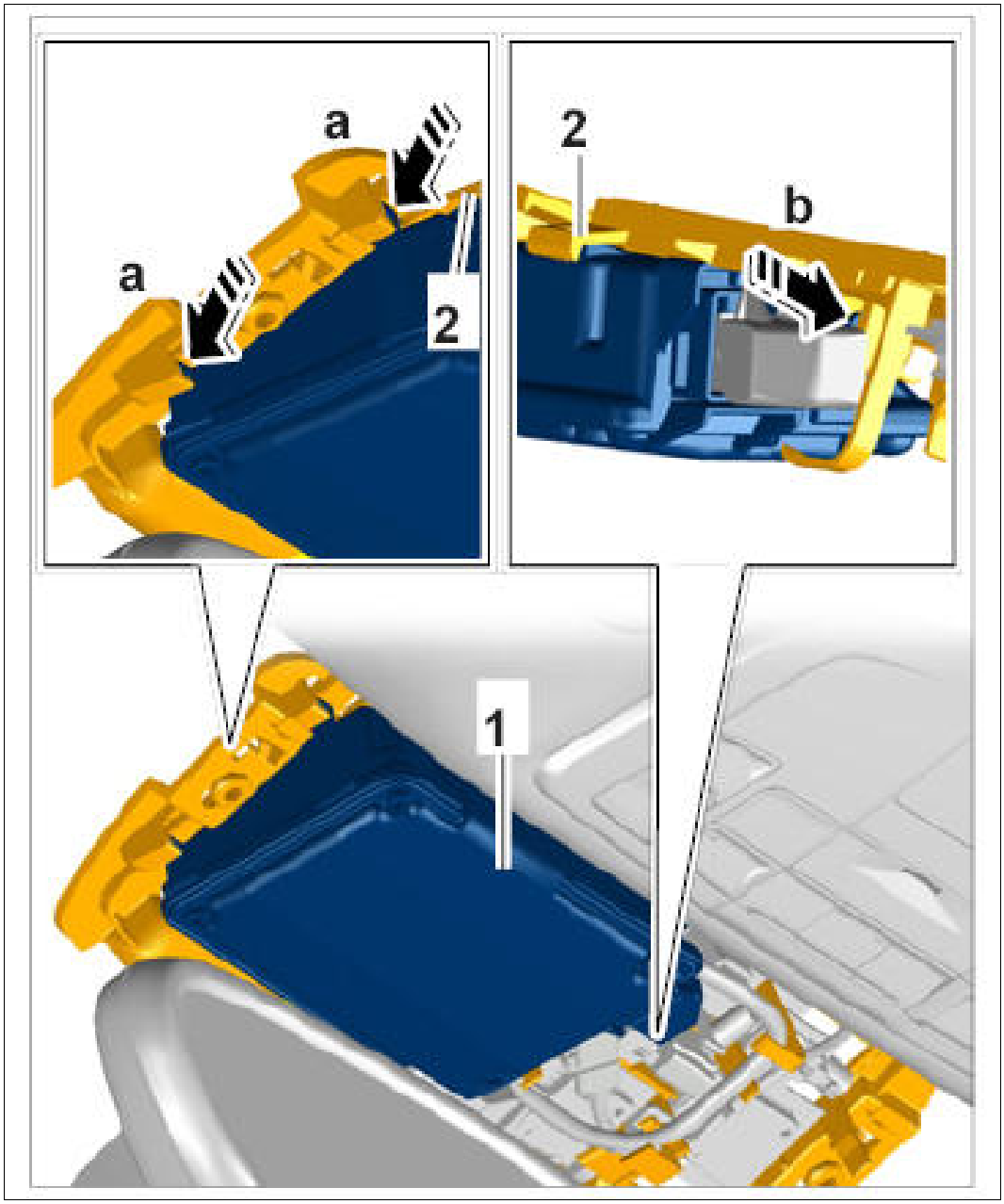

Courtesy of PORSCHE CARS NORTH AMERICA, INC.

WM 963819 REMOVING AND INSTALLING FRONT CAMERA (ALL MODELS) > SUBSEQUENT WORK

1. Install trim panels over interior rear-view mirror. → Installing Interior Rear-View Mirror
2. If the front camera was replaced or the windscreen was removed and installed, calibrate the front camera. → 9638K2 CALIBRATING FRONT CAMERA

WM 9638K2 CALIBRATING FRONT CAMERA (ALL MODELS) > TOOLS

Designation	Type	Number	Description	
Setting device with reflector	Service equipment	WE 1362		
Calibration board for lane departure warning	Service equipment	WE 1540		
PIWIS Tester II	Special tool	9818		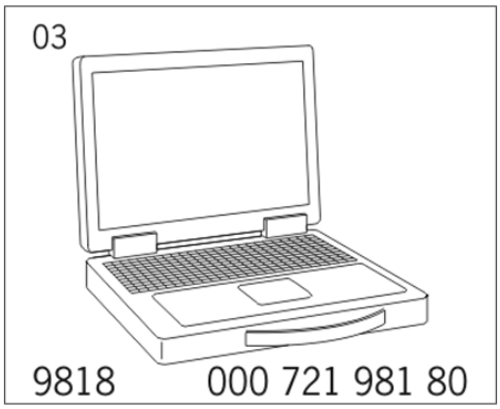

WM 9638K2 CALIBRATING FRONT CAMERA (ALL MODELS) > TECHNICAL VALUES

Location	Description	Type	Basic value	Tolerance 1	Tolerance 2
Current rating		Nominal value	40 A		

WM 9638K2 CALIBRATING FRONT CAMERA (ALL MODELS) > INFORMATION

When does the front camera need to be calibrated?

The front camera must be re-calibrated in the following situations:

- When removing and installing the front camera
- When removing and installing the windscreen
- When changing the height of the chassis
- When adjusting the chassis

WM 9638K2 CALIBRATING FRONT CAMERA (ALL MODELS) > PRELIMINARY WORK

Information

The exact position of the front camera with respect to the vehicle coordinate system is determined by calibrating the front camera.

- The setting device Setting device with reflector WE 1362 , the calibration board Calibration board for lane departure warning WE 1540 and a wheel alignment computer are required for the calibration process.

Information

Calibration must only be performed on a levelled wheel alignment platform or on level ground.

On vehicles with air suspension, switch on ignition, close the doors and set the air suspension to **Normal** .

Information

The vehicle must be empty and all doors must be closed.

1. If work was carried out on the chassis, basic initial alignment must be carried out before calibrating the front camera. → 449503 SUSPENSION ALIGNMENT, COMPLETE
2. The level must be set to **Normal** for vehicles with **air suspension** .

   Fig 1: Parking Vehicle On Wheel Alignment Platform (Shown On Cayenne)

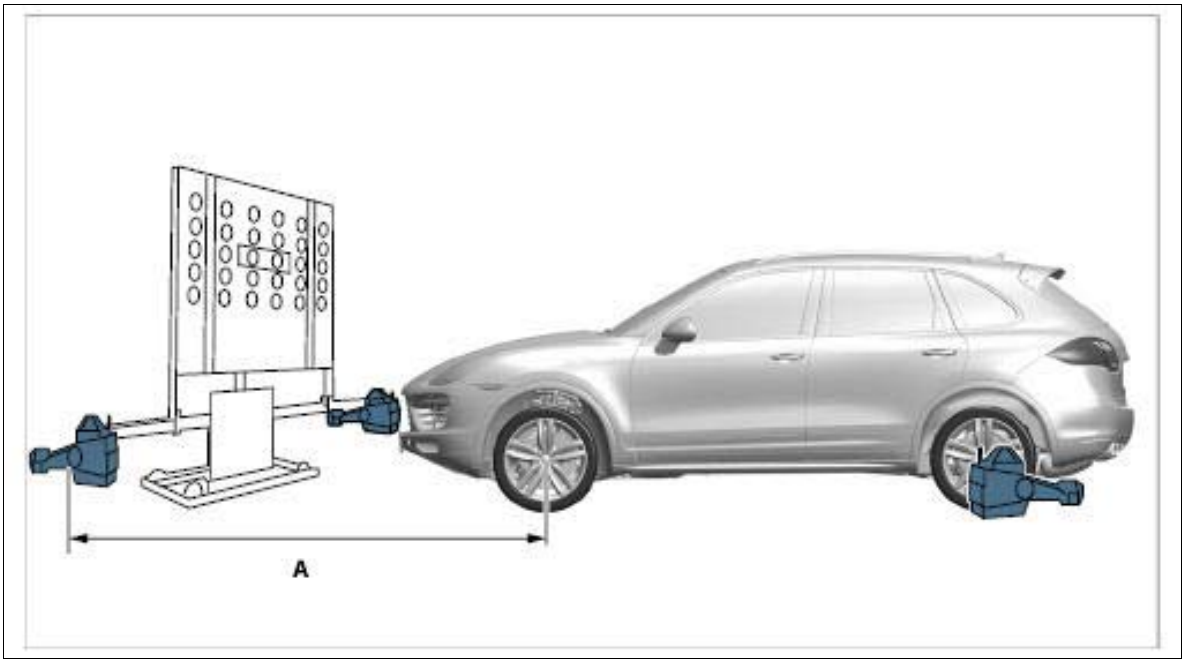

Courtesy of PORSCHE CARS NORTH AMERICA, INC.

Park the vehicle on a levelled wheel alignment platform or on a level surface and set up the calibration unit **Setting device with reflector WE 1362** in front of the vehicle in accordance with the instructions on the wheel alignment computer and PIWIS Tester.

WM 9638K2 CALIBRATING FRONT CAMERA (ALL MODELS) > CALIBRATING FRONT CAMERA

NOTE: Voltage drop

- *Risk of irreparable damage to control unit*
- *Risk of damage to control unit*
- *Fault entries in the control unit*
- *Coding in the control unit is aborted*
- *Malfunctions in control unit, even during programming*

→ Prior to disconnecting the control unit, switch off ignition and remove ignition key.

→ Ensure that the power supply is not interrupted during programming.

→ Connect a battery charger with a current rating of at least → **Nominal value: 40 A** to the vehicle battery.

Information

The **PIWIS Tester II 9818** instructions take precedence since the description may be different with later Tester releases.

The procedure described here has been structured in general terms. Different text or additional information may appear in **PIWIS Tester II 9818** .

Fig 1: Parking Vehicle On Wheel Alignment Platform (Shown On Cayenne)

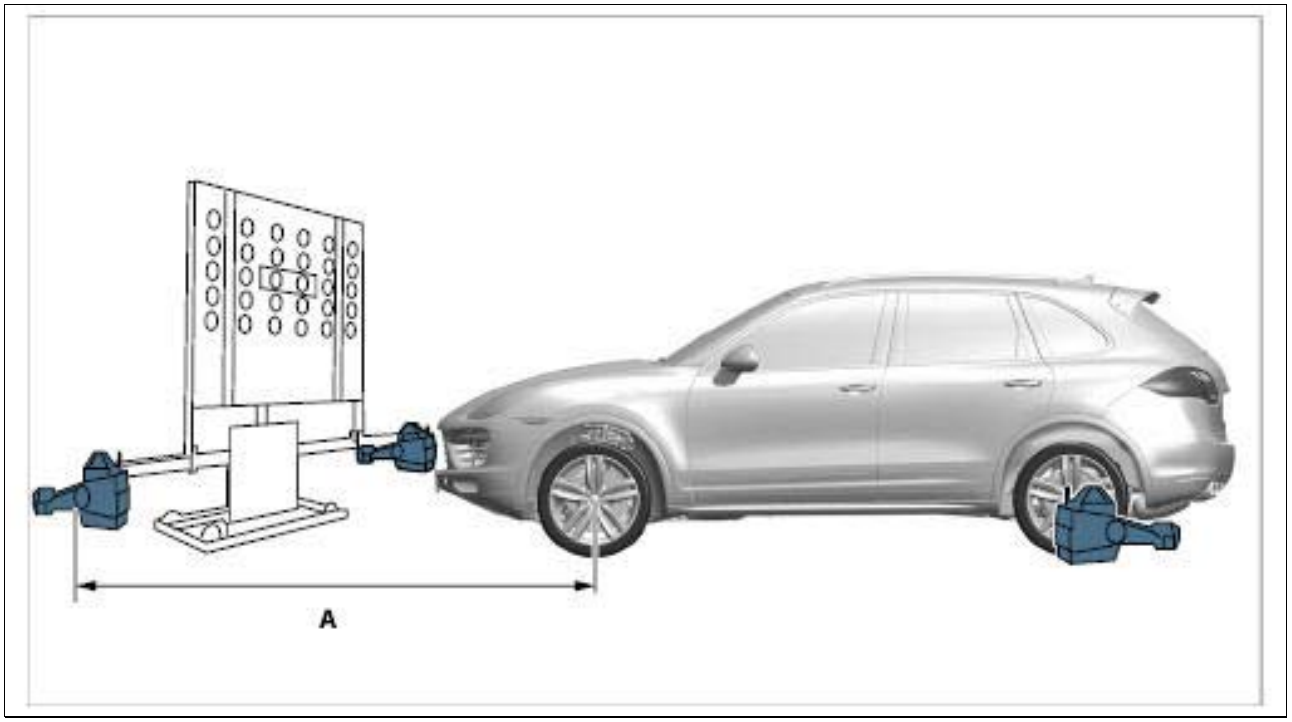

Courtesy of PORSCHE CARS NORTH AMERICA, INC.

1. The following tools are required:

1. 1.1. Setting device **Setting device with reflector WE 1362**
2. 1.2. Calibration board **Lane departure warning calibration board WE 1540**
3. 1.3. Wheel alignment computer

2. Select the **relevant vehicle in the wheel alignment computer.**
3. Select quick function **Calibrate front camera.**
4. Align the calibration board. Follow the steps and instructions on the wheel alignment computer.
5. The surface of the board must be clean and free of objects.

   Information

   The required height of the calibration board and the distance of the calibration board from the vehicle will not be displayed on the wheel alignment computer. These values are stored under **Front camera calibration** in the Tester.

6. Set the distance from the calibration unit to the vehicle as shown on the Tester. The distance **-A-** must always be between **1, 000 mm and 3, 000 mm** from the center of the wheel hub to the calibration unit. The difference between the right and left side must be < 5 mm.

   Fig 2: Checking Distance From Vehicle To Calibration Unit (Shown On Cayenne)

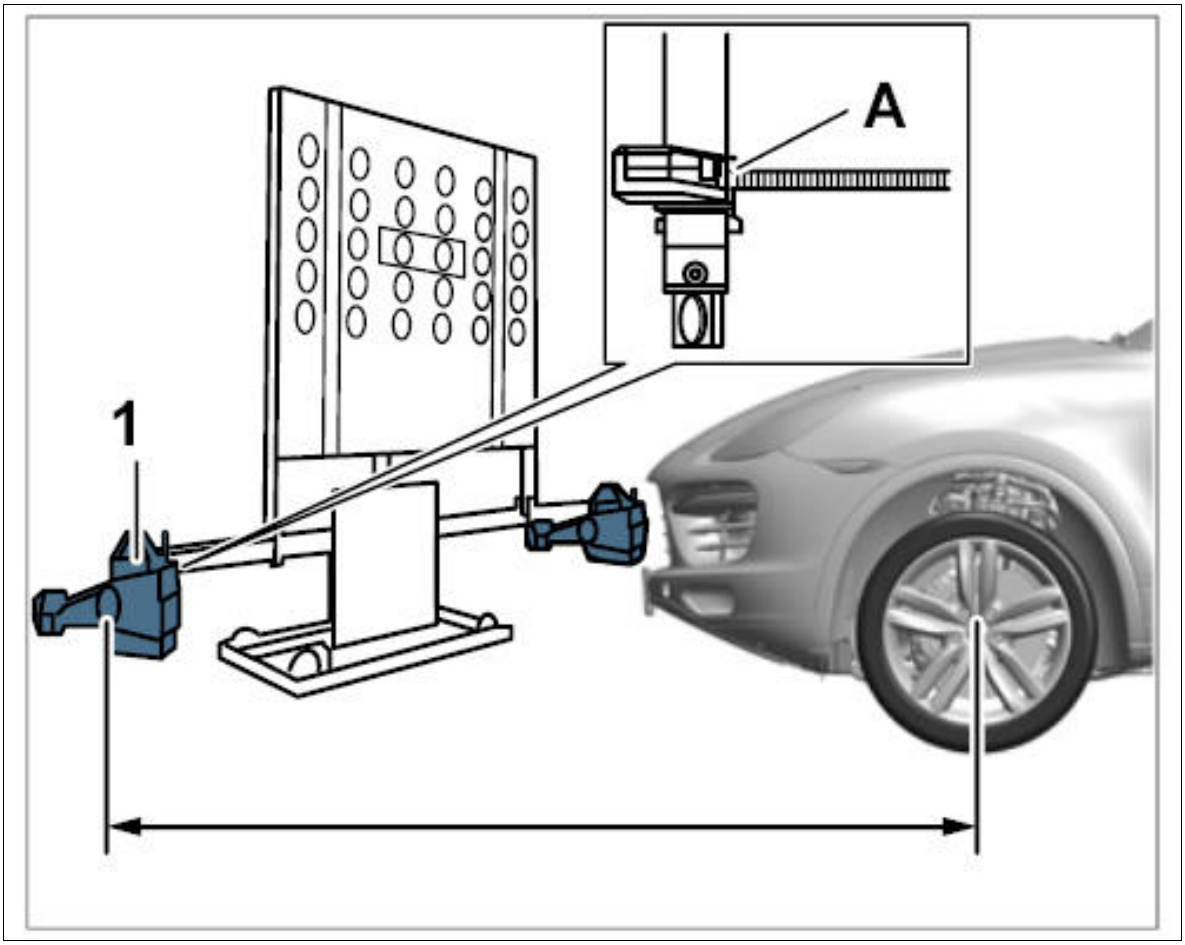

Courtesy of PORSCHE CARS NORTH AMERICA, INC.

7. Secure measured-value pickup mounting to the rear wheels of the vehicle.

8. Fit the relevant measured-value pickups on the measured-value pickup mounting and the calibration board.

9. The height of the calibration board must be **1, 400 mm** . Make sure that the measuring stick is touching the floor. If the vehicle is on a wheel alignment platform, the height of the calibration board must be adjusted to include the height of the wheel alignment platform.

10. Before starting the calibration process, write down the height of the four wheel housing edges. These must be measured from the floor (vehicle standing level) to the highest point of each wheel housing edge and must be specified in mm.

11. The wheel alignment computer is no longer needed for the rest of the calibration process. ↓**Do not move the vehicle or calibration board from this point onwards!**

    Information

    Once all adjustment procedures are complete in the wheel alignment computer, start the calibration process in the PIWIS Tester.

12. Connect the PIWIS Tester to the vehicle and start the PIWIS Tester. Switch on ignition and press [F12] to continue.

13. Select the vehicle type and start the diagnostic application.

14. Select the **Front camera** control unit in the **overview** .

15. **Select Maintenance/repairs.**

16. **Select Calibrate front camera** and press [F12]

17. Read the warnings displayed on the Tester and follow the instructions.

18. Enter the values **Wheel housing edge height and Distance to calibration board.** Press [F12] to continue.

19. Start the calibration process by pressing [F8]. The vehicle must not be moved.

20. The Tester confirms that **calibration was completed successfully** .

    Information

    If the calibration process could not be completed successfully, one or more of the calibration values are outside of the required range. There can be a number of different reasons for this.

    1. The calibration board is not at the correct height.

    2. The vehicle and calibration board are not aligned correctly.

21. Switch ignition off and then on again.

22. Check the function of the front camera.

23. Read out the fault memory.

WM 964419 REMOVING AND INSTALLING GLOVE COMPARTMENT LIGHT (ALL

MODELS) > REMOVING GLOVE COMPARTMENT LIGHT

1. Switch off ignition and pull remote control out of ignition lock.
2. Open the glove compartment and unclip glove compartment light **-1-** from the glove compartment using a plastic wedge **-a-** .

   Fig 1: Loosening Glove Compartment Light

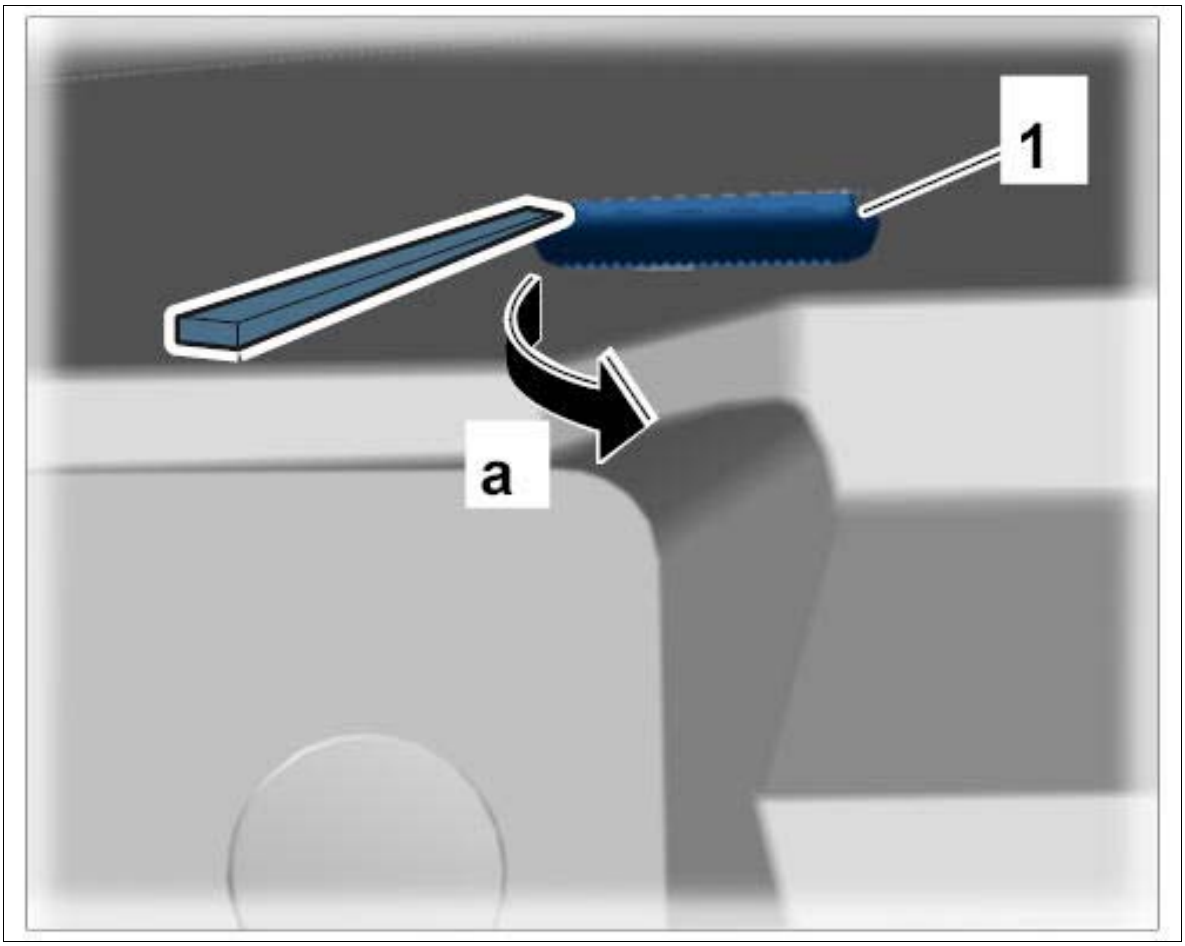

Courtesy of PORSCHE CARS NORTH AMERICA, INC.

3. Release electric plug connection **-1-** (**-a-**) and disconnect it from the glove compartment light **-2-** .

Fig 2: Disconnecting Electric Plug Connection

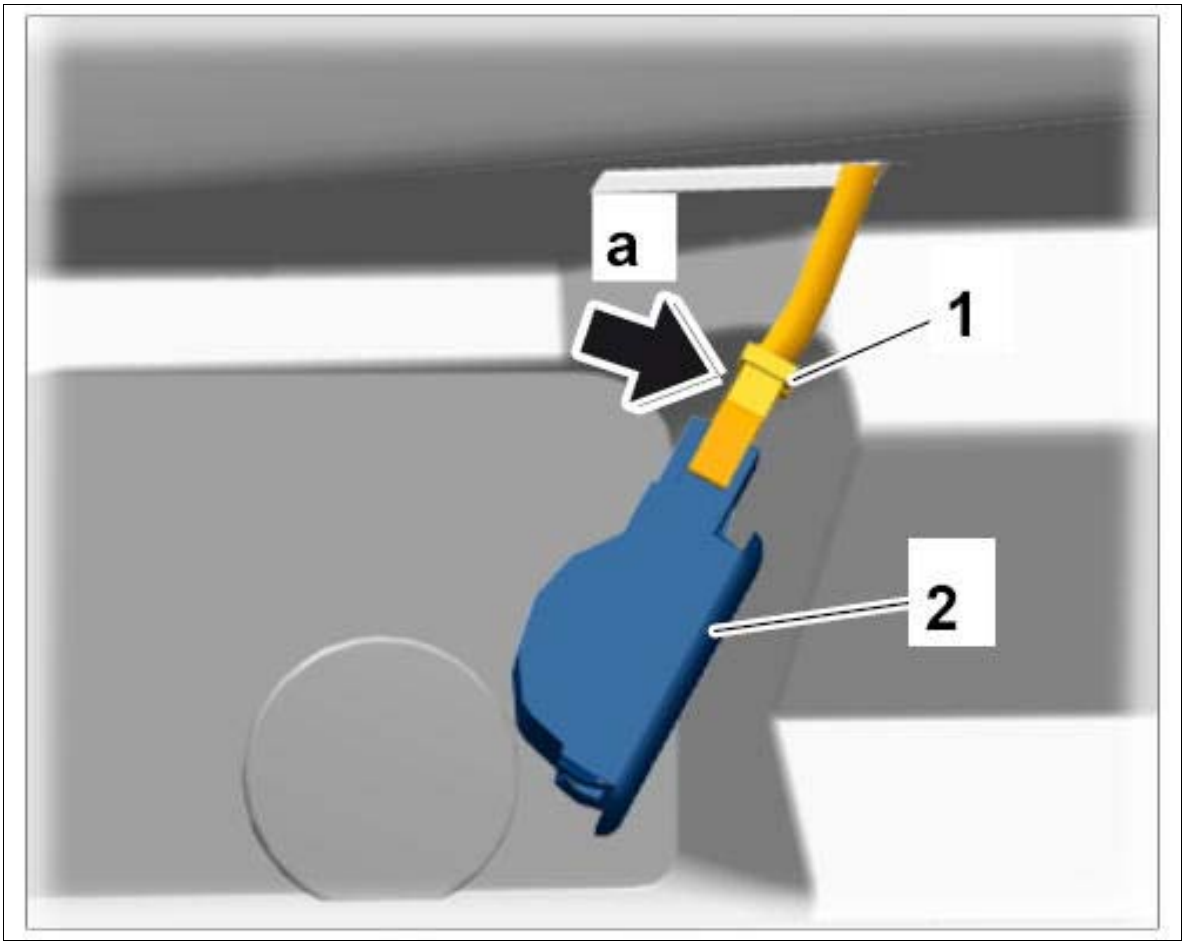

Courtesy of PORSCHE CARS NORTH AMERICA, INC.

WM 964419 REMOVING AND INSTALLING GLOVE COMPARTMENT LIGHT (ALL MODELS) > INSTALLING GLOVE COMPARTMENT LIGHT

1. Installation is performed in reverse order to removal.

WM 964619 REMOVING AND INSTALLING READING LIGHT (ALL MODELS) > REMOVING READING LIGHT

1. Release locks **-arrows-** for the reading light **-1-** at the same time using a small screwdriver and lever the reading light out of the headliner.

Fig 1: Removing Reading Light



Courtesy of PORSCHE CARS NORTH AMERICA, INC.

2. Release electric plug connection **-1-** (**-a-**) and pull it off the reading light **-2-** .

Fig 2: Disconnecting Electric Plug Connection

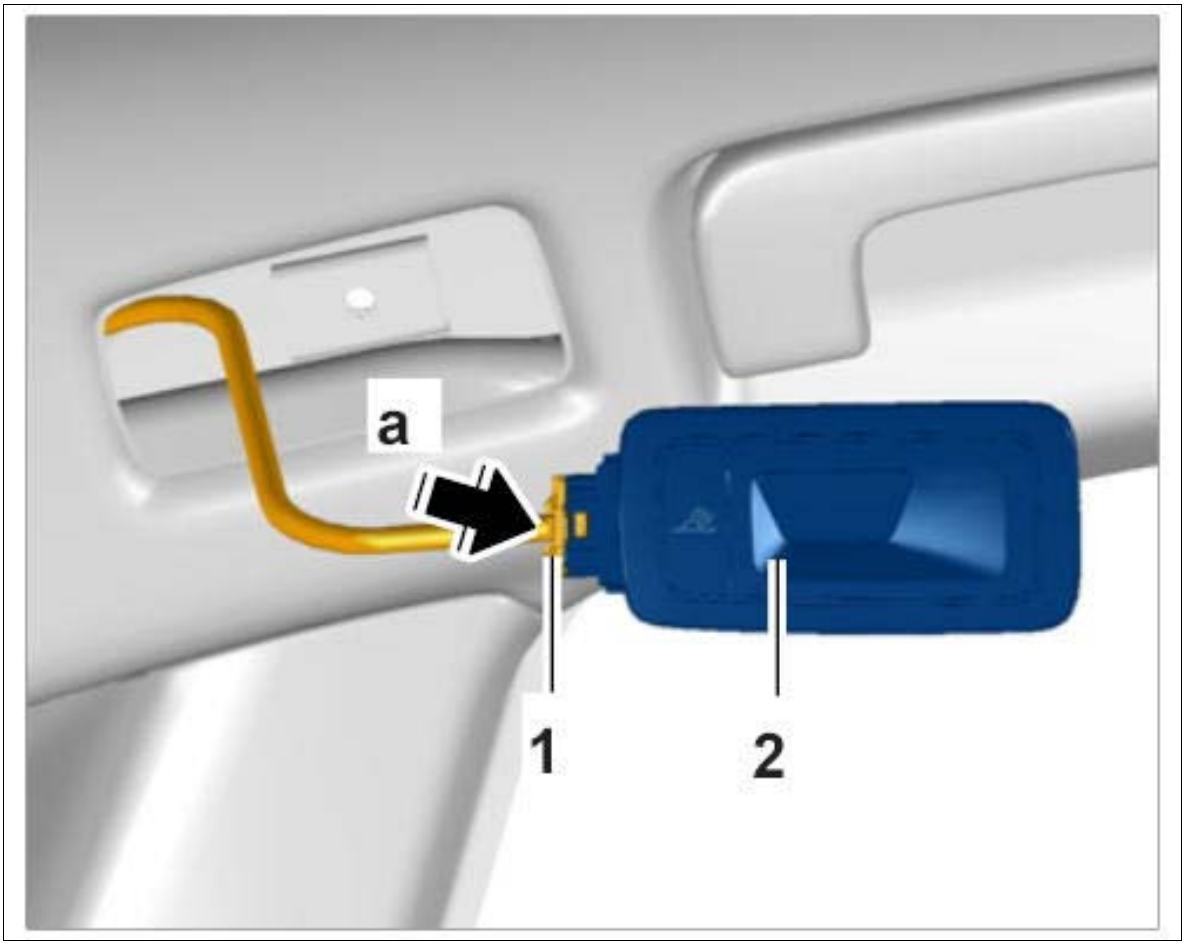

Courtesy of PORSCHE CARS NORTH AMERICA, INC.

WM 964619 REMOVING AND INSTALLING READING LIGHT (ALL MODELS) > REMOVING BULB

1. Turn socket **-1-** 90° in direction of arrow and pull it out of the reading light **-2-** .
2. Remove bulb **-3-** from its socket.

Fig 1: Removing Bulb

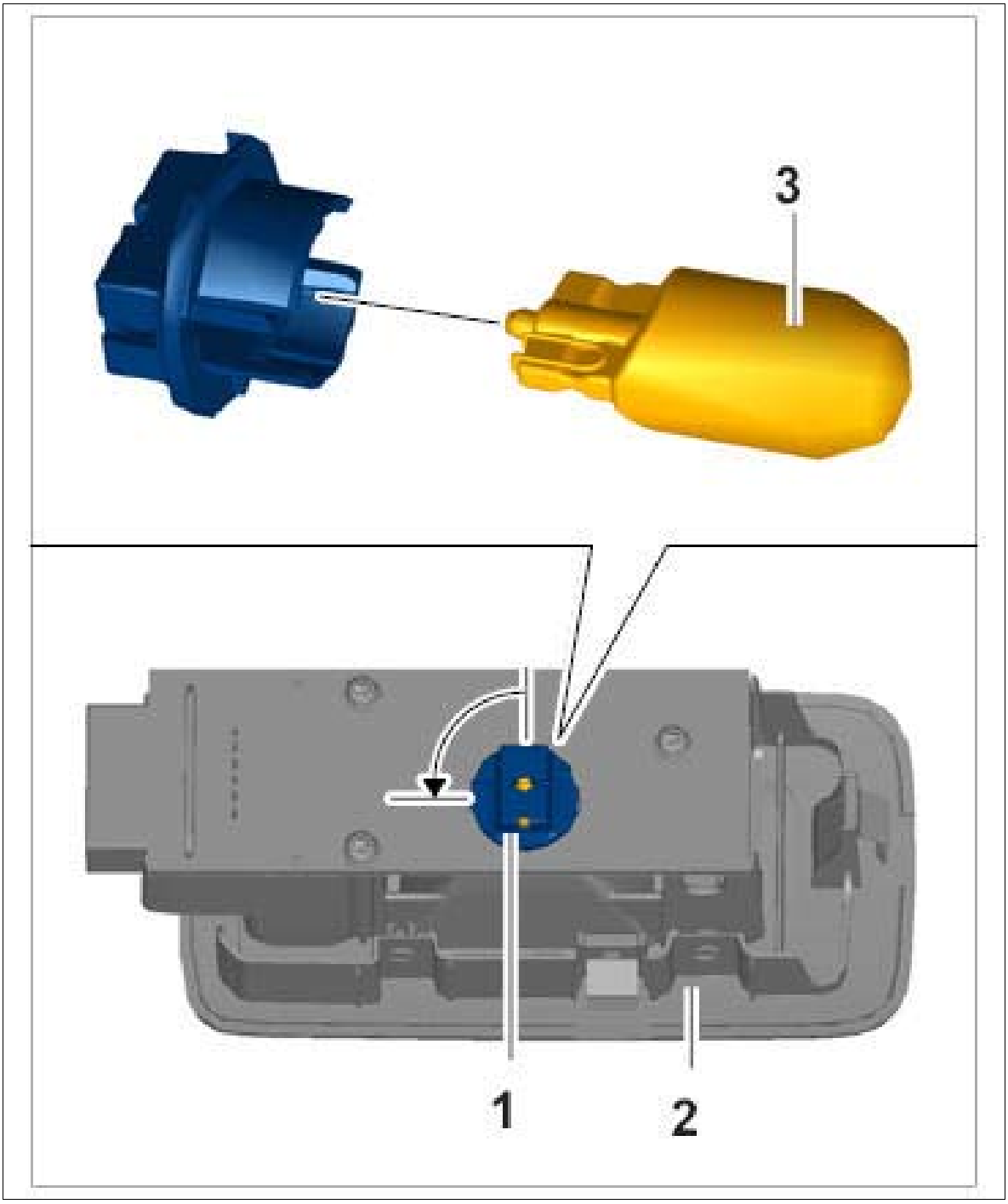

Courtesy of PORSCHE CARS NORTH AMERICA, INC.

WM 964619 REMOVING AND INSTALLING READING LIGHT (ALL MODELS) > INSTALLING BULB

1. Installation is performed in reverse order to removal.

WM 964619 REMOVING AND INSTALLING READING LIGHT (ALL MODELS) > INSTALLING READING LIGHT

1. Installation is performed in reverse order to removal.

WM 966255 REPLACING REMOTE CONTROL (HAND-HELD TRANSMITTER) (ALL MODELS) > TOOLS

Designation	Type	Number	Description	
PIWIS Tester II	Special tool	9818		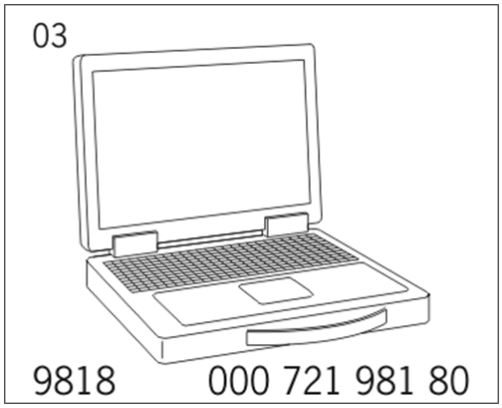

WM 966255 REPLACING REMOTE CONTROL (HAND-HELD TRANSMITTER) (ALL MODELS) > TECHNICAL VALUES

Location	Description	Type	Basic value	Tolerance 1	Tolerance 2
Current rating		Nominal value	40 A		

WM 966255 REPLACING REMOTE CONTROL (HAND-HELD TRANSMITTER) (ALL MODELS) > REPLACING REMOTE CONTROL (HAND-HELD TRANSMITTER) > REPLACING REMOTE CONTROL

Information

All remote controls (keys) are required for teaching a DME, front-end electronics (front BCM), rear-end electronics (rear BCM), electronic steering lock (ELV) control unit or remote controls (keys) for example.

Remote controls (keys) that are not taught during this teaching procedure will no longer be recognized by the vehicle.

NOTE: Voltage drop

- *Risk of irreparable damage to control unit*
- *Risk of damage to control unit*
- *Fault entries in the control unit*
- *Coding in the control unit is aborted*
- *Malfunctions in control unit, even during programming*

→ Prior to disconnecting the control unit, switch off ignition and remove ignition key.

→ Ensure that the power supply is not interrupted during programming.

→ Connect a battery charger with a current rating of at least → **Nominal value: 40 A** to the vehicle battery.

Information

The **PIWIS Tester II 9818** instructions take precedence since the description may be different with later Tester releases.

The procedure described here has been structured in general terms. Different text or additional information may appear in **PIWIS Tester II 9818** .

1. Connect the PIWIS Tester to the vehicle and start the PIWIS Tester. Switch on ignition.
2. Select the menu **Diagnostics -> Online teaching function -> Engine immobilizer** on the Start page.
3. **The relevant vehicle** must now be selected. Then press [F12] to ↓continue.
4. Follow the instructions on the Tester and press [F12] to continue.
5. The vehicle identification number (VIN) is displayed. Change the vehicle identification number if necessary.
6. Enter the repair order number and press [F12] to continue.
7. Enter the PPN user name and password and press [F12] to continue.
8. Login is performed.
9. The Tester displays the message **Login successful** . Press [F12] to continue.
10. Follow the instructions on the Tester to select the required menu.
11. Once the teaching process is completed successfully, the Tester shows the following status, for example:

    2 keys taught

    Front BCM: taught

    ELV: taught

    Rear BCM: taught

DME: taught

Overall vehicle status: taught. Press [F12] to continue.

12. Press [ESC] **to end the Online teaching function** and select the **vehicle type** on the Start page.
13. Function test: Lock, open and start the vehicle using all remote controls (hand-held transmitters).
14. Read all fault memories and erase if necessary.

WM 966519 REMOVING AND INSTALLING ALARM SIREN (ALL MODELS) > TECHNICAL VALUES

Location	Description	Type	Basic value	Tolerance 1	Tolerance 2
Alarm siren holder to cowl panel	Collar nut, M6	Tightening torque	7 Nm (5 ftlb.)		

WM 966519 REMOVING AND INSTALLING ALARM SIREN (ALL MODELS) > PRELIMINARY WORK

1. Remove cowl panel cover. → Removing cowl panel cover

WM 966519 REMOVING AND INSTALLING ALARM SIREN (ALL MODELS) > REMOVING ALARM SIREN

1. Screw off fastening nuts **-1-** and remove cover **-2-** .

Fig 1: Removing Cover

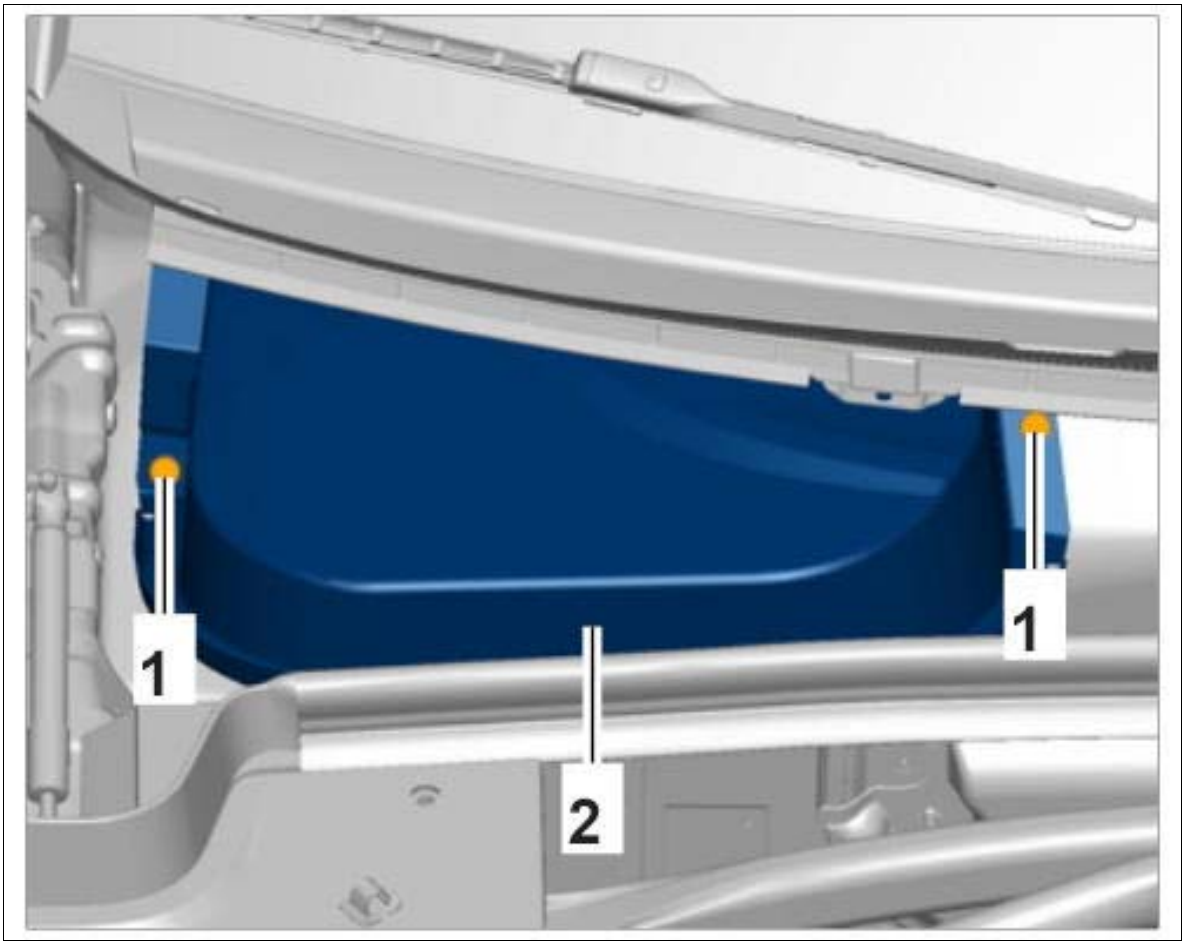

Courtesy of PORSCHE CARS NORTH AMERICA, INC.

2. Remove air inlet **-1-** .

    1. 2.1. Disengage grille **-2-** in front of the air inlet and pull it to the rear and out of the guides.

    2. 2.2. Carefully set the grille aside and leave electric plug connection on the air quality sensor **-3-** connected.

    3. 2.3. Screw off fastening nuts **-4-** and remove air inlet.

Fig 2: Removing Air Inlet

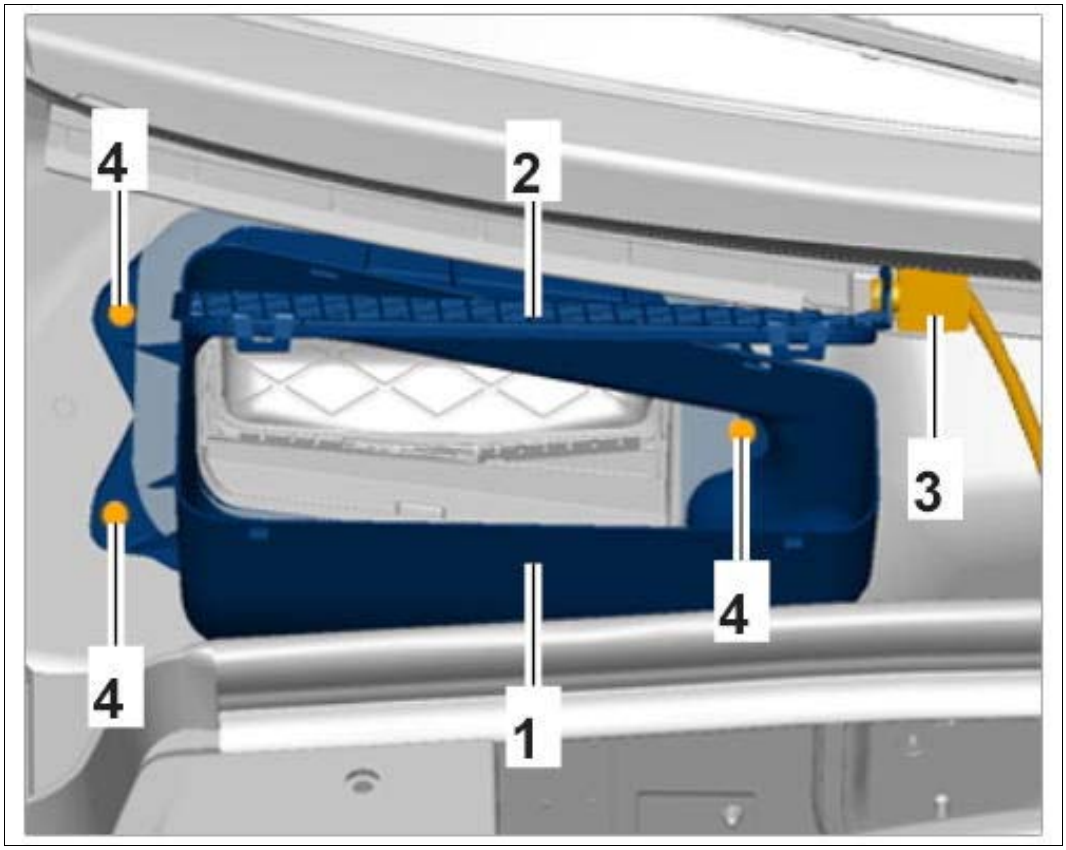

Courtesy of PORSCHE CARS NORTH AMERICA, INC.

3. Remove alarm siren **-1-** .

    1. 3.1. Release electric plug connection **-2-** and pull it off the alarm siren.
    2. 3.2. Unscrew fastening nut **-3-** and remove alarm siren and holder.

Fig 3: Removing Alarm Siren (Alarm Siren Without NI-MH Accumulator Shown)

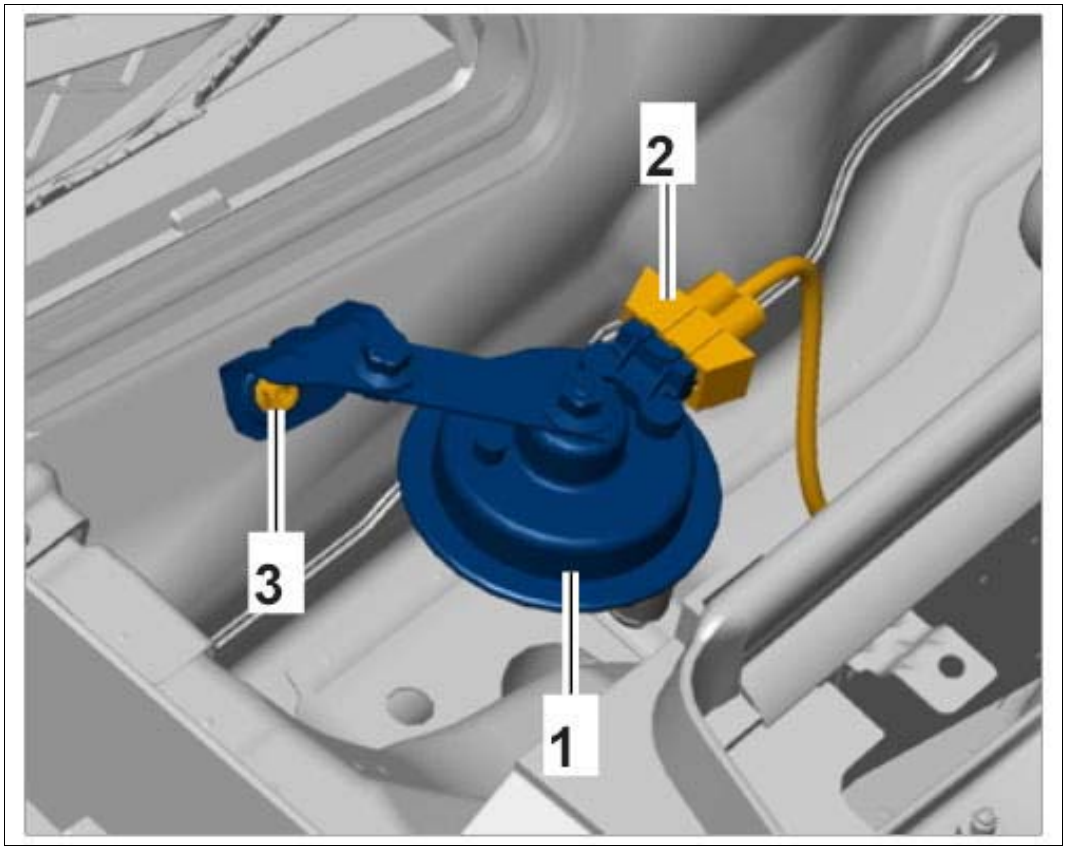

Courtesy of PORSCHE CARS NORTH AMERICA, INC.

WM 966519 REMOVING AND INSTALLING ALARM SIREN (ALL MODELS) > INSTALLING ALARM SIREN

1. Installation is performed in reverse order to removal.
2. Tighten fastening nut on the alarm siren holder. **Tightening torque 7 Nm (5 ftlb.)**

WM 966519 REMOVING AND INSTALLING ALARM SIREN (ALL MODELS) > SUBSEQUENT WORK

1. Install cowl panel cover. → Installing cowl panel cover

   Alarm siren with Ni-MH accumulator

2. Bring defective alarm siren to a collection point. Do not dispose of alarm sirens in domestic rubbish!

WM 966719 REMOVING AND INSTALLING KESSY ANTENNA (ALL MODELS) >

PRELIMINARY WORK > PRELIMINARY WORK FOR KESSY ANTENNA ON DASHBOARD

1. Remove PCM display and operator control unit. → Removing PCM display and operator control unit

WM 966719 REMOVING AND INSTALLING KESSY ANTENNA (ALL MODELS) > PRELIMINARY WORK > PRELIMINARY WORK FOR KESSY ANTENNA ON CENTRE CONSOLE

1. Remove covering frame at the rear center console and set it aside with the lines connected. → Removing Covering Frame For Center Console

WM 966719 REMOVING AND INSTALLING KESSY ANTENNA (ALL MODELS) > PRELIMINARY WORK > PRELIMINARY WORK FOR KESSY ANTENNA IN LUGGAGE COMPARTMENT

1. Remove center trim panel for luggage compartment at the rear. → Removing center trim panel for luggage compartment (luggage compartment cover)

WM 966719 REMOVING AND INSTALLING KESSY ANTENNA (ALL MODELS) > PRELIMINARY WORK > PRELIMINARY WORK FOR REAR KESSY ANTENNA

1. Remove rear apron. → REMOVING REAR APRON

WM 966719 REMOVING AND INSTALLING KESSY ANTENNA (ALL MODELS) > PRELIMINARY WORK > PRELIMINARY WORK FOR KESSY ANTENNA ON DOOR ENTRY GUARD

1. Remove door entry guard. → Removing door entry guard

WM 966719 REMOVING AND INSTALLING KESSY ANTENNA (ALL MODELS) > INFORMATION > INSTALLATION POSITION

Fig 1: Identifying Kessy Antennas Position

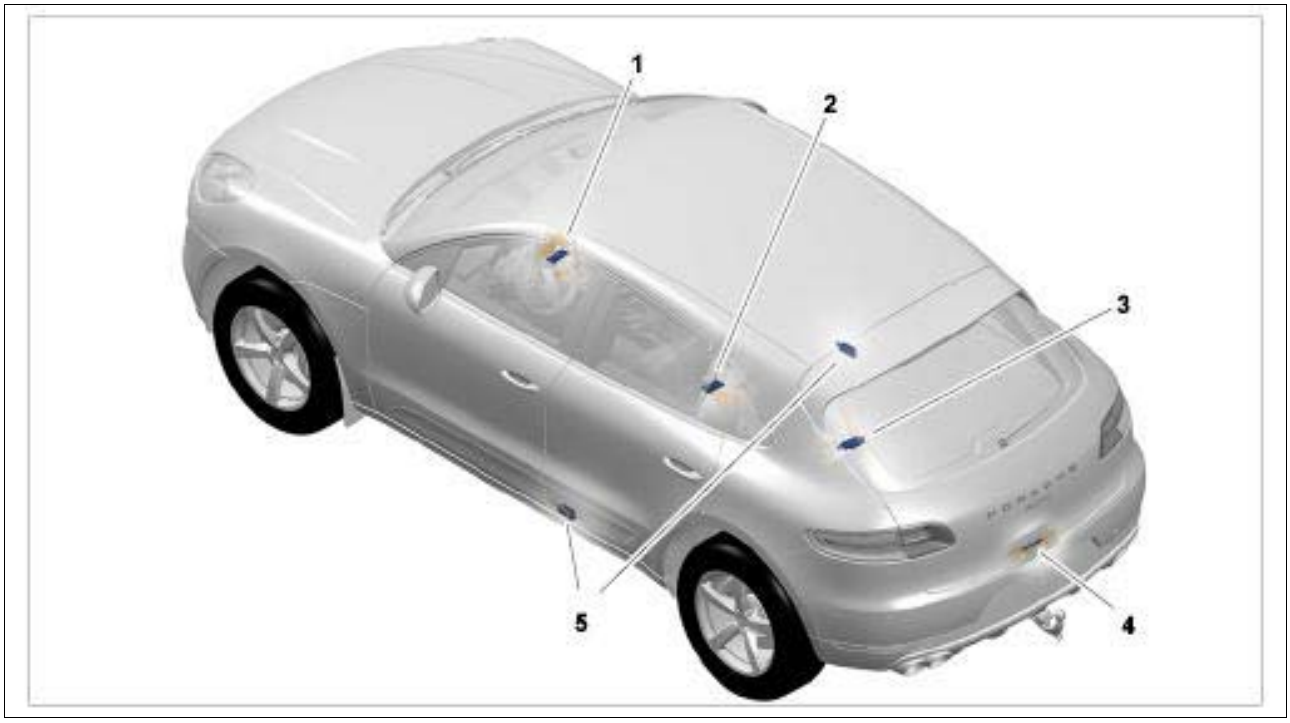

Courtesy of PORSCHE CARS NORTH AMERICA, INC.

1. KESSY antenna on dashboard
2. KESSY antenna on center console
3. KESSY antenna in luggage compartment
4. KESSY antenna in rear-end
5. KESSY antenna on door entry guard (left and right)

WM 966719 REMOVING AND INSTALLING KESSY ANTENNA (ALL MODELS) > REMOVING KESSY ANTENNA > REMOVING KESSY ANTENNA ON DASHBOARD

1. Unclip holder **-1-** for line at the holder **-2-** .
2. Disengage clips **-3-** on the holder and pull holder with Kessy antenna on dashboard up off the dashboard strut.

Fig 1: Removing Kessy Antenna Holder On Dashboard

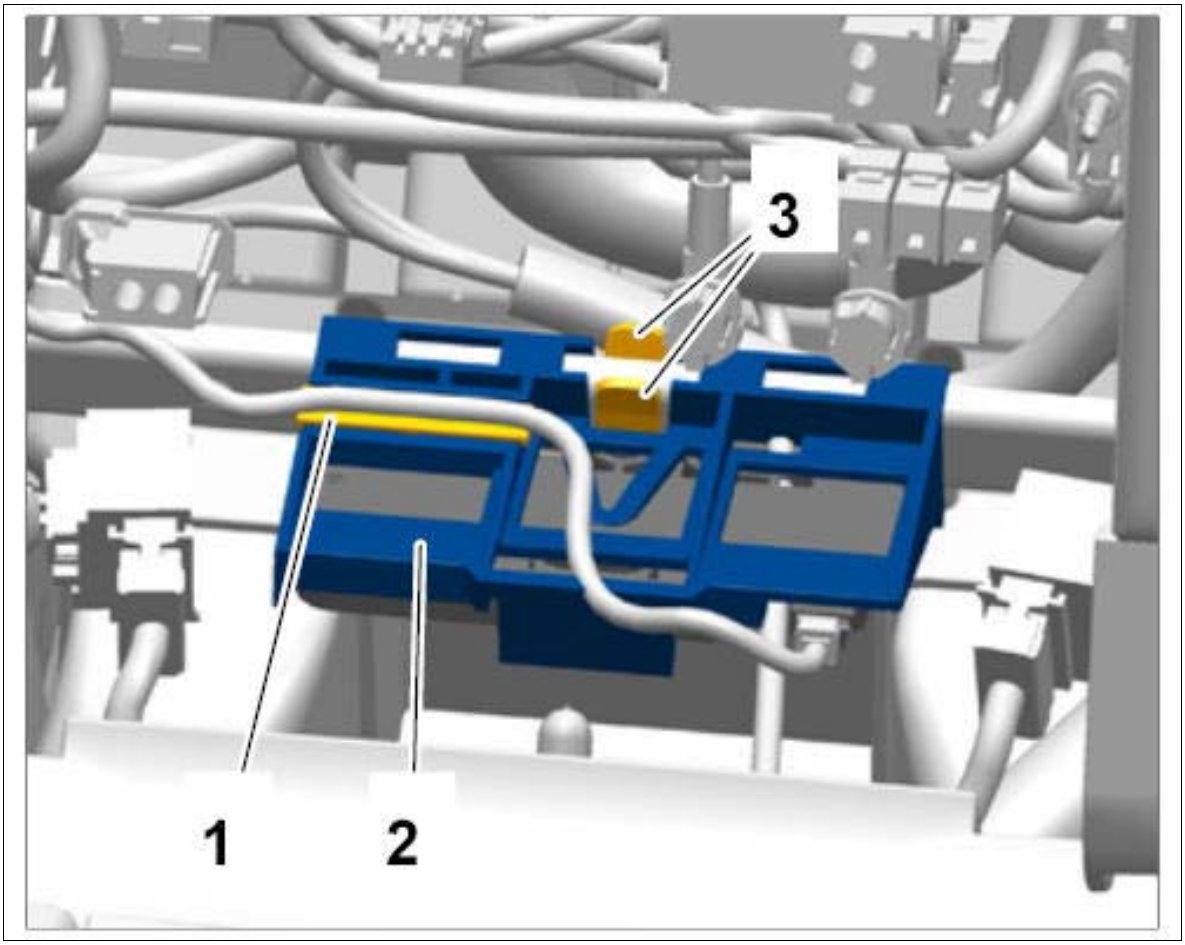

Courtesy of PORSCHE CARS NORTH AMERICA, INC.

3. Disconnect electric plug connection **-1-** from Kessy antenna on dashboard **-2-** .

4. Disengage retaining lug **-a-** and remove KESSY antenna on dashboard from its holder **-3-** .

Fig 2: Removing Kessy Antenna On Dashboard

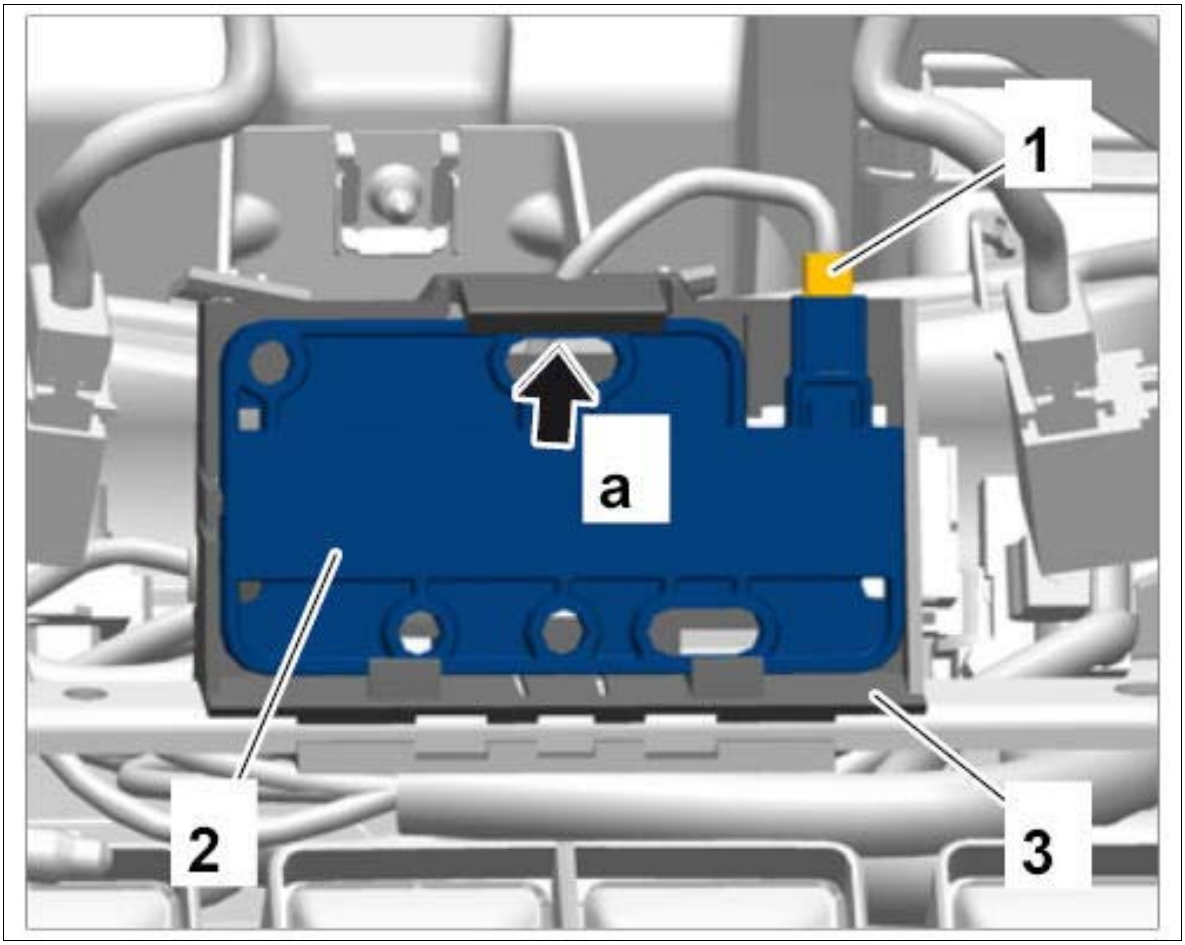

Courtesy of PORSCHE CARS NORTH AMERICA, INC.

Removing KESSY antenna on center console

1. Unscrew fastening screws **-1-** and remove KESSY antenna on center console **-2-** .
2. Disconnect electric plug connection **-3-** .

Fig 3: Removing Kessy Antenna On Centre Console

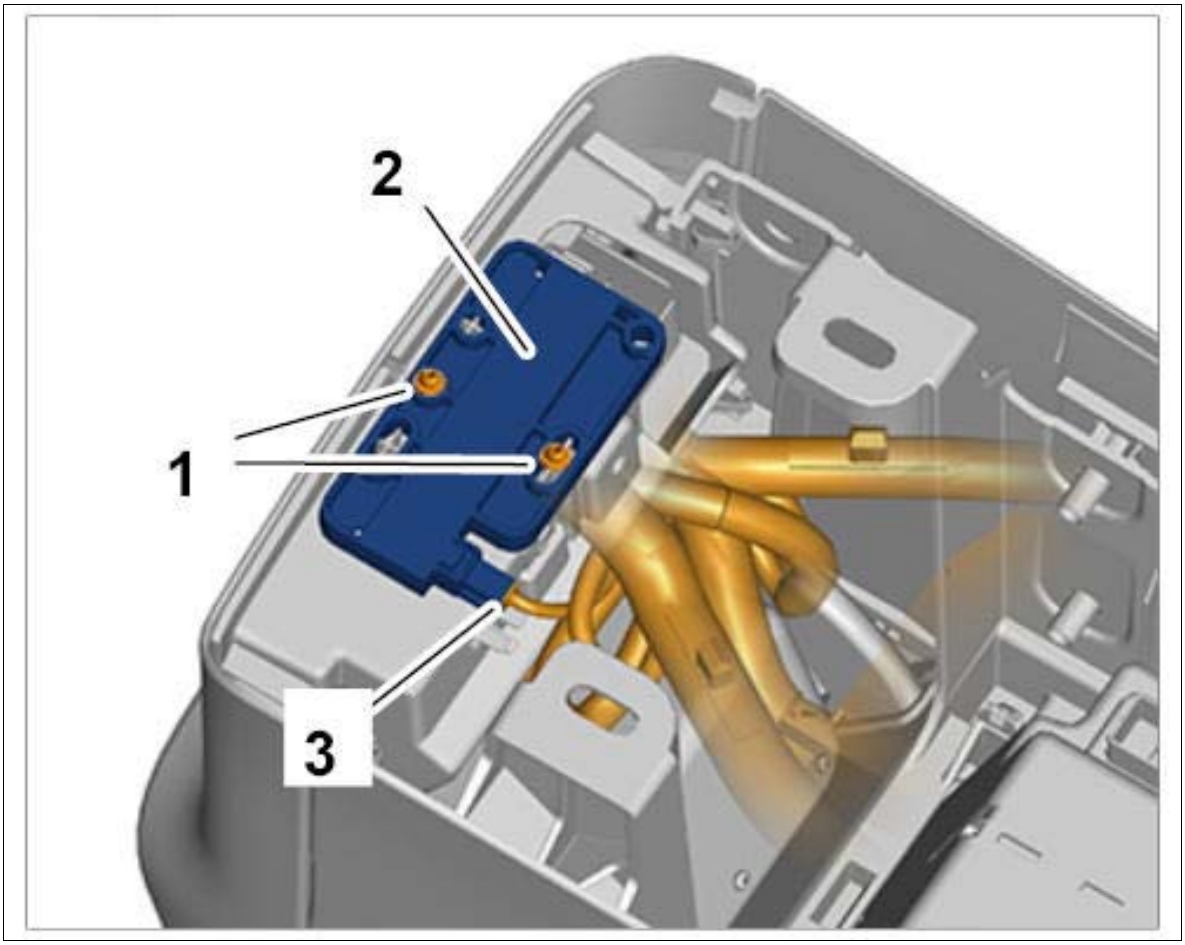

Courtesy of PORSCHE CARS NORTH AMERICA, INC.

WM 966719 REMOVING AND INSTALLING KESSY ANTENNA (ALL MODELS) > REMOVING KESSY ANTENNA > REMOVING KESSY ANTENNA IN LUGGAGE COMPARTMENT

1. Disengage retaining lugs **-a-** and remove KESSY antenna in luggage compartment **-1-** from its holder.
2. Release and disconnect electric plug connection **-2-** (**-b-**).

Fig 1: Removing Kessy Antenna In Luggage Compartment

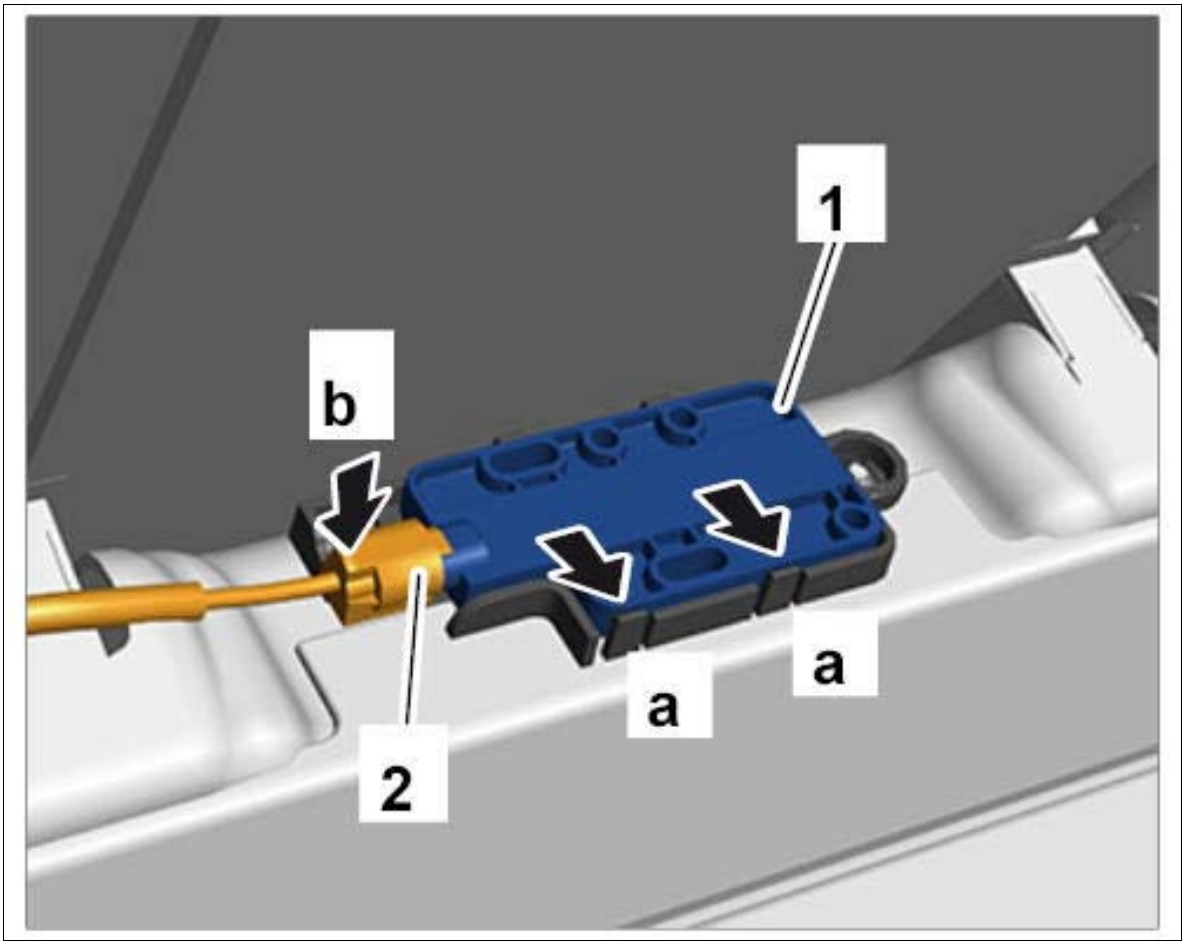

Courtesy of PORSCHE CARS NORTH AMERICA, INC.

WM 966719 REMOVING AND INSTALLING KESSY ANTENNA (ALL MODELS) > REMOVING KESSY ANTENNA > REMOVING REAR KESSY ANTENNA

1. Disengage retaining lugs **-a-** and remove rear KESSY antenna **-1-** from its holder.
2. Release and disconnect electric plug connection **-2-** (**-b-**).

Fig 1: Removing Rear Kessy Antenna

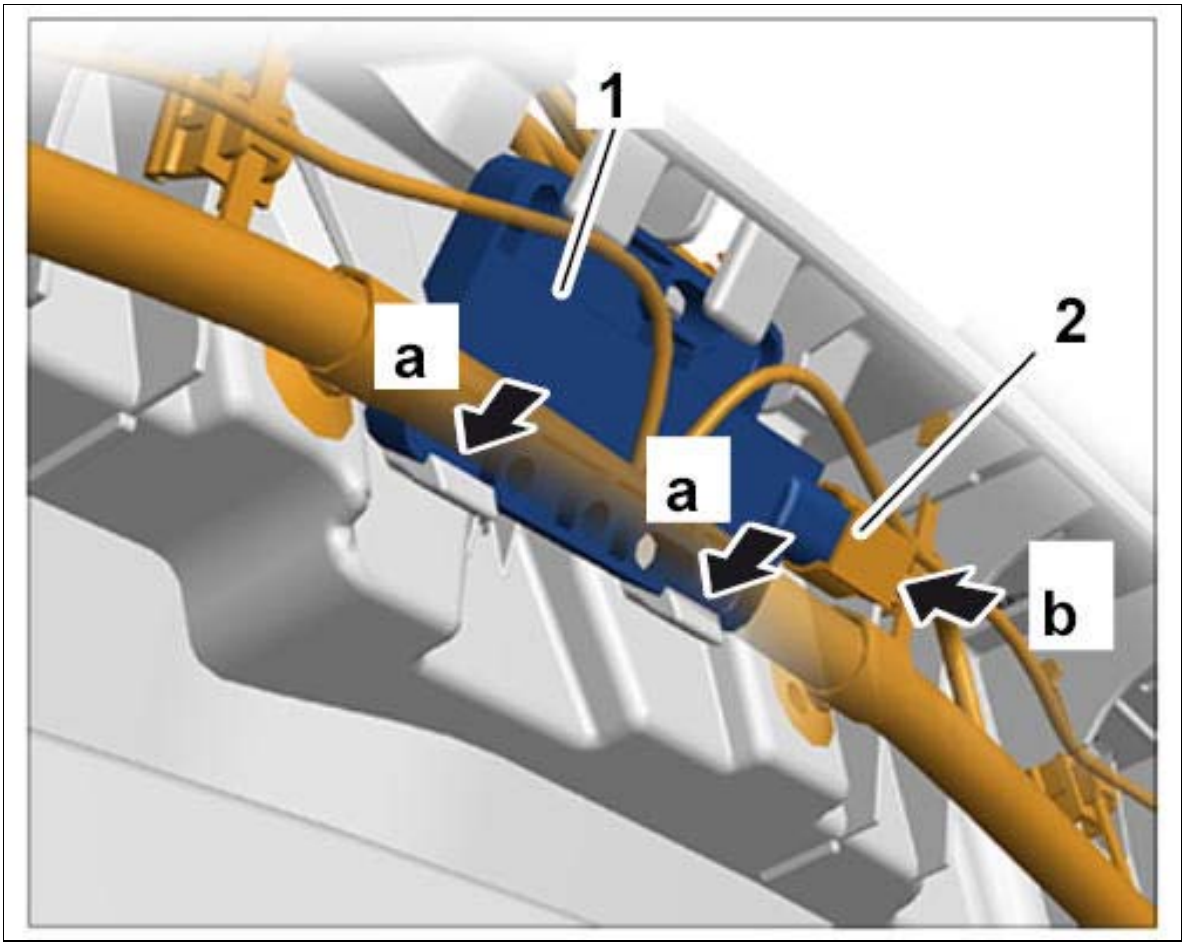

Courtesy of PORSCHE CARS NORTH AMERICA, INC.

WM 966719 REMOVING AND INSTALLING KESSY ANTENNA (ALL MODELS) > REMOVING KESSY ANTENNA > REMOVING KESSY ANTENNA ON DOOR ENTRY GUARD

1. Unclip electric line from the holder **-a-** .
2. Disengage retaining lug **-b-** and remove KESSY antenna on door entry guard **-1-** from its holder.
3. Release and disconnect electric plug connection **-2-** (**-c-**).

Fig 1: Removing Kessy Antenna On Door Entry Guard

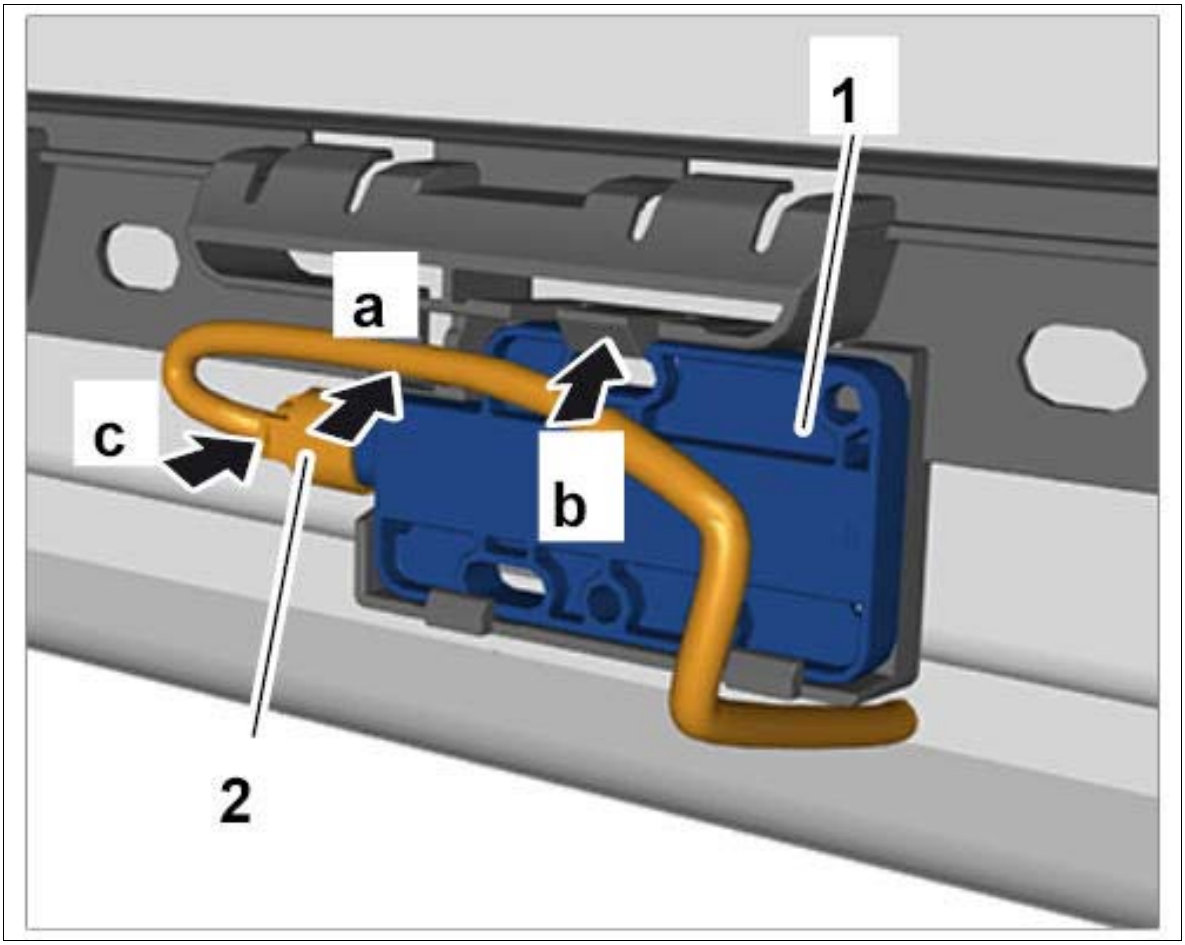

Courtesy of PORSCHE CARS NORTH AMERICA, INC.

WM 966719 REMOVING AND INSTALLING KESSY ANTENNA (ALL MODELS) > INSTALLING KESSY ANTENNA

1. Installation is performed in reverse order to removal.

WM 966719 REMOVING AND INSTALLING KESSY ANTENNA (ALL MODELS) > SUBSEQUENT WORK > SUBSEQUENT WORK FOR KESSY ANTENNA ON DASHBOARD

1. Install PCM display and operator control unit. → Installing PCM display and operator control unit

WM 966719 REMOVING AND INSTALLING KESSY ANTENNA (ALL MODELS) > SUBSEQUENT WORK > SUBSEQUENT WORK FOR KESSY ANTENNA ON CENTRE

CONSOLE

1. Install covering frame for rear center console. → Installing Covering Frame For Center Console

WM 966719 REMOVING AND INSTALLING KESSY ANTENNA (ALL MODELS) > SUBSEQUENT WORK > SUBSEQUENT WORK FOR KESSY ANTENNA IN LUGGAGE COMPARTMENT

1. Install center trim panel for luggage compartment at the rear. →Installing center trim panel for luggage compartment (luggage compartment cover)

WM 966719 REMOVING AND INSTALLING KESSY ANTENNA (ALL MODELS) > SUBSEQUENT WORK > SUBSEQUENT WORK FOR REAR KESSY ANTENNA

1. Install rear apron. → INSTALLING REAR APRON

WM 966719 REMOVING AND INSTALLING KESSY ANTENNA (ALL MODELS) > SUBSEQUENT WORK > SUBSEQUENT WORK FOR KESSY ANTENNA ON DOOR ENTRY GUARD

1. Install door entry guard. → Installing door entry guard

WM 967919 REMOVING AND INSTALLING CONTROL UNIT FOR GARAGE DOOR OPENER (ALL MODELS) > PRELIMINARY WORK

1. Remove front apron. → Removing Front Apron

WM 967919 REMOVING AND INSTALLING CONTROL UNIT FOR GARAGE DOOR OPENER (ALL MODELS) > REMOVING CONTROL UNIT FOR GARAGE DOOR OPENER

NOTE: Voltage peaks

- *Risk of damage to load or to the control unit*

→ Remove the ignition key and switch off load before disconnecting or removing load.

Information

Always comply with the regulations for handling ESD-sensitive components!

- Assembly work may only be carried out if the mechanic is wearing the working clothes and shoes approved by Porsche.
- The new part must only be removed from the ESD (electrostatic discharge) protective packaging just before installation and at the position at which the part is to be installed.
- Never touch the electric pins and plug contacts.

1. Swivel right flap **-1-** of the air guide forward.
2. Disengage lower locking mechanism **-arrow-** and remove control unit for garage door opener **-2-** from the holder.
3. Release and disconnect electric plug connection **-3-** .

Fig 1: Removing Garage Door Opener Control Unit

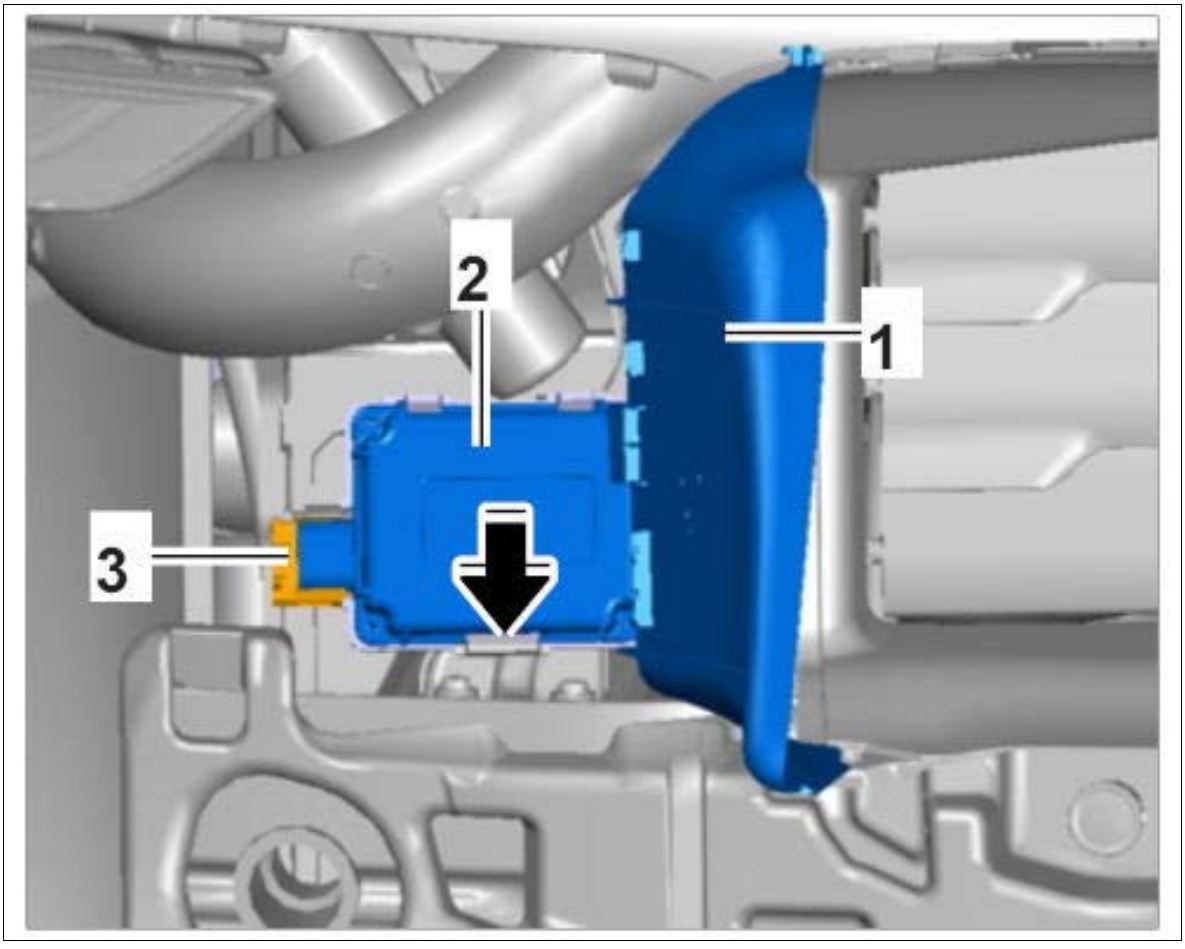

Courtesy of PORSCHE CARS NORTH AMERICA, INC.

WM 967919 REMOVING AND INSTALLING CONTROL UNIT FOR GARAGE DOOR OPENER (ALL MODELS) > INSTALLING CONTROL UNIT FOR GARAGE DOOR OPENER

1. Installation is performed in reverse order to removal.

WM 967919 REMOVING AND INSTALLING CONTROL UNIT FOR GARAGE DOOR OPENER (ALL MODELS) > SUBSEQUENT WORK

1. Install front apron. → Installing Front Apron
2. If the garage door opener control unit was replaced, all remote controls (e.g. for the garage door, gate to property) must be re-taught to suit the garage door opener control unit. → 967955 REPLACING CONTROL UNIT FOR GARAGE DOOR OPENER

WM 967955 REPLACING CONTROL UNIT FOR GARAGE DOOR OPENER(ALL MODELS) > REPLACING CONTROL UNIT FOR GARAGE DOOR OPENER > TEACHING CONTROL UNIT FOR GARAGE DOOR OPENER

Information

If the garage door opener control unit was replaced, the remote controls for the garage door drive, for example, must be re-taught.

Information

Original remote controls for garage door system cannot be taught to operate with the HomeLink in the vehicle. OR: The teaching process was confirmed, but HomeLink will not work or only works sporadically.

- Check that the battery in the original remote control for the garage door opener is new. If in doubt, change the battery and repeat the teaching process.

The programmable HomeLink replaces up to three original remote controls for operating various equipment (e.g. garage door, gate to property, alarm system).

The buttons **I, II** and **III** can each be programmed with one frequency of an original remote control.

Prerequisites for operating and programming the HomeLink:

- The ignition is switched on.
- The hazard warning lights are switched off.

WM 967955 REPLACING CONTROL UNIT FOR GARAGE DOOR OPENER(ALL MODELS) > REPLACING CONTROL UNIT FOR GARAGE DOOR OPENER > DELETING STORED SIGNAL FROM THE BUTTONS

Information

This operation erases the standard codes set in the factory. Do not repeat this operation if additional signals are to be stored on the buttons.

- Hold the two outer buttons I and III down for around 20 seconds until the LED -A- starts to flash quickly. All programmed signals for the buttons are erased.

Fig 1: Overview Of Garage Door Opener Button Assignment

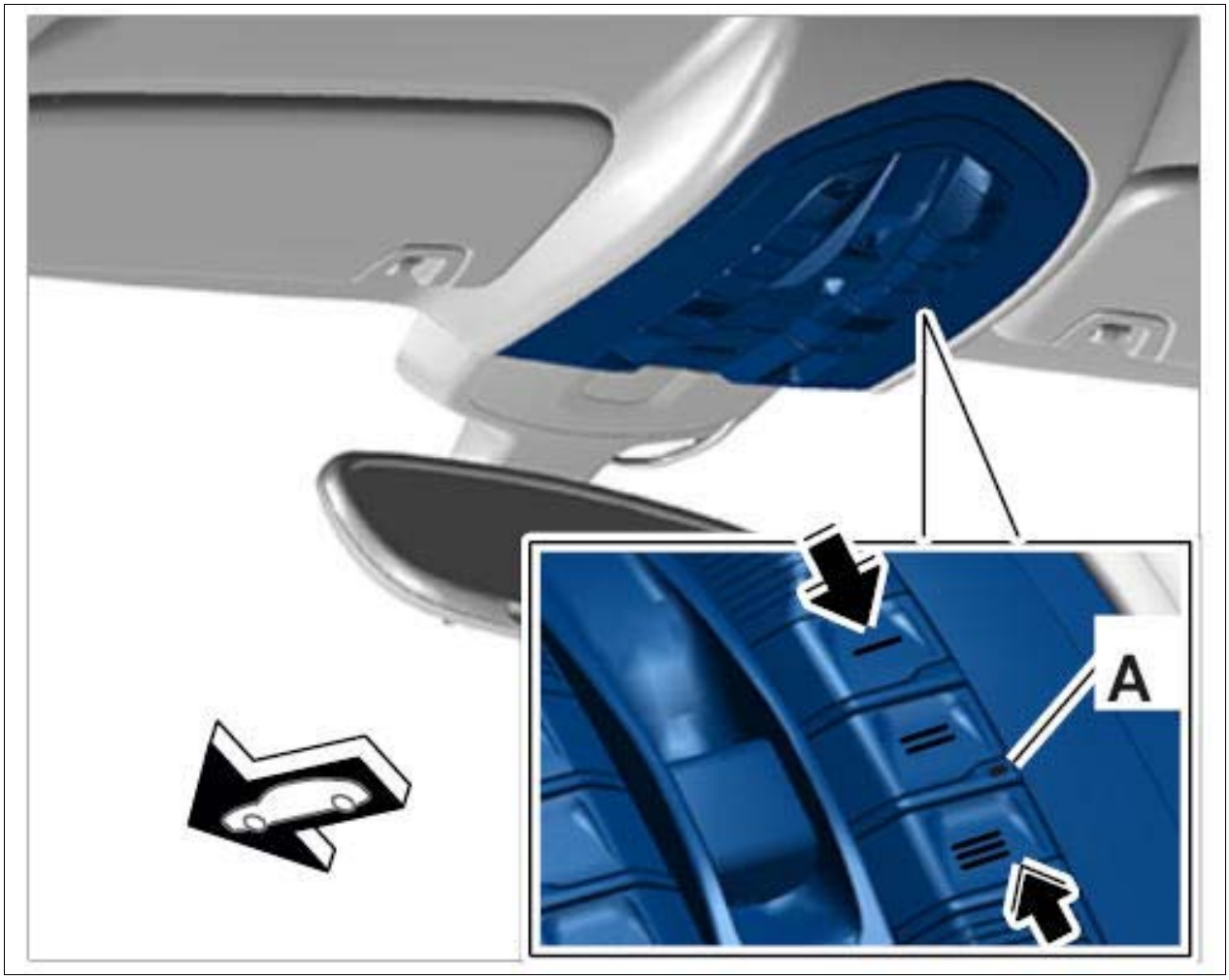

Courtesy of PORSCHE CARS NORTH AMERICA, INC.

WM 967955 REPLACING CONTROL UNIT FOR GARAGE DOOR OPENER(ALL MODELS) > REPLACING CONTROL UNIT FOR GARAGE DOOR OPENER > STORING GARAGE DOOR OPENER SIGNAL ON BUTTON WITH FIXED CODE SYSTEM

Information

A number of attempts may be necessary at different distances between the vehicle and original remote control.

The hazard warning lights flash once after 5 minutes. The programming operation must then be started from scratch.

1. The standard codes set in the factory must be erased first before any signals can be stored.
2. Press the required button on the keypad of the roof control unit until the indicator light **-A-** on button **II** flashes slowly. The button is then in learning mode for 5 minutes.

Fig 1: Overview Of Garage Door Opener Button Assignment

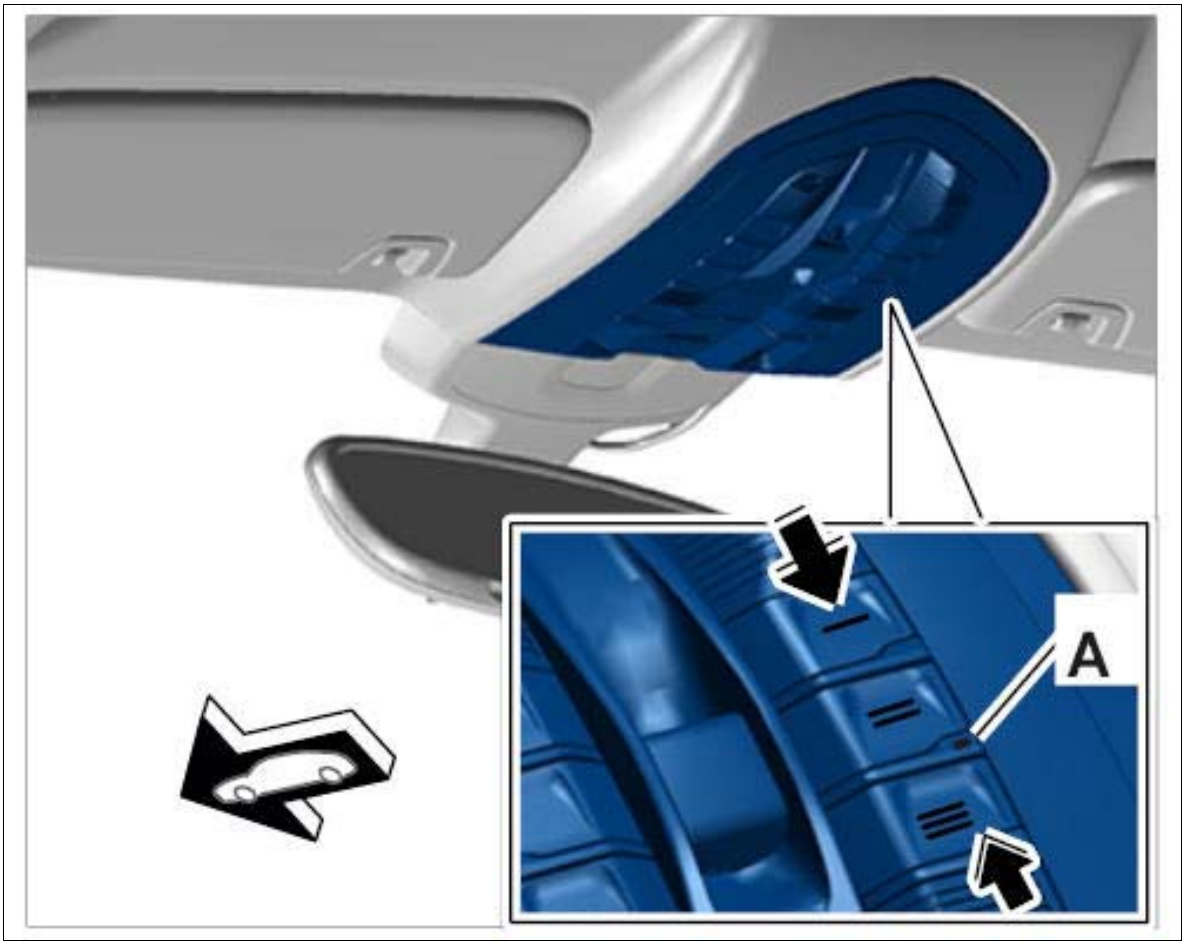

Courtesy of PORSCHE CARS NORTH AMERICA, INC.

3. Hold the original remote control at a distance of around 30 cm from the spot marked (picture) and press the Send button until the vehicle's hazard warning lights light up three times (takes up to approx. 45 seconds).

Fig 2: Identifying Remote Control Teaching Position



Courtesy of PORSCHE CARS NORTH AMERICA, INC.

4. Repeat Steps 2 to 4 to assign further buttons.

WM 967955 REPLACING CONTROL UNIT FOR GARAGE DOOR OPENER(ALL MODELS) > REPLACING CONTROL UNIT FOR GARAGE DOOR OPENER > STORING GARAGE DOOR OPENER SIGNAL ON BUTTON WITH VARIABLE CODE SYSTEM

Information

Check operating instructions for the garage door drive (or other system) for specification of a variable code.

If the garage door opener control unit has been programmed to a variable code system, it will still have to be synchronised with this system on completion of programming before it will work correctly.

1. The standard codes set in the factory must be erased first before any signals can be stored.
2. Press the required button until the LED flashes slowly. You then have around 5 minutes to complete steps 3 and 4.

Fig 1: Overview Of Garage Door Opener Button Assignment

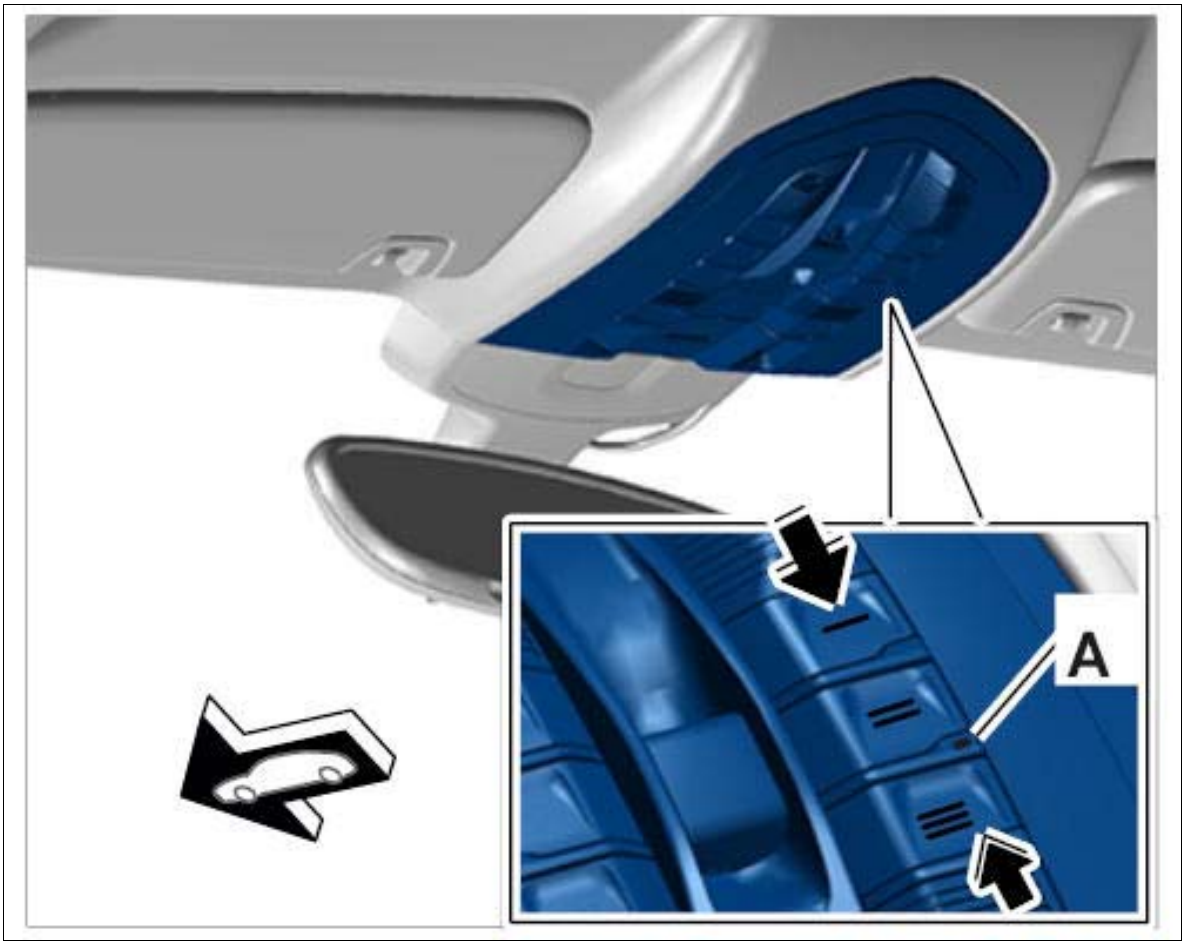

Courtesy of PORSCHE CARS NORTH AMERICA, INC.

3. Hold the original remote control approx. 0 - 30 cm in front of the marked position on the vehicle.

Fig 2: Identifying Remote Control Teaching Position



Courtesy of PORSCHE CARS NORTH AMERICA, INC.

4. Press the Send button on the original remote control until the hazard warning lights flash three times (up to approx. 45 seconds).
5. To synchronise the system: Press the programming button on the garage door drive receiver. You then have 30 seconds to initiate Step 6.
6. Press assigned button on the HomeLink twice. (You may have to press the button to be assigned a third time on some equipment in order to complete the setting.)
7. Repeat the programming steps to assign further buttons.

WM 967955 REPLACING CONTROL UNIT FOR GARAGE DOOR OPENER(ALL MODELS) > REPLACING CONTROL UNIT FOR GARAGE DOOR OPENER > RE-PROGRAMMING AN INDIVIDUAL BUTTON ON THE KEYPAD

1. Press the required button until the LED flashes slowly (approx. 20 seconds). You then have around 5 minutes to complete Steps 2 and 3.

Fig 1: Overview Of Garage Door Opener Button Assignment

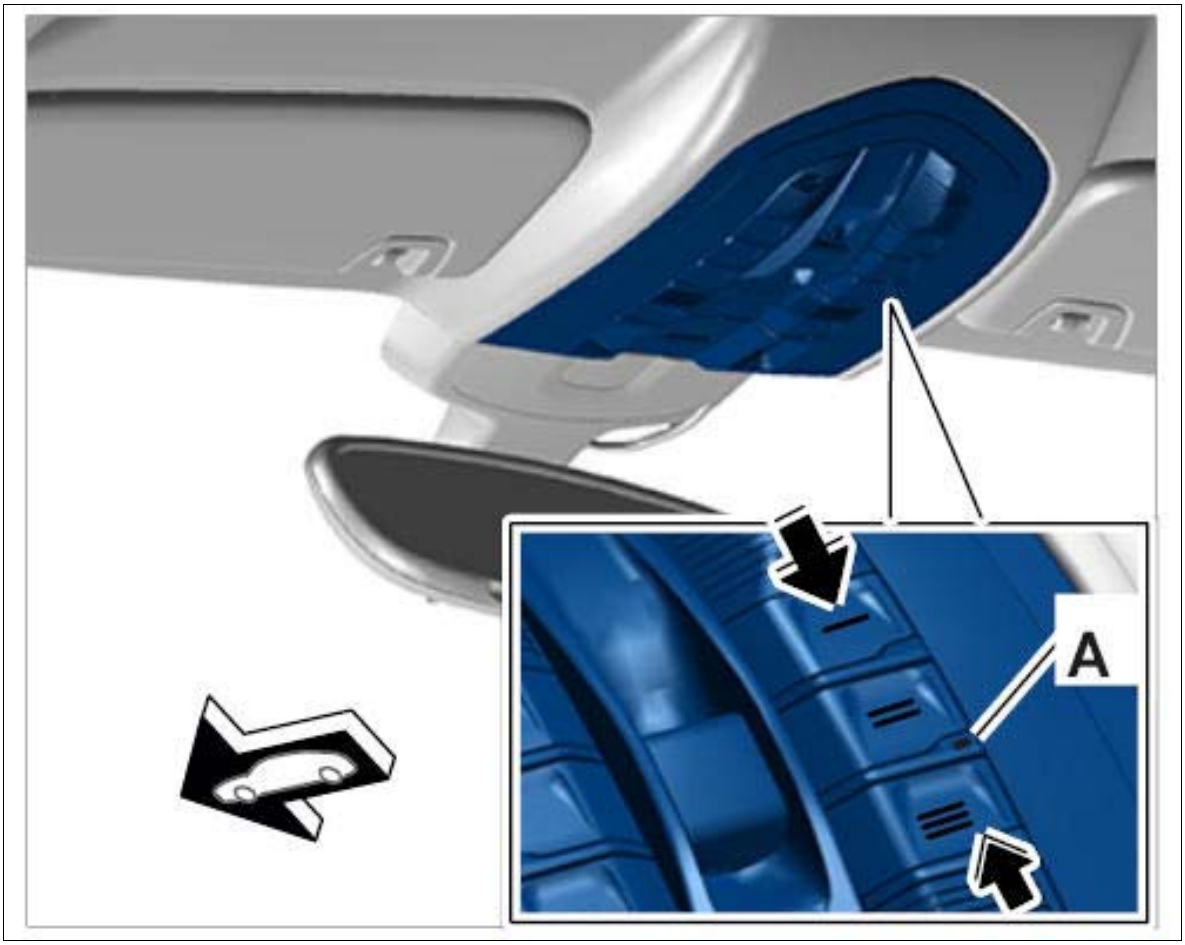

Courtesy of PORSCHE CARS NORTH AMERICA, INC.

2. Hold the original remote control approx. 0 - 30 cm in front of the marked position on the vehicle.

Fig 2: Identifying Remote Control Teaching Position



Courtesy of PORSCHE CARS NORTH AMERICA, INC.

3. Press the Send button on the original remote control until the hazard warning lights flash three times (up to approx. 45 seconds).
4. Repeat Steps 1 to 3 to assign further buttons.

Information

A number of attempts may be necessary at different distances between the vehicle and original remote control.

The hazard warning lights flash once after 5 minutes. The programming operation must then be started from scratch.

WM 967955 REPLACING CONTROL UNIT FOR GARAGE DOOR OPENER(ALL MODELS) > DIAGNOSTICS

Information

Original remote controls for garage door system cannot be taught to operate with the HomeLink in the vehicle. OR: The teaching process was confirmed, but HomeLink will not work or only works sporadically.

- Check that the battery in the original remote control for the garage door opener is new. If in doubt, change the battery and repeat the teaching process.

If after carefully observing the operating instructions and following the procedures described, teaching of the garage door opener control unit is not possible, further information can be obtained from a Hotline facility. A basic requirement is to obtain the diagnostic information beforehand as follows.

Software version

1. Press button **I** or **III** (not both) and hold for 50 seconds. The LED stops flashing and goes out completely. Continue to hold the button down. A few seconds later the LED flashes several times. The number of flashes corresponds to the software version.

e.g. four flashes	e.g. version 4.0

Regional code status

2. Press button II on the roof console and hold for approx. 50 seconds until the LED goes out and stays off. Continue to hold down button II. After a few seconds the LED flashes several times. The number of flashes indicates the programmed region.

One flash	Rest of Europe
Two flashes	France
Three flashes	U.K.
Four flashes	Italy

Information

3. Provide the following additional information about the vehicle and the original remote control:
    1. Dealer, make, model and model year of the vehicle.
    2. Make, model, age and operating frequency of the original remote control.

Hotline

Internet: www.homelink.com

For RoW, telephone: (0) 0800 0466 354 65

For USA, telephone: 1-800-355-3515

WM 0710IN GENERAL (ALL MODELS) > GENERAL INFORMATION ON "PORSCHE DYNAMIC REPAIR"

The term "Porsche Dynamic Repair" refers to cost-effective minor repairs, which are preferred over part replacement.

These repair methods can be used to rectify small areas of damage and signs of use with little effort or cost. This usually eliminates the need for replacement parts and the removal and installation of components.

However, a cost-effective repair may have quality implications. To achieve the best repair result, always use the tool recommended by Porsche and attend the special training courses run by the tool and system suppliers. The quality of the repair also depends on a number of factors, which are listed under the relevant repair descriptions.

The individual repair methods are:

- Glass repairs
- Dent repairs
- Interior cosmetic repairs
- Paint repairs
- Alloy wheel reconditioning
- PCM repairs (process description in the Technical Sales Information)

Repairs can only be carried out independently after successfully completing a course, or should be contracted out to specialist providers. In either case, always comply with the instructions and repair restrictions for the individual repair methods.

WM 0720IN GLASS REPAIRS (ALL MODELS) > TOOLS

Designation	Type	Number	Description	
Glass Repair System D Pro	Workshop equipment	WE 1354		

WM 0720IN GLASS REPAIRS (ALL MODELS) > CONDITIONS FOR REPAIRS

NOTE: Stress from a stone chip on the inside of the window

- *Crack in the windscreen*

→ Do not press against the stone chips in the window from the inside.

Information

This repair method is a cost-effective repair that may have quality implications. To achieve the best repair result, always use the tool recommended by Porsche and attend the special training courses run by the tool/system suppliers.

Laminated glass in windscreens can only be repaired under the following conditions:

- Damage in the driver's field of vision (30 cm wide in the wiper area **-X-**) and at the edge of the windscreen (10 cm **-Y-**) must not be repaired. → Driver's field of vision

  Fig 1: Identifying Driver's Vision Field

  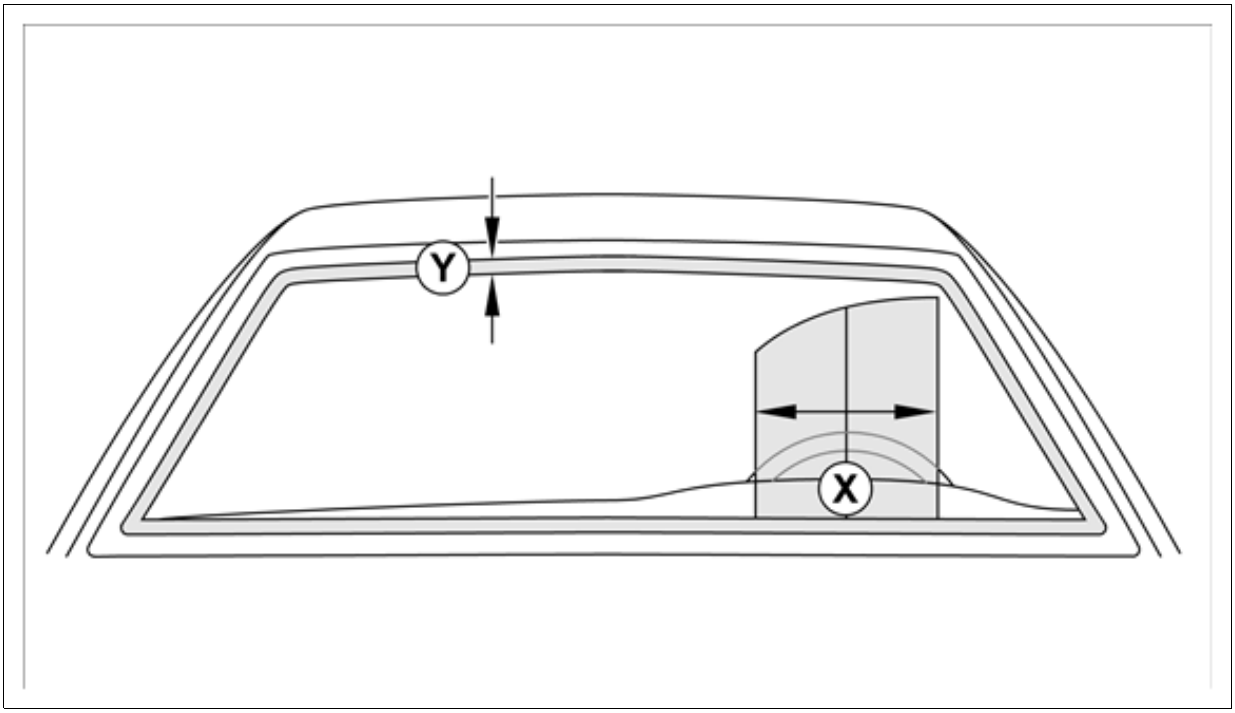

  Courtesy of PORSCHE CARS NORTH AMERICA, INC.

- Only damage to the outside of the windscreen may be repaired. There must be no damage to the inner pane or plastic film.
- Repairs must be carried out as soon as possible after the damage occurs. There must be no moisture or dirt that has visibly penetrated into the damaged area.
- The crater of the point of impact must not be more than 5 mm in diameter.
- Cracks extending radially from the point of impact must not be longer than 50 mm. → Stone chip with crack

Fig 2: Identifying Stone Chip With Crack



Courtesy of PORSCHE CARS NORTH AMERICA, INC.

A visible spot of around 1 - 2 mm in diameter will remain following repairs. → Repair result

Fig 3: Identifying Glass Repair Area



Courtesy of PORSCHE CARS NORTH AMERICA, INC.

The following damage can be satisfactorily repaired economically using this repair method:

- Bull's eye: restoration of appearance 90-99%

Fig 4: Identifying Glass Repair Area (Bull's Eye)



Courtesy of PORSCHE CARS NORTH AMERICA, INC.

- Bee wings: restoration of appearance 90-99%

Fig 5: Identifying Glass Repair Area (Bee Wings)



Courtesy of PORSCHE CARS NORTH AMERICA, INC.

- Star break: restoration of appearance 80-90%

Fig 6: Identifying Glass Repair Area (Star Break)



Courtesy of PORSCHE CARS NORTH AMERICA, INC.

- Shattered break: restoration of appearance 70-80%

Fig 7: Identifying Glass Repair Area (Shattered Break)



Courtesy of PORSCHE CARS NORTH AMERICA, INC.

WM 0720IN GLASS REPAIRS (ALL MODELS) > PREPARATION

Toolbox: **Glass Repair System D Pro WE 1354**

1. Clean the damaged area.
    1. 1.1. Use a dry cloth (without any window cleaner) to clean the windscreen around the area of damage, but do not wipe across the area of impact itself.
    2. 1.2. Remove loose splinters of glass from the chipped area using the hard metal stylus, but do not enlarge the impact crater unnecessarily. → Exposing stone chip

> *IMPORTANT: The more glass missing from the chipped surface, the more obvious the blemish following repairs.*

Fig 1: Identifying Stone Chip



Courtesy of PORSCHE CARS NORTH AMERICA, INC.

2. Secure the mirror.

   Apply gel to the suction areas of the inspection mirror and attach the mirror to the inside of the windscreen so that the procedure can be monitored from outside. → Securing mirror

Fig 2: Securing Mirror



Courtesy of PORSCHE CARS NORTH AMERICA, INC.

3. Drill out

   If necessary, use a drill to mill glass splinters and dirt out of the impact hole to a depth of approx. 1 mm.

> *IMPORTANT: Always hold the drill firmly with both hands! This is the only way to ensure that the drill is positioned securely.*

Fig 3: Drilling Stone Chip



Courtesy of PORSCHE CARS NORTH AMERICA, INC.

4. Secure the bridge.

    1. 4.1. Rub gel into the suction area on the bridge. This allows the tool to be repositioned after it has been secured in place.
    2. 4.2. Press the bridge **-1-** firmly onto the windscreen so that the threaded hole is directly above the point of impact.
    3. 4.3. Stick the bridge firmly onto windscreen by operating the vacuum pump until the red marking **-2-** is no longer visible.

    > *IMPORTANT: The bridge must remain firmly seated on the windscreen for the duration of the repair work. Operate the pump again if the red mark becomes visible.*

    4. 4.4. Align the bridge directly over the point of impact with respect to the windscreen and secure it in place using the central screw **-3-** .
    5. 4.5. Adjust the bridge so that it is parallel to the windscreen using the screws at the rear **-4-** .

Fig 4: Securing Bridge

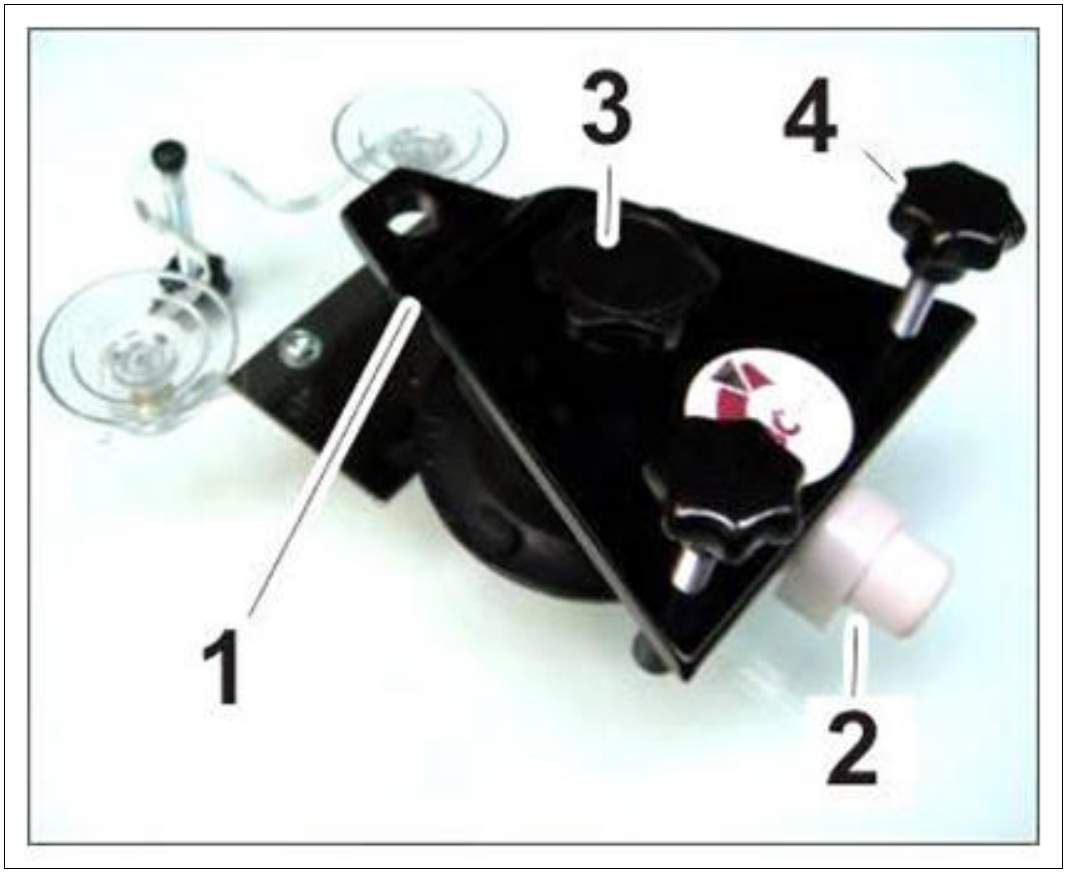

Courtesy of PORSCHE CARS NORTH AMERICA, INC.

WM 0720IN GLASS REPAIRS (ALL MODELS) > REPAIR PROCEDURE

1. Fit the bridge.

    1. 1.1. Screw injector with seal **-5-** into the bridge until the seal is touching the glass. Then press the injector against the window by completing one more turn.

Fig 1: Turning Injector Seal



Courtesy of PORSCHE CARS NORTH AMERICA, INC.

2. 1.2. Attach needle to the syringe and fill with approx. 0.15 ml of resin. → Filling syringe

Fig 2: Filling Syringe



Courtesy of PORSCHE CARS NORTH AMERICA, INC.

3. 1.3. Inject resin into the injector. → Filling injector

Fig 3: Filling Injector



Courtesy of PORSCHE CARS NORTH AMERICA, INC.

2. Pressurizing phase

1. 2.1. Slowly screw the plunger **-6-** into the injector **-5-** until resistance is felt and the shape of the seal changes → Seal under pressure . Keep a firm hold on the injector barrel while doing this.

2. 2.2. Leave the plunger pressed down at this position for around 5 min., in which time the plunger will automatically build up pressure.

Fig 4: Installing Plunger Into Injector



Courtesy of PORSCHE CARS NORTH AMERICA, INC.

Fig 5: Identifying Pressure Seal



Courtesy of PORSCHE CARS NORTH AMERICA, INC.

3. Vacuum phase

    1. 3.1. Pull up the plunger **-6-** with one hand **-A-** and secure it in position by turning it 90° clockwise **-B-** . This allows any air to escape out of the damaged area.
    2. 3.2. Release the plunger so that pressure can build up again.
    3. 3.3. Repeat steps → 3.1. and → 3.2. about 5-10 times until there is no more air in the damaged area.

Fig 6: Pulling Plunger



Courtesy of PORSCHE CARS NORTH AMERICA, INC.

Fig 7: Identifying Vacuum Seal



Courtesy of PORSCHE CARS NORTH AMERICA, INC.

4. Heating

   If the damage is more severe, the removal of trapped air can be speeded up by heating the area gently. To do this, use a lighter to heat the area of damage from the inside for 3-5 seconds.

   > *IMPORTANT: Heat during the vacuum phase only, otherwise the expanding air would cause excessive pressure in the damaged area.*

5. Remove the bridge.
   1. 5.1. Release the plunger a little (do not create a vacuum) and unscrew the injector.
   2. 5.2. Remove the bridge from the windscreen.
6. Apply finishing resin.
   1. 6.1. Add a drop of finishing resin directly onto the impact point.
   2. 6.2. Slide film across the windscreen.

Fig 8: Applying Resin



Courtesy of PORSCHE CARS NORTH AMERICA, INC.

7. Curing under a UV lamp

    1. 7.1. Place a UV lamp over the damaged area from the outside and switch it on. → Curing under a UV lamp
    2. 7.2. Curing takes around 10 minutes, depending on the size of the stone chip.

Fig 9: Identifying UV Lamp



Courtesy of PORSCHE CARS NORTH AMERICA, INC.

8. Scrape off repair resin.

    1. 8.1. Remove film and scrape off excess resin using a razor blade held at a 90 degree angle to the windscreen. → Scraping off resin

    > *IMPORTANT: Risk of damage to the windscreen. Use only blades that are in perfect condition, otherwise they could damage the windscreen.*

    2. 8.2. If there is an indentation at the point of repair, steps → 6. → 7. and → 8.1. will need to be repeated to obtain a perfect finish.

Fig 10: Removing Resin



Courtesy of PORSCHE CARS NORTH AMERICA, INC.

9. Polishing

Polish the repair area with polish and a soft cloth.

> *IMPORTANT: Do not polish for too long as this can wear down the repair resin and the surface will no longer be flat.*

Fig 11: Applying Polish On Glass



Courtesy of PORSCHE CARS NORTH AMERICA, INC.

10. Cleaning tools

    After completing repairs, clean the tools using a dry, lint-free cloth. Otherwise, the resin will damage the seals.

WM 0730IN DENT REPAIRS (ALL MODELS) > TOOLS

Designation	Type	Number	Description	

Dent removal lever set VAS 6332 XL professional dent removal set	Workshop equipment	WE 1358		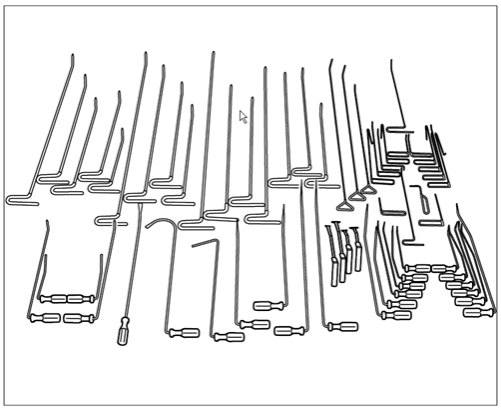
Dent removal lever set VAS 6333	Workshop equipment	WE 1359		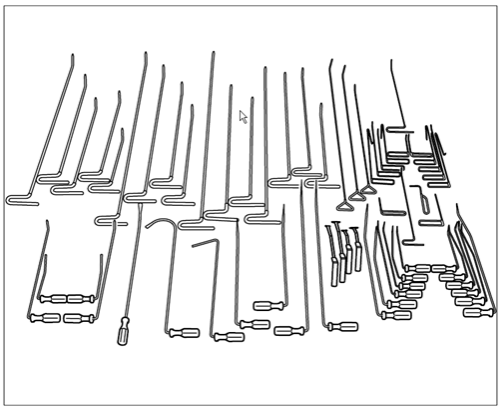
Dent removal lever set VAS 6334	Workshop equipment	WE 1360		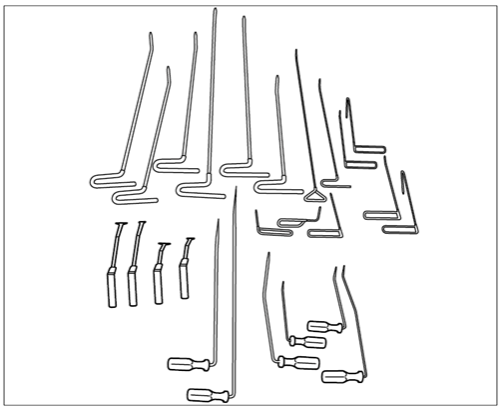
Dent remover VAS 6364	Workshop equipment	WE 1361		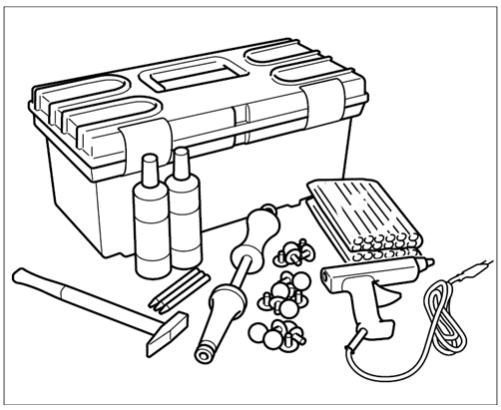

WM 0730IN DENT REPAIRS (ALL MODELS) > DENT REPAIRS

Information

This repair method is a cost-effective repair that may have quality implications. To achieve the best repair result, always use the tool recommended by Porsche and attend the special training courses run by the tool/system suppliers.

Information

Some damage cannot be worked back into shape using this method because of reinforced or bonded body parts. Each area of damage must be assessed individually.

Dents in sheet steel and aluminum panels caused by hail, bumps when parking (knocks against edge of door), chestnuts, etc. can be corrected by carrying out dent repairs using the reshaping method. With this method, dents are pressed out point-by-point from behind the metal panel using special dent removal tools and then polished.

Dent removal sets: **Dent removal lever set VAS 6332 XL professional dent removal set WE 1358, Dent removal lever set VAS 6333 WE 1359, Dent removal lever set VAS 6334 WE 1360**

Fig 1: Removing Dent Removal Sets

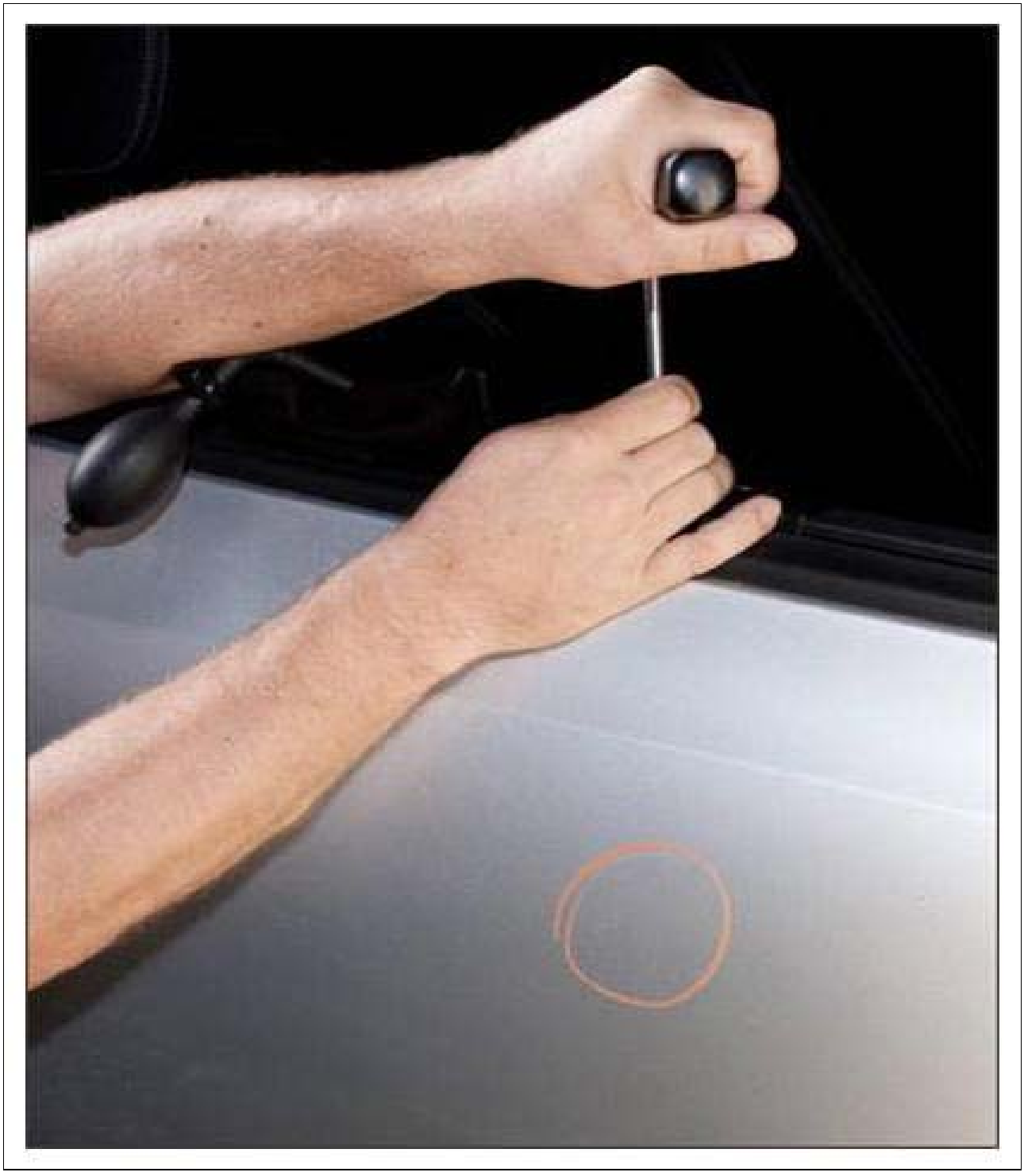

Courtesy of PORSCHE CARS NORTH AMERICA, INC.

The progress of the repair work is assessed using the reflected lines of a neon lamp on the upper side of the panel. → Before and after

Fig 2: Identifying Neon Lamp Reflected Lines

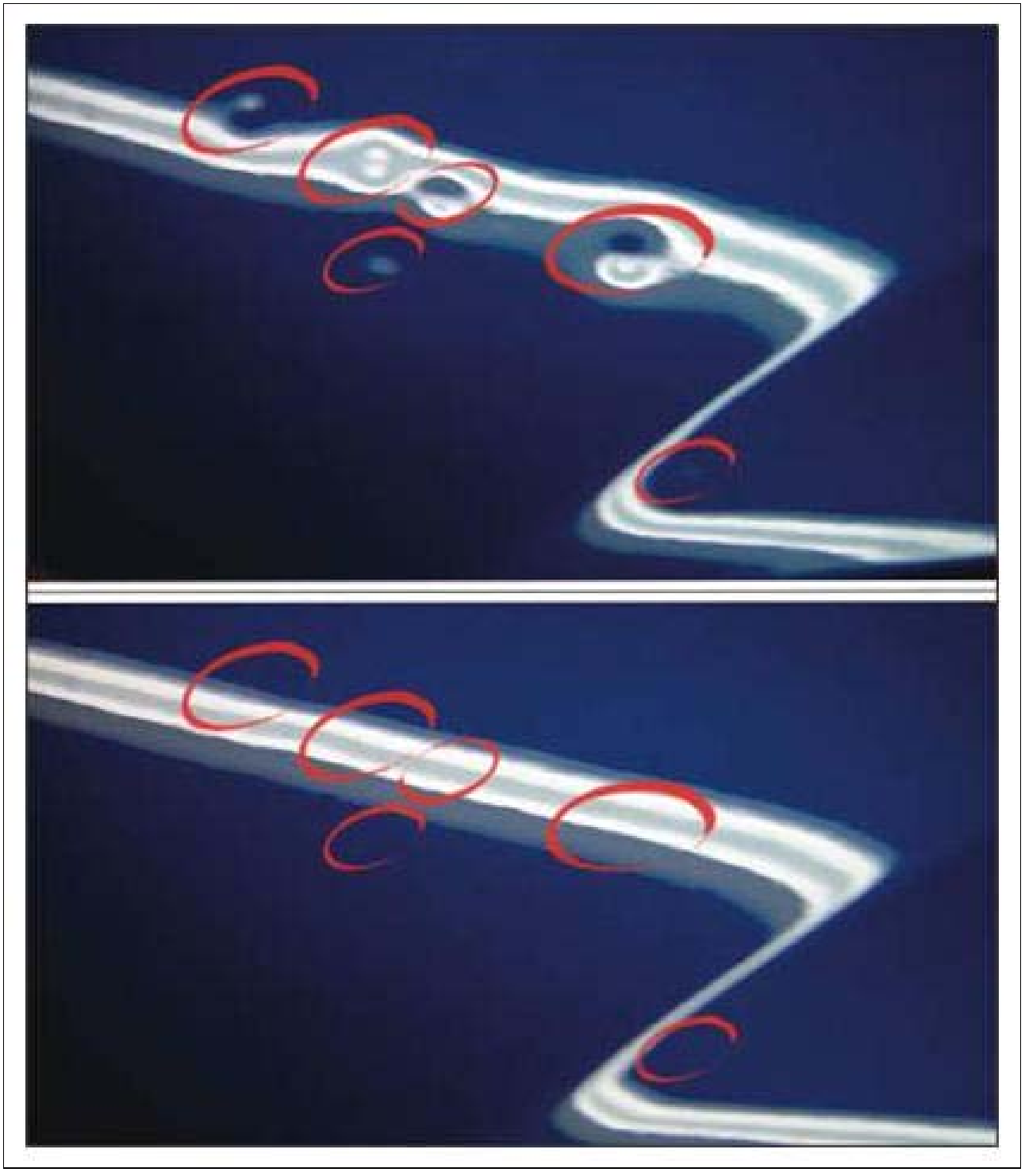

Courtesy of PORSCHE CARS NORTH AMERICA, INC.

Small dents that are not accessible from the rear can be "pulled out" using bonding techniques **Dent remover VAS 6364 WE 1361** if the strength of the adhesive bond and the adhesion of the paintwork allow this. To this end, adhesive adapters are stuck to the center of the dent using special adhesive. The dent is pulled out carefully in a controlled manner using a slide hammer puller.

WM 0730IN DENT REPAIRS (ALL MODELS) > DENT REPAIRS > PREREQUISITES

- The dent must not have any cracks in the paintwork. Examine the damaged area using an illuminated magnifier or reflected-light microscope.
- Measure thickness of paint layer around the damaged area. Paint layers up to approx. 450 µm thick are straightforward. With thicker layers of paint there is a danger that the paint will crack.
- High level of workmanship and skill
- Intensive training
- Continuous practice
- Use of recommended tools

WM 0730IN DENT REPAIRS (ALL MODELS) > DENT REPAIRS > SUCCESS FACTORS

The factors below affect the outcome of the repair work considerably:

- The location of the damage
- The extent of the damage
- The shape of the damage
- The condition of the paintwork
- Skills and experience of the technician
- Color (dark colors are trickier than light colors)
- With silver colors, sharp-edged and pointed dents may cause slight changes to the color pigments (dark sports).
- Condition of tools

WM 0730IN DENT REPAIRS (ALL MODELS) > DENT REPAIRS > TECHNICAL RESTRICTIONS FOR CARRYING OUT REPAIRS

- No/poor accessibility (for safety reasons, holes must never be drilled in order to make an area more accessible.)
- Workmanship skills, lack of practice.
- Dents with paint defects/cracks cannot be repaired.
- Damage to folded edges or reinforcements usually cannot be repaired.
- Dents with crumpled edges usually cannot be corrected.
- It may not be possible to correct creased or pointed dents.

- With the bonding technique it is usually only possible to repair flat or minor dents.
- The maximum size of the dent should not exceed a diameter of 50 mm.

WM 0730IN DENT REPAIRS (ALL MODELS) > PROCEDURE > GENERAL PROCEDURE

1. Clean the surface to be treated to obtain good light reflection.
2. Mark the dent using the wax chalk.
3. Assess accessibility of the dent.
4. Try to find the best access, even if this is difficult for some areas.
5. Remove body parts in accordance with the Service information. When doing so, always be careful with safety-critical components, such as airbags, seat-belt pretensioners, electronic components, cables, etc.
6. Locate the dent using a locating lamp and find the tool tip on the metal panel.
7. Work according to the clock method described below.
8. Work calmly and patiently.
9. When working on bumps or bulges, it is much better to tap the metal gently and repeatedly rather than using one heavy strike.
10. Be very careful when using knife tools and cutter tools as these tools can easily cause the panel to buckle.
11. Sand down rough areas and high points with a sanding block (P2000 - 4000) and then polish them.
12. After removing the dent, seal the repair area with wax or cavity protection.

WM 0730IN DENT REPAIRS (ALL MODELS) > PROCEDURE > CLOCK METHOD

With the clock method, the lines of force running through the center of the dent are removed, with the result that the material stress is reduced and the panel is flat again.

The dent should be envisaged as a dial with "12" being the furthest away. In other words, the person performing the work is standing at 6 o'clock.

Start at the edge of the dent **-A-** at 9 o'clock and work clockwise through 12 o'clock to 3 o'clock. When doing this, always remember to press the panel at as many points as possible and as close together as possible. From 3 o'clock, move further inwards and carry on through 12 o'clock to 9 o'clock. Carry out the remaining steps in this same way.

Fig 1: Identifying Dent Repair Clock Method

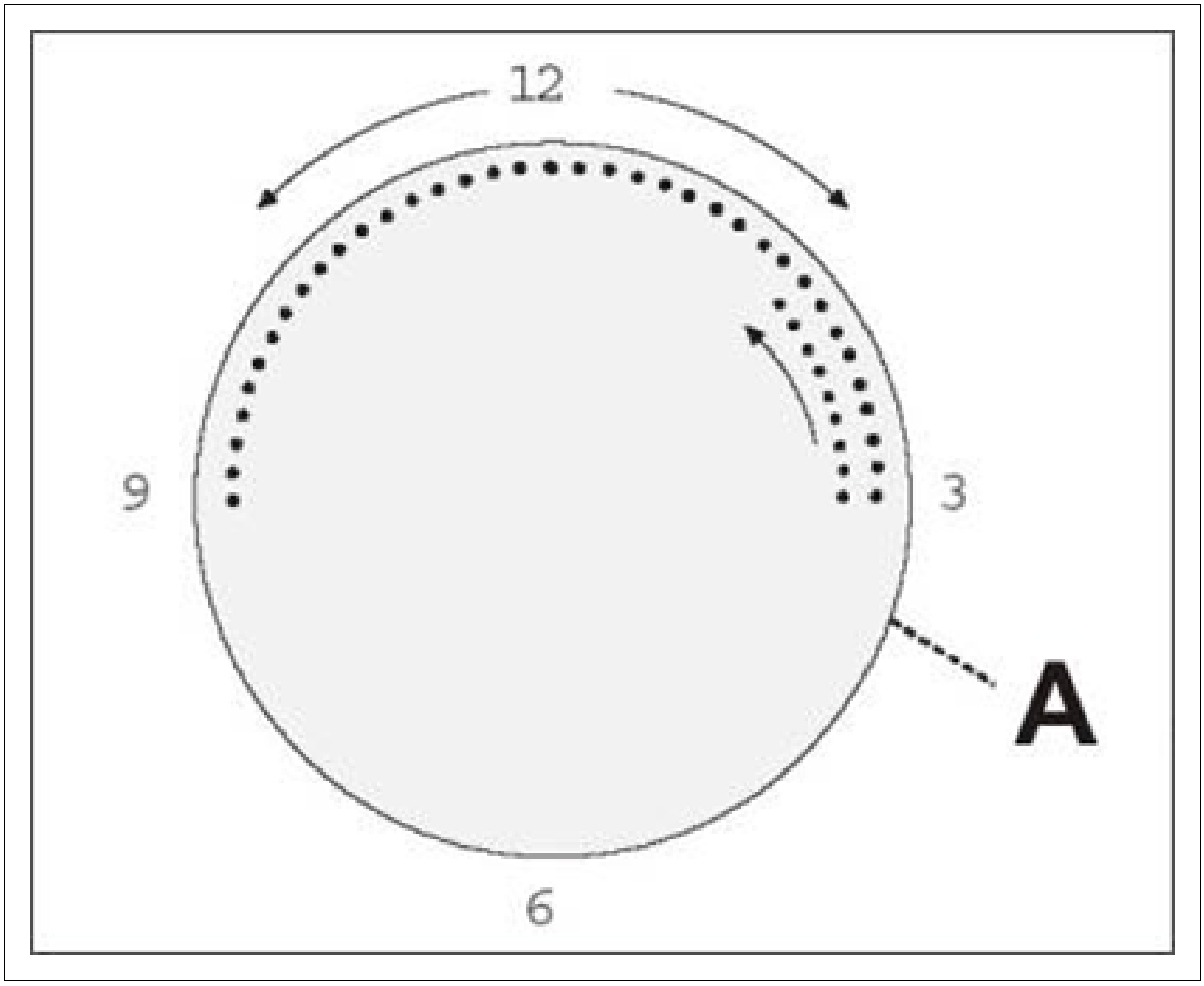

Courtesy of PORSCHE CARS NORTH AMERICA, INC.

With a dent of approx. 2 cm in diameter, it will be necessary to press the panel at around 100 - 150 points. Any point that is pressed too hard must be pushed back again before continuing. Strain can be created in the panel as a result of too many high points, with the result that the metal sheet can no longer spread out evenly.

WM 0730IN DENT REPAIRS (ALL MODELS) > PROCEDURE > DENT MASSAGE (FOR LARGER DENTS)

With this method, the lines of force are removed not by pressing at numerous points but instead by short movements.

For this process, first draw a boundary circle **-B-** at the center of the dent using wax chalk. This circle is to prevent the tool from being pulled too far into the center. This could cause the dent to break up into numerous tiny dents and make any further work more difficult.

Use the large ball tool with the large round plastic attachment. Place the tool at the edge of the dent **-A-** first at 12 o'clock and using gentle pressure approach the boundary circle with gradually increasing

pressure. Continue working from 11 o'clock to 1 o'clock, from 10 o'clock to 2 o'clock, etc. from the outer edge of the dent right up to the boundary circle. The pressure must not be too great as this could cause ridges. Once the dent has been shrunk back to the boundary circle, continue using the point-by-point clock method **-C-** .

Fig 1: Identifying Dent Massage Method For Larger Dents

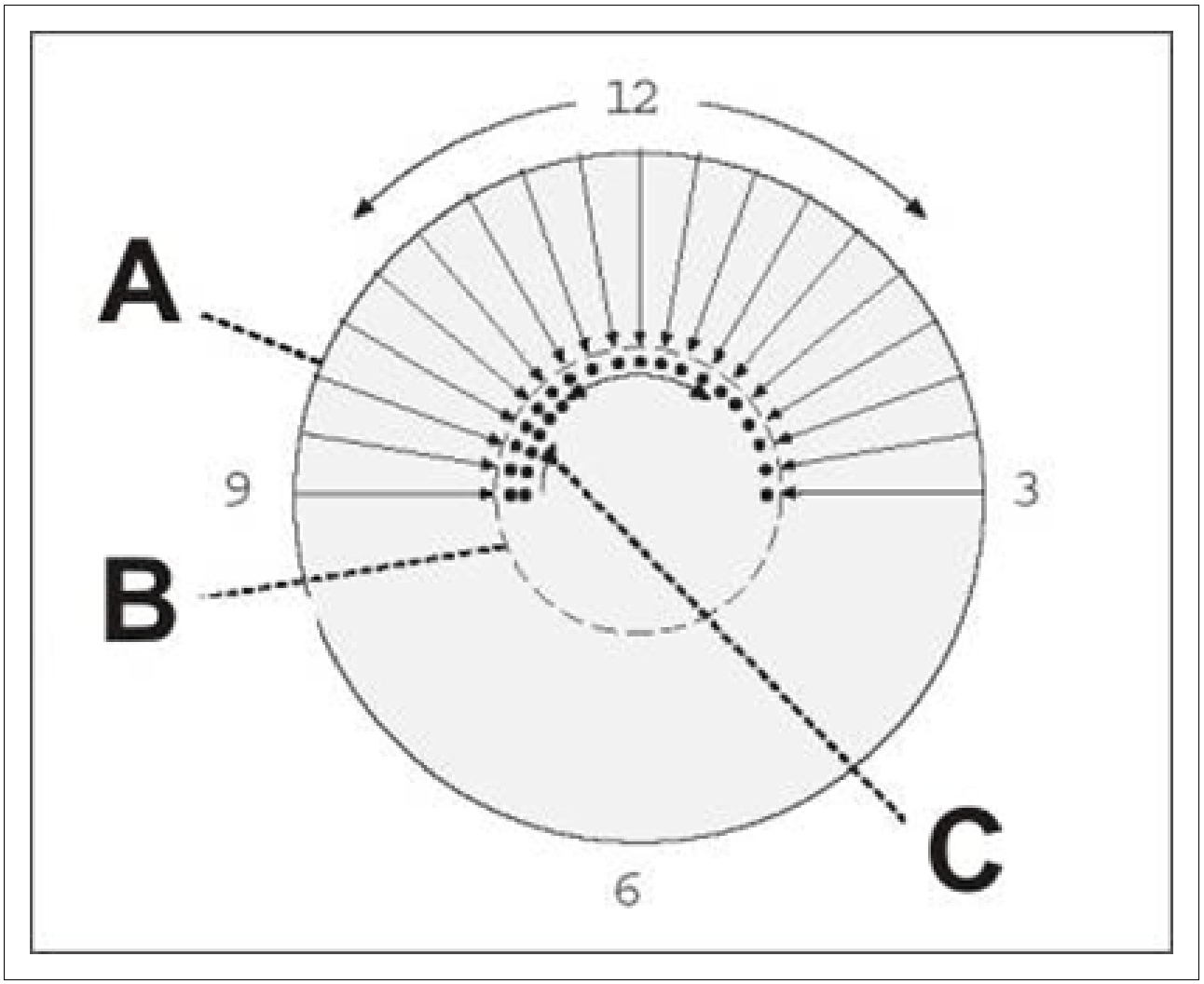

Courtesy of PORSCHE CARS NORTH AMERICA, INC.

The various dent repair methods can only be learned through intensive training and continuous practice.

WM 0740IN INTERIOR COSMETIC REPAIRS (EXCEPT MACAN) > TOOLS

Designation	Type	Number	Description	

paint-spraying gun - Sata-Minijet	Workshop equipment	WE 1146		
Interior repairs system B1	Workshop equipment	WE 1355		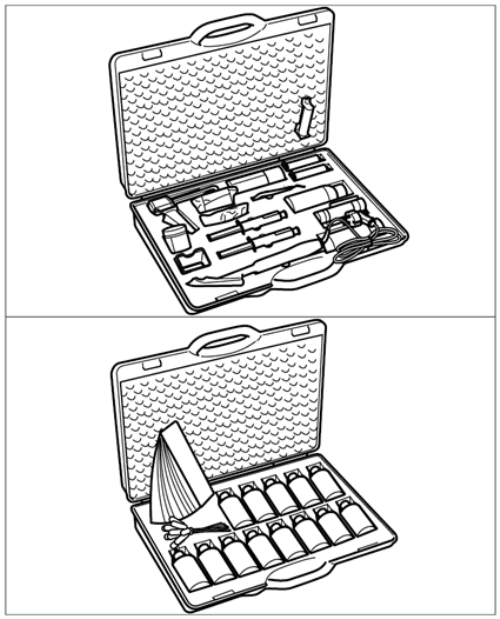
interior repair scales, small (0.01g scale)	Workshop equipment	WE 1357		

WM 0740IN INTERIOR COSMETIC REPAIRS (EXCEPT MACAN) > TECHNICAL

VALUES

Location	Description	Type	Basic value	Tolerance 1	Tolerance 2
Iron temperature		Temperature	160°C		
Iron temperature		Temperature	160°C		

WM 0740IN INTERIOR COSMETIC REPAIRS (EXCEPT MACAN) > GENERAL INFORMATION

WARNING: Toxic substances

- *Danger of poisoning or suffocation*
- *Danger of burns to the eyes and skin*

→ Ventilate the work area well.

→ Never ingest or inhale.

→ Read specific information on the Hazard Sheet.

→ Do not smoke, eat or drink in the work area.

Information

This repair method is a cost-effective repair that may have quality implications. To achieve the best repair result, always use the tool recommended by Porsche and attend the special training courses run by the tool/system suppliers.

With interior cosmetic repairs, it is possible to repair grazes, tears, scratches and burn holes in plastic and leather components in the interior. Example: → Before and after

Fig 1: Identifying Interior Cosmetic Area (Before And After)



Courtesy of PORSCHE CARS NORTH AMERICA, INC.

With this repair method, the damage is filled with special adhesives and resins and the surface structure is restored by means of a pattern imprint. The damaged area is painted over in the last step.

WM 0740IN INTERIOR COSMETIC REPAIRS (EXCEPT MACAN) > GENERAL INFORMATION > REPAIR RESTRICTIONS

- Tears and cuts in low-stressed components (e.g. dashboard, trim panels) up to around 50 mm long can be repaired.
- Tears and cuts in more heavily stressed components (e.g. seats) up to around 20 mm long can be repaired.
- Holes in low-stressed components (e.g. dashboard, trim panels) up to around 20 mm in diameter can be repaired.
- Holes in more heavily stressed components (e.g. seats) up to around 10 mm in diameter can be repaired.
- Damage in the area of a seam cannot be repaired.
- Alcantara leather cannot be repaired.
- Here too, the skills and experience of the worker are crucial for a good repair result.

WM 0740IN INTERIOR COSMETIC REPAIRS (EXCEPT MACAN) > CREATING PATTERN IMPRINT

Toolbox: **Interior repairs system B1 WE 1355**

1. Clean surface of the structural area to be copied using "Plastcleaner" and dry with warm air (approx. 60 °C).

Fig 1: Cleaning Interior Cosmetic Surface



Courtesy of PORSCHE CARS NORTH AMERICA, INC.

2. Evenly apply the "Moldmaker" two-component material to the surface using the mixing tube and mixing gun.
3. Spread out the compound into a thin layer (approx. 2 - 3 mm) using a spatula.

Fig 2: Applying Paint On Interior Cosmetic



Courtesy of PORSCHE CARS NORTH AMERICA, INC.

4. Leave pattern imprint to cure for 10 - 15 min.
5. Carefully remove pattern imprint and clean the surface using "Plastcleaner".

Fig 3: Removing Pattern Imprint



Courtesy of PORSCHE CARS NORTH AMERICA, INC.

The pattern imprint can be re-used numerous times.

The pattern imprint will not leave behind any undesirable marks and can therefore be used anywhere.

WM 0740IN INTERIOR COSMETIC REPAIRS (EXCEPT MACAN) > VINYL REPAIRS

1. Thoroughly clean the area to be repaired using "Plastcleaner" and dry with warm air (approx. 60 °C).

Fig 1: Cleaning Interior Cosmetic Surface



Courtesy of PORSCHE CARS NORTH AMERICA, INC.

2. Fill the damaged area with "Compound" adhesive filler right up to the upper level.

   Information

   Always test the thermal sensitivity of the vinyl in a concealed area first.

   If the damage is deep, apply the material in several layers, removing any excess compound at the edge immediately and curing between layers using an iron (→ **Temperature: 160°C**).

Fig 2: Filling Material Damage Area



Courtesy of PORSCHE CARS NORTH AMERICA, INC.

3. With larger areas of damage, such as tears or holes, insert a piece of nylon fabric under the area to be repaired for reinforcement.

    1. 3.1. Cut a suitable piece of nylon fabric material to size and push it under the damaged area using the small spatula.

    2. 3.2. Rub adhesive filler into the nylon fabric and cure using the iron.

4. Lay the pattern imprint onto the top layer of adhesive filler to restore the pattern, gently press on with the heated iron for 5 - 10 seconds and wait for a few seconds before continuing.

Fig 3: Heating Adhesive Filler



Courtesy of PORSCHE CARS NORTH AMERICA, INC.

5. Cool down and fix the transferred pattern using a cooling block.

Fig 4: Cooling Adhesive Filler



Courtesy of PORSCHE CARS NORTH AMERICA, INC.

6. Carefully remove pattern imprint.

Fig 5: Removing Pattern Imprint



Courtesy of PORSCHE CARS NORTH AMERICA, INC.

7. The adhesive filler has cured when it becomes slightly transparent. If the adhesive filler still looks milky, repeat steps → 4. to → 6.
8. Thoroughly clean the area to be painted using "Plastcleaner" and dry with warm air (approx. 60 °C), as "Plastcleaner" is partly water-soluble.
9. Then paint the repaired area. → Painting and dyeing

Fig 6: Applying Paint In Repaired Area



Courtesy of PORSCHE CARS NORTH AMERICA, INC.

WM 0740IN INTERIOR COSMETIC REPAIRS (EXCEPT MACAN) > LEATHER REPAIRS

1. Thoroughly clean the area to be repaired a **number of times** using "Plastcleaner" and dry with warm air (approx. 60 °C).

Fig 1: Cleaning Interior Cosmetic Surface



Courtesy of PORSCHE CARS NORTH AMERICA, INC.

WM 0740IN INTERIOR COSMETIC REPAIRS (EXCEPT MACAN) > LEATHER REPAIRS > REPAIRING SCRATCHES AND CREASES

1. Fill scratches or creases with "Leather Crack Filler" and allow to dry for around 1 - 2 hours before continuing with step → 7.

   If the damage is deep, apply in several layers and dry with warm air (approx. 60 °C); the "Leather Crack Filler" shrinks by up to 30% as it dries.

Fig 1: Filling Scratches



Courtesy of PORSCHE CARS NORTH AMERICA, INC.

WM 0740IN INTERIOR COSMETIC REPAIRS (EXCEPT MACAN) > LEATHER REPAIRS > REPAIRING TEARS AND HOLES

1. Fill the damaged area with "Compound" adhesive filler right up to the upper level.

   Information

   Always test the thermal sensitivity of the leather in a concealed area first.

   If the damage is deep, apply the material in several layers, removing any excess compound at the edge immediately and curing between layers using the iron (→ **Temperature: 160°C**).

Fig 1: Filling Material Damage Area



Courtesy of PORSCHE CARS NORTH AMERICA, INC.

2. With larger areas of damage, such as tears or holes, insert a piece of nylon fabric under the area to be repaired for reinforcement.

    1. 2.1. Cut a suitable piece of nylon fabric material to size and push it under the damaged area using the small spatula.

    2. 2.2 Rub adhesive filler into the nylon fabric and cure using the iron.

3. Lay the pattern imprint onto the top layer of adhesive filler to restore the pattern, gently press on with the heated iron for 5 - 10 seconds and wait for a few seconds before continuing.

Fig 2: Heating Adhesive Filler



Courtesy of PORSCHE CARS NORTH AMERICA, INC.

4. Cool down and fix the transferred pattern using a cooling block.

Fig 3: Cooling Adhesive Filler



Courtesy of PORSCHE CARS NORTH AMERICA, INC.

5. Carefully remove pattern imprint.

Fig 4: Removing Pattern Imprint



Courtesy of PORSCHE CARS NORTH AMERICA, INC.

6. The adhesive filler has cured when it becomes slightly transparent. If the adhesive filler still looks milky, repeat steps → 3. to → 5.

   Information

   Leather is a natural product which must be treated individually.

   The leather must be thoroughly cleaned a number of times prior to painting as leather becomes greasy from the inside and it is not possible to rule out any previous treatment with silicon-containing products. Impregnation can also impair the adhesion of the paint.

7. Thoroughly clean leather **a number of times** with "Plastcleaner". Allow the leather to air dry for approx. 5 min. after cleaning. Clean the leather again if it is very dirty or if there is still a greasy residue.

8. Sand the damaged area with an abrasive pad or sandpaper (P400).

Fig 5: Cleaning Leather



Courtesy of PORSCHE CARS NORTH AMERICA, INC.

9. Then paint the repaired area. → Painting and dyeing

Fig 6: Applying Paint In Repaired Area



Courtesy of PORSCHE CARS NORTH AMERICA, INC.

WM 0740IN INTERIOR COSMETIC REPAIRS (EXCEPT MACAN) > PAINTING AND DYEING

WARNING: Toxic substances

- *Danger of poisoning or suffocation*
- *Danger of burns to the eyes and skin*

→ Ventilate the work area well.

→ Never ingest or inhale.

→ Read specific information on the Hazard Sheet.

→ Do not smoke, eat or drink in the work area.

1. From the color samples choose the color that most closely matches the original.
2. Shake paint container thoroughly before mixing.
3. Mix paint on the paint **scales interior repair scales, small (0.01g scale) WE 1357** in accordance with the formulary.
4. Mix paints thoroughly and compare the color obtained with the original. To do this, dab or spray some of the paint onto the original part.

   Critically examine the color match of the paint when **dry.** It is often necessary to adapt the color mixture and sometimes this may take several attempts.
5. If necessary, match the sheen and color intensity using the additive "Opacante A". The amount of this additive that can be added to the paint must not exceed 25%.
6. Check adhesion of paint by gently scratching the dry paint.
7. If the color is correct, apply paint to the damaged area using **paint-spraying gun - Sata-Minijet WE 1146** or an airbrush gun.

   For small areas of damage, the paint can also be applied using a clean, lint-free cloth. In this case, apply the paint in several layers using a circular motion.

Fig 1: Applying Paint In Repaired Area



Courtesy of PORSCHE CARS NORTH AMERICA, INC.

8. Leave paint to dry at a temperature of no less than 16 °C for approx. 90 min. It may take less time to dry at warmer temperatures.

   The drying time should be increased if the paint was applied in several layers.

9. Match the lustre, if necessary:

   1. "Matt fix scan" provides a matt finish.

   2. "Gloss fix scan" provides a gloss finish.

   3. A satin finish is achieved by mixing the two gloss regulators.

      1. 9.1. Shake gloss regulators thoroughly and filter through a paper filter.

      2. 9.2. Mix "Matt fix scan" and "Gloss fix scan" thoroughly in the desired ratio.

      3. 9.3. Test gloss regulator in a concealed area.

      4. 9.4. Check the lustre when dry and adapt if necessary.

      5. 9.5. Apply the gloss regulator using **paint-spraying gun - Sata-Minijet WE 1146** or an airbrush gun.

         For small areas of damage, the gloss regulator can also be applied using a clean, lint-free cloth. Apply it using a circular motion.

10. Leave the paint to dry overnight before applying any load.

    Observe the information and instructions provided by the tool manufacturer as well.

    The various repair methods can only be learned through intensive training.

WM 0750IN PAINT REPAIRS (ALL MODELS) > GENERAL INFORMATION AND REPAIR AREAS

Information

This repair method is a cost-effective repair that may have quality implications. To achieve the best repair result, always use the tool recommended by Porsche and attend the special training courses run by the tool/system suppliers.

Paint repairs (also known as spot coating) can be used for small areas of paint damage. In this case, the damage is repaired over a small area by touching up the base and clear lacquer. The transition point from the old to the new clear lacquer is polished to achieve a match.

> *IMPORTANT: There is a danger of creating trailing edges at the transition point when polishing the area.*

Areas of application:

- Paint repairs are possible on plastic and sheet metal.

- Single-layer, double-layer and metallic paint finishes can be painted in this way.
- This painting method can be used to its full extent in areas with low light reflection (e.g. bumpers, door sills, edges of parts). **-green area-**
- Paint repairs to components with larger surfaces are only possible to a limited extent **-yellow area-** . In these areas, only small areas of damage with a diameter of up to 35 mm or a length of up to 100 mm should be repaired.
- Damage to large surface areas cannot be corrected using paint repair methods. **-red area-**

Fig 1: Identifying Paint Repairs Areas

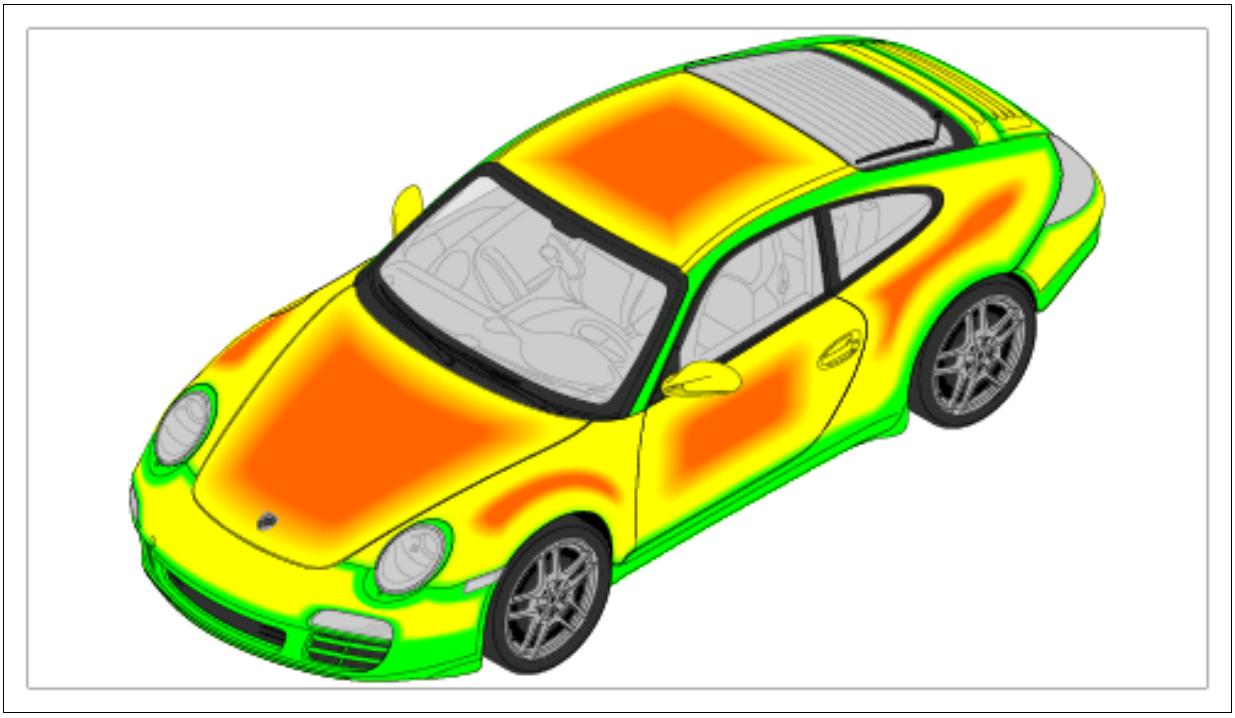

Courtesy of PORSCHE CARS NORTH AMERICA, INC.

Fig 2: Identifying Paint Repairs Areas

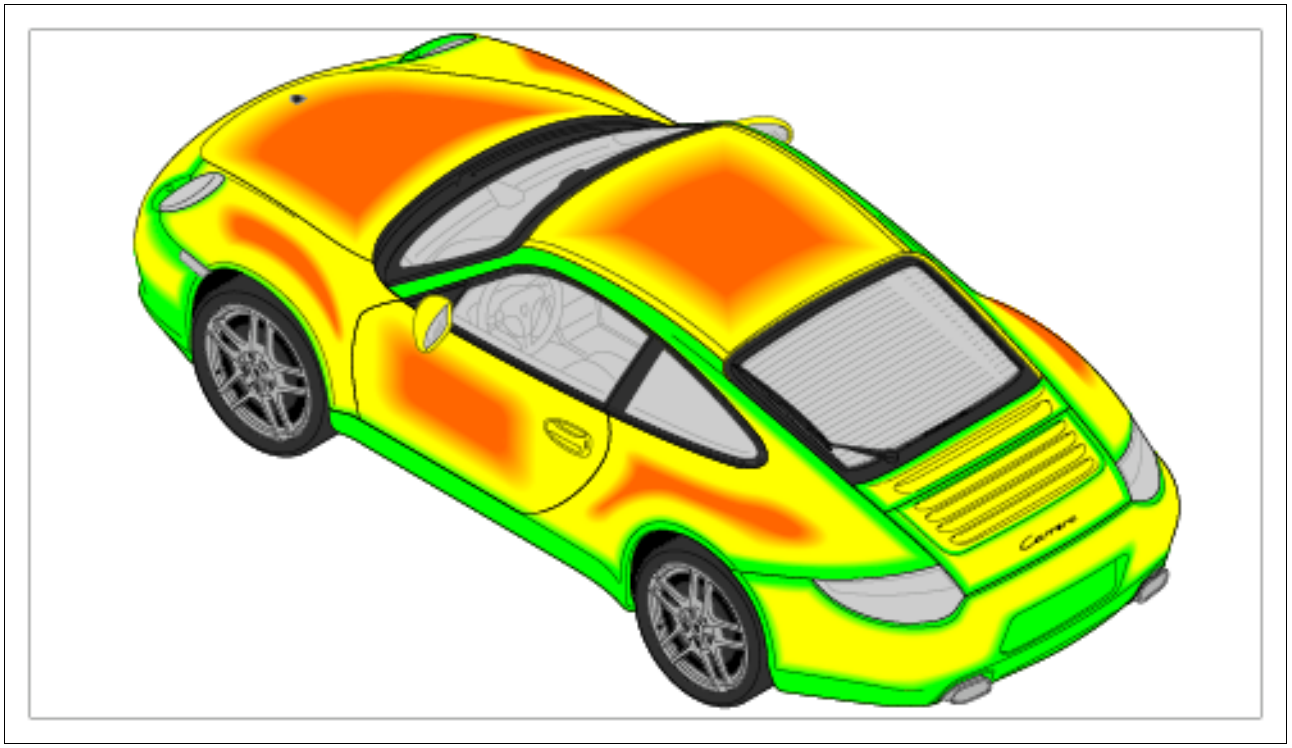

Courtesy of PORSCHE CARS NORTH AMERICA, INC.

green	Paint repairs are possible to the full extent
yellow	Paint repairs are only possible under certain conditions
red	Paint repairs are not possible

WM 0750IN PAINT REPAIRS (ALL MODELS) > GENERAL INFORMATION AND REPAIR AREAS > SUCCESS FACTORS

- Extent of damage
- Nature of damage
- Location of damage
- Workmanship skills and experience
- Tools
- Color

The full repair description can be found in the → "Paint Manual" Chapter S 8.1 and G 8.1. Always follow the manufacturer's instructions.

WM 0760IN ALLOY WHEEL RECONDITIONING (ALL MODELS) > REPAIR

RESTRICTIONS AND CONDITIONS

NOTE: Thermal stripping of alloy wheels

- *Reduced rigidity of aluminum alloy*
- *Risk of breaks and irreparable damage to the rim*

→ Do not use thermal stripping procedures or heat treatment on alloy wheels

NOTE: Incorrect repair of alloy wheels

- *Reduced endurance strength*
- *Alloy wheel breaks*

→ Only repairs to the surface paint finish on alloy wheel are permitted

The alloy wheel is a highly stressed vehicle component which may be subjected to extreme loads during operation. The repair restrictions must be strictly observed in order to ensure safe operation and prevent any potential hazards.

Information

This repair method is a cost-effective repair that may have quality implications. To achieve the best repair result, always use the tool recommended by Porsche and attend the special training courses run by the tool/system suppliers.

The repair method combines paint repair methods and conventional painting methods.

When reconditioning alloy wheels, only repairs to damaged paintwork are permitted. Example: → Permissible damage , → Permissible damage

It is still imperative to avoid sanding down areas through to the base material.

Fig 1: Identifying Permissible Damage



Courtesy of PORSCHE CARS NORTH AMERICA, INC.

Fig 2: Identifying Permissible Damage



Courtesy of PORSCHE CARS NORTH AMERICA, INC.

WM 0760IN ALLOY WHEEL RECONDITIONING (ALL MODELS) > REPAIR RESTRICTIONS AND CONDITIONS > REPAIR RESTRICTIONS

- The base material of the alloy wheel must not be damaged. For example: → NON-permissible damage , → NON-permissible damage
- Repairs that affect the base material of the wheel (deposit-welding, filling and metal-cutting machining) → Prohibited machining operations are not permitted.
- There must be no signs of corrosion on the alloy wheel.
- It is imperative to avoid sanding down areas through to the base material.

Fig 1: Identifying Non-Permissible Damage



Courtesy of PORSCHE CARS NORTH AMERICA, INC.

Fig 2: Identifying Non-Permissible Damage



Courtesy of PORSCHE CARS NORTH AMERICA, INC.

Fig 3: Caution For Machining Operations



Courtesy of PORSCHE CARS NORTH AMERICA, INC.

The full repair description can be found in → "Paint Manual" section S 8.2 and G 8.2.

WM 503809 LOOSENING AND SECURING LOCK CARRIER (SERVICE POSITION) (ALL MODELS) > TOOLS

Designation	Type	Number	Description	
Guiding rods	VW tool	T10093		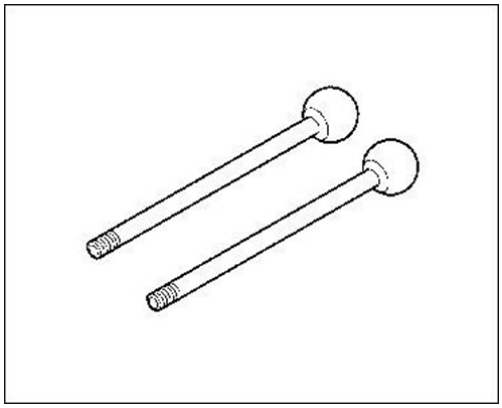

WM 503809 LOOSENING AND SECURING LOCK CARRIER (SERVICE POSITION) (ALL MODELS) > TECHNICAL VALUES

Location	Description	Type	Basic value	Tolerance 1	Tolerance 2
Transverse strut to body, top		Tightening torque	9.7 Nm (7.5 ftlb.)		
Transverse strut to body, side		Tightening torque	10 Nm (7.5 ftlb.)		
Support to lock carrier		Tightening torque	5 Nm (3.5 ftlb.)		
Wing strut to lock carrier		Tightening torque	9.7 Nm (7.5 ftlb.)		
Retaining strip to lock carrier	Screw	Tightening torque	9.7 Nm (7.5 ftlb.)		
Holder securing garage door opener control unit to lock support	Internal Torx screw, M6 x 22	Tightening torque	6 Nm (4.5 ftlb.)		
Headlight mounting to body	Hexagon socket head bolt, M6 x 30	Tightening torque	9 Nm (6.5 ftlb.)		
Carrier to body		Tightening torque	55 Nm (41 ftlb.)		

Screw-type clamps on intake and boost pressure lines		Tightening torque	5.5 Nm (4 ftlb.)		
Refrigerant line holder to dual clip for refrigerant lines	Tapping screw	Tightening torque	4.5 Nm (3.5 ftlb.)		
Fastening screw securing coolant pipe to cylinder head	M6 x 45, bottom/M6 x 12, top	Tightening torque	5 Nm (3.5 ftlb.)		

WM 503809 LOOSENING AND SECURING LOCK CARRIER (SERVICE POSITION) (ALL MODELS) > PRELIMINARY WORK

1. Remove front apron. → 631519 REMOVING AND INSTALLING FRONT APRON
2. Remove headlights. → 941519 REMOVING AND INSTALLING HEADLIGHTS
3. Remove air cleaner housing. → 242519 REMOVING AND INSTALLING AIR CLEANER HOUSING
4. Remove left headlight mounting. → 941419 REMOVING AND INSTALLING HEADLIGHT MOUNTING

WM 503809 LOOSENING AND SECURING LOCK CARRIER (SERVICE POSITION) (ALL MODELS) > LOOSENING LOCK CARRIER

Information

- The number of fastening screws, fixing clips, plug connections, holders and trim panels can vary depending on equipment.
- The illustrations for removing and installing the drive mechanism are shown only on one equipment variant and may differ from the actual equipment variant.
- Some steps must be carried out automatically.
- Some of the repair illustrations show only one side of the vehicle.

1. Disconnect battery ground strap. → 270619 REMOVING AND INSTALLING BATTERY
2. Remove engine cover.
3. Remove rubber seal **-4-** on feed-through element for pressure pipe.
4. Loosen screw-type clamp **-2-** used to secure the throttle-housing cover to the pressure pipe and pull cover off pressure pipe. → WM 243519 REMOVING AND INSTALLING THROTTLE-

HOUSING COVER (MACAN S, MACAN TURBO) .

5. Loosen clamp **-1-** and disconnect hose from pressure pipe.
6. Loosen clamp and disconnect hose **-6-** from pressure line.
7. Disconnect hose **-5-** from vacuum line for the ambient air valves.
8. Release and disconnect electric plug connection **-3-** on the pressure sensor.

Fig 1: Identifying Lines And Pressure Pipe

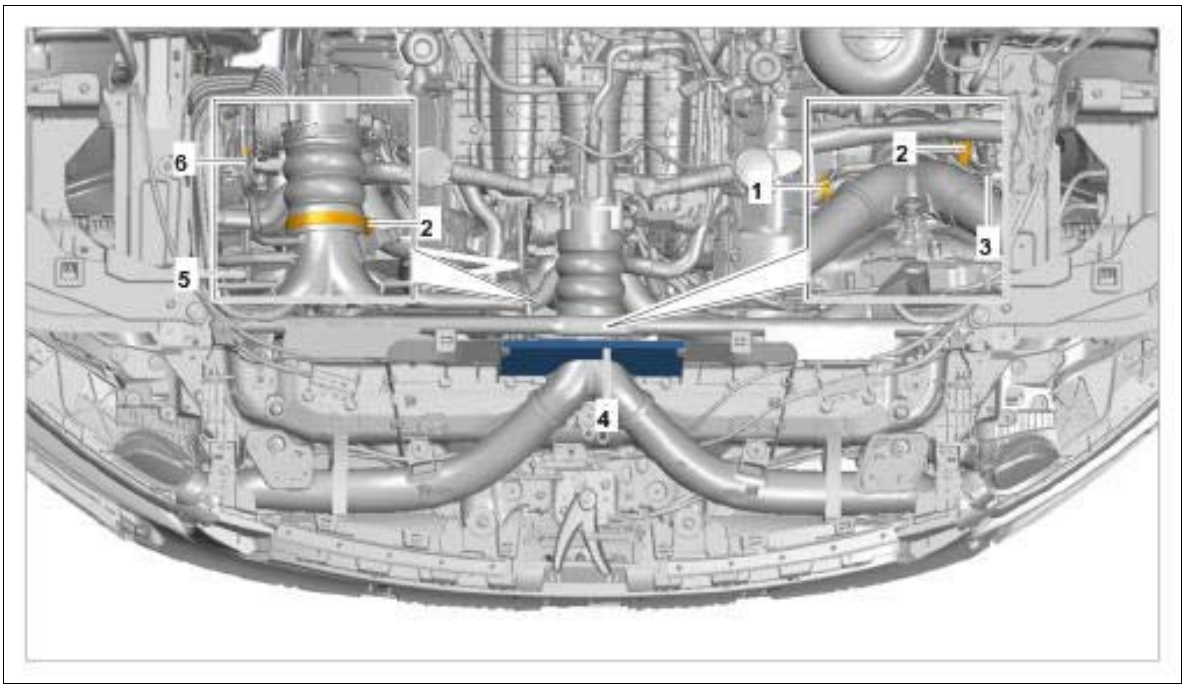

Courtesy of PORSCHE CARS NORTH AMERICA, INC.

9. Release and disconnect coolant vent line **-2-** on the bleeder valve **-1-** .
10. Unclip and disconnect operating cable **-3-** for bonnet release from the bracket.
11. Unscrew front fastening screws **-4-** on the right headlight mounting. → 941419 REMOVING AND INSTALLING HEADLIGHT MOUNTING .

Fig 2: Identifying Vent Line, Operating Cable And Headlight Mounting Point

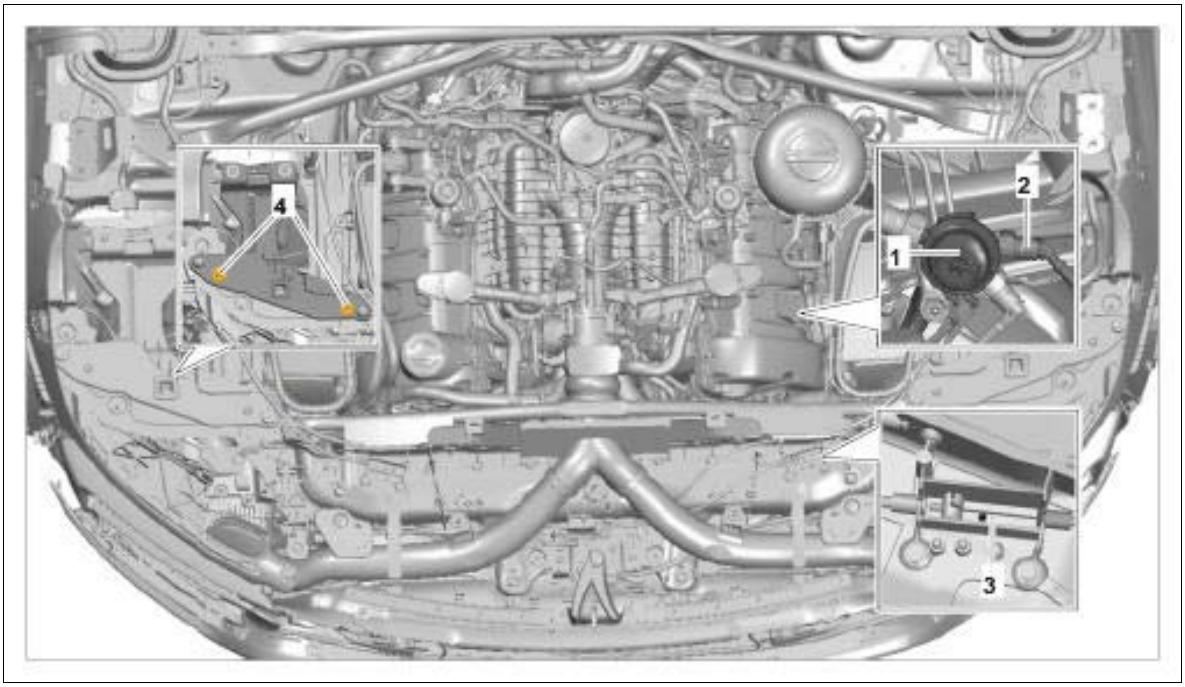

Courtesy of PORSCHE CARS NORTH AMERICA, INC.

12. Release and disconnect electric plug connections **-1-** for front wire harness and unclip wire harness at the body. → WM 971519 REMOVING AND INSTALLING FRONT WIRE HARNESS (ALL MODELS) .

13. Unscrew side fastening screws **-2-** on the front retaining strips.

Fig 3: Identifying Retaining Strip And Wire Harness

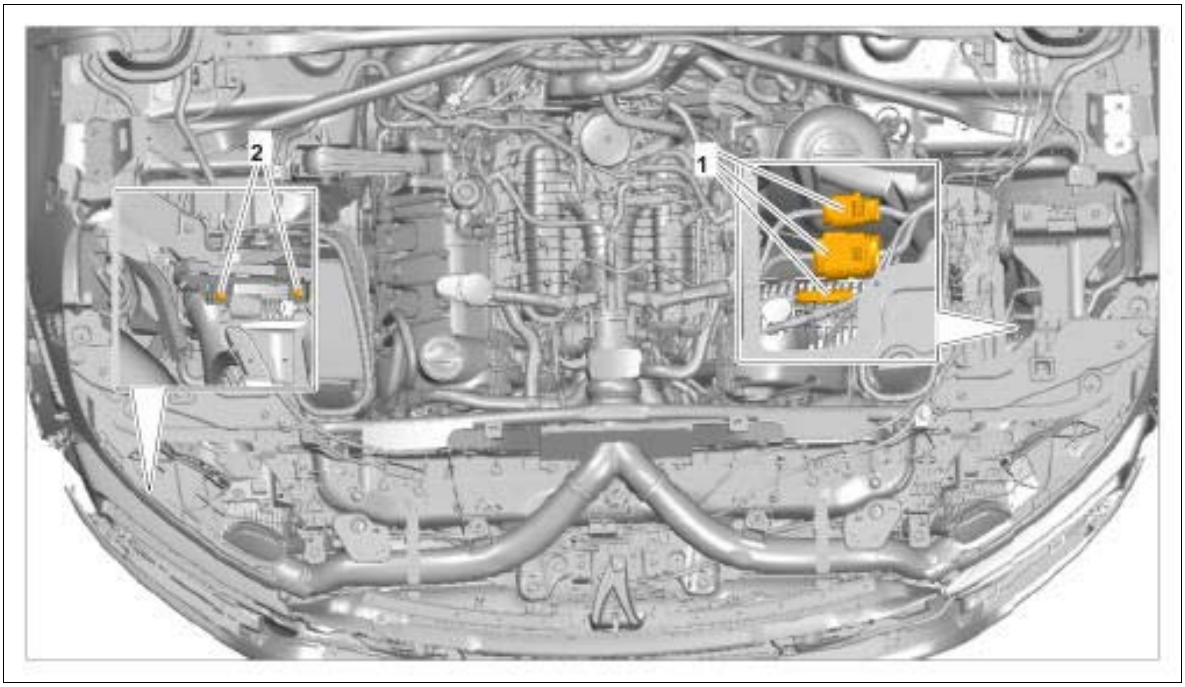

Courtesy of PORSCHE CARS NORTH AMERICA, INC.

14. Apply markings **-6-** to ensure correct installation position of lock carrier with respect to the body **-1-** during re-installation.

15. Remove upper transverse strut **-5-** for lock carrier on the body **-1-** .

    1. 15.1. Unscrew top fastening screws **-3-** .

    2. 15.2. Unscrew fastening screws **-2-** at the sides.

16. Unscrew top fastening screws **-4-** on both sides.

    Marking, threaded joint on transverse strut

17. Swivel side parts **-4-** of the air guides at the top and bottom inwards.

18. Remove control unit for garage door opener. → 967919 REMOVING AND INSTALLING CONTROL UNIT FOR GARAGE DOOR OPENER

19. Unscrew fastening screw securing holder for control unit for garage door opener to lock support and remove holder.

20. Unscrew outer top fastening screw **-1-** for the bracket at the threaded bore.

21. Screw guiding rods **-3-** into the threaded bore. Tools used: Guiding rods T10093

22. Unscrew the other fastening screws **-1-** securing the bracket to the body.

    Fig 4: Identifying Bracket Screws

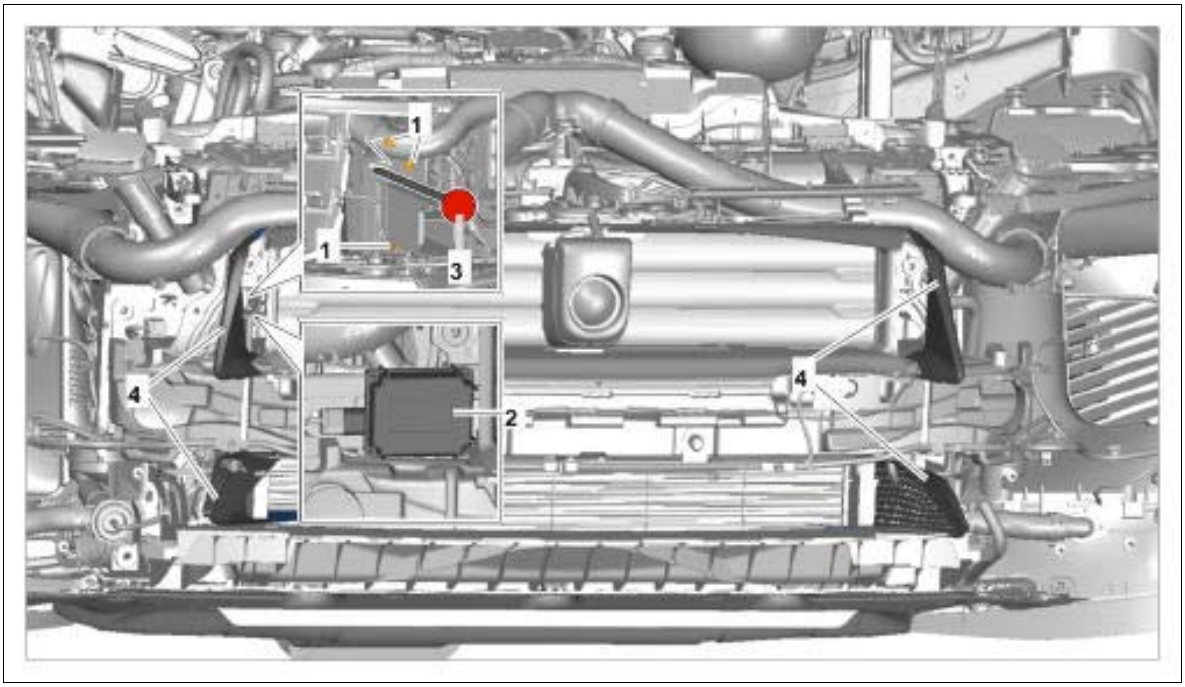

Courtesy of PORSCHE CARS NORTH AMERICA, INC.

23. Unscrew fastening screws **-1-** on supports at the lock carrier.

24. Disconnect charge air hose **-3-** at the charge-air cooler.

25. Disconnect hose from the recirculating air valve **-2-** on the intake manifold.

26. Release electric plug connection **-4-** at the coolant temperature sensor and disconnect it.

27. Release and disconnect electric plug connections for the electric fans **-5-** and unclip the relevant wire harness at the lock carrier.

Fig 5: Identifying Longitudinal Strut, Charge Air Pipe And Suction Hose

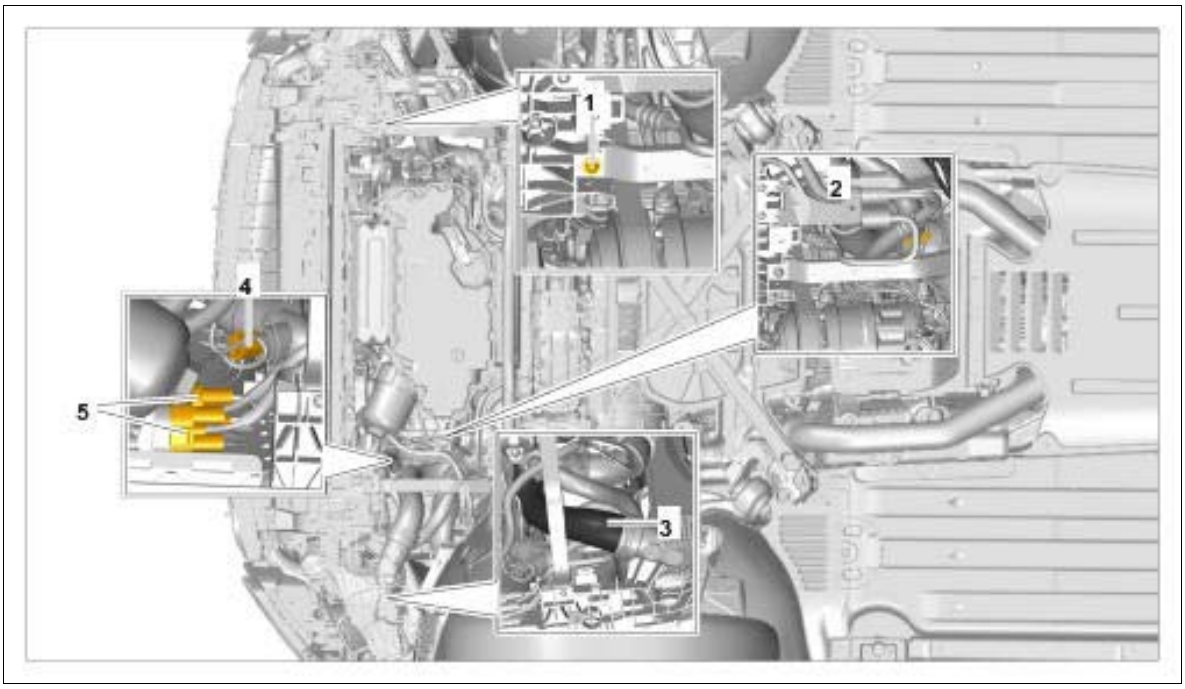

Courtesy of PORSCHE CARS NORTH AMERICA, INC.

28. Unclip wire harness **-4-** at the lock carrier.

29. Unscrew fastening screw **-3-** on the bracket for refrigerant lines.

30. Release and disconnect electric plug connections **-2-** for airbag sensors.

31. Unclip hose for headlight cleaning system **-1-** at the lock carrier.

32. Unscrew fastening screws **-5-** for coolant line **-6-** on the timing-case cover.

Fig 6: Identifying Wire Harness, Coolant And Refrigerant Line

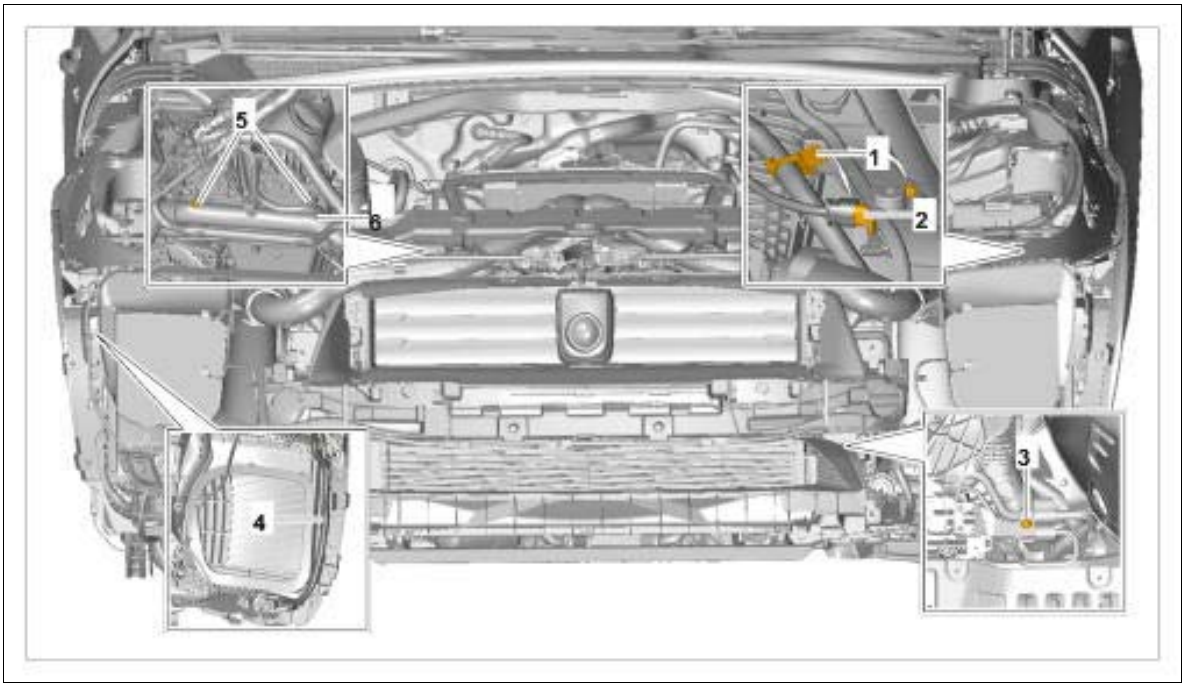

Courtesy of PORSCHE CARS NORTH AMERICA, INC.

33. Pull the lock carrier forward.

    1. 33.1. Pull lock carrier on transverse strut forward. When moving the lock carrier, make sure that the hoses and lines are not overstrained. Disconnect them beforehand if necessary.

    2. 33.2. The maximum distance between the lock carrier and front bracket must not exceed 80 mm on both sides. Otherwise, the hydraulic and refrigerant lines will be overstrained.

WM 503809 LOOSENING AND SECURING LOCK CARRIER (SERVICE POSITION) (ALL MODELS) > SECURING LOCK CARRIER

Information

Check that all fixing clips are positioned fully and correctly.

Check that the fixing clips are not bent or broken.

Replace damaged or missing clips with new ones.

The lock carrier is secured in reverse order. Pay particular attention to the following:

1. Tighten fastening screws for coolant line to the specified torque. **Tightening torque 5 Nm (3.5 ftlb.)**

2. Tighten fastening screw securing refrigerant line bracket to dual clip to the specified torque. **Tightening torque 4.5 Nm (3.5 ftlb.)**

3. Tighten fastening screws securing supports to lock carrier to the specified torque. **Tightening torque 5 Nm (3.5 ftlb.)**
4. Tighten fastening screws securing bracket to body to the specified torque. **Tightening torque 55 Nm (41 ftlb.)**
5. Tighten fastening screw on holder for garage door opener control unit to the specified torque. **Tightening torque 6 Nm (4.5 ftlb.)**
6. Tighten top fastening screws securing wing strut to lock carrier to the specified torque. **Tightening torque 9.7 Nm (7.5 ftlb.)**
7. Tighten side fastening screws securing transverse strut to body to the specified torque. **Tightening torque 10 Nm (7.5 ftlb.)**
8. Tighten top fastening screws securing transverse strut to body to the specified torque. **Tightening torque 9.7 Nm (7.5 ftlb.)**
9. Tighten side fastening screws on the front retaining strips to the specified torque. **Tightening torque 9.7 Nm (7.5 ftlb.)**
10. Tighten fastening screws securing headlight mounting to body to the specified torque. **Tightening torque 9 Nm (6.5 ftlb.)**
11. Tighten screw-type clamp securing throttle-housing cover to pressure pipe to the specified torque. **Tightening torque 5.5 Nm (4 ftlb.)**

WM 503809 LOOSENING AND SECURING LOCK CARRIER (SERVICE POSITION) (ALL MODELS) > SUBSEQUENT WORK

1. Install left headlight mounting. → INSTALLING HEADLIGHT MOUNTING
2. Install air cleaner housing. → INSTALLING AIR CLEANER HOUSING
3. Install headlights. → INSTALLING HEADLIGHTS
4. Install front apron. → INSTALLING FRONT APRON

WM 503819 REMOVING AND INSTALLING LOCK CARRIER (ALL MODELS) > TECHNICAL VALUES

Location	Description	Type	Basic value	Tolerance 1	Tolerance 2
Holder securing garage door opener control unit to lock support	Internal Torx screw, M6 x 22	Tightening torque	6 Nm (4.5 ftlb.)		
Transverse strut to body, top		Tightening torque	9.7 Nm (7.5 ftlb.)		

Transverse strut to body, side		Tightening torque	10 Nm (7.5 ftlb.)		
Support to lock carrier		Tightening torque	5 Nm (3.5 ftlb.)		
Wing strut to lock carrier		Tightening torque	9.7 Nm (7.5 ftlb.)		
Retaining strip to lock carrier	Screw	Tightening torque	9.7 Nm (7.5 ftlb.)		
Headlight mounting to body	Hexagon socket head bolt, M6 x 30	Tightening torque	9 Nm (6.5 ftlb.)		
Carrier to body		Tightening torque	55 Nm (41 ftlb.)		
Screw-type clamps on intake and boost pressure lines		Tightening torque	5.5 Nm (4 ftlb.)		
Refrigerant lines to condenser connection point	M6 x 25	Tightening torque	8 Nm (6 ftlb.)		

WM 503819 REMOVING AND INSTALLING LOCK CARRIER (ALL MODELS) > PRELIMINARY WORK

1. Remove front apron. → 631519 REMOVING AND INSTALLING FRONT APRON
2. Remove headlights. → 941519 REMOVING AND INSTALLING HEADLIGHTS
3. Remove air cleaner housing. → 242519 REMOVING AND INSTALLING AIR CLEANER HOUSING
4. Remove left headlight mounting. → 941419 REMOVING AND INSTALLING HEADLIGHT MOUNTING
5. Drain coolant. → 193817 DRAINING AND FILLING COOLANT
6. Drain refrigerant. → 870317 DRAINING AND FILLING REFRIGERANT

WM 503819 REMOVING AND INSTALLING LOCK CARRIER (ALL MODELS) > REMOVING LOCK CARRIER

Information

- The number of fastening screws, fixing clips, plug connections, holders and trim panels can vary depending on equipment.

- The illustrations for removing and installing the drive mechanism are shown only on one equipment variant and may differ from the actual equipment variant.
- Some steps must be carried out automatically.
- Some of the repair illustrations show only one side of the vehicle.

1. Disconnect battery ground strap. → 270619 REMOVING AND INSTALLING BATTERY
2. Remove engine cover.
3. Remove rubber seal **-4-** on feed-through element for pressure pipe.
4. Loosen hose clamp **-2-** securing throttle-housing cover to pressure pipe and remove cover from pressure pipe. → WM 243519 REMOVING AND INSTALLING THROTTLE-HOUSING COVER (MACAN S, MACAN TURBO) .
5. Loosen clamp and disconnect hose **-1-** from pressure pipe.
6. Loosen clamp and disconnect hose **-6-** from pressure line.
7. Disconnect hose **-5-** from vacuum line for the ambient air valves.
8. Release and disconnect electric plug connection **-3-** on the pressure sensor.

   Fig 1: Identifying Lines And Pressure Pipe

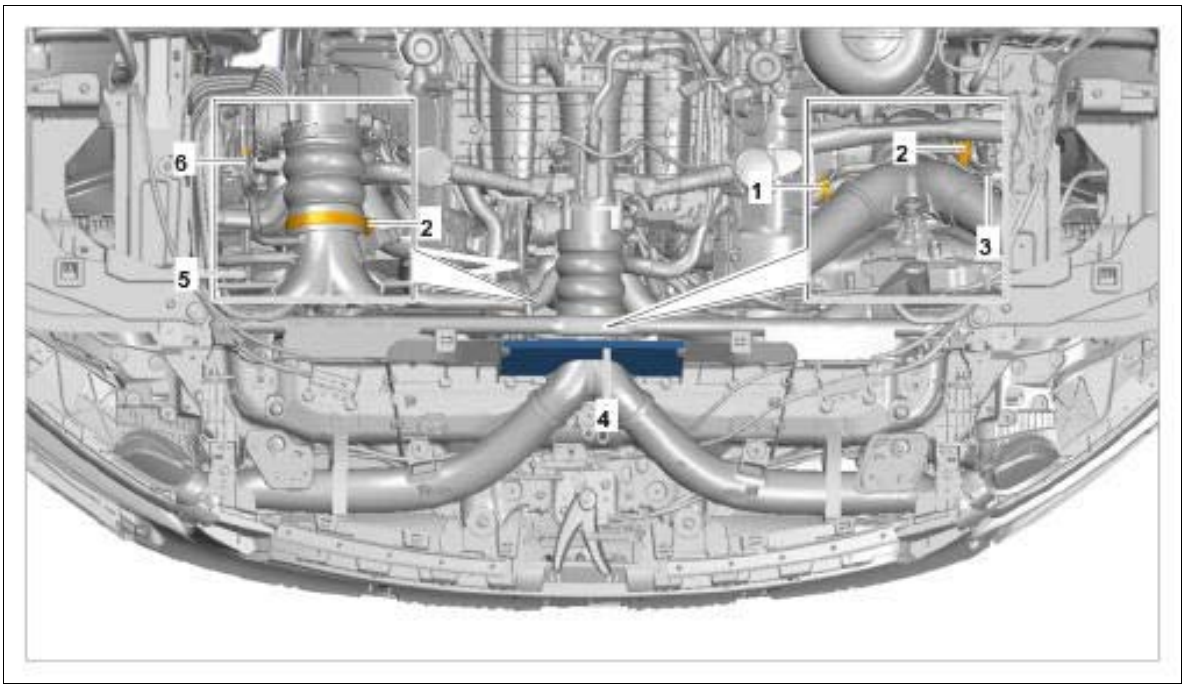

Courtesy of PORSCHE CARS NORTH AMERICA, INC.

9. Release and disconnect coolant vent line **-2-** on the bleeder valve **-1-** .
10. Unclip and disconnect operating cable **-3-** for bonnet release from the bracket.
11. Unscrew front fastening screws **-4-** on the mounting for the right headlight.

Fig 2: Identifying Vent Line, Operating Cable And Headlight Mounting Point

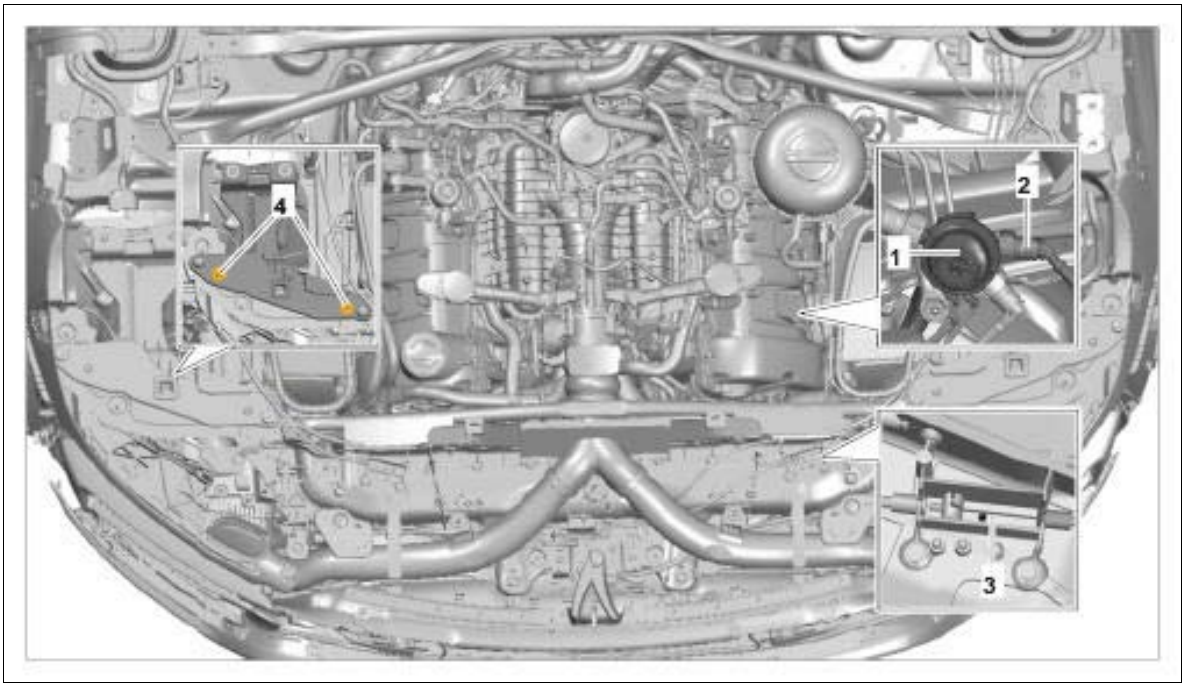

Courtesy of PORSCHE CARS NORTH AMERICA, INC.

12. Release and disconnect electric plug connections **-1-** for the front wire harness, unclip wire harness at the body and secure it to the lock carrier. → WM 971519 REMOVING AND INSTALLING FRONT WIRE HARNESS (ALL MODELS) .

13. Unscrew side fastening screws **-2-** for the front retaining strips.

Fig 3: Identifying Retaining Strip And Wire Harness

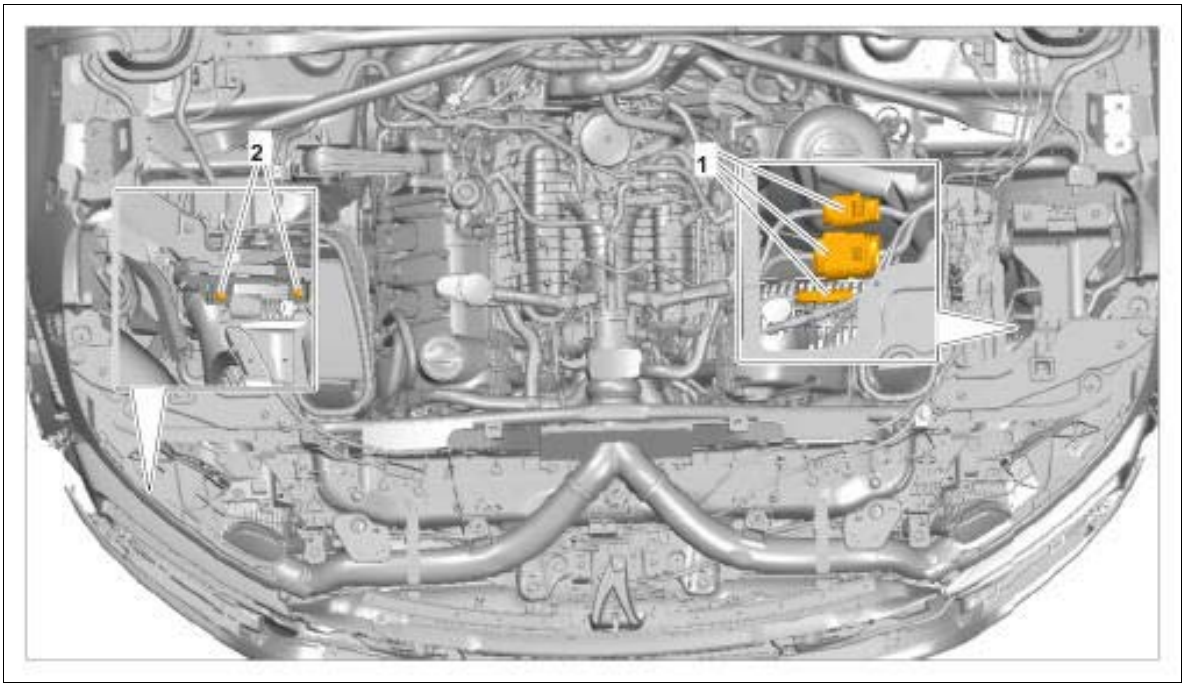

Courtesy of PORSCHE CARS NORTH AMERICA, INC.

14. Remove upper transverse strut for lock carrier at the body **-1-** .
    1. 14.1. Unscrew fastening screws **-3-** at the top.
    2. 14.2. Unscrew fastening screws **-2-** at the sides.
15. Unscrew top fastening screws **-4-** for the lock carrier.

Fig 4: Identifying Screws Of Lock Carrier

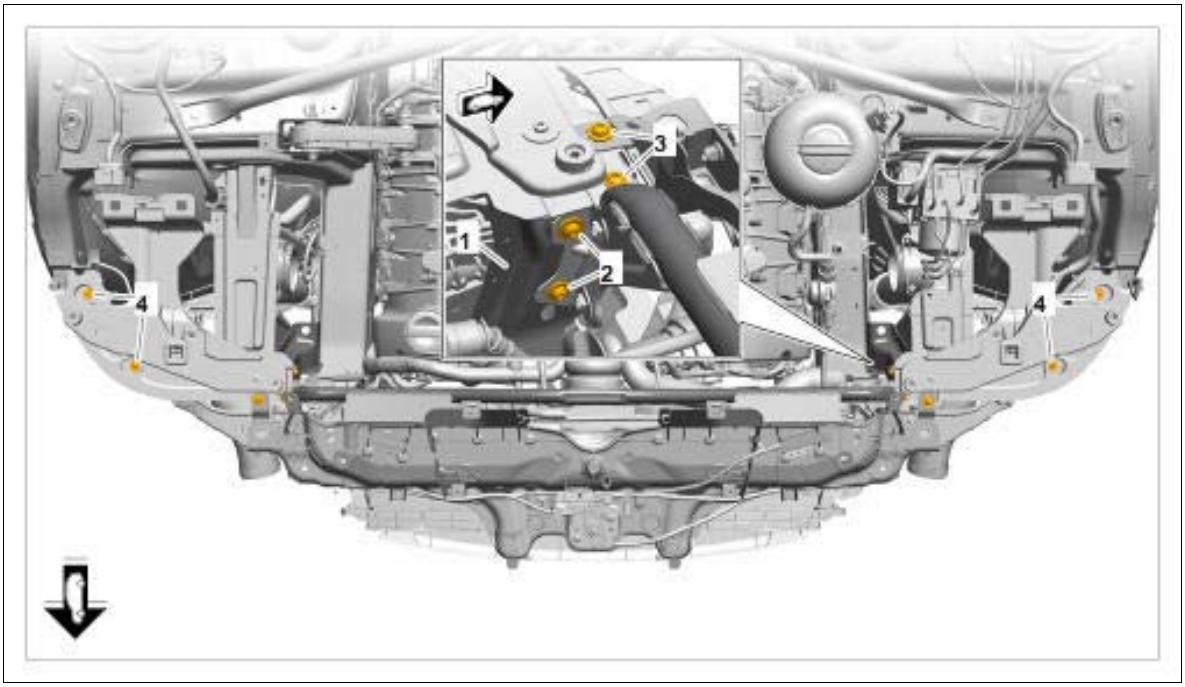

Courtesy of PORSCHE CARS NORTH AMERICA, INC.

16. Swivel side sections of the air guides **-4-** inwards.
17. Remove control unit for garage door opener **-2-** . → 967919 REMOVING AND INSTALLING CONTROL UNIT FOR GARAGE DOOR OPENER
18. Unscrew fastening screw for bracket for garage door opener control unit and remove bracket.

Fig 5: Identifying Air Guide And Garage Door Opener

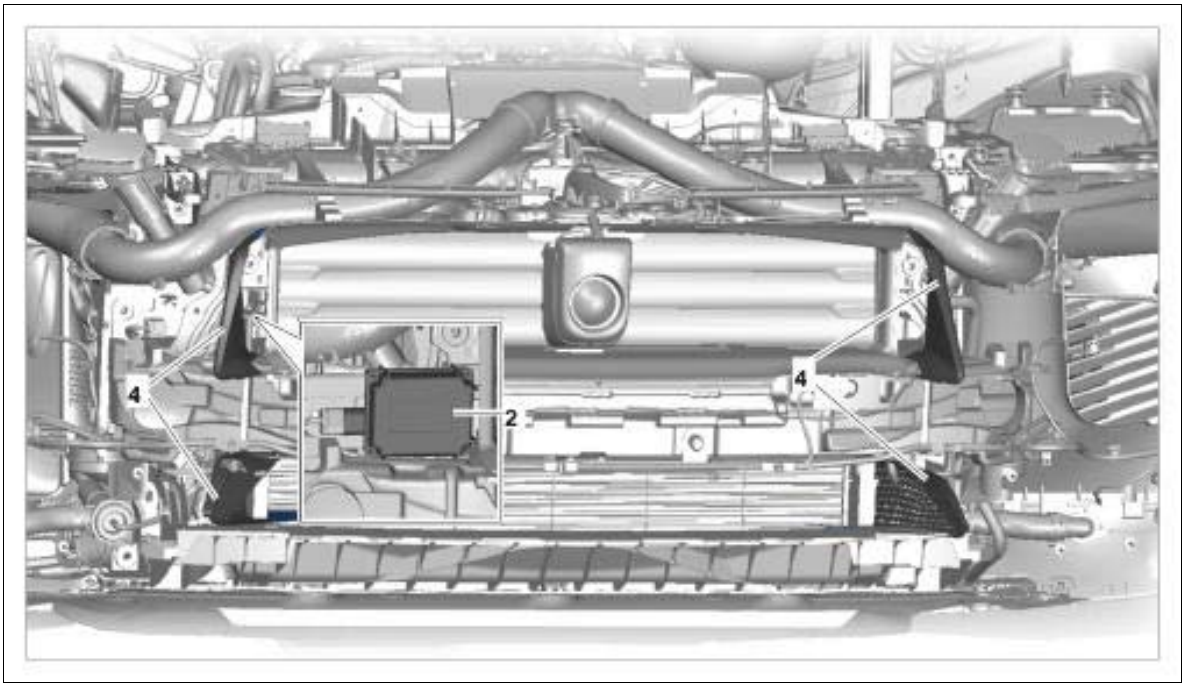

Courtesy of PORSCHE CARS NORTH AMERICA, INC.

19. Unscrew fastening screws **-1-** for supports at the lock carrier.
20. Disconnect charge air hose **-3-** at the charge-air cooler.
21. Disconnect hose from the recirculating air valve **-2-** on the intake manifold.
22. Release and disconnect electric plug connection **-4-** at the coolant temperature sensor.
23. Release and disconnect electric plug connections for the electric fans **-5-** and unclip the relevant wire harness at the lock carrier.

Fig 6: Identifying Longitudinal Strut, Charge Air Pipe And Suction Hose

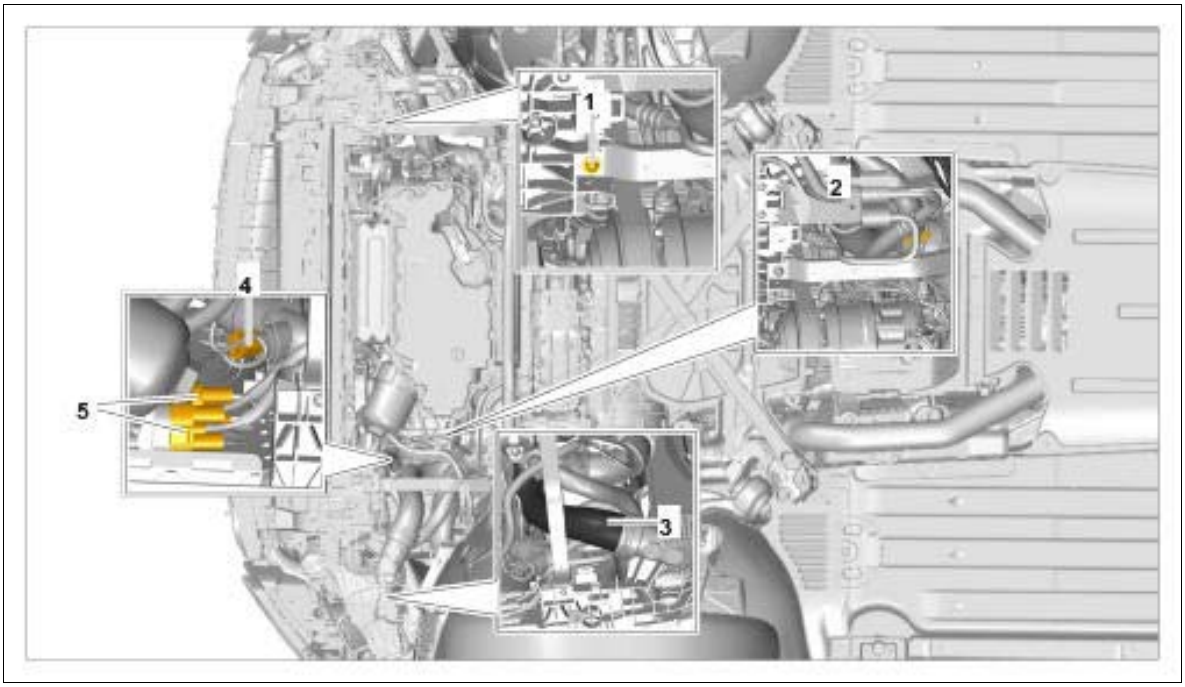

Courtesy of PORSCHE CARS NORTH AMERICA, INC.

24. Unclip wire harness **-4-** at the lock carrier and remove electric connector **-5-** on the lock carrier.

25. Disconnect refrigerant lines **-3-** at the connection point to the condenser and close off openings using stoppers.

26. Remove front air guides **-6-** for the charge-air cooler. → 214319 REMOVING AND INSTALLING CHARGE-AIR COOLER

27. Release and disconnect electric plug connections **-2-** for airbag sensors.

28. Disconnect hose **-1-** for headlight cleaning system at the connection point **-7-** , unclip at the lock carrier and guide out.

Fig 7: Removing Wire Harness, Coolant And Refrigerant Lines

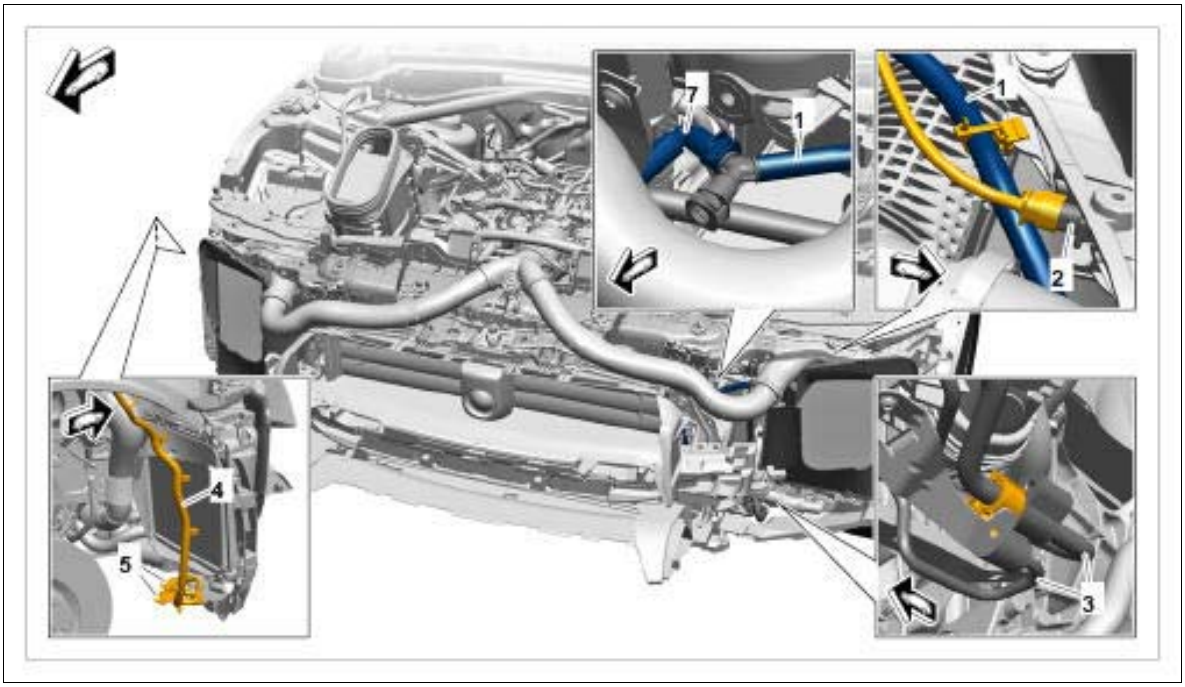

Courtesy of PORSCHE CARS NORTH AMERICA, INC.

29. Remove upper coolant hose **-1-** at the radiator.
30. Remove lower coolant hose **-2-** at the radiator.
31. Release and disconnect connections for the transmission oil lines **-3-** and close off openings using stoppers.

Fig 8: Removing Coolant Hoses And Transmission Oil Lines

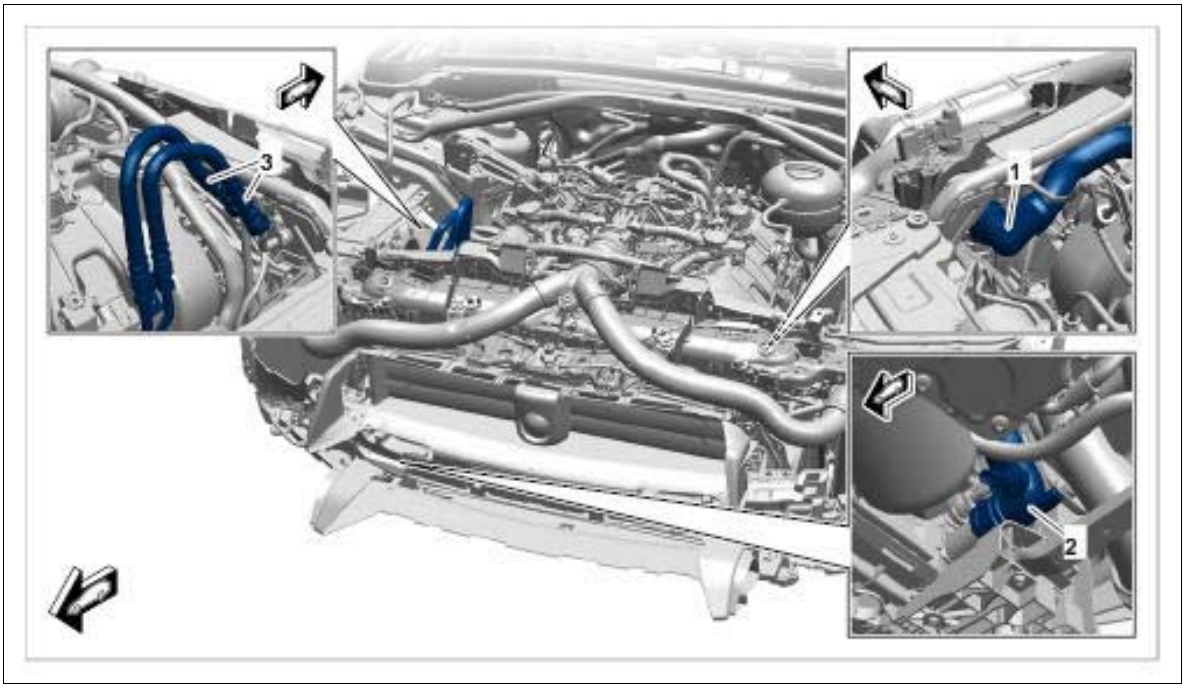

Courtesy of PORSCHE CARS NORTH AMERICA, INC.

32. Secure lock carrier from falling down, unscrew fastening screws **-1, 2-** and remove lock carrier.

Fig 9: Identifying Screws For Lock Carrier

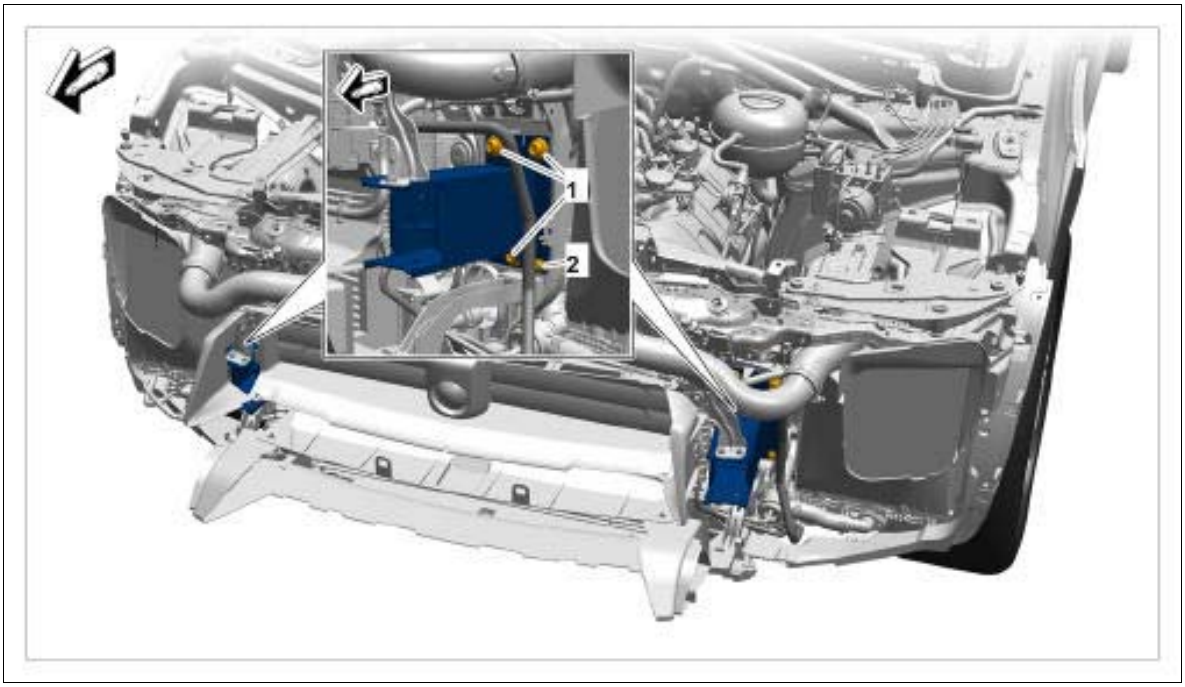

Courtesy of PORSCHE CARS NORTH AMERICA, INC.

WM 503819 REMOVING AND INSTALLING LOCK CARRIER (ALL MODELS) > INSTALLING LOCK CARRIER

Installation is performed in reverse order. Pay particular attention to the following:

1. Tighten fastening screws securing bracket to body to the specified torque. **Tightening torque 55 Nm (41 ftlb.)**
2. Replace sealing rings on the refrigerant lines and tighten fastening screws for the refrigerant lines at the connection point to the condenser to the specified torque. **Tightening torque 8 Nm (6 ftlb.)**
3. Tighten fastening screws securing supports to lock carrier to the specified torque. **Tightening torque 5 Nm (3.5 ftlb.)**
4. Tighten fastening screw on holder for garage door opener control unit to the specified torque. **Tightening torque 6 Nm (4.5 ftlb.)**
5. Tighten top fastening screws securing wing strut to lock carrier to the specified torque. **Tightening torque 9.7 Nm (7.5 ftlb.)**
6. Tighten top fastening screws securing transverse strut to body to the specified torque. **Tightening torque 9.7 Nm (7.5 ftlb.)**
7. Tighten side fastening screws securing transverse strut to body to the specified torque. **Tightening torque 10 Nm (7.5 ftlb.)**

8. Tighten side fastening screws on the front retaining strips to the specified torque. **Tightening torque 9.7 Nm (7.5 ftlb.)**
9. Tighten fastening screws securing headlight mounting to body to the specified torque. **Tightening torque 9 Nm (6.5 ftlb.)**
10. Tighten screw-type clamp securing throttle-housing cover to pressure pipe to the specified torque. **Tightening torque 5.5 Nm (4 ftlb.)**

WM 503819 REMOVING AND INSTALLING LOCK CARRIER (ALL MODELS) > SUBSEQUENT WORK

1. Fill in refrigerant. → 870317 DRAINING AND FILLING REFRIGERANT
2. Fill in coolant. → FILLING COOLANT
3. Check and top up ATF. → 370235 CHECKING AND TOPPING UP ATF
4. Install left headlight mounting. → INSTALLING HEADLIGHT MOUNTING
5. Install air cleaner housing. → INSTALLING AIR CLEANER HOUSING
6. Install headlights. → INSTALLING HEADLIGHTS
7. Install front apron. → INSTALLING FRONT APRON

WM 503819 REMOVING AND INSTALLING LOCK CARRIER SIDE SECTION AT THE LEFT (ALL MODELS) > TECHNICAL VALUES

Location	Description	Type	Basic value	Tolerance 1	Tolerance 2
Support to lock carrier		Tightening torque	5 Nm (3.5 ftlb.)		
Support to suspension subframe		Tightening torque	23 Nm (17 ftlb.)		
Lock carrier to radiator		Tightening torque	4.5 Nm (3 ftlb.)		
Radiator bracket to lock carrier		Tightening torque	4.5 Nm (3 ftlb.)		
Upper part of lock carrier to lock carrier		Tightening torque	9.7 Nm (7.5 ftlb.)		
Wing strut to lock carrier		Tightening torque	9.7 Nm (7.5 ftlb.)		

Refrigerant line holder to dual clip for refrigerant lines	Tapping screw	Tightening torque	4.5 Nm (3.5 ftlb.)		
Refrigerant line holder to lock carrier		Tightening torque	2.5 Nm (2 ftlb.)		

WM 503819 REMOVING AND INSTALLING LOCK CARRIER SIDE SECTION AT THE LEFT (ALL MODELS) > PRELIMINARY WORK

1. Drain refrigerant from the air-conditioning system. → 870317 DRAINING AND FILLING REFRIGERANT
2. Remove front bumper. → 631019 REMOVING AND INSTALLING FRONT BUMPER
3. Remove front left retaining strip. → 631719 REMOVING AND INSTALLING FRONT RETAINING STRIP
4. Remove headlight at the left. → 941519 REMOVING AND INSTALLING HEADLIGHTS
5. Remove front carrier at the left. → 633319 REMOVING AND INSTALLING FRONT CARRIER
6. Remove pedestrian protection. → 697019 REMOVING AND INSTALLING PEDESTRIAN PROTECTION

WM 503819 REMOVING AND INSTALLING LOCK CARRIER SIDE SECTION AT THE LEFT (ALL MODELS) > REMOVING LOCK CARRIER SIDE SECTION AT THE LEFT

1. Remove the two air guides for the charge-air cooler, remove charge-air cooler at the lock carrier side section and secure it in the wheel housing. → 214319 REMOVING AND INSTALLING CHARGE-AIR COOLER
2. Pull vacuum line **-1-** off the ambient air valve and unclip from the fixing clips **-2-** at the lock carrier side section.
3. Remove left headlight mounting. → 941419 REMOVING AND INSTALLING HEADLIGHT MOUNTING
4. Disconnect electric plug connection on the airbag sensor **-3-** .
5. Disconnect electric plug connections **-4-** for front-end wire harness, unclip at the lock carrier and body and guide in through the lock carrier. → 971619 REMOVING AND INSTALLING FRONT-END WIRE HARNESS
6. Disconnect section of hose for headlight cleaning system **-5-** at the Y-piece, detach it at the lock carrier and remove it from the work area. → 92771903 REMOVING AND INSTALLING HOSE FOR HEADLIGHT CLEANING SYSTEM - section from wing connection point to left spray nozzle

Fig 1: Removing Electric Plug Connections And Vacuum Line



Courtesy of PORSCHE CARS NORTH AMERICA, INC.

7. Unscrew fastening screws for refrigerant lines **-1-** .
8. Disconnect refrigerant lines **-1-** at the connection point and close off openings using stoppers.
9. Unscrew fastening screws **-2, 3-** and remove bracket **-4-** at the lock carrier.
10. Unscrew fastening screw **-5-** , screw off fastening nut **-6-** and remove the left support **-7-** .
11. Unscrew fastening screw **-8-** .

Fig 2: Installing Refrigerant Lines

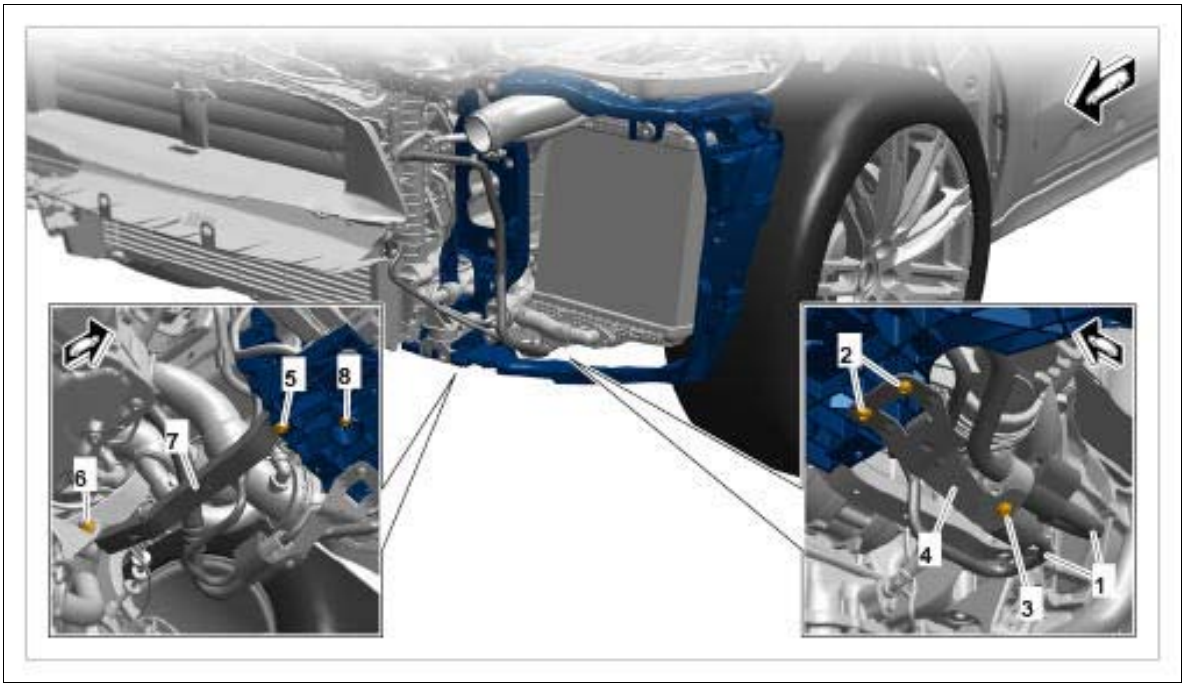

Courtesy of PORSCHE CARS NORTH AMERICA, INC.

12. Unscrew fastening screw **-1-** .
13. Support the radiator from below using a jack.
14. Unscrew fastening screws **-2-** .
15. Unscrew fastening screws **-3-** .
16. Carefully pull the radiator **-4-** forward, unclip holder **-5-** on the lock carrier side section **-6-** and carefully remove lock carrier side section **-6-** .

Fig 3: Pulling Radiator

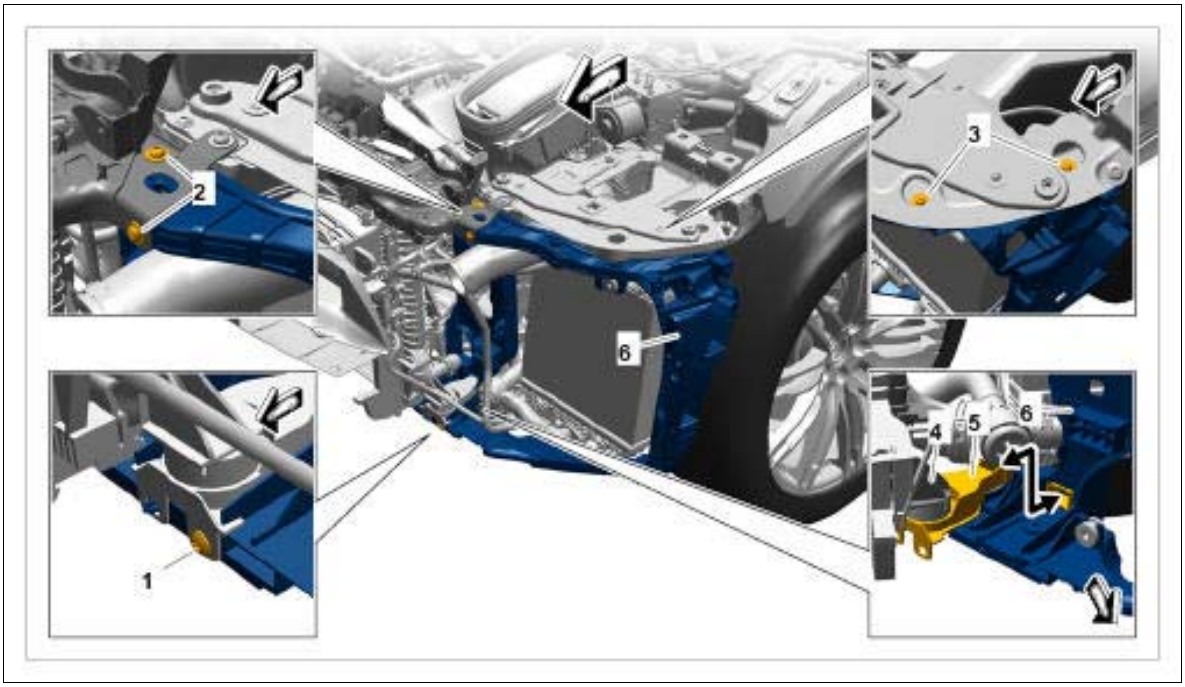

Courtesy of PORSCHE CARS NORTH AMERICA, INC.

WM 503819 REMOVING AND INSTALLING LOCK CARRIER SIDE SECTION AT THE LEFT (ALL MODELS) > INSTALLING LOCK CARRIER SIDE SECTION AT THE LEFT

Installation is performed in reverse order. Pay particular attention to the following:

1. Tighten fastening screws securing wing strut to lock carrier to the specified torque. **Tightening torque 9.7 Nm (7.5 ftlb.)**
2. Tighten fastening screws securing upper part of lock carrier to lock carrier to the specified torque. **Tightening torque 9.7 Nm (7.5 ftlb.)**
3. Tighten fastening screws securing radiator bracket to lock carrier to the specified torque. **Tightening torque 4.5 Nm (3 ftlb.)**
4. Tighten fastening screws securing refrigerant line holder to lock carrier to the specified torque. **Tightening torque 2.5 Nm (2 ftlb.)**
5. Tighten fastening screw securing refrigerant line holder to dual clip for refrigerant lines to the specified torque. **Tightening torque 4.5 Nm (3.5 ftlb.)**
6. Tighten fastening nut securing support to chassis subframe to the specified torque. **Tightening torque 23 Nm (17 ftlb.)**
7. Tighten fastening screw securing support to lock carrier to the specified torque. **Tightening torque 5 Nm (3.5 ftlb.)**
8. Tighten fastening screw securing lock carrier to radiator to the specified torque. **Tightening torque 4.5 Nm (3 ftlb.)**

WM 503819 REMOVING AND INSTALLING LOCK CARRIER SIDE SECTION AT THE LEFT (ALL MODELS) > SUBSEQUENT WORK

1. Install pedestrian protection. → INSTALLING PEDESTRIAN PROTECTION
2. Install front carrier at the left. → INSTALLING FRONT CARRIER
3. Install left headlight. → INSTALLING HEADLIGHTS
4. Install front left retaining strip. → INSTALLING FRONT RETAINING STRIP
5. Install front bumper. → INSTALLING FRONT BUMPER
6. Fill in refrigerant for air conditioning system. → 870317 DRAINING AND FILLING REFRIGERANT

WM 503819 REMOVING AND INSTALLING LOCK CARRIER SIDE SECTION AT THE RIGHT (ALL MODELS) > TECHNICAL VALUES

Location	Description	Type	Basic value	Tolerance 1	Tolerance 2
Support to lock carrier		Tightening torque	5 Nm (3.5 ftlb.)		
Support to suspension subframe		Tightening torque	23 Nm (17 ftlb.)		
Lock carrier to radiator		Tightening torque	4.5 Nm (3 ftlb.)		
Radiator bracket to lock carrier		Tightening torque	4.5 Nm (3 ftlb.)		
Upper part of lock carrier to lock carrier		Tightening torque	9.7 Nm (7.5 ftlb.)		
Wing strut to lock carrier		Tightening torque	9.7 Nm (7.5 ftlb.)		

WM 503819 REMOVING AND INSTALLING LOCK CARRIER SIDE SECTION AT THE RIGHT (ALL MODELS) > PRELIMINARY WORK

1. Remove front bumper. → 631019 REMOVING AND INSTALLING FRONT BUMPER
2. Remove main headlight at the right. → 941519 REMOVING AND INSTALLING HEADLIGHTS
3. Remove front right retaining strip. → 631719 REMOVING AND INSTALLING FRONT

RETAINING STRIP

4. Remove front carrier at the right. → 633319 REMOVING AND INSTALLING FRONT CARRIER
5. Remove pedestrian protection. → 697019 REMOVING AND INSTALLING PEDESTRIAN PROTECTION

WM 503819 REMOVING AND INSTALLING LOCK CARRIER SIDE SECTION AT THE RIGHT (ALL MODELS) > REMOVING LOCK CARRIER SIDE SECTION AT THE RIGHT

1. Remove the two air guides for the charge-air cooler, remove charge-air cooler at the lock carrier side section and secure it in the wheel housing. → 214319 REMOVING AND INSTALLING CHARGE-AIR COOLER
2. Unclip wire harness **-1-** at the lock carrier side section and remove it from the work area.
3. Disconnect electric plug connection on the airbag sensor **-2-** .
4. Disconnect vacuum line **-3-** from the ambient air valve and unclip it on the lock carrier side section.
5. Unclip wire harness **-4-** on the lock carrier side section.

Fig 1: Removing Vacuum Line And Wire Harness On Lock Carrier Side Section

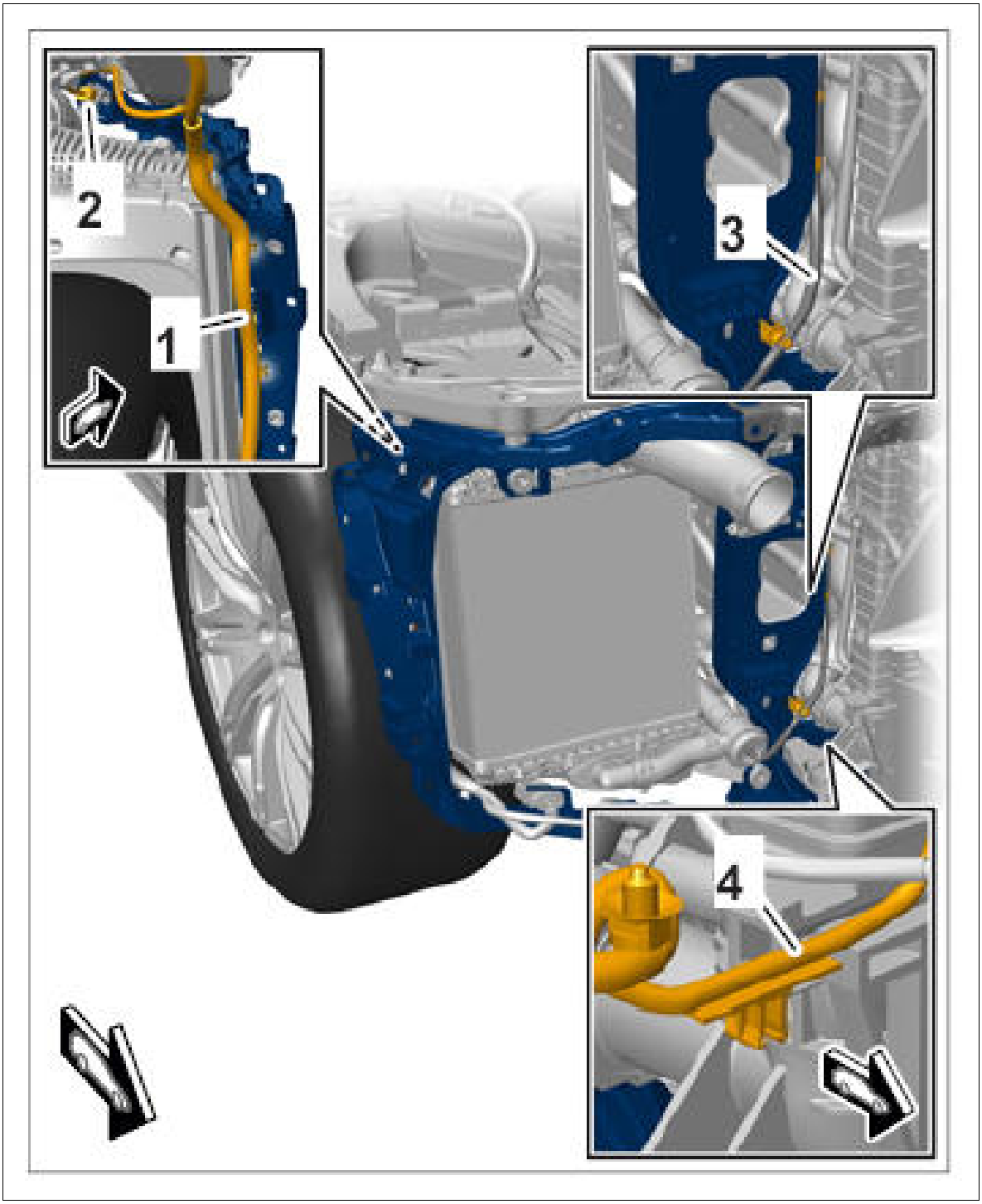

Courtesy of PORSCHE CARS NORTH AMERICA, INC.

6. Unscrew fastening screw **-1-** , screw off fastening nut **-2-** and remove the right support **-3-** .
7. Unscrew fastening screw **-4-** .
8. Unscrew fastening screw **-5-** .
9. Support the radiator from below using a jack.
10. Unscrew fastening screws **-6-** .

11. Unscrew fastening screws **-7-** .

Fig 2: Removing Screws Of Lock Carrier Side Section

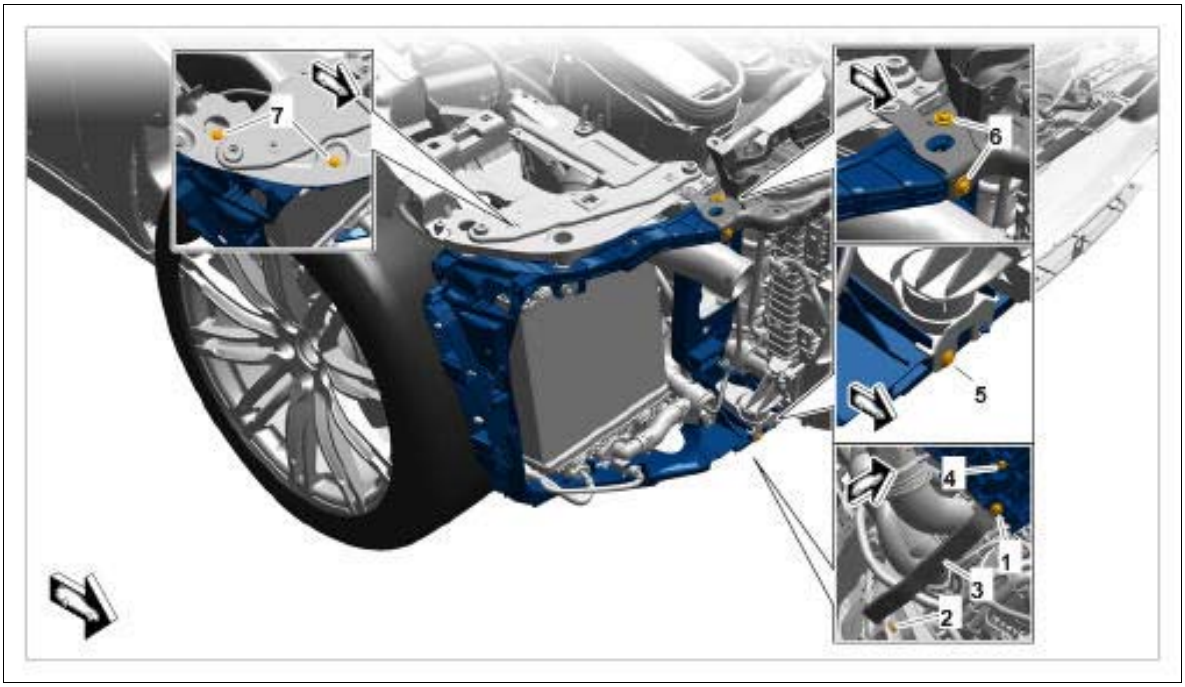

Courtesy of PORSCHE CARS NORTH AMERICA, INC.

12. Carefully pull the radiator **-1-** forward, unclip holder **-2-** on the lock carrier side section **-3-** and carefully remove lock carrier side section **-3-** .

Fig 3: Removing Lock Carrier Side Section

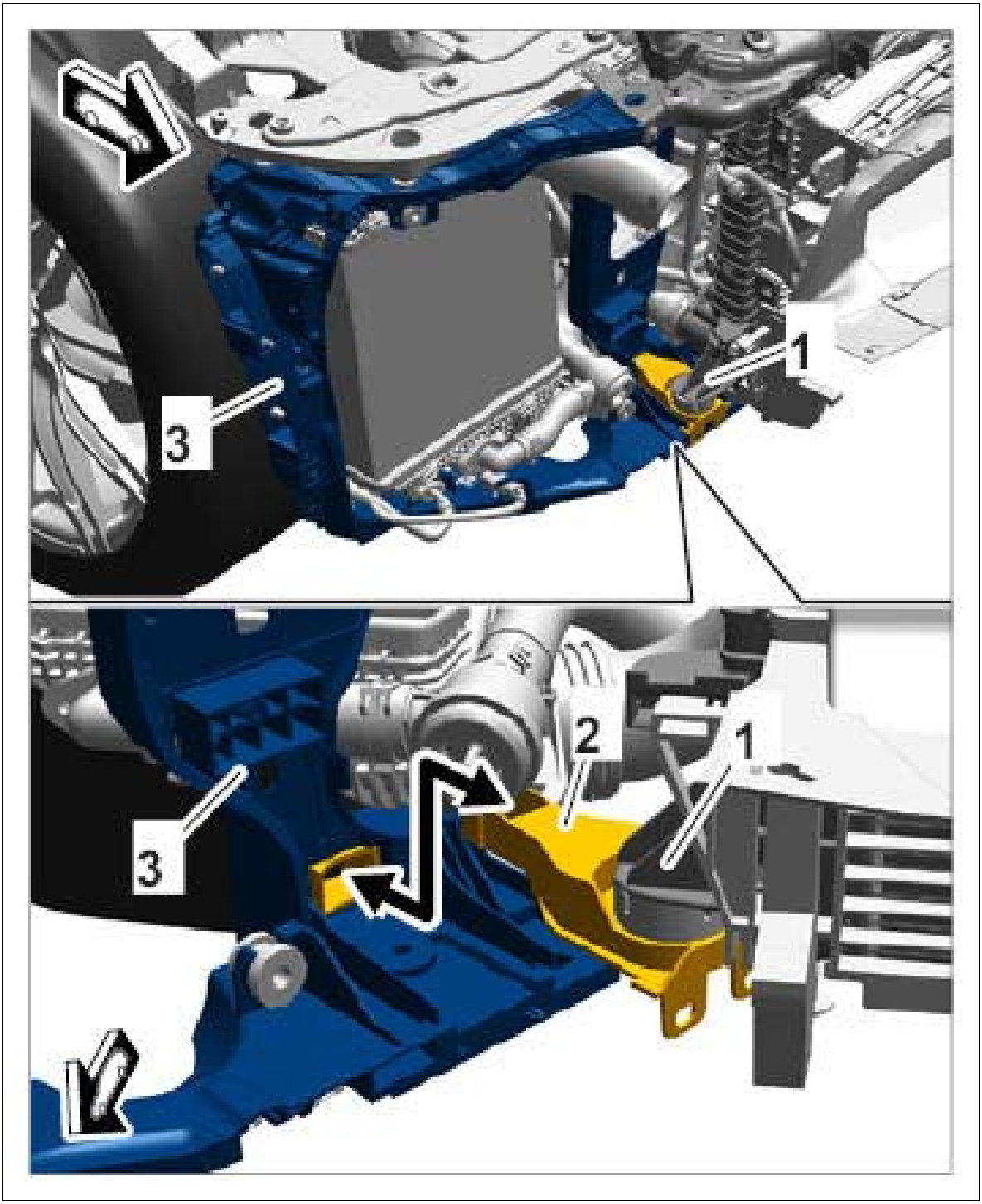

Courtesy of PORSCHE CARS NORTH AMERICA, INC.

WM 503819 REMOVING AND INSTALLING LOCK CARRIER SIDE SECTION AT THE RIGHT (ALL MODELS) > INSTALLING LOCK CARRIER SIDE SECTION AT THE RIGHT

Installation is performed in reverse order. Pay particular attention to the following:

1. Tighten fastening screws securing wing strut to lock carrier to the specified torque. **Tightening torque 9.7 Nm (7.5 ftlb.)**
2. Tighten fastening screws securing upper part of lock carrier to lock carrier to the specified torque. **Tightening torque 9.7 Nm (7.5 ftlb.)**
3. Tighten fastening screw securing support to lock carrier to the specified torque. **Tightening torque 5 Nm (3.5 ftlb.)**
4. Tighten fastening nut securing support to chassis subframe to the specified torque. **Tightening torque 23 Nm (17 ftlb.)**
5. Tighten fastening screws securing lock carrier to radiator to the specified torque. **Tightening torque 4.5 Nm (3 ftlb.)**
6. Tighten fastening screws securing radiator holder to lock carrier to the specified torque. **Tightening torque 4.5 Nm (3 ftlb.)**

WM 503819 REMOVING AND INSTALLING LOCK CARRIER SIDE SECTION AT THE RIGHT (ALL MODELS) > SUBSEQUENT WORK

1. Install pedestrian protection. → INSTALLING PEDESTRIAN PROTECTION
2. Install front carrier at the right. → INSTALLING FRONT CARRIER
3. Install headlight at the right. → INSTALLING HEADLIGHTS
4. Install front right retaining strip. → INSTALLING FRONT RETAINING STRIP
5. Install front bumper. → INSTALLING FRONT BUMPER

WM 503819 REMOVING AND INSTALLING UPPER PART OF LOCK CARRIER (ALL MODELS) > TECHNICAL VALUES

Location	Description	Type	Basic value	Tolerance 1	Tolerance 2
Upper part of lock carrier to lock carrier		Tightening torque	9.7 Nm (7.5 ftlb.)		
Upper part of lock carrier to body		Tightening torque	9.7 Nm (7.5 ftlb.)		
Upper part of lock carrier to transverse strut		Tightening torque	9.7 Nm (7.5 ftlb.)		
Upper part of lock carrier to cooling-air flaps		Tightening torque	2.5 Nm (2 ftlb.)		

WM 503819 REMOVING AND INSTALLING UPPER PART OF LOCK CARRIER (ALL MODELS) > PRELIMINARY WORK

1. Remove pressure pipe. (Only for Turbo and S vehicles) → 214119 REMOVING AND INSTALLING PRESSURE PIPE .
2. Remove headlights → 941519 REMOVING AND INSTALLING HEADLIGHTS .
3. Remove front retaining strips → 631719 REMOVING AND INSTALLING FRONT RETAINING STRIP .
4. Remove lower part of front lid lock → 551719 REMOVING AND INSTALLING LOWER PART OF FRONT LID LOCK .

WM 503819 REMOVING AND INSTALLING UPPER PART OF LOCK CARRIER (ALL MODELS) > REMOVING UPPER PART OF LOCK CARRIER

Information

- The number of fastening screws, fixing clips, plug connections, holders and trim panels can vary depending on equipment.
- The illustrations for removing and installing the drive mechanism are shown only on one equipment variant and may differ from the actual equipment variant.
- Some steps must be carried out automatically.
- Some of the repair illustrations show only one side of the vehicle.

1. Unclip lid lock cable from the bracket and disengage it. → 551419 REMOVING AND INSTALLING CABLE FOR FRONT LID LOCK
2. Unscrew fastening screws **-1-** on the lock carrier and body.
3. Unscrew fastening screws **-2-** on the transverse strut.
4. Unscrew fastening screws **-3-** on cooling-air flaps.

Fig 1: Identifying Screws On Cooling-Air Flaps

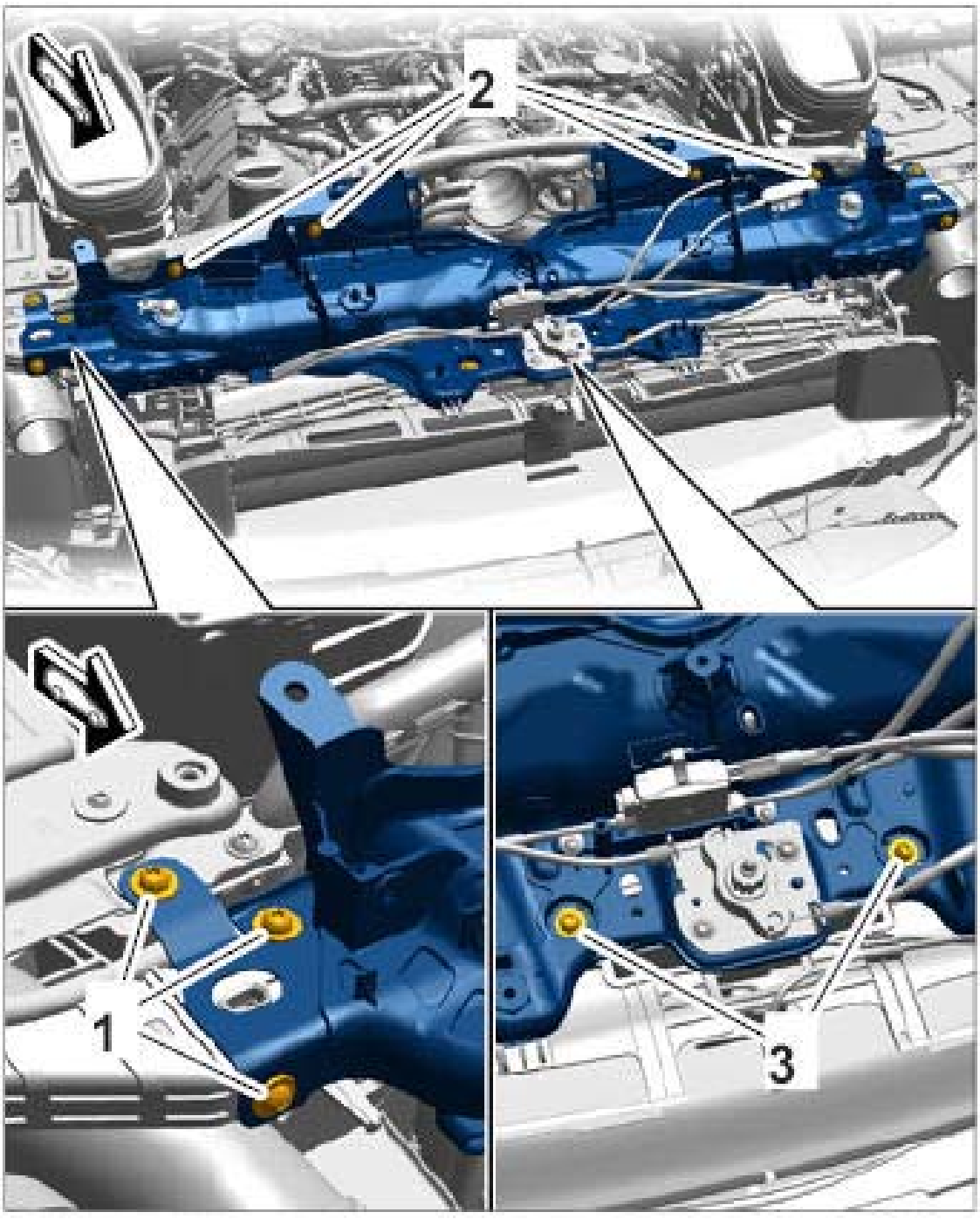

Courtesy of PORSCHE CARS NORTH AMERICA, INC.

5. Actuate release **-arrow-** and pull out fastening plug **-1-** (**-arrow-**).

6. Unclip wire harness **-3-** on upper part of lock carrier **-2-** .

Fig 2: Pulling Out Plug

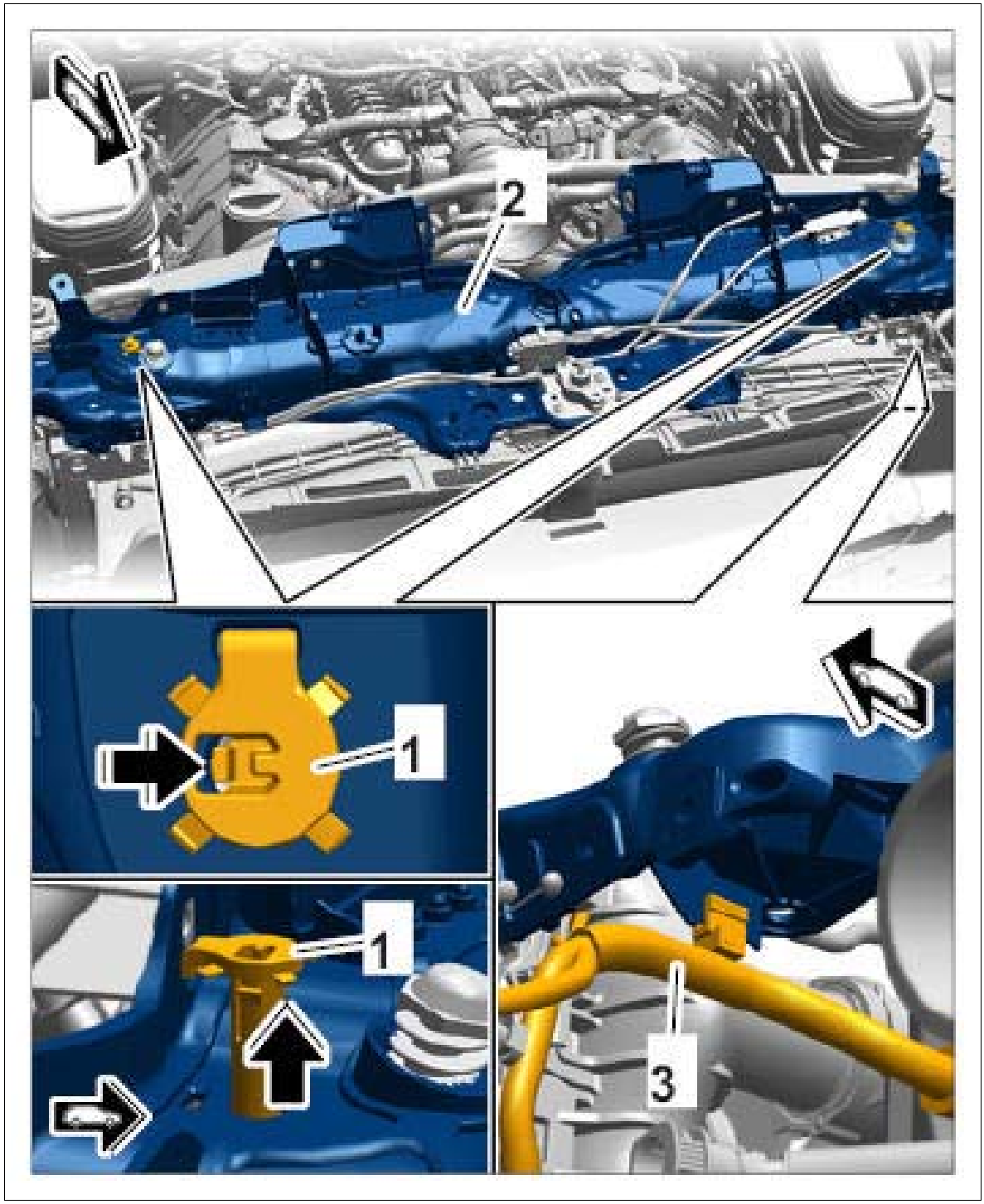

Courtesy of PORSCHE CARS NORTH AMERICA, INC.

7. Push upper part of lock carrier forward, guide the guide out of the radiator and remove it.

WM 503819 REMOVING AND INSTALLING UPPER PART OF LOCK CARRIER (ALL MODELS) > INSTALLING UPPER PART OF LOCK CARRIER

Installation is performed in reverse order. Pay particular attention to the following:

1. Tighten fastening screws securing upper part of lock carrier to body to the specified torque. **Tightening torque 9.7 Nm (7.5 ftlb.)**
2. Tighten fastening screws securing upper part of lock carrier to lock carrier to the specified torque. **Tightening torque 9.7 Nm (7.5 ftlb.)**
3. Tighten fastening screws securing upper part of lock carrier to transverse strut to the specified torque. **Tightening torque 9.7 Nm (7.5 ftlb.)**
4. Tighten fastening screws securing upper part of lock carrier to cooling-air flaps to the specified torque. **Tightening torque 2.5 Nm (2 ftlb.)**

WM 503819 REMOVING AND INSTALLING UPPER PART OF LOCK CARRIER (ALL MODELS) > SUBSEQUENT WORK

1. Install control unit for distance measuring sensor. → INSTALLING CONTROL UNIT FOR DISTANCE MEASURING SENSOR
2. Install lower part of front lid lock. → INSTALLING LOWER PART OF LID LOCK
3. Install front retaining strips. → INSTALLING FRONT RETAINING STRIP
4. Install headlights. → INSTALLING HEADLIGHTS
5. Install pressure pipe. (Only for Turbo and S vehicles) → INSTALLING PRESSURE PIPE

WM 503955 REPLACING SPRING STRUT MOUNT (ALL MODELS) > TOOLS

Designation	Type	Number	Description	
Hot-air blower	Workshop equipment	WE 1119		
Body alignment system package	Workshop equipment	WE 1121		
Special electric cutter	Workshop equipment	WE 1137		
Pneumatic Spotweld Remover, Vario Drill WS 90	Workshop equipment	WE 1139		
Hand-cartridge gun	Workshop equipment	WE 1141		
Resistance spot welder	Workshop equipment	WE 1311		

Inverter welder MIDIspot-QSVM-12000	Workshop equipment	WE 1312		
Resistance spot welder	Workshop equipment	WE 1313		
Blind riveting tool TAURUS 4	Workshop equipment	WE 1348		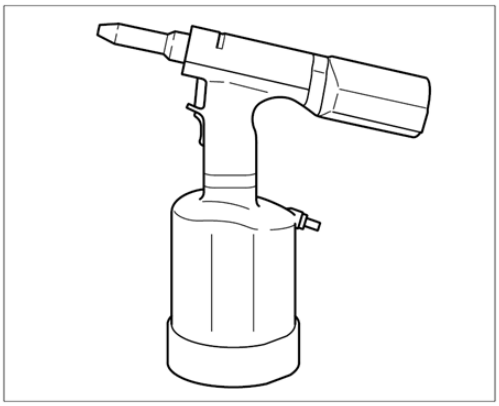
Aluminum tool set with trolley	Workshop equipment	WE 1350		
Resistance spot welder	Workshop equipment	WE 1352		
Measuring and alignment system, professional	Workshop equipment	WE 1398		
Mobile extraction unit, aluminum	Workshop equipment	WE 1507		
Body saw	Workshop equipment	WE 1508		
Star gauges for body gap dimensions	Special tool	Nr.127-1		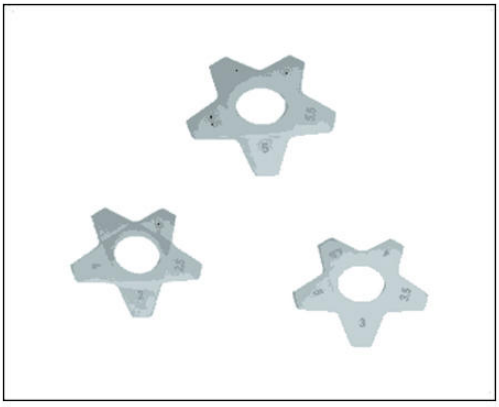

Spotweld drill; see Gr. 2.4; Workshop Equipment Manual	Commercially available tool	Nr.129		
Twist drill	Commercially available tool	Nr.201		
Countersink	Commercially available tool	Nr.202		

WM 503955 REPLACING SPRING STRUT MOUNT (ALL MODELS) > TECHNICAL VALUES

Location	Description	Type	Basic value	Tolerance 1	Tolerance 2
Dimension X		Distance	80 mm		
Drill bit		Diameter	8.0 mm		
Drill bit		Diameter	8.0 mm		
Applying adhesive		Application depth	3.0 mm		

WM 503955 REPLACING SPRING STRUT MOUNT (ALL MODELS) > PRELIMINARY WORK > PRELIMINARY WORK FOR BODY REPAIRS (WITH STRAIGHTENING SYSTEM)

1. Remove accessories in the repair area.
    1. 1.1. Remove accessories in the repair area according to the extent of damage on the vehicle.
2. Set up straightening bench with straightening system.
3. Set vehicle on straightening bench.
4. Cover accessories adjacent to the repair area on the vehicle.
    1. 4.1. Cover all accessories remaining on the vehicle and adjacent areas with fire-proof protective covers.
5. Expose joint areas.
    1. 6.1. Remove underbody protection, paint, etc. from the joint areas of the body using a hot-air gun or rotary brush.

WM 503955 REPLACING SPRING STRUT MOUNT (ALL MODELS) > SAFETY INSTRUCTIONS AND INFORMATION ON QUALITY

⚠ *CAUTION: Non-observance of safety instructions for body repairs*

- *Risk of damage to the vehicle*
- *Danger of injury*

→ Read the relevant safety instructions as well as general information and quality instructions → 5X00IN01 SAFETY INSTRUCTIONS .

- Corrosion protection measures during repairs → 5X00IN03 CORROSION PROTECTION MEASURES DURING REPAIRS .
- Body parts of various sheet-steel strengths → 5X00IN04 BODY PARTS OF VARIOUS SHEET-STEEL STRENGTHS .
- Setting self-tapping screws → 5X00IN24 SETTING SELF-TAPPING SCREWS .
- Working with body structural adhesive → 5X00IN21 WORKING WITH BODY STRUCTURAL ADHESIVE .

WM 503955 REPLACING SPRING STRUT MOUNT (ALL MODELS) > TOOLS AND MATERIALS > TOOLS AND MATERIALS FOR BODY REPAIRS

Information

- The tools for working on steel and aluminum must always be kept separate from each other. We recommend that you color code the tools using a system similar to that used for the Aluminum tool set with trolley WE 1350, for example.

Straightening set **Body alignment system package WE 1121 Measuring and alignment system, professional WE 1398**

Resistance spot welder; optional **Inverter welder MIDIspot-QSVM-12000 WE 1312, Resistance spot welder WE 1352, Resistance spot welder WE 1311, Resistance spot welder WE 1313**

Metal inert gas (MIG) welder

Pneumatic spotweld remover **Pneumatic Spotweld Remover, Vario Drill WS 90 WE 1139**

Pneumatic body saw **Body saw WE 1508**

Oscillating body saw (special electric cutter) **Special electric cutter WE 1137**

Hot-air blower **Hot-air blower WE 1119**

Hand-cartridge gun **Hand-cartridge gun WE 1141**

Spotweld drill **Spotweld drill** ; Twist drill Nr.201

Countersink for rivets **Countersink Nr.202**

Blind riveting tool for high-strength rivets **Blind riveting tool TAURUS 4 WE 1348**

Safety vacuum cleaner for aluminum dust **Mobile extraction unit, aluminum WE 1507**

Star gauges for body gap dimensions Nr.127-1

Wurth Klebt und Dichtet body sealant

WM 503955 REPLACING SPRING STRUT MOUNT (ALL MODELS) > REMOVING SPRING STRUT MOUNT

Fig 1: Locating Spring Strut Mount Position



Courtesy of PORSCHE CARS NORTH AMERICA, INC.

1. Remove wing bracket.

   Information

   Drill out the connection point on one side only. Do not damage the plate underneath.

   1. 1.1. Drill out spotwelds **-A-** using **spotweld drill** .
   2. 1.2. Grind down welded seams **-arrows-** .

Fig 2: Removing Wing Bracket

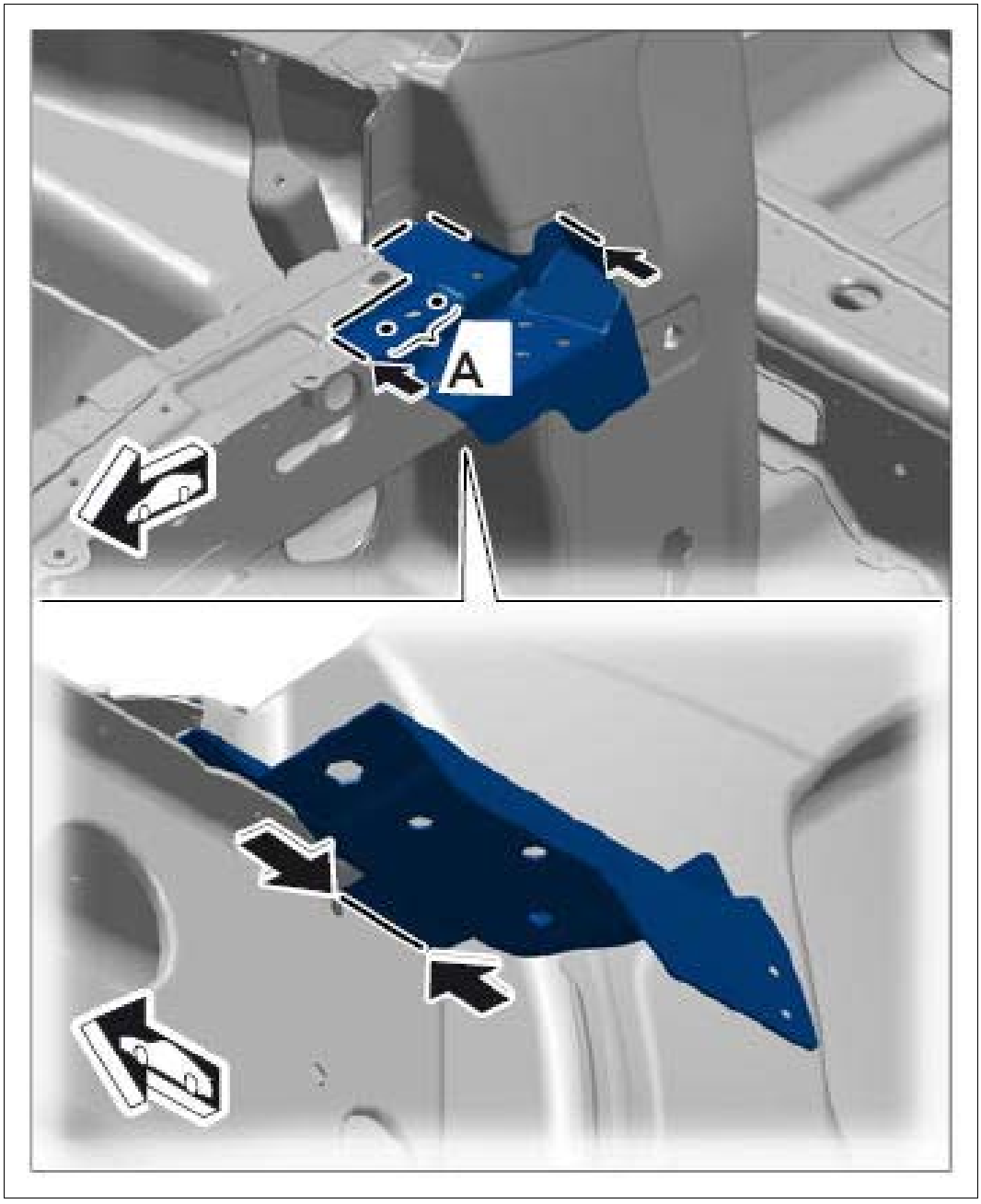

Courtesy of PORSCHE CARS NORTH AMERICA, INC.

2. Remove reinforcements.

Information

Drill out the connection point on one side only. Do not damage the plate underneath.

1. 2.1. Drill out spotwelds using **spotweld drill** .
2. 2.2. Make a rough cut **-1-** .
3. 2.3. Mark and make cut **-2-** . → **Distance: 80 mm**
4. 2.4. Grind down welded seam **-A-** .

Fig 3: Removing Reinforcements

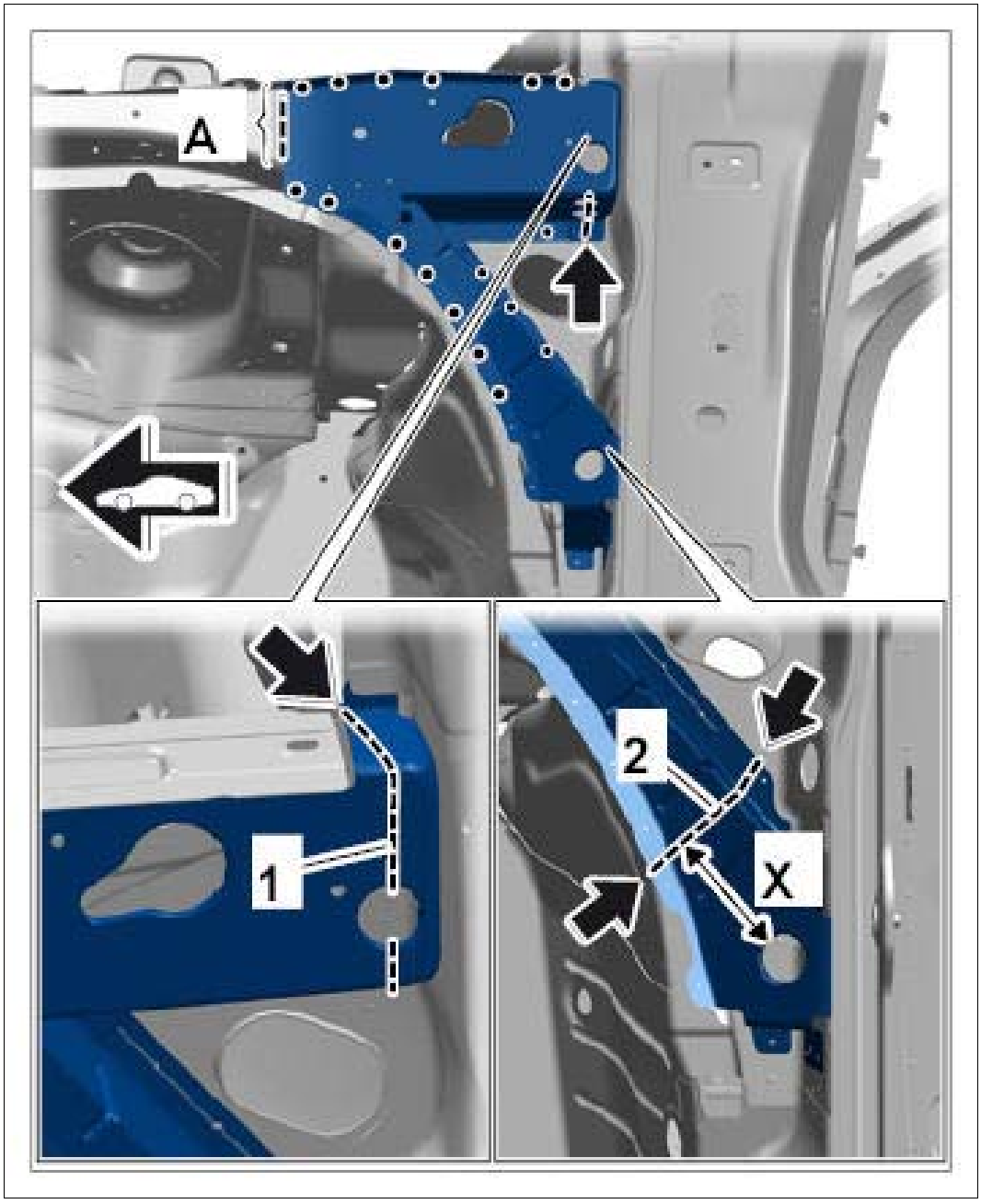

Courtesy of PORSCHE CARS NORTH AMERICA, INC.

3. Heat bonding areas.

    1. 3.1. Remove reinforcements.

Fig 4: Identifying Reinforcements



Courtesy of PORSCHE CARS NORTH AMERICA, INC.

4. Remove remaining piece of upper reinforcement **-1-** .

   Information

   Drill out the connection point on one side only. Do not damage the plate underneath.

   1. 4.1. Drill out spotwelds using **spotweld drill** .

Fig 5: Identifying Remaining Piece Of Upper Reinforcement

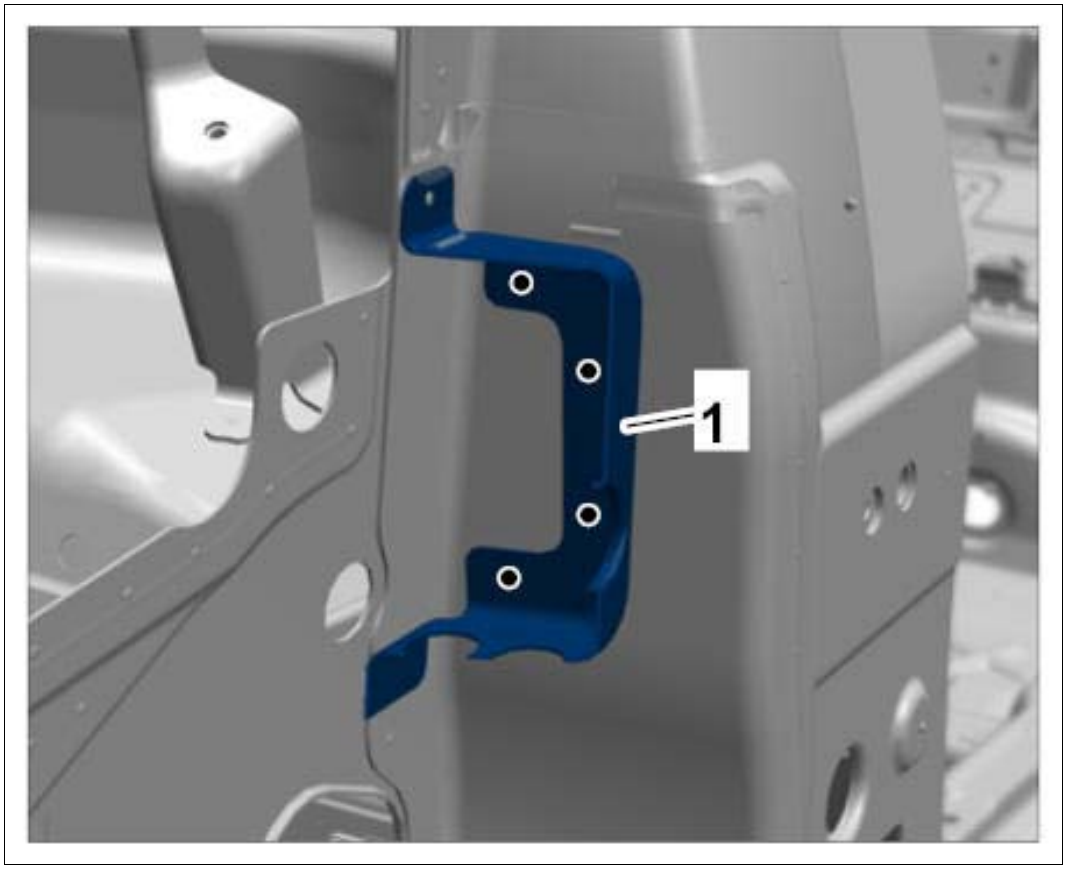

Courtesy of PORSCHE CARS NORTH AMERICA, INC.

Information

Drill out the connection point on one side only. Do not damage the plate underneath.

5. Drill out spotwelds using **spotweld drill** .

Fig 6: Drilling Out Spotwelds Spring Strut Mount

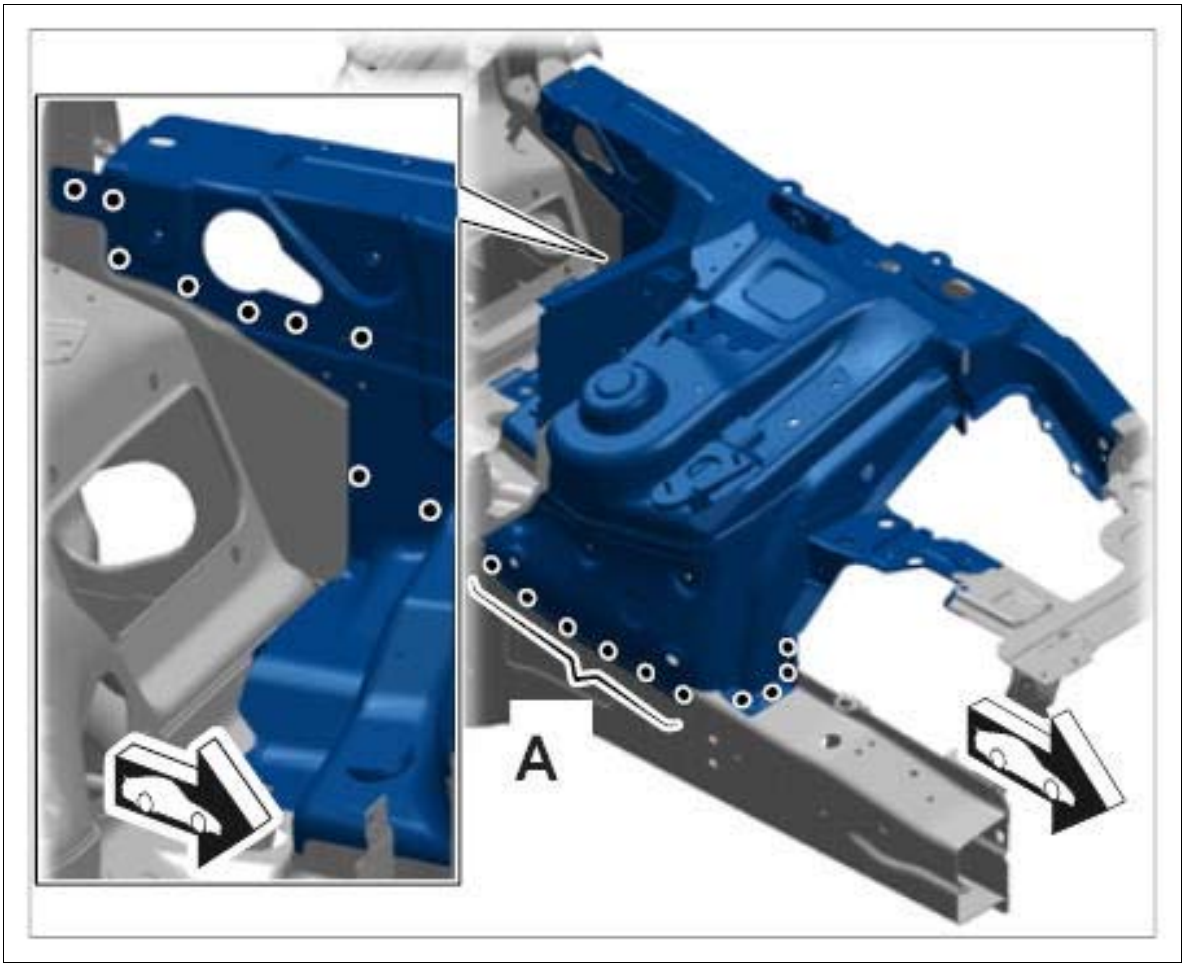

Courtesy of PORSCHE CARS NORTH AMERICA, INC.

Information

Drill out the connection point on one side only. Do not damage the plate underneath.

6. Drill out spotwelds using **spotweld drill** .

Fig 7: Removing Spring Strut Mount

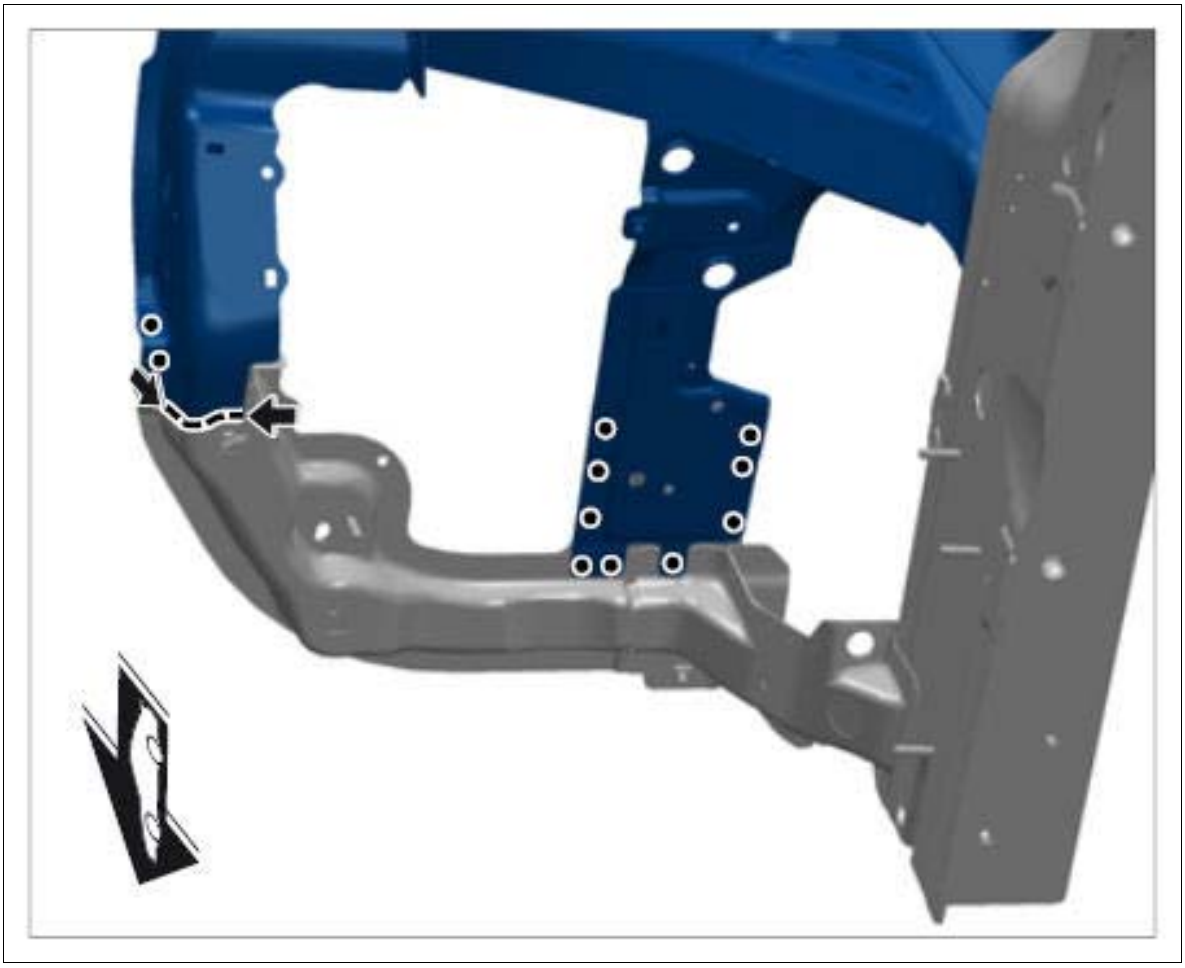

Courtesy of PORSCHE CARS NORTH AMERICA, INC.

1. 6.1. Grind down welded seams **-arrows-** .

Fig 8: Identifying Welded Seams

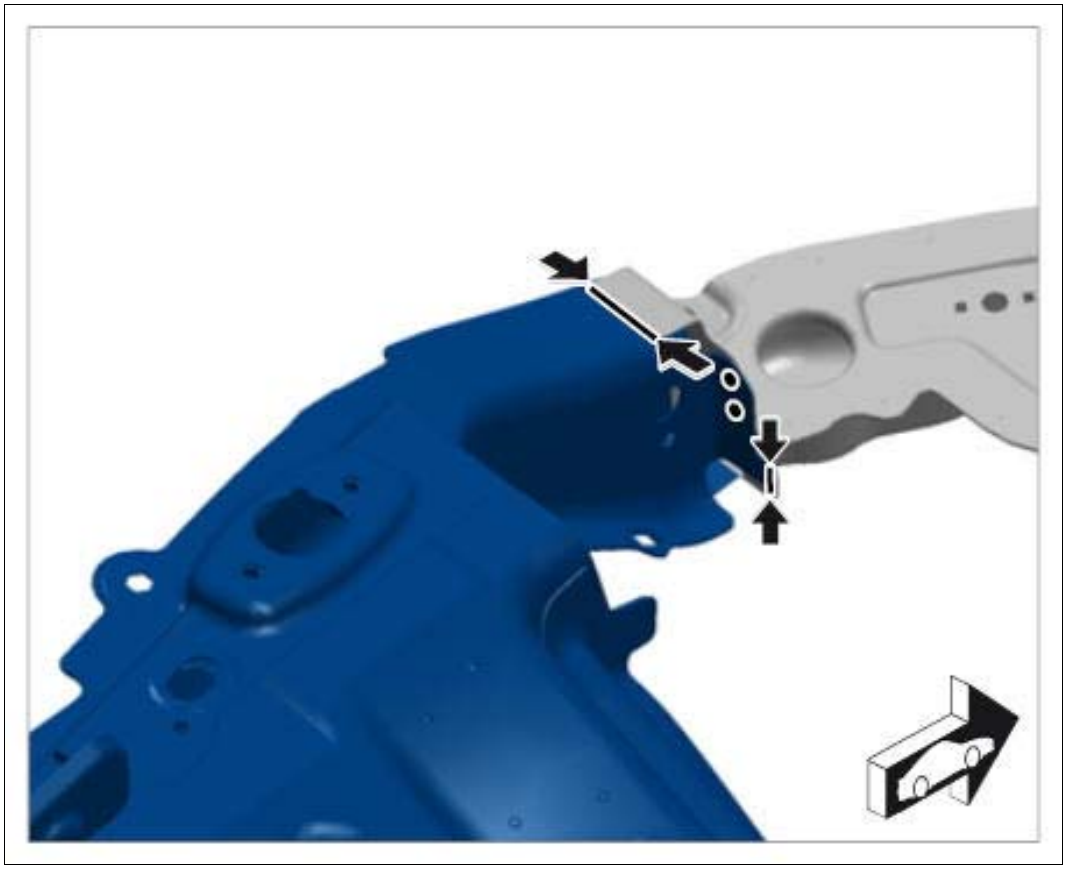

Courtesy of PORSCHE CARS NORTH AMERICA, INC.

7. Drill out spotwelds **-A-** from the inside.

Fig 9: Drilling Out Spotwelds

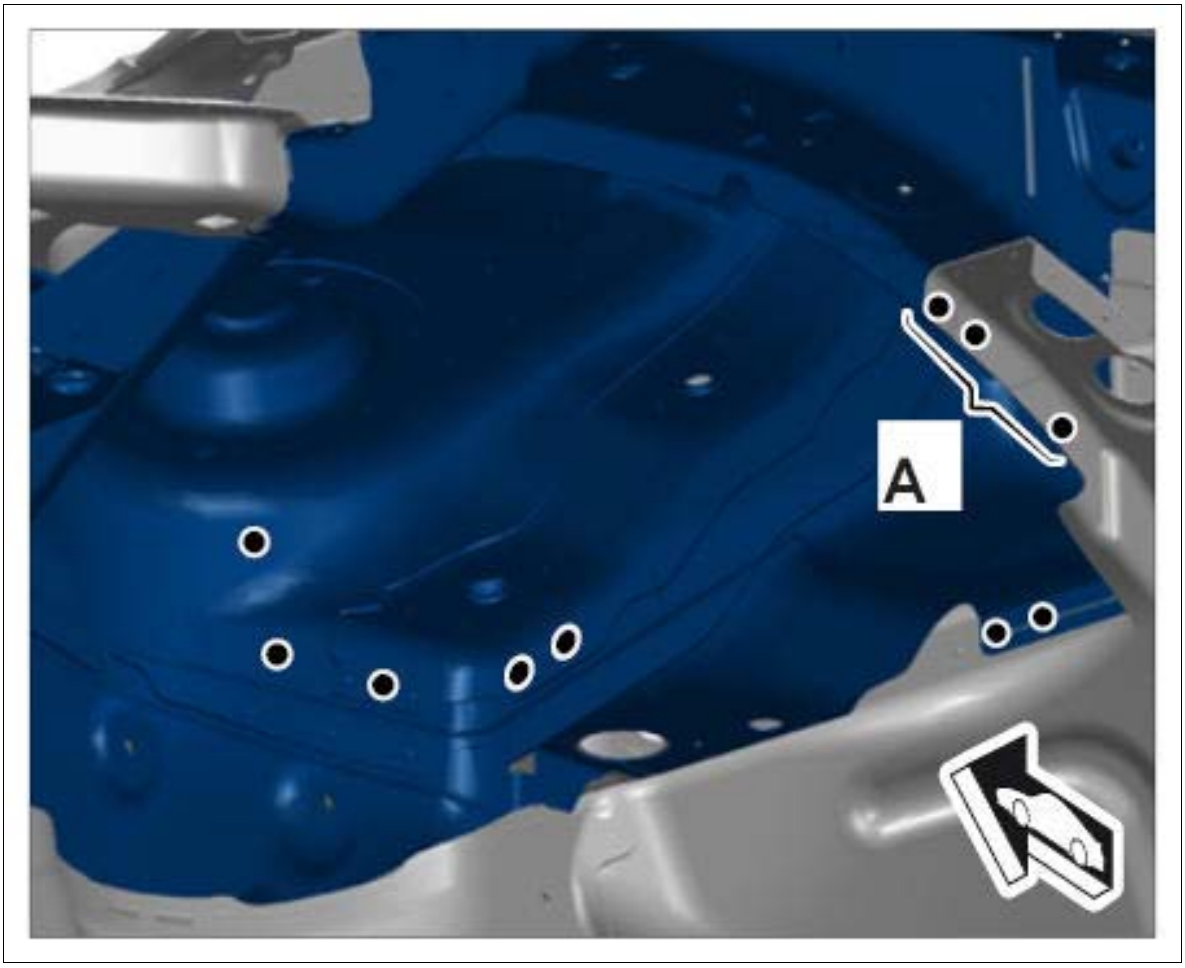

Courtesy of PORSCHE CARS NORTH AMERICA, INC.

Information

Drill out the connection point on one side only. Do not damage the plate underneath.

8. Drill out spotwelds on lower part of plenum panel using **spotweld drill** .

Fig 10: Drilling Out Spotwelds On Lower Part Of Plenum Panel



Courtesy of PORSCHE CARS NORTH AMERICA, INC.

9. Heat bonding areas.

    1. 9.1. Remove lower part of plenum panel.

Fig 11: Removing Lower Part Of Plenum Panel



Courtesy of PORSCHE CARS NORTH AMERICA, INC.

Information

Drill out the connection point on one side only. Do not damage the plate underneath.

10. Drill out spotwelds **-A-** using **spotweld drill** .

Fig 12: Drilling Out Spotwelds

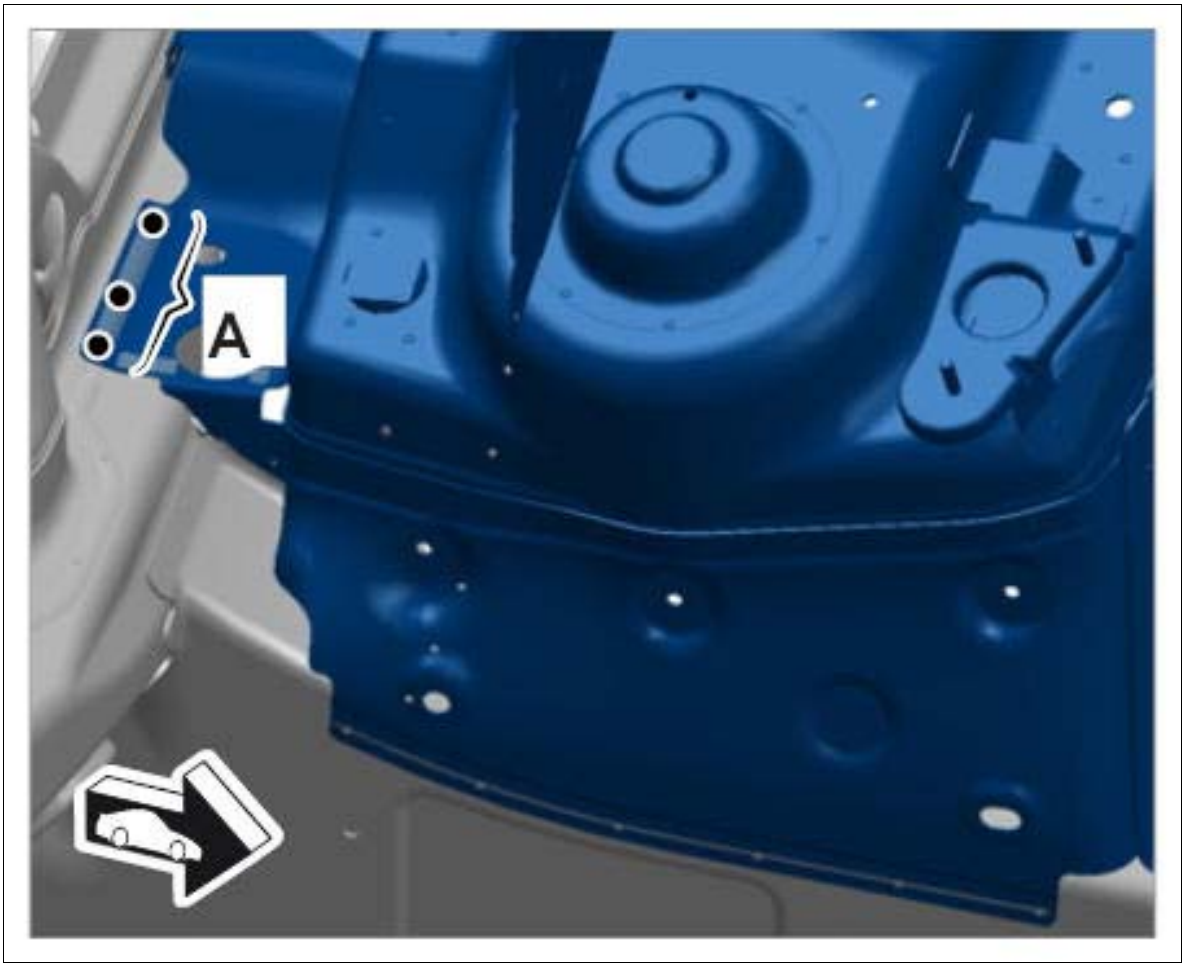

Courtesy of PORSCHE CARS NORTH AMERICA, INC.

11. Heat bonding areas.
    1. 11.1. Remove spring strut mount.

Fig 13: Removing Spring Strut Mount

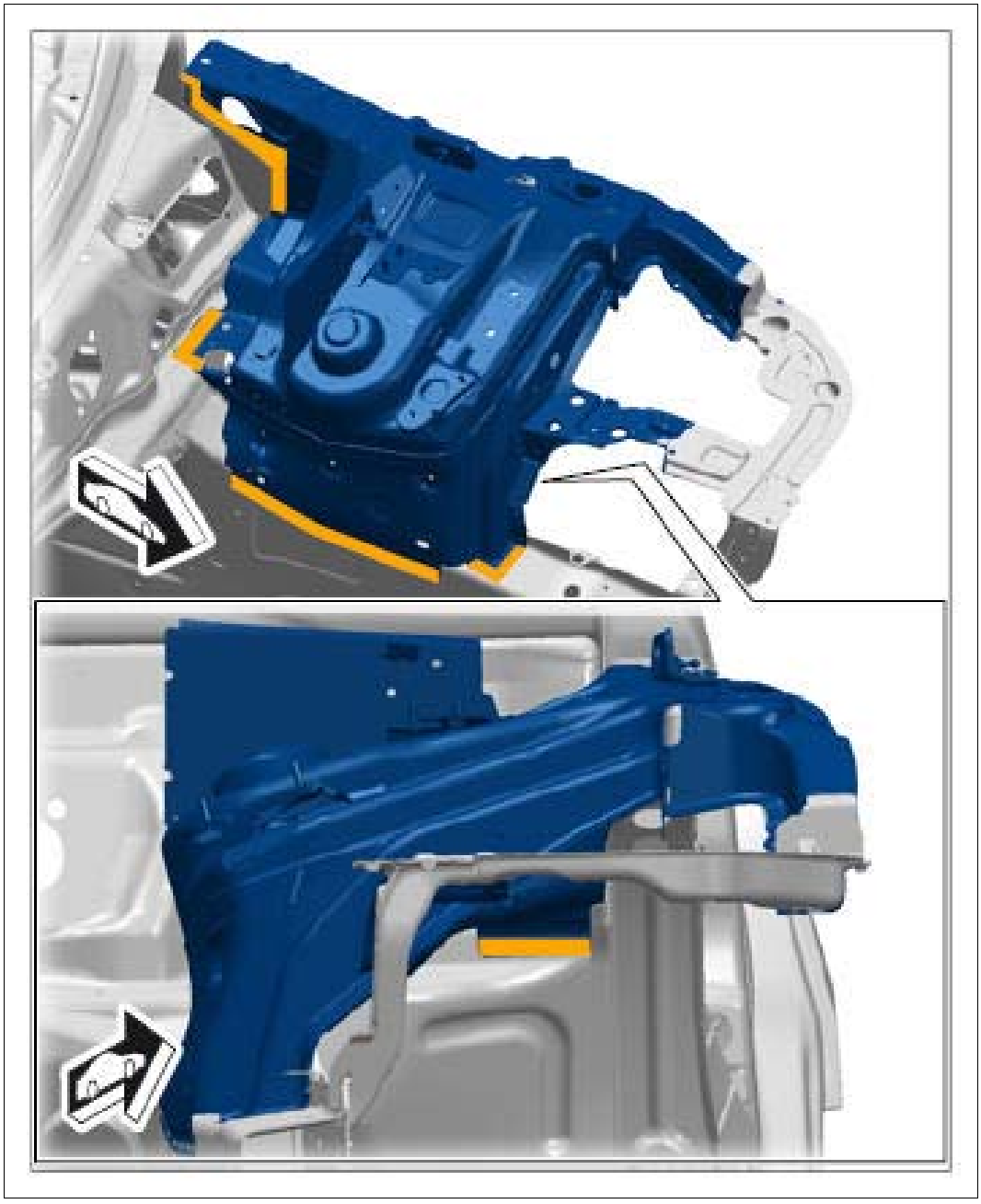

Courtesy of PORSCHE CARS NORTH AMERICA, INC.

WM 503955 REPLACING SPRING STRUT MOUNT (ALL MODELS) > PREPARING SPRING STRUT MOUNT FOR INSTALLATION

1. Cut reinforcement in area **-arrows-** leaving an overlap to the remaining piece of 30 mm.

Fig 1: Cutting Reinforcement Area Of Spring Strut Mount

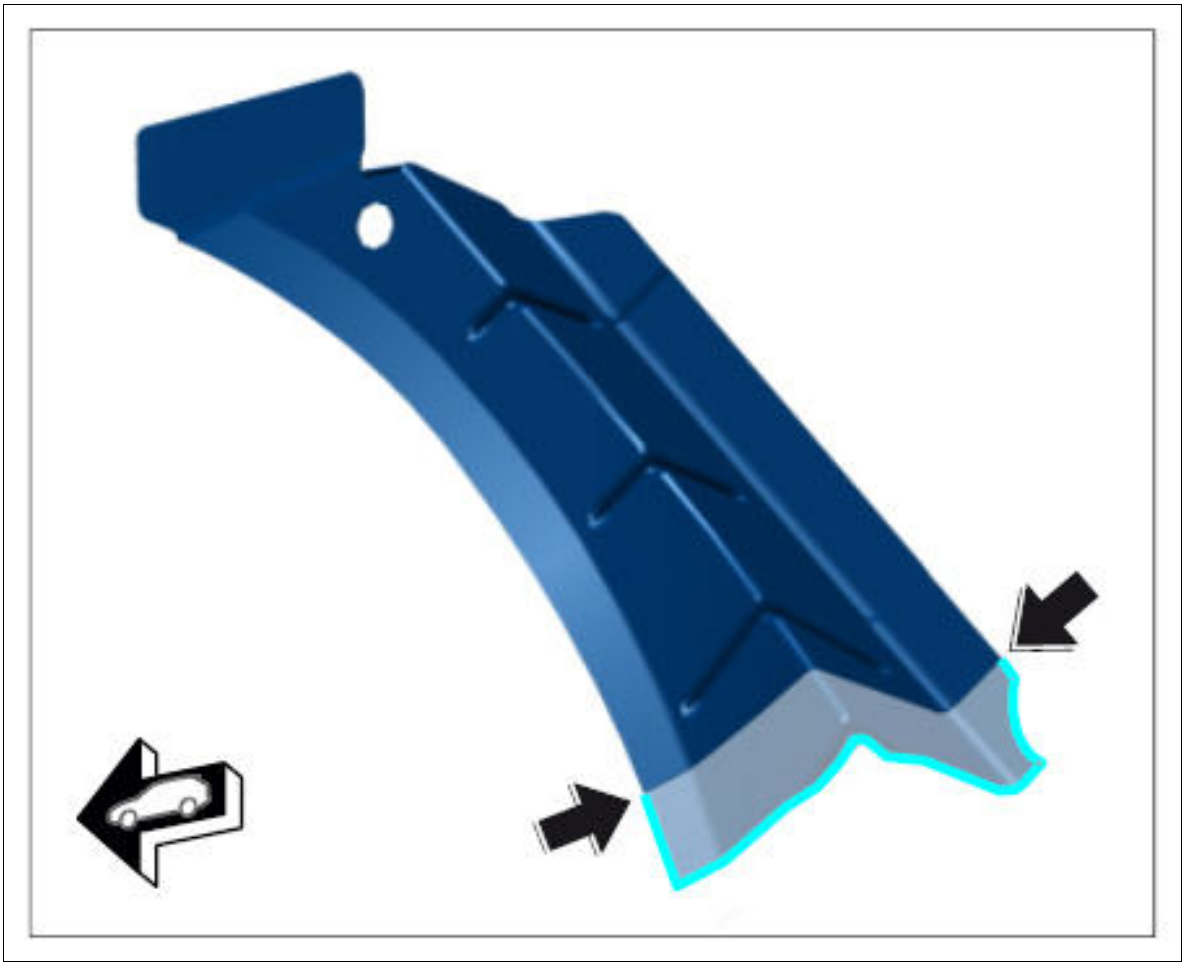

Courtesy of PORSCHE CARS NORTH AMERICA, INC.

2. Fit in and secure reinforcements.

    1. 2.1. Tack-weld upper part **-1-** and lower part **-2-** of reinforcement **-arrows-** .

Fig 2: Fitting In And Secure Reinforcements

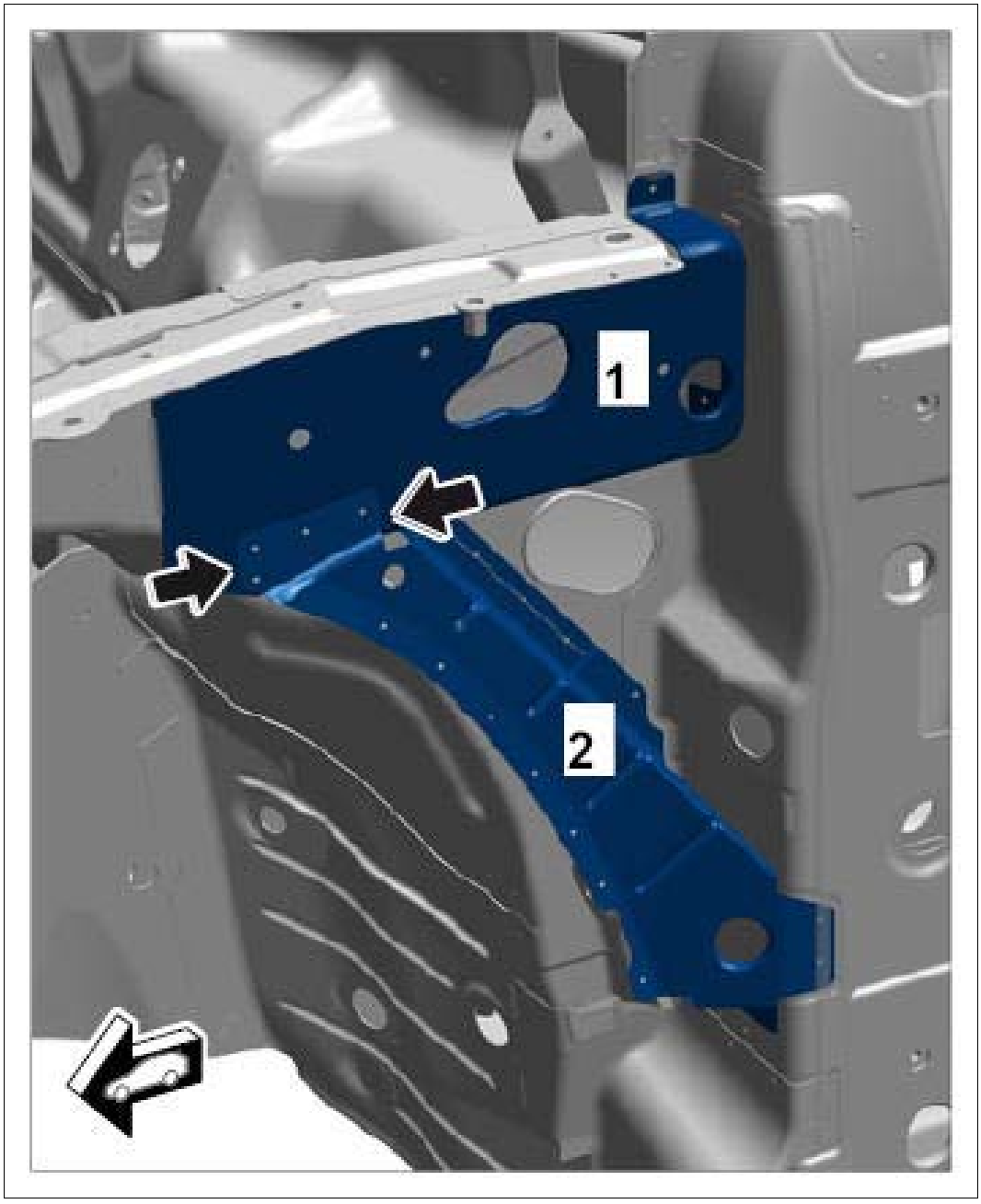

Courtesy of PORSCHE CARS NORTH AMERICA, INC.

3. Remove reinforcements.

    1. 3.1. Resistance spot-weld the marked area **-A-** .

Fig 3: Removing Reinforcements

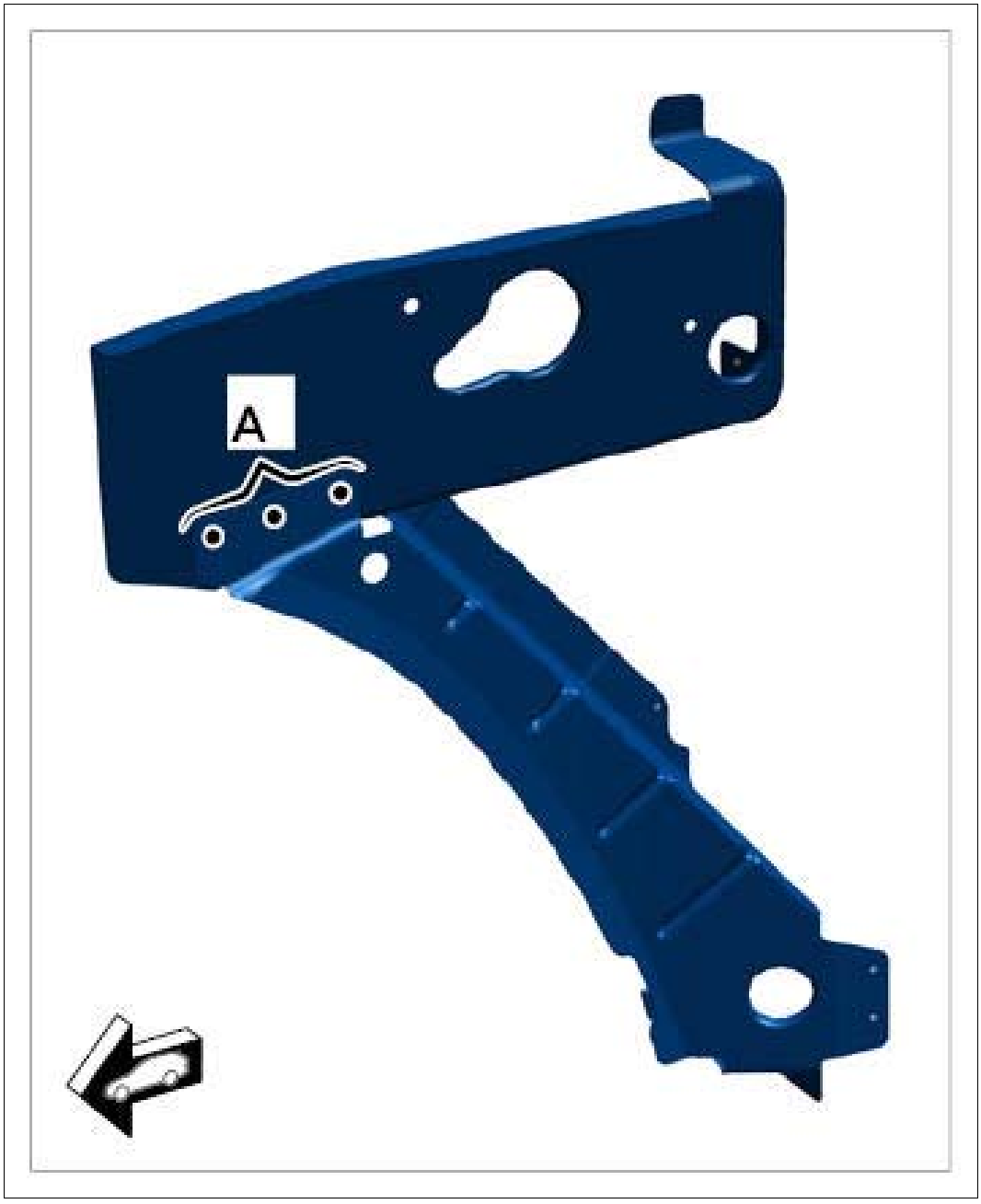

Courtesy of PORSCHE CARS NORTH AMERICA, INC.

4. Prepare wing bracket for welding.

Fig 4: Removing Wing Bracket

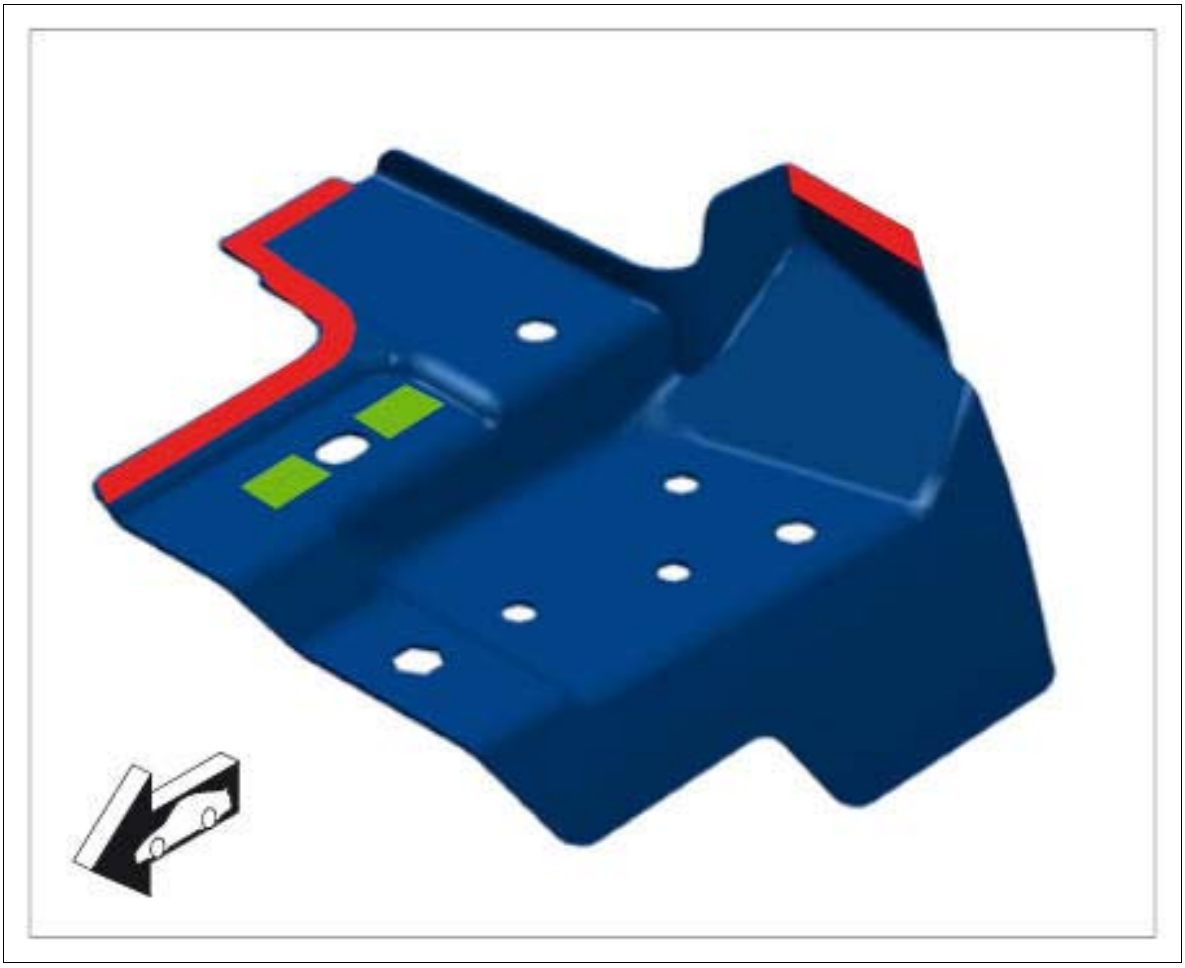

Courtesy of PORSCHE CARS NORTH AMERICA, INC.

5. Prepare reinforcement for bonding and welding.

Fig 5: Removing Reinforcement For Bonding And Welding



Courtesy of PORSCHE CARS NORTH AMERICA, INC.

6. Drill holes for plug-welding in the marked areas **-A-** on the spring strut mount using a drill bit with a diameter of → **Diameter: 8.0 mm.**

Fig 6: Installing Spring Strut Mount

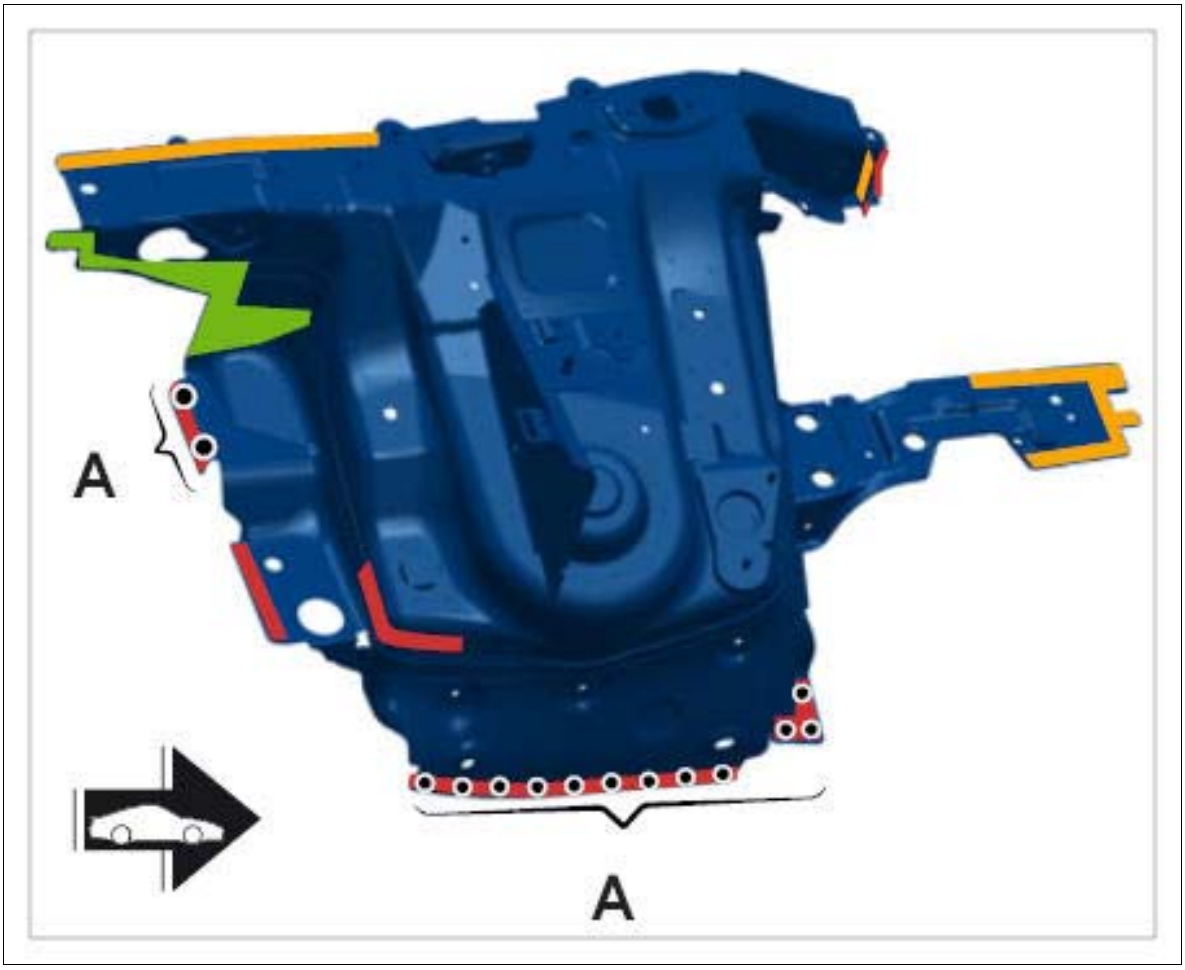

Courtesy of PORSCHE CARS NORTH AMERICA, INC.

7. Drill holes for plug-welding in the marked areas **-A-** on the lower part of the plenum panel using a drill bit with a diameter of → **Diameter: 8.0 mm** .

Fig 7: Installing Lower Part Of Plenum Panel

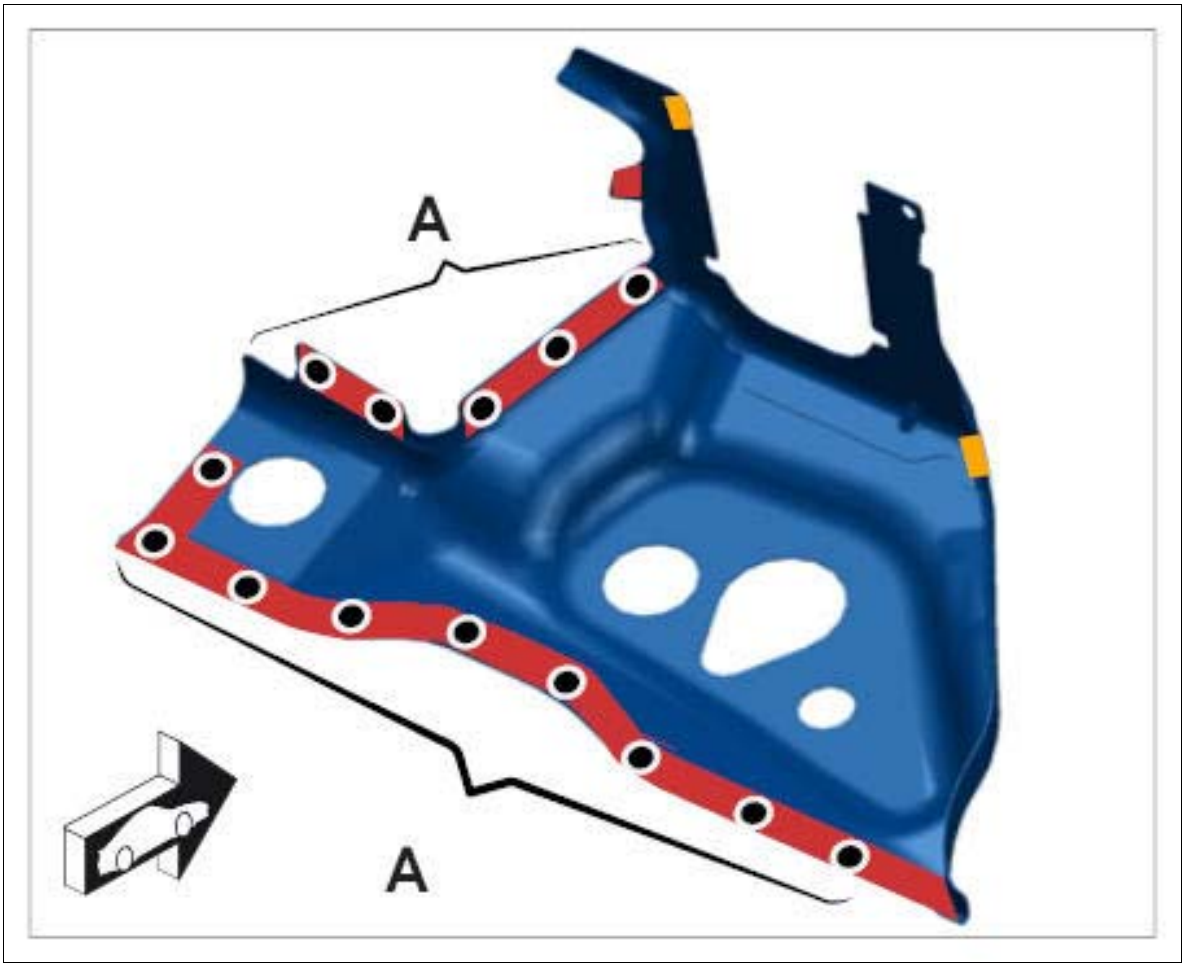

Courtesy of PORSCHE CARS NORTH AMERICA, INC.

Orange	Resistance spot-welding
Green	Resistance spot-welding + bonding
Red	Plug-welding/apply a full weld using inert gas without bonding

WM 503955 REPLACING SPRING STRUT MOUNT (ALL MODELS) > PREPARING CONNECTION AREAS OF THE BODY

1. Align the sealing surface and connections of the body.
2. De-burr connection points and prepare them for welding.

Information

1. Before final assembly, make sure you fully understand all the work steps involved and carry out a trial assembly without applying adhesive.
2. The bonding process can only be carried out reliably when a smooth and swift sequence

of operations is guaranteed.

3. Do not begin bonding work until all materials and tools necessary for later repair work are available.

3. Prepare the marked areas for welding and bonding. → 5X00IN21 WORKING WITH BODY STRUCTURAL ADHESIVE - section on "Preparing"

Fig 1: Preparing Connection Areas Of Body (1 Of 2)

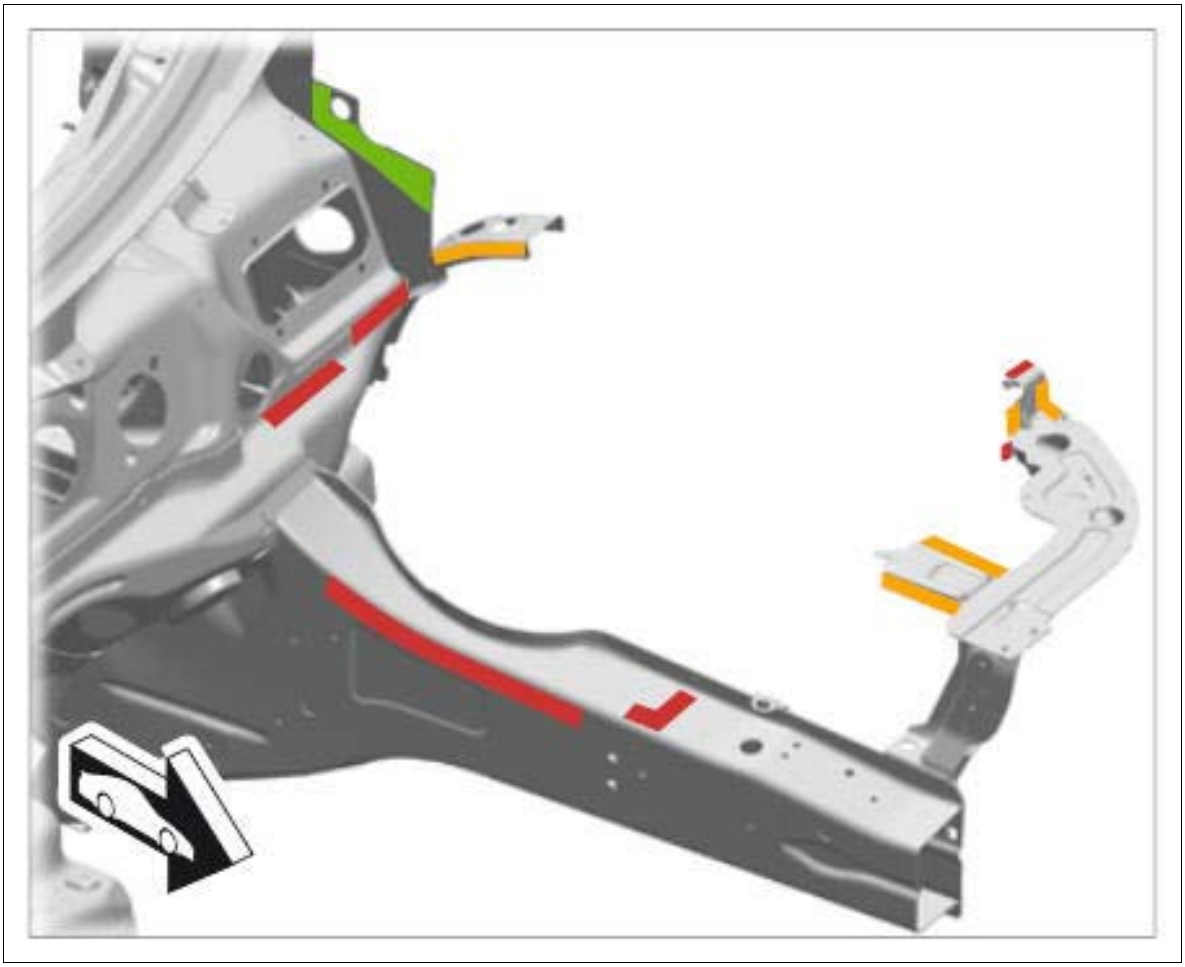

Courtesy of PORSCHE CARS NORTH AMERICA, INC.

Fig 2: Preparing Connection Areas Of Body (2 Of 2)

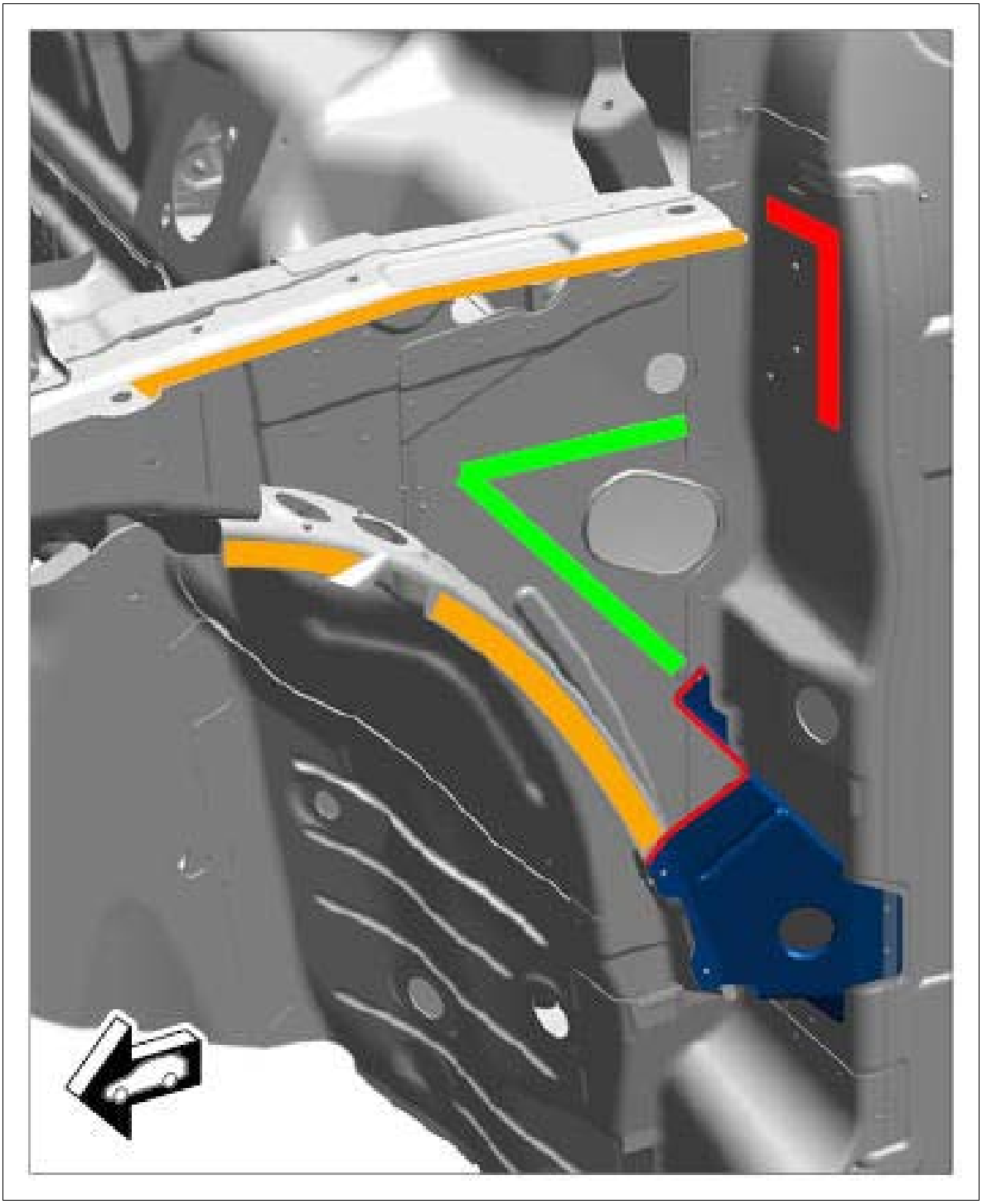

Courtesy of PORSCHE CARS NORTH AMERICA, INC.

Orange	Resistance spot-welding
Green	Resistance spot-welding + bonding
Red	Plug-welding/apply a full weld using inert gas without bonding

WM 503955 REPLACING SPRING STRUT MOUNT (ALL MODELS) > INSTALLING SPRING STRUT MOUNT

Information

- Before final assembly, make sure you fully understand all the work steps involved and carry out a trial assembly without applying adhesive.
- The bonding process can only be carried out reliably when a smooth and swift sequence of operations is guaranteed.
- Do not begin bonding work until all materials and tools necessary for later repair work are available.

1. Install spring strut mount and check that it fits perfectly. Check gap dimensions → 5X00IN DIAGRAM - BODY GAP DIMENSIONS .
    1. 1.1. Apply adhesive to the areas marked in yellow → 5X00IN21 WORKING WITH BODY STRUCTURAL ADHESIVE→ **Application depth: 3.0 mm**

       Fig 1: Applying Adhesive

       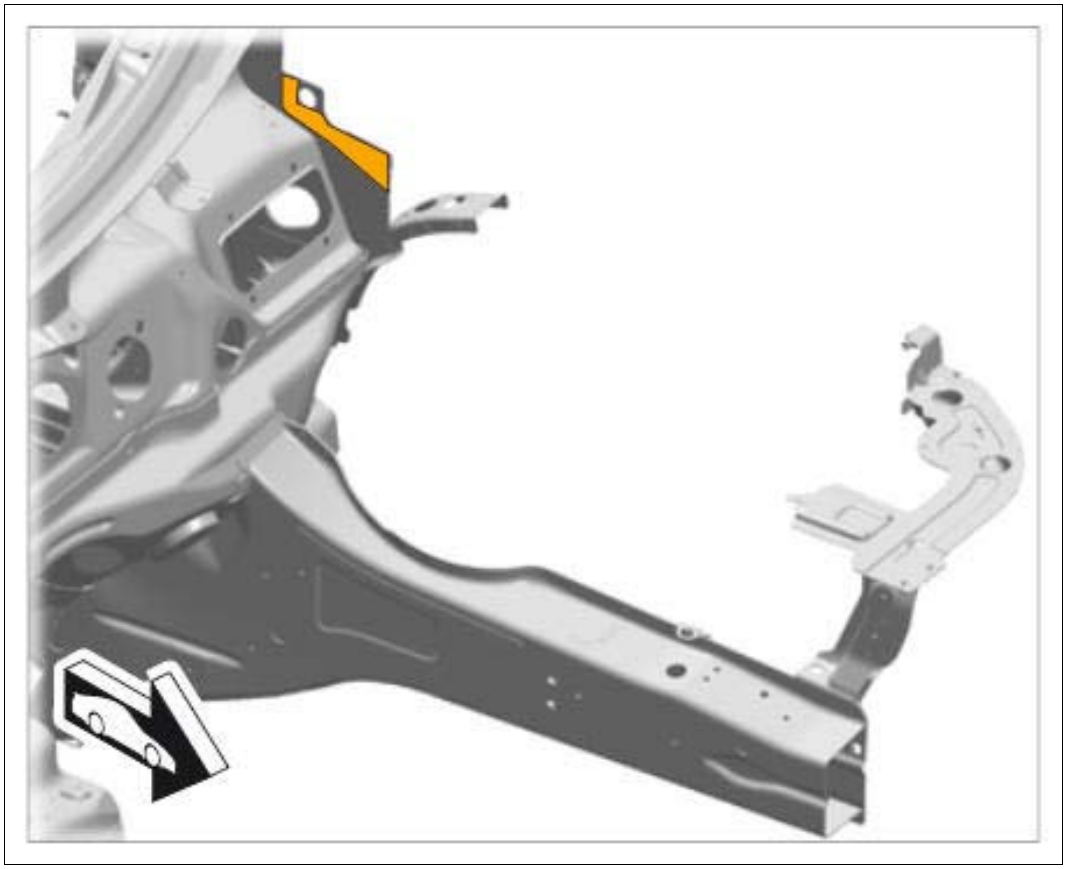

       Courtesy of PORSCHE CARS NORTH AMERICA, INC.

2. Resistance spot-weld the spring strut mount.
    1. 2.1. Plug-weld area **-A-** using inert gas.

Fig 2: Resistance Spot-Welding Spring Strut Mount

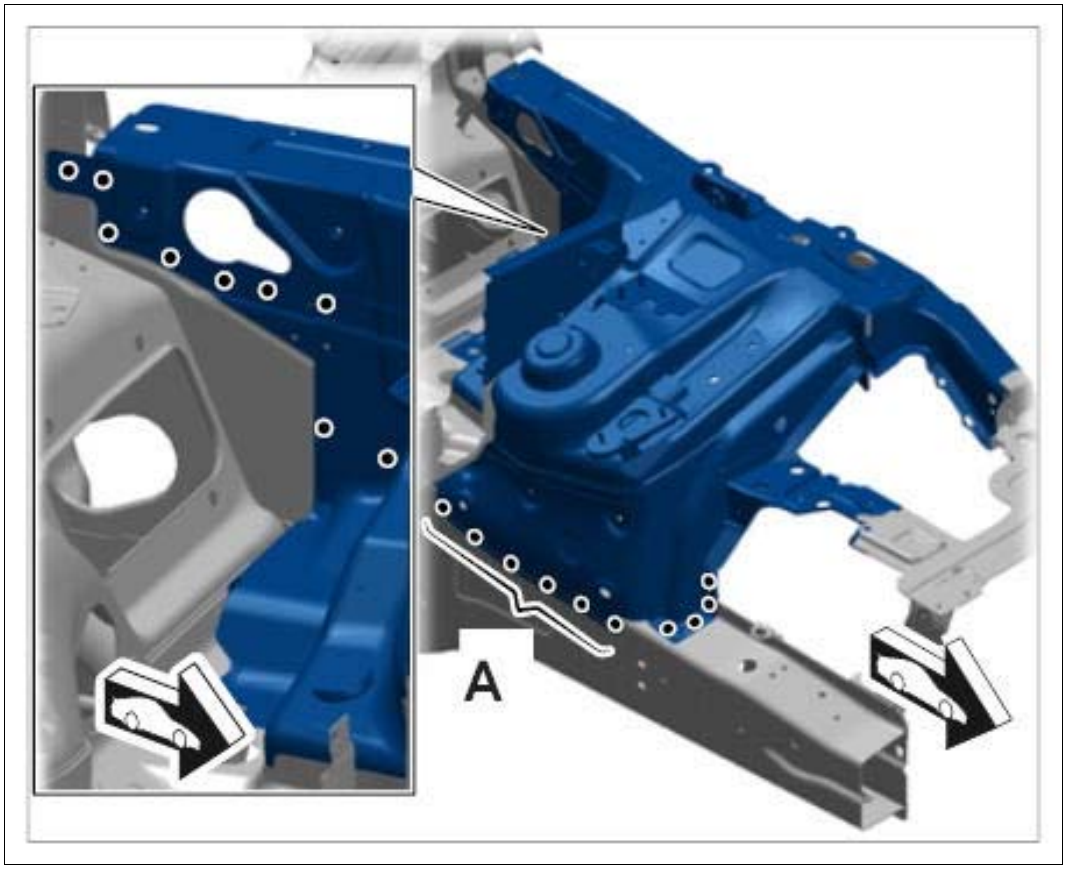

Courtesy of PORSCHE CARS NORTH AMERICA, INC.

3. Apply a full weld to the area **-arrows-** using inert gas.

Fig 3: Full Welding Spring Strut Mount (1 Of 2)

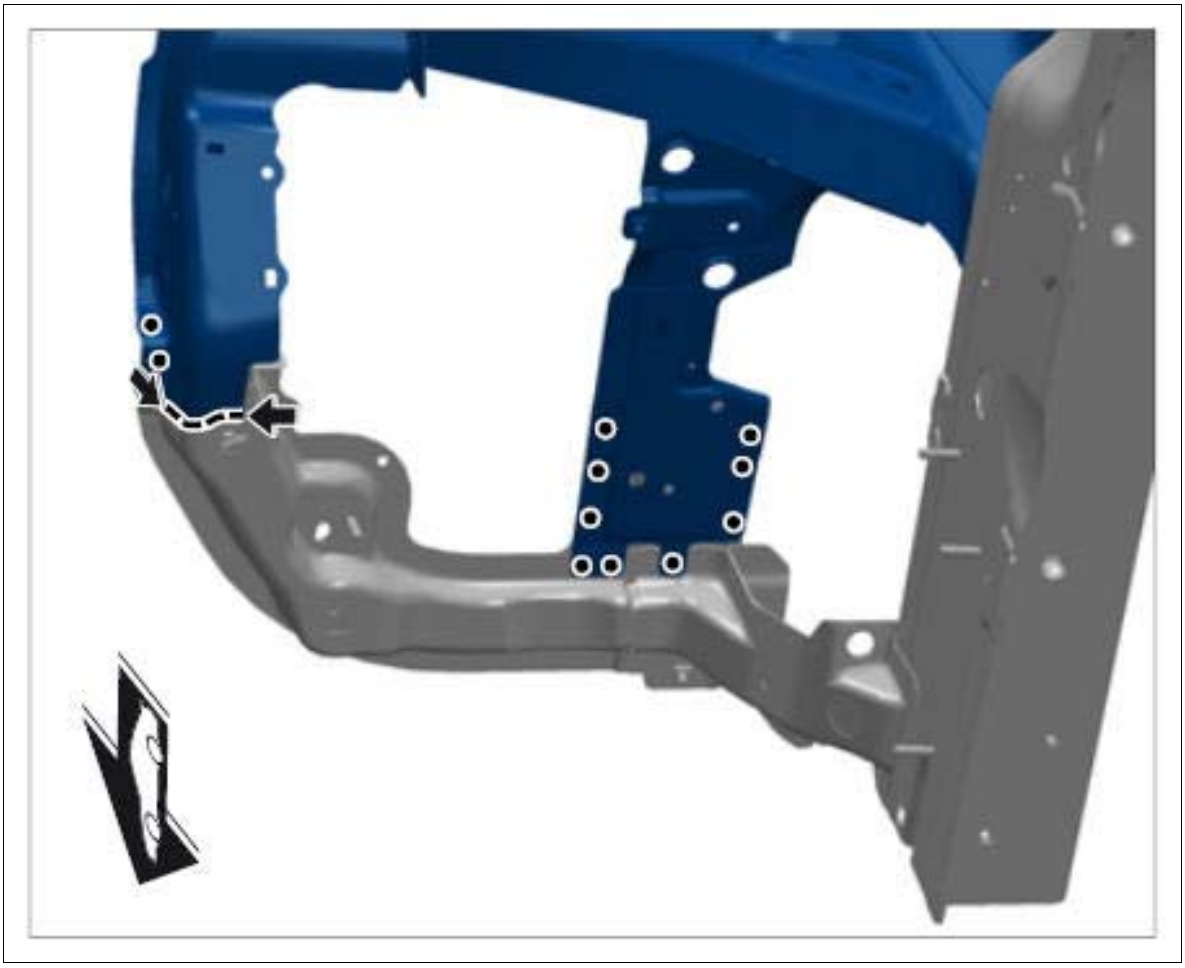

Courtesy of PORSCHE CARS NORTH AMERICA, INC.

Fig 4: Full Welding Spring Strut Mount (1 Of 2)

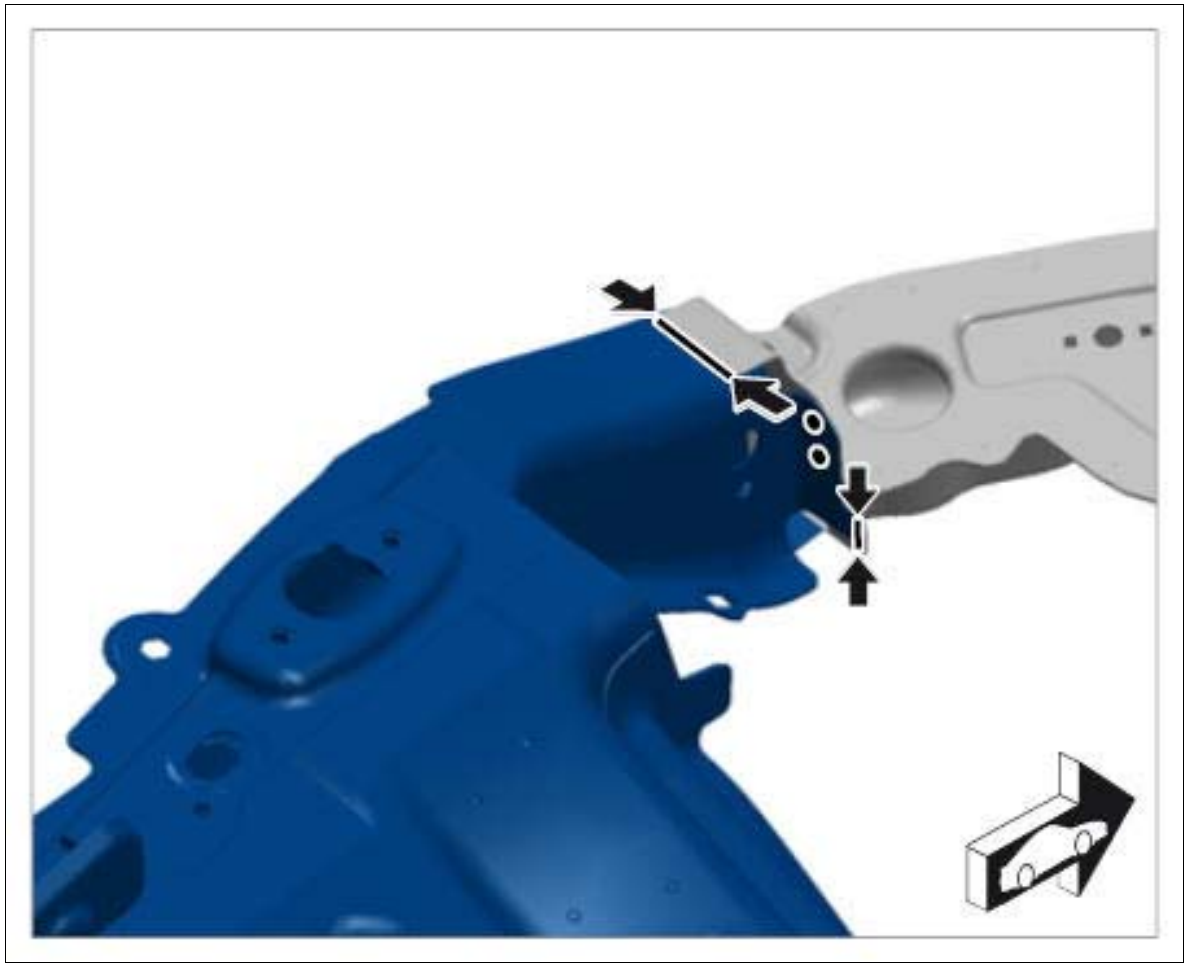

Courtesy of PORSCHE CARS NORTH AMERICA, INC.

4. Plug-weld area **-A-** using inert gas.

Fig 5: Plug-Welding Spring Strut Mount

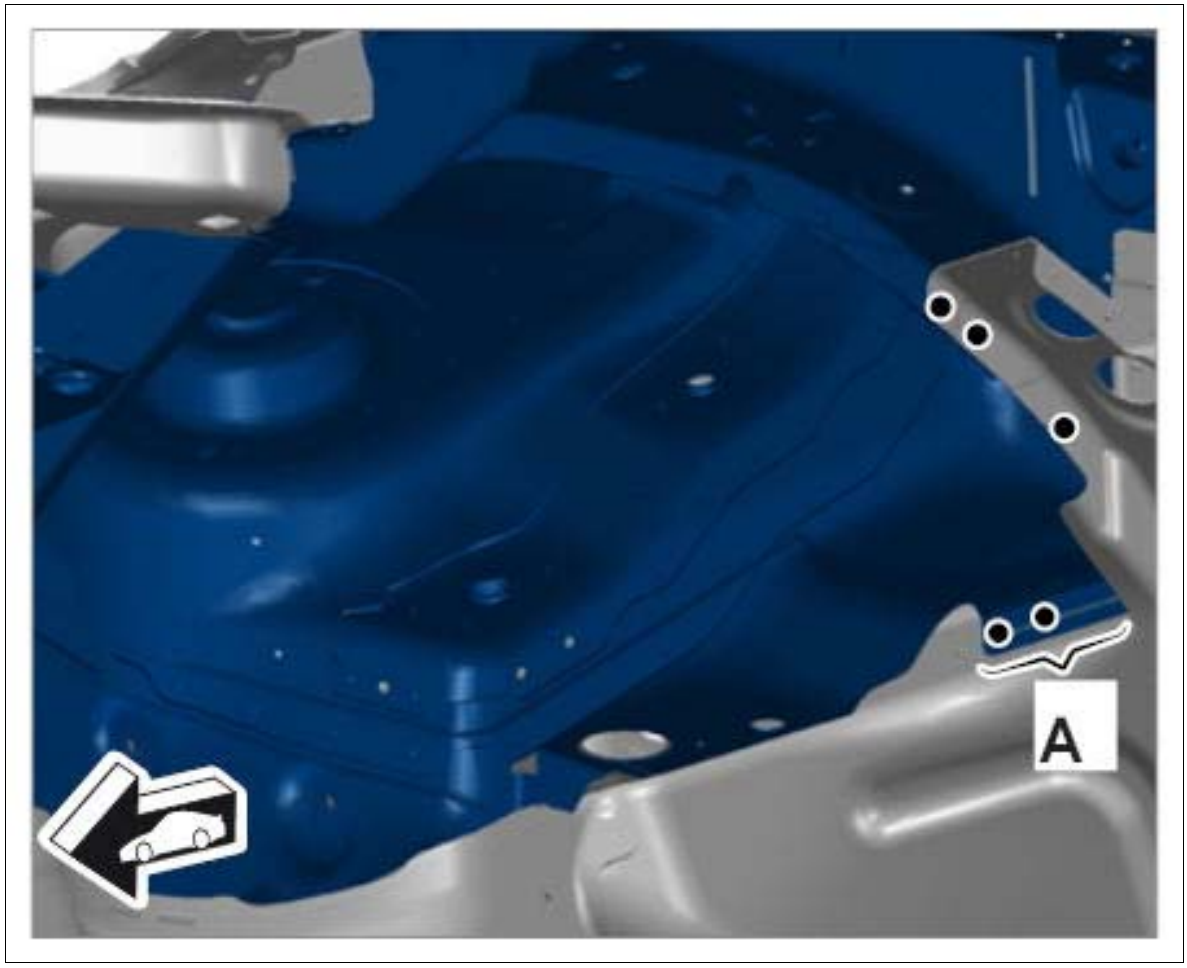

Courtesy of PORSCHE CARS NORTH AMERICA, INC.

5. Install lower part of plenum panel.
    1. 5.1. Plug-weld the lower part of the plenum panel using inert gas.
    2. 5.2. Resistance spot-weld area **-A-** .

Fig 6: Installing Lower Part Of Plenum Panel

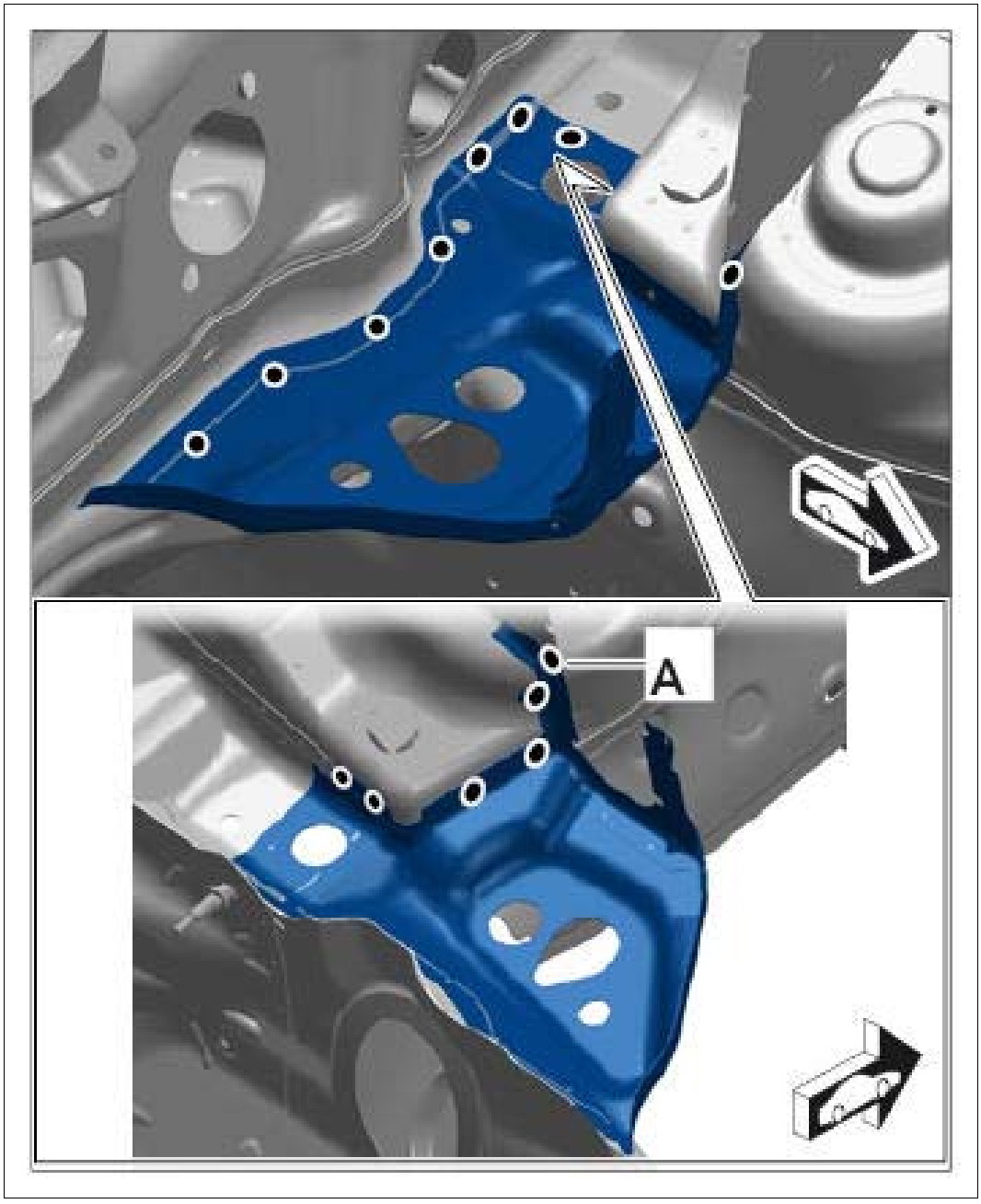

Courtesy of PORSCHE CARS NORTH AMERICA, INC.

6. Install reinforcements.

    1. 6.1. Apply adhesive to the area marked in yellow.

Fig 7: Applying Adhesive

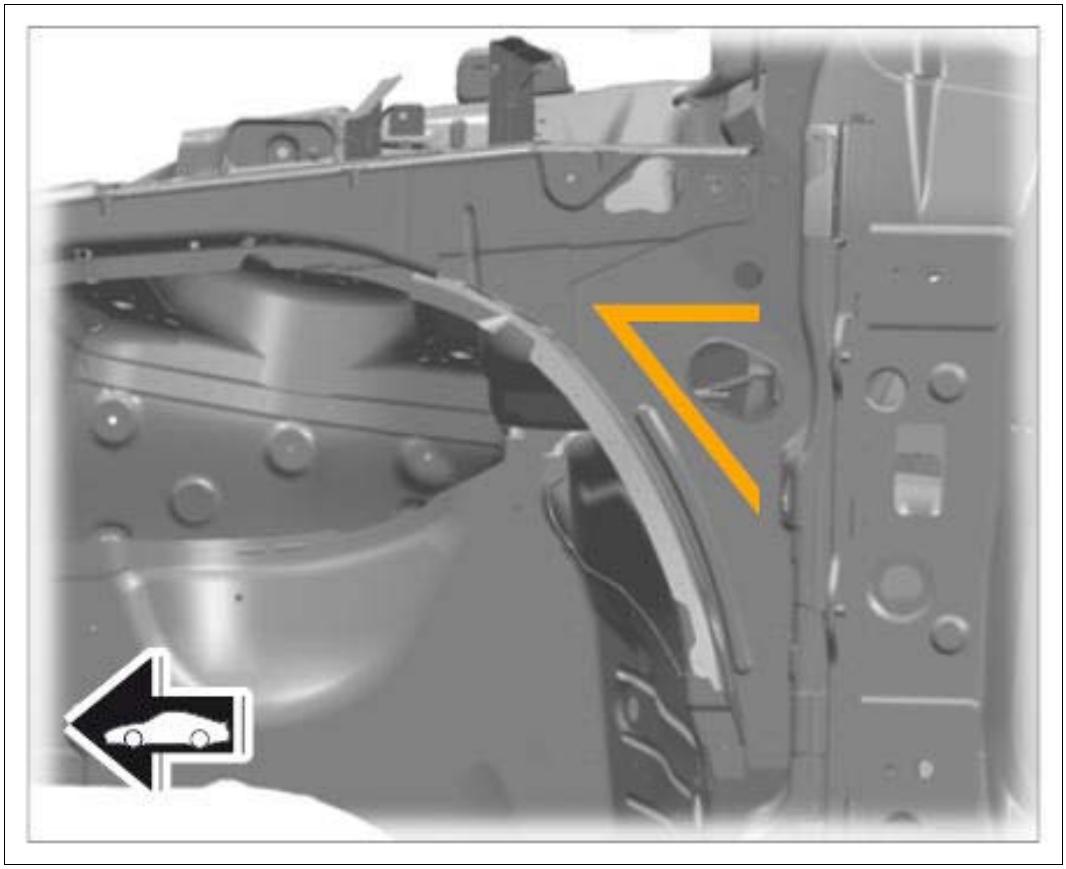

Courtesy of PORSCHE CARS NORTH AMERICA, INC.

7. Resistance spot-weld the reinforcement.

    1. 7.1. Apply a full weld to area **-A & B-** using inert gas.
    2. 7.2. Spot-weld area **-C-** using inert gas.

Fig 8: Installing Reinforcements

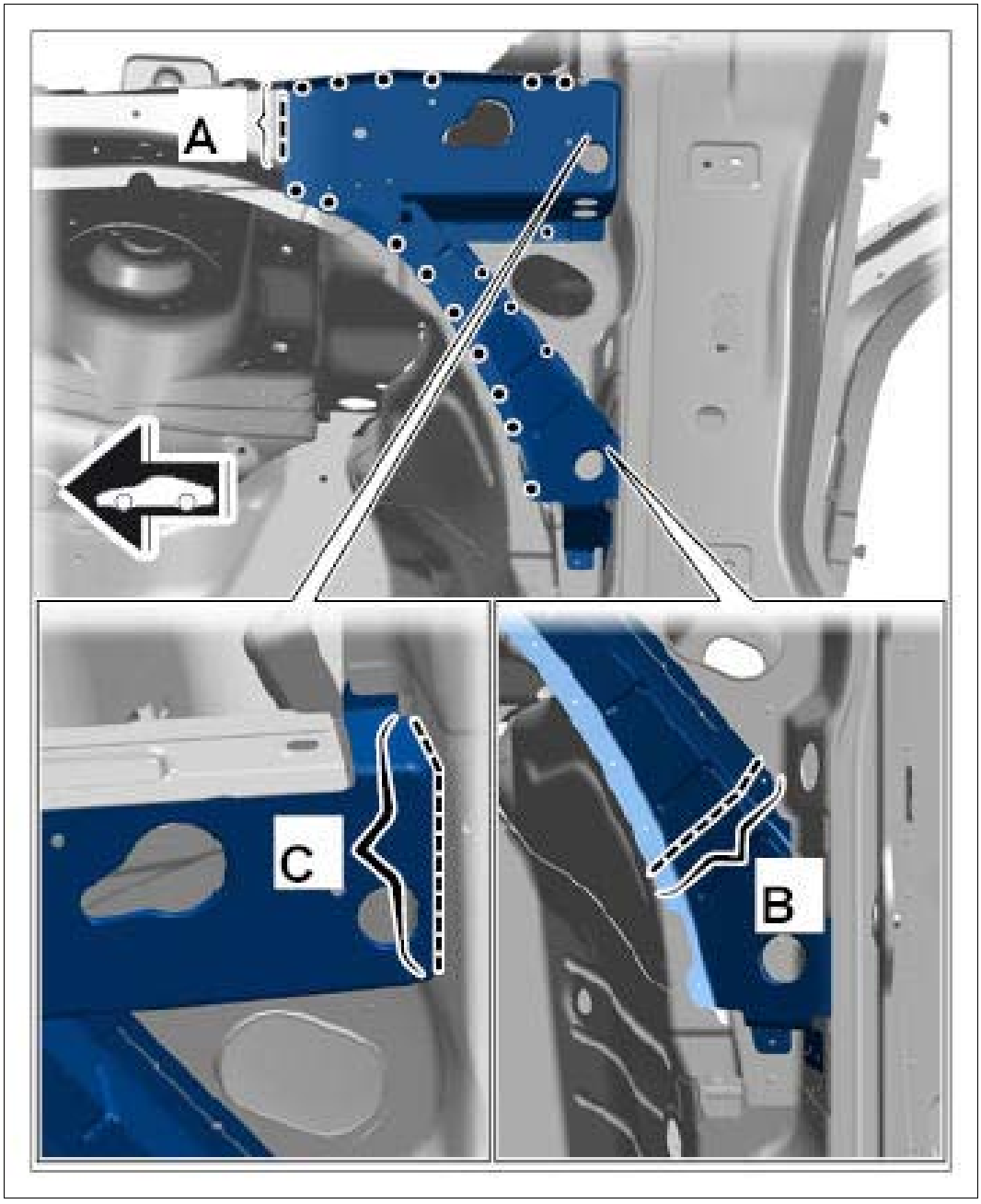

Courtesy of PORSCHE CARS NORTH AMERICA, INC.

8. Install wing bracket.
    1. 8.1. Resistance spot-weld the wing bracket in area **-A-** .
    2. 8.2. Apply a full weld to areas **-arrows-** using inert gas.

Fig 9: Installing Wing Bracket

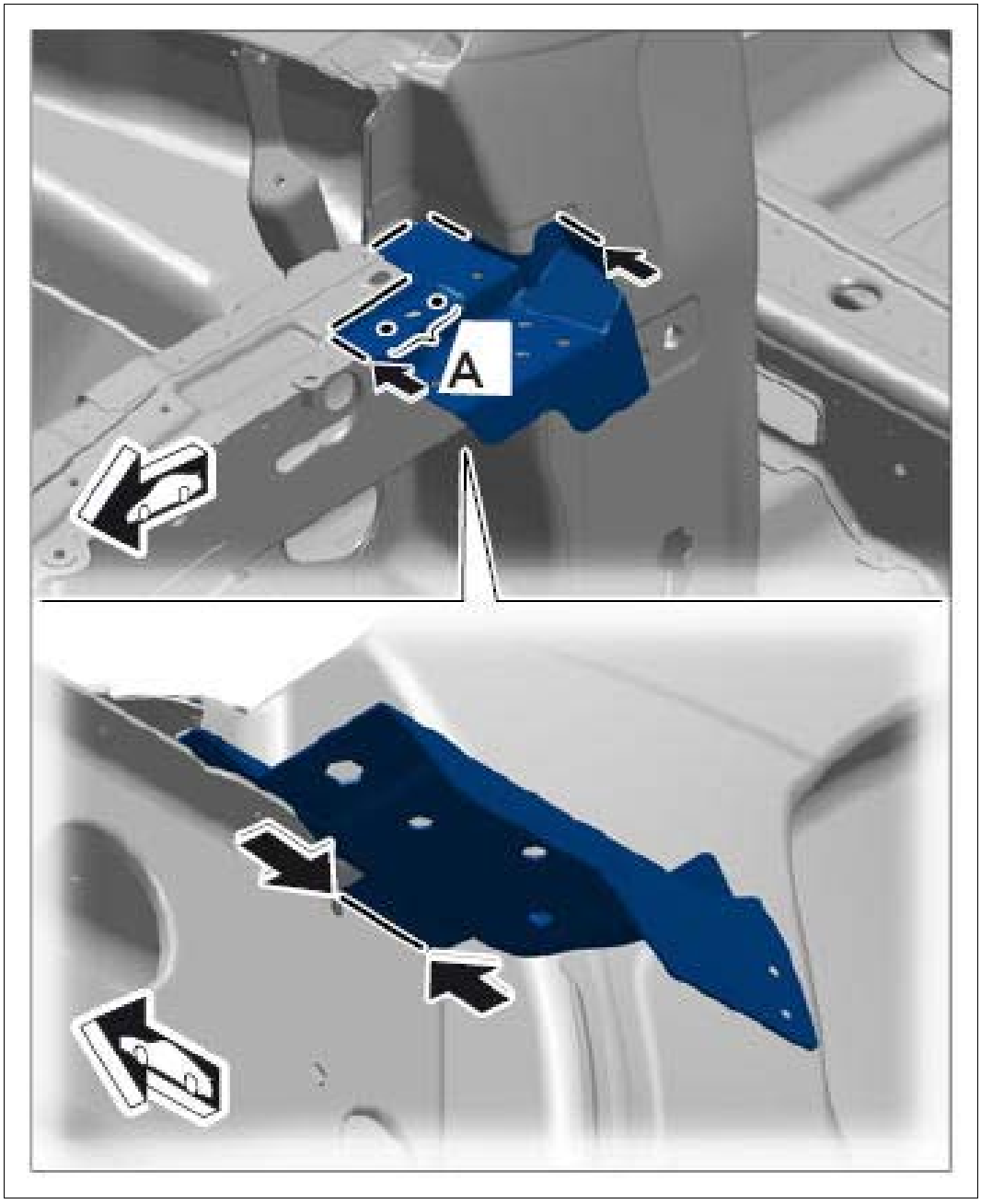

Courtesy of PORSCHE CARS NORTH AMERICA, INC.

WM 503955 REPLACING SPRING STRUT MOUNT (ALL MODELS) > SUBSEQUENT WORK > SUBSEQUENT WORK FOR BODY REPAIRS

1. Release and remove vehicle from the straightening system.
2. Clean joint areas and sheetmetal flanges with a wire brush.
3. Prime joint areas and sheetmetal flanges with 2K primer.
4. Restore standard seal with body sealant → 5X00IN42 SEAM SEALING .

Also seal the repair area carefully.

5. Paint repair area and adjacent surfaces, if necessary.
6. Restore standard underbody protection with underbody sealant → 5X00IN43 UNDERBODY PROTECTION .
7. Apply standard cavity preservation → 5X00IN44 CAVITY PRESERVATION . Also carefully apply cavity preservation to the repair area.
8. Install removed accessories in the repair area.

WM 505519 REMOVING AND INSTALLING WING (ALL MODELS) > TECHNICAL VALUES

Location	Description	Type	Basic value	Tolerance 1	Tolerance 2
Fastening screw for outer wing		Tightening torque	10 Nm (7.5 ftlb.)		
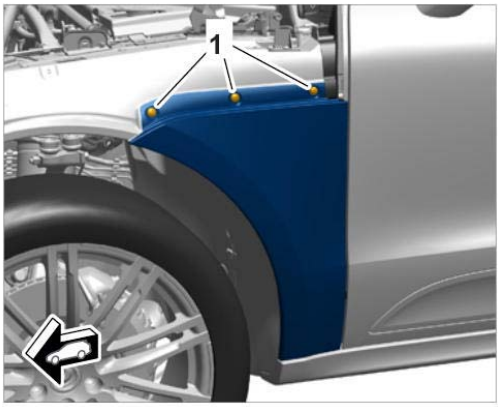 Mounting for outer wing					
Fastening screw for inner wing		Tightening torque	10 Nm (7.5 ftlb.)		

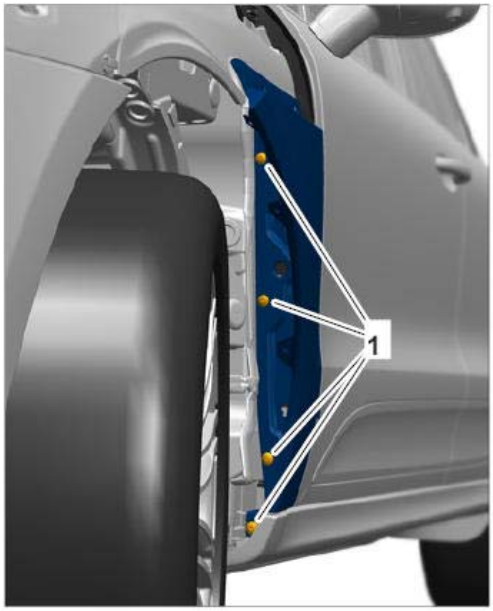

Mounting for inner wing

WM 505519 REMOVING AND INSTALLING WING (ALL MODELS) > PRELIMINARY WORK

1. Remove front wheel housing liner. → 505619 REMOVING AND INSTALLING FRONT WHEEL HOUSING LINER
2. Remove windscreen-washer reservoir on the left wing. → 926019 REMOVING AND INSTALLING WINDSCREEN-WASHER RESERVOIR
3. Partly remove heater on the right wing. → 822019 REMOVING AND INSTALLING COMPLETE HEATER

WM 505519 REMOVING AND INSTALLING WING (ALL MODELS) > REMOVING WING

Information

Use a marking pen to mark the position of accessories with respect to each other before removal in order to reduce the amount of adjustment work required for gaps and joints.

Information

- The number of fastening screws, fixing clips, plug connections, holders and trim panels can vary depending on equipment.
- The illustrations for removing and installing the drive mechanism are shown only on one equipment variant and may differ from the actual equipment variant.
- Some steps must be carried out automatically.
- Some of the repair illustrations show only one side of the vehicle.

Fig 1: Locating Wing Position

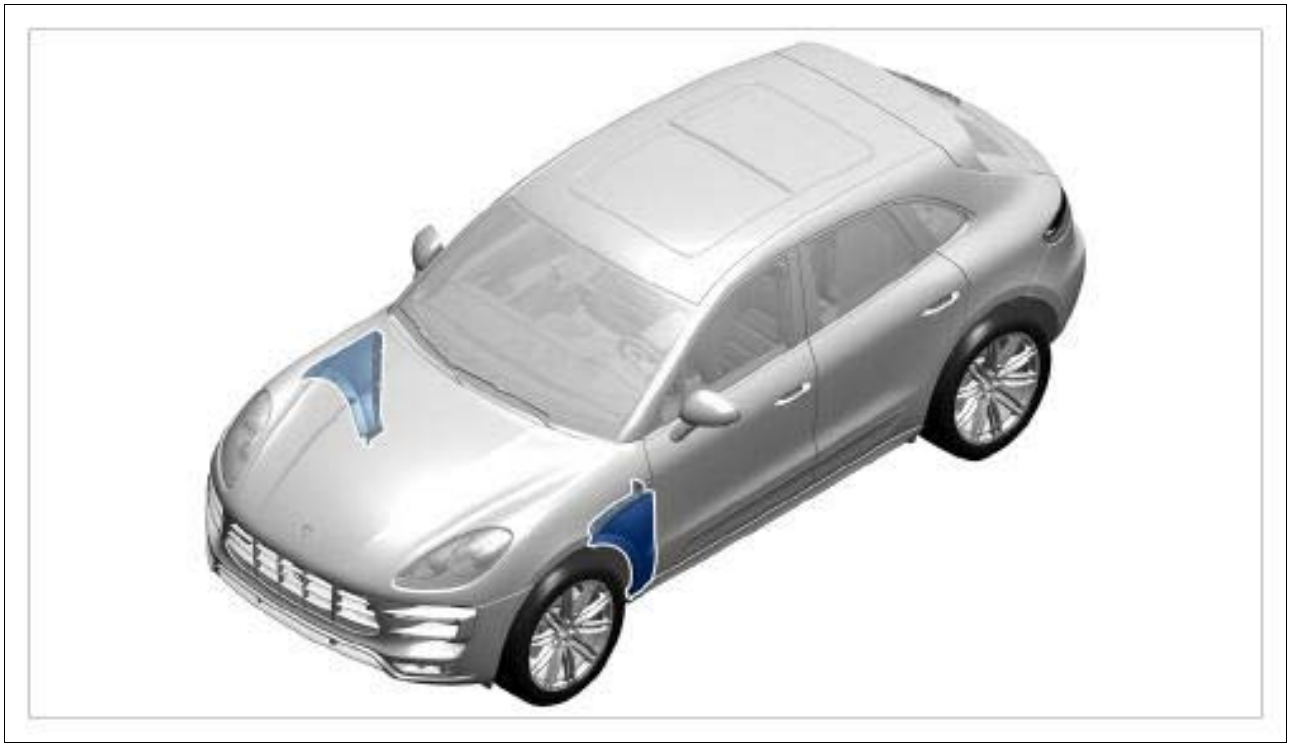

Courtesy of PORSCHE CARS NORTH AMERICA, INC.

1. Unscrew and remove fastening screws **-1-** on outer wing.

Fig 2: Removing Screws Of Outer Wing Mounting

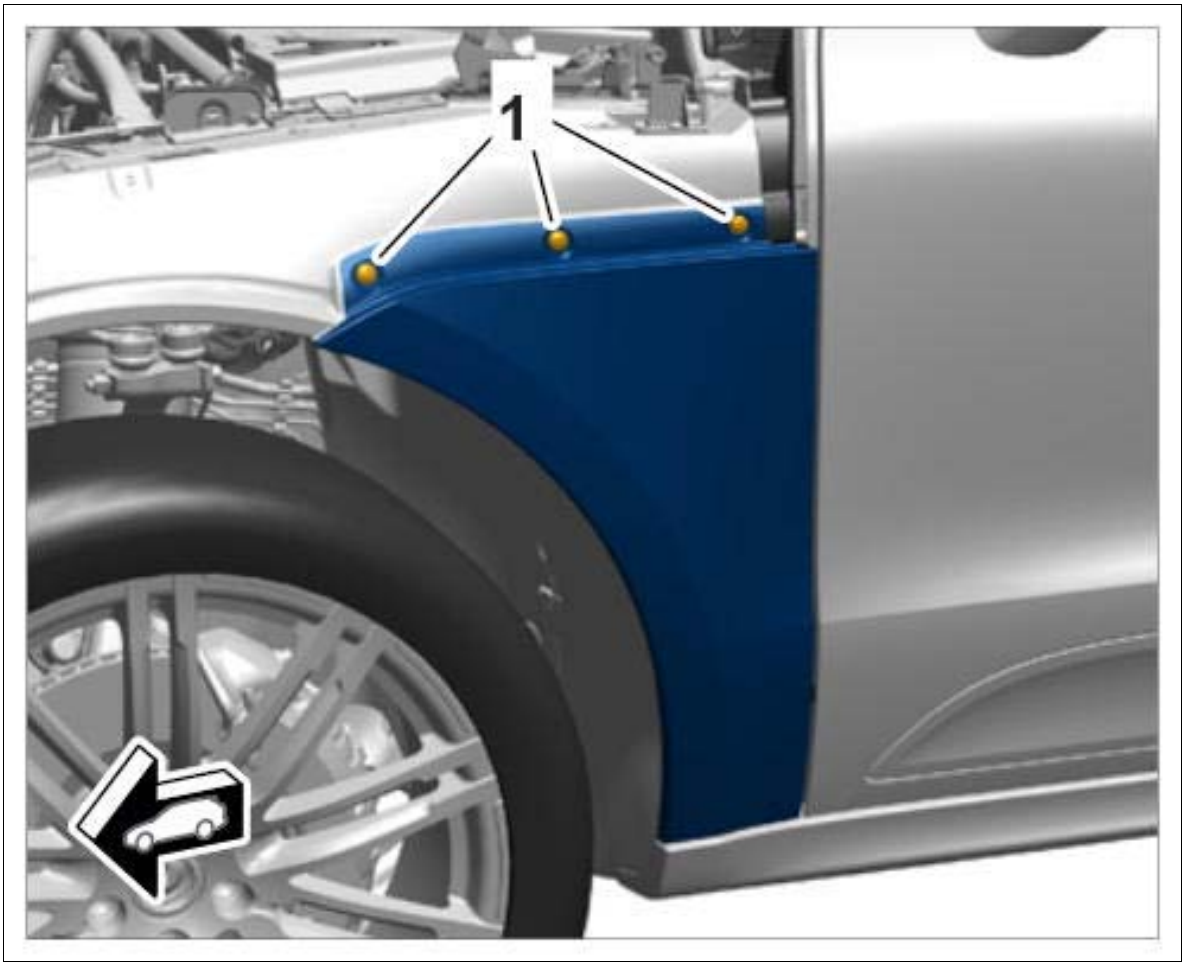

Courtesy of PORSCHE CARS NORTH AMERICA, INC.

2. Unscrew and remove fastening screws on inner wing **-1-** .

Fig 3: Identifying Inner Wing Mounting

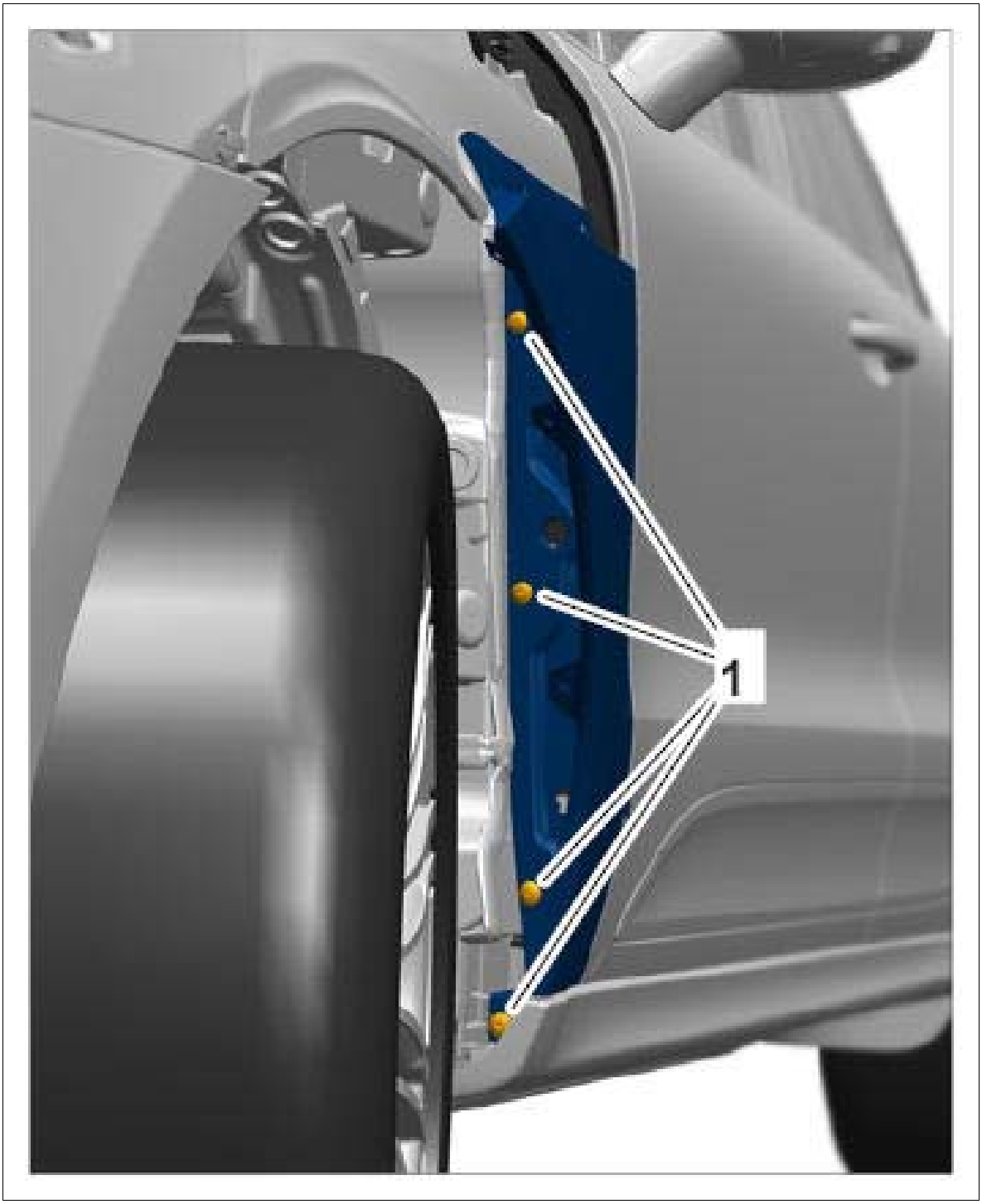

Courtesy of PORSCHE CARS NORTH AMERICA, INC.

3. Push back cover on A-pillar **-1-** (**-arrow-**) and remove wing **-2-** by pulling it upwards.

Fig 4: Removing Wing

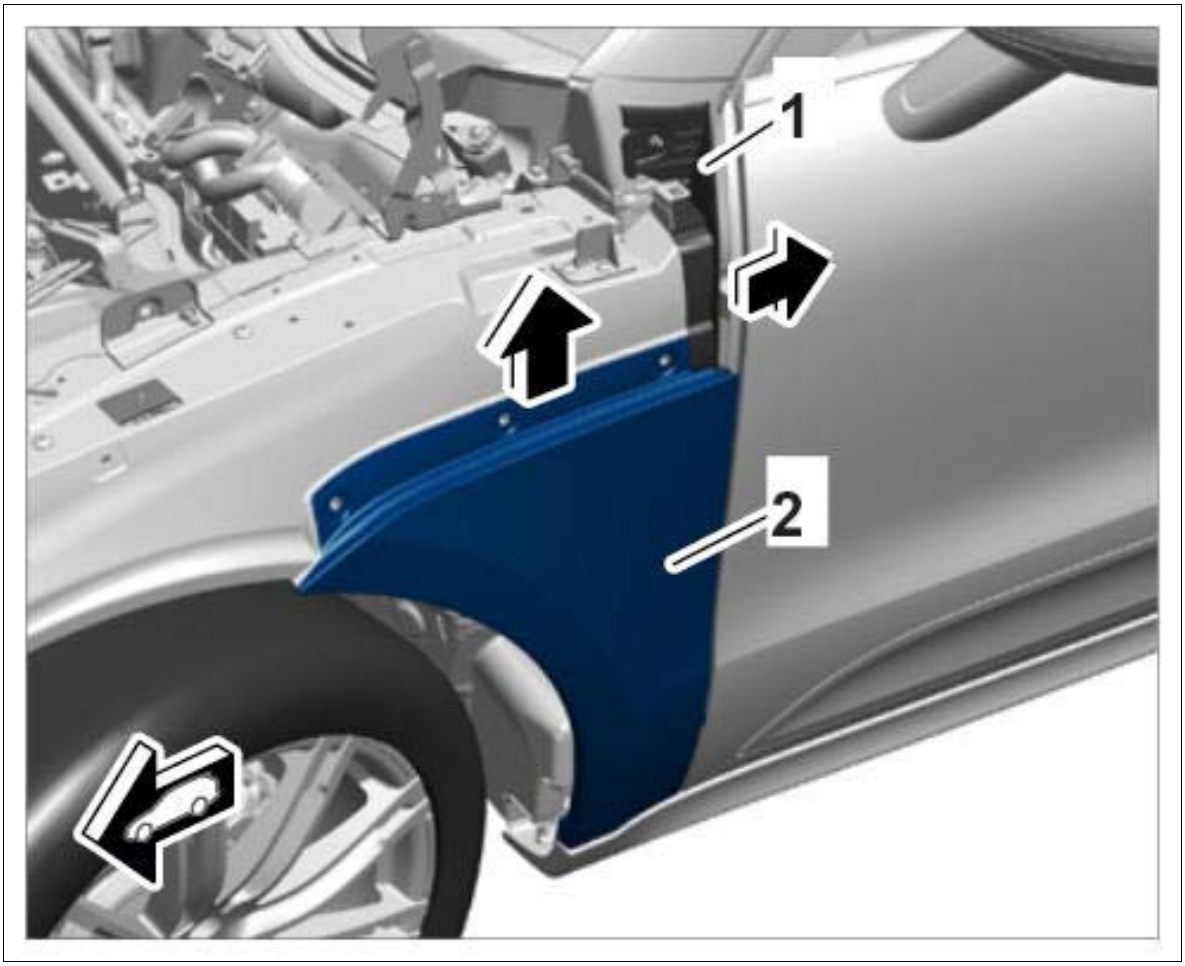

Courtesy of PORSCHE CARS NORTH AMERICA, INC.

WM 505519 REMOVING AND INSTALLING WING (ALL MODELS) > INSTALLING WING

1. Installation is performed in reverse order to removal.
2. Tighten fastening screws on outer wing to the specified tightening torque **Tightening torque 10 Nm (7.5 ftlb.)** until secure.
3. Tighten fastening screws on inner wing to the specified tightening torque **Tightening torque 10 Nm (7.5 ftlb.)** until secure.

WM 505519 REMOVING AND INSTALLING WING (ALL MODELS) > SUBSEQUENT WORK

1. Install heater on right wing → INSTALLING HEATER .
2. Install windscreen-washer reservoir on the left wing → INSTALLING WINDSCREEN-WASHER

RESERVOIR .

3. Install front wheel housing liner → INSTALLING FRONT WHEEL HOUSING LINER .

WM 505619 REMOVING AND INSTALLING FRONT WHEEL HOUSING LINER (ALL MODELS) > TECHNICAL VALUES

Location	Description	Type	Basic value	Tolerance 1	Tolerance 2
Wheel housing liner to body	Nut	Tightening torque	2.5 Nm (2 ftlb.)		
Wheel housing liner to body	Screw	Tightening torque	2 Nm (1.5 ftlb.)		

WM 505619 REMOVING AND INSTALLING FRONT WHEEL HOUSING LINER (ALL MODELS) > PRELIMINARY WORK

1. Raise the vehicle. → 4X00IN LIFTING THE VEHICLE

WM 505619 REMOVING AND INSTALLING FRONT WHEEL HOUSING LINER (ALL MODELS) > REMOVING FRONT WHEEL HOUSING LINER

Information

- The number of fastening screws, fixing clips, plug connections, holders and trim panels can vary depending on equipment.
- The illustrations for removing and installing the drive mechanism are shown only on one equipment variant and may differ from the actual equipment variant.
- Some steps must be carried out automatically.
- Some of the repair illustrations show only one side of the vehicle.

1. Unscrew fastening screws **-3-** .
2. Unscrew and remove fastening nuts **-1-** .
3. Unscrew fixing clips **-2-** .
4. Loosen and remove wheel housing liner **-4-** .

Fig 1: Removing Front Right Wheel Housing Liner

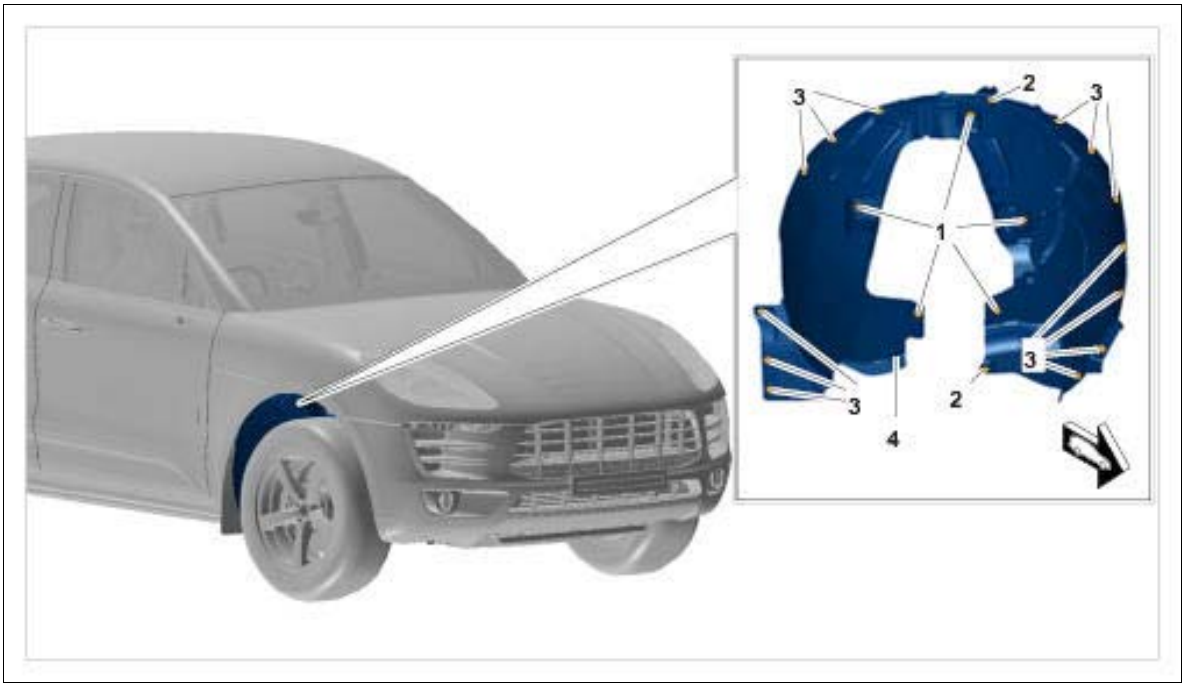

Courtesy of PORSCHE CARS NORTH AMERICA, INC.

WM 505619 REMOVING AND INSTALLING FRONT WHEEL HOUSING LINER (ALL MODELS) > INSTALLING FRONT WHEEL HOUSING LINER

Installation is performed in reverse order. Pay particular attention to the following:

1. Screw in and tighten fastening screws to **Tightening torque 2 Nm (1.5 ftlb.)** .
2. Tighten fastening nuts to **Tightening torque 2.5 Nm (2 ftlb.)** until secure.

WM 505619 REMOVING AND INSTALLING FRONT WHEEL HOUSING LINER (ALL MODELS) > SUBSEQUENT WORK

1. Lower the vehicle. → 4X00IN LIFTING THE VEHICLE

WM 506055 REPLACING HEADLIGHT MOUNTING (ALL MODELS) > TOOLS

Designation	Type	Number	Description	
Hot-air blower	Workshop equipment	WE 1119		
Body alignment system package	Workshop equipment	WE 1121		

Special electric cutter	Workshop equipment	WE 1137		
Pneumatic Spotweld Remover, Vario Drill WS 90	Workshop equipment	WE 1139		
Hand-cartridge gun	Workshop equipment	WE 1141		
Resistance spot welder	Workshop equipment	WE 1311		
Inverter welder MIDIspot-QSVM-12000	Workshop equipment	WE 1312		
Resistance spot welder	Workshop equipment	WE 1313		
Blind riveting tool TAURUS 4	Workshop equipment	WE 1348		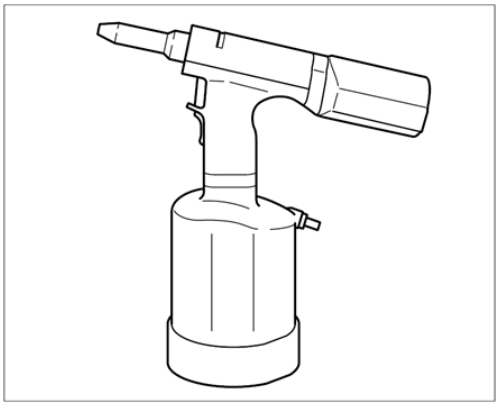
Aluminum tool set with trolley	Workshop equipment	WE 1350		
Resistance spot welder	Workshop equipment	WE 1352		
Measuring and alignment system, professional	Workshop equipment	WE 1398		
Mobile extraction unit, aluminum	Workshop equipment	WE 1507		
Body saw	Workshop equipment	WE 1508		

Star gauges for body gap dimensions	Special tool	Nr.127-1		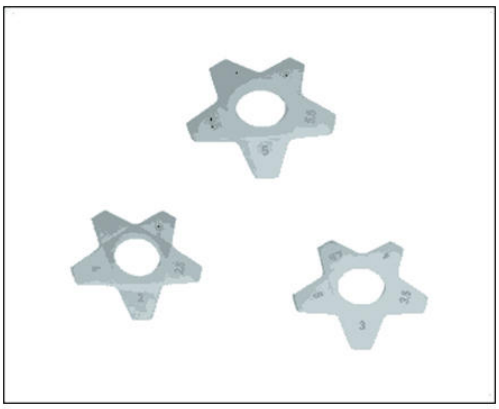
Spotweld drill; see Gr. 2.4; *** Workshop Equipment Manual	Commercially available tool	Nr.129		
Twist drill	Commercially available tool	Nr.201		
Countersink	Commercially available tool	Nr.202		

WM 506055 REPLACING HEADLIGHT MOUNTING (ALL MODELS) > TECHNICAL VALUES

Location	Description	Type	Basic value	Tolerance 1	Tolerance 2
Applying adhesive		Application depth	3.0 mm		

WM 506055 REPLACING HEADLIGHT MOUNTING (ALL MODELS) > PRELIMINARY WORK > PRELIMINARY WORK FOR BODY REPAIRS (WITH STRAIGHTENING SYSTEM)

1. Remove accessories in the repair area.
    1. 1.1. Remove accessories in the repair area according to the extent of damage on the vehicle.
2. Set up straightening bench with straightening system.
3. Set vehicle on straightening bench.
4. Cover accessories adjacent to the repair area on the vehicle.
    1. 4.1. Cover all accessories remaining on the vehicle and adjacent areas with fire-proof protective covers.
5. Expose joint areas.
    1. 6.1. Remove underbody protection, paint, etc. from the joint areas of the body using a hot-air gun or rotary brush.

WM 506055 REPLACING HEADLIGHT MOUNTING (ALL MODELS) > SAFETY INSTRUCTIONS AND INFORMATION ON QUALITY

⚠ *CAUTION: Non-observance of safety instructions for body repairs*

- *Risk of damage to the vehicle*
- *Danger of injury*

→ Read the relevant safety instructions as well as general information and quality instructions → 5X00IN01 SAFETY INSTRUCTIONS .

- Corrosion protection measures during repairs → 5X00IN03 CORROSION PROTECTION MEASURES DURING REPAIRS .
- Body parts of various sheet-steel strengths → 5X00IN04 BODY PARTS OF VARIOUS

SHEET-STEEL STRENGTHS .

- Setting self-tapping screws → 5X00IN24 SETTING SELF-TAPPING SCREWS .
- Working with body structural adhesive → 5X00IN21 WORKING WITH BODY STRUCTURAL ADHESIVE .

WM 506055 REPLACING HEADLIGHT MOUNTING (ALL MODELS) > TOOLS AND MATERIALS > TOOLS AND MATERIALS FOR BODY REPAIRS

Information

- The tools for working on steel and aluminum must always be kept separate from each other. We recommend that you color code the tools using a system similar to that used for the Aluminum tool set with trolley WE 1350, for example.

Straightening set **Body alignment system package WE 1121 Measuring and alignment system, professional WE 1398**

Resistance spot welder; optional **Inverter welder MIDIspot-QSVM-12000 WE 1312, Resistance spot welder WE 1352, Resistance spot welder WE 1311, Resistance spot welder WE 1313**

Metal inert gas (MIG) welder

Pneumatic spotweld remover **Pneumatic Spotweld Remover, Vario Drill WS 90 WE 1139**

Pneumatic body saw **Body saw WE 1508**

Oscillating body saw (special electric cutter) **Special electric cutter WE 1137**

Hot-air blower **Hot-air blower WE 1119**

Hand-cartridge gun **Hand-cartridge gun WE 1141**

Spotweld drill **Spotweld drill** ; Twist drill Nr.201

Countersink for rivets **Countersink Nr.202**

Blind riveting tool for high-strength rivets **Blind riveting tool TAURUS 4 WE 1348**

Safety vacuum cleaner for aluminum dust **Mobile extraction unit, aluminum WE 1507**

Star gauges for body gap dimensions Nr.127-1

Wurth Klebt und Dichtet body sealant

WM 506055 REPLACING HEADLIGHT MOUNTING (ALL MODELS) > REMOVING HEADLIGHT MOUNTING

Information

Only make cuts in the top plate. Make sure not to damage the plate underneath when doing this.

Fig 1: Locating Headlight Mounting Position

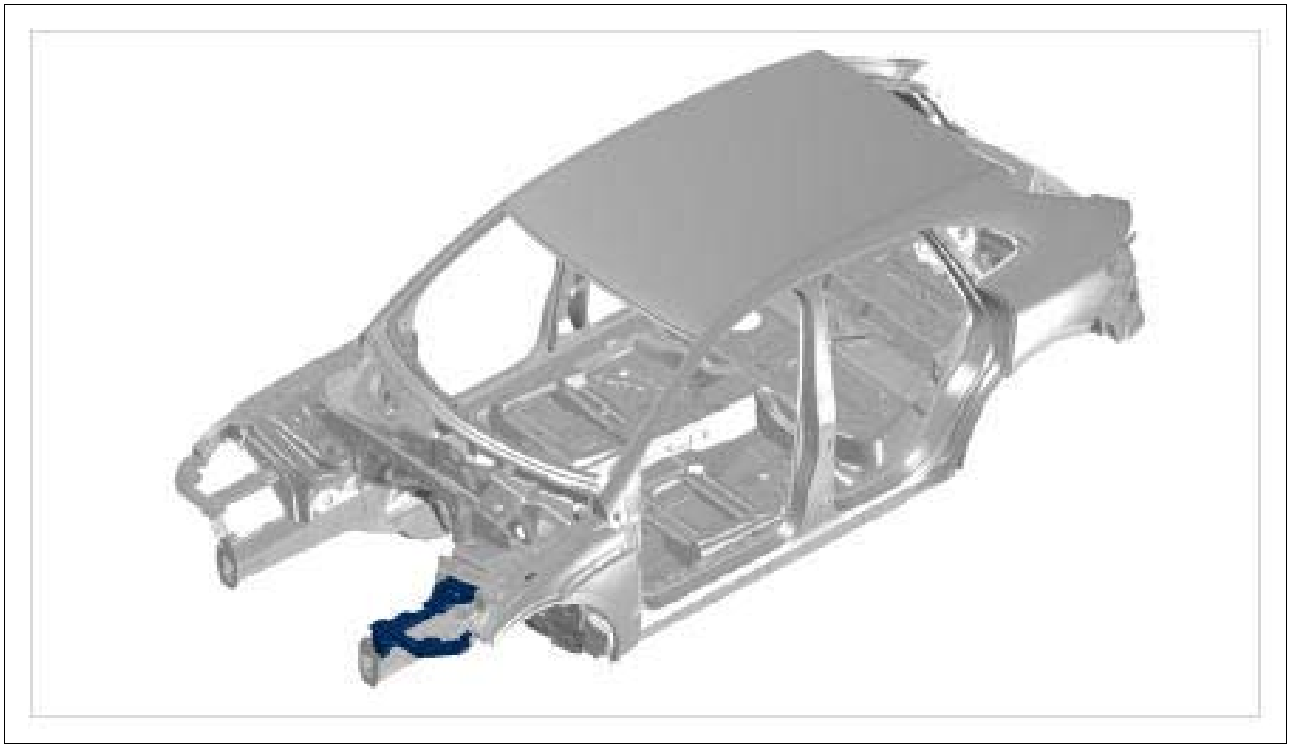

Courtesy of PORSCHE CARS NORTH AMERICA, INC.

1. Roughly cut out headlight mounting **-arrows-** .

Fig 2: Removing Headlight Mounting

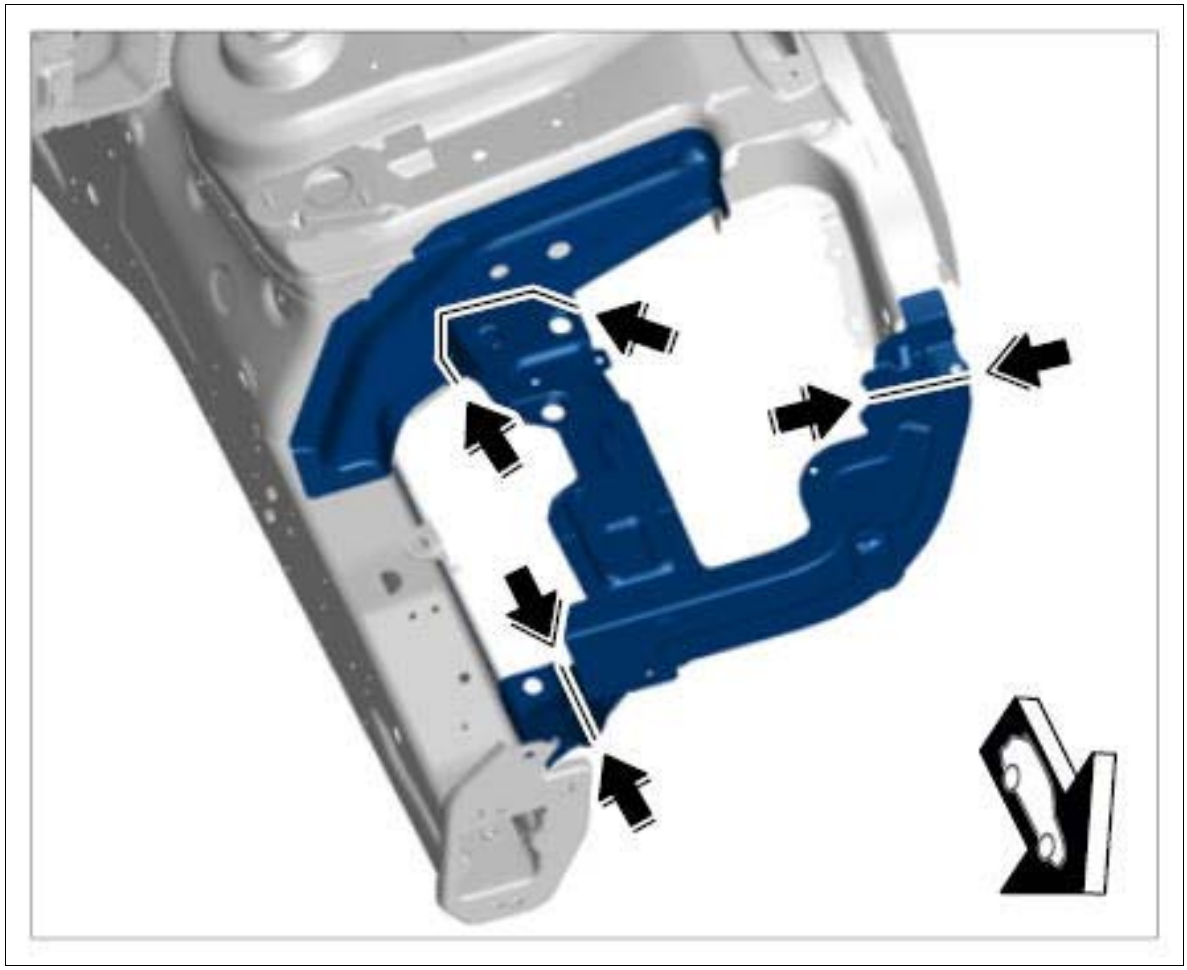

Courtesy of PORSCHE CARS NORTH AMERICA, INC.

Information

Drill out the connection point on one side only. Do not damage the plate underneath.

2. Drill out spotwelds. Spotweld drill Nr.129 Pneumatic spotweld remover, Vario Drill WS 90 WE 1139

Fig 3: Drilling Out Spotwelds

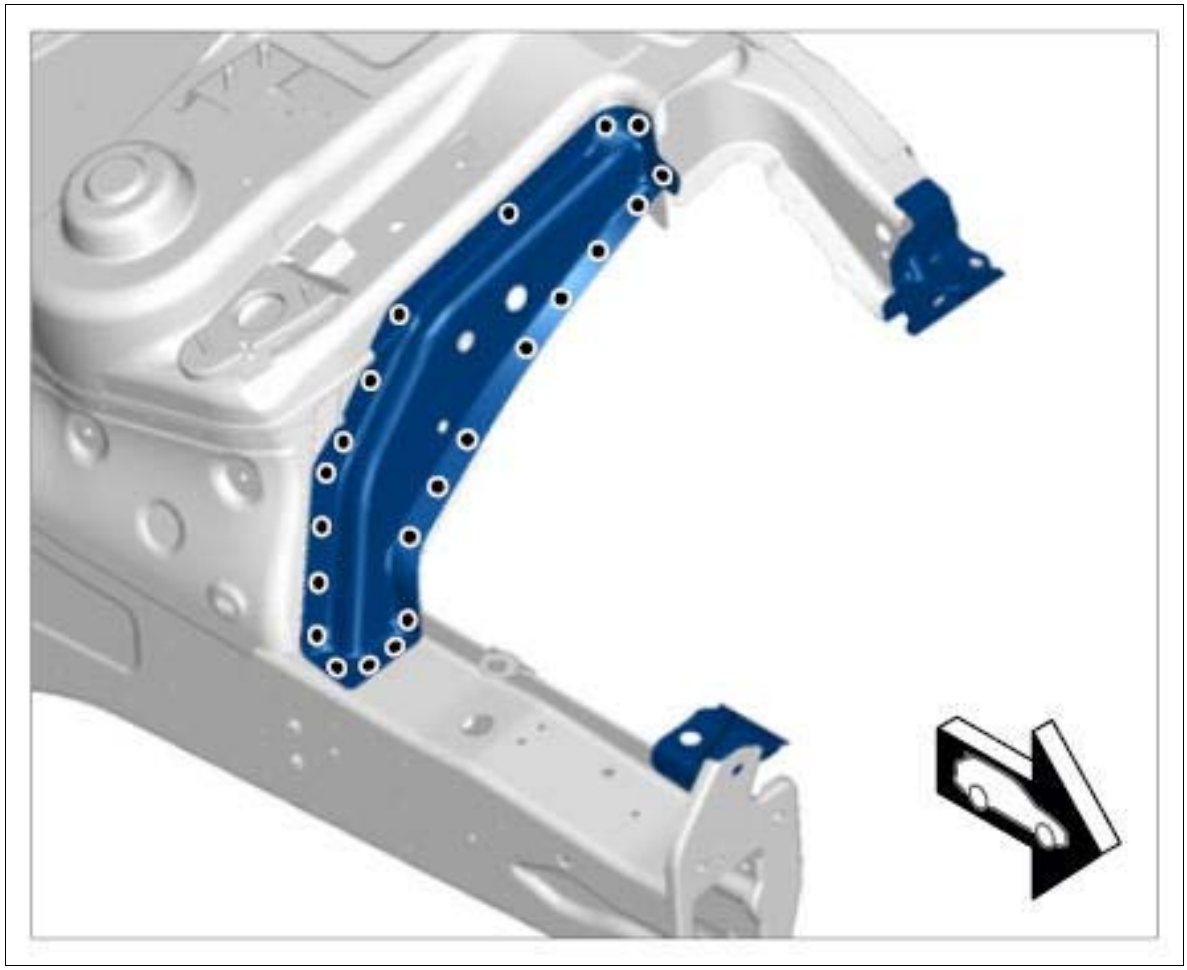

Courtesy of PORSCHE CARS NORTH AMERICA, INC.

3. Heat the marked bonding surfaces.

    1. 3.1. Remove support for ESP holder.

Fig 4: Removing Support For ESP Holder

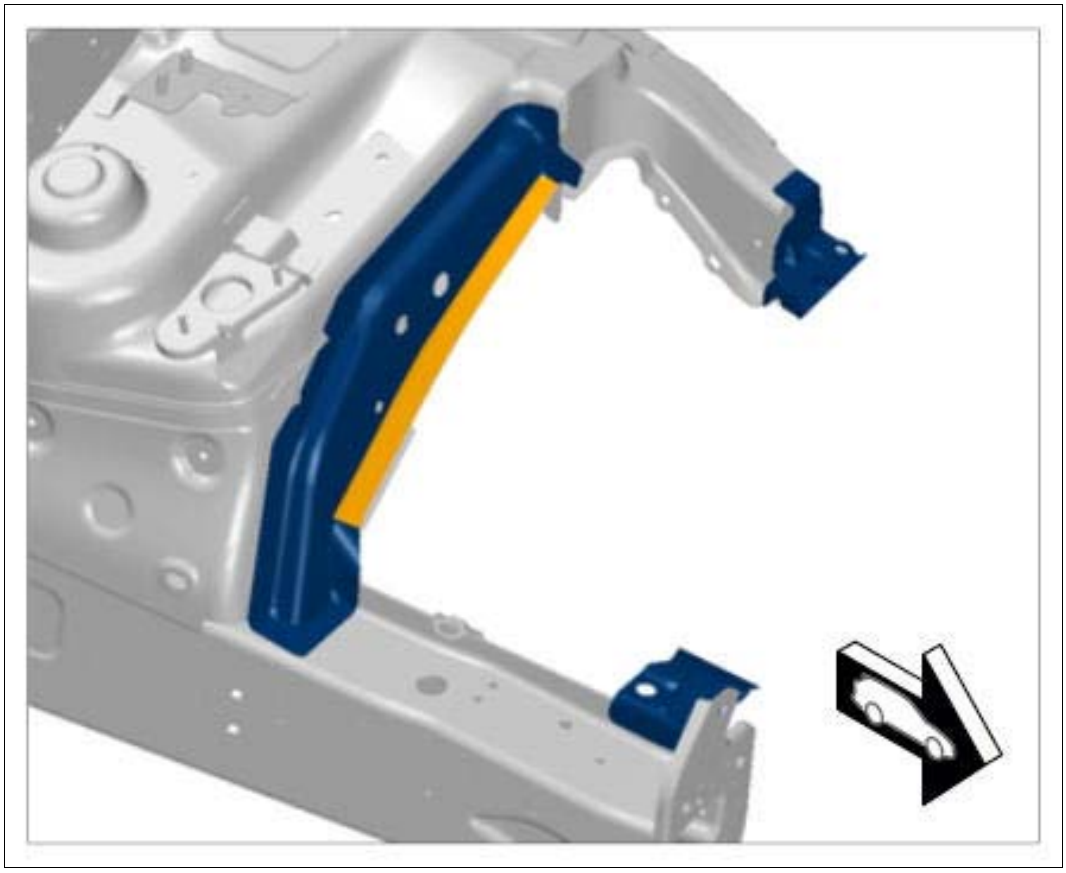

Courtesy of PORSCHE CARS NORTH AMERICA, INC.

4. Remove bracket for front side member.

   Information

   Drill out the connection point on one side only. Do not damage the plate underneath.

   1. 4.1. Drill out spotwelds. **Spotweld drill Nr.129 Pneumatic spotweld remover, Vario Drill WS 90 WE 1139**

   2. 4.2. Remove remaining pieces.

Fig 5: Removing Bracket For Front Side Member

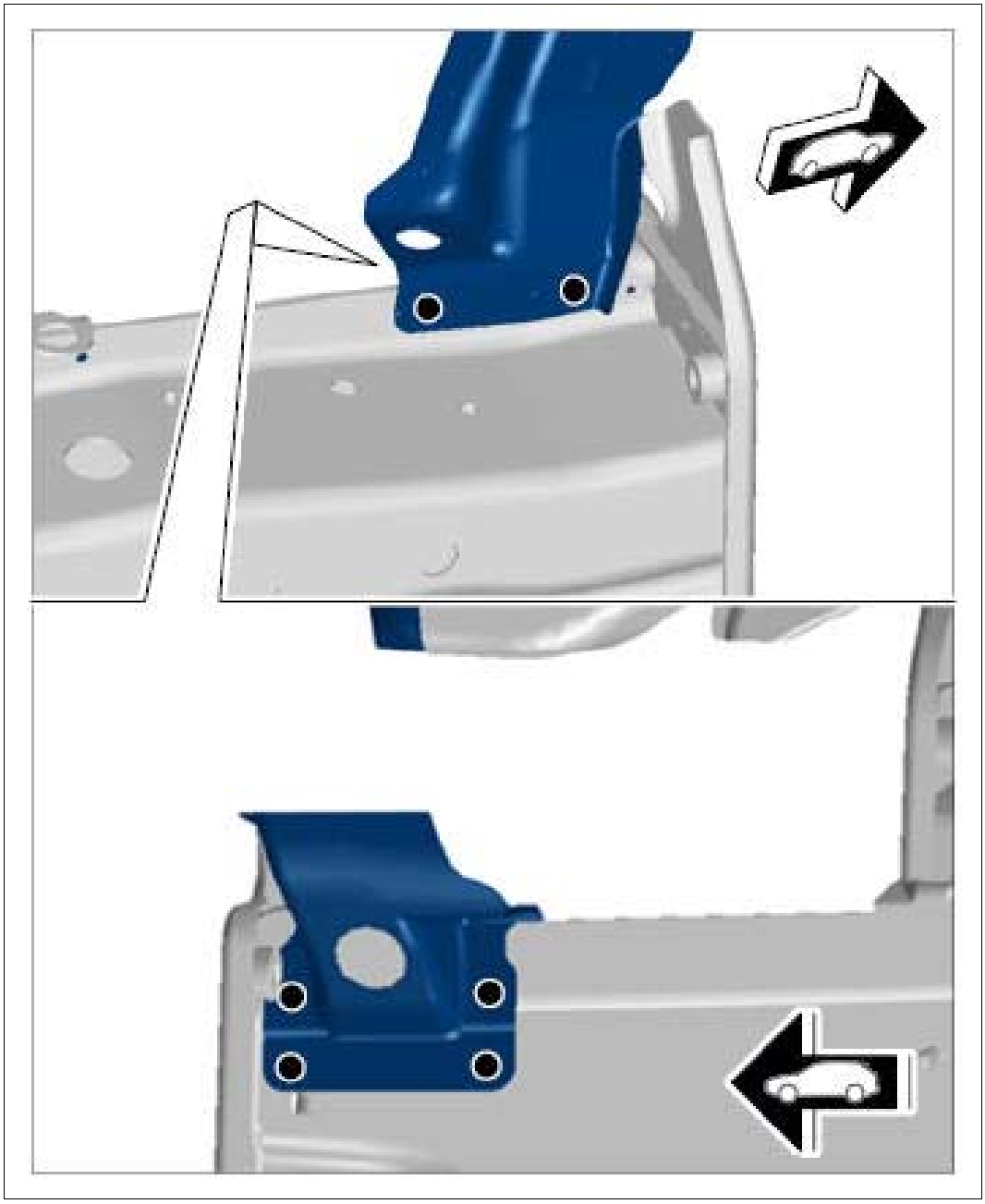

Courtesy of PORSCHE CARS NORTH AMERICA, INC.

5. Remove headlight mounting.

Information

Drill out the connection point on one side only. Do not damage the plate underneath.

1. 5.1. Drill out spotwelds. **Spotweld drill Nr.129 Pneumatic spotweld remover, Vario Drill WS 90 WE 1139**
2. 5.2. Remove welded seams **-arrows-** .
3. 5.3. Remove remaining pieces.

Fig 6: Removing Headlight Mounting

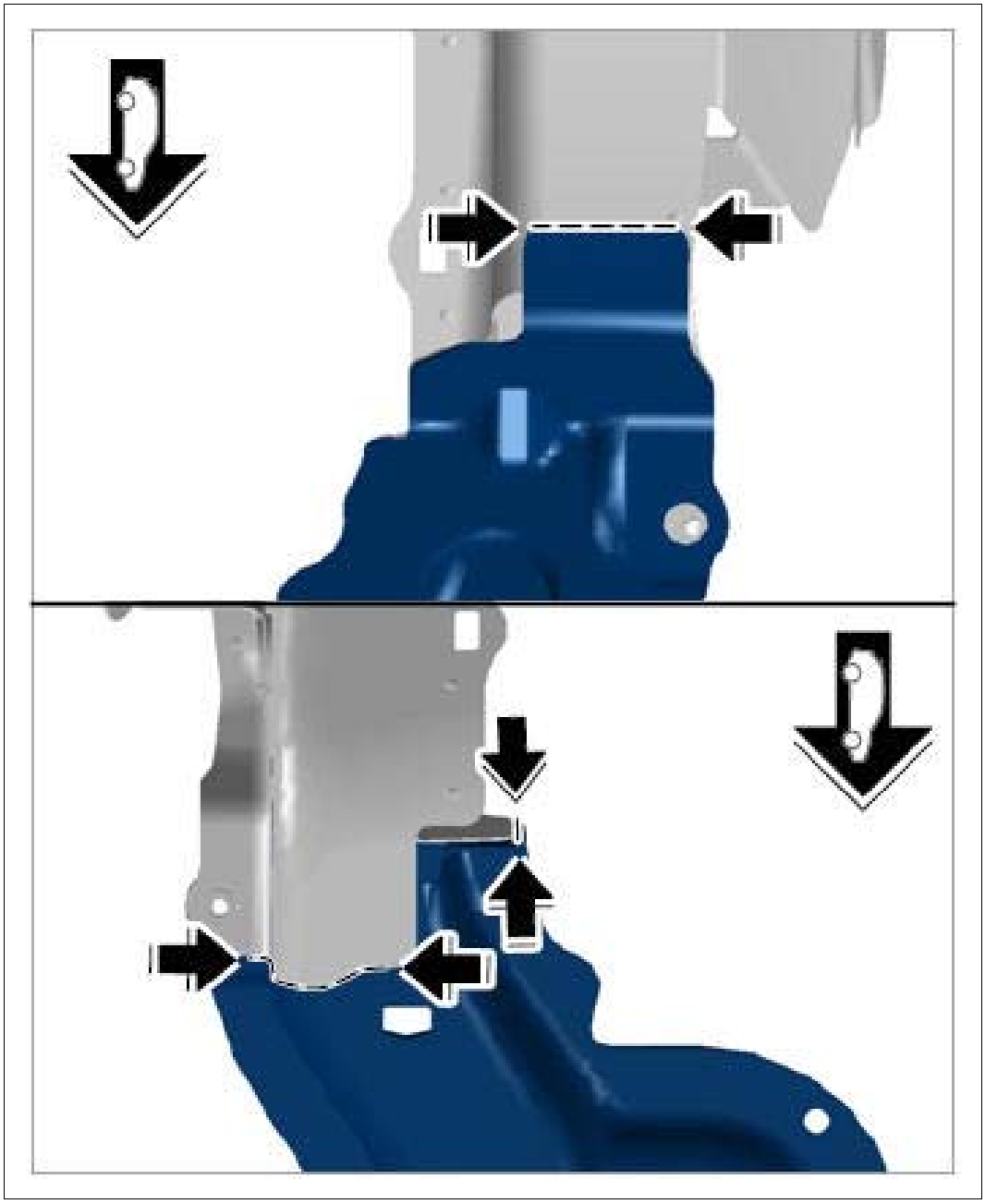

Courtesy of PORSCHE CARS NORTH AMERICA, INC.

WM 506055 REPLACING HEADLIGHT MOUNTING (ALL MODELS) > PREPARING HEADLIGHT MOUNTING FOR INSTALLATION

1. Prepare connection areas for bonding and welding.

Fig 1: Checking Connection Areas For Bonding

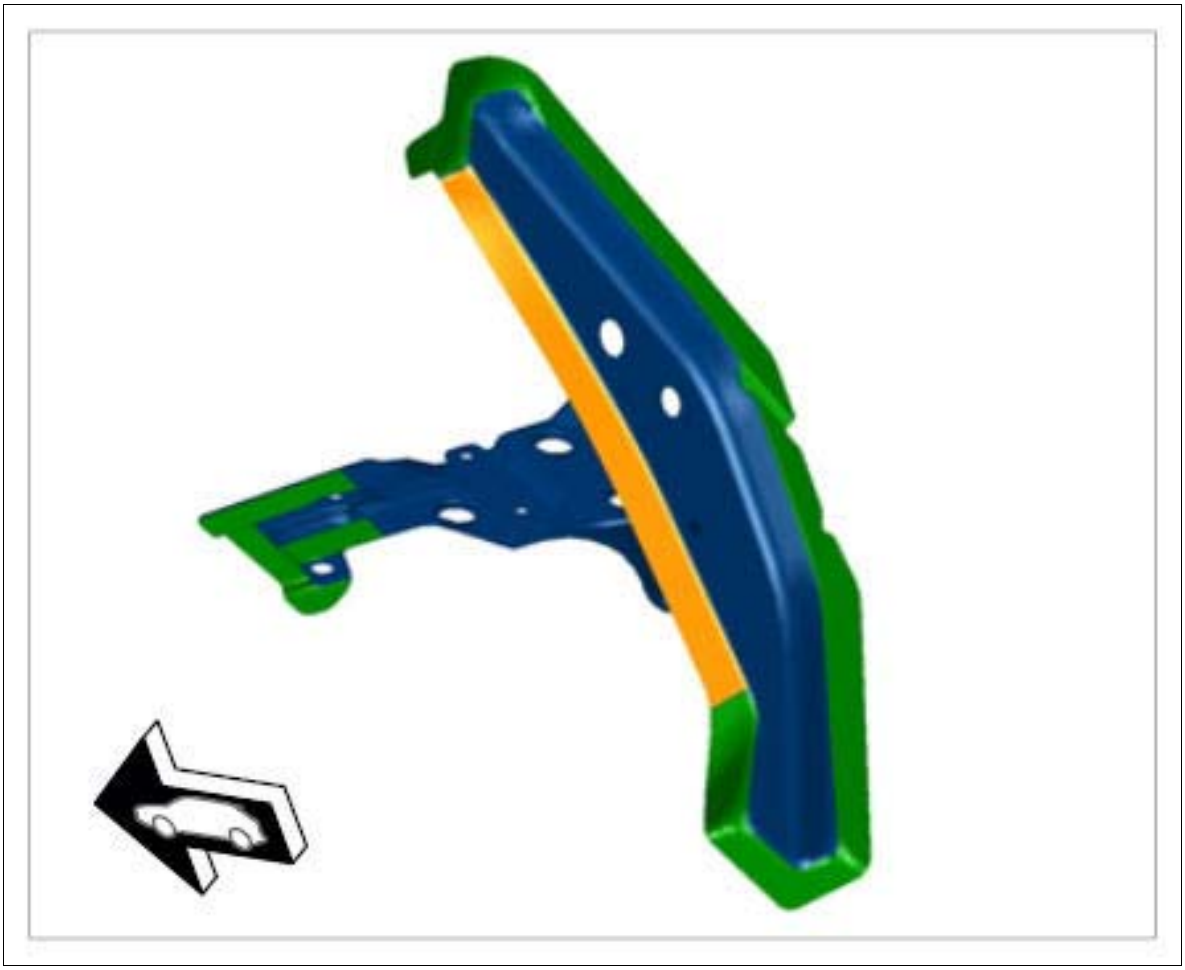

Courtesy of PORSCHE CARS NORTH AMERICA, INC.

Fig 2: Checking Connection Areas For Bonding And Welding

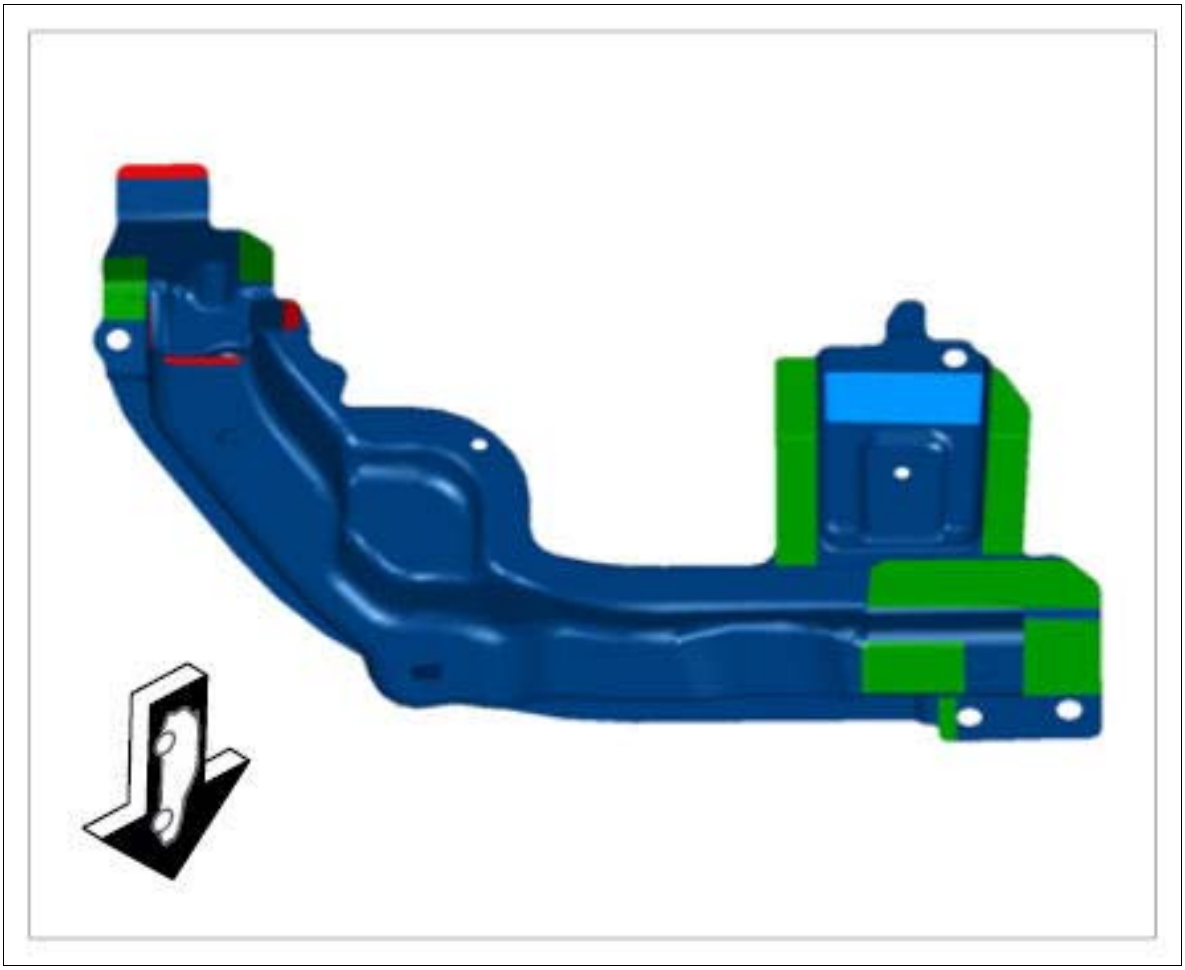

Courtesy of PORSCHE CARS NORTH AMERICA, INC.

Fig 3: Checking Connection Areas For Bonding

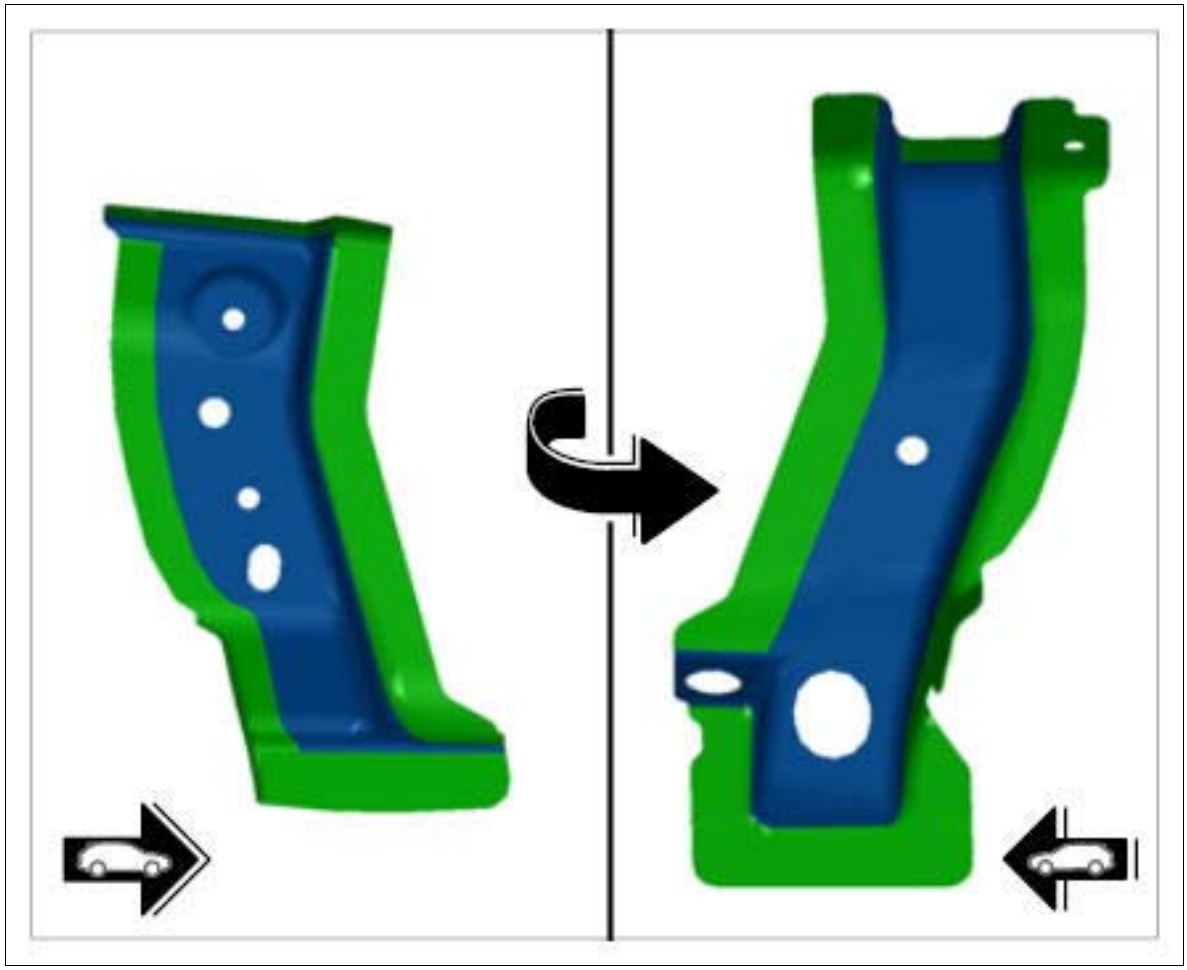

Courtesy of PORSCHE CARS NORTH AMERICA, INC.

Green	Resistance spot-welding
Orange	Resistance spot-welding + bonding
Red	Plug-welding/apply a full weld using inert gas without bonding

WM 506055 REPLACING HEADLIGHT MOUNTING (ALL MODELS) > PREPARING CONNECTION AREAS OF THE BODY

1. Align the sealing surface and connections of the body.
2. De-burr connection points and prepare them for welding.

Information

1. Before final assembly, make sure you fully understand all the work steps involved and carry out a trial assembly without applying adhesive.
2. The bonding process can only be carried out reliably when a smooth and swift sequence

of operations is guaranteed.

3. Do not begin bonding work until all materials and tools necessary for later repair work are available.

3. Prepare the marked areas for welding and bonding.

Fig 1: Preparing Connection Areas Of Body

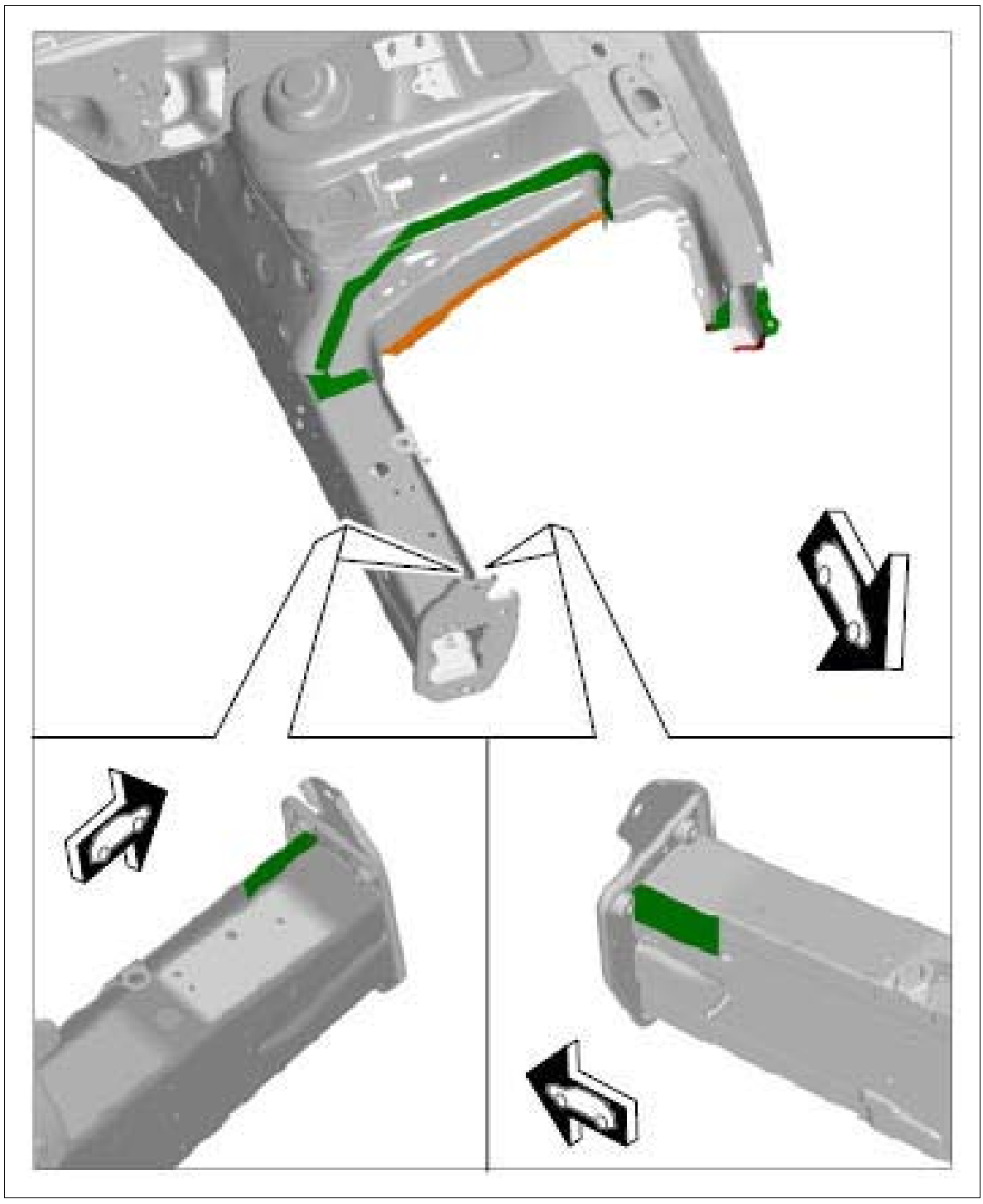

Courtesy of PORSCHE CARS NORTH AMERICA, INC.

Green	Resistance spot-welding

Red	Plug-welding/apply a full weld using inert gas without bonding
Orange	Resistance spot-welding + bonding

WM 506055 REPLACING HEADLIGHT MOUNTING (ALL MODELS) > INSTALLING HEADLIGHT MOUNTING

1. Install headlight mounting and fit it using a straightening set. Check gap dimensions → 5X00IN41 GAP DIMENSIONS .

   Information

   1. Before final assembly, make sure you fully understand all the work steps involved and carry out a trial assembly without applying adhesive.
   2. The bonding process can only be carried out reliably when a smooth and swift sequence of operations is guaranteed.
   3. Do not begin bonding work until all materials and tools necessary for later repair work are available.

2. Apply adhesive to the area marked in yellow. → **Application depth: 3.0 mm**

   Working with body structural adhesive → WM 5X00IN PROCESSING STRUCTURAL BODY ADHESIVE (ALL MODELS) .

Fig 1: Applying Adhesive



Courtesy of PORSCHE CARS NORTH AMERICA, INC.

Information

Position the headlight mounting using a straightening set.

3. Resistance spot-weld ESP holder.

Fig 2: Installing ESP Holder

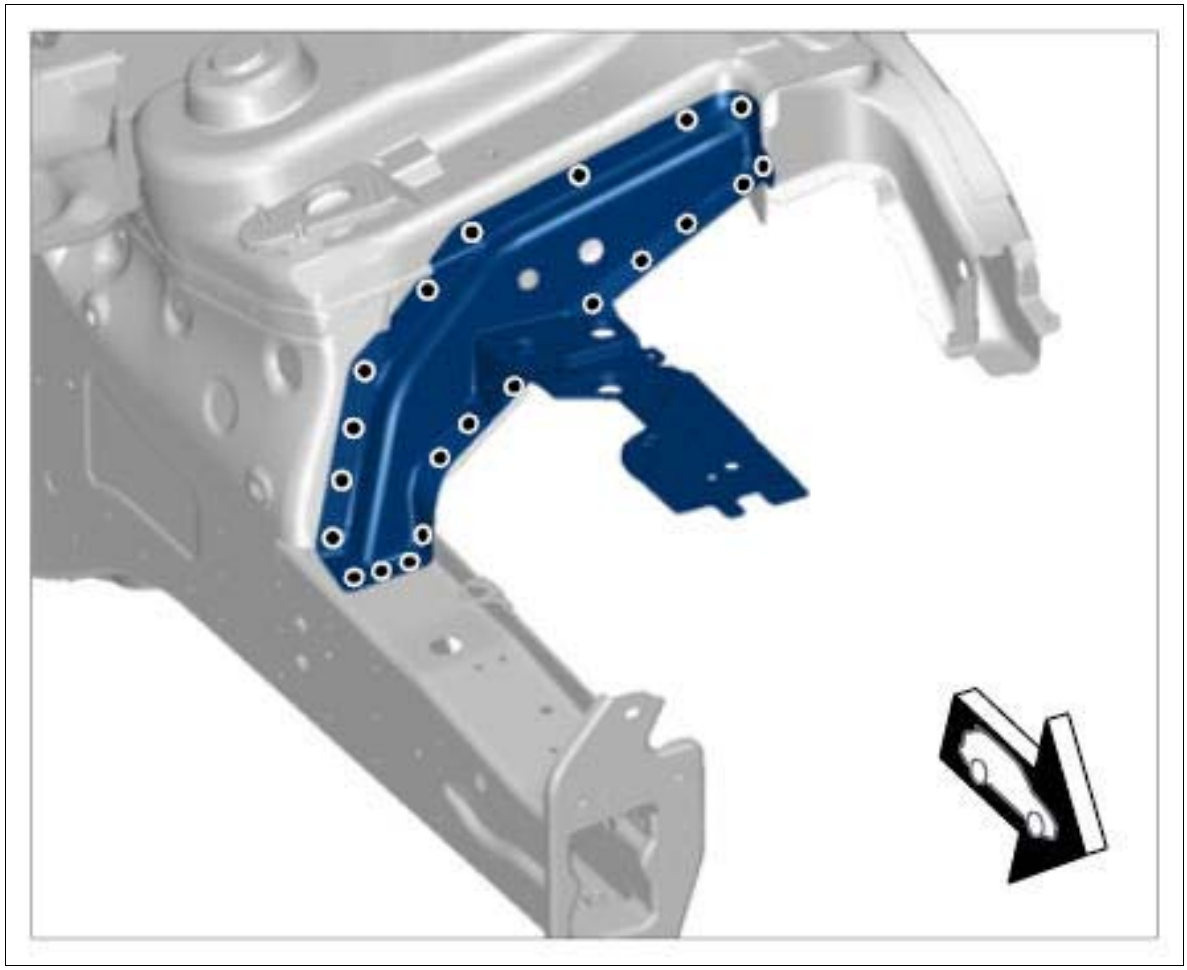

Courtesy of PORSCHE CARS NORTH AMERICA, INC.

Information

Position the headlight mounting using a straightening set.

4. Resistance spot-weld the longitudinal member brackets.

Fig 3: Installing Longitudinal Member Bracket

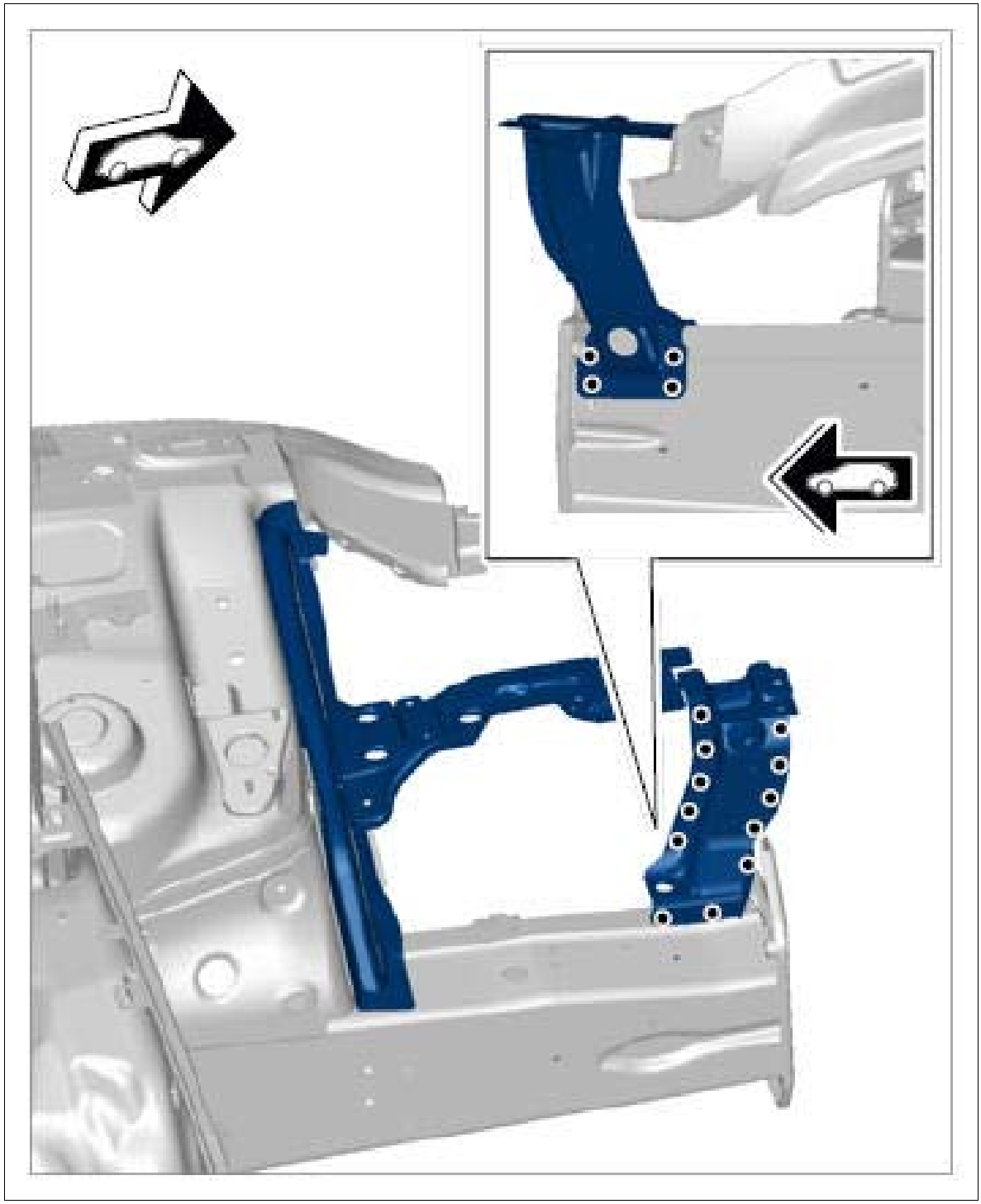

Courtesy of PORSCHE CARS NORTH AMERICA, INC.

5. Apply adhesive to the area marked in yellow.

Fig 4: Applying Adhesive

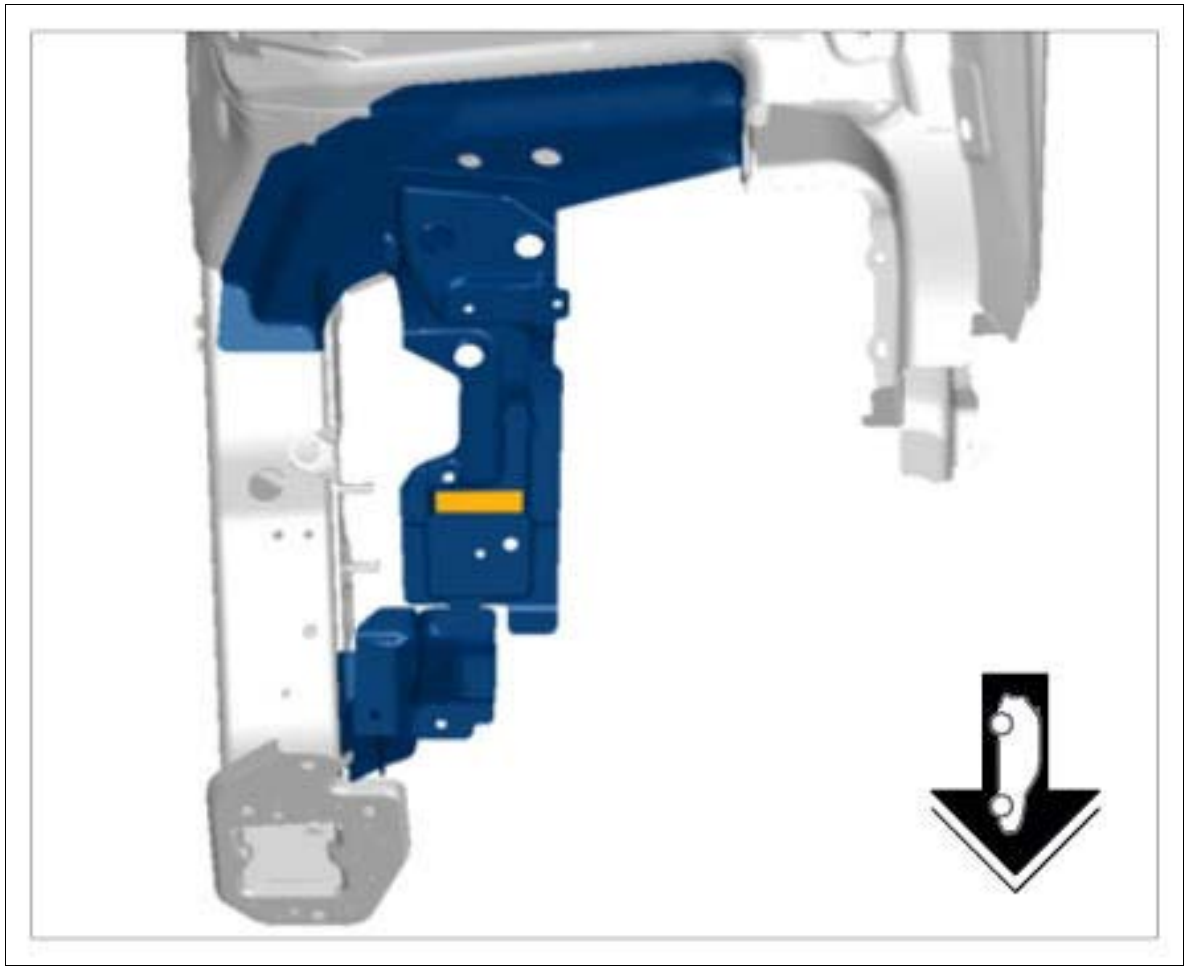

Courtesy of PORSCHE CARS NORTH AMERICA, INC.

Information

Position the headlight mounting using a straightening set.

6. Resistance spot-weld the headlight mounting.
    1. 6.1. Apply a full weld to area **-arrows-** using inert gas.

Fig 5: Installing Headlight Mounting

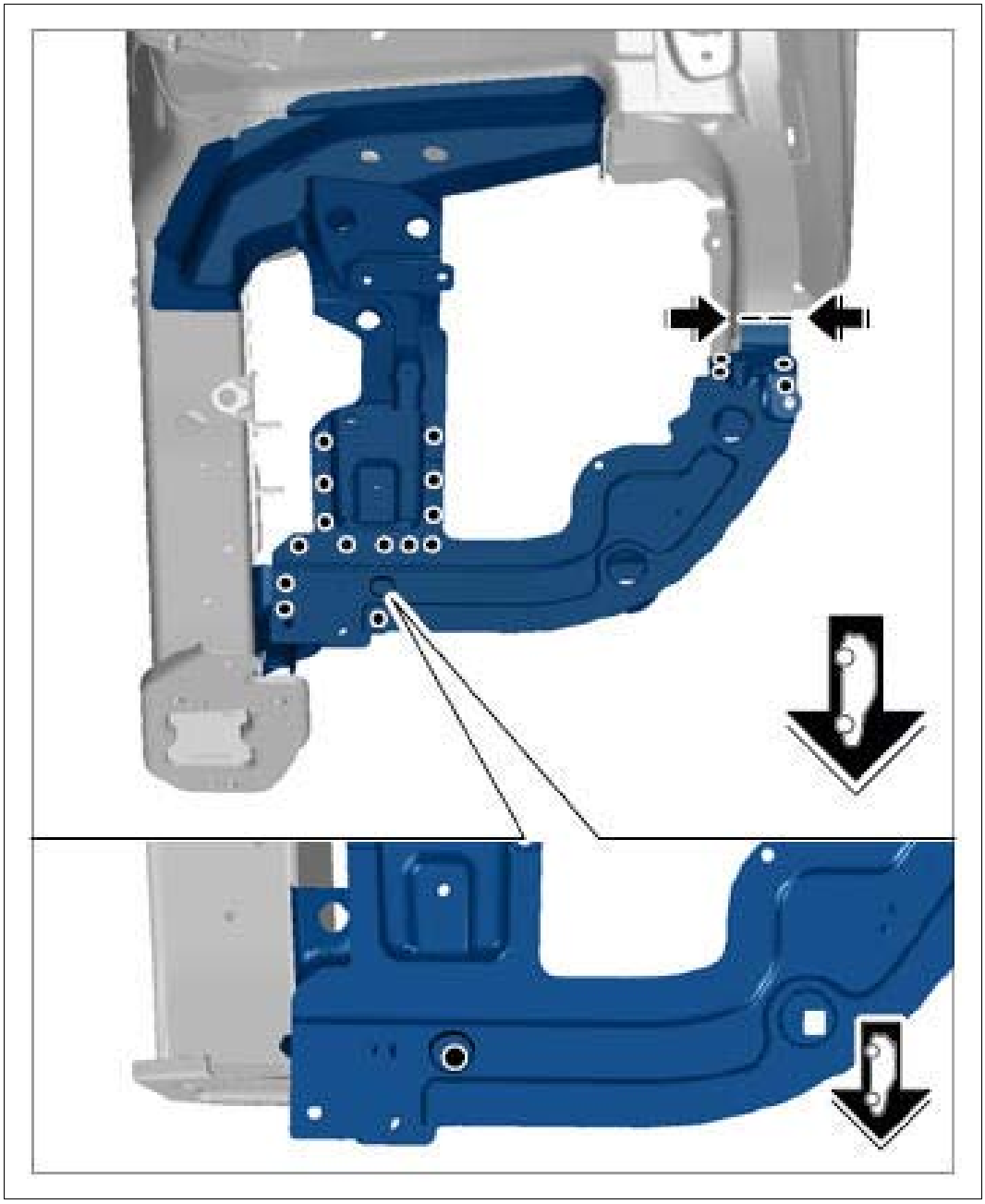

Courtesy of PORSCHE CARS NORTH AMERICA, INC.

7. Apply a full weld to area **-arrows-** using inert gas.

Fig 6: Installing Headlight Mounting

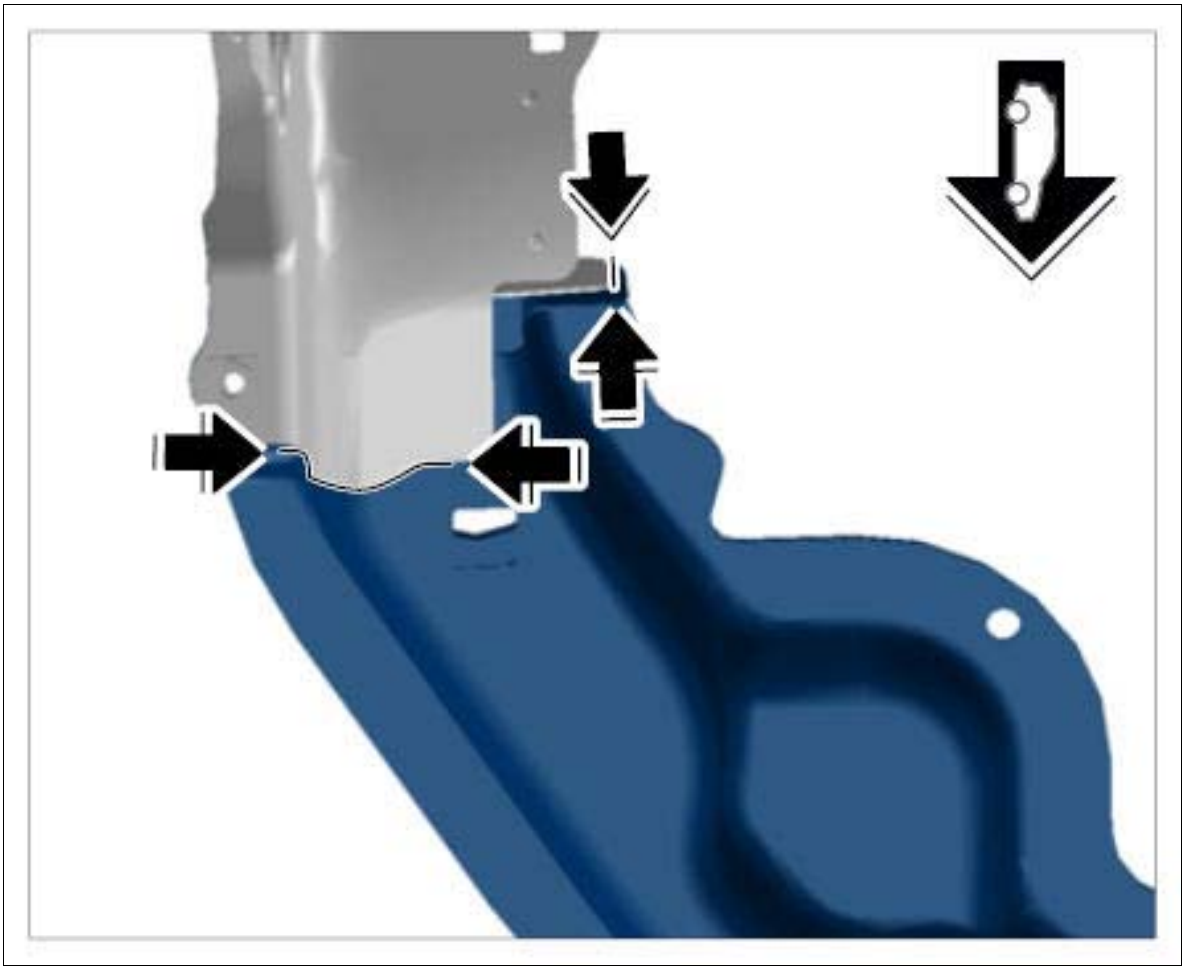

Courtesy of PORSCHE CARS NORTH AMERICA, INC.

WM 506055 REPLACING HEADLIGHT MOUNTING (ALL MODELS) > SUBSEQUENT WORK > SUBSEQUENT WORK FOR BODY REPAIRS

1. Release and remove vehicle from the straightening system.
2. Clean joint areas and sheetmetal flanges with a wire brush.
3. Prime joint areas and sheetmetal flanges with 2K primer.
4. Restore standard seal with body sealant → 5X00IN42 SEAM SEALING .

   Also seal the repair area carefully.
5. Paint repair area and adjacent surfaces, if necessary.
6. Restore standard underbody protection with underbody sealant → 5X00IN43 UNDERBODY PROTECTION - section on "Information".
7. Apply standard cavity preservation → 5X00IN44 CAVITY PRESERVATION . Also carefully apply cavity preservation to the repair area.

8. Install removed accessories in the repair area.

WM 507255 REPLACING LONGITUDINAL MEMBER FOR WHEEL HOUSING UPPER SECTION (ALL MODELS) > TOOLS

Designation	Type	Number	Description	
Hot-air blower	Workshop equipment	WE 1119		
Body alignment system package	Workshop equipment	WE 1121		
Special electric cutter	Workshop equipment	WE 1137		
Pneumatic Spotweld Remover, Vario Drill WS 90	Workshop equipment	WE 1139		
Hand-cartridge gun	Workshop equipment	WE 1141		
Resistance spot welder	Workshop equipment	WE 1311		
Inverter welder MIDIspot-QSVM-12000	Workshop equipment	WE 1312		
Resistance spot welder	Workshop equipment	WE 1313		
Blind riveting tool TAURUS 4	Workshop equipment	WE 1348		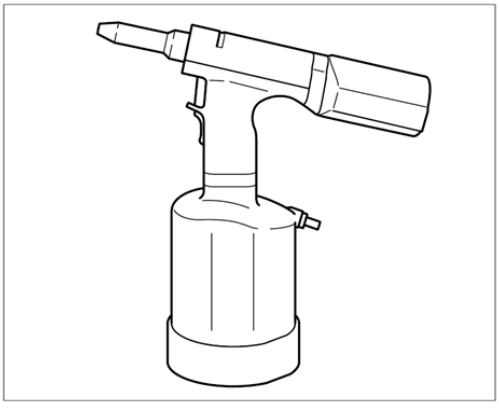
Aluminum tool set with trolley	Workshop equipment	WE 1350		
Resistance spot welder	Workshop equipment	WE 1352		

Measuring and alignment system, professional	Workshop equipment	WE 1398		
Mobile extraction unit, aluminum	Workshop equipment	WE 1507		
Body saw	Workshop equipment	WE 1508		
Star gauges for body gap dimensions	Special tool	Nr.127-1		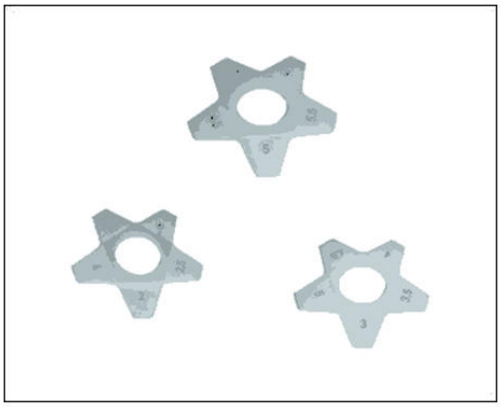
Spotweld drill; see Gr. 2.4; *** Workshop Equipment Manual	Commercially available tool	Nr.129		
Twist drill	Commercially available tool	Nr.201		

Countersink	Commercially available tool	Nr.202		

WM 507255 REPLACING LONGITUDINAL MEMBER FOR WHEEL HOUSING UPPER SECTION (ALL MODELS) > TECHNICAL VALUES

Location	Description	Type	Basic value	Tolerance 1	Tolerance 2
Dimension X		Distance	80 mm		
Applying adhesive		Application depth	3.0 mm		

WM 507255 REPLACING LONGITUDINAL MEMBER FOR WHEEL HOUSING UPPER SECTION (ALL MODELS) > PRELIMINARY WORK > PRELIMINARY WORK FOR BODY REPAIRS (WITHOUT STRAIGHTENING SYSTEM)

1. Remove accessories in the repair area.
    1. 1.1. Remove accessories in the repair area according to the extent of damage on the vehicle.
2. Cover accessories adjacent to the repair area on the vehicle.
    1. 2.1. Cover all accessories remaining on the vehicle and adjacent areas with fire-proof protective covers.
3. Expose joint areas.
    1. 4.1. Remove underbody protection, paint, etc. from the joint areas of the body using a hot-air gun or rotary brush.

WM 507255 REPLACING LONGITUDINAL MEMBER FOR WHEEL HOUSING UPPER SECTION (ALL MODELS) > SAFETY INSTRUCTIONS AND INFORMATION ON QUALITY

⚠ *CAUTION: Non-observance of safety instructions for body repairs*

- *Risk of damage to the vehicle*
- *Danger of injury*

→ Read the relevant safety instructions as well as general information and quality instructions → 5X00IN01 SAFETY INSTRUCTIONS .

- Corrosion protection measures during repairs → 5X00IN03 CORROSION PROTECTION MEASURES DURING REPAIRS .
- Body parts of various sheet-steel strengths → 5X00IN04 BODY PARTS OF VARIOUS SHEET-STEEL STRENGTHS .
- Setting self-tapping screws → 5X00IN24 SETTING SELF-TAPPING SCREWS .
- Working with body structural adhesive → 5X00IN21 WORKING WITH BODY STRUCTURAL ADHESIVE .

WM 507255 REPLACING LONGITUDINAL MEMBER FOR WHEEL HOUSING UPPER SECTION (ALL MODELS) > TOOLS AND MATERIALS > TOOLS AND MATERIALS FOR BODY REPAIRS

Information

- The tools for working on steel and aluminum must always be kept separate from each other. We recommend that you color code the tools using a system similar to that used for the Aluminum tool set with trolley WE 1350, for example.

Straightening set **Body alignment system package WE 1121 Measuring and alignment system, professional WE 1398**

Resistance spot welder; optional **Inverter welder MIDIspot-QSVM-12000 WE 1312, Resistance spot welder WE 1352, Resistance spot welder WE 1311, Resistance spot welder WE 1313**

Metal inert gas (MIG) welder

Pneumatic spotweld remover **Pneumatic Spotweld Remover, Vario Drill WS 90 WE 1139**

Pneumatic body saw **Body saw WE 1508**

Oscillating body saw (special electric cutter) **Special electric cutter WE 1137**

Hot-air blower **Hot-air blower WE 1119**

Hand-cartridge gun **Hand-cartridge gun WE 1141**

Spotweld drill **Spotweld drill** ; Twist drill Nr.201

Countersink for rivets **Countersink Nr.202**

Blind riveting tool for high-strength rivets **Blind riveting tool TAURUS 4 WE 1348**

Safety vacuum cleaner for aluminum dust **Mobile extraction unit, aluminum WE 1507**

Star gauges for body gap dimensions Nr.127-1

Wurth Klebt und Dichtet body sealant

WM 507255 REPLACING LONGITUDINAL MEMBER FOR WHEEL HOUSING UPPER SECTION (ALL MODELS) > REMOVING LONGITUDINAL MEMBER FOR WHEEL HOUSING UPPER SECTION

Fig 1: Locating Longitudinal Member For Wheel Housing Upper Section Position

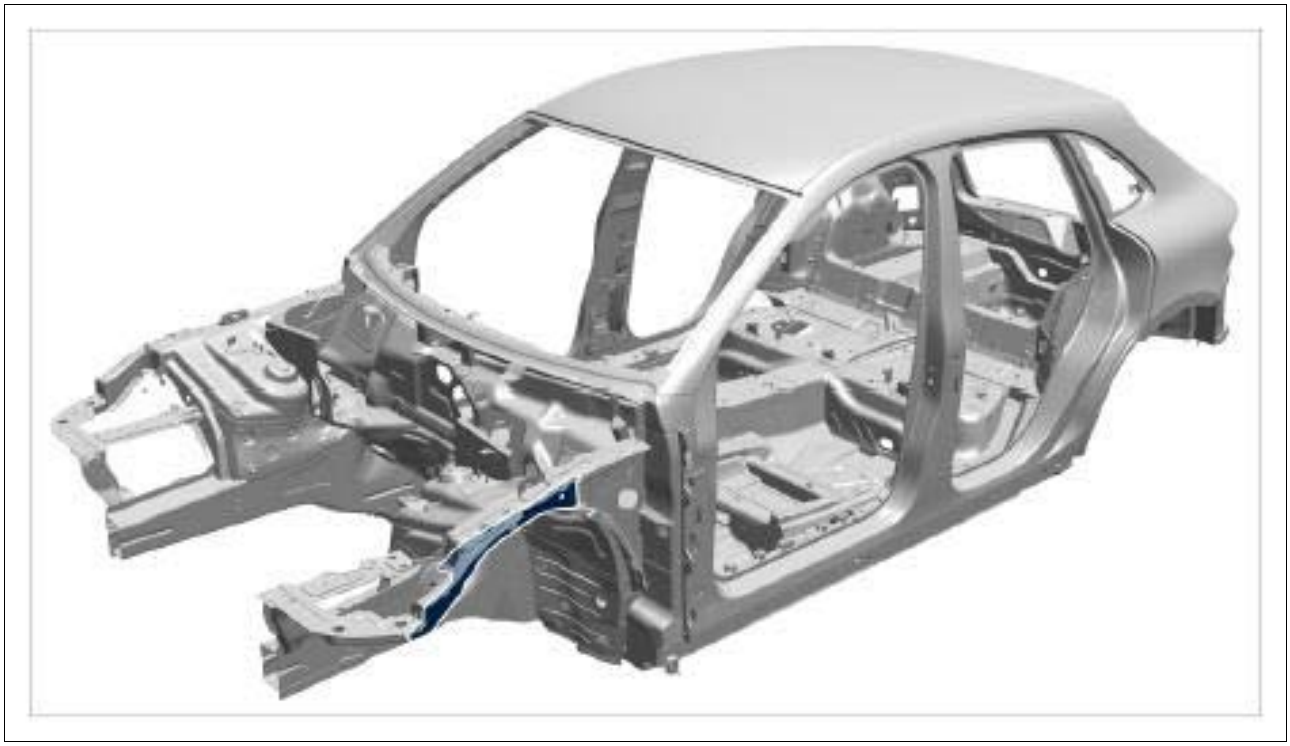

Courtesy of PORSCHE CARS NORTH AMERICA, INC.

1. Remove wing bracket.

   Information

   Drill out the connection point on one side only. Do not damage the plate underneath.

   1. 1.1. Drill out spotwelds **-A-** using **spotweld drill** .
   2. 1.2. Grind down welded seams **-arrows-** .

Fig 2: Removing Wing Bracket

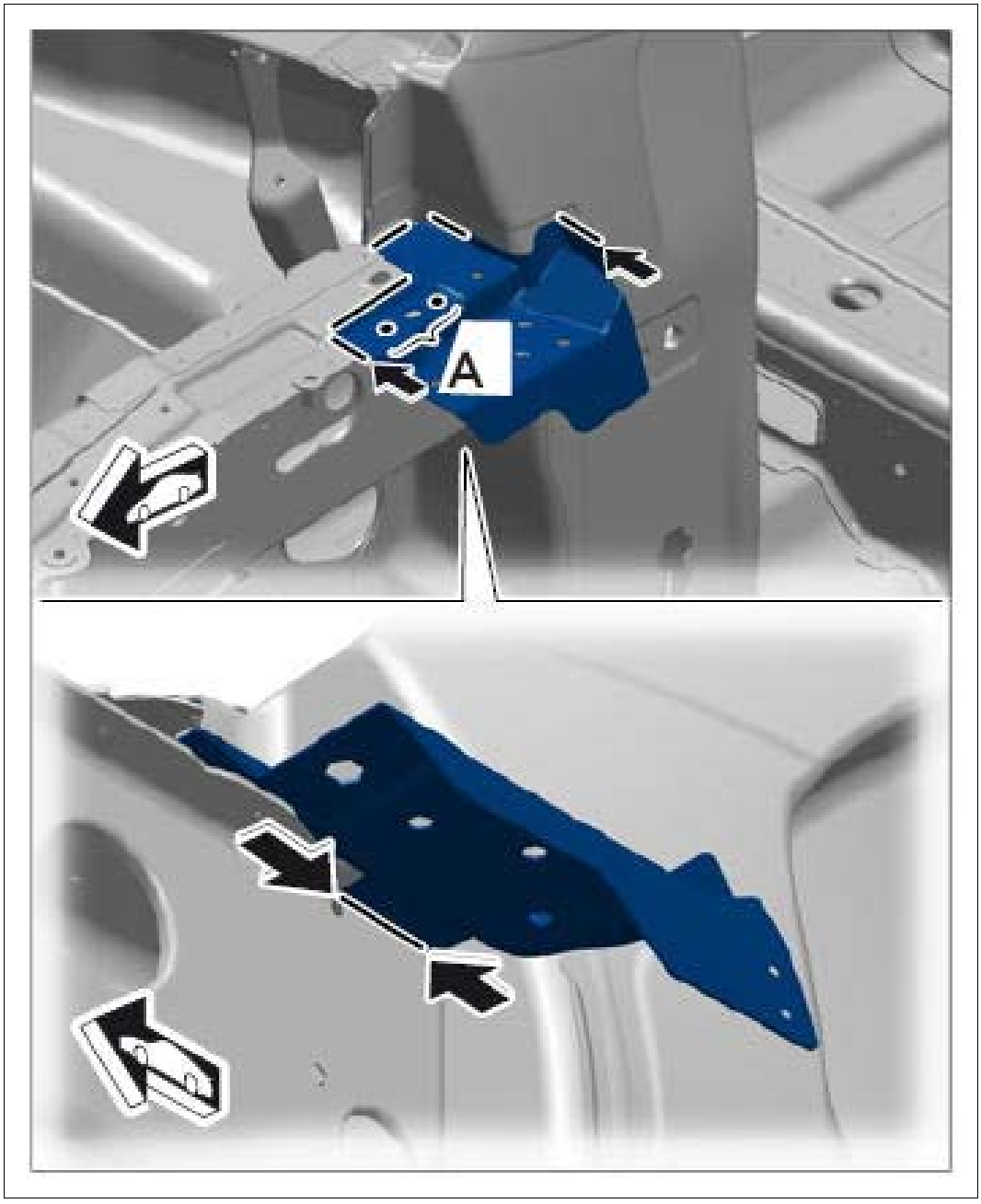

Courtesy of PORSCHE CARS NORTH AMERICA, INC.

2. Remove reinforcements.

Information

Drill out the connection point on one side only. Do not damage the plate underneath.

1. 2.1. Drill out spotwelds using **spotweld drill** .
2. 2.2. Make rough cuts **-1-** along the A-pillar **-arrows-** .

Information

Only make cuts in the top plate. Make sure not to damage the plate underneath when

doing this.

3. 2.3. Mark and make cut **-2-** . → Distance: 80 mm
4. 2.4. Grind down welded seam **-A-** .

Fig 3: Removing Reinforcements

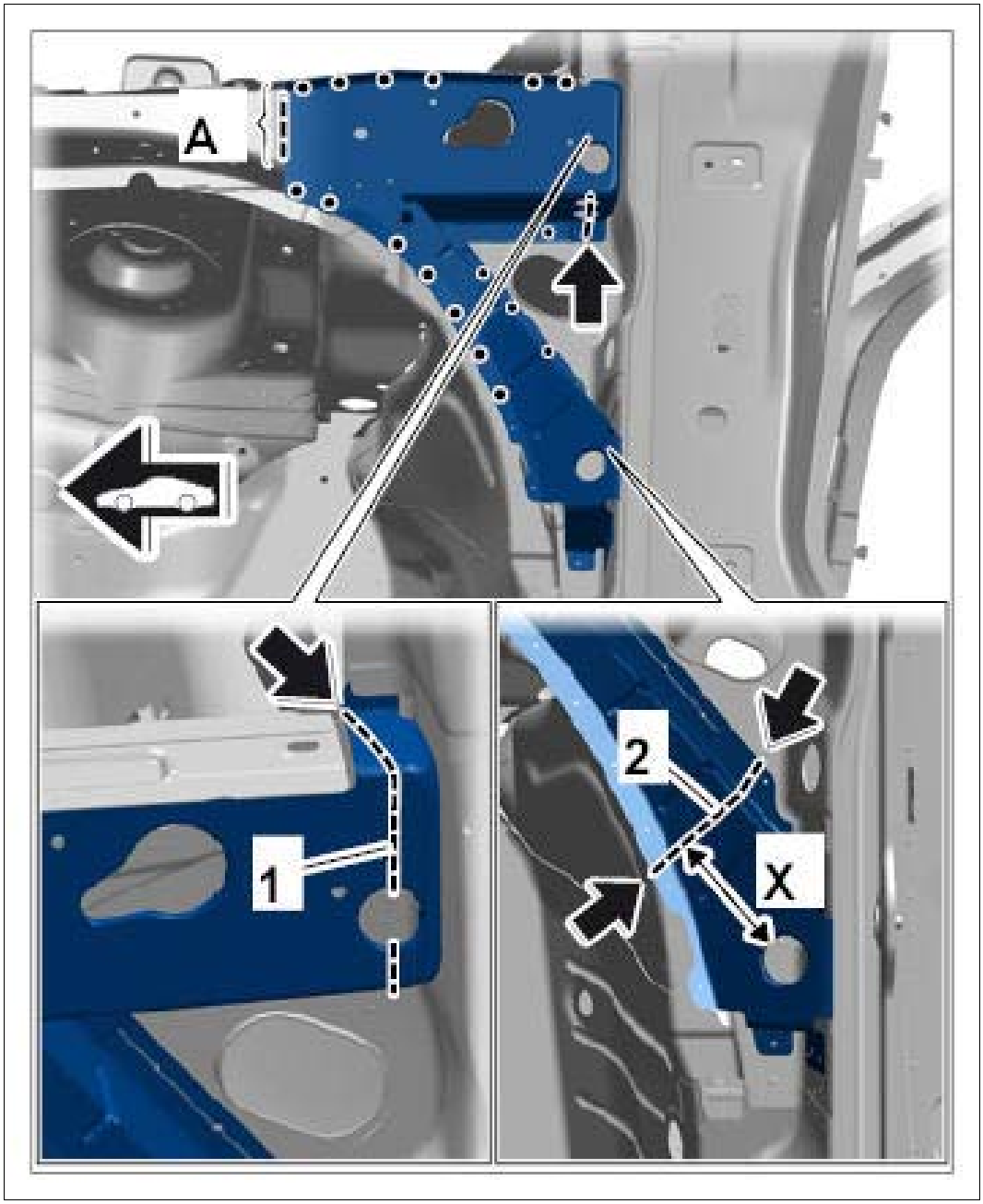

Courtesy of PORSCHE CARS NORTH AMERICA, INC.

3. Heat bonding areas.
    1. 3.1. Remove reinforcements.

Fig 4: Identifying Reinforcements



Courtesy of PORSCHE CARS NORTH AMERICA, INC.

4. Remove remaining piece of upper reinforcement **-1-** .

    1. 4.1. Drill out spotwelds using **spotweld drill** .

Fig 5: Identifying Remaining Piece Of Upper Reinforcement



Courtesy of PORSCHE CARS NORTH AMERICA, INC.

5. Remove longitudinal member for wheel housing.
    1. 5.1. Drill out spotwelds using **spotweld drill** .
    2. 5.2. Grind down welded seams **-arrows-** .
    3. 5.3. Grind down spotwelds **-A-** from the inside.

Fig 6: Removing Longitudinal Member For Wheel Housing

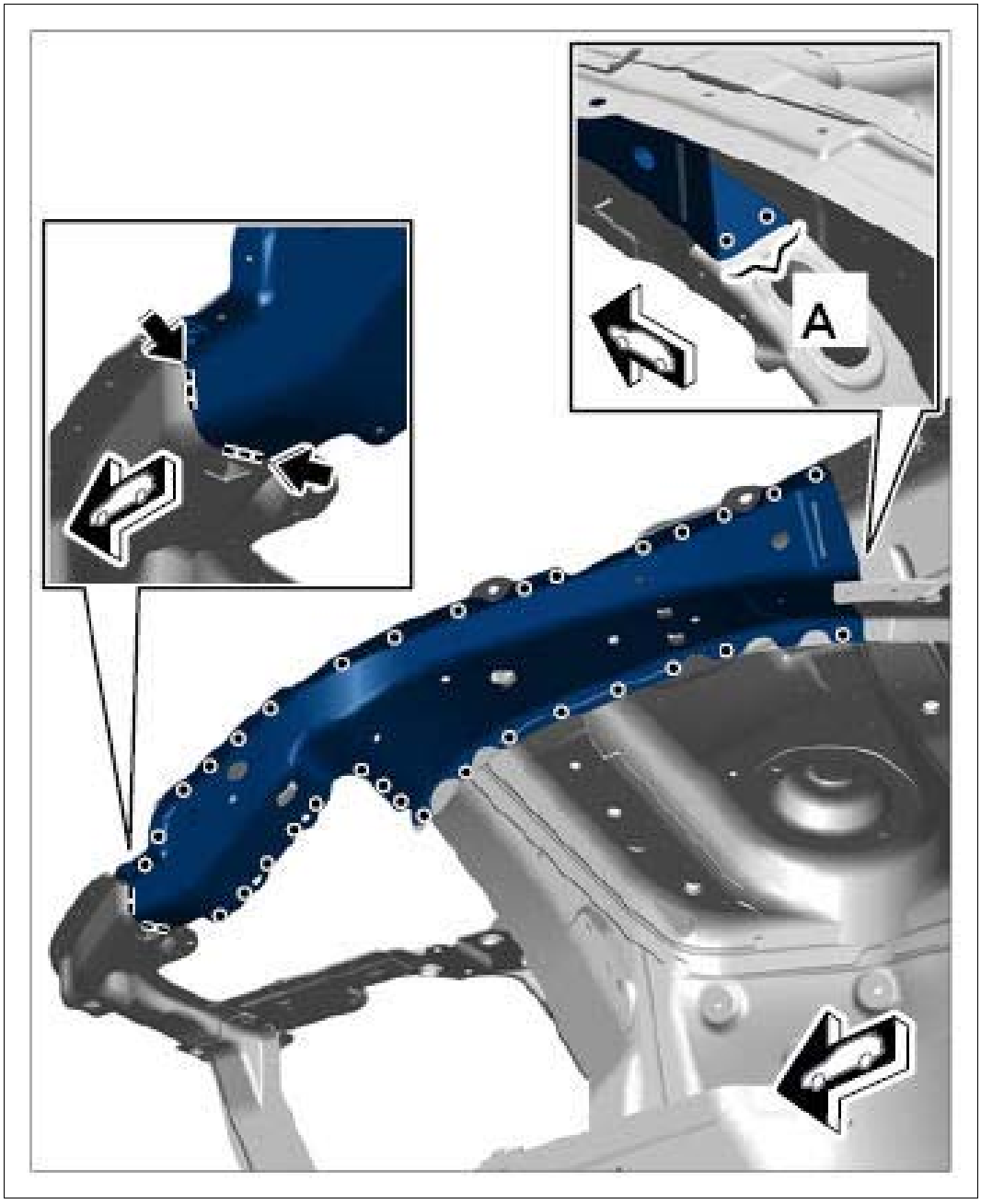

Courtesy of PORSCHE CARS NORTH AMERICA, INC.

6. Heat the bonding surfaces.

    1. 6.1. Remove longitudinal member for wheel housing.

Fig 7: Removing Longitudinal Member For Wheel Housing



Courtesy of PORSCHE CARS NORTH AMERICA, INC.

WM 507255 REPLACING LONGITUDINAL MEMBER FOR WHEEL HOUSING UPPER SECTION (ALL MODELS) > PREPARING LONGITUDINAL MEMBER FOR WHEEL HOUSING FOR INSTALLATION

1. Prepare connection areas for bonding and welding.

    1. 1.1. Install deformation elements **-1-** .

Fig 1: Installing Deformation Elements

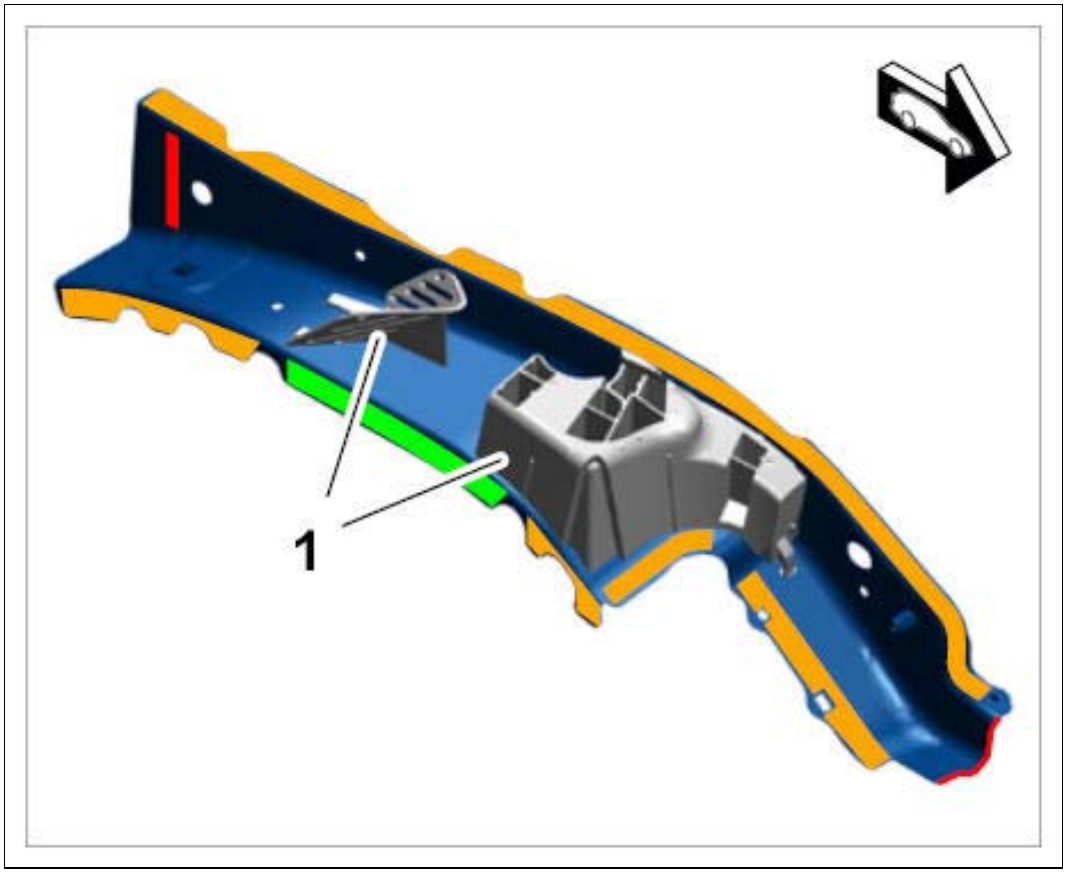

Courtesy of PORSCHE CARS NORTH AMERICA, INC.

Orange	Resistance spot-welding
Green	Resistance spot-welding + bonding
Red	Plug-welding/apply a full weld using inert gas without bonding

2. Cut reinforcement in area **-arrows-** leaving an overlap to the remaining piece of 30 mm.

Fig 2: Checking Reinforcement

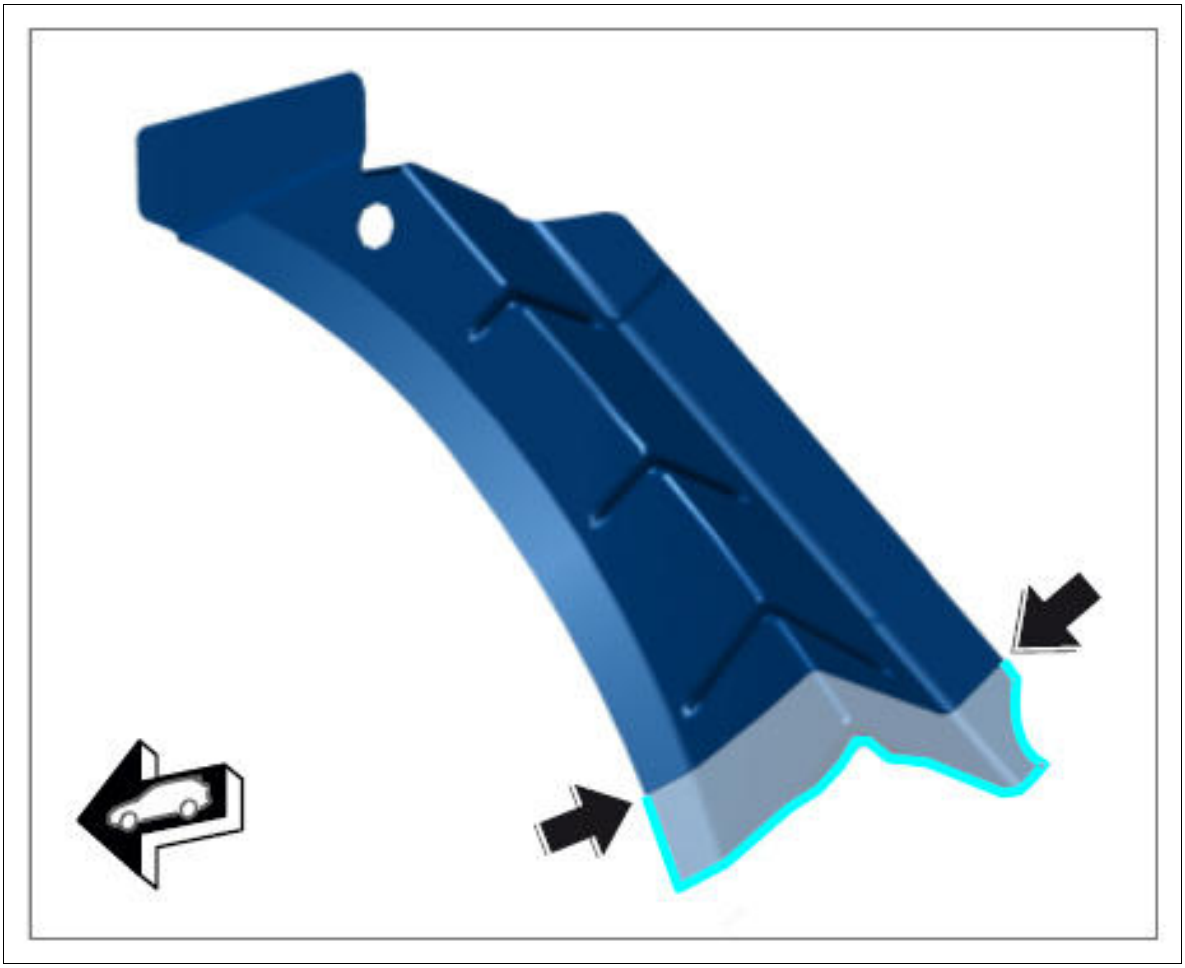

Courtesy of PORSCHE CARS NORTH AMERICA, INC.

3. Fit in and secure reinforcements.

    1. 3.1. Tack-weld upper part **-1-** and lower part **-2-** of reinforcement **-arrows-** .
    2. 3.2. Make cuts through the reinforcement and remaining piece of reinforcement **-2-** in the overlap area.

Fig 3: Installing Remaining Piece Of Reinforcement

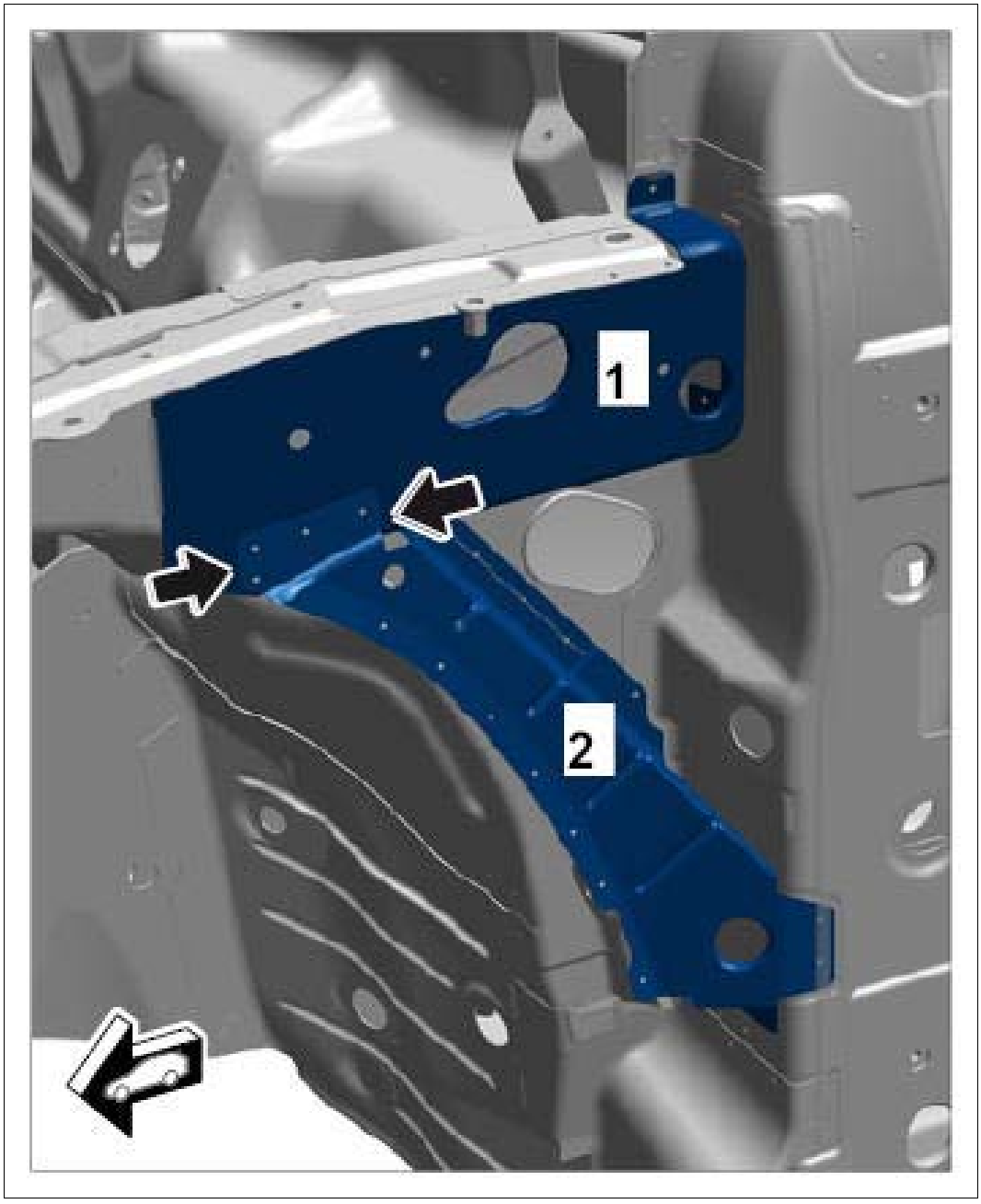

Courtesy of PORSCHE CARS NORTH AMERICA, INC.

4. Remove reinforcements.

    1. 4.1. Resistance spot-weld the marked area **-A-** .

Fig 4: Removing Reinforcements

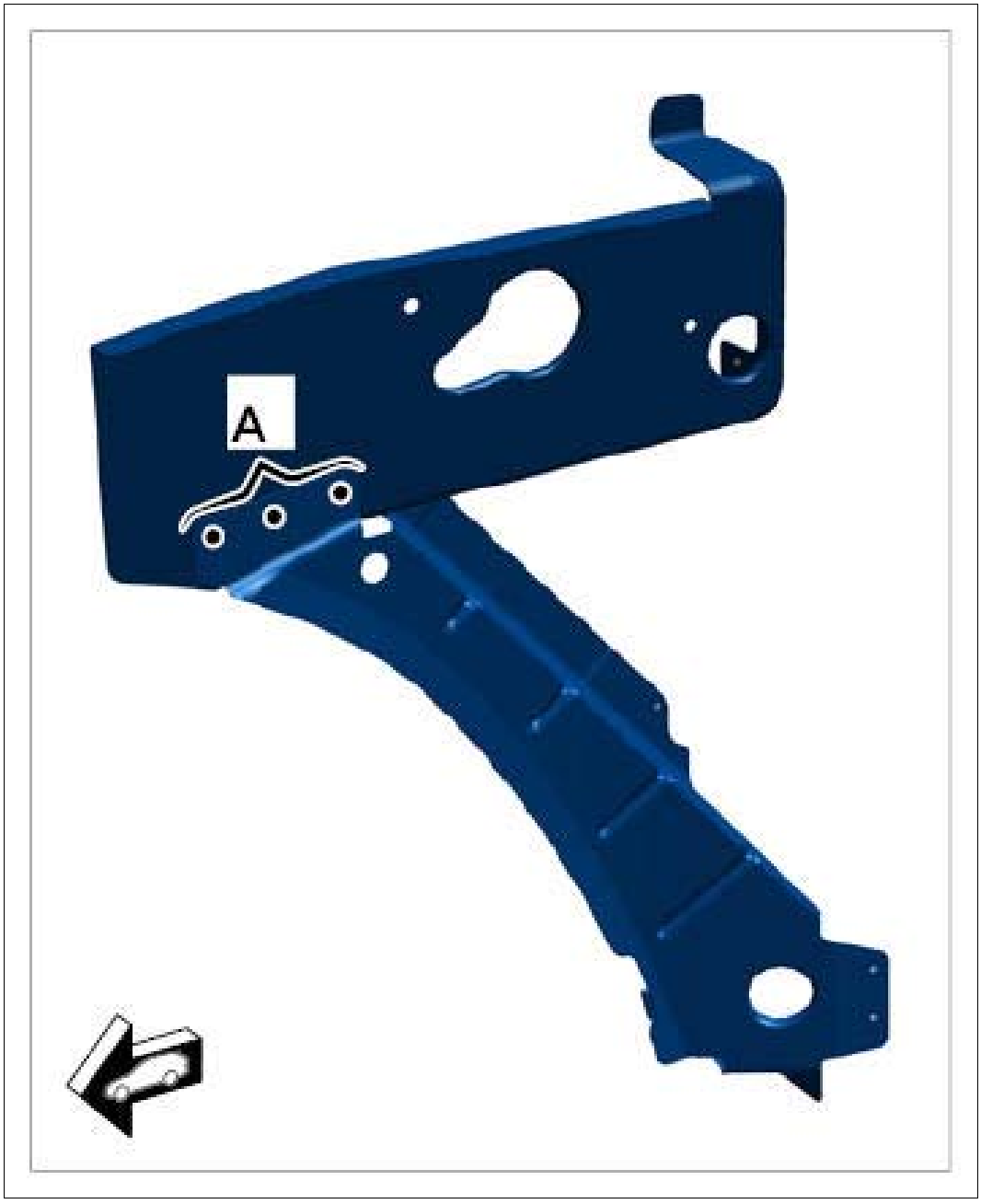

Courtesy of PORSCHE CARS NORTH AMERICA, INC.

5. Prepare reinforcement for bonding and welding.

Fig 5: Removing Reinforcement For Bonding



Courtesy of PORSCHE CARS NORTH AMERICA, INC.

Orange	Resistance spot-welding
Green	Resistance spot-welding + bonding
Red	Plug-welding/apply a full weld using inert gas without bonding

WM 507255 REPLACING LONGITUDINAL MEMBER FOR WHEEL HOUSING UPPER SECTION (ALL MODELS) > PREPARING CONNECTION AREAS OF THE BODY

1. Align the sealing surface and connections of the body.
2. De-burr connection points and prepare them for welding.

Information

1. Before final assembly, make sure you fully understand all the work steps involved and carry out a trial assembly without applying adhesive.
2. The bonding process can only be carried out reliably when a smooth and swift sequence

of operations is guaranteed.

3. Do not begin bonding work until all materials and tools necessary for later repair work are available.

3. Prepare the marked areas for welding and bonding. → 5X00IN21 WORKING WITH BODY STRUCTURAL ADHESIVE - section on "Preparing"

Fig 1: Preparing Connection Areas Of Body

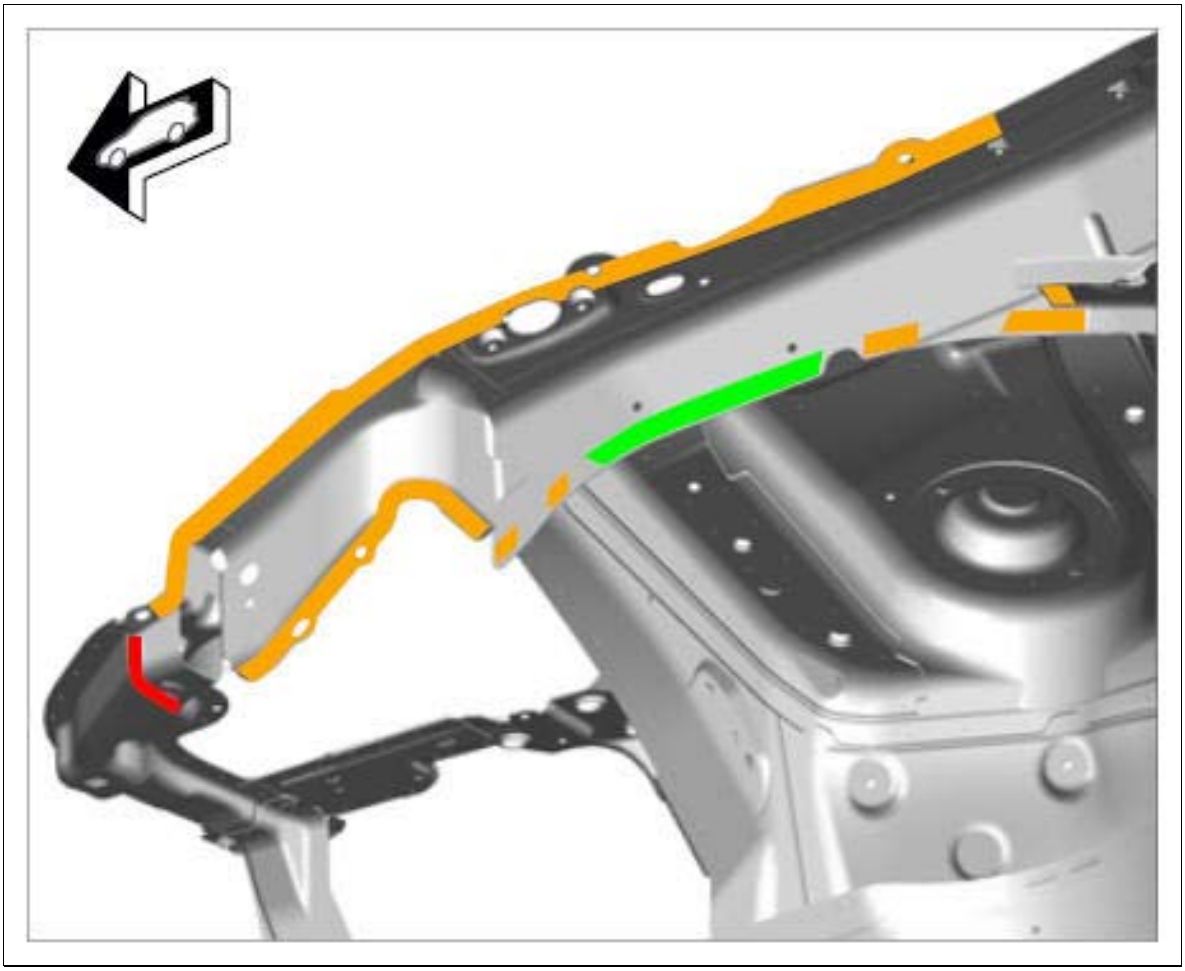

Courtesy of PORSCHE CARS NORTH AMERICA, INC.

Fig 2: Preparing Connection Areas Of Body

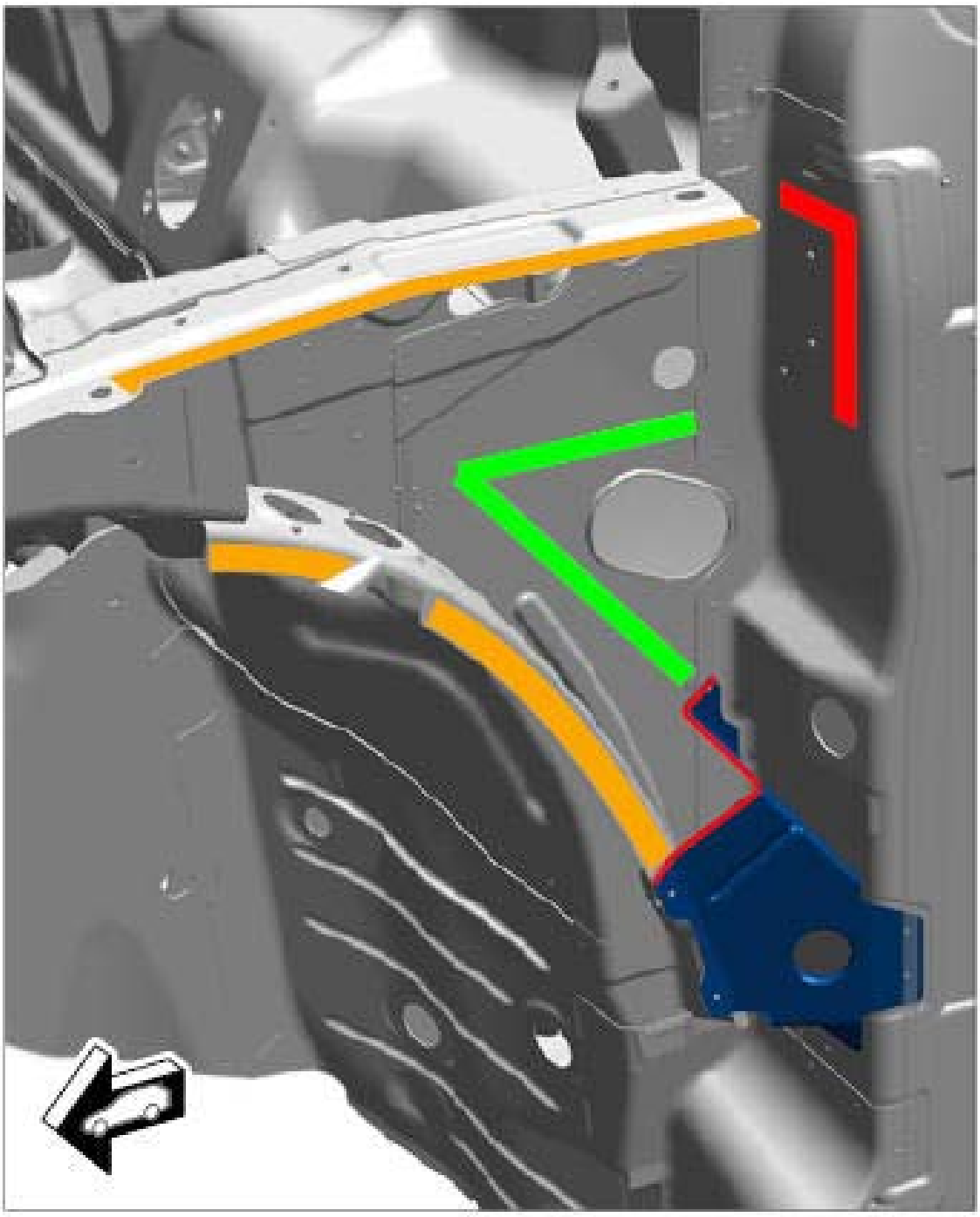

Courtesy of PORSCHE CARS NORTH AMERICA, INC.

Orange	Resistance spot-welding
Green	Resistance spot-welding + bonding
Red	Plug-welding/apply a full weld using inert gas without bonding

WM 507255 REPLACING LONGITUDINAL MEMBER FOR WHEEL HOUSING UPPER SECTION (ALL MODELS) > INSTALLING LONGITUDINAL MEMBER FOR WHEEL HOUSING

Information

- Before final assembly, make sure you fully understand all the work steps involved and carry out a trial assembly without applying adhesive.
- The bonding process can only be carried out reliably when a smooth and swift sequence of operations is guaranteed.
- Do not begin bonding work until all materials and tools necessary for later repair work are available.

1. Install longitudinal member for wheel housing and check that it fits perfectly. Check gap dimensions. → 5X00IN DIAGRAM - BODY GAP DIMENSIONS
    1. 1.1. Apply adhesive to the marked areas. → 5X00IN21 WORKING WITH BODY STRUCTURAL ADHESIVE → Application depth: 3.0 mm

    Fig 1: Applying Adhesive Of Body

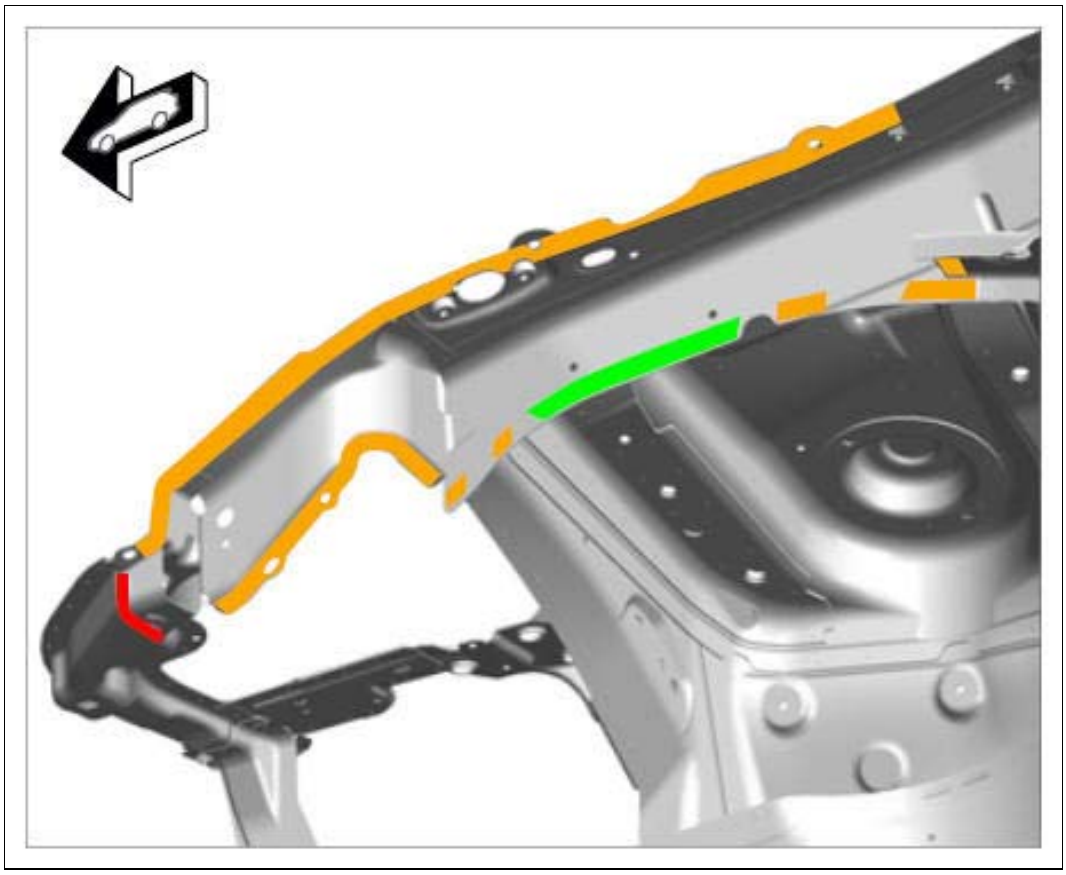

Courtesy of PORSCHE CARS NORTH AMERICA, INC.

Orange	Resistance spot-welding
Green	Resistance spot-welding + bonding

Red	Plug-welding/apply a full weld using inert gas without bonding

2. Resistance spot-weld the longitudinal member for the wheel housing.

    1. 2.1. Apply a full weld to the area **-arrows-** using inert gas.

    Fig 2: Installing Longitudinal Member For Wheel Housing

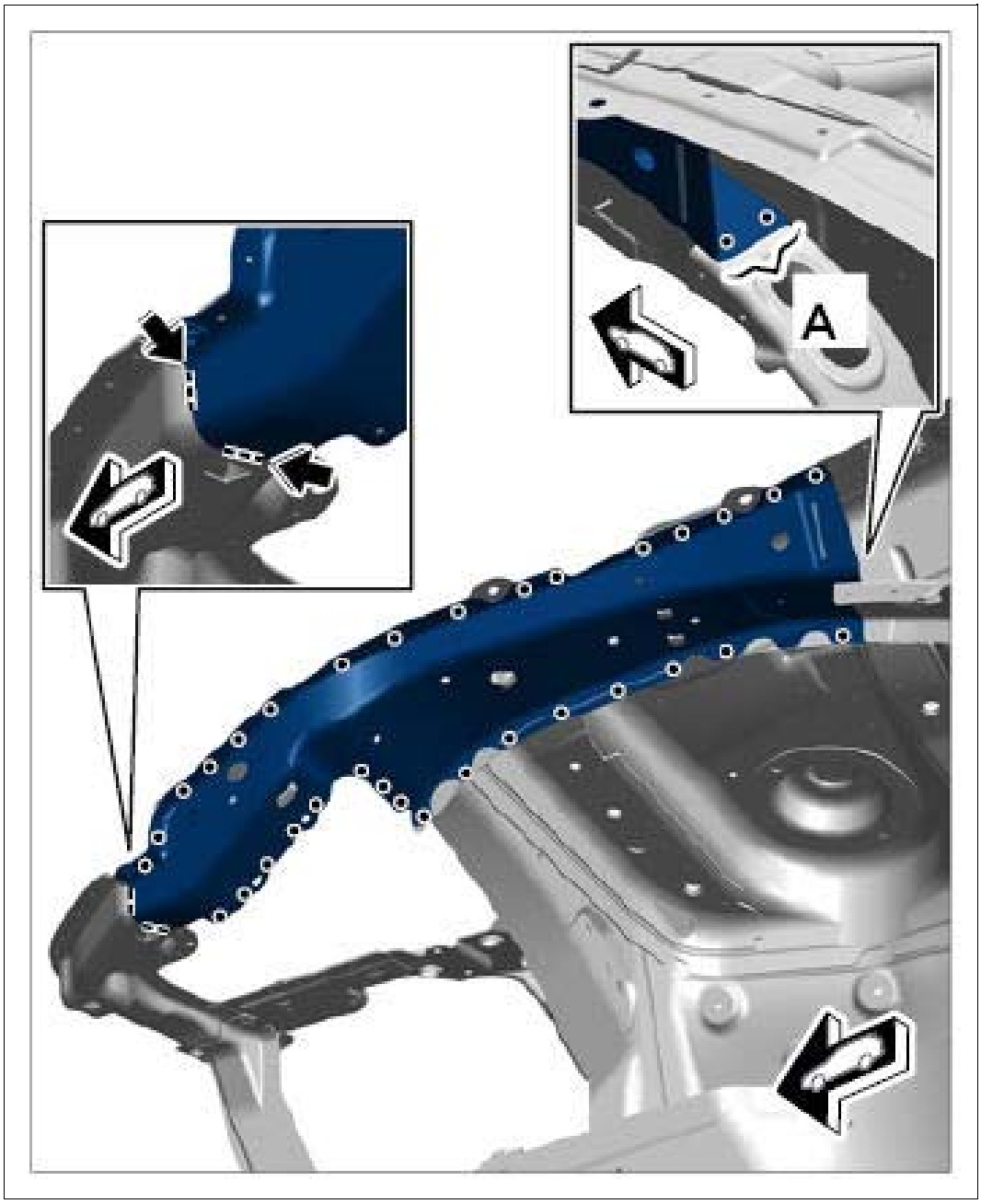

Courtesy of PORSCHE CARS NORTH AMERICA, INC.

3. Install reinforcements.

    1. 3.1. Apply adhesive to the marked areas.

Fig 3: Applying Adhesive

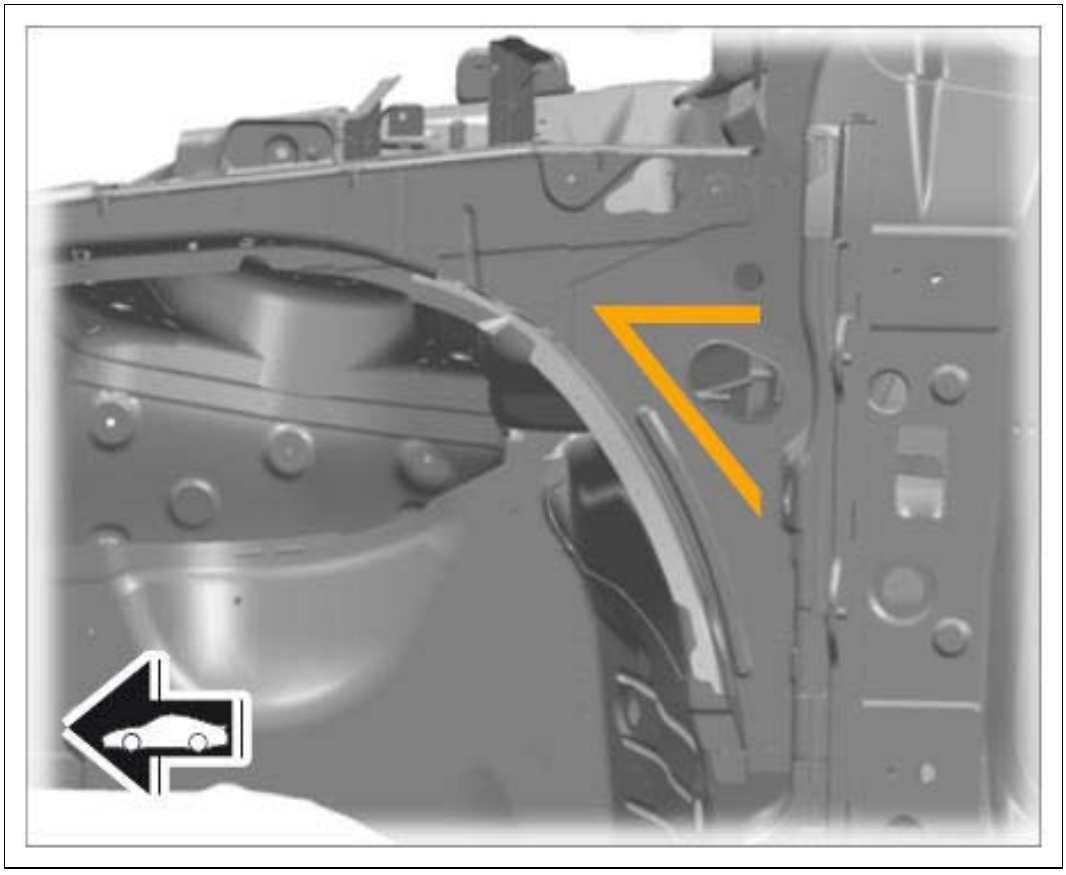

Courtesy of PORSCHE CARS NORTH AMERICA, INC.

4. Resistance spot-weld the reinforcement.
    1. 4.1. Apply a full weld to the area **-A & B-** using inert gas.
    2. 4.2. Spot-weld area **-C-** using inert gas.

Fig 4: Installing Reinforcements

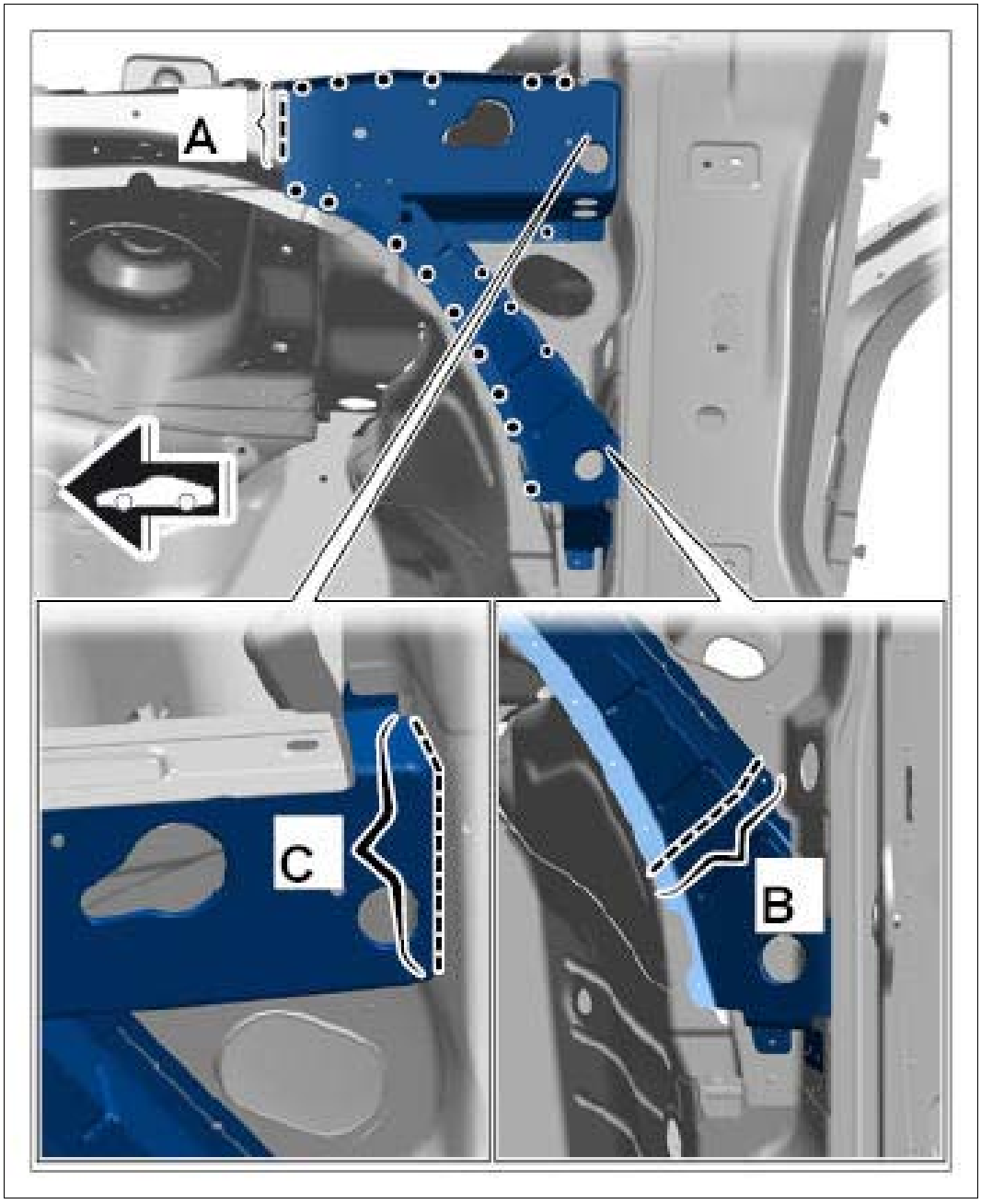

Courtesy of PORSCHE CARS NORTH AMERICA, INC.

5. Install wing bracket.
    1. 5.1. Resistance spot-weld the wing bracket in area **-A-** .
    2. 5.2. Apply a full weld to areas **-arrows-** using inert gas.

Fig 5: Installing Wing Bracket

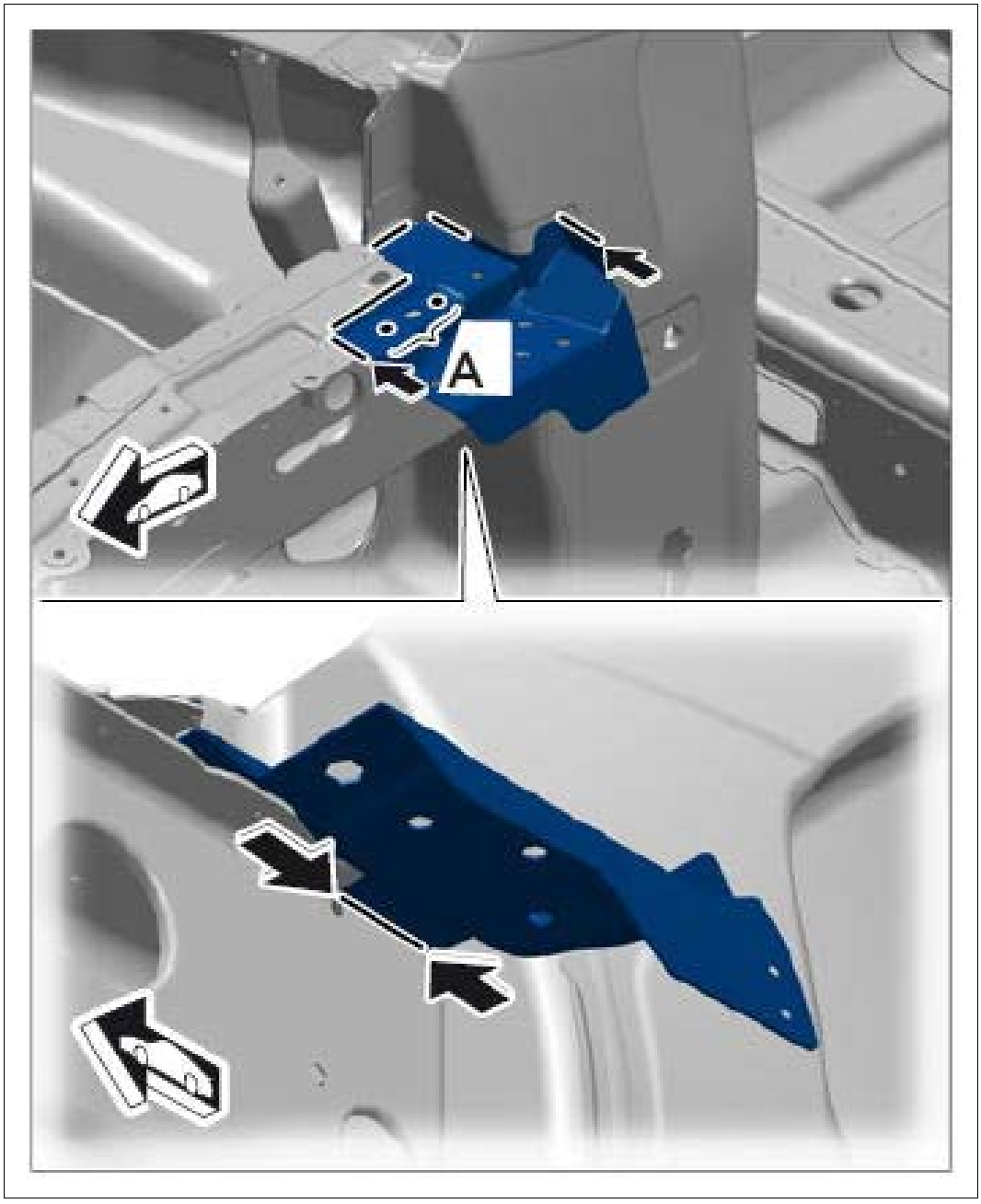

Courtesy of PORSCHE CARS NORTH AMERICA, INC.

WM 507255 REPLACING LONGITUDINAL MEMBER FOR WHEEL HOUSING UPPER SECTION (ALL MODELS) > SUBSEQUENT WORK > SUBSEQUENT WORK FOR BODY REPAIRS (WITHOUT STRAIGHTENING SYSTEM)

1. Clean joint areas and sheetmetal flanges with a wire brush.
2. Prime joint areas and sheetmetal flanges with 2K primer.
3. Restore standard seal with body sealant → 5X00IN42 SEAM SEALING .

Also seal the repair area carefully.

4. Paint repair area and adjacent surfaces, if necessary.
5. Restore standard underbody protection with underbody sealant → 5X00IN43 UNDERBODY PROTECTION .
6. Apply standard cavity preservation → 5X00IN44 CAVITY PRESERVATION . Also apply cavity preservation to the repair area.
7. Install removed accessories in the repair area.

WM 507255 REPLACING LONGITUDINAL MEMBER FOR WHEEL HOUSING UPPER SECTION (ALL MODELS) > TOOLS

Designation	Type	Number	Description	
Hot-air blower	Workshop equipment	WE 1119		
Body alignment system package	Workshop equipment	WE 1121		
Special electric cutter	Workshop equipment	WE 1137		
Pneumatic Spotweld Remover, Vario Drill WS 90	Workshop equipment	WE 1139		
Hand-cartridge gun	Workshop equipment	WE 1141		
Resistance spot welder	Workshop equipment	WE 1311		
Inverter welder MIDIspot-QSVM-12000	Workshop equipment	WE 1312		
Resistance spot welder	Workshop equipment	WE 1313		

Blind riveting tool TAURUS 4	Workshop equipment	WE 1348		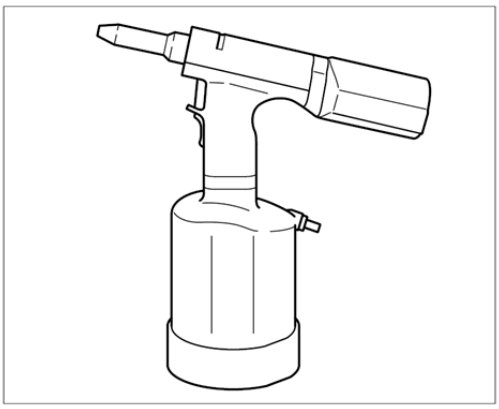
Aluminum tool set with trolley	Workshop equipment	WE 1350		
Resistance spot welder	Workshop equipment	WE 1352		
Measuring and alignment system, professional	Workshop equipment	WE 1398		
Mobile extraction unit, aluminum	Workshop equipment	WE 1507		
Body saw	Workshop equipment	WE 1508		
Star gauges for body gap dimensions	Special tool	Nr.127-1		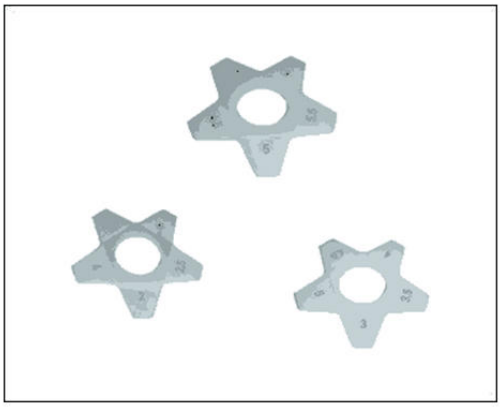

Spotweld drill; see Gr. 2.4; *** Workshop Equipment Manual	Commercially available tool	Nr.129		
Twist drill	Commercially available tool	Nr.201		
Countersink	Commercially available tool	Nr.202		

WM 507255 REPLACING LONGITUDINAL MEMBER FOR WHEEL HOUSING UPPER SECTION (ALL MODELS) > TECHNICAL VALUES

Location	Description	Type	Basic value	Tolerance 1	Tolerance 2
Dimension X		Distance	80 mm		
Applying adhesive		Application depth	3.0 mm		

WM 507255 REPLACING LONGITUDINAL MEMBER FOR WHEEL HOUSING UPPER

SECTION (ALL MODELS) > PRELIMINARY WORK > PRELIMINARY WORK FOR BODY REPAIRS (WITHOUT STRAIGHTENING SYSTEM)

1. Remove accessories in the repair area.
    1. 1.1. Remove accessories in the repair area according to the extent of damage on the vehicle.
2. Cover accessories adjacent to the repair area on the vehicle.
    1. 2.1. Cover all accessories remaining on the vehicle and adjacent areas with fire-proof protective covers.
3. Expose joint areas.
    1. 4.1. Remove underbody protection, paint, etc. from the joint areas of the body using a hot-air gun or rotary brush.

WM 507255 REPLACING LONGITUDINAL MEMBER FOR WHEEL HOUSING UPPER SECTION (ALL MODELS) > SAFETY INSTRUCTIONS AND INFORMATION ON QUALITY

⚠ *CAUTION: Non-observance of safety instructions for body repairs*

- *Risk of damage to the vehicle*
- *Danger of injury*

→ Read the relevant safety instructions as well as general information and quality instructions → 5X00IN01 SAFETY INSTRUCTIONS .

- Corrosion protection measures during repairs → 5X00IN03 CORROSION PROTECTION MEASURES DURING REPAIRS
- Body parts of various sheet-steel strengths → 5X00IN04 BODY PARTS OF VARIOUS SHEET-STEEL STRENGTHS
- Setting self-tapping screws → 5X00IN24 SETTING SELF-TAPPING SCREWS
- Working with body structural adhesive → 5X00IN21 WORKING WITH BODY STRUCTURAL ADHESIVE

WM 507255 REPLACING LONGITUDINAL MEMBER FOR WHEEL HOUSING UPPER SECTION (ALL MODELS) > TOOLS AND MATERIALS > TOOLS AND MATERIALS FOR BODY REPAIRS

Information

- The tools for working on steel and aluminum must always be kept separate from each other. We recommend that you color code the tools using a system similar to that used for the Aluminum tool set with trolley WE 1350, for example.

Straightening set **Body alignment system package WE 1121 Measuring and alignment system, professional WE 1398**

Resistance spot welder; optional **Inverter welder MIDIspot-QSVM-12000 WE 1312, Resistance spot welder WE 1352, Resistance spot welder WE 1311, Resistance spot welder WE 1313**

Metal inert gas (MIG) welder

Pneumatic spotweld remover **Pneumatic Spotweld Remover, Vario Drill WS 90 WE 1139**

Pneumatic body saw **Body saw WE 1508**

Oscillating body saw (special electric cutter) **Special electric cutter WE 1137**

Hot-air blower **Hot-air blower WE 1119**

Hand-cartridge gun **Hand-cartridge gun WE 1141**

Spotweld drill **Spotweld drill** ; Twist drill Nr.201

Countersink for rivets **Countersink Nr.202**

Blind riveting tool for high-strength rivets **Blind riveting tool TAURUS 4 WE 1348**

Safety vacuum cleaner for aluminum dust **Mobile extraction unit, aluminum WE 1507**

Star gauges for body gap dimensions Nr.127-1

Wurth Klebt und Dichtet body sealant

WM 507255 REPLACING LONGITUDINAL MEMBER FOR WHEEL HOUSING UPPER SECTION (ALL MODELS) > REMOVING LONGITUDINAL MEMBER FOR WHEEL HOUSING UPPER SECTION

Fig 1: Locating Longitudinal Member For Wheel Housing Upper Section Position

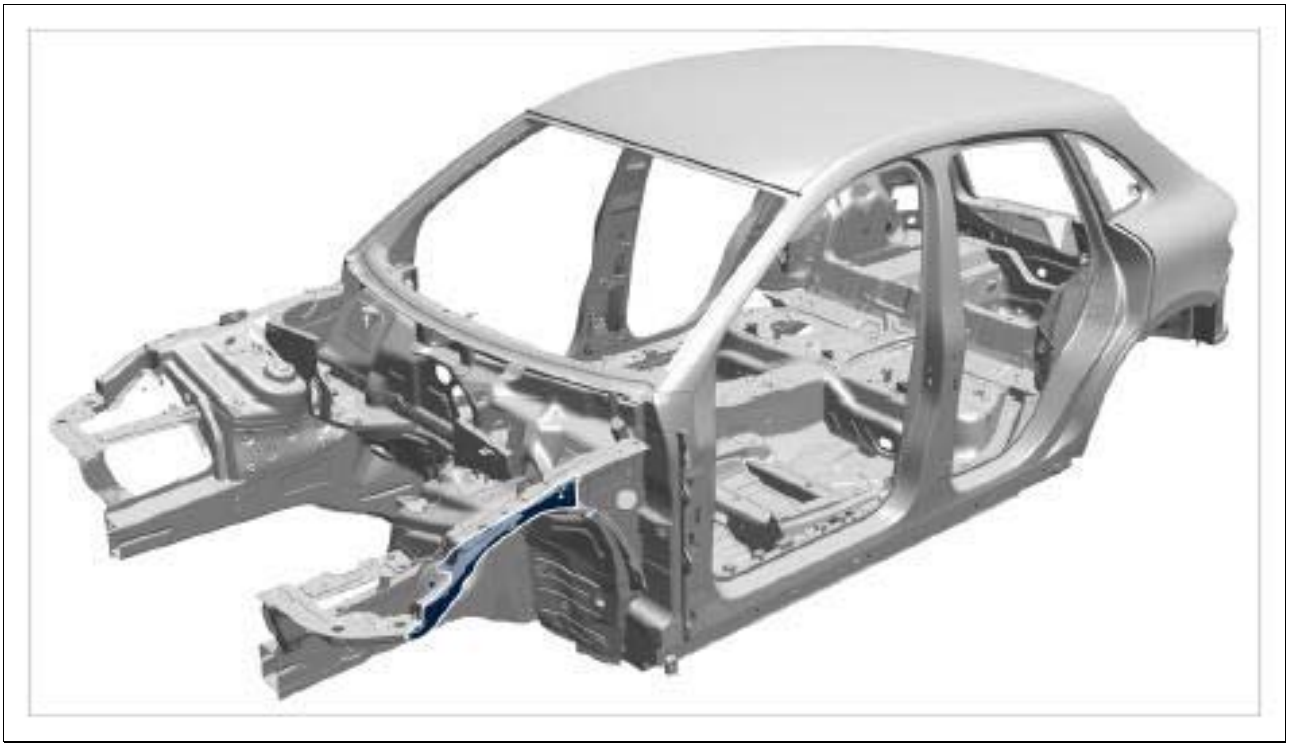

Courtesy of PORSCHE CARS NORTH AMERICA, INC.

1. Remove wing bracket.

   Information

   Drill out the connection point on one side only. Do not damage the plate underneath.

   1. 1.1. Drill out spotwelds **-A-** using **spotweld drill** .
   2. 1.2. Grind down welded seams **-arrows-** .

Fig 2: Removing Wing Bracket

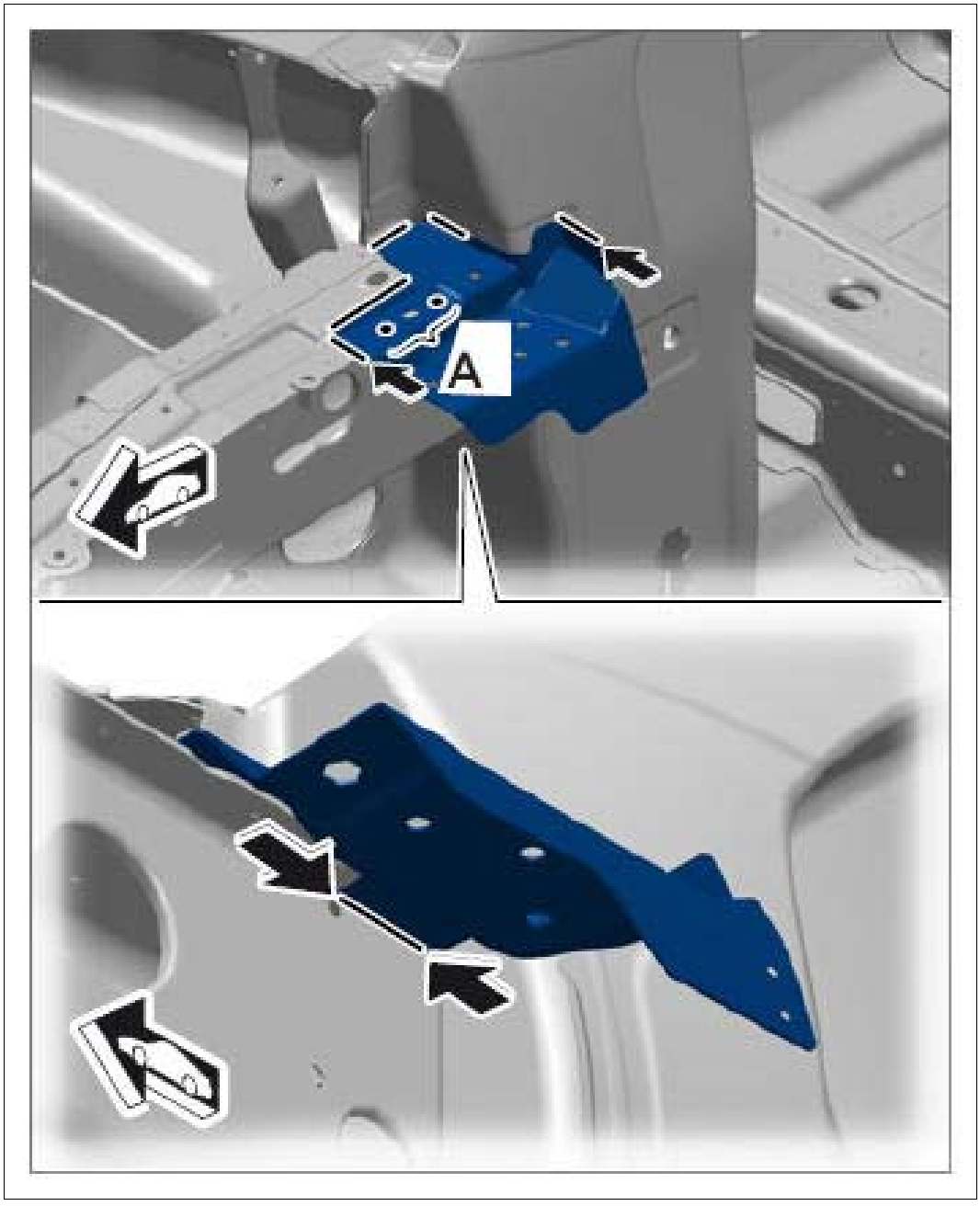

Courtesy of PORSCHE CARS NORTH AMERICA, INC.

2. Remove reinforcements.

Information

Drill out the connection point on one side only. Do not damage the plate underneath.

1. 2.1. Drill out spotwelds using **spotweld drill** .
2. 2.2. Make rough cuts **-1-** along the A-pillar **-arrows-** .

Information

Only make cuts in the top plate. Make sure not to damage the plate underneath when

doing this.

3. 2.3. Mark and make cut **-2-** . → Distance: 80 mm
4. 2.4. Grind down welded seam **-A-** .

Fig 3: Removing Reinforcements

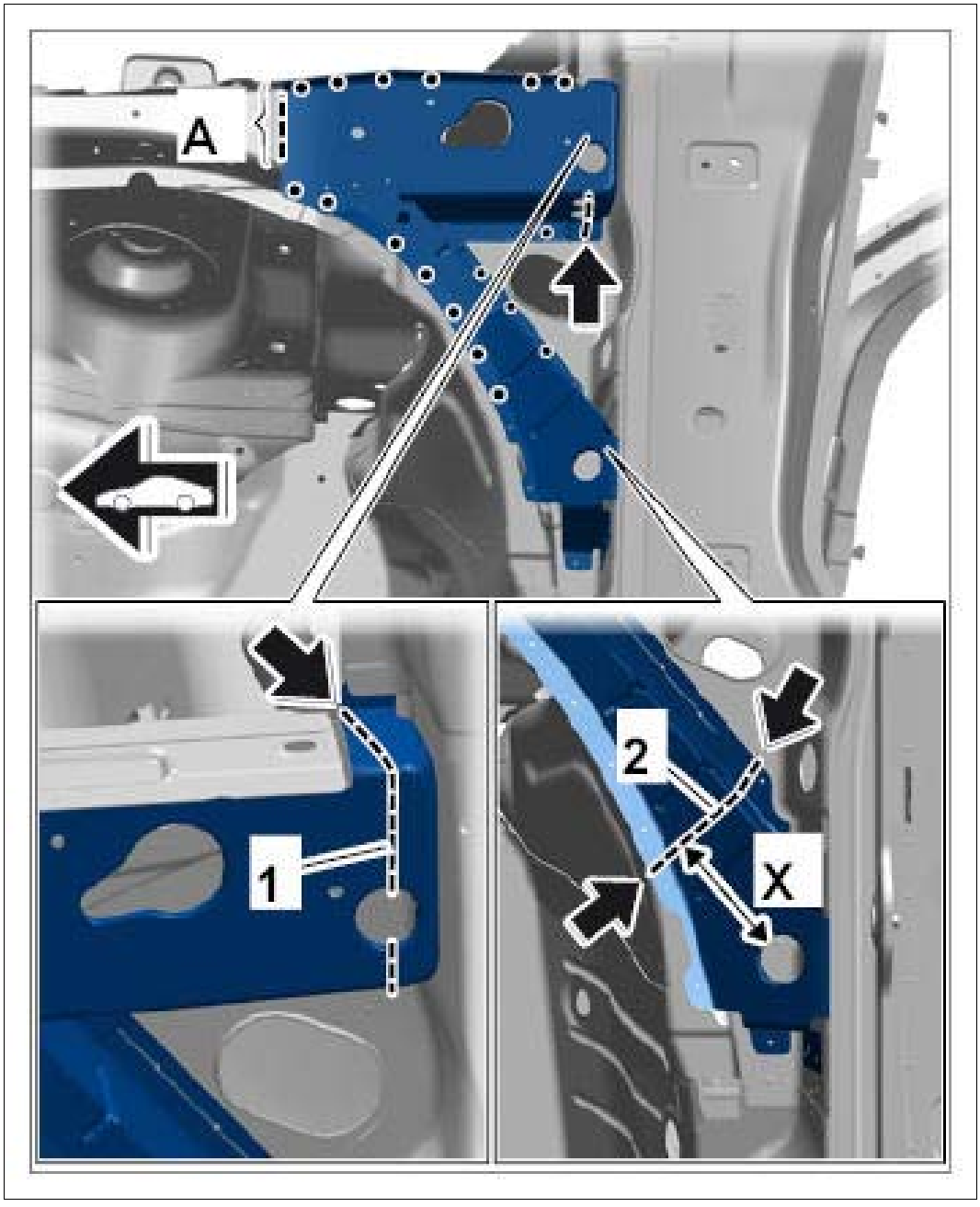

Courtesy of PORSCHE CARS NORTH AMERICA, INC.

3. Heat bonding areas.
    1. 3.1. Remove reinforcements.

Fig 4: Identifying Reinforcements



Courtesy of PORSCHE CARS NORTH AMERICA, INC.

4. Remove remaining piece of upper reinforcement **-1-** .

    1. 4.1. Drill out spotwelds using **spotweld drill** .

Fig 5: Identifying Remaining Piece Of Upper Reinforcement



Courtesy of PORSCHE CARS NORTH AMERICA, INC.

5. Remove longitudinal member for wheel housing.
    1. 5.1. Drill out spotwelds using **spotweld drill** .
    2. 5.2. Grind down welded seams **-arrows-** .
    3. 5.3. Grind down spotwelds **-A-** from the inside.

Fig 6: Removing Longitudinal Member For Wheel Housing

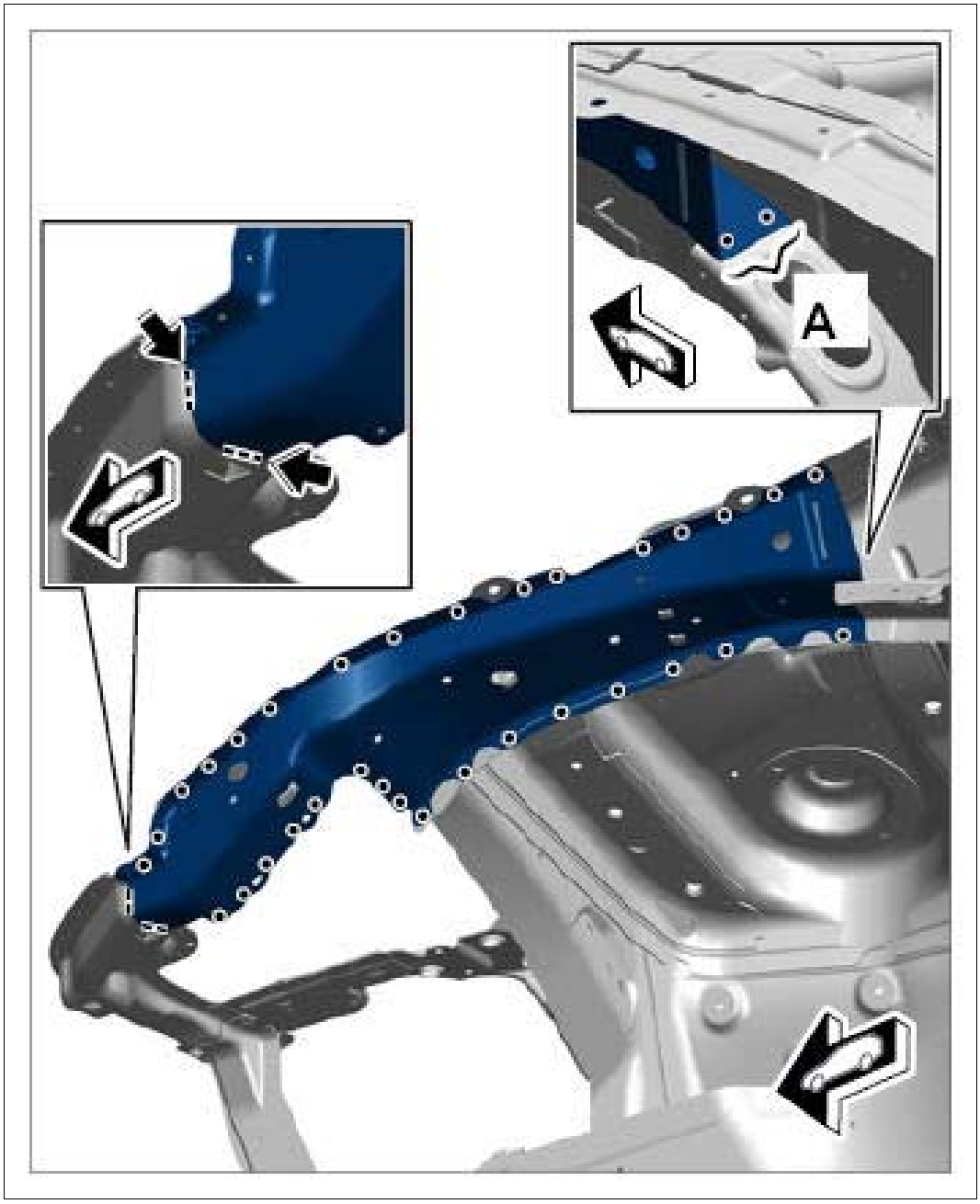

Courtesy of PORSCHE CARS NORTH AMERICA, INC.

6. Heat the bonding surfaces.

    1. 6.1. Remove longitudinal member for wheel housing.

Fig 7: Removing Longitudinal Member For Wheel Housing



Courtesy of PORSCHE CARS NORTH AMERICA, INC.

WM 507255 REPLACING LONGITUDINAL MEMBER FOR WHEEL HOUSING UPPER SECTION (ALL MODELS) > PREPARING LONGITUDINAL MEMBER FOR WHEEL HOUSING FOR INSTALLATION

1. Prepare connection areas for bonding and welding.
    1. 1.1. Install deformation elements **-1-** .

Fig 1: Installing Deformation Elements

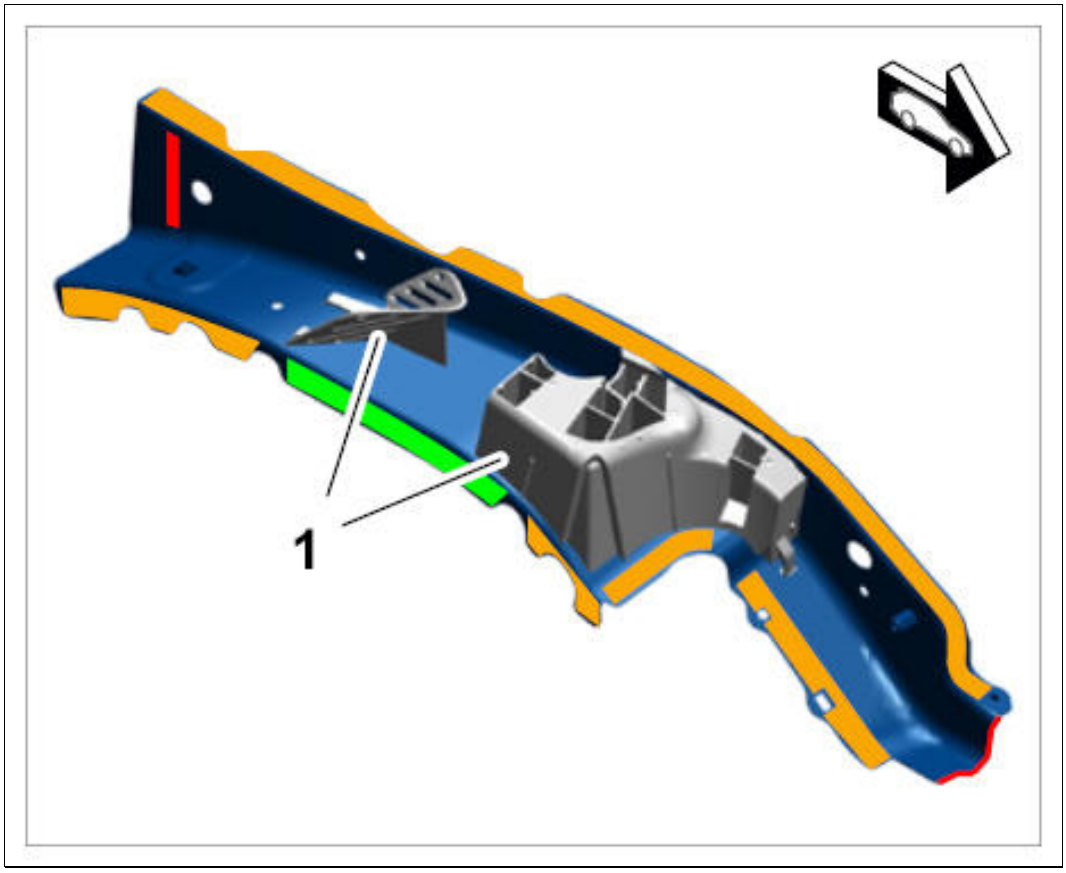

Courtesy of PORSCHE CARS NORTH AMERICA, INC.

Orange	Resistance spot-welding
Green	Resistance spot-welding + bonding
Red	Plug-welding/apply a full weld using inert gas without bonding

2. Cut reinforcement in area **-arrows-** leaving an overlap to the remaining piece of 30 mm.

Fig 2: Checking Reinforcement Area

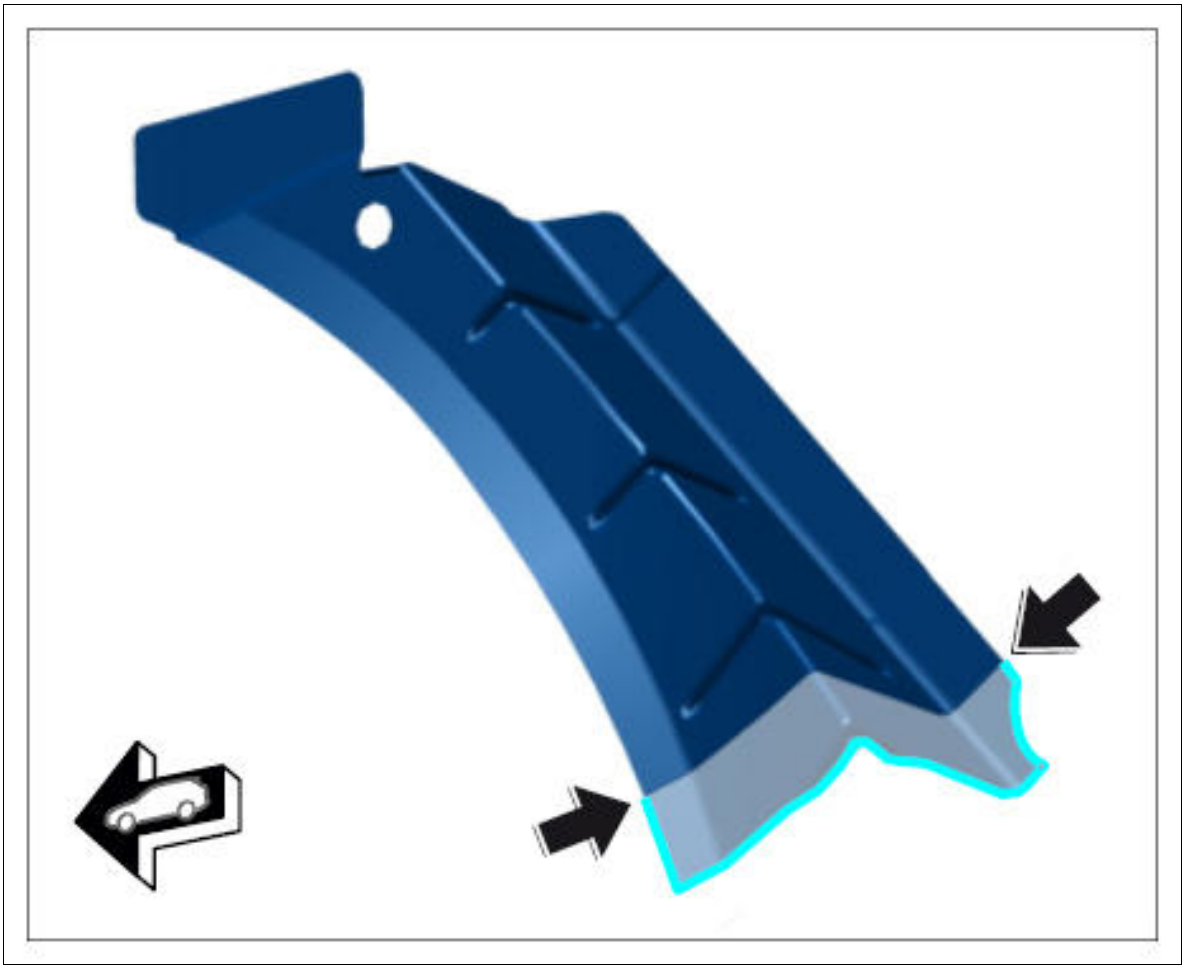

Courtesy of PORSCHE CARS NORTH AMERICA, INC.

3. Fit in and secure reinforcements.

    1. 3.1. Tack-weld upper part **-1-** and lower part **-2-** of reinforcement **-arrows-** .
    2. 3.2. Make cuts through the reinforcement and remaining piece of reinforcement **-2-** in the overlap area.

Fig 3: Securing Reinforcements Weld Upper Part

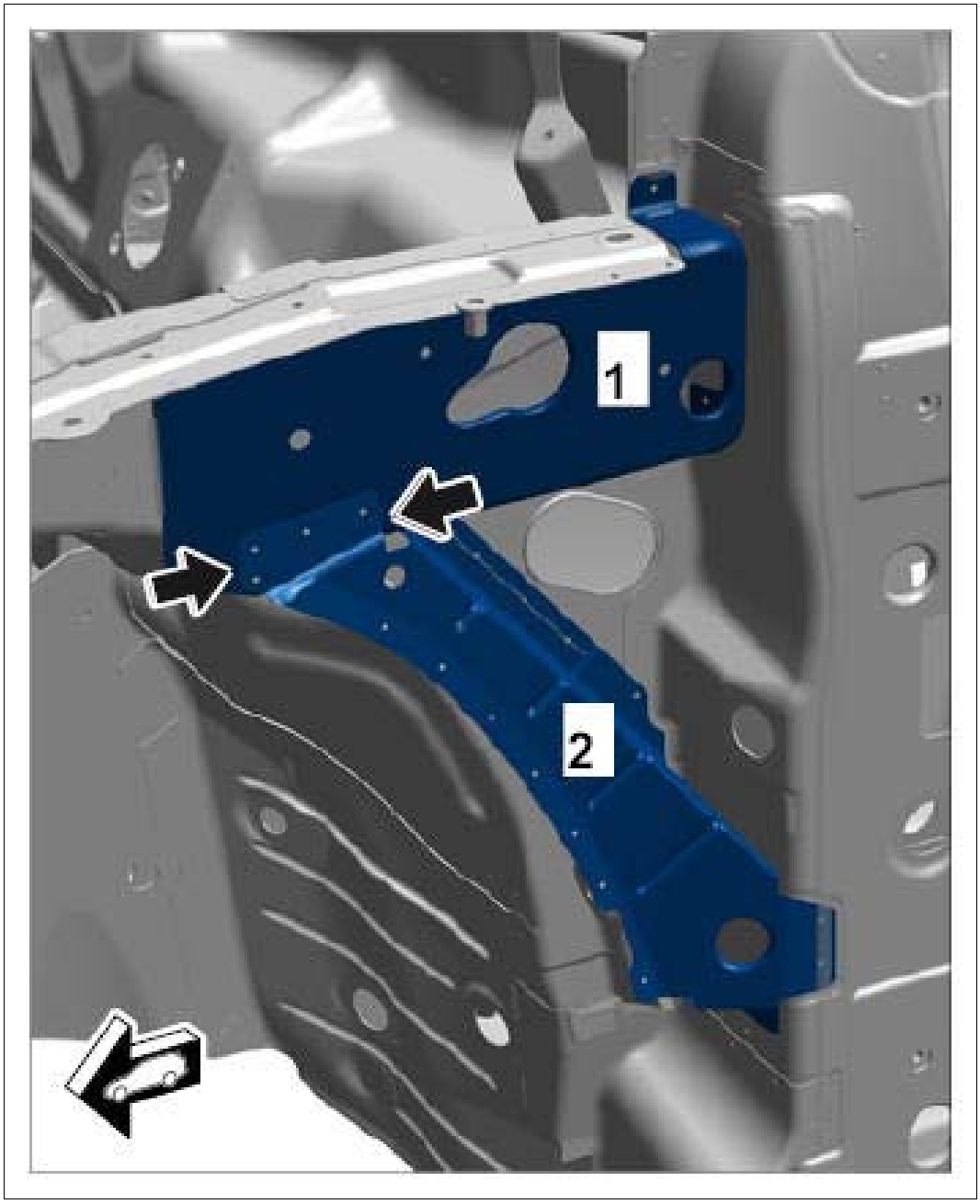

Courtesy of PORSCHE CARS NORTH AMERICA, INC.

4. Remove reinforcements.

    1. 4.1. Resistance spot-weld the marked area **-A-** .

Fig 4: Removing Reinforcements



Courtesy of PORSCHE CARS NORTH AMERICA, INC.

5. Prepare reinforcement for bonding and welding.

Fig 5: Removing Reinforcement For Bonding

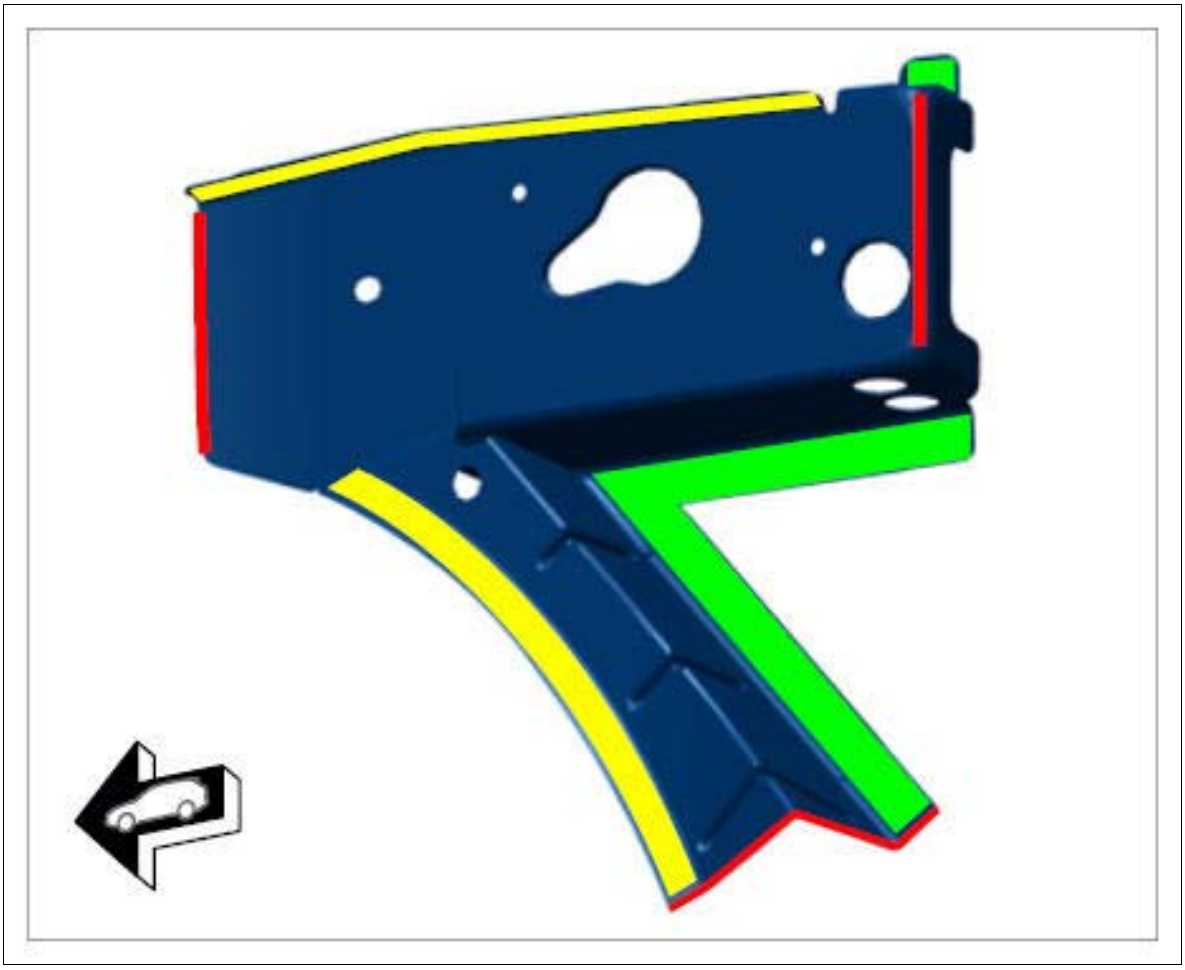

Courtesy of PORSCHE CARS NORTH AMERICA, INC.

Orange	Resistance spot-welding
Green	Resistance spot-welding + bonding
Red	Plug-welding/apply a full weld using inert gas without bonding

WM 507255 REPLACING LONGITUDINAL MEMBER FOR WHEEL HOUSING UPPER SECTION (ALL MODELS) > PREPARING CONNECTION AREAS OF THE BODY

1. Align the sealing surface and connections of the body.
2. De-burr connection points and prepare them for welding.

Information

1. Before final assembly, make sure you fully understand all the work steps involved and carry out a trial assembly without applying adhesive.
2. The bonding process can only be carried out reliably when a smooth and swift sequence

of operations is guaranteed.

3. Do not begin bonding work until all materials and tools necessary for later repair work are available.

3. Prepare the marked areas for welding and bonding. → 5X00IN21 WORKING WITH BODY STRUCTURAL ADHESIVE - section on "Preparing"

Fig 1: Preparing Connection Areas Of Body

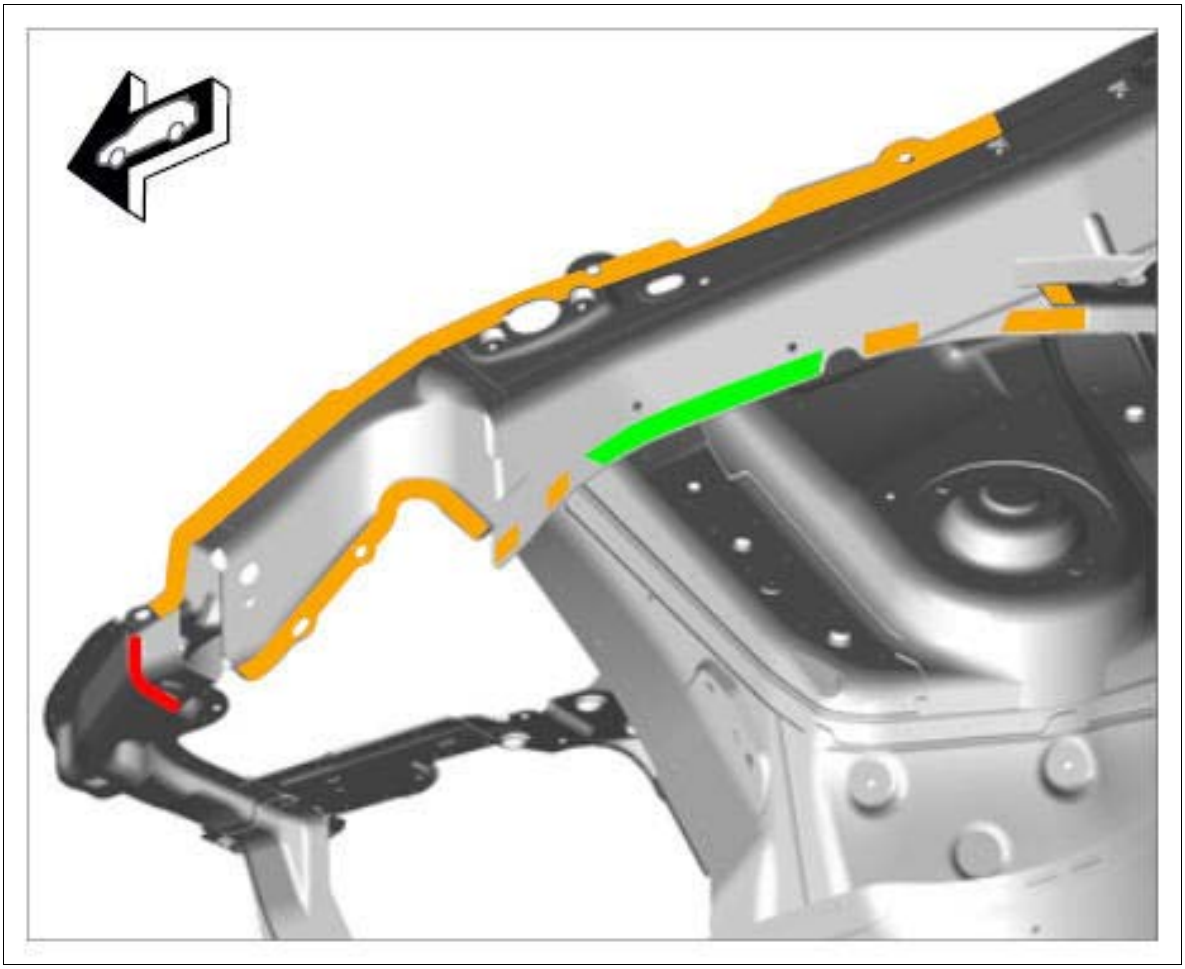

Courtesy of PORSCHE CARS NORTH AMERICA, INC.

Fig 2: Preparing Connection Areas Of Body

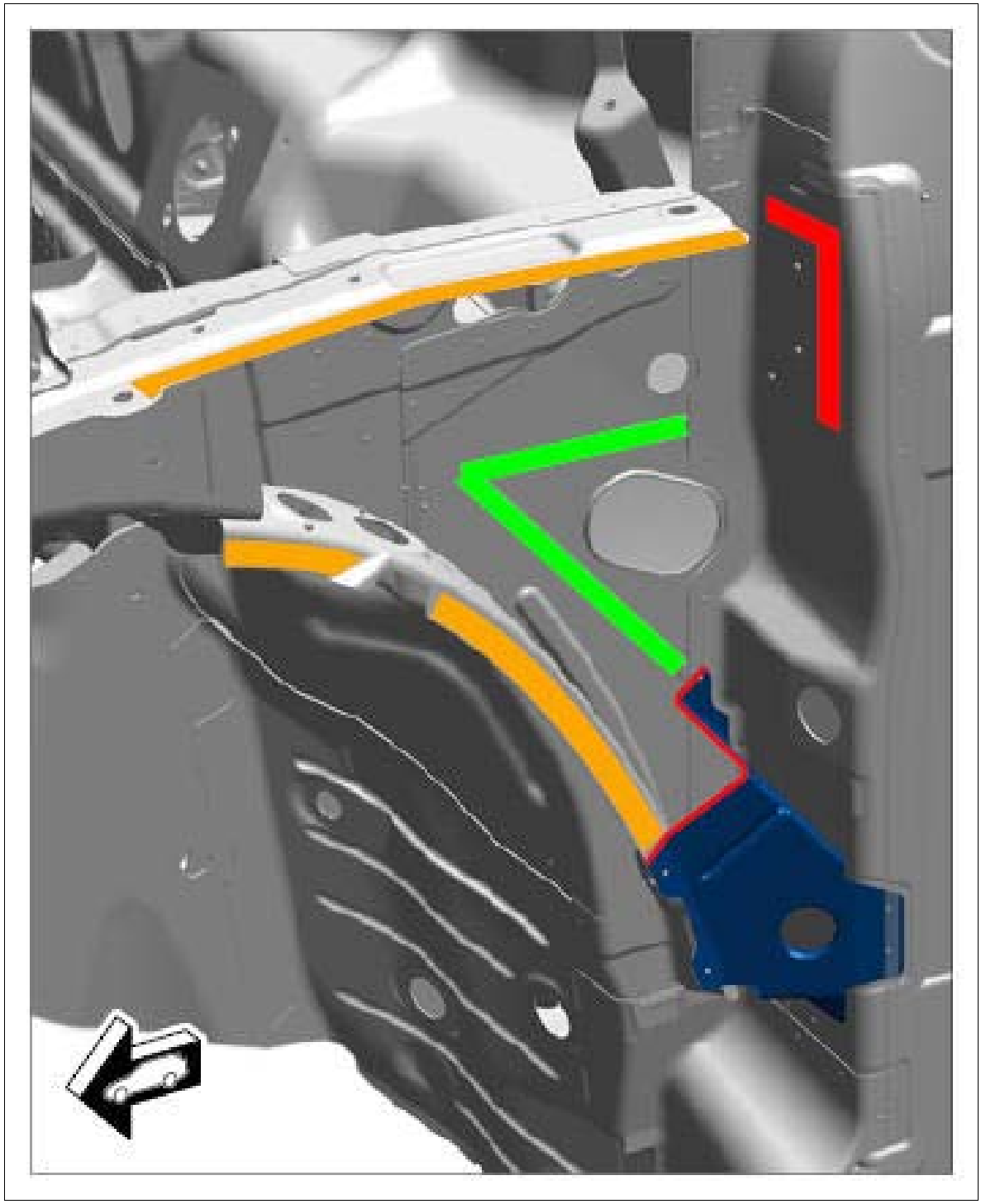

Courtesy of PORSCHE CARS NORTH AMERICA, INC.

Orange	Resistance spot-welding
Green	Resistance spot-welding + bonding
Red	Plug-welding/apply a full weld using inert gas without bonding

WM 507255 REPLACING LONGITUDINAL MEMBER FOR WHEEL HOUSING UPPER SECTION (ALL MODELS) > INSTALLING LONGITUDINAL MEMBER FOR WHEEL HOUSING

Information

- Before final assembly, make sure you fully understand all the work steps involved and carry out a trial assembly without applying adhesive.
- The bonding process can only be carried out reliably when a smooth and swift sequence of operations is guaranteed.
- Do not begin bonding work until all materials and tools necessary for later repair work are available.

1. Install longitudinal member for wheel housing and check that it fits perfectly. Check gap dimensions → 5X00IN DIAGRAM - BODY GAP DIMENSIONS .
    1. 1.1. Apply adhesive to the marked areas. → 5X00IN21 WORKING WITH BODY STRUCTURAL ADHESIVE→ **Application depth: 3.0 mm**

       Fig 1: Applying Adhesive Connection Areas Of Body

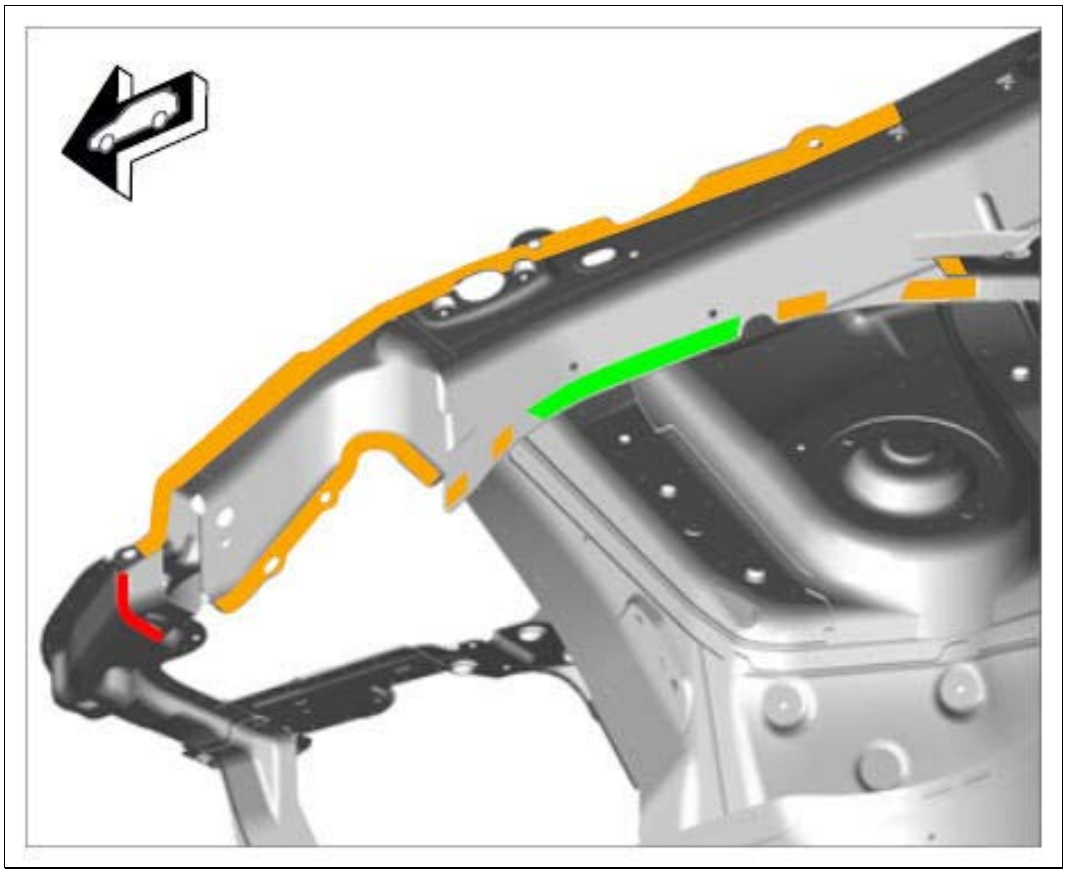

Courtesy of PORSCHE CARS NORTH AMERICA, INC.

Orange	Resistance spot-welding
Green	Resistance spot-welding + bonding

Red	Plug-welding/apply a full weld using inert gas without bonding

2. Resistance spot-weld the longitudinal member for the wheel housing.

    1. 2.1. Apply a full weld to the area **-arrows-** using inert gas.

    Fig 2: Installing Longitudinal Member For Wheel Housing

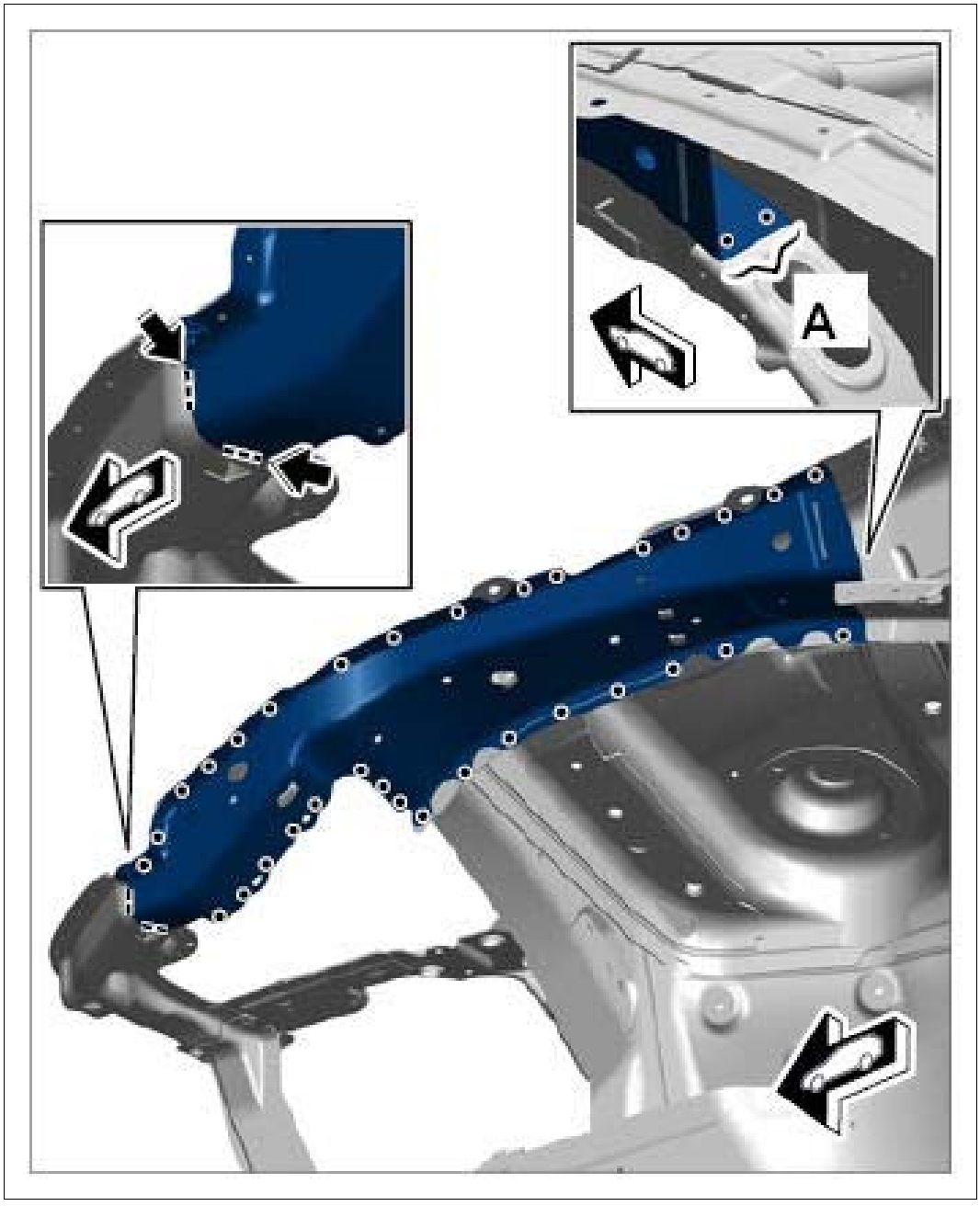

Courtesy of PORSCHE CARS NORTH AMERICA, INC.

3. Install reinforcements.

    1. 3.1. Apply adhesive to the marked areas.

Fig 3: Applying Adhesive

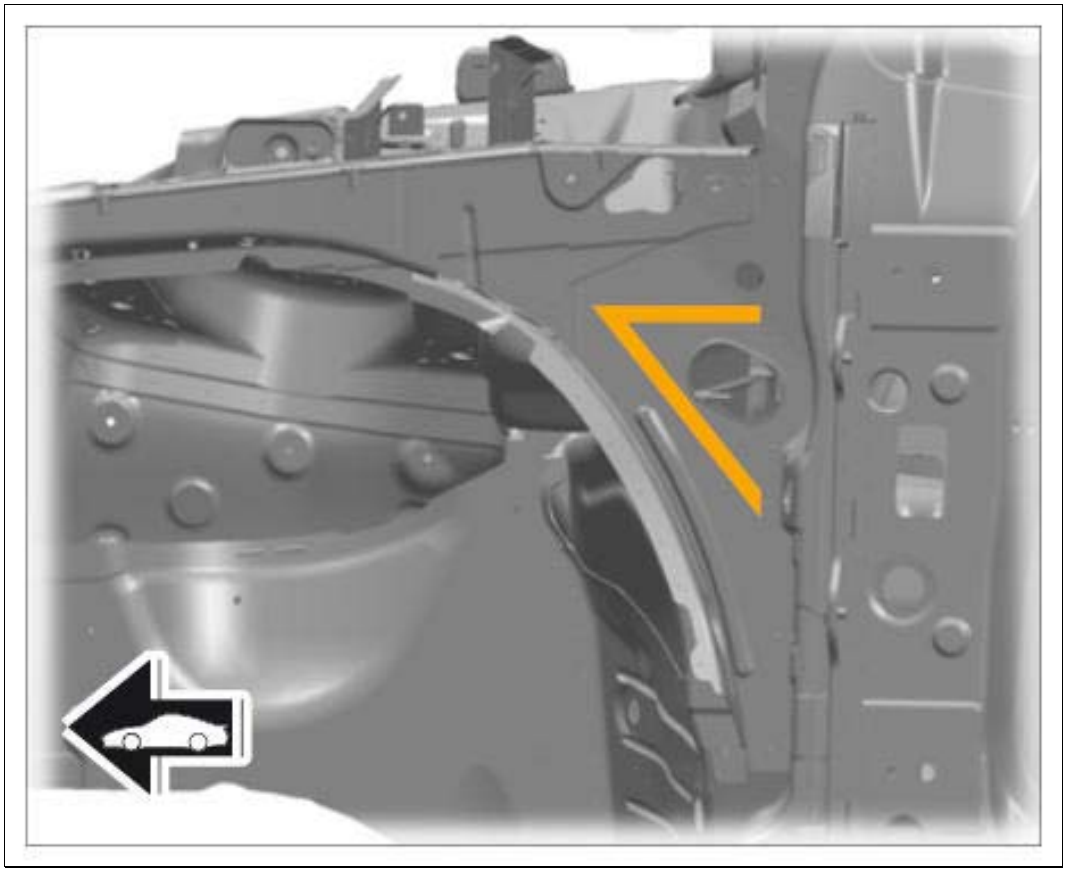

Courtesy of PORSCHE CARS NORTH AMERICA, INC.

4. Resistance spot-weld the reinforcement.
    1. 4.1. Apply a full weld to the area **-A & B-** using inert gas.
    2. 4.2. Spot-weld area **-C-** using inert gas.

Fig 4: Installing Reinforcements

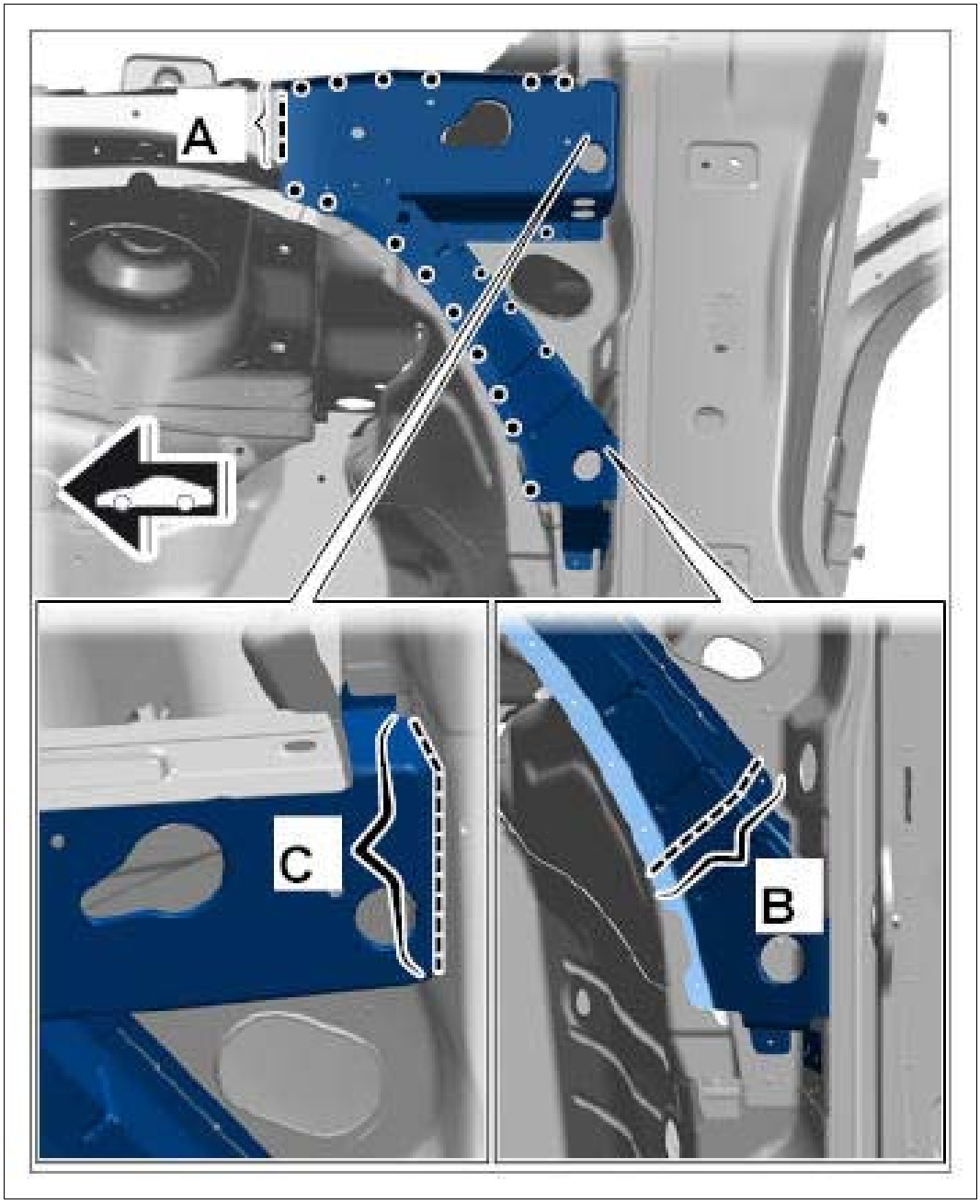

Courtesy of PORSCHE CARS NORTH AMERICA, INC.

5. Install wing bracket.
    1. 5.1. Resistance spot-weld the wing bracket in area **-A-** .
    2. 5.2. Apply a full weld to areas **-arrows-** using inert gas.

Fig 5: Installing Wing Bracket

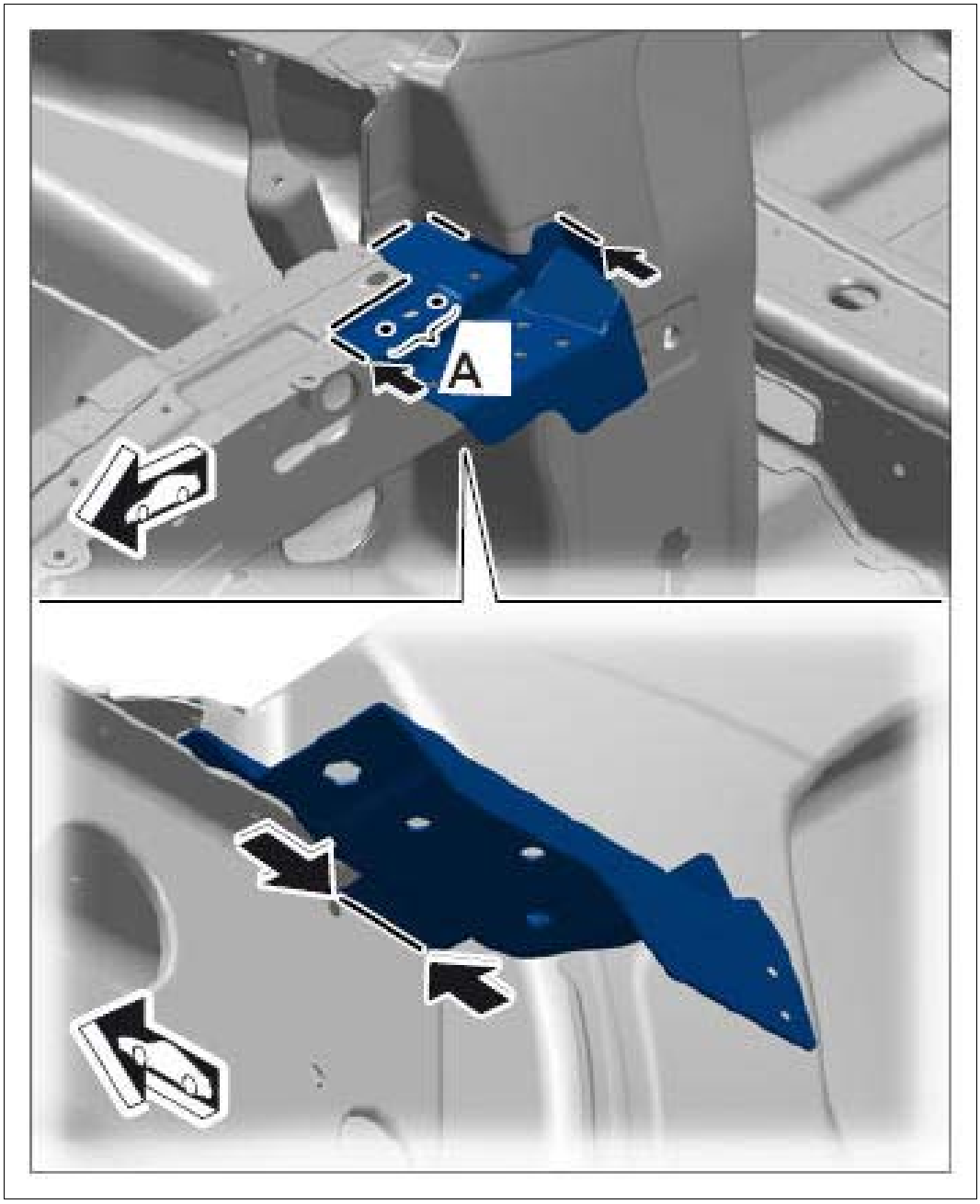

Courtesy of PORSCHE CARS NORTH AMERICA, INC.

WM 507255 REPLACING LONGITUDINAL MEMBER FOR WHEEL HOUSING UPPER SECTION (ALL MODELS) > SUBSEQUENT WORK > SUBSEQUENT WORK FOR BODY REPAIRS (WITHOUT STRAIGHTENING SYSTEM)

1. Clean joint areas and sheetmetal flanges with a wire brush.
2. Prime joint areas and sheetmetal flanges with 2K primer.
3. Restore standard seal with body sealant → 5X00IN42 SEAM SEALING .

Also seal the repair area carefully.

4. Paint repair area and adjacent surfaces, if necessary.
5. Restore standard underbody protection with underbody sealant → 5X00IN43 UNDERBODY PROTECTION .
6. Apply standard cavity preservation → 5X00IN44 CAVITY PRESERVATION . Also apply cavity preservation to the repair area.
7. Install removed accessories in the repair area.

WM 507955 REPLACING FRONT SIDE MEMBER (ALL MODELS) > TOOLS

Designation	Type	Number	Description	
Hot-air blower	Workshop equipment	WE 1119		
Body alignment system package	Workshop equipment	WE 1121		
Special electric cutter	Workshop equipment	WE 1137		
Pneumatic Spotweld Remover, Vario Drill WS 90	Workshop equipment	WE 1139		
Hand-cartridge gun	Workshop equipment	WE 1141		
Resistance spot welder	Workshop equipment	WE 1311		
Inverter welder MIDIspot-QSVM-12000	Workshop equipment	WE 1312		
Resistance spot welder	Workshop equipment	WE 1313		
Blind riveting tool TAURUS 4	Workshop equipment	WE 1348		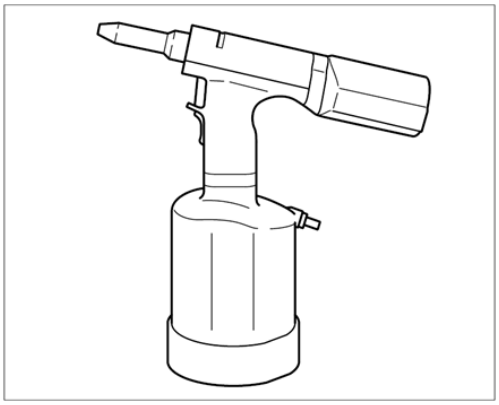

Aluminum tool set with trolley	Workshop equipment	WE 1350		
Resistance spot welder	Workshop equipment	WE 1352		
Measuring and alignment system, professional	Workshop equipment	WE 1398		
Mobile extraction unit, aluminum	Workshop equipment	WE 1507		
Body saw	Workshop equipment	WE 1508		
Star gauges for body gap dimensions	Special tool	Nr.127-1		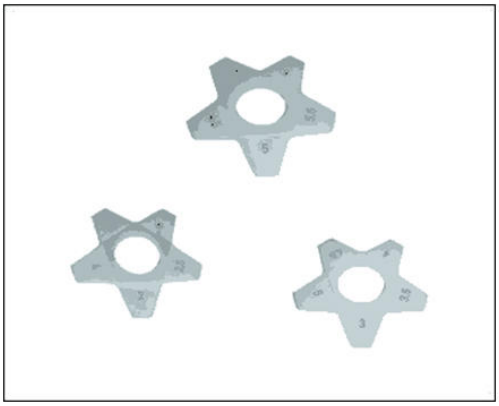
Spotweld drill; see Gr. 2.4; *** Workshop Equipment Manual	Commercially available tool	Nr.129		

Twist drill	Commercially available tool	Nr.201		
Countersink	Commercially available tool	Nr.202		

WM 507955 REPLACING FRONT SIDE MEMBER (ALL MODELS) > TECHNICAL VALUES

Location	Description	Type	Basic value	Tolerance 1	Tolerance 2
Drill bit		Diameter	6.5 mm		
Drill bit		Diameter	6.5 mm		
Drill bit		Diameter	6.5 mm		
Drill bit		Diameter	8.0 mm		
Drill bit		Diameter	6.5 mm		
Applying adhesive		Application depth	3.0 mm		
Applying adhesive		Application depth	3.0 mm		
Applying adhesive		Application depth	3.0 mm		

WM 507955 REPLACING FRONT SIDE MEMBER (ALL MODELS) > PRELIMINARY

WORK > PRELIMINARY WORK FOR BODY REPAIRS (WITH STRAIGHTENING SYSTEM)

1. Remove accessories in the repair area.
    1. 1.1. Remove accessories in the repair area according to the extent of damage on the vehicle.
2. Set up straightening bench with straightening system.
3. Set vehicle on straightening bench.
4. Cover accessories adjacent to the repair area on the vehicle.
    1. 4.1. Cover all accessories remaining on the vehicle and adjacent areas with fire-proof protective covers.
5. Expose joint areas.
    1. 6.1. Remove underbody protection, paint, etc. from the joint areas of the body using a hot-air gun or rotary brush.

WM 507955 REPLACING FRONT SIDE MEMBER (ALL MODELS) > PRELIMINARY WORK

1. Remove spring strut mount → 503955 REPLACING SPRING STRUT MOUNT .

WM 507955 REPLACING FRONT SIDE MEMBER (ALL MODELS) > SAFETY INSTRUCTIONS AND INFORMATION ON QUALITY

⚠ *CAUTION: Non-observance of safety instructions for body repairs*

- *Risk of damage to the vehicle*
- *Danger of injury*

→ Read the relevant safety instructions as well as general information and quality instructions → 5X00IN01 SAFETY INSTRUCTIONS .

- Corrosion protection measures during repairs → 5X00IN03 CORROSION PROTECTION MEASURES DURING REPAIRS .
- Body parts of various sheet-steel strengths → 5X00IN04 BODY PARTS OF VARIOUS SHEET-STEEL STRENGTHS .
- Setting self-tapping screws → 5X00IN24 SETTING SELF-TAPPING SCREWS .
- Working with body structural adhesive → 5X00IN21 WORKING WITH BODY STRUCTURAL

ADHESIVE .

WM 507955 REPLACING FRONT SIDE MEMBER (ALL MODELS) > TOOLS AND MATERIALS > TOOLS AND MATERIALS FOR BODY REPAIRS

Information

- The tools for working on steel and aluminum must always be kept separate from each other. We recommend that you color code the tools using a system similar to that used for the Aluminum tool set with trolley WE 1350, for example.

Straightening set **Body alignment system package WE 1121 Measuring and alignment system, professional WE 1398**

Resistance spot welder; optional **Inverter welder MIDIspot-QSVM-12000 WE 1312, Resistance spot welder WE 1352, Resistance spot welder WE 1311, Resistance spot welder WE 1313**

Metal inert gas (MIG) welder

Pneumatic spotweld remover **Pneumatic Spotweld Remover, Vario Drill WS 90 WE 1139**

Pneumatic body saw **Body saw WE 1508**

Oscillating body saw (special electric cutter) **Special electric cutter WE 1137**

Hot-air blower **Hot-air blower WE 1119**

Hand-cartridge gun **Hand-cartridge gun WE 1141**

Spotweld drill **Spotweld drill;** Twist drill Nr.201

Countersink for rivets **Countersink Nr.202**

Blind riveting tool for high-strength rivets **Blind riveting tool TAURUS 4 WE 1348**

Safety vacuum cleaner for aluminum dust **Mobile extraction unit, aluminum WE 1507**

Star gauges for body gap dimensions Nr.127-1

Wurth Klebt und Dichtet body sealant

WM 507955 REPLACING FRONT SIDE MEMBER (ALL MODELS) > REMOVING FRONT SIDE MEMBER

Fig 1: Locating Front Side Member Position



Courtesy of PORSCHE CARS NORTH AMERICA, INC.

Information

Drill out the connection point on one side only. Do not damage the plate underneath.

1. Drill out spotwelds using **spotweld drill** .
    1. 1.1. Grind down welded seams **-arrows-** .
    2. 1.2. Remove side member closing element.

Fig 2: Removing Side Member Closing Element

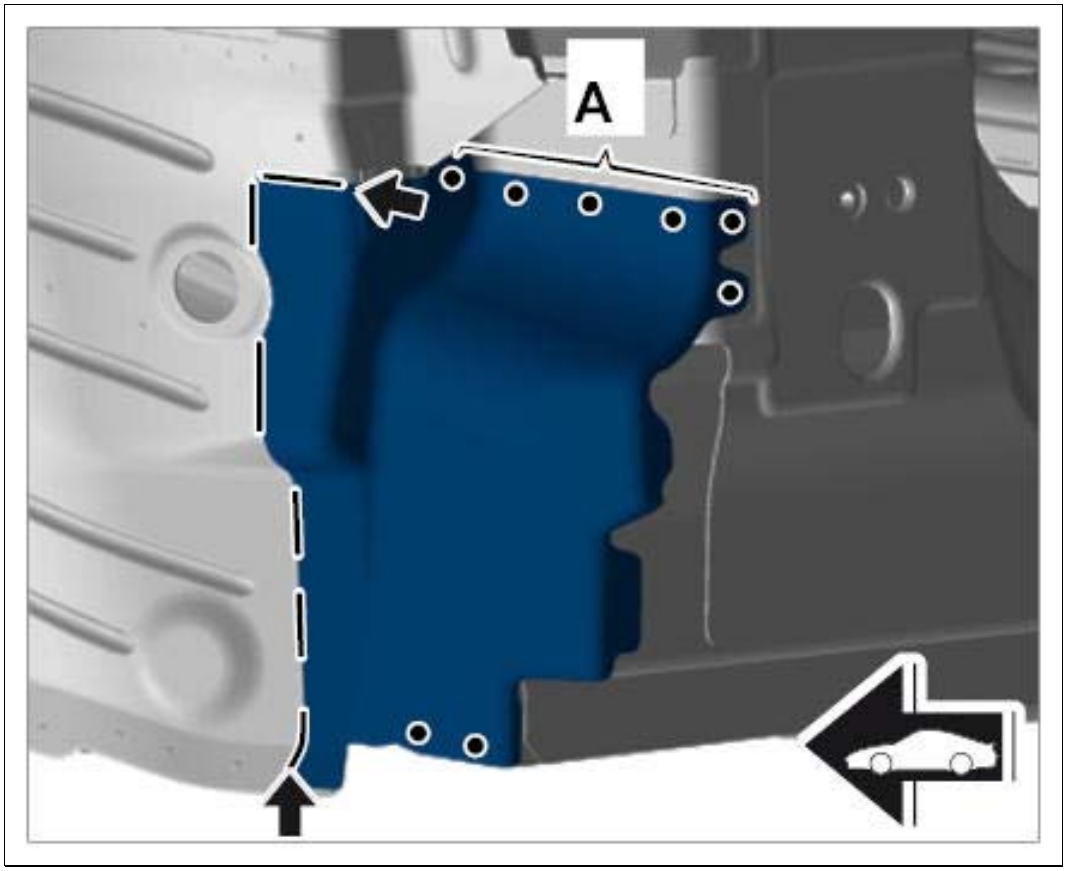

Courtesy of PORSCHE CARS NORTH AMERICA, INC.

Information

Drill out the connection point on one side only. Do not damage the plate underneath.

2. Drill out spotwelds using **spotweld drill** .

Information

Only make cuts in the top plate. Make sure not to damage the plate underneath when doing this.

1. 2.1. Mark and make cut **-arrows-** ().
2. 2.2. Remove extension for front wheel housing **-1-** . The remaining part **-2-** stays in the vehicle.

Fig 3: Removing Extension For Front Wheel Housing

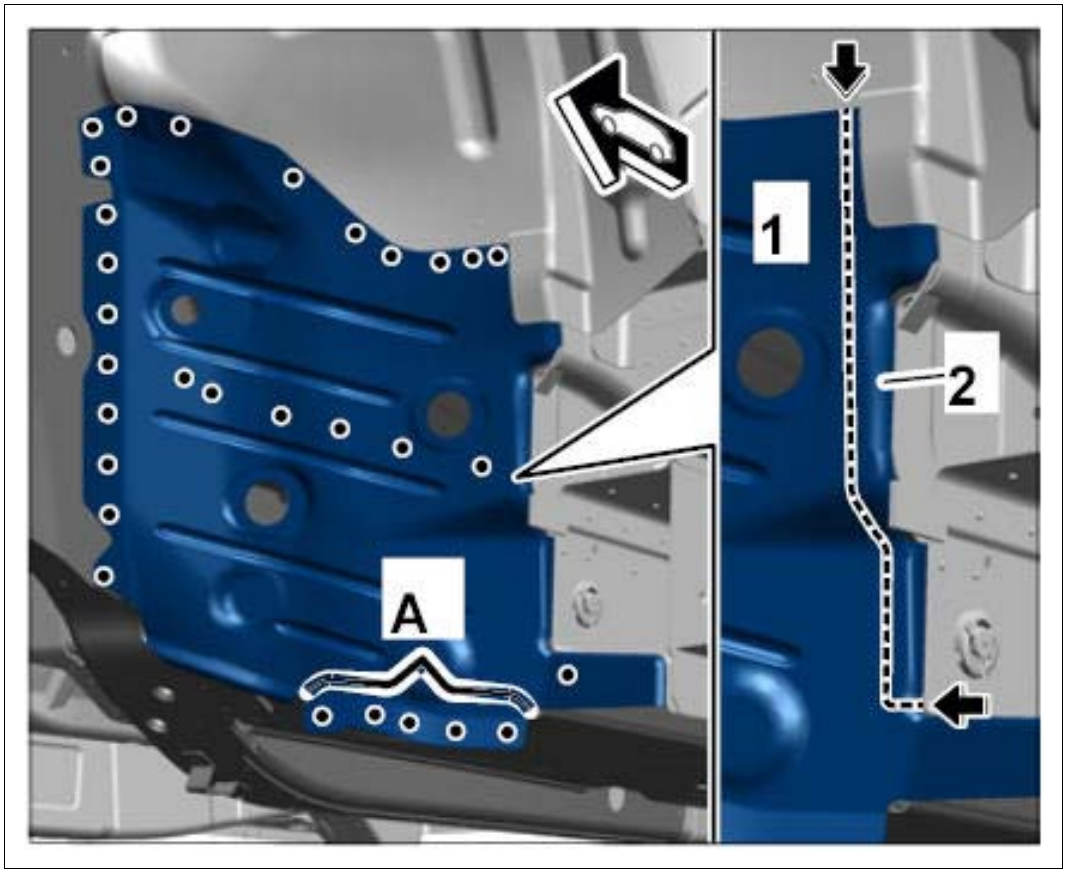

Courtesy of PORSCHE CARS NORTH AMERICA, INC.

Information

Drill out the connection point on one side only. Do not damage the plate underneath.

3. Drill out spotwelds using **spotweld drill** .

    1. 3.1. Drill out spotwelds **-A-** using **spotweld drill** , by drilling through two plate thicknesses.
    2. 3.2. Drill out spotwelds **-B-** through two plate thicknesses using a → **Diameter: 6.5 mm drill bit** .
    3. 3.3. Remove mounting.

Fig 4: Removing Mounting Front Side Member

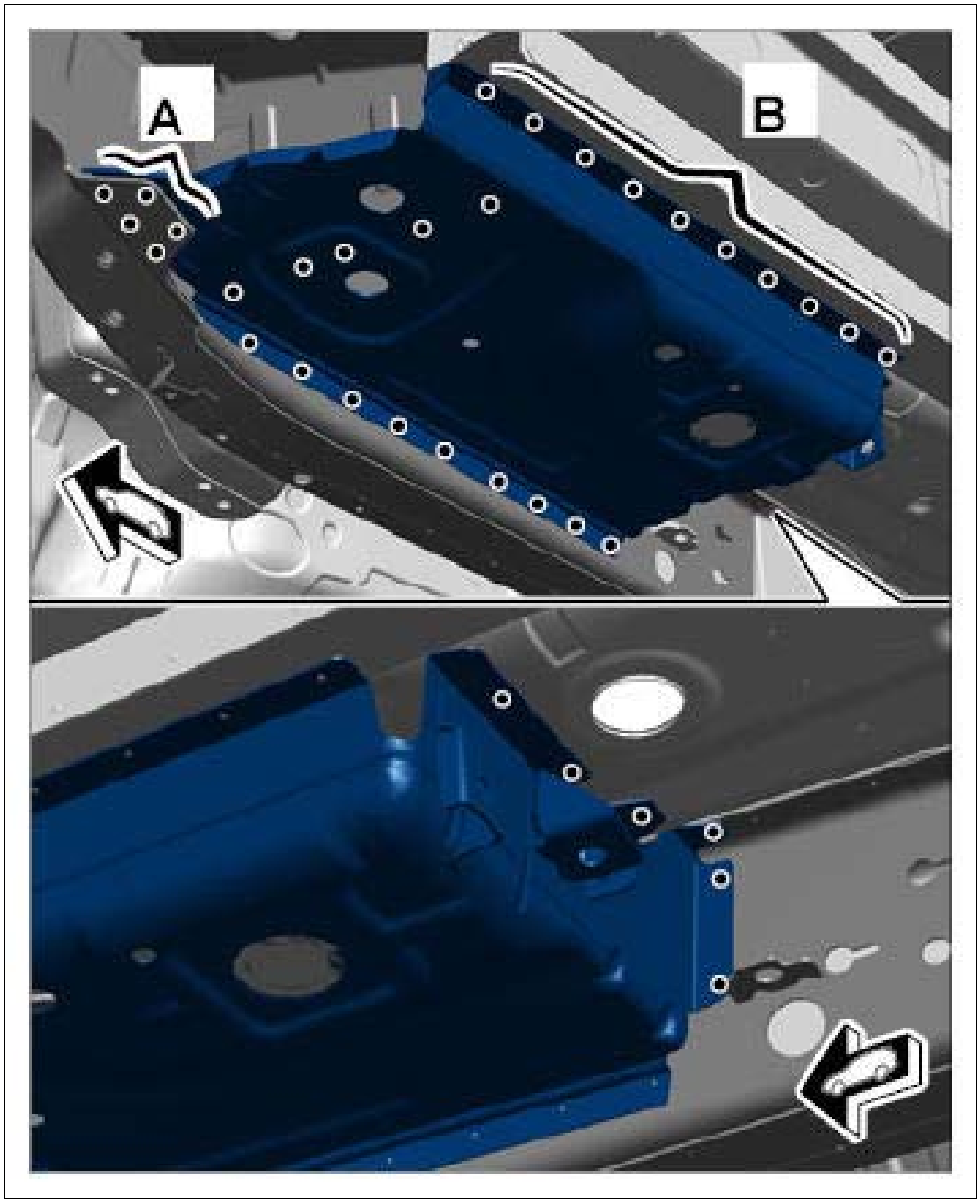

Courtesy of PORSCHE CARS NORTH AMERICA, INC.

Information

Drill out the connection point on one side only. Do not damage the plate underneath.

4. Drill out spotwelds using **spotweld drill** .
    1. 4.1. Heat the marked bonding areas.
    2. 4.2. Remove reinforcement.

Fig 5: Removing Reinforcement

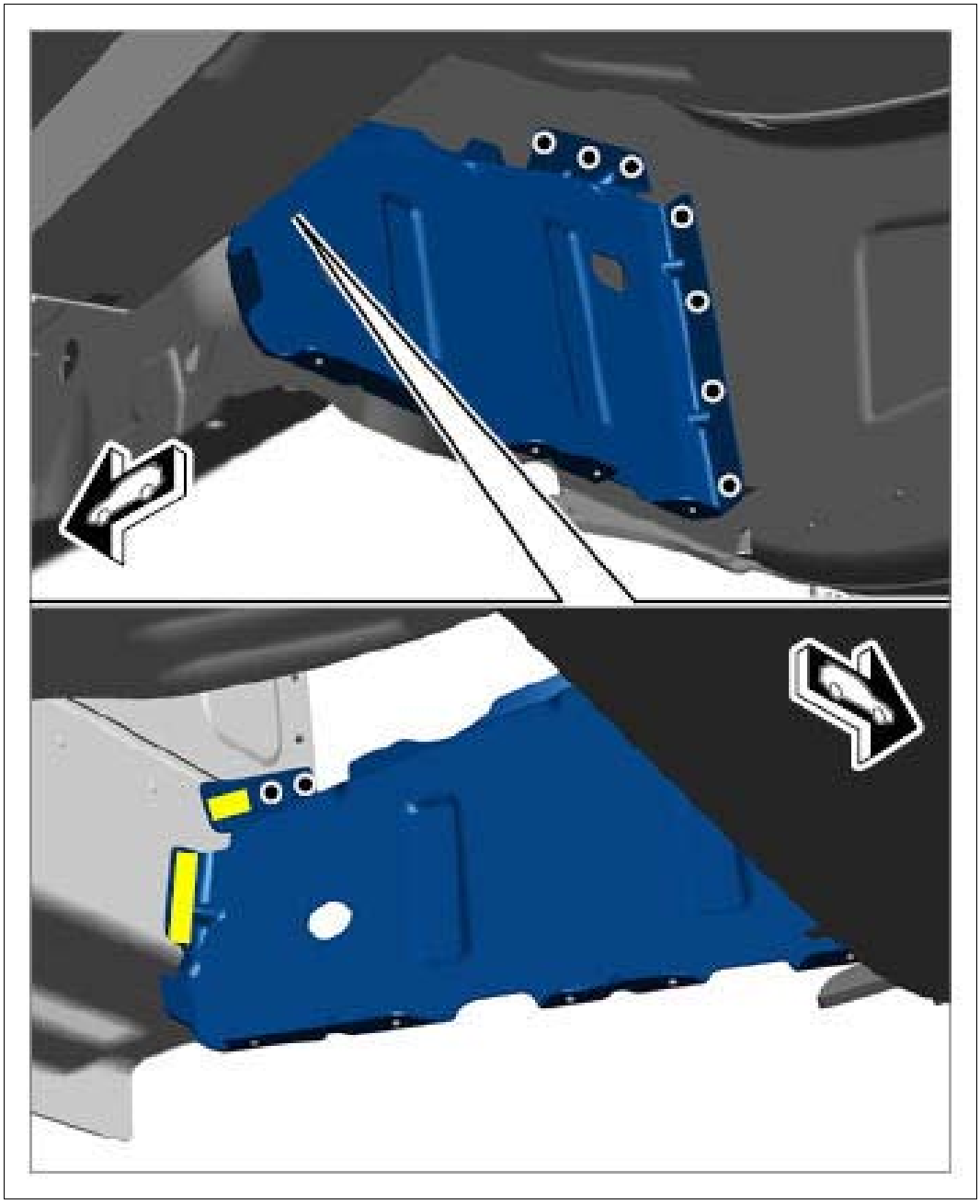

Courtesy of PORSCHE CARS NORTH AMERICA, INC.

5. Mark and make a rough cut **-arrows-** on the longitudinal member.

Fig 6: Removing Front Side Member

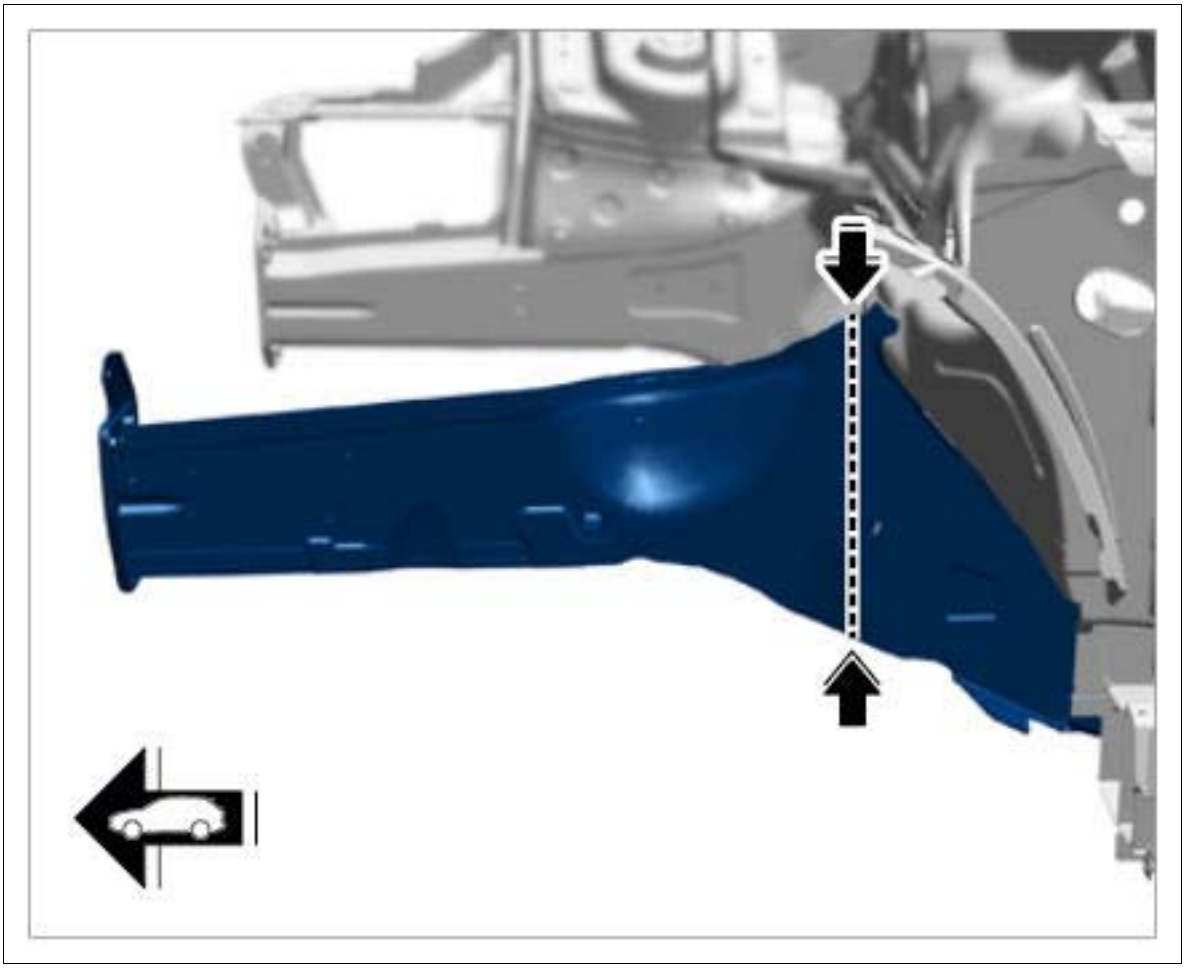

Courtesy of PORSCHE CARS NORTH AMERICA, INC.

Information

Drill out the connection point on one side only. Do not damage the plate underneath.

6. Drill out spotwelds using **spotweld drill** .

    1. 6.1. Drill out spotwelds **-B-** through two plate thicknesses using a → **Diameter: 6.5 mm drill bit** .

Fig 7: Removing Front Side Member

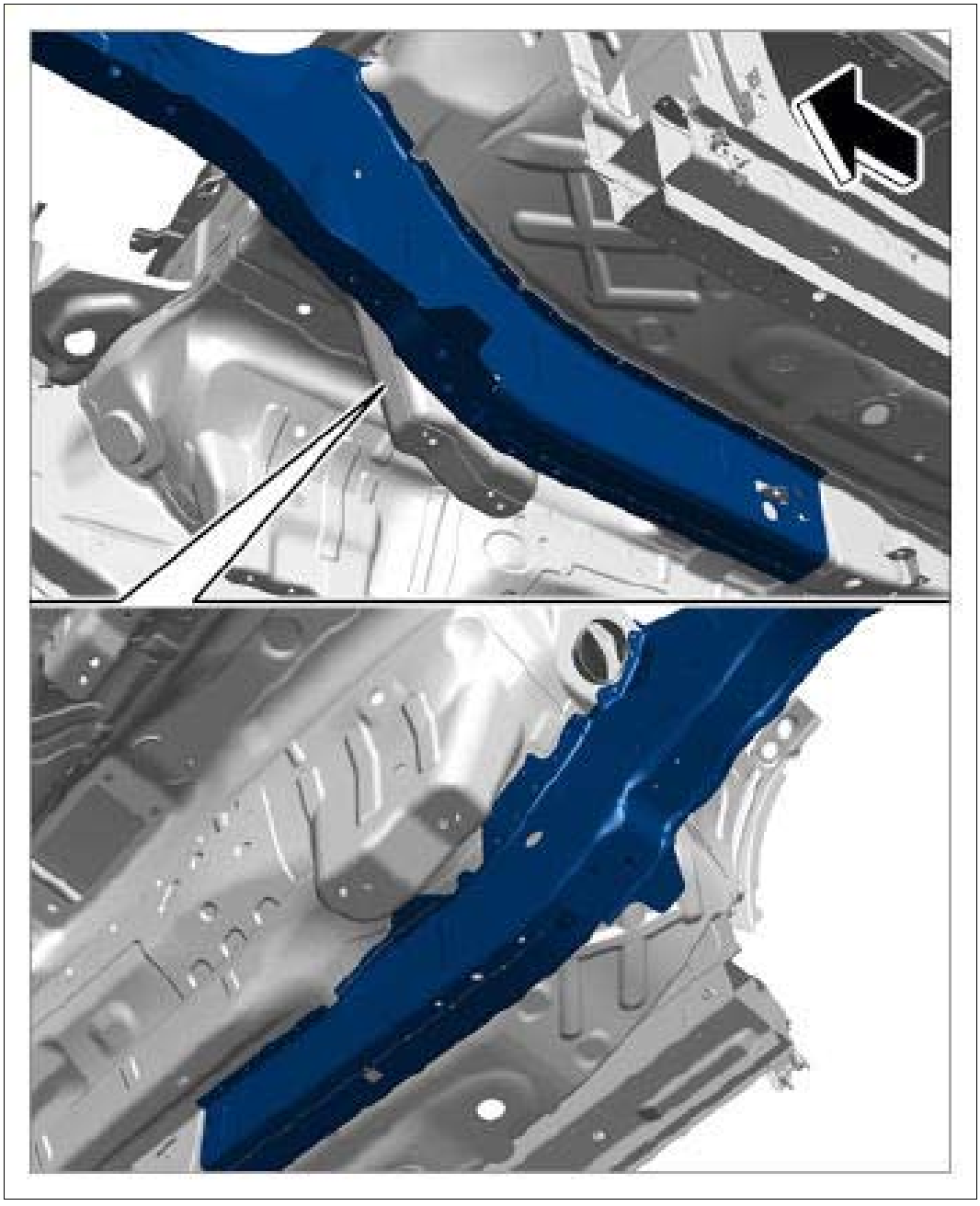

Courtesy of PORSCHE CARS NORTH AMERICA, INC.

7. Drill out spotwelds through two plate thicknesses using a → **Diameter: 6.5 mm drill bit** .

Fig 8: Removing Front Side Member

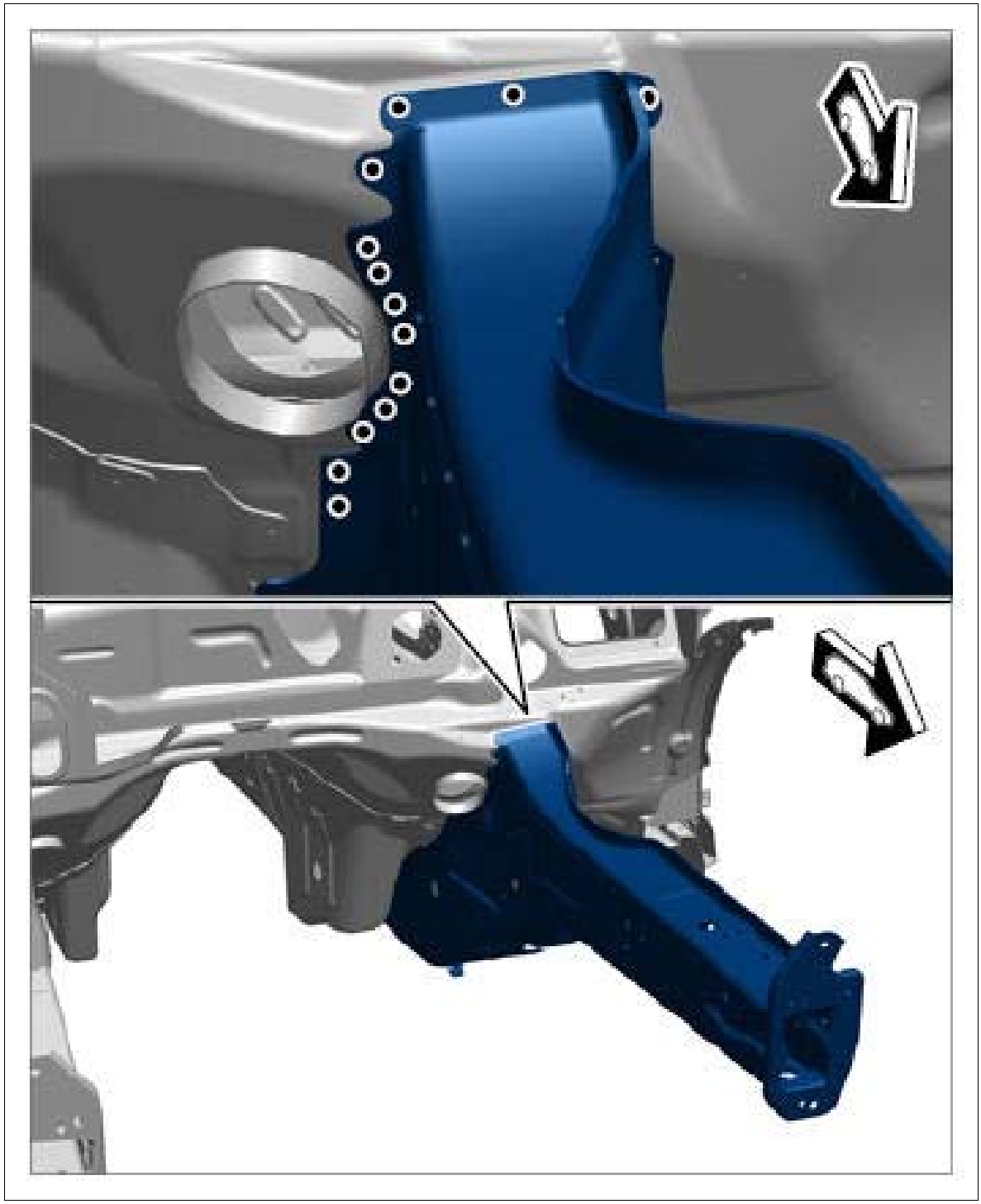

Courtesy of PORSCHE CARS NORTH AMERICA, INC.

8. Heat the marked bonding areas.

Fig 9: Removing Front Side Member

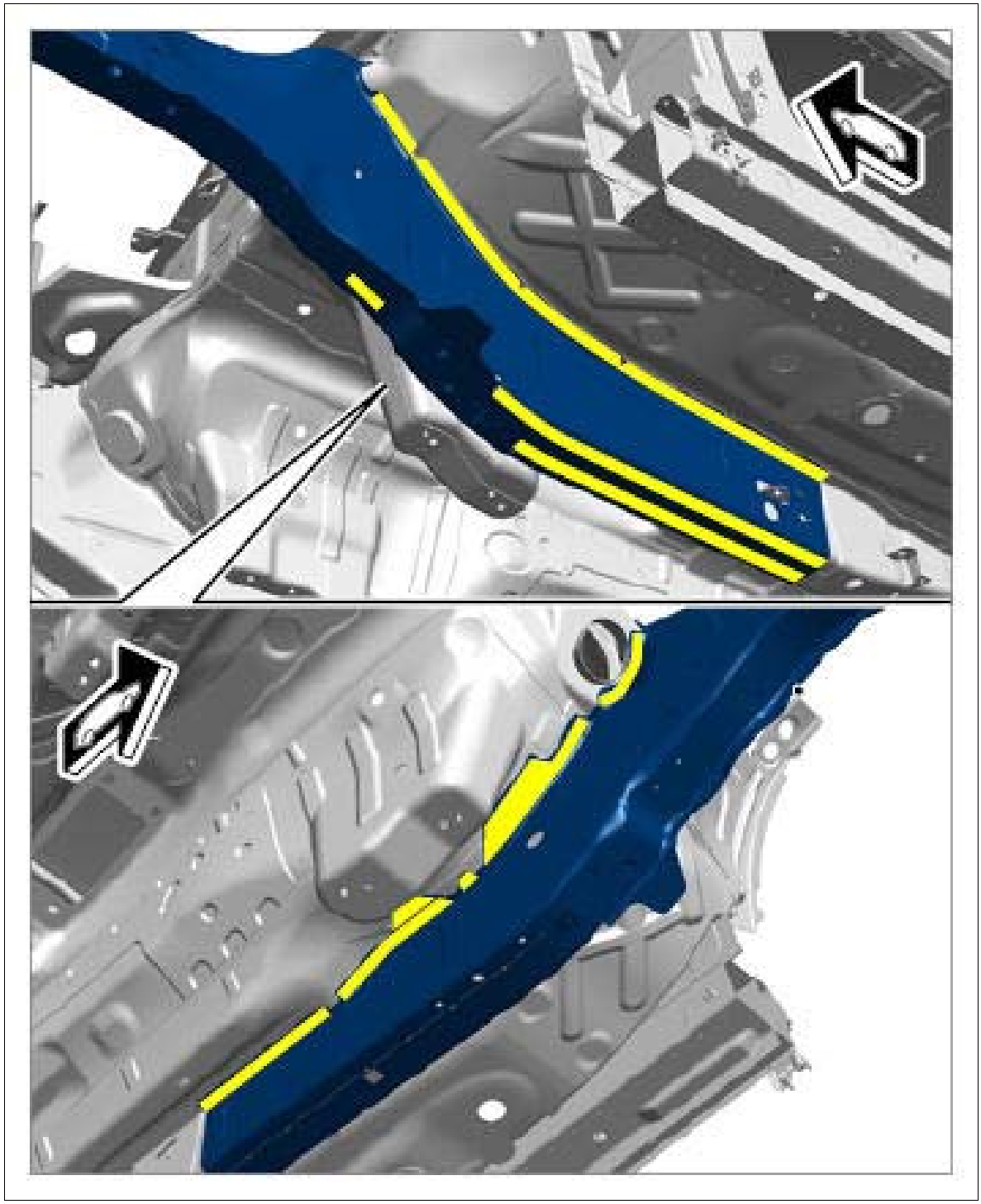

Courtesy of PORSCHE CARS NORTH AMERICA, INC.

9. Remove front side member.

WM 507955 REPLACING FRONT SIDE MEMBER (ALL MODELS) > PREPARING FRONT SIDE MEMBER FOR INSTALLATION

1. Drill holes for plug welding and blind rivet joints in the marked areas.

   Information

   Make sure that the bore holes A are flush with the connection areas of the reinforcement for the longitudinal member.

   1. 1.1. Drill holes for plug welding in area **-A-** using a → Diameter: 8.0 mm drill bit.
   2. 1.2. Drill holes for blind rivet joints in area **-B-** using a → **Diameter: 6.5 mm drill bit** .

      Fig 1: Preparing Front Side Member

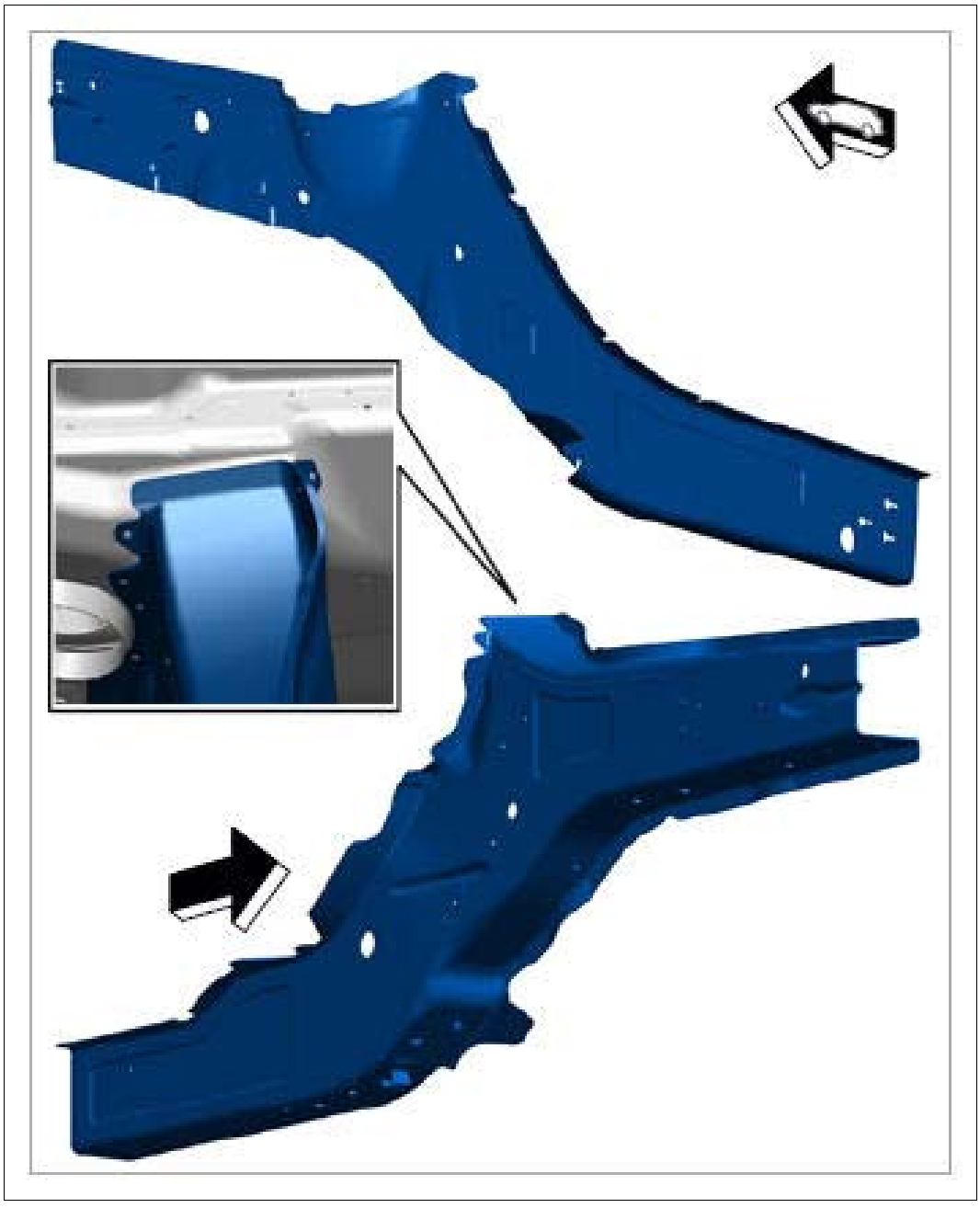

Courtesy of PORSCHE CARS NORTH AMERICA, INC.

Fig 2: Removing Reinforcement

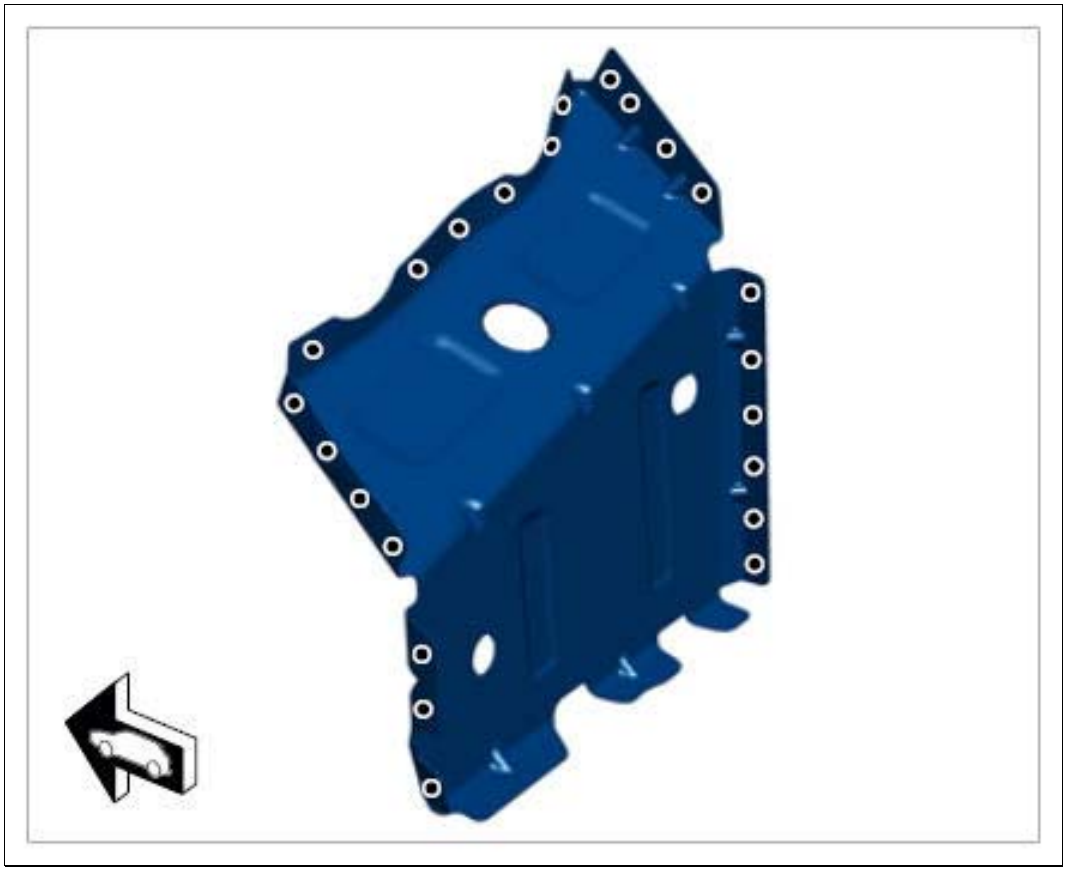

Courtesy of PORSCHE CARS NORTH AMERICA, INC.

Information

Make sure that the bore holes A are flush with the connection areas of the reinforcement for the longitudinal member.

Fig 3: Checking Bore Holes Of Reinforcement For Longitudinal Member

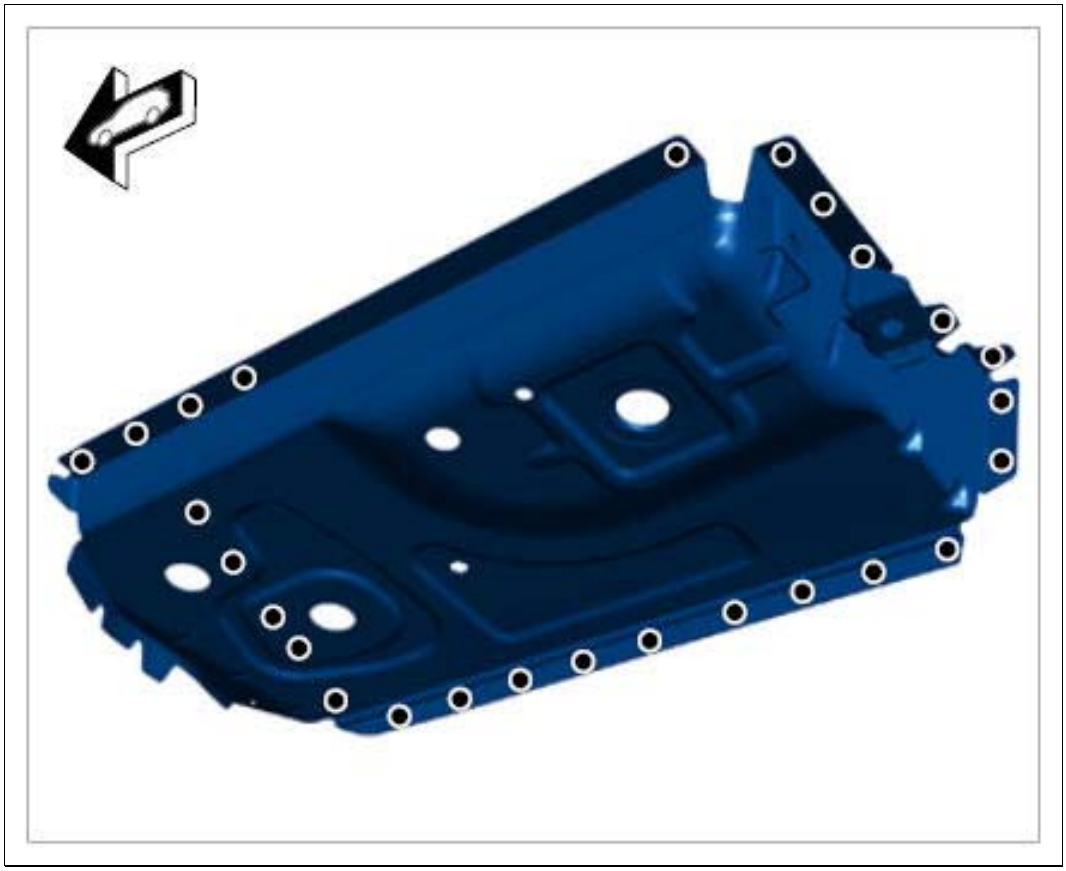

Courtesy of PORSCHE CARS NORTH AMERICA, INC.

Information

Make sure that the bore holes A are flush with the connection areas of the reinforcement for the longitudinal member.

Fig 4: Checking Front Wheel Arch Extension Bore Holes

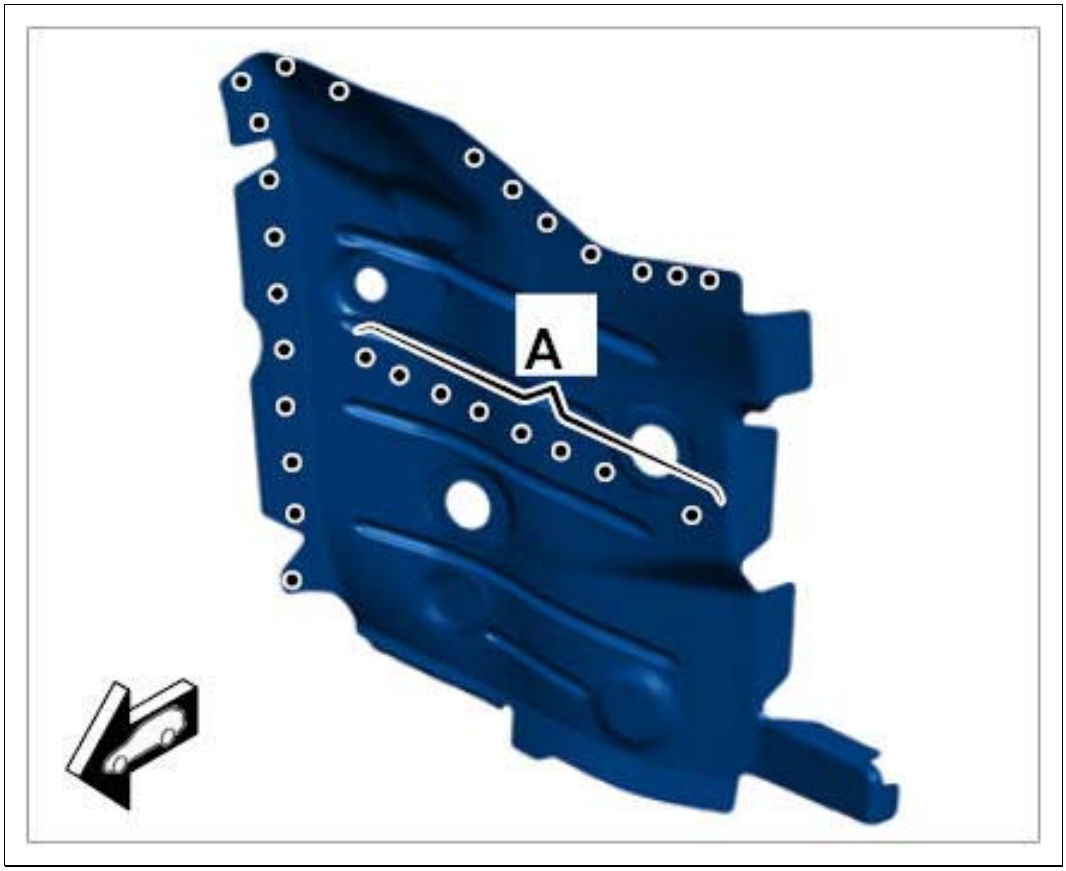

Courtesy of PORSCHE CARS NORTH AMERICA, INC.

2. Prepare front side member, reinforcement and mounting for bonding, welding and blind riveting.

Fig 5: Preparing Front Side Member

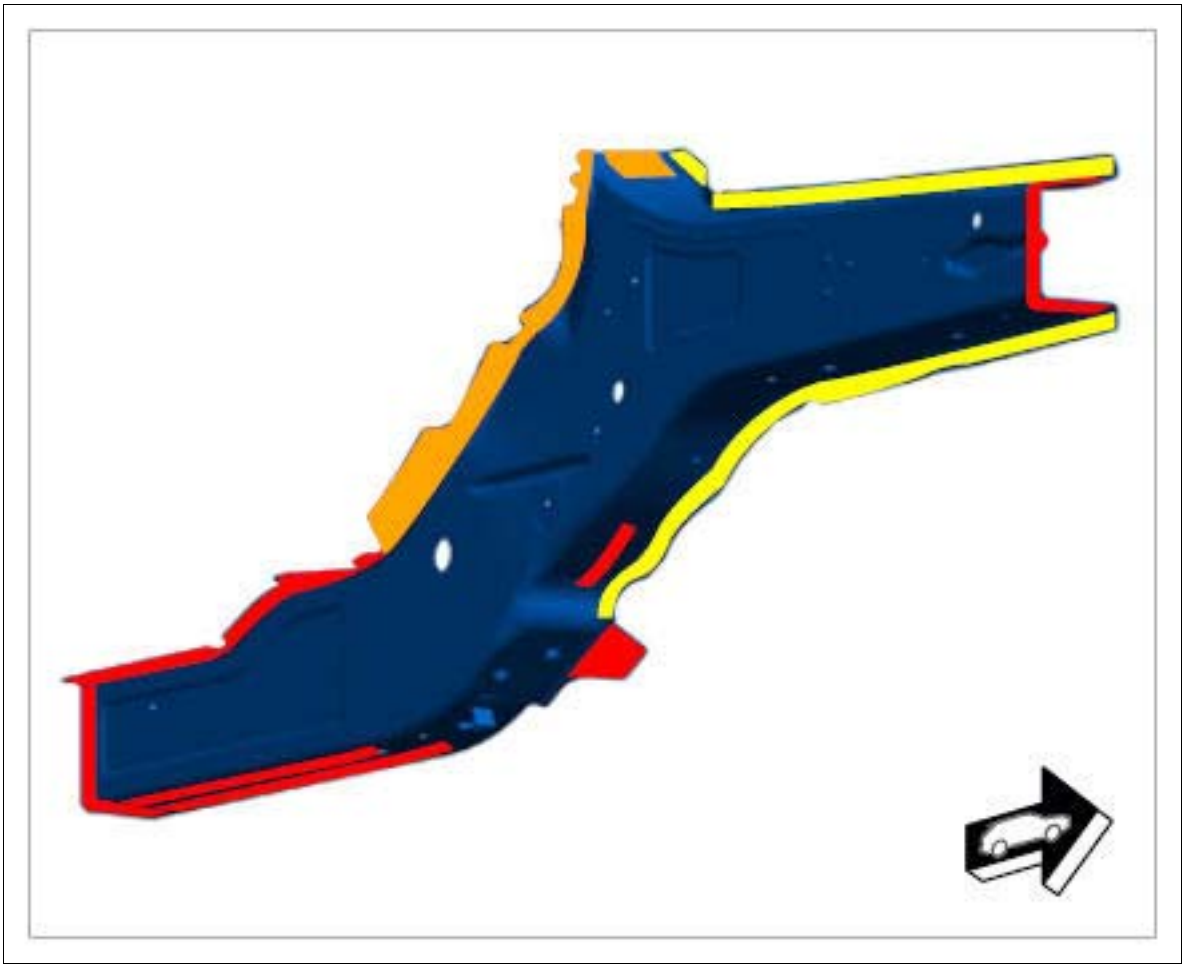

Courtesy of PORSCHE CARS NORTH AMERICA, INC.

Fig 6: Preparing Front Side Member

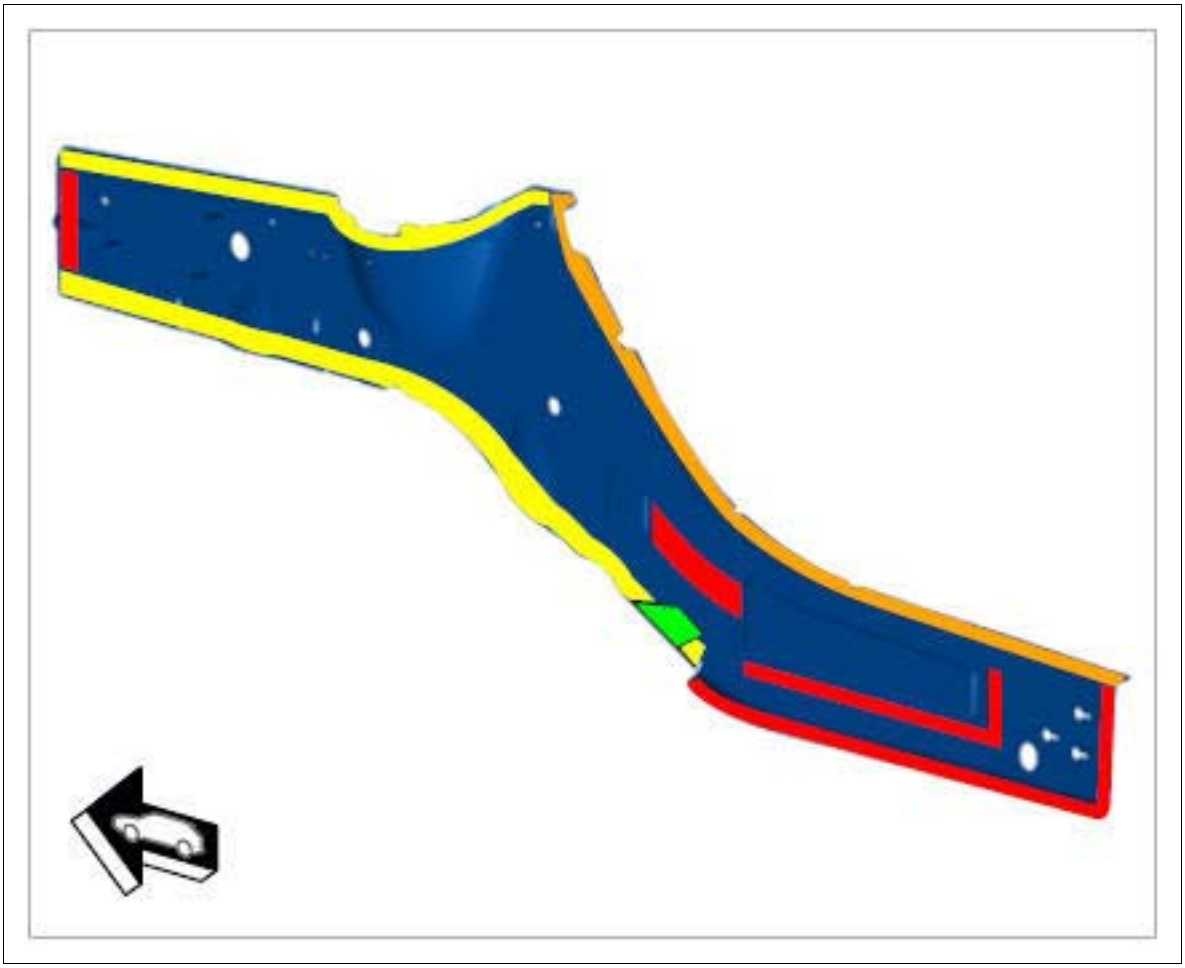

Courtesy of PORSCHE CARS NORTH AMERICA, INC.

Fig 7: Preparing Reinforcement

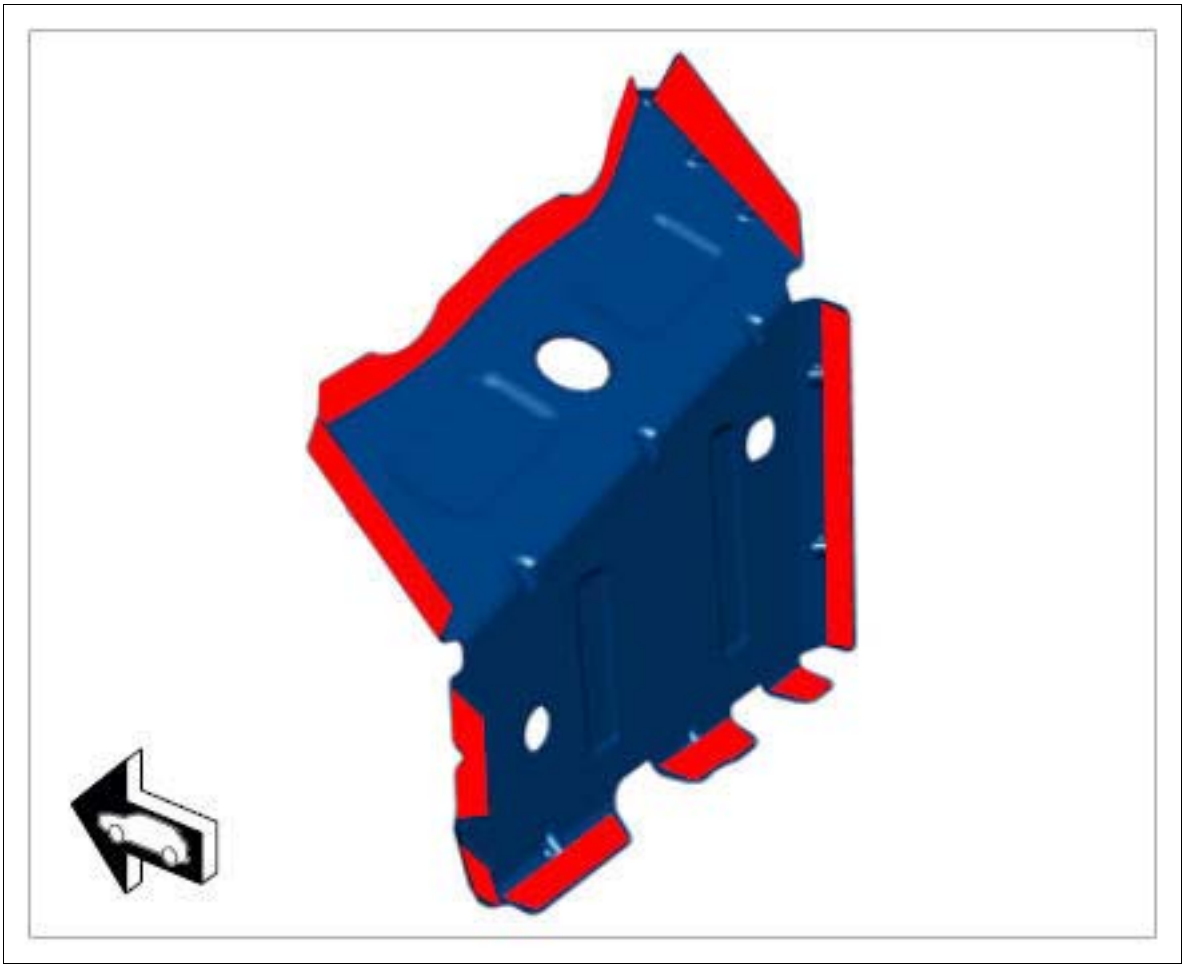

Courtesy of PORSCHE CARS NORTH AMERICA, INC.

Fig 8: Preparing Mounting Front Side Member

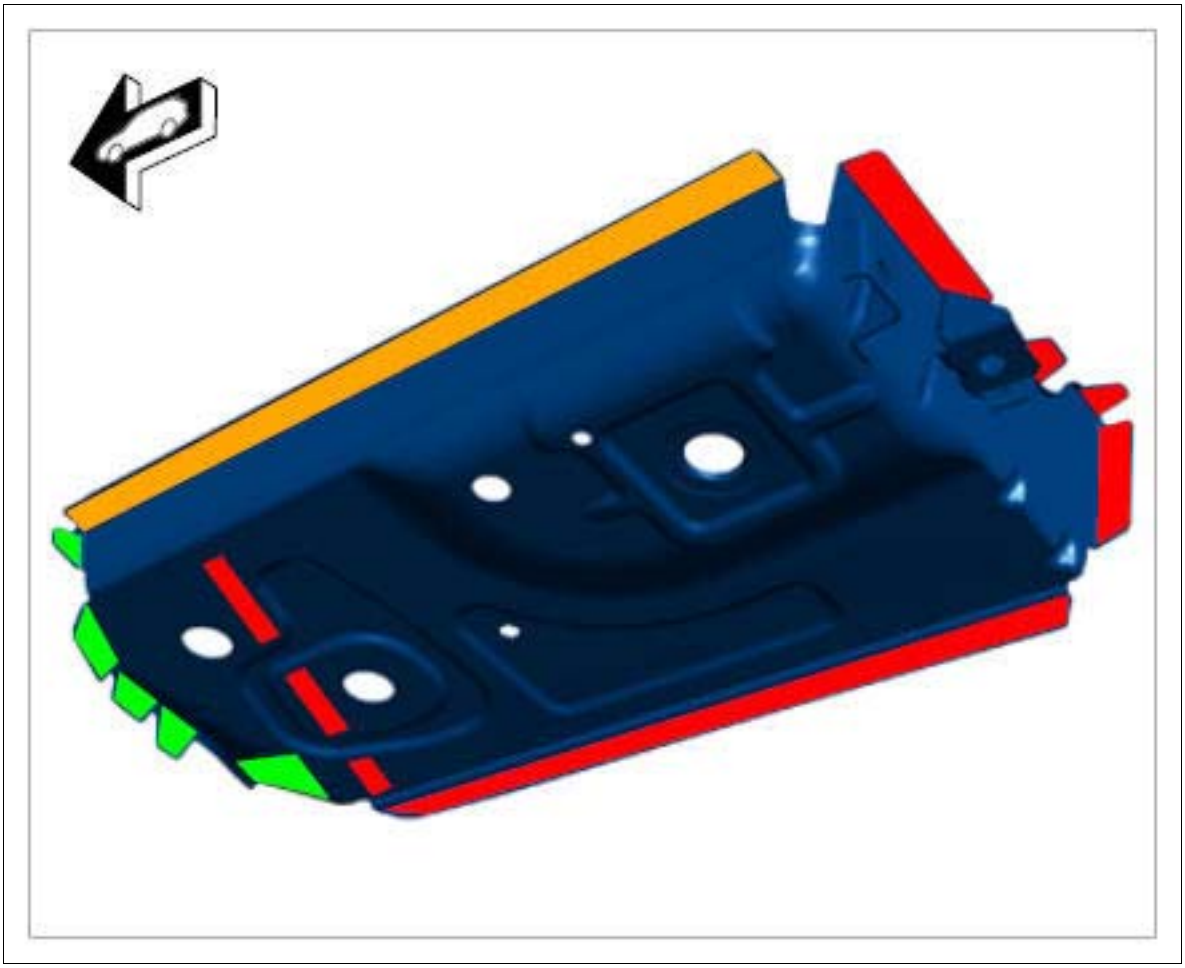

Courtesy of PORSCHE CARS NORTH AMERICA, INC.

Fig 9: Preparing Front Wheel Arch Extension

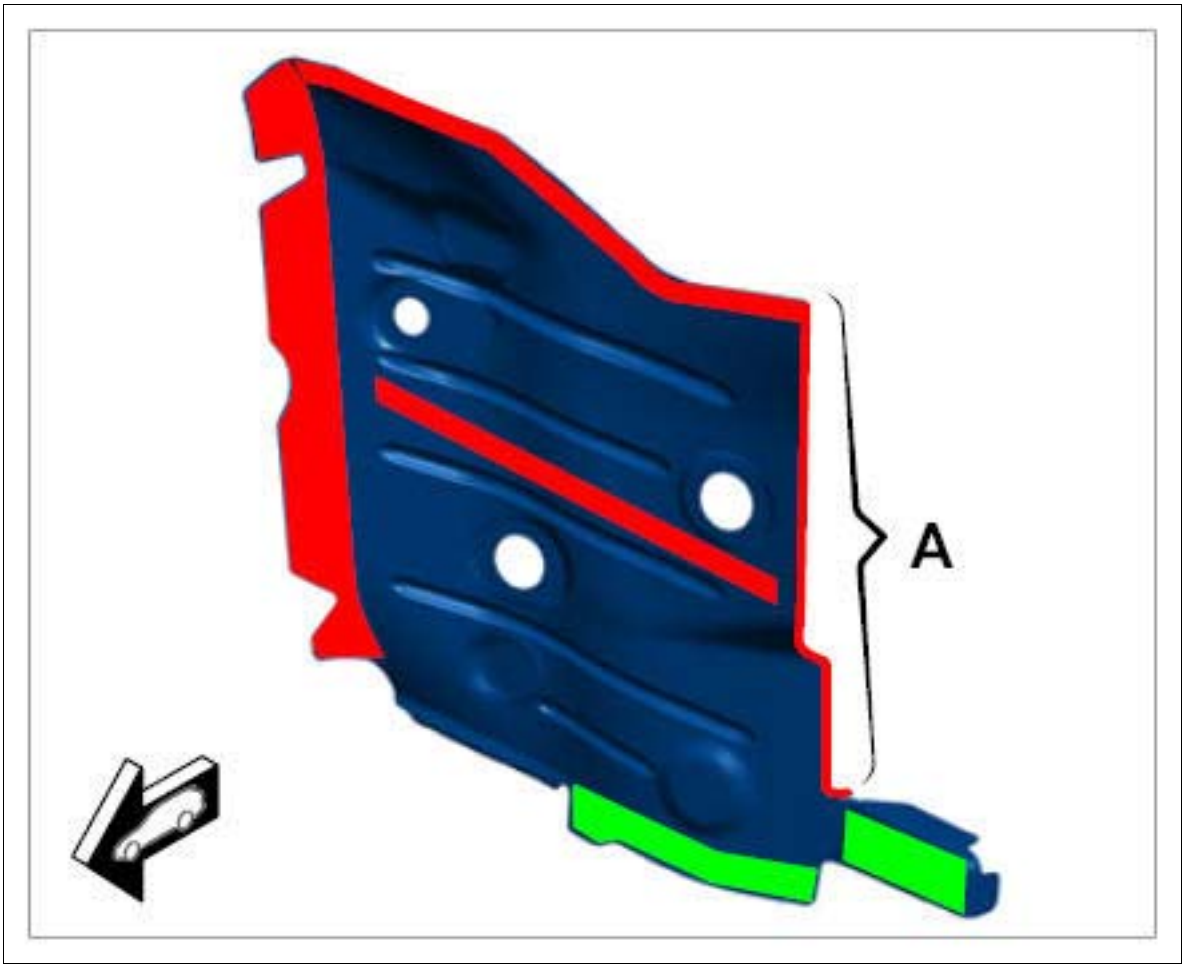

Courtesy of PORSCHE CARS NORTH AMERICA, INC.

Fig 10: Preparing Front Impact Absorber

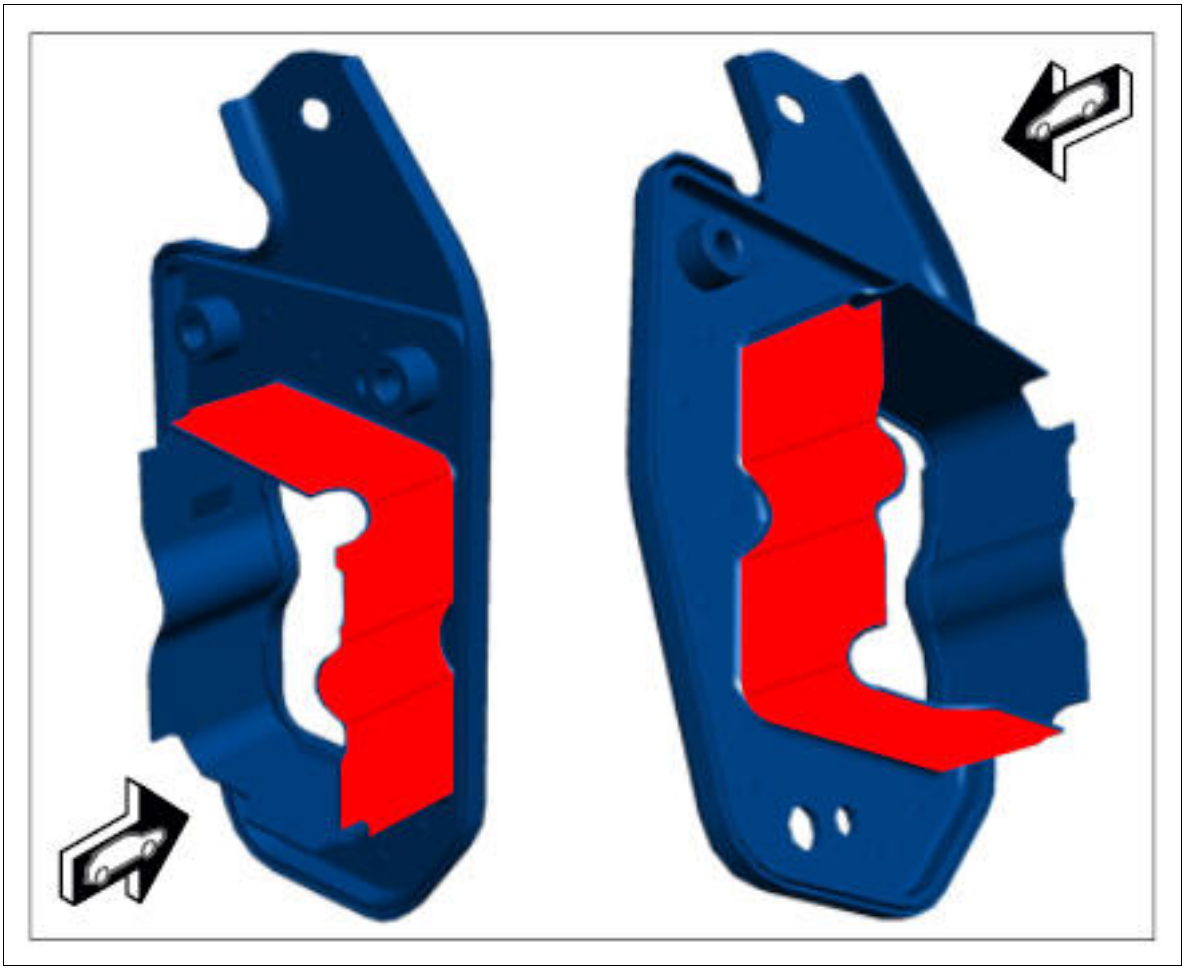

Courtesy of PORSCHE CARS NORTH AMERICA, INC.

Red	Plug-welding/apply a full weld using inert gas without bonding
Yellow	Resistance spot-welding + bonding
Green	Resistance spot-welding
Orange	Blind riveting + bonding

WM 507955 REPLACING FRONT SIDE MEMBER (ALL MODELS) > PREPARING CONNECTION AREAS OF THE BODY FOR INSTALLATION

1. Align the sealing surface and connections of the body.
2. De-burr connection points and prepare them for welding.

Information

1. Before final assembly, make sure you fully understand all the work steps involved and carry out a trial assembly without applying adhesive.

2. The bonding process can only be carried out reliably when a smooth and swift sequence of operations is guaranteed.

3. Do not begin bonding work until all materials and tools necessary for later repair work are available.

3. Prepare marked areas for welding, bonding and blind riveting. → 5X00IN21 WORKING WITH BODY STRUCTURAL ADHESIVE .

Fig 1: Preparing Connection Areas Of Body

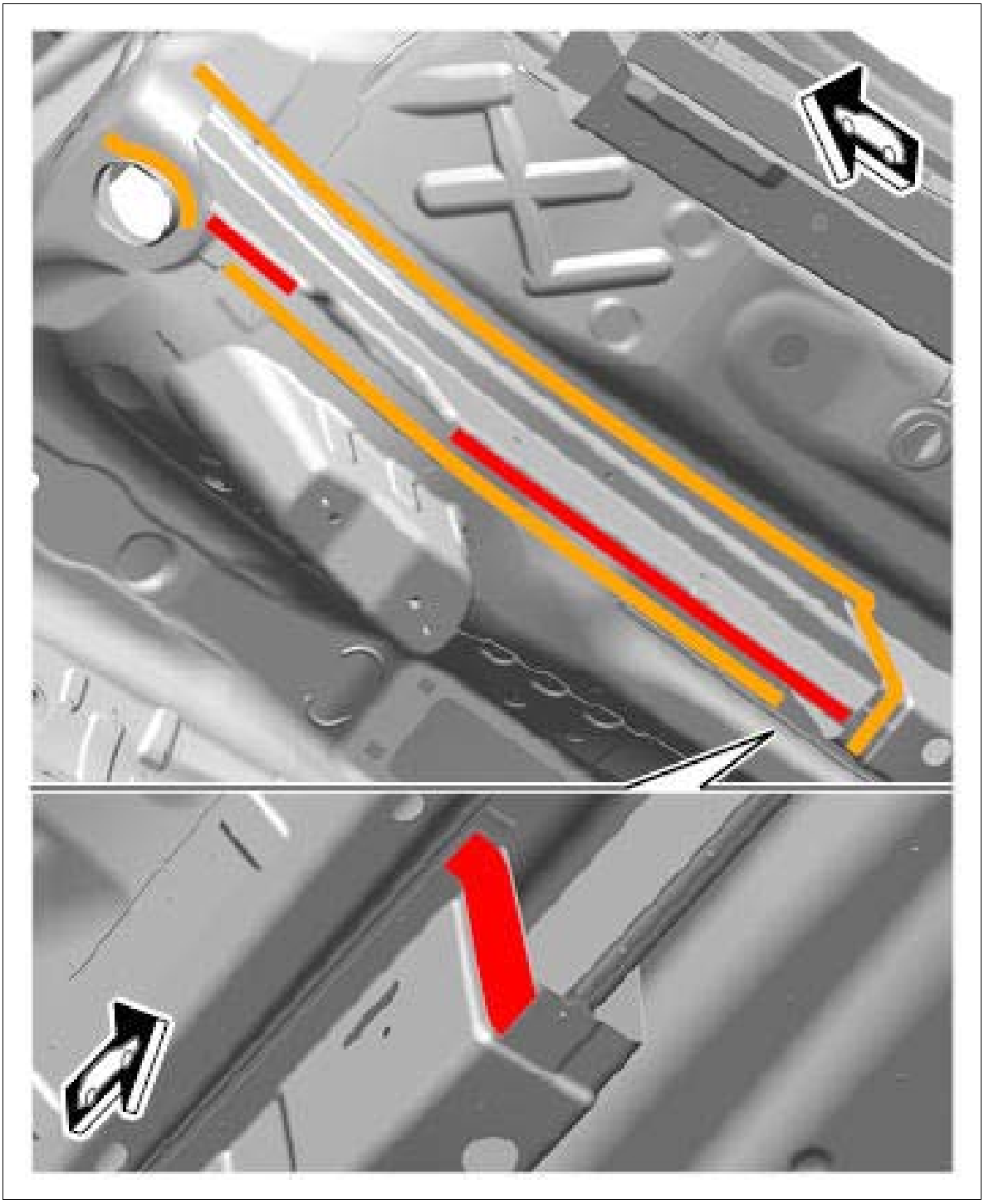

Courtesy of PORSCHE CARS NORTH AMERICA, INC.

Fig 2: Checking Connection Areas Of Body Structural Adhesive

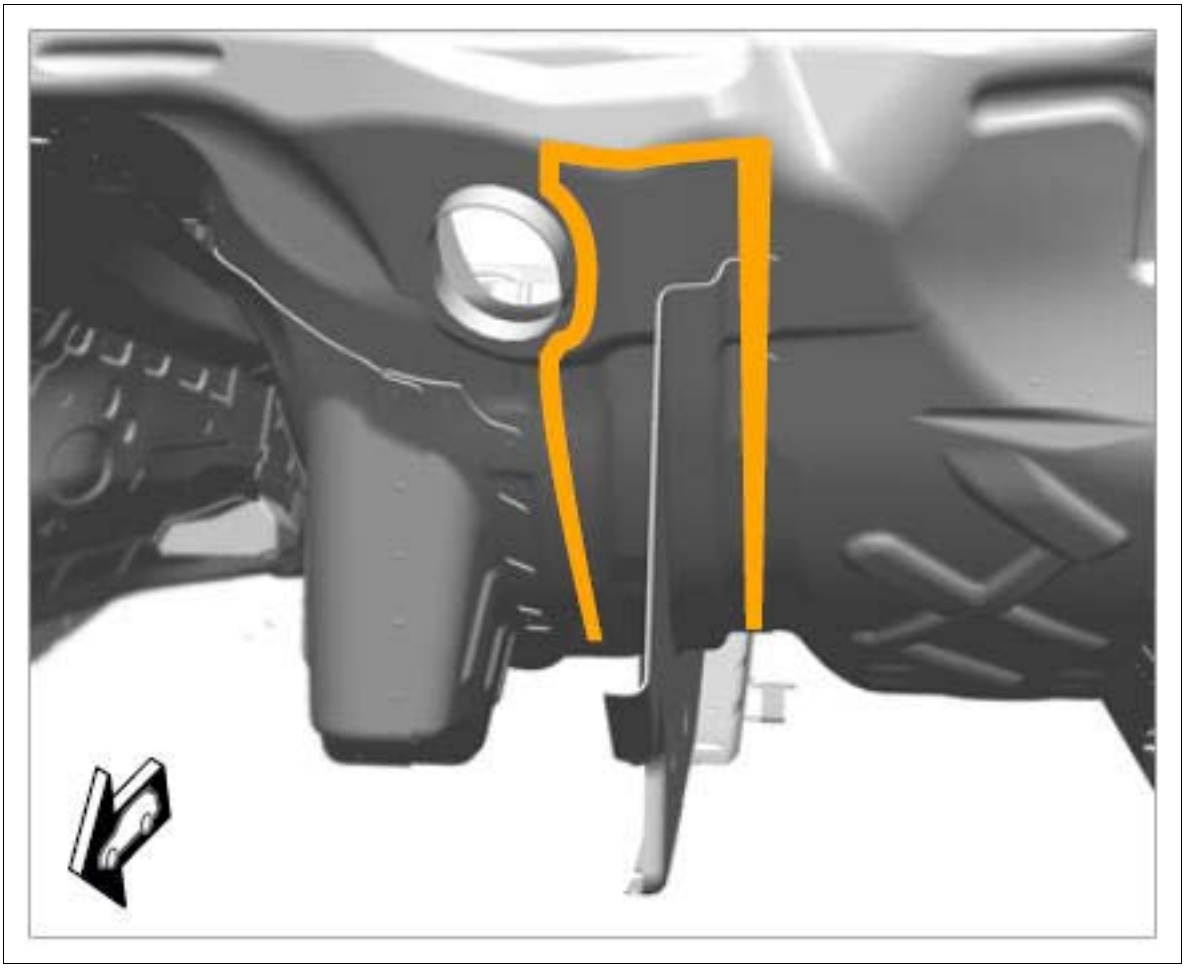

Courtesy of PORSCHE CARS NORTH AMERICA, INC.

Red	Plug-welding/apply a full weld using inert gas without bonding
Orange	Blind riveting + bonding

WM 507955 REPLACING FRONT SIDE MEMBER (ALL MODELS) > INSTALLING FRONT SIDE MEMBER

Information

- Before final assembly, make sure you fully understand all the work steps involved and carry out a trial assembly without applying adhesive.
- The bonding process can only be carried out reliably when a smooth and swift sequence of operations is guaranteed.
- Do not begin bonding work until all materials and tools necessary for later repair work are available.

1. Install front side member and check that it fits perfectly. Check gap dimensions. → 5X00IN DIAGRAM - BODY GAP DIMENSIONS

    1. 1.1. Apply foam filler to the body in area **-A-** . → 5X00IN22 WORKING WITH BODY FOAM FILLER

       Make sure that all openings and gaps between the body and C-pillar reinforcement are closed off with the sealing compound.

    2. 1.2. Apply adhesive to the areas marked in yellow. → 5X00IN21 WORKING WITH BODY STRUCTURAL ADHESIVE→ **Application depth: 3.0 mm**

       Fig 1: Applying Adhesive

       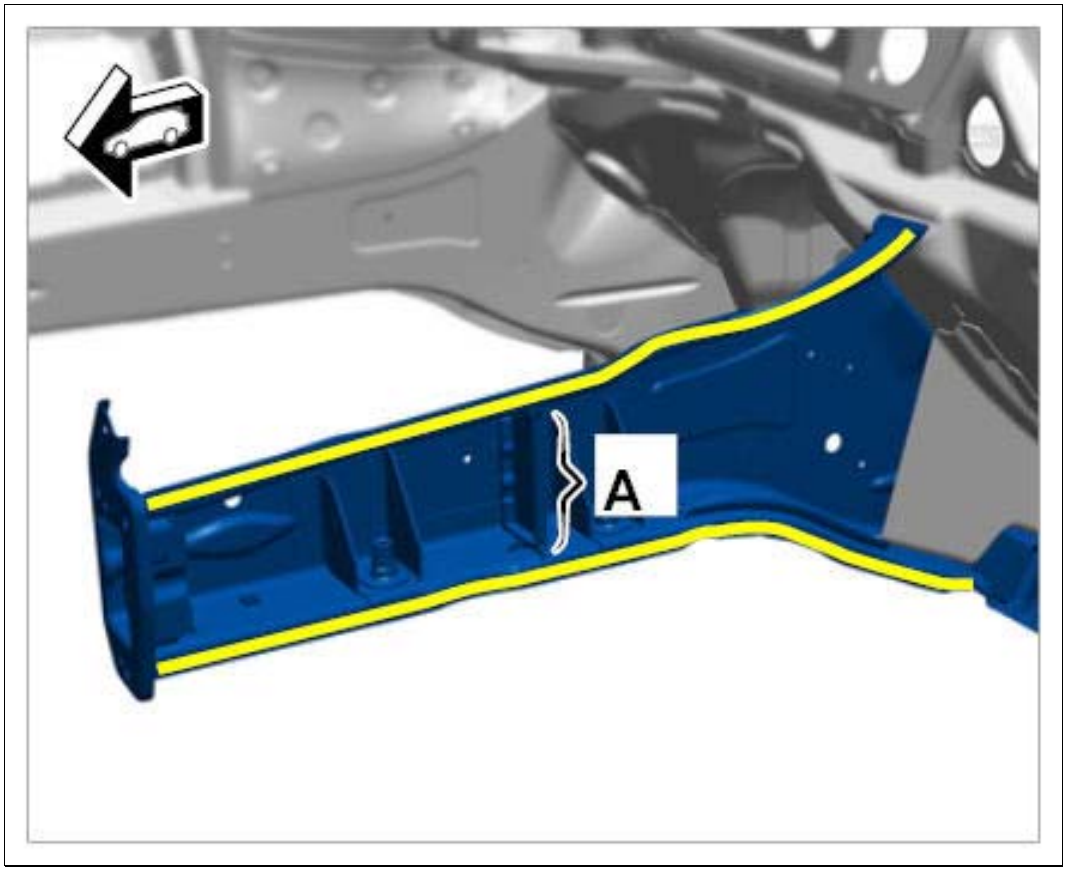

       Courtesy of PORSCHE CARS NORTH AMERICA, INC.

2. Plug-weld area **-A-** using inert gas.

    1. 2.1. Resistance spot-weld area **-B-** .

Fig 2: Installing Front Side Member

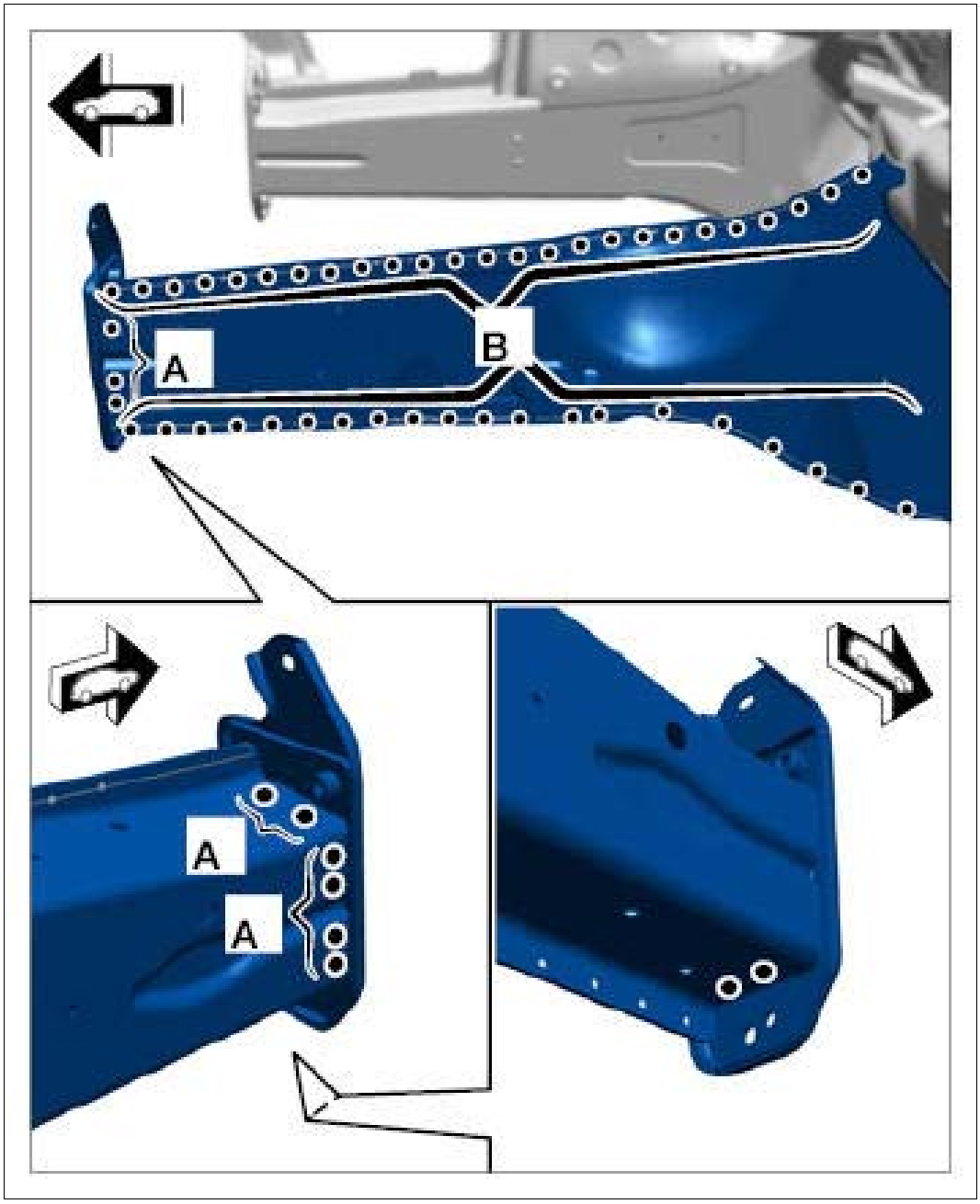

Courtesy of PORSCHE CARS NORTH AMERICA, INC.

3. Apply adhesive to the areas marked in yellow. → 5X00IN21 WORKING WITH BODY STRUCTURAL ADHESIVE→ **Application depth: 3.0 mm**

Fig 3: Applying Adhesive

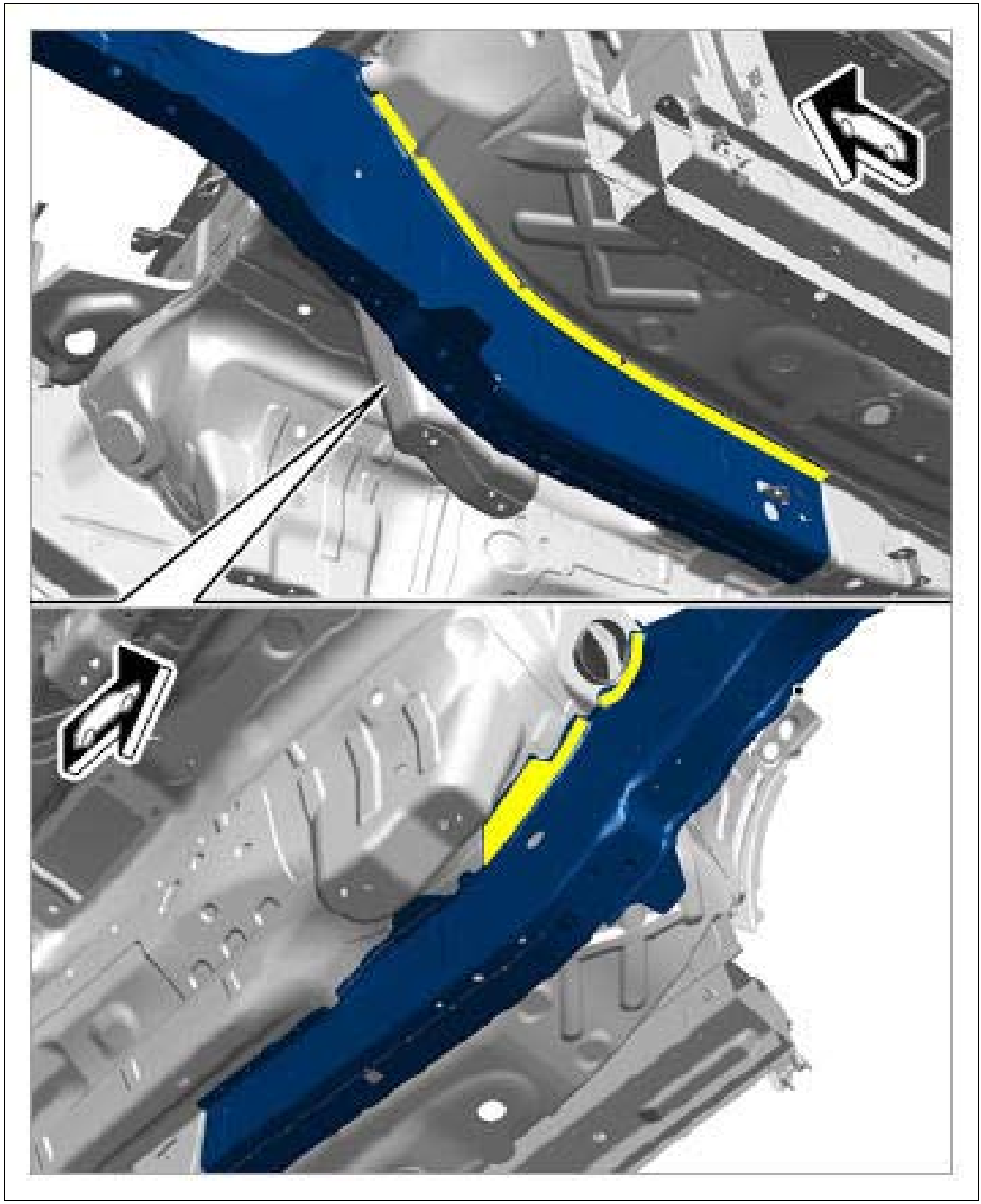

Courtesy of PORSCHE CARS NORTH AMERICA, INC.

4. Spot-weld front side member using inert gas and set blind rivets.

    1. 4.1. Rivet in front side member in the marked areas **-B-** . → BLIND RIVET 999.190.227.01

Fig 4: Installing Front Side Member

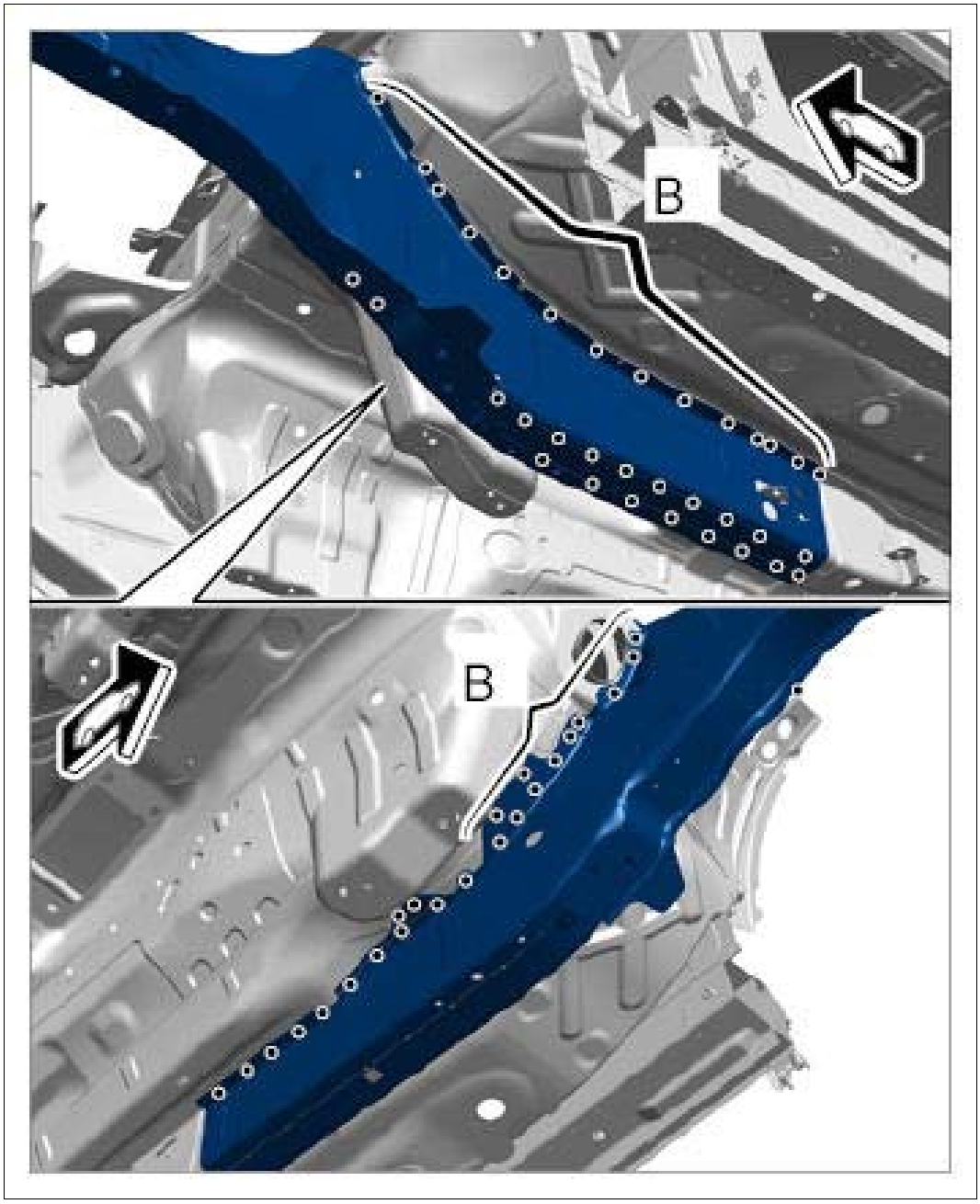

Courtesy of PORSCHE CARS NORTH AMERICA, INC.

5. Rivet in front side member. → BLIND RIVET 999.190.227.01

Fig 5: Installing Front Side Member

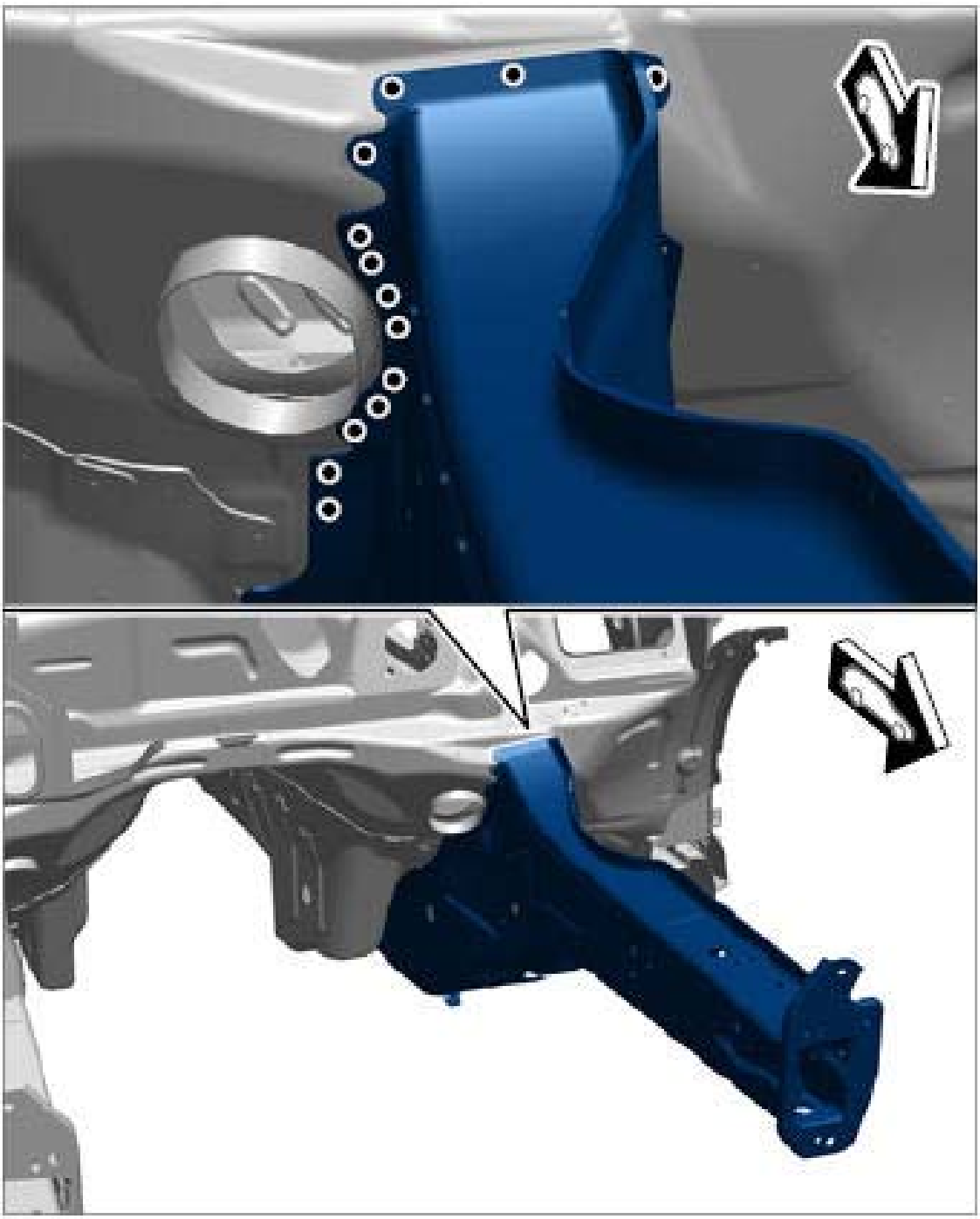

Courtesy of PORSCHE CARS NORTH AMERICA, INC.

6. Plug-weld reinforcement using inert gas.

Fig 6: Installing Reinforcement

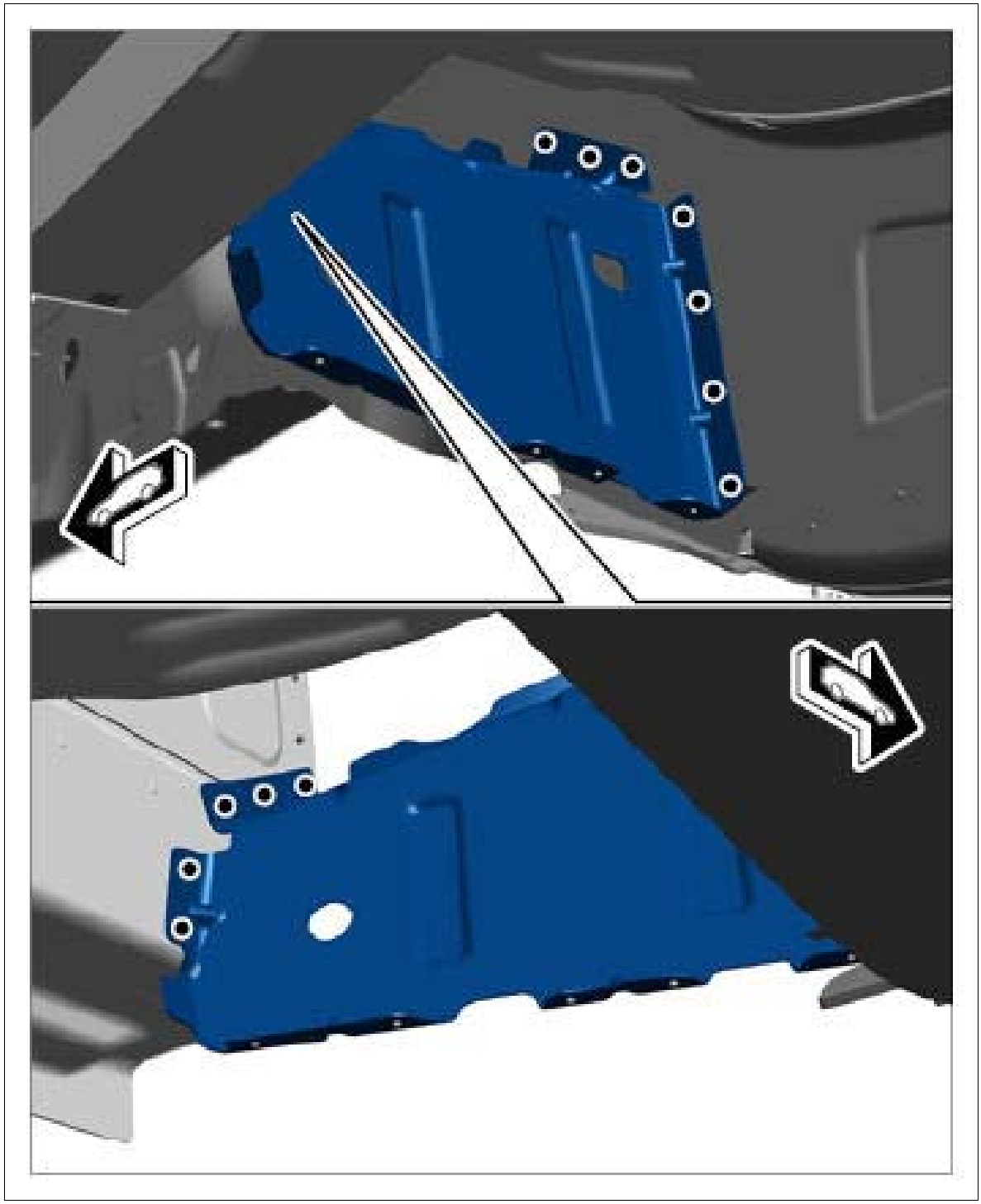

Courtesy of PORSCHE CARS NORTH AMERICA, INC.

7. Apply adhesive to the areas marked in orange. → 5X00IN21 WORKING WITH BODY STRUCTURAL ADHESIVE→ **Application depth: 3.0 mm**

Fig 7: Applying Adhesive

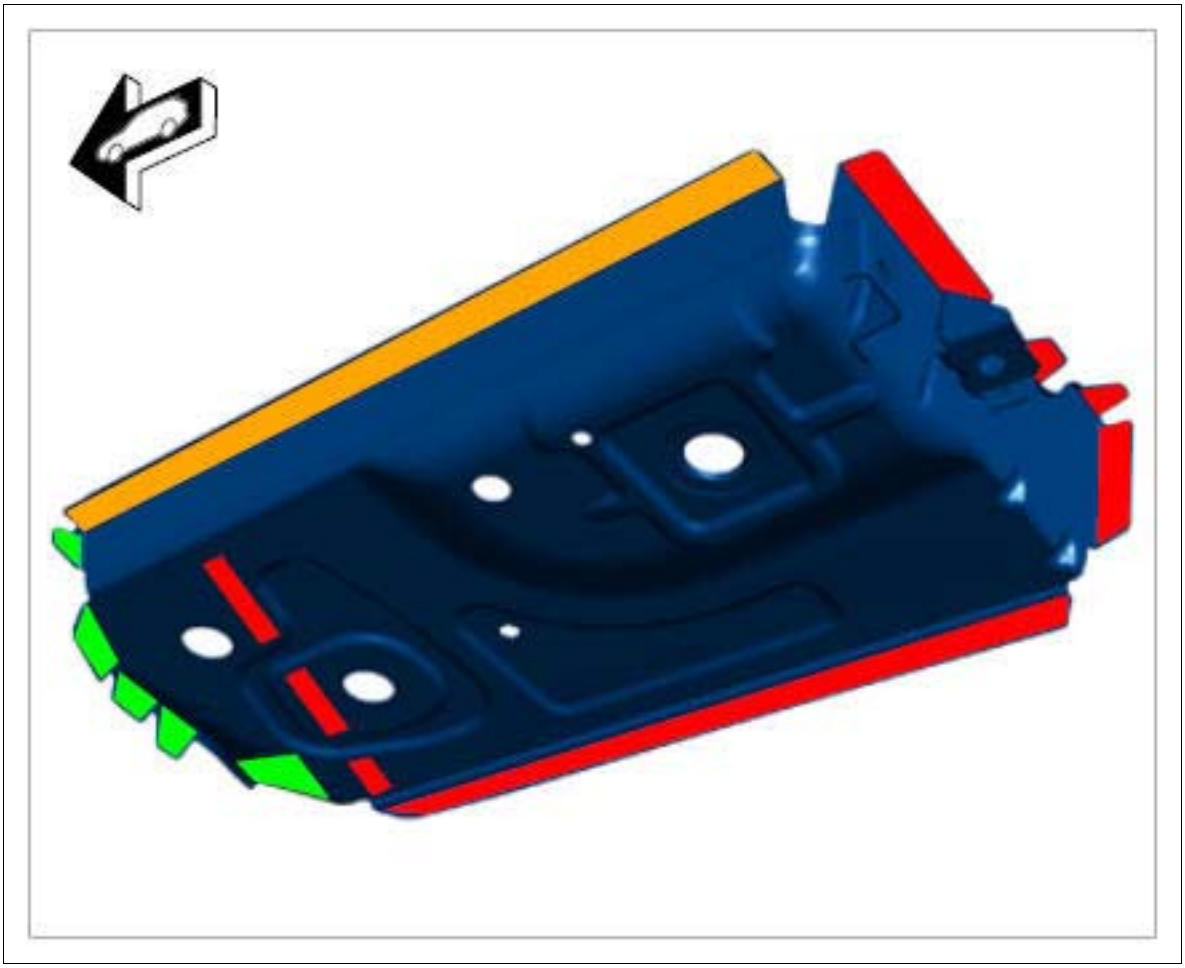

Courtesy of PORSCHE CARS NORTH AMERICA, INC.

8. Spot-weld the mounting using inert gas and set blind rivets.
    1. 8.1. Resistance spot-weld area **-A-** .
    2. 8.2. Rivet in the mounting in area **-B-** . → BLIND RIVET 999.190.229.01

Fig 8: Installing Rivet Mounting Area

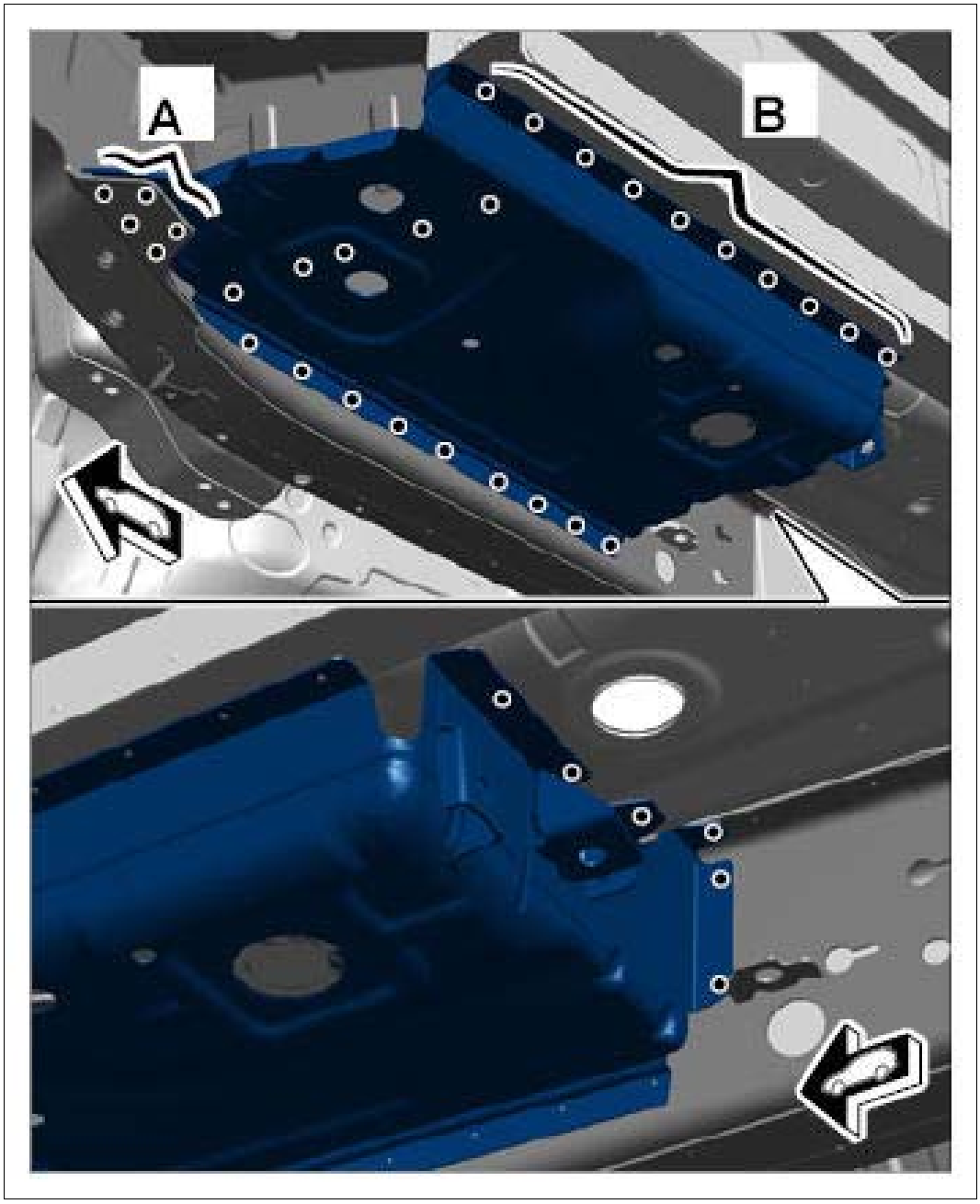

Courtesy of PORSCHE CARS NORTH AMERICA, INC.

9. Plug-weld front wheel housing extension using inert gas.
    1. 9.1. Resistance spot-weld area **-A-** .
    2. 9.2. Apply a full weld to the area **-arrows-** using inert gas.

Fig 9: Installing Front Wheel Housing Extension

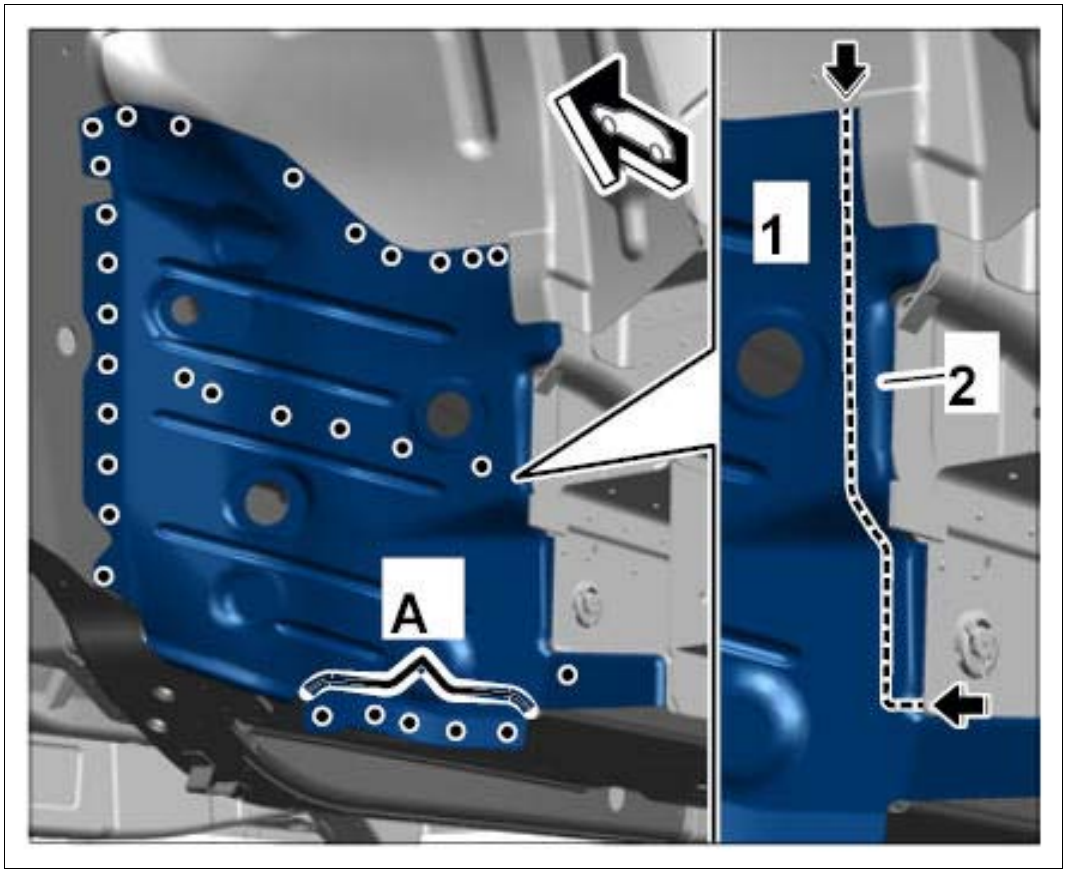

Courtesy of PORSCHE CARS NORTH AMERICA, INC.

WM 507955 REPLACING FRONT SIDE MEMBER (ALL MODELS) > SUBSEQUENT WORK

1. Install spring strut mount. → 503955 REPLACING SPRING STRUT MOUNT .

WM 507955 REPLACING FRONT SIDE MEMBER (ALL MODELS) > SUBSEQUENT WORK > SUBSEQUENT WORK FOR BODY REPAIRS

1. Release and remove vehicle from the straightening system.
2. Clean joint areas and sheetmetal flanges with a wire brush.
3. Prime joint areas and sheetmetal flanges with 2K primer.
4. Restore standard seal with body sealant → 5X00IN42 SEAM SEALING .

   Also seal the repair area carefully.
5. Paint repair area and adjacent surfaces, if necessary.

6. Restore standard underbody protection with underbody sealant → 5X00IN43 UNDERBODY PROTECTION .
7. Apply standard cavity preservation → 5X00IN44 CAVITY PRESERVATION . Also carefully apply cavity preservation to the repair area.
8. Install removed accessories in the repair area.

WM 507955 REPLACING FRONT SIDE MEMBER (FRONT SECTION) > TOOLS

Designation	Type	Number	Description	
Hot-air blower	Workshop equipment	WE 1119		
Body alignment system package	Workshop equipment	WE 1121		
Special electric cutter	Workshop equipment	WE 1137		
Pneumatic Spotweld Remover, Vario Drill WS 90	Workshop equipment	WE 1139		
Hand-cartridge gun	Workshop equipment	WE 1141		
Resistance spot welder	Workshop equipment	WE 1311		
Inverter welder MIDIspot-QSVM-12000	Workshop equipment	WE 1312		
Resistance spot welder	Workshop equipment	WE 1313		
Blind riveting tool TAURUS 4	Workshop equipment	WE 1348		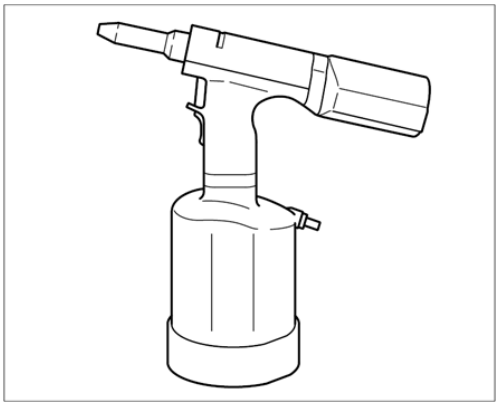
Aluminum tool set with trolley	Workshop equipment	WE 1350		

Resistance spot welder	Workshop equipment	WE 1352		
Measuring and alignment system, professional	Workshop equipment	WE 1398		
Mobile extraction unit, aluminum	Workshop equipment	WE 1507		
Body saw	Workshop equipment	WE 1508		
Star gauges for body gap dimensions	Special tool	Nr.127-1		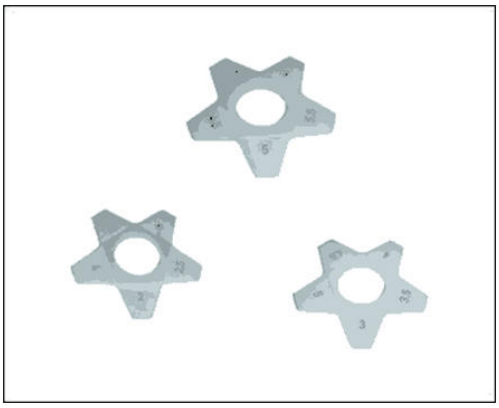
Spotweld drill; see Gr. 2.4; *** Workshop Equipment Manual	Commercially available tool	Nr.129		
Twist drill	Commercially available tool	Nr.201		

Countersink	Commercially available tool	Nr.202		

WM 507955 REPLACING FRONT SIDE MEMBER (FRONT SECTION) > TECHNICAL VALUES

Location	Description	Type	Basic value	Tolerance 1	Tolerance 2
Dimension X		Distance	100 mm		

WM 507955 REPLACING FRONT SIDE MEMBER (FRONT SECTION) > PRELIMINARY WORK > PRELIMINARY WORK FOR BODY REPAIRS (WITH STRAIGHTENING SYSTEM)

1. Remove accessories in the repair area.
    1. 1.1. Remove accessories in the repair area according to the extent of damage on the vehicle.
2. Set up straightening bench with straightening system.
3. Set vehicle on straightening bench.
4. Cover accessories adjacent to the repair area on the vehicle.
    1. 4.1. Cover all accessories remaining on the vehicle and adjacent areas with fire-proof protective covers.
5. Expose joint areas.
    1. 6.1. Remove underbody protection, paint, etc. from the joint areas of the body using a hot-air gun or rotary brush.

WM 507955 REPLACING FRONT SIDE MEMBER (FRONT SECTION) > PRELIMINARY WORK

1. Remove headlight mounting. → 506055 REPLACING HEADLIGHT MOUNTING .

WM 507955 REPLACING FRONT SIDE MEMBER (FRONT SECTION) > SAFETY INSTRUCTIONS AND INFORMATION ON QUALITY

⚠ *CAUTION: Non-observance of safety instructions for body repairs*

- *Risk of damage to the vehicle*
- *Danger of injury*

→ Read the relevant safety instructions as well as general information and quality instructions → 5X00IN01 SAFETY INSTRUCTIONS .

- Protection of electrical components during body repairs → *** 5X00IN02 Protection Of Electrical Components During Body Repairs
- Corrosion protection measures during repairs → 5X00IN03 CORROSION PROTECTION MEASURES DURING REPAIRS
- Information on aluminum repairs → *** 5X00IN05 Information on aluminum repairs
- Body parts of various sheet-steel strengths → 5X00IN04 BODY PARTS OF VARIOUS SHEET-STEEL STRENGTHS
- Replacing punch rivets and penetrated joints → *** 5X00IN23 Replacing punch rivets and penetrated joints
- Setting self-tapping screws → 5X00IN24 SETTING SELF-TAPPING SCREWS
- Working with body structural adhesive → 5X00IN21 WORKING WITH BODY STRUCTURAL ADHESIVE

WM 507955 REPLACING FRONT SIDE MEMBER (FRONT SECTION) > TOOLS AND MATERIALS > TOOLS AND MATERIALS FOR BODY REPAIRS

Information

- The tools for working on steel and aluminum must always be kept separate from each other. We recommend that you color code the tools using a system similar to that used for the Aluminum tool set with trolley WE 1350, for example.

Straightening set **Body alignment system package WE 1121 Measuring and alignment system, professional WE 1398**

Resistance spot welder; optional **Inverter welder MIDIspot-QSVM-12000 WE 1312, Resistance spot welder WE 1352, Resistance spot welder WE 1311, Resistance spot welder WE 1313**

Metal inert gas (MIG) welder

Pneumatic spotweld remover **Pneumatic Spotweld Remover, Vario Drill WS 90 WE 1139**

Pneumatic body saw **Body saw WE 1508**

Oscillating body saw (special electric cutter) **Special electric cutter WE 1137**

Hot-air blower **Hot-air blower WE 1119**

Hand-cartridge gun **Hand-cartridge gun WE 1141**

Spotweld drill **Spotweld drill;** Twist drill Nr.201

Countersink for rivets **Countersink Nr.202**

Blind riveting tool for high-strength rivets **Blind riveting tool TAURUS 4 WE 1348**

Safety vacuum cleaner for aluminum dust **Mobile extraction unit, aluminum WE 1507**

Star gauges for body gap dimensions Nr.127-1

Wurth Klebt und Dichtet body sealant

WM 507955 REPLACING FRONT SIDE MEMBER (FRONT SECTION) > REMOVING FRONT SIDE MEMBER (FRONT SECTION)

Fig 1: Locating Front Side Member Position

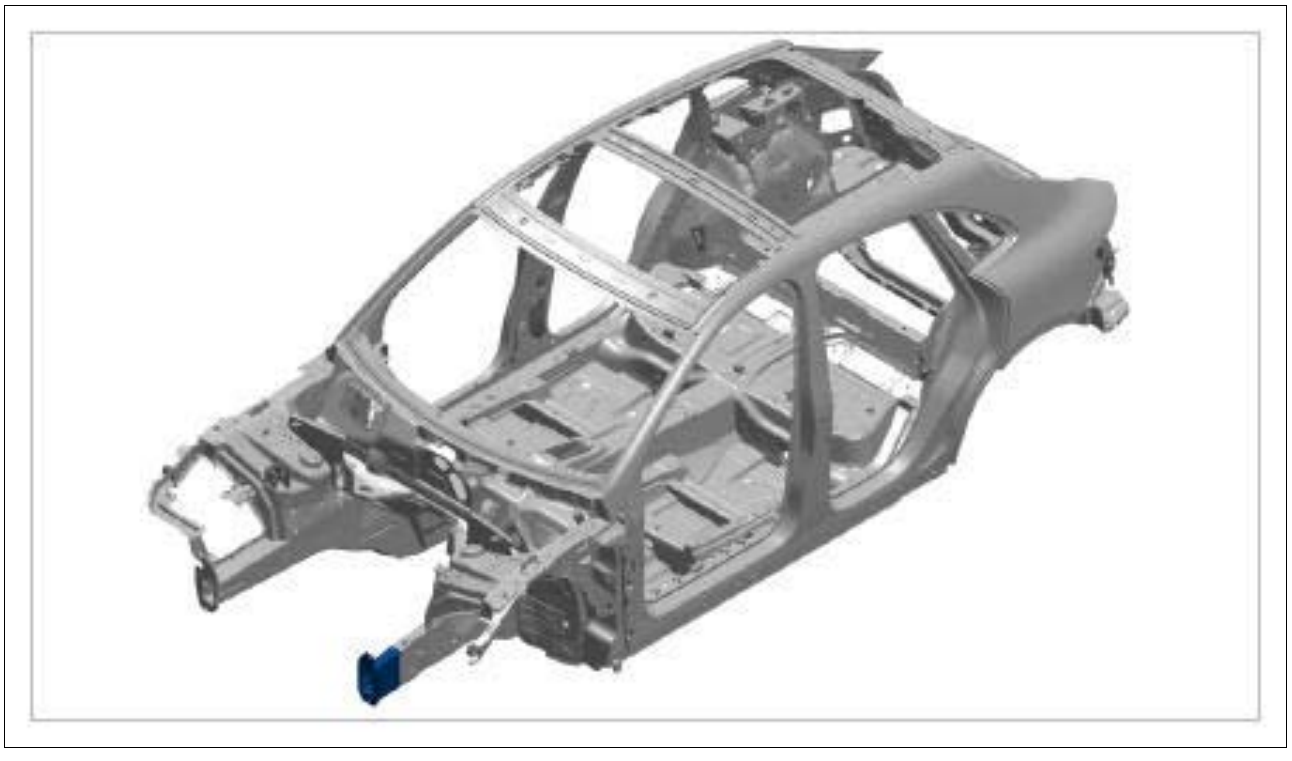

Courtesy of PORSCHE CARS NORTH AMERICA, INC.

Information

The final dimension is measured from the new front side member (section).

1. Make a rough cut on the front side member (section).

1. 1.1. Mark and make cuts. → **Distance: 100 mm**

Fig 2: Removing Front Side Member (Front Section)

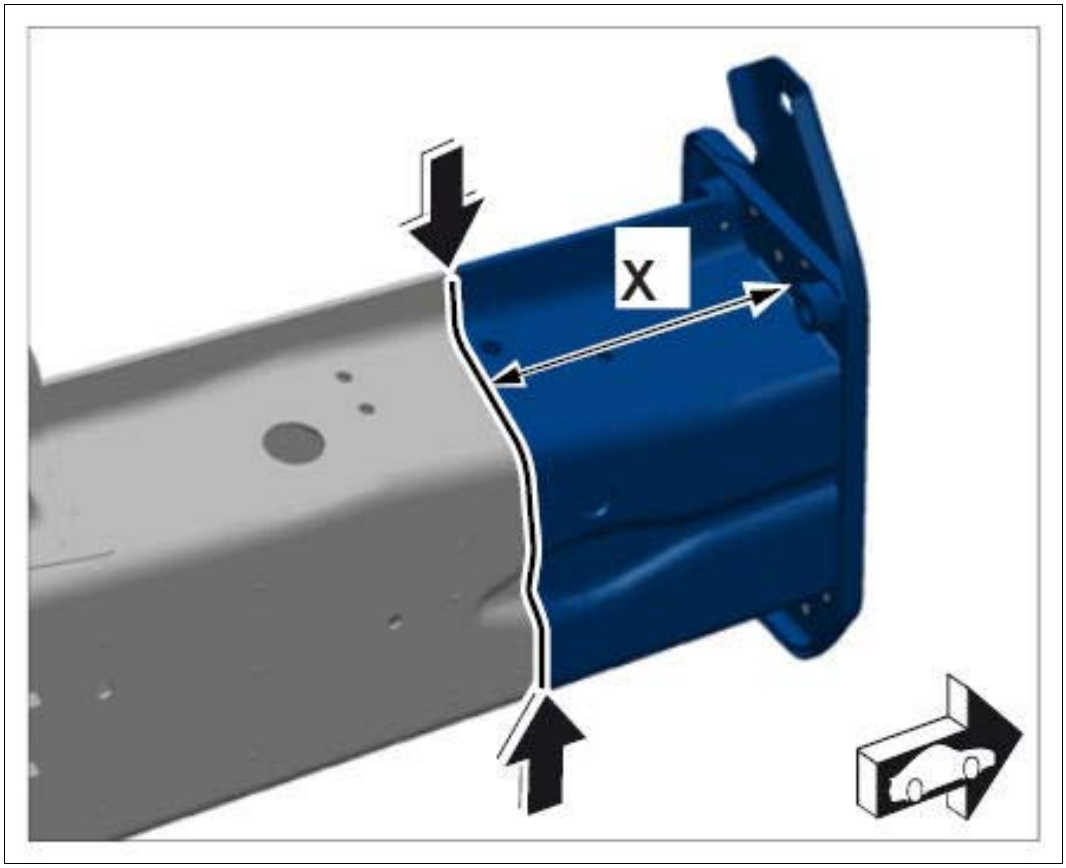

Courtesy of PORSCHE CARS NORTH AMERICA, INC.

WM 507955 REPLACING FRONT SIDE MEMBER (FRONT SECTION) > PREPARING FRONT SIDE MEMBER (SECTION) FOR INSTALLATION

1. Remove studs **-A-** from the left section of the longitudinal member **-1-** and right section of the longitudinal member **-2-** .

    1. 1.1. Prepare front side member (section) for welding.

Fig 1: Removing Studs From Left Section Of Longitudinal Member

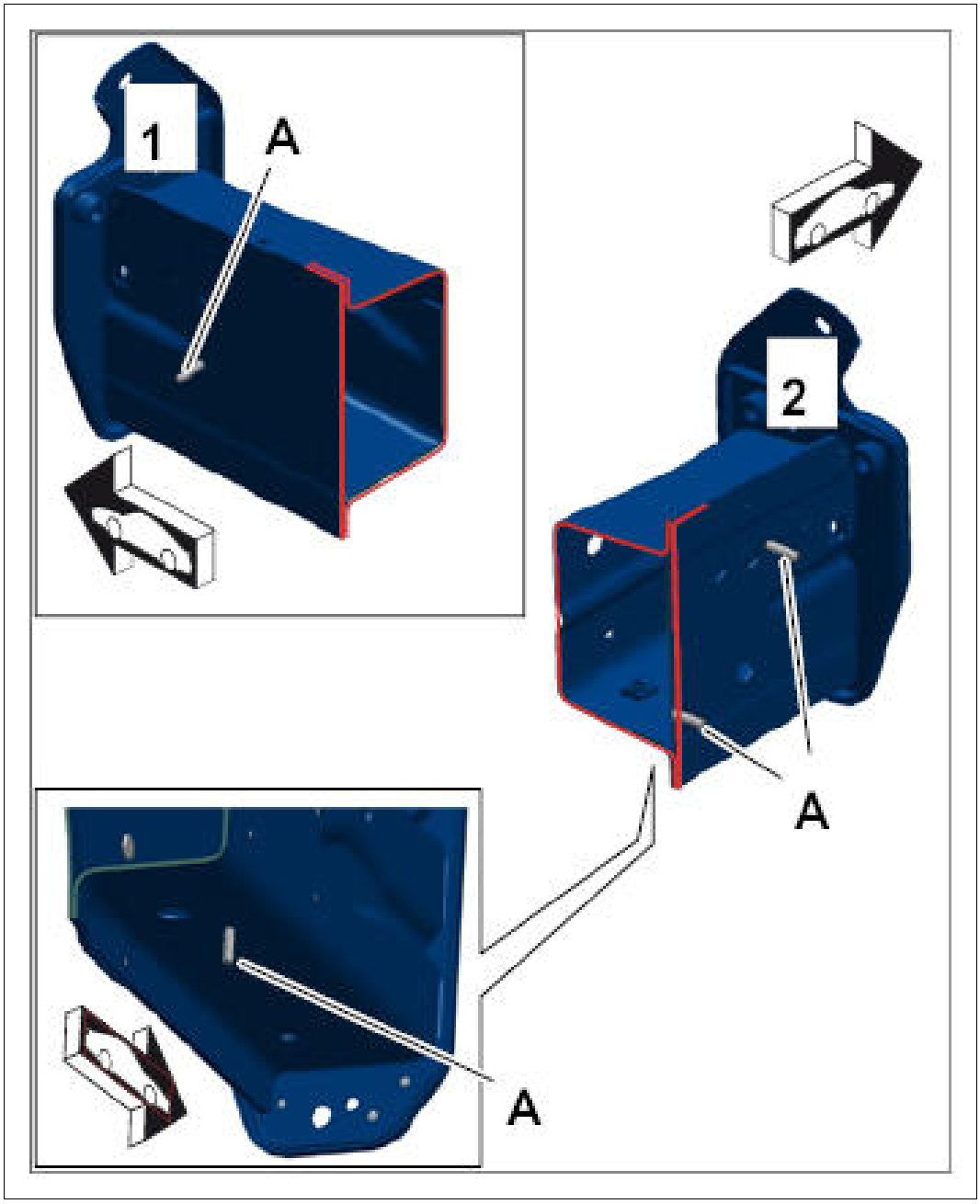

Courtesy of PORSCHE CARS NORTH AMERICA, INC.

Red	Plug-welding/apply a full weld using inert gas without bonding

WM 507955 REPLACING FRONT SIDE MEMBER (FRONT SECTION) > PREPARING CONNECTION AREAS OF THE BODY

1. Align the sealing surface and connections of the body.
2. De-burr connection points and prepare them for welding.

Information

1. Before final assembly, make sure you fully understand all the work steps involved and carry out a trial assembly without applying adhesive.
2. The bonding process can only be carried out reliably when a smooth and swift sequence of operations is guaranteed.
3. Do not begin bonding work until all materials and tools necessary for later repair work are available.

3. Prepare the marked areas for welding. → 5X00IN21 WORKING WITH BODY STRUCTURAL ADHESIVE .
4. Fit in new front side member (section) and secure it.
    1. 4.1. Take measurement **-X-** from the new part and mark it on the longitudinal member.
    2. 4.2. Cut the longitudinal member **-arrows-** .
    3. 4.3. Area **-A-** indicates the overlap area from the longitudinal member to the section of the longitudinal member.

Fig 1: Fitting Front Side Member

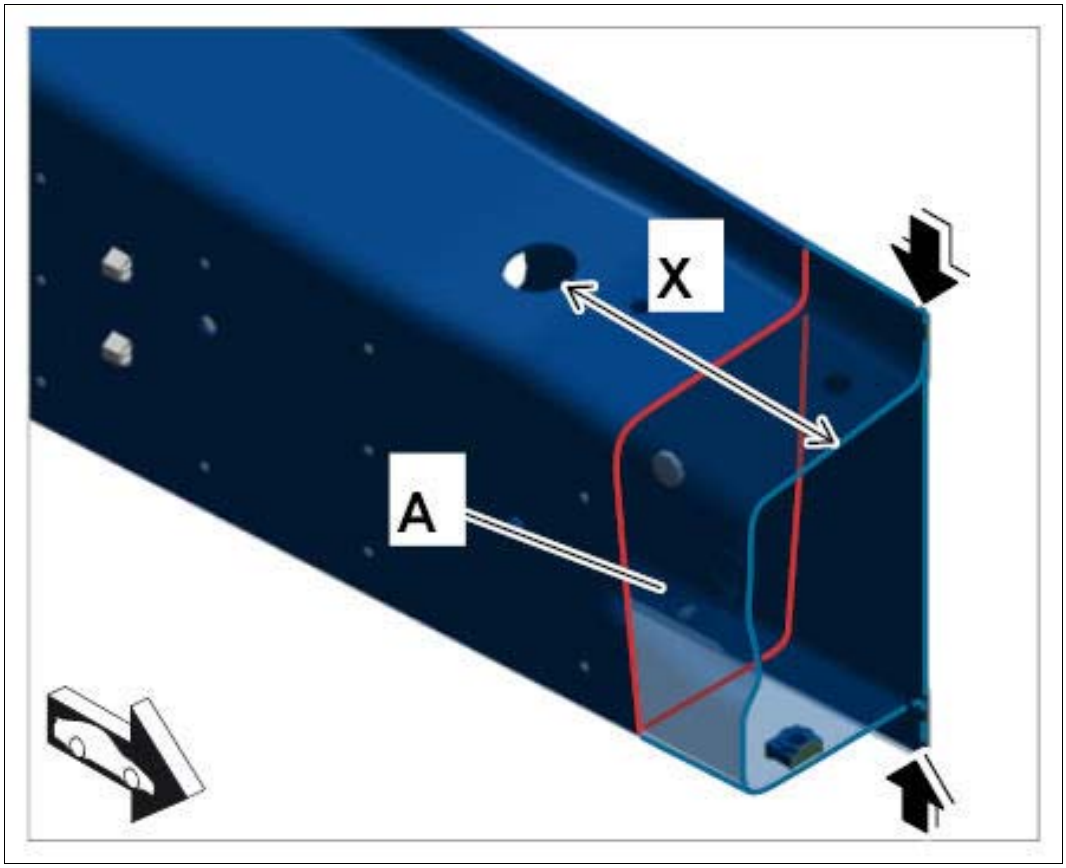

Courtesy of PORSCHE CARS NORTH AMERICA, INC.

WM 507955 REPLACING FRONT SIDE MEMBER (FRONT SECTION) > INSTALLING

FRONT SIDE MEMBER (SECTION)

Information

- Before final assembly, make sure you fully understand all the work steps involved and carry out a trial assembly without applying adhesive.
- The bonding process can only be carried out reliably when a smooth and swift sequence of operations is guaranteed.
- Do not begin bonding work until all materials and tools necessary for later repair work are available.

1. Install front side member (section) and check that it fits perfectly. Check gap dimensions → 5X00IN DIAGRAM - BODY GAP DIMENSIONS .
2. Apply a full weld to the area **-arrows-** using inert gas.

Fig 1: Installing Front Side Member (Section)

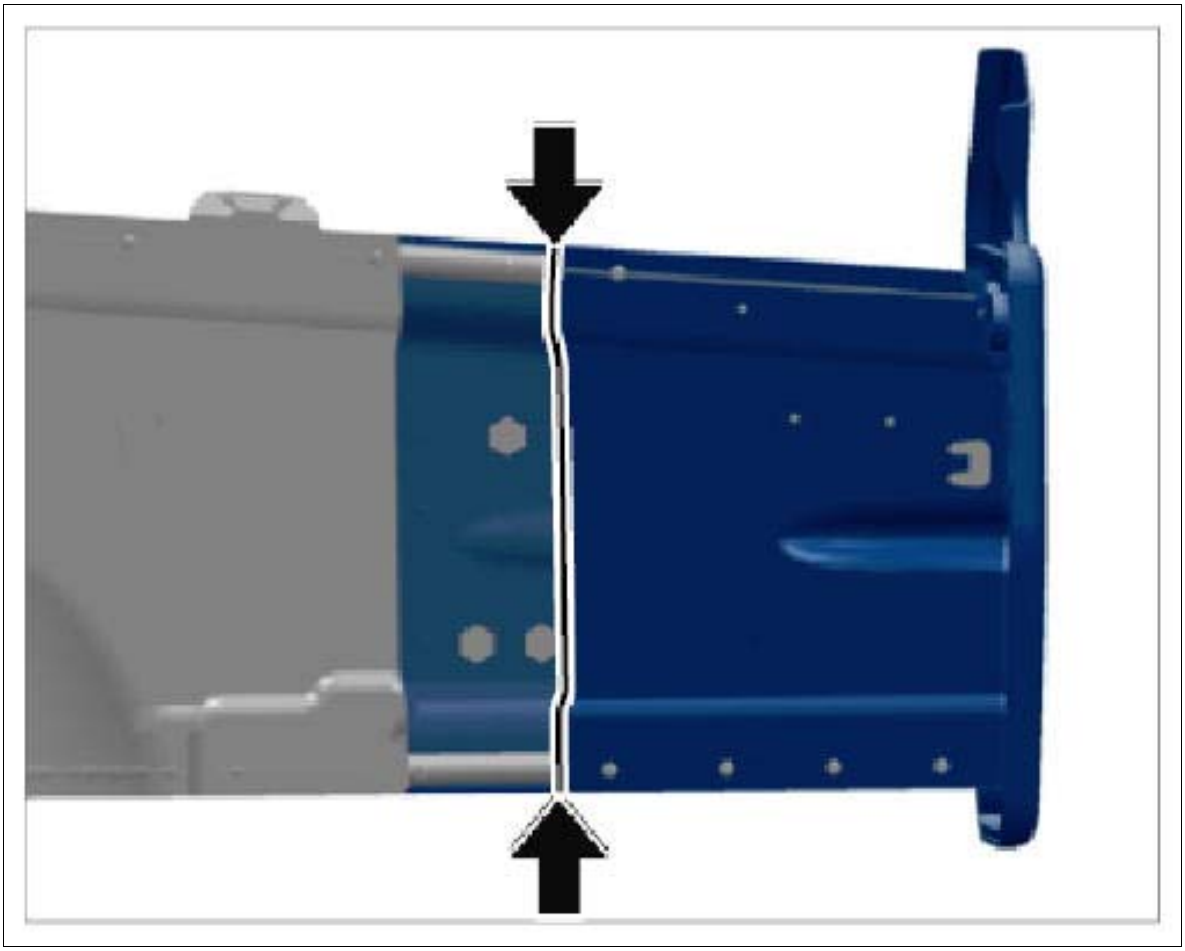

Courtesy of PORSCHE CARS NORTH AMERICA, INC.

WM 507955 REPLACING FRONT SIDE MEMBER (FRONT SECTION) > SUBSEQUENT WORK

1. Install headlight mounting → INSTALLING HEADLIGHT MOUNTING .

WM 507955 REPLACING FRONT SIDE MEMBER (FRONT SECTION) > SUBSEQUENT WORK > SUBSEQUENT WORK FOR BODY REPAIRS

1. Release and remove vehicle from the straightening system.
2. Clean joint areas and sheetmetal flanges with a wire brush.
3. Prime joint areas and sheetmetal flanges with 2K primer.
4. Restore standard seal with body sealant → 5X00IN42 SEAM SEALING .

   Also seal the repair area carefully.
5. Paint repair area and adjacent surfaces, if necessary.
6. Restore standard underbody protection with underbody sealant → 5X00IN43 UNDERBODY PROTECTION .
7. Apply standard cavity preservation → 5X00IN44 CAVITY PRESERVATION . Also carefully apply cavity preservation to the repair area.
8. Install removed accessories in the repair area.

WM 508119 REMOVING AND INSTALLING CROSS PANEL (DISASSEMBLING PLENUM PANEL) > PRELIMINARY WORK

1. Remove plenum panel cover → 508719 REMOVING AND INSTALLING COWL PANEL COVER .
2. Remove front strut → 408619 REMOVING AND INSTALLING FRONT STRUT (DOME STRUT) .

WM 508119 REMOVING AND INSTALLING CROSS PANEL (DISASSEMBLING PLENUM PANEL) > REMOVING CROSS PANEL

Information

- The number of fastening screws, fixing clips, plug connections, holders and trim panels can vary depending on equipment.
- The illustrations for removing and installing the drive mechanism are shown only on one equipment variant and may differ from the actual equipment variant.
- Some steps must be carried out automatically.
- Some of the repair illustrations show only one side of the vehicle.

Fig 1: Locating Cross Panel Position



Courtesy of PORSCHE CARS NORTH AMERICA, INC.

1. Unscrew fastening screw **-1-** on the cross panel **-2-** .

   Remove fastening clamp **-3-** on the cross panel.

   The fastening clamp cannot be removed without damaging it and must be replaced.

Fig 2: Removing Cross Panel

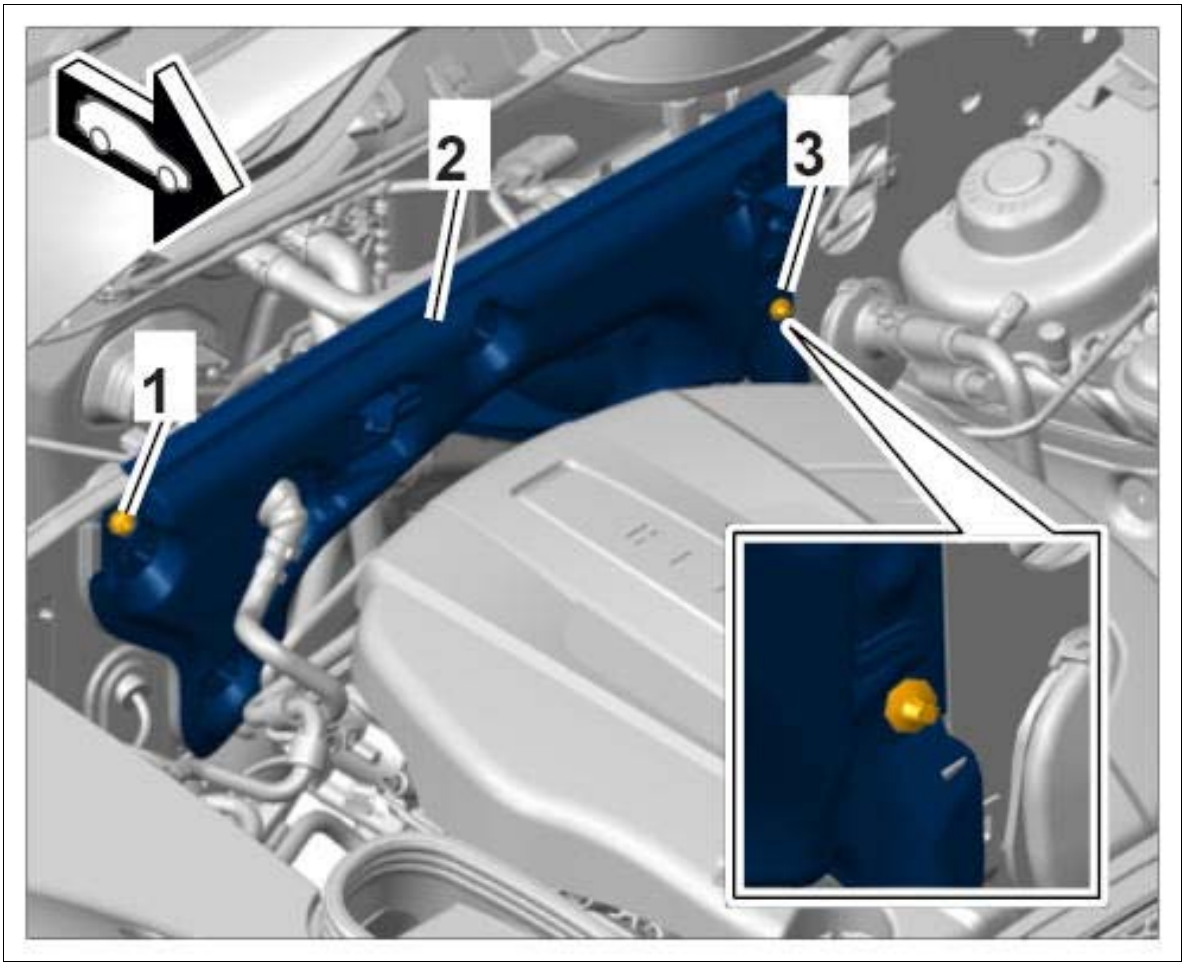

Courtesy of PORSCHE CARS NORTH AMERICA, INC.

2. Disconnect wire harness **-1-** at the fixing clips **-A, B & C-** in direction of arrow.

    1. 2.1. Pull vacuum line **-2-** off the vacuum hose **-3-** in direction of arrow **-D-** .

Fig 3: Removing Wire Harness/Vacuum Line

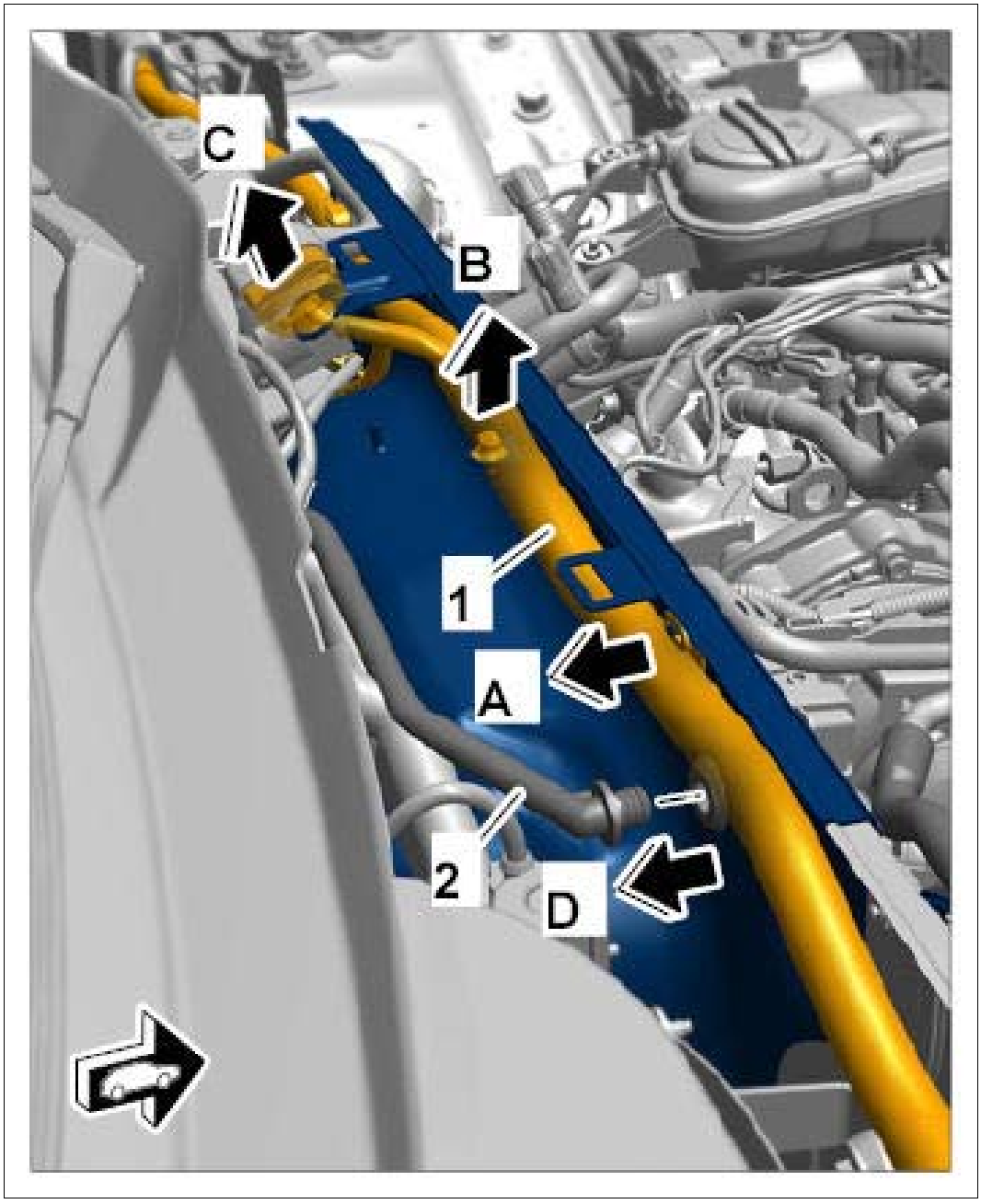

Courtesy of PORSCHE CARS NORTH AMERICA, INC.

3. Press vacuum hose **-1-** together using a suitable tool **-arrows A-** and disconnect it from the cross panel **-2-** (**-arrow B-**).

Fig 4: Loosening Vacuum Hose



Courtesy of PORSCHE CARS NORTH AMERICA, INC.

4. Disconnect coolant hoses.

    1. 4.1. **Clamp coolant hoses on both sides using hose clamps.**

    2. 4.2. Loosen retaining clip **-arrows-** and pull off coolant hoses for heating **-1-** and **-2-** on the cross panel **-3-** .

    3. 4.3. Absorb and wipe off emerging coolant with a cloth.

Fig 5: Disconnecting Coolant Hoses

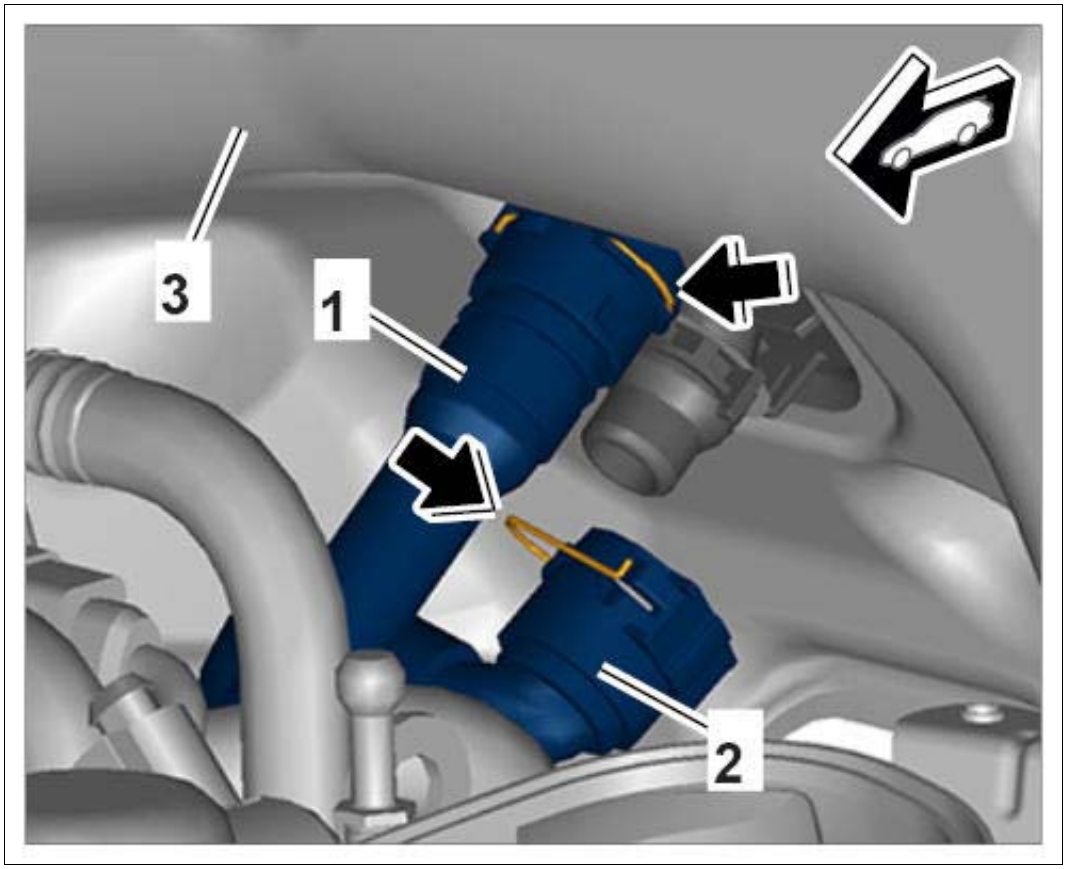

Courtesy of PORSCHE CARS NORTH AMERICA, INC.

5. Remove cross panel by pulling it upwards.

WM 508119 REMOVING AND INSTALLING CROSS PANEL (DISASSEMBLING PLENUM PANEL) > INSTALLING CROSS PANEL

1. Installation is performed in reverse order to removal.
    1. 1.1. Position seal for cross panel.
    2. 1.2. Make sure that the cross panel **-1-** engages in the guides **-arrows-** during installation.

Fig 1: Installing Cross Panel

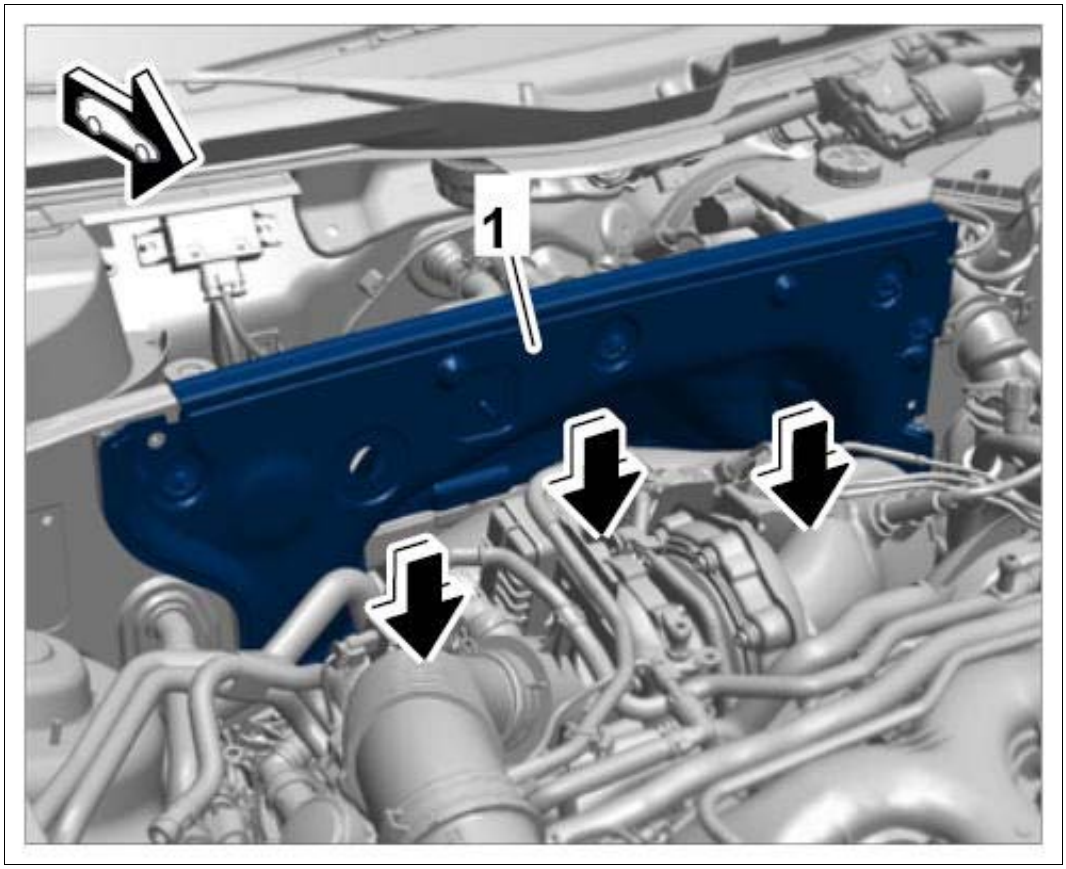

Courtesy of PORSCHE CARS NORTH AMERICA, INC.

WM 508119 REMOVING AND INSTALLING CROSS PANEL (DISASSEMBLING PLENUM PANEL) > SUBSEQUENT WORK

1. Install plenum panel cover → INSTALLING COWL PANEL COVER .
2. Install front strut → INSTALLING FRONT STRUT .
3. Check the cooling system → 190101 CHECKING THE COOLING SYSTEM .

WM 508719 REMOVING AND INSTALLING COWL PANEL COVER > REMOVING COWL PANEL COVER

Fig 1: Locating Cowl Panel Cover Position



Courtesy of PORSCHE CARS NORTH AMERICA, INC.

1. Unclip cover **-1-** for plenum panel by pulling it upwards and remove it by pulling it forward.

Fig 2: Removing Plenum Panel Cover

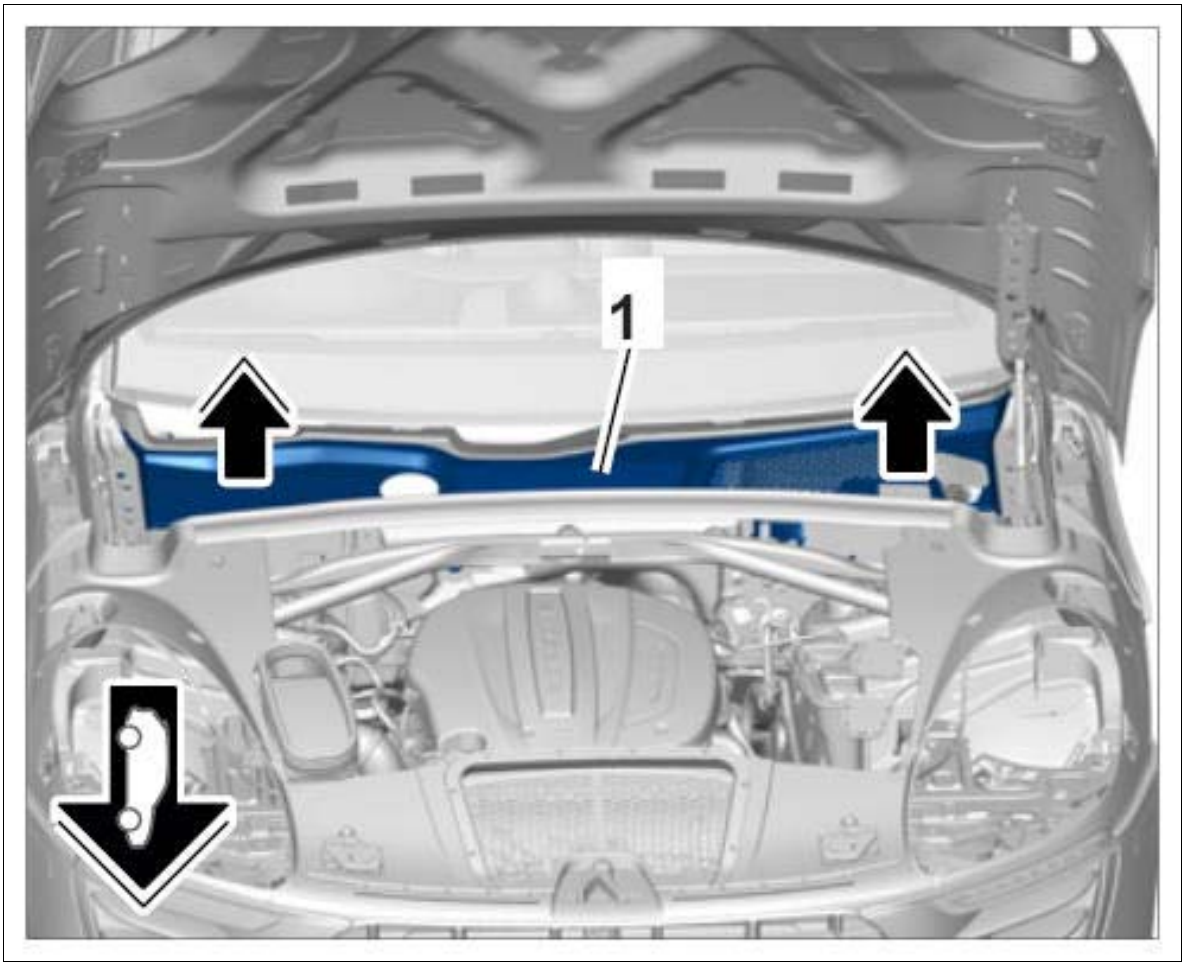

Courtesy of PORSCHE CARS NORTH AMERICA, INC.

2. Remove cowl panel cover.
    1. 2.1. Remove wiper arm. → 922519 REMOVING AND INSTALLING WIPER ARM
    2. 2.2. Unclip cover **-1-** from the windscreen guide and remove it by pulling it upwards.

Fig 3: Removing Cowl Panel Cover

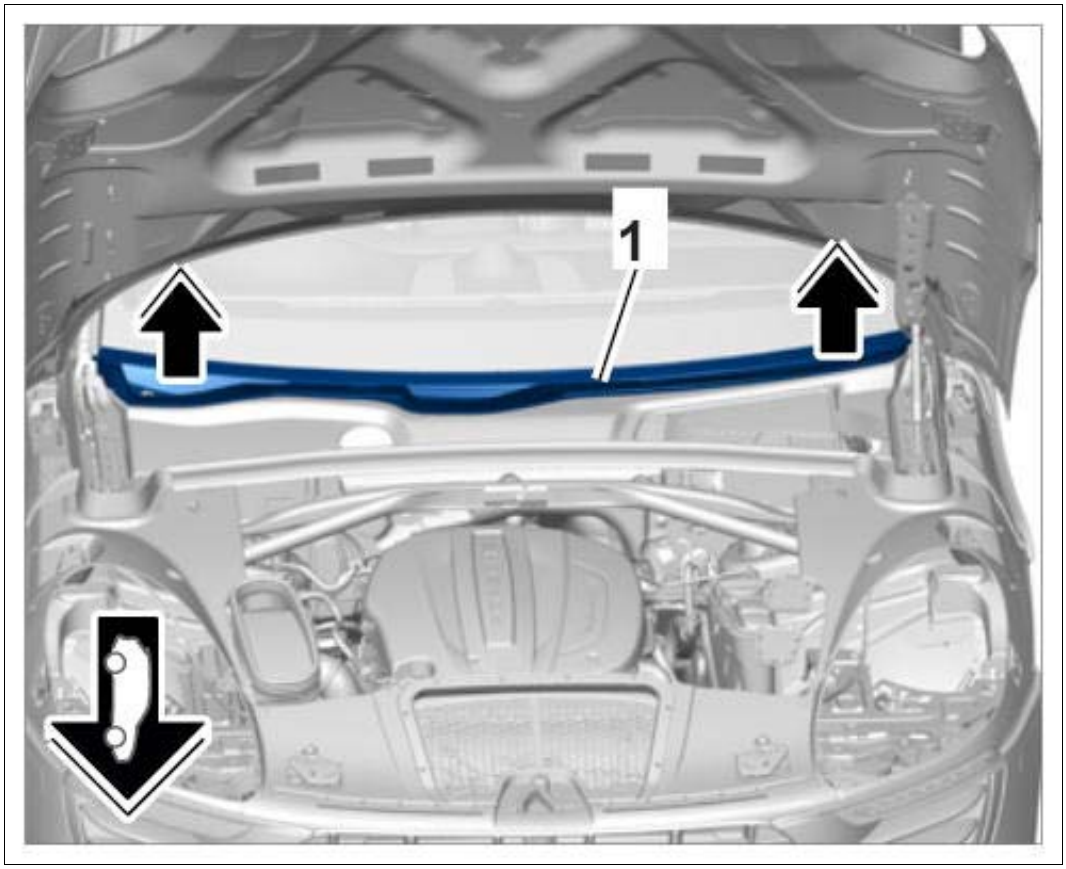

Courtesy of PORSCHE CARS NORTH AMERICA, INC.

WM 508719 REMOVING AND INSTALLING COWL PANEL COVER > INSTALLING COWL PANEL COVER

1. Installation is performed in reverse order to removal.
2. Engage locking lug **-3-** on the cowl panel cover in the retaining strip on the windscreen **-4-** .

Fig 1: Installing Cowl Panel Cover

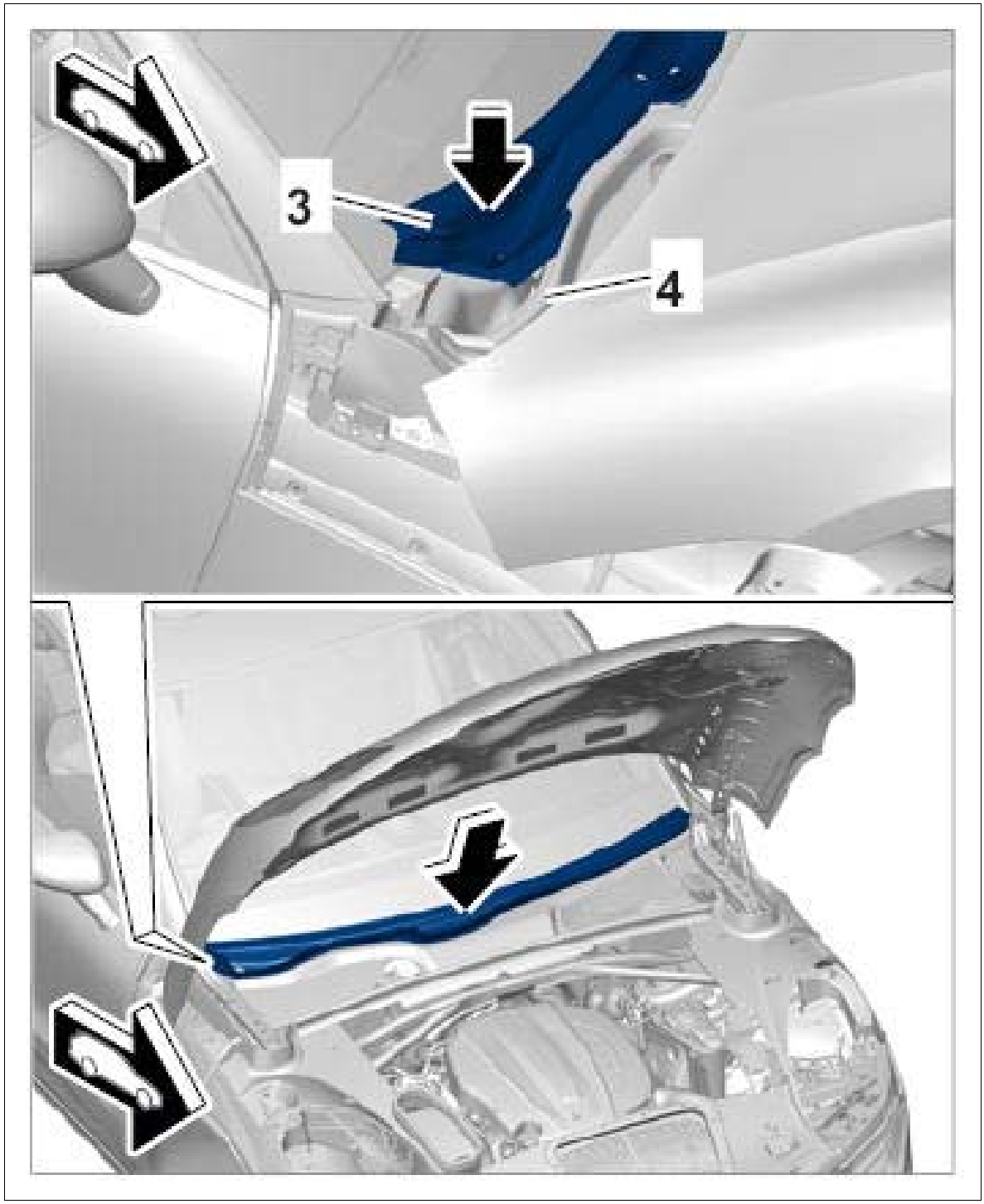

Courtesy of PORSCHE CARS NORTH AMERICA, INC.

3. Clip in cover for plenum panel and check that the rubber profile is seated correctly.

WM 510355 REPLACING ROOF (WITH SLIDING ROOF) (ALL MODELS) > TOOLS

Designation	Type	Number	Description	
Hot-air blower	Workshop equipment	WE 1119		
Body alignment system package	Workshop equipment	WE 1121		
Special electric cutter	Workshop equipment	WE 1137		
Pneumatic Spotweld Remover, Vario Drill WS 90	Workshop equipment	WE 1139		
Hand-cartridge gun	Workshop equipment	WE 1141		
Resistance spot welder	Workshop equipment	WE 1311		
Inverter welder MIDIspot-QSVM-12000	Workshop equipment	WE 1312		
Resistance spot welder	Workshop equipment	WE 1313		
Blind riveting tool TAURUS 4	Workshop equipment	WE 1348		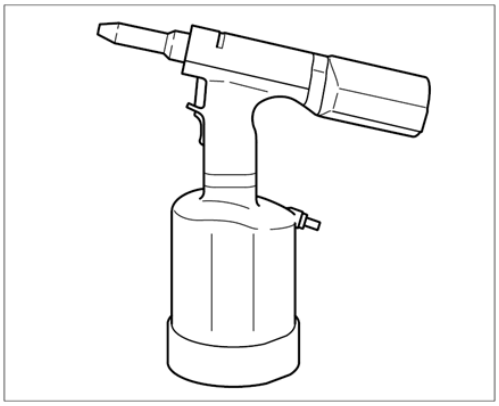
Aluminum tool set with trolley	Workshop equipment	WE 1350		
Resistance spot welder	Workshop equipment	WE 1352		
Measuring and alignment system,	Workshop equipment	WE 1398		

professional				
Mobile extraction unit, aluminum	Workshop equipment	WE 1507		
Body saw	Workshop equipment	WE 1508		
Star gauges for body gap dimensions	Special tool	Nr.127-1		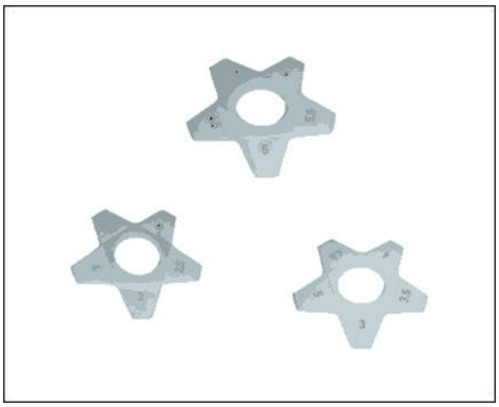
Spotweld drill	Commercially available tool	Nr.129		
Twist drill	Commercially available tool	Nr.201		

Countersink	Commercially available tool	Nr.202		

WM 510355 REPLACING ROOF (WITH SLIDING ROOF) (ALL MODELS) > TECHNICAL VALUES

Location	Description	Type	Basic value	Tolerance 1	Tolerance 2
Roof cut line	Roof outer edge	Distance	15 mm	+2 mm	

WM 510355 REPLACING ROOF (WITH SLIDING ROOF) (ALL MODELS) > PRELIMINARY WORK > PRELIMINARY WORK FOR BODY REPAIRS (WITHOUT STRAIGHTENING SYSTEM)

1. Remove accessories in the repair area.
    1. 1.1. Remove accessories in the repair area according to the extent of damage on the vehicle.
2. Cover accessories adjacent to the repair area on the vehicle.
    1. 2.1. Cover all accessories remaining on the vehicle and adjacent areas with fire-proof protective covers.
3. Reshape connection area of the sheetmetal parts to be replaced.
4. Expose joint areas.
    1. 4.1. Remove underbody protection, paint, etc. from the joint areas of the body using a hot-air gun or rotary brush.

WM 510355 REPLACING ROOF (WITH SLIDING ROOF) (ALL MODELS) > SAFETY INSTRUCTIONS AND INFORMATION ON QUALITY

⚠ *CAUTION: Non-observance of safety instructions for body repairs*

- *Risk of damage to the vehicle*
- *Danger of injury*

→ Read the relevant safety instructions as well as general information and quality instructions → 5X00IN01 SAFETY INSTRUCTIONS .

- Protection of electrical components during body repairs
- Corrosion protection measures during repairs → 5X00IN03 CORROSION PROTECTION MEASURES DURING REPAIRS
- Information on aluminum repairs
- Body parts of various sheet-steel strengths → 5X00IN04 BODY PARTS OF VARIOUS SHEET-STEEL STRENGTHS
- Replacing punch rivets and penetrated joints
- Setting self-tapping screws → 5X00IN24 SETTING SELF-TAPPING SCREWS
- Working with body structural adhesive → 5X00IN21 WORKING WITH BODY STRUCTURAL ADHESIVE

WM 510355 REPLACING ROOF (WITH SLIDING ROOF) (ALL MODELS) > TOOLS AND MATERIALS > TOOLS AND MATERIALS FOR BODY REPAIRS

Information

- The tools for working on steel and aluminum must always be kept separate from each other. We recommend that you color code the tools using a system similar to that used for the Aluminum tool set with trolley WE 1350, for example.

Straightening set **Body alignment system package WE 1121 Measuring and alignment system, professional WE 1398**

Resistance spot welder; optional Inverter welder **MIDIspot-QSVM-12000 WE 1312, Resistance spot welder WE 1352, Resistance spot welder WE 1311, Resistance spot welder WE 1313**

Metal inert gas (MIG) welder

Pneumatic spotweld remover **Pneumatic Spotweld Remover, Vario Drill WS 90 WE 1139**

Pneumatic body saw **Body saw WE 1508**

Oscillating body saw (special electric cutter) **Special electric cutter WE 1137**

Hot-air blower **Hot-air blower WE 1119**

Hand-cartridge gun **Hand-cartridge gun WE 1141**

Spotweld drill **Spotweld drill** ; **Twist drill Nr.201**

Countersink for rivets **Countersink Nr.202**

Blind riveting tool for high-strength rivets **Blind riveting tool TAURUS 4 WE 1348**

Safety vacuum cleaner for aluminum dust **Mobile extraction unit, aluminum WE 1507**

Star gauges for body gap dimensions Nr.127-1

Wurth Klebt und Dichtet body sealant

WM 510355 REPLACING ROOF (WITH SLIDING ROOF) (ALL MODELS) > REMOVING ROOF

Fig 1: Identifying Roof Installation Position

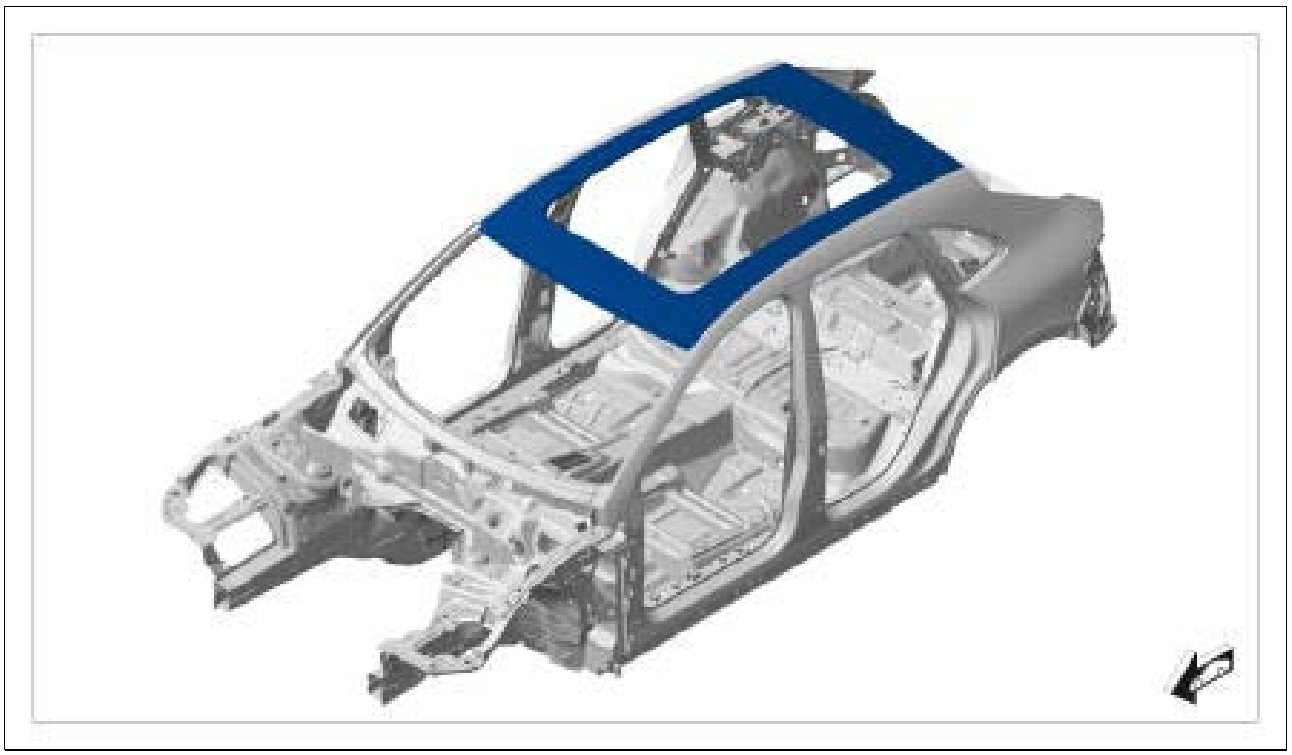

Courtesy of PORSCHE CARS NORTH AMERICA, INC.

Information

Drill out the connection point on one side only. Do not damage the plate underneath.

1. Drill out spotwelds using **spotweld drill**

Fig 2: Identifying Roof Spotwelds Area

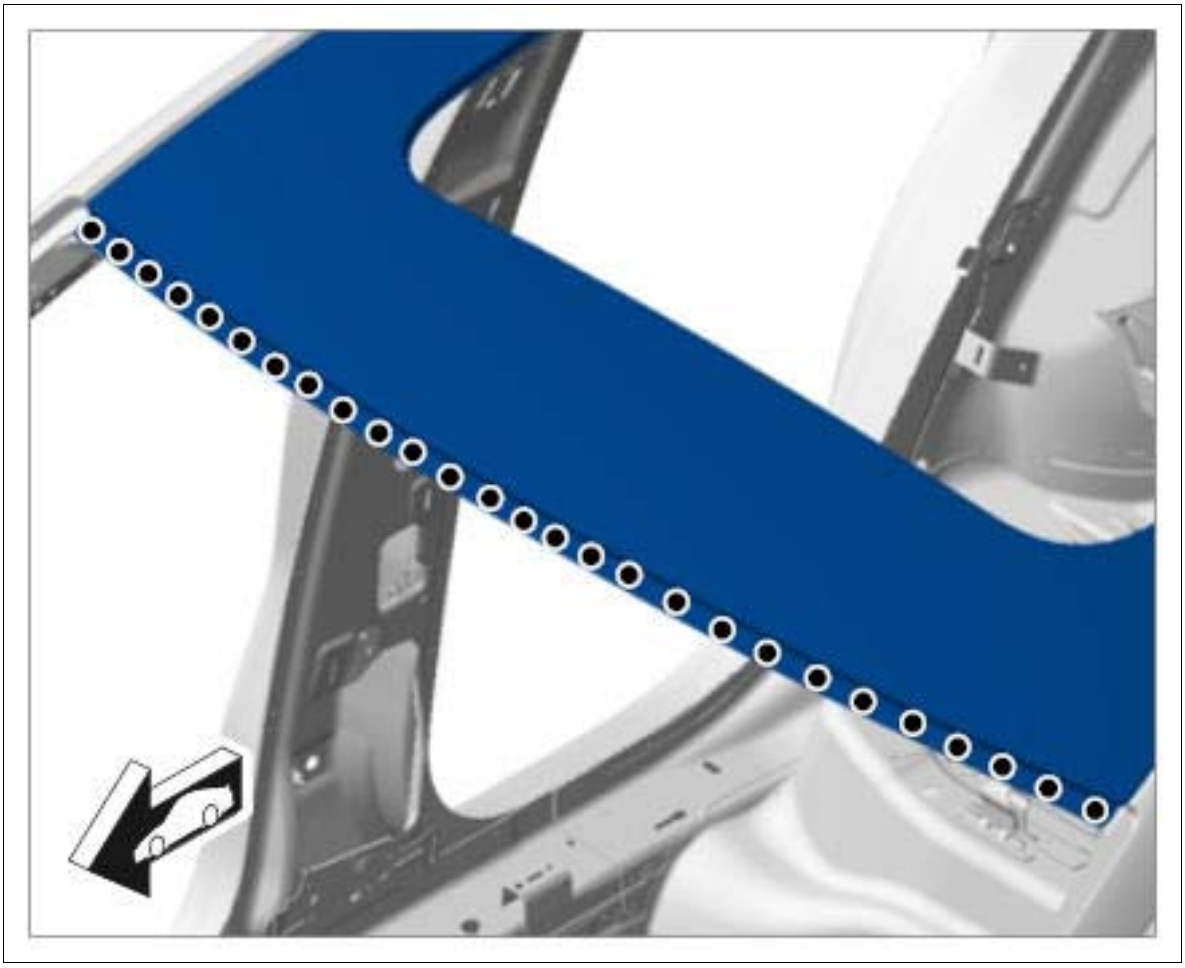

Courtesy of PORSCHE CARS NORTH AMERICA, INC.

Fig 3: Identifying Roof Spotwelds Area

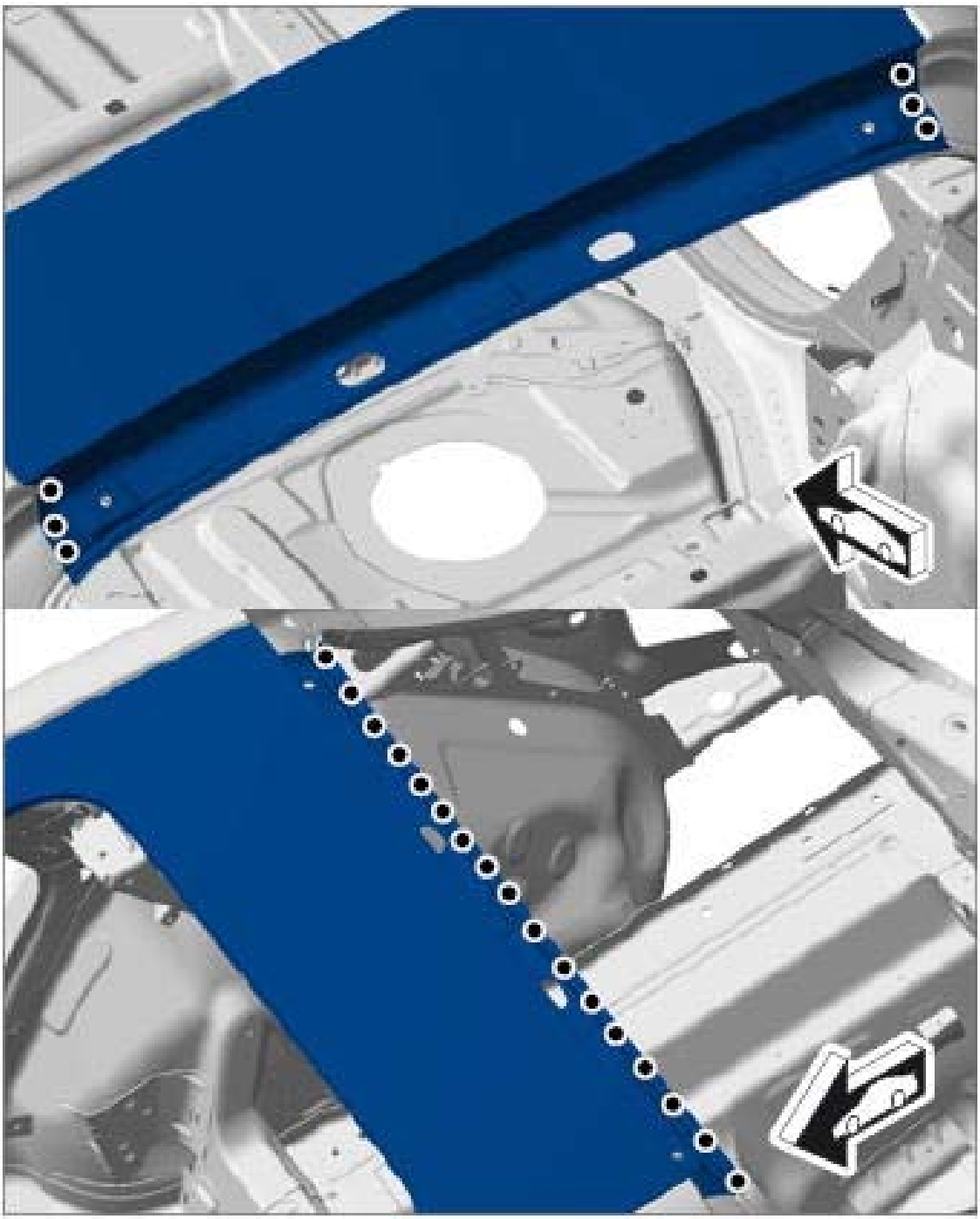

Courtesy of PORSCHE CARS NORTH AMERICA, INC.

2. Affix adhesive tape **-1-** along the edge of the roof on both sides at dimension **-X-** . → **Distance: 15 mm+2 mm**

   Adhesive tape serves as cut line.

Fig 4: Identifying Roof Edge Dimension

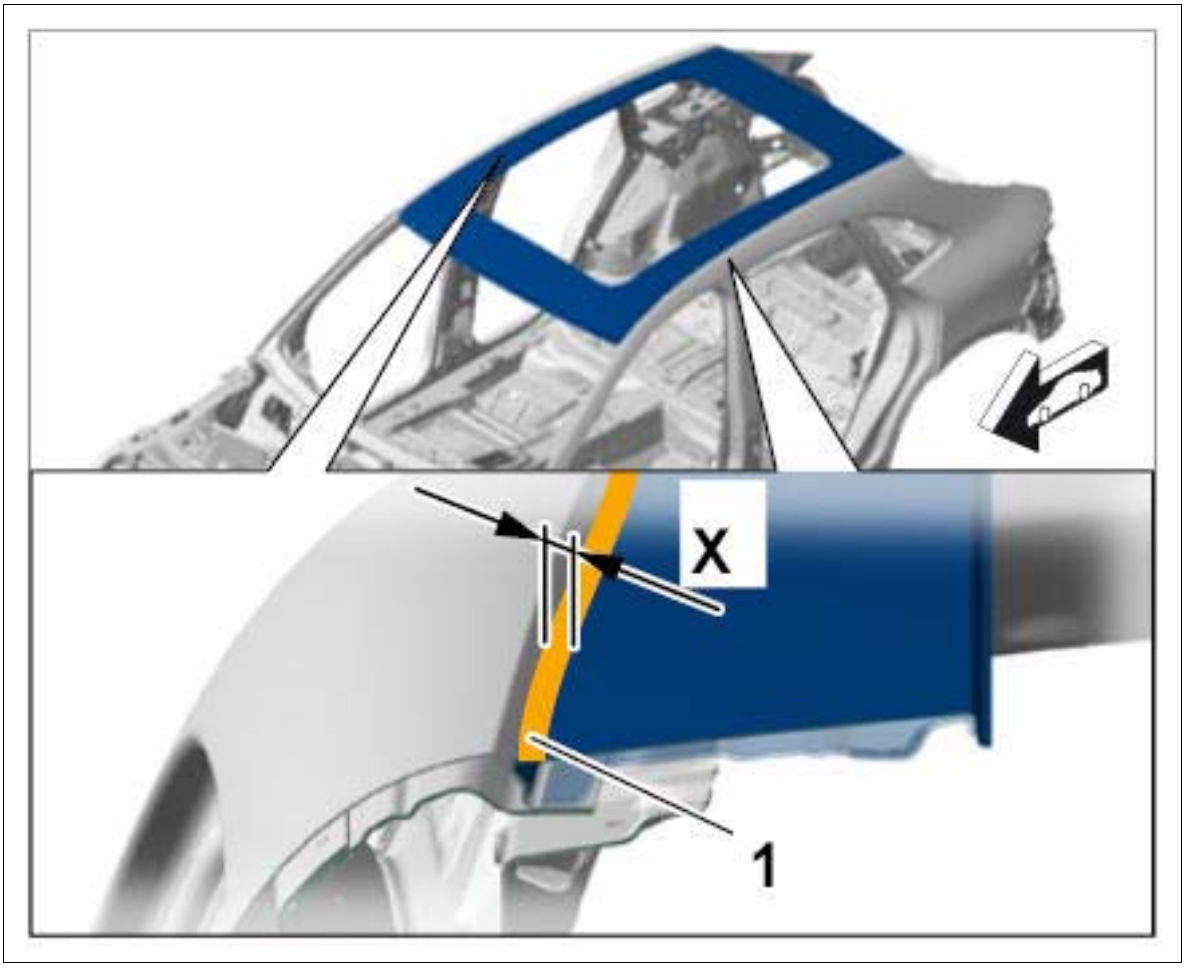

Courtesy of PORSCHE CARS NORTH AMERICA, INC.

Information

Only make cuts in the top plate. Make sure not to damage the plate underneath when doing this.

3. Make cut on both sides.
4. Heat connection areas using the hot-air gun.

Fig 5: Identifying Roof



Courtesy of PORSCHE CARS NORTH AMERICA, INC.

Fig 6: Identifying Roof



Courtesy of PORSCHE CARS NORTH AMERICA, INC.

5. Remove roof (with the help of two people).

Information

1. During separation make sure that the components beneath are not damaged.

6. Remove remaining pieces of roof.
    1. 6.1. Cut off laser soldered joints on side panels.
    2. 6.2. Remove remaining pieces.

Fig 7: Identifying Roof Pieces

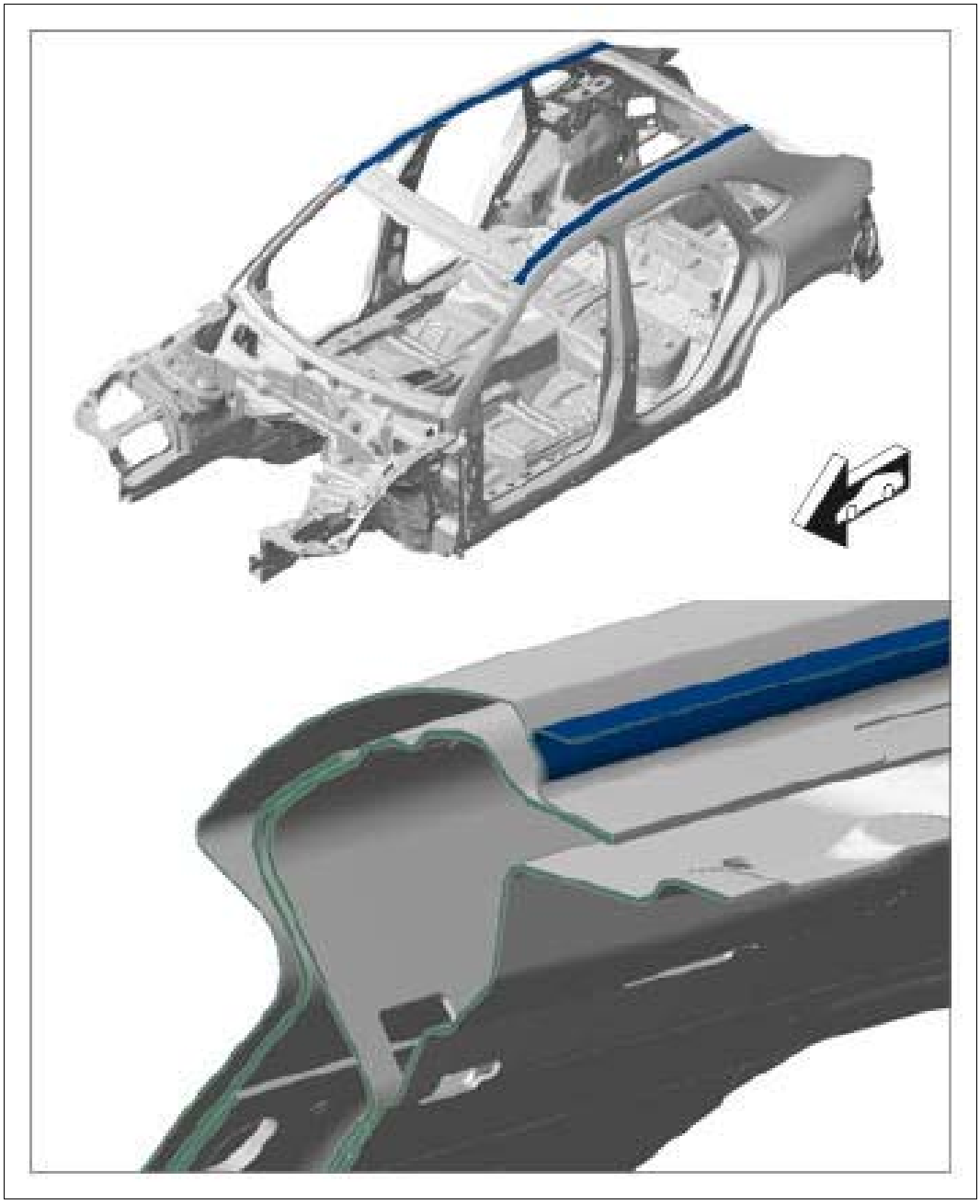

Courtesy of PORSCHE CARS NORTH AMERICA, INC.

WM 510355 REPLACING ROOF (WITH SLIDING ROOF) (ALL MODELS) > PREPARING ROOF FOR INSTALLATION

1. Prepare connection flanges in areas **-A-** for bonding and welding.

Fig 1: Identifying Roof Connection Flanges Areas

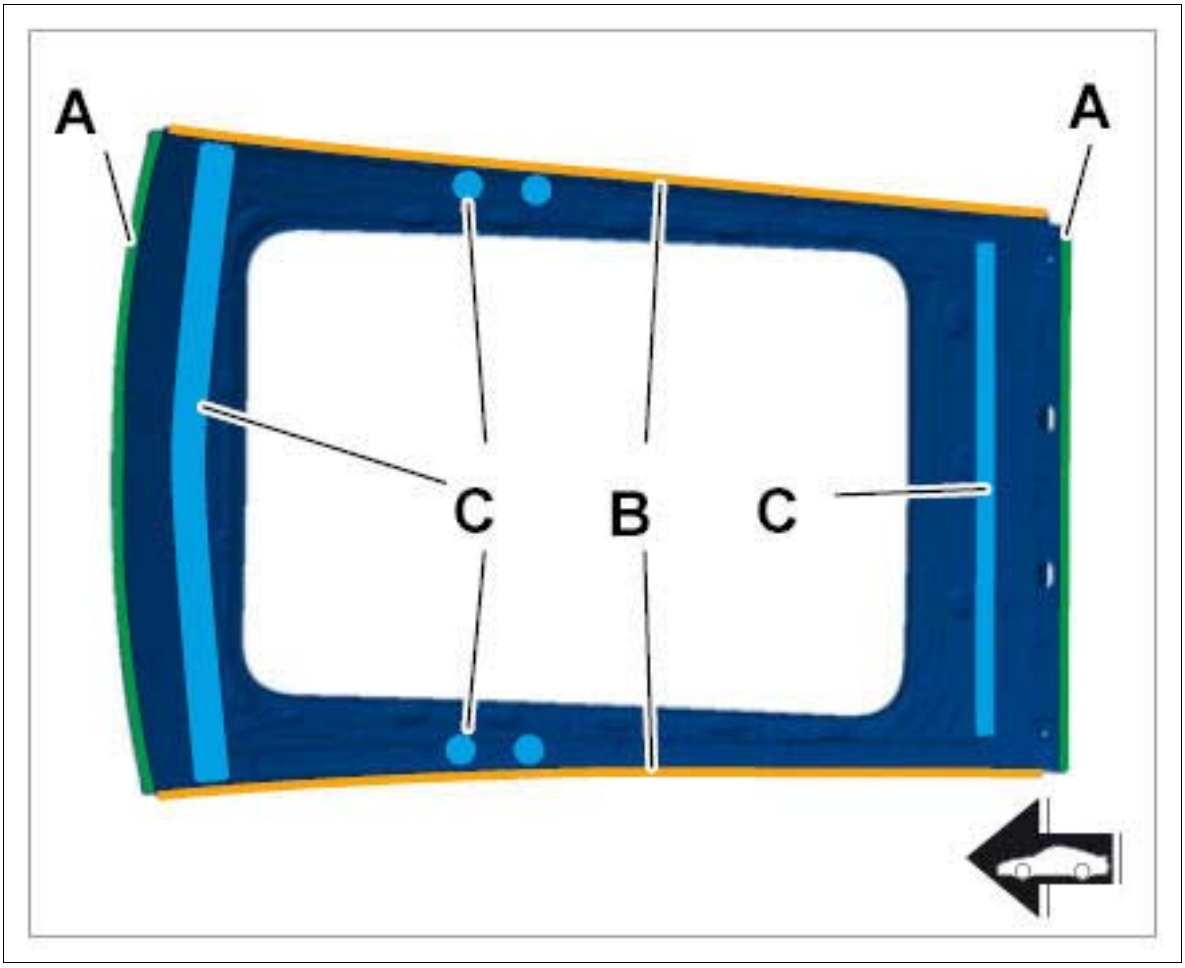

Courtesy of PORSCHE CARS NORTH AMERICA, INC.

2. Prepare bonding surfaces for applying structural adhesive **-B-** . → 5X00IN21 WORKING WITH BODY STRUCTURAL ADHESIVE
3. Clean bonding areas of support adhesive **-C-** from inside using acetone.

WM 510355 REPLACING ROOF (WITH SLIDING ROOF) (ALL MODELS) > PREPARING CONNECTION AREAS OF BODY FOR INSTALLING ROOF

Information

Do not apply zinc powder paint to the bonding areas.

1. Clean welding and bonding areas.

Fig 1: Identifying Body Connection Areas

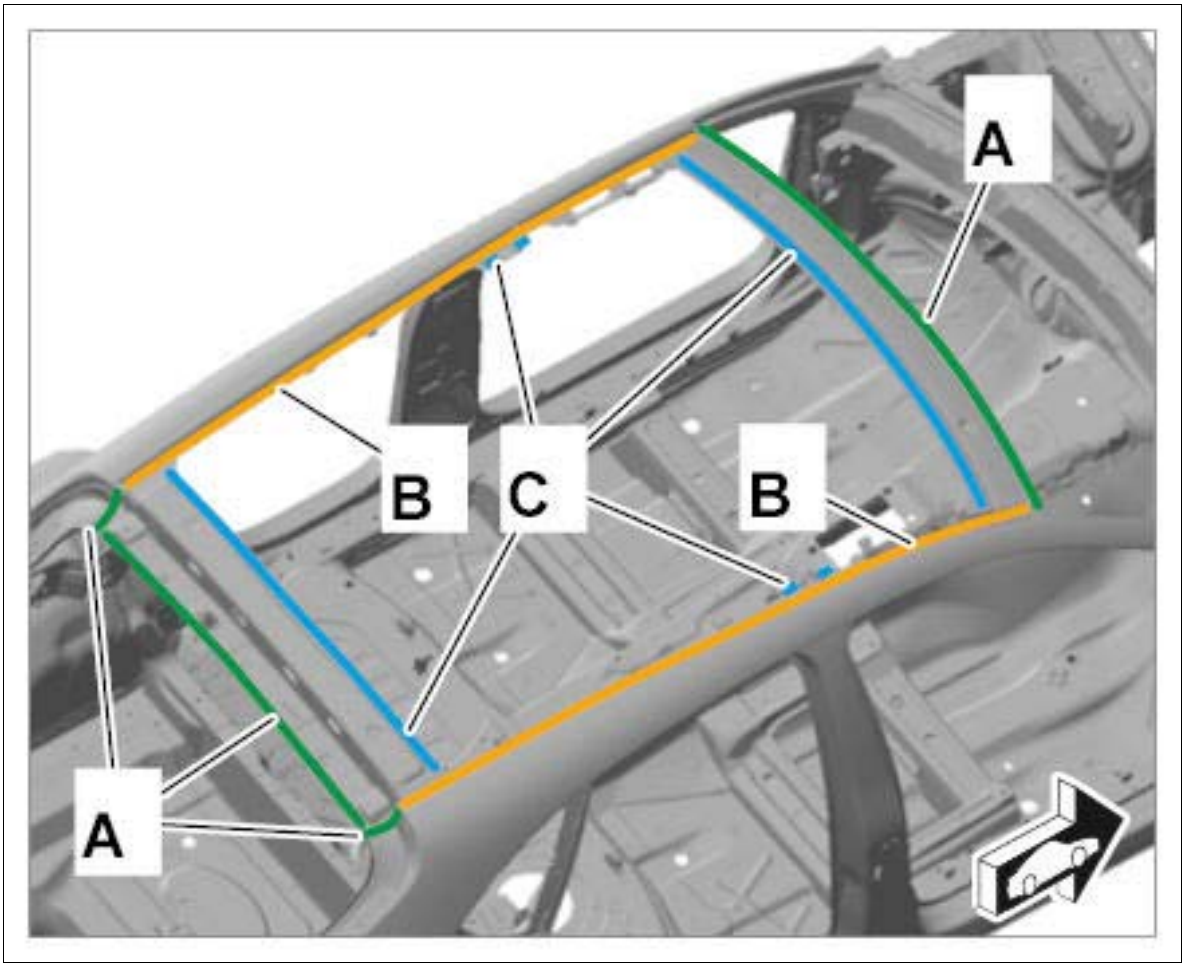

Courtesy of PORSCHE CARS NORTH AMERICA, INC.

1. 1.1. Prepare connection flanges in areas **-A-** for resistance spot-welding and bonding.
2. 1.2. Prepare connection flanges in areas **-B-** for bonding.
3. 1.3. Prepare bonding areas of support adhesive **-C-** for bonding with window adhesive.

WM 510355 REPLACING ROOF (WITH SLIDING ROOF) (ALL MODELS) > INSTALLING ROOF

1. Apply structural adhesive and support adhesive (window adhesive).

Fig 1: Identifying Roof Adhesive Applying Areas

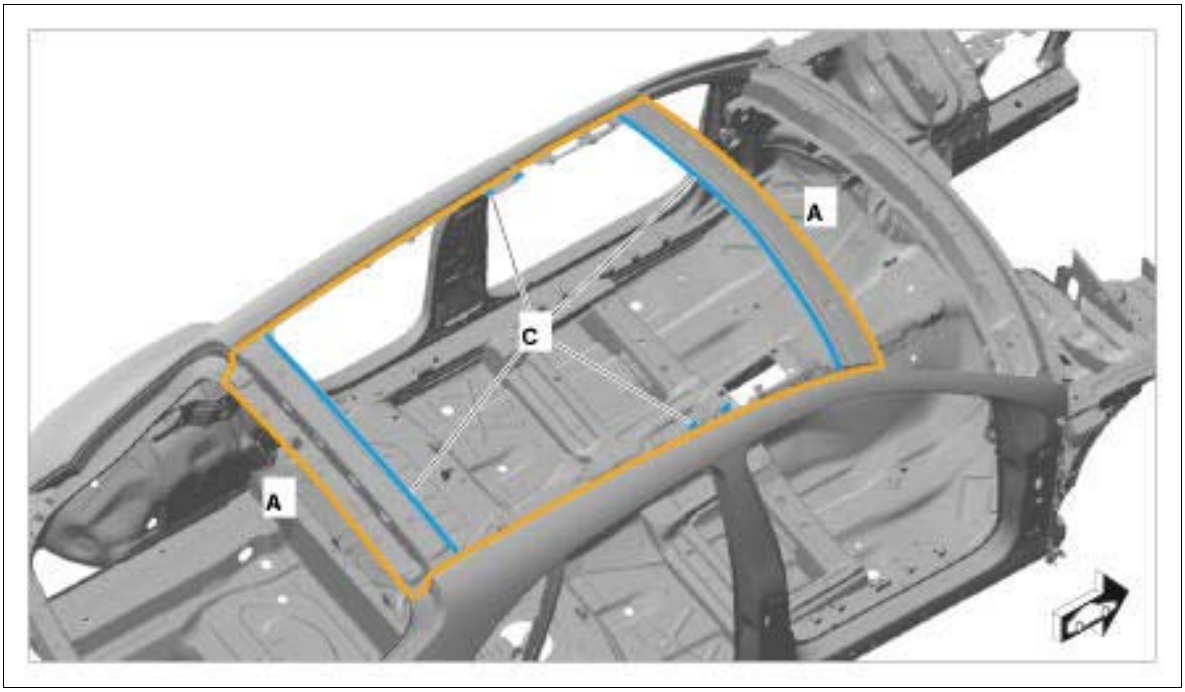

Courtesy of PORSCHE CARS NORTH AMERICA, INC.

1. 1.1. Evenly apply structural adhesive to the marked areas **-A-** .

   Working with body structural adhesive → 5X00IN21 WORKING WITH BODY STRUCTURAL ADHESIVE

   Structural adhesive

2. 1.2. Apply support adhesive (window adhesive) to the marked areas **-C-** .

   Support adhesive

2. Place roof on rear roof frame with the help of two people **-arrow A-** and swivel it in towards the front **-arrow B-** .

Fig 2: Installing Roof

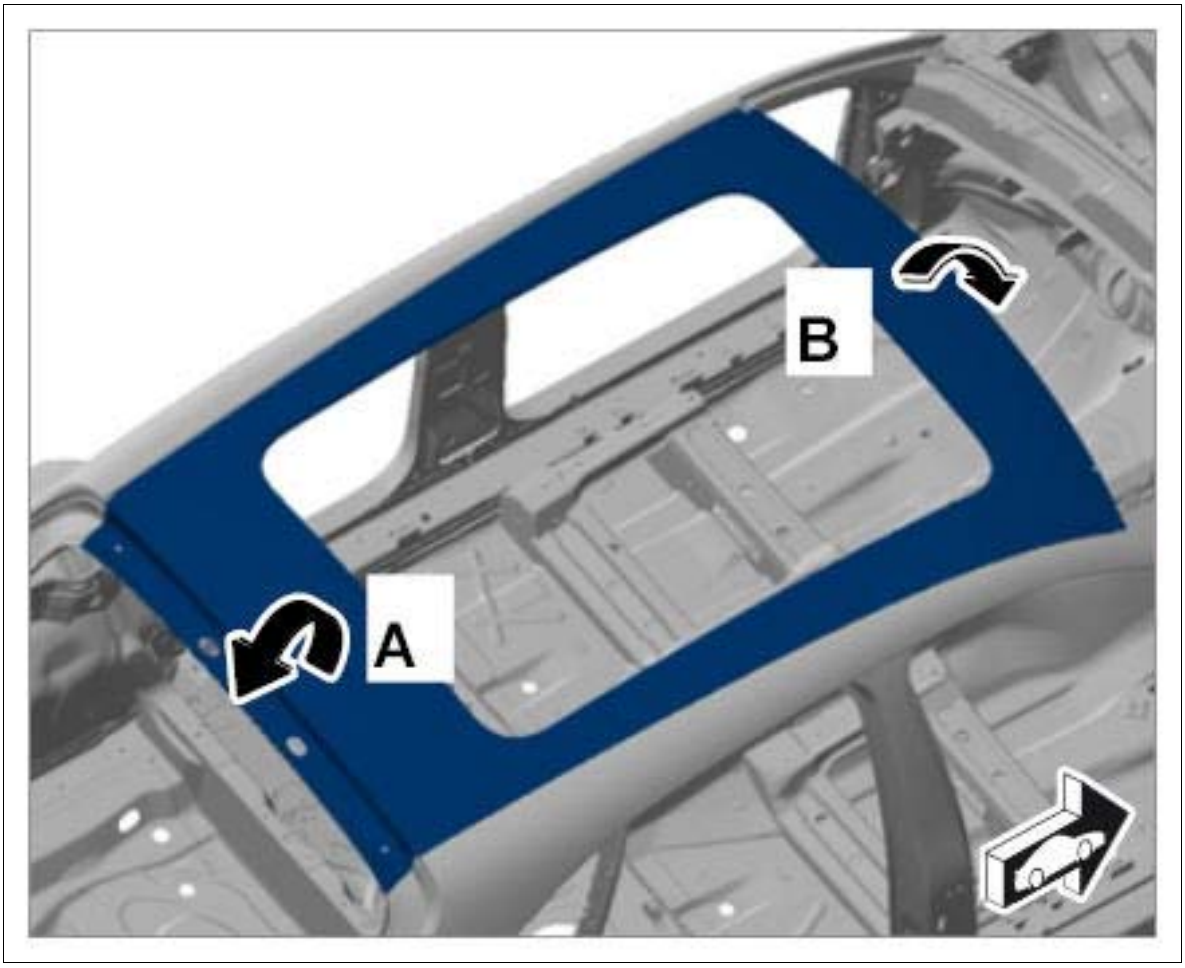

Courtesy of PORSCHE CARS NORTH AMERICA, INC.

Information

1. Have this work carried out by an assistant while at the same time starting with the welding work.

3. Clean surface of roof in the side panel area.

Fig 3: Cleaning Roof Surface

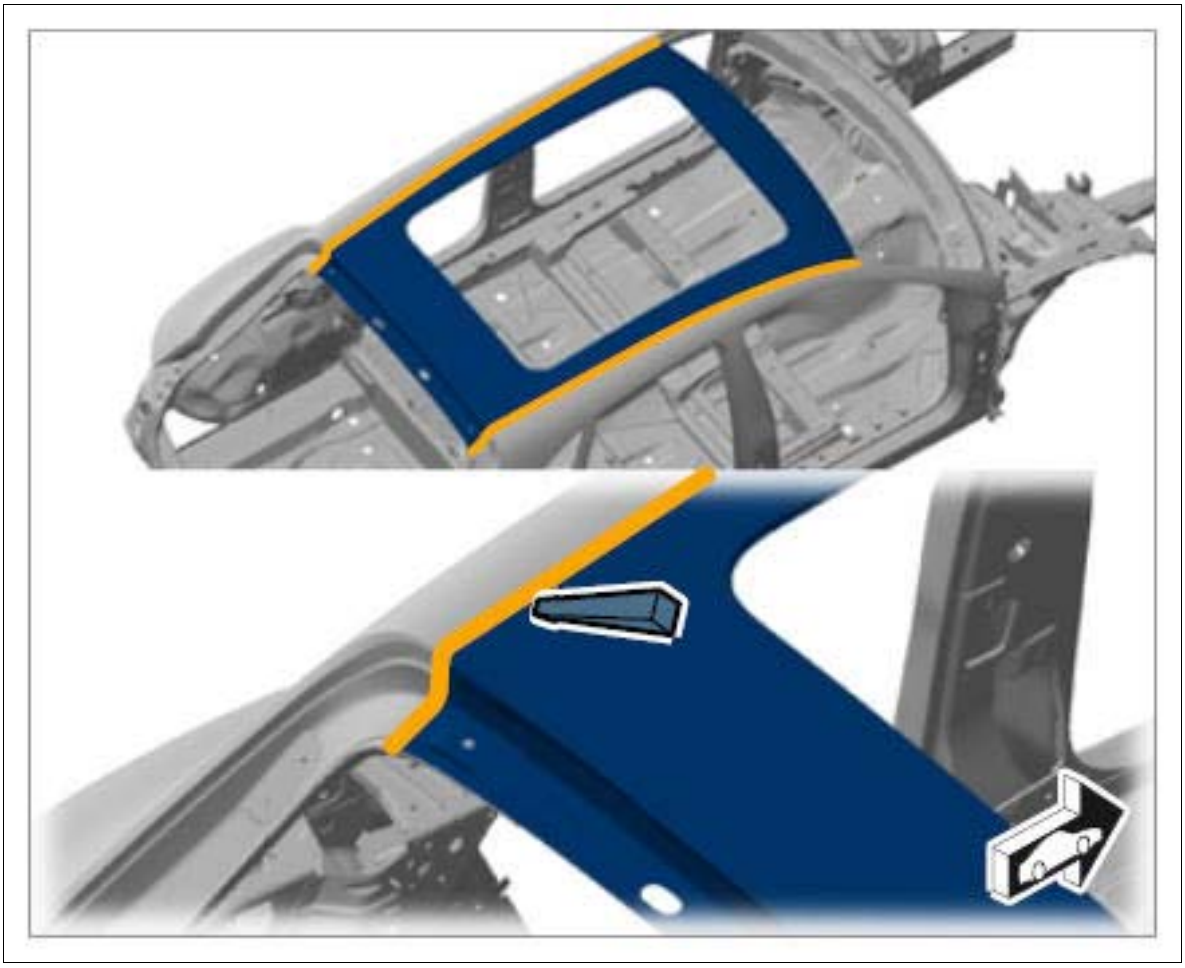

Courtesy of PORSCHE CARS NORTH AMERICA, INC.

1. 3.1. Remove most of the excess adhesive material with a plastic spatula or cloth.
2. 3.2. Finish cleaning visible surfaces with a cloth soaked in cleaning solution.

Fig 4: Cleaning Roof



Courtesy of PORSCHE CARS NORTH AMERICA, INC.

4. Resistance spot-weld the front of the roof.

Fig 5: Identifying Front Roof Spot-Weld Area

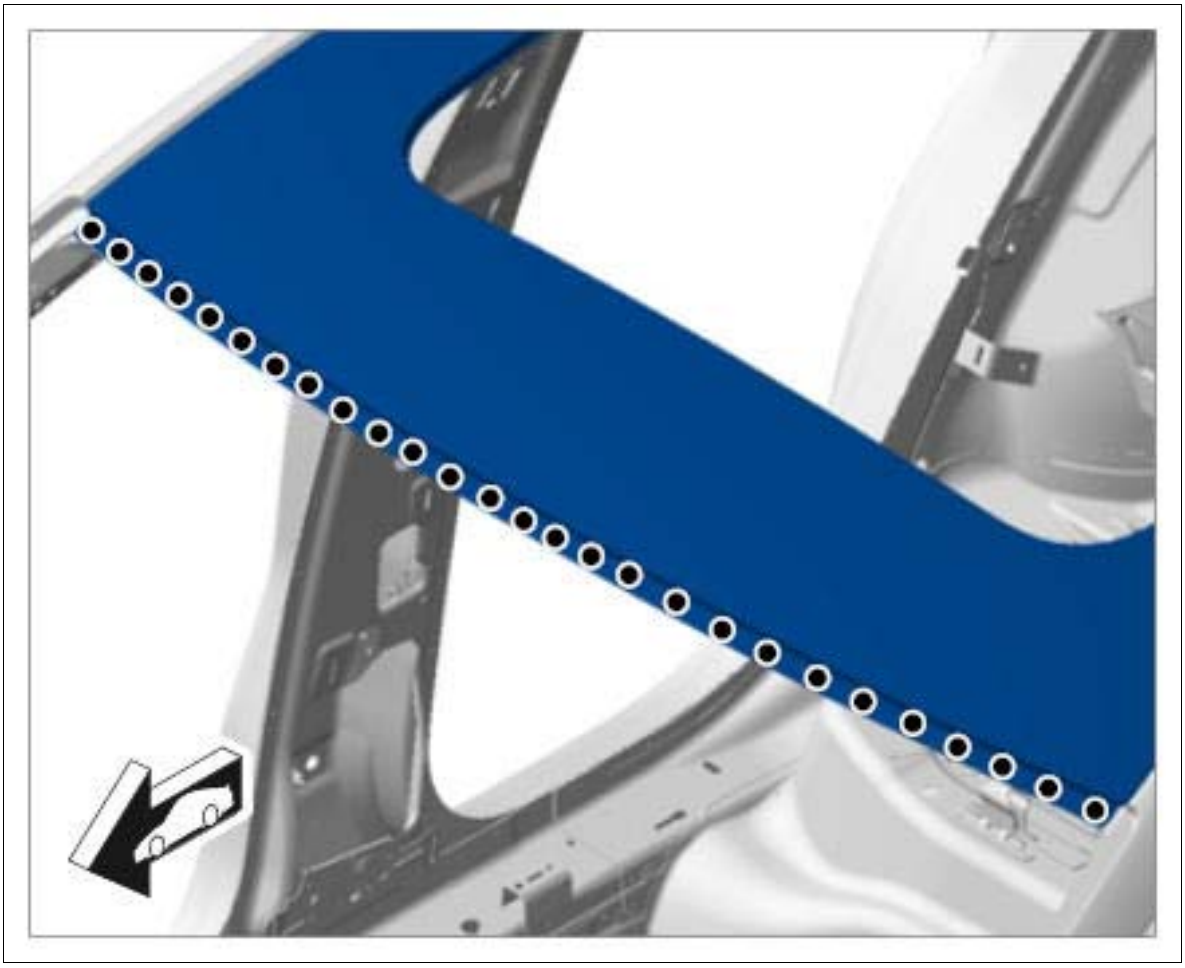

Courtesy of PORSCHE CARS NORTH AMERICA, INC.

5. Resistance spot-weld the rear of the roof.

Fig 6: Identifying Rear Roof Spot-Weld Area

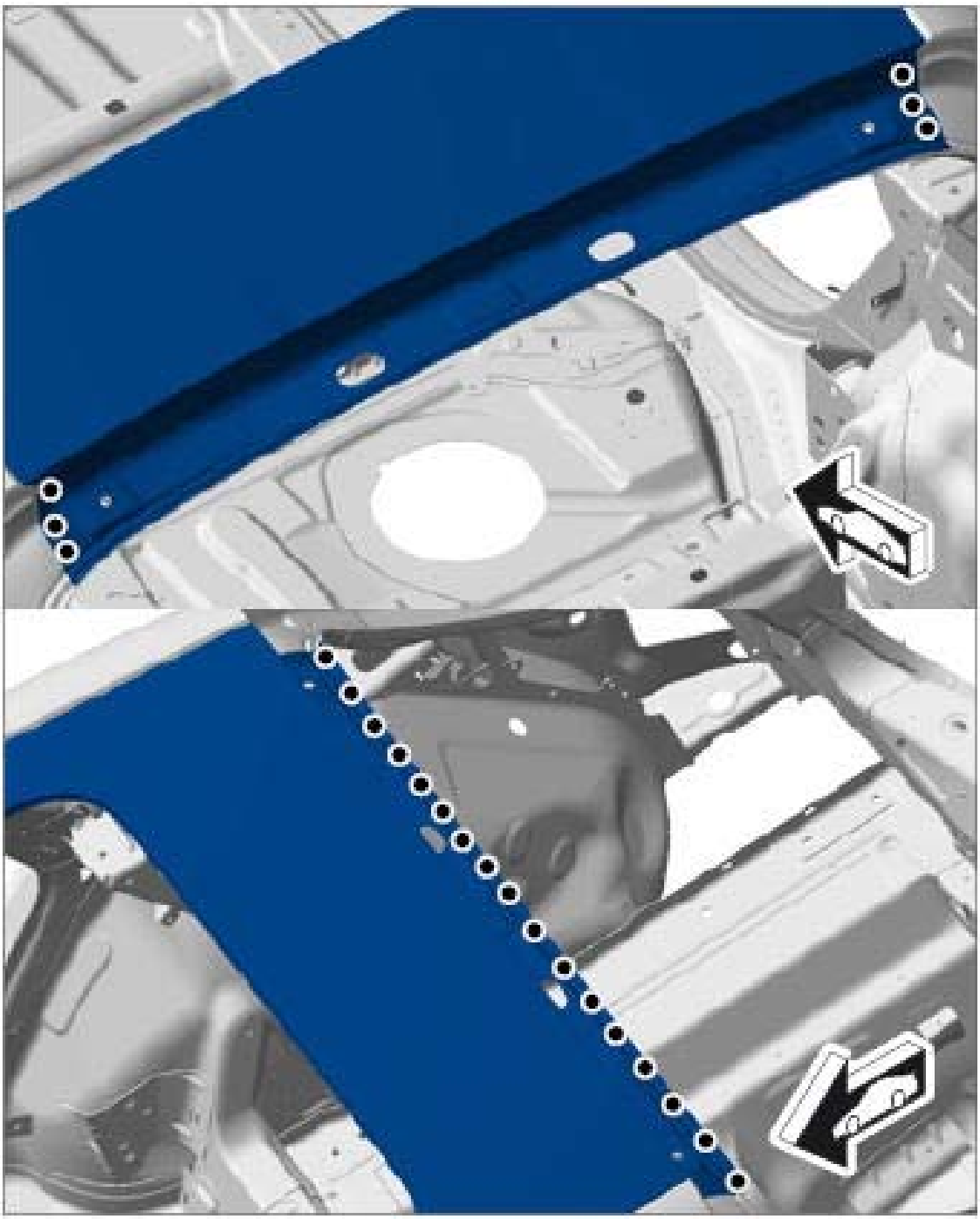

Courtesy of PORSCHE CARS NORTH AMERICA, INC.

WM 510355 REPLACING ROOF (WITH SLIDING ROOF) (ALL MODELS) > SUBSEQUENT WORK > SUBSEQUENT WORK FOR BODY REPAIRS (WITHOUT STRAIGHTENING SYSTEM)

1. Clean joint areas and sheetmetal flanges with a wire brush.

2. Prime joint areas and sheetmetal flanges with 2K primer.
3. Restore standard seal with body sealant → 5X00IN42 SEAM SEALING .

   Also seal the repair area carefully.
4. Paint repair area and adjacent surfaces, if necessary.
5. Restore standard underbody protection with underbody sealant → 5X00IN43 UNDERBODY PROTECTION .
6. Apply standard cavity preservation → 5X00IN44 CAVITY PRESERVATION . Also apply cavity preservation to the repair area.
7. Install removed accessories in the repair area.

WM 510355 REPLACING ROOF (WITHOUT SLIDING ROOF) (ALL MODELS) > TOOLS

Designation	Type	Number	Description	
Hot-air blower	Workshop equipment	WE 1119		
Body alignment system package	Workshop equipment	WE 1121		
Special electric cutter	Workshop equipment	WE 1137		
Pneumatic Spotweld Remover, Vario Drill WS 90	Workshop equipment	WE 1139		
Hand-cartridge gun	Workshop equipment	WE 1141		
Resistance spot welder	Workshop equipment	WE 1311		
Inverter welder MIDIspot-QSVM-12000	Workshop equipment	WE 1312		
Resistance spot welder	Workshop equipment	WE 1313		

Blind riveting tool TAURUS 4	Workshop equipment	WE 1348		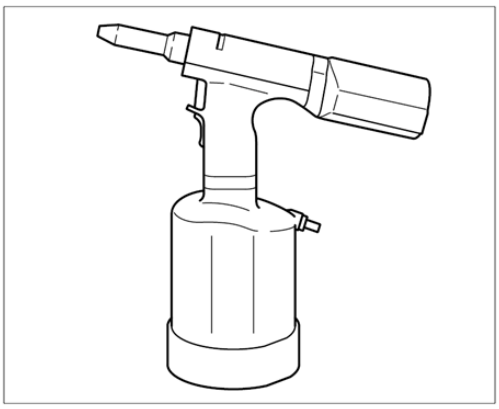
Aluminum tool set with trolley	Workshop equipment	WE 1350		
Resistance spot welder	Workshop equipment	WE 1352		
Measuring and alignment system, professional	Workshop equipment	WE 1398		
Mobile extraction unit, aluminum	Workshop equipment	WE 1507		
Body saw	Workshop equipment	WE 1508		
Star gauges for body gap dimensions	Special tool	Nr.127-1		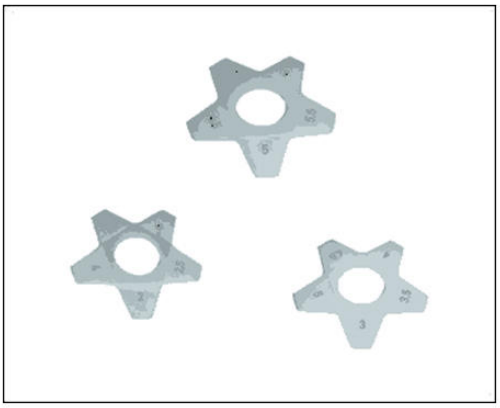

Spotweld drill	Commercially available tool	Nr.129		
Twist drill	Commercially available tool	Nr.201		
Countersink	Commercially available tool	Nr.202		

WM 510355 REPLACING ROOF (WITHOUT SLIDING ROOF) (ALL MODELS) > TECHNICAL VALUES

Location	Description	Type	Basic value	Tolerance 1	Tolerance 2
Roof cut line	Roof outer edge	Distance	15 mm	+2 mm	

WM 510355 REPLACING ROOF (WITHOUT SLIDING ROOF) (ALL MODELS) > PRELIMINARY WORK > PRELIMINARY WORK FOR BODY REPAIRS (WITHOUT STRAIGHTENING SYSTEM)

1. Remove accessories in the repair area.
    1. 1.1. Remove accessories in the repair area according to the extent of damage on the vehicle.
2. Cover accessories adjacent to the repair area on the vehicle.
    1. 2.1. Cover all accessories remaining on the vehicle and adjacent areas with fire-proof protective covers.
3. Reshape connection area of the sheetmetal parts to be replaced.
4. Expose joint areas.
    1. 4.1. Remove underbody protection, paint, etc. from the joint areas of the body using a hot-air gun or rotary brush.

WM 510355 REPLACING ROOF (WITHOUT SLIDING ROOF) (ALL MODELS) > SAFETY INSTRUCTIONS AND INFORMATION ON QUALITY

⚠ *CAUTION: Non-observance of safety instructions for body repairs*

- *Risk of damage to the vehicle*
- *Danger of injury*

→ Read the relevant safety instructions as well as general information and quality instructions → 5X00IN01 SAFETY INSTRUCTIONS .

- Protection of electrical components during body repairs
- Corrosion protection measures during repairs → 5X00IN03 CORROSION PROTECTION MEASURES DURING REPAIRS
- Information on aluminum repairs
- Body parts of various sheet-steel strengths → 5X00IN04 BODY PARTS OF VARIOUS SHEET-STEEL STRENGTHS
- Replacing punch rivets and penetrated joints
- Setting self-tapping screws → 5X00IN24 SETTING SELF-TAPPING SCREWS
- Working with body structural adhesive → 5X00IN21 WORKING WITH BODY STRUCTURAL ADHESIVE

WM 510355 REPLACING ROOF (WITHOUT SLIDING ROOF) (ALL MODELS) > TOOLS AND MATERIALS > TOOLS AND MATERIALS FOR BODY REPAIRS

Information

- The tools for working on steel and aluminum must always be kept separate from each other. We recommend that you color code the tools using a system similar to that used for the Aluminum tool set with trolley WE 1350, for example.

Straightening set **Body alignment system package WE 1121 Measuring and alignment system, professional WE 1398**

Resistance spot welder; optional **Inverter welder MIDIspot-QSVM-12000 WE 1312, Resistance spot welder WE 1352, Resistance spot welder WE 1311, Resistance spot welder WE 1313**

Metal inert gas (MIG) welder

Pneumatic spotweld remover **Pneumatic Spotweld Remover, Vario Drill WS 90 WE 1139**

Pneumatic body saw **Body saw WE 1508**

Oscillating body saw (special electric cutter) **Special electric cutter WE 1137**

Hot-air blower **Hot-air blower WE 1119**

Hand-cartridge gun **Hand-cartridge gun WE 1141**

Spotweld drill **Spotweld drill Nr.129 Twist drill Nr.201**

Countersink for rivets **Countersink Nr.202**

Blind riveting tool for high-strength rivets **Blind riveting tool TAURUS 4 WE 1348**

Safety vacuum cleaner for aluminum dust **Mobile extraction unit, aluminum WE 1507**

Star gauges for body gap dimensions Nr.127-1

Wurth Klebt und Dichtet body sealant

WM 510355 REPLACING ROOF (WITHOUT SLIDING ROOF) (ALL MODELS) > REMOVING ROOF

Fig 1: Identifying Roof Installation Position



Courtesy of PORSCHE CARS NORTH AMERICA, INC.

Information

Drill out the connection point on one side only. Do not damage the plate underneath.

1. Drill out spotwelds using **spotweld drill;** .
    1. 1.1. Heat bonding areas using a hot-air blower and remove adhesive.

Fig 2: Identifying Roof Spotwelds Area

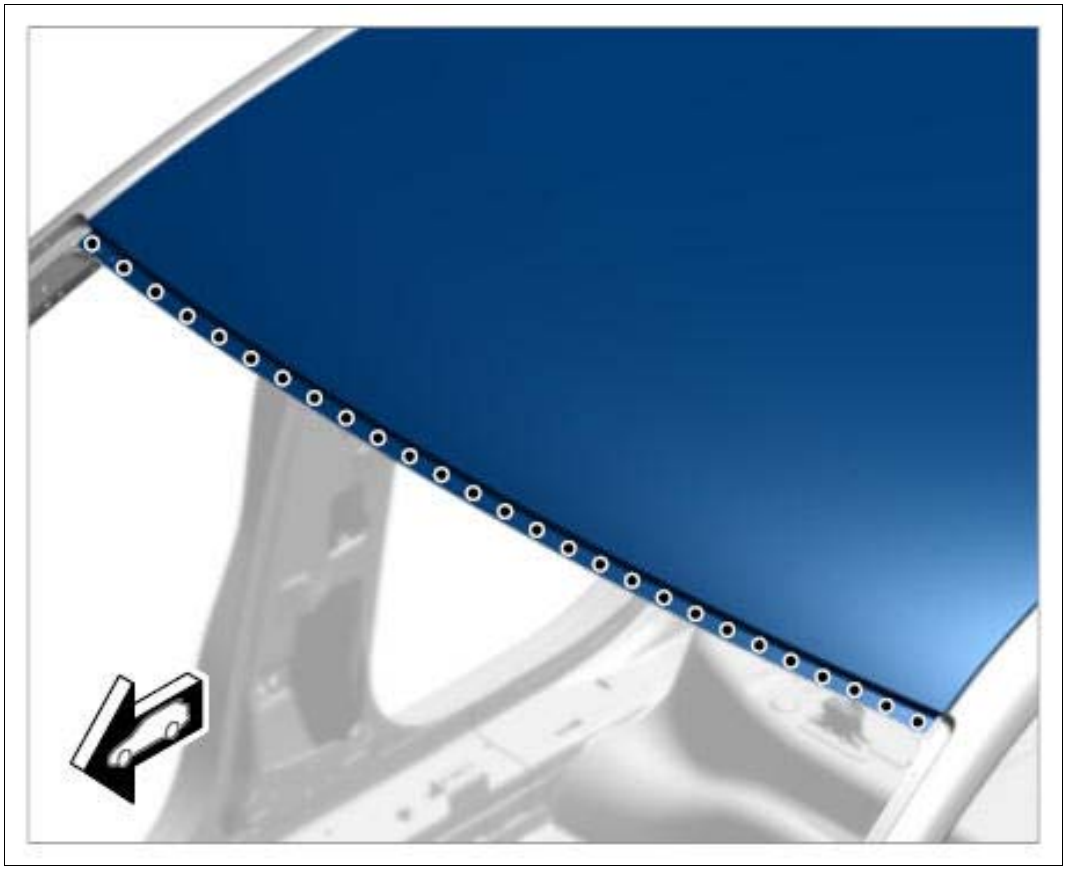

Courtesy of PORSCHE CARS NORTH AMERICA, INC.

Fig 3: Identifying Roof Spotwelds Area

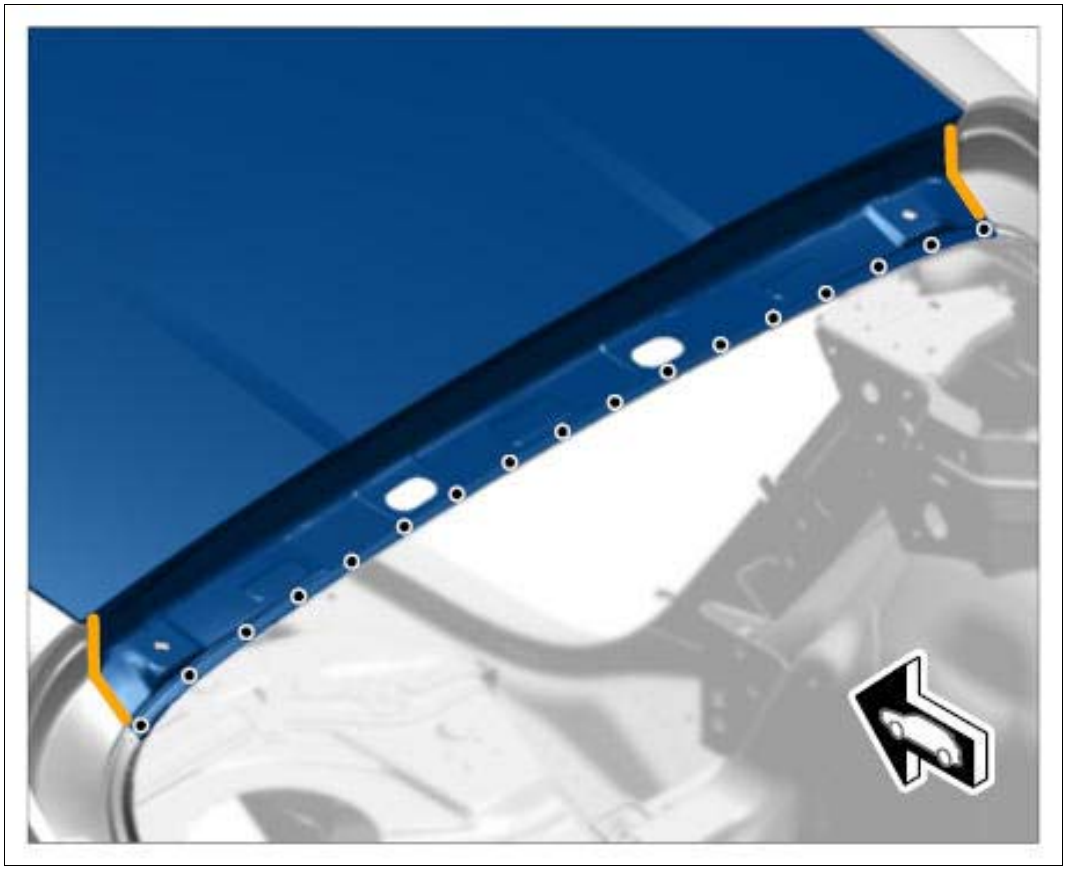

Courtesy of PORSCHE CARS NORTH AMERICA, INC.

2. Affix adhesive tape **-1-** along the edge of the roof on both sides at dimension **-X-** . → **Distance: 15 mm+2 mm**

   Adhesive tape serves as cut line.

Fig 4: Identifying Roof Edge Dimension

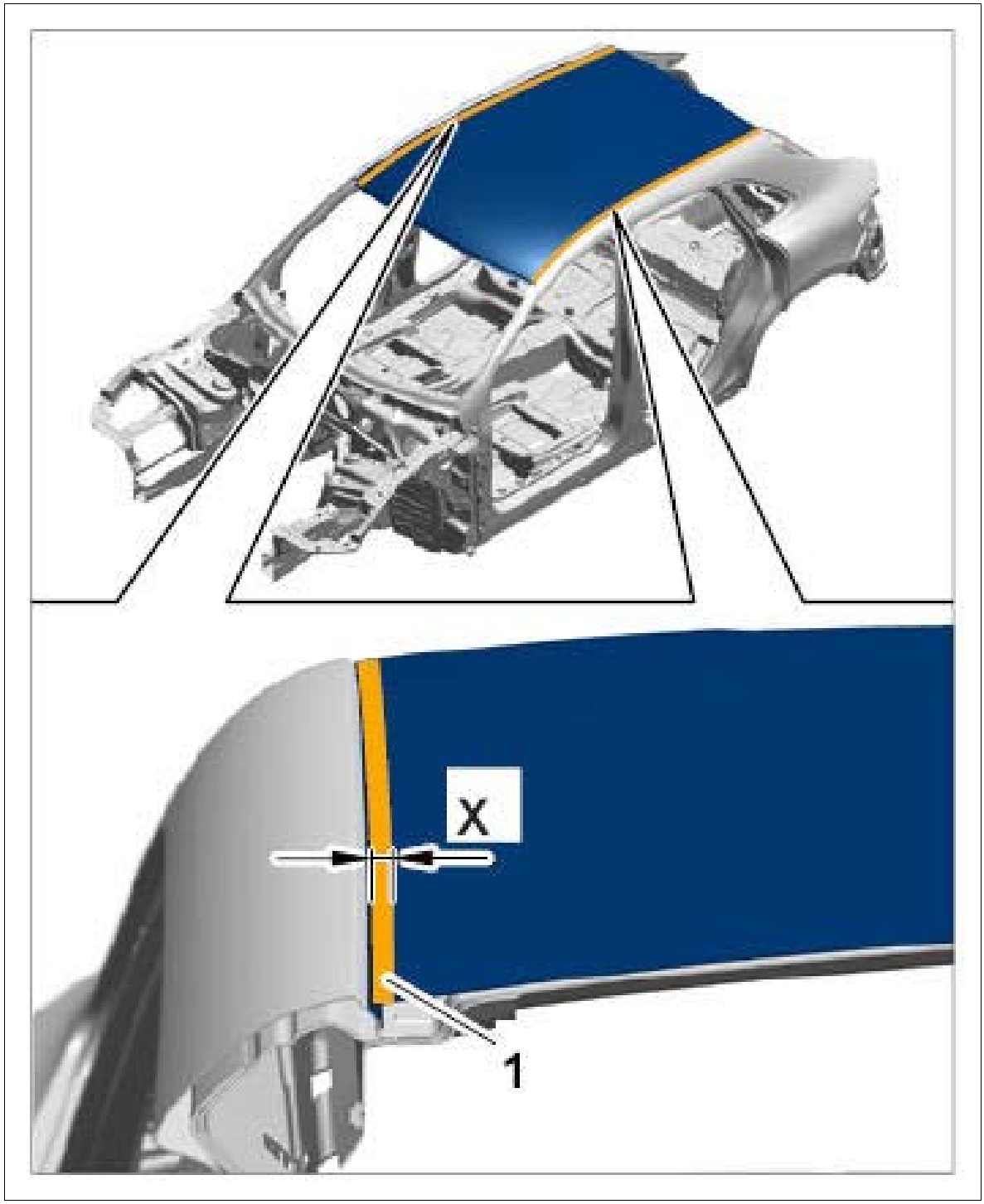

Courtesy of PORSCHE CARS NORTH AMERICA, INC.

Information

Only make cuts in the top plate. Make sure not to damage the plate underneath when doing this.

3. Make cut on both sides.
4. Heat connection areas using the hot-air blower.

Fig 5: Identifying Roof



Courtesy of PORSCHE CARS NORTH AMERICA, INC.

Fig 6: Identifying Roof

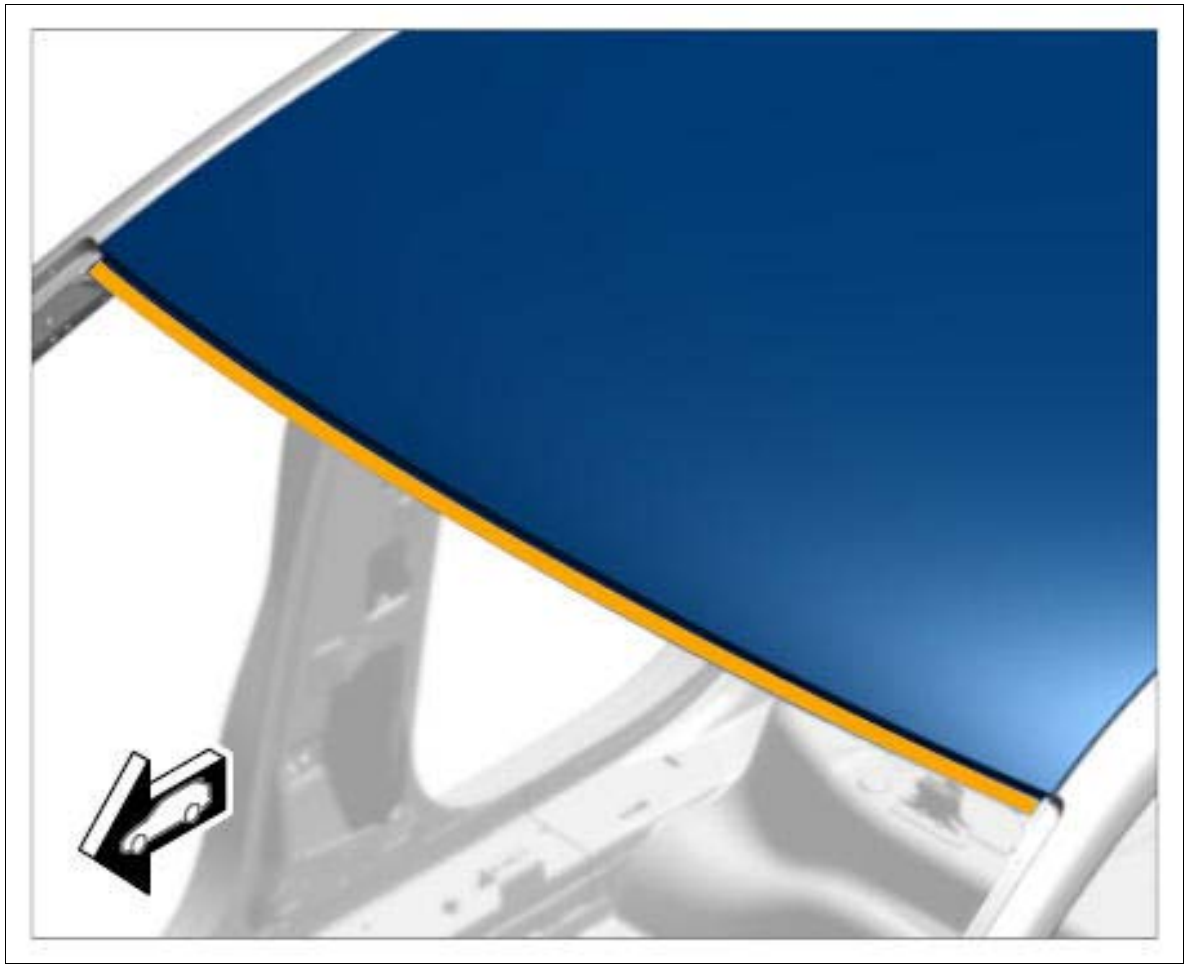

Courtesy of PORSCHE CARS NORTH AMERICA, INC.

5. Remove roof (with the help of two people).

   Information

   1. During separation make sure that the components beneath are not damaged.

6. Remove remaining pieces of roof.

   1. 6.1. Cut off laser soldered joints on side panels.
   2. 6.2. Remove remaining pieces.

Fig 7: Identifying Roof Pieces

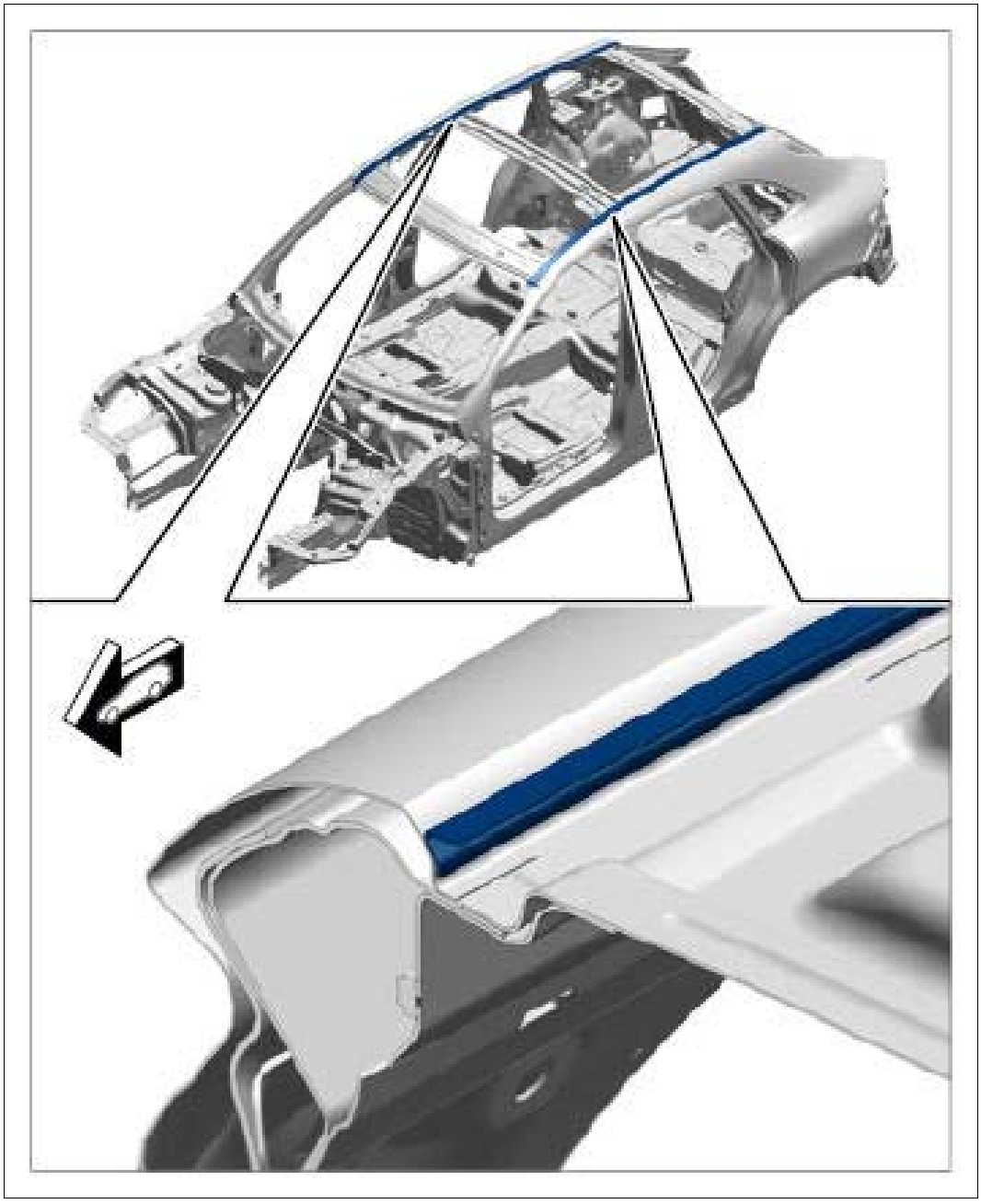

Courtesy of PORSCHE CARS NORTH AMERICA, INC.

WM 510355 REPLACING ROOF (WITHOUT SLIDING ROOF) (ALL MODELS) > PREPARING ROOF FOR INSTALLATION

1. Prepare connection flanges in areas **-A-** for bonding and welding.

Fig 1: Identifying Roof Connection Flanges Areas

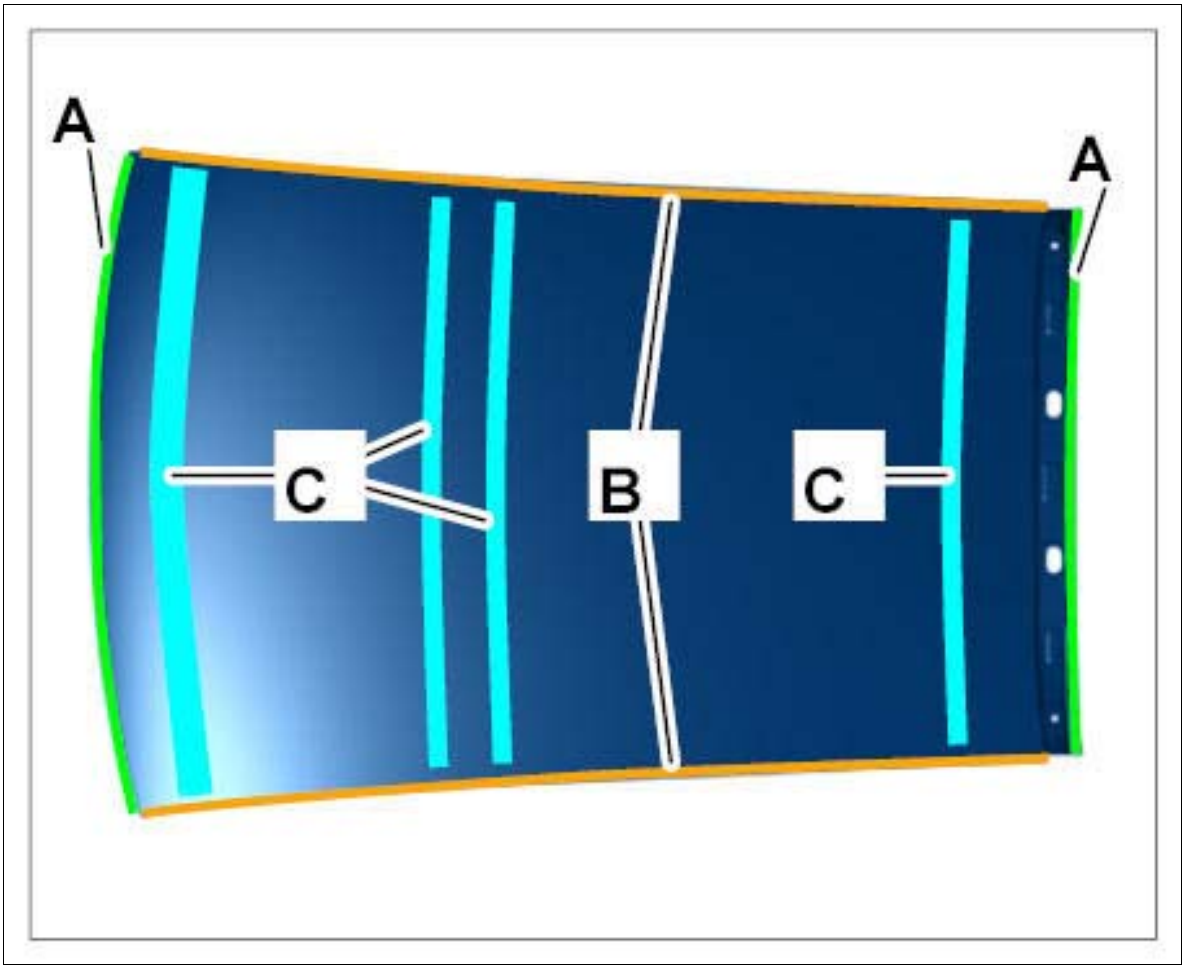

Courtesy of PORSCHE CARS NORTH AMERICA, INC.

2. Prepare bonding surfaces for applying structural adhesive **-B-** . → 5X00IN21 WORKING WITH BODY STRUCTURAL ADHESIVE
3. Clean bonding areas of support adhesive **-C-** from inside using acetone.

WM 510355 REPLACING ROOF (WITHOUT SLIDING ROOF) (ALL MODELS) > PREPARING CONNECTION AREAS OF BODY FOR INSTALLING ROOF

Information

Do not apply zinc powder paint to the bonding areas.

1. Clean welding and bonding areas.

Fig 1: Identifying Body Connection Areas

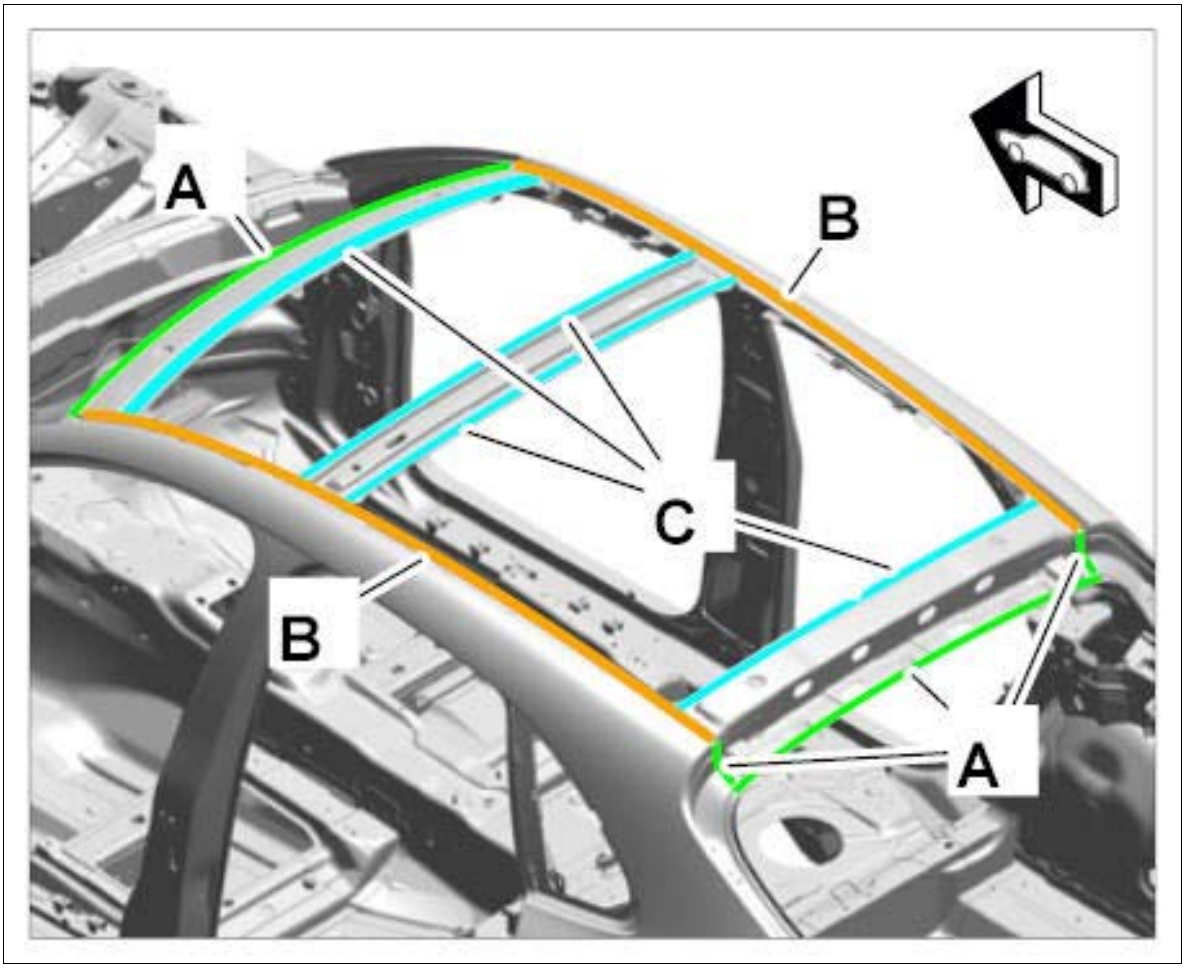

Courtesy of PORSCHE CARS NORTH AMERICA, INC.

1. 1.1. Prepare connection flanges in areas **-A-** for resistance spot-welding and bonding.
2. 1.2. Prepare connection flanges in areas **-B-** for bonding.
3. 1.3. Prepare bonding areas of support adhesive **-C-** for bonding with window adhesive.

WM 510355 REPLACING ROOF (WITHOUT SLIDING ROOF) (ALL MODELS) > INSTALLING ROOF

1. Apply structural adhesive and support adhesive (window adhesive).

Fig 1: Identifying Roof Adhesive Applying Area

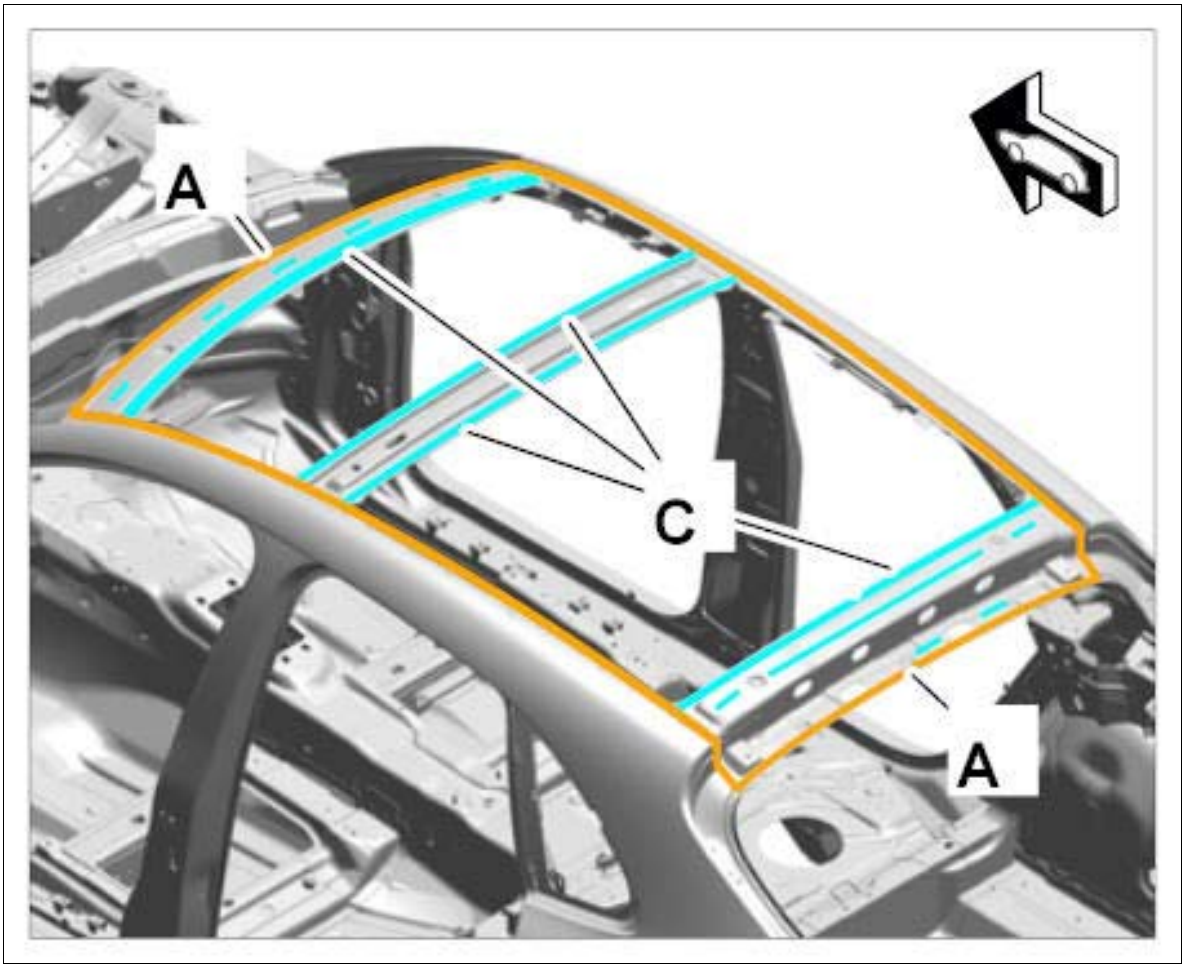

Courtesy of PORSCHE CARS NORTH AMERICA, INC.

1. 1.1. Evenly apply structural adhesive to the marked areas **-A-** .

   Working with body structural adhesive → 5X00IN21 WORKING WITH BODY STRUCTURAL ADHESIVE

   Structural adhesive

2. 1.2. Apply support adhesive (window adhesive) to the marked areas **-C-** .

   Support adhesive

2. Place roof on rear roof frame with the help of two people **-arrow A-** and swivel it in towards the front **-arrow B-** .

Fig 2: Installing Roof

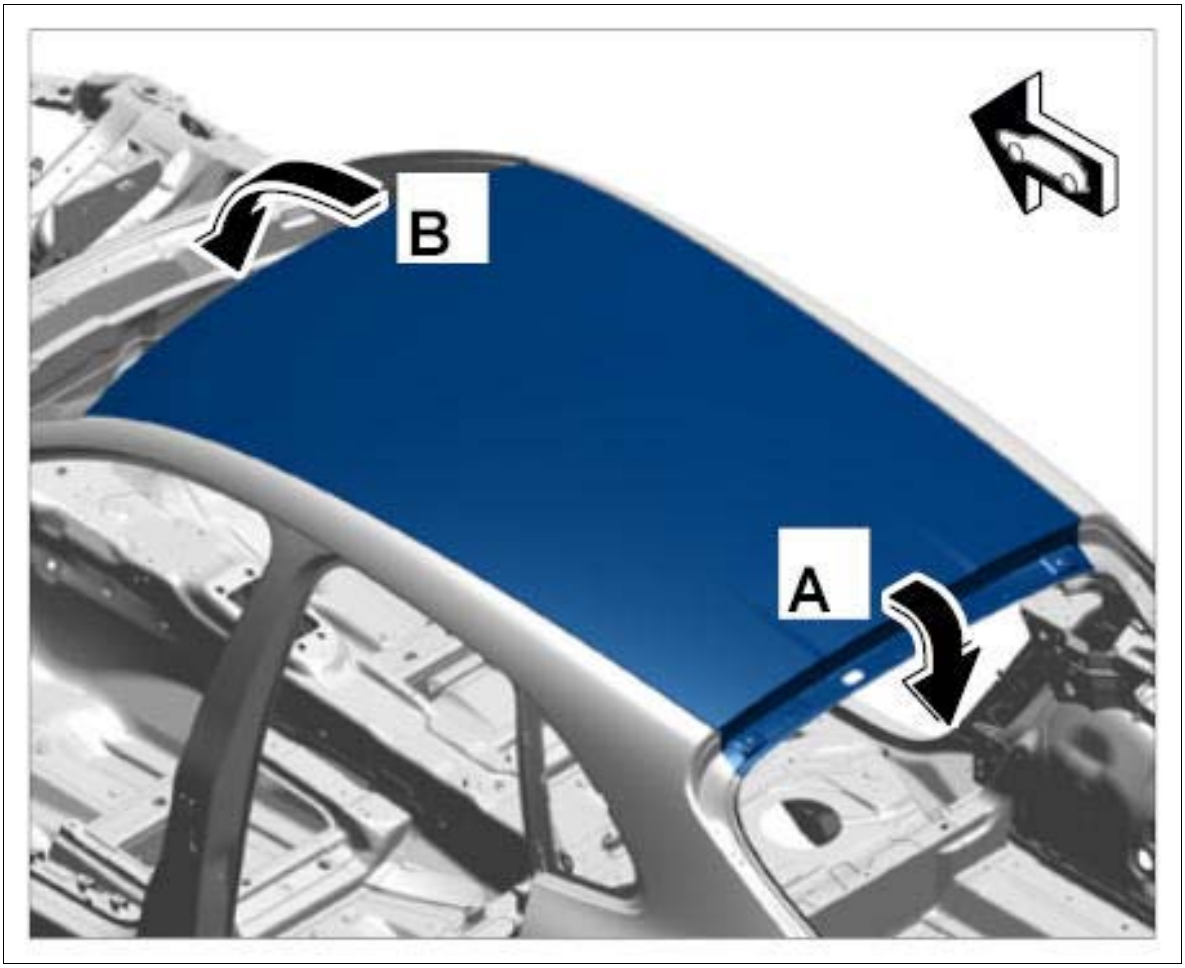

Courtesy of PORSCHE CARS NORTH AMERICA, INC.

Information

1. Have this work carried out by an assistant while at the same time starting with the welding work.

3. Clean surface of roof in the side panel area.

Fig 3: Cleaning Roof Surface

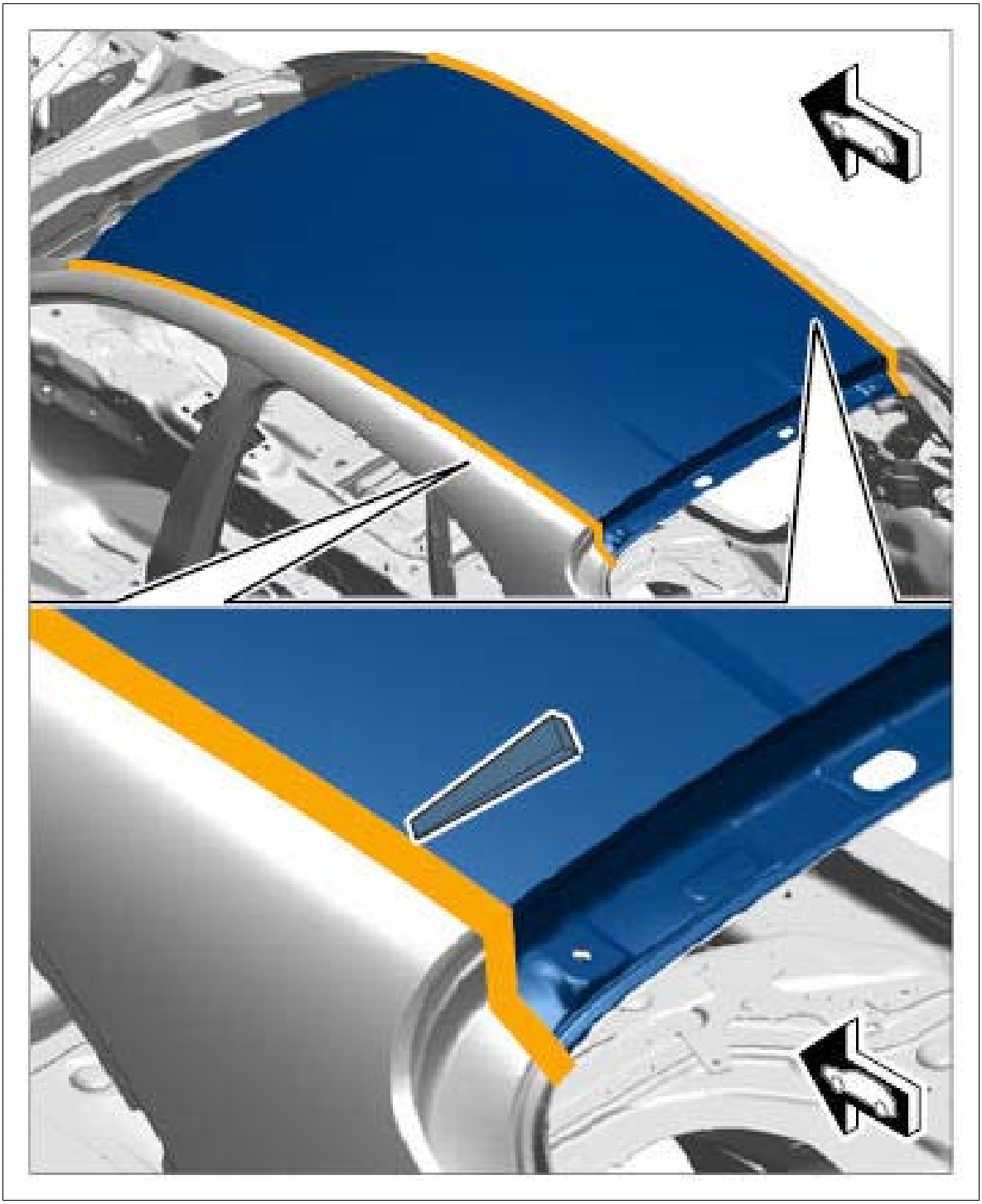

Courtesy of PORSCHE CARS NORTH AMERICA, INC.

1. 3.1. Remove most of the excess adhesive material with a plastic spatula or cloth.
2. 3.2. Finish cleaning visible surfaces with a cloth soaked in cleaning solution.

Fig 4: Cleaning Roof

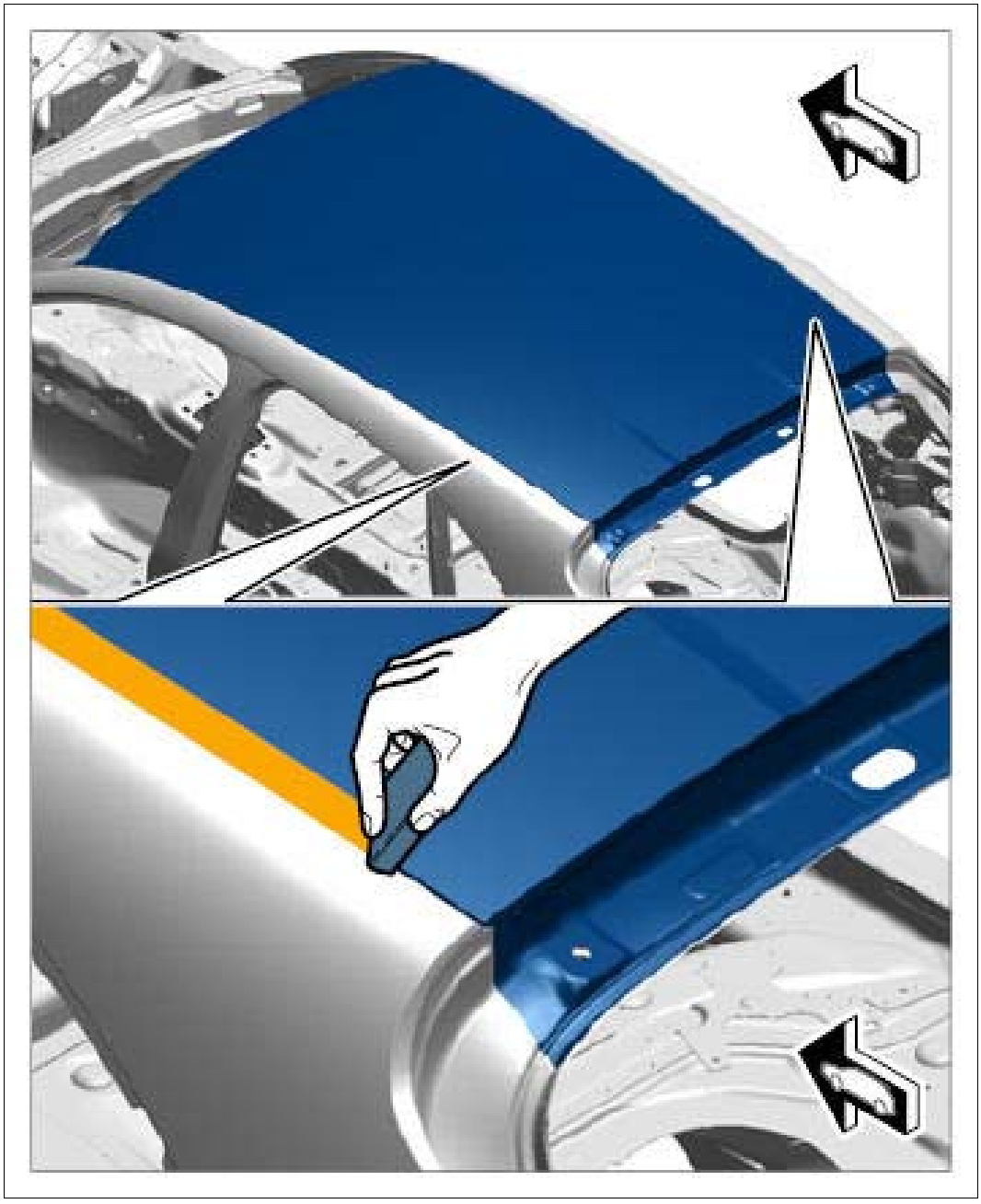

Courtesy of PORSCHE CARS NORTH AMERICA, INC.

4. Resistance spot-weld the front of the roof.

Fig 5: Identifying Front Roof Spot-Weld Area

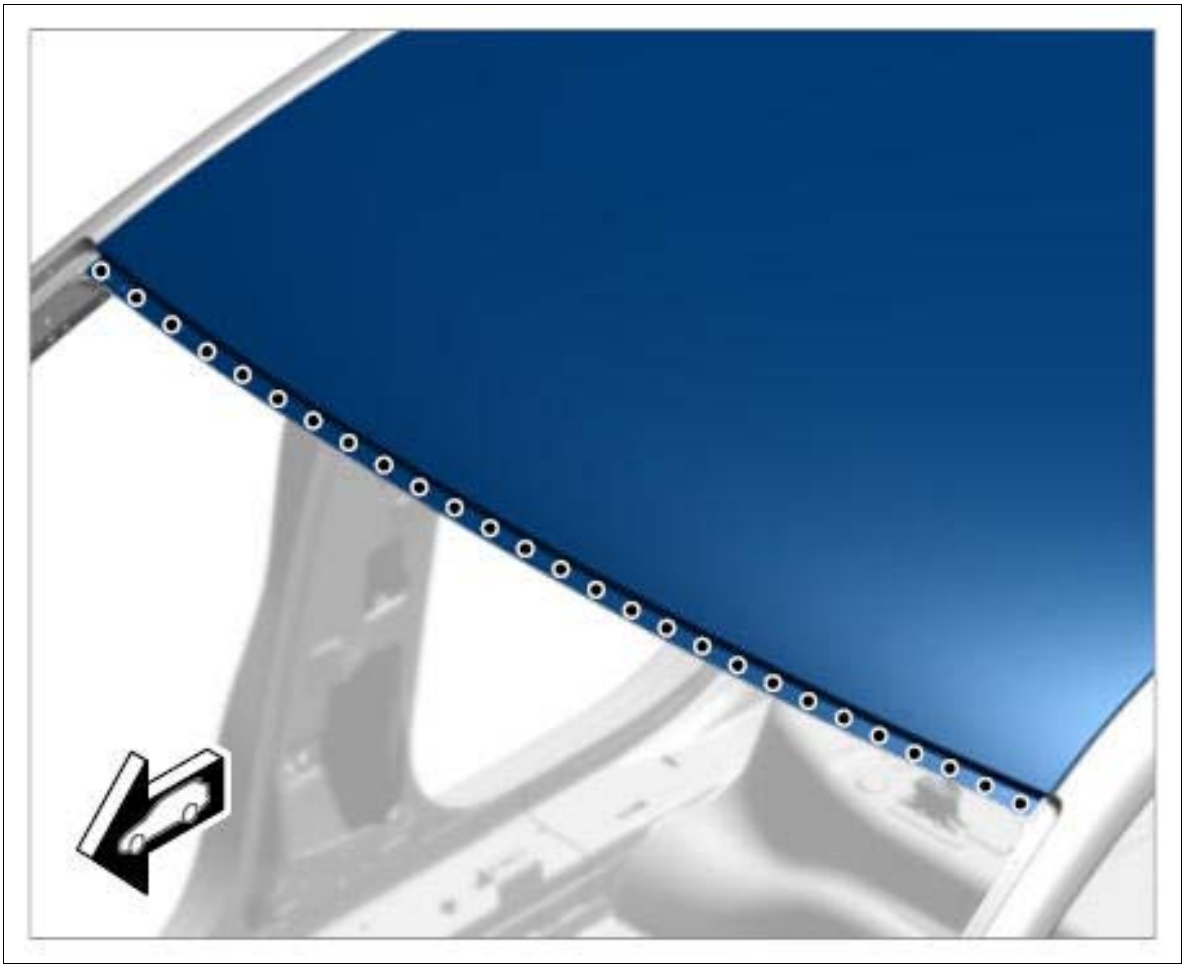

Courtesy of PORSCHE CARS NORTH AMERICA, INC.

5. Resistance spot-weld the rear of the roof.

Fig 6: Identifying Rear Roof Spot-Weld Area

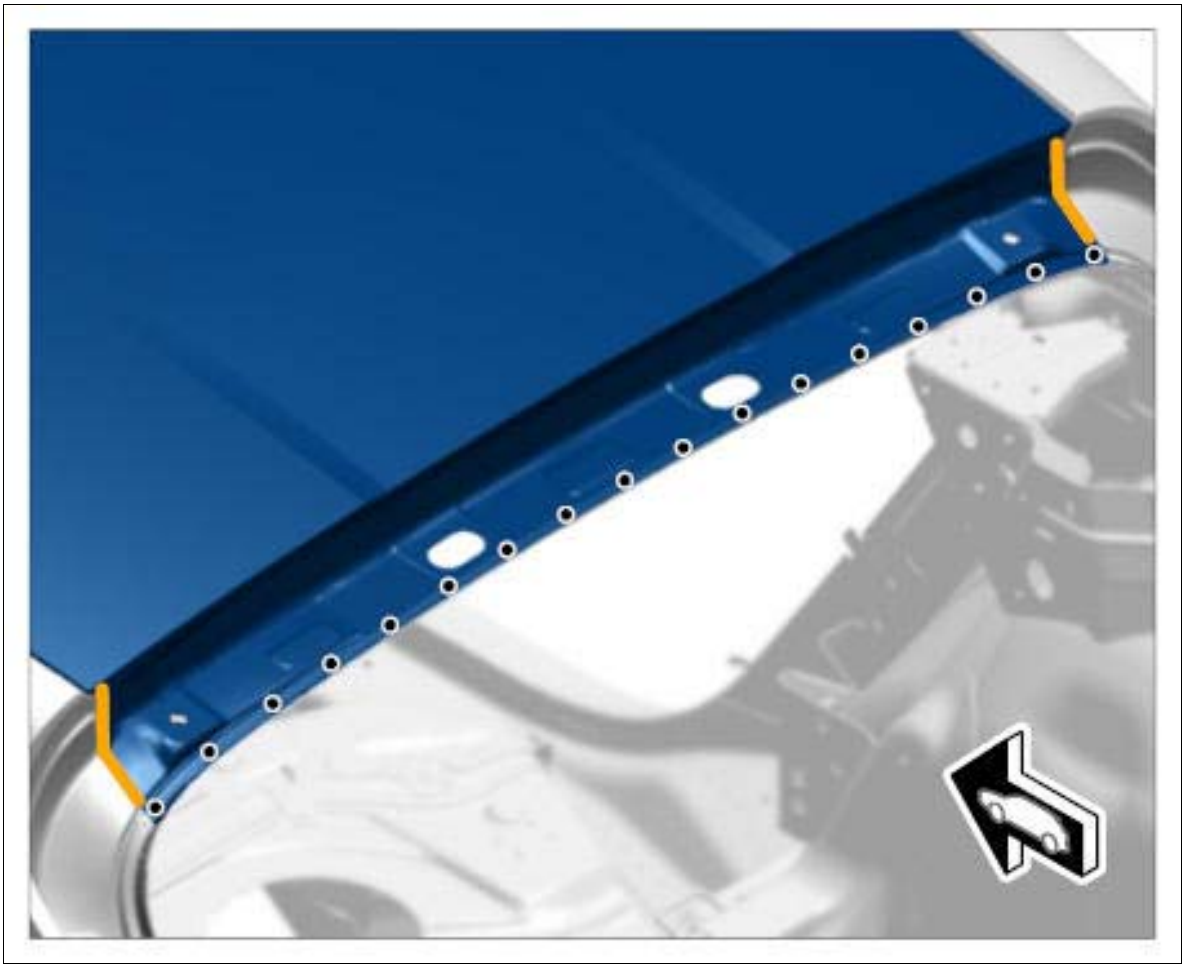

Courtesy of PORSCHE CARS NORTH AMERICA, INC.

6. Stick on roof reinforcements **-1;2-** .

    1. 6.1. Apply 1-component window adhesive. → 5X00IN21 WORKING WITH BODY STRUCTURAL ADHESIVE

Fig 7: Identifying Roof Reinforcements

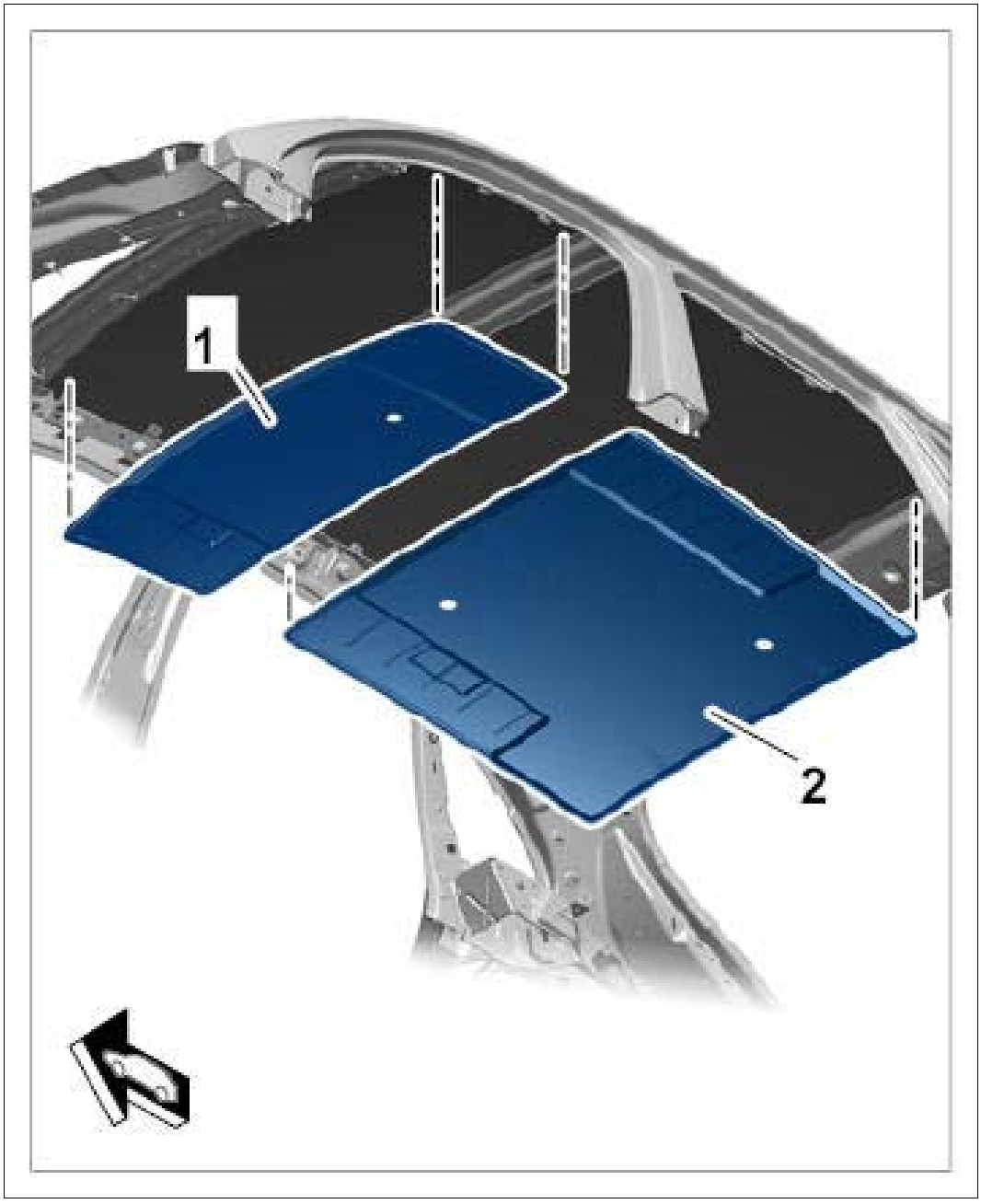

Courtesy of PORSCHE CARS NORTH AMERICA, INC.

WM 510355 REPLACING ROOF (WITHOUT SLIDING ROOF) (ALL MODELS) > SUBSEQUENT WORK > SUBSEQUENT WORK FOR BODY REPAIRS (WITHOUT STRAIGHTENING SYSTEM)

1. Clean joint areas and sheetmetal flanges with a wire brush.
2. Prime joint areas and sheetmetal flanges with 2K primer.
3. Restore standard seal with body sealant → 5X00IN42 SEAM SEALING .

Also seal the repair area carefully.

4. Paint repair area and adjacent surfaces, if necessary.
5. Restore standard underbody protection with underbody sealant → 5X00IN43 UNDERBODY PROTECTION .
6. Apply standard cavity preservation → 5X00IN44 CAVITY PRESERVATION . Also apply cavity preservation to the repair area.
7. Install removed accessories in the repair area.

WM 510355 REPLACING ROOF (WITHOUT SLIDING ROOF) (ALL MODELS) > TOOLS

Designation	Type	Number	Description	
Hot-air blower	Workshop equipment	WE 1119		
Body alignment system package	Workshop equipment	WE 1121		
Special electric cutter	Workshop equipment	WE 1137		
Pneumatic Spotweld Remover, Vario Drill WS 90	Workshop equipment	WE 1139		
Hand-cartridge gun	Workshop equipment	WE 1141		
Resistance spot welder	Workshop equipment	WE 1311		
Inverter welder MIDIspot-QSVM-12000	Workshop equipment	WE 1312		
Resistance spot welder	Workshop equipment	WE 1313		
Blind riveting tool TAURUS 4	Workshop equipment	WE 1348		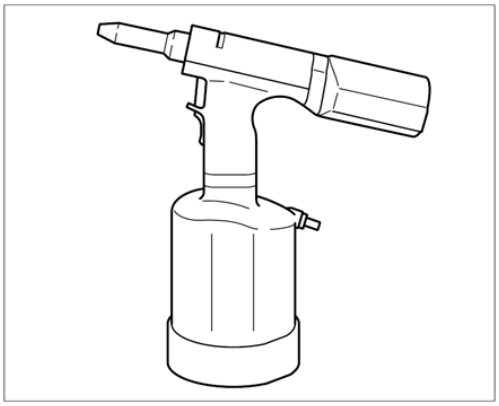

Aluminum tool set with trolley	Workshop equipment	WE 1350		
Resistance spot welder	Workshop equipment	WE 1352		
Measuring and alignment system, professional	Workshop equipment	WE 1398		
Mobile extraction unit, aluminum	Workshop equipment	WE 1507		
Body saw	Workshop equipment	WE 1508		
Star gauges for body gap dimensions	Special tool	Nr.127-1		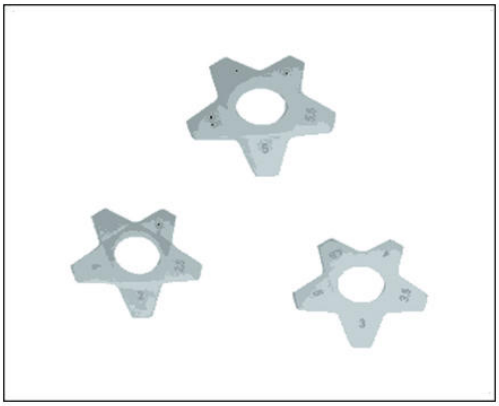
Spotweld drill	Commercially available tool	Nr.129		

Twist drill	Commercially available tool	Nr.201		
Countersink	Commercially available tool	Nr.202		

WM 510355 REPLACING ROOF (WITHOUT SLIDING ROOF) (ALL MODELS) > TECHNICAL VALUES

Location	Description	Type	Basic value	Tolerance 1	Tolerance 2
Roof cut line	Roof outer edge	Distance	15 mm	+2 mm	

WM 510355 REPLACING ROOF (WITHOUT SLIDING ROOF) (ALL MODELS) > PRELIMINARY WORK > PRELIMINARY WORK FOR BODY REPAIRS (WITHOUT STRAIGHTENING SYSTEM)

1. Remove accessories in the repair area.
    1. 1.1. Remove accessories in the repair area according to the extent of damage on the vehicle.
2. Cover accessories adjacent to the repair area on the vehicle.
    1. 2.1. Cover all accessories remaining on the vehicle and adjacent areas with fire-proof protective covers.
3. Reshape connection area of the sheetmetal parts to be replaced.

4. Expose joint areas.

    1. 4.1. Remove underbody protection, paint, etc. from the joint areas of the body using a hot-air gun or rotary brush.

WM 510355 REPLACING ROOF (WITHOUT SLIDING ROOF) (ALL MODELS) > SAFETY INSTRUCTIONS AND INFORMATION ON QUALITY

> ⚠ *CAUTION: Non-observance of safety instructions for body repairs*
>
> - *Risk of damage to the vehicle*
> - *Danger of injury*

→ Read the relevant safety instructions as well as general information and quality instructions → 5X00IN01 SAFETY INSTRUCTIONS .

- Protection of electrical components during body repairs
- Corrosion protection measures during repairs → 5X00IN03 CORROSION PROTECTION MEASURES DURING REPAIRS
- Information on aluminum repairs
- Body parts of various sheet-steel strengths → 5X00IN04 BODY PARTS OF VARIOUS SHEET-STEEL STRENGTHS
- Replacing punch rivets and penetrated joints
- Setting self-tapping screws → 5X00IN24 SETTING SELF-TAPPING SCREWS
- Working with body structural adhesive → 5X00IN21 WORKING WITH BODY STRUCTURAL ADHESIVE

WM 510355 REPLACING ROOF (WITHOUT SLIDING ROOF) (ALL MODELS) > TOOLS AND MATERIALS > TOOLS AND MATERIALS FOR BODY REPAIRS

Information

- The tools for working on steel and aluminum must always be kept separate from each other. We recommend that you color code the tools using a system similar to that used for the Aluminum tool set with trolley WE 1350, for example.

Straightening set **Body alignment system package WE 1121 Measuring and alignment system, professional WE 1398**

Resistance spot welder; optional **Inverter welder MIDIspot-QSVM-12000 WE 1312, Resistance spot welder WE 1352, Resistance spot welder WE 1311, Resistance spot welder WE 1313**

Metal inert gas (MIG) welder

Pneumatic spotweld remover **Pneumatic Spotweld Remover, Vario Drill WS 90 WE 1139**

Pneumatic body saw **Body saw WE 1508**

Oscillating body saw (special electric cutter) **Special electric cutter WE 1137**

Hot-air blower **Hot-air blower WE 1119**

Hand-cartridge gun **Hand-cartridge gun WE 1141**

Spotweld drill **Spotweld drill** ; **Nr.129 Twist drill Nr.201**

Countersink for rivets **Countersink Nr.202**

Blind riveting tool for high-strength rivets **Blind riveting tool TAURUS 4 WE 1348**

Safety vacuum cleaner for aluminum dust **Mobile extraction unit, aluminum WE 1507**

Star gauges for body gap dimensions Nr.127-1

Wurth Klebt und Dichtet body sealant

WM 510355 REPLACING ROOF (WITHOUT SLIDING ROOF) (ALL MODELS) > REMOVING ROOF

Fig 1: Identifying Roof Installation Position

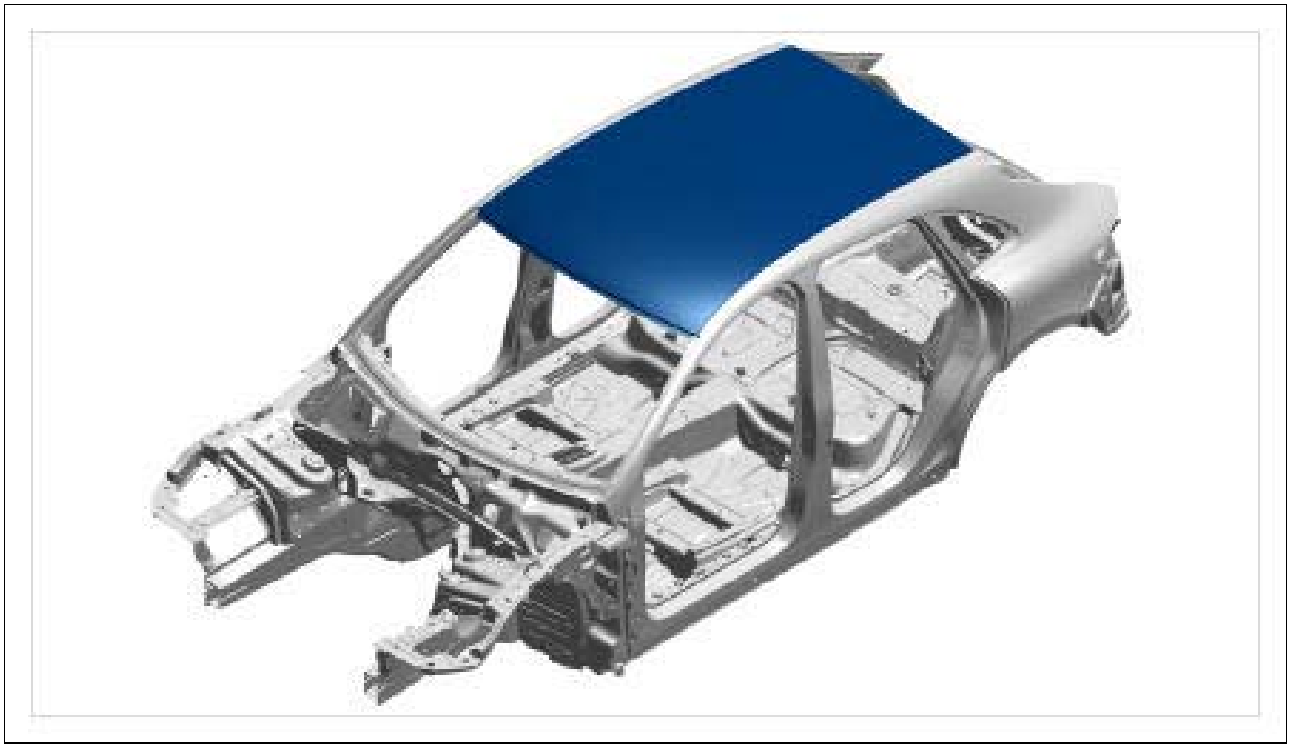

Courtesy of PORSCHE CARS NORTH AMERICA, INC.

Information

Drill out the connection point on one side only. Do not damage the plate underneath.

1. Drill out spotwelds using **spotweld drill** .

    1. 1.1. Heat bonding areas using a hot-air blower and remove adhesive.

Fig 2: Identifying Roof

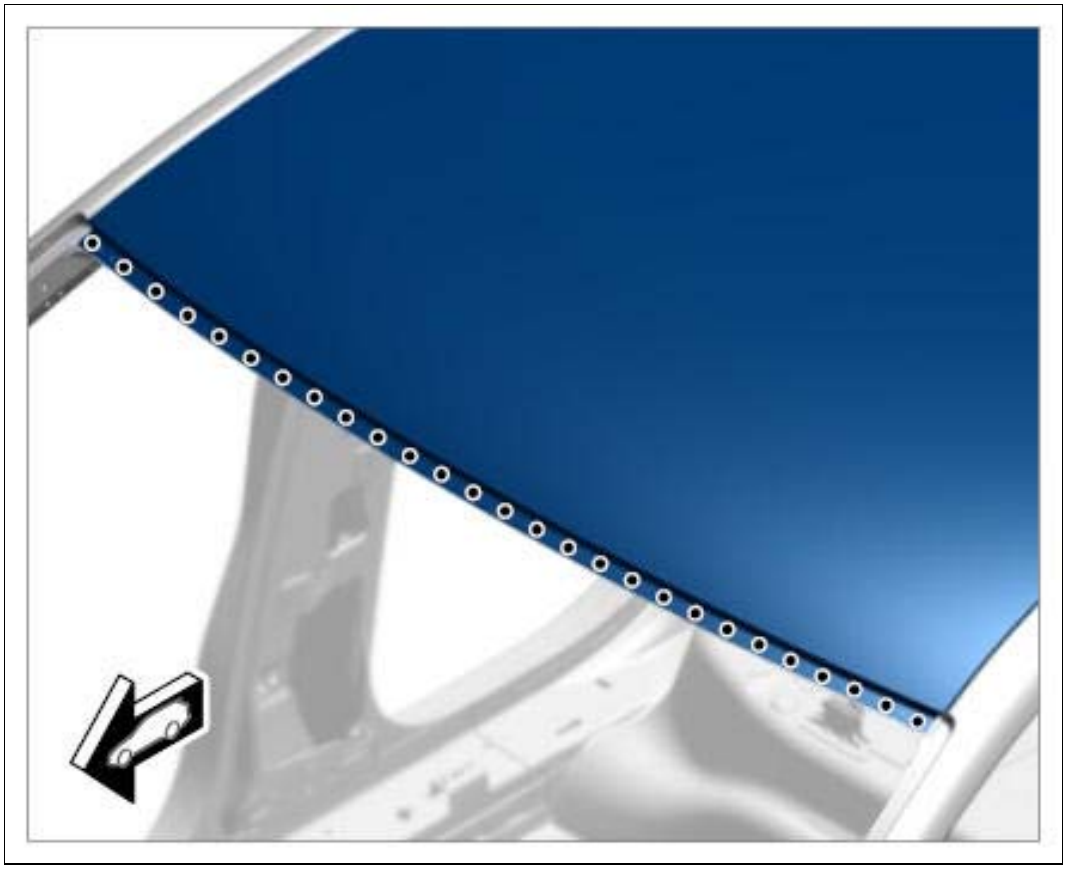

Courtesy of PORSCHE CARS NORTH AMERICA, INC.

Fig 3: Identifying Roof

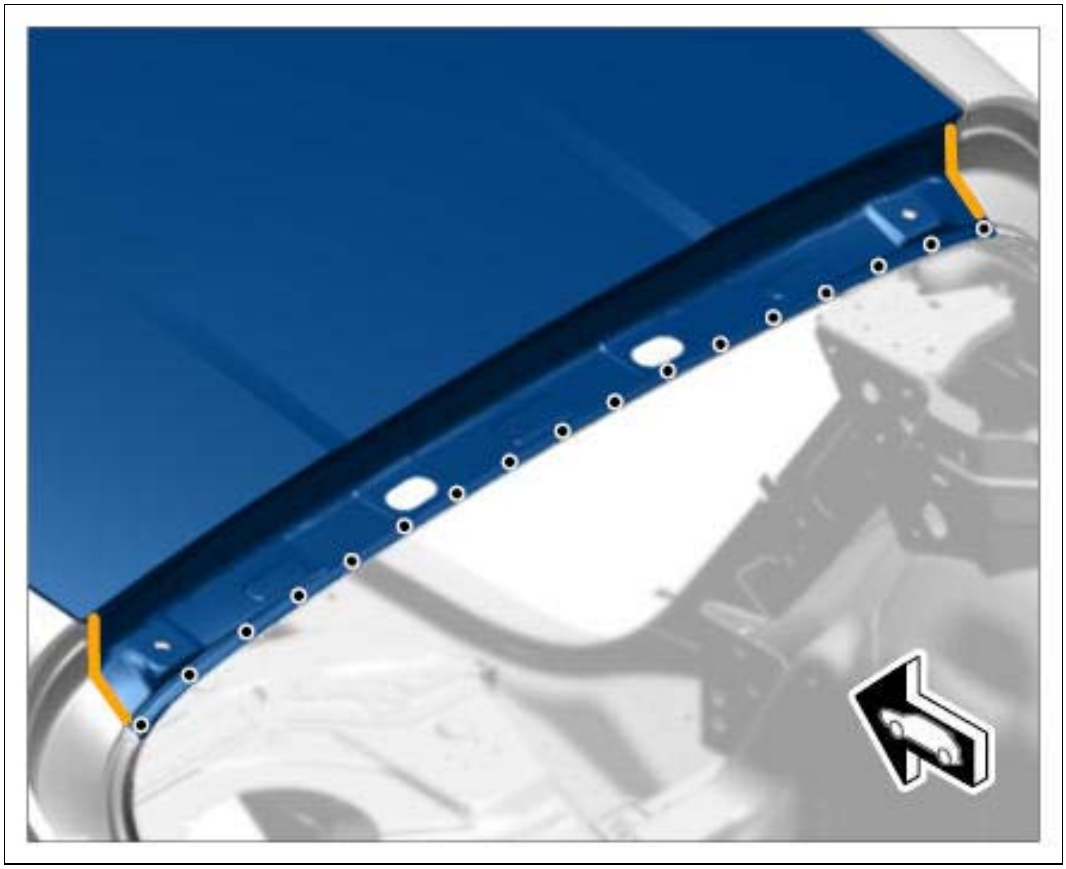

Courtesy of PORSCHE CARS NORTH AMERICA, INC.

2. Affix adhesive tape **-1-** along the edge of the roof on both sides at dimension **-X-** . → **Distance: 15 mm+2 mm**

   Adhesive tape serves as cut line.

Fig 4: Identifying Roof Edge Dimension

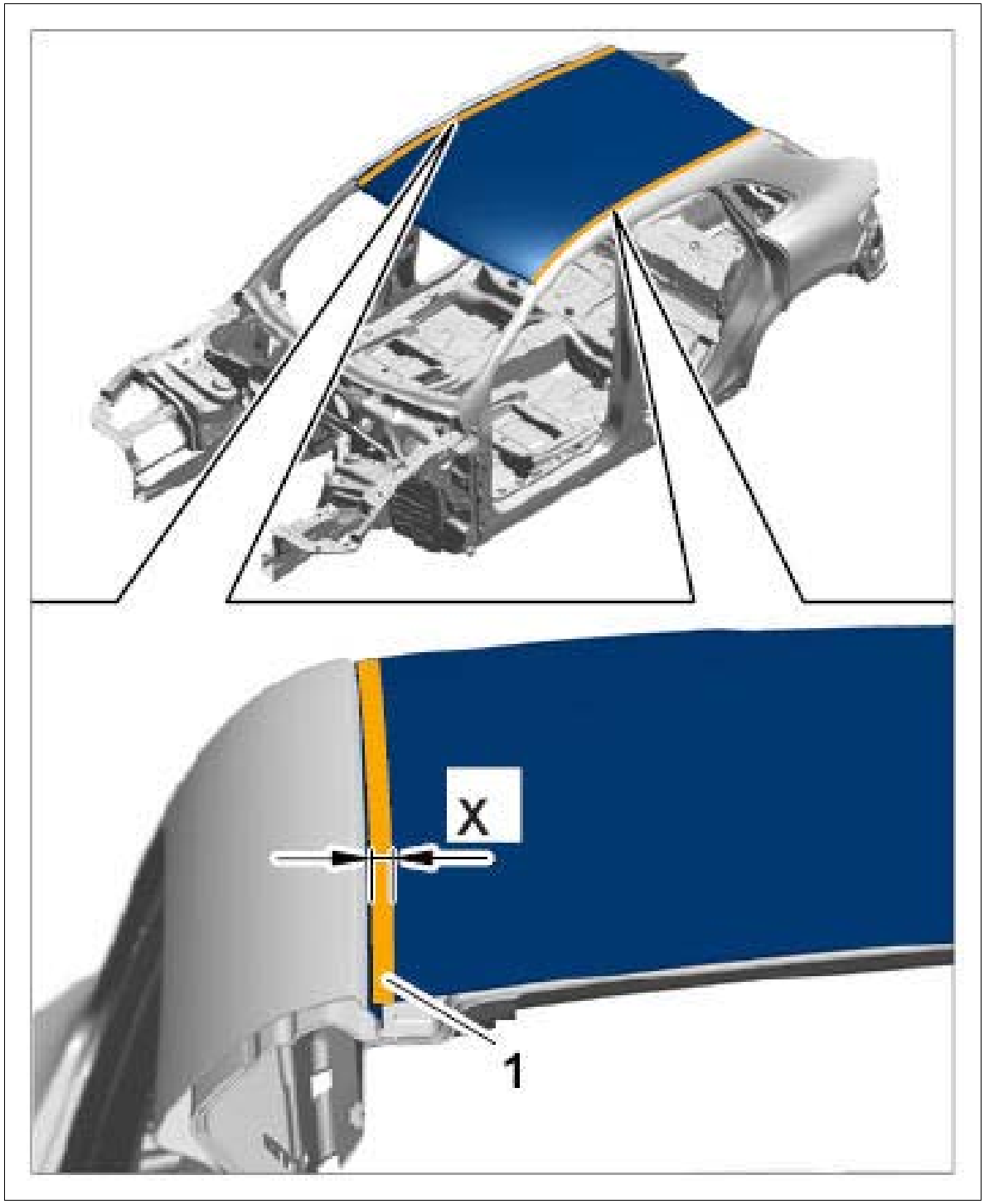

Courtesy of PORSCHE CARS NORTH AMERICA, INC.

Information

Only make cuts in the top plate. Make sure not to damage the plate underneath when doing this.

3. Make cut on both sides.
4. Heat connection areas using the hot-air blower.

Fig 5: Identifying Roof



Courtesy of PORSCHE CARS NORTH AMERICA, INC.

Fig 6: Identifying Roof

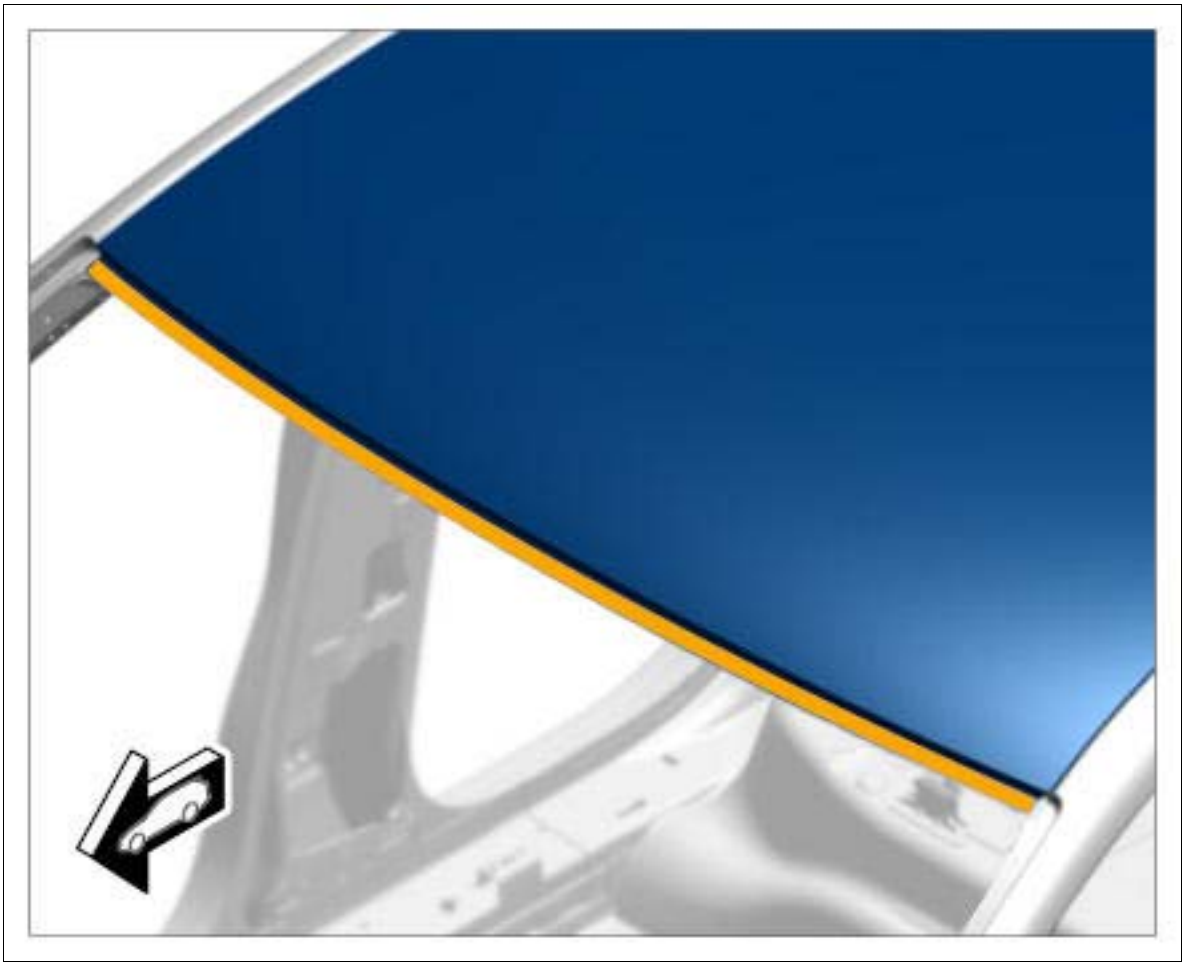

Courtesy of PORSCHE CARS NORTH AMERICA, INC.

5. Remove roof (with the help of two people).

   Information

   1. During separation make sure that the components beneath are not damaged.

6. Remove remaining pieces of roof.

   1. 6.1. Cut off laser soldered joints on side panels.
   2. 6.2. Remove remaining pieces.

Fig 7: Identifying Roof Pieces

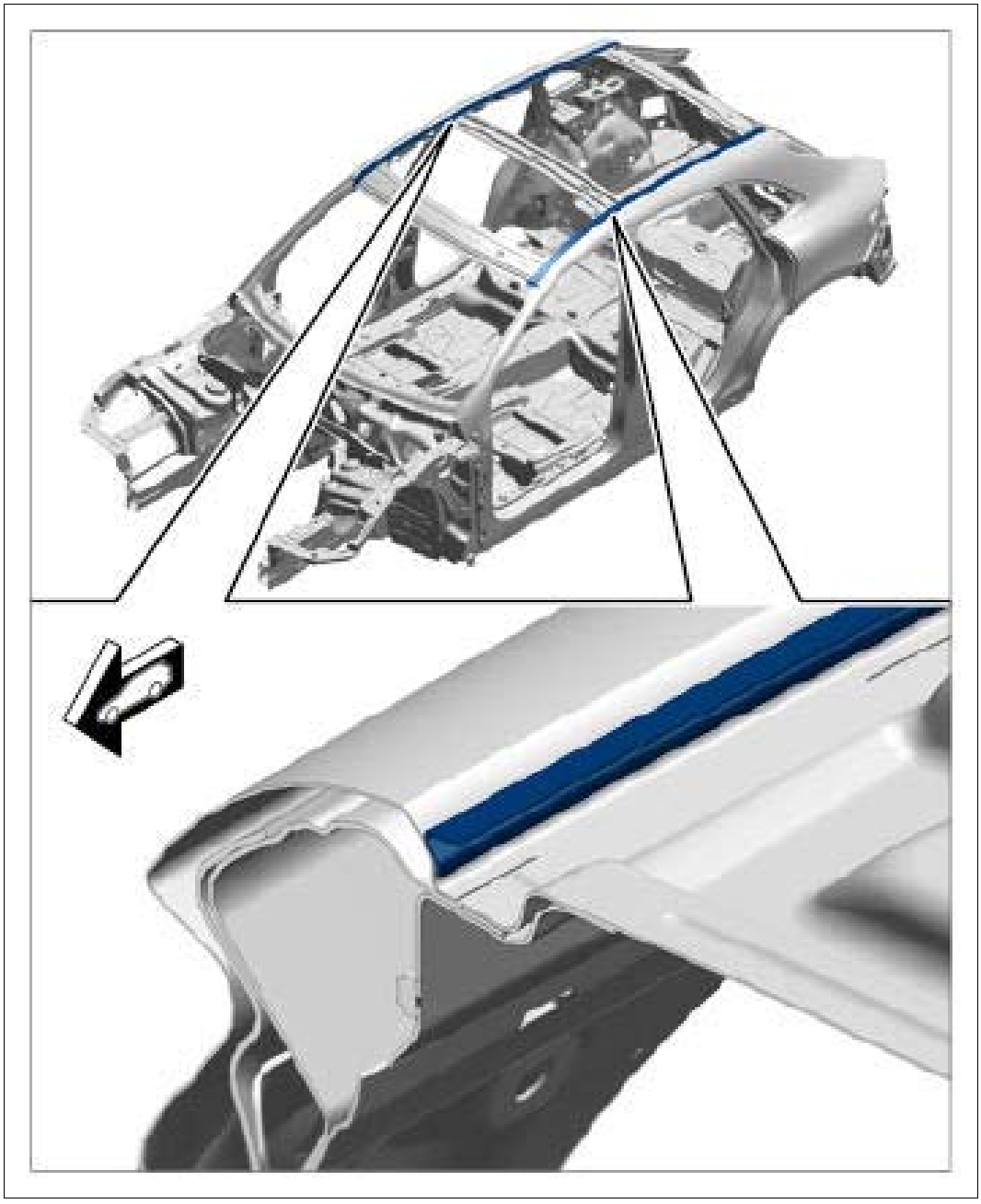

Courtesy of PORSCHE CARS NORTH AMERICA, INC.

WM 510355 REPLACING ROOF (WITHOUT SLIDING ROOF) (ALL MODELS) > PREPARING ROOF FOR INSTALLATION

1. Prepare connection flanges in areas **-A-** for bonding and welding.

Fig 1: Identifying Roof Connection Flanges Areas

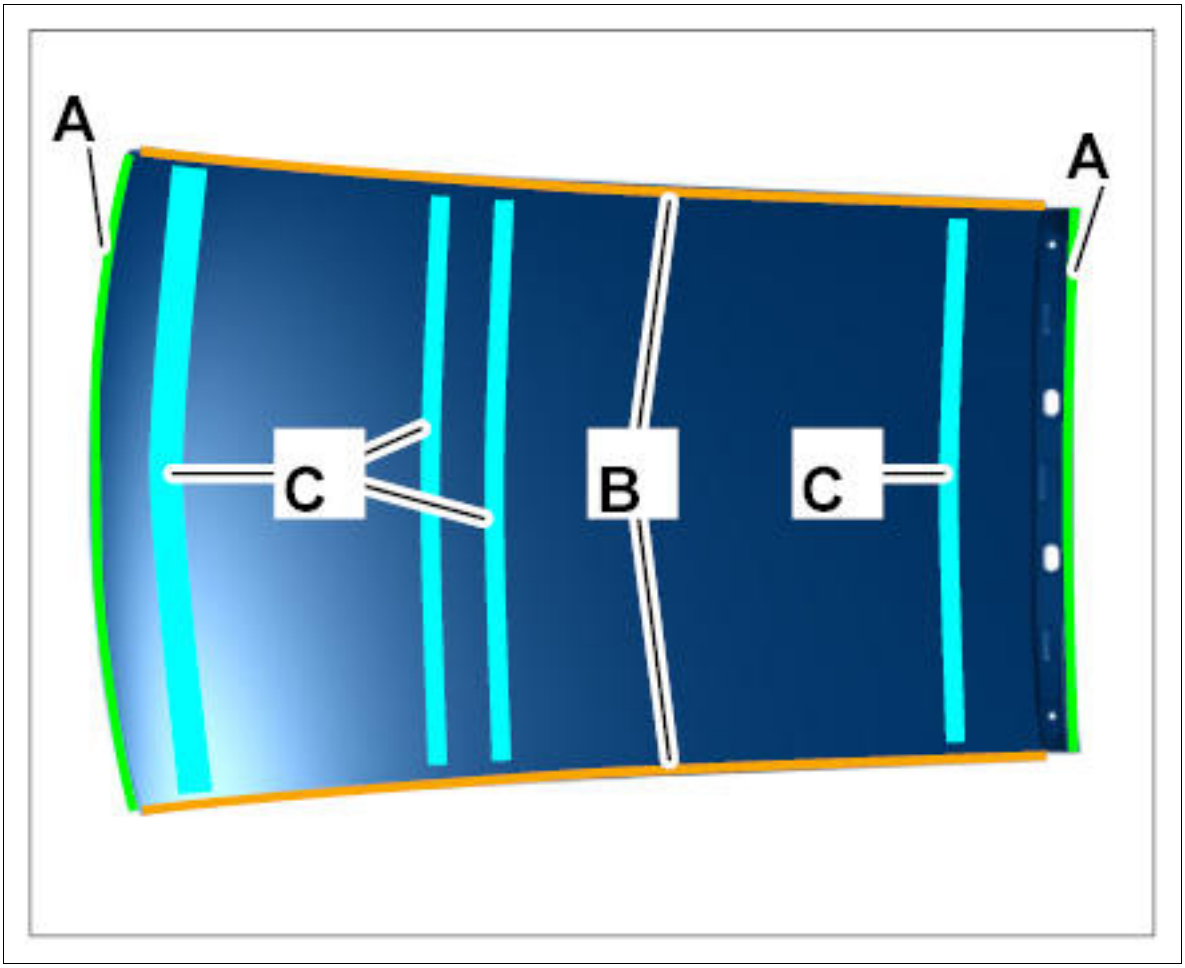

Courtesy of PORSCHE CARS NORTH AMERICA, INC.

2. Prepare bonding surfaces for applying structural adhesive **-B-** . → 5X00IN21 WORKING WITH BODY STRUCTURAL ADHESIVE
3. Clean bonding areas of support adhesive **-C-** from inside using acetone.

WM 510355 REPLACING ROOF (WITHOUT SLIDING ROOF) (ALL MODELS) > PREPARING CONNECTION AREAS OF BODY FOR INSTALLING ROOF

Information

Do not apply zinc powder paint to the bonding areas.

1. Clean welding and bonding areas.

Fig 1: Identifying Body Connection Areas

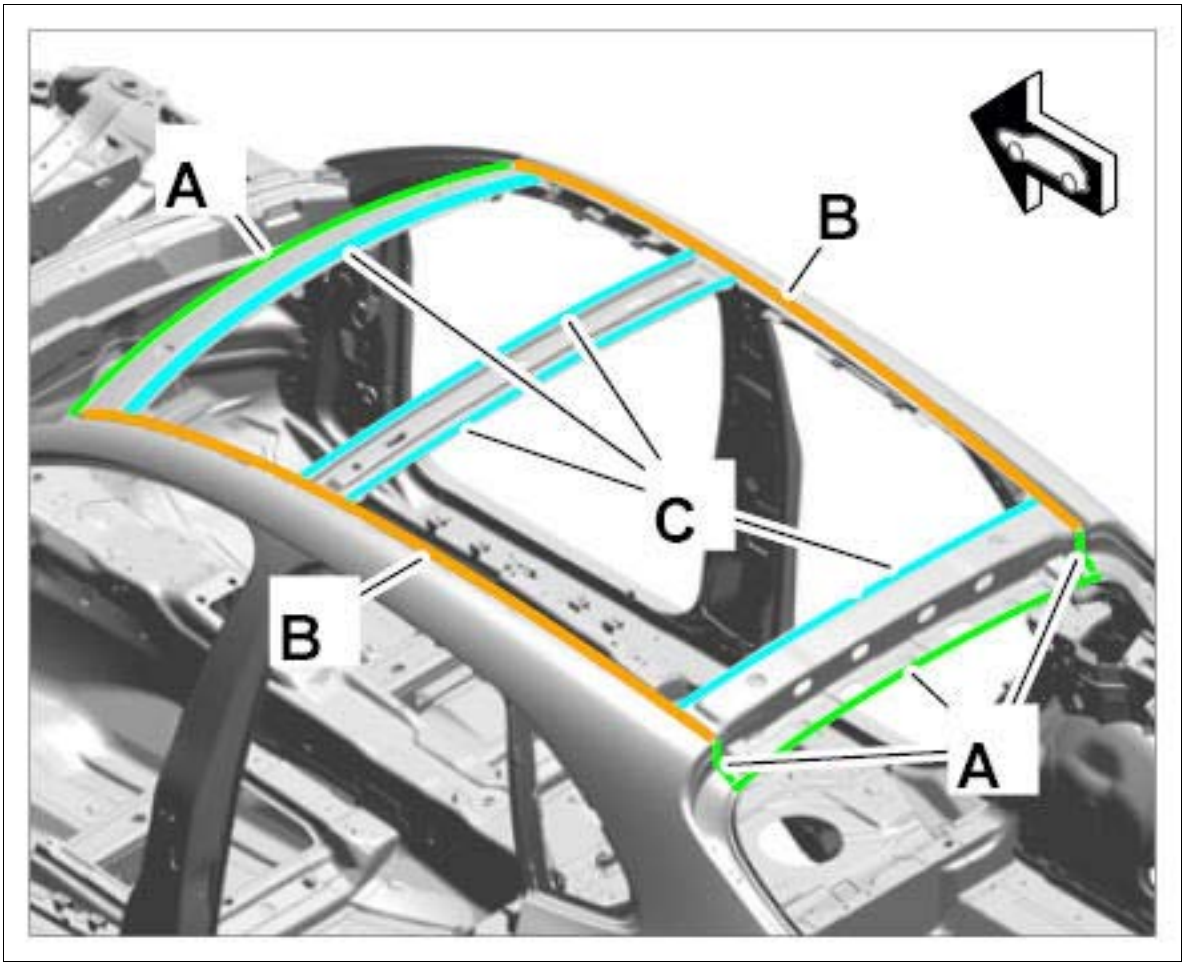

Courtesy of PORSCHE CARS NORTH AMERICA, INC.

1. 1.1. Prepare connection flanges in areas **-A-** for resistance spot-welding and bonding.
2. 1.2. Prepare connection flanges in areas **-B-** for bonding.
3. 1.3. Prepare bonding areas of support adhesive **-C-** for bonding with window adhesive.

WM 510355 REPLACING ROOF (WITHOUT SLIDING ROOF) (ALL MODELS) > INSTALLING ROOF

1. Apply structural adhesive and support adhesive (window adhesive).

Fig 1: Identifying Roof Adhesive Applying Area

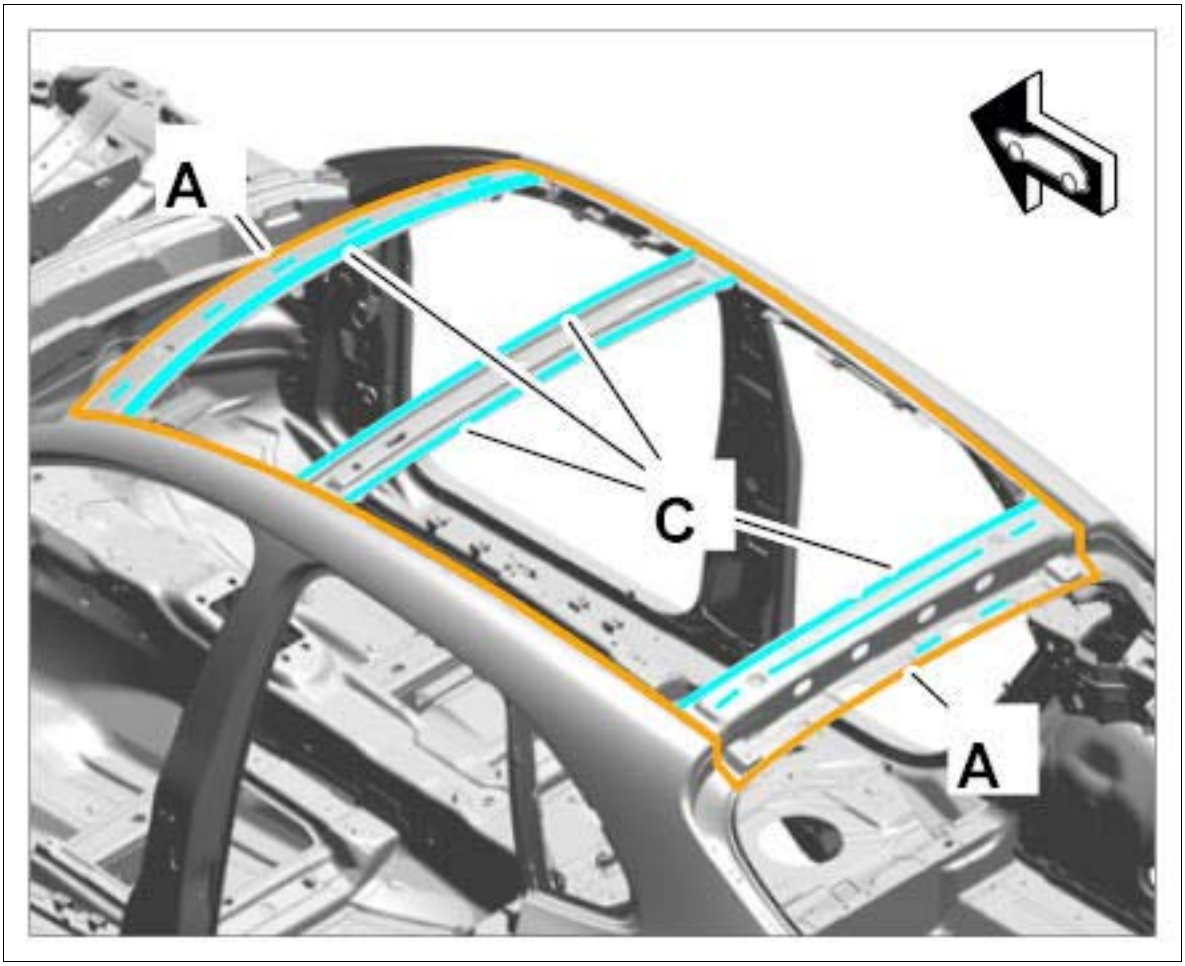

Courtesy of PORSCHE CARS NORTH AMERICA, INC.

1. 1.1. Evenly apply structural adhesive to the marked areas **-A-** .

   Working with body structural adhesive → 5X00IN21 WORKING WITH BODY STRUCTURAL ADHESIVE

   Structural adhesive

2. 1.2. Apply support adhesive (window adhesive) to the marked areas **-C-** .

   Support adhesive

2. Place roof on rear roof frame with the help of two people **-arrow A-** and swivel it in towards the front **-arrow B-** .

Fig 2: Installing Roof

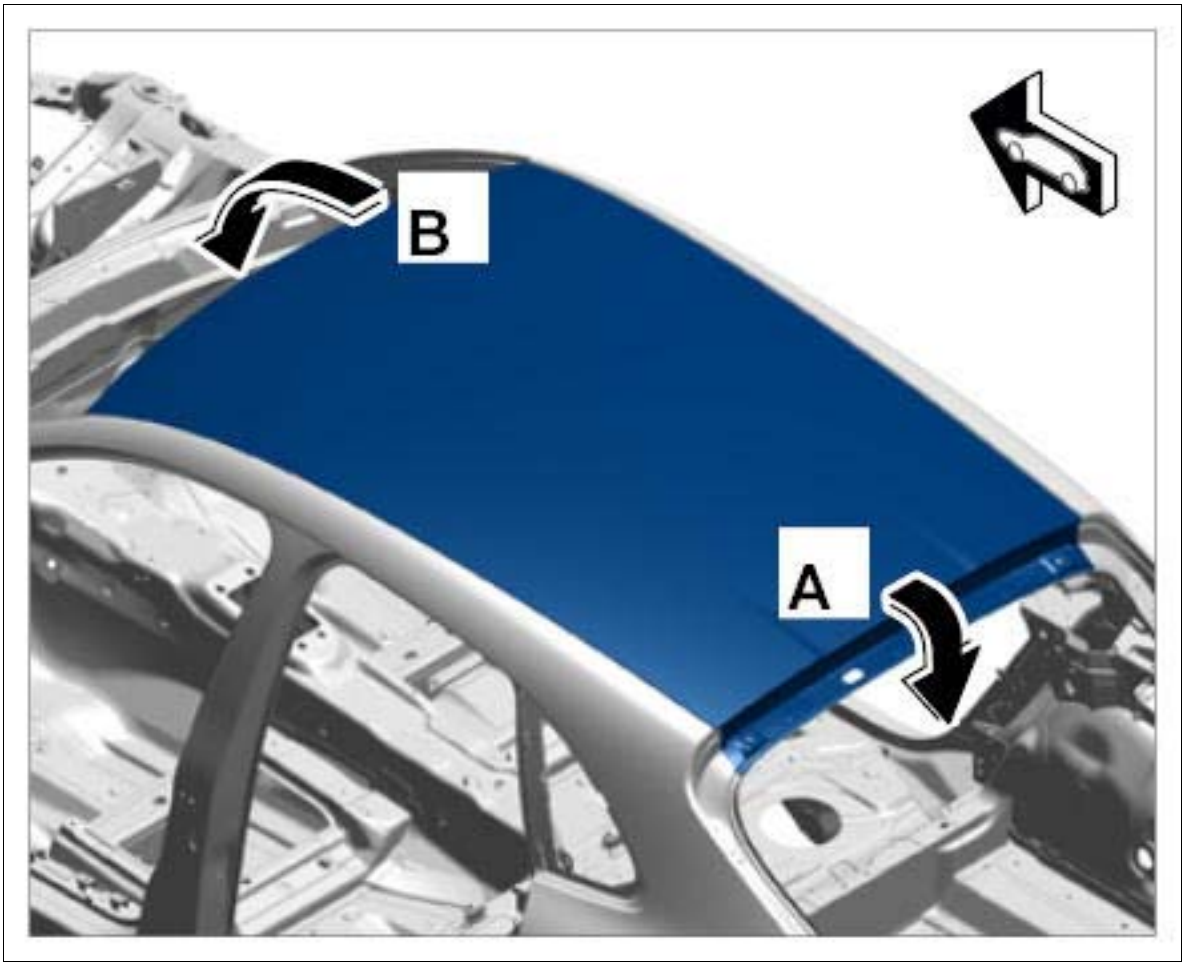

Courtesy of PORSCHE CARS NORTH AMERICA, INC.

Information

Have this work carried out by an assistant while at the same time starting with the welding work.

3. Clean surface of roof in the side panel area.

Fig 3: Cleaning Roof Surface

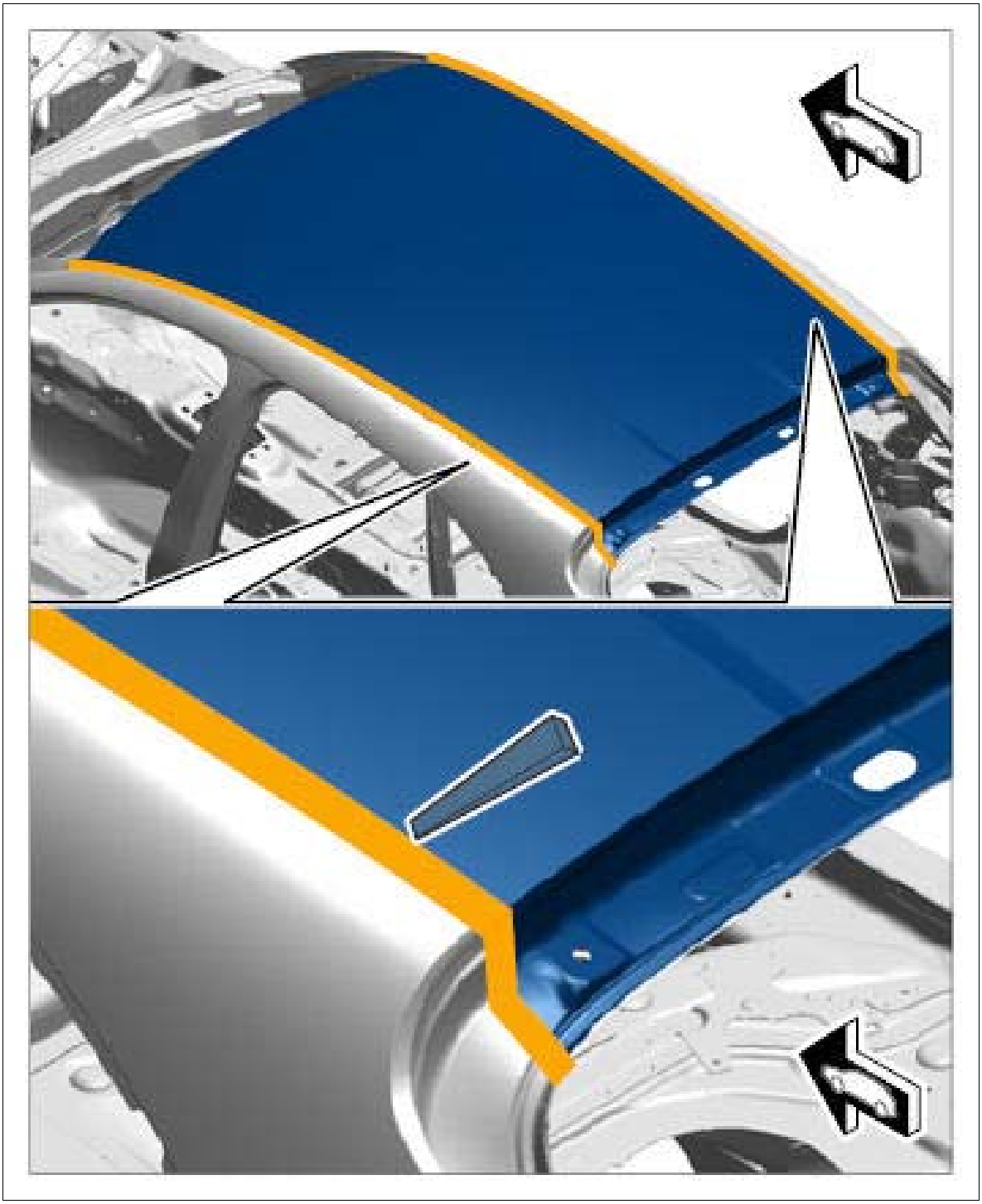

Courtesy of PORSCHE CARS NORTH AMERICA, INC.

1. 3.1. Remove most of the excess adhesive material with a plastic spatula or cloth.
2. 3.2. Finish cleaning visible surfaces with a cloth soaked in cleaning solution.

Fig 4: Cleaning Roof

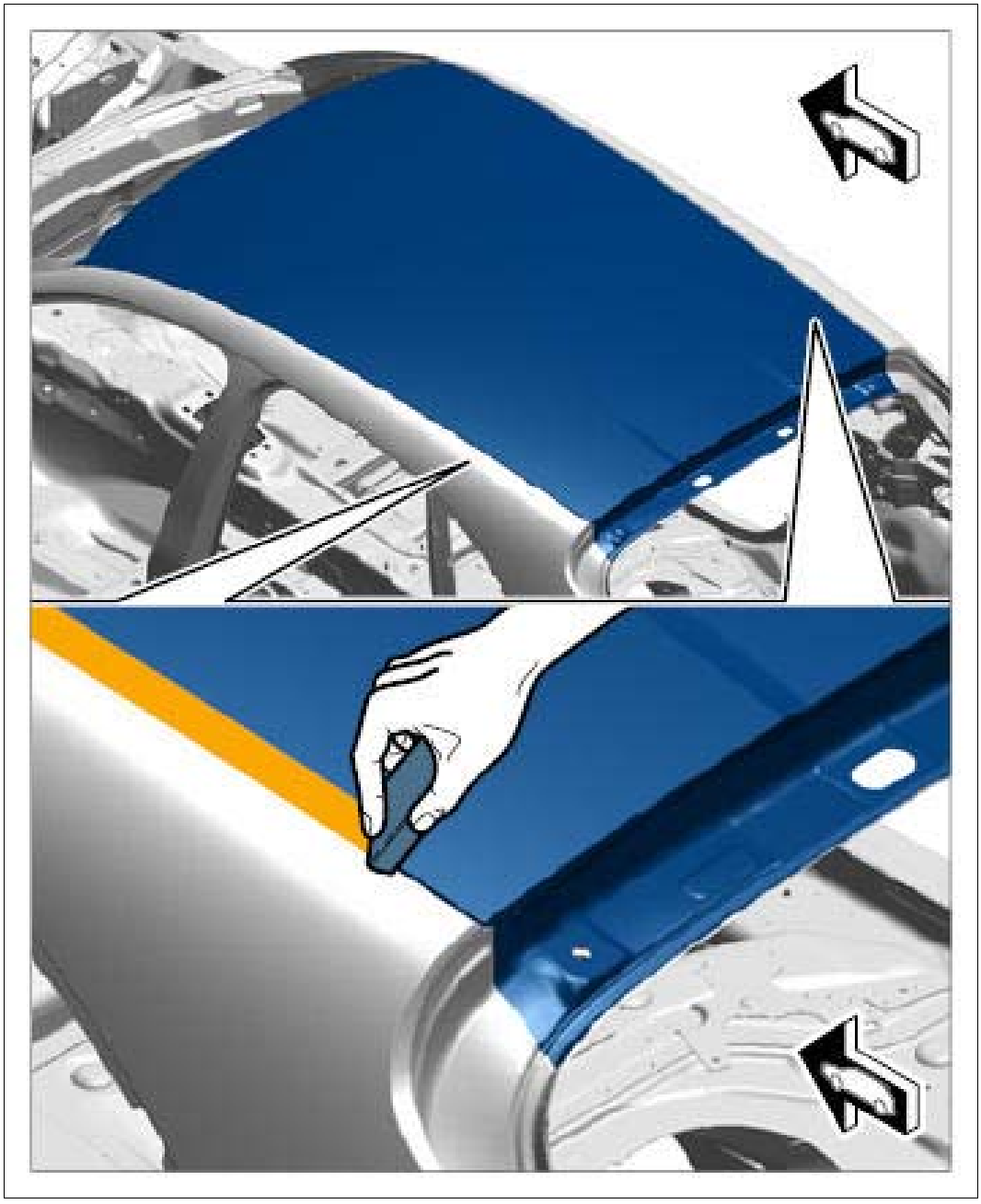

Courtesy of PORSCHE CARS NORTH AMERICA, INC.

4. Resistance spot-weld the front of the roof.

Fig 5: Identifying Front Roof Spot-Weld Area

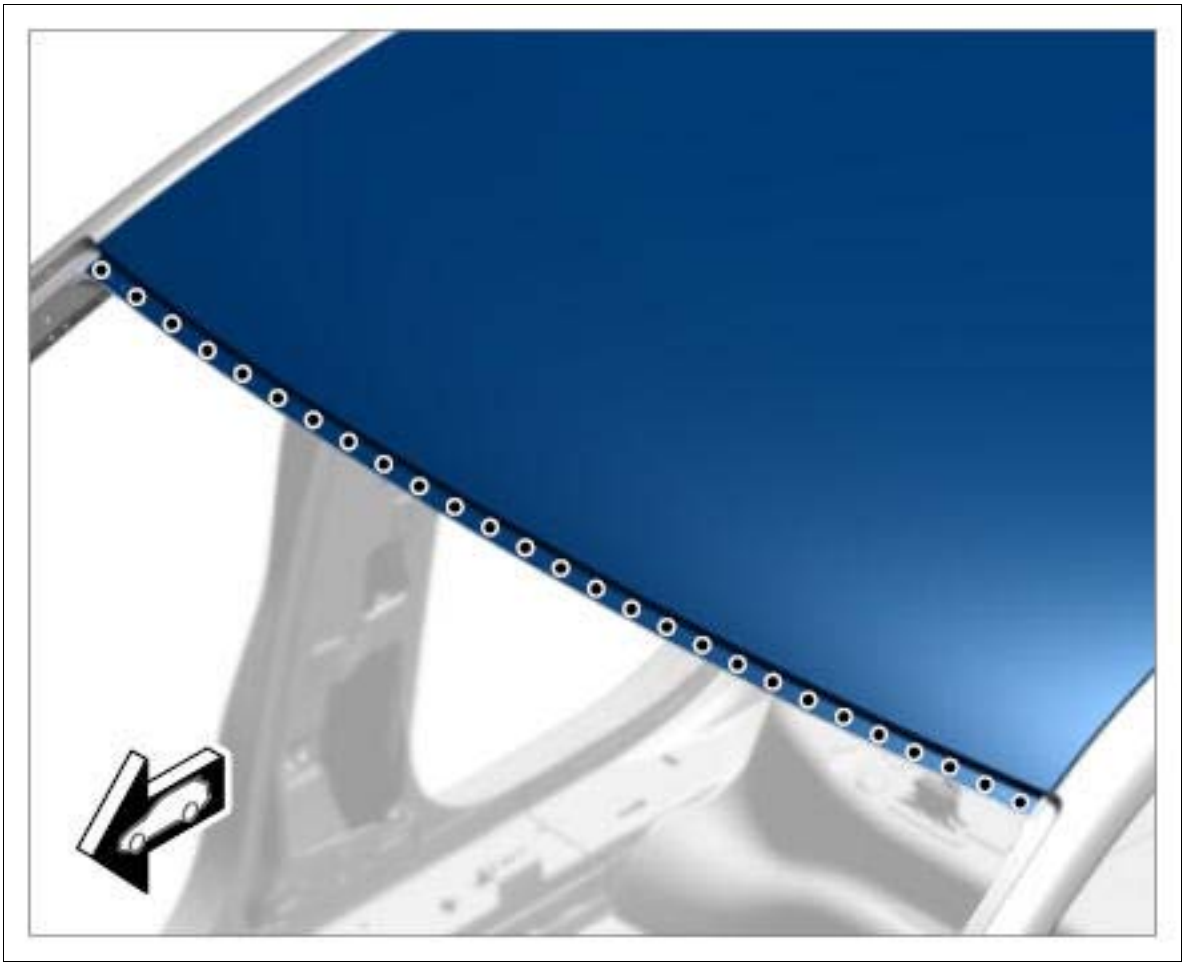

Courtesy of PORSCHE CARS NORTH AMERICA, INC.

5. Resistance spot-weld the rear of the roof.

Fig 6: Identifying Rear Roof Spot-Weld Area

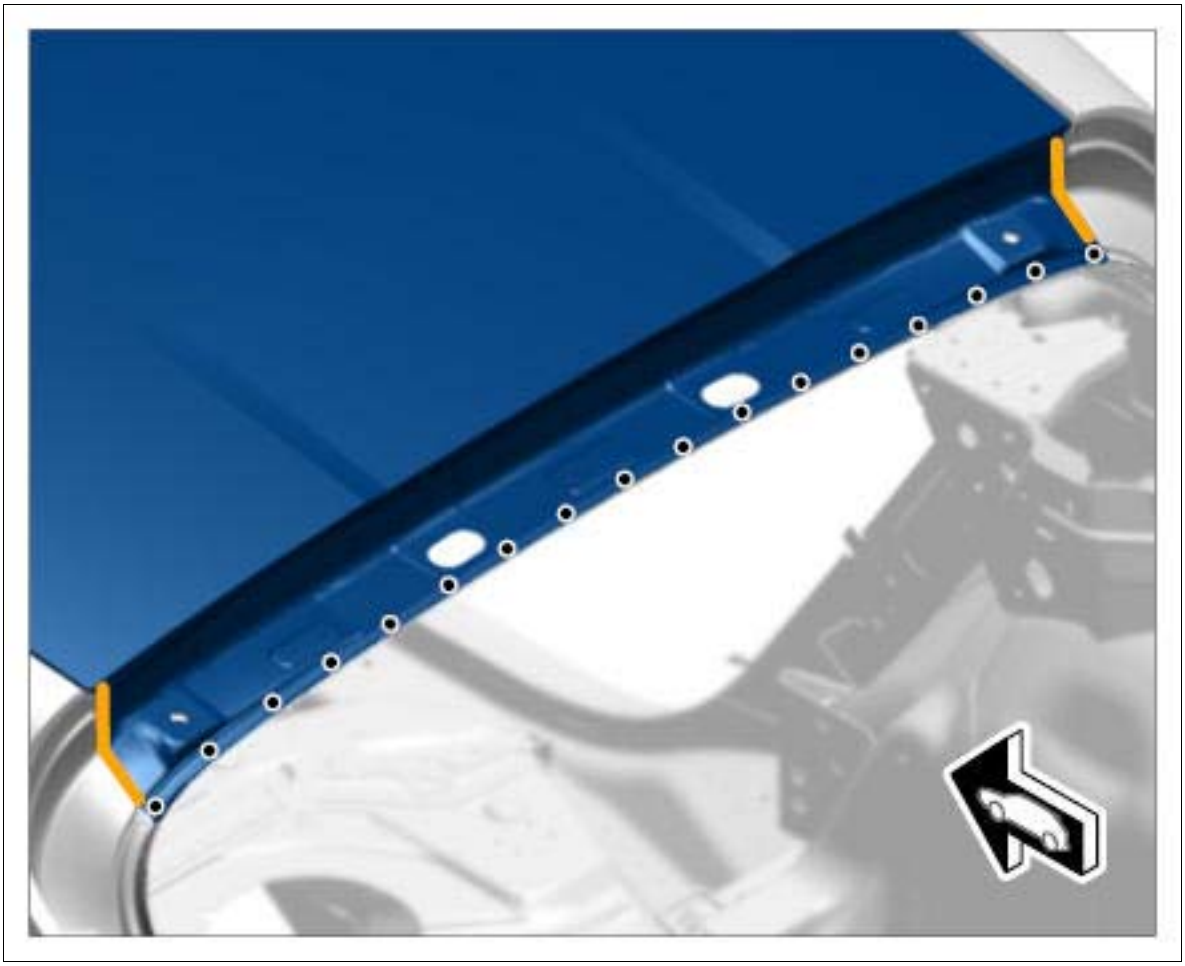

Courtesy of PORSCHE CARS NORTH AMERICA, INC.

6. Stick on roof reinforcements **-1;2-** .

    1. 6.1. Apply 1-component window adhesive. → 5X00IN21 WORKING WITH BODY STRUCTURAL ADHESIVE

Fig 7: Identifying Roof Reinforcements

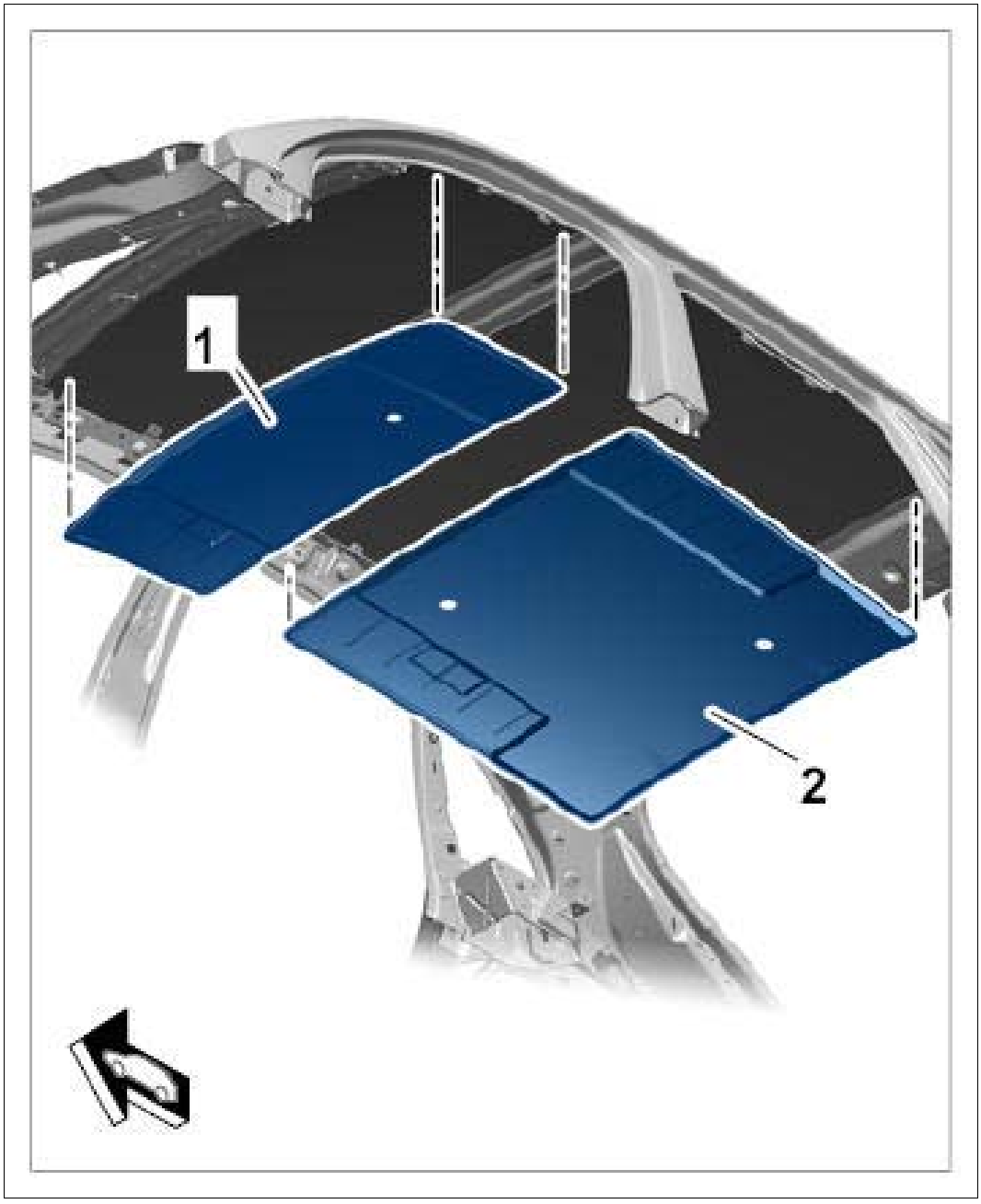

Courtesy of PORSCHE CARS NORTH AMERICA, INC.

WM 510355 REPLACING ROOF (WITHOUT SLIDING ROOF) (ALL MODELS) > SUBSEQUENT WORK > SUBSEQUENT WORK FOR BODY REPAIRS (WITHOUT STRAIGHTENING SYSTEM)

1. Clean joint areas and sheetmetal flanges with a wire brush.
2. Prime joint areas and sheetmetal flanges with 2K primer.
3. Restore standard seal with body sealant → 5X00IN42 SEAM SEALING .

Also seal the repair area carefully.

4. Paint repair area and adjacent surfaces, if necessary.
5. Restore standard underbody protection with underbody sealant → 5X00IN43 UNDERBODY PROTECTION .
6. Apply standard cavity preservation → 5X00IN44 CAVITY PRESERVATION . Also apply cavity preservation to the repair area.
7. Install removed accessories in the repair area.

WM 510555 REPLACING ROOF PILLAR (ALL MODELS) > TOOLS

Designation	Type	Number	Description	
Hot-air blower	Workshop equipment	WE 1119		
Body alignment system package	Workshop equipment	WE 1121		
Special electric cutter	Workshop equipment	WE 1137		
Pneumatic Spotweld Remover, Vario Drill WS 90	Workshop equipment	WE 1139		
Hand-cartridge gun	Workshop equipment	WE 1141		
Resistance spot welder	Workshop equipment	WE 1311		
Inverter welder MIDIspot-QSVM-12000	Workshop equipment	WE 1312		
Resistance spot welder	Workshop equipment	WE 1313		
Blind riveting tool TAURUS 4	Workshop equipment	WE 1348		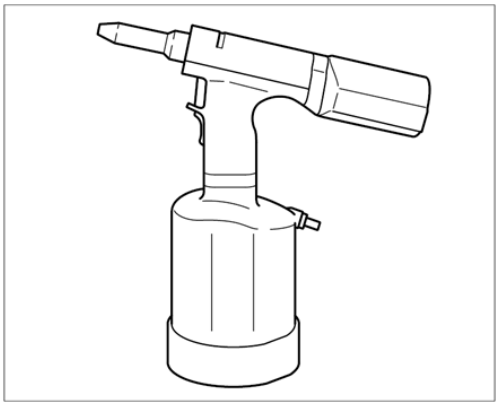

Aluminum tool set with trolley	Workshop equipment	WE 1350		
Resistance spot welder	Workshop equipment	WE 1352		
Measuring and alignment system, professional	Workshop equipment	WE 1398		
Mobile extraction unit, aluminum	Workshop equipment	WE 1507		
Body saw	Workshop equipment	WE 1508		
Star gauges for body gap dimensions	Special tool	Nr.127-1		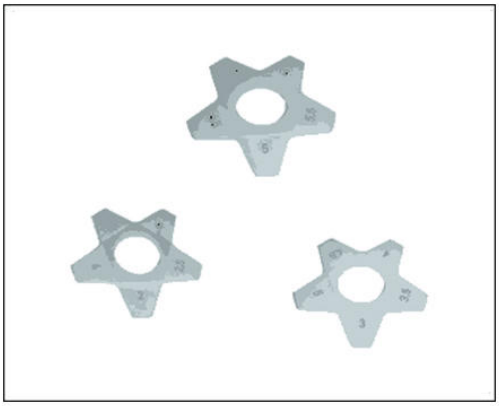
Spotweld drill	Commercially available tool	Nr.129		

Twist drill	Commercially available tool	Nr.201		
Countersink	Commercially available tool	Nr.202		

WM 510555 REPLACING ROOF PILLAR (ALL MODELS) > TECHNICAL VALUES

Location	Description	Type	Basic value	Tolerance 1	Tolerance 2
Drill bit		Diameter	6.5 mm		
Applying adhesive		Application depth	3.0 mm		

WM 510555 REPLACING ROOF PILLAR (ALL MODELS) > PRELIMINARY WORK > PRELIMINARY WORK FOR BODY REPAIRS (WITH STRAIGHTENING SYSTEM)

1. Remove accessories in the repair area.
    1. 1.1. Remove accessories in the repair area according to the extent of damage on the vehicle.
2. Set up straightening bench with straightening system.
3. Set vehicle on straightening bench.
4. Cover accessories adjacent to the repair area on the vehicle.
    1. 4.1. Cover all accessories remaining on the vehicle and adjacent areas with

fire-proof protective covers.

5. Reshape connection area of the sheetmetal parts to be replaced.
6. Expose joint areas.
    1. 6.1. Remove underbody protection, paint, etc. from the joint areas of the body using a hot-air gun or rotary brush.

WM 510555 REPLACING ROOF PILLAR (ALL MODELS) > PRELIMINARY WORK

1. Remove B-pillar reinforcement. → 514255 REPLACING B-PILLAR REINFORCEMENT
2. Remove A-pillar. → 511255 REPLACING A-PILLAR
3. Remove roof pillar. → 510555 REPLACING OUTER ROOF PILLAR PANEL

WM 510555 REPLACING ROOF PILLAR (ALL MODELS) > SAFETY INSTRUCTIONS AND INFORMATION ON QUALITY

⚠ *CAUTION: Non-observance of safety instructions for body repairs*

- *Risk of damage to the vehicle*
- *Danger of injury*

→ Read the relevant safety instructions as well as general information and quality instructions → 5X00IN01 SAFETY INSTRUCTIONS .

- Protection of electrical components during body repairs
- Corrosion protection measures during repairs → 5X00IN03 CORROSION PROTECTION MEASURES DURING REPAIRS
- Information on aluminum repairs
- Body parts of various sheet-steel strengths → 5X00IN04 BODY PARTS OF VARIOUS SHEET-STEEL STRENGTHS
- Replacing punch rivets and penetrated joints
- Setting self-tapping screws → 5X00IN24 SETTING SELF-TAPPING SCREWS
- Working with body structural adhesive → 5X00IN21 WORKING WITH BODY STRUCTURAL ADHESIVE

WM 510555 REPLACING ROOF PILLAR (ALL MODELS) > TOOLS AND MATERIALS >

TOOLS AND MATERIALS FOR BODY REPAIRS

Information

- The tools for working on steel and aluminum must always be kept separate from each other. We recommend that you color code the tools using a system similar to that used for the Aluminum tool set with trolley WE 1350, for example.

Straightening set **Body alignment system package WE 1121 Measuring and alignment system, professional WE 1398**

Resistance spot welder; optional **Inverter welder MIDIspot-QSVM-12000 WE 1312, Resistance spot welder WE 1352, Resistance spot welder WE 1311, Resistance spot welder WE 1313**

Metal inert gas (MIG) welder

Pneumatic spotweld remover **Pneumatic Spotweld Remover, Vario Drill WS 90 WE 1139**

Pneumatic body saw **Body saw WE 1508**

Oscillating body saw (special electric cutter) **Special electric cutter WE 1137**

Hot-air blower **Hot-air blower WE 1119**

Hand-cartridge gun **Hand-cartridge gun WE 1141**

Spotweld drill **Spotweld drill** ; Twist drill Nr.201

Countersink for rivets **Countersink Nr.202**

Blind riveting tool for high-strength rivets **Blind riveting tool TAURUS 4 WE 1348**

Safety vacuum cleaner for aluminum dust **Mobile extraction unit, aluminum WE 1507**

Star gauges for body gap dimensions Nr.127-1

Wurth Klebt und Dichtet body sealant

WM 510555 REPLACING ROOF PILLAR (ALL MODELS) > REMOVING ROOF PILLAR

Installation position of roof pillar

Information

Drill out the connection point on one side only. Do not damage the plate underneath.

1. Drill out spotwelds using **spotweld drill;**

Fig 1: Identifying Roof Pillar

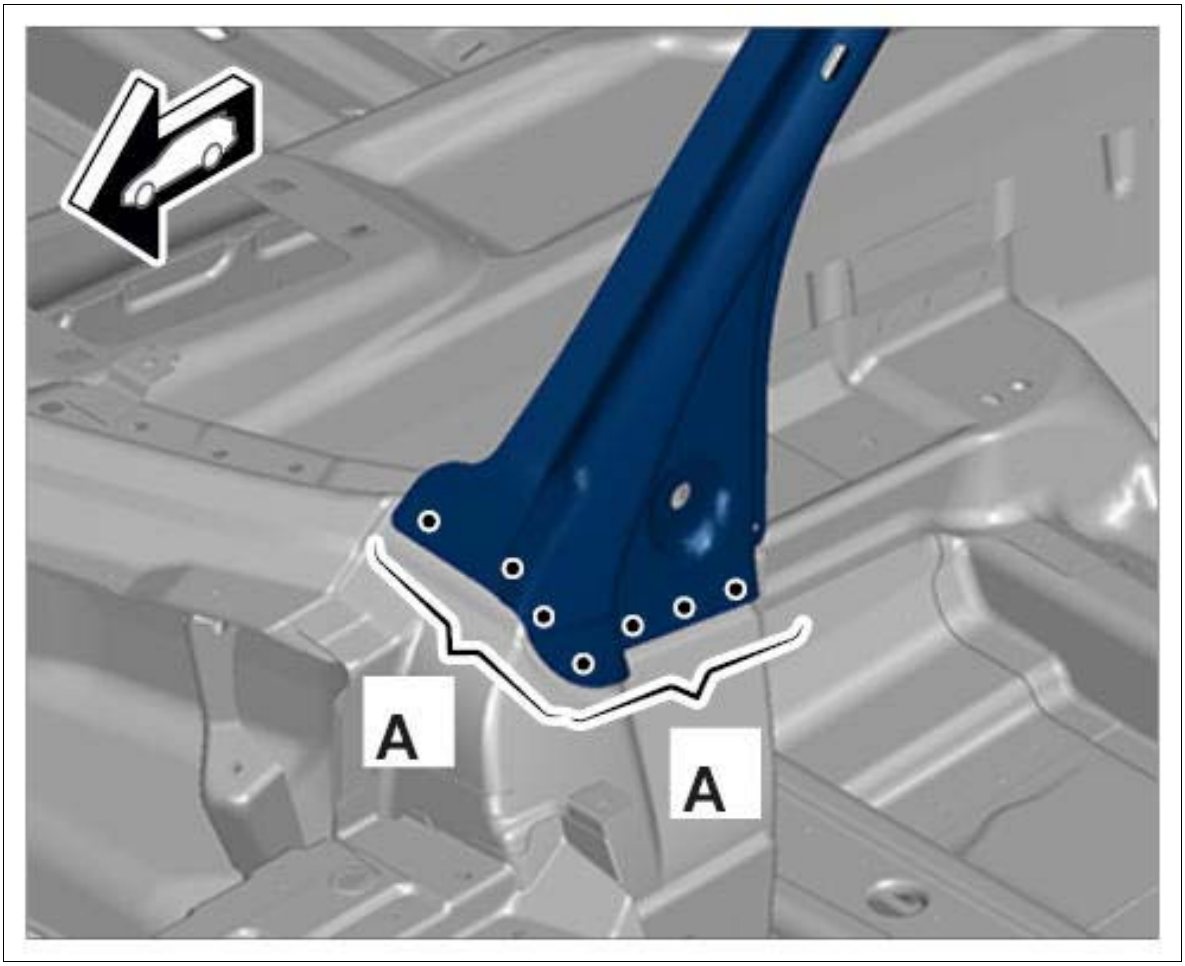

Courtesy of PORSCHE CARS NORTH AMERICA, INC.

Fig 2: Identifying Roof Pillar



Courtesy of PORSCHE CARS NORTH AMERICA, INC.

Fig 3: Identifying Roof Pillar

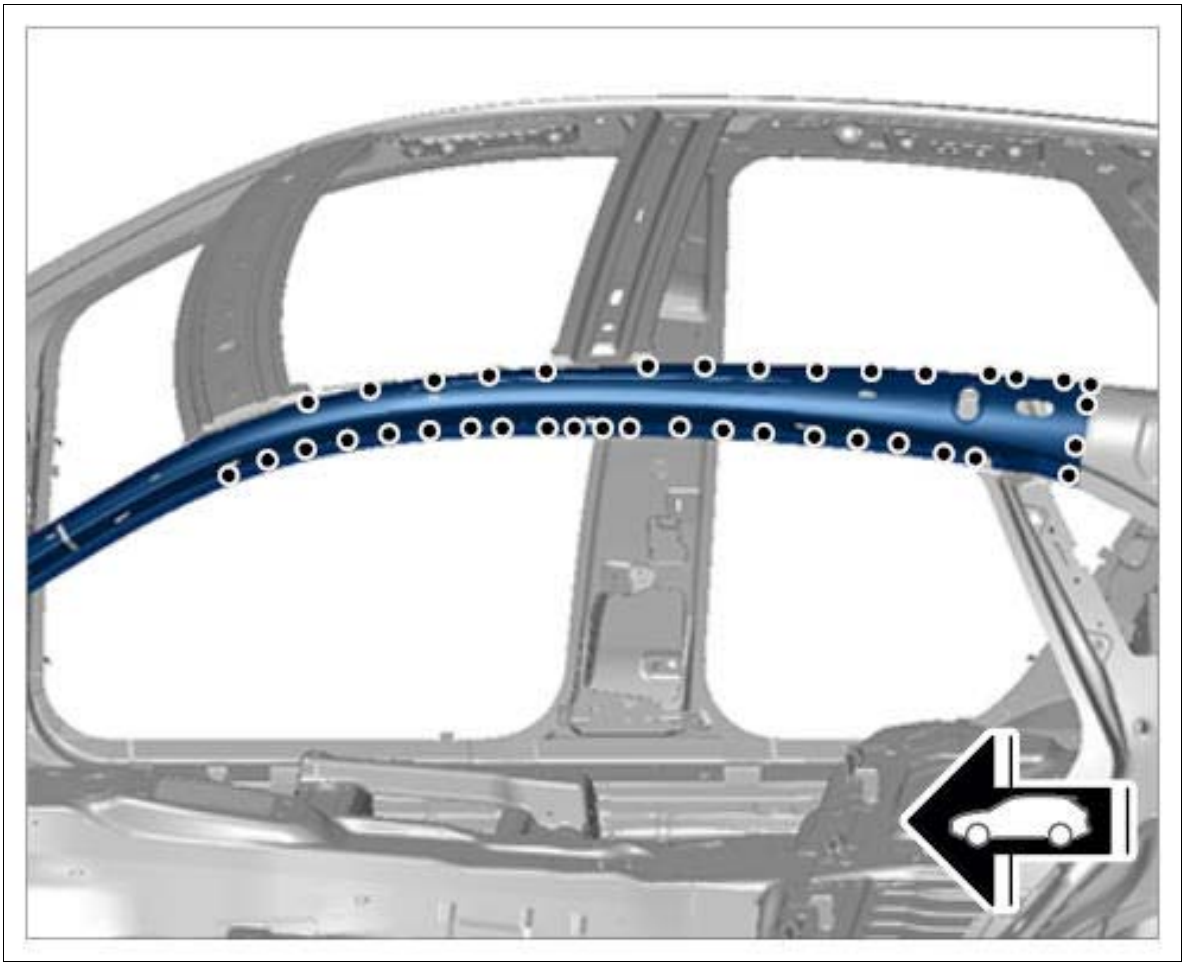

Courtesy of PORSCHE CARS NORTH AMERICA, INC.

2. Heat the marked bonding areas.

    1. 2.1. Remove roof pillar.

Fig 4: Identifying Roof Pillar

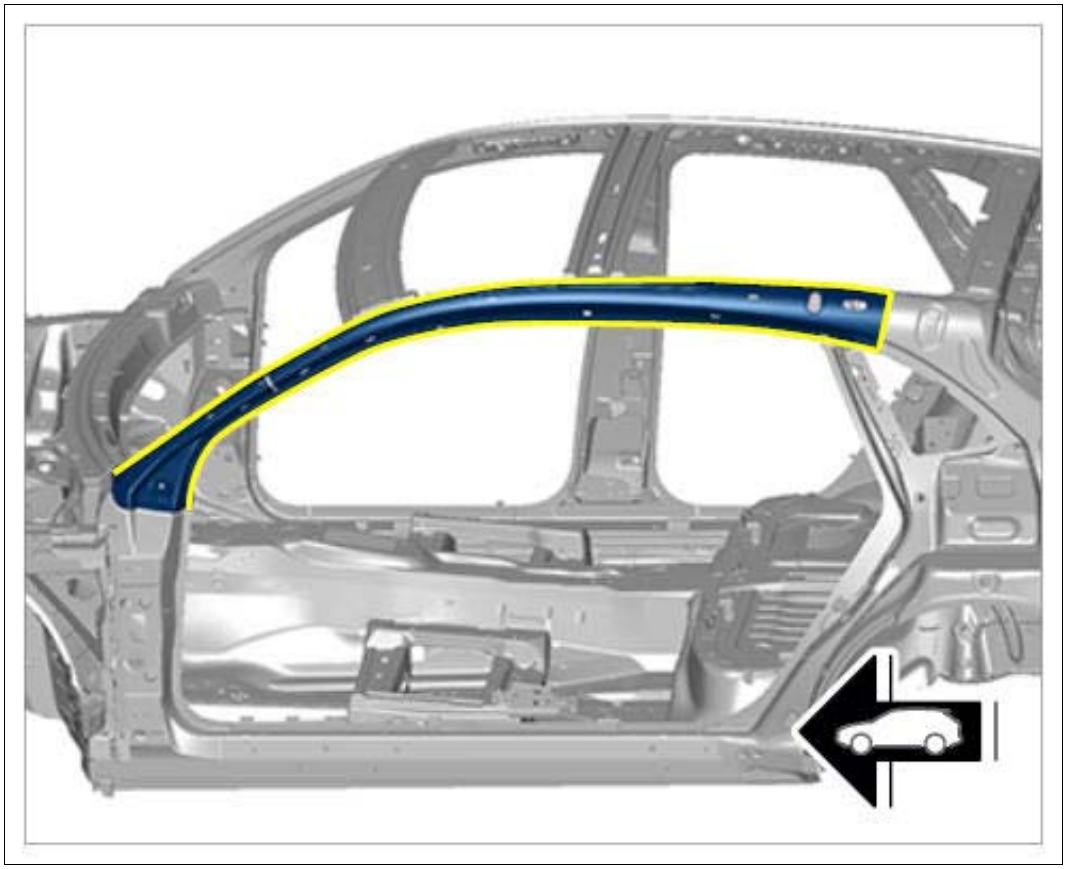

Courtesy of PORSCHE CARS NORTH AMERICA, INC.

WM 510555 REPLACING ROOF PILLAR (ALL MODELS) > PREPARING ROOF PILLAR FOR INSTALLATION

1. Fit in the roof pillar.
2. Completely drill holes for blind rivet joints in the marked areas **-A-** . → **Diameter: 6.5 mm**

Fig 1: Identifying Blind Rivet Joints Holes Drilling Areas

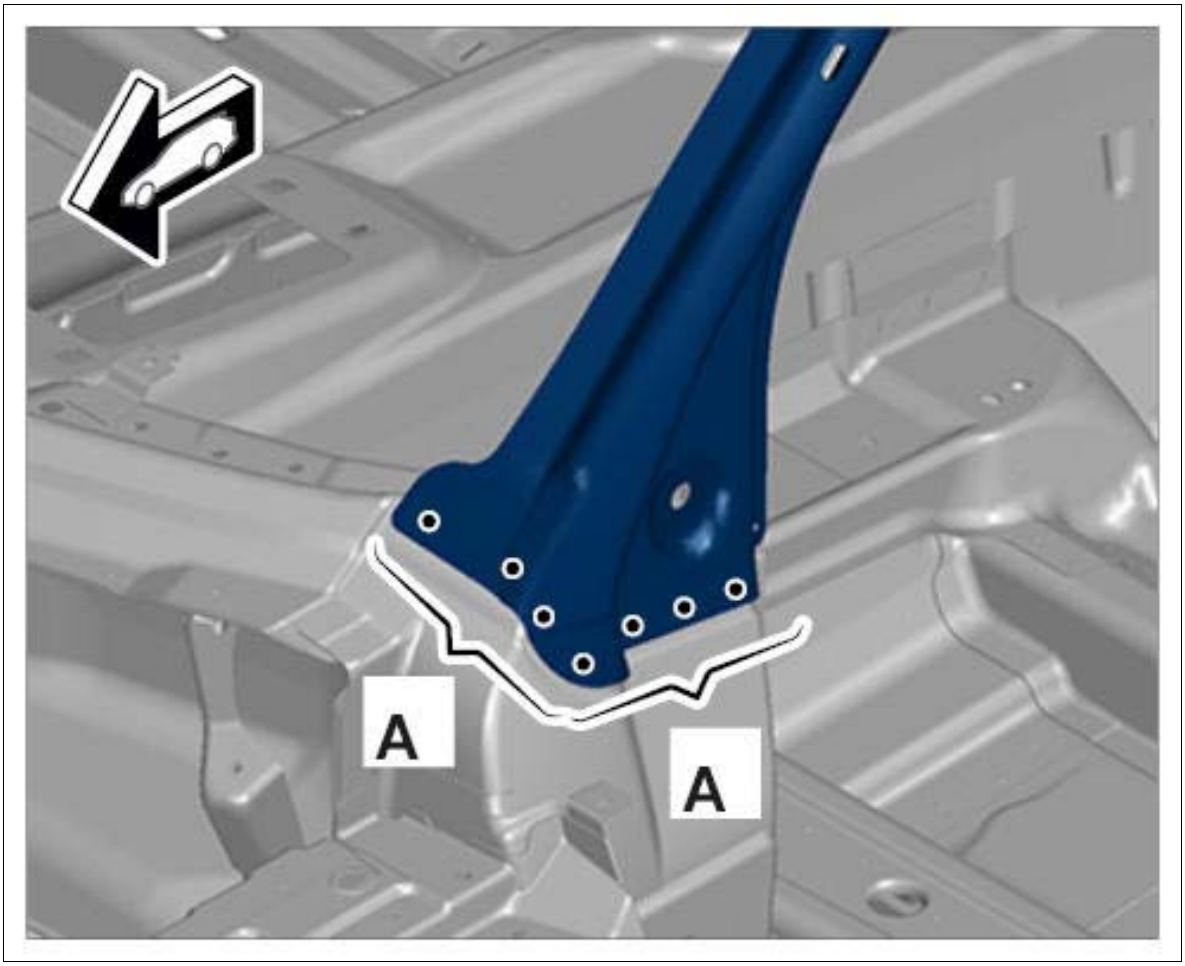

Courtesy of PORSCHE CARS NORTH AMERICA, INC.

3. Prepare the marked connection areas for bonding and welding.

Fig 2: Identifying Roof Pillar Mark Connection Areas

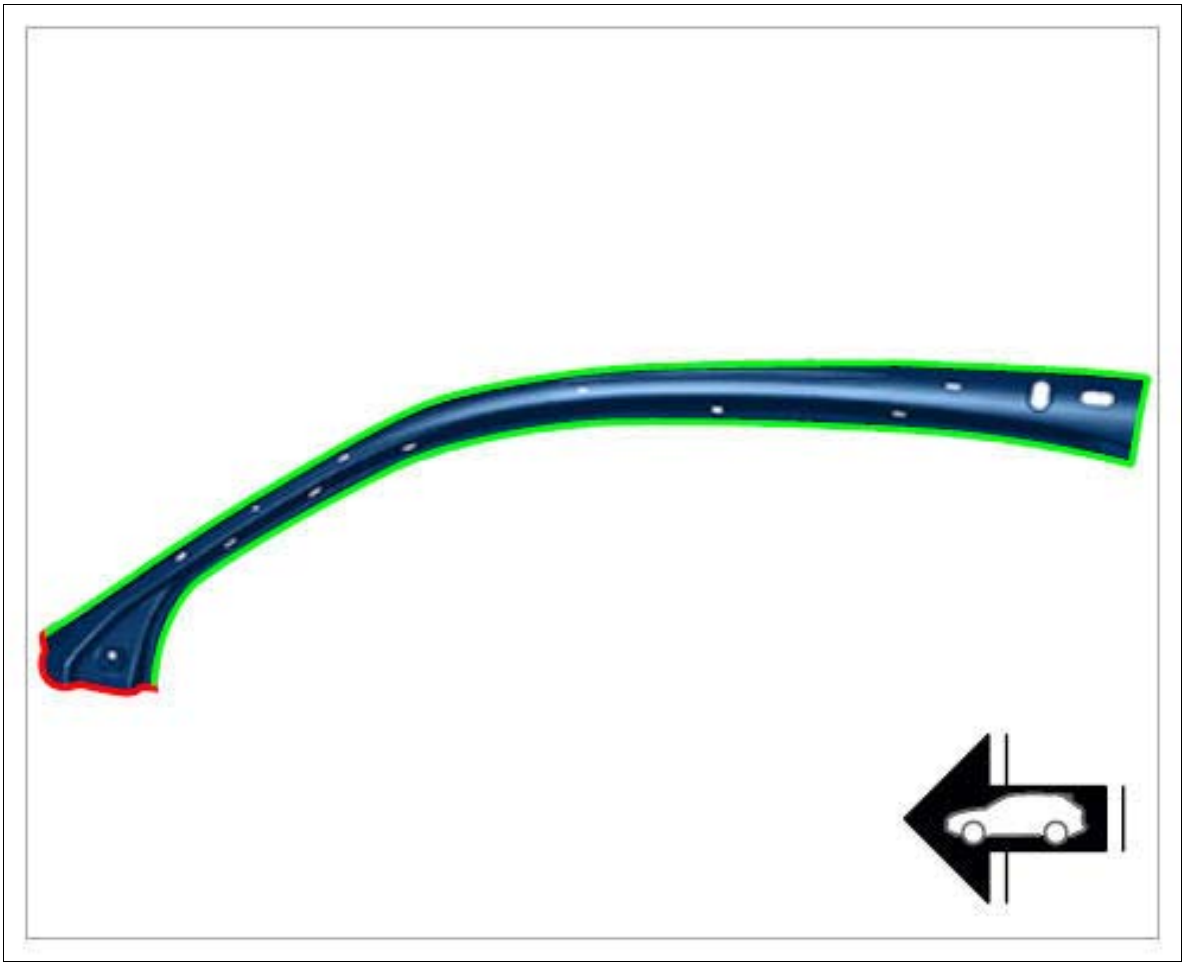

Courtesy of PORSCHE CARS NORTH AMERICA, INC.

Green	Resistance spot-welding + bonding
Red	Bonding + blind rivets

WM 510555 REPLACING ROOF PILLAR (ALL MODELS) > PREPARING CONNECTION AREAS OF THE BODY

1. Align the sealing surface and connections of the body.

   Information

   1. Before final assembly, make sure you fully understand all the work steps involved and carry out a trial assembly without applying adhesive.
   2. The bonding process can only be carried out reliably when a smooth and swift sequence of operations is guaranteed.
   3. Do not begin bonding work until all materials and tools necessary for later repair work are available.

2. De-burr connection points and prepare them for bonding. → 5X00IN21 WORKING WITH BODY STRUCTURAL ADHESIVE

3. Prepare the marked areas for bonding and welding.

Fig 1: Identifying Body Connection Areas

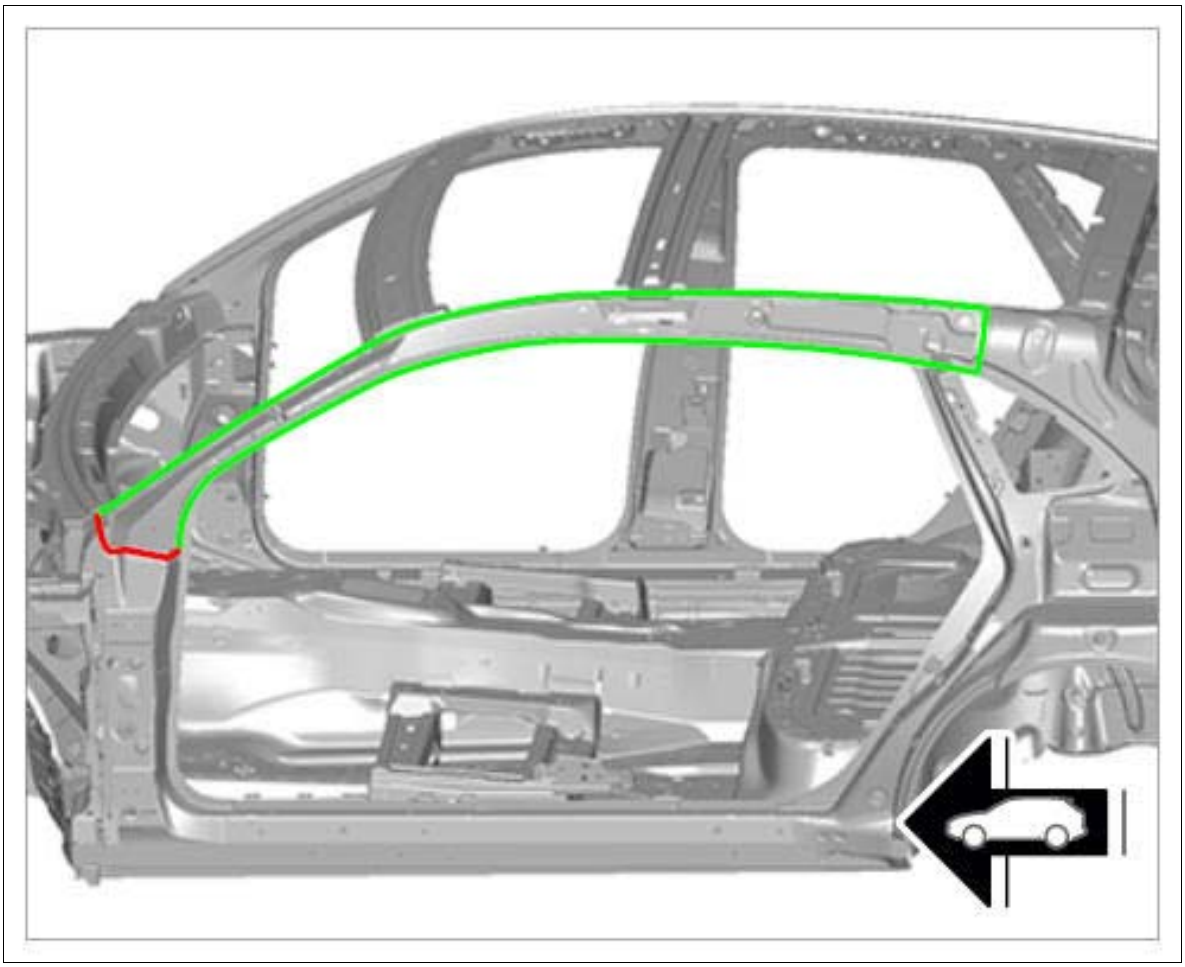

Courtesy of PORSCHE CARS NORTH AMERICA, INC.

Green	Resistance spot-welding + bonding
Red	Bonding + blind rivets

WM 510555 REPLACING ROOF PILLAR (ALL MODELS) > INSTALLING ROOF PILLAR

Information

- Before final assembly, make sure you fully understand all the work steps involved and carry out a trial assembly without applying adhesive.
- The bonding process can only be carried out reliably when a smooth and swift sequence of operations is guaranteed.
- Do not begin bonding work until all materials and tools necessary for later repair work are available.

1. Install roof pillar and check that it fits perfectly. Check gap dimensions. → 5X00IN DIAGRAM - BODY GAP DIMENSIONS

    1. 1.1. Apply adhesive to the areas marked in yellow. → 5X00IN21 WORKING WITH BODY STRUCTURAL ADHESIVE→ **Application depth: 3.0 mm**

    Fig 1: Identifying Adhesive Applying Areas

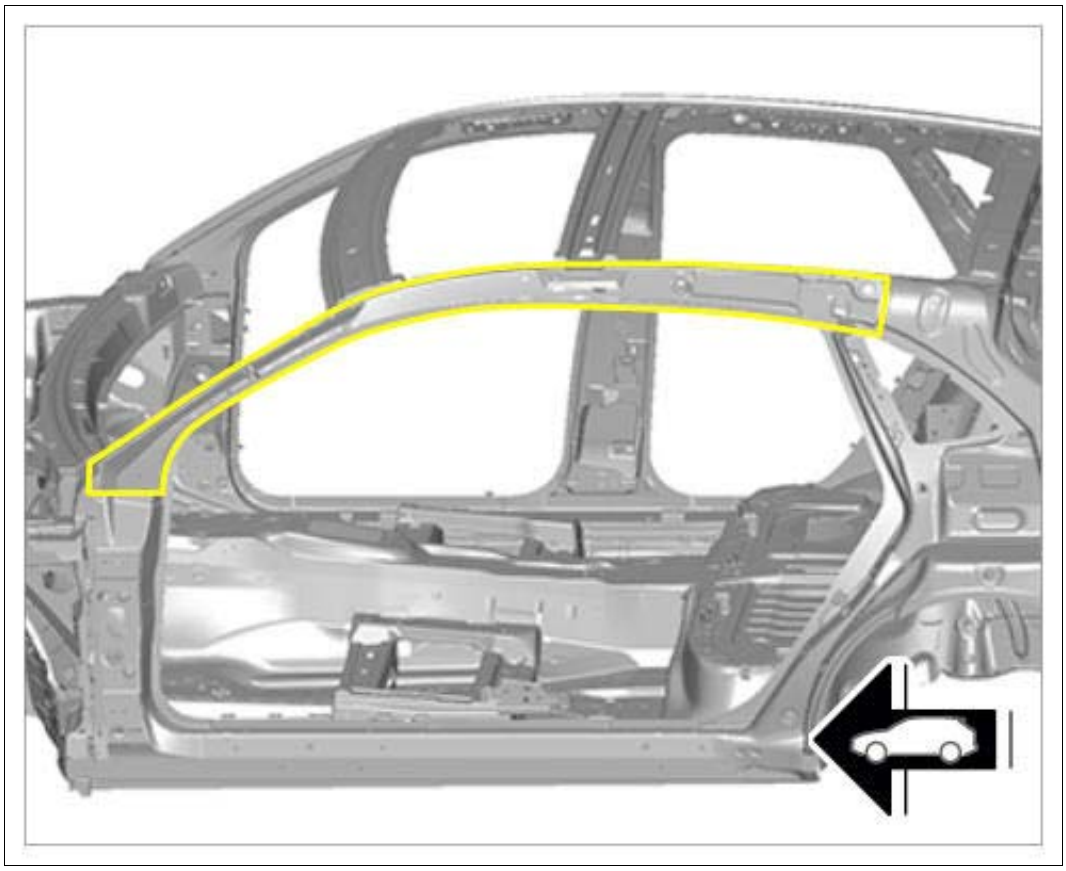

Courtesy of PORSCHE CARS NORTH AMERICA, INC.

2. Resistance spot-weld the roof pillar.

Fig 2: Identifying Roof Pillar Spot-Weld Area

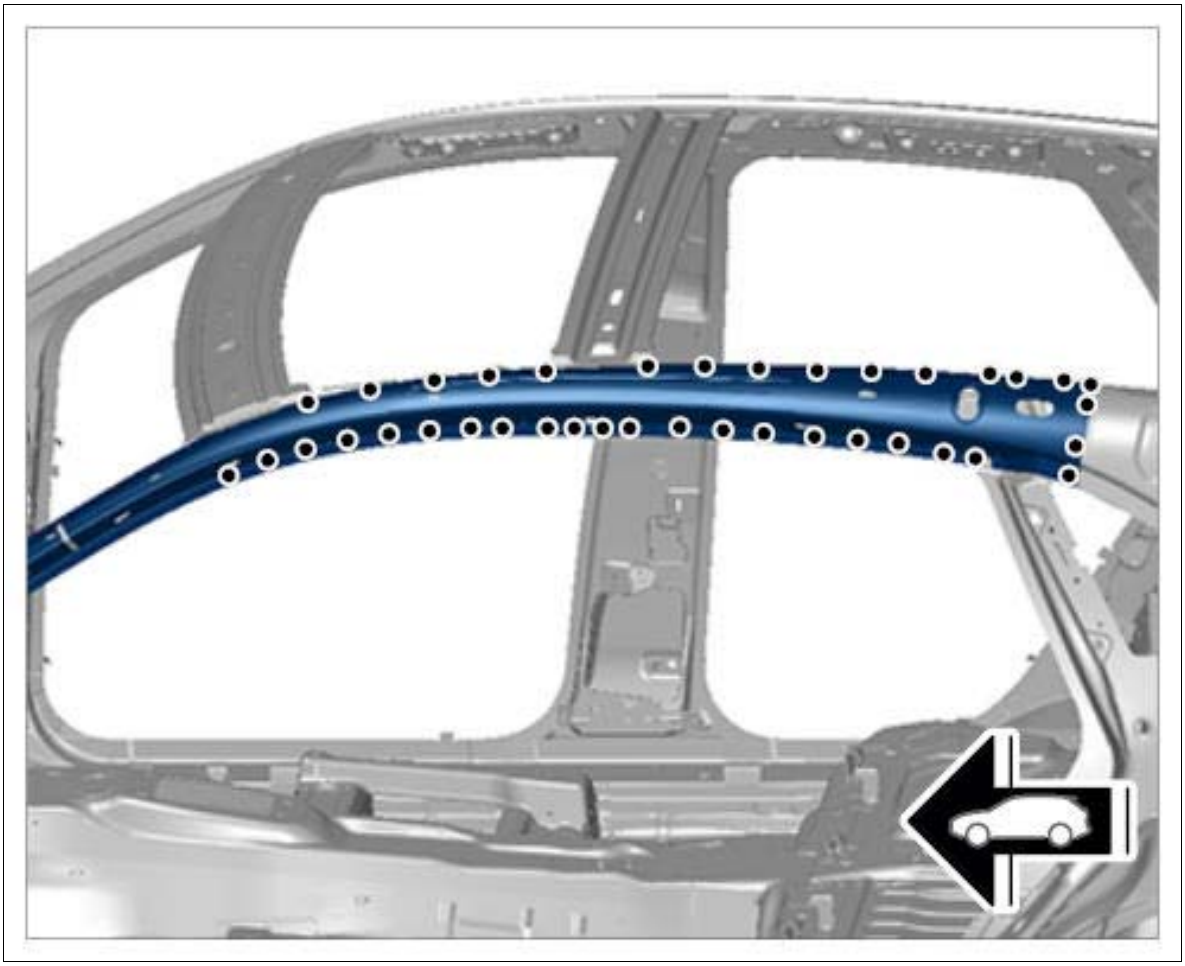

Courtesy of PORSCHE CARS NORTH AMERICA, INC.

Fig 3: Identifying Roof Pillar Spot-Weld Area



Courtesy of PORSCHE CARS NORTH AMERICA, INC.

3. Rivet in the roof pillar in area **-A-** . → BLIND RIVET 999.190.227.01

Fig 4: Identifying Roof Pillar Rivet Area

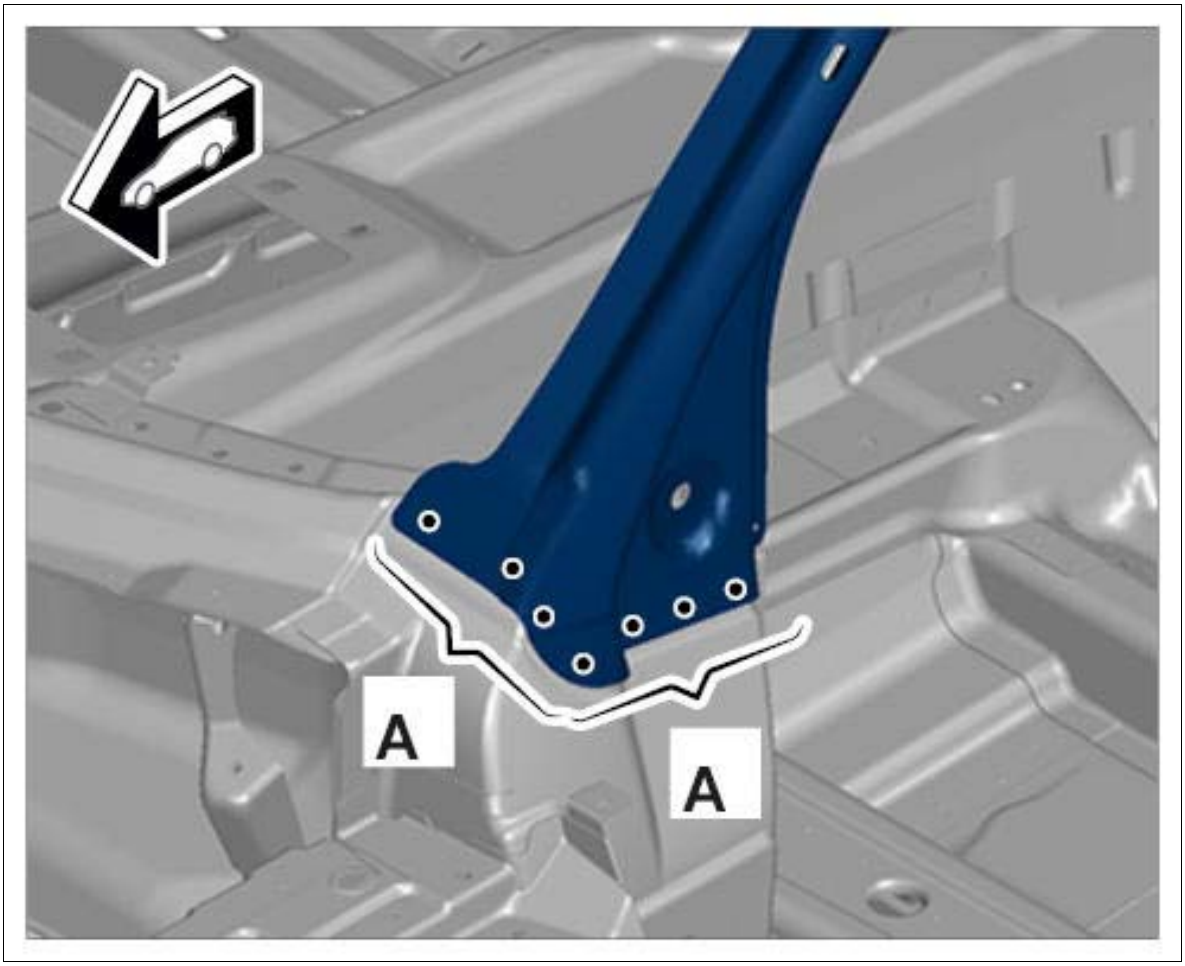

Courtesy of PORSCHE CARS NORTH AMERICA, INC.

WM 510555 REPLACING ROOF PILLAR (ALL MODELS) > SUBSEQUENT WORK

1. Remove B-pillar reinforcement. → 514255 REPLACING B-PILLAR REINFORCEMENT
2. Remove A-pillar. → 511255 REPLACING A-PILLAR
3. Remove roof pillar. → 510555 REPLACING OUTER ROOF PILLAR PANEL

WM 510555 REPLACING ROOF PILLAR (ALL MODELS) > SUBSEQUENT WORK > SUBSEQUENT WORK FOR BODY REPAIRS

1. Release and remove vehicle from the straightening system.
2. Clean joint areas and sheetmetal flanges with a wire brush.
3. Prime joint areas and sheetmetal flanges with 2K primer.
4. Restore standard seal with body sealant → 5X00IN42 SEAM SEALING .

Also seal the repair area carefully.

5. Paint repair area and adjacent surfaces, if necessary.
6. Restore standard underbody protection with underbody sealant → 5X00IN43 UNDERBODY PROTECTION .
7. Apply standard cavity preservation → 5X00IN44 CAVITY PRESERVATION . Also carefully apply cavity preservation to the repair area.
8. Install removed accessories in the repair area.

WM 510555 REPLACING ROOF PILLAR (OUTER PANEL) (ALL MODELS) > TOOLS

Designation	Type	Number	Description	
Hot-air blower	Workshop equipment	WE 1119		
Body alignment system package	Workshop equipment	WE 1121		
Special electric cutter	Workshop equipment	WE 1137		
Pneumatic Spotweld Remover, Vario Drill WS 90	Workshop equipment	WE 1139		
Hand-cartridge gun	Workshop equipment	WE 1141		
Resistance spot welder	Workshop equipment	WE 1311		
Inverter welder MIDIspot-QSVM-12000	Workshop equipment	WE 1312		
Resistance spot welder	Workshop equipment	WE 1313		
Blind riveting tool TAURUS 4	Workshop equipment	WE 1348		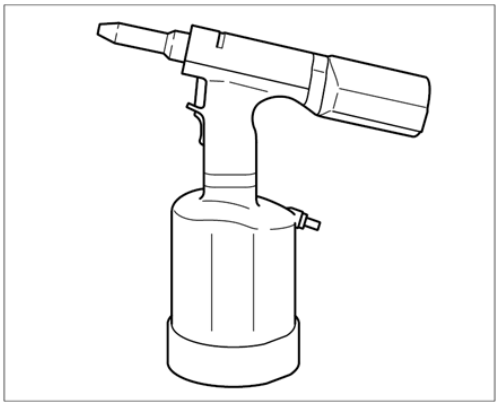

Aluminum tool set with trolley	Workshop equipment	WE 1350		
Resistance spot welder	Workshop equipment	WE 1352		
Measuring and alignment system, professional	Workshop equipment	WE 1398		
Mobile extraction unit, aluminum	Workshop equipment	WE 1507		
Body saw	Workshop equipment	WE 1508		
Star gauges for body gap dimensions	Special tool	Nr.127-1		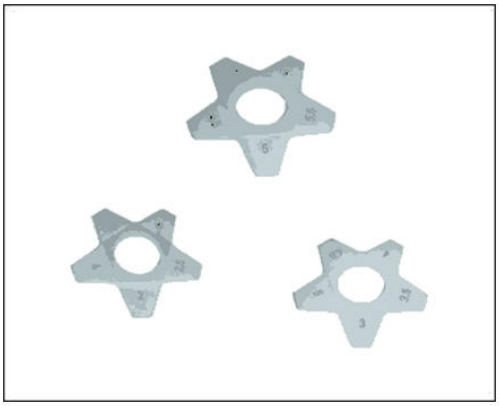
Spotweld drill	Commercially available tool	Nr.129		

Twist drill	Commercially available tool	Nr.201		
Countersink	Commercially available tool	Nr.202		

WM 510555 REPLACING ROOF PILLAR (OUTER PANEL) (ALL MODELS) > TECHNICAL VALUES

Location	Description	Type	Basic value	Tolerance 1	Tolerance 2
Dimension X		Distance	70 mm		
Dimension Y		Distance	120 mm		
Dimension Z		Distance	90 mm		
Dimension W		Distance	50 mm		
Applying adhesive		Application depth	3.0 mm		

WM 510555 REPLACING ROOF PILLAR (OUTER PANEL) (ALL MODELS) > PRELIMINARY WORK > PRELIMINARY WORK FOR BODY REPAIRS (WITHOUT STRAIGHTENING SYSTEM)

1. Remove accessories in the repair area.

    1. 1.1. Remove accessories in the repair area according to the extent of damage on the vehicle.

2. Cover accessories adjacent to the repair area on the vehicle.

    1. 2.1. Cover all accessories remaining on the vehicle and adjacent areas with fire-proof protective covers.

3. Reshape connection area of the sheetmetal parts to be replaced. Note: Information on aluminum repairs.

4. Expose joint areas.

    1. 4.1. Remove underbody protection, paint, etc. from the joint areas of the body using a hot-air gun or rotary brush.

WM 510555 REPLACING ROOF PILLAR (OUTER PANEL) (ALL MODELS) > PRELIMINARY WORK

1. Remove roof. → 510355 REPLACING ROOF

WM 510555 REPLACING ROOF PILLAR (OUTER PANEL) (ALL MODELS) > SAFETY INSTRUCTIONS AND INFORMATION ON QUALITY

⚠ *CAUTION: Non-observance of safety instructions for body repairs*

- *Risk of damage to the vehicle*
- *Danger of injury*

→ Read the relevant safety instructions as well as general information and quality instructions → 5X00IN01 SAFETY INSTRUCTIONS .

- Protection of electrical components during body repairs
- Corrosion protection measures during repairs → 5X00IN03 CORROSION PROTECTION MEASURES DURING REPAIRS
- Information on aluminum repairs
- Body parts of various sheet-steel strengths → 5X00IN04 BODY PARTS OF VARIOUS SHEET-STEEL STRENGTHS
- Replacing punch rivets and penetrated joints
- Setting self-tapping screws → 5X00IN24 SETTING SELF-TAPPING SCREWS
- Working with body structural adhesive → 5X00IN21 WORKING WITH BODY STRUCTURAL ADHESIVE

WM 510555 REPLACING ROOF PILLAR (OUTER PANEL) (ALL MODELS) > TOOLS AND MATERIALS > TOOLS AND MATERIALS FOR BODY REPAIRS

Information

- The tools for working on steel and aluminum must always be kept separate from each other. We recommend that you color code the tools using a system similar to that used for the Aluminum tool set with trolley WE 1350, for example.

Straightening set **Body alignment system package WE 1121 Measuring and alignment system, professional WE 1398**

Resistance spot welder; optional **Inverter welder MIDIspot-QSVM-12000 WE 1312, Resistance spot welder WE 1352, Resistance spot welder WE 1311, Resistance spot welder WE 1313**

Metal inert gas (MIG) welder

Pneumatic spotweld remover **Pneumatic Spotweld Remover, Vario Drill WS 90 WE 1139**

Pneumatic body saw **Body saw WE 1508**

Oscillating body saw (special electric cutter) **Special electric cutter WE 1137**

Hot-air blower **Hot-air blower WE 1119**

Hand-cartridge gun **Hand-cartridge gun WE 1141**

Spotweld drill **Spotweld drill** ; **Twist drill Nr.201**

Countersink for rivets **Countersink Nr.202**

Blind riveting tool for high-strength rivets **Blind riveting tool TAURUS 4 WE 1348**

Safety vacuum cleaner for aluminum dust **Mobile extraction unit, aluminum WE 1507**

Star gauges for body gap dimensions Nr.127-1

Wurth Klebt und Dichtet body sealant

WM 510555 REPLACING ROOF PILLAR (OUTER PANEL) (ALL MODELS) > REMOVING ROOF PILLAR

Fig 1: Identifying Roof Pillar Installation Position

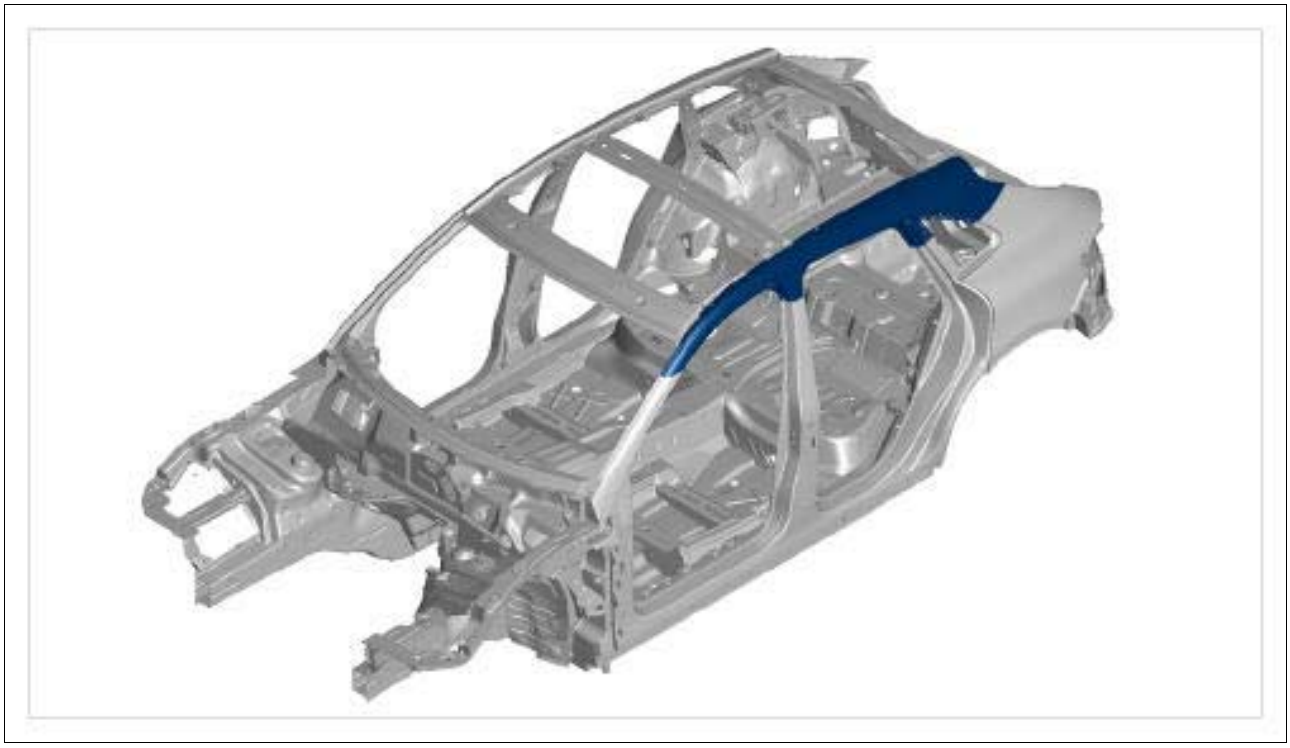

Courtesy of PORSCHE CARS NORTH AMERICA, INC.

Information

Only make cuts in the top plate. Make sure not to damage the plate underneath when doing this.

Information

Mark cuts **W, X, Y, Z** in accordance with the new part. Make sure to leave an overlap of approx. 3 cm with respect to the body.

1. Mark and make cuts. → **Distance: 70 mm** → **Distance: 120 mm** → **Distance: 90 mm** → **Distance: 50 mm**

Fig 2: Identifying Roof Pillar Mark Cutting Position

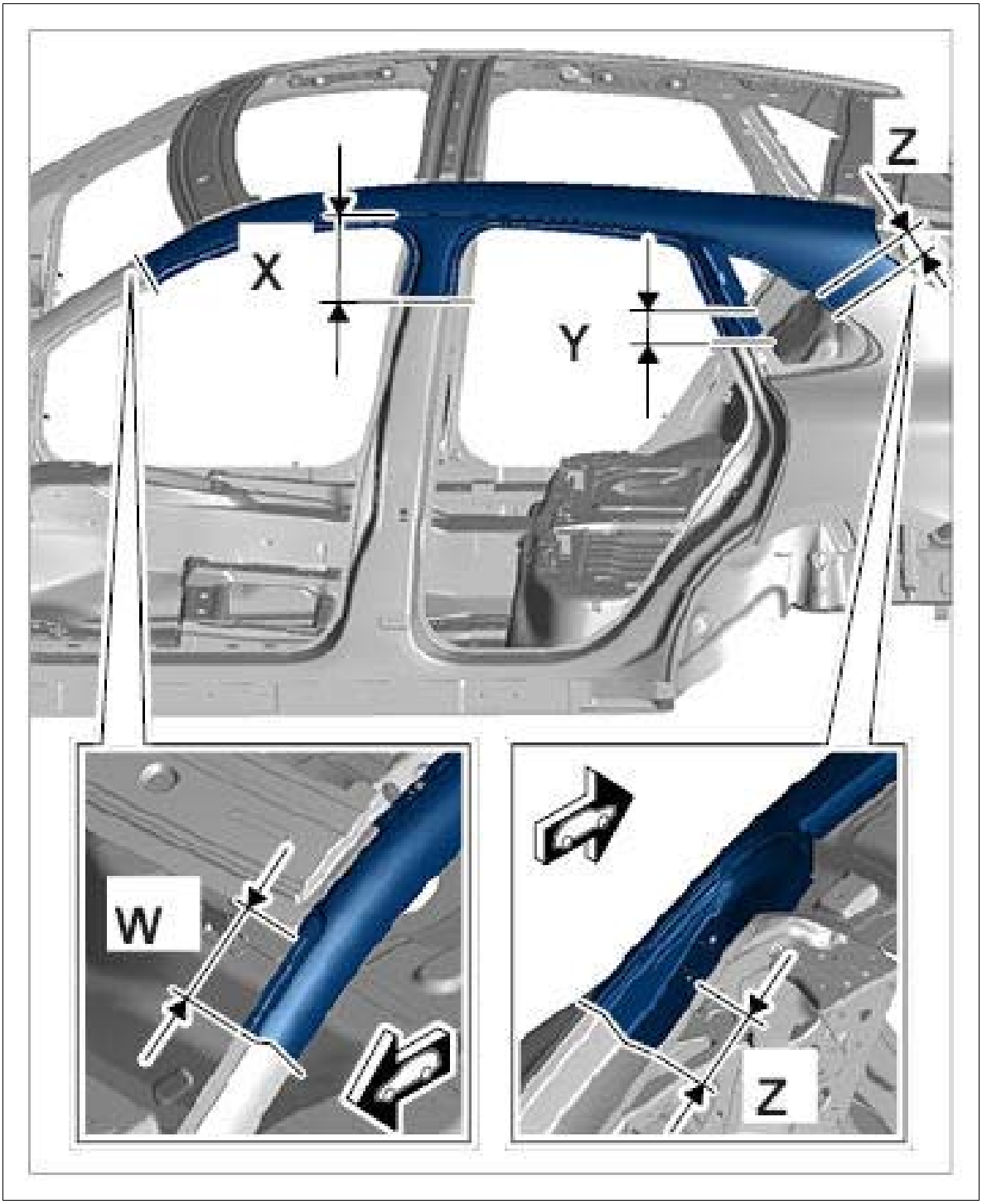

Courtesy of PORSCHE CARS NORTH AMERICA, INC.

Information

Drill out the connection point on one side only. Do not damage the plate underneath.

2. Drill out spotwelds using **spotweld drill;** .

Fig 3: Identifying Roof Pillar Spotwelds Area



Courtesy of PORSCHE CARS NORTH AMERICA, INC.

Fig 4: Identifying Roof Pillar

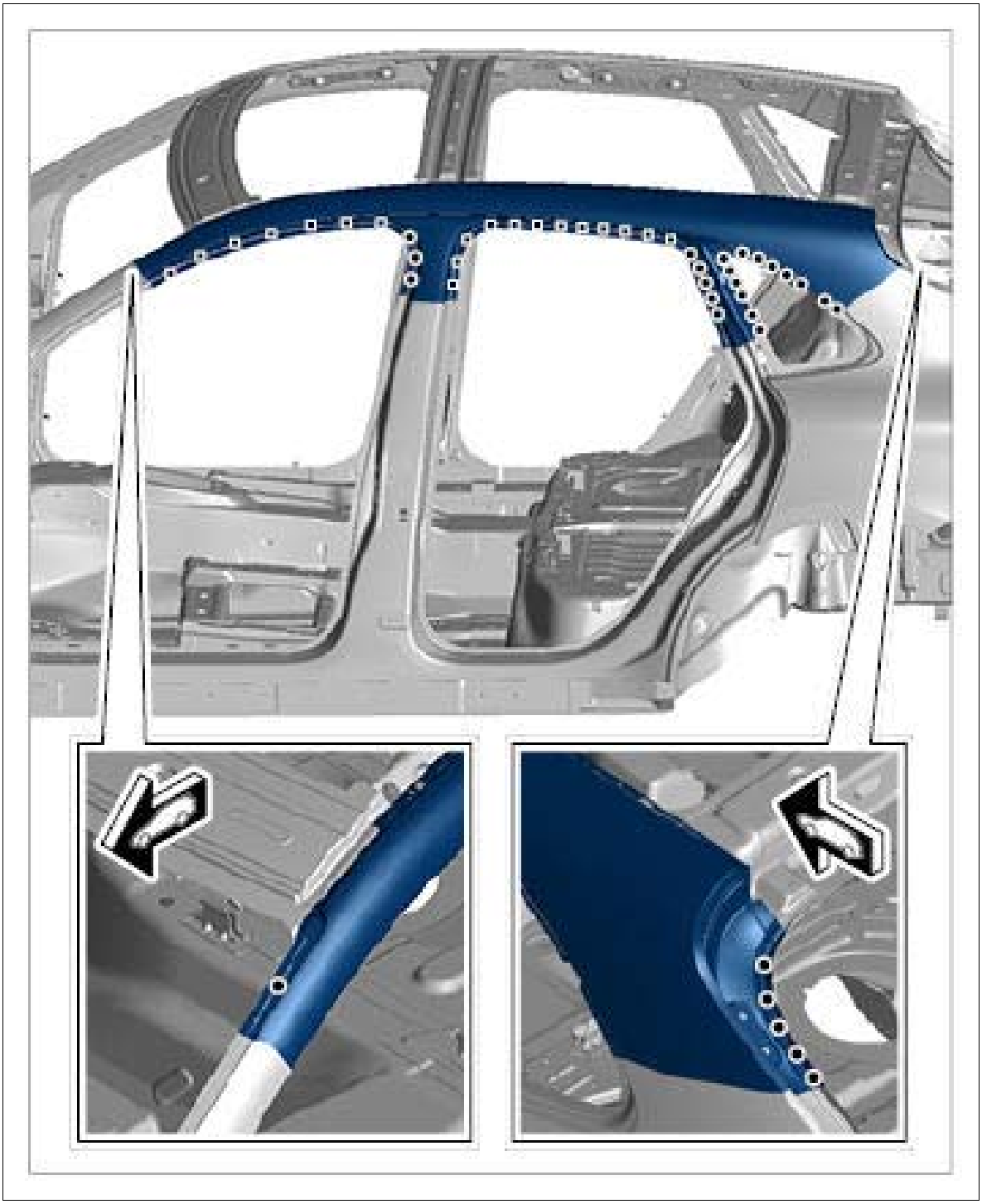

Courtesy of PORSCHE CARS NORTH AMERICA, INC.

3. Heat the marked bonding areas.

Fig 5: Identifying Roof Pillar

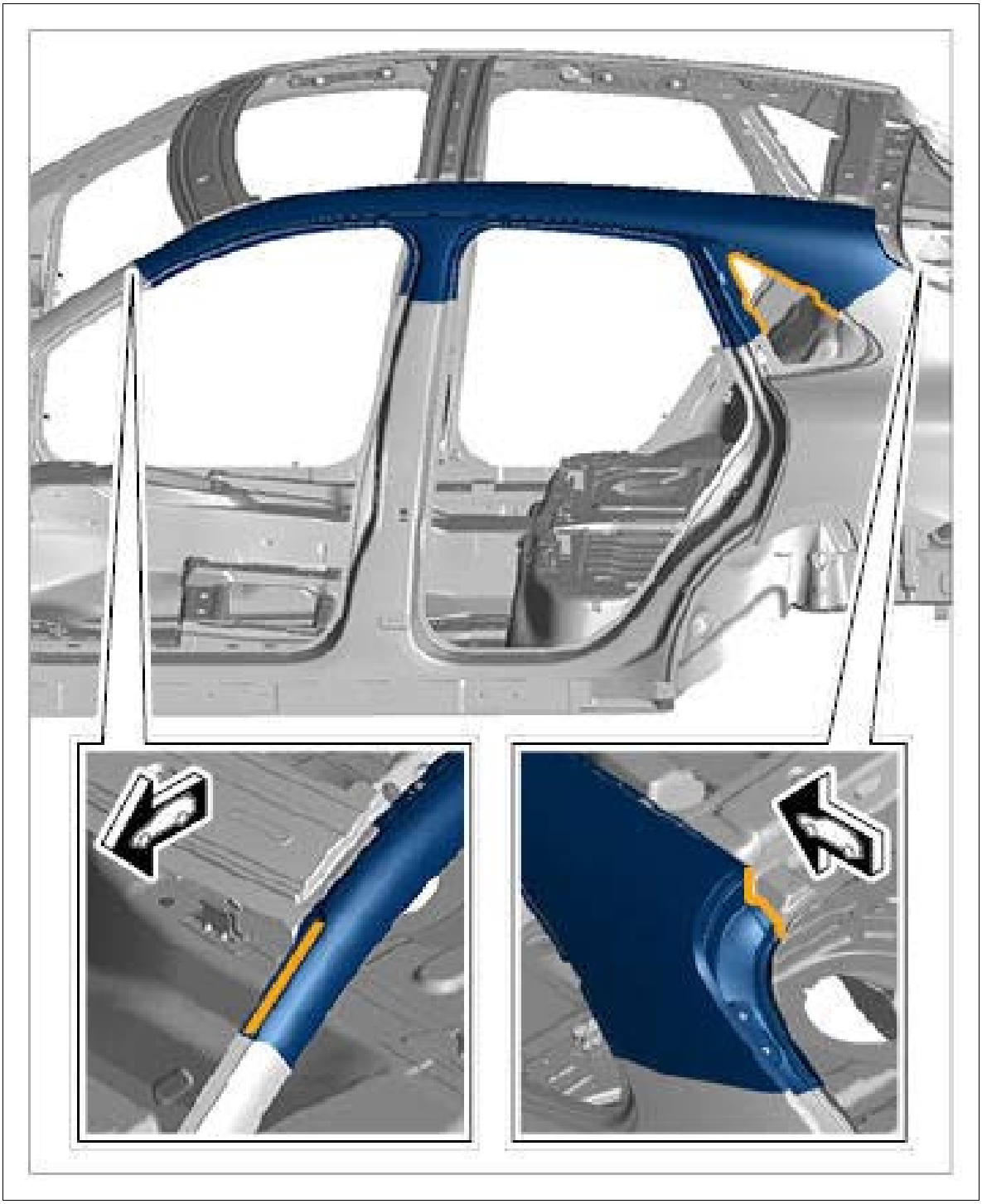

Courtesy of PORSCHE CARS NORTH AMERICA, INC.

Information

The front and center roof cross members overlap the roof pillar. Make a sufficient gap between the components before removing the roof pillar.

4. Make a sufficient gap with respect to the roof pillar in area **-A-** on the front and center roof cross members.

1. 4.1. Remove roof pillar.

Fig 6: Identifying Roof Pillar

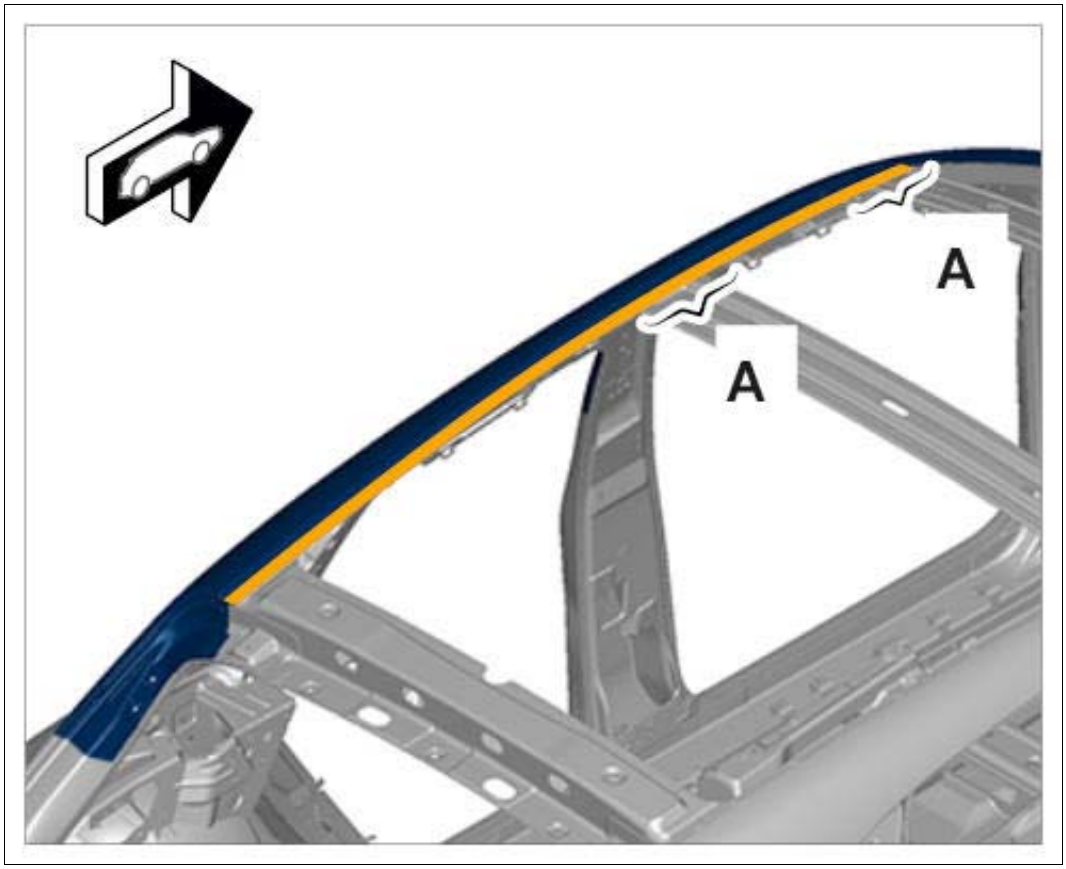

Courtesy of PORSCHE CARS NORTH AMERICA, INC.

WM 510555 REPLACING ROOF PILLAR (OUTER PANEL) (ALL MODELS) > PREPARING ROOF PILLAR FOR INSTALLATION

1. Fit in rear side section.

    1. 1.1. Cut rear side section at the transitions to the body leaving an overlap of 30 mm.

Fig 1: Identifying Roof Pillar

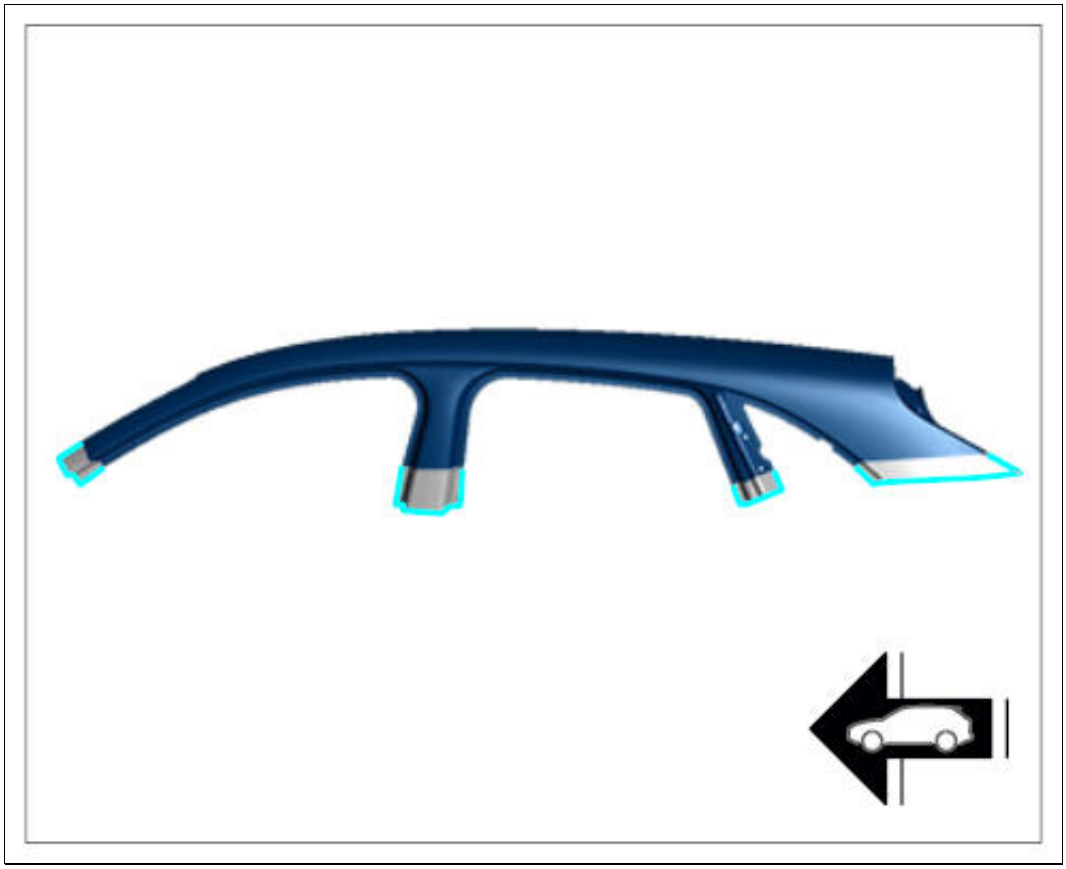

Courtesy of PORSCHE CARS NORTH AMERICA, INC.

2. Fit in roof pillar again.
    1. 2.1. Make cuts through the roof pillar and body in the overlap areas.
3. Prepare connection areas for bonding and welding.

Fig 2: Identifying Roof Pillar Connection Areas

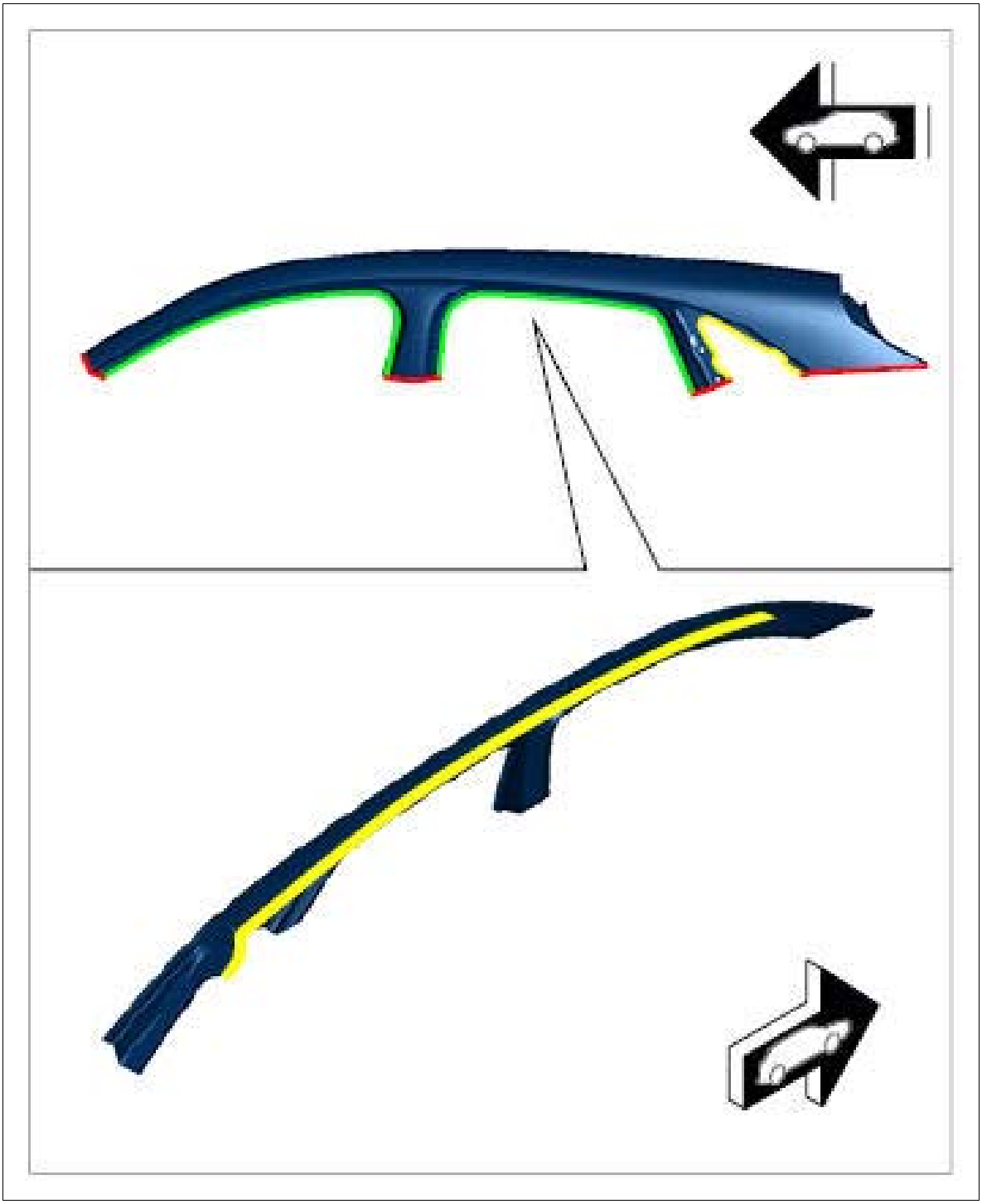

Courtesy of PORSCHE CARS NORTH AMERICA, INC.

Red	Plug-welding/apply a full weld using inert gas without bonding
Green	Resistance spot-welding
Yellow	Bonding + resistance spot-welding

WM 510555 REPLACING ROOF PILLAR (OUTER PANEL) (ALL MODELS) > PREPARING CONNECTION AREAS OF THE BODY FOR INSTALLATION

1. Align the sealing surface and connections of the body.
2. De-burr connection points and prepare them for welding.

   Information

   Before final assembly, make sure you fully understand all the work steps involved and carry out a trial assembly without applying adhesive.

   1. The bonding process can only be carried out reliably when a smooth and swift sequence of operations is guaranteed.
   2. Do not begin bonding work until all materials and tools necessary for later repair work are available.

3. Prepare the marked areas for bonding and welding. → 5X00IN21 WORKING WITH BODY STRUCTURAL ADHESIVE

Fig 1: Identifying Body Connection Areas

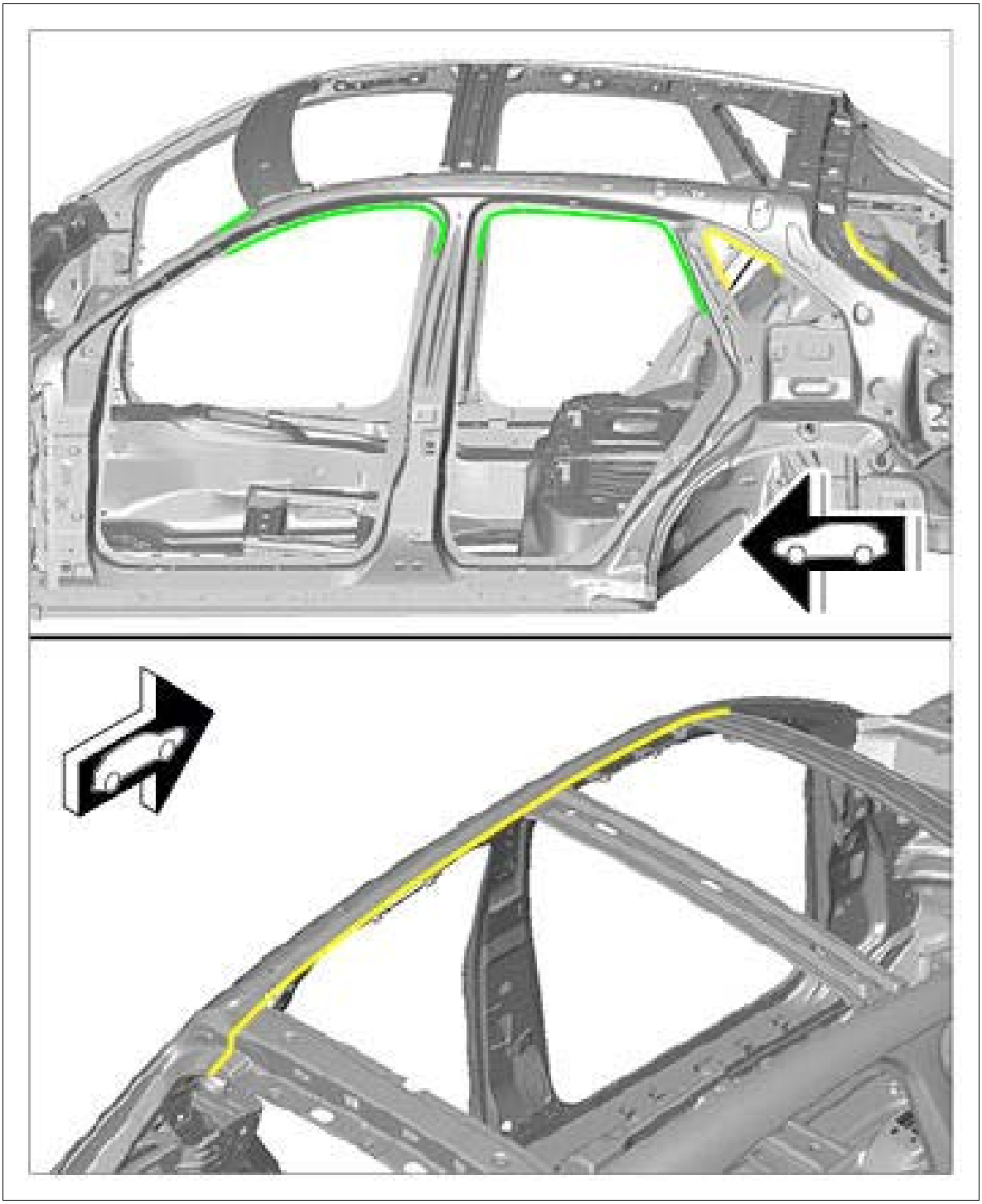

Courtesy of PORSCHE CARS NORTH AMERICA, INC.

Yellow	Bonding + resistance spot-welding
Green	Resistance spot-welding
Blue	Bonding

WM 510555 REPLACING ROOF PILLAR (OUTER PANEL) (ALL MODELS) > INSTALLING ROOF PILLAR

Information

- Before final assembly, make sure you fully understand all the work steps involved and carry out a trial assembly without applying adhesive.
- The bonding process can only be carried out reliably when a smooth and swift sequence of operations is guaranteed.
- Do not begin bonding work until all materials and tools necessary for later repair work are available.

1. Install roof pillar and check that it fits perfectly. Check gap dimensions. → 5X00IN DIAGRAM - BODY GAP DIMENSIONS
    1. 1.1. Apply adhesive to the areas marked in yellow. → 5X00IN21 WORKING WITH BODY STRUCTURAL ADHESIVE→ **Application depth: 3.0 mm**

Fig 1: Identifying Adhesive Applying Area

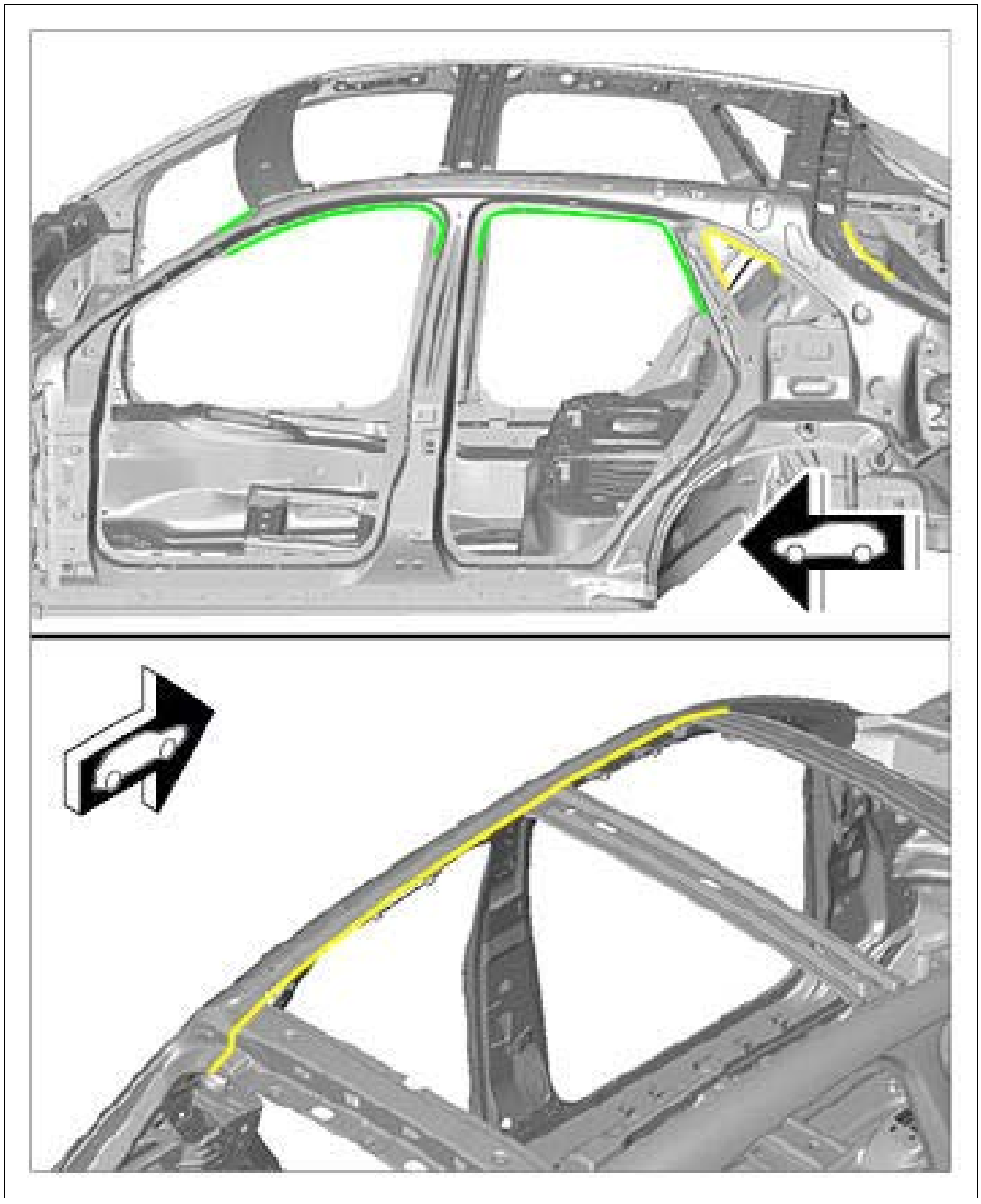

Courtesy of PORSCHE CARS NORTH AMERICA, INC.

2. Resistance spot-weld the roof pillar.

Fig 2: Identifying Roof Pillar Spot-Weld Area



Courtesy of PORSCHE CARS NORTH AMERICA, INC.

Fig 3: Installing Roof Pillar

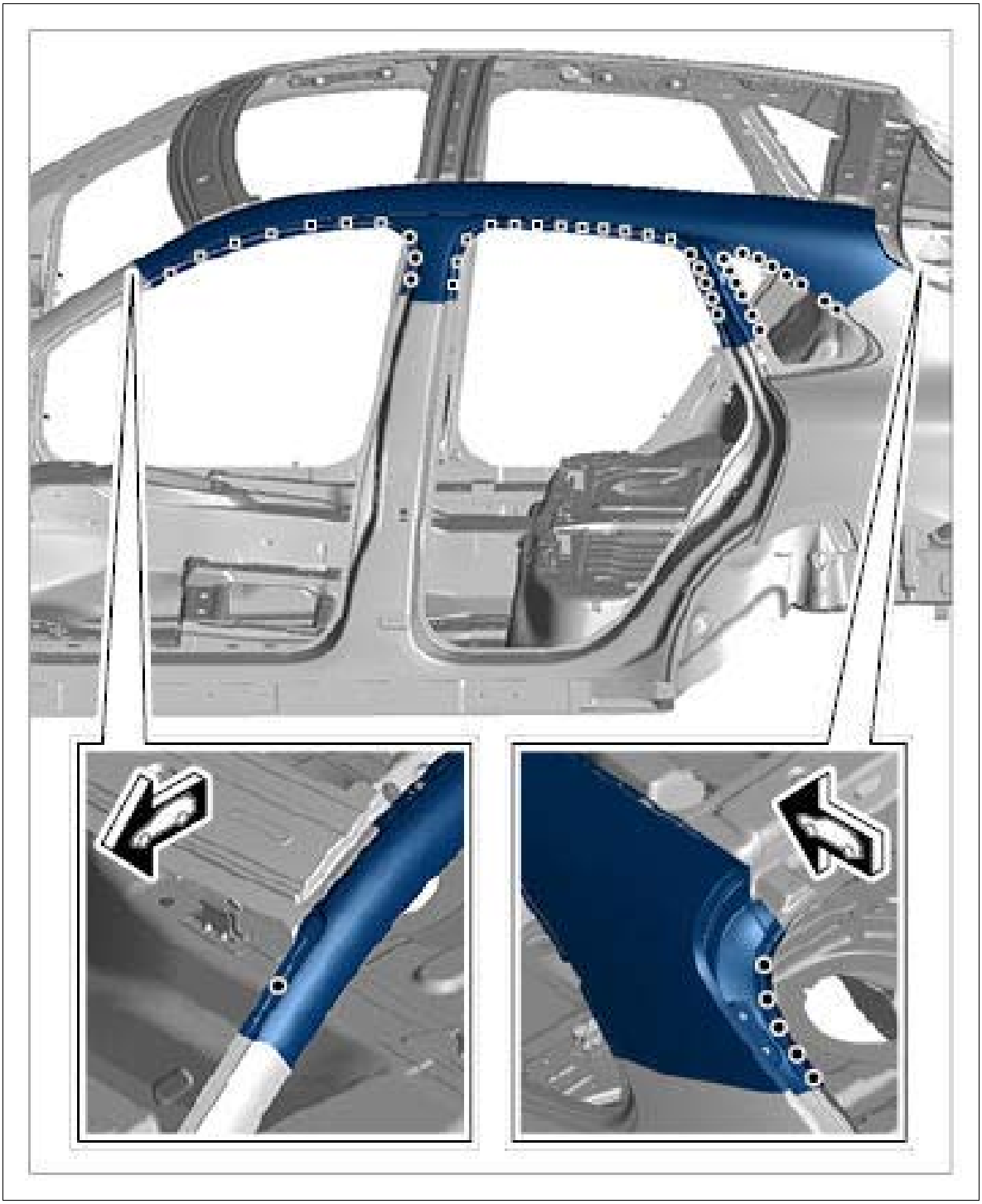

Courtesy of PORSCHE CARS NORTH AMERICA, INC.

3. Apply a full weld to the area **-arrows-** using inert gas.

Fig 4: Installing Roof Pillar

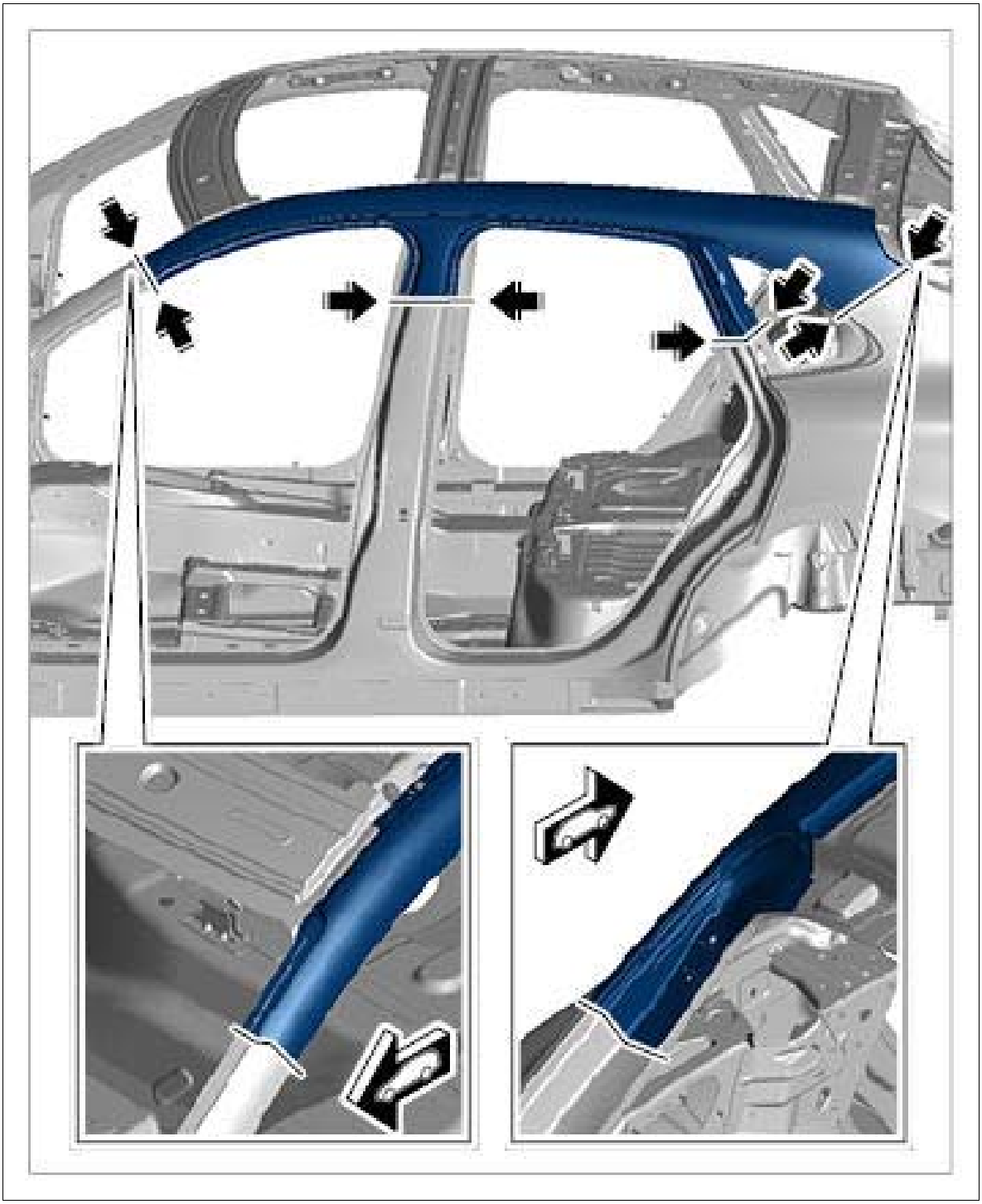

Courtesy of PORSCHE CARS NORTH AMERICA, INC.

WM 510555 REPLACING ROOF PILLAR (OUTER PANEL) (ALL MODELS) > SUBSEQUENT WORK

1. Install roof. → Installing Roof

WM 510555 REPLACING ROOF PILLAR (OUTER PANEL) (ALL MODELS) > SUBSEQUENT WORK > SUBSEQUENT WORK FOR BODY REPAIRS (WITHOUT STRAIGHTENING SYSTEM)

1. Clean joint areas and sheetmetal flanges with a wire brush.
2. Prime joint areas and sheetmetal flanges with 2K primer.
3. Restore standard seal with body sealant → 5X00IN42 SEAM SEALING .

   Also seal the repair area carefully.
4. Paint repair area and adjacent surfaces, if necessary.
5. Restore standard underbody protection with underbody sealant → 5X00IN43 UNDERBODY PROTECTION .
6. Apply standard cavity preservation → 5X00IN44 CAVITY PRESERVATION . Also apply cavity preservation to the repair area.
7. Install removed accessories in the repair area.

WM 510655 REPLACING UPPER FRONT ROOF FRAME (ALL MODELS) > TOOLS

Designation	Type	Number	Description	
Hot-air blower	Workshop equipment	WE 1119		
Body alignment system package	Workshop equipment	WE 1121		
Special electric cutter	Workshop equipment	WE 1137		
Pneumatic Spotweld Remover, Vario Drill WS 90	Workshop equipment	WE 1139		
Hand-cartridge gun	Workshop equipment	WE 1141		
Resistance spot welder	Workshop equipment	WE 1311		
Inverter welder MIDIspot-QSVM-12000	Workshop equipment	WE 1312		
Resistance spot welder	Workshop equipment	WE 1313		

Blind riveting tool TAURUS 4	Workshop equipment	WE 1348		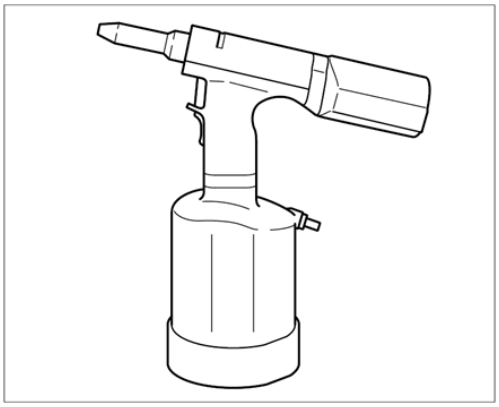
Aluminum tool set with trolley	Workshop equipment	WE 1350		
Resistance spot welder	Workshop equipment	WE 1352		
Measuring and alignment system, professional	Workshop equipment	WE 1398		
Mobile extraction unit, aluminum	Workshop equipment	WE 1507		
Body saw	Workshop equipment	WE 1508		
Star gauges for body gap dimensions	Special tool	Nr.127-1		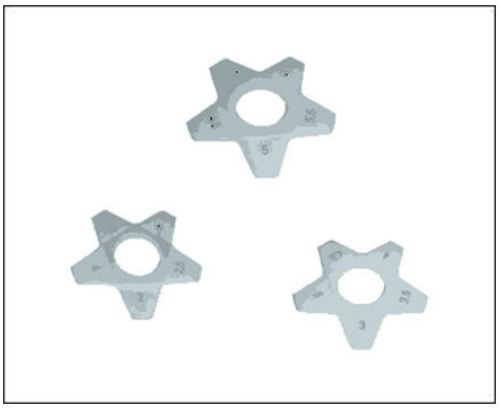

Spotweld drill	Commercially available tool	Nr.129		
Twist drill	Commercially available tool	Nr.201		
Countersink	Commercially available tool	Nr.202		

WM 510655 REPLACING UPPER FRONT ROOF FRAME (ALL MODELS) > TECHNICAL VALUES

Location	Description	Type	Basic value	Tolerance 1	Tolerance 2
Applying adhesive		Application depth	3.0 mm		

WM 510655 REPLACING UPPER FRONT ROOF FRAME (ALL MODELS) > PRELIMINARY WORK > PRELIMINARY WORK FOR BODY REPAIRS (WITHOUT

STRAIGHTENING SYSTEM)

1. Remove accessories in the repair area.
    1. 1.1. Remove accessories in the repair area according to the extent of damage on the vehicle.
2. Cover accessories adjacent to the repair area on the vehicle.
    1. 2.1. Cover all accessories remaining on the vehicle and adjacent areas with fire-proof protective covers.
3. Reshape connection area of the sheetmetal parts to be replaced. Note: Information on aluminum repairs
4. Expose joint areas.
    1. 4.1. Remove underbody protection, paint, etc. from the joint areas of the body using a hot-air gun or rotary brush.

WM 510655 REPLACING UPPER FRONT ROOF FRAME (ALL MODELS) > PRELIMINARY WORK

1. Remove roof. → 510355 REPLACING ROOF

WM 510655 REPLACING UPPER FRONT ROOF FRAME (ALL MODELS) > SAFETY INSTRUCTIONS AND INFORMATION ON QUALITY

⚠ *CAUTION: Non-observance of safety instructions for body repairs*

- *Risk of damage to the vehicle*
- *Danger of injury*

→ Read the relevant safety instructions as well as general information and quality instructions → 5X00IN01 SAFETY INSTRUCTIONS .

- Protection of electrical components during body repairs
- Corrosion protection measures during repairs → 5X00IN03 CORROSION PROTECTION MEASURES DURING REPAIRS
- Information on aluminum repairs
- Body parts of various sheet-steel strengths → 5X00IN04 BODY PARTS OF VARIOUS SHEET-STEEL STRENGTHS
- Replacing punch rivets and penetrated joints

- Setting self-tapping screws → 5X00IN24 SETTING SELF-TAPPING SCREWS
- Working with body structural adhesive → 5X00IN21 WORKING WITH BODY STRUCTURAL ADHESIVE

WM 510655 REPLACING UPPER FRONT ROOF FRAME (ALL MODELS) > TOOLS AND MATERIALS > TOOLS AND MATERIALS FOR BODY REPAIRS

Information

- The tools for working on steel and aluminum must always be kept separate from each other. We recommend that you color code the tools using a system similar to that used for the Aluminum tool set with trolley WE 1350, for example.

Straightening set **Body alignment system package WE 1121 Measuring and alignment system, professional WE 1398**

Resistance spot welder; optional **Inverter welder MIDIspot-QSVM-12000 WE 1312, Resistance spot welder WE 1352, Resistance spot welder WE 1311, Resistance spot welder WE 1313**

Metal inert gas (MIG) welder

Pneumatic spotweld remover **Pneumatic Spotweld Remover, Vario Drill WS 90 WE 1139**

Pneumatic body saw **Body saw WE 1508**

Oscillating body saw (special electric cutter) **Special electric cutter WE 1137**

Hot-air blower **Hot-air blower WE 1119**

Hand-cartridge gun **Hand-cartridge gun WE 1141**

Spotweld drill **Spotweld drill Twist drill Nr.201**

Countersink for rivets **Countersink Nr.202**

Blind riveting tool for high-strength rivets **Blind riveting tool TAURUS 4 WE 1348**

Safety vacuum cleaner for aluminum dust **Mobile extraction unit, aluminum WE 1507**

Star gauges for body gap dimensions Nr.127-1

Wurth Klebt und Dichtet body sealant

WM 510655 REPLACING UPPER FRONT ROOF FRAME (ALL MODELS) > REMOVING UPPER FRONT ROOF FRAME

Information

Drill out the connection point on one side only. Do not damage the plate underneath.

Fig 1: Identifying Upper Front Roof Frame Installation Position

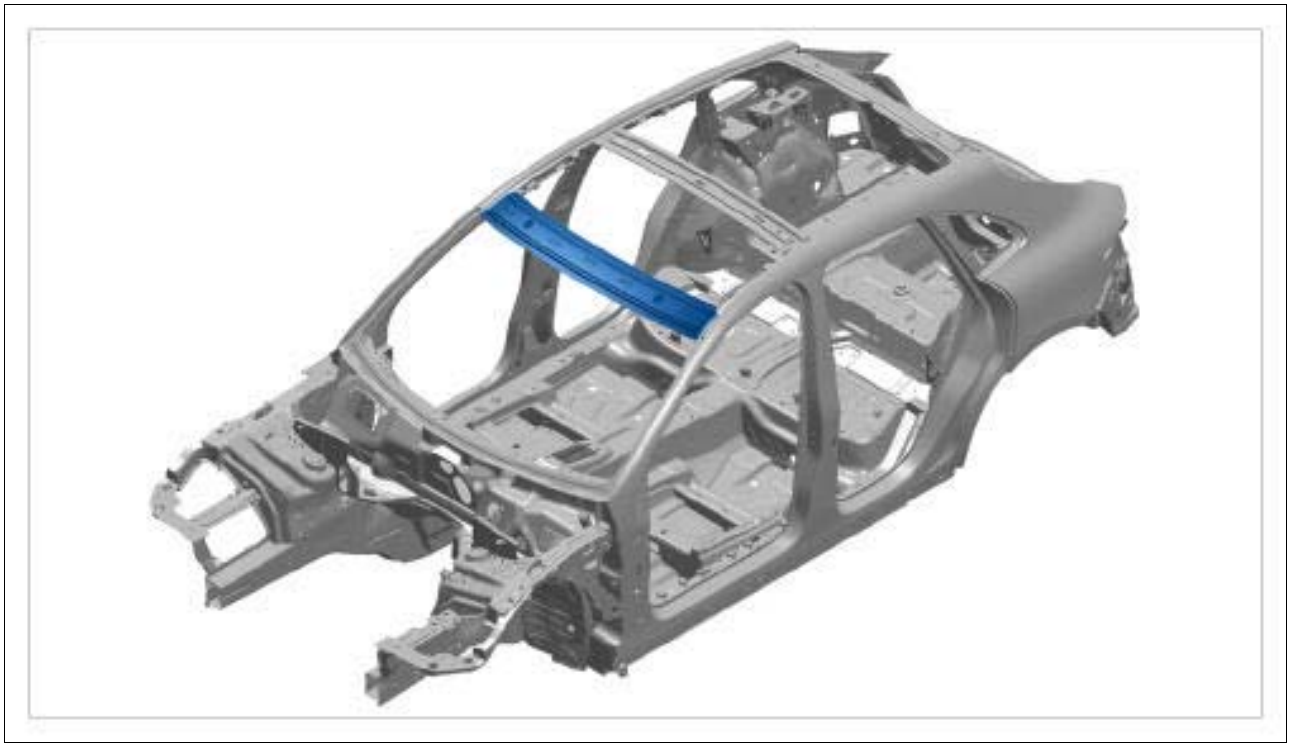

Courtesy of PORSCHE CARS NORTH AMERICA, INC.

1. Roughly cut out upper and lower part of roof frame **-arrows-** .

Fig 2: Removing Upper Front Roof Frame

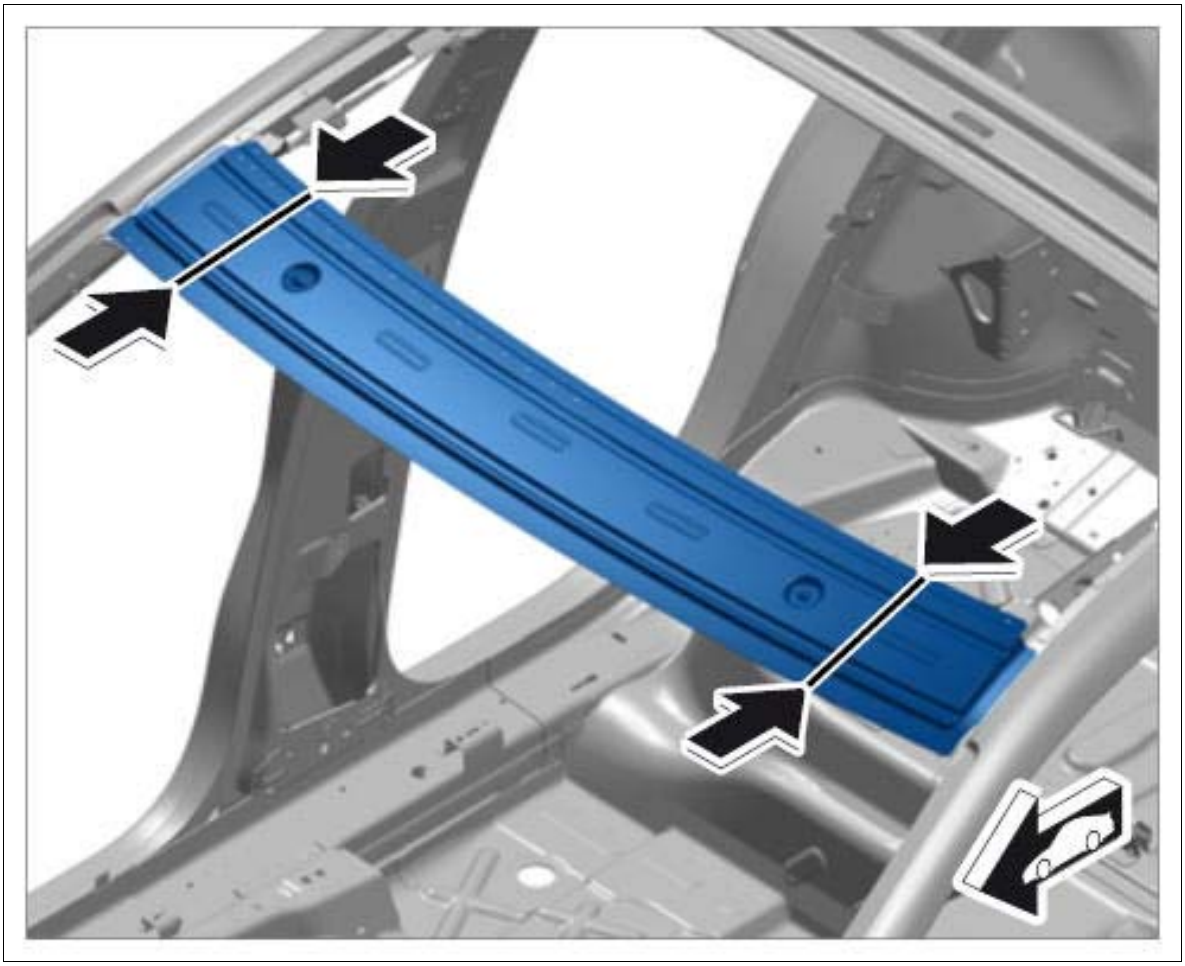

Courtesy of PORSCHE CARS NORTH AMERICA, INC.

2. Drill through spotwelds using a spotweld drill .

Information

Drill out spotwelds A through two plate thicknesses.

1. 2.1. Drill through spotwelds in area **-A-** using a **spotweld drill** .
2. 2.2. Heat bonding areas.
3. 2.3. Remove remaining pieces **-1-** of top half of roof frame.

Fig 3: Removing Upper Front Roof Frame

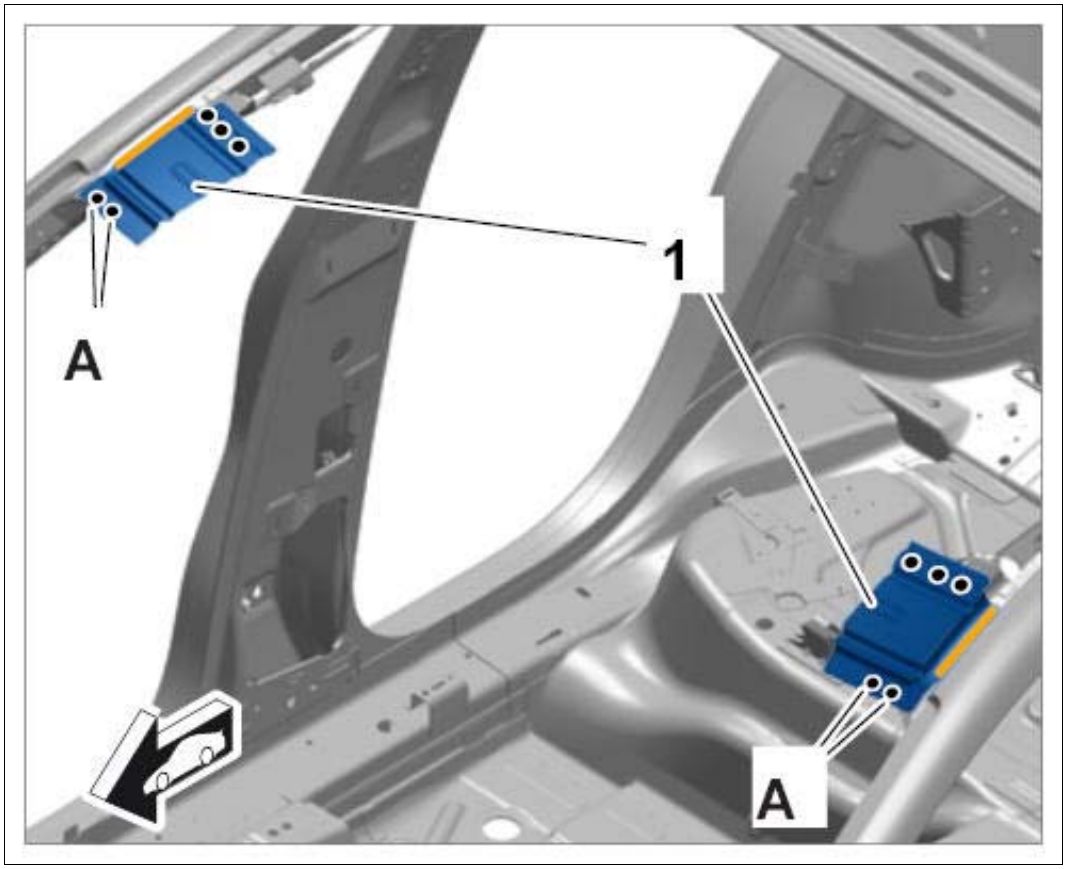

Courtesy of PORSCHE CARS NORTH AMERICA, INC.

3. Drill through spotwelds using a **spotweld drill**

    1. 3.1. Remove remaining pieces of bottom half of roof frame **-2-** .

Fig 4: Removing Upper Front Roof Frame

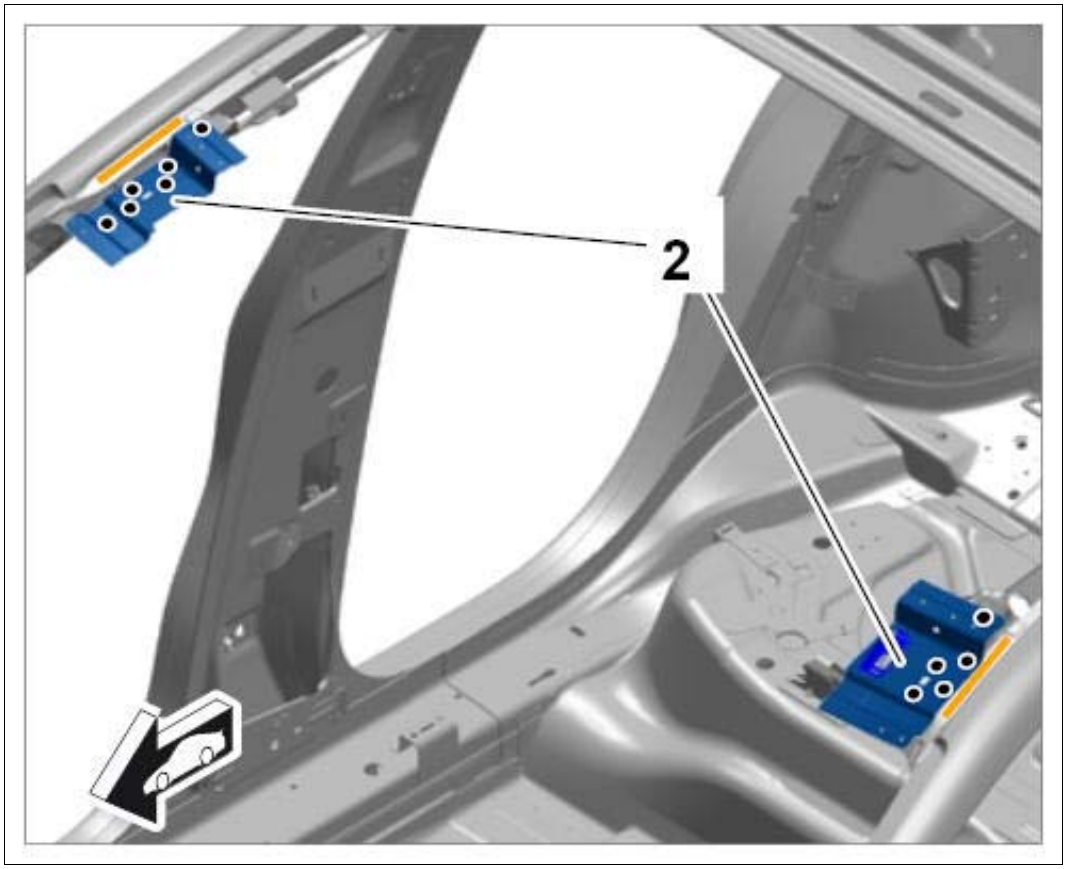

Courtesy of PORSCHE CARS NORTH AMERICA, INC.

WM 510655 REPLACING UPPER FRONT ROOF FRAME (ALL MODELS) > PREPARING CONNECTION AREAS OF UPPER FRONT ROOF FRAME

1. Fit in lower part **-2-** and upper part of upper front roof frame **-1-** .
2. Prepare connection areas for bonding and welding.

Fig 1: Identifying Upper And Lower Part Of Roof Frame

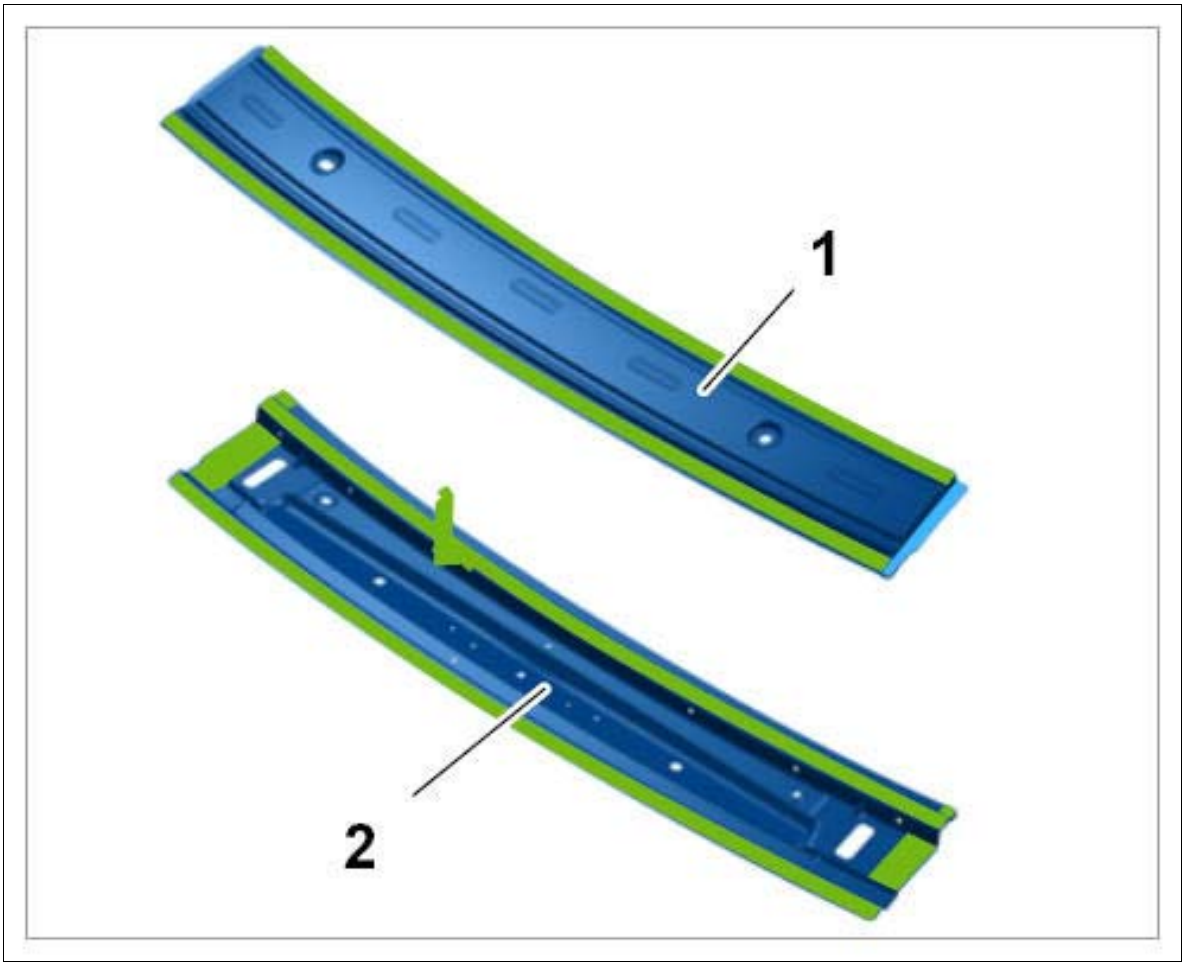

Courtesy of PORSCHE CARS NORTH AMERICA, INC.

Green	Resistance spot-welding
Blue	Bonding

WM 510655 REPLACING UPPER FRONT ROOF FRAME (ALL MODELS) > PREPARING CONNECTION AREAS OF THE BODY

1. Align the sealing surface and connections of the body.
2. De-burr connection points and prepare them for welding.

Information

1. Before final assembly, make sure you fully understand all the work steps involved and carry out a trial assembly without applying adhesive.
2. The bonding process can only be carried out reliably when a smooth and swift sequence of operations is guaranteed.
3. Do not begin bonding work until all materials and tools necessary for later repair work are

available.

3. Prepare the marked areas for welding and bonding. → 5X00IN21 WORKING WITH BODY STRUCTURAL ADHESIVE

Fig 1: Identifying Body Connection Areas

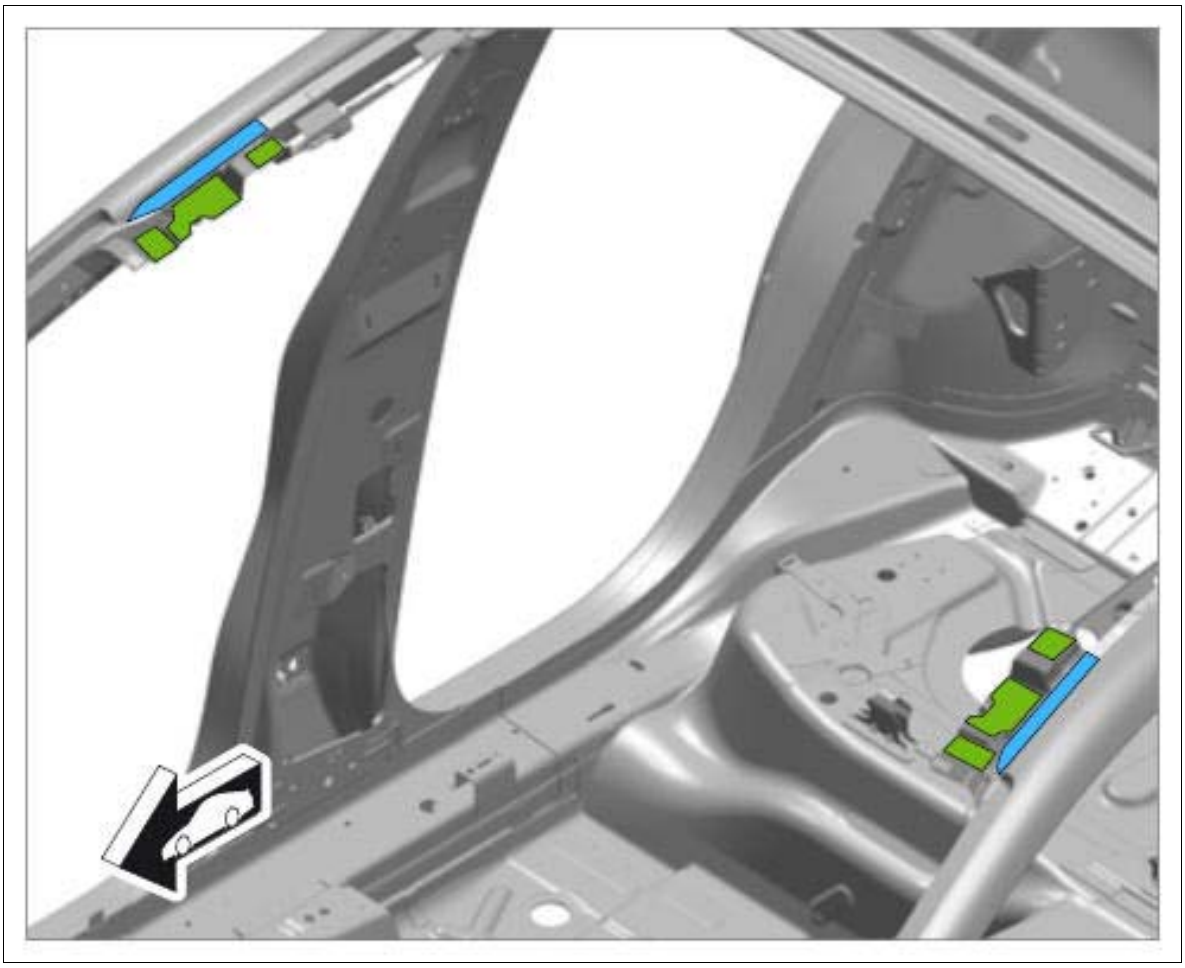

Courtesy of PORSCHE CARS NORTH AMERICA, INC.

Green	Resistance spot-welding
Blue	Bonding

WM 510655 REPLACING UPPER FRONT ROOF FRAME (ALL MODELS) > INSTALLING UPPER FRONT ROOF FRAME

Information

- Before final assembly, make sure you fully understand all the work steps involved and carry out a trial assembly without applying adhesive.
- The bonding process can only be carried out reliably when a smooth and swift sequence of operations is guaranteed.

- Do not begin bonding work until all materials and tools necessary for later repair work are available.

1. Fit in lower part of roof frame.

    1. 1.1. Resistance spot-weld lower part of roof frame.

    Fig 1: Installing Lower Part Of Roof Frame

    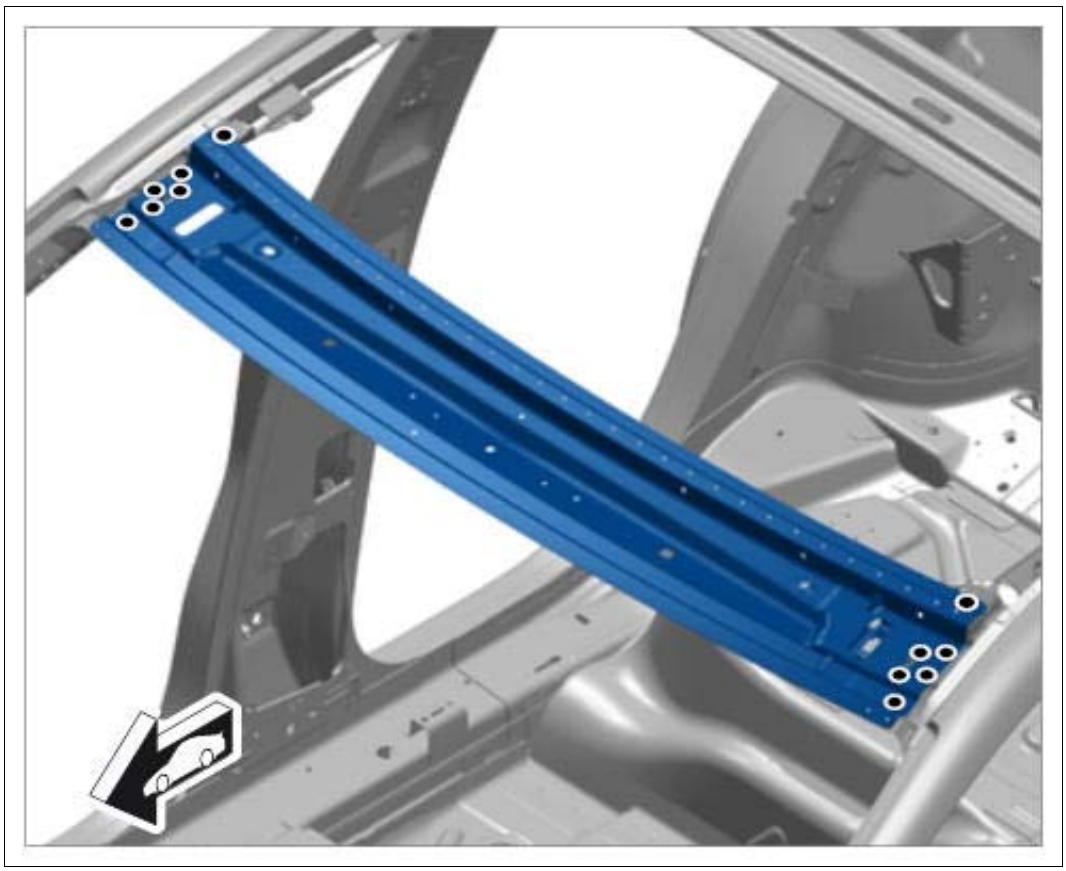

    Courtesy of PORSCHE CARS NORTH AMERICA, INC.

2. Install upper front roof frame and check that it fits perfectly. Check gap dimensions. → 5X00IN DIAGRAM - BODY GAP DIMENSIONS

    1. 2.1. Apply adhesive to the areas marked in yellow. → 5X00IN21 WORKING WITH BODY STRUCTURAL ADHESIVE**Application depth: 3.0 mm**

Fig 2: Identifying Adhesive Applying Area

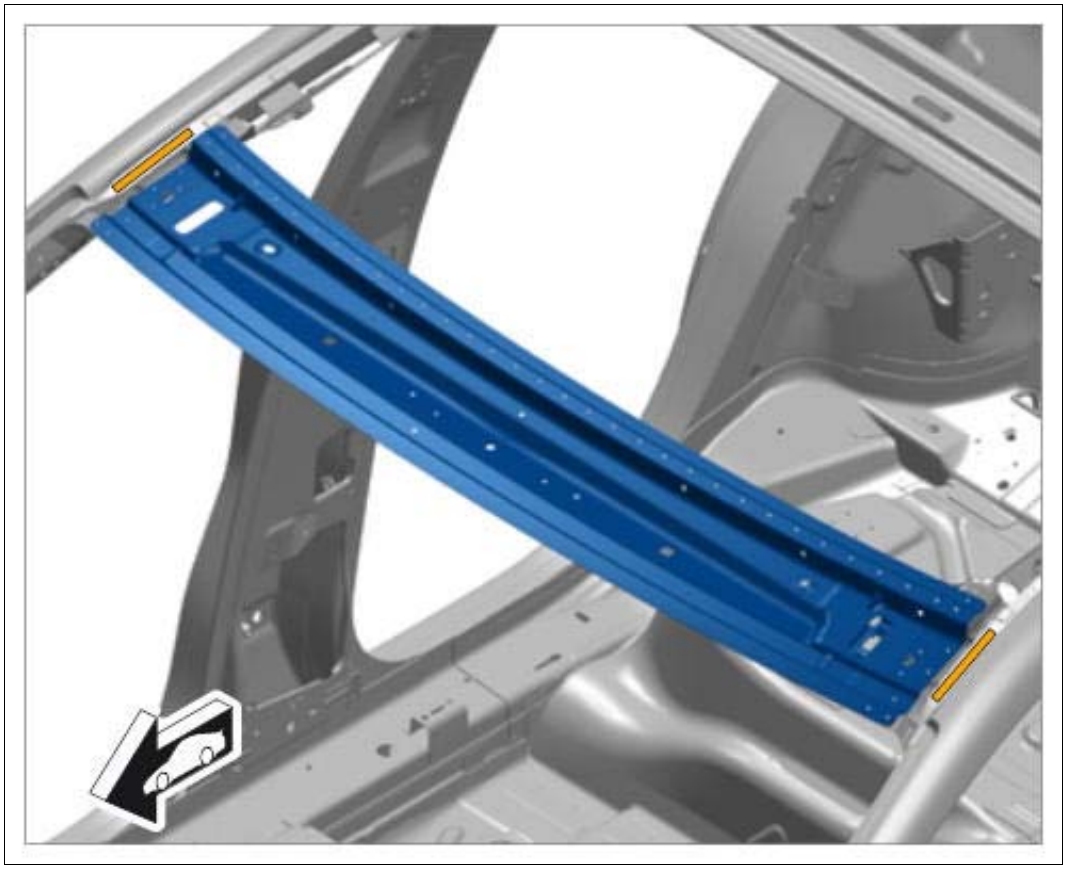

Courtesy of PORSCHE CARS NORTH AMERICA, INC.

3. Resistance spot-weld upper part of roof frame.

Fig 3: Installing Upper Part Of Roof Frame

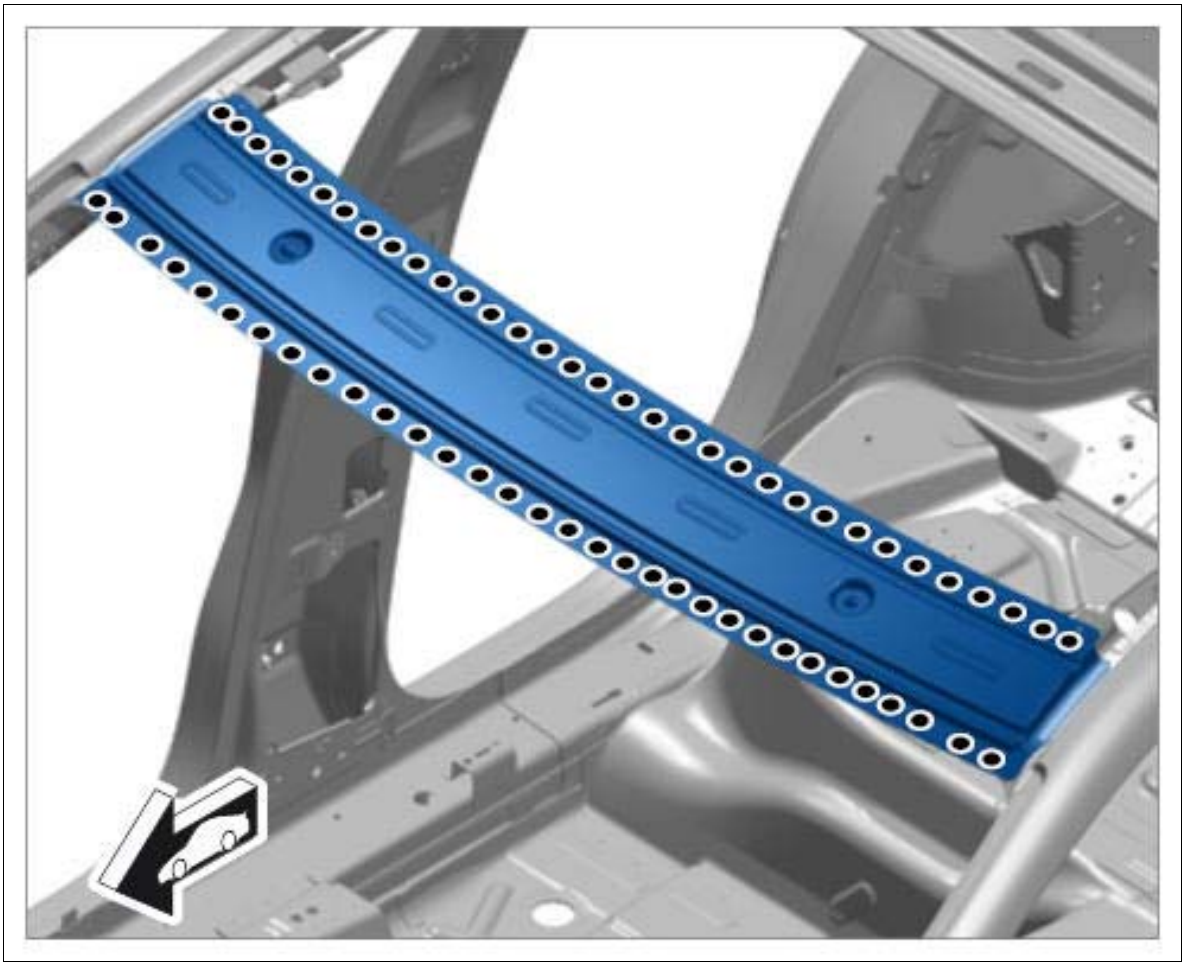

Courtesy of PORSCHE CARS NORTH AMERICA, INC.

WM 510655 REPLACING UPPER FRONT ROOF FRAME (ALL MODELS) > SUBSEQUENT WORK

1. Install roof. → Installing Roof

WM 510655 REPLACING UPPER FRONT ROOF FRAME (ALL MODELS) > SUBSEQUENT WORK > SUBSEQUENT WORK FOR BODY REPAIRS (WITHOUT STRAIGHTENING SYSTEM)

1. Clean joint areas and sheetmetal flanges with a wire brush.
2. Prime joint areas and sheetmetal flanges with 2K primer.
3. Restore standard seal with body sealant → 5X00IN42 SEAM SEALING .

   Also seal the repair area carefully.

4. Paint repair area and adjacent surfaces, if necessary.
5. Restore standard underbody protection with underbody sealant → 5X00IN43 UNDERBODY PROTECTION .
6. Apply standard cavity preservation → 5X00IN44 CAVITY PRESERVATION . Also apply cavity preservation to the repair area.
7. Install removed accessories in the repair area.

WM 510955 REPLACING REAR CROSS MEMBER (ALL MODELS) > TOOLS

Designation	Type	Number	Description	
Hot-air blower	Workshop equipment	WE 1119		
Body alignment system package	Workshop equipment	WE 1121		
Special electric cutter	Workshop equipment	WE 1137		
Pneumatic Spotweld Remover, Vario Drill WS 90	Workshop equipment	WE 1139		
Hand-cartridge gun	Workshop equipment	WE 1141		
Resistance spot welder	Workshop equipment	WE 1311		
Inverter welder MIDIspot-QSVM-12000	Workshop equipment	WE 1312		
Resistance spot welder	Workshop equipment	WE 1313		
Blind riveting tool TAURUS 4	Workshop equipment	WE 1348		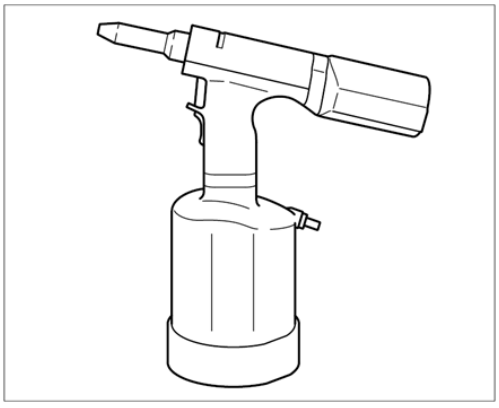

Aluminum tool set with trolley	Workshop equipment	WE 1350		
Resistance spot welder	Workshop equipment	WE 1352		
Measuring and alignment system, professional	Workshop equipment	WE 1398		
Mobile extraction unit, aluminum	Workshop equipment	WE 1507		
Body saw	Workshop equipment	WE 1508		
Star gauges for body gap dimensions	Special tool	Nr.127-1		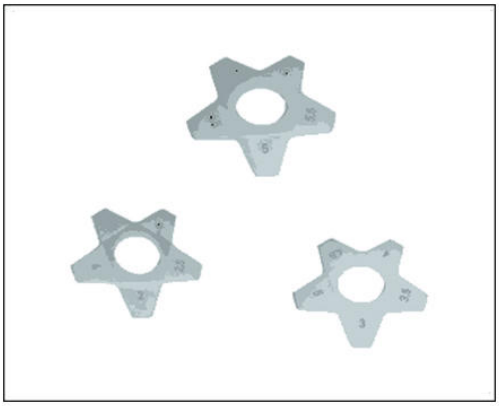
Spotweld drill	Commercially available tool	Nr.129		

Twist drill	Commercially available tool	Nr.201		
Countersink	Commercially available tool	Nr.202		

WM 510955 REPLACING REAR CROSS MEMBER (ALL MODELS) > TECHNICAL VALUES

Location	Description	Type	Basic value	Tolerance 1	Tolerance 2
Applying adhesive		Application depth	3.0 mm		

WM 510955 REPLACING REAR CROSS MEMBER (ALL MODELS) > PRELIMINARY WORK > PRELIMINARY WORK FOR BODY REPAIRS (WITHOUT STRAIGHTENING SYSTEM)

1. Remove accessories in the repair area.
    1. 1.1. Remove accessories in the repair area according to the extent of damage on the vehicle.
2. Cover accessories adjacent to the repair area on the vehicle.
    1. 2.1. Cover all accessories remaining on the vehicle and adjacent areas with fire-proof protective covers.
3. Reshape connection area of the sheetmetal parts to be replaced. Note: Information on

aluminum repairs.

4. Expose joint areas.

    1. 4.1. Remove underbody protection, paint, etc. from the joint areas of the body using a hot-air gun or rotary brush.

WM 510955 REPLACING REAR CROSS MEMBER (ALL MODELS) > PRELIMINARY WORK

1. Remove roof. → 510355 REPLACING ROOF

WM 510955 REPLACING REAR CROSS MEMBER (ALL MODELS) > SAFETY INSTRUCTIONS AND INFORMATION ON QUALITY

⚠ *CAUTION: Non-observance of safety instructions for body repairs*

- *Risk of damage to the vehicle*
- *Danger of injury*

→ Read the relevant safety instructions as well as general information and quality instructions → 5X00IN01 SAFETY INSTRUCTIONS .

- Protection of electrical components during body repairs
- Corrosion protection measures during repairs → 5X00IN03 CORROSION PROTECTION MEASURES DURING REPAIRS
- Information on aluminum repairs
- Body parts of various sheet-steel strengths → 5X00IN04 BODY PARTS OF VARIOUS SHEET-STEEL STRENGTHS
- Replacing punch rivets and penetrated joints
- Setting self-tapping screws → 5X00IN24 SETTING SELF-TAPPING SCREWS
- Working with body structural adhesive → 5X00IN21 WORKING WITH BODY STRUCTURAL ADHESIVE

WM 510955 REPLACING REAR CROSS MEMBER (ALL MODELS) > TOOLS AND MATERIALS > TOOLS AND MATERIALS FOR BODY REPAIRS

Information

- The tools for working on steel and aluminum must always be kept separate from each other. We recommend that you color code the tools using a system similar to that used for the Aluminum tool set with trolley WE 1350, for example.

Straightening set **Body alignment system package WE 1121 Measuring and alignment system, professional WE 1398**

Resistance spot welder; optional **Inverter welder MIDIspot-QSVM-12000 WE 1312, Resistance spot welder WE 1352, Resistance spot welder WE 1311, Resistance spot welder WE 1313**

Metal inert gas (MIG) welder

Pneumatic spotweld remover **Pneumatic Spotweld Remover, Vario Drill WS 90 WE 1139**

Pneumatic body saw **Body saw WE 1508**

Oscillating body saw (special electric cutter) **Special electric cutter WE 1137**

Hot-air blower **Hot-air blower WE 1119**

Hand-cartridge gun **Hand-cartridge gun WE 1141**

Spotweld drill **Spotweld drill Twist drill Nr.201**

Countersink for rivets **Countersink Nr.202**

Blind riveting tool for high-strength rivets **Blind riveting tool TAURUS 4 WE 1348**

Safety vacuum cleaner for aluminum dust **Mobile extraction unit, aluminum WE 1507**

Star gauges for body gap dimensions Nr.127-1

Wurth Klebt und Dichtet body sealant

WM 510955 REPLACING REAR CROSS MEMBER (ALL MODELS) > REMOVING REAR CROSS MEMBER

Fig 1: Identifying Rear Cross Member Installation Position

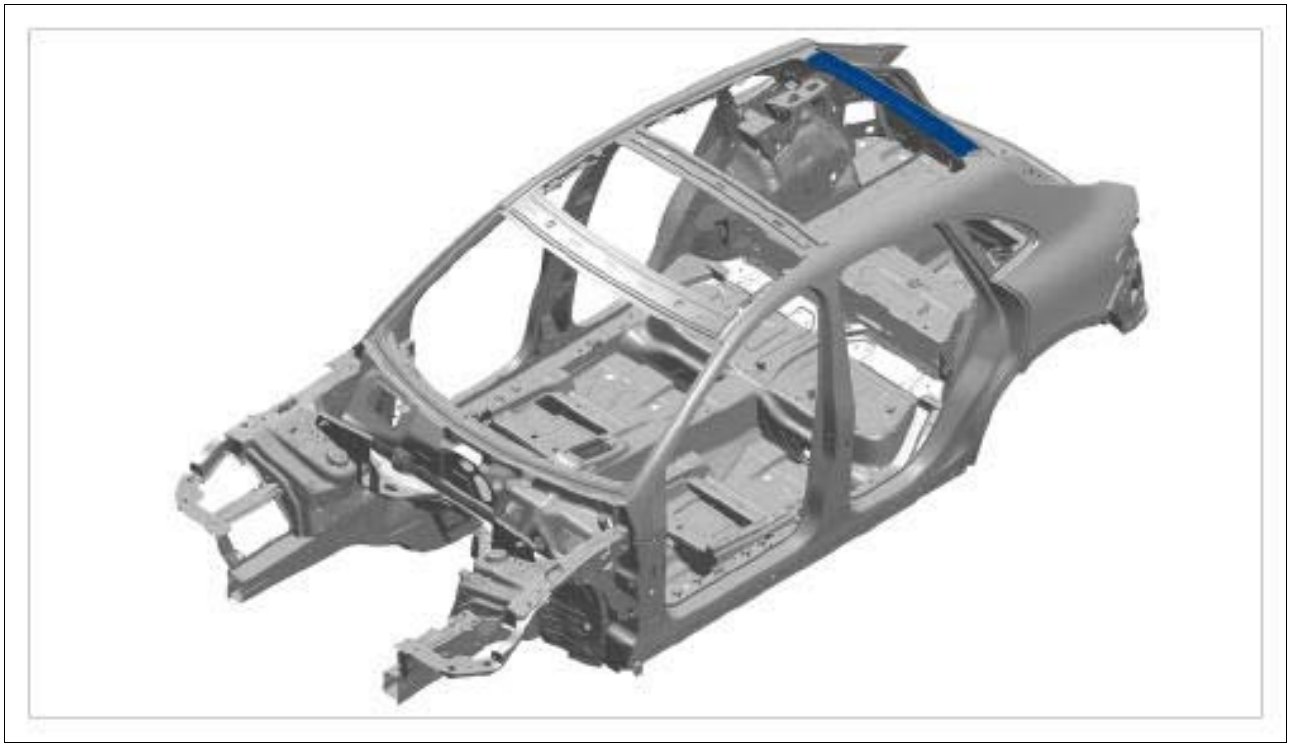

Courtesy of PORSCHE CARS NORTH AMERICA, INC.

Information

Drill out the connection point on one side only. Do not damage the plate underneath.

1. Drill out spotwelds using **spotweld drill** .
    1. 1.1. Heat bonding areas marked in yellow.
    2. 1.2. Remove upper part of rear cross member.

Fig 2: Identifying Upper Part Of Rear Cross Member

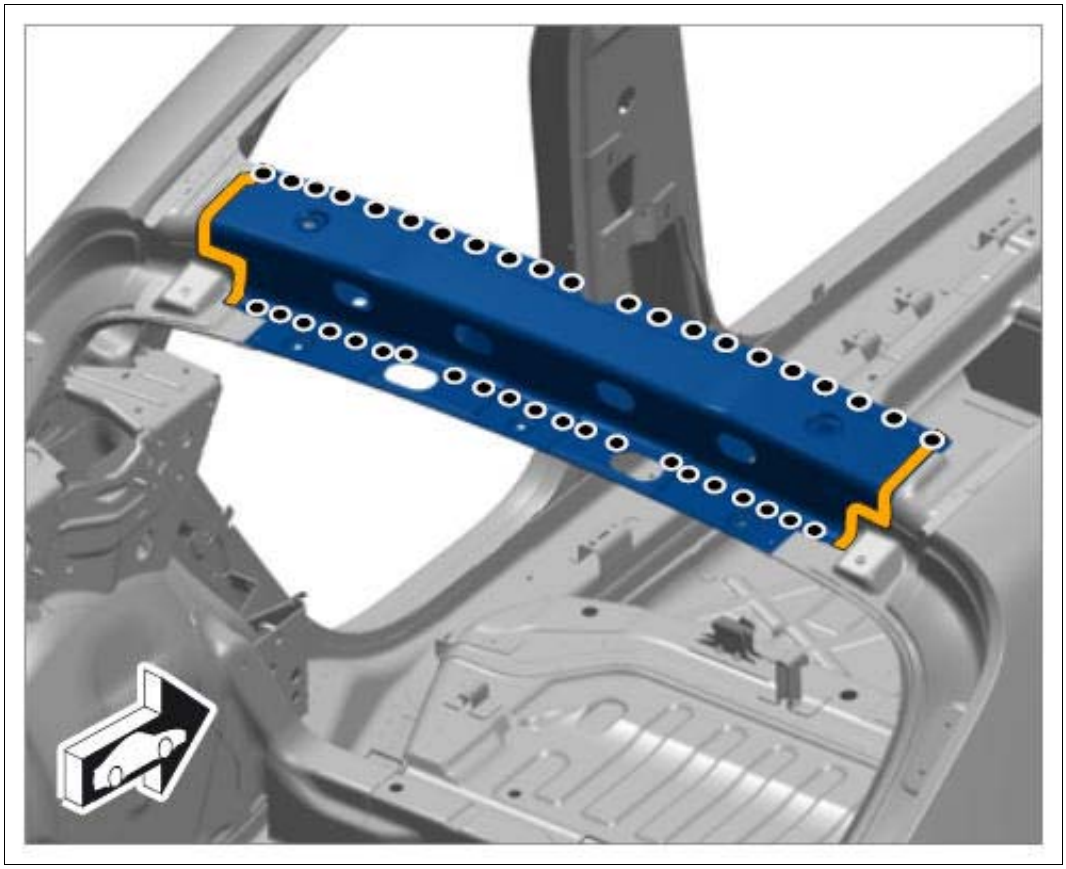

Courtesy of PORSCHE CARS NORTH AMERICA, INC.

Information

Drill out the connection point on one side only. Do not damage the plate underneath.

2. Drill out spotwelds using spotweld drill .

    1. 2.1. Remove lower part of cross member.

Fig 3: Identifying Lower Part Of Rear Cross Member

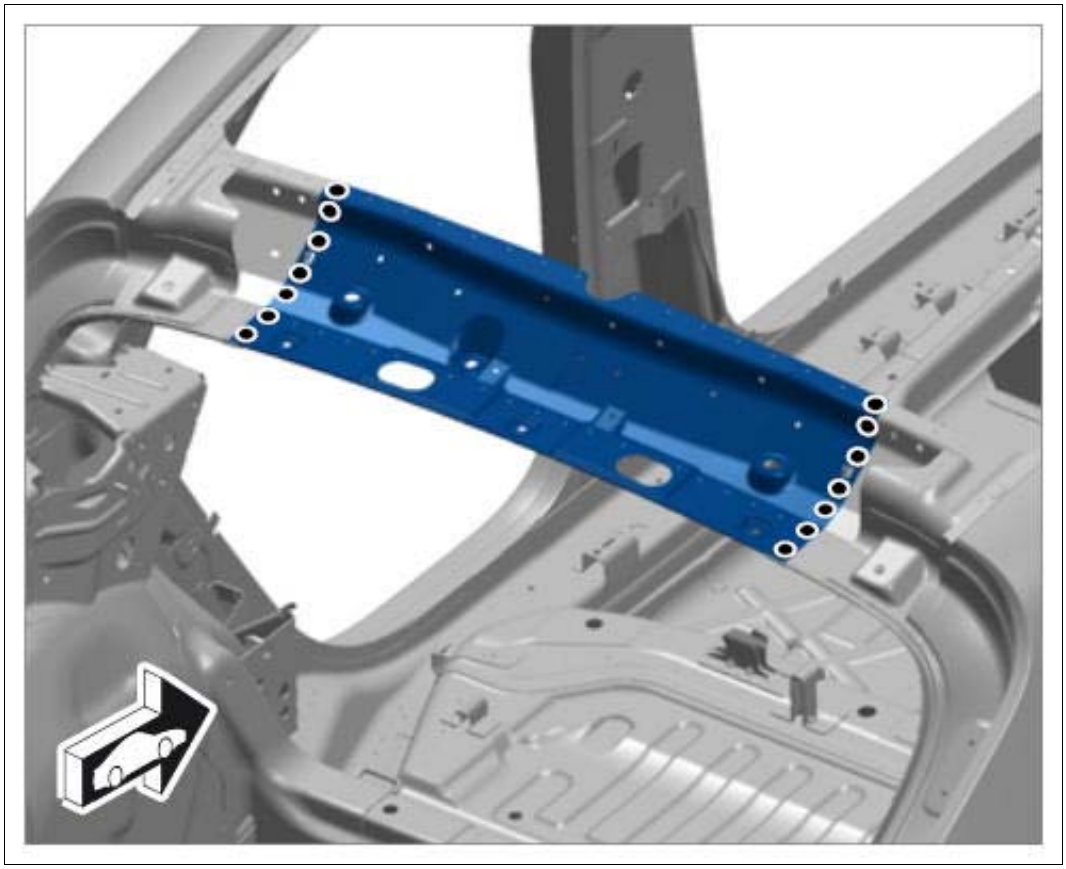

Courtesy of PORSCHE CARS NORTH AMERICA, INC.

WM 510955 REPLACING REAR CROSS MEMBER (ALL MODELS) > PREPARING REAR CROSS MEMBER FOR INSTALLATION

1. Fit in rear cross member.
2. Prepare rear cross member for bonding and welding.

Fig 1: Identifying Rear Cross Member

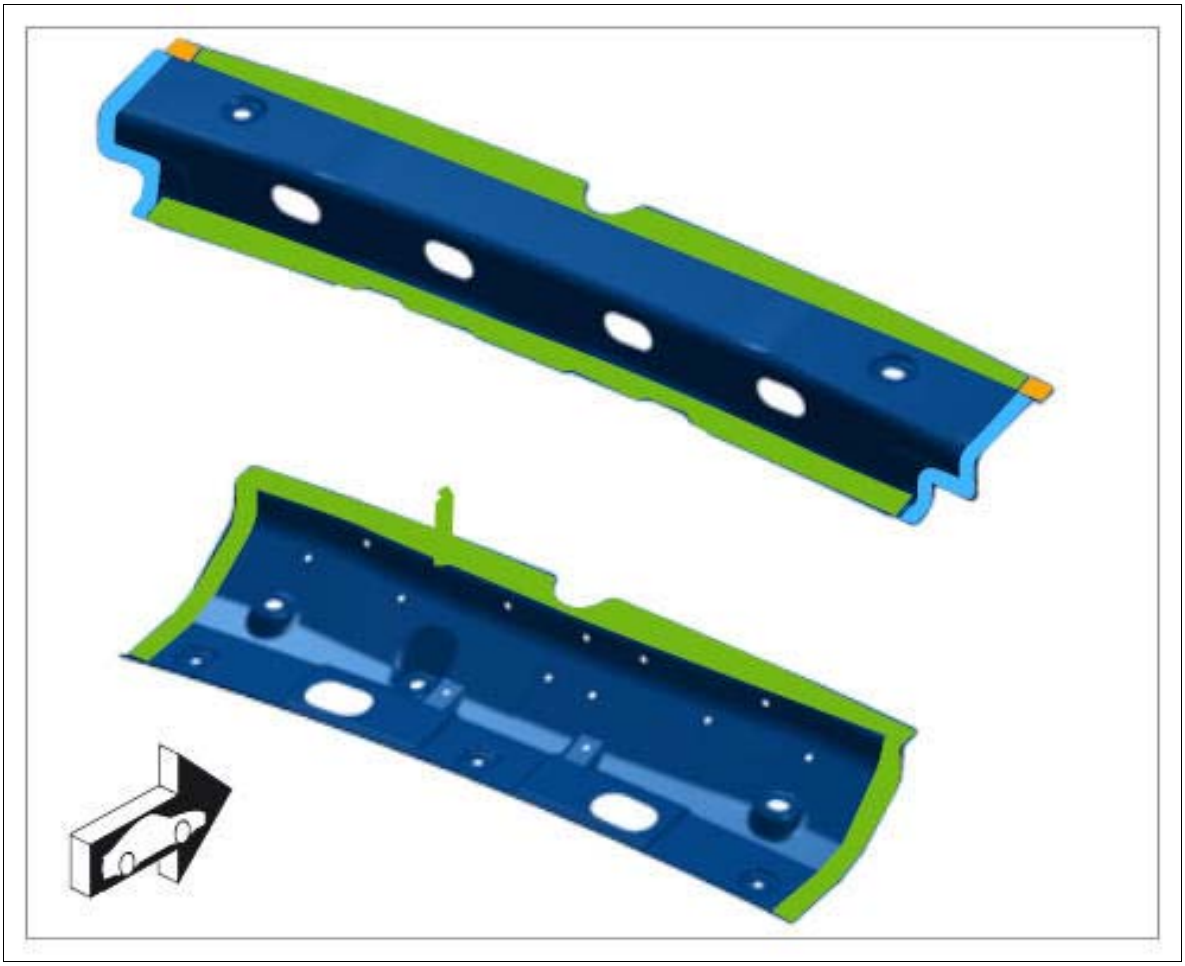

Courtesy of PORSCHE CARS NORTH AMERICA, INC.

Green	Resistance spot-welding
Blue	Bonding
Orange	Bonding + resistance spot-welding

WM 510955 REPLACING REAR CROSS MEMBER (ALL MODELS) > PREPARING CONNECTION AREAS OF THE BODY

1. Align the sealing surface and connections of the body.
2. De-burr connection points and prepare them for welding.

Information

1. Before final assembly, make sure you fully understand all the work steps involved and carry out a trial assembly without applying adhesive.
2. The bonding process can only be carried out reliably when a smooth and swift sequence of operations is guaranteed.

3. Do not begin bonding work until all materials and tools necessary for later repair work are available.

3. Prepare the marked areas for welding and bonding. → 5X00IN21 WORKING WITH BODY STRUCTURAL ADHESIVE

Fig 1: Identifying Body Connection Areas

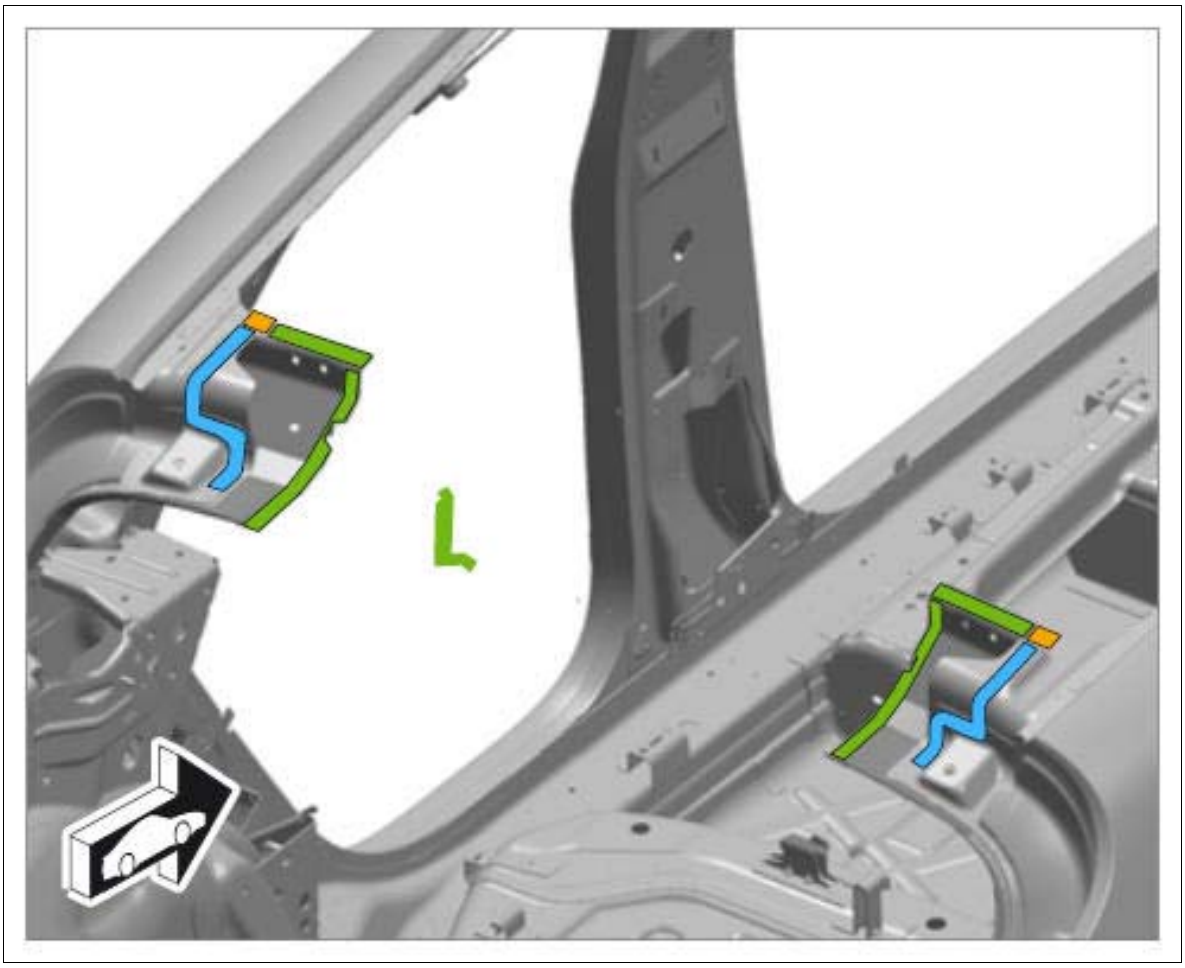

Courtesy of PORSCHE CARS NORTH AMERICA, INC.

Green	Resistance spot-welding
Blue	Bonding
Orange	Bonding + resistance spot-welding

WM 510955 REPLACING REAR CROSS MEMBER (ALL MODELS) > INSTALLING REAR CROSS MEMBER

Information

- Before final assembly, make sure you fully understand all the work steps involved and carry out a trial assembly without applying adhesive.
- The bonding process can only be carried out reliably when a smooth and swift sequence of

operations is guaranteed.

- Do not begin bonding work until all materials and tools necessary for later repair work are available.

1. Install rear cross member and check that it fits perfectly. Check gap dimensions. → 5X00IN DIAGRAM - BODY GAP DIMENSIONS

    1. 1.1. Resistance spot-weld lower part of rear cross member.

    2. 1.2. Apply adhesive to the areas marked in orange. → 5X00IN21 WORKING WITH BODY STRUCTURAL ADHESIVE → Application depth: 3.0 mm

    Fig 1: Installing Lower Part Of Rear Cross Member

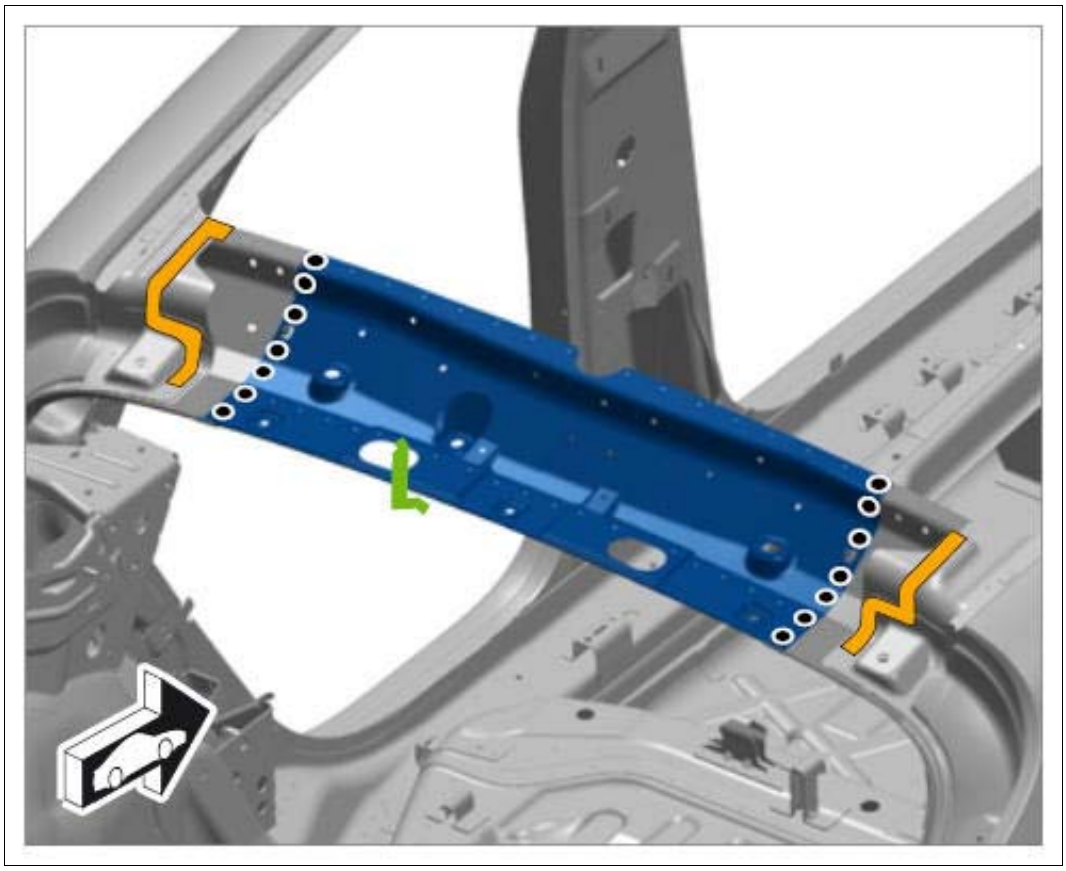

Courtesy of PORSCHE CARS NORTH AMERICA, INC.

2. Resistance spot-weld upper part of rear cross member.

Fig 2: Installing Upper Part Of Rear Cross Member

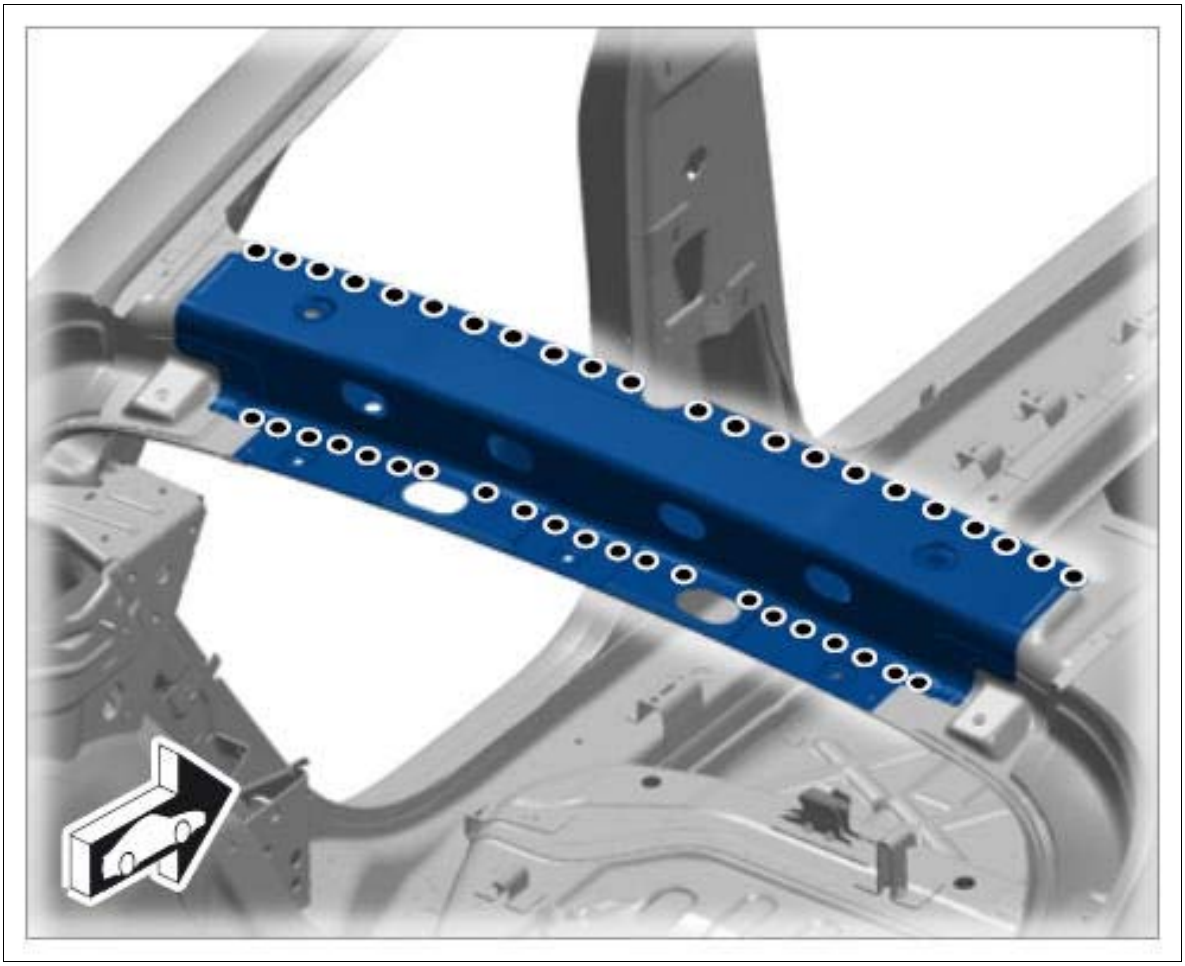

Courtesy of PORSCHE CARS NORTH AMERICA, INC.

WM 510955 REPLACING REAR CROSS MEMBER (ALL MODELS) > SUBSEQUENT WORK

1. Install roof. → Installing Roof

WM 510955 REPLACING REAR CROSS MEMBER (ALL MODELS) > SUBSEQUENT WORK > SUBSEQUENT WORK FOR BODY REPAIRS (WITHOUT STRAIGHTENING SYSTEM)

1. Clean joint areas and sheetmetal flanges with a wire brush.
2. Prime joint areas and sheetmetal flanges with 2K primer.
3. Restore standard seal with body sealant → 5X00IN42 SEAM SEALING .

   Also seal the repair area carefully.

4. Paint repair area and adjacent surfaces, if necessary.
5. Restore standard underbody protection with underbody sealant → 5X00IN43 UNDERBODY PROTECTION .
6. Apply standard cavity preservation → 5X00IN44 CAVITY PRESERVATION . Also apply cavity preservation to the repair area.
7. Install removed accessories in the repair area.

WM 511255 REPLACING A-PILLAR (ALL MODELS) > TOOLS

Designation	Type	Number	Description	
Hot-air blower	Workshop equipment	WE 1119		
Body alignment system package	Workshop equipment	WE 1121		
Special electric cutter	Workshop equipment	WE 1137		
Pneumatic Spotweld Remover, Vario Drill WS 90	Workshop equipment	WE 1139		
Hand-cartridge gun	Workshop equipment	WE 1141		
Resistance spot welder	Workshop equipment	WE 1311		
Inverter welder MIDIspot-QSVM-12000	Workshop equipment	WE 1312		
Resistance spot welder	Workshop equipment	WE 1313		
Blind riveting tool TAURUS 4	Workshop equipment	WE 1348		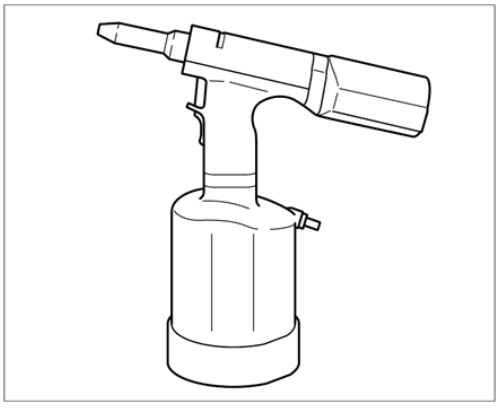

Aluminum tool set with trolley	Workshop equipment	WE 1350		
Resistance spot welder	Workshop equipment	WE 1352		
Measuring and alignment system, professional	Workshop equipment	WE 1398		
Mobile extraction unit, aluminum	Workshop equipment	WE 1507		
Body saw	Workshop equipment	WE 1508		
Star gauges for body gap dimensions	Special tool	Nr.127-1		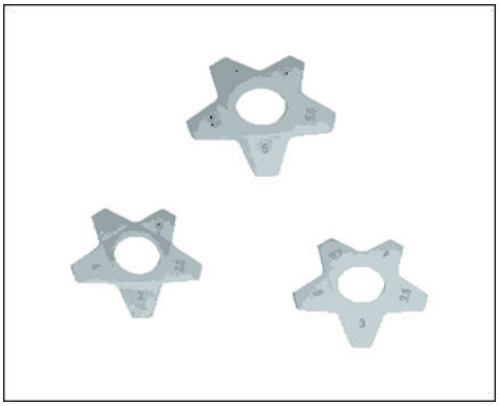
Spotweld drill	Commercially available tool	Nr.129		

Twist drill	Commercially available tool	Nr.201		
Countersink	Commercially available tool	Nr.202		

WM 511255 REPLACING A-PILLAR (ALL MODELS) > TECHNICAL VALUES

Location	Description	Type	Basic value	Tolerance 1	Tolerance 2
Dimension X		Distance	70 mm		
Dimension Y		Distance	65 mm		
Wing rail		Dimension x	90 mm		
Drill bit		Diameter	8.0 mm		
Applying adhesive		Application depth	3.0 mm		

WM 511255 REPLACING A-PILLAR (ALL MODELS) > PRELIMINARY WORK > PRELIMINARY WORK FOR BODY REPAIRS (WITHOUT STRAIGHTENING SYSTEM)

1. Remove accessories in the repair area.
    1. 1.1. Remove accessories in the repair area according to the extent of damage on the vehicle.
2. Cover accessories adjacent to the repair area on the vehicle.

1. 2.1. Cover all accessories remaining on the vehicle and adjacent areas with fire-proof protective covers.

3. Reshape connection area of the sheetmetal parts to be replaced. Note: Information on aluminum repairs.

4. Expose joint areas.

    1. 4.1. Remove underbody protection, paint, etc. from the joint areas of the body using a hot-air gun or rotary brush.

WM 511255 REPLACING A-PILLAR (ALL MODELS) > SAFETY INSTRUCTIONS AND INFORMATION ON QUALITY

> ⚠ *CAUTION: Non-observance of safety instructions for body repairs*
>
> - *Risk of damage to the vehicle*
> - *Danger of injury*

→ Read the relevant safety instructions as well as general information and quality instructions → 5X00IN01 SAFETY INSTRUCTIONS .

- Protection of electrical components during body repairs
- Corrosion protection measures during repairs → 5X00IN03 CORROSION PROTECTION MEASURES DURING REPAIRS
- Information on aluminum repairs
- Body parts of various sheet-steel strengths → 5X00IN04 BODY PARTS OF VARIOUS SHEET-STEEL STRENGTHS
- Replacing punch rivets and penetrated joints
- Setting self-tapping screws → 5X00IN24 SETTING SELF-TAPPING SCREWS
- Working with body structural adhesive → 5X00IN21 WORKING WITH BODY STRUCTURAL ADHESIVE

WM 511255 REPLACING A-PILLAR (ALL MODELS) > TOOLS AND MATERIALS > TOOLS AND MATERIALS FOR BODY REPAIRS

Information

- The tools for working on steel and aluminum must always be kept separate from each other. We recommend that you color code the tools using a system similar to that used for the Aluminum tool set with trolley WE 1350, for example.

Straightening set **Body alignment system package WE 1121 Measuring and alignment system, professional WE 1398**

Resistance spot welder; optional **Inverter welder MIDIspot-QSVM-12000 WE 1312, Resistance spot welder WE 1352, Resistance spot welder WE 1311, Resistance spot welder WE 1313**

Metal inert gas (MIG) welder

Pneumatic spotweld remover **Pneumatic Spotweld Remover, Vario Drill WS 90 WE 1139**

Pneumatic body saw **Body saw WE 1508**

Oscillating body saw (special electric cutter) **Special electric cutter WE 1137**

Hot-air blower **Hot-air blower WE 1119**

Hand-cartridge gun **Hand-cartridge gun WE 1141**

Spotweld drill **Spotweld drill Twist drill Nr.201**

Countersink for rivets **Countersink Nr.202**

Blind riveting tool for high-strength rivets **Blind riveting tool TAURUS 4 WE 1348**

Safety vacuum cleaner for aluminum dust **Mobile extraction unit, aluminum WE 1507**

Star gauges for body gap dimensions Nr.127-1

Wurth Klebt und Dichtet body sealant

WM 511255 REPLACING A-PILLAR (ALL MODELS) > REMOVING A-PILLAR

Fig 1: Identifying A-Pillar Installation Position

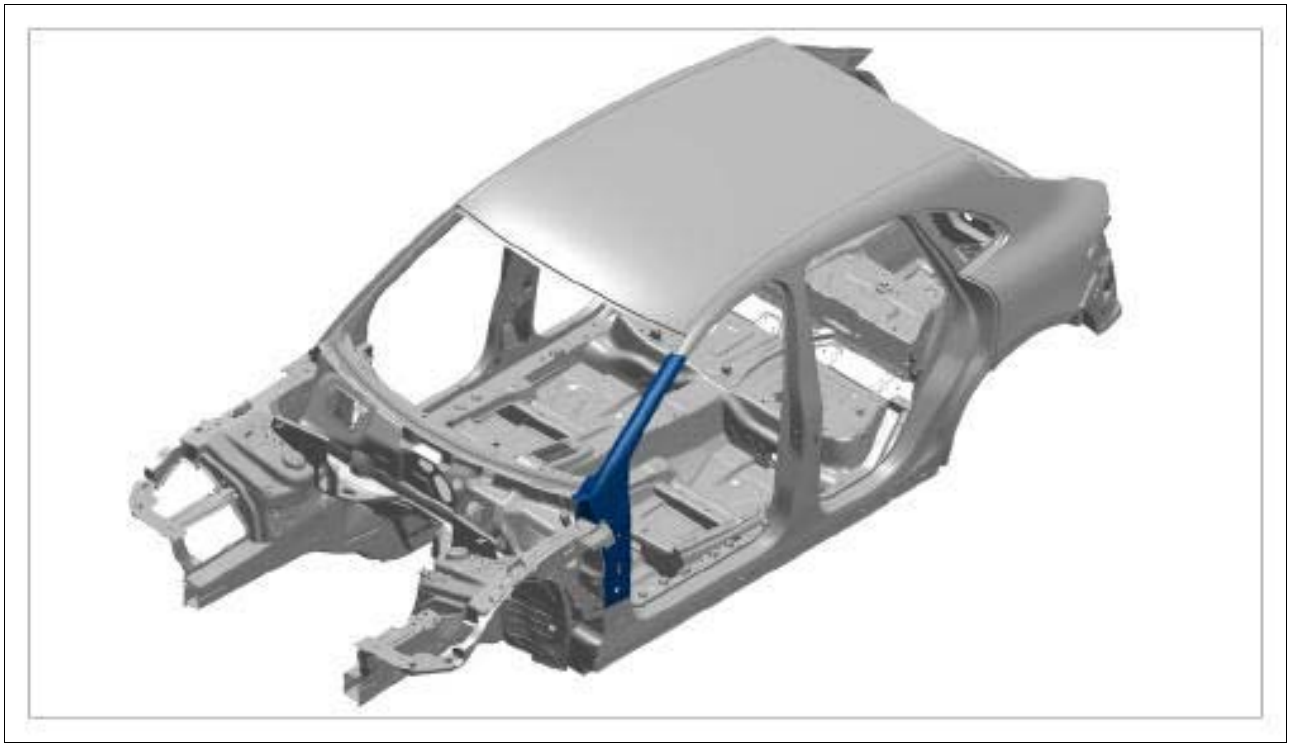

Courtesy of PORSCHE CARS NORTH AMERICA, INC.

1. Remove wing bracket.

   Information

   Drill out the connection point on one side only. Do not damage the plate underneath.

   1. 1.1. Drill out spotwelds **-A-** using spotweld drill.
   2. 1.2. Grind down welded seams **-arrows-** .

Fig 2: Identifying Wing Bracket

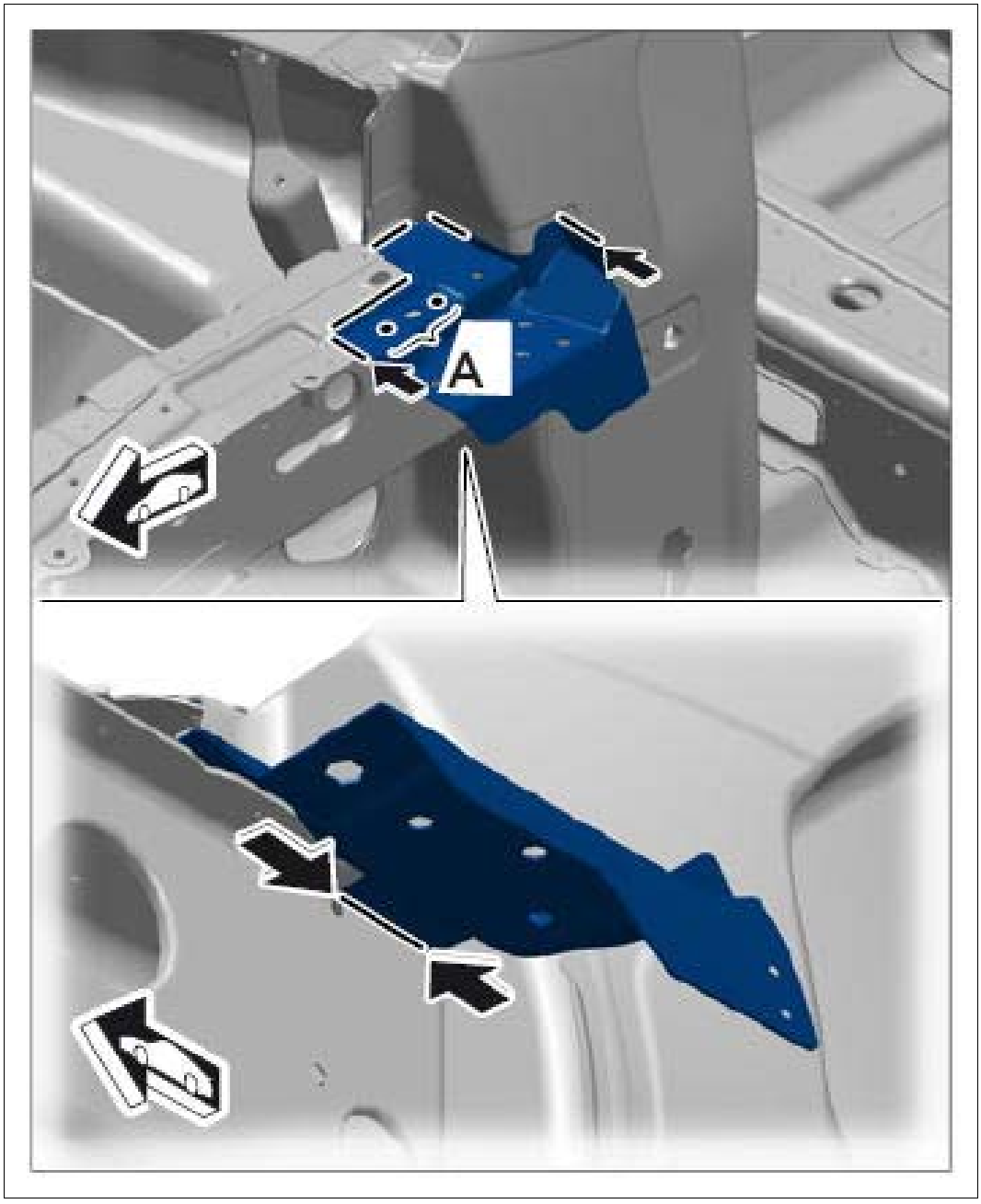

Courtesy of PORSCHE CARS NORTH AMERICA, INC.

Information

Mark cuts **X & Y** in accordance with the new part. Make sure to leave an overlap of approx. 3 cm with respect to the body.

Information

Only make cuts in the top plate. Make sure not to damage the plate underneath when doing this.

2. Mark and make cuts. → **Distance: 70 mm** → **Distance: 65 mm**

Fig 3: Identifying A-Pillar Mark Cutting Position

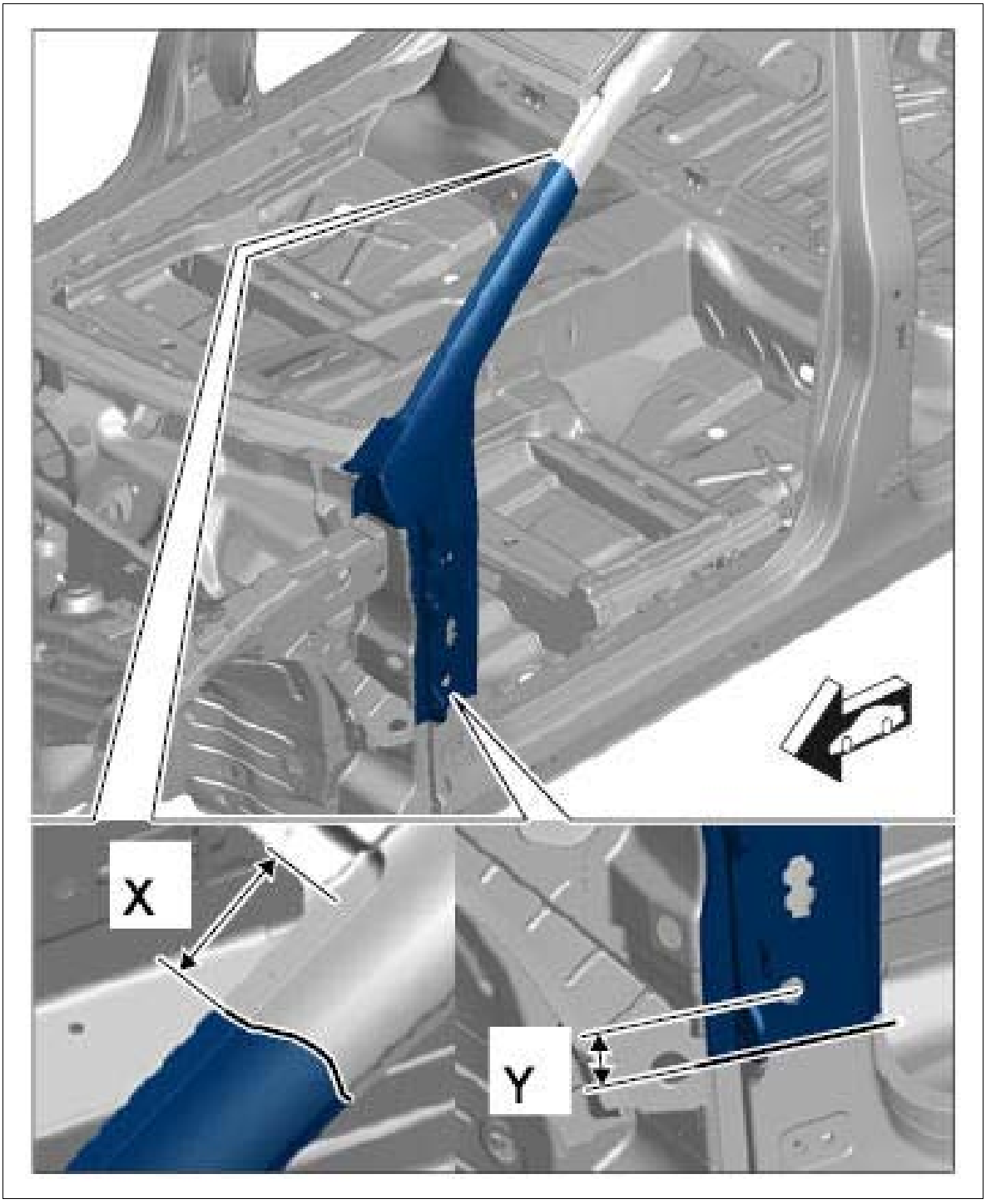

Courtesy of PORSCHE CARS NORTH AMERICA, INC.

Information

Drill out the connection point on one side only. Do not damage the plate underneath.

3. Drill out spotwelds using spotweld drill .

Fig 4: Identifying A-Pillar

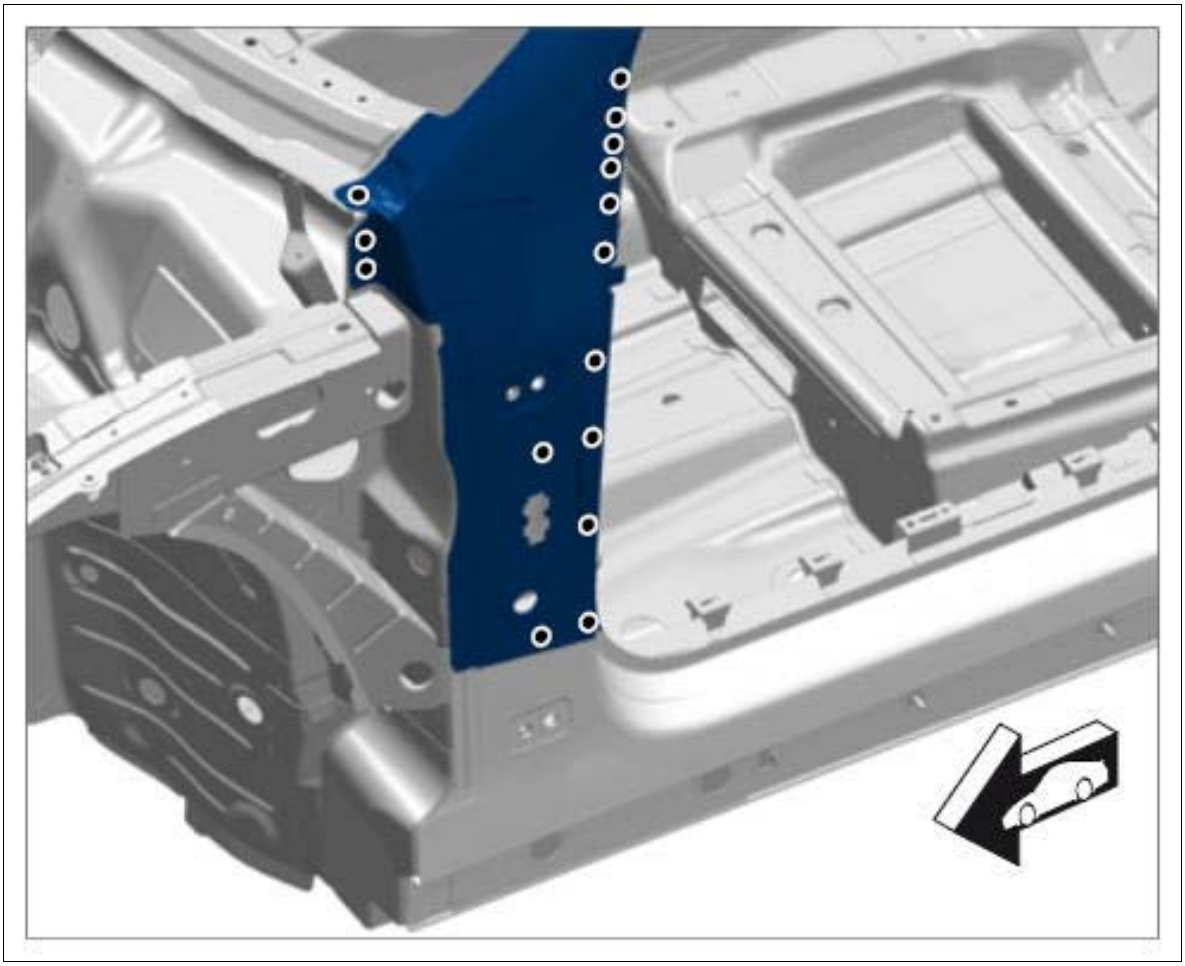

Courtesy of PORSCHE CARS NORTH AMERICA, INC.

Fig 5: Identifying A-Pillar

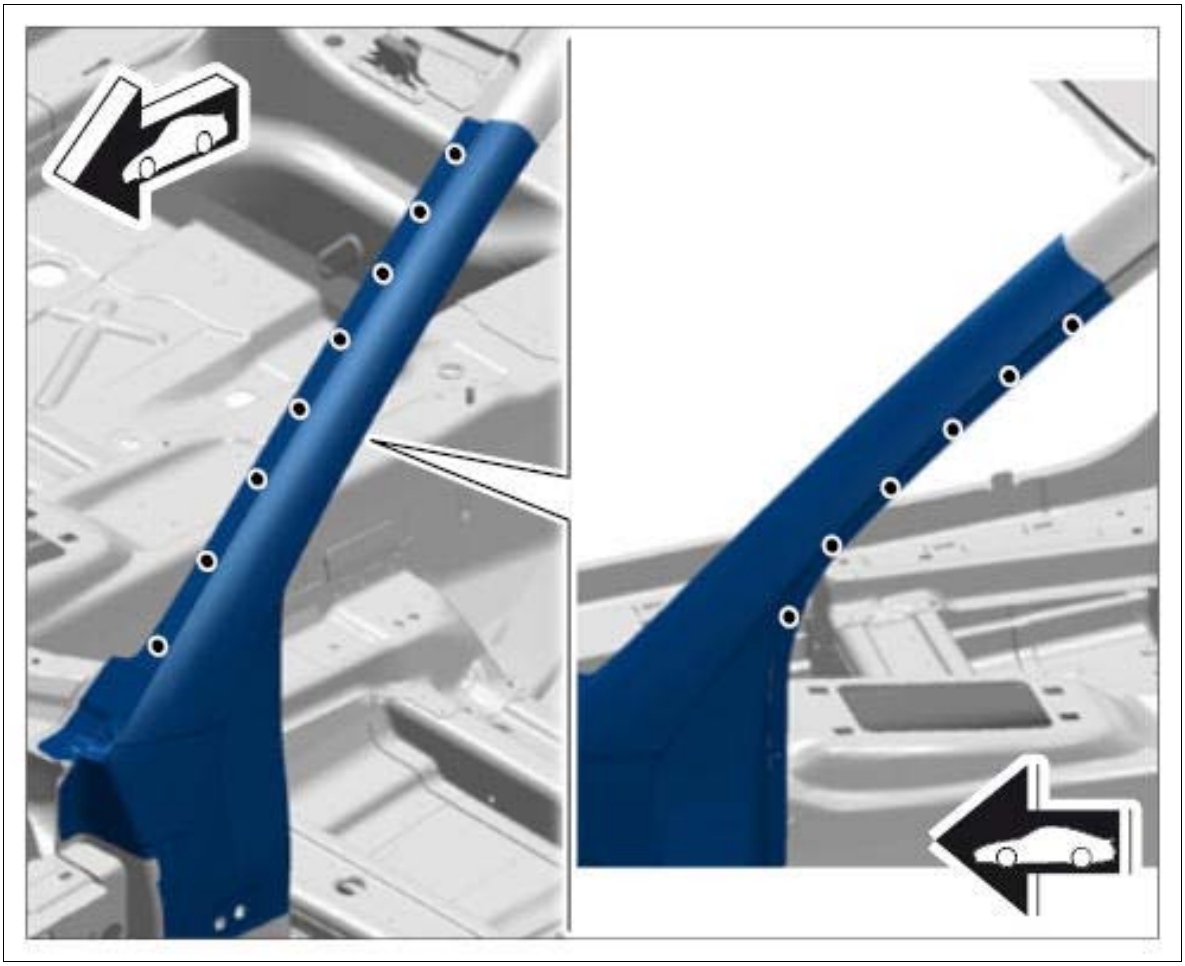

Courtesy of PORSCHE CARS NORTH AMERICA, INC.

4. Remove A-pillar.
5. Remove remaining piece of wing attachment strip.

   Information

   Drill out the connection point on one side only. Do not damage the plate underneath.

   1. 5.1. Drill out spotwelds using spotweld drill .

Fig 6: Identifying Wing Attachment Strip

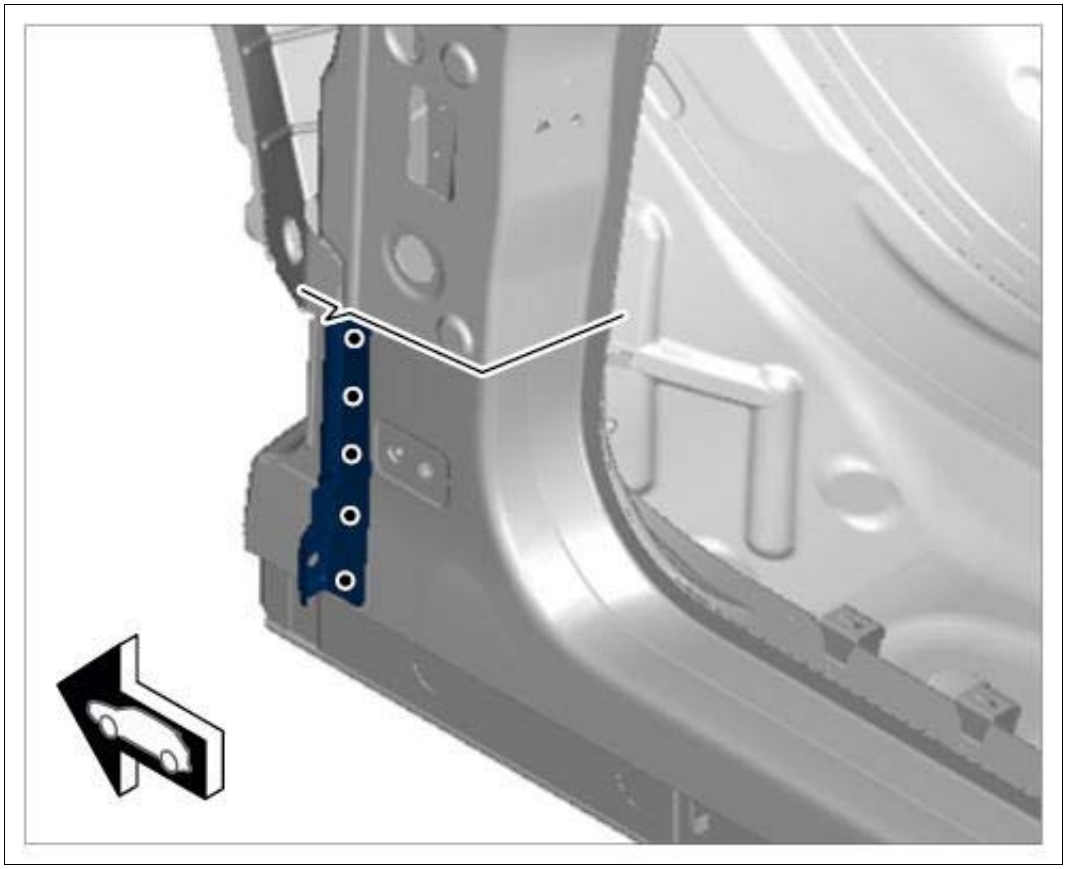

Courtesy of PORSCHE CARS NORTH AMERICA, INC.

WM 511255 REPLACING A-PILLAR (ALL MODELS) > PREPARING A-PILLAR FOR INSTALLATION

1. Fit in A-pillar.
    1. 1.1. Cut A-pillar at the transitions to the body leaving an overlap of 30 mm.
    2. 1.2. Fit in A-pillar again.
    3. 1.3. Make cuts through the A-pillar and body in the overlap areas.

Fig 1: Identifying A-Pillar



Courtesy of PORSCHE CARS NORTH AMERICA, INC.

Information

Shorten the wing attachment strip to prevent an overlap in the welded area on the A-pillar.

2. Cut back the wing rail **-1-** . → **Dimension x: 90 mm**

Fig 2: Identifying Wing Rail Dimension

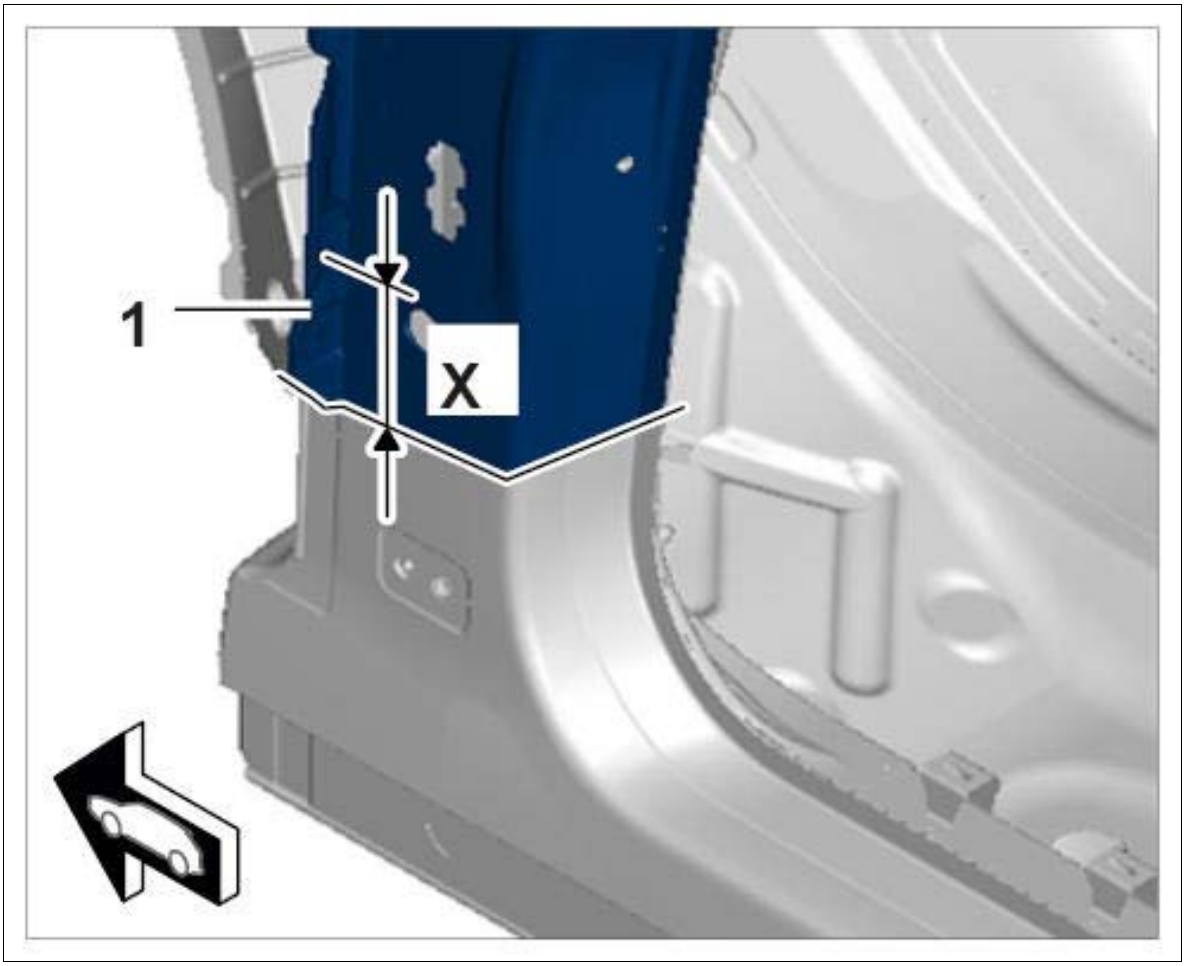

Courtesy of PORSCHE CARS NORTH AMERICA, INC.

3. Prepare connection areas for bonding and welding.

Fig 3: Identifying A-Pillar Connection Areas

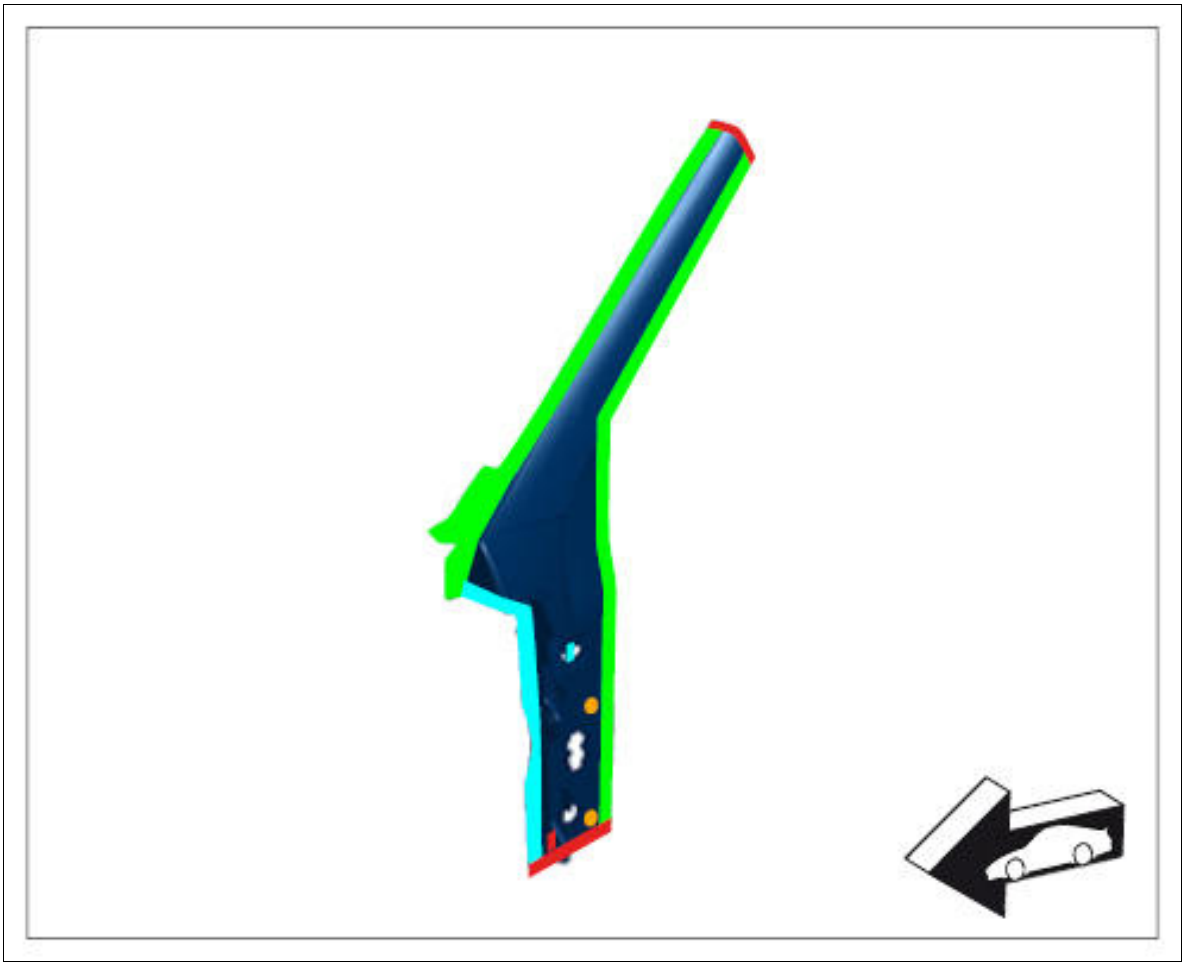

Courtesy of PORSCHE CARS NORTH AMERICA, INC.

Orange	Resistance spot-welding
Green	Resistance spot-welding + bonding
Blue	Bonding
Red	Plug-welding/apply a full weld using inert gas without bonding

4. Prepare wing rail.

    1. 4.1. Drill holes for plug-welding in the marked areas on the rail using a drill bit with a diameter of → **Diameter: 8.0 mm.**

Fig 4: Identifying Wing Rail

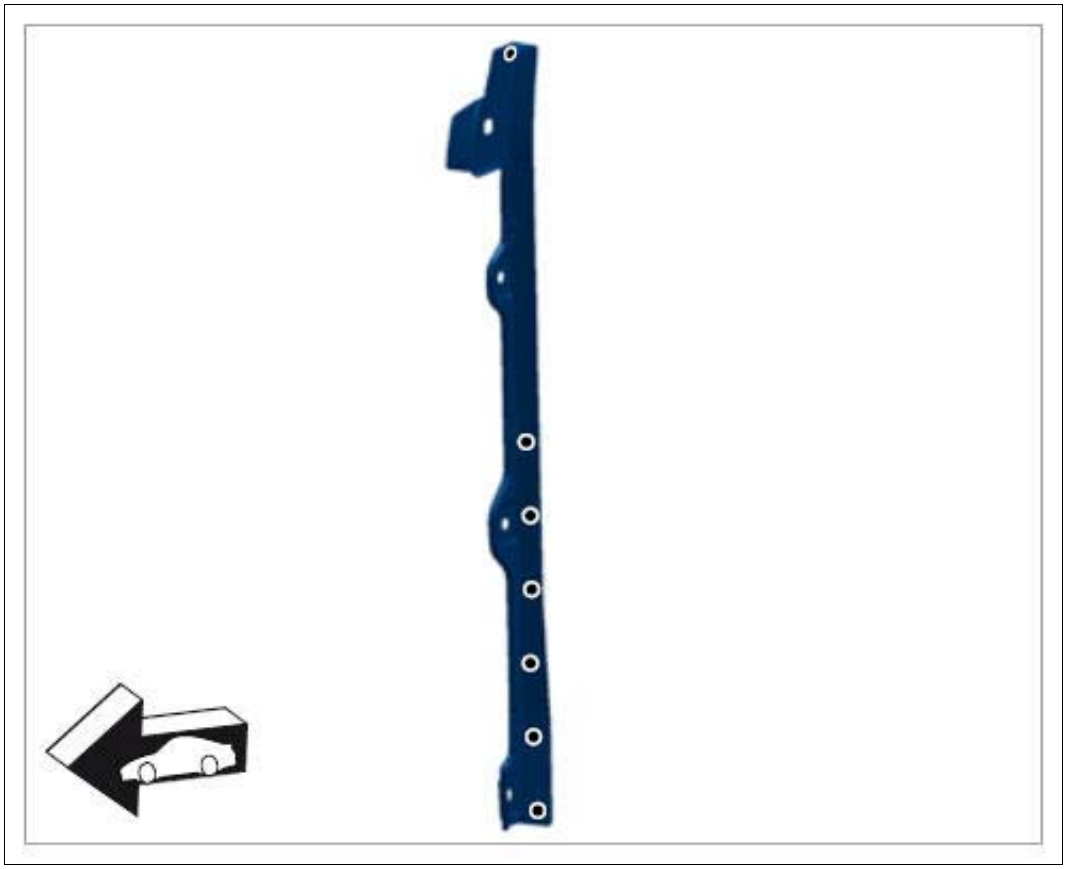

Courtesy of PORSCHE CARS NORTH AMERICA, INC.

5. Prepare wing bracket for welding.

Fig 5: Identifying Wing Bracket

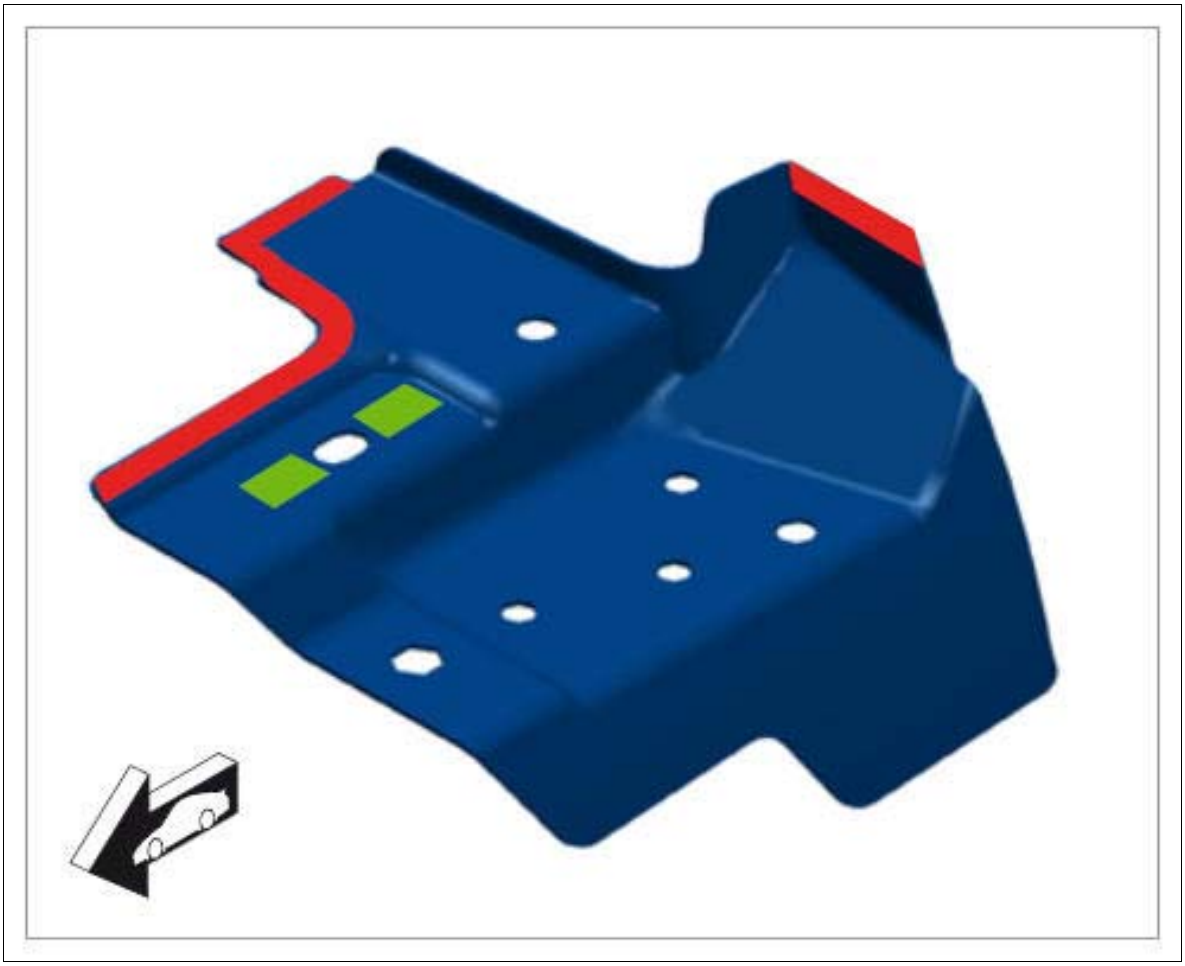

Courtesy of PORSCHE CARS NORTH AMERICA, INC.

WM 511255 REPLACING A-PILLAR (ALL MODELS) > PREPARING CONNECTION AREAS OF THE BODY FOR INSTALLATION

1. Align the sealing surface and connections of the body.
2. De-burr connection points and prepare them for welding.

   Information

   1. Before final assembly, make sure you fully understand all the work steps involved and carry out a trial assembly without applying adhesive.
   2. The bonding process can only be carried out reliably when a smooth and swift sequence of operations is guaranteed.
   3. Do not begin bonding work until all materials and tools necessary for later repair work are available.

3. Prepare the marked areas for welding and bonding. → 5X00IN21 WORKING WITH BODY STRUCTURAL ADHESIVE

Fig 1: Identifying Body Connection Areas

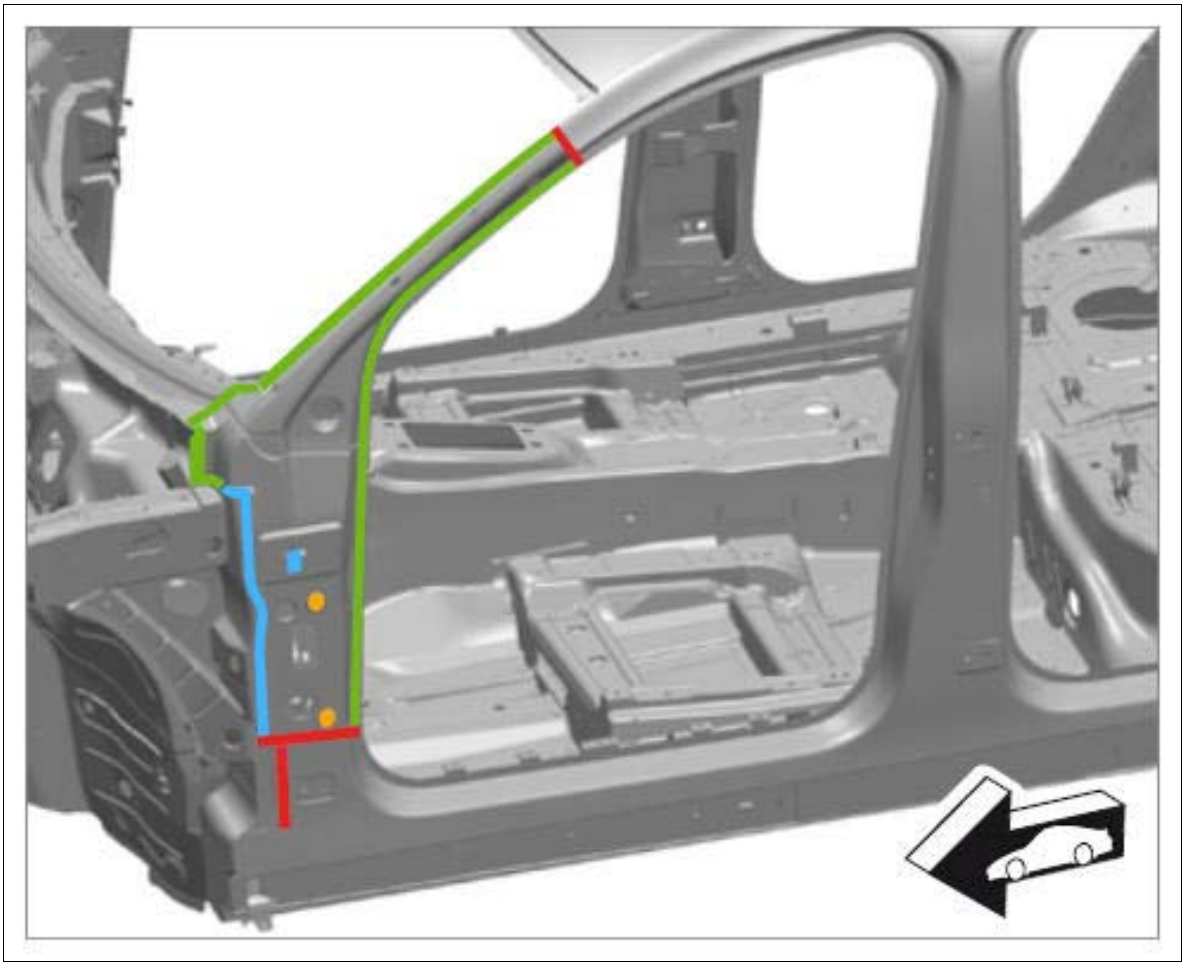

Courtesy of PORSCHE CARS NORTH AMERICA, INC.

Orange	Resistance spot-welding
Green	Resistance spot-welding + bonding
Blue	Bonding
Red	Plug-welding/apply a full weld using inert gas without bonding

WM 511255 REPLACING A-PILLAR (ALL MODELS) > INSTALLING A-PILLAR

Information

- Before final assembly, make sure you fully understand all the work steps involved and carry out a trial assembly without applying adhesive.
- The bonding process can only be carried out reliably when a smooth and swift sequence of operations is guaranteed.
- Do not begin bonding work until all materials and tools necessary for later repair work are

available.

1. Install A-pillar and check that it fits perfectly. Check gap dimensions. → 5X00IN DIAGRAM - BODY GAP DIMENSIONS

    1. 1.1. Apply adhesive to the areas marked in yellow. → 5X00IN21 WORKING WITH BODY STRUCTURAL ADHESIVE→ **Application depth: 3.0 mm**

    Fig 1: Identifying Adhesive Applying Areas

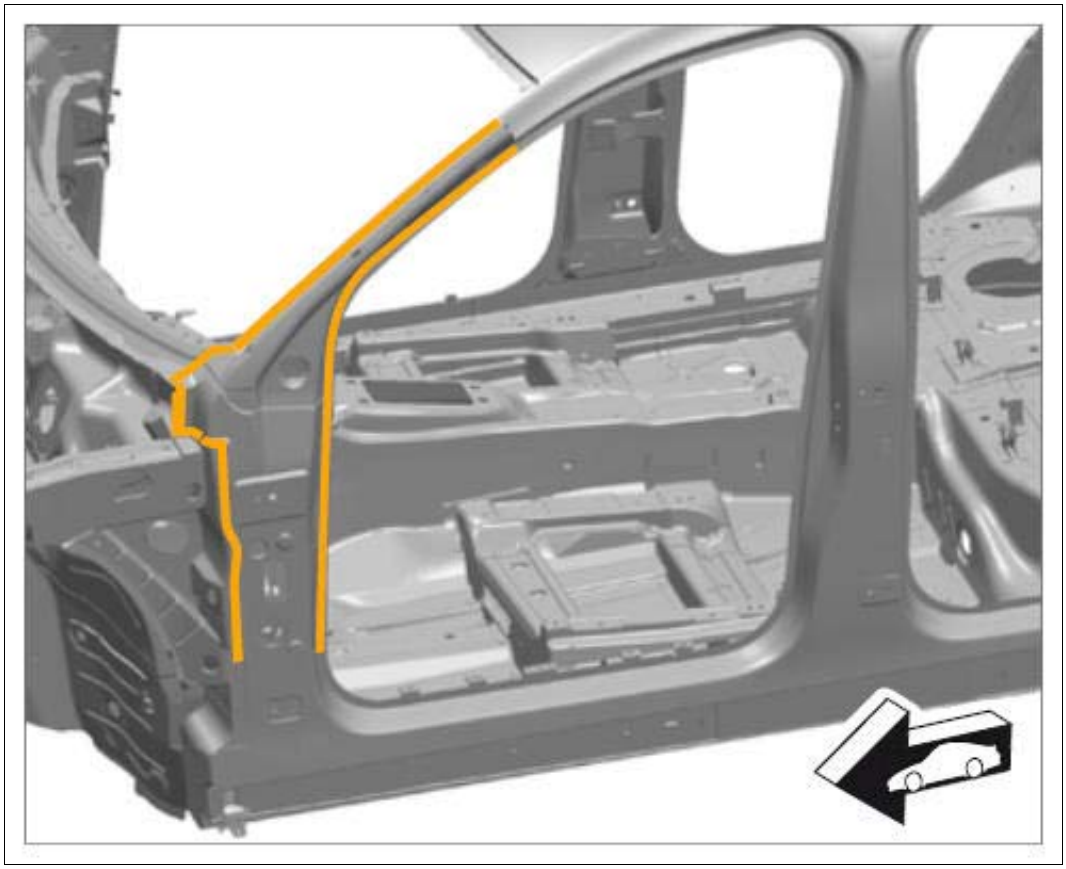

Courtesy of PORSCHE CARS NORTH AMERICA, INC.

2. Resistance spot-weld the A-pillar.

Fig 2: Identifying A-Pillar Spot-Weld Area

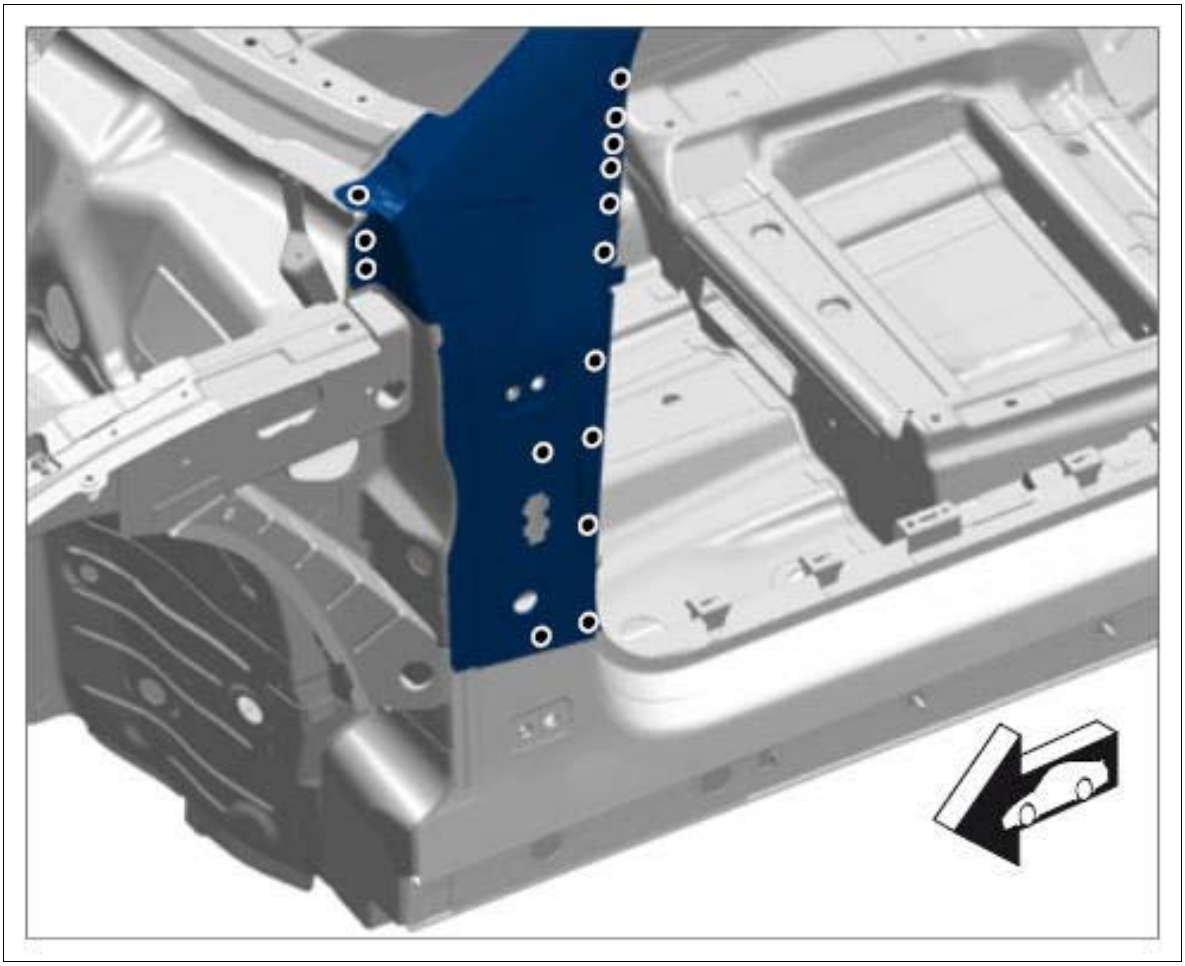

Courtesy of PORSCHE CARS NORTH AMERICA, INC.

Fig 3: Installing A-Pillar

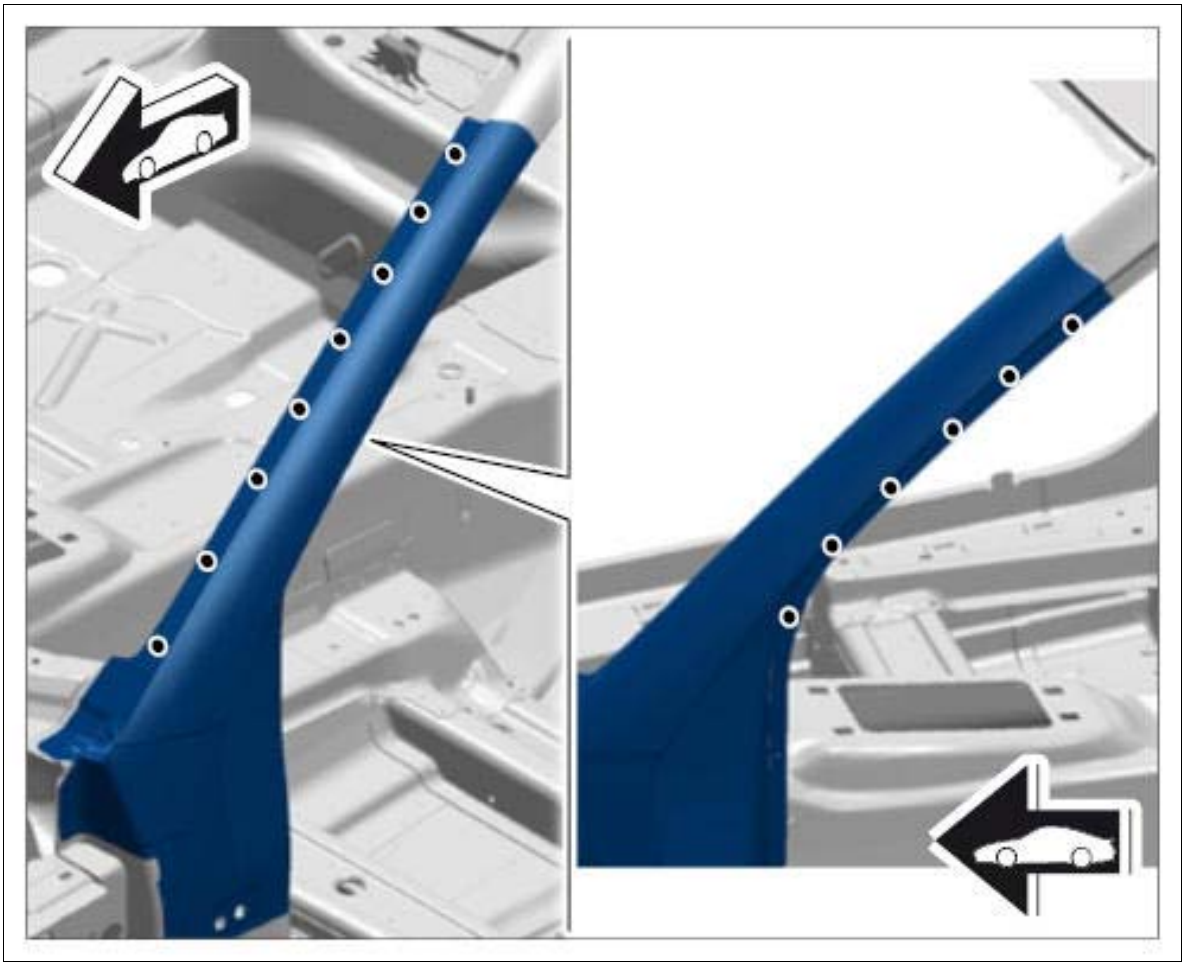

Courtesy of PORSCHE CARS NORTH AMERICA, INC.

3. Apply a full weld to the A-pillar using inert gas **-arrows-** .

Fig 4: Installing A-Pillar

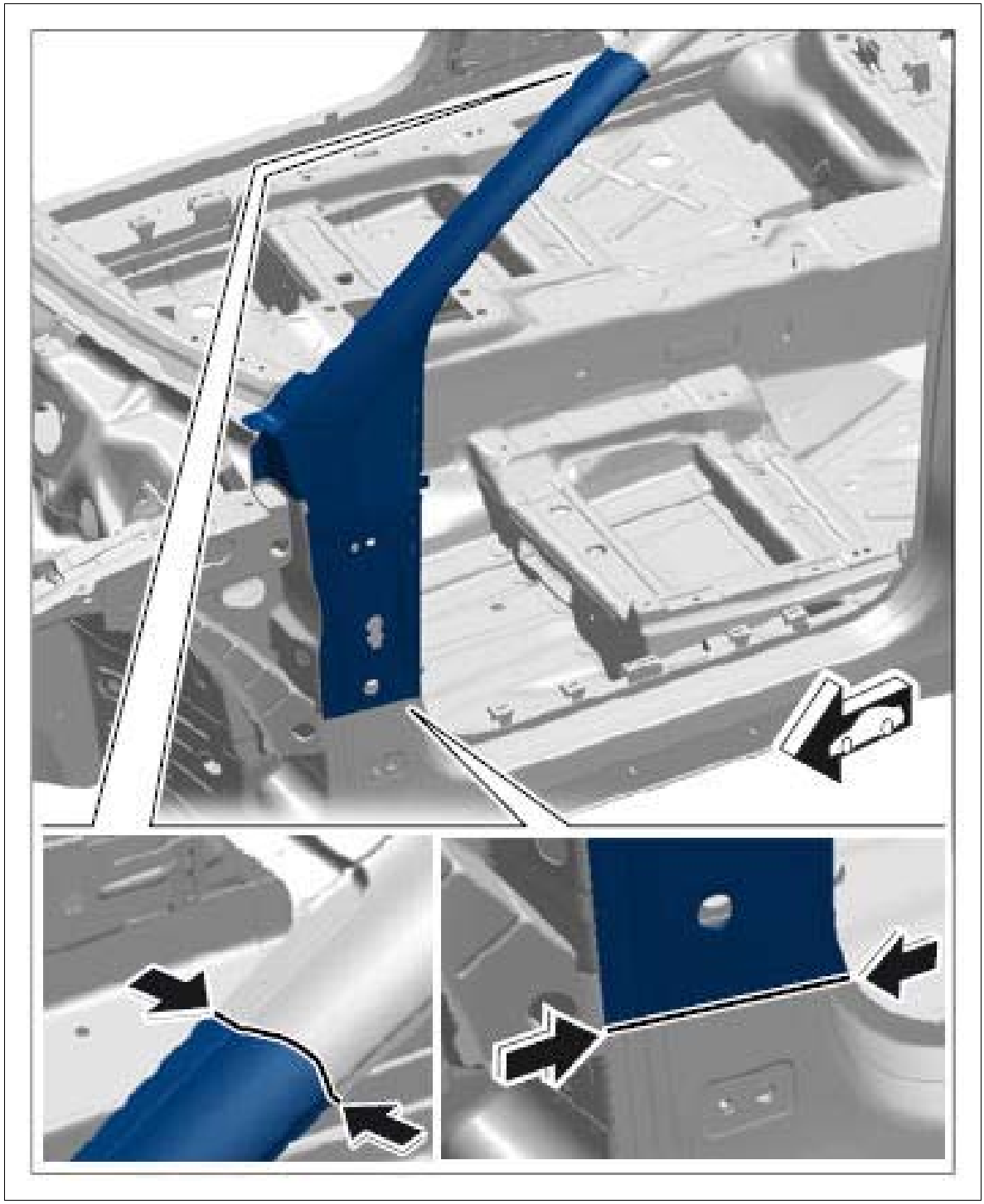

Courtesy of PORSCHE CARS NORTH AMERICA, INC.

4. Install wing.

    1. 4.1. Secure wing rail to wing and fit it.
    2. 4.2. Plug-weld the wing rail **-1-** under inert gas **-A-** .
    3. 4.3. Apply a full weld to area **-arrows-** using inert gas.

Fig 5: Identifying Wing Bracket

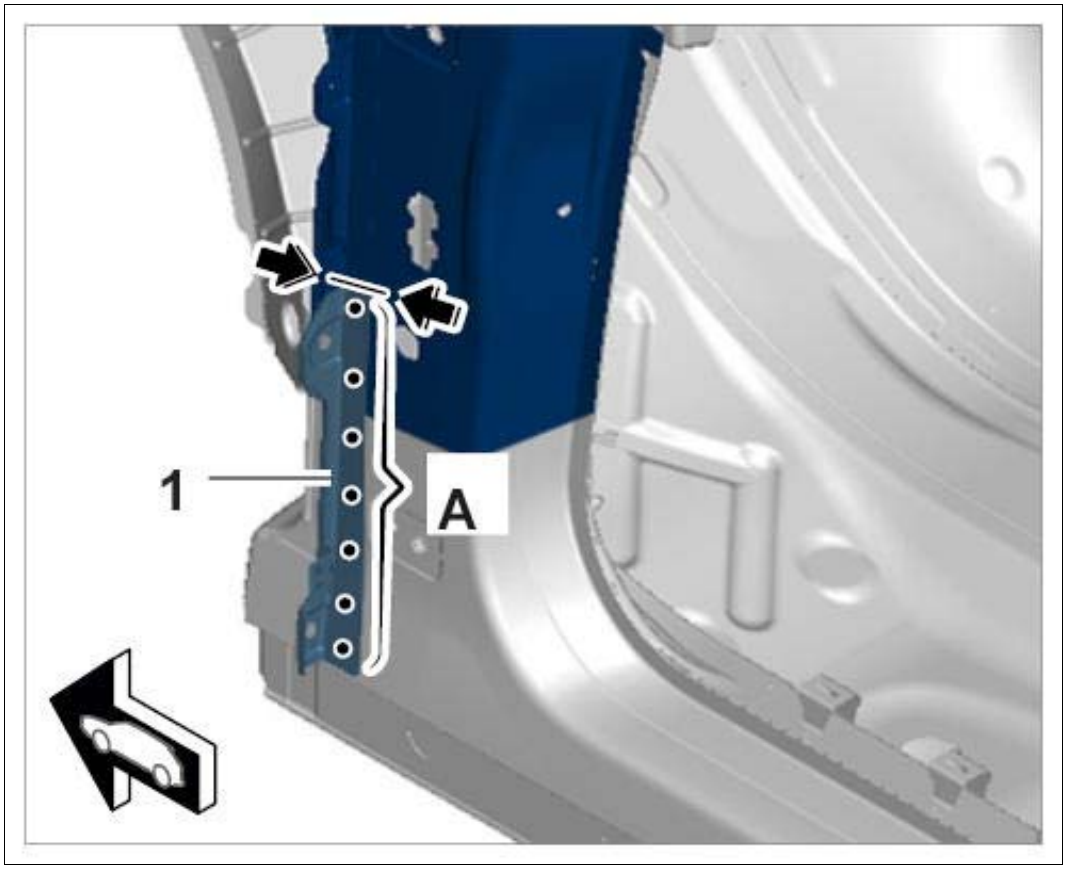

Courtesy of PORSCHE CARS NORTH AMERICA, INC.

5. Install wing bracket.

    1. 5.1. Resistance spot-weld the wing bracket in area **-A-** .
    2. 5.2. Apply a full weld to areas **-arrows-** using inert gas.

Fig 6: Identifying Wing Fastening Rail

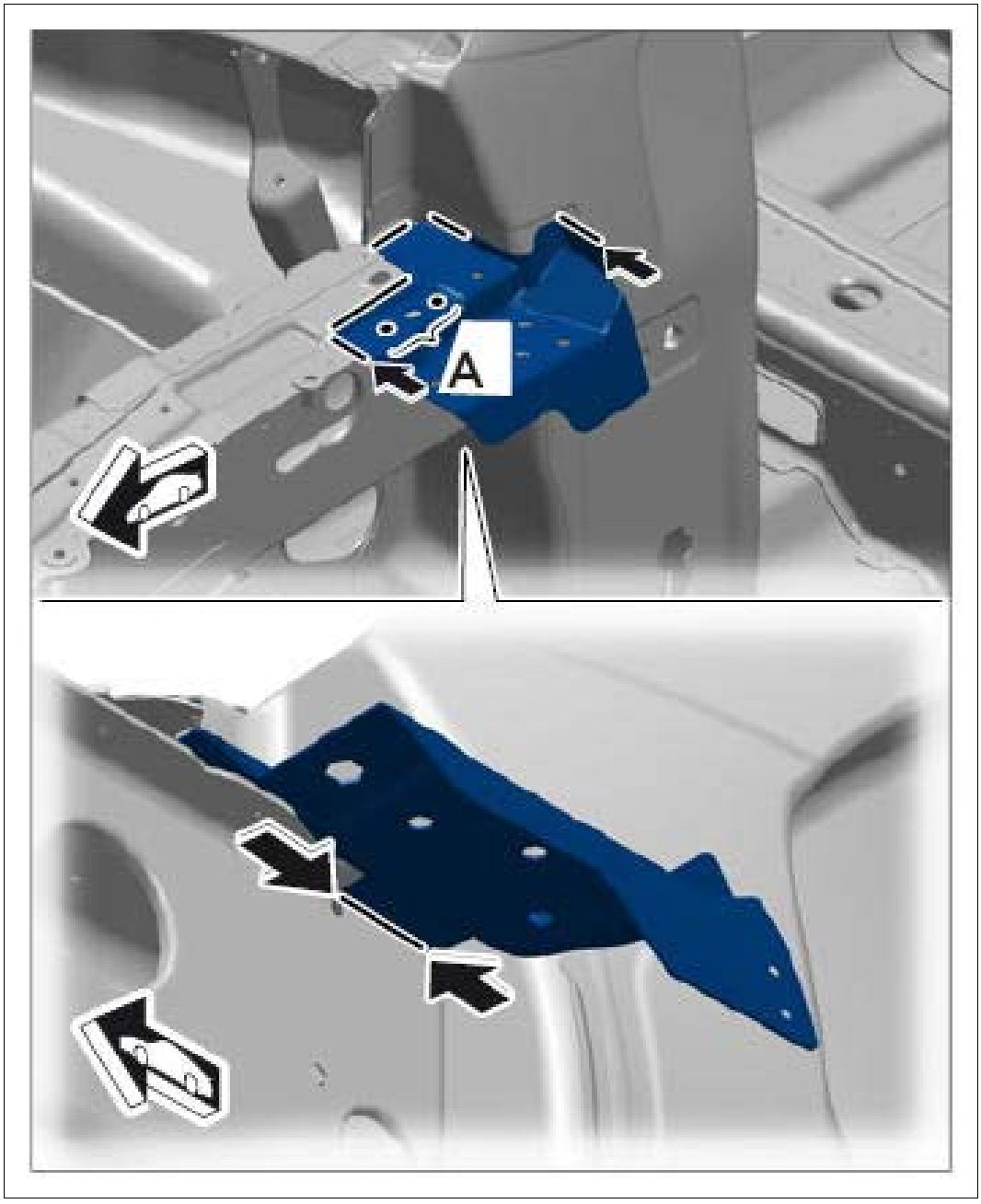

Courtesy of PORSCHE CARS NORTH AMERICA, INC.

WM 511255 REPLACING A-PILLAR (ALL MODELS) > SUBSEQUENT WORK > SUBSEQUENT WORK FOR BODY REPAIRS (WITHOUT STRAIGHTENING SYSTEM)

1. Clean joint areas and sheetmetal flanges with a wire brush.
2. Prime joint areas and sheetmetal flanges with 2K primer.
3. Restore standard seal with body sealant → 5X00IN42 SEAM SEALING .

   Also seal the repair area carefully.

4. Paint repair area and adjacent surfaces, if necessary.
5. Restore standard underbody protection with underbody sealant → 5X00IN43 UNDERBODY PROTECTION .
6. Apply standard cavity preservation → 5X00IN44 CAVITY PRESERVATION . Also apply cavity preservation to the repair area.
7. Install removed accessories in the repair area.

WM 511355 REPLACING A-PILLAR REINFORCEMENT (ALL MODELS) > TOOLS

Designation	Type	Number	Description	
Hot-air blower	Workshop equipment	WE 1119		
Body alignment system package	Workshop equipment	WE 1121		
Special electric cutter	Workshop equipment	WE 1137		
Pneumatic Spotweld Remover, Vario Drill WS 90	Workshop equipment	WE 1139		
Hand-cartridge gun	Workshop equipment	WE 1141		
Resistance spot welder	Workshop equipment	WE 1311		
Inverter welder MIDIspot-QSVM-12000	Workshop equipment	WE 1312		
Resistance spot welder	Workshop equipment	WE 1313		
Blind riveting tool TAURUS 4	Workshop equipment	WE 1348		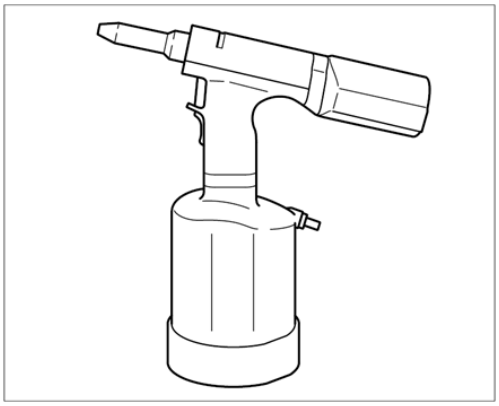

Aluminum tool set with trolley	Workshop equipment	WE 1350		
Resistance spot welder	Workshop equipment	WE 1352		
Measuring and alignment system, professional	Workshop equipment	WE 1398		
Mobile extraction unit, aluminum	Workshop equipment	WE 1507		
Body saw	Workshop equipment	WE 1508		
Star gauges for body gap dimensions	Special tool	Nr.127-1		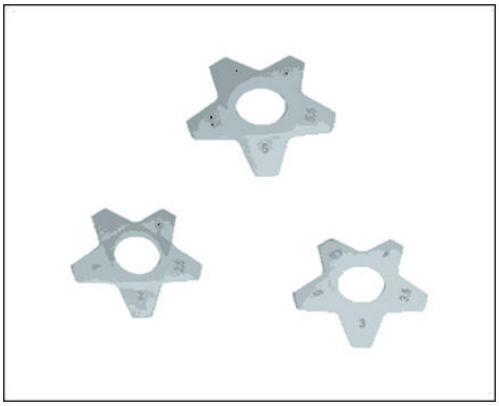
Spotweld drill	Commercially available tool	Nr.129		

Twist drill	Commercially available tool	Nr.201		
Countersink	Commercially available tool	Nr.202		

WM 511355 REPLACING A-PILLAR REINFORCEMENT (ALL MODELS) > TECHNICAL VALUES

Location	Description	Type	Basic value	Tolerance 1	Tolerance 2
Drill bit		Diameter	8.0 mm		
Drill bit		Diameter	8.0 mm		
Drill bit		Diameter	8.0 mm		
Applying adhesive		Application depth	3.0 mm		

WM 511355 REPLACING A-PILLAR REINFORCEMENT (ALL MODELS) > PRELIMINARY WORK > PRELIMINARY WORK FOR BODY REPAIRS (WITHOUT STRAIGHTENING SYSTEM)

1. Remove accessories in the repair area.
    1. 1.1. Remove accessories in the repair area according to the extent of damage on the vehicle.
2. Cover accessories adjacent to the repair area on the vehicle.

1. 2.1. Cover all accessories remaining on the vehicle and adjacent areas with fire-proof protective covers.

3. Reshape connection area of the sheetmetal parts to be replaced. Note: Information on aluminum repairs.

4. Expose joint areas.

    1. 4.1. Remove underbody protection, paint, etc. from the joint areas of the body using a hot-air gun or rotary brush.

WM 511355 REPLACING A-PILLAR REINFORCEMENT (ALL MODELS) > PRELIMINARY WORK

1. Remove A-pillar. → 511255 REPLACING A-PILLAR

2. Remove front part of outer side member. → 514555 REPLACING OUTER SIDE MEMBER

WM 511355 REPLACING A-PILLAR REINFORCEMENT (ALL MODELS) > SAFETY INSTRUCTIONS AND INFORMATION ON QUALITY

⚠ *CAUTION: Non-observance of safety instructions for body repairs*

- *Risk of damage to the vehicle*
- *Danger of injury*

→ Read the relevant safety instructions as well as general information and quality instructions → 5X00IN01 SAFETY INSTRUCTIONS .

- Protection of electrical components during body repairs
- Corrosion protection measures during repairs → 5X00IN03 CORROSION PROTECTION MEASURES DURING REPAIRS
- Information on aluminum repairs
- Body parts of various sheet-steel strengths → 5X00IN04 BODY PARTS OF VARIOUS SHEET-STEEL STRENGTHS
- Replacing punch rivets and penetrated joints
- Setting self-tapping screws → 5X00IN24 SETTING SELF-TAPPING SCREWS
- Working with body structural adhesive → 5X00IN21 WORKING WITH BODY STRUCTURAL ADHESIVE

WM 511355 REPLACING A-PILLAR REINFORCEMENT (ALL MODELS) > TOOLS AND MATERIALS > TOOLS AND MATERIALS FOR BODY REPAIRS

Information

- The tools for working on steel and aluminum must always be kept separate from each other. We recommend that you color code the tools using a system similar to that used for the Aluminum tool set with trolley WE 1350, for example.

Straightening set **Body alignment system package WE 1121 Measuring and alignment system, professional WE 1398**

Resistance spot welder; optional **Inverter welder MIDIspot-QSVM-12000 WE 1312, Resistance spot welder WE 1352, Resistance spot welder WE 1311, Resistance spot welder WE 1313**

Metal inert gas (MIG) welder

Pneumatic spotweld remover **Pneumatic Spotweld Remover, Vario Drill WS 90 WE 1139**

Pneumatic body saw **Body saw WE 1508**

Oscillating body saw (special electric cutter) **Special electric cutter WE 1137**

Hot-air blower **Hot-air blower WE 1119**

Hand-cartridge gun **Hand-cartridge gun WE 1141**

Spotweld drill **Spotweld drill Twist drill Nr.201**

Countersink for rivets **Countersink Nr.202**

Blind riveting tool for high-strength rivets **Blind riveting tool TAURUS 4 WE 1348**

Safety vacuum cleaner for aluminum dust **Mobile extraction unit, aluminum WE 1507**

Star gauges for body gap dimensions Nr.127-1

Wurth Klebt und Dichtet body sealant

WM 511355 REPLACING A-PILLAR REINFORCEMENT (ALL MODELS) > REMOVING A-PILLAR REINFORCEMENT

Fig 1: Identifying A-Pillar Reinforcement Installation Position

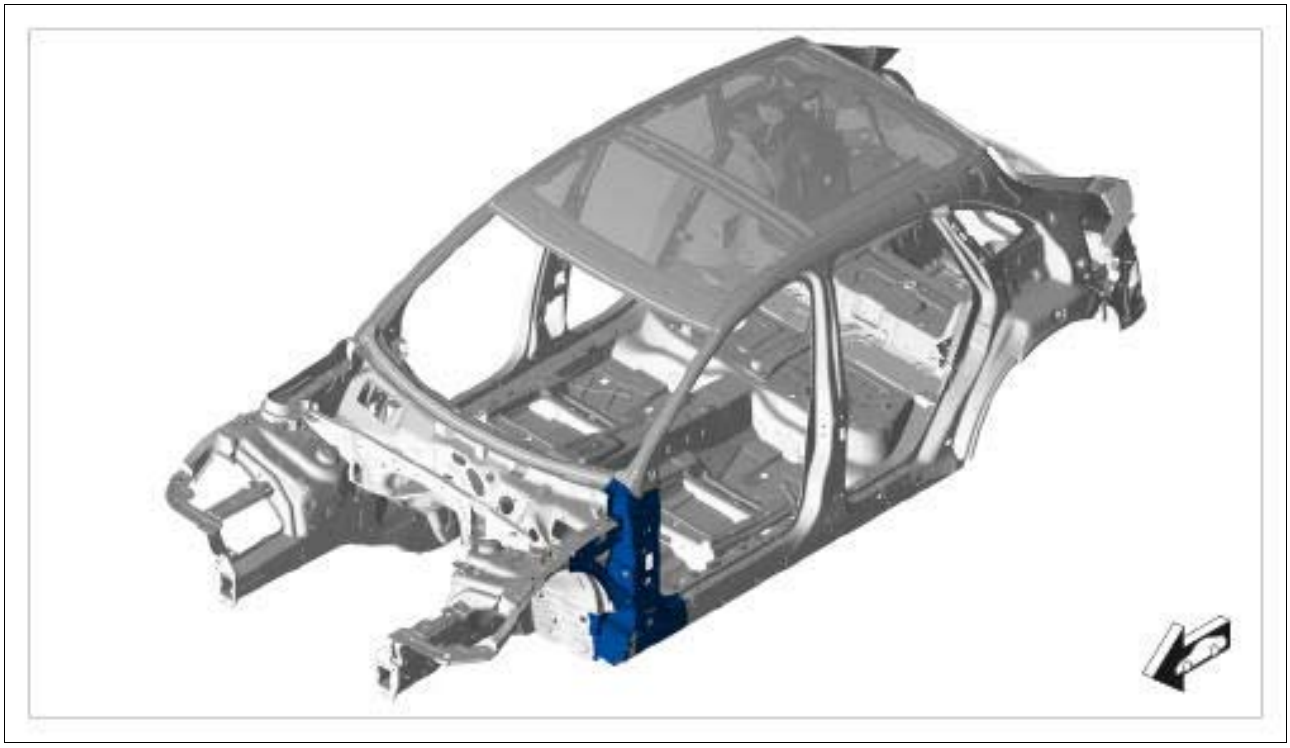

Courtesy of PORSCHE CARS NORTH AMERICA, INC.

1. Remove side member closing element.

   Information

   Drill out the connection point on one side only. Do not damage the plate underneath.

   1. 1.1. Drill out spotwelds using spotweld drill .
   2. 1.2. Grind down welded seams **-arrows-** .

Fig 2: Identifying Side Member Closing Element

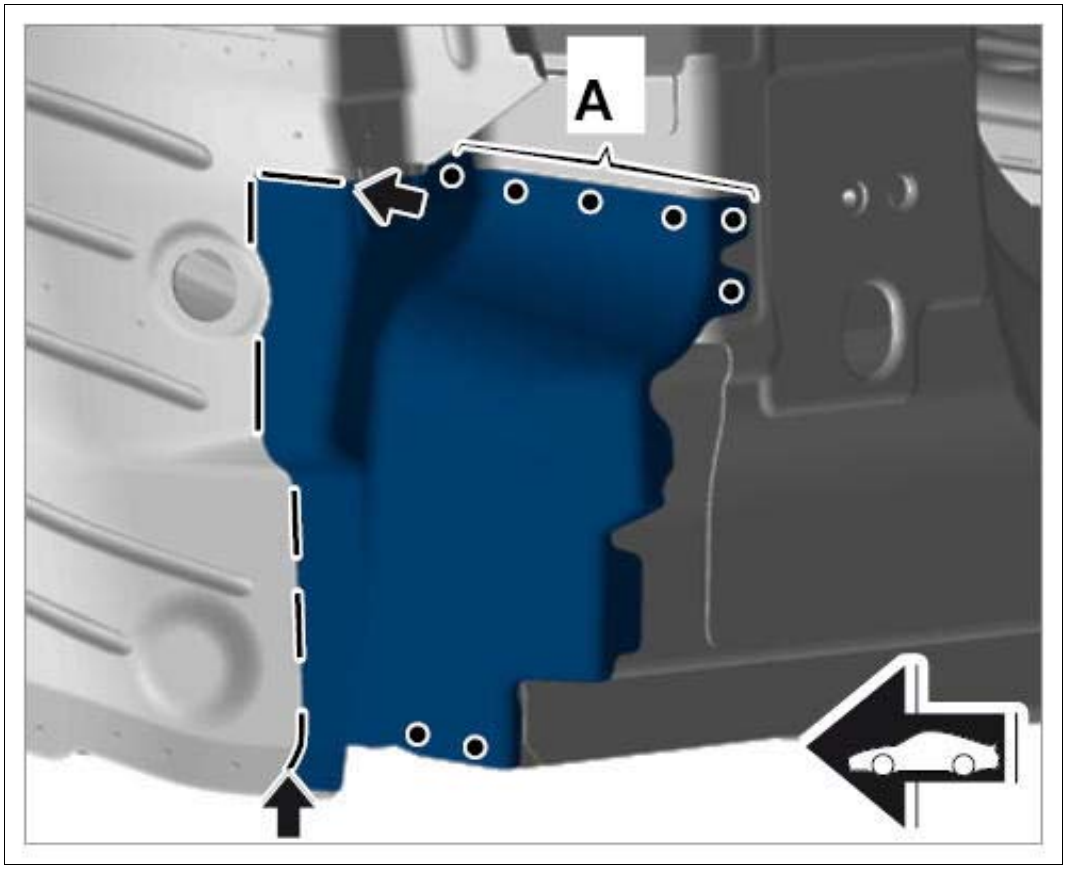

Courtesy of PORSCHE CARS NORTH AMERICA, INC.

Information

Only make cuts in the top plate. Make sure not to damage the plate underneath when doing this.

2. Mark and make a rough cut **-arrows-** .

Information

Drill out the connection point on one side only. Do not damage the plate underneath.

1. 2.1. Drill out marked spotwelds using spotweld drill .

Fig 3: Identifying A-Pillar Reinforcement

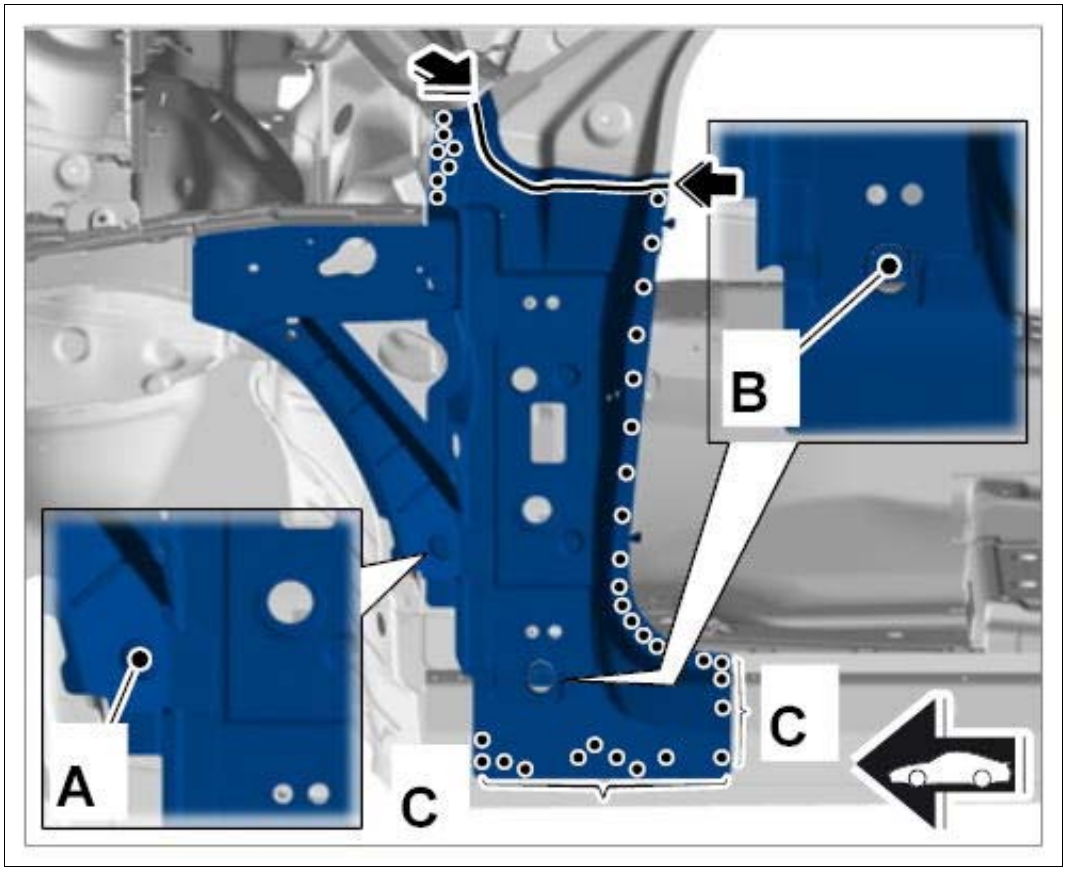

Courtesy of PORSCHE CARS NORTH AMERICA, INC.

Information

Drill out the connection point on one side only. Do not damage the plate underneath.

3. Drill out marked **spotwelds using spotweld drill** .

    1. 3.1. Grind down welded seams **-arrows-** .

Fig 4: Identifying A-Pillar Reinforcement

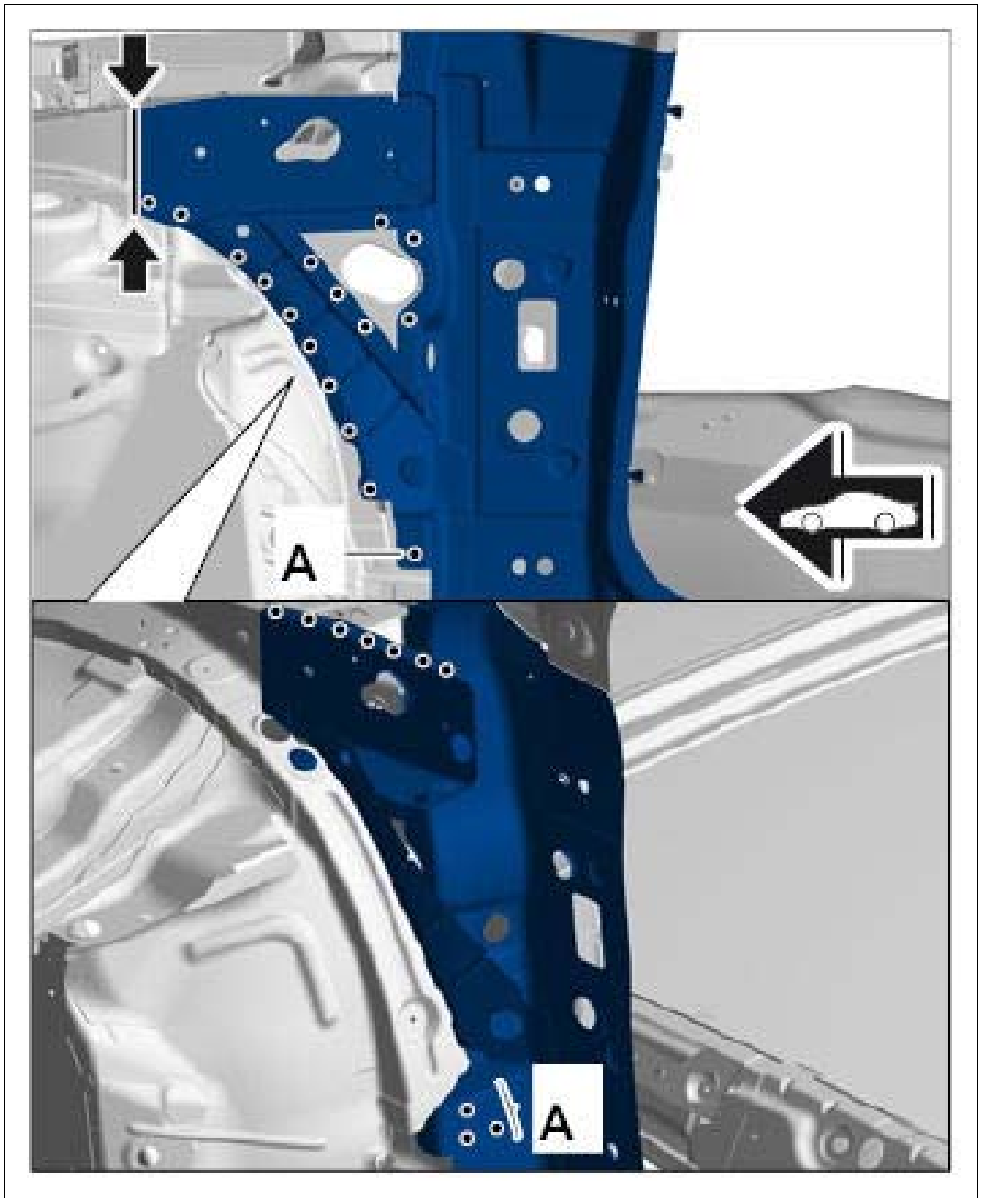

Courtesy of PORSCHE CARS NORTH AMERICA, INC.

4. Heat bonding areas.

Fig 5: Identifying A-Pillar Reinforcement Bonding Areas

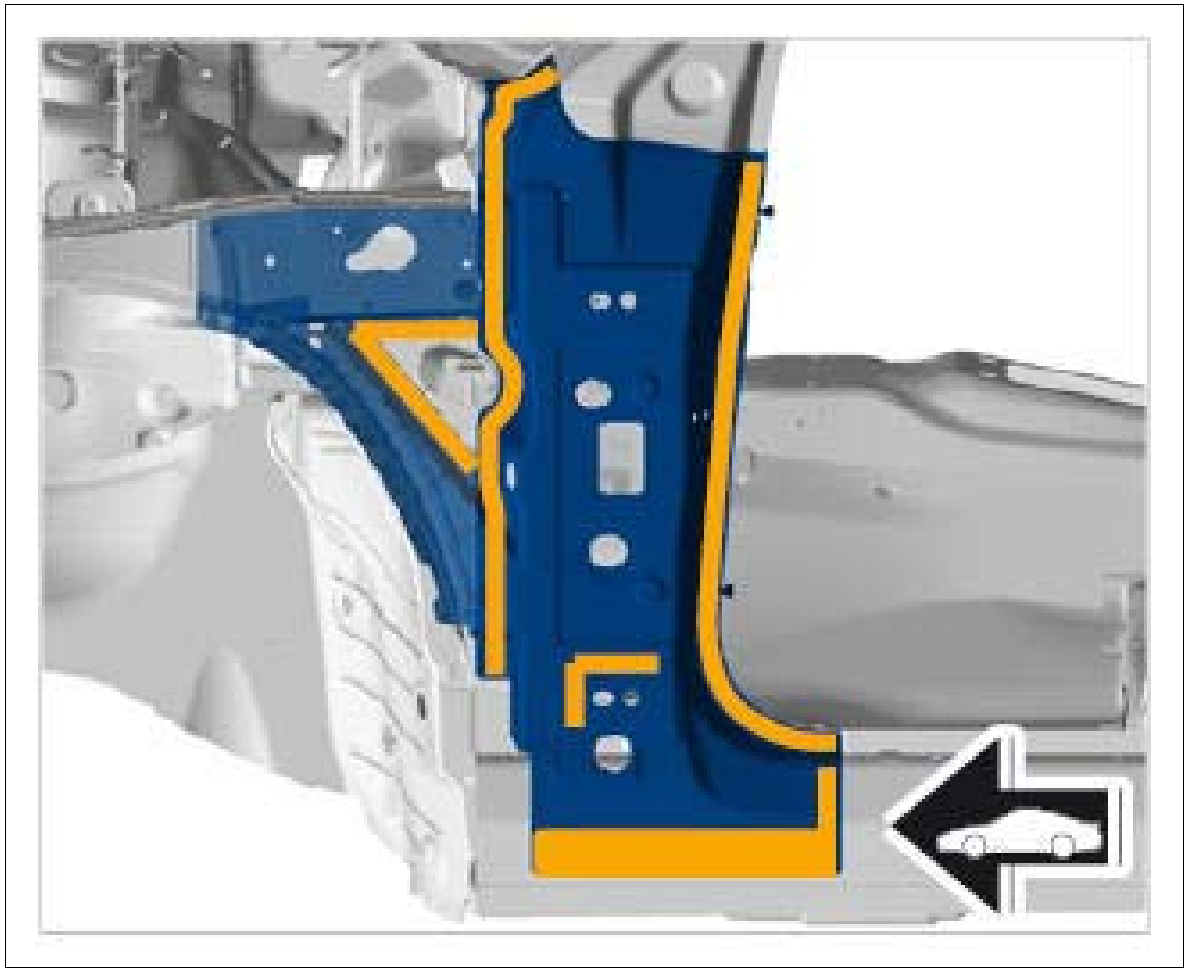

Courtesy of PORSCHE CARS NORTH AMERICA, INC.

5. Heat bonding areas from inside **-arrows-** .

    1. 5.1. Remove A-pillar reinforcement.

Fig 6: Locating A-Pillar Reinforcement Bonding Areas

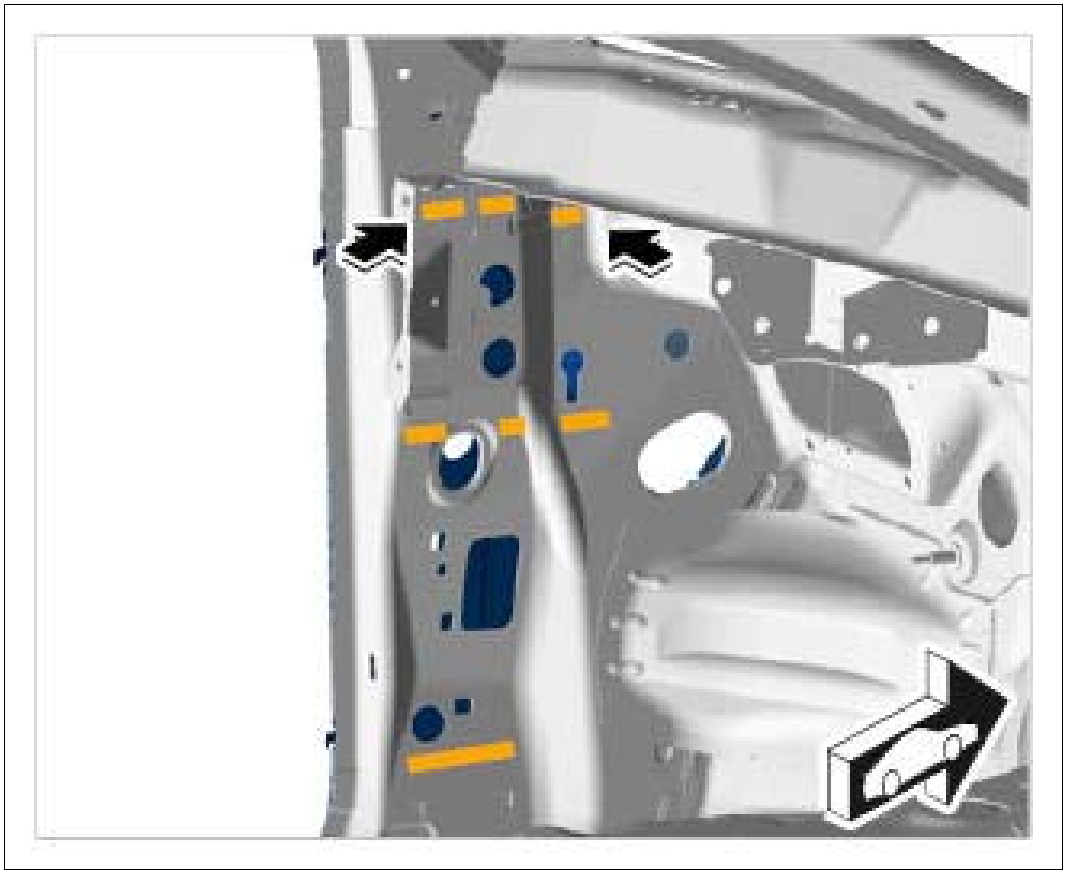

Courtesy of PORSCHE CARS NORTH AMERICA, INC.

6. Remove remaining piece.

    1. 6.1. Drill out **spotwelds using spotweld drill** .
    2. 6.2. Remove remaining piece of A-pillar reinforcement **-1-** in a downward direction **-arrows-** .

Fig 7: Identifying A-Pillar Reinforcement Piece

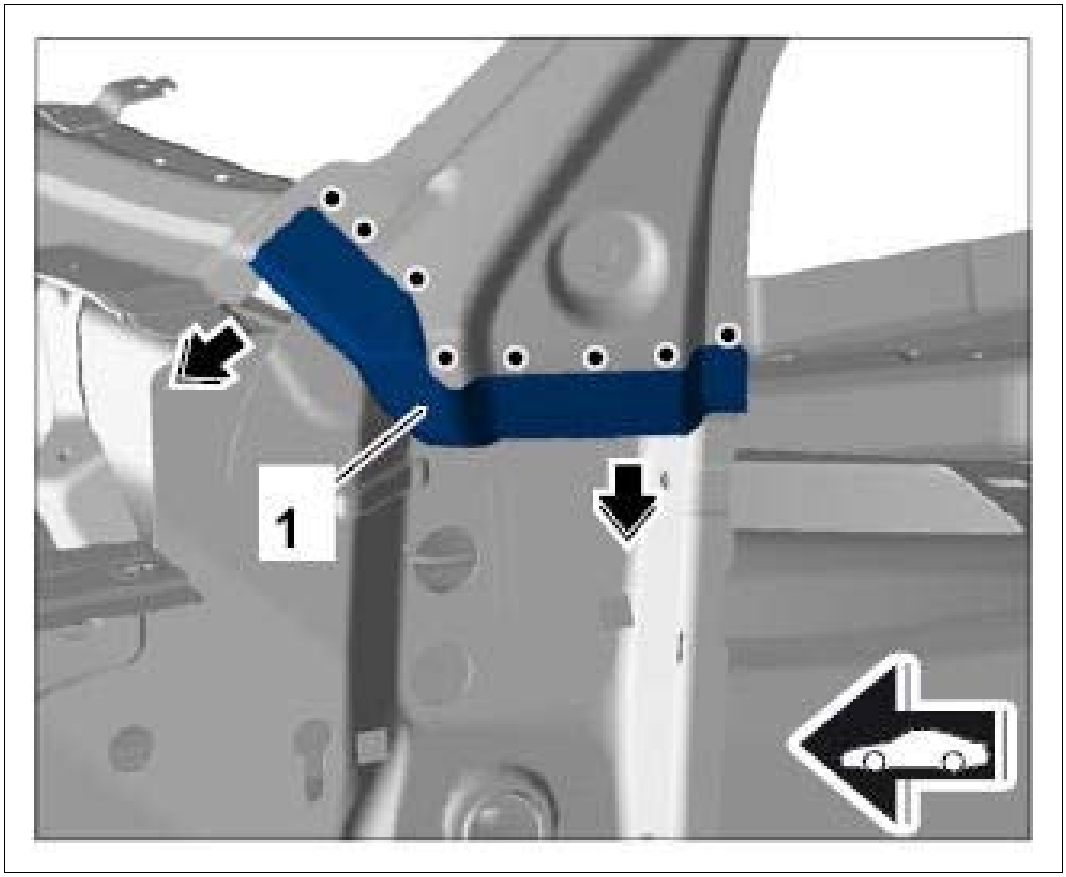

Courtesy of PORSCHE CARS NORTH AMERICA, INC.

WM 511355 REPLACING A-PILLAR REINFORCEMENT (ALL MODELS) > PREPARING A-PILLAR REINFORCEMENT FOR INSTALLATION

1. Fit A-pillar reinforcement.
2. Drill holes for plug welding in the marked areas **-A-** on the A-pillar reinforcement using a drill bit with a diameter of → Diameter: 8.0 mm.

Fig 1: Locating A-Pillar Reinforcement

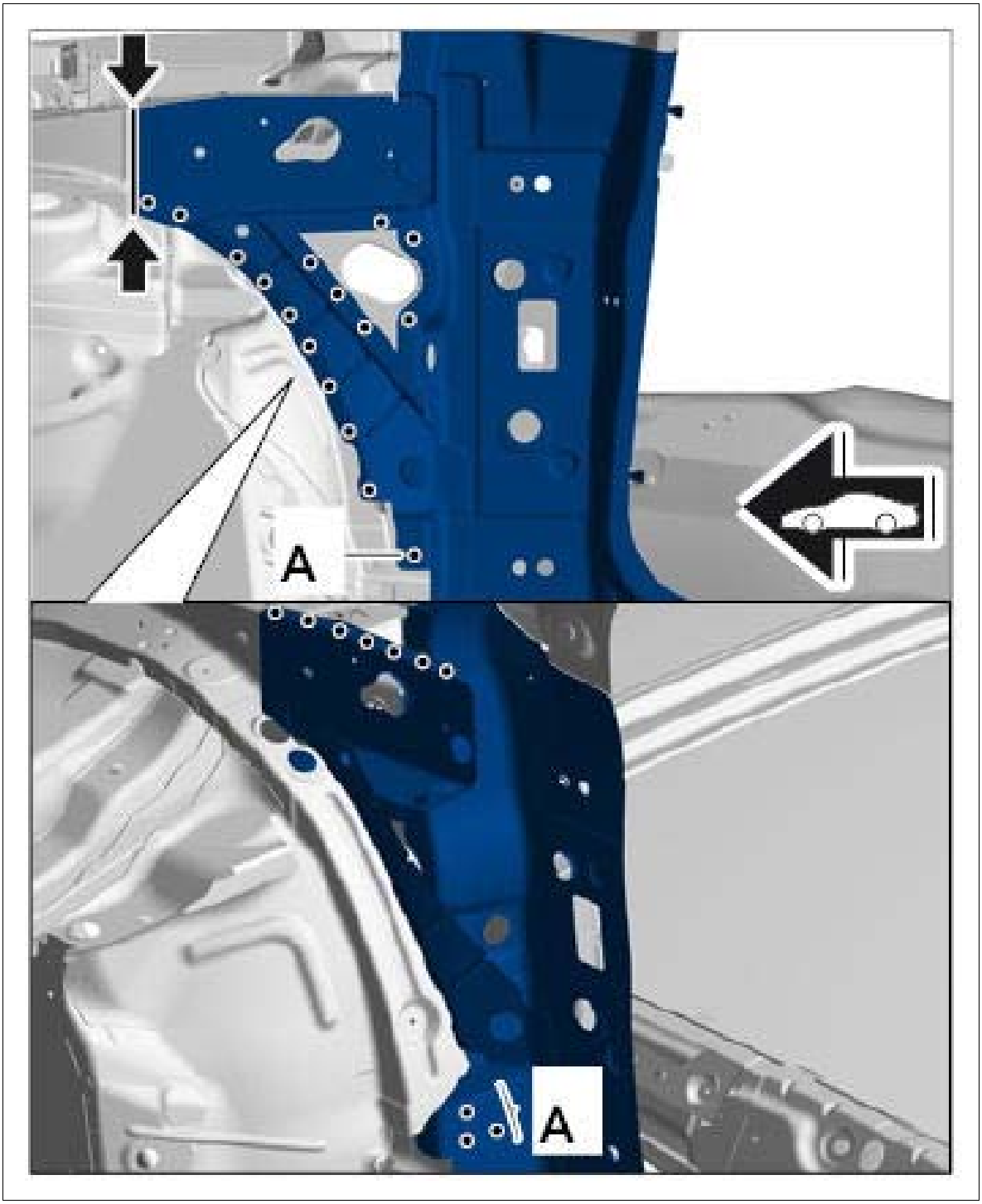

Courtesy of PORSCHE CARS NORTH AMERICA, INC.

3. Prepare the marked connection areas for bonding and welding.

    1. 3.1. Drill holes for plug welding in the marked areas **-A-** on the A-pillar reinforcement using a drill bit with a diameter of → **Diameter: 8.0 mm.**

Fig 2: Identifying A-Pillar Reinforcement Holes Marked Areas

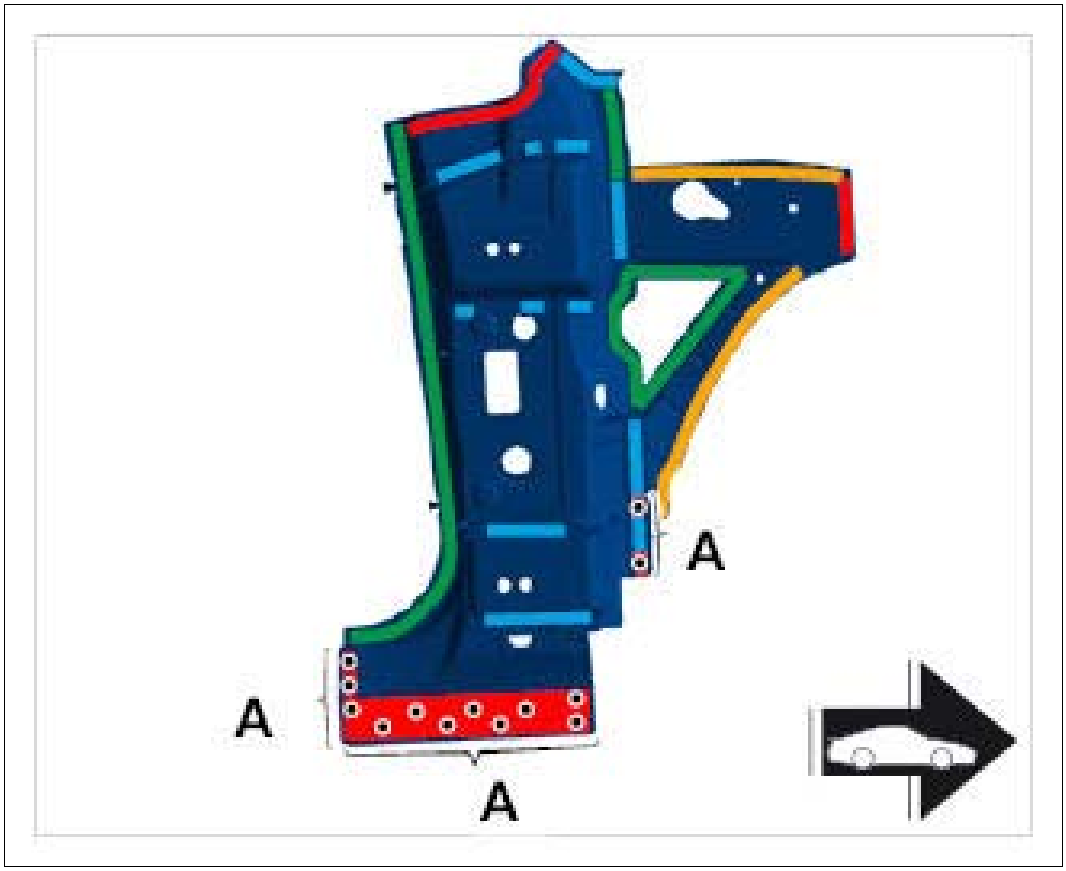

Courtesy of PORSCHE CARS NORTH AMERICA, INC.

Green	Resistance spot-welding
Blue	Bonding
Red	Plug-welding/apply a full weld using inert gas without bonding
Orange	Bonding + resistance spot-welding

4. Drill holes for plug welding in the marked areas **-A-** on the side member closing element using a drill bit with a diameter of → Diameter: 8.0 mm.

Fig 3: Locating Side Member Closing Element

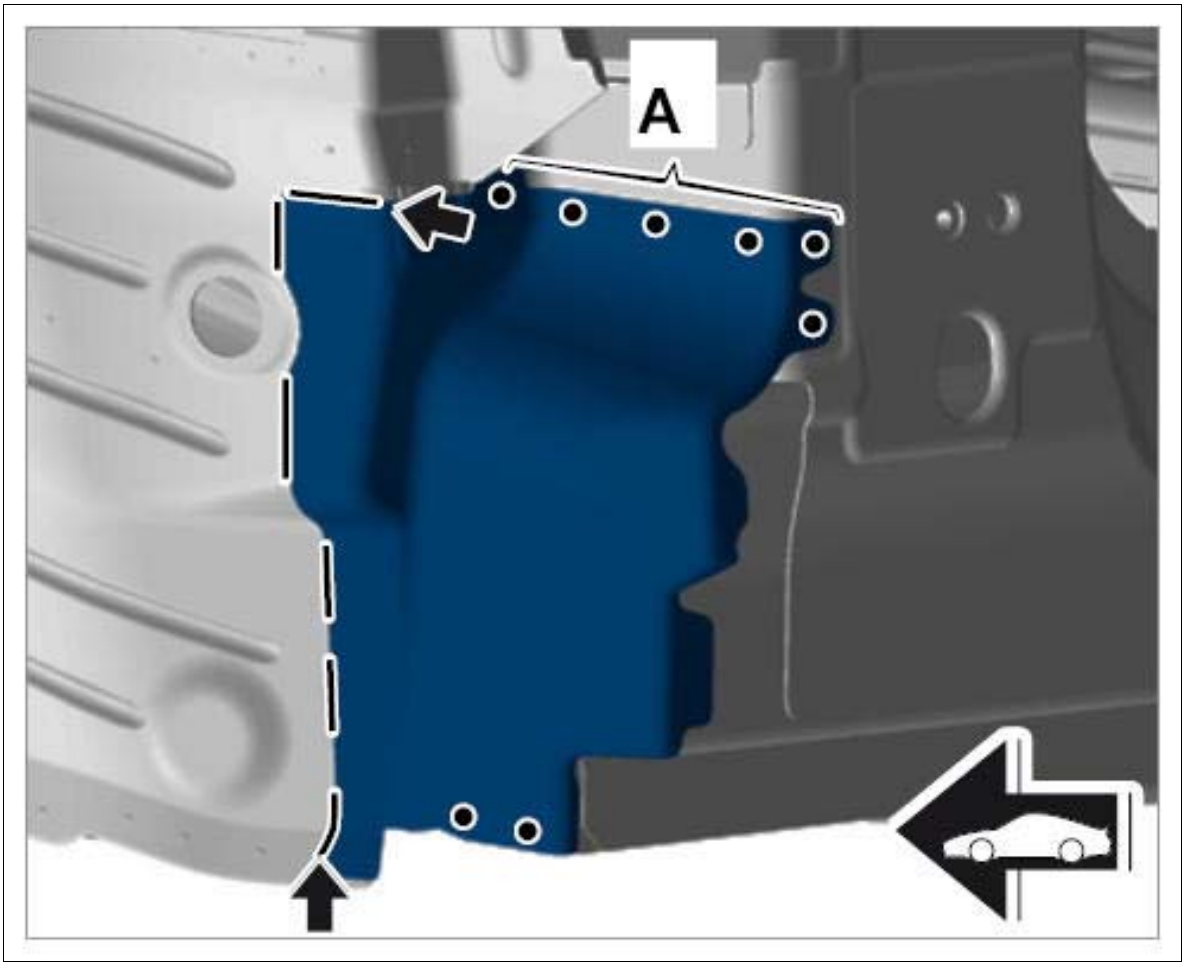

Courtesy of PORSCHE CARS NORTH AMERICA, INC.

WM 511355 REPLACING A-PILLAR REINFORCEMENT (ALL MODELS) > PREPARING CONNECTION AREAS OF THE BODY FOR INSTALLATION

1. Align the sealing surface and connections of the body.
2. De-burr connection areas and prepare for welding.

   Information

   1. Before final assembly, make sure you fully understand all the work steps involved and carry out a trial assembly without applying adhesive.
   2. The bonding process can only be carried out reliably when a smooth and swift sequence of operations is guaranteed.
   3. Do not begin bonding work until all materials and tools necessary for later repair work are available.
3. Prepare marked areas for welding and bonding.

Fig 1: Identifying Body Connection Areas

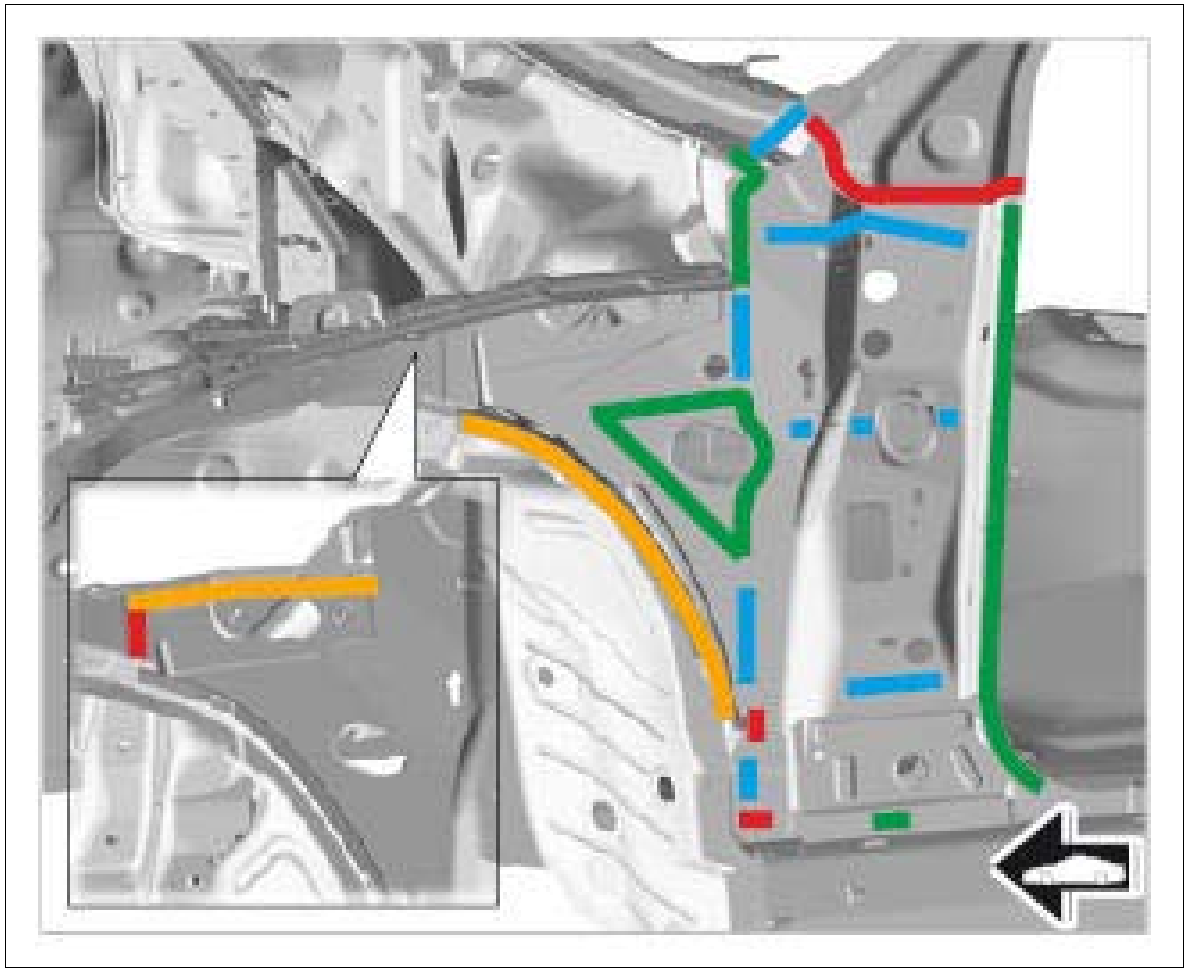

Courtesy of PORSCHE CARS NORTH AMERICA, INC.

Green	Resistance spot-welding
Blue	Bonding
Red	Plug-welding/apply a full weld using inert gas without bonding
Orange	Bonding + resistance spot-welding

WM 511355 REPLACING A-PILLAR REINFORCEMENT (ALL MODELS) > INSTALLING A-PILLAR REINFORCEMENT

Information

- Before final assembly, make sure you fully understand all the work steps involved and carry out a trial assembly without applying adhesive.
- The bonding process can only be carried out reliably when a smooth and swift sequence of operations is guaranteed.

- Do not begin bonding work until all materials and tools necessary for later repair work are available.

1. Install A-pillar reinforcement and check that it fits perfectly. Check gap dimensions. → 5X00IN DIAGRAM - BODY GAP DIMENSIONS

   Information

   Adhesive must not be applied to areas to be plug-welded or fully welded using inert gas.

   1. 1.1. Apply adhesive to the marked areas. → 5X00IN21 WORKING WITH BODY STRUCTURAL ADHESIVE→ **Application depth: 3.0 mm**

   2. 1.2. Apply foam filler to the sealing element area on the body. → 5X00IN22 WORKING WITH BODY FOAM FILLER

      Make sure that all openings and gaps between the end plate and rear lock support are sealed with the sealing compound.

      Fig 1: Identifying Adhesive Applying Areas

      

      Courtesy of PORSCHE CARS NORTH AMERICA, INC.

2. Guide in A-pillar reinforcement **-1-** at an angle from the bottom **-arrows a-** up **-arrow A-** .

Fig 2: Identifying A-Pillar Reinforcement

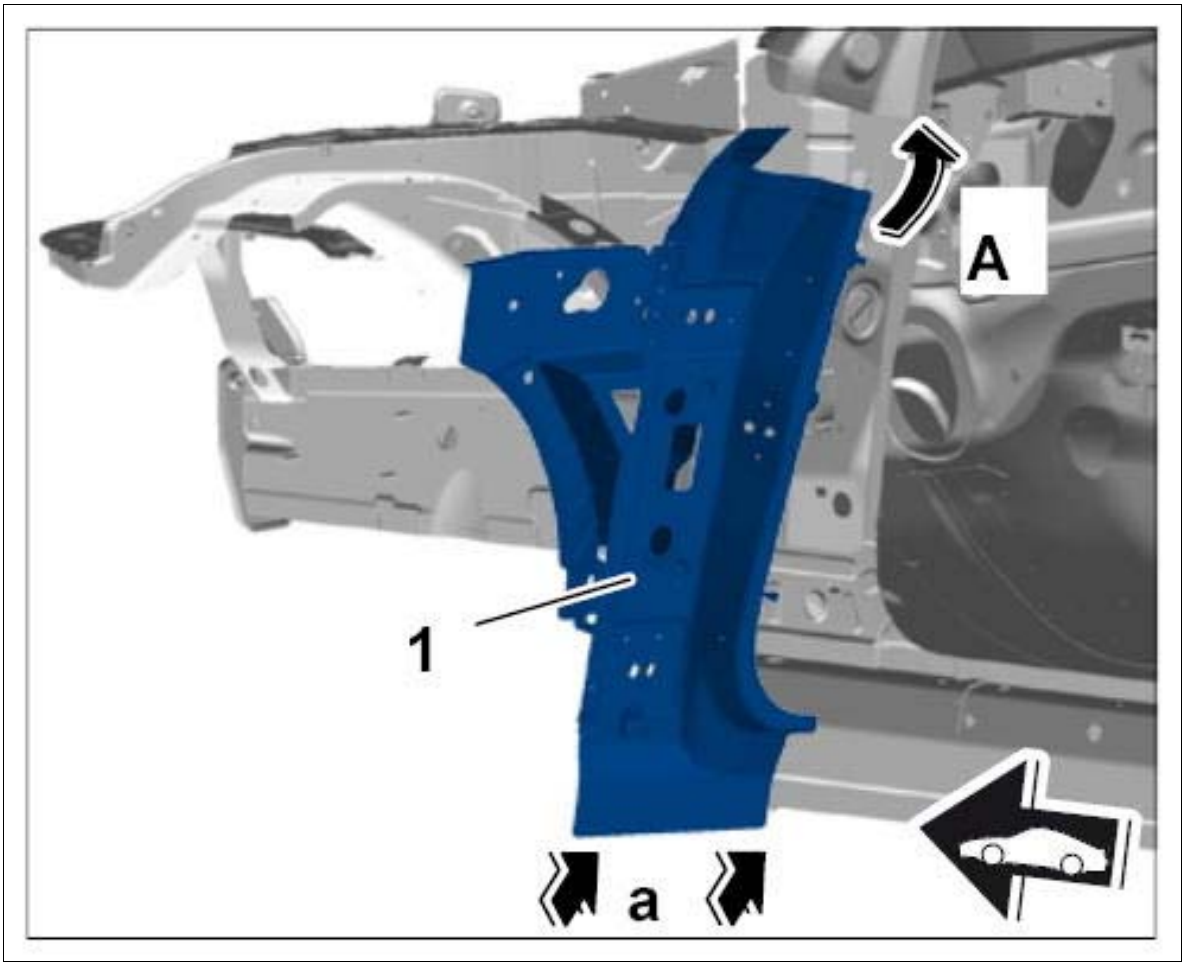

Courtesy of PORSCHE CARS NORTH AMERICA, INC.

3. Resistance spot-weld the A-pillar reinforcement.
    1. 3.1. Plug-weld area -A; C-using inert gas.
    2. 3.2. Resistance spot-weld area **-B-** .

Fig 3: Identifying A-Pillar Reinforcement

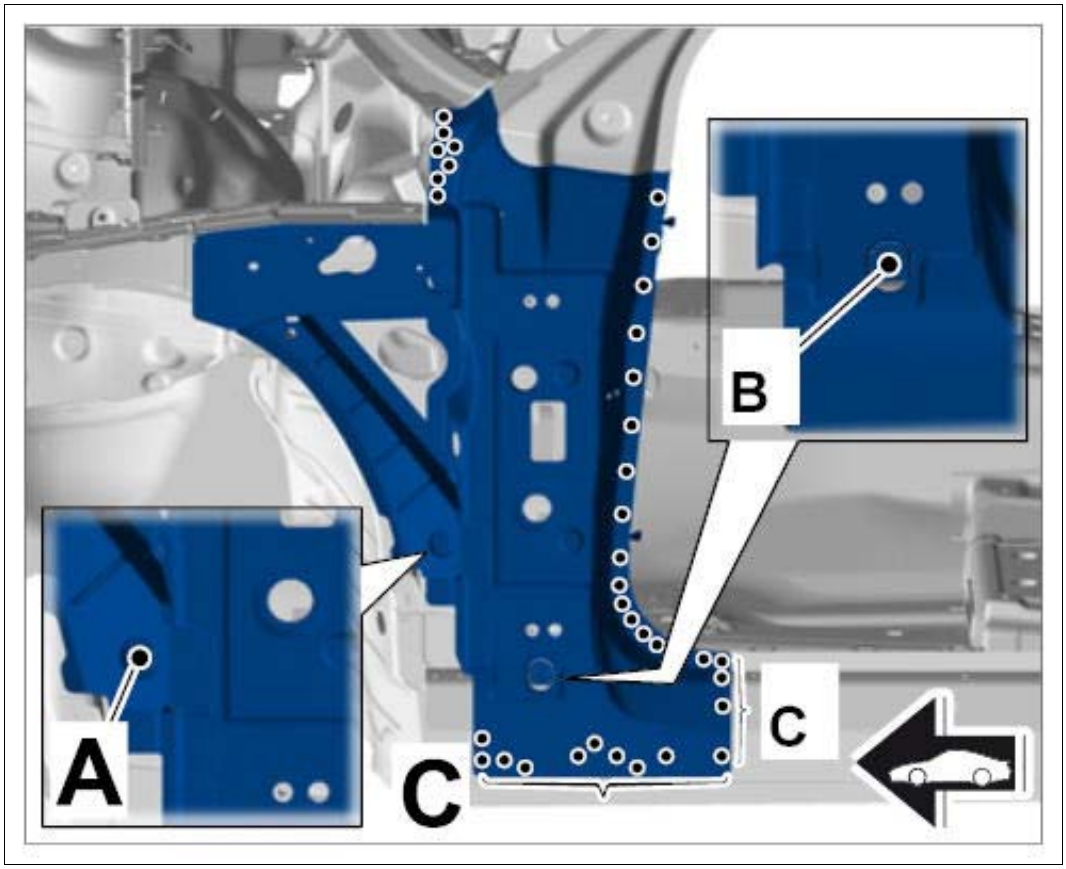

Courtesy of PORSCHE CARS NORTH AMERICA, INC.

4. Resistance spot-weld the A-pillar reinforcement.
    1. 4.1. Plug-weld area **-A-** using inert gas.
    2. 4.2. Apply a full weld to the area **-arrows-** using inert gas.

Fig 4: Identifying A-Pillar Reinforcement

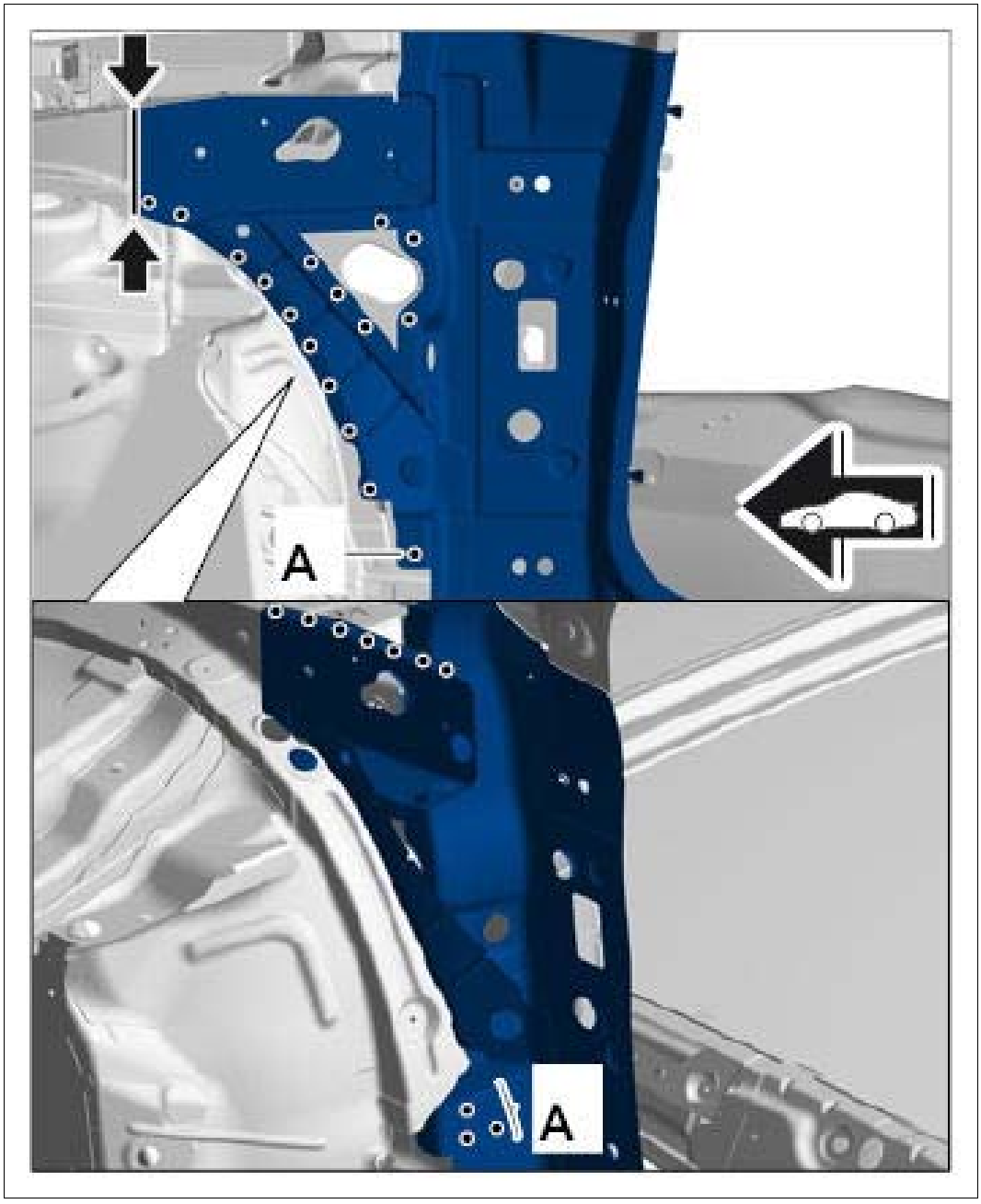

Courtesy of PORSCHE CARS NORTH AMERICA, INC.

5. Plug-weld the A-pillar reinforcement in area **-A-** using inert gas.

Fig 5: Identifying A-Pillar Reinforcement

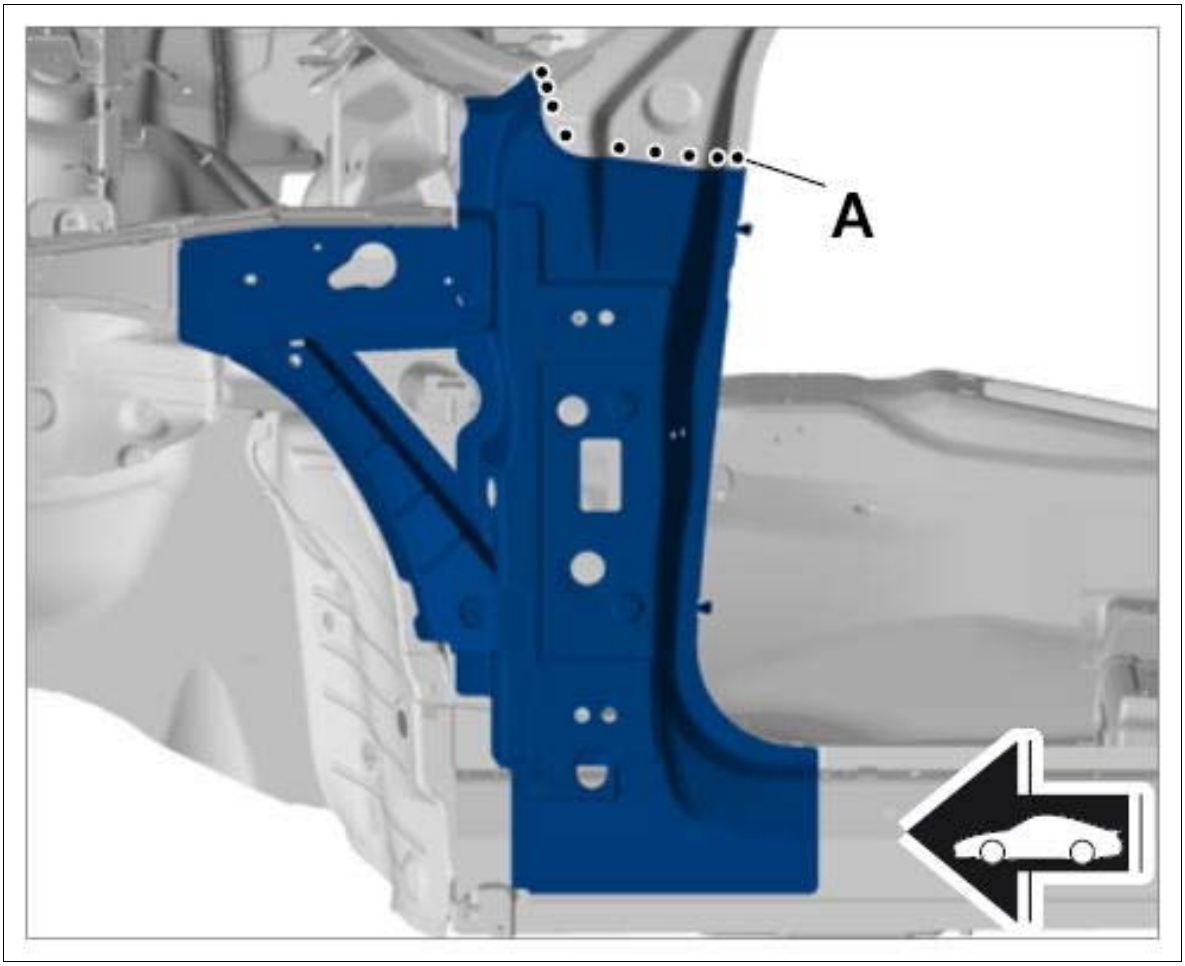

Courtesy of PORSCHE CARS NORTH AMERICA, INC.

6. Resistance spot-weld the side member closing element.
    1. 6.1. Plug-weld area **-A-** using inert gas.
    2. 6.2. Apply a full weld to the area **-arrows-** using inert gas.

Fig 6: Identifying Side Member Closing Element

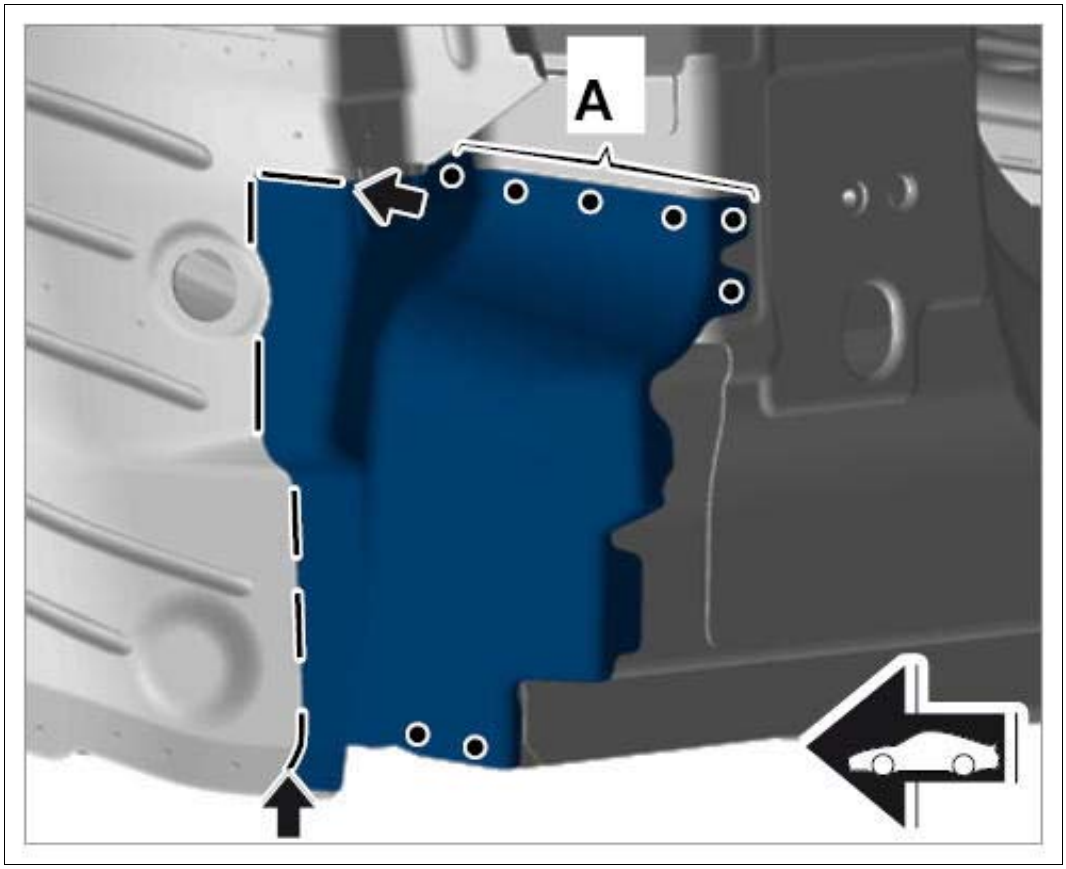

Courtesy of PORSCHE CARS NORTH AMERICA, INC.

WM 511355 REPLACING A-PILLAR REINFORCEMENT (ALL MODELS) > SUBSEQUENT WORK

1. Install A-pillar. → 511255 REPLACING A-PILLAR
2. Install front part of outer side member. → 514555 REPLACING OUTER SIDE MEMBER

WM 511355 REPLACING A-PILLAR REINFORCEMENT (ALL MODELS) > SUBSEQUENT WORK > SUBSEQUENT WORK FOR BODY REPAIRS (WITHOUT STRAIGHTENING SYSTEM)

1. Clean joint areas and sheetmetal flanges with a wire brush.
2. Prime joint areas and sheetmetal flanges with 2K primer.
3. Restore standard seal with body sealant → 5X00IN42 SEAM SEALING .

   Also seal the repair area carefully.
4. Paint repair area and adjacent surfaces, if necessary.

5. Restore standard underbody protection with underbody sealant → 5X00IN43 UNDERBODY PROTECTION .
6. Apply standard cavity preservation → 5X00IN44 CAVITY PRESERVATION . Also apply cavity preservation to the repair area.
7. Install removed accessories in the repair area.

WM 514155 REPLACING B-PILLAR (ALL MODELS) > TOOLS

Designation	Type	Number	Description	
Hot-air blower	Workshop equipment	WE 1119		
Body alignment system package	Workshop equipment	WE 1121		
Special electric cutter	Workshop equipment	WE 1137		
Pneumatic Spotweld Remover, Vario Drill WS 90	Workshop equipment	WE 1139		
Hand-cartridge gun	Workshop equipment	WE 1141		
Resistance spot welder	Workshop equipment	WE 1311		
Inverter welder MIDIspot-QSVM-12000	Workshop equipment	WE 1312		
Resistance spot welder	Workshop equipment	WE 1313		
Blind riveting tool TAURUS 4	Workshop equipment	WE 1348		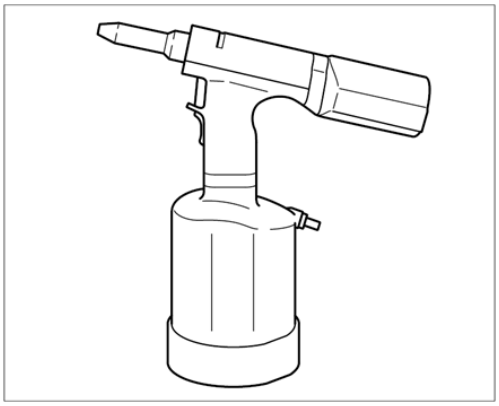
Aluminum tool set with trolley	Workshop equipment	WE 1350		

Resistance spot welder	Workshop equipment	WE 1352		
Measuring and alignment system, professional	Workshop equipment	WE 1398		
Mobile extraction unit, aluminum	Workshop equipment	WE 1507		
Body saw	Workshop equipment	WE 1508		
Star gauges for body gap dimensions	Special tool	Nr.127-1		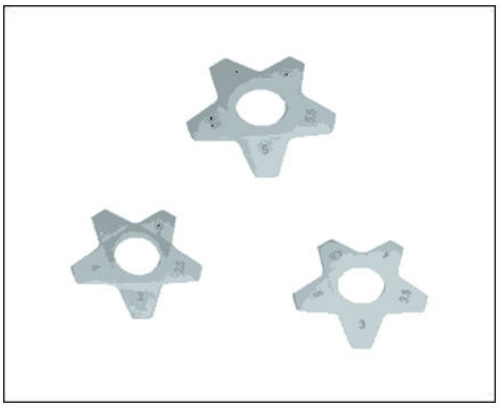
Spotweld drill	Commercially available tool	Nr.129		
Twist drill	Commercially available tool	Nr.201		

Countersink	Commercially available tool	Nr.202		

WM 514155 REPLACING B-PILLAR (ALL MODELS) > TECHNICAL VALUES

Location	Description	Type	Basic value	Tolerance 1	Tolerance 2
Dimensione E		Distance	23 mm		
Dimensions F		Distance	75 mm		
Dimensions G		Distance	120 mm		
Applying adhesive		Application depth	3.0 mm		

WM 514155 REPLACING B-PILLAR (ALL MODELS) > PRELIMINARY WORK > PRELIMINARY WORK FOR BODY REPAIRS (WITHOUT STRAIGHTENING BENCH)

Information

- If it can be ensured there has been no deformation of the vehicle structure, the following repair can be carried out without the need of a straightening bench. In this case, the vehicle must not be raised when welding the component; it must stand on its wheels on an even surface.

1. Remove accessories in the repair area.

    1. 1.1. Remove accessories in the repair area according to the extent of damage to the vehicle.

2. Cover the accessories adjacent to the repair area on the vehicle.

    1. 2.1. Cover all accessories remaining on the vehicle and adjacent areas with fire-proof protective covers.

3. Reshape connection area of the sheetmetal parts to be replaced.

4. Expose joint areas.

    1. 4.1. Remove underbody protection, paint, etc. from the joint areas of the body.

WM 514155 REPLACING B-PILLAR (ALL MODELS) > SAFETY INSTRUCTIONS AND INFORMATION ON QUALITY

⚠ *CAUTION: Non-observance of safety instructions for body repairs*

- *Risk of damage to the vehicle*
- *Danger of injury*

→ Read the relevant safety instructions as well as general information and quality instructions → 5X00IN01 SAFETY INSTRUCTIONS .

- Protection of electrical components during body repairs
- Corrosion protection measures during repairs → 5X00IN03 CORROSION PROTECTION MEASURES DURING REPAIRS
- Information on aluminum repairs
- Body parts of various sheet-steel strengths → 5X00IN04 BODY PARTS OF VARIOUS SHEET-STEEL STRENGTHS
- Replacing punch rivets and penetrated joints
- Setting self-tapping screws → 5X00IN24 SETTING SELF-TAPPING SCREWS
- Working with body structural adhesive → 5X00IN21 WORKING WITH BODY STRUCTURAL ADHESIVE

WM 514155 REPLACING B-PILLAR (ALL MODELS) > TOOLS AND MATERIALS > TOOLS AND MATERIALS FOR BODY REPAIRS

Information

- The tools for working on steel and aluminum must always be kept separate from each other. We recommend that you color code the tools using a system similar to that used for the Aluminum tool set with trolley WE 1350, for example.

Straightening set **Body alignment system package WE 1121 Measuring and alignment system, professional WE 1398**

Resistance spot welder; optional **Inverter welder MIDIspot-QSVM-12000 WE 1312, Resistance spot welder WE 1352, Resistance spot welder WE 1311, Resistance spot welder WE 1313**

Metal inert gas (MIG) welder

Pneumatic spotweld remover **Pneumatic Spotweld Remover, Vario Drill WS 90 WE 1139**

Pneumatic body saw **Body saw WE 1508**

Oscillating body saw (special electric cutter) **Special electric cutter WE 1137**

Hot-air blower **Hot-air blower WE 1119**

Hand-cartridge gun **Hand-cartridge gun WE 1141**

Spotweld drill **Spotweld drill Twist drill Nr.201**

Countersink for rivets **Countersink Nr.202**

Blind riveting tool for high-strength rivets **Blind riveting tool TAURUS 4 WE 1348**

Safety vacuum cleaner for aluminum dust **Mobile extraction unit, aluminum WE 1507**

Star gauges for body gap dimensions Nr.127-1

Wurth Klebt und Dichtet body sealant

WM 514155 REPLACING B-PILLAR (ALL MODELS) > REMOVING B-PILLAR > CUT VARIANTS

Information

Cuts can be made in the defined areas on the outer B-pillar due to the parts dimensions. The purpose of the different cuts is to keep the repair area as small as possible in the event of damage.

The diagram should help you to determine the correct position of cuts.

E-F-H - Replace cuts for the B-pillar reinforcement. → 514255 REPLACING B-PILLAR REINFORCEMENT

E-F-G - Replace cuts for the B-pillar. → 514155 REPLACING B-PILLAR

Fig 1: Identifying B-Pillar Reinforcement Cutting Position

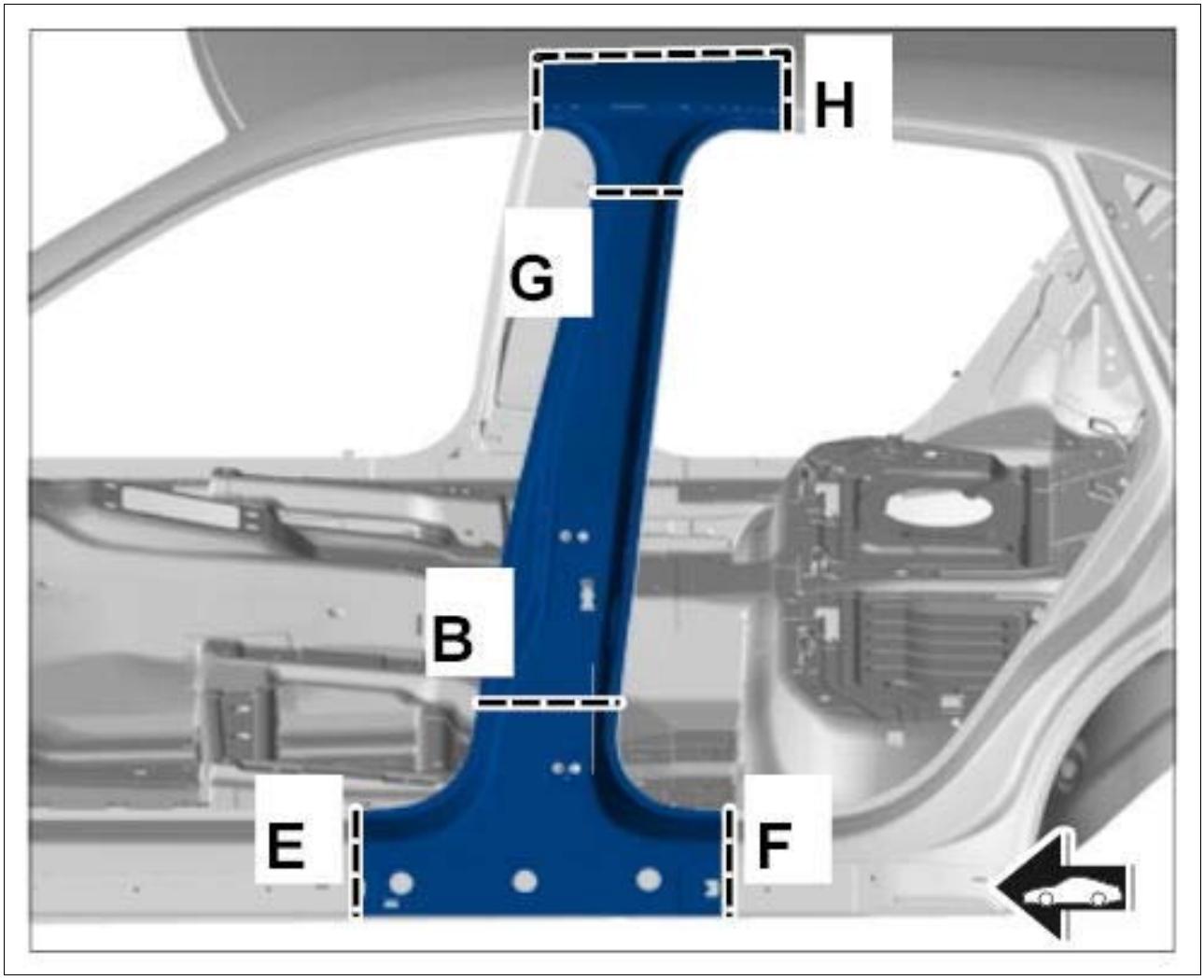

Courtesy of PORSCHE CARS NORTH AMERICA, INC.

WM 514155 REPLACING B-PILLAR (ALL MODELS) > REMOVING B-PILLAR > REMOVING OUTER B-PILLAR

Fig 1: Identifying B-Pillar Installation Position

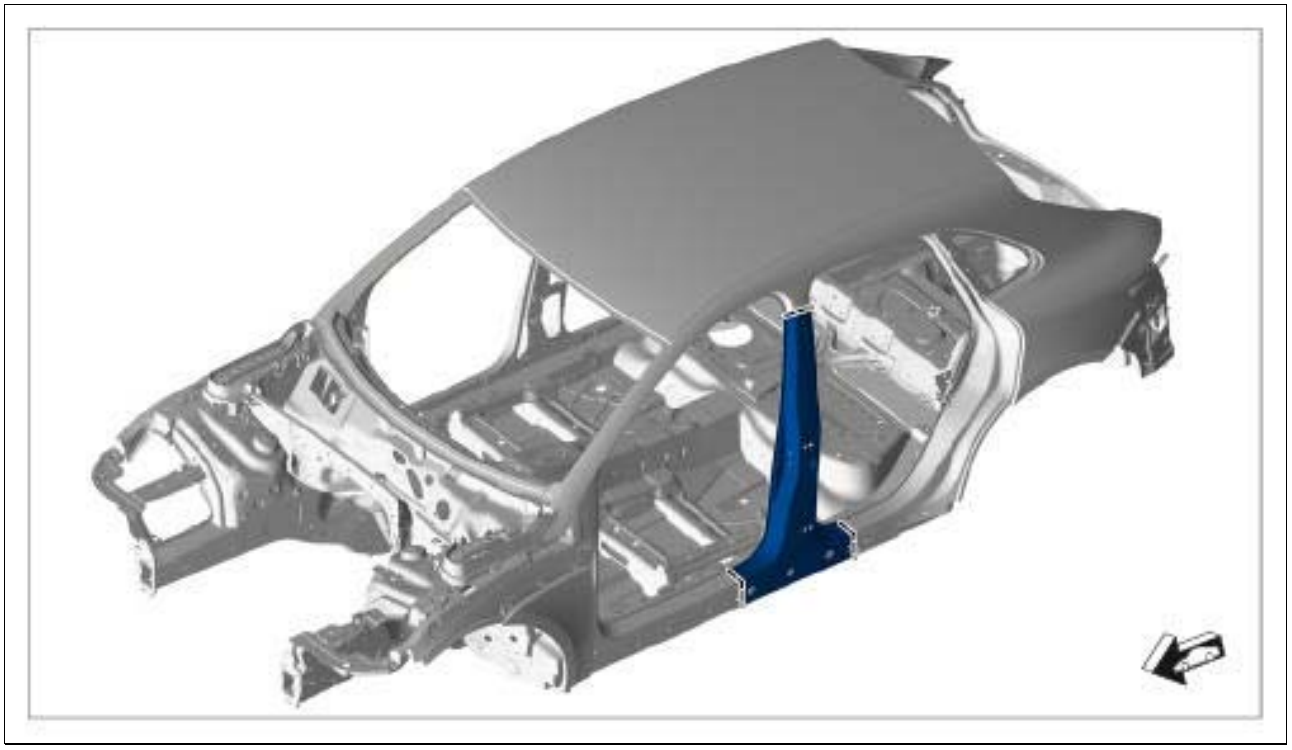

Courtesy of PORSCHE CARS NORTH AMERICA, INC.

Information

Only make cuts in the top plate. Make sure not to damage the plate underneath when doing this.

Information

Mark cuts E, F and G in accordance with the new part. Make sure to leave an overlap of approx. 3 cm with respect to the body.

1. Mark and make cuts.

   → **Distance: 23 mm**

   → **Distance: 75 mm**

   → **Distance: 120 mm**

Fig 2: Identifying B-Pillar Mark Cutting Position

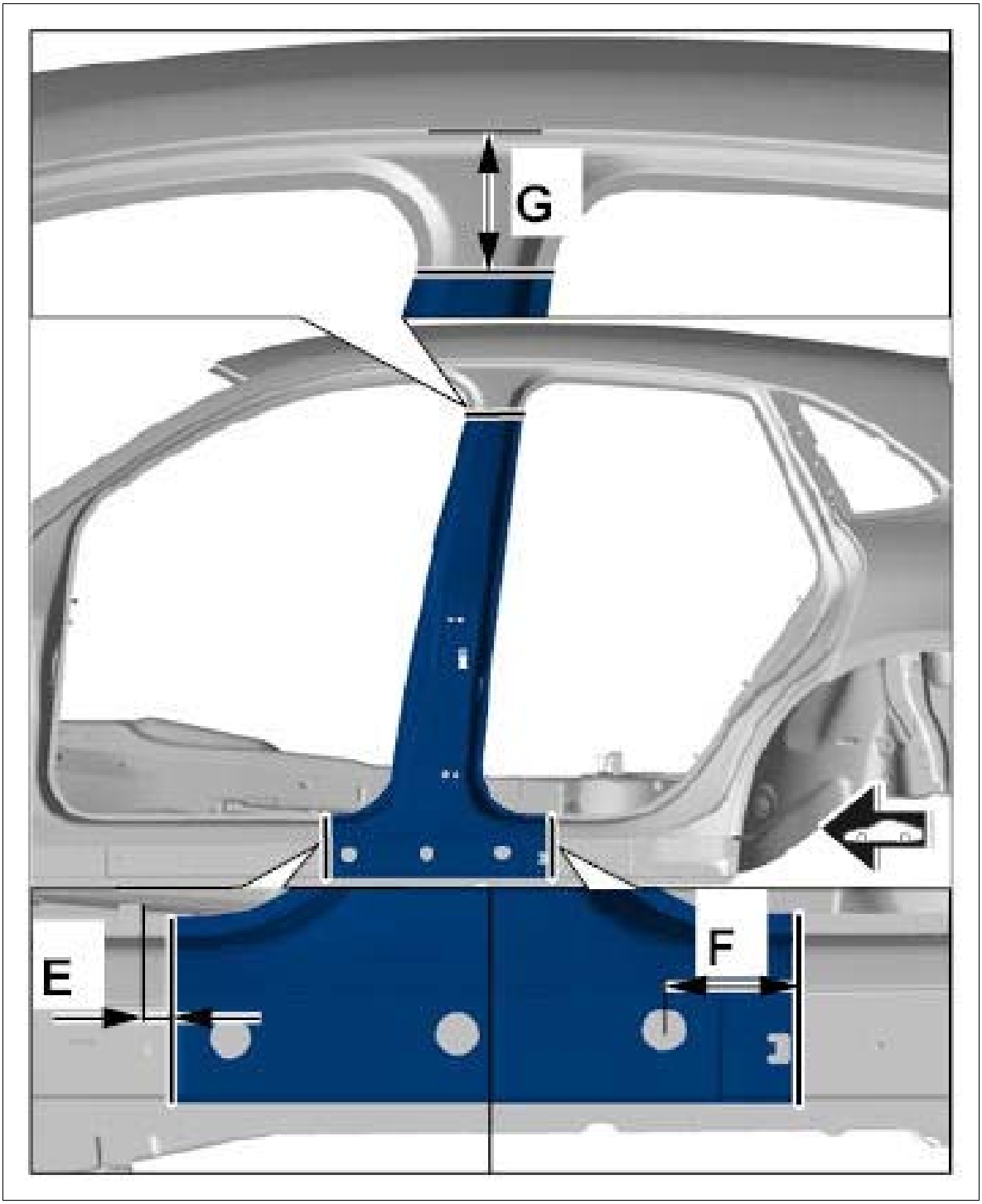

Courtesy of PORSCHE CARS NORTH AMERICA, INC.

Information

Drill out the connection point on one side only. Do not damage the plate underneath.

2. Drill out spotwelds using **spotweld drill** .

Fig 3: Identifying B-Pillar Spotwelds Area

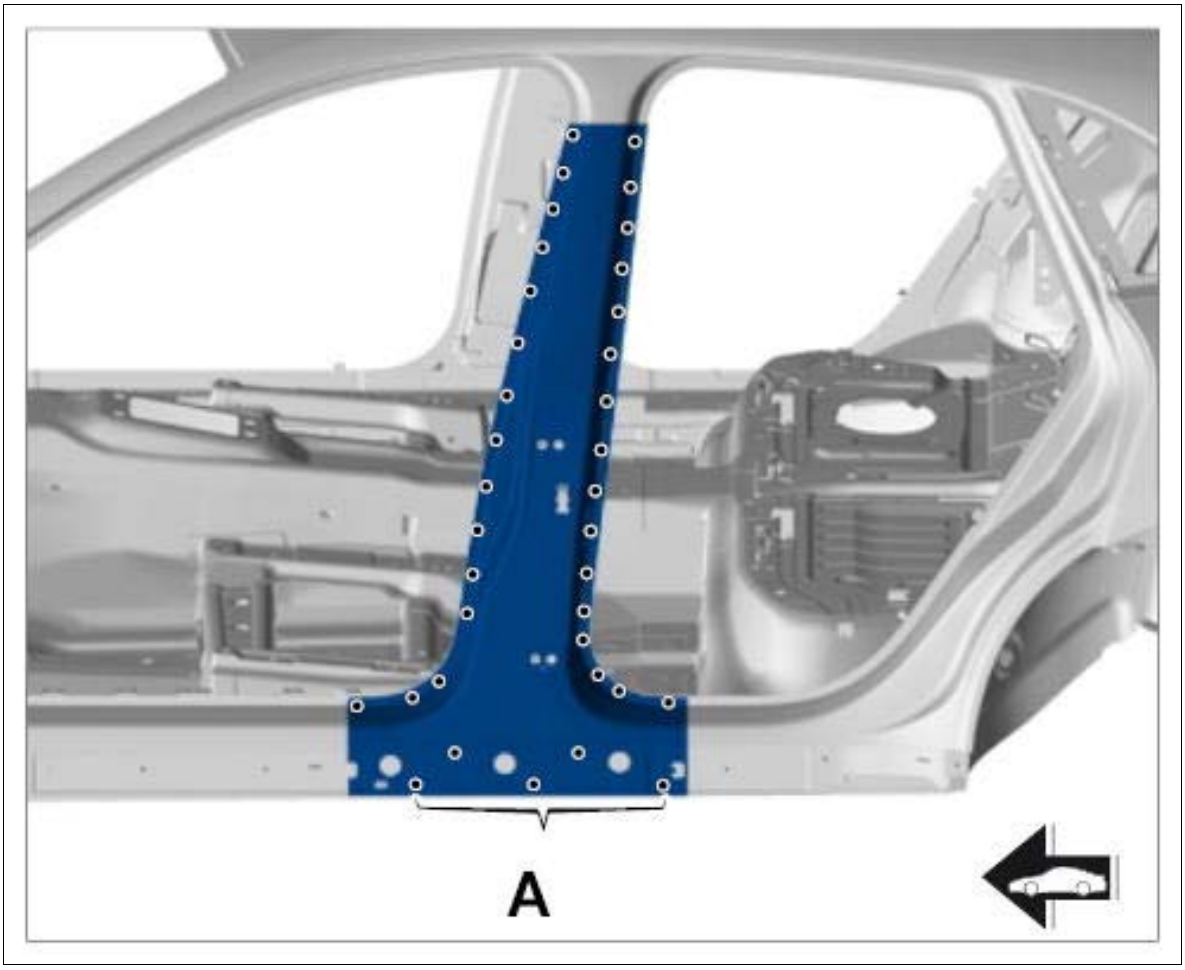

Courtesy of PORSCHE CARS NORTH AMERICA, INC.

3. Heat bonding areas.

    1. 3.1. Remove B-pillar.

Fig 4: Removing B-Pillar

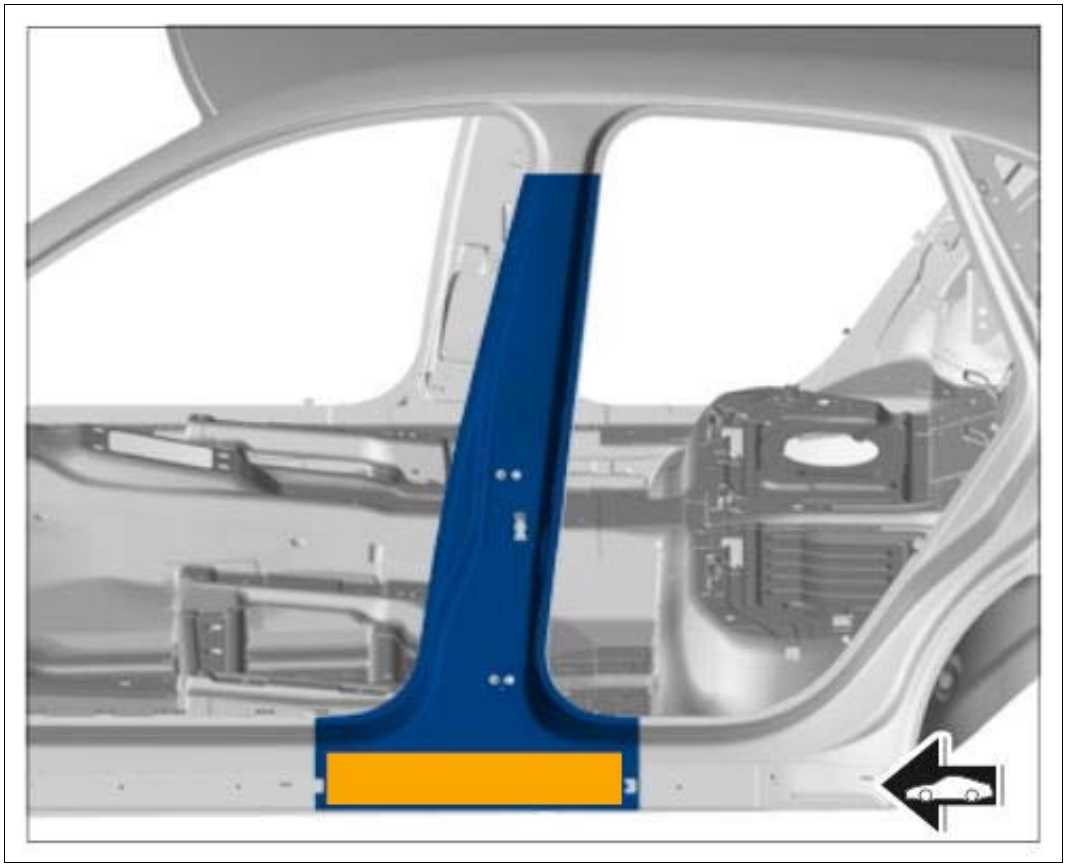

Courtesy of PORSCHE CARS NORTH AMERICA, INC.

WM 514155 REPLACING B-PILLAR (ALL MODELS) > PREPARING B-PILLAR FOR INSTALLATION

Information

Adhesive must not be applied to areas to be plug-welded or fully welded using inert gas.

1. Fit in B-pillar.
    1. 1.1. Cut B-pillar at the transitions to the body leaving an overlap of 30 mm.

Fig 1: Identifying B-Pillar

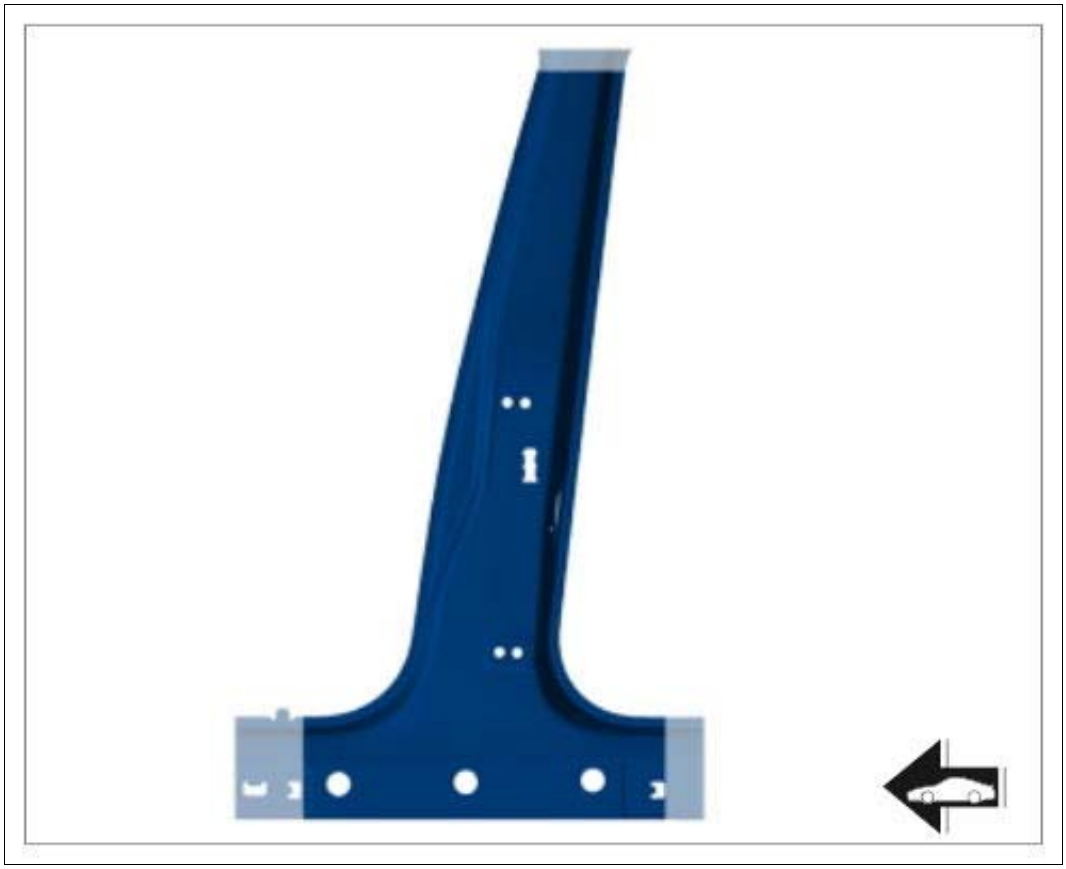

Courtesy of PORSCHE CARS NORTH AMERICA, INC.

2. Prepare B-pillar for bonding and welding.

Fig 2: Identifying B-Pillar Bonding Area

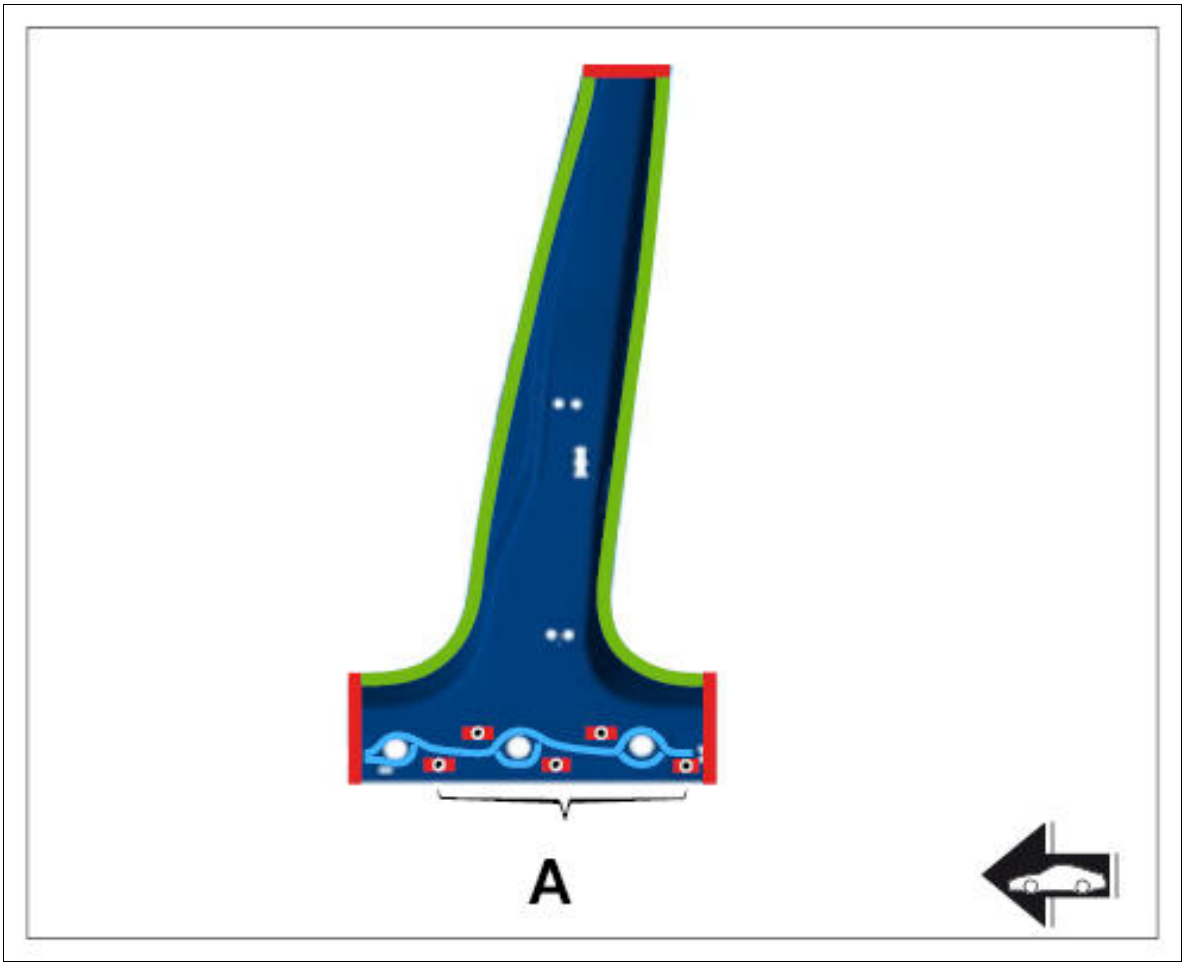

Courtesy of PORSCHE CARS NORTH AMERICA, INC.

Green	Resistance spot-welding + bonding
Blue	Bonding
Red	Resistance spot-welding/apply a full weld using inert gas without bonding

WM 514155 REPLACING B-PILLAR (ALL MODELS) > PREPARING CONNECTION AREAS OF THE BODY

1. Align the sealing surface and connections of the body.
2. De-burr connection points and prepare them for welding.

Information

1. Before final assembly, make sure you fully understand all the work steps involved and carry out a trial assembly without applying adhesive.
2. The bonding process can only be carried out reliably when a smooth and swift sequence

of operations is guaranteed.

3. Do not begin bonding work until all materials and tools necessary for later repair work are available.

3. Prepare the marked areas for welding and bonding. → 5X00IN21 WORKING WITH BODY STRUCTURAL ADHESIVE

Fig 1: Identifying Body Connection Areas

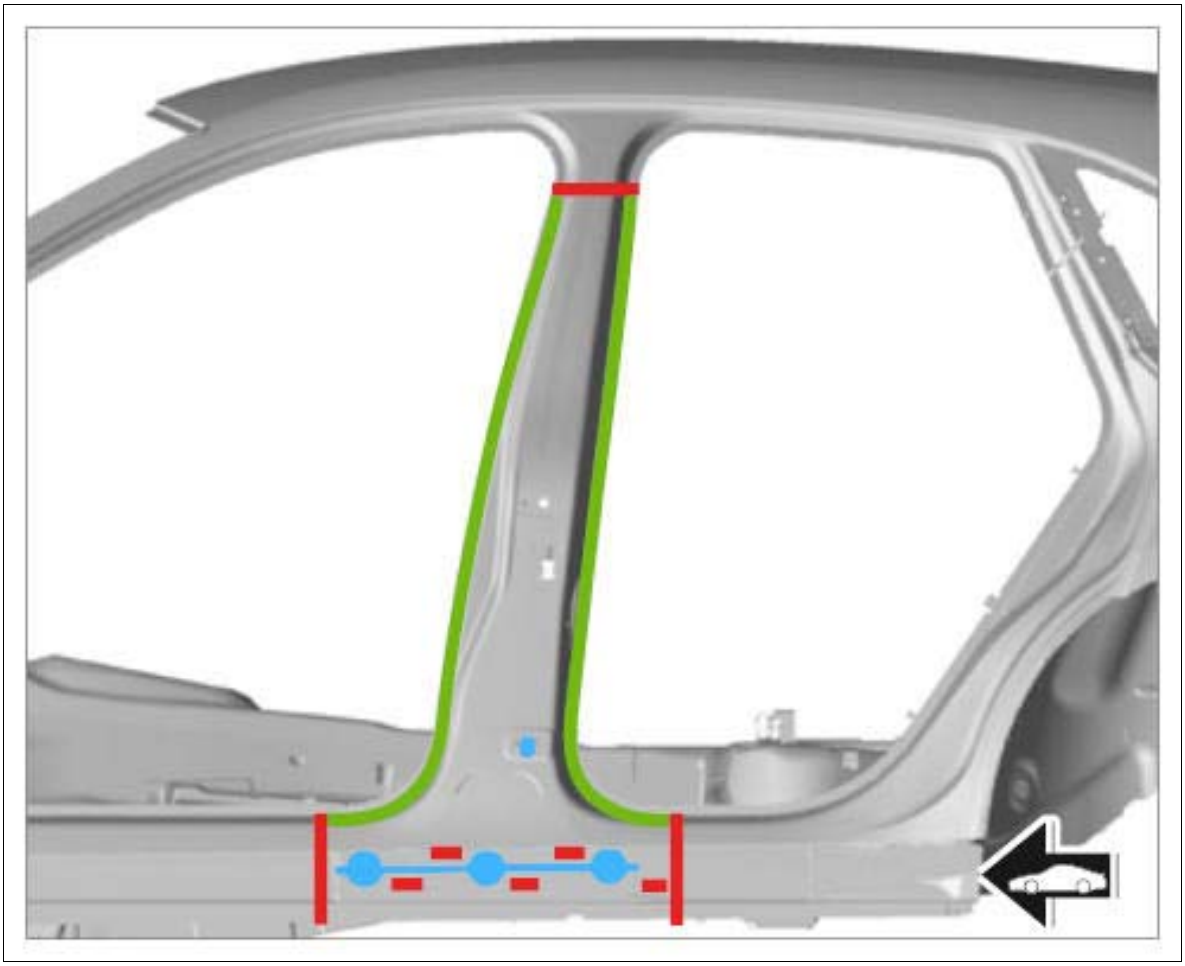

Courtesy of PORSCHE CARS NORTH AMERICA, INC.

Green	Resistance spot-welding + bonding
Blue	Bonding
Red	Resistance spot-welding/apply a full weld using inert gas without bonding

WM 514155 REPLACING B-PILLAR (ALL MODELS) > INSTALLING B-PILLAR

Information

- Before final assembly, make sure you fully understand all the work steps involved and carry out a trial assembly without applying adhesive.

- The bonding process can only be carried out reliably when a smooth and swift sequence of operations is guaranteed.
- Do not begin bonding work until all materials and tools necessary for later repair work are available.

1. Install outer B-pillar and check that it fits perfectly. Check gap dimensions. → 5X00IN DIAGRAM - BODY GAP DIMENSIONS

   Information

   Adhesive must not be applied to areas to be plug-welded or fully welded using inert gas.

   1. 1.1. Apply adhesive to the areas marked in yellow. → 5X00IN21 WORKING WITH BODY STRUCTURAL ADHESIVE→ **Application depth: 3.0 mm**

      Fig 1: Identifying Adhesive Mark Applying Areas

      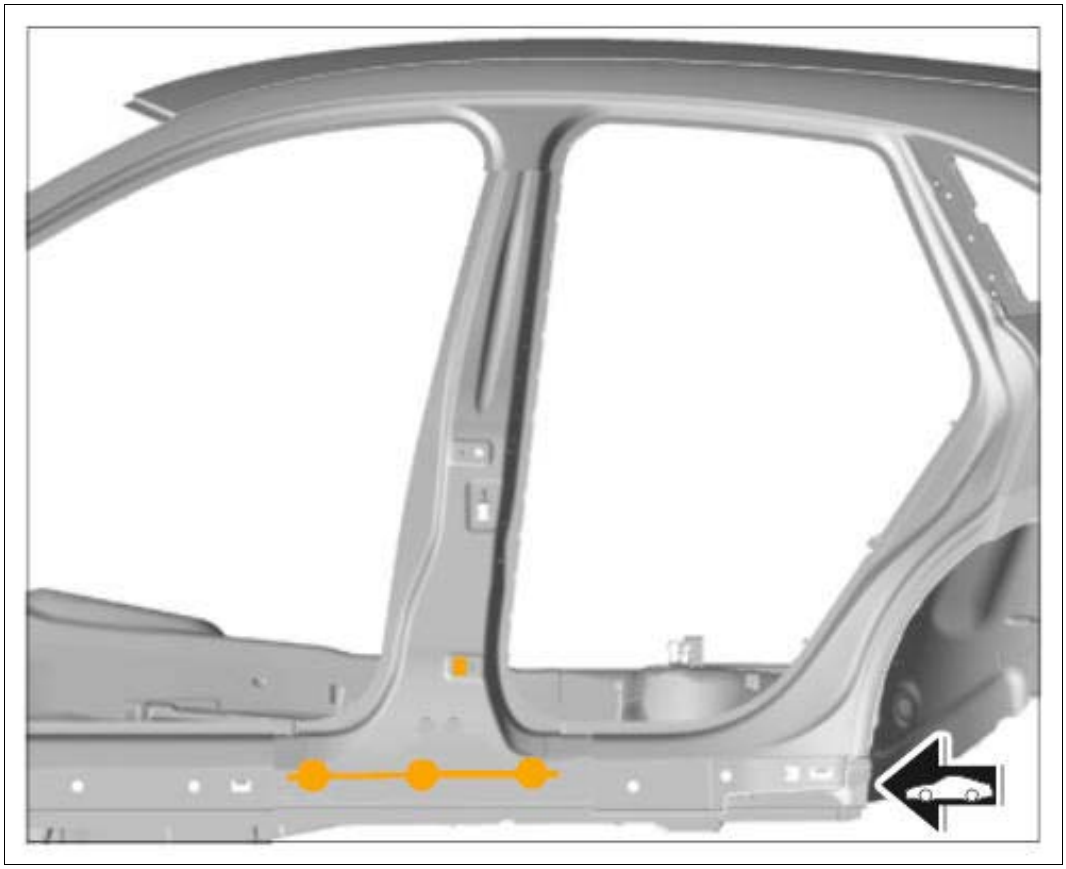

      Courtesy of PORSCHE CARS NORTH AMERICA, INC.

2. Resistance spot-weld the B-pillar.

   1. 2.1. Resistance spot-weld area **-A-** .

Fig 2: Identifying B-Pillar Spot-Weld Area

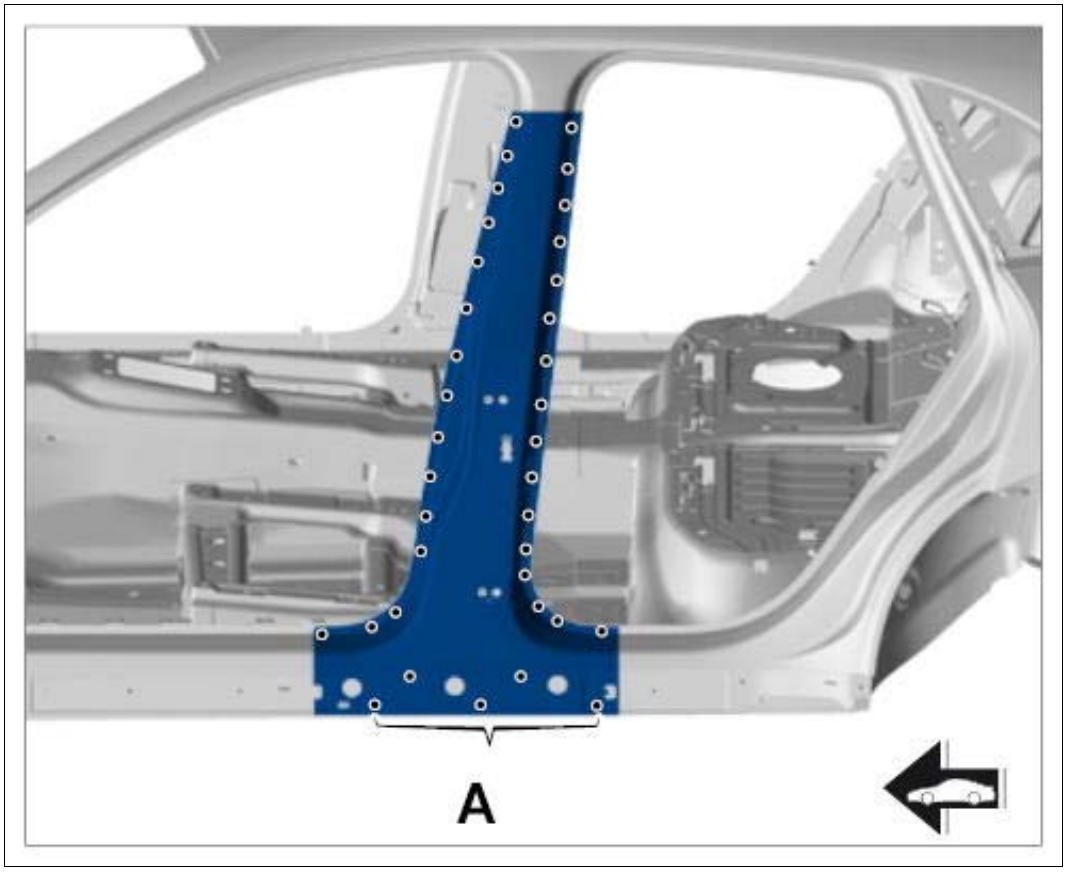

Courtesy of PORSCHE CARS NORTH AMERICA, INC.

3. Apply a full weld to area **-arrows-** using inert gas.

Fig 3: Locating B-Pillar Welding Area

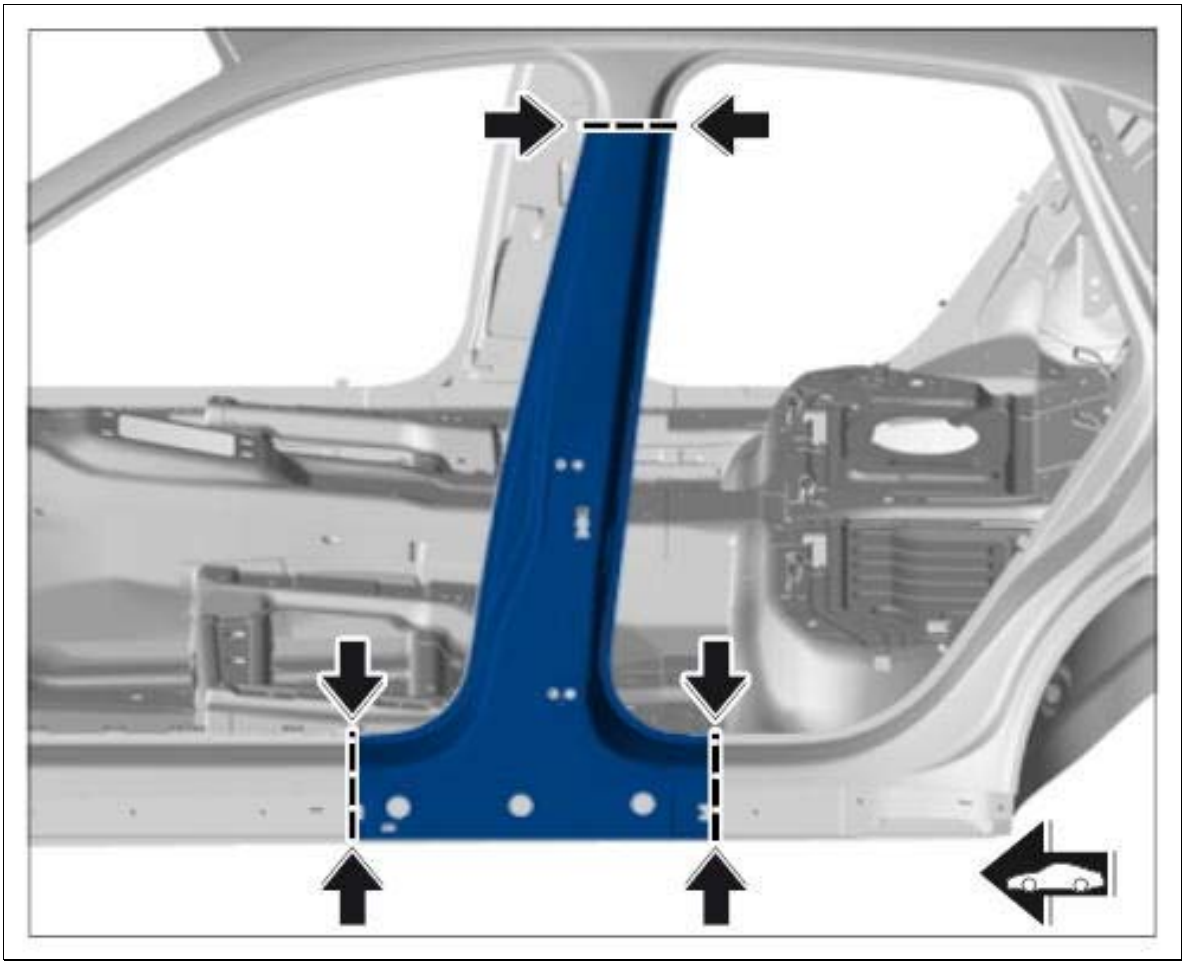

Courtesy of PORSCHE CARS NORTH AMERICA, INC.

WM 514155 REPLACING B-PILLAR (ALL MODELS) > SUBSEQUENT WORK > SUBSEQUENT WORK FOR BODY REPAIRS (WITHOUT STRAIGHTENING SYSTEM)

1. Clean joint areas and sheetmetal flanges with a wire brush.
2. Prime joint areas and sheetmetal flanges with 2K primer.
3. Restore standard seal with body sealant → 5X00IN42 SEAM SEALING .

   Also seal the repair area carefully.
4. Paint repair area and adjacent surfaces, if necessary.
5. Restore standard underbody protection with underbody sealant → 5X00IN43 UNDERBODY PROTECTION .
6. Apply standard cavity preservation → 5X00IN44 CAVITY PRESERVATION . Also apply cavity preservation to the repair area.
7. Install removed accessories in the repair area.

WM 514255 REPLACING B-PILLAR REINFORCEMENT (ALL MODELS) > TOOLS

Designation	Type	Number	Description	
Hot-air blower	Workshop equipment	WE 1119		
Body alignment system package	Workshop equipment	WE 1121		
Special electric cutter	Workshop equipment	WE 1137		
Pneumatic Spotweld Remover, Vario Drill WS 90	Workshop equipment	WE 1139		
Hand-cartridge gun	Workshop equipment	WE 1141		
Resistance spot welder	Workshop equipment	WE 1311		
Inverter welder MIDIspot-QSVM-12000	Workshop equipment	WE 1312		
Resistance spot welder	Workshop equipment	WE 1313		
Blind riveting tool TAURUS 4	Workshop equipment	WE 1348		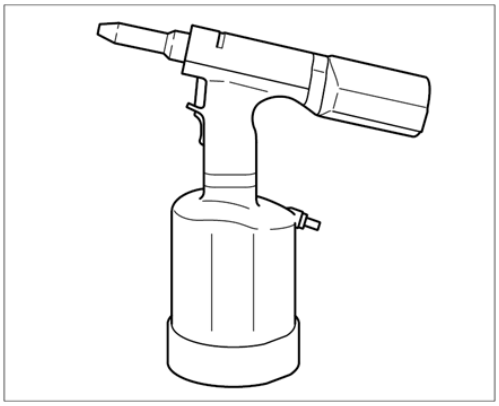
Aluminum tool set with trolley	Workshop equipment	WE 1350		
Resistance spot welder	Workshop equipment	WE 1352		
Measuring and alignment system, professional	Workshop equipment	WE 1398		

Mobile extraction unit, aluminum	Workshop equipment	WE 1507		
Body saw	Workshop equipment	WE 1508		
Star gauges for body gap dimensions	Special tool	Nr.127-1		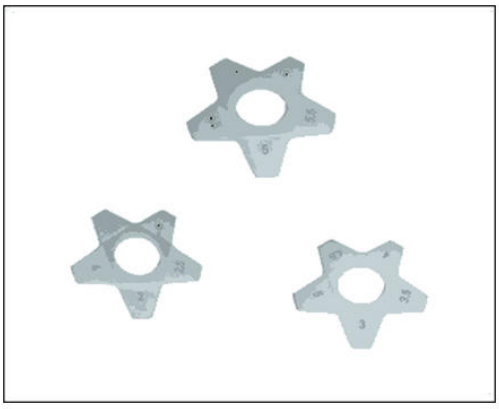
Spotweld drill	Commercially available tool	Nr.129		
Twist drill	Commercially available tool	Nr.201		

Countersink	Commercially available tool	Nr.202		

WM 514255 REPLACING B-PILLAR REINFORCEMENT (ALL MODELS) > TECHNICAL VALUES

Location	Description	Type	Basic value	Tolerance 1	Tolerance 2
Dimensions X		Distance	80 mm		
Dimensions Y		Distance	110 mm		
Dimensions Z		Distance	90 mm		
Drill bit		Diameter	6.5 mm		
Applying adhesive		Application depth	3.0 mm		

WM 514255 REPLACING B-PILLAR REINFORCEMENT (ALL MODELS) > PRELIMINARY WORK > PRELIMINARY WORK FOR BODY REPAIRS (WITH STRAIGHTENING SYSTEM)

1. Remove accessories in the repair area.
    1. 1.1. Remove accessories in the repair area according to the extent of damage on the vehicle.
2. Set up straightening bench with straightening system.
3. Set vehicle on straightening bench.
4. Cover accessories adjacent to the repair area on the vehicle.
    1. 4.1. Cover all accessories remaining on the vehicle and adjacent areas with fire-proof protective covers.
5. Reshape connection area of the sheetmetal parts to be replaced.
6. Expose joint areas.

1. 6.1. Remove underbody protection, paint, etc. from the joint areas of the body using a hot-air gun or rotary brush.

WM 514255 REPLACING B-PILLAR REINFORCEMENT (ALL MODELS) > PRELIMINARY WORK

1. Remove B-pillar. → 514155 REPLACING B-PILLAR
2. Remove outer side member. → 514555 REPLACING OUTER SIDE MEMBER

WM 514255 REPLACING B-PILLAR REINFORCEMENT (ALL MODELS) > SAFETY INSTRUCTIONS AND INFORMATION ON QUALITY

⚠ *CAUTION: Non-observance of safety instructions for body repairs*

- *Risk of damage to the vehicle*
- *Danger of injury*

→ Read the relevant safety instructions as well as general information and quality instructions → 5X00IN01 SAFETY INSTRUCTIONS .

- Protection of electrical components during body repairs
- Corrosion protection measures during repairs → 5X00IN03 CORROSION PROTECTION MEASURES DURING REPAIRS
- Information on aluminum repairs
- Body parts of various sheet-steel strengths → 5X00IN04 BODY PARTS OF VARIOUS SHEET-STEEL STRENGTHS
- Replacing punch rivets and penetrated joints
- Setting self-tapping screws → 5X00IN24 SETTING SELF-TAPPING SCREWS
- Working with body structural adhesive → 5X00IN21 WORKING WITH BODY STRUCTURAL ADHESIVE

WM 514255 REPLACING B-PILLAR REINFORCEMENT (ALL MODELS) > TOOLS AND MATERIALS > TOOLS AND MATERIALS FOR BODY REPAIRS

Information

- The tools for working on steel and aluminum must always be kept separate from each other. We recommend that you color code the tools using a system similar to that used for the Aluminum tool

set with trolley WE 1350, for example.

Straightening set **Body alignment system package WE 1121 Measuring and alignment system, professional WE 1398**

Resistance spot welder; optional **Inverter welder MIDIspot-QSVM-12000 WE 1312, Resistance spot welder WE 1352, Resistance spot welder WE 1311, Resistance spot welder WE 1313**

Metal inert gas (MIG) welder

Pneumatic spotweld remover **Pneumatic Spotweld Remover, Vario Drill WS 90 WE 1139**

Pneumatic body saw **Body saw WE 1508**

Oscillating body saw (special electric cutter) **Special electric cutter WE 1137**

Hot-air blower **Hot-air blower WE 1119**

Hand-cartridge gun **Hand-cartridge gun WE 1141**

Spotweld drill **Spotweld drill Twist drill Nr.201**

Countersink for rivets **Countersink Nr.202**

Blind riveting tool for high-strength rivets **Blind riveting tool TAURUS 4 WE 1348**

Safety vacuum cleaner for aluminum dust **Mobile extraction unit, aluminum WE 1507**

Star gauges for body gap dimensions Nr.127-1

Wurth Klebt und Dichtet body sealant

WM 514255 REPLACING B-PILLAR REINFORCEMENT (ALL MODELS) > REMOVING B-PILLAR REINFORCEMENT

Fig 1: Identifying B-Pillar Reinforcement Installation Position

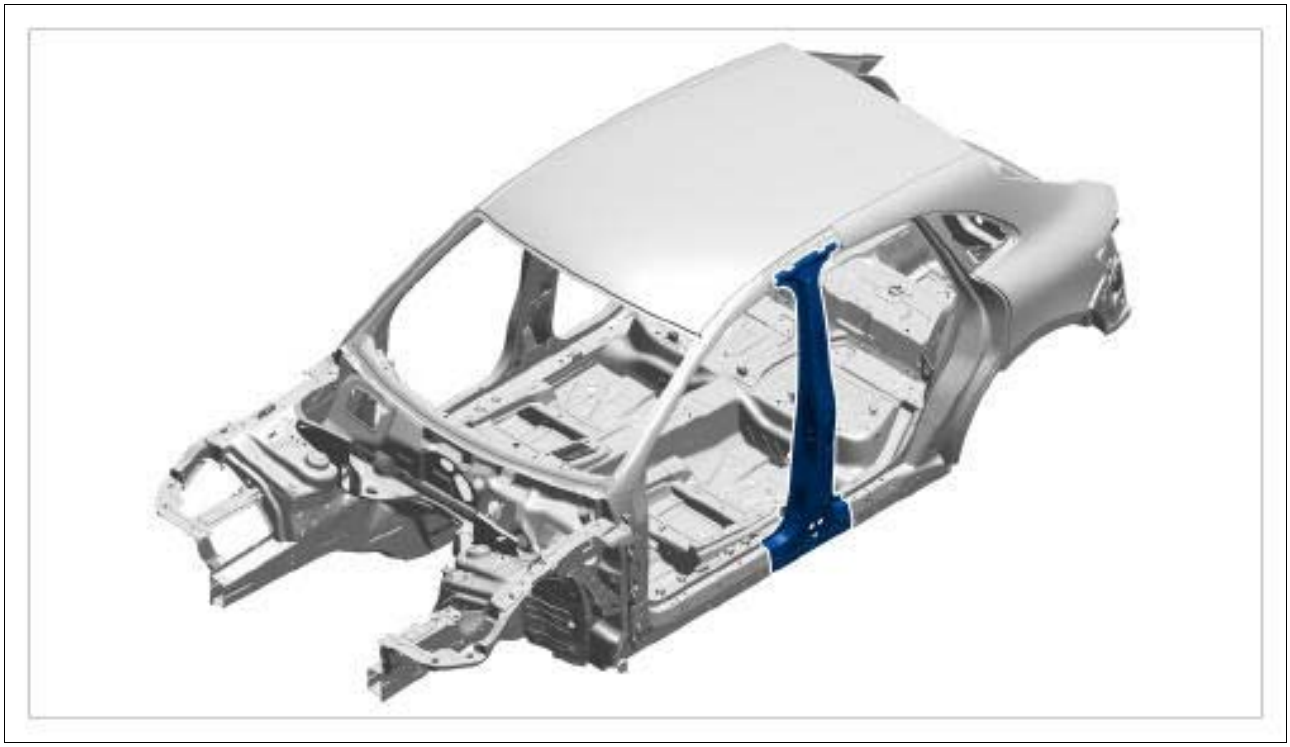

Courtesy of PORSCHE CARS NORTH AMERICA, INC.

1. A window will be cut into the outer B-pillar/roof pillar in the upper B-pillar area.

   Information

   Only make cuts in the top plate. Make sure not to damage the plate underneath when doing this.

   Information

   Mark cuts **X, Y and Z** in accordance with the new part. Make sure to leave an overlap of approx. 3 cm with respect to the body.

   1. 1.1. Mark and make cuts.

      → **Distance: 80 mm**

      → **Distance: 110 mm**

      → **Distance: 90 mm**

   2. 1.2. Drill out spotwelds using **spotweld drill** .

Fig 2: Removing Upper B-Pillar Section

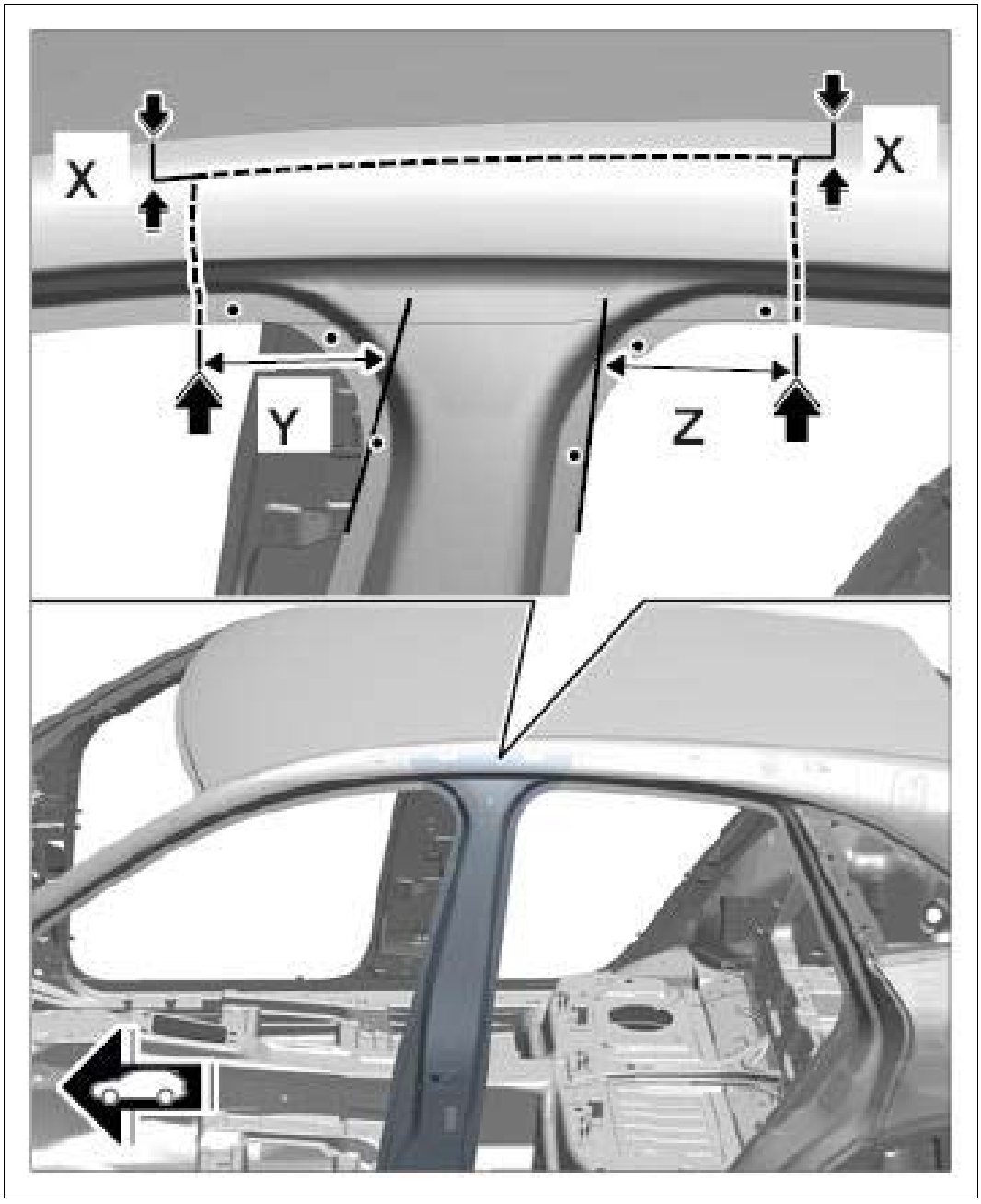

Courtesy of PORSCHE CARS NORTH AMERICA, INC.

2. Make a rough cut **-arrows-** through the B-pillar reinforcement and inner B-pillar.
    1. 2.1. Drill out **spotwelds using spotweld drill** .
    2. 2.2. Remove remaining pieces of B-pillar reinforcement.

Fig 3: Identifying B-Pillar Reinforcement



Courtesy of PORSCHE CARS NORTH AMERICA, INC.

3. Drill out spotwelds using **spotweld drill** .

    1. 3.1. Remove remaining pieces **-1-** of inner B-pillar.

Fig 4: Identifying Inner B-Pillar Pieces

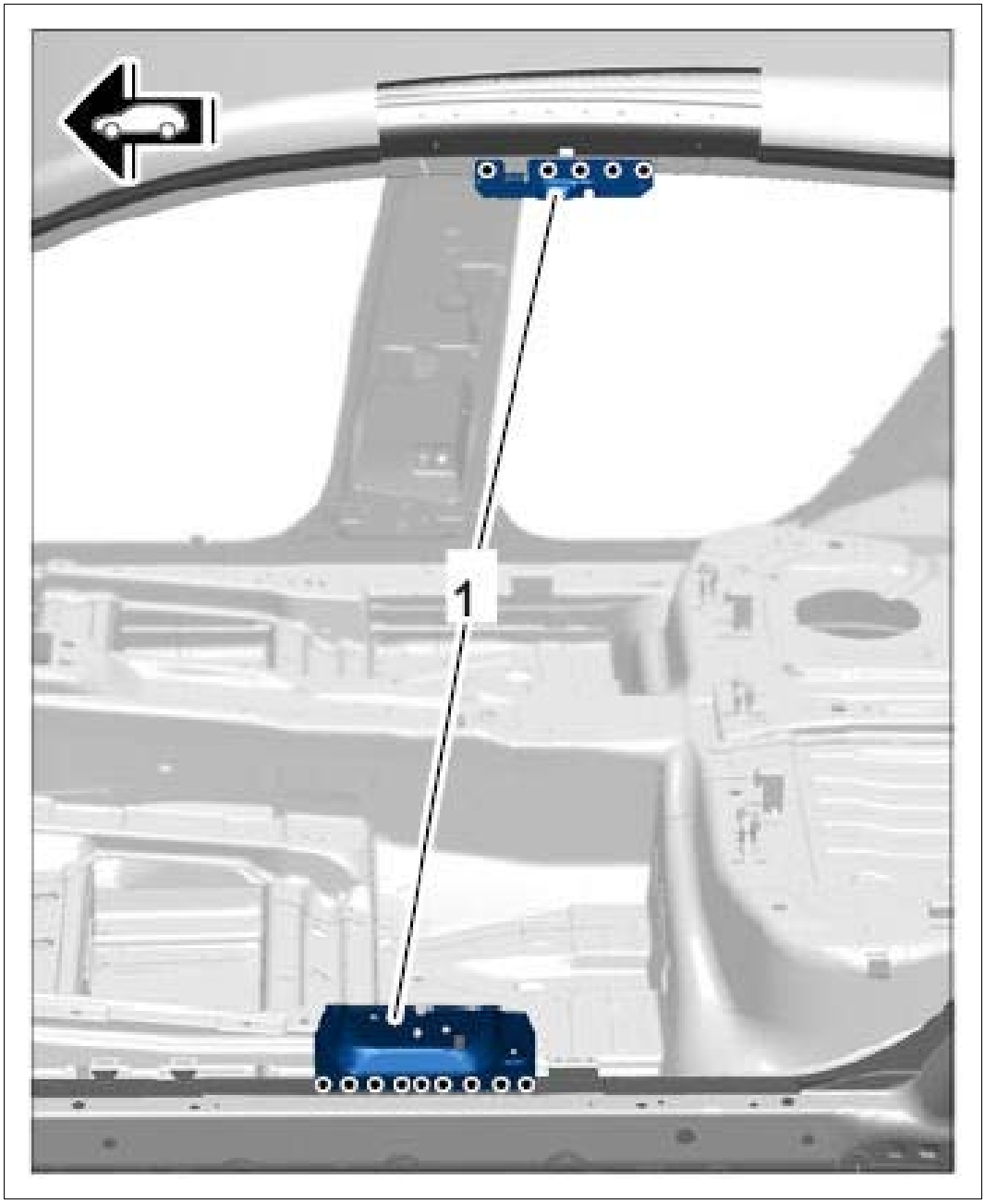

Courtesy of PORSCHE CARS NORTH AMERICA, INC.

WM 514255 REPLACING B-PILLAR REINFORCEMENT (ALL MODELS) > PREPARING B-PILLAR REINFORCEMENT AND INNER B-PILLAR FOR INSTALLATION

1. Position and fit in the inner B-pillar and B-pillar reinforcement using an alignment bracket set.
2. Drill through the holes for blind rivet connections completely in the marked areas **-A-** on the B-pillar reinforcement and the underlying door sill. → **Diameter: 6.5 mm**

Fig 1: Identifying B-Pillar Reinforcement Holes Drilling Areas



Courtesy of PORSCHE CARS NORTH AMERICA, INC.

3. Prepare the marked connection areas for welding, bonding and blind rivets.
    1. 3.1. Inner B-pillar **-1-** .
    2. 3.2. B-pillar reinforcement **-2-** .

    Information

    1. Before final assembly, make sure you fully understand all the work steps

involved and carry out a trial assembly without applying adhesive.

2. The bonding process can only be carried out reliably when a smooth and swift sequence of operations is guaranteed.

3. Do not begin bonding work until all materials and tools necessary for later repair work are available.

3. 3.3. Prepare connection areas marked in red on the B-pillar reinforcement **-2-** for bonding. → 5X00IN21 WORKING WITH BODY STRUCTURAL ADHESIVE

Fig 2: Identifying B-Pillar Reinforcement Mark Connection Areas

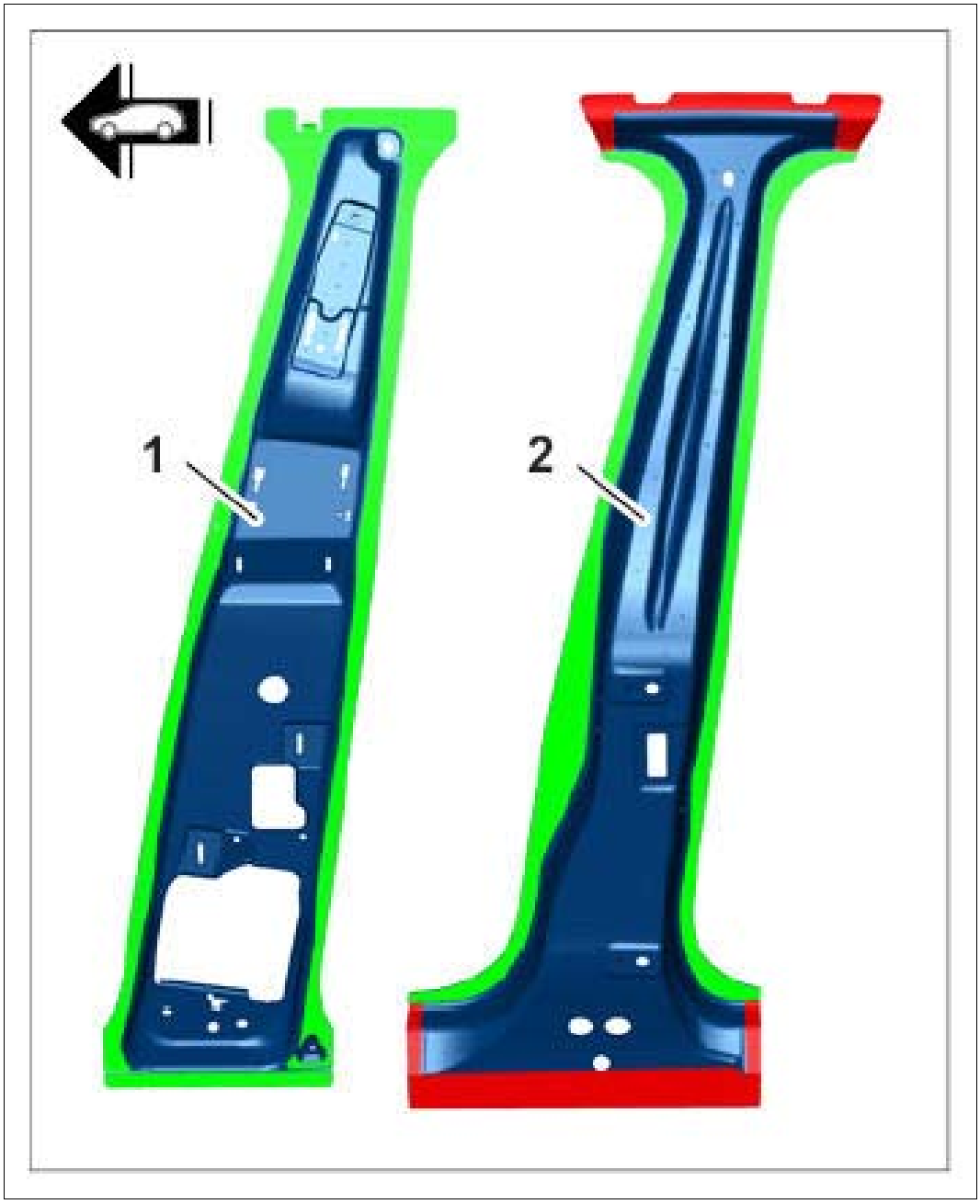

Courtesy of PORSCHE CARS NORTH AMERICA, INC.

Green	Resistance spot-welding

Red	Bonding + blind rivets

WM 514255 REPLACING B-PILLAR REINFORCEMENT (ALL MODELS) > PREPARING CONNECTION AREAS OF THE BODY

1. Align the sealing surface and connections of the body.
2. De-burr connection points and prepare them for welding.

   Information

   1. Before final assembly, make sure you fully understand all the work steps involved and carry out a trial assembly without applying adhesive.
   2. The bonding process can only be carried out reliably when a smooth and swift sequence of operations is guaranteed.
   3. Do not begin bonding work until all materials and tools necessary for later repair work are available.

3. Prepare the marked areas for welding and bonding. → 5X00IN21 WORKING WITH BODY STRUCTURAL ADHESIVE

Fig 1: Identifying Body Connection Areas

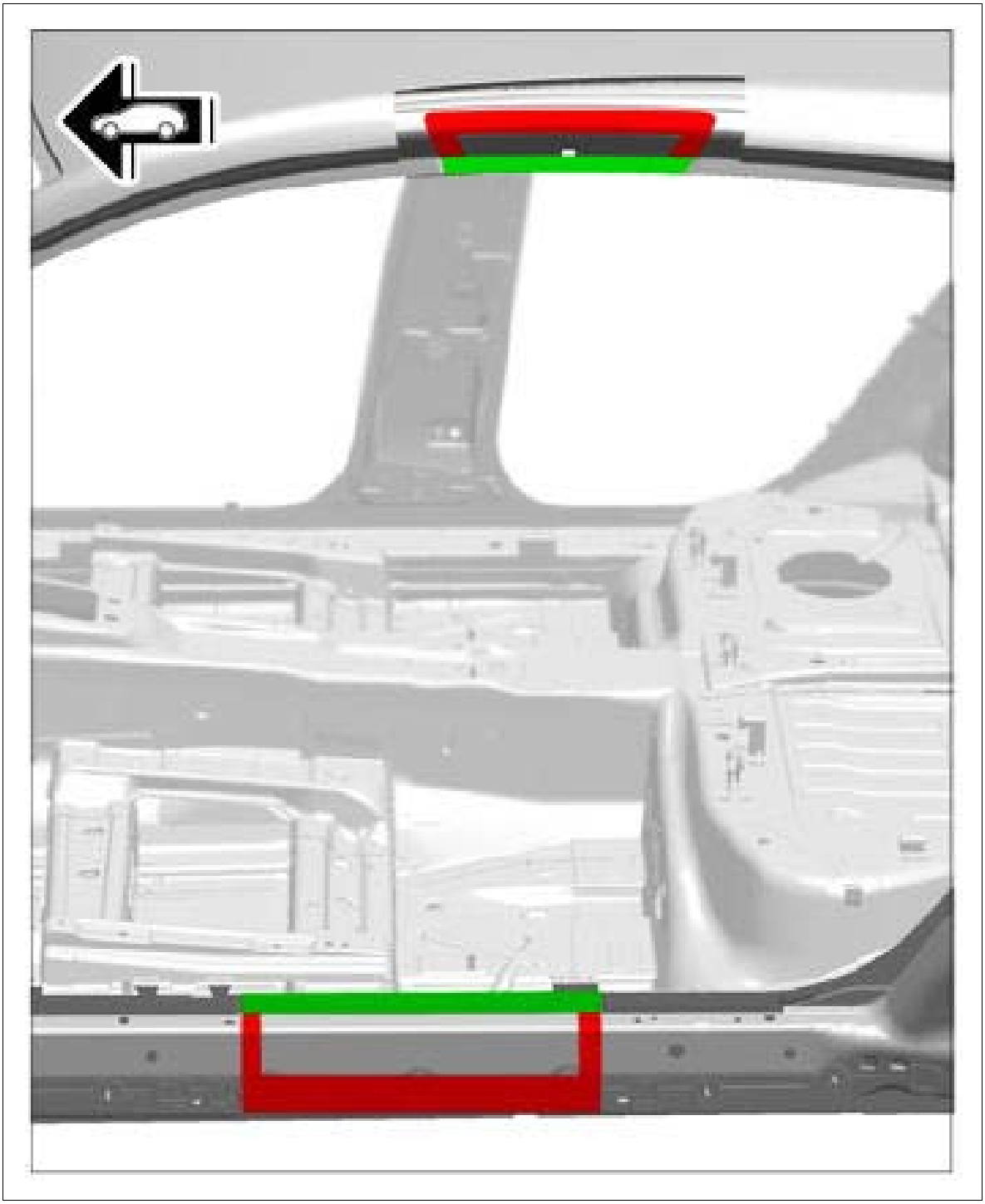

Courtesy of PORSCHE CARS NORTH AMERICA, INC.

Green	Resistance spot-welding
Red	Bonding + blind rivets

WM 514255 REPLACING B-PILLAR REINFORCEMENT (ALL MODELS) > INSTALLING

B-PILLAR REINFORCEMENT AND INNER B-PILLAR

Information

- Before final assembly, make sure you fully understand all the work steps involved and carry out a trial assembly without applying adhesive.
- The bonding process can only be carried out reliably when a smooth and swift sequence of operations is guaranteed.
- Do not begin bonding work until all materials and tools necessary for later repair work are available.

1. Install inner B-pillar and check that it fits perfectly. Check gap dimensions. → 5X00IN DIAGRAM - BODY GAP DIMENSIONS
2. Resistance spot-weld the inner B-pillar.

Fig 1: Installing Inner B-Pillar

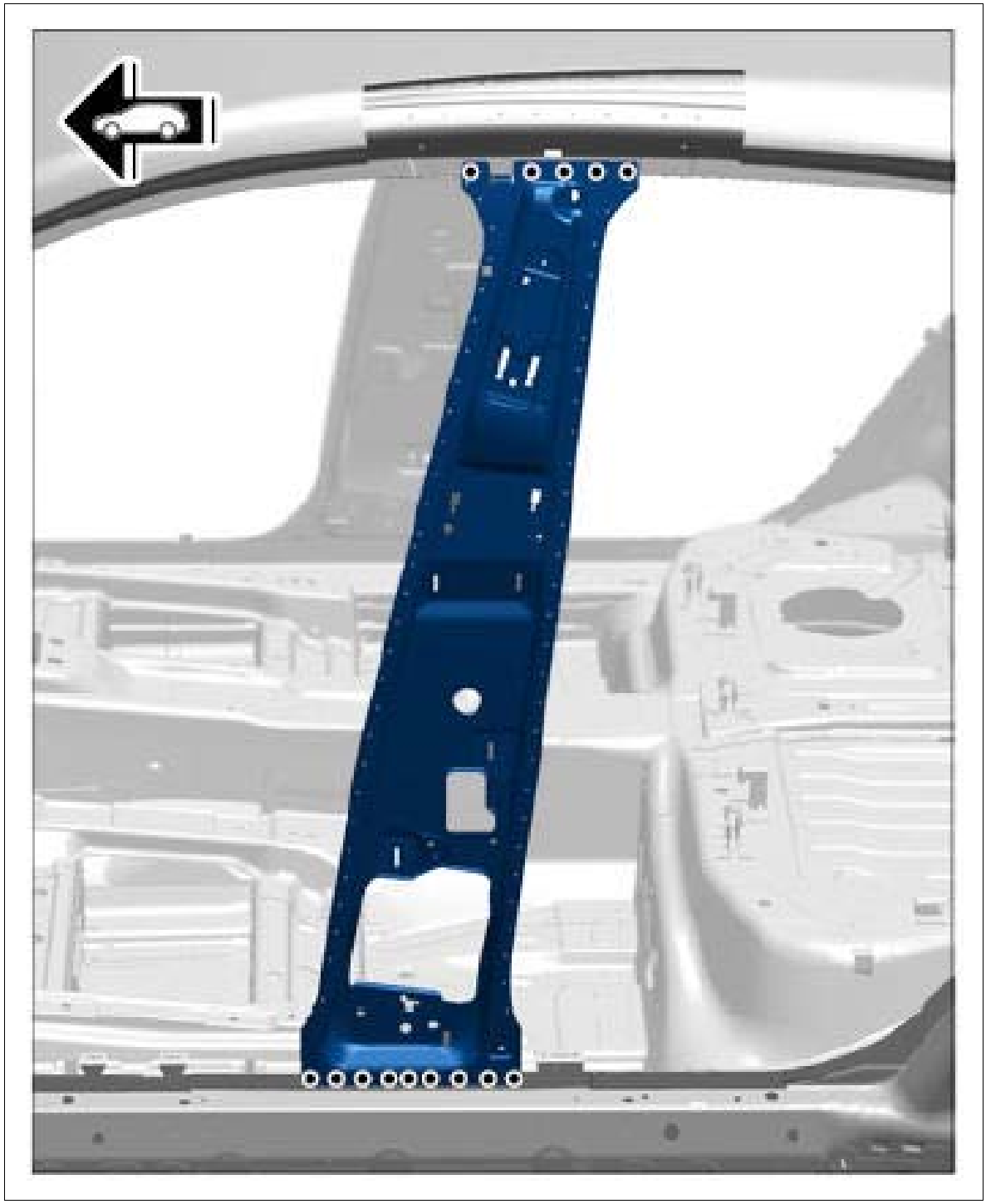

Courtesy of PORSCHE CARS NORTH AMERICA, INC.

3. Bond and fit blind rivets in B-pillar reinforcement.

    1. 3.1. Apply adhesive to the marked areas. → 5X00IN21 WORKING WITH BODY STRUCTURAL ADHESIVE→ **Application depth: 3.0 mm**

Fig 2: Identifying Adhesive Mark Applying Areas



Courtesy of PORSCHE CARS NORTH AMERICA, INC.

2. 3.2. Rivet in B-pillar reinforcement in areas **-A-** . → BLIND RIVET 999.190.227.01

Fig 3: Identifying B-Pillar Reinforcement Rivet Areas



Courtesy of PORSCHE CARS NORTH AMERICA, INC.

3. 3.3. Resistance spot-weld areas **-B-** .

Fig 4: Identifying B-Pillar Reinforcement Spot-Weld Areas

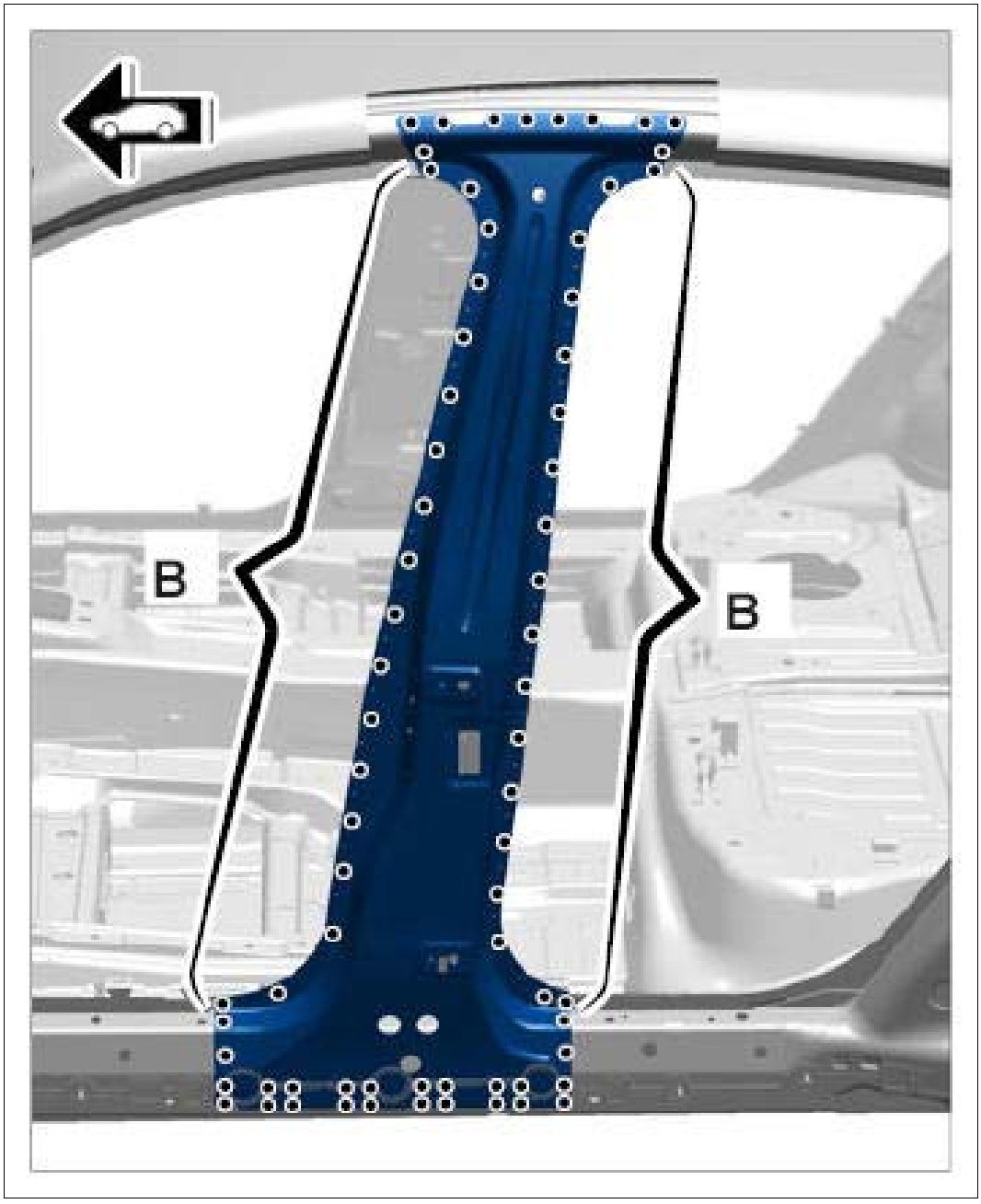

Courtesy of PORSCHE CARS NORTH AMERICA, INC.

4. Apply a full weld to the B-pillar section using inert gas **-arrows-** .

    1. 4.1. Resistance spot-weld the marked area.

Fig 5: Identifying B-Pillar Section

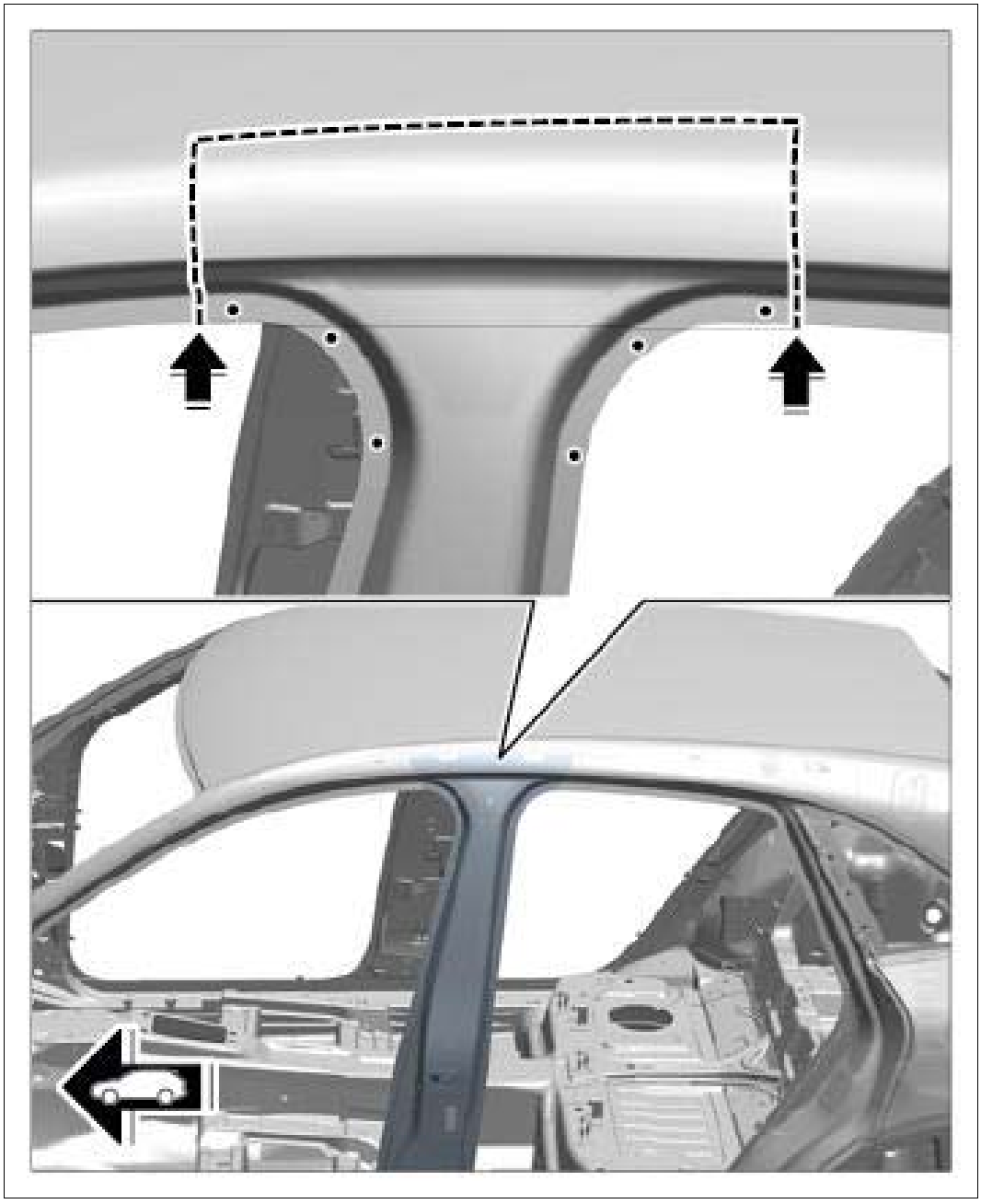

Courtesy of PORSCHE CARS NORTH AMERICA, INC.

WM 514255 REPLACING B-PILLAR REINFORCEMENT (ALL MODELS) > SUBSEQUENT WORK

1. Install B-pillar. → 514155 REPLACING B-PILLAR
2. Install outer side member. → 514555 REPLACING OUTER SIDE MEMBER

WM 514255 REPLACING B-PILLAR REINFORCEMENT (ALL MODELS) > SUBSEQUENT WORK > SUBSEQUENT WORK FOR BODY REPAIRS

1. Release and remove vehicle from the straightening system.
2. Clean joint areas and sheetmetal flanges with a wire brush.
3. Prime joint areas and sheetmetal flanges with 2K primer.
4. Restore standard seal with body sealant → 5X00IN42 SEAM SEALING .

   Also seal the repair area carefully.
5. Paint repair area and adjacent surfaces, if necessary.
6. Restore standard underbody protection with underbody sealant → 5X00IN43 UNDERBODY PROTECTION .
7. Apply standard cavity preservation → 5X00IN44 CAVITY PRESERVATION . Also carefully apply cavity preservation to the repair area.
8. Install removed accessories in the repair area.

WM 514555 REPLACING OUTER SIDE MEMBER (ALL MODELS) > TOOLS

Designation	Type	Number	Description	
Hot-air blower	Workshop equipment	WE 1119		
Body alignment system package	Workshop equipment	WE 1121		
Special electric cutter	Workshop equipment	WE 1137		
Pneumatic Spotweld Remover, Vario Drill WS 90	Workshop equipment	WE 1139		
Hand-cartridge gun	Workshop equipment	WE 1141		
Resistance spot welder	Workshop equipment	WE 1311		
Inverter welder MIDIspot-QSVM-12000	Workshop equipment	WE 1312		
Resistance spot welder	Workshop equipment	WE 1313		

Blind riveting tool TAURUS 4	Workshop equipment	WE 1348		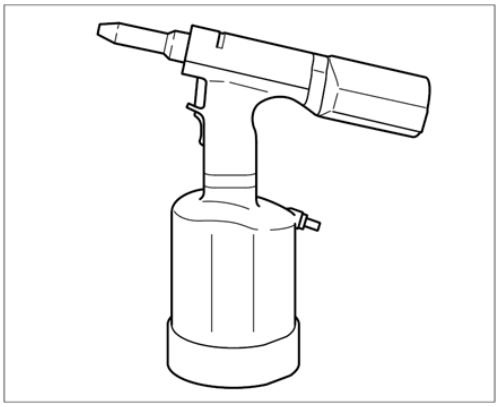
Aluminum tool set with trolley	Workshop equipment	WE 1350		
Resistance spot welder	Workshop equipment	WE 1352		
Measuring and alignment system, professional	Workshop equipment	WE 1398		
Mobile extraction unit, aluminum	Workshop equipment	WE 1507		
Body saw	Workshop equipment	WE 1508		
Star gauges for body gap dimensions	Special tool	Nr.127-1		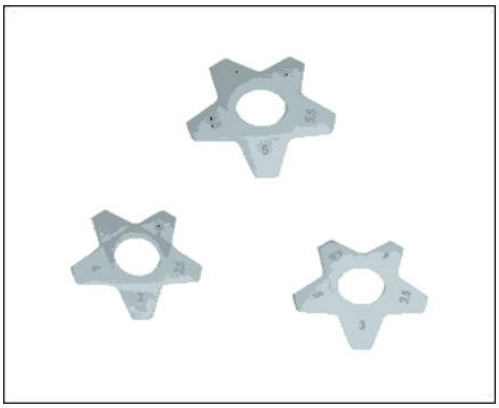

Spotweld drill	Commercially available tool	Nr.129		
Twist drill	Commercially available tool	Nr.201		
Countersink	Commercially available tool	Nr.202		

WM 514555 REPLACING OUTER SIDE MEMBER (ALL MODELS) > TECHNICAL VALUES

Location	Description	Type	Basic value	Tolerance 1	Tolerance 2
Dimension D		Distance	60 mm		
Dimension E		Distance	23 mm		
Dimension F		Distance	75 mm		
Applying adhesive		Application depth	3.0 mm		

WM 514555 REPLACING OUTER SIDE MEMBER (ALL MODELS) > PRELIMINARY WORK > PRELIMINARY WORK FOR BODY REPAIRS (WITHOUT STRAIGHTENING SYSTEM)

1. Remove accessories in the repair area.
    1. 1.1. Remove accessories in the repair area according to the extent of damage on the vehicle.
2. Cover accessories adjacent to the repair area on the vehicle.
    1. 2.1. Cover all accessories remaining on the vehicle and adjacent areas with fire-proof protective covers.
3. Reshape connection area of the sheetmetal parts to be replaced. Note: Information on aluminum repairs
4. Expose joint areas.
    1. 4.1. Remove underbody protection, paint, etc. from the joint areas of the body using a hot-air gun or rotary brush.

WM 514555 REPLACING OUTER SIDE MEMBER (ALL MODELS) > SAFETY INSTRUCTIONS AND INFORMATION ON QUALITY

⚠ *CAUTION: Non-observance of safety instructions for body repairs*

- *Risk of damage to the vehicle*
- *Danger of injury*

→ Read the relevant safety instructions as well as general information and quality instructions → 5X00IN01 SAFETY INSTRUCTIONS .

- Protection of electrical components during body repairs
- Corrosion protection measures during repairs → 5X00IN03 CORROSION PROTECTION MEASURES DURING REPAIRS
- Information on aluminum repairs
- Body parts of various sheet-steel strengths → 5X00IN04 BODY PARTS OF VARIOUS SHEET-STEEL STRENGTHS
- Replacing punch rivets and penetrated joints
- Setting self-tapping screws → 5X00IN24 SETTING SELF-TAPPING SCREWS
- Working with body structural adhesive → 5X00IN21 WORKING WITH BODY STRUCTURAL

ADHESIVE

WM 514555 REPLACING OUTER SIDE MEMBER (ALL MODELS) > TOOLS AND MATERIALS > TOOLS AND MATERIALS FOR BODY REPAIRS

- The tools for working on steel and aluminum must always be kept separate from each other. We recommend that you color code the tools using a system similar to that used for the Aluminum tool set with trolley WE 1350, for example.

Straightening set **Body alignment system package WE 1121 Measuring and alignment system, professional WE 1398**

Resistance spot welder; optional **Inverter welder MIDIspot-QSVM-12000 WE 1312, Resistance spot welder WE 1352, Resistance spot welder WE 1311, Resistance spot welder WE 1313**

Metal inert gas (MIG) welder

Pneumatic spotweld remover **Pneumatic Spotweld Remover, Vario Drill WS 90 WE 1139**

Pneumatic body saw **Body saw WE 1508**

Oscillating body saw (special electric cutter) **Special electric cutter WE 1137**

Hot-air blower **Hot-air blower WE 1119**

Hand-cartridge gun **Hand-cartridge gun WE 1141**

Spotweld drill **Spotweld drill Twist drill Nr.201**

Countersink for rivets **Countersink Nr.202**

Blind riveting tool for high-strength rivets **Blind riveting tool TAURUS 4 WE 1348**

Safety vacuum cleaner for aluminum dust **Mobile extraction unit, aluminum WE 1507**

Star gauges for body gap dimensions Nr.127-1

Wurth Klebt und Dichtet body sealant

WM 514555 REPLACING OUTER SIDE MEMBER (ALL MODELS) > REMOVING OUTER SIDE MEMBER > CUT VARIANTS

Information

Cuts can be made in the defined areas in the outer side member due to the parts dimensions. The purpose of the different cuts is to keep the repair area as small as possible in the event of damage.

The diagram should help you to determine the correct position of cuts.

Fig 1: Identifying Outer Side Member Variants Cutting Position

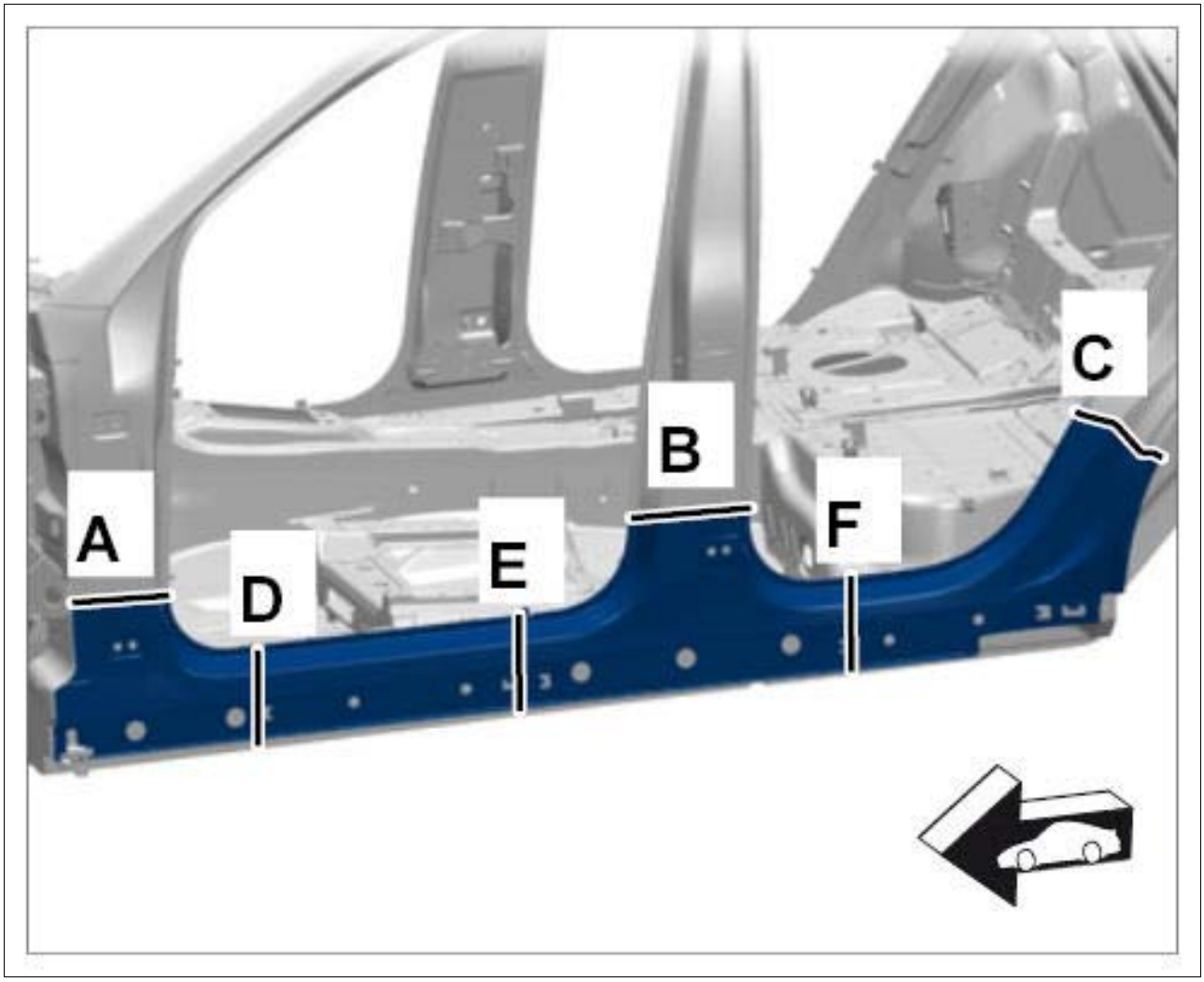

Courtesy of PORSCHE CARS NORTH AMERICA, INC.

A-B-C - Replace cuts for outer side member. → 514555 REPLACING OUTER SIDE MEMBER

B-C-D - Replace cuts for center side member. → 514855 REPLACING CENTRE SIDE MEMBER

E-F - Replace cuts for B-pillar. → 514155 REPLACING B-PILLAR

Fig 2: Identifying Outer Side Member Variants Cutting Position

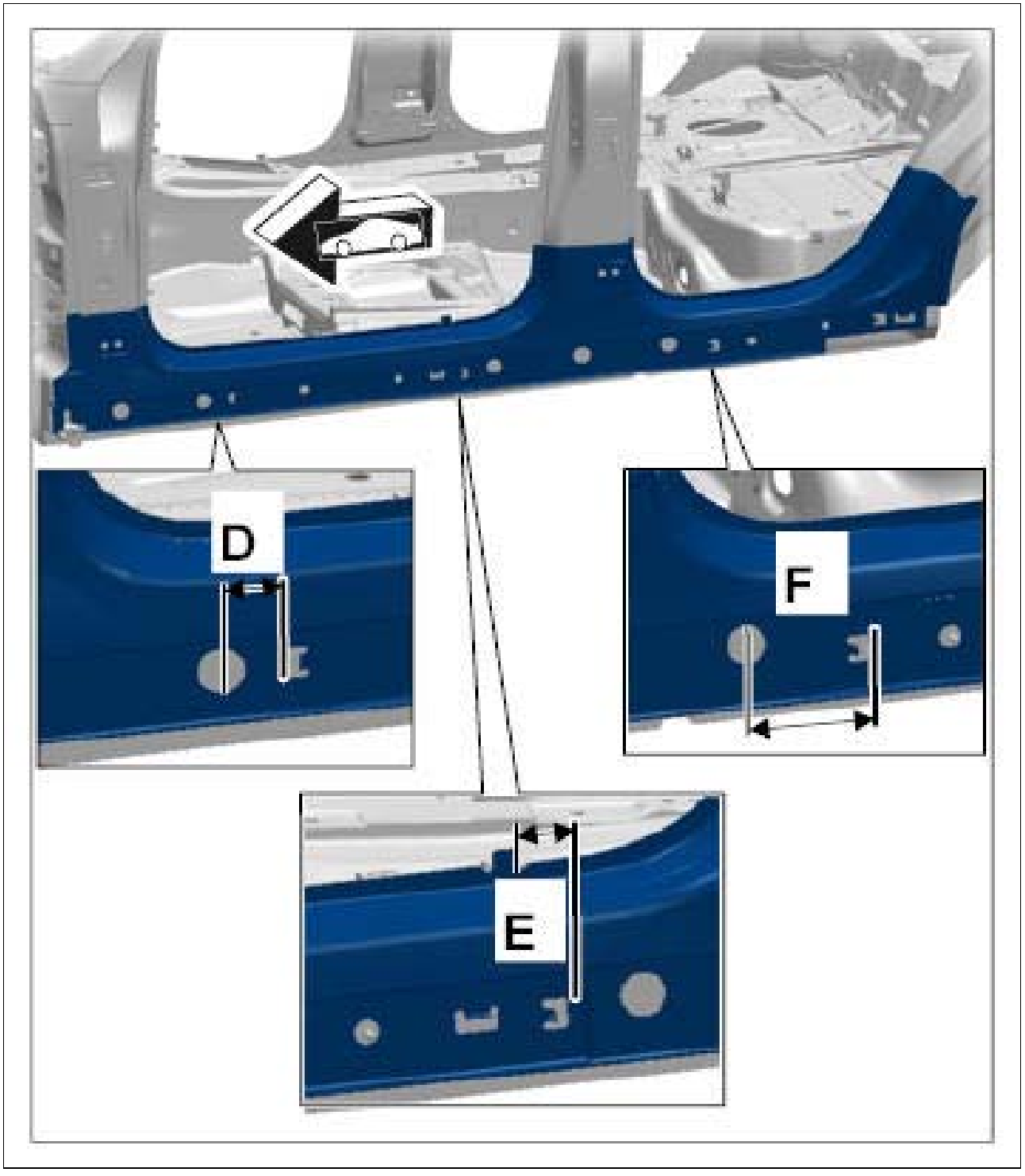

Courtesy of PORSCHE CARS NORTH AMERICA, INC.

D - → Distance: 60 mm

E - → Distance: 23 mm

F - → Distance: 75 mm

WM 514555 REPLACING OUTER SIDE MEMBER (ALL MODELS) > REMOVING OUTER SIDE MEMBER > REMOVING OUTER SIDE MEMBER

Information

Only make cuts in the top plate. Make sure not to damage the plate underneath when doing this.

Information

Mark cuts **A, B and C** in accordance with the new part. Make sure to leave an overlap of approx. 3 cm with respect to the body.

Fig 1: Identifying Outer Side Member

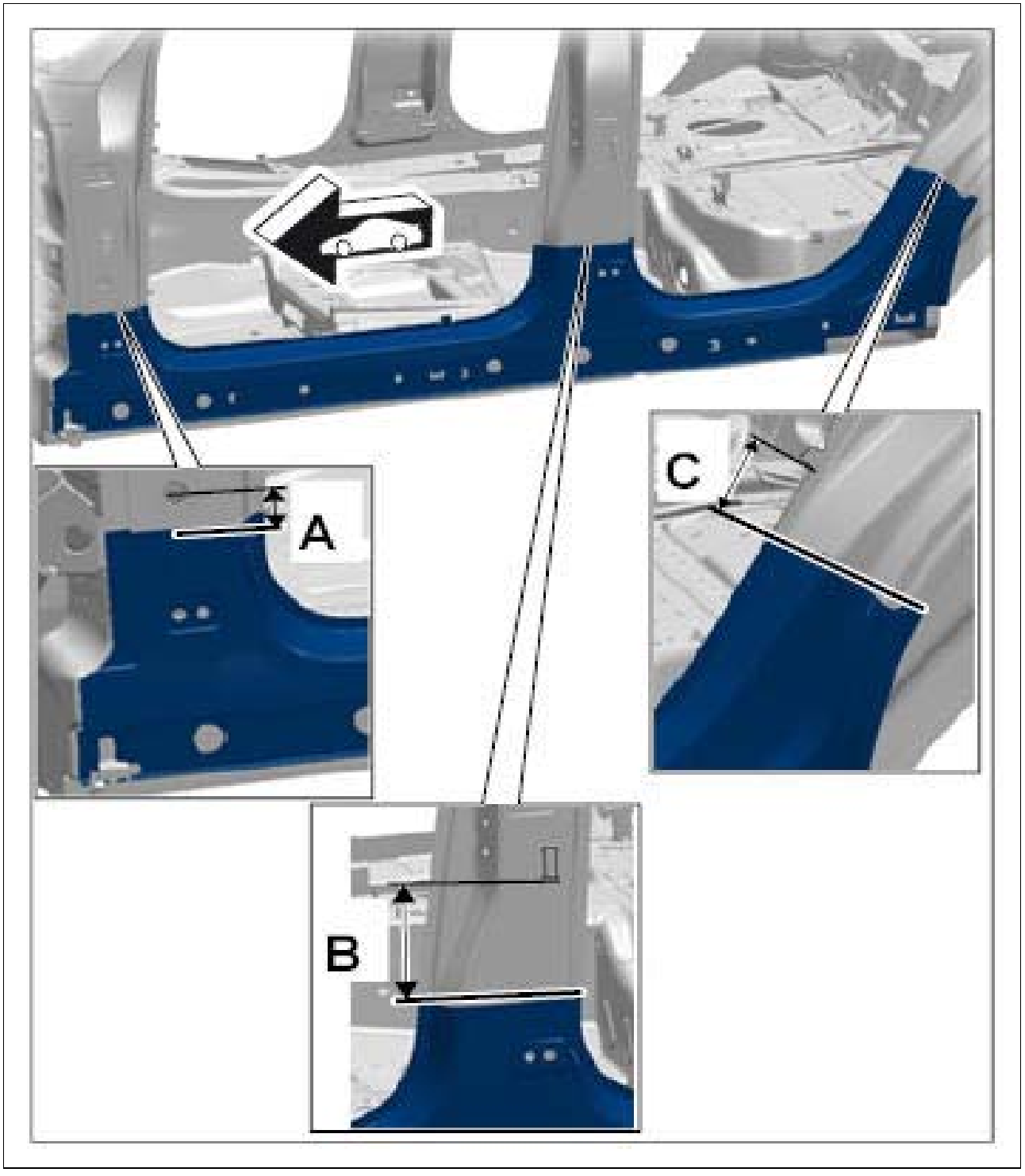

Courtesy of PORSCHE CARS NORTH AMERICA, INC.

1. Drill out spotwelds using **spotweld drill** .

Fig 2: Identifying Side Member

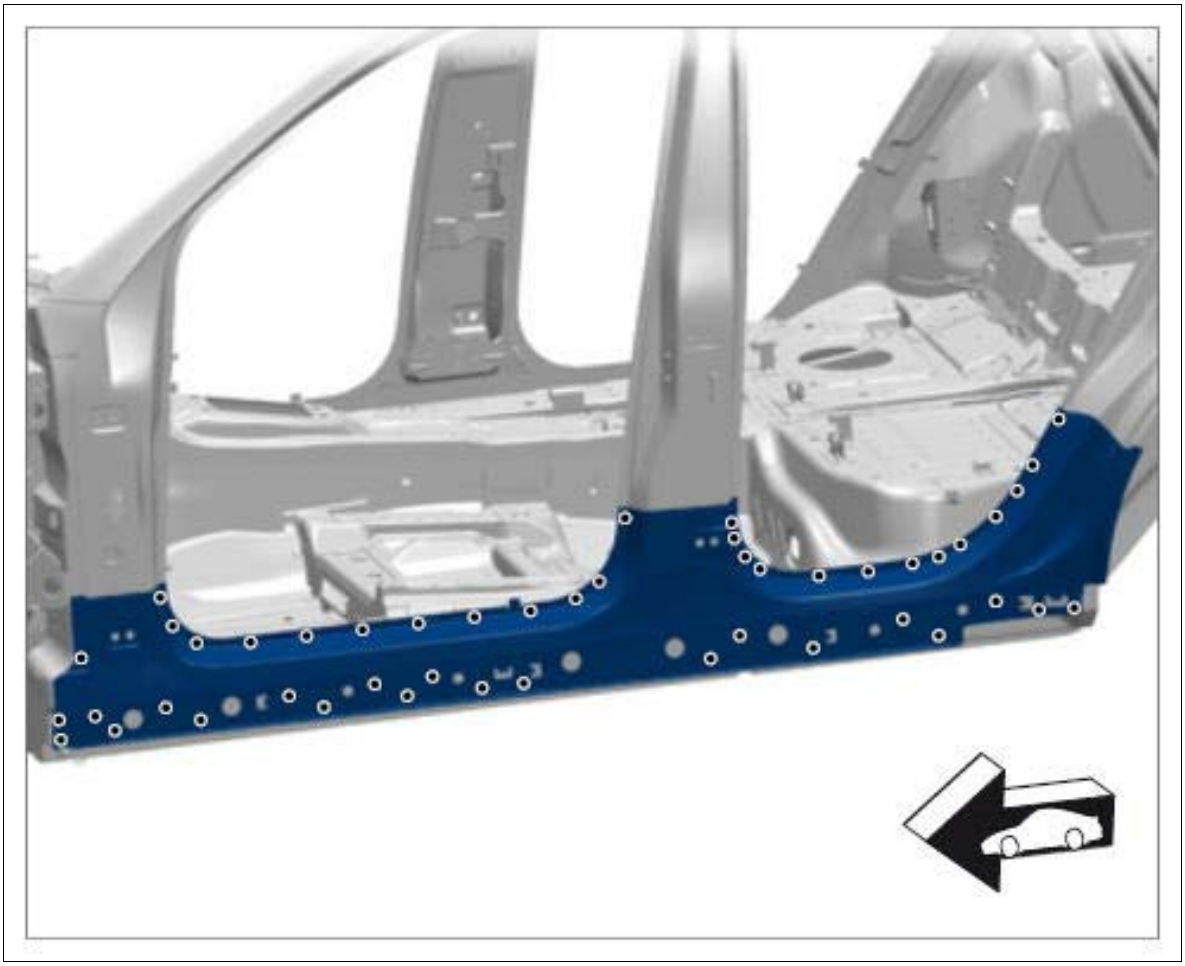

Courtesy of PORSCHE CARS NORTH AMERICA, INC.

2. Heat bonding areas.

    1. 2.1. Bend up edge of wheel arch **-A-** .
    2. 2.2. Remove side member.

Fig 3: Identifying Side Member

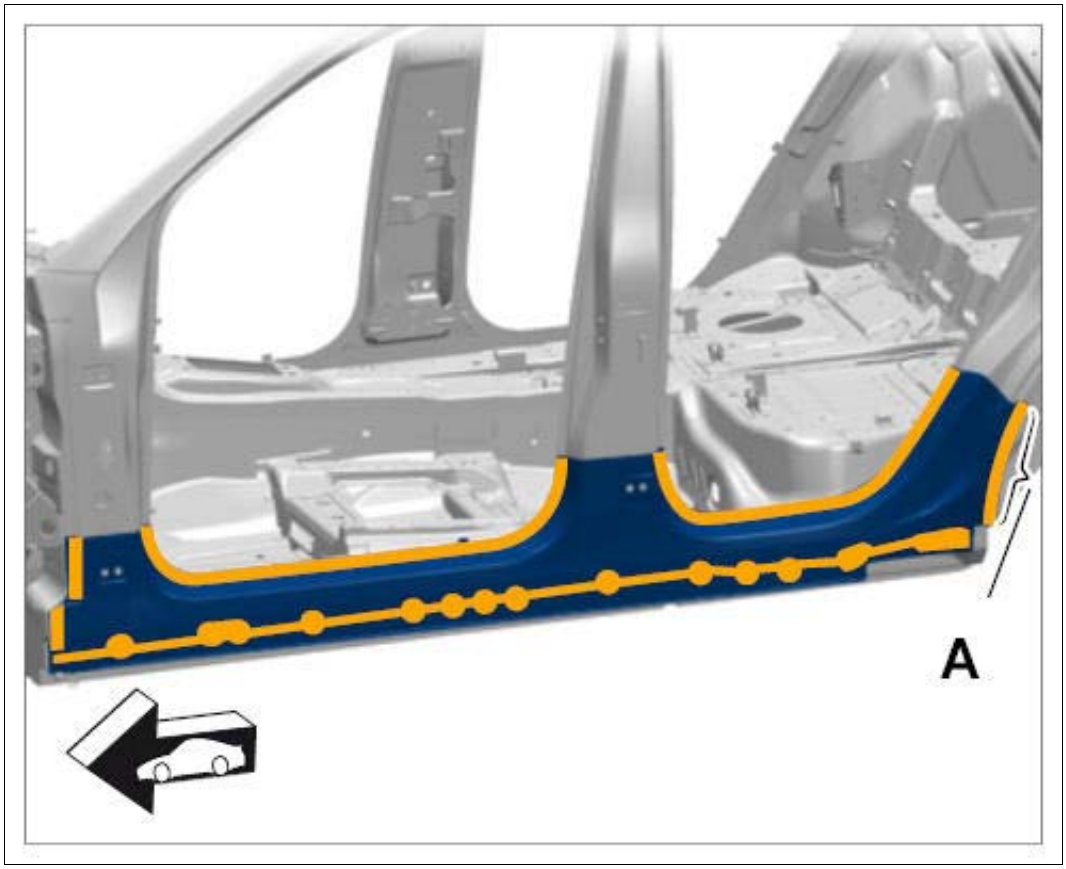

Courtesy of PORSCHE CARS NORTH AMERICA, INC.

WM 514555 REPLACING OUTER SIDE MEMBER (ALL MODELS) > PREPARING OUTER SIDE MEMBER FOR INSTALLATION

Information

Adhesive must not be applied to areas to be plug-welded or fully welded using inert gas.

1. Fit in outer side member.
    1. 1.1. Cut outer side member at the transitions to the body leaving an overlap of 30 mm.

Fig 1: Identifying Outer Side Member

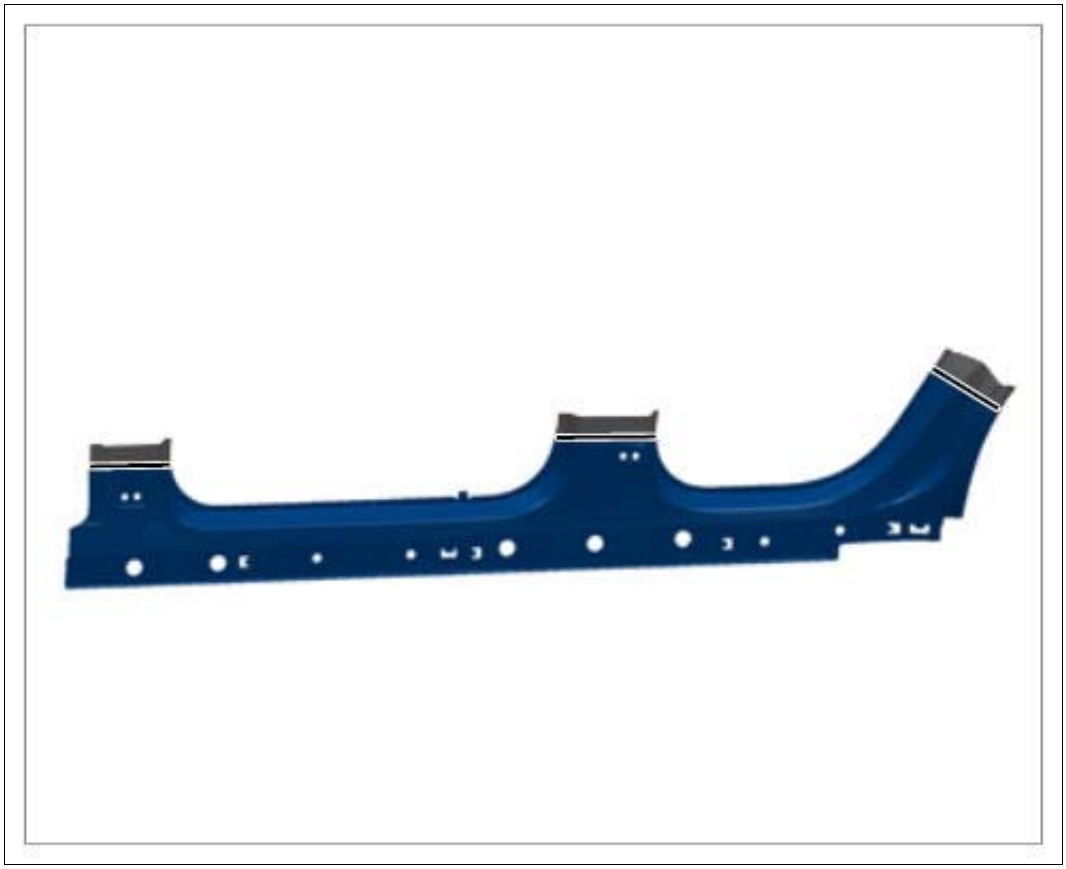

Courtesy of PORSCHE CARS NORTH AMERICA, INC.

2. Prepare outer side member for bonding and welding.

Fig 2: Identifying Outer Side Member

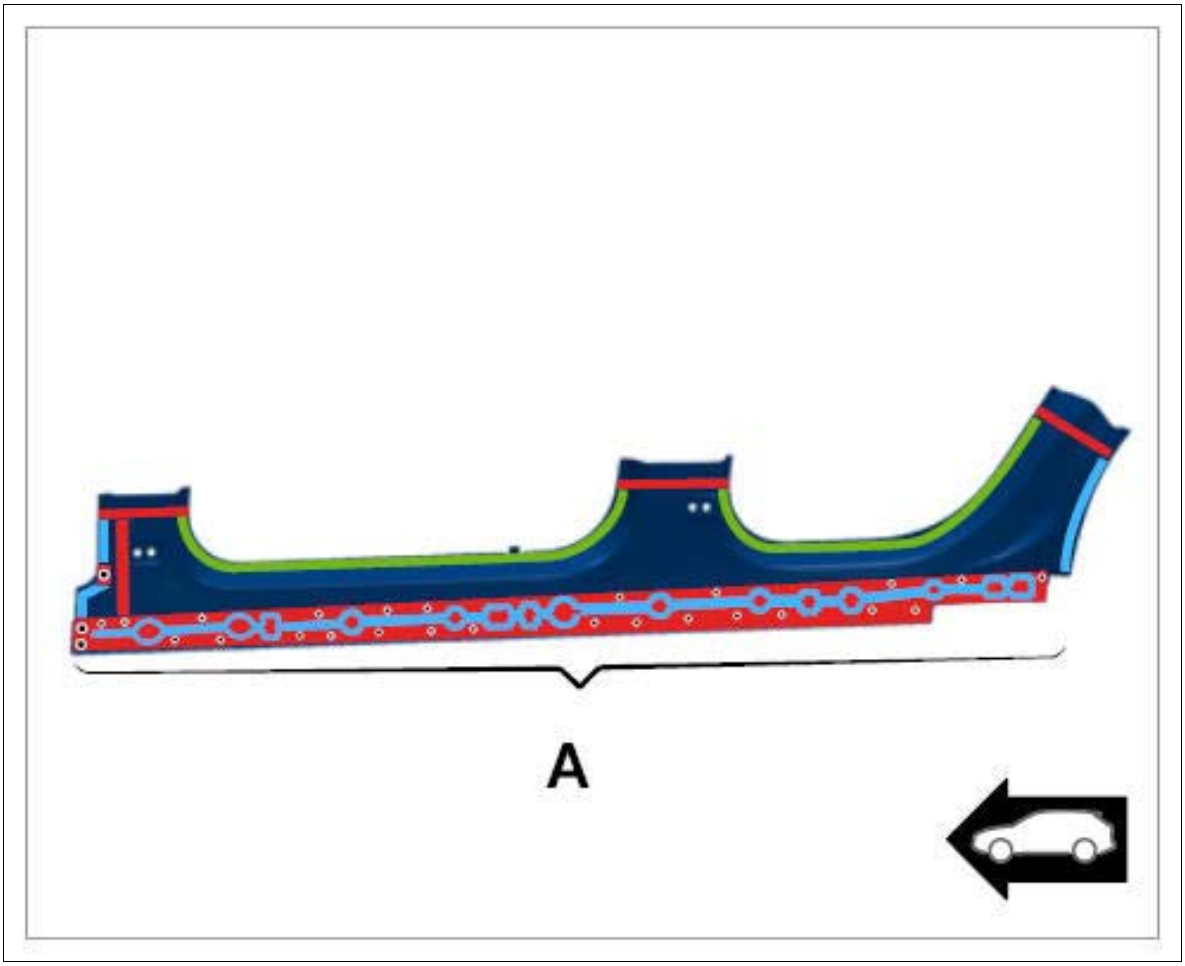

Courtesy of PORSCHE CARS NORTH AMERICA, INC.

Green	Resistance spot-welding + bonding
Blue	Bonding
Red	Resistance spot-welding/apply a full weld using inert gas without bonding

WM 514555 REPLACING OUTER SIDE MEMBER (ALL MODELS) > PREPARING CONNECTION AREAS OF THE BODY FOR INSTALLATION

1. Align the sealing surface and connections of the body.
2. De-burr connection points and prepare them for welding.

Information

1. Before final assembly, make sure you fully understand all the work steps involved and carry out a trial assembly without applying adhesive.
2. The bonding process can only be carried out reliably when a smooth and swift sequence

of operations is guaranteed.

3. Do not begin bonding work until all materials and tools necessary for later repair work are available.

3. Prepare the marked areas for welding and bonding. → 5X00IN21 WORKING WITH BODY STRUCTURAL ADHESIVE

Fig 1: Identifying Body Connection Areas

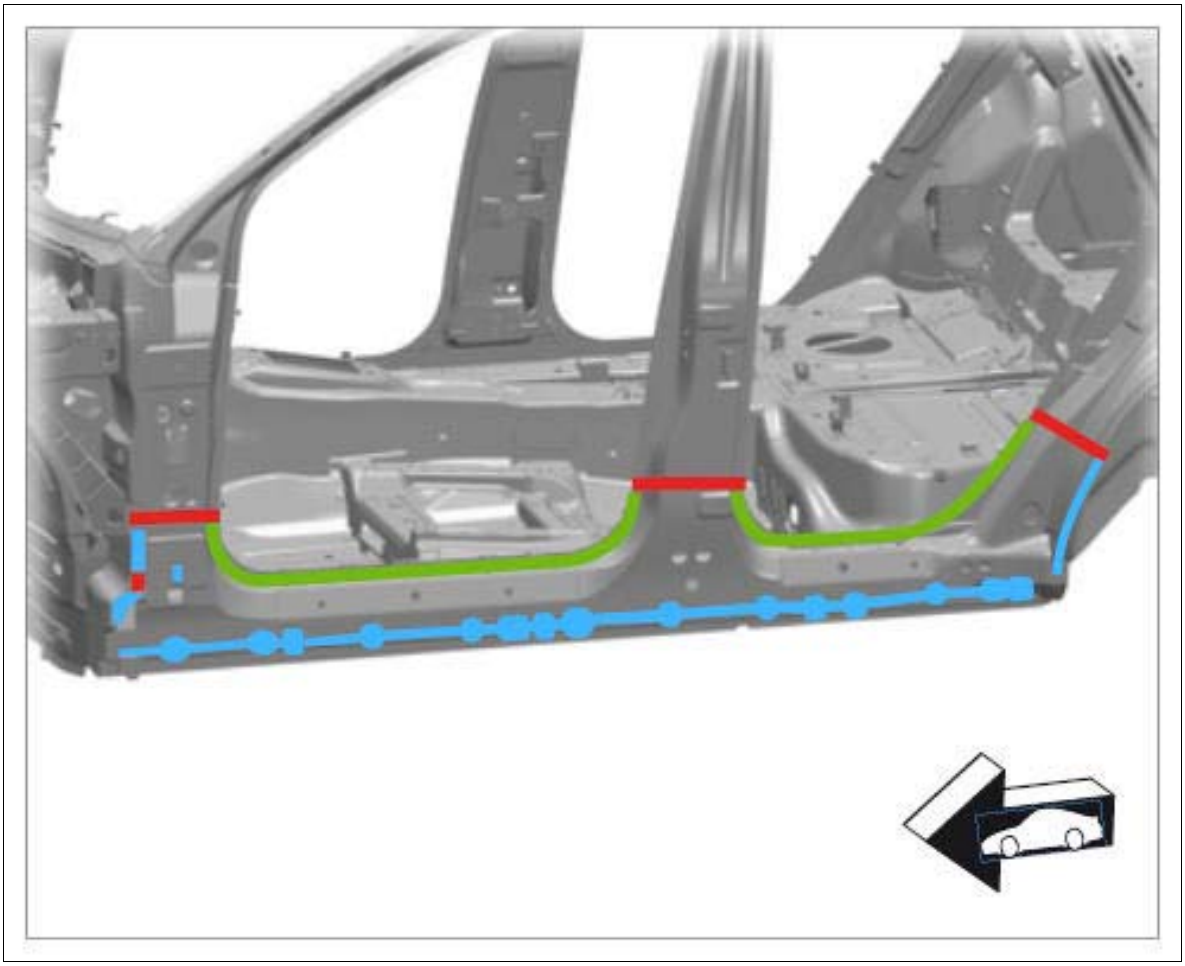

Courtesy of PORSCHE CARS NORTH AMERICA, INC.

Green	Resistance spot-welding + bonding
Blue	Bonding
Red	Resistance spot-welding/apply a full weld using inert gas without bonding

WM 514555 REPLACING OUTER SIDE MEMBER (ALL MODELS) > INSTALLING OUTER SIDE MEMBER

Information

- Before final assembly, make sure you fully understand all the work steps involved and carry out a

trial assembly without applying adhesive.

- The bonding process can only be carried out reliably when a smooth and swift sequence of operations is guaranteed.
- Do not begin bonding work until all materials and tools necessary for later repair work are available.

1. Install outer side member and check that it fits perfectly. Check gap dimensions. → 5X00IN DIAGRAM - BODY GAP DIMENSIONS
    1. 1.1. Apply adhesive to the areas marked in yellow. → 5X00IN21 WORKING WITH BODY STRUCTURAL ADHESIVE→ **Application depth: 3.0 mm**

       Fig 1: Identifying Adhesive Applying Areas

       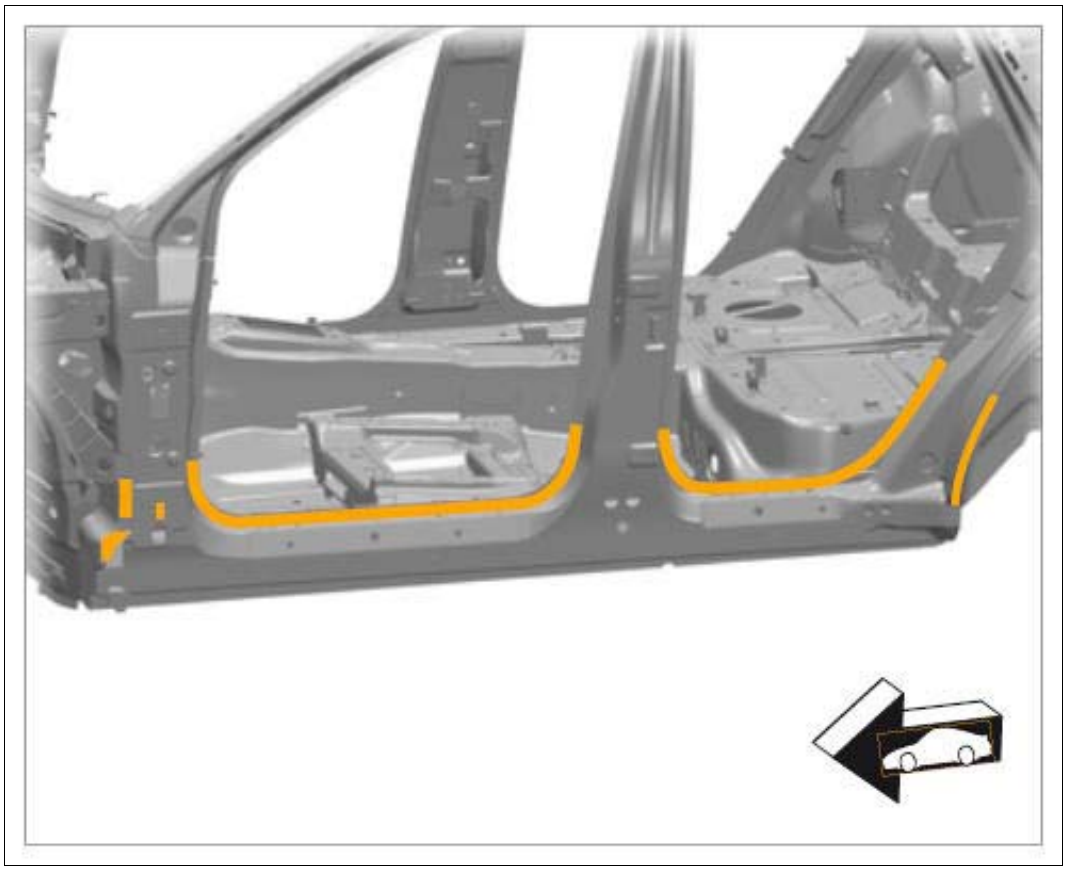

       Courtesy of PORSCHE CARS NORTH AMERICA, INC.

       Information

       Adhesive must not be applied to areas to be plug-welded or fully welded using inert gas.

2. Apply adhesive to area **-A-** . Make sure that no adhesive gets onto the connection areas for resistance spot-welding.

Fig 2: Identifying Adhesive Applying Area

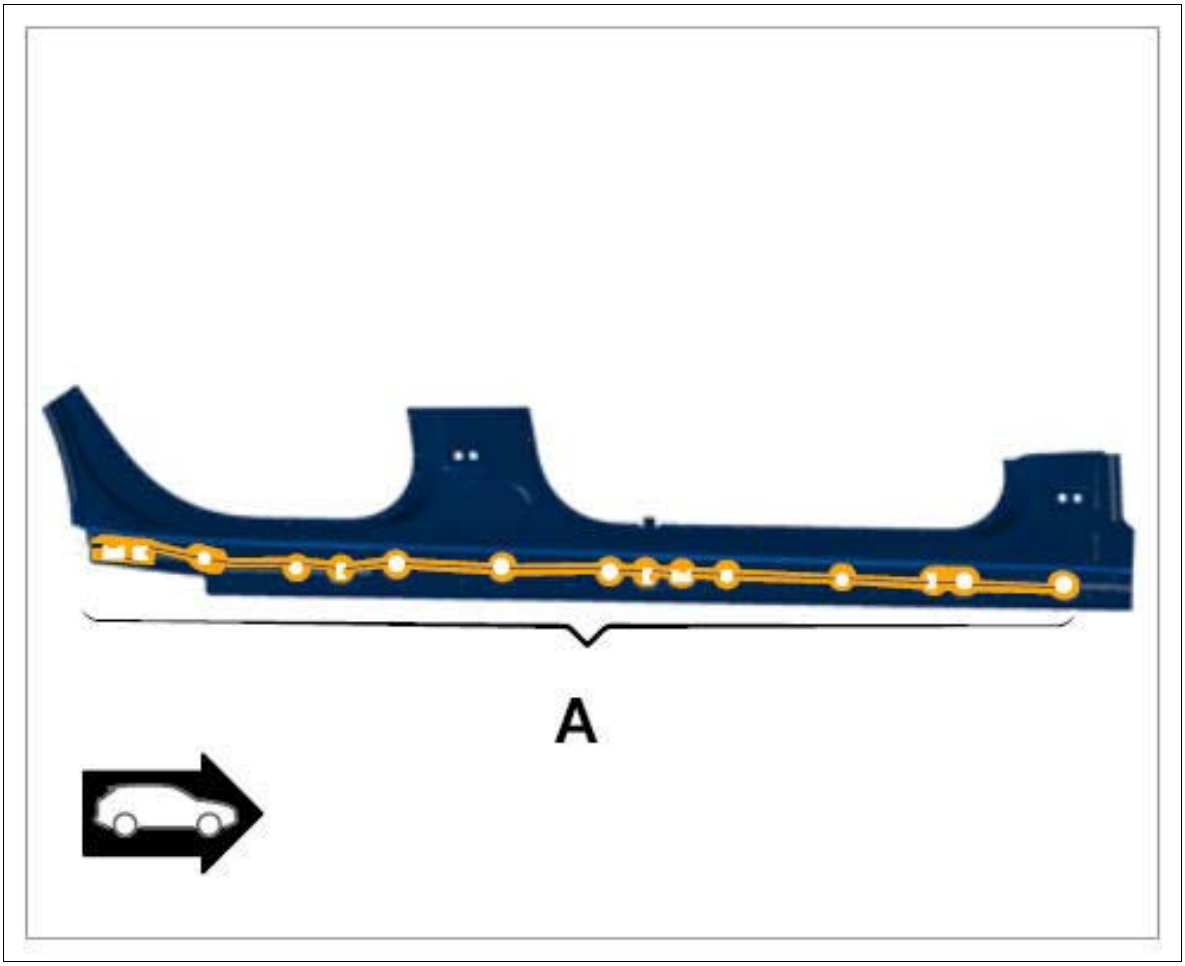

Courtesy of PORSCHE CARS NORTH AMERICA, INC.

3. Resistance spot-weld the outer side member.
    1. 3.1. Resistance spot-weld area **-A-** .
    2. 3.2. Flange area **-B-** on the edge of the wheel arch.

Fig 3: Identifying Outer Side Member

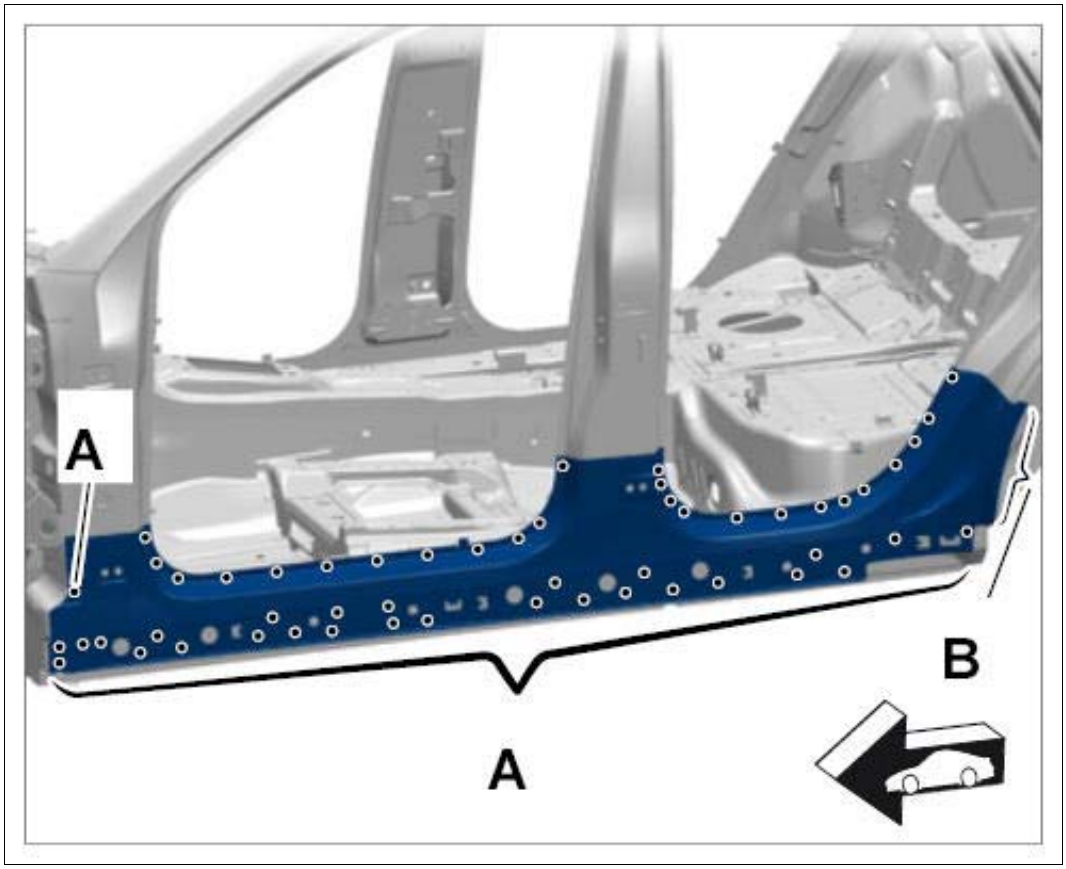

Courtesy of PORSCHE CARS NORTH AMERICA, INC.

Information

Adhesive must not be applied to areas to be plug-welded or fully welded using inert gas.

4. Apply a full weld to the outer side member using inert gas **-arrows-** .

Fig 4: Identifying Outer Side Member

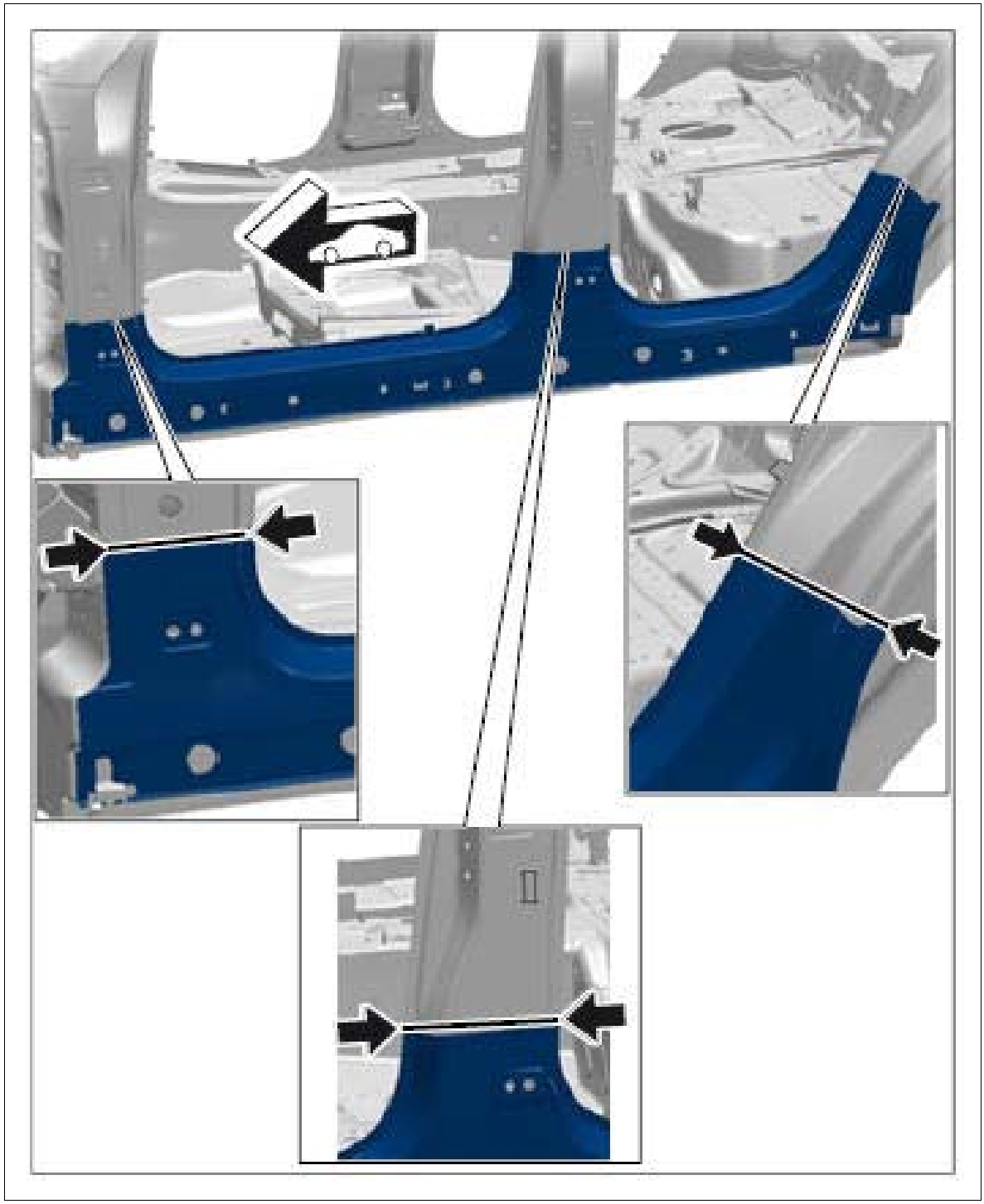

Courtesy of PORSCHE CARS NORTH AMERICA, INC.

WM 514555 REPLACING OUTER SIDE MEMBER (ALL MODELS) > SUBSEQUENT WORK > SUBSEQUENT WORK FOR BODY REPAIRS (WITHOUT STRAIGHTENING SYSTEM)

1. Clean joint areas and sheetmetal flanges with a wire brush.

2. Prime joint areas and sheetmetal flanges with 2K primer.
3. Restore standard seal with body sealant → 5X00IN42 SEAM SEALING .

   Also seal the repair area carefully.
4. Paint repair area and adjacent surfaces, if necessary.
5. Restore standard underbody protection with underbody sealant → 5X00IN43 UNDERBODY PROTECTION .
6. Apply standard cavity preservation → 5X00IN44 CAVITY PRESERVATION . Also apply cavity preservation to the repair area.
7. Install removed accessories in the repair area.

WM 514755 REPLACING INNER SIDE MEMBER (ALL MODELS) > TOOLS

Designation	Type	Number	Description	
Hot-air blower	Workshop equipment	WE 1119		
Body alignment system package	Workshop equipment	WE 1121		
Special electric cutter	Workshop equipment	WE 1137		
Pneumatic Spotweld Remover, Vario Drill WS 90	Workshop equipment	WE 1139		
Hand-cartridge gun	Workshop equipment	WE 1141		
Resistance spot welder	Workshop equipment	WE 1311		
Inverter welder MIDIspot-QSVM-12000	Workshop equipment	WE 1312		
Resistance spot welder	Workshop equipment	WE 1313		

Blind riveting tool TAURUS 4	Workshop equipment	WE 1348		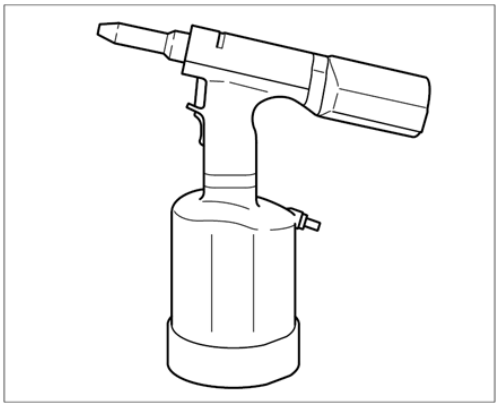
Aluminum tool set with trolley	Workshop equipment	WE 1350		
Resistance spot welder	Workshop equipment	WE 1352		
Measuring and alignment system, professional	Workshop equipment	WE 1398		
Mobile extraction unit, aluminum	Workshop equipment	WE 1507		
Body saw	Workshop equipment	WE 1508		
Star gauges for body gap dimensions	Special tool	Nr.127-1		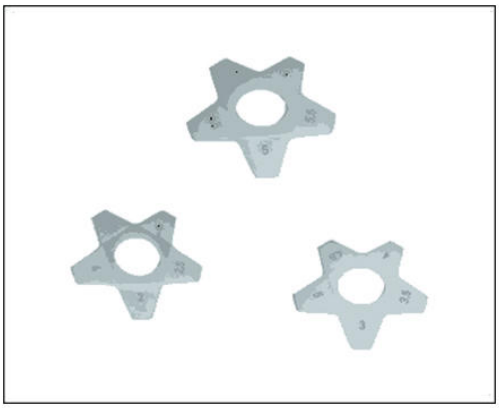

Spotweld drill	Commercially available tool	Nr.129		
Twist drill	Commercially available tool	Nr.201		
Countersink	Commercially available tool	Nr.202		

WM 514755 REPLACING INNER SIDE MEMBER (ALL MODELS) > TECHNICAL VALUES

Location	Description	Type	Basic value	Tolerance 1	Tolerance 2
Applying adhesive		Application depth	3.0 mm		

WM 514755 REPLACING INNER SIDE MEMBER (ALL MODELS) > PRELIMINARY WORK > PRELIMINARY WORK FOR BODY REPAIRS (WITH STRAIGHTENING

SYSTEM)

1. Remove accessories in the repair area.
    1. 1.1. Remove accessories in the repair area according to the extent of damage on the vehicle.
2. Set up straightening bench with straightening system.
3. Set vehicle on straightening bench.
4. Cover accessories adjacent to the repair area on the vehicle.
    1. 4.1. Cover all accessories remaining on the vehicle and adjacent areas with fire-proof protective covers.
5. Reshape connection area of the sheetmetal parts to be replaced.
6. Expose joint areas.
    1. 6.1. Remove underbody protection, paint, etc. from the joint areas of the body using a hot-air gun or rotary brush.

WM 514755 REPLACING INNER SIDE MEMBER (ALL MODELS) > PRELIMINARY WORK

1. Remove side member reinforcement. → 514955 REPLACING SIDE MEMBER REINFORCEMENT

WM 514755 REPLACING INNER SIDE MEMBER (ALL MODELS) > SAFETY INSTRUCTIONS AND INFORMATION ON QUALITY

⚠ *CAUTION: Non-observance of safety instructions for body repairs*

- *Risk of damage to the vehicle*
- *Danger of injury*

→ Read the relevant safety instructions as well as general information and quality instructions → 5X00IN01 SAFETY INSTRUCTIONS .

- Protection of electrical components during body repairs
- Corrosion protection measures during repairs → 5X00IN03 CORROSION PROTECTION MEASURES DURING REPAIRS
- Information on aluminum repairs
- Body parts of various sheet-steel strengths → 5X00IN04 BODY PARTS OF VARIOUS

SHEET-STEEL STRENGTHS

- Replacing punch rivets and penetrated joints
- Setting self-tapping screws → 5X00IN24 SETTING SELF-TAPPING SCREWS
- Working with body structural adhesive → 5X00IN21 WORKING WITH BODY STRUCTURAL ADHESIVE

WM 514755 REPLACING INNER SIDE MEMBER (ALL MODELS) > TOOLS AND MATERIALS > TOOLS AND MATERIALS FOR BODY REPAIRS

Information

- The tools for working on steel and aluminum must always be kept separate from each other. We recommend that you color code the tools using a system similar to that used for the Aluminum tool set with trolley WE 1350, for example.

Straightening set **Body alignment system package WE 1121 Measuring and alignment system, professional WE 1398**

Resistance spot welder; optional **Inverter welder MIDIspot-QSVM-12000 WE 1312, Resistance spot welder WE 1352, Resistance spot welder WE 1311, Resistance spot welder WE 1313**

Metal inert gas (MIG) welder

Pneumatic spotweld remover **Pneumatic Spotweld Remover, Vario Drill WS 90 WE 1139**

Pneumatic body saw **Body saw WE 1508**

Oscillating body saw (special electric cutter) **Special electric cutter WE 1137**

Hot-air blower **Hot-air blower WE 1119**

Hand-cartridge gun **Hand-cartridge gun WE 1141**

Spotweld drill **Spotweld drill Twist drill Nr.201**

Countersink for rivets **Countersink Nr.202**

Blind riveting tool for high-strength rivets **Blind riveting tool TAURUS 4 WE 1348**

Safety vacuum cleaner for aluminum dust **Mobile extraction unit, aluminum WE 1507**

Star gauges for body gap dimensions Nr.127-1

Wurth Klebt und Dichtet body sealant

WM 514755 REPLACING INNER SIDE MEMBER (ALL MODELS) > REMOVING INNER SIDE MEMBER

Fig 1: Identifying Inner Side Member Installation Position

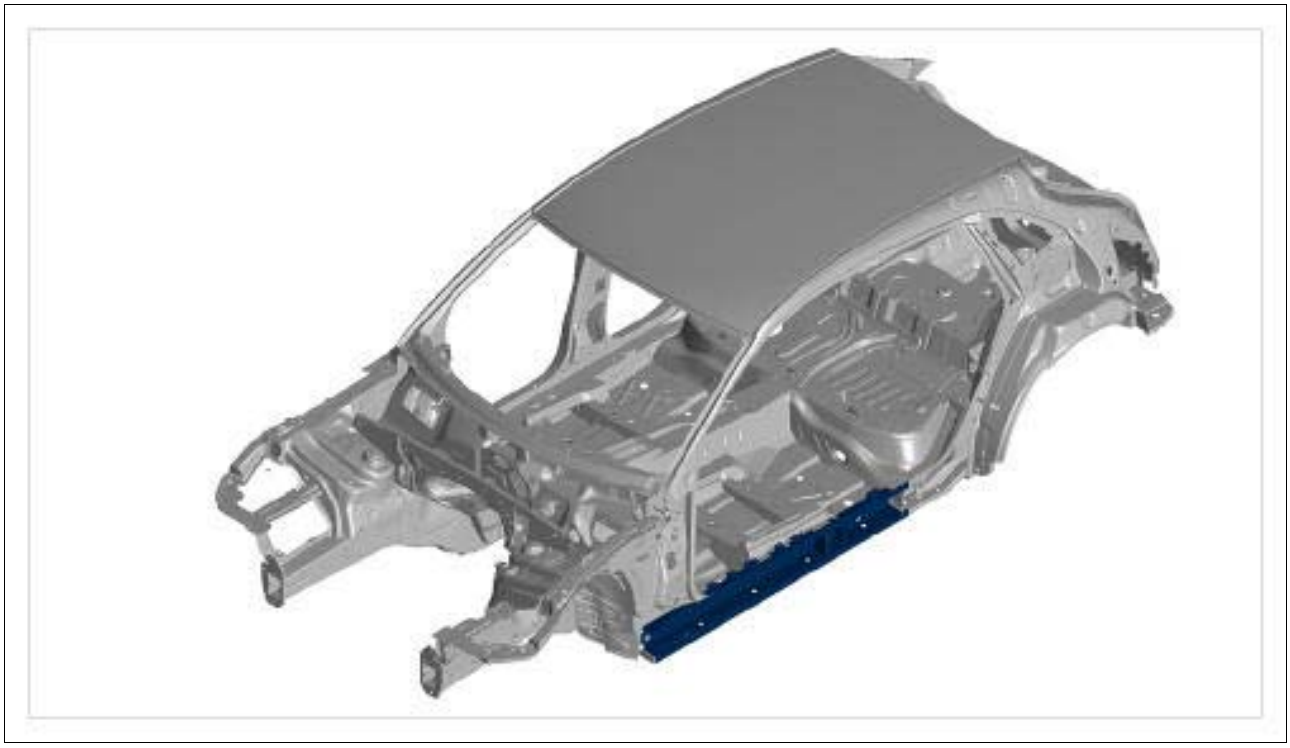

Courtesy of PORSCHE CARS NORTH AMERICA, INC.

Information

Drill out the connection point on one side only. Do not damage the plate underneath.

1. Drill out spotwelds using **spotweld drill** .

Fig 2: Identifying Inner Side Member

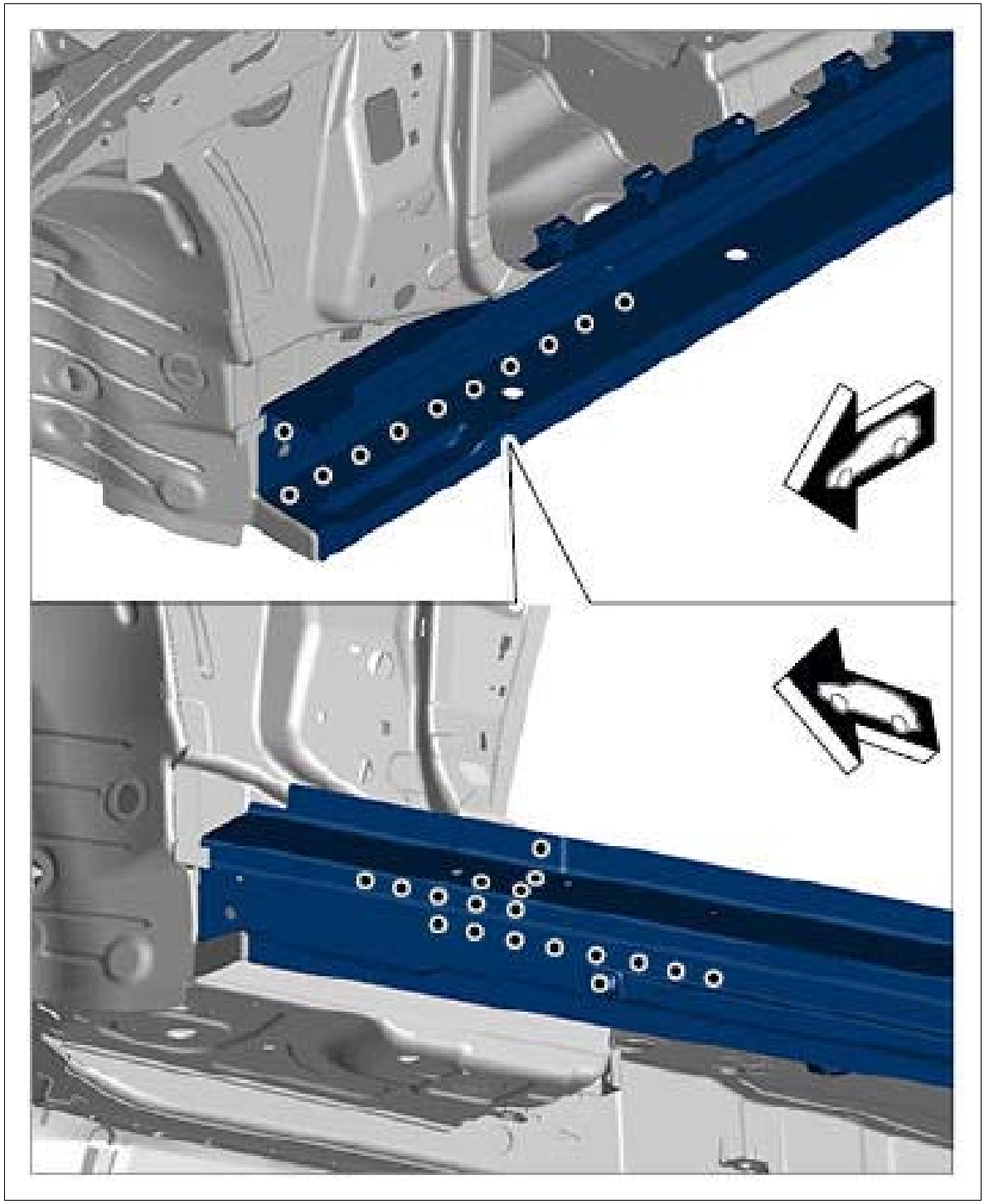

Courtesy of PORSCHE CARS NORTH AMERICA, INC.

2. Drill out spotwelds on reinforcement **-1-** using **spotweld drill** .

    1. 2.1. Remove reinforcement.

Fig 3: Identifying Reinforcement

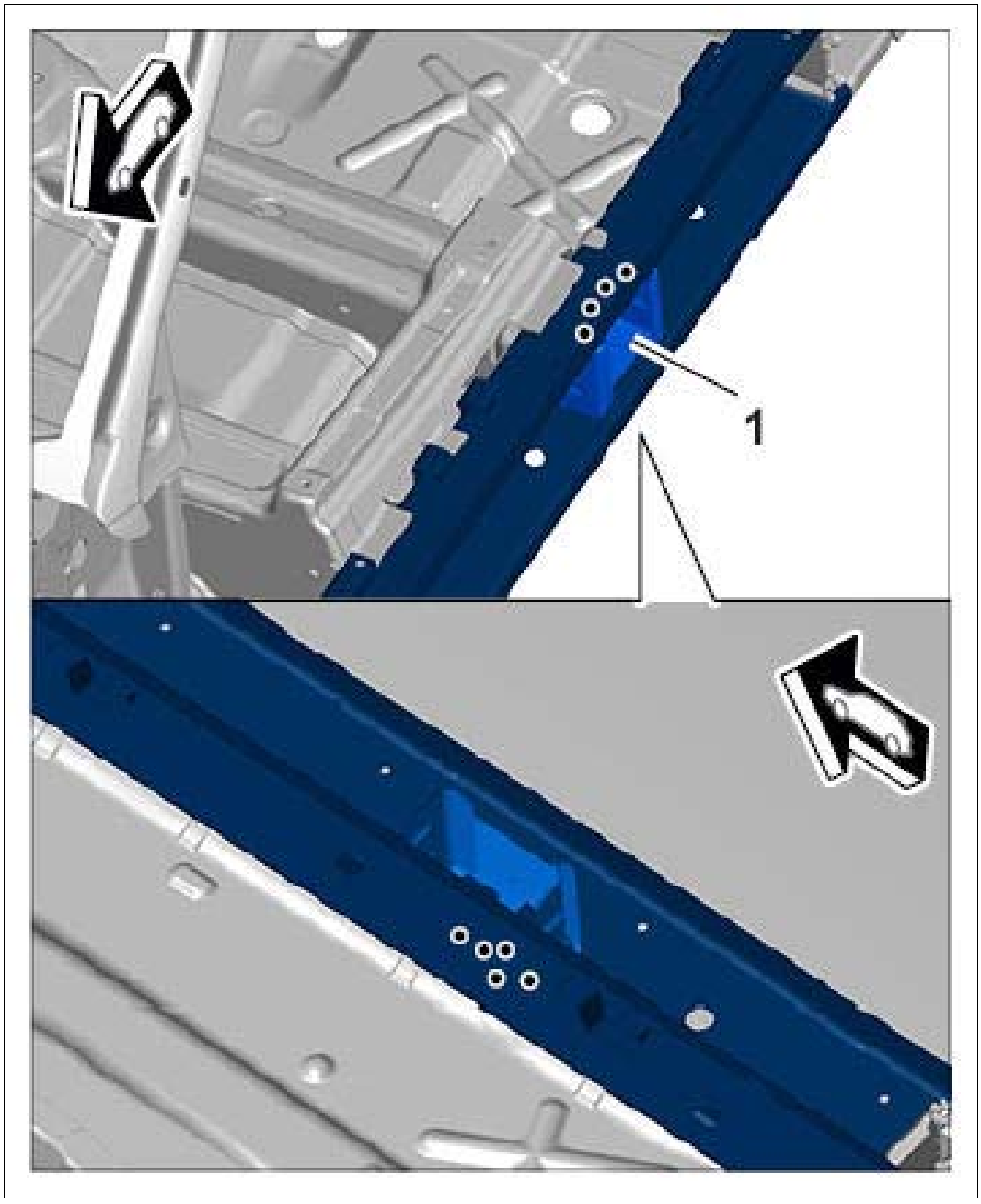

Courtesy of PORSCHE CARS NORTH AMERICA, INC.

3. Drill through spotwelds in area **-A-** using **spotweld drill** .

Fig 4: Identifying Inner Side Member

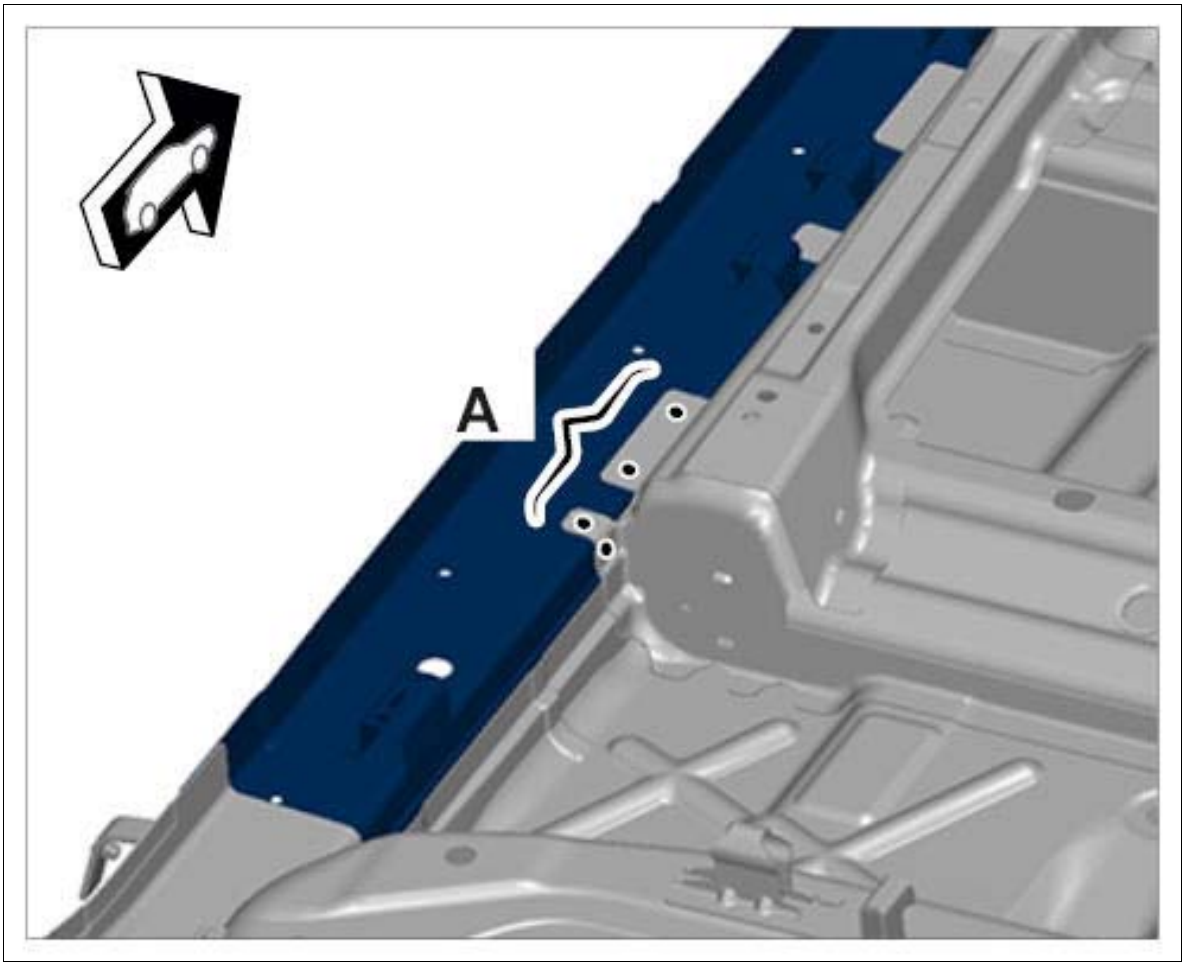

Courtesy of PORSCHE CARS NORTH AMERICA, INC.

Information

Drill out the connection point on one side only. Do not damage the plate underneath.

4. Drill out spotwelds using **spotweld drill;**

Fig 5: Removing Inner Side Member

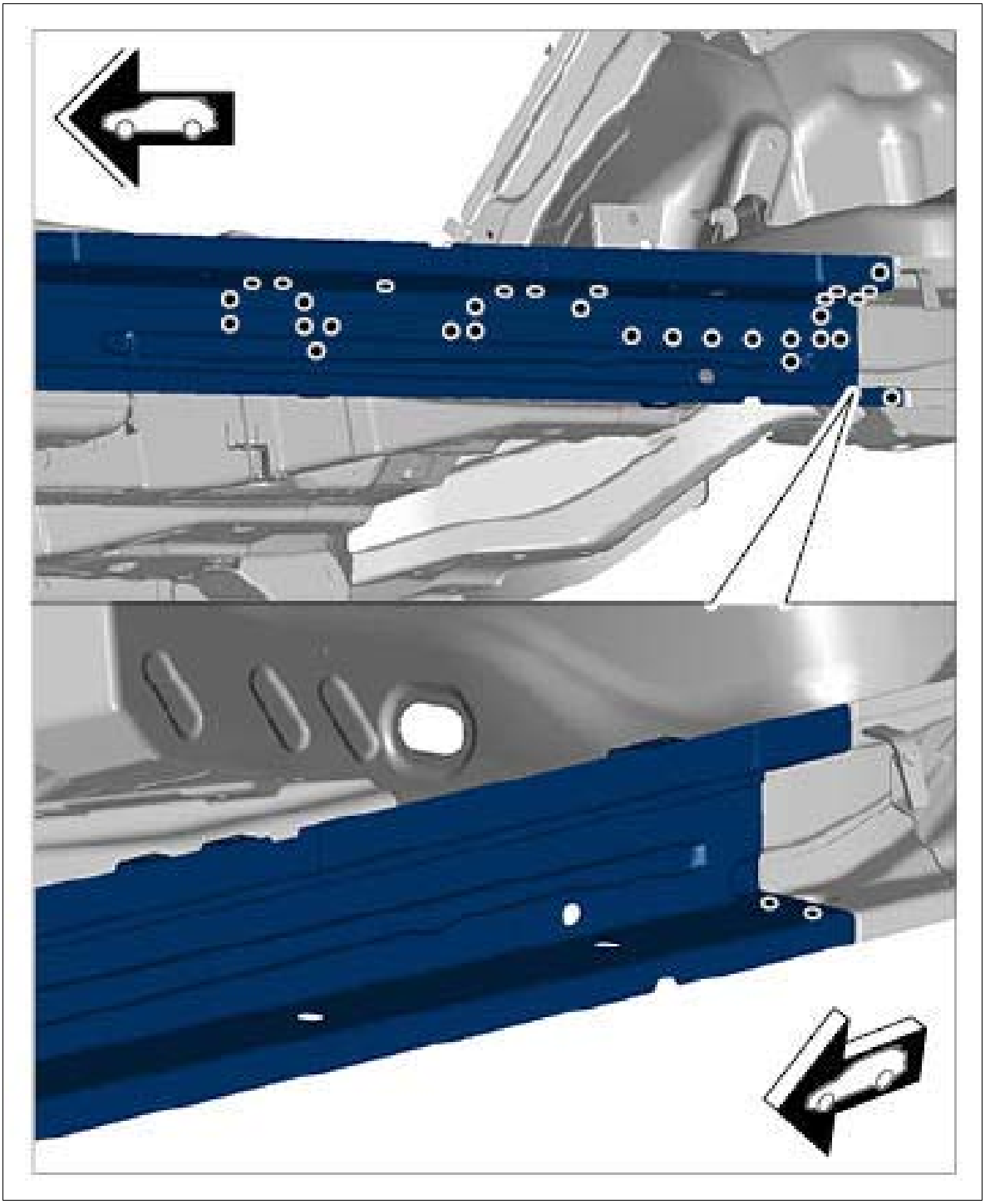

Courtesy of PORSCHE CARS NORTH AMERICA, INC.

5. Heat the marked bonding areas.

    1. 5.1. Remove inner side member.

Fig 6: Identifying Inner Side Member

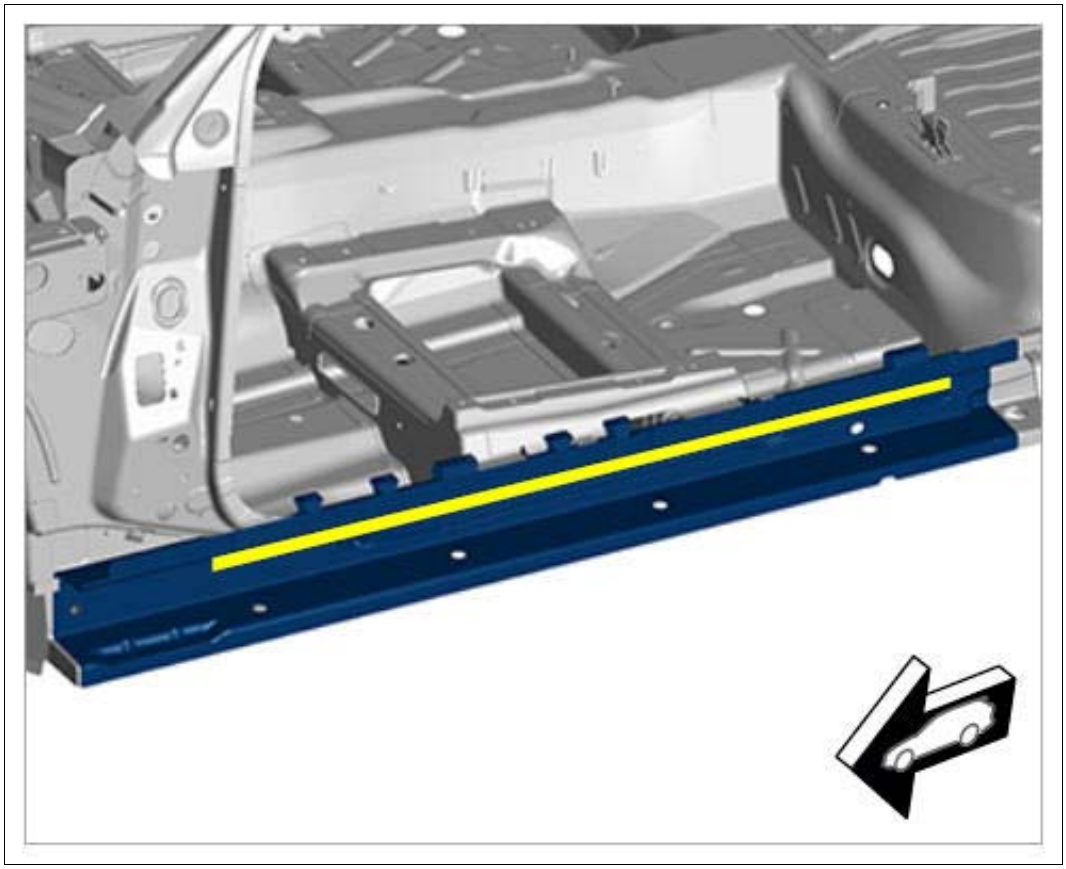

Courtesy of PORSCHE CARS NORTH AMERICA, INC.

WM 514755 REPLACING INNER SIDE MEMBER (ALL MODELS) > PREPARING INNER SIDE MEMBER FOR INSTALLATION

1. Fit in inner side member.
2. Prepare the marked connection areas for bonding and welding.

Fig 1: Identifying Inner Side Member

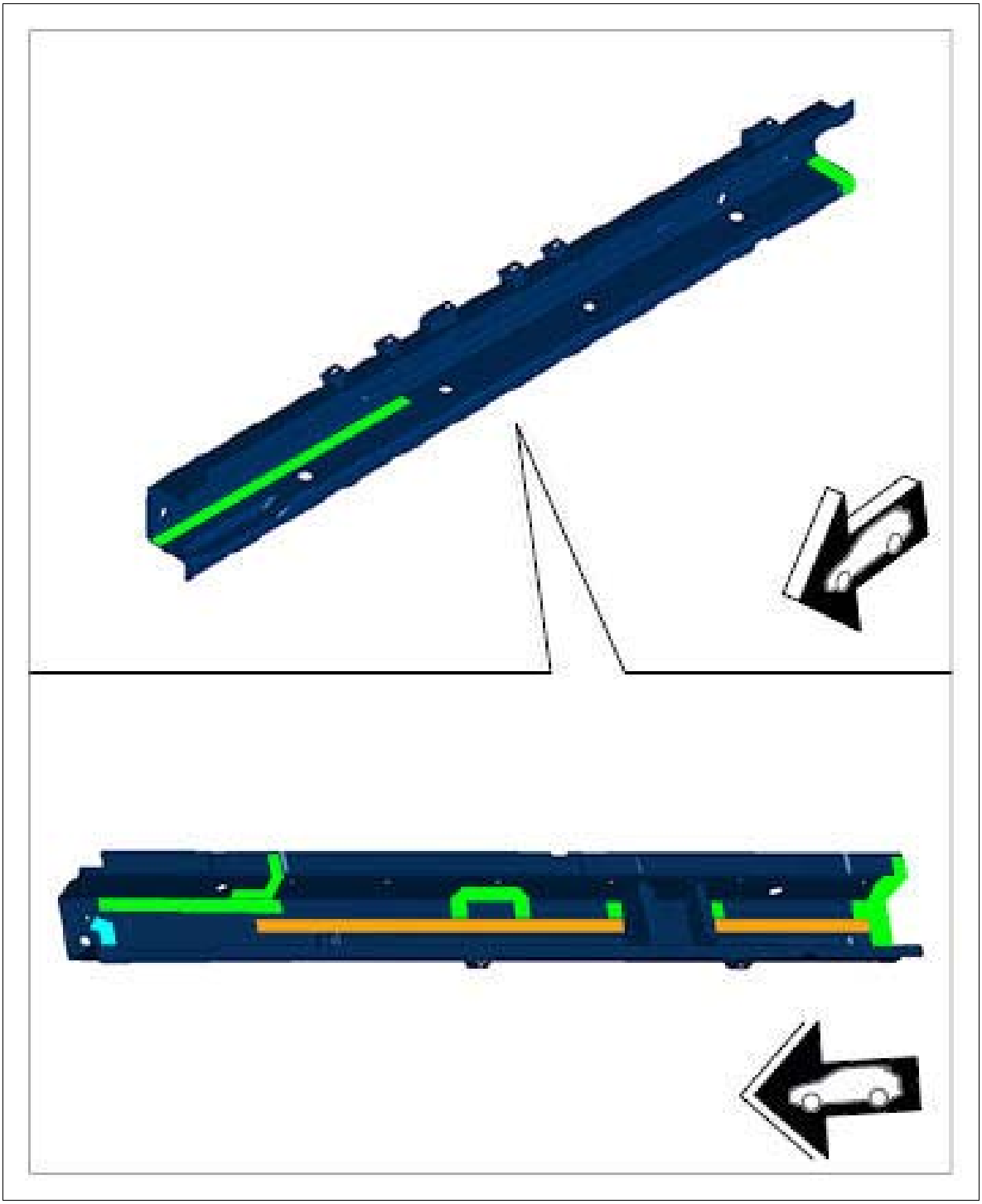

Courtesy of PORSCHE CARS NORTH AMERICA, INC.

Green	Resistance spot-welding
Blue	Bonding
Orange	Bonding + resistance spot-welding

WM 514755 REPLACING INNER SIDE MEMBER (ALL MODELS) > PREPARING CONNECTION AREAS OF THE BODY FOR INSTALLATION

1. Align the sealing surface and connections of the body.
2. De-burr connection areas and prepare for welding.

   Information

   1. Before final assembly, make sure you fully understand all the work steps involved and carry out a trial assembly without applying adhesive.
   2. The bonding process can only be carried out reliably when a smooth and swift sequence of operations is guaranteed.
   3. Do not begin bonding work until all materials and tools necessary for later repair work are available.

3. Prepare the marked areas for welding and bonding.

   Fig 1: Identifying Body Connection Areas

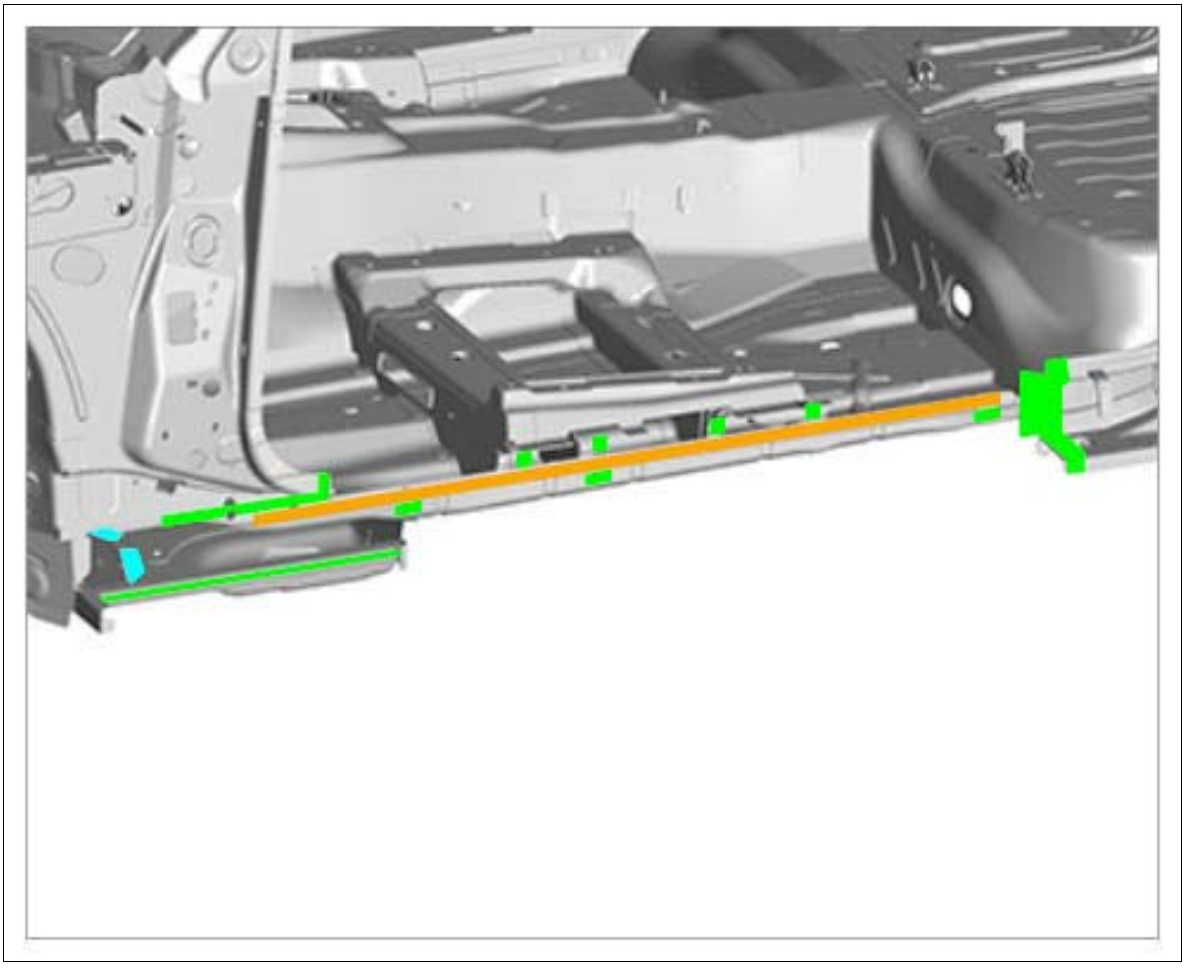

Courtesy of PORSCHE CARS NORTH AMERICA, INC.

Green	Resistance spot-welding
Blue	Bonding

Orange	Bonding + resistance spot-welding

WM 514755 REPLACING INNER SIDE MEMBER (ALL MODELS) > INSTALLING INNER SIDE MEMBER

1. Install inner side member and check that it fits perfectly. Check gap dimensions. → 5X00IN DIAGRAM - BODY GAP DIMENSIONS

   Information

   1. Before final assembly, make sure you fully understand all the work steps involved and carry out a trial assembly without applying adhesive.
   2. The bonding process can only be carried out reliably when a smooth and swift sequence of operations is guaranteed.
   3. Do not begin bonding work until all materials and tools necessary for later repair work are available.

      1. 1.1. Apply adhesive to the marked areas. → 5X00IN21 WORKING WITH BODY STRUCTURAL ADHESIVE→ **Application depth: 3.0 mm**

         Fig 1: Identifying Adhesive Applying Areas

         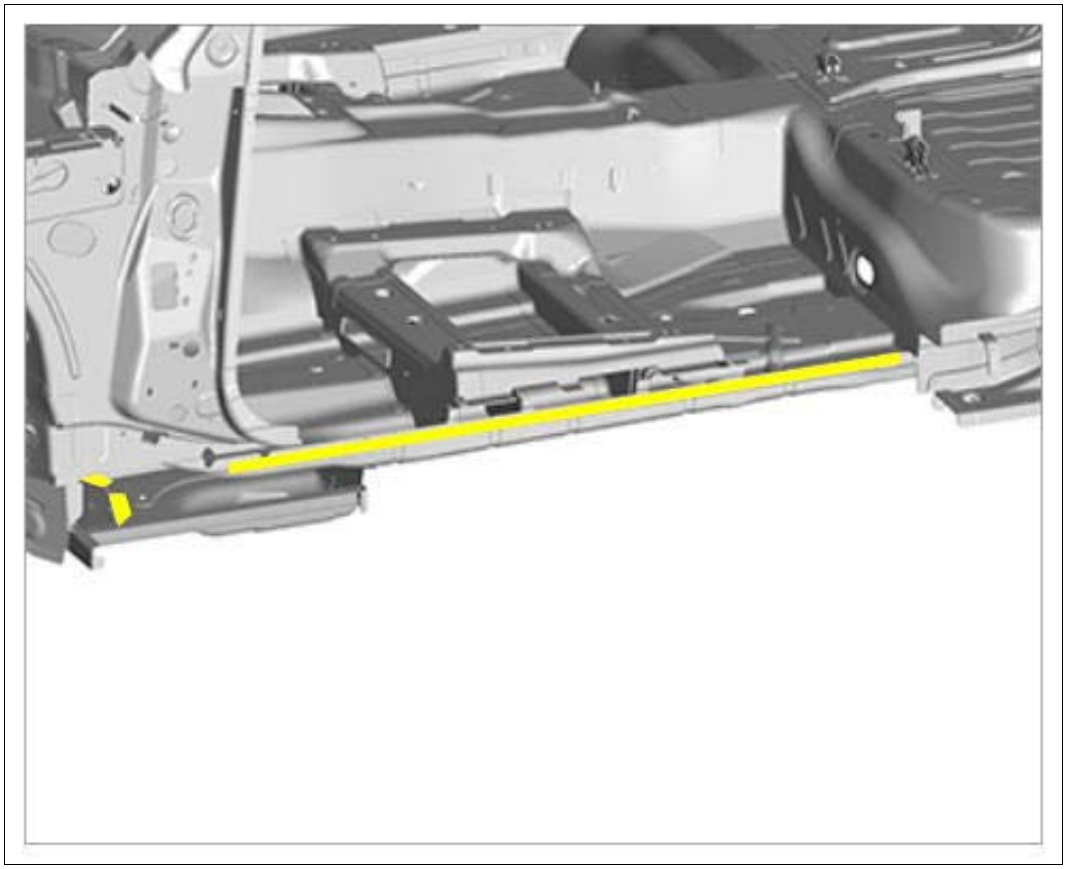

         Courtesy of PORSCHE CARS NORTH AMERICA, INC.

2. Resistance spot-weld the inner side member.

Fig 2: Installing Inner Side Member

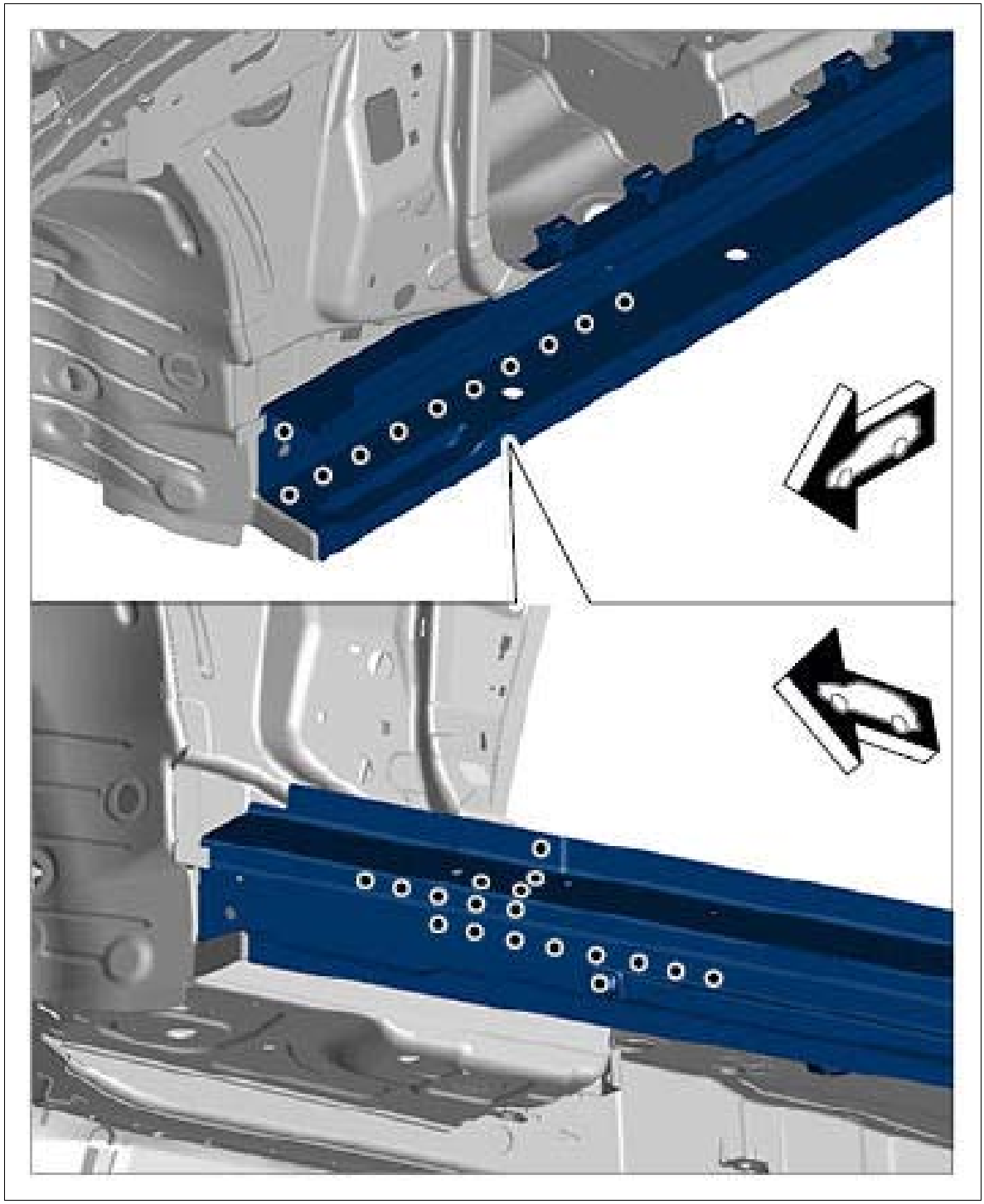

Courtesy of PORSCHE CARS NORTH AMERICA, INC.

Fig 3: Installing Inner Side Member

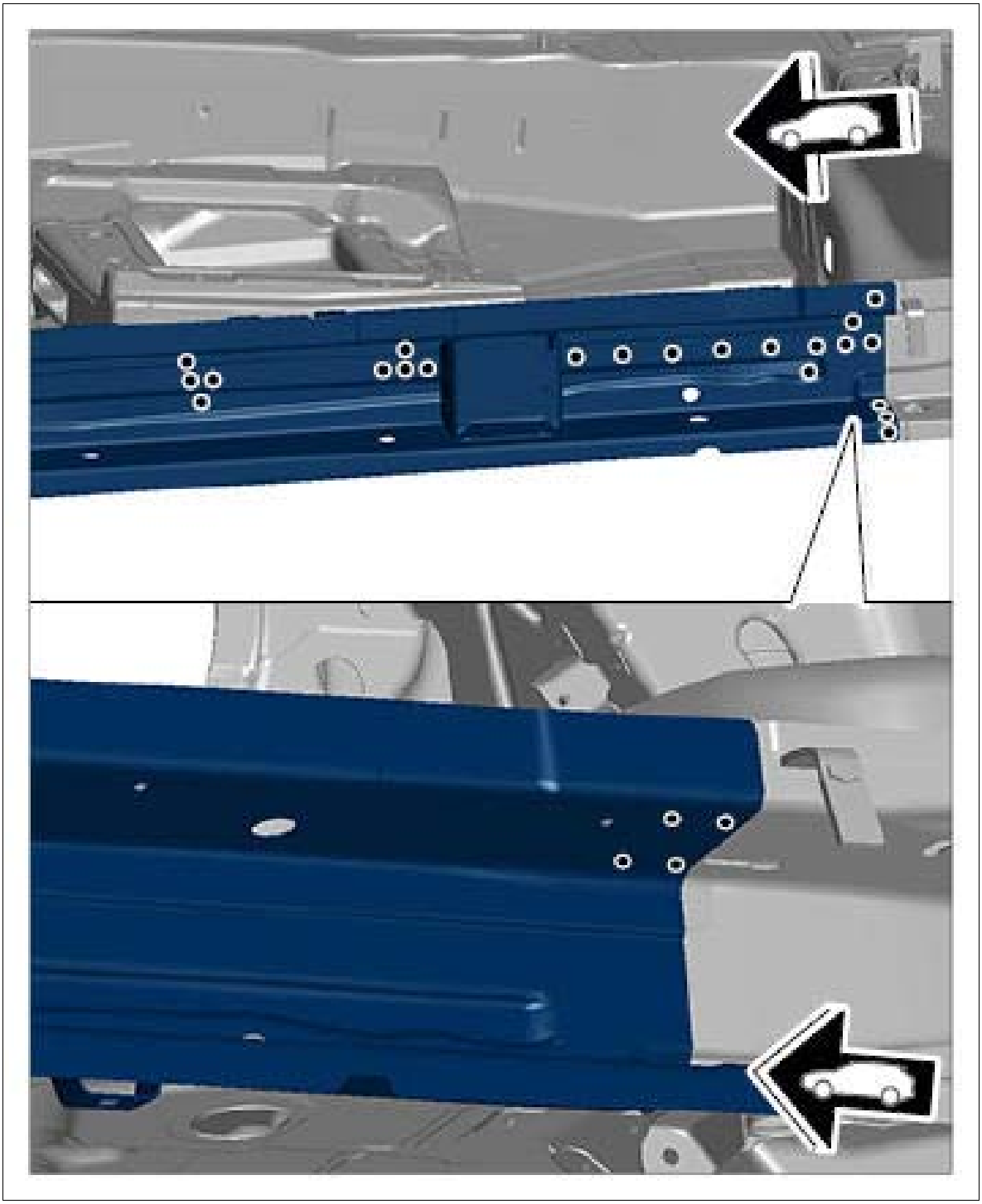

Courtesy of PORSCHE CARS NORTH AMERICA, INC.

3. Plug-weld area **-A-** using inert gas.

Fig 4: Installing Inner Side Member

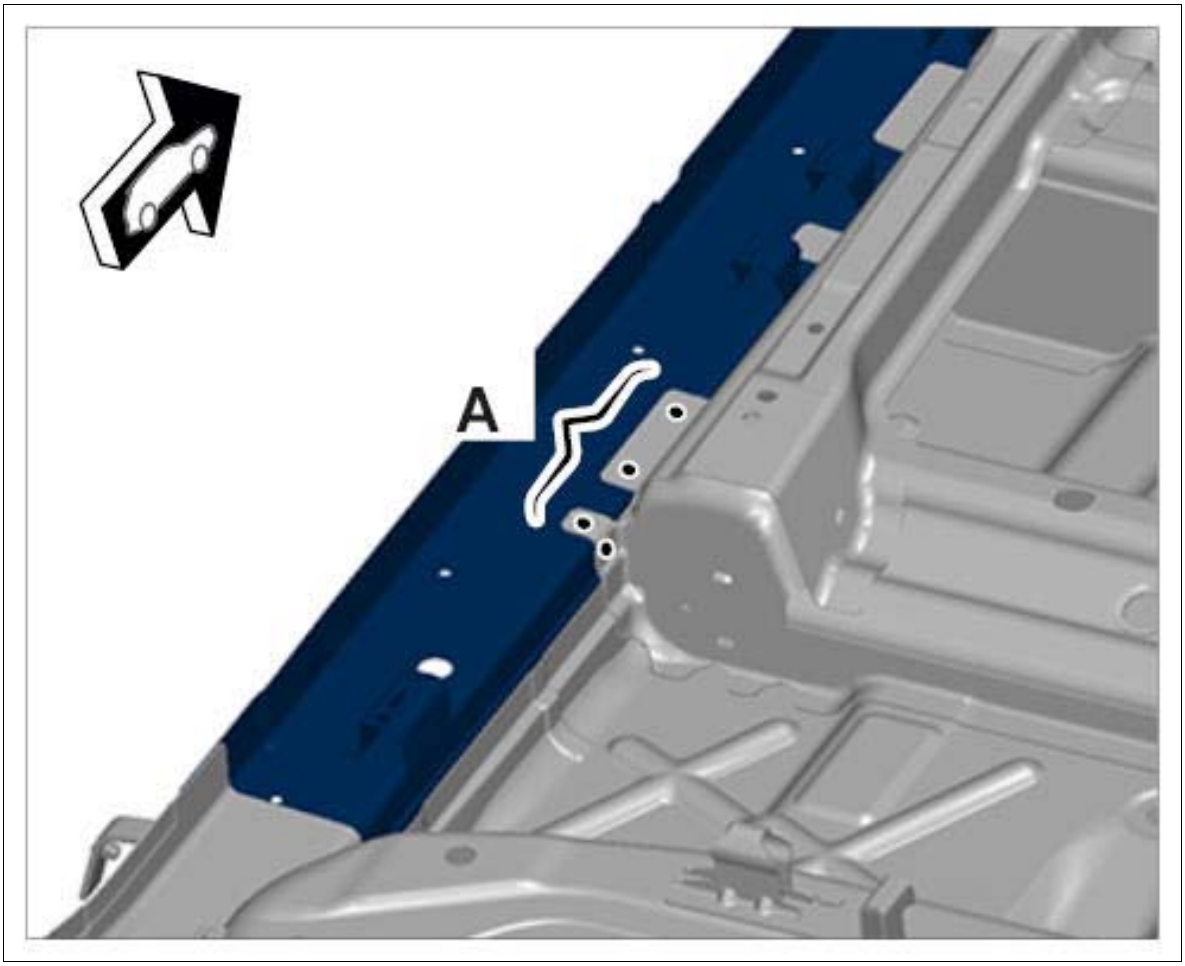

Courtesy of PORSCHE CARS NORTH AMERICA, INC.

WM 514755 REPLACING INNER SIDE MEMBER (ALL MODELS) > SUBSEQUENT WORK

1. Install side member reinforcement. → 514955 REPLACING SIDE MEMBER REINFORCEMENT

WM 514755 REPLACING INNER SIDE MEMBER (ALL MODELS) > SUBSEQUENT WORK > SUBSEQUENT WORK FOR BODY REPAIRS (WITHOUT STRAIGHTENING SYSTEM)

1. Clean joint areas and sheetmetal flanges with a wire brush.
2. Prime joint areas and sheetmetal flanges with 2K primer.
3. Restore standard seal with body sealant → 5X00IN42 SEAM SEALING .

   Also seal the repair area carefully.

4. Paint repair area and adjacent surfaces, if necessary.
5. Restore standard underbody protection with underbody sealant → 5X00IN43 UNDERBODY PROTECTION .
6. Apply standard cavity preservation → 5X00IN44 CAVITY PRESERVATION . Also apply cavity preservation to the repair area.
7. Install removed accessories in the repair area.

WM 514855 REPLACING CENTRE SIDE MEMBER (ALL MODELS) > TOOLS

Designation	Type	Number	Description	
Hot-air blower	Workshop equipment	WE 1119		
Body alignment system package	Workshop equipment	WE 1121		
Special electric cutter	Workshop equipment	WE 1137		
Pneumatic Spotweld Remover, Vario Drill WS 90	Workshop equipment	WE 1139		
Hand-cartridge gun	Workshop equipment	WE 1141		
Resistance spot welder	Workshop equipment	WE 1311		
Inverter welder MIDIspot-QSVM-12000	Workshop equipment	WE 1312		
Resistance spot welder	Workshop equipment	WE 1313		
Blind riveting tool TAURUS 4	Workshop equipment	WE 1348		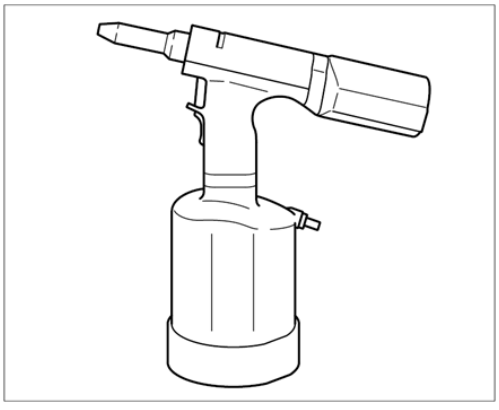

Aluminum tool set with trolley	Workshop equipment	WE 1350		
Resistance spot welder	Workshop equipment	WE 1352		
Measuring and alignment system, professional	Workshop equipment	WE 1398		
Mobile extraction unit, aluminum	Workshop equipment	WE 1507		
Body saw	Workshop equipment	WE 1508		
Star gauges for body gap dimensions	Special tool	Nr.127-1		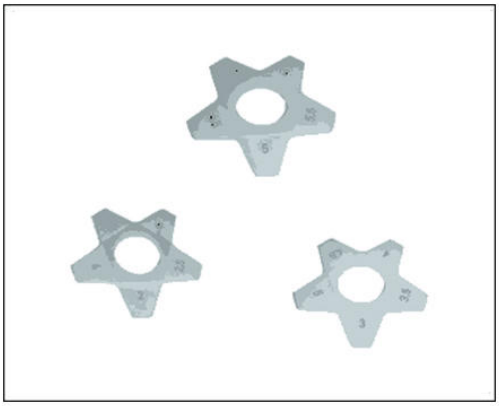
Spotweld drill	Commercially available tool	Nr.129		

Twist drill	Commercially available tool	Nr.201		
Countersink	Commercially available tool	Nr.202		

WM 514855 REPLACING CENTRE SIDE MEMBER (ALL MODELS) > TECHNICAL VALUES

Location	Description	Type	Basic value	Tolerance 1	Tolerance 2
Dimension D		Distance	60 mm		
Dimension E		Distance	23 mm		
Dimension F		Distance	75 mm		
Applying adhesive		Application depth	3.0 mm		

WM 514855 REPLACING CENTRE SIDE MEMBER (ALL MODELS) > PRELIMINARY WORK > PRELIMINARY WORK FOR BODY REPAIRS (WITHOUT STRAIGHTENING SYSTEM)

1. Remove accessories in the repair area.
    1. 1.1. Remove accessories in the repair area according to the extent of damage on the vehicle.
2. Cover accessories adjacent to the repair area on the vehicle.

1. 2.1. Cover all accessories remaining on the vehicle and adjacent areas with fire-proof protective covers.

3. Reshape connection area of the sheetmetal parts to be replaced. Note: Information on aluminum repairs

4. Expose joint areas.

    1. 4.1. Remove underbody protection, paint, etc. from the joint areas of the body using a hot-air gun or rotary brush.

WM 514855 REPLACING CENTRE SIDE MEMBER (ALL MODELS) > SAFETY INSTRUCTIONS AND INFORMATION ON QUALITY

⚠ *CAUTION: Non-observance of safety instructions for body repairs*

- *Risk of damage to the vehicle*
- *Danger of injury*

→ Read the relevant safety instructions as well as general information and quality instructions → 5X00IN01 SAFETY INSTRUCTIONS .

- Protection of electrical components during body repairs
- Corrosion protection measures during repairs → 5X00IN03 CORROSION PROTECTION MEASURES DURING REPAIRS
- Information on aluminum repairs
- Body parts of various sheet-steel strengths → 5X00IN04 BODY PARTS OF VARIOUS SHEET-STEEL STRENGTHS
- Replacing punch rivets and penetrated joints
- Setting self-tapping screws → 5X00IN24 SETTING SELF-TAPPING SCREWS
- Working with body structural adhesive → 5X00IN21 WORKING WITH BODY STRUCTURAL ADHESIVE

WM 514855 REPLACING CENTRE SIDE MEMBER (ALL MODELS) > TOOLS AND MATERIALS > TOOLS AND MATERIALS FOR BODY REPAIRS

Information

- The tools for working on steel and aluminum must always be kept separate from each other. We recommend that you color code the tools using a system similar to that used for the Aluminum tool set with trolley WE 1350, for example.

Straightening set **Body alignment system package WE 1121 Measuring and alignment system, professional WE 1398**

Resistance spot welder; optional **Inverter welder MIDIspot-QSVM-12000 WE 1312, Resistance spot welder WE 1352, Resistance spot welder WE 1311, Resistance spot welder WE 1313**

Metal inert gas (MIG) welder

Pneumatic spotweld remover **Pneumatic Spotweld Remover, Vario Drill WS 90 WE 1139**

Pneumatic body saw **Body saw WE 1508**

Oscillating body saw (special electric cutter) **Special electric cutter WE 1137**

Hot-air blower **Hot-air blower WE 1119**

Hand-cartridge gun **Hand-cartridge gun WE 1141**

Spotweld drill **Spotweld drill Twist drill Nr.201**

Countersink for rivets **Countersink Nr.202**

Blind riveting tool for high-strength rivets **Blind riveting tool TAURUS 4 WE 1348**

Safety vacuum cleaner for aluminum dust **Mobile extraction unit, aluminum WE 1507**

Star gauges for body gap dimensions Nr.127-1

Wurth Klebt und Dichtet body sealant

WM 514855 REPLACING CENTRE SIDE MEMBER (ALL MODELS) > REMOVING CENTRE SIDE MEMBER > CUT VARIANTS

Information

Cuts can be made in the defined areas in the outer side member due to the parts dimensions. The purpose of the different cuts is to keep the repair area as small as possible in the event of damage.

The diagram should help you to determine the correct position of cuts.

Fig 1: Identifying Outer Side Member Variants Cutting Position

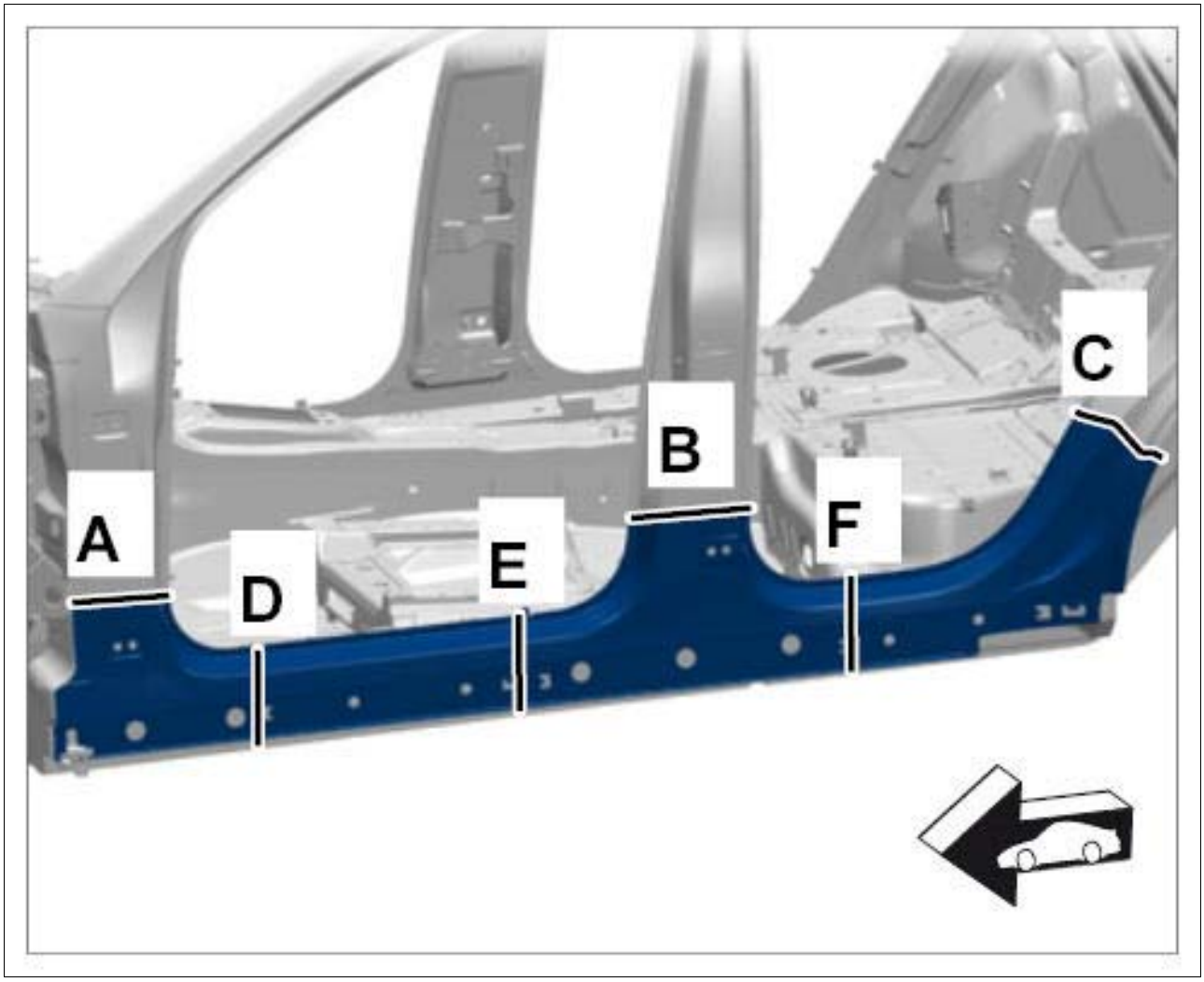

Courtesy of PORSCHE CARS NORTH AMERICA, INC.

A-B-C - Replace cuts for outer side member. → 514555 REPLACING OUTER SIDE MEMBER

B-C-D - Replace cuts for center side member. → 514855 REPLACING CENTRE SIDE MEMBER

E-F - Replace cuts for B-pillar. → 514155 REPLACING B-PILLAR

Fig 2: Identifying Outer Side Member Variants Cutting Position

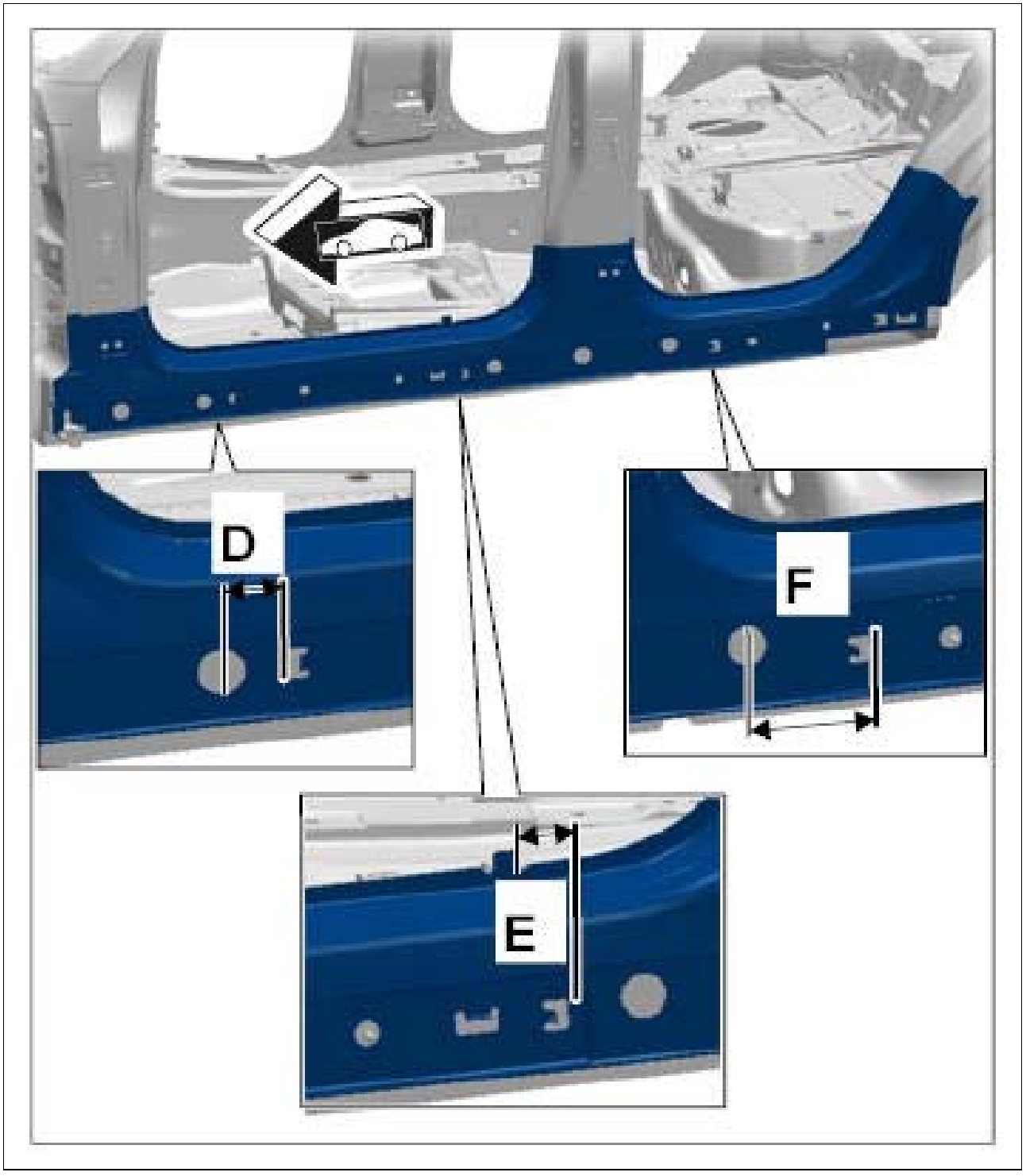

Courtesy of PORSCHE CARS NORTH AMERICA, INC.

D - → Distance: 60 mm

E - → Distance: 23 mm

F - → Distance: 75 mm

WM 514855 REPLACING CENTRE SIDE MEMBER (ALL MODELS) > REMOVING CENTRE SIDE MEMBER > REMOVING CENTRE SIDE MEMBER

Information

Only make cuts in the top plate. Make sure not to damage the plate underneath when doing this.

Information

Mark cuts B, C and D in accordance with the new part. Make sure to leave an overlap of approx. 3 cm with respect to the body.

Fig 1: Identifying Centre Side Member

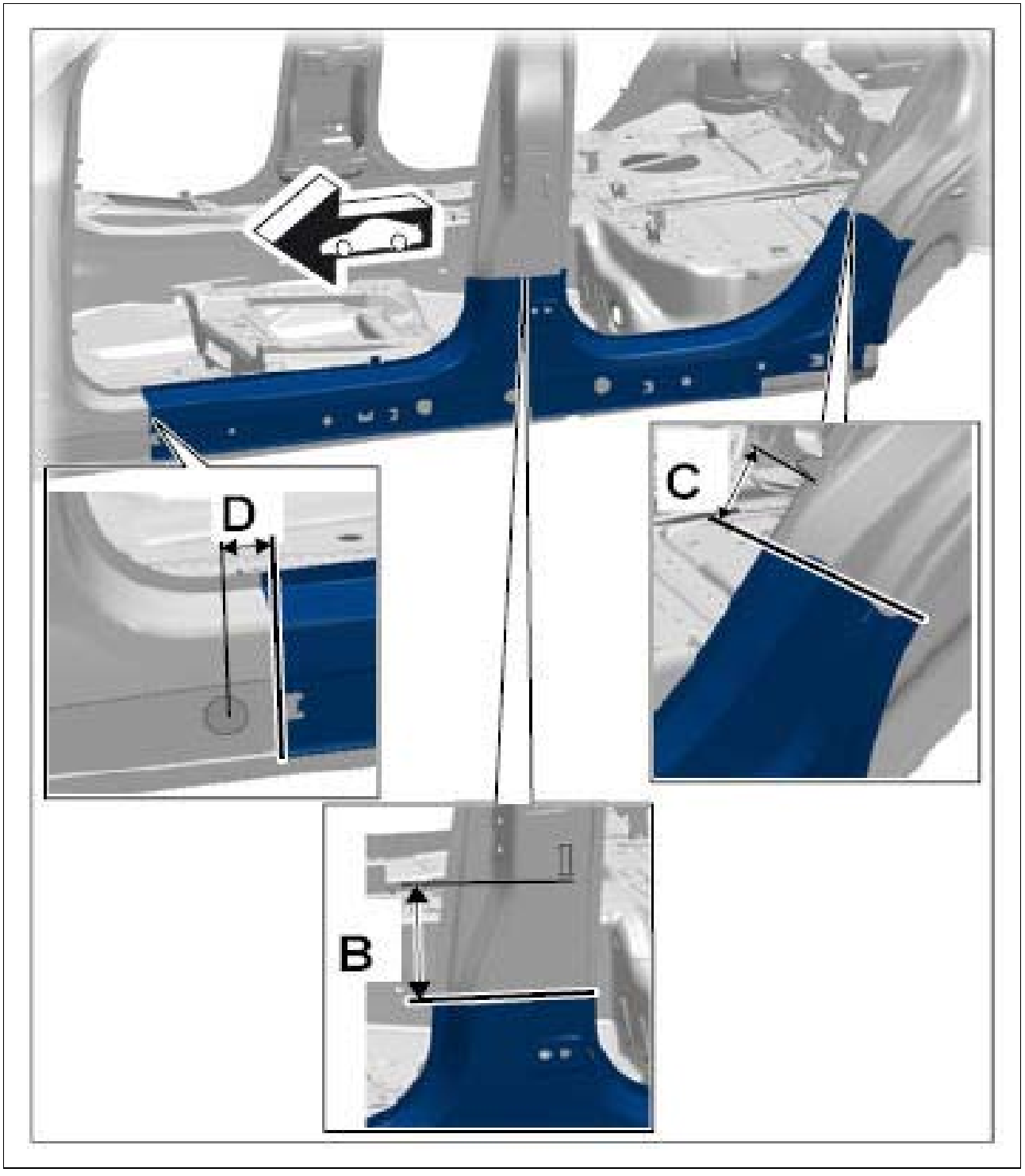

Courtesy of PORSCHE CARS NORTH AMERICA, INC.

1. Drill out spotwelds using **spotweld drill** .

Fig 2: Identifying Centre Side Member

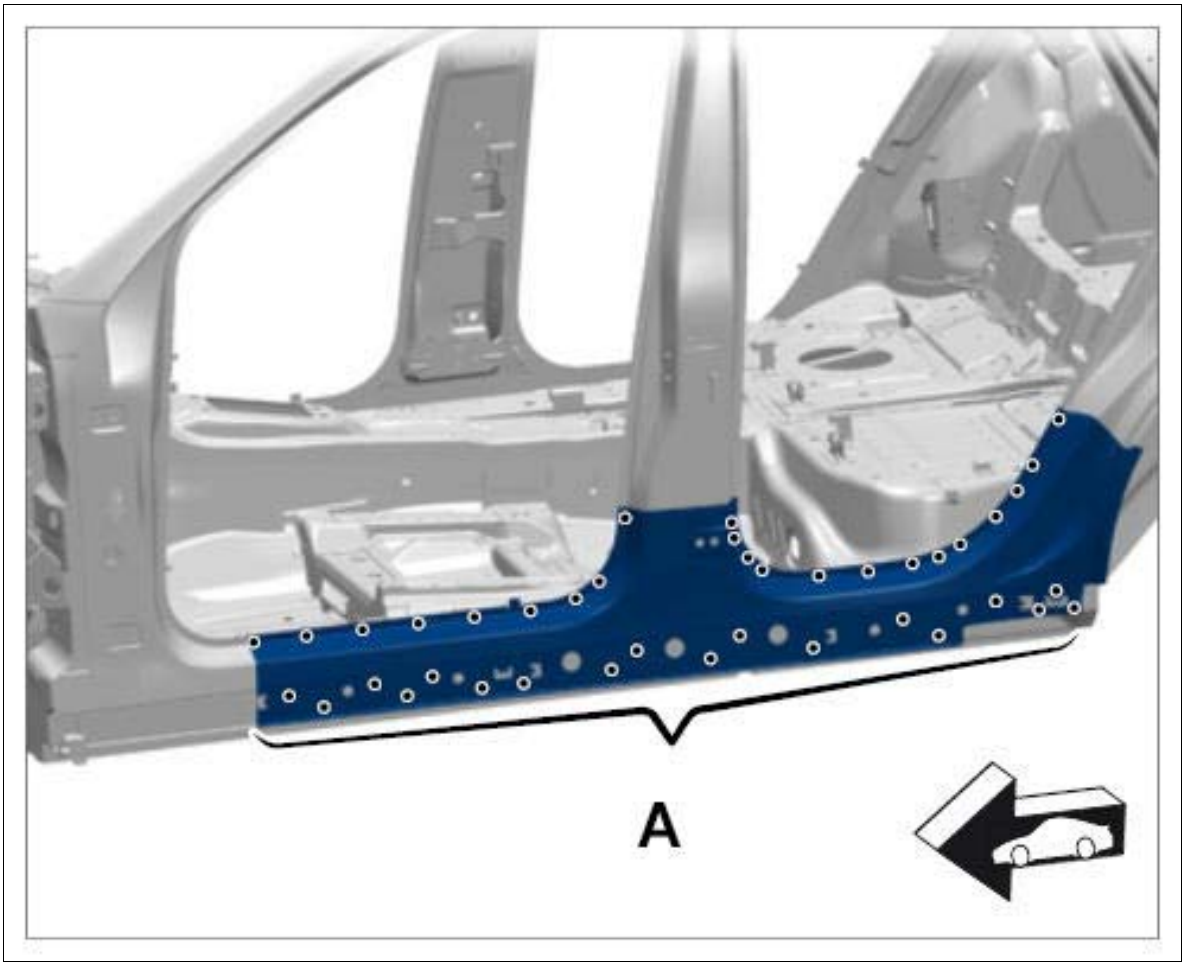

Courtesy of PORSCHE CARS NORTH AMERICA, INC.

2. Heat bonding areas.
    1. 2.1. Bend up edge of wheel arch **-A-** .
    2. 2.2. Remove center side member.

Fig 3: Identifying Side Member

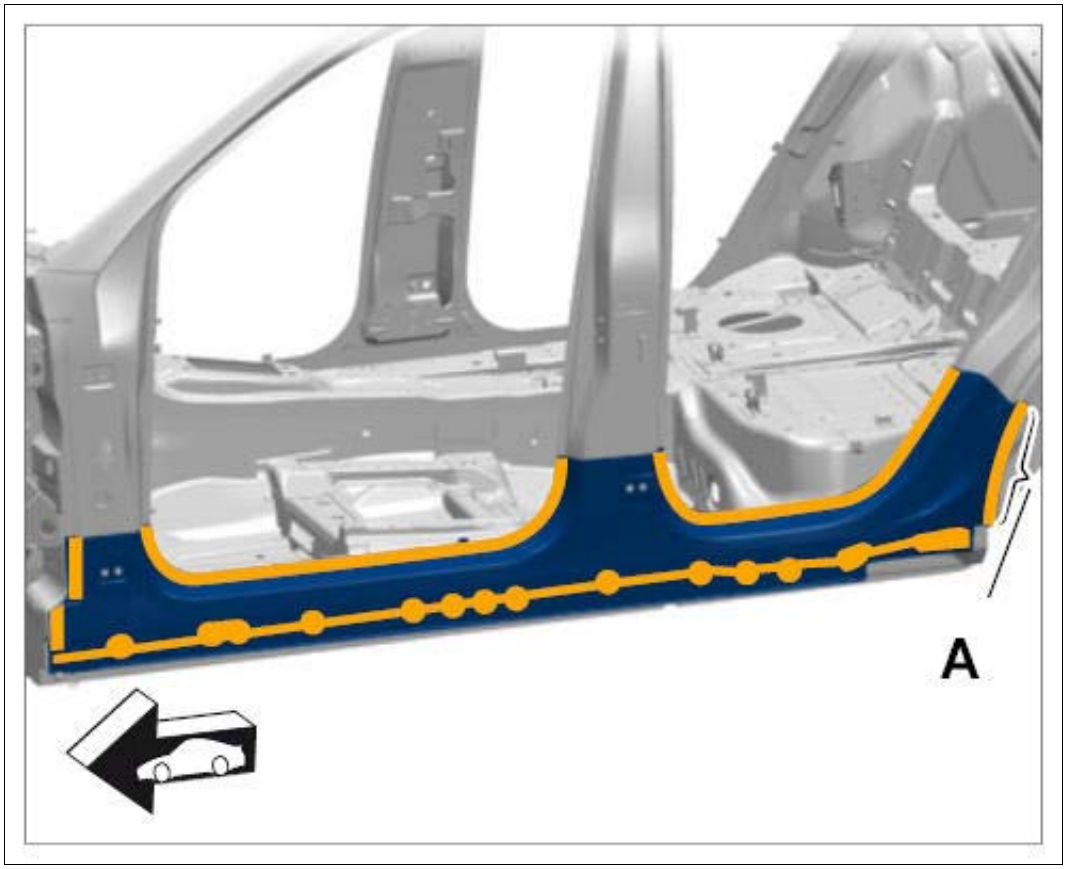

Courtesy of PORSCHE CARS NORTH AMERICA, INC.

WM 514855 REPLACING CENTRE SIDE MEMBER (ALL MODELS) > PREPARING CENTRE SIDE MEMBER FOR INSTALLATION

Information

Adhesive must not be applied to areas to be plug-welded or fully welded using inert gas.

1. Fit in center side member.
    1. 1.1. Cut center side member at the transitions to the body leaving an overlap of 30 mm.

Fig 1: Identifying Centre Side Member

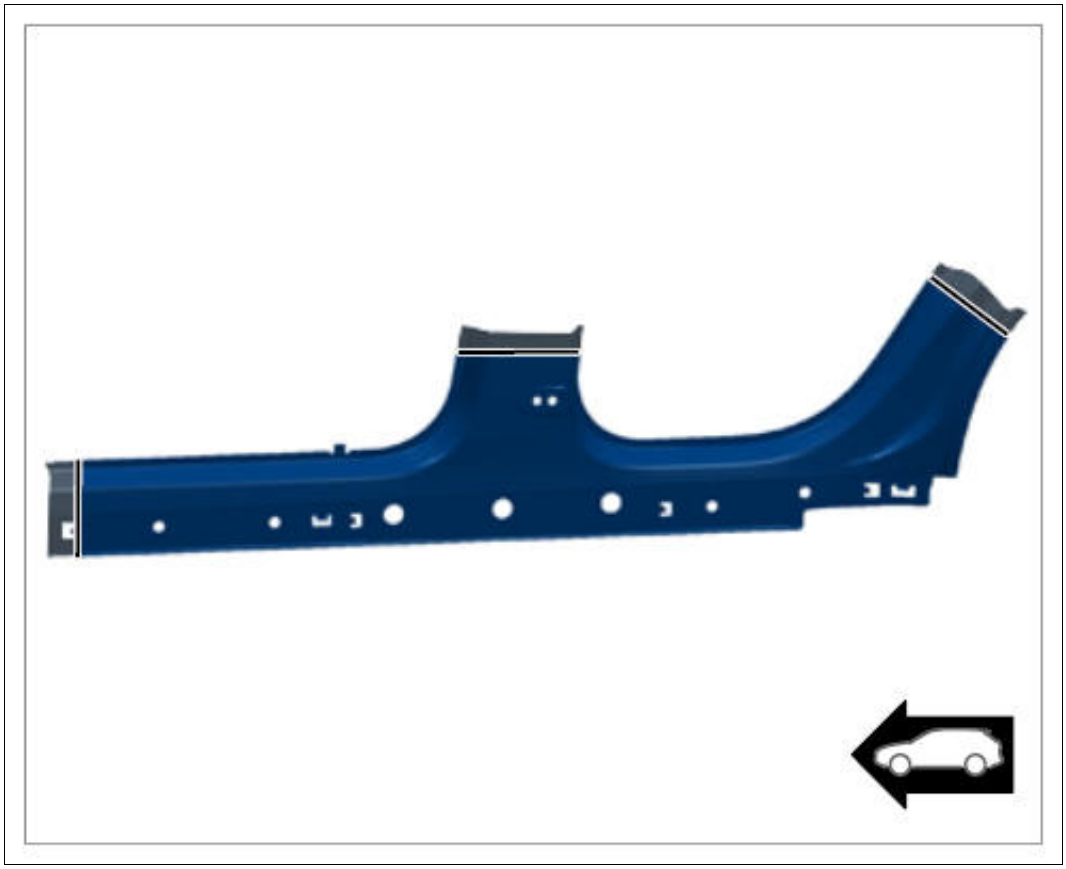

Courtesy of PORSCHE CARS NORTH AMERICA, INC.

2. Fit in center side member again.

    1. 2.1. Make cuts through the center side member and body in the overlap areas.

3. Prepare center side member for bonding and welding.

Fig 2: Identifying Centre Side Member

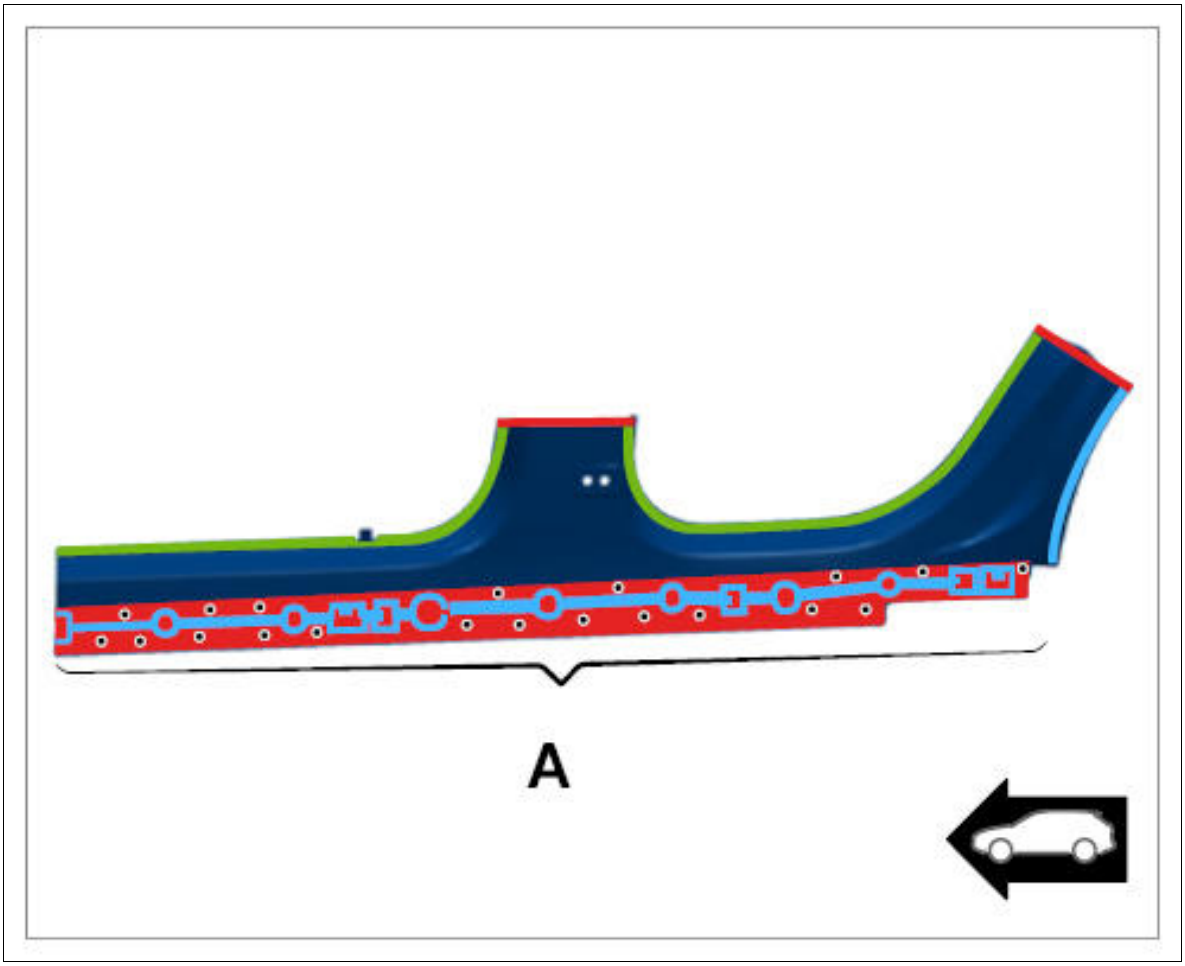

Courtesy of PORSCHE CARS NORTH AMERICA, INC.

Green	Resistance spot-welding + bonding
Blue	Bonding
Red	Resistance spot-welding/apply a full weld using inert gas without bonding

WM 514855 REPLACING CENTRE SIDE MEMBER (ALL MODELS) > PREPARING CONNECTION AREAS OF THE BODY FOR INSTALLATION

1. Align the sealing surface and connections of the body.
2. De-burr connection points and prepare them for welding.

Information

1. Before final assembly, make sure you fully understand all the work steps involved and carry out a trial assembly without applying adhesive.
2. The bonding process can only be carried out reliably when a smooth and swift sequence

of operations is guaranteed.

3. Do not begin bonding work until all materials and tools necessary for later repair work are available.

3. Prepare the marked areas for welding and bonding. → 5X00IN21 WORKING WITH BODY STRUCTURAL ADHESIVE

Fig 1: Identifying Body Connection Areas

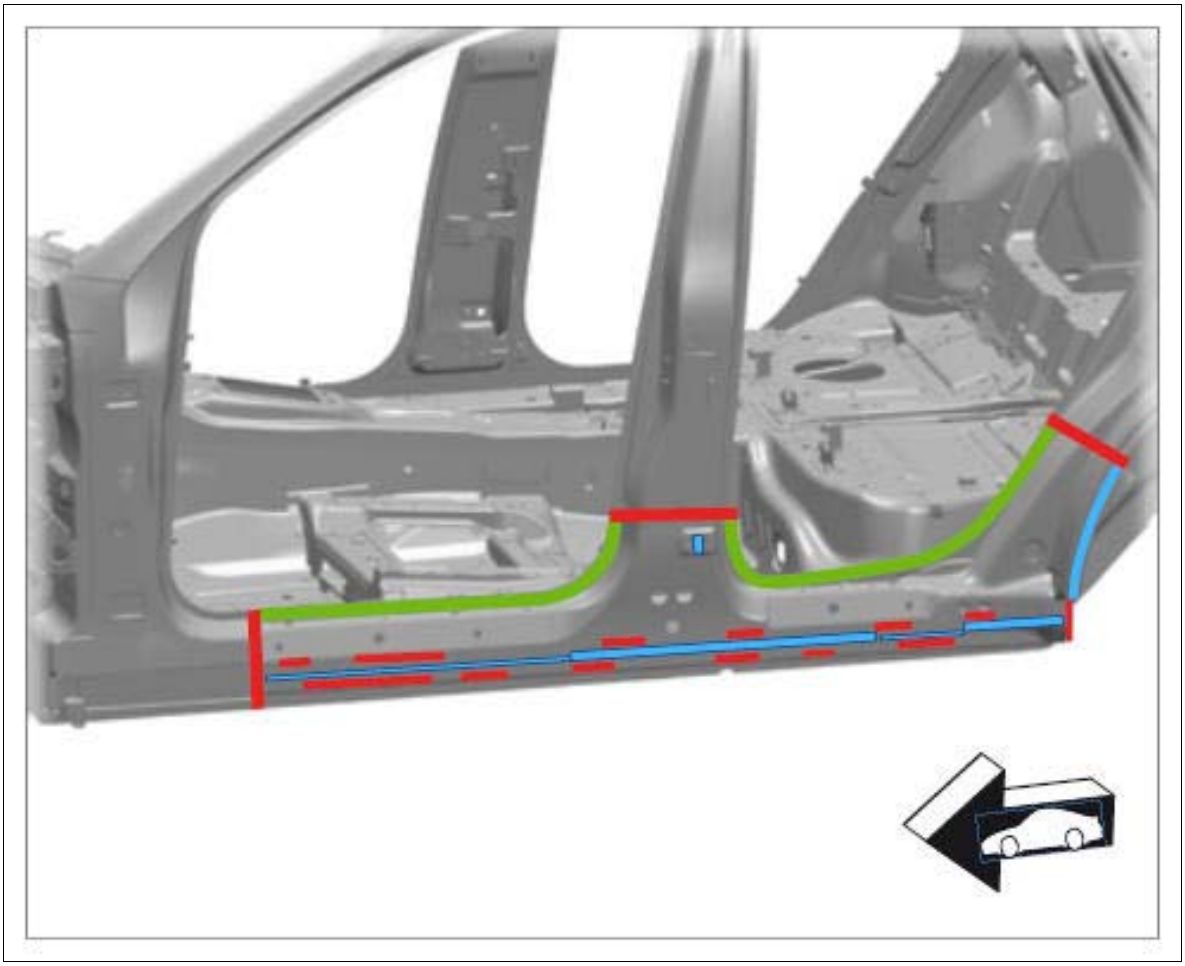

Courtesy of PORSCHE CARS NORTH AMERICA, INC.

Green	Resistance spot-welding + bonding
Blue	Bonding
Red	Resistance spot-welding/apply a full weld using inert gas without bonding

WM 514855 REPLACING CENTRE SIDE MEMBER (ALL MODELS) > INSTALLING CENTRE SIDE MEMBER

Information

- Before final assembly, make sure you fully understand all the work steps involved and carry out a

trial assembly without applying adhesive.

- The bonding process can only be carried out reliably when a smooth and swift sequence of operations is guaranteed.
- Do not begin bonding work until all materials and tools necessary for later repair work are available.

1. Install center side member and check that it fits perfectly. Check gap dimensions. → 5X00IN DIAGRAM - BODY GAP DIMENSIONS
    1. 1.1. Apply adhesive to the areas marked in yellow. → 5X00IN21 WORKING WITH STRUCTURAL BODY ADHESIVE→ **Application depth: 3.0 mm**

       Fig 1: Identifying Adhesive Applying Areas

       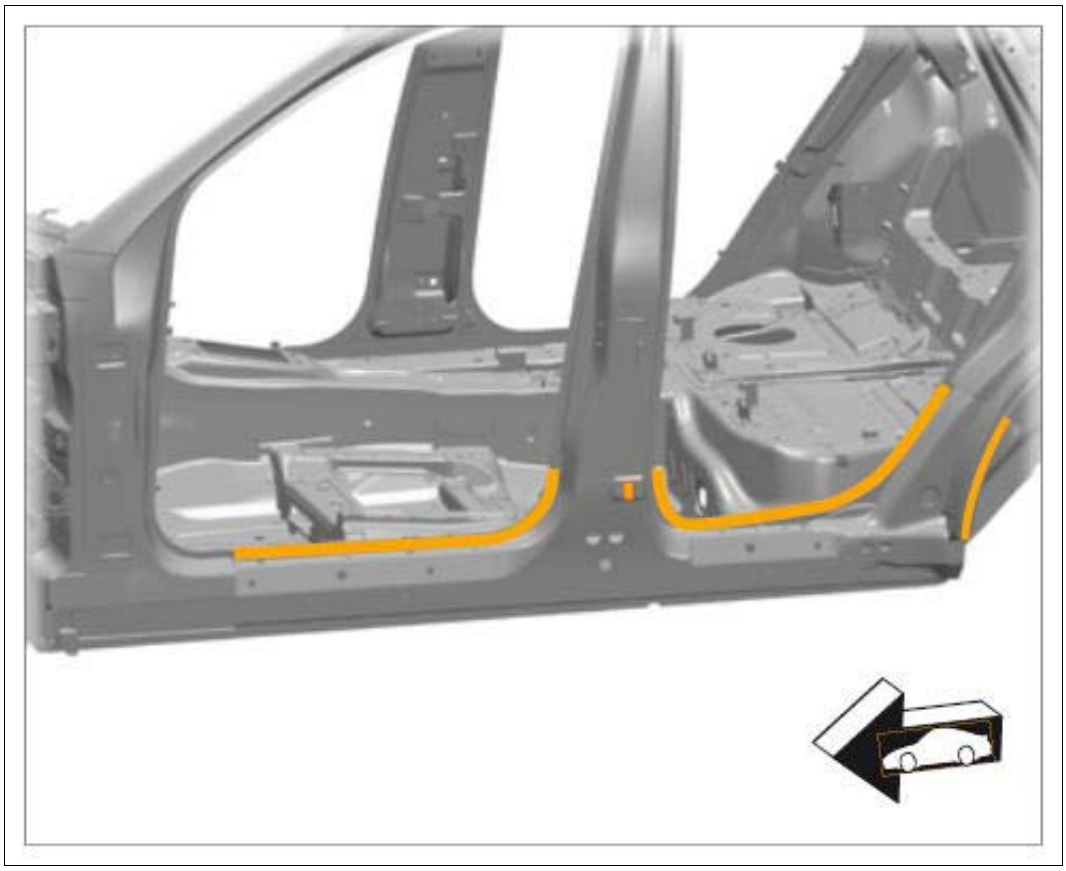

       Courtesy of PORSCHE CARS NORTH AMERICA, INC.

2. Apply adhesive to area **-A-** . Make sure that no adhesive gets onto the connection areas for resistance spot-welding.

Fig 2: Identifying Adhesive Applying Area

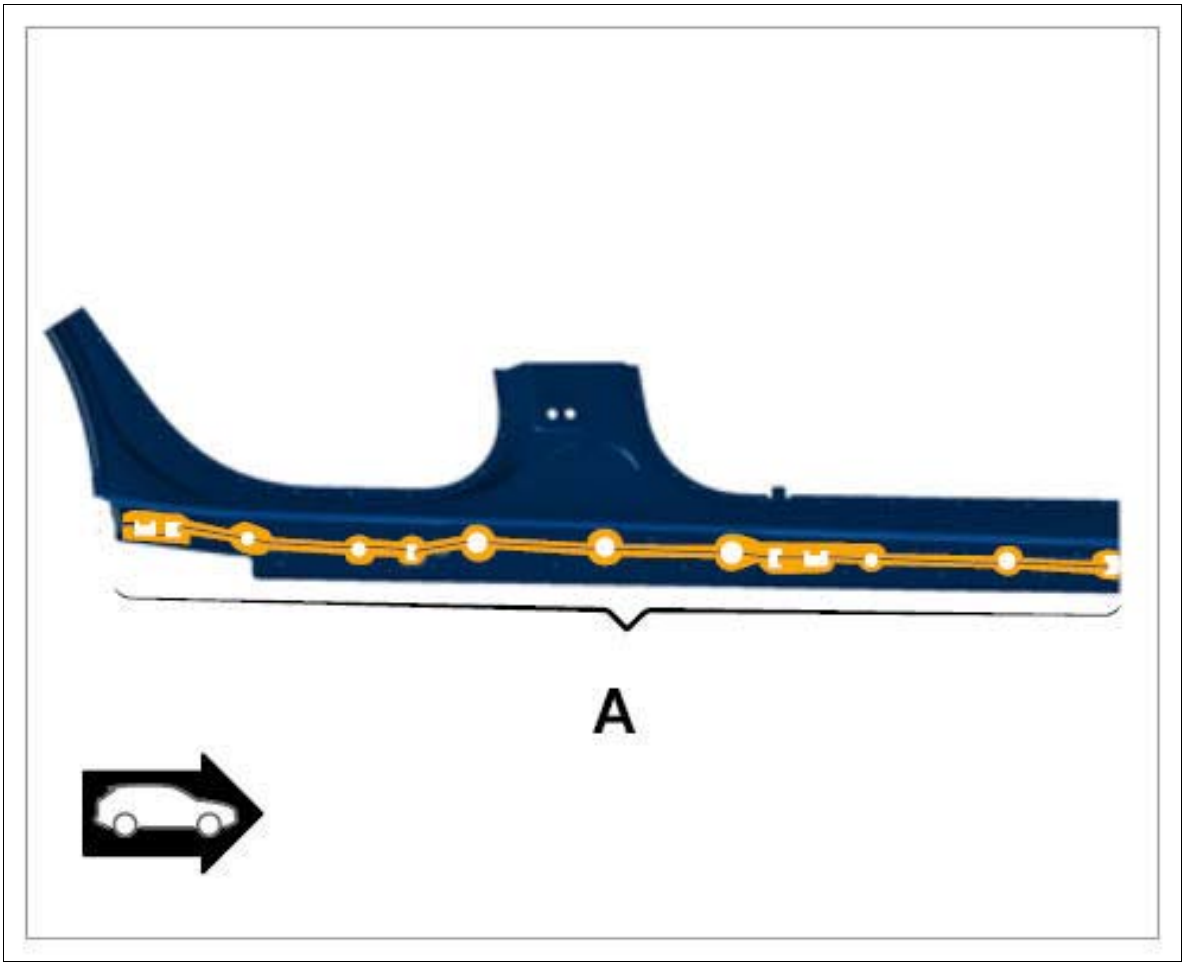

Courtesy of PORSCHE CARS NORTH AMERICA, INC.

3. Resistance spot-weld the center side member.
    1. 3.1. Resistance spot-weld area **-A-** .
    2. 3.2. Apply a full weld to the center side member using inert gas **-arrows-** .
    3. 3.3. Flange area **-B-** on the edge of the wheel arch.

Fig 3: Identifying Centre Side Member

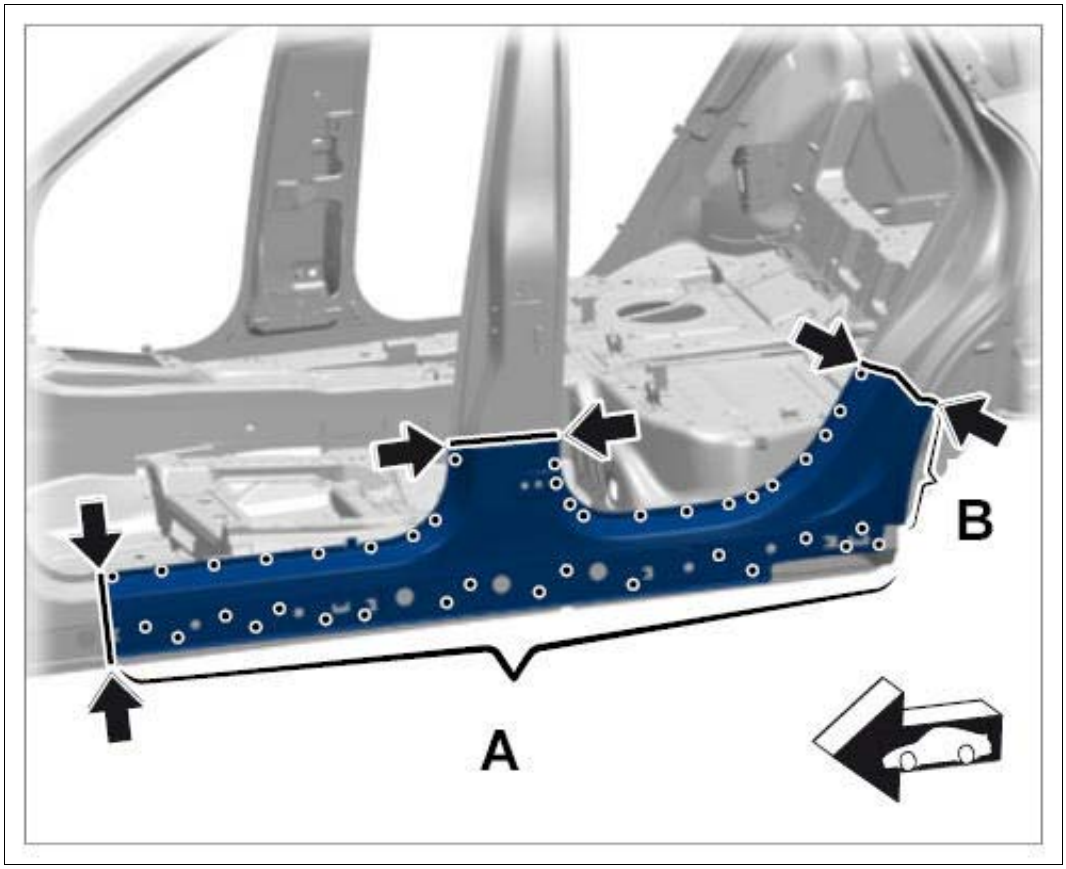

Courtesy of PORSCHE CARS NORTH AMERICA, INC.

WM 514855 REPLACING CENTRE SIDE MEMBER (ALL MODELS) > SUBSEQUENT WORK > SUBSEQUENT WORK FOR BODY REPAIRS (WITHOUT STRAIGHTENING SYSTEM)

1. Clean joint areas and sheetmetal flanges with a wire brush.
2. Prime joint areas and sheetmetal flanges with 2K primer.
3. Restore standard seal with body sealant → 5X00IN42 SEAM SEALING .

   Also seal the repair area carefully.
4. Paint repair area and adjacent surfaces, if necessary.
5. Restore standard underbody protection with underbody sealant → 5X00IN43 UNDERBODY PROTECTION .
6. Apply standard cavity preservation → 5X00IN44 CAVITY PRESERVATION . Also apply cavity preservation to the repair area.
7. Install removed accessories in the repair area.

WM 514955 REPLACING SIDE MEMBER REINFORCEMENT (ALL MODELS) > TOOLS

Designation	Type	Number	Description	
Hot-air blower	Workshop equipment	WE 1119		
Body alignment system package	Workshop equipment	WE 1121		
Special electric cutter	Workshop equipment	WE 1137		
Pneumatic Spotweld Remover, Vario Drill WS 90	Workshop equipment	WE 1139		
Hand-cartridge gun	Workshop equipment	WE 1141		
Resistance spot welder	Workshop equipment	WE 1311		
Inverter welder MIDIspot-QSVM-12000	Workshop equipment	WE 1312		
Resistance spot welder	Workshop equipment	WE 1313		
Blind riveting tool TAURUS 4	Workshop equipment	WE 1348		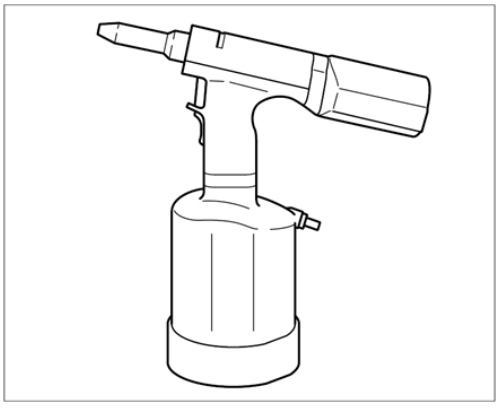
Aluminum tool set with trolley	Workshop equipment	WE 1350		
Resistance spot welder	Workshop equipment	WE 1352		
Measuring and alignment system, professional	Workshop equipment	WE 1398		

Mobile extraction unit, aluminum	Workshop equipment	WE 1507		
Body saw	Workshop equipment	WE 1508		
Star gauges for body gap dimensions	Special tool	Nr.127-1		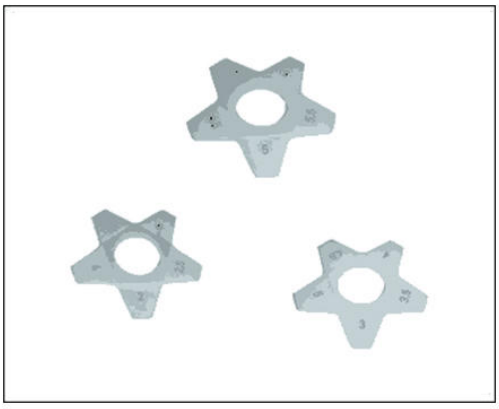
Spotweld drill	Commercially available tool	Nr.129		
Twist drill	Commercially available tool	Nr.201		

Countersink	Commercially available tool	Nr.202		

WM 514955 REPLACING SIDE MEMBER REINFORCEMENT (ALL MODELS) > TECHNICAL VALUES

Location	Description	Type	Basic value	Tolerance 1	Tolerance 2
Applying adhesive		Application depth	3.0 mm		

WM 514955 REPLACING SIDE MEMBER REINFORCEMENT (ALL MODELS) > PRELIMINARY WORK > PRELIMINARY WORK FOR BODY REPAIRS (WITH STRAIGHTENING SYSTEM)

1. Remove accessories in the repair area.
    1. 1.1. Remove accessories in the repair area according to the extent of damage on the vehicle.
2. Set up straightening bench with straightening system.
3. Set vehicle on straightening bench.
4. Cover accessories adjacent to the repair area on the vehicle.
    1. 4.1. Cover all accessories remaining on the vehicle and adjacent areas with fire-proof protective covers.
5. Reshape connection area of the sheetmetal parts to be replaced.
6. Expose joint areas.
    1. 6.1. Remove underbody protection, paint, etc. from the joint areas of the body using a hot-air gun or rotary brush.

WM 514955 REPLACING SIDE MEMBER REINFORCEMENT (ALL MODELS) >

PRELIMINARY WORK

1. Remove A-pillar reinforcement. → 511355 REPLACING A-PILLAR REINFORCEMENT
2. Remove B-pillar reinforcement. → 514255 REPLACING B-PILLAR REINFORCEMENT
3. Remove C-pillar reinforcement. → 532955 REPLACING C-PILLAR REINFORCEMENT

WM 514955 REPLACING SIDE MEMBER REINFORCEMENT (ALL MODELS) > SAFETY INSTRUCTIONS AND INFORMATION ON QUALITY

⚠ *CAUTION: Non-observance of safety instructions for body repairs*

- *Risk of damage to the vehicle*
- *Danger of injury*

→ Read the relevant safety instructions as well as general information and quality instructions → 5X00IN01 SAFETY INSTRUCTIONS .

- Protection of electrical components during body repairs.
- Corrosion protection measures during repairs → 5X00IN03 CORROSION PROTECTION MEASURES DURING REPAIRS
- Information on aluminum repairs
- Body parts of various sheet-steel strengths → 5X00IN04 BODY PARTS OF VARIOUS SHEET-STEEL STRENGTHS
- Replacing punch rivets and penetrated joints
- Setting self-tapping screws → 5X00IN24 SETTING SELF-TAPPING SCREWS
- Working with body structural adhesive → 5X00IN21 WORKING WITH BODY STRUCTURAL ADHESIVE

WM 514955 REPLACING SIDE MEMBER REINFORCEMENT (ALL MODELS) > TOOLS AND MATERIALS > TOOLS AND MATERIALS FOR BODY REPAIRS

Information

- The tools for working on steel and aluminum must always be kept separate from each other. We recommend that you color code the tools using a system similar to that used for the Aluminum tool set with trolley WE 1350, for example.

Straightening set **Body alignment system package WE 1121 Measuring and alignment system, professional WE 1398**

Resistance spot welder; optional **Inverter welder MIDIspot-QSVM-12000 WE 1312, Resistance spot welder WE 1352, Resistance spot welder WE 1311, Resistance spot welder WE 1313**

Metal inert gas (MIG) welder

Pneumatic spotweld remover **Pneumatic Spotweld Remover, Vario Drill WS 90 WE 1139**

Pneumatic body saw **Body saw WE 1508**

Oscillating body saw (special electric cutter) **Special electric cutter WE 1137**

Hot-air blower **Hot-air blower WE 1119**

Hand-cartridge gun **Hand-cartridge gun WE 1141**

Spotweld drill **Spotweld drill Twist drill Nr.201**

Countersink for rivets **Countersink Nr.202**

Blind riveting tool for high-strength rivets **Blind riveting tool TAURUS 4 WE 1348**

Safety vacuum cleaner for aluminum dust **Mobile extraction unit, aluminum WE 1507**

Star gauges for body gap dimensions Nr.127-1

Wurth Klebt und Dichtet body sealant

WM 514955 REPLACING SIDE MEMBER REINFORCEMENT (ALL MODELS) > REMOVING SIDE MEMBER REINFORCEMENT

Fig 1: Identifying Side Member Reinforcement Installation Position

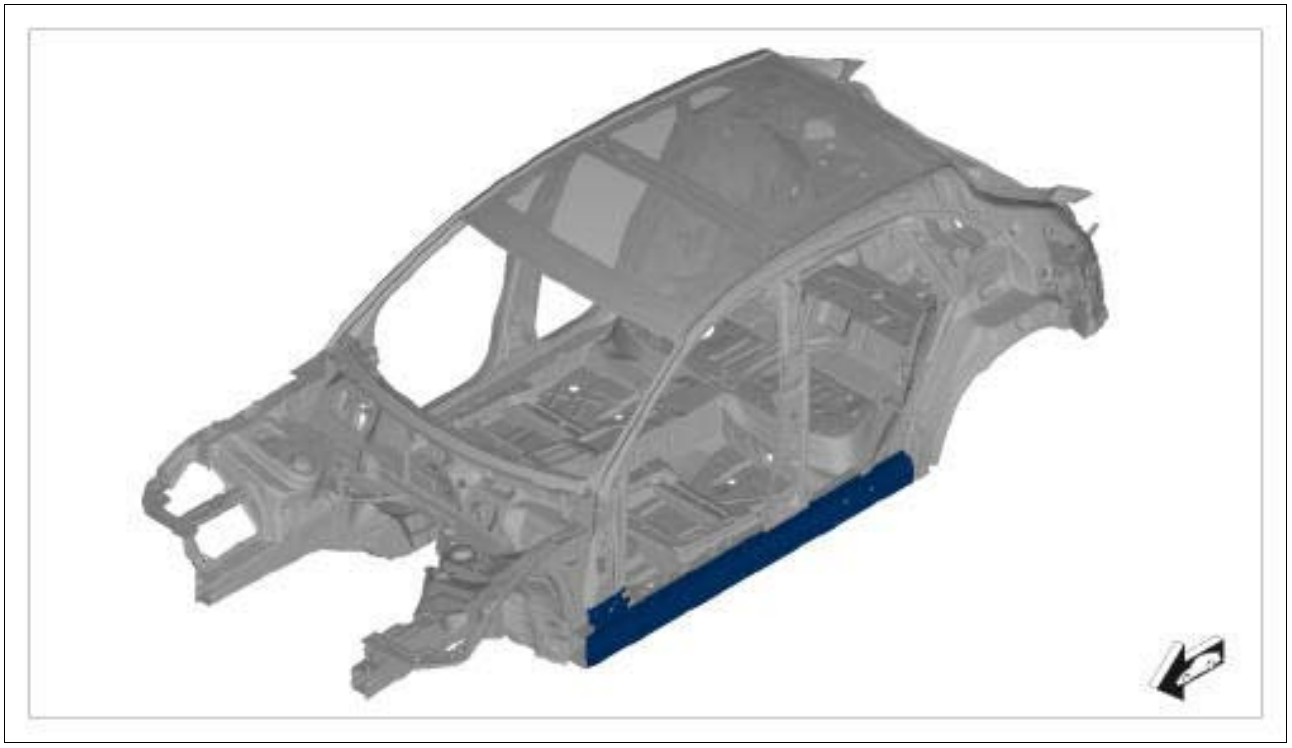

Courtesy of PORSCHE CARS NORTH AMERICA, INC.

1. Remove side member reinforcement.

   Information

   Drill out the connection point on one side only. Do not damage the plate underneath.

   1. 1.1. Drill out **spotwelds using spotweld drill** .

      Fig 2: Identifying Side Member Reinforcement

      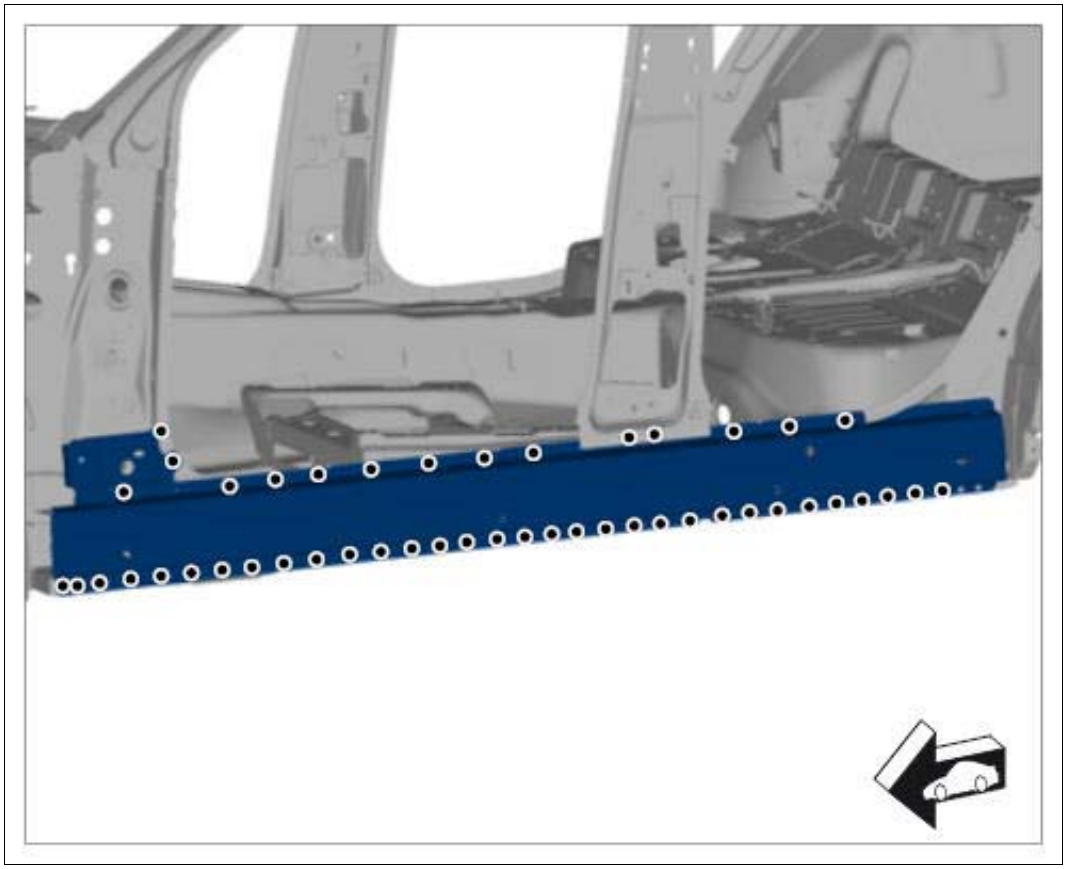

      Courtesy of PORSCHE CARS NORTH AMERICA, INC.

2. Heat bonding areas.

   1. 2.1. Pull down side member reinforcement in the inner B-pillar area **-arrow A-** and remove it **-arrows a-** .

Fig 3: Identifying Side Member Reinforcement

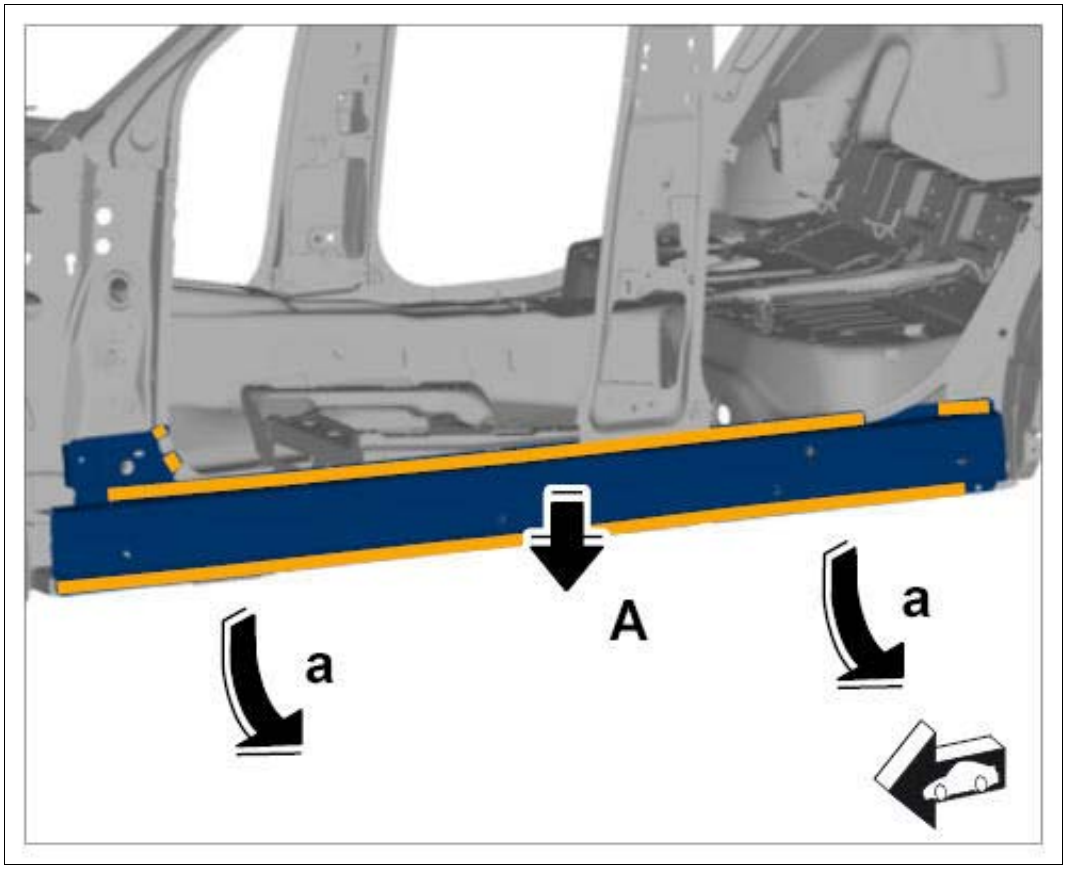

Courtesy of PORSCHE CARS NORTH AMERICA, INC.

WM 514955 REPLACING SIDE MEMBER REINFORCEMENT (ALL MODELS) > PREPARING SIDE MEMBER REINFORCEMENT FOR INSTALLATION

1. Fit in side member reinforcement.
2. Prepare side member reinforcement for bonding and welding.

Fig 1: Identifying Side Member Reinforcement

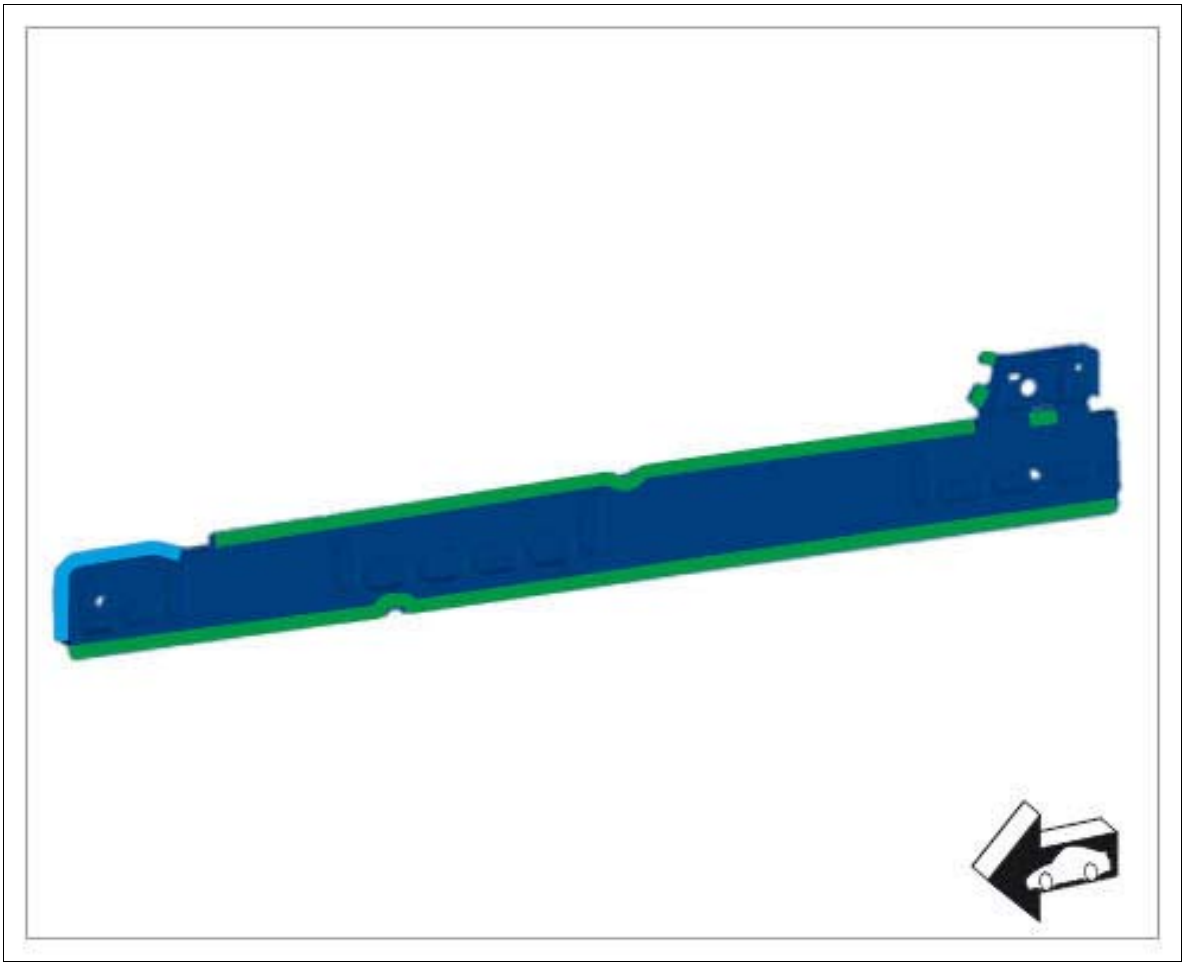

Courtesy of PORSCHE CARS NORTH AMERICA, INC.

Green	Resistance spot-welding + bonding
Blue	Bonding

WM 514955 REPLACING SIDE MEMBER REINFORCEMENT (ALL MODELS) > PREPARING CONNECTION AREAS OF THE BODY

1. Align the sealing surface and connections of the body.
2. De-burr connection points and prepare them for welding.

Information

1. Before final assembly, make sure you fully understand all the work steps involved and carry out a trial assembly without applying adhesive.
2. The bonding process can only be carried out reliably when a smooth and swift sequence of operations is guaranteed.
3. Do not begin bonding work until all materials and tools necessary for later repair work are

available.

3. Prepare the marked areas for welding and bonding. → 5X00IN21 WORKING WITH BODY STRUCTURAL ADHESIVE

Fig 1: Identifying Body Connection Areas

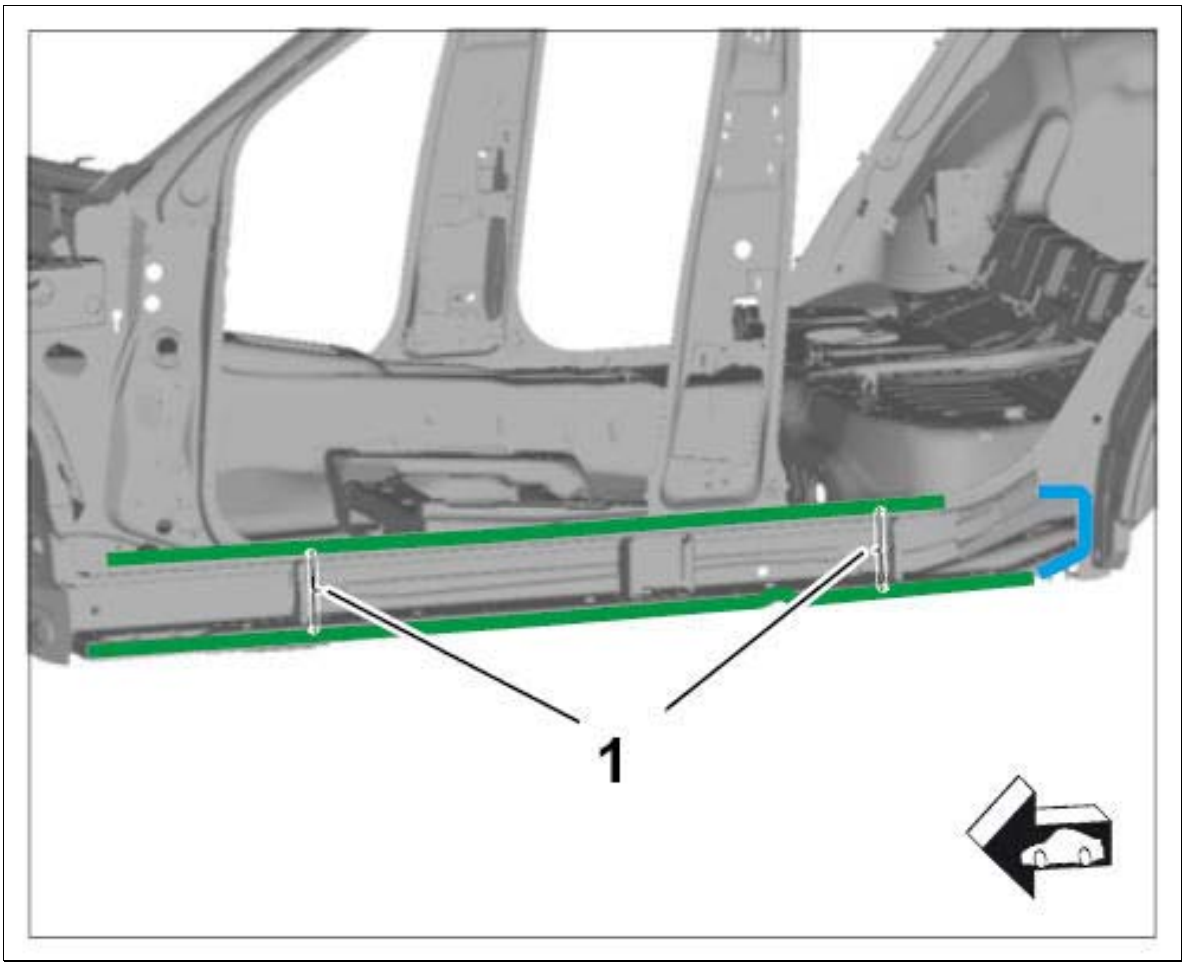

Courtesy of PORSCHE CARS NORTH AMERICA, INC.

Green	Resistance spot-welding + bonding
Blue	Bonding

WM 514955 REPLACING SIDE MEMBER REINFORCEMENT (ALL MODELS) > INSTALLING SIDE MEMBER REINFORCEMENT

Information

- Before final assembly, make sure you fully understand all the work steps involved and carry out a trial assembly without applying adhesive.
- The bonding process can only be carried out reliably when a smooth and swift sequence of operations is guaranteed.
- Do not begin bonding work until all materials and tools necessary for later repair work are

available.

1. Install side member reinforcement and check that it fits perfectly. Check gap dimensions. → 5X00IN DIAGRAM - BODY GAP DIMENSIONS

    1. 1.1. Apply adhesive to the areas marked in yellow. → 5X00IN21 WORKING WITH BODY STRUCTURAL ADHESIVE→ **Application depth: 3.0 mm**

2. Bond in molded parts **-1-** .

3. Apply foam filler. → 5X00IN22 WORKING WITH BODY FOAM FILLER

   Make sure that all openings and gaps are closed off with the sealing compound.

   Fig 1: Identifying Adhesive Applying Area

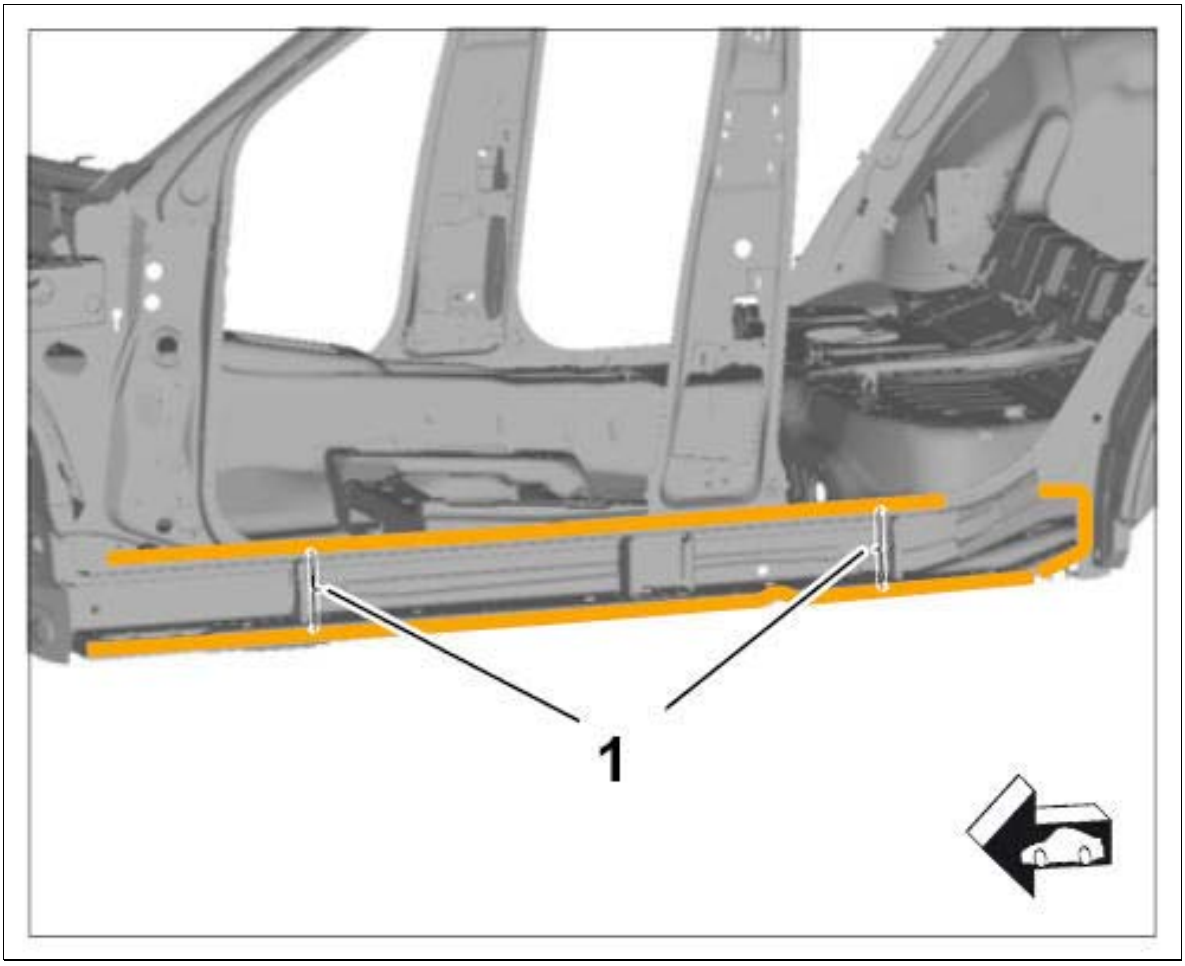

Courtesy of PORSCHE CARS NORTH AMERICA, INC.

4. Install side member reinforcement.

    1. 4.1. Guide in side member reinforcement from below **-arrows a-** and push it under the inner B-pillar **-arrow A-** .

Fig 2: Identifying Side Member Reinforcement

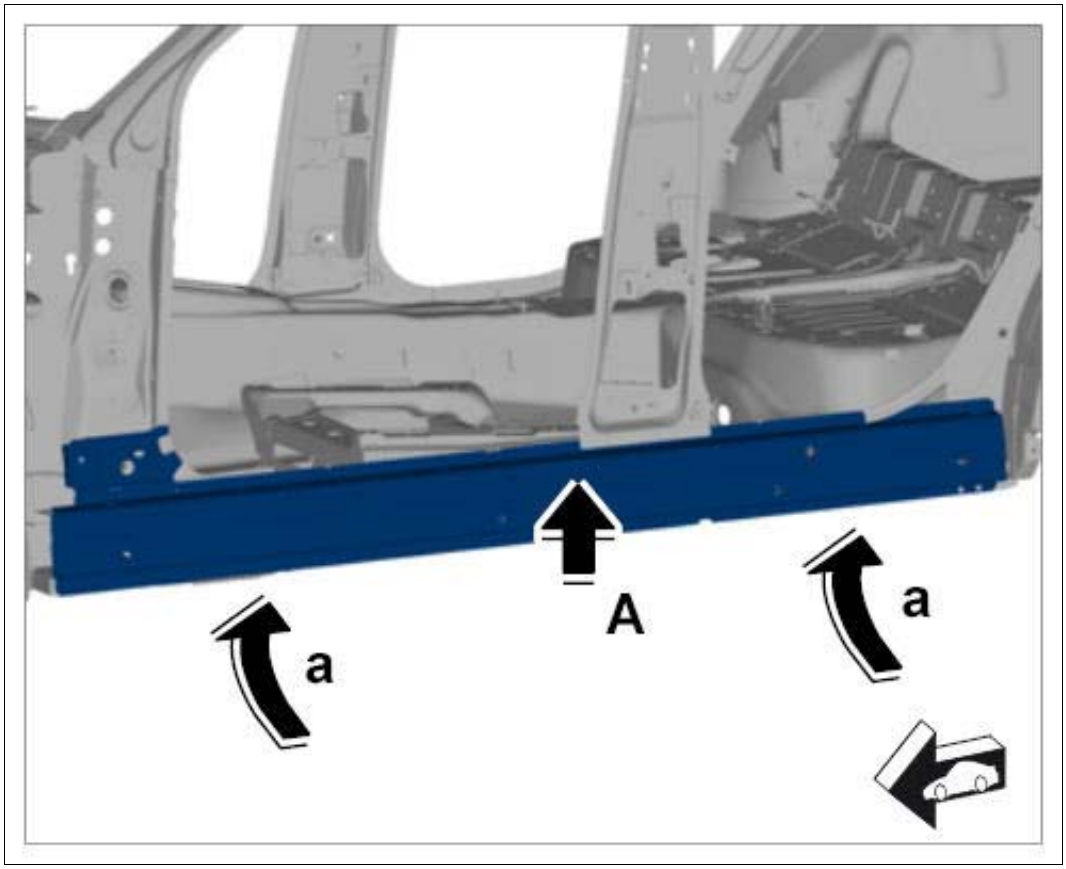

Courtesy of PORSCHE CARS NORTH AMERICA, INC.

5. Resistance spot-weld the side member reinforcement.

Fig 3: Identifying Side Member Reinforcement

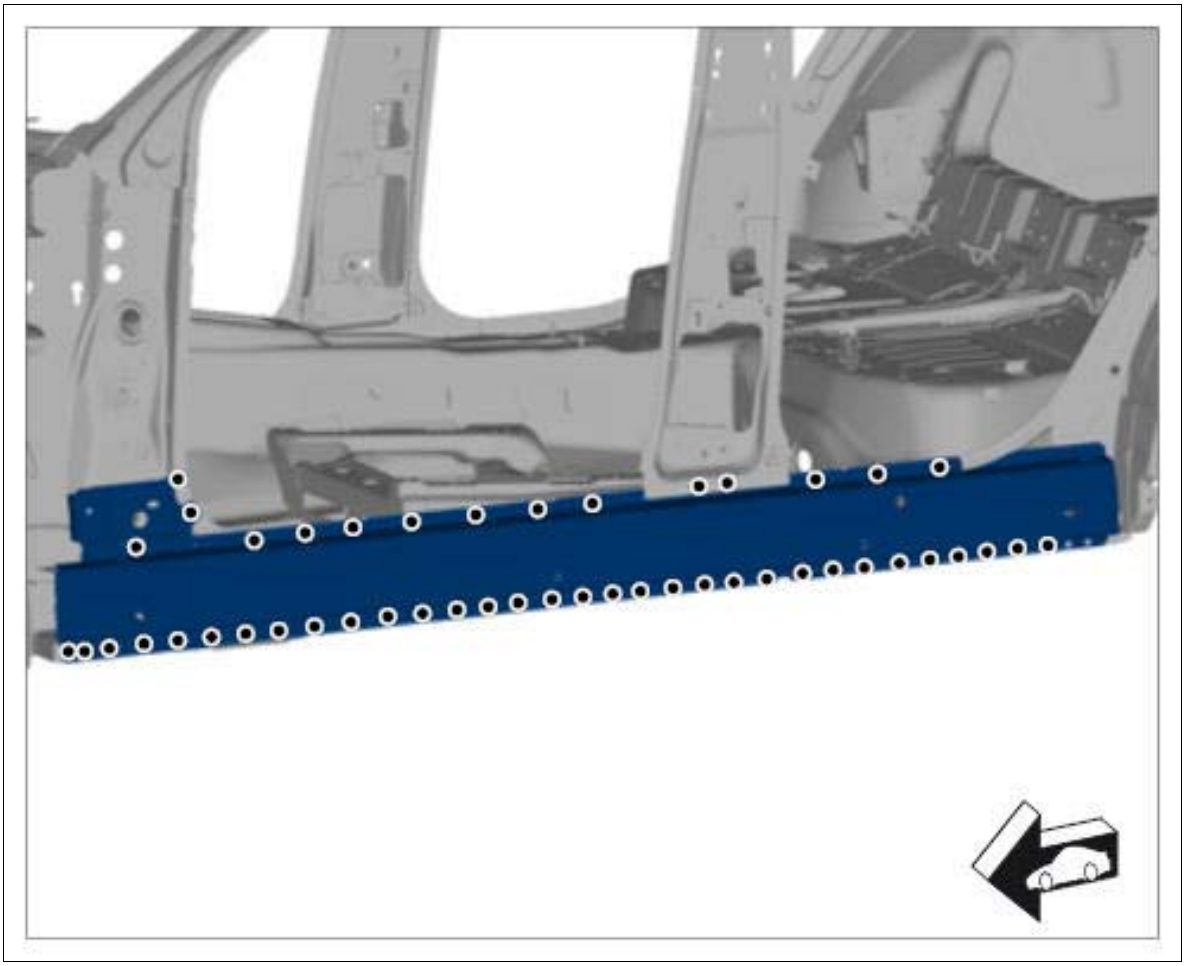

Courtesy of PORSCHE CARS NORTH AMERICA, INC.

WM 514955 REPLACING SIDE MEMBER REINFORCEMENT (ALL MODELS) > SUBSEQUENT WORK

1. Install A-pillar reinforcement. → 511355 REPLACING A-PILLAR REINFORCEMENT
2. Install B-pillar reinforcement. → 514255 REPLACING B-PILLAR REINFORCEMENT
3. Install C-pillar reinforcement. → 532955 REPLACING C-PILLAR REINFORCEMENT

WM 514955 REPLACING SIDE MEMBER REINFORCEMENT (ALL MODELS) > SUBSEQUENT WORK > SUBSEQUENT WORK FOR BODY REPAIRS

1. Release and remove vehicle from the straightening system.
2. Clean joint areas and sheetmetal flanges with a wire brush.
3. Prime joint areas and sheetmetal flanges with 2K primer.

4. Restore standard seal with body sealant → 5X00IN42 SEAM SEALING .

   Also seal the repair area carefully.

5. Paint repair area and adjacent surfaces, if necessary.

6. Restore standard underbody protection with underbody sealant → 5X00IN43 UNDERBODY PROTECTION .

7. Apply standard cavity preservation → 5X00IN44 CAVITY PRESERVATION . Also carefully apply cavity preservation to the repair area.

8. Install removed accessories in the repair area.

WM 516819 REMOVING AND INSTALLING DASHBOARD SUPPORT (ALL MODELS) > TECHNICAL VALUES

Location	Description	Type	Basic value	Tolerance 1	Tolerance 2
Bracket to cardan tunnel	Fastening screw	Tightening torque	20 Nm (15 ftlb.)		
Bracket to A-pillar	Fastening screw	Tightening torque	20 Nm (15 ftlb.)		
Bracket to A-pillar	Fastening nut	Tightening torque	20 Nm (15 ftlb.)		
Bracket to body	Fastening screw	Tightening torque	20 Nm (15 ftlb.)		
Air guide to bracket		Tightening torque	1.5 Nm (1 ftlb.)		
Support to bracket		Tightening torque	9 Nm (6.5 ftlb.)		

WM 516819 REMOVING AND INSTALLING DASHBOARD SUPPORT (ALL MODELS) > PRELIMINARY WORK

1. Remove dashboard. → 701819 REMOVING AND INSTALLING DASHBOARD

2. Remove center console trims. → 681419 REMOVING AND INSTALLING CENTRE CONSOLE TRIM

3. Remove steering column. → 481519 REMOVING AND INSTALLING STEERING COLUMN

4. Remove passenger's airbag unit. → 695919 REMOVING AND INSTALLING PASSENGER'S AIRBAG UNIT

WM 516819 REMOVING AND INSTALLING DASHBOARD SUPPORT (ALL MODELS) > REMOVING DASHBOARD SUPPORT

Information

- The number of fastening screws, fixing clips, plug connections, holders and trim panels can vary depending on equipment.
- The illustrations for removing and installing the drive mechanism are shown only on one equipment variant and may differ from the actual equipment variant.
- Some steps must be carried out automatically.
- Some of the repair illustrations show only one side of the vehicle.

1. Cover center console with protective mat.
2. Remove Kessy antenna on dashboard with the bracket. → 966719 REMOVING AND INSTALLING KESSY ANTENNA
3. Unclip air guide **-1-** at the air conditioner and remove it.
4. Unclip air guide **-2-** at the air conditioner and remove it.
5. Unclip electric line **-3-** at bracket for passenger's airbag unit and remove bracket **-4-** .
6. Unscrew fastening screw **-5-** for the right air guide at the support.

Fig 1: Identifying Air Guides

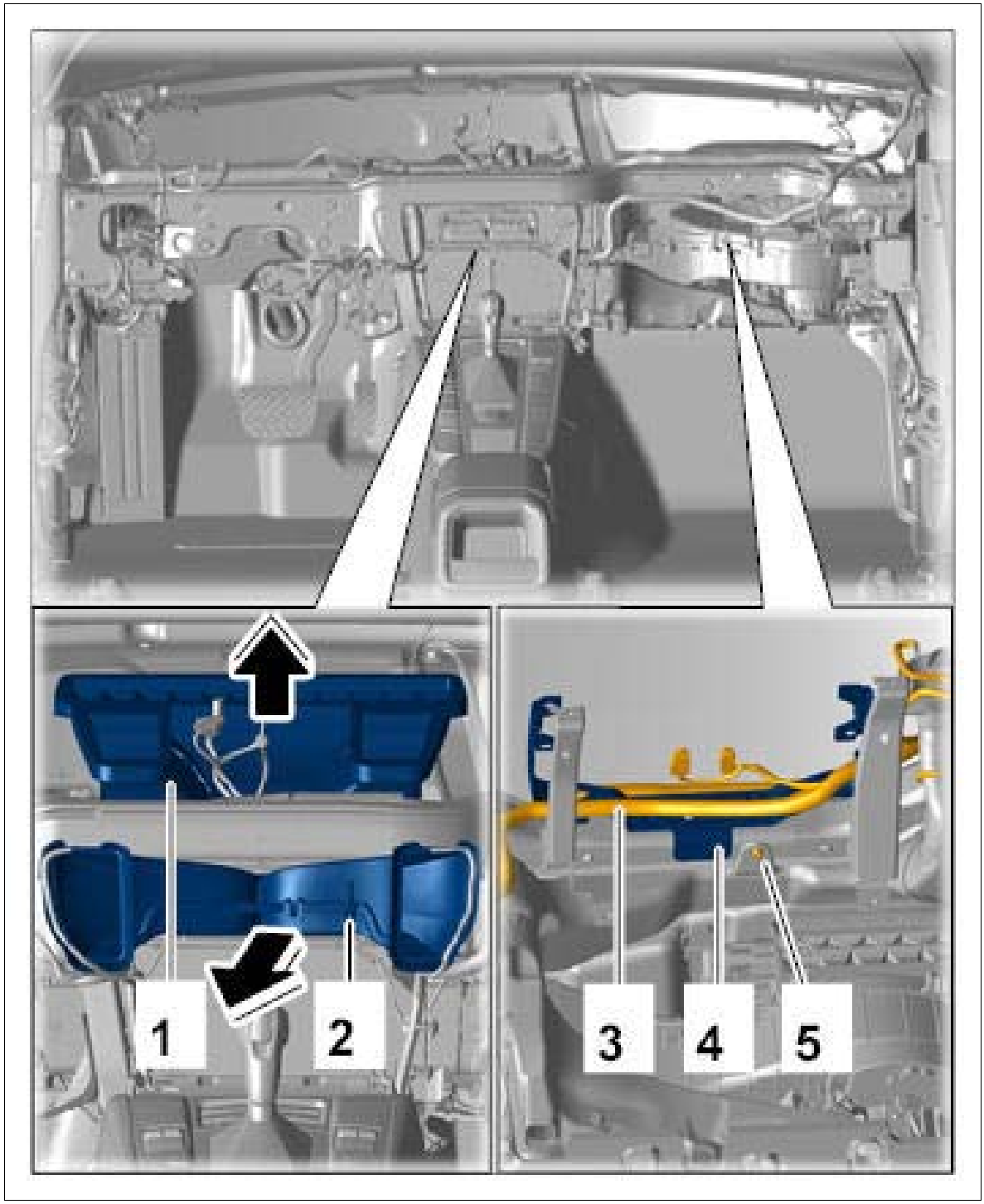

Courtesy of PORSCHE CARS NORTH AMERICA, INC.

7. Unscrew fastening screws **-1-** on the support.
8. Unscrew fastening screws **-2-** and remove holder **-3-** .

Fig 2: Identifying Dashboard Support Brackets

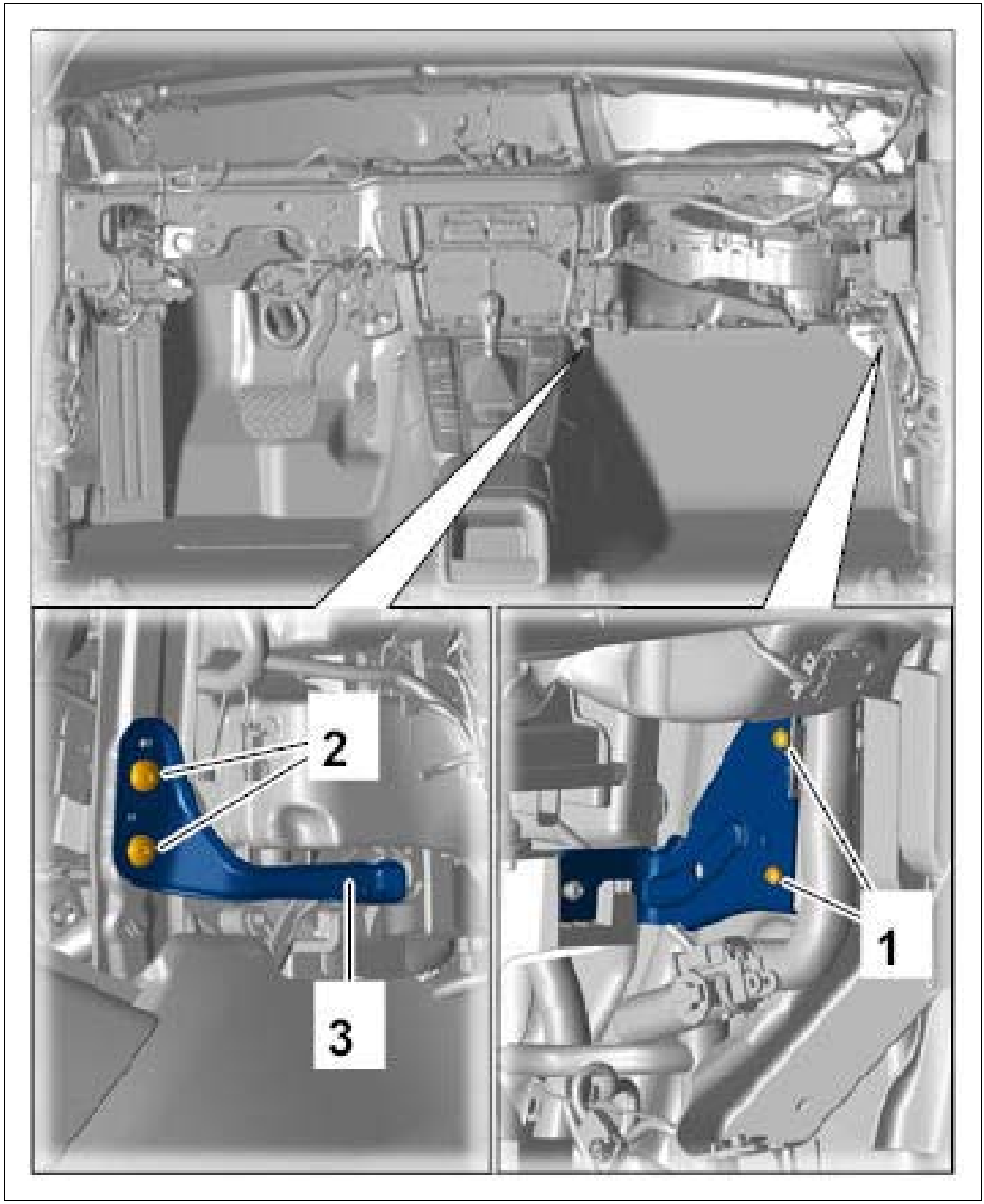

Courtesy of PORSCHE CARS NORTH AMERICA, INC.

9. Unscrew fastening screws **-1, 2, 3-** on the air conditioner.

Fig 3: Identifying Air Conditioning Unit

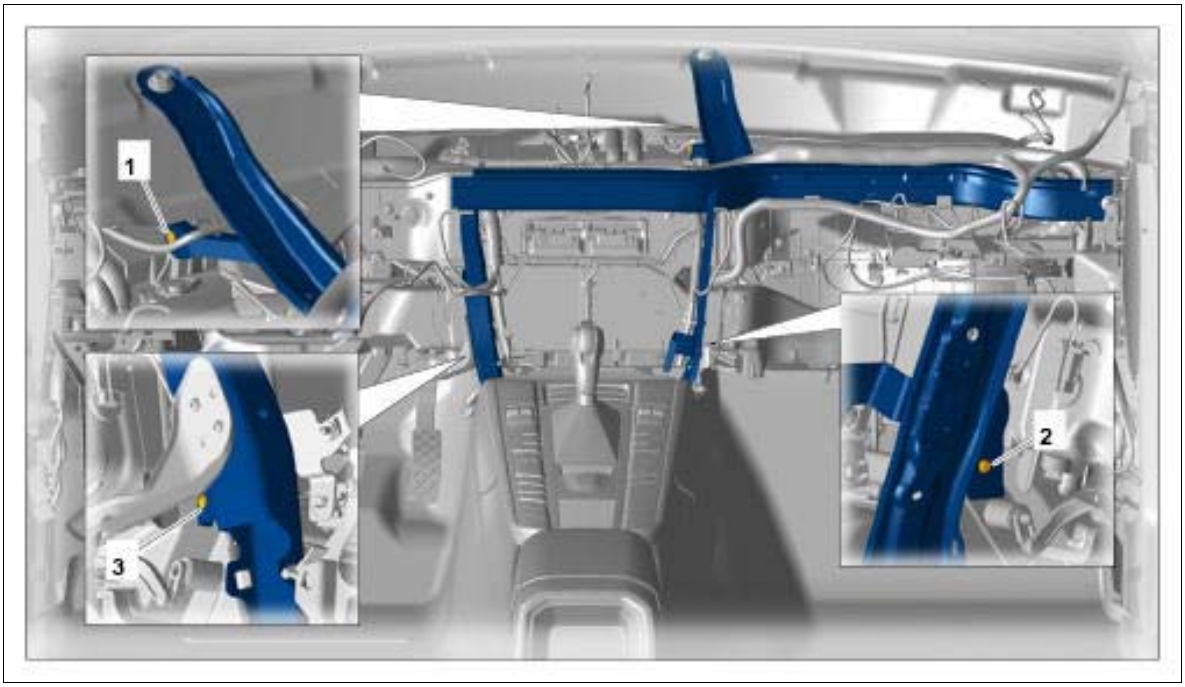

Courtesy of PORSCHE CARS NORTH AMERICA, INC.

10. Carry out all steps required for loosening the dashboard wire harness from the support. → WM 970819 REMOVING AND INSTALLING WIRE HARNESS FOR DASHBOARD
11. Unscrew fastening screws **-1-** .
12. Unscrew fastening screw **-2-** .
13. Unscrew fastening nuts **-3-** .
14. Unscrew fastening screw **-4-** .

Fig 4: Identifying Dashboard Support Screws And Nuts

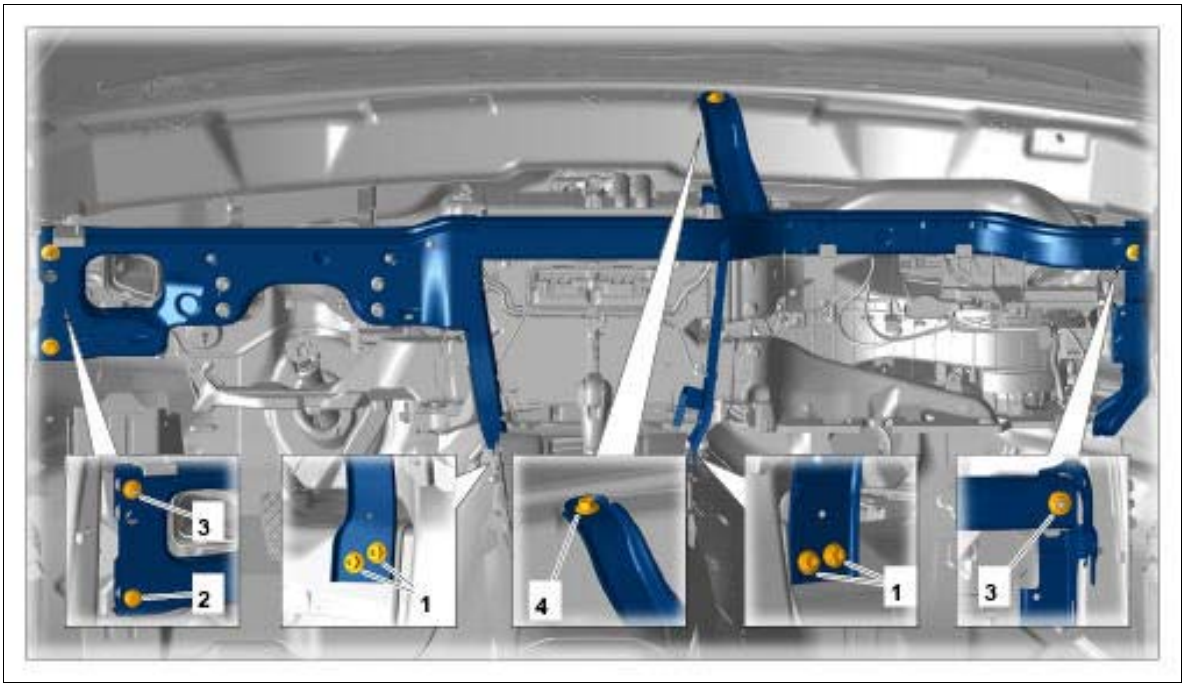

Courtesy of PORSCHE CARS NORTH AMERICA, INC.

The help of another person is required for steps 15 to 18.

15. Press air conditioner **-1-** in direction of arrow **-arrow-** using a suitable tool and guide retaining lug **-2-** out of the bracket **-3-** .
16. Carefully pull support **-4-** forward until the support **-4-** is removed fully at the studs **-5-** .
17. Pad the strut **-6-** with foam to prevent damage to the windscreen.
18. Carefully lift up the support **-4-** and remove it.

Fig 5: Identifying Dashboard Support

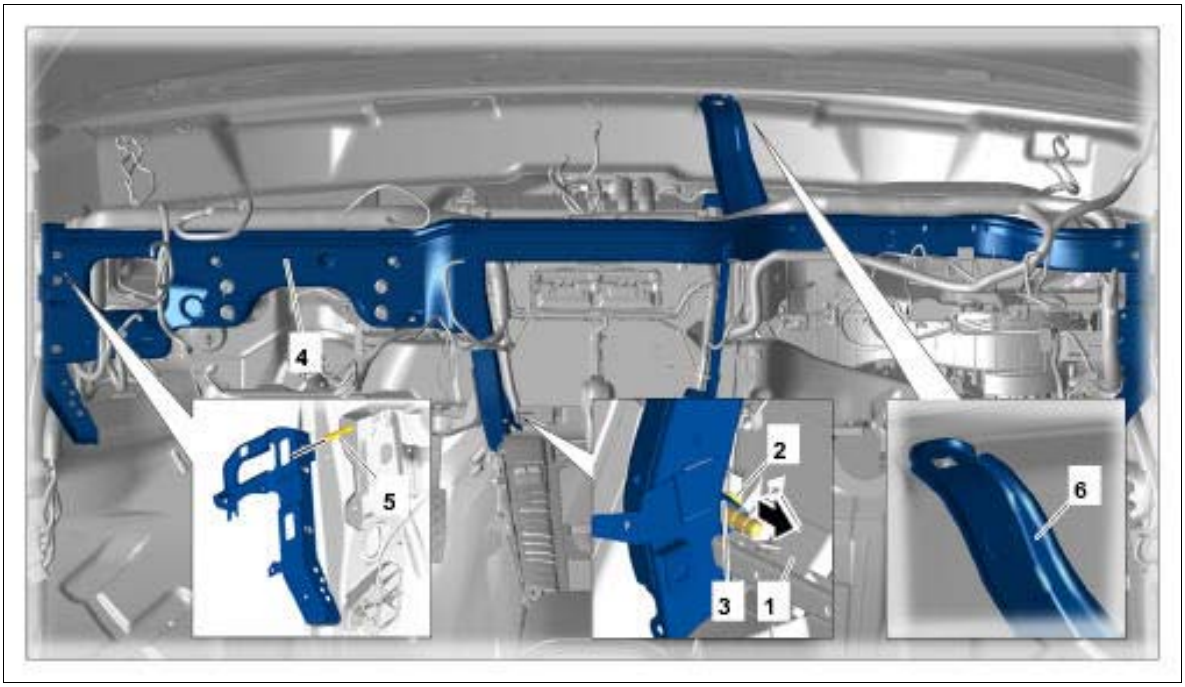

Courtesy of PORSCHE CARS NORTH AMERICA, INC.

WM 516819 REMOVING AND INSTALLING DASHBOARD SUPPORT (ALL MODELS) > INSTALLING DASHBOARD SUPPORT

Information

Check that all fixing clips are positioned fully and correctly.

Check that the fixing clips are not bent or broken.

Replace damaged or missing clips with new ones.

Installation is performed in reverse order. Pay particular attention to the following:

1. When installing the support, check that the lines -1, 2- are routed correctly.

Fig 1: Installing Dashboard Support



Courtesy of PORSCHE CARS NORTH AMERICA, INC.

2. Tighten fastening nuts on the support at the A-pillar to the specified torque. **Tightening torque 20 Nm (15 ftlb.)**
3. Tighten fastening screw on the support at the A-pillar to the specified torque. **Tightening torque 20 Nm (15 ftlb.)**
4. Tighten fastening screws securing support to cardan tunnel to the specified torque. **Tightening torque 20 Nm (15 ftlb.)**
5. Tighten fastening screw securing support to body to the specified torque. **Tightening torque 20 Nm (15 ftlb.)**
6. Tighten fastening screws securing support to air conditioner to the specified torque.
7. Tighten fastening screws securing brackets to support to the specified torque. **Tightening torque 9 Nm (6.5 ftlb.)**
8. Tighten fastening screw securing air guide to support to the specified torque. **Tightening torque 1.5 Nm (1 ftlb.)**

WM 516819 REMOVING AND INSTALLING DASHBOARD SUPPORT (ALL MODELS) > SUBSEQUENT WORK

1. Install passenger's airbag unit. → 695919 REMOVING AND INSTALLING PASSENGER'S AIRBAG UNIT
2. Install steering column. → 481519 REMOVING AND INSTALLING STEERING COLUMN

3. Install center console trims. → 681419 REMOVING AND INSTALLING CENTRE CONSOLE TRIM
4. Install dashboard. → 701819 REMOVING AND INSTALLING DASHBOARD

WM 518941 REPAIRING THREADED BUSH FOR CHASSIS SUBFRAME MOUNT (ALL MODELS) > INSTALLING REPAIR THREADED BUSH

Information not available at this time (9-2-2015).

WM 519219 REMOVING AND INSTALLING COVER FOR FRONT UNDERBODY (ALL MODELS) > TOOLS

Designation	Type	Number	Description	
Torque screwdriver	Commercially available tool	Nr.89 Pos.5		

WM 519219 REMOVING AND INSTALLING COVER FOR FRONT UNDERBODY (ALL MODELS) > TECHNICAL VALUES

Location	Description	Type	Basic value	Tolerance 1	Tolerance 2
Wheel housing liner to body	Screw	Tightening torque	2 Nm (1.5 ftlb.)		
Cover on front underbody	Fastening screw	Tightening torque	2.5 Nm (2 ftlb.)		

WM 519219 REMOVING AND INSTALLING COVER FOR FRONT UNDERBODY (ALL MODELS) > PRELIMINARY WORK

1. Raise the vehicle. → 4X00IN LIFTING THE VEHICLE

WM 519219 REMOVING AND INSTALLING COVER FOR FRONT UNDERBODY (ALL MODELS) > REMOVING COVER FOR FRONT UNDERBODY > REMOVING CENTRAL COVER FOR FRONT UNDERBODY

NOTE: Irritant substances and materials

- *Itching*
- *Skin irritation*

→ Wear personal protective gear.

Information

- The number of fastening screws, fixing clips, plug connections, holders and trim panels can vary depending on equipment.
- The illustrations for removing and installing the drive mechanism are shown only on one equipment variant and may differ from the actual equipment variant.
- Some steps must be carried out automatically.
- Some of the repair illustrations show only one side of the vehicle.

1. Release expansion rivets **-3-** and remove them.
2. Unscrew fastening screws **-2-** and remove central cover at the front **-1-** .

Fig 1: Identifying Front Underbody Central Cover And Screws

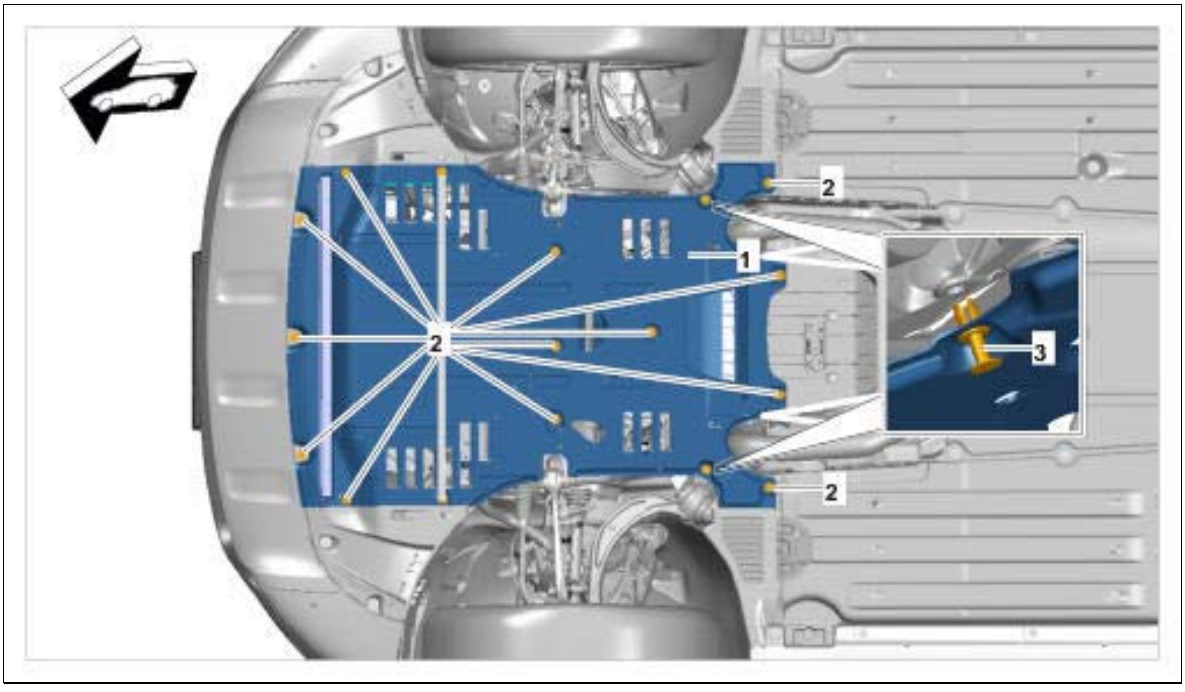

Courtesy of PORSCHE CARS NORTH AMERICA, INC.

WM 519219 REMOVING AND INSTALLING COVER FOR FRONT UNDERBODY (ALL MODELS) > REMOVING COVER FOR FRONT UNDERBODY > REMOVING SIDE COVER FOR FRONT UNDERBODY

1. Press release **-arrow-** and disconnect hose for headlight ventilation **-3-** .
2. Unscrew fastening screws **-2-** and remove side cover at the front **-1-** .

Fig 1: Identifying Front Underbody Side Cover

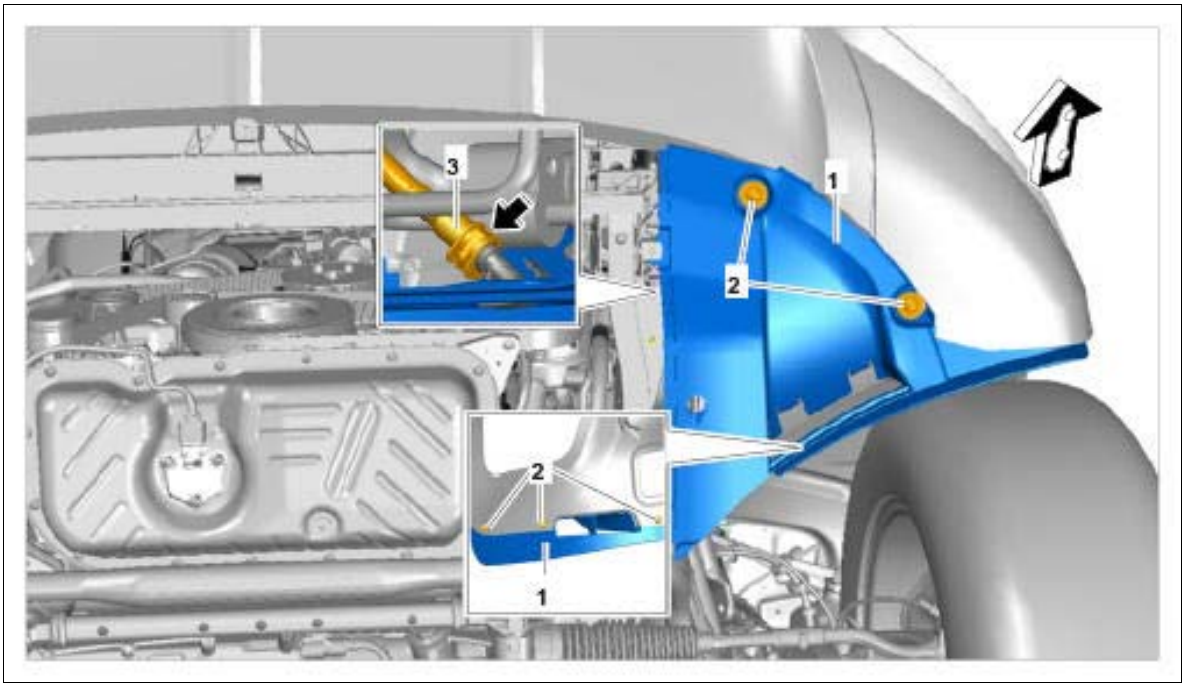

Courtesy of PORSCHE CARS NORTH AMERICA, INC.

WM 519219 REMOVING AND INSTALLING COVER FOR FRONT UNDERBODY (ALL MODELS) > INSTALLING COVER FOR FRONT UNDERBODY

Installation is performed in reverse order. Pay particular attention to the following:

1. Tighten fastening screws for front underbody to **Tightening torque 2.5 Nm (2 ftlb.)** until secure. **Torque screwdriver Nr.89 Pos.5**
2. Tighten fastening screws securing wheel housing liner to underbody panelling to **Tightening torque 2 Nm (1.5 ftlb.)** until secure.

WM 519219 REMOVING AND INSTALLING COVER FOR FRONT UNDERBODY (ALL MODELS) > SUBSEQUENT WORK

1. Lower the vehicle. → 4X00IN LIFTING THE VEHICLE

2. **On vehicles with Lane Change Assist, the control unit must be calibrated.**

WM 519319 REMOVING AND INSTALLING COVER FOR CENTRE UNDERBODY (ALL MODELS) > TOOLS

Designation	Type	Number	Description	
Torque screwdriver	Commercially available tool	Nr.89 Pos.5		

WM 519319 REMOVING AND INSTALLING COVER FOR CENTRE UNDERBODY (ALL MODELS) > TECHNICAL VALUES

Location	Description	Type	Basic value	Tolerance 1	Tolerance 2
Cover on center underbody	Fastening screw	Tightening torque	2.5 Nm (2 ftlb.)		
Cover on transmission cross member	Fastening screw	Tightening torque	3.5 Nm (2.5 ftlb.)		
Cover on center underbody	Fastening nut	Tightening torque	2.5 Nm (2 ftlb.)		

WM 519319 REMOVING AND INSTALLING COVER FOR CENTRE UNDERBODY (ALL MODELS) > PRELIMINARY WORK

1. Raise the vehicle. → 4X00IN LIFTING THE VEHICLE

WM 519319 REMOVING AND INSTALLING COVER FOR CENTRE UNDERBODY (ALL MODELS) > REMOVING COVER FOR CENTRE UNDERBODY > REMOVING CENTRAL COVER FOR CENTRE UNDERBODY

NOTE: Irritant substances and materials

- *Itching*
- *Skin irritation*

→ Wear personal protective gear.

Information

- The number of fastening screws, fixing clips, plug connections, holders and trim panels can vary depending on equipment.
- The illustrations for removing and installing the drive mechanism are shown only on one equipment variant and may differ from the actual equipment variant.
- Some steps must be carried out automatically.
- Some of the repair illustrations show only one side of the vehicle.

1. Unscrew fastening screws **-1-** and remove central cover at the center **-2-** .

Fig 1: Identifying Centre Underbody Central Cover And Screws

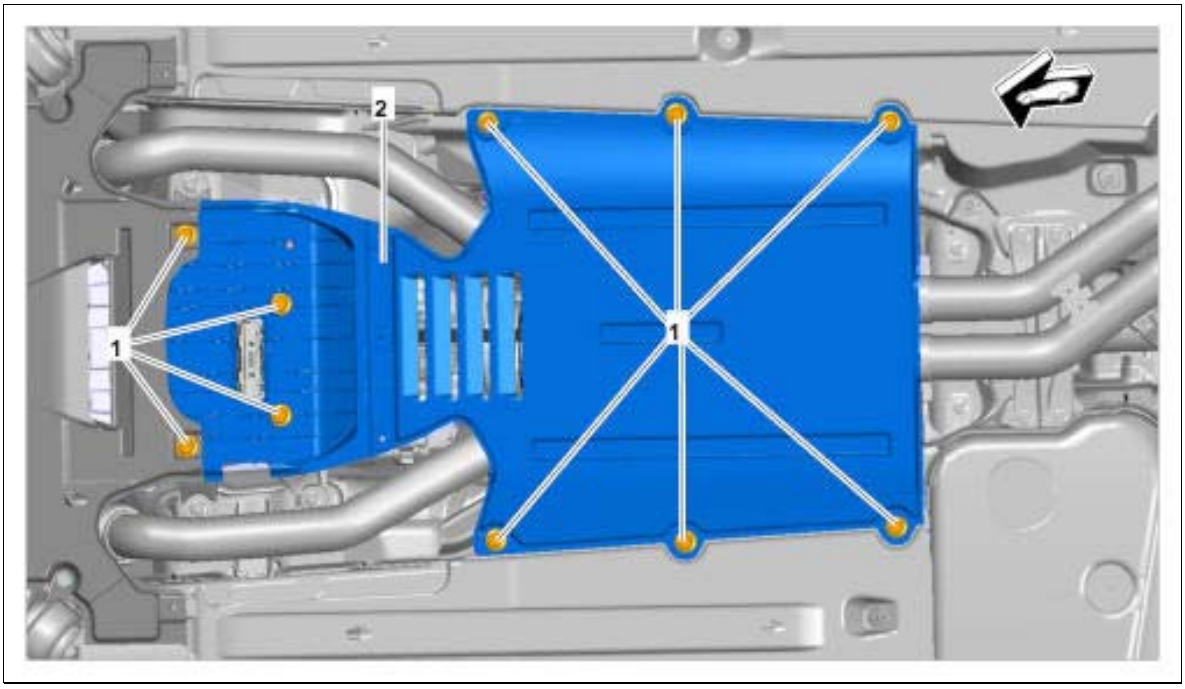

Courtesy of PORSCHE CARS NORTH AMERICA, INC.

WM 519319 REMOVING AND INSTALLING COVER FOR CENTRE UNDERBODY (ALL MODELS) > REMOVING COVER FOR CENTRE UNDERBODY > REMOVING RIGHT SIDE COVER FOR CENTRE UNDERBODY

NOTE: Irritant substances and materials

- *Itching*
- *Skin irritation*

→ Wear personal protective gear.

1. Unscrew fastening nuts **-1-** and remove heat shield **-5-** (only fitted on vehicles with petrol engine).
2. Unscrew fastening screws **-4-** and remove side cover at the front **-2-** .
3. Unclip side cover at the rear **-3-** from the underbody and remove it.

Fig 1: Identifying Centre Underbody Right Side Cover

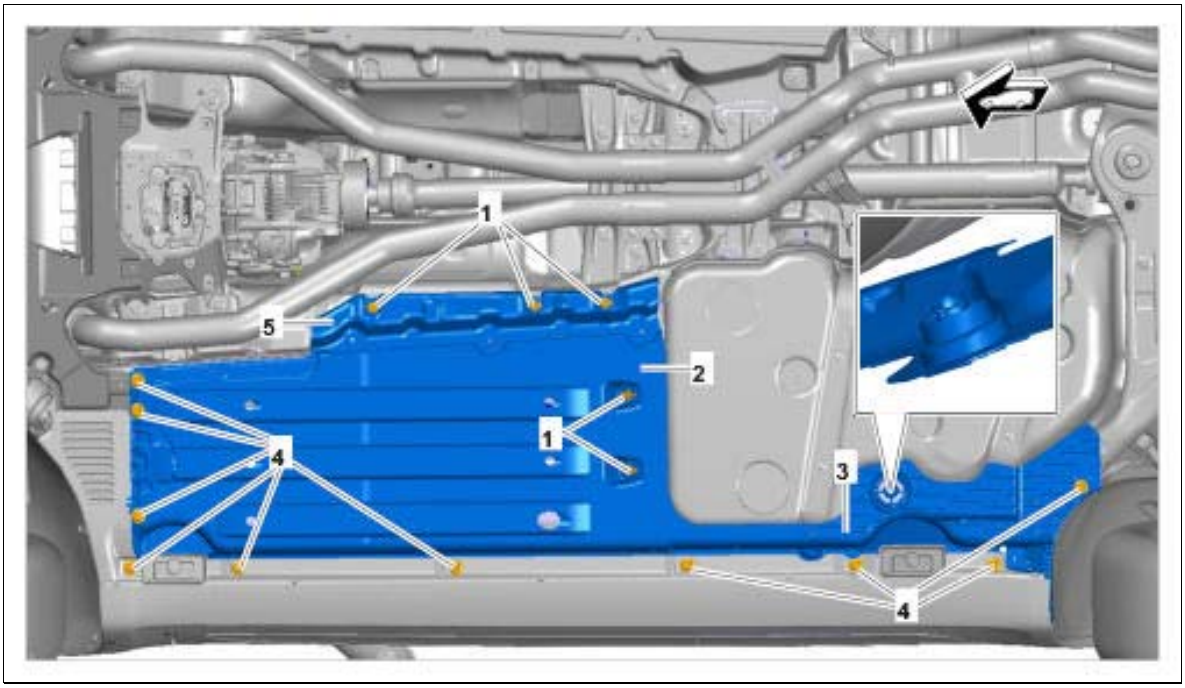

Courtesy of PORSCHE CARS NORTH AMERICA, INC.

WM 519319 REMOVING AND INSTALLING COVER FOR CENTRE UNDERBODY (ALL MODELS) > REMOVING COVER FOR CENTRE UNDERBODY > REMOVING LEFT SIDE COVER FOR CENTRE UNDERBODY

NOTE: Irritant substances and materials

- *Itching*
- *Skin irritation*

→ Wear personal protective gear.

1. Unscrew fastening nuts **-3-** and remove heat shield **-4-** (only fitted on vehicles with petrol engine).
2. Unscrew fastening screws **-1-** and remove side cover **-2-** .

Fig 1: Identifying Centre Underbody Left Side Cover

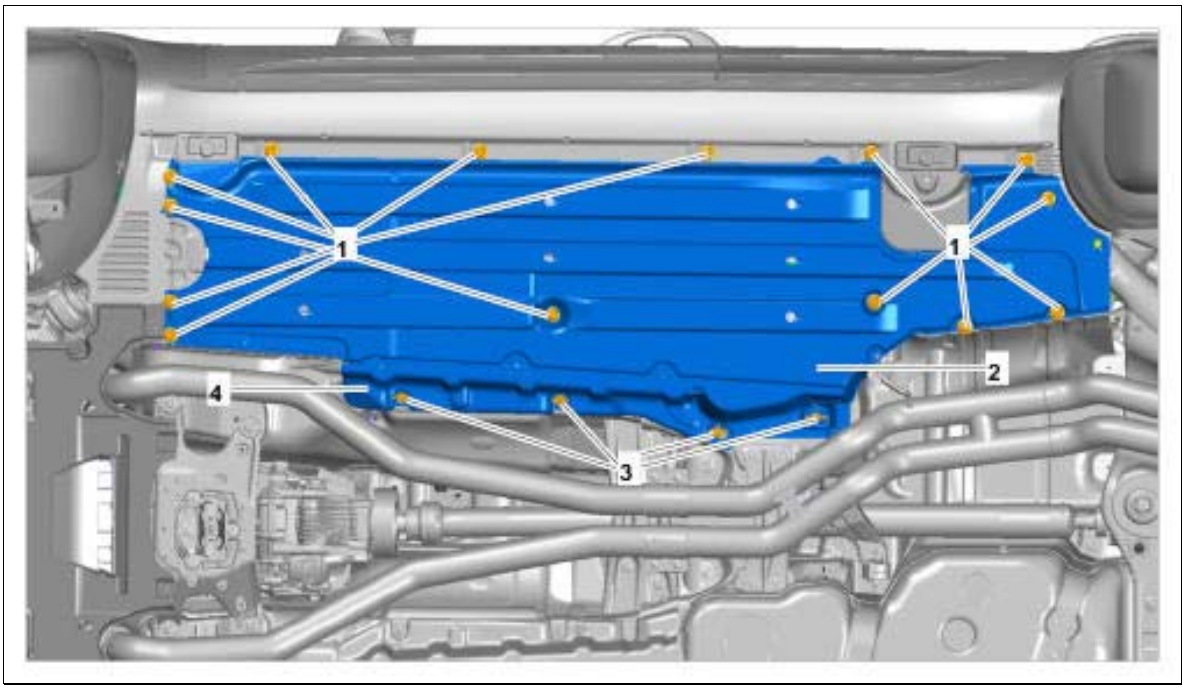

Courtesy of PORSCHE CARS NORTH AMERICA, INC.

WM 519319 REMOVING AND INSTALLING COVER FOR CENTRE UNDERBODY (ALL MODELS) > INSTALLING COVER FOR CENTRE UNDERBODY

Installation is performed in reverse order. Pay particular attention to the following:

1. Tighten fastening screws to **Tightening torque 2.5 Nm (2 ftlb.)** until secure. **Torque screwdriver Nr.89 Pos.5**
2. Tighten fastening screws to **Tightening torque 3.5 Nm (2.5 ftlb.)** until secure.
3. Tighten fastening nuts to **Tightening torque 2.5 Nm (2 ftlb.)** until secure.

WM 519319 REMOVING AND INSTALLING COVER FOR CENTRE UNDERBODY (ALL MODELS) > SUBSEQUENT WORK

1. Lower the vehicle. → 4X00IN LIFTING THE VEHICLE
2. **On vehicles with Lane Change Assist, the control unit must be calibrated.**

WM 519419 REMOVING AND INSTALLING COVER FOR REAR UNDERBODY (ALL MODELS) > TOOLS

Designation	Type	Number	Description	
Torque screwdriver	Commercially available tool	Nr.89 Pos.5		

WM 519419 REMOVING AND INSTALLING COVER FOR REAR UNDERBODY (ALL MODELS) > TECHNICAL VALUES

Location	Description	Type	Basic value	Tolerance 1	Tolerance 2
Cover on rear underbody	Fastening nut	Tightening torque	2.5 Nm (2 ftlb.)		

WM 519419 REMOVING AND INSTALLING COVER FOR REAR UNDERBODY (ALL MODELS) > PRELIMINARY WORK

1. Raise the vehicle. → 4X00IN LIFTING THE VEHICLE

WM 519419 REMOVING AND INSTALLING COVER FOR REAR UNDERBODY (ALL MODELS) > REMOVING COVER FOR REAR UNDERBODY

NOTE: Irritant substances and materials

- *Itching*
- *Skin irritation*

→ Wear personal protective gear.

Information

- The number of fastening screws, fixing clips, plug connections, holders and trim panels can vary depending on equipment.
- The illustrations for removing and installing the drive mechanism are shown only on one equipment variant and may differ from the actual equipment variant.
- Some steps must be carried out automatically.
- Some of the repair illustrations show only one side of the vehicle.

1. Unscrew and remove fastening nuts **-1-** .
2. Remove cover **-2-** .

Fig 1: Identifying Rear Underbody Cover And Nuts

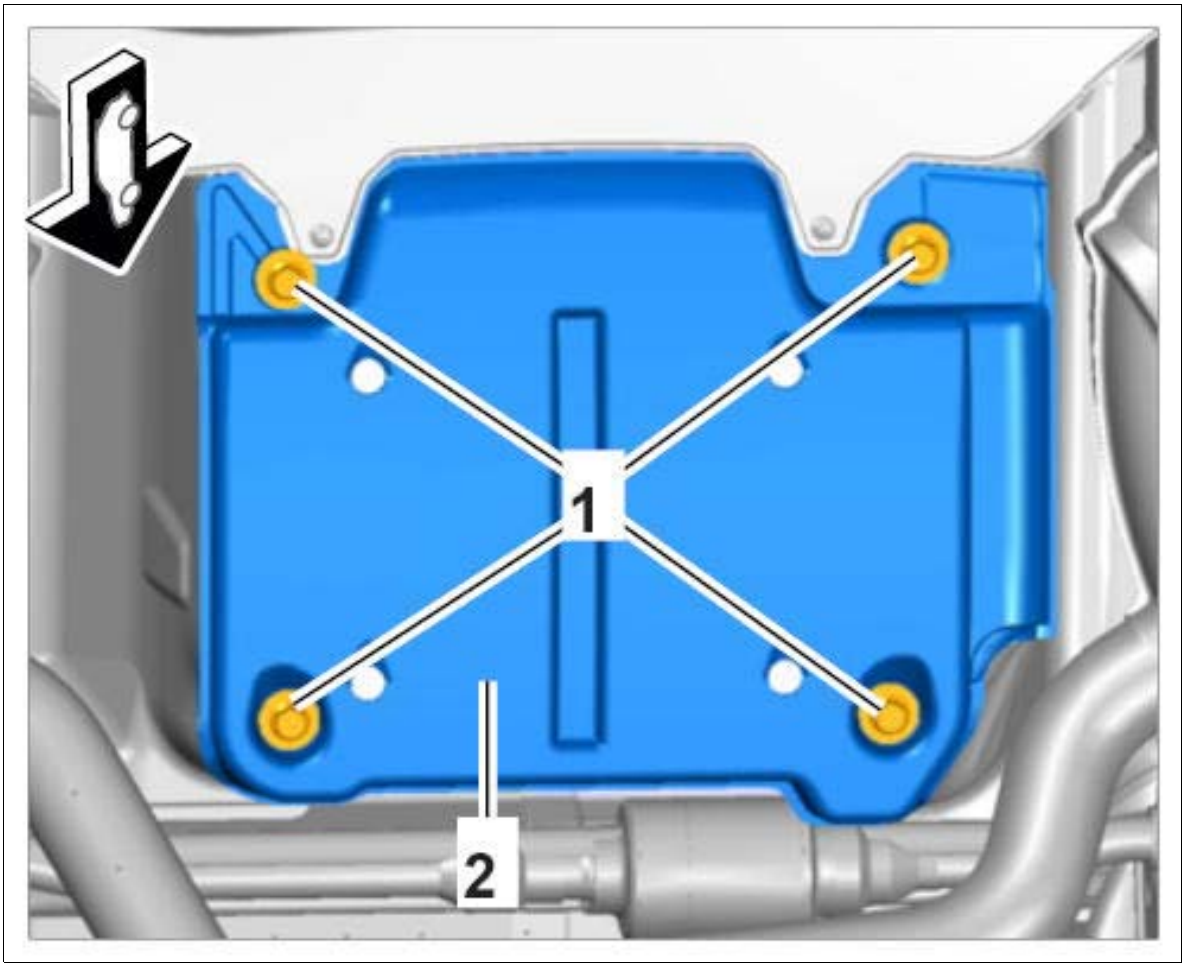

Courtesy of PORSCHE CARS NORTH AMERICA, INC.

WM 519419 REMOVING AND INSTALLING COVER FOR REAR UNDERBODY (ALL MODELS) > INSTALLING COVER FOR REAR UNDERBODY

Installation is performed in reverse order. Pay particular attention to the following:

1. Tighten fastening nuts to the specified tightening torque. **Tightening torque 2.5 Nm (2 ftlb.) Torque screwdriver Nr.89 Pos.5**

WM 519419 REMOVING AND INSTALLING COVER FOR REAR UNDERBODY (ALL MODELS) > SUBSEQUENT WORK

1. Lower the vehicle. → 4X00IN LIFTING THE VEHICLE
2. **On vehicles with Lane Change Assist, the control unit must be calibrated.**

Service Manual: 53 - BODY REAR -- (95B) - MACAN

WM 530555 REPLACING REAR CLOSING PANEL (ALL MODELS) > TOOLS

Designation	Type	Number	Description	
Hot-air blower	Service equipment	WE 1119		
Body alignment system package	Service equipment	WE 1121		
Special electric cutter	Service equipment	WE 1137		
Pneumatic Spotweld Remover, Vario Drill WS 90	Service equipment	WE 1139		
Hand-cartridge gun	Service equipment	WE 1141		
Resistance spot welder	Service equipment	WE 1311		
Inverter welder MIDIspot-QSVM-12000	Service equipment	WE 1312		
Resistance spot welder	Service equipment	WE 1313		
Blind riveting tool TAURUS 4	Service equipment	WE 1348		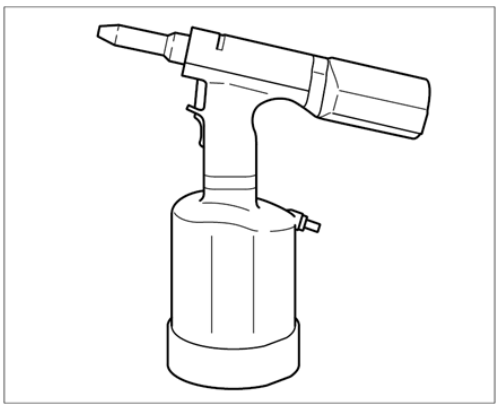
Aluminum tool set with trolley	Service equipment	WE 1350		
Resistance spot welder	Service equipment	WE 1352		
Measuring and alignment system,	Service equipment	WE 1398		

professional				
Mobile extraction unit, aluminum	Service equipment	WE 1507		
Body saw	Service equipment	WE 1508		
Star gauges for body gap dimensions	Special tool	Nr.127-1		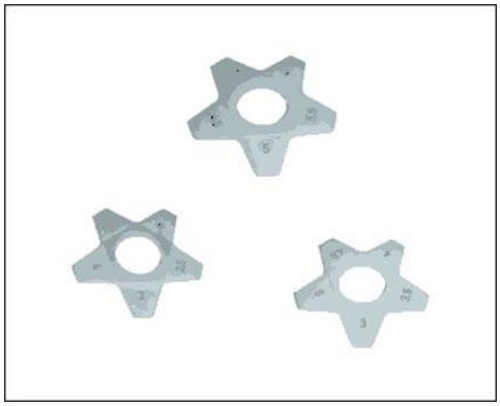
Spotweld drill	Commercially available tool	Nr.129		
Twist drill	Commercially available tool	Nr.201		

Countersink	Commercially available tool	Nr.202		

WM 530555 REPLACING REAR CLOSING PANEL (ALL MODELS) > TECHNICAL VALUES

Location	Description	Type	Basic value	Tolerance 1	Tolerance 2
Drill bit		Diameter	8.0 mm		
Applying adhesive		Application depth	3.0 mm		

WM 530555 REPLACING REAR CLOSING PANEL (ALL MODELS) > PRELIMINARY WORK > PRELIMINARY WORK FOR BODY REPAIRS (WITHOUT STRAIGHTENING SYSTEM)

1. Remove accessories in the repair area.
    1. 1.1. Remove accessories in the repair area according to the extent of damage on the vehicle.
2. Cover accessories adjacent to the repair area on the vehicle.
    1. 2.1. Cover all accessories remaining on the vehicle and adjacent areas with fire-proof protective covers.
3. Reshape connection area of the sheetmetal parts to be replaced. Note: Information on aluminum repairs. Refer to the appropriate information on aluminum
4. Expose joint areas.
    1. 4.1. Remove underbody protection, paint, etc. from the joint areas of the body using a hot-air gun or rotary brush.

WM 530555 REPLACING REAR CLOSING PANEL (ALL MODELS) > SAFETY INSTRUCTIONS AND INFORMATION ON QUALITY

⚠ *CAUTION: Non-observance of safety instructions for body repairs*

- *Risk of damage to the vehicle*
- *Danger of injury*

→ Read the relevant safety instructions as well as general information and quality instructions → 5X00IN01 SAFETY INSTRUCTIONS .

- Protection of electrical components during body repairs
- Corrosion protection measures during repairs → 5X00IN03 CORROSION PROTECTION MEASURES DURING REPAIRS
- Information on aluminum repairs. Refer to the appropriate information on aluminum repairs.
- Body parts of various sheet-steel strengths → 5X00IN04 BODY PARTS OF VARIOUS SHEET-STEEL STRENGTHS
- Replacing punch rivets and penetrated joints
- Setting self-tapping screws → 5X00IN24 SETTING SELF-TAPPING SCREWS
- Working with body structural adhesive → 5X00IN21 WORKING WITH BODY STRUCTURAL ADHESIVE

WM 530555 REPLACING REAR CLOSING PANEL (ALL MODELS) > TOOLS AND MATERIALS > TOOLS AND MATERIALS FOR BODY REPAIRS

- The tools for working on steel and aluminum must always be kept separate from each other. We recommend that you color code the tools using a system similar to that used for the Aluminum tool set with trolley WE 1350, for example.

Straightening set **Body alignment system package WE 1121 Measuring and alignment system, professional WE 1398**

Resistance spot welder; optional **Inverter welder MIDIspot-QSVM-12000 WE 1312, Resistance spot welder WE 1352, Resistance spot welder WE 1311, Resistance spot welder WE 1313**

Metal inert gas (MIG) welder

Pneumatic spotweld remover **Pneumatic Spotweld Remover, Vario Drill WS 90 WE 1139**

Pneumatic body saw **Body saw WE 1508**

Oscillating body saw (special electric cutter) **Special electric cutter WE 1137**

Hot-air blower **Hot-air blower WE 1119**

Hand-cartridge gun **Hand-cartridge gun WE 1141**

Spotweld drill **Spotweld drill**

Countersink for rivets **Countersink Nr.202**

Blind riveting tool for high-strength rivets **Blind riveting tool TAURUS 4 WE 1348**

Safety vacuum cleaner for aluminum dust **Mobile extraction unit, aluminum WE 1507**

Star gauges for body gap dimensions Nr.127-1

Wurth glue and seals body sealant

WM 530555 REPLACING REAR CLOSING PANEL (ALL MODELS) > REMOVING REAR CLOSING PANEL > REMOVING REAR TRANSVERSE LOCK SUPPORT

Fig 1: Identifying Rear Transverse Lock Support Position



Courtesy of PORSCHE CARS NORTH AMERICA, INC.

Information

Drill out the connection point on one side only. Do not damage the plate underneath.

1. Drill out spotwelds using **spotweld drill;** .

Fig 2: Removing Rear Transverse Lock Support

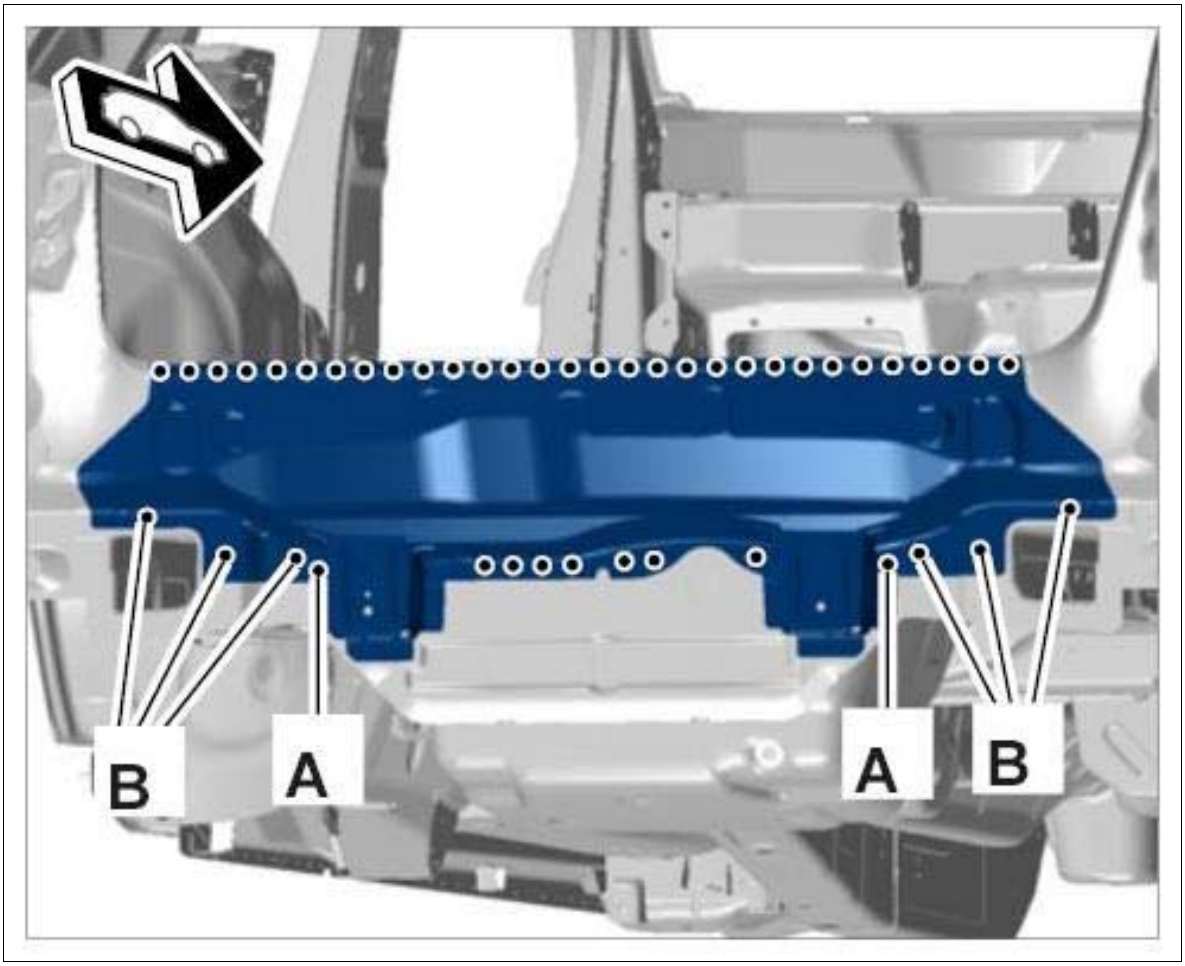

Courtesy of PORSCHE CARS NORTH AMERICA, INC.

2. Heat the marked bonding surfaces.

    1. 2.1. Remove rear transverse lock support.

Fig 3: Removing Rear Transverse Lock Support

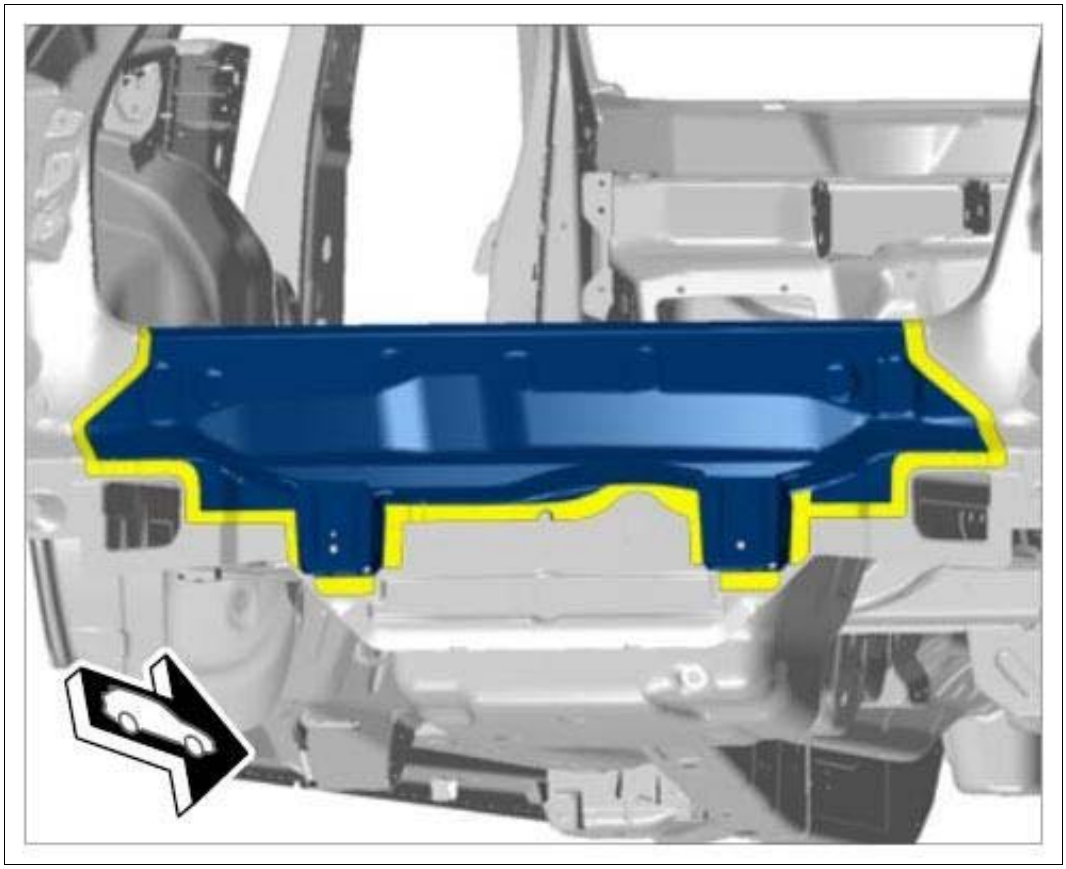

Courtesy of PORSCHE CARS NORTH AMERICA, INC.

WM 530555 REPLACING REAR CLOSING PANEL (ALL MODELS) > PREPARING REAR CLOSING PANEL FOR INSTALLATION > PREPARING REAR TRANSVERSE LOCK SUPPORT FOR INSTALLATION

Information

- Before final assembly, make sure you fully understand all the work steps involved and carry out a trial assembly without applying adhesive.
- The bonding process can only be carried out reliably when a smooth and swift sequence of operations is guaranteed.
- Do not begin bonding work until all materials and tools necessary for later repair work are available.

1. Fit in rear transverse lock support.
2. Drill holes for plug-welding using a drill bit with a diameter of → **Diameter: 8.0 mm** .

Fig 1: Identifying Rear Transverse Lock Support Holes Drilling Areas

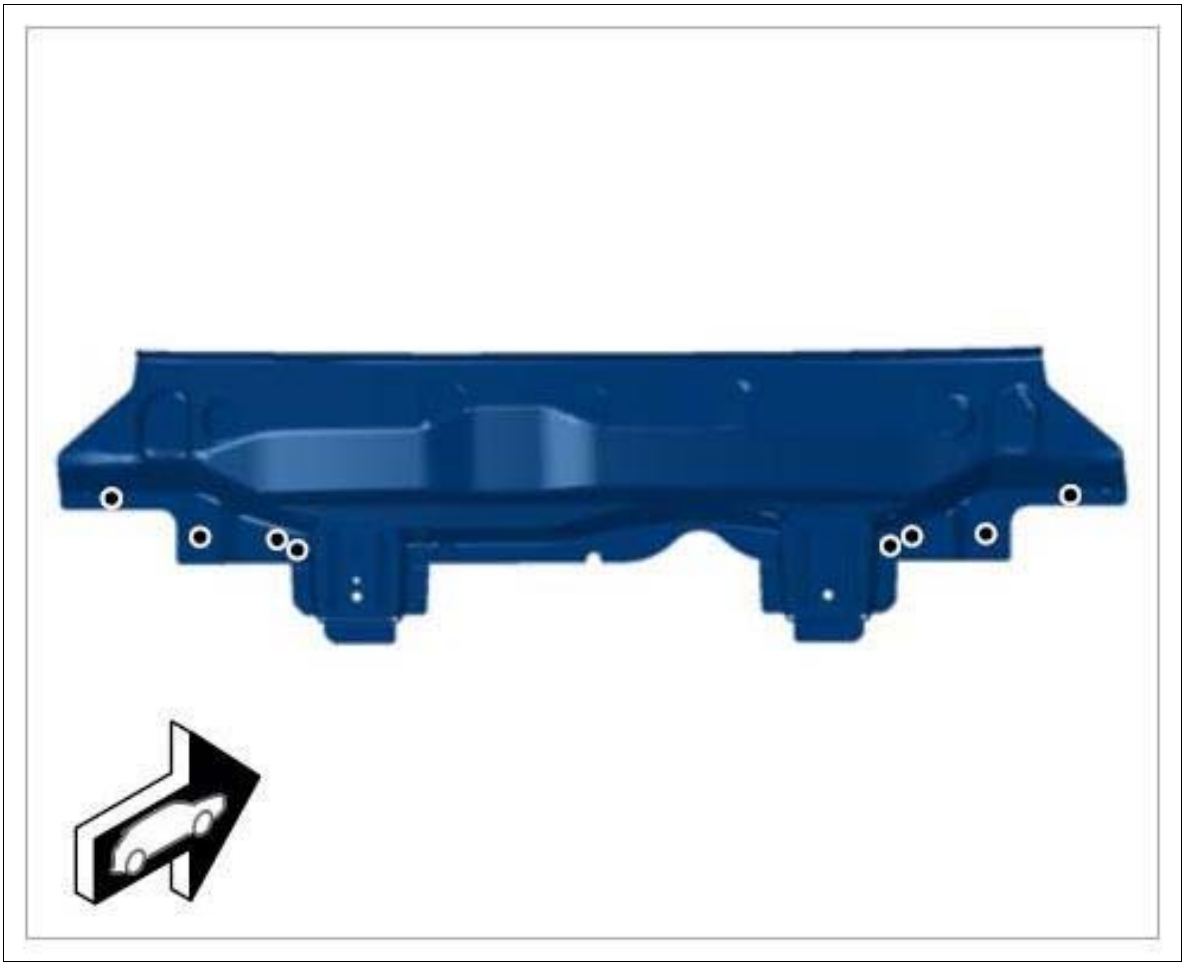

Courtesy of PORSCHE CARS NORTH AMERICA, INC.

3. Prepare connection areas for bonding and welding.

Fig 2: Identifying Rear Transverse Lock Support Connection Areas

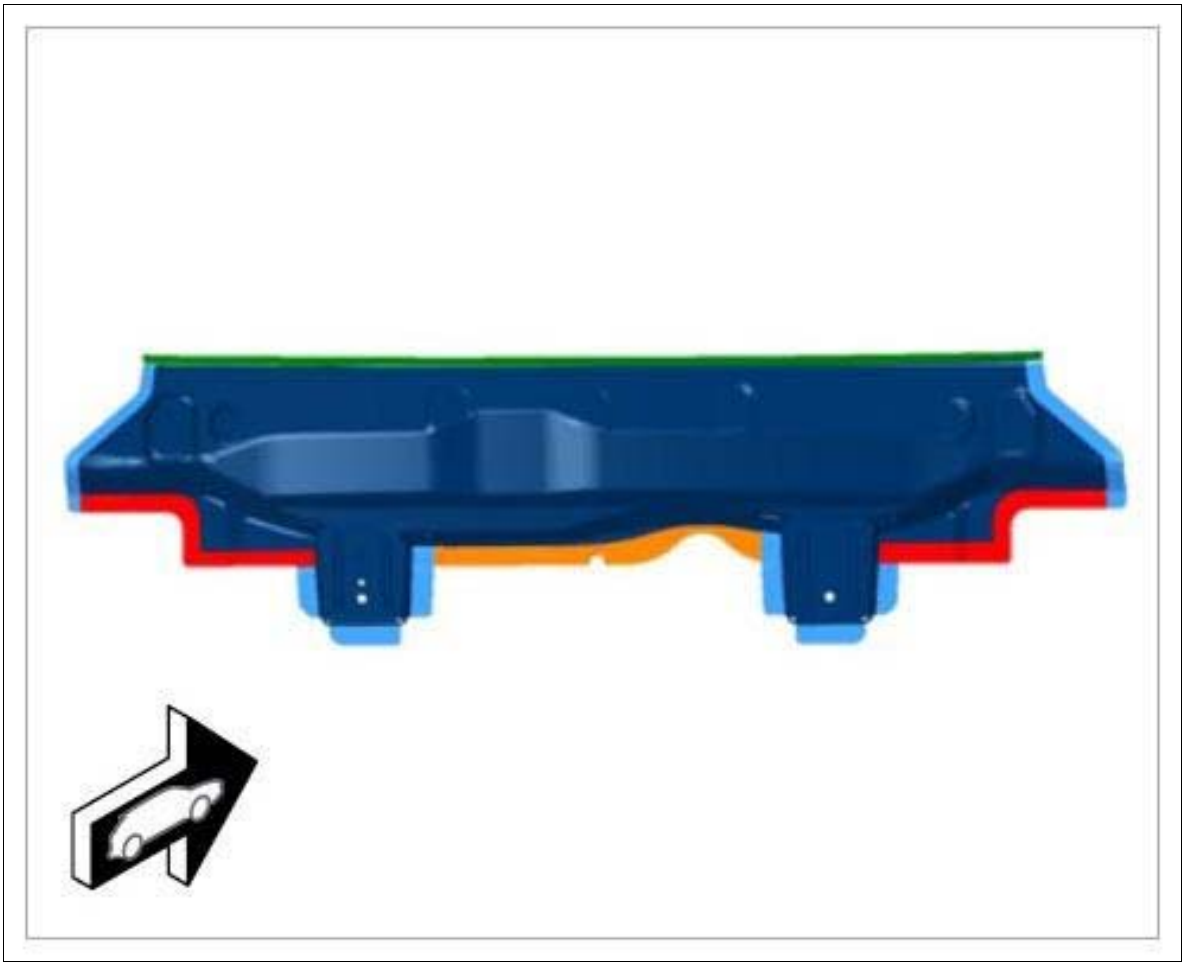

Courtesy of PORSCHE CARS NORTH AMERICA, INC.

Orange	Bonding + resistance spot-welding
Green	Resistance spot-welding
Blue	Bonding

WM 530555 REPLACING REAR CLOSING PANEL (ALL MODELS) > PREPARING CONNECTION AREAS OF THE BODY

1. Align the sealing surface and connections of the body.
2. De-burr connection points and prepare them for welding.
3. Prepare the marked areas for welding and bonding.

Fig 1: Identifying Body Connection Areas

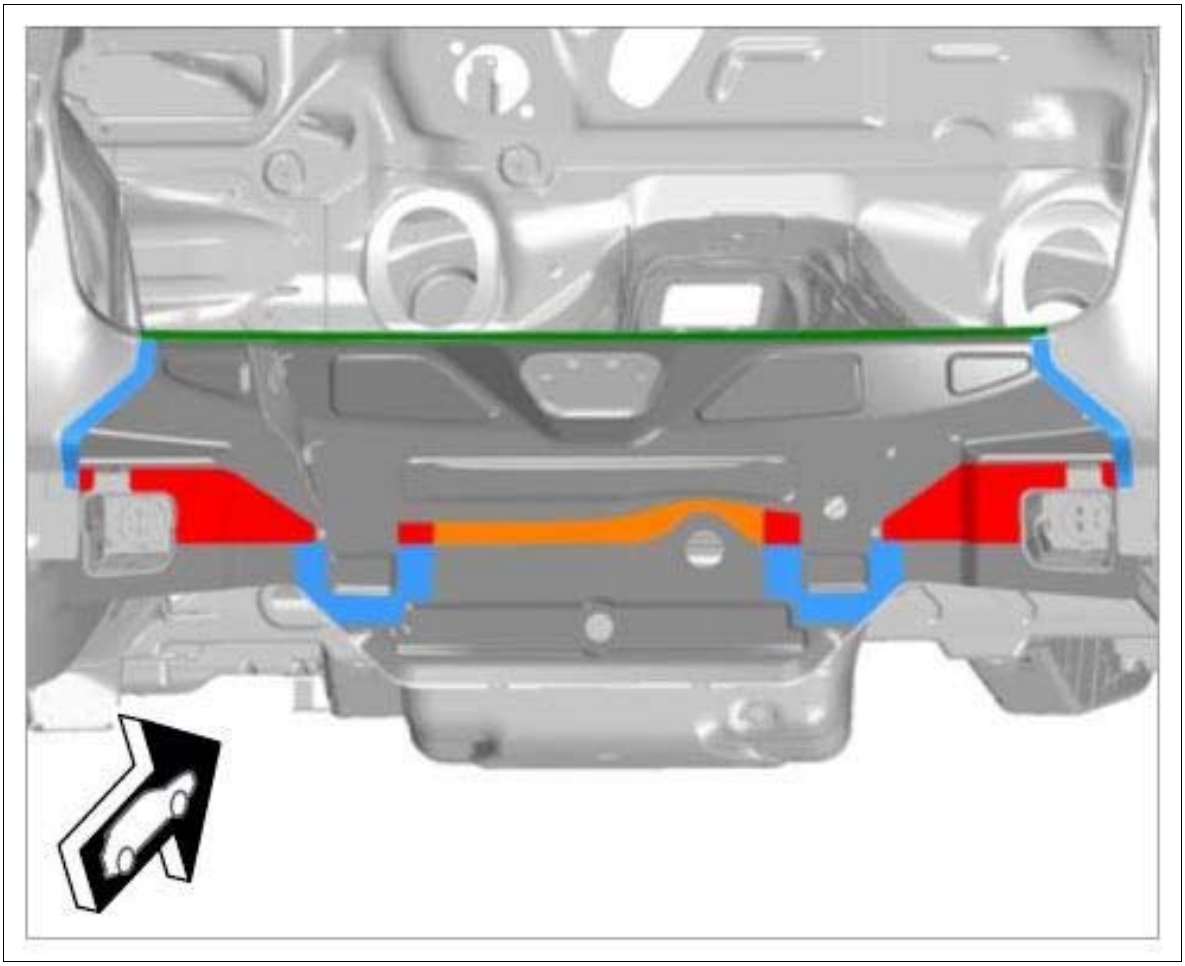

Courtesy of PORSCHE CARS NORTH AMERICA, INC.

Red	Plug-welding/apply a full weld using inert gas without bonding
Green	Resistance spot-welding
Blue	Bonding

WM 530555 REPLACING REAR CLOSING PANEL (ALL MODELS) > INSTALLING REAR CLOSING PANEL

Information

- Before final assembly, make sure you fully understand all the work steps involved and carry out a trial assembly without applying adhesive.
- The bonding process can only be carried out reliably when a smooth and swift sequence of operations is guaranteed.
- Do not begin bonding work until all materials and tools necessary for later repair work are available.

1. Install rear closing panel and check that it fits perfectly. Check gap dimensions. → 5X00IN DIAGRAM - BODY GAP DIMENSIONS

    1. 1.1. Apply foam filler to the body in area **-A-** . → 5X00IN22 WORKING WITH BODY FOAM FILLER

       Make sure that all openings and gaps between the end plate and rear lock support are sealed with the sealing compound.

    2. 1.2. Apply adhesive to the areas marked in yellow. → 5X00IN21 WORKING WITH BODY STRUCTURAL ADHESIVE→ **Application depth: 3.0 mm**

       Fig 1: Identifying Adhesive Applying Areas

       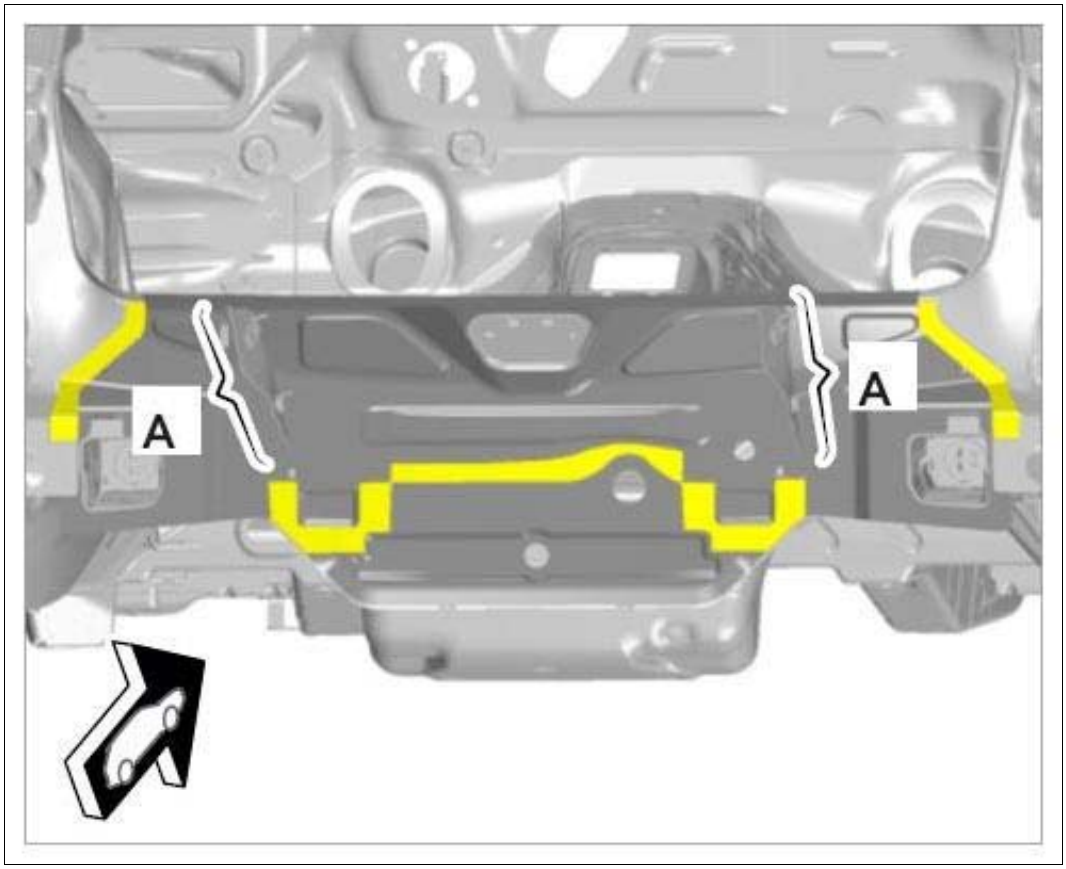

       Courtesy of PORSCHE CARS NORTH AMERICA, INC.

2. Resistance spot-weld the rear closing panel.

    1. 2.1. Plug-weld area **-A & B-** using inert gas.

Fig 2: Identifying Rear Closing Panel Plug-Weld Area

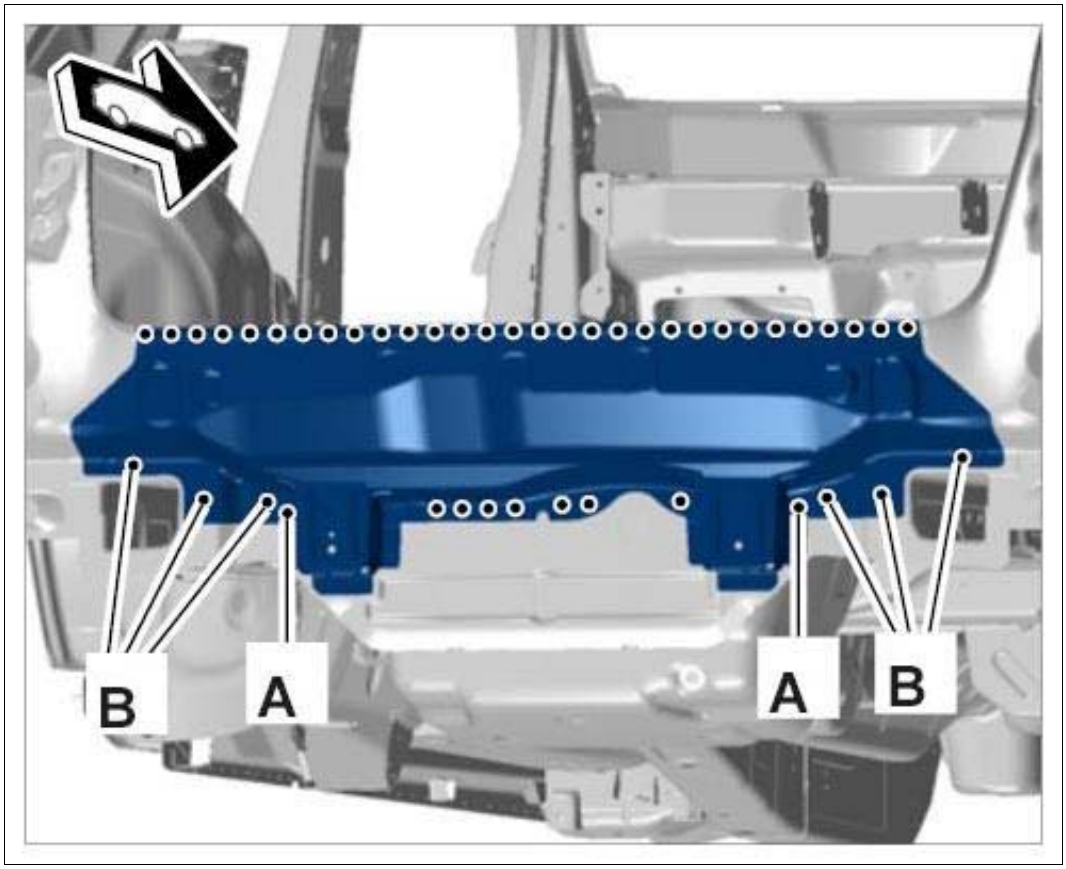

Courtesy of PORSCHE CARS NORTH AMERICA, INC.

WM 530555 REPLACING REAR CLOSING PANEL (ALL MODELS) > SUBSEQUENT WORK > SUBSEQUENT WORK FOR BODY REPAIRS (WITHOUT STRAIGHTENING SYSTEM)

1. Clean joint areas and sheetmetal flanges with a wire brush.
2. Prime joint areas and sheetmetal flanges with 2K primer.
3. Restore standard seal with body sealant → 5X00IN42 SEAM SEALING .

   Also seal the repair area carefully.
4. Paint repair area and adjacent surfaces, if necessary.
5. Restore standard underbody protection with underbody sealant → 5X00IN43 UNDERBODY PROTECTION .
6. Apply standard cavity preservation → 5X00IN44 CAVITY PRESERVATION . Also apply cavity preservation to the repair area.
7. Install removed accessories in the repair area.

WM 530555 REPLACING INNER REAR CLOSING PANEL (ALL MODELS) > TOOLS

Designation	Type	Number	Description	
Hot-air blower	Service equipment	WE 1119		
Body alignment system package	Service equipment	WE 1121		
Special electric cutter	Service equipment	WE 1137		
Pneumatic Spotweld Remover, Vario Drill WS 90	Service equipment	WE 1139		
Hand-cartridge gun	Service equipment	WE 1141		
Resistance spot welder	Service equipment	WE 1311		
Inverter welder MIDIspot-QSVM-12000	Service equipment	WE 1312		
Resistance spot welder	Service equipment	WE 1313		
Blind riveting tool TAURUS 4	Service equipment	WE 1348		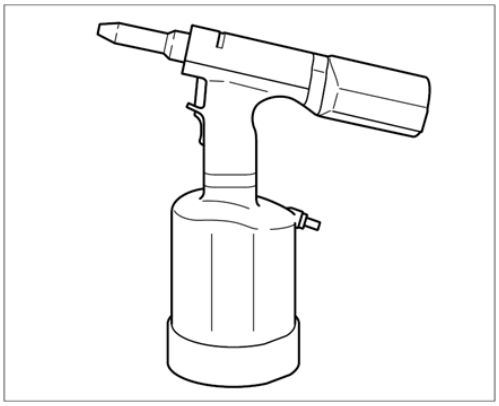
Aluminum tool set with trolley	Service equipment	WE 1350		
Resistance spot welder	Service equipment	WE 1352		
Measuring and alignment system, professional	Service equipment	WE 1398		

Mobile extraction unit, aluminum	Service equipment	WE 1507		
Body saw	Service equipment	WE 1508		
Star gauges for body gap dimensions	Special tool	Nr.127-1		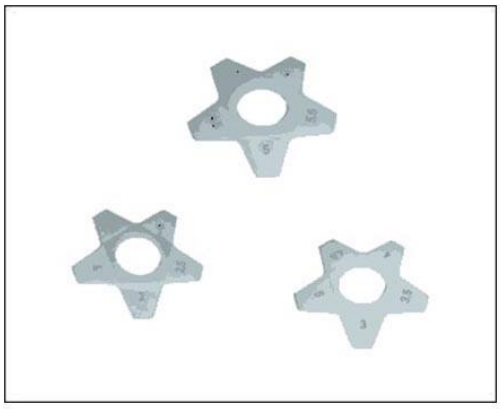
Spotweld drill	Commercially available tool	Nr.129		
Twist drill	Commercially available tool	Nr.201		

Countersink	Commercially available tool	Nr.202		

WM 530555 REPLACING INNER REAR CLOSING PANEL (ALL MODELS) > TECHNICAL VALUES

Location	Description	Type	Basic value	Tolerance 1	Tolerance 2
Applying adhesive		Application depth	3.0 mm		

WM 530555 REPLACING INNER REAR CLOSING PANEL (ALL MODELS) > PRELIMINARY WORK > PRELIMINARY WORK FOR BODY REPAIRS (WITHOUT STRAIGHTENING SYSTEM)

1. Remove accessories in the repair area.
    1. 1.1. Remove accessories in the repair area according to the extent of damage on the vehicle.
2. Cover accessories adjacent to the repair area on the vehicle.
    1. 2.1. Cover all accessories remaining on the vehicle and adjacent areas with fire-proof protective covers.
3. Reshape connection area of the sheetmetal parts to be replaced. Note: Information on aluminum repairs. Refer to the appropriate information on aluminum repairs
4. Expose joint areas.
    1. 4.1. Remove underbody protection, paint, etc. from the joint areas of the body using a hot-air gun or rotary brush.

1. Remove rear closing panel. → Removing Rear Closing Panel

WM 530555 REPLACING INNER REAR CLOSING PANEL (ALL MODELS) > SAFETY INSTRUCTIONS AND INFORMATION ON QUALITY

⚠ *CAUTION: Non-observance of safety instructions for body repairs*

- *Risk of damage to the vehicle*
- *Danger of injury*

→ Read the relevant safety instructions as well as general information and quality instructions → 5X00IN01 SAFETY INSTRUCTIONS .

- Protection of electrical components during body repairs
- Corrosion protection measures during repairs → 5X00IN03 CORROSION PROTECTION MEASURES DURING REPAIRS
- Information on aluminum repairs. Refer to the appropriate information on aluminum repairs.
- Body parts of various sheet-steel strengths → 5X00IN04 BODY PARTS OF VARIOUS SHEET-STEEL STRENGTHS
- Replacing punch rivets and penetrated joints
- Setting self-tapping screws → 5X00IN24 SETTING SELF-TAPPING SCREWS
- Working with body structural adhesive → 5X00IN21 WORKING WITH BODY STRUCTURAL ADHESIVE

WM 530555 REPLACING INNER REAR CLOSING PANEL (ALL MODELS) > TOOLS AND MATERIALS > TOOLS AND MATERIALS FOR BODY REPAIRS

Information

- The tools for working on steel and aluminum must always be kept separate from each other. We recommend that you color code the tools using a system similar to that used for the Aluminum tool set with trolley WE 1350, for example.

Straightening set **Body alignment system package WE 1121 Measuring and alignment system, professional WE 1398**

Resistance spot welder; optional **Inverter welder MIDIspot-QSVM-12000 WE 1312, Resistance spot welder WE 1352, Resistance spot welder WE 1311, Resistance spot welder WE 1313**

Metal inert gas (MIG) welder

Pneumatic spotweld remover **Pneumatic Spotweld Remover, Vario Drill WS 90 WE 1139**

Pneumatic body saw **Body saw WE 1508**

Oscillating body saw (special electric cutter) **Special electric cutter WE 1137**

Hot-air blower **Hot-air blower WE 1119**

Hand-cartridge gun **Hand-cartridge gun WE 1141**

Spotweld drill **Spotweld drill**

Countersink for rivets **Countersink Nr.202**

Blind riveting tool for high-strength rivets **Blind riveting tool TAURUS 4 WE 1348**

Safety vacuum cleaner for aluminum dust **Mobile extraction unit, aluminum WE 1507**

Star gauges for body gap dimensions Nr.127-1

Wurth glue and seals body sealant

WM 530555 REPLACING INNER REAR CLOSING PANEL (ALL MODELS) > REMOVING INNER REAR CLOSING PANEL

Fig 1: Identifying Inner Rear Closing Panel Position



Courtesy of PORSCHE CARS NORTH AMERICA, INC.

Information

Drill out the connection point on one side only. Do not damage the plate underneath.

1. Drill out spotwelds using **spotweld drill;** .

Fig 2: Removing Inner Rear Closing Panel

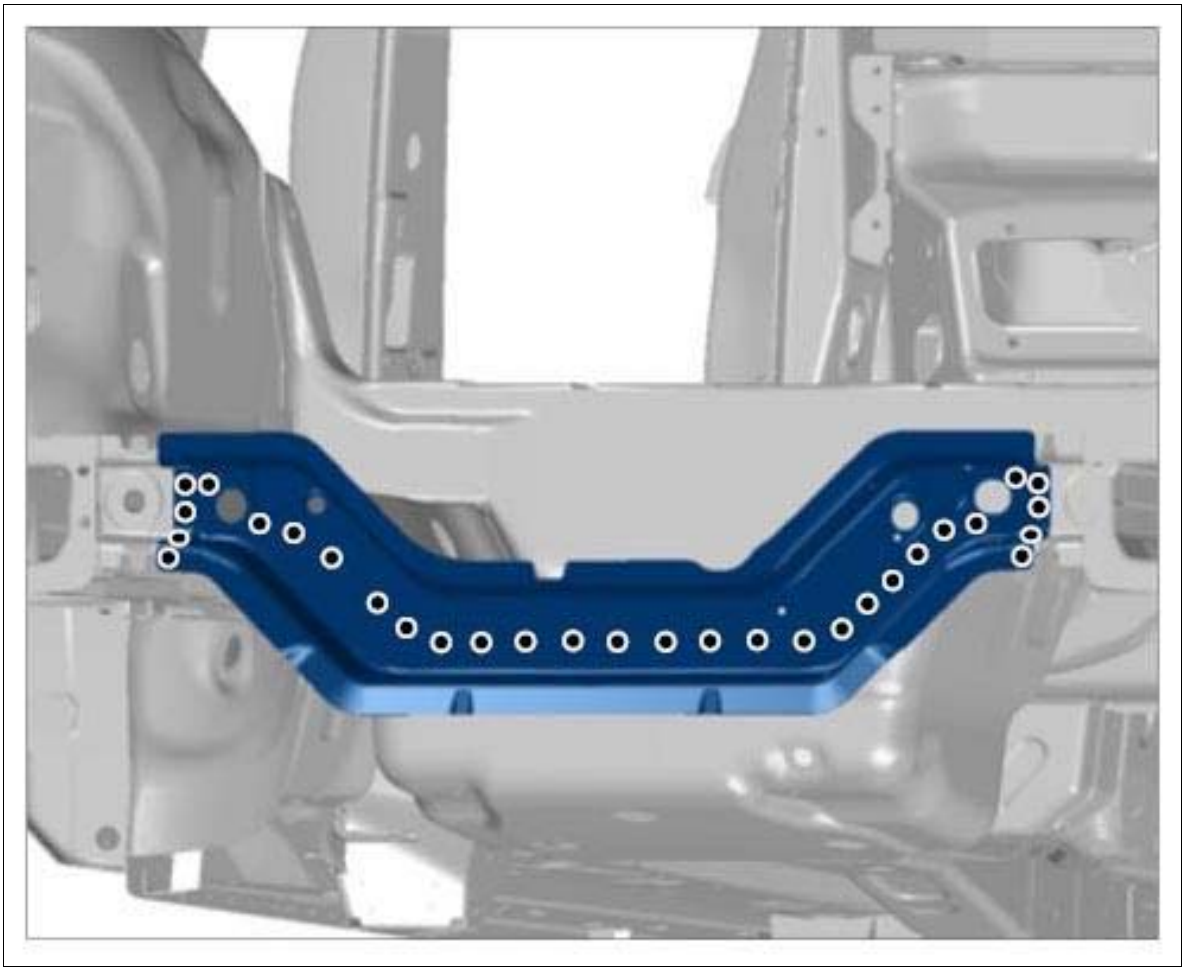

Courtesy of PORSCHE CARS NORTH AMERICA, INC.

2. Heat the marked bonding surfaces.

    1. 2.1. Remove inner rear closing panel.

Fig 3: Removing Inner Rear Closing Panel

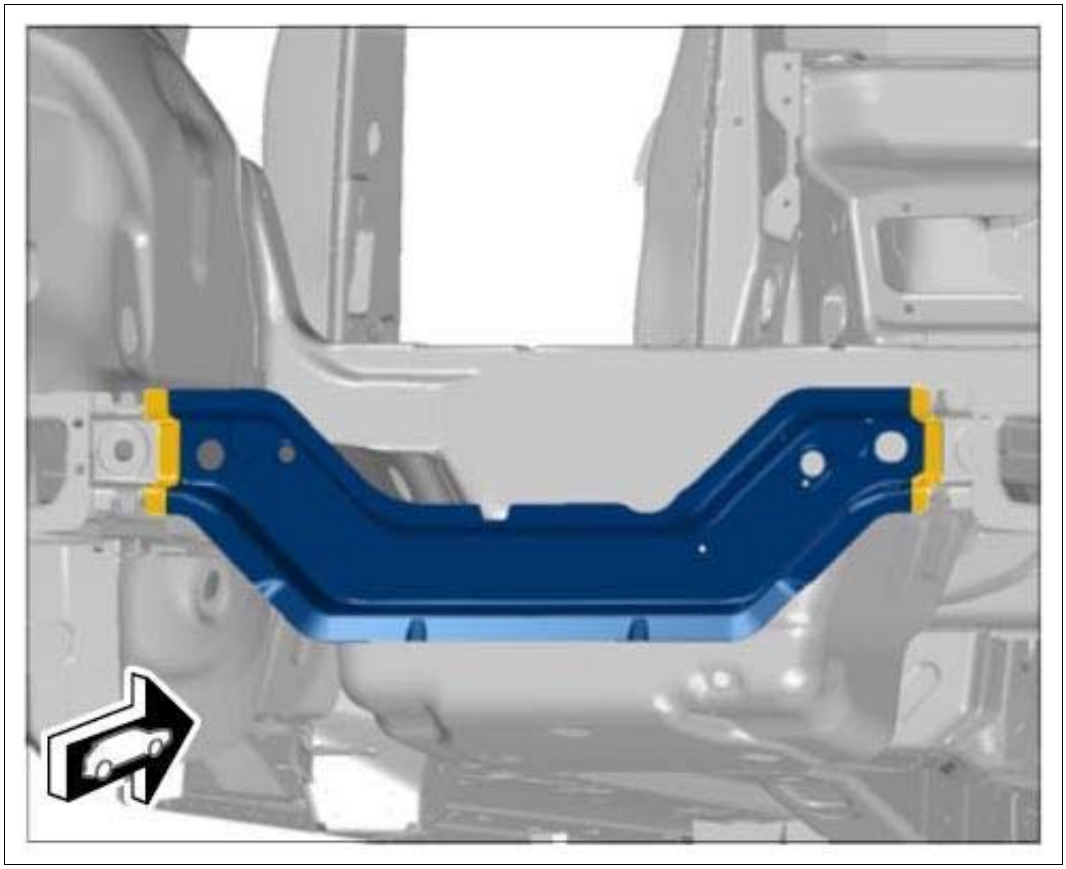

Courtesy of PORSCHE CARS NORTH AMERICA, INC.

WM 530555 REPLACING INNER REAR CLOSING PANEL (ALL MODELS) > PREPARING INNER REAR CLOSING PANEL FOR INSTALLATION

Information

- Before final assembly, make sure you fully understand all the work steps involved and carry out a trial assembly without applying adhesive.
- The bonding process can only be carried out reliably when a smooth and swift sequence of operations is guaranteed.
- Do not begin bonding work until all materials and tools necessary for later repair work are available.

1. Prepare the marked areas for bonding and welding.

Fig 1: Identifying Inner Rear Closing Panel

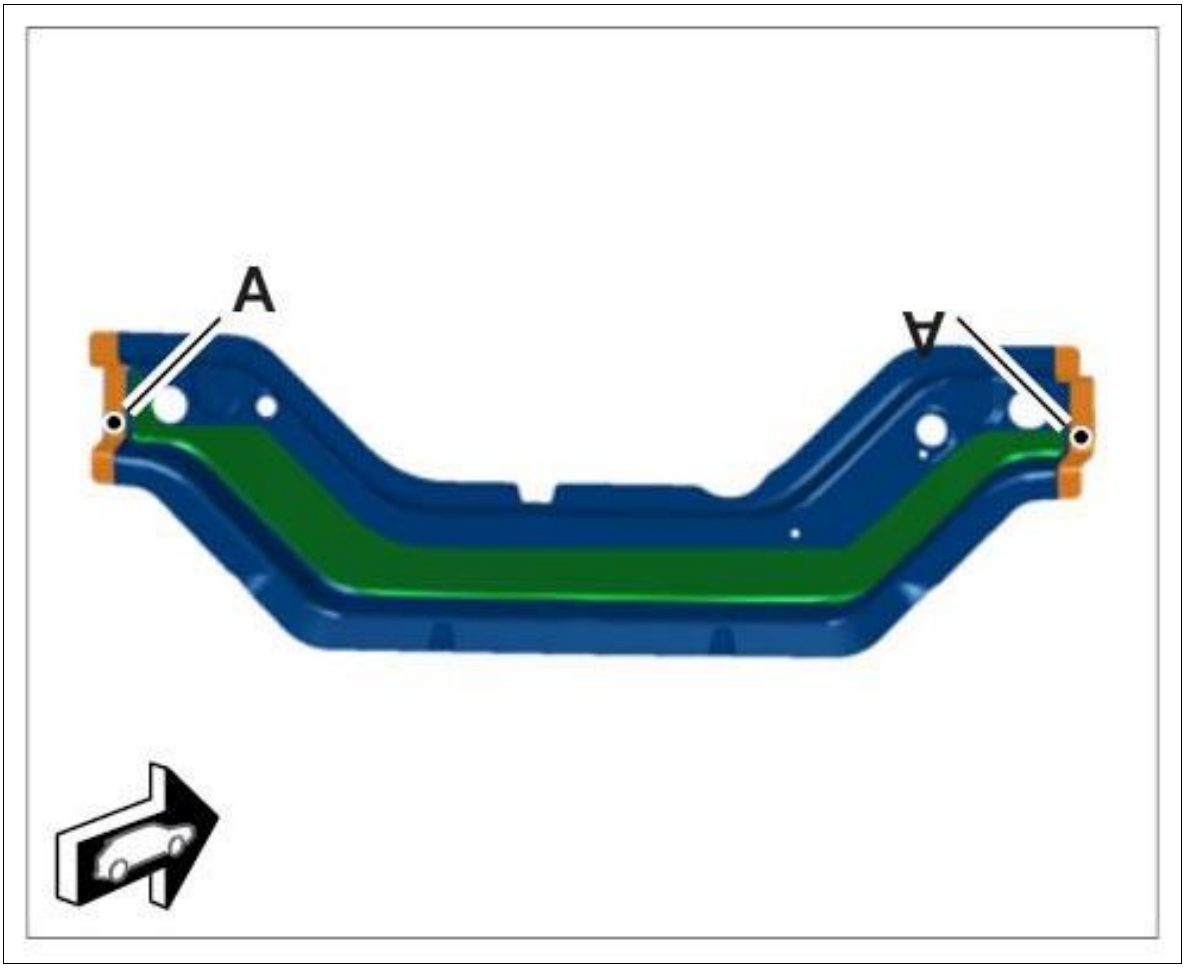

Courtesy of PORSCHE CARS NORTH AMERICA, INC.

Orange	Bonding + resistance spot-welding
Green	Resistance spot-welding

WM 530555 REPLACING INNER REAR CLOSING PANEL (ALL MODELS) > PREPARING CONNECTION AREAS OF THE BODY

1. Align the sealing surface and connections of the body.
2. De-burr connection points and prepare them for welding.
3. Prepare the marked areas for welding and bonding.

Fig 1: Identifying Body Connection Areas

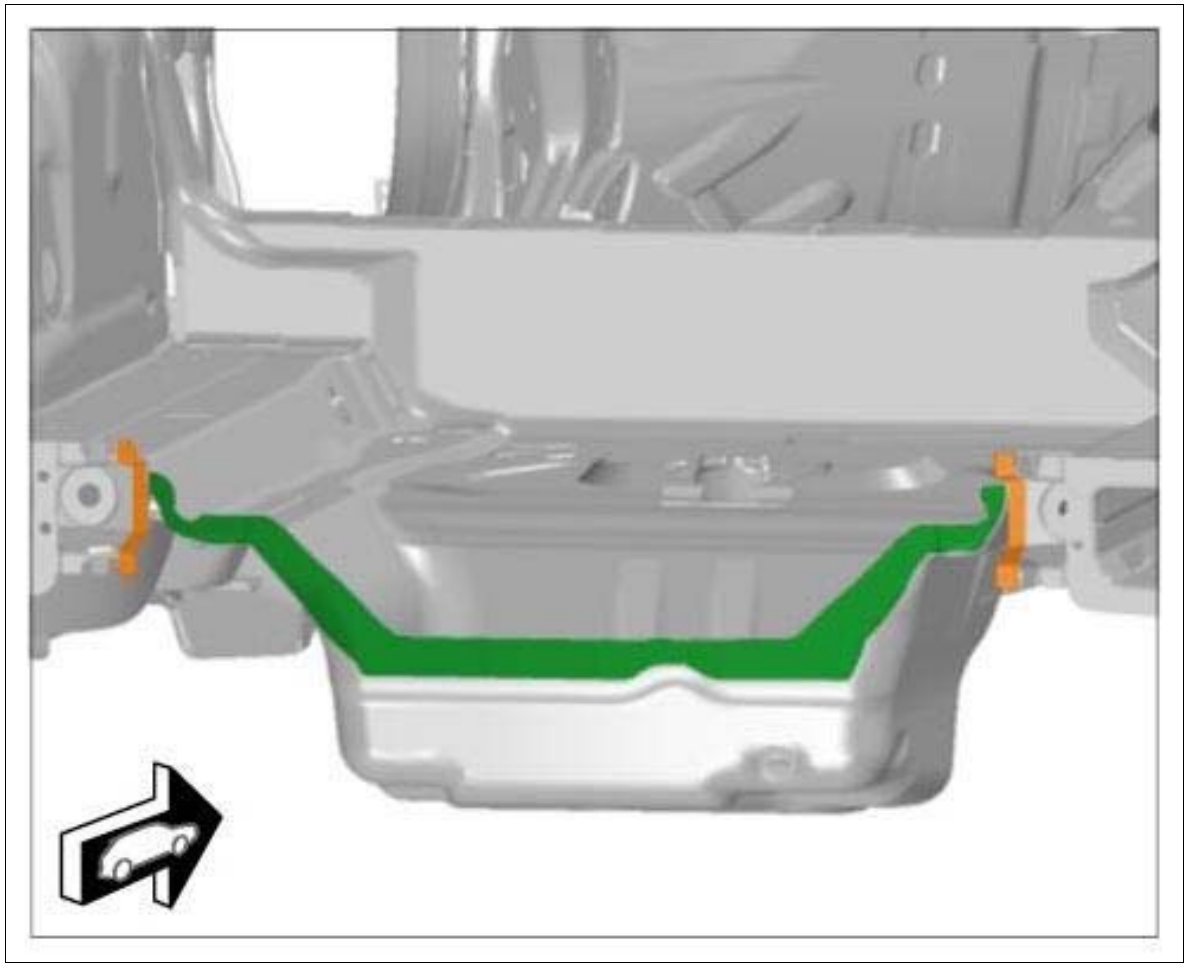

Courtesy of PORSCHE CARS NORTH AMERICA, INC.

Orange	Bonding + resistance spot-welding
Green	Resistance spot-welding

WM 530555 REPLACING INNER REAR CLOSING PANEL (ALL MODELS) > INSTALLING INNER REAR CLOSING PANEL

Information

- Before final assembly, make sure you fully understand all the work steps involved and carry out a trial assembly without applying adhesive.
- The bonding process can only be carried out reliably when a smooth and swift sequence of operations is guaranteed.
- Do not begin bonding work until all materials and tools necessary for later repair work are available.

1. Apply adhesive to the marked area. → **Application depth: 3.0 mm** ↓

Working with body structural adhesive → 5X00IN21 WORKING WITH BODY STRUCTURAL ADHESIVE

Fig 1: Identifying Adhesive Applying Area

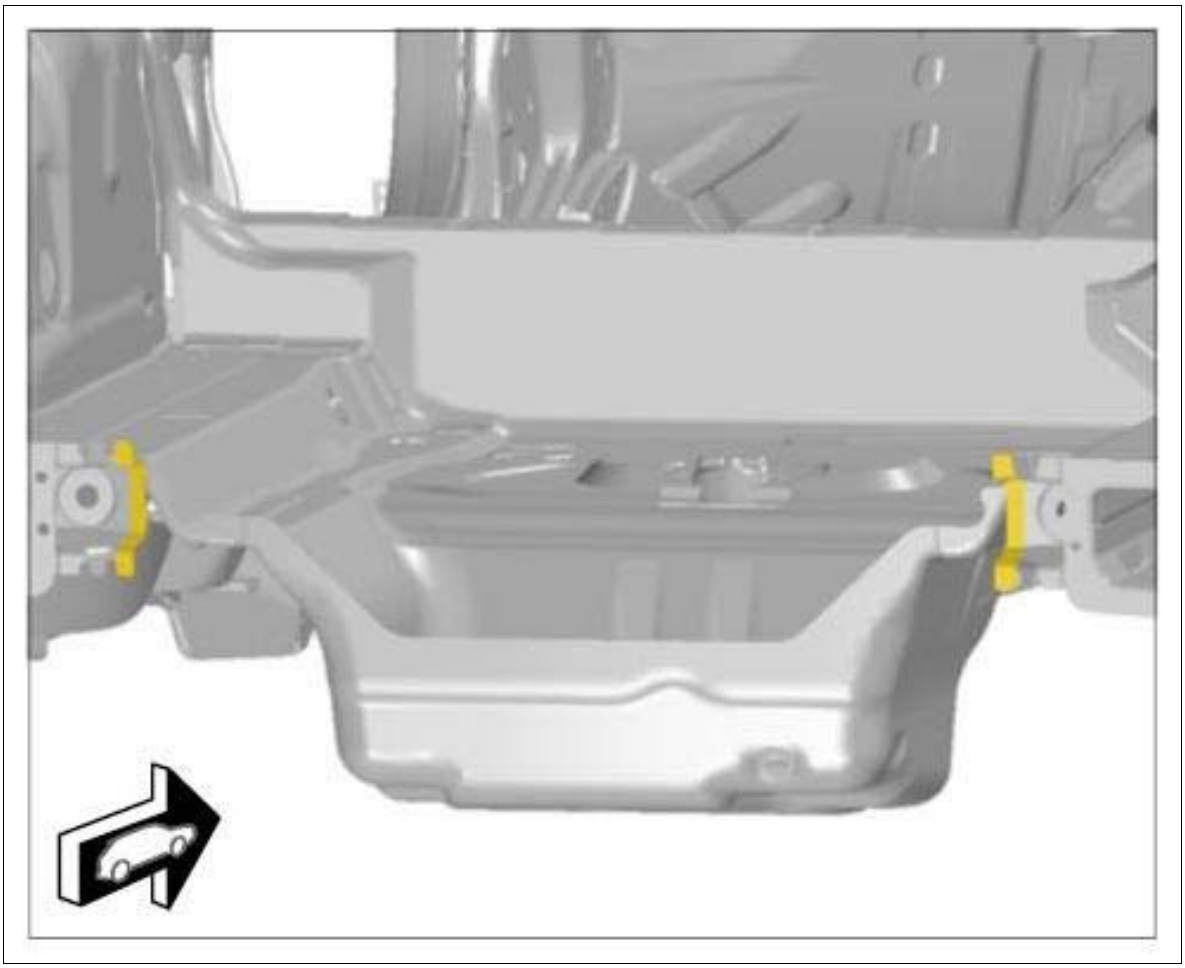

Courtesy of PORSCHE CARS NORTH AMERICA, INC.

2. Resistance spot-weld the inner rear closing panel.

Fig 2: Identifying Inner Rear Closing Panel Spot-Weld Area

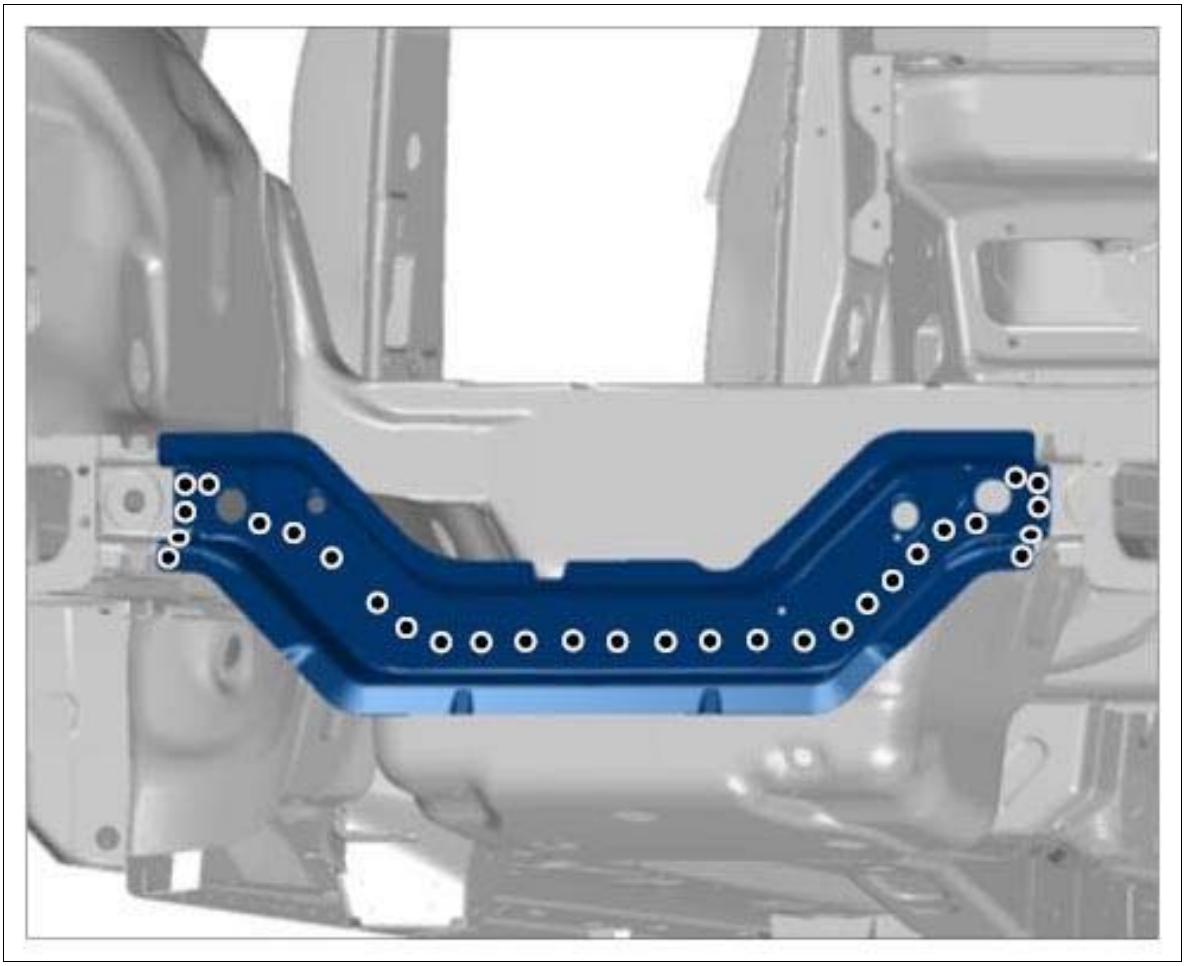

Courtesy of PORSCHE CARS NORTH AMERICA, INC.

WM 530555 REPLACING INNER REAR CLOSING PANEL (ALL MODELS) > SUBSEQUENT WORK

1. Install rear closing panel. → 530555 REPLACING REAR CLOSING PANEL

WM 530555 REPLACING INNER REAR CLOSING PANEL (ALL MODELS) > SUBSEQUENT WORK > SUBSEQUENT WORK FOR BODY REPAIRS (WITHOUT STRAIGHTENING SYSTEM)

1. Clean joint areas and sheetmetal flanges with a wire brush.
2. Prime joint areas and sheetmetal flanges with 2K primer.
3. Restore standard seal with body sealant → 5X00IN42 SEAM SEALING .

   Also seal the repair area carefully.

4. Paint repair area and adjacent surfaces, if necessary.
5. Restore standard underbody protection with underbody sealant → 5X00IN43 UNDERBODY PROTECTION .
6. Apply standard cavity preservation → 5X00IN44 CAVITY PRESERVATION . Also apply cavity preservation to the repair area.
7. Install removed accessories in the repair area.

WM 531655 REPLACING REAR TRANSVERSE LOCK SUPPORT (ALL MODELS) > TOOLS

Designation	Type	Number	Description	
Hot-air blower	Service equipment	WE 1119		
Body alignment system package	Service equipment	WE 1121		
Special electric cutter	Service equipment	WE 1137		
Pneumatic Spotweld Remover, Vario Drill WS 90	Service equipment	WE 1139		
Hand-cartridge gun	Service equipment	WE 1141		
Resistance spot welder	Service equipment	WE 1311		
Inverter welder MIDIspot-QSVM-12000	Service equipment	WE 1312		
Resistance spot welder	Service equipment	WE 1313		

Blind riveting tool TAURUS 4	Service equipment	WE 1348		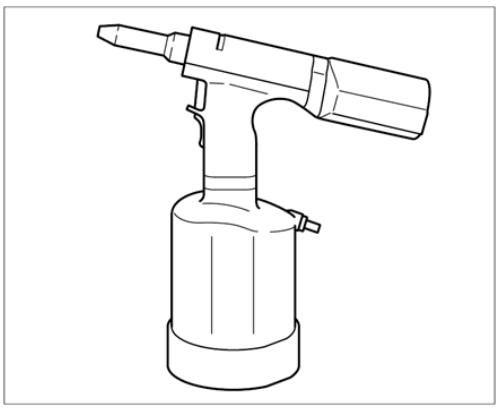
Aluminum tool set with trolley	Service equipment	WE 1350		
Resistance spot welder	Service equipment	WE 1352		
Measuring and alignment system, professional	Service equipment	WE 1398		
Mobile extraction unit, aluminum	Service equipment	WE 1507		
Body saw	Service equipment	WE 1508		
Star gauges for body gap dimensions	Special tool	Nr.127-1		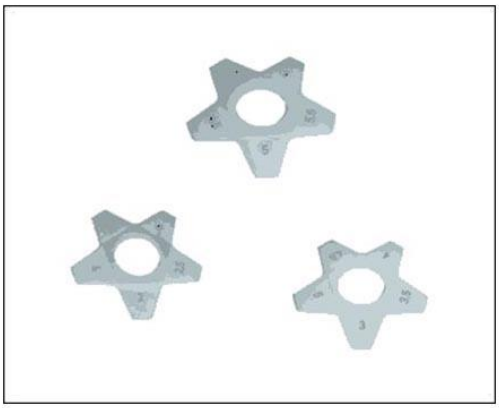

Spotweld drill	Commercially available tool	Nr.129		
Twist drill	Commercially available tool	Nr.201		
Countersink	Commercially available tool	Nr.202		

WM 531655 REPLACING REAR TRANSVERSE LOCK SUPPORT (ALL MODELS) > TECHNICAL VALUES

Location	Description	Type	Basic value	Tolerance 1	Tolerance 2
Applying adhesive		Application depth	3.0 mm		

WM 531655 REPLACING REAR TRANSVERSE LOCK SUPPORT (ALL MODELS) > PRELIMINARY WORK > PRELIMINARY WORK FOR BODY REPAIRS (WITHOUT

STRAIGHTENING SYSTEM)

1. Remove accessories in the repair area.
    1. 1.1. Remove accessories in the repair area according to the extent of damage on the vehicle.
2. Cover accessories adjacent to the repair area on the vehicle.
    1. 2.1. Cover all accessories remaining on the vehicle and adjacent areas with fire-proof protective covers.
3. Reshape connection area of the sheetmetal parts to be replaced. Note: Information on aluminum repairs. Refer to the appropriate information on aluminum repairs
4. Expose joint areas.
    1. 4.1. Remove underbody protection, paint, etc. from the joint areas of the body using a hot-air gun or rotary brush.

1. Remove transverse lock support. → Replacing Rear Transverse Lock Support

WM 531655 REPLACING REAR TRANSVERSE LOCK SUPPORT (ALL MODELS) > SAFETY INSTRUCTIONS AND INFORMATION ON QUALITY

⚠ *CAUTION: Non-observance of safety instructions for body repairs*

- *Risk of damage to the vehicle*
- *Danger of injury*

→ Read the relevant safety instructions as well as general information and quality instructions → 5X00IN01 SAFETY INSTRUCTIONS .

- Protection of electrical components during body repairs
- Corrosion protection measures during repairs → 5X00IN03 CORROSION PROTECTION MEASURES DURING REPAIRS
- Information on aluminum repairs. Refer to the appropriate information on aluminum repairs.
- Body parts of various sheet-steel strengths → 5X00IN04 BODY PARTS OF VARIOUS SHEET-STEEL STRENGTHS
- Replacing punch rivets and penetrated joints
- Setting self-tapping screws → 5X00IN24 SETTING SELF-TAPPING SCREWS
- Working with body structural adhesive → 5X00IN21 WORKING WITH BODY STRUCTURAL ADHESIVE

WM 531655 REPLACING REAR TRANSVERSE LOCK SUPPORT (ALL MODELS) > TOOLS AND MATERIALS > TOOLS AND MATERIALS FOR BODY REPAIRS

Information

- The tools for working on steel and aluminum must always be kept separate from each other. We recommend that you color code the tools using a system similar to that used for the Aluminum tool set with trolley WE 1350, for example.

Straightening set **Body alignment system package WE 1121 Measuring and alignment system, professional WE 1398**

Resistance spot welder; optional **Inverter welder MIDIspot-QSVM-12000 WE 1312, Resistance spot welder WE 1352, Resistance spot welder WE 1311, Resistance spot welder WE 1313**

Metal inert gas (MIG) welder

Pneumatic spotweld remover **Pneumatic Spotweld Remover, Vario Drill WS 90 WE 1139**

Pneumatic body saw **Body saw WE 1508**

Oscillating body saw (special electric cutter) **Special electric cutter WE 1137**

Hot-air blower **Hot-air blower WE 1119**

Hand-cartridge gun **Hand-cartridge gun WE 1141**

Spotweld drill **Spotweld drill**

Countersink for rivets **Countersink Nr.202**

Blind riveting tool for high-strength rivets **Blind riveting tool TAURUS 4 WE 1348**

Safety vacuum cleaner for aluminum dust **Mobile extraction unit, aluminum WE 1507**

Star gauges for body gap dimensions Nr.127-1

Wurth glue and seals body sealant

WM 531655 REPLACING REAR TRANSVERSE LOCK SUPPORT (ALL MODELS) > REPLACING REAR TRANSVERSE LOCK SUPPORT

Fig 1: Identifying Rear Transverse Lock Support Position

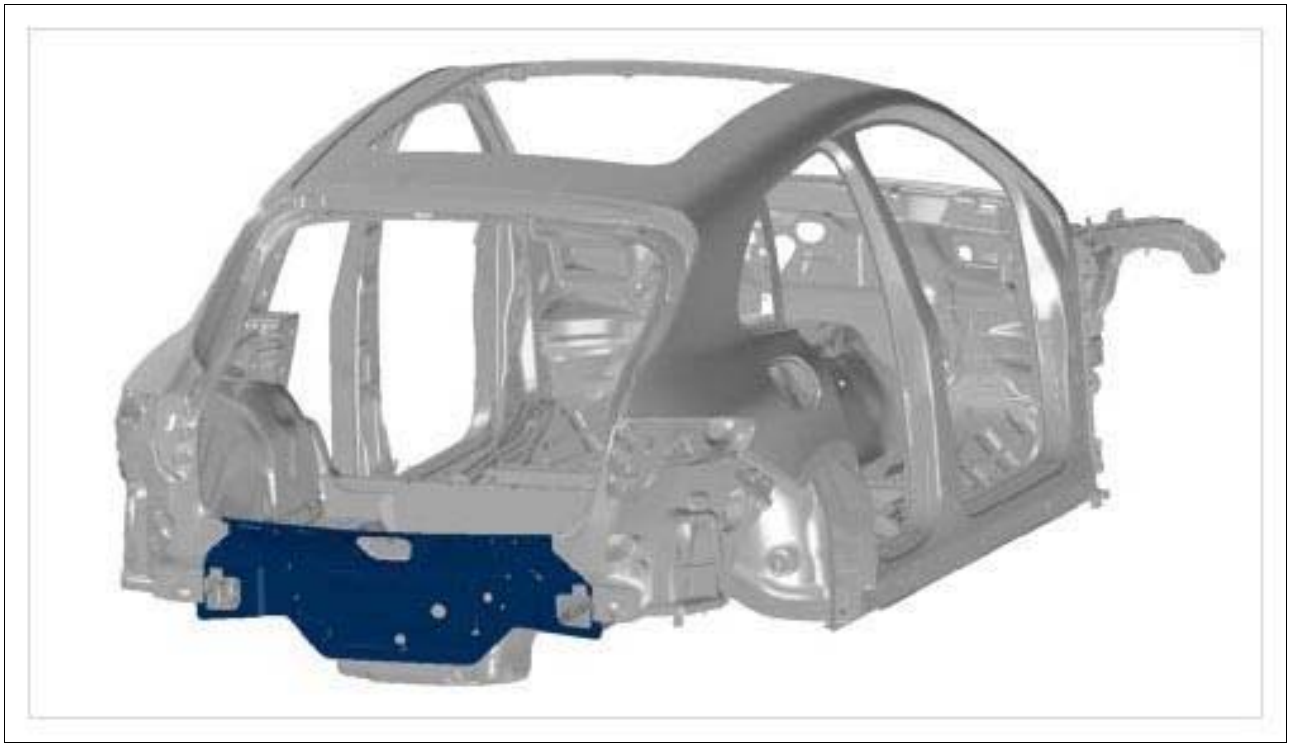

Courtesy of PORSCHE CARS NORTH AMERICA, INC.

Information

Drill out the connection point on one side only. Do not damage the plate underneath.

1. Drill out spotwelds using **spotweld drill;** .

Fig 2: Removing Rear Transverse Lock Support

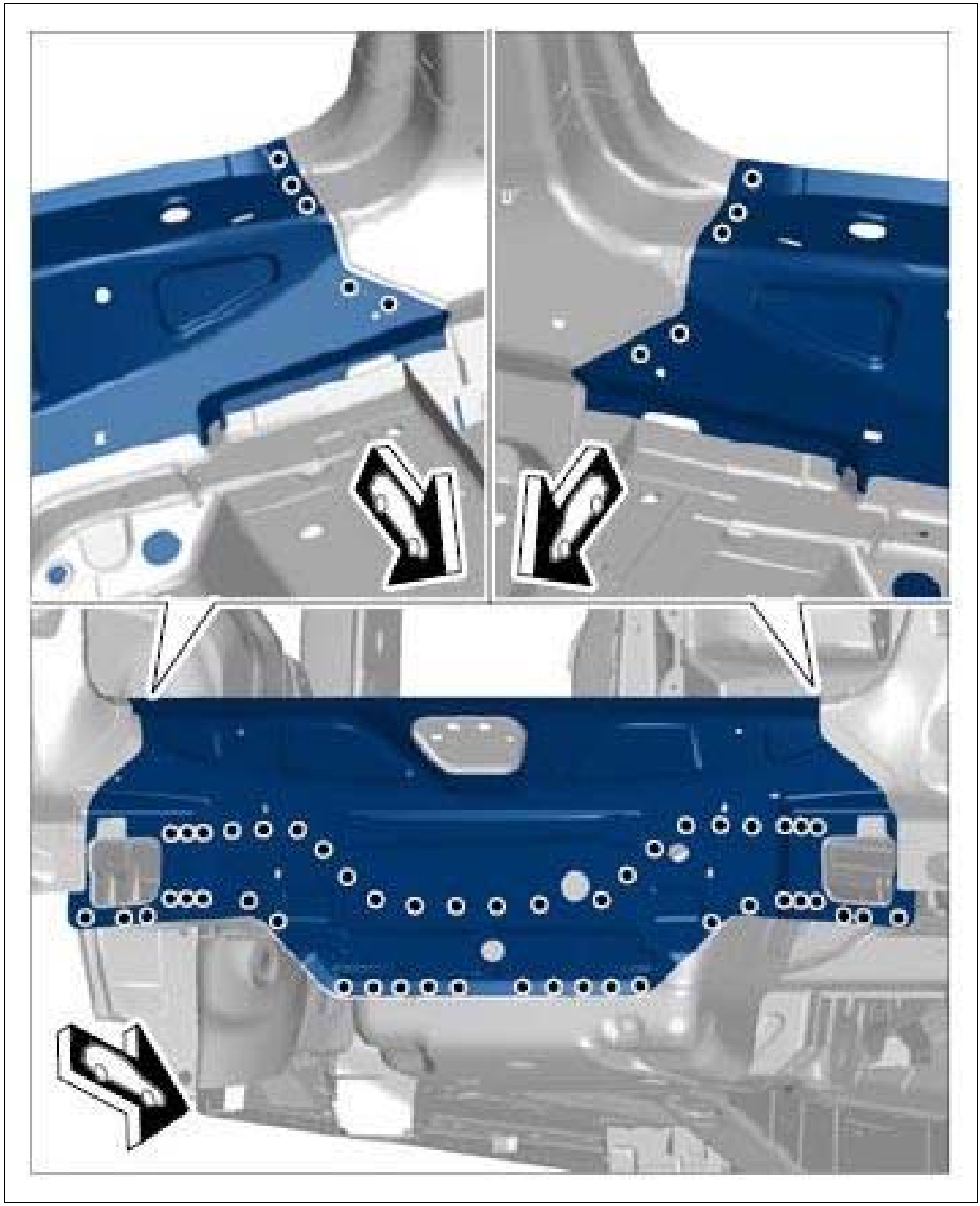

Courtesy of PORSCHE CARS NORTH AMERICA, INC.

2. Make a sufficient gap between the corner plates at the left and right and the transverse lock support **-arrows-** .

Fig 3: Removing Rear Transverse Lock Support



Courtesy of PORSCHE CARS NORTH AMERICA, INC.

3. Heat the marked bonding surfaces.

    1. 3.1. Pull closing panel to the rear in the lower area **-arrows A-** and then remove it by pulling it upwards **-arrows a-** .

Fig 4: Removing Rear Transverse Lock Support

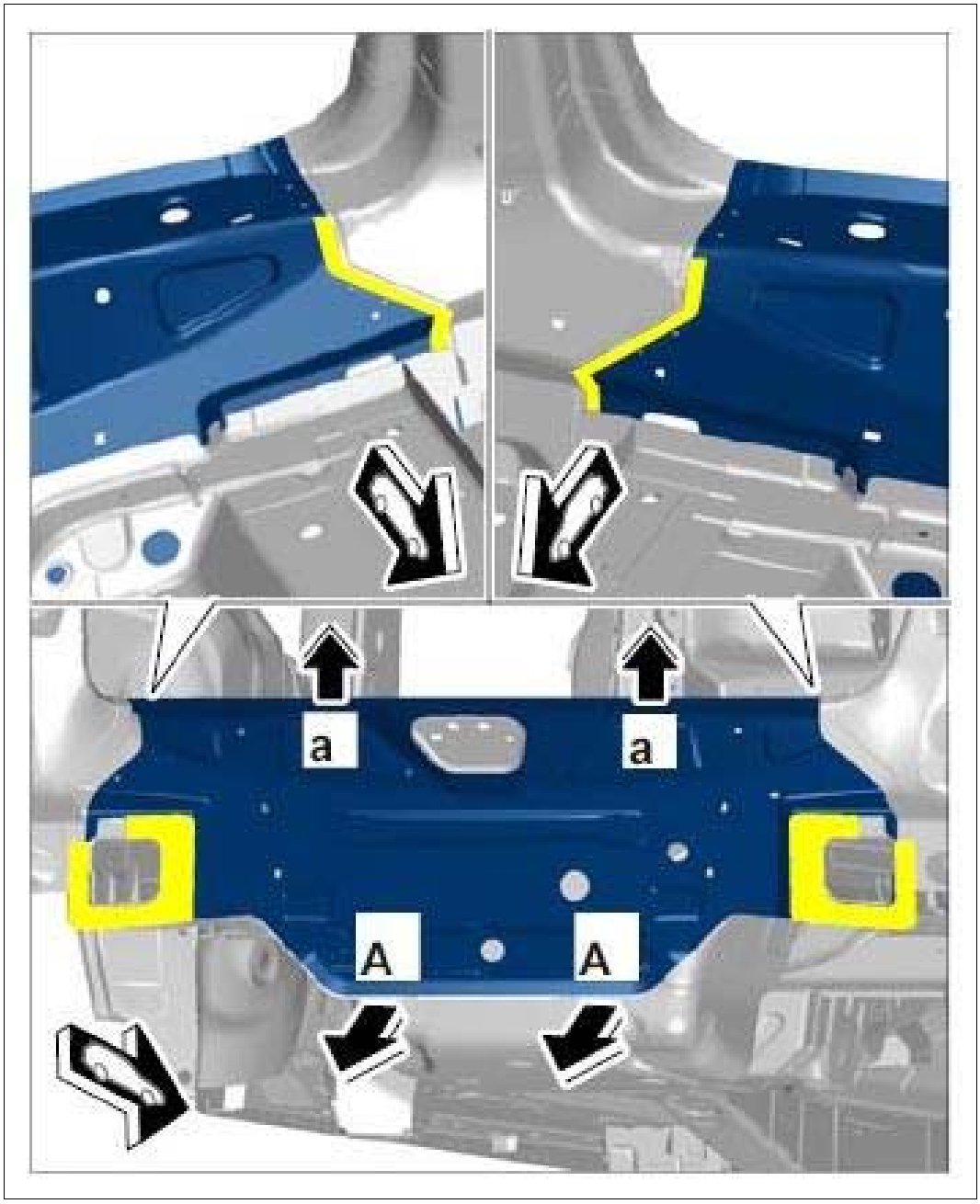

Courtesy of PORSCHE CARS NORTH AMERICA, INC.

WM 531655 REPLACING REAR TRANSVERSE LOCK SUPPORT (ALL MODELS) > PREPARING REAR TRANSVERSE LOCK SUPPORT FOR INSTALLATION

Information

- Before final assembly, make sure you fully understand all the work steps involved and carry out a trial assembly without applying adhesive.
- The bonding process can only be carried out reliably when a smooth and swift sequence of operations is guaranteed.

- Do not begin bonding work until all materials and tools necessary for later repair work are available.

1. Prepare the marked areas for bonding and welding.

   Fig 1: Identifying Rear Transverse Lock Support Marked Areas

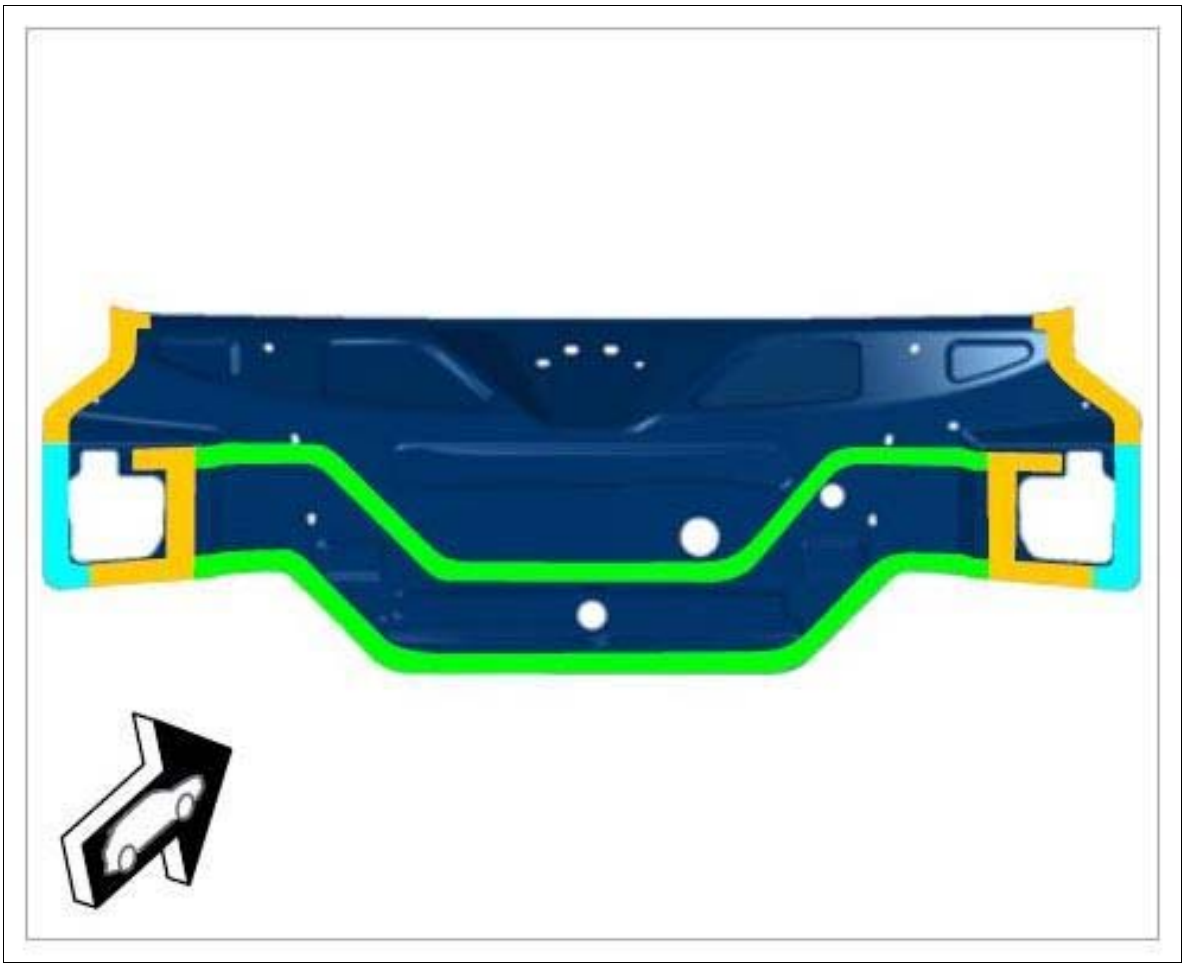

Courtesy of PORSCHE CARS NORTH AMERICA, INC.

Orange	Bonding + resistance spot-welding
Green	Resistance spot-welding
Blue	Bonding

WM 531655 REPLACING REAR TRANSVERSE LOCK SUPPORT (ALL MODELS) > PREPARING CONNECTION AREAS OF THE BODY FOR INSTALLATION

1. Align the sealing surface and connections of the body.
2. De-burr connection points and prepare them for welding.

   Information

   1. Before final assembly, make sure you fully understand all the work steps involved and

carry out a trial assembly without applying adhesive.

2. The bonding process can only be carried out reliably when a smooth and swift sequence of operations is guaranteed.

3. Do not begin bonding work until all materials and tools necessary for later repair work are available.

3. Prepare marked areas for welding and bonding. → 5X00IN21 WORKING WITH BODY STRUCTURAL ADHESIVE

Fig 1: Identifying Body Connection Areas

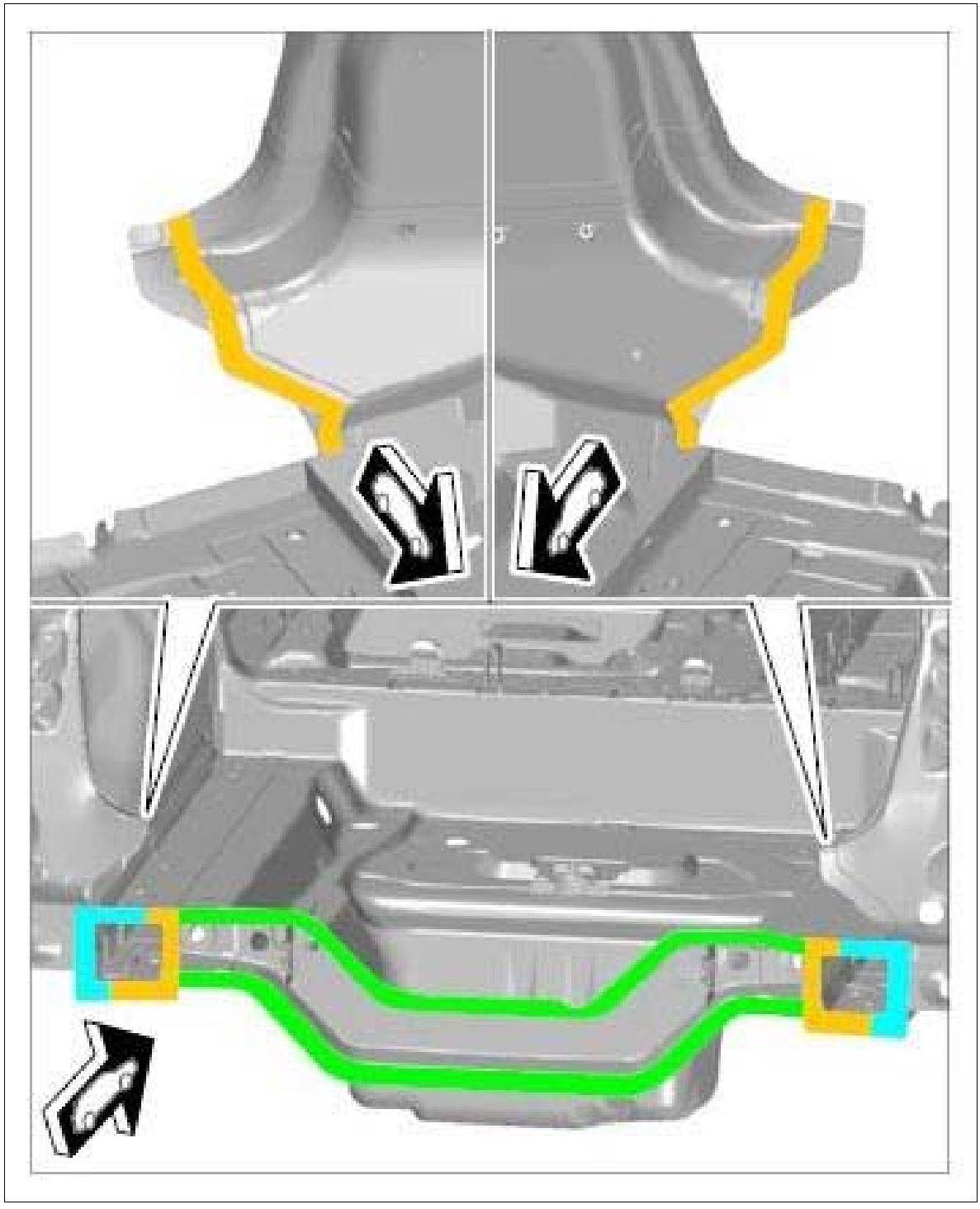

Courtesy of PORSCHE CARS NORTH AMERICA, INC.

Orange	Bonding + resistance spot-welding
Green	Resistance spot-welding
Blue	Bonding

WM 531655 REPLACING REAR TRANSVERSE LOCK SUPPORT (ALL MODELS) > INSTALLING REAR TRANSVERSE LOCK SUPPORT

Information

- Before final assembly, make sure you fully understand all the work steps involved and carry out a trial assembly without applying adhesive.
- The bonding process can only be carried out reliably when a smooth and swift sequence of operations is guaranteed.
- Do not begin bonding work until all materials and tools necessary for later repair work are available.

1. Install rear transverse lock support and check that it fits perfectly. Check gap dimensions. → 5X00IN DIAGRAM - BODY GAP DIMENSIONS

    1. 1.1. Apply foam filler to the body in area **-A-** . → 5X00IN22 WORKING WITH BODY FOAM FILLER

       Make sure that all openings and gaps are closed off with the sealing compound.

    2. 1.2. Apply adhesive to the areas marked in yellow. → 5X00IN21 WORKING WITH STRUCTURAL BODY ADHESIVE→ **Application depth: 3.0 mm**

Fig 1: Identifying Adhesive Applying Areas

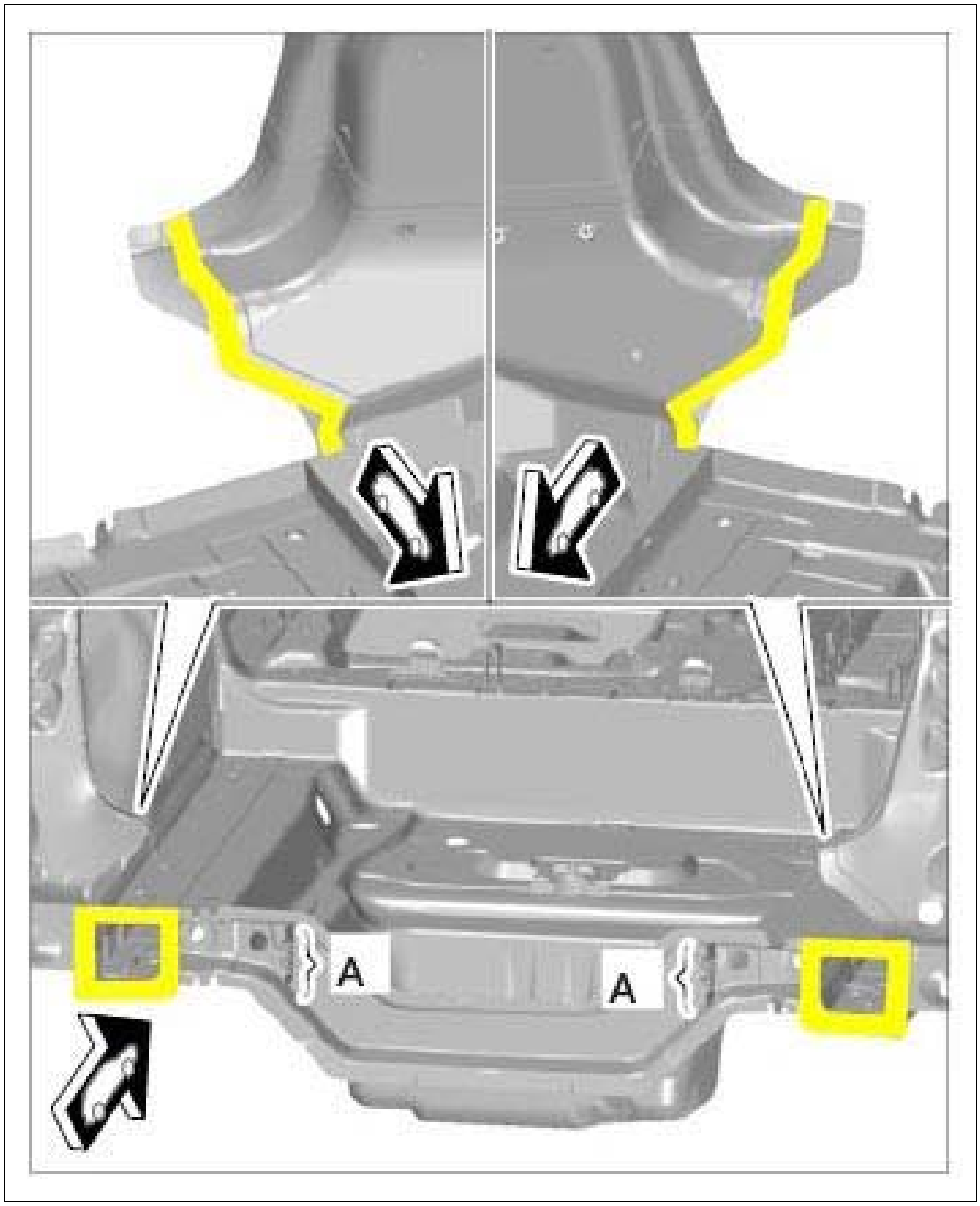

Courtesy of PORSCHE CARS NORTH AMERICA, INC.

2. Install rear transverse lock support.

    1. 2.1. Guide in rear transverse lock support from above **-arrows A-** and position it between the corner plates **-arrows a-** .

    2. 2.2. Straighten connection areas between the corner plates and rear transverse lock support.

    3. 2.3. Resistance spot-weld the rear transverse lock support.

Fig 2: Installing Rear Transverse Lock Support

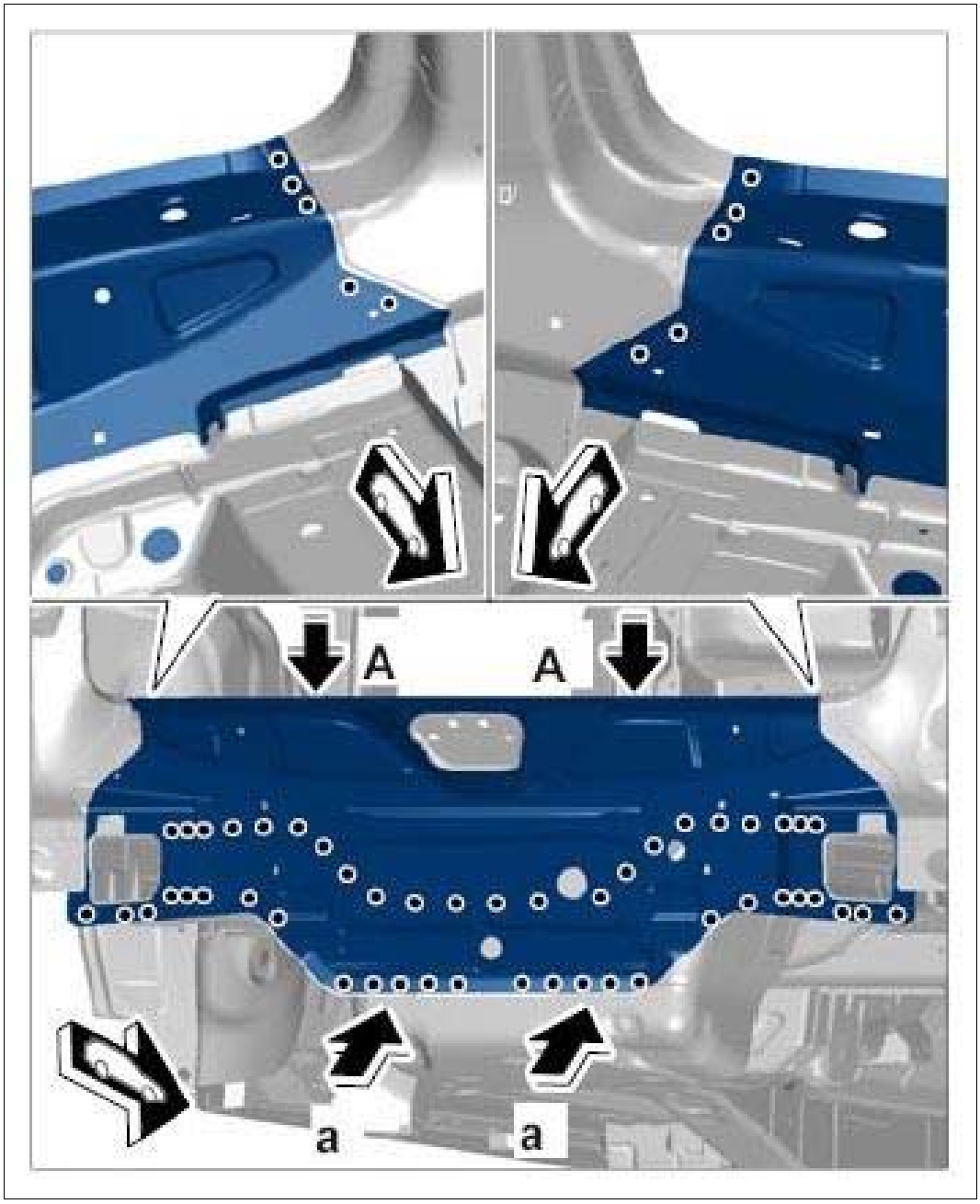

Courtesy of PORSCHE CARS NORTH AMERICA, INC.

WM 531655 REPLACING REAR TRANSVERSE LOCK SUPPORT (ALL MODELS) > SUBSEQUENT WORK

1. Install rear closing panel. → 530555 REPLACING REAR CLOSING PANEL

WM 531655 REPLACING REAR TRANSVERSE LOCK SUPPORT (ALL MODELS) > SUBSEQUENT WORK > SUBSEQUENT WORK FOR BODY REPAIRS (WITHOUT

STRAIGHTENING SYSTEM)

1. Clean joint areas and sheetmetal flanges with a wire brush.
2. Prime joint areas and sheetmetal flanges with 2K primer.
3. Restore standard seal with body sealant → 5X00IN42 SEAM SEALING .

   Also seal the repair area carefully.
4. Paint repair area and adjacent surfaces, if necessary.
5. Restore standard underbody protection with underbody sealant → 5X00IN43 UNDERBODY PROTECTION .
6. Apply standard cavity preservation → 5X00IN44 CAVITY PRESERVATION . Also apply cavity preservation to the repair area.
7. Install removed accessories in the repair area.

WM 532455 REPLACING REAR BOOT FLOOR PLATE (ALL MODELS) > TOOLS

Designation	Type	Number	Description	
Hot-air blower	Service equipment	WE 1119		
Body alignment system package	Service equipment	WE 1121		
Special electric cutter	Service equipment	WE 1137		
Pneumatic Spotweld Remover, Vario Drill WS 90	Service equipment	WE 1139		
Hand-cartridge gun	Service equipment	WE 1141		
Resistance spot welder	Service equipment	WE 1311		
Inverter welder MIDIspot-QSVM-12000	Service equipment	WE 1312		
Resistance spot welder	Service equipment	WE 1313		

Blind riveting tool TAURUS 4	Service equipment	WE 1348		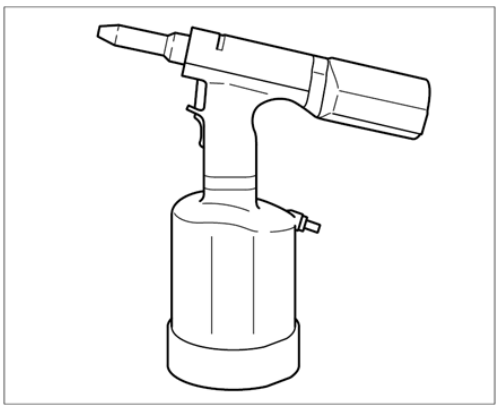
Aluminum tool set with trolley	Service equipment	WE 1350		
Resistance spot welder	Service equipment	WE 1352		
Measuring and alignment system, professional	Service equipment	WE 1398		
Mobile extraction unit, aluminum	Service equipment	WE 1507		
Body saw	Service equipment	WE 1508		
Star gauges for body gap dimensions	Special tool	Nr.127-1		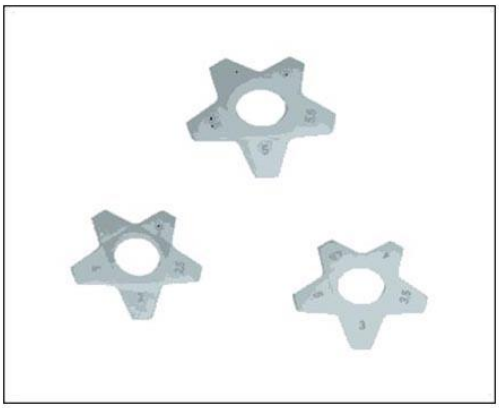

Spotweld drill	Commercially available tool	Nr.129		
Twist drill	Commercially available tool	Nr.201		
Countersink	Commercially available tool	Nr.202		

WM 532455 REPLACING REAR BOOT FLOOR PLATE (ALL MODELS) > TECHNICAL VALUES

Location	Description	Type	Basic value	Tolerance 1	Tolerance 2
Drill bit		Diameter	8.0 mm		

WM 532455 REPLACING REAR BOOT FLOOR PLATE (ALL MODELS) > PRELIMINARY WORK > PRELIMINARY WORK FOR BODY REPAIRS (WITHOUT

STRAIGHTENING SYSTEM)

1. Remove accessories in the repair area.
    1. 1.1. Remove accessories in the repair area according to the extent of damage on the vehicle.
2. Cover accessories adjacent to the repair area on the vehicle.
    1. 2.1. Cover all accessories remaining on the vehicle and adjacent areas with fire-proof protective covers.
3. Reshape connection area of the sheetmetal parts to be replaced. Note: Information on aluminum repairs. Refer to the appropriate information on aluminum repairs.
4. Expose joint areas.
    1. 4.1. Remove underbody protection, paint, etc. from the joint areas of the body using a hot-air gun or rotary brush.

1. Remove inner rear closing panel. → 53055510 REPLACING INNER REAR CLOSING PANEL

WM 532455 REPLACING REAR BOOT FLOOR PLATE (ALL MODELS) > SAFETY INSTRUCTIONS AND INFORMATION ON QUALITY

⚠ *CAUTION: Non-observance of safety instructions for body repairs*

- *Risk of damage to the vehicle*
- *Danger of injury*

→ Read the relevant safety instructions as well as general information and quality instructions → 5X00IN01 SAFETY INSTRUCTIONS .

- Protection of electrical components during body repairs
- Corrosion protection measures during repairs → 5X00IN03 CORROSION PROTECTION MEASURES DURING REPAIRS
- Information on aluminum repairs. Refer to the appropriate information on aluminum repairs.
- Body parts of various sheet-steel strengths → 5X00IN04 BODY PARTS OF VARIOUS SHEET-STEEL STRENGTHS
- Replacing punch rivets and penetrated joints
- Setting self-tapping screws → 5X00IN24 SETTING SELF-TAPPING SCREWS
- Working with body structural adhesive → 5X00IN21 WORKING WITH BODY STRUCTURAL ADHESIVE

WM 532455 REPLACING REAR BOOT FLOOR PLATE (ALL MODELS) > TOOLS AND MATERIALS > TOOLS AND MATERIALS FOR BODY REPAIRS

Information

- The tools for working on steel and aluminum must always be kept separate from each other. We recommend that you color code the tools using a system similar to that used for the Aluminum tool set with trolley WE 1350, for example.

Straightening set **Body alignment system package WE 1121 Measuring and alignment system, professional WE 1398**

Resistance spot welder; optional **Inverter welder MIDIspot-QSVM-12000 WE 1312, Resistance spot welder WE 1352, Resistance spot welder WE 1311, Resistance spot welder WE 1313**

Metal inert gas (MIG) welder.

Pneumatic spotweld remover **Pneumatic Spotweld Remover, Vario Drill WS 90 WE 1139**

Pneumatic body saw **Body saw WE 1508**

Oscillating body saw (special electric cutter) **Special electric cutter WE 1137**

Hot-air blower **Hot-air blower WE 1119**

Hand-cartridge gun **Hand-cartridge gun WE 1141**

Spotweld drill **Spotweld drill**

Countersink for rivets **Countersink Nr.202**

Blind riveting tool for high-strength rivets **Blind riveting tool TAURUS 4 WE 1348**

Safety vacuum cleaner for aluminum dust **Mobile extraction unit, aluminum WE 1507**

Star gauges for body gap dimensions Nr.127-1

Wurth glue and seals body sealant

WM 532455 REPLACING REAR BOOT FLOOR PLATE (ALL MODELS) > REMOVING REAR BOOT FLOOR PLATE

Fig 1: Identifying Rear Boot Floor Plate Position

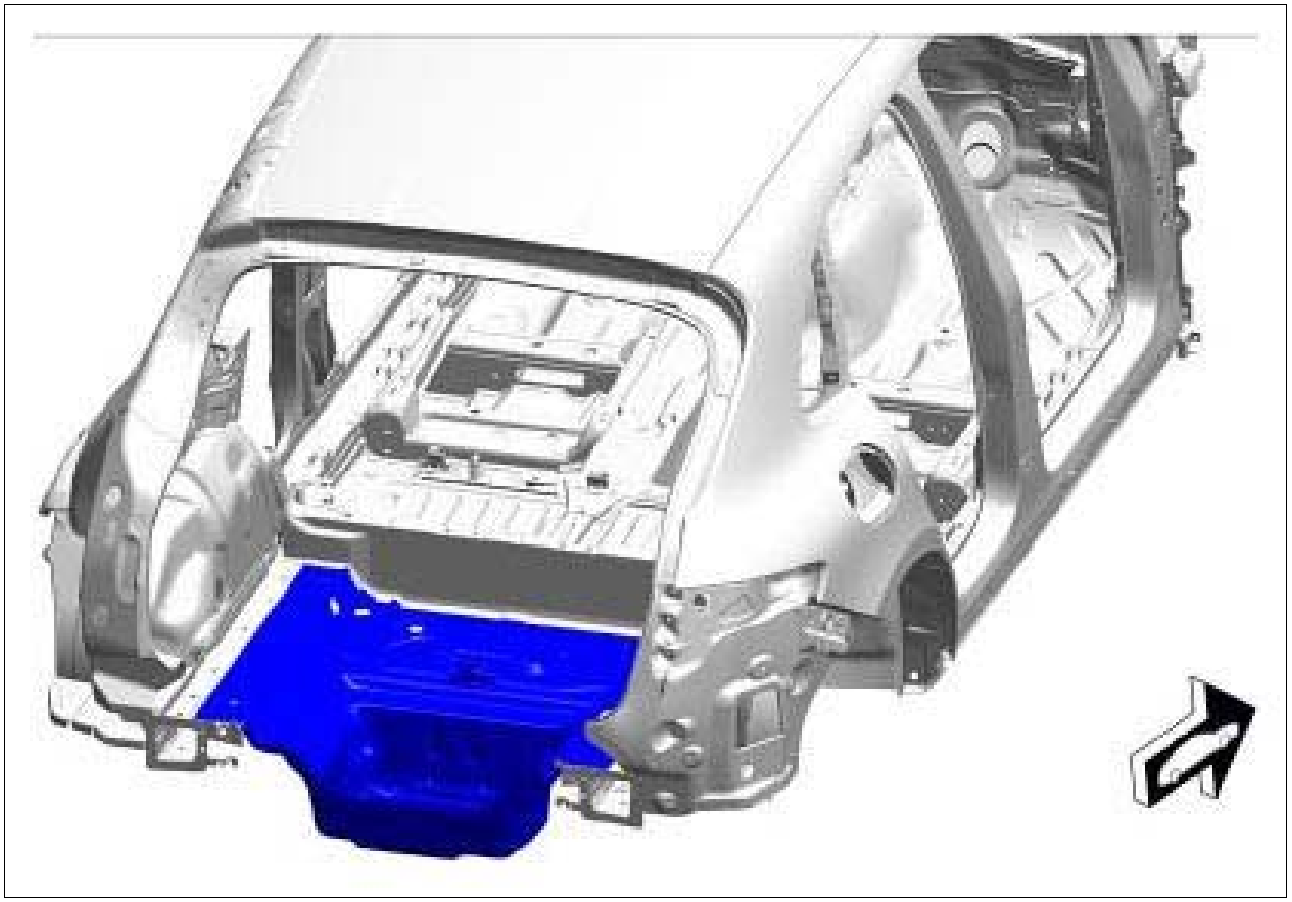

Courtesy of PORSCHE CARS NORTH AMERICA, INC.

Information

Drill out the connection point on one side only. Do not damage the plate underneath.

1. Drill out spotwelds using **spotweld drill;** .

Fig 2: Removing Rear Boot Floor Plate

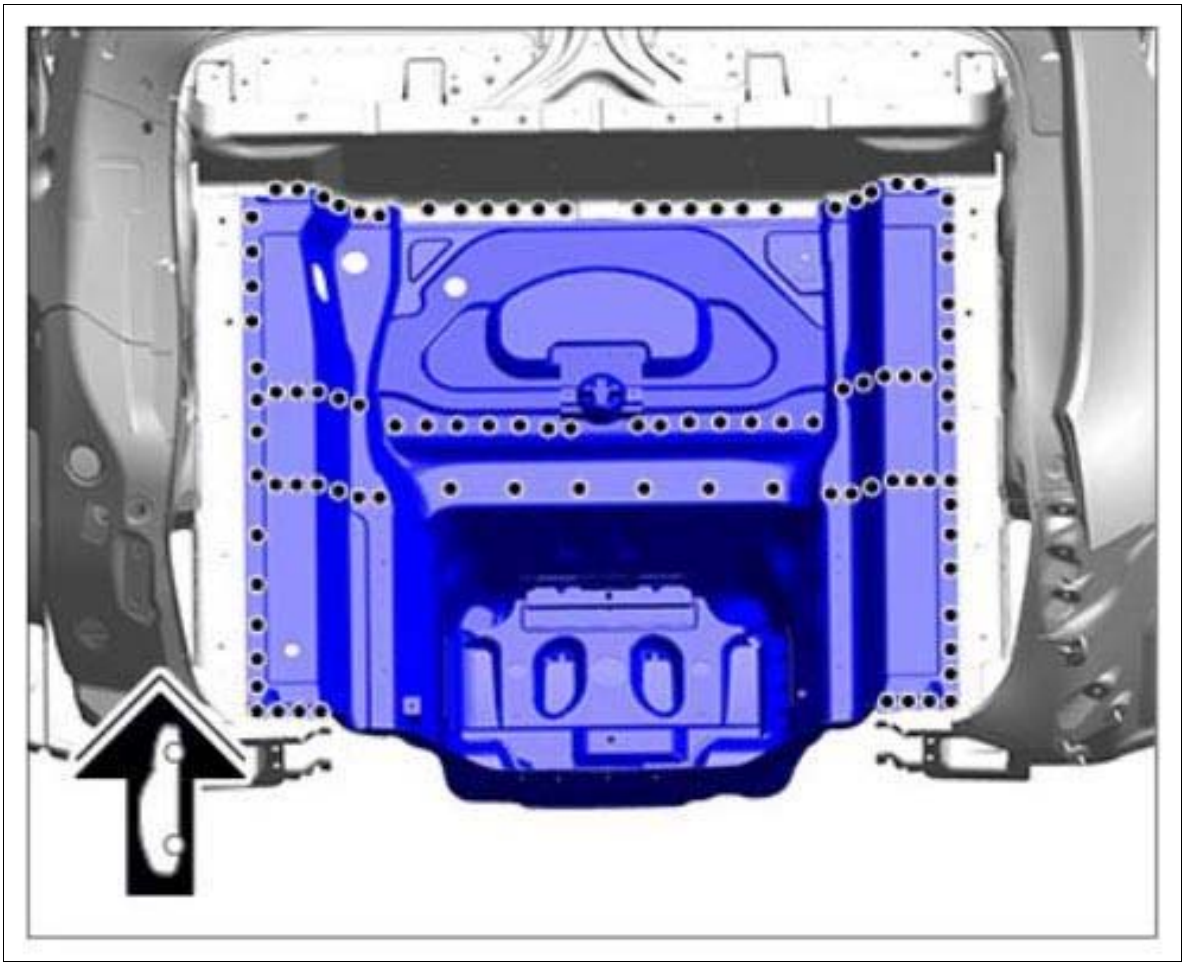

Courtesy of PORSCHE CARS NORTH AMERICA, INC.

2. Heat bonding areas.

    1. 2.1. Remove rear boot floor plate.

Fig 3: Removing Rear Boot Floor Plate

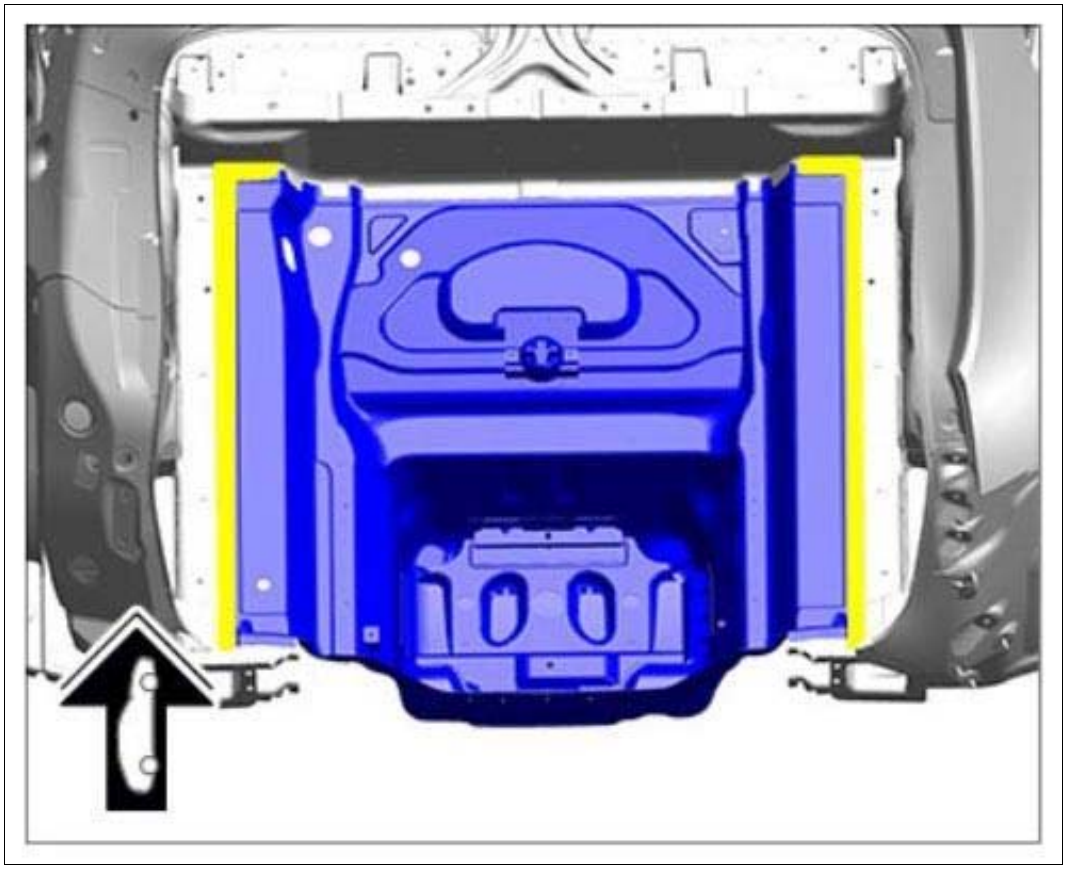

Courtesy of PORSCHE CARS NORTH AMERICA, INC.

WM 532455 REPLACING REAR BOOT FLOOR PLATE (ALL MODELS) > PREPARING REAR BOOT FLOOR PLATE FOR INSTALLATION

Information

- Before final assembly, make sure you fully understand all the work steps involved and carry out a trial assembly without applying adhesive.
- The bonding process can only be carried out reliably when a smooth and swift sequence of operations is guaranteed.
- Do not begin bonding work until all materials and tools necessary for later repair work are available .

1. Fit in rear boot floor plate.
2. Drill holes for plug-welding using a drill bit with a diameter of → **Diameter: 8.0 mm** .

Fig 1: Identifying Rear Boot Floor Plate

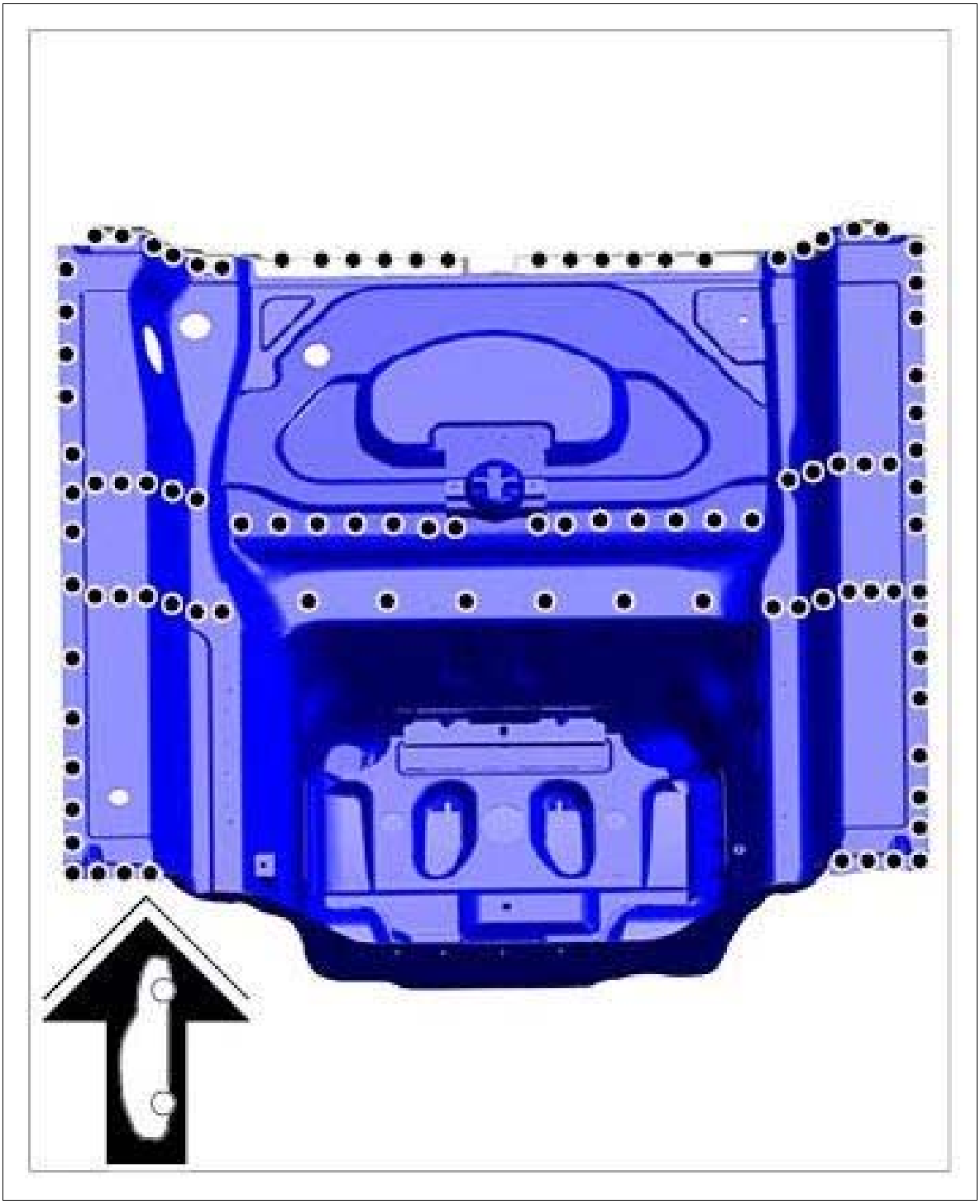

Courtesy of PORSCHE CARS NORTH AMERICA, INC.

3. Prepare connection areas for welding.

Fig 2: Identifying Body Connection Areas

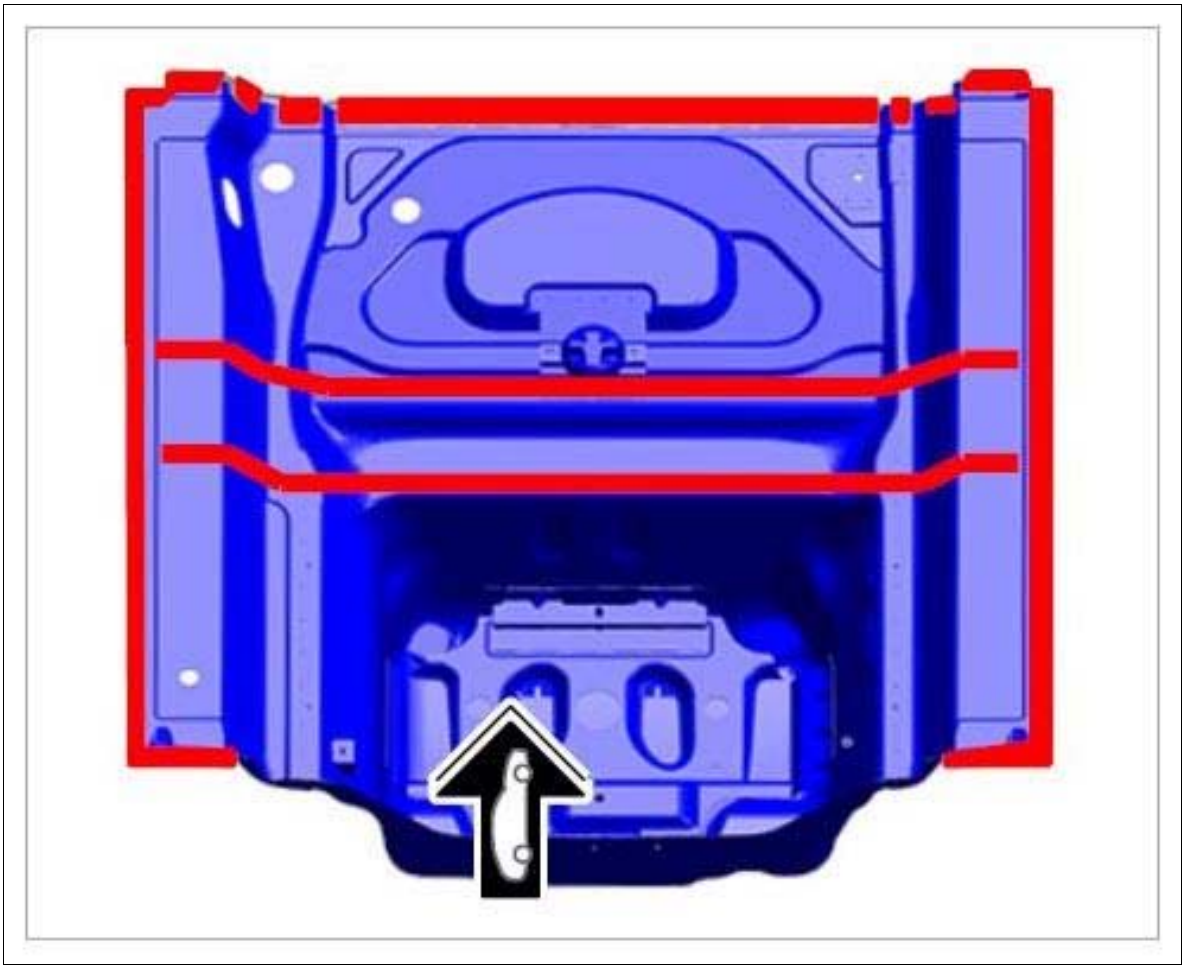

Courtesy of PORSCHE CARS NORTH AMERICA, INC.

Red	Plug-welding/apply a full weld using inert gas without bonding

WM 532455 REPLACING REAR BOOT FLOOR PLATE (ALL MODELS) > PREPARING CONNECTION AREAS OF THE BODY

1. Align the sealing surface and connections of the body.
2. De-burr connection points and prepare them for welding.
3. Prepare the marked areas for welding and bonding.

Fig 1: Identifying Rear Boot Floor Plate

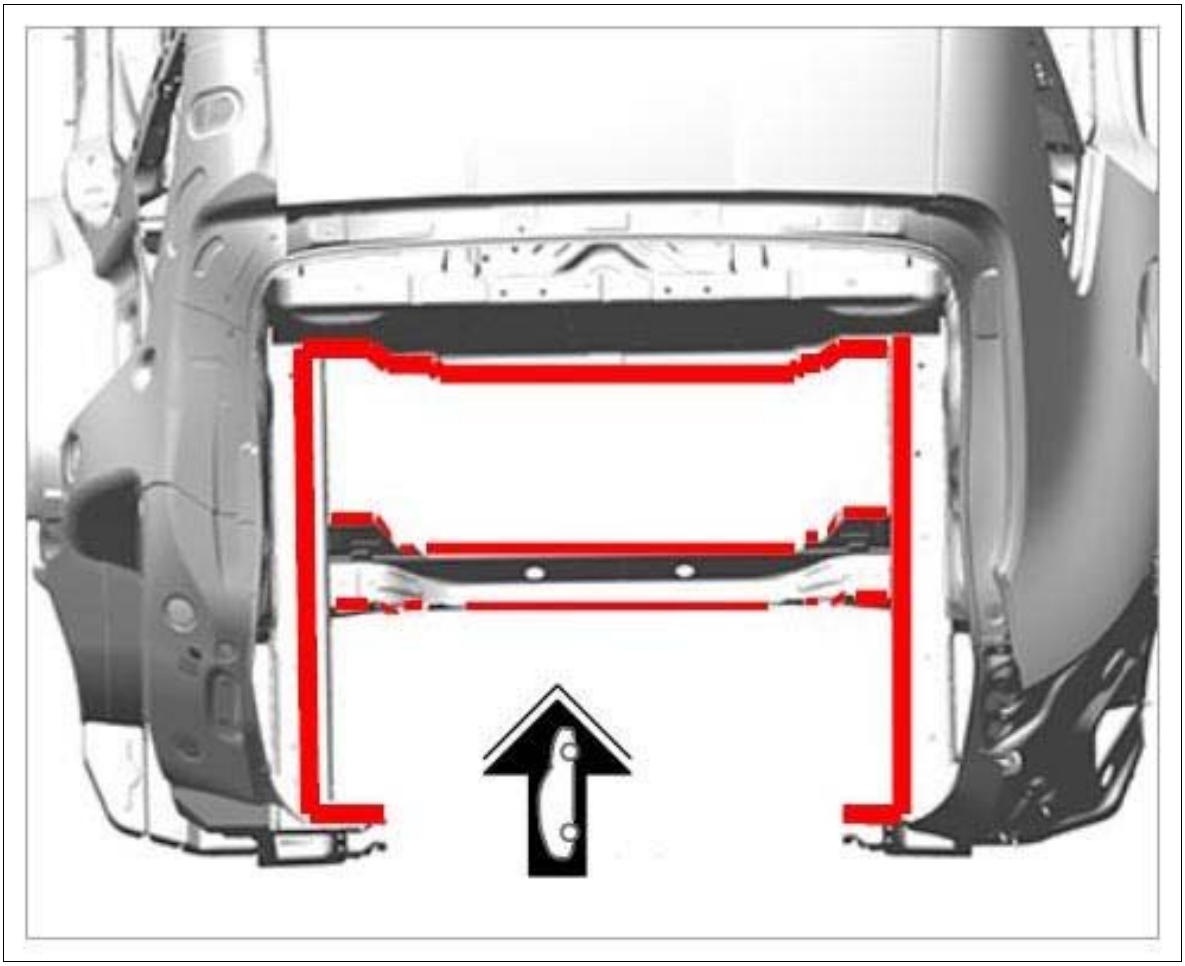

Courtesy of PORSCHE CARS NORTH AMERICA, INC.

Red	Plug-welding/apply a full weld using inert gas without bonding

WM 532455 REPLACING REAR BOOT FLOOR PLATE (ALL MODELS) > INSTALLING REAR BOOT FLOOR PLATE

Information

- Before final assembly, make sure you fully understand all the work steps involved and carry out a trial assembly without applying adhesive.
- The bonding process can only be carried out reliably when a smooth and swift sequence of operations is guaranteed.
- Do not begin bonding work until all materials and tools necessary for later repair work are available.

1. Install rear boot floor plate and check that it fits perfectly. Check gap dimensions. → 5X00IN DIAGRAM - BODY GAP DIMENSIONS

2. Plug-weld boot floor plate using inert gas.

Fig 1: Installing Rear Boot Floor Plate

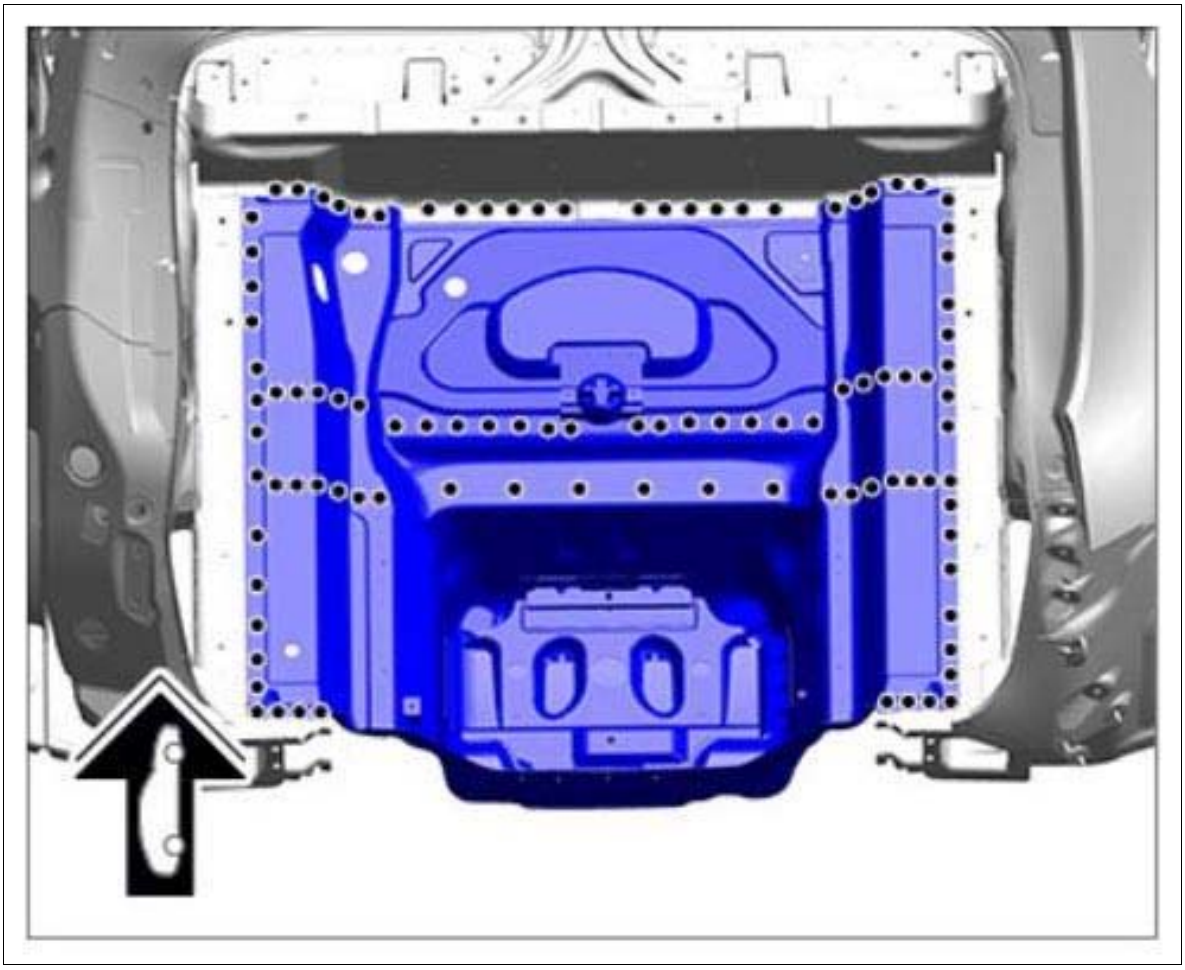

Courtesy of PORSCHE CARS NORTH AMERICA, INC.

WM 532455 REPLACING REAR BOOT FLOOR PLATE (ALL MODELS) > SUBSEQUENT WORK

1. Install inner rear closing panel. → ↓53055510 REPLACING INNER REAR CLOSING PANEL

WM 532455 REPLACING REAR BOOT FLOOR PLATE (ALL MODELS) > SUBSEQUENT WORK > SUBSEQUENT WORK FOR BODY REPAIRS (WITHOUT STRAIGHTENING SYSTEM)

1. Clean joint areas and sheetmetal flanges with a wire brush.
2. Prime joint areas and sheetmetal flanges with 2K primer.
3. Restore standard seal with body sealant → 5X00IN42 SEAM SEALING .

   Also seal the repair area carefully.

4. Paint repair area and adjacent surfaces, if necessary.
5. Restore standard underbody protection with underbody sealant → 5X00IN43 UNDERBODY PROTECTION .
6. Apply standard cavity preservation → 5X00IN44 CAVITY PRESERVATION . Also apply cavity preservation to the repair area.
7. Install removed accessories in the repair area.

WM 532555 REPLACING REAR-END WELL (ALL MODELS) > TOOLS

Designation	Type	Number	Description	
Hot-air blower	Service equipment	WE 1119		
Body alignment system package	Service equipment	WE 1121		
Special electric cutter	Service equipment	WE 1137		
Pneumatic Spotweld Remover, Vario Drill WS 90	Service equipment	WE 1139		
Hand-cartridge gun	Service equipment	WE 1141		
Resistance spot welder	Service equipment	WE 1311		
Inverter welder MIDIspot-QSVM-12000	Service equipment	WE 1312		
Resistance spot welder	Service equipment	WE 1313		

Blind riveting tool TAURUS 4	Service equipment	WE 1348		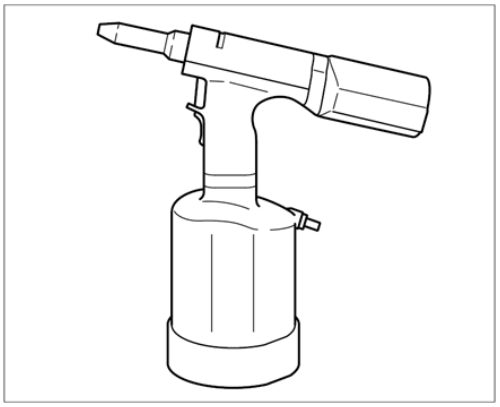
Aluminum tool set with trolley	Service equipment	WE 1350		
Resistance spot welder	Service equipment	WE 1352		
Measuring and alignment system, professional	Service equipment	WE 1398		
Mobile extraction unit, aluminum	Service equipment	WE 1507		
Body saw	Service equipment	WE 1508		
Star gauges for body gap dimensions	Special tool	Nr.127-1		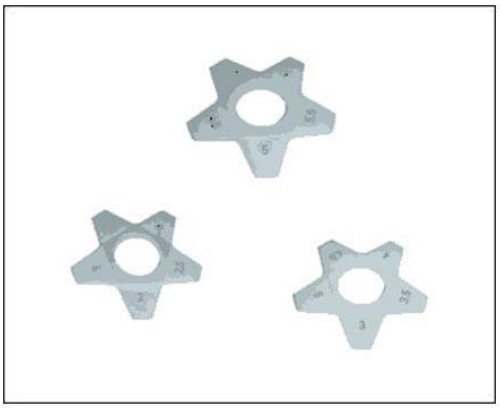

Commercially available tool		Nr.129		
Twist drill	Commercially available tool	Nr.201		
Countersink	Commercially available tool	Nr.202		

WM 532555 REPLACING REAR-END WELL (ALL MODELS) > PRELIMINARY WORK

1. Remove inner rear closing panel. → 53055510 REPLACING INNER REAR CLOSING PANEL

WM 532555 REPLACING REAR-END WELL (ALL MODELS) > PRELIMINARY WORK > PRELIMINARY WORK FOR BODY REPAIRS (WITHOUT STRAIGHTENING SYSTEM)

1. Remove accessories in the repair area.
    1. 1.1. Remove accessories in the repair area according to the extent of damage on the vehicle.

2. Cover accessories adjacent to the repair area on the vehicle.

    1. 2.1. Cover all accessories remaining on the vehicle and adjacent areas with fire-proof protective covers.

3. Reshape connection area of the sheetmetal parts to be replaced. Note: Information on aluminum repairs. Refer to the appropriate information on aluminum repairs.

4. Expose joint areas.

    1. 4.1. Remove underbody protection, paint, etc. from the joint areas of the body using a hot-air gun or rotary brush.

WM 532555 REPLACING REAR-END WELL (ALL MODELS) > SAFETY INSTRUCTIONS AND INFORMATION ON QUALITY

> ⚠ *CAUTION: Non-observance of safety instructions for body repairs*
>
> - *Risk of damage to the vehicle*
> - *Danger of injury*

→ Read the relevant safety instructions as well as general information and quality instructions → 5X00IN01 SAFETY INSTRUCTIONS .

- Protection of electrical components during body repairs
- Corrosion protection measures during repairs → 5X00IN03 CORROSION PROTECTION MEASURES DURING REPAIRS
- Information on aluminum repairs. Refer to the appropriate information on aluminum repairs
- Body parts of various sheet-steel strengths → 5X00IN04 BODY PARTS OF VARIOUS SHEET-STEEL STRENGTHS
- Replacing punch rivets and penetrated joints
- Setting self-tapping screws → 5X00IN24 SETTING SELF-TAPPING SCREWS
- Working with body structural adhesive → 5X00IN21 WORKING WITH BODY STRUCTURAL ADHESIVE

WM 532555 REPLACING REAR-END WELL (ALL MODELS) > TOOLS AND MATERIALS > TOOLS AND MATERIALS FOR BODY REPAIRS

Information

- The tools for working on steel and aluminum must always be kept separate from each other. We recommend that you color code the tools using a system similar to that used for the Aluminum tool

set with trolley WE 1350, for example.

Straightening set **Body alignment system package WE 1121 Measuring and alignment system, professional WE 1398**

Resistance spot welder; optional **Inverter welder MIDIspot-QSVM-12000 WE 1312, Resistance spot welder WE 1352, Resistance spot welder WE 1311, Resistance spot welder WE 1313**

Metal inert gas (MIG) welder.

Pneumatic spotweld remover **Pneumatic Spotweld Remover, Vario Drill WS 90 WE 1139**

Pneumatic body saw **Body saw WE 1508**

Oscillating body saw (special electric cutter) **Special electric cutter WE 1137**

Hot-air blower **Hot-air blower WE 1119**

Hand-cartridge gun **Hand-cartridge gun WE 1141**

Spotweld drill **Spotweld drill**

Countersink for rivets **Countersink Nr.202**

Blind riveting tool for high-strength rivets **Blind riveting tool TAURUS 4 WE 1348**

Safety vacuum cleaner for aluminum dust **Mobile extraction unit, aluminum WE 1507**

Star gauges for body gap dimensions Nr.127-1

Wurth glue and seals body sealant

WM 532555 REPLACING REAR-END WELL (ALL MODELS) > REMOVING REAR-END WELL

Fig 1: Identifying Rear-End Well Position



Courtesy of PORSCHE CARS NORTH AMERICA, INC.

Information

Drill out the connection point on one side only. Do not damage the plate underneath.

1. Drill out spotwelds using **spotweld drill;** .
    1. 1.1. Remove rear-end well.

Fig 2: Identifying Rear-End Well Spotwelds Area



Courtesy of PORSCHE CARS NORTH AMERICA, INC.

WM 532555 REPLACING REAR-END WELL (ALL MODELS) > PREPARING REAR-END WELL FOR INSTALLATION

1. Prepare the marked areas for welding.

Fig 1: Identifying Rear-End Well Marked Areas



Courtesy of PORSCHE CARS NORTH AMERICA, INC.

Orange	Resistance spot-welding

WM 532555 REPLACING REAR-END WELL (ALL MODELS) > PREPARING CONNECTION AREAS OF THE BODY

1. Align the sealing surface and connections of the body.
2. De-burr the connection points and prepare them for welding.

Information

1. Before final assembly, make sure you fully understand all the work steps involved and carry out a trial assembly without applying adhesive.
2. The bonding process can only be carried out reliably when a smooth and swift sequence of operations is guaranteed.
3. Do not begin bonding work until all materials and tools necessary for later repair work are available.

3. Prepare the marked areas for welding. → 5X00IN21 WORKING WITH BODY STRUCTURAL ADHESIVE

Fig 1: Identifying Body Connection Areas

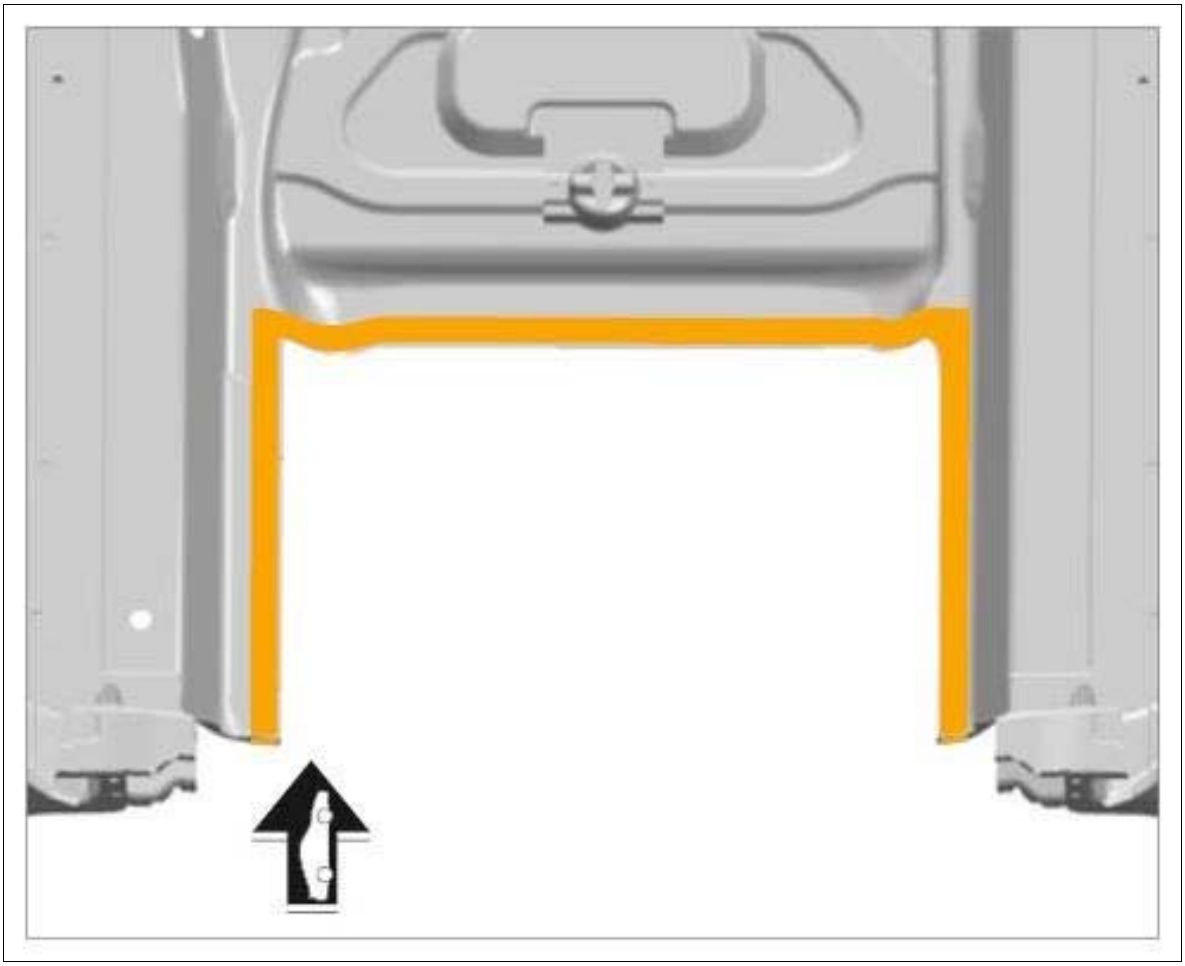

Courtesy of PORSCHE CARS NORTH AMERICA, INC.

Orange	Resistance spot-welding

WM 532555 REPLACING REAR-END WELL (ALL MODELS) > INSTALLING REAR-END WELL

Information

- Before final assembly, make sure you fully understand all the work steps involved and carry out a trial assembly without applying adhesive.
- The bonding process can only be carried out reliably when a smooth and swift sequence of operations is guaranteed.
- Do not begin bonding work until all materials and tools necessary for later repair work are available.

1. Install rear-end well and check that it fits perfectly. Check gap dimensions. → 5X00IN

DIAGRAM - BODY GAP DIMENSIONS

2. Resistance spot-weld the rear-end well.

Fig 1: Identifying Rear-End Well Spot-Weld Areas

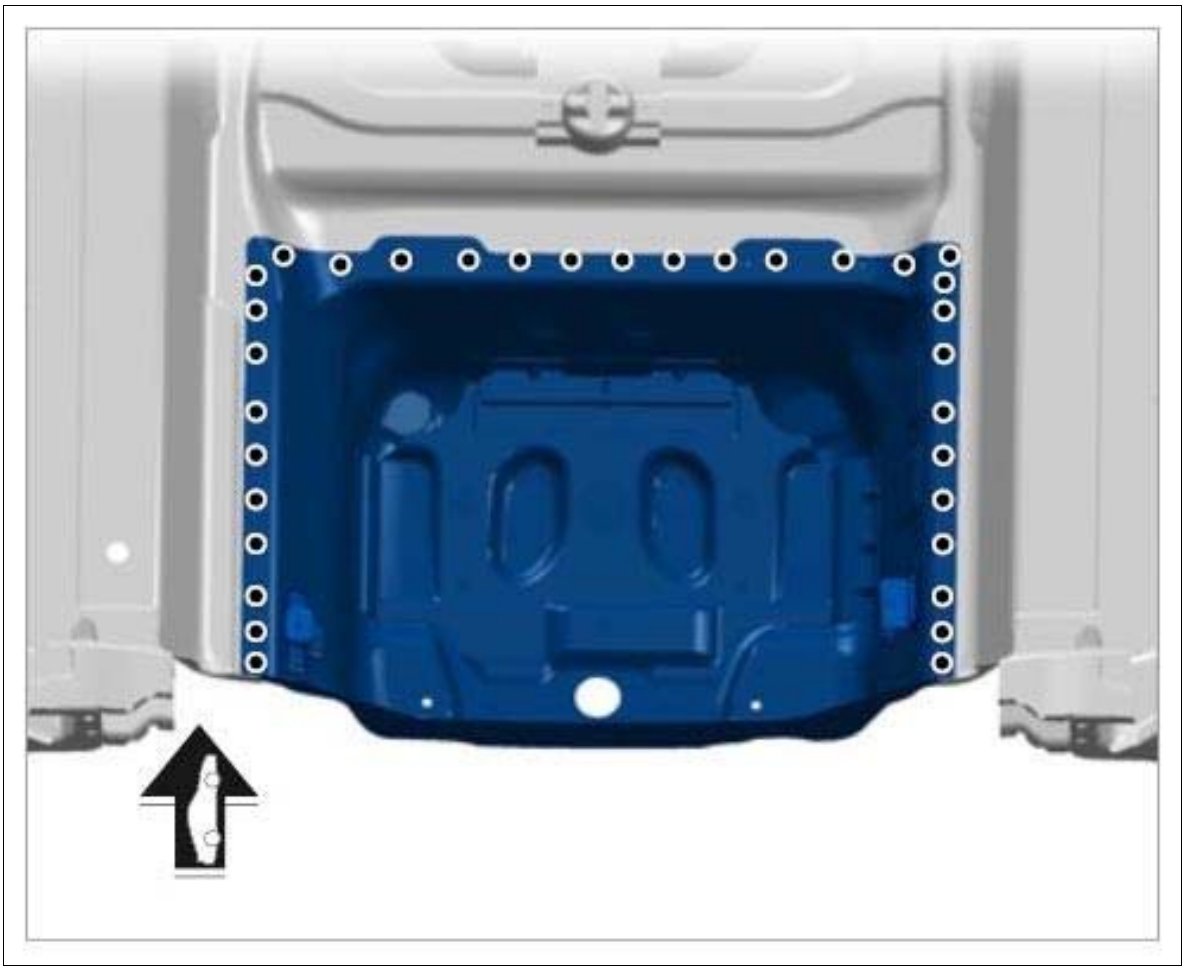

Courtesy of PORSCHE CARS NORTH AMERICA, INC.

WM 532555 REPLACING REAR-END WELL (ALL MODELS) > SUBSEQUENT WORK

1. Install inner rear closing panel. → 53055510 REPLACING INNER REAR CLOSING PANEL

WM 532555 REPLACING REAR-END WELL (ALL MODELS) > SUBSEQUENT WORK > SUBSEQUENT WORK FOR BODY REPAIRS (WITHOUT STRAIGHTENING SYSTEM)

1. Clean joint areas and sheetmetal flanges with a wire brush.
2. Prime joint areas and sheetmetal flanges with 2K primer.
3. Restore standard seal with body sealant → 5X00IN42 SEAM SEALING .

   Also seal the repair area carefully.

4. Paint repair area and adjacent surfaces, if necessary.
5. Restore standard underbody protection with underbody sealant → 5X00IN43 UNDERBODY PROTECTION .
6. Apply standard cavity preservation → 5X00IN44 CAVITY PRESERVATION . Also apply cavity preservation to the repair area.
7. Install removed accessories in the repair area.

WM 532955 REPLACING C-PILLAR REINFORCEMENT (ALL MODELS) > TOOLS

Designation	Type	Number	Description	
Hot-air blower	Service equipment	WE 1119		
Body alignment system package	Service equipment	WE 1121		
Special electric cutter	Service equipment	WE 1137		
Pneumatic Spotweld Remover, Vario Drill WS 90	Service equipment	WE 1139		
Hand-cartridge gun	Service equipment	WE 1141		
Resistance spot welder	Service equipment	WE 1311		
Inverter welder MIDIspot-QSVM-12000	Service equipment	WE 1312		
Resistance spot welder	Service equipment	WE 1313		

Blind riveting tool TAURUS 4	Service equipment	WE 1348		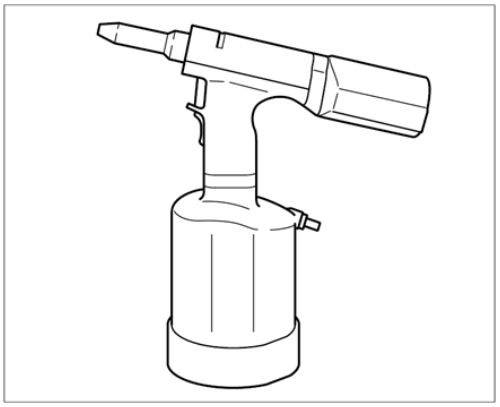
Aluminum tool set with trolley	Service equipment	WE 1350		
Resistance spot welder	Service equipment	WE 1352		
Measuring and alignment system, professional	Service equipment	WE 1398		
Mobile extraction unit, aluminum	Service equipment	WE 1507		
Body saw	Service equipment	WE 1508		
Star gauges for body gap dimensions	Special tool	Nr.127-1		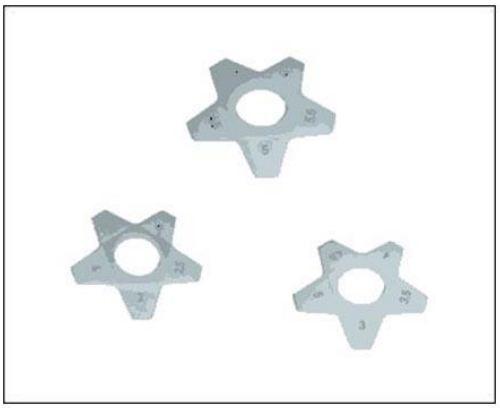

Commercially available tool		Nr.129		
Twist drill	Commercially available tool	Nr.201		
Countersink	Commercially available tool	Nr.202		

WM 532955 REPLACING C-PILLAR REINFORCEMENT (ALL MODELS) > TECHNICAL VALUES

Location	Description	Type	Basic value	Tolerance 1	Tolerance 2
Dimension X		Distance	100 mm		
Dimension Y		Distance	90 mm		
Drill bit		Diameter	8.0 mm		
Applying adhesive		Application depth	3.0 mm		

WM 532955 REPLACING C-PILLAR REINFORCEMENT (ALL MODELS) > PRELIMINARY WORK > PRELIMINARY WORK FOR BODY REPAIRS (WITHOUT STRAIGHTENING SYSTEM)

1. Remove accessories in the repair area.
    1. 1.1. Remove accessories in the repair area according to the extent of damage on the vehicle.
2. Cover accessories adjacent to the repair area on the vehicle.
    1. 2.1. Cover all accessories remaining on the vehicle and adjacent areas with fire-proof protective covers.
3. Reshape connection area of the sheetmetal parts to be replaced. Note: Information on aluminum repairs. Refer to the appropriate information on aluminum repairs
4. Expose joint areas.
    1. 4.1. Remove underbody protection, paint, etc. from the joint areas of the body using a hot-air gun or rotary brush.

1. Remove side panel. → Removing Rear Side Section
2. Remove side member. → Removing Outer Side Member

WM 532955 REPLACING C-PILLAR REINFORCEMENT (ALL MODELS) > SAFETY INSTRUCTIONS AND INFORMATION ON QUALITY

⚠ *CAUTION: Non-observance of safety instructions for body repairs*

- *Risk of damage to the vehicle*
- *Danger of injury*

→ Read the relevant safety instructions as well as general information and quality instructions → 5X00IN01 SAFETY INSTRUCTIONS .

- Protection of electrical components during body repairs
- Corrosion protection measures during repairs → 5X00IN03 CORROSION PROTECTION MEASURES DURING REPAIRS
- Information on aluminum repairs. Refer to the appropriate information on aluminum repairs
- Body parts of various sheet-steel strengths → 5X00IN04 BODY PARTS OF VARIOUS SHEET-STEEL STRENGTHS
- Replacing punch rivets and penetrated joints

- Setting self-tapping screws → 5X00IN24 SETTING SELF-TAPPING SCREWS
- Working with body structural adhesive → 5X00IN21 WORKING WITH BODY STRUCTURAL ADHESIVE

WM 532955 REPLACING C-PILLAR REINFORCEMENT (ALL MODELS) > TOOLS AND MATERIALS > TOOLS AND MATERIALS FOR BODY REPAIRS

Information

- The tools for working on steel and aluminum must always be kept separate from each other. We recommend that you color code the tools using a system similar to that used for the Aluminum tool set with trolley WE 1350, for example.

Straightening set **Body alignment system package WE 1121 Measuring and alignment system, professional WE 1398**

Resistance spot welder; optional **Inverter welder MIDIspot-QSVM-12000 WE 1312, Resistance spot welder WE 1352, Resistance spot welder WE 1311, Resistance spot welder WE 1313**

Metal inert gas (MIG) welder

Pneumatic spotweld remover **Pneumatic Spotweld Remover, Vario Drill WS 90 WE 1139**

Pneumatic body saw **Body saw WE 1508**

Oscillating body saw (special electric cutter) **Special electric cutter WE 1137**

Hot-air blower **Hot-air blower WE 1119**

Hand-cartridge gun **Hand-cartridge gun WE 1141**

Spotweld drill **Spotweld drill**

Countersink for rivets **Countersink Nr.202**

Blind riveting tool for high-strength rivets **Blind riveting tool TAURUS 4 WE 1348**

Safety vacuum cleaner for aluminum dust **Mobile extraction unit, aluminum WE 1507**

Star gauges for body gap dimensions Nr.127-1

Wurth glue and seals body sealant

WM 532955 REPLACING C-PILLAR REINFORCEMENT (ALL MODELS) > REMOVING C-PILLAR REINFORCEMENT

Fig 1: Identifying C-Pillar Reinforcement Position



Courtesy of PORSCHE CARS NORTH AMERICA, INC.

1. Remove C-pillar reinforcement.

   Information

   Drill out the connection point on one side only. Do not damage the plate underneath.

   1. 1.1. Drill out spotwelds using **spotweld drill;** .

Fig 2: Removing C-Pillar Reinforcement

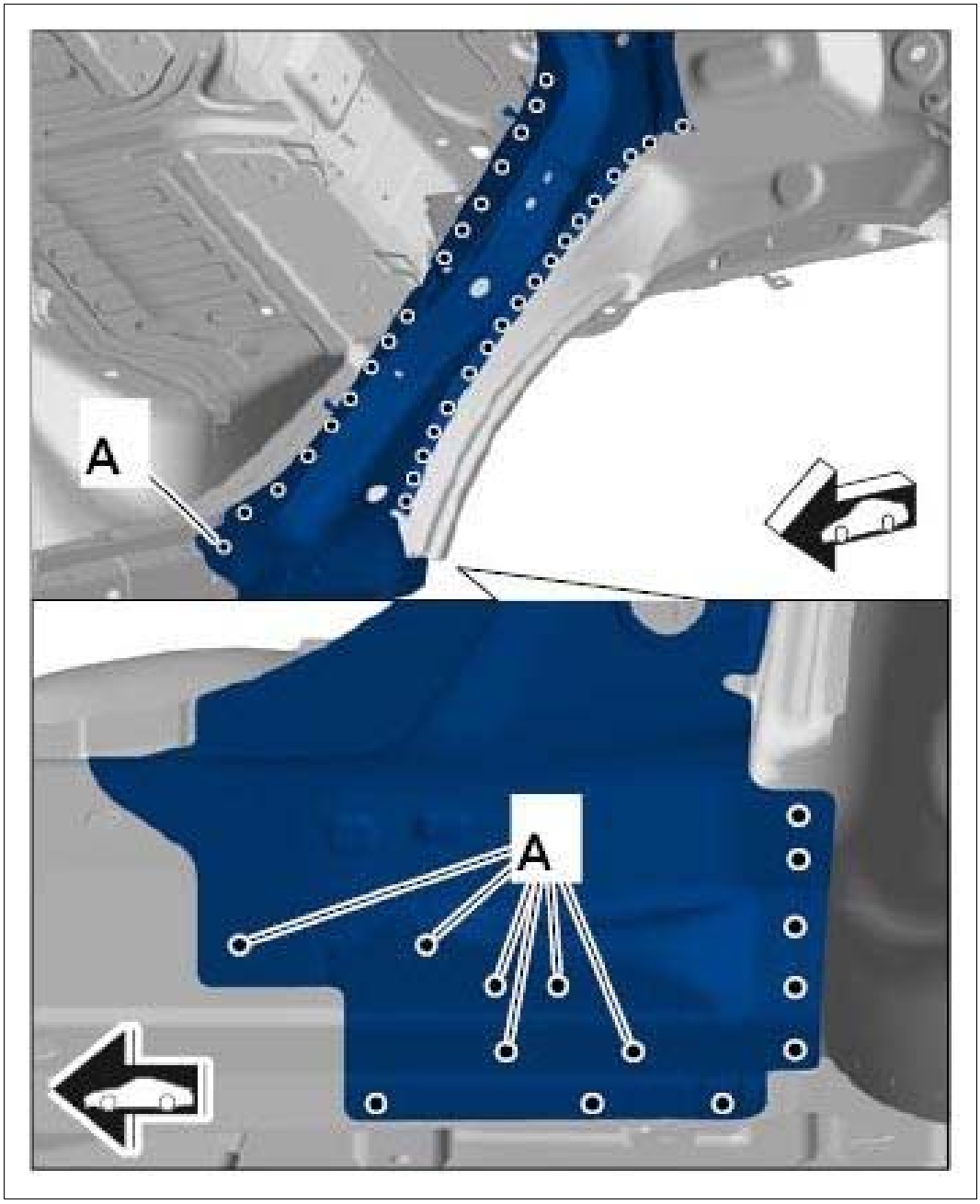

Courtesy of PORSCHE CARS NORTH AMERICA, INC.

2. Remove side panel section **-1-** .

Information

Only make cuts in the top plate. Make sure not to damage the plate underneath when doing this.

1. 2.1. Mark and make cuts. → **Distance: 100 mm**

Information

Drill out the connection point on one side only. Do not damage the plate underneath.

2. 2.2. Drill out spotwelds using **spotweld drill;** .

Fig 3: Identifying Side Panel Section Dimension

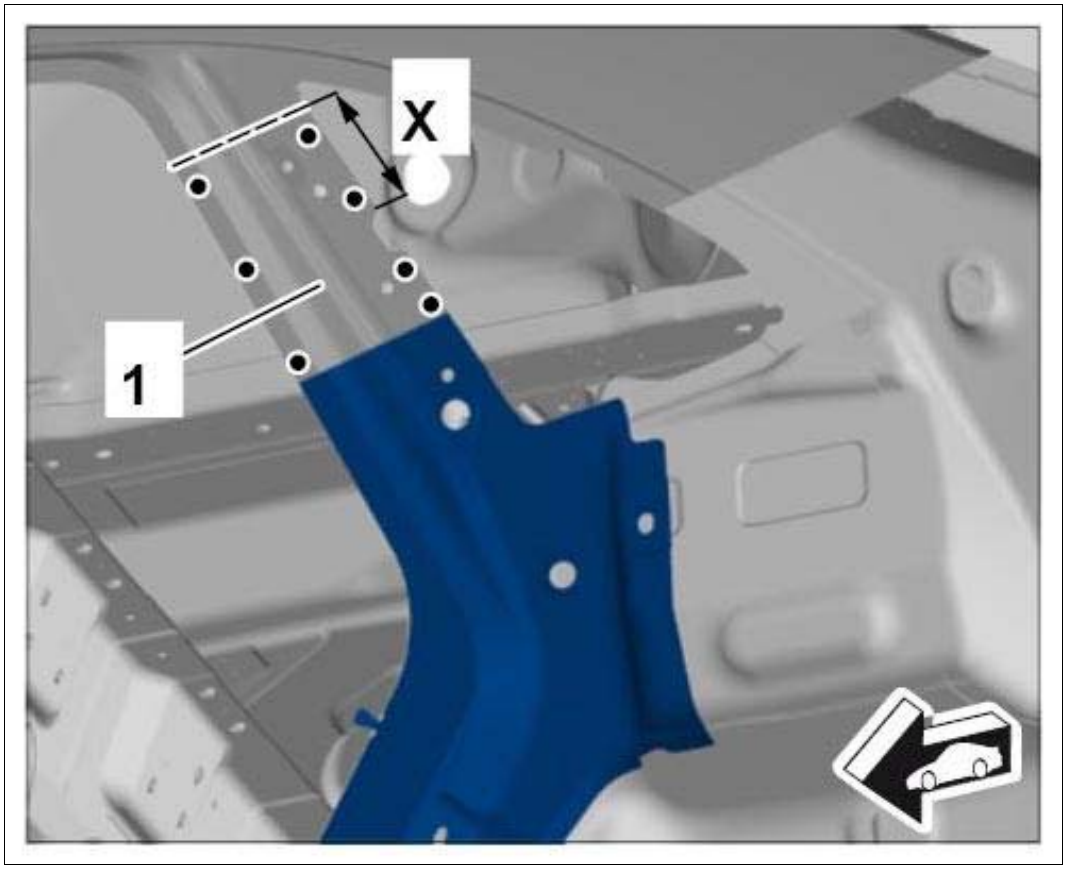

Courtesy of PORSCHE CARS NORTH AMERICA, INC.

3. Heat bonding areas.

1. 3.1. Remove side panel **-1-** section.

Fig 4: Removing Side Panel Section

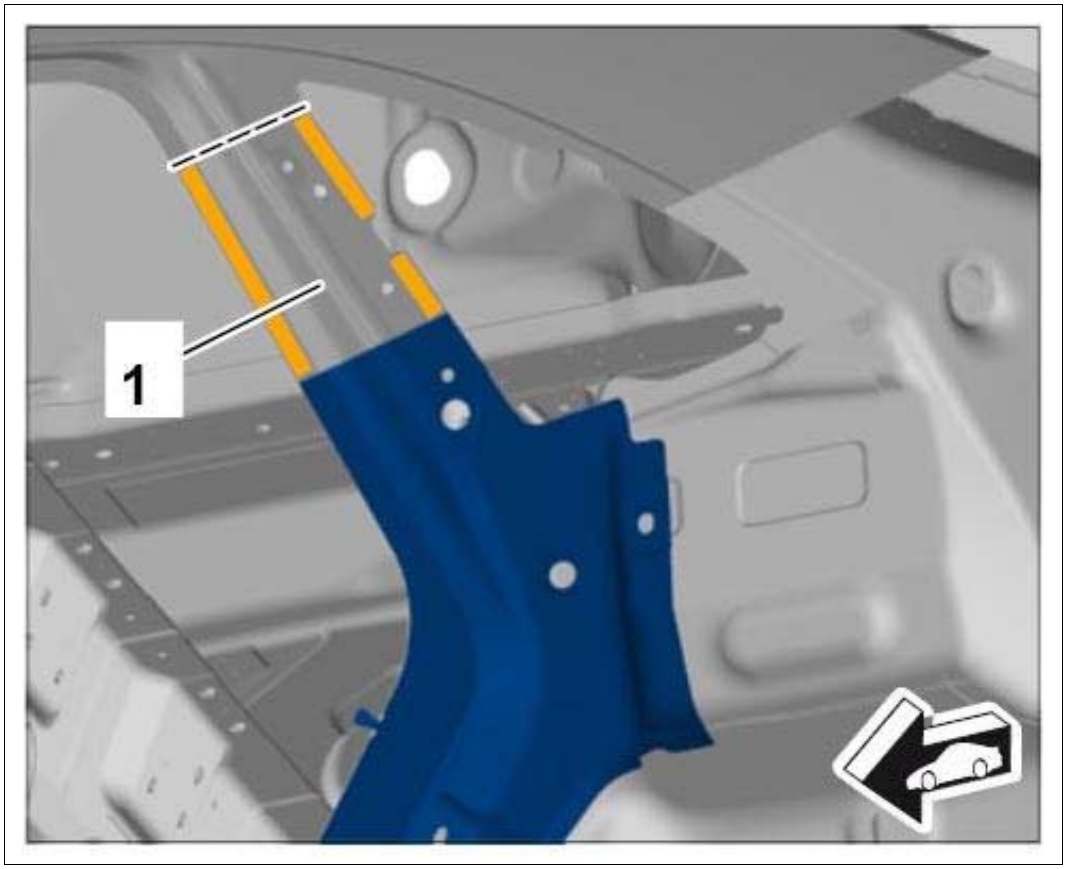

Courtesy of PORSCHE CARS NORTH AMERICA, INC.

Information

Only make cuts in the top plate. Make sure not to damage the plate underneath when doing this.

Information

Mark cut Y in accordance with the new part. Make sure to leave an overlap of approx. 3 cm with respect to the body.

4. Mark and make cuts. → **Distance: 90 mm**

Information

Drill out the connection point on one side only. Do not damage the plate underneath.

1. 4.1. Drill out spotwelds using **spotweld drill;** .

Fig 5: Identifying C-Pillar Reinforcement Spotwelds Area

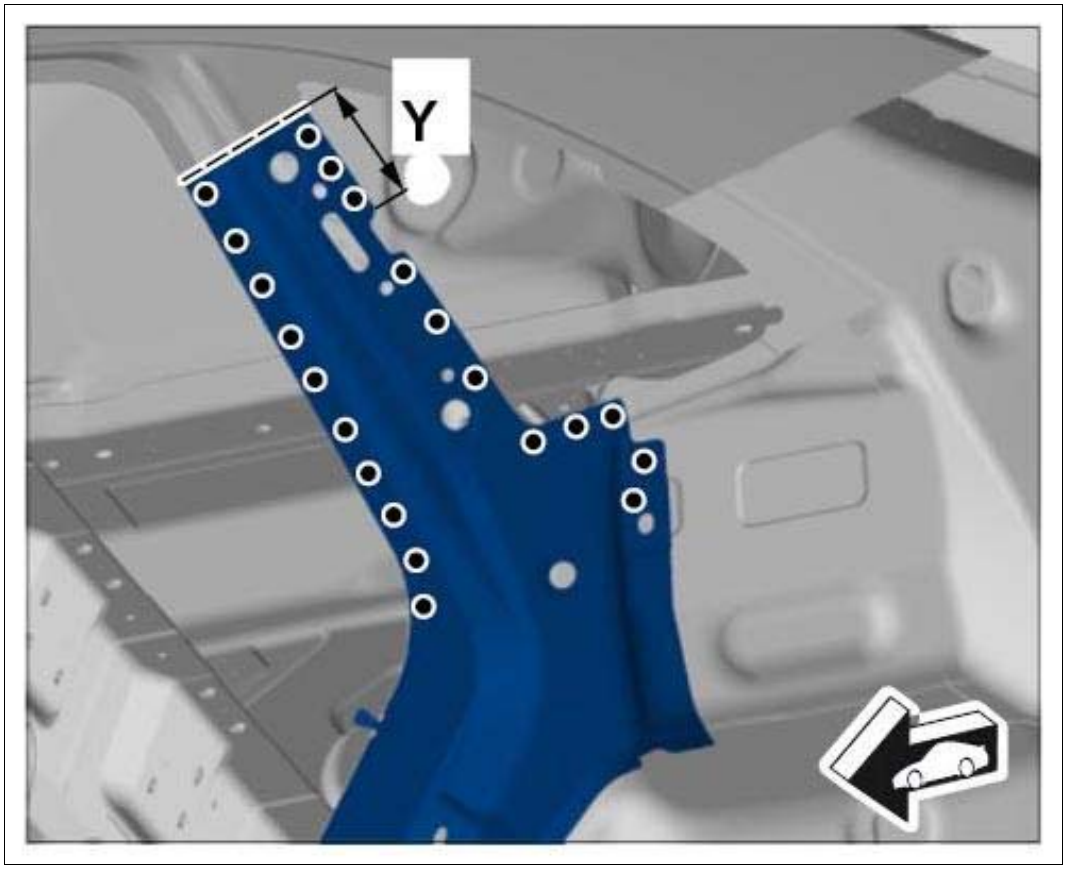

Courtesy of PORSCHE CARS NORTH AMERICA, INC.

5. Heat bonding areas.

    1. 5.1. Remove C-pillar reinforcement.

Fig 6: Removing C-Pillar Reinforcement

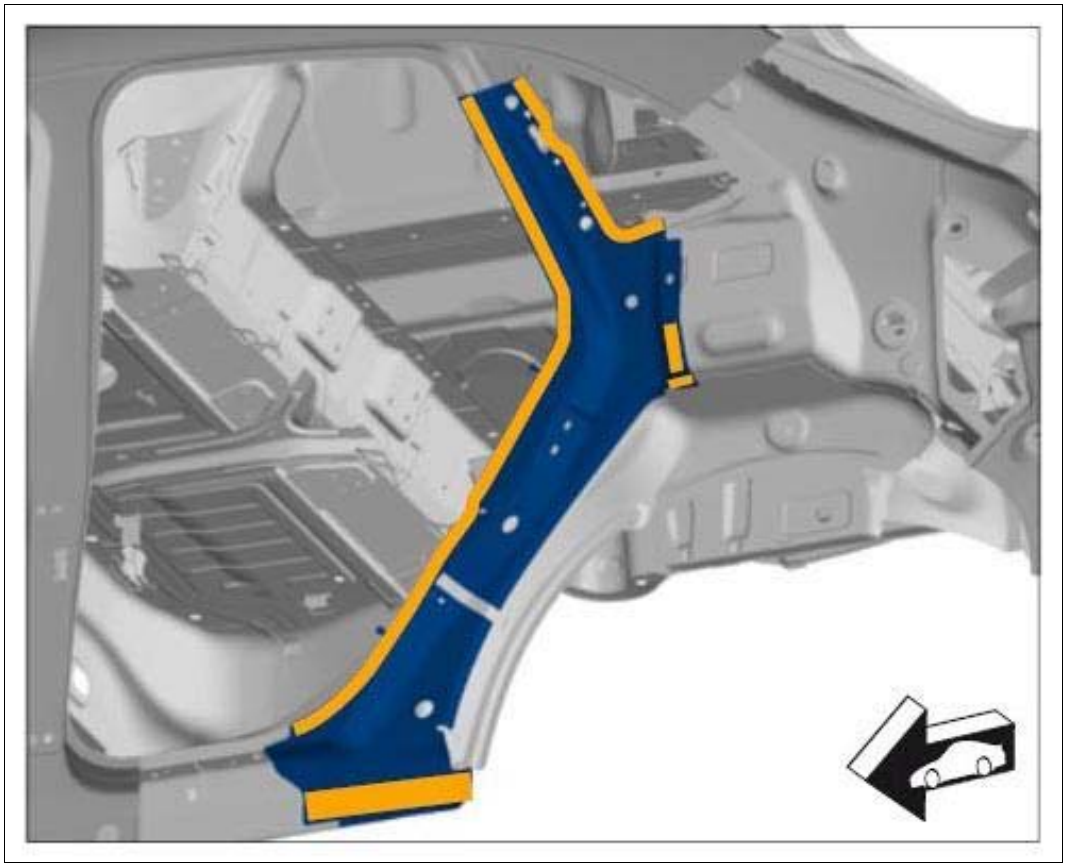

Courtesy of PORSCHE CARS NORTH AMERICA, INC.

WM 532955 REPLACING C-PILLAR REINFORCEMENT (ALL MODELS) > PREPARING C-PILLAR REINFORCEMENT FOR INSTALLATION

1. Cut C-pillar reinforcement in area **-Y-** leaving an overlap to the body of 30 mm.

Fig 1: Identifying C-Pillar Reinforcement Area

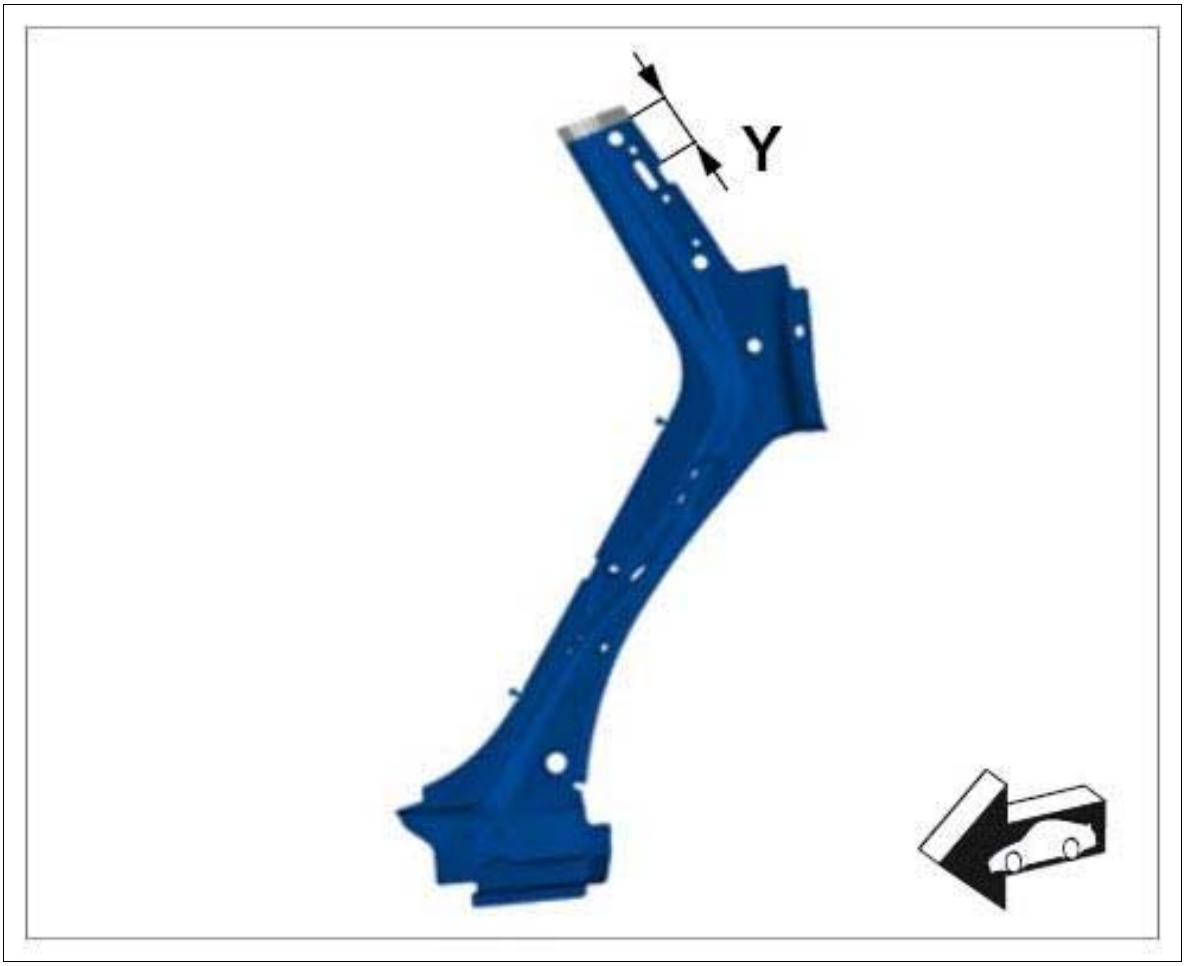

Courtesy of PORSCHE CARS NORTH AMERICA, INC.

2. Fit and secure C-pillar reinforcement.

    1. 2.1. Tack-weld upper part **-1-** and lower part **-2-** of C-pillar reinforcement **-arrows-** .

Fig 2: Locating C-Pillar Reinforcement

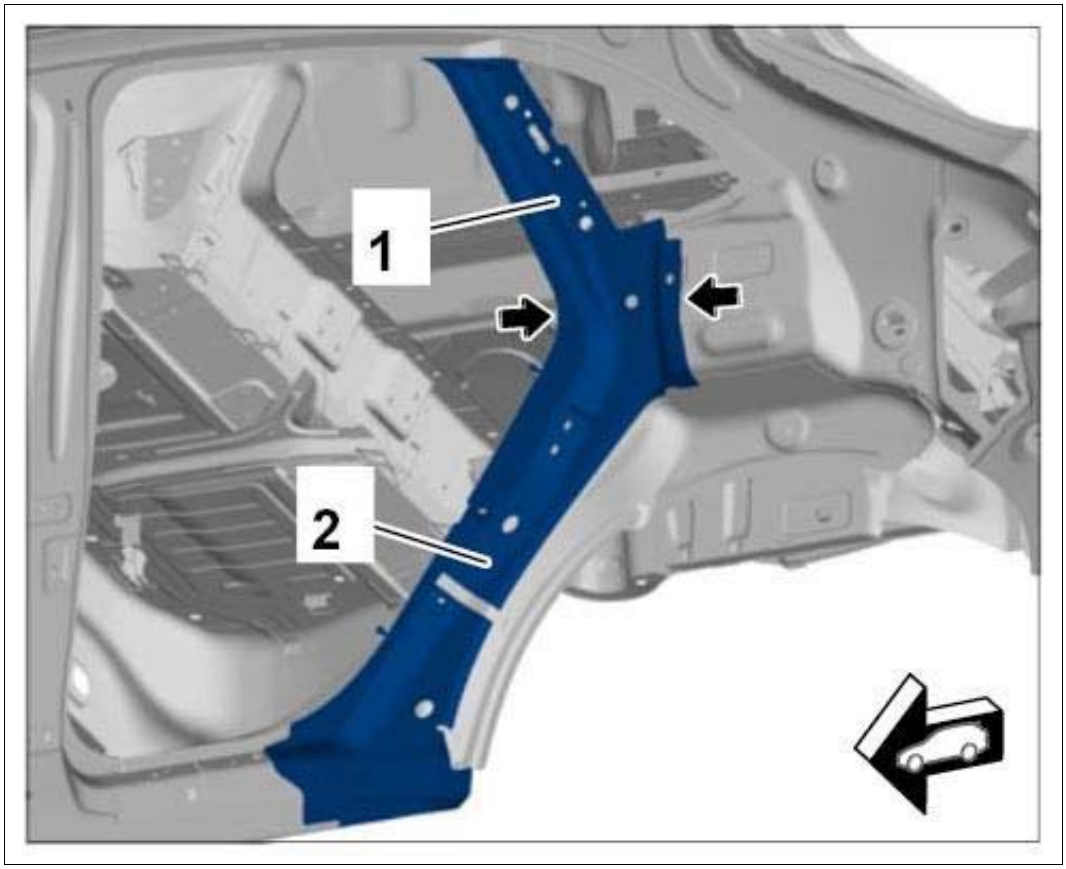

Courtesy of PORSCHE CARS NORTH AMERICA, INC.

3. Remove upper part and lower part of C-pillar reinforcement.
4. Resistance spot-weld upper part **-1-** and lower part **-2-** of C-pillar reinforcement in the marked area.

Fig 3: Identifying C-Pillar Reinforcement

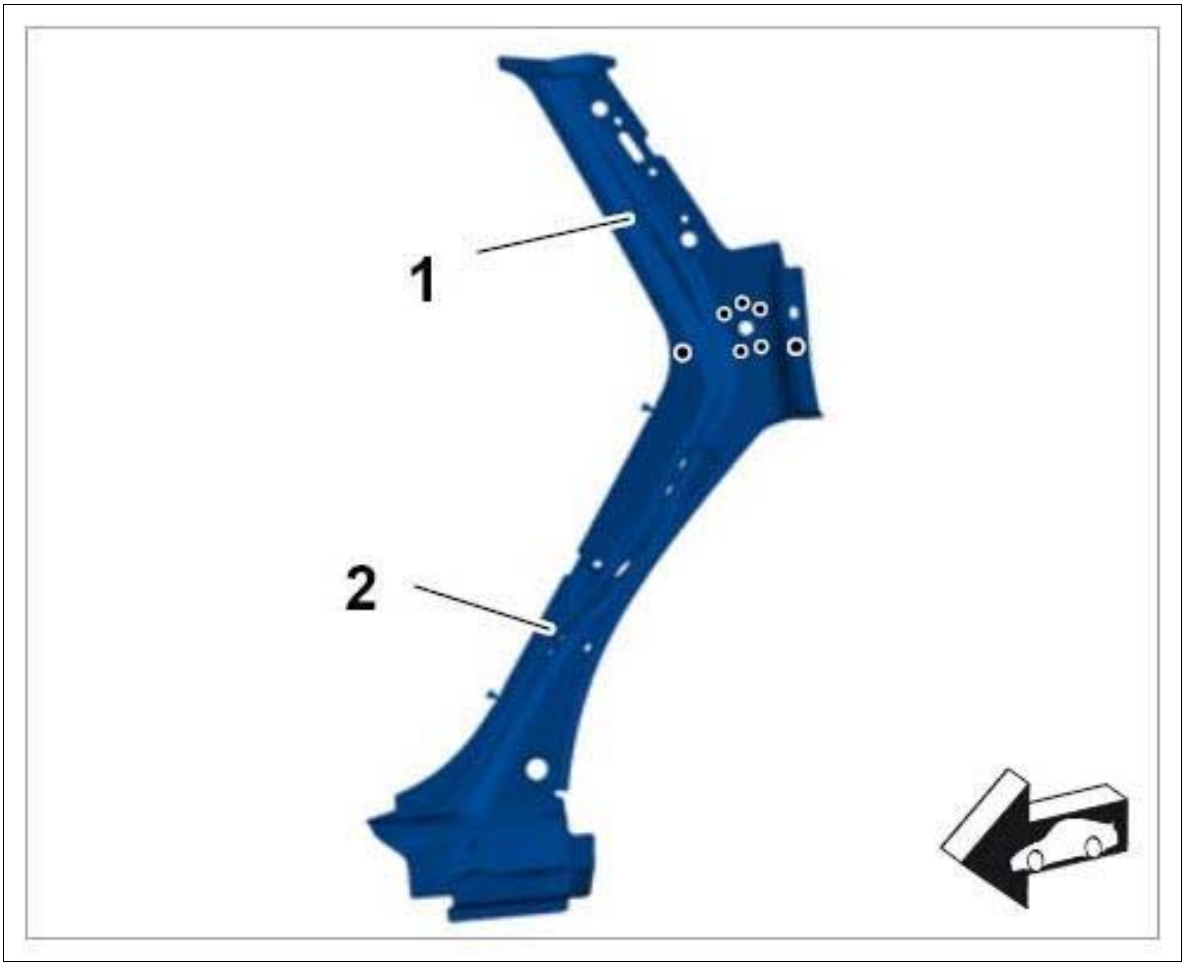

Courtesy of PORSCHE CARS NORTH AMERICA, INC.

5. Prepare C-pillar reinforcement for bonding and welding.

Information

Adhesive must not be applied to areas to be plug-welded or fully welded using inert gas.

1. 5.1. Drill holes for plug-welding in the marked areas **-A-** using a drill bit with a diameter of → **Diameter: 8.0 mm.**

Fig 4: Identifying C-Pillar Reinforcement Holes Drilling Areas

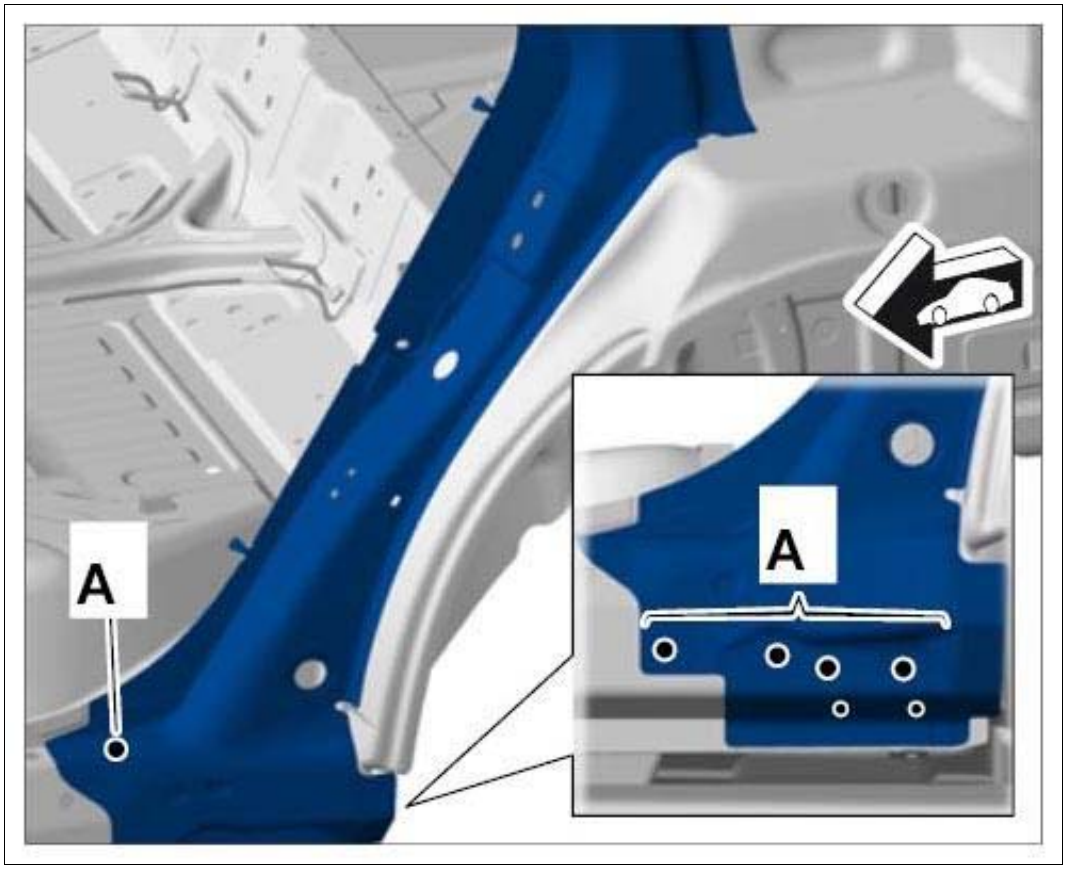

Courtesy of PORSCHE CARS NORTH AMERICA, INC.

6. Prepare connection areas on both sides.

Fig 5: Identifying C-Pillar Reinforcement Connection Areas

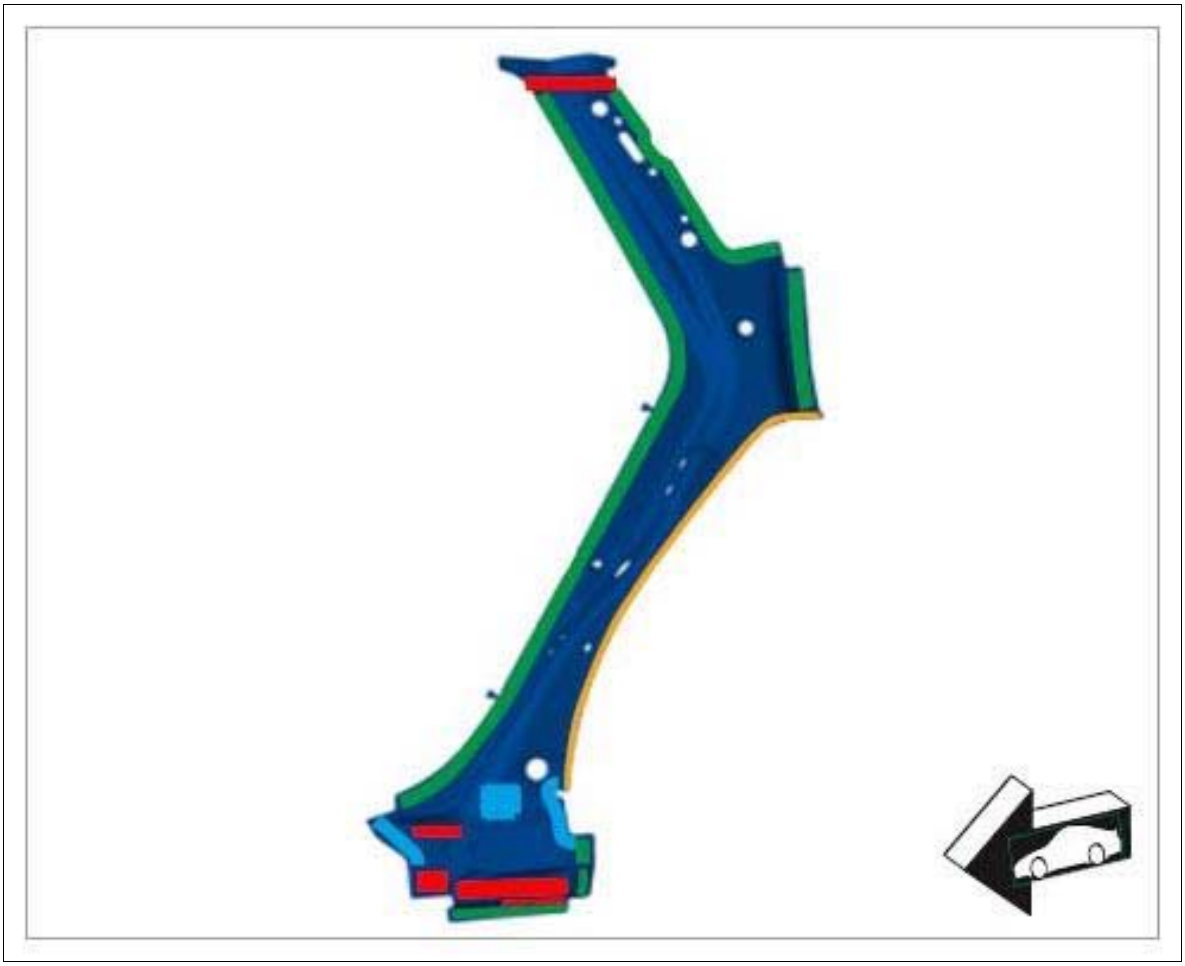

Courtesy of PORSCHE CARS NORTH AMERICA, INC.

Red	Plug-welding/apply a full weld using inert gas without bonding
Green	Resistance spot-welding + bonding
Blue	Bonding

Orange	Resistance spot-welding

WM 532955 REPLACING C-PILLAR REINFORCEMENT (ALL MODELS) > PREPARING CONNECTION AREAS OF THE BODY FOR INSTALLATION

1. Align the sealing surface and connections of the body.
2. De-burr connection points and prepare them for welding.

Information

1. Before final assembly, make sure you fully understand all the work steps involved and carry out a trial assembly without applying adhesive.

2. The bonding process can only be carried out reliably when a smooth and swift sequence of operations is guaranteed.

3. Do not begin bonding work until all materials and tools necessary for later repair work are available.

3. Prepare the marked areas for welding and bonding. → Preparing Bonding Surfaces

Fig 1: Identifying Body Connection Areas

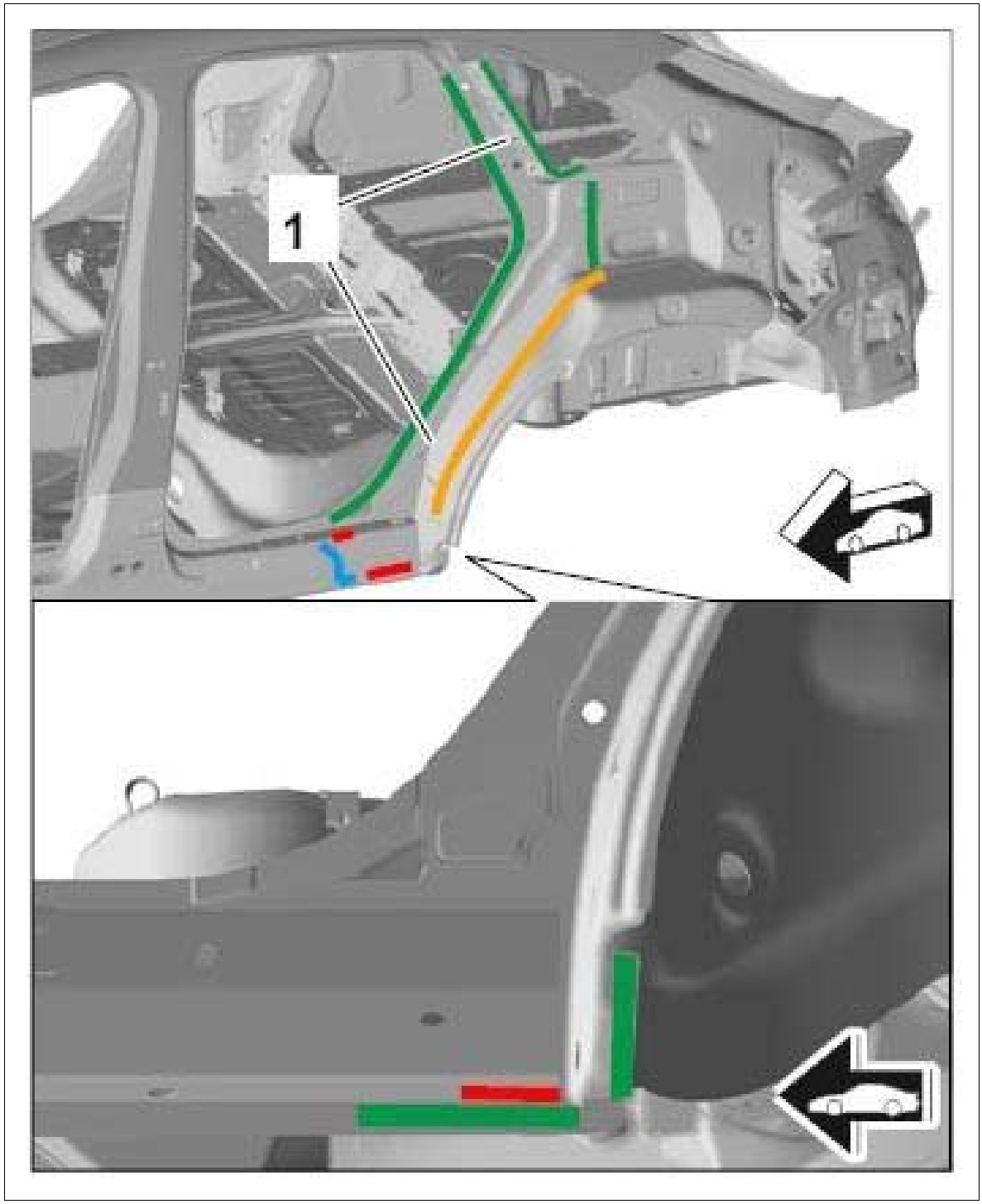

Courtesy of PORSCHE CARS NORTH AMERICA, INC.

Red	Plug-welding/apply a full weld using inert gas without bonding
Green	Resistance spot-welding + bonding
Blue	Bonding

Orange	Resistance spot-welding

WM 532955 REPLACING C-PILLAR REINFORCEMENT (ALL MODELS) > INSTALLING C-PILLAR REINFORCEMENT

Information

- Before final assembly, make sure you fully understand all the work steps involved and carry out a trial assembly without applying adhesive.
- The bonding process can only be carried out reliably when a smooth and swift sequence of operations is guaranteed.
- Do not begin bonding work until all materials and tools necessary for later repair work are available.

Information

Adhesive must not be applied to areas to be plug-welded or fully welded using inert gas.

1. Install outer B-pillar and check that it fits perfectly. Check gap dimensions. → 5X00IN DIAGRAM - BODY GAP DIMENSIONS
    1. 1.1. Apply foam filler to the body in area **-1-** . → 5X00IN22 WORKING WITH BODY FOAM FILLER

       Make sure that all openings and gaps between the body and C-pillar reinforcement are closed off with the sealing compound.
    2. 1.2. Apply adhesive to the areas marked in yellow. → 5X00IN21 WORKING WITH BODY STRUCTURAL ADHESIVE→ **Application depth: 3.0 mm**

Fig 1: Identifying Adhesive Applying Areas

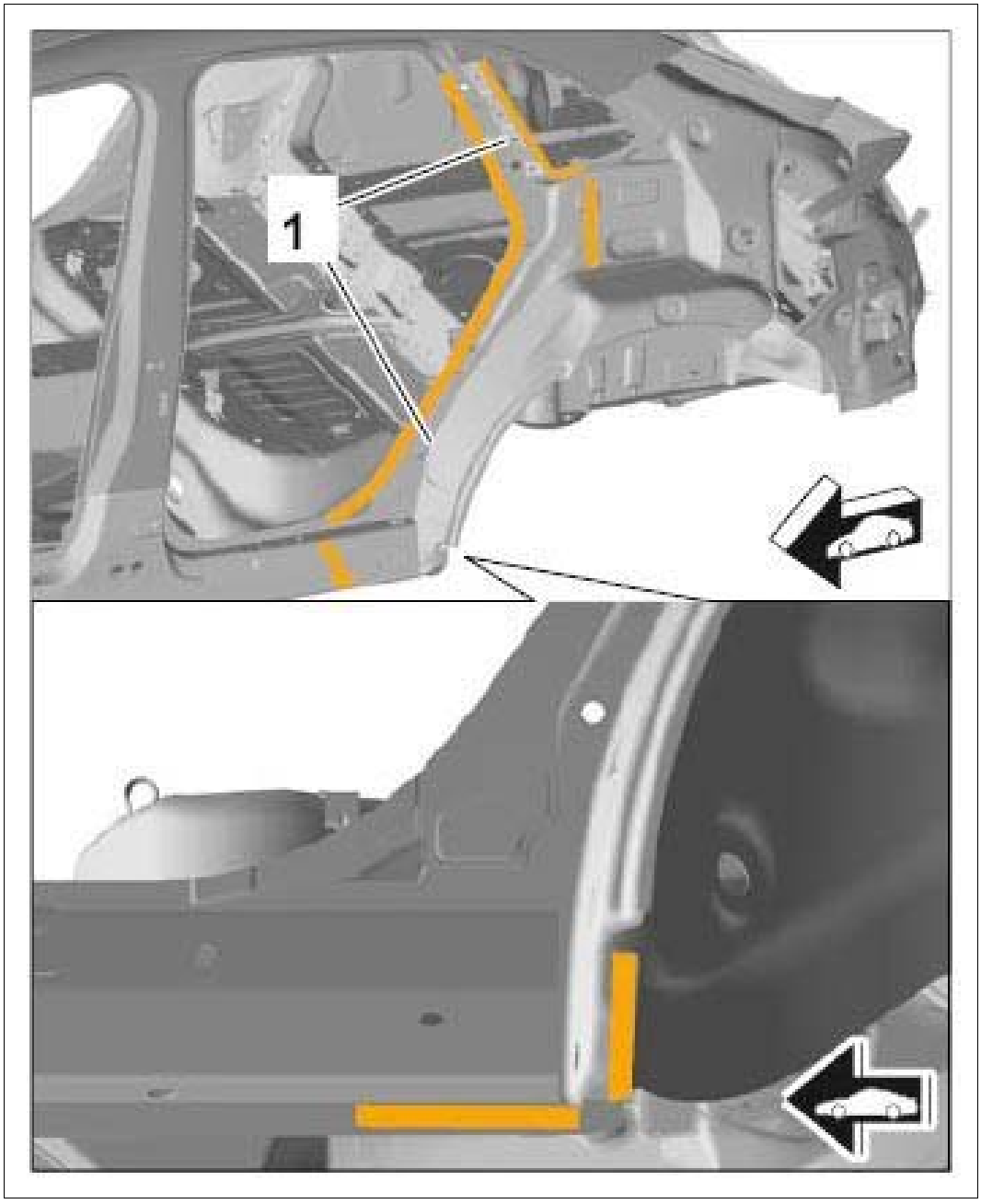

Courtesy of PORSCHE CARS NORTH AMERICA, INC.

2. Resistance spot-weld the C-pillar reinforcement.
    1. 2.1. Plug-weld area **-A-** using inert gas.

Fig 2: Identifying C-Pillar Reinforcement Plug-Weld Area

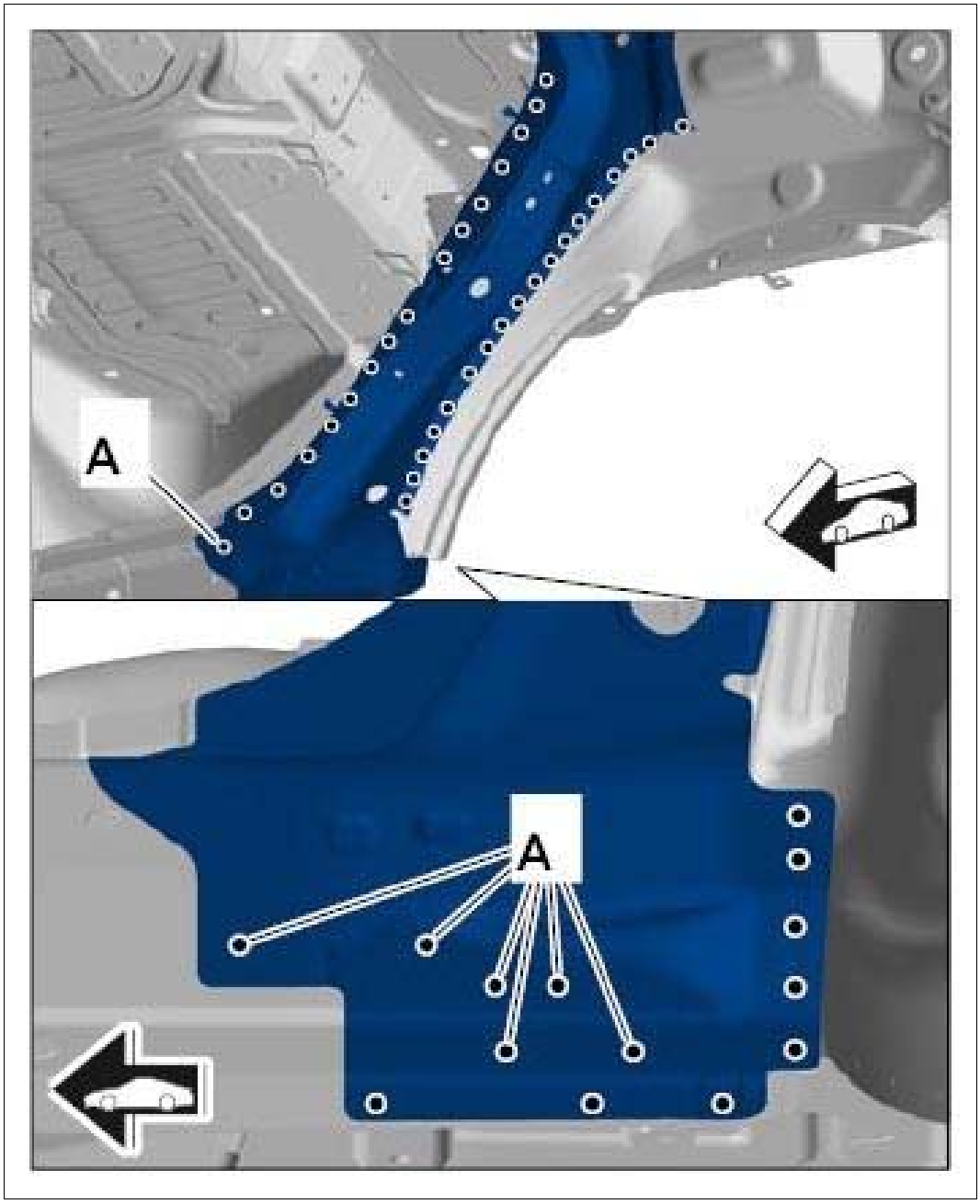

Courtesy of PORSCHE CARS NORTH AMERICA, INC.

3. Resistance spot-weld the C-pillar reinforcement.

    1. 3.1. Plug-weld area **-arrows-** using inert gas.

Fig 3: Identifying C-Pillar Reinforcement Plug-Weld Area

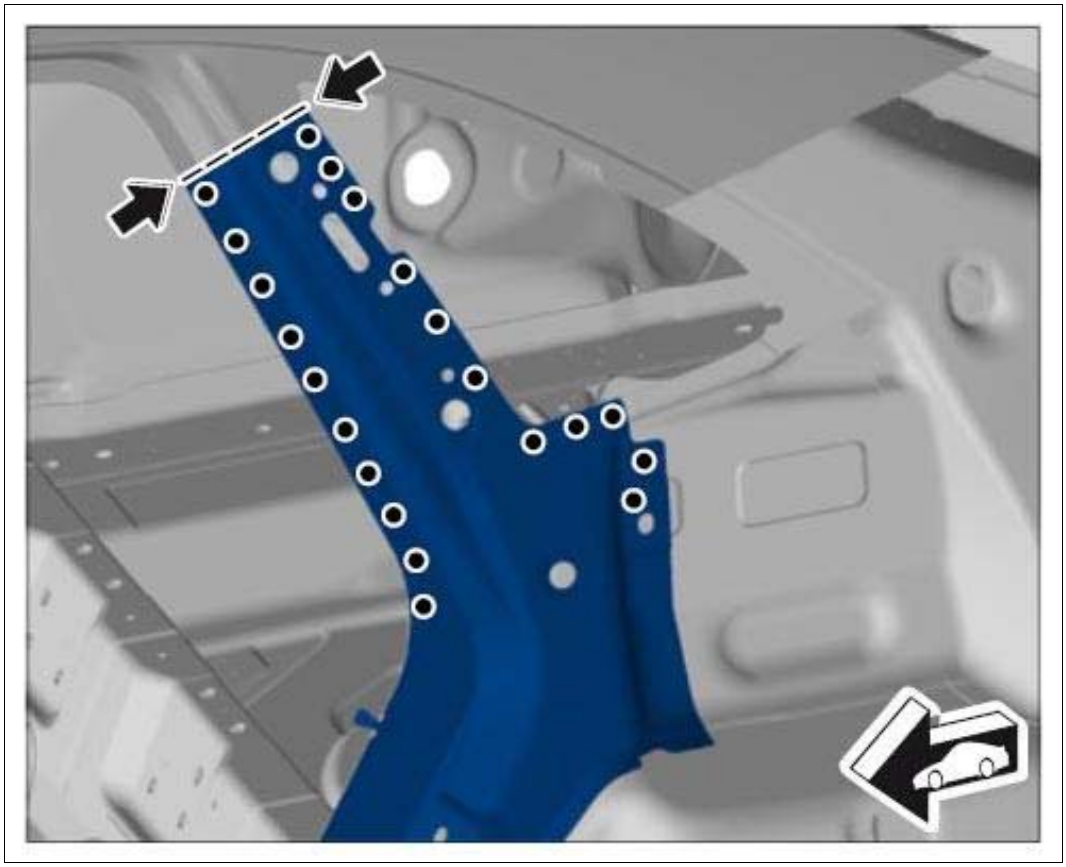

Courtesy of PORSCHE CARS NORTH AMERICA, INC.

WM 532955 REPLACING C-PILLAR REINFORCEMENT (ALL MODELS) > SUBSEQUENT WORK

1. Install side panel. → Installing Rear Side Section
2. Install side member. → Installing Outer Side Member

WM 532955 REPLACING C-PILLAR REINFORCEMENT (ALL MODELS) > SUBSEQUENT WORK > SUBSEQUENT WORK FOR BODY REPAIRS (WITHOUT STRAIGHTENING SYSTEM)

1. Clean joint areas and sheetmetal flanges with a wire brush.
2. Prime joint areas and sheetmetal flanges with 2K primer.
3. Restore standard seal with body sealant → 5X00IN42 SEAM SEALING .

   Also seal the repair area carefully.
4. Paint repair area and adjacent surfaces, if necessary.

5. Restore standard underbody protection with underbody sealant → 5X00IN43 UNDERBODY PROTECTION .
6. Apply standard cavity preservation → 5X00IN44 CAVITY PRESERVATION . Also apply cavity preservation to the repair area.
7. Install removed accessories in the repair area.

WM 534855 REPLACING REAR SIDE MEMBER (ALL MODELS) > TOOLS

Designation	Type	Number	Description	
Hot-air blower	Service equipment	WE 1119		
Body alignment system package	Service equipment	WE 1121		
Special electric cutter	Service equipment	WE 1137		
Pneumatic Spotweld Remover, Vario Drill WS 90	Service equipment	WE 1139		
Hand-cartridge gun	Service equipment	WE 1141		
Resistance spot welder	Service equipment	WE 1311		
Inverter welder MIDIspot-QSVM-12000	Service equipment	WE 1312		
Resistance spot welder	Service equipment	WE 1313		

Blind riveting tool TAURUS 4	Service equipment	WE 1348		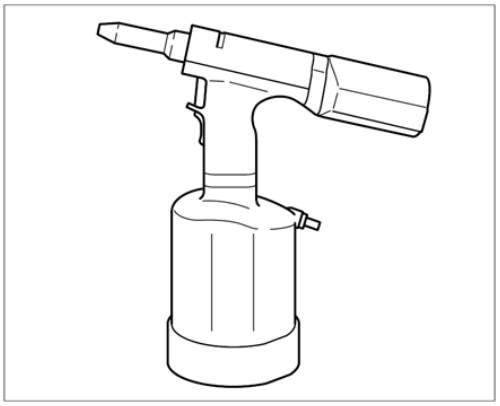
Aluminum tool set with trolley	Service equipment	WE 1350		
Resistance spot welder	Service equipment	WE 1352		
Measuring and alignment system, professional	Service equipment	WE 1398		
Mobile extraction unit, aluminum	Service equipment	WE 1507		
Body saw	Service equipment	WE 1508		
Star gauges for body gap dimensions	Special tool	Nr.127-1		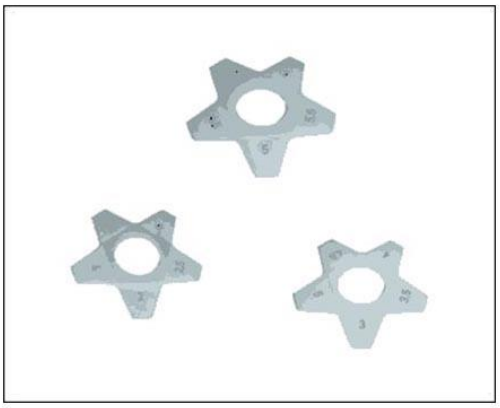

Commercially available tool		Nr.129		
Twist drill	Commercially available tool	Nr.201		
Countersink	Commercially available tool	Nr.202		

WM 534855 REPLACING REAR SIDE MEMBER (ALL MODELS) > TECHNICAL VALUES

Location	Description	Type	Basic value	Tolerance 1	Tolerance 2
Drill bit		Diameter	6.5 mm		
Drill bit		Diameter	8.0 mm		
Applying adhesive		Application depth	3.0 mm		

WM 534855 REPLACING REAR SIDE MEMBER (ALL MODELS) > PRELIMINARY WORK > PRELIMINARY WORK FOR BODY REPAIRS (WITH STRAIGHTENING SYSTEM)

1. Remove accessories in the repair area.
    1. 1.1. Remove accessories in the repair area according to the extent of damage on the vehicle.
2. Set up straightening bench with straightening system.
3. Set vehicle on straightening bench.
4. Cover accessories adjacent to the repair area on the vehicle.
    1. 4.1. Cover all accessories remaining on the vehicle and adjacent areas with fire-proof protective covers.
5. Reshape connection area of the sheetmetal parts to be replaced. See Information on aluminum repairs. Refer to the appropriate information on aluminum repairs
6. Expose joint areas.
    1. 6.1. Remove underbody protection, paint, etc. from the joint areas of the body using a hot-air gun or rotary brush.

1. Remove (inner) rear wheel housing. → Removing (Inner) Rear Wheel Housing
2. Remove rear boot floor plate. → Removing Rear Boot Floor Plate
3. Remove side member reinforcement. → Removing Side Member Reinforcement

WM 534855 REPLACING REAR SIDE MEMBER (ALL MODELS) > SAFETY INSTRUCTIONS AND INFORMATION ON QUALITY

⚠ *CAUTION: Non-observance of safety instructions for body repairs*

- *Risk of damage to the vehicle*
- *Danger of injury*

→ Read the relevant safety instructions as well as general information and quality instructions → 5X00IN01 SAFETY INSTRUCTIONS .

- Protection of electrical components during body repairs
- Corrosion protection measures during repairs → 5X00IN03 CORROSION PROTECTION MEASURES DURING REPAIRS
- Information on aluminum repairs. Refer to the appropriate information on aluminum repairs

- Body parts of various sheet-steel strengths → 5X00IN04 BODY PARTS OF VARIOUS SHEET-STEEL STRENGTHS
- Replacing punch rivets and penetrated joints
- Setting self-tapping screws → 5X00IN24 SETTING SELF-TAPPING SCREWS
- Working with body structural adhesive → 5X00IN21 WORKING WITH BODY STRUCTURAL ADHESIVE

WM 534855 REPLACING REAR SIDE MEMBER (ALL MODELS) > TOOLS AND MATERIALS > TOOLS AND MATERIALS FOR BODY REPAIRS

Information

- The tools for working on steel and aluminum must always be kept separate from each other. We recommend that you color code the tools using a system similar to that used for the Aluminum tool set with trolley WE 1350, for example.

Straightening set **Body alignment system package WE 1121 Measuring and alignment system, professional WE 1398**

Resistance spot welder; optional **Inverter welder MIDIspot-QSVM-12000 WE 1312, Resistance spot welder WE 1352, Resistance spot welder WE 1311, Resistance spot welder WE 1313**

Metal inert gas (MIG) welder

Pneumatic spotweld remover **Pneumatic Spotweld Remover, Vario Drill WS 90 WE 1139**

Pneumatic body saw **Body saw WE 1508**

Oscillating body saw (special electric cutter) **Special electric cutter WE 1137**

Hot-air blower **Hot-air blower WE 1119**

Hand-cartridge gun **Hand-cartridge gun WE 1141**

Spotweld drill **Spotweld drill**

Countersink for rivets **Countersink Nr.202**

Blind riveting tool for high-strength rivets **Blind riveting tool TAURUS 4 WE 1348**

Safety vacuum cleaner for aluminum dust **Mobile extraction unit, aluminum WE 1507**

Star gauges for body gap dimensions Nr.127-1

Wurth glue and seals body sealant

WM 534855 REPLACING REAR SIDE MEMBER (ALL MODELS) > REMOVING REAR SIDE MEMBER

Fig 1: Identifying Rear Side Member Position



Courtesy of PORSCHE CARS NORTH AMERICA, INC.

Information

Drill out the connection point on one side only. Do not damage the plate underneath.

1. Drill out spotwelds using **spotweld drill;** .
    1. 1.1. Remove cross member for spare wheel.

Fig 2: Removing Spare Wheel Cross Member

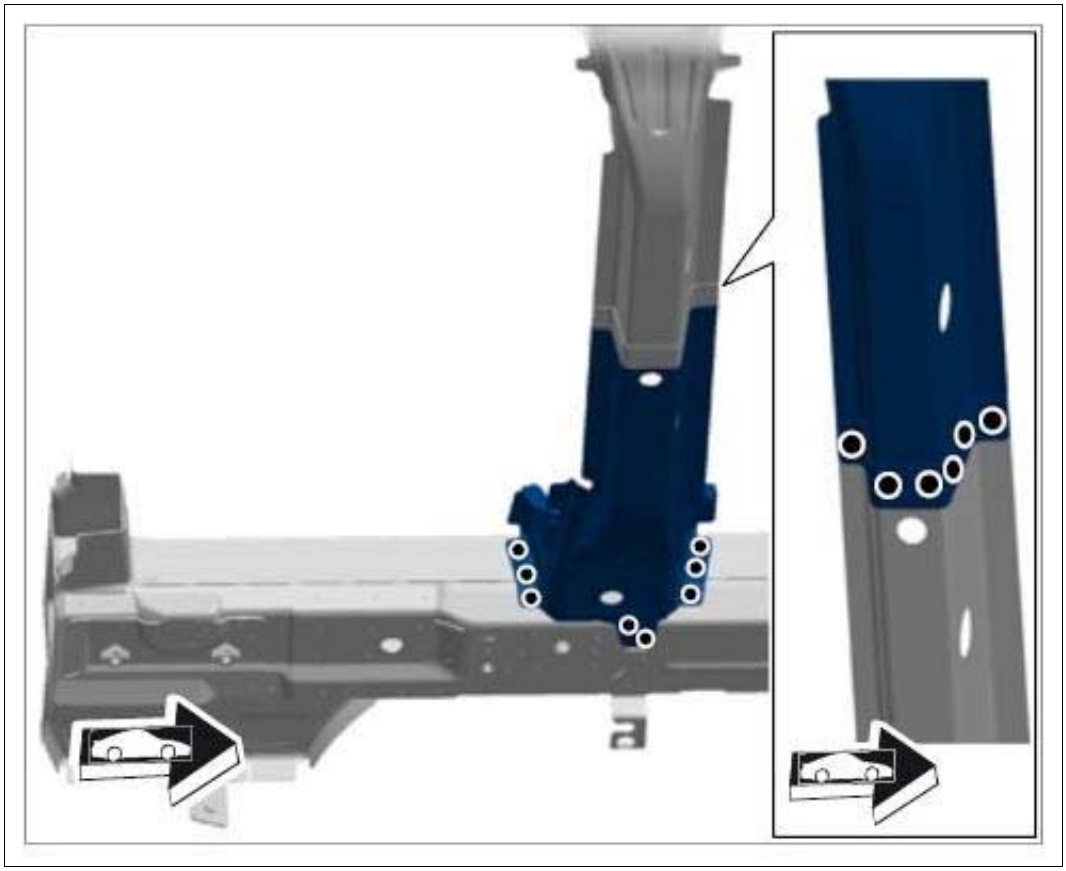

Courtesy of PORSCHE CARS NORTH AMERICA, INC.

Information

Drill out the connection point on one side only. Do not damage the plate underneath.

2. Drill out spotwelds using **spotweld drill;** .

    1. 2.1. Remove rear side member reinforcement **-1-** .

Fig 3: Removing Rear Side Member Reinforcement

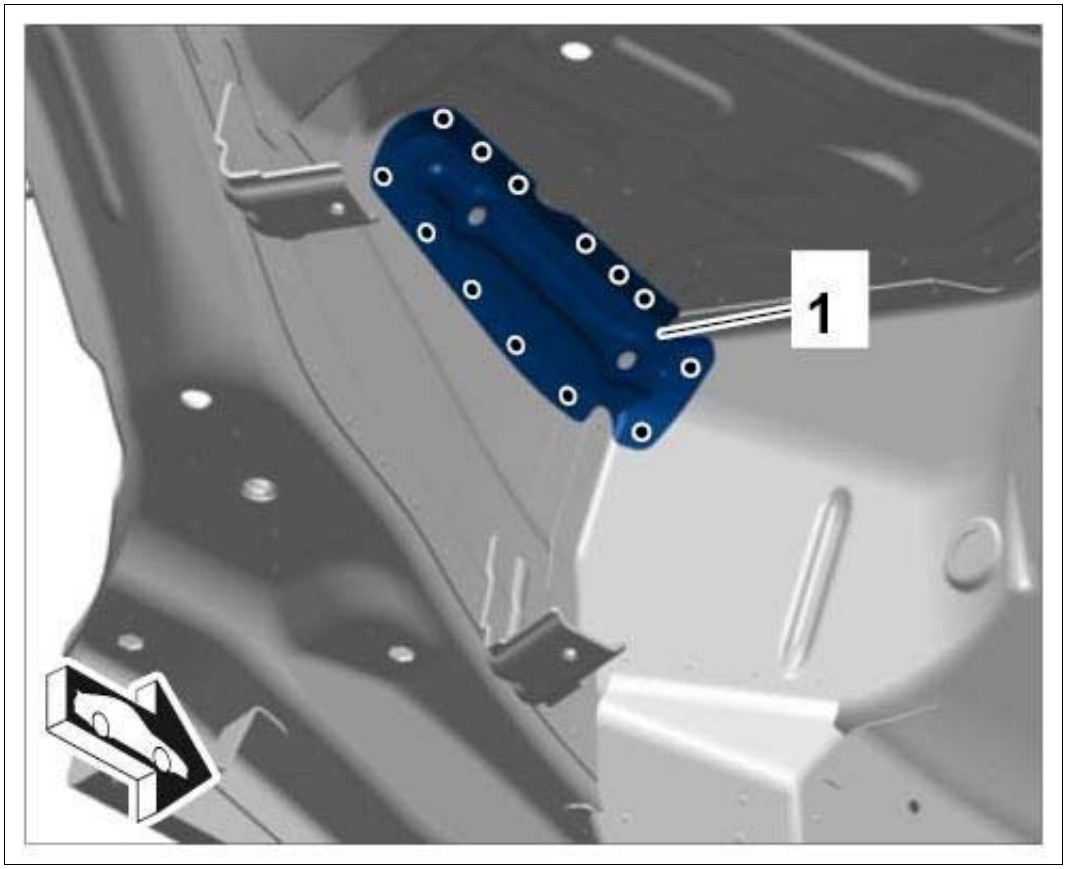

Courtesy of PORSCHE CARS NORTH AMERICA, INC.

Information

Drill out the connection point on one side only. Do not damage the plate underneath.

3. Drill out spotwelds using **spotweld drill;** .

Fig 4: Removing Rear Side Member

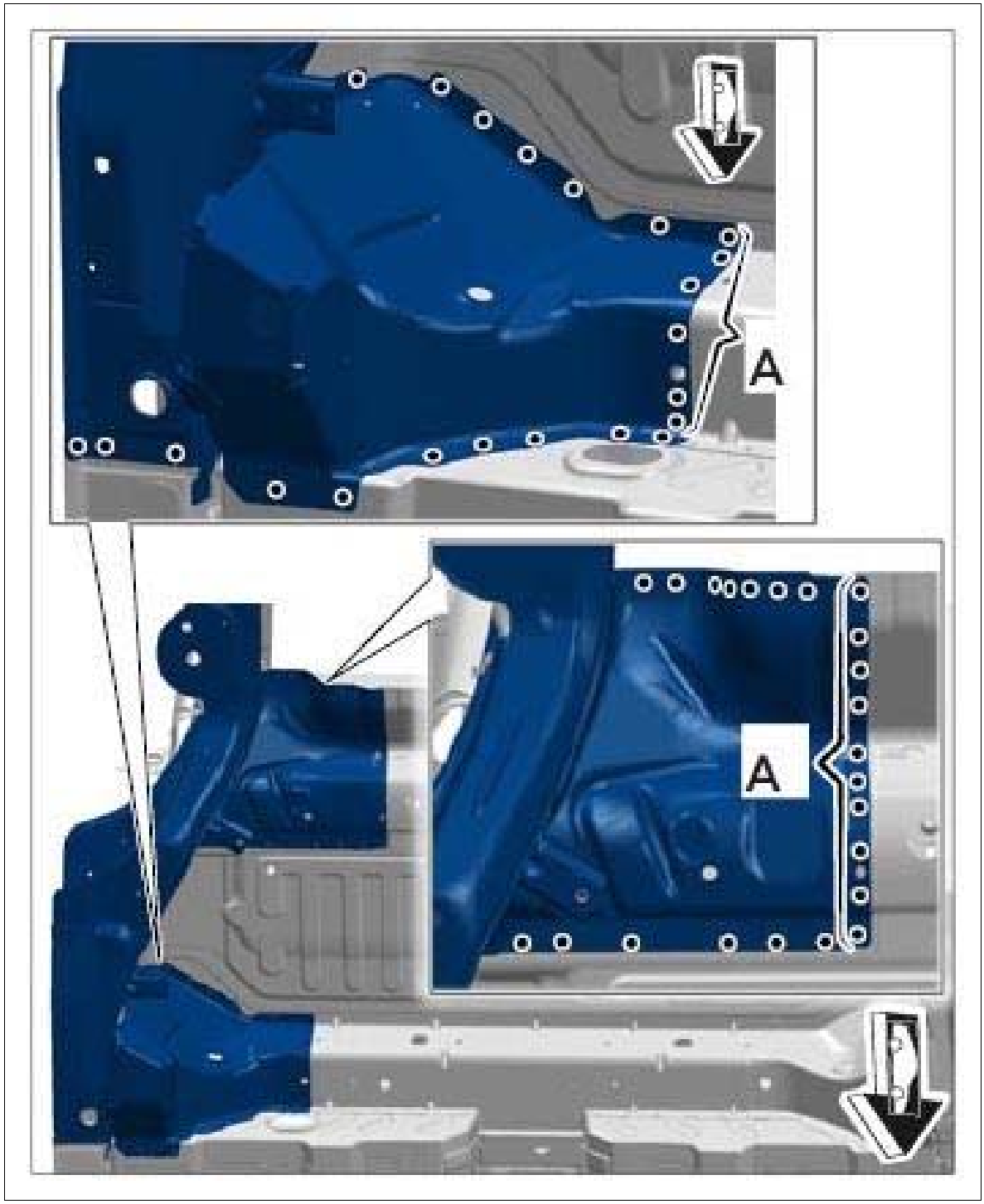

Courtesy of PORSCHE CARS NORTH AMERICA, INC.

Fig 5: Removing Rear Side Member

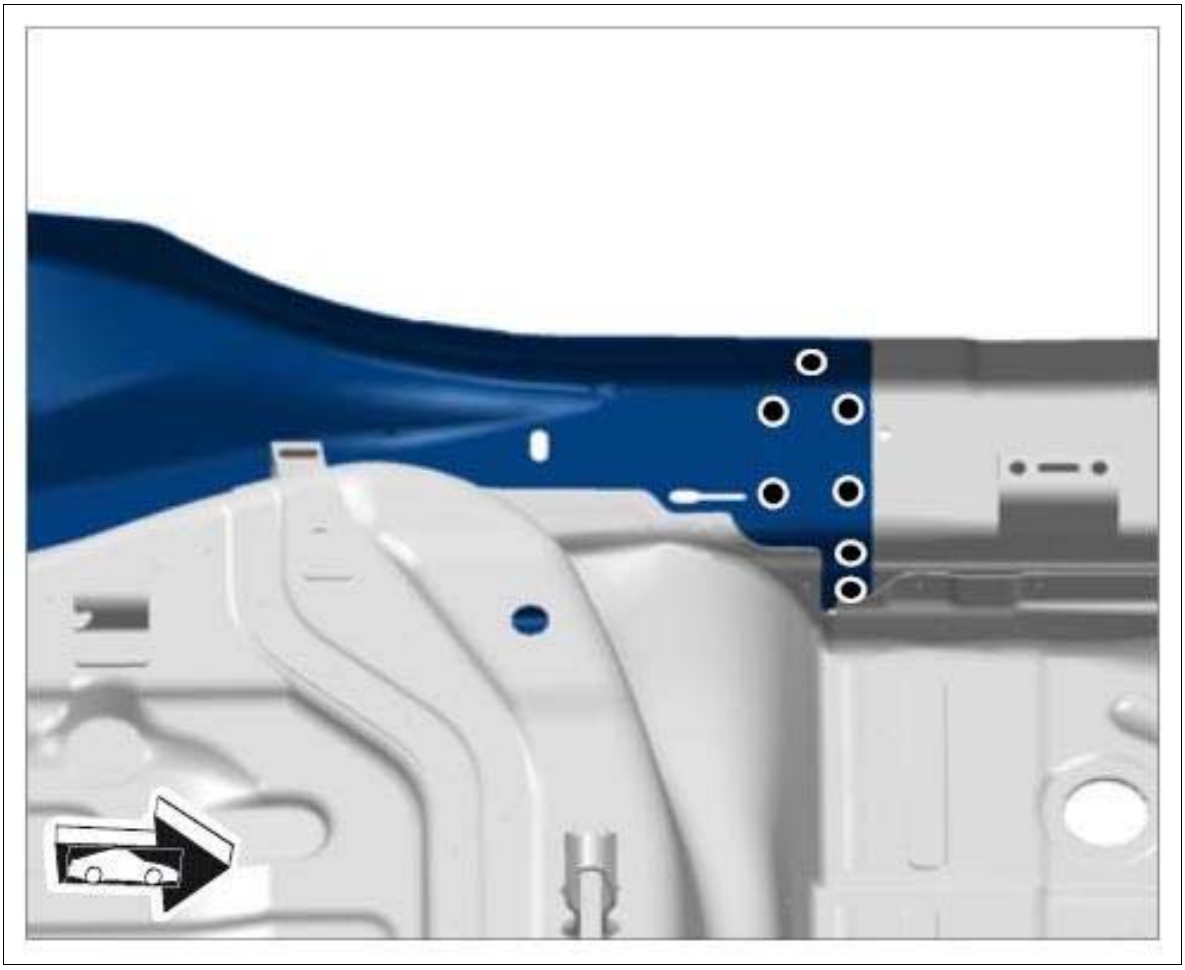

Courtesy of PORSCHE CARS NORTH AMERICA, INC.

Fig 6: Removing Rear Side Member

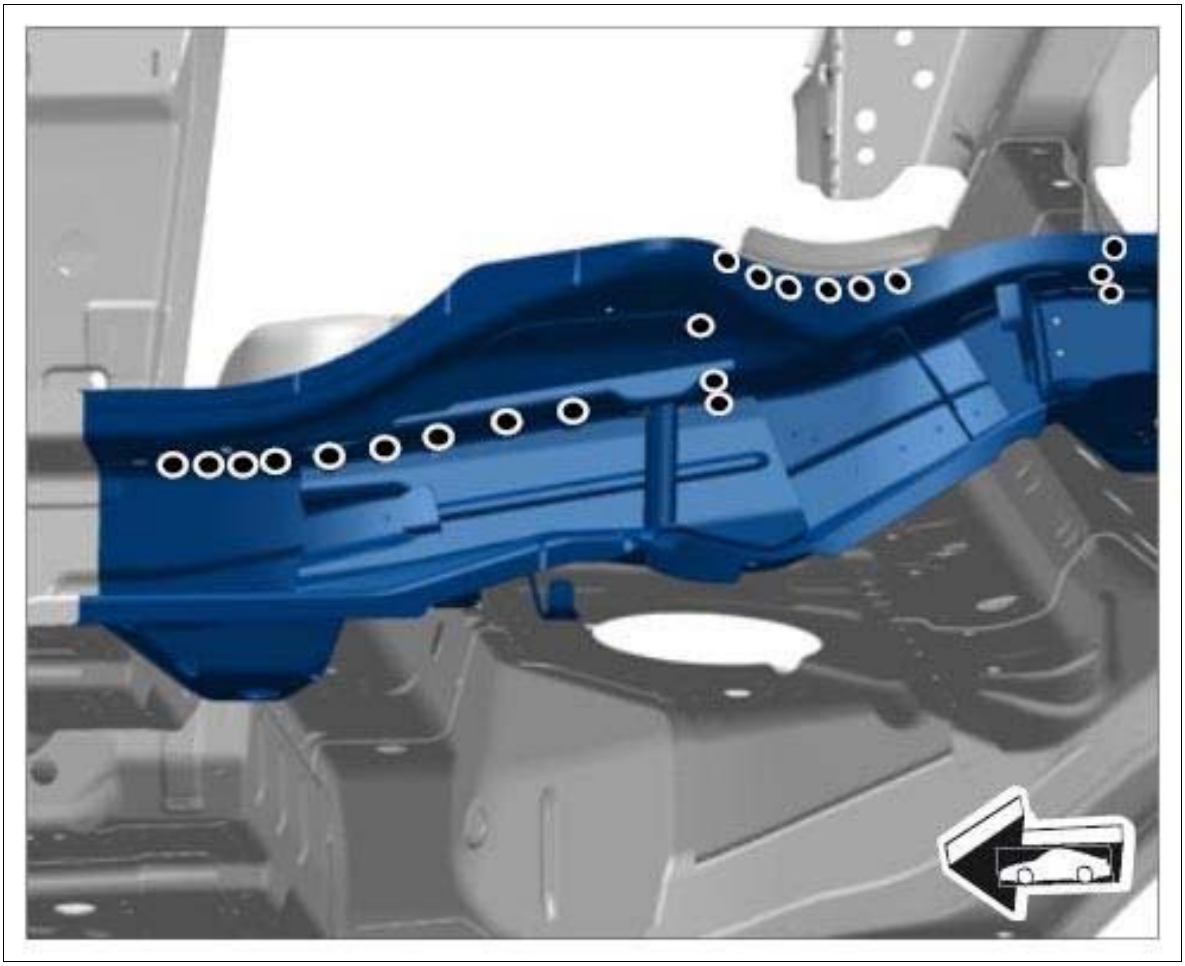

Courtesy of PORSCHE CARS NORTH AMERICA, INC.

4. Heat the marked bonding areas.

Fig 7: Removing Rear Side Member

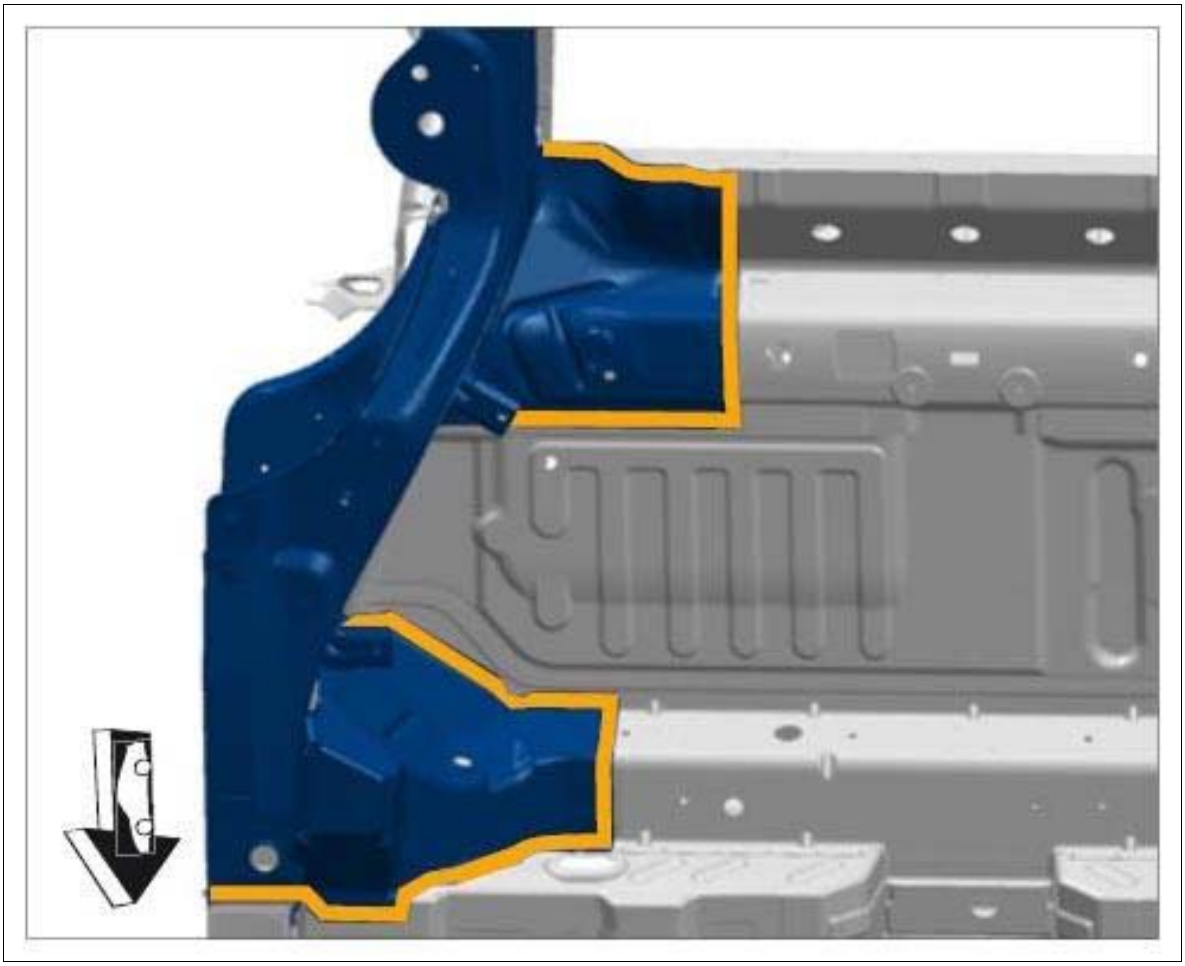

Courtesy of PORSCHE CARS NORTH AMERICA, INC.

Fig 8: Removing Rear Side Member

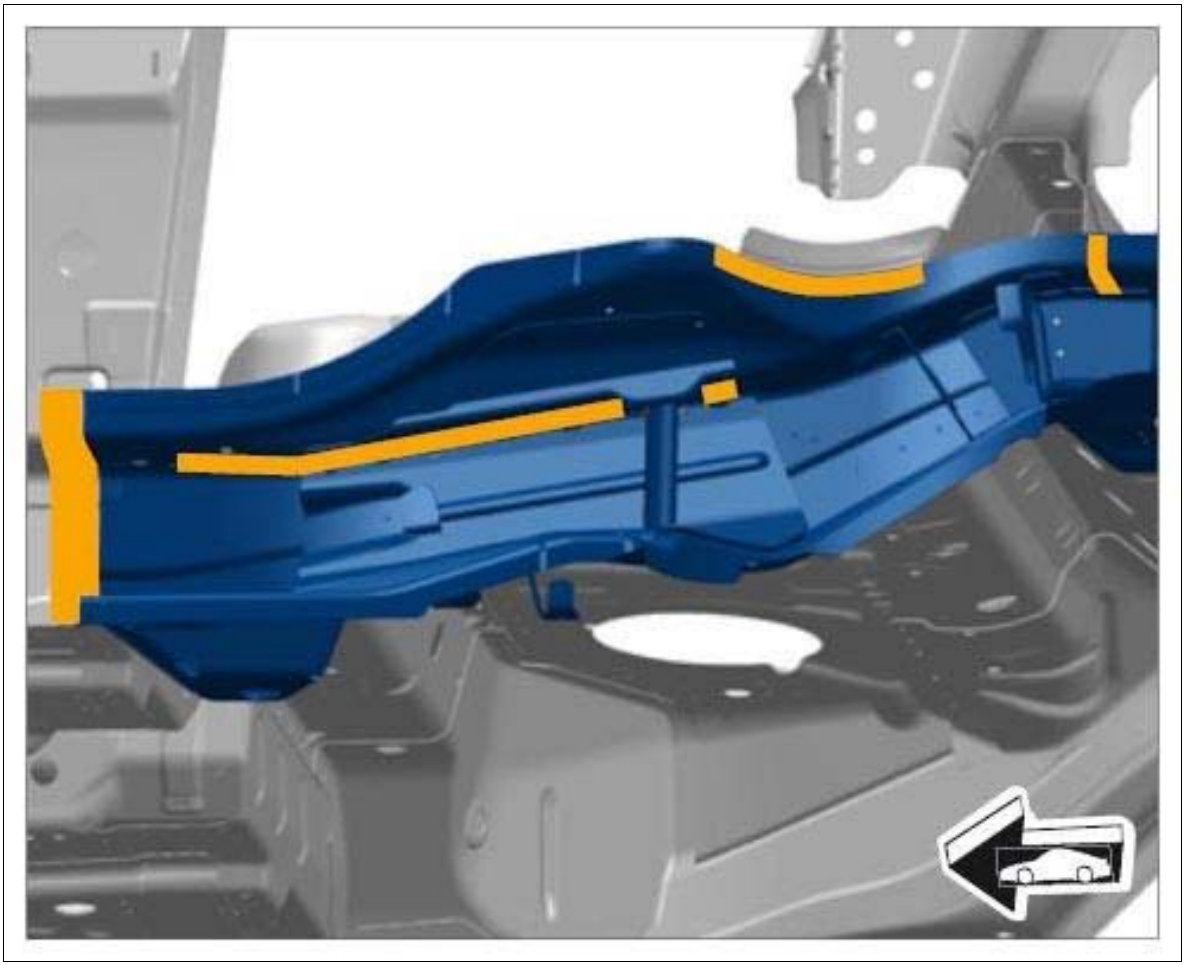

Courtesy of PORSCHE CARS NORTH AMERICA, INC.

5. Remove rear side member.

WM 534855 REPLACING REAR SIDE MEMBER (ALL MODELS) > PREPARING REAR SIDE MEMBER FOR INSTALLATION

1. Fit in rear side member.
2. Prepare rear side member for bonding and blind rivets.
    1. 2.1. Prepare for bonding in the area shown and drill out the holes for a blind rivet joint fully. → **Diameter: 6.5 mm**

Fig 1: Identifying Blind Rivet Joints Holes Drilling Areas

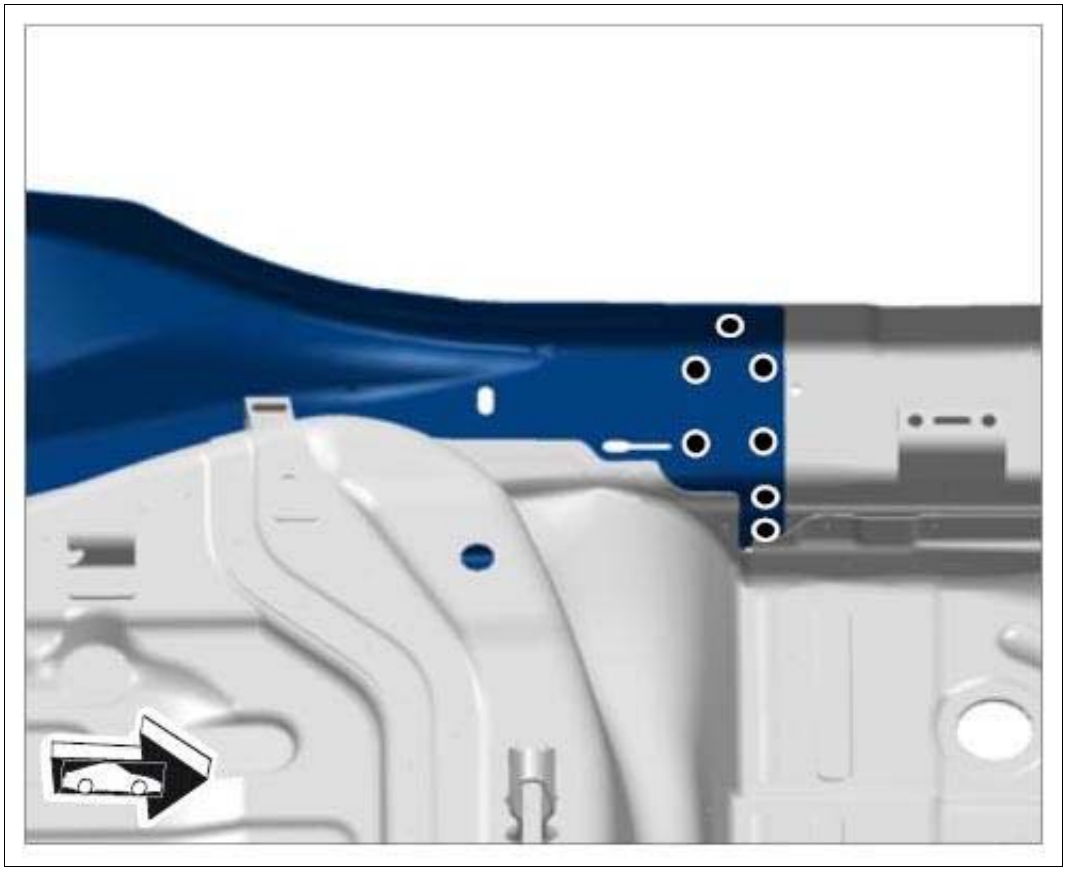

Courtesy of PORSCHE CARS NORTH AMERICA, INC.

3. Prepare rear side member for bonding and welding.

    1. 3.1. Drill holes for plug welding in the marked areas **-A-** on the rear side member. → **Diameter: 8.0 mm**

Fig 2: Turning Rear Side Member

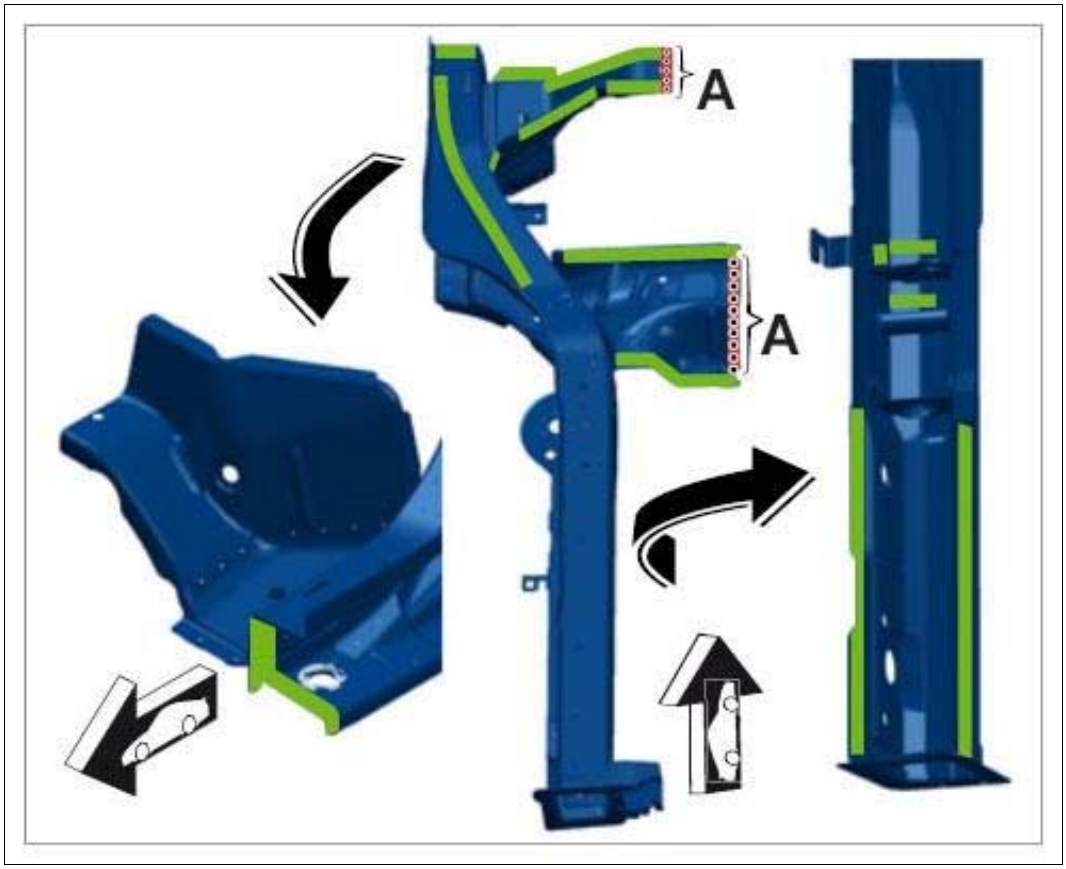

Courtesy of PORSCHE CARS NORTH AMERICA, INC.

Fig 3: Identifying Spare Wheel Cross Member

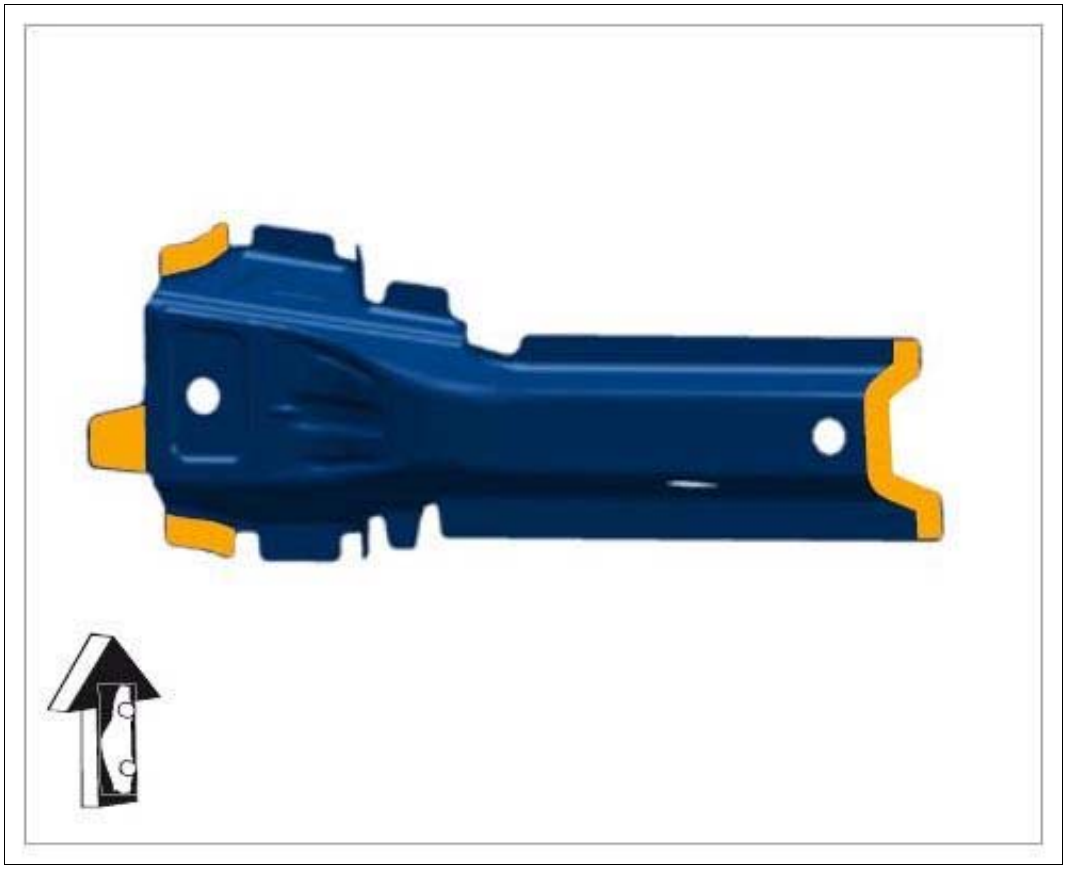

Courtesy of PORSCHE CARS NORTH AMERICA, INC.

Fig 4: Identifying Rear Side Member Reinforcement



Courtesy of PORSCHE CARS NORTH AMERICA, INC.

Fig 5: Identifying Corner Plate

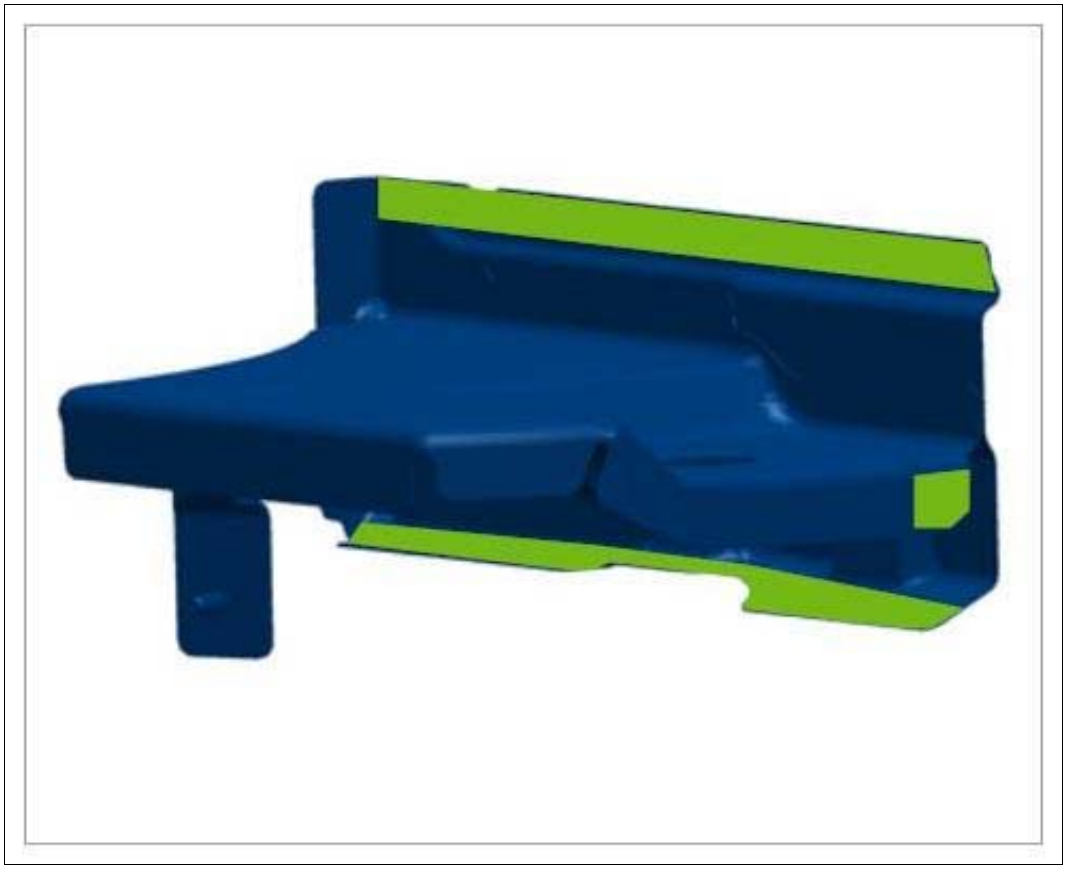

Courtesy of PORSCHE CARS NORTH AMERICA, INC.

Green	Resistance spot-welding + bonding
Red	Plug-welding/apply a full weld using inert gas without bonding
Orange	Resistance spot-welding

WM 534855 REPLACING REAR SIDE MEMBER (ALL MODELS) > PREPARING CONNECTION AREAS OF THE BODY

1. Align the sealing surface and connections of the body.
2. De-burr connection points and prepare them for welding.

Information

1. Before final assembly, make sure you fully understand all the work steps involved and carry out a trial assembly without applying adhesive.
2. The bonding process can only be carried out reliably when a smooth and swift sequence of operations is guaranteed.
3. Do not begin bonding work until all materials and tools necessary for later repair work are available.

3. Prepare the marked areas for welding and bonding. → Preparing Bonding Surfaces

Fig 1: Identifying Body Connection Areas

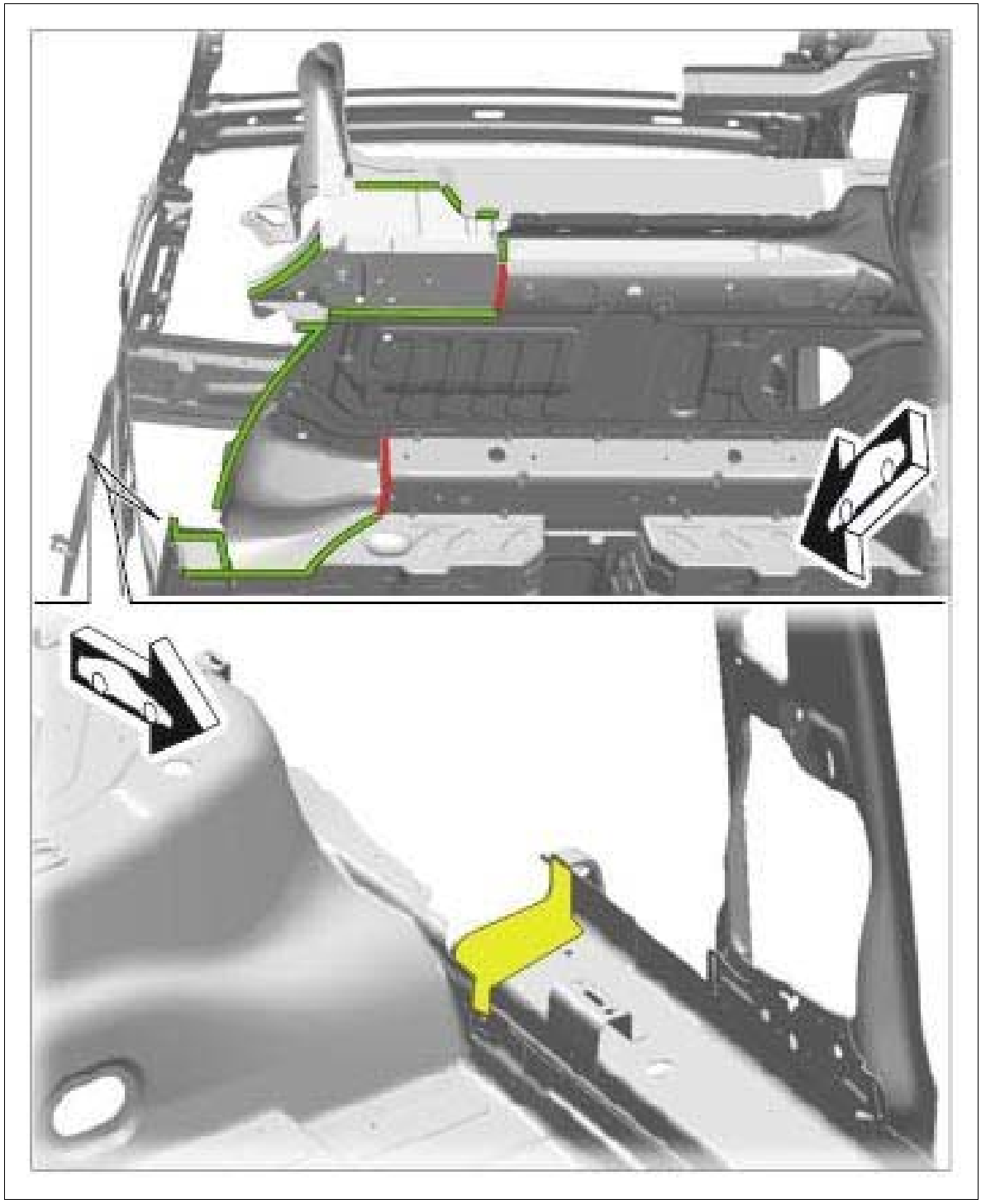

Courtesy of PORSCHE CARS NORTH AMERICA, INC.

Fig 2: Identifying Body Connection Areas

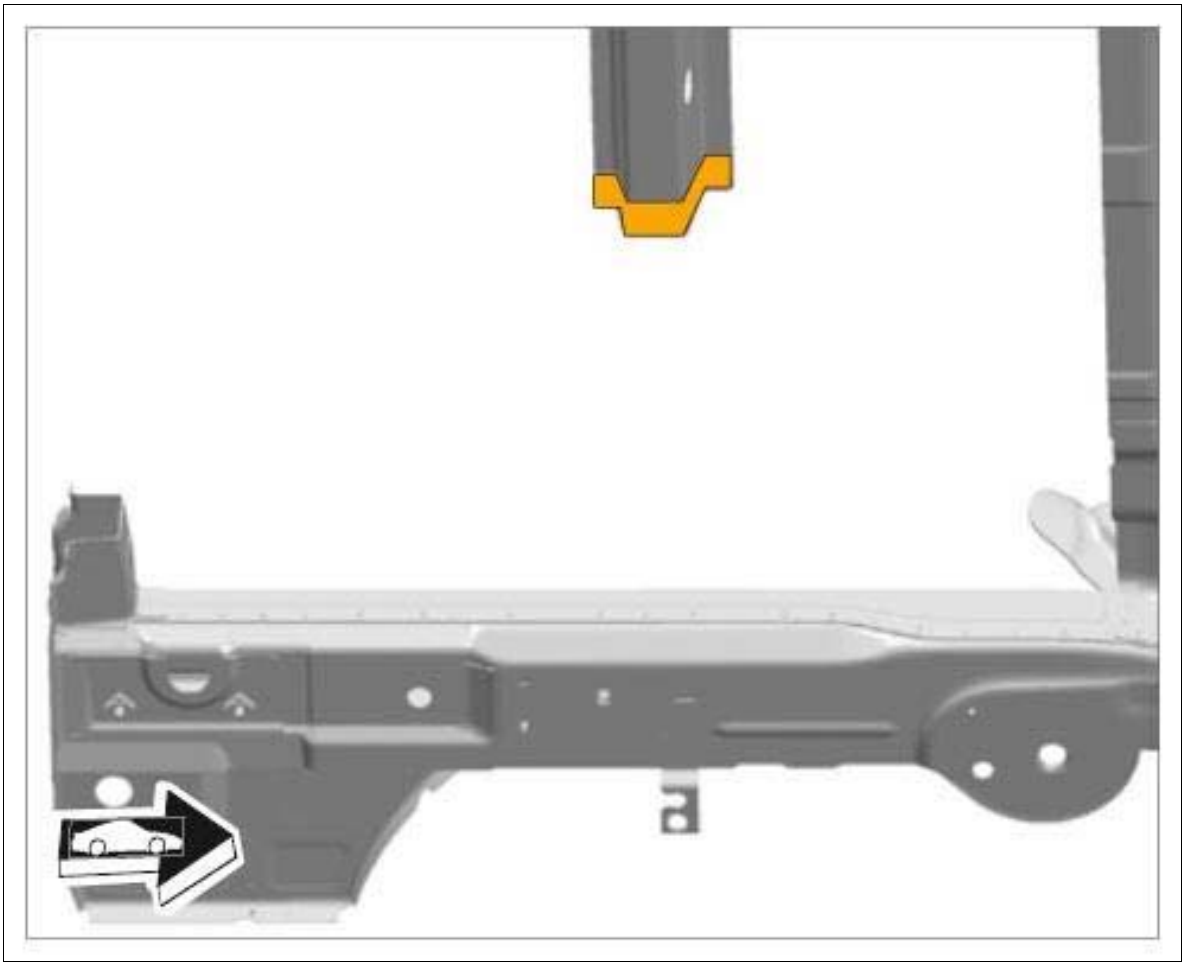

Courtesy of PORSCHE CARS NORTH AMERICA, INC.

Fig 3: Identifying Body Connection Areas

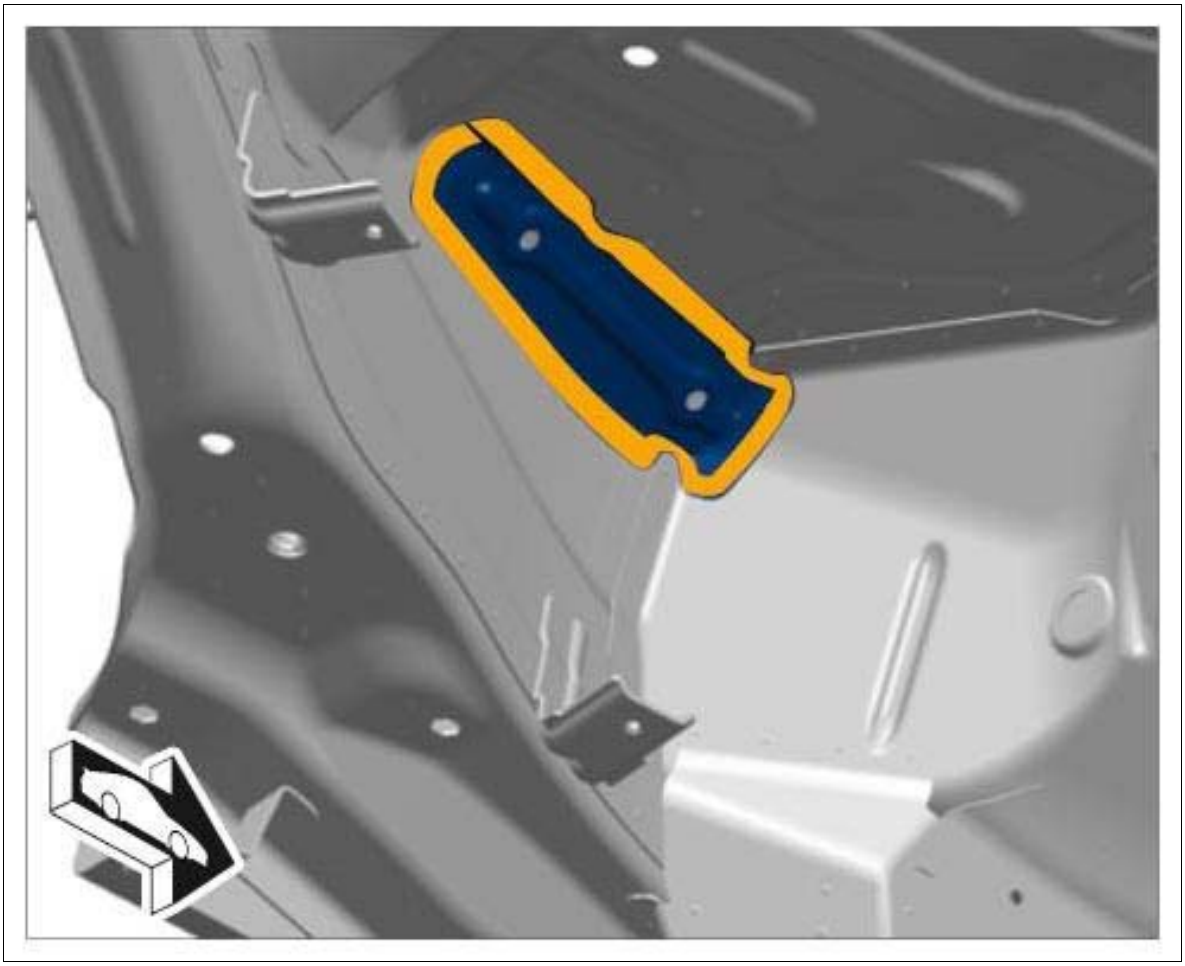

Courtesy of PORSCHE CARS NORTH AMERICA, INC.

Yellow	Bonding + blind rivets
Green	Resistance spot-welding + bonding
Red	Plug-welding/apply a full weld using inert gas without bonding
Orange	Resistance spot-welding

WM 534855 REPLACING REAR SIDE MEMBER (ALL MODELS) > INSTALLING REAR SIDE MEMBER

Information

- Before final assembly, make sure you fully understand all the work steps involved and carry out a trial assembly without applying adhesive.
- The bonding process can only be carried out reliably when a smooth and swift sequence of operations is guaranteed.
- Do not begin bonding work until all materials and tools necessary for later repair work are

available.

1. Install rear side member and check that it fits perfectly. Check gap dimensions. → 5X00IN DIAGRAM - BODY GAP DIMENSIONS

    1. 1.1. Apply adhesive to the areas marked in yellow and green. → 5X00IN21 WORKING WITH BODY STRUCTURAL ADHESIVE→ **Application depth: 3.0 mm**

    Fig 1: Identifying Adhesive Applying Areas

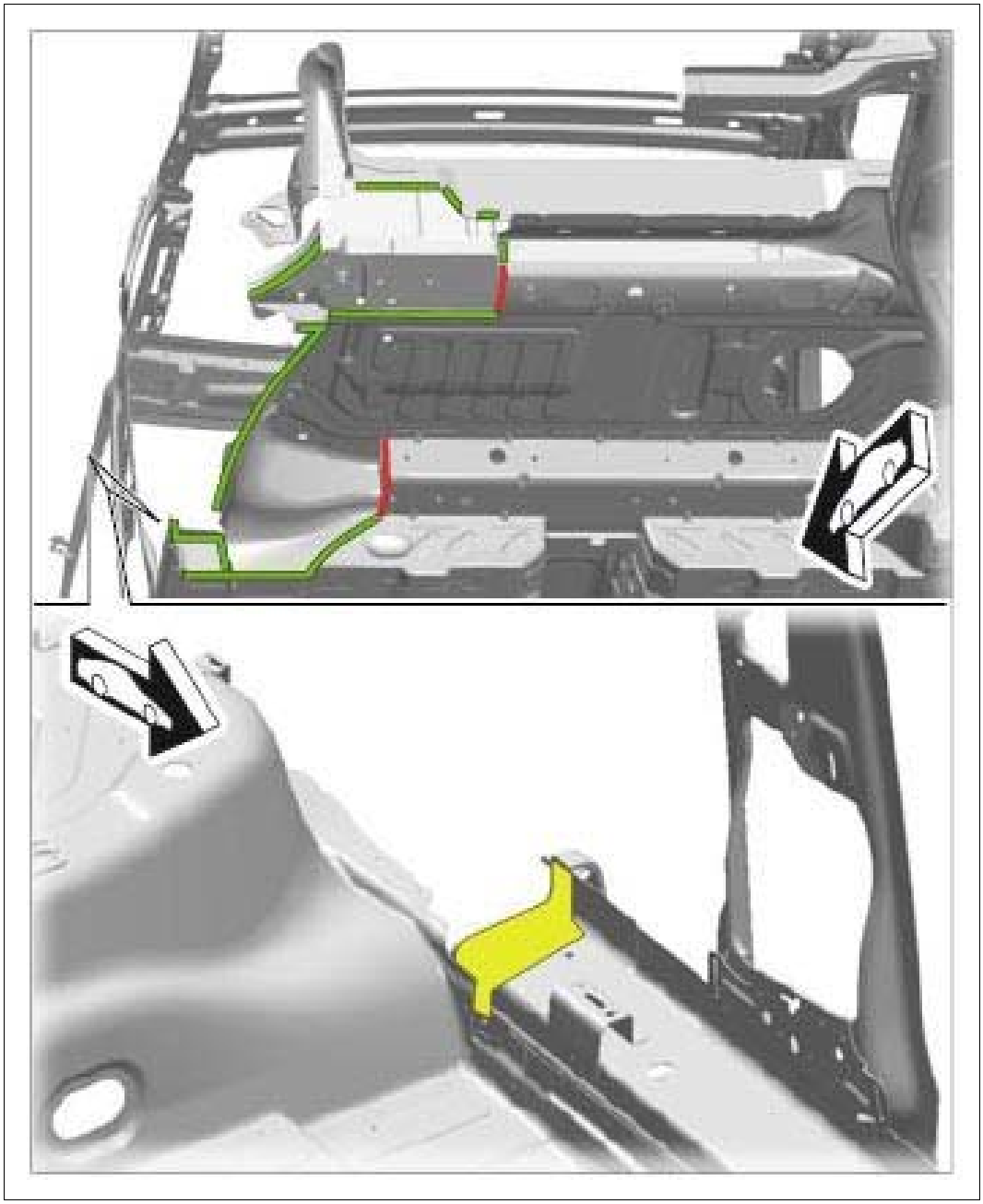

Courtesy of PORSCHE CARS NORTH AMERICA, INC.

Yellow	Bonding + blind rivets
Green	Resistance spot-welding + bonding
Red	Plug-welding/apply a full weld using inert gas without bonding

2. Rear side member bonding + blind rivets.

    1. 2.1. Rivet in rear side member in the area shown. → BLIND RIVET 999.190.227.01

    Fig 2: Identifying Rear Side Member Rivet Area

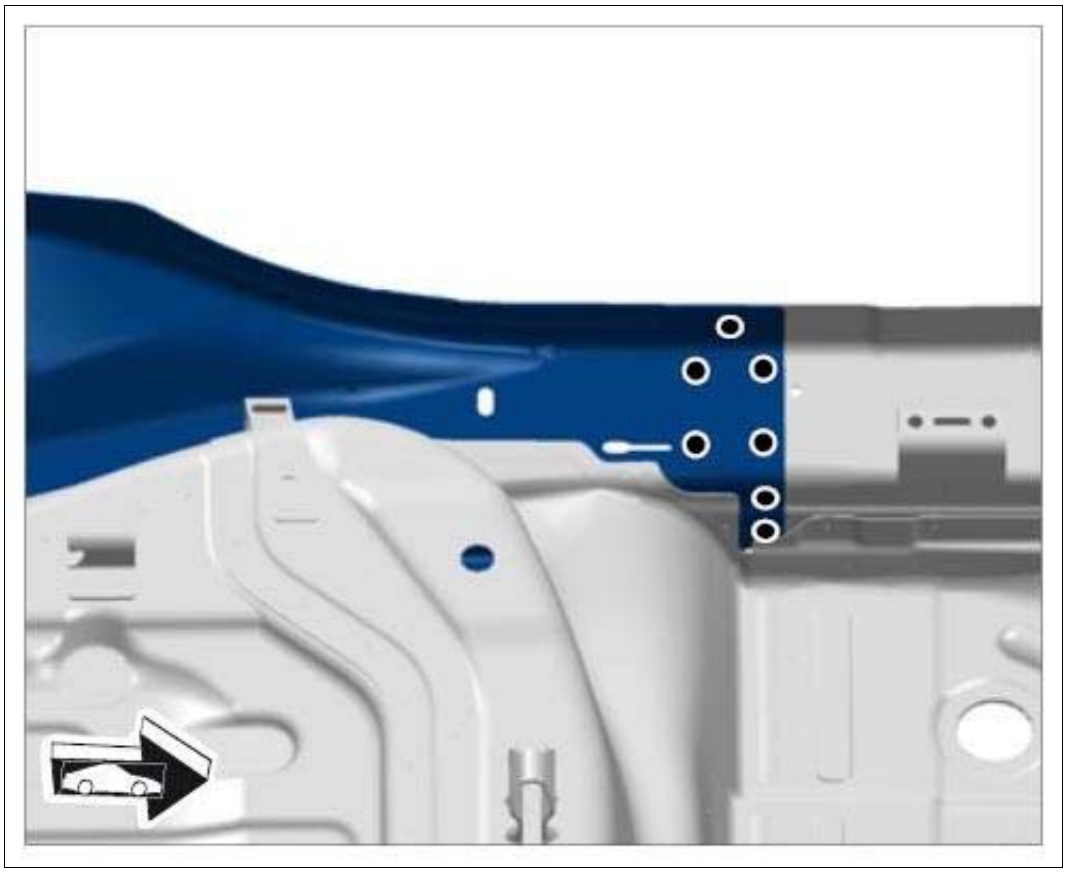

Courtesy of PORSCHE CARS NORTH AMERICA, INC.

3. Resistance spot-weld the rear side member.

    1. 3.1. Plug-weld area **-A-** using inert gas.

Fig 3: Installing Rear Side Member

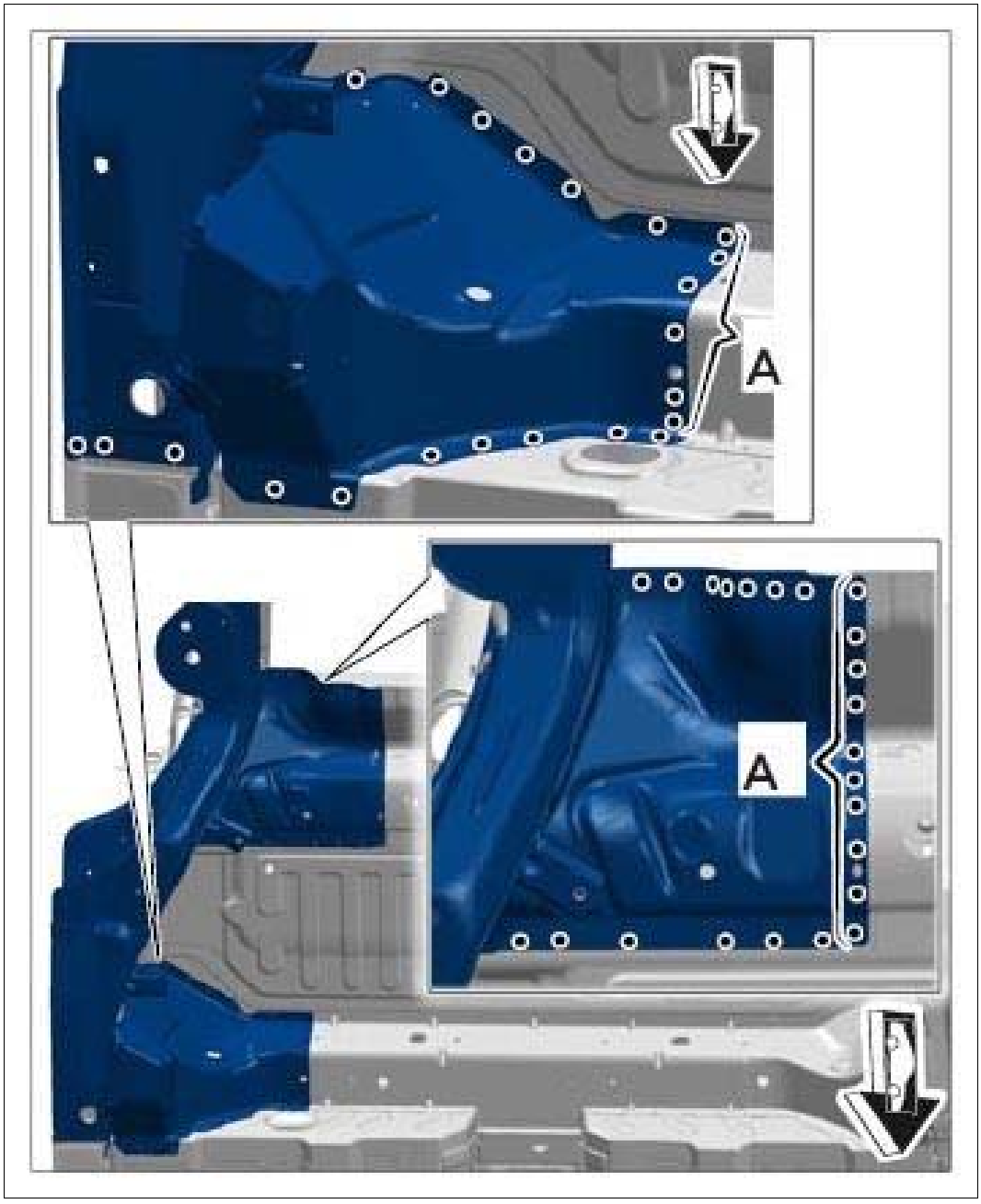

Courtesy of PORSCHE CARS NORTH AMERICA, INC.

Fig 4: Installing Rear Side Member

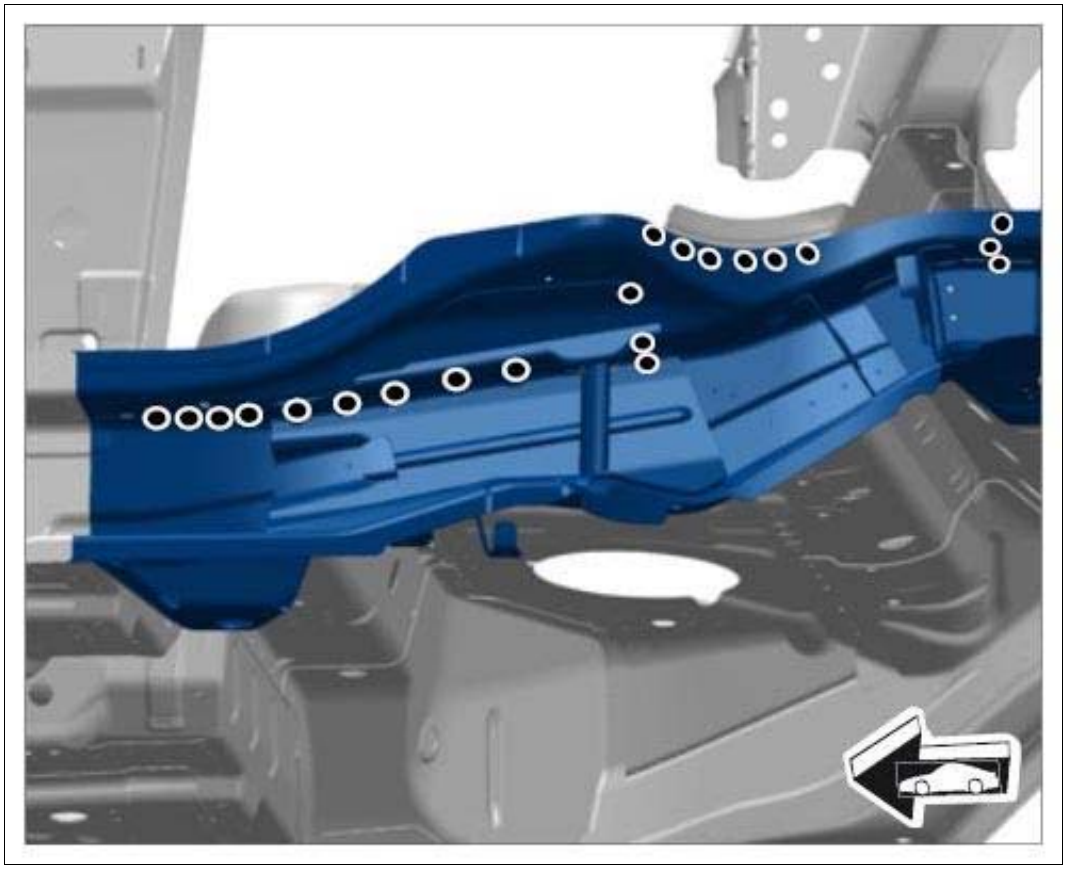

Courtesy of PORSCHE CARS NORTH AMERICA, INC.

4. Resistance spot-weld the rear side member reinforcement **-1-** .

Fig 5: Installing Rear Side Member Reinforcement

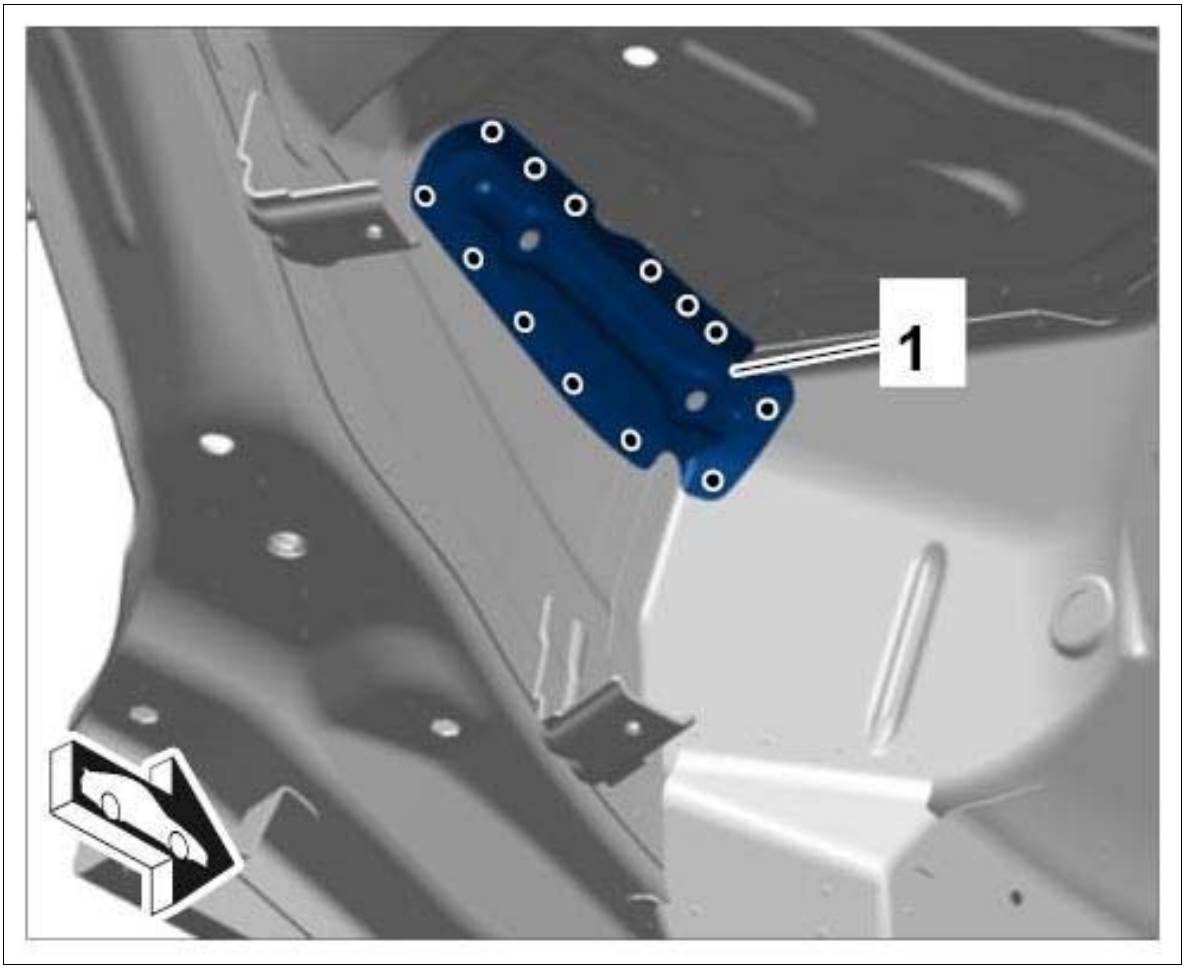

Courtesy of PORSCHE CARS NORTH AMERICA, INC.

5. Resistance spot-weld cross member for spare wheel.

Fig 6: Installing Spare Wheel Cross Member

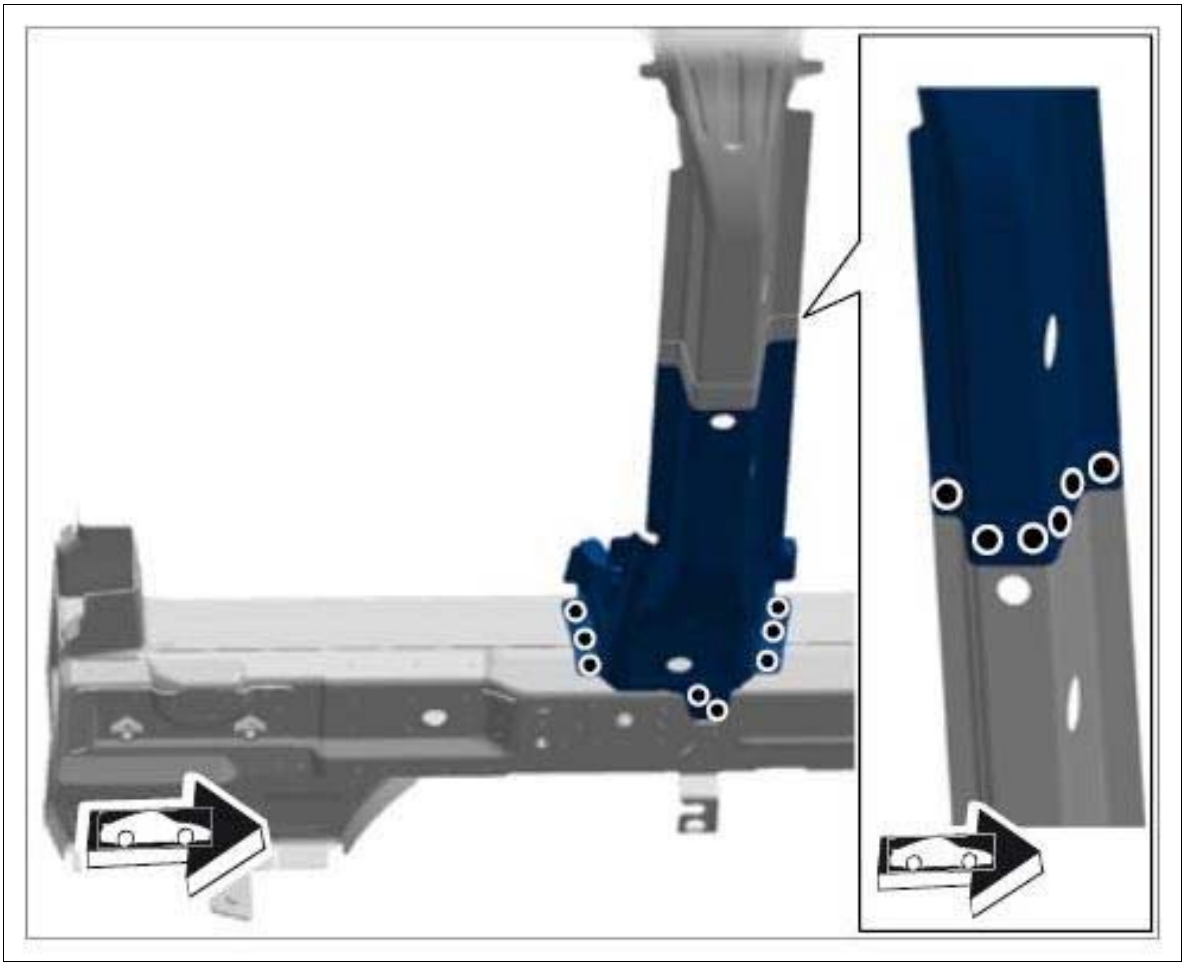

Courtesy of PORSCHE CARS NORTH AMERICA, INC.

6. Apply foam filler to the body in area **-A-** . → 5X00IN22 WORKING WITH BODY FOAM FILLER

   Make sure that all openings and gaps are closed off with the sealing compound.

Fig 7: Installing Corner Plate



Courtesy of PORSCHE CARS NORTH AMERICA, INC.

7. Resistance spot-weld the corner plate.

Fig 8: Installing Corner Plate

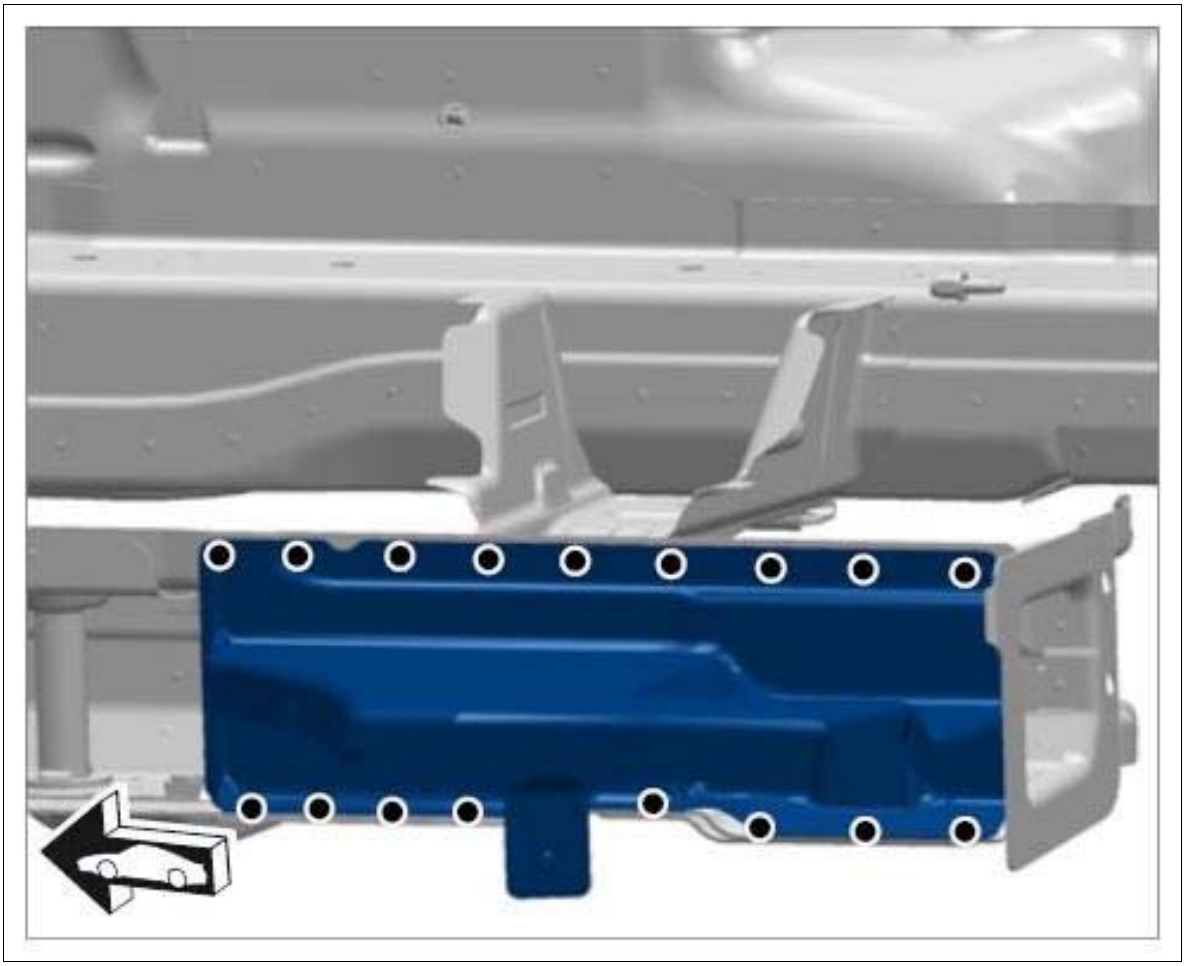

Courtesy of PORSCHE CARS NORTH AMERICA, INC.

WM 534855 REPLACING REAR SIDE MEMBER (ALL MODELS) > SUBSEQUENT WORK

1. Install (inner) rear wheel housing. → Installing (Inner) Rear Wheel Housing
2. Install rear boot floor plate. → Installing Rear Boot Floor Plate
3. Install side member reinforcement. → Installing Side Member Reinforcement

WM 534855 REPLACING REAR SIDE MEMBER (ALL MODELS) > SUBSEQUENT WORK > SUBSEQUENT WORK FOR BODY REPAIRS

1. Release and remove vehicle from the straightening system.
2. Clean joint areas and sheetmetal flanges with a wire brush.
3. Prime joint areas and sheetmetal flanges with 2K primer.

4. Restore standard seal with body sealant → 5X00IN42 SEAM SEALING

   Also seal the repair area carefully.

5. Paint repair area and adjacent surfaces, if necessary.

6. Restore standard underbody protection with underbody sealant → 5X00IN43 UNDERBODY PROTECTION

7. Apply standard cavity preservation → 5X00IN44 CAVITY PRESERVATION . Also carefully apply cavity preservation to the repair area.

8. Install removed accessories in the repair area.

WM 534855 REPLACING REAR SIDE MEMBER (SECTION) (ALL MODELS) > TOOLS

Designation	Type	Number	Description	
Hot-air blower	Service equipment	WE 1119		
Body alignment system package	Service equipment	WE 1121		
Special electric cutter	Service equipment	WE 1137		
Pneumatic Spotweld Remover, Vario Drill WS 90	Service equipment	WE 1139		
Hand-cartridge gun	Service equipment	WE 1141		
Resistance spot welder	Service equipment	WE 1311		
Inverter welder MIDIspot-QSVM-12000	Service equipment	WE 1312		
Resistance spot welder	Service equipment	WE 1313		

Blind riveting tool TAURUS 4	Service equipment	WE 1348		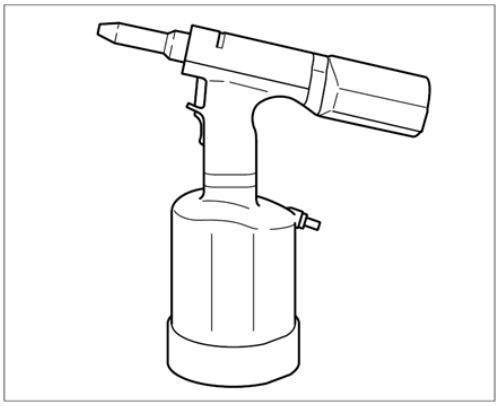
Aluminum tool set with trolley	Service equipment	WE 1350		
Resistance spot welder	Service equipment	WE 1352		
Measuring and alignment system, professional	Service equipment	WE 1398		
Mobile extraction unit, aluminum	Service equipment	WE 1507		
Body saw	Service equipment	WE 1508		
Star gauges for body gap dimensions	Special tool	Nr.127-1		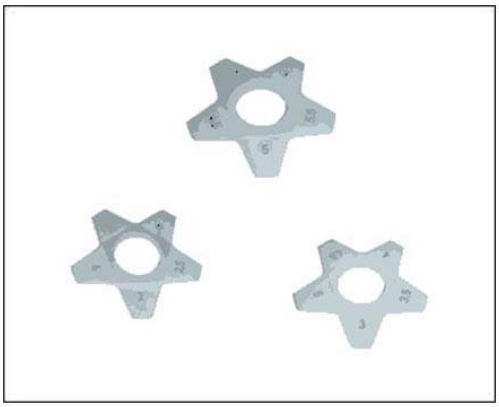

Spotweld drill	Commercially available tool	Nr.129		
Twist drill	Commercially available tool	Nr.201		
Countersink	Commercially available tool	Nr.202		

WM 534855 REPLACING REAR SIDE MEMBER (SECTION) (ALL MODELS) > TECHNICAL VALUES

Location	Description	Type	Basic value	Tolerance 1	Tolerance 2
Dimension X		Distance	180 mm		
Applying adhesive		Application depth	3.0 mm		

WM 534855 REPLACING REAR SIDE MEMBER (SECTION) (ALL MODELS) > PRELIMINARY WORK > PRELIMINARY WORK FOR BODY REPAIRS (WITH STRAIGHTENING SYSTEM)

1. Remove accessories in the repair area.
    1. 1.1. Remove accessories in the repair area according to the extent of damage on the vehicle.
2. Set up straightening bench with straightening system.
3. Set vehicle on straightening bench.
4. Cover accessories adjacent to the repair area on the vehicle.
    1. 4.1. Cover all accessories remaining on the vehicle and adjacent areas with fire-proof protective covers.
5. Reshape connection area of the sheetmetal parts to be replaced. See Information on aluminum repairs → Refer to the appropriate information on aluminum repairs
6. Expose joint areas.
    1. 6.1. Remove underbody protection, paint, etc. from the joint areas of the body using a hot-air gun or rotary brush.

1. Remove rear boot floor plate. → Removing Rear Boot Floor Plate
2. Remove frame for light.

WM 534855 REPLACING REAR SIDE MEMBER (SECTION) (ALL MODELS) > SAFETY INSTRUCTIONS AND INFORMATION ON QUALITY

⚠ *CAUTION: Non-observance of safety instructions for body repairs*

- *Risk of damage to the vehicle*
- *Danger of injury*

→ Read the relevant safety instructions as well as general information and quality instructions → 5X00IN01 SAFETY INSTRUCTIONS .

- Protection of electrical components during body repairs
- Corrosion protection measures during repairs → 5X00IN03 CORROSION PROTECTION MEASURES DURING REPAIRS
- Information on aluminum repairs. Refer to the appropriate information on aluminum repairs
- Body parts of various sheet-steel strengths → 5X00IN04 BODY PARTS OF VARIOUS SHEET-STEEL STRENGTHS

- Replacing punch rivets and penetrated joints
- Setting self-tapping screws → 5X00IN24 SETTING SELF-TAPPING SCREWS
- Working with body structural adhesive → 5X00IN21 WORKING WITH BODY STRUCTURAL ADHESIVE

WM 534855 REPLACING REAR SIDE MEMBER (SECTION) (ALL MODELS) > TOOLS AND MATERIALS > TOOLS AND MATERIALS FOR BODY REPAIRS

Information

- The tools for working on steel and aluminum must always be kept separate from each other. We recommend that you color code the tools using a system similar to that used for the Aluminum tool set with trolley WE 1350, for example.

Straightening set **Body alignment system package WE 1121 Measuring and alignment system, professional WE 1398**

Resistance spot welder; optional **Inverter welder MIDIspot-QSVM-12000 WE 1312, Resistance spot welder WE 1352, Resistance spot welder WE 1311, Resistance spot welder WE 1313**

Metal inert gas (MIG) welder.

Pneumatic spotweld remover **Pneumatic Spotweld Remover, Vario Drill WS 90 WE 1139**

Pneumatic body saw **Body saw WE 1508**

Oscillating body saw (special electric cutter) **Special electric cutter WE 1137**

Hot-air blower **Hot-air blower WE 1119**

Hand-cartridge gun **Hand-cartridge gun WE 1141**

Spotweld drill **Spotweld drill**

Countersink for rivets **Countersink Nr.202**

Blind riveting tool for high-strength rivets **Blind riveting tool TAURUS 4 WE 1348**

Safety vacuum cleaner for aluminum dust **Mobile extraction unit, aluminum WE 1507**

Star gauges for body gap dimensions Nr.127-1

Wurth glue and seals body sealant

WM 534855 REPLACING REAR SIDE MEMBER (SECTION) (ALL MODELS) > REMOVING REAR SIDE MEMBER (SECTION)

Fig 1: Identifying Rear Side Member Position (Section)



Courtesy of PORSCHE CARS NORTH AMERICA, INC.

Information

Cut completely through the rear side member (section) in the marked area.

Information

Mark cut X in accordance with the new part. Make sure to leave an overlap of approx. 3 cm with respect to the body.

1. Mark and make cut. → **Distance: 180 mm**

Fig 2: Removing Rear Side Member (Section)

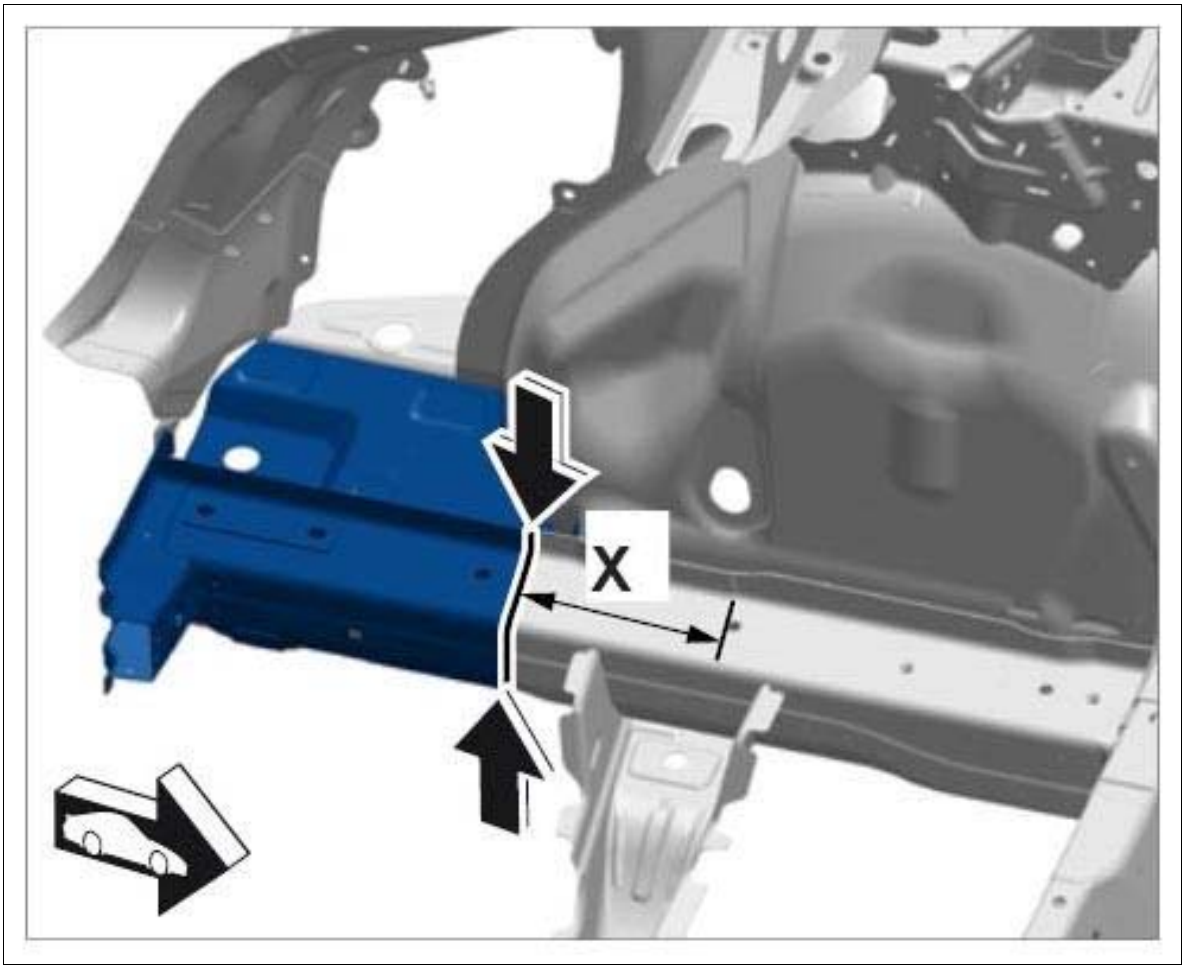

Courtesy of PORSCHE CARS NORTH AMERICA, INC.

Information

Drill out the connection point on one side only. Do not damage the plate underneath.

2. Drill out spotwelds using **spotweld drill;**

Fig 3: Removing Rear Side Member (Section)

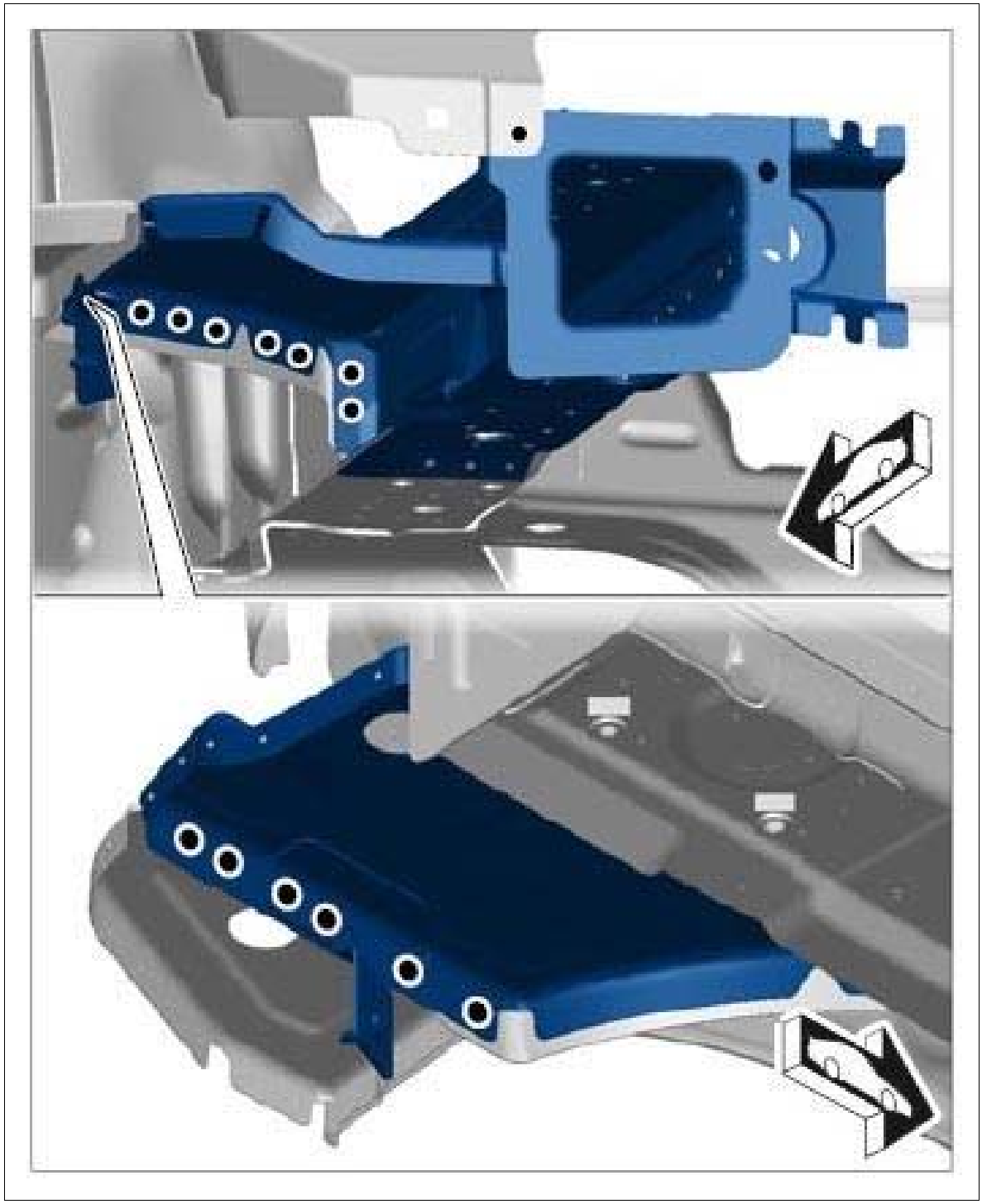

Courtesy of PORSCHE CARS NORTH AMERICA, INC.

3. Heat the marked bonding surfaces.

Fig 4: Removing Rear Side Member (Section)

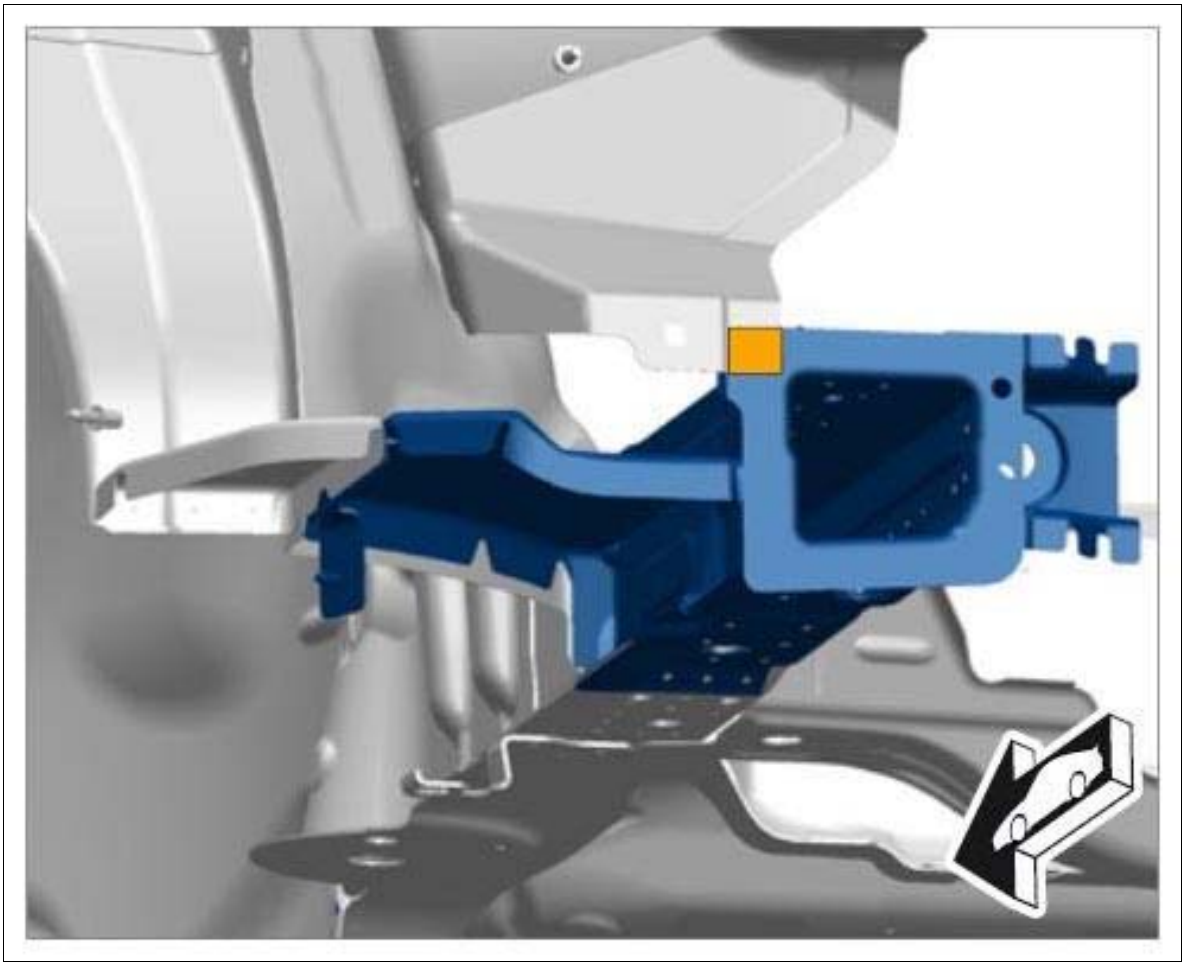

Courtesy of PORSCHE CARS NORTH AMERICA, INC.

4. Remove rear side member (section).

WM 534855 REPLACING REAR SIDE MEMBER (SECTION) (ALL MODELS) > PREPARING REAR SIDE MEMBER (SECTION) FOR INSTALLATION

1. Fit in rear side member.
    1. 1.1. Cut rear side member at the transitions to the body leaving an overlap of 30 mm.

Fig 1: Identifying Rear Side Member (Section)

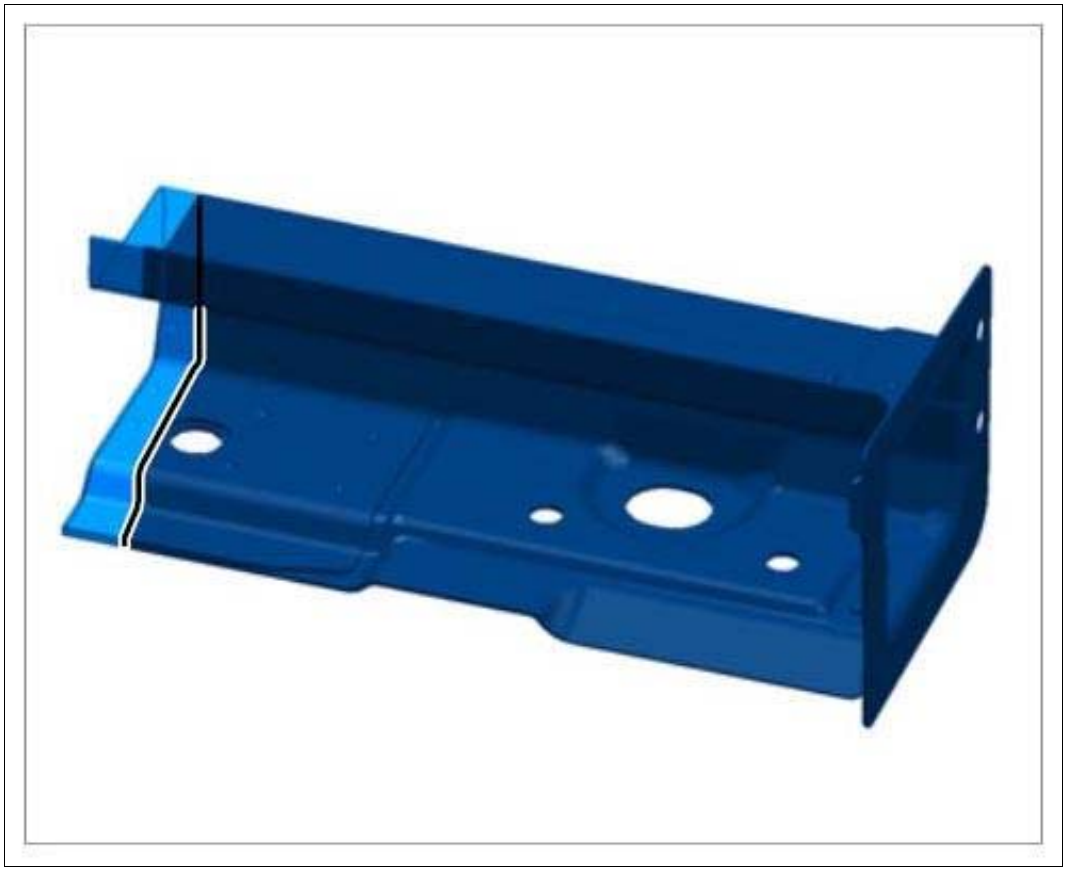

Courtesy of PORSCHE CARS NORTH AMERICA, INC.

2. Fit in rear side member again.

    1. 2.1. Make cuts through the rear side member (section) and rear side member in the overlap areas.

3. Prepare connection areas for bonding and welding.

Fig 2: Identifying Rear Side Member (Section)



Courtesy of PORSCHE CARS NORTH AMERICA, INC.

Fig 3: Identifying Corner Plate



Courtesy of PORSCHE CARS NORTH AMERICA, INC.

4. Resistance spot-weld the closing element.

Fig 4: Identifying Closing Element Spot-Weld Area

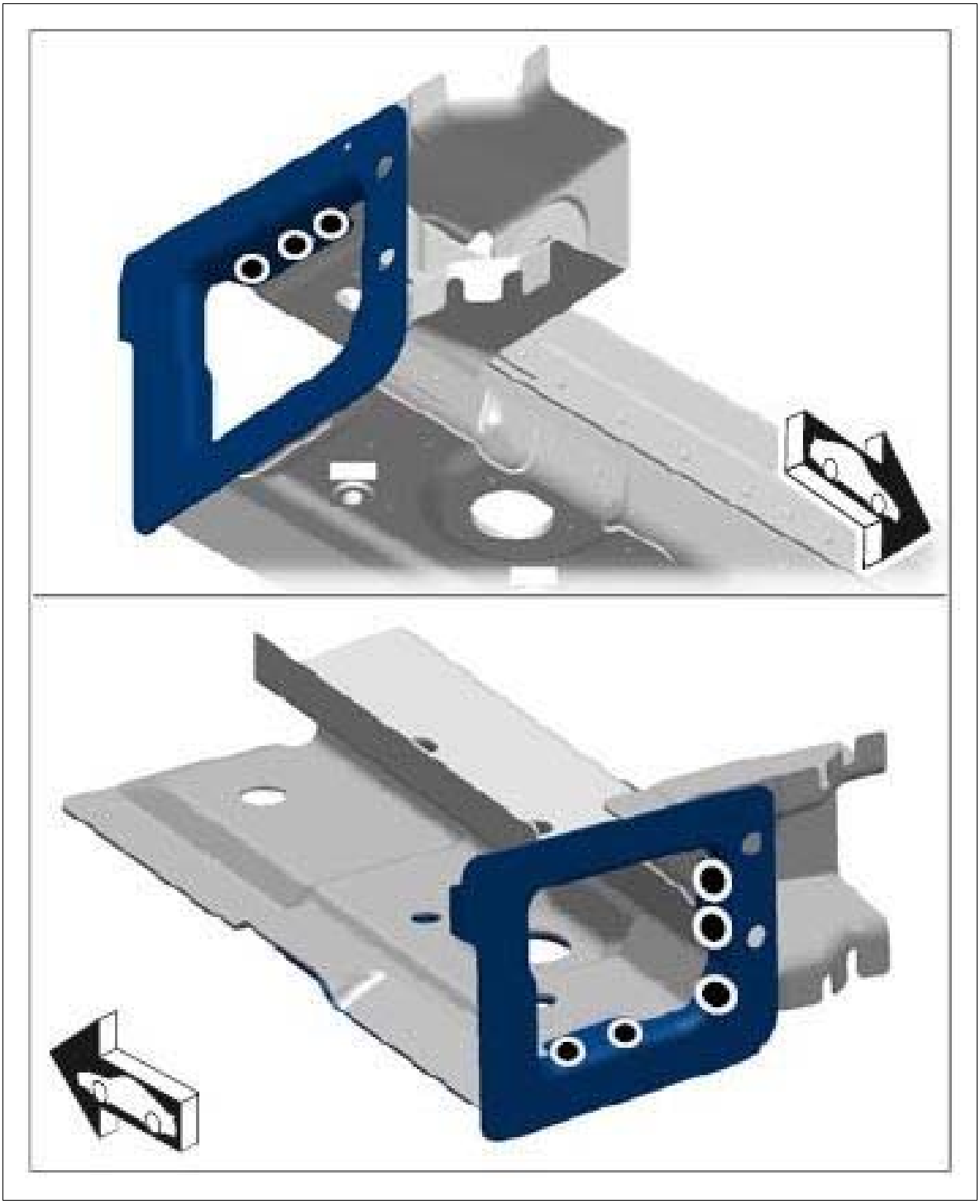

Courtesy of PORSCHE CARS NORTH AMERICA, INC.

Red	Plug-welding/apply a full weld using inert gas without bonding
Green	Resistance spot-welding
Yellow	Bonding + resistance spot-welding

WM 534855 REPLACING REAR SIDE MEMBER (SECTION) (ALL MODELS) > PREPARING CONNECTION AREAS OF THE BODY

Information

- Before final assembly, make sure you fully understand all the work steps involved and carry out a trial assembly without applying adhesive.
- The bonding process can only be carried out reliably when a smooth and swift sequence of operations is guaranteed.
- Do not begin bonding work until all materials and tools necessary for later repair work are available.

1. Align the sealing surface and connections of the body.
2. De-burr connection points and prepare them for welding.
3. Prepare the marked areas for bonding and welding. → Preparing Bonding Surfaces

Fig 1: Identifying Body Connection Areas

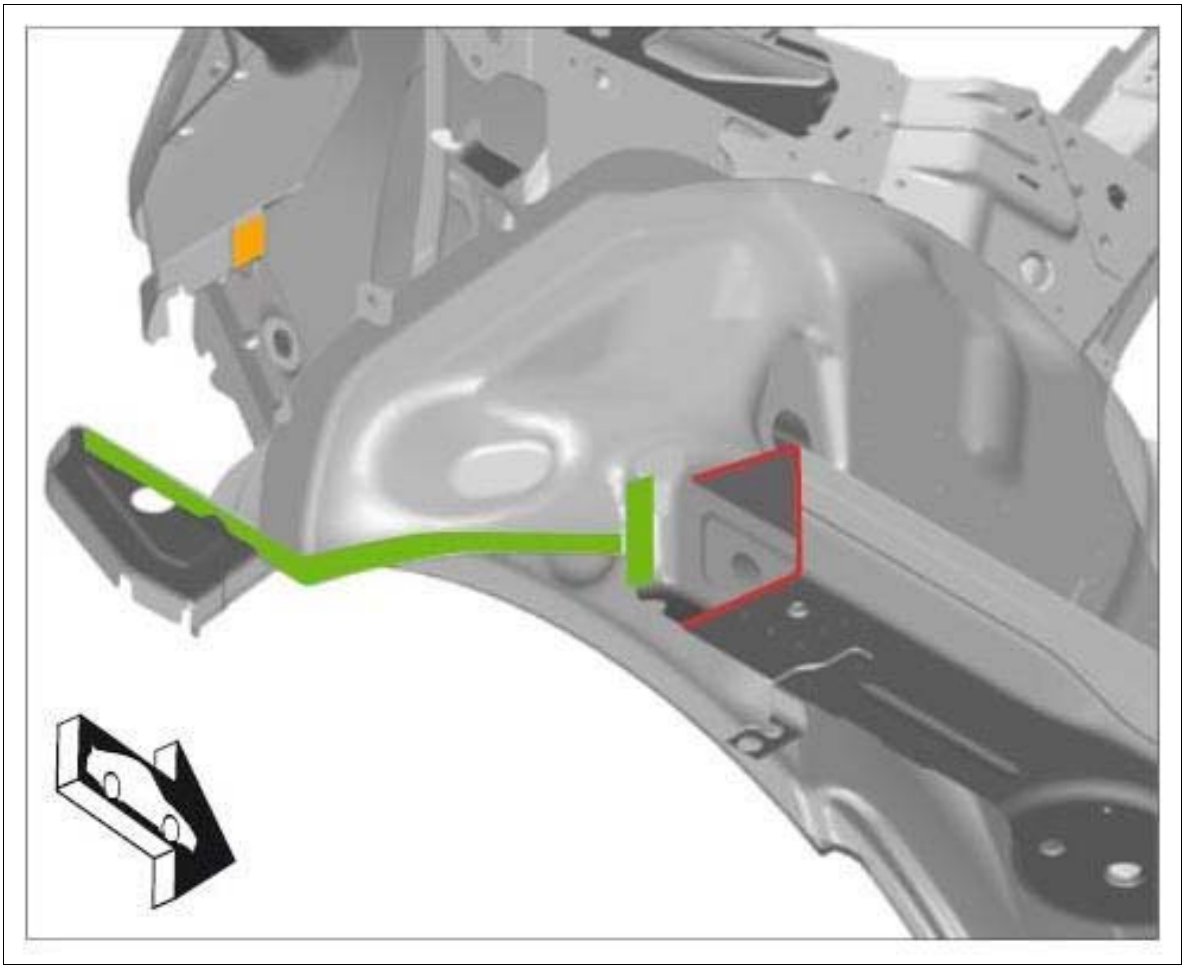

Courtesy of PORSCHE CARS NORTH AMERICA, INC.

Red	Plug-welding/apply a full weld using inert gas without bonding
Green	Resistance spot-welding

Yellow	Bonding + resistance spot-welding

WM 534855 REPLACING REAR SIDE MEMBER (SECTION) (ALL MODELS) > INSTALLING REAR SIDE MEMBER (SECTION)

Information

- Before final assembly, make sure you fully understand all the work steps involved and carry out a trial assembly without applying adhesive.
- The bonding process can only be carried out reliably when a smooth and swift sequence of operations is guaranteed.
- Do not begin bonding work until all materials and tools necessary for later repair work are available.

1. Install rear side member (section) and check that it fits perfectly. Check gap dimensions. → 5X00IN DIAGRAM - BODY GAP DIMENSIONS
    1. 1.1. Apply adhesive to the areas marked in yellow. → 5X00IN21 WORKING WITH BODY STRUCTURAL ADHESIVE→ **Application depth: 3.0 mm**

       Fig 1: Identifying Adhesive Applying Areas



Courtesy of PORSCHE CARS NORTH AMERICA, INC.

2. Resistance spot-weld the rear side member (section) **-2-** and corner plate **-1-** .

Fig 2: Identifying Rear Side Member Spot-Weld Areas (Section)

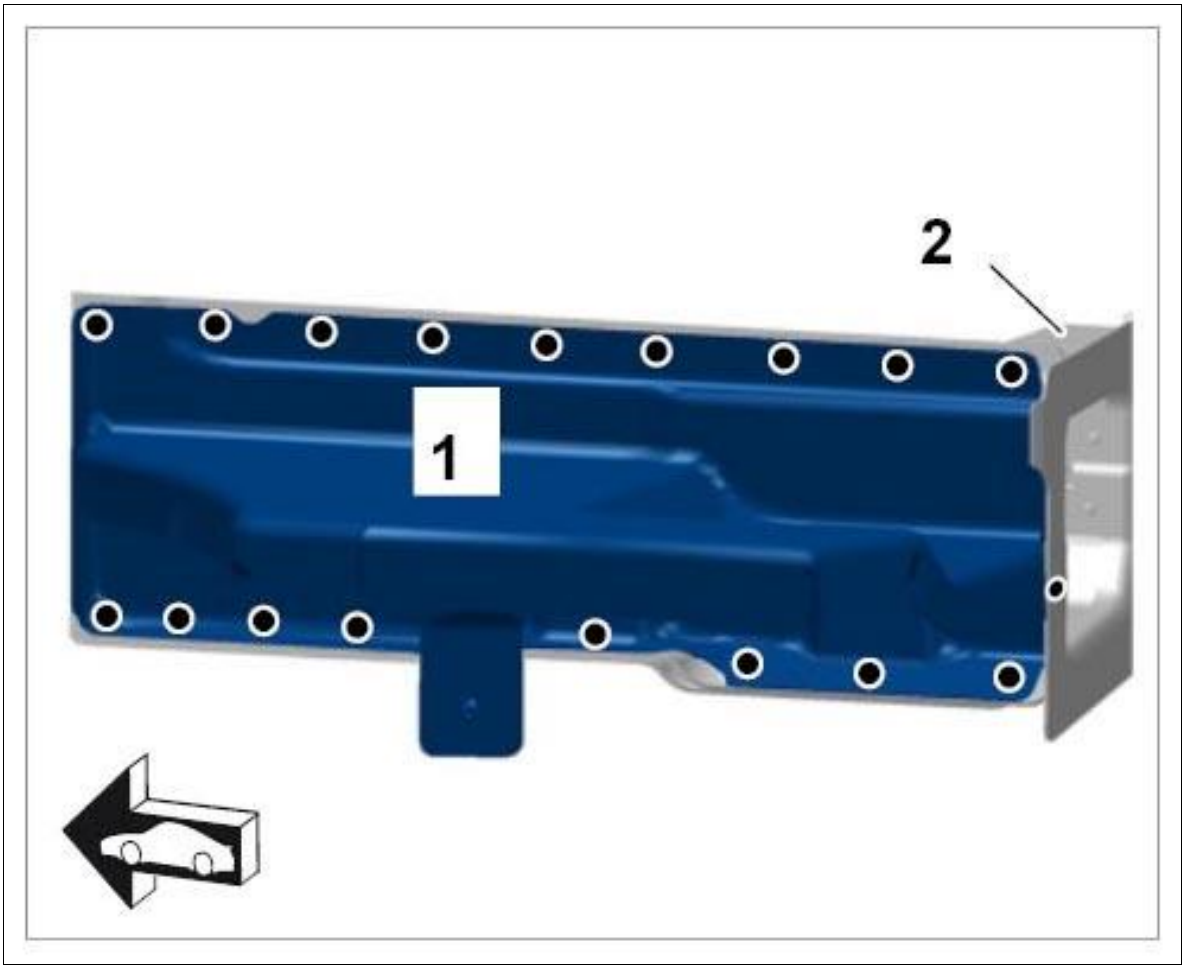

Courtesy of PORSCHE CARS NORTH AMERICA, INC.

3. Install and secure rear side member (section) **-2-** with corner plate **-1-** .
    1. 3.1. Apply a full weld to the area **-arrows-** using inert gas.
    2. 3.2. Resistance spot-weld area **-A-** .

Fig 3: Installing Rear Side Member (Section) With Corner Plate

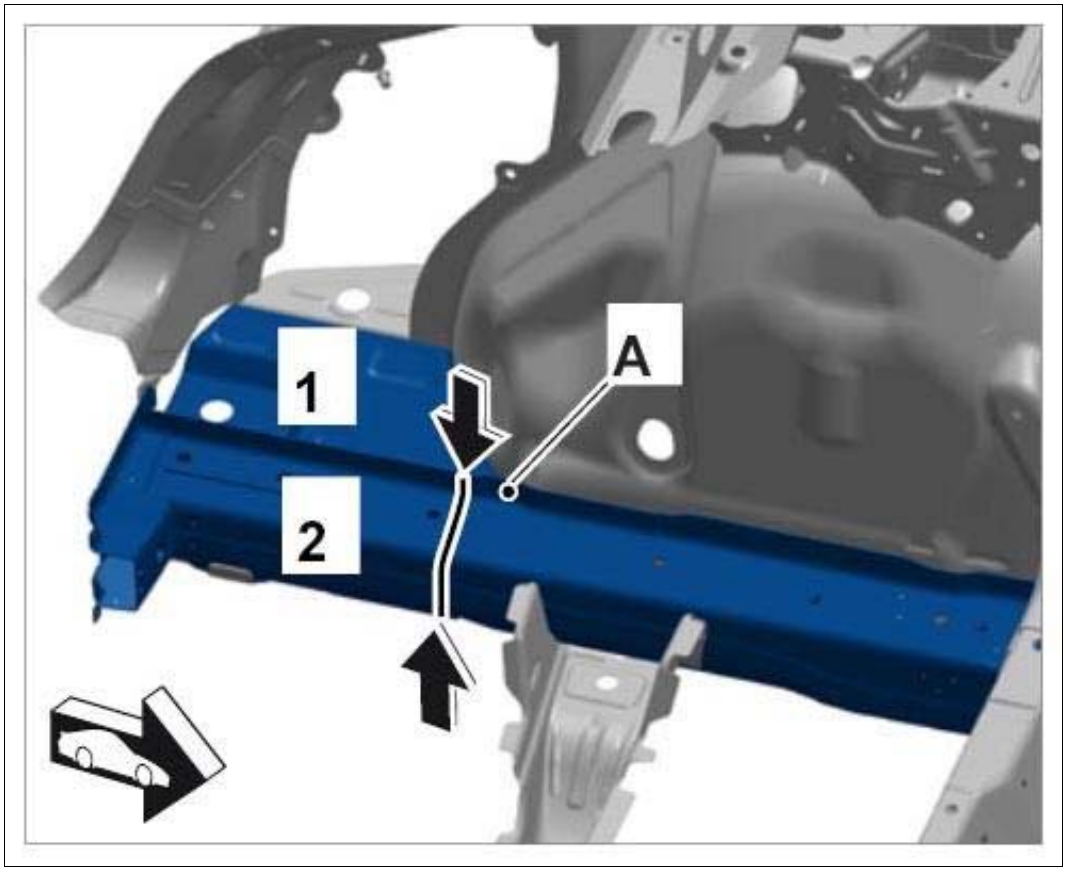

Courtesy of PORSCHE CARS NORTH AMERICA, INC.

4. Resistance spot-weld the corner plate.

Fig 4: Installing Rear Side Member (Section)

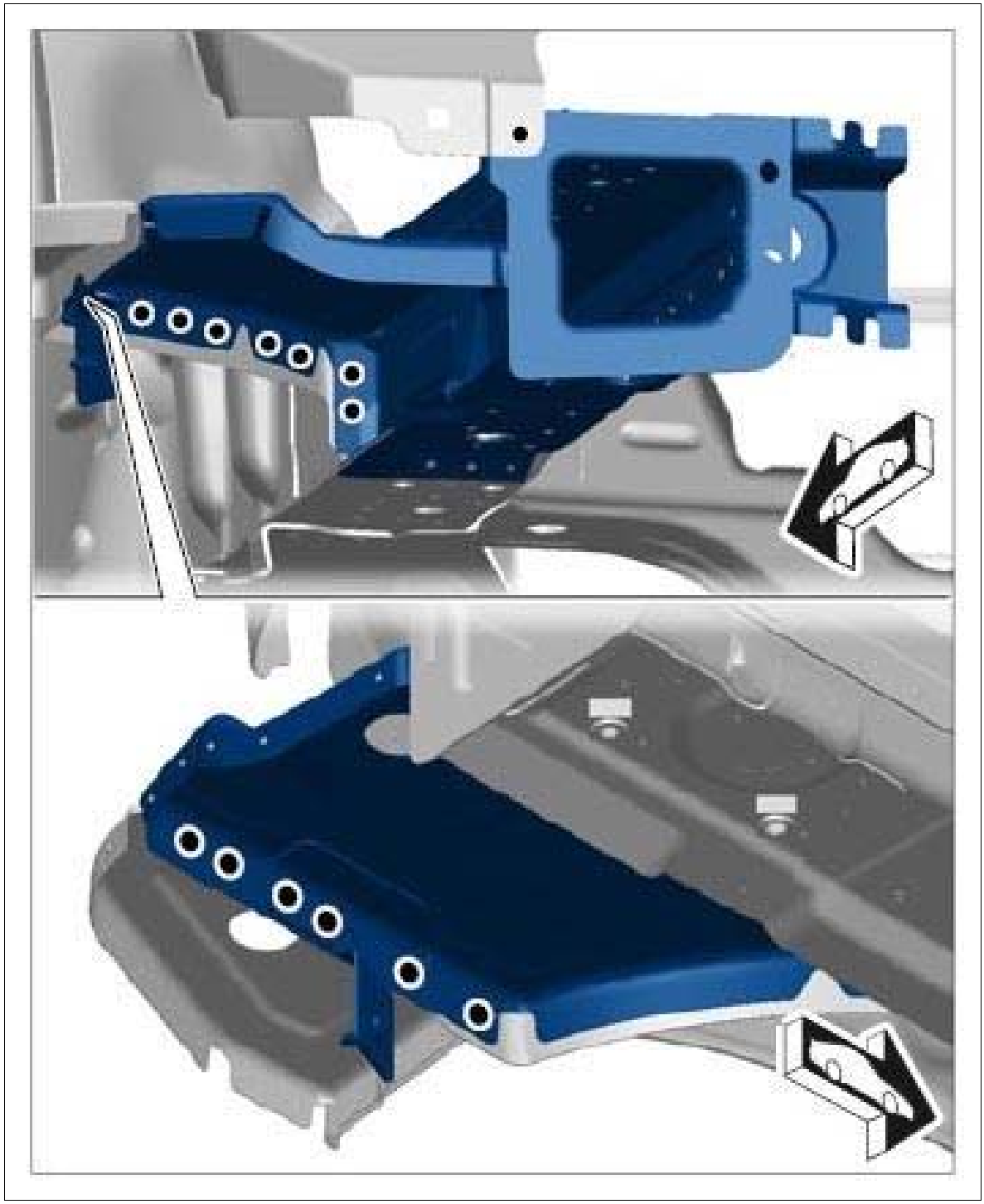

Courtesy of PORSCHE CARS NORTH AMERICA, INC.

WM 534855 REPLACING REAR SIDE MEMBER (SECTION) (ALL MODELS) > SUBSEQUENT WORK

1. Install rear boot floor plate. → Installing Rear Boot Floor Plate

2. Install frame for light.

WM 534855 REPLACING REAR SIDE MEMBER (SECTION) (ALL MODELS) > SUBSEQUENT WORK > SUBSEQUENT WORK FOR BODY REPAIRS

1. Release and remove vehicle from the straightening system.
2. Clean joint areas and sheetmetal flanges with a wire brush.
3. Prime joint areas and sheetmetal flanges with 2K primer.
4. Restore standard seal with body sealant → 5X00IN42 SEAM SEALING

   Also seal the repair area carefully.
5. Paint repair area and adjacent surfaces, if necessary.
6. Restore standard underbody protection with underbody sealant → 5X00IN43 UNDERBODY PROTECTION
7. Apply standard cavity preservation → 5X00IN44 CAVITY PRESERVATION . Also carefully apply cavity preservation to the repair area.
8. Install removed accessories in the repair area.

WM 535555 REPLACING REAR SIDE SECTION (ALL MODELS) > TOOLS

Designation	Type	Number	Description	
Hot-air blower	Service equipment	WE 1119		
Body alignment system package	Service equipment	WE 1121		
Special electric cutter	Service equipment	WE 1137		
Pneumatic Spotweld Remover, Vario Drill WS 90	Service equipment	WE 1139		
Hand-cartridge gun	Service equipment	WE 1141		
Resistance spot welder	Service equipment	WE 1311		
Inverter welder MIDIspot-	Service equipment	WE 1312		

QSVM-12000				
Resistance spot welder	Service equipment	WE 1313		
Blind riveting tool TAURUS 4	Service equipment	WE 1348		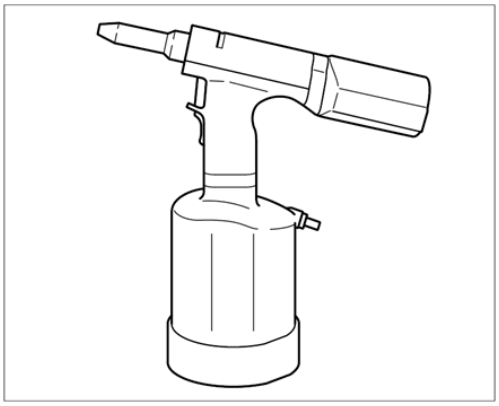
Aluminum tool set with trolley	Service equipment	WE 1350		
Resistance spot welder	Service equipment	WE 1352		
Measuring and alignment system, professional	Service equipment	WE 1398		
Mobile extraction unit, aluminum	Service equipment	WE 1507		
Body saw	Service equipment	WE 1508		
Star gauges for body gap dimensions	Special tool	Nr.127-1		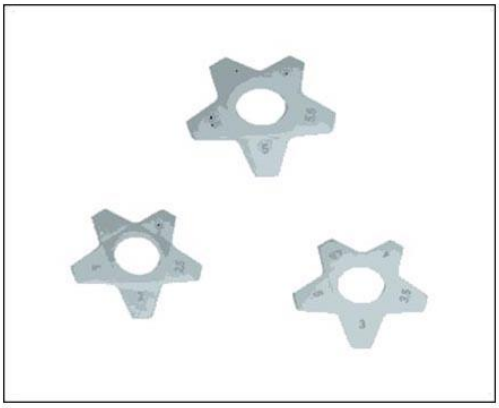

Spotweld drill	Commercially available tool	Nr.129		
Twist drill	Commercially available tool	Nr.201		
Countersink	Commercially available tool	Nr.202		

WM 535555 REPLACING REAR SIDE SECTION (ALL MODELS) > TECHNICAL VALUES

Location	Description	Type	Basic value	Tolerance 1	Tolerance 2
Dimension X		Distance	86 mm		
Dimension Y		Distance	60 mm		
Dimension Z		Distance	90 mm		
Dimension W		Distance	50 mm		

Applying adhesive		Application depth	3.0 mm		

WM 535555 REPLACING REAR SIDE SECTION (ALL MODELS) > PRELIMINARY WORK > PRELIMINARY WORK FOR BODY REPAIRS (WITHOUT STRAIGHTENING SYSTEM)

1. Remove accessories in the repair area.
    1. 1.1. Remove accessories in the repair area according to the extent of damage on the vehicle.
2. Cover accessories adjacent to the repair area on the vehicle.
    1. 2.1. Cover all accessories remaining on the vehicle and adjacent areas with fire-proof protective covers.
3. Reshape connection area of the sheetmetal parts to be replaced. Note: Information on aluminum repairs. Refer to the appropriate information on aluminum repairs
4. Expose joint areas.
    1. 4.1. Remove underbody protection, paint, etc. from the joint areas of the body using a hot-air gun or rotary brush.

WM 535555 REPLACING REAR SIDE SECTION (ALL MODELS) > SAFETY INSTRUCTIONS AND INFORMATION ON QUALITY

⚠ *CAUTION: Non-observance of safety instructions for body repairs*

- *Risk of damage to the vehicle*
- *Danger of injury*

→ Read the relevant safety instructions as well as general information and quality instructions → 5X00IN01 SAFETY INSTRUCTIONS .

- Protection of electrical components during body repairs
- Corrosion protection measures during repairs → 5X00IN03 CORROSION PROTECTION MEASURES DURING REPAIRS
- Information on aluminum repairs. Refer to the appropriate information on aluminum repairs
- Body parts of various sheet-steel strengths → 5X00IN04 BODY PARTS OF VARIOUS SHEET-STEEL STRENGTHS
- Replacing punch rivets and penetrated joints

- Setting self-tapping screws → 5X00IN24 SETTING SELF-TAPPING SCREWS
- Working with body structural adhesive → 5X00IN21 WORKING WITH BODY STRUCTURAL ADHESIVE

WM 535555 REPLACING REAR SIDE SECTION (ALL MODELS) > TOOLS AND MATERIALS > TOOLS AND MATERIALS FOR BODY REPAIRS

- The tools for working on steel and aluminum must always be kept separate from each other. We recommend that you color code the tools using a system similar to that used for the Aluminum tool set with trolley WE 1350, for example.

Straightening set **Body alignment system package WE 1121 Measuring and alignment system, professional WE 1398**

Resistance spot welder; optional **Inverter welder MIDIspot-QSVM-12000 WE 1312, Resistance spot welder WE 1352, Resistance spot welder WE 1311, Resistance spot welder WE 1313**

Metal inert gas (MIG) welder

Pneumatic spotweld remover **Pneumatic Spotweld Remover, Vario Drill WS 90 WE 1139**

Pneumatic body saw **Body saw WE 1508**

Oscillating body saw (special electric cutter) **Special electric cutter WE 1137**

Hot-air blower **Hot-air blower WE 1119**

Hand-cartridge gun **Hand-cartridge gun WE 1141**

Spotweld drill **Spotweld drill**

Countersink for rivets **Countersink Nr.202**

Blind riveting tool for high-strength rivets **Blind riveting tool TAURUS 4 WE 1348**

Safety vacuum cleaner for aluminum dust **Mobile extraction unit, aluminum WE 1507**

Star gauges for body gap dimensions Nr.127-1

Wurth glue and seals body sealant

WM 535555 REPLACING REAR SIDE SECTION (ALL MODELS) > REMOVING REAR SIDE SECTION

Fig 1: Identifying Rear Side Section Installation Position



Courtesy of PORSCHE CARS NORTH AMERICA, INC.

Information

Only make cuts in the top plate. Make sure not to damage the plate underneath when doing this.

Information

Mark cuts X in accordance with the new part. Make sure to leave an overlap of approx. 3 cm with respect to the body.

1. Mark and make cuts. → **Distance: 86 mm** → **Distance: 60 mm** → **Distance: 90 mm** → **Distance: 50 mm**

Fig 2: Identifying Rear Side Section Cutting Dimension

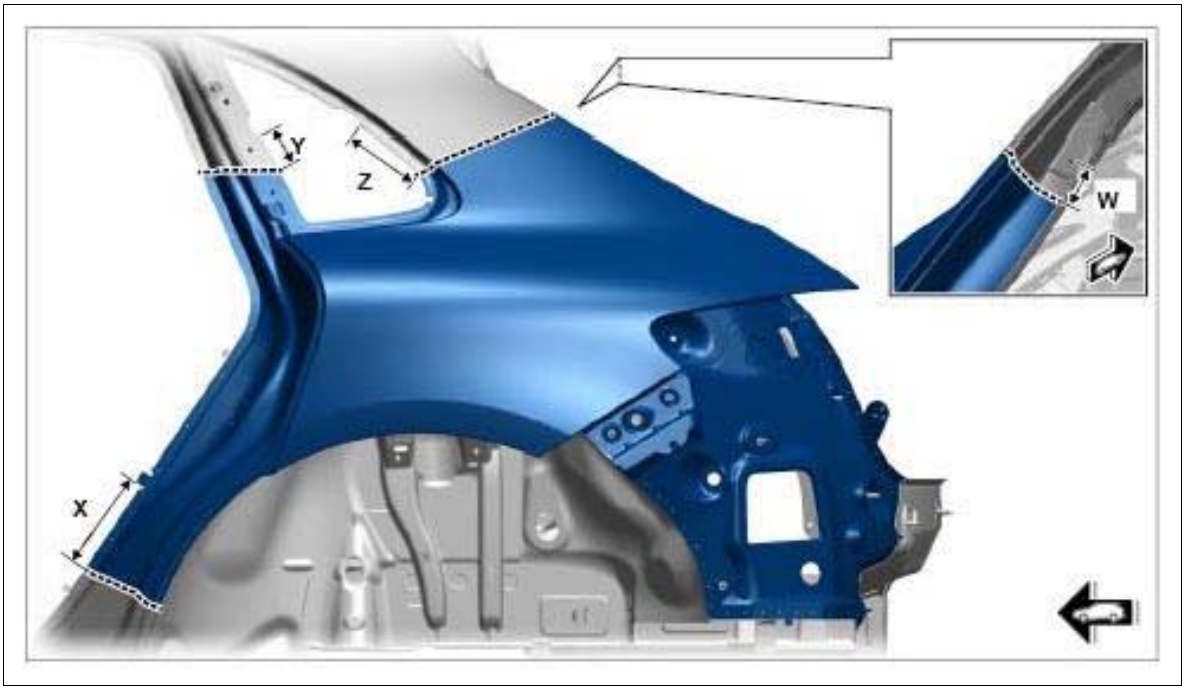

Courtesy of PORSCHE CARS NORTH AMERICA, INC.

Information

Drill out the connection point on one side only. Do not damage the plate underneath.

2. Drill out spotwelds using **spotweld drill;** .

Fig 3: Removing Rear Side Section

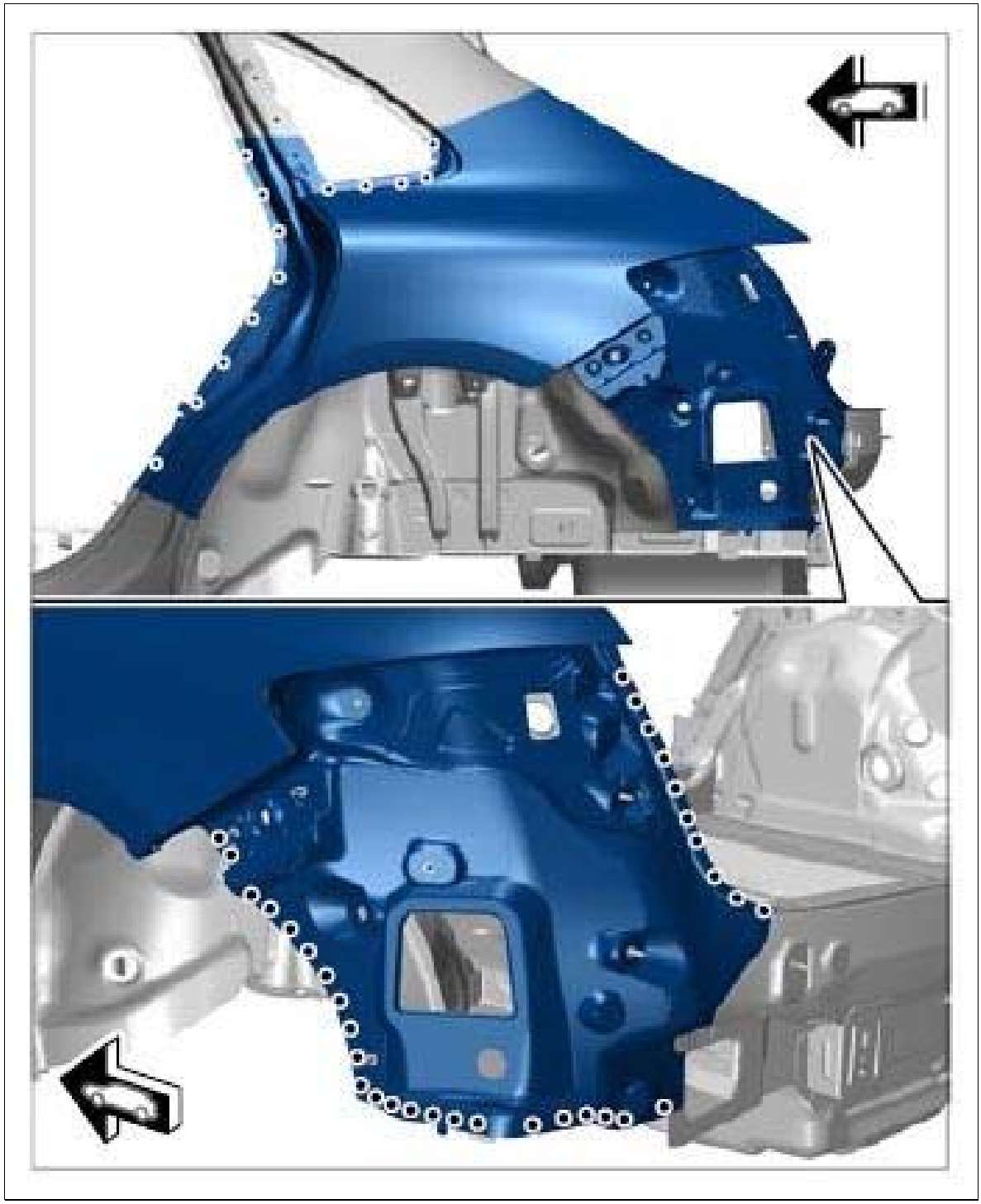

Courtesy of PORSCHE CARS NORTH AMERICA, INC.

Fig 4: Removing Rear Side Section

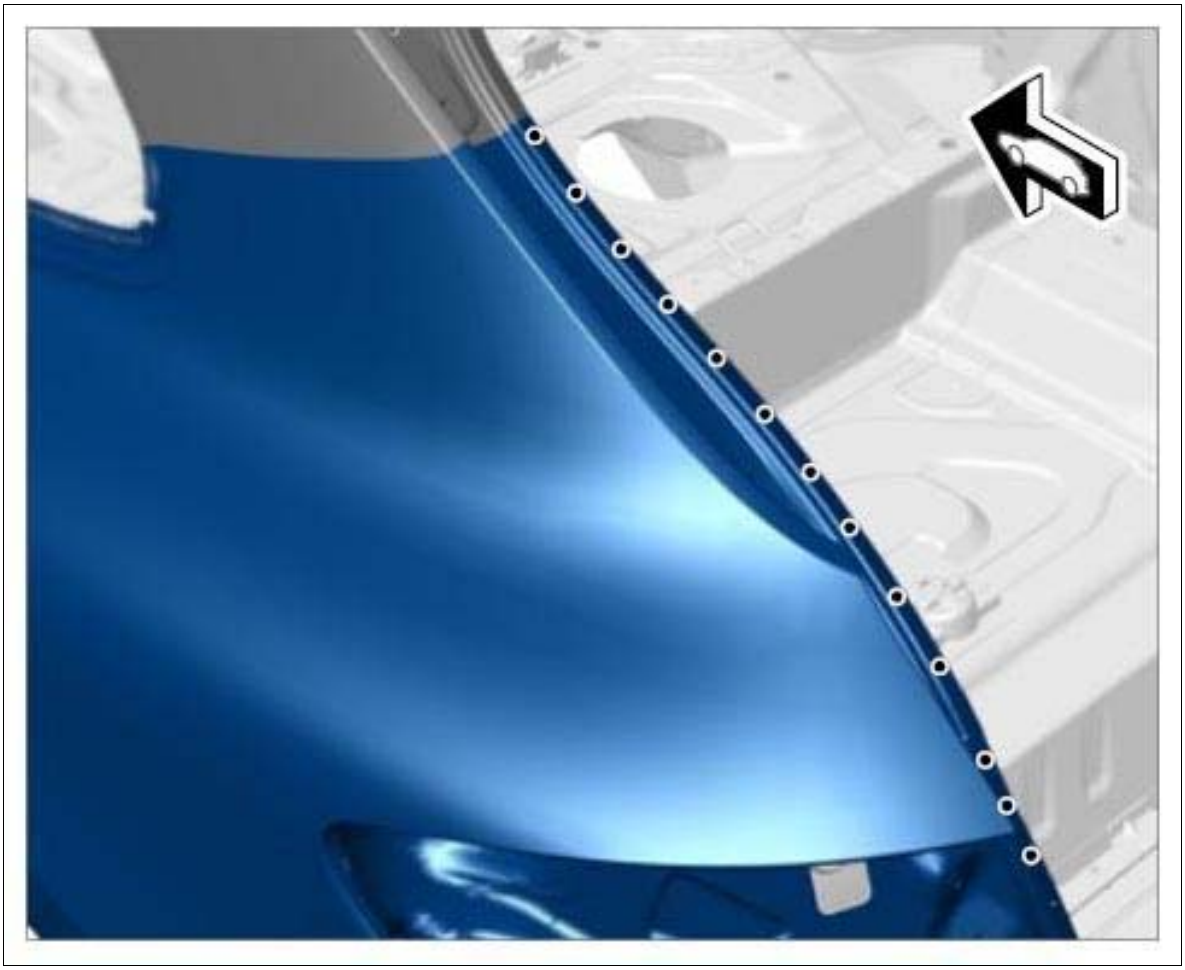

Courtesy of PORSCHE CARS NORTH AMERICA, INC.

3. Bend up edge of wheel arch in area **-arrows-** .

Fig 5: Locating Wheel Arch Edge

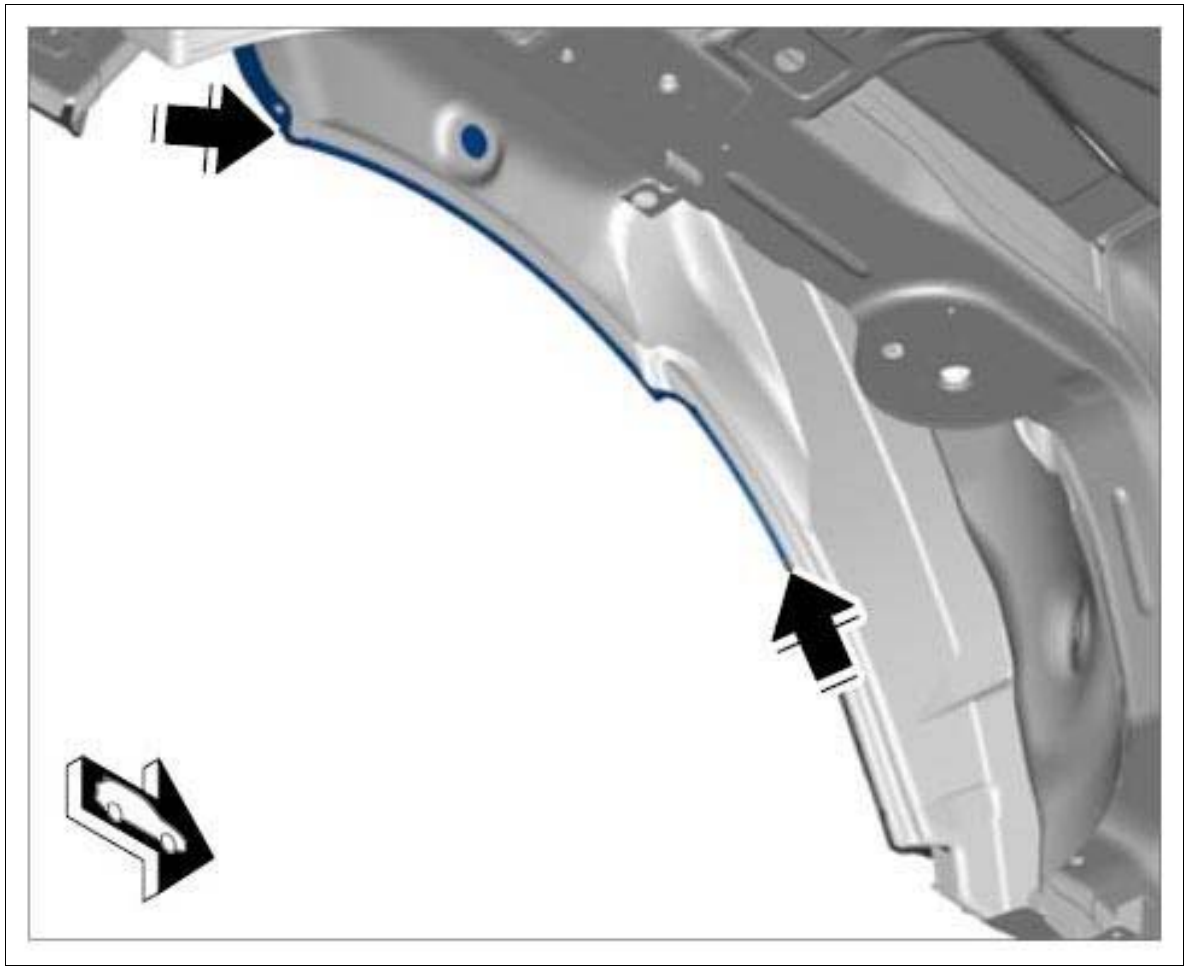

Courtesy of PORSCHE CARS NORTH AMERICA, INC.

4. Heat the marked bonding surfaces.

    1. 4.1. Remove rear side section.

Fig 6: Removing Rear Side Section



Courtesy of PORSCHE CARS NORTH AMERICA, INC.

WM 535555 REPLACING REAR SIDE SECTION (ALL MODELS) > PREPARING REAR SIDE SECTION FOR INSTALLATION

1. Fit in rear side section.

    1. 1.1. Cut rear side section at the transitions to the body leaving an overlap of 30 mm.

Fig 1: Identifying Rear Side Panel



Courtesy of PORSCHE CARS NORTH AMERICA, INC.

2. Prepare connection areas for bonding and welding.

Fig 2: Identifying Rear Side Panel Connection Areas

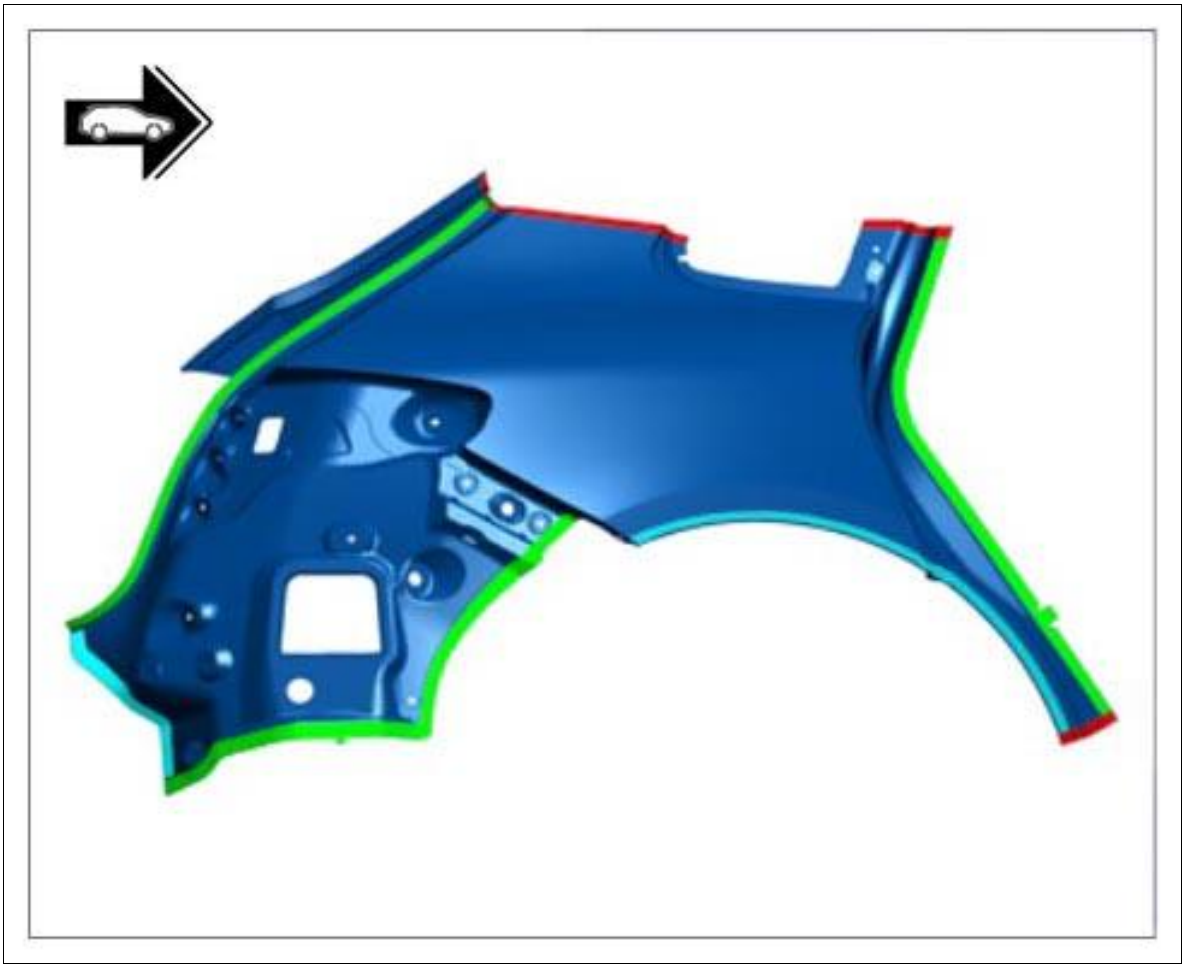

Courtesy of PORSCHE CARS NORTH AMERICA, INC.

Red	Plug-welding/apply a full weld using inert gas without bonding
Green	Resistance spot-welding
Blue	Bonding

WM 535555 REPLACING REAR SIDE SECTION (ALL MODELS) > PREPARING CONNECTION AREAS OF THE BODY FOR INSTALLATION

1. Align the sealing surface and connections of the body.
2. De-burr connection points and prepare them for welding.

Information

1. Before final assembly, make sure you fully understand all the work steps involved and carry out a trial assembly without applying adhesive .
2. The bonding process can only be carried out reliably when a smooth and swift sequence of operations is guaranteed.

3. Do not begin bonding work until all materials and tools necessary for later repair work are available.

3. Prepare the marked areas for bonding and welding. → Preparing Bonding Surfaces

Fig 1: Identifying Body Connection Areas

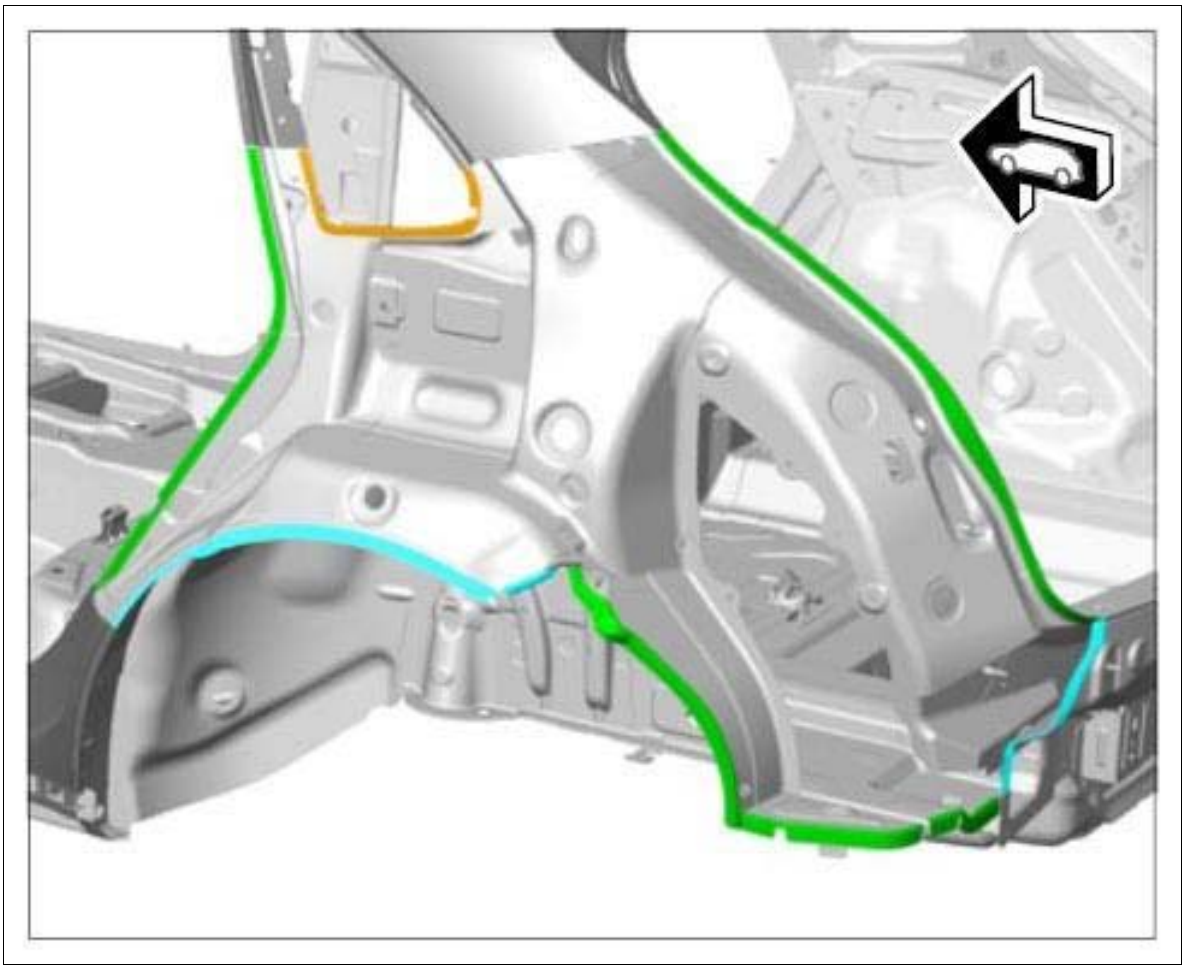

Courtesy of PORSCHE CARS NORTH AMERICA, INC.

Orange	Bonding + resistance spot-welding
Green	Resistance spot-welding
Blue	Bonding

WM 535555 REPLACING REAR SIDE SECTION (ALL MODELS) > INSTALLING REAR SIDE SECTION

Information

- Before final assembly, make sure you fully understand all the work steps involved and carry out a trial assembly without applying adhesive.
- The bonding process can only be carried out reliably when a smooth and swift sequence of operations is guaranteed.

- Do not begin bonding work until all materials and tools necessary for later repair work are available.

1. Install side panel and check that it fits perfectly. Check gap dimensions. → 5X00IN DIAGRAM - BODY GAP DIMENSIONS

    1. 1.1. Apply foam filler to the body in area **-A-** . → 5X00IN22 WORKING WITH BODY FOAM FILLER

       Make sure that all openings and gaps are closed off with the sealing compound.

    2. 1.2. Apply adhesive to the areas marked in yellow. → 5X00IN21 WORKING WITH BODY STRUCTURAL ADHESIVE→ **Application depth: 3.0 mm**

       Fig 1: Identifying Adhesive Applying Areas

       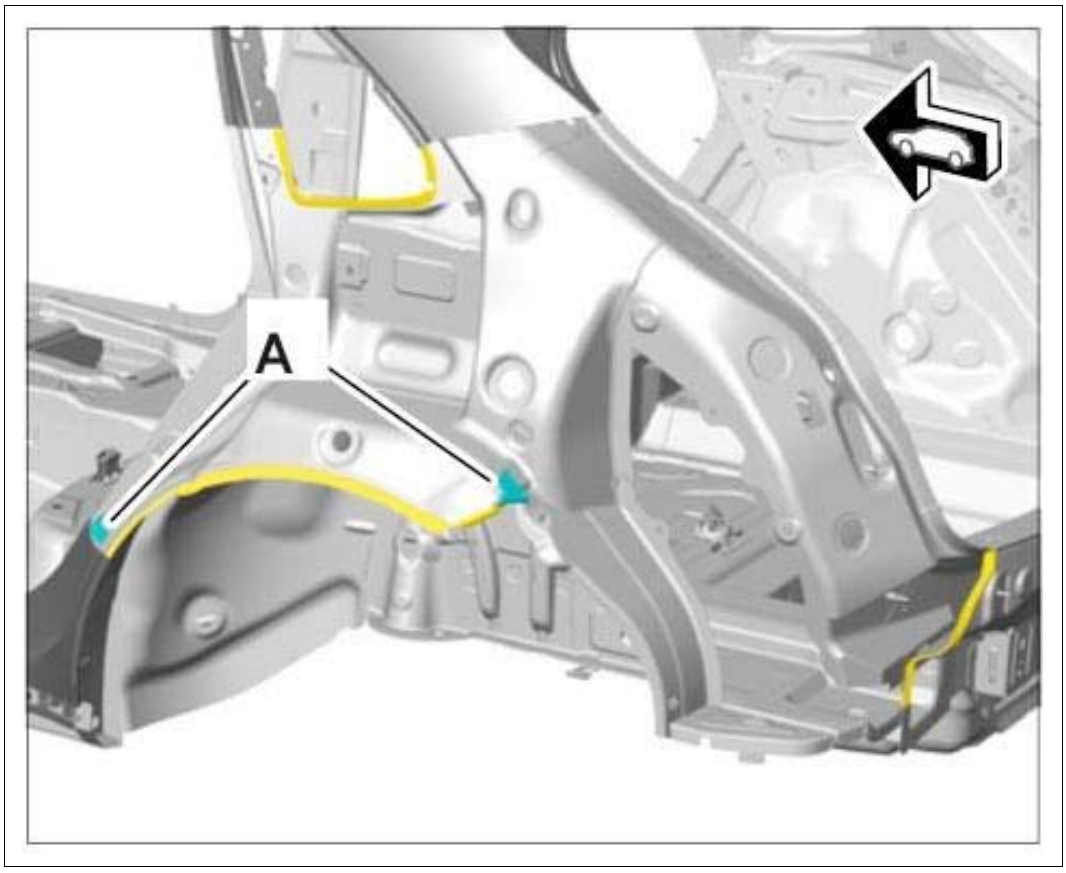

       Courtesy of PORSCHE CARS NORTH AMERICA, INC.

2. Resistance spot-weld the side panel.

Fig 2: Removing Rear Side Section

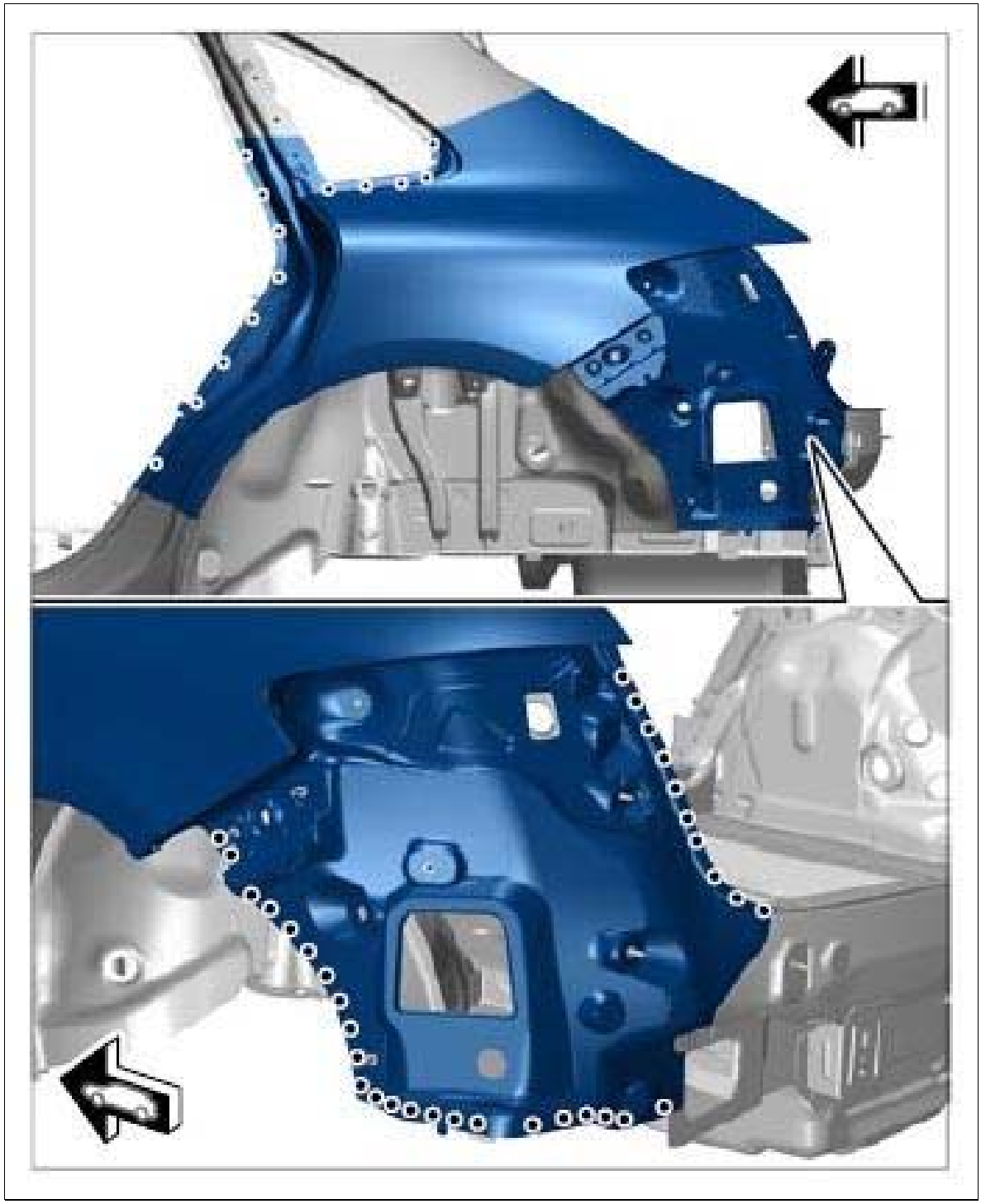

Courtesy of PORSCHE CARS NORTH AMERICA, INC.

Fig 3: Removing Rear Side Section

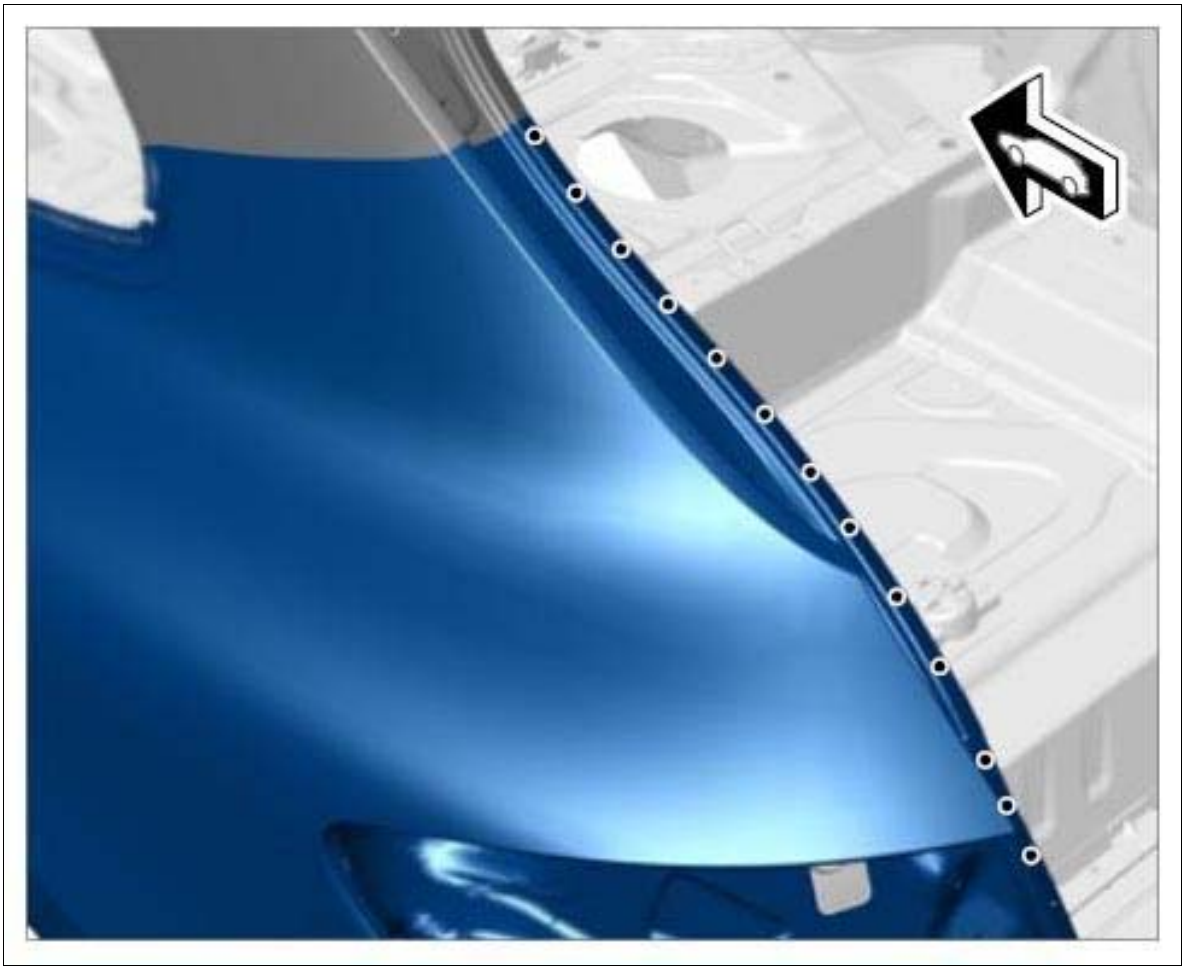

Courtesy of PORSCHE CARS NORTH AMERICA, INC.

3. Apply a full weld to area **-arrows-** using inert gas.

Fig 4: Installing Rear Side Section

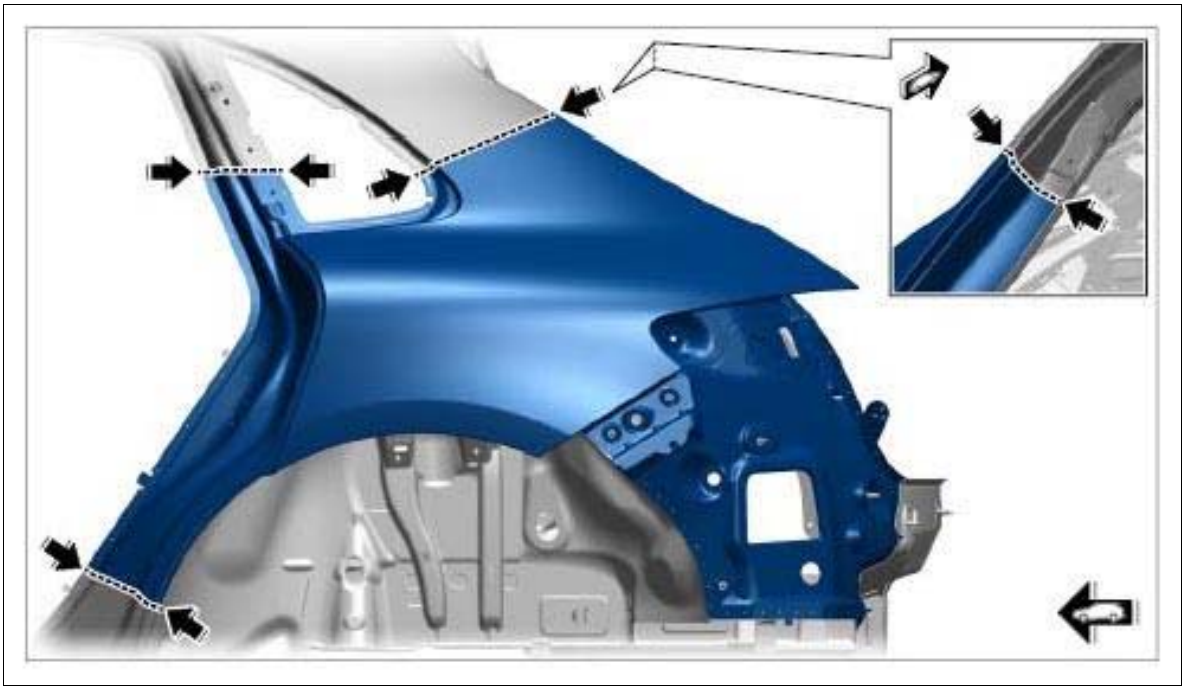

Courtesy of PORSCHE CARS NORTH AMERICA, INC.

4. Flange edge of wheel arch in area **-arrows-** .

Fig 5: Locating Flange Edge Of Wheel Arch

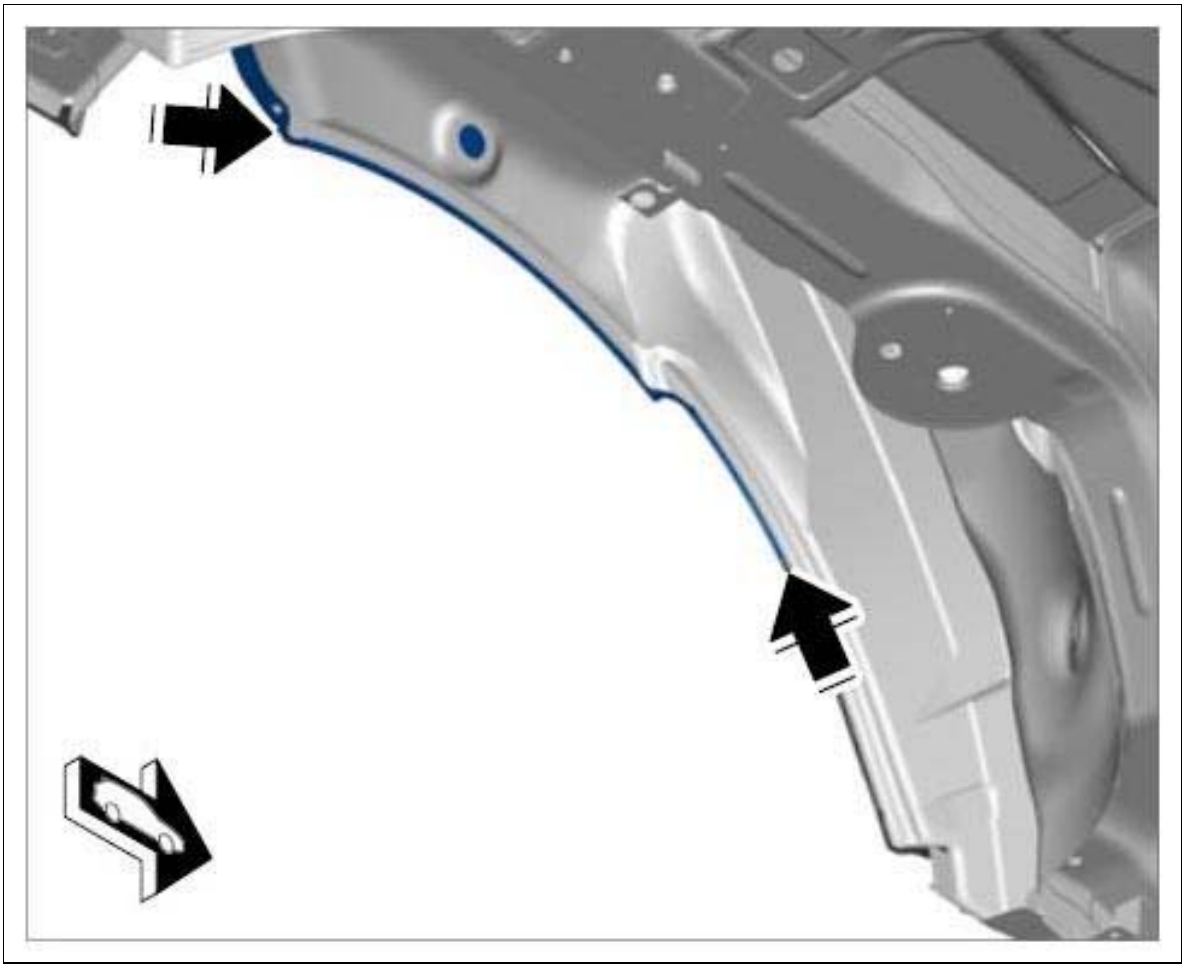

Courtesy of PORSCHE CARS NORTH AMERICA, INC.

WM 535555 REPLACING REAR SIDE SECTION (ALL MODELS) > SUBSEQUENT WORK > SUBSEQUENT WORK FOR BODY REPAIRS (WITHOUT STRAIGHTENING SYSTEM)

1. Clean joint areas and sheetmetal flanges with a wire brush.
2. Prime joint areas and sheetmetal flanges with 2K primer.
3. Restore standard seal with body sealant → 5X00IN42 SEAM SEALING .

   Also seal the repair area carefully.
4. Paint repair area and adjacent surfaces, if necessary.
5. Restore standard underbody protection with underbody sealant → 5X00IN43 UNDERBODY PROTECTION .
6. Apply standard cavity preservation → 5X00IN44 CAVITY PRESERVATION . Also apply cavity preservation to the repair area.

7. Install removed accessories in the repair area.

WM 535655 REPLACING SIDE SECTION LOWER PART (ALL MODELS) > TOOLS

Designation	Type	Number	Description	
Hot-air blower	Service equipment	WE 1119		
Body alignment system package	Service equipment	WE 1121		
Special electric cutter	Service equipment	WE 1137		
Pneumatic Spotweld Remover, Vario Drill WS 90	Service equipment	WE 1139		
Hand-cartridge gun	Service equipment	WE 1141		
Resistance spot welder	Service equipment	WE 1311		
Inverter welder MIDIspot-QSVM-12000	Service equipment	WE 1312		
Resistance spot welder	Service equipment	WE 1313		
Blind riveting tool TAURUS 4	Service equipment	WE 1348		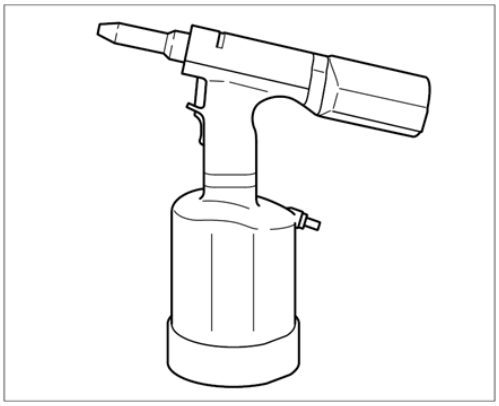
Aluminum tool set with trolley	Service equipment	WE 1350		
Resistance spot welder	Service equipment	WE 1352		
Measuring and alignment	Service equipment	WE 1398		

system, professional				
Mobile extraction unit, aluminum	Service equipment	WE 1507		
Body saw	Service equipment	WE 1508		
Star gauges for body gap dimensions	Special tool	Nr.127-1		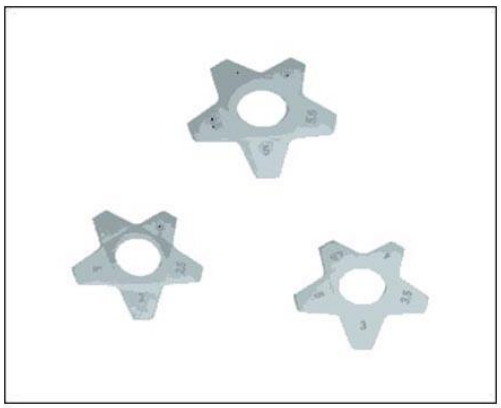
Spotweld drill	Commercially available tool	Nr.129		
Twist drill	Commercially available tool	Nr.201		

Countersink	Commercially available tool	Nr.202		

WM 535655 REPLACING SIDE SECTION LOWER PART (ALL MODELS) > TECHNICAL VALUES

Location	Description	Type	Basic value	Tolerance 1	Tolerance 2
Applying adhesive		Application depth	3.0 mm		

WM 535655 REPLACING SIDE SECTION LOWER PART (ALL MODELS) > PRELIMINARY WORK > PRELIMINARY WORK FOR BODY REPAIRS (WITHOUT STRAIGHTENING SYSTEM)

1. Remove accessories in the repair area.
    1. 1.1. Remove accessories in the repair area according to the extent of damage on the vehicle.
2. Cover accessories adjacent to the repair area on the vehicle.
    1. 2.1. Cover all accessories remaining on the vehicle and adjacent areas with fire-proof protective covers.
3. Reshape connection area of the sheetmetal parts to be replaced. Note: Information on aluminum repairs. Refer to the appropriate information on aluminum repairs
4. Expose joint areas.
    1. 4.1. Remove underbody protection, paint, etc. from the joint areas of the body using a hot-air gun or rotary brush.

1. Remove rear lock support. → 531655 REPLACING REAR LOCK SUPPORT - section on "Removing"

WM 535655 REPLACING SIDE SECTION LOWER PART (ALL MODELS) > SAFETY

INSTRUCTIONS AND INFORMATION ON QUALITY

⚠ *CAUTION: Non-observance of safety instructions for body repairs*

- *Risk of damage to the vehicle*
- *Danger of injury*

→ Read the relevant safety instructions as well as general information and quality instructions → 5X00IN01 SAFETY INSTRUCTIONS .

- Protection of electrical components during body repairs
- Corrosion protection measures during repairs → 5X00IN03 CORROSION PROTECTION MEASURES DURING REPAIRS
- Information on aluminum repairs. Refer to the appropriate information on aluminum repairs
- Body parts of various sheet-steel strengths → 5X00IN04 BODY PARTS OF VARIOUS SHEET-STEEL STRENGTHS
- Replacing punch rivets and penetrated joints
- Setting self-tapping screws → 5X00IN24 SETTING SELF-TAPPING SCREWS
- Working with body structural adhesive → 5X00IN21 WORKING WITH BODY STRUCTURAL ADHESIVE

WM 535655 REPLACING SIDE SECTION LOWER PART (ALL MODELS) > TOOLS AND MATERIALS > TOOLS AND MATERIALS FOR BODY REPAIRS

Information

- The tools for working on steel and aluminum must always be kept separate from each other. We recommend that you color code the tools using a system similar to that used for the Aluminum tool set with trolley WE 1350, for example.

Straightening set **Body alignment system package WE 1121 Measuring and alignment system, professional WE 1398**

Resistance spot welder; optional **Inverter welder MIDIspot-QSVM-12000 WE 1312, Resistance spot welder WE 1352, Resistance spot welder WE 1311, Resistance spot welder WE 1313**

Metal inert gas (MIG) welder

Pneumatic spotweld remover **Pneumatic Spotweld Remover, Vario Drill WS 90 WE 1139**

Pneumatic body saw **Body saw WE 1508**

Oscillating body saw (special electric cutter) **Special electric cutter WE 1137**

Hot-air blower **Hot-air blower WE 1119**

Hand-cartridge gun **Hand-cartridge gun WE 1141**

Spotweld drill **Spotweld drill**

Countersink for rivets **Countersink Nr.202**

Blind riveting tool for high-strength rivets **Blind riveting tool TAURUS 4 WE 1348**

Safety vacuum cleaner for aluminum dust **Mobile extraction unit, aluminum WE 1507**

Star gauges for body gap dimensions Nr.127-1

Wurth glue and seals body sealant

WM 535655 REPLACING SIDE SECTION LOWER PART (ALL MODELS) > REMOVING SIDE SECTION LOWER PART

Fig 1: Identifying Side Section Lower Part Position



Courtesy of PORSCHE CARS NORTH AMERICA, INC.

Information

Drill out the connection point on one side only. Do not damage the plate underneath.

1. Drill out spotwelds using **spotweld drill;** .
    1. 1.1. Drill out spotweld **-A-** from the inside.

Fig 2: Removing Side Section Lower Part

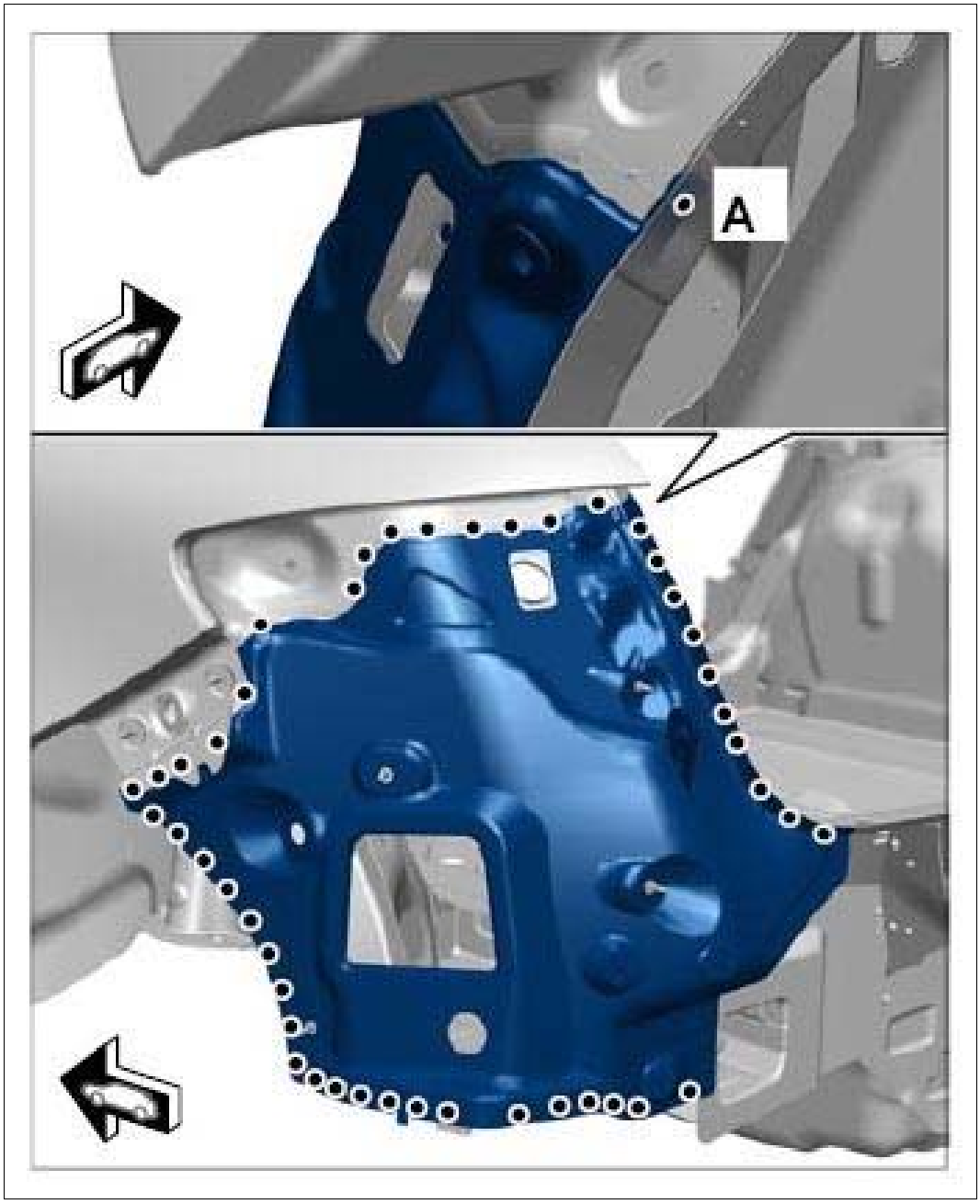

Courtesy of PORSCHE CARS NORTH AMERICA, INC.

2. Heat the marked bonding surfaces.

    1. 2.1. Make a sufficient gap between the side section **-1-** and side section lower part **-2- (-arrows-)** .

    2. 2.2. Remove side section lower part.

Fig 3: Removing Side Section Lower Part

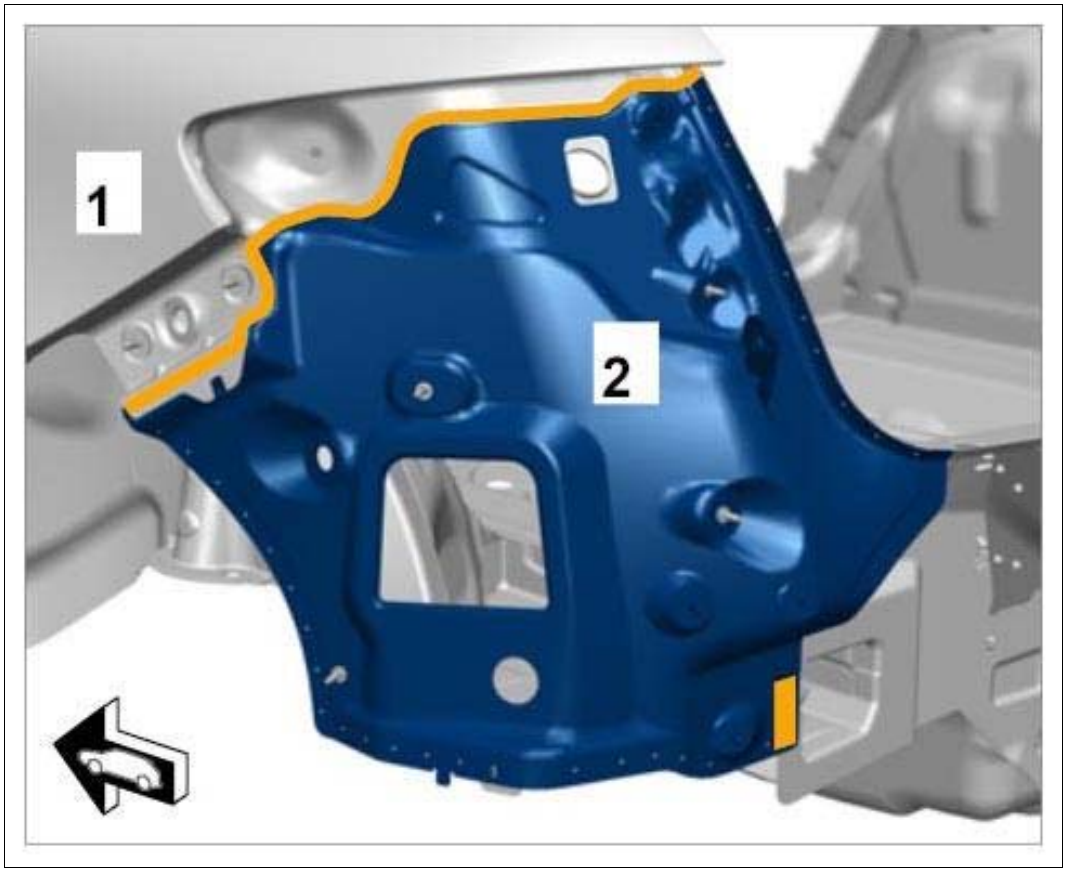

Courtesy of PORSCHE CARS NORTH AMERICA, INC.

WM 535655 REPLACING SIDE SECTION LOWER PART (ALL MODELS) > PREPARING SIDE SECTION LOWER PART FOR INSTALLATION

Information

- Before final assembly, make sure you fully understand all the work steps involved and carry out a trial assembly without applying adhesive.
- The bonding process can only be carried out reliably when a smooth and swift sequence of operations is guaranteed.
- Do not begin bonding work until all materials and tools necessary for later repair work are available.

1. Prepare the marked areas for welding and bonding.

Fig 1: Identifying Side Section Lower Part Marked Areas

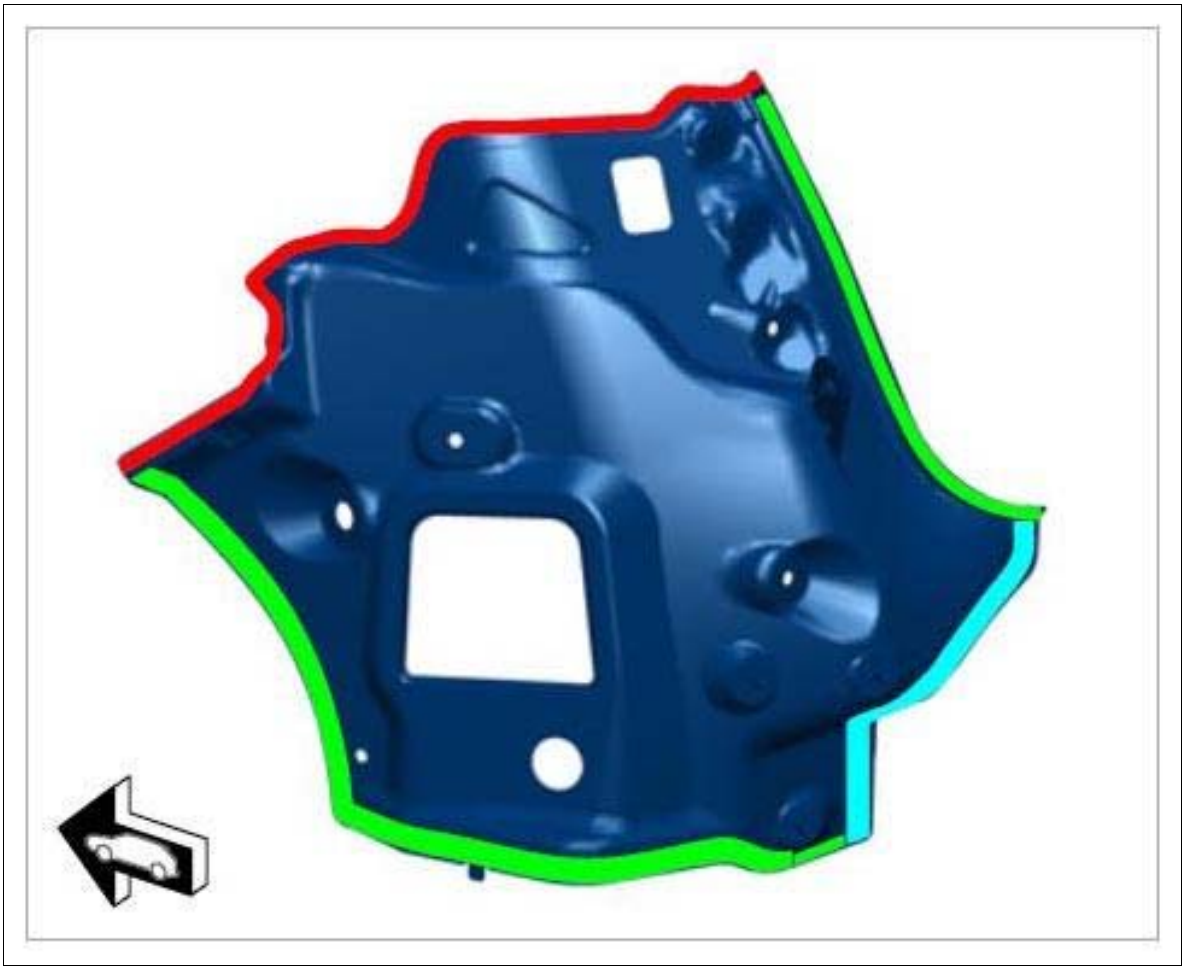

Courtesy of PORSCHE CARS NORTH AMERICA, INC.

Green	Resistance spot-welding
Blue	Bonding
Red	Plug-welding/apply a full weld using inert gas without bonding

WM 535655 REPLACING SIDE SECTION LOWER PART (ALL MODELS) > PREPARING CONNECTION AREAS OF THE BODY

1. Align the sealing surface and connections of the body.
2. De-burr connection points and prepare them for welding.
3. Prepare the marked areas for welding and bonding.

Fig 1: Identifying Body Connection Areas

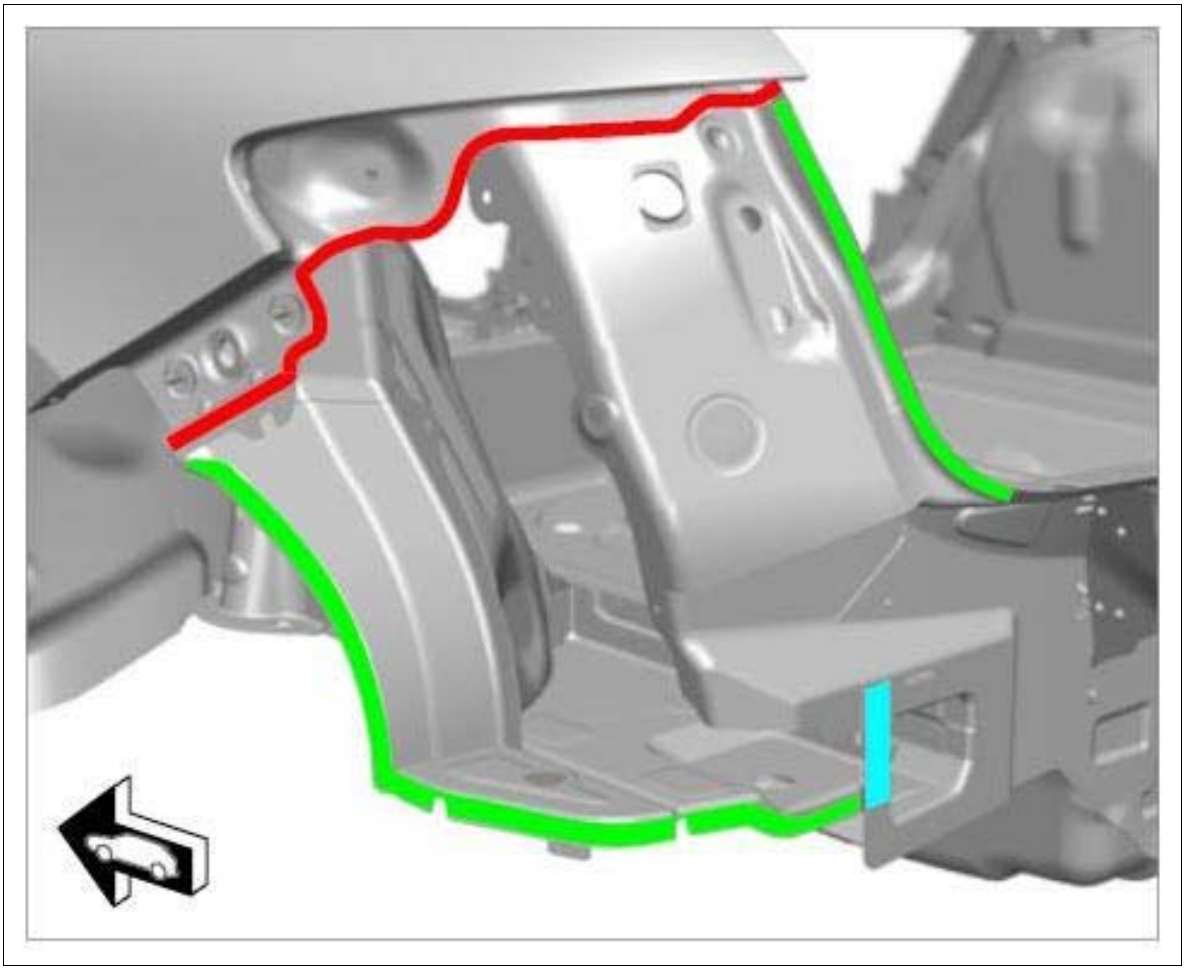

Courtesy of PORSCHE CARS NORTH AMERICA, INC.

Green	Resistance spot-welding
Blue	Bonding
Red	Plug-welding/apply a full weld using inert gas without bonding

WM 535655 REPLACING SIDE SECTION LOWER PART (ALL MODELS) > INSTALLING SIDE SECTION LOWER PART

Information

- Before final assembly, make sure you fully understand all the work steps involved and carry out a trial assembly without applying adhesive.
- The bonding process can only be carried out reliably when a smooth and swift sequence of operations is guaranteed.
- Do not begin bonding work until all materials and tools necessary for later repair work are available.

1. Apply adhesive. → **Application depth: 3.0 mm**

   Working with body structural adhesive → 5X00IN21 WORKING WITH BODY STRUCTURAL ADHESIVE

   Fig 1: Identifying Adhesive Applying Areas

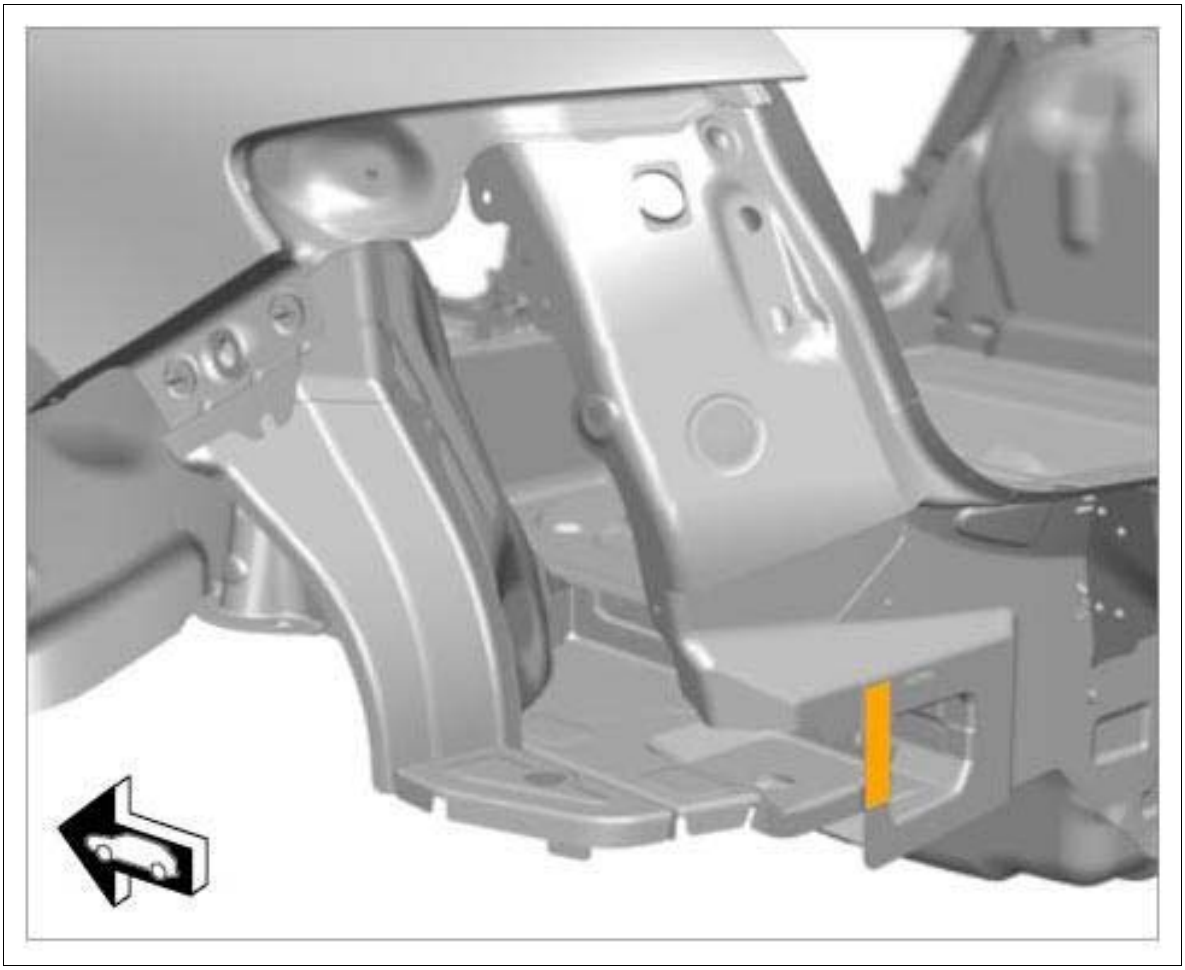

Courtesy of PORSCHE CARS NORTH AMERICA, INC.

2. Resistance spot-weld the side section lower part.

    1. 2.1. Plug-weld area **-A-** using inert gas.

Fig 2: Installing Side Section Lower Part

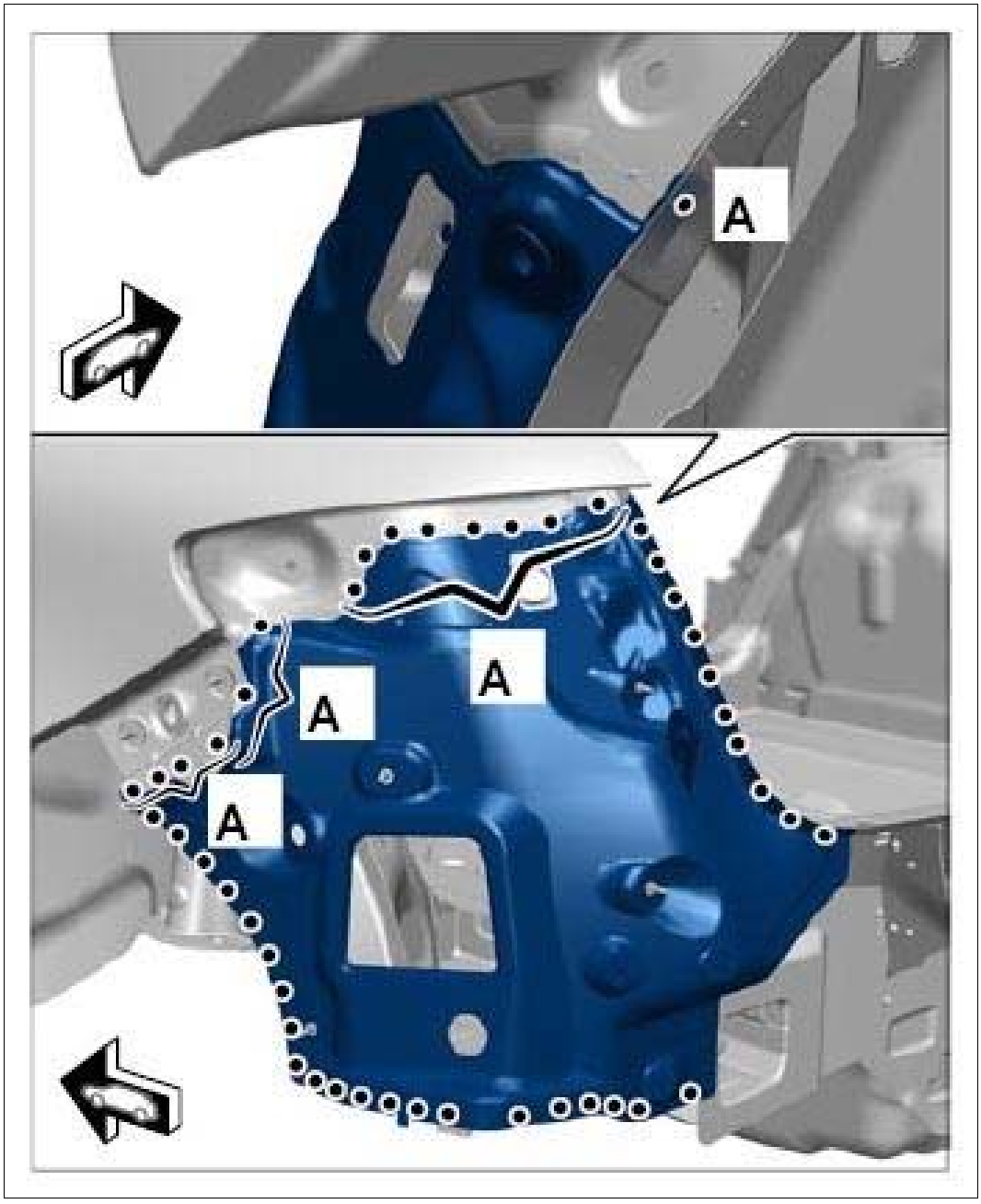

Courtesy of PORSCHE CARS NORTH AMERICA, INC.

WM 535655 REPLACING SIDE SECTION LOWER PART (ALL MODELS) > SUBSEQUENT WORK

1. Install rear lock support. → Installing Rear Transverse Lock Support

WM 535655 REPLACING SIDE SECTION LOWER PART (ALL MODELS) > SUBSEQUENT WORK > SUBSEQUENT WORK FOR BODY REPAIRS (WITHOUT

STRAIGHTENING SYSTEM)

1. Clean joint areas and sheetmetal flanges with a wire brush.
2. Prime joint areas and sheetmetal flanges with 2K primer.
3. Restore standard seal with body sealant → 5X00IN42 SEAM SEALING .

   Also seal the repair area carefully.
4. Paint repair area and adjacent surfaces, if necessary.
5. Restore standard underbody protection with underbody sealant → 5X00IN43 UNDERBODY PROTECTION .
6. Apply standard cavity preservation → 5X00IN44 CAVITY PRESERVATION . Also apply cavity preservation to the repair area.
7. Install removed accessories in the repair area.

WM 536855 REPLACING (INNER) REAR WHEEL HOUSING (ALL MODELS) > TOOLS

Designation	Type	Number	Description	
Hot-air blower	Service equipment	WE 1119		
Body alignment system package	Service equipment	WE 1121		
Special electric cutter	Service equipment	WE 1137		
Pneumatic Spotweld Remover, Vario Drill WS 90	Service equipment	WE 1139		
Hand-cartridge gun	Service equipment	WE 1141		
Resistance spot welder	Service equipment	WE 1311		
Inverter welder MIDIspot-QSVM-12000	Service equipment	WE 1312		
Resistance spot welder	Service equipment	WE 1313		

Blind riveting tool TAURUS 4	Service equipment	WE 1348		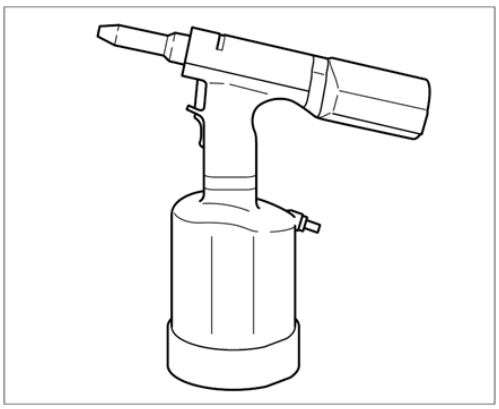
Aluminum tool set with trolley	Service equipment	WE 1350		
Resistance spot welder	Service equipment	WE 1352		
Measuring and alignment system, professional	Service equipment	WE 1398		
Mobile extraction unit, aluminum	Service equipment	WE 1507		
Body saw	Service equipment	WE 1508		
Star gauges for body gap dimensions	Special tool	Nr.127-1		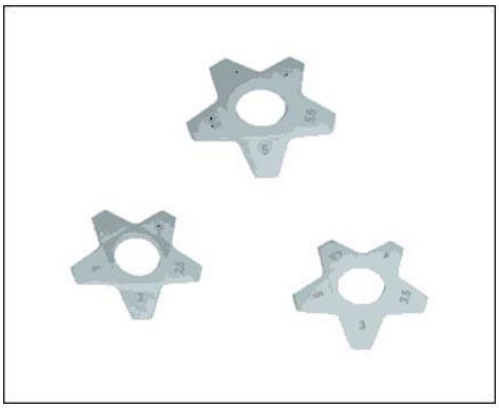

Spotweld drill	Commercially available tool	Nr.129		
Twist drill	Commercially available tool	Nr.201		
Countersink	Commercially available tool	Nr.202		

WM 536855 REPLACING (INNER) REAR WHEEL HOUSING (ALL MODELS) > TECHNICAL VALUES

Location	Description	Type	Basic value	Tolerance 1	Tolerance 2
Drill bit		Diameter	8.0 mm		
Applying adhesive		Application depth	3.0 mm		
Applying adhesive		Application depth	3.0 mm		

Dimension X		Distance	35 mm		
Dimension Y		Distance	50 mm		
Applying adhesive		Application depth	3.0 mm		

WM 536855 REPLACING (INNER) REAR WHEEL HOUSING (ALL MODELS) > PRELIMINARY WORK > PRELIMINARY WORK FOR BODY REPAIRS (WITHOUT STRAIGHTENING SYSTEM)

1. Remove accessories in the repair area.
    1. 1.1. Remove accessories in the repair area according to the extent of damage on the vehicle.
2. Cover accessories adjacent to the repair area on the vehicle.
    1. 2.1. Cover all accessories remaining on the vehicle and adjacent areas with fire-proof protective covers.
3. Reshape connection area of the sheetmetal parts to be replaced. Note: Information on aluminum repairs. Refer to the appropriate information on aluminum repairs
4. Expose joint areas.
    1. 4.1. Remove underbody protection, paint, etc. from the joint areas of the body using a hot-air gun or rotary brush.

1. Remove outer wheel housing. → 536855 REPLACING (OUTER) REAR WHEEL HOUSING
2. Remove upper part of rear cross member. → 510955 REPLACING REAR CROSS MEMBER
3. Remove roof pillar. → 510555 REPLACING ROOF PILLAR
4. Remove closing panel. → 530555 REPLACING REAR CLOSING PANEL

WM 536855 REPLACING (INNER) REAR WHEEL HOUSING (ALL MODELS) > SAFETY INSTRUCTIONS AND INFORMATION ON QUALITY

⚠ *CAUTION: Non-observance of safety instructions for body repairs*

- *Risk of damage to the vehicle*
- *Danger of injury*

→ Read the relevant safety instructions as well as general information and quality instructions → 5X00IN01 SAFETY INSTRUCTIONS .

- Protection of electrical components during body repairs
- Corrosion protection measures during repairs → 5X00IN03 CORROSION PROTECTION MEASURES DURING REPAIRS
- Information on aluminum repairs. Refer to the appropriate information on aluminum repairs
- Body parts of various sheet-steel strengths → 5X00IN04 BODY PARTS OF VARIOUS SHEET-STEEL STRENGTHS
- Replacing punch rivets and penetrated joints
- Setting self-tapping screws → 5X00IN24 SETTING SELF-TAPPING SCREWS
- Working with body structural adhesive → 5X00IN21 WORKING WITH BODY STRUCTURAL ADHESIVE

WM 536855 REPLACING (INNER) REAR WHEEL HOUSING (ALL MODELS) > TOOLS AND MATERIALS > TOOLS AND MATERIALS FOR BODY REPAIRS

Information

- The tools for working on steel and aluminum must always be kept separate from each other. We recommend that you color code the tools using a system similar to that used for the Aluminum tool set with trolley WE 1350, for example.

Straightening set **Body alignment system package WE 1121 Measuring and alignment system, professional WE 1398**

Resistance spot welder; optional **Inverter welder MIDIspot-QSVM-12000 WE 1312, Resistance spot welder WE 1352, Resistance spot welder WE 1311, Resistance spot welder WE 1313**

Metal inert gas (MIG) welder

Pneumatic spotweld remover **Pneumatic Spotweld Remover, Vario Drill WS 90 WE 1139**

Pneumatic body saw **Body saw WE 1508**

Oscillating body saw (special electric cutter) **Special electric cutter WE 1137**

Hot-air blower **Hot-air blower WE 1119**

Hand-cartridge gun **Hand-cartridge gun WE 1141**

Spotweld drill **Spotweld drill**

Countersink for rivets **Countersink Nr.202**

Blind riveting tool for high-strength rivets **Blind riveting tool TAURUS 4 WE 1348**

Safety vacuum cleaner for aluminum dust **Mobile extraction unit, aluminum WE 1507**

Star gauges for body gap dimensions Nr.127-1

Wurth glue and seals body sealant

WM 536855 REPLACING (INNER) REAR WHEEL HOUSING (ALL MODELS) > REMOVING (INNER) REAR WHEEL HOUSING > REMOVING D-PILLAR REINFORCEMENT

Fig 1: Identifying D-Pillar Reinforcement Installation Position

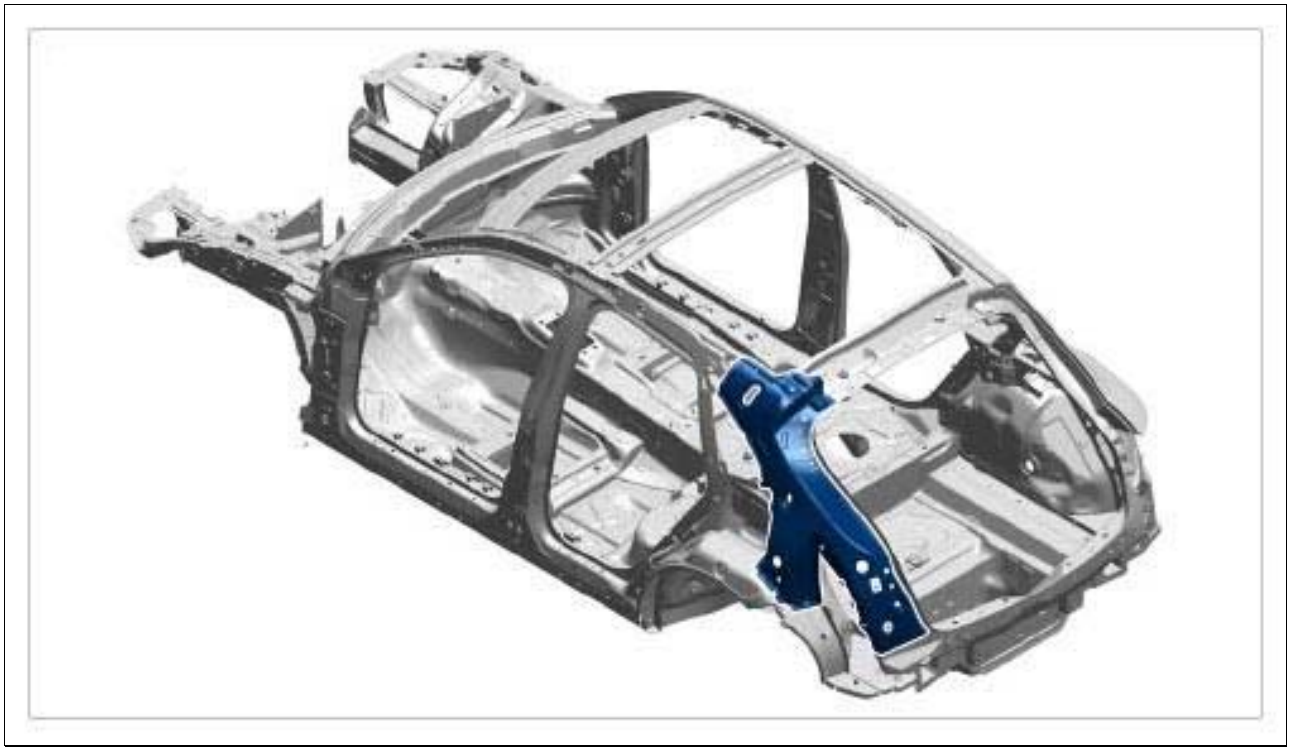

Courtesy of PORSCHE CARS NORTH AMERICA, INC.

Information

Drill out the connection point on one side only. Do not damage the plate underneath.

1. Drill out spotwelds using **spotweld drill;** .

Fig 2: Removing D-Pillar Reinforcement

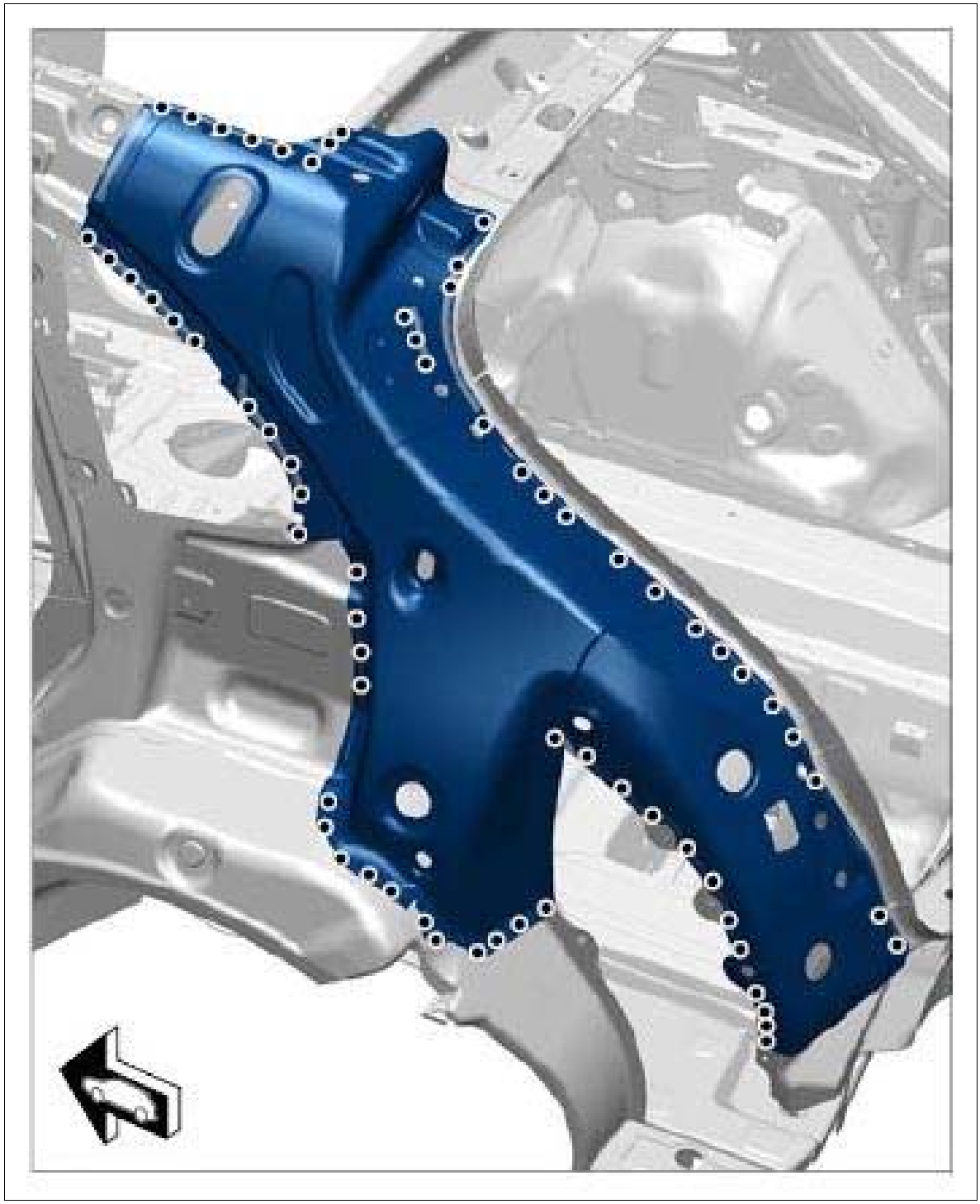

Courtesy of PORSCHE CARS NORTH AMERICA, INC.

2. Heat the bonding surfaces.

    1. 2.1. Remove D-pillar reinforcement.

Fig 3: Removing D-Pillar Reinforcement



Courtesy of PORSCHE CARS NORTH AMERICA, INC.

WM 536855 REPLACING (INNER) REAR WHEEL HOUSING (ALL MODELS) > REMOVING (INNER) REAR WHEEL HOUSING > REMOVING INNER SIDE SECTION

Fig 1: Identifying Inner Side Section Installation Position

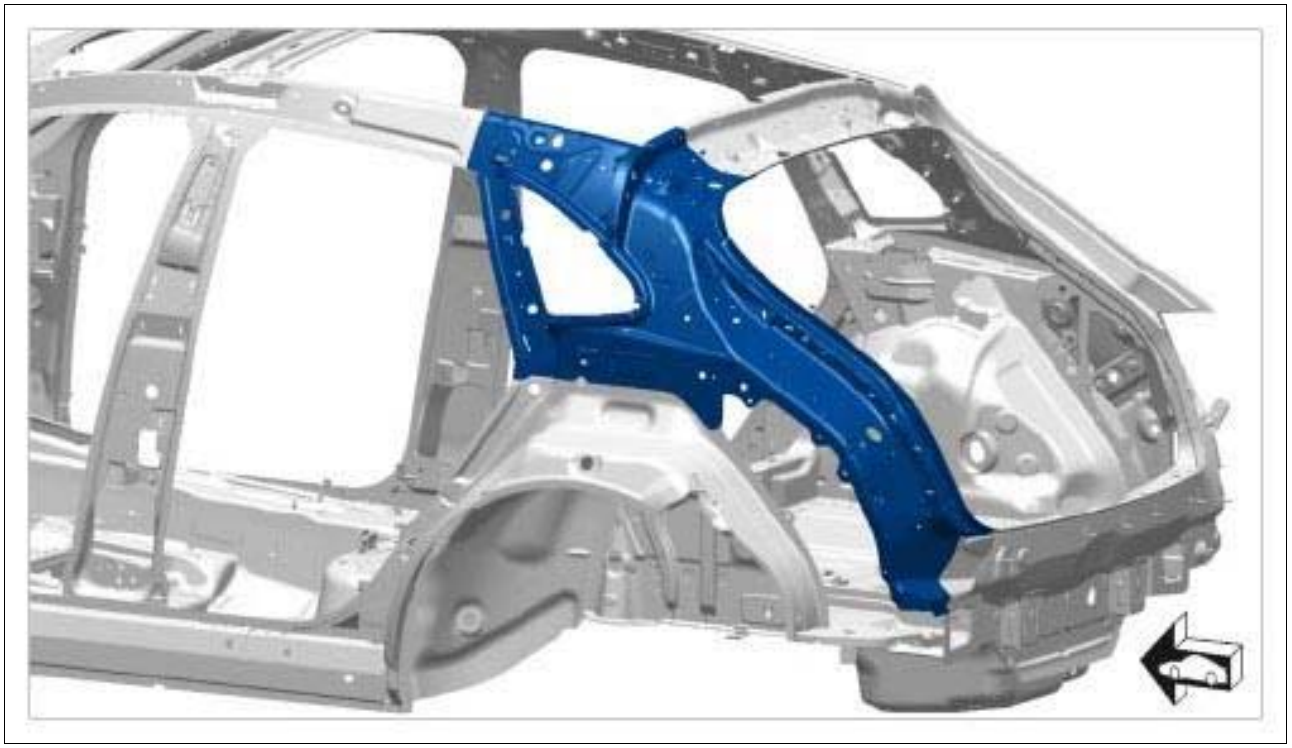

Courtesy of PORSCHE CARS NORTH AMERICA, INC.

Information

Drill out the connection point on one side only. Do not damage the plate underneath.

1. Drill out spotwelds using **spotweld drill;** .

Fig 2: Removing Inner Side Section



Courtesy of PORSCHE CARS NORTH AMERICA, INC.

Fig 3: Removing Inner Side Section

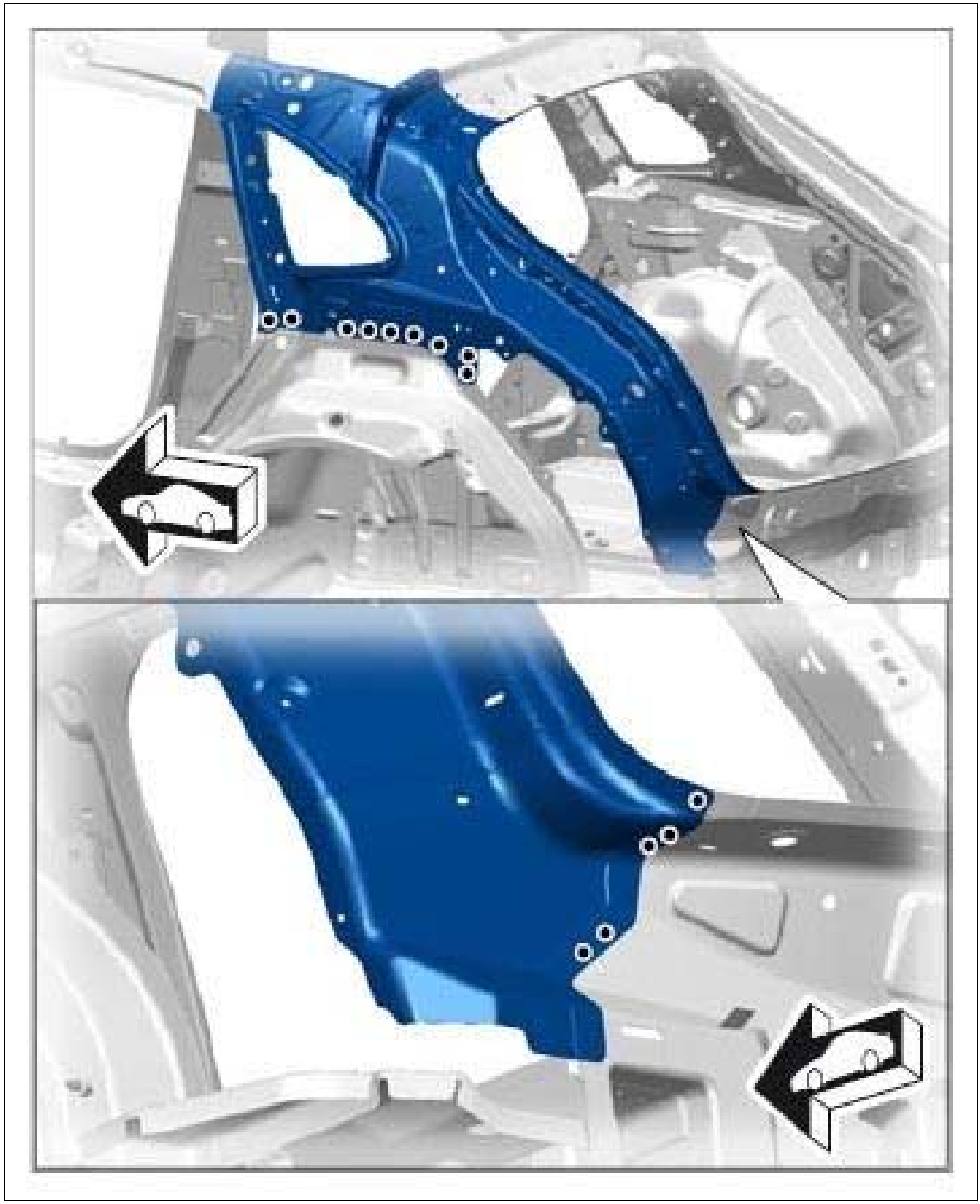

Courtesy of PORSCHE CARS NORTH AMERICA, INC.

2. Grind down welded seams in area **-A-** .

Fig 4: Removing Inner Side Section



Courtesy of PORSCHE CARS NORTH AMERICA, INC.

3. Heat the bonding surfaces.

    1. 3.1. Remove inner side section.

Fig 5: Removing Inner Side Section

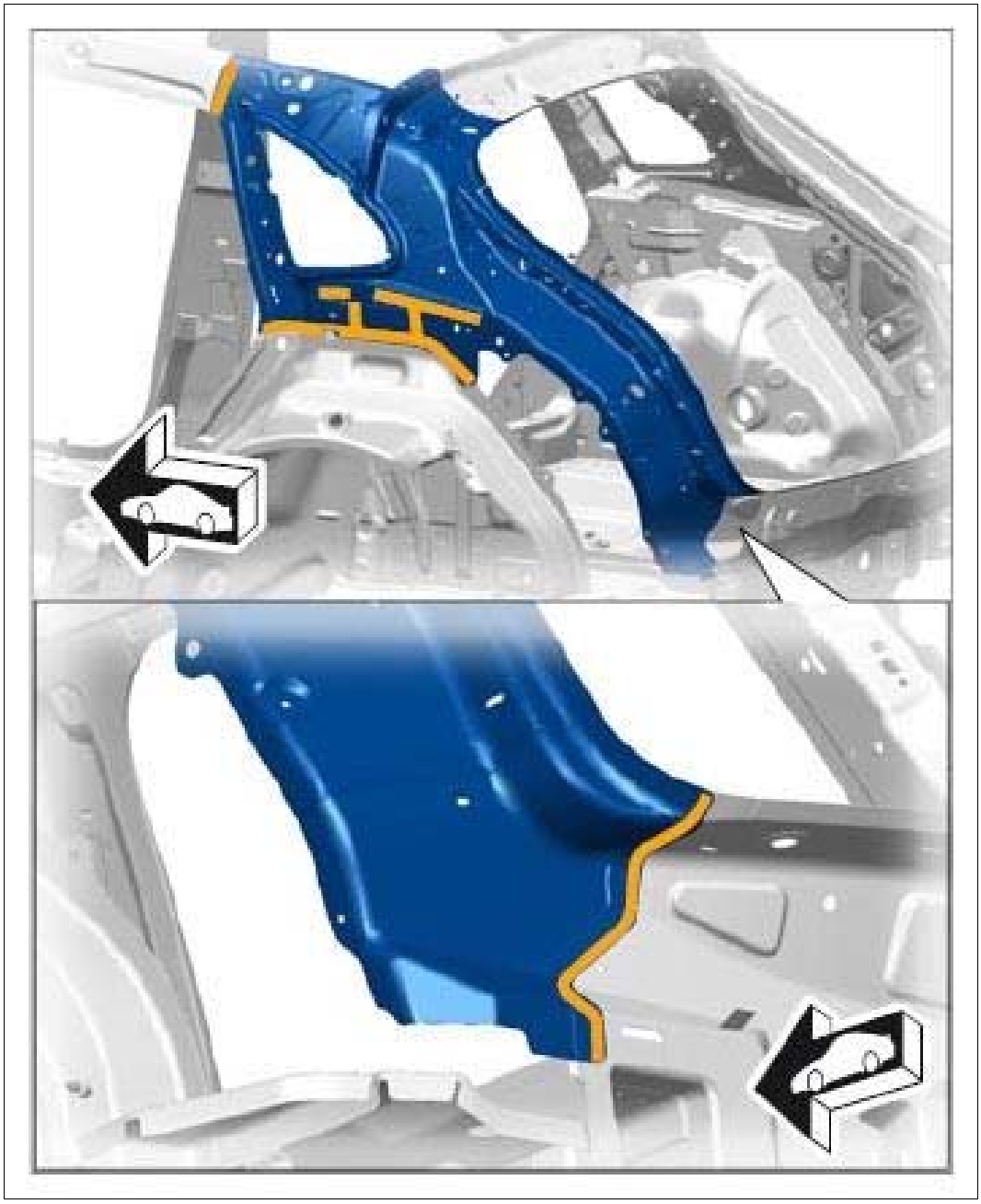

Courtesy of PORSCHE CARS NORTH AMERICA, INC.

WM 536855 REPLACING (INNER) REAR WHEEL HOUSING (ALL MODELS) > REMOVING (INNER) REAR WHEEL HOUSING > REMOVING (INNER) REAR WHEEL HOUSING

Fig 1: Identifying Rear Wheel Housing Installation Position (Inner)



Courtesy of PORSCHE CARS NORTH AMERICA, INC.

Information

Drill out the connection point on one side only. Do not damage the plate underneath.

1. Drill out spotwelds using **spotweld drill;** .

Fig 2: Removing Rear Wheel Housing (Inner)

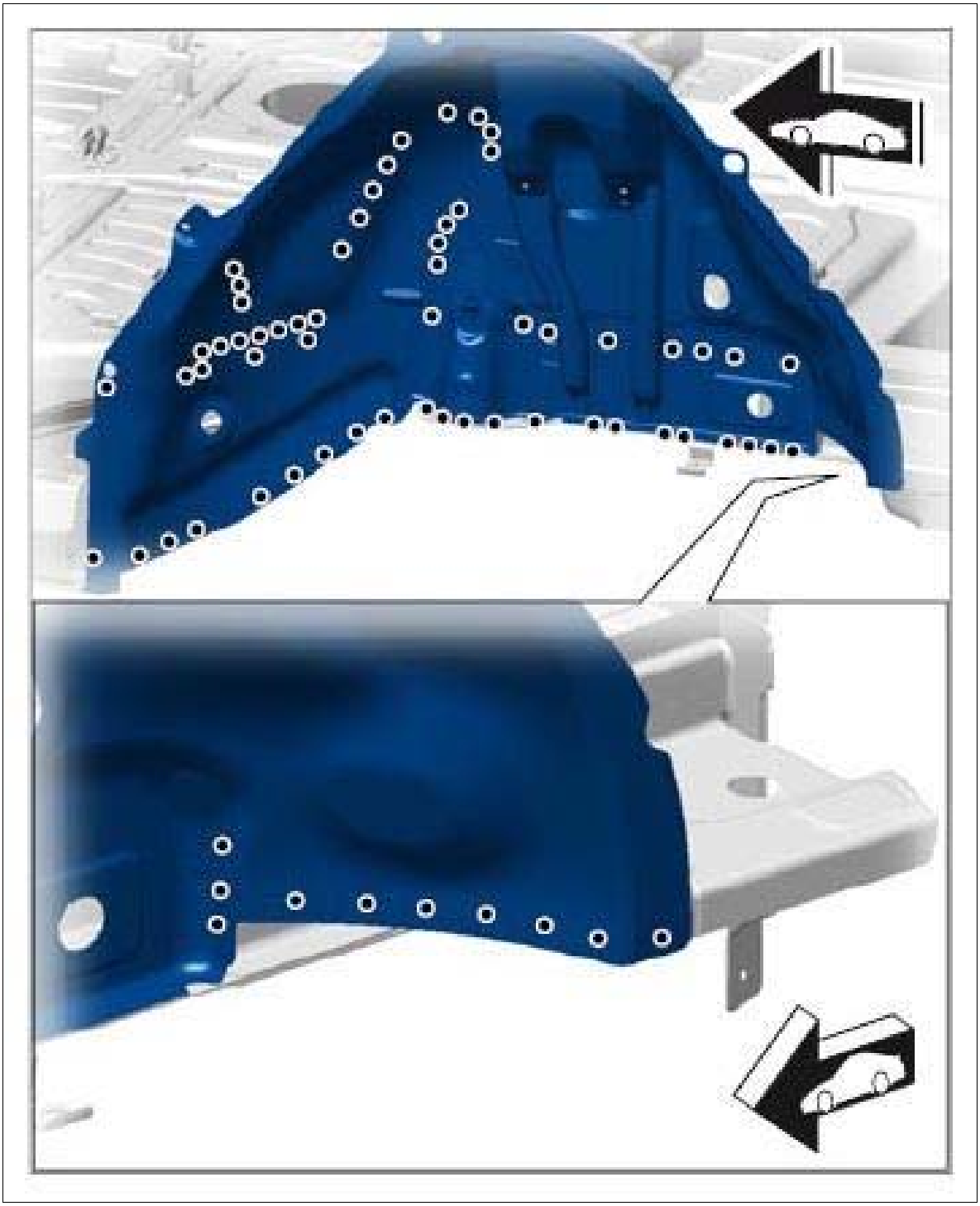

Courtesy of PORSCHE CARS NORTH AMERICA, INC.

2. Heat bonding areas.

Information

Bonding areas are difficult to reach. The bonding surfaces are heated from inside and outside.

1. 2.1. Heat area **-A-** from inside and outside.

2. 2.2. Remove (inner) rear wheel housing.

Fig 3: Removing Rear Wheel Housing (Inner)

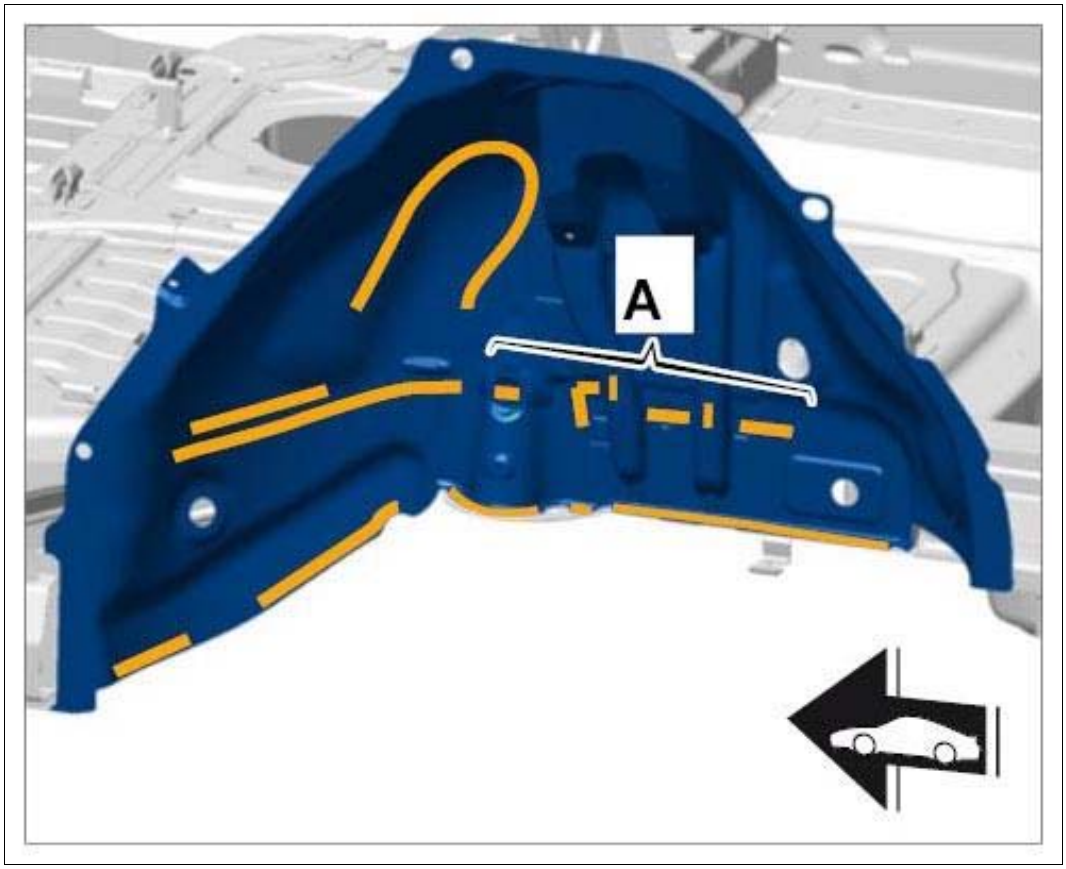

Courtesy of PORSCHE CARS NORTH AMERICA, INC.

WM 536855 REPLACING (INNER) REAR WHEEL HOUSING (ALL MODELS) > PREPARING (INNER) REAR WHEEL HOUSING FOR INSTALLATION

1. Prepare (inner) rear wheel housing for bonding and welding.

Fig 1: Identifying Rear Wheel Housing (Inner)

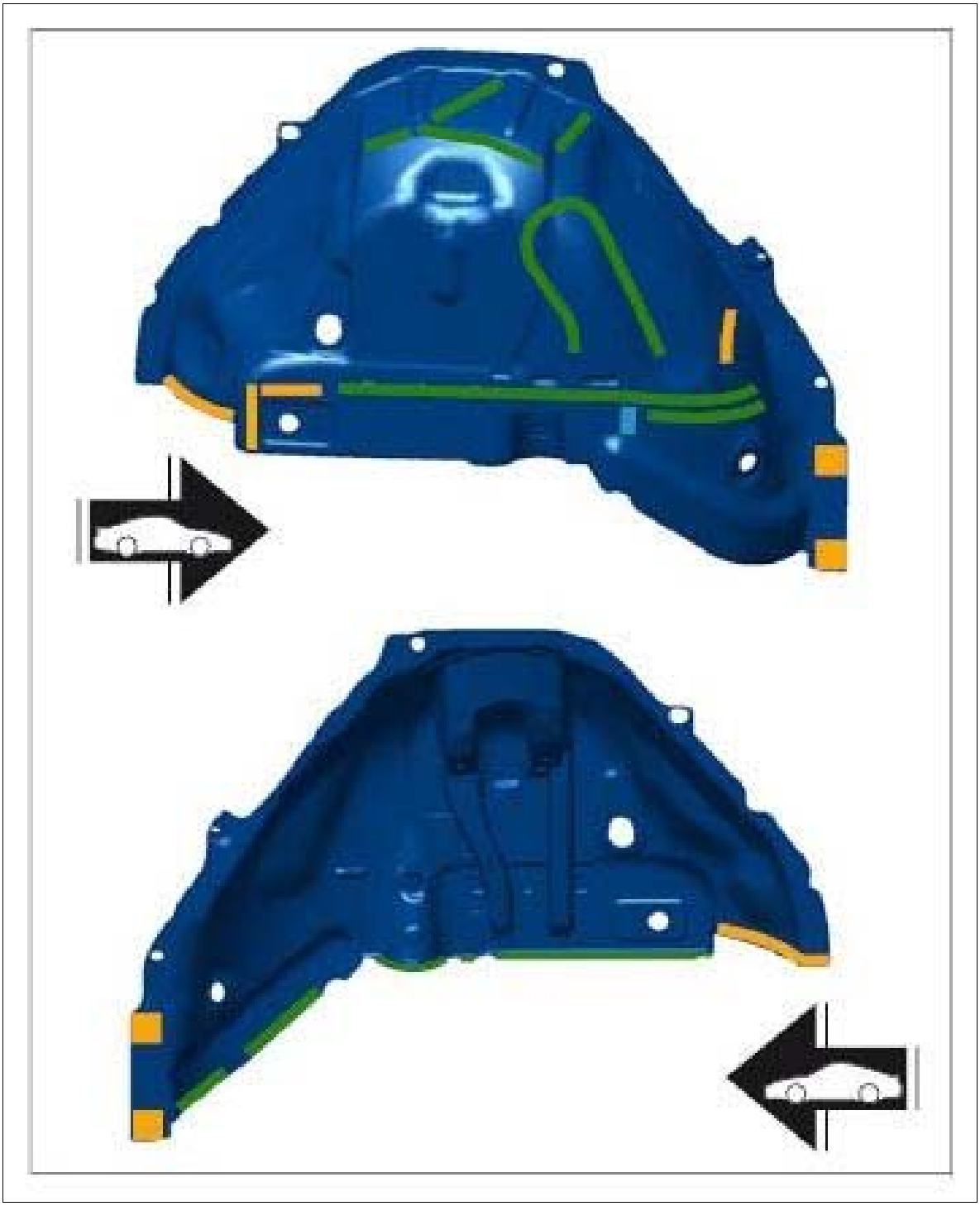

Courtesy of PORSCHE CARS NORTH AMERICA, INC.

2. Prepare seat belt bracket for bonding and welding.

    1. 2.1. Drill holes for plug-welding in the marked areas **-A-** using a drill bit with a diameter of → **Diameter: 8.0 mm** .

Fig 2: Identifying Inner Side Section

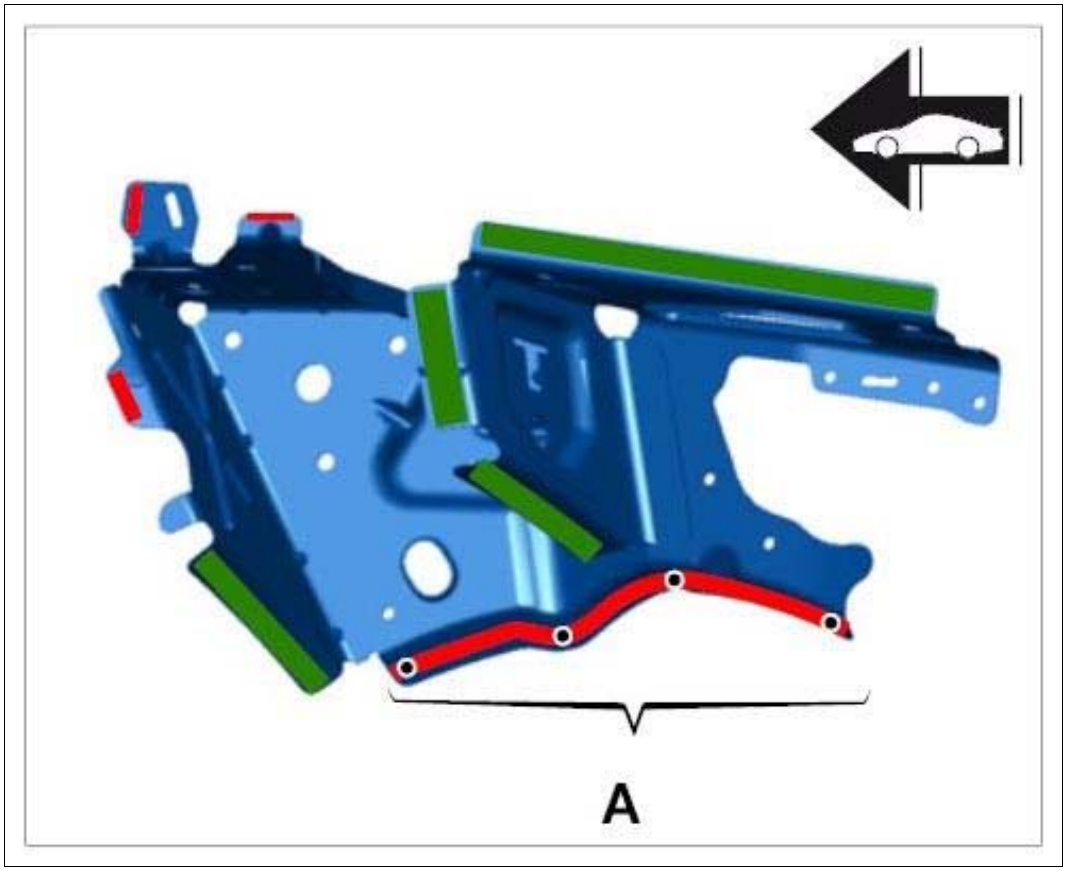

Courtesy of PORSCHE CARS NORTH AMERICA, INC.

Green	Resistance spot-welding + bonding
Blue	Bonding
Red	Plug-welding/apply a full weld using inert gas without bonding
Orange	Resistance spot-welding

WM 536855 REPLACING (INNER) REAR WHEEL HOUSING (ALL MODELS) > PREPARING (INNER) REAR WHEEL HOUSING FOR INSTALLATION > PREPARING INNER SIDE SECTION FOR INSTALLATION

1. Prepare inner side section for bonding and welding.

Fig 1: Identifying Seat Belt Bracket



Courtesy of PORSCHE CARS NORTH AMERICA, INC.

Green	Resistance spot-welding + bonding
Blue	Bonding
Red	Plug-welding/apply a full weld using inert gas without bonding
Orange	Resistance spot-welding

WM 536855 REPLACING (INNER) REAR WHEEL HOUSING (ALL MODELS) > PREPARING (INNER) REAR WHEEL HOUSING FOR INSTALLATION > PREPARING D-PILLAR REINFORCEMENT FOR INSTALLATION

1. Prepare D-pillar reinforcement for bonding and welding.

Fig 1: Identifying D-Pillar Reinforcement



Courtesy of PORSCHE CARS NORTH AMERICA, INC.

Green	Resistance spot-welding + bonding

WM 536855 REPLACING (INNER) REAR WHEEL HOUSING (ALL MODELS) > PREPARING CONNECTION AREAS OF THE BODY

1. Align the sealing surface and connections of the body.
2. De-burr connection points and prepare them for welding.

   Information

   1. Before final assembly, make sure you fully understand all the work steps involved and carry out a trial assembly without applying adhesive.
   2. The bonding process can only be carried out reliably when a smooth and swift sequence of operations is guaranteed.
   3. Do not begin bonding work until all materials and tools necessary for later repair work are available.

3. Prepare the marked areas for welding and bonding. → 5X00IN21 WORKING WITH BODY STRUCTURAL ADHESIVE

Fig 1: Identifying Body Connection Areas

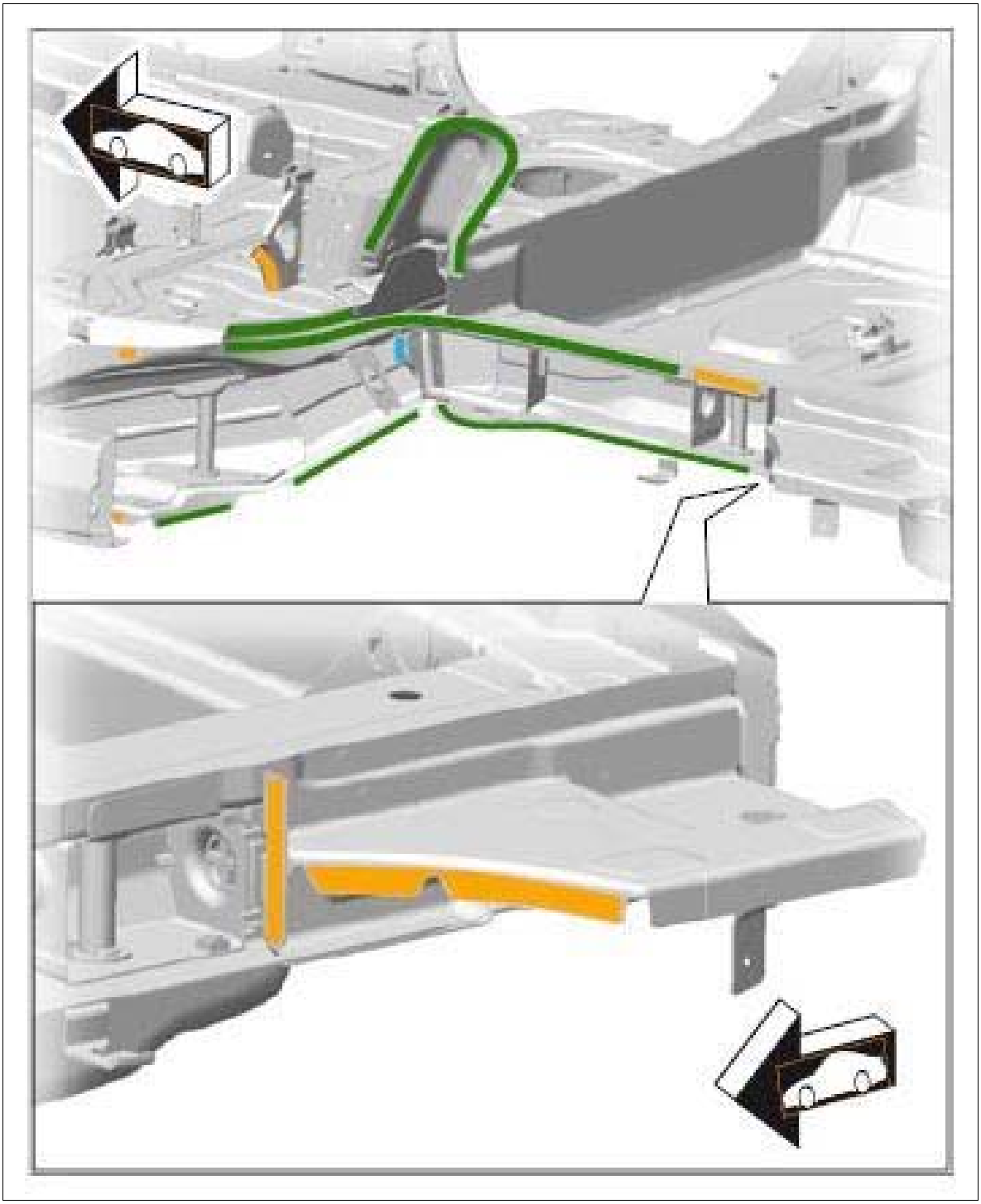

Courtesy of PORSCHE CARS NORTH AMERICA, INC.

Green	Resistance spot-welding + bonding
Blue	Bonding
Orange	Resistance spot-welding

WM 536855 REPLACING (INNER) REAR WHEEL HOUSING (ALL MODELS) > PREPARING CONNECTION AREAS OF THE BODY > PREPARING CONNECTION AREAS OF THE BODY

1. Align the sealing surface and connections of the body.
2. De-burr connection points and prepare them for welding.

   Information

   1. Before final assembly, make sure you fully understand all the work steps involved and carry out a trial assembly without applying adhesive.
   2. The bonding process can only be carried out reliably when a smooth and swift sequence of operations is guaranteed.
   3. Do not begin bonding work until all materials and tools necessary for later repair work are available.

3. Prepare the marked areas for welding and bonding. → 5X00IN21 WORKING WITH BODY STRUCTURAL ADHESIVE

   Fig 1: Identifying Body Connection Areas

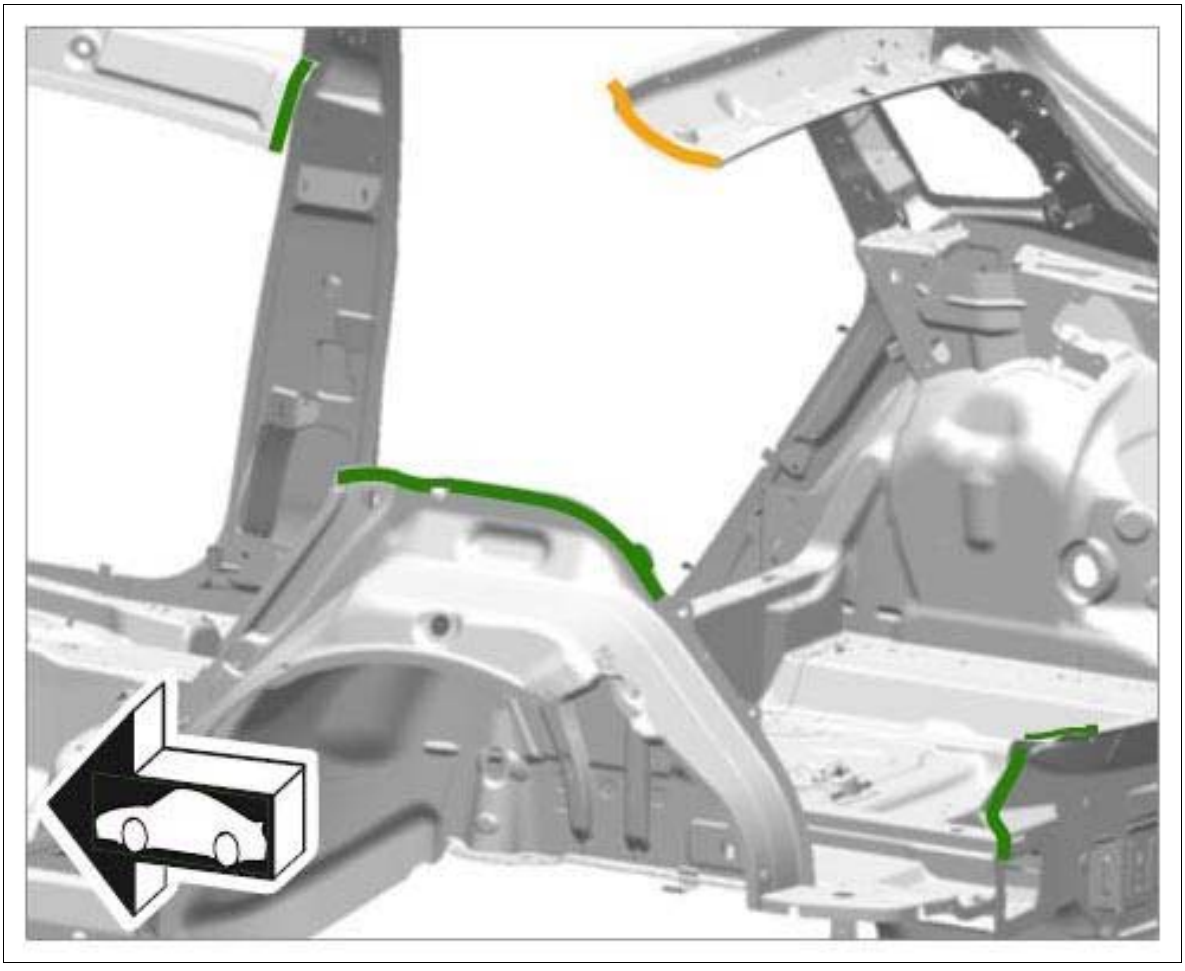

Courtesy of PORSCHE CARS NORTH AMERICA, INC.

Green	Resistance spot-welding + bonding
Orange	Resistance spot-welding

WM 536855 REPLACING (INNER) REAR WHEEL HOUSING (ALL MODELS) > PREPARING CONNECTION AREAS OF THE BODY > PREPARING CONNECTION AREAS OF THE BODY

1. Align the sealing surface and connections of the body.
2. De-burr connection points and prepare them for welding.

   Information

   1. Before final assembly, make sure you fully understand all the work steps involved and carry out a trial assembly without applying adhesive.
   2. The bonding process can only be carried out reliably when a smooth and swift sequence of operations is guaranteed.
   3. Do not begin bonding work until all materials and tools necessary for later repair work are available.

3. Prepare the marked areas for welding and bonding. → 5X00IN21 WORKING WITH BODY STRUCTURAL ADHESIVE

Fig 1: Identifying Body Connection Areas

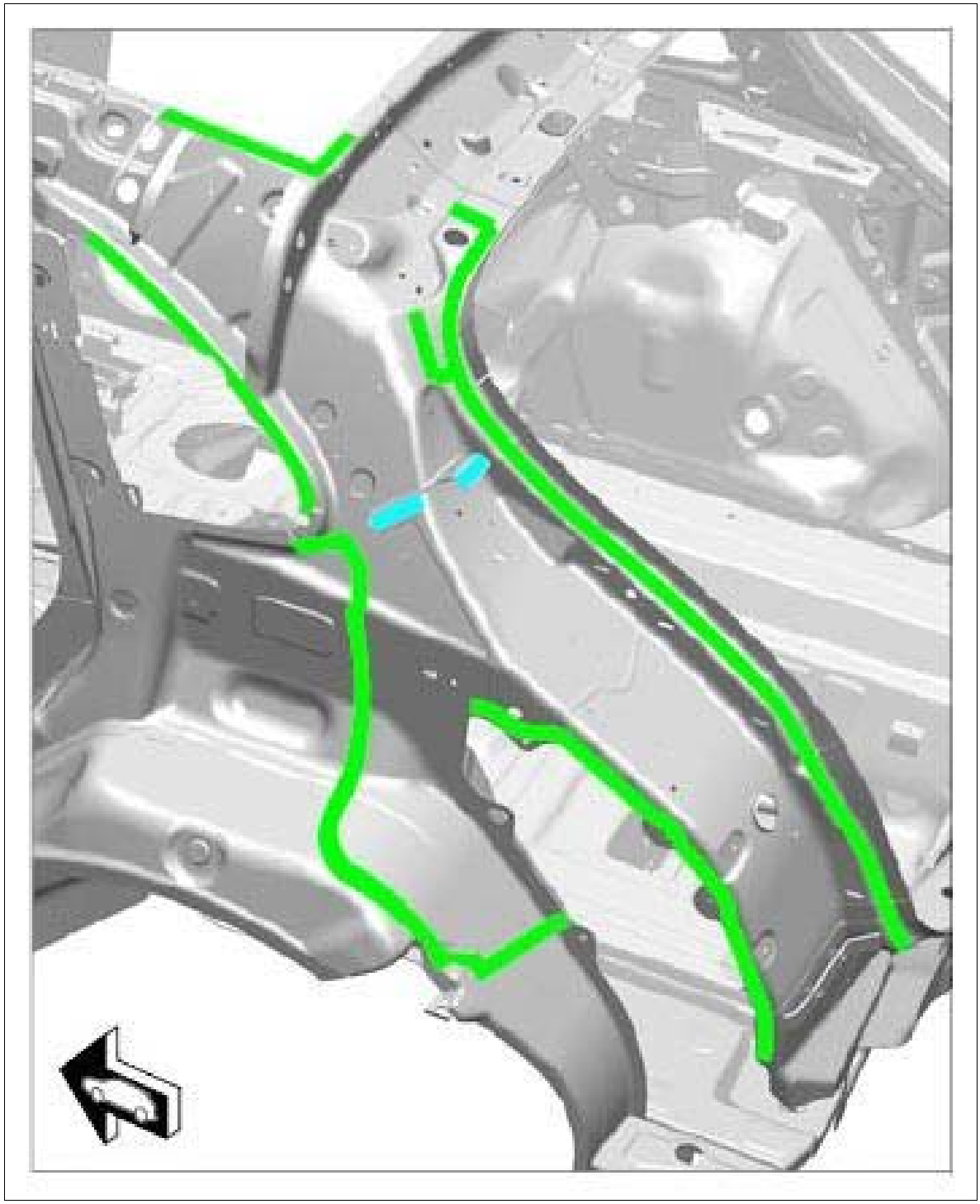

Courtesy of PORSCHE CARS NORTH AMERICA, INC.

Green	Resistance spot-welding + bonding
Blue	Bonding

WM 536855 REPLACING (INNER) REAR WHEEL HOUSING (ALL MODELS) >

INSTALLING (INNER) REAR WHEEL HOUSING

Information

- Before final assembly, make sure you fully understand all the work steps involved and carry out a trial assembly without applying adhesive.
- The bonding process can only be carried out reliably when a smooth and swift sequence of operations is guaranteed.
- Do not begin bonding work until all materials and tools necessary for later repair work are available.

1. Install (inner) rear wheel housing and check that it fits perfectly. Check gap dimensions. → 5X00IN DIAGRAM - BODY GAP DIMENSIONS

    1. 1.1. Apply adhesive to the areas marked in yellow. → 5X00IN21 WORKING WITH BODY STRUCTURAL ADHESIVE→ **Application depth: 3.0 mm**

        Fig 1: Identifying Adhesive Applying Areas

        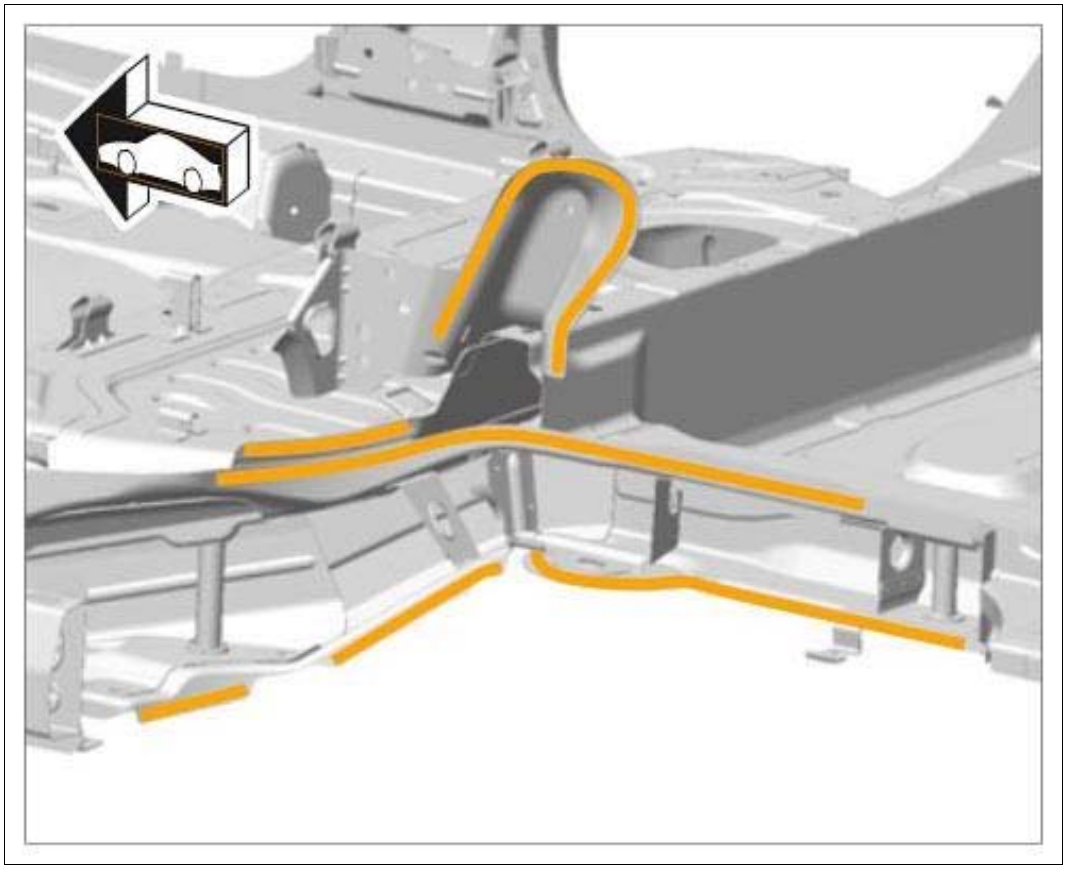

        Courtesy of PORSCHE CARS NORTH AMERICA, INC.

2. Resistance spot-weld the (inner) rear wheel housing.

Fig 2: Removing Rear Wheel Housing (Inner)

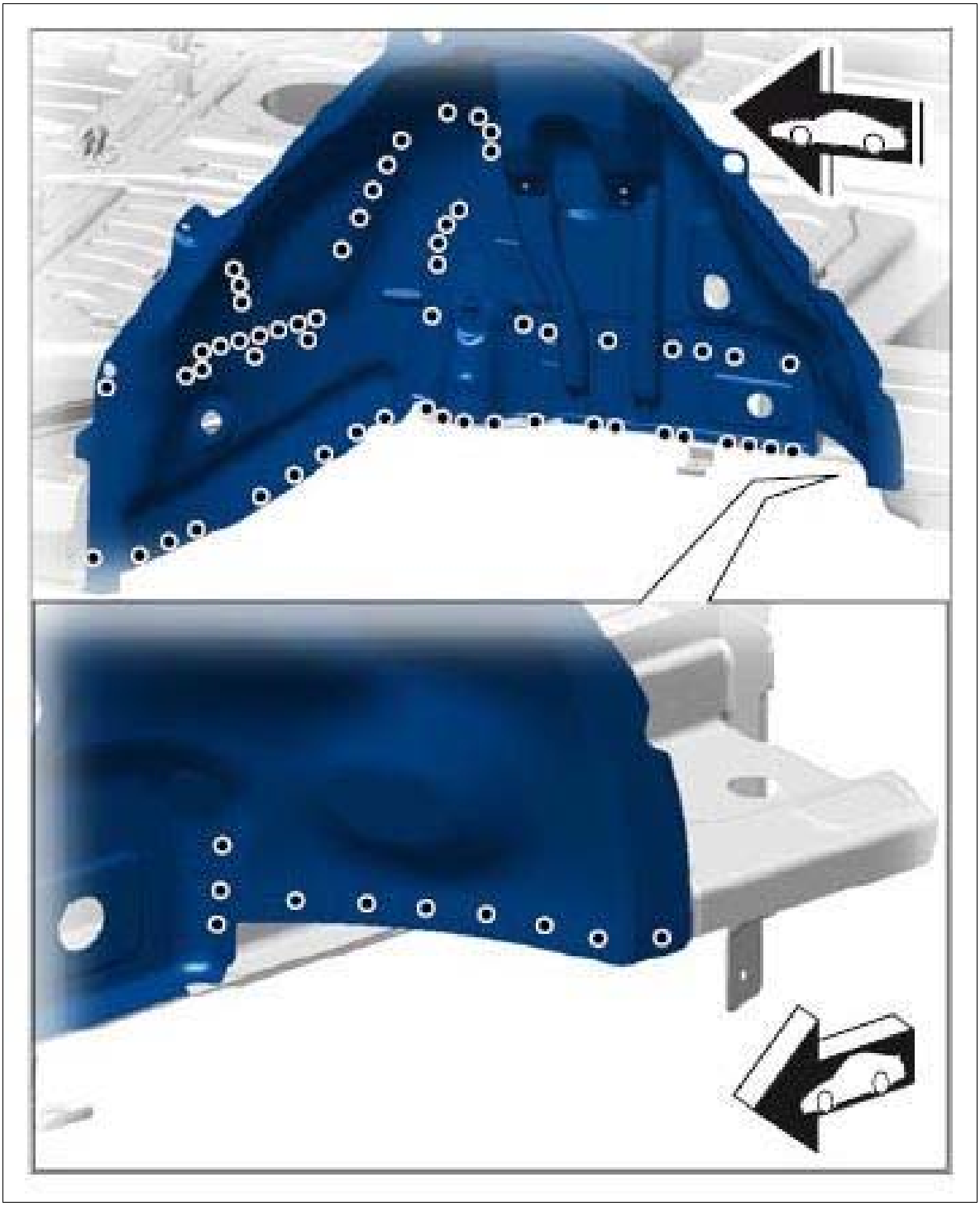

Courtesy of PORSCHE CARS NORTH AMERICA, INC.

WM 536855 REPLACING (INNER) REAR WHEEL HOUSING (ALL MODELS) > INSTALLING (INNER) REAR WHEEL HOUSING > INSTALLING INNER SIDE SECTION

Information

- Before final assembly, make sure you fully understand all the work steps involved and carry out a trial assembly without applying adhesive.
- The bonding process can only be carried out reliably when a smooth and swift sequence of operations is guaranteed.
- Do not begin bonding work until all materials and tools necessary for later repair work are available.

1. Install inner side section and check that it fits perfectly. Check gap dimensions. → 5X00IN DIAGRAM - BODY GAP DIMENSIONS

    1. 1.1. Apply adhesive to the areas marked in green. → 5X00IN21 WORKING WITH BODY STRUCTURAL ADHESIVE→ **Application depth: 3.0 mm**

       Fig 1: Identifying Adhesive Applying Areas

       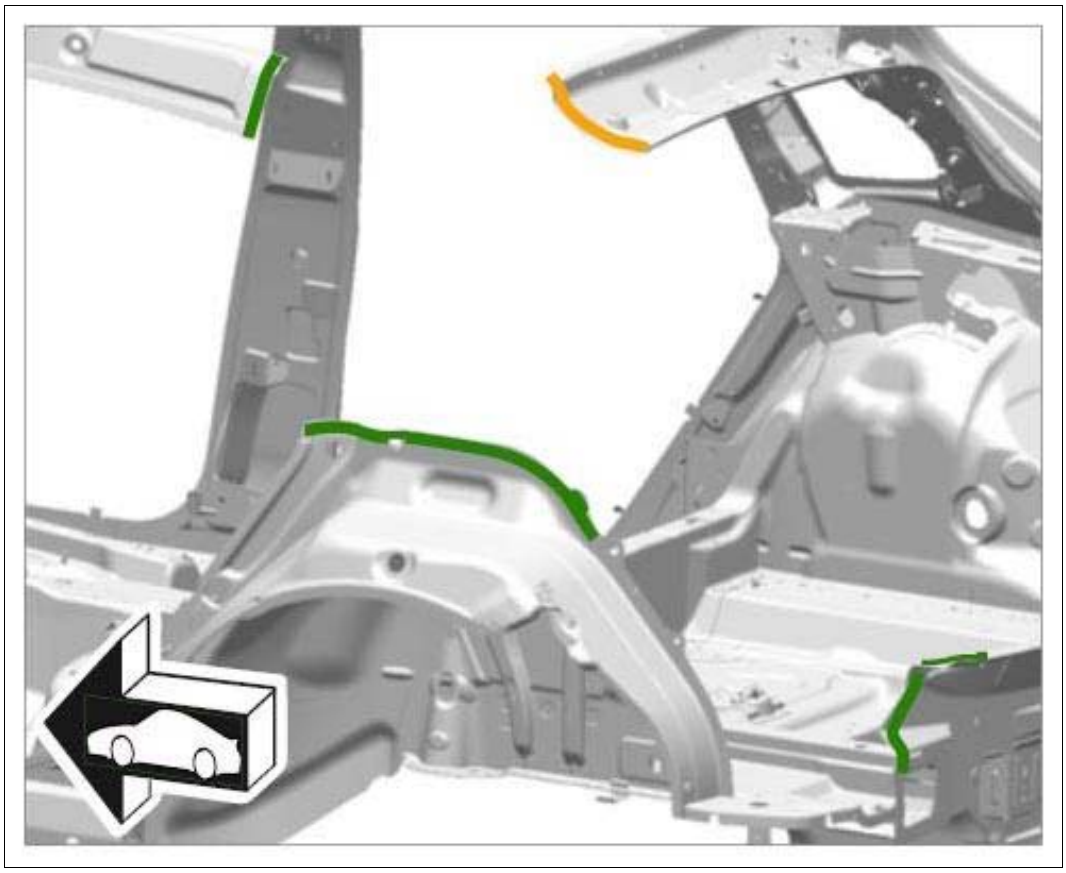

       Courtesy of PORSCHE CARS NORTH AMERICA, INC.

Green	Resistance spot-welding + bonding
Orange	Resistance spot-welding

2. Resistance spot-weld the inner side section.

Fig 2: Installing Inner Side Section



Courtesy of PORSCHE CARS NORTH AMERICA, INC.

Fig 3: Installing Inner Side Section

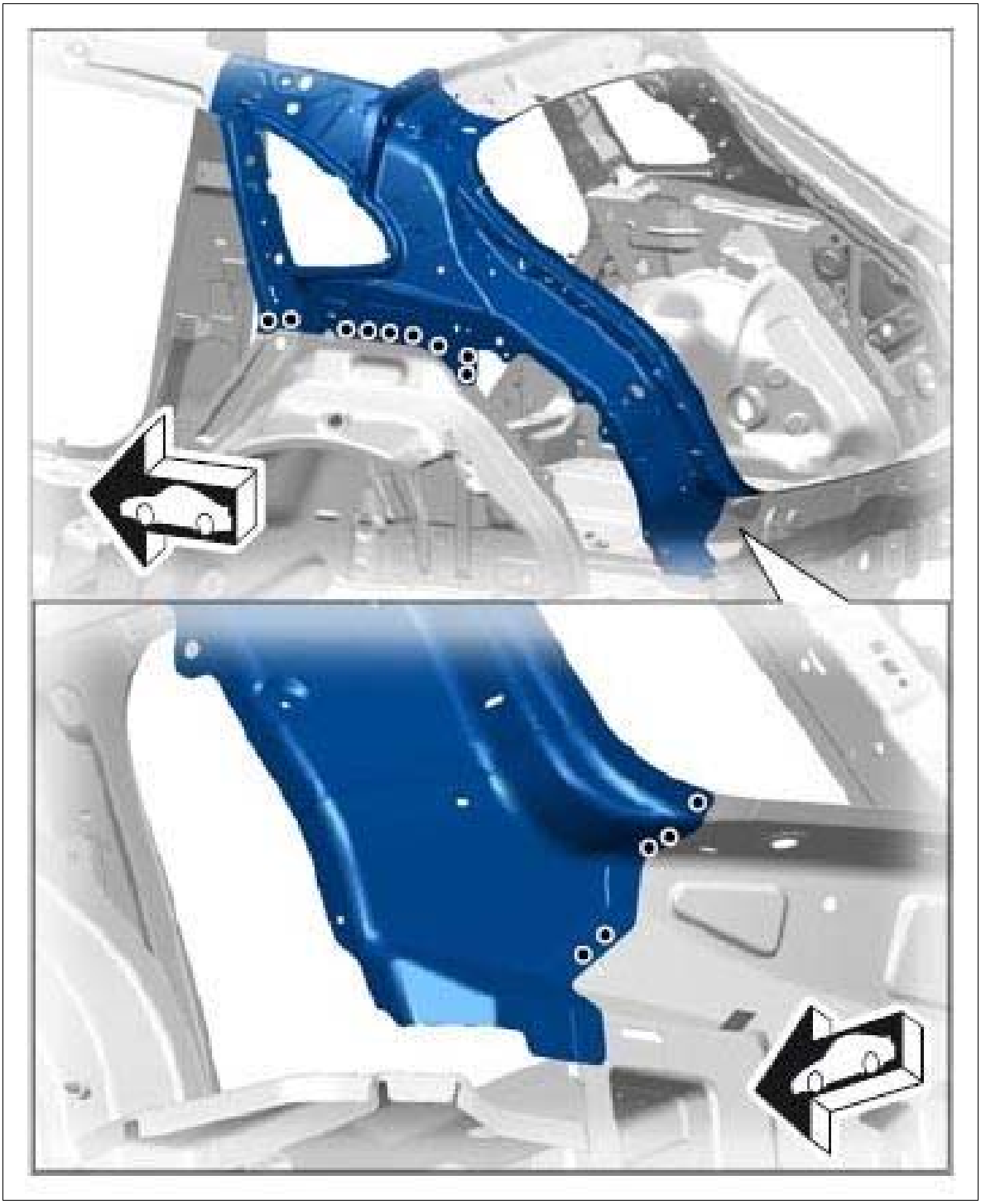

Courtesy of PORSCHE CARS NORTH AMERICA, INC.

Information

Measure the position and alignment of the seat belt bracket at several points as indicated. Fit in and secure seat belt bracket with backrest.

3. Fit in and secure the seat belt bracket **-1-** . → **Distance: 35 mm** → **Distance: 50 mm**

Fig 4: Installing Seat Belt Bracket

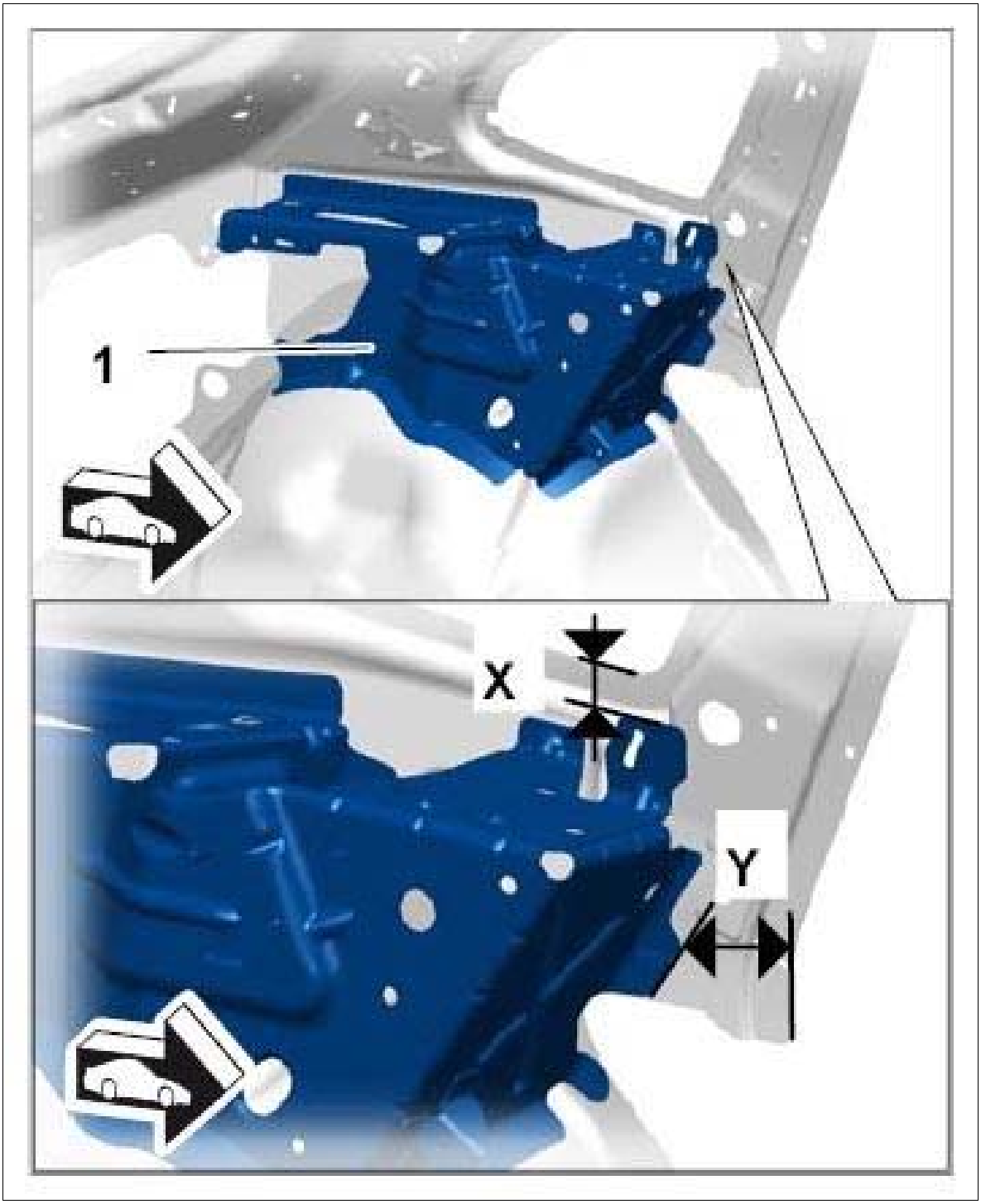

Courtesy of PORSCHE CARS NORTH AMERICA, INC.

4. Resistance spot-weld the seat belt bracket **-1-** .
    1. 4.1. Apply a full weld to area **-A-** using inert gas.
    2. 4.2. Plug-weld area **-B-** using inert gas.

Fig 5: Installing Seat Belt Bracket

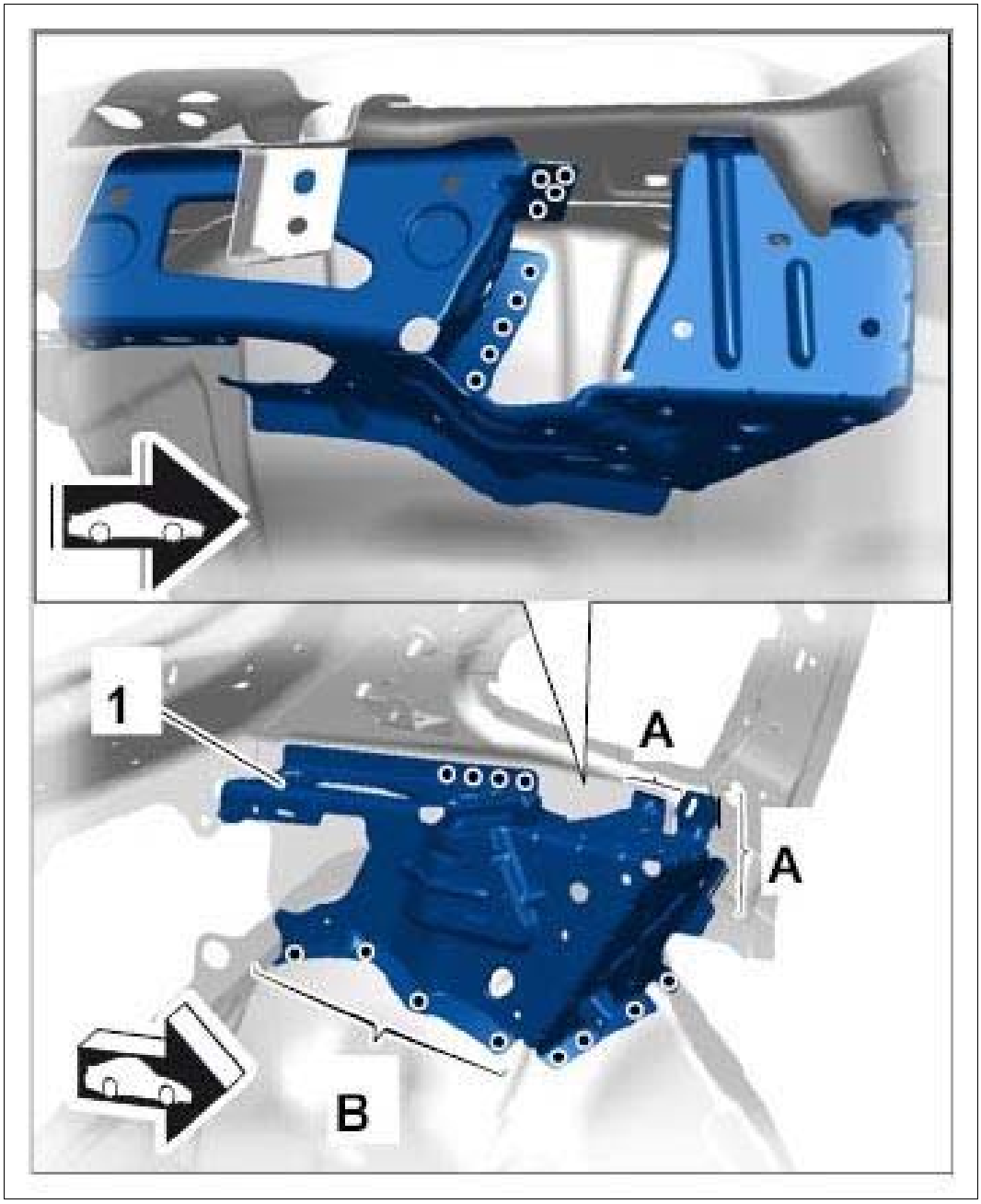

Courtesy of PORSCHE CARS NORTH AMERICA, INC.

WM 536855 REPLACING (INNER) REAR WHEEL HOUSING (ALL MODELS) > INSTALLING (INNER) REAR WHEEL HOUSING > INSTALLING D-PILLAR REINFORCEMENT

Information

- Before final assembly, make sure you fully understand all the work steps involved and carry out a trial assembly without applying adhesive.

- The bonding process can only be carried out reliably when a smooth and swift sequence of operations is guaranteed.
- Do not begin bonding work until all materials and tools necessary for later repair work are available.

1. Install D-pillar reinforcement and check that it fits perfectly. Check gap dimensions. → 5X00IN DIAGRAM - BODY GAP DIMENSIONS

    1. 1.1. Apply foam filler to the body in area **-A-** . → 5X00IN22 WORKING WITH BODY FOAM FILLER

       Make sure that all openings and gaps between the inner side section and D-pillar reinforcement are closed off with the sealing compound.

    2. 1.2. Apply adhesive to the areas marked in yellow. → 5X00IN21 WORKING WITH BODY STRUCTURAL ADHESIVE→ **Application depth: 3.0 mm**

Fig 1: Identifying Adhesive Applying Areas

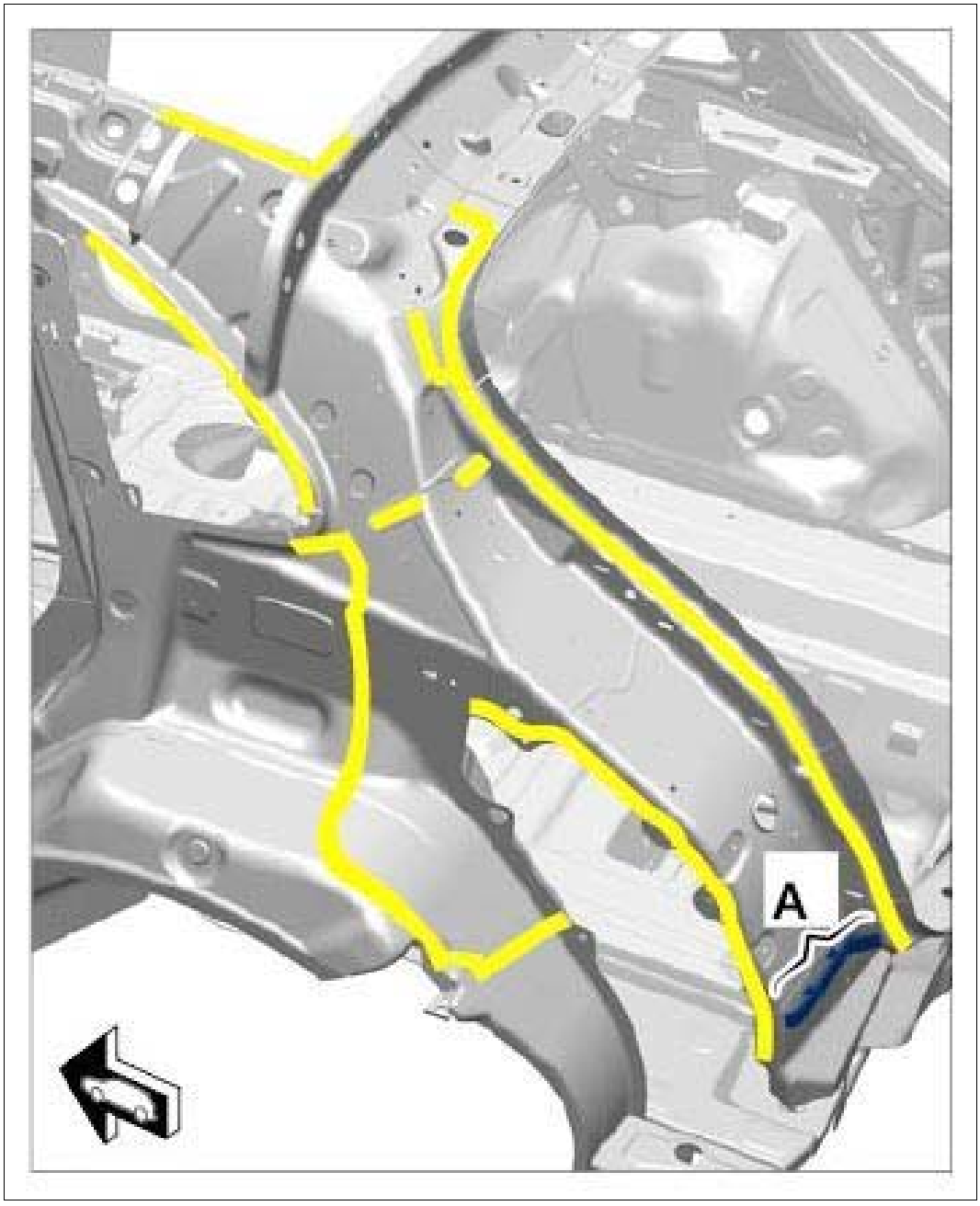

Courtesy of PORSCHE CARS NORTH AMERICA, INC.

2. Resistance spot-weld the D-pillar reinforcement.

Fig 2: Installing D-Pillar Reinforcement

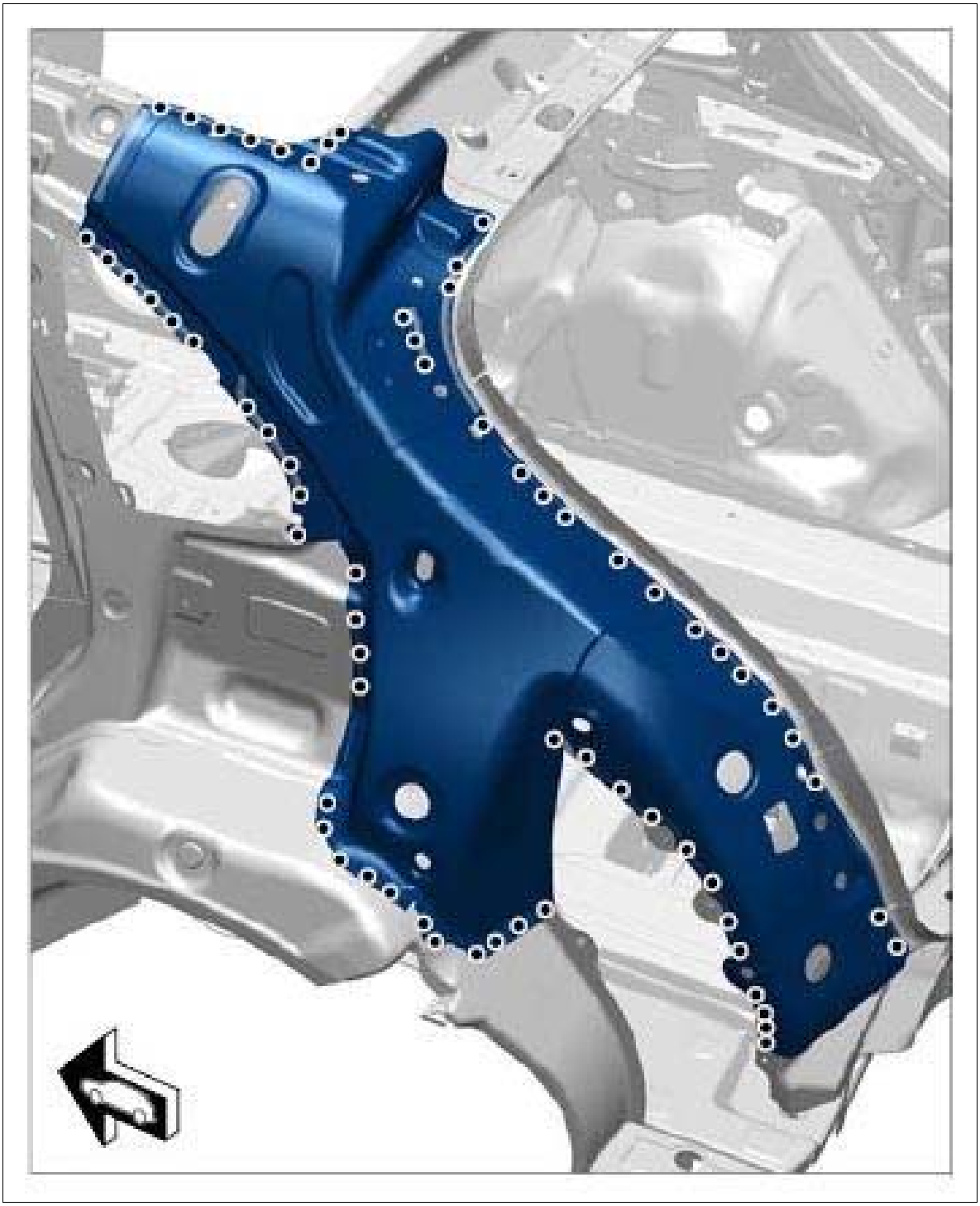

Courtesy of PORSCHE CARS NORTH AMERICA, INC.

WM 536855 REPLACING (INNER) REAR WHEEL HOUSING (ALL MODELS) > SUBSEQUENT WORK

1. Install outer wheel housing. → 536855 REPLACING (OUTER) REAR WHEEL HOUSING

2. Install upper part of rear cross member. → 510955 REPLACING REAR CROSS MEMBER
3. Install roof pillar. → 510555 REPLACING ROOF PILLAR
4. Install closing panel. → 530555 REPLACING REAR CLOSING PANEL - section on "Installing"

WM 536855 REPLACING (INNER) REAR WHEEL HOUSING (ALL MODELS) > SUBSEQUENT WORK > SUBSEQUENT WORK FOR BODY REPAIRS

1. Release and remove vehicle from the straightening system.
2. Clean joint areas and sheetmetal flanges with a wire brush.
3. Prime joint areas and sheetmetal flanges with 2K primer.
4. Restore standard seal with body sealant → 5X00IN42 SEAM SEALING - section on "Information".

   Also seal the repair area carefully.
5. Paint repair area and adjacent surfaces, if necessary.
6. Restore standard underbody protection with underbody sealant → 5X00IN43 UNDERBODY PROTECTION - section on "Information".
7. Apply standard cavity preservation → 5X00IN44 CAVITY PRESERVATION - section on "Information". Also carefully apply cavity preservation to the repair area.
8. Install removed accessories in the repair area.

WM 536855 REPLACING (OUTER) REAR WHEEL HOUSING (ALL MODELS) > TOOLS

Designation	Type	Number	Description	
Hot-air blower	Service equipment	WE 1119		
Body alignment system package	Service equipment	WE 1121		
Special electric cutter	Service equipment	WE 1137		
Pneumatic Spotweld Remover, Vario Drill WS 90	Service equipment	WE 1139		
Hand-cartridge gun	Service equipment	WE 1141		

Resistance spot welder	Service equipment	WE 1311		
Inverter welder MIDIspot-QSVM-12000	Service equipment	WE 1312		
Resistance spot welder	Service equipment	WE 1313		
Blind riveting tool TAURUS 4	Service equipment	WE 1348		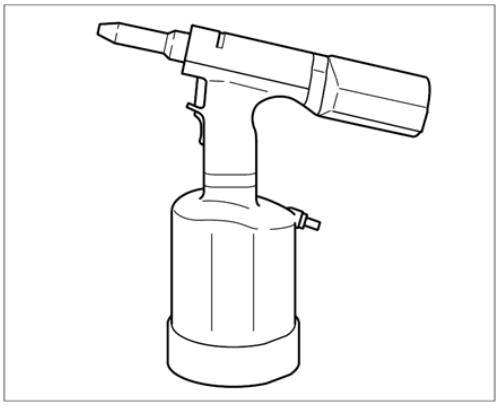
Aluminum tool set with trolley	Service equipment	WE 1350		
Resistance spot welder	Service equipment	WE 1352		
Measuring and alignment system, professional	Service equipment	WE 1398		
Mobile extraction unit, aluminum	Service equipment	WE 1507		
Body saw	Service equipment	WE 1508		
Star gauges for body gap dimensions	Special tool	Nr.127-1		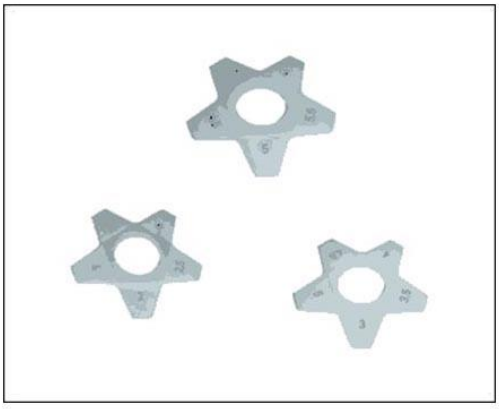

Spotweld drill	Commercially available tool	Nr.129		
Twist drill	Commercially available tool	Nr.201		
Countersink	Commercially available tool	Nr.202		

WM 536855 REPLACING (OUTER) REAR WHEEL HOUSING (ALL MODELS) > TECHNICAL VALUES

Location	Description	Type	Basic value	Tolerance 1	Tolerance 2
Dimension X		Distance	20 mm		
Applying adhesive		Application depth	3.0 mm		

WM 536855 REPLACING (OUTER) REAR WHEEL HOUSING (ALL MODELS) >

PRELIMINARY WORK > PRELIMINARY WORK FOR BODY REPAIRS (WITHOUT STRAIGHTENING SYSTEM)

1. Remove accessories in the repair area.
    1. 1.1. Remove accessories in the repair area according to the extent of damage on the vehicle.
2. Cover accessories adjacent to the repair area on the vehicle.
    1. 2.1. Cover all accessories remaining on the vehicle and adjacent areas with fire-proof protective covers.
3. Reshape connection area of the sheetmetal parts to be replaced. Note: Information on aluminum repairs. Refer to the appropriate information on aluminum repairs
4. Expose joint areas.
    1. 4.1. Remove underbody protection, paint, etc. from the joint areas of the body using a hot-air gun or rotary brush.

1. Remove rear side section. → Removing Rear Side Section

WM 536855 REPLACING (OUTER) REAR WHEEL HOUSING (ALL MODELS) > SAFETY INSTRUCTIONS AND INFORMATION ON QUALITY

⚠ *CAUTION: Non-observance of safety instructions for body repairs*

- *Risk of damage to the vehicle*
- *Danger of injury*

→ Read the relevant safety instructions as well as general information and quality instructions → 5X00IN01 SAFETY INSTRUCTIONS .

- Protection of electrical components during body repairs
- Corrosion protection measures during repairs → 5X00IN03 CORROSION PROTECTION MEASURES DURING REPAIRS
- Information on aluminum repairs. Refer to the appropriate information on aluminum repairs
- Body parts of various sheet-steel strengths → 5X00IN04 BODY PARTS OF VARIOUS SHEET-STEEL STRENGTHS
- Replacing punch rivets and penetrated joints
- Setting self-tapping screws → 5X00IN24 SETTING SELF-TAPPING SCREWS
- Working with body structural adhesive → 5X00IN21 WORKING WITH BODY STRUCTURAL ADHESIVE

WM 536855 REPLACING (OUTER) REAR WHEEL HOUSING (ALL MODELS) > TOOLS AND MATERIALS > TOOLS AND MATERIALS FOR BODY REPAIRS

Information

- The tools for working on steel and aluminum must always be kept separate from each other. We recommend that you color code the tools using a system similar to that used for the Aluminum tool set with trolley WE 1350, for example.

Straightening set **Body alignment system package WE 1121 Measuring and alignment system, professional WE 1398**

Resistance spot welder; optional **Inverter welder MIDIspot-QSVM-12000 WE 1312, Resistance spot welder WE 1352, Resistance spot welder WE 1311, Resistance spot welder WE 1313**

Metal inert gas (MIG) welder

Pneumatic spotweld remover **Pneumatic Spotweld Remover, Vario Drill WS 90 WE 1139**

Pneumatic body saw **Body saw WE 1508**

Oscillating body saw (special electric cutter) **Special electric cutter WE 1137**

Hot-air blower **Hot-air blower WE 1119**

Hand-cartridge gun **Hand-cartridge gun WE 1141**

Spotweld drill **Spotweld drill**

Countersink for rivets **Countersink Nr.202**

Blind riveting tool for high-strength rivets **Blind riveting tool TAURUS 4 WE 1348**

Safety vacuum cleaner for aluminum dust **Mobile extraction unit, aluminum WE 1507**

Star gauges for body gap dimensions Nr.127-1

Wurth glue and seals body sealant

WM 536855 REPLACING (OUTER) REAR WHEEL HOUSING (ALL MODELS) > REMOVING REAR WHEEL HOUSING

Information

Drill out the connection point on one side only. Do not damage the plate underneath.

Fig 1: Identifying Rear Wheel Housing Position

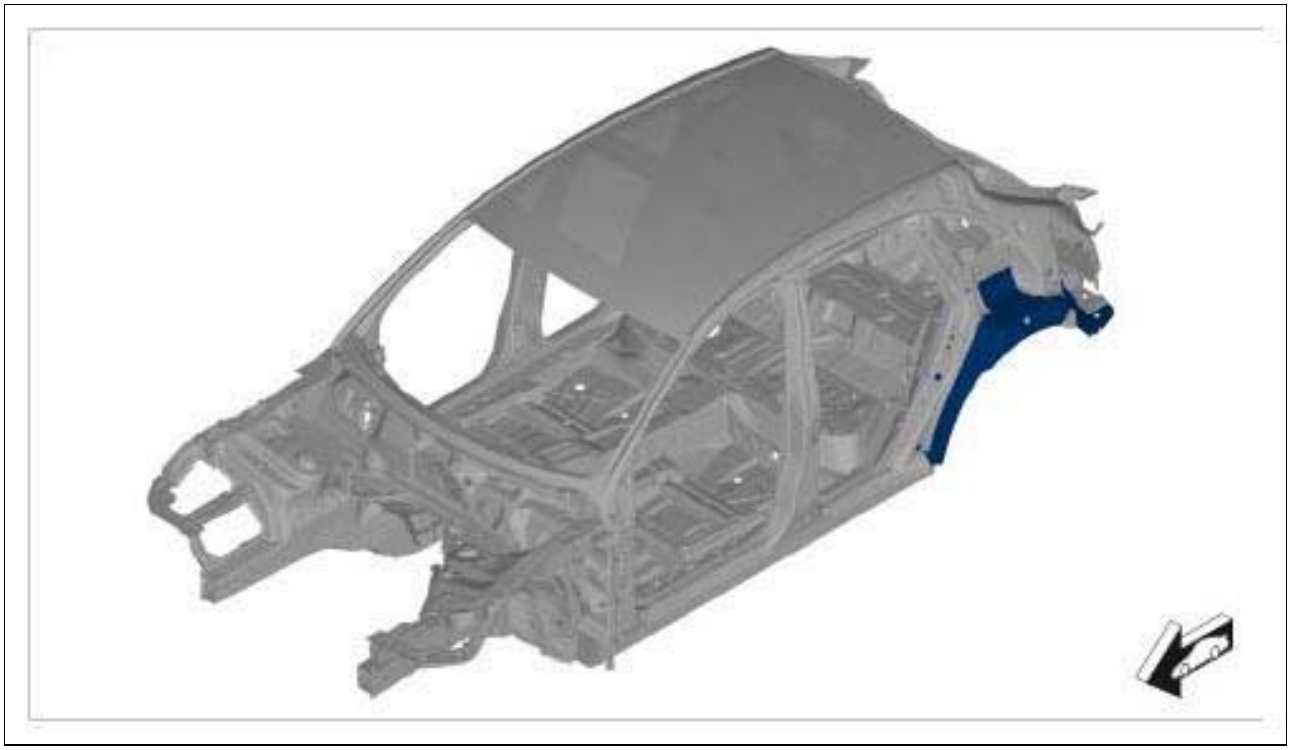

Courtesy of PORSCHE CARS NORTH AMERICA, INC.

Information

Make sure to leave an overlap of approx 20 mm on the wheel housing.

Information

Only make cuts in the top plate. Make sure not to damage the plate underneath when doing this.

1. Mark and make the required cut. → **Distance: 20 mm**

    1. 1.1. Remove rear wheel housing.

Fig 2: Removing Rear Wheel Housing

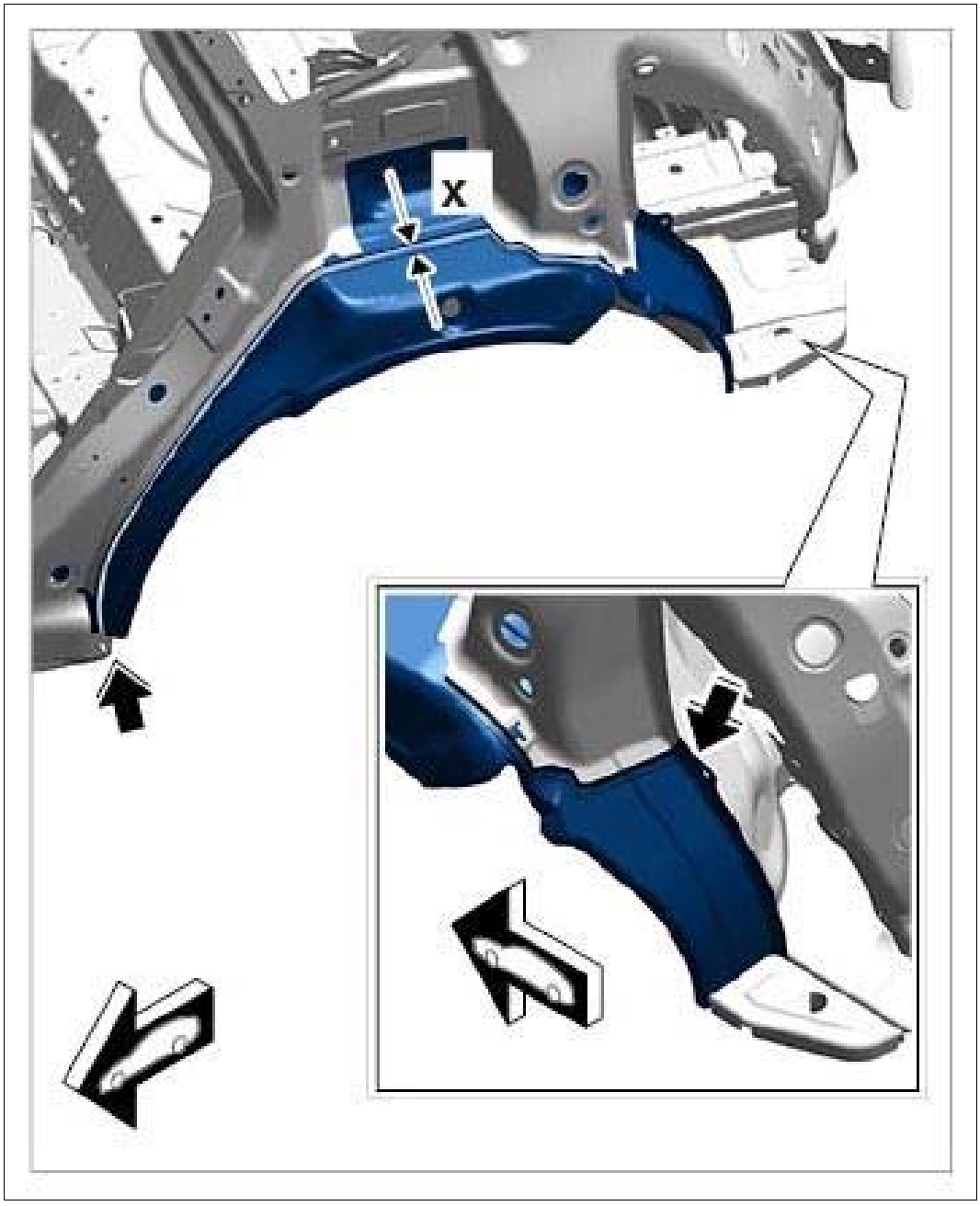

Courtesy of PORSCHE CARS NORTH AMERICA, INC.

2. Remove remaining pieces of rear wheel housing.

    1. 2.1. Drill out spotwelds using **spotweld drill;** .

Fig 3: Removing Rear Wheel Housing Pieces

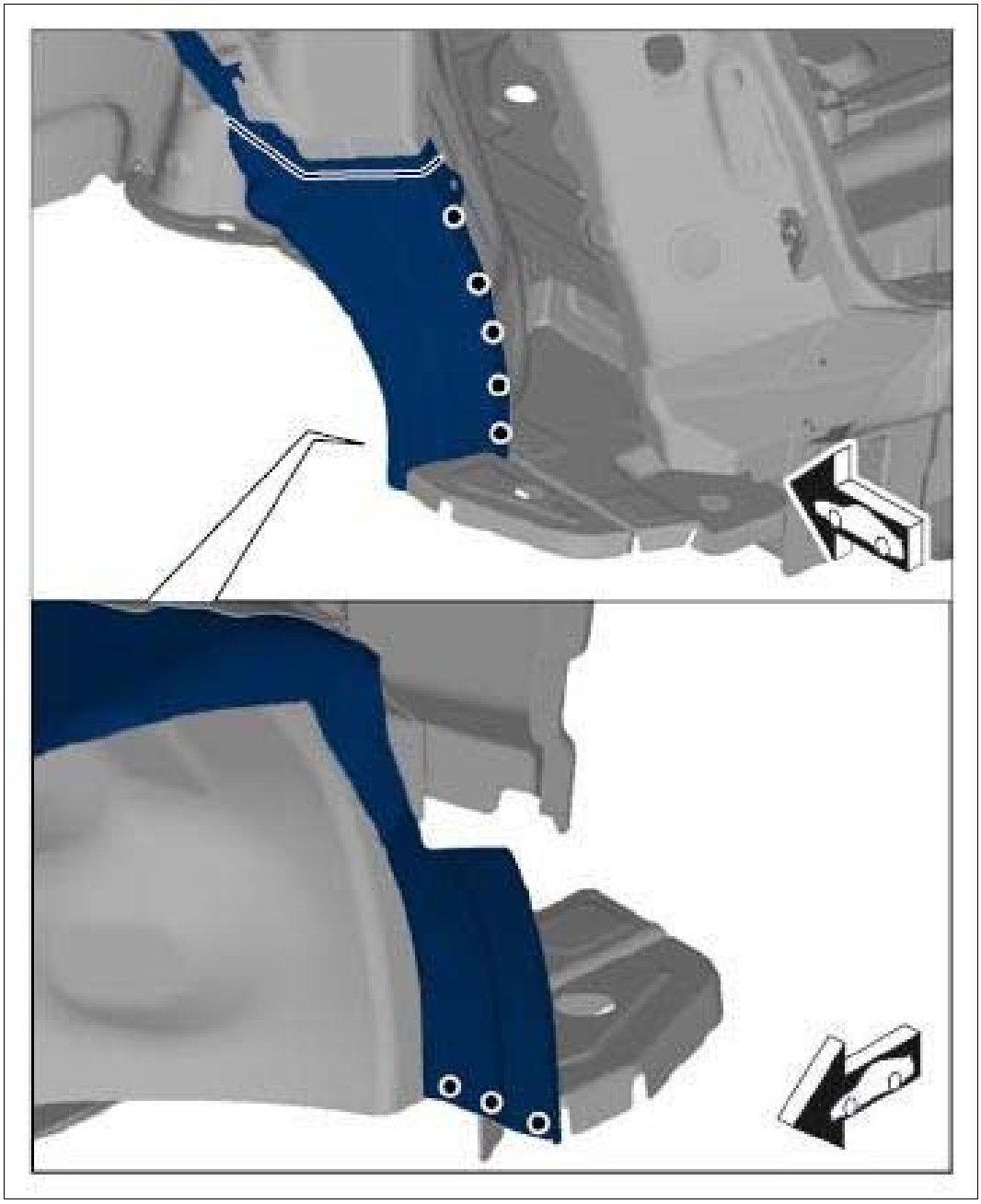

Courtesy of PORSCHE CARS NORTH AMERICA, INC.

WM 536855 REPLACING (OUTER) REAR WHEEL HOUSING (ALL MODELS) > PREPARING REAR WHEEL HOUSING FOR INSTALLATION

1. Fit in rear wheel housing.

    1. 1.1. Cut rear wheel housing at the transitions to the remaining section of the wheel housing leaving an overlap of 20 mm.

Fig 1: Identifying Rear Wheel Housing

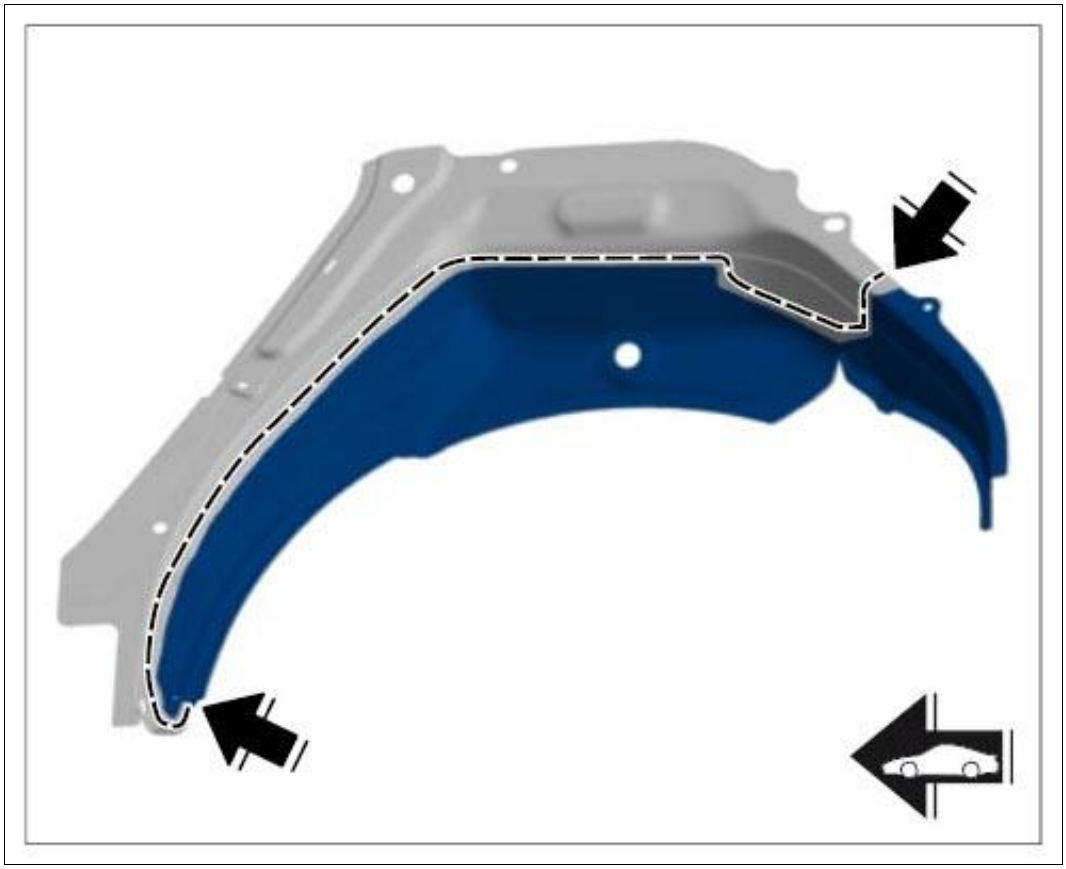

Courtesy of PORSCHE CARS NORTH AMERICA, INC.

2. Prepare rear wheel housing for bonding and welding.

Fig 2: Identifying Rear Wheel Housing

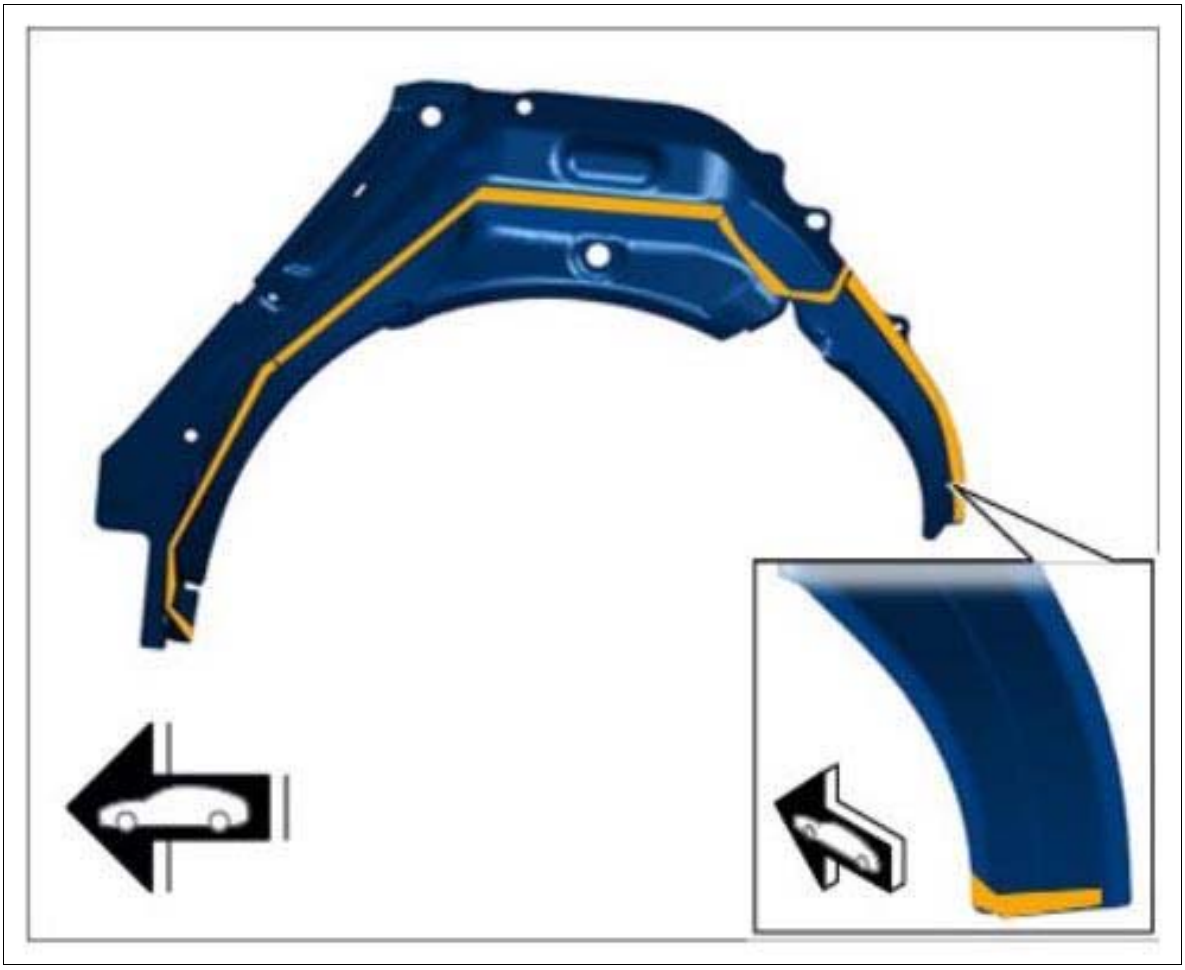

Courtesy of PORSCHE CARS NORTH AMERICA, INC.

Orange	Resistance spot-welding + bonding

WM 536855 REPLACING (OUTER) REAR WHEEL HOUSING (ALL MODELS) > PREPARING CONNECTION AREAS OF THE BODY

1. Align the sealing surface and connections of the body.
2. De-burr connection points and prepare them for welding.

Information

1. Before final assembly, make sure you fully understand all the work steps involved and carry out a trial assembly without applying adhesive.
2. The bonding process can only be carried out reliably when a smooth and swift sequence of operations is guaranteed.
3. Do not begin bonding work until all materials and tools necessary for later repair work are available.

3. Prepare the marked areas for welding and bonding. → Preparing Bonding Surfaces

Fig 1: Identifying Body Connection Areas

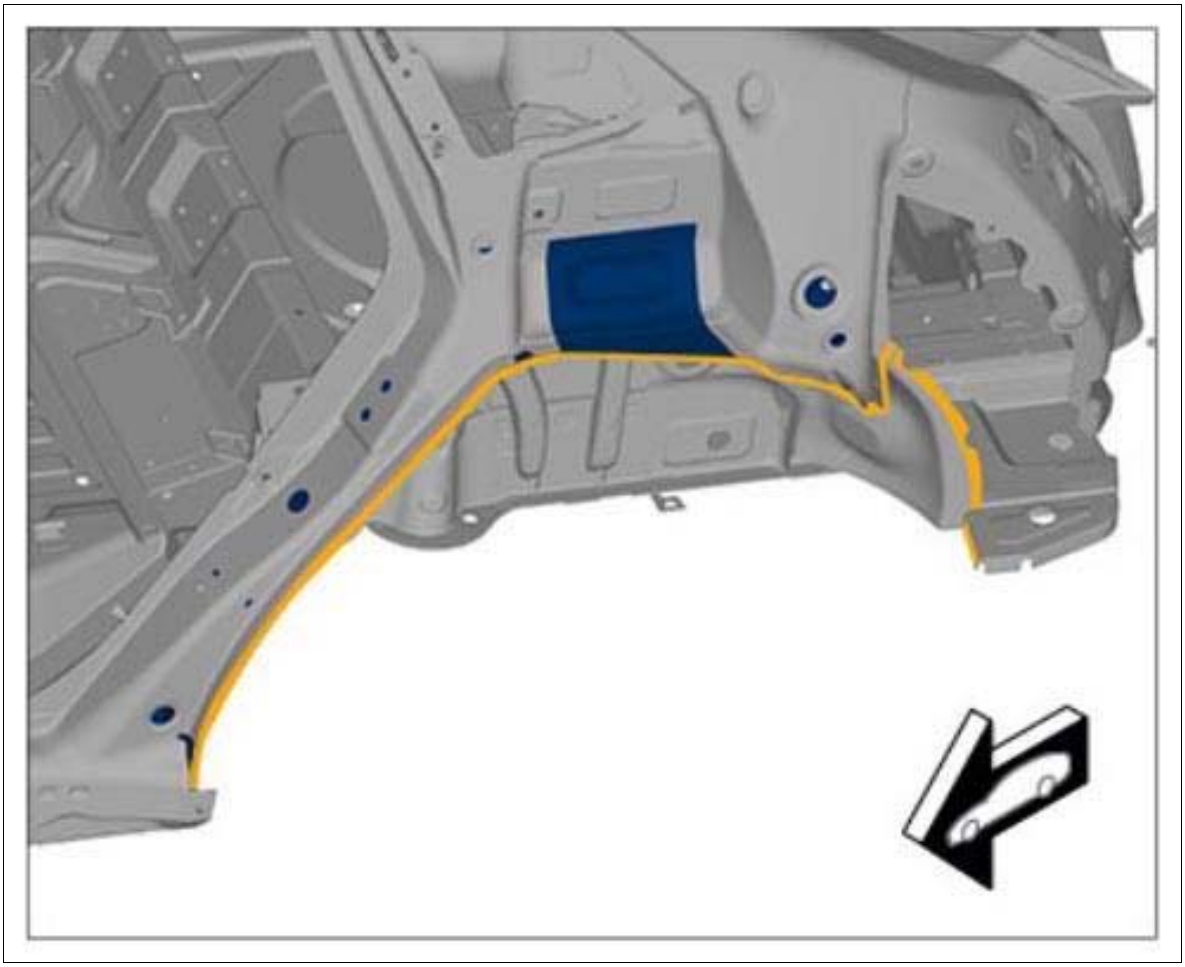

Courtesy of PORSCHE CARS NORTH AMERICA, INC.

Orange	Resistance spot-welding + bonding

WM 536855 REPLACING (OUTER) REAR WHEEL HOUSING (ALL MODELS) > INSTALLING REAR WHEEL HOUSING

Information

- Before final assembly, make sure you fully understand all the work steps involved and carry out a trial assembly without applying adhesive.
- The bonding process can only be carried out reliably when a smooth and swift sequence of operations is guaranteed.
- Do not begin bonding work until all materials and tools necessary for later repair work are available.

1. Fit rear wheel housing and check that it fits perfectly. Check gap dimensions. → 5X00IN DIAGRAM - BODY GAP DIMENSIONS

1. 1.1. Apply adhesive to the areas marked in yellow. → 5X00IN21 WORKING WITH BODY STRUCTURAL ADHESIVE→ **Application depth: 3.0 mm**

   Fig 1: Identifying Adhesive Applying Areas

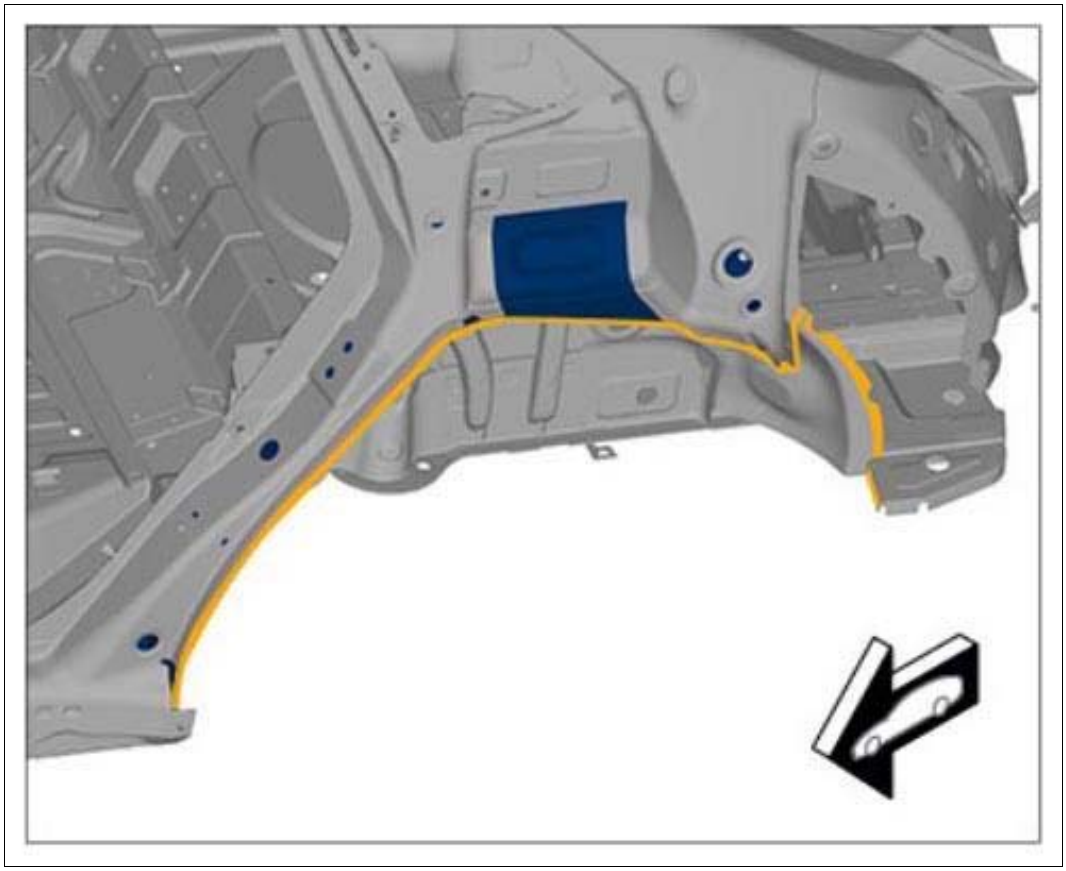

Courtesy of PORSCHE CARS NORTH AMERICA, INC.

2. Resistance spot-weld the rear wheel housing.

Fig 2: Installing Rear Wheel Housing

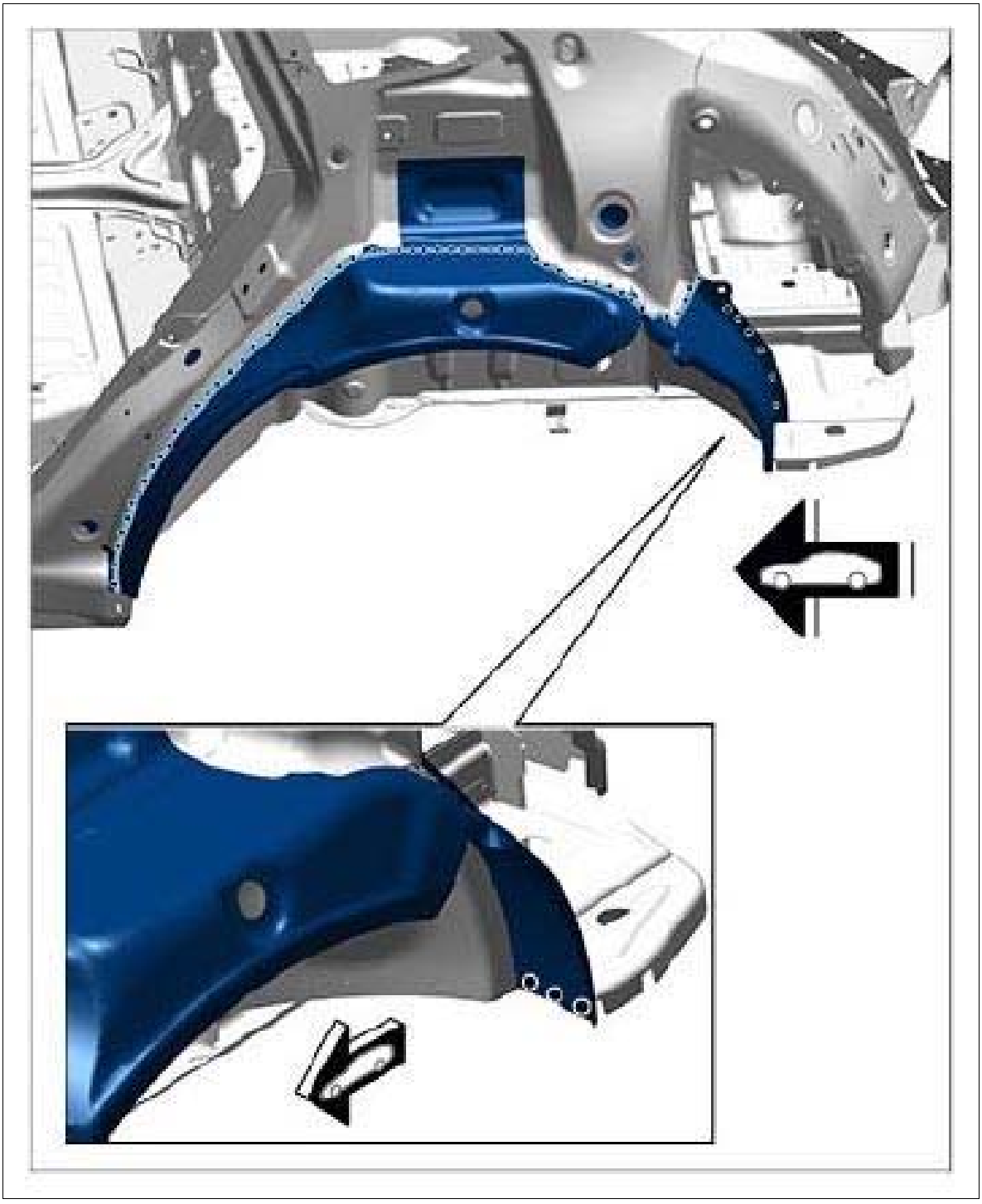

Courtesy of PORSCHE CARS NORTH AMERICA, INC.

WM 536855 REPLACING (OUTER) REAR WHEEL HOUSING (ALL MODELS) > SUBSEQUENT WORK

1. Install rear side section. → Installing Rear Side Section

WM 536855 REPLACING (OUTER) REAR WHEEL HOUSING (ALL MODELS) > SUBSEQUENT WORK > SUBSEQUENT WORK FOR BODY REPAIRS (WITHOUT STRAIGHTENING SYSTEM)

1. Clean joint areas and sheetmetal flanges with a wire brush.
2. Prime joint areas and sheetmetal flanges with 2K primer.
3. Restore standard seal with body sealant → 5X00IN42 SEAM SEALING .

   Also seal the repair area carefully.
4. Paint repair area and adjacent surfaces, if necessary.
5. Restore standard underbody protection with underbody sealant → 5X00IN43 UNDERBODY PROTECTION .
6. Apply standard cavity preservation → 5X00IN44 CAVITY PRESERVATION . Also apply cavity preservation to the repair area.
7. Install removed accessories in the repair area.

WM 536919 REMOVING AND INSTALLING REAR WHEEL HOUSING LINER (ALL MODELS) > TECHNICAL VALUES

Location	Description	Type	Basic value	Tolerance 1	Tolerance 2
Wheel housing liner to body Nut		Tightening torque	2.5 Nm (2 ftlb.)		
Wheel housing liner to body Screw		Tightening torque	2 Nm (1.5 ftlb.)		

WM 536919 REMOVING AND INSTALLING REAR WHEEL HOUSING LINER (ALL MODELS) > PRELIMINARY WORK

1. Raise the vehicle. → 4X00IN LIFTING THE VEHICLE

WM 536919 REMOVING AND INSTALLING REAR WHEEL HOUSING LINER (ALL MODELS) > REMOVING REAR WHEEL HOUSING LINER

Information

- The number of fastening screws, fixing clips, plug connections, holders and trim panels can vary depending on equipment.
- The illustrations for removing and installing the drive mechanism are shown only on one equipment variant and may differ from the actual equipment variant.
- Some steps must be carried out automatically.
- Some of the repair illustrations show only one side of the vehicle.

1. Unscrew fastening screws **-2-** .
2. Unscrew and remove fastening nuts **-1-** .
3. Loosen and remove wheel housing liner **-3-** .

Fig 1: Identifying Rear Right Wheel Housing Liner

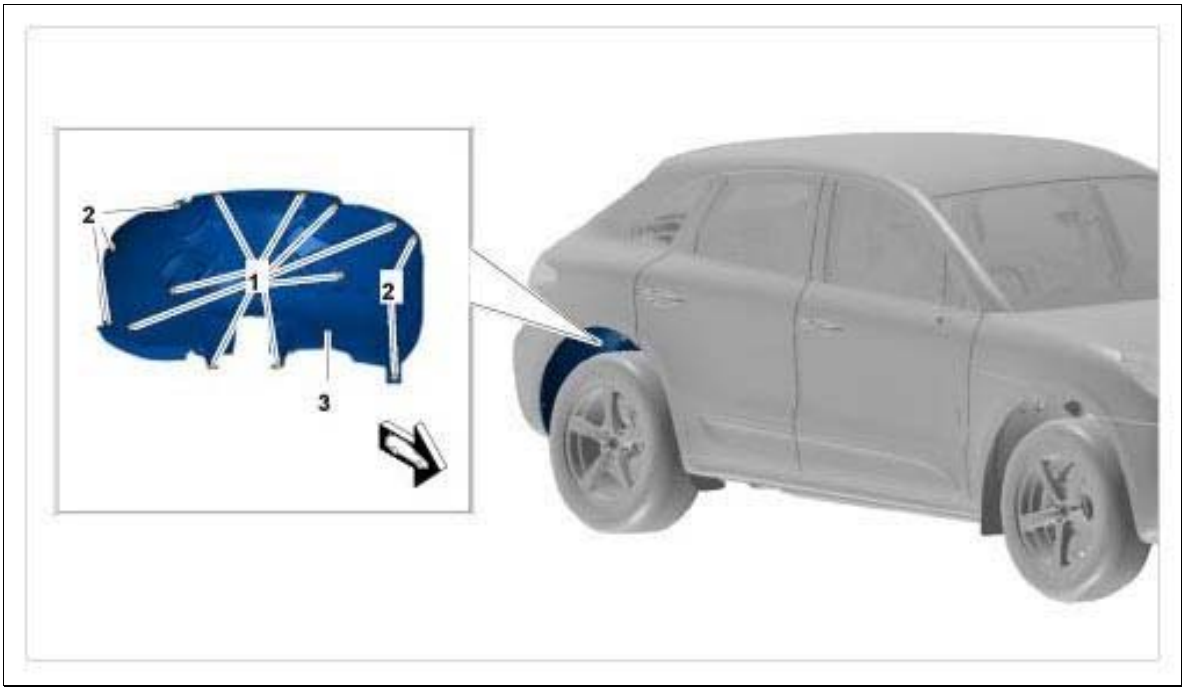

Courtesy of PORSCHE CARS NORTH AMERICA, INC.

WM 536919 REMOVING AND INSTALLING REAR WHEEL HOUSING LINER (ALL MODELS) > INSTALLING REAR WHEEL HOUSING LINER

Installation is performed in reverse order. Pay particular attention to the following:

1. Tighten fastening screws to the specified tightening torque. **Tightening torque 2 Nm (1.5 ftlb.)**
2. Tighten fastening nuts to the specified tightening torque. **Tightening torque 2.5 Nm (2 ftlb.)**

WM 536919 REMOVING AND INSTALLING REAR WHEEL HOUSING LINER (ALL

MODELS) > SUBSEQUENT WORK

1. Lower the vehicle. → 4X00IN LIFTING THE VEHICLE

Service Manual: 55 - LIDS, FLAPS -- (95B) - MACAN

WM 551419 REMOVING AND INSTALLING CABLE FOR FRONT LID LOCK (MACAN, MACAN S, MACAN TURBO) > TECHNICAL VALUES

Location	Description	Type	Basic value	Tolerance 1	Tolerance 2
Release mechanism on upper part of lock carrier		Tightening torque	10 Nm (7.5 ftlb.)		

WM 551419 REMOVING AND INSTALLING CABLE FOR FRONT LID LOCK (MACAN, MACAN S, MACAN TURBO) > PRELIMINARY WORK > PRELIMINARY WORK FOR REMOVING FRONT SECTION OF LID-LOCK CABLE

1. Remove lower part of front lid lock. → 551719 REMOVING AND INSTALLING LOWER PART OF FRONT LID LOCK

WM 551419 REMOVING AND INSTALLING CABLE FOR FRONT LID LOCK (MACAN, MACAN S, MACAN TURBO) > PRELIMINARY WORK > PRELIMINARY WORK FOR REMOVING REAR SECTION OF LID-LOCK CABLE

1. Remove control unit for front-end electronics. → 944919 REMOVING AND INSTALLING CONTROL UNIT FOR FRONT-END ELECTRONICS

WM 551419 REMOVING AND INSTALLING CABLE FOR FRONT LID LOCK (MACAN, MACAN S, MACAN TURBO) > REMOVING LID-LOCK CABLE > REMOVING FRONT SECTION OF LID-LOCK CABLE

Information

- The number of fastening screws, fixing clips, plug connections, holders and trim panels can vary depending on equipment.
- The illustrations for removing and installing the drive mechanism are shown only on one equipment variant and may differ from the actual equipment variant.
- Some steps must be carried out automatically.
- Some of the repair illustrations show only one side of the vehicle.

1. Remove sound absorbers **-1-** .
2. Unscrew fastening screws **-2-** and remove release element.

3. Unclip operating cable **-3-** from the bracket and disconnect it.
4. Unclip deflection unit **-4-** on the lock carrier.
5. Unclip operating cables on the lock carrier.
6. Remove operating cables.

Fig 1: Identifying Front Lid Lock In Engine Compartment (Front Cable)

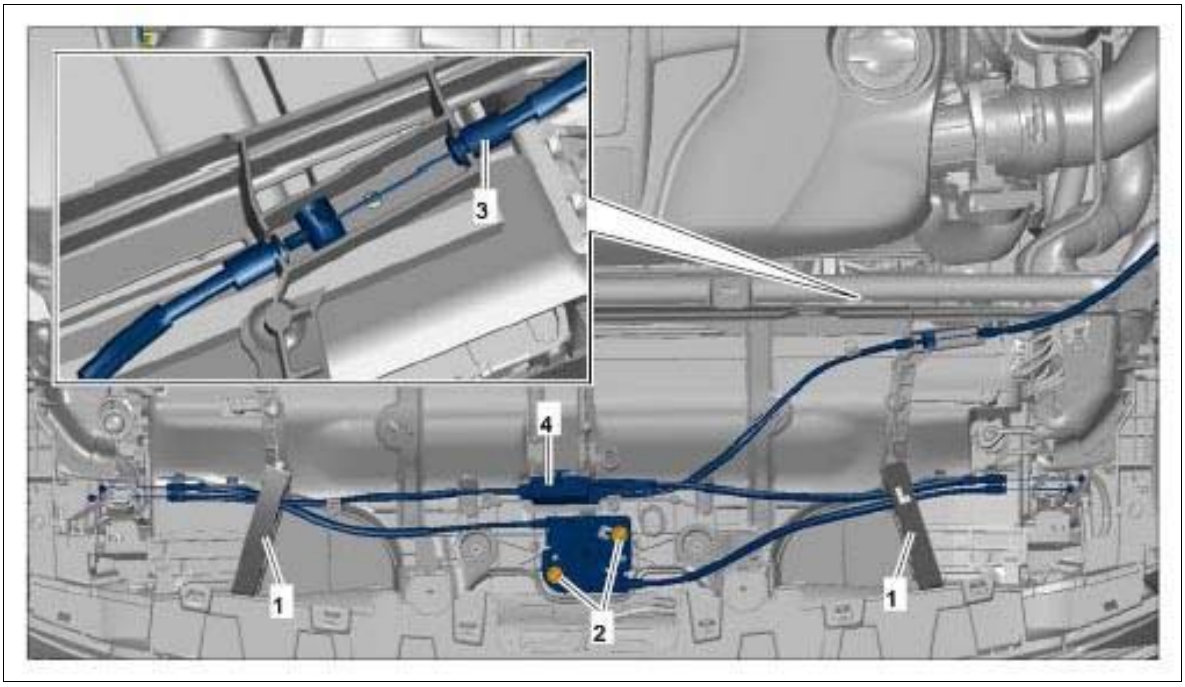

Courtesy of PORSCHE CARS NORTH AMERICA, INC.

WM 551419 REMOVING AND INSTALLING CABLE FOR FRONT LID LOCK (MACAN, MACAN S, MACAN TURBO) > REMOVING LID-LOCK CABLE > REMOVING REAR SECTION OF LID-LOCK CABLE

1. Unclip operating cable **-2-** from the bracket **-3-** and disconnect it.
2. Remove front trim panel. → 700219 REMOVING AND INSTALLING FRONT TRIM PANEL
3. Unclip operating cable **-2-** from the fixing clips **-1-** .

Fig 1: Identifying Front Lid Lock In Engine Compartment (Rear Cable)

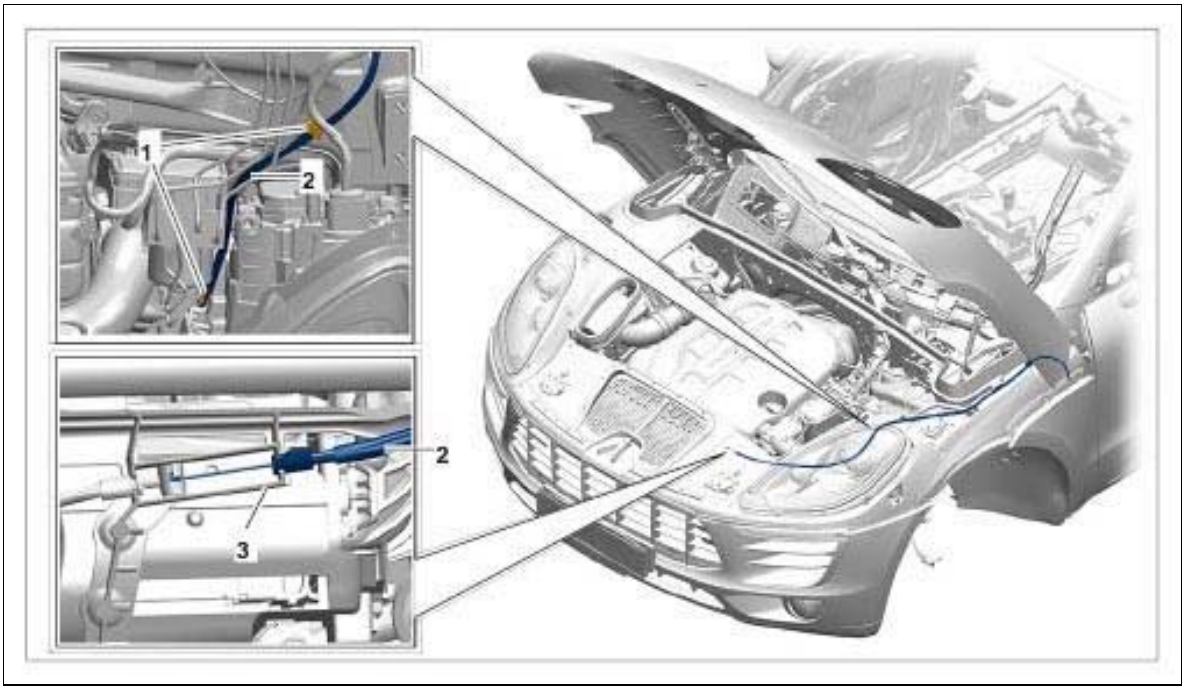

Courtesy of PORSCHE CARS NORTH AMERICA, INC.

4. Remove front inner door sill trim. → 680519 REMOVING AND INSTALLING FRONT INNER DOOR SILL TRIM
5. Unclip operating cable **-1-** from release unit **-2-** and disengage it.
6. Loosen insulating mat **-3-** and secure it outside the work area.
7. Guide rubber sleeve **-4-** out of the body.
8. Lubricate operating cable **-1-** and pull it out towards the passenger compartment.

Fig 2: Identifying Front Lid Lock In Passenger Compartment (Rear Cable)

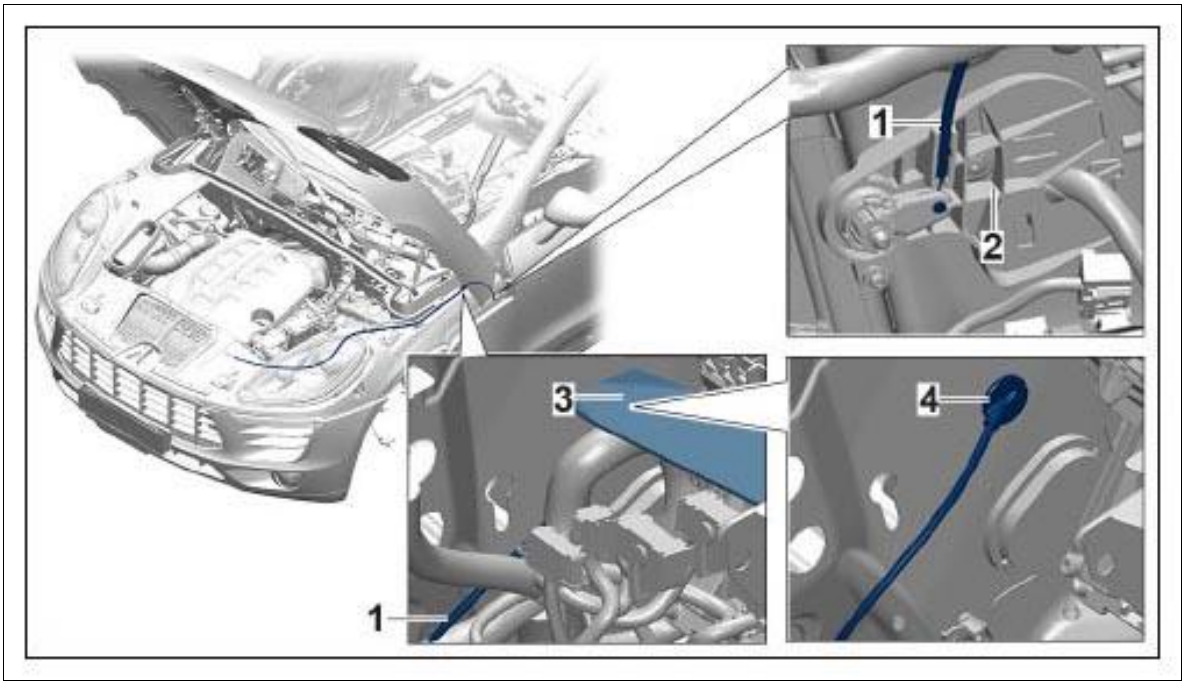

Courtesy of PORSCHE CARS NORTH AMERICA, INC.

WM 551419 REMOVING AND INSTALLING CABLE FOR FRONT LID LOCK (MACAN, MACAN S, MACAN TURBO) > INSTALLING LID-LOCK CABLE

Information

Check that all fixing clips are positioned fully and correctly.

Check that the fixing clips are not bent or broken.

Replace damaged or missing clips with new ones.

Installation is performed in reverse order. Pay particular attention to the following:

1. Tighten fastening screws to the specified torque. **Tightening torque 10 Nm (7.5 ftlb.)**

WM 551419 REMOVING AND INSTALLING CABLE FOR FRONT LID LOCK (MACAN, MACAN S, MACAN TURBO) > SUBSEQUENT WORK > SUBSEQUENT WORK FOR FRONT SECTION OF LID-LOCK CABLE

1. Install lower part of front lid lock. → INSTALLING LOWER PART OF LID LOCK

WM 551419 REMOVING AND INSTALLING CABLE FOR FRONT LID LOCK (MACAN, MACAN S, MACAN TURBO) > SUBSEQUENT WORK > SUBSEQUENT WORK FOR

REAR SECTION OF LID-LOCK CABLE

1. Install control unit for front-end electronics. → INSTALLING CONTROL UNIT FOR FRONT-END ELECTRONICS

WM 551719 REMOVING AND INSTALLING LOWER PART OF FRONT LID LOCK (MACAN, MACAN S, MACAN TURBO) > TECHNICAL VALUES

Location	Description	Type	Basic value	Tolerance 1	Tolerance 2
Lower part of lock carrier to lock carrier		Tightening torque	11 Nm (8 ftlb.)		

WM 551719 REMOVING AND INSTALLING LOWER PART OF FRONT LID LOCK (MACAN, MACAN S, MACAN TURBO) > PRELIMINARY WORK

1. Remove cover for front lock support. → 703919 REMOVING AND INSTALLING COVER FOR FRONT LOCK SUPPORT

WM 551719 REMOVING AND INSTALLING LOWER PART OF FRONT LID LOCK (MACAN, MACAN S, MACAN TURBO) > REMOVING LOWER PART OF LID LOCK

Information

- The number of fastening screws, fixing clips, plug connections, holders and trim panels can vary depending on equipment.
- The illustrations for removing and installing the drive mechanism are shown only on one equipment variant and may differ from the actual equipment variant.
- Some steps must be carried out automatically.
- Some of the repair illustrations show only one side of the vehicle.

1. Remove pressure pipe. (Only if fitted) → 214119 REMOVING AND INSTALLING PRESSURE PIPE
2. Unscrew fastening screws **-1-** securing lower part of lid lock **-2-** to lock carrier.
3. Remove lower part of lid lock **-2-** by pulling it up.

Fig 1: Overview Of Lower Part Of Lid Lock

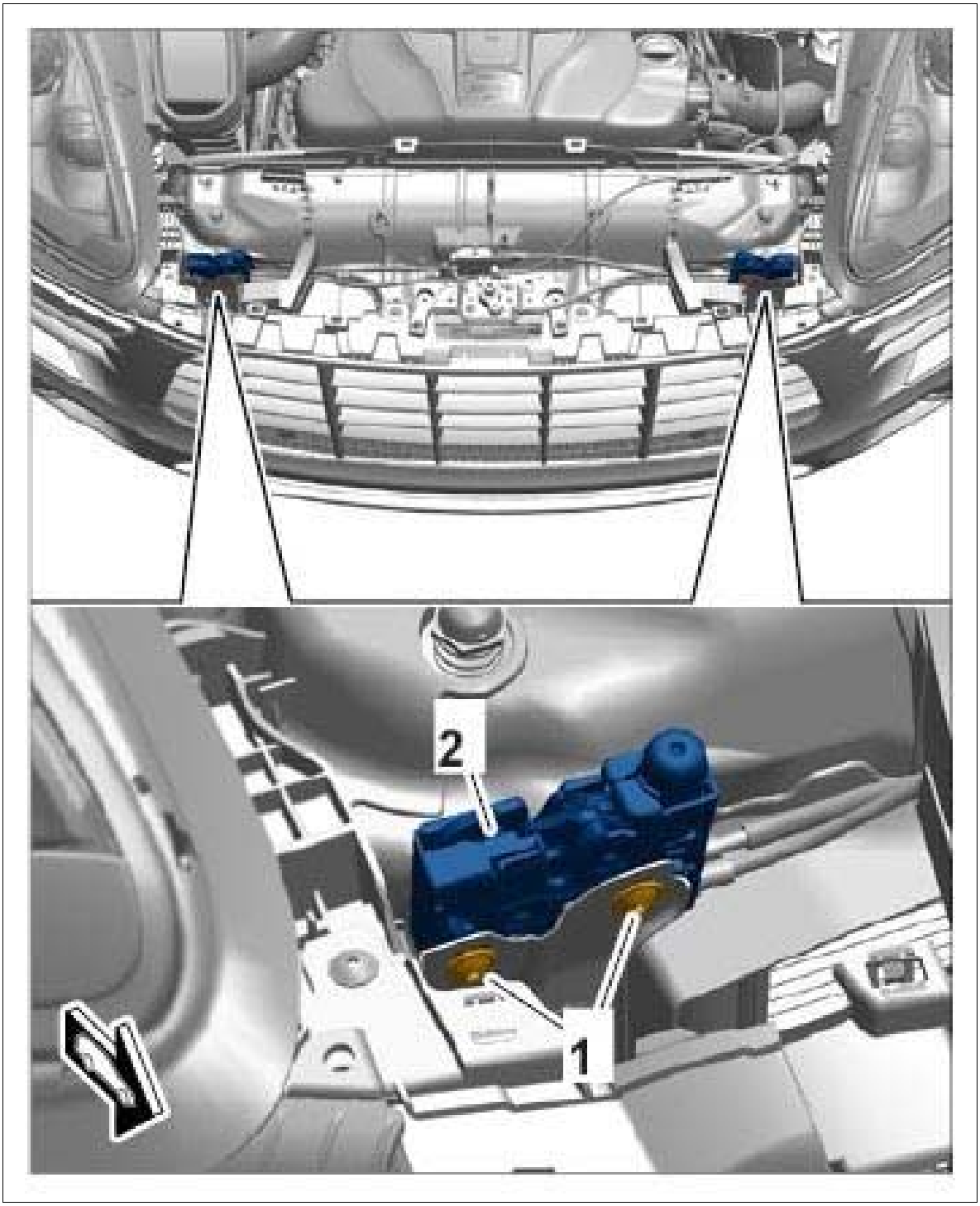

Courtesy of PORSCHE CARS NORTH AMERICA, INC.

4. Unclip microswitch on lower part of lid lock **-arrows-** .
5. Disengage ball joints **-1-** for the operating cables **-2-** from lower part of lid lock.
6. Unclip operating cables **-2-** on lower part of lid lock.
7. Remove lower part of lid lock.

Fig 2: Locating Lower Part Of Lid Lock

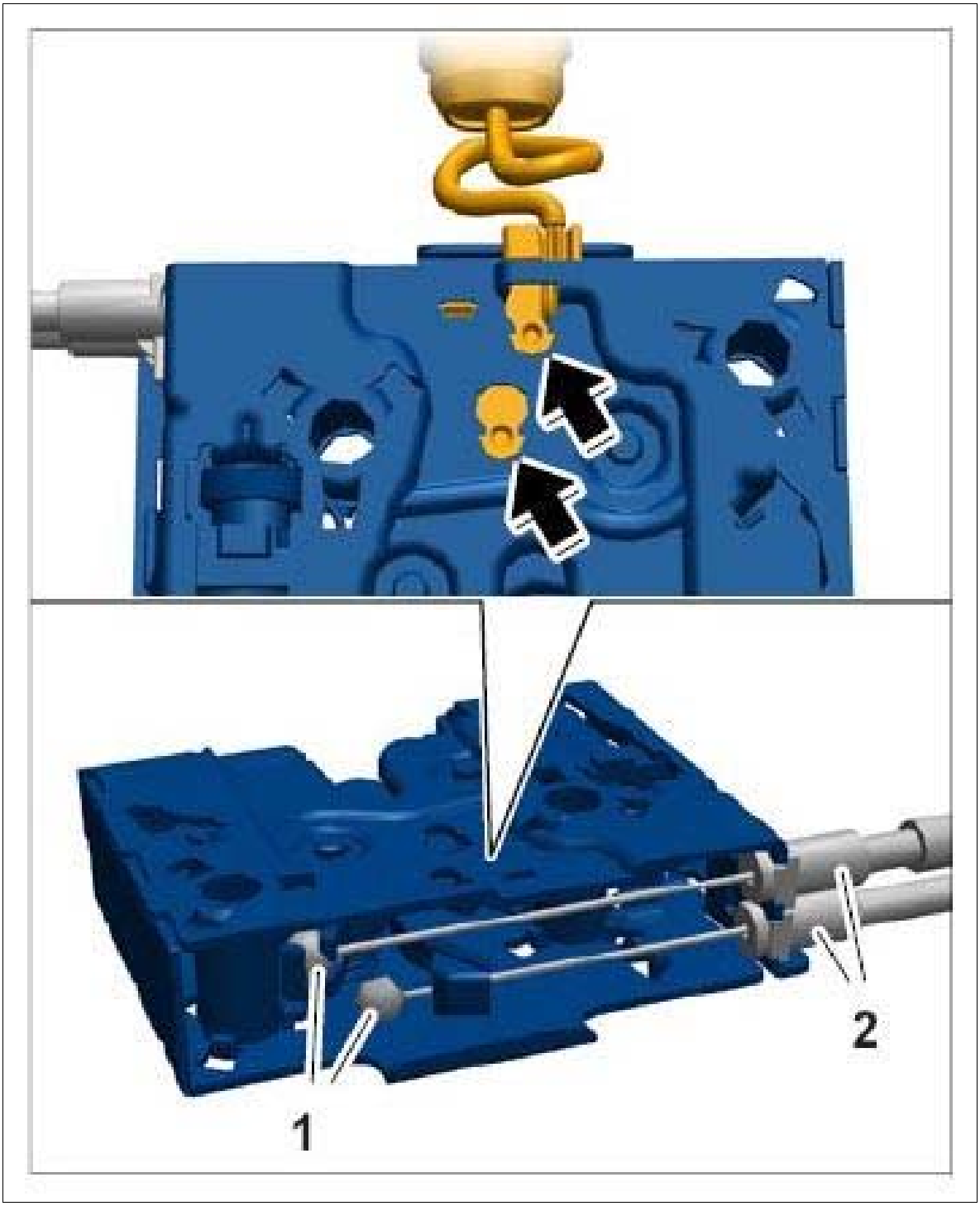

Courtesy of PORSCHE CARS NORTH AMERICA, INC.

WM 551719 REMOVING AND INSTALLING LOWER PART OF FRONT LID LOCK (MACAN, MACAN S, MACAN TURBO) > INSTALLING LOWER PART OF LID LOCK

Installation is performed in reverse order. Pay particular attention to the following:

1. Tighten fastening screws to the specified torque. **Tightening torque 11 Nm (8 ftlb.)**

WM 551719 REMOVING AND INSTALLING LOWER PART OF FRONT LID LOCK (MACAN, MACAN S, MACAN TURBO) > SUBSEQUENT WORK

1. Install cover for front lock support. → INSTALLING COVER FOR FRONT LOCK SUPPORT

WM 551819 REMOVING AND INSTALLING UPPER PART OF FRONT LID LOCK (MACAN, MACAN S, MACAN TURBO) > REMOVING UPPER PART OF FRONT LID LOCK

Fig 1: Locating Upper Part Of Front Lid Lock Position



Courtesy of PORSCHE CARS NORTH AMERICA, INC.

1. Determine installation position.
    1. 1.1. Determine position of upper part of lock **-1-** with respect to the lid according to the impression made at the factory **-arrow-** and write it down.

Fig 2: Identifying Upper Part Of Lock Position

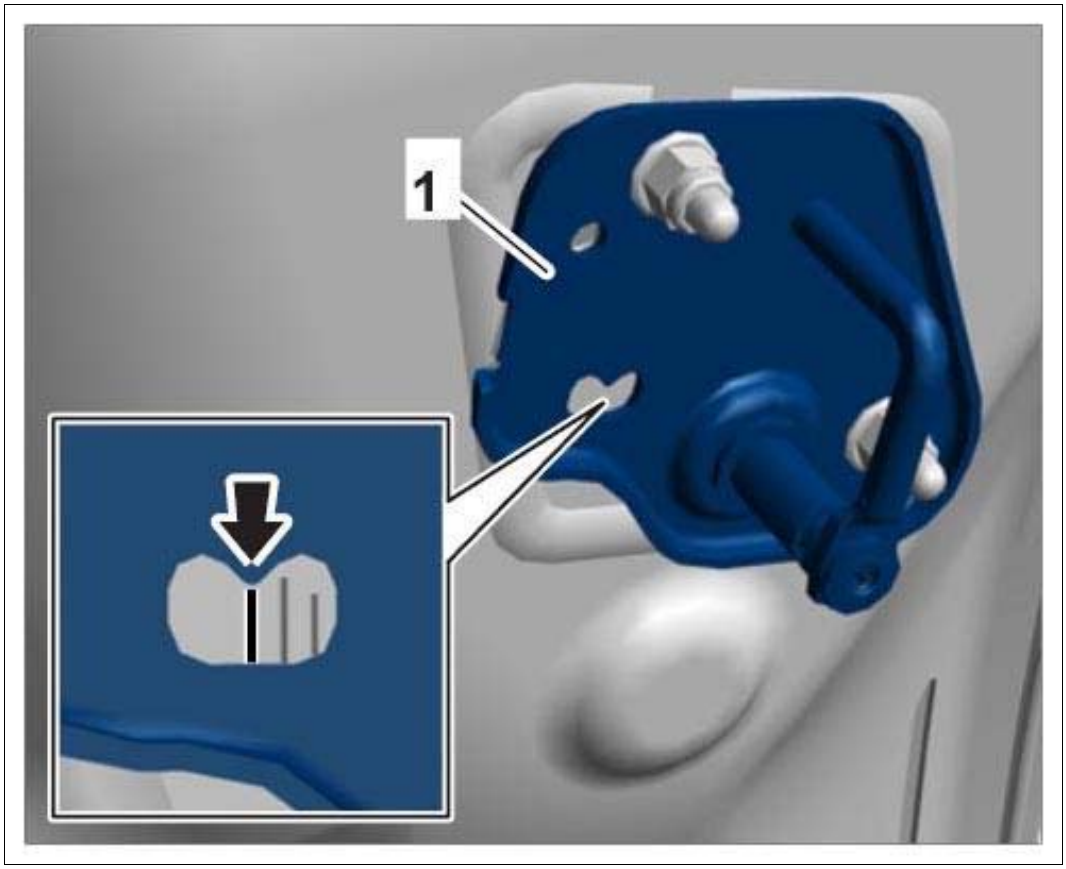

Courtesy of PORSCHE CARS NORTH AMERICA, INC.

2. Unscrew fastening nuts **-1-** and remove upper part of lid lock **-2-** .

Fig 3: Removing Upper Part Of Lid Lock

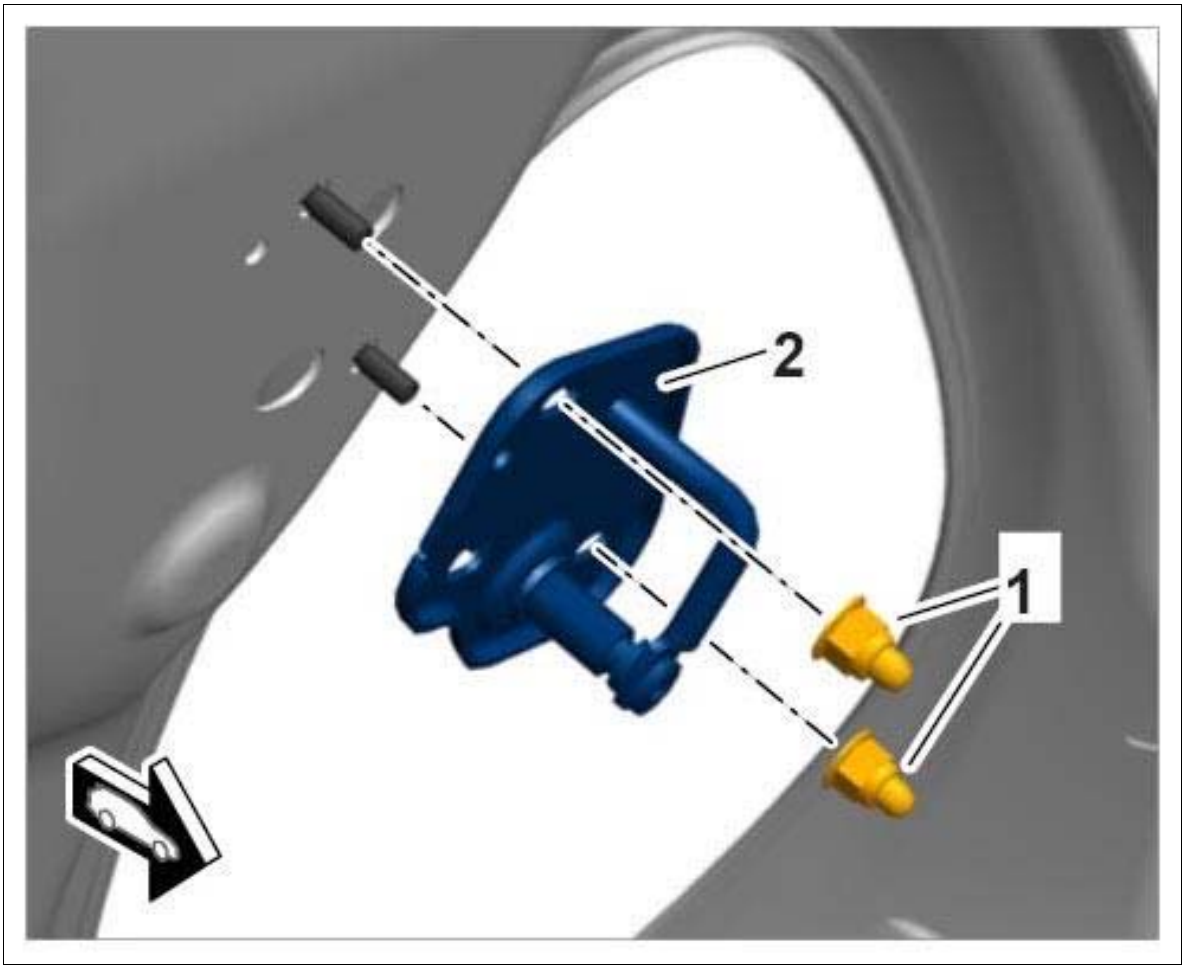

Courtesy of PORSCHE CARS NORTH AMERICA, INC.

WM 551819 REMOVING AND INSTALLING UPPER PART OF FRONT LID LOCK (MACAN, MACAN S, MACAN TURBO) > INSTALLING UPPER PART OF FRONT LID LOCK

Information

- The self-locking nuts must always be replaced.

1. Adjust upper part of lock with respect to the lid according to the noted position (impression made at the factory).
2. Fit fastening nuts so that the upper part of the lock can still be moved.
3. Lower the lid slowly until the clip for the upper part of the lock **-1-** is touching the lower part of the lock. The clip must be centered flush with the slit in the lower part of the lock **-2-** .

Fig 1: Identifying Upper Part Of Lock

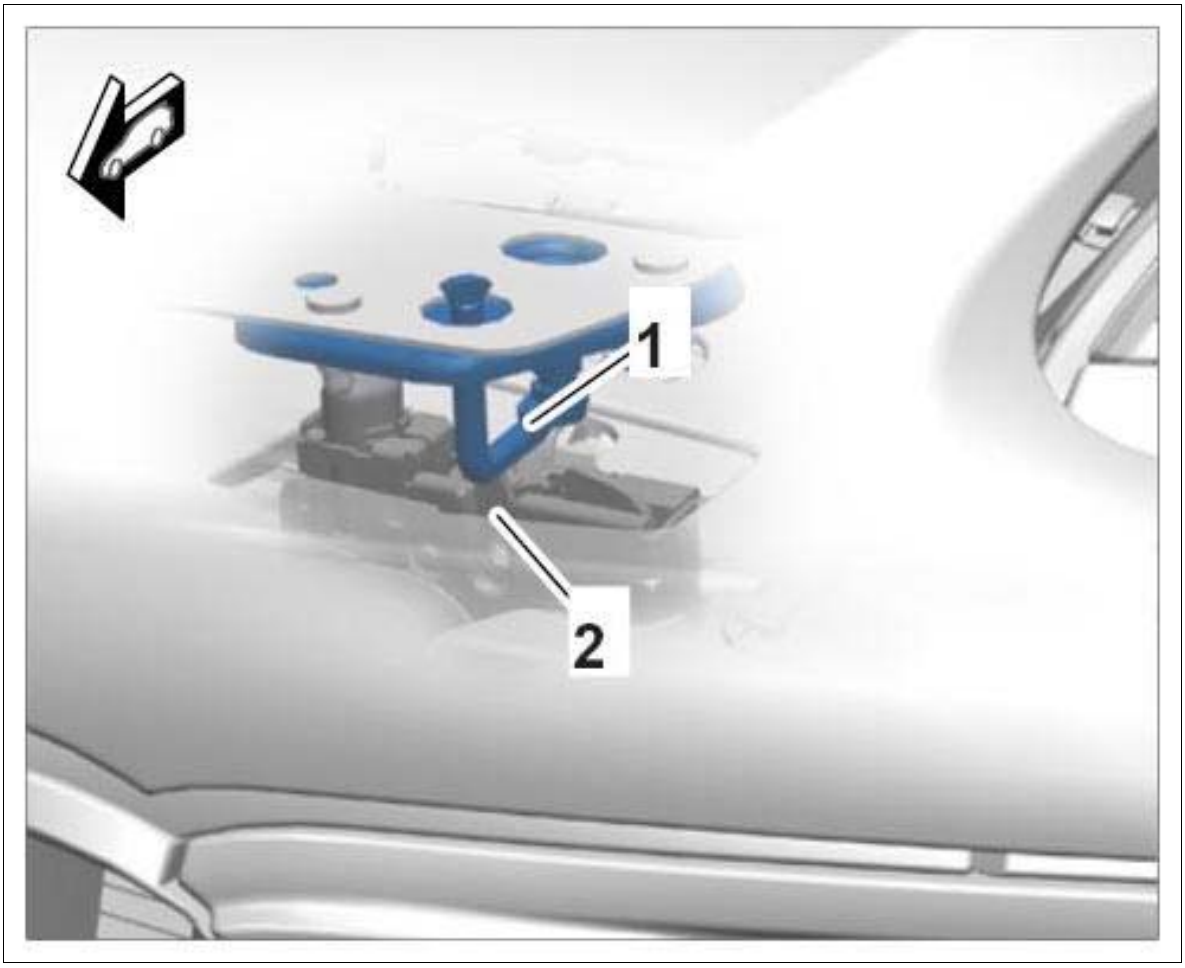

Courtesy of PORSCHE CARS NORTH AMERICA, INC.

WM 551819 REMOVING AND INSTALLING UPPER PART OF FRONT LID LOCK (MACAN, MACAN S, MACAN TURBO) > CHECKING CLOSING FUNCTION OF LID LOCK

1. Check closing function of lid lock.
    1. 1.1. Close the lid fully.
    2. 1.2. Release the lid.
    3. 1.3. Check that the hook holds the lid down.
    4. 1.4. Release the hook until the bolt on the lower part of the lock is free.

WM 552213 SECURING LID (SERVICE POSITION) (MACAN, MACAN S, MACAN TURBO) > TOOLS

Designation	Type	Number	Description	
bonnet stay	Special tool	9873		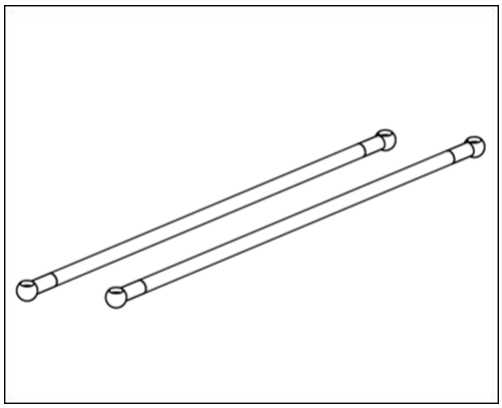

WM 552213 SECURING LID (SERVICE POSITION) (MACAN, MACAN S, MACAN TURBO) > PRELIMINARY WORK

1. Remove pneumatic spring. → 553119 REMOVING AND INSTALLING FRONT PNEUMATIC SPRING

WM 552213 SECURING LID (SERVICE POSITION) (MACAN, MACAN S, MACAN TURBO) > SECURING LID (SERVICE POSITION)

Information

- Make sure that the bonnet stay is engaged correctly.
- Check that the bonnet stay is seated correctly.

1. When carrying out service work on the vehicle, the special tool bonnet stay 9873 can be used in addition to the standard pneumatic spring.
2. Position bonnet stay.
    1. 2.1. Position bonnet stay **-1-** and clip it into the ball joint at the top and bottom **-arrow-** .

Fig 1: Locating Bonnet Stay

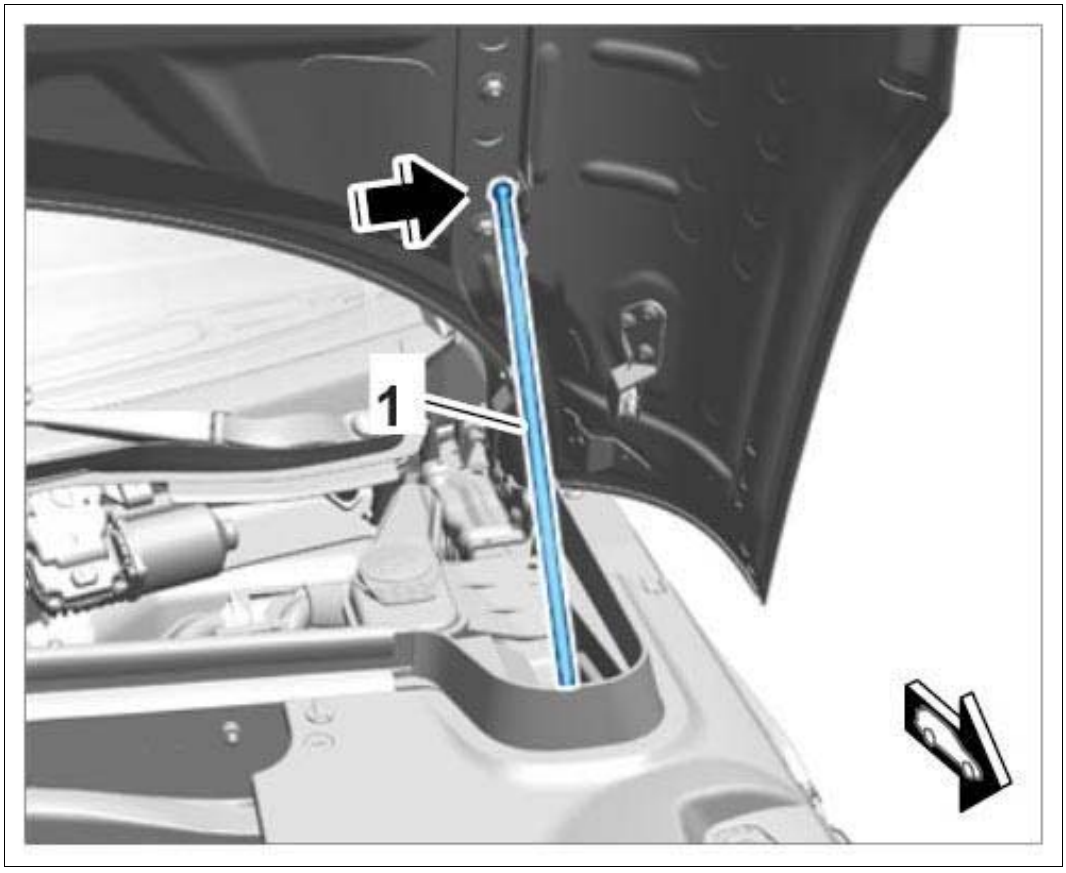

Courtesy of PORSCHE CARS NORTH AMERICA, INC.

3. Once service work is complete, install pneumatic spring → INSTALLING PNEUMATIC SPRING .

WM 552215 ADJUSTING FRONT LID (MACAN, MACAN S, MACAN TURBO) > TOOLS

Designation	Type	Number	Description	
Star gauges for body gap dimensions	Special tool	NR.127-1		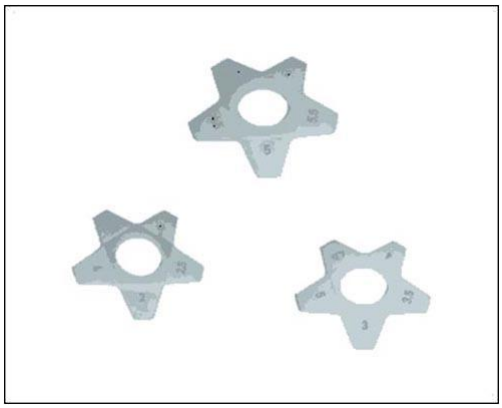

WM 552215 ADJUSTING FRONT LID (MACAN, MACAN S, MACAN TURBO) > TECHNICAL VALUES

Location	Description	Type	Basic value	Tolerance 1	Tolerance 2
Fastening nut for front lid		Tightening torque	20 Nm (15 ftlb.)		
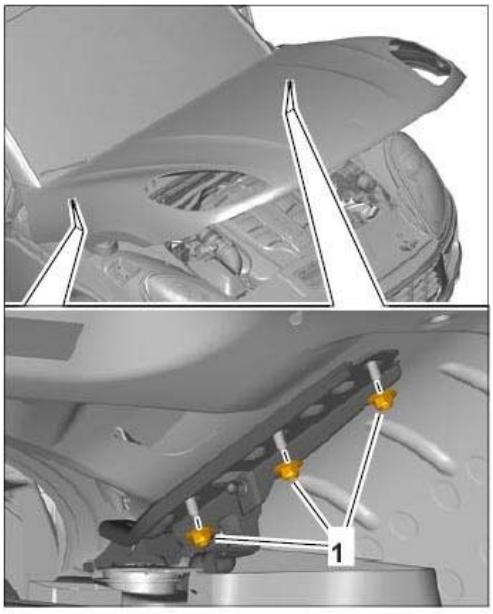 Front lid					
Fastening screw for upper part of lid lock, front		Tightening torque	8 Nm (6 ftlb.)		
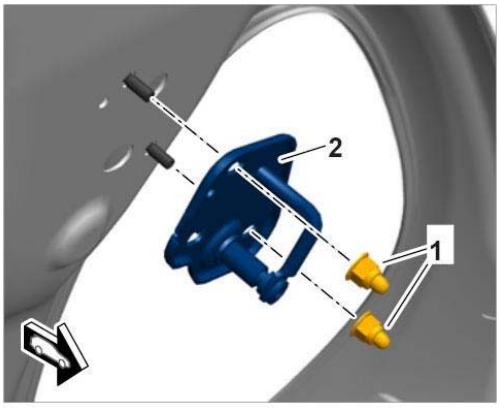 Fastening nuts for upper part of lid lock					
Fastening screws for lid hinge		Tightening torque	20 Nm (15 ftlb.)		

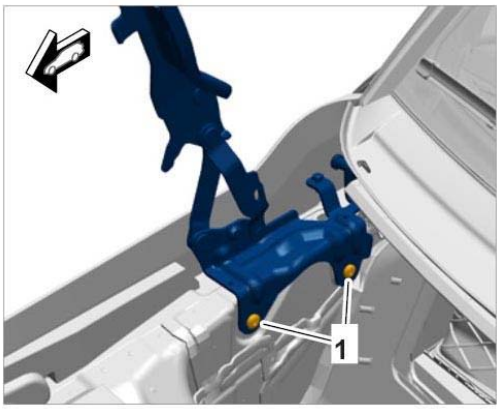

Removing lid hinge

Fastening screw for guide plate		Tightening torque	8 Nm (6 ftlb.)		

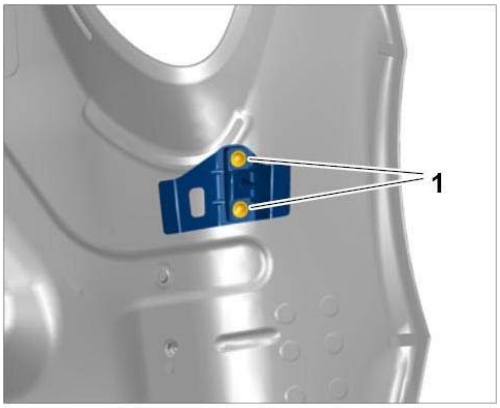

Guide plate

Fastening nut for front lock		Tightening torque	8 Nm (6 ftlb.)		

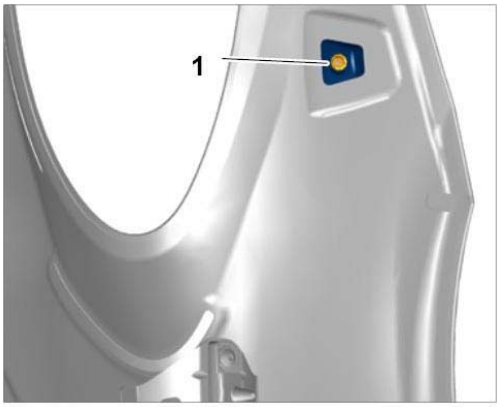

Front lock

WM 552215 ADJUSTING FRONT LID (MACAN, MACAN S, MACAN TURBO) > TECHNICAL VALUES > GAP DIMENSIONS FOR BODY FRONT SECTION

Fig 1: Identifying Body Front Section Gap Dimensions

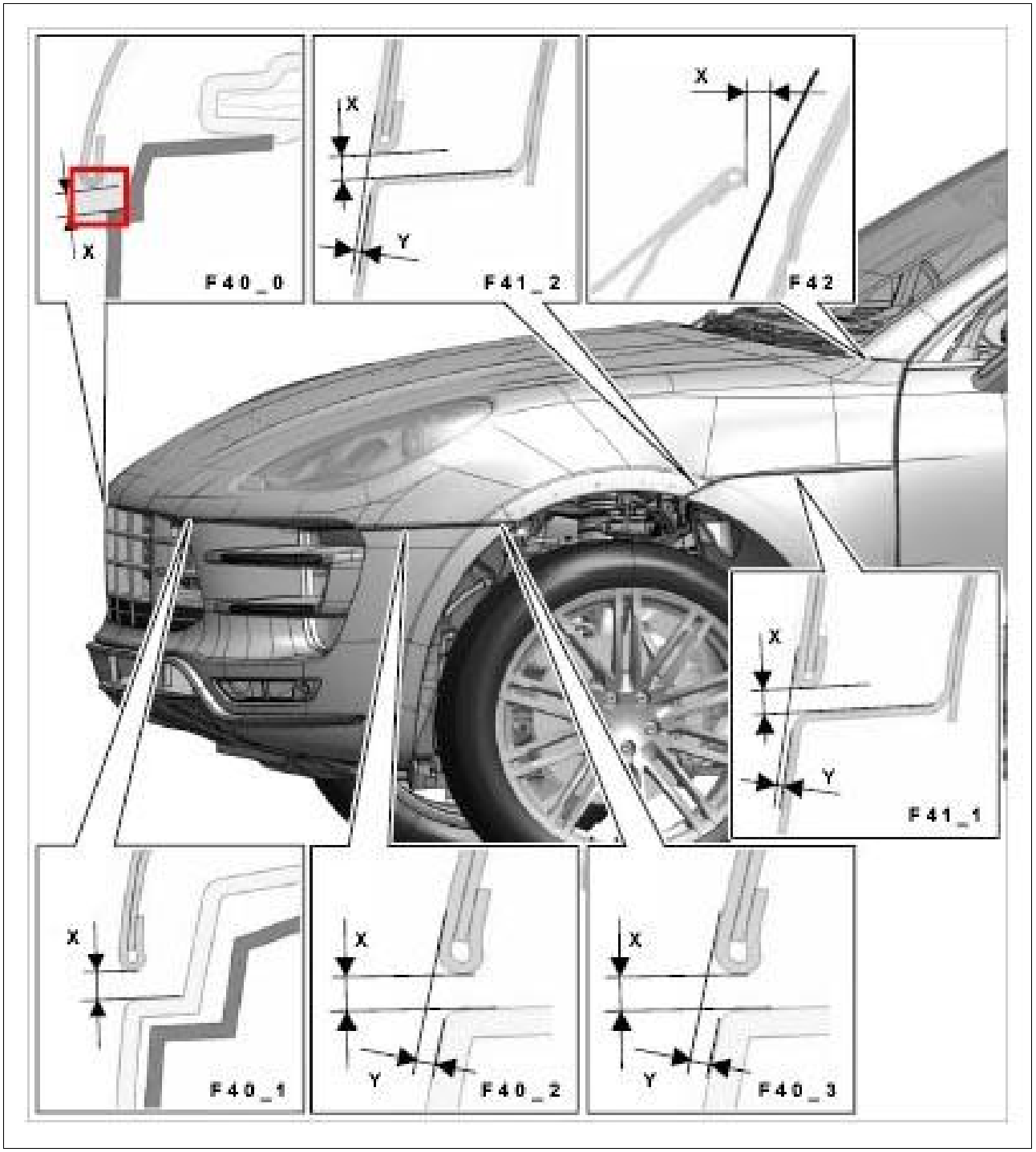

Courtesy of PORSCHE CARS NORTH AMERICA, INC.

F40_0 - → Gap dimension: 4.8 mm+1 mm-0.6 mm

Fig 2: Identifying Body Front Section Gap Dimensions

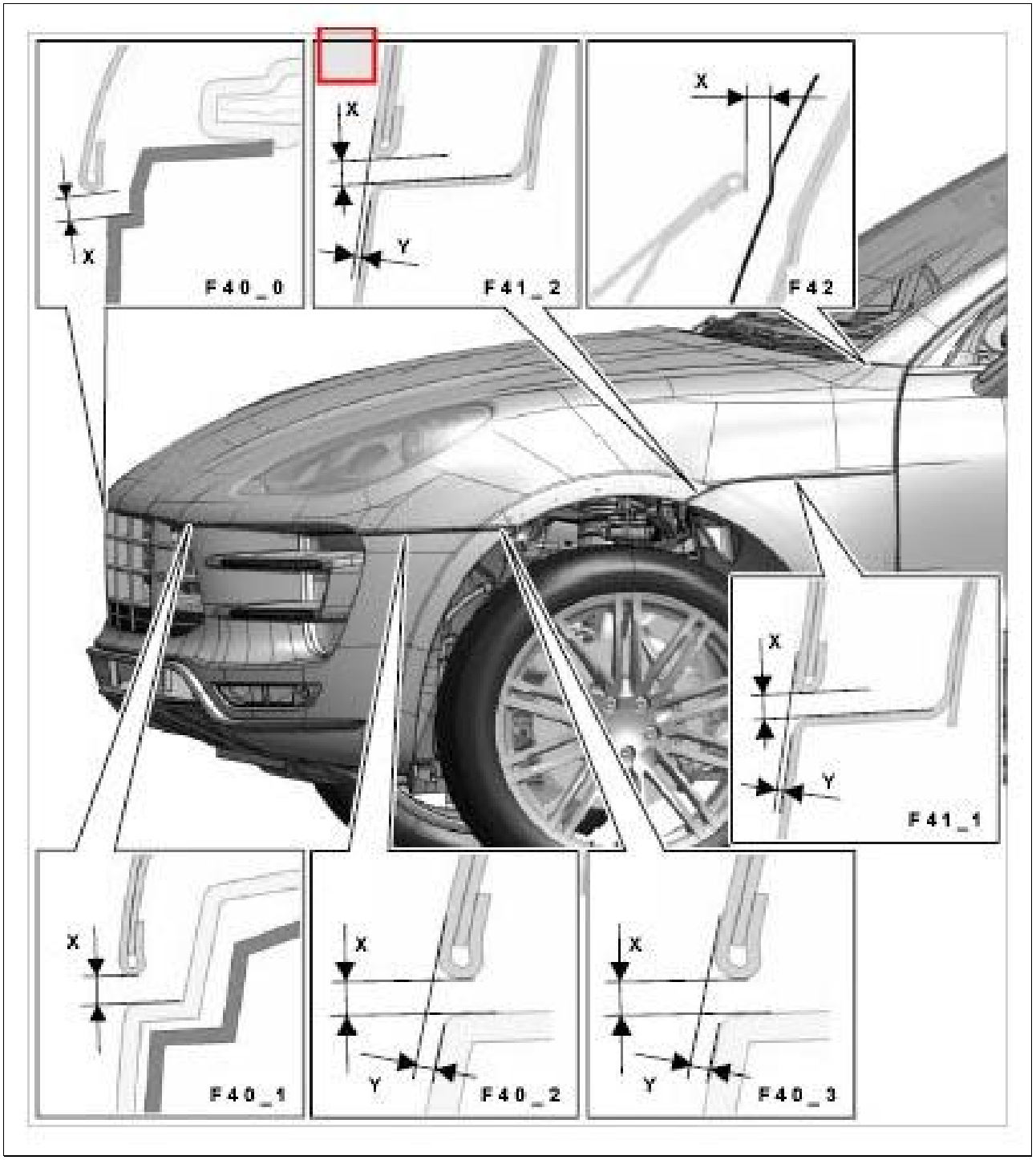

Courtesy of PORSCHE CARS NORTH AMERICA, INC.

F40_1 - → Gap dimension: 4.8 mm+1 mm-0.6 mm

Fig 3: Identifying Body Front Section Gap Dimensions

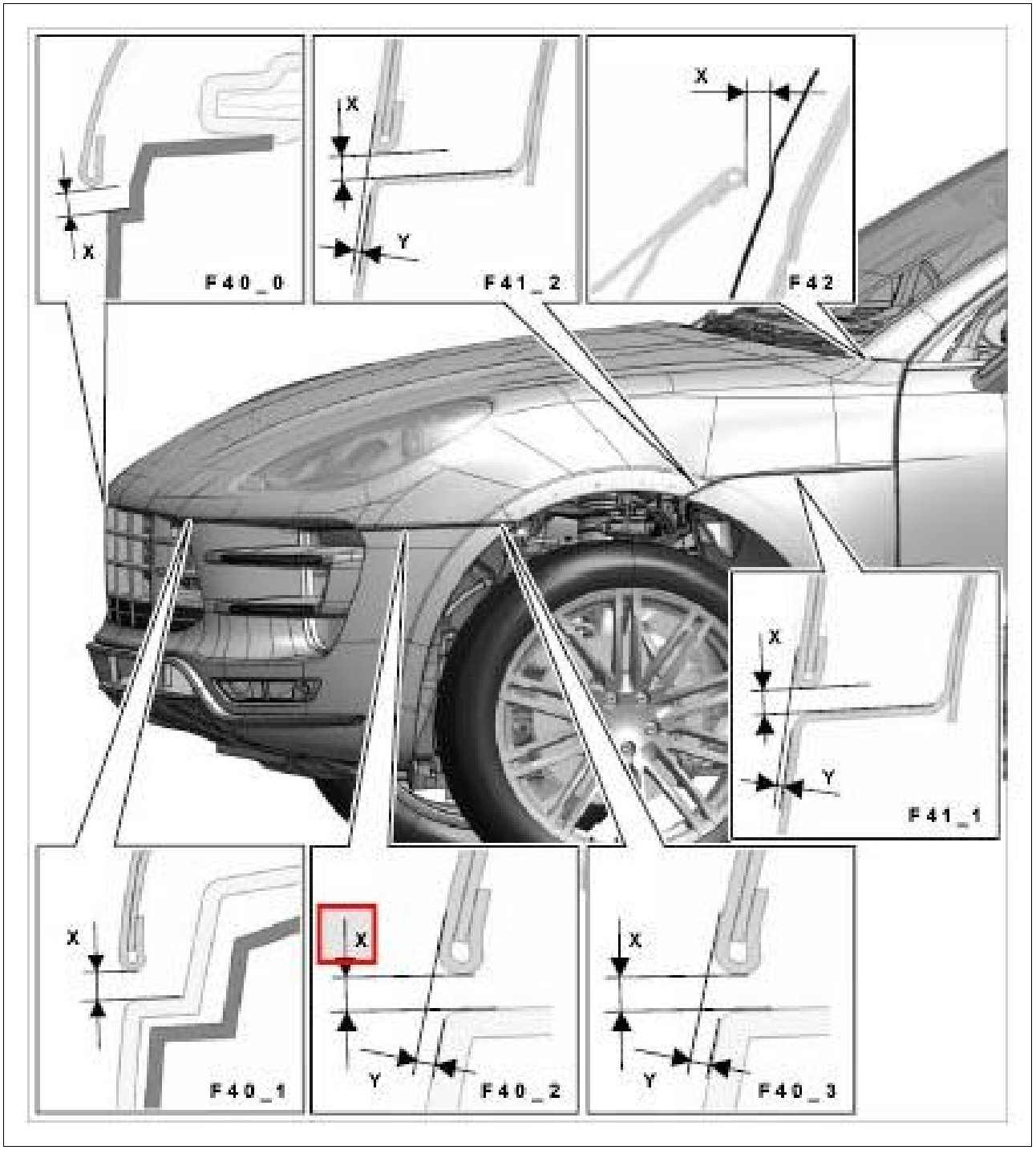

Courtesy of PORSCHE CARS NORTH AMERICA, INC.

F40_2 - → Gap dimension: 3.5 mm+/-0.5 mm

Fig 4: Identifying Body Front Section Gap Dimensions

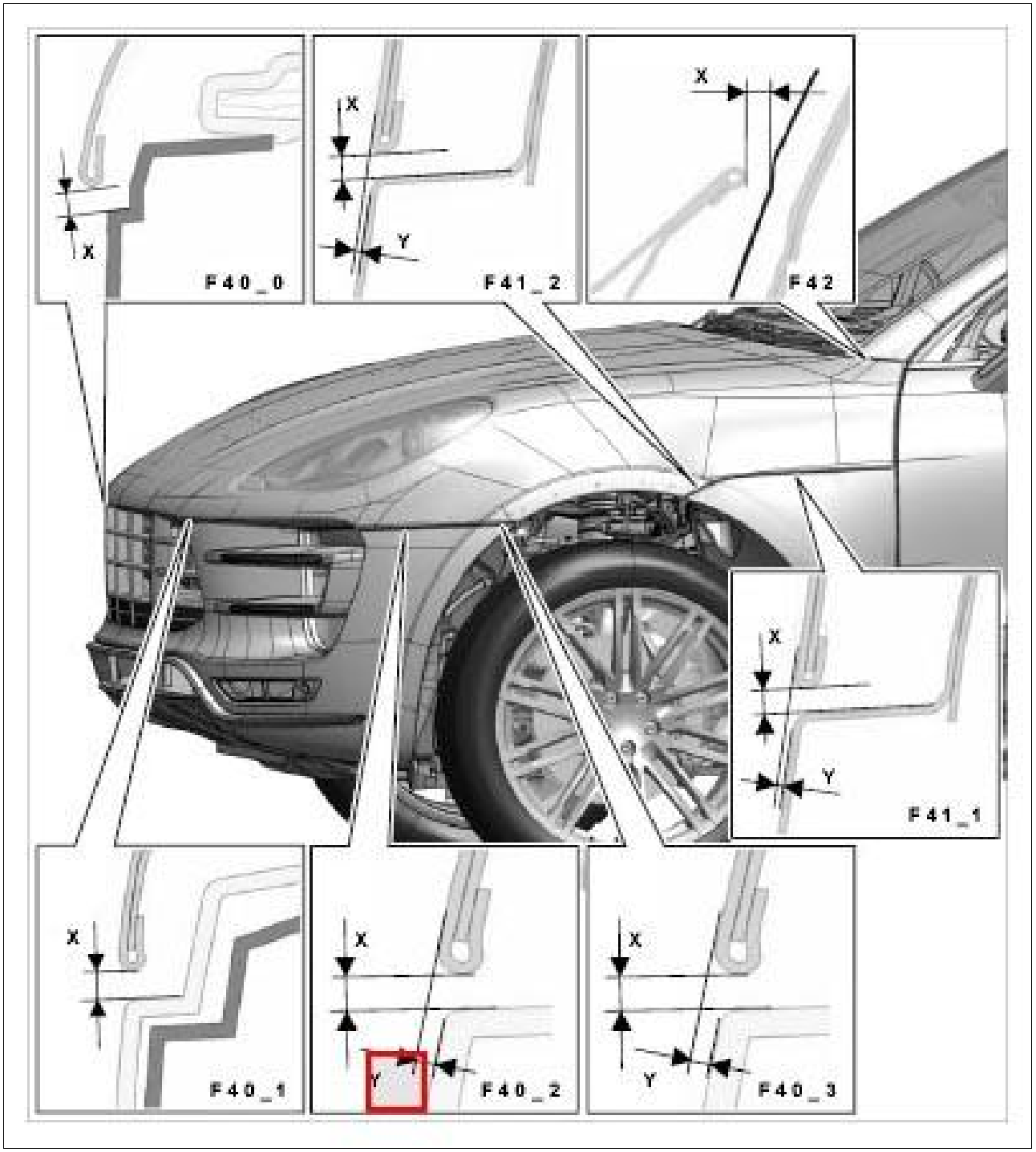

Courtesy of PORSCHE CARS NORTH AMERICA, INC.

F40_2 - → Gap dimension: 1.5 mm

Fig 5: Identifying Body Front Section Gap Dimensions

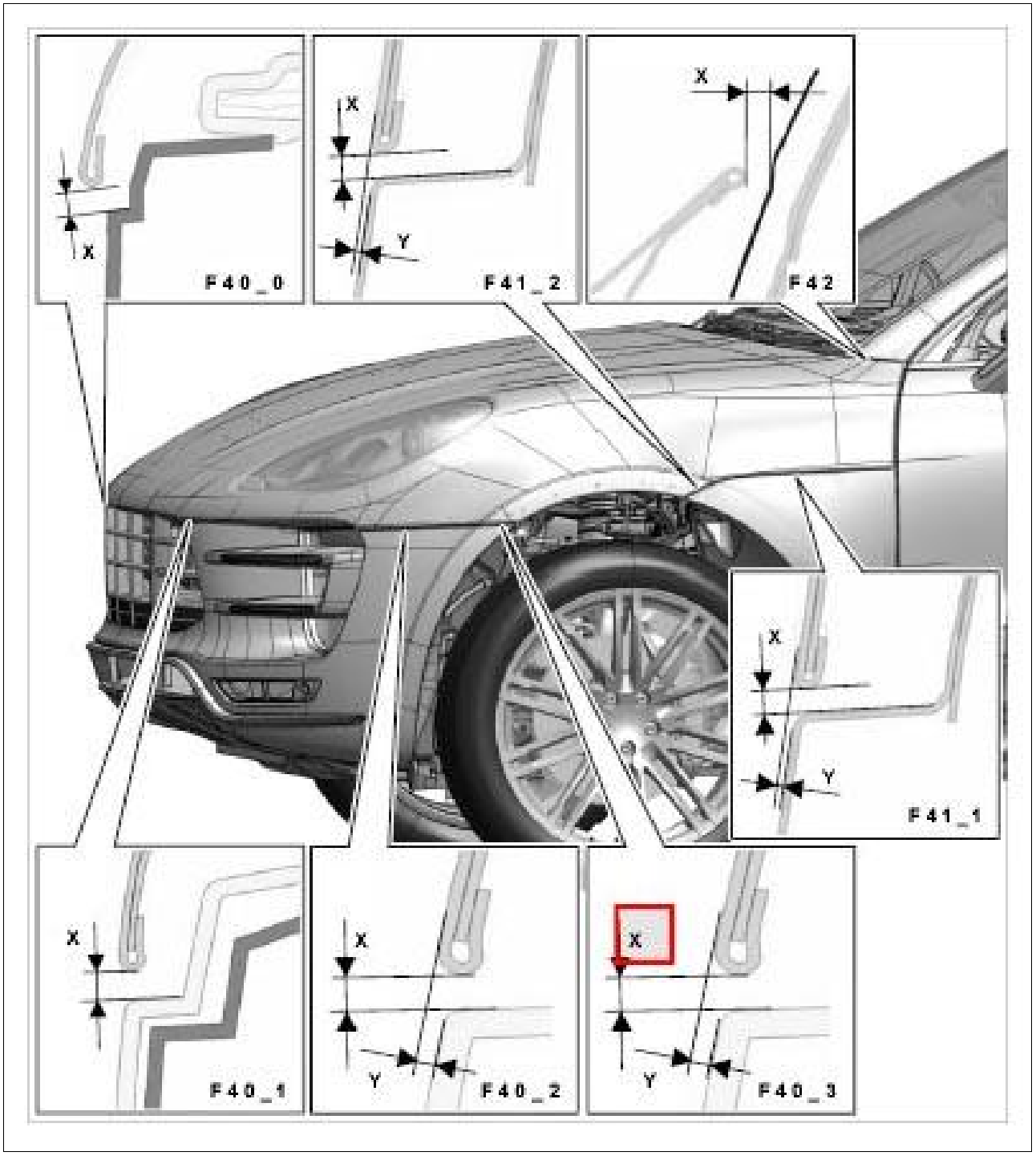

Courtesy of PORSCHE CARS NORTH AMERICA, INC.

F40_3 - → Gap dimension: 3.5 mm+/-0.5 mm

Fig 6: Identifying Body Front Section Gap Dimensions

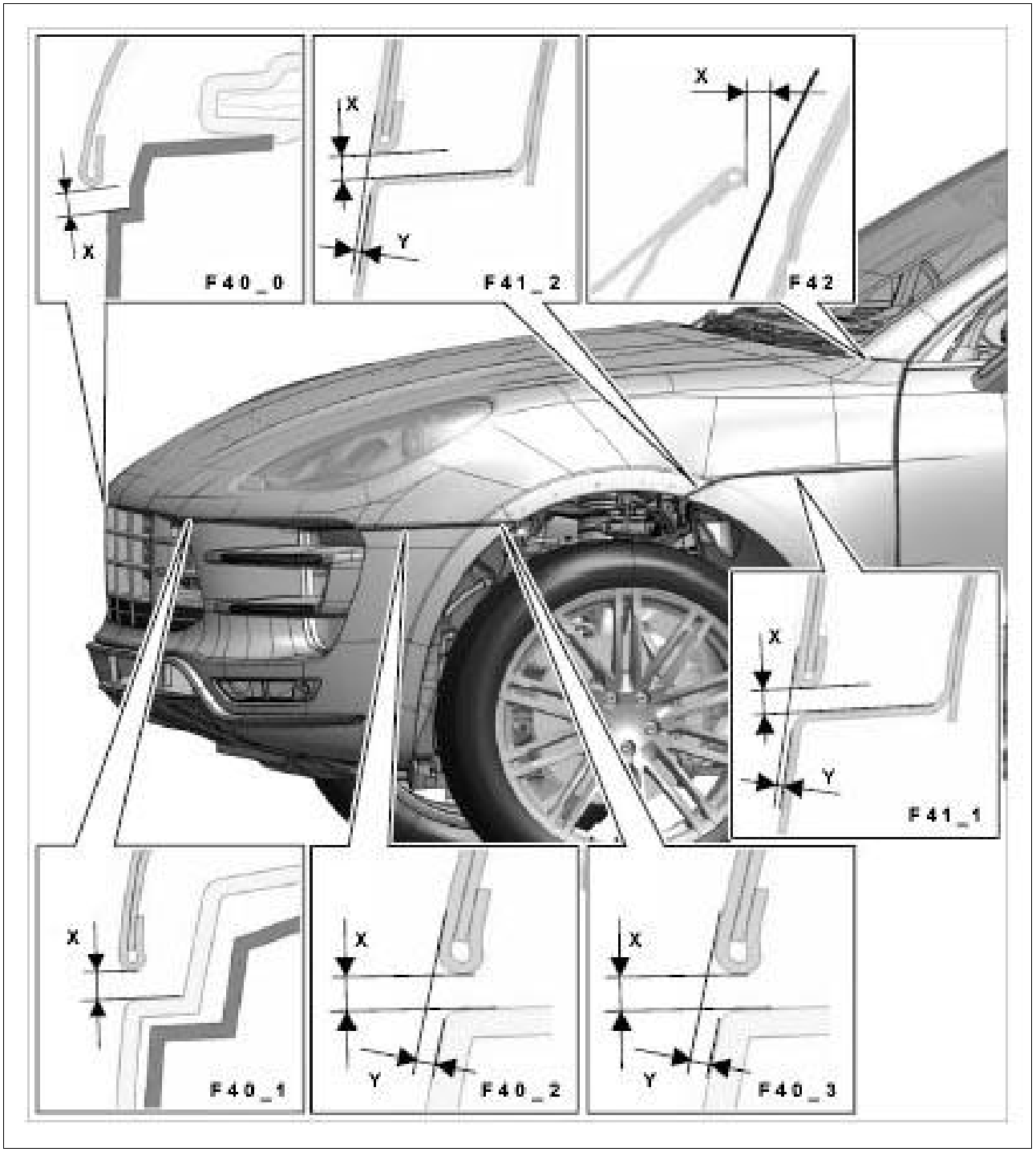

Courtesy of PORSCHE CARS NORTH AMERICA, INC.

F40_3 - → Gap dimension: 1 mm

Fig 7: Identifying Body Front Section Gap Dimensions

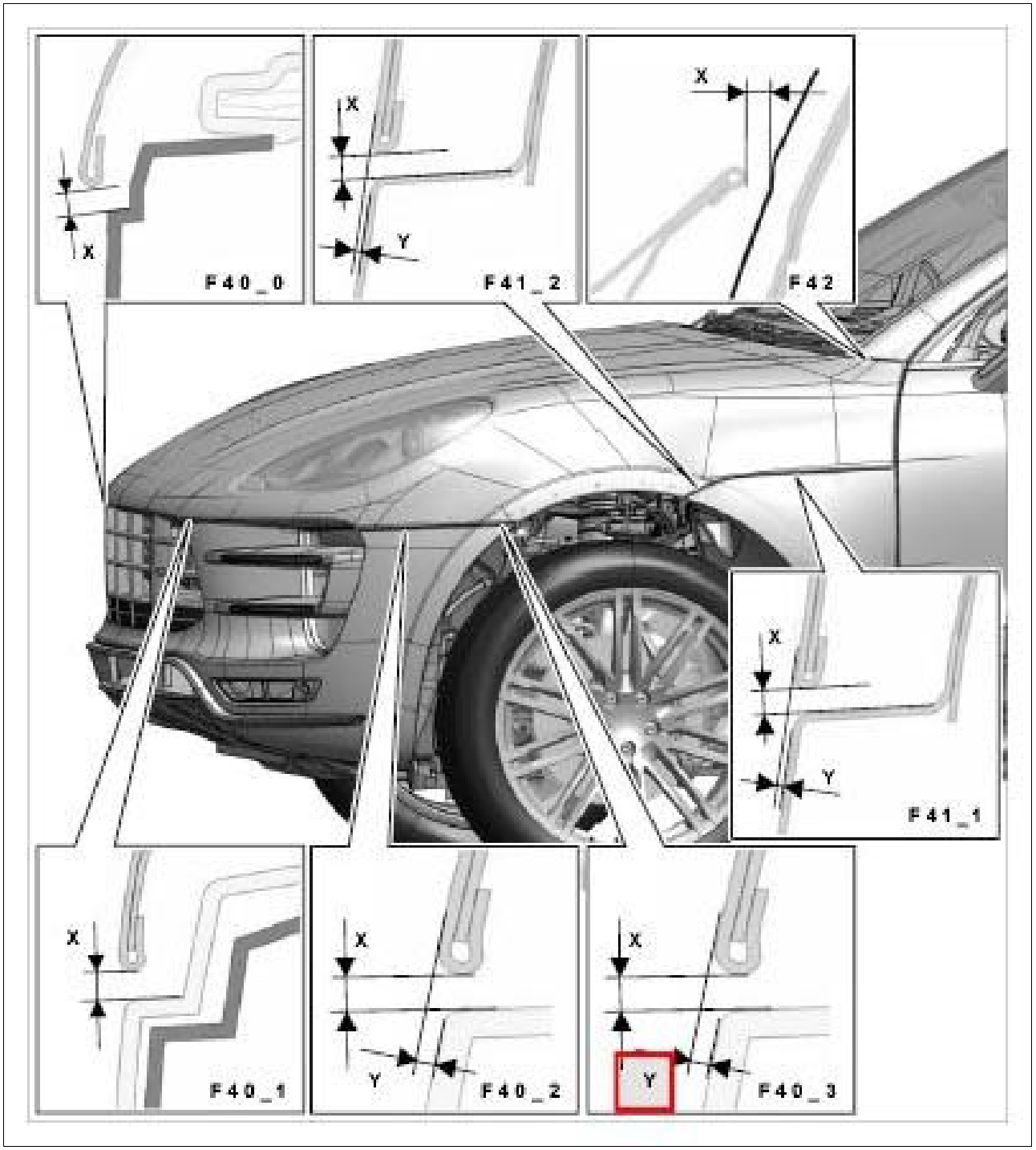

Courtesy of PORSCHE CARS NORTH AMERICA, INC.

F41_1 - → Gap dimension: 3.5 mm+/-0.5 mm

Fig 8: Identifying Body Front Section Gap Dimensions

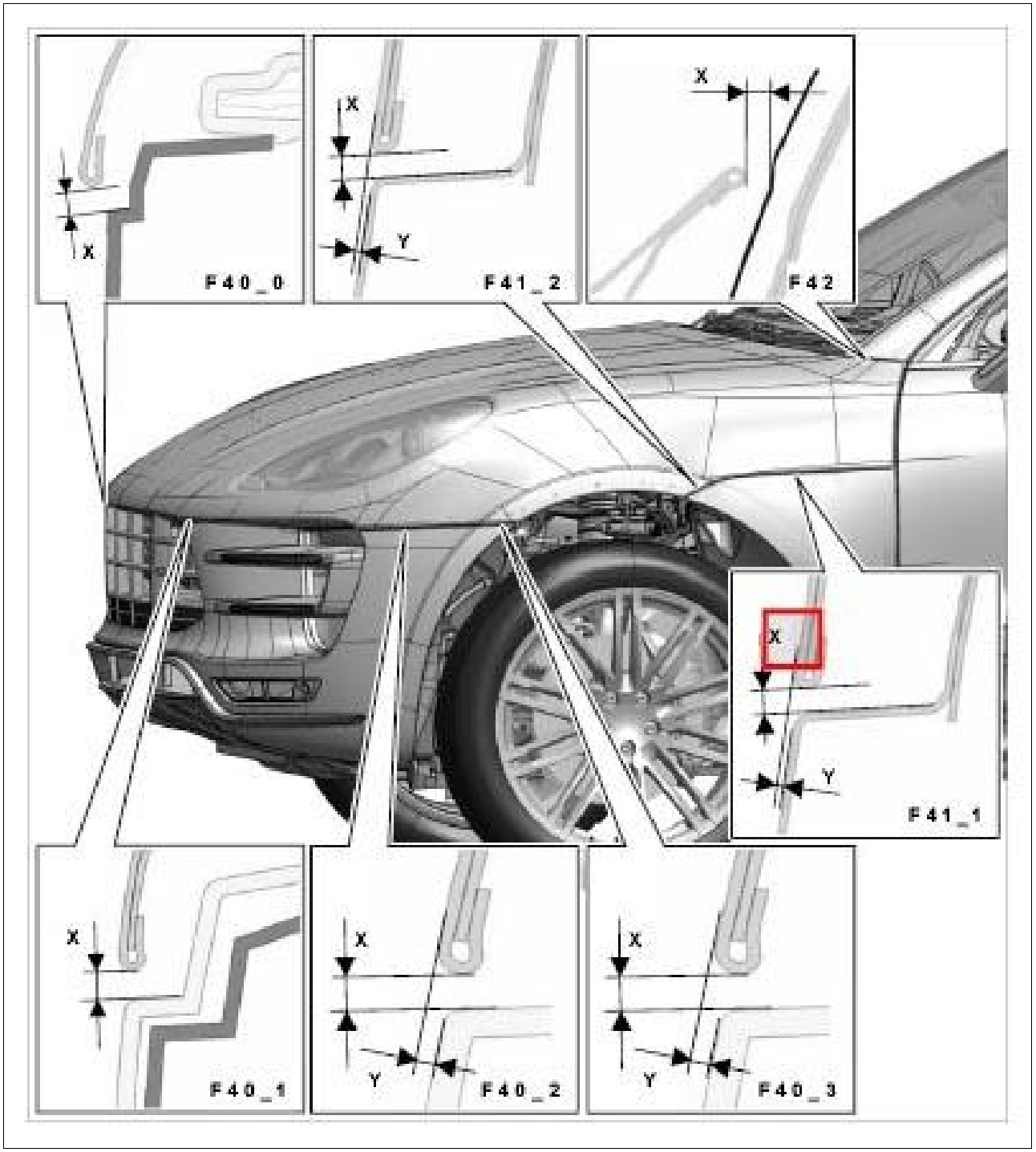

Courtesy of PORSCHE CARS NORTH AMERICA, INC.

F41_1 - → Gap dimension: 1 mm

Fig 9: Identifying Body Front Section Gap Dimensions

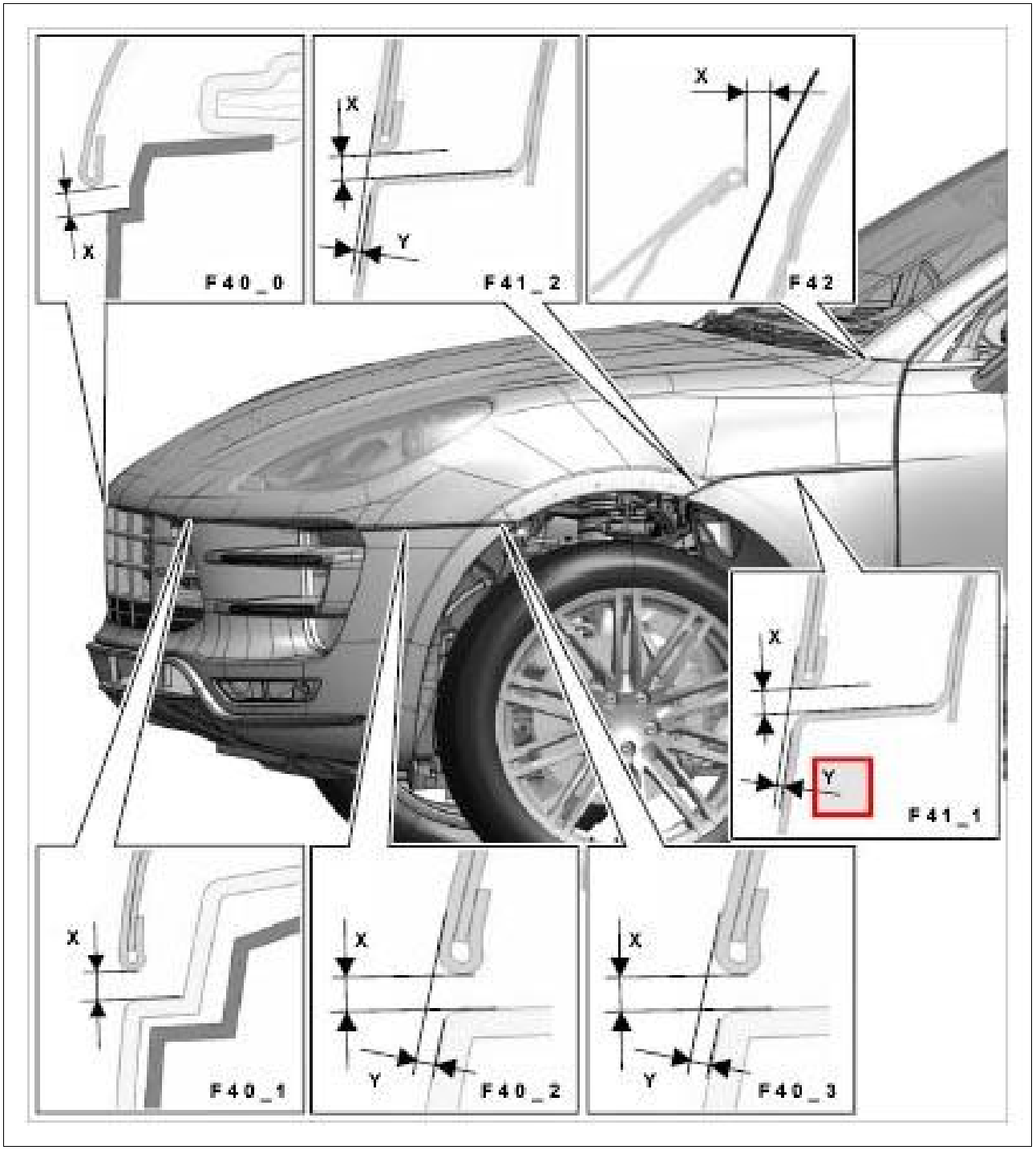

Courtesy of PORSCHE CARS NORTH AMERICA, INC.

F41_2 - → Gap dimension: 3.5 mm+/-0.5 mm

Fig 10: Identifying Body Front Section Gap Dimensions

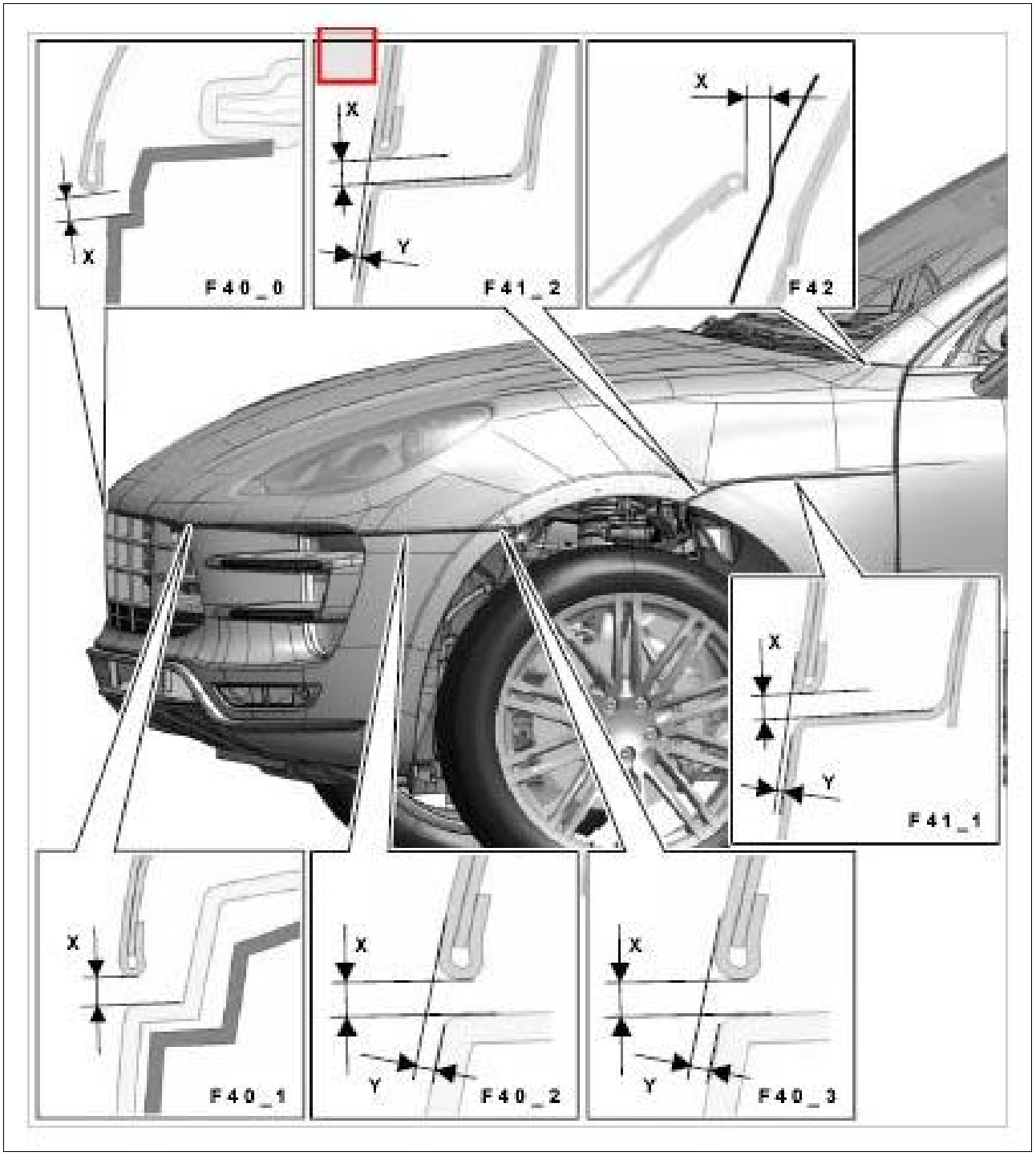

Courtesy of PORSCHE CARS NORTH AMERICA, INC.

F41_2 - → Gap dimension: 1.5 mm

Fig 11: Identifying Body Front Section Gap Dimensions

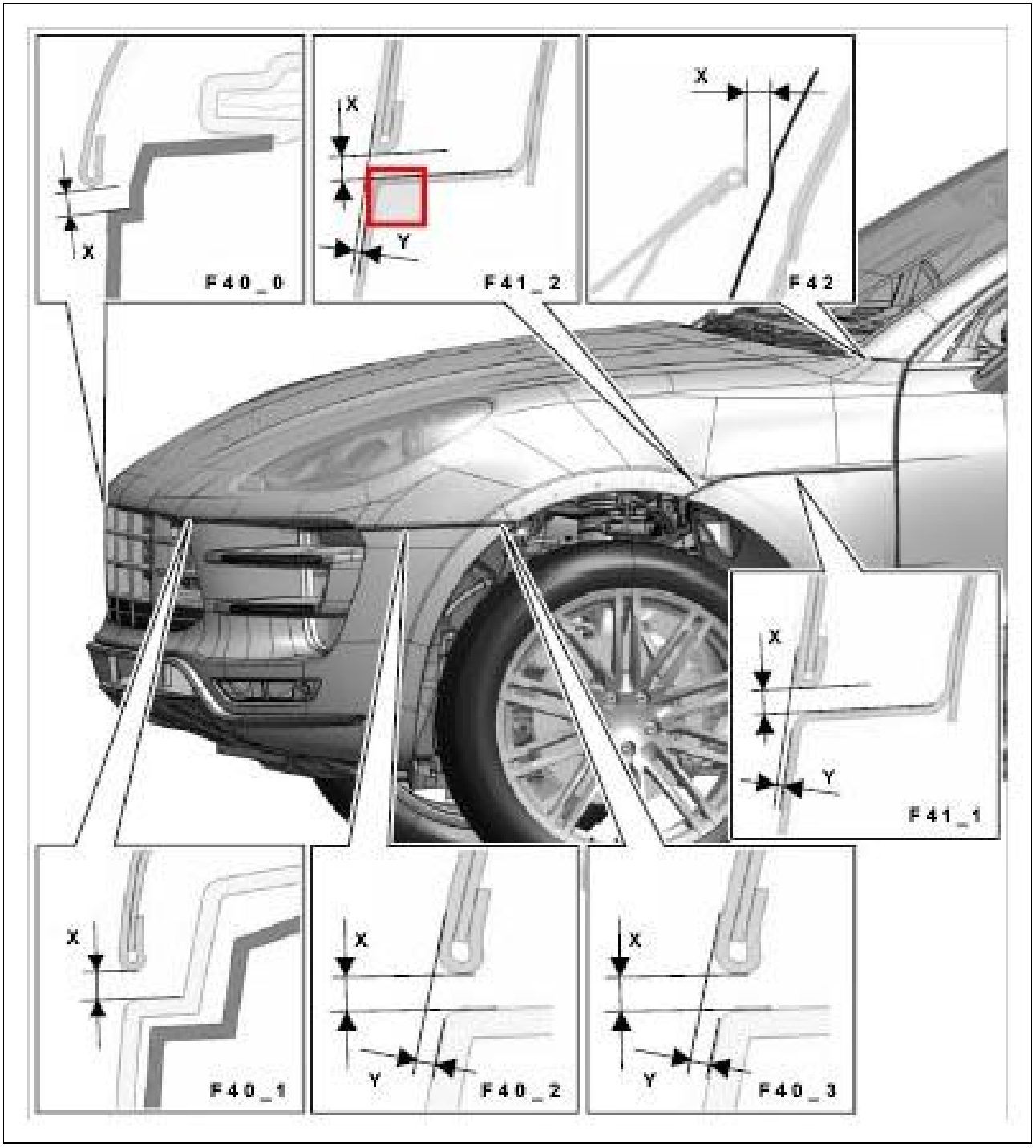

Courtesy of PORSCHE CARS NORTH AMERICA, INC.

F42 - → Gap dimension: 4.5 mm

Fig 12: Identifying Body Front Section Gap Dimensions

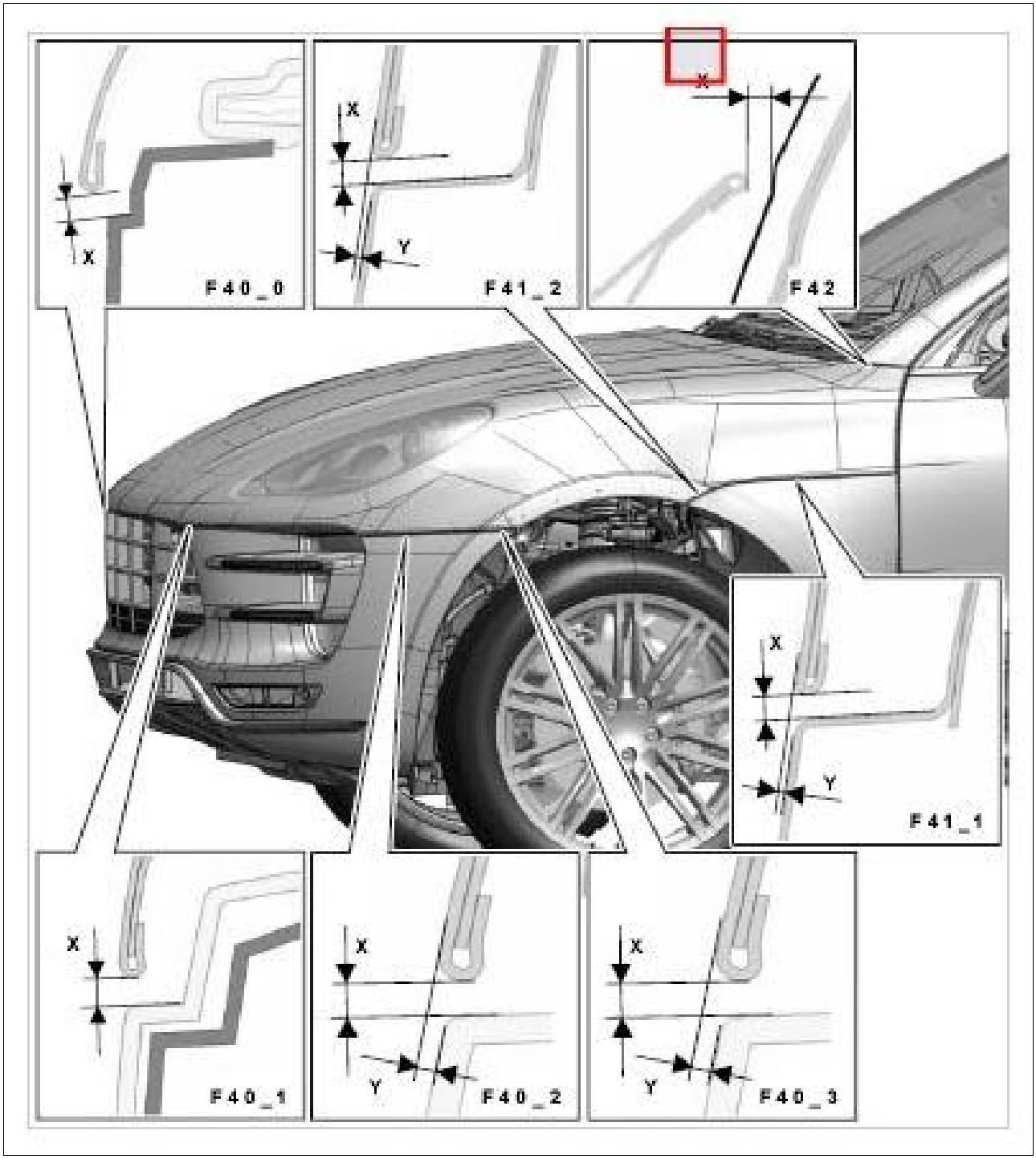

Courtesy of PORSCHE CARS NORTH AMERICA, INC.

WM 552215 ADJUSTING FRONT LID (MACAN, MACAN S, MACAN TURBO) > PRELIMINARY WORK

1. **For lid hinge alignment in X and Z direction**
2. Remove cowl panel cover. → 508719 REMOVING AND INSTALLING COWL PANEL COVER

3. Remove cover for alarm siren. → 966519 REMOVING AND INSTALLING ALARM SIREN
4. Remove cover for DME control unit. → 247019 REMOVING AND INSTALLING DME CONTROL UNIT

WM 552215 ADJUSTING FRONT LID (MACAN, MACAN S, MACAN TURBO) > ADJUSTING FRONT LID > ADJUSTING FRONT GAP DIMENSIONS

Information

- Set gap dimensions on lid and accessories in accordance with the gap specifications.
- Given a clearance in the opening that is too great or too small, the accessories must be centered with respect to the body.
- Ensure that the gaps do not run in a wedge-shaped fashion or do not narrow at local points.
- The given values are guidelines, which should be observed as far as possible.
- The guidelines apply to repair and assembly work.
- Use star gauges to check the gap dimensions. Star gauges for body gap dimensions NR.127-1

Fig 1: Adjusting Front Lid

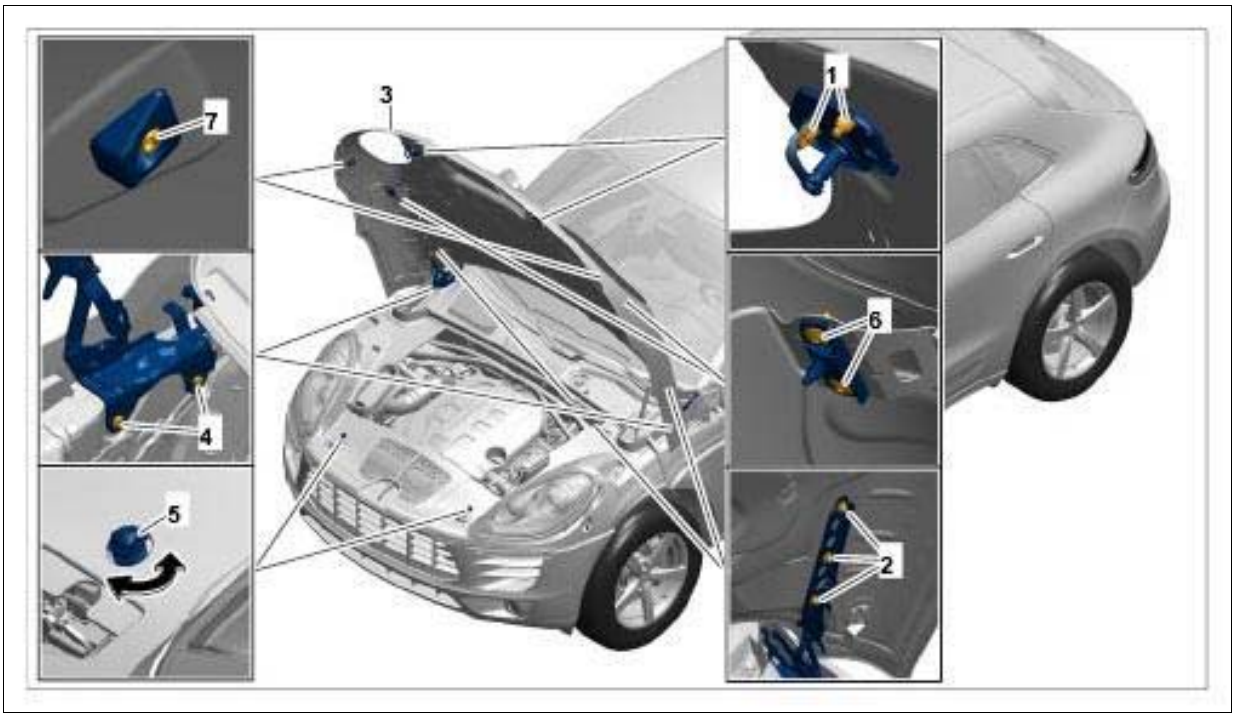

Courtesy of PORSCHE CARS NORTH AMERICA, INC.

1. Alignment of lid hinge **-1-** in X and Z direction on the bodyshell.

Fig 2: Identifying Lid Hinge Alignment

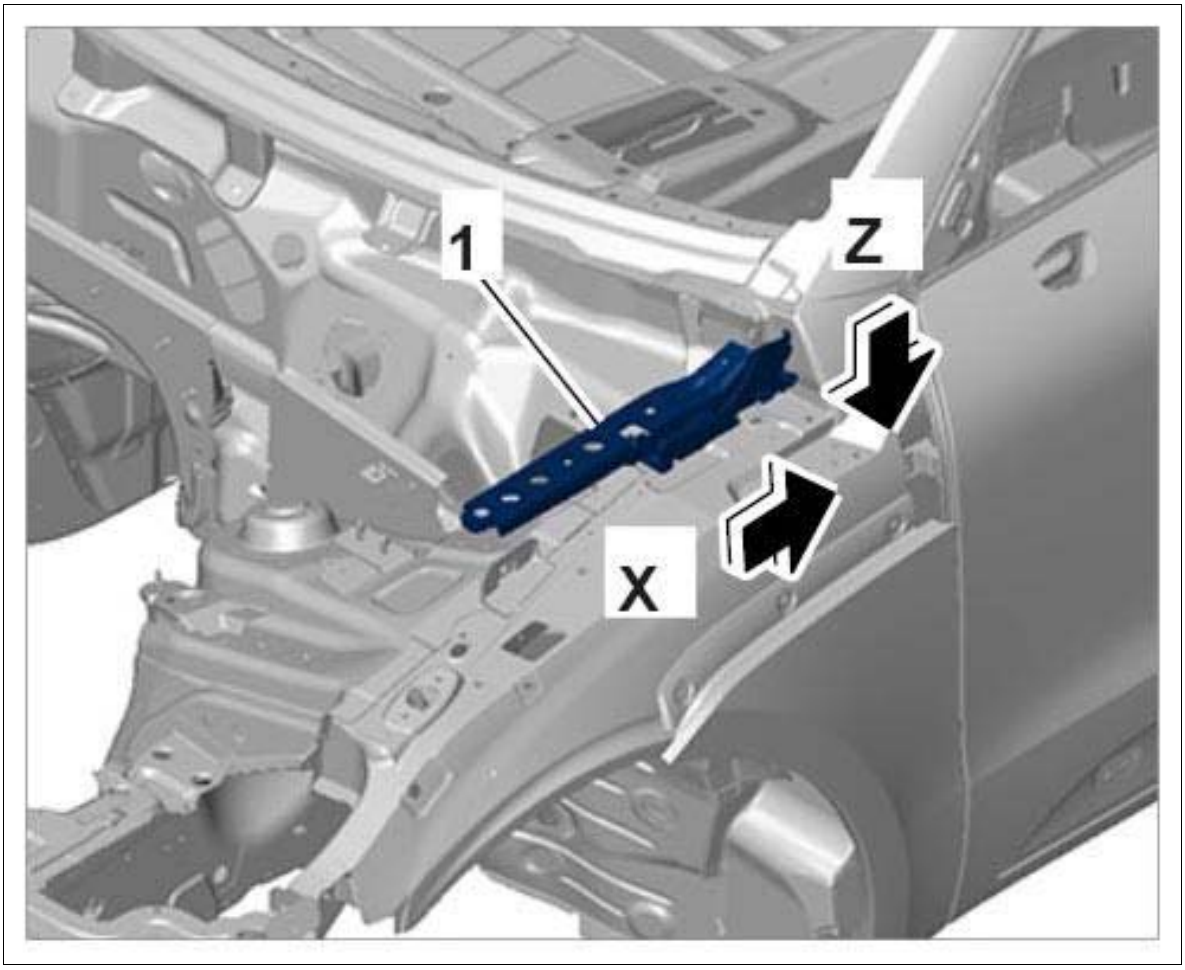

Courtesy of PORSCHE CARS NORTH AMERICA, INC.

2. Alignment of the front lid using the adjusting elements in X, Y, Z **-X, Y, Z -** .

Fig 3: Identifying Front Lid Alignment

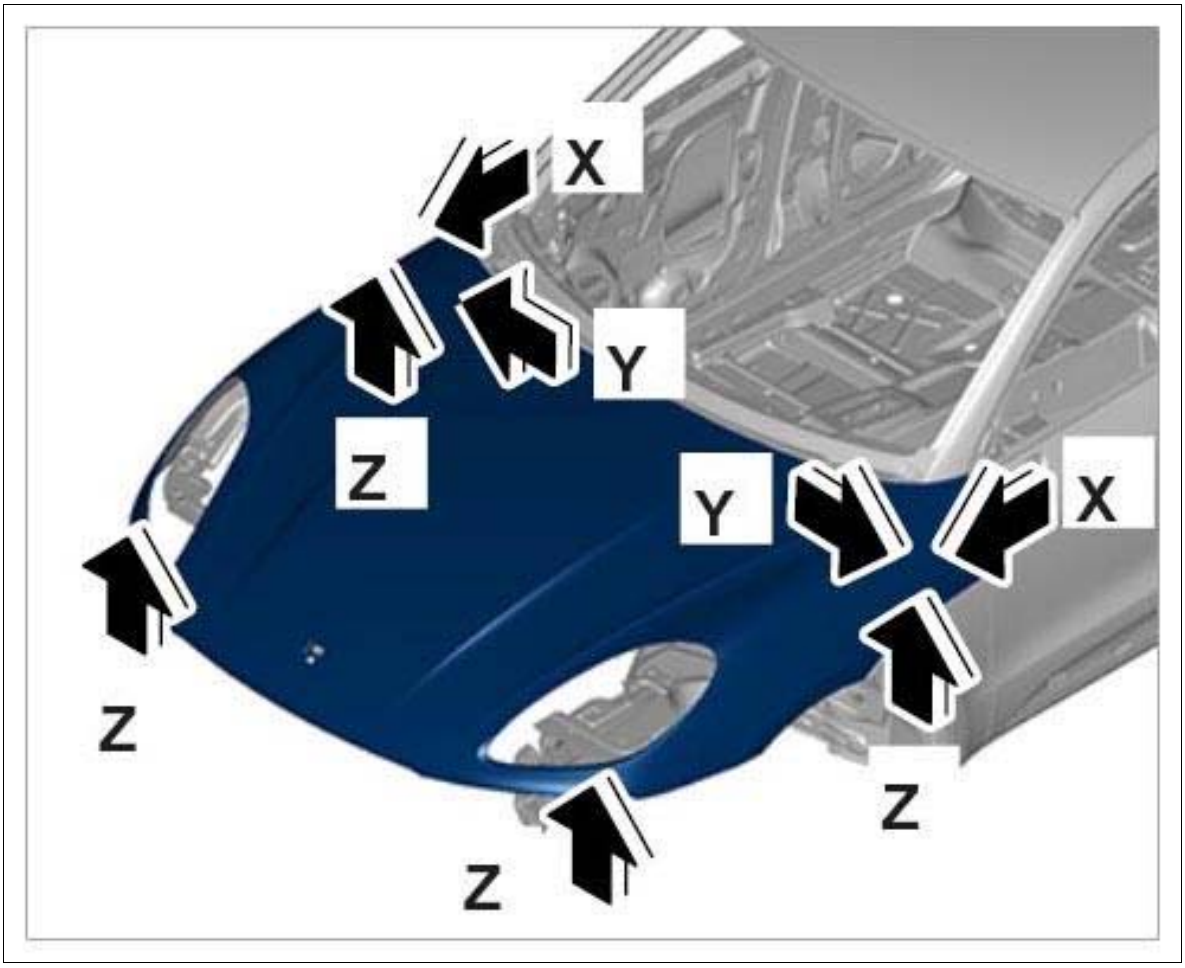

Courtesy of PORSCHE CARS NORTH AMERICA, INC.

No.	Component	Function	Procedure
1.	Fastening nuts on upper part of lid lock **-1-**	Locking mechanism for front lid	Loosen.
2.	Fastening nuts securing lid hinge to lid **-2-**	Adjusting gap dimensions in X and Y direction	Loosen.
3.	Front lid **-3-**		Set gap dimensions in X and Y direction by moving the lid.
4.	Fastening nuts securing lid hinge to lid **-2-**	Adjusting gap dimensions in X and Y direction	Tighten fastening nuts to **Tightening torque 20 Nm (15 ftlb.)** until secure.

			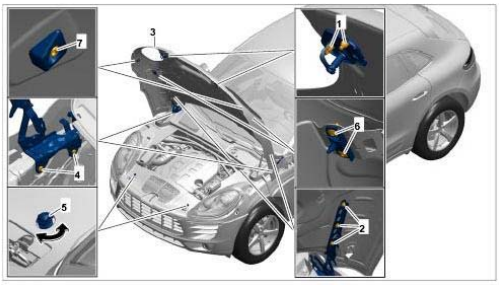 Adjusting front lid
5.	Fastening nuts on upper part of lid lock **-1-**	Locking mechanism for front lid	Tighten fastening nuts to **Tightening torque 8 Nm (6 ftlb.)** . 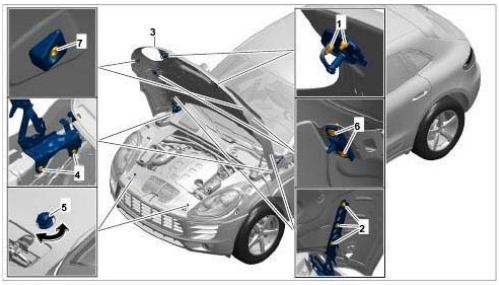 Adjusting front lid
6.	Fastening screws securing lid hinge to body **-4-**	Adjusting gap dimensions in Z direction, rear	Loosen.
7.	Front lid **-3-**		Set gap dimensions in Z direction at the rear by moving the lid.
8.	Fastening screws securing lid hinge to body **-4-**	Adjusting gap dimensions in Z direction, rear	Tighten fastening screws to **Tightening torque 20 Nm (15 ftlb.)** . 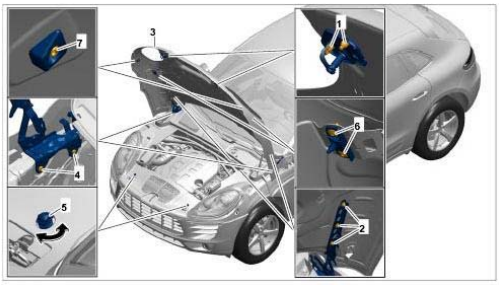 Adjusting front lid
9.	Guide plate on front lid **-6-**	Adjusting gap dimensions in X and Y direction	Set gap dimensions in X and Y direction by moving the lid
10.	Fastening screw for guide plate on front lid		Tighten fastening screw to **Tightening torque 8 Nm (6 ftlb.)** .

			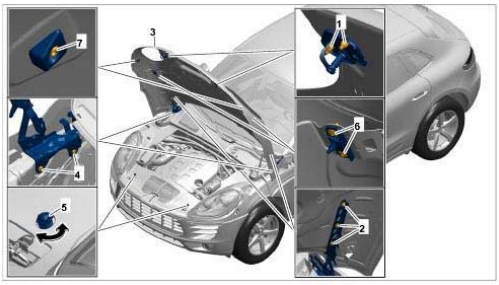 Adjusting front lid
11.	Rubber stop for front lid **-7-**	Adjusting gap dimensions in Z direction, rear	Tighten fastening screw to **Tightening torque 8 Nm (6 ftlb.)** . 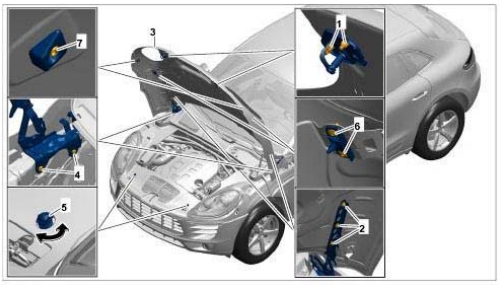 Adjusting front lid
12.	Rubber stop **-5-**	Adjusting gap dimensions in Z direction, front	Set gap dimensions and inclination by turning the rubber stops. There must be slight preload on the lid as a result of setting the rubber stops.

WM 552215 ADJUSTING FRONT LID (MACAN, MACAN S, MACAN TURBO) > CHECKING FRONT LID LOCK

Information

The lid lock does not have an emergency release.

When working close to the front apron and on the various parts of the lock, carry out the following function test before closing the lid:

1. Check that the release cable is clipped fully into the bracket provided.
2. Lock lower part of lid lock using a screwdriver.
3. Release the lid lock using the lever in the passenger compartment.
4. Perform a visual inspection to check that the lock releases correctly.

WM 552215 ADJUSTING FRONT LID (MACAN, MACAN S, MACAN TURBO) > SUBSEQUENT WORK

1. For lid hinge alignment in X and Z direction

2. Check joint and gap dimensions of headlights and make adjustments if necessary. → 941415 ADJUSTING HEADLIGHT MOUNTING
3. Install cover for DME control unit. → INSTALLING DME CONTROL UNIT
4. Install cover for alarm siren. → INSTALLING ALARM SIREN
5. Install cowl panel cover. → INSTALLING COWL PANEL COVER

WM 552219 REMOVING AND INSTALLING FRONT LID (MACAN, MACAN S, MACAN TURBO) > TECHNICAL VALUES

Location	Description	Type	Basic value	Tolerance 1	Tolerance 2
Fastening nut for front lid		Tightening torque	20 Nm (15 ftlb.)		

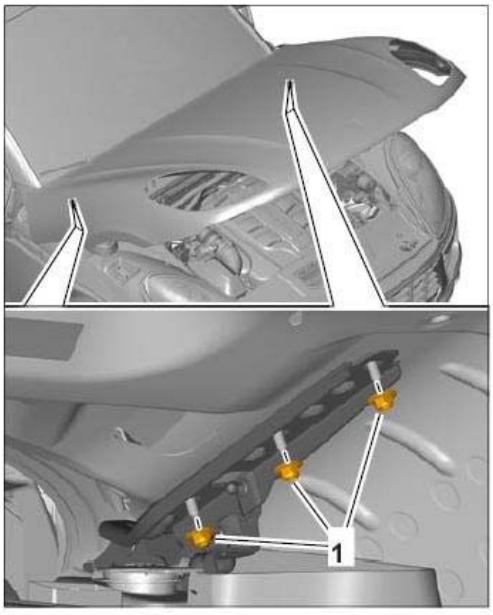

Front lid

WM 552219 REMOVING AND INSTALLING FRONT LID (MACAN, MACAN S, MACAN TURBO) > PRELIMINARY WORK

1. Remove spray nozzle for windscreen washer system. → 926619 REMOVING AND INSTALLING SPRAY NOZZLE FOR WINDSCREEN WASHER SYSTEM

WM 552219 REMOVING AND INSTALLING FRONT LID (MACAN, MACAN S, MACAN TURBO) > REMOVING FRONT LID

Information

Use a marking pen to mark the position of accessories with respect to each other before removal in order to reduce the amount of adjustment work required for gaps and joints.

Information

- The number of fastening screws, fixing clips, plug connections, holders and trim panels can vary depending on equipment.
- The illustrations for removing and installing the drive mechanism are shown only on one equipment variant and may differ from the actual equipment variant.
- Some steps must be carried out automatically.
- Some of the repair illustrations show only one side of the vehicle.

Fig 1: Locating Front Lid Position



Courtesy of PORSCHE CARS NORTH AMERICA, INC.

1. Pull grommet **-1-** for wire harness out of the cut-out.

Fig 2: Pulling Wire Harness Grommet

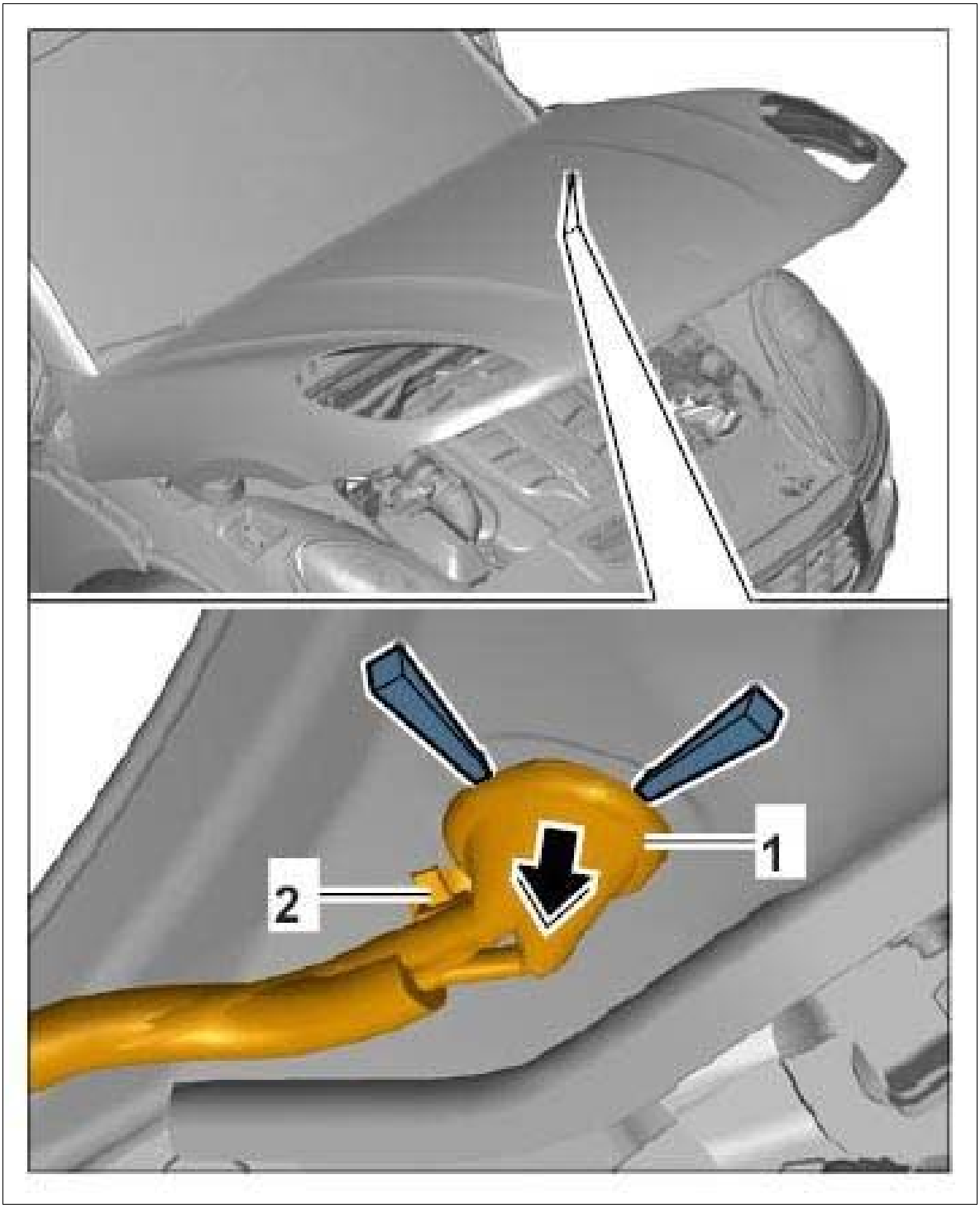

Courtesy of PORSCHE CARS NORTH AMERICA, INC.

1. 1.1. Unclip fixing clip **-2-** for wire harness.

2. Pull wire harness out of the lid **-arrow-** .

3. A second person should hold the front lid to prevent it from closing accidentally.

    1. 3.1. Screw off fastening nuts **-1-** for the front lid.

Fig 3: Identifying Front Lid Fastening Nuts

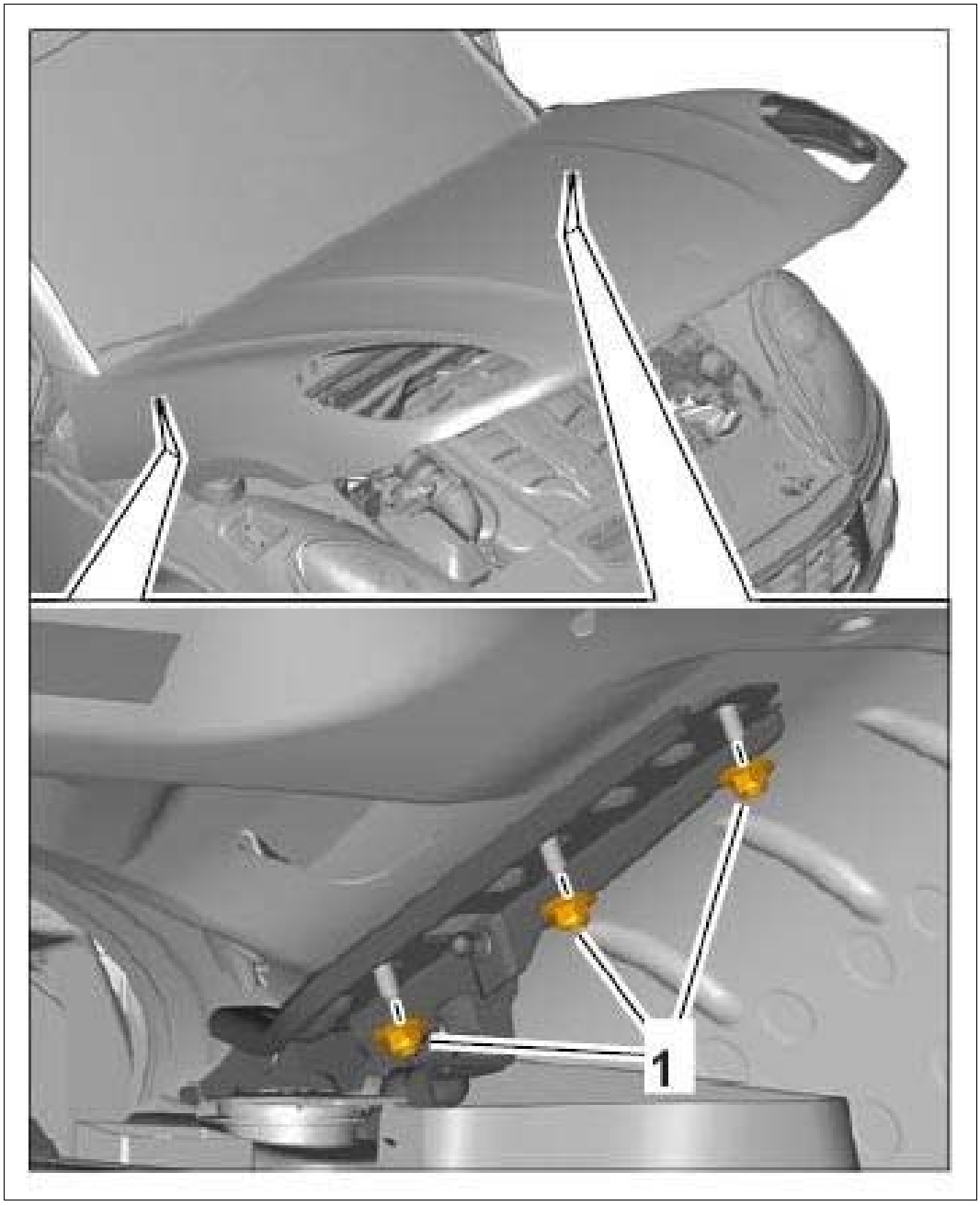

Courtesy of PORSCHE CARS NORTH AMERICA, INC.

4. Remove front lid.

WM 552219 REMOVING AND INSTALLING FRONT LID (MACAN, MACAN S, MACAN TURBO) > INSTALLING FRONT LID

1. The lid is installed in reverse order to removal.
2. Adjust the front lid. → 552215 ADJUSTING FRONT LID .
3. Check gap and joint dimensions of headlights and make adjustments if necessary. → 941415

ADJUSTING HEADLIGHT MOUNTING

4. Tighten the fastening nuts to the specified tightening torque **Tightening torque 20 Nm (15 ftlb.)** .

WM 552219 REMOVING AND INSTALLING FRONT LID (MACAN, MACAN S, MACAN TURBO) > SUBSEQUENT WORK

1. Install spray nozzle for windscreen washer system. → INSTALLING SPRAY NOZZLE FOR WINDSCREEN WASHER SYSTEM

WM 552237 DISASSEMBLING AND ASSEMBLING FRONT LID (MACAN, MACAN S, MACAN TURBO) > TECHNICAL VALUES

Location	Description	Type	Basic value	Tolerance 1	Tolerance 2
Fastening screw for rubber stop, rear		Tightening torque	8 Nm (6 ftlb.)		
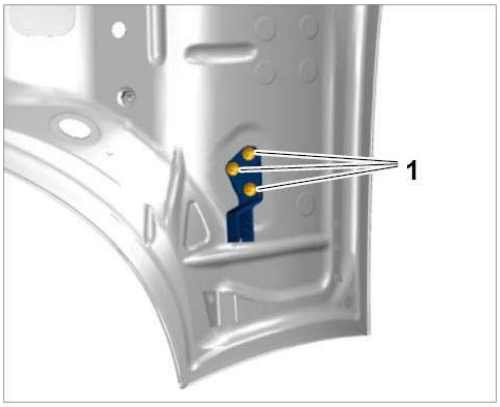 Rear lock					
Fastening nut for front lock		Tightening torque	8 Nm (6 ftlb.)		
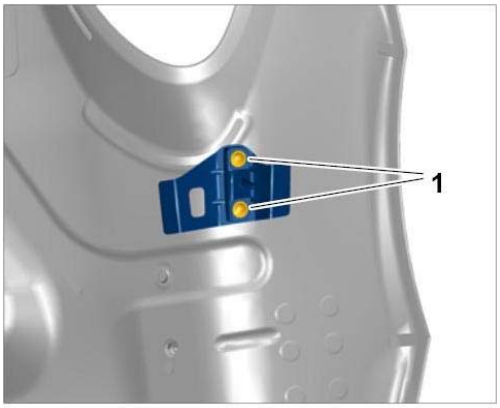 Guide plate					

Fastening nut for front lock		Tightening torque	8 Nm (6 ftlb.)		

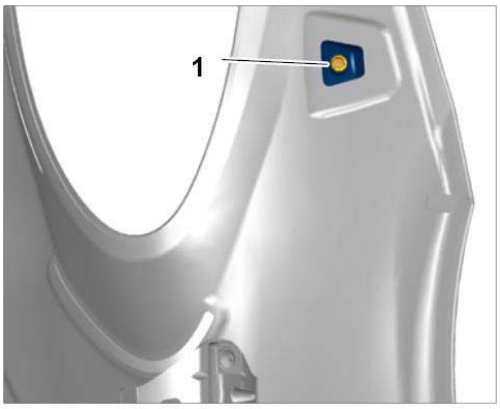

Front lock

WM 552237 DISASSEMBLING AND ASSEMBLING FRONT LID (MACAN, MACAN S, MACAN TURBO) > PRELIMINARY WORK

Information

Use a marking pen to mark the position of accessories with respect to each other before removal in order to reduce the amount of adjustment work required for gaps and joints.

1. Remove front lid. → 552219 REMOVING AND INSTALLING FRONT LID
2. Remove upper part of lid lock. → 551819 REMOVING AND INSTALLING UPPER PART OF FRONT LID LOCK
3. Remove front lid seal. → 553319 REMOVING AND INSTALLING FRONT LID SEAL
4. Remove front logo. → 660719 REMOVING AND INSTALLING FRONT LOGO
5. Remove insulation from rear lid. → 700419 REMOVING AND INSTALLING INSULATION FOR FRONT LID

WM 552237 DISASSEMBLING AND ASSEMBLING FRONT LID (MACAN, MACAN S, MACAN TURBO) > DISASSEMBLING FRONT LID

1. Unscrew and remove fastening screws **-1-** on rear rubber stop.

Fig 1: Identifying Rear Stop Fastening Screws

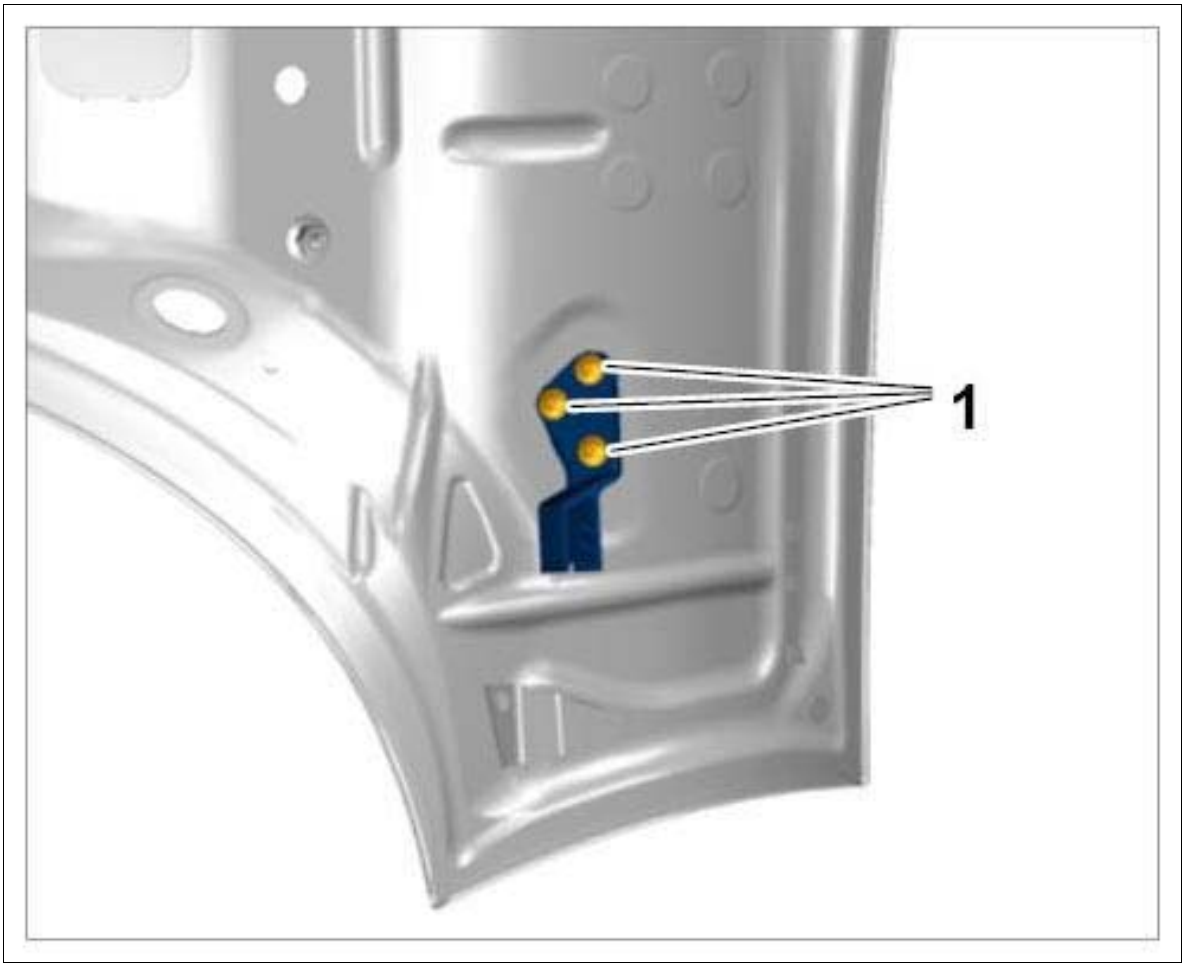

Courtesy of PORSCHE CARS NORTH AMERICA, INC.

Unscrew and remove fastening screws **-1-** on the guide plate.

Fig 2: Identifying Guide Plate Fastening Screws

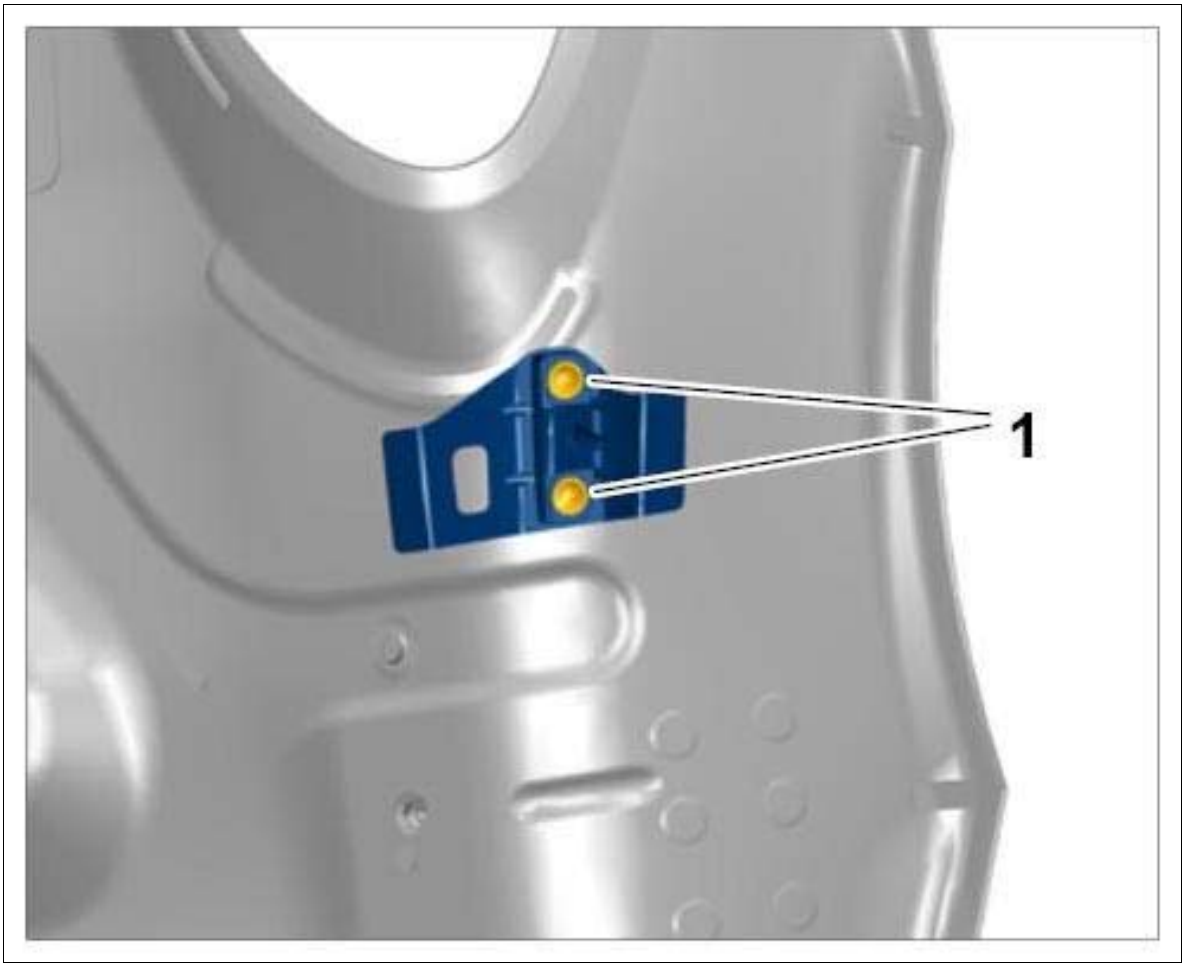

Courtesy of PORSCHE CARS NORTH AMERICA, INC.

2. Unscrew and remove fastening nut **-1-** on rubber stop.

Fig 3: Identifying Front Stop Fastening Nut

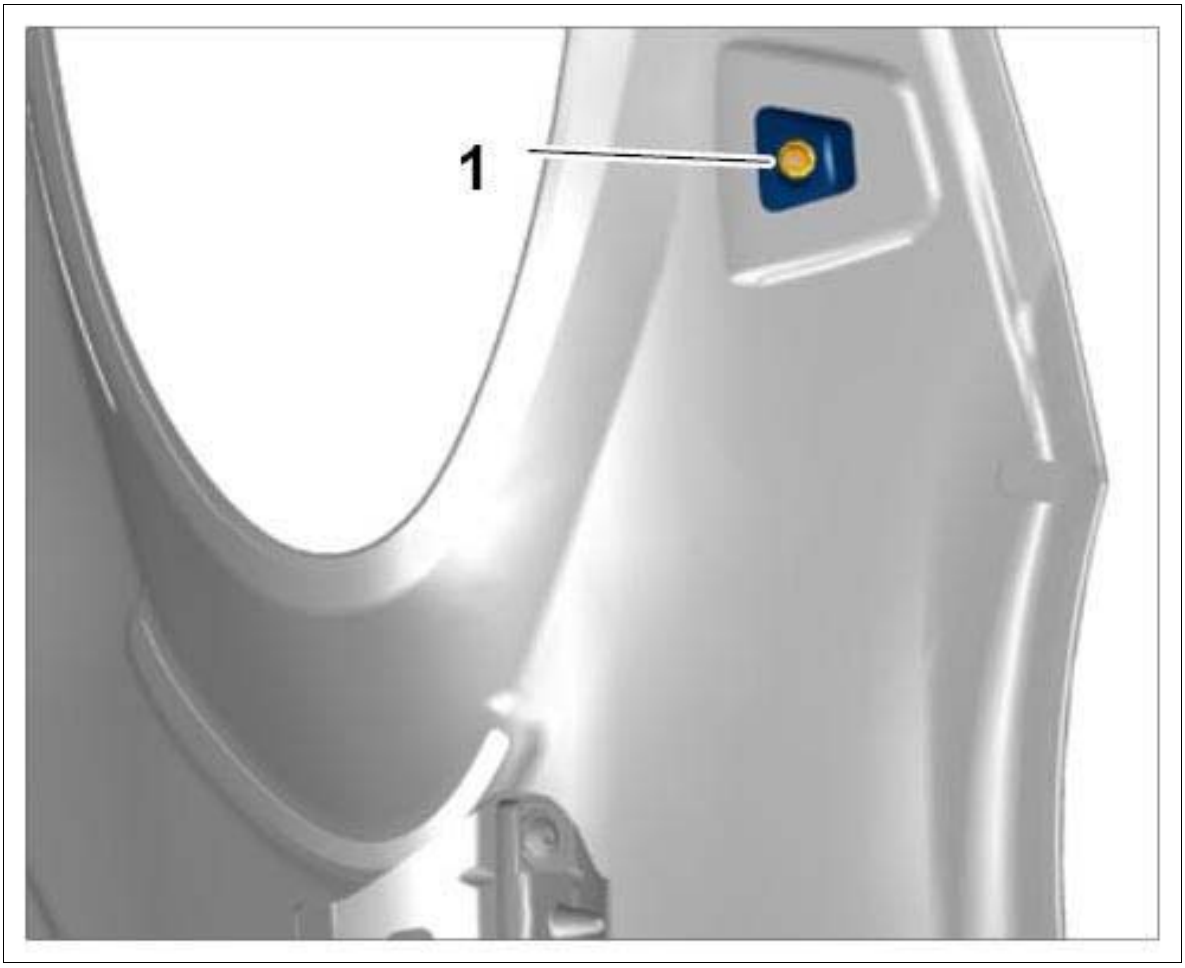

Courtesy of PORSCHE CARS NORTH AMERICA, INC.

WM 552237 DISASSEMBLING AND ASSEMBLING FRONT LID (MACAN, MACAN S, MACAN TURBO) > ASSEMBLING FRONT LID

Information

- Check installation position of the guide plate.
- Arrow on sealing surface must be pointing in the opposite direction to direction of travel.

1. Assembly is performed in reverse order to disassembly.
2. Tighten rear rubber stop to **Tightening torque 8 Nm (6 ftlb.)** until secure.
3. Tighten guide plate to **Tightening torque 8 Nm (6 ftlb.)** until secure.
4. Tighten front stop to **Tightening torque 8 Nm (6 ftlb.)** until secure.

WM 552237 DISASSEMBLING AND ASSEMBLING FRONT LID (MACAN, MACAN S,

MACAN TURBO) > SUBSEQUENT WORK

1. Install insulation for front lid. → INSTALLING INSULATION FOR FRONT LID
2. Fit logo. → 660719 REMOVING AND INSTALLING FRONT LOGO
3. Install lid seal. → INSTALLING FRONT LID SEAL
4. Install upper part of lid lock. → INSTALLING UPPER PART OF FRONT LID LOCK
5. Install front lid. → INSTALLING FRONT LID
6. Adjust the front lid. → 552215 ADJUSTING FRONT LID

WM 552519 REMOVING AND INSTALLING FRONT LID HINGE (MACAN, MACAN S, MACAN TURBO) > TECHNICAL VALUES

Location	Description	Type	Basic value	Tolerance 1	Tolerance 2
Fastening screws for lid hinge		Tightening torque	20 Nm (15 ftlb.)		

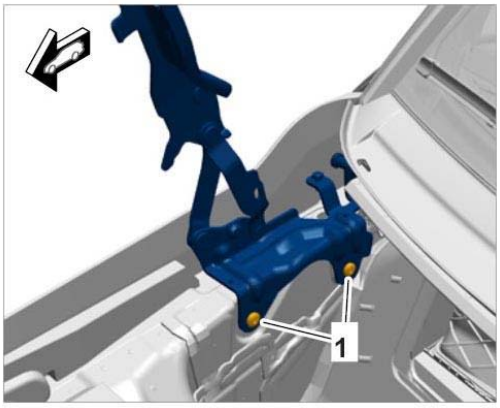

Removing lid hinge

WM 552519 REMOVING AND INSTALLING FRONT LID HINGE (MACAN, MACAN S, MACAN TURBO) > PRELIMINARY WORK

Information

Use a marking pen to mark the position of accessories with respect to each other before removal in order to reduce the amount of adjustment work required for gaps and joints.

Information

- Some of the repair illustrations show only one side of the vehicle.
- Naturally, some steps also have to be performed on the opposite side of the vehicle as well.

1. Remove front lid. → 552219 REMOVING AND INSTALLING FRONT LID
2. Remove cowl panel cover. → 508719 REMOVING AND INSTALLING COWL PANEL COVER
3. Remove right hinge on cover for alarm siren. → 966519 REMOVING AND INSTALLING ALARM SIREN
4. Remove left hinge on DME control unit cover. → 247019 REMOVING AND INSTALLING DME CONTROL UNIT
5. Remove pneumatic spring on the lid side. → 553119 REMOVING AND INSTALLING FRONT PNEUMATIC SPRING

WM 552519 REMOVING AND INSTALLING FRONT LID HINGE (MACAN, MACAN S, MACAN TURBO) > REMOVING FRONT LID HINGE

Fig 1: Locating Lid Hinge Position

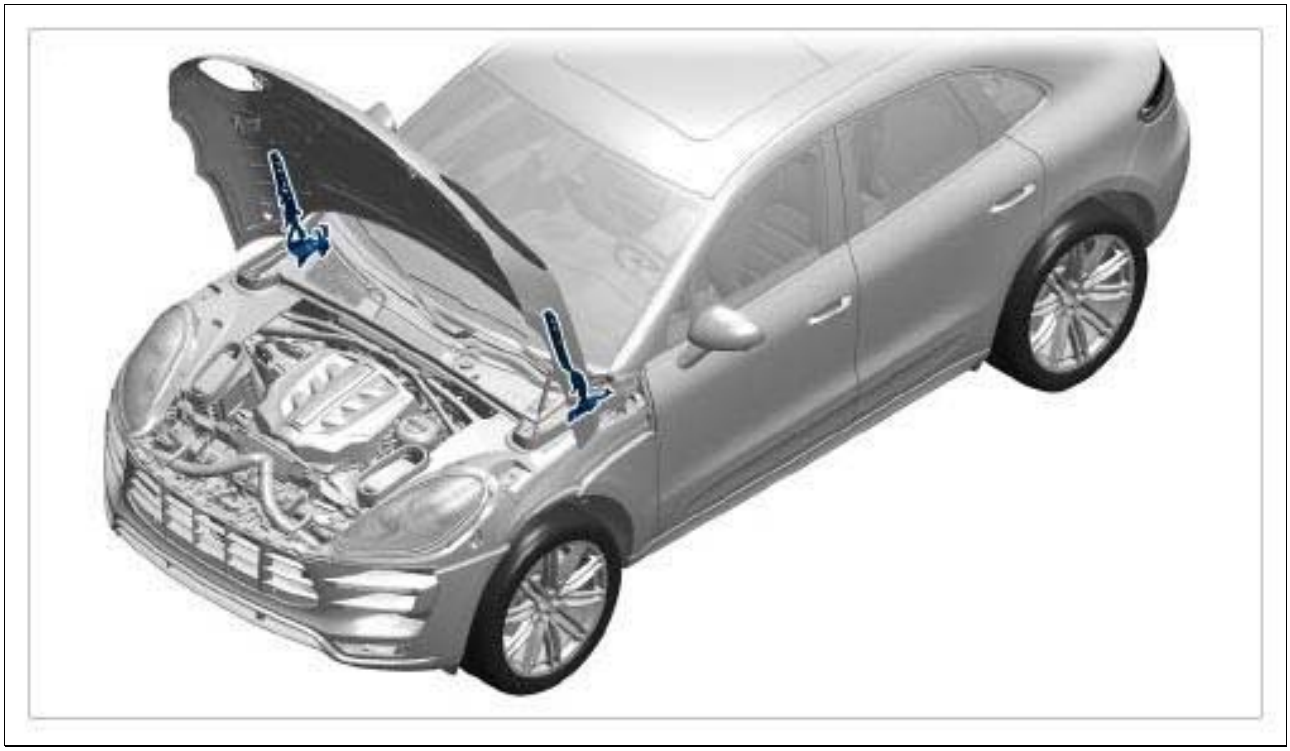

Courtesy of PORSCHE CARS NORTH AMERICA, INC.

1. Unscrew and remove fastening screws **-1-** on the lid hinge.

Fig 2: Removing Lid Hinge

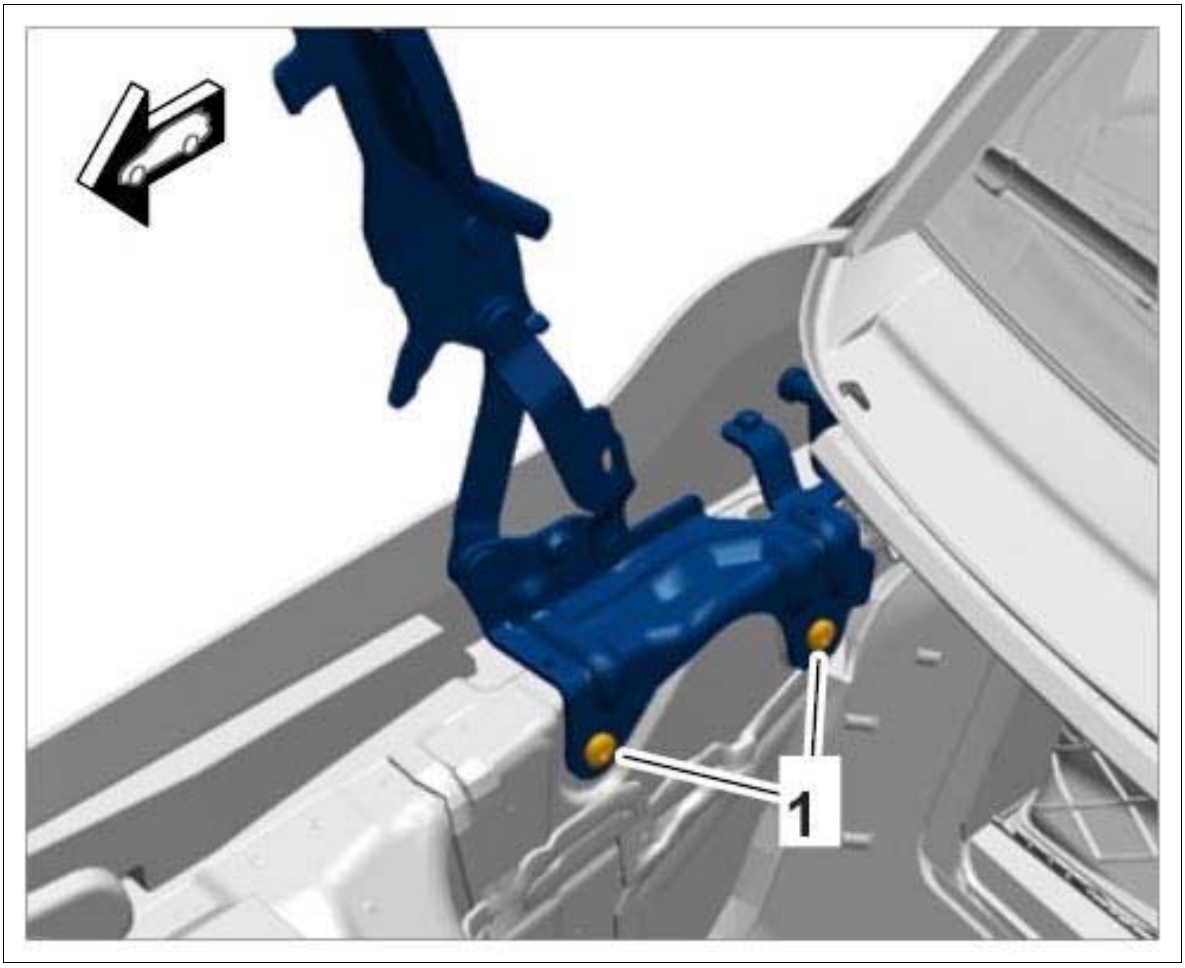

Courtesy of PORSCHE CARS NORTH AMERICA, INC.

2. Remove lid hinge by pulling it up.

WM 552519 REMOVING AND INSTALLING FRONT LID HINGE (MACAN, MACAN S, MACAN TURBO) > INSTALLING FRONT LID HINGE

Information

- Some of the repair illustrations show only one side of the vehicle.
- Naturally, some steps also have to be performed on the opposite side of the vehicle as well.

1. Installation is performed in reverse order to removal.
2. Tighten fastening screws to the specified tightening torque **Tightening torque 20 Nm (15 ftlb.)** until secure.

WM 552519 REMOVING AND INSTALLING FRONT LID HINGE (MACAN, MACAN S,

MACAN TURBO) > SUBSEQUENT WORK

1. Install front lid. → INSTALLING FRONT LID
2. Adjust the front lid. → 552215 ADJUSTING FRONT LID
3. Install pneumatic spring. → INSTALLING PNEUMATIC SPRING
4. Install left hinge on DME control unit cover. → INSTALLING DME CONTROL UNIT
5. Install right hinge on alarm siren cover. → INSTALLING ALARM SIREN
6. Install cowl panel cover. → INSTALLING COWL PANEL COVER

WM 553119 REMOVING AND INSTALLING FRONT PNEUMATIC SPRING (MACAN, MACAN S, MACAN TURBO) > REMOVING FRONT PNEUMATIC SPRING

⚠ *CAUTION: Incorrect handling of gas-filled shock absorbers*

- *Gas-filled shock absorbers can burst*
- *Risk of eye injuries*
- *Risk of bruising*

→ Gas-filled shock absorbers must be in idle state before removal.

→ Open the lid.

→ Secure the lid to prevent it from closing accidentally following removal of the gas-filled shock absorbers.

→ Do not use force to open the gas-filled shock absorbers because of their high internal pressure.

Fig 1: Locating Pneumatic Spring Position

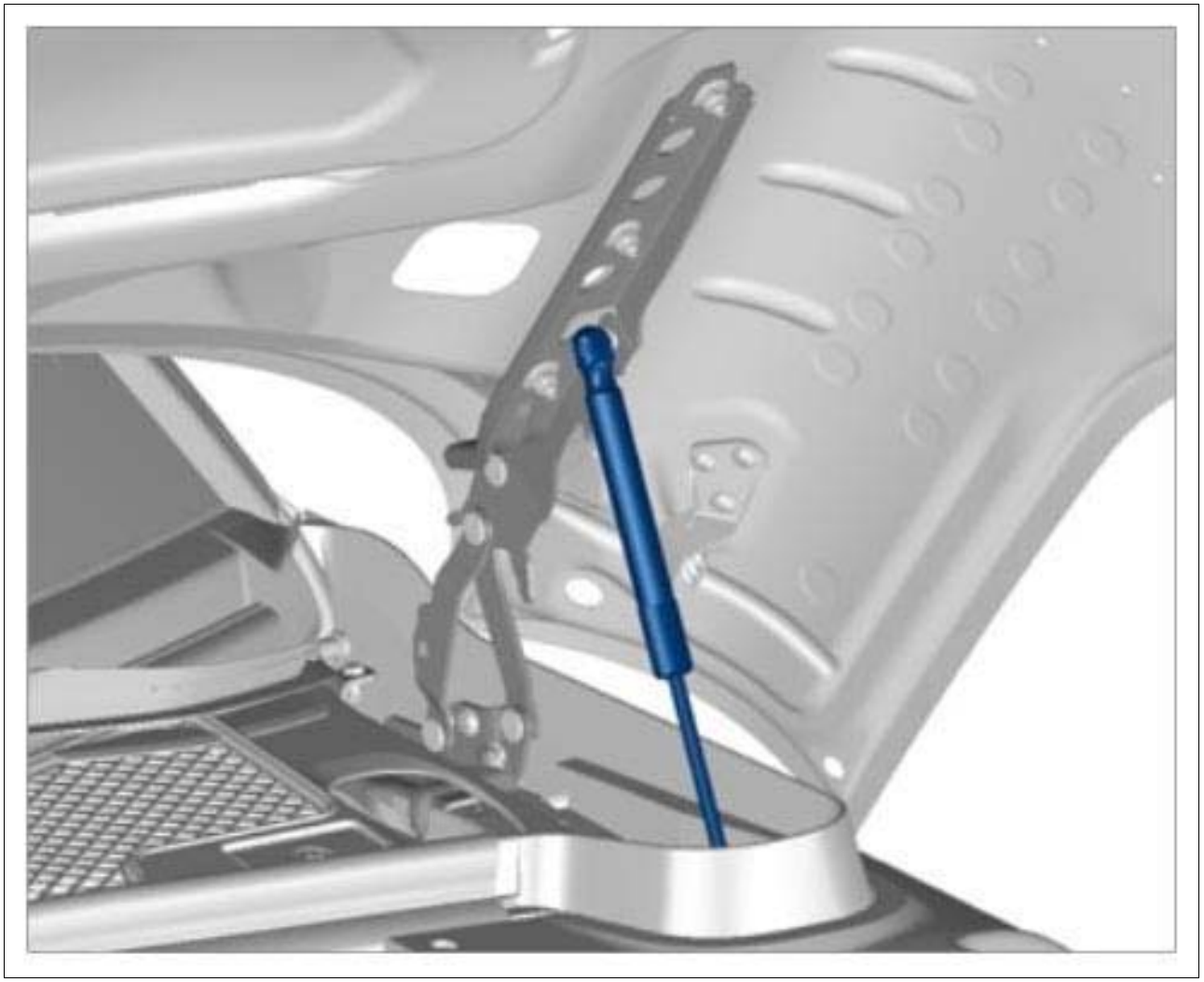

Courtesy of PORSCHE CARS NORTH AMERICA, INC.

1. Disengage pneumatic spring at the lid and body.

Fig 2: Disengaging Pneumatic Spring (Lid)

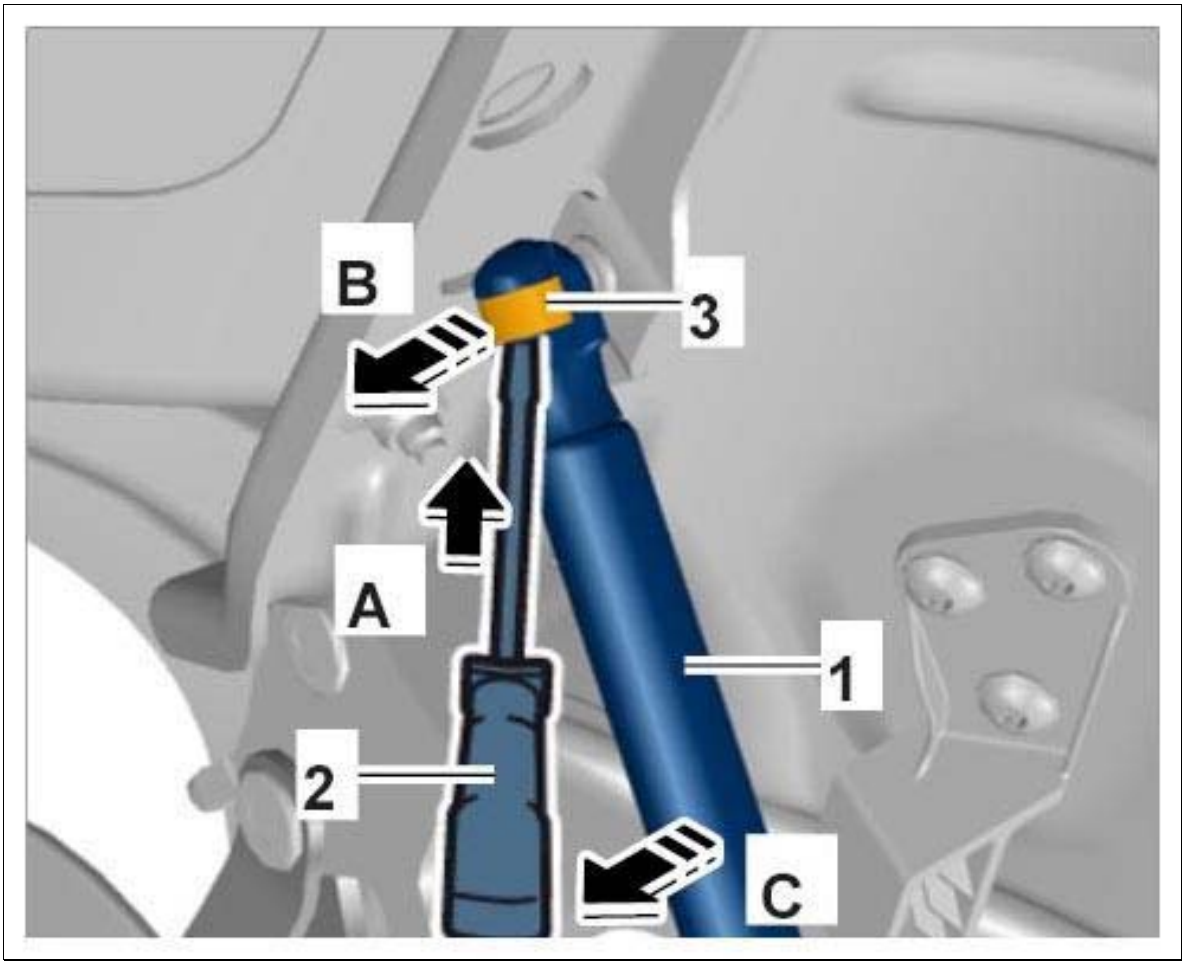

Courtesy of PORSCHE CARS NORTH AMERICA, INC.

Fig 3: Disengaging Pneumatic Spring (Body)

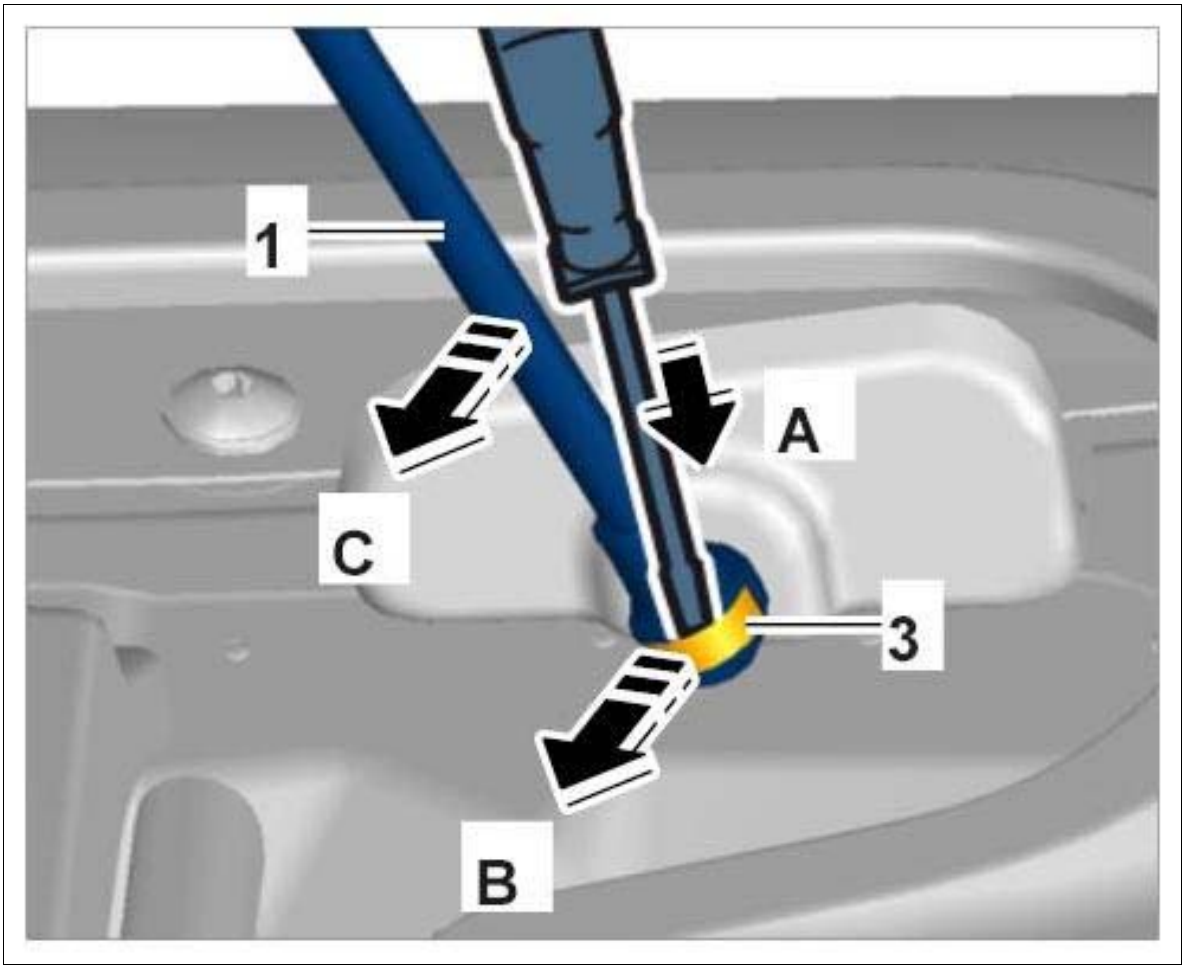

Courtesy of PORSCHE CARS NORTH AMERICA, INC.

1. 1.1. Get a second person to secure the front lid to prevent it from closing accidentally.
2. 1.2. Insert a screwdriver **-2-** between the head of the pneumatic spring and the safety clip **-3- (-A-)** .
3. 1.3. Loosen the safety clip **-3-** by levering the screwdriver **-2-** up and down **-B-** .
4. 1.4. The safety clip remains in the head of the pneumatic spring.
5. 1.5. Pull pneumatic spring **-1-** off the ball joints **-C-** .
6. 1.6. Remove screwdriver.

2. Remove pneumatic spring.

WM 553119 REMOVING AND INSTALLING FRONT PNEUMATIC SPRING (MACAN, MACAN S, MACAN TURBO) > INSTALLING PNEUMATIC SPRING

Information

Check installation direction of pneumatic spring (arrow).

1. Installation is performed in reverse order to removal.

WM 553119 REMOVING AND INSTALLING FRONT PNEUMATIC SPRING (MACAN, MACAN S, MACAN TURBO) > FUNCTION TEST ON PNEUMATIC SPRING

1. Close and open the lid several times to check that the pneumatic springs are working properly and were fitted correctly.
2. Open the lid fully. The fitted pneumatic spring must secure the lid in open position.
3. Close the lid.

WM 553319 REMOVING AND INSTALLING FRONT LID SEAL (MACAN, MACAN S, MACAN TURBO) > REMOVING FRONT LID SEAL

Fig 1: Removing Front Lid Seal

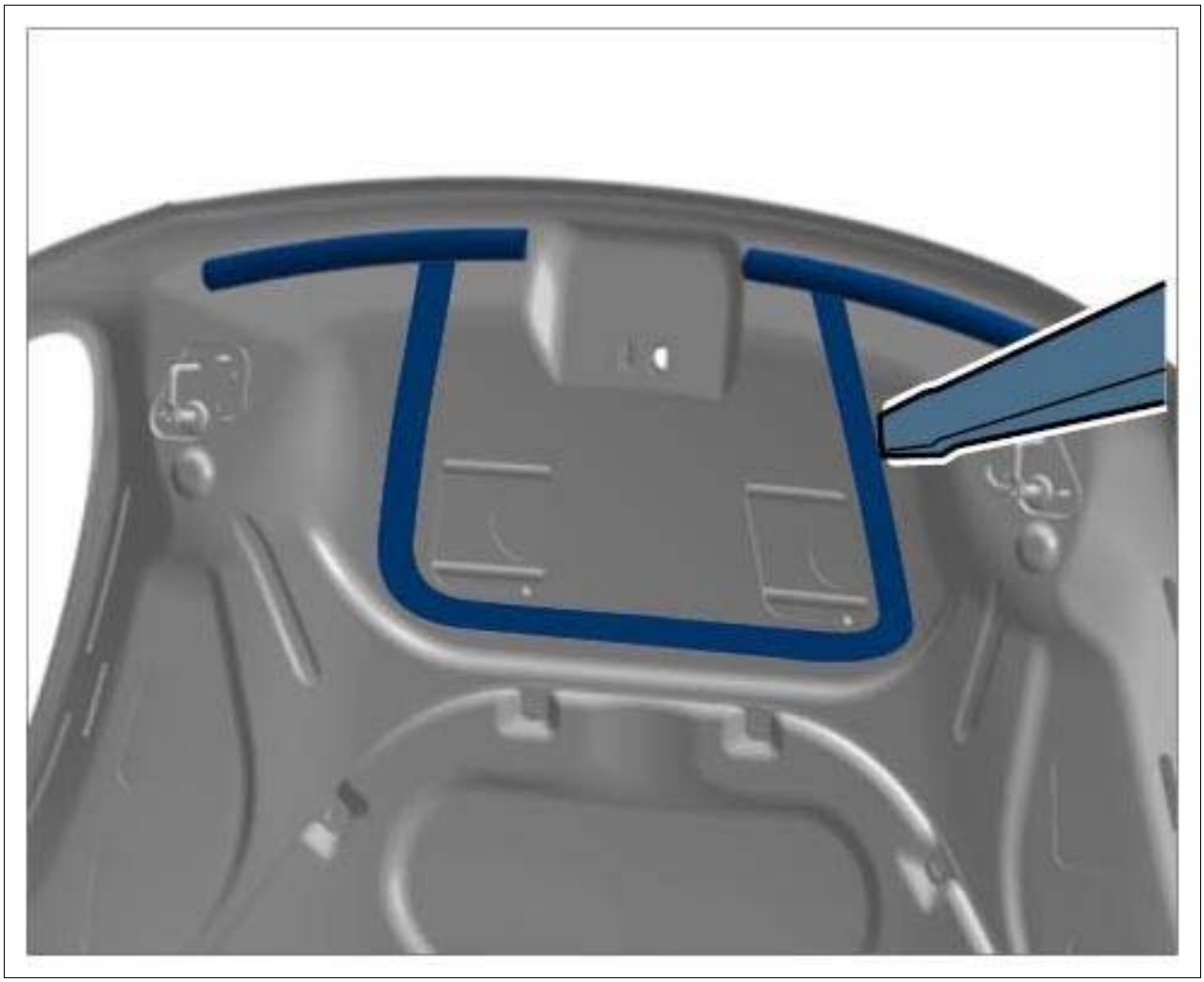

Courtesy of PORSCHE CARS NORTH AMERICA, INC.

1. Unclip seal at the left and right **-1-** using a suitable tool.

Fig 2: Removing Side Seal

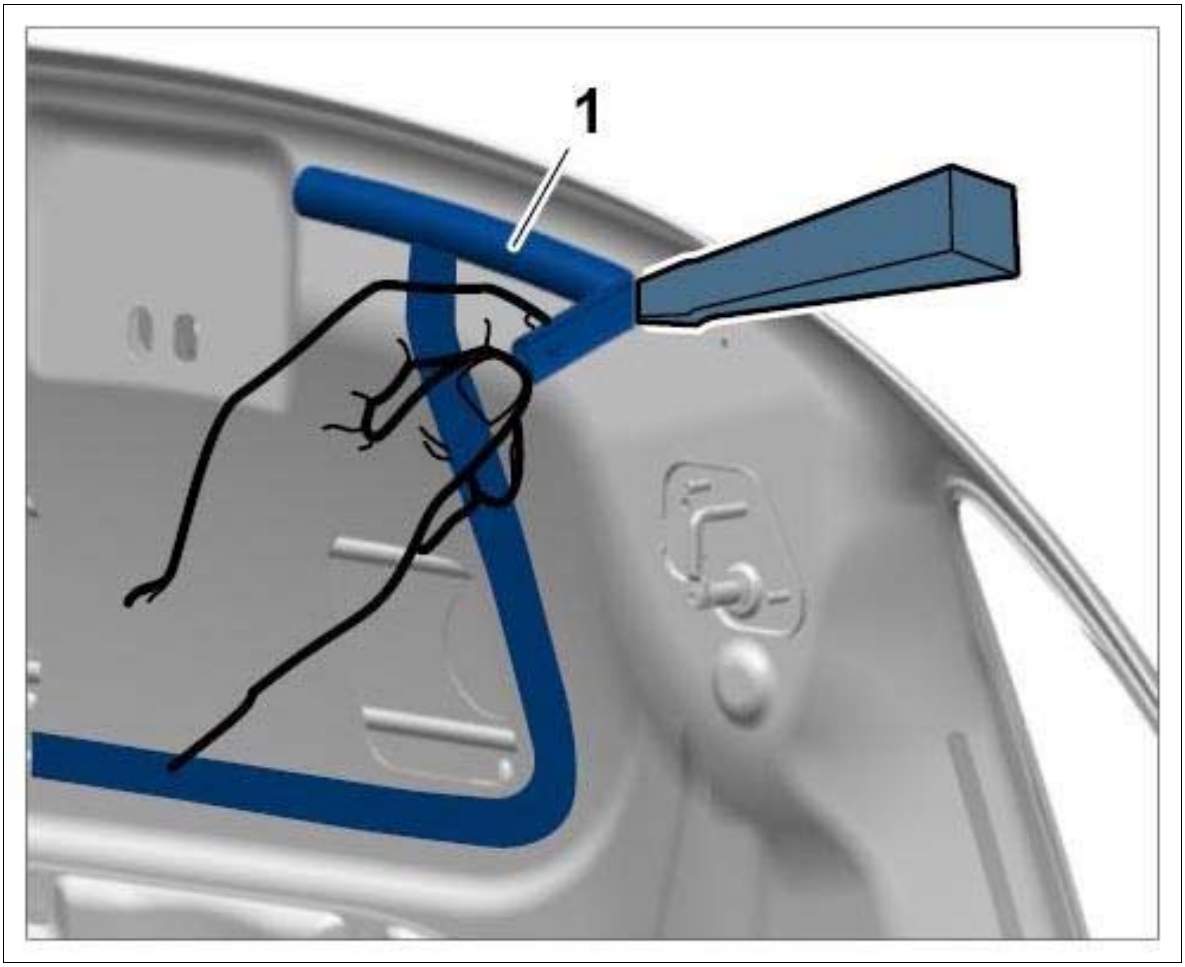

Courtesy of PORSCHE CARS NORTH AMERICA, INC.

2. Unclip center seal **-1-** using a suitable tool.

Fig 3: Removing Center Seal

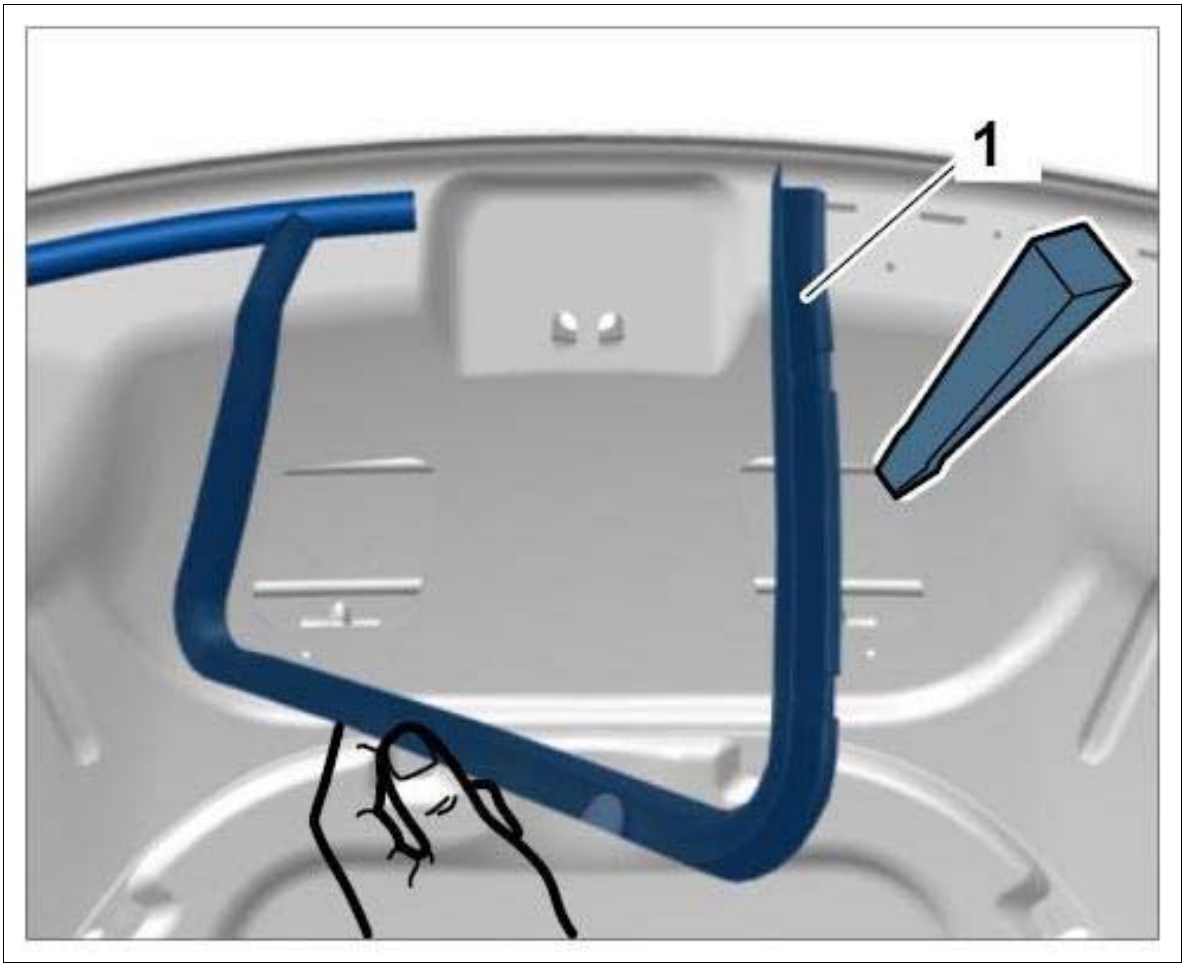

Courtesy of PORSCHE CARS NORTH AMERICA, INC.

WM 553319 REMOVING AND INSTALLING FRONT LID SEAL (MACAN, MACAN S, MACAN TURBO) > INSTALLING FRONT LID SEAL

Information

Check that all fixing clips are positioned fully and correctly.

Check that the fixing clips are not bent or broken.

Replace damaged or missing clips with new ones.

1. Installation is performed in reverse order to removal.

WM 553755 REPLACING FILLER FLAP (MACAN, MACAN S, MACAN TURBO) > TOOLS

Designation	Type	Number	Description

hook	VW tool	3370		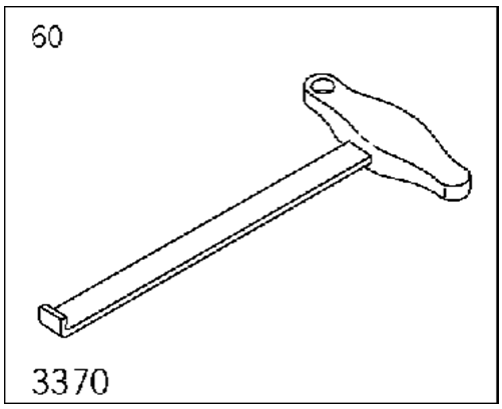

WM 553755 REPLACING FILLER FLAP (MACAN, MACAN S, MACAN TURBO) > REPLACING FILLER FLAP

Information

The filler flap housing will be damaged during removal and must be replaced during installation.

1. Open filler flap.
2. Remove filler flap.

Fig 1: Pulling Filler Flap (Similar Illustration)

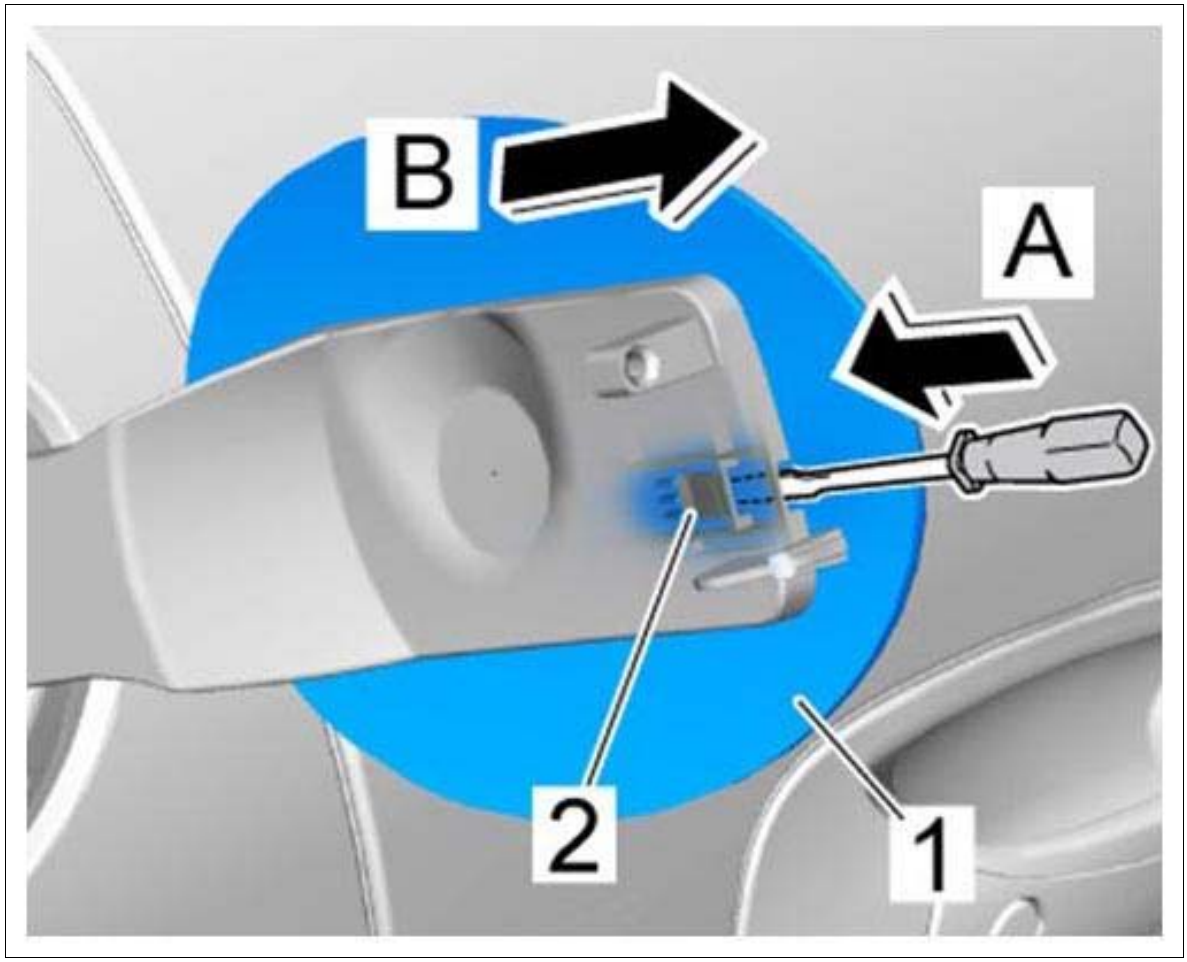

Courtesy of PORSCHE CARS NORTH AMERICA, INC.

1. 2.1. Insert a screwdriver into the cut-out **-arrow A-** and disengage the catch **-2-** .
2. 2.2. Detach filler flap **-1-** by pulling it **-arrow B-** out of the catch.

3. Open the fuel tank cap **-arrow A-** , unclip the retaining strap **-1-** and pull it off **-arrow B-** .

Fig 2: Turning Fuel Tank Cap (Similar Illustration)

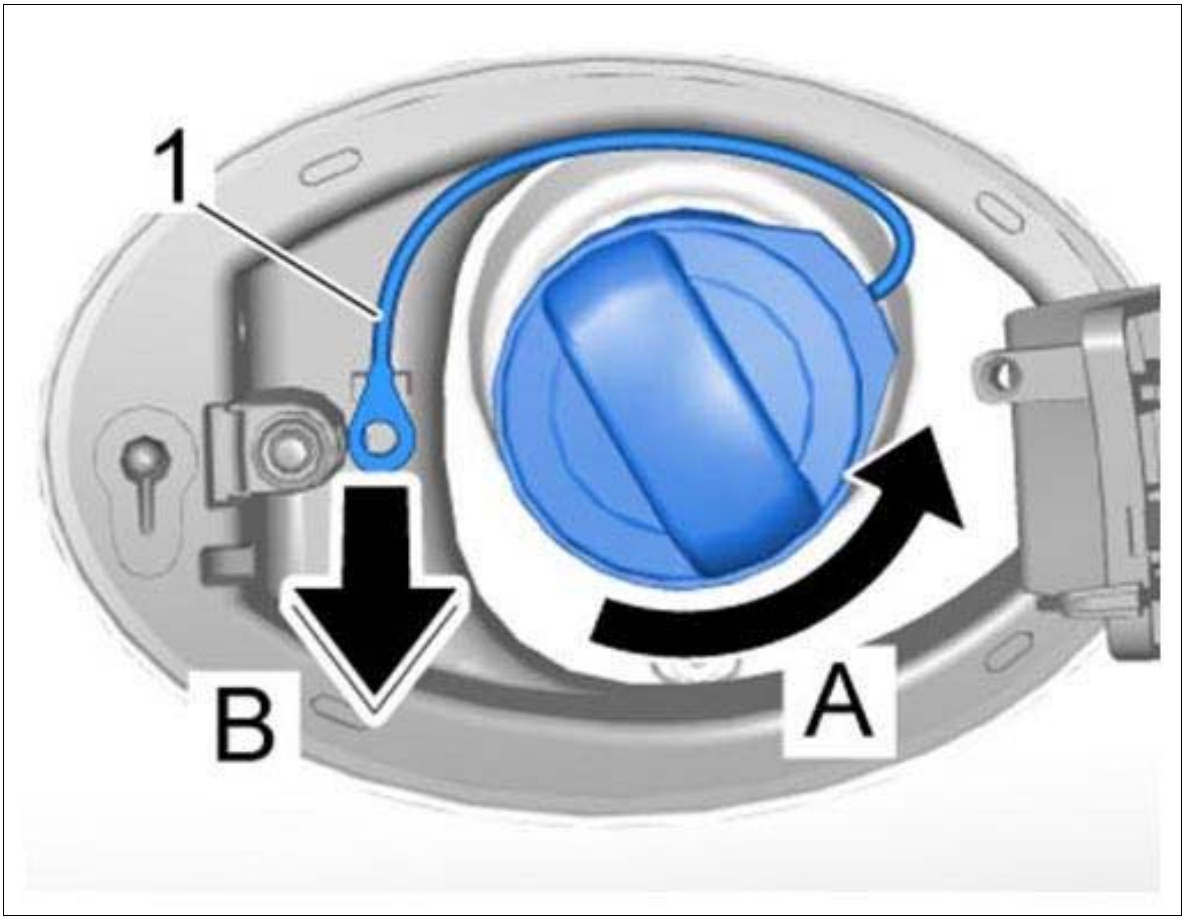

Courtesy of PORSCHE CARS NORTH AMERICA, INC.

4. Open luggage compartment trim at the left.
5. Unhook mounting for emergency release **-1-** .

To make it easier to guide back the emergency release, secure a suitable aid to the pull knob and pull it out using the cable.

Fig 3: Removing Emergency Release

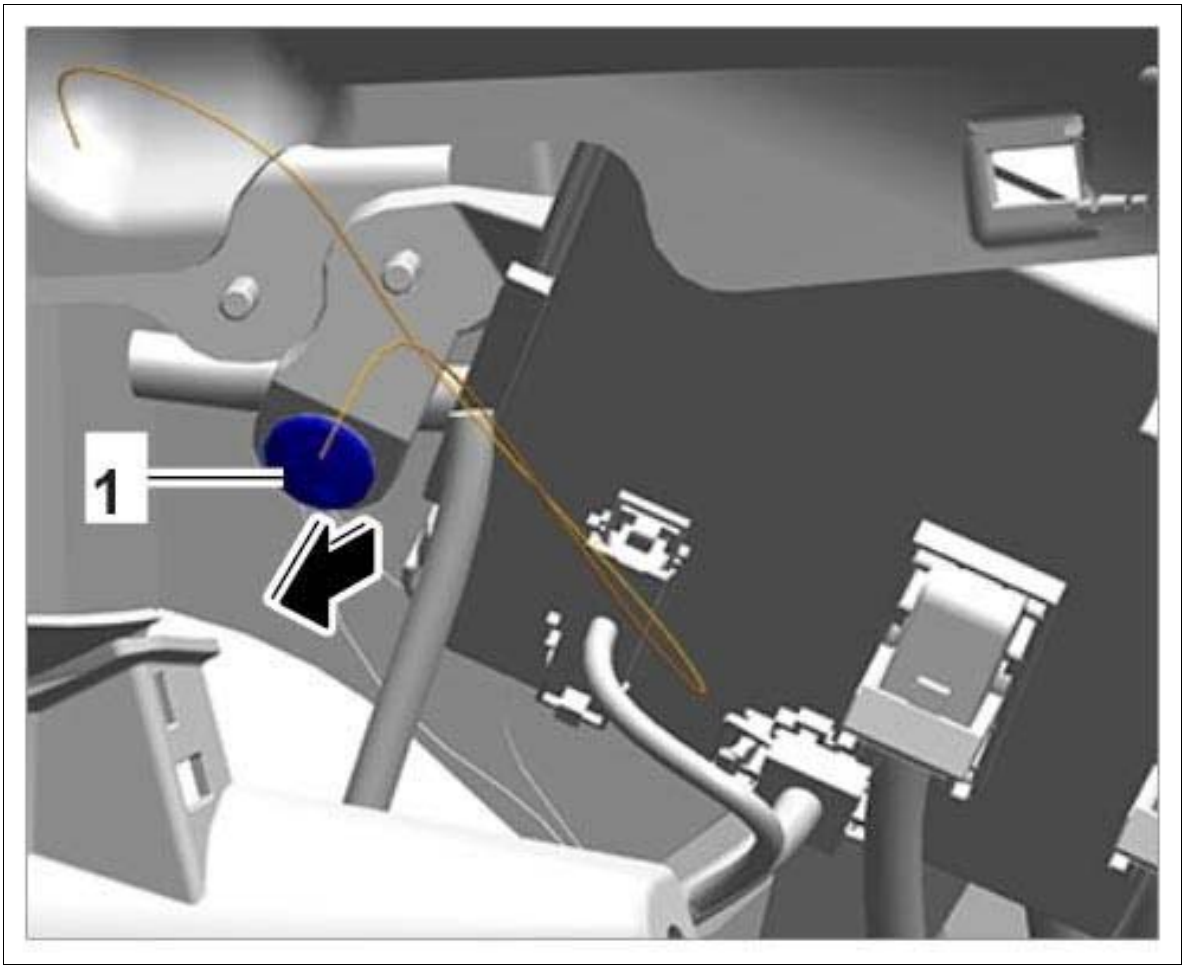

Courtesy of PORSCHE CARS NORTH AMERICA, INC.

6. Unscrew fastening screw **-1-** for filler flap actuator.

Fig 4: Loosening Filler Flap



Courtesy of PORSCHE CARS NORTH AMERICA, INC.

7. Use a screwdriver to puncture all depressions and release the catches **-arrow-** .

Fig 5: Releasing Locking Lugs

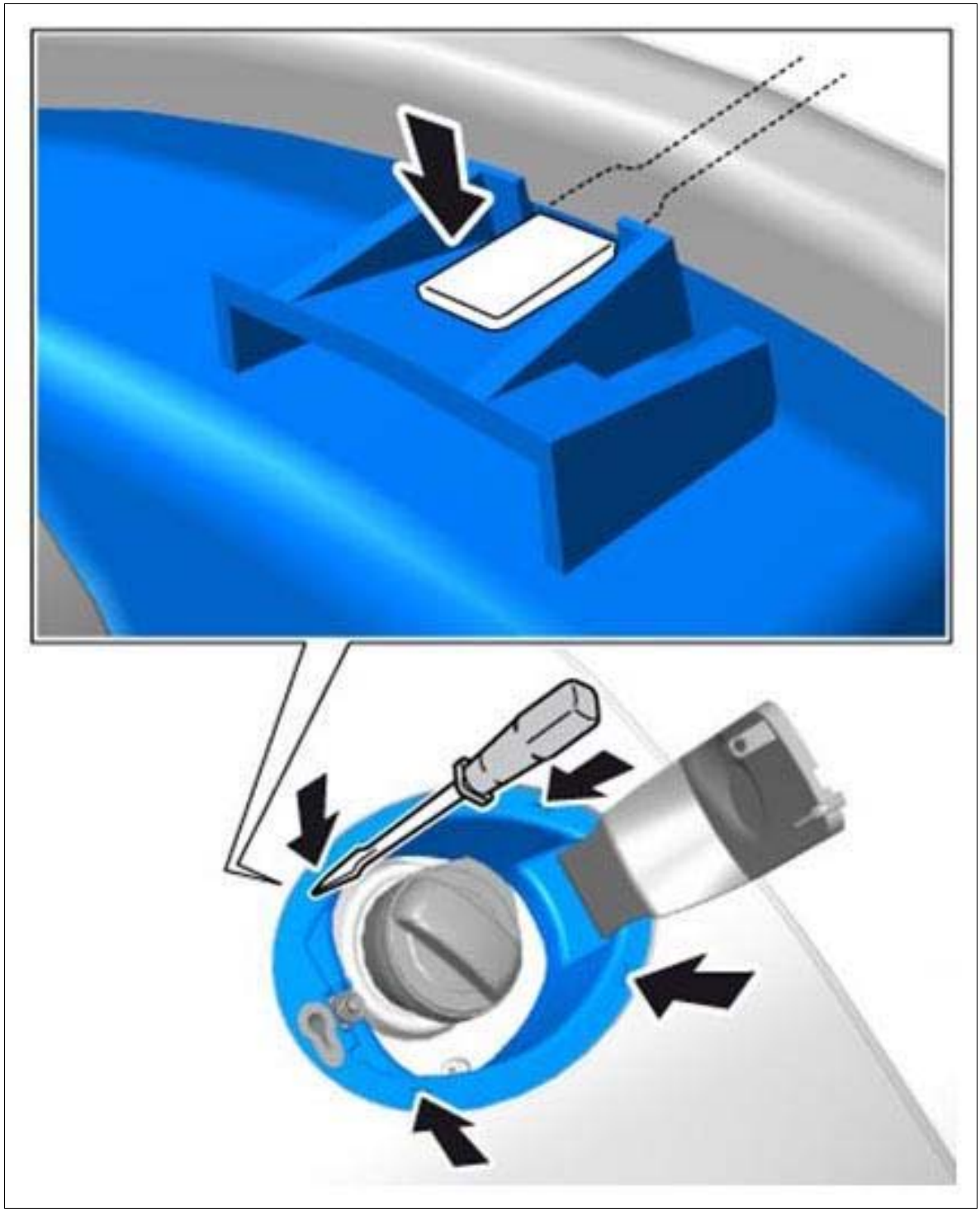

Courtesy of PORSCHE CARS NORTH AMERICA, INC.

8. Use special tool hook 3370 to pull out the filler flap housing **-arrow A-** .

Fig 6: Pulling Filler Flap Housing

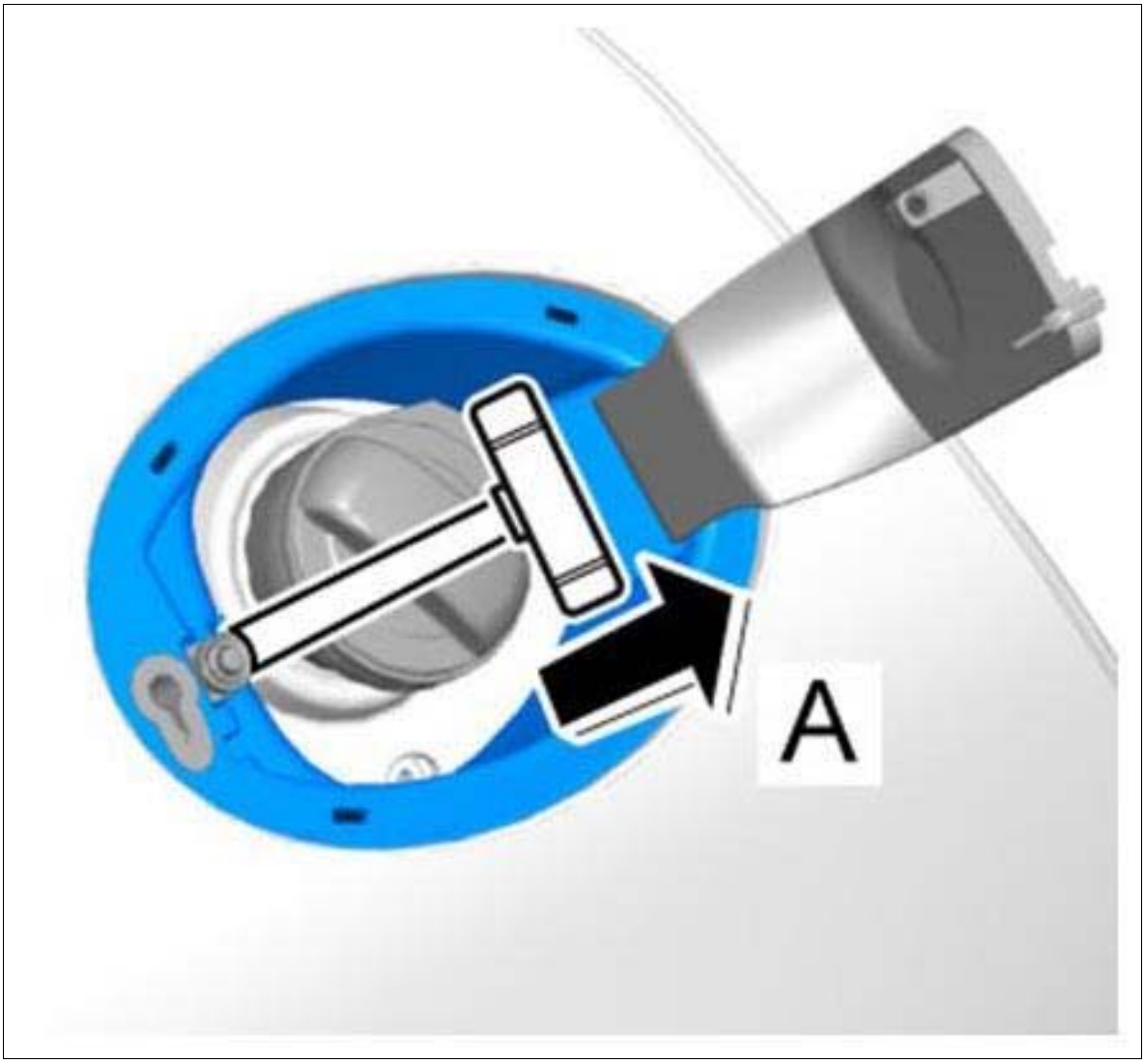

Courtesy of PORSCHE CARS NORTH AMERICA, INC.

9. Release electric plug connection and disconnect connector.
10. Guide new filler flap housing **-arrow-** into the opening in the body.

Fig 7: Turning Filler Flap Housing

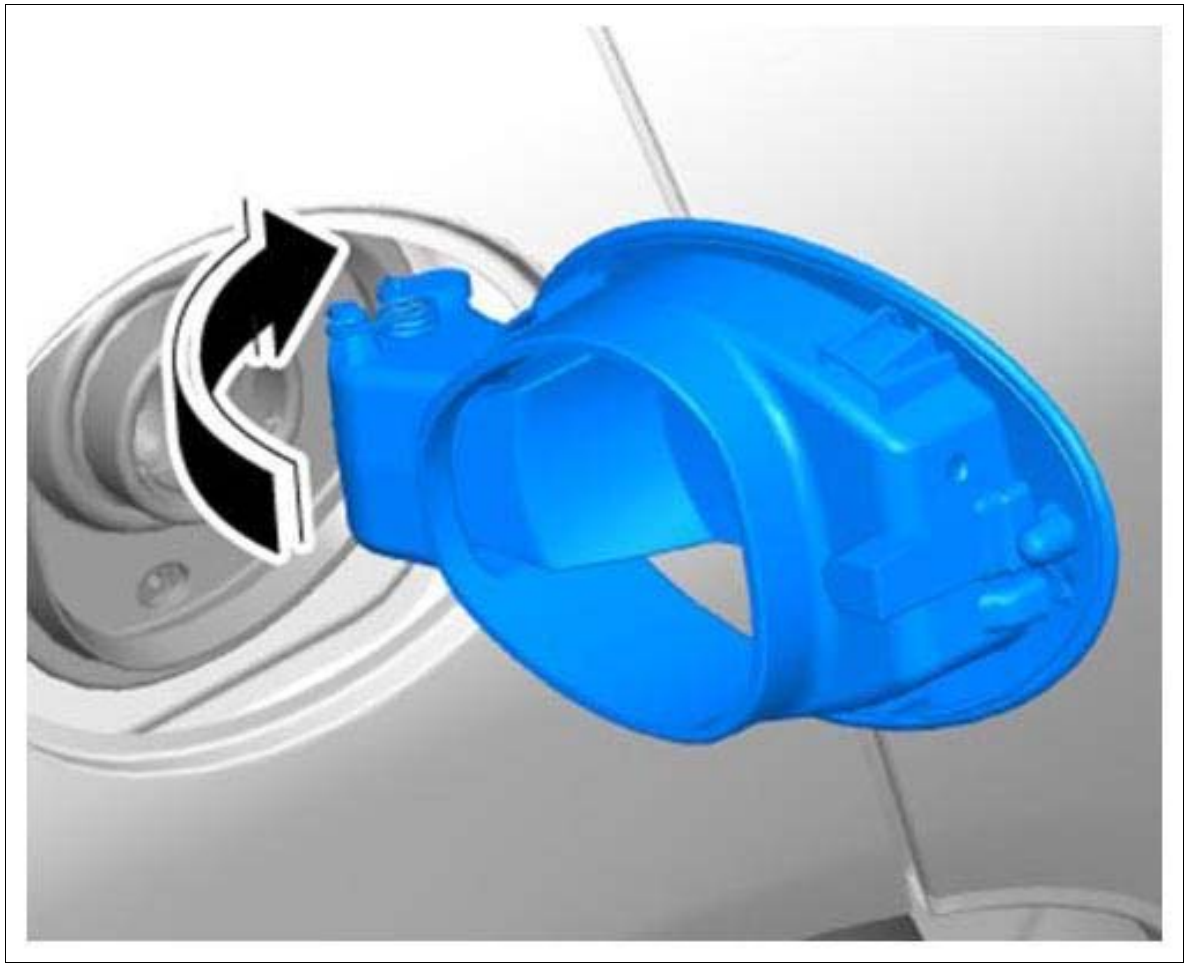

Courtesy of PORSCHE CARS NORTH AMERICA, INC.

11. Guide emergency release cable in through the bodyshell.
12. Connect electric plug connection.
13. Guide emergency release cable through the bodyshell and engage it at the release button.
14. Align the filler flap housing so that the rubber lip goes all around the outside of the filler flap housing **-arrow-** .

Fig 8: Fitting Filler Flap Housing

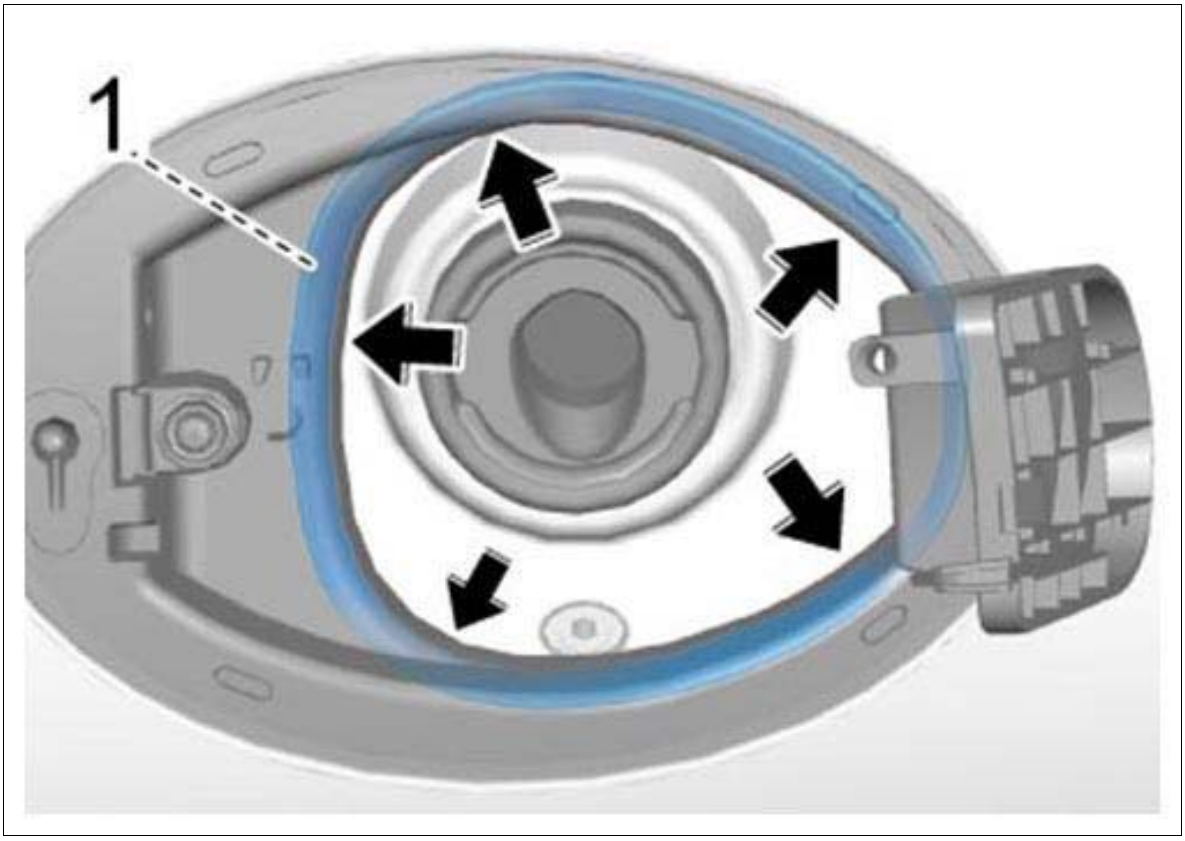

Courtesy of PORSCHE CARS NORTH AMERICA, INC.

15. Press the filler flap housing against the body until the locking lugs engage securely.
16. Push on the tank cap **-arrow-** so that the retaining lugs **-1-** lock into the holders and engage with an audible click in the catch **-2-** .

Fig 9: Pushing Tank Cap

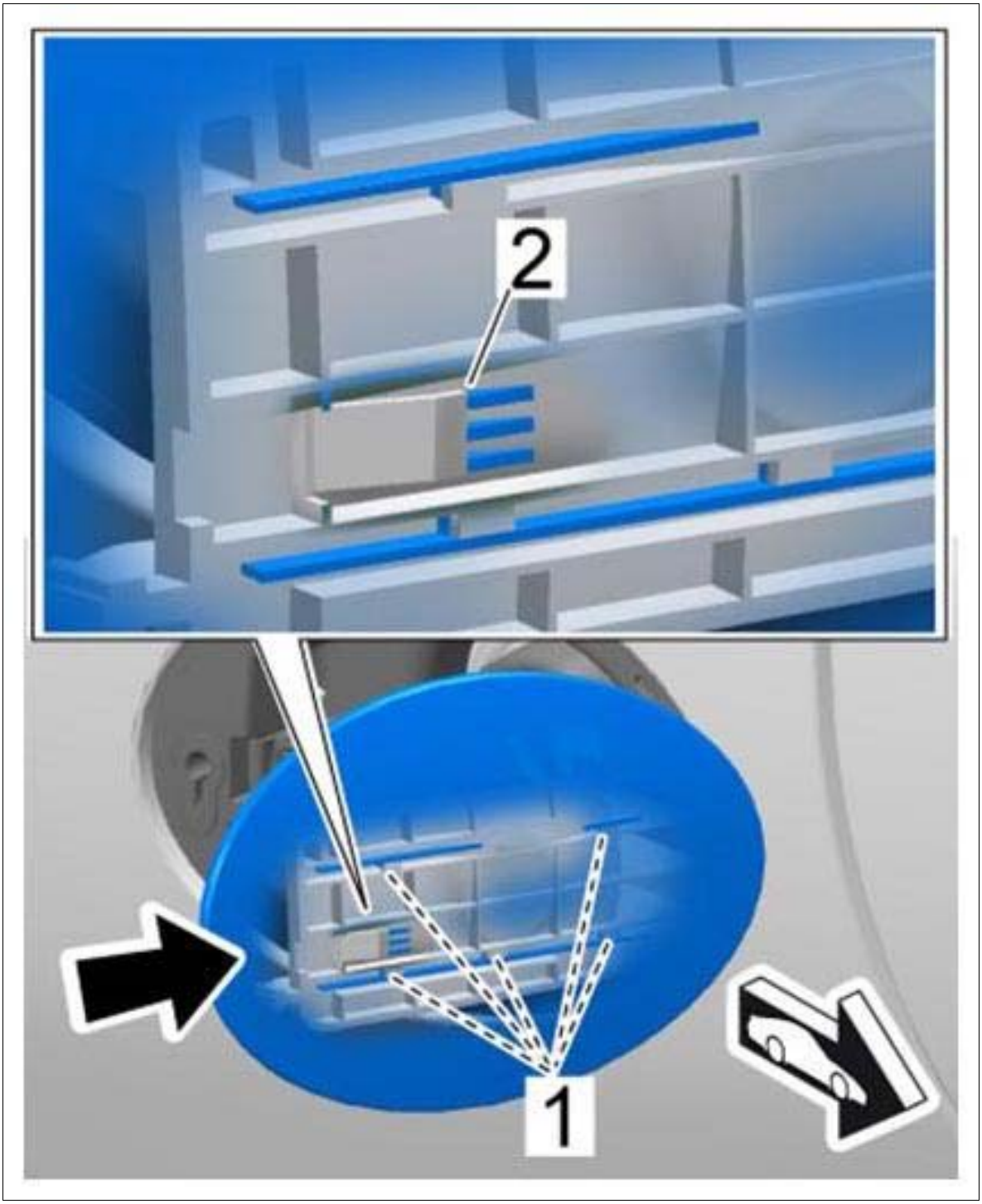

Courtesy of PORSCHE CARS NORTH AMERICA, INC.

17. Clip in retaining strap **-1- (-arrow A-)** .

Fig 10: Fitting Retaining Strap And Fuel Tank Cap

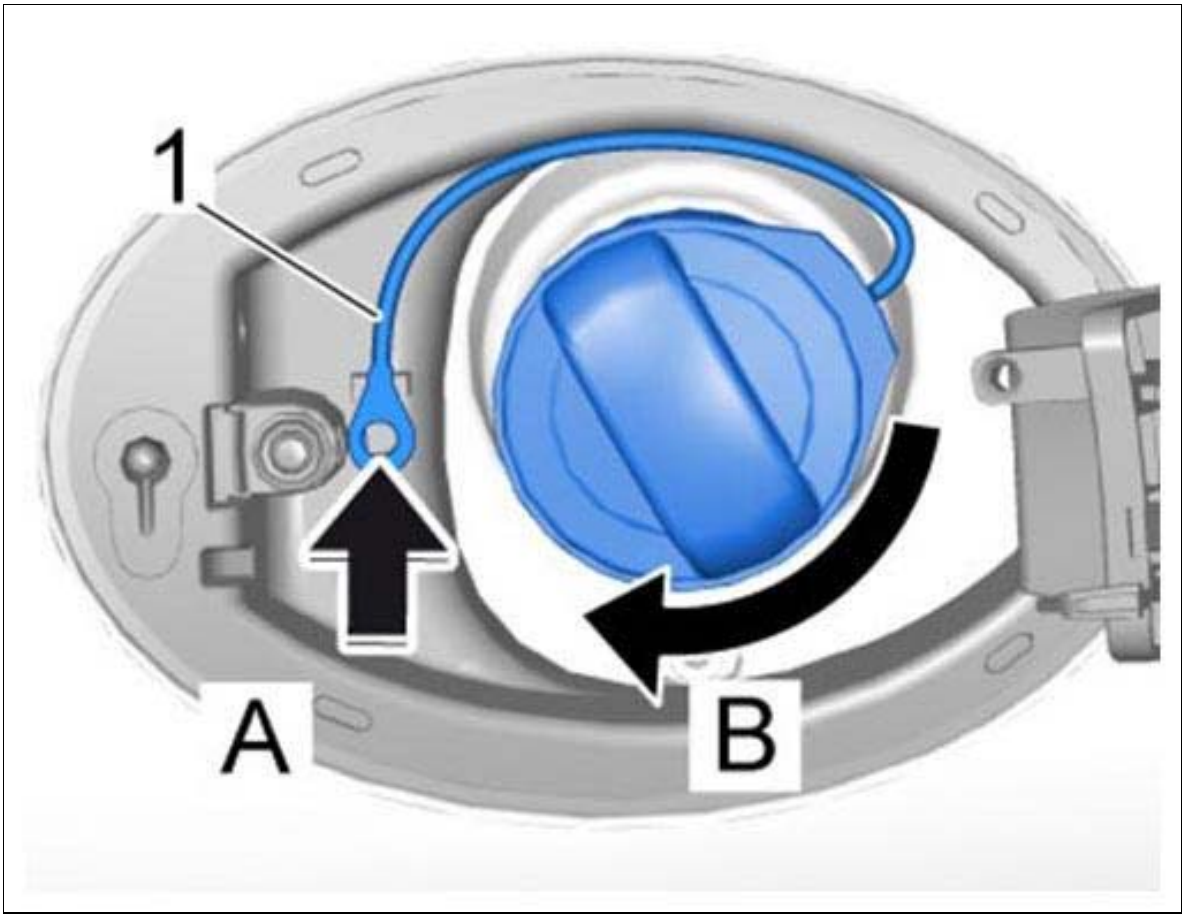

Courtesy of PORSCHE CARS NORTH AMERICA, INC.

18. Screw in fuel tank cap **-arrow B-** .

WM 553819 REMOVING AND INSTALLING SWITCHING ELEMENT FOR FILLER FLAP (MACAN, MACAN S, MACAN TURBO) > INFORMATION

The filler flap switching element is integrated in the filler flap module and may not be replaced separately.
→ 553755 REPLACING FILLER FLAP

WM 555719 REMOVING AND INSTALLING REAR LID RELEASE (MACAN, MACAN S, MACAN TURBO) > PRELIMINARY WORK

1. Remove wiper motor for rear window washer. → 923419 REMOVING AND INSTALLING WIPER MOTOR FOR REAR WINDOW WASHER .

WM 555719 REMOVING AND INSTALLING REAR LID RELEASE (MACAN, MACAN S, MACAN TURBO) > REMOVING REAR LID RELEASE

1. Release and disconnect electric plug connection.
2. Remove rear lid release.

Fig 1: Removing Release Switch

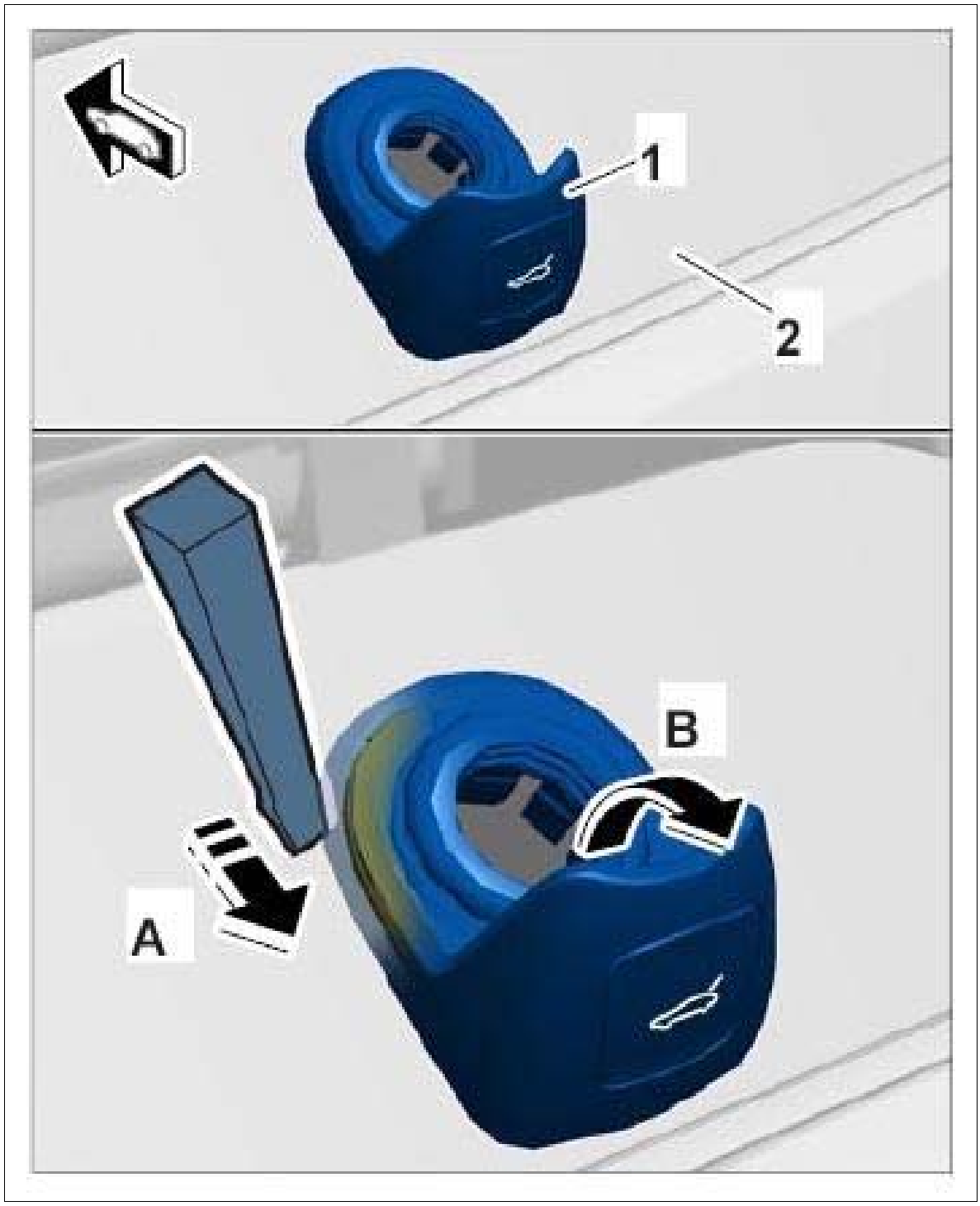

Courtesy of PORSCHE CARS NORTH AMERICA, INC.

1. 2.1. At the outer edge of the release switch, insert a plastic wedge no deeper than 2.5 mm between the release switch **-1-** and rear window **-2-** as shown **-arrow A-** .
2. 2.2. Push the plastic wedge straight down and unclip the release switch from the retainer plate **-arrow B-** .

Do not use force on the retainer plate.

WM 555719 REMOVING AND INSTALLING REAR LID RELEASE (MACAN, MACAN S, MACAN TURBO) > INSTALLING REAR LID RELEASE

NOTE: Incorrect installation of release switch.

- *Damage to rear window trim.*

→ Carefully press in release switch without using excessive force.

Information

Steps 1 to 1.7 described below must only be carried out if a new contact plate with round connector is installed.

1. **Replace plug connection for rear lid release on the vehicle side.**

1. 1.1. Remove fabric tape around the main wire harness as shown.

Fig 1: Removing Fabric Tape

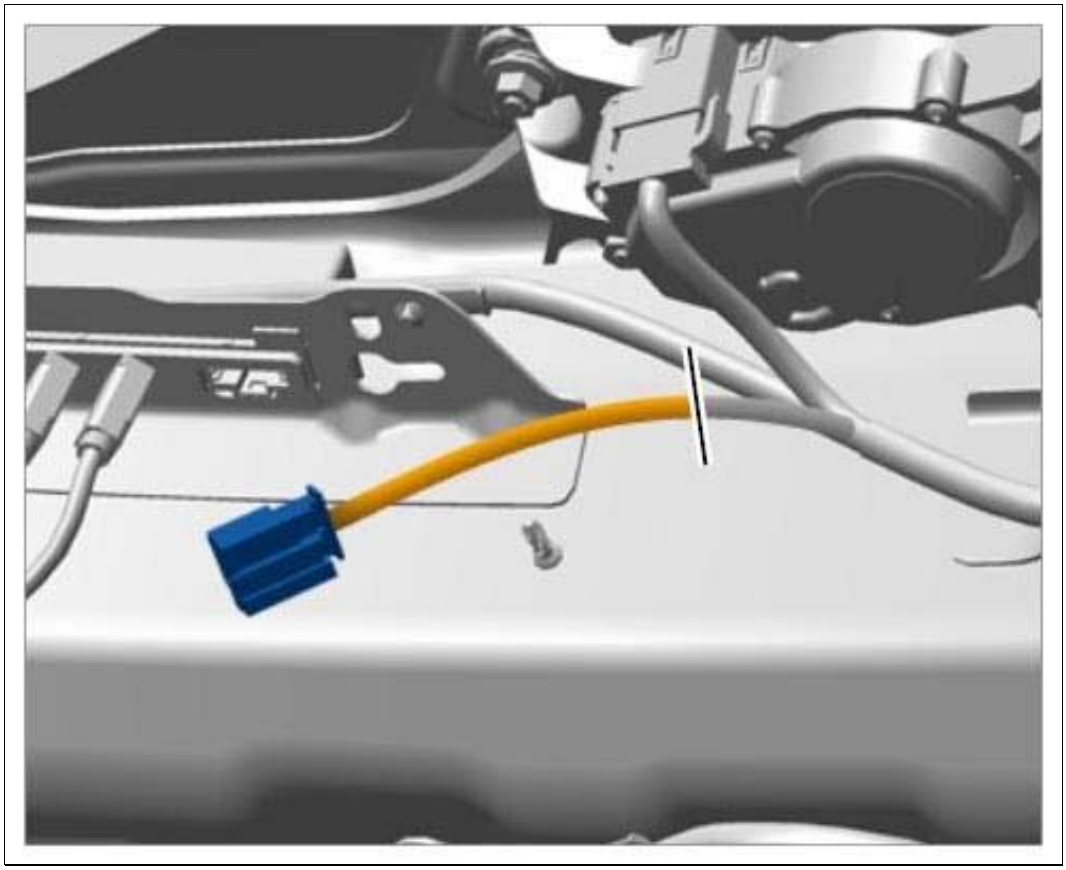

Courtesy of PORSCHE CARS NORTH AMERICA, INC.

1. Select a place for the joint where there is enough space to join the individual

lines.

2. Mark the electric lines if necessary.

3. If the wire harness is damaged to such an extent that it cannot be repaired using a crimp connector, the individual lines of the connector must be replaced. For further information, see: → 9X00IN ORDERING AND REPAIRING ELECTRIC PLUG CONNECTIONS .

2. 1.2. Cut off connector lines **-1-** in the marked area **individually** using **stripping pliers VAS 1978/3 -2-.**

   Fig 2: Cutting Connector Line

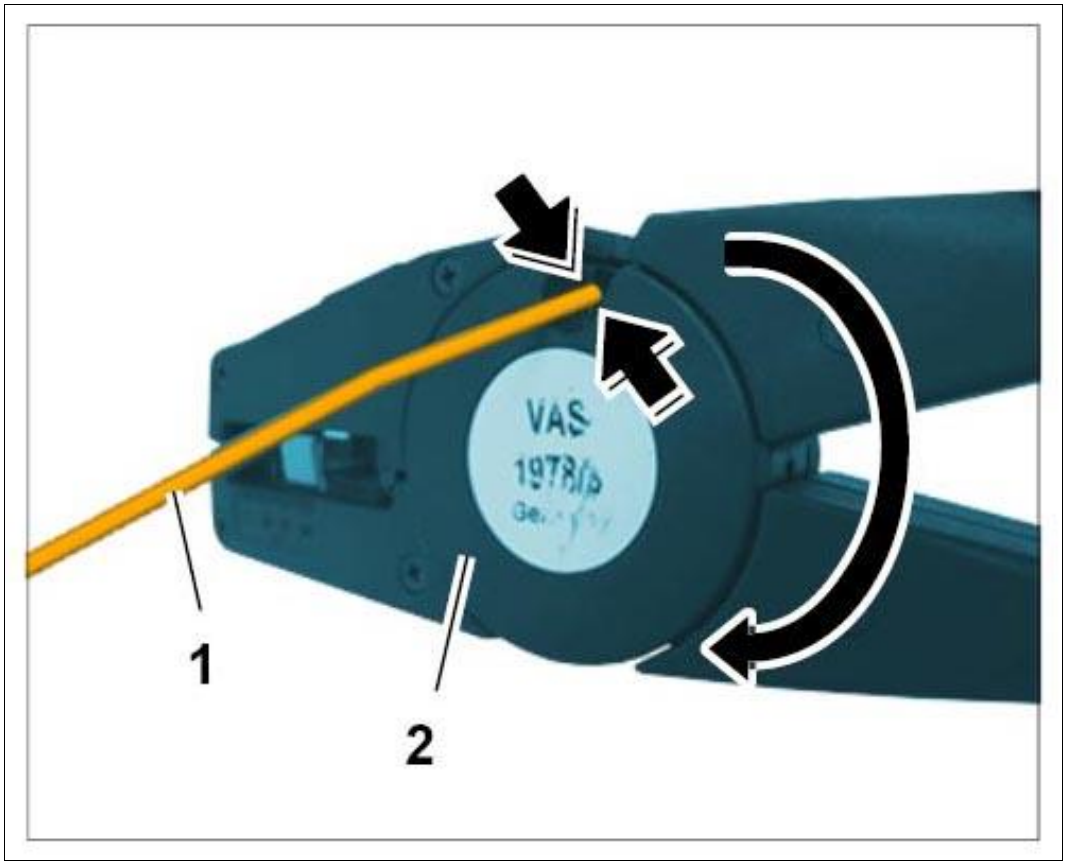

Courtesy of PORSCHE CARS NORTH AMERICA, INC.

3. 1.3. Strip the lines you have just cut (yellow/blue and brown) **-1-** using the **stripping pliers VAS 1978/3 -2-** .

   The green/white line in the wire harness is not used and must then be insulated using fabric tape.

Fig 3: Identifying Stripping Repair Line

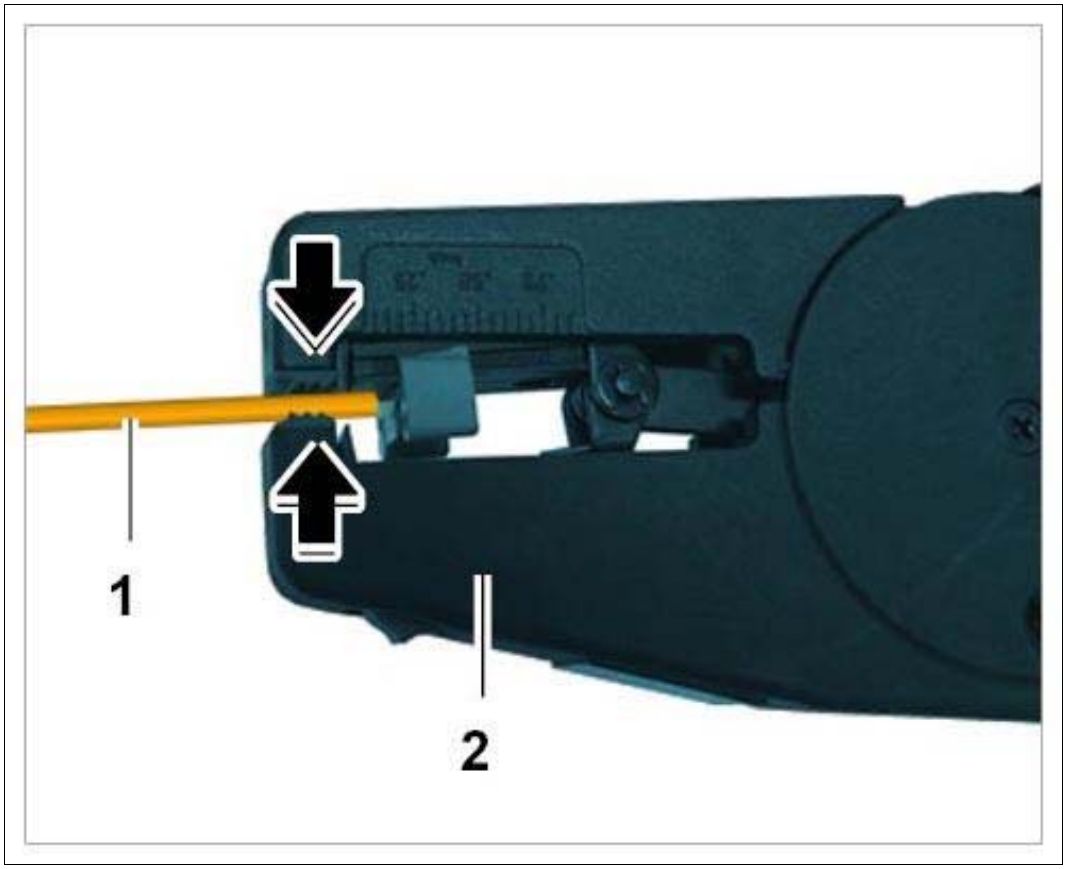

Courtesy of PORSCHE CARS NORTH AMERICA, INC.

4. 1.4. Insert the stripped lines **-1-** into the corresponding crimp connector **-2-** on the repair connector, Part No. **95B.998.030** .

   Line assignment:

   Brown line of the connector to **brown/white** line of the main wire harness.

   Yellow/blue line of the connector to **yellow/blue** line of the main wire harness.

Fig 4: Inserting Lines Into Crimp Connector

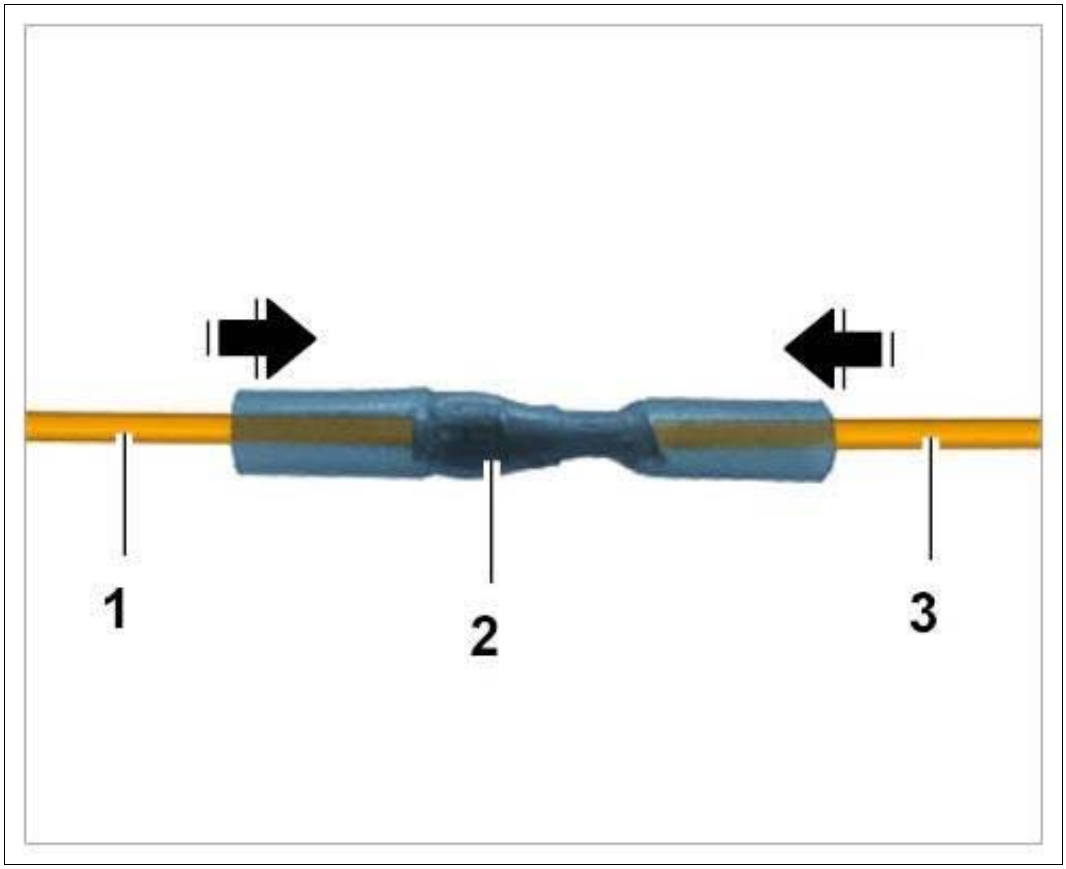

Courtesy of PORSCHE CARS NORTH AMERICA, INC.

5. 1.5. Crimp on both lines using **crimping pliers VAS 1978/1-1** .

Fig 5: Locating Repair Line

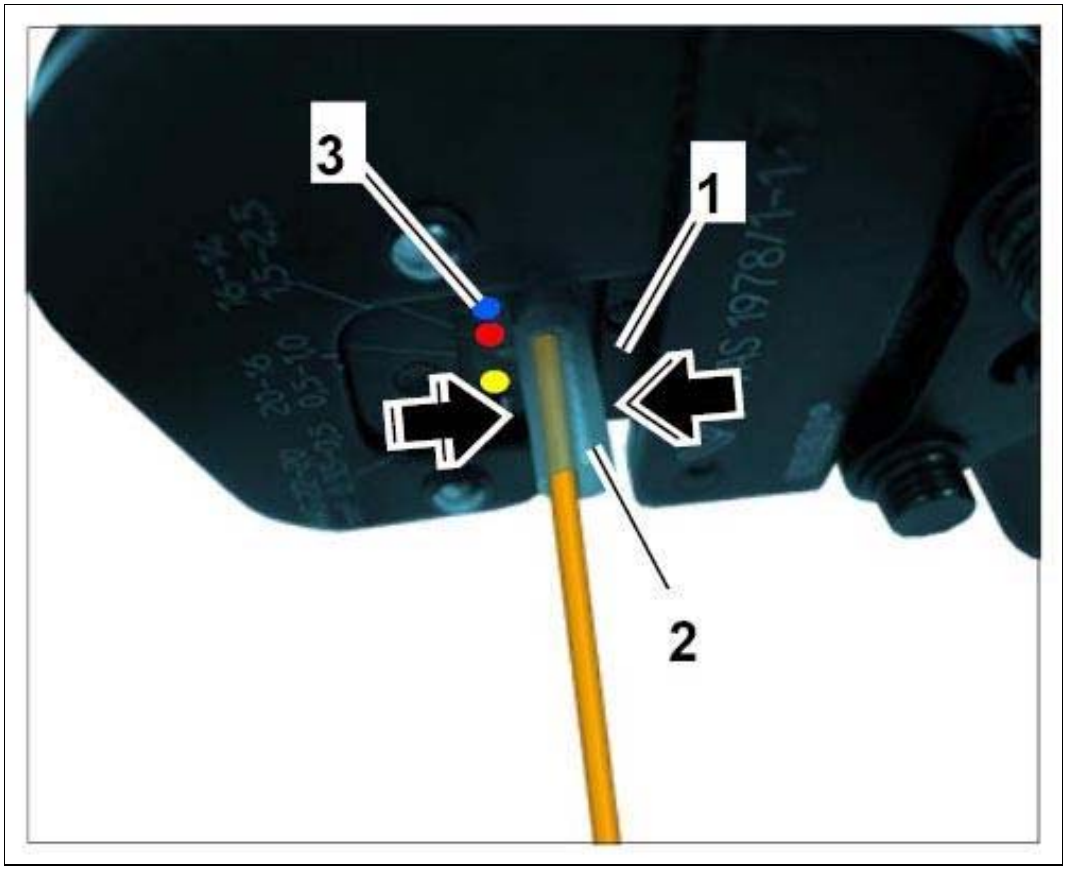

Courtesy of PORSCHE CARS NORTH AMERICA, INC.

1. 1.5.1. Insert crimping pliers insert **-1-** according to the color marking **-3-** on the crimp connector **-2-** into the **crimping pliers VAS 1978/1-1** .
2. 1.5.2. Crimp on the crimp connector **-2-** using **crimping pliers VAS 1978/1-1** .

6. 1.6. Seal shrink-fit hose on the crimp connection **-1-** using **hot-air blower VAS 1978/14A -2-** .

Fig 6: Heating Seal Shrink-Fit Hose On Crimp Connection

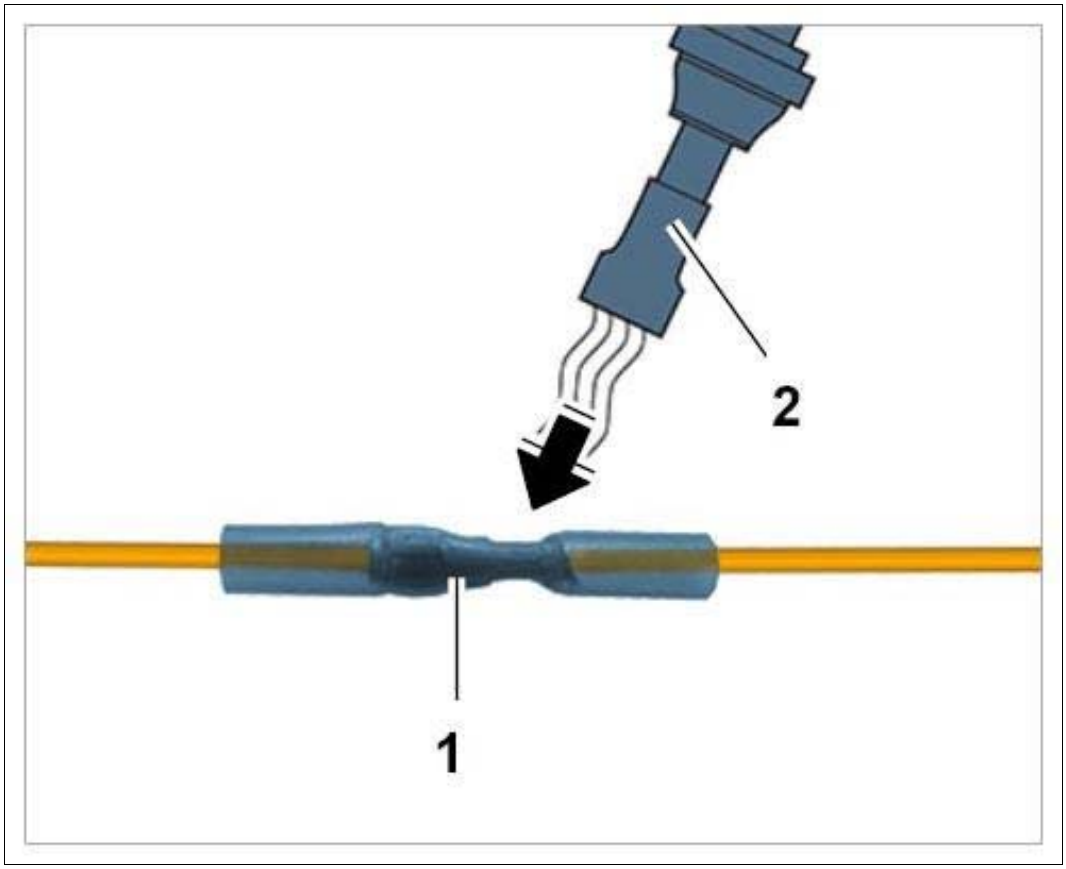

Courtesy of PORSCHE CARS NORTH AMERICA, INC.

7. 1.7. Wrap fabric tape around the main wire harness and connector lines.

Fig 7: Wrapping Tape Around Wire Harness

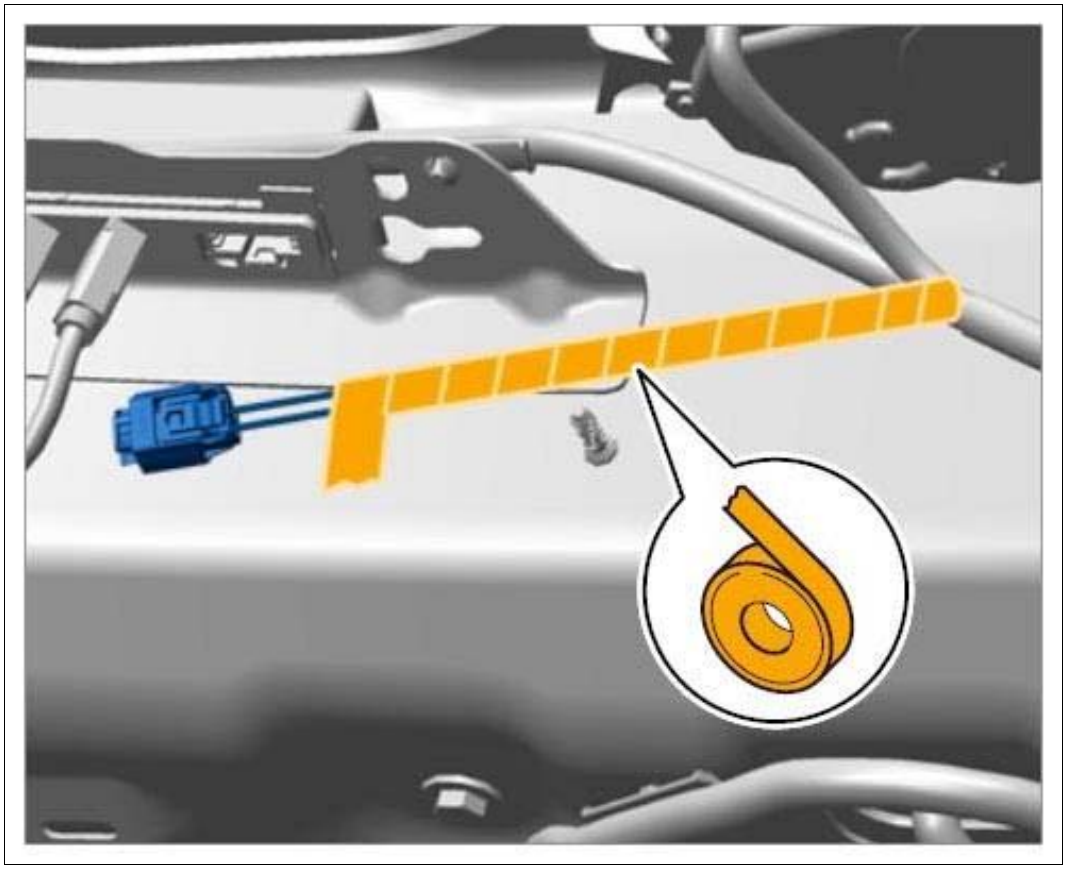

Courtesy of PORSCHE CARS NORTH AMERICA, INC.

2. **Install rear lid release.**

Fig 8: Installing Release Switch

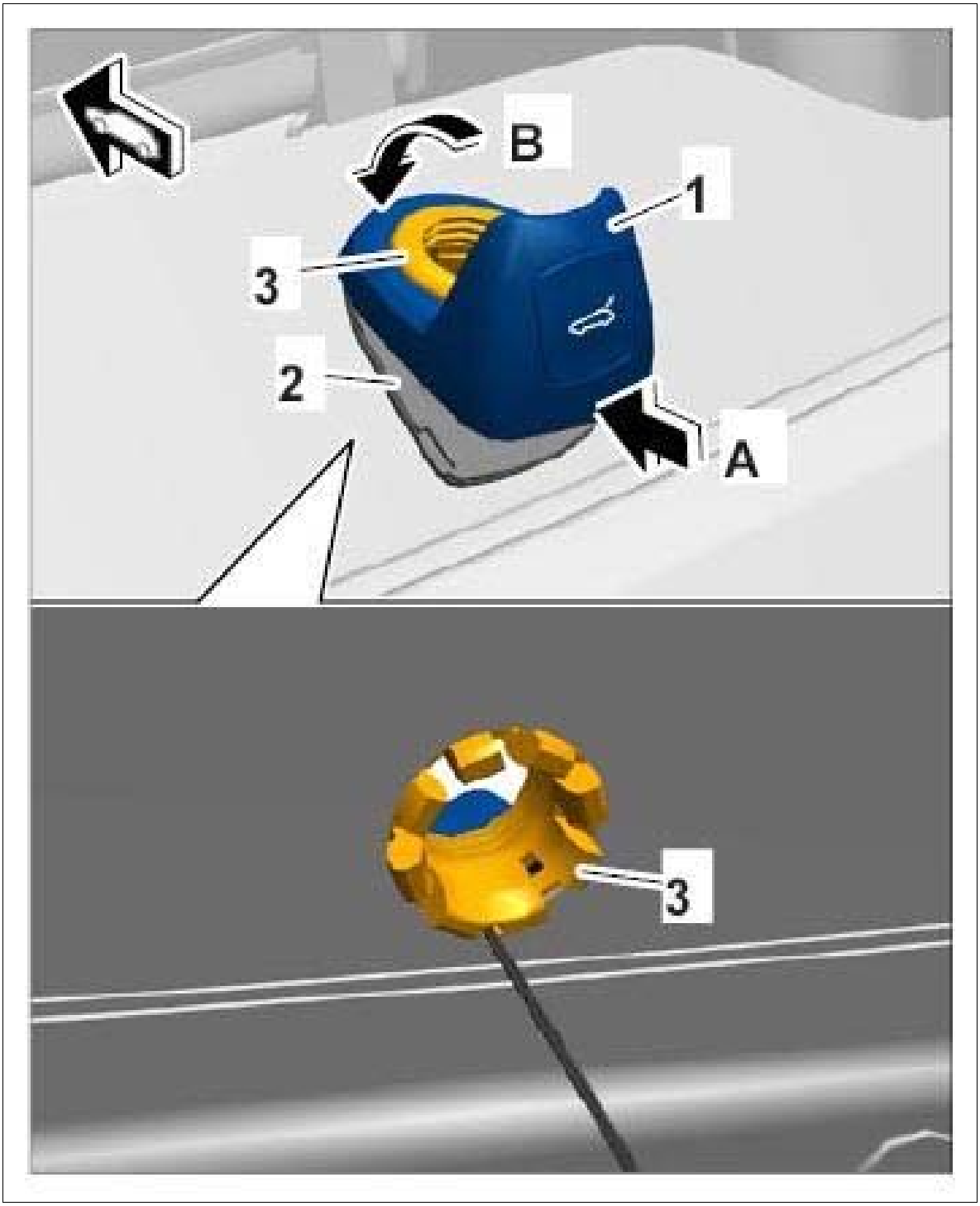

Courtesy of PORSCHE CARS NORTH AMERICA, INC.

1. 2.1. Coat the retainer plate **-2-** with soapy water before installing the new release switch **-1-** .
2. 2.2. Position the release switch **-1-** on the retainer plate **-2-** as shown and check that the sealing grommet **-3-** is fitted correctly in the opening for the rear window all the way around.
3. 2.3. Guide in release switch **-1-** at the bottom of the retainer plate **-2-** first **-arrow**

A- and then engage it at the top **-arrow B-** .

3. Connect electric plug connection **-arrows-** .

Fig 9: Connecting Plug Connection

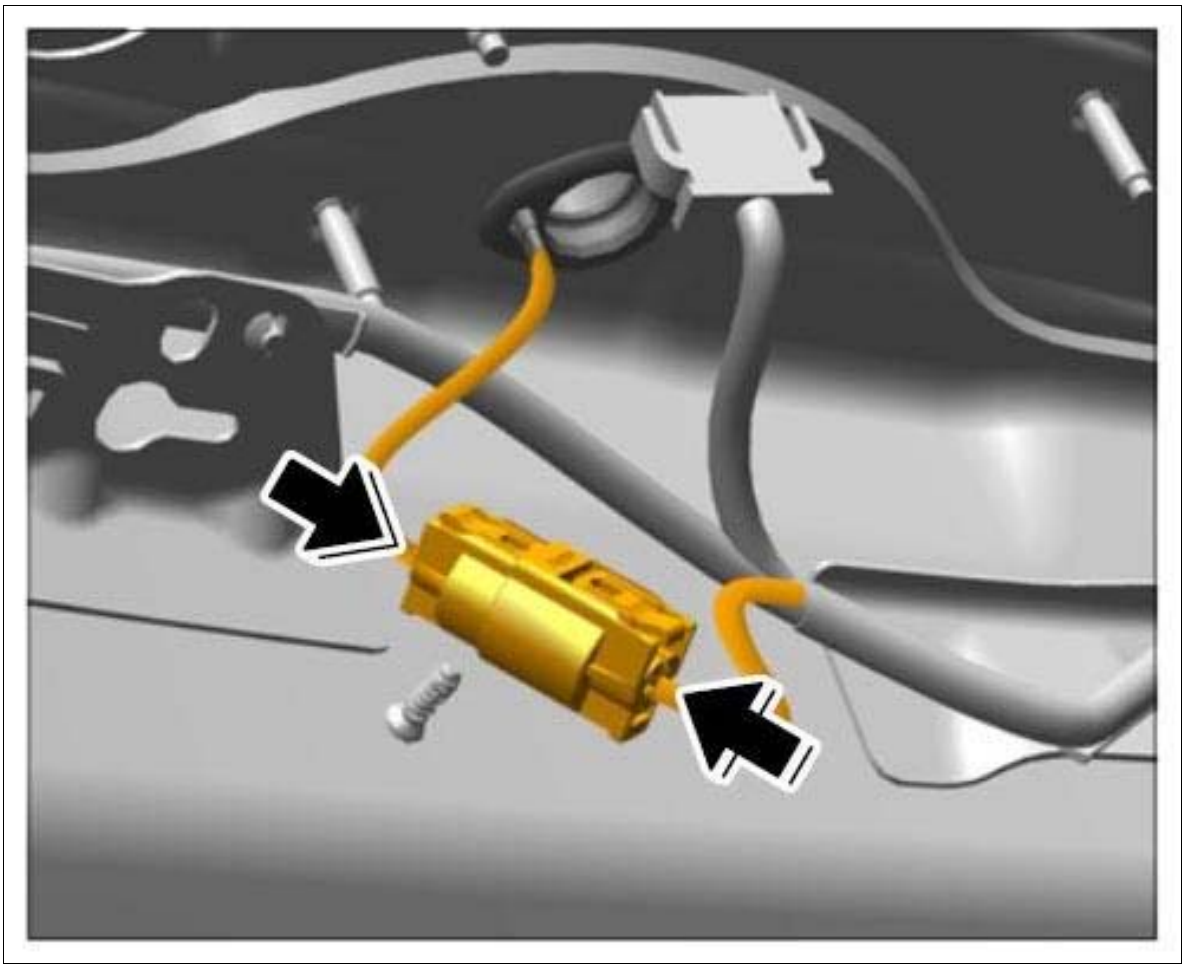

Courtesy of PORSCHE CARS NORTH AMERICA, INC.

4. Perform function test on rear lid release.

WM 555719 REMOVING AND INSTALLING REAR LID RELEASE (MACAN, MACAN S, MACAN TURBO) > SUBSEQUENT WORK

1. Install wiper motor for rear window washer. → INSTALLING WIPER MOTOR FOR REAR WINDOW WASHER .

WM 556819 REMOVING AND INSTALLING CONTROL UNIT FOR REAR LID (MACAN, MACAN S, MACAN TURBO) > TOOLS

Designation	Type	Number	Description	

PIWIS Tester II	Special tool	9818		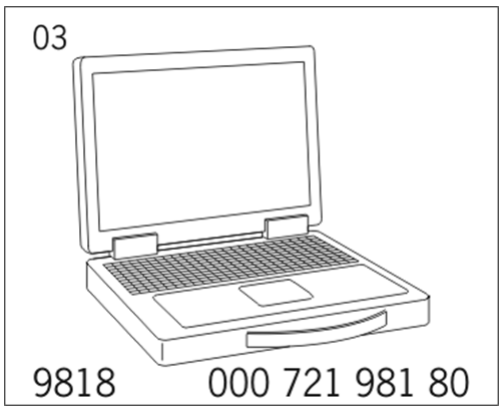

WM 556819 REMOVING AND INSTALLING CONTROL UNIT FOR REAR LID (MACAN, MACAN S, MACAN TURBO) > PRELIMINARY WORK

1. Remove trim panel for rear lid. → 708719 TRIM PANEL FOR REAR LID .

WM 556819 REMOVING AND INSTALLING CONTROL UNIT FOR REAR LID (MACAN, MACAN S, MACAN TURBO) > REMOVING CONTROL UNIT FOR REAR LID

NOTE: Voltage peaks

- *Risk of damage to load or to the control unit*

→ Remove the ignition key and switch off load before disconnecting or removing load.

Information

Always comply with the regulations for handling ESD-sensitive components!

- Assembly work may only be carried out if the mechanic is wearing the working clothes and shoes approved by Porsche.
- The new part must only be removed from the ESD (electrostatic discharge) protective packaging just before installation and at the position at which the part is to be installed.
- Never touch the electric pins and plug contacts.

1. Switch off ignition and pull remote control out of ignition lock.
2. Release clip **-a- (-1-)** , swivel it aside **-b-** and remove electric plug connection from rear lid control unit **-2-** .
3. Release electric plug connections **-3- (-c-)** and disconnect them from the rear lid control unit.

Fig 1: Disconnecting Electric Plug Connections

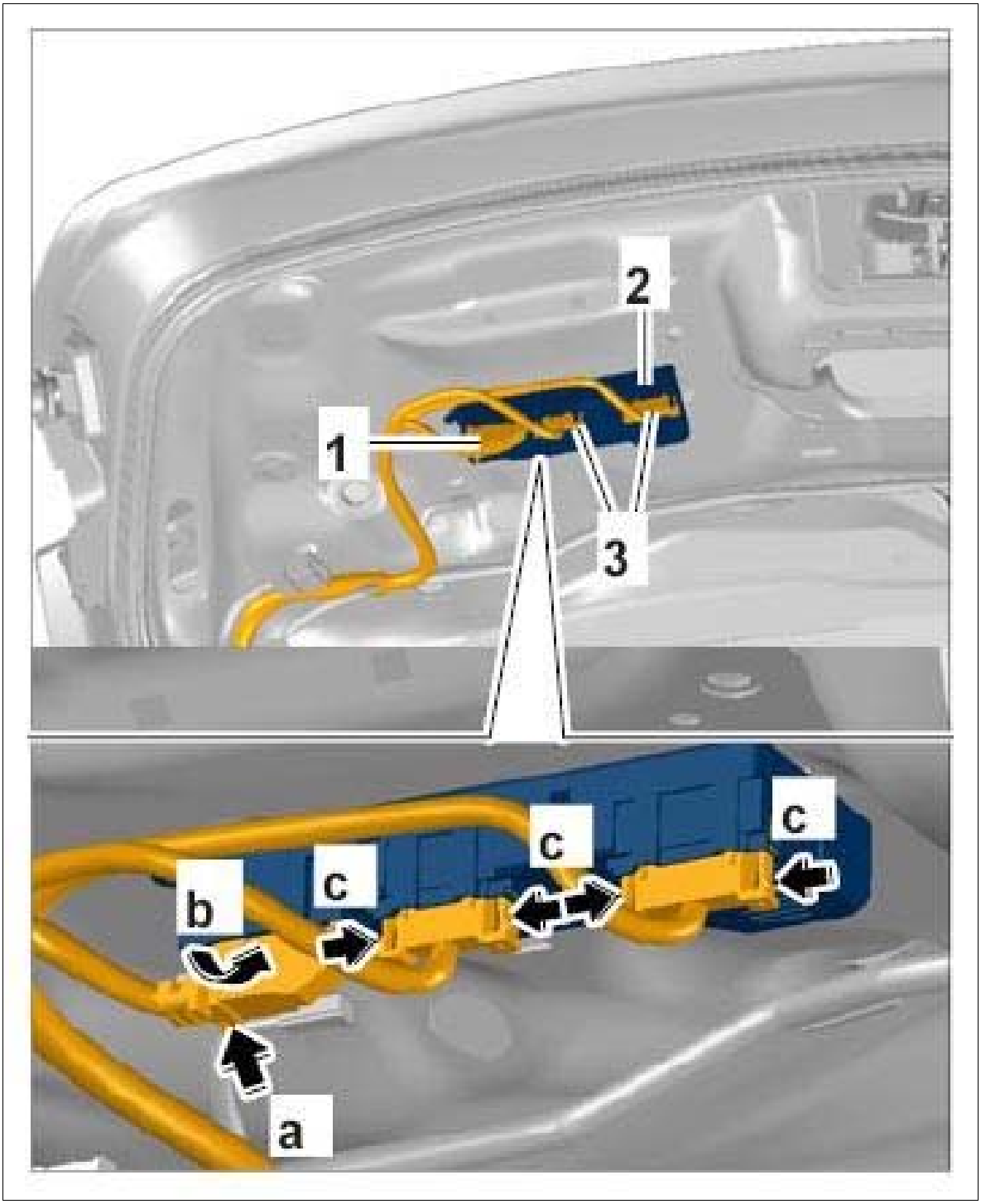

Courtesy of PORSCHE CARS NORTH AMERICA, INC.

4. Release control unit for rear lid **-1- (-a-)** and slide it to the left out of the guides on the rear lid **-b-** .

Fig 2: Removing Rear Lid Control Unit

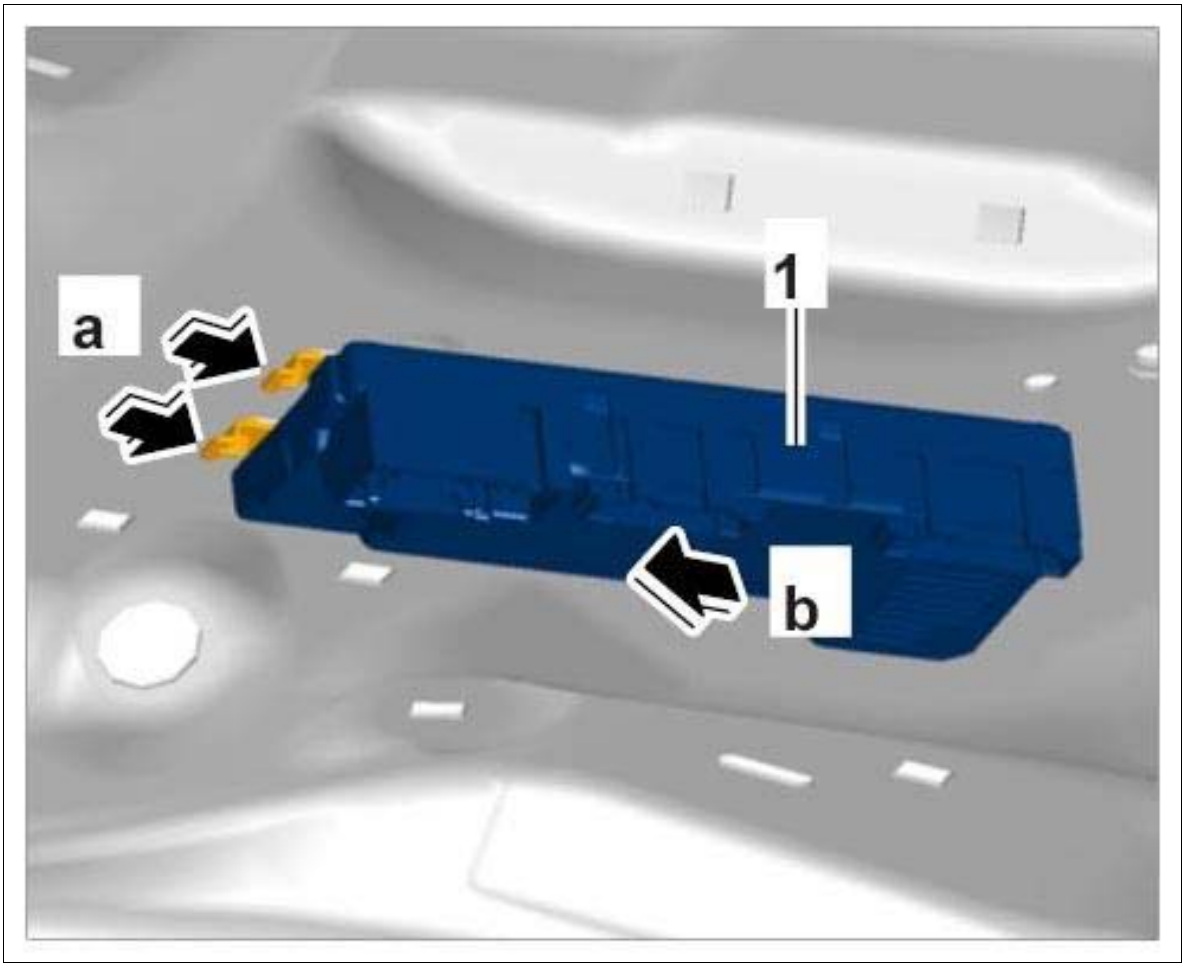

Courtesy of PORSCHE CARS NORTH AMERICA, INC.

WM 556819 REMOVING AND INSTALLING CONTROL UNIT FOR REAR LID (MACAN, MACAN S, MACAN TURBO) > INSTALLING CONTROL UNIT FOR REAR LID

1. Installation is performed in reverse order to removal.

WM 556819 REMOVING AND INSTALLING CONTROL UNIT FOR REAR LID (MACAN, MACAN S, MACAN TURBO) > SUBSEQUENT WORK

1. Install trim panel for rear lid. → INSTALLING TRIM PANEL FOR REAR LID .
2. If the rear lid control unit was replaced, teach the new rear lid control unit to suit the vehicle using **PIWIS Tester II 9818.** → 556855 REPLACING CONTROL UNIT FOR REAR LID

WM 556855 REPLACING CONTROL UNIT FOR REAR LID (MACAN, MACAN S,

MACAN TURBO) > TOOLS

Designation	Type	Number	Description	
PIWIS Tester II	Special tool	9818		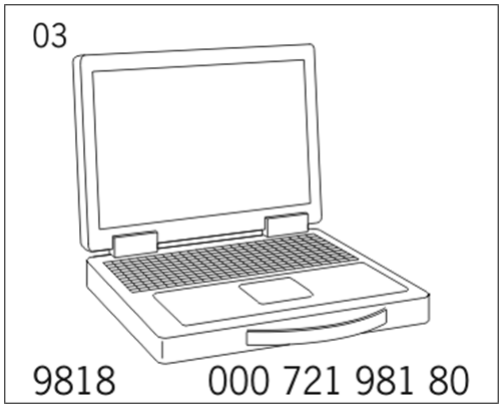

WM 556855 REPLACING CONTROL UNIT FOR REAR LID (MACAN, MACAN S, MACAN TURBO) > TECHNICAL VALUES

Location	Description	Type	Basic value	Tolerance 1	Tolerance 2
Current rating		Nominal value	40 A		

WM 556855 REPLACING CONTROL UNIT FOR REAR LID (MACAN, MACAN S, MACAN TURBO) > PRELIMINARY WORK

1. Remove control unit for rear lid. → 556819 REMOVING AND INSTALLING CONTROL UNIT FOR REAR LID .

WM 556855 REPLACING CONTROL UNIT FOR REAR LID (MACAN, MACAN S, MACAN TURBO) > CODING AND CALIBRATING CONTROL UNIT

NOTE: Voltage drop

- *Risk of irreparable damage to control unit*
- *Risk of damage to control unit*
- *Fault entries in the control unit*
- *Coding in the control unit is aborted*
- *Malfunctions in control unit, even during programming*

→ Prior to disconnecting the control unit, switch off ignition and remove ignition key.

→ Ensure that the power supply is not interrupted during programming.

→ Connect a battery charger with a current rating of at least → **Nominal value: 40 A** to the vehicle battery.

Information

The **PIWIS Tester II 9818** instructions take precedence since the description may be different with later Tester releases.

The procedure described here has been structured in general terms. Different text or additional information may appear in **PIWIS Tester II 9818** .

1. Connect the Porsche System Tester to the vehicle and start the System Tester. Switch on ignition and press [F12] to continue.
2. Select the vehicle type. The diagnostic application starts.
3. Select the required control unit, e.g. Rear lid in the overview and press [F12] to continue.
4. **Extended identification** must now be selected.
5. **Enter the vehicle identification number** and press Enter.
6. **Maintenance/repairs** must then be selected.
7. **Control unit replacement** must now be selected. Then press [F12] to continue.
8. **Select Write data,** press [F12] and then press [F8] to start. Data is installed.
9. The System Tester displays the message **Data has been written.** Press [F12] to continue.
10. **Codings/adaptations** must now be selected.
11. **Automatic coding** must now be selected. Then press [F12] to continue.
12. If the message **Coding was completed successfully** appears, press [F12] to continue.

    ⚠ *CAUTION: When you start the calibration/teaching process, the tailgate moves to its limit stops. Mechanical force limitation is not guaranteed during this process.*

    1. Danger of pinching and squashing body parts.

    2. Incorrect values for the control unit, resulting in malfunctions.

    → Take precautions to ensure that no body parts and objects can get caught in the tailgate.

13. Select **Calibration** in the **Maintenance/repairs** menu and press [F12] to continue.
14. Read the warnings, press [F12] to continue and then press [F8] to start the calibration process.
15. Read the instructions on the Tester and perform the calibration process as instructed.

16. Once the teaching process has been completed successfully, an acoustic signal will be issued.
17. **Fault memory** must be selected and erased if necessary.

WM 557319 REMOVING AND INSTALLING ACTUATING CYLINDER FOR REAR LID (MACAN, MACAN S, MACAN TURBO) > PRELIMINARY WORK

1. Remove trim panel for rear lid. → 708719 TRIM PANEL FOR REAR LID

WM 557319 REMOVING AND INSTALLING ACTUATING CYLINDER FOR REAR LID (MACAN, MACAN S, MACAN TURBO) > REMOVING ACTUATING CYLINDER FOR REAR LID > REMOVING REAR ACTUATING CYLINDERS

⚠ *CAUTION: Incorrect handling of actuating cylinders*

- *Actuating cylinders can burst*
- *Risk of eye injuries*
- *Risk of bruising*

→ The actuating cylinders must be in idle state in order to remove them.

→ Open the lid.

→ Secure the lid after removing the actuating cylinders to prevent it from closing accidentally.

→ Do not use force when opening the actuating cylinders due to the high internal pressure.

Information

- The number of fastening screws, fixing clips, plug connections, holders and trim panels can vary depending on equipment.
- The illustrations for removing and installing the drive mechanism are shown only on one equipment variant and may differ from the actual equipment variant.
- Some steps must be carried out automatically.
- Some of the repair illustrations show only one side of the vehicle.

Fig 1: Locating Rear Lid Actuating Cylinder Position



Courtesy of PORSCHE CARS NORTH AMERICA, INC.

1. Release electric plug connection **-1-** and disconnect connector.

Fig 2: Disconnecting Plug Connection

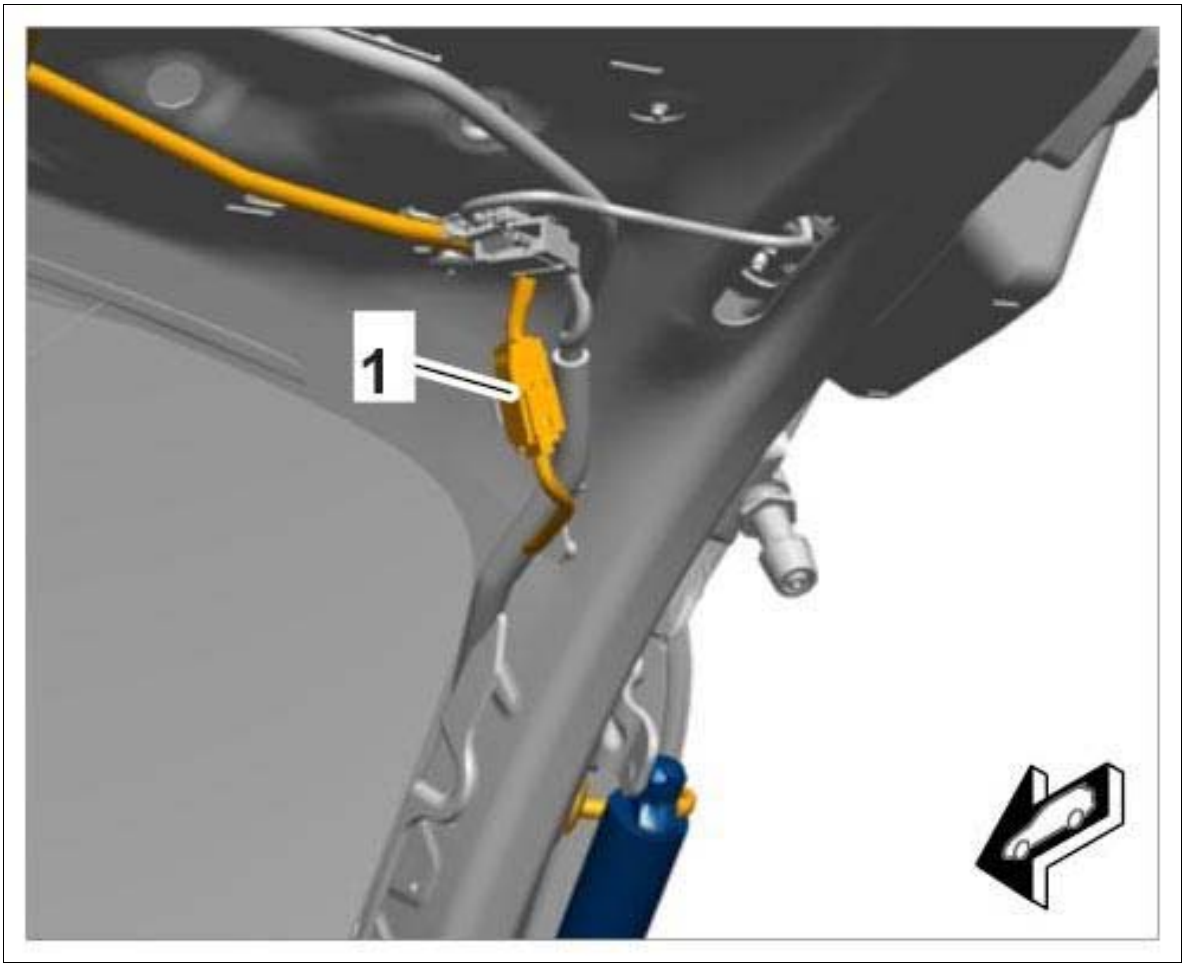

Courtesy of PORSCHE CARS NORTH AMERICA, INC.

2. Press rubber sleeve out of the rear lid.
3. Guide out electric line.
4. A second person should hold the rear lid to prevent it from closing accidentally.
5. Insert a screwdriver between the actuating cylinder **-2-** and safety clip **-1-** .

Fig 3: Removing Actuating Cylinder

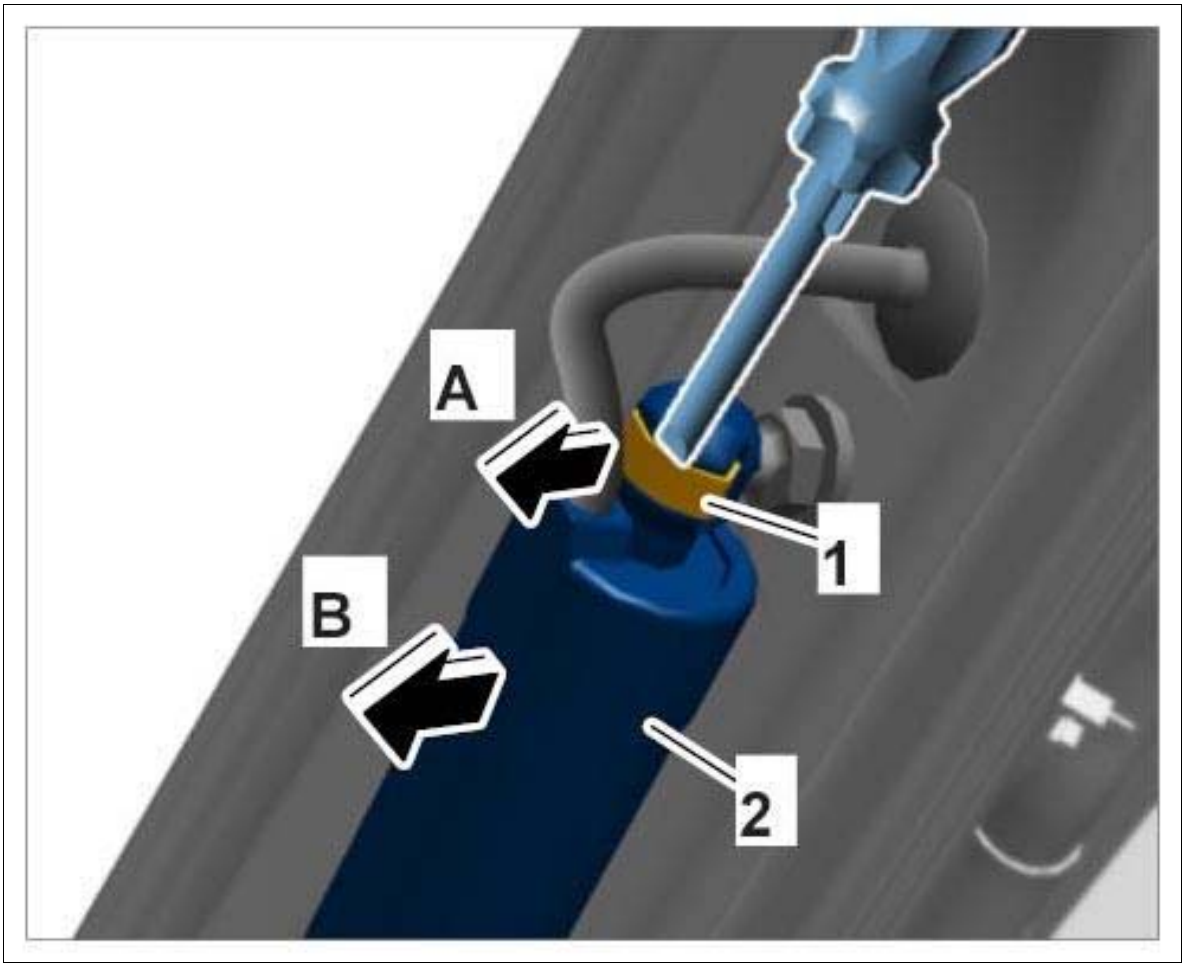

Courtesy of PORSCHE CARS NORTH AMERICA, INC.

6. Lift up the safety clip by levering the screwdriver **-A-** . The safety clip remains on the actuating cylinder.
7. Pull actuating cylinder off the ball joint **-B-** .
8. Remove actuating cylinder at the body side in the same way.

WM 557319 REMOVING AND INSTALLING ACTUATING CYLINDER FOR REAR LID (MACAN, MACAN S, MACAN TURBO) > INSTALLING ACTUATING CYLINDER FOR REAR LID

1. Installation is performed in reverse order to removal.
2. Check that the safety clips have engaged correctly. The safety clip must be directly on the head of the pneumatic spring.
3. Plug in electric plug connection until it engages securely.

WM 557319 REMOVING AND INSTALLING ACTUATING CYLINDER FOR REAR LID (MACAN, MACAN S, MACAN TURBO) > SUBSEQUENT WORK

1. Install trim panel for rear lid. → INSTALLING TRIM PANEL FOR REAR LID

WM 557319 REMOVING AND INSTALLING ACTUATING CYLINDER FOR REAR LID (MACAN, MACAN S, MACAN TURBO) > FUNCTION TEST ON REAR PNEUMATIC SPRINGS

1. Close and open the lid several times to check that the pneumatic springs are working properly and were fitted correctly.
2. Open the lid fully. The two fitted pneumatic springs must hold the lid open.
3. Close the lid.

WM 558219 REMOVING AND INSTALLING REAR LID RELEASE SWITCH (MACAN, MACAN S, MACAN TURBO) > REMOVING REAR LID RELEASE SWITCH

1. Lever rear lid release switch **-1-** out of the trim panel using a plastic wedge.
2. Disconnect electric plug connection **-2-** from the rear lid release switch.

Fig 1: Removing Rear Lid Release Switch

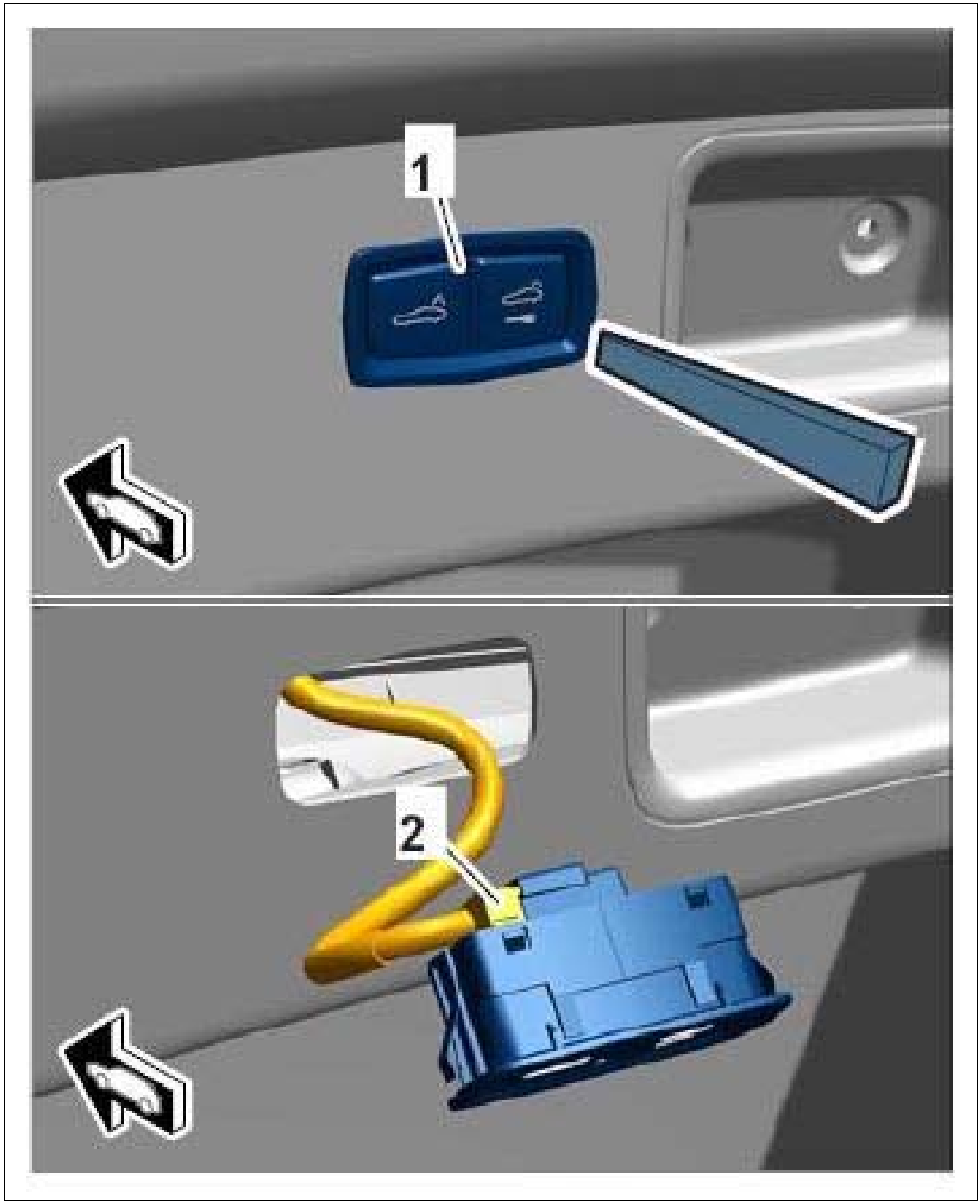

Courtesy of PORSCHE CARS NORTH AMERICA, INC.

WM 558219 REMOVING AND INSTALLING REAR LID RELEASE SWITCH (MACAN, MACAN S, MACAN TURBO) > INSTALLING REAR LID RELEASE SWITCH

1. Installation is performed in reverse order to removal.

WM 558419 REMOVING AND INSTALLING REAR LID RELEASE MOTOR (MACAN, MACAN S, MACAN TURBO) > INFORMATION

1. The rear lid release motor is integrated in the upper part of the rear lid lock and cannot be replaced separately. → 558719 REMOVING AND INSTALLING UPPER PART OF REAR LID LOCK

WM 558519 REMOVING AND INSTALLING MICROSWITCH FOR FRONT LID LOCK (MACAN, MACAN S, MACAN TURBO) > PRELIMINARY WORK

1. Remove lower part of front lid lock. Do not loosen operating cables. → 551719 REMOVING AND INSTALLING LOWER PART OF FRONT LID LOCK .

WM 558519 REMOVING AND INSTALLING MICROSWITCH FOR FRONT LID LOCK (MACAN, MACAN S, MACAN TURBO) > REMOVING MICROSWITCH FOR FRONT LID LOCK

1. Disengage locking mechanism **-a-** and pull microswitch **-1-** out of the front lid lock **-2-** .

Fig 1: Removing Microswitch

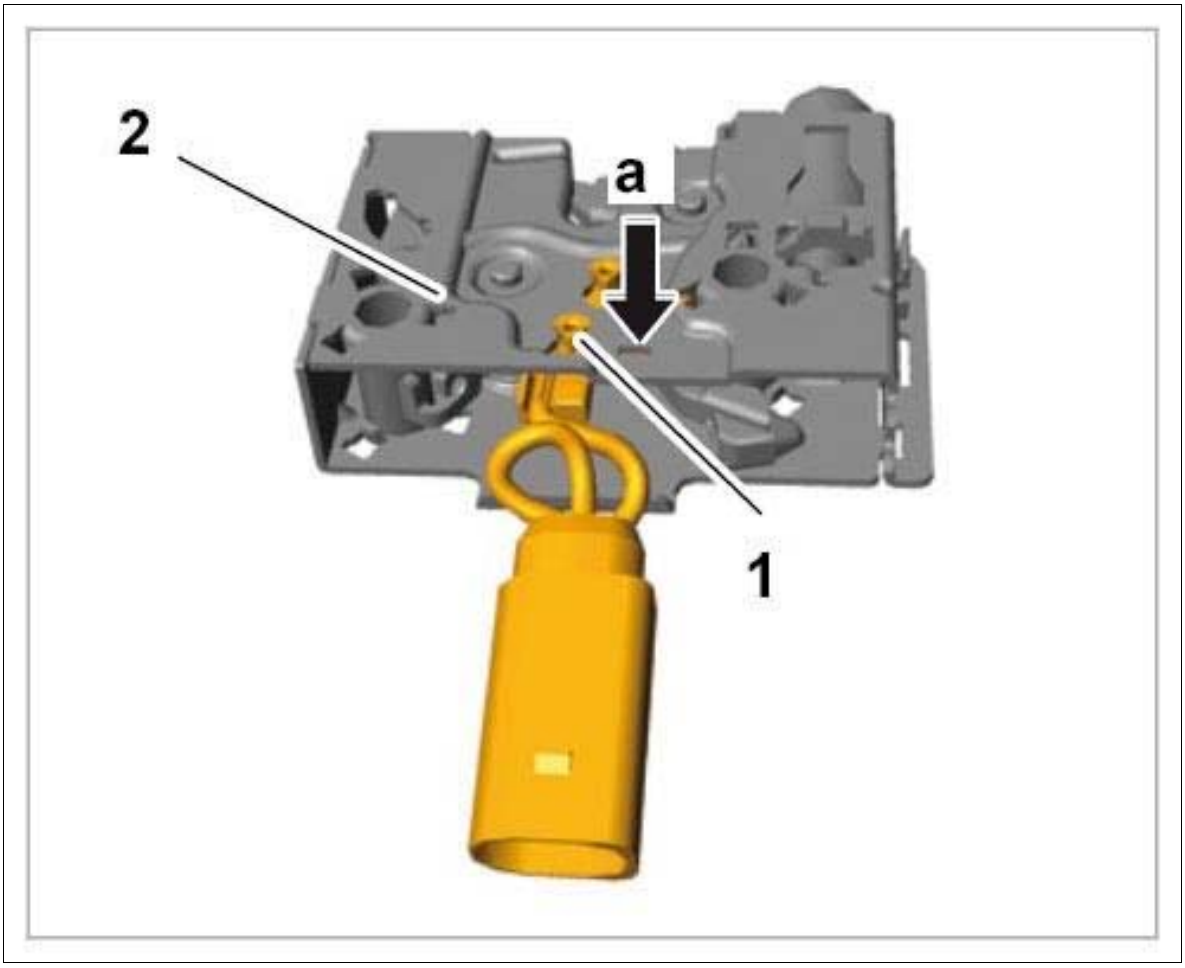

Courtesy of PORSCHE CARS NORTH AMERICA, INC.

2. Release electric plug connection **-1- (-a-)** and slide it down off the retaining clip **-A-** .
3. Release and disconnect electric plug connection.

Fig 2: Disconnecting Electric Plug Connection

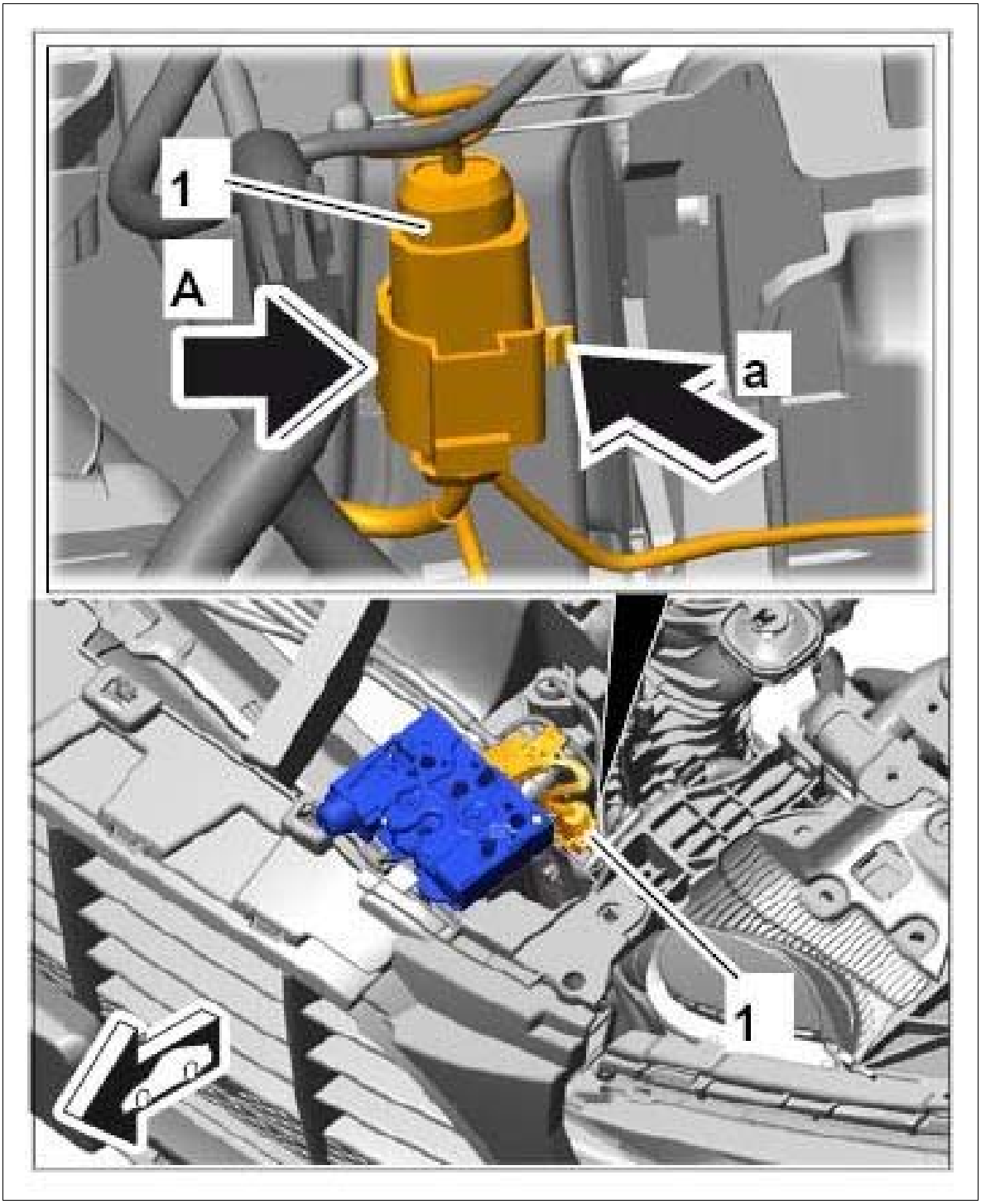

Courtesy of PORSCHE CARS NORTH AMERICA, INC.

WM 558519 REMOVING AND INSTALLING MICROSWITCH FOR FRONT LID LOCK (MACAN, MACAN S, MACAN TURBO) > INSTALLING MICROSWITCH FOR FRONT LID LOCK

1. Installation is performed in reverse order to removal.

WM 558519 REMOVING AND INSTALLING MICROSWITCH FOR FRONT LID LOCK (MACAN, MACAN S, MACAN TURBO) > SUBSEQUENT WORK

1. Install lower part of front lid lock. → INSTALLING LOWER PART OF LID LOCK .

WM 558619 REMOVING AND INSTALLING LOWER PART OF REAR LID LOCK (MACAN, MACAN S, MACAN TURBO) > TECHNICAL VALUES

Location	Description	Type	Basic value	Tolerance 1	Tolerance 2
Fastening screw for lower part of lid lock		Tightening torque	18 Nm (13 ftlb.)		

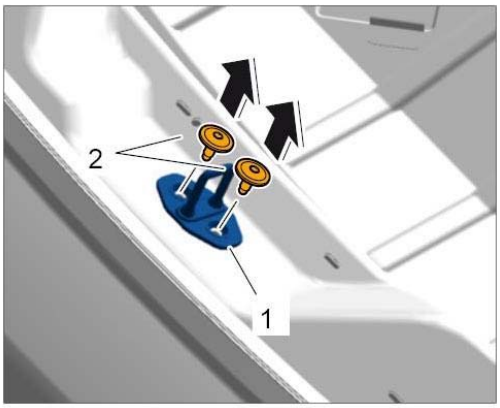

Removing lower part of lid lock

WM 558619 REMOVING AND INSTALLING LOWER PART OF REAR LID LOCK (MACAN, MACAN S, MACAN TURBO) > PRELIMINARY WORK

1. Remove cover for rear lock support. → 703919 REMOVING AND INSTALLING COVER FOR REAR LOCK SUPPORT

WM 558619 REMOVING AND INSTALLING LOWER PART OF REAR LID LOCK (MACAN, MACAN S, MACAN TURBO) > REMOVING LOWER PART OF REAR LID LOCK

1. Mark installation position of lower part of rear lid lock **-1-** .

Fig 1: Removing Lower Part Of Lid Lock

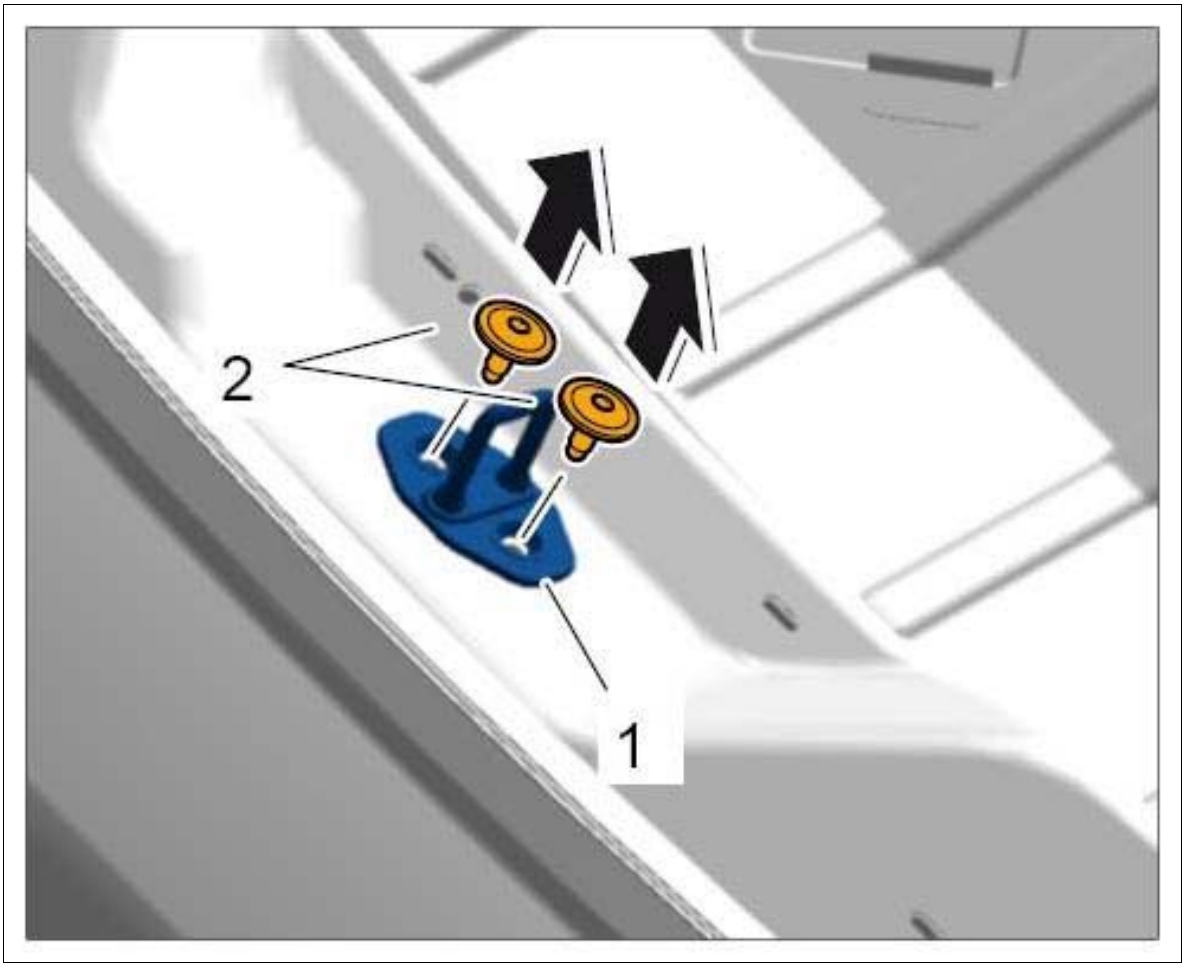

Courtesy of PORSCHE CARS NORTH AMERICA, INC.

2. Unscrew fastening screws **-2-** for lower part of lid lock **-1-** .
3. Remove lower part of lid lock by pulling it up.

WM 558619 REMOVING AND INSTALLING LOWER PART OF REAR LID LOCK (MACAN, MACAN S, MACAN TURBO) > INSTALLING LOWER PART OF REAR LID LOCK

1. Installation is performed in reverse order to removal.
2. Tighten fastening screws to the specified tightening torque **Tightening torque 18 Nm (13 ftlb.)** until secure.

WM 558619 REMOVING AND INSTALLING LOWER PART OF REAR LID LOCK (MACAN, MACAN S, MACAN TURBO) > SUBSEQUENT WORK

1. Install cover for rear lock support. → INSTALLING COVER FOR REAR LOCK SUPPORT

WM 558719 REMOVING AND INSTALLING UPPER PART OF REAR LID LOCK (MACAN, MACAN S, MACAN TURBO) > TECHNICAL VALUES

Location	Description	Type	Basic value	Tolerance 1	Tolerance 2
Fastening screw for upper part of lid lock		Tightening torque	8 Nm (6 ftlb.)	Torque angle 45°	

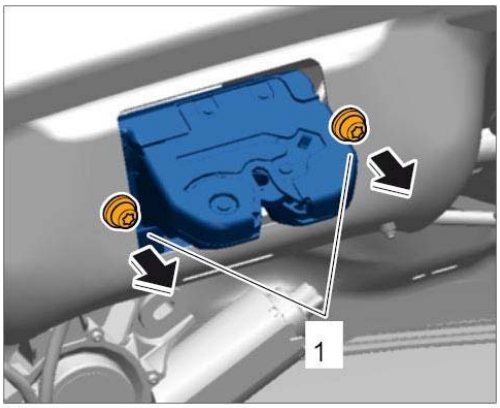

Unscrewing fastening screws

WM 558719 REMOVING AND INSTALLING UPPER PART OF REAR LID LOCK (MACAN, MACAN S, MACAN TURBO) > PRELIMINARY WORK

1. Remove trim panel for rear lid. → 708719 TRIM PANEL FOR REAR LID

WM 558719 REMOVING AND INSTALLING UPPER PART OF REAR LID LOCK (MACAN, MACAN S, MACAN TURBO) > REMOVING UPPER PART OF REAR LID LOCK

WARNING: Electrically moved components

- *Danger of limbs being trapped or severed*

→ Switch off electric power to drive motor.

→ Make sure it does not switch on again.

→ Check that there is no electric charge.

NOTE: Voltage peaks

- *Risk of damage to load or to the control unit*

→ Switch off ignition and remove remote control before disconnecting or removing load.

Fig 1: Locating Upper Part Of Lid Lock Position



Courtesy of PORSCHE CARS NORTH AMERICA, INC.

1. Release and unplug electric plug connections **-1-** .

Fig 2: Removing Electric Plug Connection

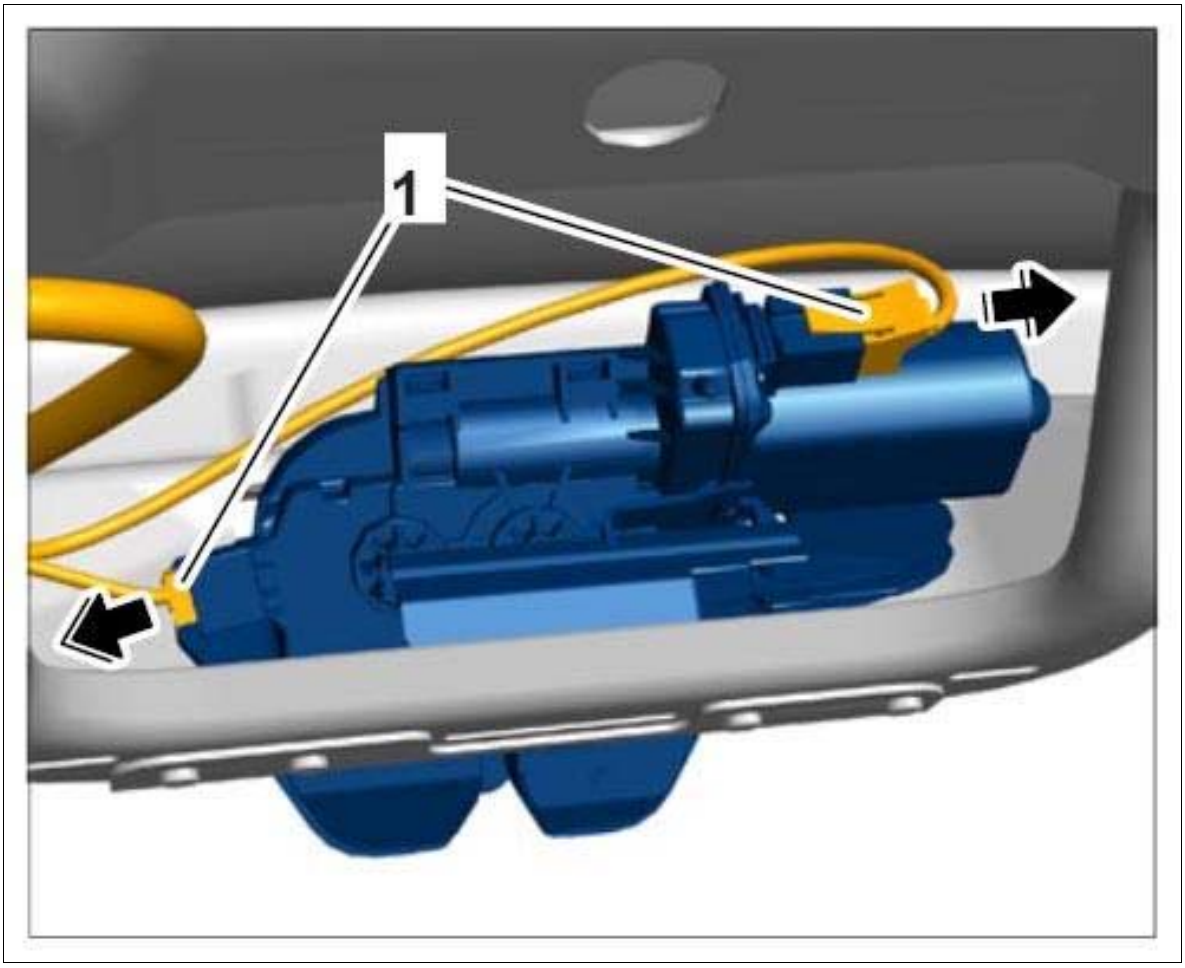

Courtesy of PORSCHE CARS NORTH AMERICA, INC.

2. Unscrew and remove fastening screws **-1-** for upper part of rear lid lock.

Fig 3: Loosening Upper Part Of Lid Lock

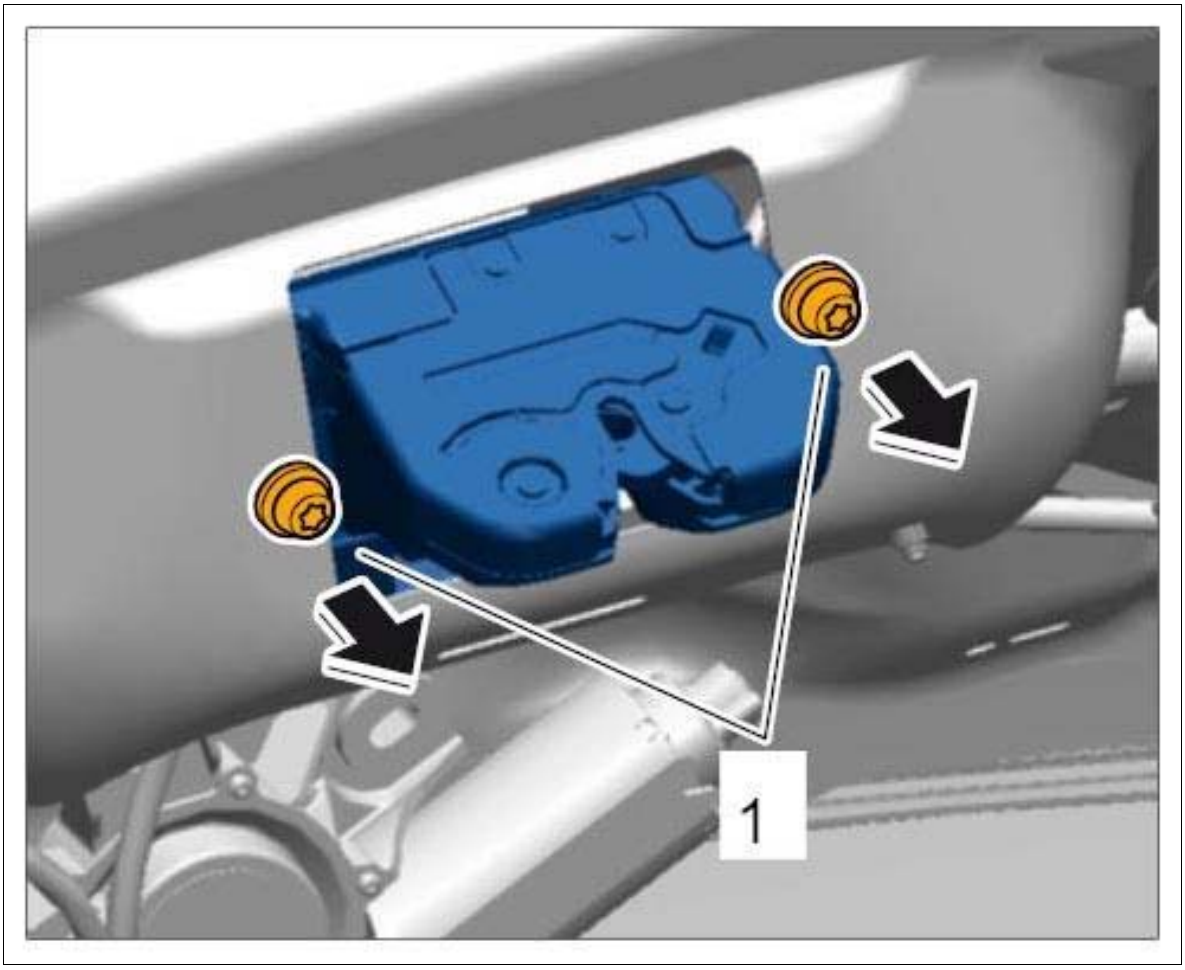

Courtesy of PORSCHE CARS NORTH AMERICA, INC.

3. Remove upper part of lid lock from the rear lid.

WM 558719 REMOVING AND INSTALLING UPPER PART OF REAR LID LOCK (MACAN, MACAN S, MACAN TURBO) > INSTALLING UPPER PART OF REAR LID LOCK

1. Installation is performed in reverse order to removal.
2. Tighten fastening screws to **Tightening torque 8 Nm (6 ftlb.) Torque angle 45°** until secure.

WM 558719 REMOVING AND INSTALLING UPPER PART OF REAR LID LOCK (MACAN, MACAN S, MACAN TURBO) > SUBSEQUENT WORK

1. Install trim panel for rear lid. → INSTALLING TRIM PANEL FOR REAR LID

WM 559015 ADJUSTING REAR LID (MACAN, MACAN S, MACAN TURBO) > TOOLS

Designation	Type	Number	Description	
Star gauges for body gap dimensions	Special tool	NR.127-1		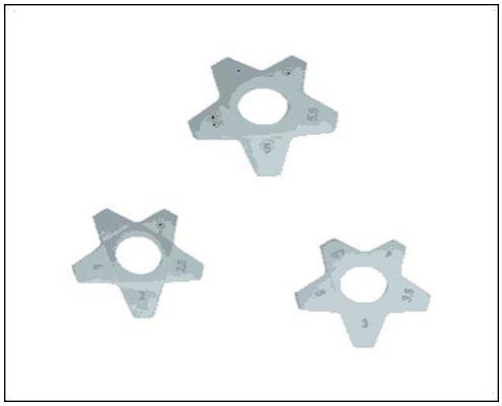

WM 559015 ADJUSTING REAR LID (MACAN, MACAN S, MACAN TURBO) > TECHNICAL VALUES

Location	Description	Type	Basic value	Tolerance 1	Tolerance 2
Fastening screw for tailgate hinge		Tightening torque	10 Nm (7.5 ftlb.)		
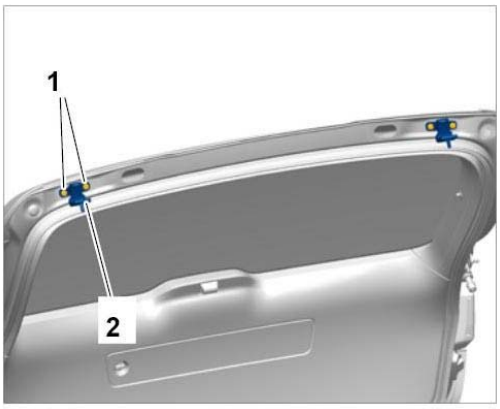 Tailgate hinge mounting					
Fastening screw for guide wedge		Tightening torque	6 Nm (4.5 ftlb.)		

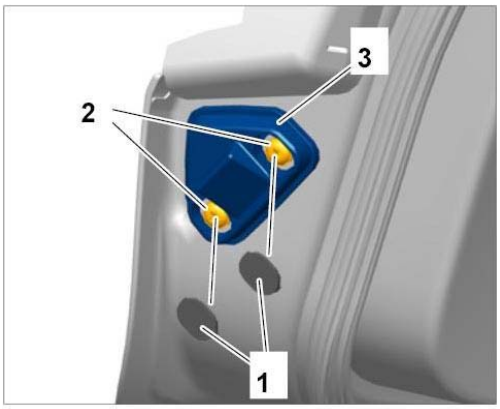

Removing guide wedge

Fastening nut for lid hinge (on body side)		Tightening torque	23 Nm (17 ftlb.)		

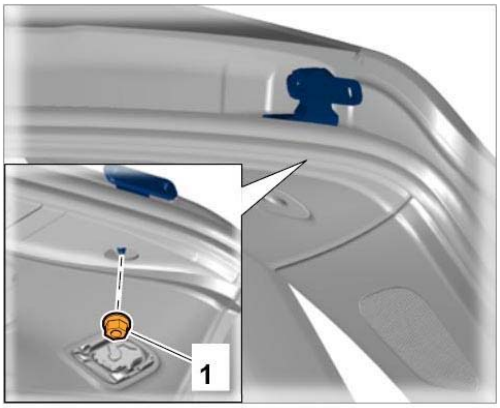

Hinge on body side

Fastening screw for lower part of lid lock		Tightening torque	18 Nm (13 ftlb.)		

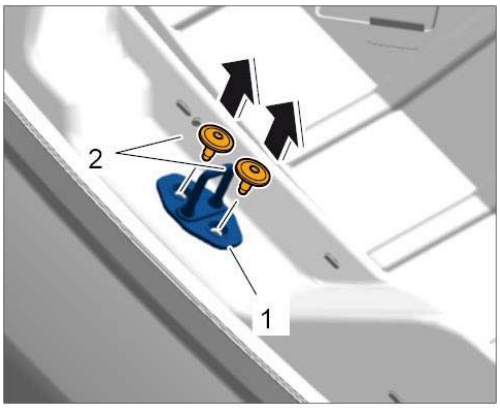

Removing lower part of lid lock

WM 559015 ADJUSTING REAR LID (MACAN, MACAN S, MACAN TURBO) > TECHNICAL VALUES > GAP DIMENSIONS - REAR LID

Location	Description	Type	Basic value	Tolerance 1	Tolerance 2
Rear lid/rear spoiler to roof	R1 (gap)	Gap dimension	6 mm	+/-1.1 mm	
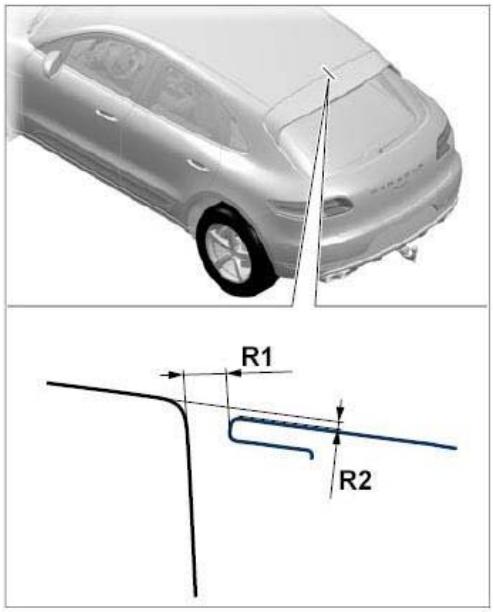 Rear lid/rear spoiler					
Rear lid/rear spoiler to roof	R2 (offset)	Gap dimension	-1.5 mm	+/-1.1 mm	
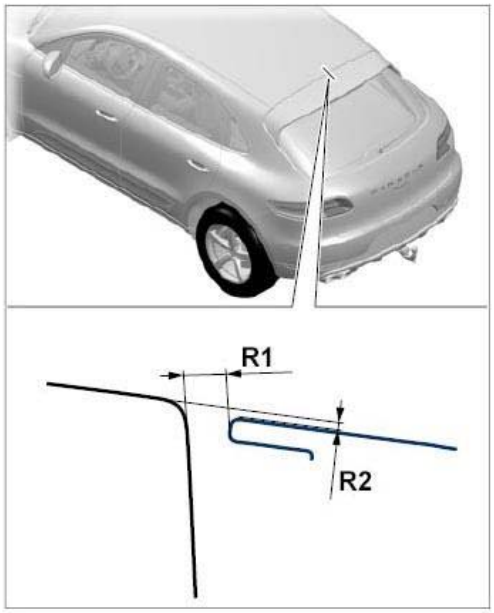 Rear lid/rear spoiler to roof					
Rear lid to side panel	R3 (gap)	Gap dimension	4 mm	+0.7 mm	-0.9 mm

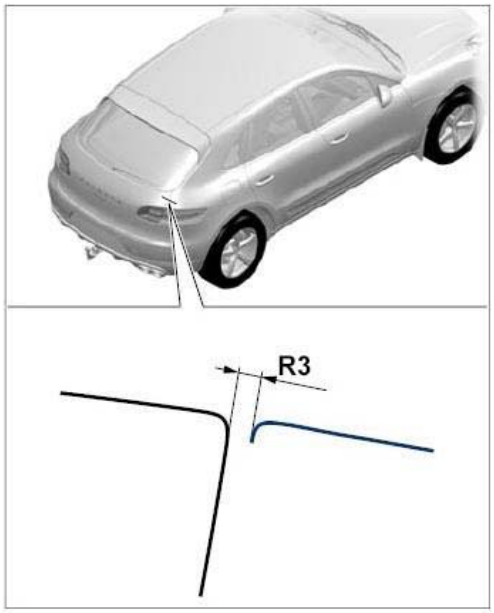

Rear lid to side panel

Rear lid to side panel	R3b (offset)	Gap dimension	0 mm	+/-0.6 mm	

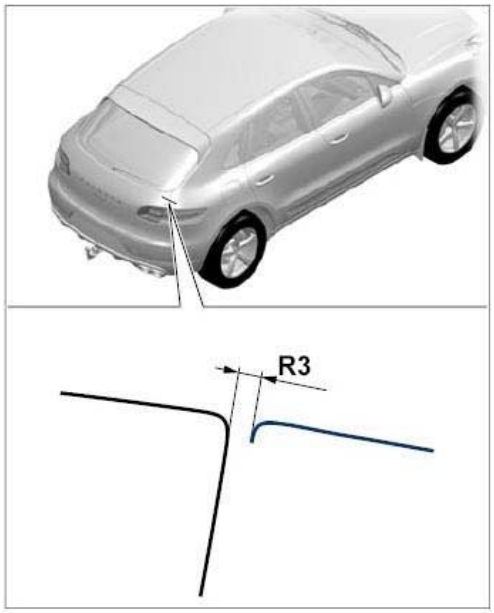

Rear lid to side panel

Rear lid to rear apron	R4 (gap)	Gap dimension	4 mm	+/-0.8 mm	

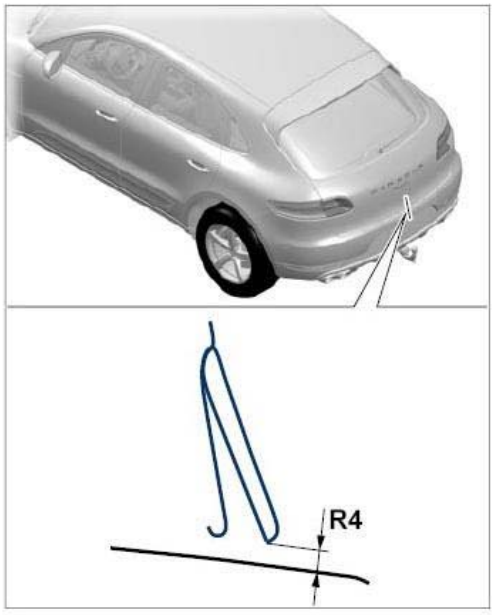

Rear lid to rear apron

WM 559015 ADJUSTING REAR LID (MACAN, MACAN S, MACAN TURBO) > ADJUSTING REAR LID

Information

- Set gap dimensions on lid and accessories in accordance with the gap specifications.
- Given a clearance in the opening that is too great or too small, the accessories must be centered with respect to the body.
- Ensure that the gaps do not run in a wedge-shaped fashion or do not narrow at local points.
- The given values are guidelines, which should be observed as far as possible.
- The guidelines apply to repair and assembly work.
- Use star gauges to check the gap dimensions. Star gauges for body gap dimensions NR.127-1

Fig 1: Adjusting Rear Lid

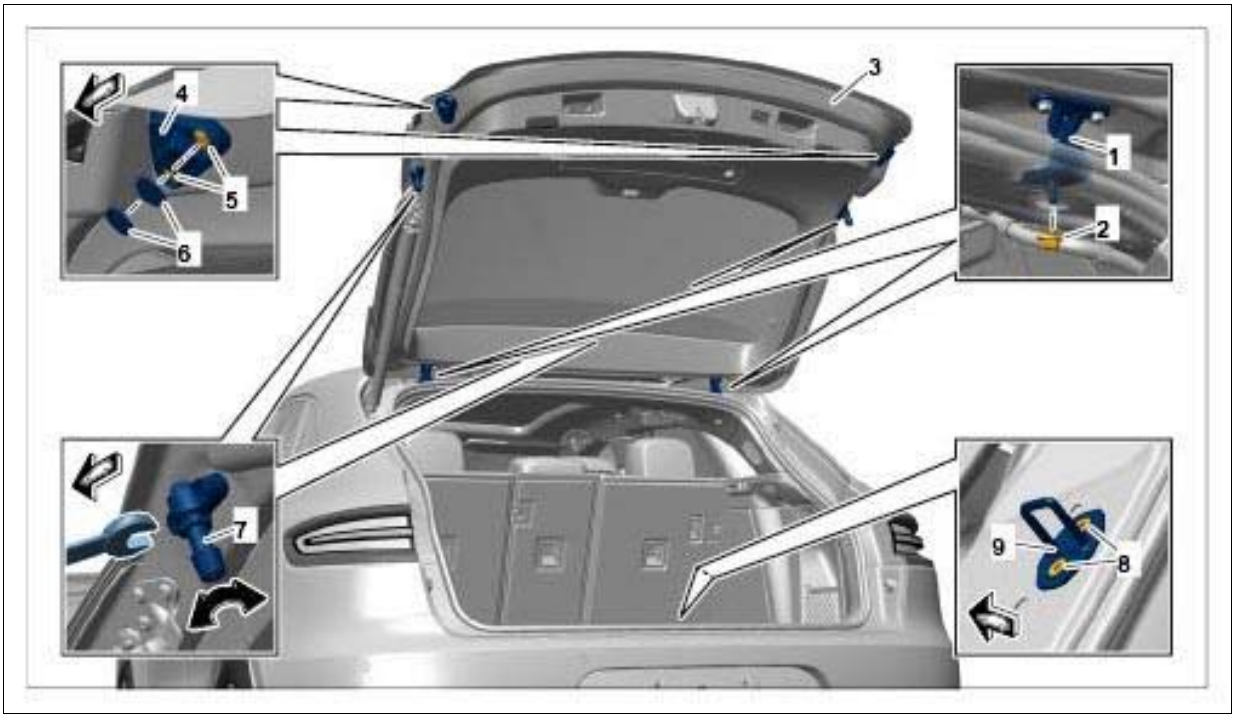

Courtesy of PORSCHE CARS NORTH AMERICA, INC.

No.	Component	Function	Procedure
1.	Fastening screws **-8-** for catch bar **-9-**	Locking mechanism for rear lid	Loosen.
2.	Fastening screws securing lid hinge -1 and 2- to rear lid	Adjustment of gap dimensions in Y and Z direction	Loosen.
3.	Rear lid **-3-**		Set gap dimensions in Y and Z direction by moving the lid.
4.	Fastening screws securing lid hinge **-1-** to rear lid	Adjustment of gap dimensions in Y and Z direction	Tighten fastening screws **-1-** to **Tightening torque 10 Nm (7.5 ftlb.)** until secure. 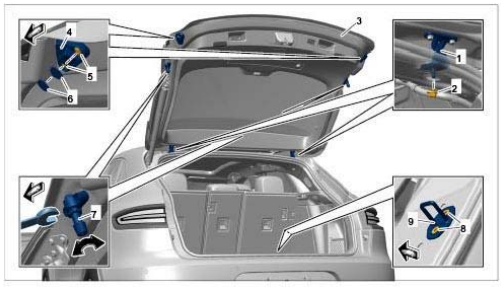 Adjusting rear lid
5.	Fastening screws securing lid hinge to body **-2-** . If	Adjusting gap dimensions in X direction, rear	Loosen.

	adjustments are needed, detach the rear roof trim panel. → 708419 REMOVING AND INSTALLING HEADLINER .		
6.	Fastening screws securing lid hinge to body **-2-** . If adjustments are needed, detach the rear roof trim panel. → 708419 REMOVING AND INSTALLING HEADLINER .	Adjusting gap dimensions in X direction, rear	Tighten fastening screws **-2-** to **Tightening torque 23 Nm (17 ftlb.)** until secure.  Adjusting rear lid
7.	Fastening screws **-5-** for the guide wedge on the sides of the lid **-4-**	Correcting gap dimension with respect to the body	Tighten fastening screws **-5-** to **Tightening torque 6 Nm (4.5 ftlb.)** until secure.  Adjusting rear lid
8.	Lower part of lid lock l **-9-**	Locking mechanism for rear lid	Adjust latch by moving lower part of lid lock.
9.	Fastening screws **-8-** for lower part of lid lock **-9-**	Locking mechanism for rear lid	Tighten fastening screws **-8-** to **Tightening torque 18 Nm (13 ftlb.)** until secure. 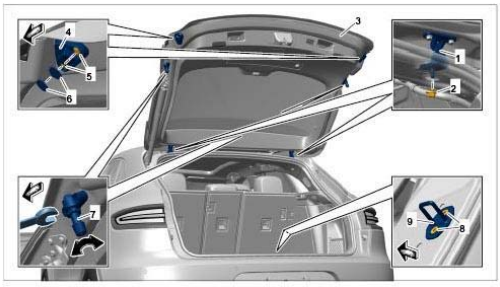 Adjusting rear lid
10.	Rubber stop **-7-**	Adjusting gap dimensions and preload	Set gap dimensions and inclination by turning the rubber stops **-7-** . There must be slight preload on the lid as a result of

			setting the rubber stops **-7-** .

WM 559015 ADJUSTING REAR LID (MACAN, MACAN S, MACAN TURBO) > CHECKING REAR LID LOCK > FUNCTION TEST ON REAR LID LOCK

1. Check the function of the rear lid lock.
    1. 1.1. Lock the lid lock using a screwdriver and then unlock it again using the lid release.

       The lock must swivel out freely.
    2. 1.2. Check that the rear lid stays open automatically in the upper positions.
    3. 1.3. From the middle position, the rear lid must fall into the lock automatically and lock fully. (with gas-filled shock absorbers)
    4. 1.4. Perform a visual inspection to check that the lock releases again correctly.
2. Check electric operation of rear lid lock.
    1. 2.1. Open the lock using the electric release or remote control.
3. Check electric tailgate drive mechanism.
    1. 3.1. Check opening and closing function using the outer handle on the rear lid, the remote control and the switch in the driver's door.
    2. 3.2. It must be possible to stop rear lid operation at any time using all actuators.
    3. 3.3. Check the obstacle detection function.

       Simulate an obstacle while opening and closing by holding the rear lid firmly.

WM 559019 REMOVING AND INSTALLING REAR LID (MACAN, MACAN S, MACAN TURBO) > TECHNICAL VALUES

Location	Description	Type	Basic value	Tolerance 1	Tolerance 2
Fastening screw for lid hinge		Tightening torque	10 Nm (7.5 ftlb.)		

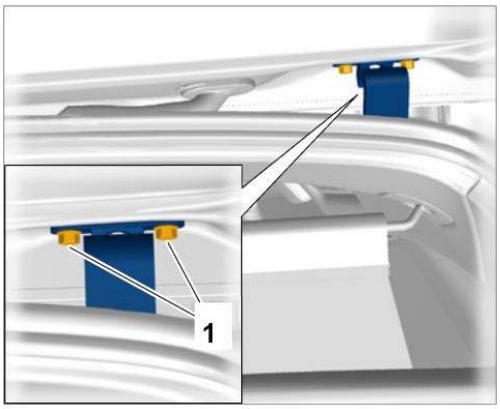

Rear lid hinge

WM 559019 REMOVING AND INSTALLING REAR LID (MACAN, MACAN S, MACAN TURBO) > PRELIMINARY WORK

1. Remove rear spoiler. → 665819 REMOVING AND INSTALLING REAR SPOILER
2. Remove wire harness at the left. → 972719 REMOVING AND INSTALLING WIRE HARNESS FOR TAILGATE AT THE LEFT
3. Remove wire harness at the right. → 972719 REMOVING AND INSTALLING WIRE HARNESS FOR TAILGATE AT THE RIGHT

WM 559019 REMOVING AND INSTALLING REAR LID (MACAN, MACAN S, MACAN TURBO) > REMOVING REAR LID

⚠ *CAUTION: Incorrect handling of gas-filled shock absorbers*

- *Gas-filled shock absorbers can burst*
- *Risk of eye injuries*
- *Risk of bruising*

→ Gas-filled shock absorbers must be in idle state before removal.

→ Open the lid.

→ Secure the lid to prevent it from closing accidentally following removal of the gas-filled shock absorbers.

→ Do not use force to open the gas-filled shock absorbers because of their high internal pressure.

Information

- Only remove the wiring harness from the rear lid as far as the lid hinge.

Information

Use a marking pen to mark the position of accessories with respect to each other before removal in order to reduce the amount of adjustment work required for gaps and joints.

Fig 1: Locating Rear Lid Position

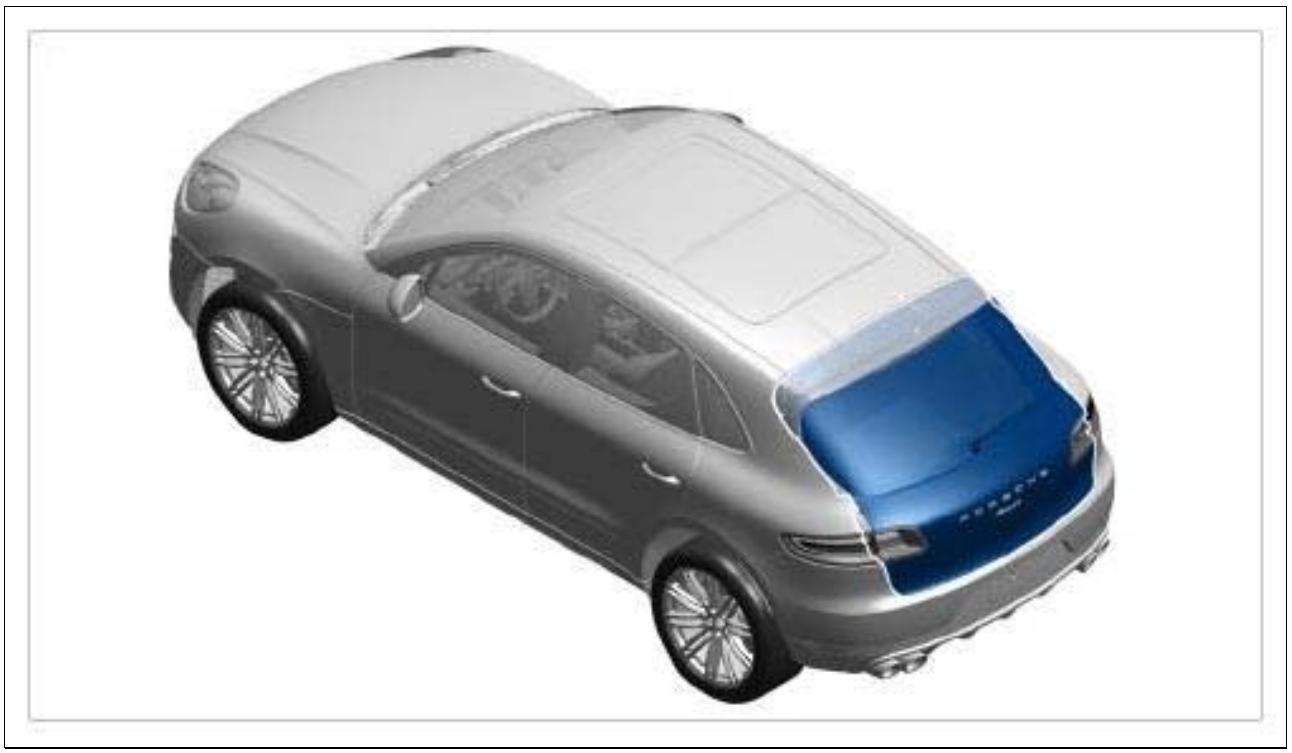

Courtesy of PORSCHE CARS NORTH AMERICA, INC.

1. A second person should hold the rear lid to prevent it from closing accidentally.

   Only for vehicles with Power Lift Tailgate

2. Remove actuating cylinder for rear lid at the top of the rear lid. → 557319 REMOVING AND INSTALLING ACTUATING CYLINDER FOR REAR LID .

   Only for vehicles without Power Lift Tailgate

3. Remove gas-filled shock absorber for rear lid at the top of the rear lid. → 559319 REMOVING AND INSTALLING REAR PNEUMATIC SPRING .

4. Unscrew fastening screws securing rear lid to lid hinges.

Fig 2: Identifying Rear Lid Hinge Fastening Screws

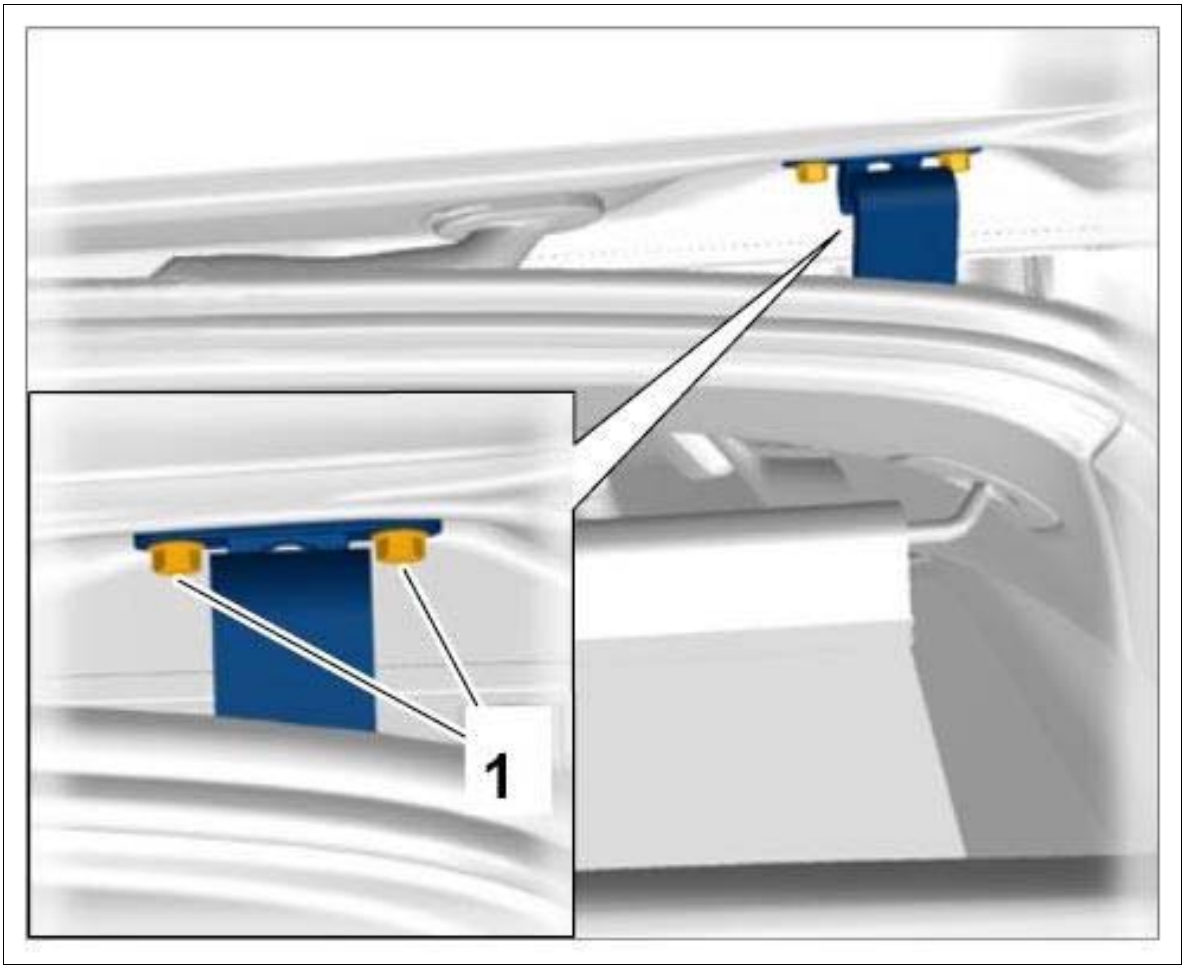

Courtesy of PORSCHE CARS NORTH AMERICA, INC.

5. Remove rear lid.

WM 559019 REMOVING AND INSTALLING REAR LID (MACAN, MACAN S, MACAN TURBO) > INSTALLING REAR LID

1. Installation is performed in reverse order to removal.
2. Tighten fastening screws to the specified tightening torque **Tightening torque 10 Nm (7.5 ftlb.)** until secure.

WM 559019 REMOVING AND INSTALLING REAR LID (MACAN, MACAN S, MACAN TURBO) > SUBSEQUENT WORK

1. Install wire harness at the left. → INSTALLING WIRE HARNESS FOR TAILGATE AT THE LEFT
2. Install wire harness at the right. → INSTALLING WIRE HARNESS FOR TAILGATE AT THE RIGHT

3. Install rear spoiler. → INSTALLING REAR SPOILER

4. Adjust gaps and gap dimensions of rear lid. → 559015 ADJUSTING REAR LID

WM 559037 DISASSEMBLING AND ASSEMBLING REAR LID (MACAN, MACAN S, MACAN TURBO) > TOOLS

Designation	Type	Number	Description	
hand riveting tool for set of riveting nuts	Commercially available tool	Nr.123		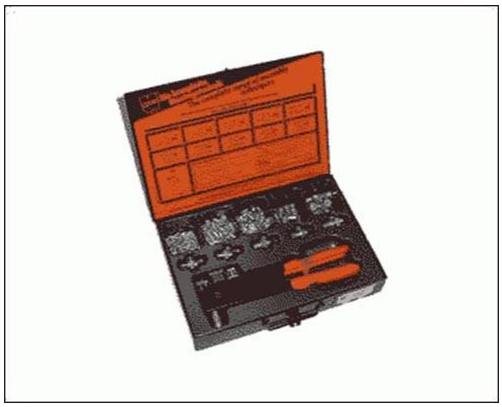
Hand riveting tool	Commercially available tool	Nr.124-1 Pos.1		

WM 559037 DISASSEMBLING AND ASSEMBLING REAR LID (MACAN, MACAN S, MACAN TURBO) > TECHNICAL VALUES

Location	Description	Type	Basic value	Tolerance 1	Tolerance 2
Mounting for gas-filled shock absorber holder/actuating cylinder		Tightening torque	10 Nm (7.5 ftlb.)		

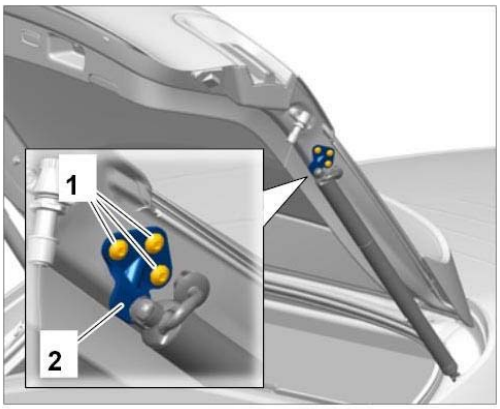

Bracket for gas-filled shock absorber

Fastening screw for tailgate hinge		Tightening torque	10 Nm (7.5 ftlb.)		

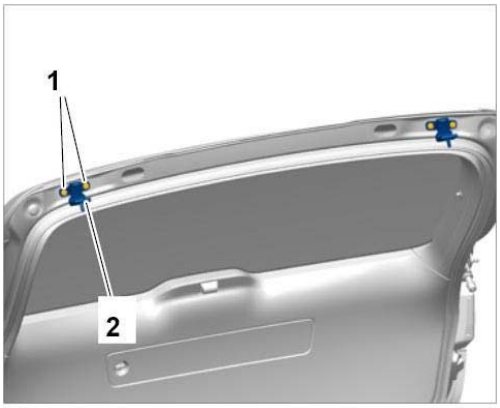

Tailgate hinge mounting

Fastening screw for adjusting element		Tightening torque	8 Nm (6 ftlb.)		

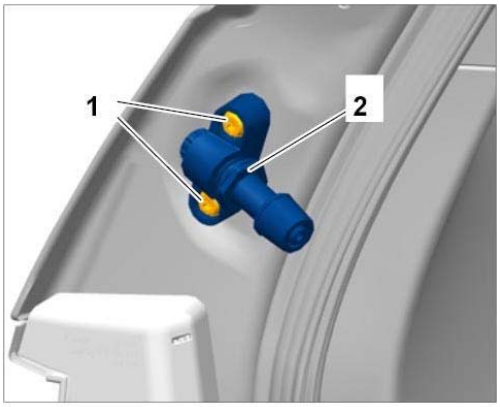

Adjusting element mounting

Fastening screw for guide wedge		Tightening torque	6 Nm (4.5 ftlb.)		

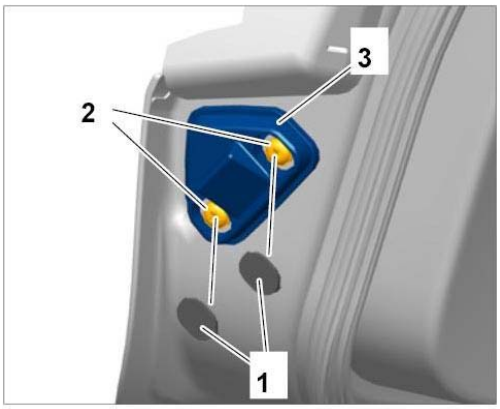

Removing guide wedge

WM 559037 DISASSEMBLING AND ASSEMBLING REAR LID (MACAN, MACAN S, MACAN TURBO) > PRELIMINARY WORK

1. Remove upper part of lid lock. → 558719 REMOVING AND INSTALLING UPPER PART OF REAR LID LOCK
2. Remove rear lid release. → 555719 REMOVING AND INSTALLING REAR LID RELEASE
3. Remove tail light in rear lid. → 943119 REMOVING AND INSTALLING TAIL LIGHT IN REAR LID
4. Remove wiper motor for rear window washer. → 923419 REMOVING AND INSTALLING WIPER MOTOR FOR REAR WINDOW WASHER
5. Remove rear spoiler. → 665819 REMOVING AND INSTALLING REAR SPOILER
6. Remove rear window. → 648619 REMOVING AND INSTALLING REAR WINDOW
7. **Remove electrical components (depending on equipment).**
    1. 7.1. Remove antenna amplifier. → 918419 REMOVING AND INSTALLING ANTENNA AMPLIFIER .
    2. 7.2. Remove control unit for antenna amplifier. → 918619 REMOVING AND INSTALLING CONTROL UNIT FOR ANTENNA AMPLIFIER .
    3. 7.3. Remove control unit for rear lid. → 556819 REMOVING AND INSTALLING CONTROL UNIT FOR REAR LID .

       Remove rear lid. → 559019 REMOVING AND INSTALLING REAR LID

WM 559037 DISASSEMBLING AND ASSEMBLING REAR LID (MACAN, MACAN S, MACAN TURBO) > DISASSEMBLING REAR LID

Information

- The number of fastening screws, fixing clips, plug connections, holders and trim panels can vary

depending on equipment.

- The illustrations for removing and installing the drive mechanism are shown only on one equipment variant and may differ from the actual equipment variant.
- Some steps must be carried out automatically.
- Some of the repair illustrations show only one side of the vehicle.

1. Unscrew and remove fastening screw **-1-** on holder **-2-** for gas-filled shock absorber.

   Fig 1: Identifying Gas-Filled Shock Absorber Bracket Fastening Screw

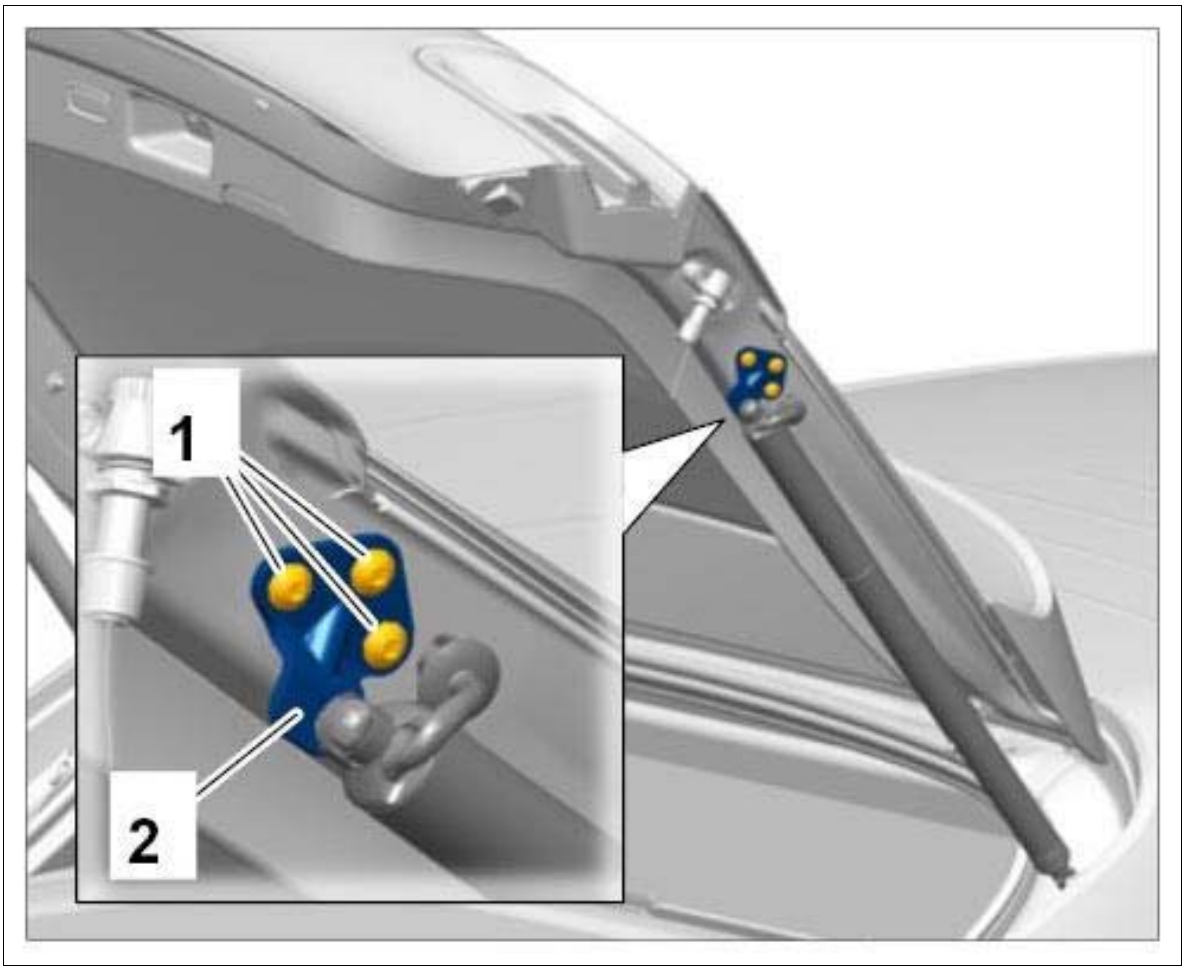

Courtesy of PORSCHE CARS NORTH AMERICA, INC.

2. Unscrew and remove fastening screws **-1-** on the adjusting element **-2-** .

Fig 2: Adjusting Element Mounting

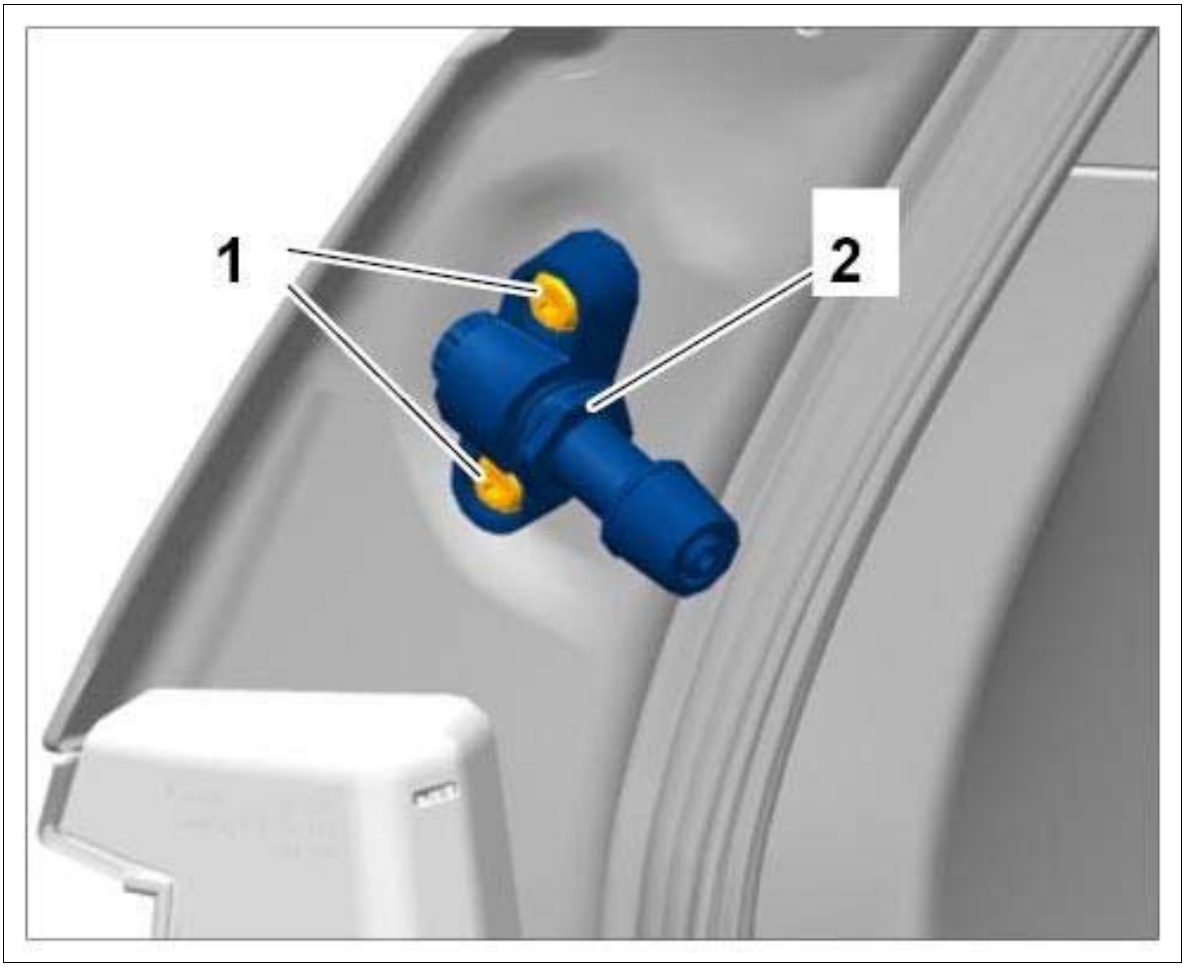

Courtesy of PORSCHE CARS NORTH AMERICA, INC.

3. Unclip caps **-1-** on guide wedge and unscrew and remove fastening screws **-2-** on guide wedge **-3-** .

Fig 3: Removing Guide Wedge

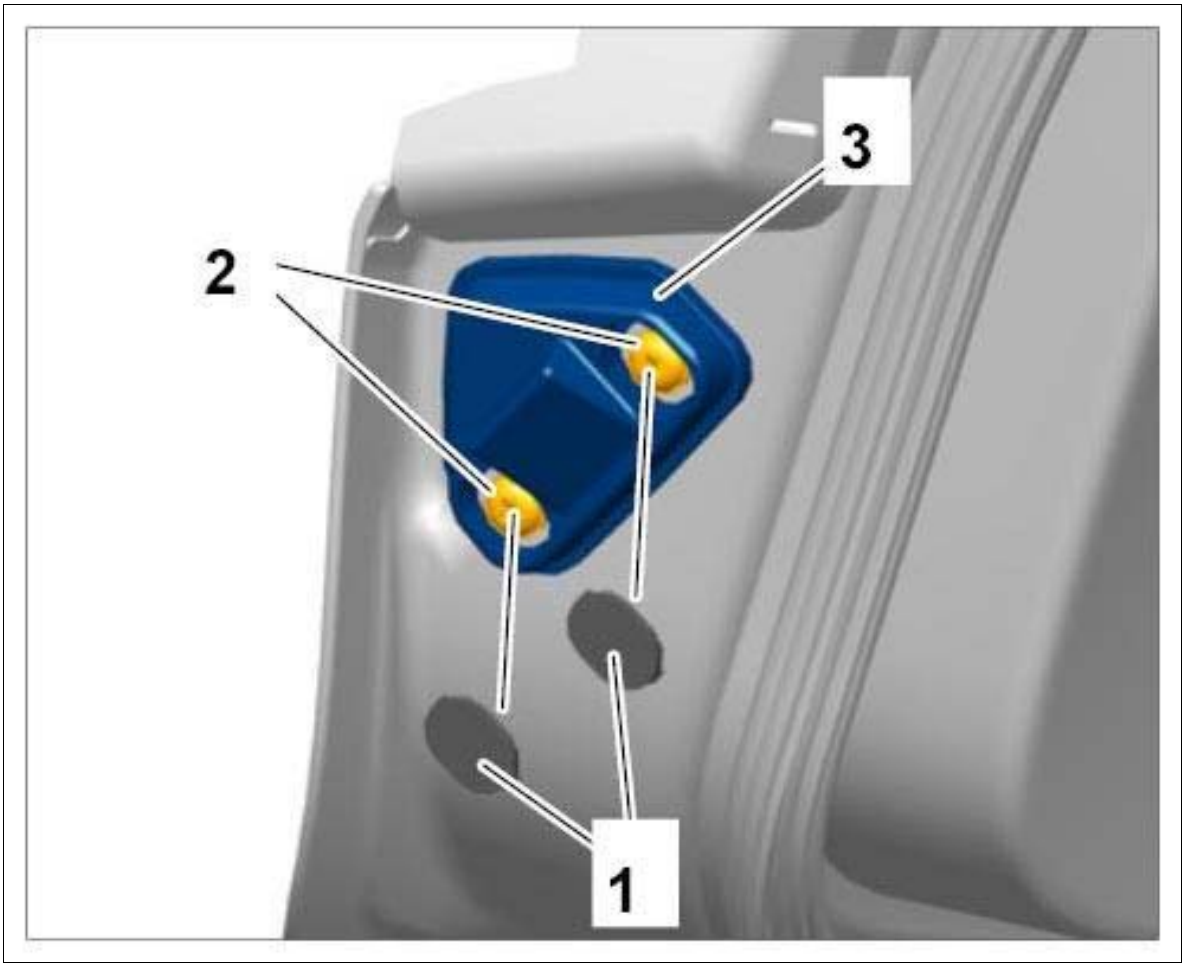

Courtesy of PORSCHE CARS NORTH AMERICA, INC.

4. Drill out blind rivets **-2-** on bracket for rear spoiler **-1-** .

Fig 4: Installing Rear Spoiler Bracket

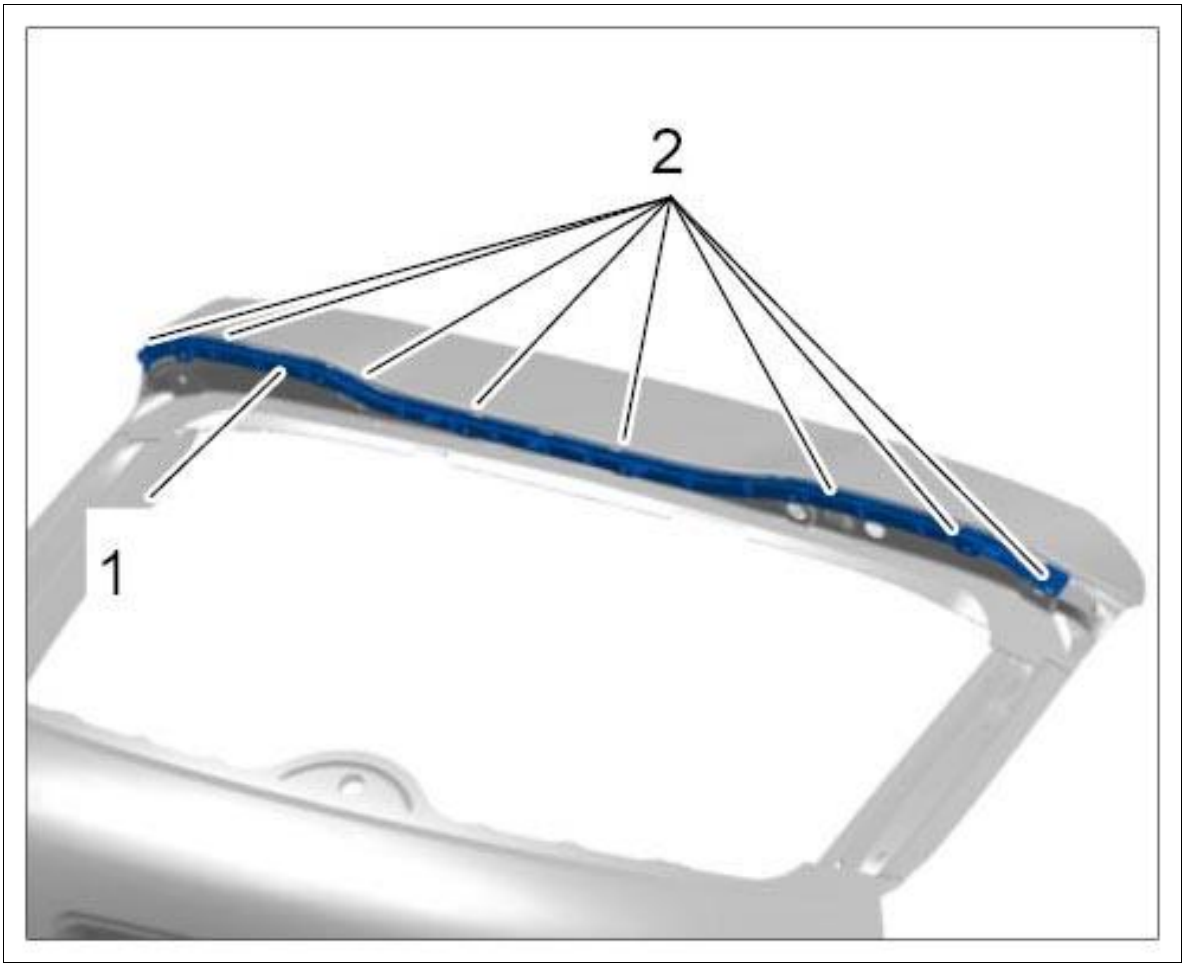

Courtesy of PORSCHE CARS NORTH AMERICA, INC.

5. Unscrew and remove fastening screws **-1-** on tailgate hinge **-2-** .

Fig 5: Identifying Tailgate Hinge Fastening Screws

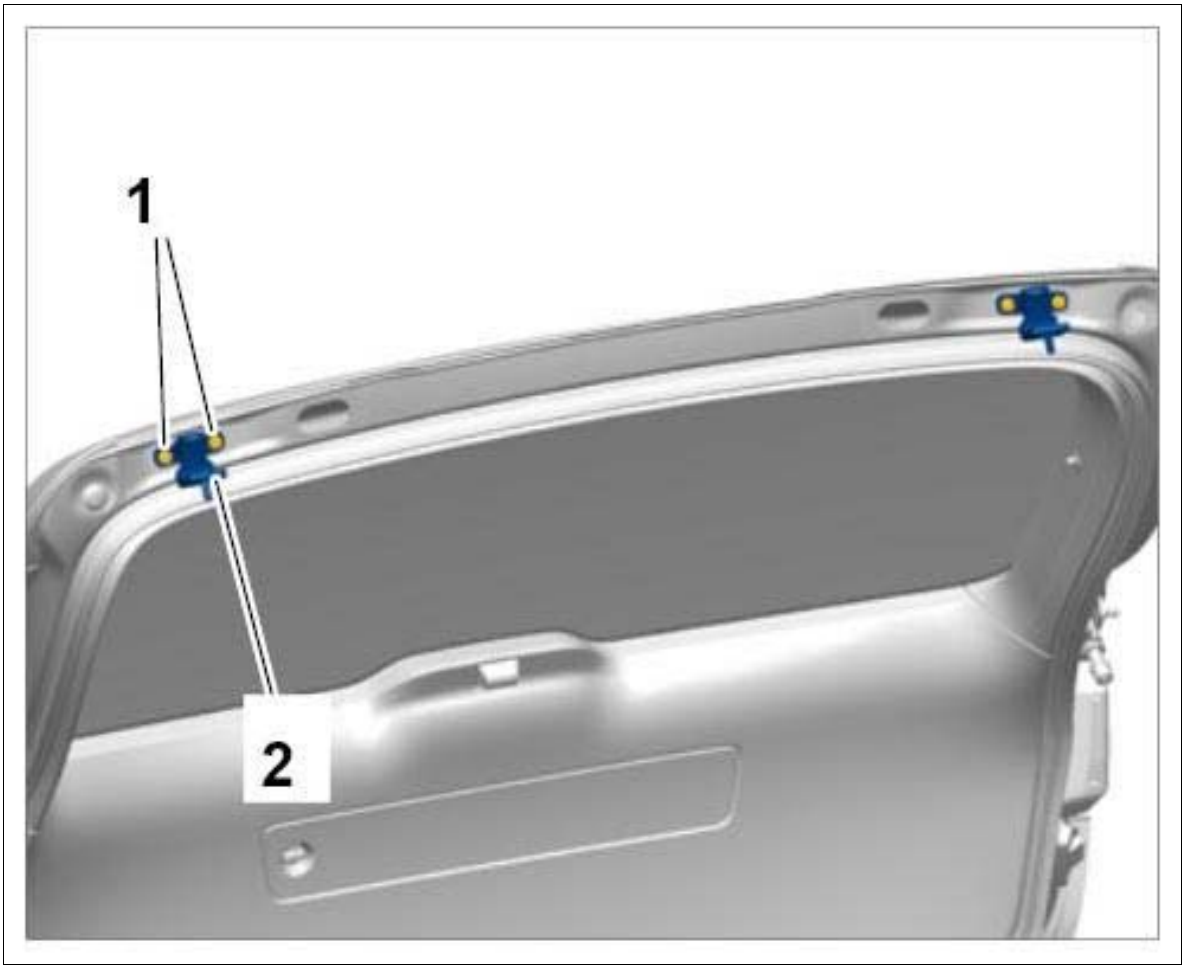

Courtesy of PORSCHE CARS NORTH AMERICA, INC.

6. Unclip stoppers and caps using a suitable tool.
7. Remove number plate bracket if necessary.

WM 559037 DISASSEMBLING AND ASSEMBLING REAR LID (MACAN, MACAN S, MACAN TURBO) > ASSEMBLING REAR LID

Information

- The number of fastening screws, fixing clips, plug connections, holders and trim panels can vary depending on equipment.
- The illustrations for removing and installing the drive mechanism are shown only on one equipment variant and may differ from the actual equipment variant.
- Some steps must be carried out automatically.
- Some of the repair illustrations show only one side of the vehicle.

1. Fit blind rivet nuts into the bodyshell on the new lid and rivet using **hand riveting tool for set**

of riveting nuts Nr.123 .

1. 1.1. Position and fit the guide wedge.

2. Position bracket for rear spoiler **-1-** and rivet to the lid using blind rivets, starting from the center outwards **-2-. Hand riveting tool Nr.124-1 Pos.1**

Fig 1: Installing Rear Spoiler Bracket

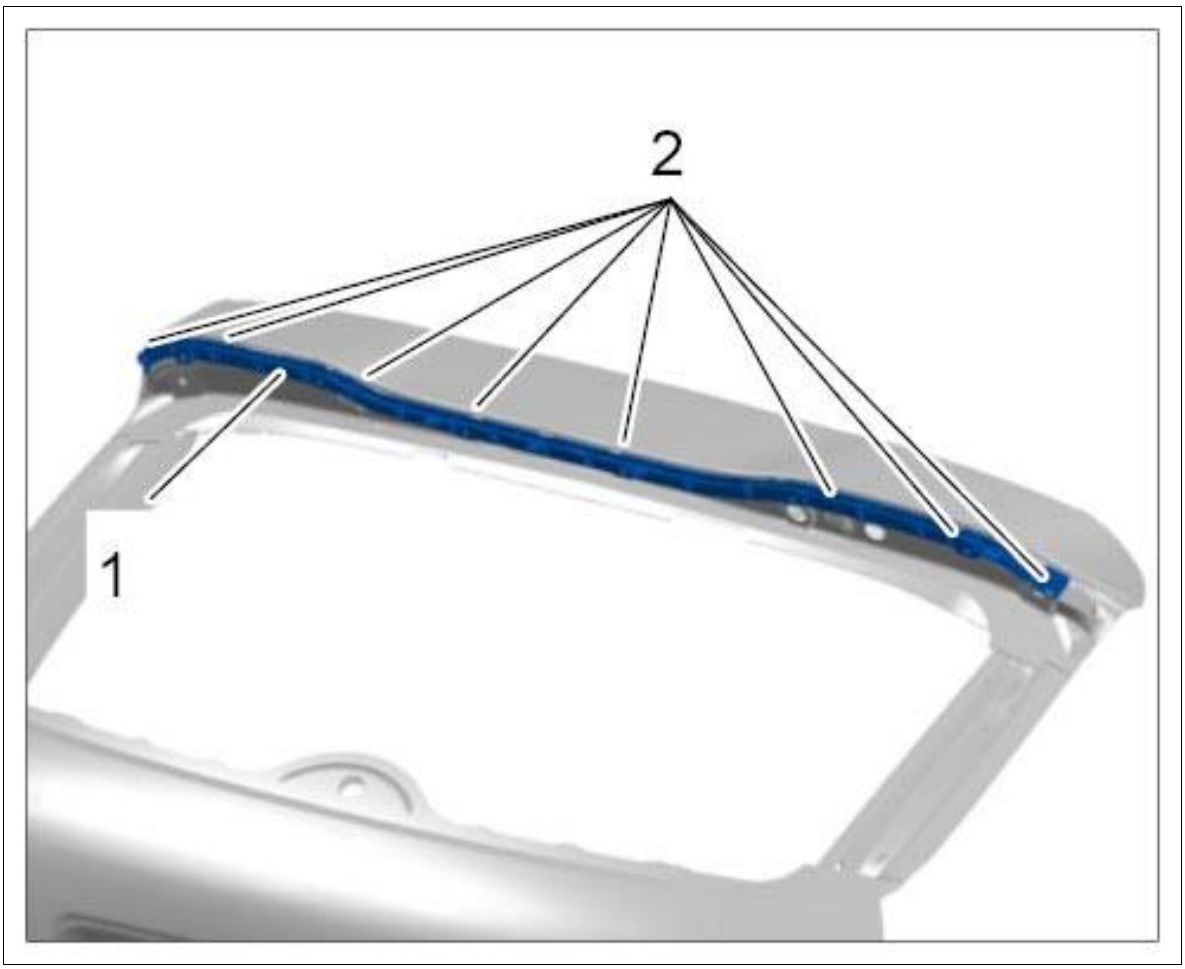

Courtesy of PORSCHE CARS NORTH AMERICA, INC.

3. Position and secure adjusting element.

4. Installation is performed in reverse order to removal.

5. Tighten fastening screw on holder for gas-filled shock absorber to **Tightening torque 10 Nm (7.5 ftlb.)** until secure.

6. Tighten fastening screw on tailgate hinge to **Tightening torque 10 Nm (7.5 ftlb.)** until secure.

7. Tighten fastening screw on adjusting element to **Tightening torque 8 Nm (6 ftlb.)** until secure.

8. Tighten fastening screw on guide wedge to **Tightening torque 6 Nm (4.5 ftlb.)** until secure.

WM 559037 DISASSEMBLING AND ASSEMBLING REAR LID (MACAN, MACAN S,

MACAN TURBO) > SUBSEQUENT WORK

1. Install rear lid. → INSTALLING REAR LID
2. Install electric components (depending on equipment).
    1. 2.1. Install control unit for rear lid. → 556855 REPLACING CONTROL UNIT FOR REAR LID
    2. 2.2. Install control unit for antenna amplifier. → INSTALLING ANTENNA CONTROL UNIT
    3. 2.3. Install antenna amplifier. → INSTALLING ANTENNA AMPLIFIER
3. Install rear window. → INSTALLING REAR WINDOW
4. Install rear spoiler. → INSTALLING REAR SPOILER
5. Install wiper motor for rear window washer. → INSTALLING WIPER MOTOR FOR REAR WINDOW WASHER
6. Install tail light in rear lid. → INSTALLING TAIL LIGHT
7. Install rear lid release. → INSTALLING REAR LID RELEASE
8. Install upper part of lid lock. → INSTALLING UPPER PART OF REAR LID LOCK
9. Adjust the rear lid. → 559015 ADJUSTING REAR LID

WM 559119 REMOVING AND INSTALLING REAR LID HINGE (MACAN, MACAN S, MACAN TURBO) > TECHNICAL VALUES

Location	Description	Type	Basic value	Tolerance 1	Tolerance 2
Fastening screw for lid hinge		Tightening torque	10 Nm (7.5 ftlb.)		

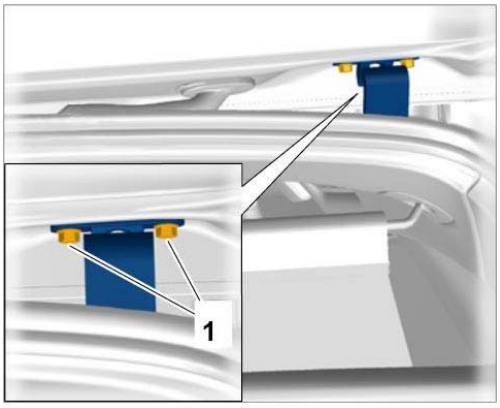

Rear lid hinge

Fastening nut for lid hinge (on body side)		Tightening torque	23 Nm (17 ftlb.)		

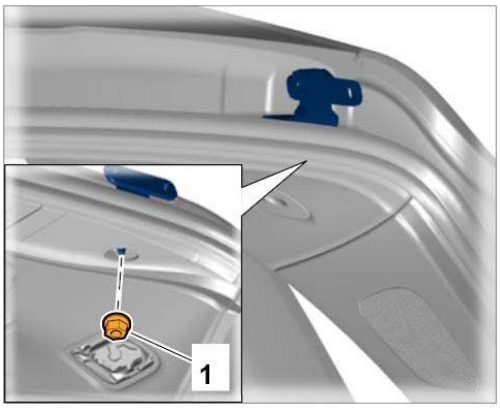

Hinge on body side

WM 559119 REMOVING AND INSTALLING REAR LID HINGE (MACAN, MACAN S, MACAN TURBO) > REMOVING REAR LID HINGE

Information

- Some of the repair illustrations show only one side of the vehicle.
- Naturally, some steps also have to be performed on the opposite side of the vehicle as well.

Information

Use a marking pen to mark the position of accessories with respect to each other before removal in order to reduce the amount of adjustment work required for gaps and joints.

1. Detach rear roof trim panel and pull it down carefully.
2. Two people are needed to replace the rear lid hinge.
    1. 2.1. One person to support the rear lid.
    2. 2.2. Another person to replace the lid hinge.
3. Unscrew and remove fastening screws **-1-** on the rear lid hinge.

Fig 1: Identifying Rear Lid Hinge Fastening Screws

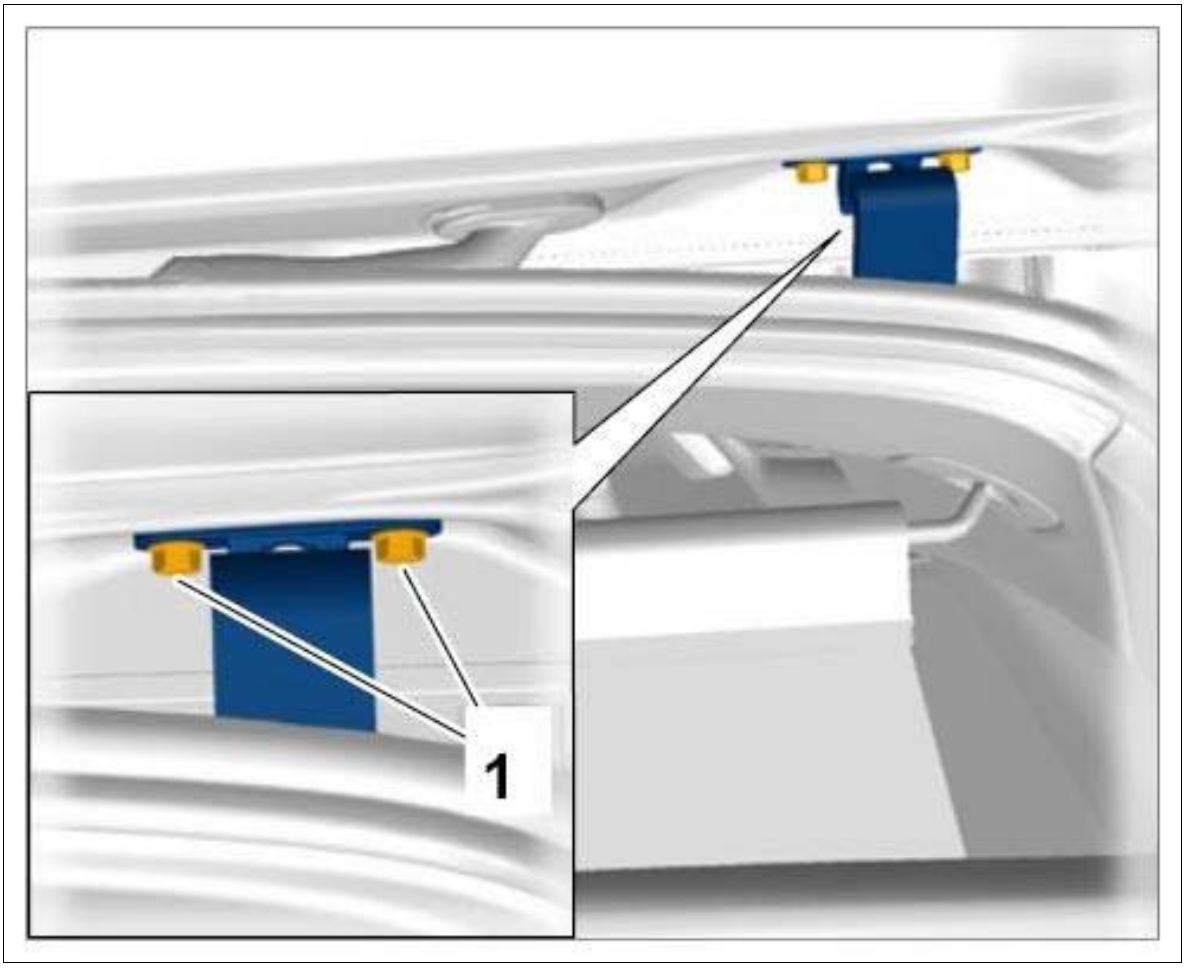

Courtesy of PORSCHE CARS NORTH AMERICA, INC.

4. Unscrew and remove fastening nut **-1-** on the lid hinge.

Fig 2: Identifying Hinge On Body Side

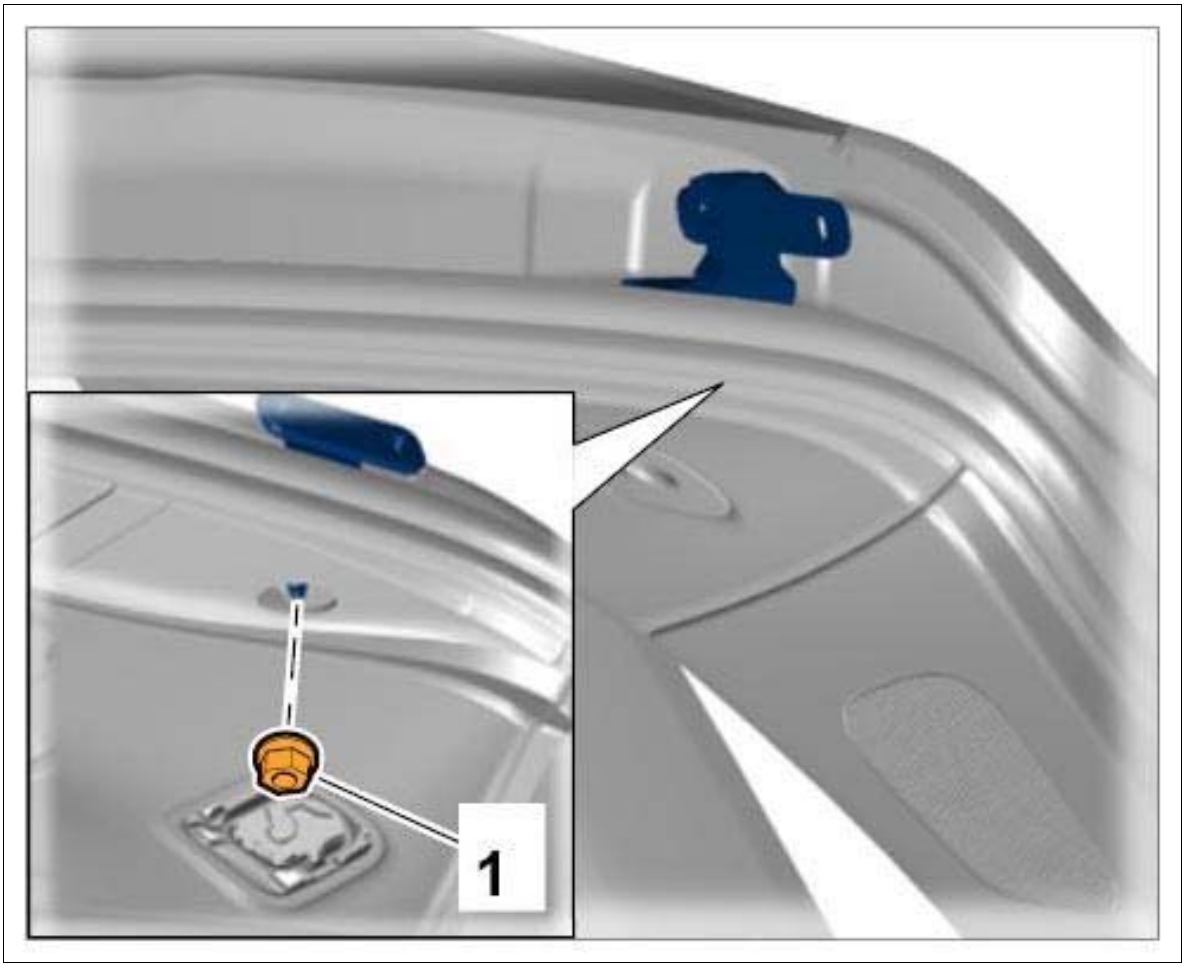

Courtesy of PORSCHE CARS NORTH AMERICA, INC.

5. Remove lid hinge by pulling it up.

WM 559119 REMOVING AND INSTALLING REAR LID HINGE (MACAN, MACAN S, MACAN TURBO) > INSTALLING REAR LID HINGE

1. Installation is performed in reverse order to removal.
2. Tighten fastening screw for lid hinge to **Tightening torque 10 Nm (7.5 ftlb.)** until secure.
3. Tighten fastening nut for lid hinge to **Tightening torque 23 Nm (17 ftlb.)** until secure.

WM 559119 REMOVING AND INSTALLING REAR LID HINGE (MACAN, MACAN S, MACAN TURBO) > SUBSEQUENT WORK

1. Adjust rear lid. → 559015 ADJUSTING REAR LID

WM 559319 REMOVING AND INSTALLING REAR PNEUMATIC SPRING (MACAN, MACAN S, MACAN TURBO) > REMOVING REAR PNEUMATIC SPRING

⚠ *CAUTION: Incorrect handling of gas-filled shock absorbers*

- *Gas-filled shock absorbers can burst*
- *Risk of eye injuries*
- *Risk of bruising*

→ Gas-filled shock absorbers must be in idle state before removal.

→ Open the lid.

→ Secure the lid to prevent it from closing accidentally following removal of the gas-filled shock absorbers.

→ Do not use force to open the gas-filled shock absorbers because of their high internal pressure.

Information

- The number of fastening screws, fixing clips, plug connections, holders and trim panels can vary depending on equipment.
- The illustrations for removing and installing the drive mechanism are shown only on one equipment variant and may differ from the actual equipment variant.
- Some steps must be carried out automatically.
- Some of the repair illustrations show only one side of the vehicle.

1. Open the rear lid.
2. Loosen the pneumatic spring.

Fig 1: Removing Pneumatic Spring

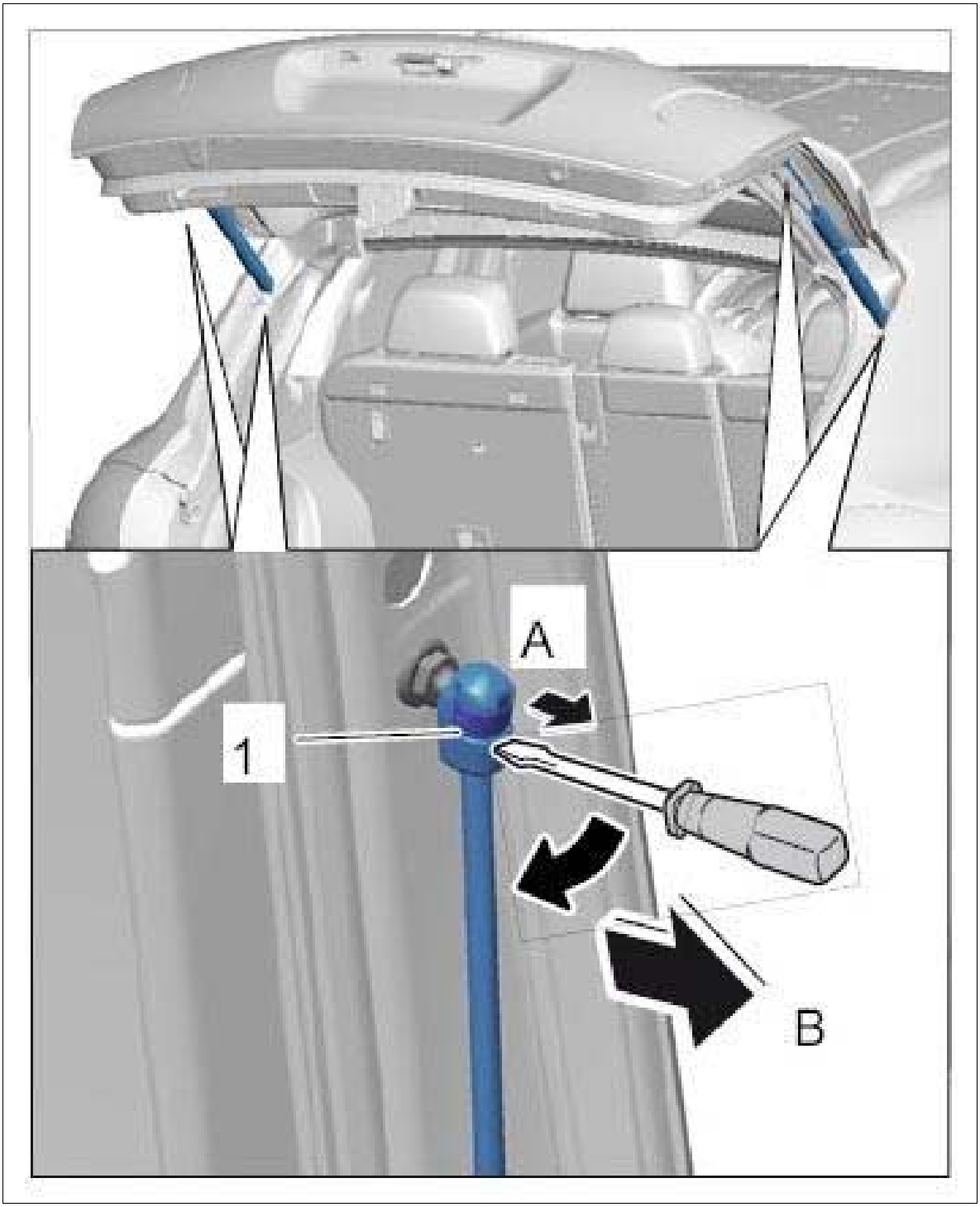

Courtesy of PORSCHE CARS NORTH AMERICA, INC.

1. 2.1. A second person should hold the rear lid to prevent it from closing accidentally.
2. 2.2. Insert a screwdriver between the head of the pneumatic spring **-1-** and the safety clip.
3. 2.3. Lift up the safety clip by levering the screwdriver towards the rear **-A-** . The safety clip remains on the head of the pneumatic spring **-1-** .

4. 2.4. Pull the pneumatic spring off the ball joint **-B-** .
5. 2.5. Remove the screwdriver.

WM 559319 REMOVING AND INSTALLING REAR PNEUMATIC SPRING (MACAN, MACAN S, MACAN TURBO) > INSTALLING REAR PNEUMATIC SPRING

1. Installation is performed in reverse order to removal.
2. Check that the safety clips have engaged correctly. The safety clip must be directly on the head of the pneumatic spring.

WM 559319 REMOVING AND INSTALLING REAR PNEUMATIC SPRING (MACAN, MACAN S, MACAN TURBO) > FUNCTION TEST ON REAR PNEUMATIC SPRING

1. Close and open the lid several times to check that the pneumatic springs are working properly and were fitted correctly.
2. Open the lid fully. The two fitted pneumatic springs must hold the lid open.
3. Close the lid.

WM 559419 REMOVING AND INSTALLING REAR LID SEAL (MACAN, MACAN S, MACAN TURBO) > REMOVING REAR LID SEAL

1. Pull rear lid seal **-1-** off the sheetmetal flange.

Fig 1: Removing Rear Lid Seal

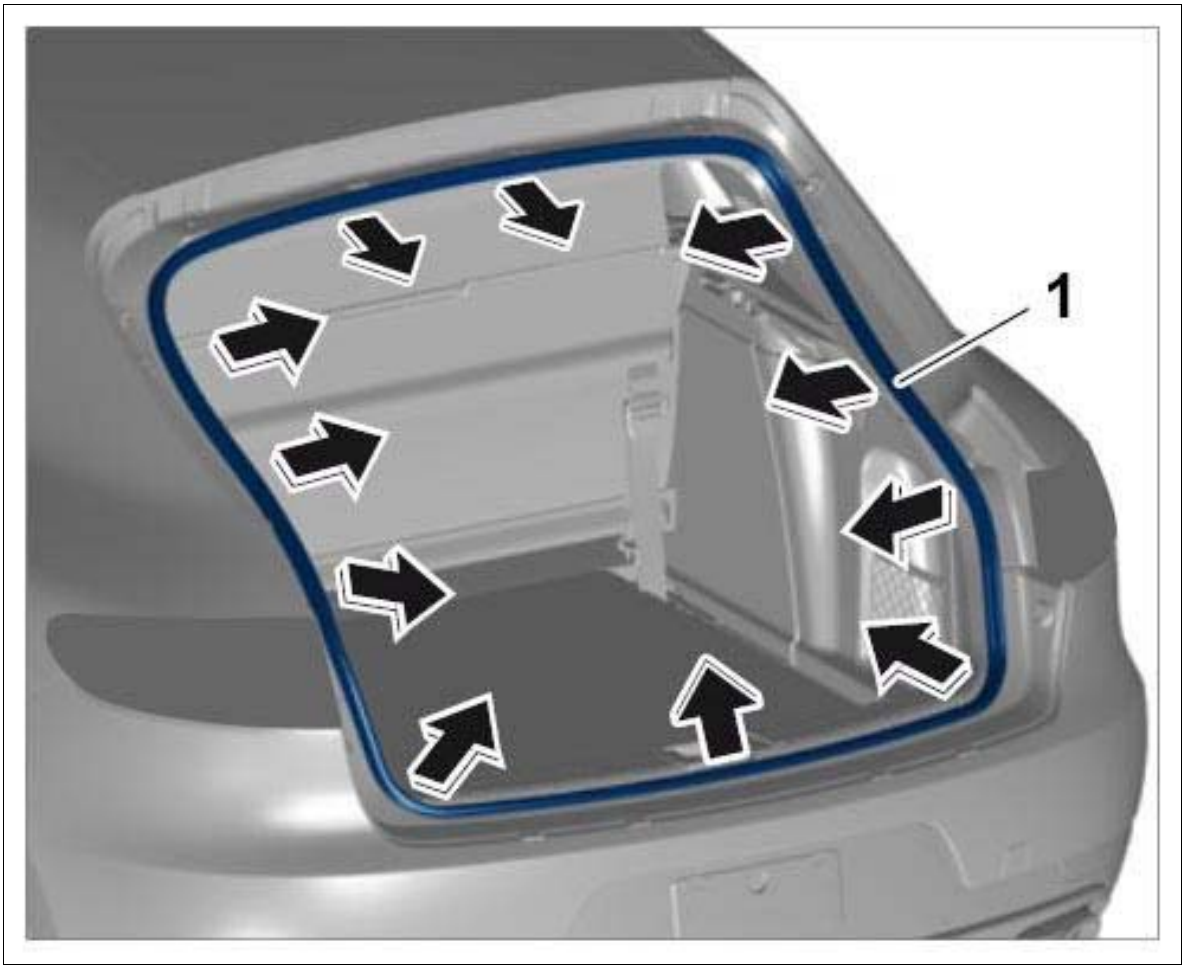

Courtesy of PORSCHE CARS NORTH AMERICA, INC.

2. Remove all the old sealant from the sheetmetal flange.

WM 559419 REMOVING AND INSTALLING REAR LID SEAL (MACAN, MACAN S, MACAN TURBO) > INSTALLING REAR LID SEAL

1. Place rear lid seal in installation position.

Fig 1: Installing Rear Lid Seal

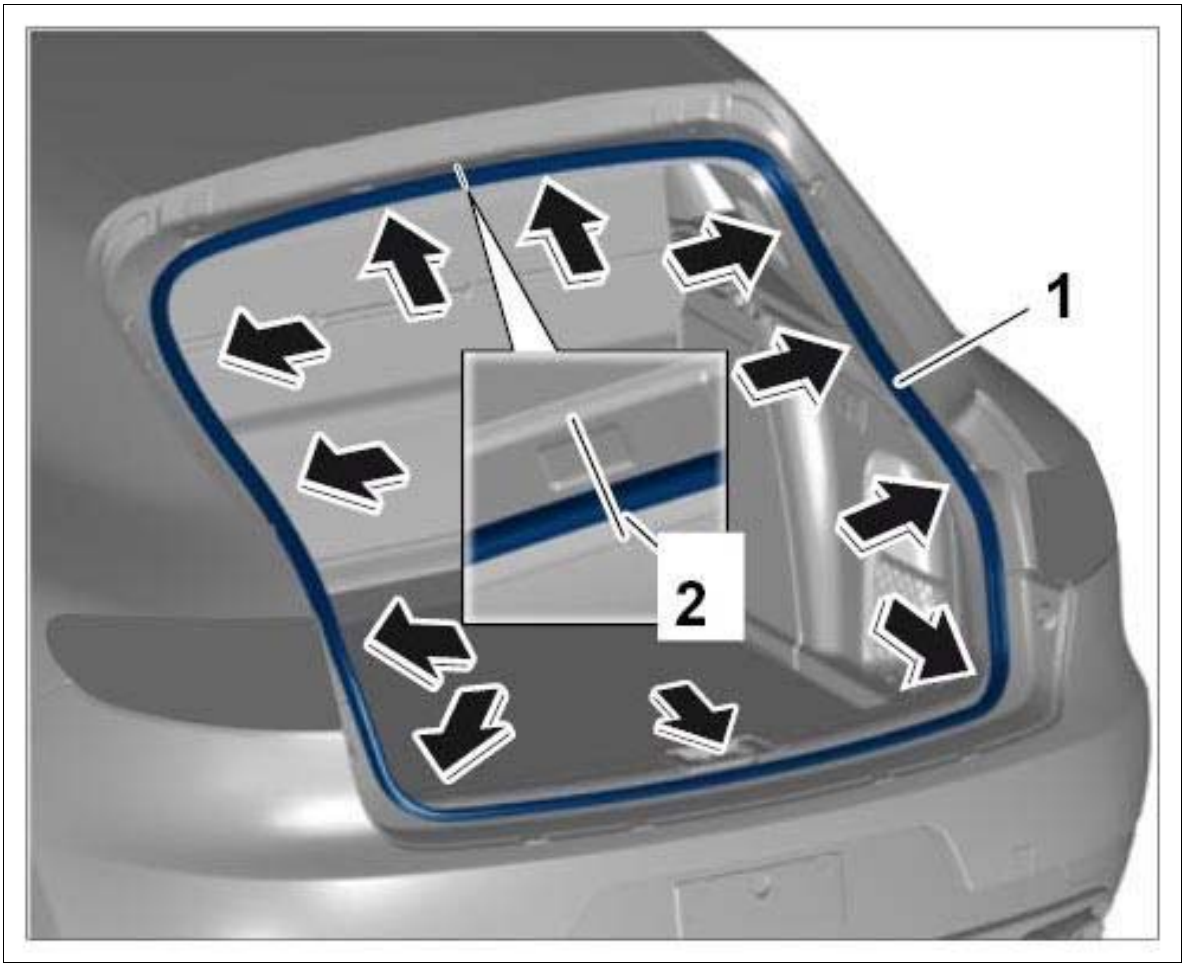

Courtesy of PORSCHE CARS NORTH AMERICA, INC.

1. 1.1. Position marking on the seal **-2-** at the center of the vehicle.
2. 1.2. Fit seal with the vent holes facing outwards on the sheetmetal flange.

2. Press rear lid seal **-1-** onto the sheetmetal flange.
3. Check that the seal is fitted securely and is flush, especially in the rounded areas.

WM 570837 DISASSEMBLING AND ASSEMBLING KEY (ALL MODELS) > DISASSEMBLING AND ASSEMBLING KEY > DISASSEMBLING KEY

1. Disengage locking mechanism **-A-** and pull emergency key about 15 mm out of the remote control **-B-** .

   Fig 1: Pulling Emergency Key Out Of Remote Control

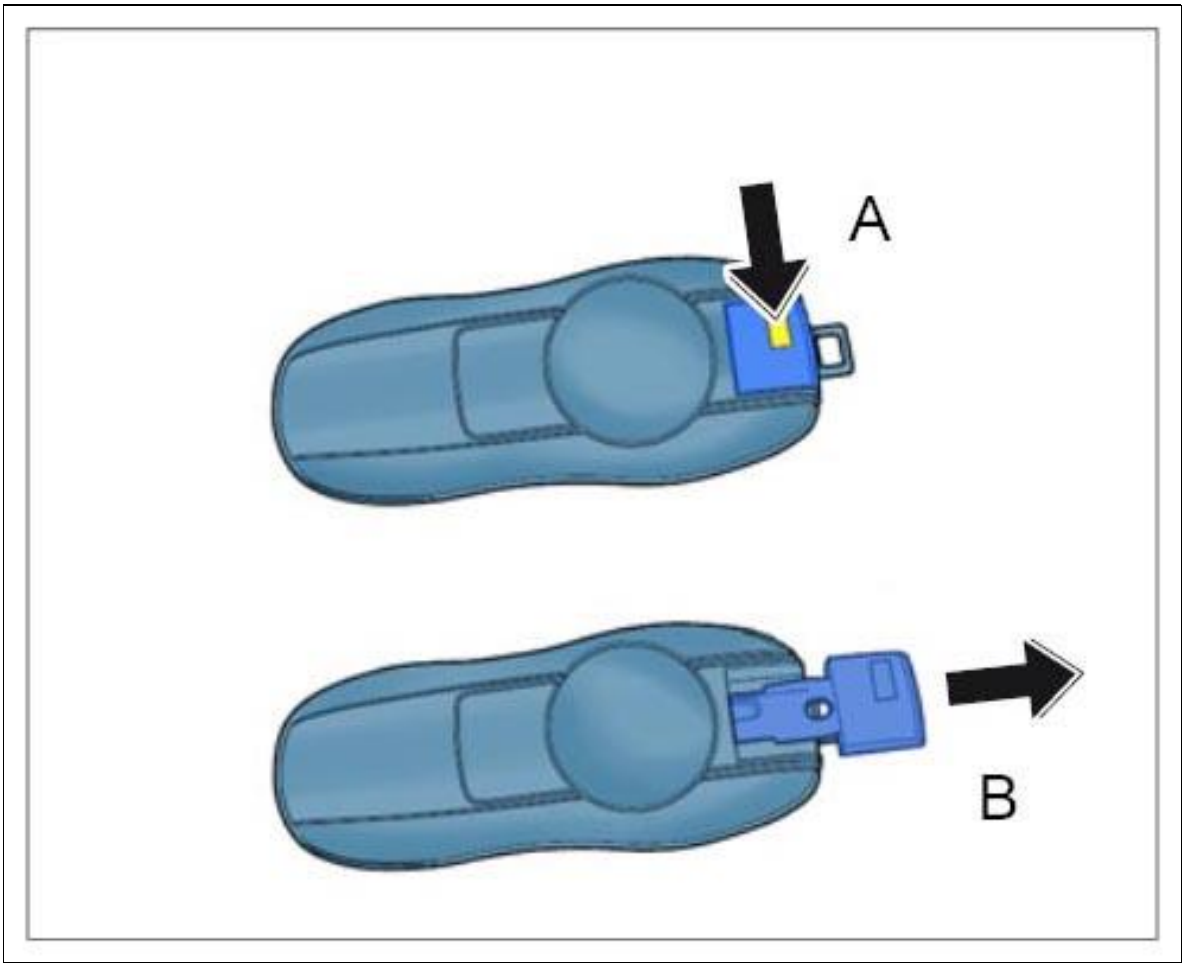

Courtesy of PORSCHE CARS NORTH AMERICA, INC.

2. Open up battery compartment lid up with emergency key **-A-** .
3. Remove battery from the remote control **-arrow-** .

Fig 2: Removing Battery

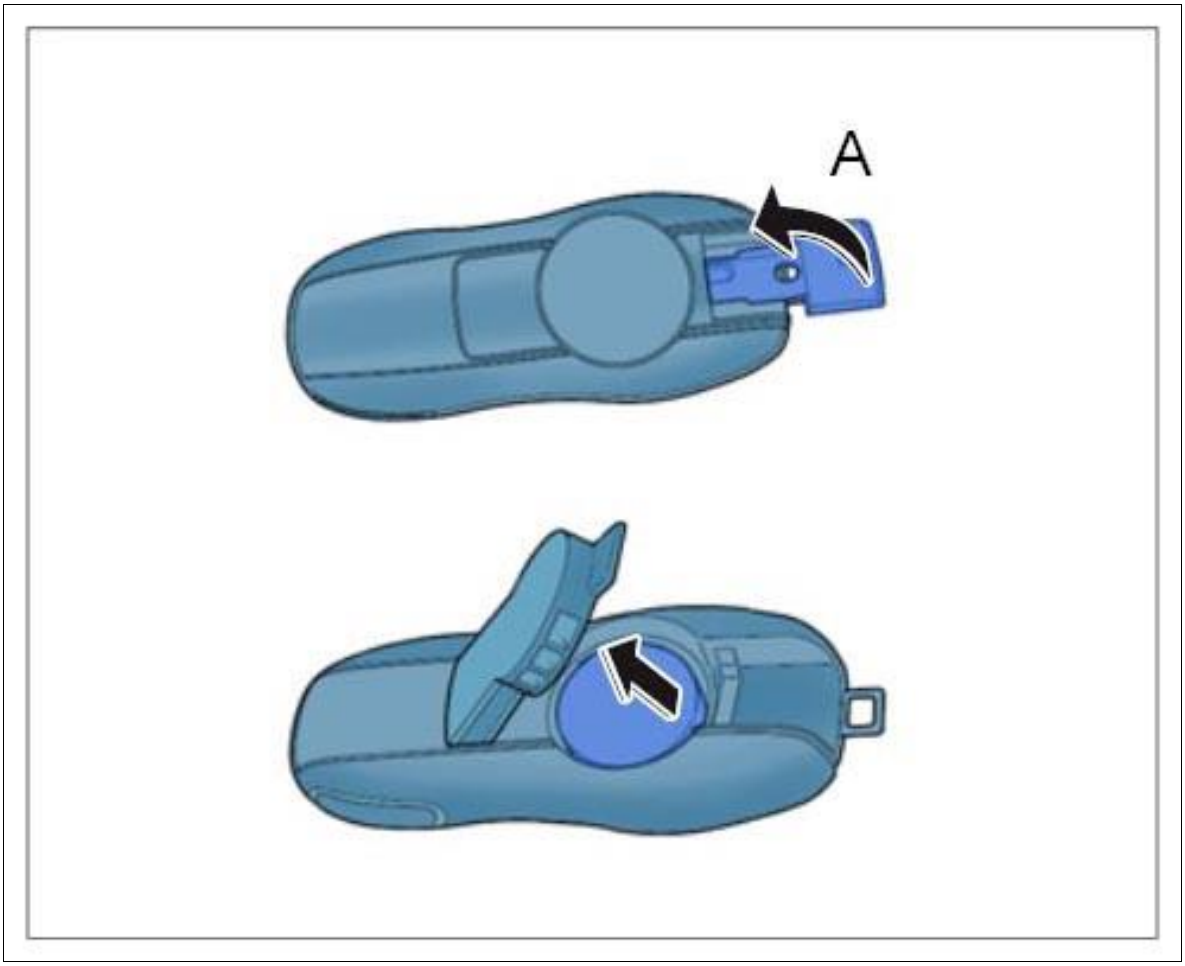

Courtesy of PORSCHE CARS NORTH AMERICA, INC.

WM 570837 DISASSEMBLING AND ASSEMBLING KEY (ALL MODELS) > DISASSEMBLING AND ASSEMBLING KEY > ASSEMBLING KEY

Information

Check that the polarity of the battery CR 2032 is correct: The positive terminal must be pointing up towards the battery compartment lid.

1. Assembly is performed in reverse order to disassembly.

WM 570919 REMOVING AND INSTALLING LOCK CYLINDER (ALL MODELS) > PRELIMINARY WORK

1. Remove door panel. → Removing front door panel
2. Remove front door handle. → Removing Door Handle

3. Remove door lock. → Removing Door Lock

WM 570919 REMOVING AND INSTALLING LOCK CYLINDER (ALL MODELS) > REMOVING LOCK CYLINDER

1. Unscrew fastening screw **-1-** on inner part of door handle.

   Fig 1: Removing Inner Part Of Door Handle

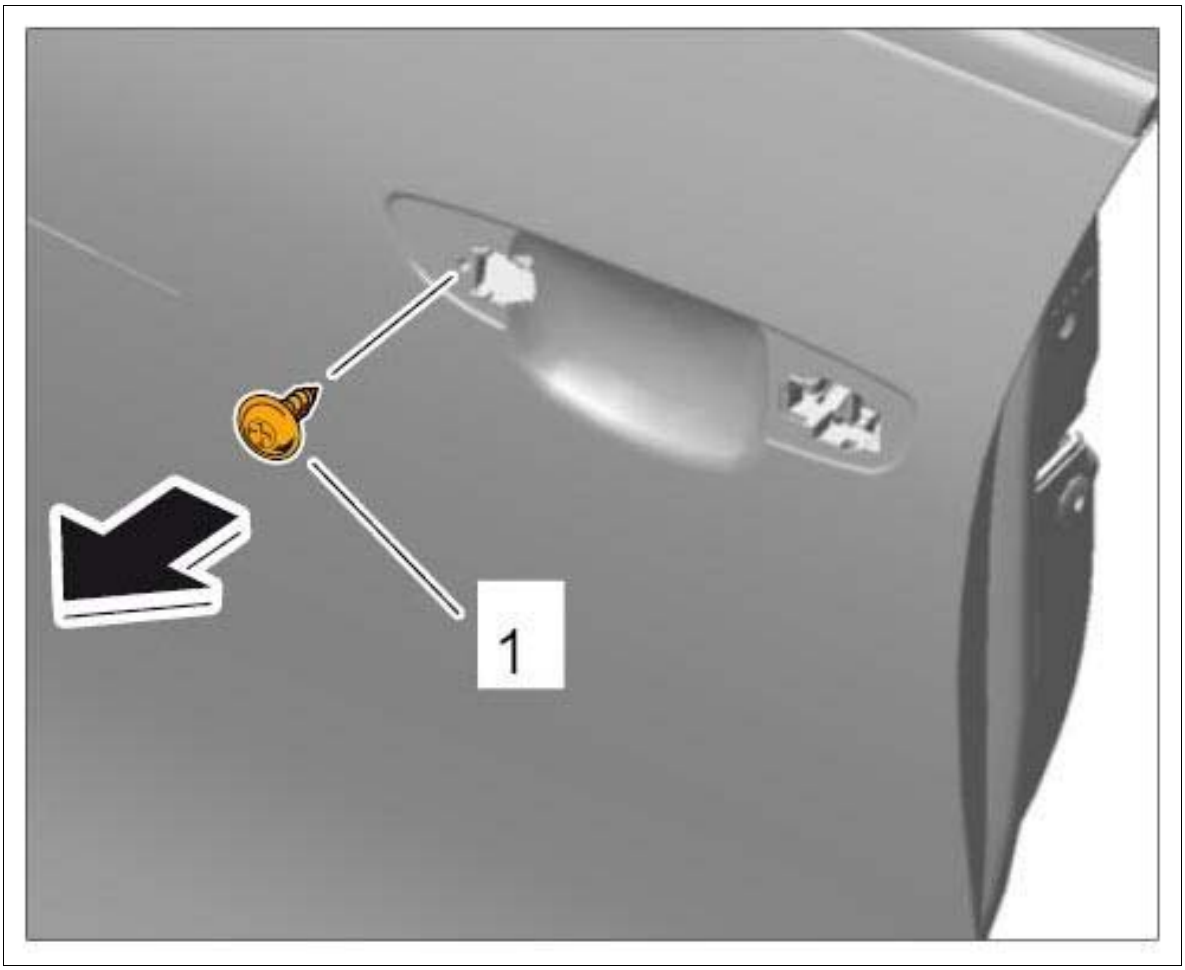

Courtesy of PORSCHE CARS NORTH AMERICA, INC.

2. Unhook inner part of door handle and remove it by pulling it inwards.

Fig 2: Removing Inner Part Of Door Handle

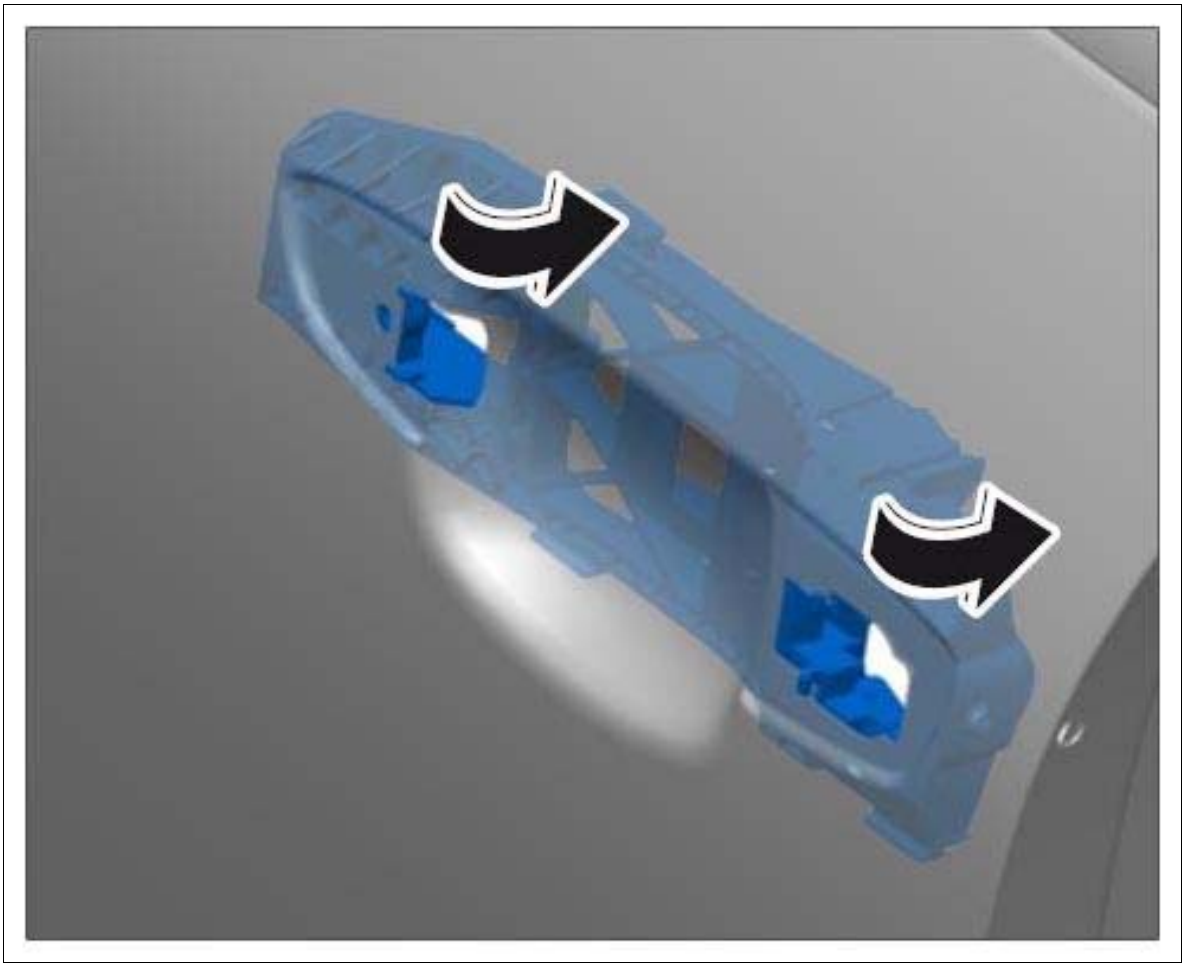

Courtesy of PORSCHE CARS NORTH AMERICA, INC.

3. **Vehicles with KESSY:** Disconnect electric plug connection and remove inner part of door handle.
4. Unclip lock **-1-** on the fastening screw for the lock cylinder.
    1. 4.1. Unscrew and remove fastening screw **-2-** on inner part of door handle fully.

       Remove lock cylinder **-3-** by pulling it upwards.

Fig 3: Identifying Lock Cylinder

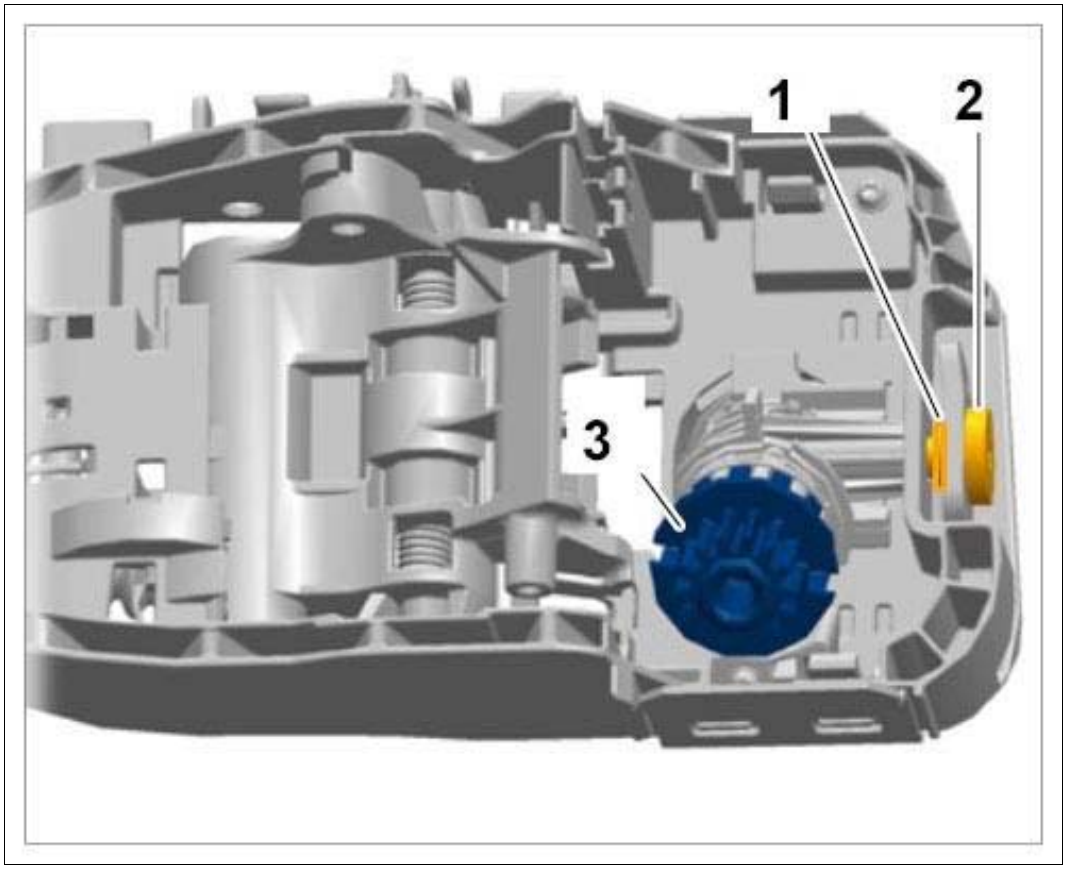

Courtesy of PORSCHE CARS NORTH AMERICA, INC.

WM 570919 REMOVING AND INSTALLING LOCK CYLINDER (ALL MODELS) > INSTALLING LOCK CYLINDER

1. Installation is performed in reverse order to removal.

WM 570919 REMOVING AND INSTALLING LOCK CYLINDER (ALL MODELS) > SUBSEQUENT WORK

1. Install door lock. → Installing Door Lock
2. Install front door handle. → Installing Door Handle
3. Install front door panel. → Installing front door panel

WM 571119 REMOVING AND INSTALLING FRONT DOOR HANDLE (ALL MODELS) > TECHNICAL VALUES

Location	Description	Type	Basic value	Tolerance 1	Tolerance 2
Fastening screw for door handle		Tightening torque	2.5 Nm (2 ftlb.)		

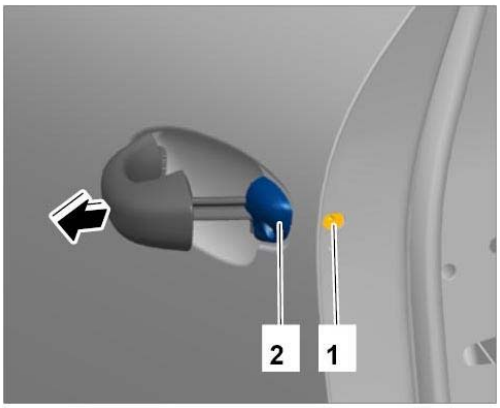

Loosening door handle

WM 571119 REMOVING AND INSTALLING FRONT DOOR HANDLE (ALL MODELS) > REMOVING DOOR HANDLE

Fig 1: Identifying Door Handle Position



Courtesy of PORSCHE CARS NORTH AMERICA, INC.

1. Open the driver's door.
2. Remove cap on the inside of the door.

3. Unscrew fastening screw **-1-** as far as it will go.

1. 3.1. Pull door handle outwards and remove protection cap **-2-** .

Fig 2: Releasing Door Handle

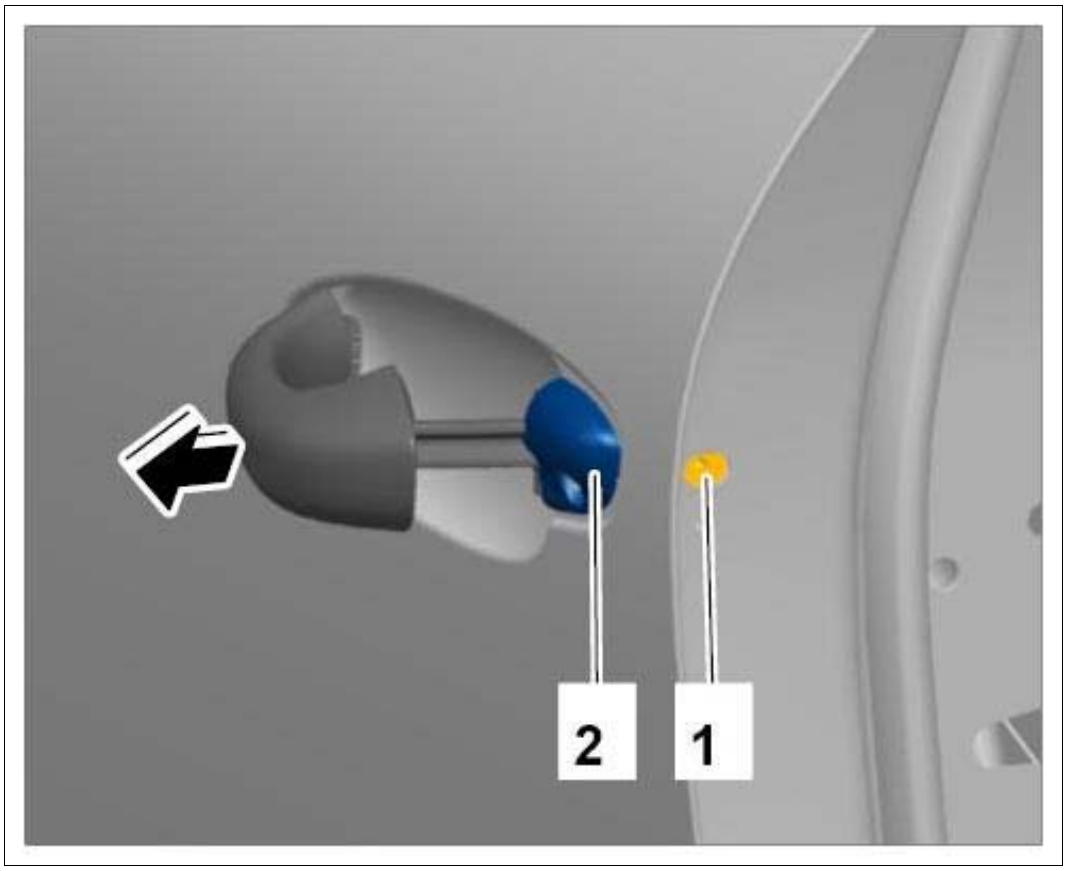

Courtesy of PORSCHE CARS NORTH AMERICA, INC.

4. Pull door handle **-1-** on front driver's side to the rear and unhook it.

Fig 3: Removing Door Handle

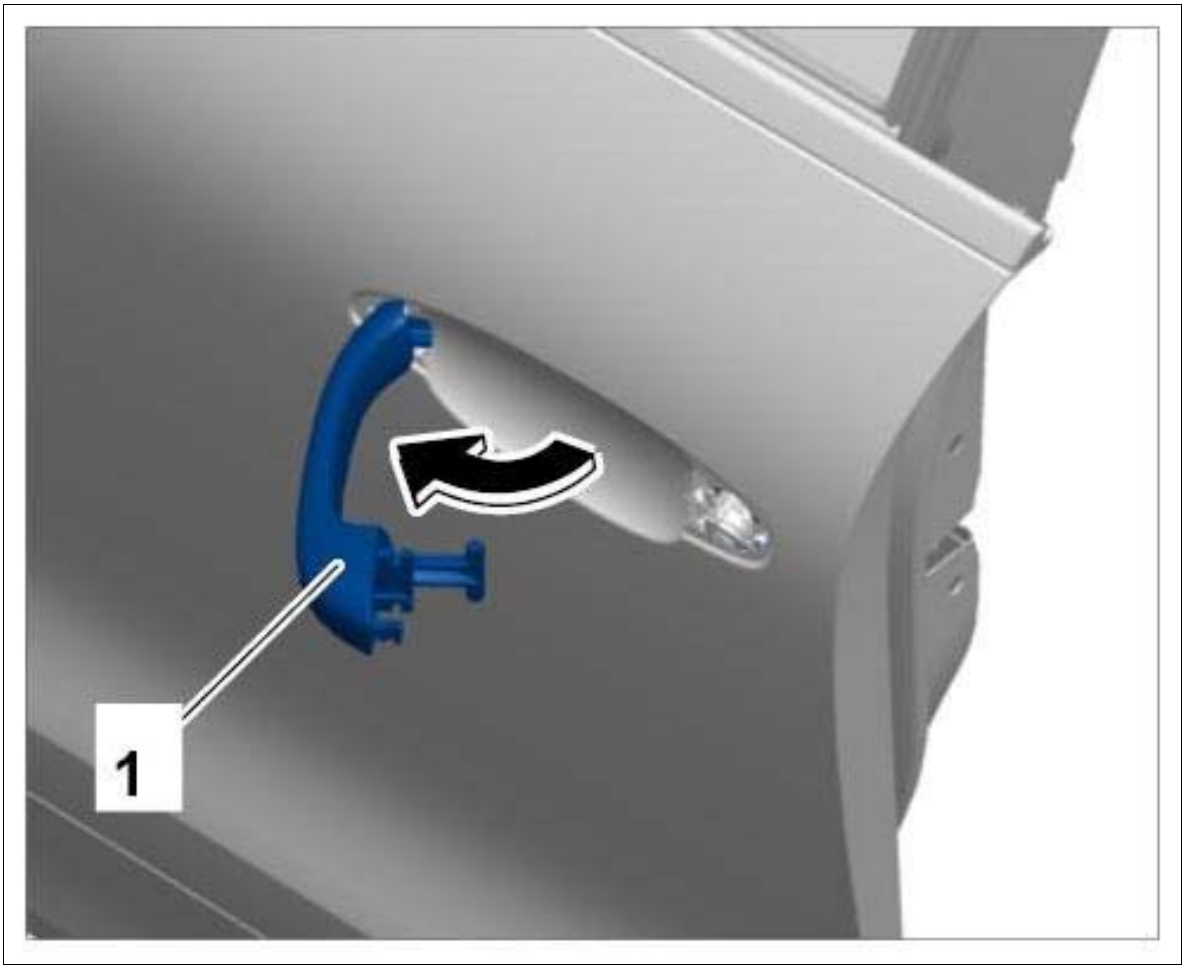

Courtesy of PORSCHE CARS NORTH AMERICA, INC.

1. 4.1. Swivel door handle out by 90° **-arrow-** and pull it out of the inner part.
2. 4.2. Remove rubber base.

5. Vehicles with KESSY: Release and disconnect electric plug connection.

WM 571119 REMOVING AND INSTALLING FRONT DOOR HANDLE (ALL MODELS) > INSTALLING DOOR HANDLE

1. Installation is performed in reverse order to removal.
2. Tighten fastening screw on door handle to **Tightening torque 2.5 Nm (2 ftlb.)** .

WM 571719 REMOVING AND INSTALLING DOOR LOCK (ALL MODELS) > TECHNICAL VALUES

Location	Description	Type	Basic value	Tolerance 1	Tolerance 2
Fastening screw for door lock		Tightening torque	20 Nm (15 ftlb.)		

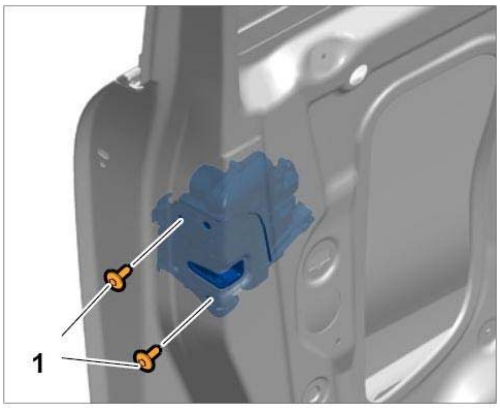

Unscrewing fastening screws

WM 571719 REMOVING AND INSTALLING DOOR LOCK (ALL MODELS) > PRELIMINARY WORK

1. Remove front door panel. → Removing front door panel
2. Remove front power windows mechanism. → Removing front power windows

WM 571719 REMOVING AND INSTALLING DOOR LOCK (ALL MODELS) > REMOVING DOOR LOCK

Information

- The number of fastening screws, fixing clips, plug connections, holders and trim panels can vary depending on equipment.
- The illustrations for removing and installing the drive mechanism are shown only on one equipment variant and may differ from the actual equipment variant.
- Some steps must be carried out automatically.
- Some of the repair illustrations show only one side of the vehicle.

Fig 1: Identifying Door Lock Position

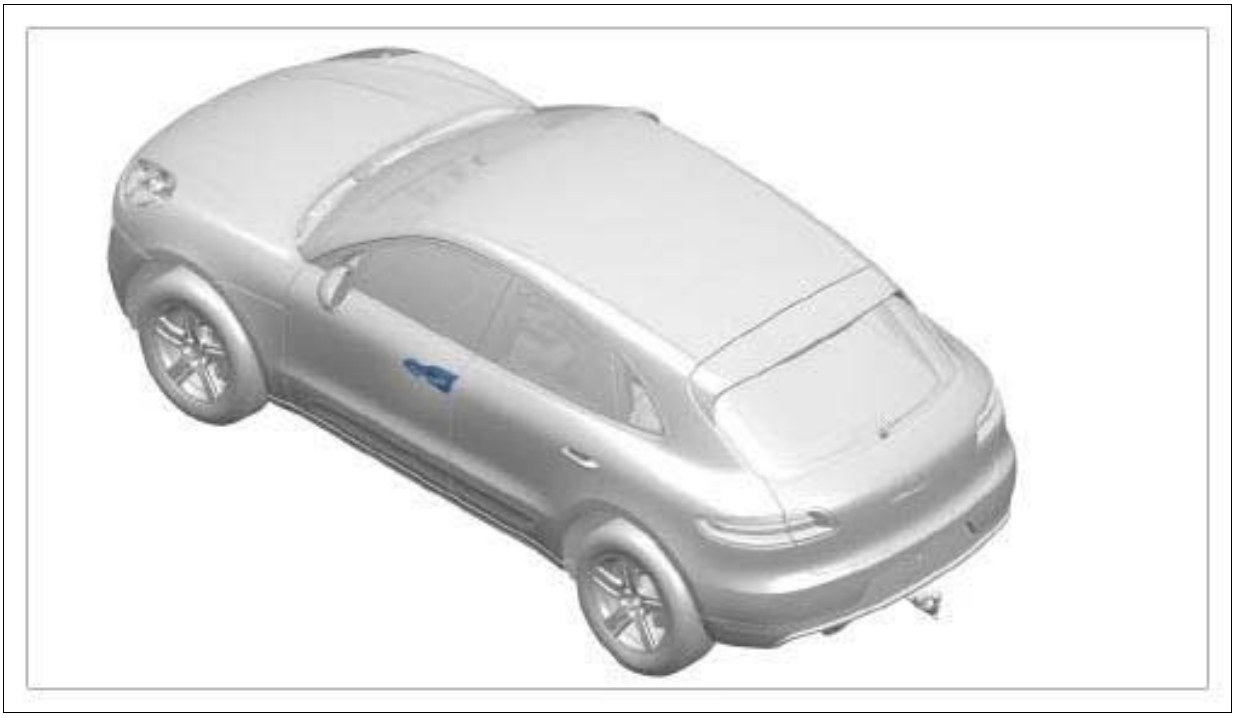

Courtesy of PORSCHE CARS NORTH AMERICA, INC.

1. Unscrew and remove fastening screws for door lock **-1-** .

Fig 2: Identifying Door Lock Screws

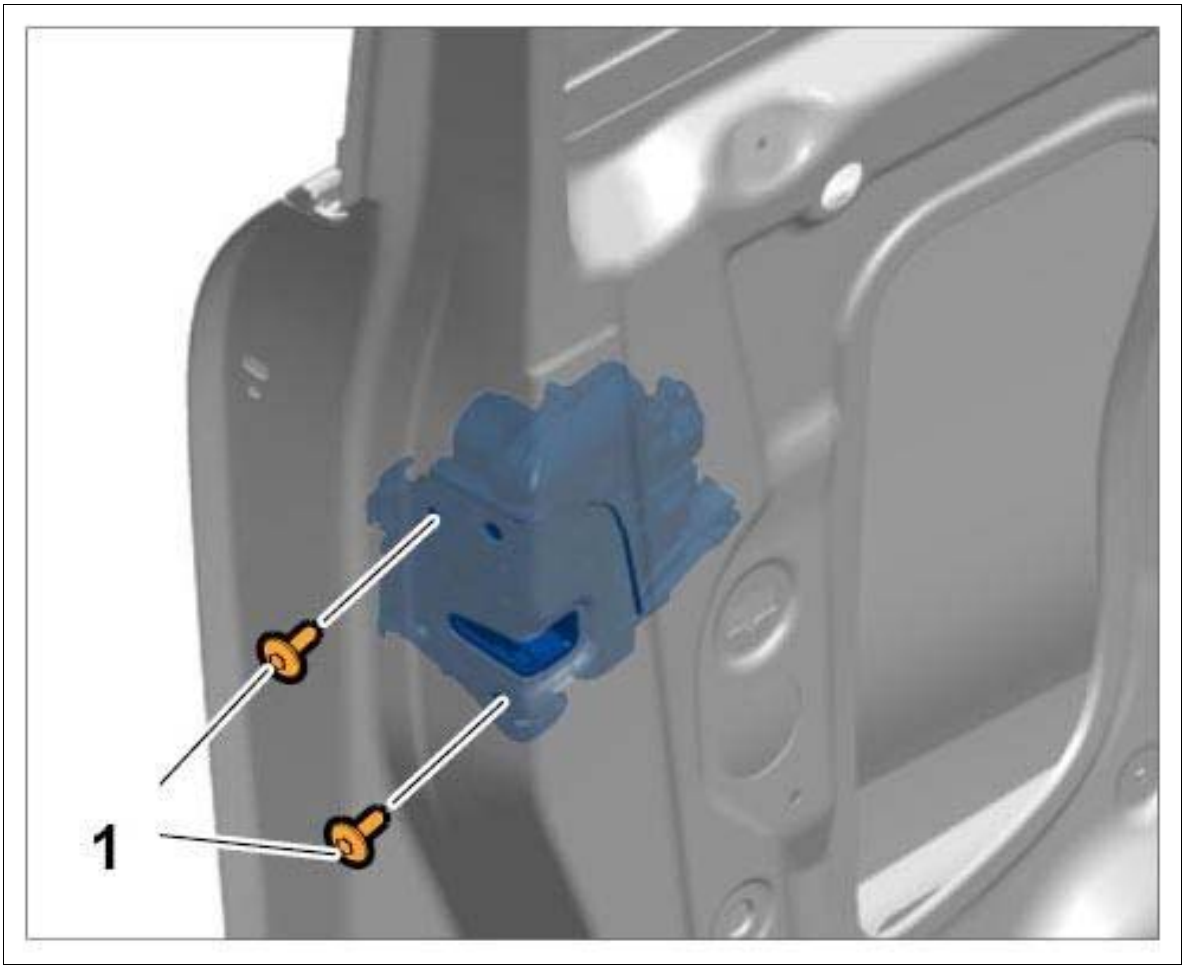

Courtesy of PORSCHE CARS NORTH AMERICA, INC.

2. Remove door lock **-1-** .

    1. 2.1. Driver's side: Guide actuator paddle for door lock out of the supporting bow **-2-** in the outer part of the door **-A-** .

Fig 3: Removing Door Lock

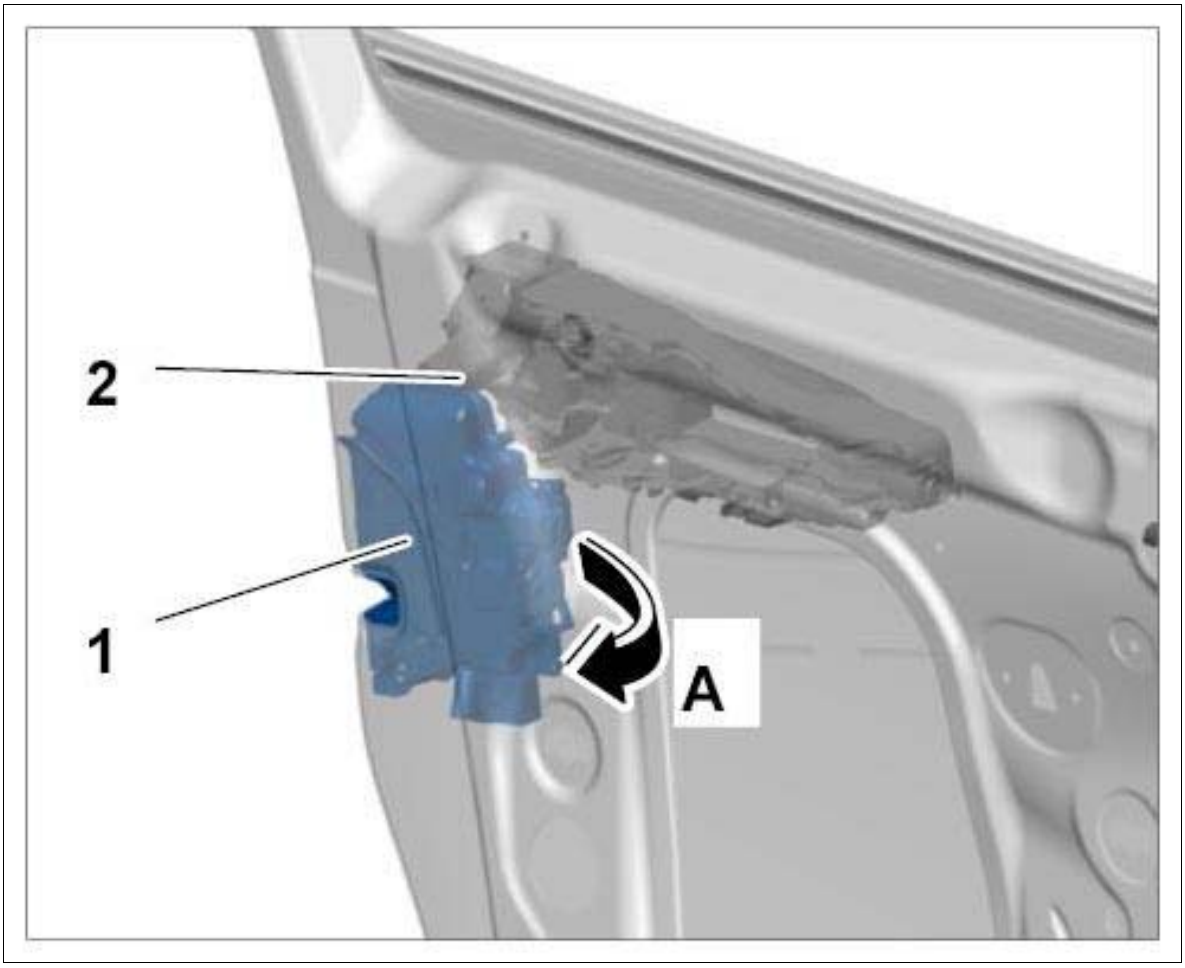

Courtesy of PORSCHE CARS NORTH AMERICA, INC.

3. Disconnect electric plug connection from the door lock.

Fig 4: Disconnecting Electric Plug Connection For Door Lock

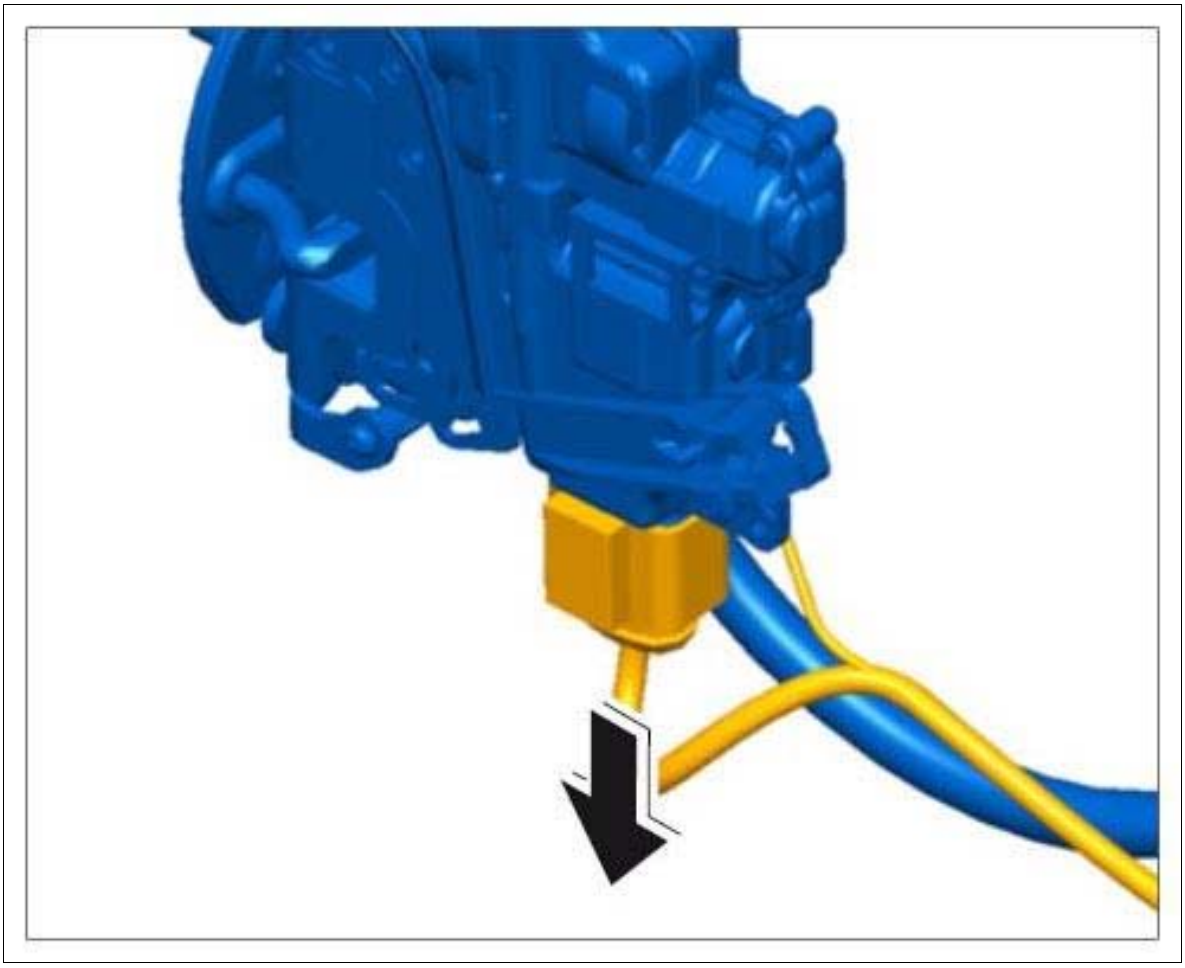

Courtesy of PORSCHE CARS NORTH AMERICA, INC.

4. Disengage bowden cable from the door lock to the outer handle in the door lock.
    1. 4.1. Release bowden cable bracket **-3- (-a-)** and unclip it **-A-** .
    2. 4.2. Turn bowden cable bracket by 90° **-B-** and disengage the driver **-4-** .

Fig 5: Removing Bowden Cable

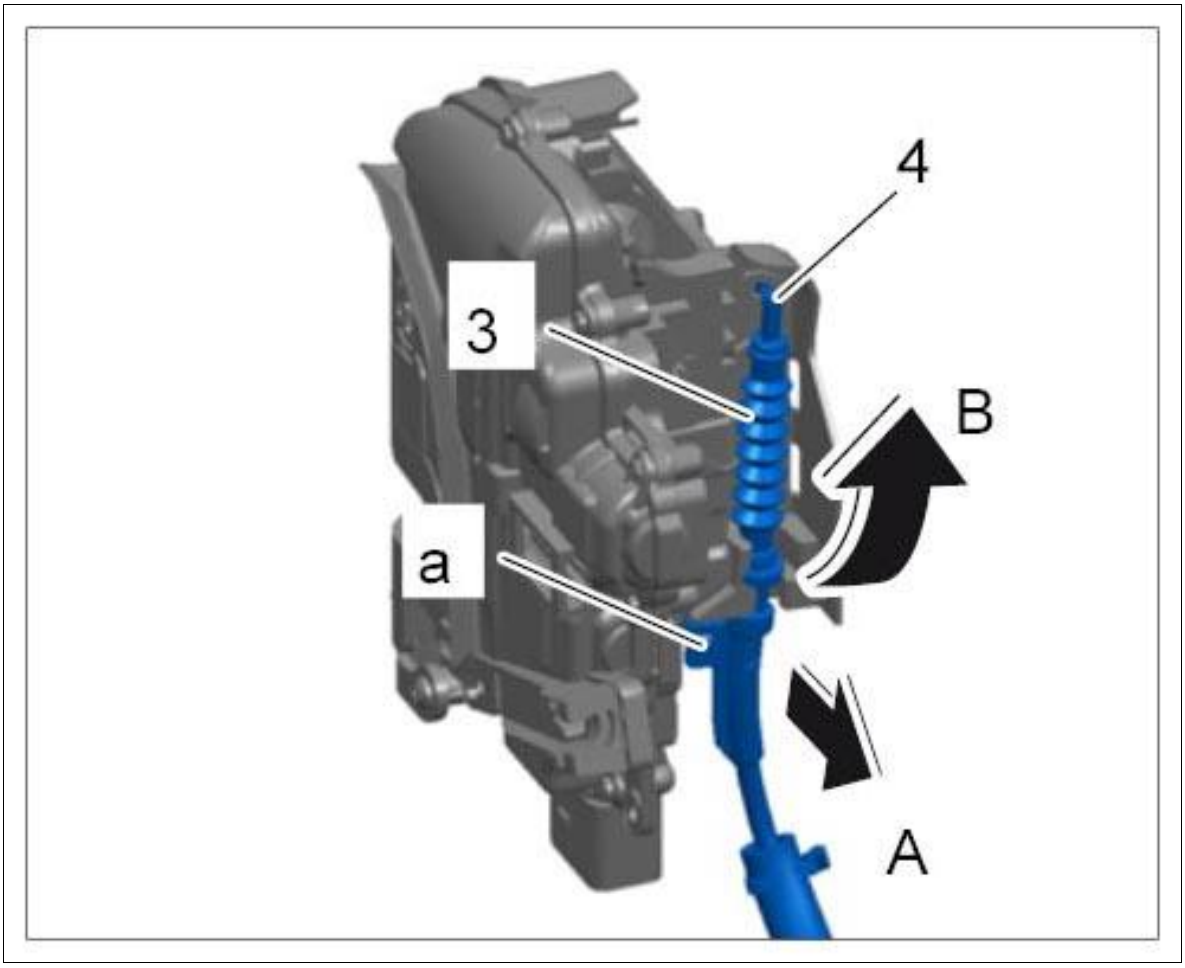

Courtesy of PORSCHE CARS NORTH AMERICA, INC.

5. Disengage bowden cable for inner door release at the door lock. → Removing Inner Door Release
6. Remove door lock.

WM 571719 REMOVING AND INSTALLING DOOR LOCK (ALL MODELS) > INSTALLING DOOR LOCK

1. Installation is performed in reverse order to removal.
2. Press door paddle aside using a suitable tool and guide in door lock.

Fig 1: Installing Door Lock

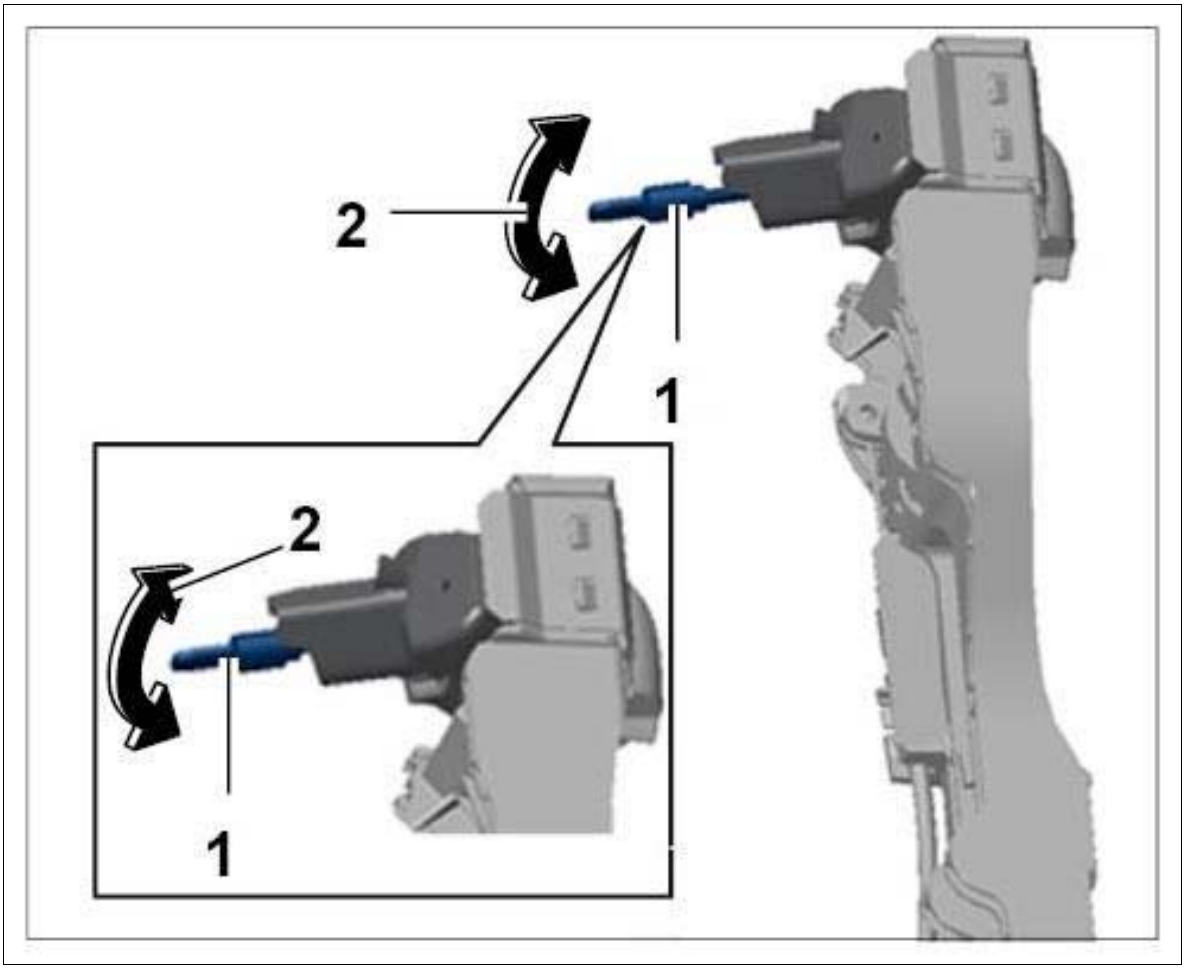

Courtesy of PORSCHE CARS NORTH AMERICA, INC.

3. Fit and tighten fastening screw for door lock to **Tightening torque 20 Nm (15 ftlb.)** .

WM 571719 REMOVING AND INSTALLING DOOR LOCK (ALL MODELS) > SUBSEQUENT WORK

1. Install front door panel. → Installing front door panel

WM 572615 ADJUSTING LOCK PEG (ALL MODELS) > TOOLS

Designation	Type	Number	Description	

slide hammer kit	Commercially available tool	Nr.168		

WM 572615 ADJUSTING LOCK PEG (ALL MODELS) > TECHNICAL VALUES

Location	Description	Type	Basic value	Tolerance 1	Tolerance 2
Fastening screw for lock peg (striker pin)		Tightening torque	25 Nm (19 ftlb.)		

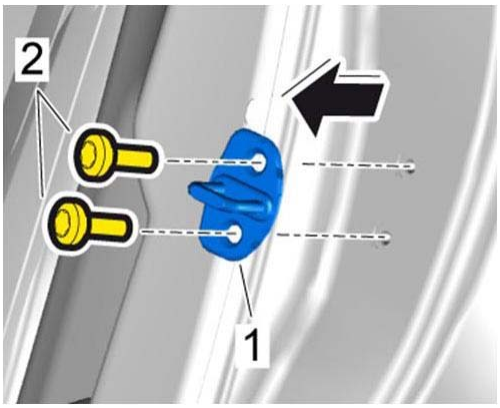

Removing lock peg

WM 572615 ADJUSTING LOCK PEG (ALL MODELS) > ADJUSTING LOCK PEG

Information

- The striker pin can be adjusted by changing the plasticity of the adjusting element in the B-pillar.
- The setting is retained when the striker pin is removed.

Fig 1: Adjusting Element For Striker Pin

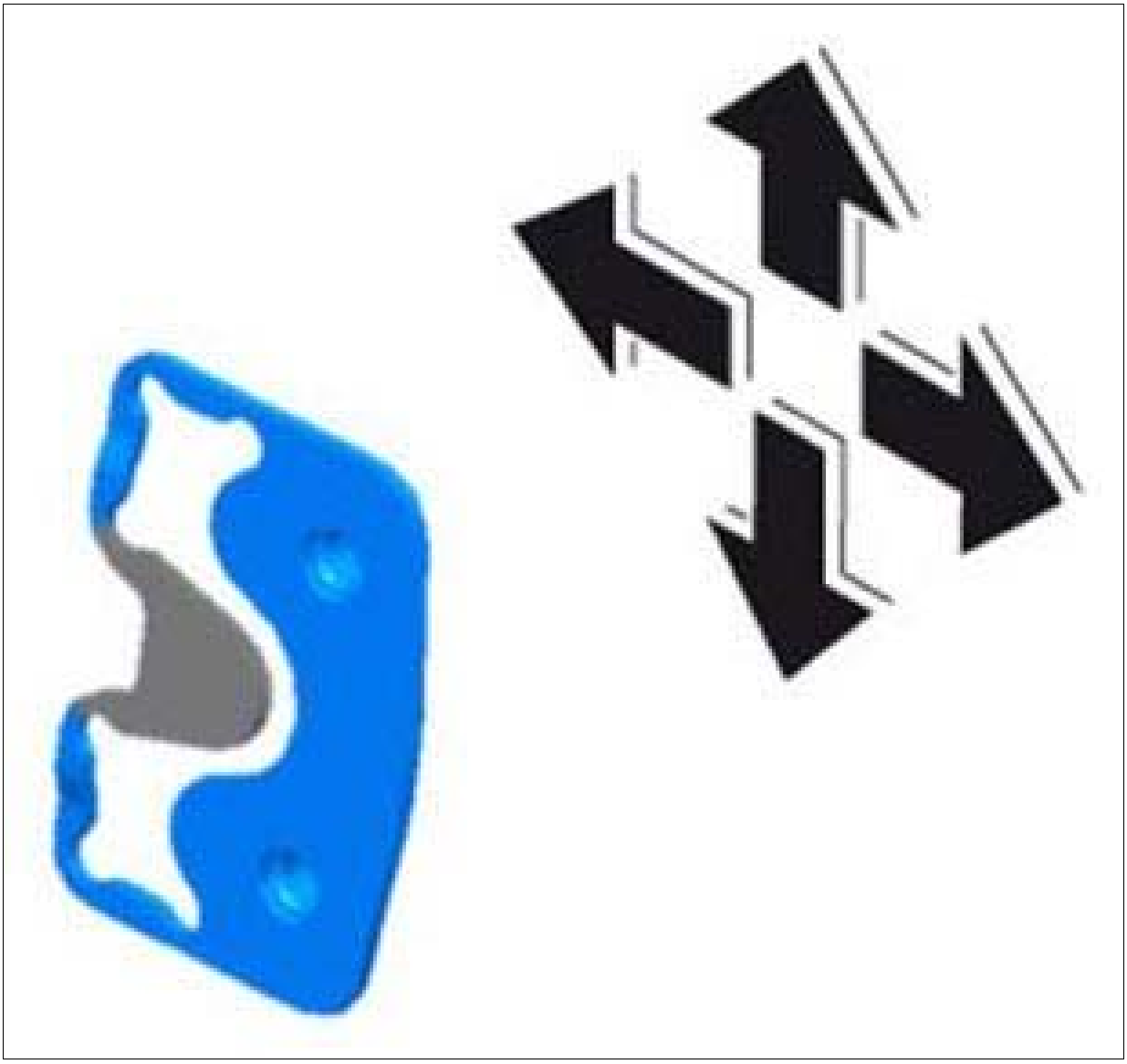

Courtesy of PORSCHE CARS NORTH AMERICA, INC.

1. Loosen fastening screws **-2-** .
2. Move lock peg outwards.
    1. 2.1. Move the lock peg **-1-** outwards (if necessary) using **slide hammer kit Nr.168** .

Fig 2: Moving Lock Peg

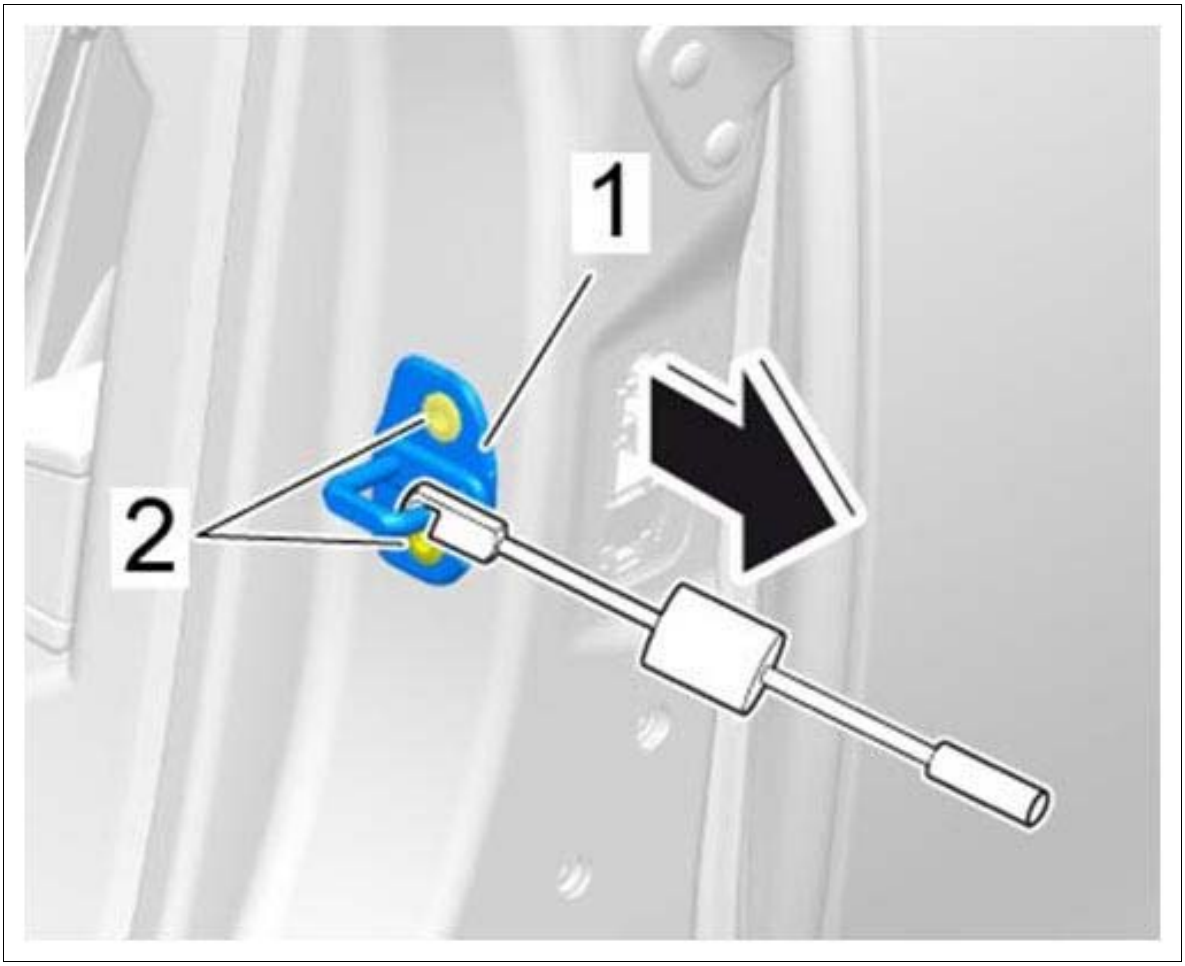

Courtesy of PORSCHE CARS NORTH AMERICA, INC.

3. Adjust the lock peg back/down/up (if necessary).
    1. 3.1. Move catch bar **-1-** to the required position using a plastic hammer.
    2. 3.2. Carefully close the door and check adjustment.

Fig 3: Adjusting Lock Peg

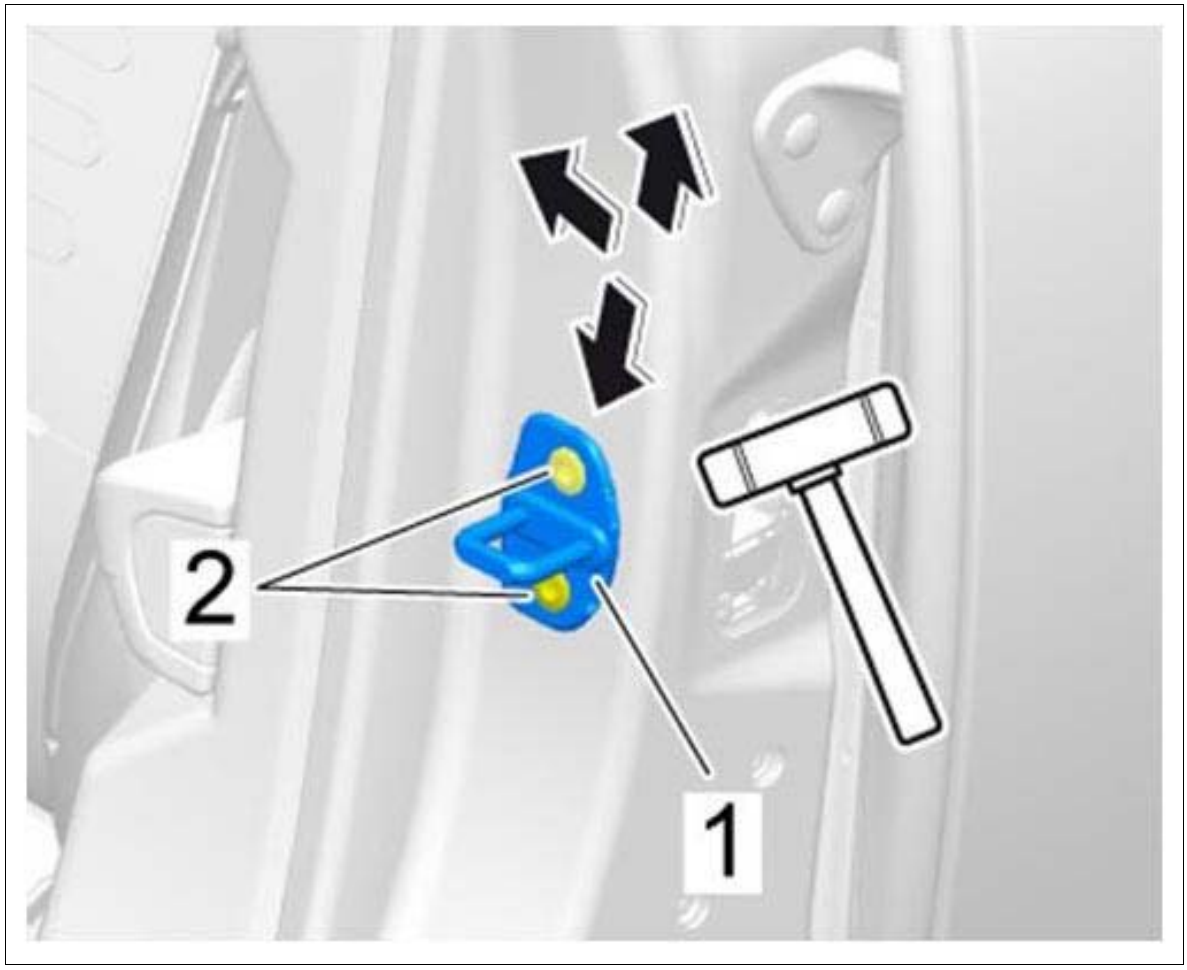

Courtesy of PORSCHE CARS NORTH AMERICA, INC.

4. Tighten fastening screws **-2-** to **Tightening torque 25 Nm (19 ftlb.)** until secure.

WM 575115 ADJUSTING FRONT DOOR (ALL MODELS) > TOOLS

Designation	Type	Number	Description	
star gauges for body gap dimensions	Special tool	NR.127-1		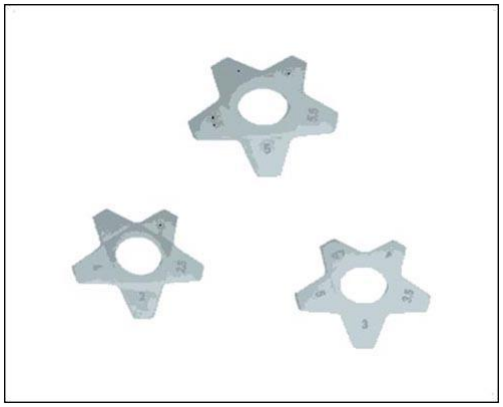

WM 575115 ADJUSTING FRONT DOOR (ALL MODELS) > TECHNICAL VALUES

Location	Description	Type	Basic value	Tolerance 1	Tolerance 2
Fastening screw for lock peg (striker pin)		Tightening torque	25 Nm (19 ftlb.)		
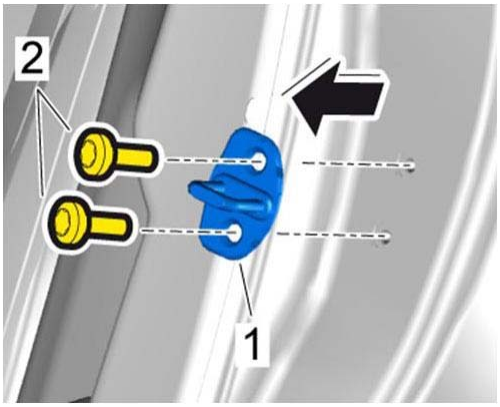 Removing lock peg					
Fastening screw securing hinge to front door		Tightening torque	55 Nm (41 ftlb.)		
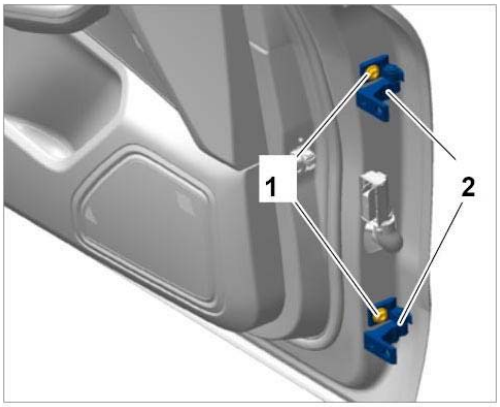 Front door hinge					
Door hinge to outer A-pillar		Tightening torque	50 Nm (37 ftlb.)		

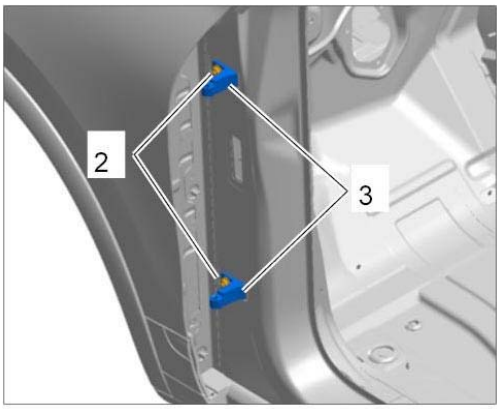

Loosening rear door hinge on body side at the outside

WM 575115 ADJUSTING FRONT DOOR (ALL MODELS) > TECHNICAL VALUES > GAP DIMENSIONS FOR FRONT DOOR/REAR DOOR/SIDE WINDOW

Fig 1: Identifying Gap Dimensions For Front Door

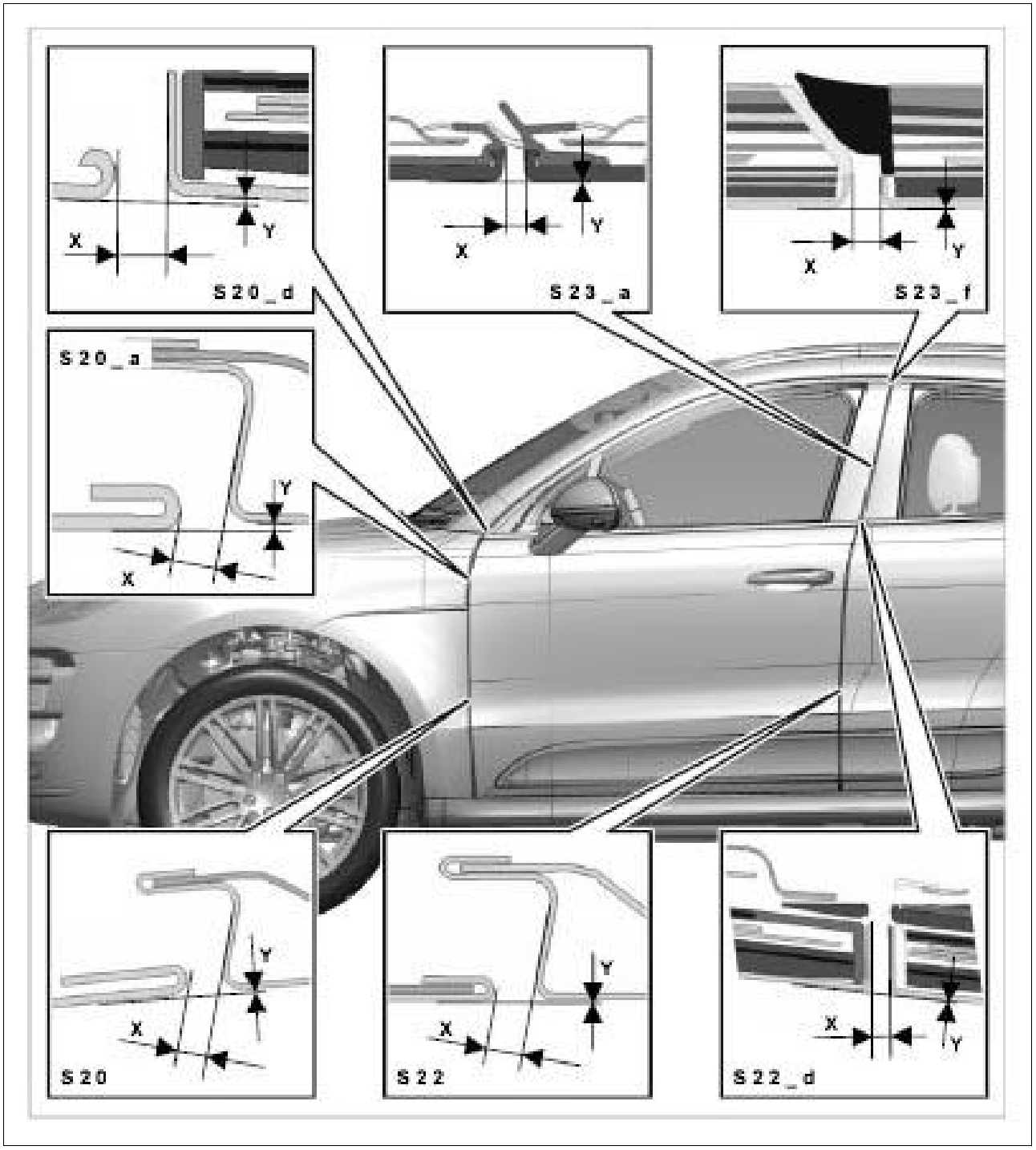

Courtesy of PORSCHE CARS NORTH AMERICA, INC.

S20_d - → Gap dimension: 4.2 mm+/-1 mm

Fig 2: Identifying Gap Dimensions For Front Door (S20)

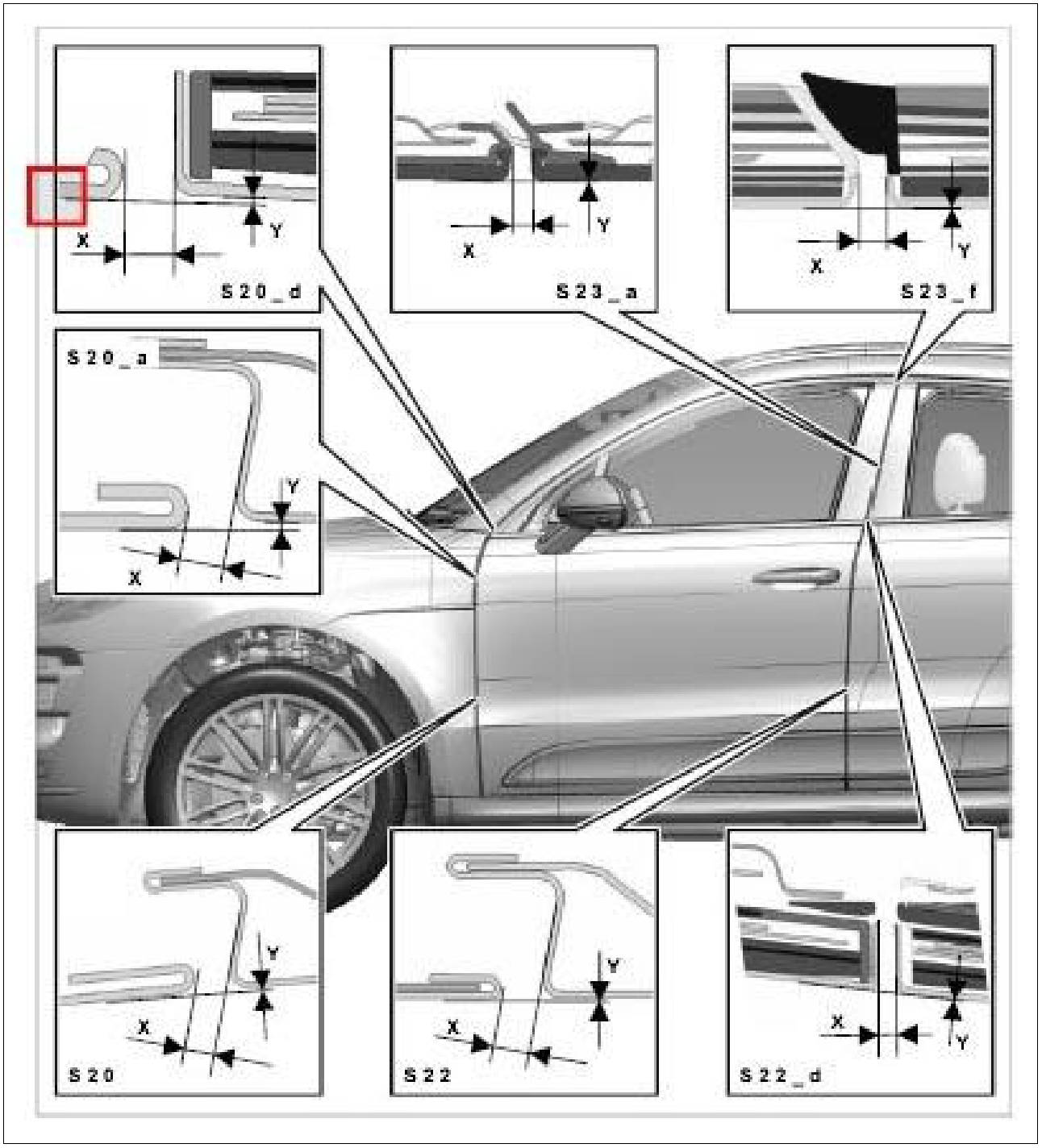

Courtesy of PORSCHE CARS NORTH AMERICA, INC.

S20_d - → Gap dimension: 1 mm

Fig 3: Identifying Gap Dimensions For Front Door (S23)

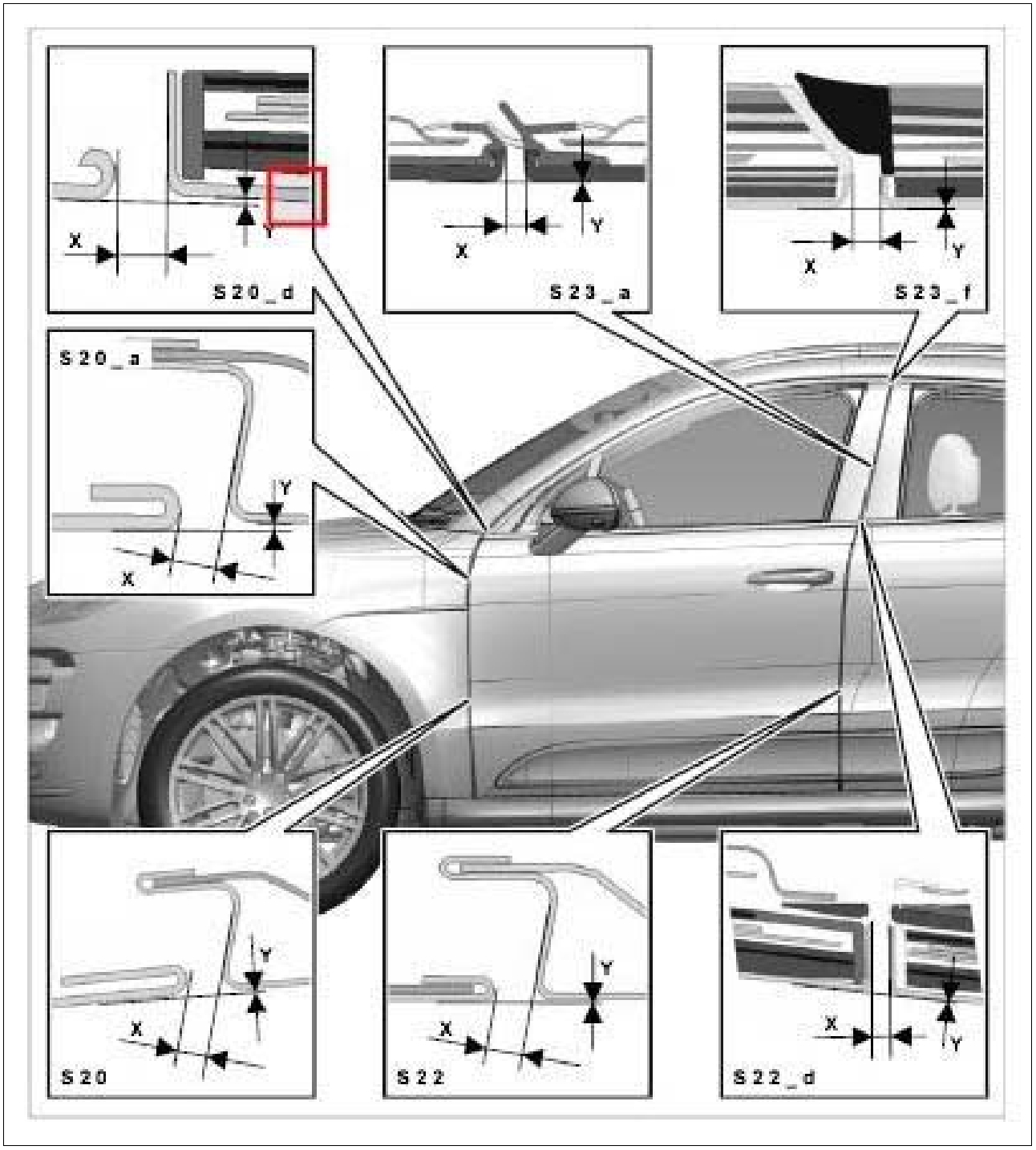

Courtesy of PORSCHE CARS NORTH AMERICA, INC.

S23_a - → Gap dimension: 4.2 mm+/-1 mm

Fig 4: Identifying Gap Dimensions For Front Door (S23)

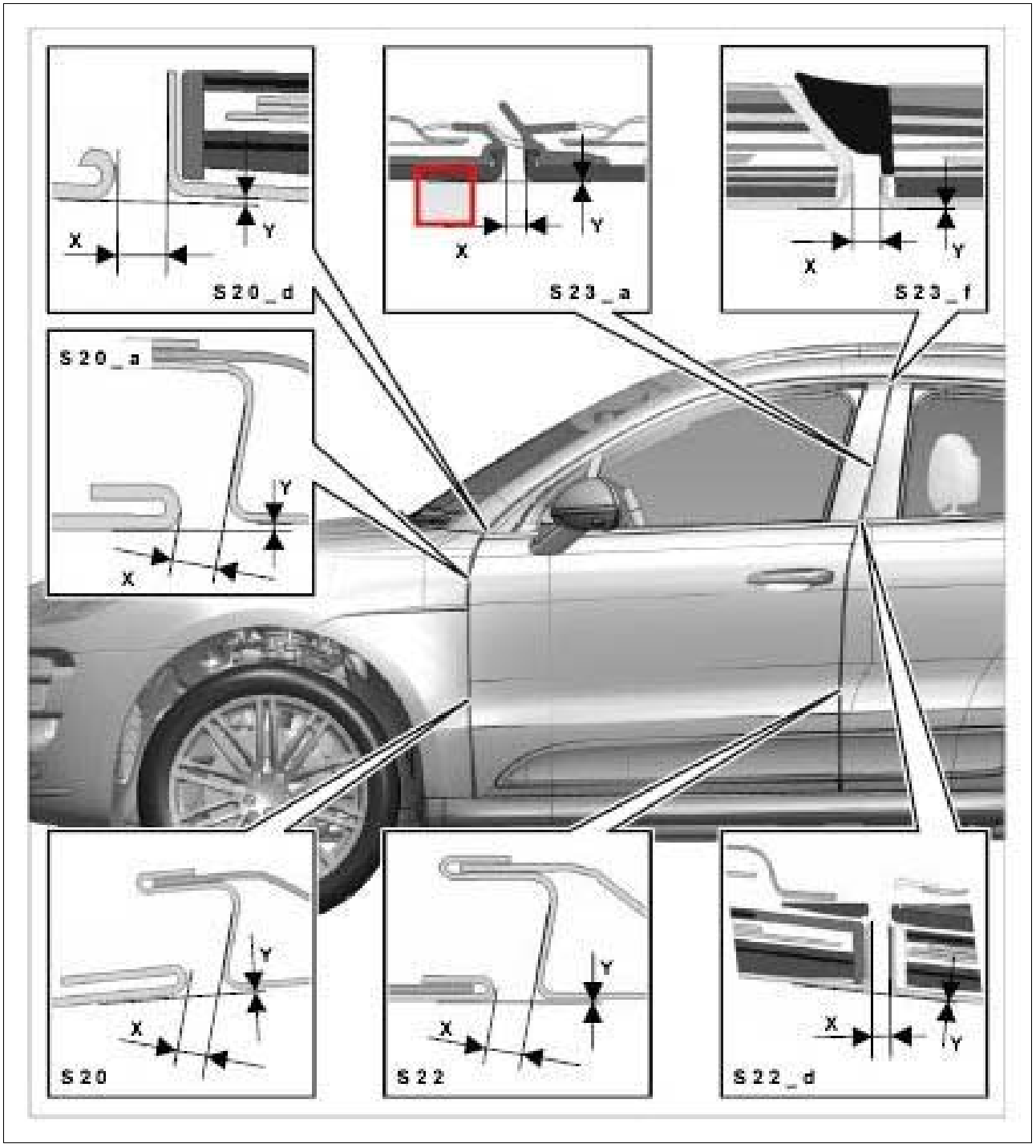

Courtesy of PORSCHE CARS NORTH AMERICA, INC.

S23_a - → Gap dimension: 0 mm

Fig 5: Identifying Gap Dimensions For Front Door (S23)

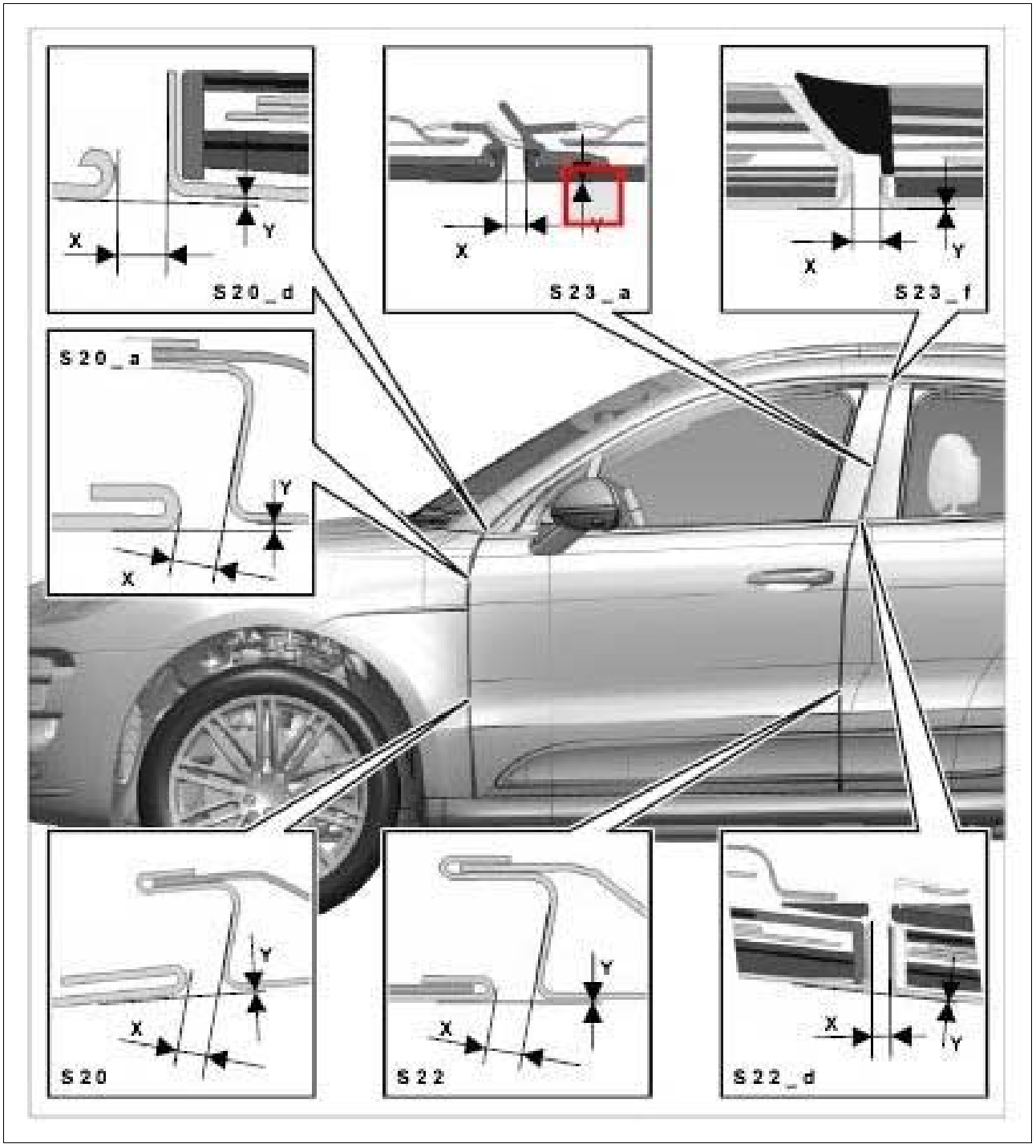

Courtesy of PORSCHE CARS NORTH AMERICA, INC.

S23_f - → Gap dimension: 4.2 mm+/-1 mm

Fig 6: Identifying Gap Dimensions For Front Door (S23)

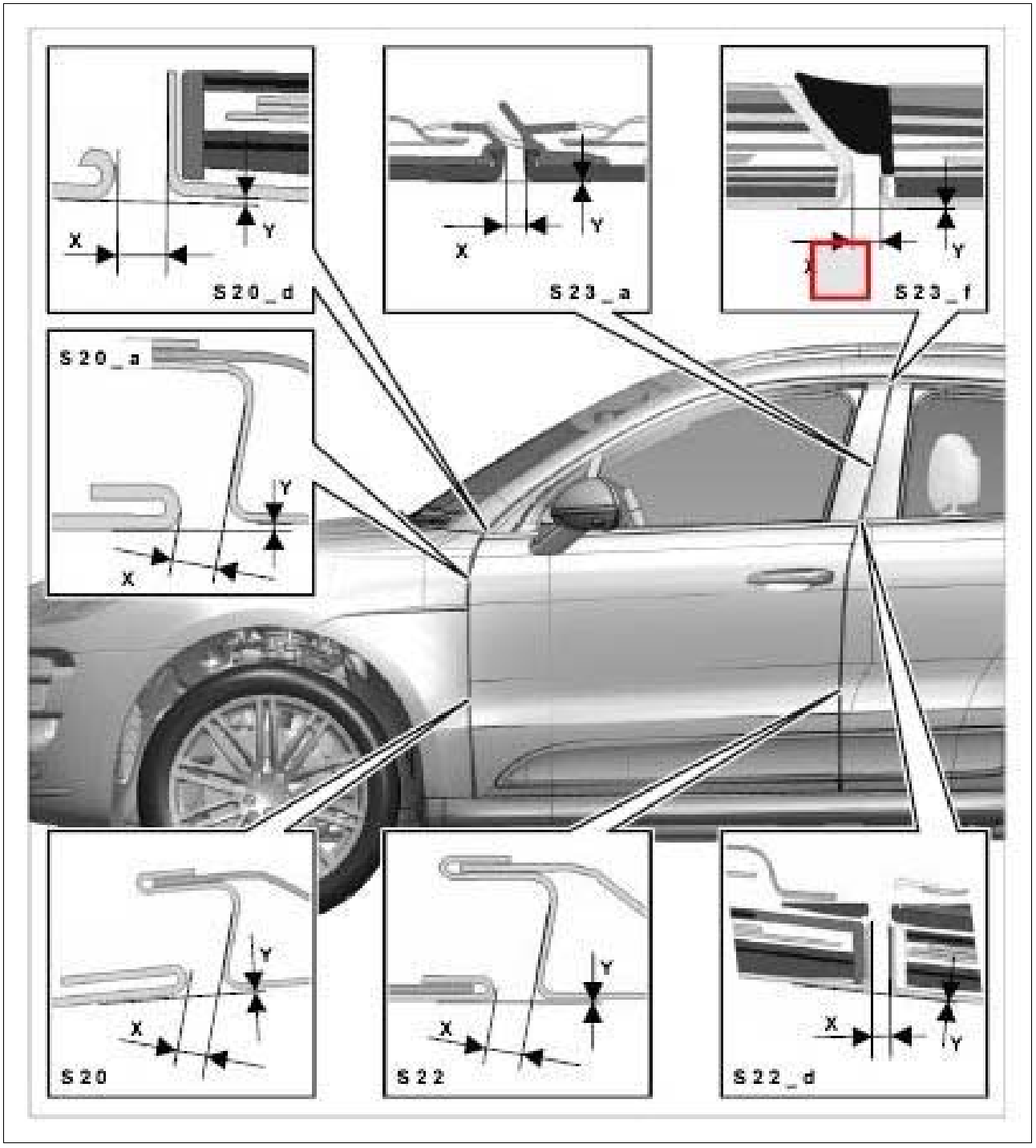

Courtesy of PORSCHE CARS NORTH AMERICA, INC.

S23_f - → Gap dimension: 0 mm

Fig 7: Identifying Gap Dimensions For Front Door (S20)

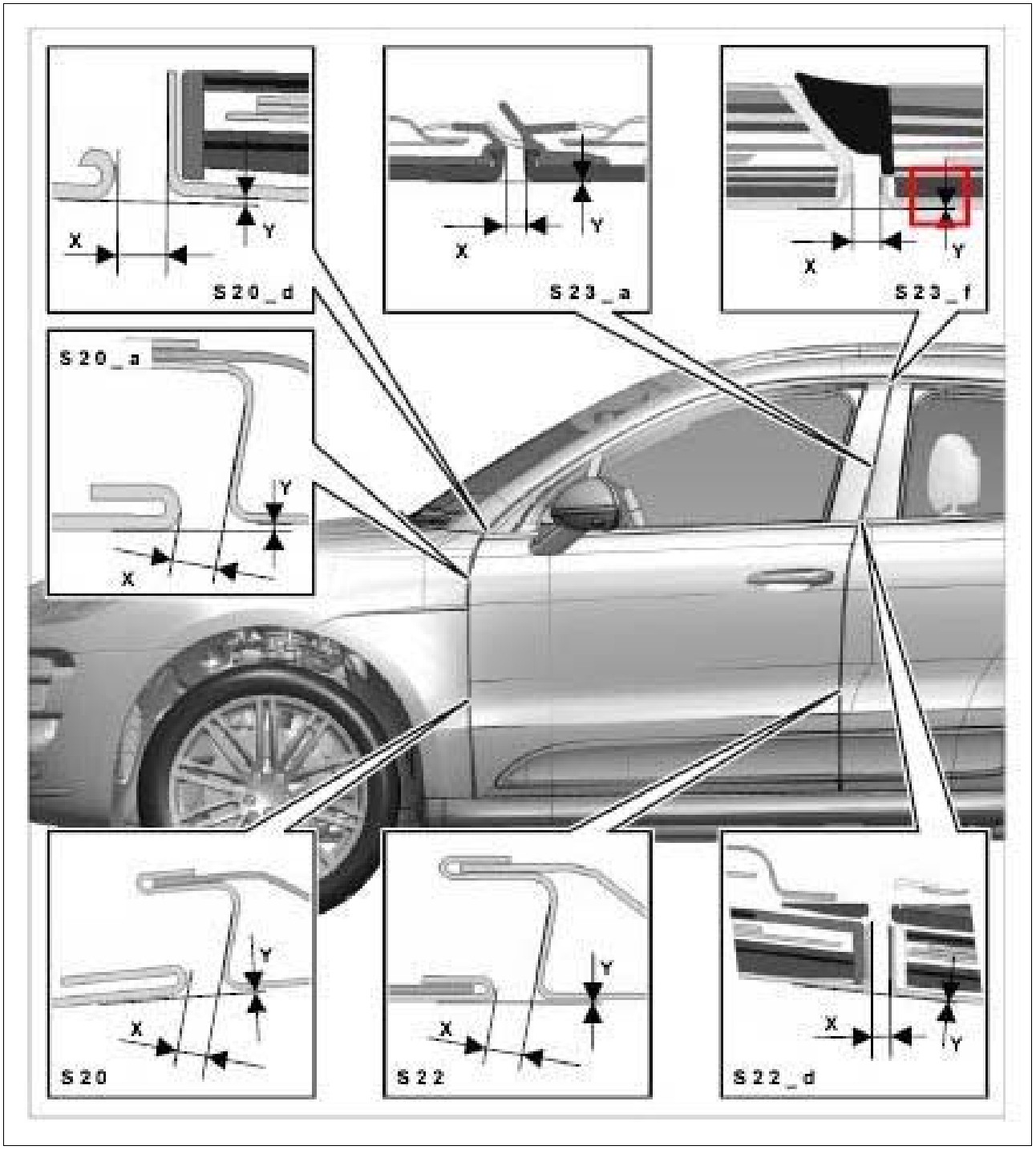

Courtesy of PORSCHE CARS NORTH AMERICA, INC.

S20_a - → Gap dimension: 4.1 mm+/-0.5 mm

Fig 8: Identifying Gap Dimensions For Front Door (S20)

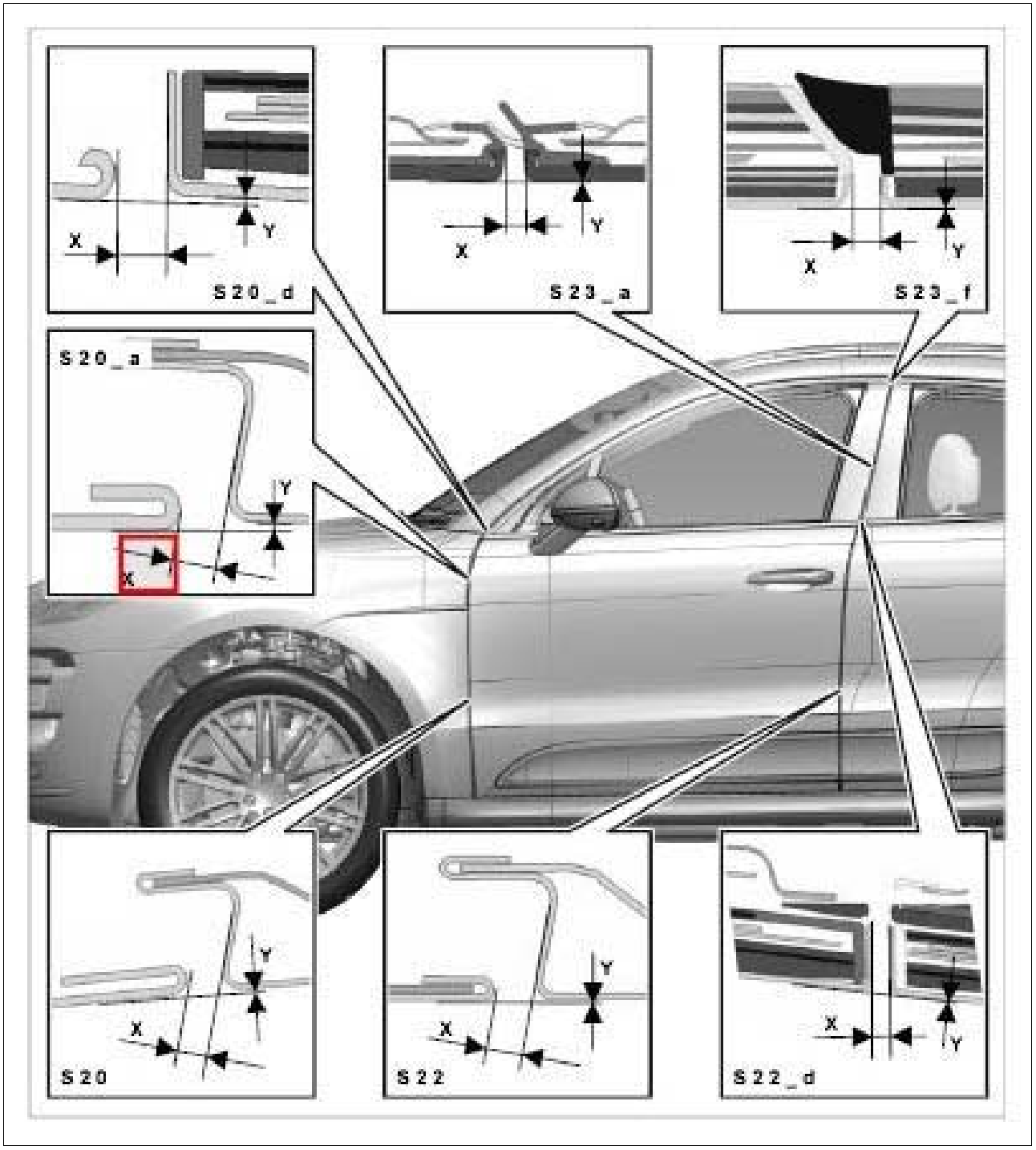

Courtesy of PORSCHE CARS NORTH AMERICA, INC.

S20_a - → Gap dimension: 1 mm

Fig 9: Identifying Gap Dimensions For Front Door (S20)

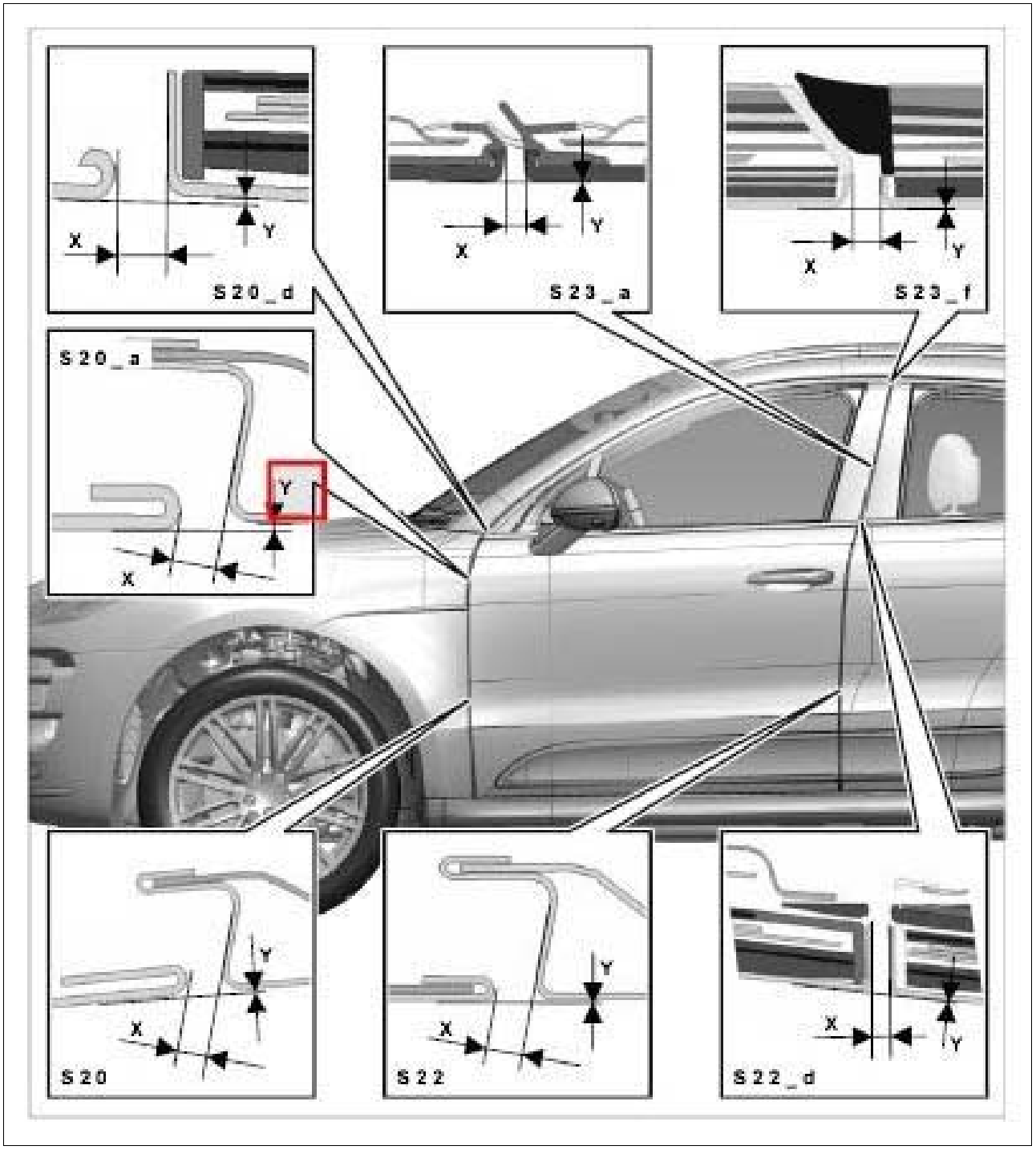

Courtesy of PORSCHE CARS NORTH AMERICA, INC.

S20 - → Gap dimension: 4.1 mm+/-0.5 mm

Fig 10: Identifying Gap Dimensions For Front Door (S20)

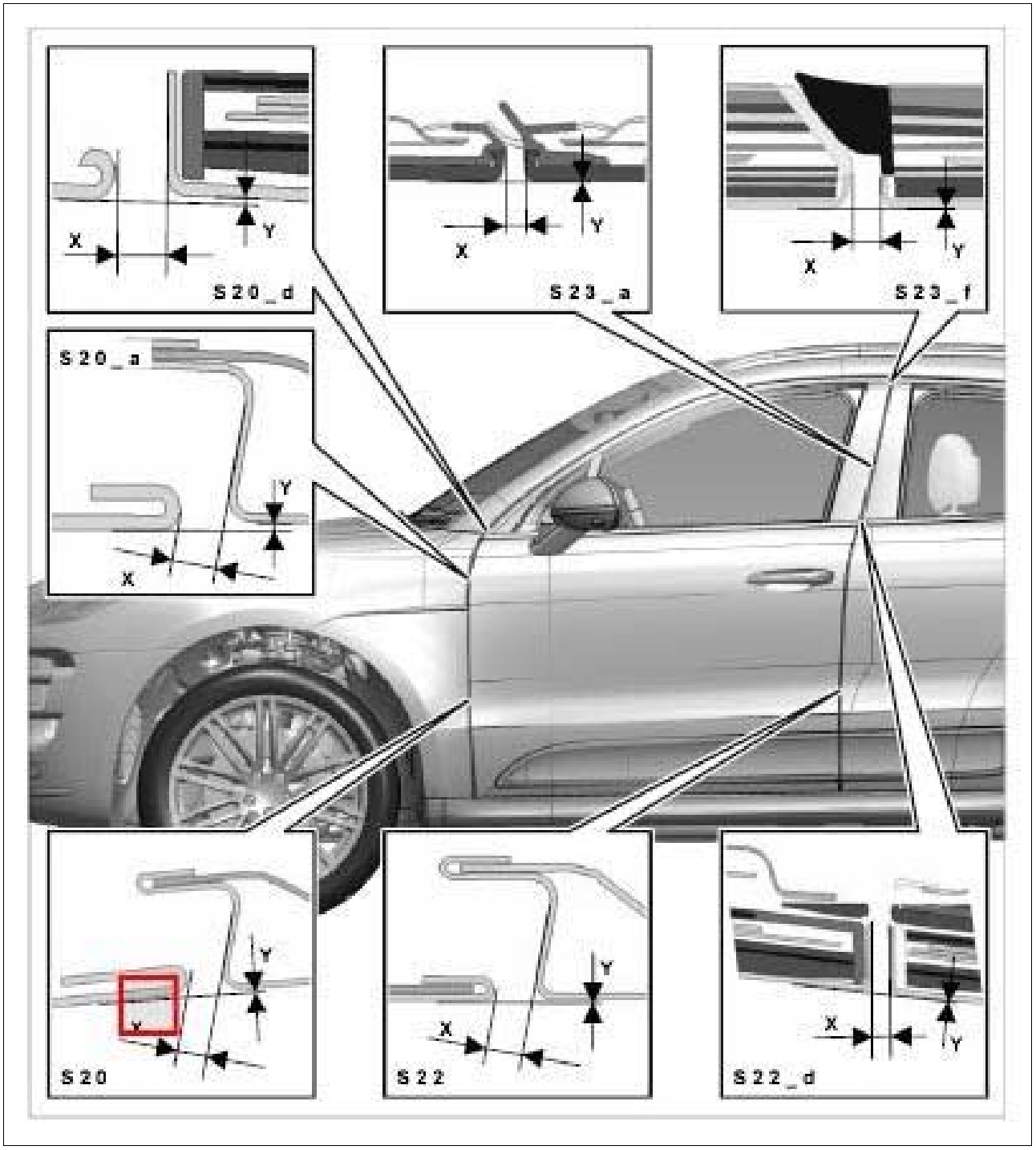

Courtesy of PORSCHE CARS NORTH AMERICA, INC.

S20 - → Gap dimension: 0 mm

Fig 11: Identifying Gap Dimensions For Front Door (S22)

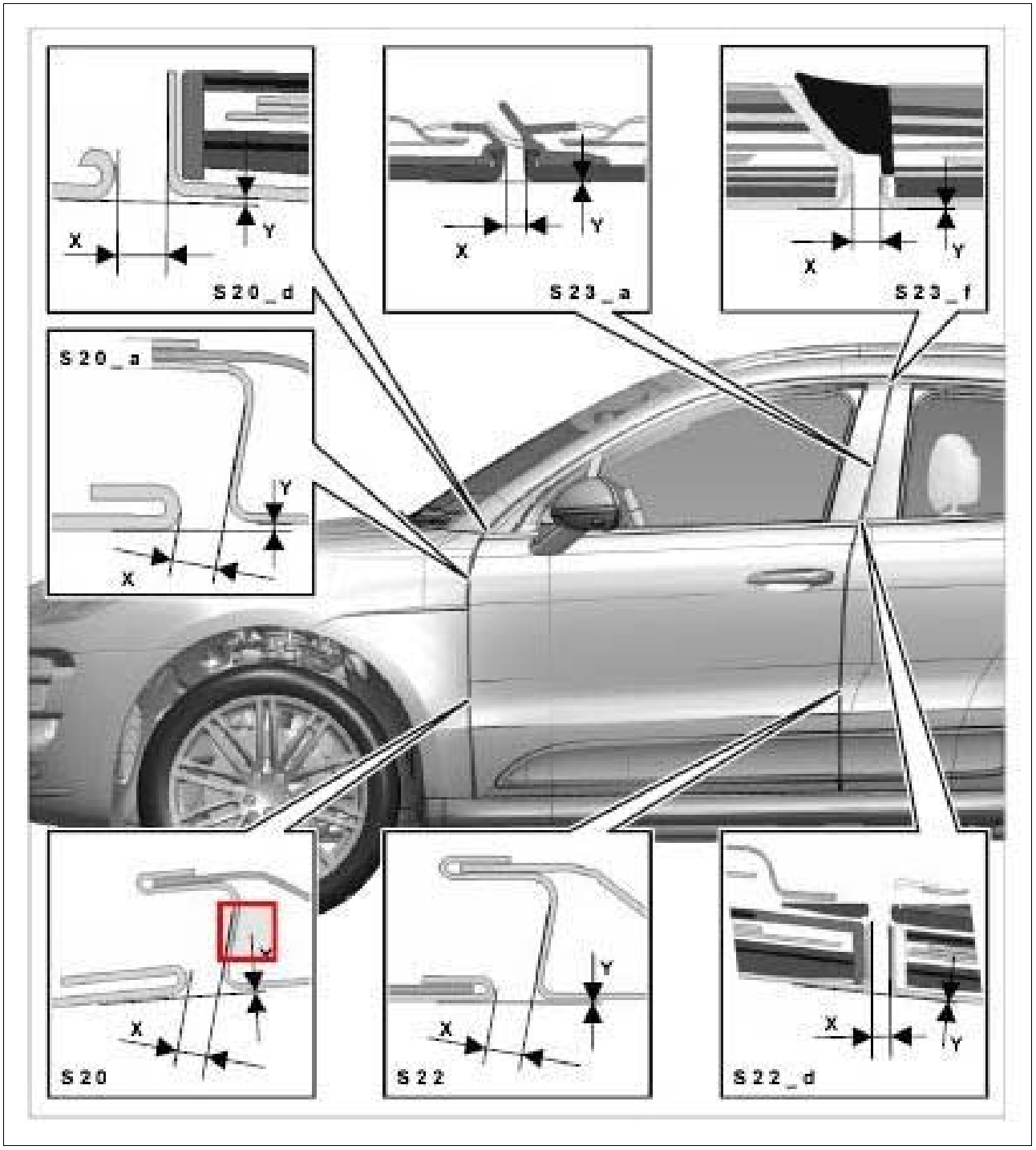

Courtesy of PORSCHE CARS NORTH AMERICA, INC.

S22 - → Gap dimension: 4.2 mm+/-0.5 mm

Fig 12: Identifying Gap Dimensions For Front Door (S22)

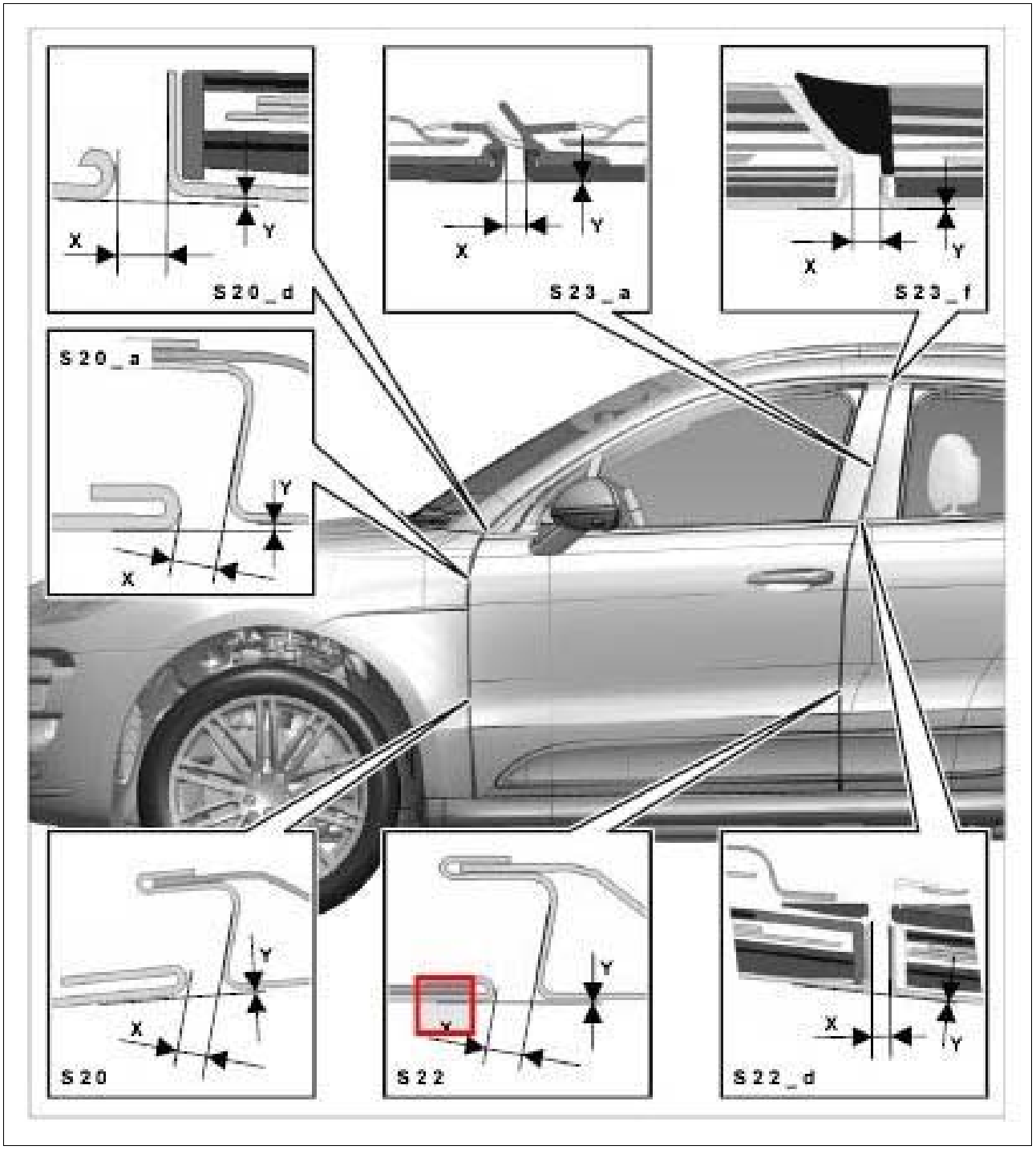

Courtesy of PORSCHE CARS NORTH AMERICA, INC.

S22 - → Gap dimension: 0 mm

Fig 13: Identifying Gap Dimensions For Front Door (S22)

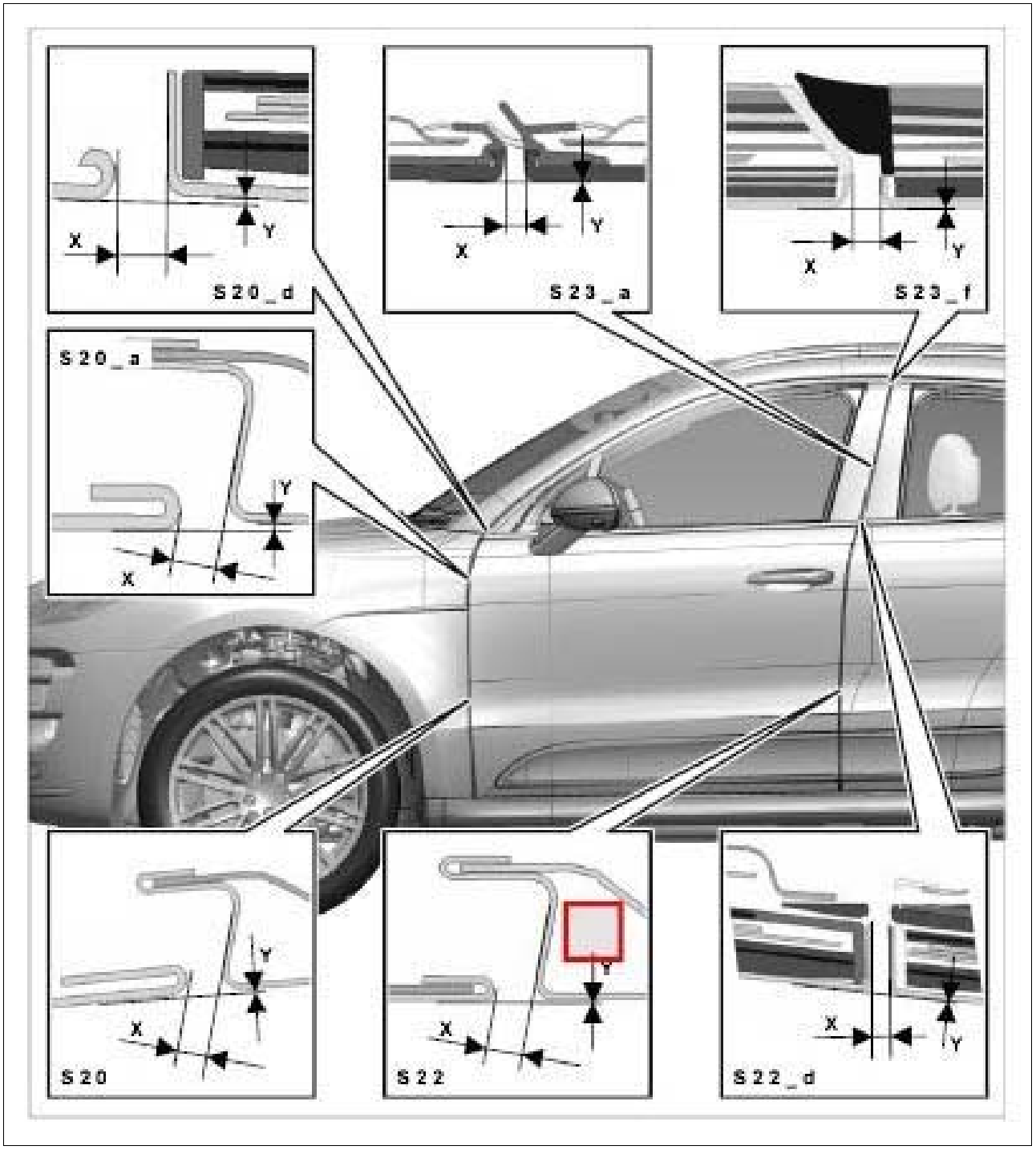

Courtesy of PORSCHE CARS NORTH AMERICA, INC.

S22_d - → Gap dimension: 4.2 mm+/-1 mm

Fig 14: Identifying Gap Dimensions For Front Door (S22)

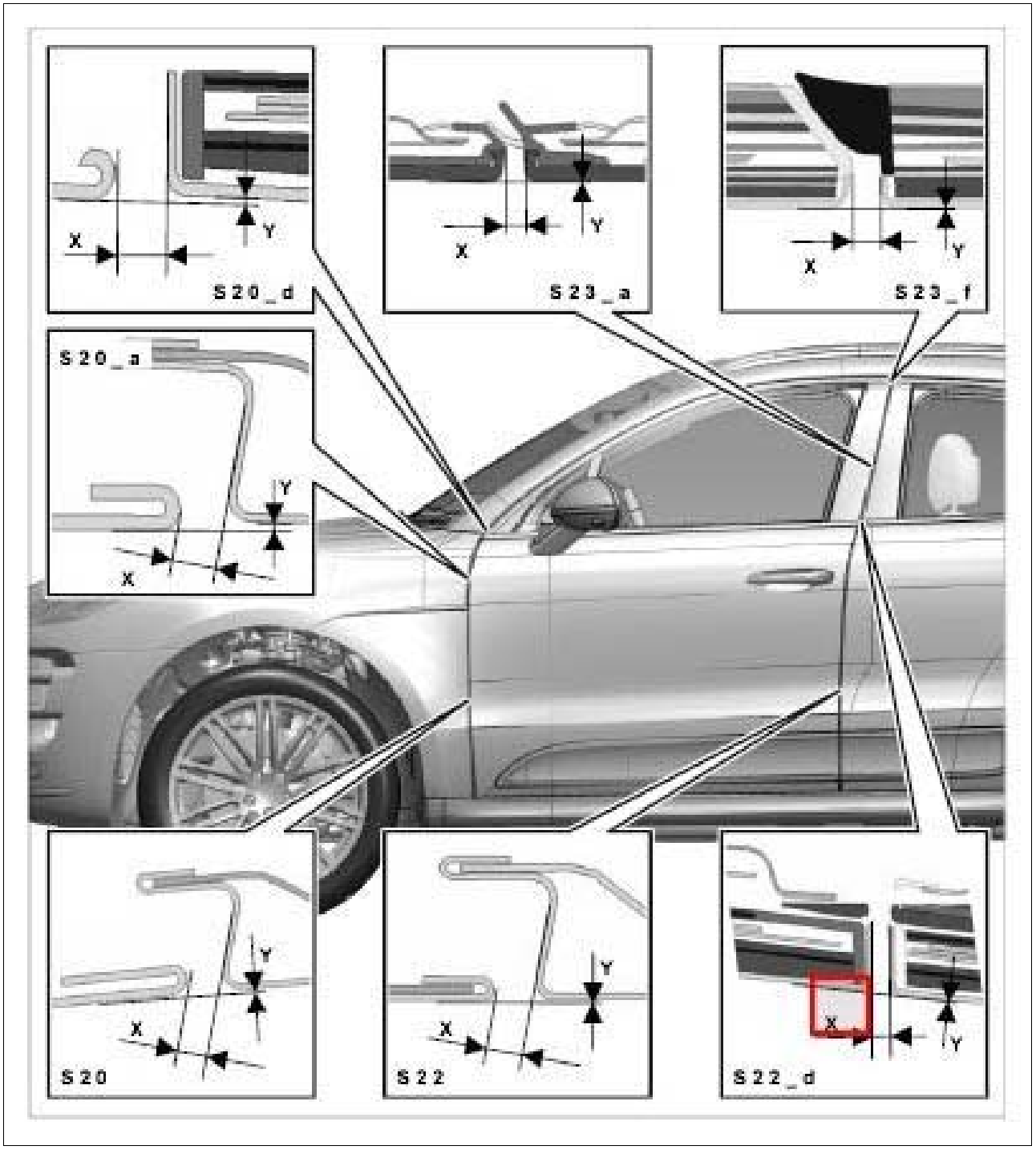

Courtesy of PORSCHE CARS NORTH AMERICA, INC.

S22_d - → Gap dimension: 0 mm

Fig 15: Identifying Gap Dimensions For Front To Rear Door

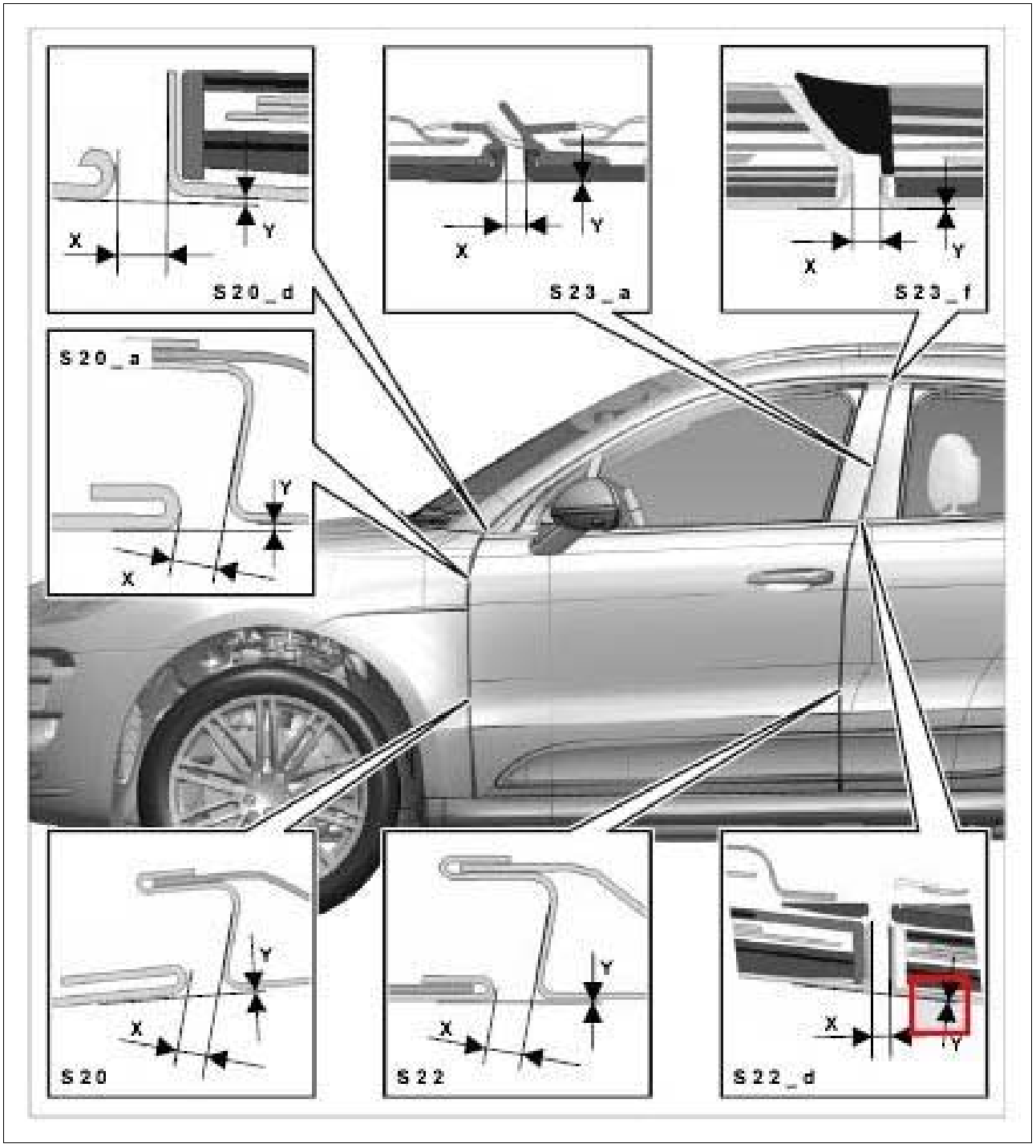

Courtesy of PORSCHE CARS NORTH AMERICA, INC.

Fig 16: Identifying Gap Dimensions For Front Door (S21)

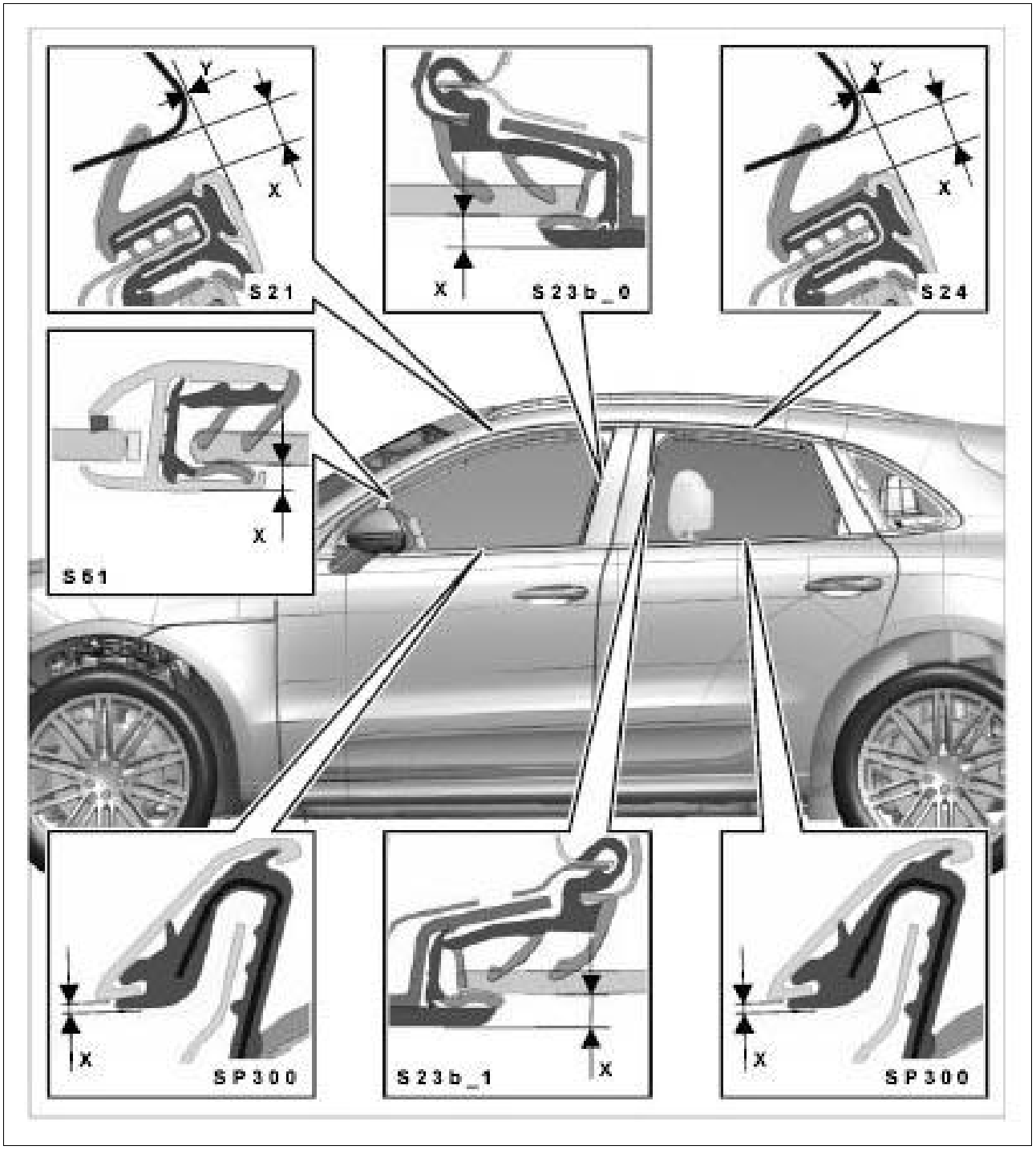

Courtesy of PORSCHE CARS NORTH AMERICA, INC.

S21 - → Gap dimension: 4.5 mm+/-2 mm

Fig 17: Identifying Gap Dimensions For Front To Rear Door

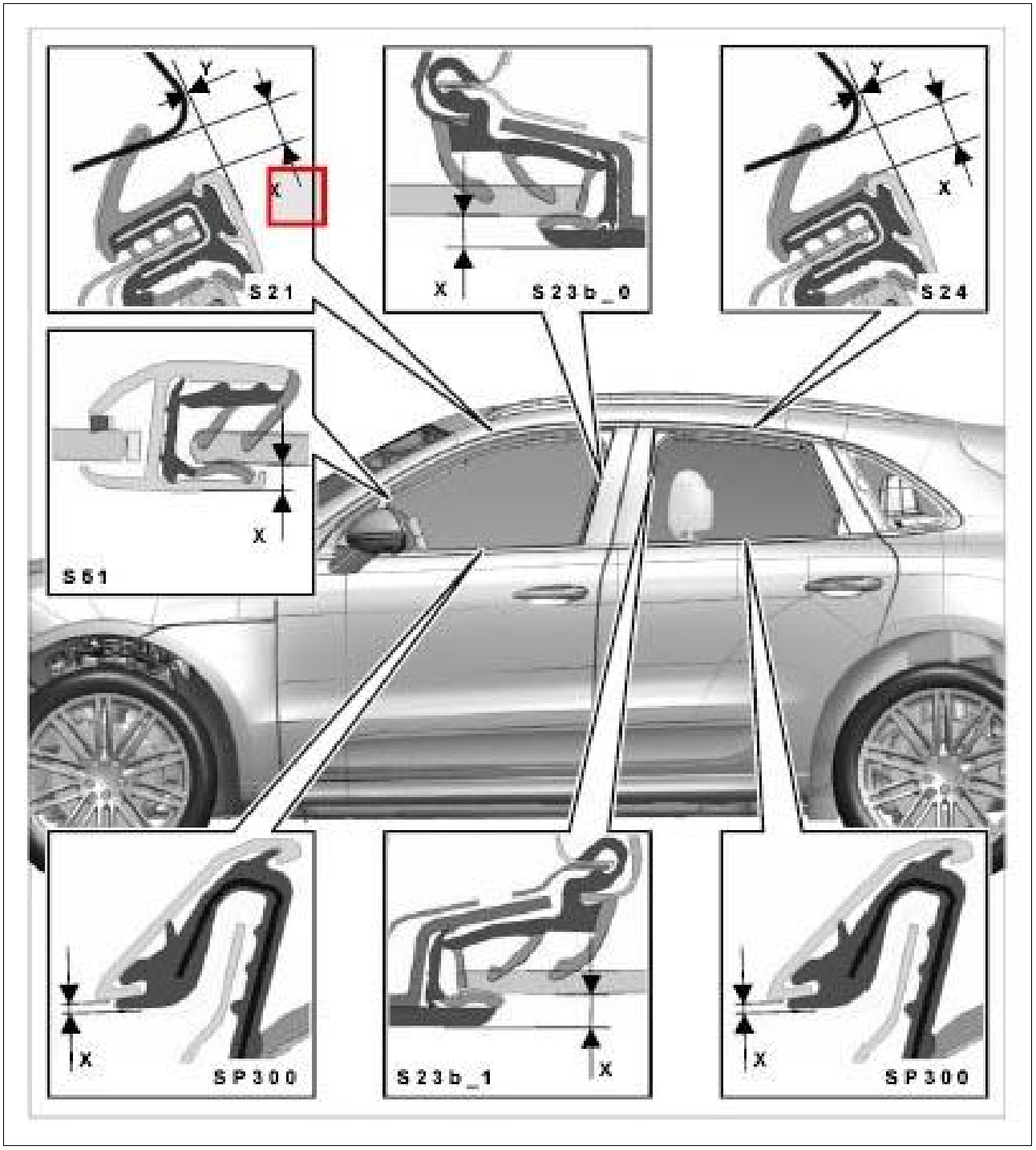

Courtesy of PORSCHE CARS NORTH AMERICA, INC.

S21 - → Gap dimension: 0 mm

Fig 18: Identifying Gap Dimensions For Front To Rear Door (S23B)

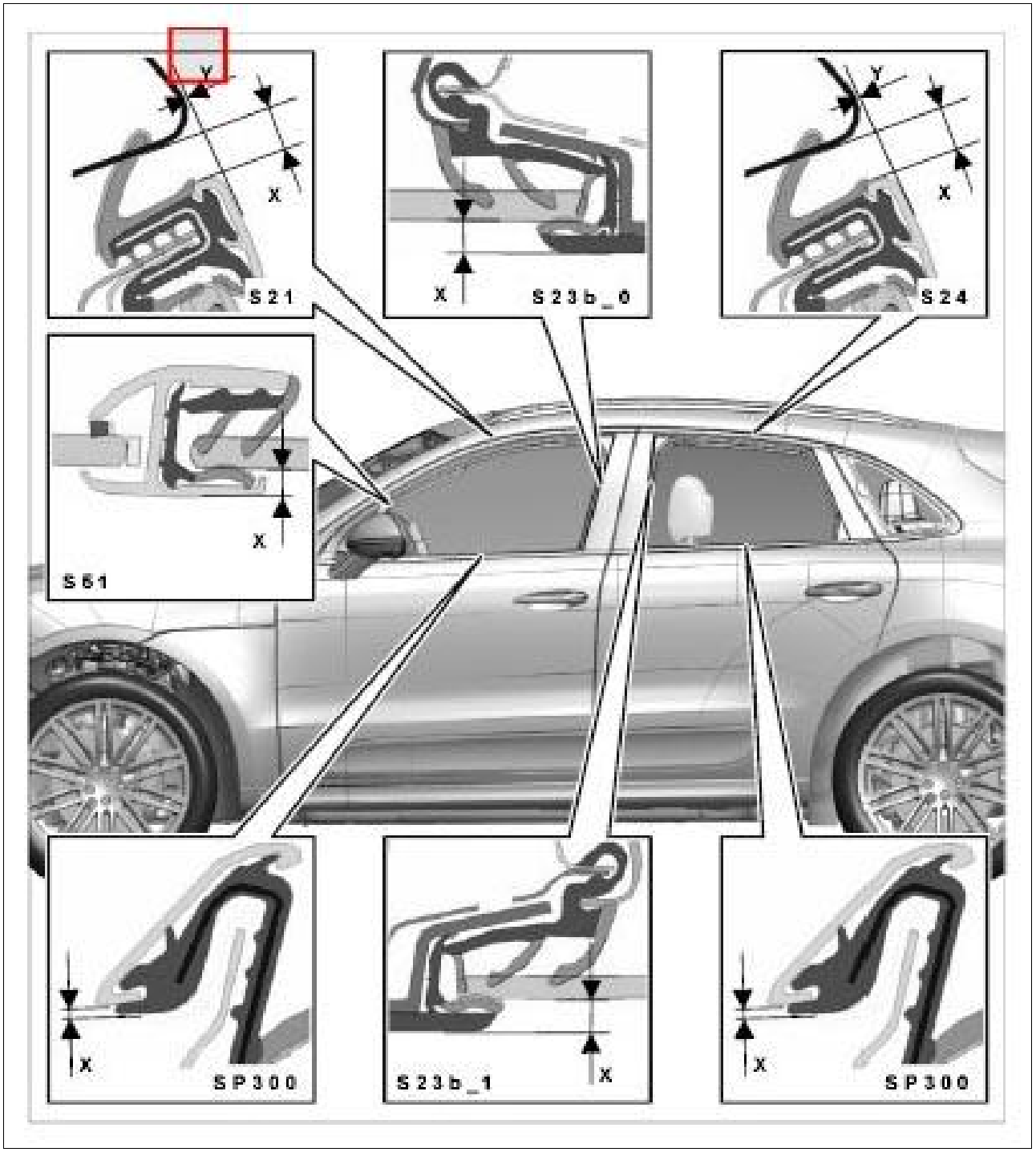

Courtesy of PORSCHE CARS NORTH AMERICA, INC.

S23b_0 - → Gap dimension: 4.5 mm+/-1 mm

Fig 19: Identifying Gap Dimensions Of Front To Rear Door (S24)

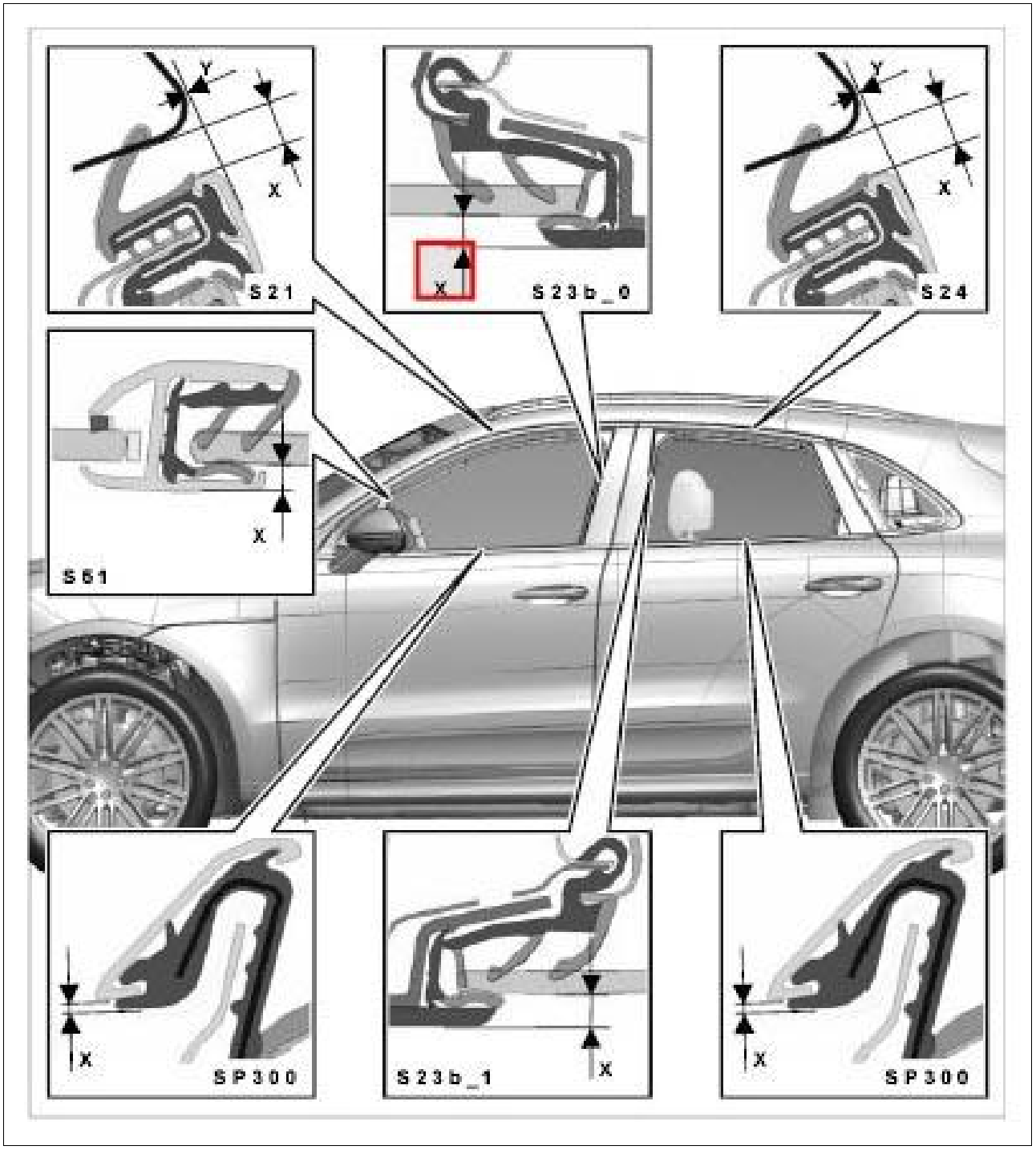

Courtesy of PORSCHE CARS NORTH AMERICA, INC.

S24 - → Gap dimension: 4.5 mm+/-2 mm

Fig 20: Identifying Gap Dimensions For Front To Rear Door

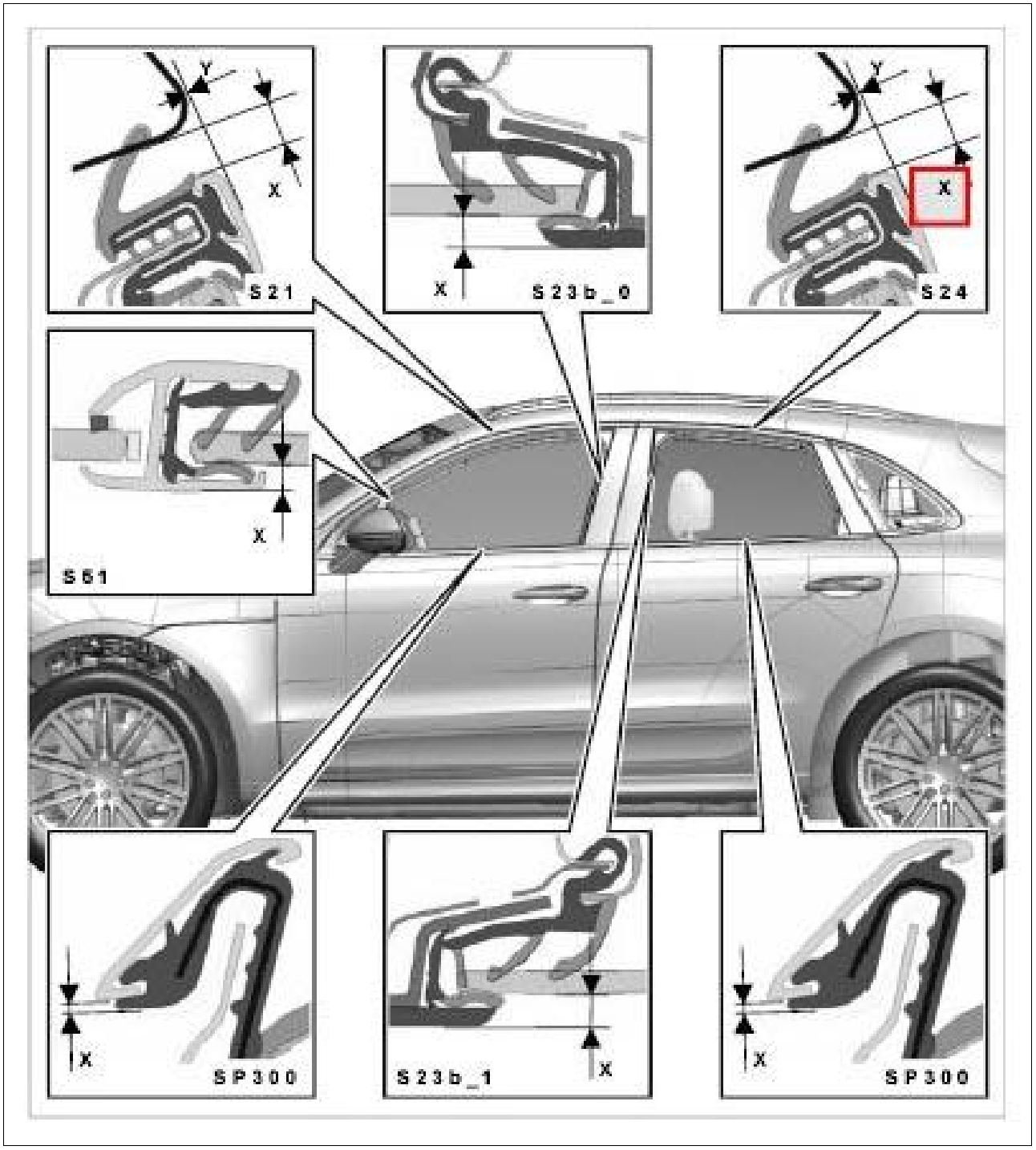

Courtesy of PORSCHE CARS NORTH AMERICA, INC.

S24 - → Gap dimension: 0 mm

Fig 21: Identifying Gap Dimensions For Front To Rear Door (S51)

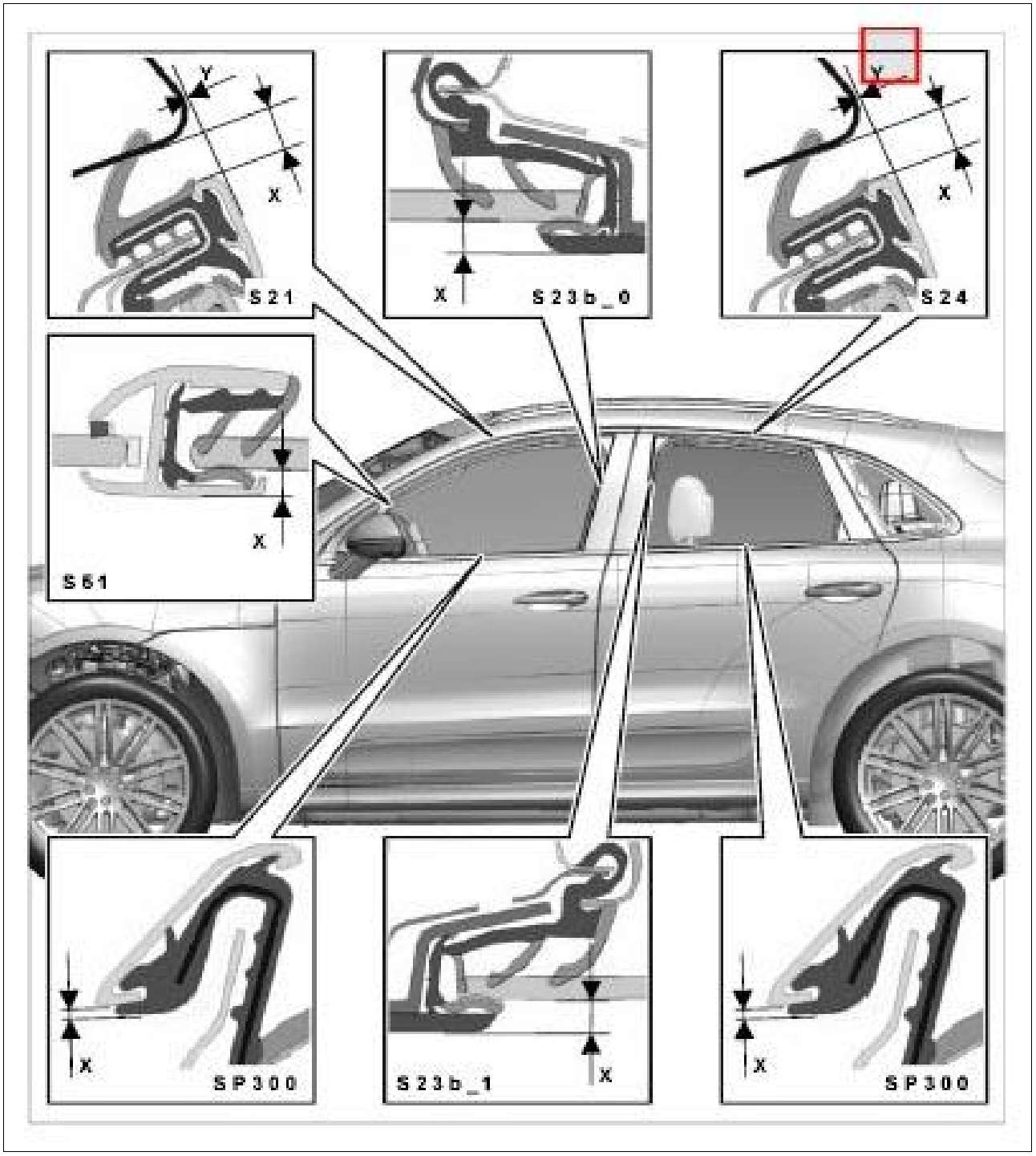

Courtesy of PORSCHE CARS NORTH AMERICA, INC.

S51 - → Gap dimension: 4.1 mm+/-1 mm

Fig 22: Identifying Gap Dimensions For Front To Rear Door (SP300)

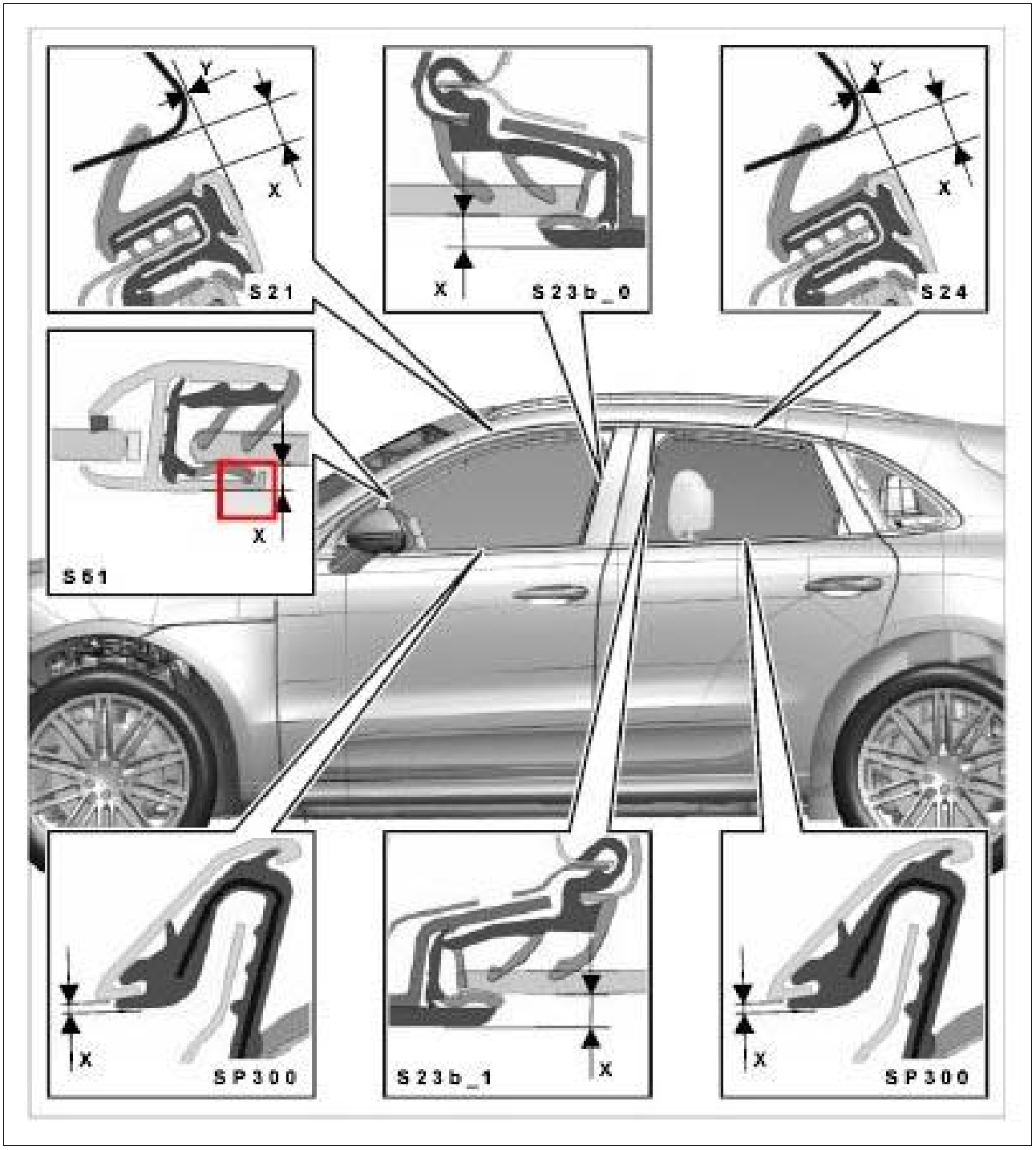

Courtesy of PORSCHE CARS NORTH AMERICA, INC.

SP300 - → Gap dimension: 0.8 mm+/-0.5 mm

Fig 23: Identifying Gap Dimensions For Front To Rear Door (S23B)

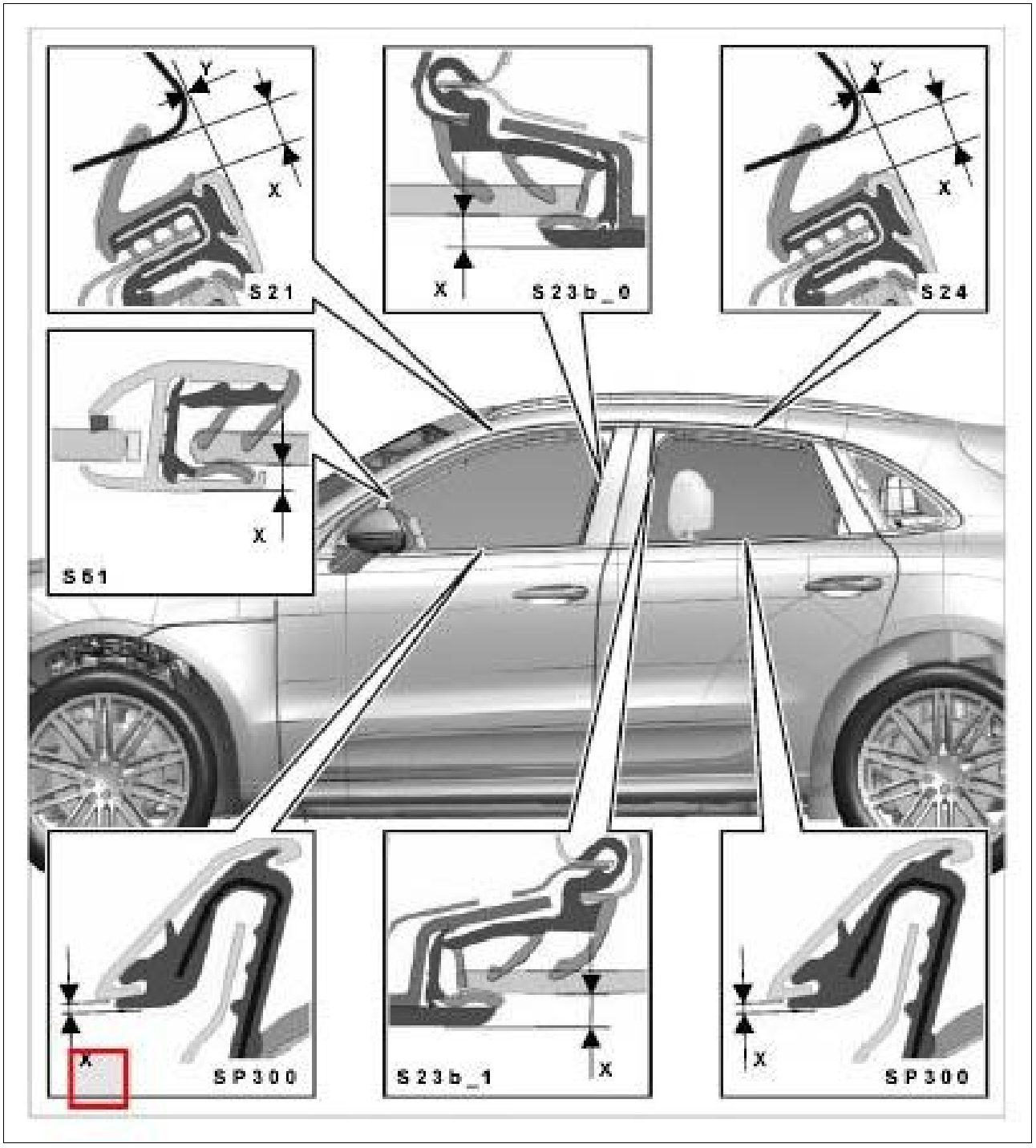

Courtesy of PORSCHE CARS NORTH AMERICA, INC.

S23b_1 - → Gap dimension: 4.5 mm+/-1 mm

Fig 24: Identifying Gap Dimensions For Front To Rear Door (SP300)

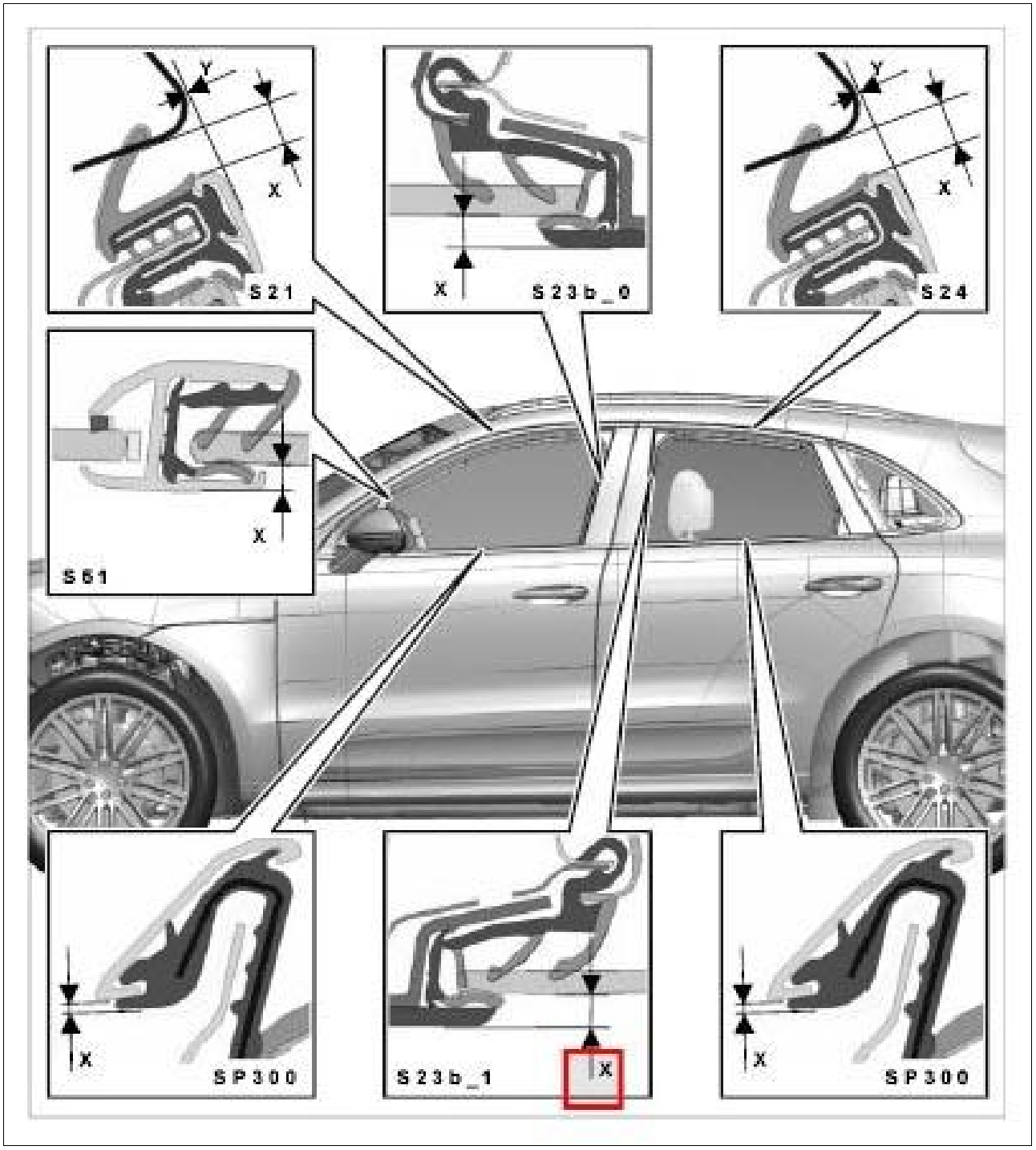

Courtesy of PORSCHE CARS NORTH AMERICA, INC.

SP300 - → Gap dimension: 0.8 mm+/-0.5 mm

Fig 25: Identifying Gap Dimensions For Rear Side Window

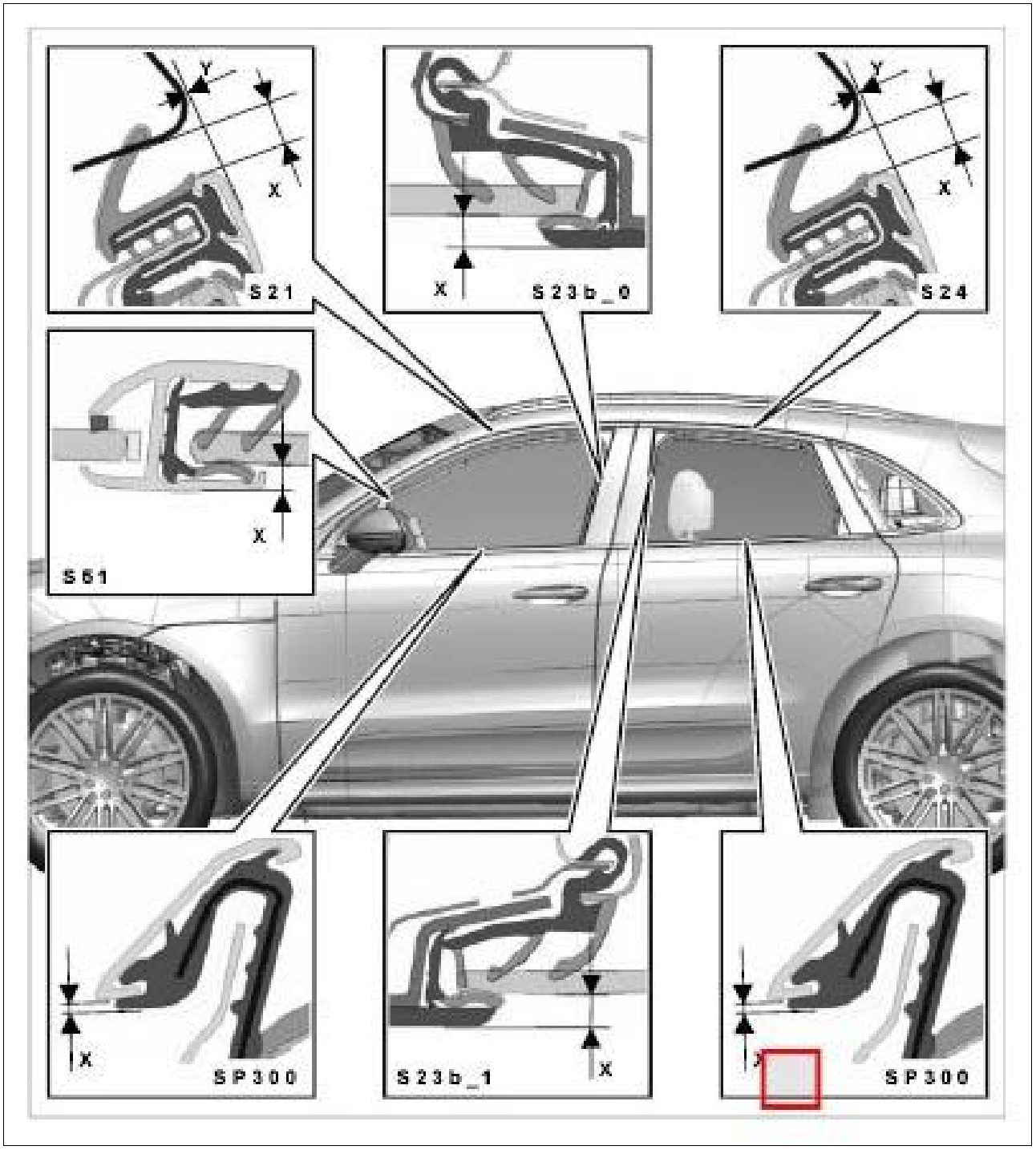

Courtesy of PORSCHE CARS NORTH AMERICA, INC.

Fig 26: Identifying Gap Dimensions For Front To Rear Door (S25)

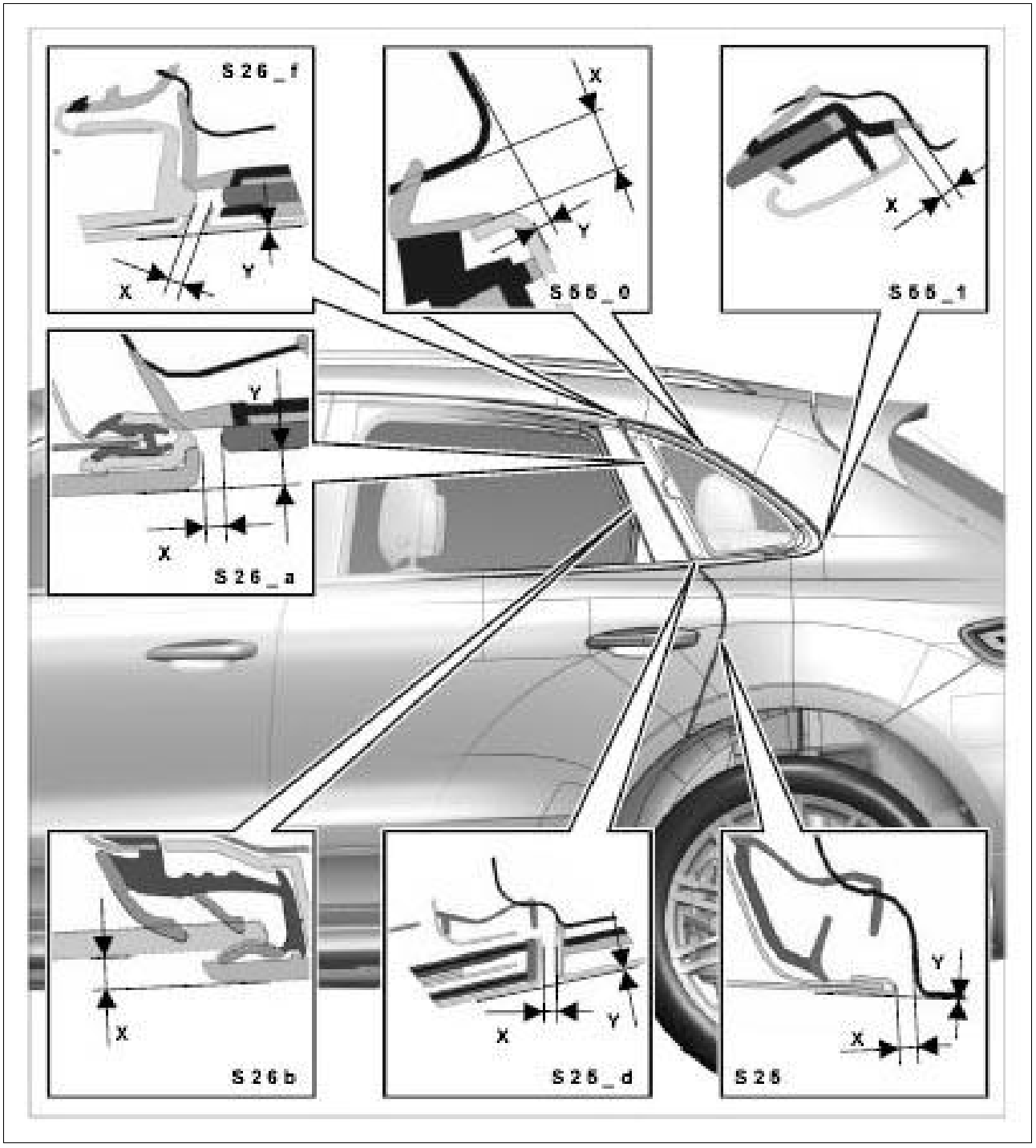

Courtesy of PORSCHE CARS NORTH AMERICA, INC.

S25 - → Gap dimension: 3.5 mm+/-0.5 mm

Fig 27: Identifying Gap Dimensions For Rear Side Window (S25)

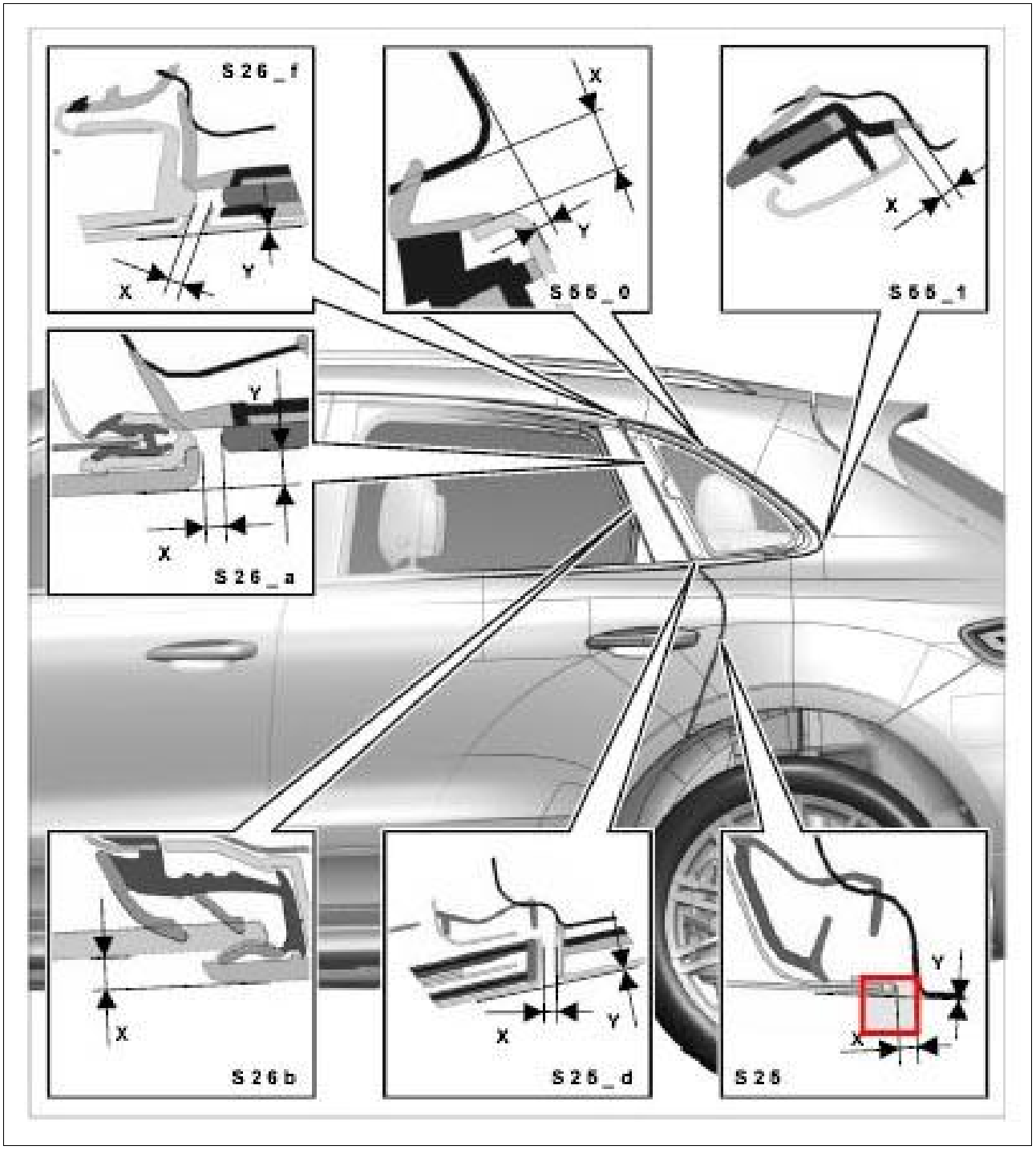

Courtesy of PORSCHE CARS NORTH AMERICA, INC.

S25 - → Gap dimension: 0 mm

Fig 28: Identifying Gap Dimensions For Rear Side Window

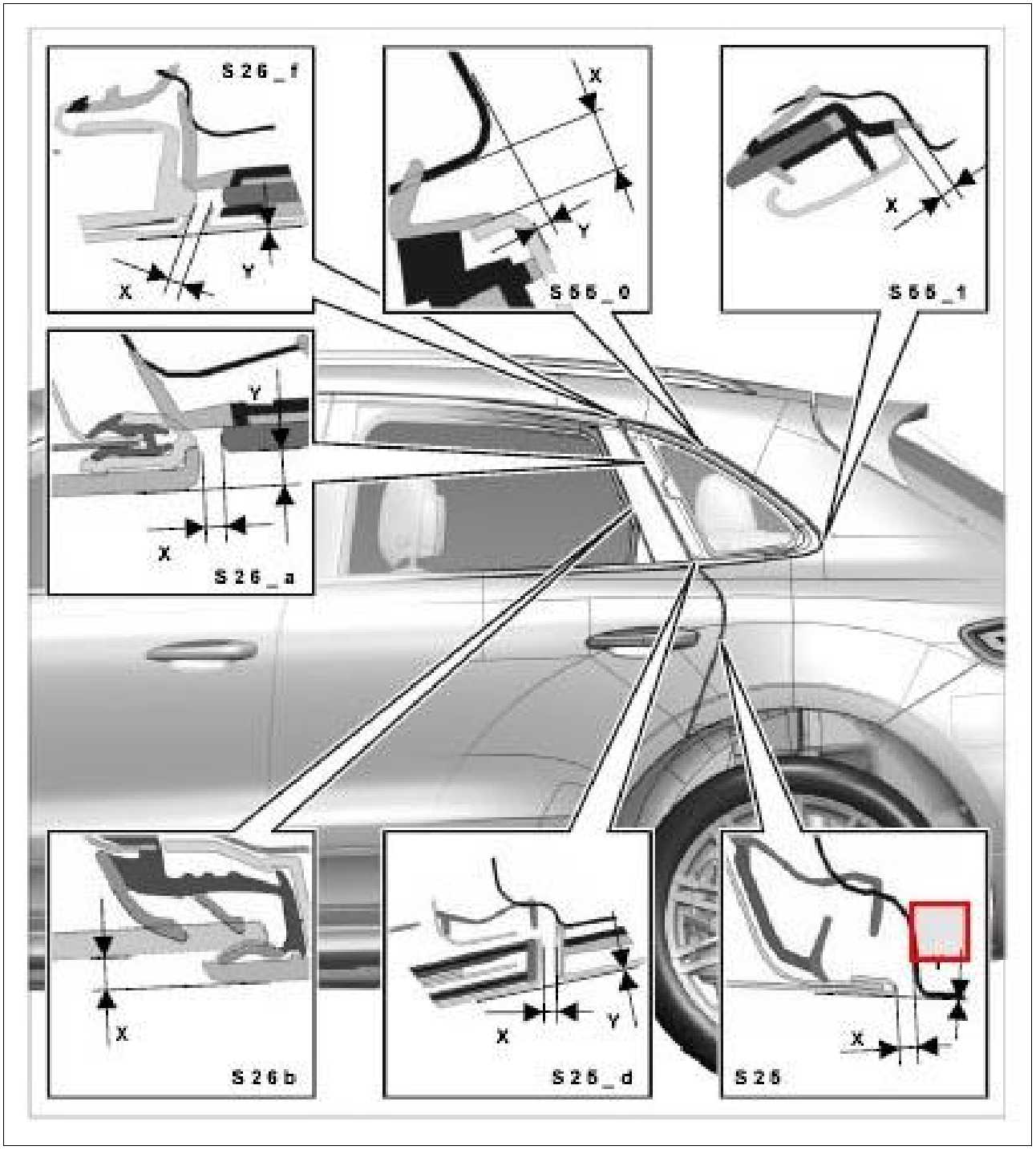

Courtesy of PORSCHE CARS NORTH AMERICA, INC.

S25_d - → Gap dimension: 3.5 mm+/-1 mm

Fig 29: Identifying Gap Dimensions For Rear Side Window

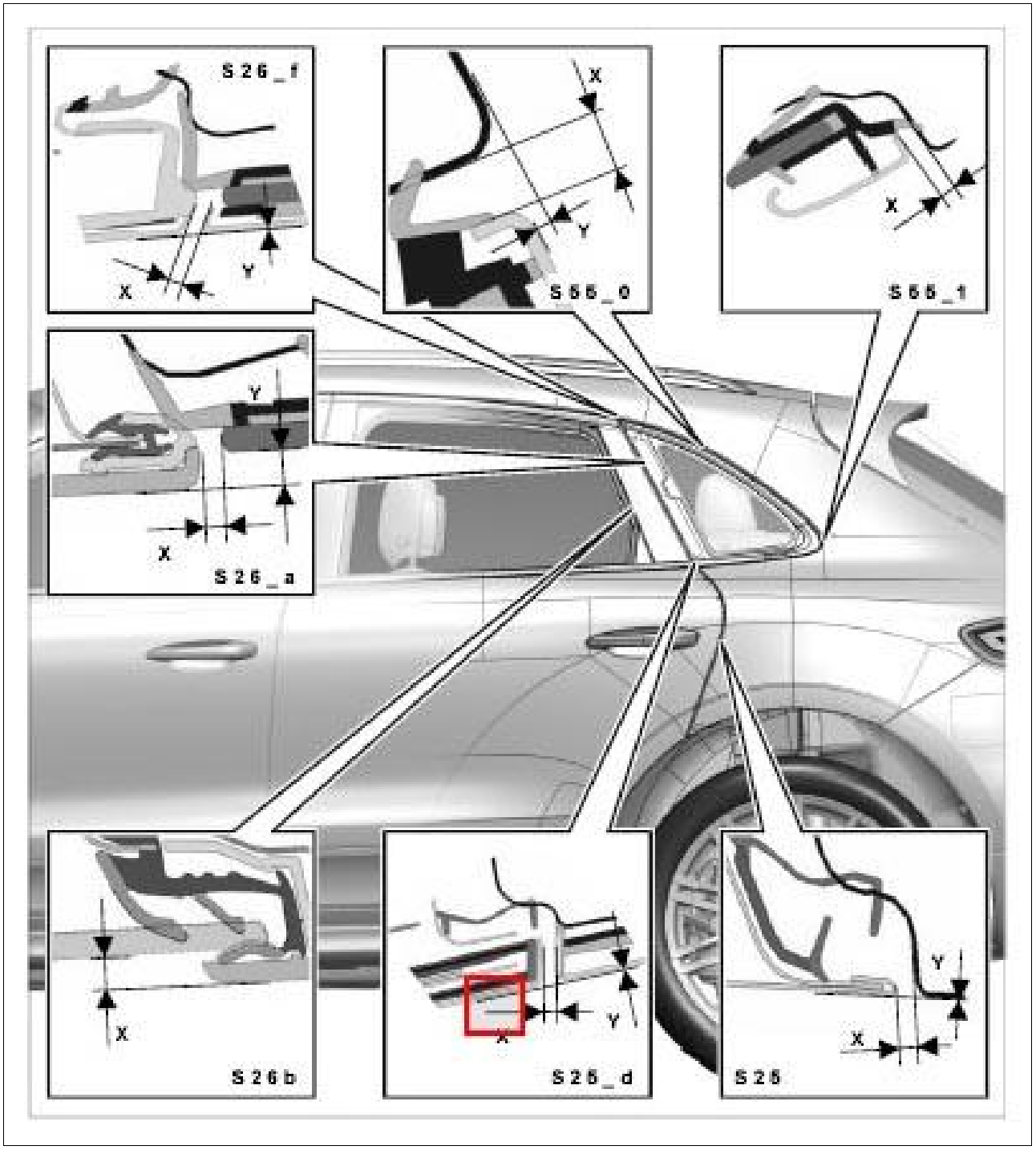

Courtesy of PORSCHE CARS NORTH AMERICA, INC.

S25_d - → Gap dimension: 0 mm

Fig 30: Identifying Gap Dimensions For Rear Side Window (S26B)

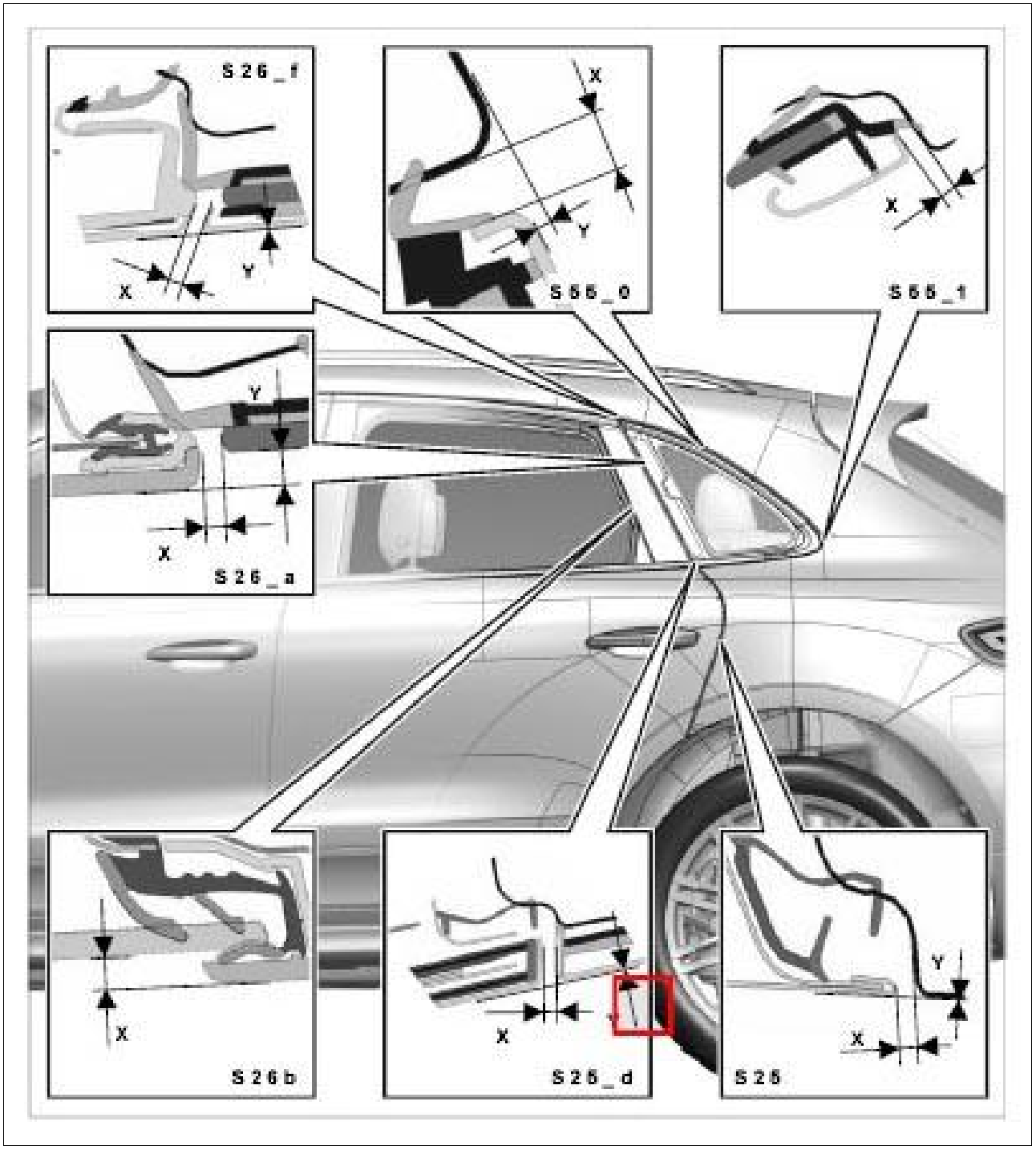

Courtesy of PORSCHE CARS NORTH AMERICA, INC.

S26b - → Gap dimension: 4.6 mm+/-1 mm

Fig 31: Identifying Gap Dimensions For Rear Side Window

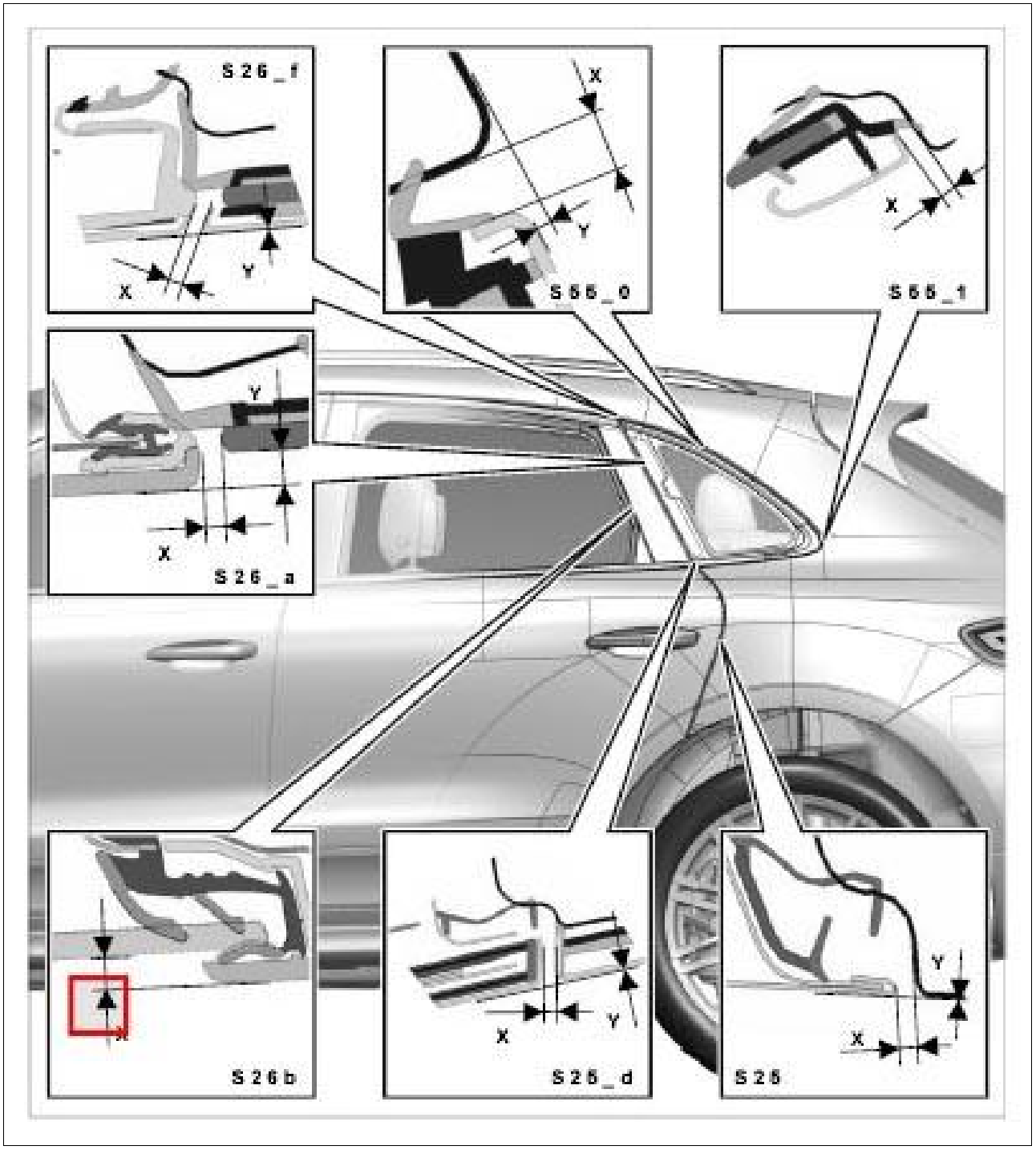

Courtesy of PORSCHE CARS NORTH AMERICA, INC.

S26_a - → Gap dimension: 3.5 mm+/-1 mm

Fig 32: Identifying Gap Dimensions For Rear Side Window

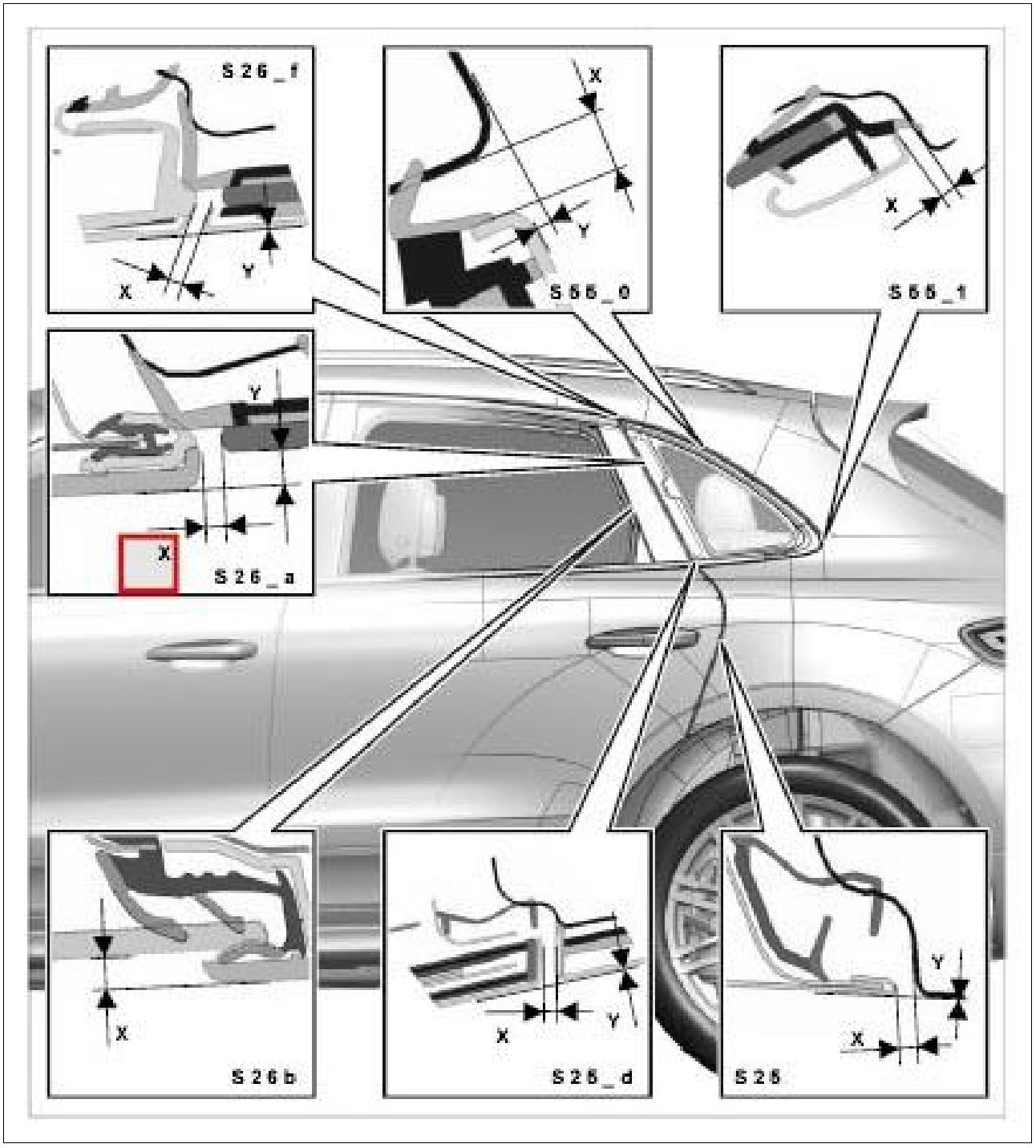

Courtesy of PORSCHE CARS NORTH AMERICA, INC.

S26_a - → Gap dimension: 4.2 mm+/-1 mm

Fig 33: Identifying Gap Dimensions For Rear Side Window

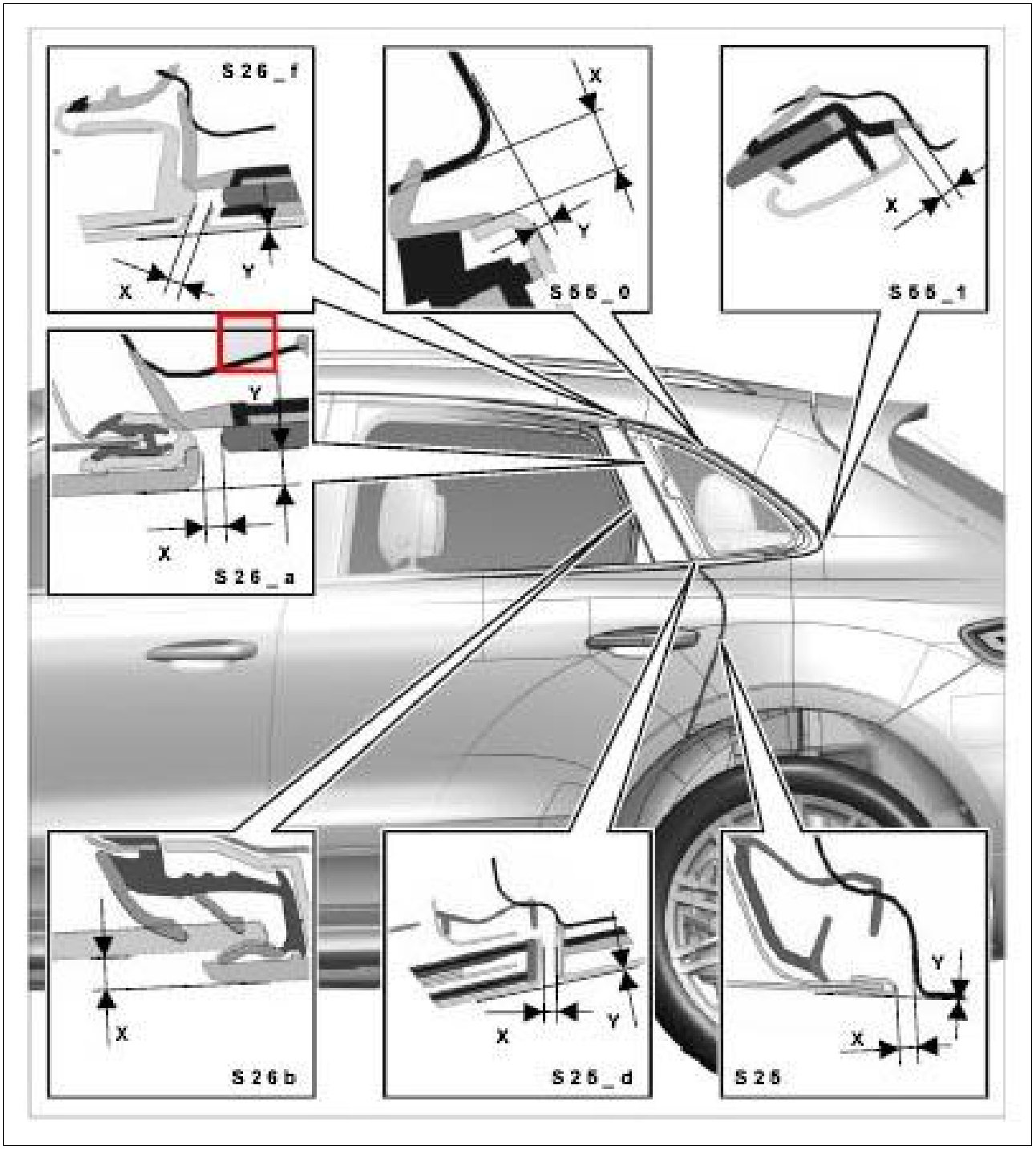

Courtesy of PORSCHE CARS NORTH AMERICA, INC.

S26_f - → Gap dimension: 3.5 mm+/-1 mm

Fig 34: Identifying Gap Dimensions For Rear Side Window (S26)

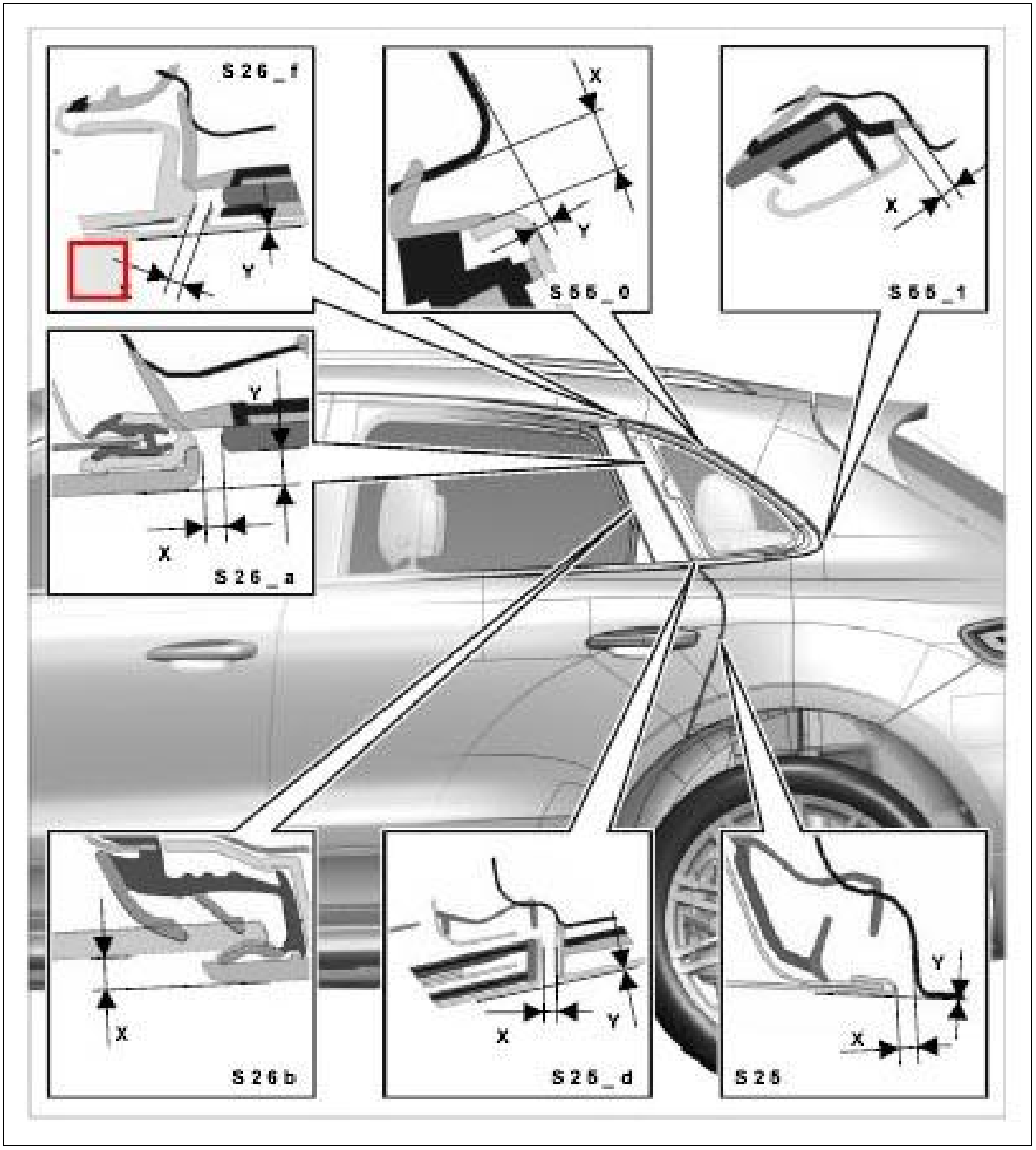

Courtesy of PORSCHE CARS NORTH AMERICA, INC.

S26_f - → Gap dimension: 0.3 mm

Fig 35: Identifying Gap Dimensions For Rear Side Window (S55)

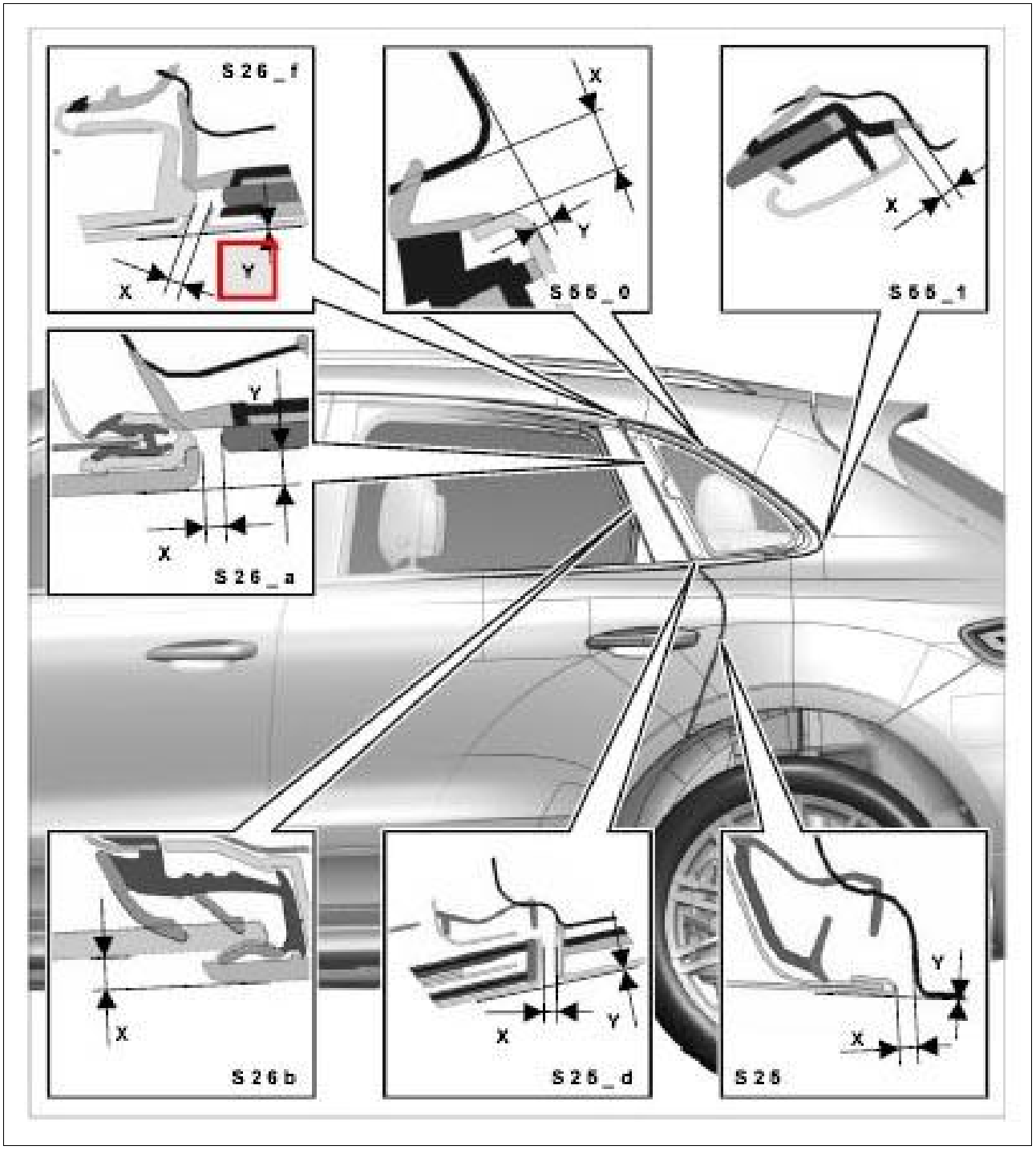

Courtesy of PORSCHE CARS NORTH AMERICA, INC.

S55_0 - → Gap dimension: 4.5 mm+/-1.5 mm

Fig 36: Identifying Gap Dimensions For Rear Side Window (S55)

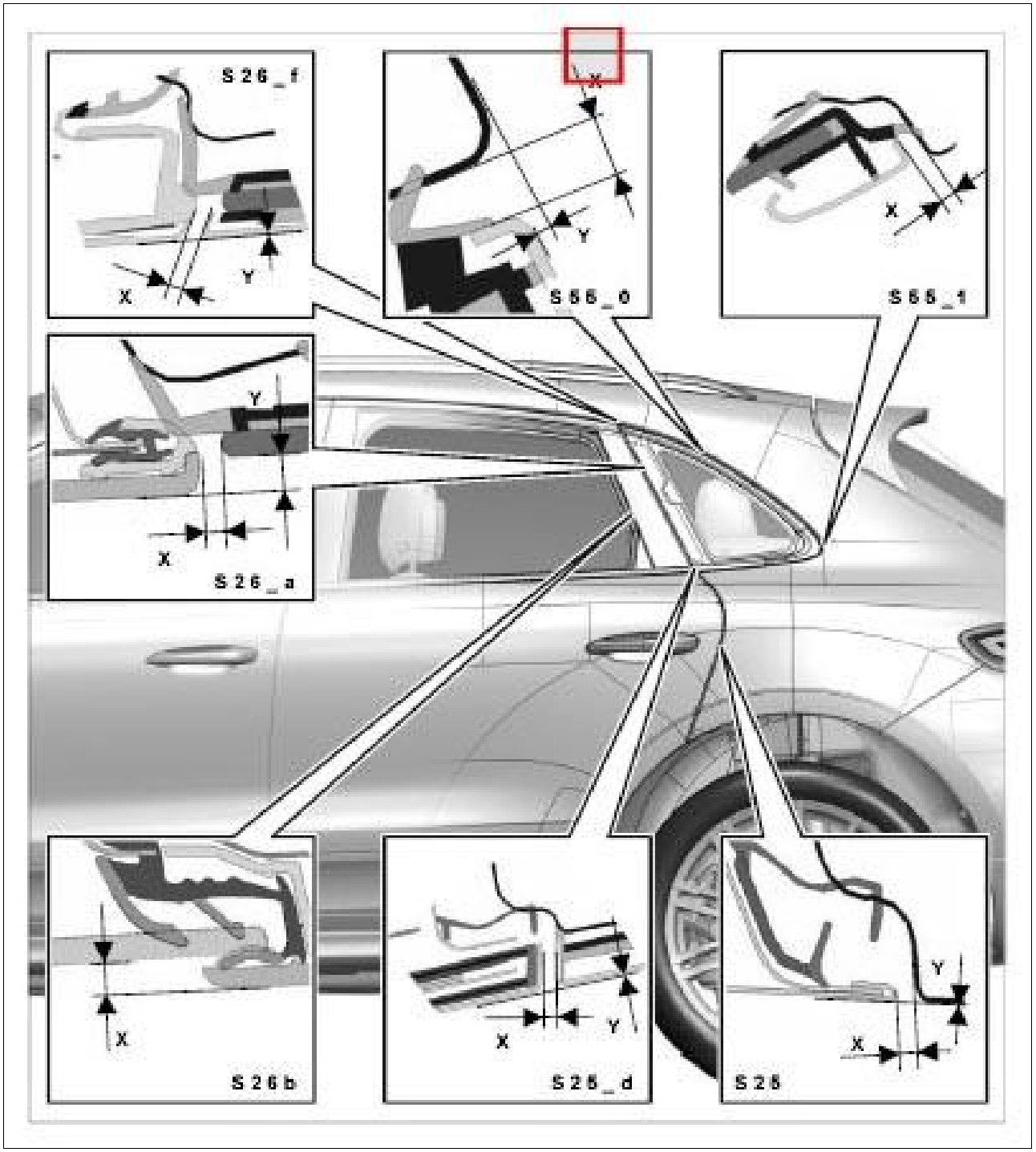

Courtesy of PORSCHE CARS NORTH AMERICA, INC.

S55_0 - → Gap dimension: 0.8 mm+/-1 mm

Fig 37: Identifying Gap Dimensions For Rear Side Window

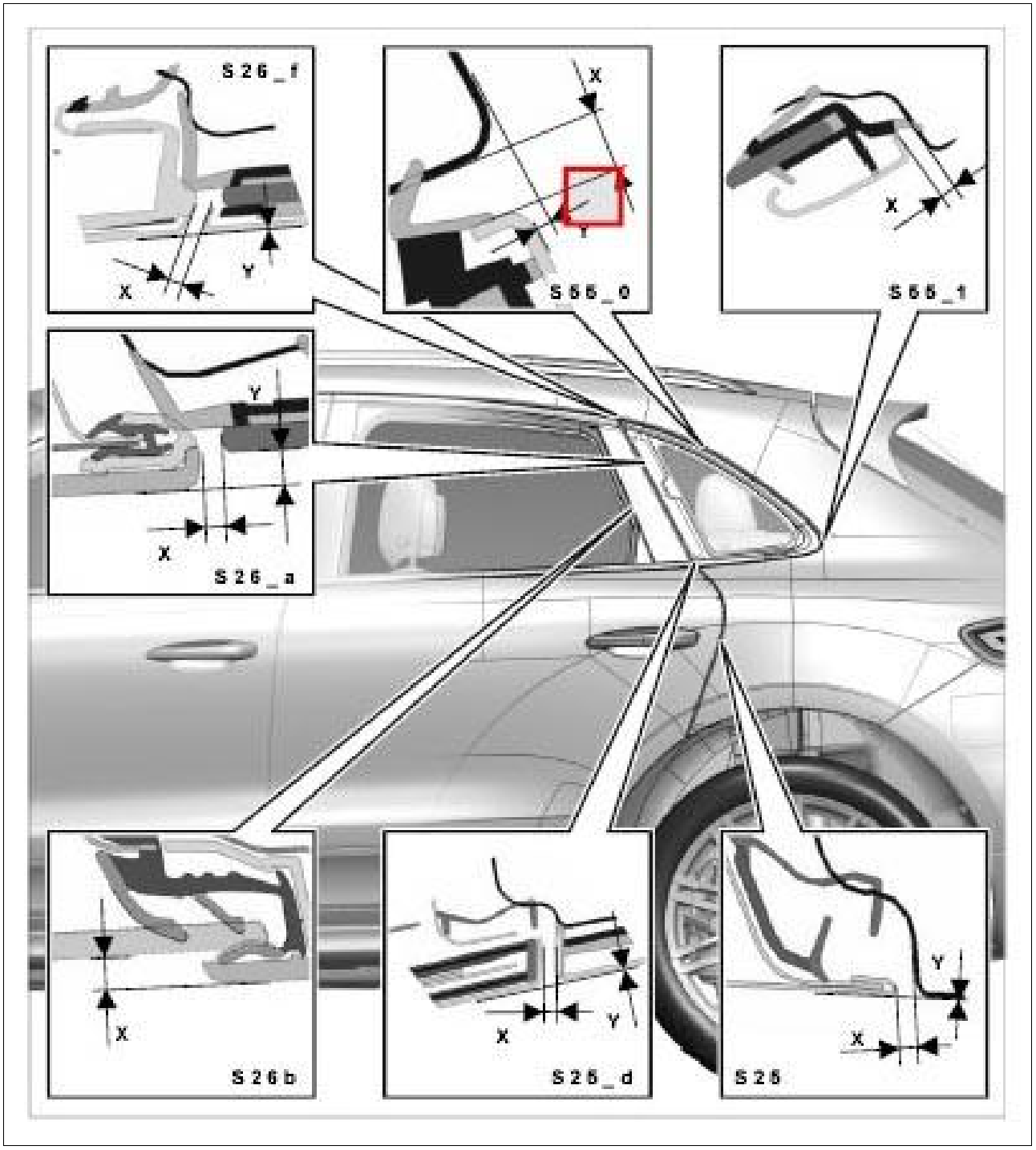

Courtesy of PORSCHE CARS NORTH AMERICA, INC.

S55_1 - → Gap dimension: 3.8 mm+/-0.8 mm

Fig 38: Identifying Gap Dimensions For Rear Side Window

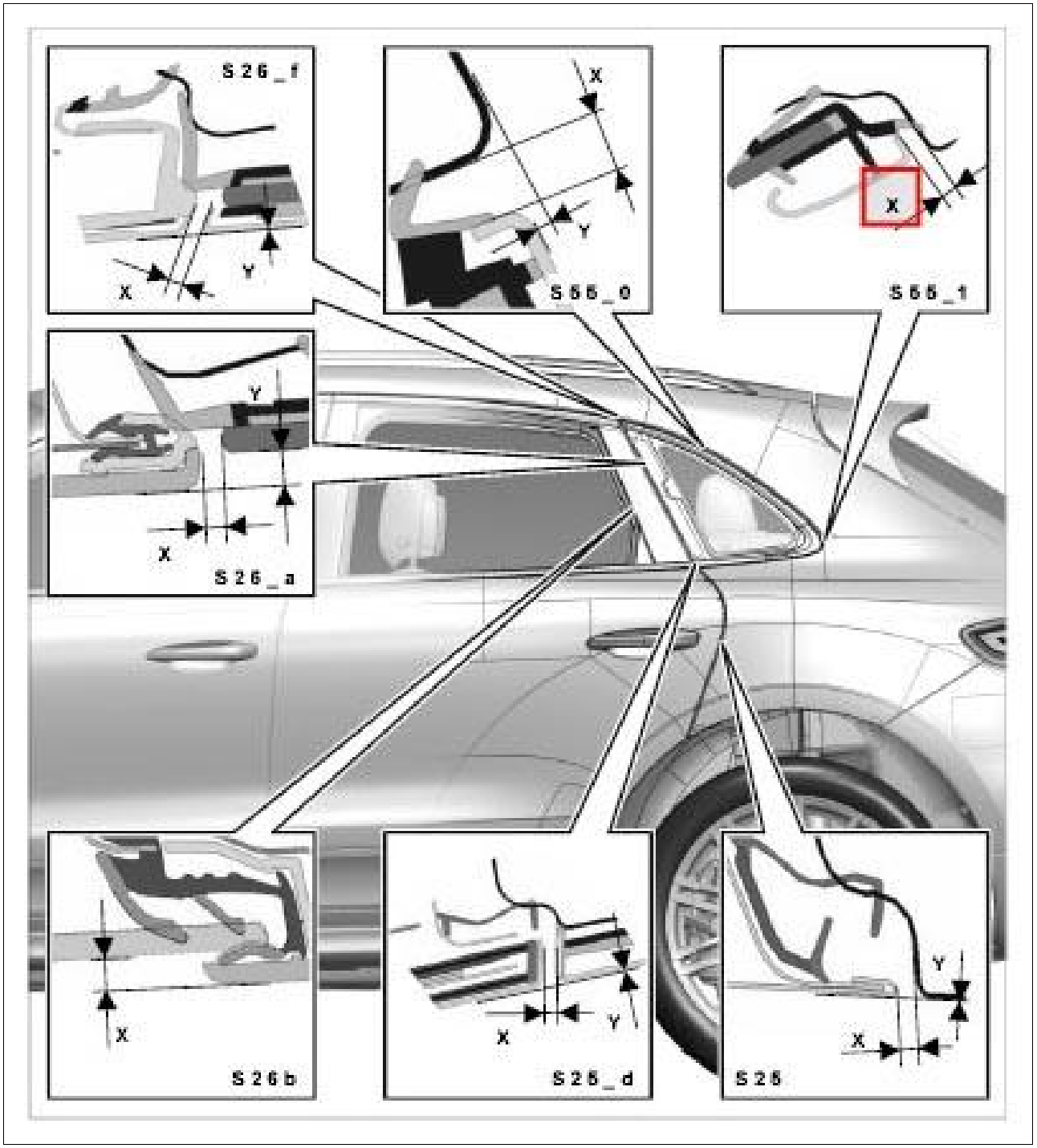

Courtesy of PORSCHE CARS NORTH AMERICA, INC.

WM 575115 ADJUSTING FRONT DOOR (ALL MODELS) > ADJUSTING FRONT DOOR

WARNING: Incorrect handling of safety bolts

- *Danger of injury*

- *Loss of torque*

→ Always use new fastening screws and nuts following removal.

→ Observe specified tightening torques.

→ Carry out a visual inspection of all re-used parts.

Information

Only tighten the fastening screws on the door hinges hand-tight from the inside until the doors are set correctly.

Information

- Set gap dimensions on the lids, doors and covers, or accessories in accordance with the gap specifications.
- Given a clearance in the openings that is too great or too small, the movable body parts or the accessories must be centred accordingly.
- Ensure that the gaps do not run in a wedge-shaped fashion or do not narrow at local points.
- You can use star gauges for body gap dimensions NR.127-1 for this.
- The given values are guidelines which should be observed as far as possible.
- The guidelines apply to repair and assembly work.

Information

- The door hinge must be aligned after installing the door.
- Loosen fastening screws for door hinge at the door and fastening screws for door hinge at the A-pillar so that the threaded connections can be moved.

Information

- The number of fastening screws, fixing clips, plug connections, holders and trim panels↓ can vary depending on equipment.
- The illustrations for removing and installing the drive mechanism are shown only on one equipment variant and may differ from the actual equipment variant.
- Some steps must be carried out automatically.
- Some of the repair illustrations show only one side of the vehicle.

1. Adjust front door with door hinge at the door.

Fig 1: Identifying Front Door Hinge On Door Side

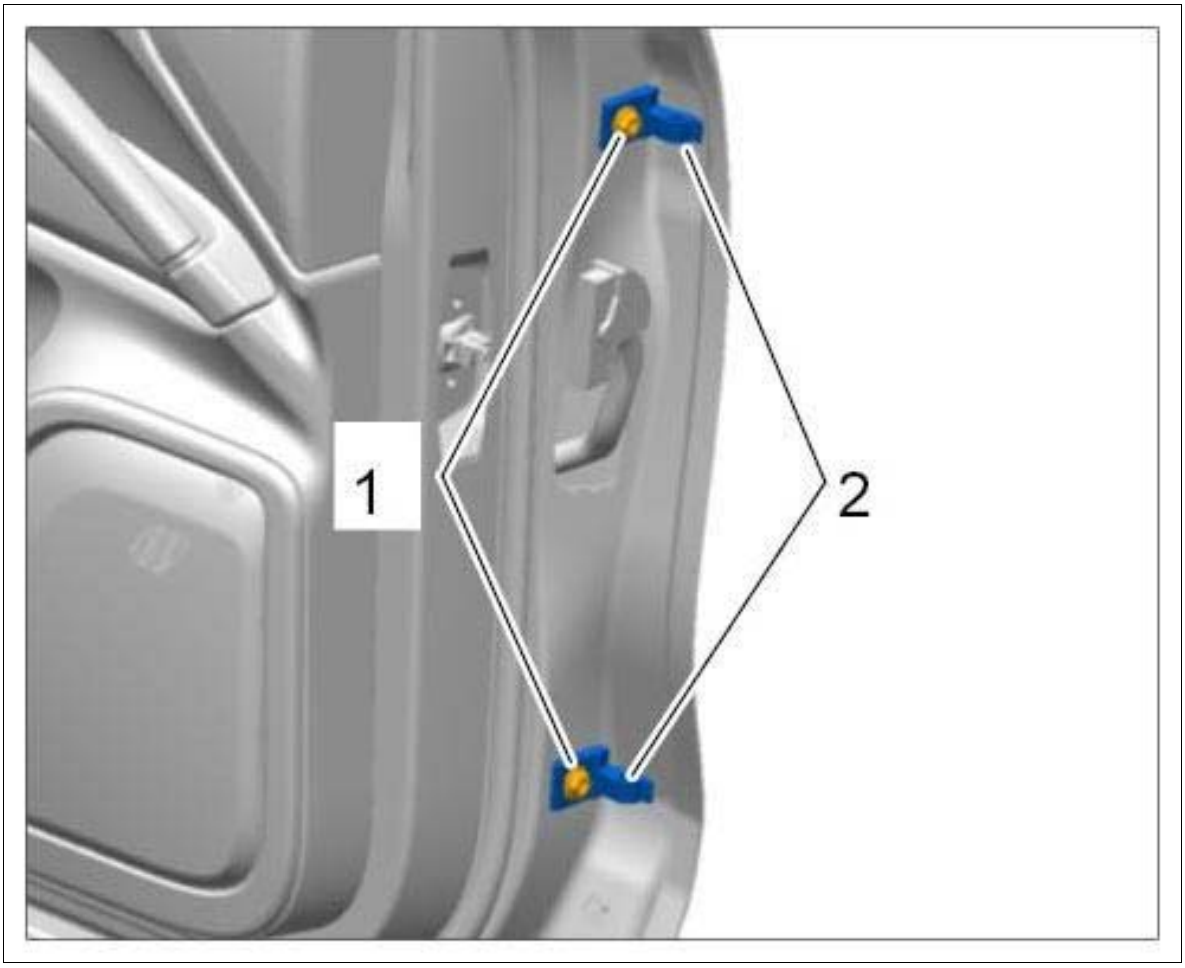

Courtesy of PORSCHE CARS NORTH AMERICA, INC.

No.	Component	Function	Procedure
1.	Fastening screw **-1-** securing door hinge **-2-** to front door	Adjustment of gap dimensions in Y and Z direction	Loosen.
2.	Front door		Adjust gap dimensions in Y and Z direction by moving the door.
3.	Fastening screw **-1-** securing door hinge **-2-** to front door	Adjustment of gap dimensions in Y and Z direction	Tighten fastening screw **-1-** securing door hinge **-2-** to front door to **Tightening torque 55 Nm (41 ftlb.)** .

2. Adjust front door with door hinge at the body.

Fig 2: Loosening Front Door Hinge On Body Side At Inside

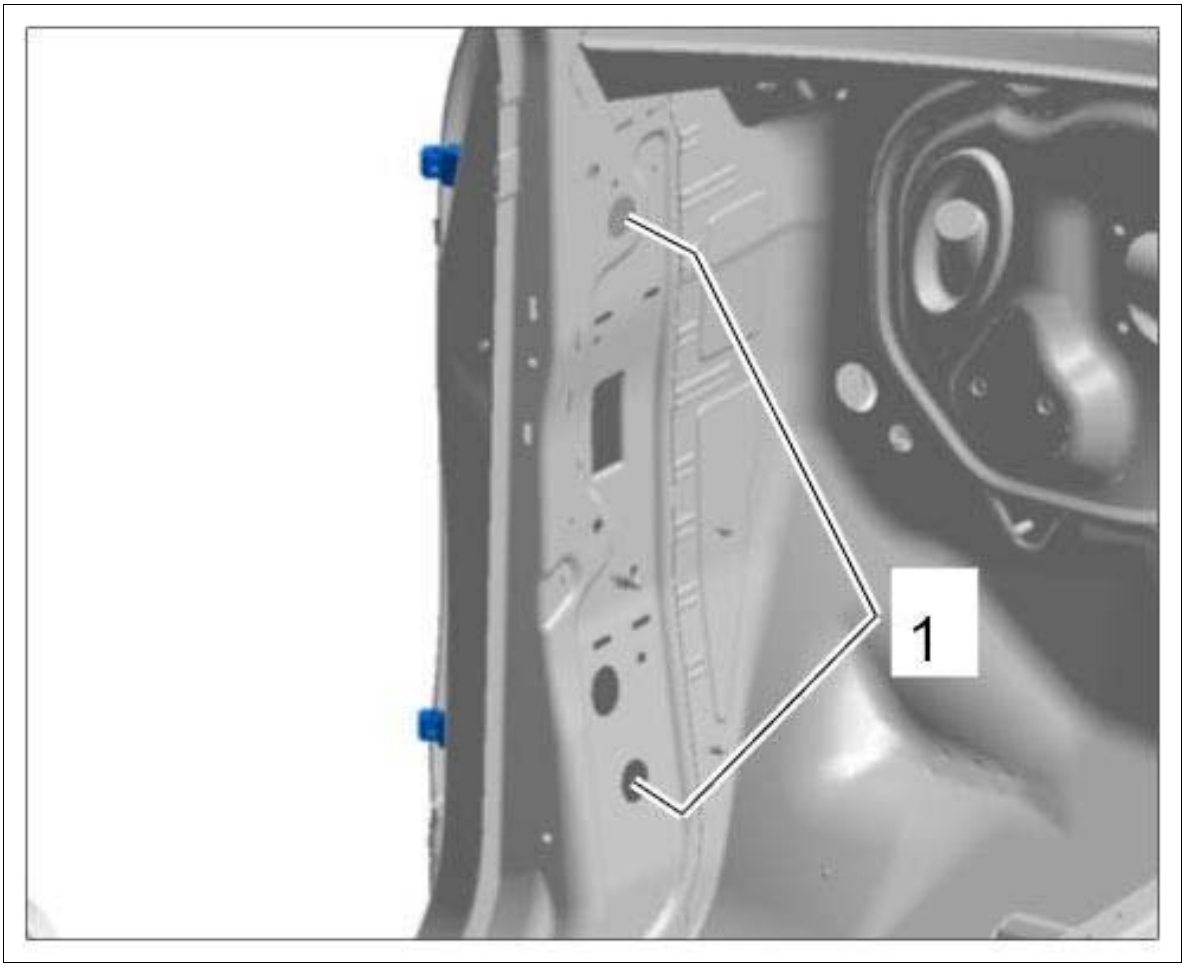

Courtesy of PORSCHE CARS NORTH AMERICA, INC.

Fig 3: Loosening Front Door Hinge On Body Side At Outside

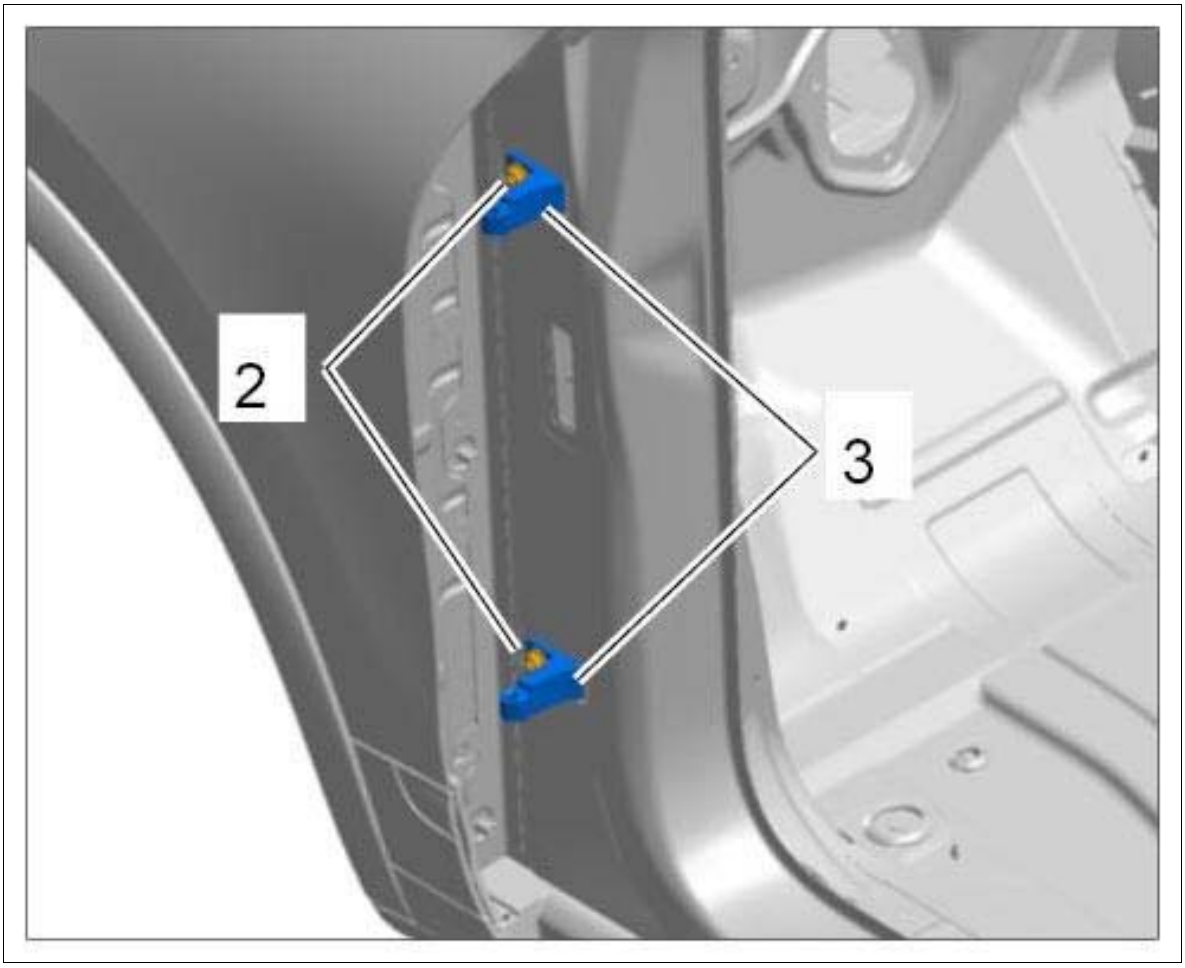

Courtesy of PORSCHE CARS NORTH AMERICA, INC.

No.	Component	Function	Procedure
1.	Fastening screw securing door hinge to body on outside **-2-** and inside **-1-** → Installing Front Door Hinge	Adjustment of gap dimensions in X and Z direction	Loosen.
2.	Front door		Adjust gap dimensions in X and Z direction by moving the rear door.
3.	Fastening screw securing door hinge to body on outside **-2-** and inside **-1-** → Installing Front Door Hinge	Adjustment of gap dimensions in X and Z direction	Tighten fastening screws securing door hinge to body on outside **-2-** and inside **-1- Tightening torque 50 Nm (37 ftlb.)** .

3. Adjust front door at the lock peg (striker pin).

Fig 4: Adjusting Lock Peg

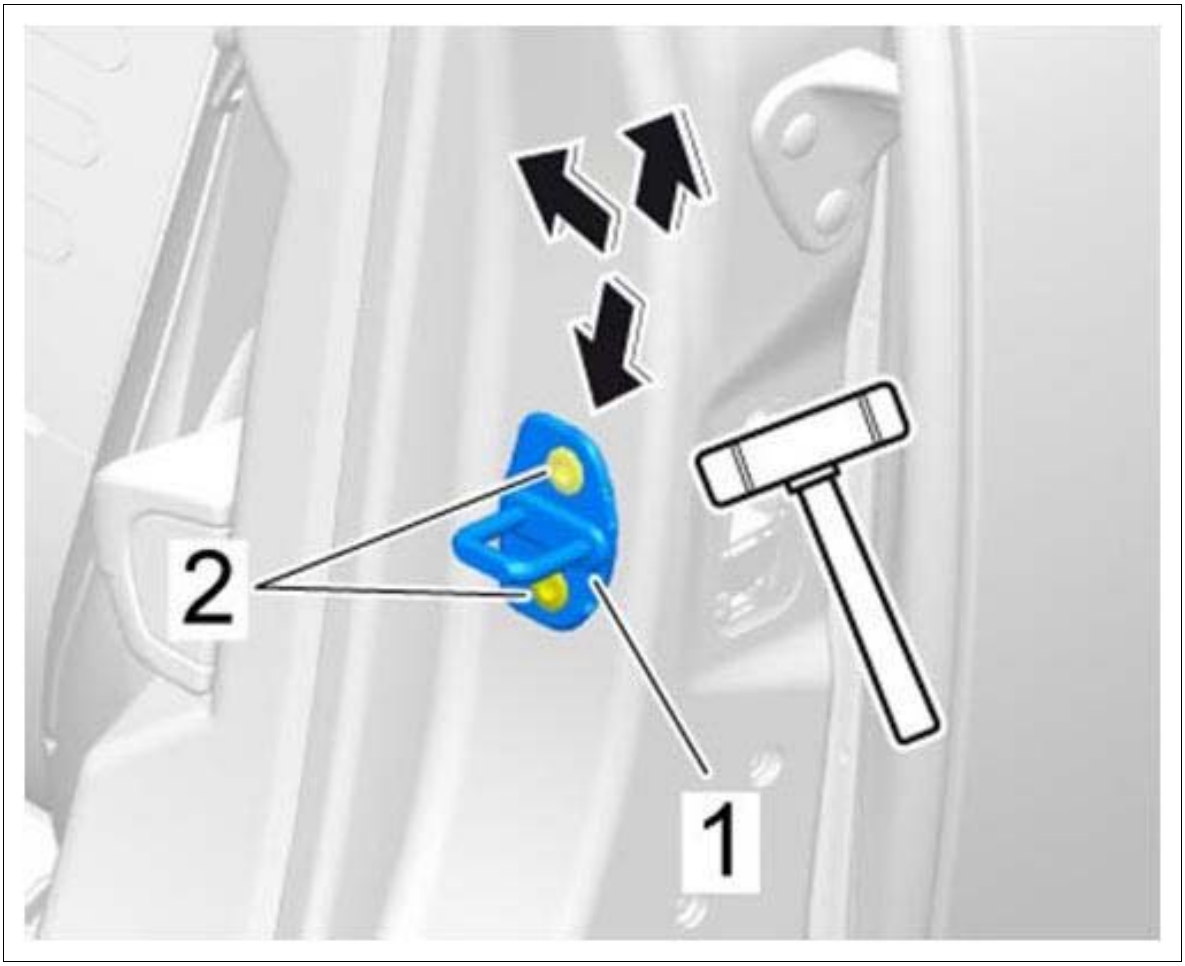

Courtesy of PORSCHE CARS NORTH AMERICA, INC.

No.	Component	Function	Procedure
1.	Fastening screws **-2-** for lock peg **-1-** at the front	Locking mechanism for front door	Loosen.
2.	Front door		Adjust gap dimensions in Y and Z direction at the rear by moving the front door.
3.	Fastening screws **-2-** for lock peg **-1-** at the front	Adjust gap dimensions in Z direction at the rear by moving the front door.	Tighten fastening screws **-2-** for lock peg **-1-** at the front to **Tightening torque 25 Nm (19 ftlb.)**

WM 575115 ADJUSTING FRONT DOOR (ALL MODELS) > CHECKING FRONT DOOR LOCK

1. Check the function of the front door lock.

2. Check closing and opening forces and compare with the other doors.

   If these forces differ, re-adjust the door.

WM 575119 REMOVING AND INSTALLING FRONT DOOR (ALL MODELS) > TECHNICAL VALUES

Location	Description	Type	Basic value	Tolerance 1	Tolerance 2
Fastening screw for door arrester		Tightening torque	33 Nm (24 ftlb.)		
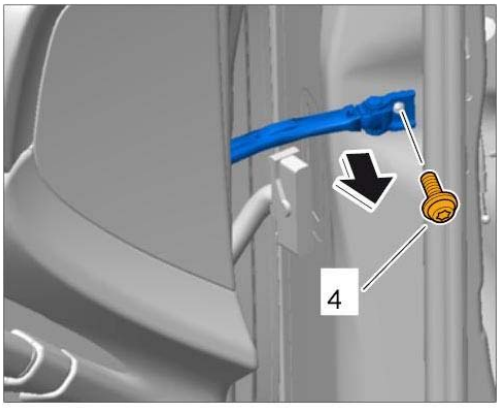 Unscrewing fastening screw on door arrester					
Fastening screw for hinge		Tightening torque	27 Nm (20 ftlb.)	+/-3.5 Nm (+/- 2.5 ftlb.)	
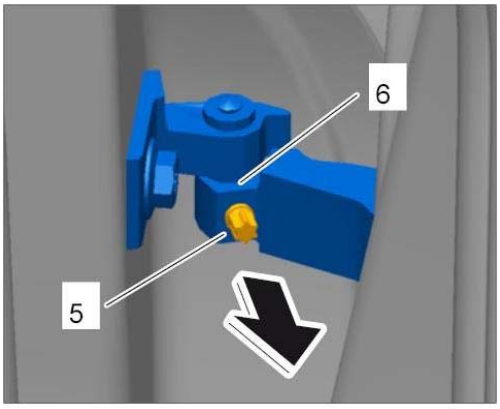 Loosening fastening screws for hinge connection					

WM 575119 REMOVING AND INSTALLING FRONT DOOR (ALL MODELS) > REMOVING FRONT DOOR

1. Slide the locking mechanism **-1-** up using a suitable tool and disconnect plug connection **-2-** .

Fig 1: Disconnecting Electric Plug Connection

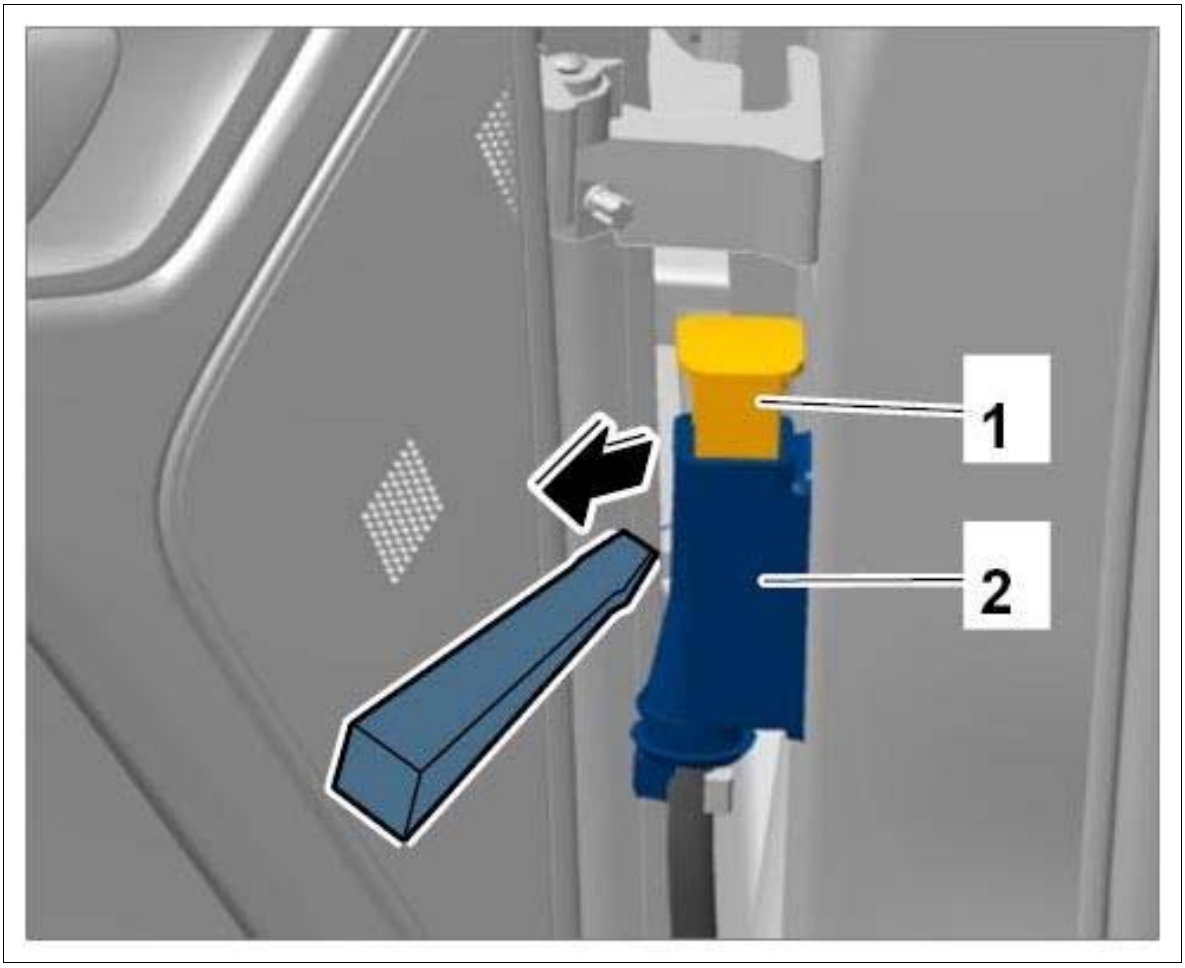

Courtesy of PORSCHE CARS NORTH AMERICA, INC.

2. Unscrew and remove fastening screw on the door arrester **-4-** at the vehicle door.

Fig 2: Removing Screw On Door Arrester

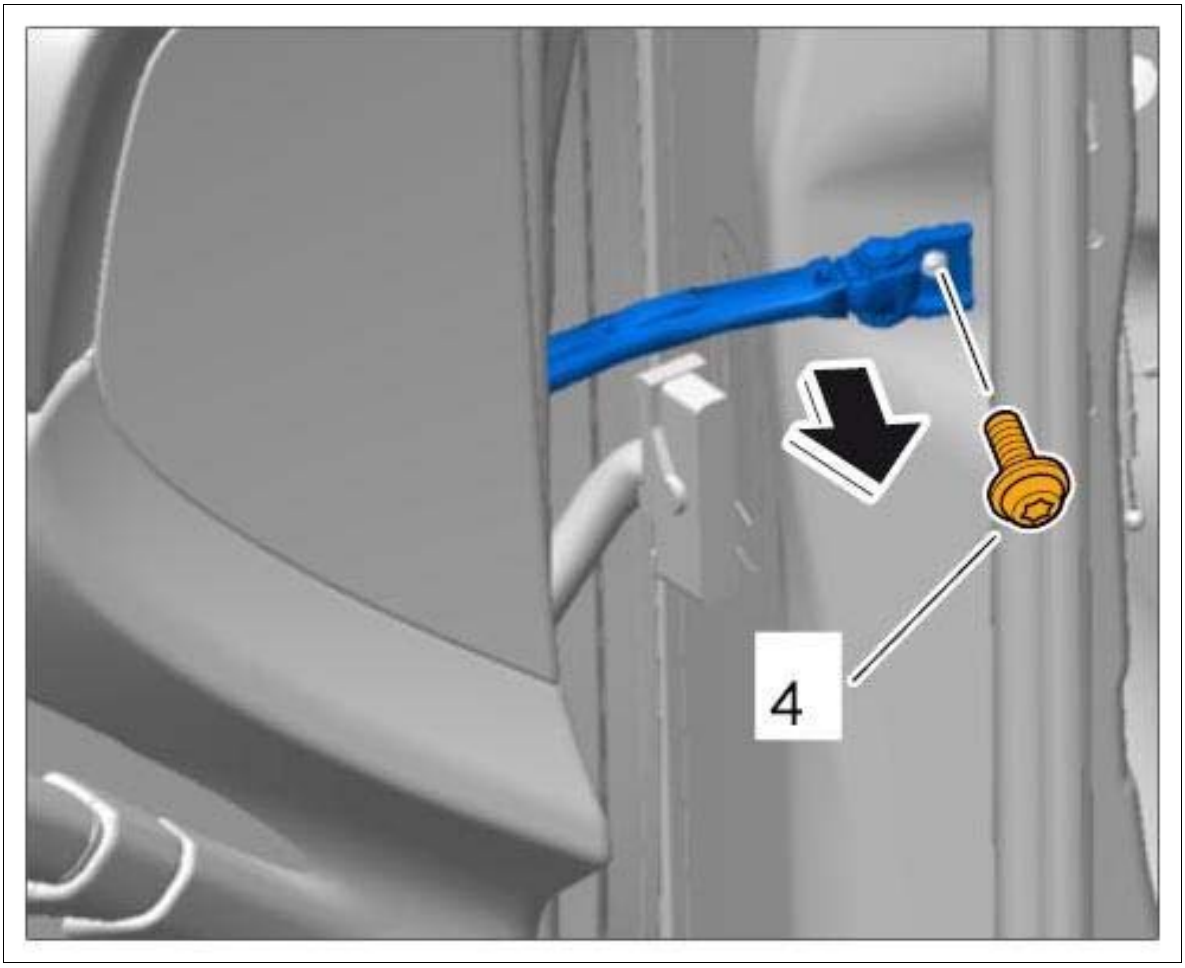

Courtesy of PORSCHE CARS NORTH AMERICA, INC.

3. Pull plastic caps **-3-** off the hinge screws at the top and bottom hinge joints **-6-** .

Fig 3: Pulling Off Caps On Hinge Screws

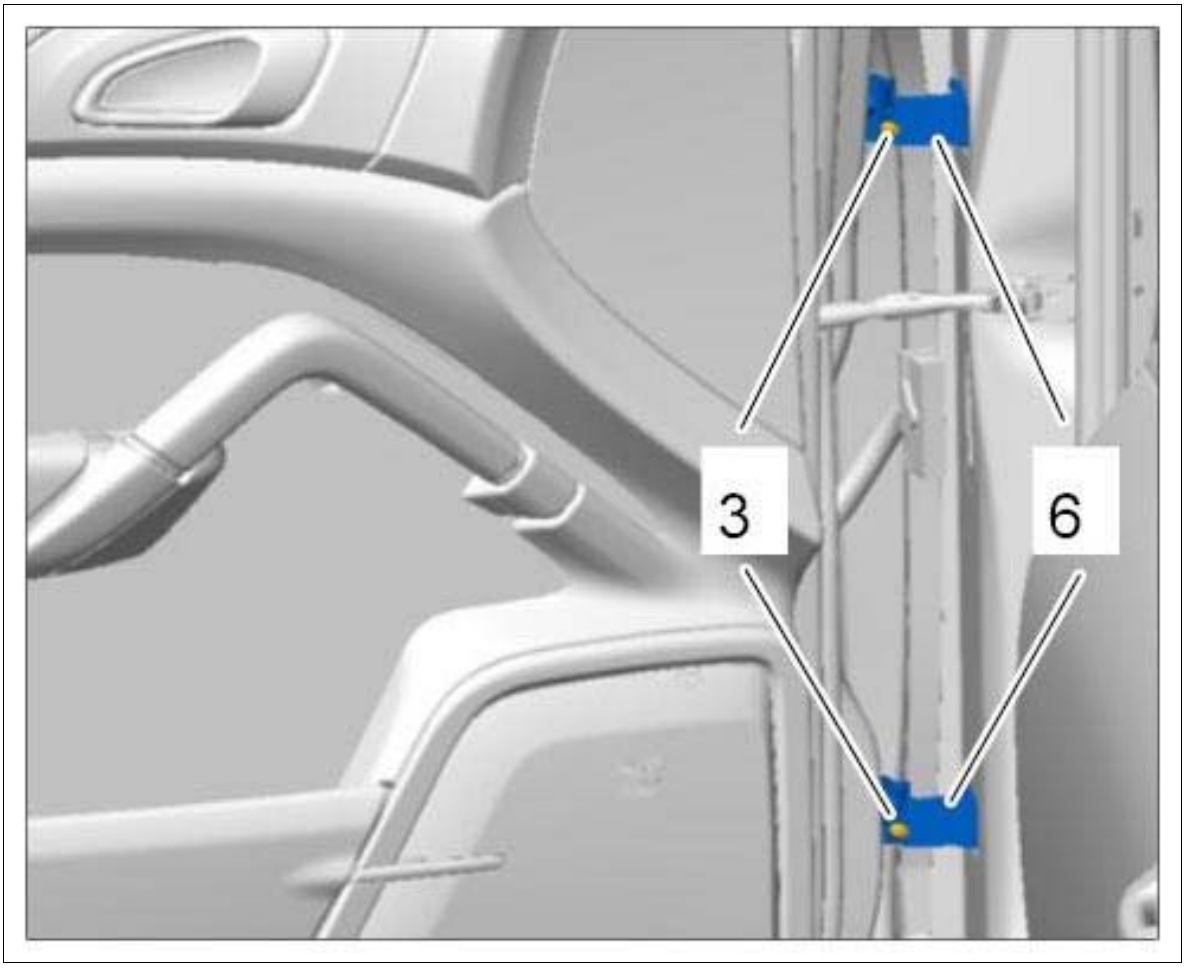

Courtesy of PORSCHE CARS NORTH AMERICA, INC.

4. Loosen fastening screws **-5-** on the top and bottom hinge joint **-6-** .

Fig 4: Loosening Hinge Joint

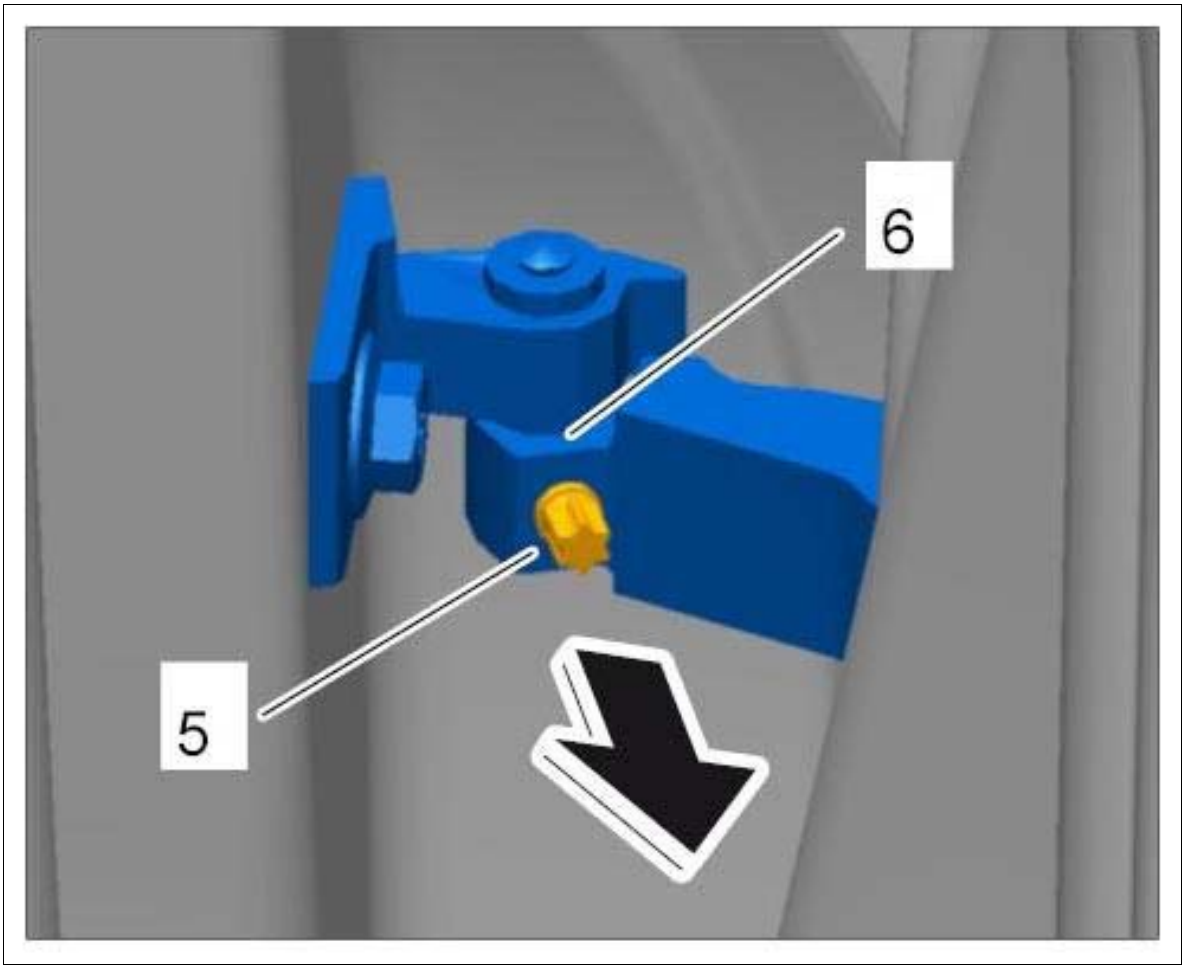

Courtesy of PORSCHE CARS NORTH AMERICA, INC.

5. Get another person to hold the vehicle door.
6. Lift the vehicle door up slightly until the hinge bolts come out of the hinge halves on the door side.

Fig 5: Lifting Vehicle Door

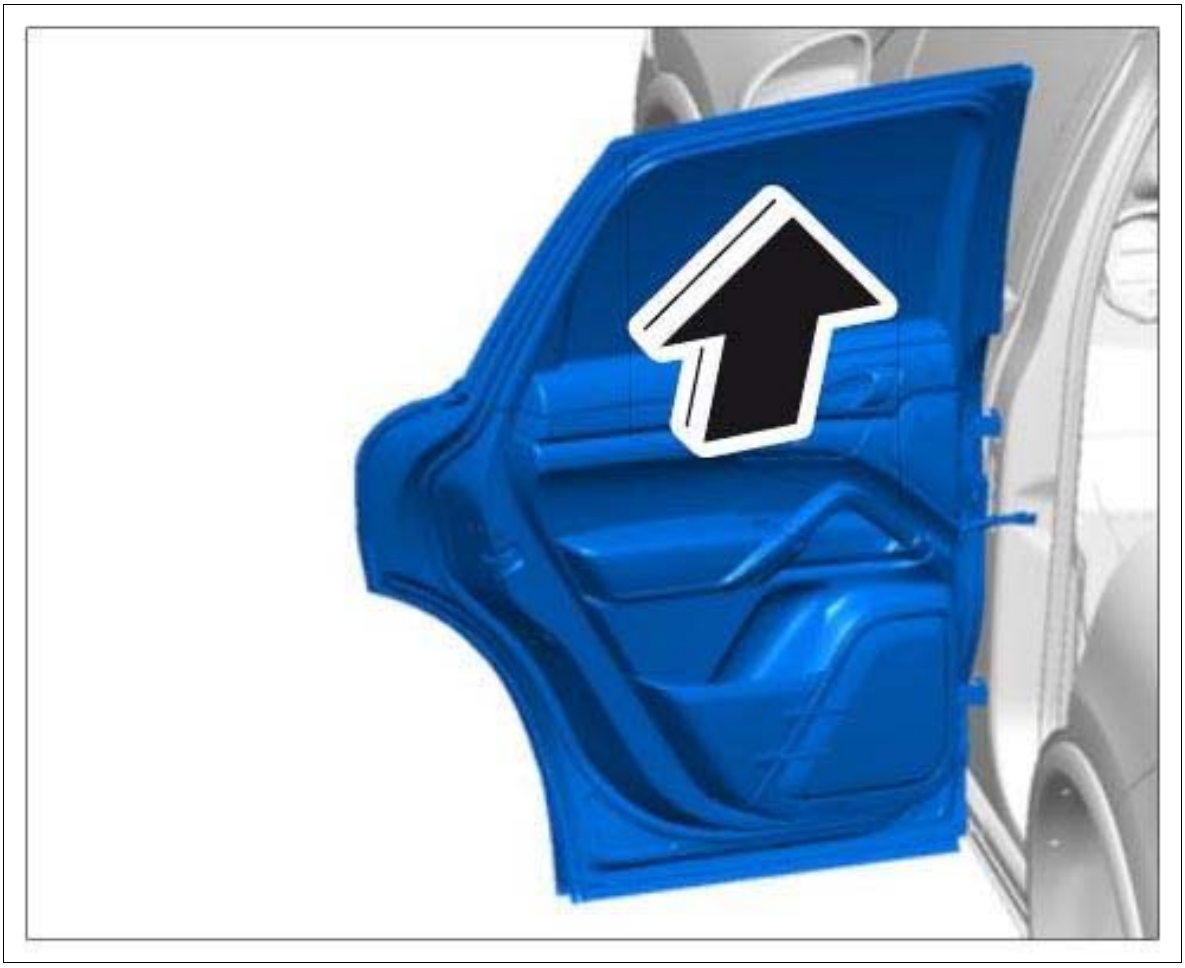

Courtesy of PORSCHE CARS NORTH AMERICA, INC.

7. Remove vehicle door.

WM 575119 REMOVING AND INSTALLING FRONT DOOR (ALL MODELS) > INSTALLING FRONT DOOR

1. Installation is performed in reverse order to removal.
2. Tighten fastening screw on door hinge to **Tightening torque 27 Nm (20 ftlb.) +/-3.5 Nm (+/-2.5 ftlb.)** .
3. Tighten fastening screw for door arrester to **Tightening torque 33 Nm (24 ftlb.)** .

WM 575155 REPLACING FRONT DOOR (ALL MODELS) > REPLACING FRONT DOOR

Information

- The scope of work to be carried out can vary depending on equipment variant.

- Some steps must be carried out automatically.
- Missing or damaged components and fastening parts must be replaced with new ones.

1. Remove rear-view mirror. → Removing rear-view mirror
2. Remove window channel seal. → REMOVING FRONT WINDOW GUIDE
3. Remove window guide. → Removing front window guide
4. Remove cover for door. → Removing cover for front door
5. Remove corner window pane. → Removing front corner window pane
6. Remove door handle. → Removing Door Handle
7. Remove door lock. → Removing Door Lock
8. Remove inner door release. → Removing Inner Door Release
9. Remove door arrester. → Removing Front Door Arrester
10. Remove door control unit. → WM 577355 REPLACING DOOR CONTROL UNIT
11. Remove rubber seal for front door. → Removing Lower Rubber Seal For Front Door
12. Remove power window regulator. → Removing front power windows
13. Remove wire harness for door. → Removing wire harness for door in front door panel
14. Remove door. → Removing Front Door
15. Install new door. → Installing Front Door
16. Fit blind rivet nut (top fastening point for the corner window pane).

Further assembly is carried out in reverse order.

WM 575319 REMOVING AND INSTALLING FRONT DOOR HINGE (ALL MODELS) > TECHNICAL VALUES

Location	Description	Type	Basic value	Tolerance 1	Tolerance 2
Fastening screw securing hinge to front door		Tightening torque	55 Nm (41 ftlb.)		

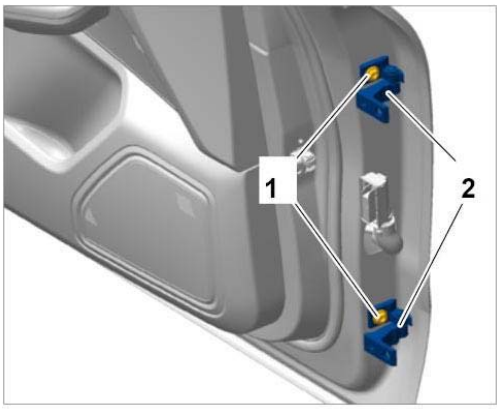

Front door hinge

WM 575319 REMOVING AND INSTALLING FRONT DOOR HINGE (ALL MODELS) > PRELIMINARY WORK

1. Remove front door. → Removing Front Door

WM 575319 REMOVING AND INSTALLING FRONT DOOR HINGE (ALL MODELS) > REMOVING FRONT DOOR HINGE

Information

- Some of the repair illustrations show only one side of the vehicle.
- Naturally, some steps also have to be performed on the opposite side of the vehicle as well.

Fig 1: Identifying Door Hinge Position



Courtesy of PORSCHE CARS NORTH AMERICA, INC.

1. Unscrew fastening screw **-1-** on door hinge **-2-** .

Fig 2: Identifying Front Door Hinge

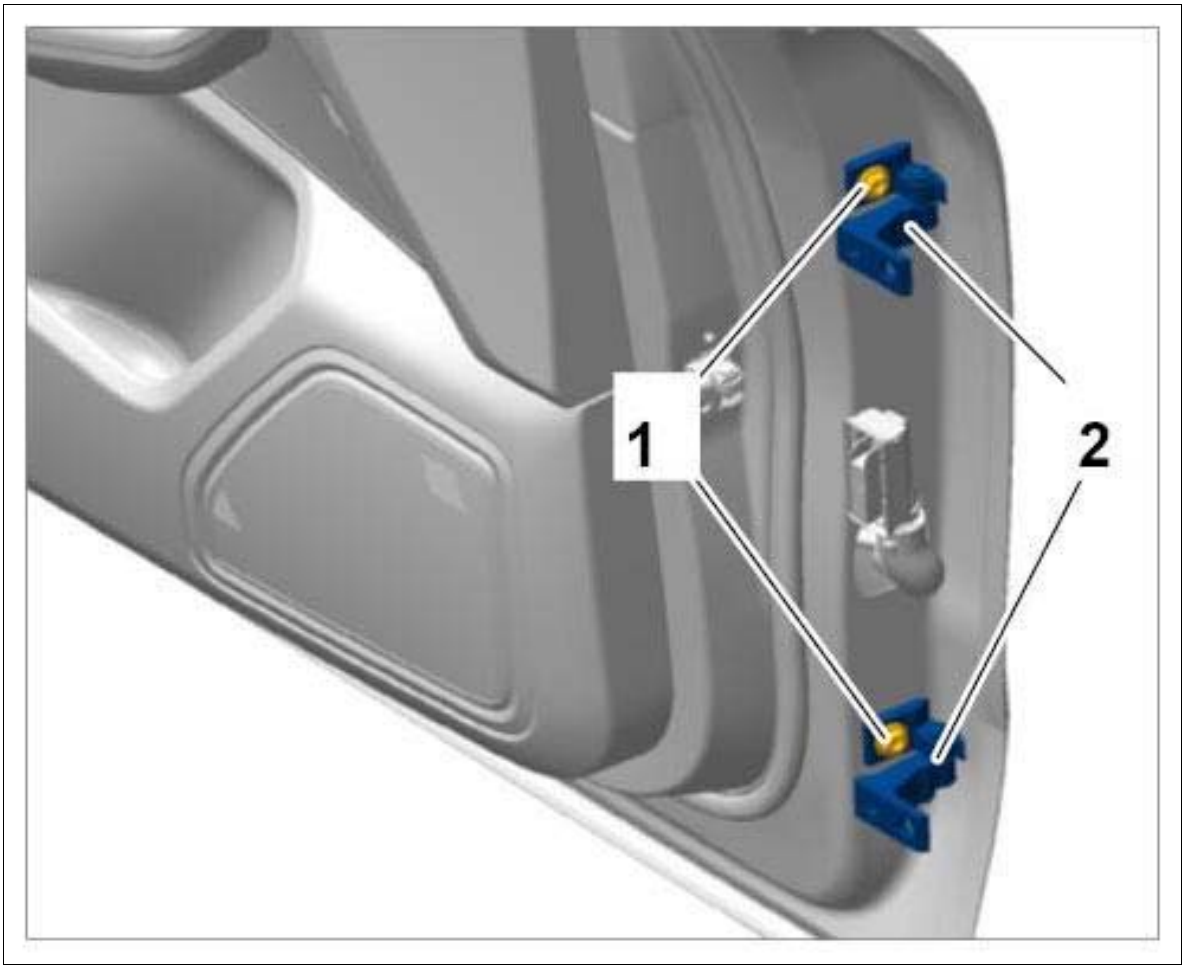

Courtesy of PORSCHE CARS NORTH AMERICA, INC.

WM 575319 REMOVING AND INSTALLING FRONT DOOR HINGE (ALL MODELS) > INSTALLING FRONT DOOR HINGE

WARNING: Incorrect handling of safety bolts

- *Danger of injury*
- *Loss of torque*

→ Always use new fastening screws and nuts following removal.

→ Observe specified tightening torques.

→ Carry out a visual inspection of all re-used parts.

Information

- Some of the repair illustrations show only one side of the vehicle.
- Naturally, some steps also have to be performed on the opposite side of the vehicle as well.

1. Installation is performed in reverse order to removal.
2. Tighten fastening screws to **Tightening torque 55 Nm (41 ftlb.)** until secure.

WM 575355 REPLACING DOOR HINGE (ON BODY SIDE) (ALL MODELS) > TECHNICAL VALUES

Location	Description	Type	Basic value	Tolerance 1	Tolerance 2
Door hinge to outer A-pillar		Tightening torque	50 Nm (37 ftlb.)		

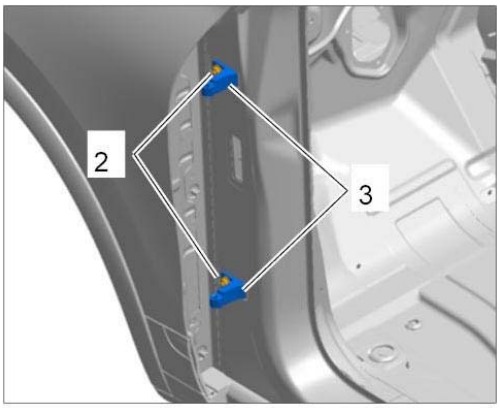

Loosening rear door hinge on body side at the outside

Door hinge to inner A-pillar		Tightening torque	50 Nm (37 ftlb.)		

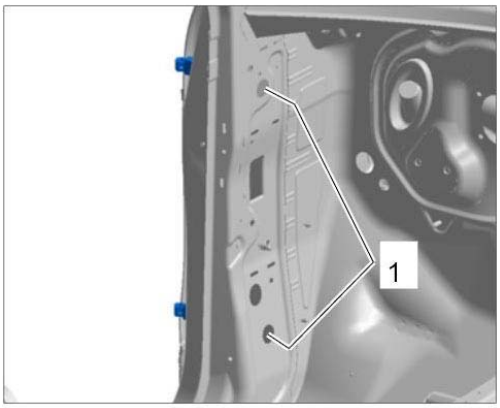

Loosening rear door hinge on body side at the inside

WM 575355 REPLACING DOOR HINGE (ON BODY SIDE) (ALL MODELS) > PRELIMINARY WORK > PRELIMINARY WORK FOR FRONT DOOR HINGE ON BODY SIDE

1. Remove front door. → Removing Front Door

   Top left door hinge:

2. Remove trim panel under dashboard. → Removing trim panel under dashboard at the right
3. Loosen main wire harness if necessary at the left. → Loosening main wire harness in passenger compartment at the left

   Top right door hinge:

4. Remove glove compartment. → Removing Glove Compartment

   Bottom left and right door hinge:

5. Remove inner door sill trim. → Removing Front Inner Door Sill Trim

WM 575355 REPLACING DOOR HINGE (ON BODY SIDE) (ALL MODELS) > PRELIMINARY WORK > FRONT DOOR HINGE ON BODY SIDE

Information

Use a marking pen to mark the position of accessories with respect to each other before removal in order to reduce the amount of adjustment work required for gaps and joints.

Information

- Some of the repair illustrations show only one side of the vehicle.
- Naturally, some steps also have to be performed on the opposite side of the vehicle as well.

Fig 1: Identifying Front Door Hinge Installation Position



Courtesy of PORSCHE CARS NORTH AMERICA, INC.

1. Remove grommet on the inside of the A-pillar and loosen insulating mats if necessary.
2. Unscrew fastening screws **-2-** from both hinges **-3-** at the outside.

Fig 2: Loosening Front Door Hinge On Body Side At Outside

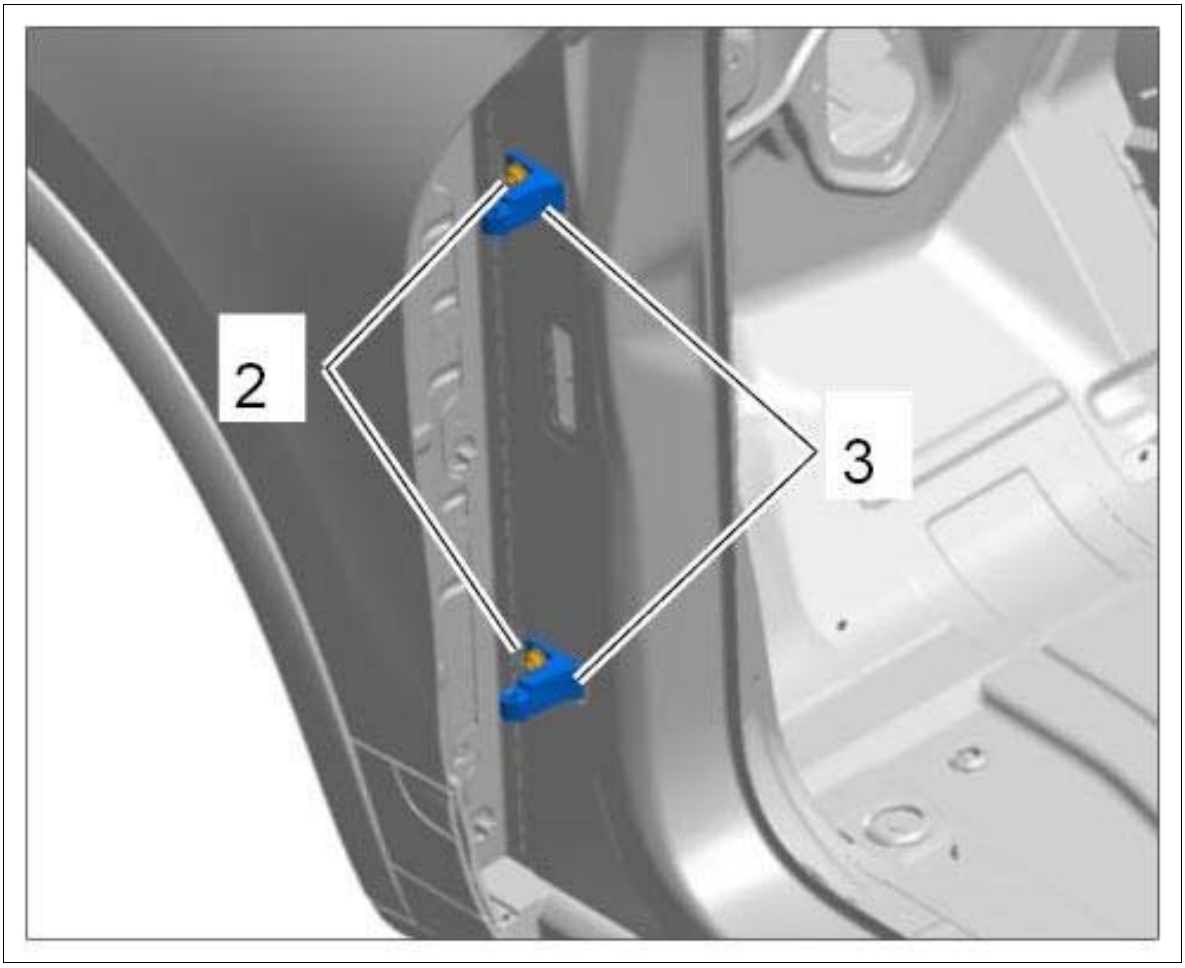

Courtesy of PORSCHE CARS NORTH AMERICA, INC.

3. Unscrew fastening screws **-1-** from the A-pillar at the inside.

Fig 3: Loosening Front Door Hinge On Body Side At Inside

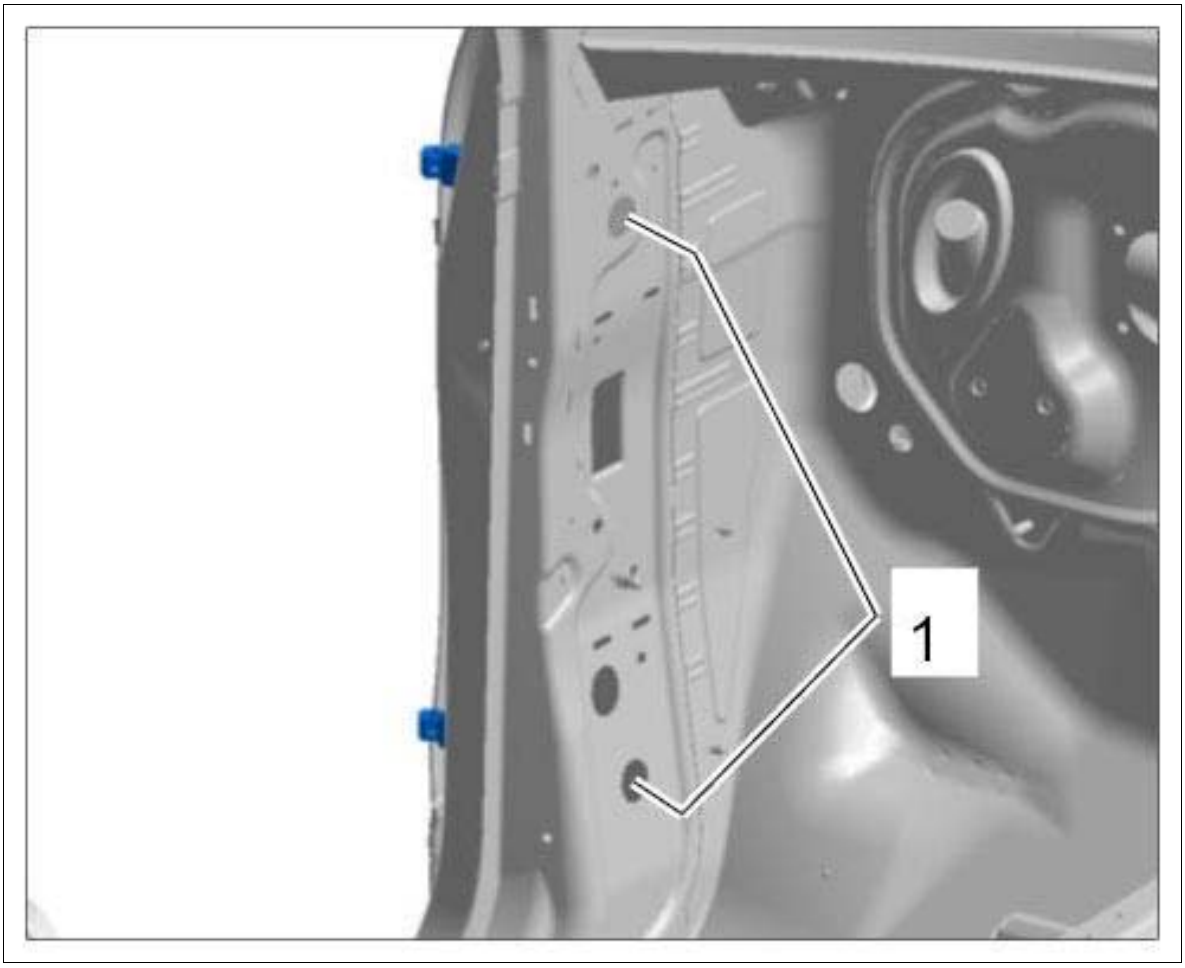

Courtesy of PORSCHE CARS NORTH AMERICA, INC.

WM 575355 REPLACING DOOR HINGE (ON BODY SIDE) (ALL MODELS) > INSTALLING FRONT DOOR HINGE ON BODY SIDE

WARNING: Incorrect handling of safety bolts

- *Danger of injury*
- *Loss of torque*

→ Always use new fastening screws and nuts following removal.

→ Observe specified tightening torques.

→ Carry out a visual inspection of all re-used parts.

Information

Only tighten the fastening screws on the door hinges hand-tight from the inside until the doors are set

correctly.

Information

- Some of the repair illustrations show only one side of the vehicle.
- Naturally, some steps also have to be performed on the opposite side of the vehicle as well.

1. Installation is performed in reverse order to removal.
    1. The hinges can be set at roughly the correct position during installation by positioning them on the existing indents.
    2. When installing the hinges on a new door, the door must be re-adjusted: → 575115 ADJUSTING FRONT DOOR
2. Tighten outer fastening screw to **Tightening torque 50 Nm (37 ftlb.)** .
3. Tighten inner fastening screw to **Tightening torque 50 Nm (37 ftlb.)** .

WM 575355 REPLACING DOOR HINGE (ON BODY SIDE) (ALL MODELS) > SUBSEQUENT WORK > SUBSEQUENT WORK FOR FRONT DOOR HINGE ON BODY SIDE

1. Install front door. → Installing Front Door
2. Adjust the front door. → 575115 ADJUSTING FRONT DOOR

   Top left door hinge

3. Secure wire harness. → Securing main wire harness in passenger compartment at the left
4. Install trim panel under dashboard. →Installing trim panel under dashboard at the left

   Top right door hinge

5. Install glove compartment. → Installing Glove Compartment

   Bottom left and right door hinge:

6. Install inner door sill trim. → Installing Front Inner Door Sill Trim

WM 575919 REMOVING AND INSTALLING FRONT DOOR ARRESTER (ALL MODELS) > TECHNICAL VALUES

Location	Description	Type	Basic value	Tolerance 1	Tolerance 2
Fastening screw for door arrester		Tightening torque	33 Nm (24 ftlb.)		

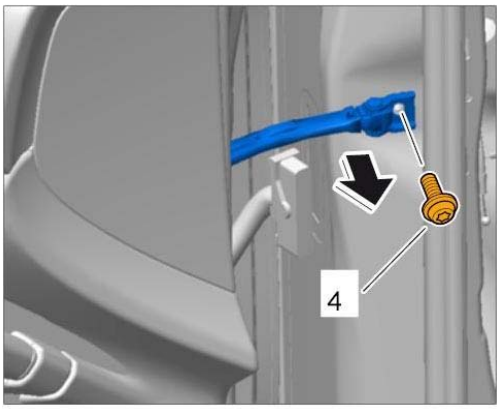

Unscrewing fastening screw on door arrester

Fastening screw for door arrester	Item 2	Tightening torque	8 Nm (6 ftlb.)		

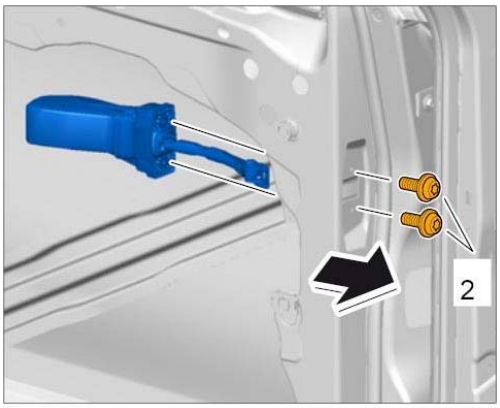

Unscrewing fastening screws for door

WM 575919 REMOVING AND INSTALLING FRONT DOOR ARRESTER (ALL MODELS) > PRELIMINARY WORK

1. Remove front door panel. → Removing front door panel
2. Remove front loudspeakers. → Removing front loudspeakers

WM 575919 REMOVING AND INSTALLING FRONT DOOR ARRESTER (ALL MODELS) > REMOVING FRONT DOOR ARRESTER

Information

- Some of the repair illustrations show only one side of the vehicle.
- Naturally, some steps also have to be performed on the opposite side of the vehicle as well.

1. Unscrew and remove fastening screw for A-pillar **-1-** .

Fig 1: Removing Door Arrester

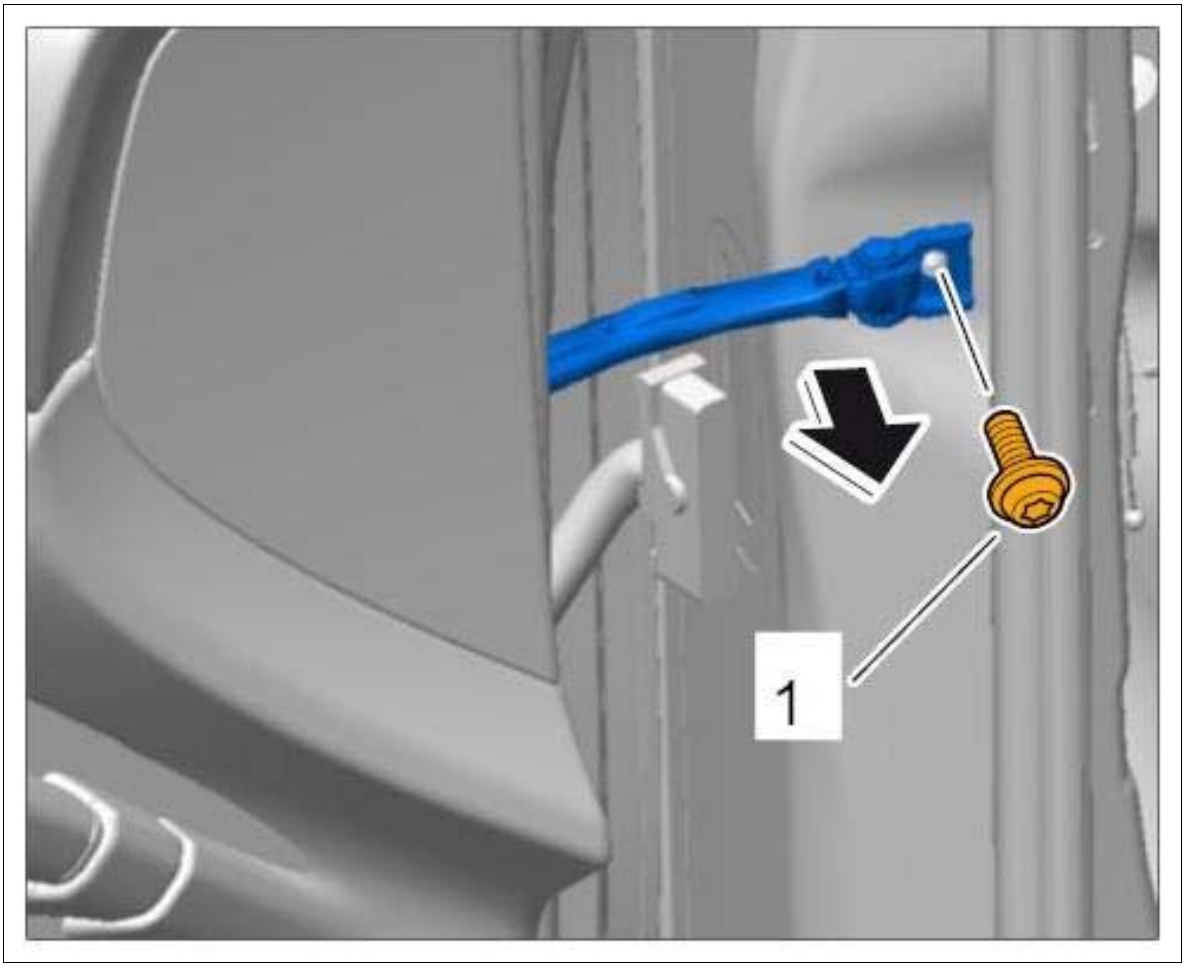

Courtesy of PORSCHE CARS NORTH AMERICA, INC.

2. Unscrew and remove fastening screws for door **-2-** .

Fig 2: Removing Door Arrester



Courtesy of PORSCHE CARS NORTH AMERICA, INC.

3. Remove door arrester by moving it inwards.

WM 575919 REMOVING AND INSTALLING FRONT DOOR ARRESTER (ALL MODELS) > INSTALLING FRONT DOOR ARRESTER

1. Installation is performed in reverse order to removal.
2. Tighten fastening screw for door arrester to **Tightening torque 8 Nm (6 ftlb.)** until secure.
3. Tighten fastening screw securing door arrester to A-pillar to **Tightening torque 33 Nm (24 ftlb.)** until secure.

WM 575919 REMOVING AND INSTALLING FRONT DOOR ARRESTER (ALL MODELS) > SUBSEQUENT WORK

1. Install front loudspeakers. → Installing front loudspeakers

2. Install front door panel. → Installing front door panel

WM 576519 REMOVING AND INSTALLING LOWER RUBBER SEAL FOR FRONT DOOR (ALL MODELS) > REMOVING LOWER RUBBER SEAL FOR FRONT DOOR

Fig 1: Identifying Lower Rubber Seal Position



Courtesy of PORSCHE CARS NORTH AMERICA, INC.

1. Pull seal back out of the guide **-A-** and remove it in a downward direction **-B-** .

Fig 2: Removing Seal

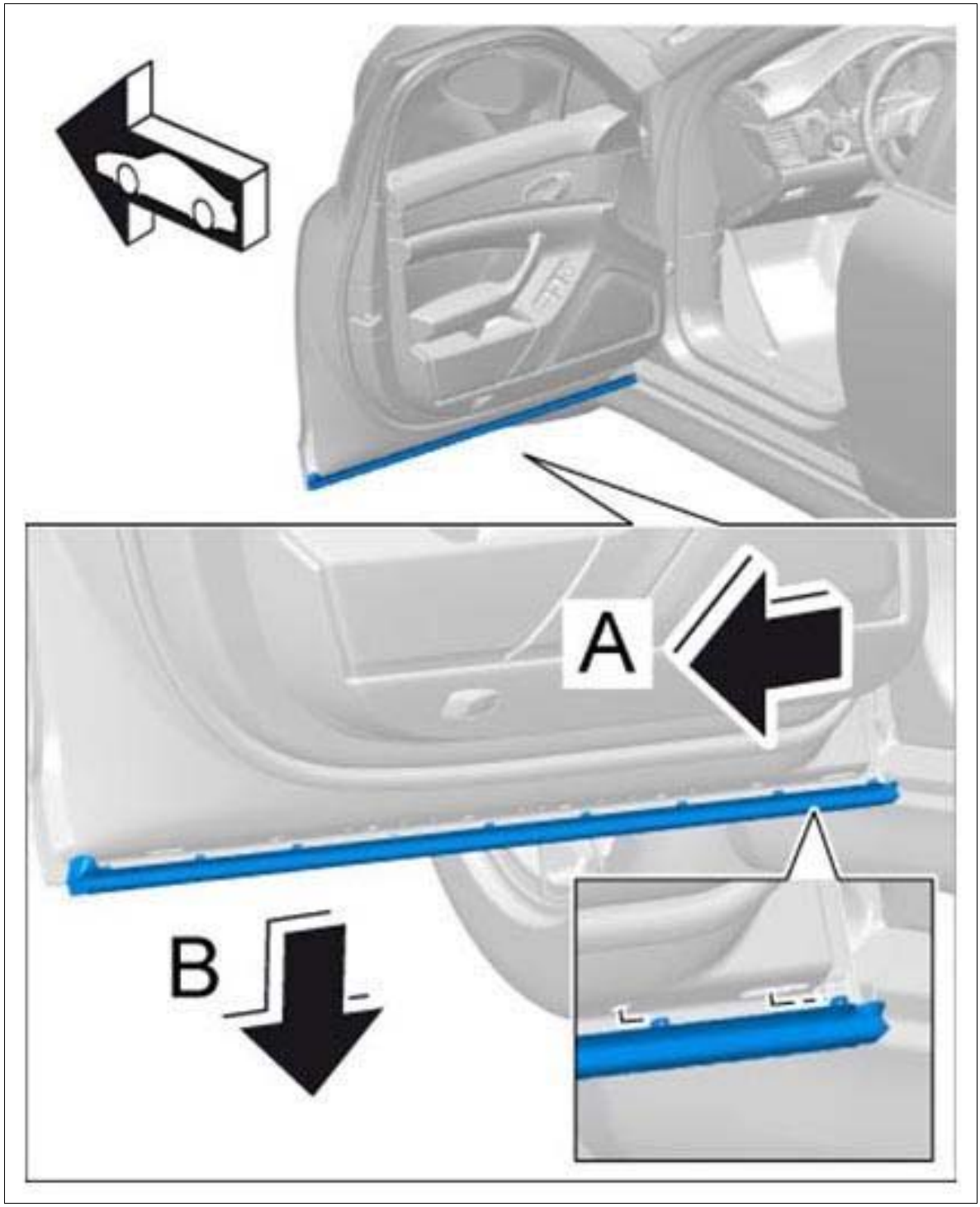

Courtesy of PORSCHE CARS NORTH AMERICA, INC.

WM 576519 REMOVING AND INSTALLING LOWER RUBBER SEAL FOR FRONT DOOR (ALL MODELS) > INSTALLING LOWER RUBBER SEAL FOR FRONT DOOR

1. Installation is performed in reverse order to removal.

2. Check that the rubber seal is fitted correctly.

WM 577355 REPLACING DOOR CONTROL UNIT (ALL MODELS) > TOOLS

Designation	Type	Number	Description	
PIWIS Tester II	Special tool	9818		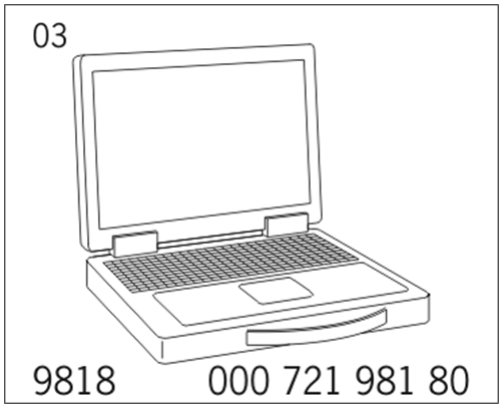

WM 577355 REPLACING DOOR CONTROL UNIT (ALL MODELS) > TECHNICAL VALUES

Location	Description	Type	Basic value	Tolerance 1	Tolerance 2
Current rating		Nominal value	40 A		

WM 577355 REPLACING DOOR CONTROL UNIT (ALL MODELS) > REPLACING DOOR CONTROL UNIT

NOTE: Voltage drop

- *Risk of irreparable damage to control unit*
- *Risk of damage to control unit*
- *Fault entries in the control unit*
- *Coding in the control unit is aborted*
- *Malfunctions in control unit, even during programming*

→ Prior to disconnecting the control unit, switch off ignition and remove ignition key.

→ Ensure that the power supply is not interrupted during programming.

→ Connect a battery charger with a current rating of at least → **Nominal value: 40 A** to the vehicle battery.

Information

The **PIWIS Tester II 9818** instructions take precedence since the description may be different with later Tester releases.

The procedure described here has been structured in general terms. Different text or additional information may appear in **PIWIS Tester II 9818** .

1. Switch off ignition and replace control unit. → Replacing Door Control Unit
2. Connect the PIWIS Tester to the vehicle and start the Tester. Switch on ignition.
3. Select the vehicle type and start the diagnostic application.
4. Select the required control unit, e.g. **Driver's door** in the **overview** .
5. **Extended identification** must now be selected.
6. **Enter the vehicle identification number** and press Enter.
7. **Maintenance/repairs** must then be selected.
8. **Control unit replacement** must now be selected. Then press [F12].
9. **Select Write data,** press [F12] and then press [F8] to start. The data is now loaded.
10. The Tester displays the message **Data has been written.** Press [F12] to continue.
11. **Codings/adaptations** must now be selected.
12. **Automatic coding** must now be selected. Then press [F12] to continue.
13. When the message **Coding has been completed successfully** appears, press [F12] to continue.
14. Read out the fault memory and erase it if necessary.
15. Check the function of the door control unit.

WM 578919 REMOVING AND INSTALLING CONTROL UNIT FOR REAR-END ELECTRONICS (ALL MODELS) > TOOLS

Designation	Type	Number	Description	

PIWIS Tester II	Special tool	9818		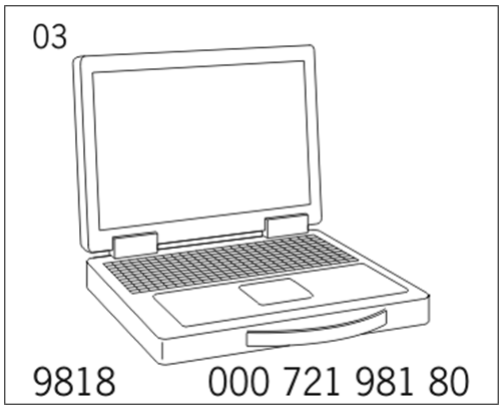

WM 578919 REMOVING AND INSTALLING CONTROL UNIT FOR REAR-END ELECTRONICS (ALL MODELS) > PRELIMINARY WORK

1. Move inner part of side trim panel for rear luggage compartment on the right and connected lines aside. → Removing side trim panel for rear luggage compartment

WM 578919 REMOVING AND INSTALLING CONTROL UNIT FOR REAR-END ELECTRONICS (ALL MODELS) > REMOVING CONTROL UNIT FOR REAR-END ELECTRONICS

NOTE: Voltage peaks

- *Risk of damage to load or to the control unit*

→ Remove the ignition key and switch off load before disconnecting or removing load.

Information

Always comply with the regulations for handling ESD-sensitive components!

- Assembly work may only be carried out if the mechanic is wearing the working clothes and shoes approved by Porsche.
- The new part must only be removed from the ESD (electrostatic discharge) protective packaging just before installation and at the position at which the part is to be installed.
- Never touch the electric pins and plug contacts.

1. Unclip control unit for rear-end electronics **-1-** from the holder **-2- (-a-)** and swivel it out **-b-** .

Fig 1: Removing Control Unit For Rear-End Electronics

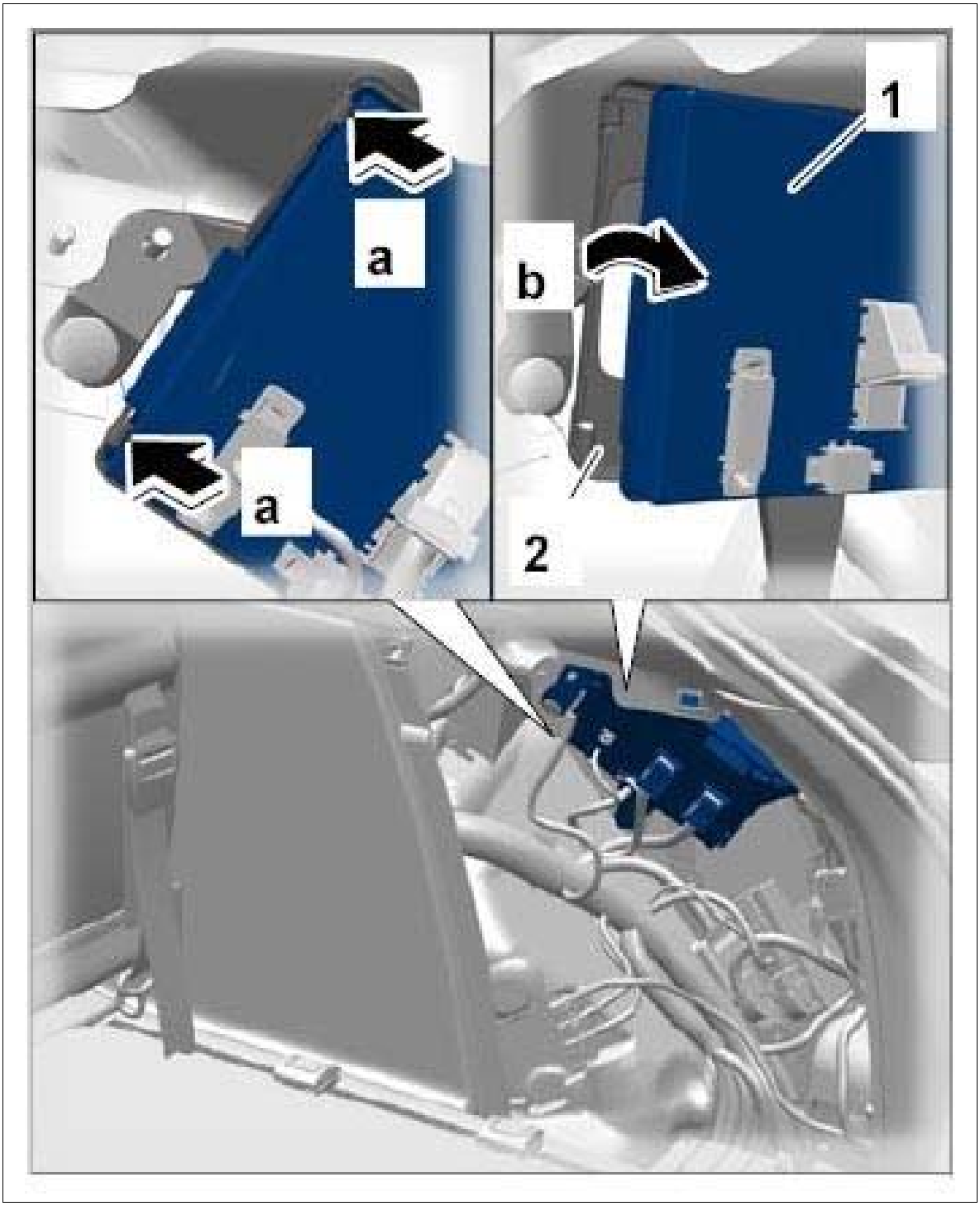

Courtesy of PORSCHE CARS NORTH AMERICA, INC.

2. Release electric plug connections **-1- (-arrows-)** and disconnect them from the rear-end electronics control unit **-2-** .

Fig 2: Disconnecting Electric Plug Connections

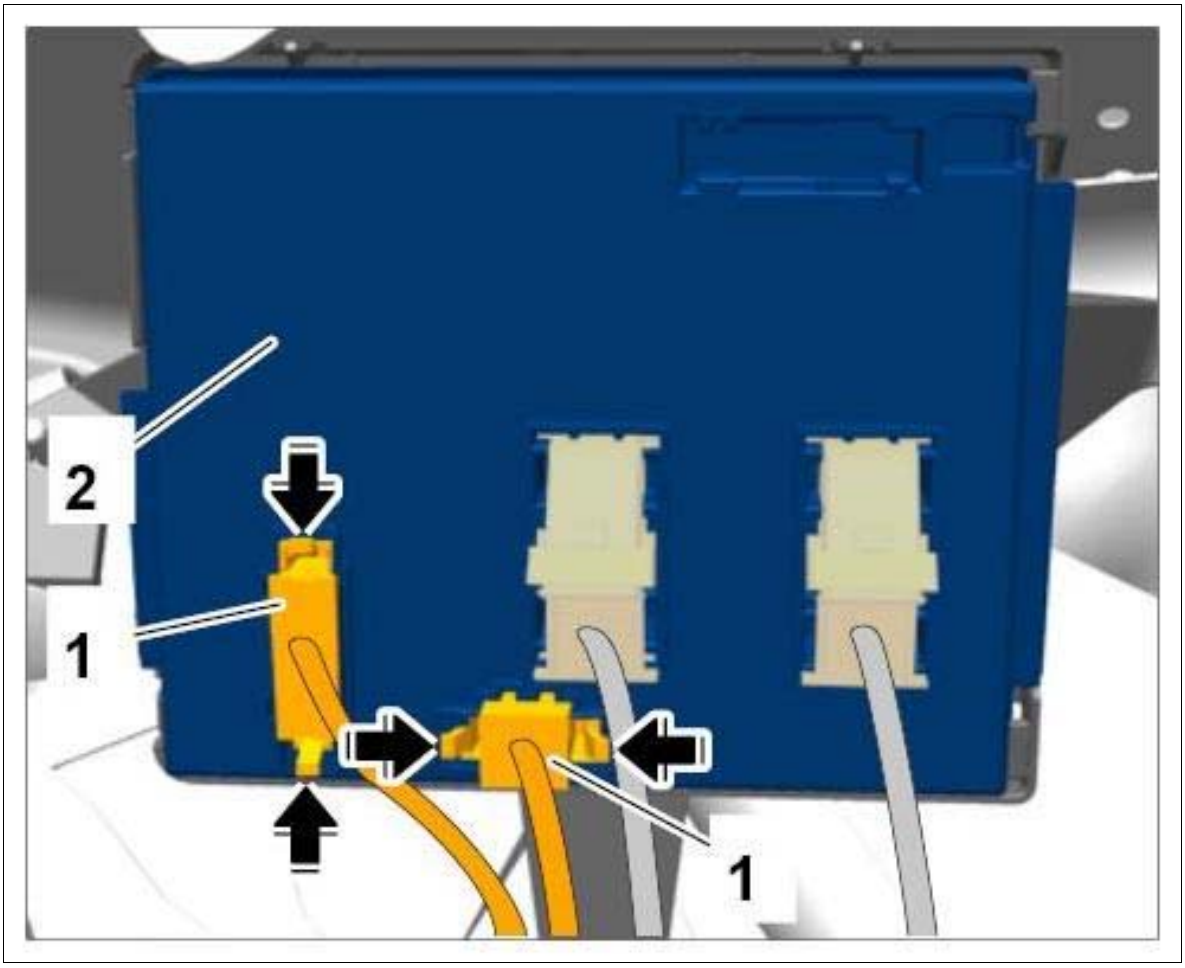

Courtesy of PORSCHE CARS NORTH AMERICA, INC.

3. Release the swivel bar **-1- (-arrows-)** , swivel it up and disconnect electric plug connections **-2-** from the rear-end electronics control unit **-3-** .

Fig 3: Disconnecting Electric Plug Connections

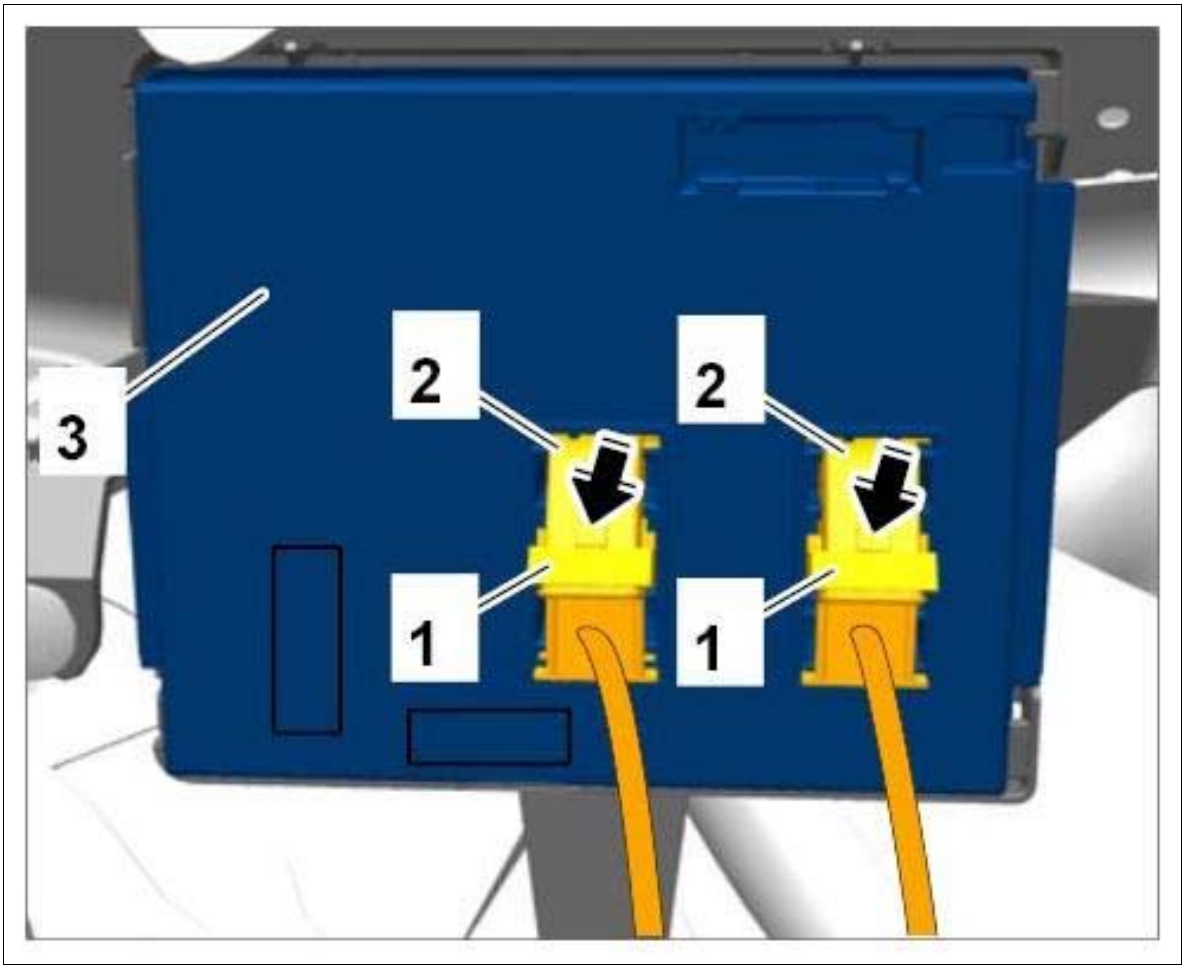

Courtesy of PORSCHE CARS NORTH AMERICA, INC.

WM 578919 REMOVING AND INSTALLING CONTROL UNIT FOR REAR-END ELECTRONICS (ALL MODELS) > INSTALLING CONTROL UNIT FOR REAR-END ELECTRONICS

Information

Always comply with the regulations for handling ESD-sensitive components!

- Assembly work may only be carried out if the mechanic is wearing the working clothes and shoes approved by Porsche.
- The new part must only be removed from the ESD (electrostatic discharge) protective packaging just before installation and at the position at which the part is to be installed.
- Never touch the electric pins and plug contacts.

1. Installation is performed in reverse order to removal.

WM 578919 REMOVING AND INSTALLING CONTROL UNIT FOR REAR-END ELECTRONICS (ALL MODELS) > SUBSEQUENT WORK

1. Install inner part of side trim panel for rear luggage compartment at the right. → Installing side trim panel for rear luggage compartment
2. If the rear-end electronics control unit was replaced, adapt the new rear-end electronics control unit to suit the vehicle using **PIWIS Tester II 9818** . → 578955 REPLACING CONTROL UNIT FOR REAR-END ELECTRONICS

WM 578955 REPLACING CONTROL UNIT FOR REAR-END ELECTRONICS (ALL MODELS) > TOOLS

Designation	Type	Number	Description	
PIWIS Tester II	Special tool	9818		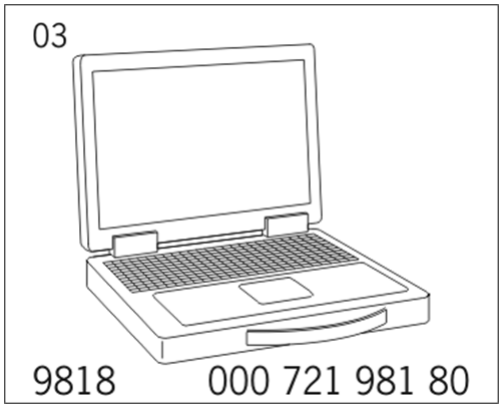

WM 578955 REPLACING CONTROL UNIT FOR REAR-END ELECTRONICS (ALL MODELS) > TECHNICAL VALUES

Location	Description	Type	Basic value	Tolerance 1	Tolerance 2
Current rating		Nominal value	40 A		

WM 578955 REPLACING CONTROL UNIT FOR REAR-END ELECTRONICS (ALL MODELS) > PRELIMINARY WORK

1. Switch off ignition and replace control unit. → 578919 REMOVING AND INSTALLING CONTROL UNIT FOR REAR-END ELECTRONICS

WM 578955 REPLACING CONTROL UNIT FOR REAR-END ELECTRONICS (ALL MODELS) > TEACHING CONTROL UNIT FOR REAR-END ELECTRONICS > TEACHING

REAR-END ELECTRONICS CONTROL UNIT

Information

All remote controls (keys) are required for teaching a DME, front-end electronics (front BCM), rear-end electronics (rear BCM), electronic steering lock (ELV) control unit or remote controls (keys) for example.

Remote controls (keys) that are not taught during this teaching procedure will no longer be recognized by the vehicle.

NOTE: Voltage drop

- *Risk of irreparable damage to control unit*
- *Risk of damage to control unit*
- *Fault entries in the control unit*
- *Coding in the control unit is aborted*
- *Malfunctions in control unit, even during programming*

→ Prior to disconnecting the control unit, switch off ignition and remove ignition key.

→ Ensure that the power supply is not interrupted during programming.

→ Connect a battery charger with a current rating of at least → **Nominal value: 40 A** to the vehicle battery.

Information

The **PIWIS Tester II 9818** instructions take precedence since the description may be different with later Tester releases.

The procedure described here has been structured in general terms. Different text or additional information may appear in **PIWIS Tester II 9818** .

1. Connect the PIWIS Tester to the vehicle and start the Tester. Switch on ignition.
2. Select the vehicle type and start the diagnostic application.
3. Select the **Rear-end electronics** control unit in the overview.
4. **Codings/adaptations** must now be selected.
5. **Automatic coding** must be selected and then press [F12].
6. The Tester displays the message **Coding completed successfully.** Press [F12] to end the process.
7. To activate the control units, switch on the hazard warning lights.
8. Return to the Start page.
9. Select the **Online teaching function** menu on the **Diagnostics tab** .

10. Select the **Engine immobilizer** sub-menu.
11. **Vehicle** must now be selected. Then press [F12] to continue. Vehicle data will be read out.
12. Follow the instructions on the Tester and press [F12] to continue.
13. Once the teaching process is completed successfully, the Tester shows the following status, for example:

    2 keys taught

    Front BCM: taught

    ELV: taught

    Rear BCM: taught

    DME: taught

    Overall vehicle status: taught. Continue with [F12]
14. Press ESC to exit the **Online teaching function** and return to the diagnostic application.
15. **Erase the fault memory.**
16. Function test: Lock, open and start the vehicle using all remote controls (hand-held transmitters).
17. Read out the fault memory.

WM 581119 REMOVING AND INSTALLING REAR DOOR HANDLE (ALL MODELS) > TOOLS

Designation	Type	Number	Description	
removal and assembly tool	VW tool	T10389		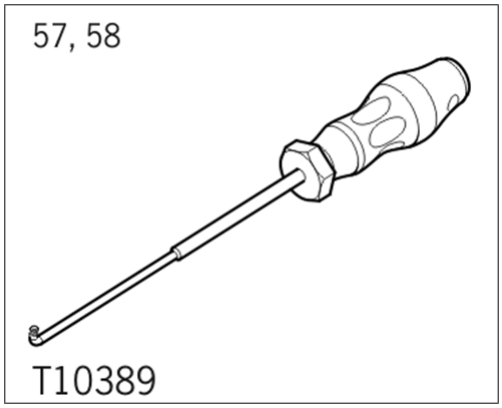

WM 581119 REMOVING AND INSTALLING REAR DOOR HANDLE (ALL MODELS) > REMOVING REAR DOOR HANDLE

Fig 1: Identifying Door Handle Position

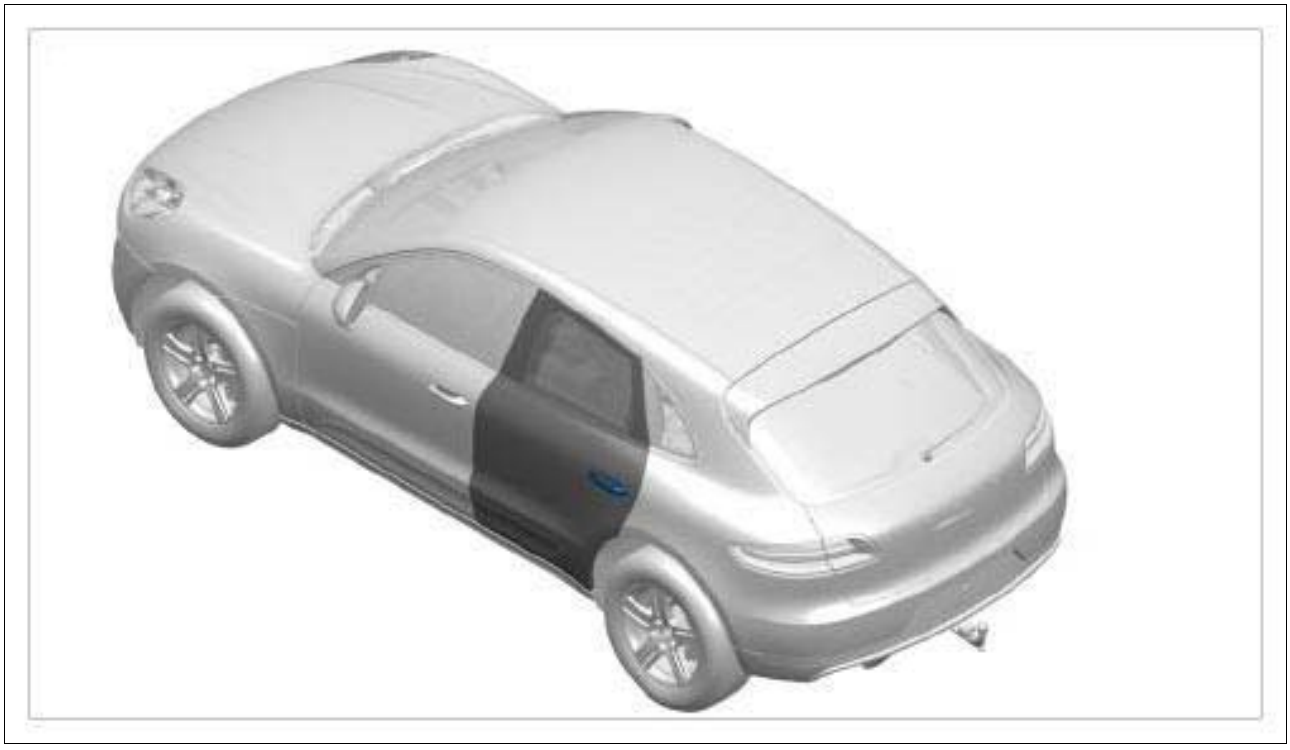

Courtesy of PORSCHE CARS NORTH AMERICA, INC.

1. Unclip inner door seal **-1-** in the door handle area.

Fig 2: Removing Inner Door Seal

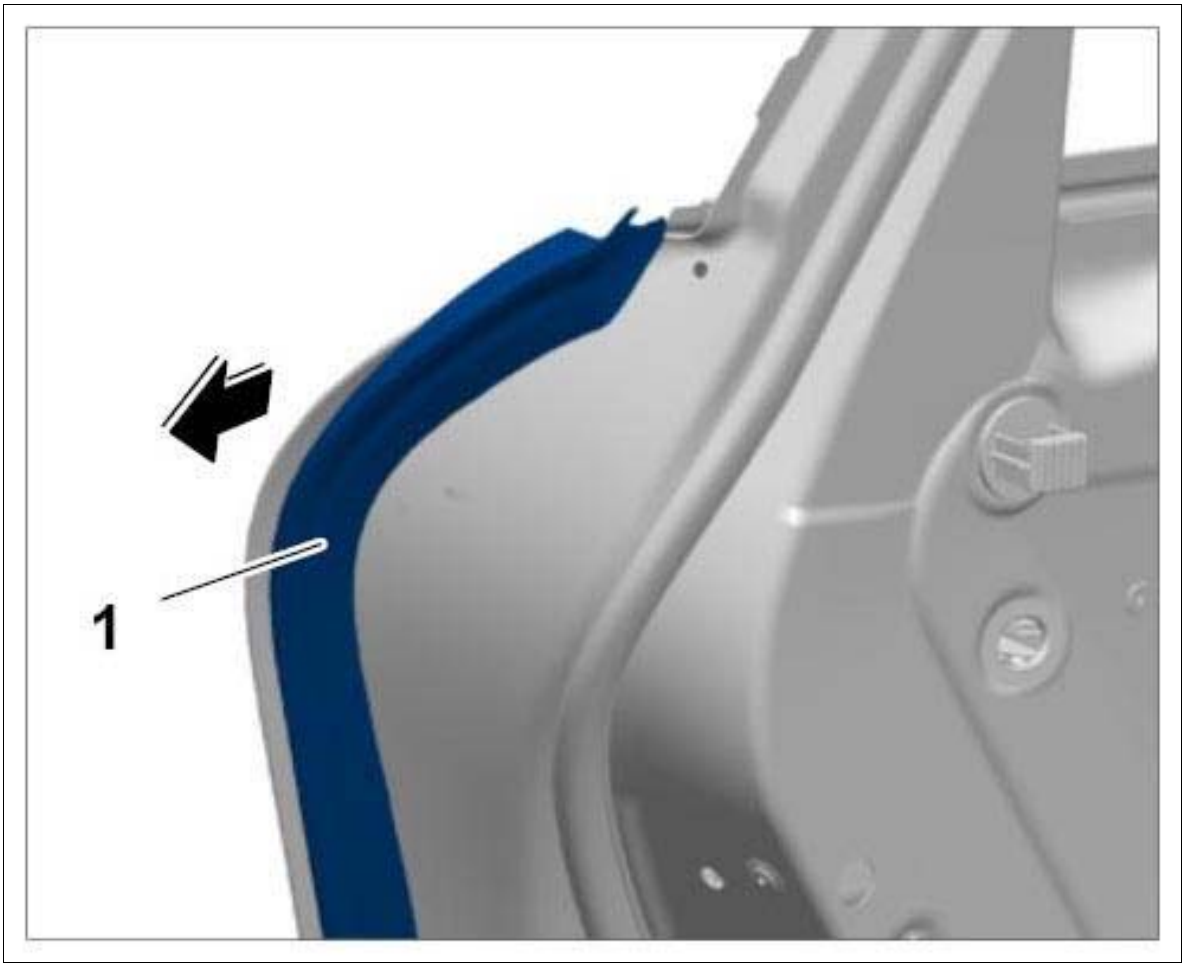

Courtesy of PORSCHE CARS NORTH AMERICA, INC.

2. Insert **removal and assembly tool T10389 -1-** into the rear door and pull the locking clip **-2-** to the rear.

Fig 3: Releasing Lock Clip

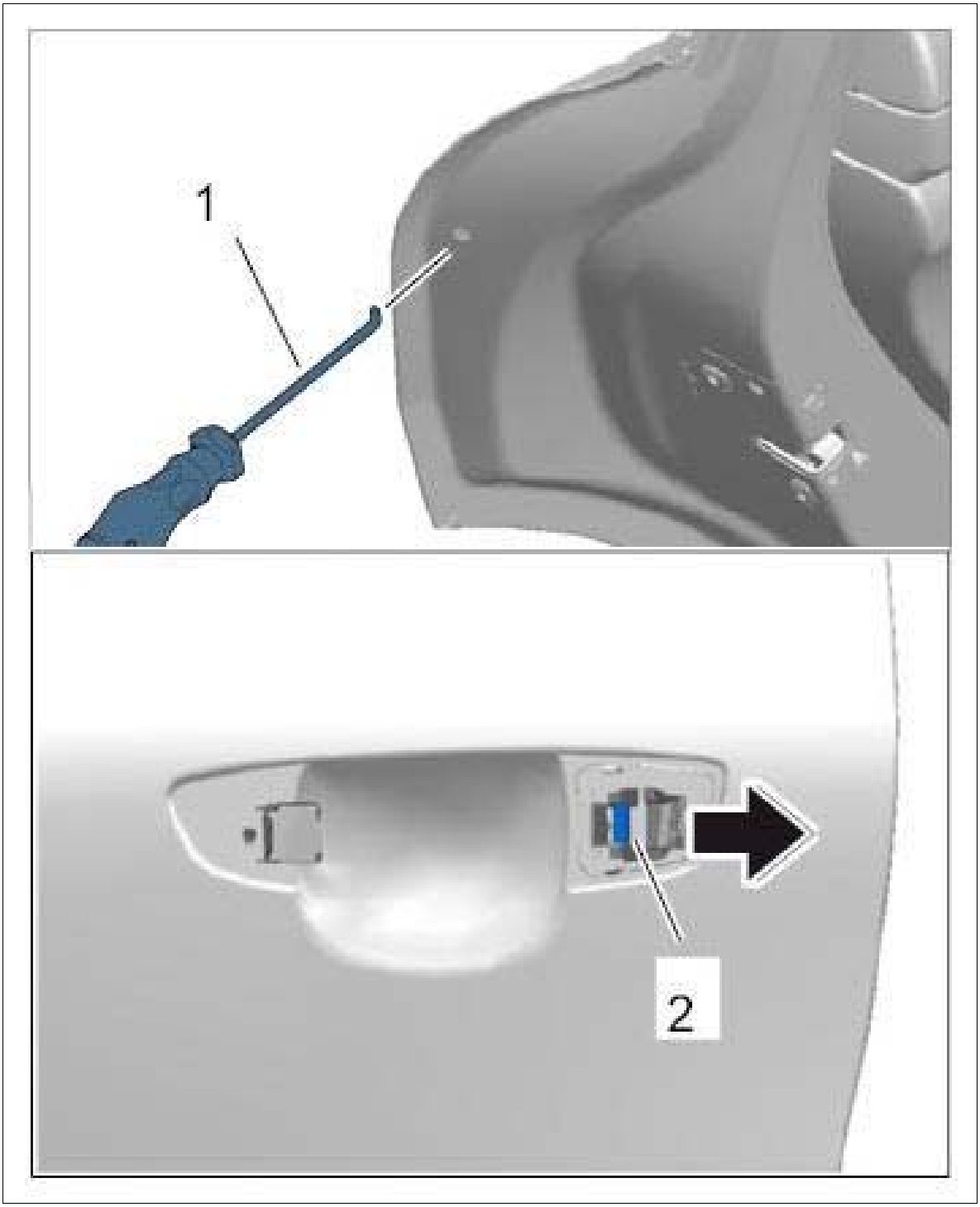

Courtesy of PORSCHE CARS NORTH AMERICA, INC.

3. Pull door handle **-1-** to the rear and unhook it.

Fig 4: Removing Door Handle

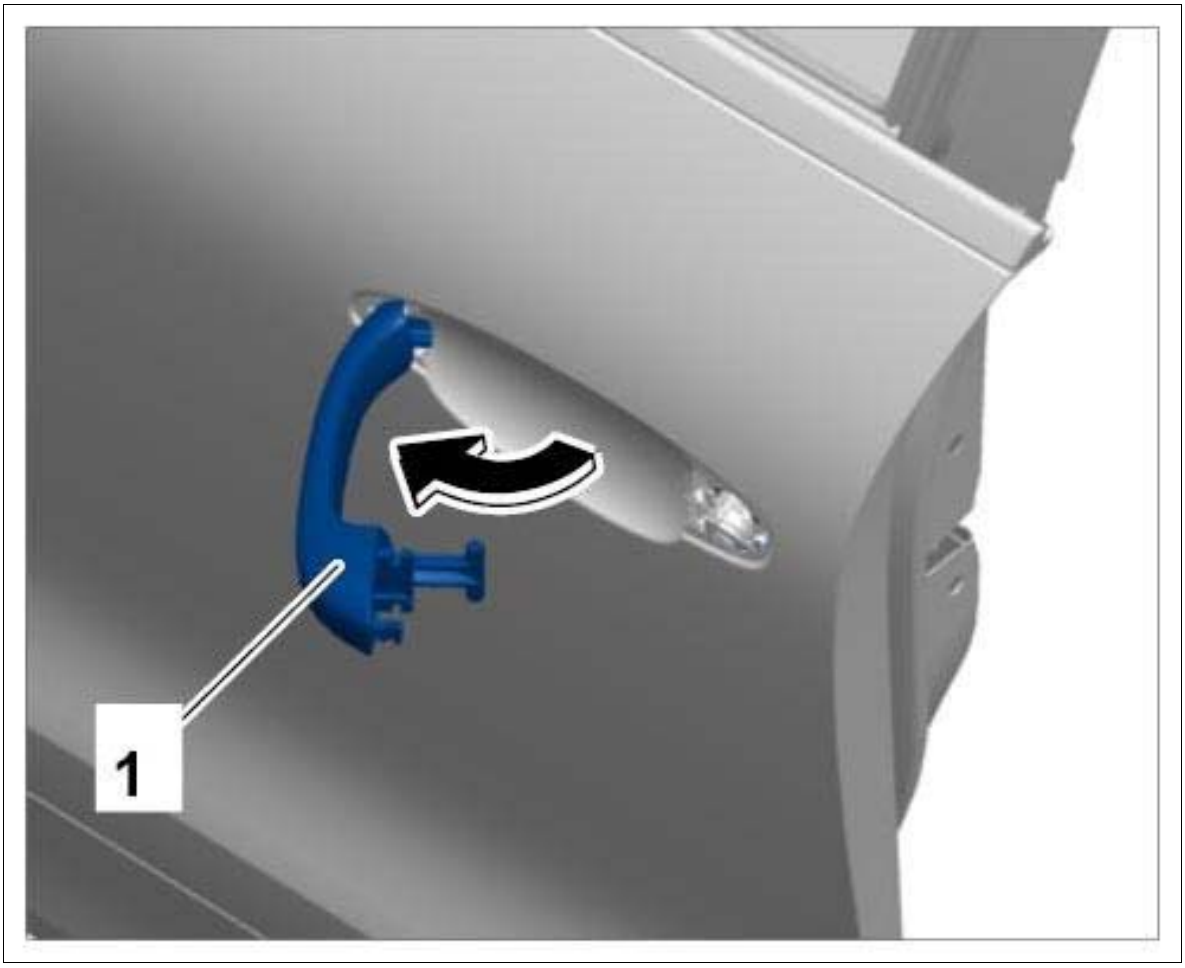

Courtesy of PORSCHE CARS NORTH AMERICA, INC.

1. 3.1. Swivel door handle out by 90° **-arrow-** and pull it out of the inner part.
2. 3.2. Remove door handle with protection cap.

WM 581119 REMOVING AND INSTALLING REAR DOOR HANDLE (ALL MODELS) > INSTALLING REAR DOOR HANDLE

1. Installation is performed in reverse order to removal.

WM 581719 REMOVING AND INSTALLING REAR DOOR LOCK (ALL MODELS) > TECHNICAL VALUES

Location	Description	Type	Basic value	Tolerance 1	Tolerance 2
Fastening screw for rear		Tightening torque	20 Nm (15 ftlb.)		

door lock					

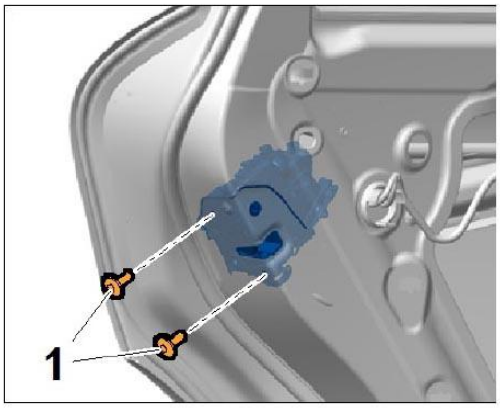

Mounting for door lock

WM 581719 REMOVING AND INSTALLING REAR DOOR LOCK (ALL MODELS) > PRELIMINARY WORK

1. Remove rear door panel. → Removing rear door panel

WM 581719 REMOVING AND INSTALLING REAR DOOR LOCK (ALL MODELS) > REMOVING REAR DOOR LOCK

Fig 1: Identifying Door Lock Position

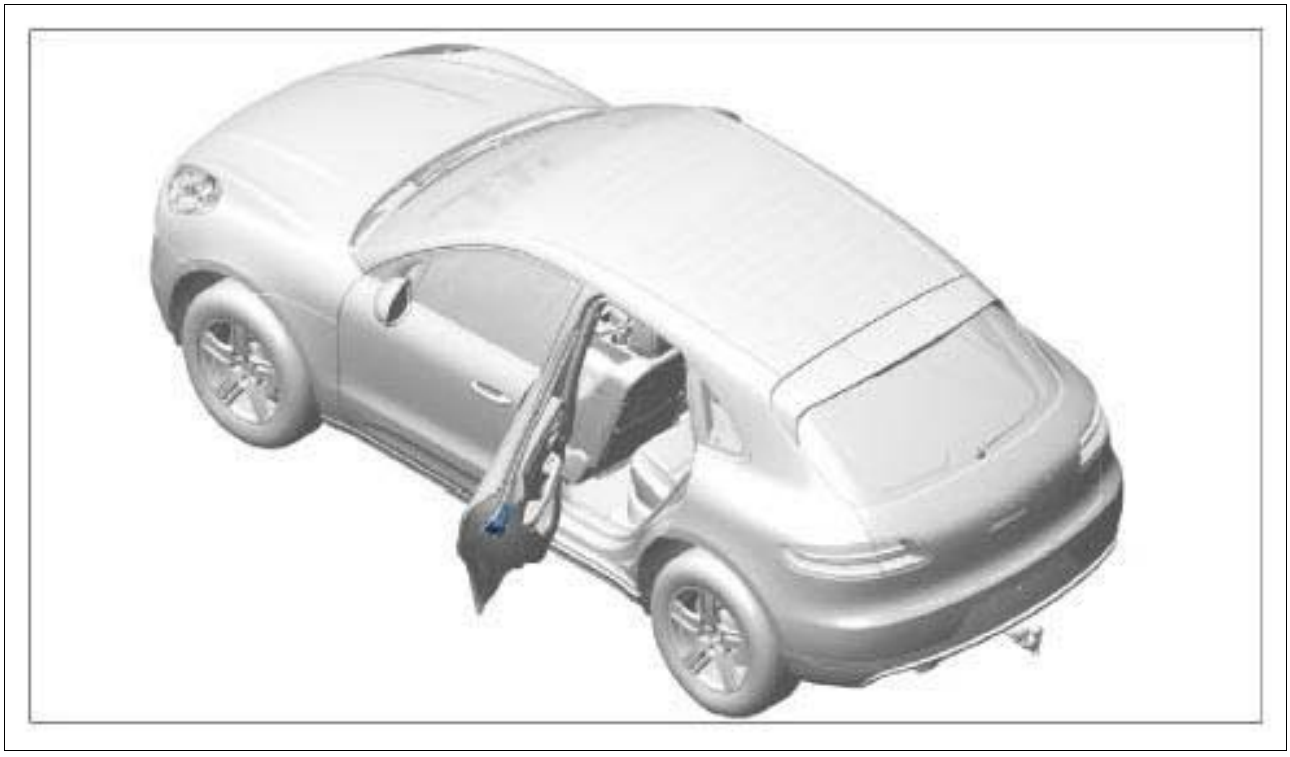

Courtesy of PORSCHE CARS NORTH AMERICA, INC.

1. Unscrew and remove fastening screws **-1-** .

Fig 2: Identifying Screws Of Door Lock

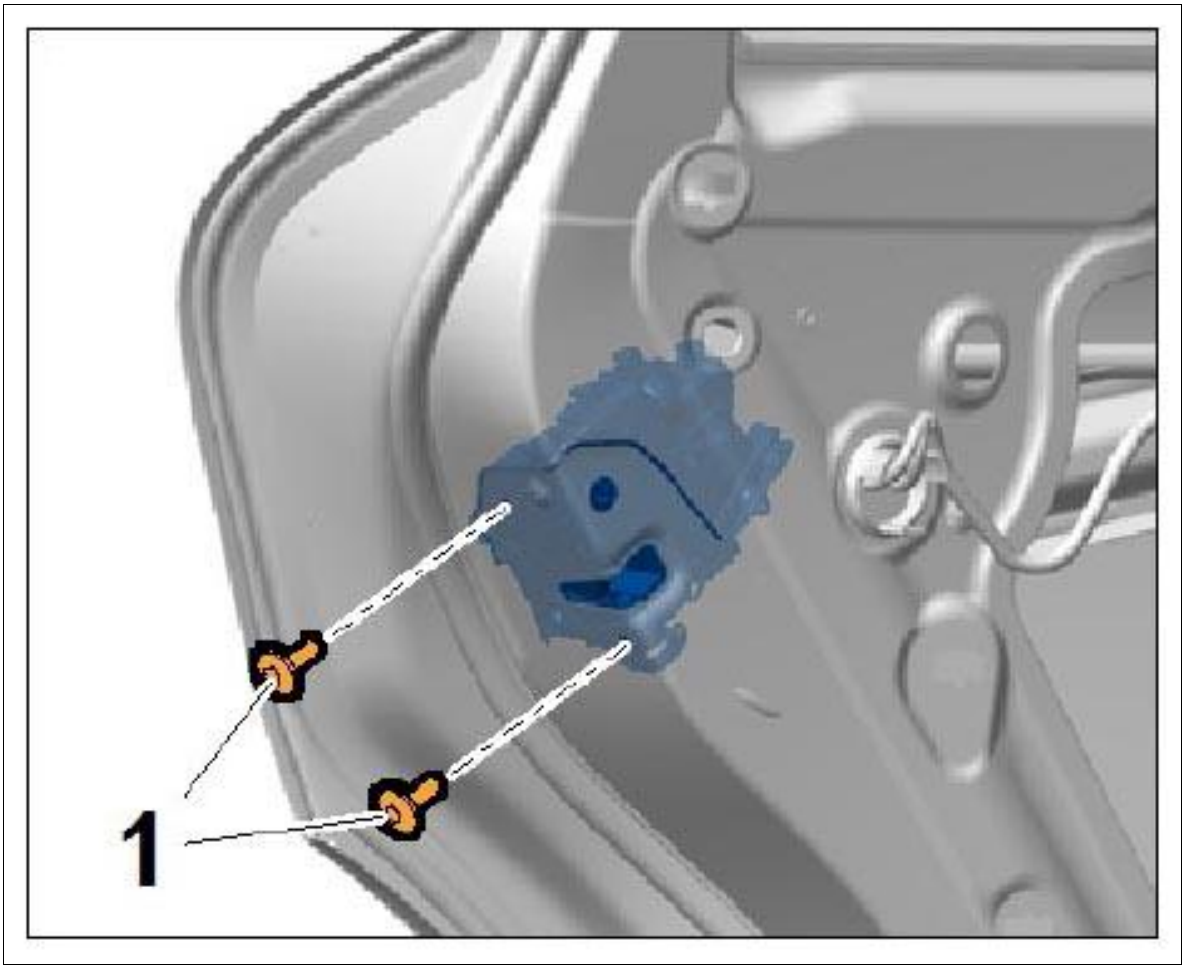

Courtesy of PORSCHE CARS NORTH AMERICA, INC.

Fig 3: Identifying Fastening Screws

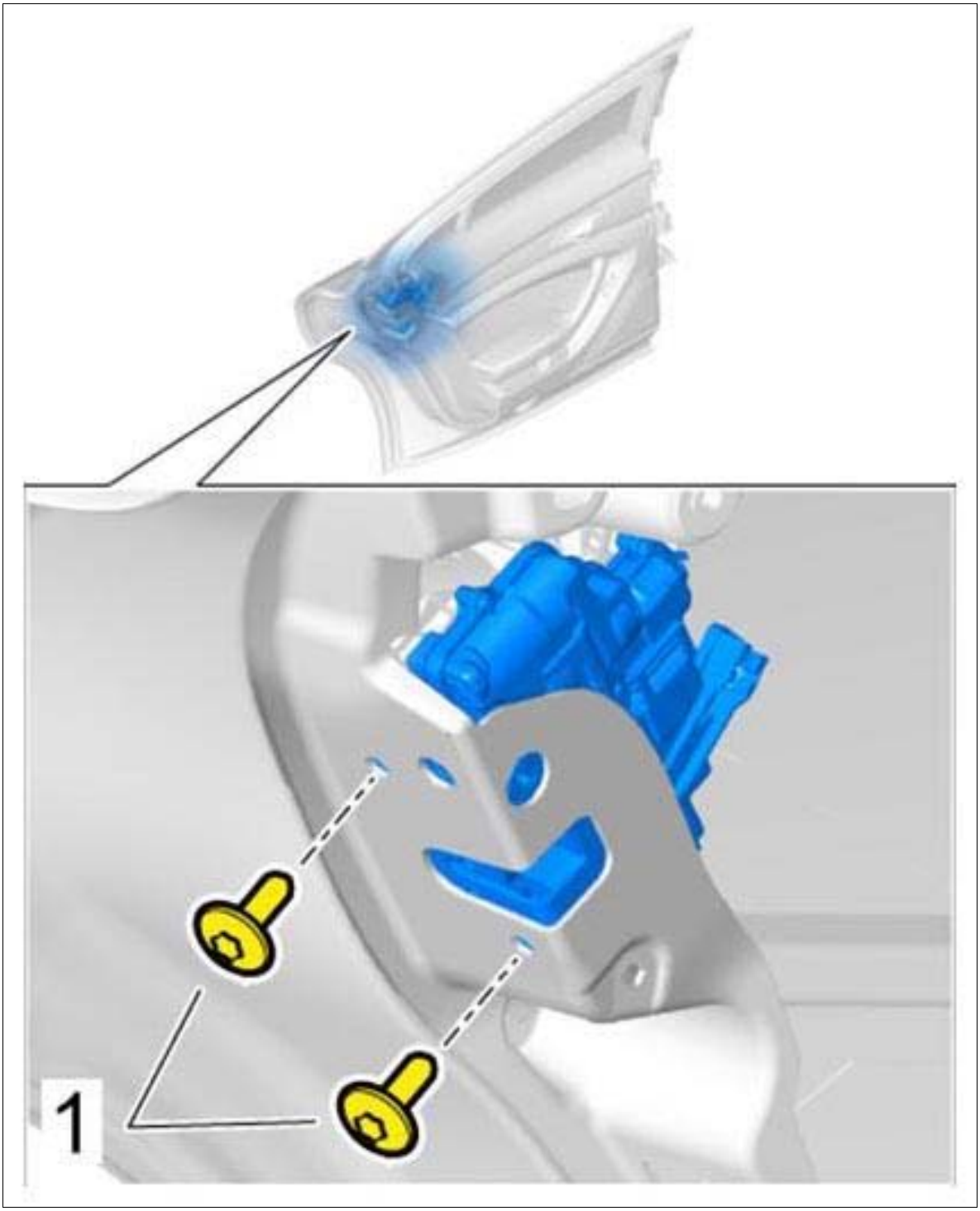

Courtesy of PORSCHE CARS NORTH AMERICA, INC.

2. Guide bowden cable for inner door opener out through the basic door frame.
3. Remove door lock.
4. Disconnect electric plug connection from the door lock.

Fig 4: Disconnecting Electric Plug Connection For Door Lock



Courtesy of PORSCHE CARS NORTH AMERICA, INC.

5. Disengage bowden cable from the door lock to the outer handle in the door lock.
    1. 5.1. Release bowden cable bracket **-3- (-a-)** and unclip it **-A-** .
    2. 5.2. Turn bowden cable bracket by 90° **-B-** and disengage the catch **-4-** .

Fig 5: Removing Bowden Cable

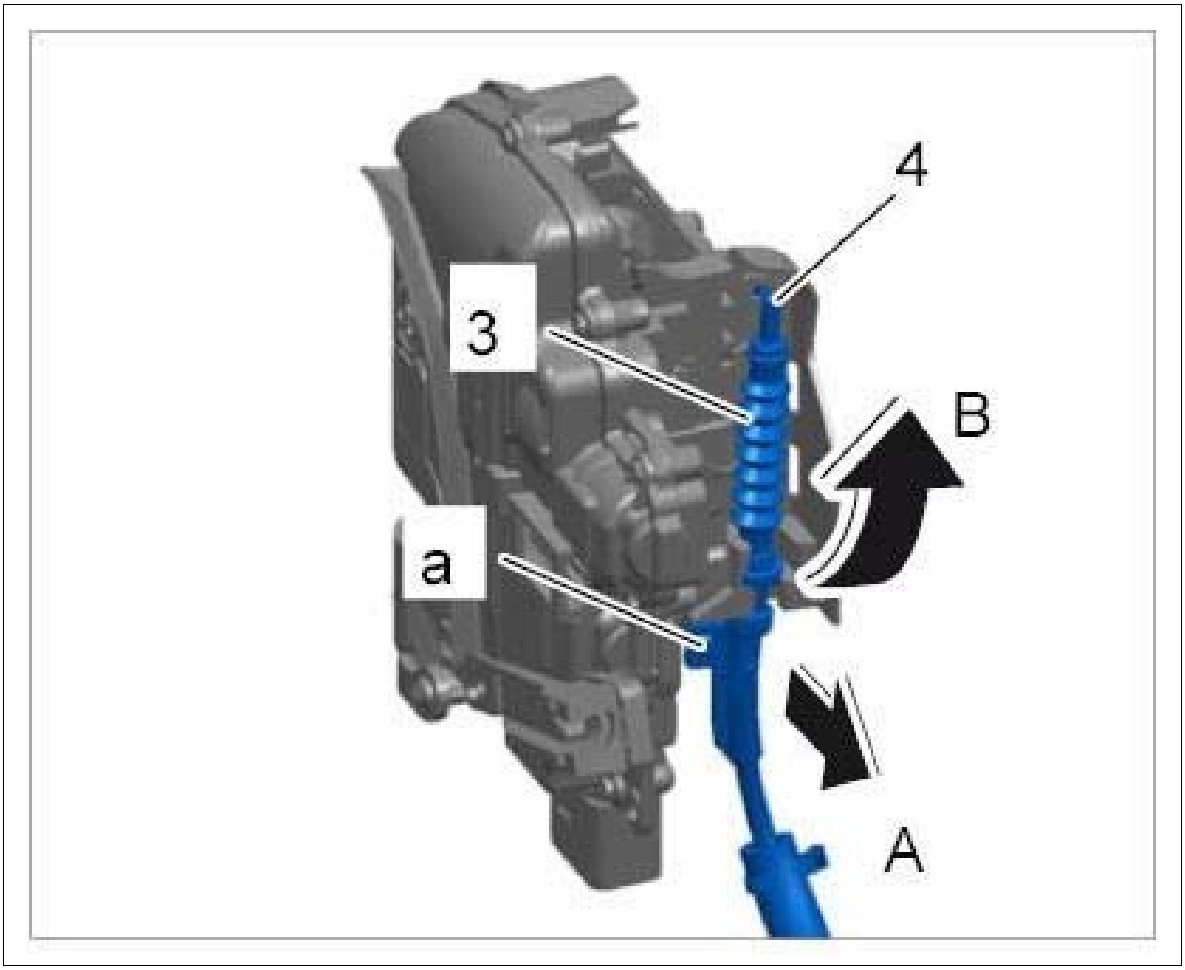

Courtesy of PORSCHE CARS NORTH AMERICA, INC.

6. Remove door lock.

WM 581719 REMOVING AND INSTALLING REAR DOOR LOCK (ALL MODELS) > INSTALLING REAR DOOR LOCK

1. Installation is performed in reverse order to removal.
2. Tighten fastening screw on rear door lock to **Tightening torque 20 Nm (15 ftlb.)** .

WM 581719 REMOVING AND INSTALLING REAR DOOR LOCK (ALL MODELS) > SUBSEQUENT WORK

1. Install rear door panel. → Installing rear door panel

WM 582615 ADJUSTING LOCK PEG (ALL MODELS) > TOOLS

Designation	Type	Number	Description	
slide hammer kit	Commercially available tool	Nr.168		

WM 582615 ADJUSTING LOCK PEG (ALL MODELS) > TECHNICAL VALUES

Location	Description	Type	Basic value	Tolerance 1	Tolerance 2
Fastening screw for lock peg (striker pin)		Tightening torque	25 Nm (19 ftlb.)		

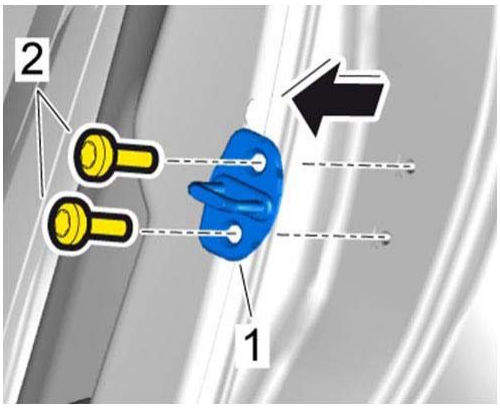

Removing lock peg

WM 582615 ADJUSTING LOCK PEG (ALL MODELS) > ADJUSTING LOCK PEG

Information

- The striker pin can be adjusted by changing the plasticity of the adjusting element in the B-pillar.
- The setting is retained when the striker pin is removed.

Fig 1: Adjusting Element For Striker Pin

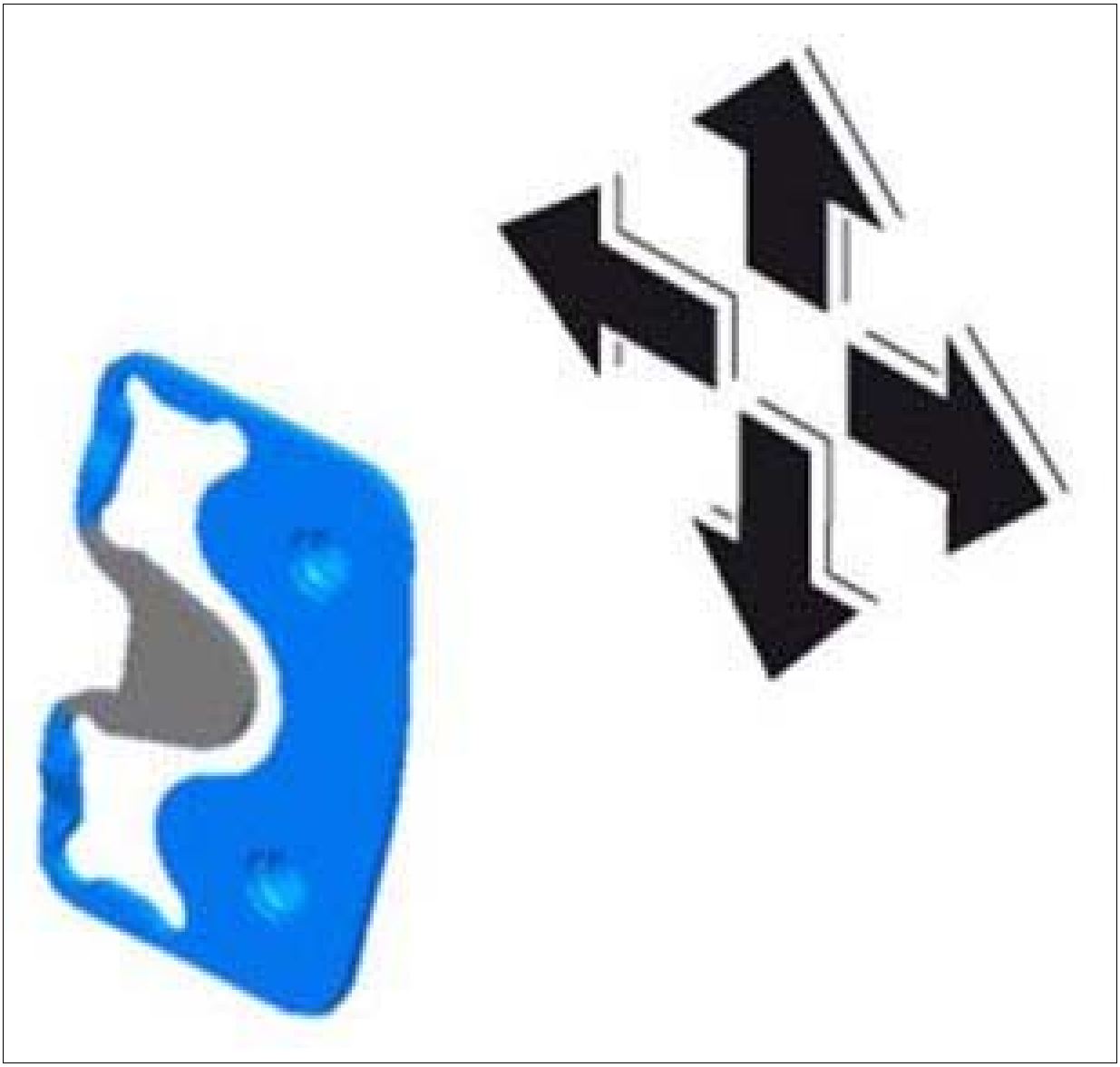

Courtesy of PORSCHE CARS NORTH AMERICA, INC.

1. Loosen fastening screws **-2-** .
2. Move lock peg outwards.
    1. 2.1. Move the lock peg **-1-** outwards (if necessary) using slide hammer kit Nr.168.

Fig 2: Moving Lock Peg

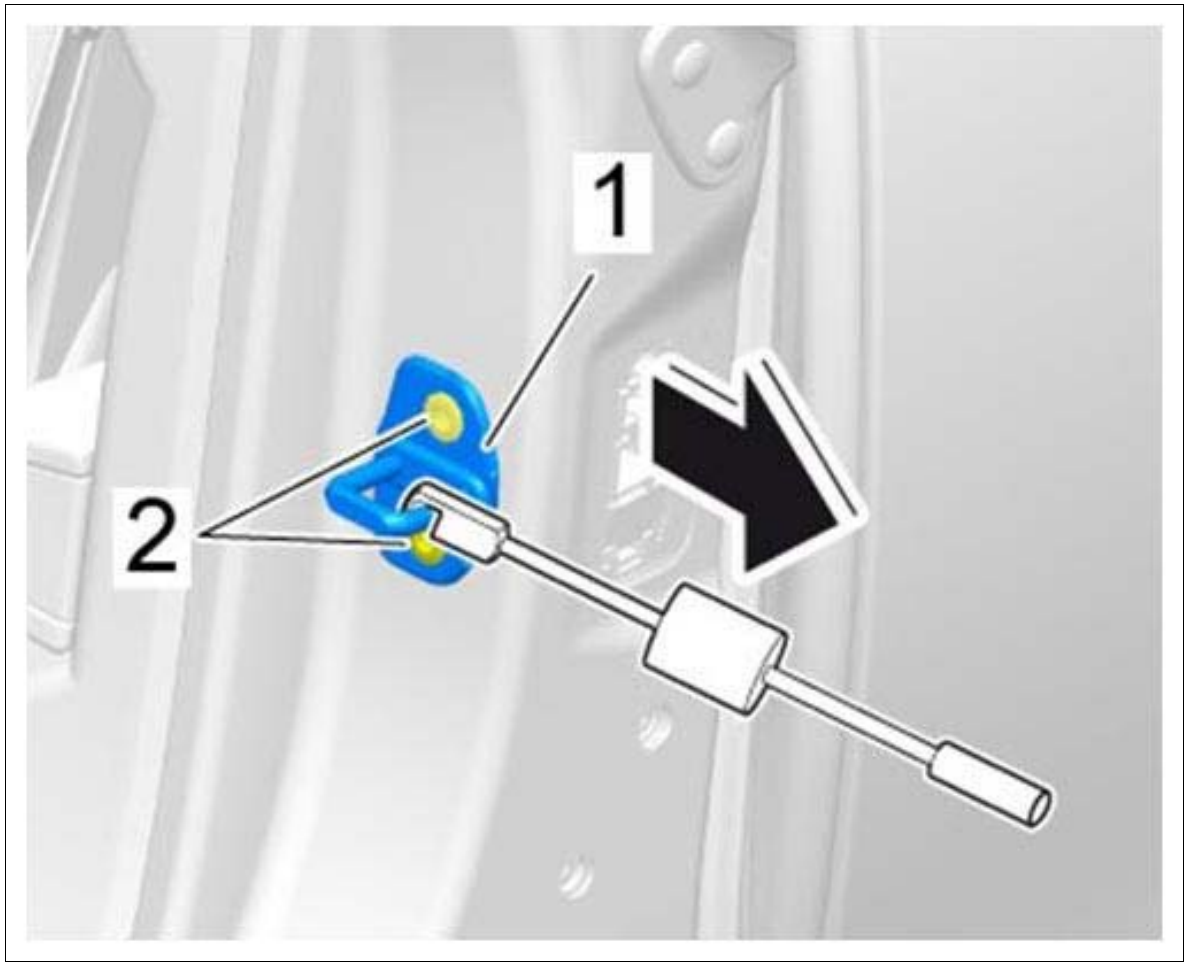

Courtesy of PORSCHE CARS NORTH AMERICA, INC.

3. Adjust the lock peg back/down/up (if necessary).
    1. 3.1. Move catch bar **-1-** to the required position using a plastic hammer.
    2. 3.2. Carefully close the door and check adjustment.
4. Tighten fastening screws **-2-** to **Tightening torque 25 Nm (19 ftlb.)** until secure.

Fig 3: Adjusting Lock Peg

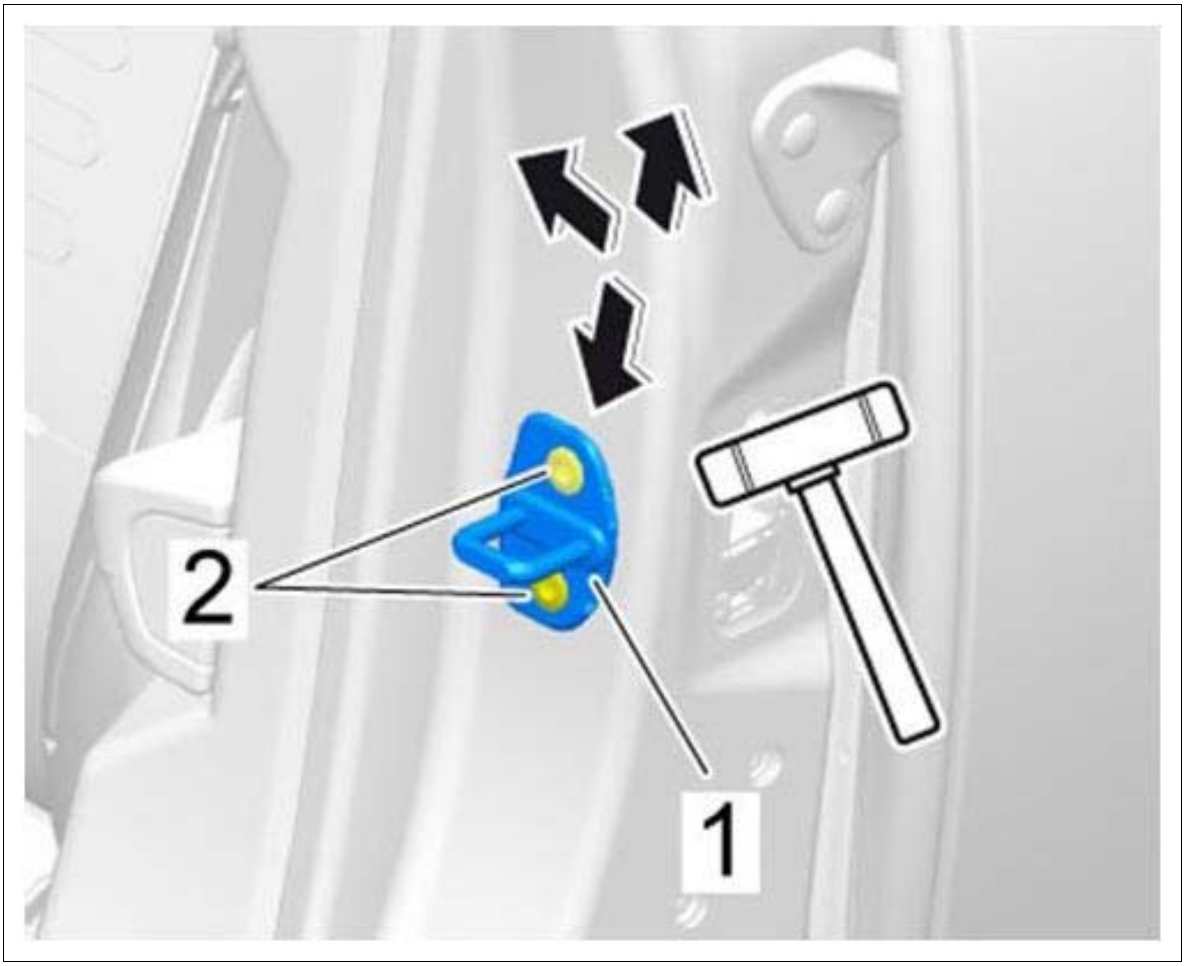

Courtesy of PORSCHE CARS NORTH AMERICA, INC.

WM 582619 REMOVING AND INSTALLING LOCK PEG (ALL MODELS) > TECHNICAL VALUES

Location	Description	Type	Basic value	Tolerance 1	Tolerance 2
Fastening screw for lock peg (striker pin)		Tightening torque	25 Nm (19 ftlb.)		

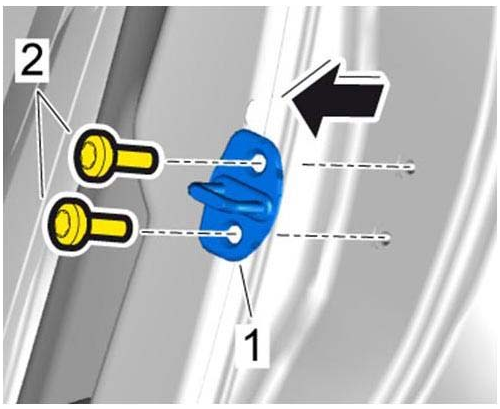

Removing lock peg

WM 582619 REMOVING AND INSTALLING LOCK PEG (ALL MODELS) > REMOVING LOCK PEG

Information

- Some of the repair illustrations show only one side of the vehicle.
- Naturally, some steps also have to be performed on the opposite side of the vehicle as well.

1. Unscrew fastening screws **-2-** and remove lock peg **-1-** .

Fig 1: Removing Lock Peg

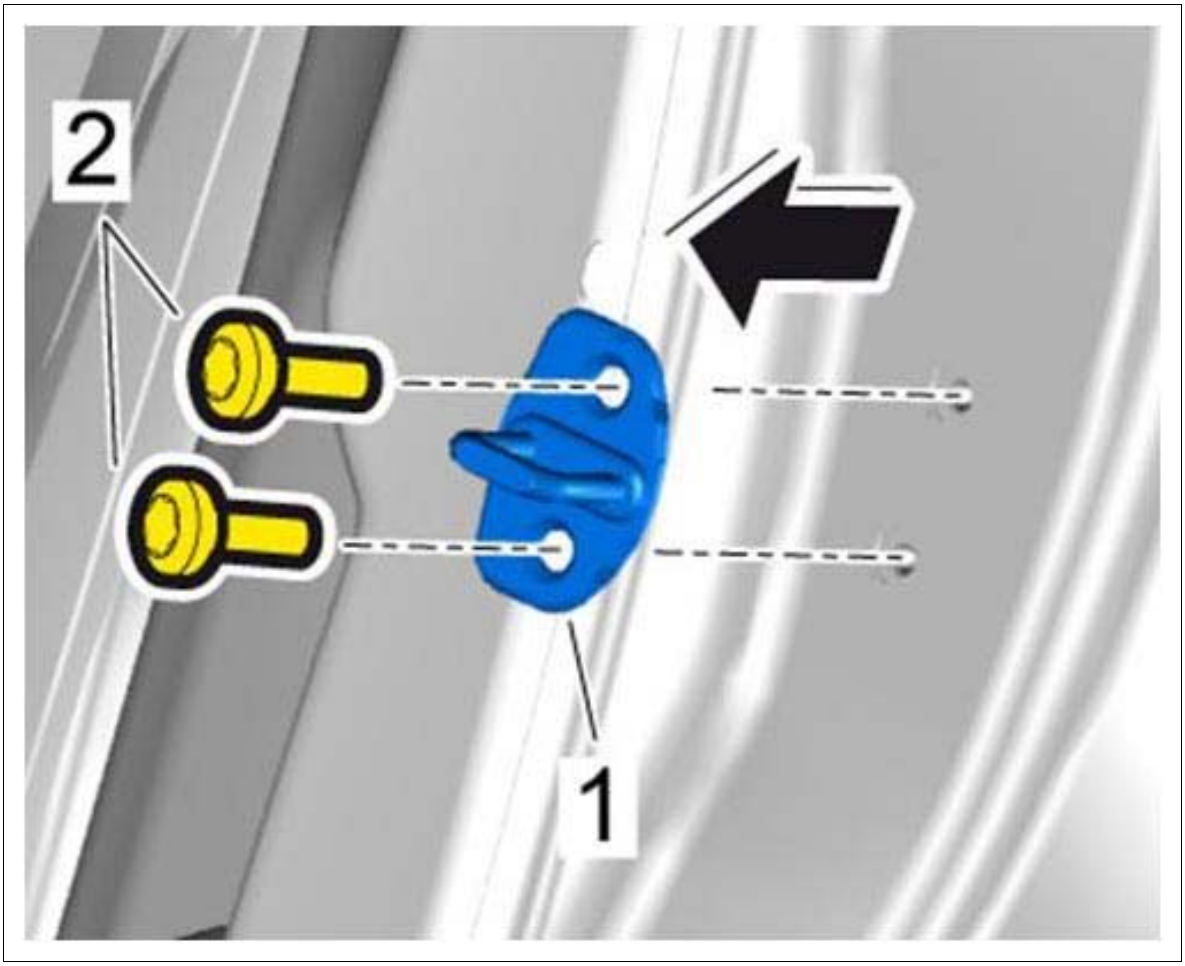

Courtesy of PORSCHE CARS NORTH AMERICA, INC.

WM 582619 REMOVING AND INSTALLING LOCK PEG (ALL MODELS) > INSTALLING LOCK PEG

Information

- Some of the repair illustrations show only one side of the vehicle.
- Naturally, some steps also have to be performed on the opposite side of the vehicle as well.

1. Position lock peg and screw in the fastening screws. Locking clip - bend facing inside of vehicle.
2. Carefully close vehicle door and check that the lock peg is correctly positioned with respect to the lock.
3. Adjust the lock peg to suit the lock as required.
4. Tighten fastening screws to **Tightening torque 25 Nm (19 ftlb.)** until secure.
5. Check adjustment of vehicle door and adjust it if necessary. → 585115 ADJUSTING REAR

WM 583719 REMOVING AND INSTALLING INNER DOOR RELEASE (ALL MODELS) > PRELIMINARY WORK

1. Remove rear door lock. → Removing Rear Door Lock

WM 583719 REMOVING AND INSTALLING INNER DOOR RELEASE (ALL MODELS) > REMOVING INNER DOOR RELEASE

Information

- The number of fastening screws, fixing clips, plug connections, holders and trim panels can vary depending on equipment.
- The illustrations for removing and installing the drive mechanism are shown only on one equipment variant and may differ from the actual equipment variant.
- Some steps must be carried out automatically.
- Some of the repair illustrations show only one side of the vehicle.

1. Loosen inner door release **-1-** at the door lock.
    1. 1.1. Turn bowden cable clip 90° **-A-** and remove it from the bracket **-B-** .

Fig 1: Loosening Inner Door

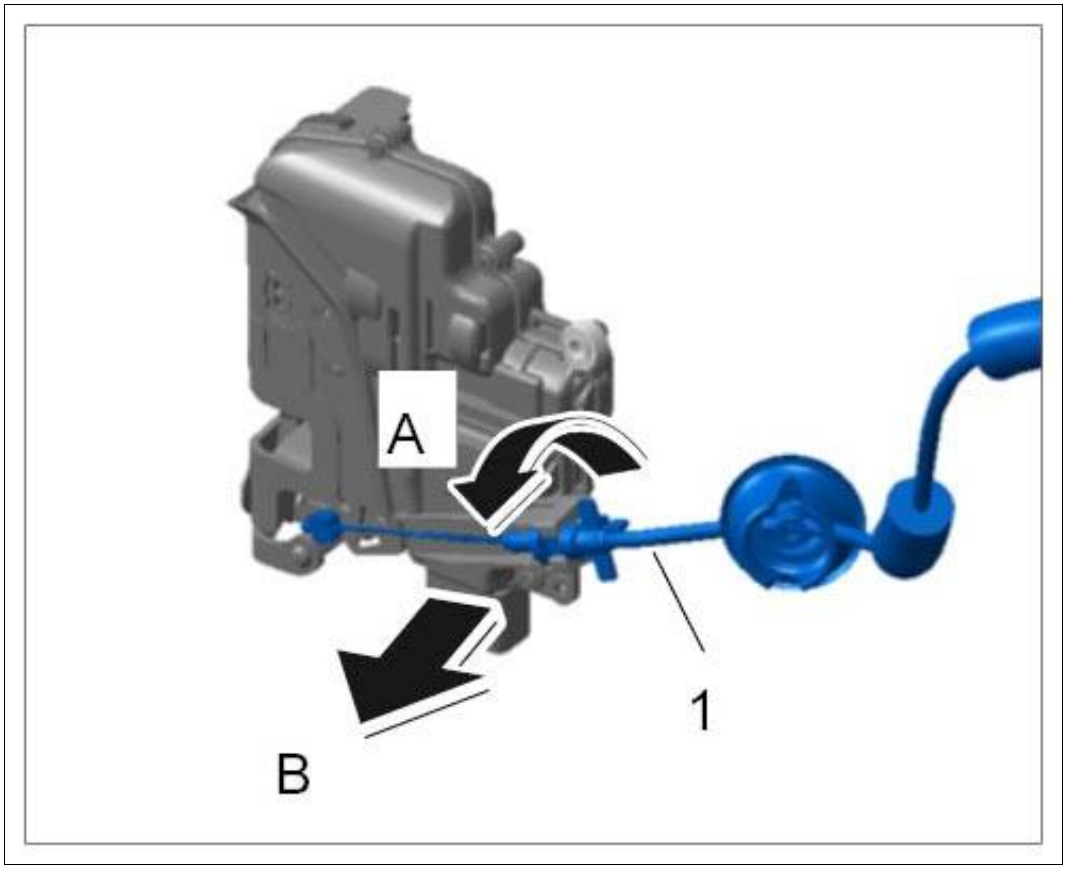

Courtesy of PORSCHE CARS NORTH AMERICA, INC.

2. Disengage driver for inner door release.

    1. 2.1. Turn inner door release **-A-** until the driver in the mounting is released.
    2. 2.2. Remove driver for inner door release **-1-** from the mounting **-B-** .

Fig 2: Removing Inner Door

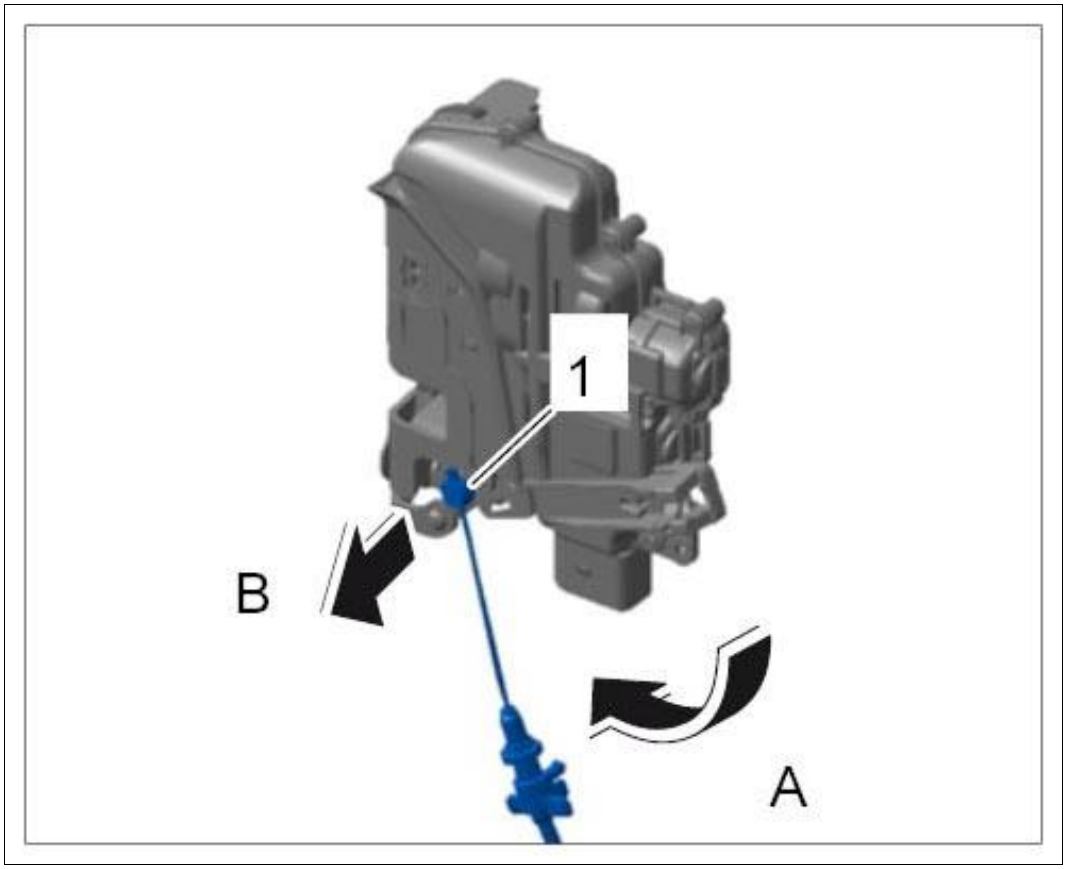

Courtesy of PORSCHE CARS NORTH AMERICA, INC.

WM 583719 REMOVING AND INSTALLING INNER DOOR RELEASE (ALL MODELS) > INSTALLING INNER DOOR RELEASE

1. The inner door release is installed in reverse order to removal.

WM 583719 REMOVING AND INSTALLING INNER DOOR RELEASE (ALL MODELS) > SUBSEQUENT WORK

1. Install rear door lock. → Installing Rear Door Lock

WM 585115 ADJUSTING REAR DOOR (ALL MODELS) > TOOLS

Designation	Type	Number	Description	

star gauges for body gap dimensions	Special tool	NR.127-1		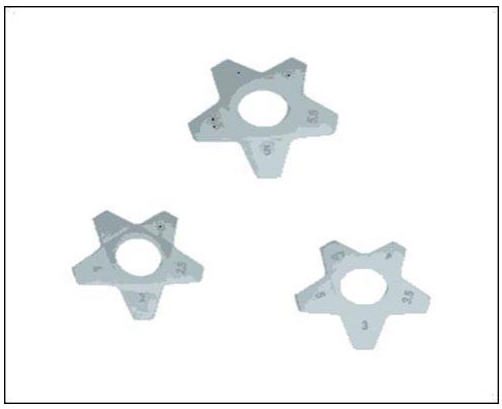

WM 585115 ADJUSTING REAR DOOR (ALL MODELS) > TECHNICAL VALUES

Location	Description	Type	Basic value	Tolerance 1	Tolerance 2
Fastening screw for lock peg (striker pin)		Tightening torque	25 Nm (19 ftlb.)		
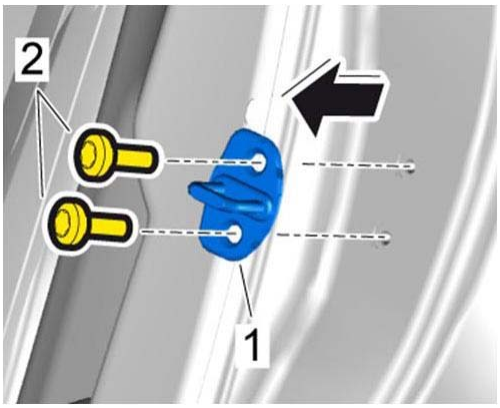 Removing lock peg					
Fastening screw securing door hinge to rear door		Tightening torque	55 Nm (41 ftlb.)		

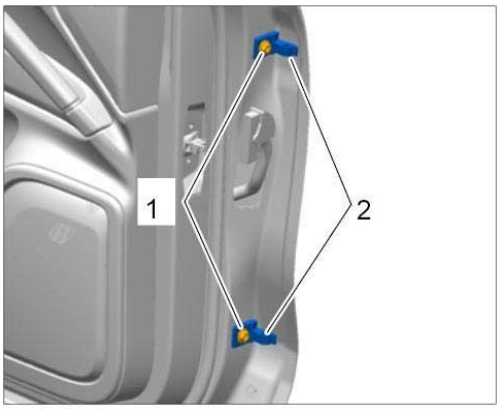

Removing rear door hinge on door side

Fastening screw securing door hinge to B-pillar		Tightening torque	50 Nm (37 ftlb.)		

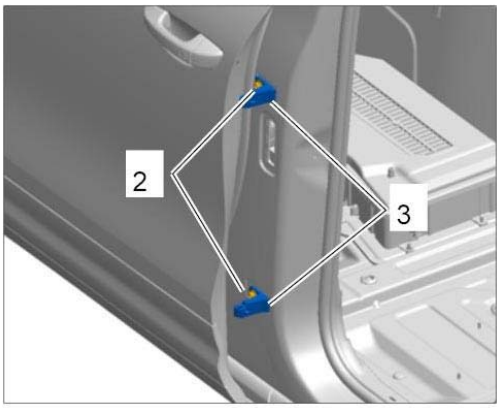

Mounting for rear door hinge on body side at the outside

Fastening screw securing door hinge to inner B-pillar		Tightening torque	50 Nm (37 ftlb.)		

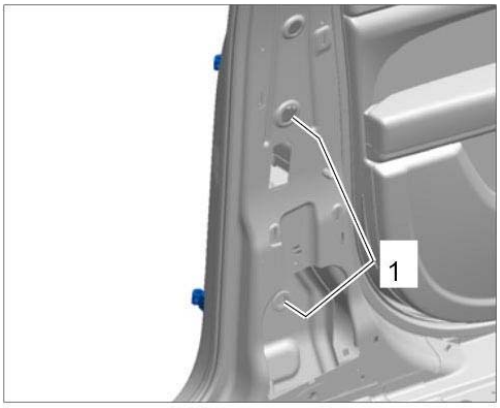

Mounting for rear door hinge on body side at the inside

WM 585115 ADJUSTING REAR DOOR (ALL MODELS) > TECHNICAL VALUES > GAP DIMENSIONS FOR FRONT DOOR/REAR DOOR/SIDE WINDOW

Fig 1: Identifying Gap Dimensions For Front Door (S20)

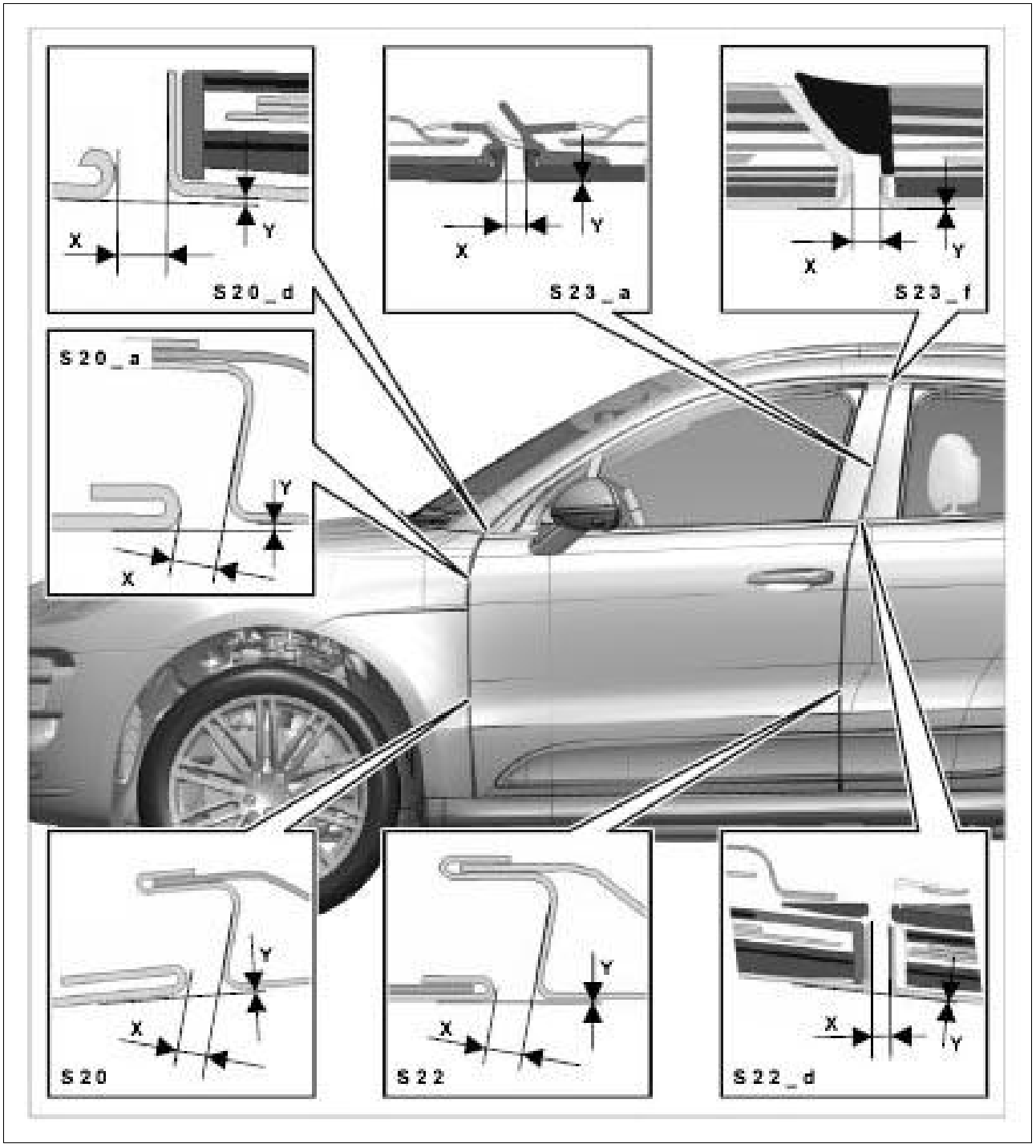

Courtesy of PORSCHE CARS NORTH AMERICA, INC.

S20_d - → Gap dimension: 4.2 mm+/-1 mm

Fig 2: Identifying Gap Dimensions For Front Door (S20)

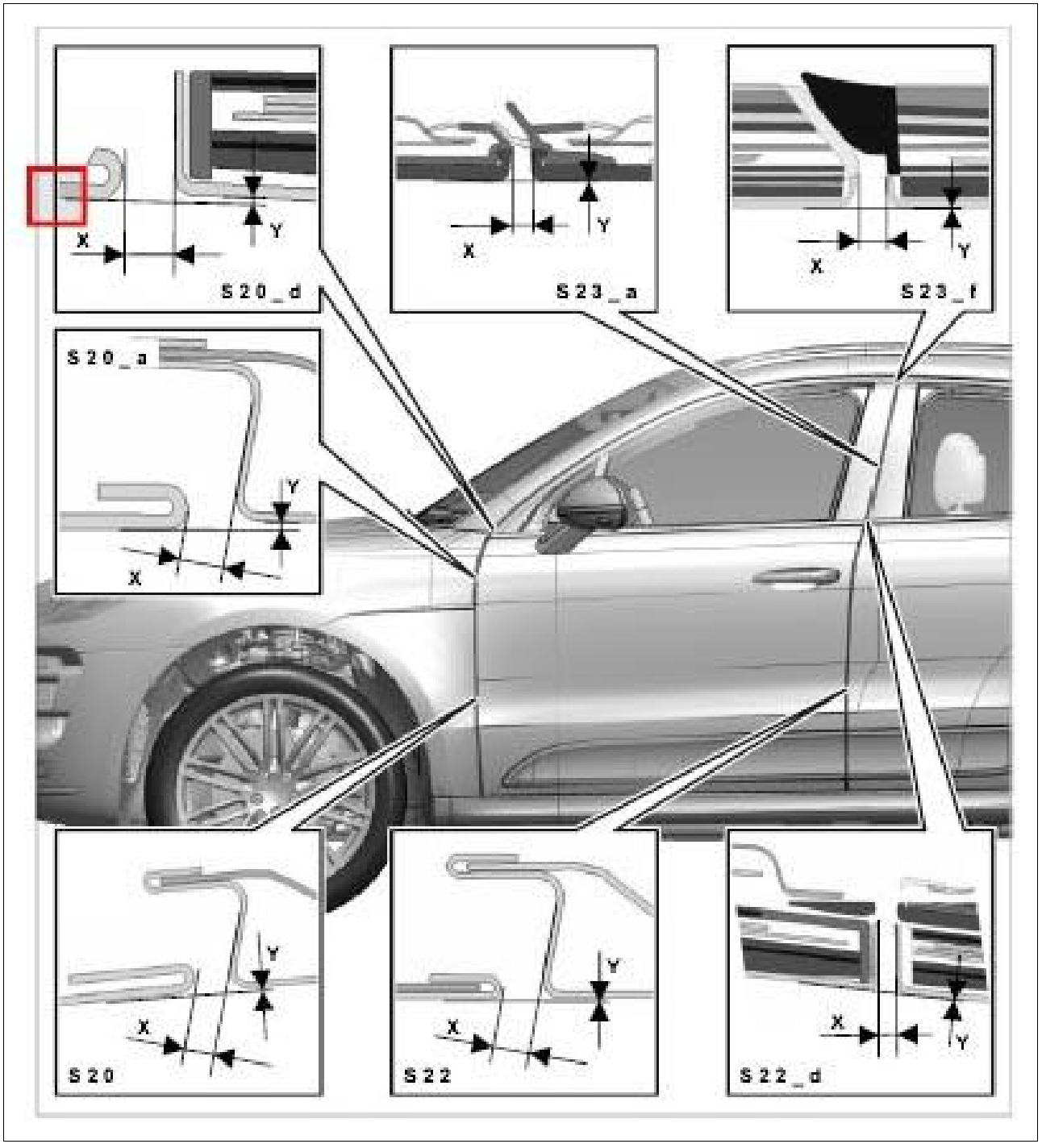

Courtesy of PORSCHE CARS NORTH AMERICA, INC.

S20_d - → Gap dimension: 1 mm

Fig 3: Gap Dimensions For Front Door (S23)

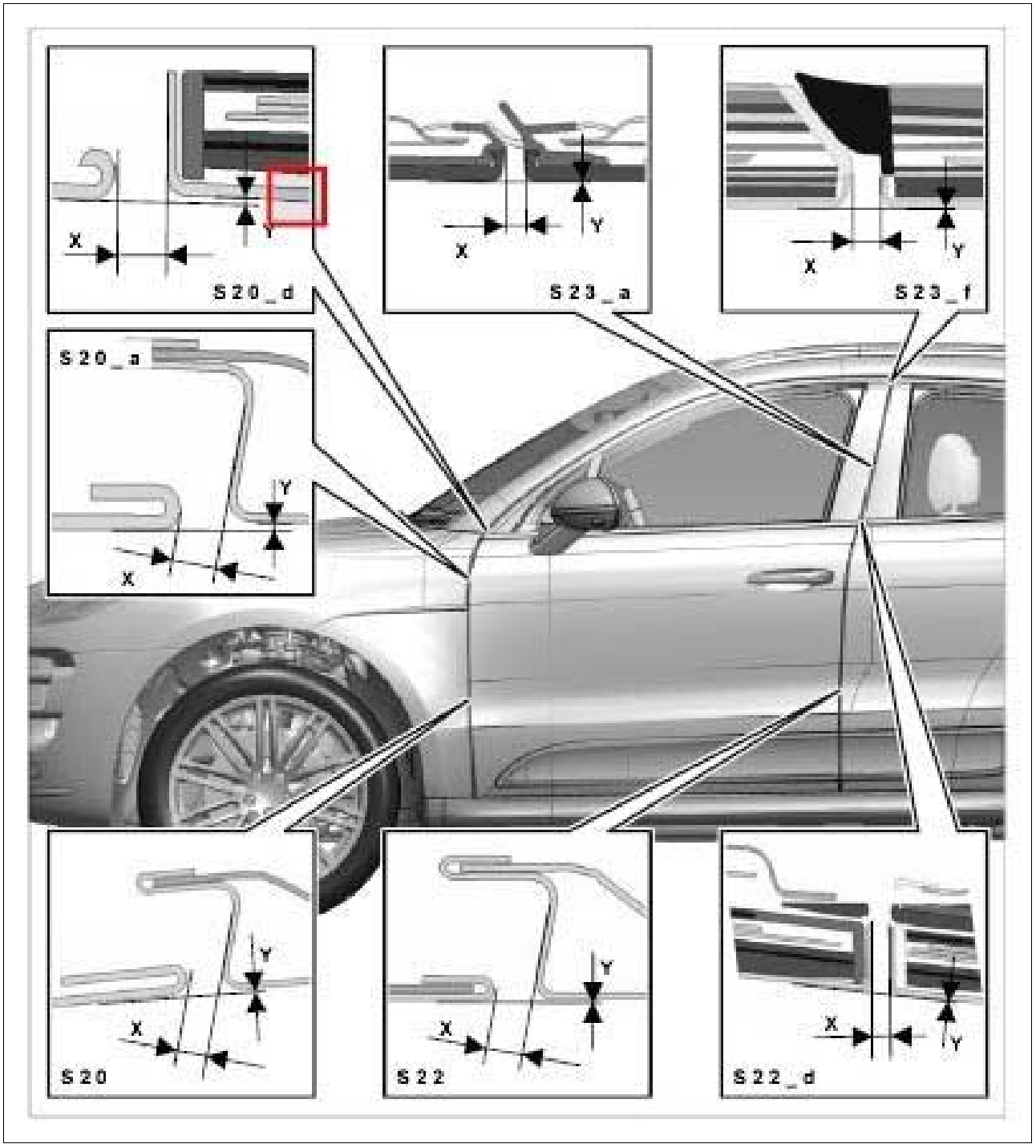

Courtesy of PORSCHE CARS NORTH AMERICA, INC.

S23_a - → Gap dimension: 4.2 mm+/-1 mm

Fig 4: Identifying Gap Dimensions For Front Door (S23)

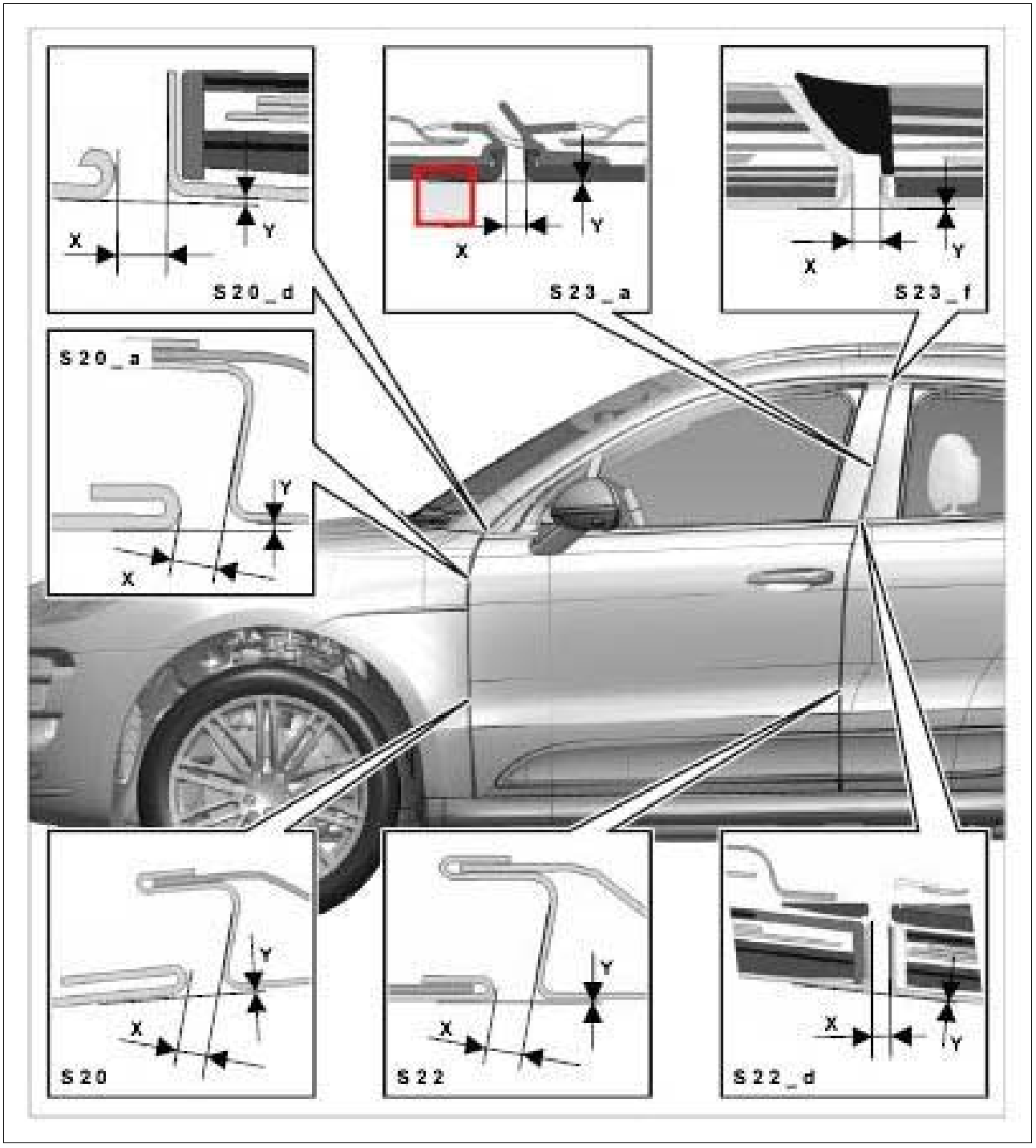

Courtesy of PORSCHE CARS NORTH AMERICA, INC.

S23_a - → Gap dimension: 0 mm

Fig 5: Identifying Gap Dimensions For Front Door (S23)

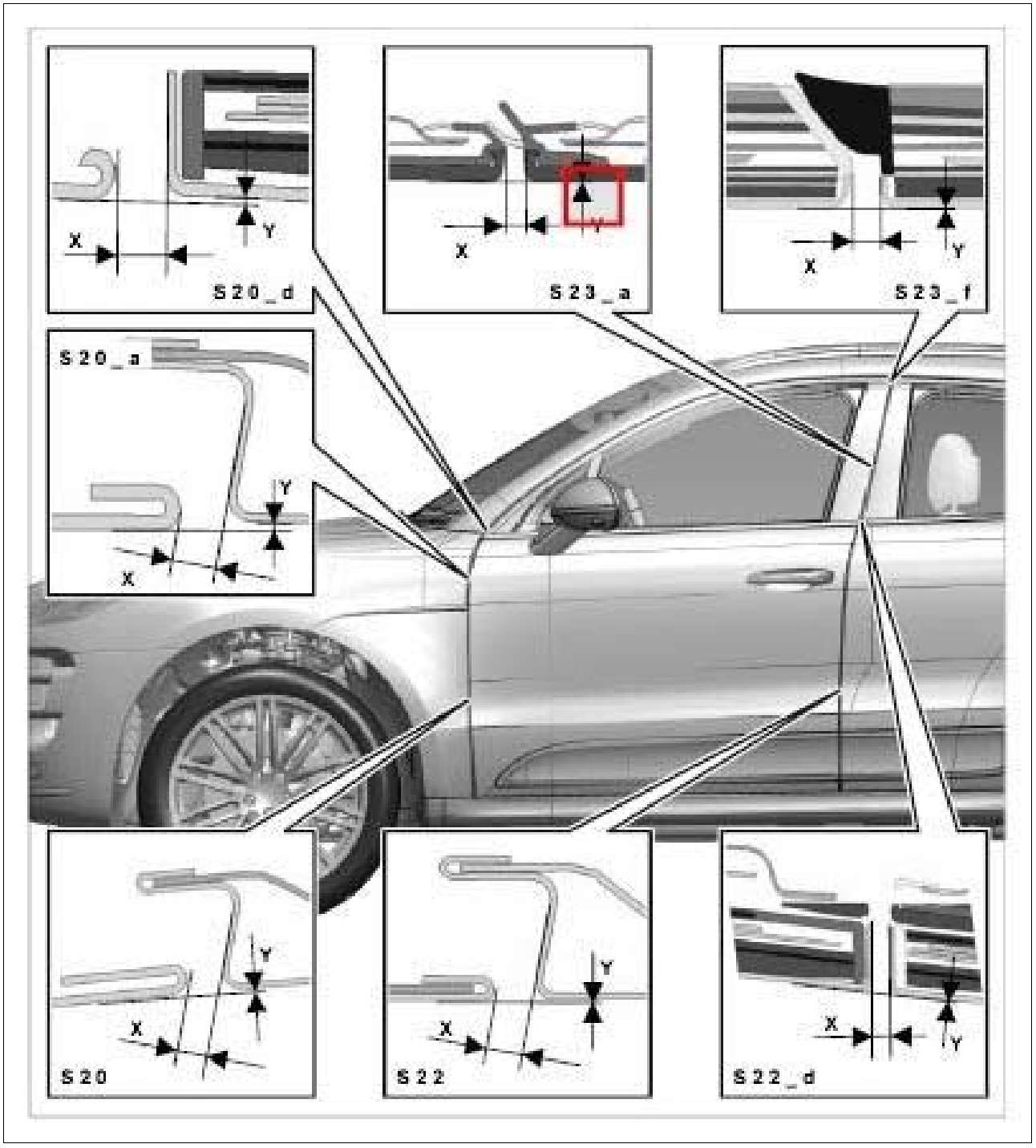

Courtesy of PORSCHE CARS NORTH AMERICA, INC.

S23_f - → Gap dimension: 4.2 mm+/-1 mm

Fig 6: Identifying Gap Dimensions For Front Door (S23)

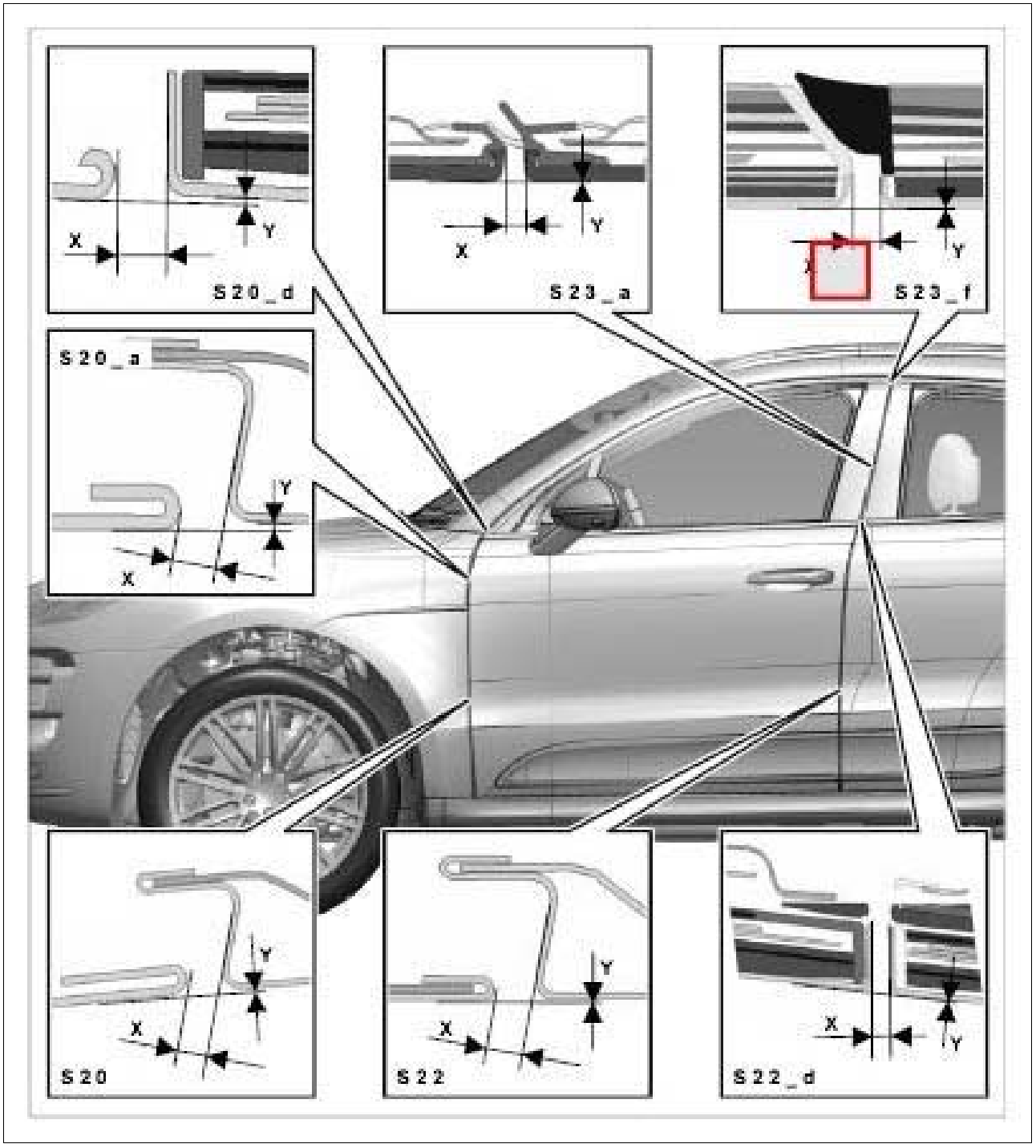

Courtesy of PORSCHE CARS NORTH AMERICA, INC.

S23_f - → Gap dimension: 0 mm

Fig 7: Identifying Gap Dimensions For Front Door (S20)

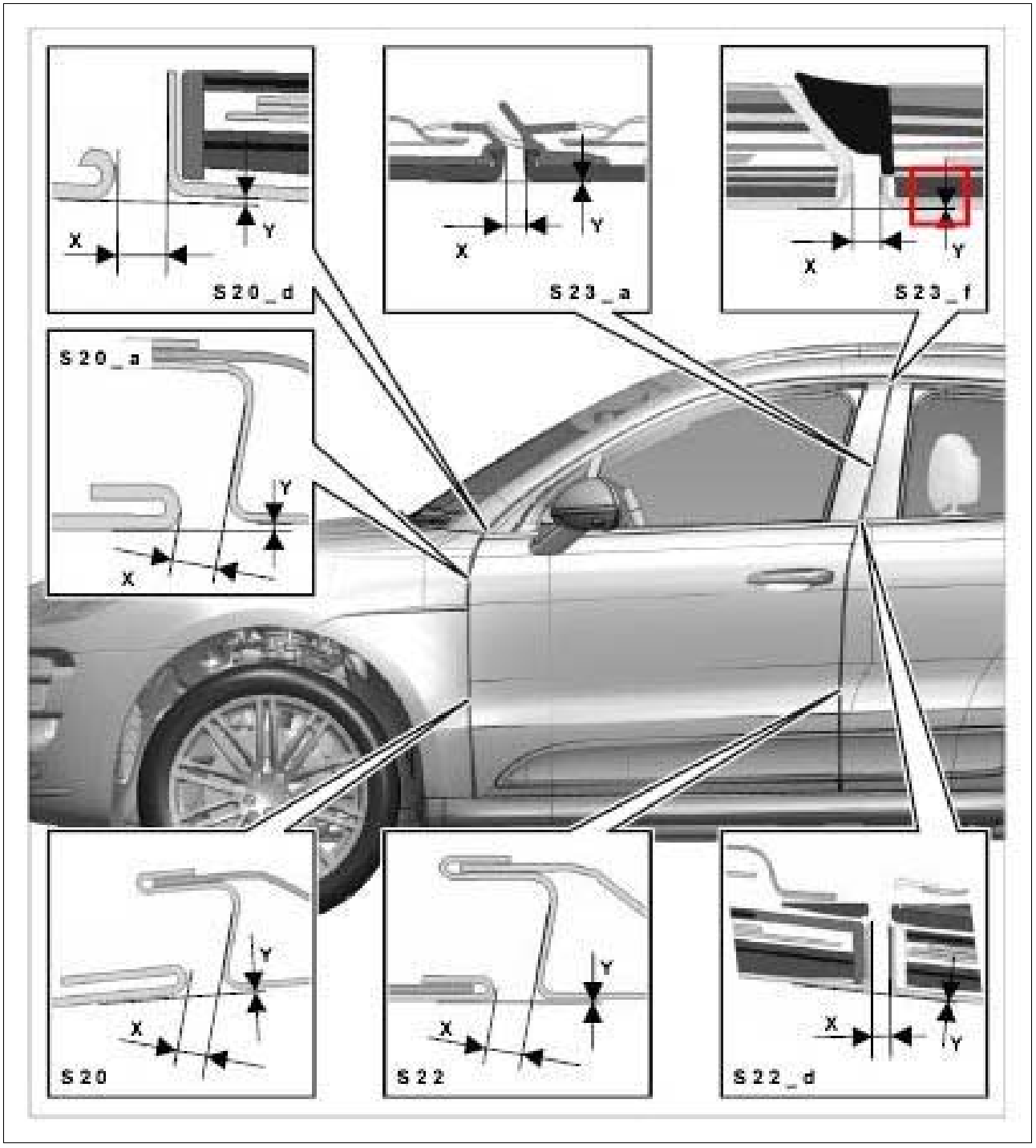

Courtesy of PORSCHE CARS NORTH AMERICA, INC.

S20_a - → Gap dimension: 4.1 mm+/-0.5 mm

Fig 8: Identifying Gap Dimensions For Front Door (S20)

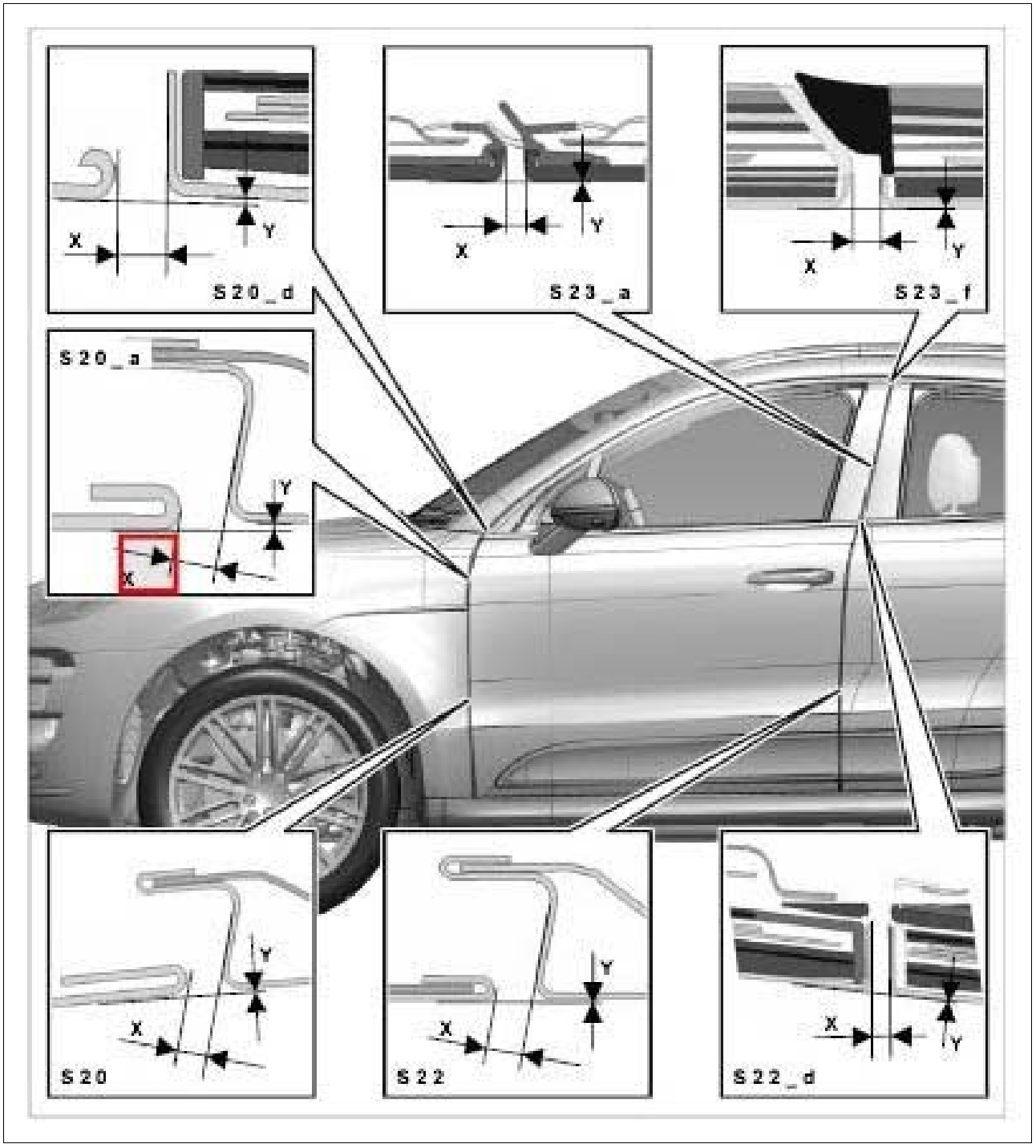

Courtesy of PORSCHE CARS NORTH AMERICA, INC.

S20_a - → Gap dimension: 1 mm

Fig 9: Identifying Gap Dimensions For Front Door (S20)

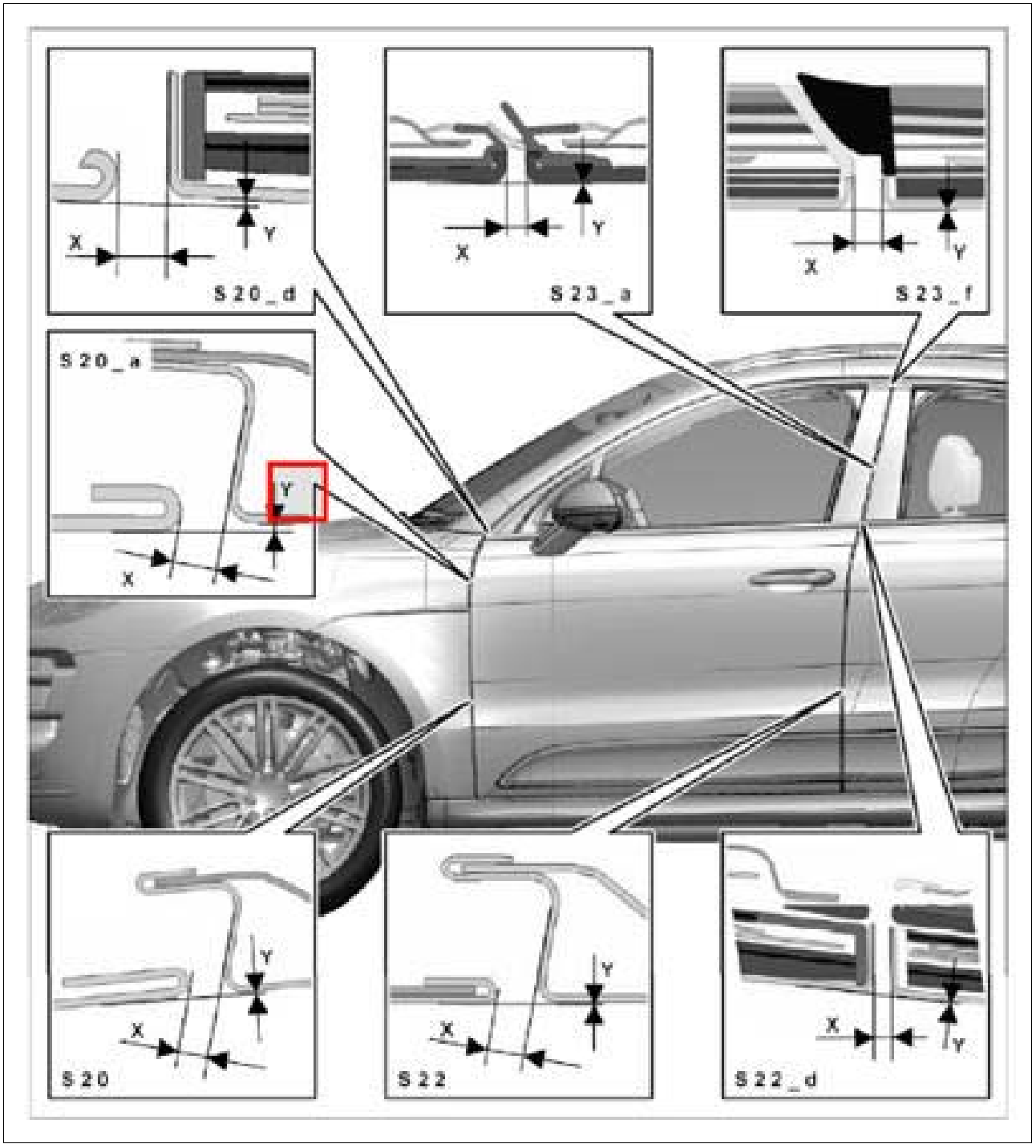

Courtesy of PORSCHE CARS NORTH AMERICA, INC.

S20 - → Gap dimension: 4.1 mm+/-0.5 mm

Fig 10: Identifying Gap Dimensions For Front Door (S20)

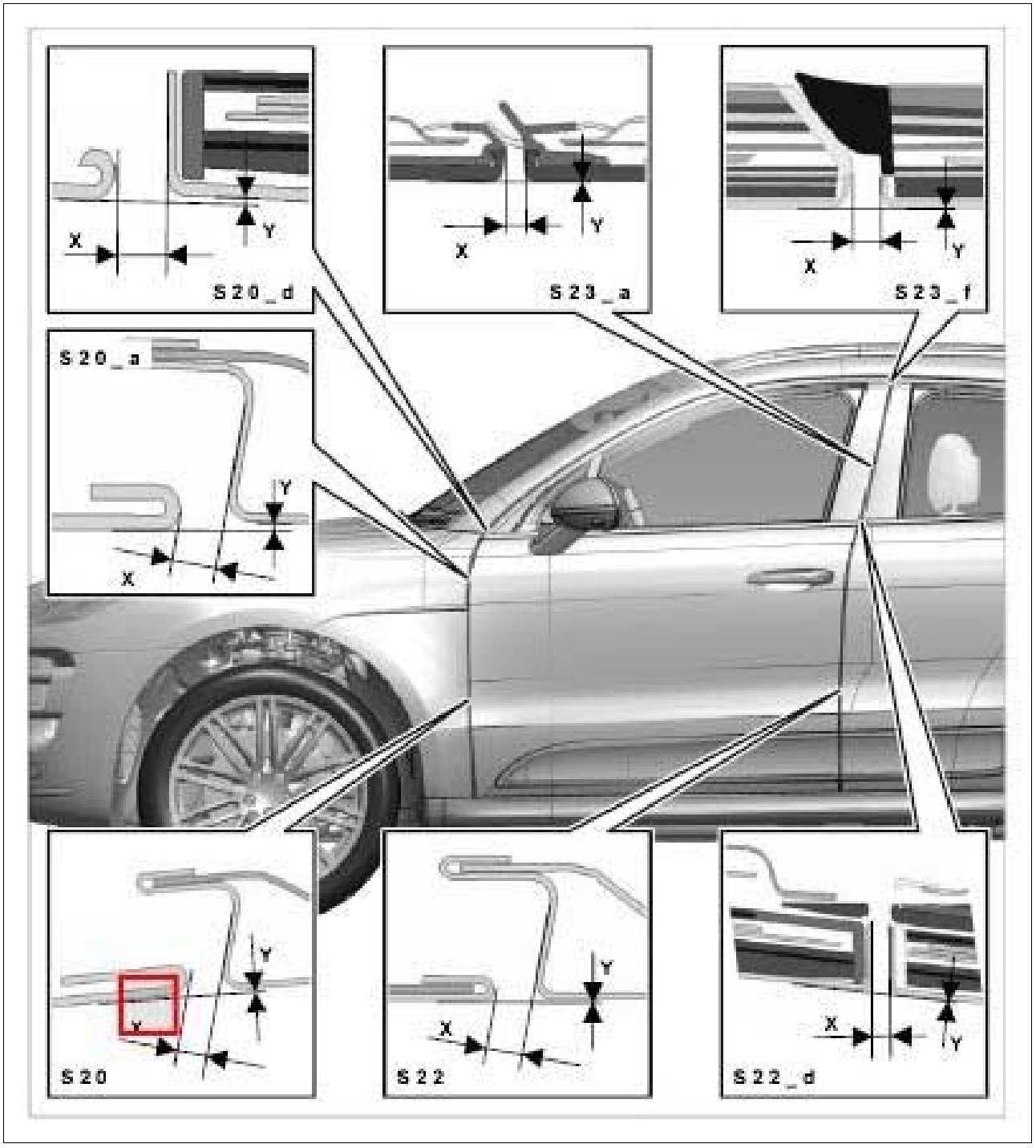

Courtesy of PORSCHE CARS NORTH AMERICA, INC.

S20 - → Gap dimension: 0 mm

Fig 11: Identifying Gap Dimensions For Front Door (S22)

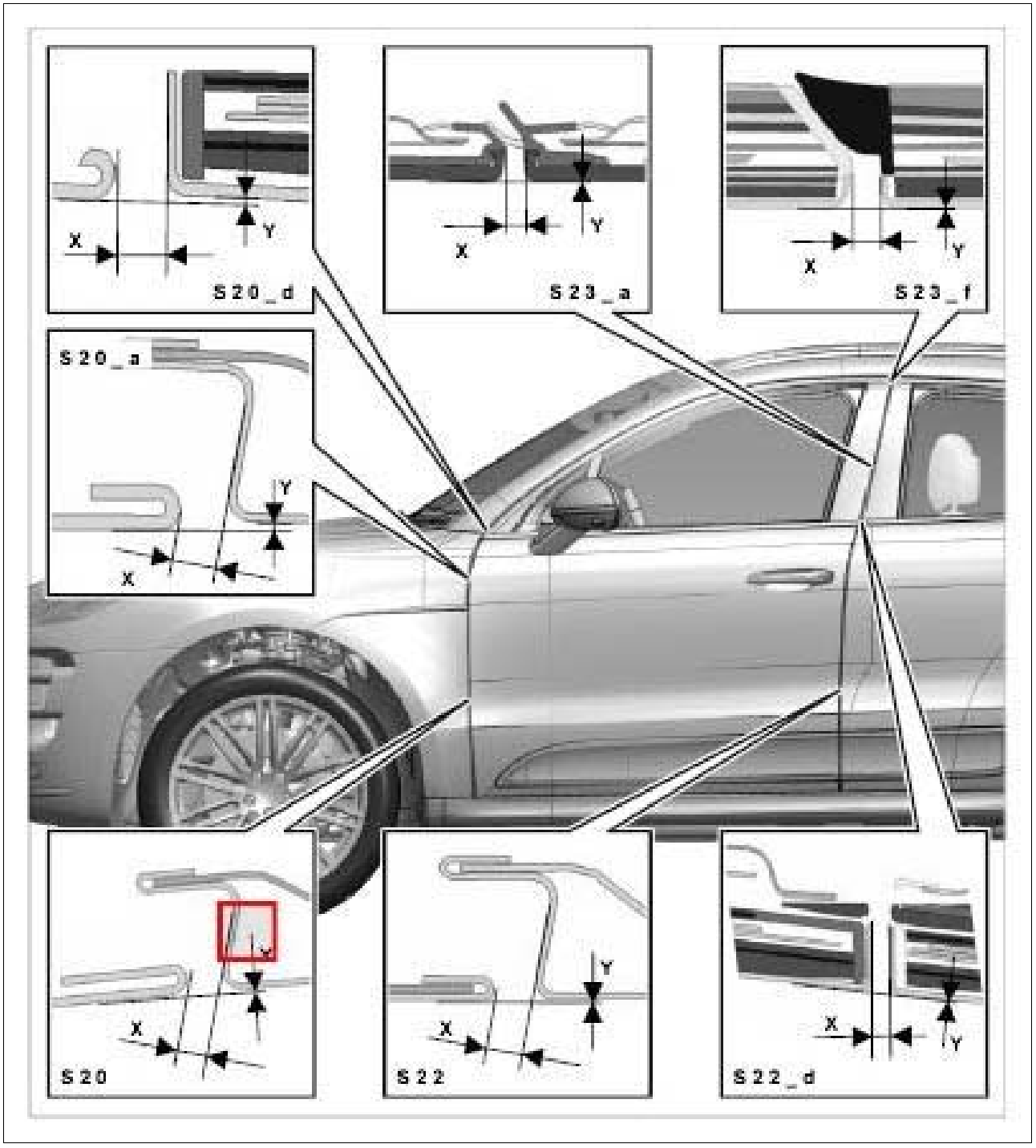

Courtesy of PORSCHE CARS NORTH AMERICA, INC.

S22 - → Gap dimension: 4.2 mm+/-0.5 mm

Fig 12: Identifying Gap Dimensions For Front Door (S22)

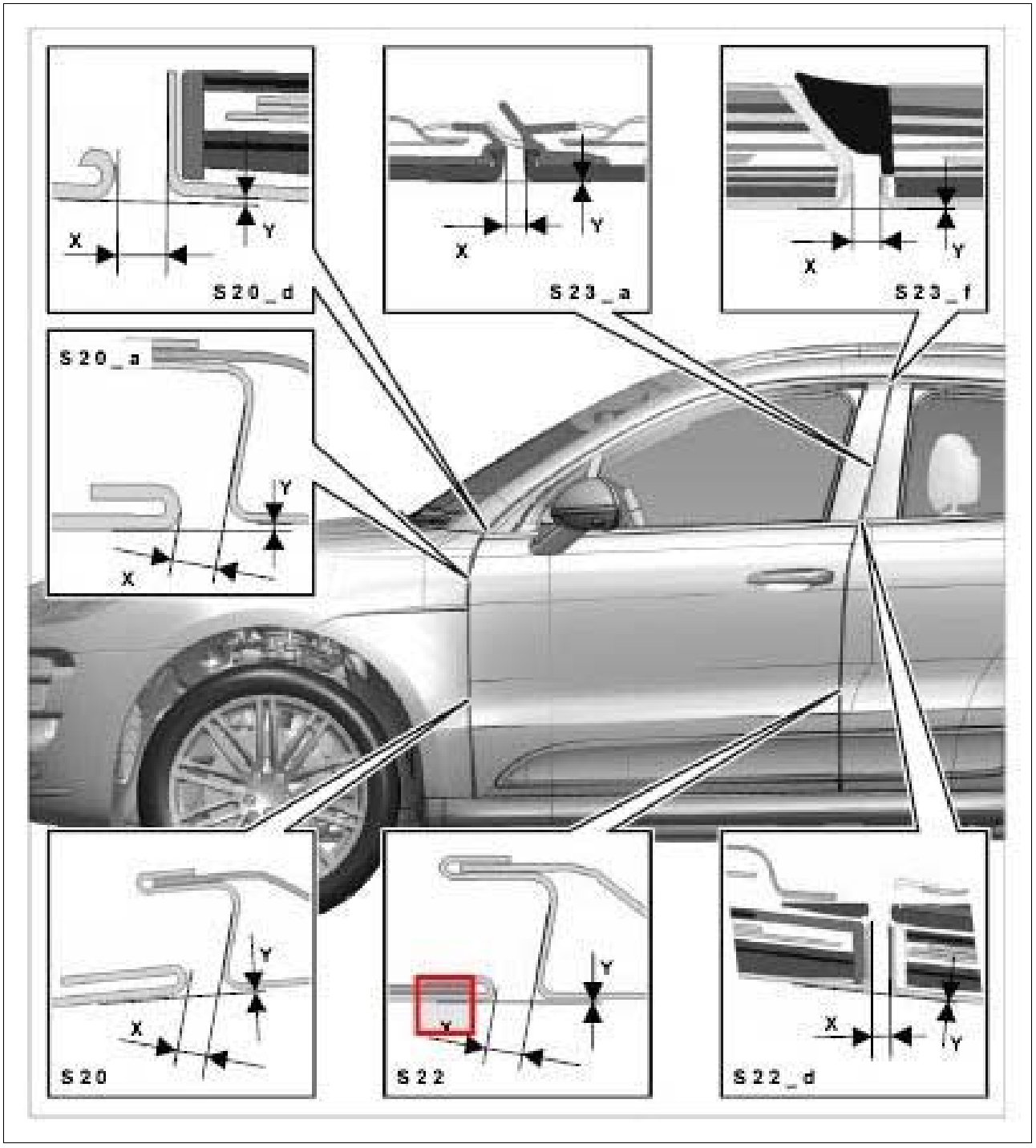

Courtesy of PORSCHE CARS NORTH AMERICA, INC.

S22 - → Gap dimension: 0 mm

Fig 13: Identifying Gap Dimensions For Front Door (S22)

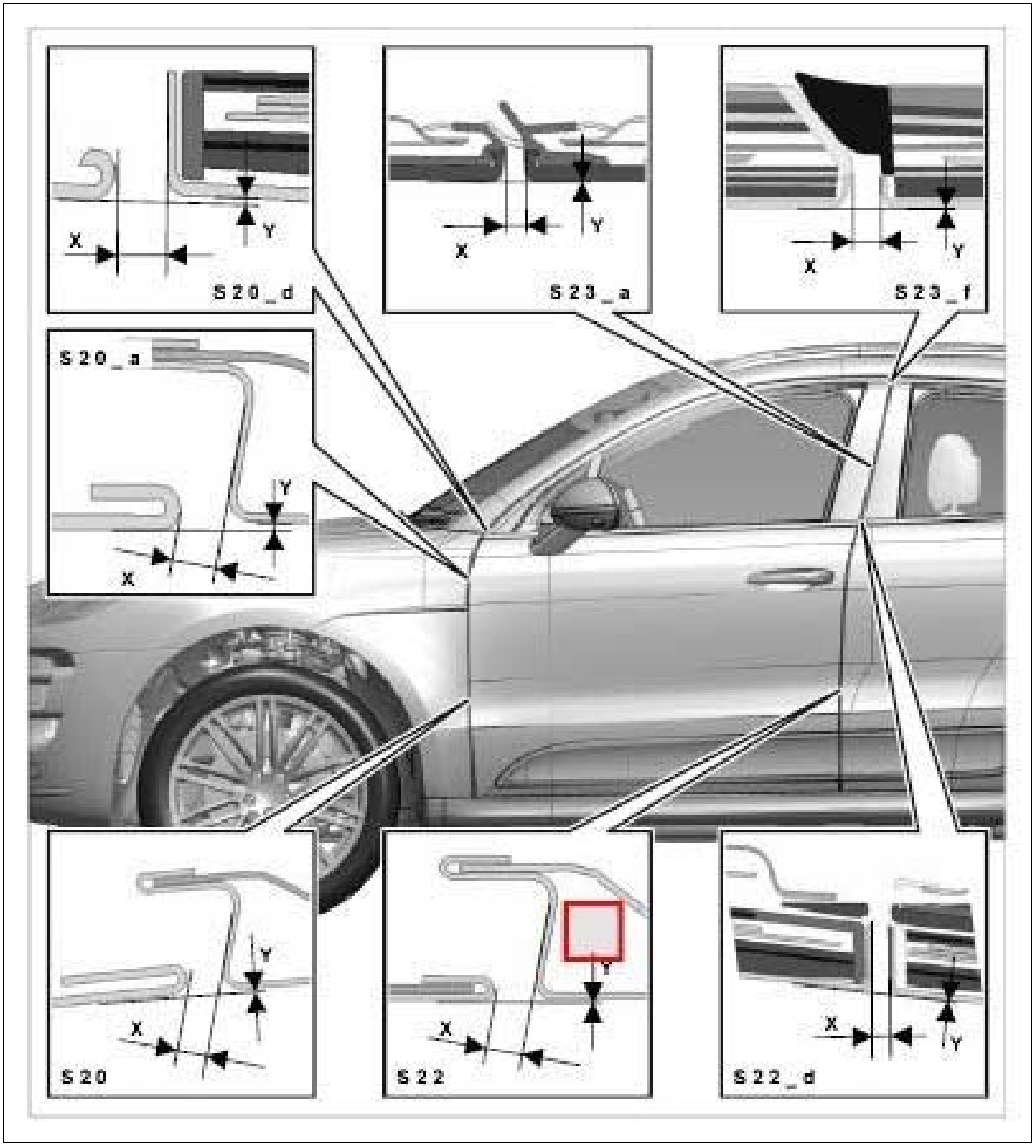

Courtesy of PORSCHE CARS NORTH AMERICA, INC.

S22_d - → Gap dimension: 4.2 mm+/-1 mm

Fig 14: Identifying Gap Dimensions For Front Door (S22)

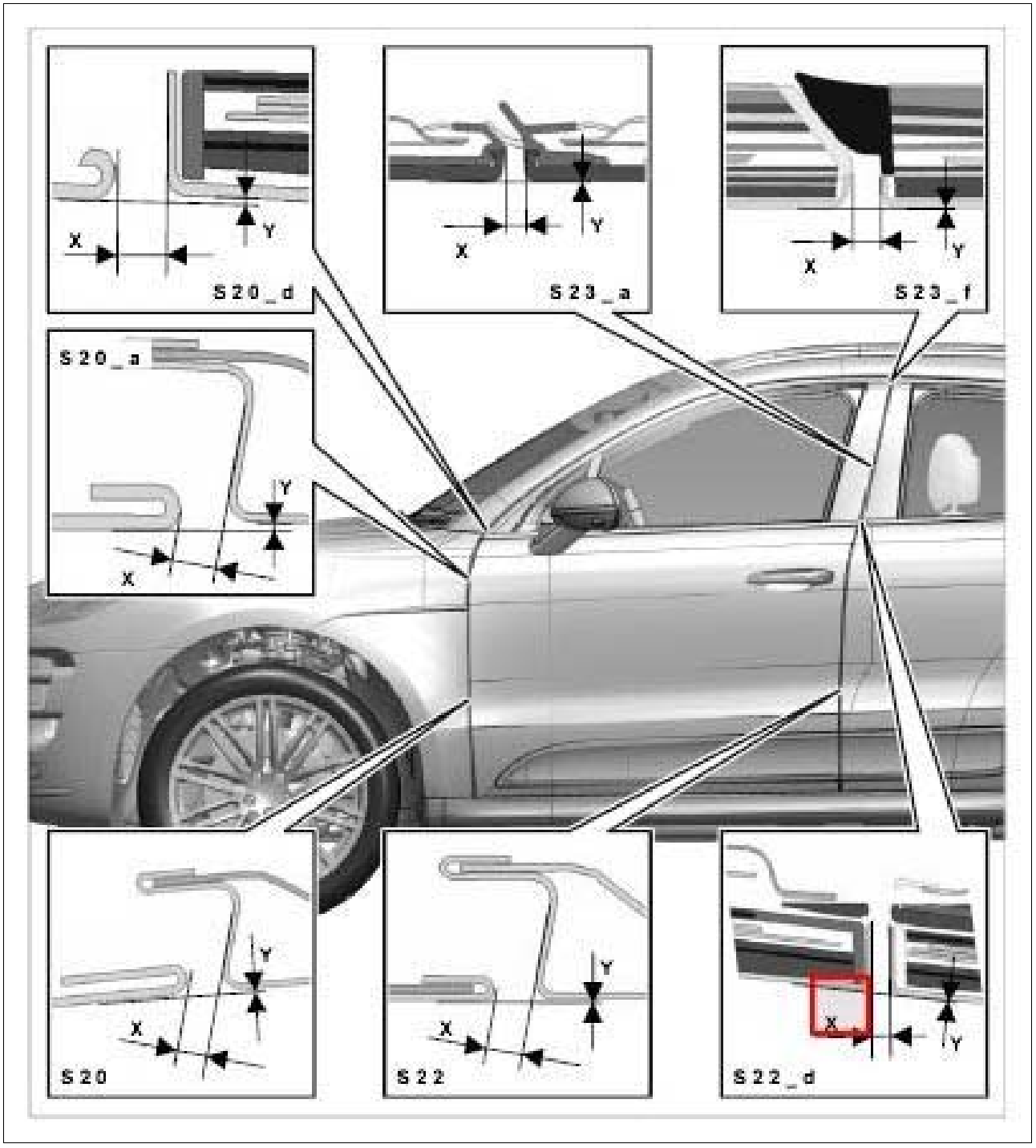

Courtesy of PORSCHE CARS NORTH AMERICA, INC.

S22_d - → Gap dimension: 0 mm

Fig 15: Identifying Gap Dimensions For Front To Rear Door

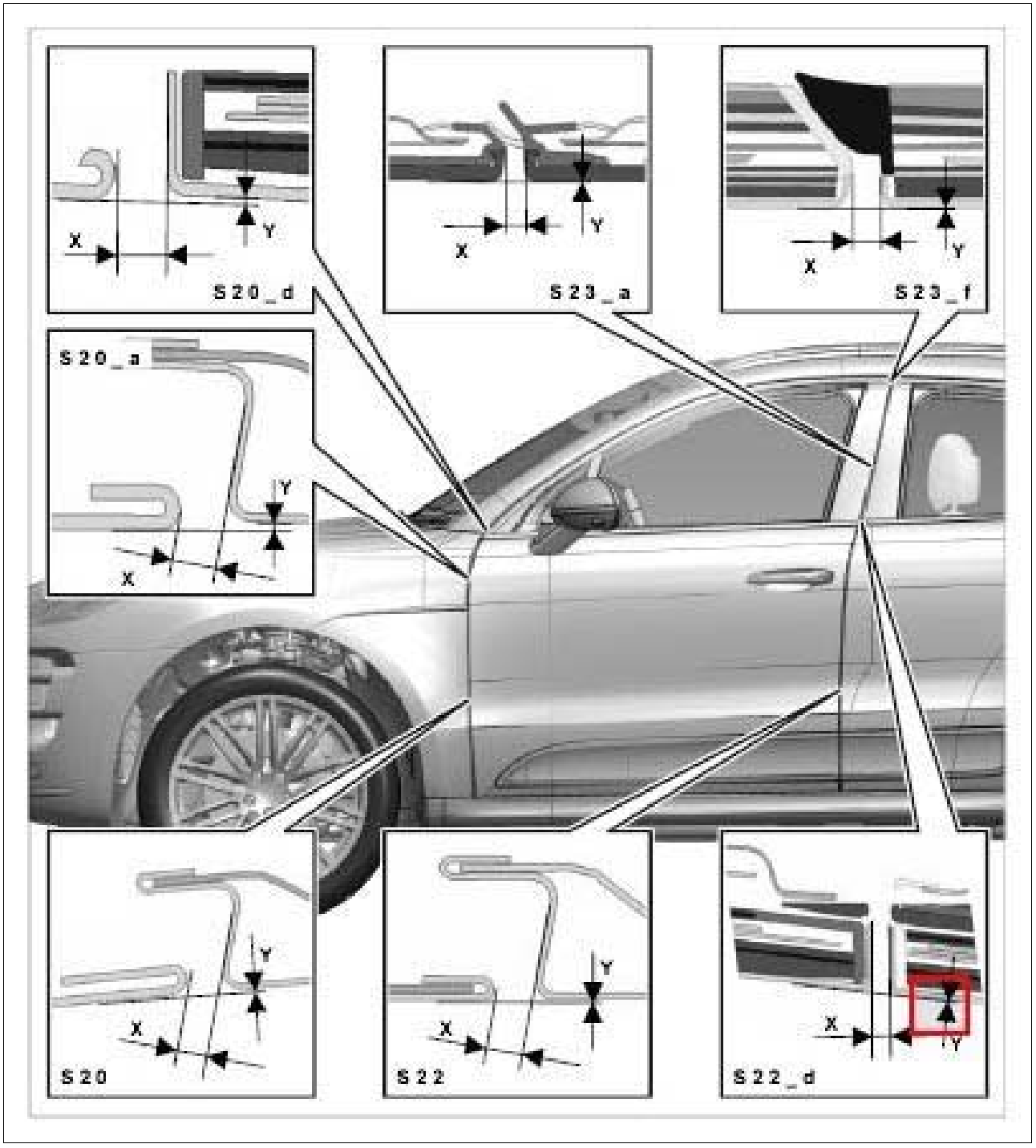

Courtesy of PORSCHE CARS NORTH AMERICA, INC.

Fig 16: Identifying Gap Dimensions For Front Door (S21)

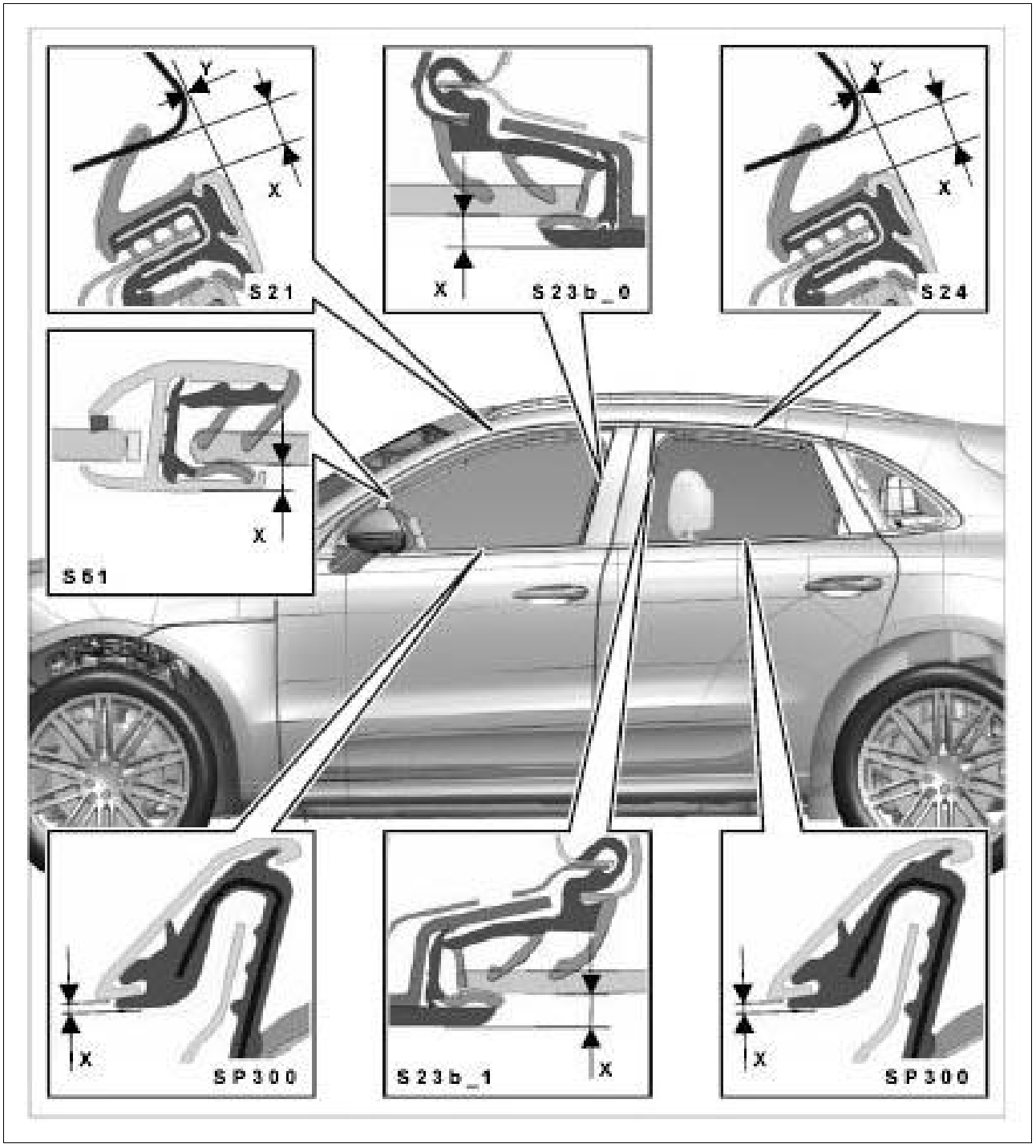

Courtesy of PORSCHE CARS NORTH AMERICA, INC.

S21 - → Gap dimension: 4.5 mm+/-2 mm

Fig 17: Identifying Gap Dimensions For Front To Rear Door (S21)

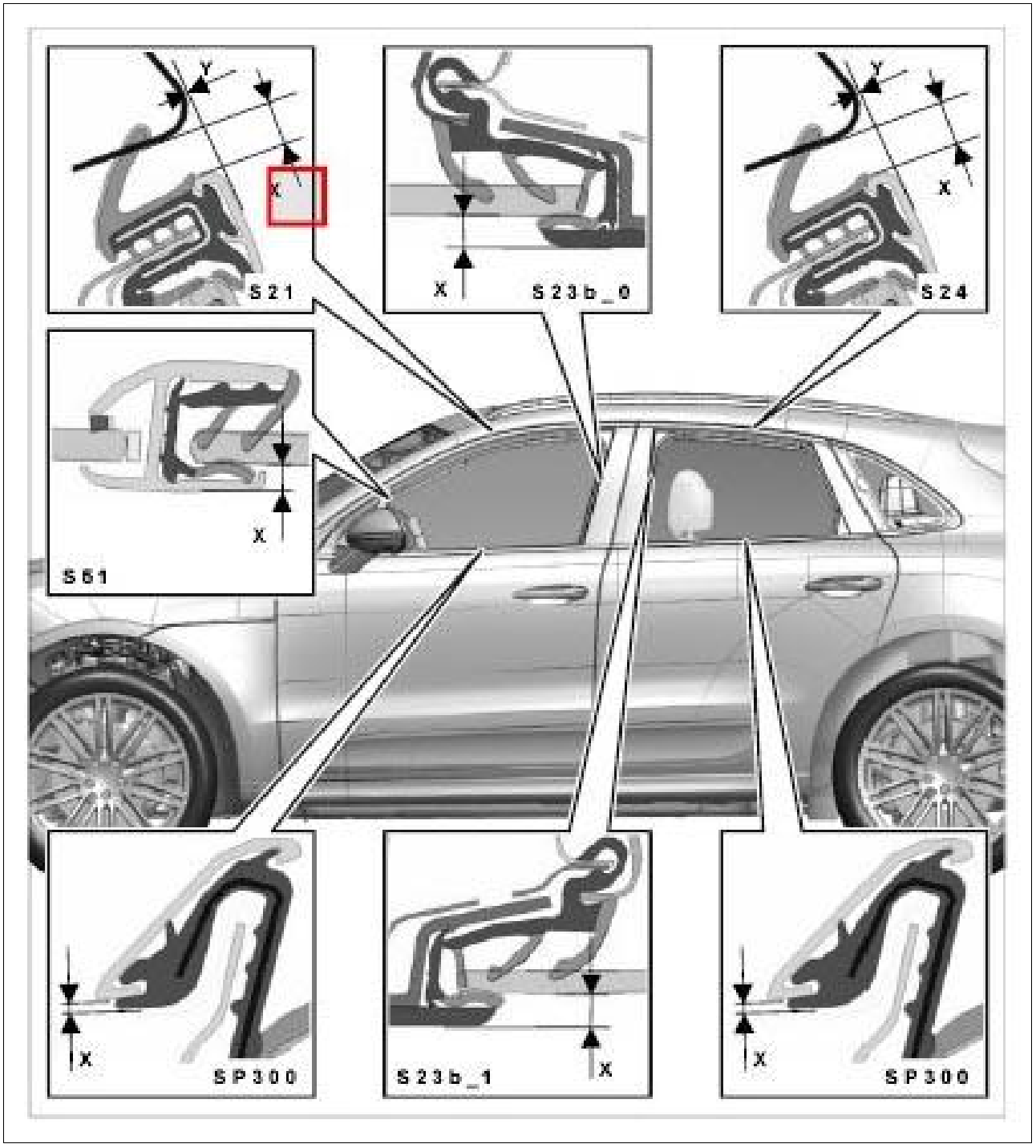

Courtesy of PORSCHE CARS NORTH AMERICA, INC.

S21 - → Gap dimension: 0 mm

Fig 18: Identifying Gap Dimensions For Front To Rear Door (S23B)

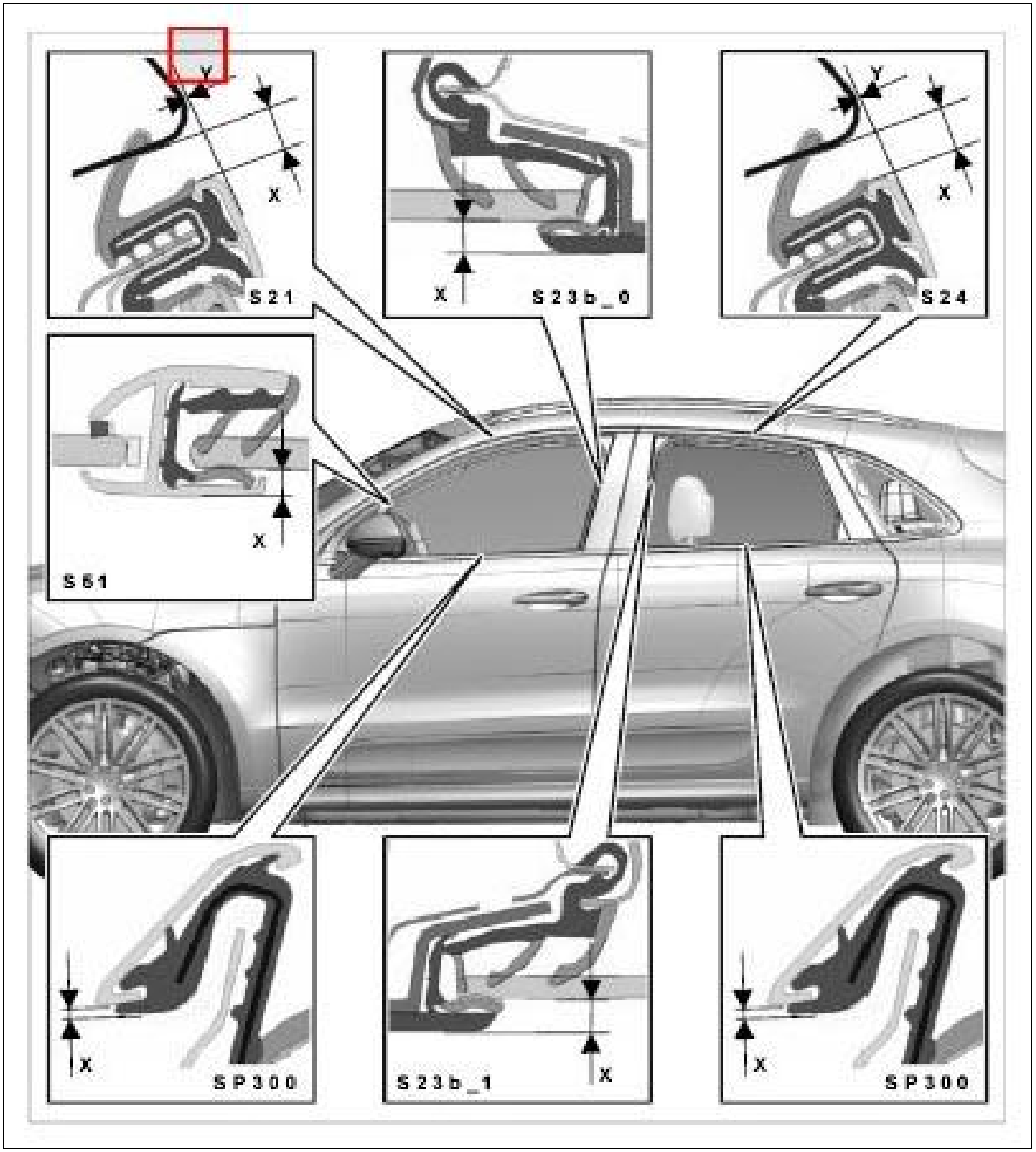

Courtesy of PORSCHE CARS NORTH AMERICA, INC.

S23b_0 - → Gap dimension: 4.5 mm+/-1 mm

Fig 19: Identifying Gap Dimensions Of Front To Rear Door (S24)

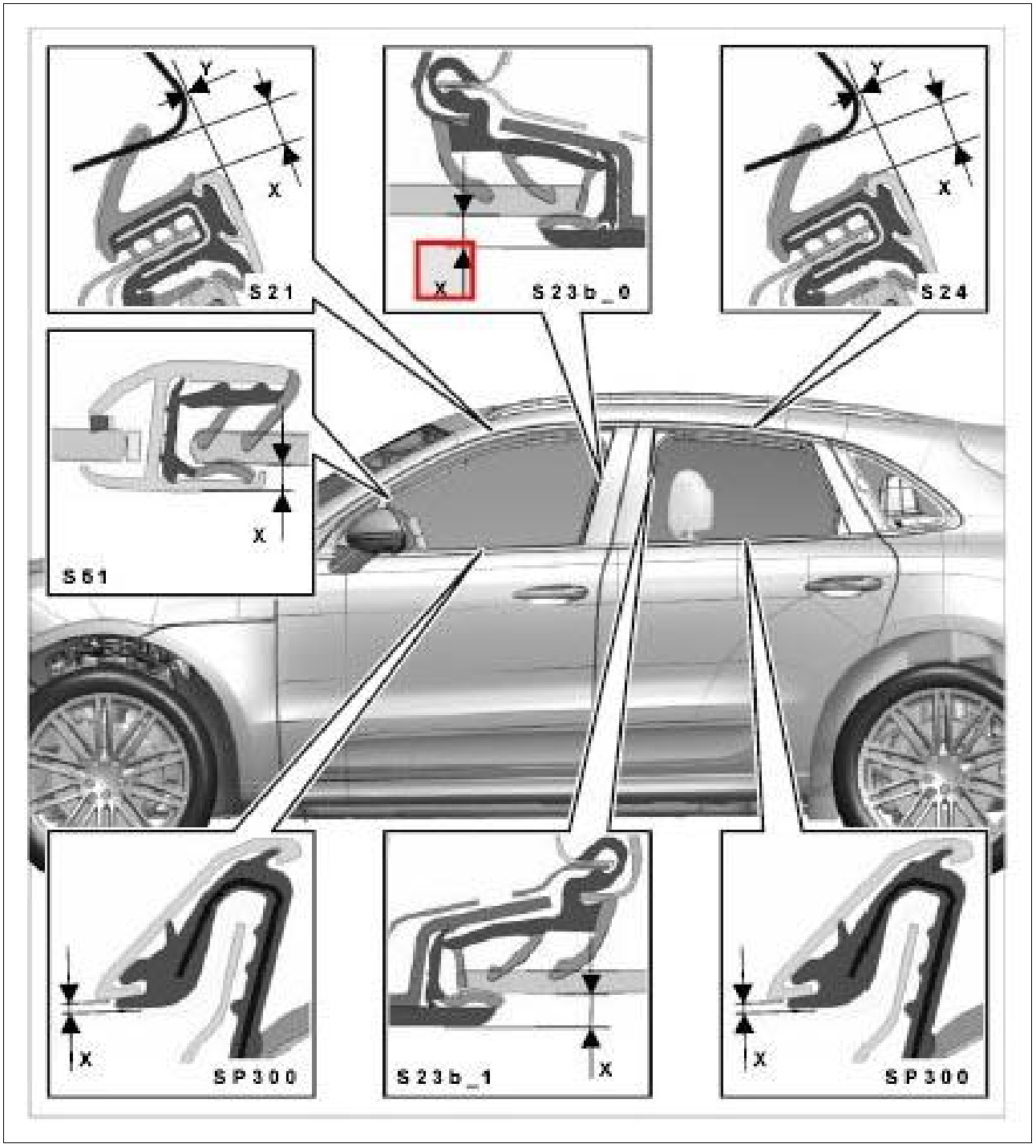

Courtesy of PORSCHE CARS NORTH AMERICA, INC.

S24 - → Gap dimension: 4.5 mm+/-2 mm

Fig 20: Identifying Gap Dimensions Of Front To Rear Door (S24)

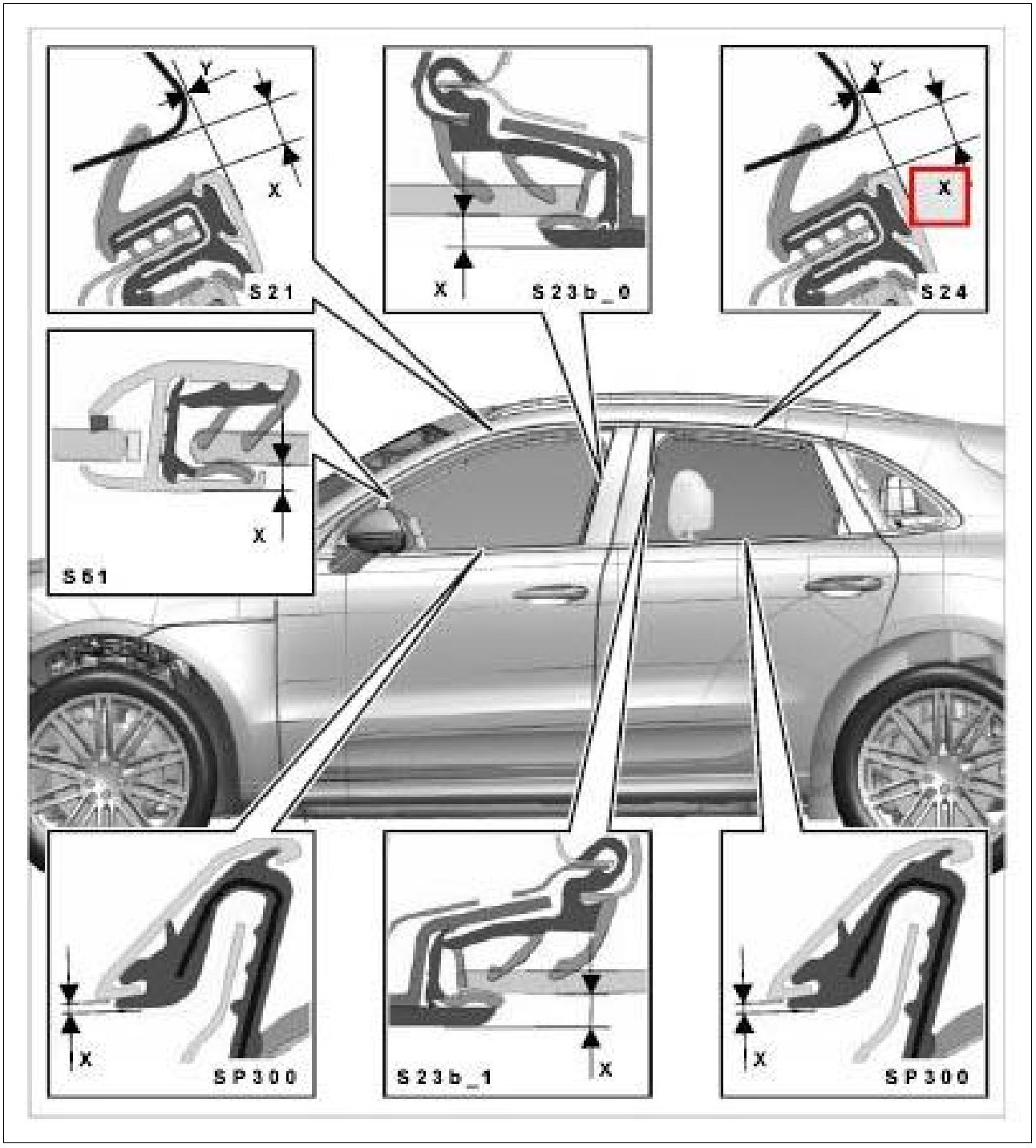

Courtesy of PORSCHE CARS NORTH AMERICA, INC.

S24 - → Gap dimension: 0 mm

Fig 21: Identifying Gap Dimensions Of Front To Rear Door (S51)

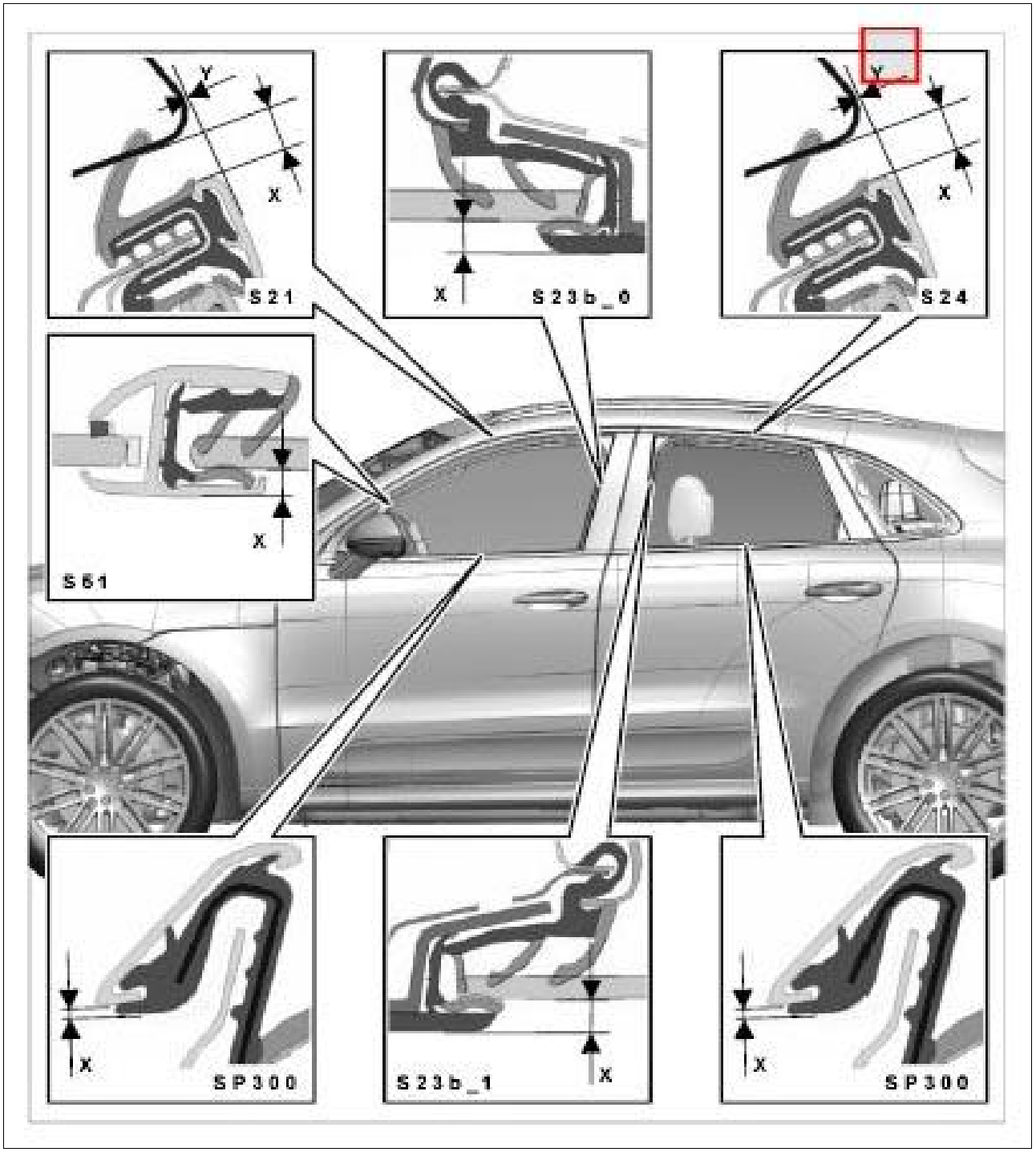

Courtesy of PORSCHE CARS NORTH AMERICA, INC.

S51 - → Gap dimension: 4.1 mm+/-1 mm

Fig 22: Identifying Gap Dimensions Of Front To Rear Door (SP300)

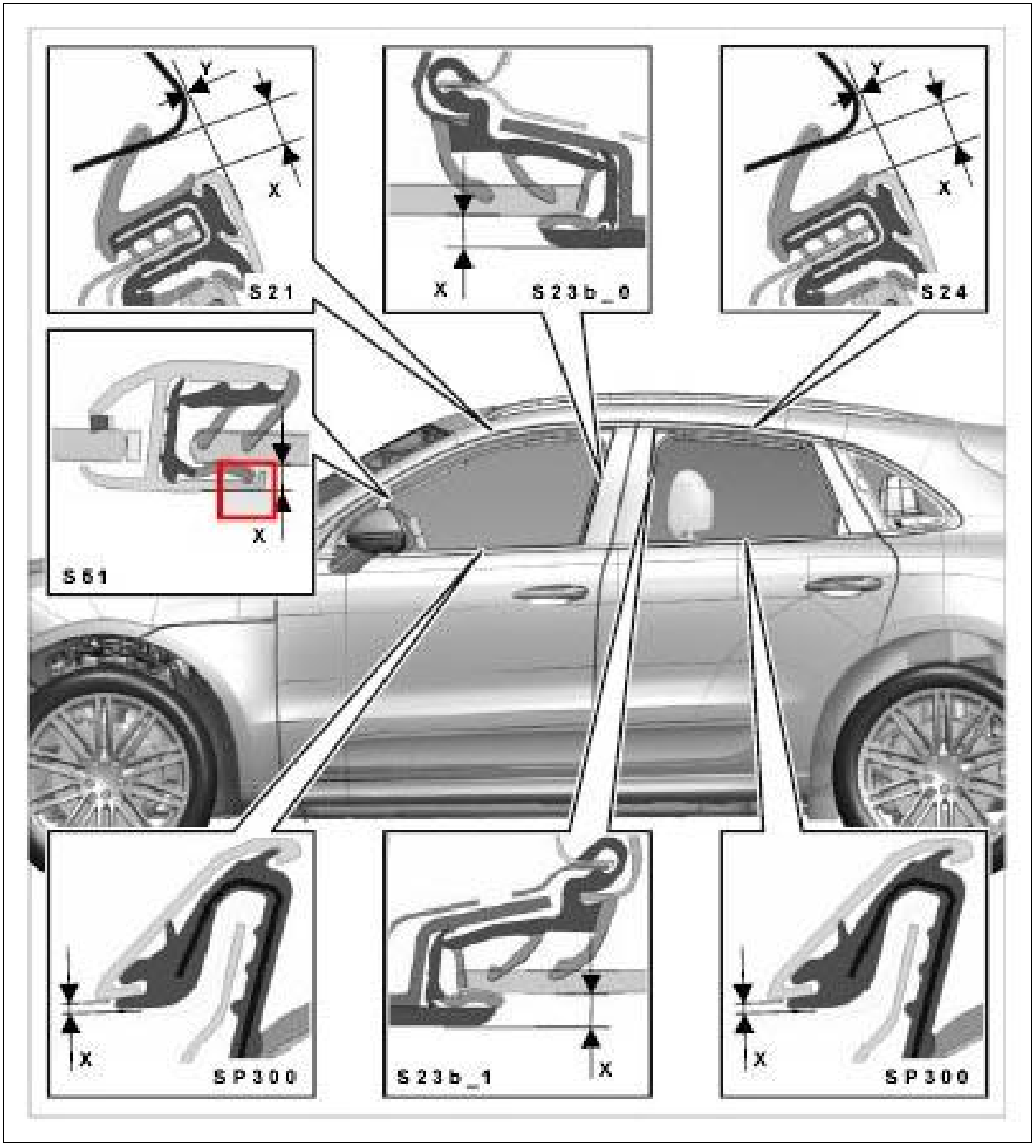

Courtesy of PORSCHE CARS NORTH AMERICA, INC.

SP300 - → Gap dimension: 0.8 mm+/-0.5 mm

Fig 23: Identifying Gap Dimensions For Front To Rear Door (S23B)

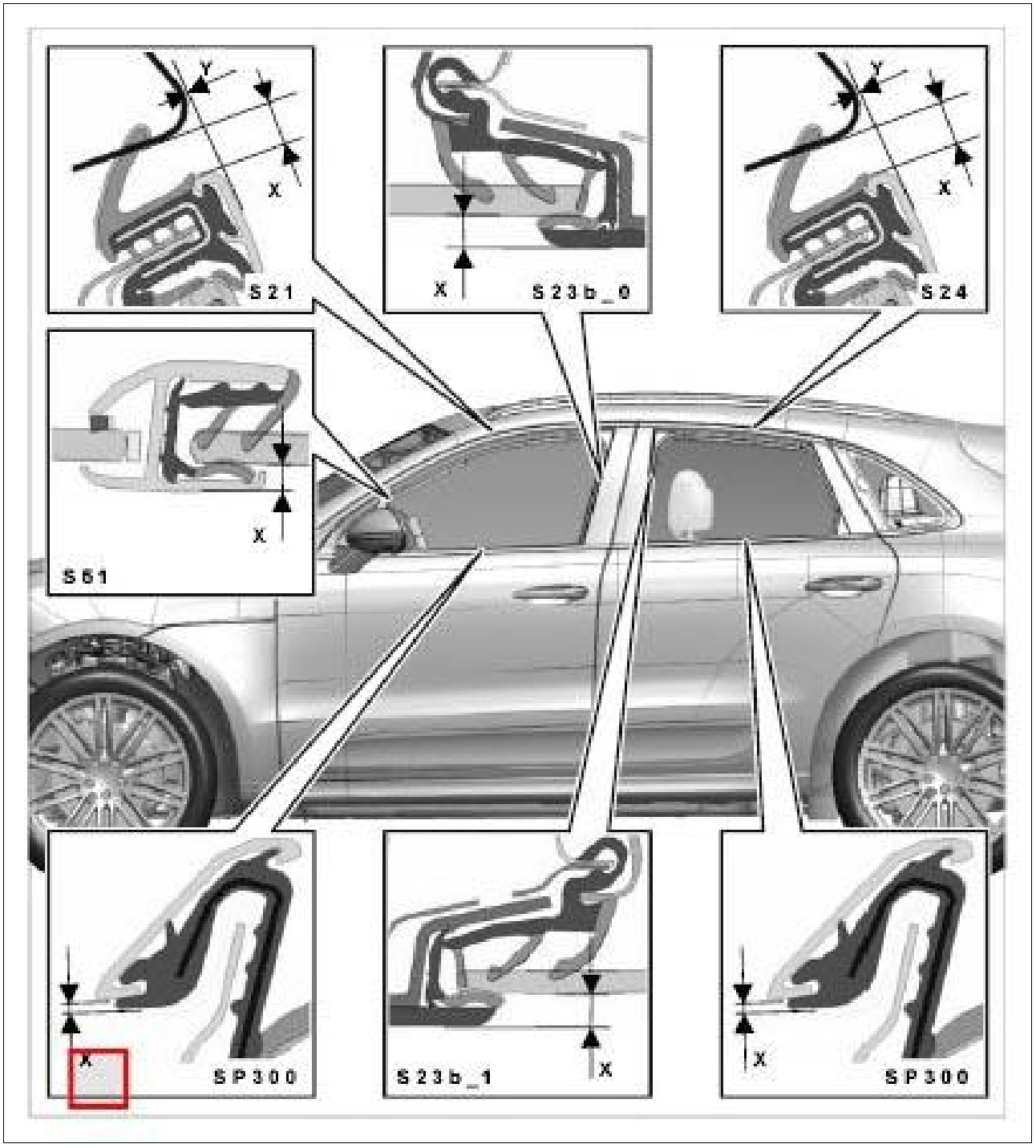

Courtesy of PORSCHE CARS NORTH AMERICA, INC.

S23b_1 - → Gap dimension: 4.5 mm+/-1 mm

Fig 24: Identifying Gap Dimensions For Front To Rear Door (S23B)

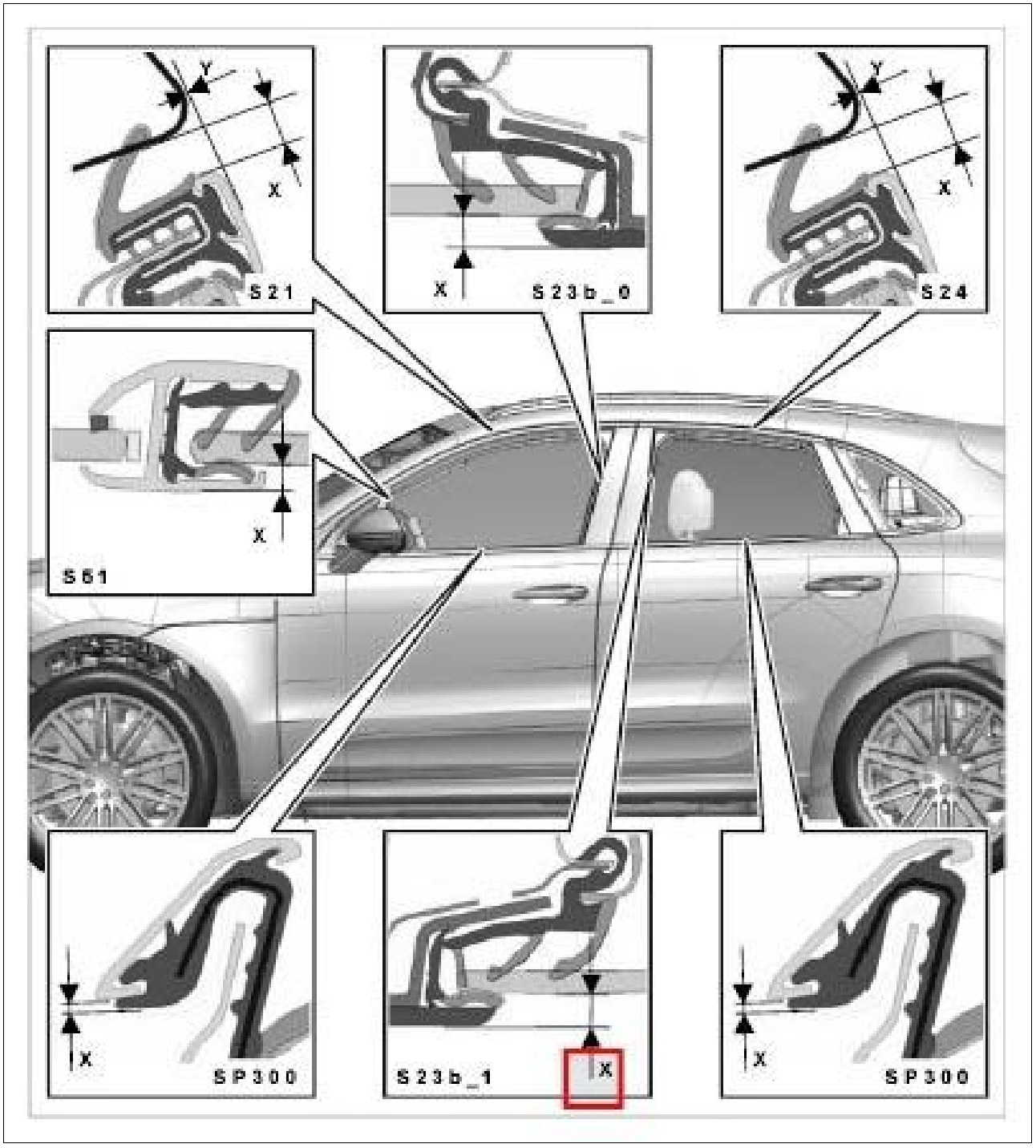

Courtesy of PORSCHE CARS NORTH AMERICA, INC.

SP300 - → Gap dimension: 0.8 mm+/-0.5 mm

Fig 25: Identifying Gap Dimensions For Front To Rear Door

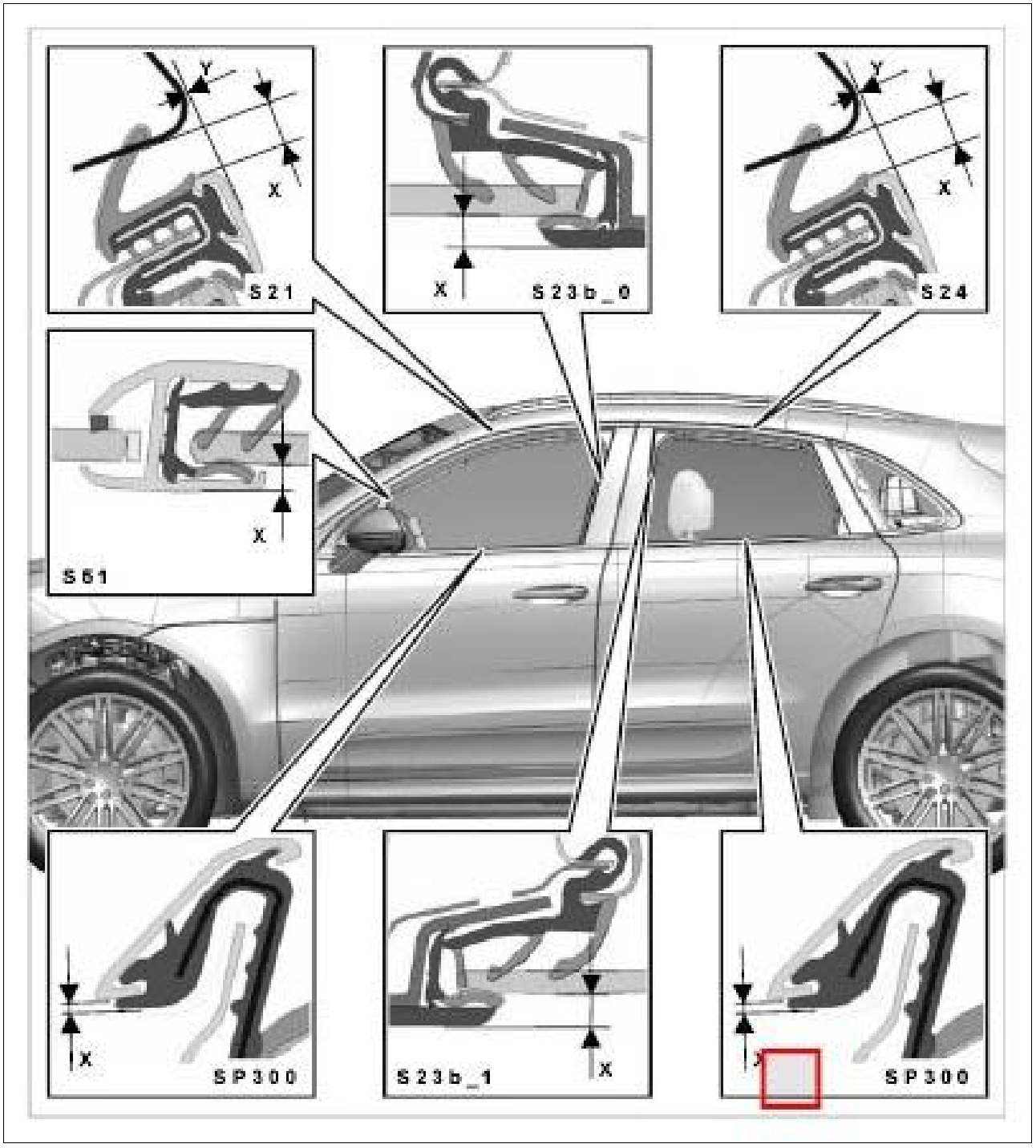

Courtesy of PORSCHE CARS NORTH AMERICA, INC.

Fig 26: Identifying Gap Dimensions For Rear Door (S25)

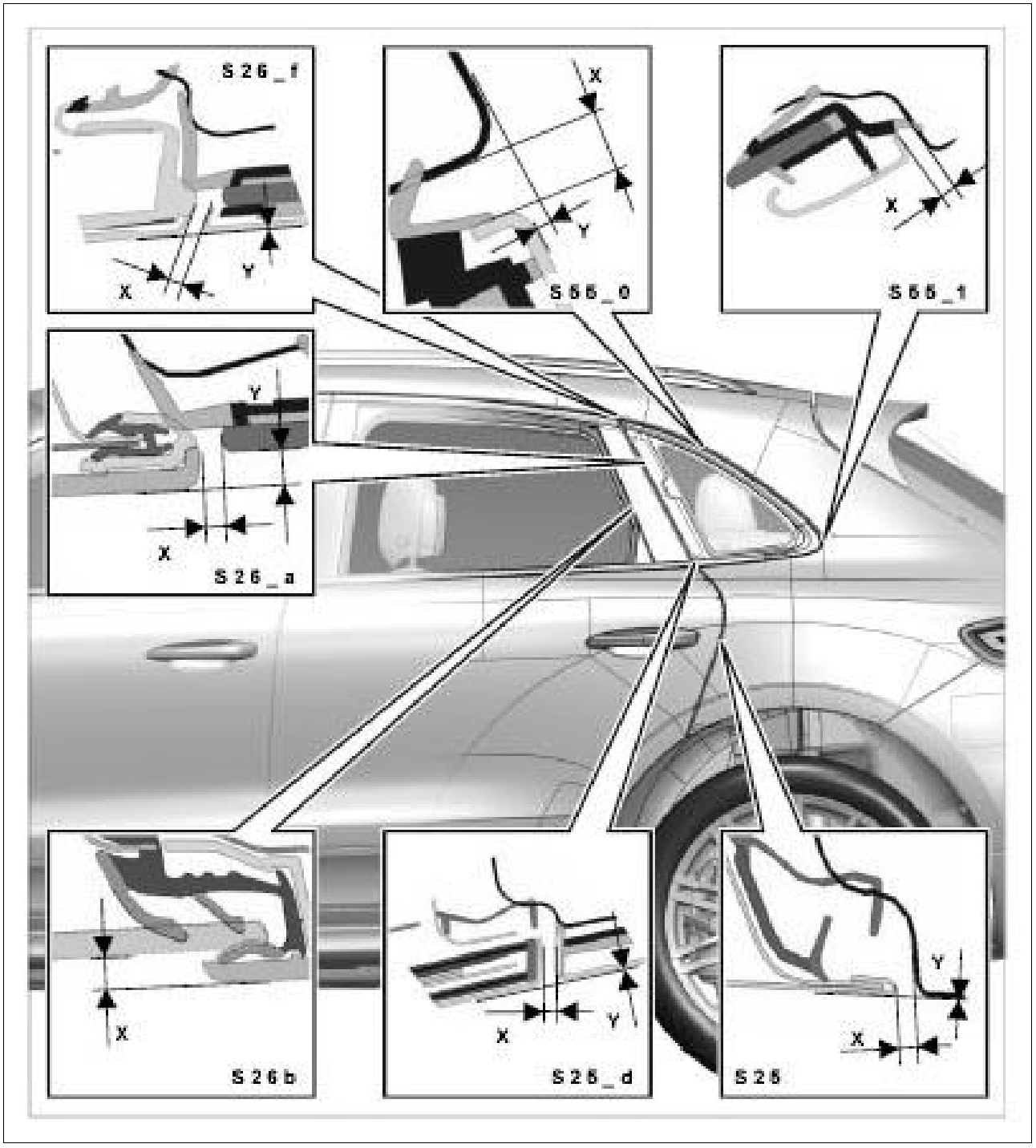

Courtesy of PORSCHE CARS NORTH AMERICA, INC.

S25 - → Gap dimension: 3.5 mm+/-0.5 mm

Fig 27: Identifying Gap Dimensions For Rear Door

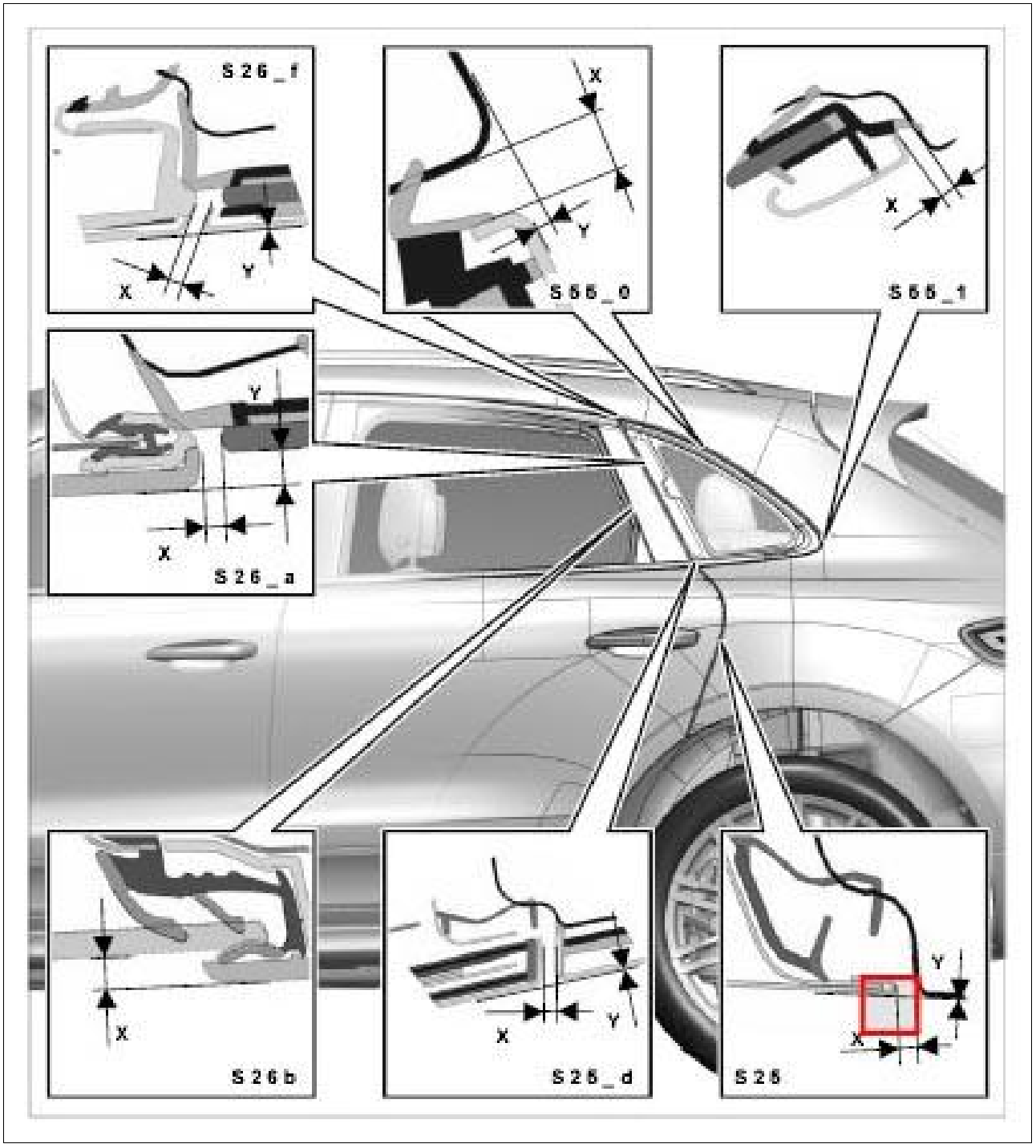

Courtesy of PORSCHE CARS NORTH AMERICA, INC.

S25 - → Gap dimension: 0 mm

Fig 28: Identifying Gap Dimensions For Rear Door (S25)

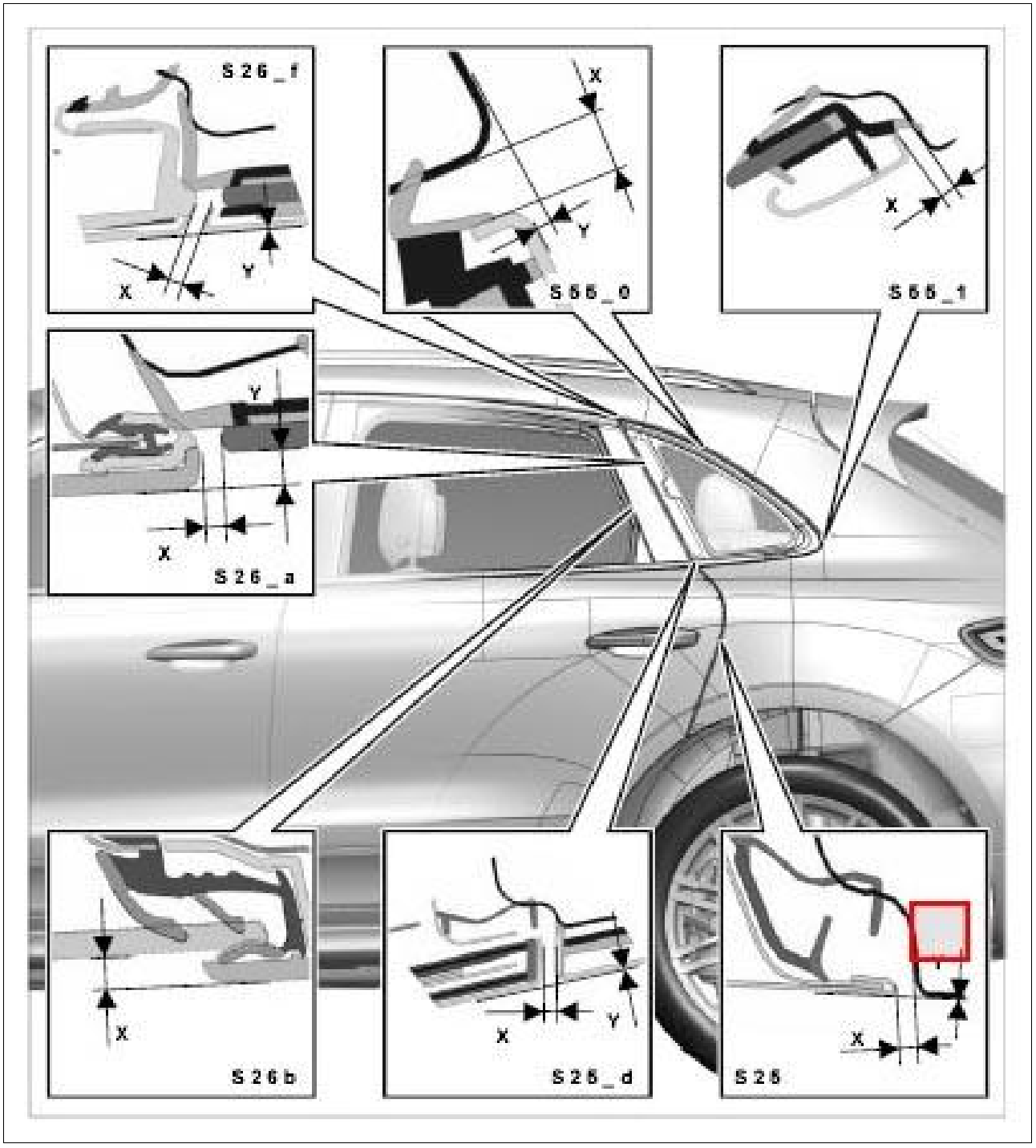

Courtesy of PORSCHE CARS NORTH AMERICA, INC.

S25_d - → Gap dimension: 3.5 mm+/-1 mm

Fig 29: Identifying Gap Dimensions For Rear Door

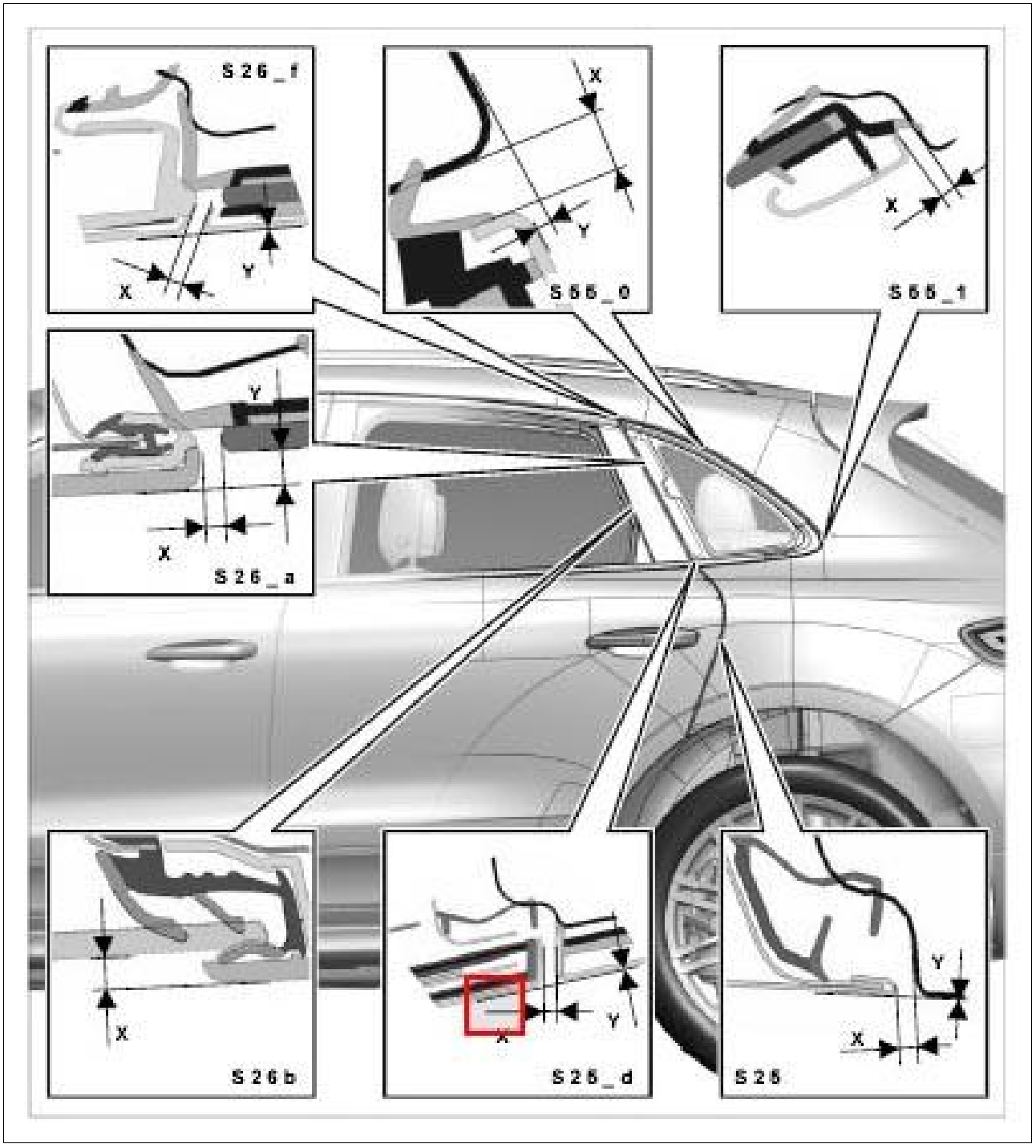

Courtesy of PORSCHE CARS NORTH AMERICA, INC.

S25_d - → Gap dimension: 0 mm

Fig 30: Identifying Gap Dimensions For Rear Door (S26B)

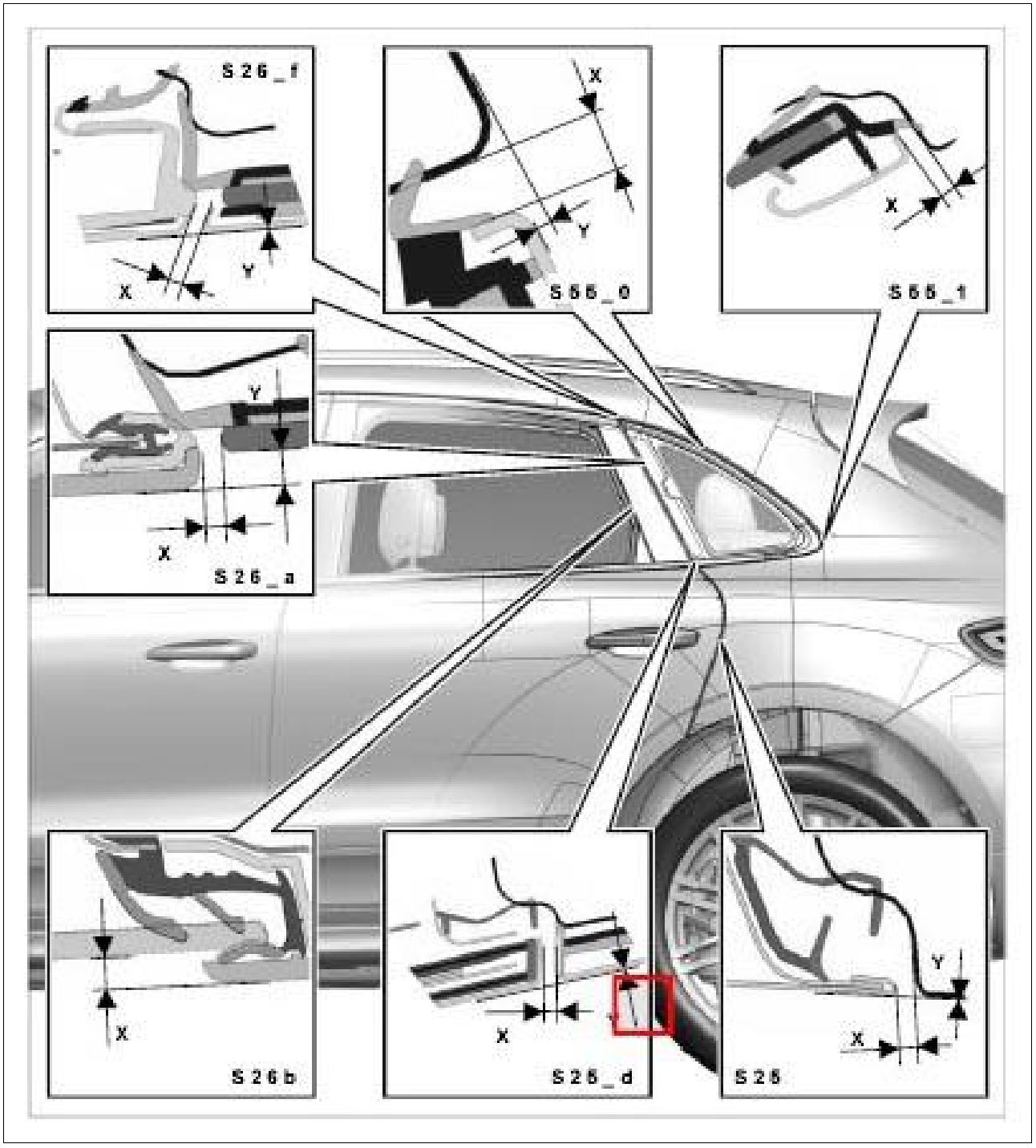

Courtesy of PORSCHE CARS NORTH AMERICA, INC.

S26b - → Gap dimension: 4.6 mm+/-1 mm

Fig 31: Identifying Gap Dimensions For Rear Door (S26)

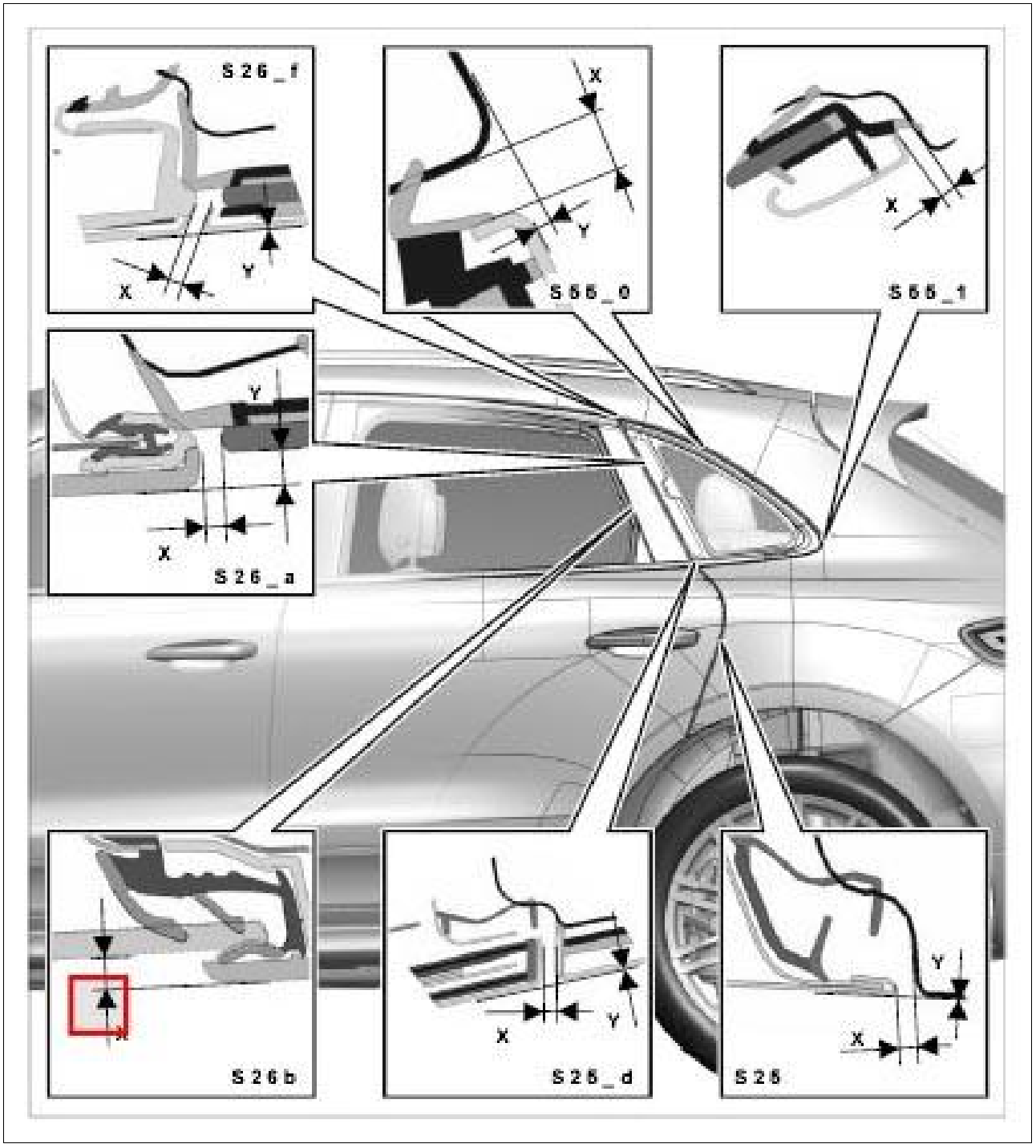

Courtesy of PORSCHE CARS NORTH AMERICA, INC.

S26_a - → Gap dimension: 3.5 mm+/-1 mm

Fig 32: Identifying Gap Dimensions For Rear Door (S26)

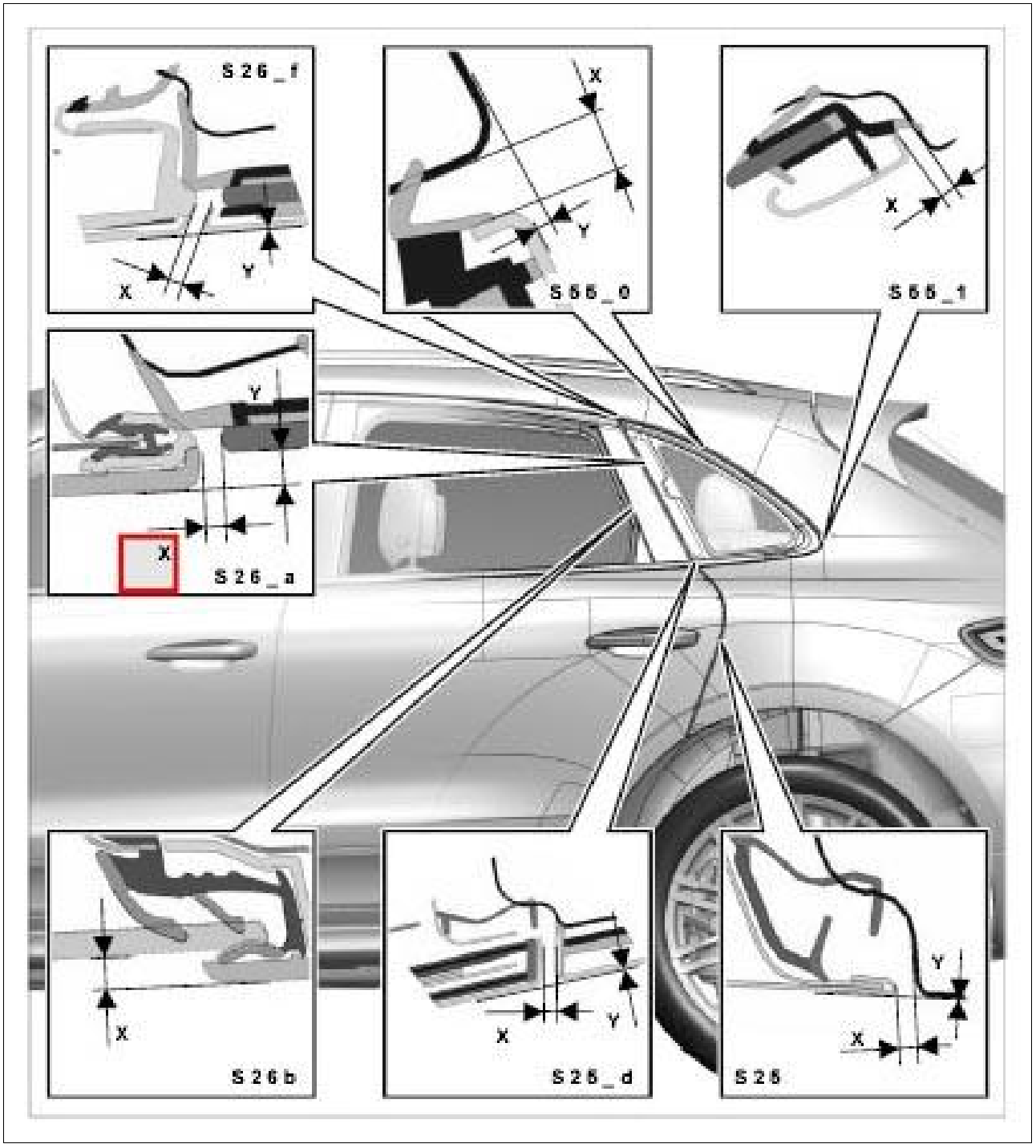

Courtesy of PORSCHE CARS NORTH AMERICA, INC.

S26_a - → Gap dimension: 4.2 mm+/-1 mm

Fig 33: Identifying Gap Dimensions For Rear Door (S26)

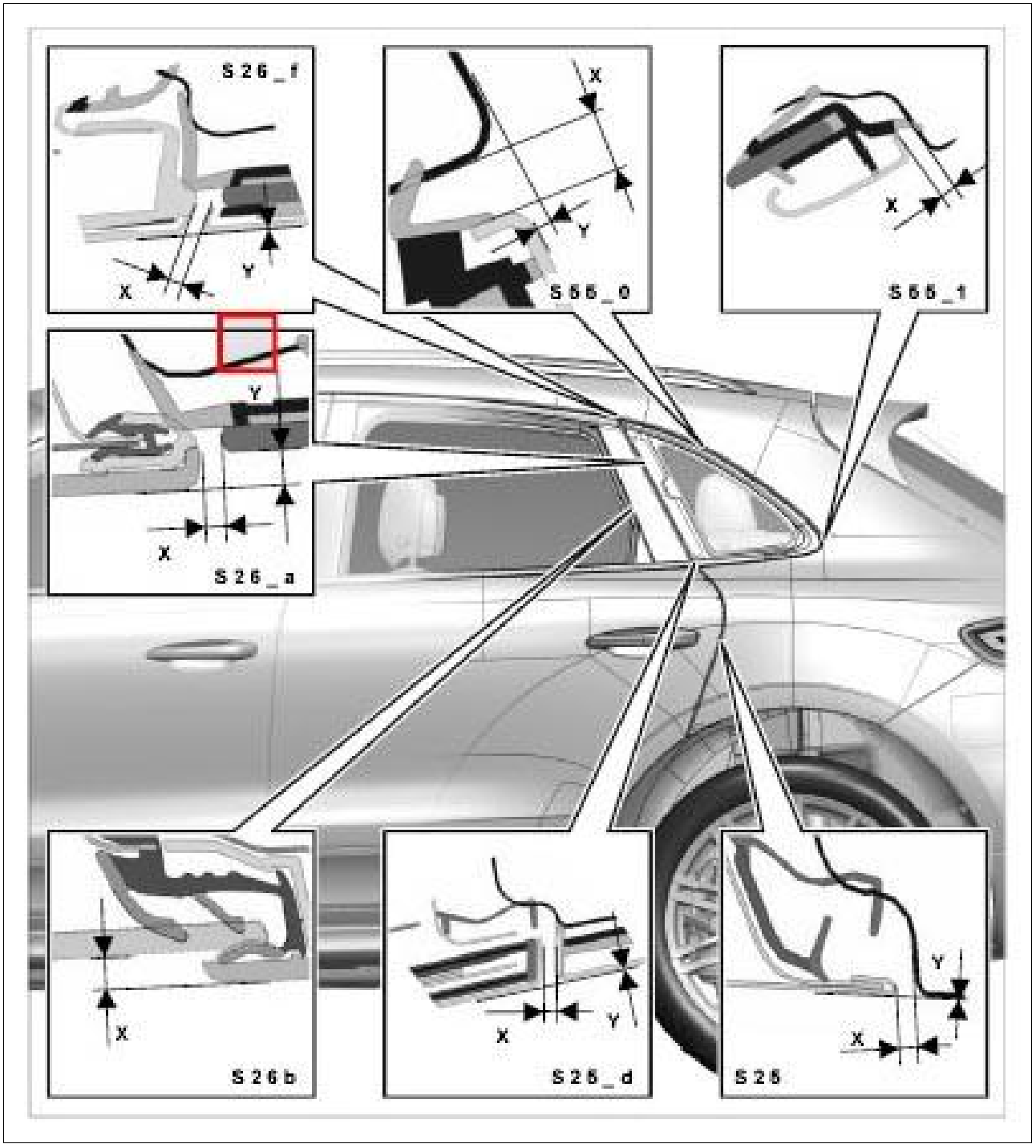

Courtesy of PORSCHE CARS NORTH AMERICA, INC.

S26_f - → Gap dimension: 3.5 mm+/-1 mm

Fig 34: Identifying Gap Dimensions For Rear Door (S26)

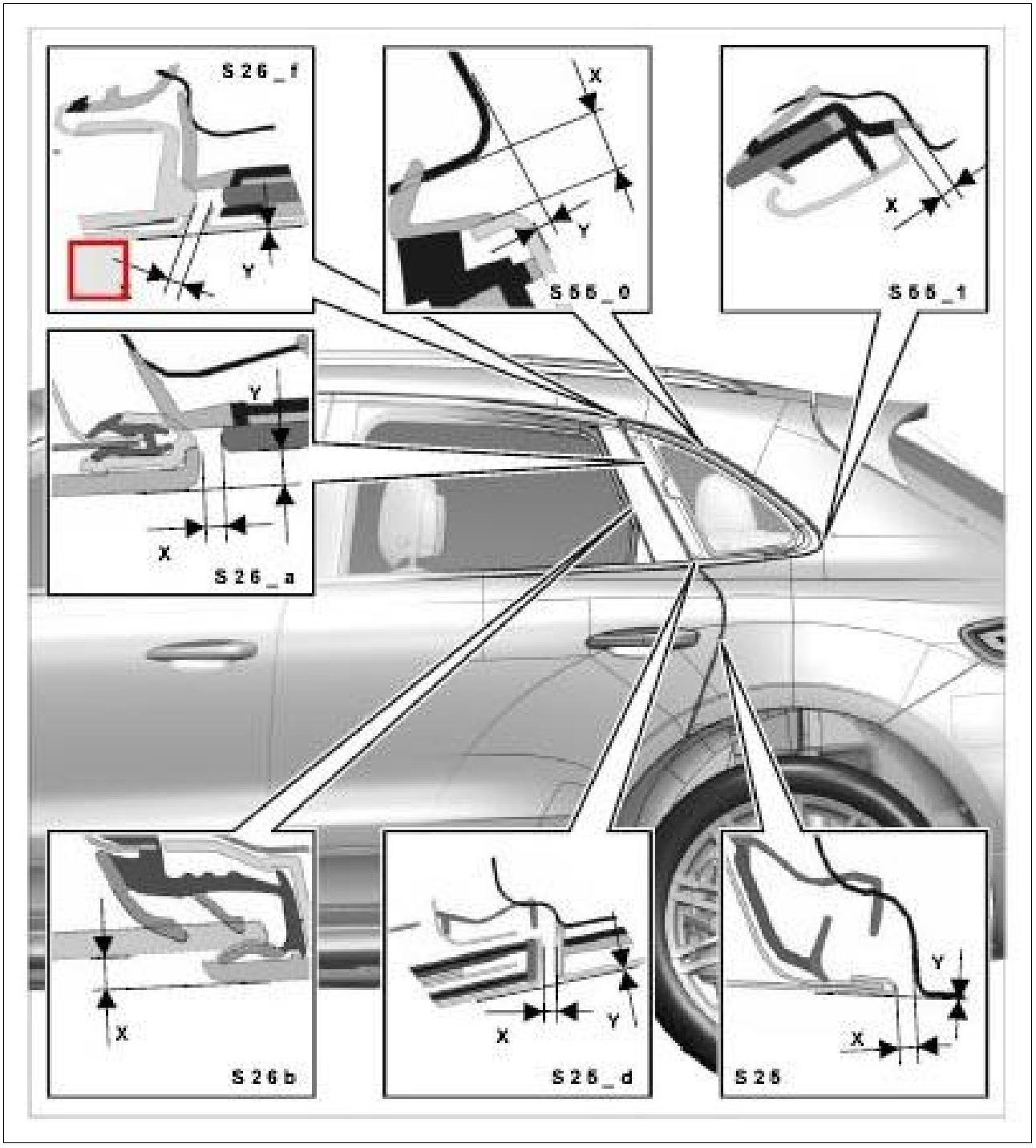

Courtesy of PORSCHE CARS NORTH AMERICA, INC.

S26_f - → Gap dimension: 0.3 mm

Fig 35: Identifying Gap Dimensions For Rear Door (S55)

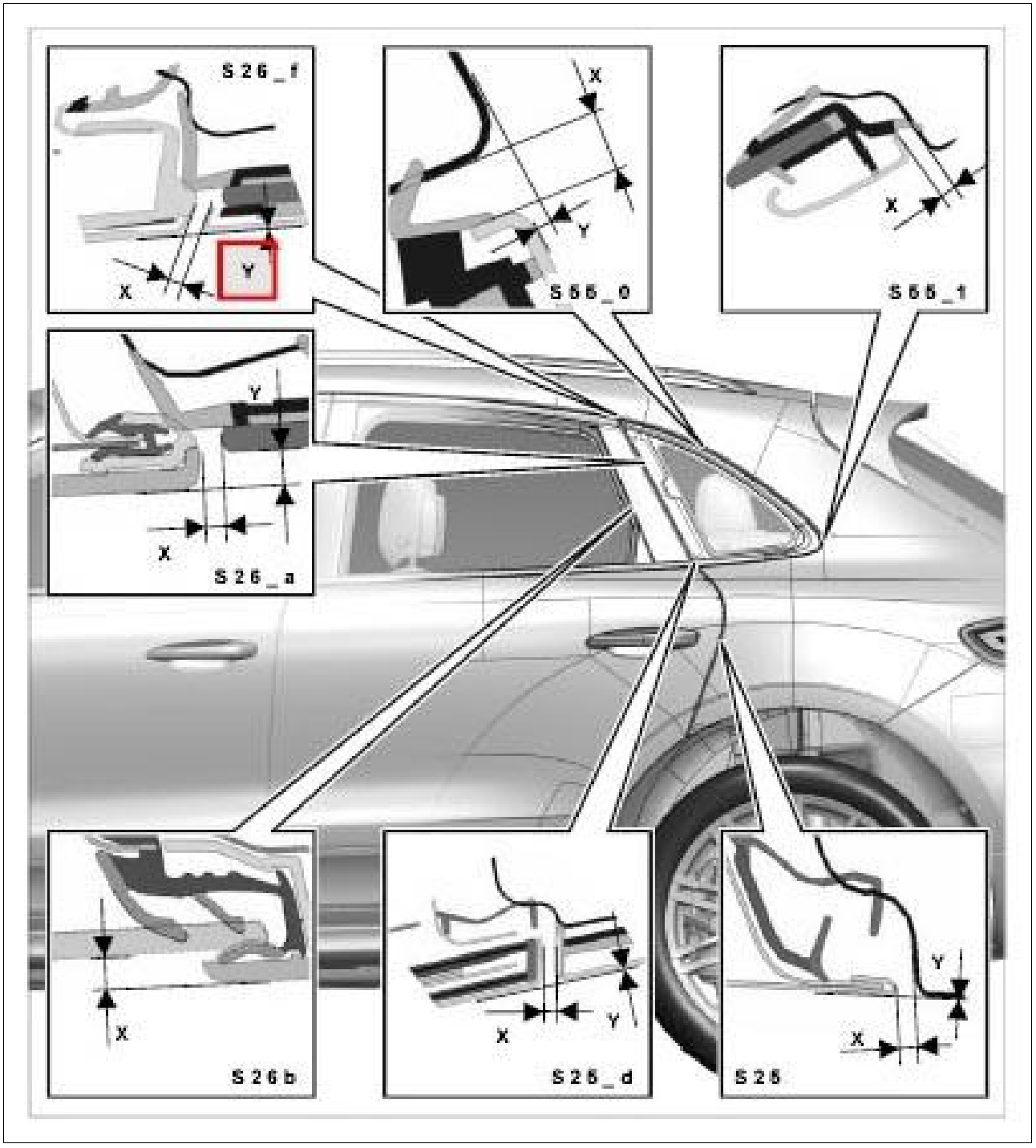

Courtesy of PORSCHE CARS NORTH AMERICA, INC.

S55_0 - → Gap dimension: 4.5 mm+/-1.5 mm

Fig 36: Identifying Gap Dimensions For Rear Door (S55)

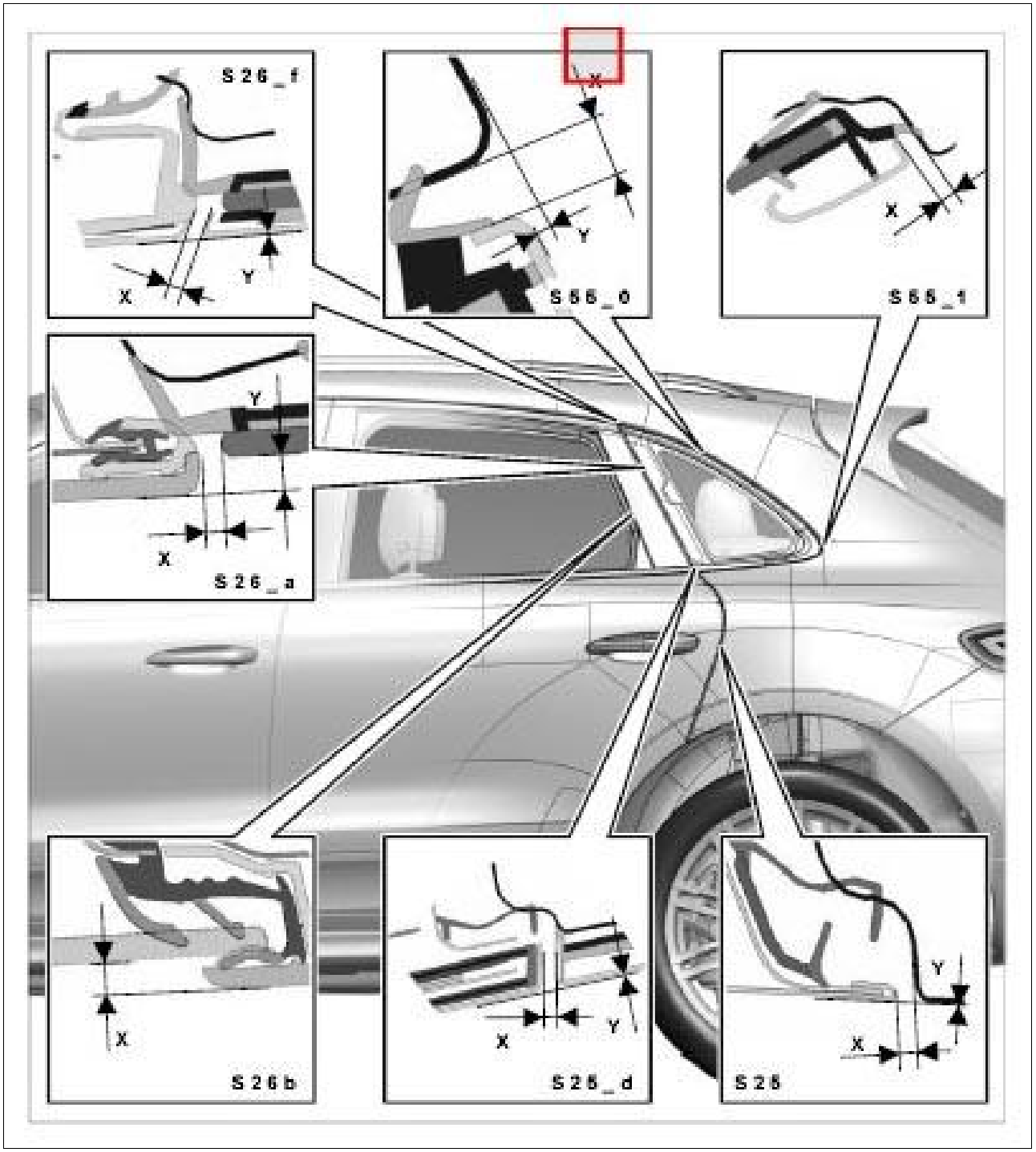

Courtesy of PORSCHE CARS NORTH AMERICA, INC.

S55_0 - → Gap dimension: 0.8 mm+/-1 mm

Fig 37: Identifying Gap Dimensions For Rear Door (S55)

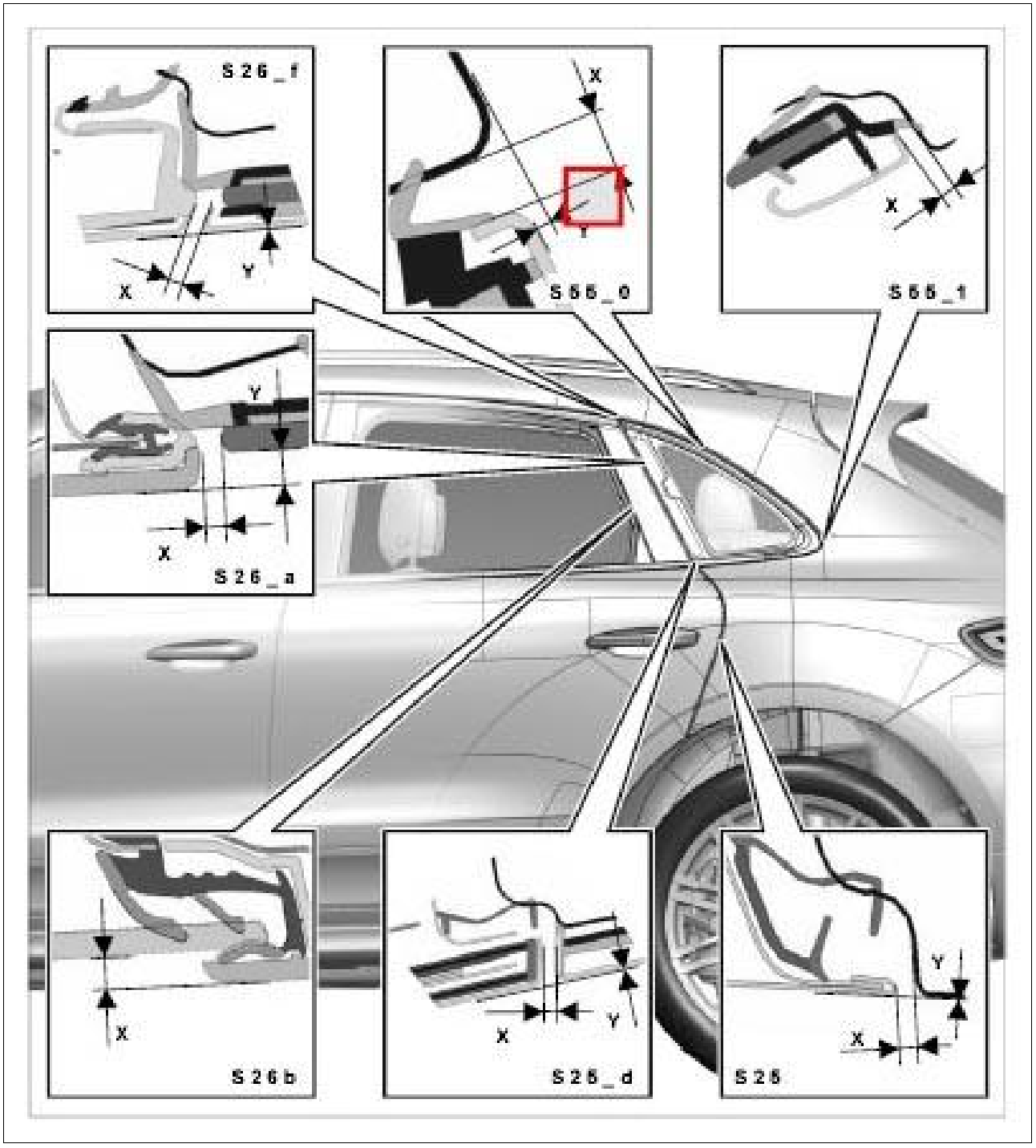

Courtesy of PORSCHE CARS NORTH AMERICA, INC.

S55_1 - → Gap dimension: 3.8 mm+/-0.8 mm

Fig 38: Identifying Gap Dimensions For Rear Door

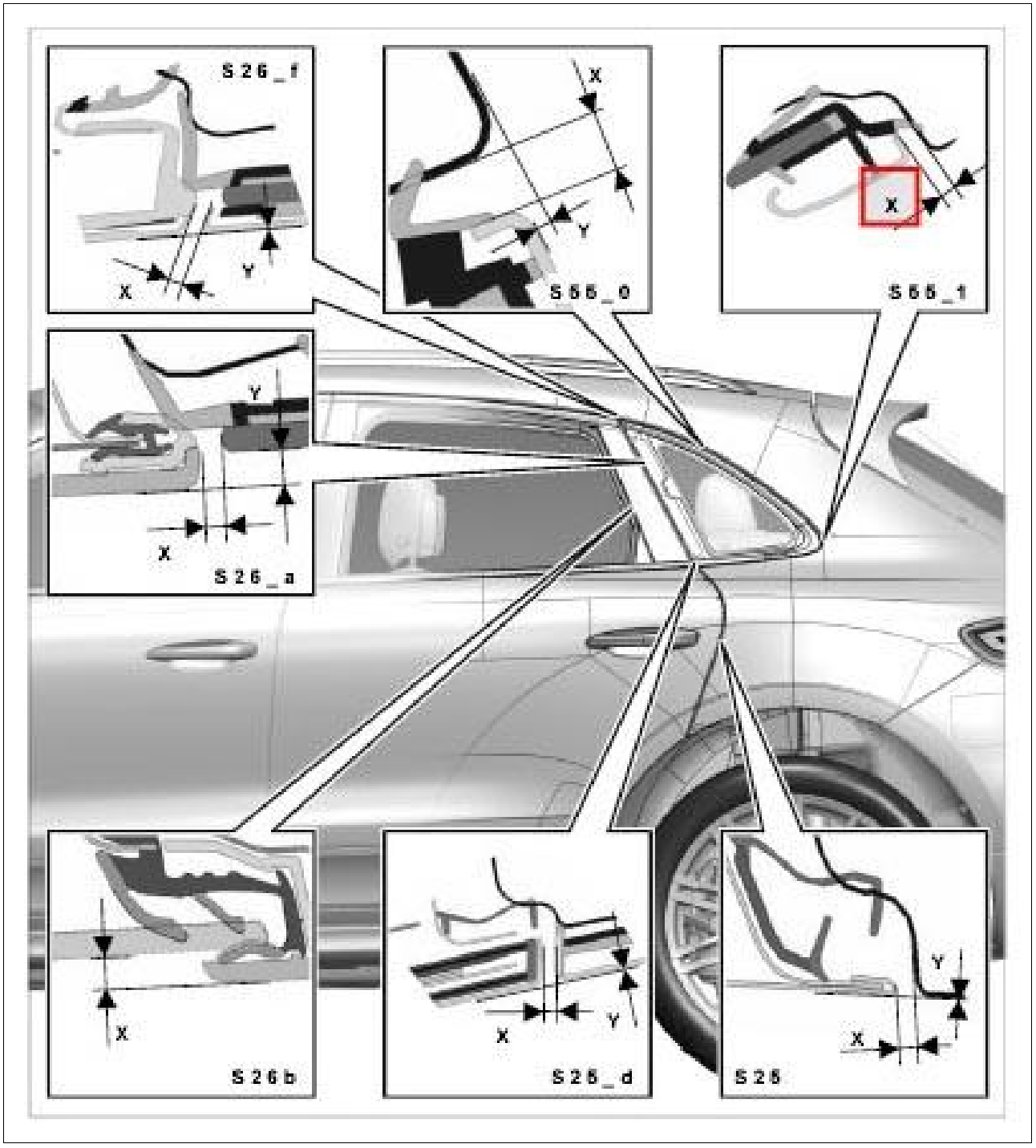

Courtesy of PORSCHE CARS NORTH AMERICA, INC.

WM 585115 ADJUSTING REAR DOOR (ALL MODELS) > ADJUSTING REAR DOOR

WARNING: Incorrect handling of safety bolts

- *Danger of injury*

- *Loss of torque*

→ Always use new fastening screws and nuts following removal.

→ Observe specified tightening torques.

→ Carry out a visual inspection of all re-used parts.

Information

Only tighten the fastening screws on the door hinges hand-tight from the inside until the doors are set correctly.

Information

- Set gap dimensions on the lids, doors and covers, or accessories in accordance with the gap specifications.
- Given a clearance in the openings that is too great or too small, the movable body parts or the accessories must be centered accordingly.
- Ensure that the gaps do not run in a wedge-shaped fashion or do not narrow at local points.
- You can use star gauges for body gap dimensions NR.127-1 for this.
- The given values are guidelines which should be observed as far as possible.
- The guidelines apply to repair and assembly work.

Information

- The door hinge must be aligned after installing the door.
- Loosen fastening screws for door hinge at the door and fastening screws for door hinge at the B-pillar so that the threaded connections can be moved.

Information

- The number of fastening screws, fixing clips, plug connections, holders and trim panels can vary depending on equipment.
- The illustrations for removing and installing the drive mechanism are shown only on one equipment variant and may differ from the actual equipment variant.
- Some steps must be carried out automatically.
- Some of the repair illustrations show only one side of the vehicle.

1. Adjust rear door with door hinge at the door.

Fig 1: Identifying Rear Door Hinge On Door Side

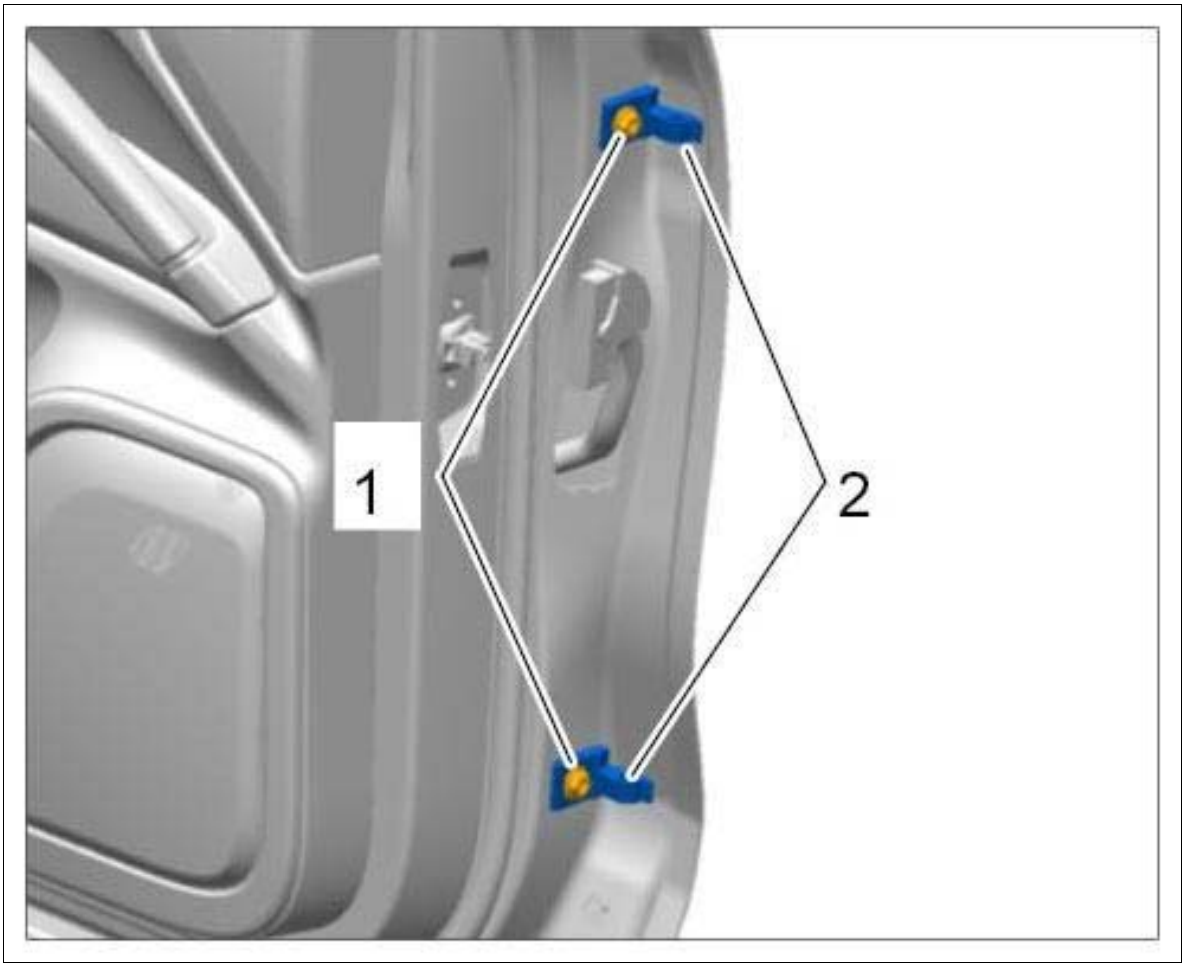

Courtesy of PORSCHE CARS NORTH AMERICA, INC.

No.	Component	Function	Procedure
1.	Fastening screw **-1-** securing door hinge **-2-** to rear door	Adjustment of gap dimensions in Y and Z direction	Loosen.
2.	Rear door		Adjust gap dimensions in X and Y direction by moving the door.
3.	Fastening screw **-1-** securing door hinge **-2-** to rear door	Adjustment of gap dimensions in Y and Z direction	Tighten fastening screw **-1-** securing door hinge **-2-** to rear door to **Tightening torque 55 Nm (41 ftlb.)** .

2. Adjust rear door with door hinge at the body.

Fig 2: Loosening Rear Door Hinge On Body Side At Inside

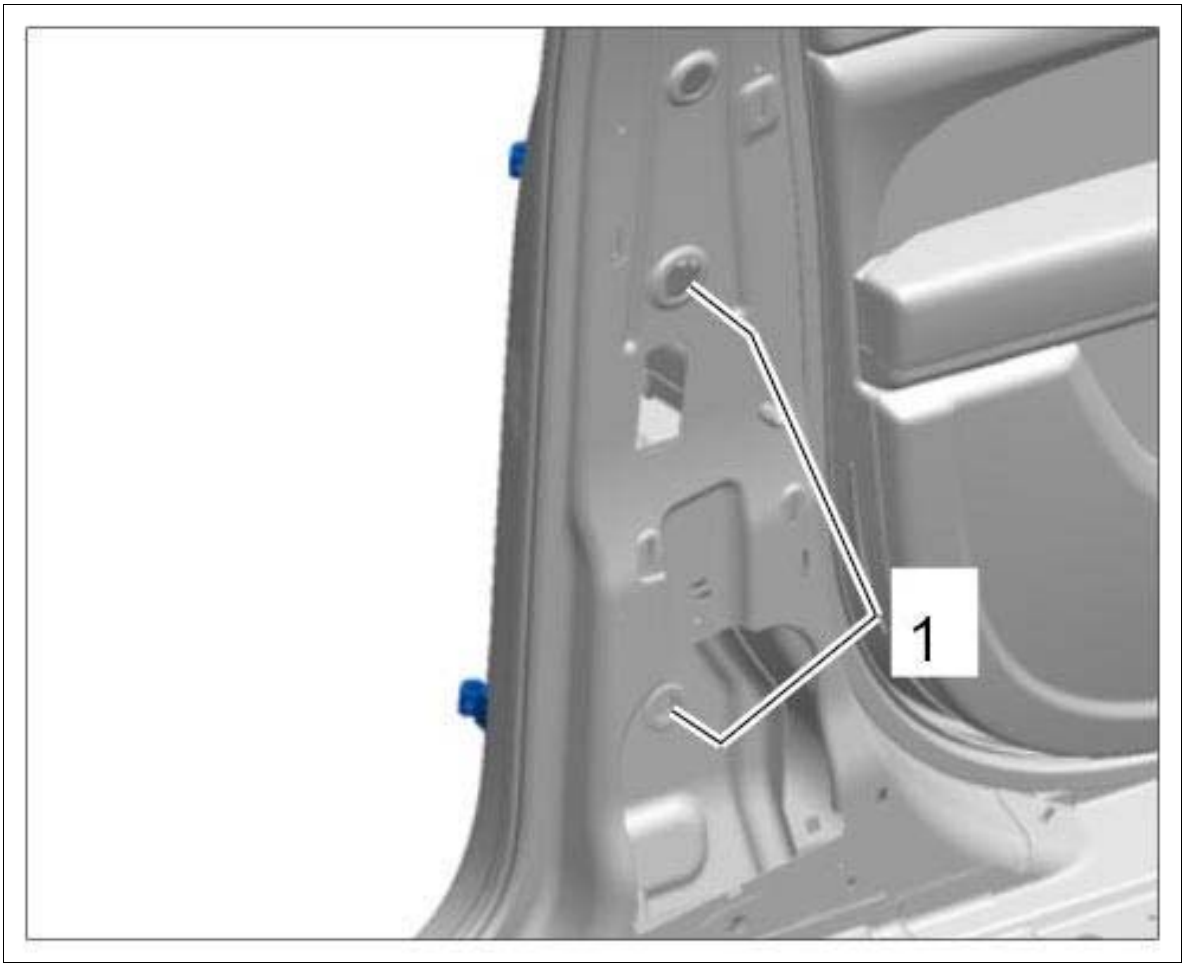

Courtesy of PORSCHE CARS NORTH AMERICA, INC.

Fig 3: Loosening Rear Door Hinge On Body Side At Outside

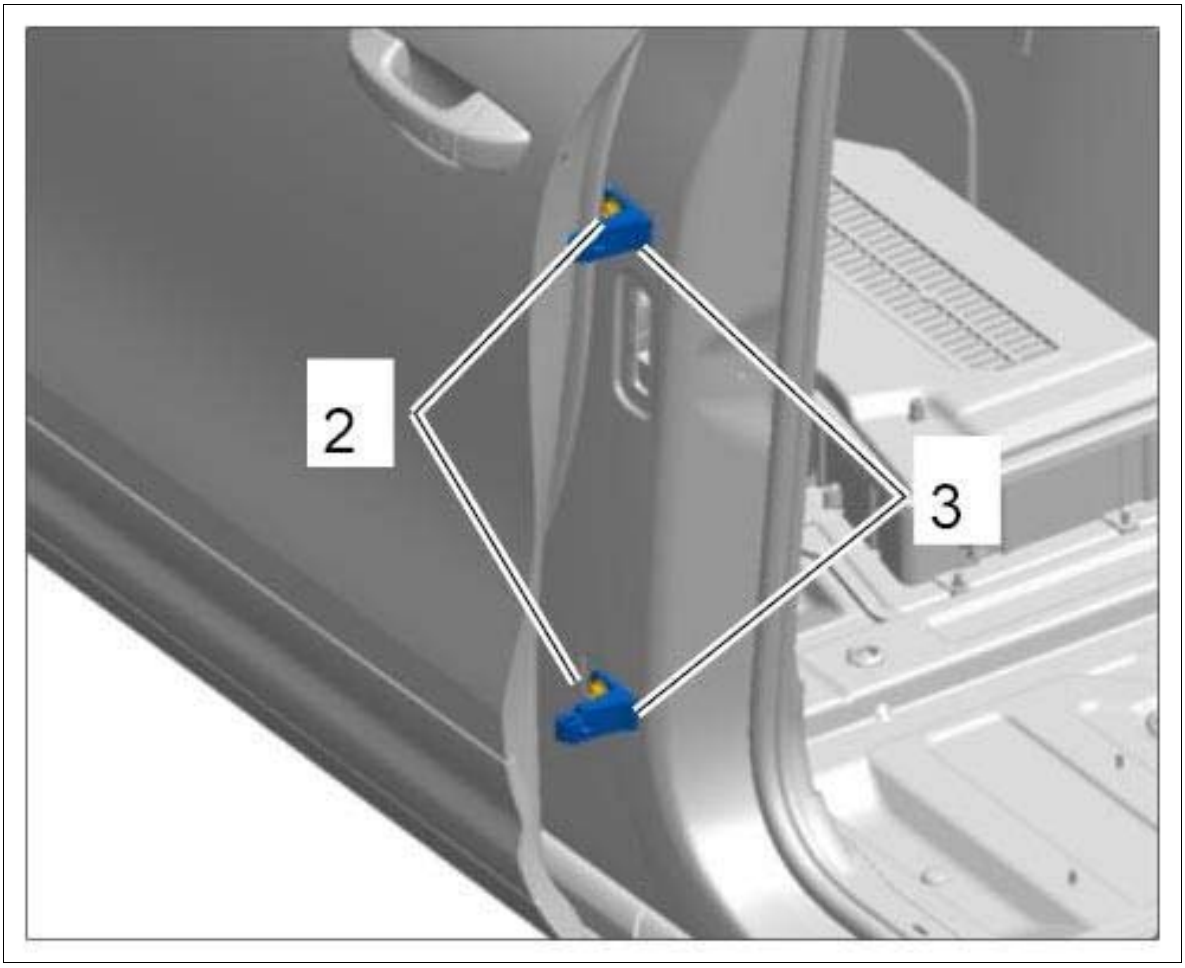

Courtesy of PORSCHE CARS NORTH AMERICA, INC.

No.	Component	Function	Procedure
1.	Fastening screws securing door hinge to body on outside **-2-** and inside **-1-** → Removing Rear Door	Adjustment of gap dimensions in X and Z direction	Loosen.
2.	Rear door		Adjust gap dimensions in Z direction by moving the rear door.
3.	Fastening screws securing door hinge to body on outside **-2-** and inside **-1-** → Installing Rear Door	Adjustment of gap dimensions in X and Z direction	Tighten fastening screws securing door hinge to body on outside **-2-** and inside **-1- Tightening torque 50 Nm (37 ftlb.)** **Tightening torque 50 Nm (37 ftlb.)** .

3. Adjust rear door with lock peg (striker pin).

Fig 4: Adjusting Lock Peg

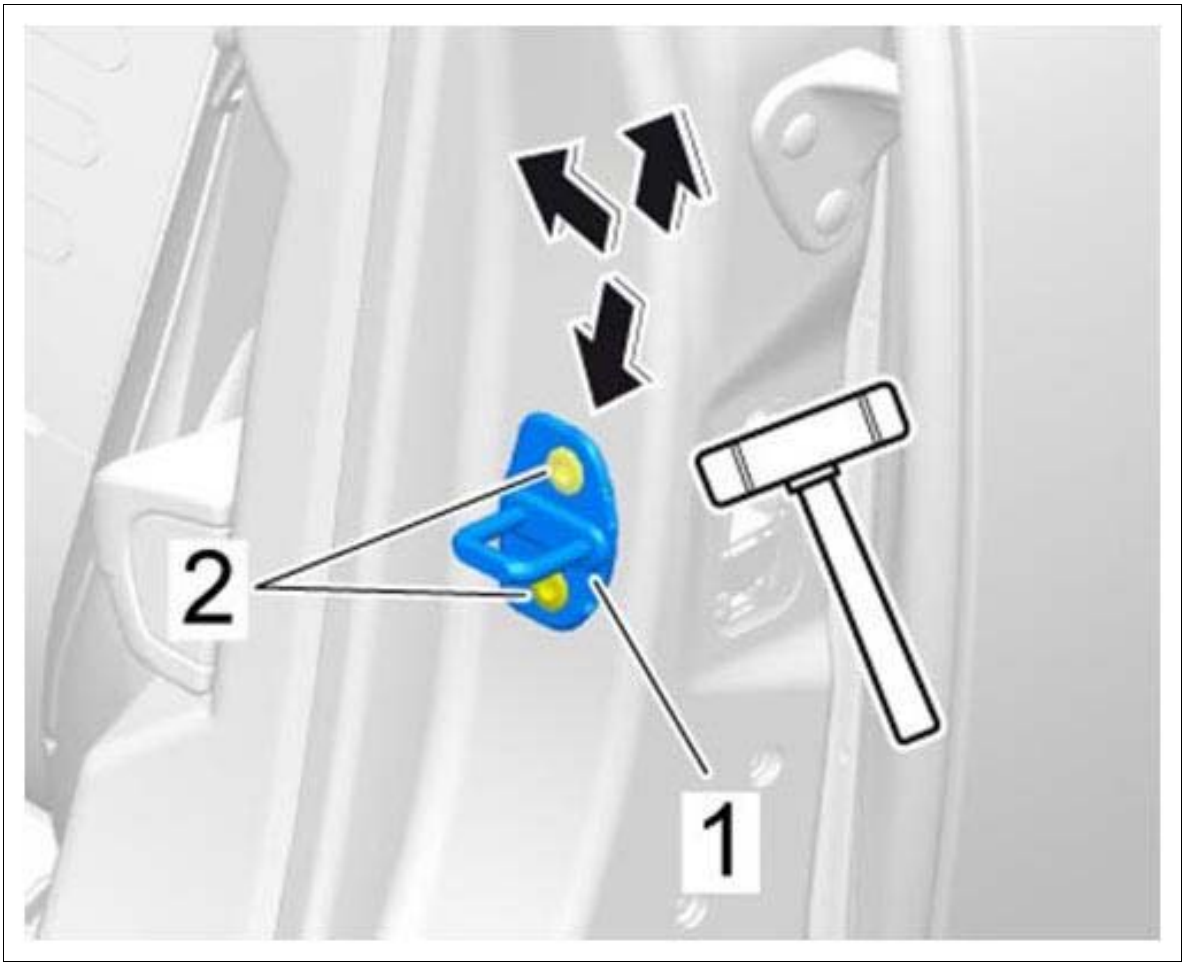

Courtesy of PORSCHE CARS NORTH AMERICA, INC.

No.	Component	Function	Procedure
1.	Fastening screws **-2-** for lock peg **-1-** at the rear	Locking mechanism for rear door	Loosen.
2.	Rear door		Adjust gap dimensions in Y and Z direction at the rear by moving the rear door.
3.	Fastening screws **-2-** for lock peg **-1-** at the rear	Adjust gap dimensions in Z direction at the rear by moving the rear door.	Tighten fastening screws **-2-** for lock peg **-1-** at the rear to **Tightening torque 25 Nm (19 ftlb.)** .

WM 585119 REMOVING AND INSTALLING REAR DOOR (ALL MODELS) > TECHNICAL VALUES

Location	Description	Type	Basic value	Tolerance 1	Tolerance 2
Fastening screw for door arrester		Tightening torque	33 Nm (24 ftlb.)		
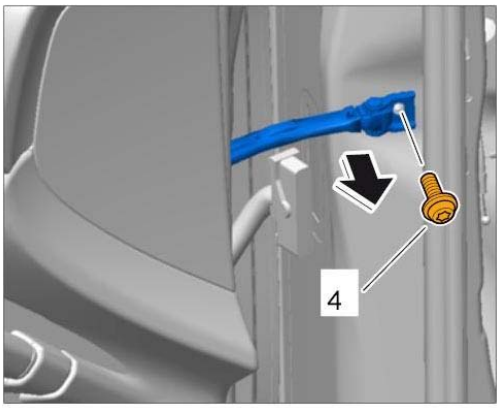 Unscrewing fastening screw on door arrester					
Fastening screw for hinge		Tightening torque	27 Nm (20 ftlb.)	+/-3.5 Nm (+/- 2.5 ftlb.)	
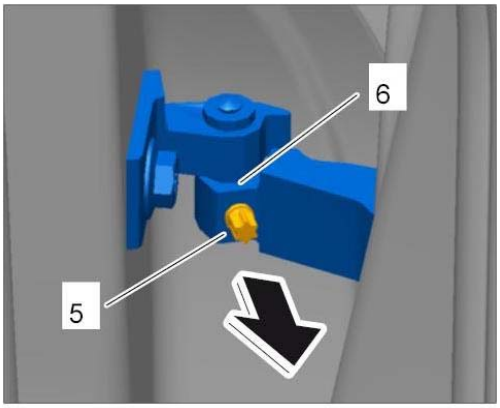 Loosening fastening screws for hinge connection					

WM 585119 REMOVING AND INSTALLING REAR DOOR (ALL MODELS) > REMOVING REAR DOOR

1. Slide the locking mechanism **-1-** on plug connection **-2-** up using a suitable tool and disconnect the connector.

Fig 1: Disconnecting Electric Plug Connection

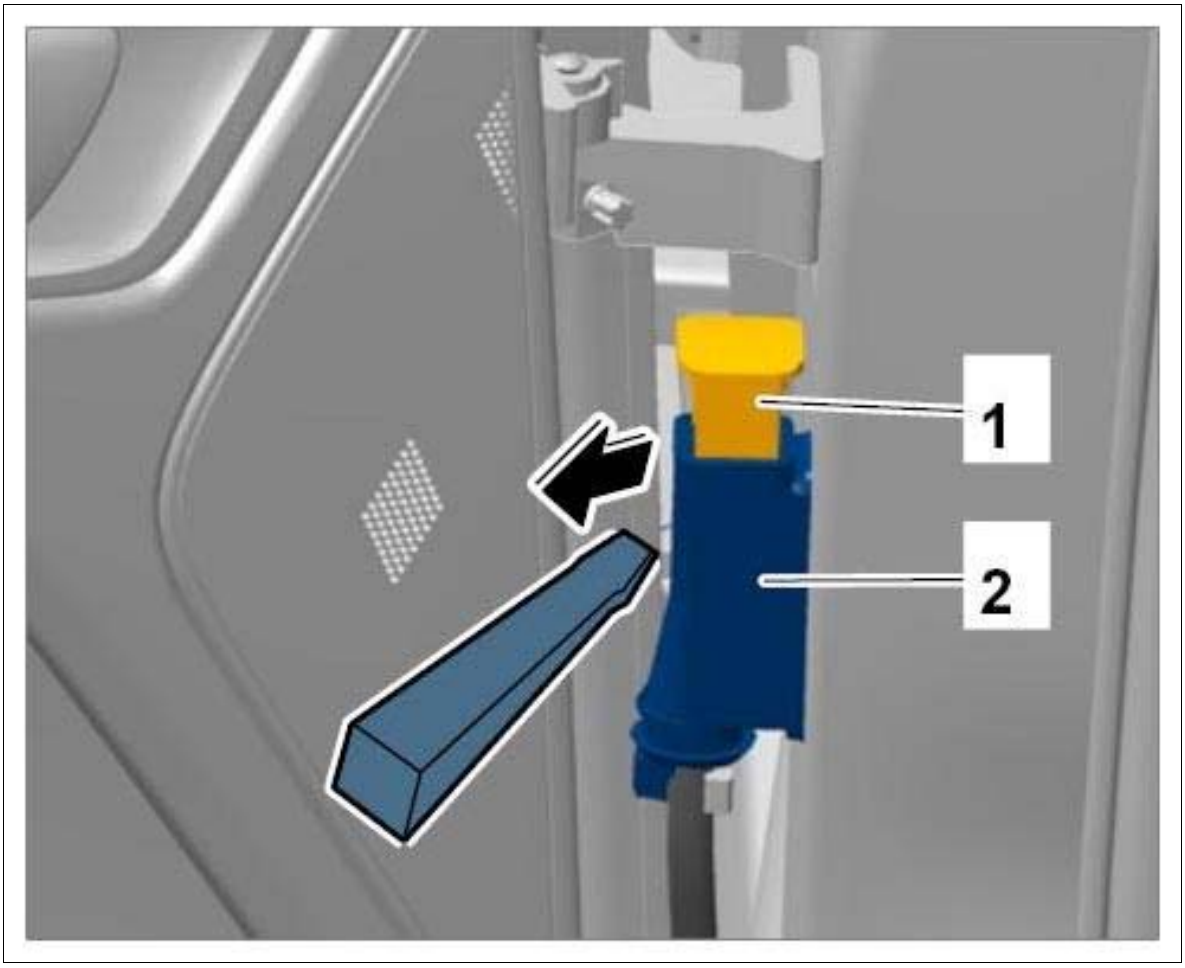

Courtesy of PORSCHE CARS NORTH AMERICA, INC.

2. Unscrew and remove fastening screw on the door arrester **-4-** at the vehicle door.

Fig 2: Removing Fastening Screw On Door Arrester

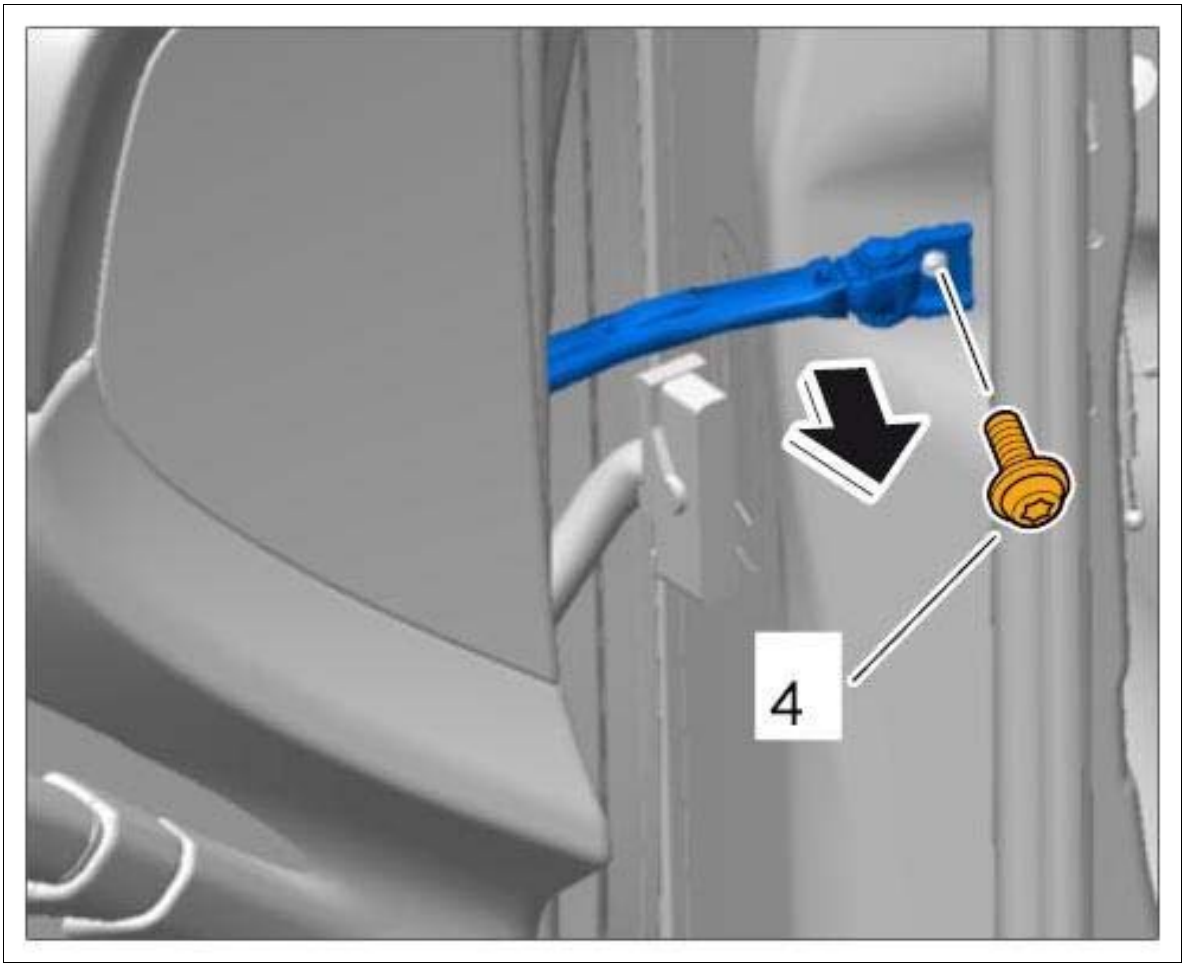

Courtesy of PORSCHE CARS NORTH AMERICA, INC.

3. Pull plastic caps **-3-** off the hinge screws at the top and bottom hinge joints **-6-** .

Fig 3: Identifying Caps On Hinge Screws

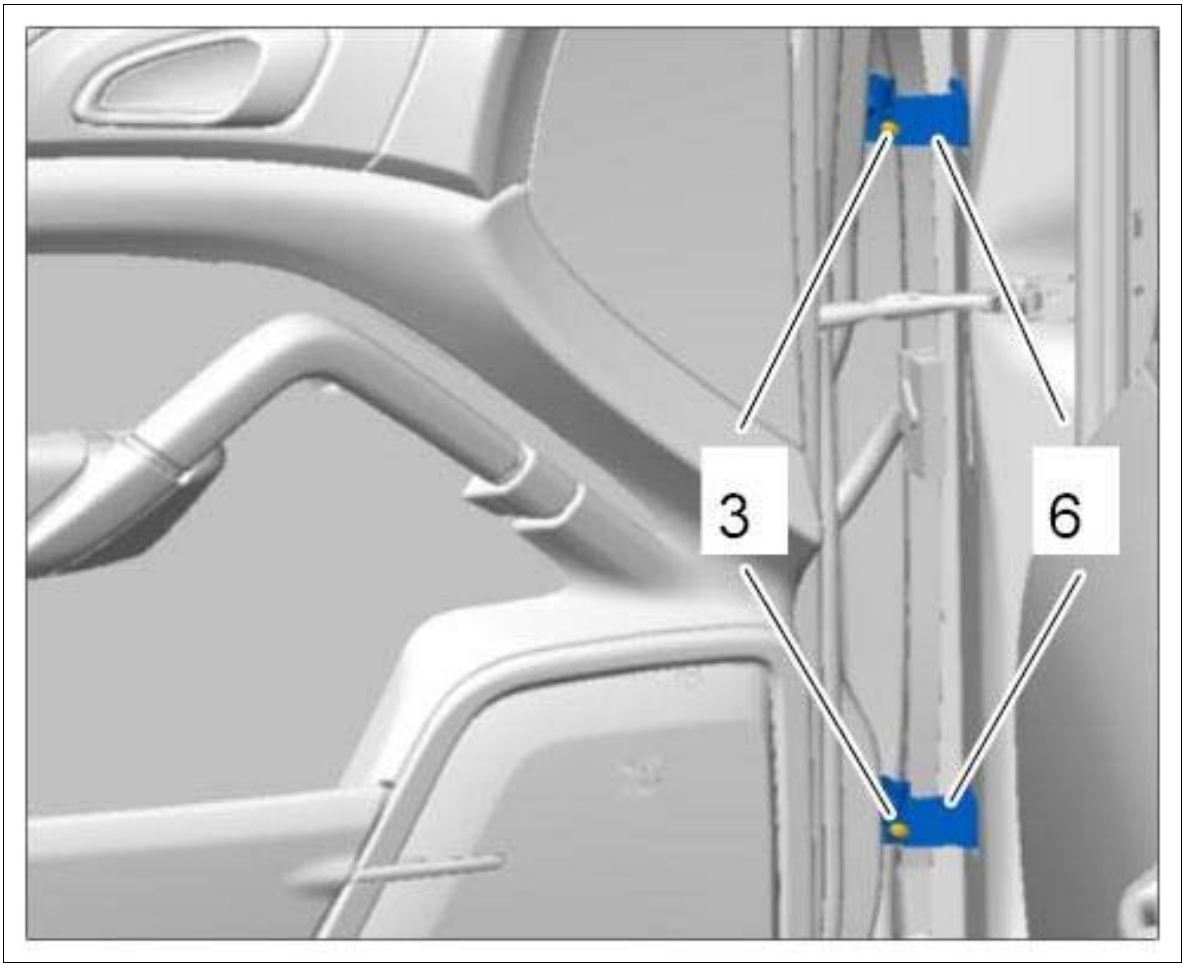

Courtesy of PORSCHE CARS NORTH AMERICA, INC.

4. Loosen fastening screws **-5-** on the upper and lower hinge joint **-6-** .

Fig 4: Loosening Hinge Joint

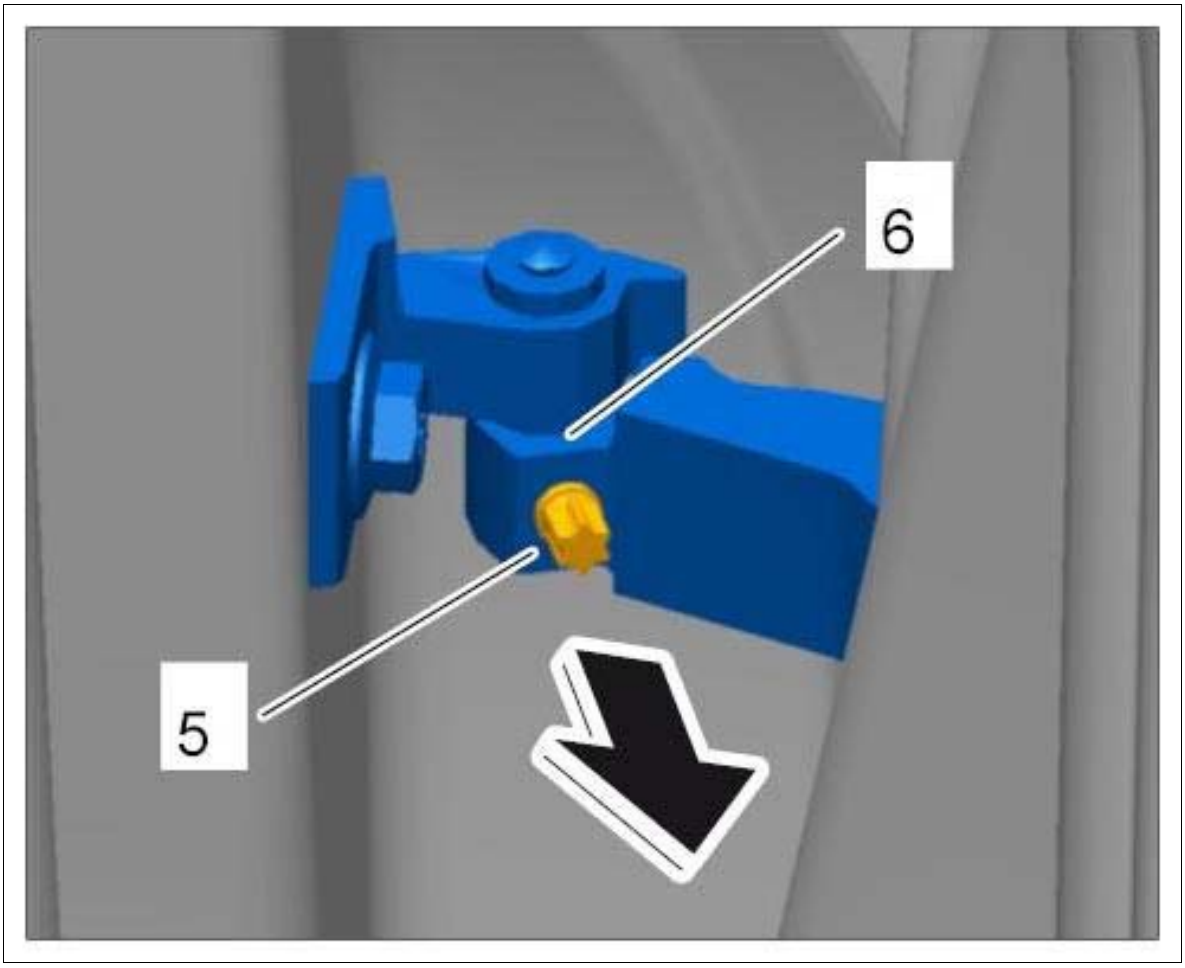

Courtesy of PORSCHE CARS NORTH AMERICA, INC.

5. Get another person to hold the vehicle door.
6. Lift the vehicle door up slightly until the hinge bolts come out of the hinge halves on the door side.

Fig 5: Lifting Vehicle Door

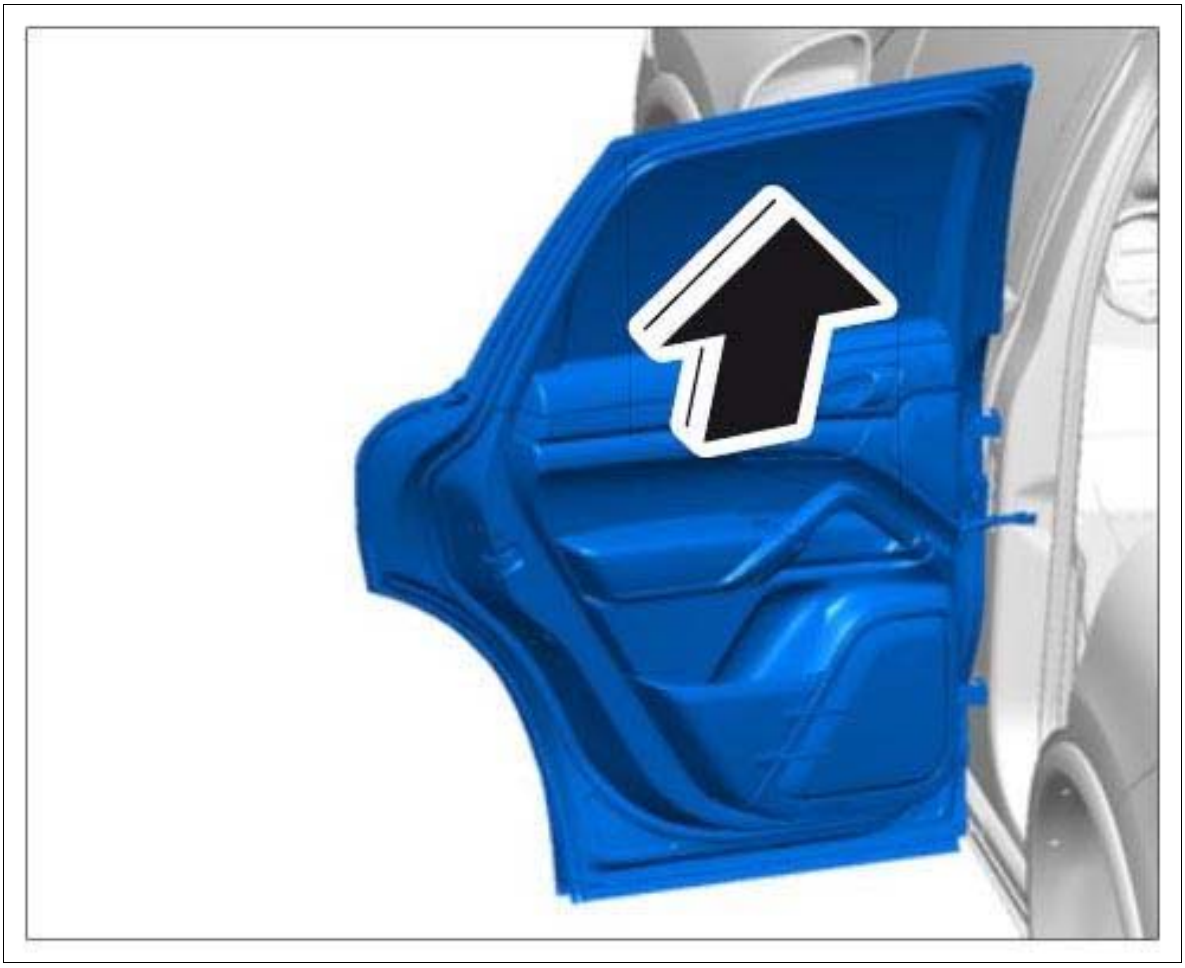

Courtesy of PORSCHE CARS NORTH AMERICA, INC.

7. Remove vehicle door.

WM 585119 REMOVING AND INSTALLING REAR DOOR (ALL MODELS) > INSTALLING REAR DOOR

1. Installation is performed in reverse order to removal.
2. Tighten fastening screw on door hinge to **Tightening torque 27 Nm (20 ftlb.) +/-3.5 Nm (+/-2.5 ftlb.)** .
3. Tighten fastening screw for door arrester to **Tightening torque 33 Nm (24 ftlb.)** .

WM 585155 REPLACING REAR DOOR (ALL MODELS) > REPLACING REAR DOOR

Information

- The scope of work to be carried out can vary depending on equipment variant.

- Some steps must be carried out automatically.
- Missing or damaged components and fastening parts must be replaced with new ones.

1. Remove window channel seal. → REMOVING REAR WINDOW GUIDE
2. Remove window guide. → Removing rear window guide
3. Remove cover for door. → Removing cover for rear door
4. Remove door handle. → Removing Rear Door Handle
5. Remove door lock. → Removing Rear Door Lock
6. Remove inner door release. → Removing Inner Door Release
7. Remove door arrester. → Removing Rear Door Arrester
8. Remove door control unit. → Removing Rear Door Control Unit
9. Remove rubber seal for rear door. → Removing Rubber Seal For Rear Door
10. Remove power window regulator. → Removing rear power windows
11. Remove wire harness for door. → Removing wire harness for door in front door panel
12. Remove door. → Removing Rear Door
13. Install new door. → Installing Rear Door

Assembly is carried out in reverse order.

WM 585919 REMOVING AND INSTALLING REAR DOOR ARRESTER (ALL MODELS) > TECHNICAL VALUES

Location	Description	Type	Basic value	Tolerance 1	Tolerance 2
Fastening screw for door arrester	Item 1	Tightening torque	33 Nm (24 ftlb.)		

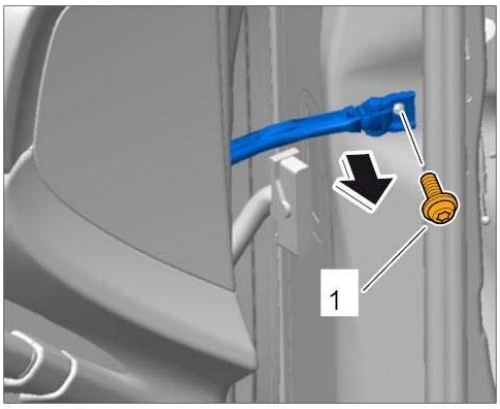

Unscrewing fastening screw at the body

Fastening screw for door stay	Item 2	Tightening torque	8 Nm (6 ftlb.)		

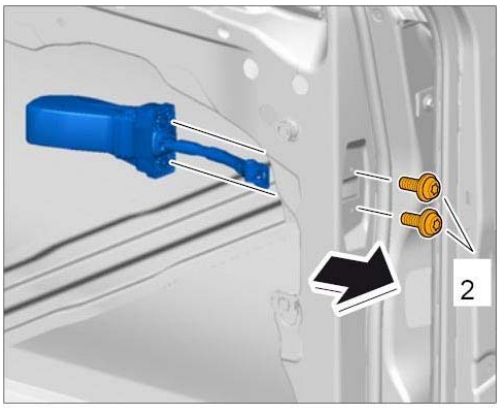

Unscrewing fastening screws for door

WM 585919 REMOVING AND INSTALLING REAR DOOR ARRESTER (ALL MODELS) > PRELIMINARY WORK

1. Remove rear door panel. → Removing rear door panel
2. Remove rear woofer. → Removing rear loudspeakers

WM 585919 REMOVING AND INSTALLING REAR DOOR ARRESTER (ALL MODELS) > REMOVING REAR DOOR ARRESTER

Information

- Some of the repair illustrations show only one side of the vehicle.
- Naturally, some steps also have to be performed on the opposite side of the vehicle as well.

1. Unscrew and remove fastening screw for B-pillar **-1-** .

Fig 1: Loosening Door Arrester

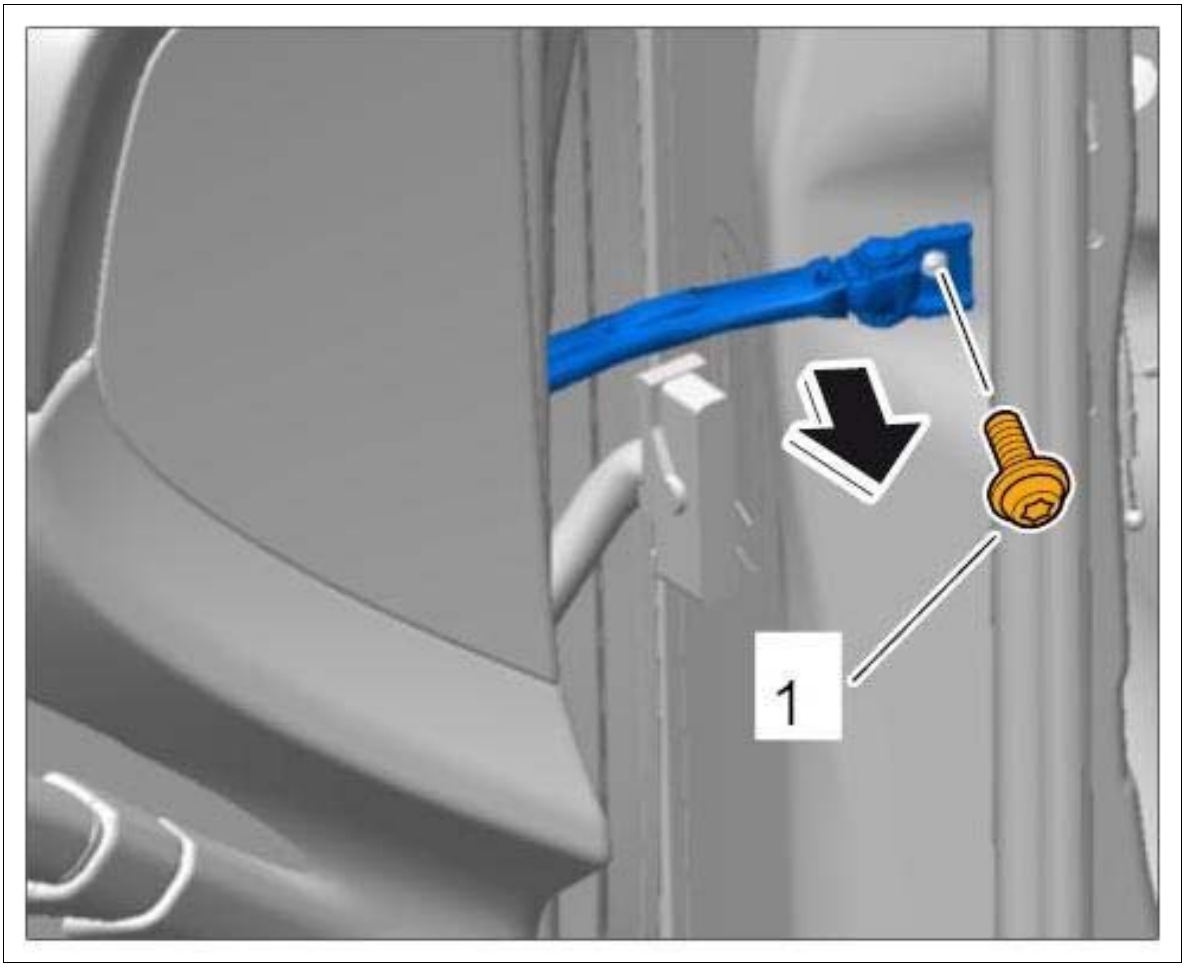

Courtesy of PORSCHE CARS NORTH AMERICA, INC.

2. Unscrew and remove fastening screws for door **-2-** .

Fig 2: Removing Door Arrester



Courtesy of PORSCHE CARS NORTH AMERICA, INC.

WM 585919 REMOVING AND INSTALLING REAR DOOR ARRESTER (ALL MODELS) > INSTALLING REAR DOOR ARRESTER

1. Installation is performed in reverse order to removal.
2. Tighten fastening screw securing door arrester at the door side to **Tightening torque 8 Nm (6 ftlb.)** until secure.
3. Tighten fastening screw securing door arrester to B-pillar to **Tightening torque 33 Nm (24 ftlb.)** until secure.

WM 585919 REMOVING AND INSTALLING REAR DOOR ARRESTER (ALL MODELS) > SUBSEQUENT WORK

1. Install rear woofer. → Installing rear loudspeakers
2. Install rear door panel. → Installing rear door panel

WM 586319 REMOVING AND INSTALLING RUBBER SEAL FOR REAR DOOR (ALL MODELS) > PRELIMINARY WORK

1. Remove upper part of B-pillar trim panel. → Removing lower part of B-pillar trim panel
2. Remove door entry guard. → Removing Rear Inner Door Sill Trim
3. Remove lower part of B-pillar trim panel. → Removing lower part of B-pillar trim panel
4. Remove rear seat airbag. → Removing rear side airbag
5. Remove C-pillar trim panel. → Removing C-pillar trim panel
6. Remove rear grab handle. → Removing Rear Grab Handle

WM 586319 REMOVING AND INSTALLING RUBBER SEAL FOR REAR DOOR (ALL MODELS) > REMOVING RUBBER SEAL FOR REAR DOOR

1. Loosen headliner **-1-** close to the rubber seal for the rear door **-2-** .

Fig 1: Detaching Headliner

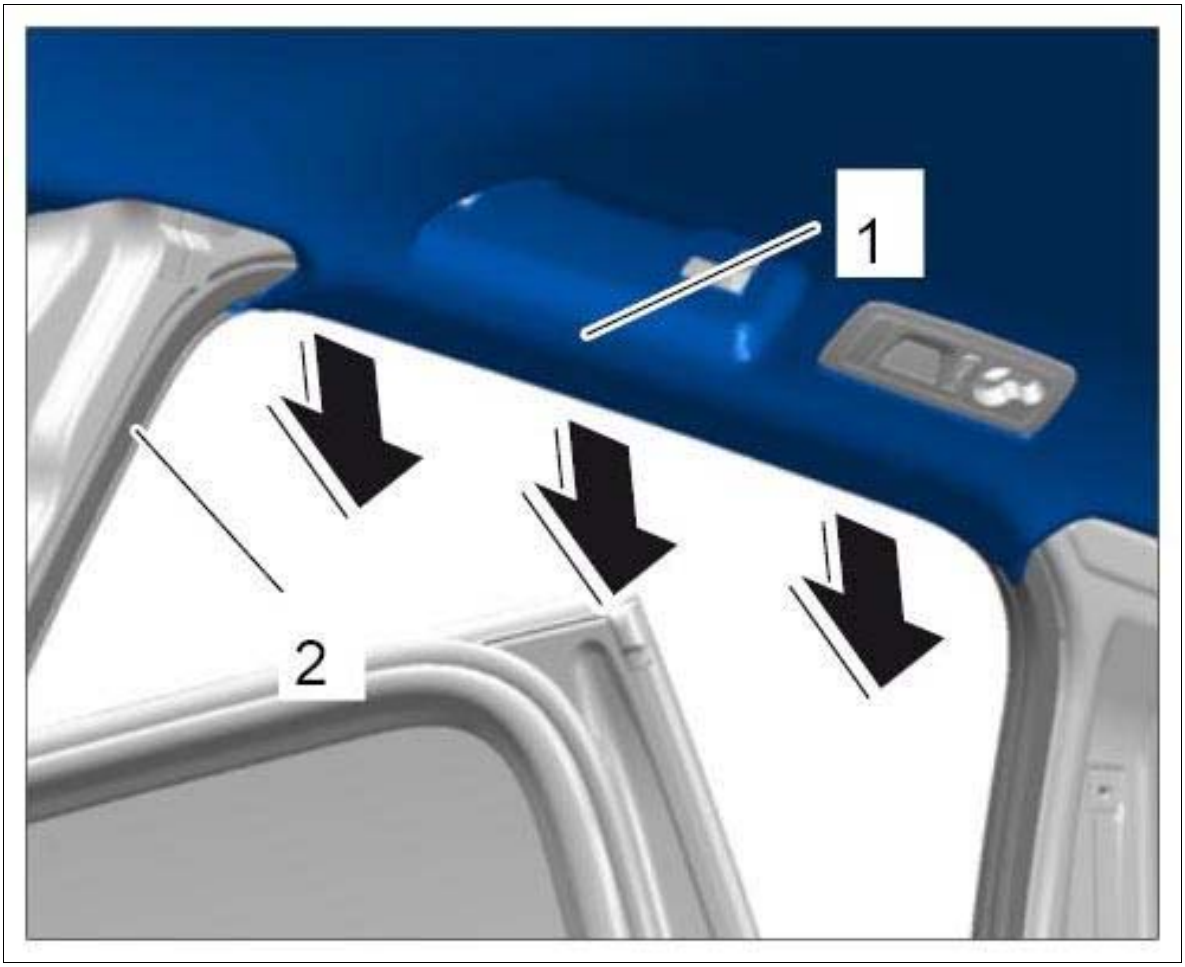

Courtesy of PORSCHE CARS NORTH AMERICA, INC.

2. Pull off rubber seal all around the sheetmetal flange.

Fig 2: Removing Rubber Seal For Rear Door

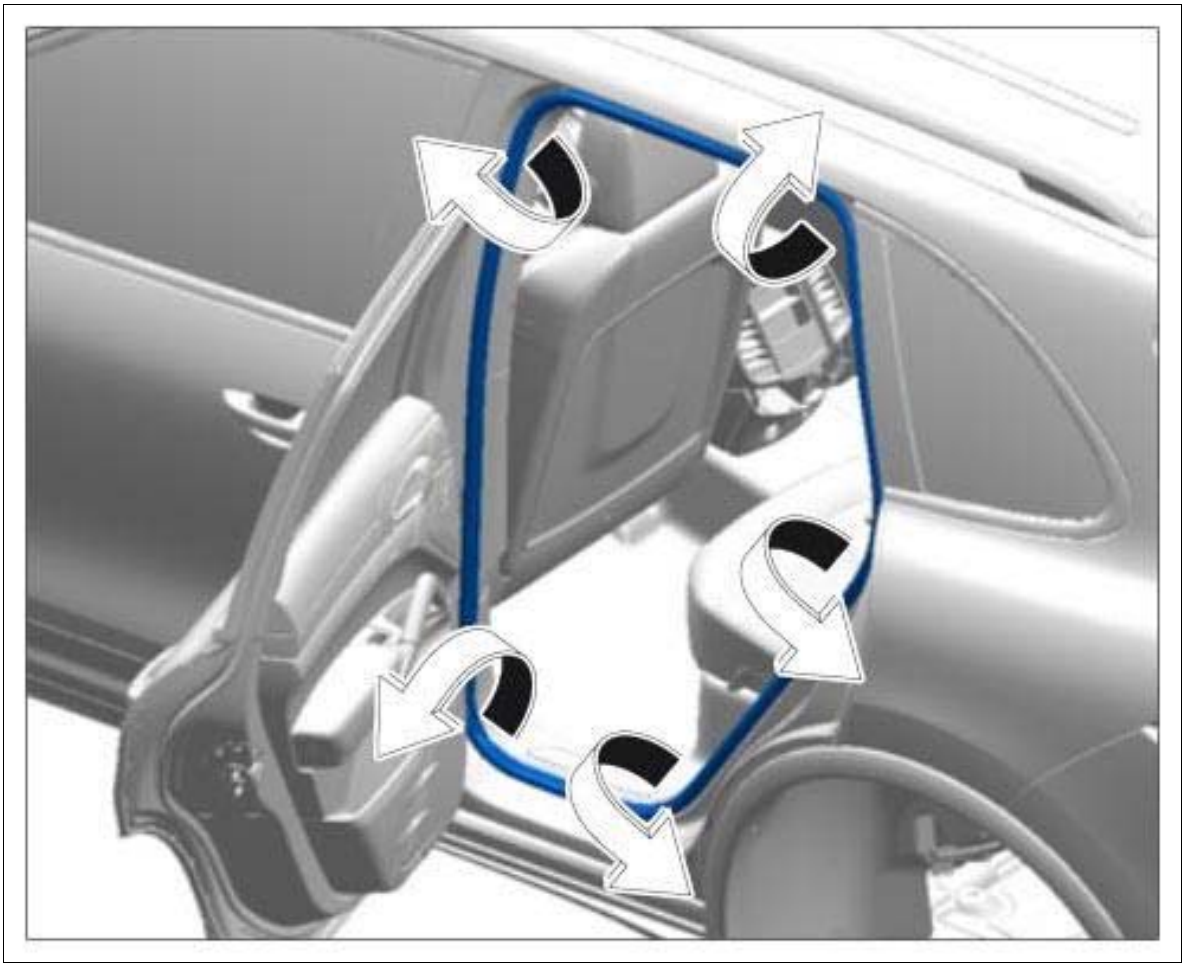

Courtesy of PORSCHE CARS NORTH AMERICA, INC.

WM 586319 REMOVING AND INSTALLING RUBBER SEAL FOR REAR DOOR (ALL MODELS) > INSTALLING RUBBER SEAL FOR REAR DOOR

1. Fit vulcanization point of rubber seal **-1-** close to the door arrester on the sheetmetal flange.

Fig 1: Identifying Rubber Seal For Rear Door

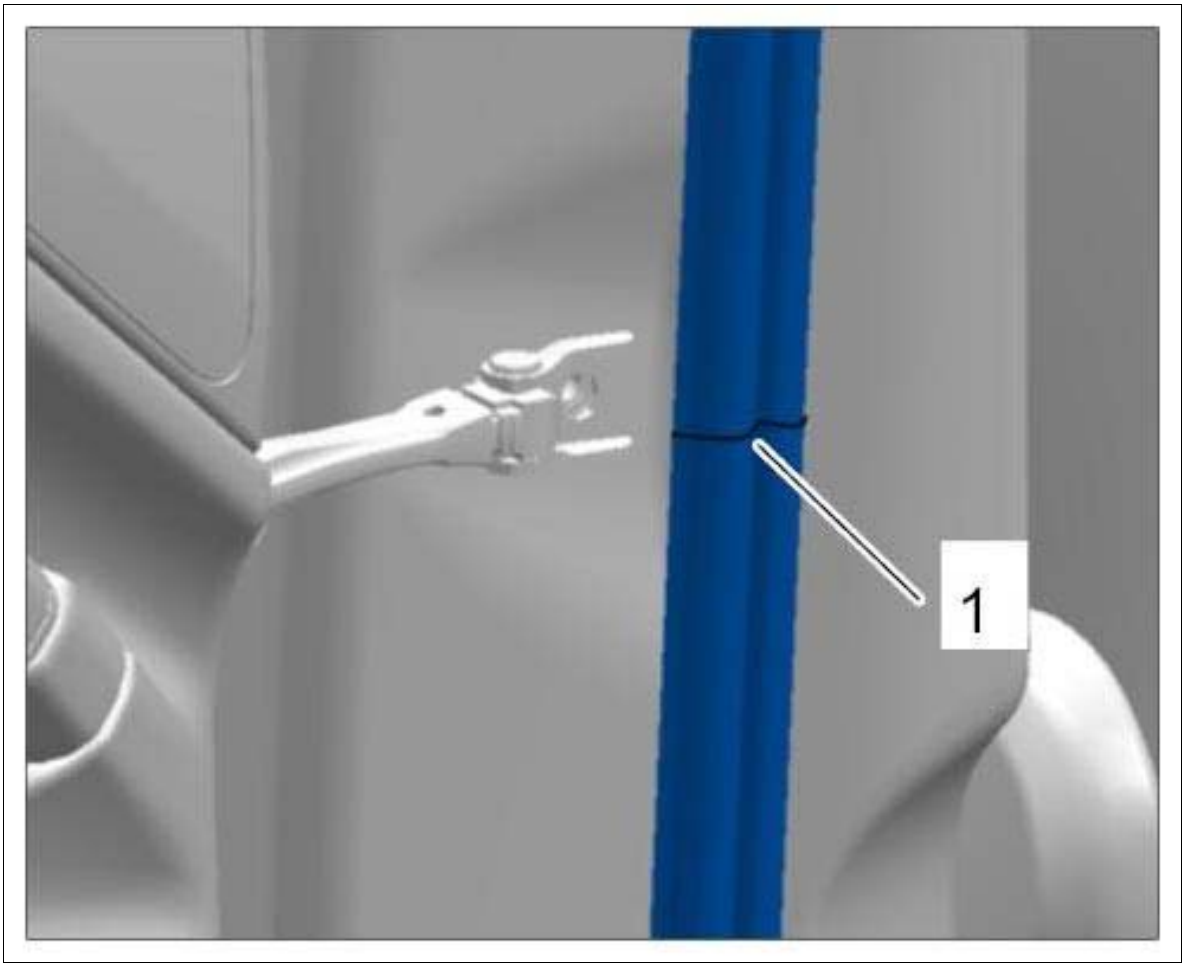

Courtesy of PORSCHE CARS NORTH AMERICA, INC.

The air vents in the seal must be facing the outside of the vehicle.

2. Press rubber seal onto the sheetmetal flange all the way around.

Fig 2: Installing Rubber Seal For Rear Door



Courtesy of PORSCHE CARS NORTH AMERICA, INC.

3. Check that the rubber seal is fitted correctly.
    1. 3.1. Pay particular attention to correct fitting in the areas near the tight radii; there must be no deformation or stretching.
    2. 3.2. Check the air vents; they must not be closed or covered.
4. Guide headliner into the rubber seal.

WM 586319 REMOVING AND INSTALLING RUBBER SEAL FOR REAR DOOR (ALL MODELS) > SUBSEQUENT WORK

1. Install lower part of B-pillar trim panel. → Installing lower part of B-pillar trim panel
2. Install upper part of B-pillar trim panel. → Installing upper part of B-pillar trim panel
3. Install C-pillar trim panel. → Installing C-pillar trim panel
4. Install rear door entry guard. → Installing Rear Inner Door Sill Trim

5. Install rear seat airbag. → Installing rear side airbag
6. Install rear grab handle. → Installing Rear Grab Handle

WM 587319 REMOVING AND INSTALLING REAR DOOR CONTROL UNIT (ALL MODELS) > TOOLS

Designation	Type	Number	Description	
PIWIS Tester II	Special tool	9818		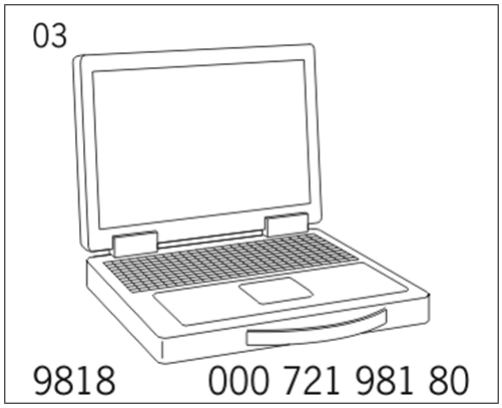

WM 587319 REMOVING AND INSTALLING REAR DOOR CONTROL UNIT (ALL MODELS) > PRELIMINARY WORK

1. Remove rear door panel. → Removing rear door panel

WM 587319 REMOVING AND INSTALLING REAR DOOR CONTROL UNIT (ALL MODELS) > REMOVING REAR DOOR CONTROL UNIT

NOTE: Voltage peaks

- *Risk of damage to load or to the control unit*

→ Remove the ignition key and switch off load before disconnecting or removing load.

Information

Always comply with the regulations for handling ESD-sensitive components!

- Assembly work may only be carried out if the mechanic is wearing the working clothes and shoes approved by Porsche.
- The new part must only be removed from the ESD (electrostatic discharge) protective packaging just before installation and at the position at which the part is to be installed.

- Never touch the electric pins and plug contacts.

1. Switch off ignition and pull remote control out of ignition lock.
2. Release electric connector **-1- (-a-)** and disconnect it from the rear door control unit **-2- (-b-)** .

Fig 1: Disconnecting Electric Plug Connection

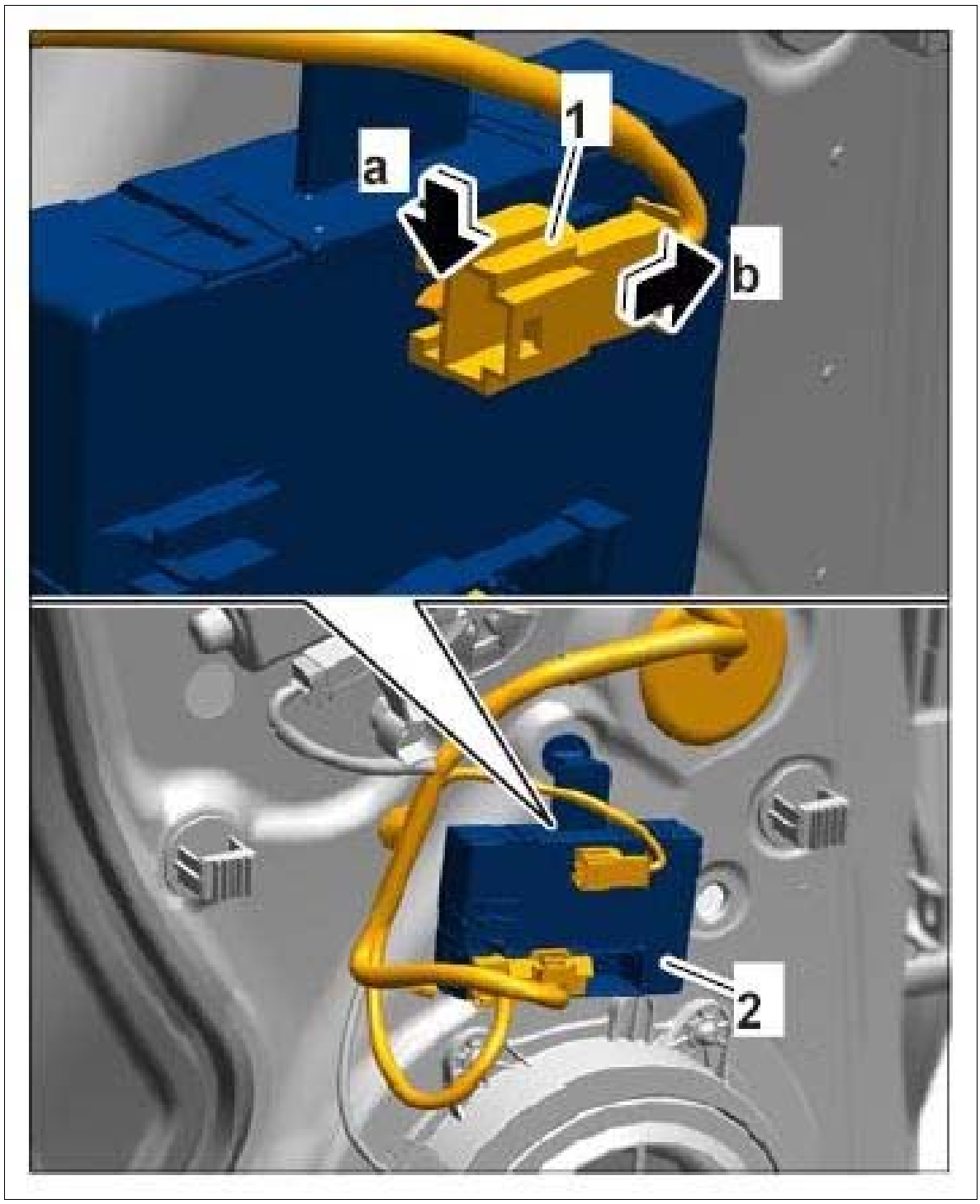

Courtesy of PORSCHE CARS NORTH AMERICA, INC.

3. Release electric plug connection **-1- (-a-)** and disconnect it from the rear door control unit **-2-** .

4. Pull locking mechanism **-b-** , press release button **-c-** and pull off electric plug connection **-3-** .

Fig 2: Disconnecting Electric Plug Connections

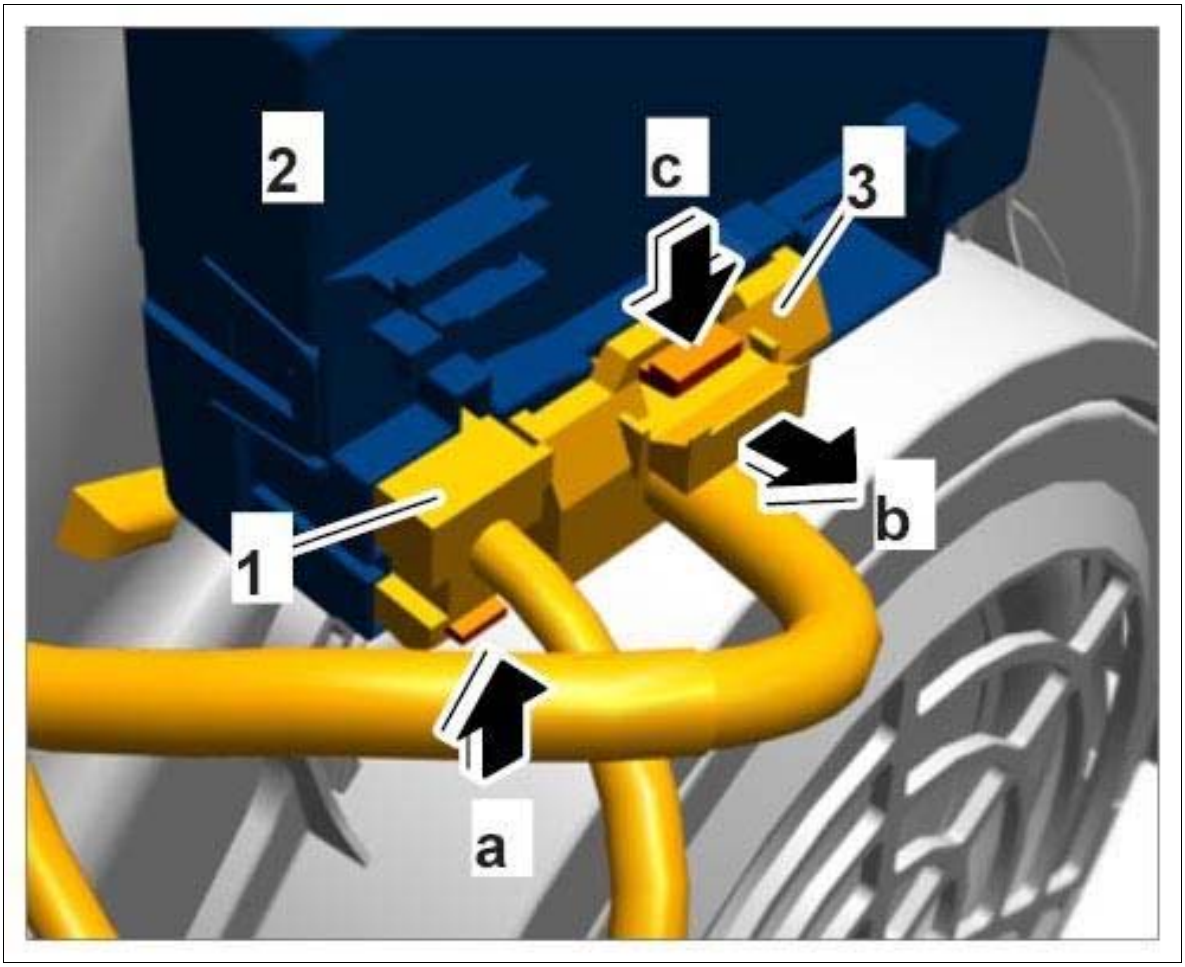

Courtesy of PORSCHE CARS NORTH AMERICA, INC.

5. Release locking lug **-a-** and disconnect top of rear door control unit **-1-** from the rear door **-b-** .

6. Pull retaining lugs **-2-** on rear door control unit up out of the door.

Fig 3: Removing Rear Door Control Unit

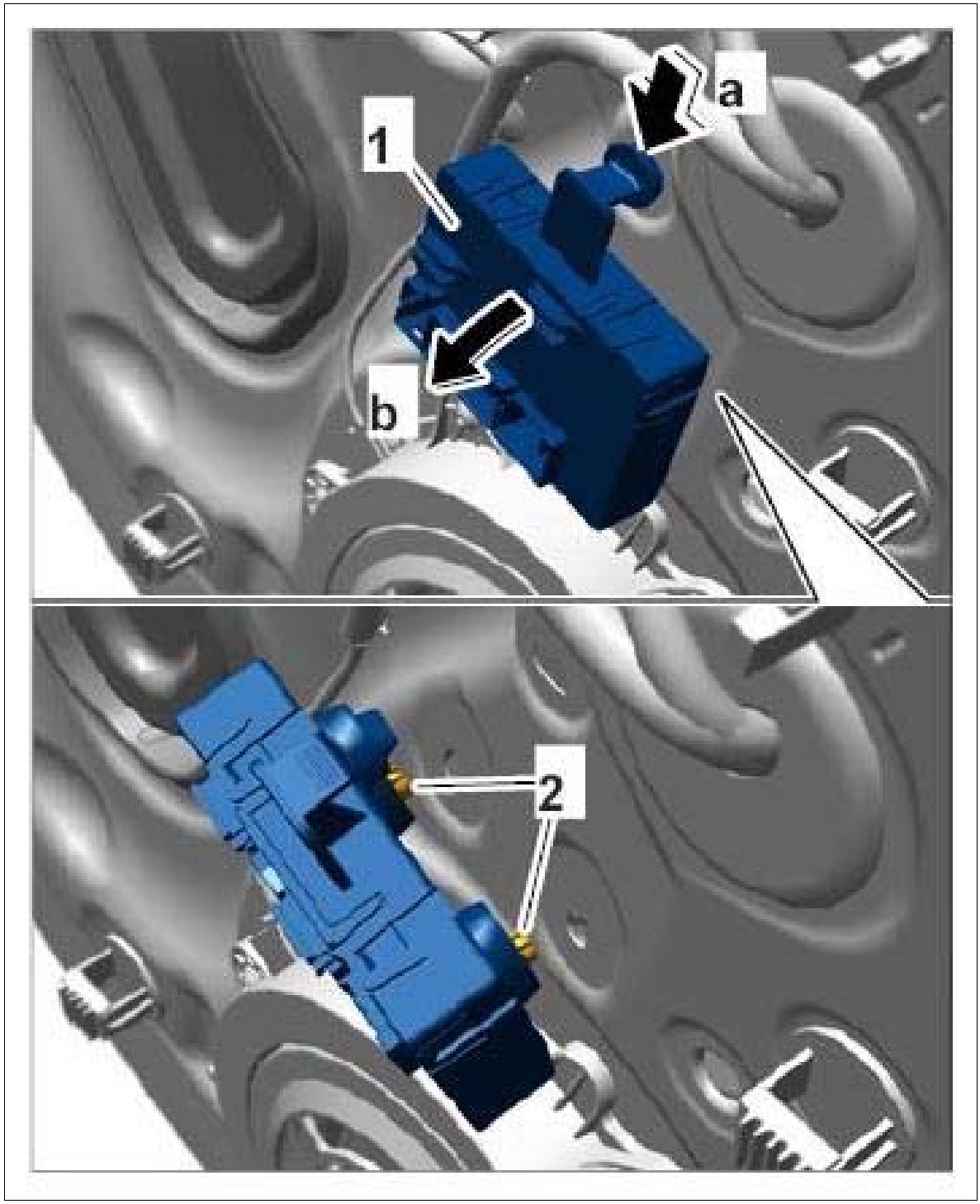

Courtesy of PORSCHE CARS NORTH AMERICA, INC.

WM 587319 REMOVING AND INSTALLING REAR DOOR CONTROL UNIT (ALL MODELS) > INSTALLING REAR DOOR CONTROL UNIT

Information

Always comply with the regulations for handling ESD-sensitive components!

- Assembly work may only be carried out if the mechanic is wearing the working clothes and shoes approved by Porsche.
- The new part must only be removed from the ESD (electrostatic discharge) protective packaging just before installation and at the position at which the part is to be installed.
- Never touch the electric pins and plug contacts.

1. Installation is performed in reverse order to removal.

WM 587319 REMOVING AND INSTALLING REAR DOOR CONTROL UNIT (ALL MODELS) > SUBSEQUENT WORK

1. Install rear door panel. → Installing rear door panel
2. If the rear door control unit was replaced, teach the new rear door control unit to suit the vehicle using **PIWIS Tester II 9818** . → 587355 REPLACING REAR DOOR CONTROL UNIT

WM 587355 REPLACING REAR DOOR CONTROL UNIT (ALL MODELS) > TOOLS

Designation	Type	Number	Description	
PIWIS Tester II	Special tool	9818		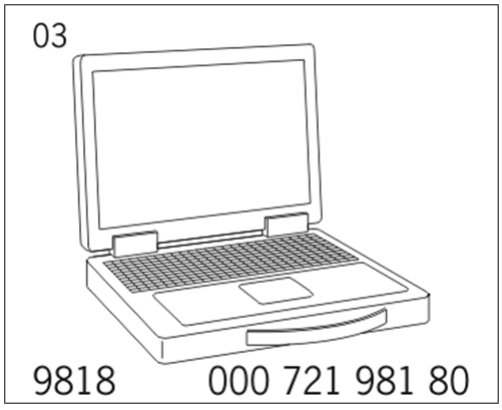

Location	Description	Type	Basic value	Tolerance 1	Tolerance 2
Current rating		Nominal value	40 A		

WM 587355 REPLACING REAR DOOR CONTROL UNIT (ALL MODELS) > REPLACING REAR DOOR CONTROL UNIT

NOTE: Voltage drop

- *Risk of irreparable damage to control unit*
- *Risk of damage to control unit*
- *Fault entries in the control unit*
- *Coding in the control unit is aborted*
- *Malfunctions in control unit, even during programming*

→ Prior to disconnecting the control unit, switch off ignition and remove ignition key.

→ Ensure that the power supply is not interrupted during programming.

→ Connect a battery charger with a current rating of at least → **Nominal value: 40 A** to the vehicle battery.

Information

The **PIWIS Tester II 9818** instructions take precedence since the description may be different with later Tester releases.

The procedure described here has been structured in general terms. Different text or additional information may appear in **PIWIS Tester II 9818** .

1. Switch off ignition and replace control unit. → 587355 REPLACING REAR DOOR CONTROL UNIT
2. Connect the PIWIS Tester to the vehicle and start the Tester. Switch on ignition.
3. Select the vehicle type and start the diagnostic application.
4. Select the required control unit, e.g. **Rear left door** in the overview.
5. **Extended identification** must now be selected.
6. **Enter the vehicle identification number** and press Enter.
7. **Maintenance/repairs** must then be selected.
8. **Control unit replacement** must now be selected. Then press [F12].
9. **Select Write data** , press [F12] and then press [F8] to start. The data is now loaded.
10. The Tester displays the message **Data has been written.** Press [F12] to continue.
11. **Codings/adaptations** must now be selected.
12. **Automatic coding** must now be selected. Then press [F12] to continue.
13. When the message **Coding has been completed successfully** appears, press [F12] to continue.
14. Read out the fault memory and erase it if necessary.
15. Check the function of the door control unit.

WM 5X00IN SAFETY NOTES (ALL MODELS) > SAFETY INSTRUCTIONS FOR RAISING VEHICLES > DANGER OF INJURY WHEN RAISING VEHICLES

WARNING: Vehicle can fall down

- *Risk of squashing or crushing*
- *Risk of damage to the vehicle*

→ Do not place any solid objects under the raised vehicle.

→ Ensure that the lifting platform is prevented from lowering.

→ Remove solid objects before lowering the vehicle.

→ Raise the vehicle only at the jacking points provided.

→ The outer jacking points should be used primarily.

WM 5X00IN SAFETY NOTES (ALL MODELS) > SAFETY INSTRUCTIONS FOR RAISING VEHICLES > DAMAGE WHEN RAISING VEHICLES

WARNING: Vehicle can fall down

- *Risk of squashing or crushing*
- *Risk of damage to the vehicle*

→ Do not place any solid objects under the raised vehicle.

→ Ensure that the lifting platform is prevented from lowering.

→ Remove solid objects before lowering the vehicle.

→ Raise the vehicle only at the jacking points provided.

→ The outer jacking points should be used primarily.

WM 5X00IN SAFETY NOTES (ALL MODELS) > GENERAL WARNING NOTES > SAFETY INSTRUCTIONS FOR GRINDING WORK

WARNING: Excessively high dust concentration during grinding work

- *Risk of explosion*

→ Remove any grinding dust using the relevant vacuum cleaner approved for use on the material.

→ Remove dust in the work area regularly.

→ Do not use compressed air to blow away dust deposits.

→ Always separate the dust from different materials (separate aluminum, steel and carbon fibre-reinforced plastic).

→ Clean the extraction system at regular intervals.

→ Never weld and grind in the same room at the same time.

→ Only use pneumatic grinders if possible.

WM 5X00IN SAFETY NOTES (ALL MODELS) > GENERAL WARNING NOTES > SAFETY INSTRUCTIONS FOR FUEL TANK

WARNING: Grinding and welding work

- *Danger of fire or explosion*

→ Avoid working in an area with highly inflammable or explosive materials.

→ Cover highly inflammable or explosive areas.

→ Remove highly inflammable or explosive parts.

WM 5X00IN SAFETY NOTES (ALL MODELS) > GENERAL WARNING NOTES > SAFETY INSTRUCTIONS FOR AIR CONDITIONING

CAUTION: Danger of injury! Bursting of the filled air-conditioning system during welding and brazing work!

- *Danger of injury due to the filled air-conditioning system bursting during welding and brazing work.*

→ No welding, brazing or hot-air heating may be performed on parts of the filled air-conditioning system!

→ While drying after painting work, the temperature burden on the vehicle must not exceed two hours at a maximum temperature of 80 °C!

→ Make sure that parts of the air-conditioning system do not heat up during welding or brazing work on the vehicle!

→ In the case of extreme heating of filled air-conditioning systems, a very strong overpressure may be caused in the system which may lead to an explosion.

WM 5X00IN SAFETY NOTES (ALL MODELS) > SAFETY INSTRUCTIONS FOR ADHESIVE BONDING > DANGER OF POISONING AND INJURY WHEN USING ADHESIVE

WARNING: Toxic substances

- *Danger of poisoning or suffocation*
- *Danger of burns to the eyes and skin*

→ Ventilate the work area well.

→ Never ingest or inhale.

→ Read specific information on the Hazard Sheet.

→ Do not smoke, eat or drink in the work area.

WM 5X00IN SAFETY NOTES (ALL MODELS) > SAFETY INSTRUCTIONS FOR ADHESIVE BONDING > SAFETY INSTRUCTIONS FOR TEROMIX-6700 TWO-COMPONENT ADHESIVE

NOTE: Non-observance of setting time for adhesive

- *Risk of damage to side panel*

→ Weld in the new part within 30 minutes.

WM 5X00IN SAFETY NOTES (ALL MODELS) > SAFETY INSTRUCTIONS FOR INSTALLATION WORK > SAFETY INSTRUCTIONS FOR AIRBAG SYSTEM

WARNING: Incorrect handling of airbag units

- *Triggering of airbag unit.*
- *System faults can occur.*

→ Switch off ignition and remove ignition key or remote control (hand-held transmitter).

→ A power supply (e.g. battery charger) must not be connected to the external power supply/jump-lead starting terminals.

→ Disconnect the battery and insulate the ground strap so that all contact with a ground carrier is avoided.

→ Wait 1 minute after disconnecting the battery.

→ Only pull off connector on the triggering unit after the waiting time has elapsed.

→ Make sure that no foreign objects are located in front of the airbag unit during installation.

→ Replace damaged parts during removal.

→ Always position airbag units so that the blow-out opening is facing upwards, e.g. crest on driver's airbag.

→ Do not position anything on the airbag units.

→ If removed for an extended period, the airbag units must be stored in a safe place.

→ Airbag units must not come into contact with grease, oil, detergents, liquids, or similar substances.

→ Do not expose airbag units to temperatures above 90°.

→ Do not remove the short-circuit spring on the plug-in contacts.

→ Ignition and preparations may only be carried out by skilled staff, supervised by a second responsible person.

→ Before disposal, the airbag unit must be rendered harmless by electrical ignition performed in accordance with all precautionary measures, thereby preventing it from being used incorrectly.

WM 5X00IN SAFETY NOTES (ALL MODELS) > SAFETY INSTRUCTIONS FOR CORROSION PROTECTION > SAFETY INSTRUCTIONS FOR STOPPER LOCATION PLAN (BODY)

NOTE: Removing stoppers

- *Risk of corrosion*
- *Uncontrolled water leakage*

→ Body apertures that are sealed with stoppers at the factory must be re-sealed with the stoppers

provided following disassembly or repair work.

WM 5X00IN SAFETY NOTES (ALL MODELS) > SAFETY INSTRUCTIONS FOR CORROSION PROTECTION > SAFETY INSTRUCTIONS FOR WATER DRAINS (BODY)

NOTE: Water drain hoses not cleaned correctly

- *Water drain hoses are pushed out or pressed into the body.*

→ When cleaning water drain hoses, only blow the hoses out with light compressed-air pressure.

→ The water hoses should only be blown out when the slide/tilt roof is closed.

WM 5X00IN CORROSION PROTECTION MEASURES DURING REPAIR WORK (ALL MODELS) > MEASURES FOR MAINTAINING LONG-TERM BODY PROTECTION

Information

- Following repair work, the standard corrosion protection should only be restored using the corrosion protection agents approved by the manufacturer. The following points must be observed during body repairs.
- Always apply welding primer to both sides of the welding flange when resistance spot welding.
- Prime repair areas from outside. Prime on both sides in the accessible areas.
- Seal all sheetmetal overlaps, sheetmetal edges, butt joints, weld seams etc. with body sealant.
- Only apply body sealant to primed sheetmetal parts.
- Apply top coat paint to the inside of the outer panelling before welding. See "Paint build-up": → "Paint Manual"
- Build up paint on bare sheetmetal panels according to the painting methods described in the → "Paint Manual".
- Repair or create standard underbody protection by applying long-life undersealing material.
- Preserve cavities in the repair area with cavity preservative after applying a top coat paint.
- Check that the standard water drains (stoppers) are working correctly and clean them after the cavity preservation material has dried.

WM 5X00IN CORROSION PROTECTION MEASURES DURING REPAIR WORK (ALL MODELS) > PREREQUISITE FOR ENSURING VALIDITY OF THE LONG-LIFE GUARANTEE

Porsche long-life guarantee conditions

- All body repairs must be carried out correctly and according to the specific Porsche instructions for sheetmetal, paint and corrosion protection/preservation work.
- To avoid jeopardising the long-life guarantee, a paint condition report will be drawn up two years after delivery of the vehicle. This condition report must be drafted annually by every Official Porsche Centre.

WM 5X00IN BODY PARTS OF VARIOUS SHEET-STEEL STRENGTHS (ALL MODELS) > LIST OF MATERIALS

Fig 1: Identifying Materials

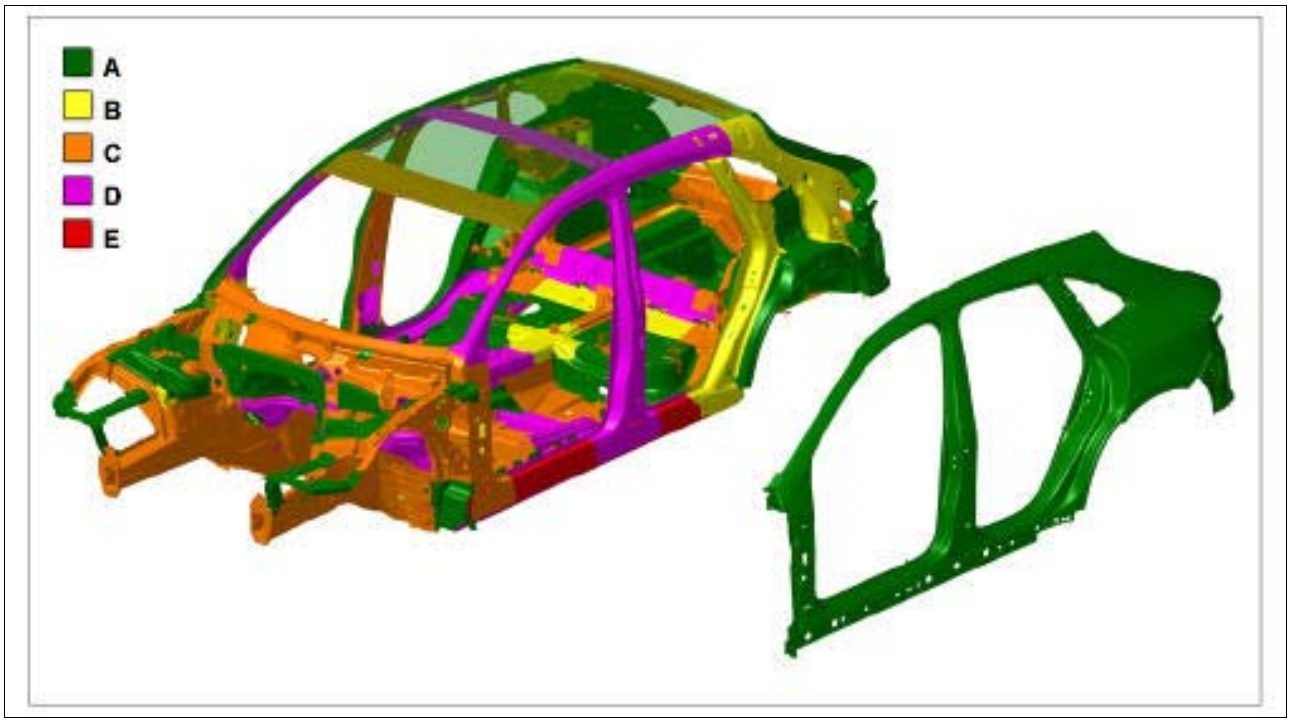

Courtesy of PORSCHE CARS NORTH AMERICA, INC.

A - Sheet steel

B - High-strength steel

C, E - Very-high-strength steel

D - Ultra-high-strength steel

Item	Material group	Material	Proof stress (1)	Tensile strength (2)	Use/Characteristics
A	Sheet steel	DX54	120-220 N/mm^2	260-350 N/mm^2	Outer skin parts very malleable

					Can be MIG welded Part replacement as per Workshop Manual
		DX56	120-180 N/mm^2	260-350 N/mm^2	
		DX57	120-170 N/mm^2	260-350 N/mm^2	
B	High-strength steel	HX260LAD	260-330 N/mm^2	350-430 N/mm^2	Reinforcement parts moderately to not very malleable Can be MIG welded Part replacement as per Workshop Manual
		HX340LAD	340-420 N/mm^2	410-510 N/mm^2	
		HX420LAD	420-520 N/mm^2	470-590 N/mm^2	
C	Very-highs-trength steel	HCT600X	340-420 N/mm^2	> 690 N/mm^2	Reinforcement parts not malleable Can be MIG welded Can be resistance spot-welded only using approved welders Part replacement is not permitted
		HCT780X	470-600 N/mm^2	> 780 N/mm^2	
E		HCT980 C	600-750 N/mm^2	> 980 N/mm^2	
D	Ultra-high-strength steel	22MnB5	> 950 N/mm^2	> 1, 400 N/mm^2	Pillars and columns not malleable MIG welding permitted only in exceptional cases Can be resistance spot-welded only using approved welders Part replacement is not permitted

(1)	Proof stress (yield stress) is the amount of mechanical stress above which a material will extend or buckle irreversibly or deform plastically.
(2)	Tensile strength is the resistance of a material to a force tending to tear it apart. If the tensile force is greater than the tensile strength of a body, it will be damaged irreparably.

WM 5X00IN BODY PARTS OF VARIOUS SHEET-STEEL STRENGTHS (ALL MODELS) > HIGH-STRENGTH STEEL

Information

- Only "Genuine Porsche spare parts" must be used for repair work.

Body parts of high-strength steel contribute to better protection of the passenger compartment and thus increase protection of the passengers. In addition to improved crash safety, these parts also have a positive influence on fatigue strength. In terms of crash behavior, body parts made from high-strength sheet steel are characterized by their higher energy absorption. But this also means that higher reshaping force must be applied in reshaping work.

WM 5X00IN BODY PARTS OF VARIOUS SHEET-STEEL STRENGTHS (ALL MODELS) > VERY-HIGH-STRENGTH STEEL

Information

- Only "Genuine Porsche spare parts" must be used for repair work.

Damaged or deformed body parts can impair torsional rigidity, flexional resistance and crash safety. Body parts can no longer be reshaped. Straightening and reshaping is not permitted. If a body part is damaged or deformed, it must be replaced.

WM 5X00IN BODY PARTS OF VARIOUS SHEET-STEEL STRENGTHS (ALL MODELS) > ULTRA-HIGH-STRENGTH STEEL

Information

- Only "Genuine Porsche spare parts" must be used for repair work.

Information

Ultra-high-strength steel panels are extremely strong and rigid. These body parts are recast warm during manufacturing and are press-hardened in cooled recast tools. Damaged or deformed body parts can impair torsional rigidity, flexional resistance and crash safety.

Information on ultra-high-strength steel:

- Ultra-high-strength body parts must only be replaced as a complete unit.
- Ultra-high-strength body parts can no longer be reshaped.
- Straightening and reshaping is not permitted.
- Use special drill bits for drilling ultra-high-strength steel.
- Resistance spot-welding can only be carried out using the inverter welders currently approved by Porsche AG.
- Plug spot-welding ultra-high-strength steel does not produce sufficiently strong joints. If holes need to be welded, additional welding seams must be applied.
- For butt, overlap and reinforcement welding, the individual spot welds and welded seams must be at least 30 mm long.
- Resistance spotwelds can also be replaced by blind rivets and adhesive. The number of rivets must be increased for ultra-high-strength steel panels.

During repairs, always read the specific instructions in the relevant Service information.

WM 5X00IN BODY PARTS OF VARIOUS SHEET-STEEL STRENGTHS (ALL MODELS) >

SEPARATION POINTS

Information

- Separation points that influence the strength of the body, and thus also the vehicle's operating and traffic safety, must be determined according to the specifications in the relevant Service Information!
- Body reinforcements can be separated or joined together only if this is specified in the method descriptions. Otherwise, a damaged reinforcement must always be replaced with a new one!

WM 5X00IN BODY PARTS OF VARIOUS SHEET-STEEL STRENGTHS (ALL MODELS) > WELDING WORK

Information

- The oxyacetylene welding process must not be used for welding body parts made of high-strength, very-high-strength and ultra-high-strength steel!
- Carry out test-welding before starting resistance spot-welding!

All specified steel panels can be welded using the approved resistance spot-welders.

The MIG welding process can only be used on ultra-high-strength steel in exceptional cases! Details of where this process can be used can be found in the relevant repair instructions. The MIG welding process can be used without restriction on all other specified steel panels.

WM 5X00IN SEALING ELEMENTS (ALL MODELS) > SEALING ELEMENTS

Information

- Sealing elements are either bonded or filled with foam filler depending on the repair area.

Fig 1: Overview Of Sealing Elements

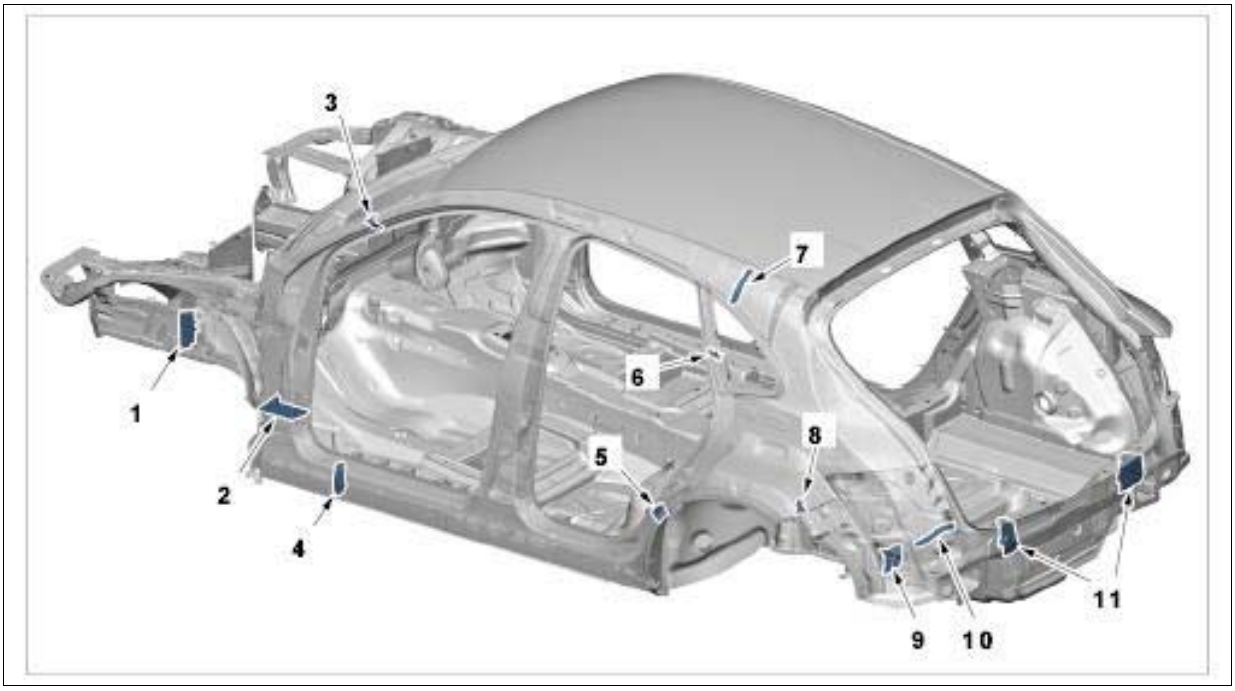

Courtesy of PORSCHE CARS NORTH AMERICA, INC.

1. Sealing element for front side member
2. Sealing element for bottom of A-pillar reinforcement
3. Sealing element for top of A-pillar reinforcement
4. Sealing element for side member reinforcement
5. Sealing element for bottom of C-pillar reinforcement
6. Sealing element for top of C-pillar reinforcement
7. Sealing element for roof pillar
8. Sealing element for rear side section
9. Sealing element for rear side member
10. Sealing element for D-pillar reinforcement
11. Sealing elements for rear end panel

WM 5X00IN GENERAL INFORMATION AND NOTES ON QUALITY (ALL MODELS) > BATTERY TRICKLE CHARGING > BATTERY TRICKLE CHARGE

Information

- In Order To Prevent The Vehicle Battery From Discharging When Visiting The Workshop, A Battery Charging Unit With A Rated Current Of At Least 40 A Must Be Connected As Soon As The Vehicle

Is Unlocked.

Refer To → 270619 Removing And Installing Battery For More Instructions About Connecting The Battery Charger.

WM 5X00IN GENERAL INFORMATION AND NOTES ON QUALITY (ALL MODELS) > INFORMATION ON ELECTRONIC CONTROL UNITS

Information

- If electronic components, e.g. ABS control module, have been removed for repair work and are then reused, they must undergo a functional check after fitting in accordance with existing specifications.

WM 5X00IN GENERAL INFORMATION AND NOTES ON QUALITY (ALL MODELS) > INFORMATION ON ELECTRONIC CONTROL UNITS > PROTECTION AGAINST OVERVOLTAGE WHEN PERFORMING WELDING WORK

To protect electronic control units from overvoltage during electric arc welding, the following work regulations must be observed:

- When performing welding work: Remove plug connections on the engine, transmission and airbag control units.
- Remove clamp from negative terminal of battery and cover the battery.
- When welding work is extensive, electronic control units in the immediate vicinity of the welding point must be removed.
- Connect the ground connection of the electric arc welding equipment as near as possible to the welding point on the part to be welded. Ensure that there are no electrically insulated parts between the ground connection and the welding point.
- Do not touch electronic control units or electric cables with the ground connection or the welding electrode.

WM 5X00IN GENERAL INFORMATION AND NOTES ON QUALITY (ALL MODELS) > INFORMATION ON ELECTRONIC CONTROL UNITS > REPLACING CONTROL UNITS

The replacement of electronic control units after an accident is necessary if at least one of the following conditions is met:

The housing is noticeably deformed or damaged.

The sealing surface or console is deformed (the unit shows no external damage).

The plug connection is damaged or corroded by moisture.

Functional checks or on-board diagnosis of the unit indicate the fault "Control unit faulty".

WM 5X00IN GENERAL INFORMATION AND NOTES ON QUALITY (ALL MODELS) > INFORMATION ON MAINTAINING LONG-LIFE CORROSION PROTECTION

Information

- Following repair work, the standard corrosion protection should only be restored using the corrosion protection agents provided and approved by the manufacturer. The following points must be observed for body repairs.
- Always apply welding primer to both sides of the welding flange when resistance spot welding.
- Prime repair areas from outside. Prime on both sides in the accessible areas.
- Seal all sheetmetal overlaps, sheetmetal edges, butt joints, weld seams etc. with body sealant.
- When replacing structurally bonded body parts, proceed according to the information in the respective repair instructions.
- Only apply body sealant to primed sheetmetal parts.
- Apply top coat paint to the inside of the outer panelling before welding. See "Paint build-up": → "Paint Manual"
- Build up paint on bare sheetmetal panels according to the painting methods described in the → "Paint Manual".
- Repair or create standard undersealing by applying long-life undersealing material.
- Preserve cavities in the repair area with cavity preservative after applying a top coat paint.
- Check that the standard water drains (stoppers) function correctly and clean them after the cavity preservation material has dried.

WM 5X00IN GENERAL INFORMATION AND NOTES ON QUALITY (ALL MODELS) > INFORMATION ON MAINTAINING LONG-LIFE CORROSION PROTECTION > PREREQUISITE FOR MAINTAINING THE LONG-LIFE GUARANTEE

All body repairs must be performed properly and according to the specific instructions defined by Porsche for sheetmetal, painting and corrosion inhibition/preservation work. To avoid jeopardising the long-life guarantee, a paint condition report will be drawn up two years after delivery of the vehicle. This condition report must be updated every two years by every Official Porsche Centre.

WM 5X00IN WORKING WITH BODY STRUCTURAL FOAM (ALL MODELS) > WORKING WITH BODY STRUCTURAL FOAM > PRODUCT DESCRIPTION

Processing time is approx. 60 - 90 minutes. The structural foam is hardened after 8 - 24 hours. The

hardening time depends on temperature, area of application, amount of foam used and exposed surface. The hardening process can be speeded up by heating the components to up to 50 °C.

WM 5X00IN WORKING WITH BODY STRUCTURAL FOAM (ALL MODELS) > WORKING WITH BODY STRUCTURAL FOAM > APPLICATIONS

The **body structural foam** is ideal for **increasing the rigidity, strength and fatigue endurance limit of cavities, plates and structural parts** , e.g. pillars, door sills and frame sections.

WM 5X00IN WORKING WITH BODY STRUCTURAL FOAM (ALL MODELS) > WORKING WITH BODY STRUCTURAL FOAM > PROCESSING

WARNING: Toxic substances

- *Danger of poisoning or suffocation*
- *Danger of burns to the eyes and skin*

→ Ventilate the work area well.

→ Never ingest or inhale.

→ Read specific information on the Hazard Sheet.

→ Do not smoke, eat or drink in the work area.

Information

Always observe the relevant work safety regulations when working with body structural foam.

Information

The work area must be dry and free of grease, oil and dust.

Remove loose parts.

Do not wet the area beforehand.

Observe temperature limits:

- Cartridge and ambient temperature: -40 - 90 °C
- Optimal temperature: 20 - 30 °C

Information

The volume of the structural foam will expand by approx. 0 - 30 % in cavities. When filling large cavities, the chemical reaction can cause strong heat generation.

Remove fresh foam residue immediately with a cloth soaked in acetone. Hardened foam residue can

only be removed mechanically afterwards.

- **Application from the cartridge:**
- 1. Remove safety pin from the stopper.
- 2. Screw off the top cap.
- 3. Remove the stopper.
- 4. Screw the mixing nozzle provided together with the previously removed cap onto the cartridge.
- 5. Insert the cartridge into the applicator gun.

  Information

  - To ensure that the substance is completely mixed, apply a bead of structural foam measuring approx. 30 mm in length to a piece of cardboard before use.
  - Use structural foam within the processing time.
  - Do not apply pressure on foam-filled parts until hardening is complete.
  - If the entire contents of the cartridge is not used, remove the mixing nozzle, clean the material outlet opening thoroughly and screw the stopper and cap back on. The remaining material can be used again at a later time using a new mixing nozzle.
- 6. Apply structural foam.

WM 5X00IN WORKING WITH BODY STRUCTURAL FOAM (ALL MODELS) > AREAS OF APPLICATION > USING STRUCTURAL ADHESIVE, AREAS OF APPLICATION

Type of adhesive	Part No.	Use
Structural adhesive	→ 000.043.206.30	All bonded joints with additional welding or rivets.
Structural foam	→ 000.043.207.66	• Front side member

WM 5X00IN PROCESSING STRUCTURAL BODY ADHESIVE (ALL MODELS) > TOOLS

Designation	Type	Number	Description	
Primer	Commercially available tool			
infrared heater	Workshop equipment	WE xxxx		

WM 5X00IN PROCESSING STRUCTURAL BODY ADHESIVE (ALL MODELS) > TECHNICAL VALUES

Location	Description	Type	Basic value	Tolerance 1	Tolerance 2
Minimum processing temperature	Betamate 2096	Minimum temperature	15°C		
Maximum processing temperature	Betamate 2096	Maximum temperature	35°C		
Optimal processing temperature	Betamate 2096	Minimum temperature	18°C		
Optimal processing temperature	Betamate 2096	Maximum temperature	23°C		
Structural bonding	Betamate 2096	Processing time at 15 °C	75 min		
Structural bonding	Betamate 2096	Processing time at 18 °C	70 min		
Structural bonding	Betamate 2096	Processing time at 20 °C	65 min		
Structural bonding	Betamate 2096	Processing time at 23 °C	60 min		
Structural bonding	Betamate 2096	Processing time at 25 °C	55 min		
Structural bonding	Betamate 2096	Processing time at 30 °C	45 min		
Structural bonding	Betamate 2096	Processing time at 35 °C	35 min		
Length of adhesive bead		Length	10 cm		
Applying adhesive	Spread out evenly	Application depth	0.5 mm		
Bead of adhesive		Application depth	3 mm		
Maximum layer thickness		Layer thickness	1 mm		
Minimum hardening temperature	Betamate 2096	Minimum temperature	18°C		

Maximum hardening temperature	Betamate 2096	Maximum temperature	80°C		
Assembly strength	Betamate 2096	Hardening time at 18 °C	12 h		
Assembly strength	Betamate 2096	Hardening time at 60 °C	35 min		
Endurance strength	Betamate 2096	Standing time at 18 ° C	96 h		
Primer		Flash-off time	5 min		

WM 5X00IN PROCESSING STRUCTURAL BODY ADHESIVE (ALL MODELS) > TOOLS AND MATERIALS > PROCESSING STRUCTURAL BODY ADHESIVE

Fig 1: Identifying Tools And Materials For Structural Bonding

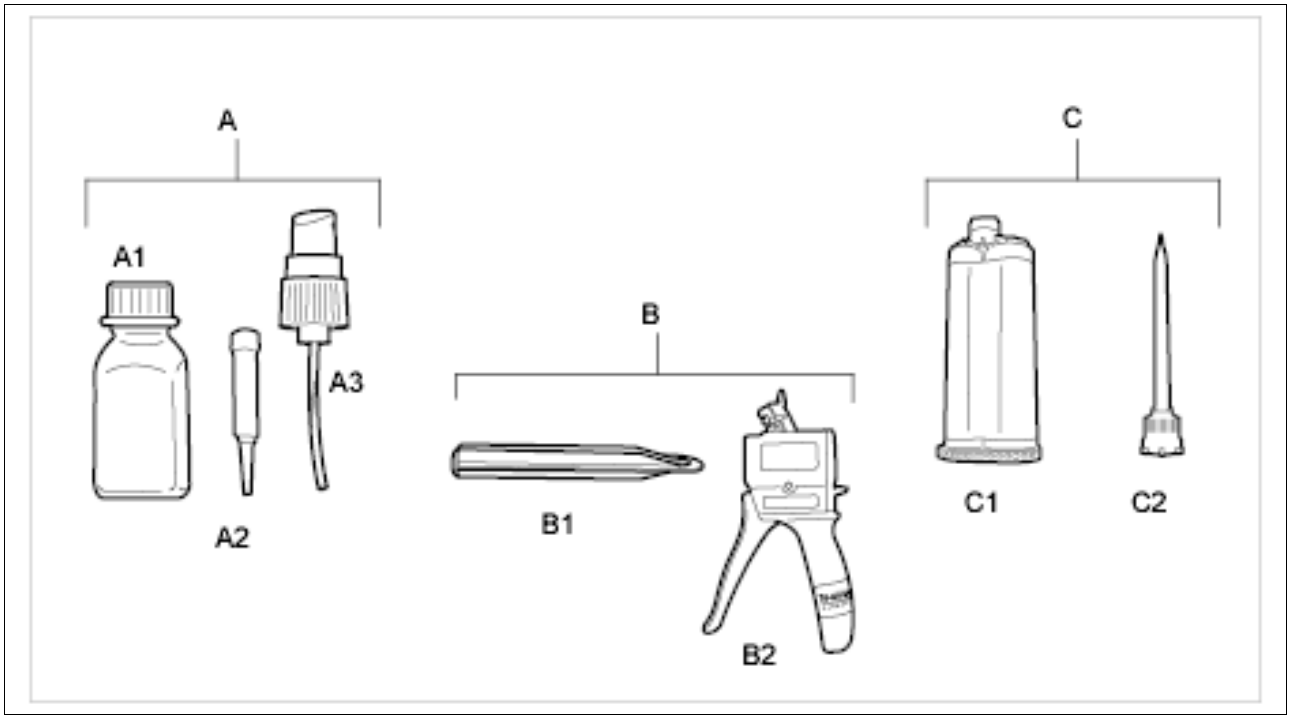

Courtesy of PORSCHE CARS NORTH AMERICA, INC.

Item	Designation	Source	Explanation
-A-	**Primer**		
-B-	**Applicator gun**		
-C-	**Betamate 2096 adhesive set**		

Item	Designation
-B1-	Piston rod
-B2-	Gun grip
-C1-	Double cartridge
-C2-	Processing nozzle

WM 5X00IN PROCESSING STRUCTURAL BODY ADHESIVE (ALL MODELS) > INFORMATION ON THE USE OF STRUCTURAL ADHESIVES IN VEHICLE CONSTRUCTION > GENERAL

Structural bonding in the bodyshell means that the adhesive assumes functions of stiffness, crash strength and endurance strength, whereby the characteristics of the bodyshell are positively influenced in a significant way.

A high-strength, heat-hardening single-component epoxy resin adhesive, which hardens fully in the cathodic immersion paint drying oven, is used for the conventional steel bodyshell.

In the event of repairs, this adhesive is replaced by a cold-hardening two-component epoxy resin adhesive, since the hardening temperatures necessary for the single-component epoxy resin adhesive cannot be used on an assembled vehicle.

WM 5X00IN PROCESSING STRUCTURAL BODY ADHESIVE (ALL MODELS) > INFORMATION ON THE USE OF STRUCTURAL ADHESIVES IN VEHICLE CONSTRUCTION > COMBINED JOINING PROCESSES

Combined joining processes are regularly used both in standard production and during repairs.

In the case of resistance-spot welding, all bonding surfaces and spot welds are replaced during repairs.

In this case, the unhardened adhesive must be displaced from the joint area by observing an appropriate holdback time before actually starting resistance-spot welding.

In the case of two-component adhesives, the hardening reaction starts immediately after mixing and application; this increases the viscosity and so there is only a certain time window in which spot-weld bonding can be performed if the process is to be reliable.

For this reason, all time-intensive preliminary work (drilling, cutting to size, fixing etc.) on the parts to be joined must be performed before application of adhesive and joining.

This also applies to mechanical joining processes where the adhesive has to be displaced from the joint area, e.g. riveting.

WM 5X00IN PROCESSING STRUCTURAL BODY ADHESIVE (ALL MODELS) > INFORMATION ON THE USE OF STRUCTURAL ADHESIVES IN VEHICLE

CONSTRUCTION > SEPARATING BODY COMPONENTS

In the case of 3-layer spot-welded panel joints with a hardened bonded layer in which only the outer panel needs to be replaced, drill the outer panel in the area of the spotwelds sufficiently without damaging the spotweld and bonded joint in the second component layer.

Fig 1: Separating Body Components

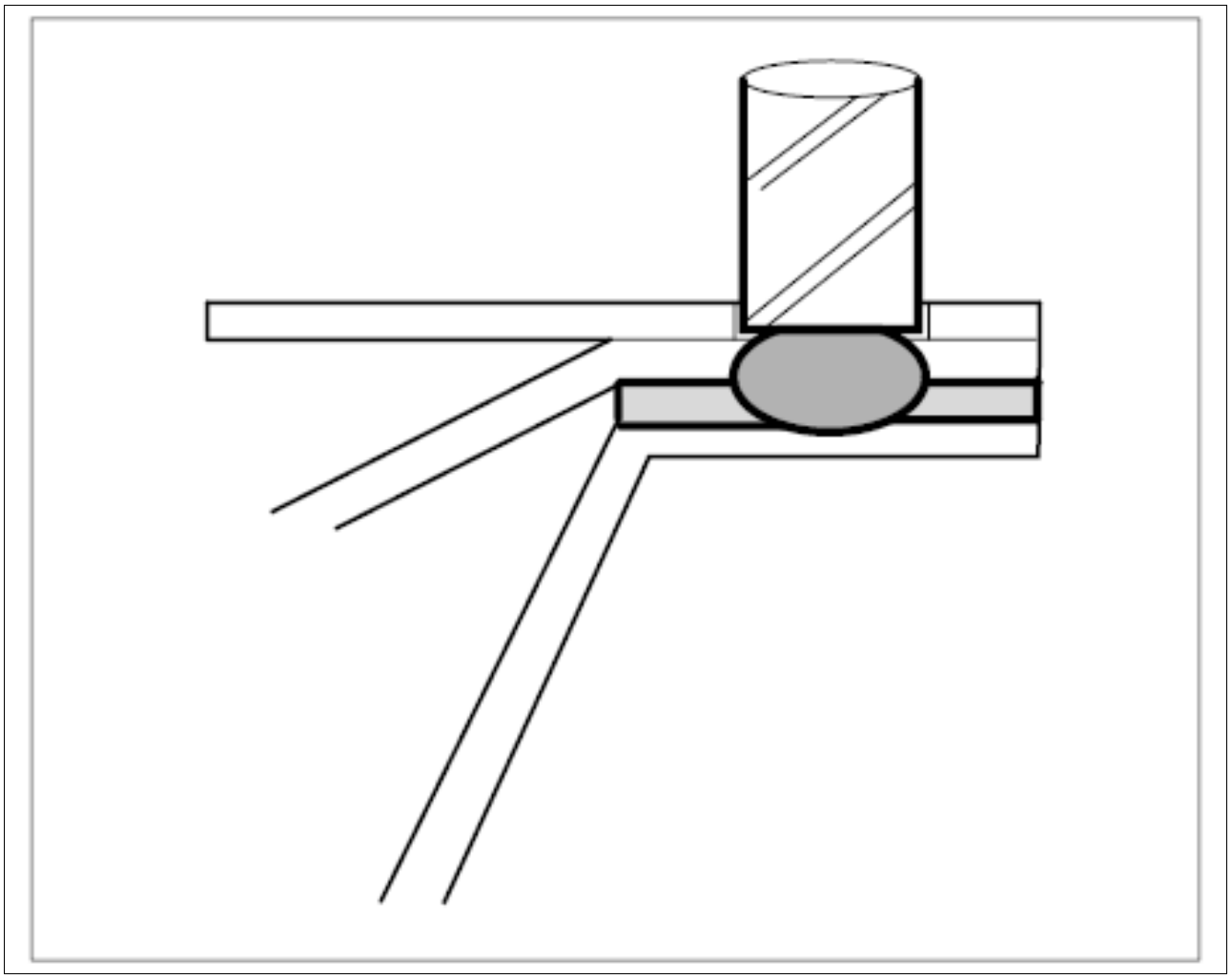

Courtesy of PORSCHE CARS NORTH AMERICA, INC.

In the case of 3-layer spot-welded panel joints with a hardened bonded layer on the outer panel, drill the outer panel in the area of the spotwelds sufficiently without damaging the spotweld in the second component layer.

Fig 2: Separating Bonded Body Components

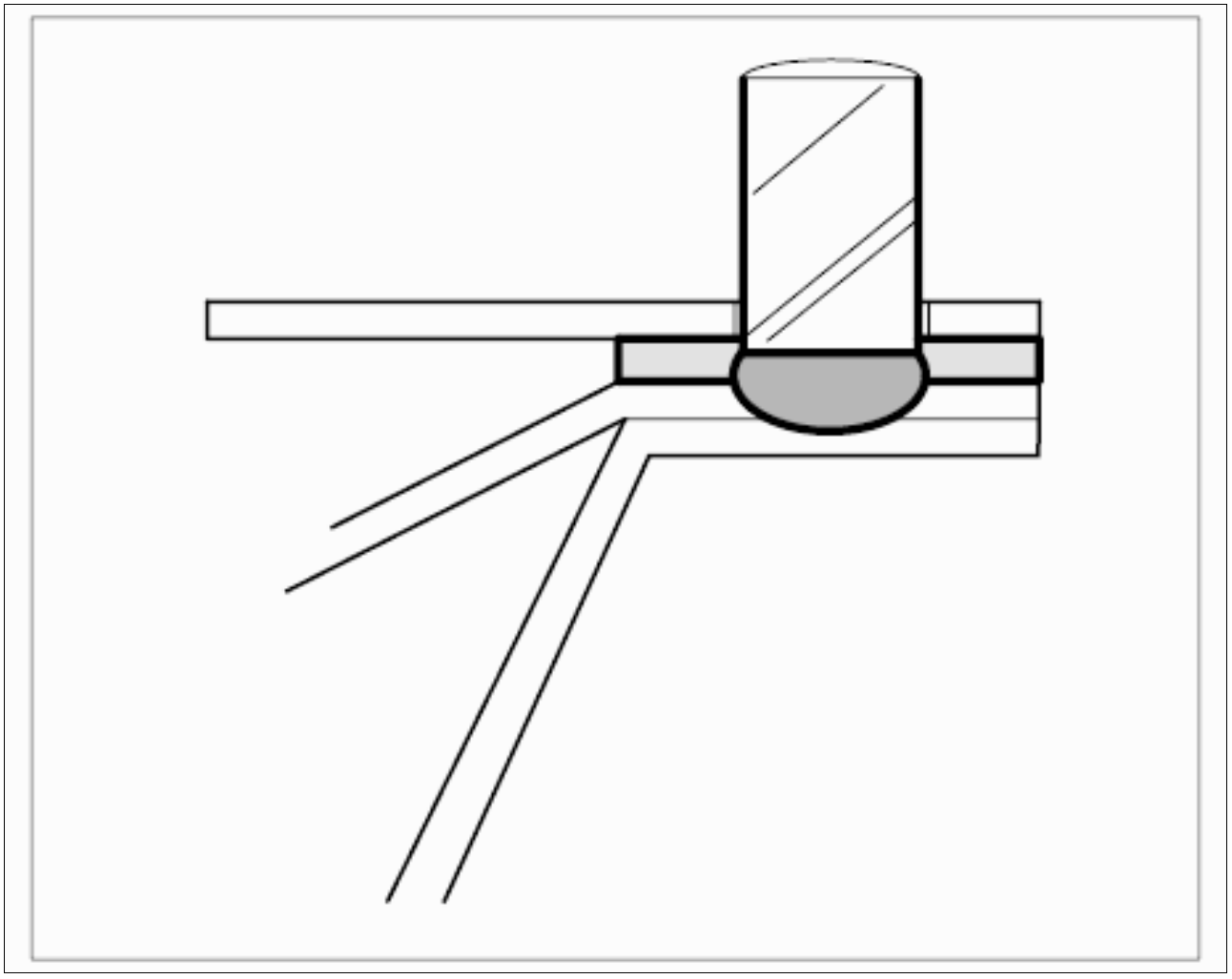

Courtesy of PORSCHE CARS NORTH AMERICA, INC.

After removing the loosened body part, old adhesive must be removed and any uneven spots must be sanded down.

The flange area must then be pre-treated for bonding.

WM 5X00IN PROCESSING STRUCTURAL BODY ADHESIVE (ALL MODELS) > INFORMATION ON THE USE OF STRUCTURAL ADHESIVES IN VEHICLE CONSTRUCTION > WELDING IN BODY COMPONENTS

Once the spare parts have been secured, repair spotwelds must be placed on the old spotwelds because there is no current flow possible in areas with a hardened bonded layer.

Fig 1: Identifying Spot-Welding Body Components

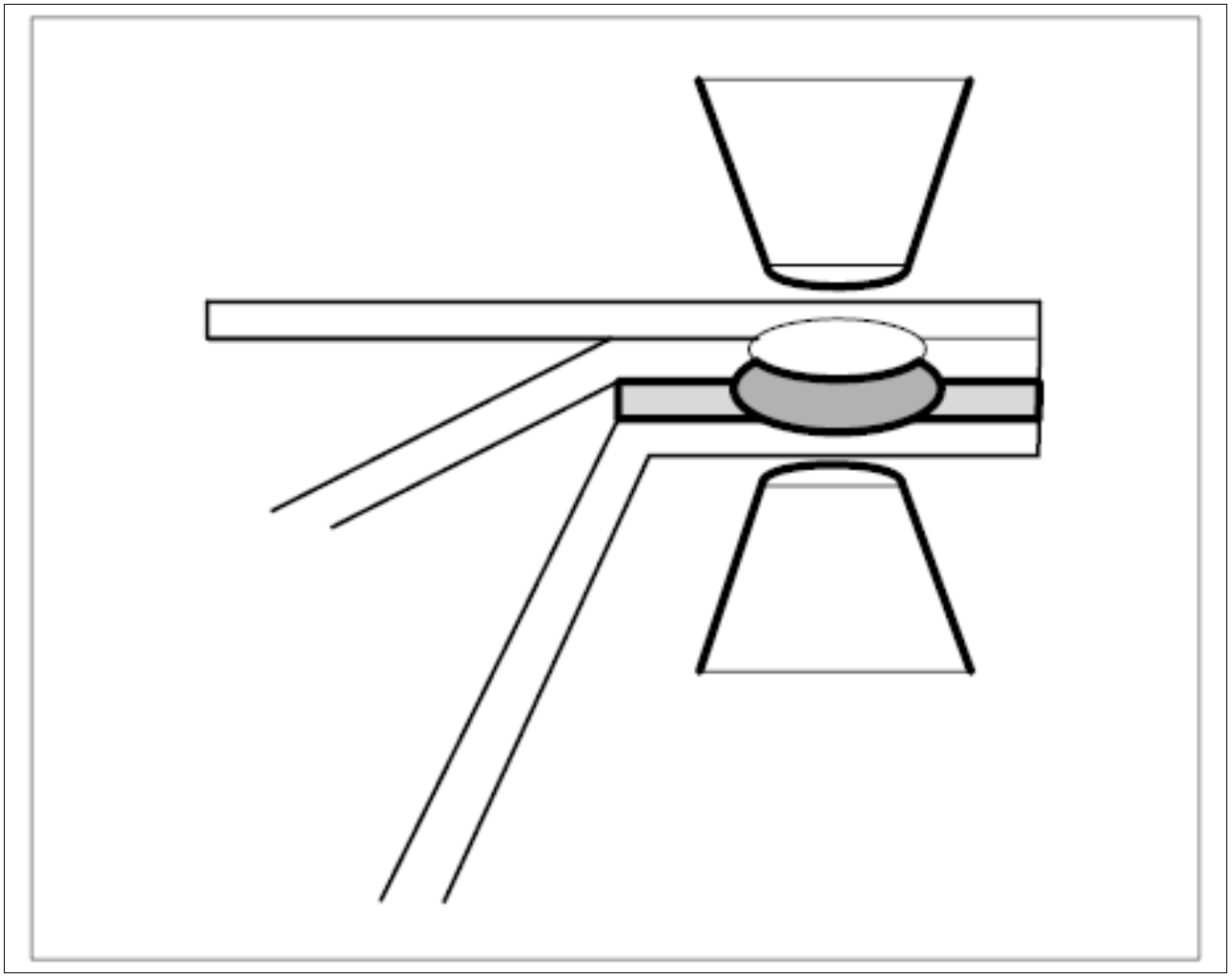

Courtesy of PORSCHE CARS NORTH AMERICA, INC.

Fig 2: Identifying Spot-Welding Body Components

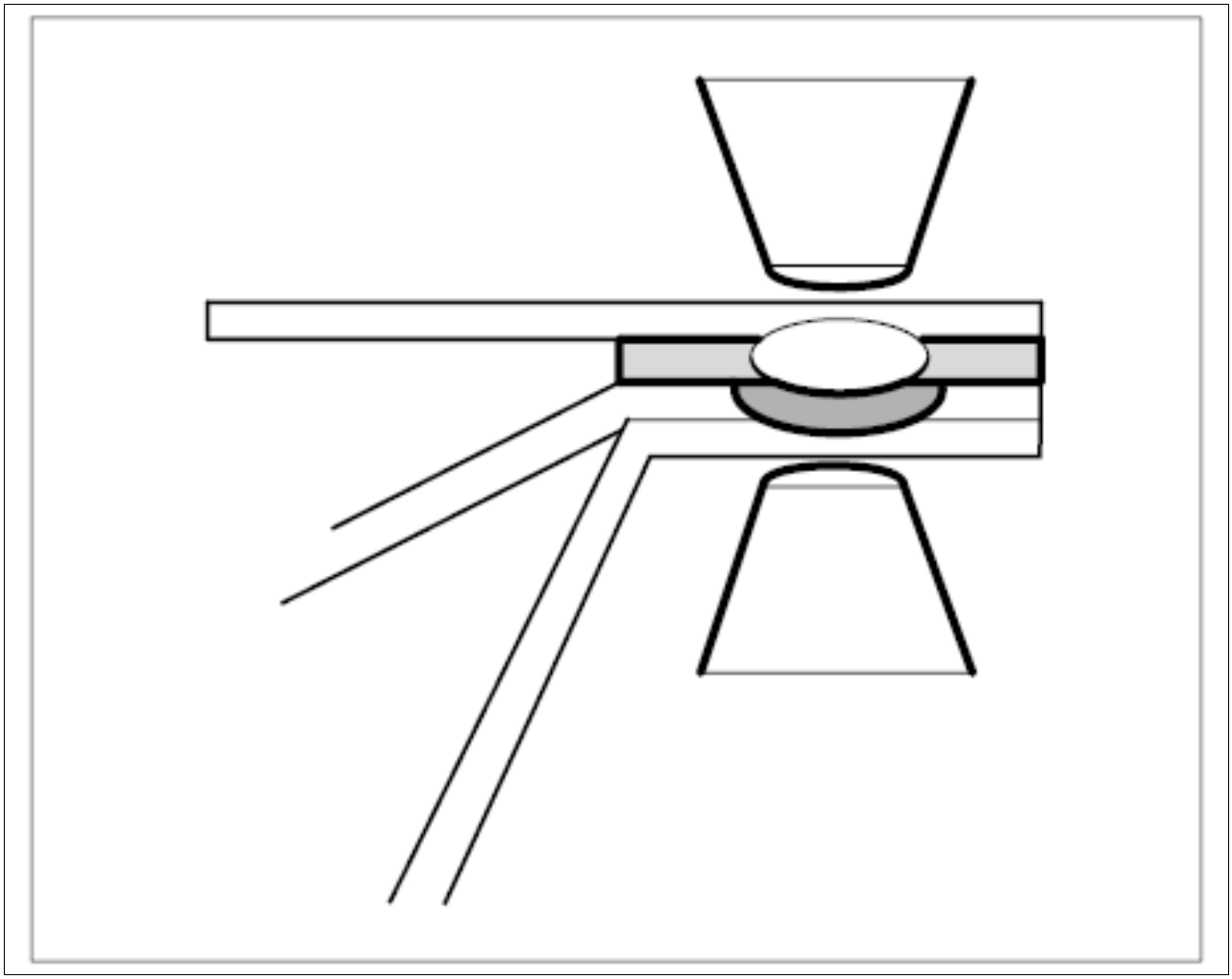

Courtesy of PORSCHE CARS NORTH AMERICA, INC.

Information

- In areas in which bonded flanges are spot-welded in an unhardened state, suction devices must be used due to combustion products.
- Areas that can only be accessed from one side must be joined with MAG plug-welds or MAG welded seams. In these cases, no adhesive can be used in the vicinity of the welded seam because this would burn and would have a negative effect on the joint.
- The areas without adhesive must be protected using appropriate anti-corrosion and sealing measures.

Welding procedures other than resistance spot-welding are not permitted since the thermal effect would destroy the bonded joint over a wide area.

WM 5X00IN PROCESSING STRUCTURAL BODY ADHESIVE (ALL MODELS) > WORKING WITH ADHESIVES > GENERAL INFORMATION

WARNING: Toxic substances

- *Danger of poisoning or suffocation*
- *Danger of burns to the eyes and skin*

→ Ventilate the work area well.

→ Never ingest or inhale.

→ Read specific information on the Hazard Sheet.

→ Do not smoke, eat or drink in the work area.

Information

- The vehicle, components and adhesives must be brought to processing temperature (acclimatised) before getting started. Processing temperature must be maintained for approx. 30 minutes before starting to work on the bonding surfaces.
- Bonding surfaces must be free from oil, old adhesive, dirt, moisture, and layers of paint and oxide.
- Body structural adhesive and primer must only be used on bare metal parts.
- Only use abrasive products based on pure silicon carbide (SIC) for sanding/grinding down the bonding area until bare.
- Always wear clean gloves when touching the cleaned surfaces to ensure that no sweat from your hands or dirt is transferred onto the bonding surface.
- Apply primer within 5 minutes on bare surfaces, particularly on aluminum components. Work in sections on large components and carry out intermediate sanding.
- The jointing operation must take place directly after application of the adhesive in order to guarantee a high quality and reliable bond. Otherwise the adhesive bead must be removed, with pre-treatment of the surface and application of the adhesive being repeated.
- After adhesive has hardened, carefully prime accessible bonding areas and seal with body sealant. Protect bonding areas in cavities against corrosion using cavity preservation.

Information

- To check that the substance is completely mixed, apply a 30-mm long bead of fresh adhesive to a piece of cardboard before processing.
- Process the adhesive within the processing time. The adhesive must be applied and the body part must be joined within this time period. Any resistance welding or mechanical joining procedures (e.g. riveting, screwing) to be carried out in the bonding area must also be performed within this time period.
- Do not put pressure on bonded parts until hardening is complete!
- If the contents of the cartridge is not used up completely, the processing nozzle must be left on the cartridge until the adhesive hardens. If you intend to use the adhesive again later, a new processing nozzle must be used.

Information

During cold periods, overnight or in cold countries, appropriate steps must be taken to ensure that the minimum hardening temperature is reached.

- Optimize heating system settings, e.g. deactivate night-time lowering of temperature.
- Keep doors and windows closed; avoid droughts.
- Install auxiliary heaters in the body repair area.

Information

- In addition to this information, observe the relevant job descriptions for body repairs!

Information

Infrared heaters only heat small sections of the body and are therefore only suitable for minor repairs.

- Only use devices with temperature control, automatic distance measurement and measuring point display, e.g. infrared heater WE xxxx or infrared heater WE xxxx.

WM 5X00IN PROCESSING STRUCTURAL BODY ADHESIVE (ALL MODELS) > WORKING WITH ADHESIVES > PREPARING BONDING SURFACES > CLEAN

Sticky, solid layers such as dirt, rust, layers of paint (cathodic-dip layers), etc. must be removed using 100 to 150 grain sandpaper in order to improve the strength of a bonding area.

WM 5X00IN PROCESSING STRUCTURAL BODY ADHESIVE (ALL MODELS) > WORKING WITH ADHESIVES > PREPARING BONDING SURFACES > DEGREASE

To prevent possible grease residue from spreading onto the surface when grinding down the surface until bare at a later stage, the bonding surfaces must be cleaned using a lint-free cloth soaked in acetone.

Fig 1: Identifying Bonding Surfaces Grease Applying Area



Courtesy of PORSCHE CARS NORTH AMERICA, INC.

WM 5X00IN PROCESSING STRUCTURAL BODY ADHESIVE (ALL MODELS) > WORKING WITH ADHESIVES > PREPARING BONDING SURFACES > SAND/GRIND UNTIL BARE

To improve adhesion, it is important to sand the bonding surfaces until bare using 150 to 180 grain sandpaper. The sanding effect can be improved by cross-sanding.

Only use abrasive products based on pure silicon carbide (SIC) for sanding/grinding down the bonding surface until bare.

Fig 1: Identifying Sanding Bonding Surfaces

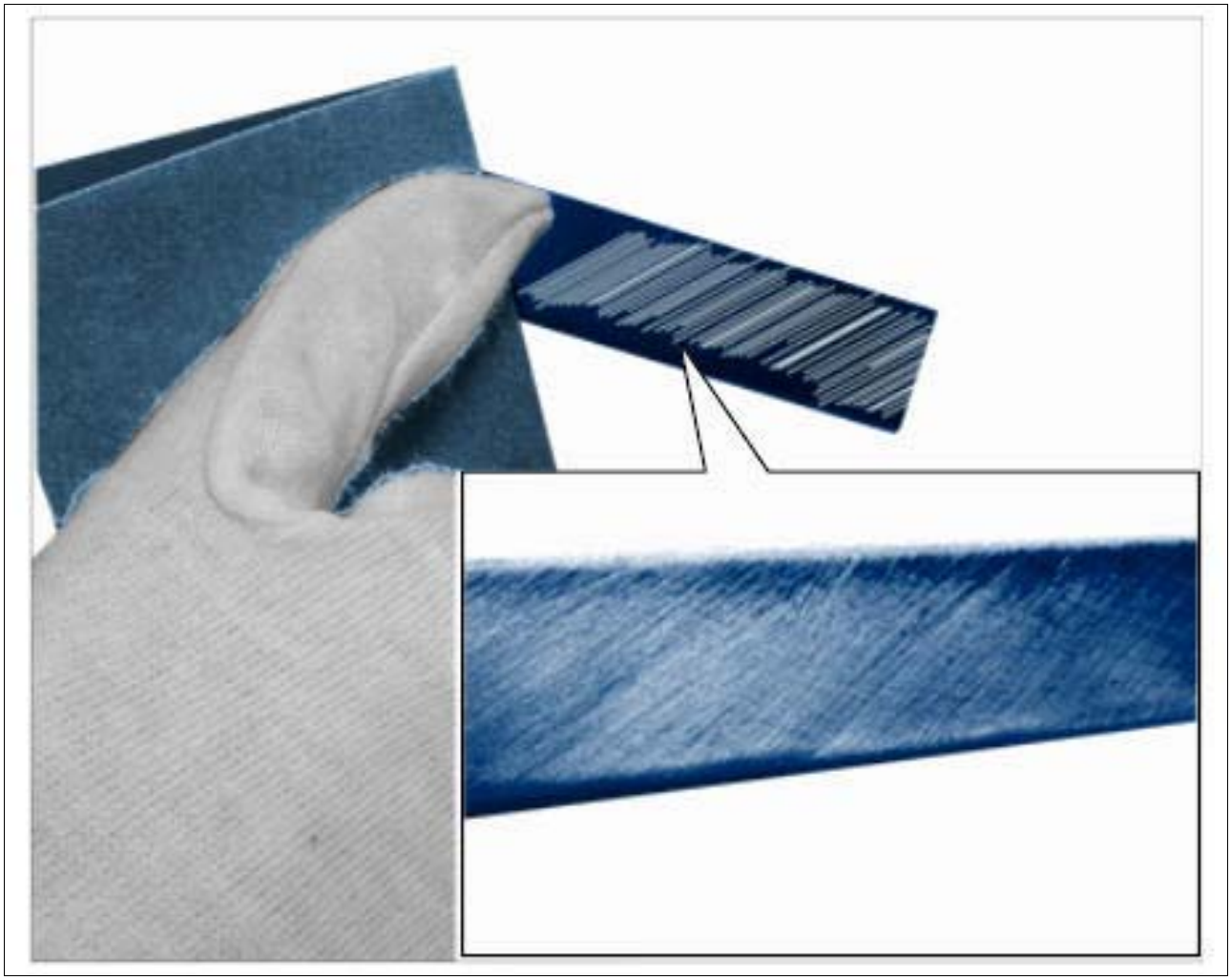

Courtesy of PORSCHE CARS NORTH AMERICA, INC.

WM 5X00IN PROCESSING STRUCTURAL BODY ADHESIVE (ALL MODELS) > WORKING WITH ADHESIVES > PREPARING BONDING SURFACES > DEGREASE

The bare bonding flange areas must then be cleaned using a lint-free cloth soaked in acetone.

Leave cleaned surfaces to dry off for approx. 5 - 10 minutes; bonding surfaces must be completely dry.

Fig 1: Identifying Bonding Surfaces Grease Applying Area



Courtesy of PORSCHE CARS NORTH AMERICA, INC.

WM 5X00IN PROCESSING STRUCTURAL BODY ADHESIVE (ALL MODELS) > WORKING WITH ADHESIVES > PREPARING BONDING SURFACES > PRIME

Apply primer to the cleaned surfaces.

WM 5X00IN PROCESSING STRUCTURAL BODY ADHESIVE (ALL MODELS) > WORKING WITH ADHESIVES > PROCESSING CONDITIONS

During processing, the ambient and material temperature must be at least → **Minimum temperature: 15°C** and must not exceed → **Maximum temperature: 35°C.**

The optimal processing temperature is → **Minimum temperature: 18°C** to → **Maximum temperature: 23°C.**

Higher processing temperatures reduce processing time.

→ **Processing time at 15 °C: 75 min**

→ **Processing time at 18 °C: 70 min**

→ **Processing time at 20 °C: 65 min**

→ **Processing time at 23 °C: 60 min**

→ **Processing time at 25 °C: 55 min**

→ **Processing time at 30 °C: 45 min**

→ **Processing time at 35 °C: 35 min**

WM 5X00IN PROCESSING STRUCTURAL BODY ADHESIVE (ALL MODELS) > WORKING WITH ADHESIVES > JOINING PROCESS

1. Check to see how much adhesive oozes out.

Fig 1: Checking Emerging Adhesive

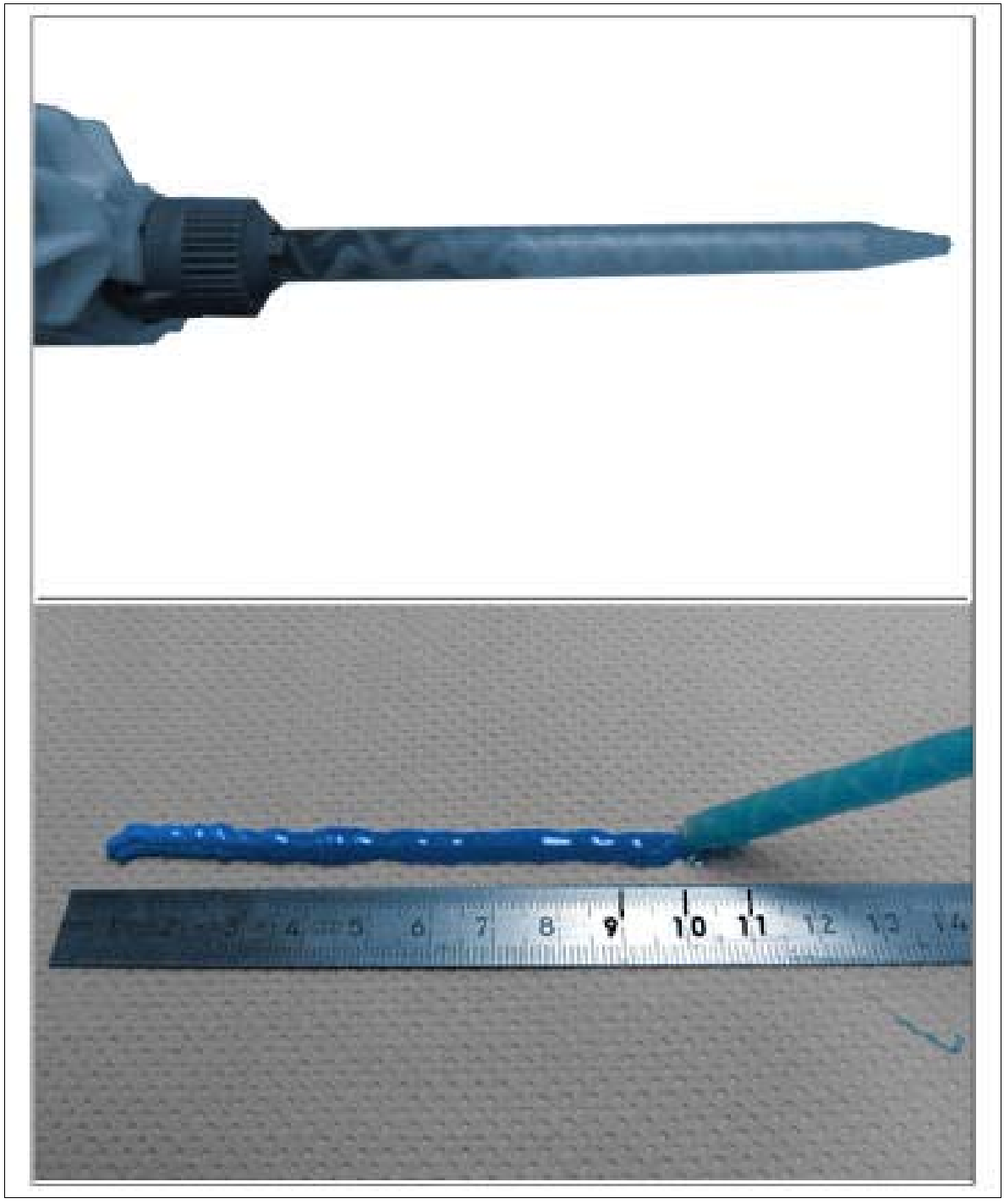

Courtesy of PORSCHE CARS NORTH AMERICA, INC.

1. 1.1. Make sure that the two-component adhesive is mixed evenly in the mixing tube.
2. 1.2. Before applying adhesive to the joints, apply a bead of adhesive with a length of → **Length: 10 cm** to a paper towel or similar object and dispose of it later. The hardening process can also be checked using this bead.

2. Apply adhesive.

1. 2.1. Apply adhesive to the flanges of the joints.

Fig 2: Applying Adhesive

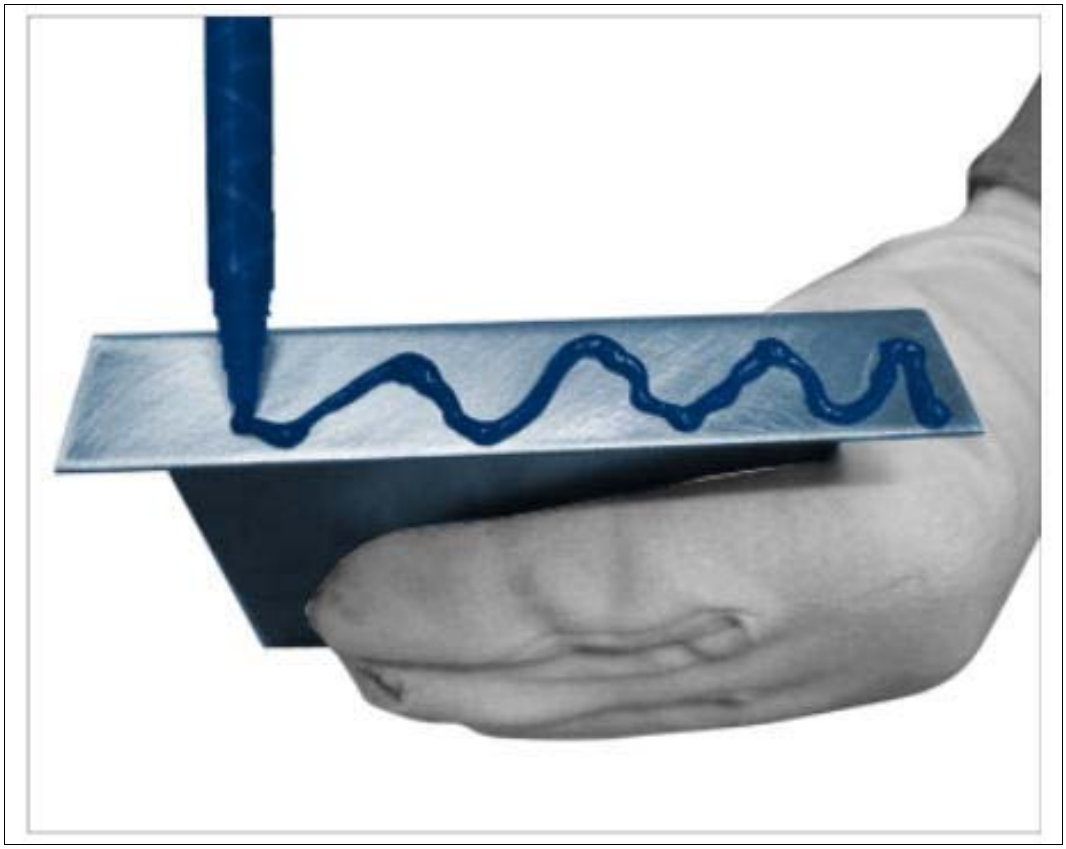

Courtesy of PORSCHE CARS NORTH AMERICA, INC.

2. 2.2. Spread the adhesive out over the flanges of the joint. → **Application depth: 0.5 mm**

Fig 3: Identifying Spread Adhesive

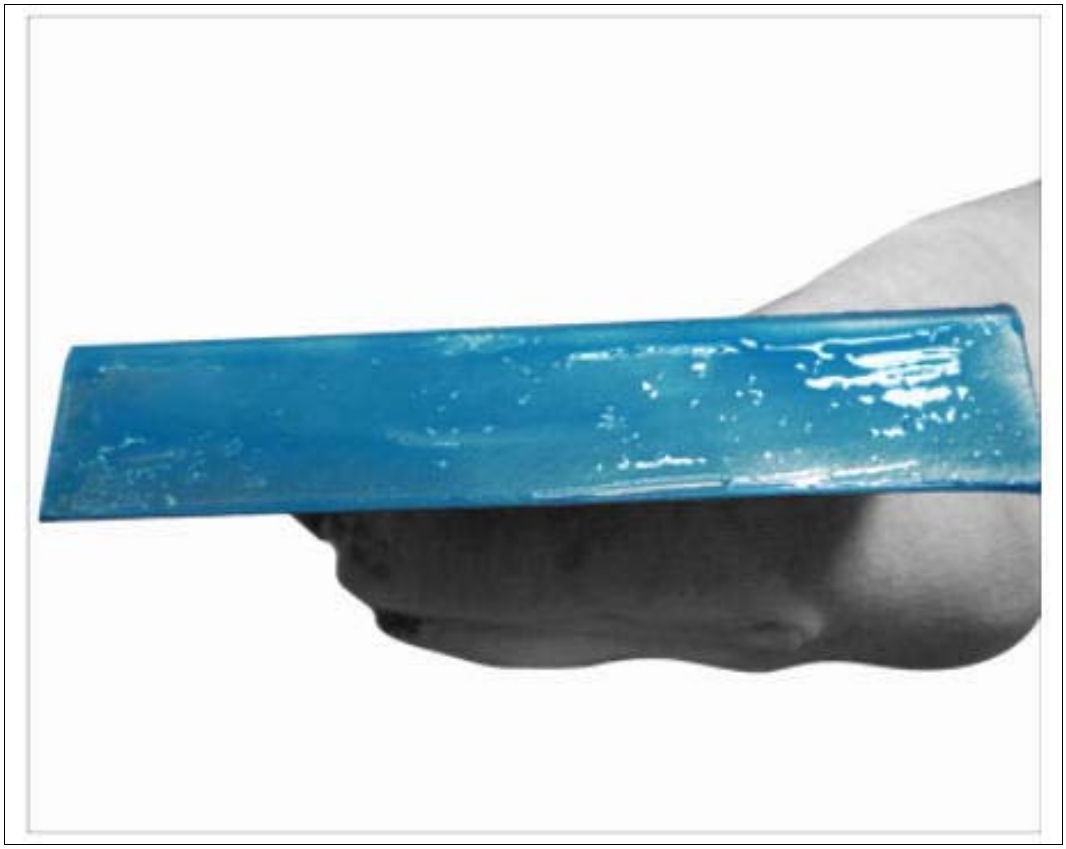

Courtesy of PORSCHE CARS NORTH AMERICA, INC.

3. 2.3. Areas not covered by cathodic immersion paint and exposed body panels in cavities must be brushed or filled with structural adhesive.

3. Apply adhesive to the edges.

Fig 4: Identifying Bead Of Adhesive At Edges

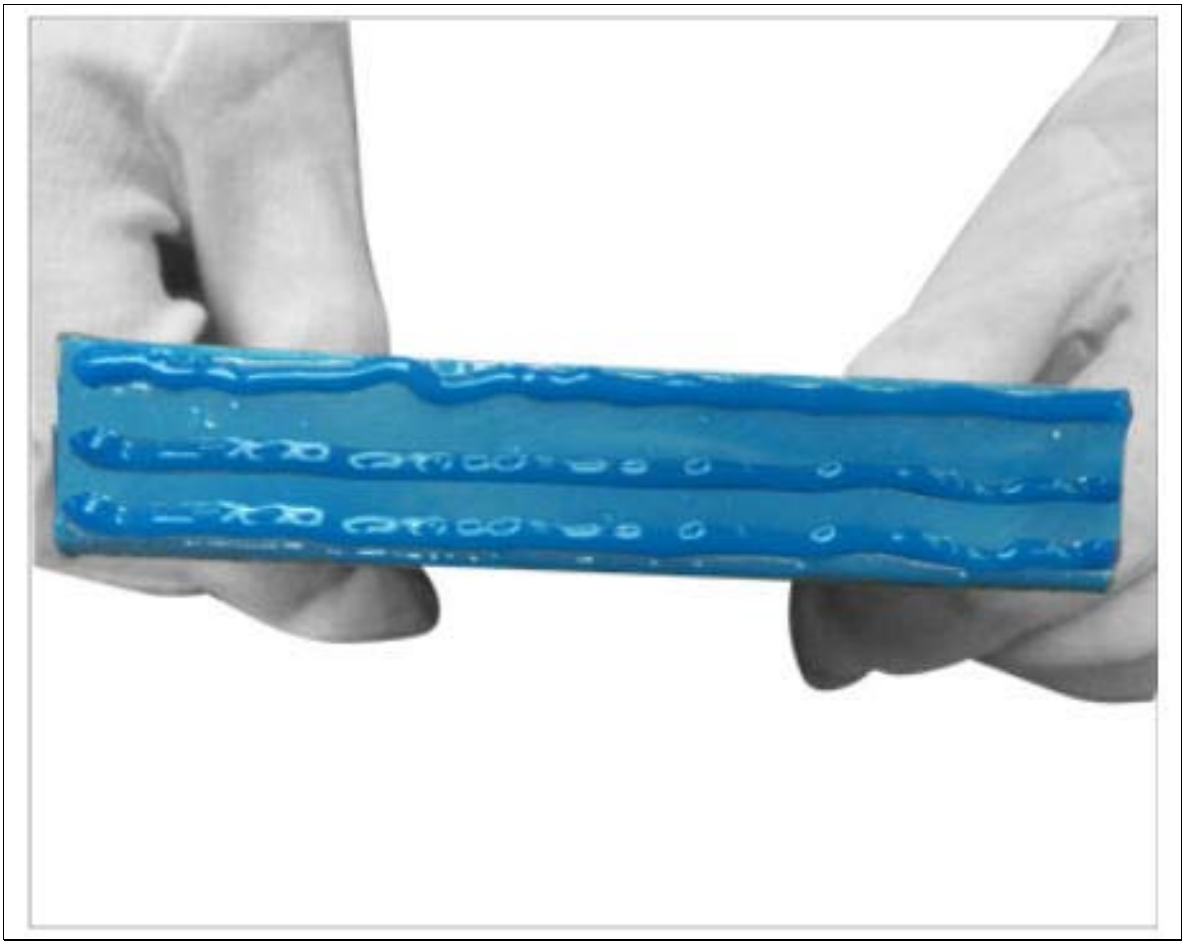

Courtesy of PORSCHE CARS NORTH AMERICA, INC.

1. 3.1. Apply additional beads of adhesive at the edges and center of the joint. → **Application depth: 3 mm**

   Information

   1. When the adhesive oozes out along the entire length of the joint on both sides, enough adhesive has been applied.

   2. 1 50 ml cartridge is sufficient for a flange length of approx. 6 m.

4. Join components.

Fig 5: Identifying Structural Body Adhesive Joining Components

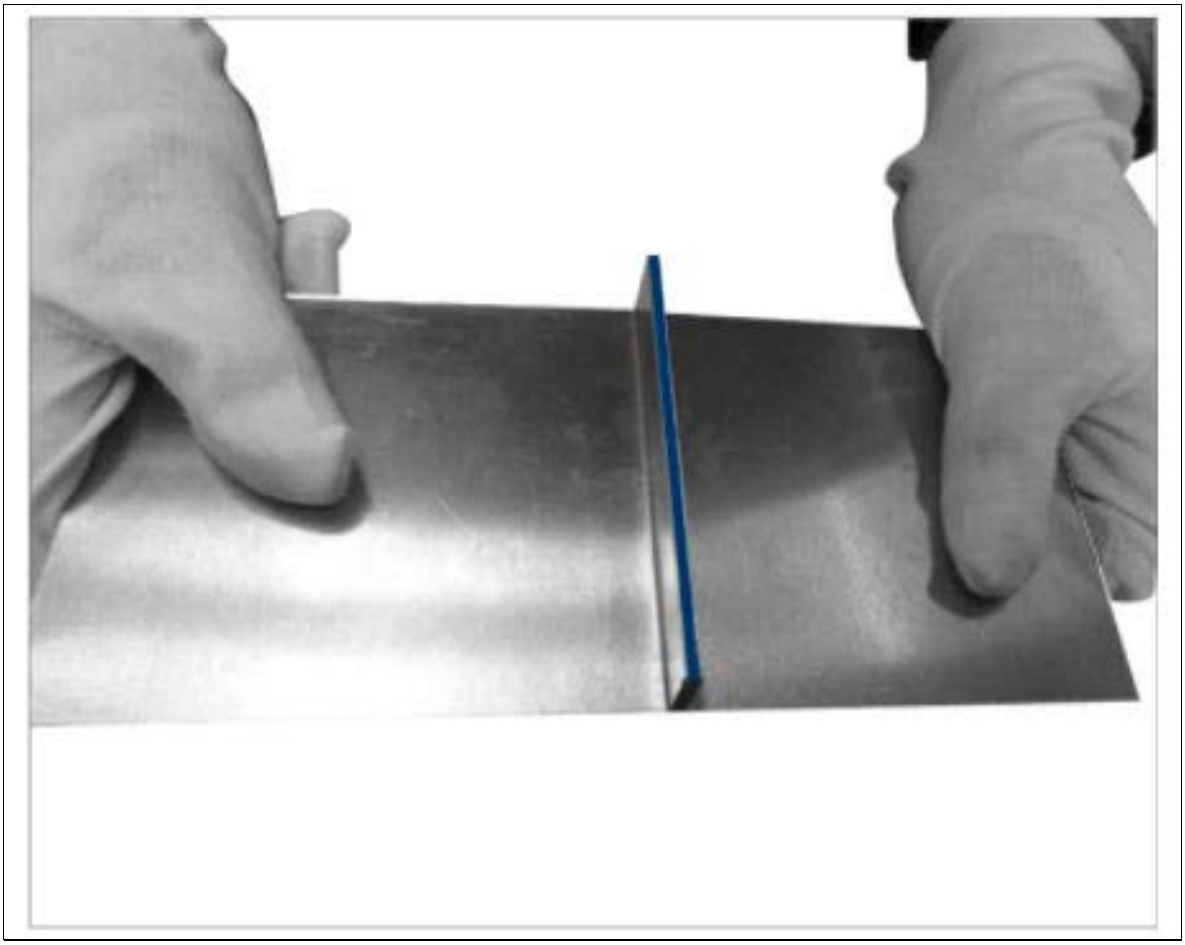

Courtesy of PORSCHE CARS NORTH AMERICA, INC.

1. 4.1. Join parts, secure them and weld, rivet and screw them within the processing time.

   The joining process must take place immediately after applying adhesive in order to guarantee a high quality and reliable bond.

   Otherwise the adhesive bead must be removed and pre-treatment of the surface and application of the adhesive must be repeated.

   The thickness of the layer of adhesive after joining must not exceed → **Layer thickness: 1 mm** ; spread the adhesive out on the bonding surface using a spatula if necessary.

5. Remove any excess adhesive.

Fig 6: Removing Excess Adhesive

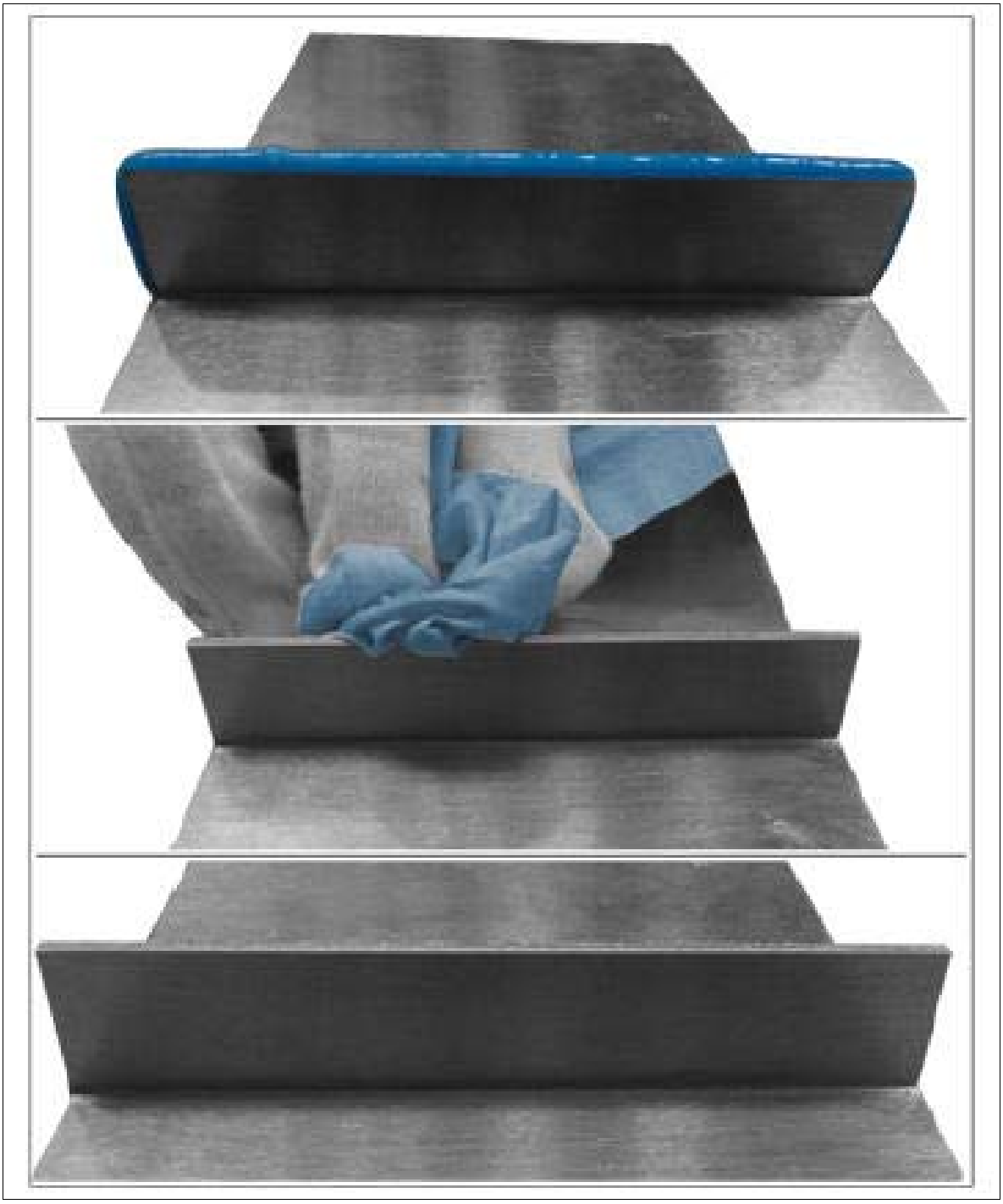

Courtesy of PORSCHE CARS NORTH AMERICA, INC.

1. 5.1. Remove most of the excess material with paper or a cloth.
2. 5.2. Finish cleaning visible surfaces with a cloth soaked in acetone.

   Hardened material can only be removed by mechanical means.

WM 5X00IN PROCESSING STRUCTURAL BODY ADHESIVE (ALL MODELS) >

WORKING WITH ADHESIVES > HARDENING

The body structural adhesives used harden at temperatures of between → **Minimum temperature: 18°C** and → **Maximum temperature: 80°C.**

Information

Infrared heaters only heat small sections of the body and are therefore only suitable for minor repairs.

- Only use devices with temperature control, automatic distance measurement and measuring point display, e.g. infrared heater WE xxxx or infrared heater WE xxxx.

Hardening can be accelerated by heat (e.g. using an infrared heater or in a painting booth).

Do not put pressure on bonded parts until the required assembly strength is reached.

WM 5X00IN PROCESSING STRUCTURAL BODY ADHESIVE (ALL MODELS) > WORKING WITH ADHESIVES > ASSEMBLY STRENGTH

Information

- The object temperature must be above the minimum hardening temperature for the entire specified time period.
- If the minimum hardening temperature could not be reached within the specified time period, the standing time must be increased or additional heat must be applied to the bonded joint.
- If the hardening temperature is significantly less than the minimum hardening temperature (approx. 10 °C), this can cause irreversible damage to the bonded joint. This can have a negative effect on the strength of the bonded joint.

Information

- Once the required assembly strength is reached, the vehicle must be removed from the straightening system. Assembly work can then be performed.

The vehicle must not be moved and no further work must be carried out on the vehicle following repair bonding for at least → **Hardening time at 18 °C: 12 h** (leave to harden overnight).

The standing time can be shortened by applying heat. E.g. → **Hardening time at 60 °C: 35 min.**

WM 5X00IN PROCESSING STRUCTURAL BODY ADHESIVE (ALL MODELS) > WORKING WITH ADHESIVES > CORROSION PROTECTION

After adhesive has hardened, carefully prime accessible bonding areas and seal with body sealant.

Protect bonding areas in cavities against corrosion using cavity preservation.

WM 5X00IN PROCESSING STRUCTURAL BODY ADHESIVE (ALL MODELS) >

WORKING WITH ADHESIVES > DISPOSAL

Small amounts remaining after mixing and complete hardening may be disposed of as industrial waste.

Dispose of used acetone-soaked cleaning cloths as special-category waste.

WM 5X00IN PROCESSING STRUCTURAL BODY ADHESIVE (ALL MODELS) > WORKING WITH ADHESIVES > ENDURANCE STRENGTH

Information

- The object temperature must be above the minimum hardening temperature for the entire specified time period.
- If the minimum hardening temperature could not be reached within the specified time period, the standing time must be increased or additional heat must be applied to the bonded joint.
- If the hardening temperature is significantly less than the minimum hardening temperature (approx. 10 °C), this can cause irreversible damage to the bonded joint. This can have a negative effect on the strength of the bonded joint.

Information

After this time, the vehicle meets the crash requirements and may be driven on public roads.

The vehicle can be handed over to the customer.

The time between joining the repaired components and starting to use them must be at least → **Standing time at 18 °C: 96 h.**

WM 5X00IN PROCESSING STRUCTURAL BODY ADHESIVE (ALL MODELS) > HANDLING PRIMER > GENERAL

Primers improve the long-term durability of the bonded area

Primers reveal the actual condition of the surface to be bonded.

Primers protect the bonding surface from environmental influences, thereby increasing corrosion protection.

To achieve a better effect, apply primer only very lightly.

Primer prevents oxidation of the surface. This is particularly important when bonding aluminum.

WM 5X00IN PROCESSING STRUCTURAL BODY ADHESIVE (ALL MODELS) > HANDLING PRIMER > 2-COMPONENT SIP

Information

Use the primer within 8 hours. Apply a thin, even coat to the bonded flanges and remove excess primer. Protect surfaces you have already primed from dirt and soiling. Otherwise, the bonded joint may be defective.

Information

- Primed surfaces can be exposed for up to 3 days before undergoing further processing.
- Make sure that the surfaces are not contaminated by environmental influences.
- If the primer is left exposed for more than 3 days, it must be removed and re-applied.
- For the reasons specified above, we recommend that body parts are bonded immediately after applying the primer.

1. Prepare bonded flanges for bonding. (See WORKING WITH ADHESIVES)
2. Open bottle for component A.

   Fig 1: Opening Bottle



Courtesy of PORSCHE CARS NORTH AMERICA, INC.

3. Fill bottle completely with component B.

Fig 2: Filling Bottle With Component B



Courtesy of PORSCHE CARS NORTH AMERICA, INC.

4. Screw on spray head.

Fig 3: Screwing On Spray Head

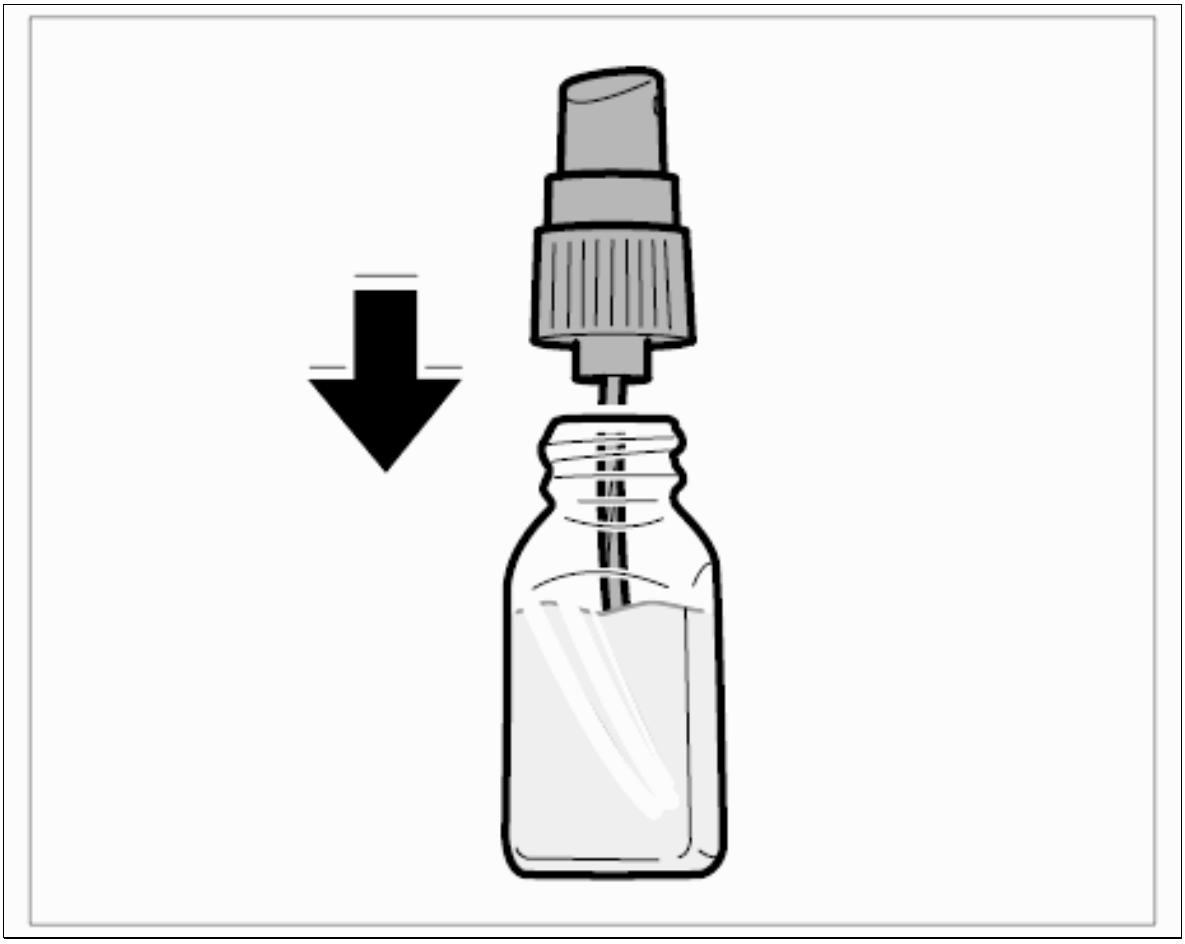

Courtesy of PORSCHE CARS NORTH AMERICA, INC.

5. Mix components together by shaking vigorously.

Fig 4: Mixing Components

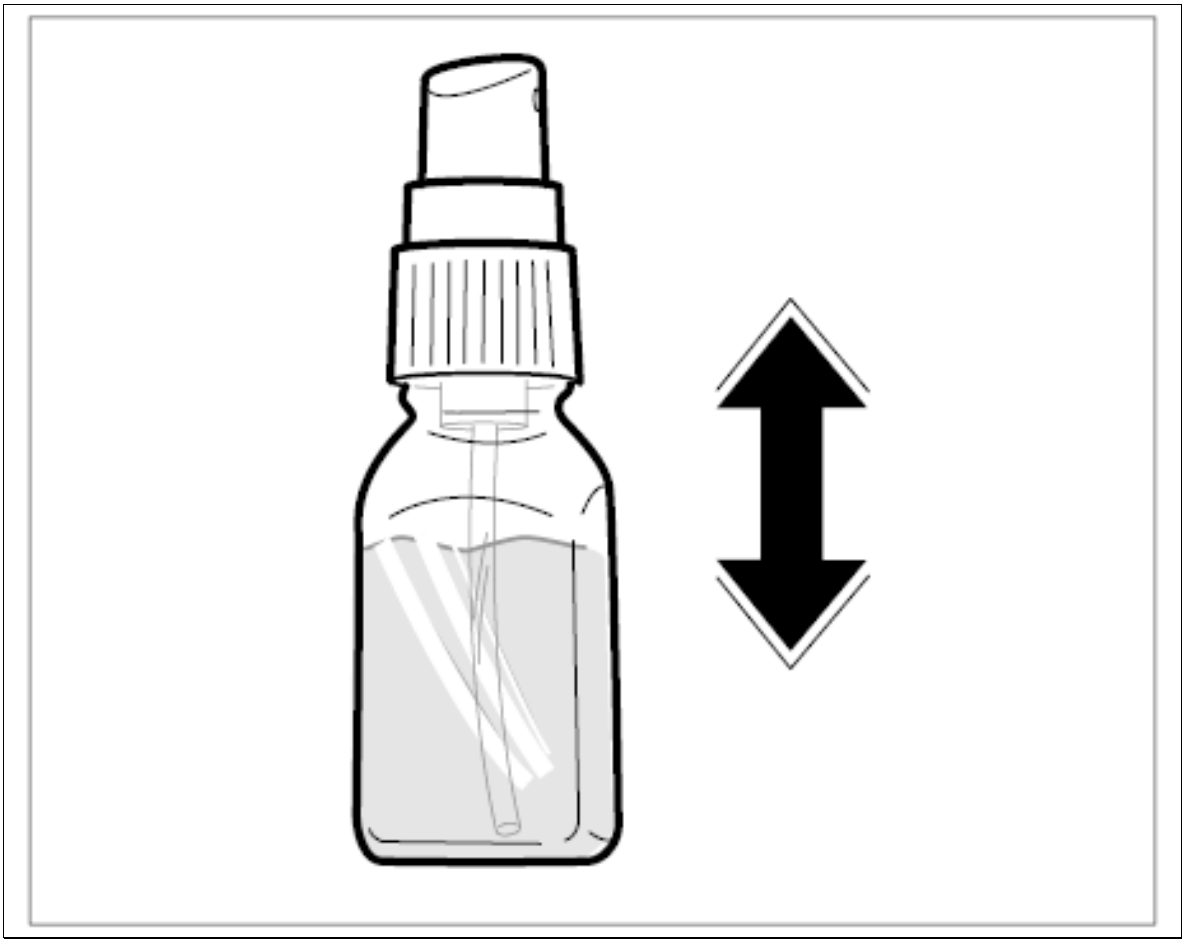

Courtesy of PORSCHE CARS NORTH AMERICA, INC.

6. Clean adhesive flange with isopropanol and leave to dry off for 5-10 minutes.
7. Spray on primer in the area around the adhesive flange.
    1. 7.1. Process mixed primer within eight hours; do not keep any leftover primer.

Fig 5: Applying Primer

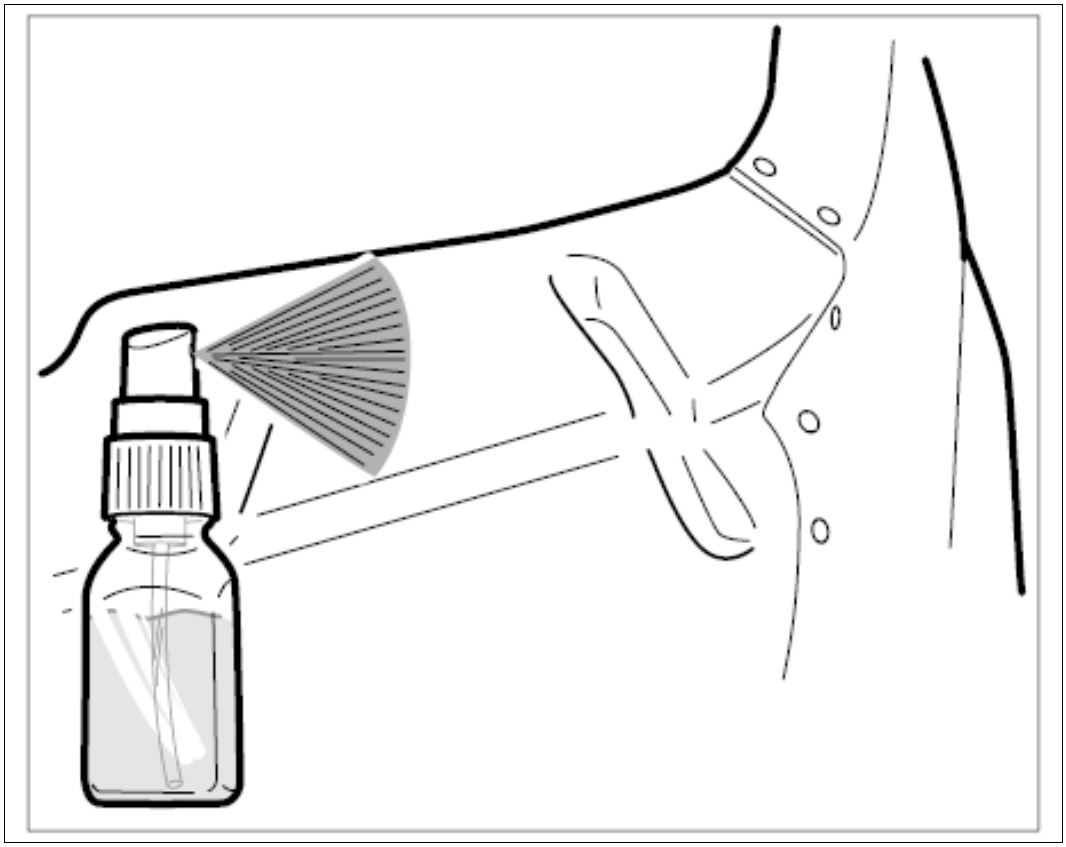

Courtesy of PORSCHE CARS NORTH AMERICA, INC.

Fig 6: Identifying Working Time Of 2-Component Sip

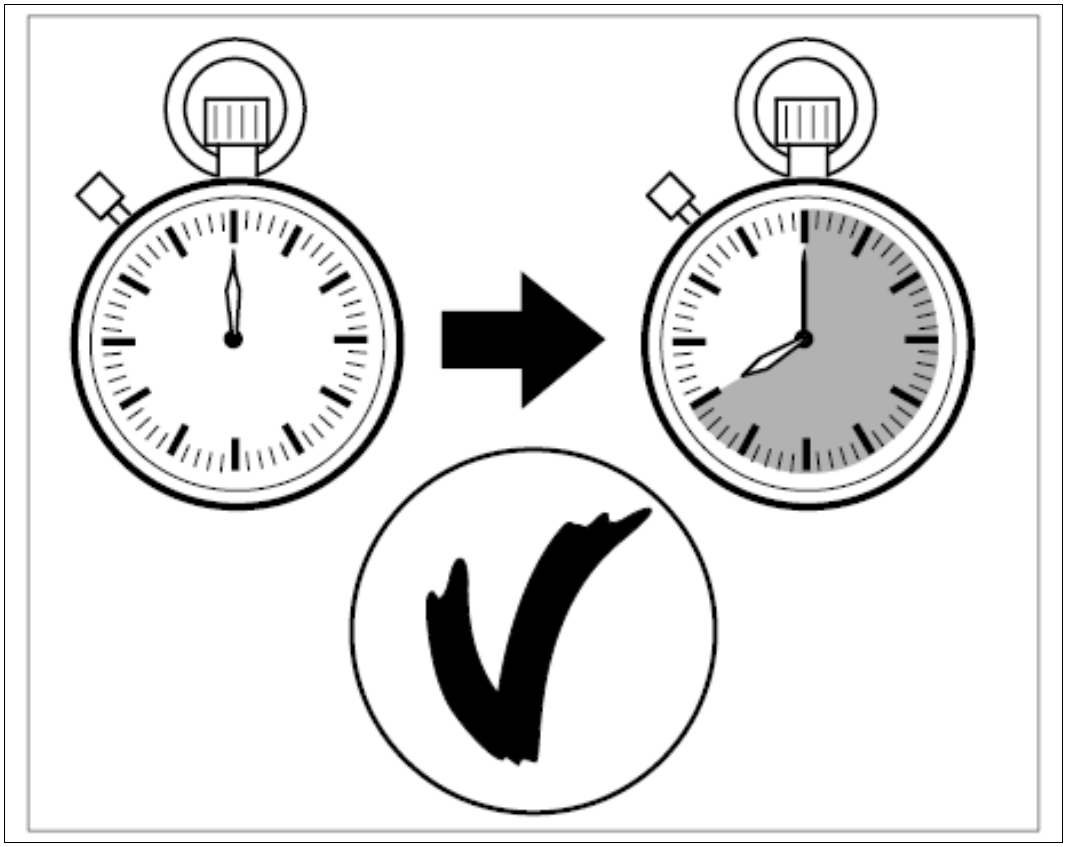

Courtesy of PORSCHE CARS NORTH AMERICA, INC.

8. Check primer application.

   Bonded flanges are coated evenly with primer:

   result is OK.

Fig 7: Identifying Primer Application OK



Courtesy of PORSCHE CARS NORTH AMERICA, INC.

Remove excess primer with a clean, dry lint-free cloth.

A thin, violet-colored coating of primer is sufficient for the bonded flanges.

Fig 8: Removing Excess Primer

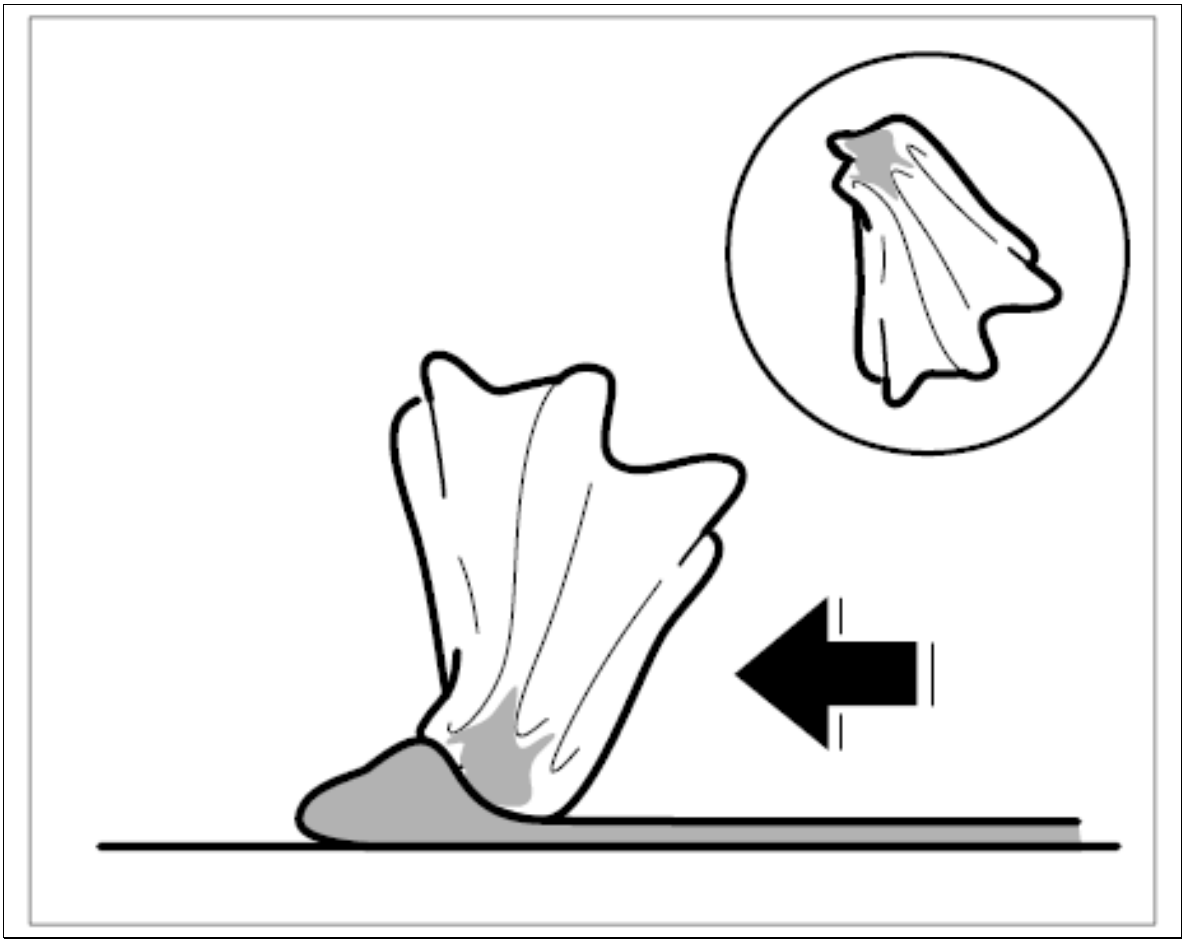

Courtesy of PORSCHE CARS NORTH AMERICA, INC.

Adhesive flanges are not evenly coated (droplet formation):

result is not OK.

If an even application of primer is not obtained, the bonded flange must be completely cleaned, sanded and primed once again.

Fig 9: Identifying Primer Bonded Flange (Incorrect)



Courtesy of PORSCHE CARS NORTH AMERICA, INC.

9. Dry primer.
    1. 9.1. Allow primer to flash off; it must be dust-dry before any adhesive is applied.

Location	Description	Type	Basic value	Tolerance 1	Tolerance 2
Primer		Flash-off time	5 min		

10. Process adhesive.

WM 5X00IN PROCESSING STRUCTURAL BODY ADHESIVE (ALL MODELS) > HANDLING PROCESSING DEVICES > APPLICATOR GUN

1. Open holder.
    1. 1.1. Release holder **-arrow-** and fold up.

Fig 1: Releasing Holder

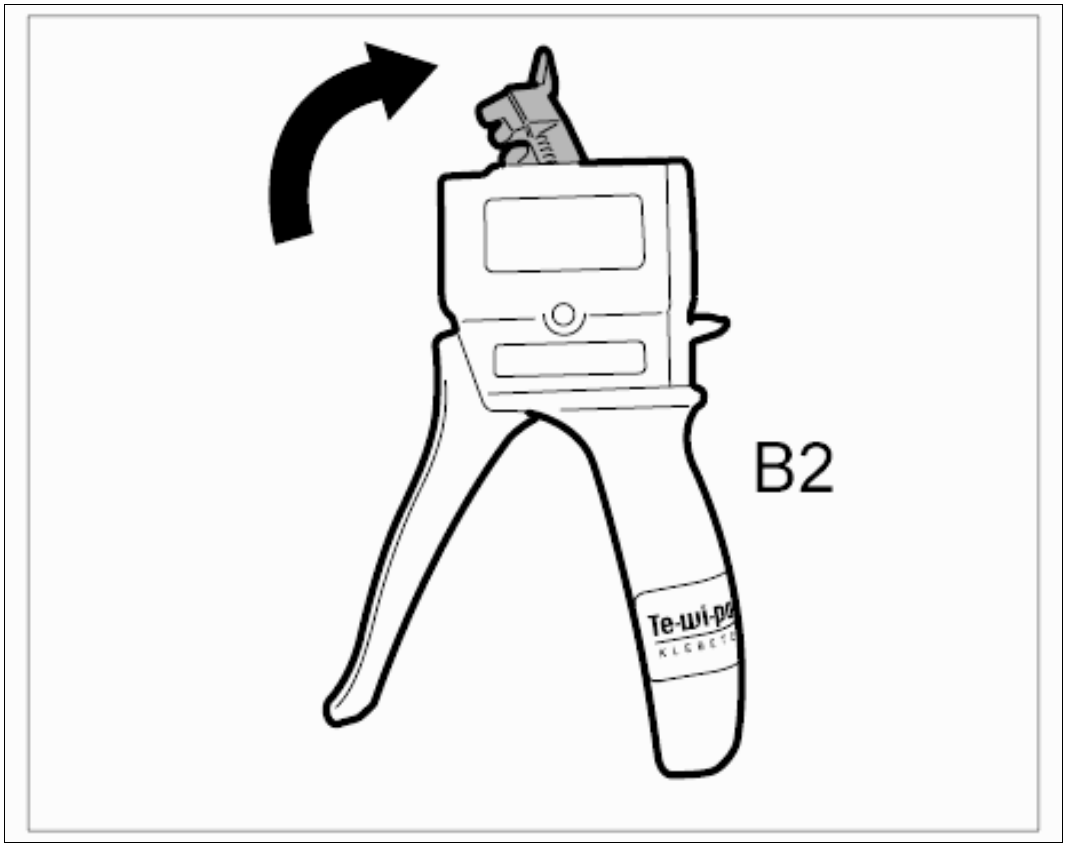

Courtesy of PORSCHE CARS NORTH AMERICA, INC.

2. Press sliding lock upwards

    1. 2.1. Press sliding lock upwards in direction of arrow **-arrow-** .

Fig 2: Pressing Sliding Lock

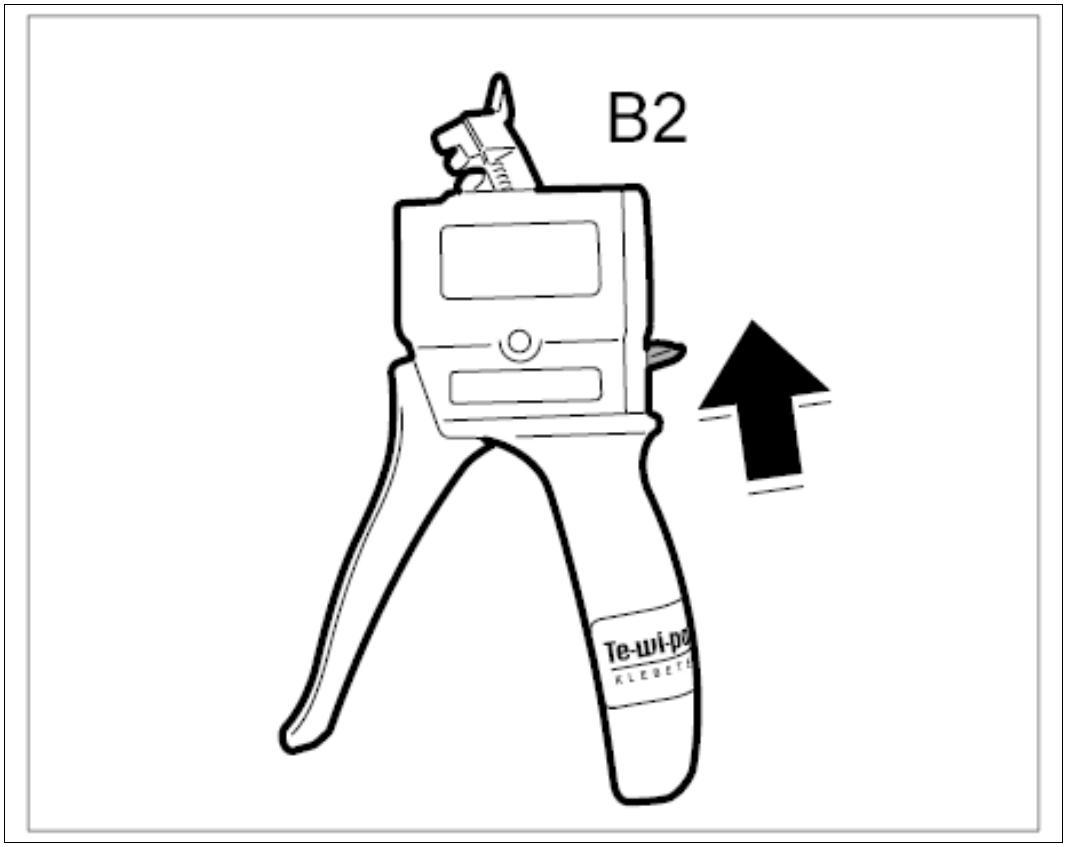

Courtesy of PORSCHE CARS NORTH AMERICA, INC.

3. Insert piston rod.

    1. 3.1. Hold sliding lock pressed and insert piston rod **-B1-** completely into the gun grip **-B1-** .

Fig 3: Inserting Piston Rod

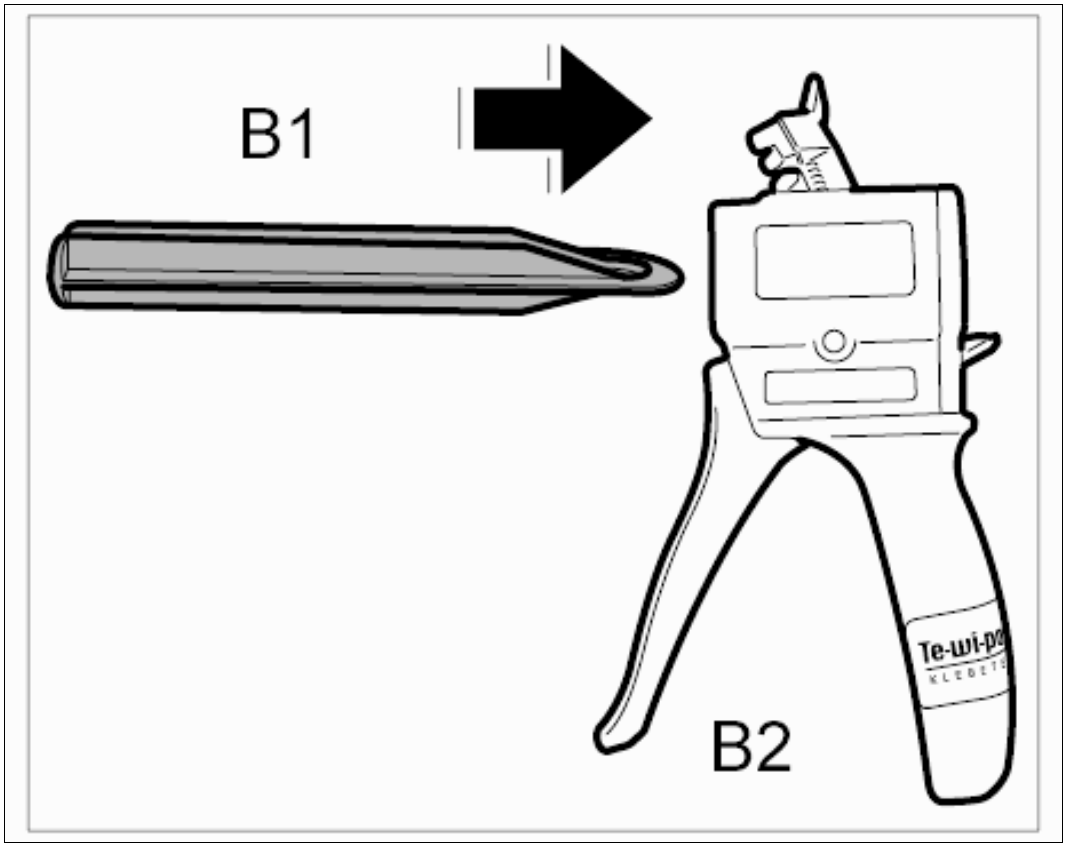

Courtesy of PORSCHE CARS NORTH AMERICA, INC.

4. Insert mixing cartridge.

    1. 4.1. Insert double cartridge **-C1-** into the gun **-B-** from above. Insert the cartridge until the muzzle of the gun engages in the groove of the cartridge.

Fig 4: Inserting Cartridge

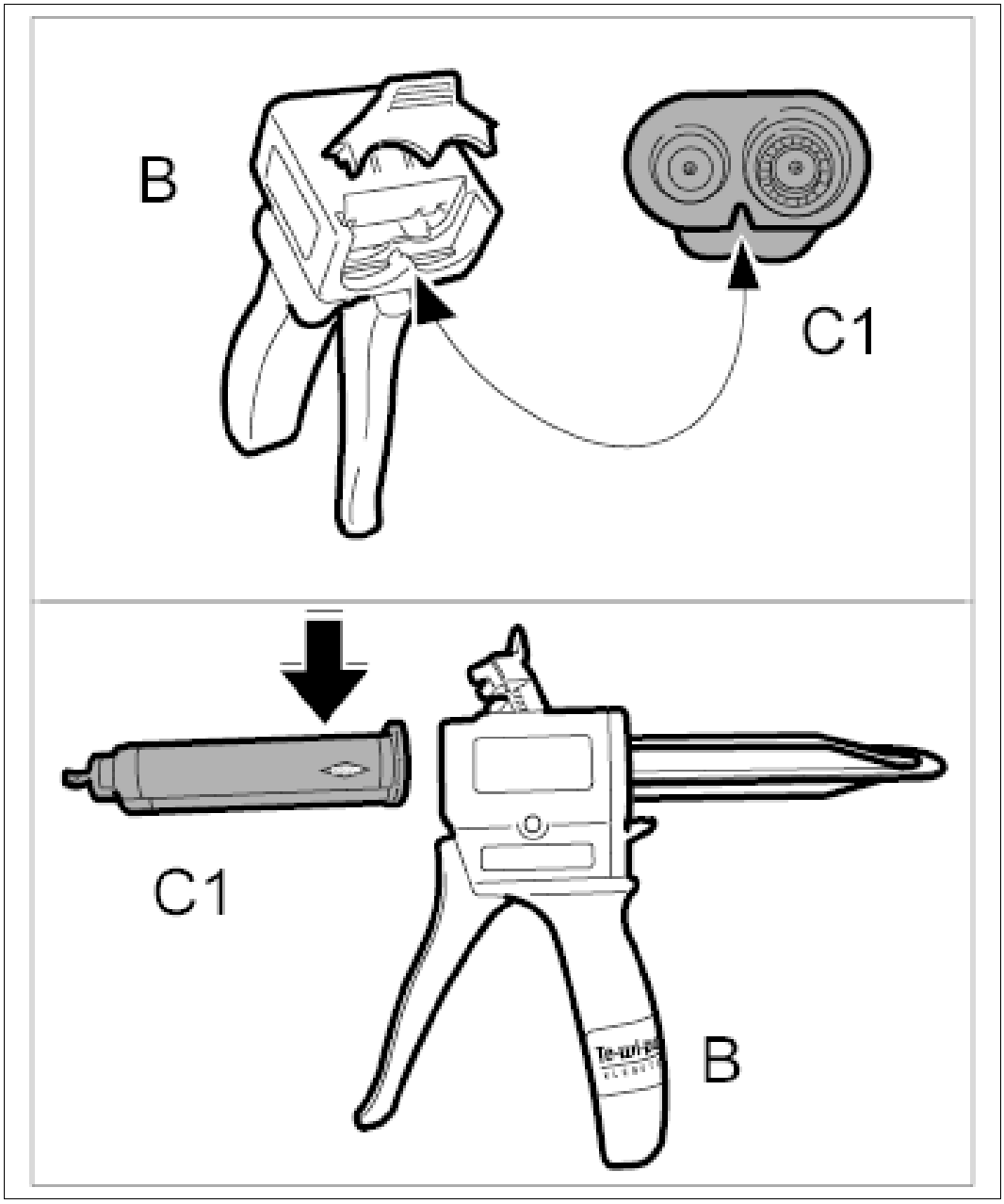

Courtesy of PORSCHE CARS NORTH AMERICA, INC.

5. Engage holder.

    1. 5.1. Swivel holder downward and engage on handle of gun.

Fig 5: Engaging Holder

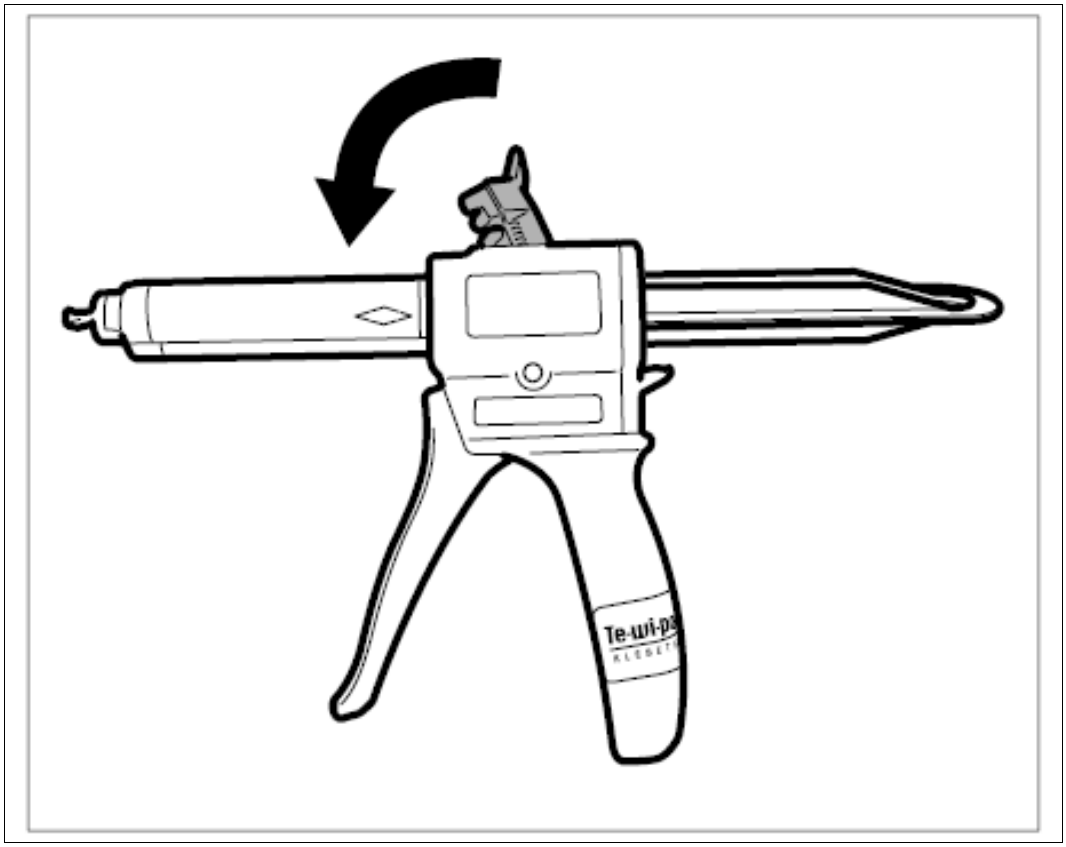

Courtesy of PORSCHE CARS NORTH AMERICA, INC.

6. Open cartridge.

    1. 6.1. Turn screw cap 90 ° counter-clockwise and remove.

Fig 6: Opening Cartridge

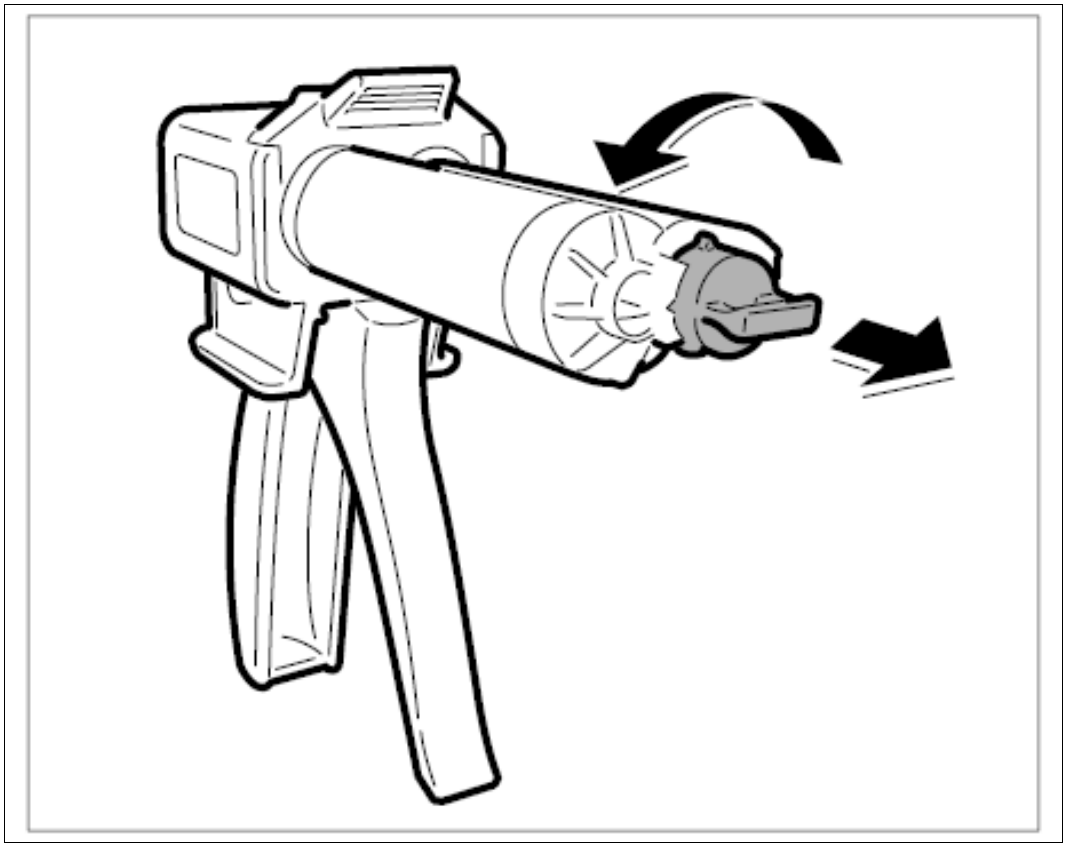

Courtesy of PORSCHE CARS NORTH AMERICA, INC.

7. Squeeze adhesive to the front.

    1. 7.1. Press the gun grip to allow the piston rod to move out slowly until an equal amount of both components emerges.

    2. 7.2. Wipe off any adhesive that emerges.

8. Fit processing nozzle.

    1. 8.1. Before fitting the processing nozzle, make sure that the muzzle **-A-** and the mixing ducts are aligned; turn the bayonet locking mechanism on the processing nozzle by 90° if necessary.

    2. 8.2. Position processing nozzle **-C2-** and turn clockwise 90°.

Fig 7: Fitting Nozzle

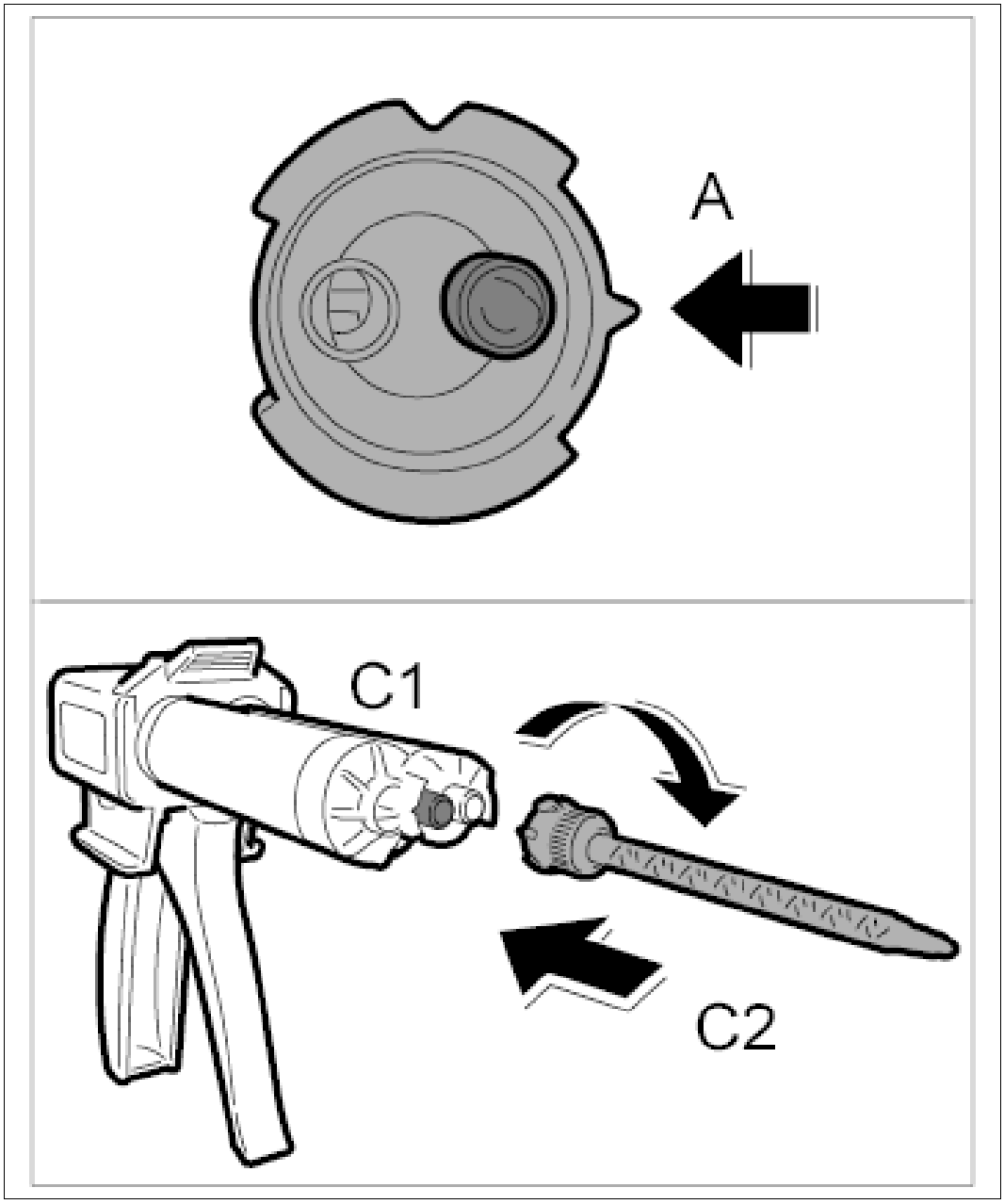

Courtesy of PORSCHE CARS NORTH AMERICA, INC.

9. Mix adhesive components.
    1. 9.1. Press the gun grip to allow the piston rod to move out slowly until the adhesive is visible in the processing pipe.
10. Bond the body part within the specified processing time.

Fig 8: Identifying Working Time Of Structural Adhesive

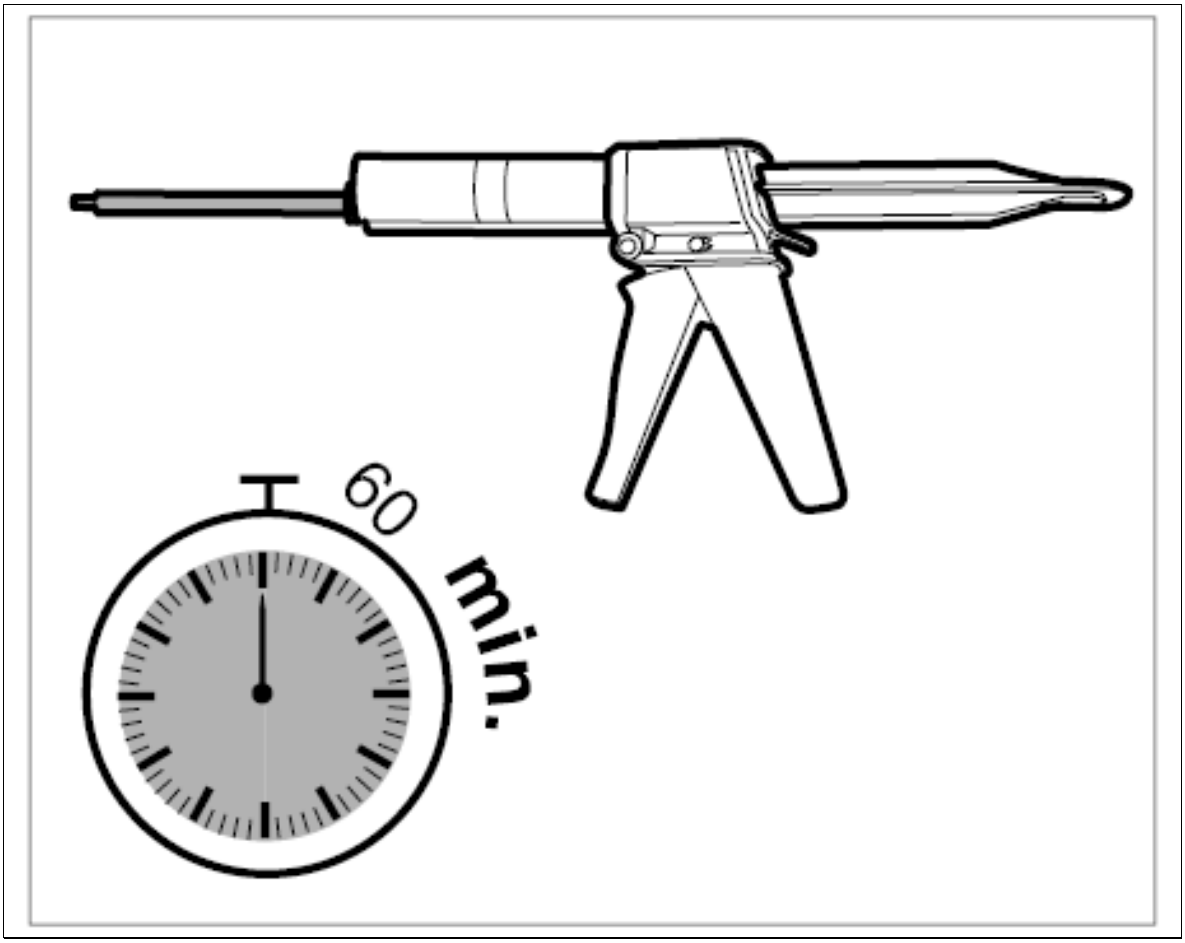

Courtesy of PORSCHE CARS NORTH AMERICA, INC.

WM 5X00IN WORKING WITH BODY FOAM FILLER (ALL MODELS) > PRODUCT DESCRIPTION

The processing time is approx. 15-18 minutes. Processing can be interrupted briefly for up to approx. 5 minutes. The chemical reaction is essentially complete after approx. 30 minutes. The hardened foam does not swell or shrink.

WM 5X00IN WORKING WITH BODY FOAM FILLER (ALL MODELS) > APPLICATIONS

The **foam filler** is ideal for **filling, insulating and sealing cavities** , e.g. on pillars, door sills and frame sections.

WM 5X00IN WORKING WITH BODY FOAM FILLER (ALL MODELS) > PROCESSING

Information

Always observe the relevant work safety regulations when working with the foam filler.

> *WARNING: Toxic substances*
>
> - *Danger of poisoning or suffocation*
> - *Danger of burns to the eyes and skin*

→ Ventilate the work area well.

→ Never ingest or inhale.

→ Read specific information on the Hazard Sheet.

→ Do not smoke, eat or drink in the work area.

Information

The work area must be free of dust and grease.

Remove loose parts.

Do not wet the area beforehand.

Observe temperature limits:

- Can and ambient temperature: 10-35°C
- Optimal temperature: 18-23°C

Information

Apply sparingly since the volume of the foam filler will expand by approx. 50-100% in open areas and by approx. 100-200% in cavities. Approx. 0.25 liters of foam volume is produced per second of foam time (free-foaming). The foam filler is silver-grey. Remove fresh foam residues immediately with PU cleaner. Hardened foam residues can only be removed mechanically afterwards. Always remove foam from the can following activation.

- **Activation process:**
- 1. Break open the seal on the activation lid.
- 2. Use a piece of wire to pull the activation lid out as far as it will go (approx. 11 cm up to the notch).
- 3. Break off the wire at the required rupture point (notch) over the valve.
- 4. Screw plastic adapter into the valve.
- 5. Shake can vigorously up and down (approx. 20 times).
- 6. Release foam downwards out of the can with the valve.
- **Subsequent work:**

  The hardened foam filler can be processed further by sanding, cutting or sawing. It can be painted

or varnished.

WM 5X00IN SETTING SELF-TAPPING SCREWS (ALL MODELS) > TOOLS

Designation	Type	Number	Description	
Cordless drill CXS 10 Li 1.3 set	Workshop equipment	WE 1448		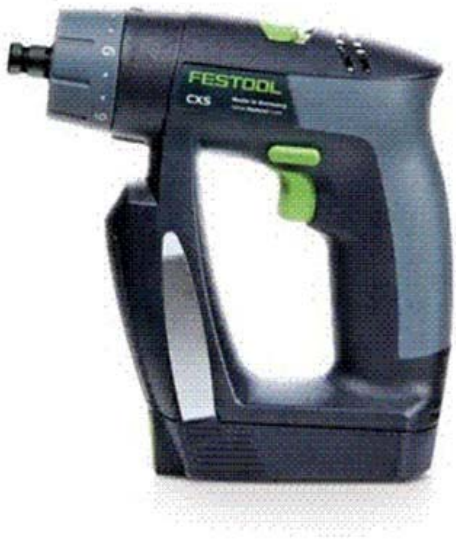

WM 5X00IN SETTING SELF-TAPPING SCREWS (ALL MODELS) > SETTING SELF-TAPPING SCREWS

1. Align and secure body parts.
2. Drill body parts using a small drill bit (**-X-** mm).
3. Remove body parts.
4. Drill holes in the outer component (**-Y-** mm).

Fig 1: Identifying Hole Geometry

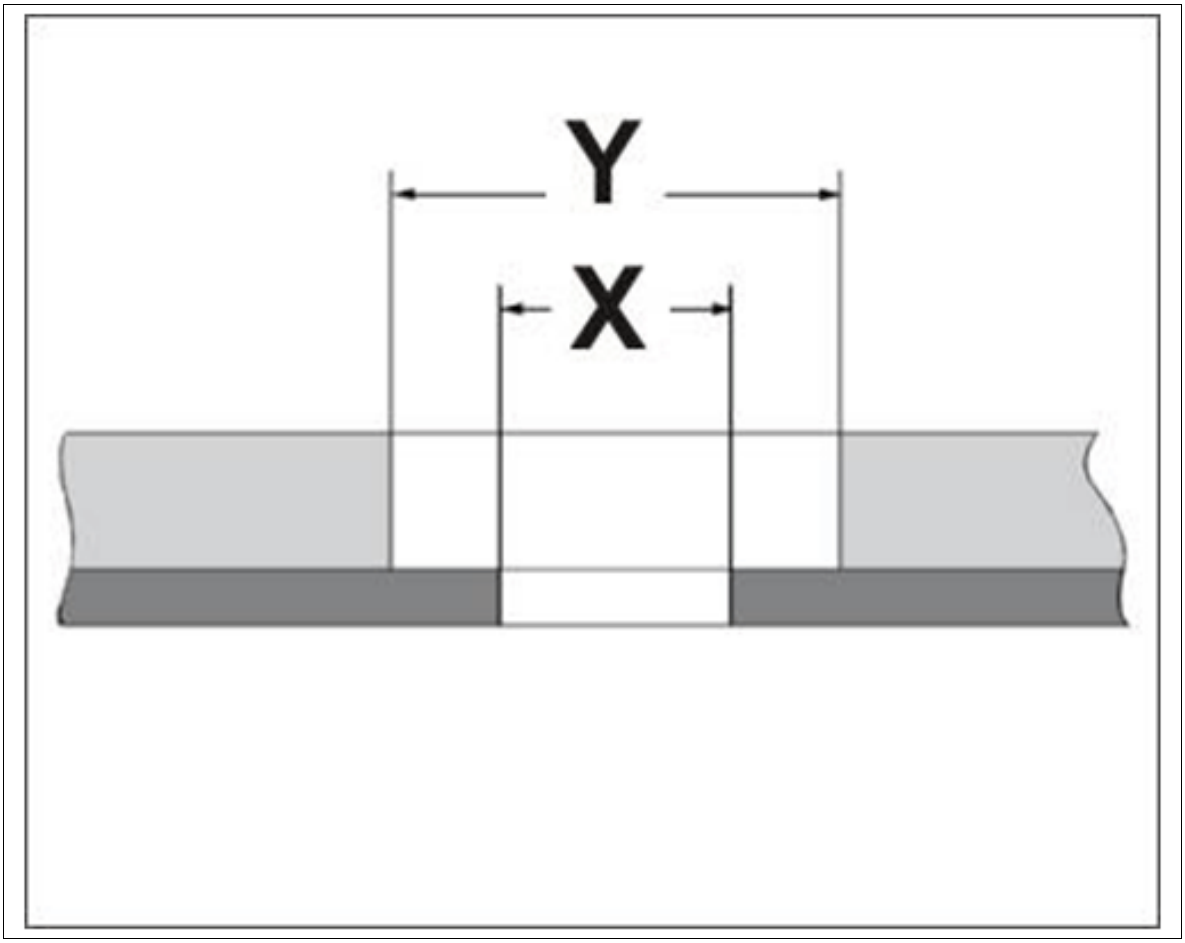

Courtesy of PORSCHE CARS NORTH AMERICA, INC.

5. De-burr all bore holes.
6. Prepare bonding surfaces and bond body parts. → 5X00IN21 WORKING WITH BODY STRUCTURAL ADHESIVE
7. Align and secure body parts.
8. Screw on body parts using a special screw.
    1. 8.1. Fit screw.

Fig 2: Fitting Screw

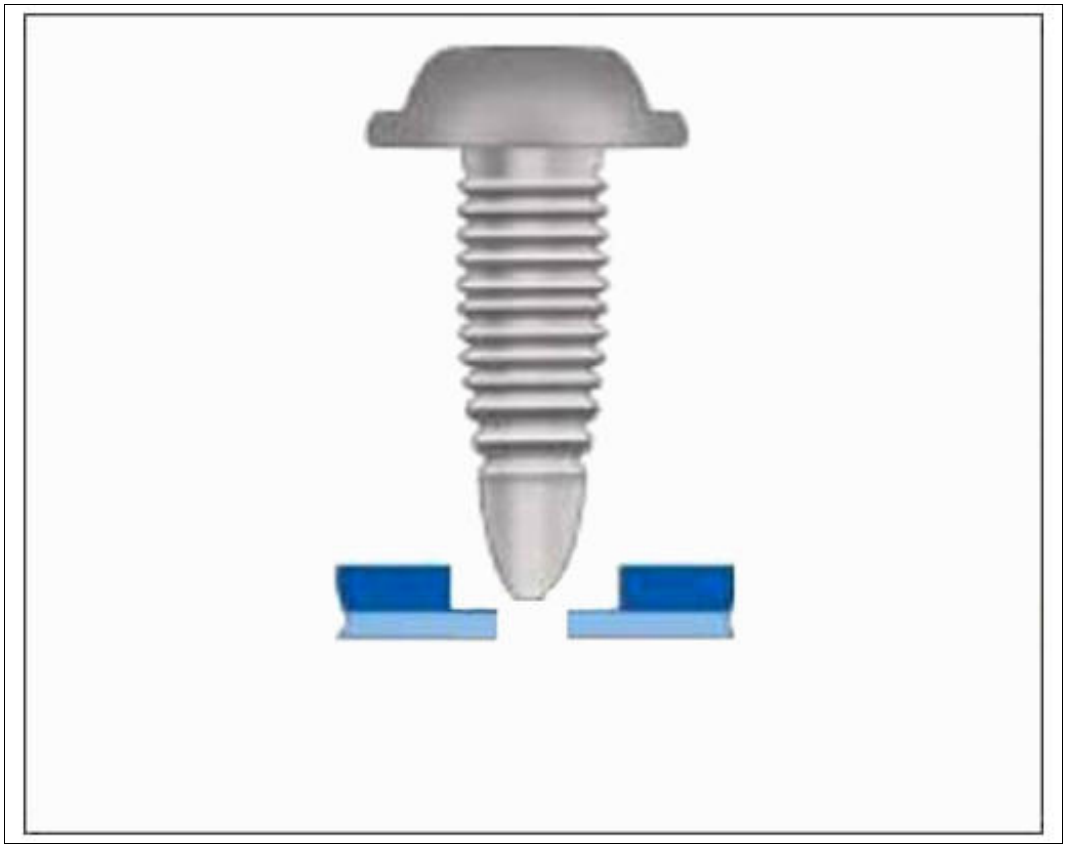

Courtesy of PORSCHE CARS NORTH AMERICA, INC.

2. 8.2. Shape the cylindrical extrusion by screwing in at high speed (> 1, 000 RPM).
   Cordless drill CXS 10 Li 1.3 set WE 1448

Fig 3: Identifying Shape Cylindrical Extrusion



Courtesy of PORSCHE CARS NORTH AMERICA, INC.

3. 8.3. Groove the metric thread without tension.

Fig 4: Identifying Groove Thread



Courtesy of PORSCHE CARS NORTH AMERICA, INC.

4. 8.4. Continue to screw in at low speed (< 100 RPM).

Fig 5: Identifying Screw



Courtesy of PORSCHE CARS NORTH AMERICA, INC.

Information

If the prescribed torque is not reached when screwing in screws (screw does not tighten securely), the next size screw must be used.

5. 8.5. Tighten the screw to the prescribed torque.

Fig 6: Tightening Screws



Courtesy of PORSCHE CARS NORTH AMERICA, INC.

WM 5X00IN REPLACING THREADED BOLTS (ALL MODELS) > TOOLS

Designation	Type	Number	Description	
pop rivet nut pliers	Workshop equipment	WE 1476		

WM 5X00IN REPLACING THREADED BOLTS (ALL MODELS) > TECHNICAL VALUES

Location	Description	Type	Basic value	Tolerance 1	Tolerance 2
Drill bit		Diameter	4.0 mm		
Drill bit		Diameter	9.0 mm		

WM 5X00IN REPLACING THREADED BOLTS (ALL MODELS) > PRELIMINARY WORK

1. Remove add-on parts in the repair area.

WM 5X00IN REPLACING THREADED BOLTS (ALL MODELS) > REPLACING THREADED BOLTS

Fig 1: Identifying Threaded Bolts Installation Position

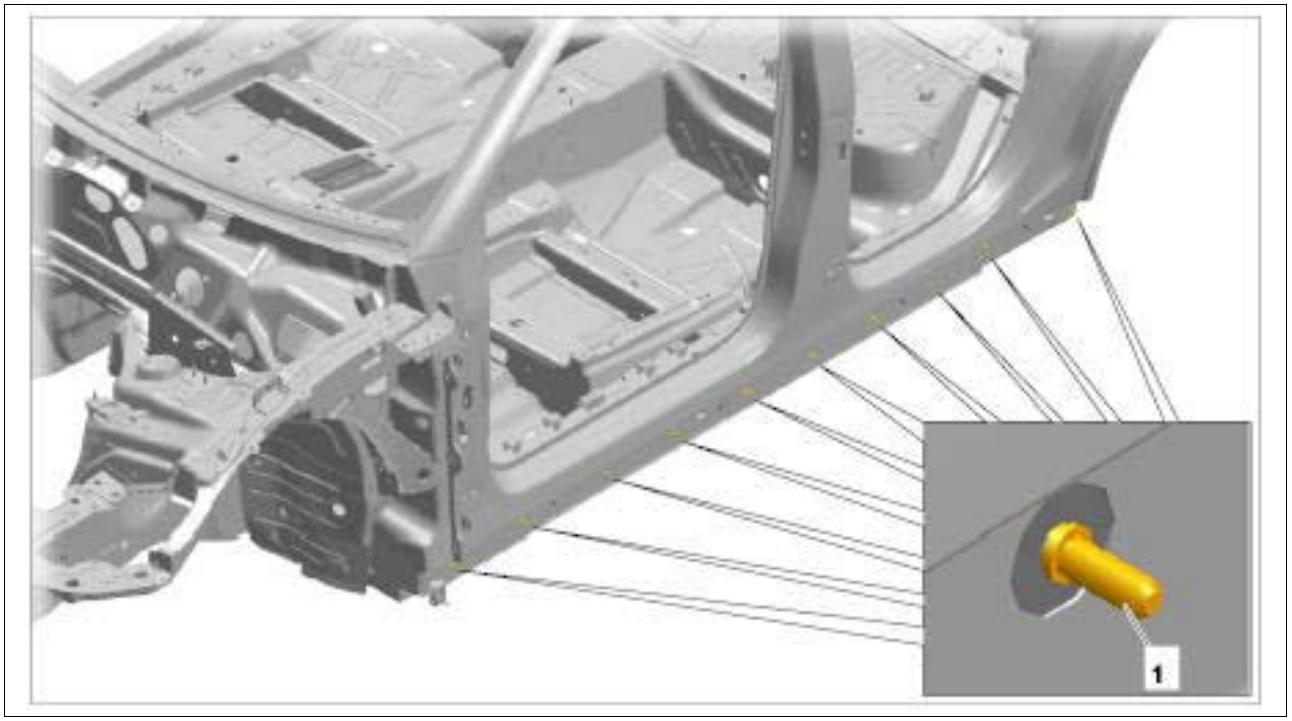

Courtesy of PORSCHE CARS NORTH AMERICA, INC.

Information

- Defective or broken threaded bolts can be replaced with repair bolts.

The following bolts are available:

- Threaded bolt, M6: → BOLT N.105.954.01

1. Grip defective threaded bolts on the complete vehicle (e.g. bolts with damaged threads) using a pliers and screw them out.

   Grind down during body repairs if necessary.

2. Remove dirt from the sealing surface area of the repair bolt.

3. Drill a hole.

   1. 3.1. Drill a hole in the center of the broken bolt **-1-** (**-arrow-**). → **Diameter: 4.0 mm**

Fig 2: Locating Drill Hole

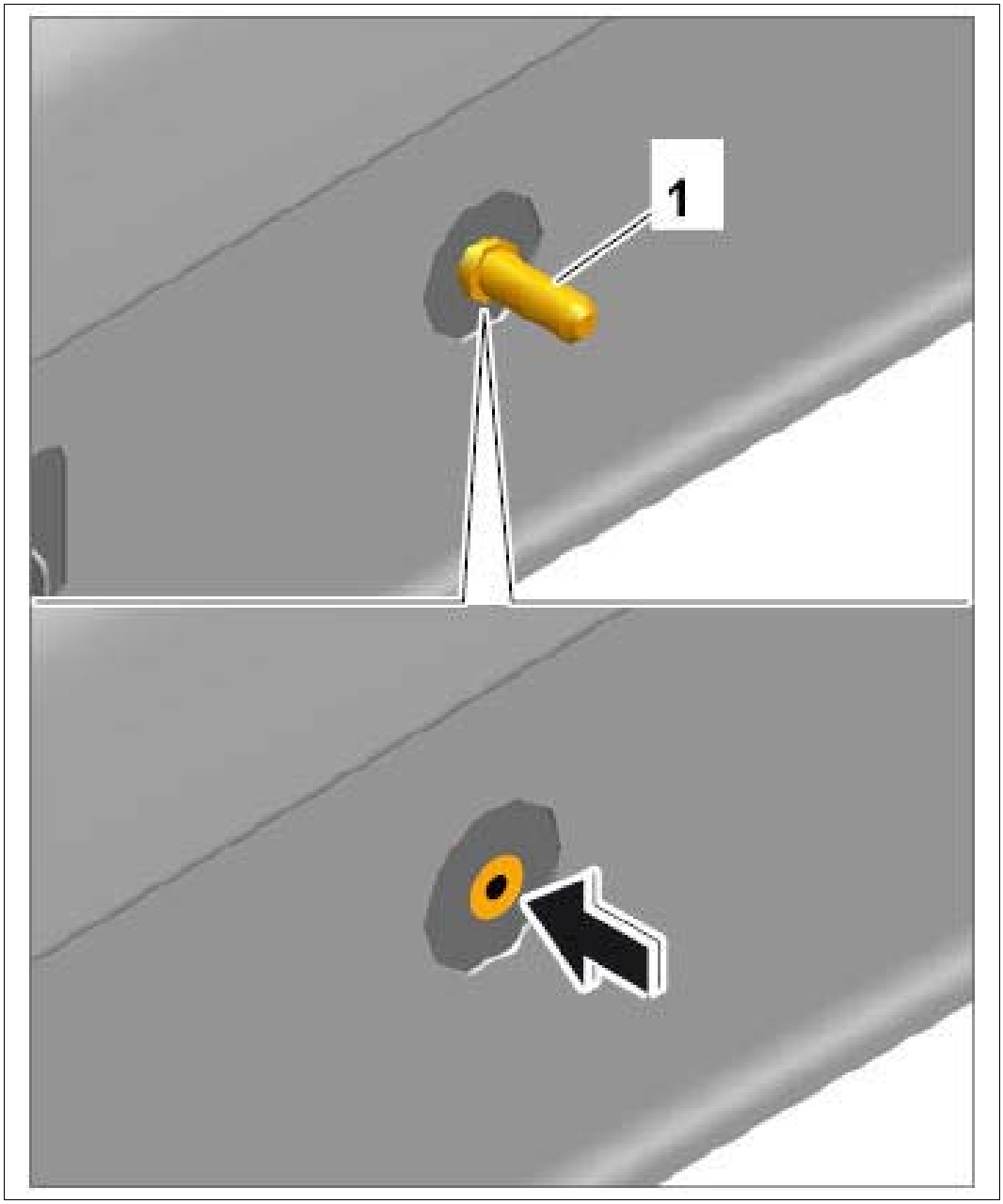

Courtesy of PORSCHE CARS NORTH AMERICA, INC.

2. 3.2. Drill out the hole.

   For M6 threaded bolts → **Diameter: 9.0 mm**

Fig 3: Identifying Threaded Bolts Hole



Courtesy of PORSCHE CARS NORTH AMERICA, INC.

4. Prime rivet area.

5. Prepare threaded bolt for installation.

    1. 5.1. On the back of the bolt **-1-** , apply sealing compound → SEALING MATERIAL 000.043.204.38 as a continuous bead of sealant **-2-** .

Fig 4: Applying Sealing Compound

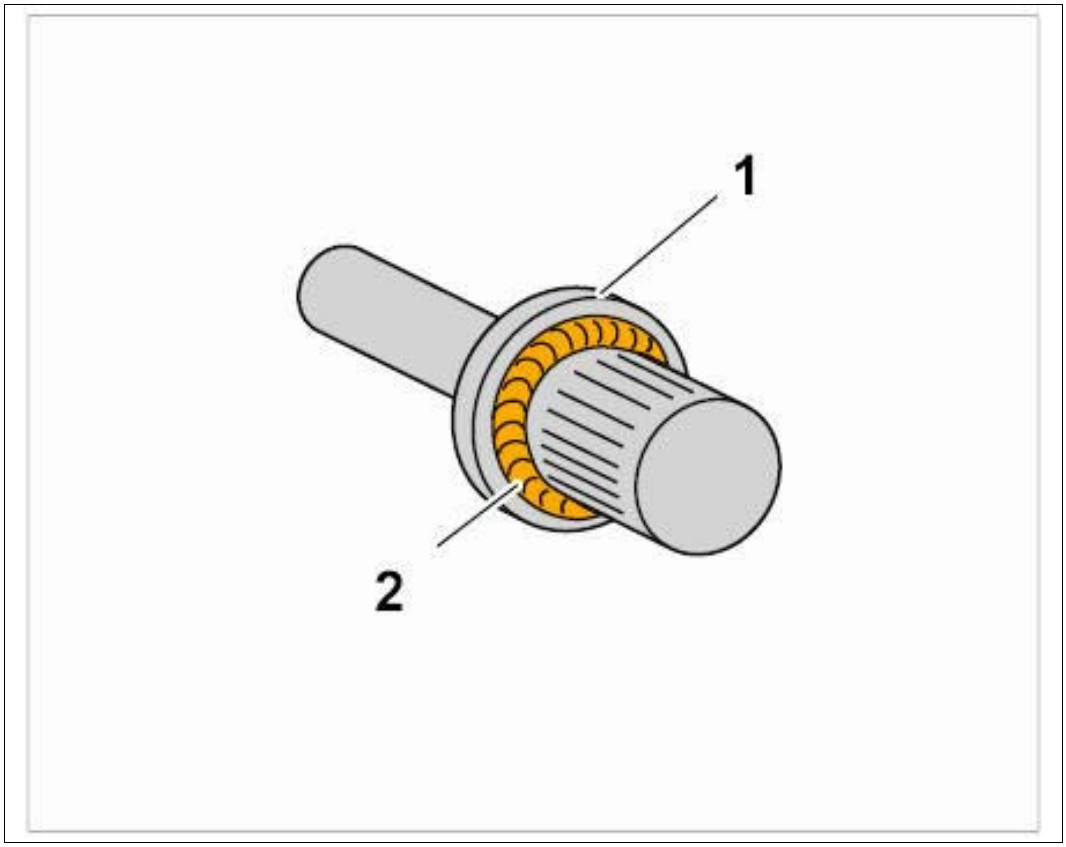

Courtesy of PORSCHE CARS NORTH AMERICA, INC.

6. Rivet in threaded bolt.
    1. 6.1. Insert threaded bolt into the bore.
    2. 6.2. Rivet in threaded bolt using the riveting tool **pop rivet nut pliers WE 1476.**

Fig 5: Identifying Riveted Threaded Bolt

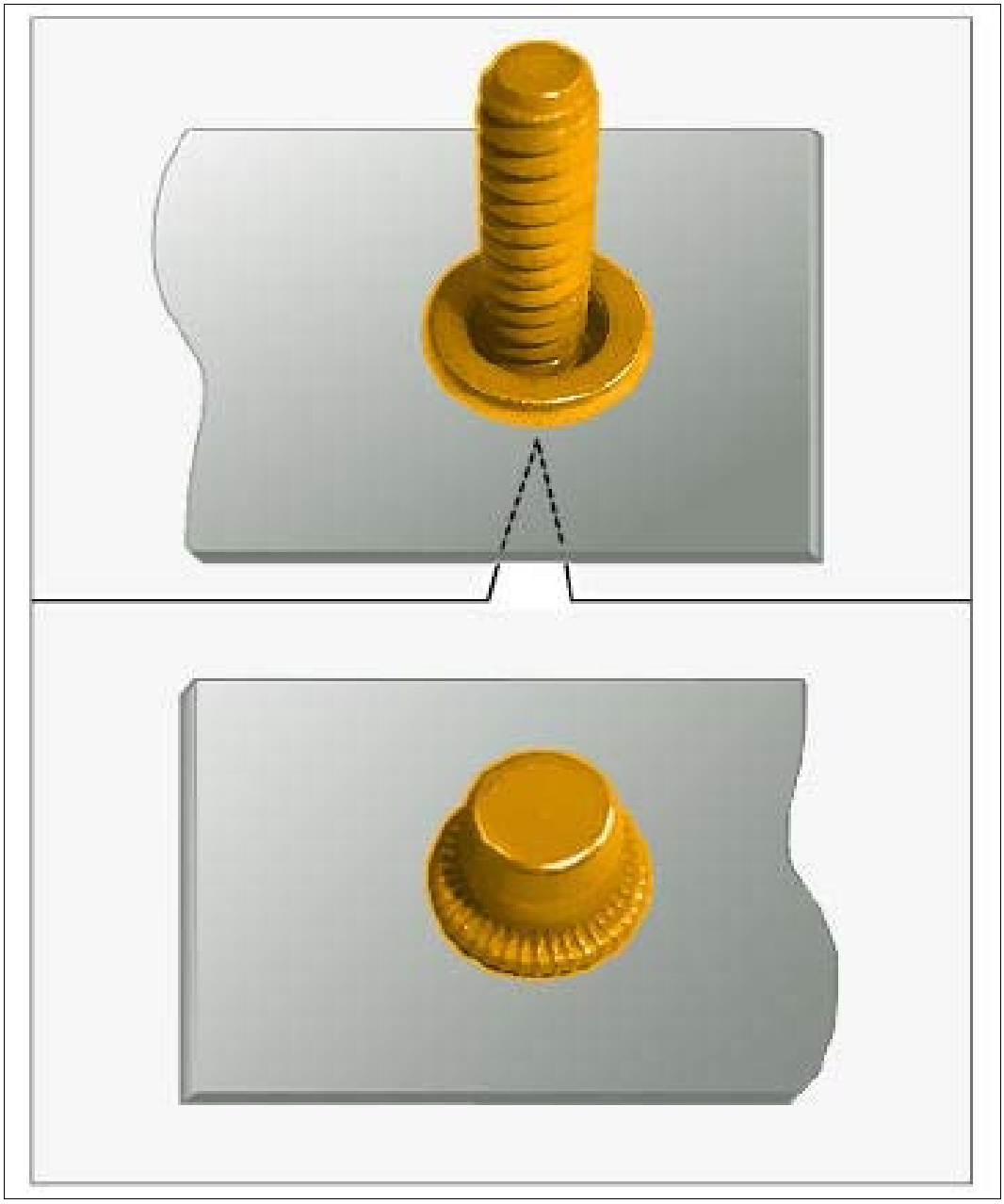

Courtesy of PORSCHE CARS NORTH AMERICA, INC.

7. Remove any sealing compound that has oozed out.

WM 5X00IN REPLACING THREADED BOLTS (ALL MODELS) > SUBSEQUENT WORK

1. Apply primer to the repair area.
2. Seal the joint for the threaded bolt.
3. Install add-on parts in the repair area.
4. Apply cavity protection to the repair area. → 5X00IN44 CAVITY PRESERVATION

WM 5X00IN GAP DIMENSIONS (ALL MODELS) > TECHNICAL VALUES

Location	Description	Type	Basic value	Tolerance 1	Tolerance 2
Mirror to door		Gap dimension	1.5 mm	+/-1 mm	
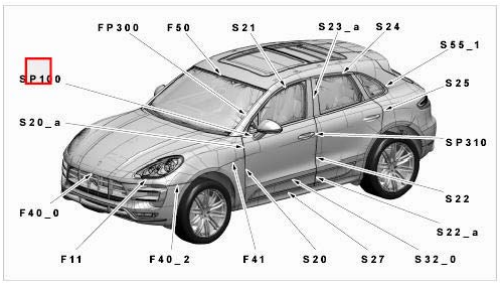 Overview of gap dimensions					
Strip to pillar		Gap dimension	-0.5 mm	+/-0.5 mm	
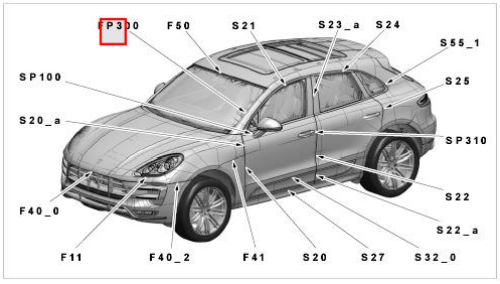 Overview of gap dimensions					
Windscreen to roof		Gap dimension	3.2 mm	+/-0.5 mm	
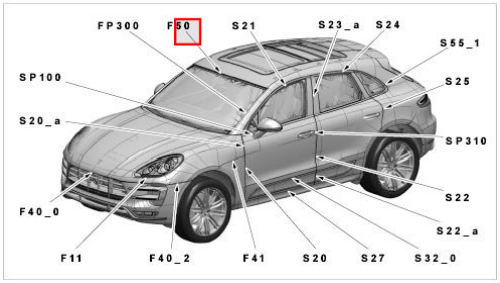 Overview of gap dimensions					
Strip to side panel		Gap dimension	4.5 mm	+/-2 mm	

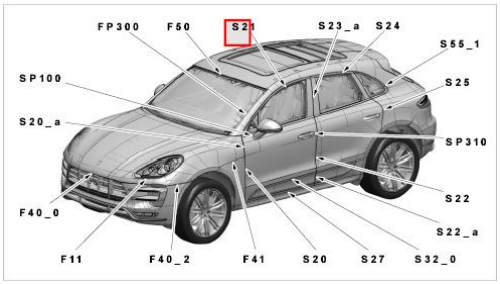

Overview of gap dimensions

Trim, front to rear		Gap dimension	4.2 mm	+/-1 mm	

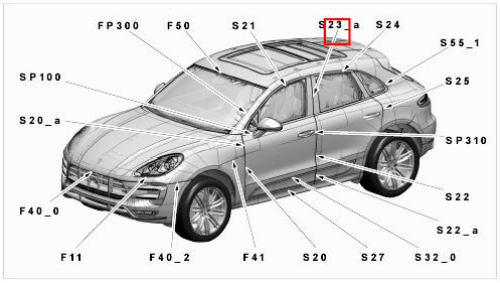

Overview of gap dimensions

Strip to side panel		Gap dimension	4.5 mm	+/-2 mm	

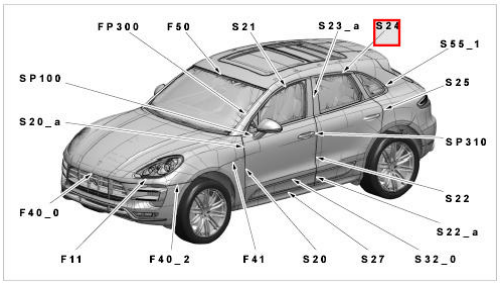

Overview of gap dimensions

Strip to side panel		Gap dimension	3.8 mm	+/-0.8 mm	

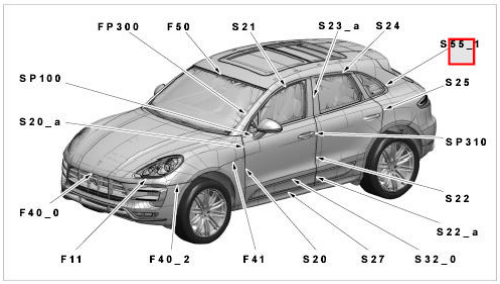

Overview of gap dimensions

Rear door to side panel		Gap dimension	3.5 mm	+/-0.5 mm	

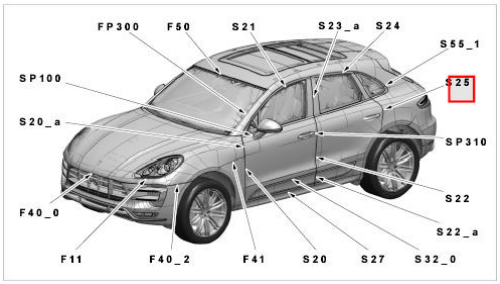

Overview of gap dimensions

Handle to front door		Gap dimension	1 mm	+/-0.5 mm	

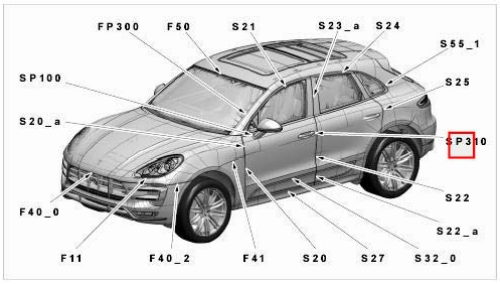

Overview of gap dimensions

Rear door to front door		Gap dimension	4.2 mm	0.5 mm	

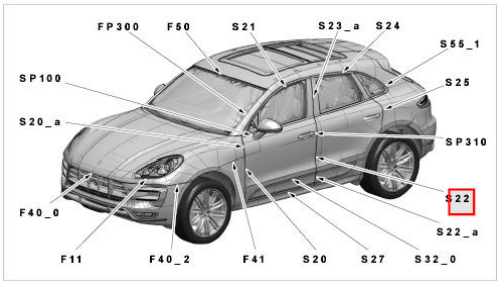

Overview of gap dimensions

Trim, front to rear		Gap dimension	4.2 mm	1 mm	

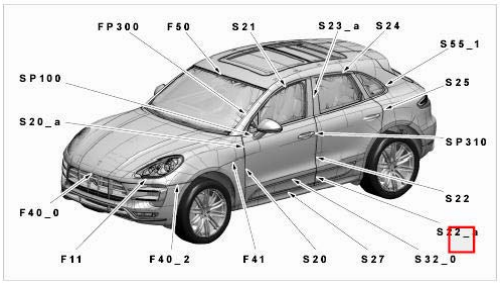

Overview of gap dimensions

Trim to door		Gap dimension	1 mm	+/-0.5 mm	

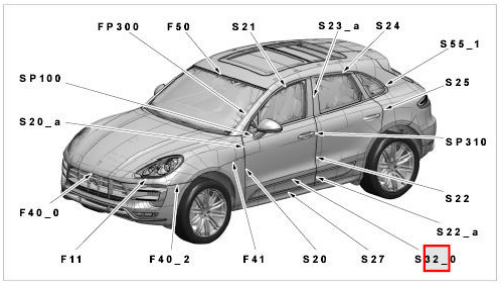

Overview of gap dimensions

Door sill to door		Gap dimension	4 mm	+/-1.5 mm	

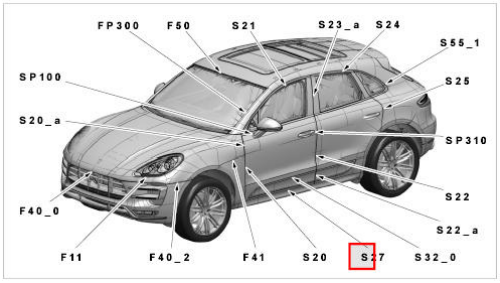

Overview of gap dimensions

Door to wing		Gap dimension	4.1 mm	+/-0.5 mm	

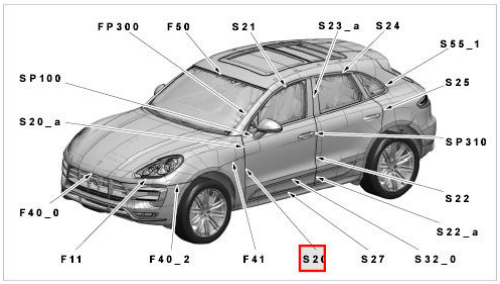

Overview of gap dimensions

Front lid to wing		Gap dimension	3.5 mm	0.5 mm	

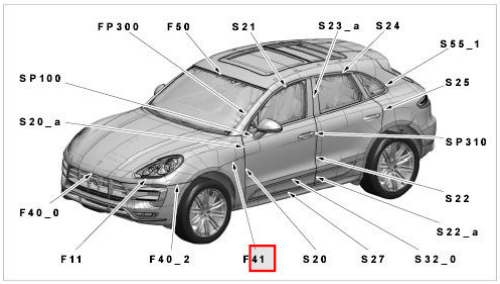

Overview of gap dimensions

Front lid to front apron		Gap dimension	3.5 mm	0.5 mm	

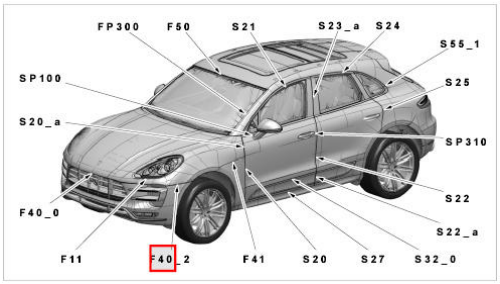

Overview of gap dimensions

Headlight to front lid		Gap dimension	4.7 mm	+/-0.8 mm	

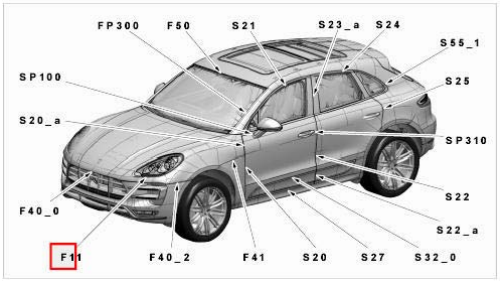

Overview of gap dimensions

Front lid to front apron		Gap dimension	4.8 mm	+1 mm	-0.6 mm

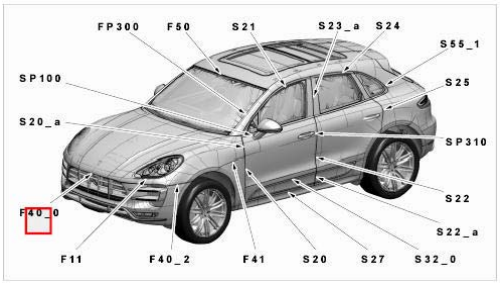

Overview of gap dimensions

Door to front lid		Gap dimension	4.1 mm	+/-0.5 mm	

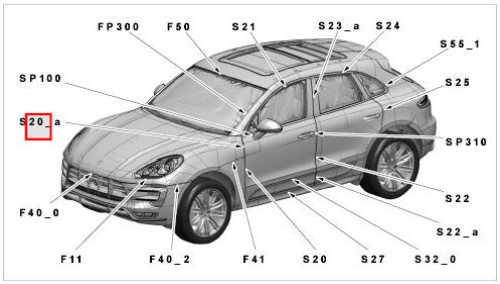

Overview of gap dimensions

Light to side panel		Gap dimension	1 mm	+/-0.8 mm	

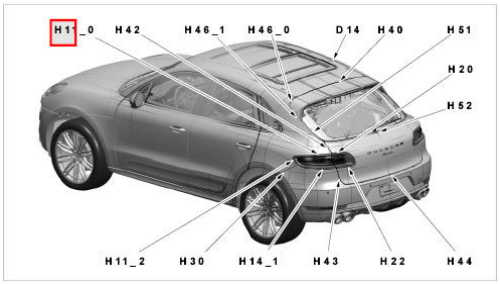

Overview of gap dimensions

Rear lid to side panel		Gap dimension	4 mm	+0.7 mm	-0.9 mm

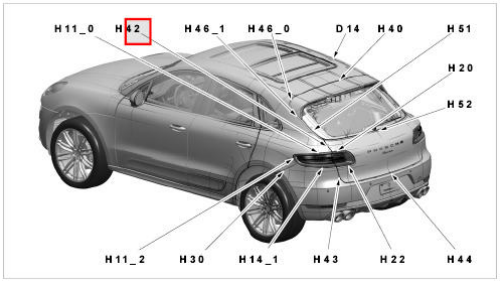

Overview of gap dimensions

Spoiler to side panel		Gap dimension	4 mm	+/-0.5 mm	

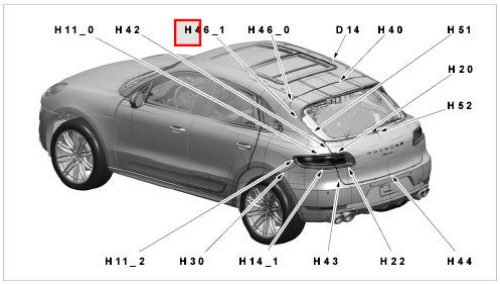

Overview of gap dimensions

Spoiler to side panel		Gap dimension	6 mm	+1 mm	-0.5 mm

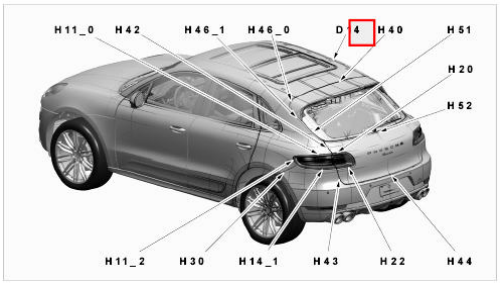

Overview of gap dimensions

Roof to side panel		Gap dimension	-3 mm	+/-1 mm	

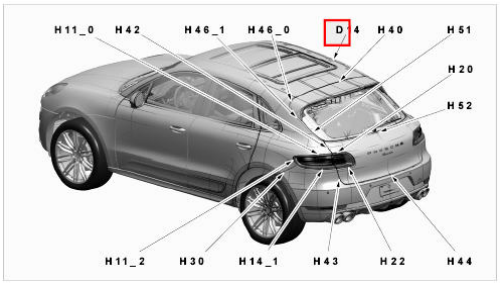

Overview of gap dimensions

Spoiler to roof		Gap dimension	6 mm	+1 mm	-0.5 mm

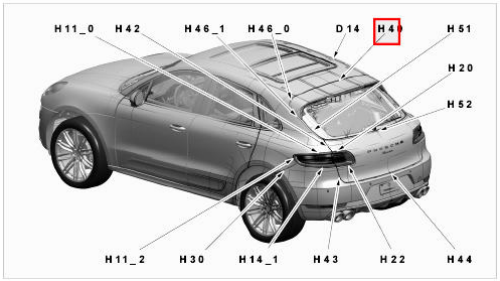

Overview of gap dimensions

Rear window to side panel		Gap dimension	4 mm	+/-0.8 mm	

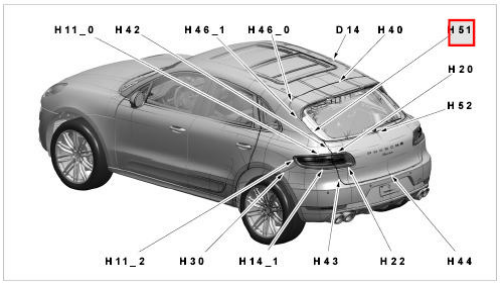

Overview of gap dimensions

Tail light to rear lid		Gap dimension	1 mm	+/-0.8 mm	

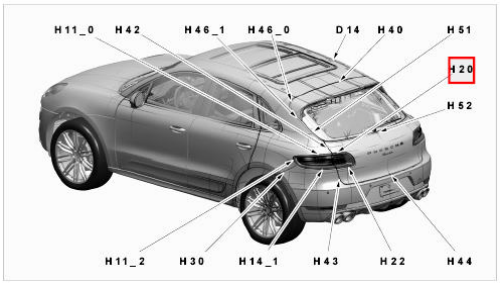

Overview of gap dimensions

Rear window to rear lid		Fugenmas	4 mm	+/-0.8 mm	

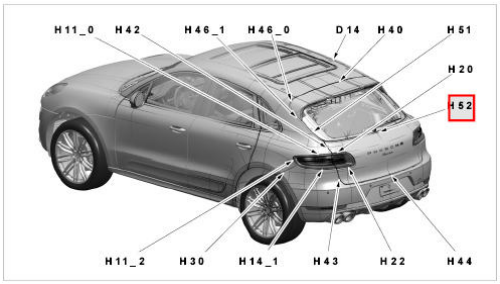

Overview of gap dimensions

Rear lid to rear apron		Gap dimension	4 mm	+/-0.8 mm	

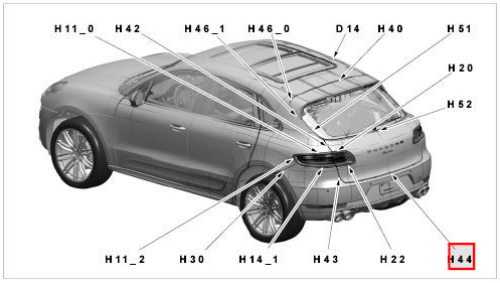

Overview of gap dimensions

Light to rear lid		Gap dimension	1 mm	+/-0.8 mm	

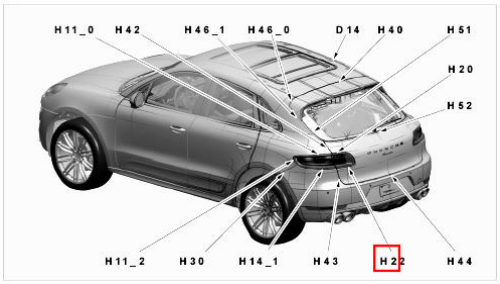

Overview of gap dimensions

Rear lid to rear apron		Gap dimension	4 mm	+0.7 mm	-0.9 mm

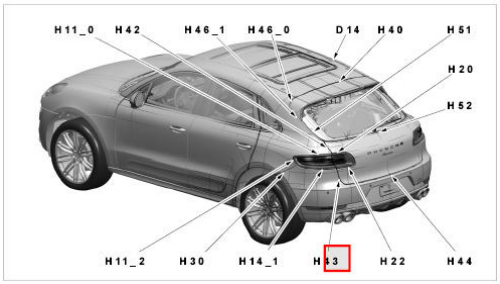

Overview of gap dimensions

Tail light to rear apron		Gap dimension	1 mm	+/-0.8 mm	

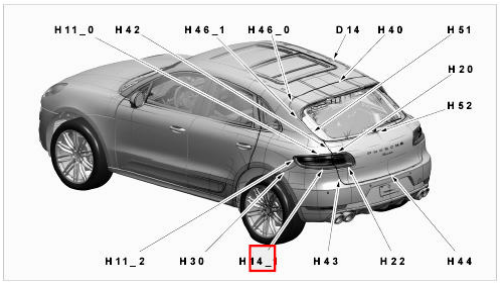

Overview of gap dimensions

Rear apron to side panel		Gap dimension	0 mm	+0.5 mm	-0 mm

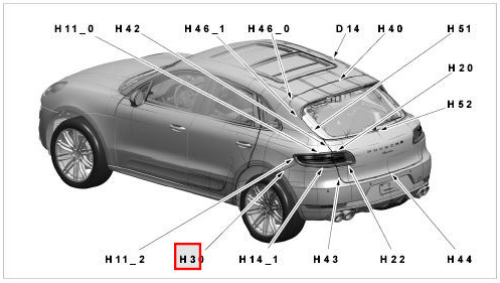

Overview of gap dimensions

Tail light to side panel		Gap dimension	1 mm	+/-0.8 mm	

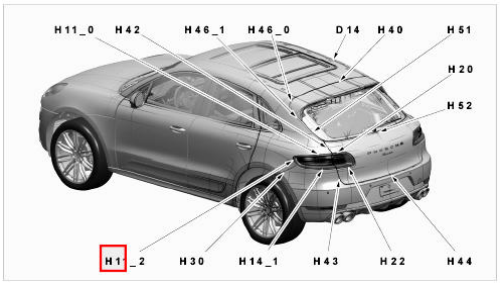

Overview of gap dimensions

Front lid to front apron (x)		Gap dimension	4.8 mm	+1 mm	-0.6 mm

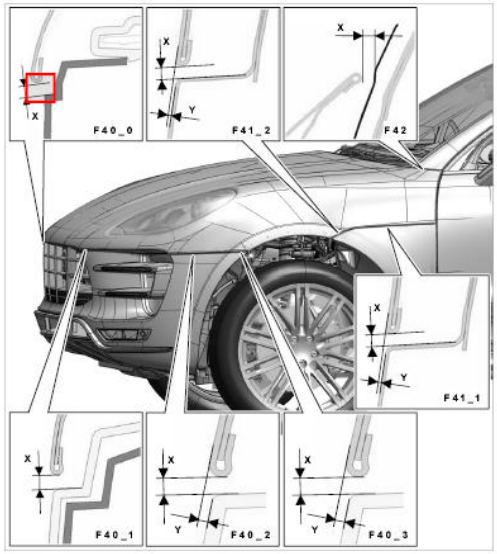

Gap dimensions for body front section

Front lid to front apron (x)		Gap dimension	4.8 mm	+1 mm	-0.6 mm

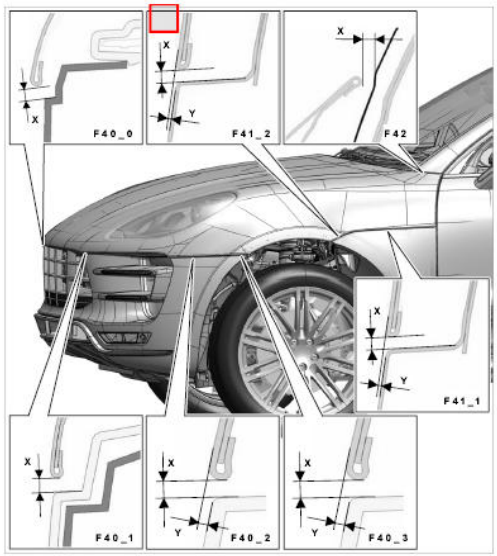

Gap dimensions for body front section

Front lid to front apron (x)		Gap dimension	3.5 mm	+/-0.5 mm	

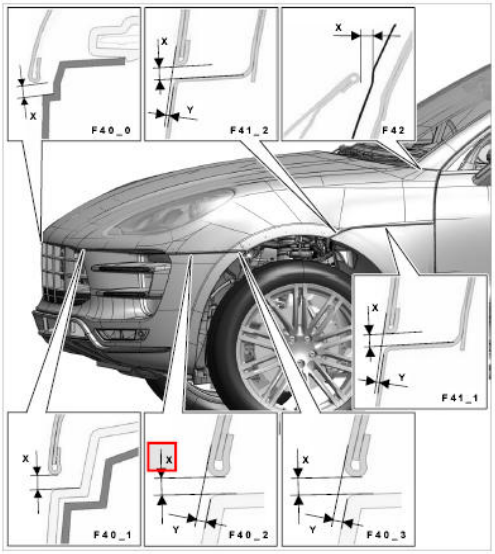

Gap dimensions for body front section

Front lid to front apron (y)		Gap dimension	1.5 mm		

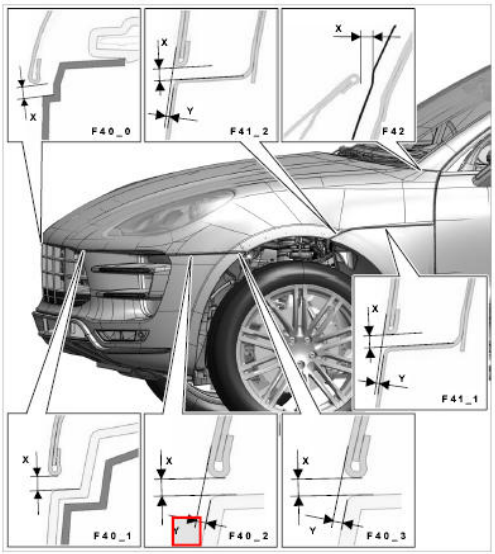

Gap dimensions for body front section

Front lid to front apron (x)		Gap dimension	3.5 mm	+/-0.5 mm	

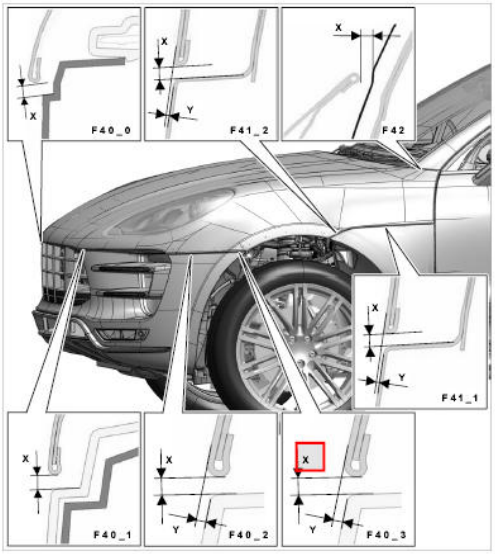

Gap dimensions for body front section

Front lid to front apron (y)		Gap dimension	1 mm		

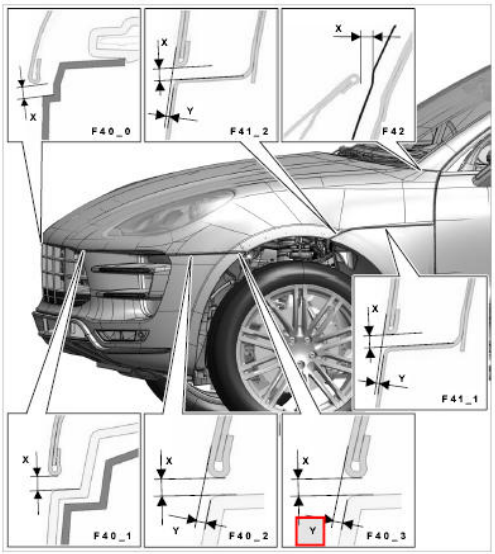

Gap dimensions for body front section

Front lid to wing (x)		Gap dimension	3.5 mm	+/-0.5 mm	

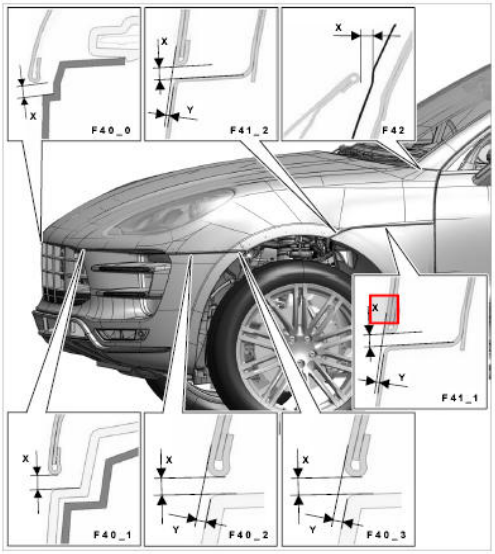

Gap dimensions for body front section

Front lid to wing (y)		Gap dimension	1 mm		

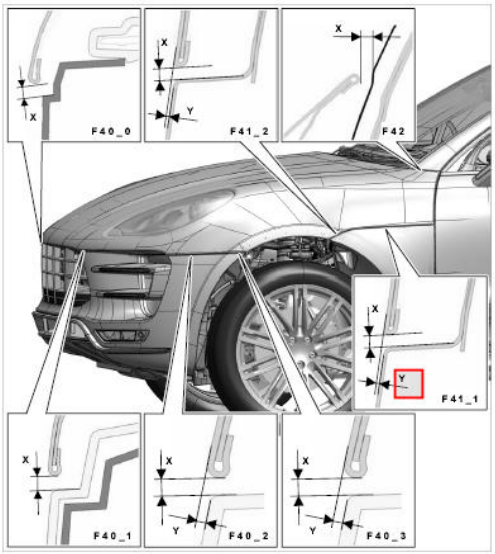

Gap dimensions for body front section

Front lid to wing (x)		Gap dimension	3.5 mm	+/-0.5 mm	

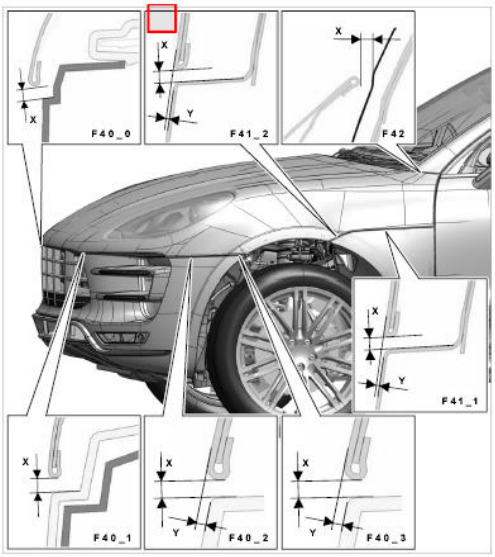

Gap dimensions for body front section

Front lid to wing (y)		Gap dimension	1.5 mm		

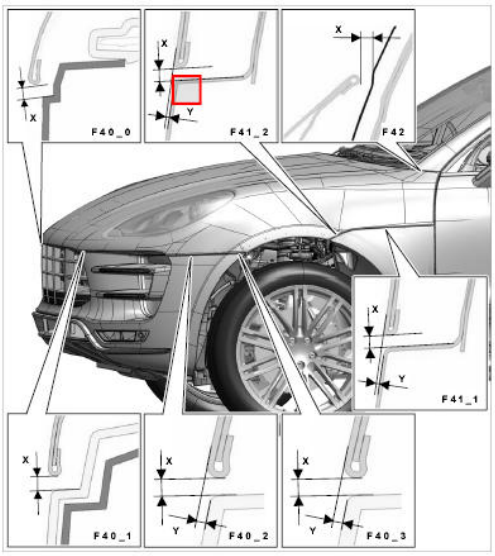

Gap dimensions for body front section

Front lid to side panel (x)		Gap dimension	4.5 mm		

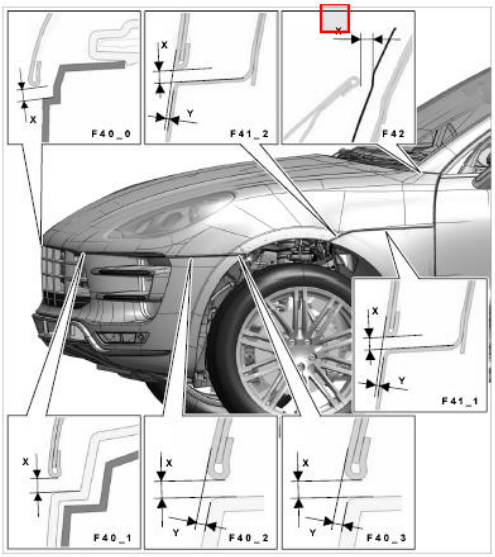

Gap dimensions for body front section

Windscreen to roof (x)		Gap dimension	3.2 mm	+/-0.5 mm	

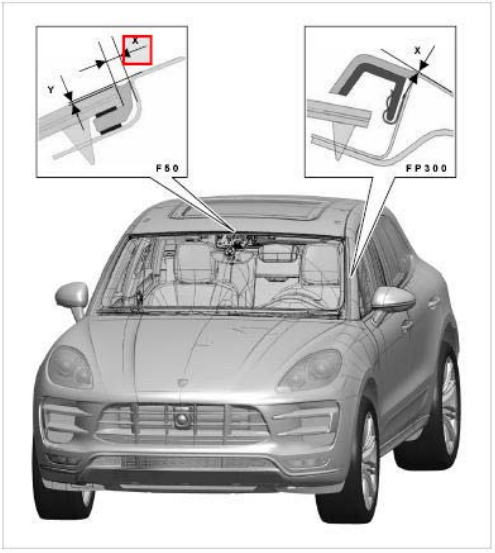

Gap dimensions for windscreen

Windscreen to roof (y)		Gap dimension	0.5 mm		

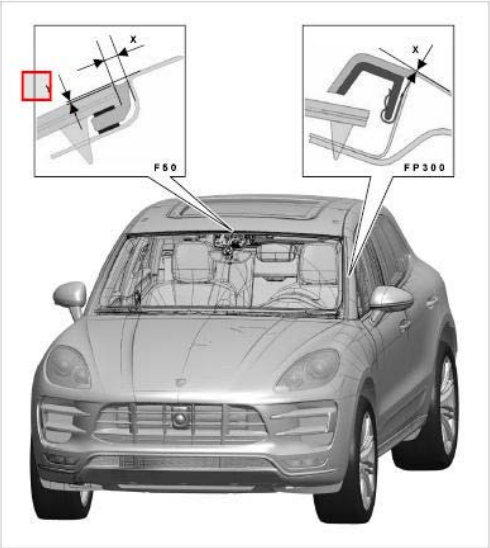

Gap dimensions for windscreen

Water drain strip to side panel (x)		Gap dimension	0.5 mm		

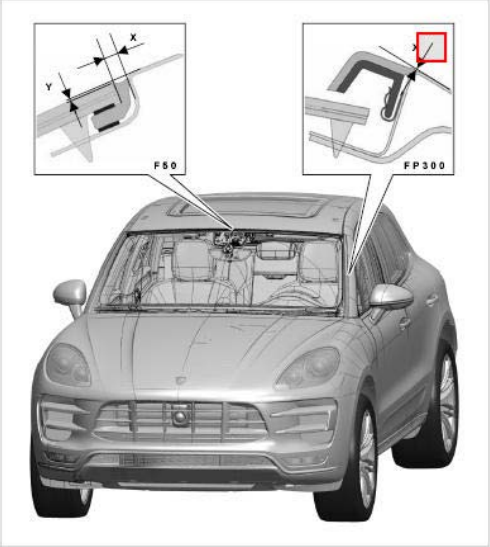

Gap dimensions for windscreen

Panoramic sliding roof to roof, front (x)		Gap dimension	10 mm	+/-1.2 mm	

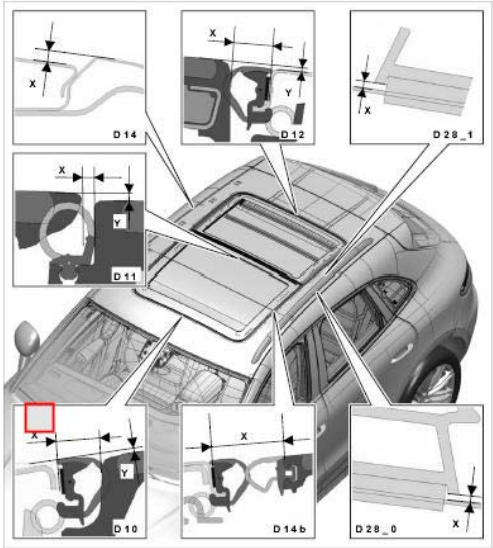

Gap dimensions for roof

Panoramic sliding roof to roof, front (y)		Gap dimension	1 mm		

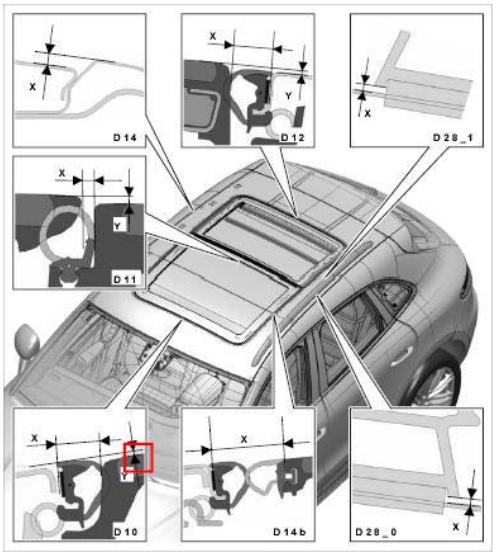

Gap dimensions for roof

Panoramic sliding roof part 1 to part 2 (x)		Gap dimension	2 mm	+/-0.5 mm	

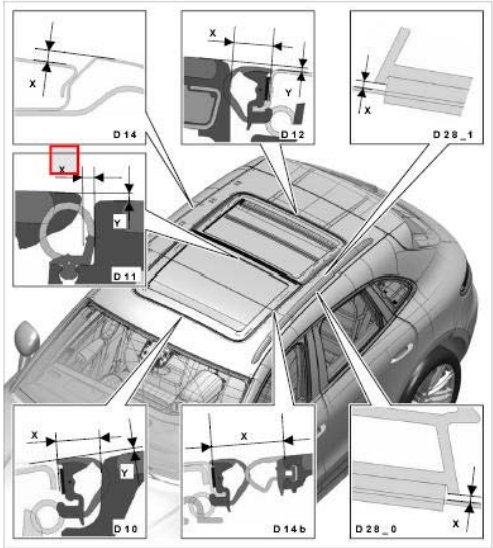

Gap dimensions for roof

Panoramic sliding roof part 1 to part 2 (y)		Gap dimension	1 mm		

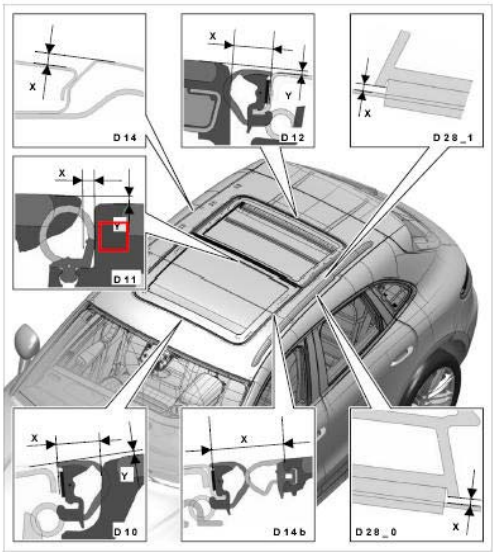

Gap dimensions for roof

Panoramic sliding roof to roof, rear (x)		Gap dimension	10 mm	+/-1.2 mm	

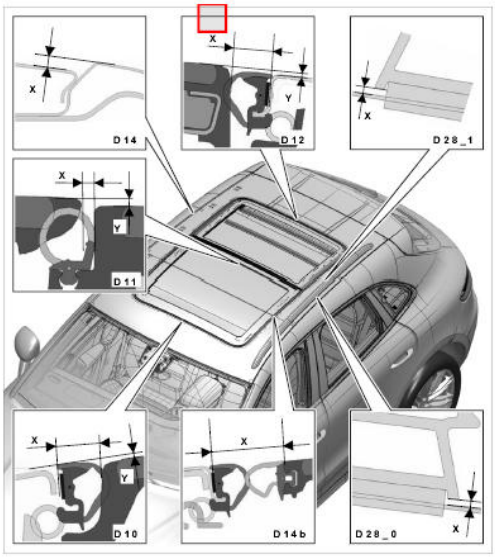

Gap dimensions for roof

Panoramic sliding roof to roof, rear (y)		Gap dimension	1 mm		

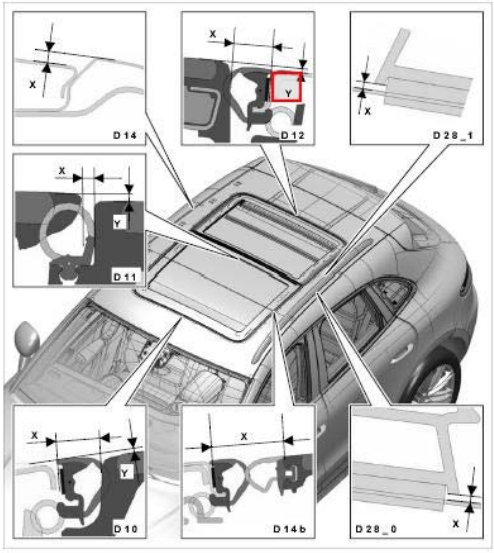

Gap dimensions for roof

Roof to side panel (x)		Gap dimension	3 mm	+/-1 mm	

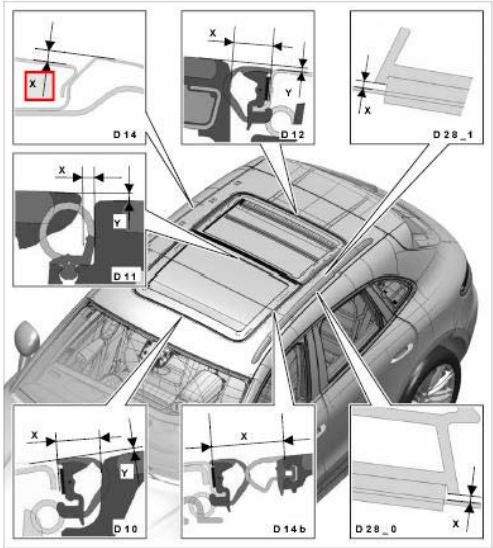

Gap dimensions for roof

Panoramic sliding roof to roof, sides (x)		Gap dimension	22 mm	+/-1.2 mm	

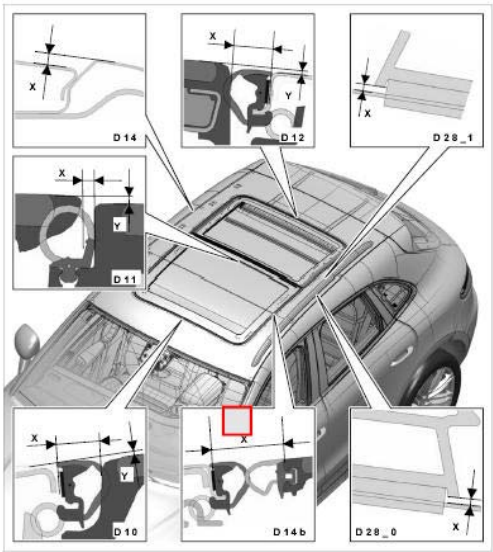

Gap dimensions for roof

Roof rail to roof, outer (x)		Gap dimension	1.5 mm	+/-0.75 mm	

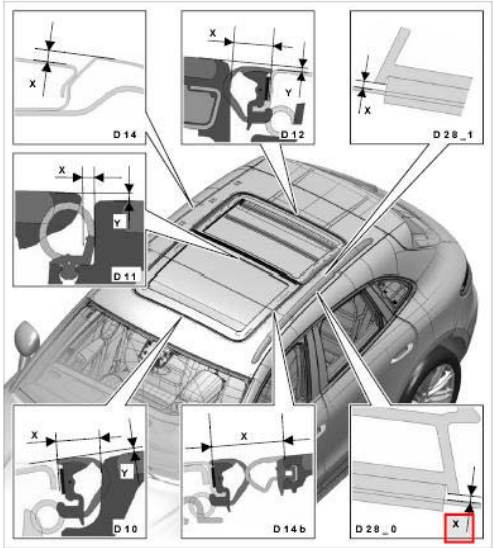

Gap dimensions for roof

Roof rail to roof, inner (x)		Gap dimension	1.5 mm	+/-0.7 mm	

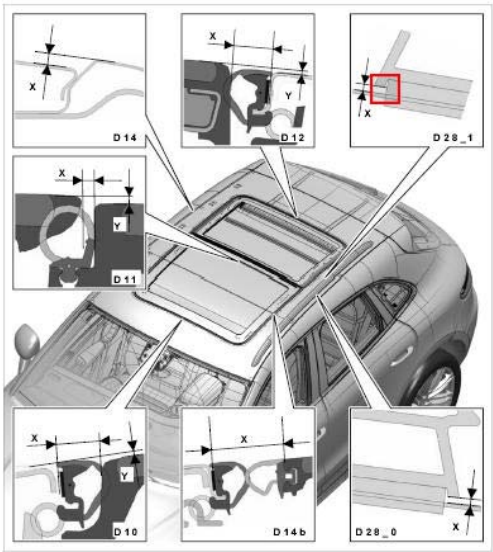

Gap dimensions for roof

Door molding, rear to front (x)		Gap dimension	4.2 mm	+/-1 mm	

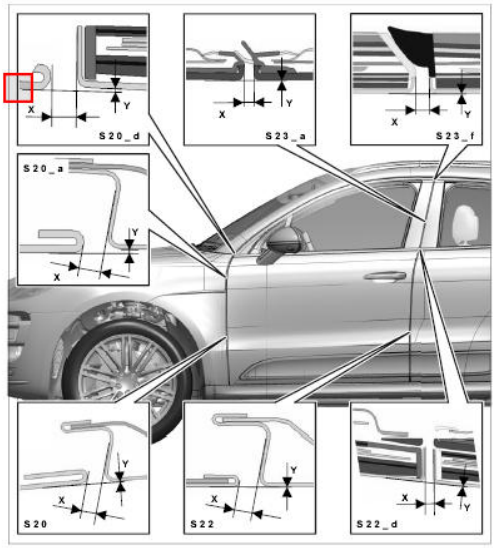

Gap dimensions for front door

Door molding, rear to front (y)		Gap dimension	1 mm		

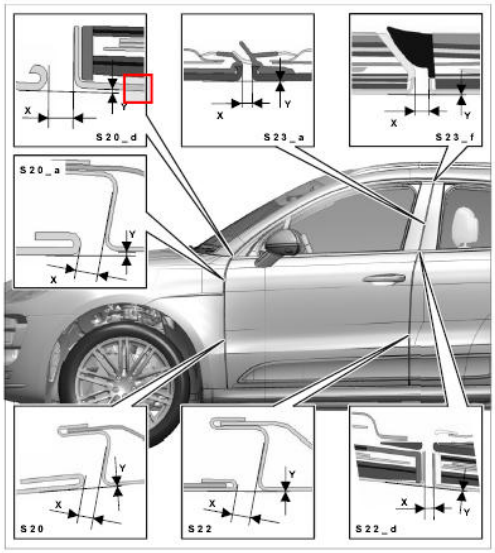

Gap dimensions for front door

B-pillar trim, rear to front (x)		Gap dimension	4.2 mm	+/-1 mm	

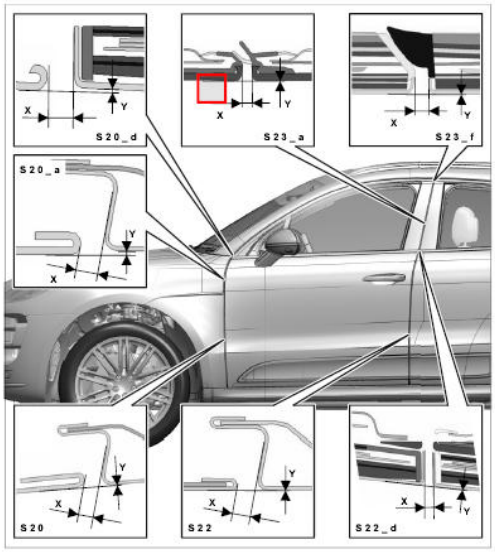

Gap dimensions for front door

B-pillar trim, rear to front (y)		Gap dimension	0 mm		

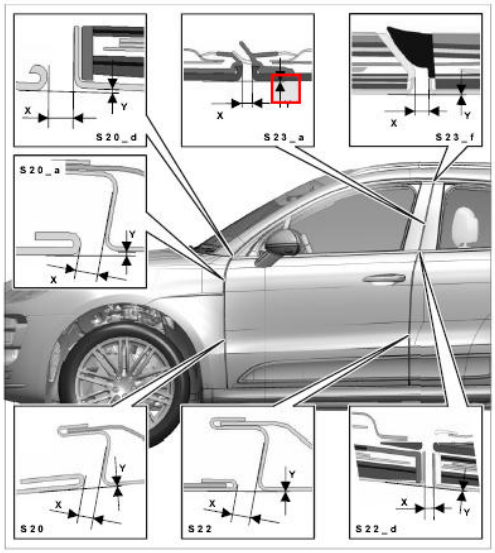

Gap dimensions for front door

Door molding, top rear to front (x)		Gap dimension	4.2 mm	+/-1 mm	

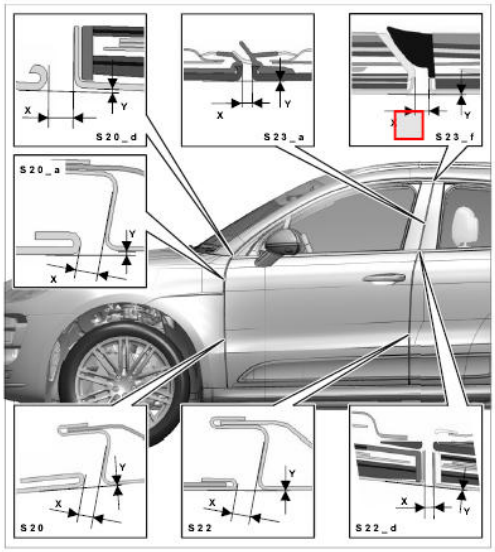

Gap dimensions for front door

Door molding, top rear to front (y)		Gap dimension	0 mm		

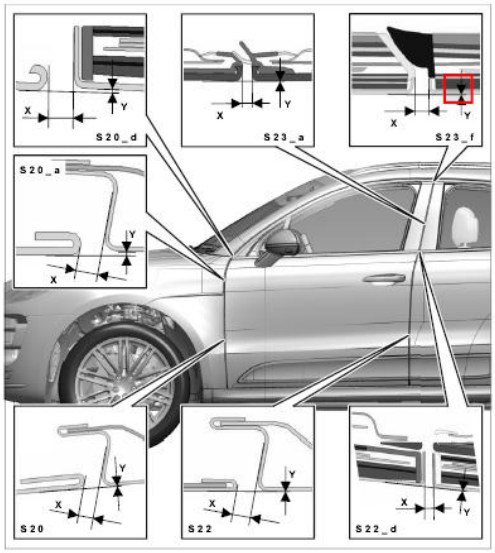

Gap dimensions for front door

Door to front lid (x)		Gap dimension	4.1 mm	+/-0.5 mm	

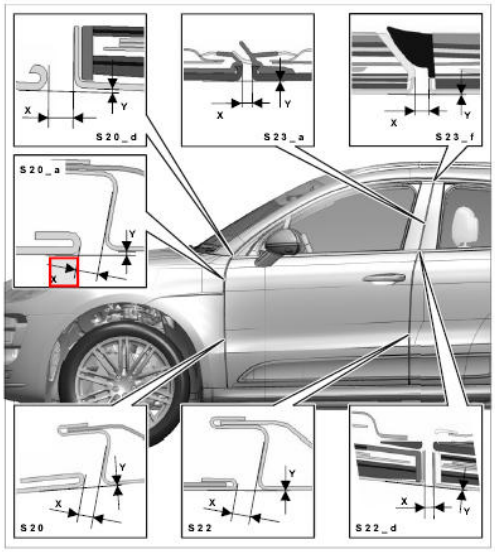

Gap dimensions for front door

Door to front lid (y)		Gap dimension	1 mm		

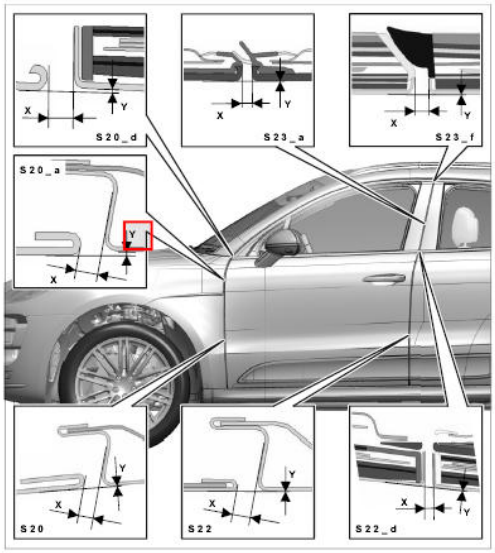

Gap dimensions for front door

Door to wing (x)		Gap dimension	4.1 mm	+/-0.5 mm	

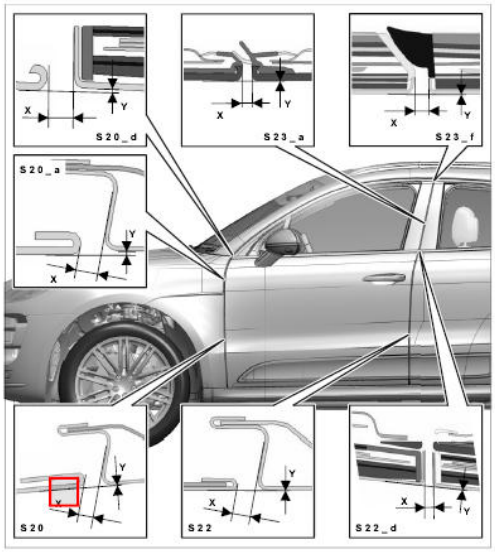

Gap dimensions for front door

Door to wing (y)		Gap dimension	0 mm		

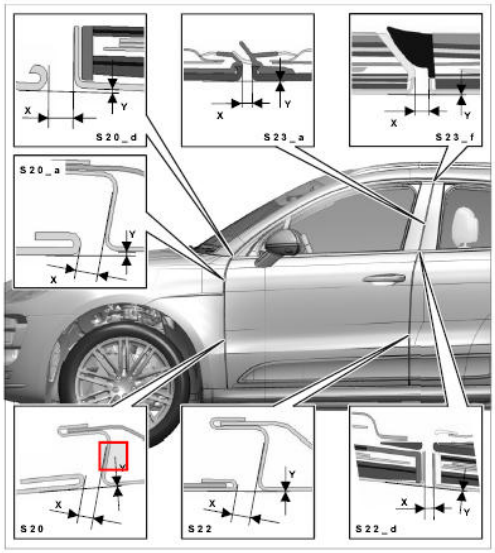

Gap dimensions for front door

Rear door to front door (x)		Gap dimension	4.2 mm	+/-0.5 mm	

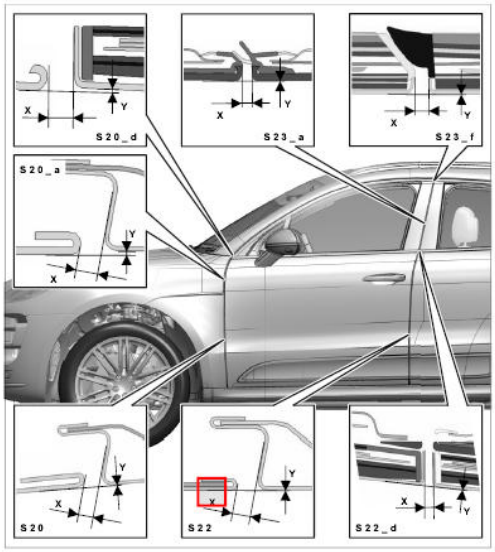

Gap dimensions for front door

Rear door to front door (y)		Gap dimension	0 mm		

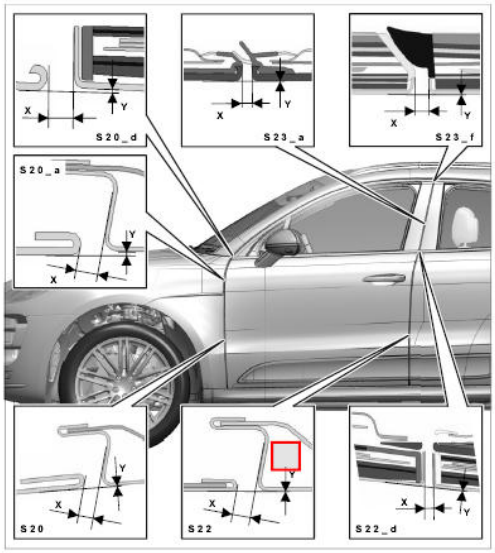

Gap dimensions for front door

Door molding, rear to front (x)		Gap dimension	4.2 mm	+/-1 mm	

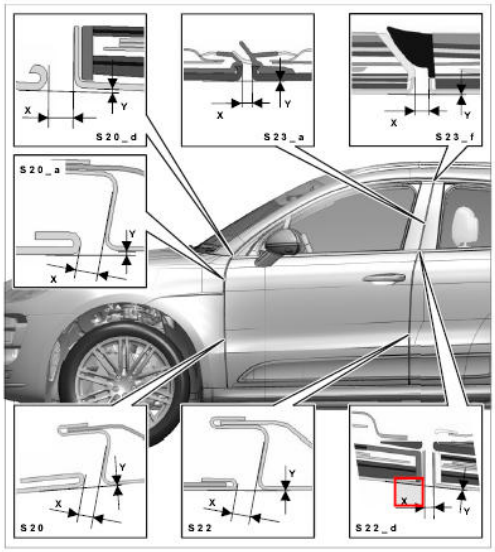

Gap dimensions for front door

Door molding, rear to front (y)		Gap dimension	0 mm		

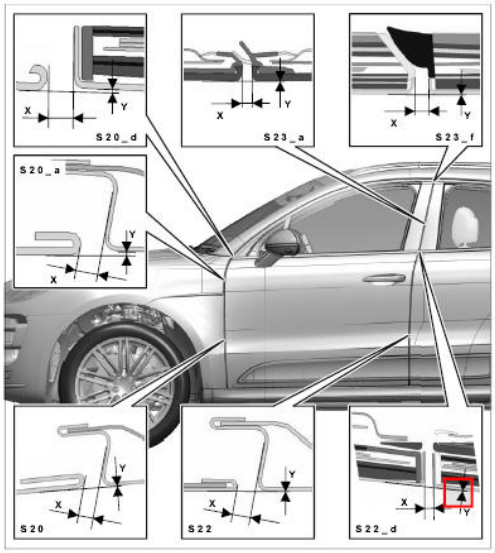

Gap dimensions for front door

Door molding, top to side panel (x)		Gap dimension	4.5 mm	+/-2 mm	

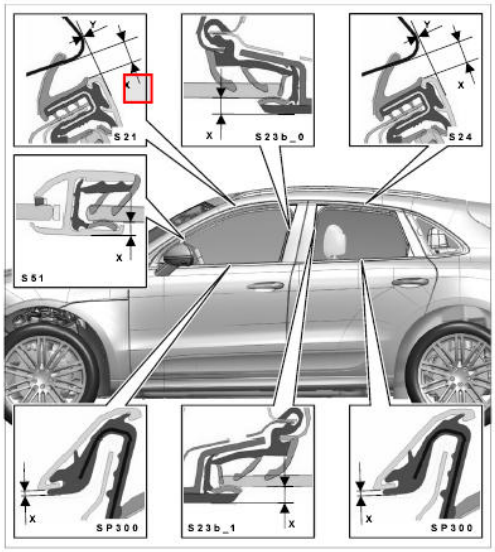

Gap dimensions for front door to rear door

Door molding, top to side panel (y)		Gap dimension	0 mm		

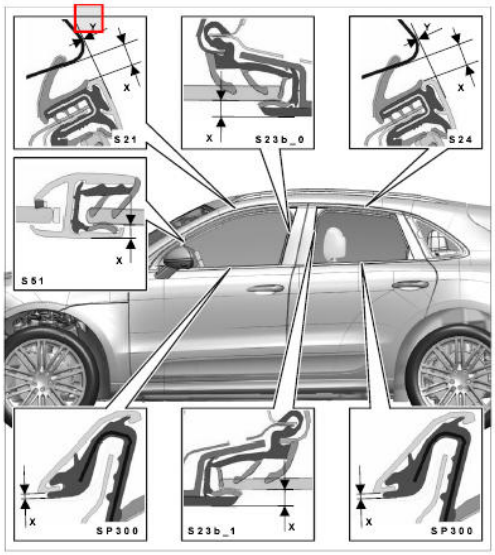

Gap dimensions for front door to rear door

B-pillar trim, front to glazing (x)		Gap dimension	4.5 mm	+/-1 mm	

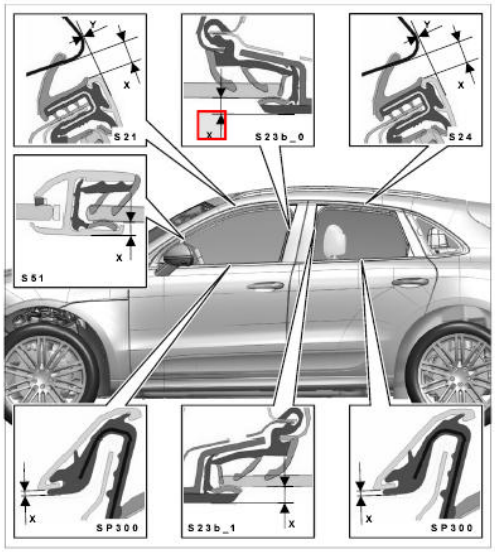

Gap dimensions of front door to rear door

Door molding, top to side panel (x)		Gap dimension	4.5 mm	+/-2 mm	

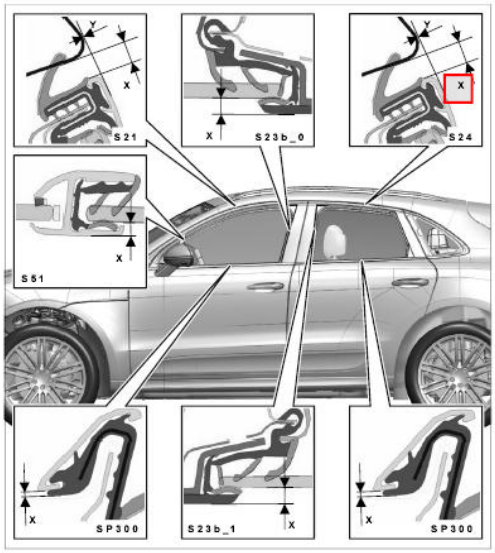

Gap dimensions for front door to rear door

Door molding, top to side panel (y)		Gap dimension	0 mm		

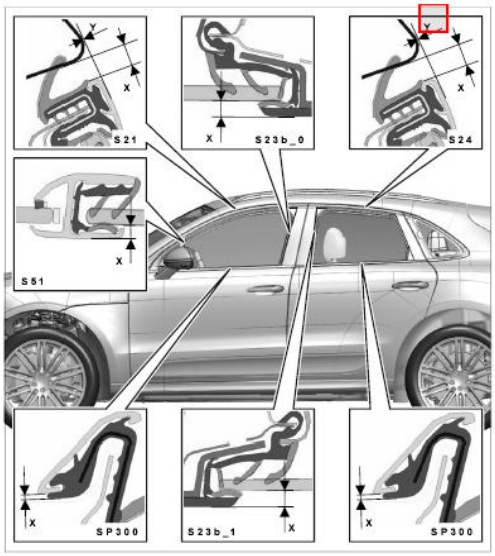

Gap dimensions for front door to rear door

Triangular window bar to glazing (x)		Gap dimension	4.1 mm	+/-1 mm	

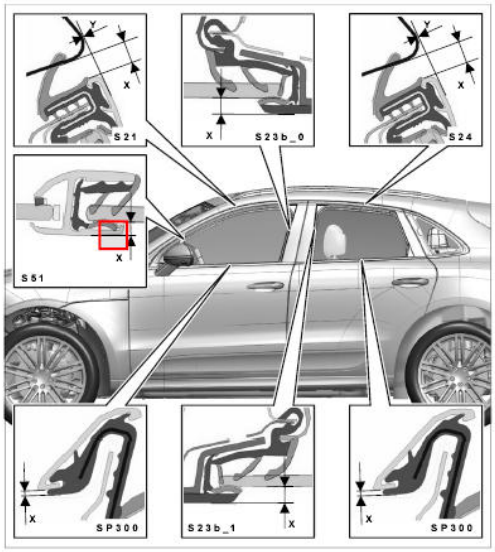

Gap dimensions for front door to rear door

Door molding, front to outer door panel (x)		Gap dimension	0.8 mm	+/-0.5 mm	

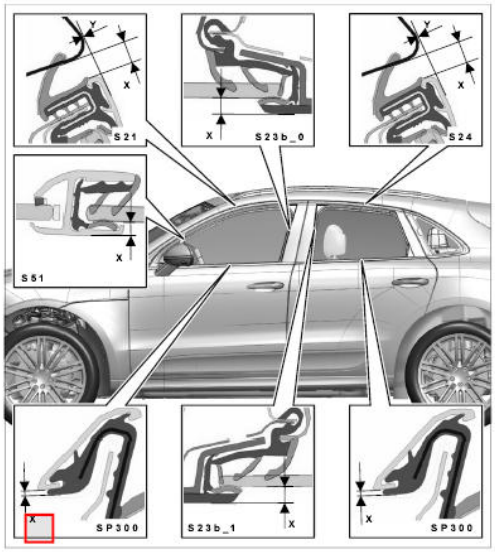

Gap dimensions for front door to rear door

B-pillar trim, rear to glazing (x)		Gap dimension	4.5 mm	+/-1 mm	

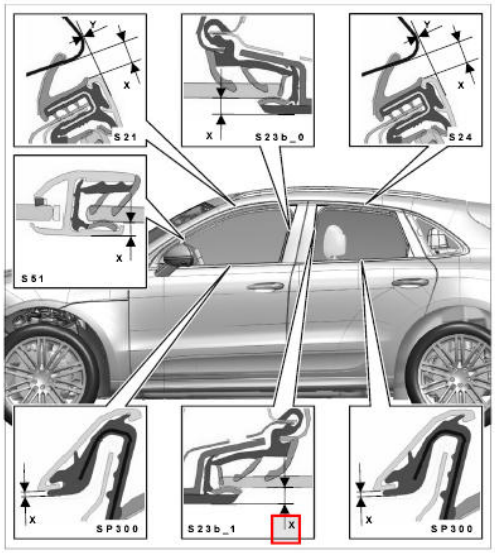

Gap dimensions for front door to rear door

Door molding, rear to outer door panel (x)		Gap dimension	0.8 mm	+/-0.5 mm	

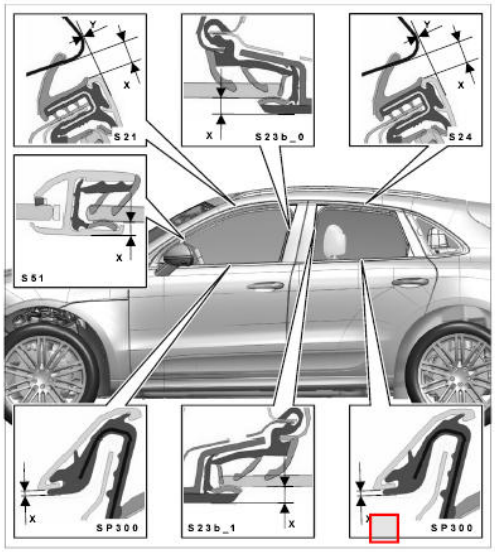

Gap dimensions for front door to rear door

Rear door to side panel (x)		Gap dimension	3.5 mm	+/-0.5 mm	

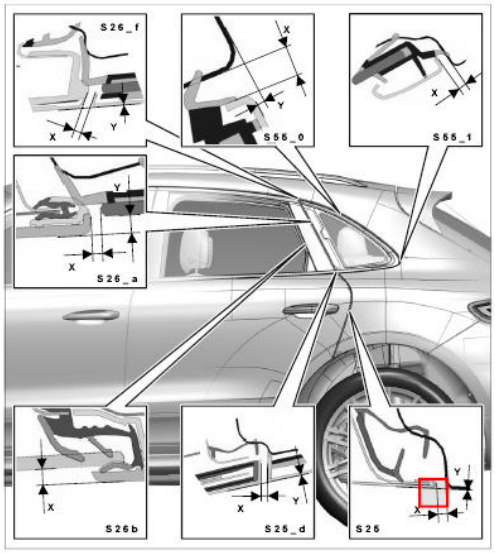

Gap dimensions for rear door/rear side window

Rear door to side panel (y)		Gap dimension	0 mm		

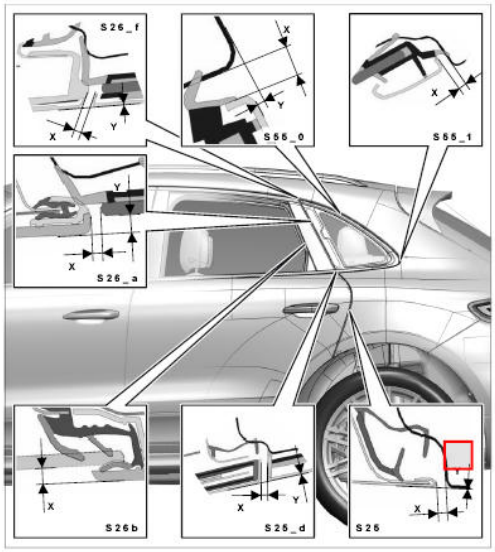

Gap dimensions for rear door/rear side window

Rear door molding to rear window molding (x)		Gap dimension	3.5 mm	+/-1 mm	

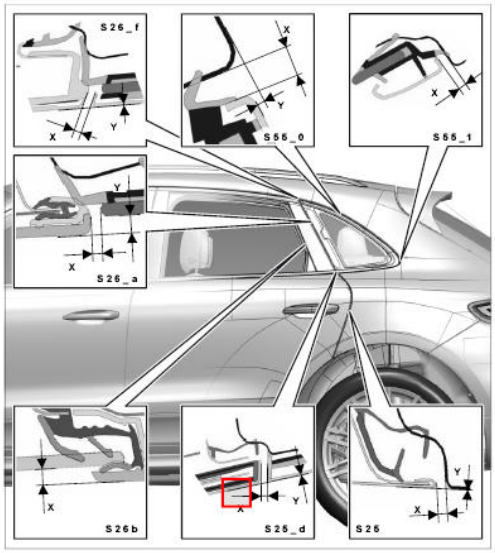

Gap dimensions for rear door/rear side window

Rear door molding to rear window molding (y)		Gap dimension	0 mm		

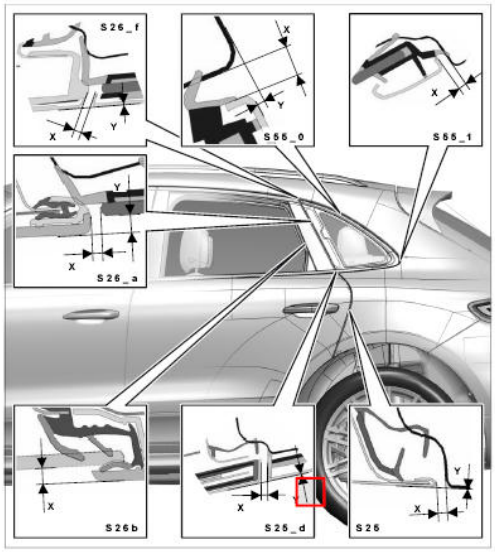

Gap dimensions for rear door/rear side window

C-pillar trim to door window (x)		Gap dimension	4.6 mm	+/-1 mm	

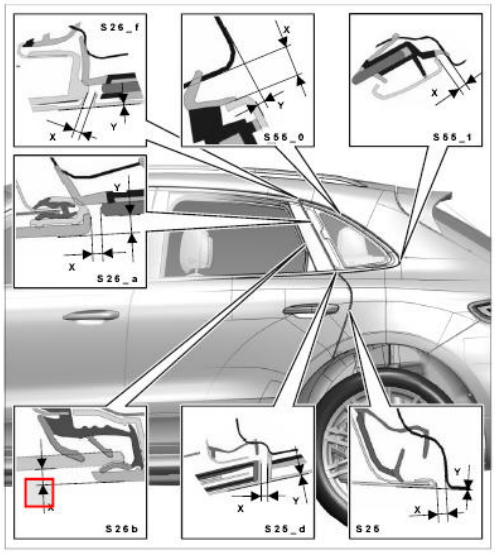

Gap dimensions for rear door/rear side window

C-pillar trim to rear window (x)		Gap dimension	3.5 mm	+/-1 mm	

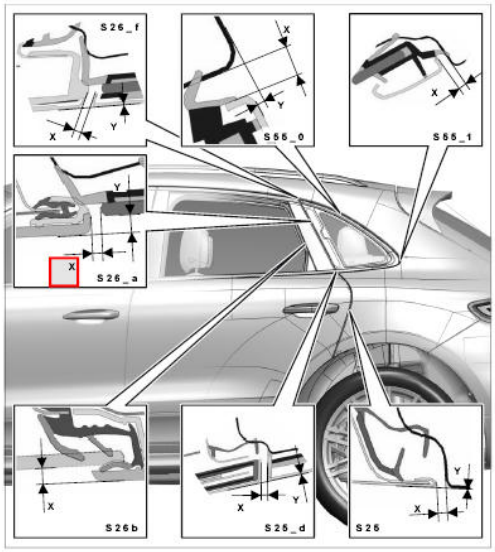

Gap dimensions for rear door/rear side window

C-pillar trim to rear window (y)		Gap dimension	4.2 mm	+/-1 mm	

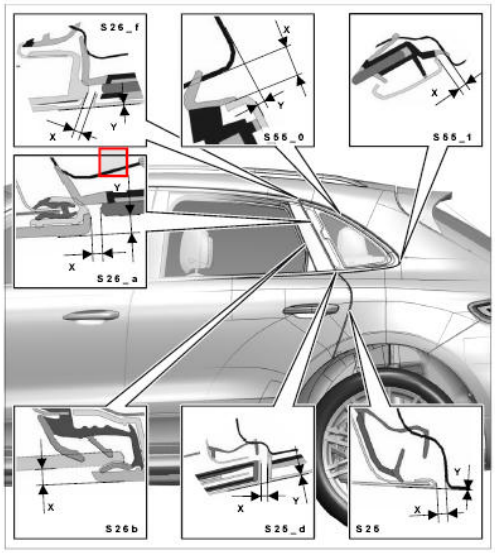

Gap dimensions for rear door/rear side window

Door molding, top to rear window molding (x)		Gap dimension	3.5 mm	+/-1 mm	

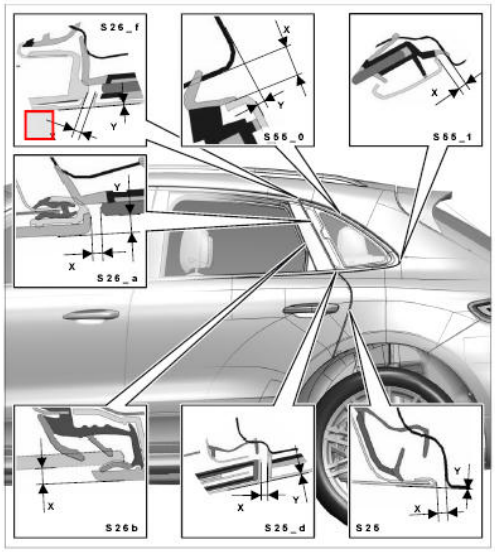

Gap dimensions for rear door/rear side window

Door molding, top to rear window molding (y)		Gap dimension	0.3 mm		

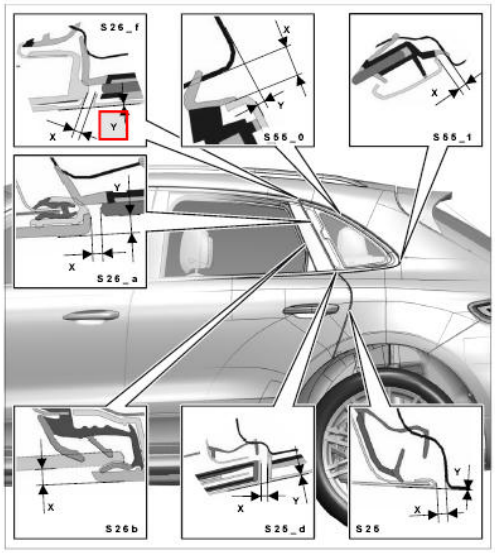

Gap dimensions for rear door/rear side window

Rear window molding to side panel (x)		Gap dimension	4.5 mm	+/-1.5 mm	

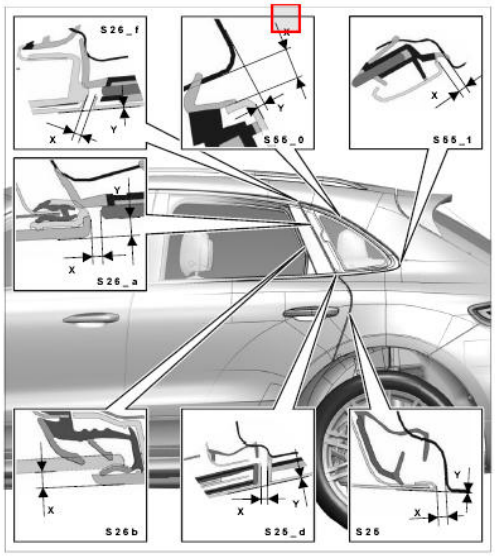

Gap dimensions for rear door/rear side window

Rear window molding to side panel (y)		Gap dimension	0.8 mm	+/-1 mm	

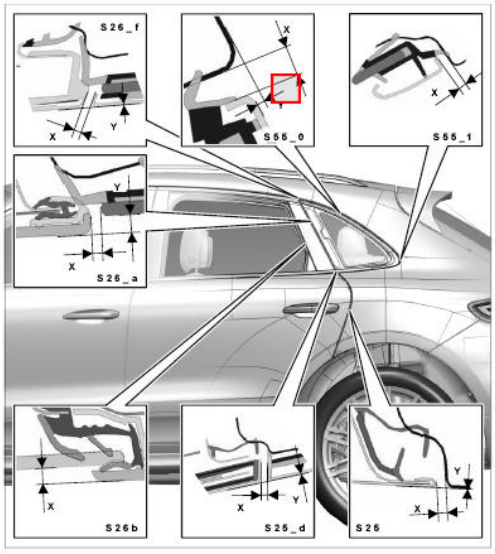

Gap dimensions for rear door/rear side window

Rear window molding to side panel (x)		Gap dimension	3.8 mm	+/-0.8 mm	

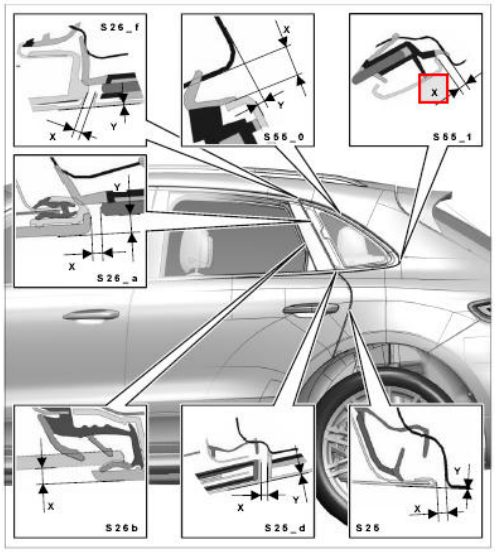

Gap dimensions for rear door/rear side window

Door sill to wing (x)		Gap dimension	4 mm	+/-1.5 mm	

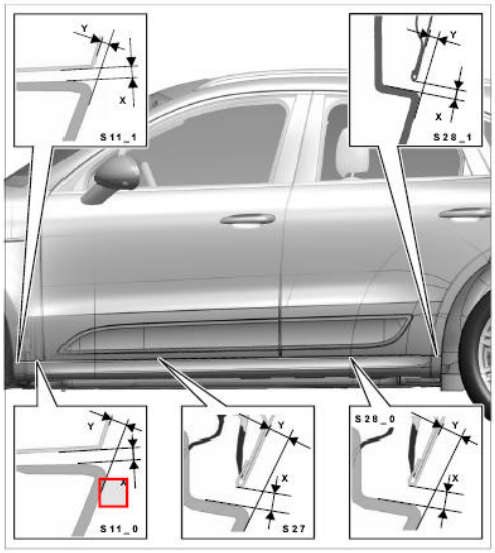

Gap dimensions for sill cover

Door sill to wing (y)		Gap dimension	5 mm	+/-1.5 mm	

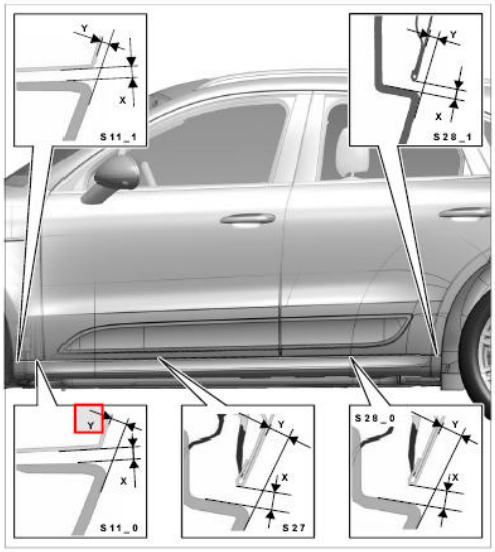

Gap dimensions for sill cover

Door sill to wing (x)		Contact force	4 mm	+/-1.5 mm	

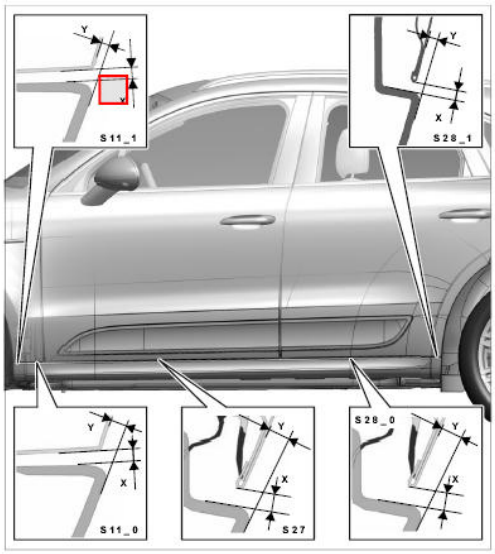

Gap dimensions for sill cover

Door sill to wing (y)		Gap dimension	5 mm	+/-1.5 mm	

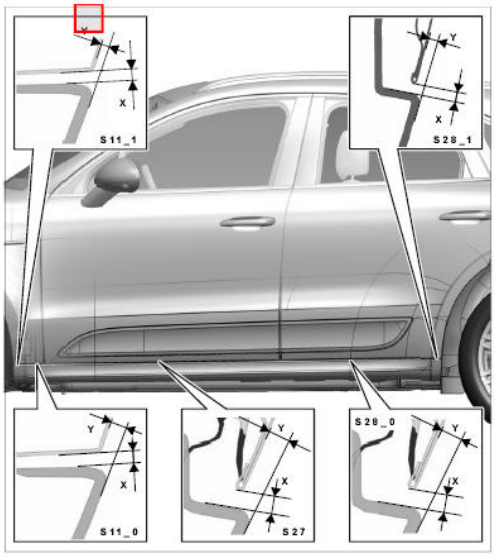

Gap dimensions for sill cover

Door sill to front door (x)		Gap dimension	4 mm	+/-1.5 mm	

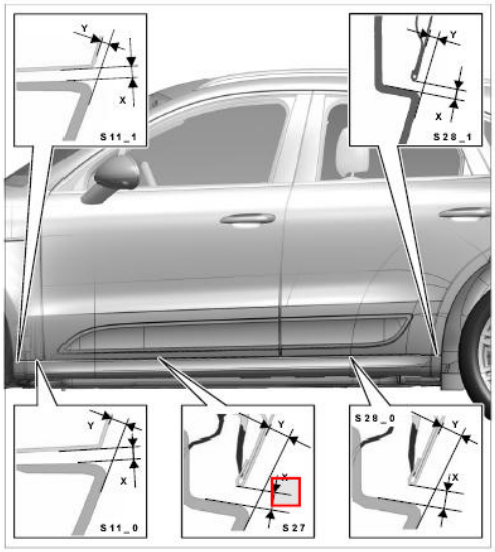

Gap dimensions for sill cover

Door sill to front door (y)		Gap dimension	5 mm	+/-1.5 mm	

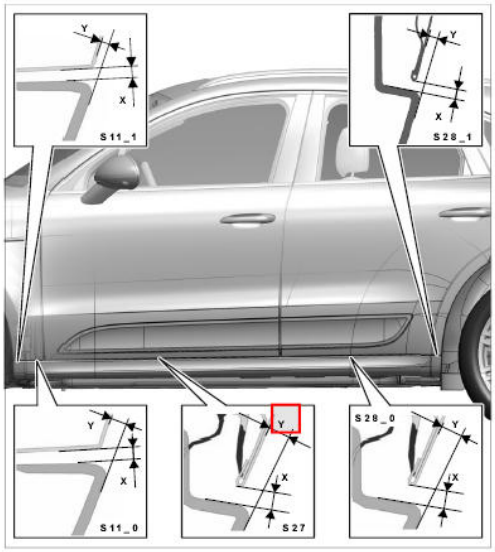

Gap dimensions for sill cover

Door sill to rear door (x)		Gap dimension	4 mm	+/-1.5 mm	

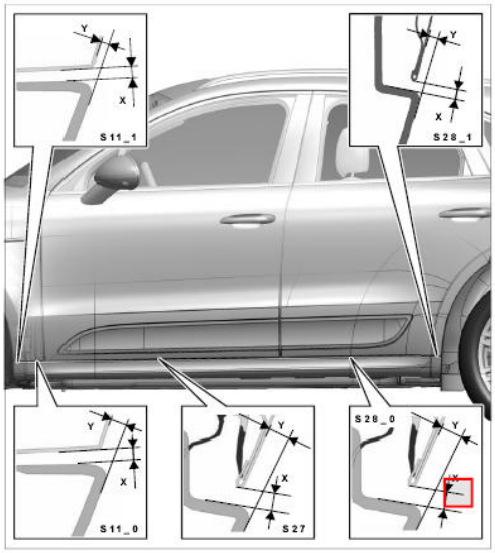

Gap dimensions for sill cover

Door sill to rear door (y)		Gap dimension	5 mm	+/-1.5 mm	

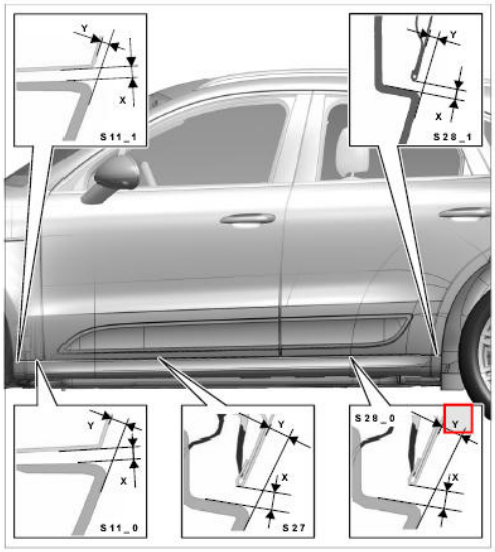

Gap dimensions for sill cover

Door sill to rear door (x)		Gap dimension	4 mm	+/-1.5 mm	

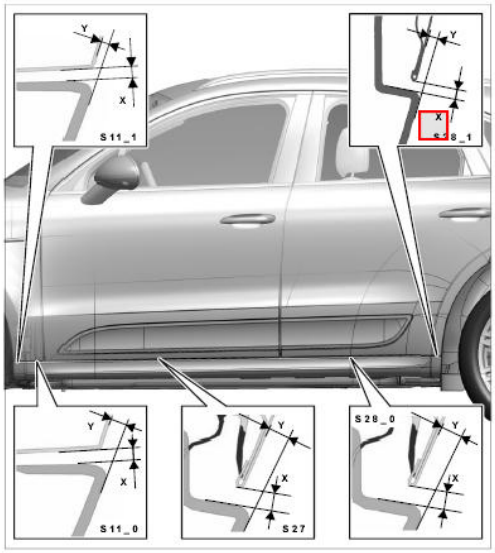

Gap dimensions for sill cover

Door sill to rear door (y)		Gap dimension	5 mm	+/-1.5 mm	

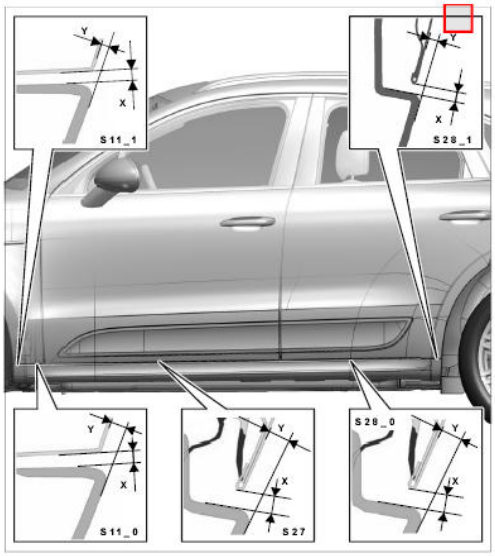

Gap dimensions for sill cover

Filler flap to side panel (x)		Gap dimension	2 mm	+/-0.5 mm	

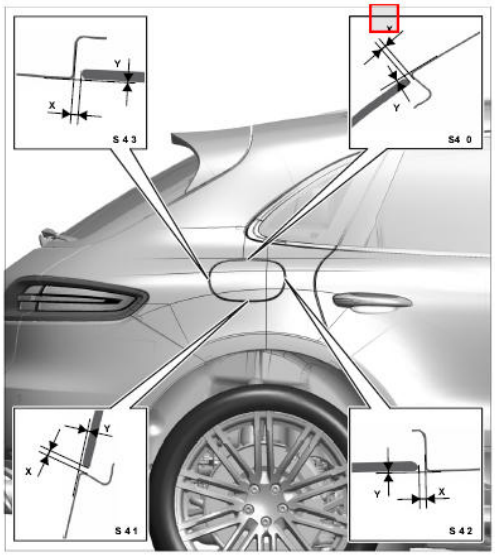

Gap dimensions for filler flap

Filler flap to side panel (y)		Gap dimension	0.25 mm		

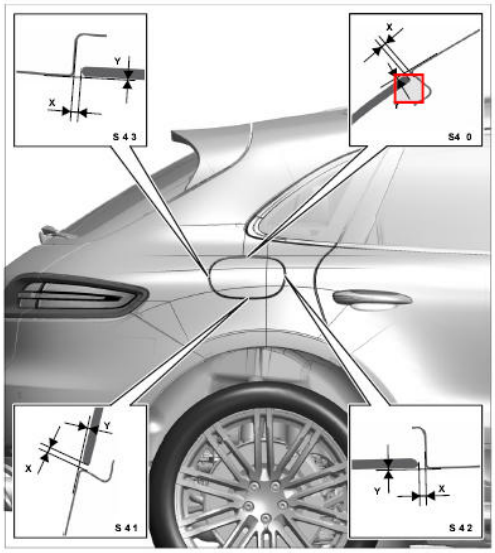

Gap dimensions for filler flap

Filler flap to side panel (x)		Gap dimension	2.3 mm	+/-0.5 mm	

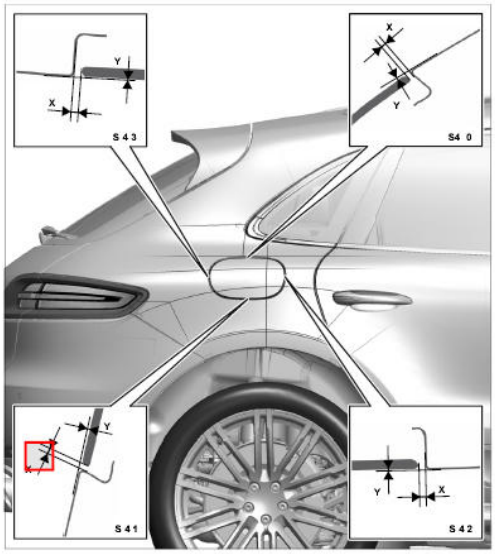

Gap dimensions for filler flap

Filler flap to side panel (y)		Gap dimension	0.25 mm		

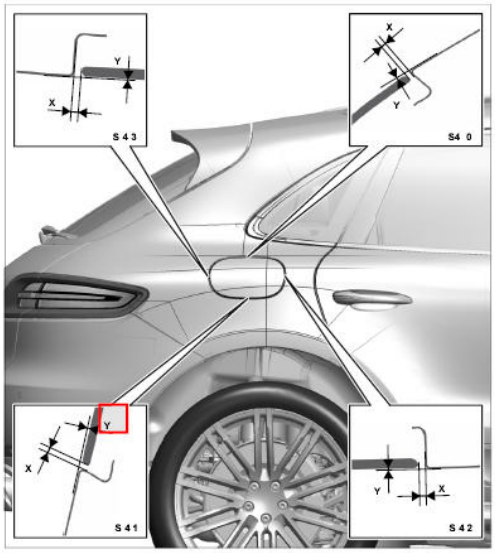

Gap dimensions for filler flap

Filler flap to side panel (x)		Gap dimension	2.3 mm	+/-0.5 mm	

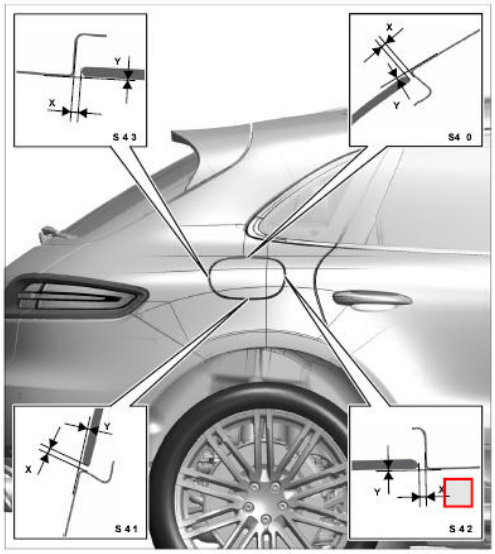

Gap dimensions for filler flap

Filler flap to side panel (y)		Gap dimension	0.25 mm		

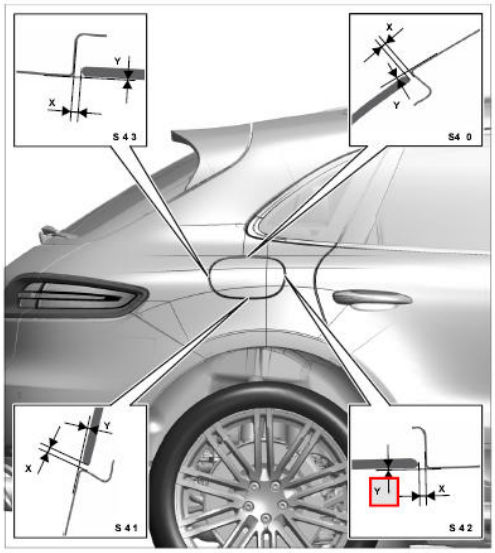

Gap dimensions for filler flap

Filler flap to side panel (x)		Gap dimension	2.3 mm	+/-0.5 mm	

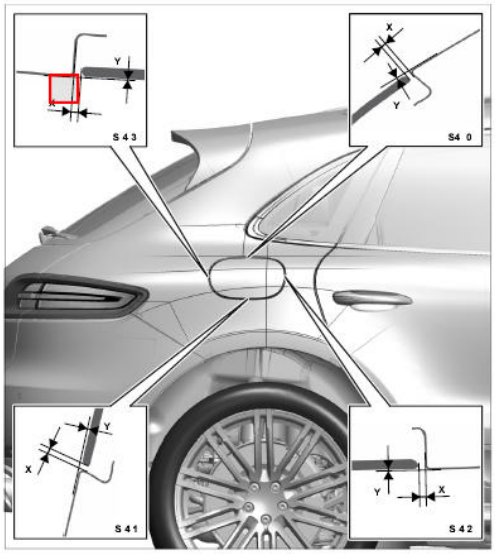

Gap dimensions for filler flap

Filler flap to side panel (y)		Gap dimension	-0.25 mm		

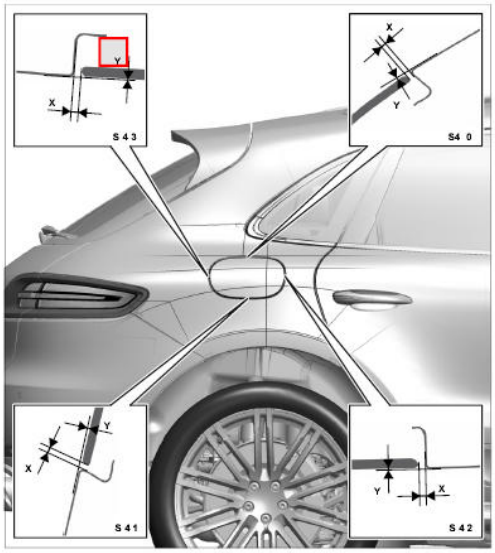

Gap dimensions for filler flap

Tail/brake/direction indicator/reversing lights Part 1 to side panel (x)		Gap dimension	1 mm	+/-0.8 mm	

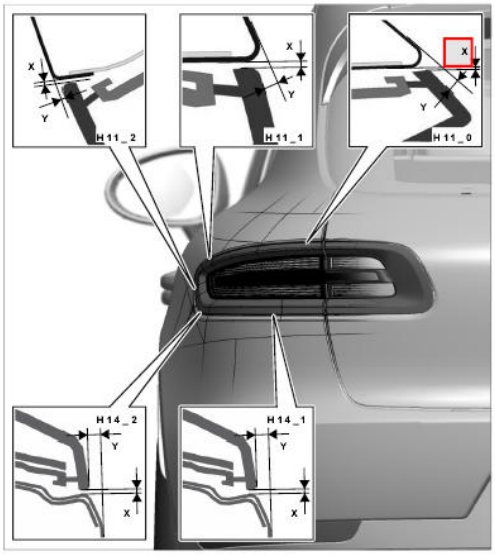

Gap dimensions for tail light

SBBR-Leuchte Part 1 to side panel (y)		Gap dimension	-4.5 mm	+/-0.5 mm	

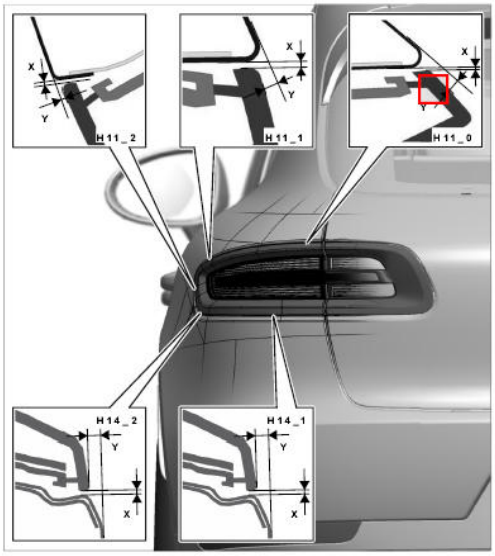

Gap dimensions for tail light

Tail/brake/direction indicator/reversing lights Part 1 to side panel (x)		Gap dimension	1 mm	+/-0.8 mm	

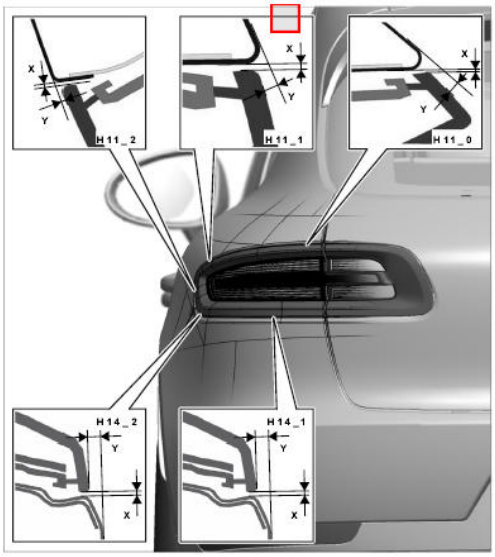

Gap dimensions for tail light

Tail/brake/direction indicator/reversing lights Part 1 to side panel (y)		Gap dimension	-2 mm	+/-0.5 mm	

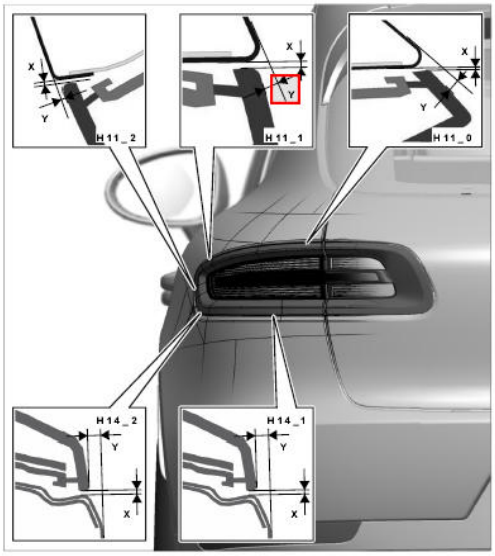

Gap dimensions for tail light

Tail/brake/direction indicator/reversing lights Part 1 to side panel (x)		Gap dimension	1 mm	+/-0.8 mm	

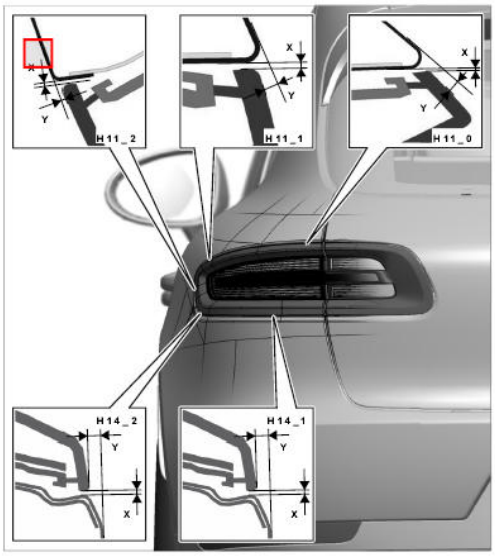

Gap dimensions for tail light

Tail/brake/direction indicator/reversing lights Part 1 to side panel (y)		Gap dimension	1 mm	+/-0.8 mm	

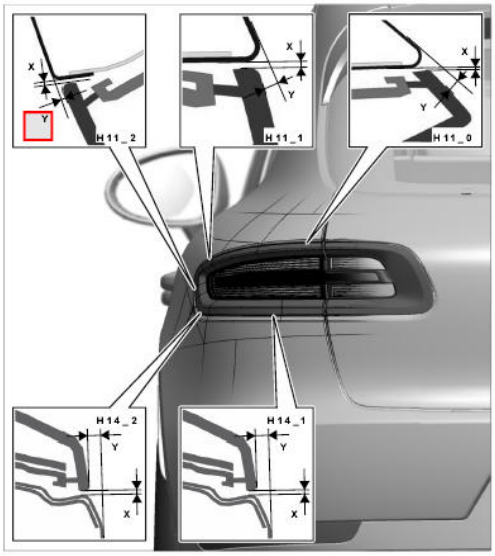

Gap dimensions for tail light

Tail/brake/direction indicator/reversing lights Part 1 to rear apron (x)		Gap dimension	1 mm	+/-0.8 mm	

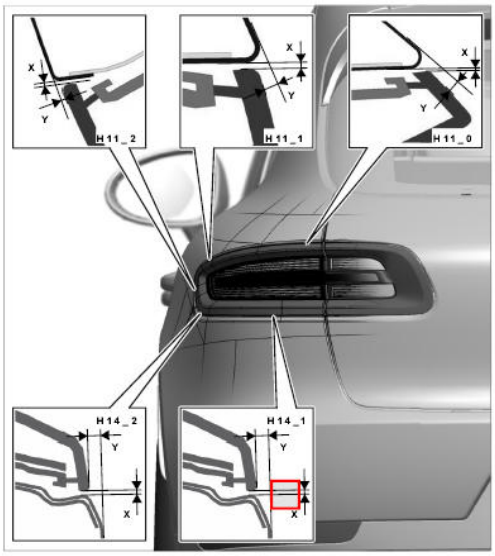

Gap dimensions for tail light

Tail/brake/direction indicator/reversing lights Part 1 to rear apron (y)		Gap dimension	-3.8 mm	+/-0.5 mm	

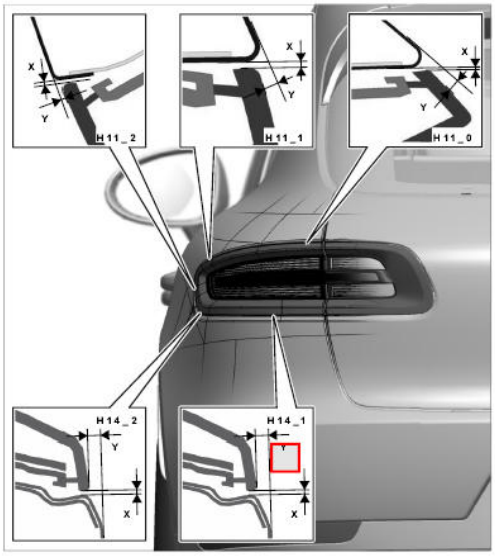

Gap dimensions for tail light

Tail/brake/direction indicator/reversing lights Part 1 to rear apron (x)		Gap dimension	1 mm	+/-0.5 mm	

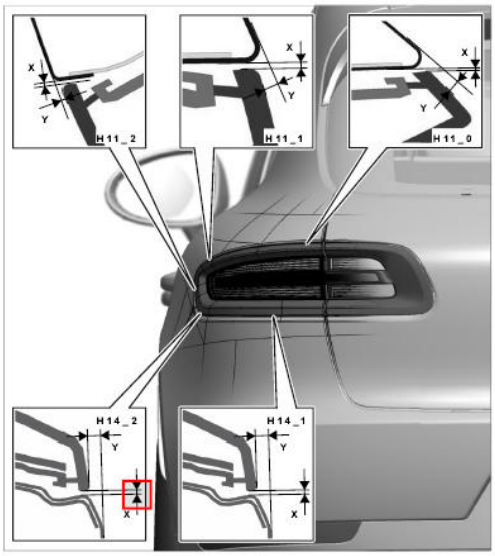

Gap dimensions for tail light

Tail/brake/direction indicator/reversing lights Part 1 to rear apron (y)		Gap dimension	1 mm	+/-0.5 mm	

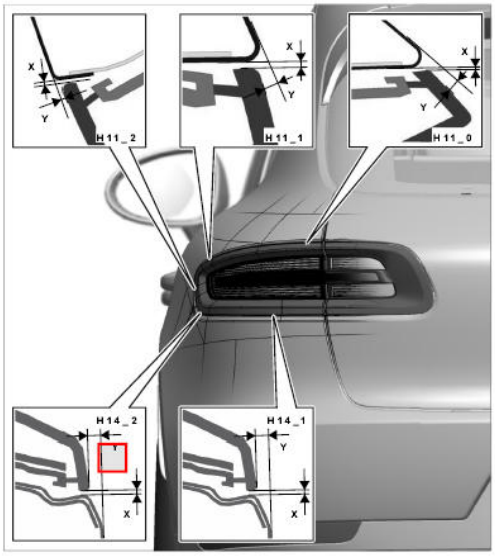

Gap dimensions for tail light

Tail/brake/direction indicator/reversing lights Part 1 to part 2 (x)		Gap dimension	4 mm	+/-0.8 mm	

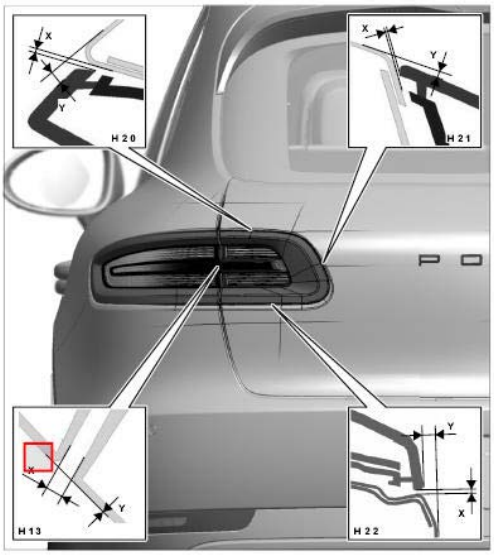

Inner gap dimensions for tail light

Tail/brake/direction indicator/reversing lights Part 1 to part 2 (y)		Gap dimension	0 mm	+/-0.8 mm	

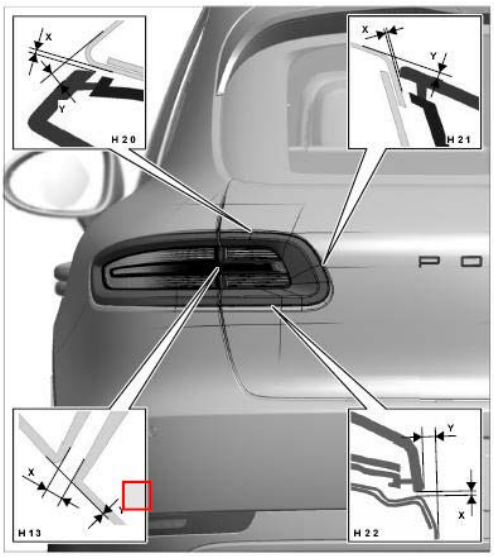

Inner gap dimensions for tail light

Tail/brake/direction indicator/reversing lights Part 2 to rear lid (x)		Gap dimension	1 mm	+/-0.8 mm	

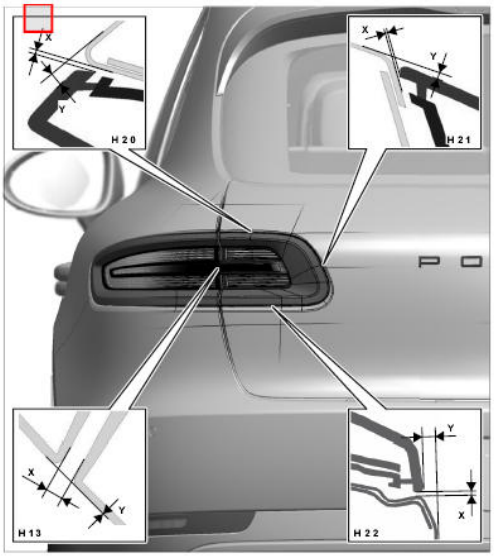

Inner gap dimensions for tail light

Tail/brake/direction indicator/reversing lights Part 2 to rear lid (y)		Gap dimension	-4.5 mm	+/-0.5 mm	

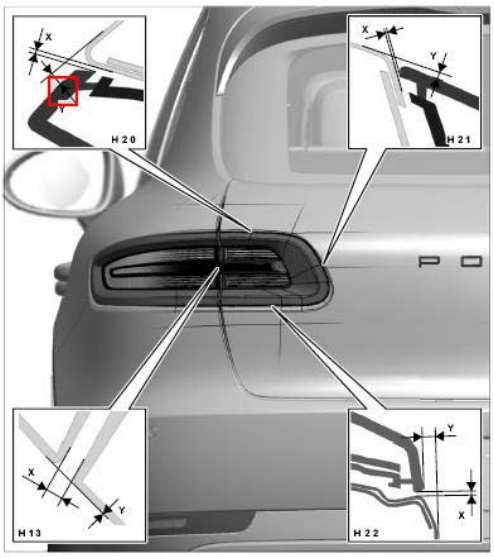

Inner gap dimensions for tail light

Tail/brake/direction indicator/reversing lights Part 2 to rear lid (x)		Gap dimension	1 mm	+/-0.8 mm	

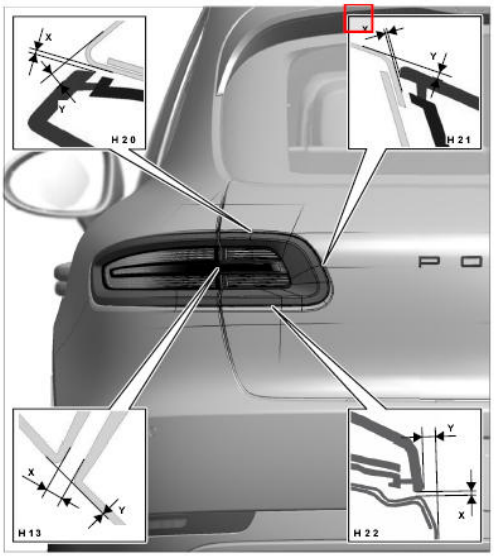

Inner gap dimensions for tail light

Tail/brake/direction indicator/reversing lights Part 2 to rear lid (y)		Gap dimension	-2 mm	+/-0.5 mm	

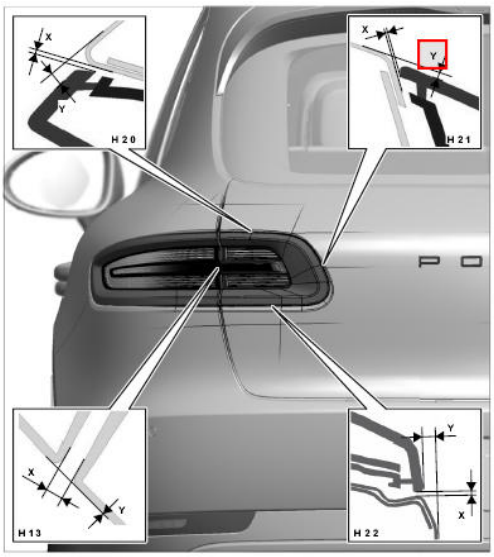

Inner gap dimensions for tail light

Tail/brake/direction indicator/reversing lights Part 2 to rear lid (x)		Gap dimension	1 mm	+/-0.8 mm	

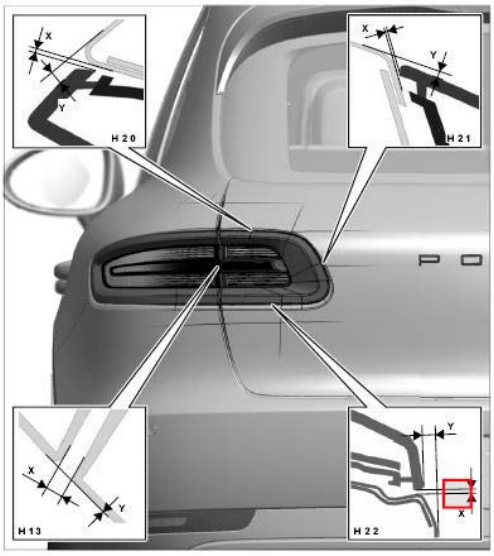

Inner gap dimensions for tail light

Tail/brake/direction indicator/reversing lights Part 2 to rear lid (y)		Gap dimension	-3.8 mm	+/-0.5 mm	

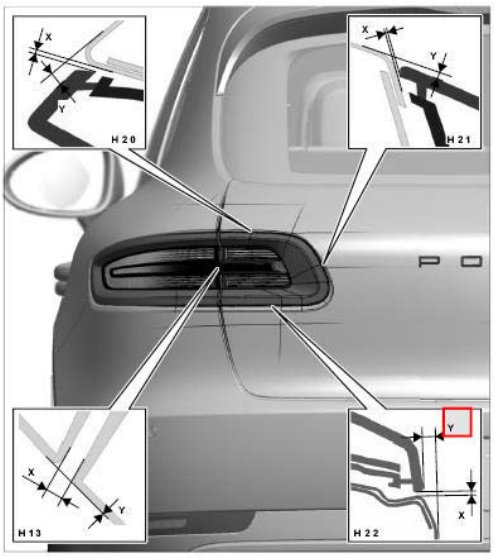

Gap dimensions for tail light

Rear apron to side panel (x)		Gap dimension	0 mm	+0.5 mm	

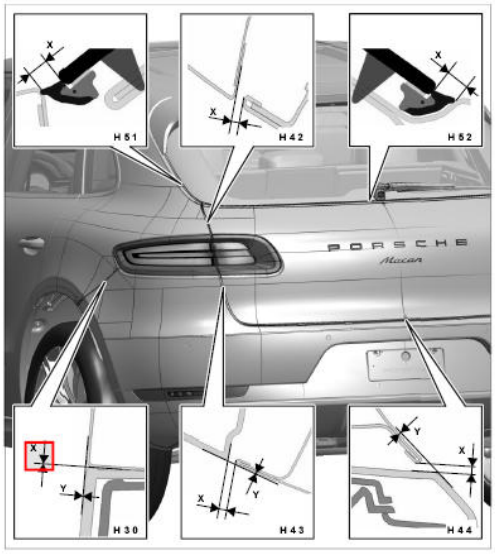

Gap dimensions for rear end

Rear apron to side panel (y)		Gap dimension	0 mm	+/-0.8 mm	

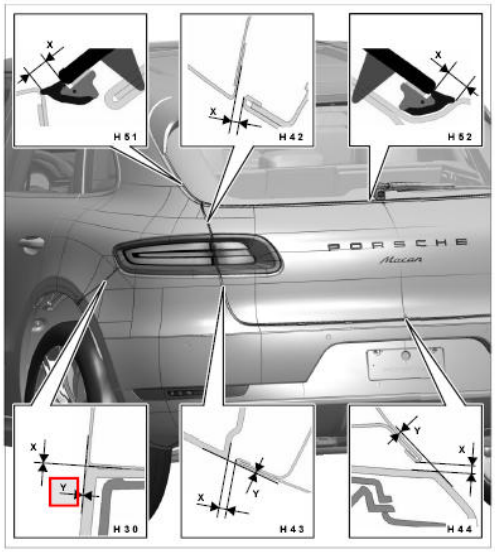

Gap dimensions for rear end

Rear lid to side panel (x)		Gap dimension	4 mm	+0.7 mm	-0.9 mm

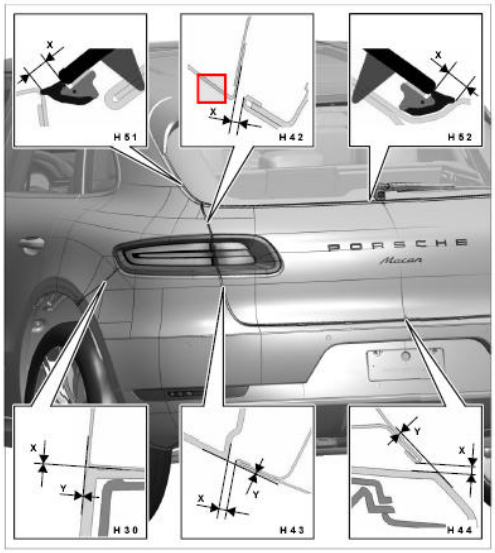

Gap dimensions for rear end

Rear lid to side panel (x)		Gap dimension	4 mm	+/-0.8 mm	

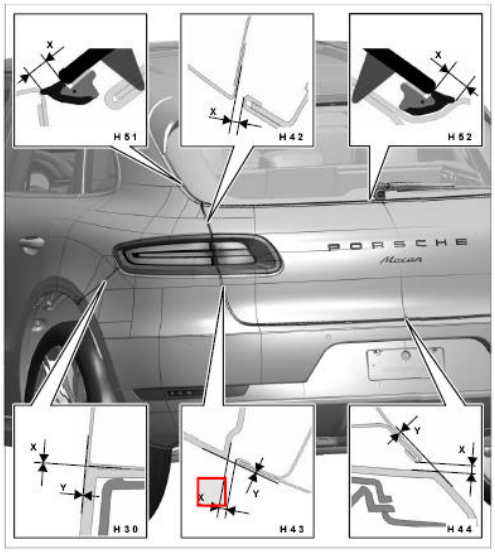

Gap dimensions for rear end

Rear lid to side panel (y)		Gap dimension	4 mm	+/-0.8 mm	

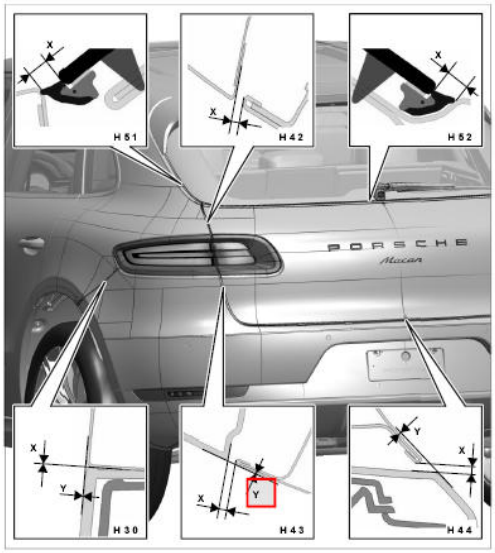

Gap dimensions for rear end

Rear lid/rear spoiler to roof	R1 (gap)	Gap dimension	6 mm	+/-1.1 mm	

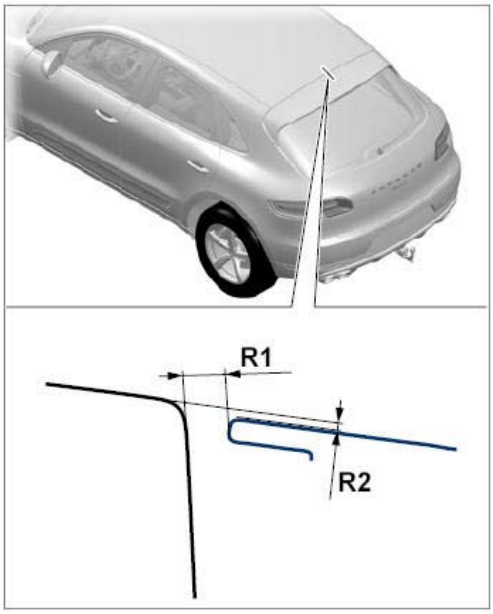

Rear lid/rear spoiler

Rear lid/rear spoiler to roof	R2 (offset)	Gap dimension	-1.5 mm	+/-1.1 mm	

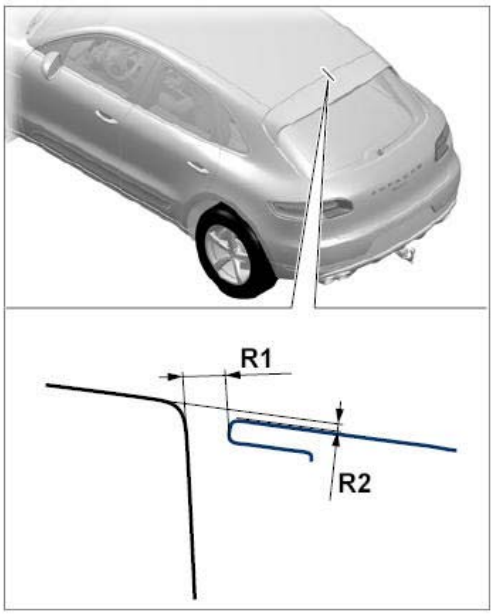

Rear lid/rear spoiler to roof

Rear lid to side panel	R3 (gap)	Gap dimension	4 mm	+0.7 mm	-0.9 mm

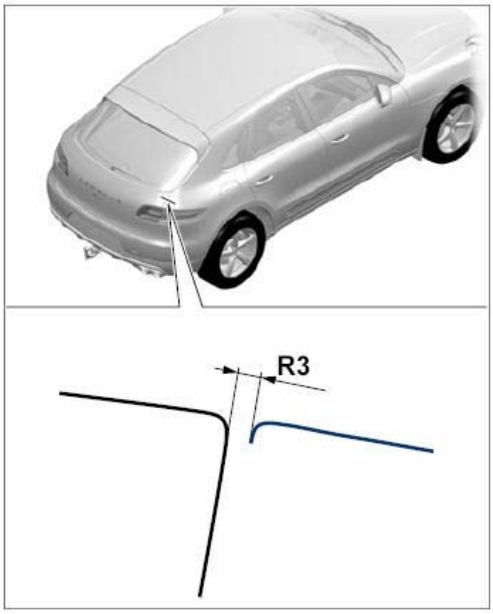

Rear lid to side panel

Rear lid to side panel	R3b (offset)	Gap dimension	0 mm	+/-0.6 mm	

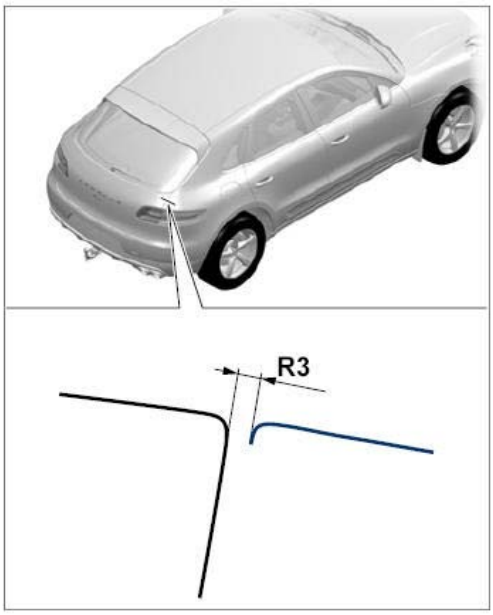

Rear lid to side panel

Rear lid to rear apron	R4 (gap)	Gap dimension	4 mm	+/-0.8 mm	

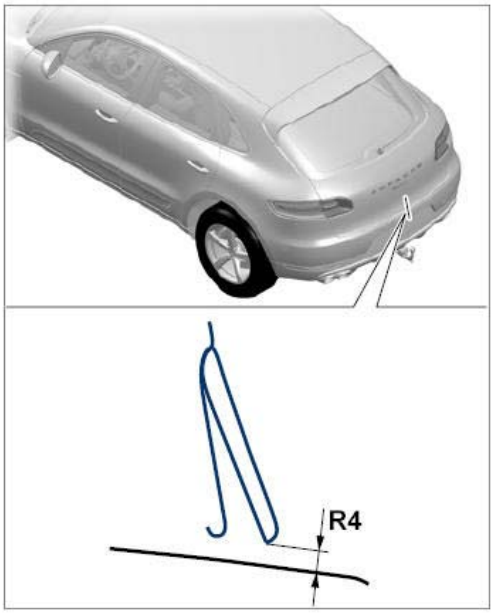

Rear lid to rear apron

Overview of outer gap dimension for body

Fig 1: Identifying Vehicle Gap Dimensions (SP100)

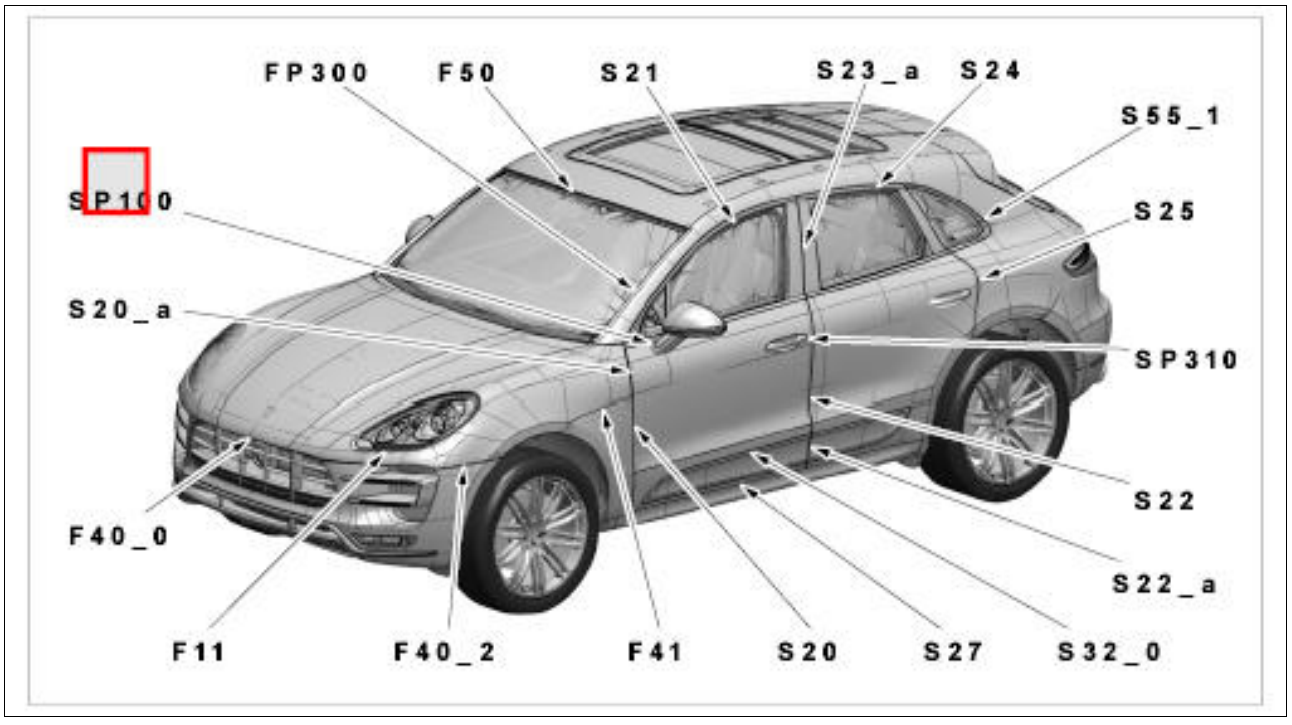

Courtesy of PORSCHE CARS NORTH AMERICA, INC.

SP100 - → Gap dimension: 1.5 mm+/-1 mm

Fig 2: Identifying Vehicle Gap Dimensions (FP300)

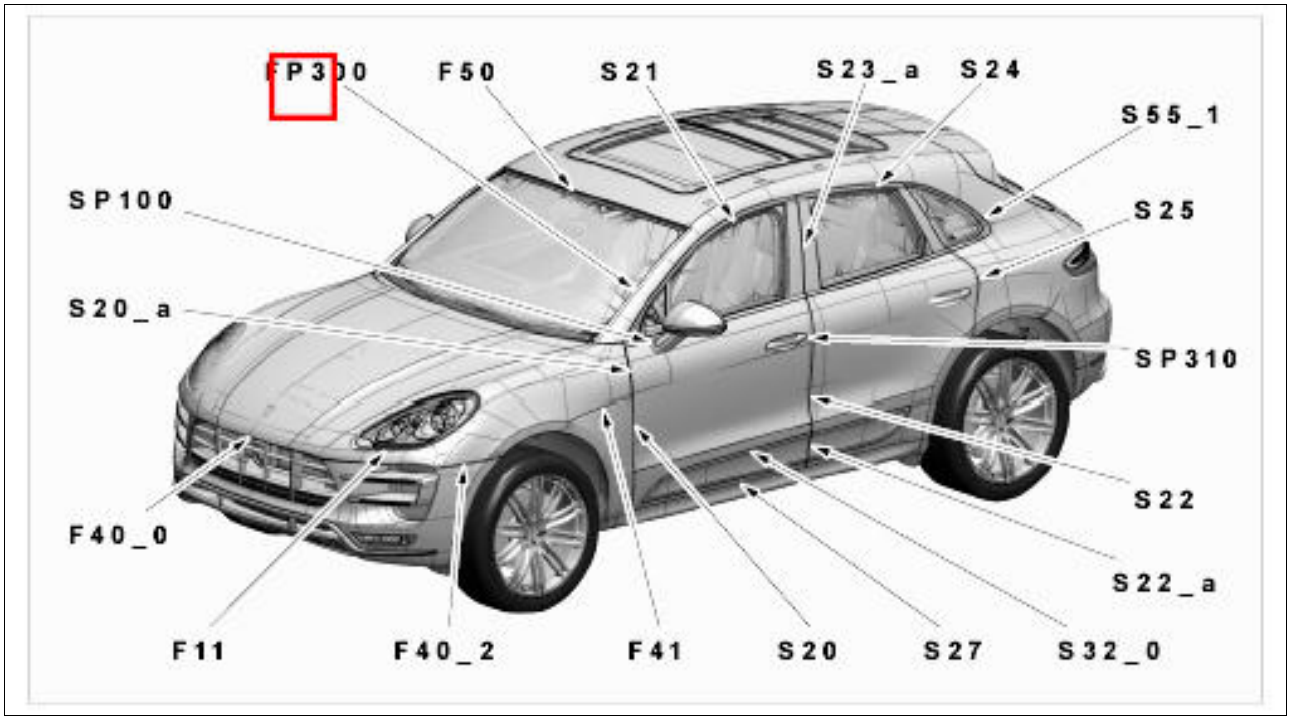

Courtesy of PORSCHE CARS NORTH AMERICA, INC.

FP300 - → Gap dimension: -0.5 mm+/-0.5 mm

Fig 3: Identifying Vehicle Gap Dimensions (F50)

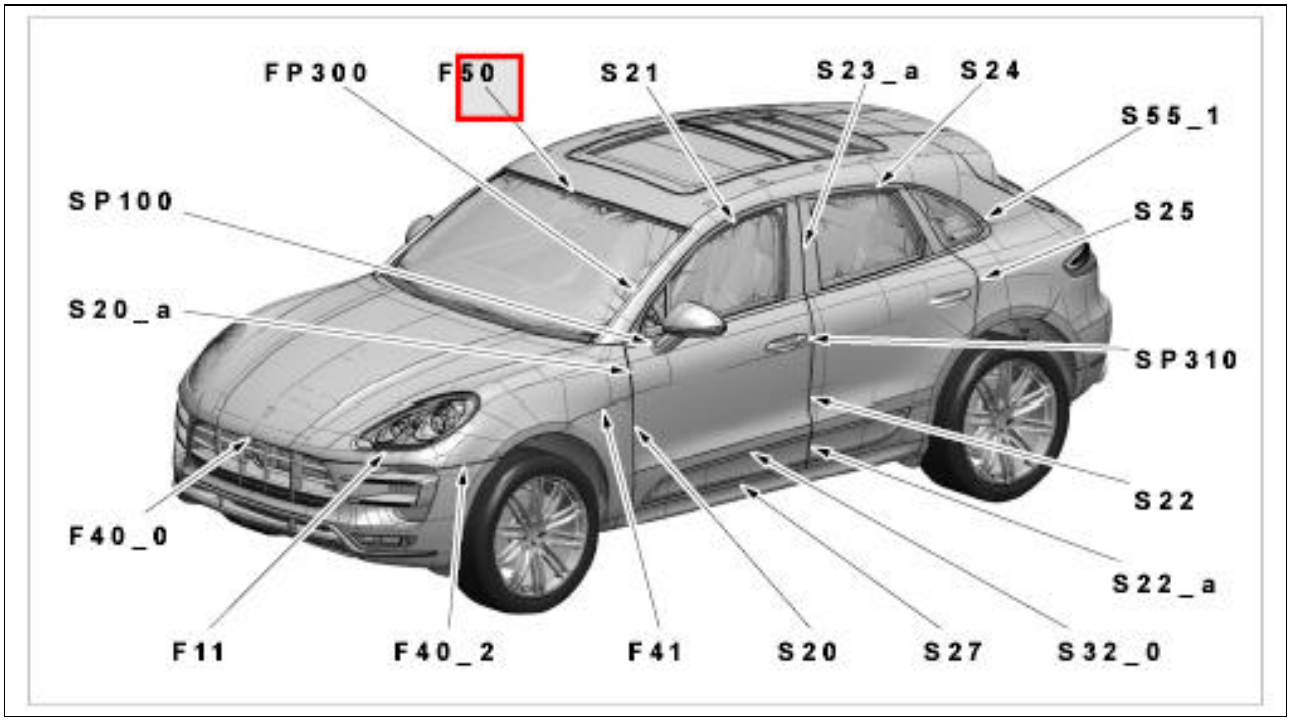

Courtesy of PORSCHE CARS NORTH AMERICA, INC.

F50 - → Gap dimension: 3.2 mm+/-0.5 mm

Fig 4: Identifying Vehicle Gap Dimensions (S21)

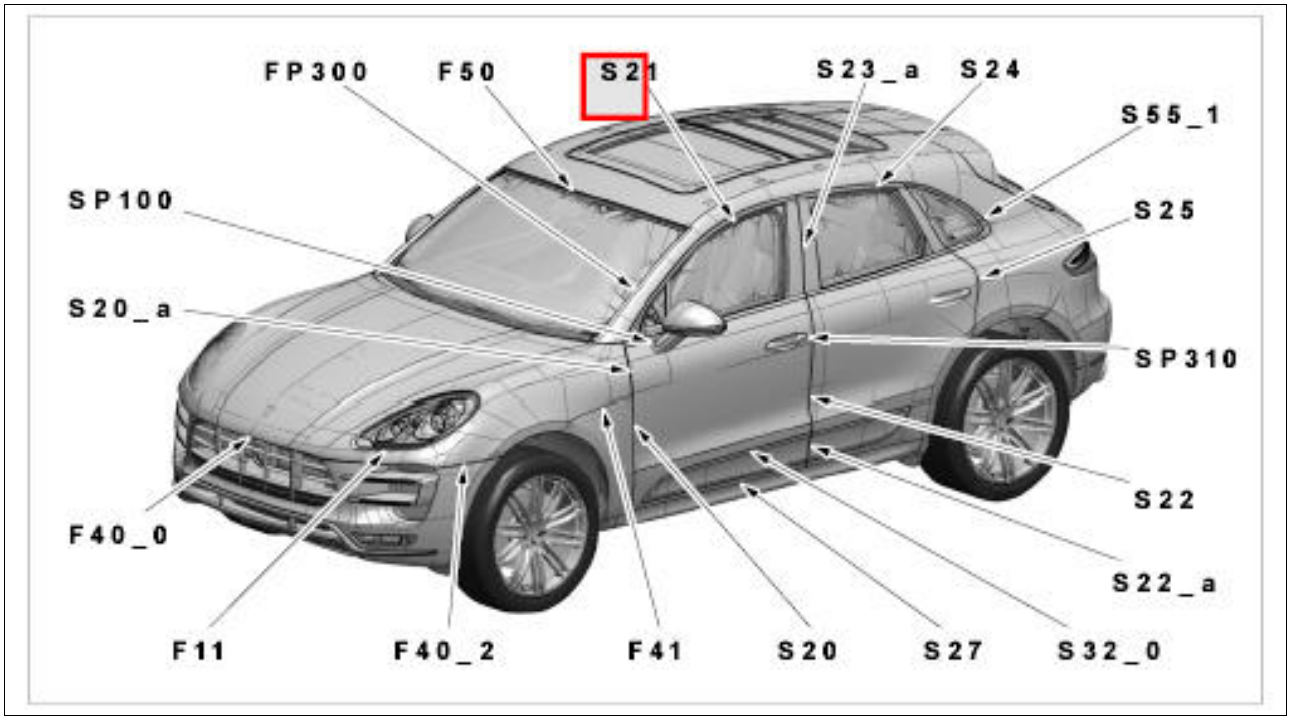

Courtesy of PORSCHE CARS NORTH AMERICA, INC.

S21 - → Gap dimension: 4.5 mm+/-2 mm

Fig 5: Identifying Vehicle Gap Dimensions (S23)

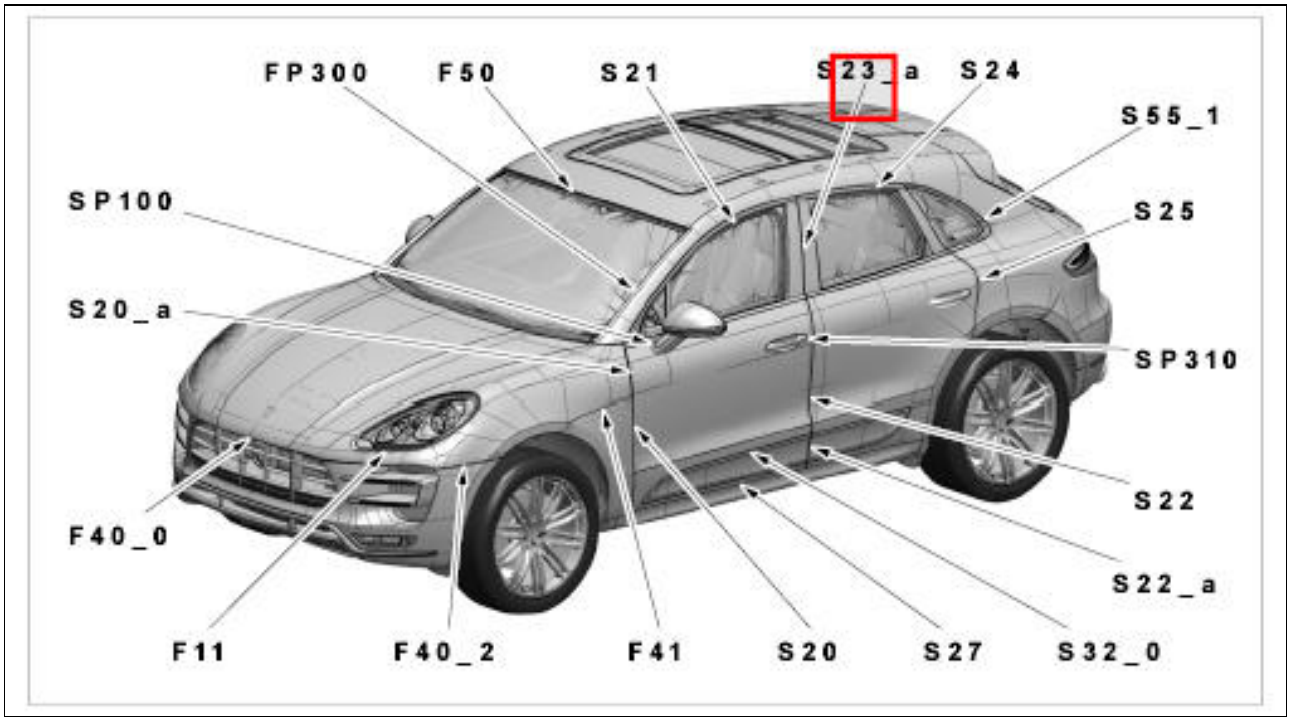

Courtesy of PORSCHE CARS NORTH AMERICA, INC.

S23_a - → Gap dimension: 4.2 mm+/-1 mm

Fig 6: Identifying Vehicle Gap Dimensions (S24)

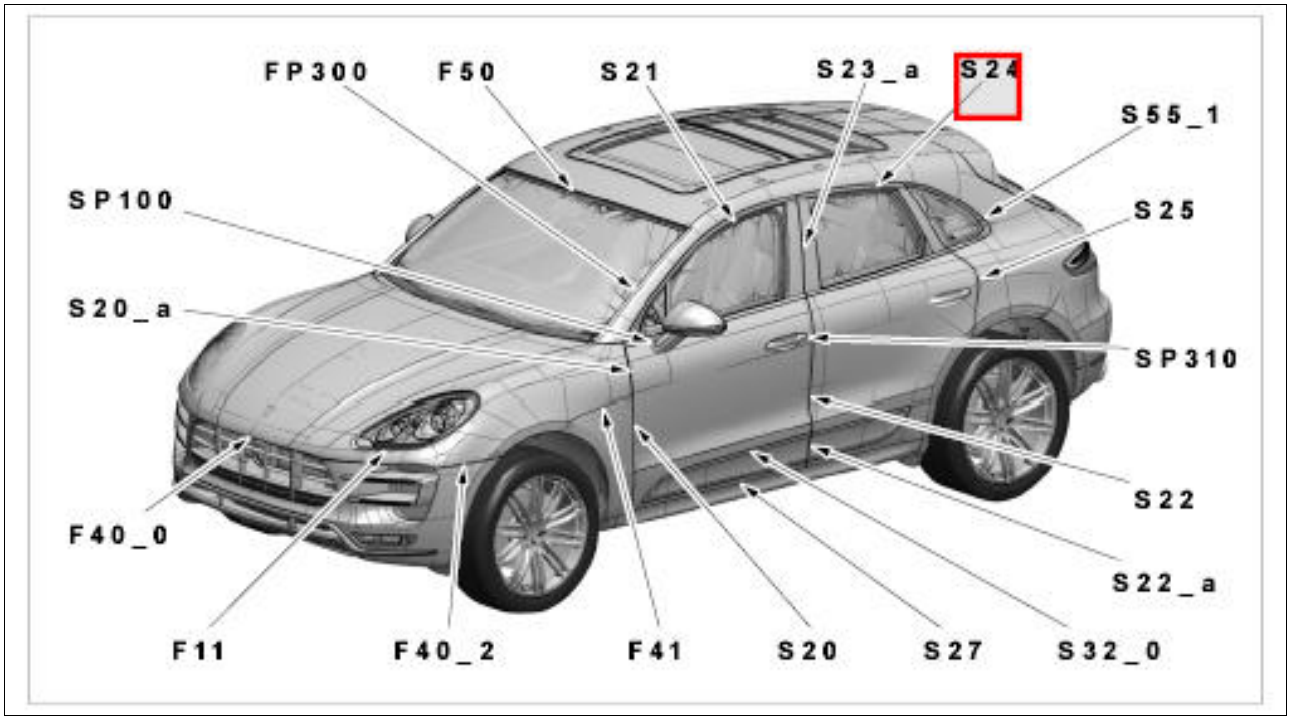

Courtesy of PORSCHE CARS NORTH AMERICA, INC.

S24 - → Gap dimension: 4.5 mm+/-2 mm

Fig 7: Identifying Vehicle Gap Dimensions (S55)

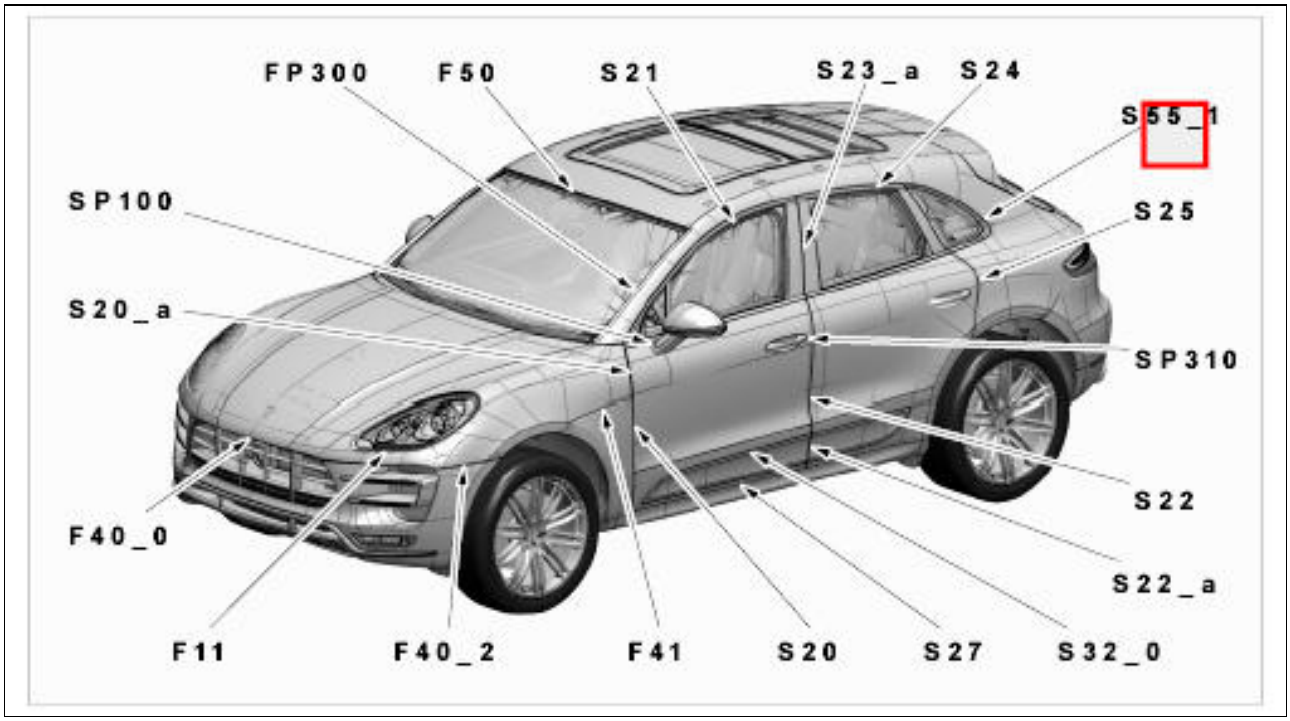

Courtesy of PORSCHE CARS NORTH AMERICA, INC.

S55_1 - → Gap dimension: 3.8 mm+/-0.8 mm

Fig 8: Identifying Vehicle Gap Dimensions (S25)

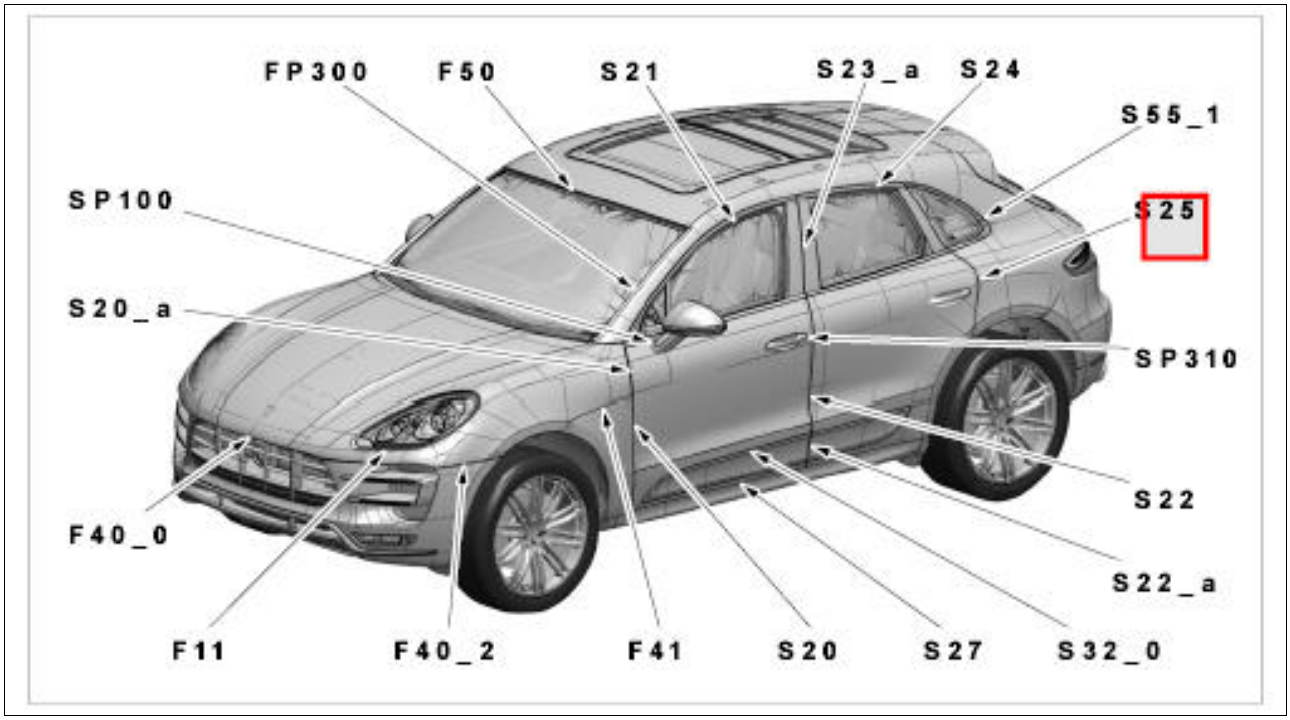

Courtesy of PORSCHE CARS NORTH AMERICA, INC.

S25 - → Gap dimension: 3.5 mm+/-0.5 mm

Fig 9: Identifying Vehicle Gap Dimensions (SP310)

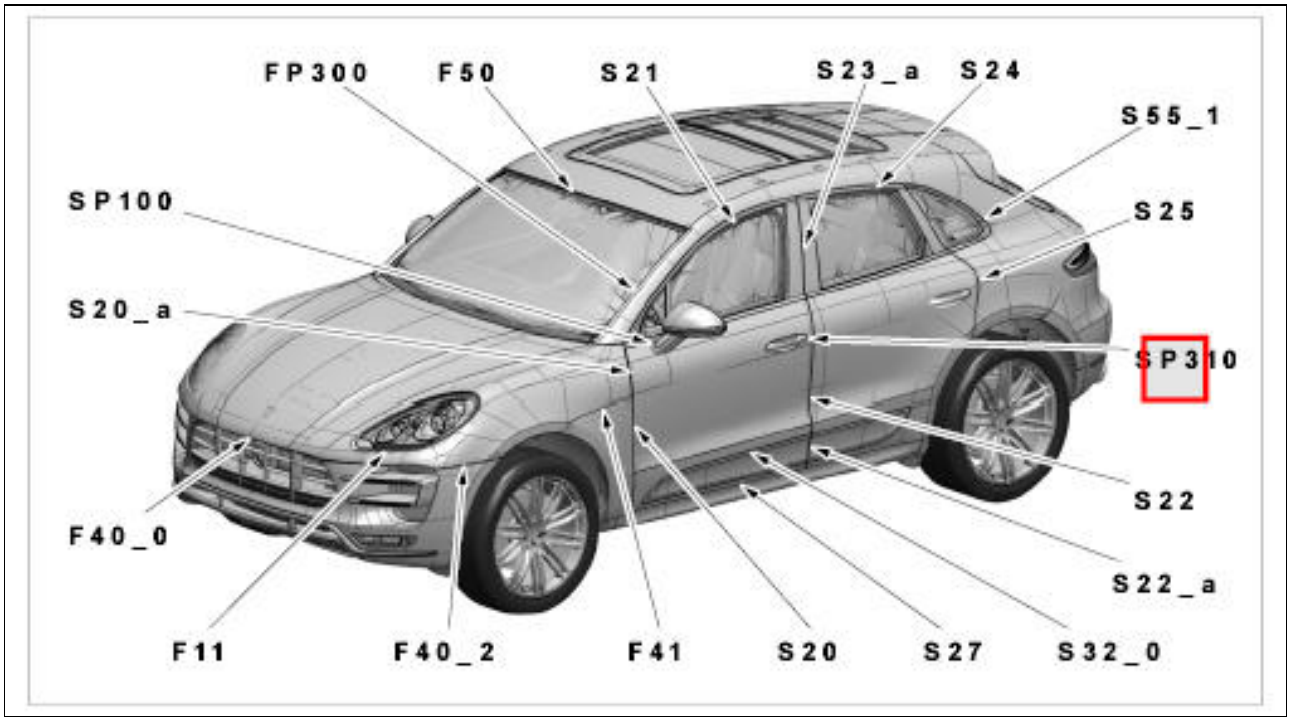

Courtesy of PORSCHE CARS NORTH AMERICA, INC.

SP310 - → Gap dimension: 1 mm+/-0.5 mm

Fig 10: Identifying Vehicle Gap Dimensions (S22)

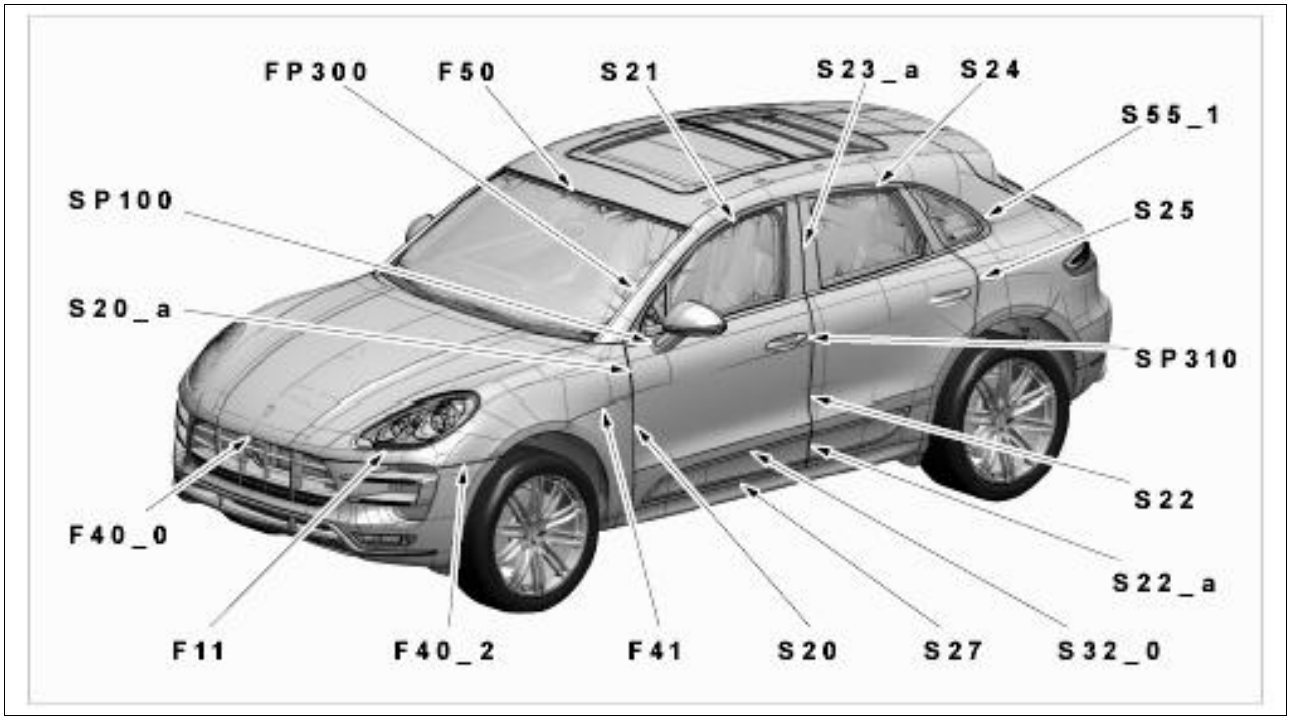

Courtesy of PORSCHE CARS NORTH AMERICA, INC.

S22 - → Gap dimension: 4.2 mm0.5 mm

Fig 11: Identifying Vehicle Gap Dimensions (S22)

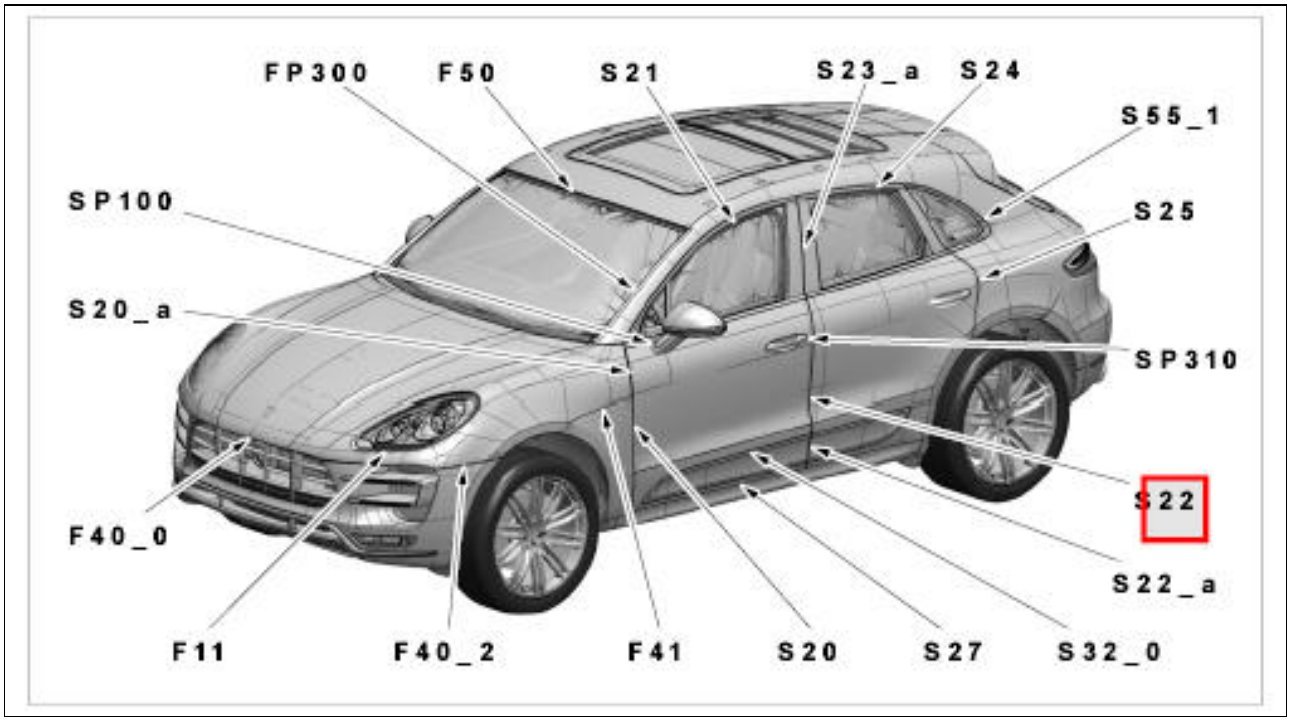

Courtesy of PORSCHE CARS NORTH AMERICA, INC.

S22_a - → Gap dimension: 4.2 mm1 mm

Fig 12: Identifying Vehicle Gap Dimensions (S32)

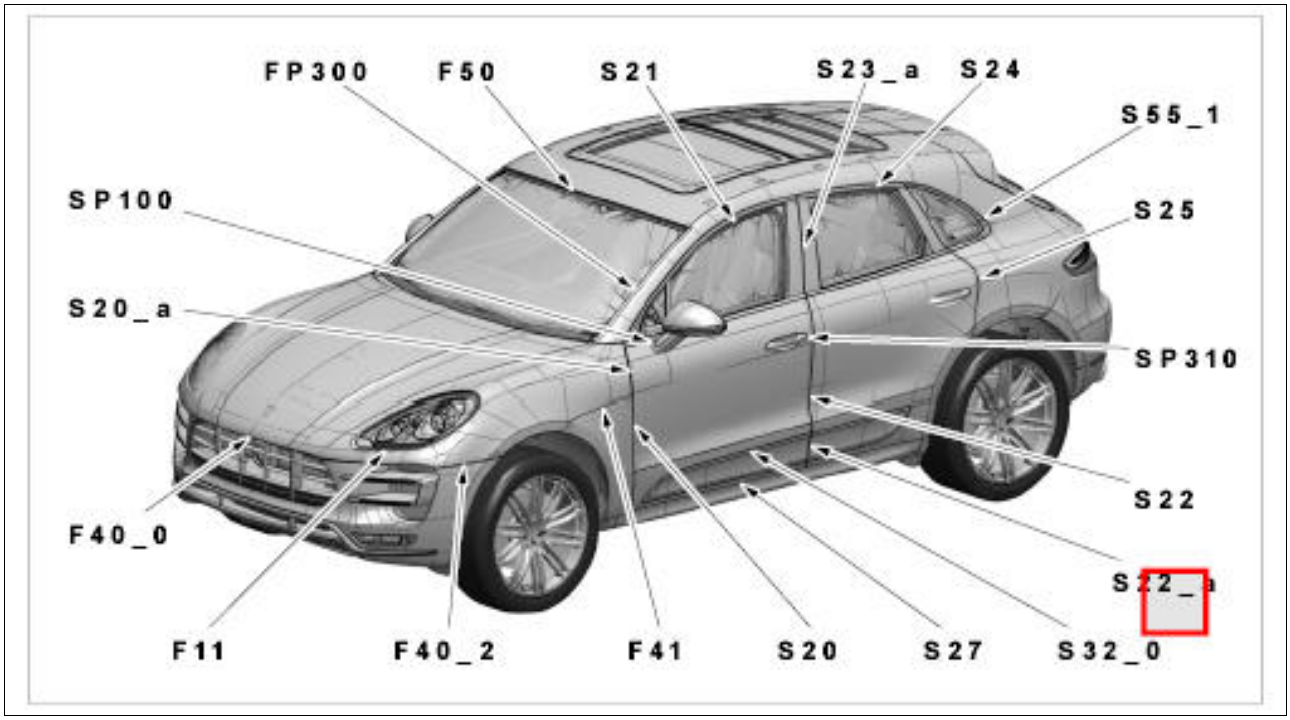

Courtesy of PORSCHE CARS NORTH AMERICA, INC.

S32_0 - → Gap dimension: 1 mm+/-0.5 mm

Fig 13: Identifying Vehicle Gap Dimensions (S27)

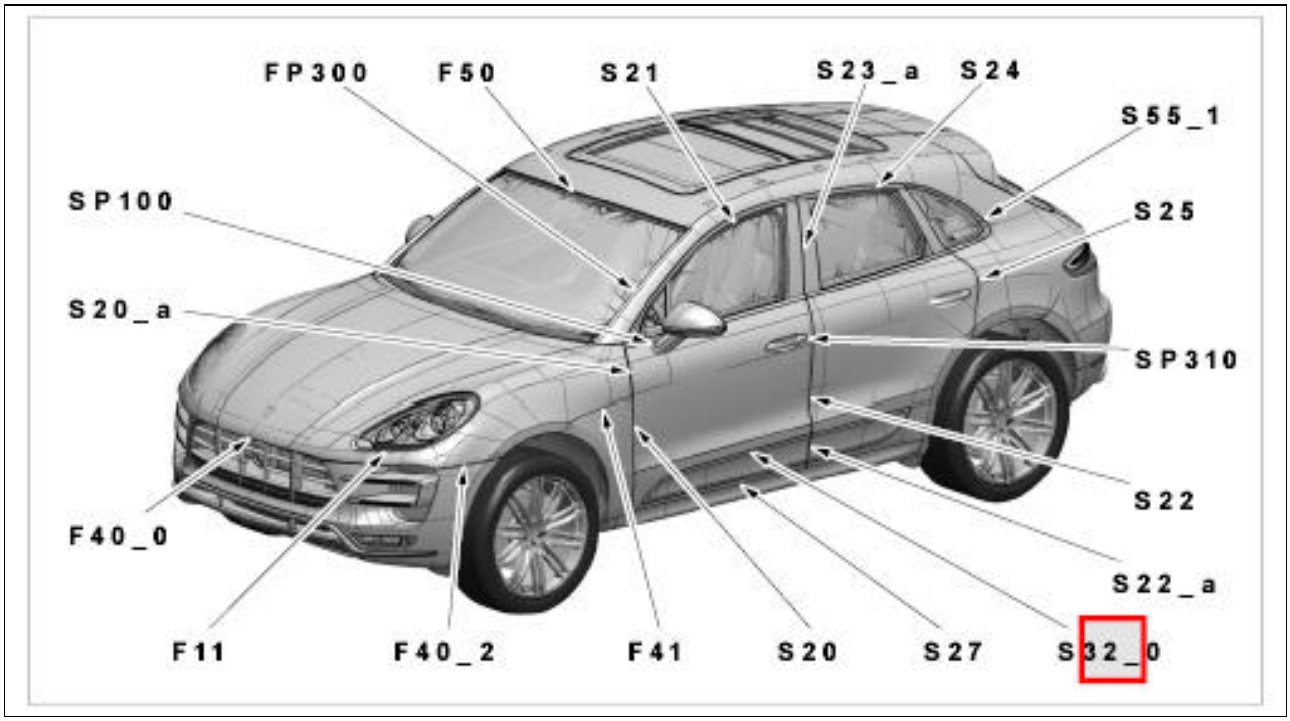

Courtesy of PORSCHE CARS NORTH AMERICA, INC.

S27 - → Gap dimension: 4 mm+/-1.5 mm

Fig 14: Identifying Vehicle Gap Dimensions (S20)

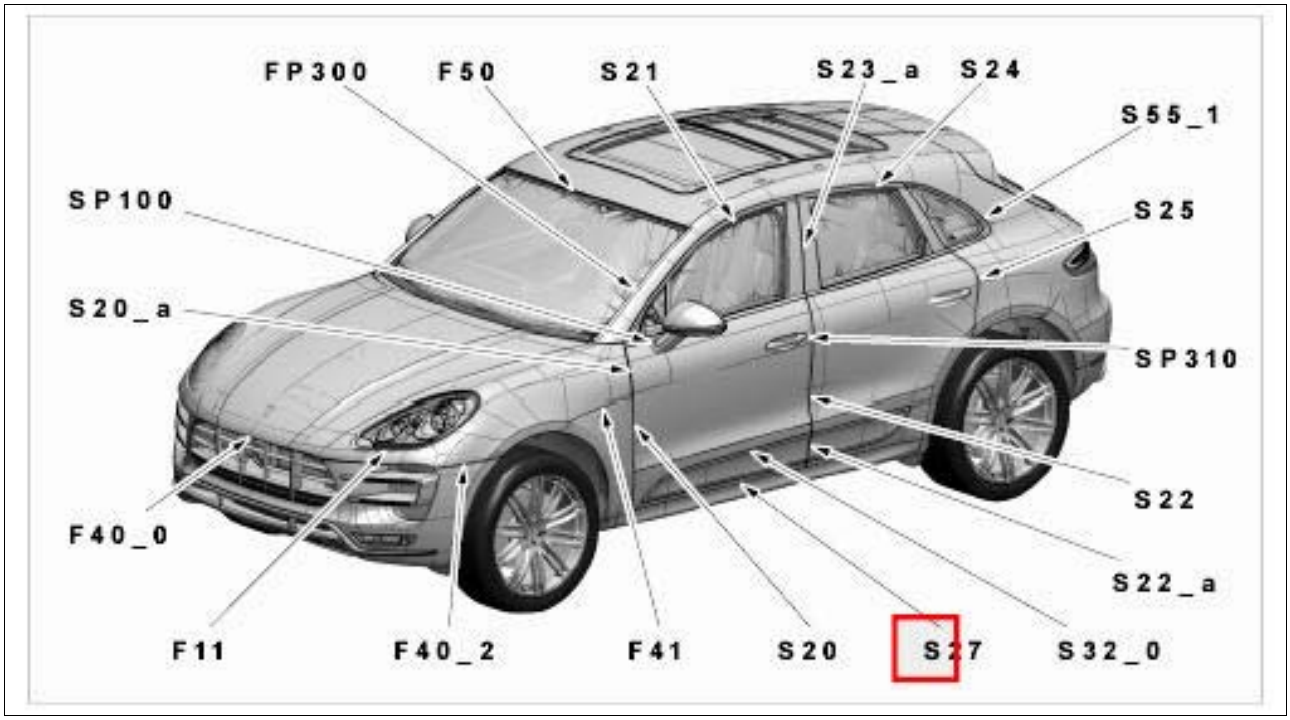

Courtesy of PORSCHE CARS NORTH AMERICA, INC.

S20 - → Gap dimension: 4.1 mm+/-0.5 mm

Fig 15: Identifying Vehicle Gap Dimensions (F41)

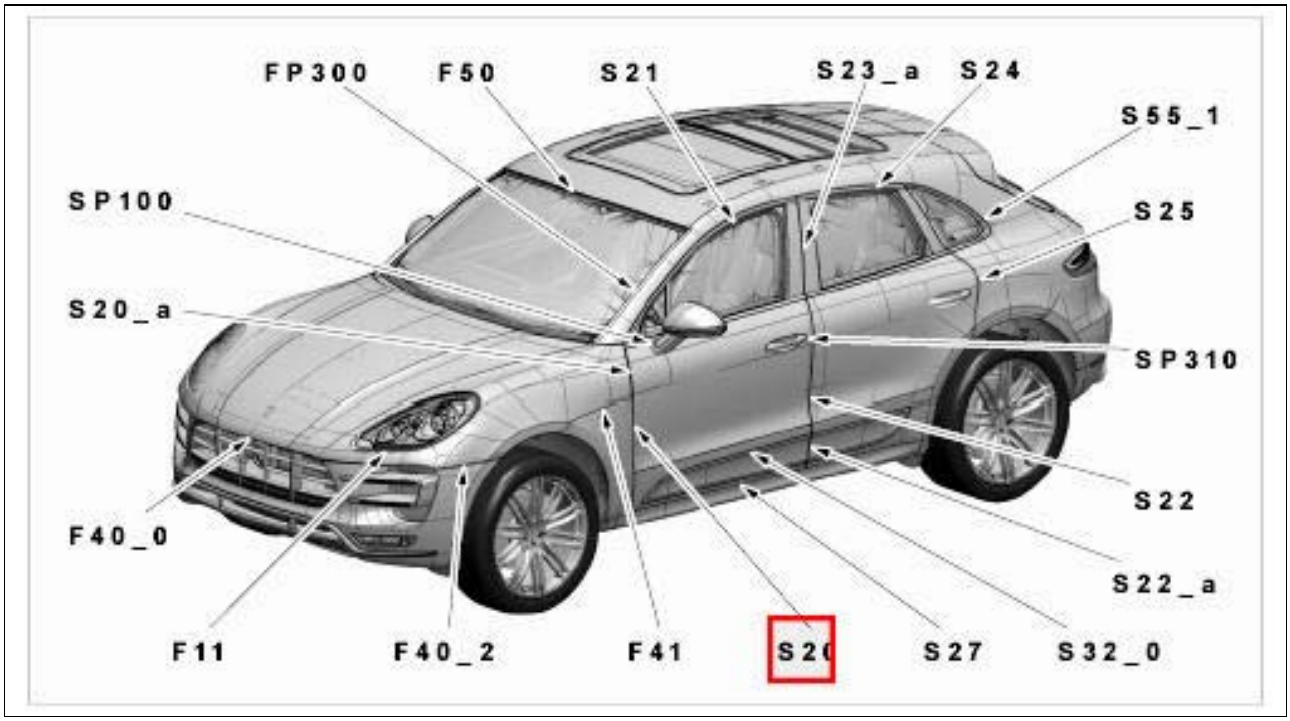

Courtesy of PORSCHE CARS NORTH AMERICA, INC.

F41 - → Gap dimension: 3.5 mm0.5 mm

Fig 16: Identifying Vehicle Gap Dimensions (F40)

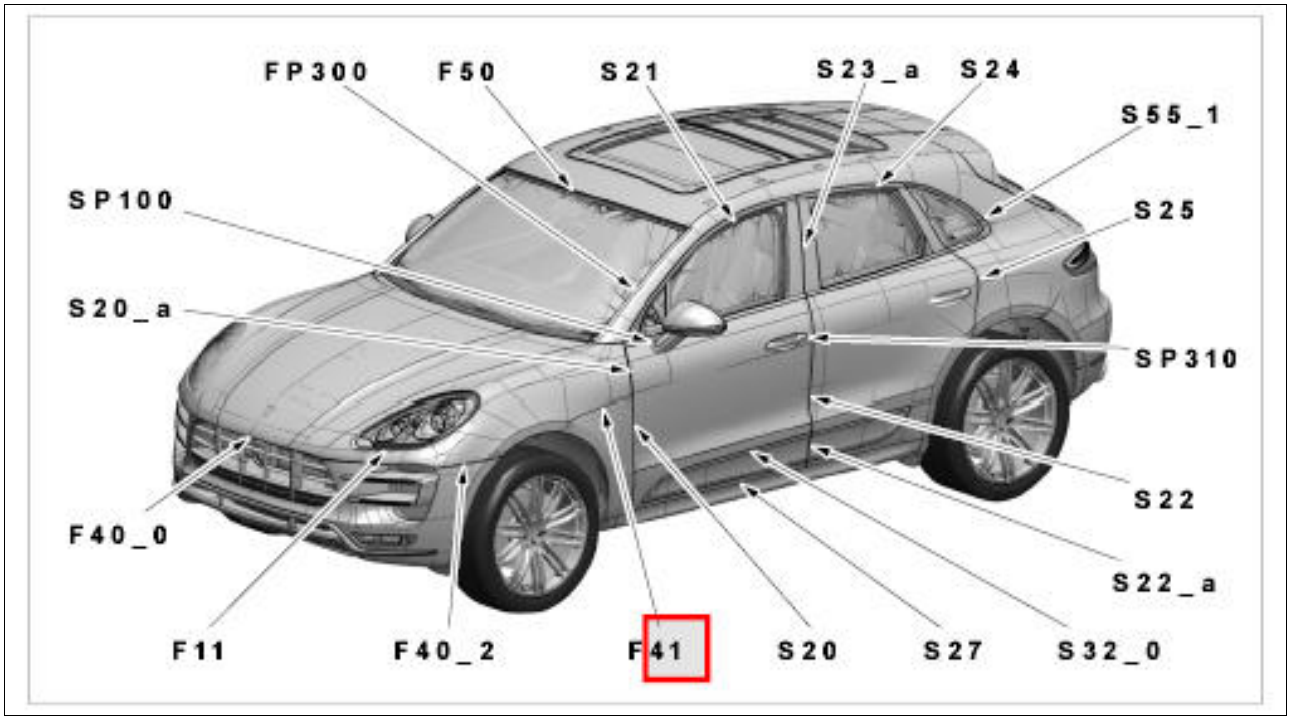

Courtesy of PORSCHE CARS NORTH AMERICA, INC.

F40_2 - → Gap dimension: 3.5 mm0.5 mm

Fig 17: Identifying Vehicle Gap Dimensions (F11)

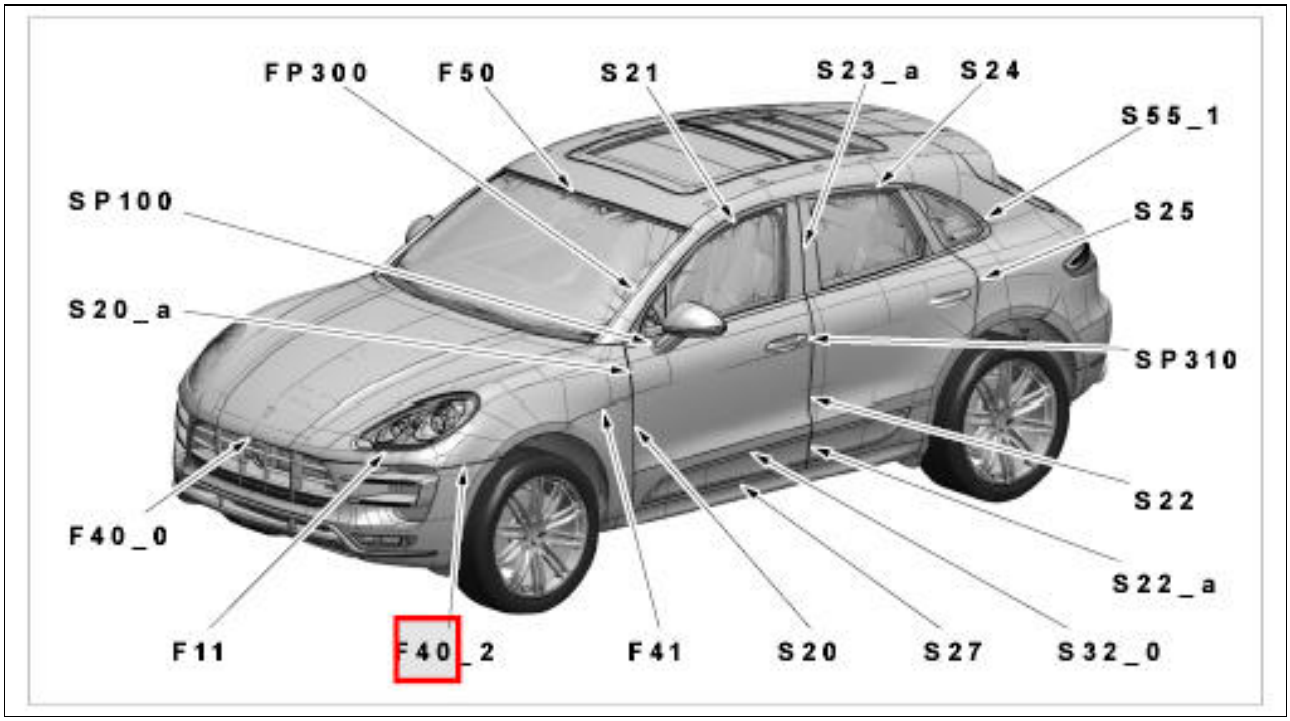

Courtesy of PORSCHE CARS NORTH AMERICA, INC.

F11 - → Gap dimension: 4.7 mm+/-0.8 mm

Fig 18: Identifying Vehicle Gap Dimensions (F40)

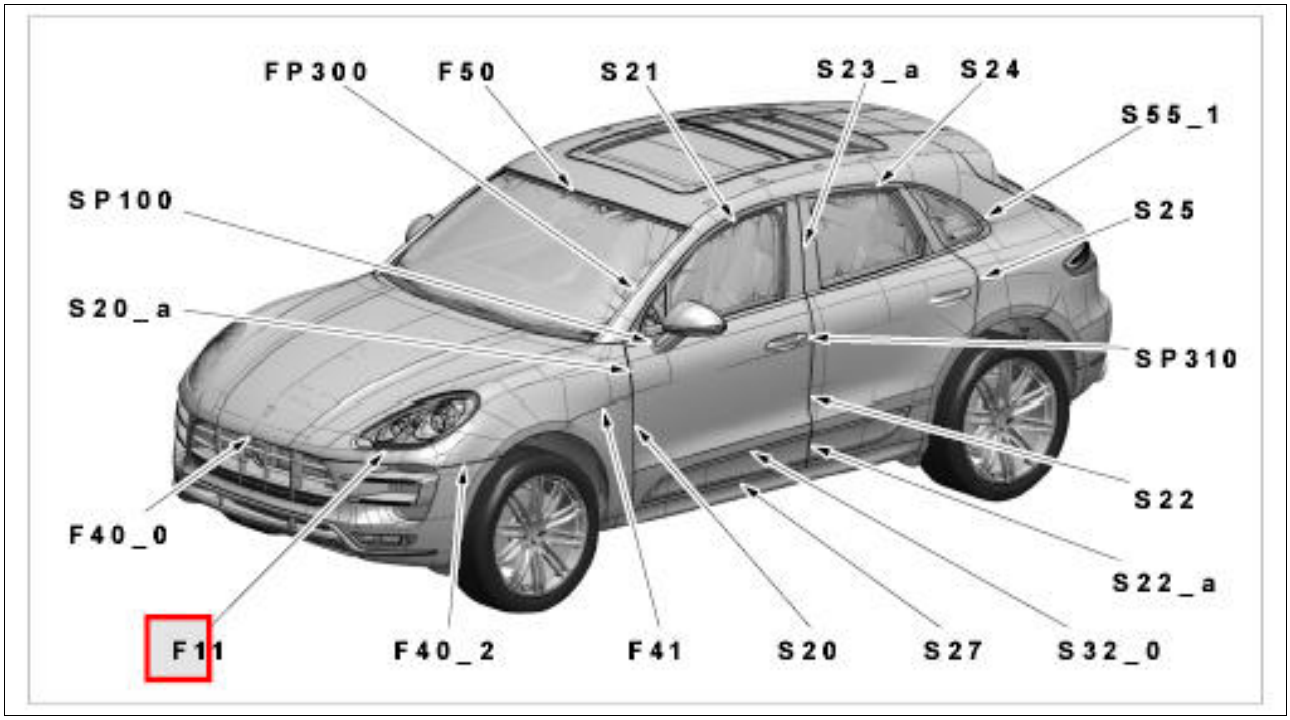

Courtesy of PORSCHE CARS NORTH AMERICA, INC.

F40_0 - → Gap dimension: 4.8 mm+1 mm-0.6 mm

Fig 19: Identifying Vehicle Gap Dimensions (S20)

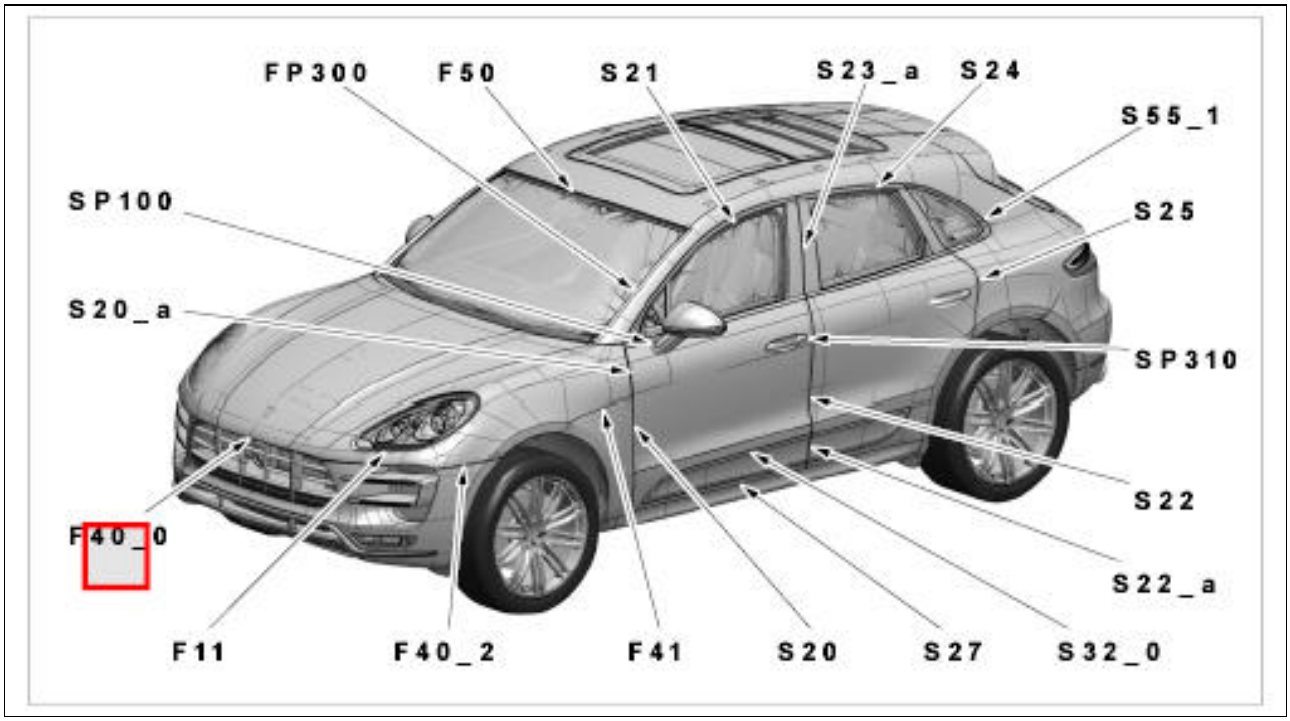

Courtesy of PORSCHE CARS NORTH AMERICA, INC.

S20_a - → Gap dimension: 4.1 mm+/-0.5 mm

Fig 20: Identifying Vehicle Gap Dimensions

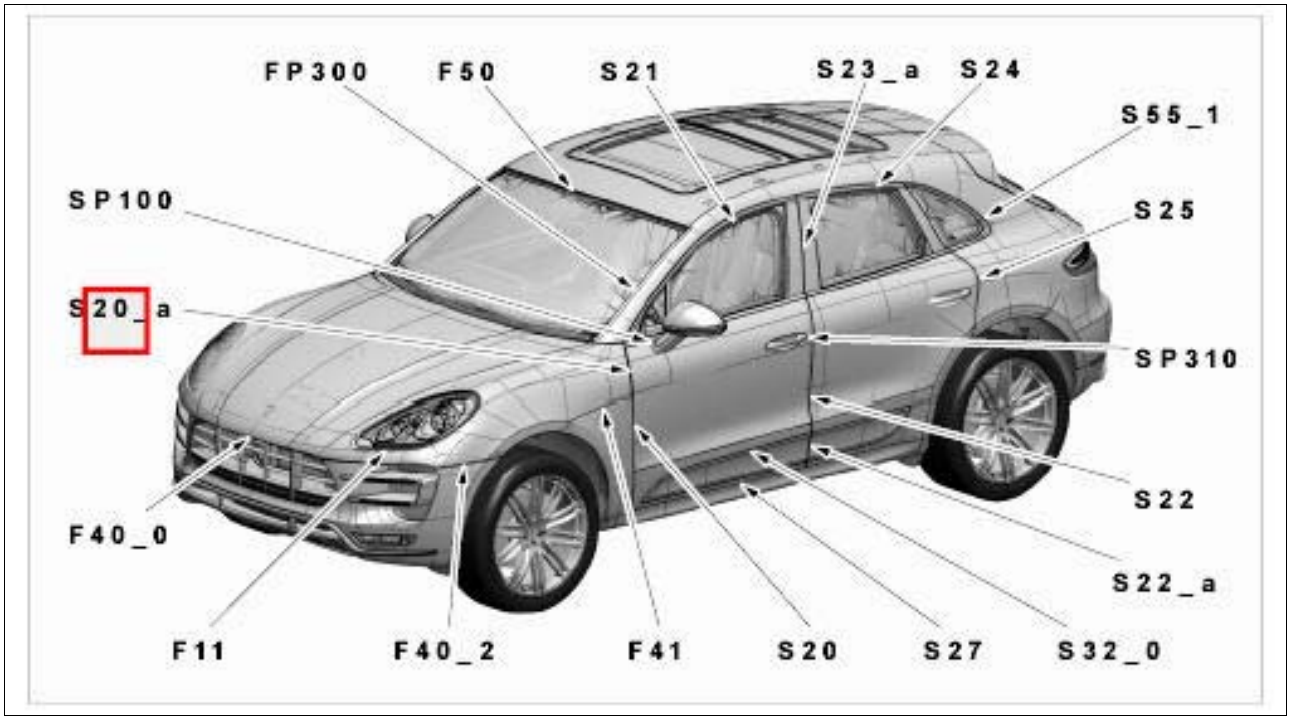

Courtesy of PORSCHE CARS NORTH AMERICA, INC.

1. Overview of gap dimensions.

Fig 21: Identifying Vehicle Gap Dimensions (H11)

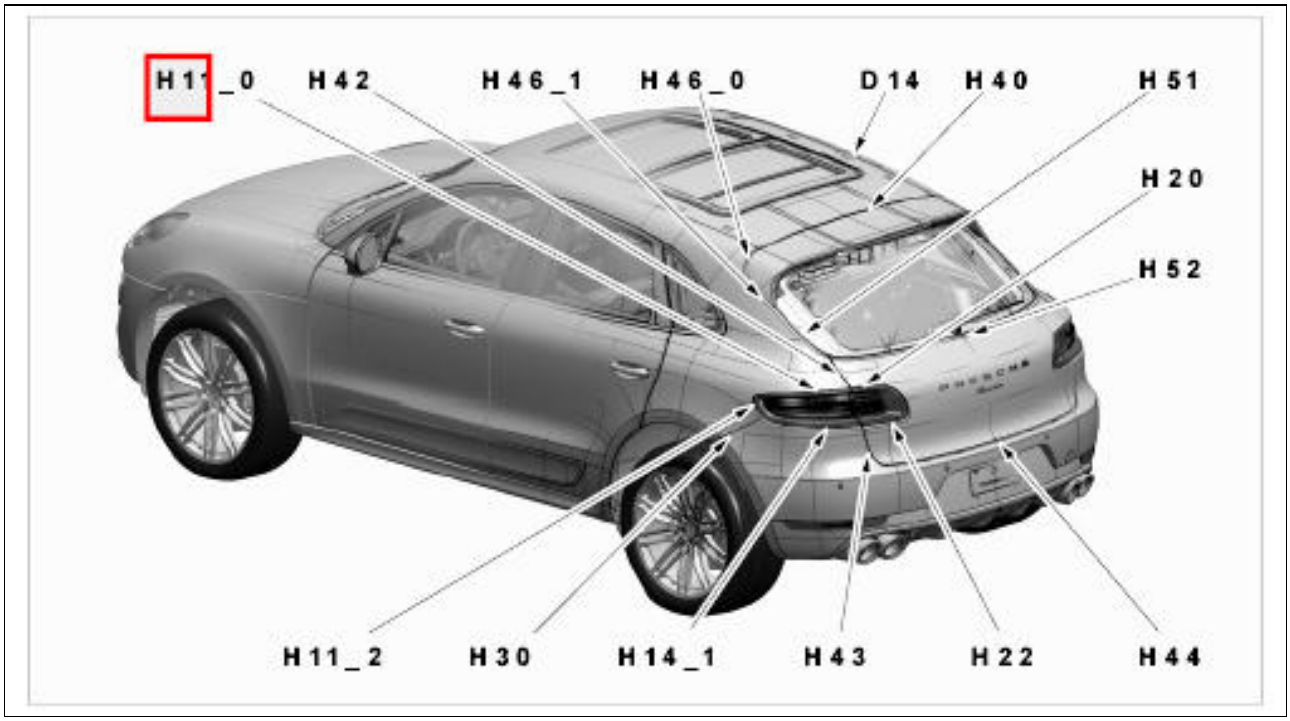

Courtesy of PORSCHE CARS NORTH AMERICA, INC.

H11_0 - → Gap dimension: 1 mm+/-0.8 mm

Fig 22: Identifying Vehicle Gap Dimensions (H42)

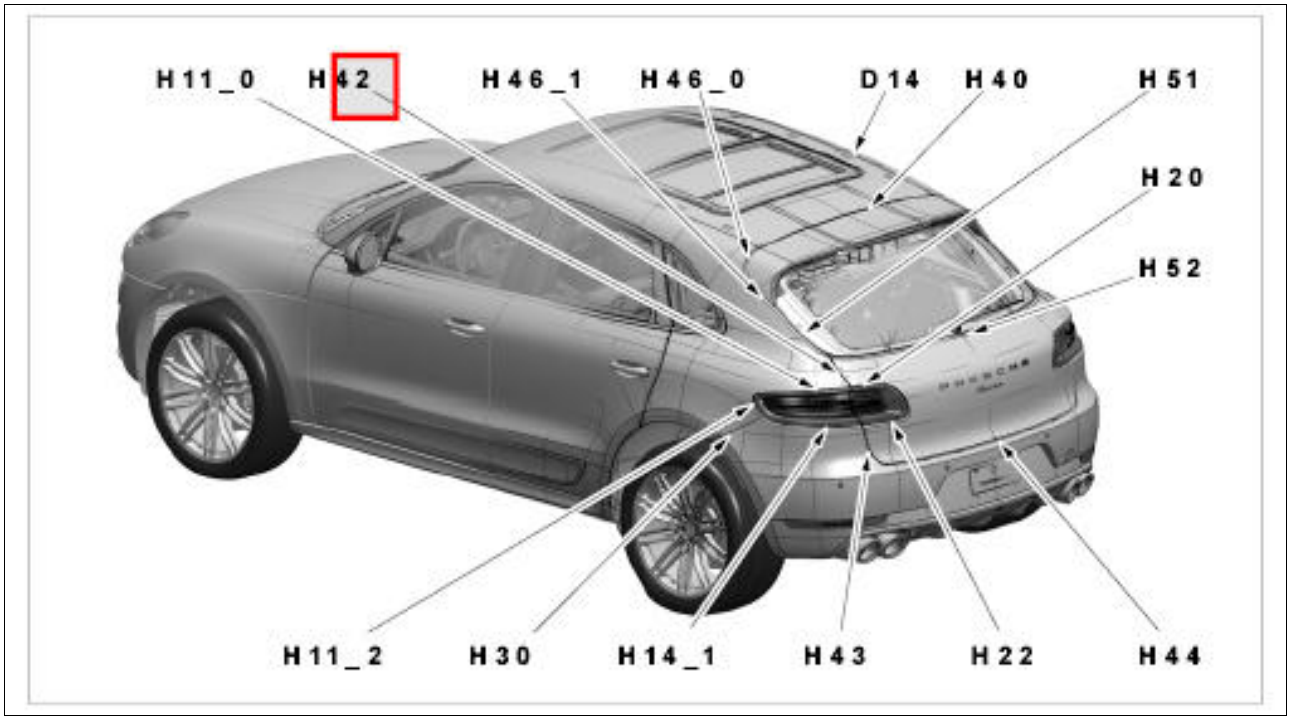

Courtesy of PORSCHE CARS NORTH AMERICA, INC.

H42 - → Gap dimension: 4 mm+0.7 mm-0.9 mm

Fig 23: Identifying Vehicle Gap Dimensions (H46)

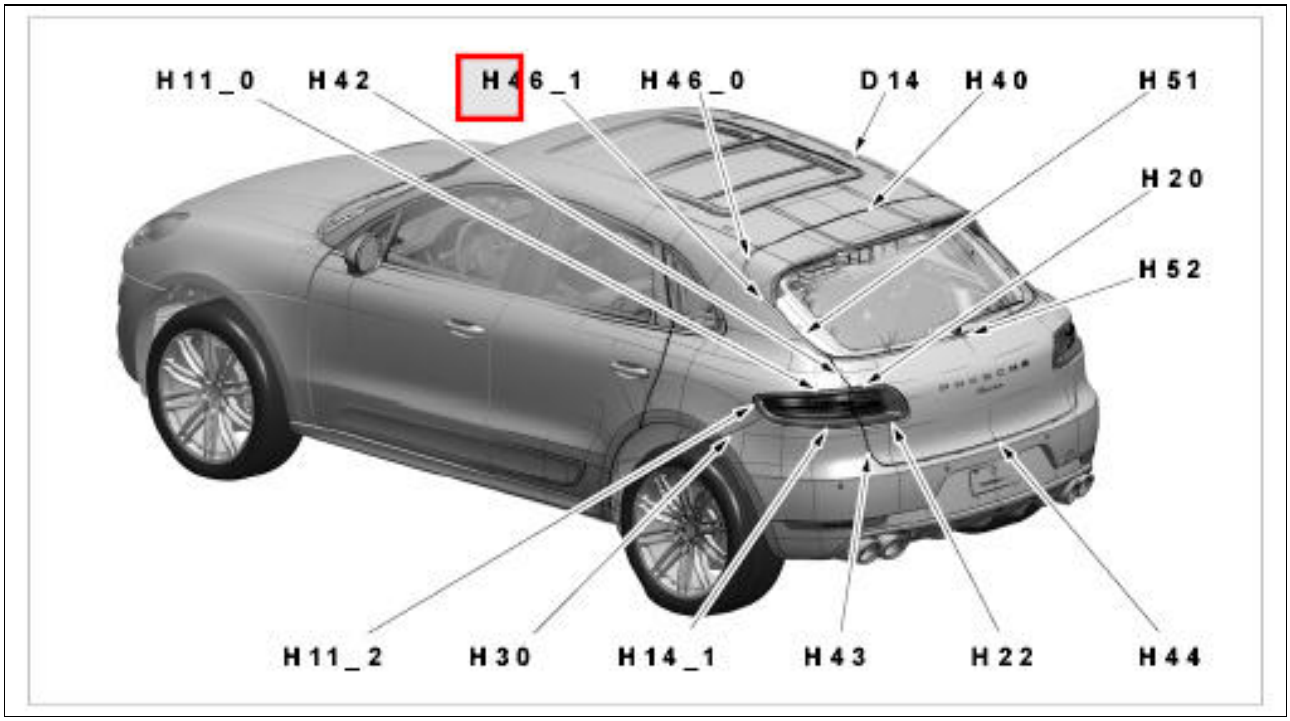

Courtesy of PORSCHE CARS NORTH AMERICA, INC.

H46_1 - → Gap dimension: 4 mm+/-0.5 mm

Fig 24: Identifying Vehicle Gap Dimensions (H46)

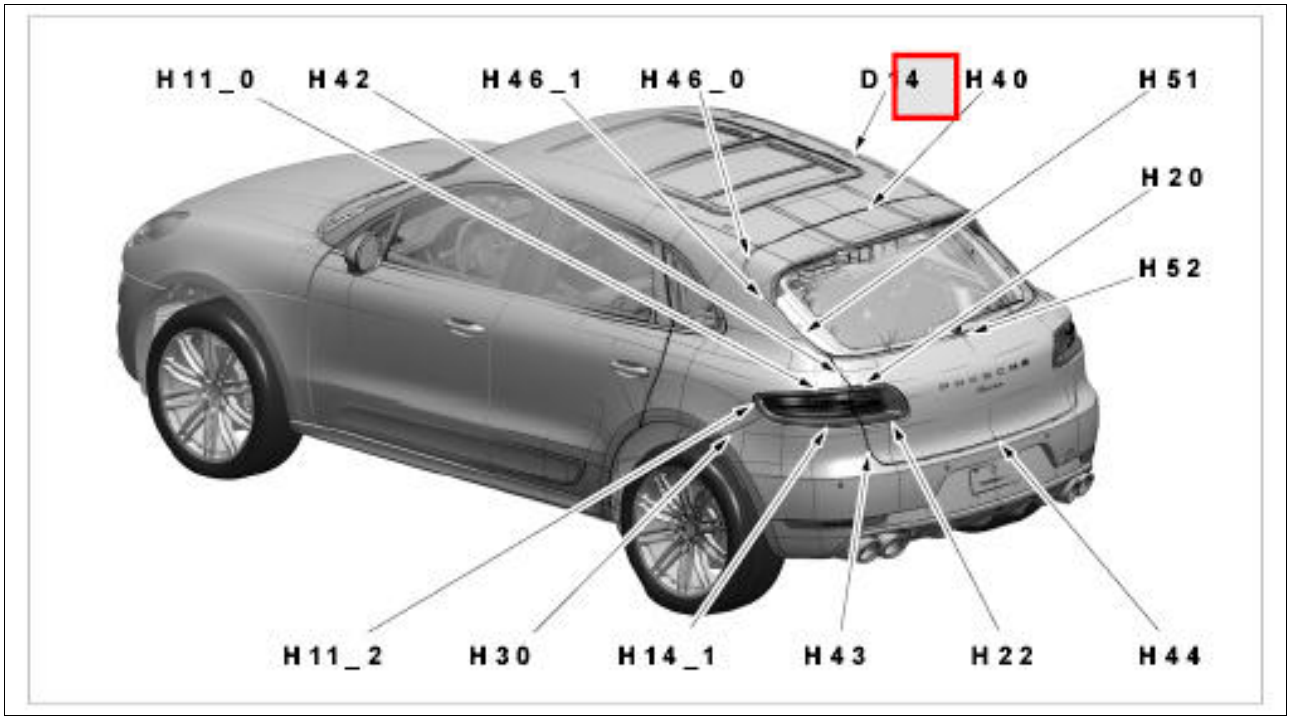

Courtesy of PORSCHE CARS NORTH AMERICA, INC.

H46_0 - → Gap dimension: 6 mm+1 mm-0.5 mm

Fig 25: Identifying Vehicle Gap Dimensions (D14)

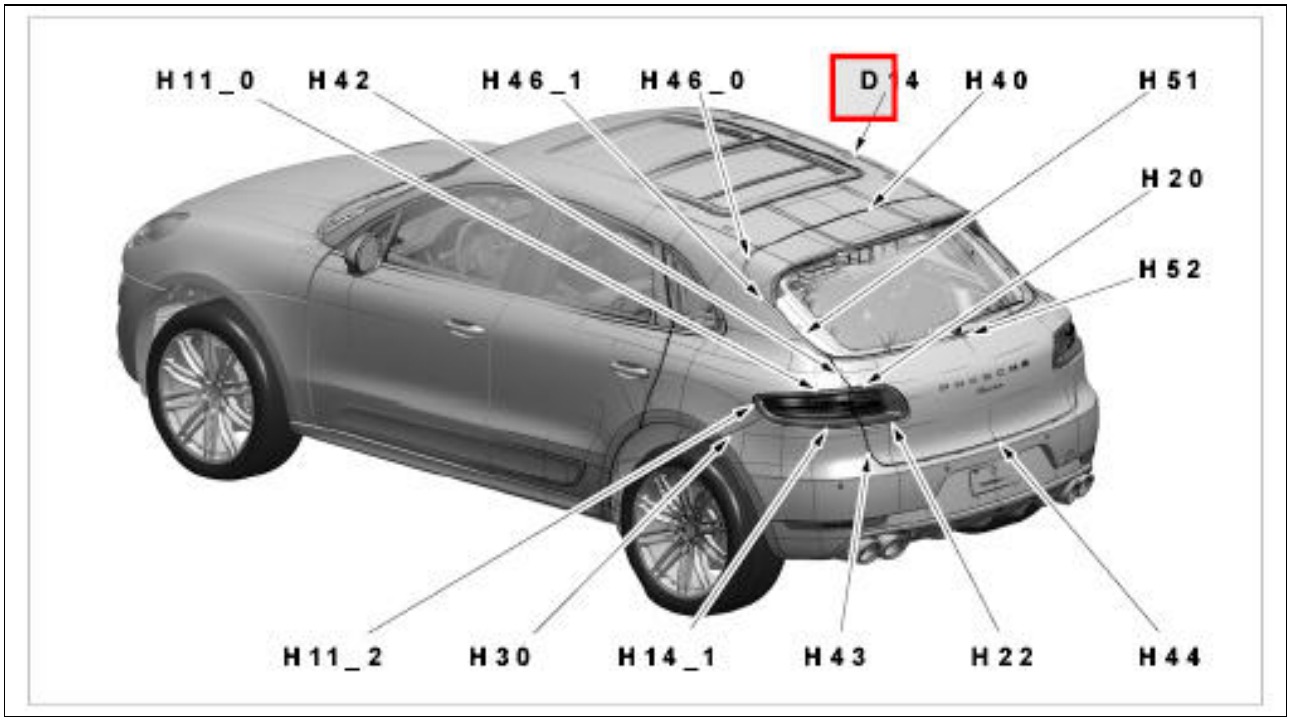

Courtesy of PORSCHE CARS NORTH AMERICA, INC.

D14 - → Gap dimension: -3 mm+/-1 mm

Fig 26: Identifying Vehicle Gap Dimensions (H40)

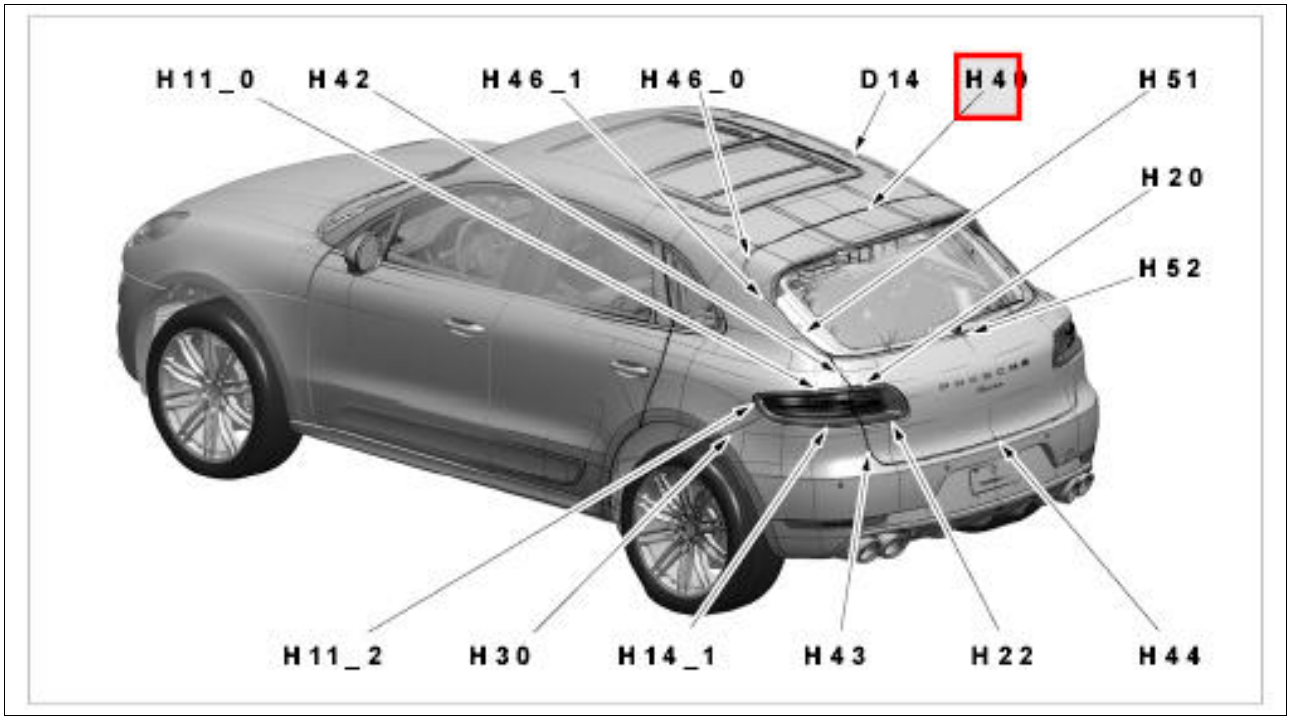

Courtesy of PORSCHE CARS NORTH AMERICA, INC.

H40 - → Gap dimension: 6 mm+1 mm-0.5 mm

Fig 27: Identifying Vehicle Gap Dimensions (H51)

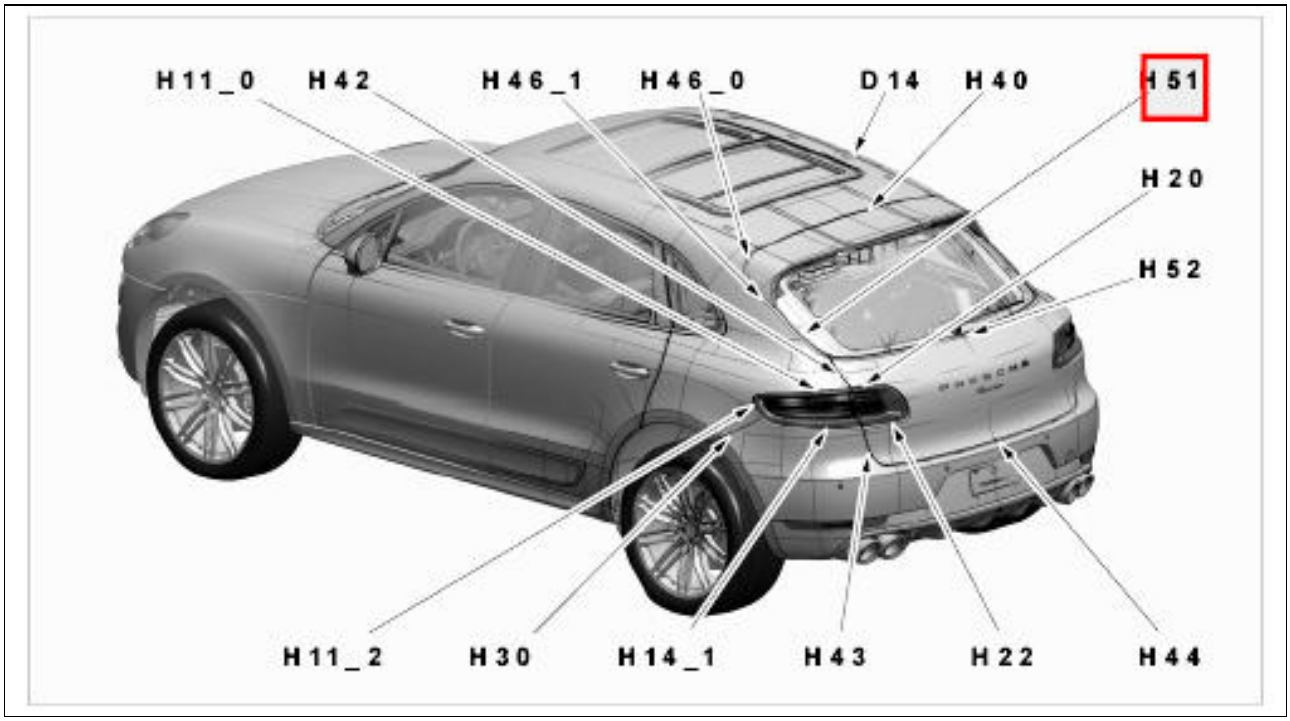

Courtesy of PORSCHE CARS NORTH AMERICA, INC.

H51 - → Gap dimension: 4 mm+/-0.8 mm

Fig 28: Identifying Vehicle Gap Dimensions (H20)

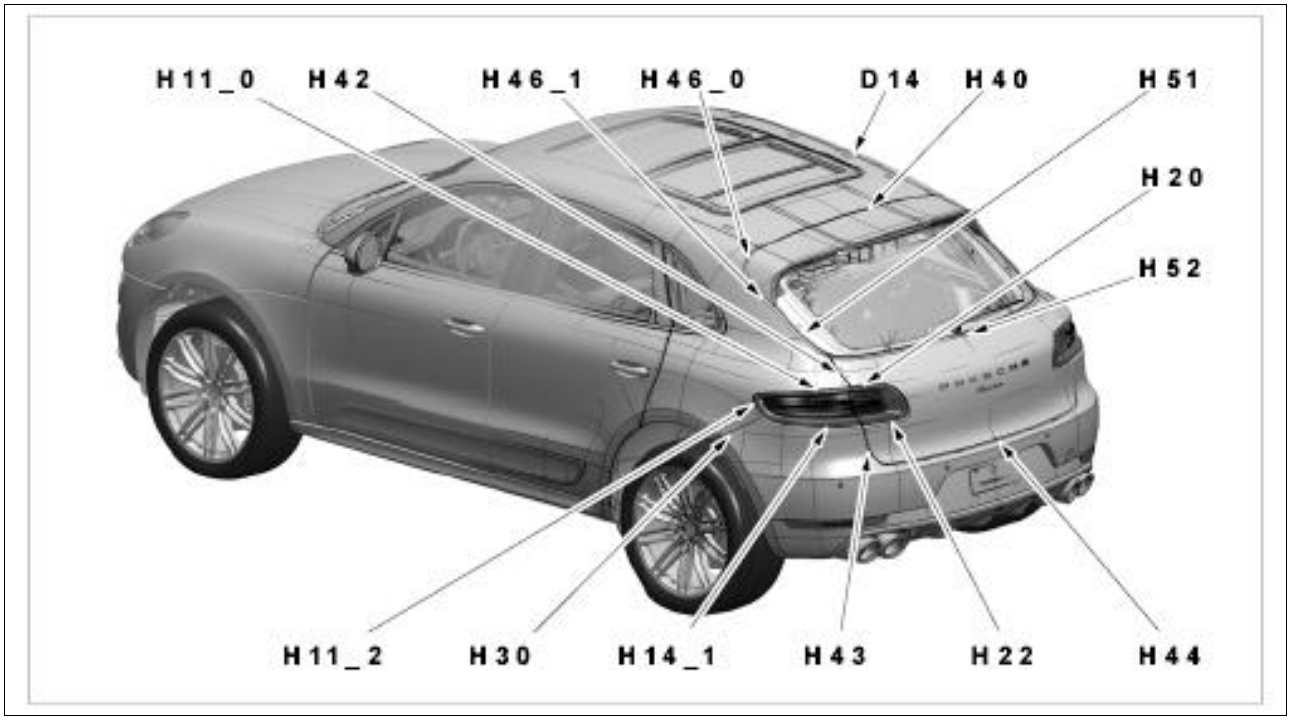

Courtesy of PORSCHE CARS NORTH AMERICA, INC.

H20 - → Gap dimension: 1 mm+/-0.8 mm

Fig 29: Identifying Vehicle Gap Dimensions (H52)

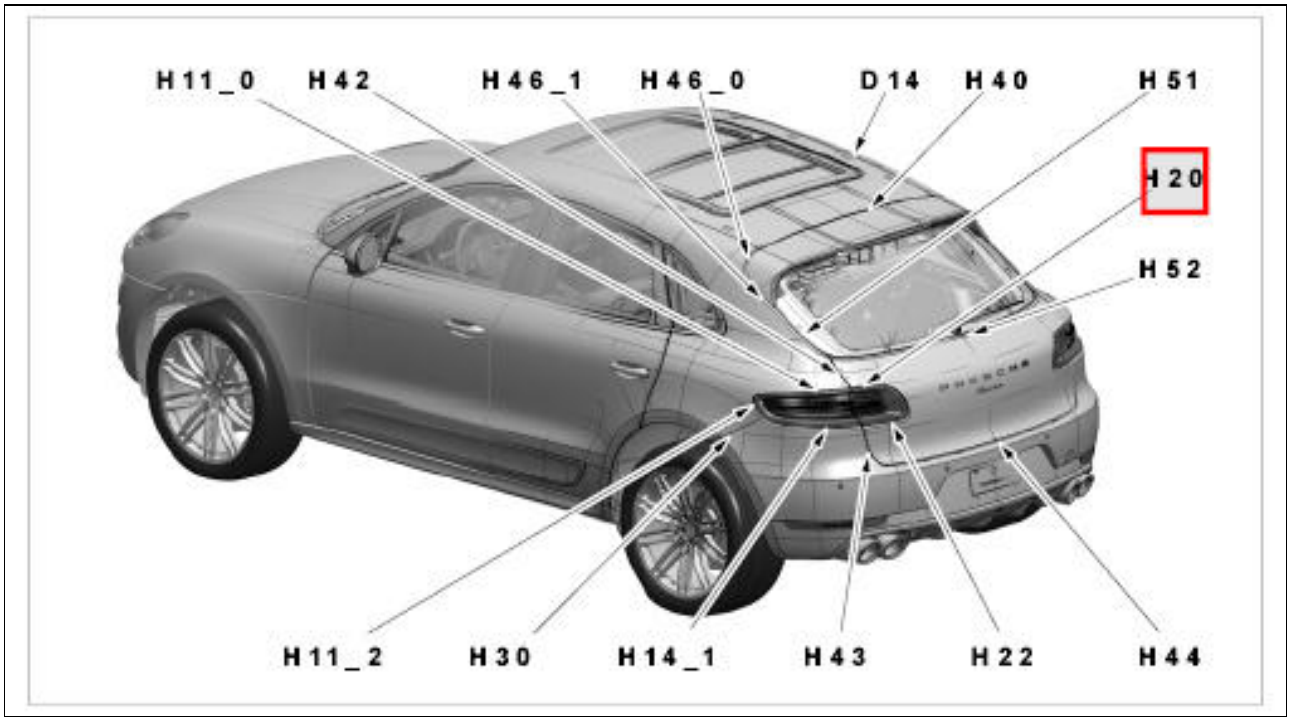

Courtesy of PORSCHE CARS NORTH AMERICA, INC.

H52 - → Fugenmas: 4 mm+/-0.8 mm

Fig 30: Identifying Vehicle Gap Dimensions (H44)

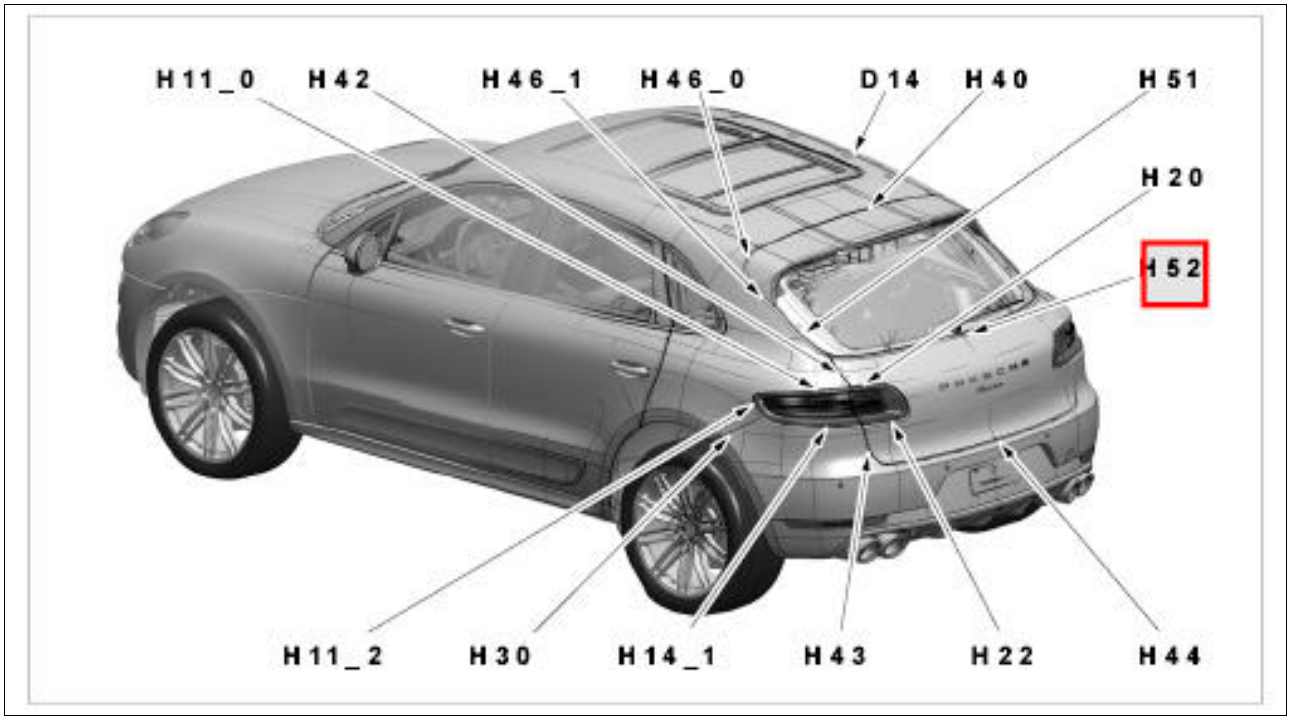

Courtesy of PORSCHE CARS NORTH AMERICA, INC.

H44 - → Gap dimension: 4 mm+/-0.8 mm

Fig 31: Identifying Vehicle Gap Dimensions (H22)

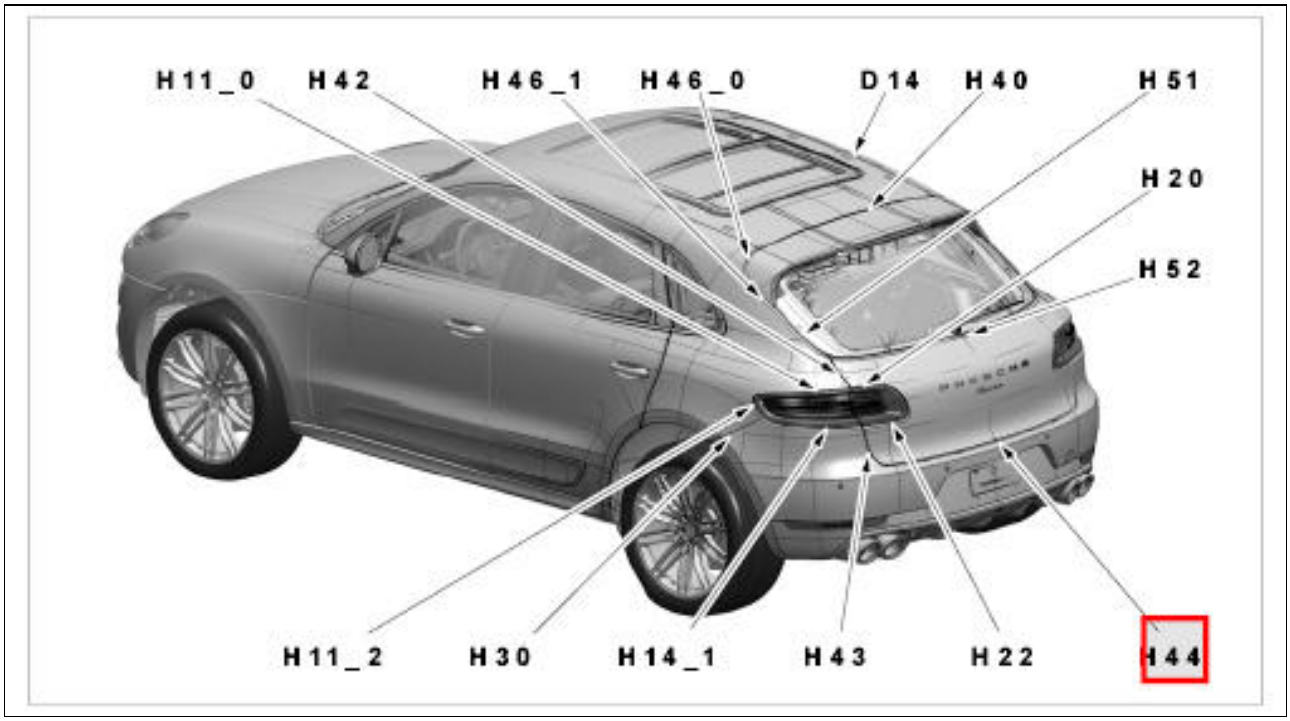

Courtesy of PORSCHE CARS NORTH AMERICA, INC.

H22 - → Gap dimension: 1 mm+/-0.8 mm

Fig 32: Identifying Vehicle Gap Dimensions (H43)

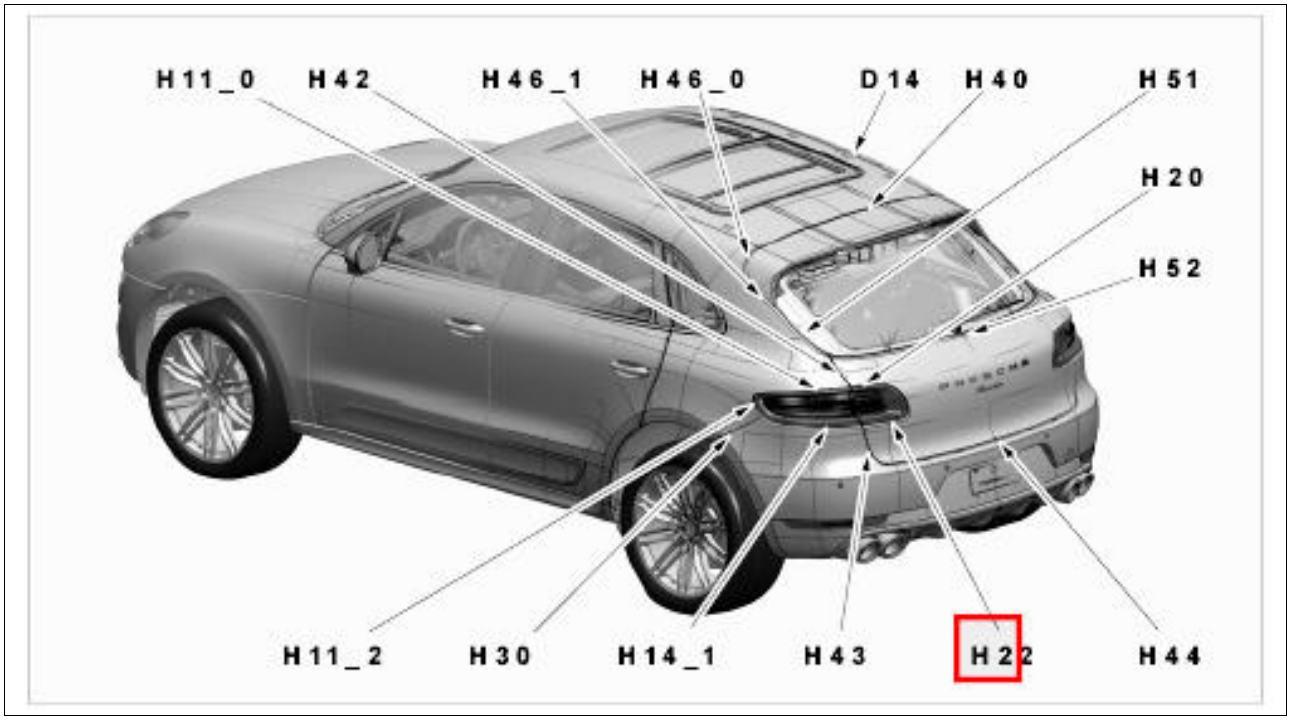

Courtesy of PORSCHE CARS NORTH AMERICA, INC.

H43 - → Gap dimension: 4 mm+0.7 mm-0.9 mm

Fig 33: Identifying Vehicle Gap Dimensions (H14)

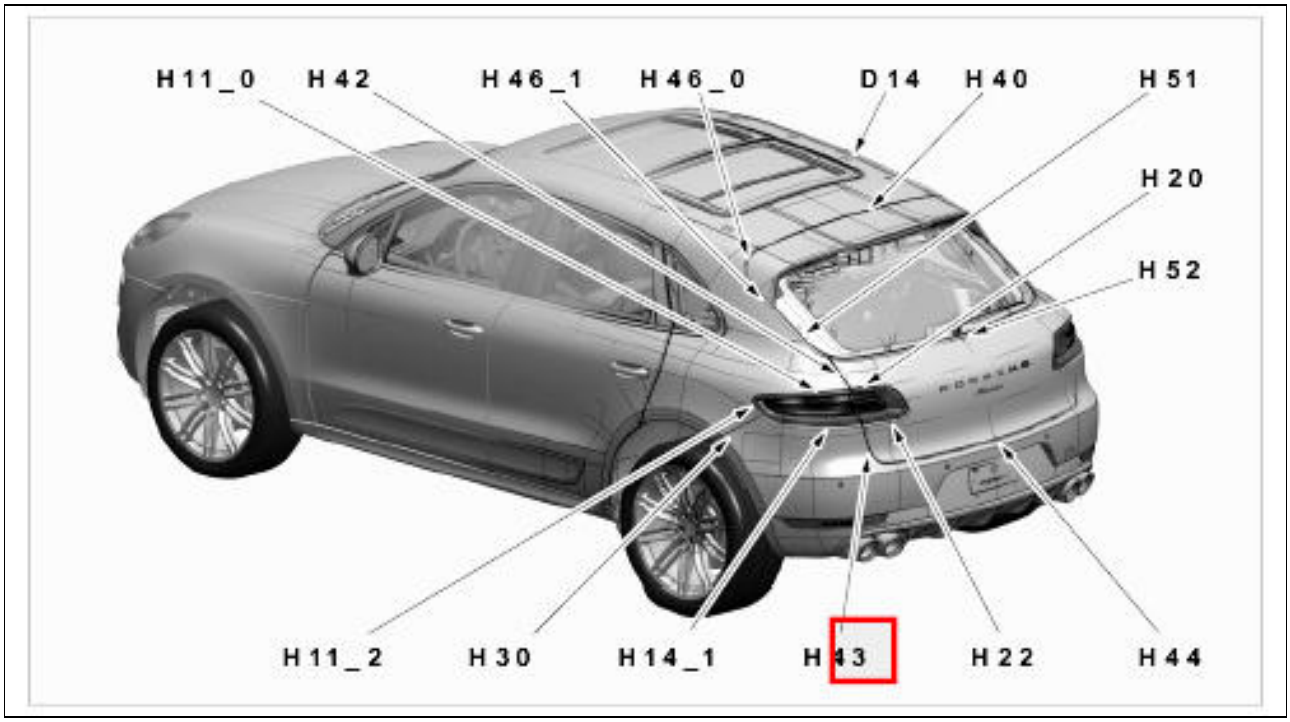

Courtesy of PORSCHE CARS NORTH AMERICA, INC.

H14_1 - → Gap dimension: 1 mm+/-0.8 mm

Fig 34: Identifying Vehicle Gap Dimensions (H30)

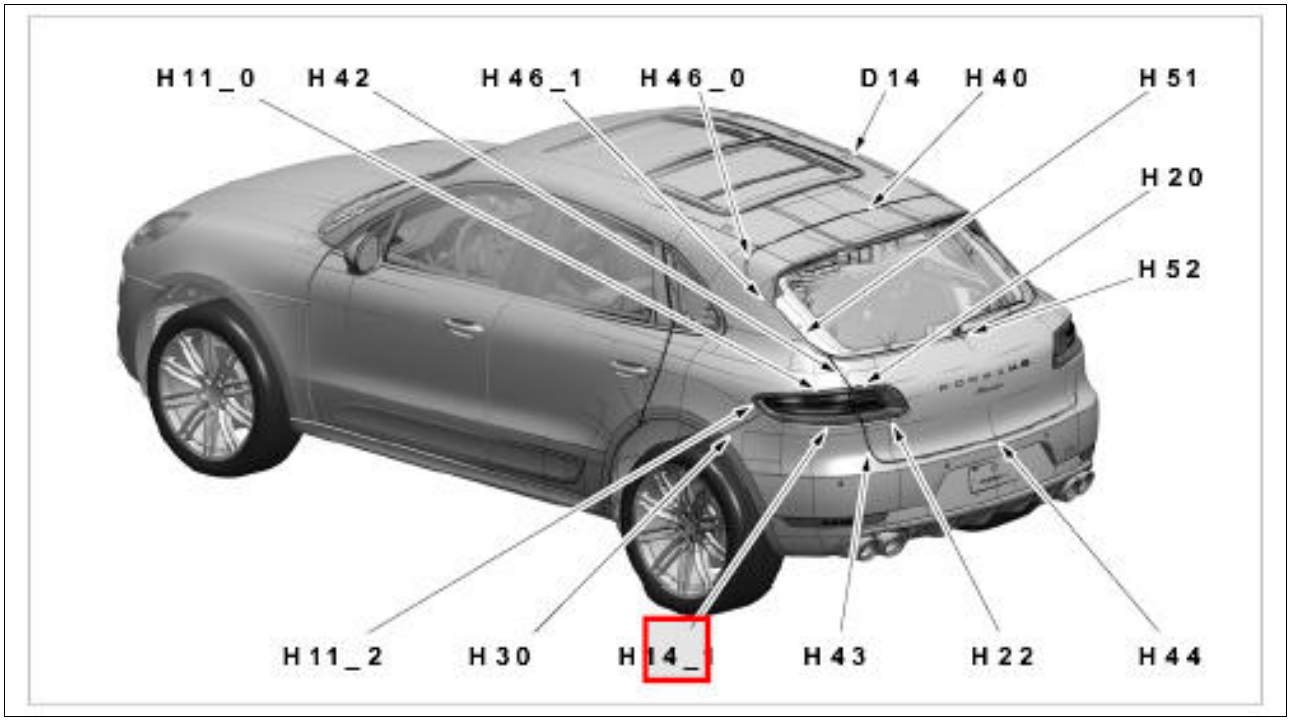

Courtesy of PORSCHE CARS NORTH AMERICA, INC.

H30 - → Gap dimension: 0 mm+0.5 mm-0 mm

Fig 35: Identifying Vehicle Gap Dimensions (H11)

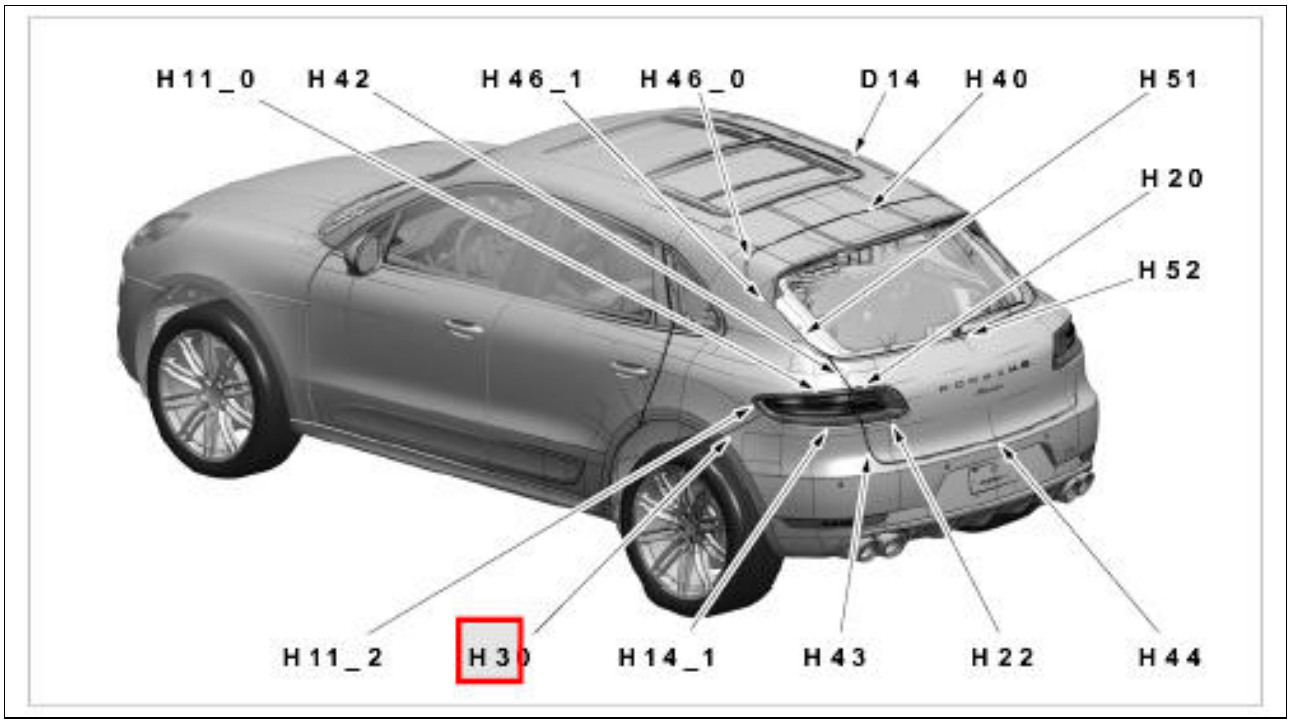

Courtesy of PORSCHE CARS NORTH AMERICA, INC.

H11_2 - → Gap dimension: 1 mm+/-0.8 mm

Fig 36: Identifying Vehicle Gap Dimensions

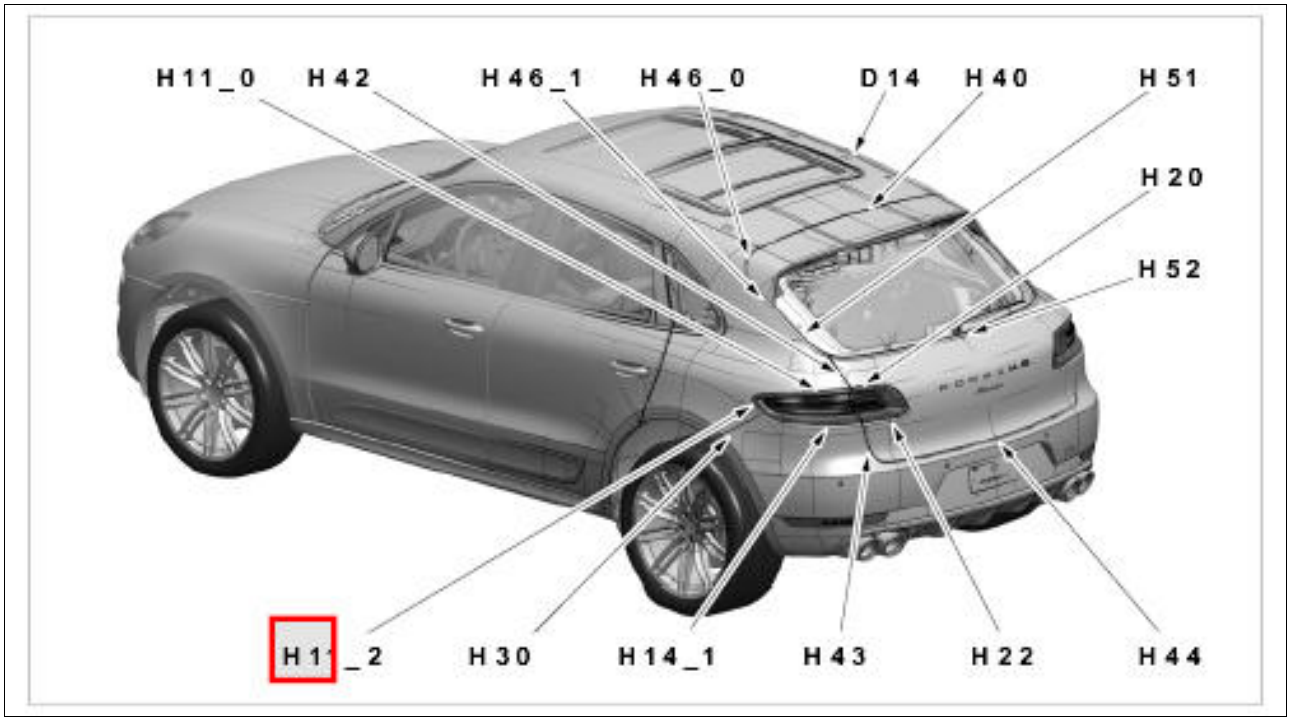

Courtesy of PORSCHE CARS NORTH AMERICA, INC.

Gap dimensions for body front section

Fig 37: Identifying Gap Dimensions For Body Front Section

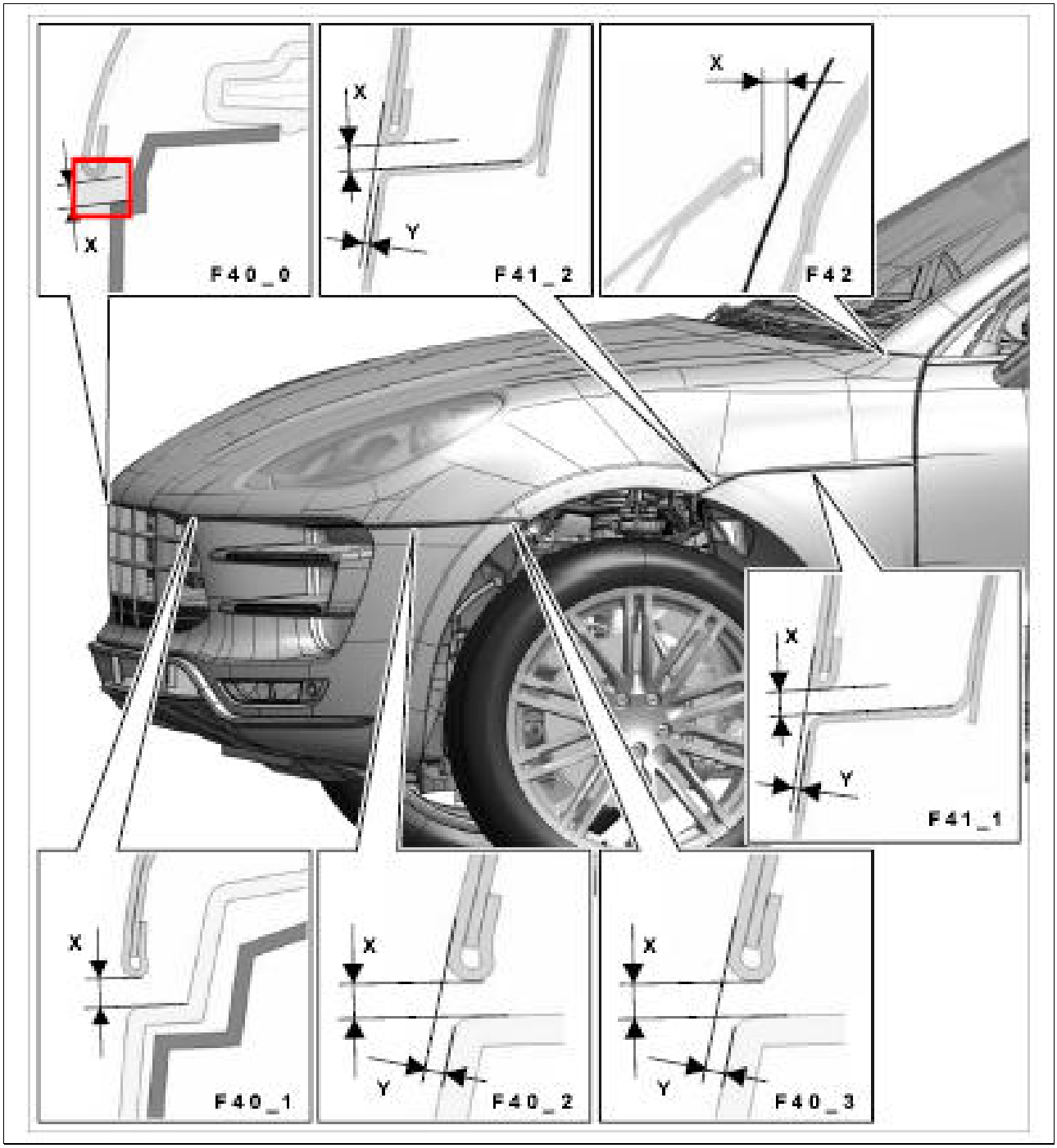

Courtesy of PORSCHE CARS NORTH AMERICA, INC.

F40_0 - → Gap dimension: 4.8 mm+1 mm-0.6 mm

Fig 38: Identifying Gap Dimensions For Body Front Section

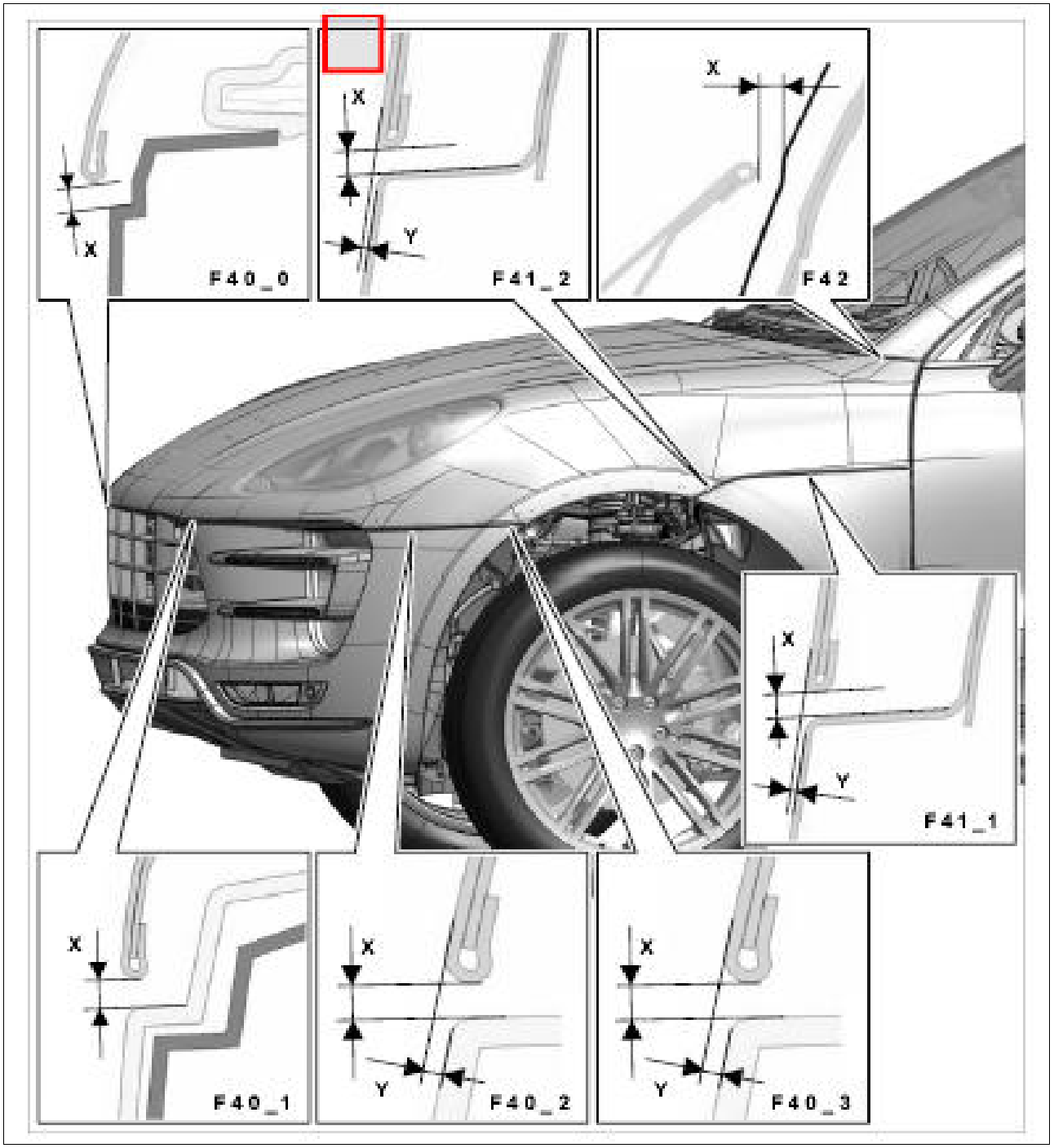

Courtesy of PORSCHE CARS NORTH AMERICA, INC.

F40_1 - → Gap dimension: 4.8 mm+1 mm-0.6 mm

Fig 39: Identifying Gap Dimensions For Body Front Section

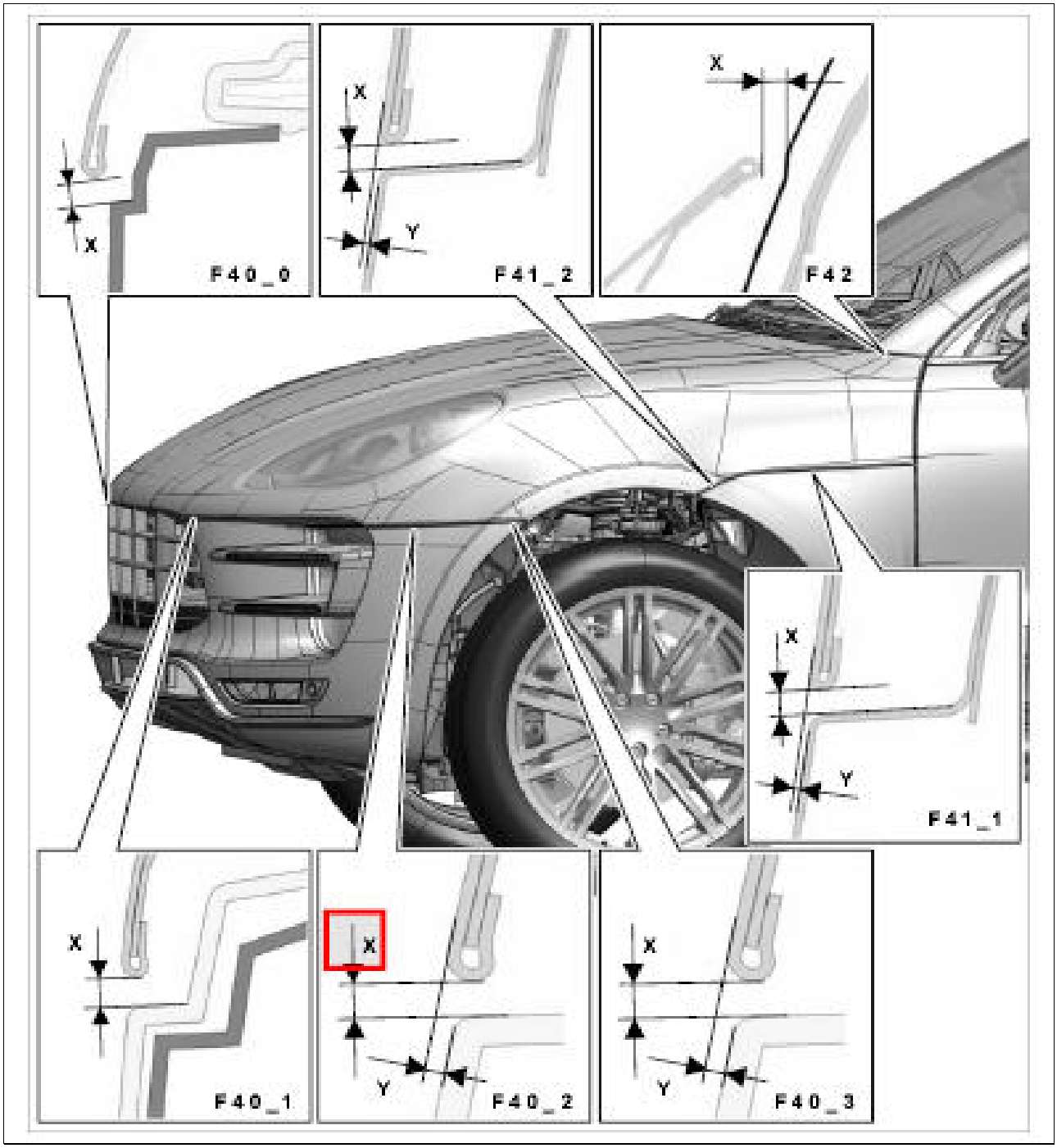

Courtesy of PORSCHE CARS NORTH AMERICA, INC.

F40_2 - → Gap dimension: 3.5 mm+/-0.5 mm

Fig 40: Identifying Gap Dimensions For Body Front Section

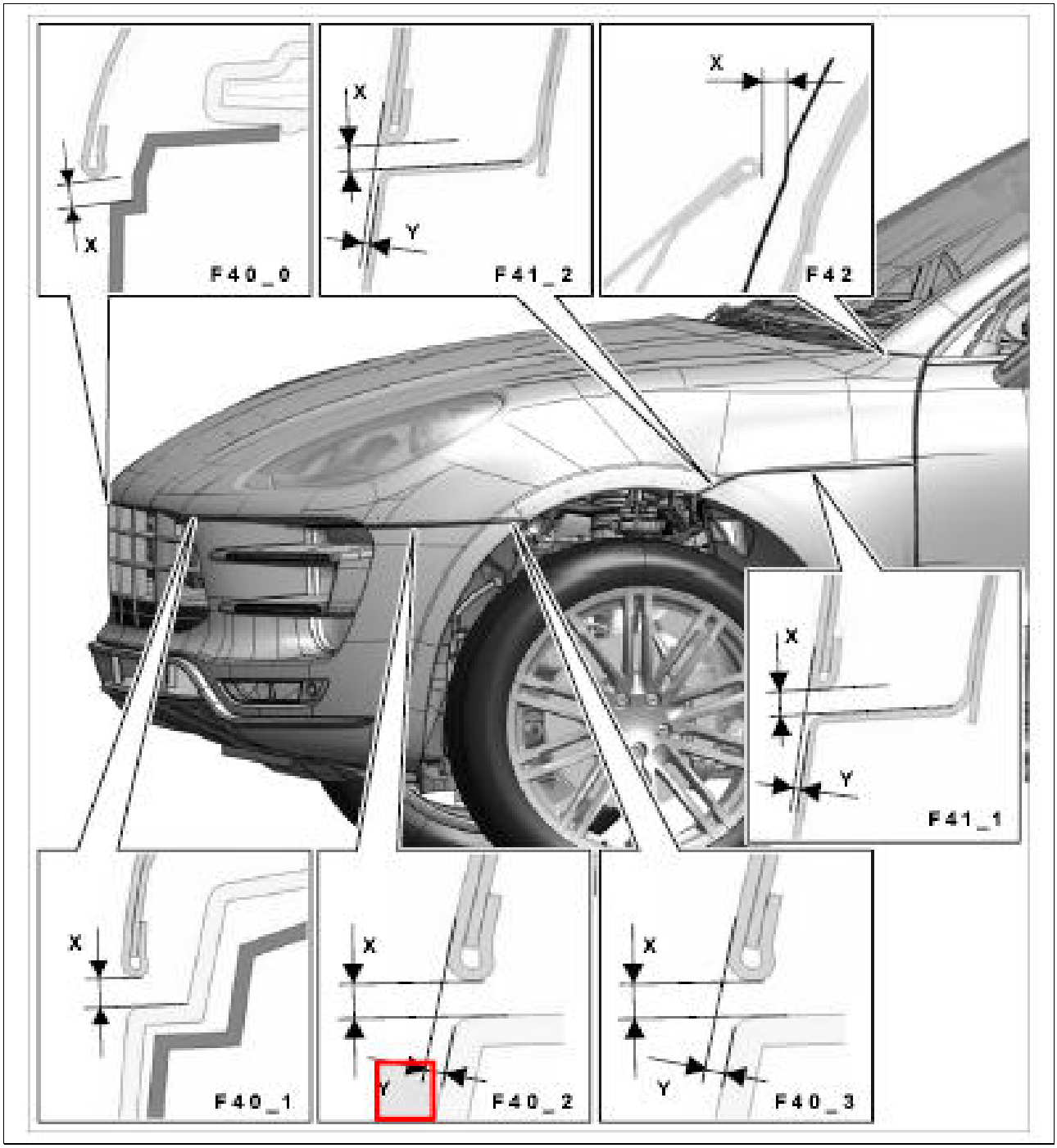

Courtesy of PORSCHE CARS NORTH AMERICA, INC.

F40_2 - → Gap dimension: 1.5 mm

Fig 41: Identifying Gap Dimensions For Body Front Section (F40)

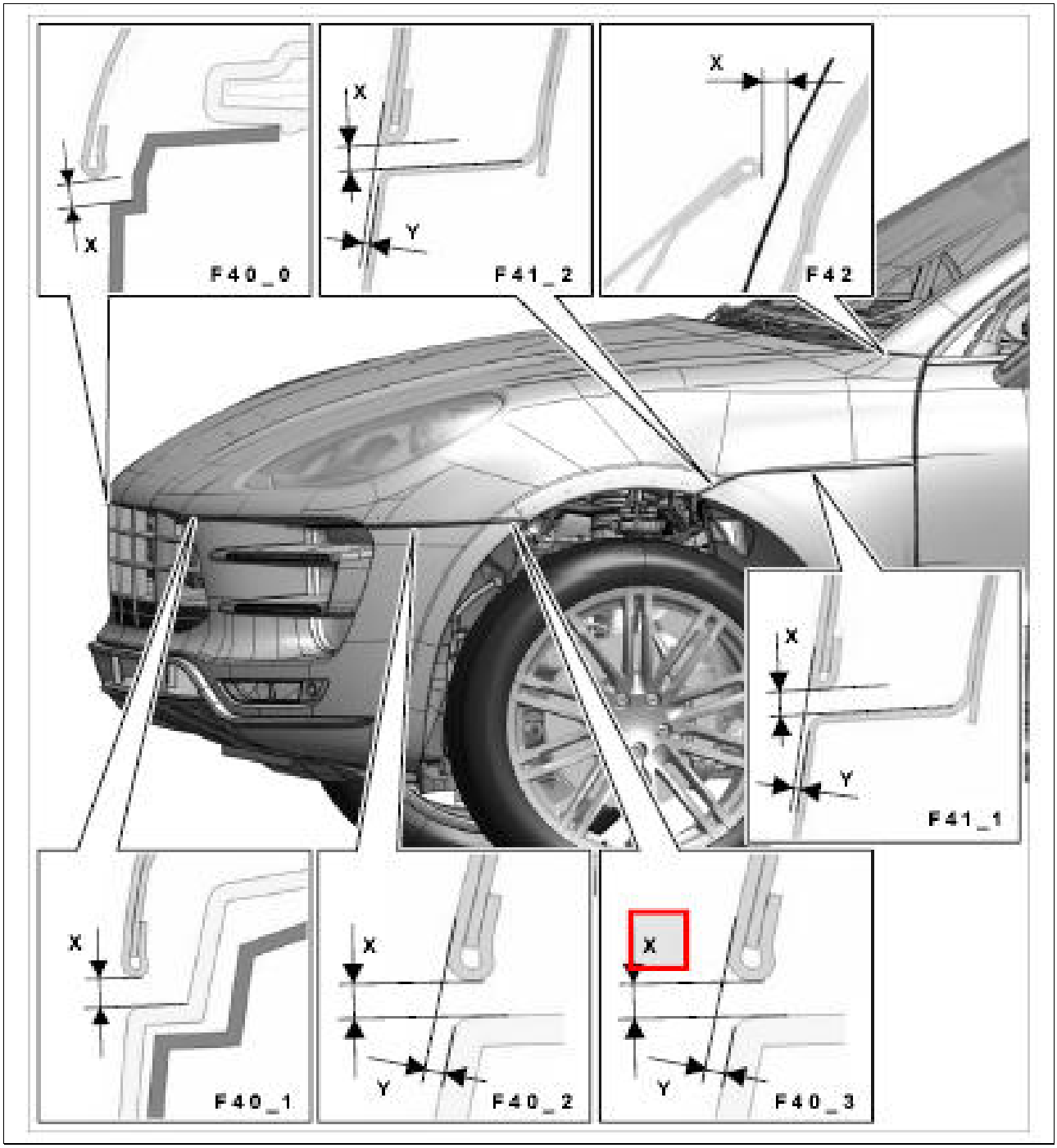

Courtesy of PORSCHE CARS NORTH AMERICA, INC.

F40_3 - → Gap dimension: 3.5 mm+/-0.5 mm

Fig 42: Identifying Gap Dimensions For Body Front Section

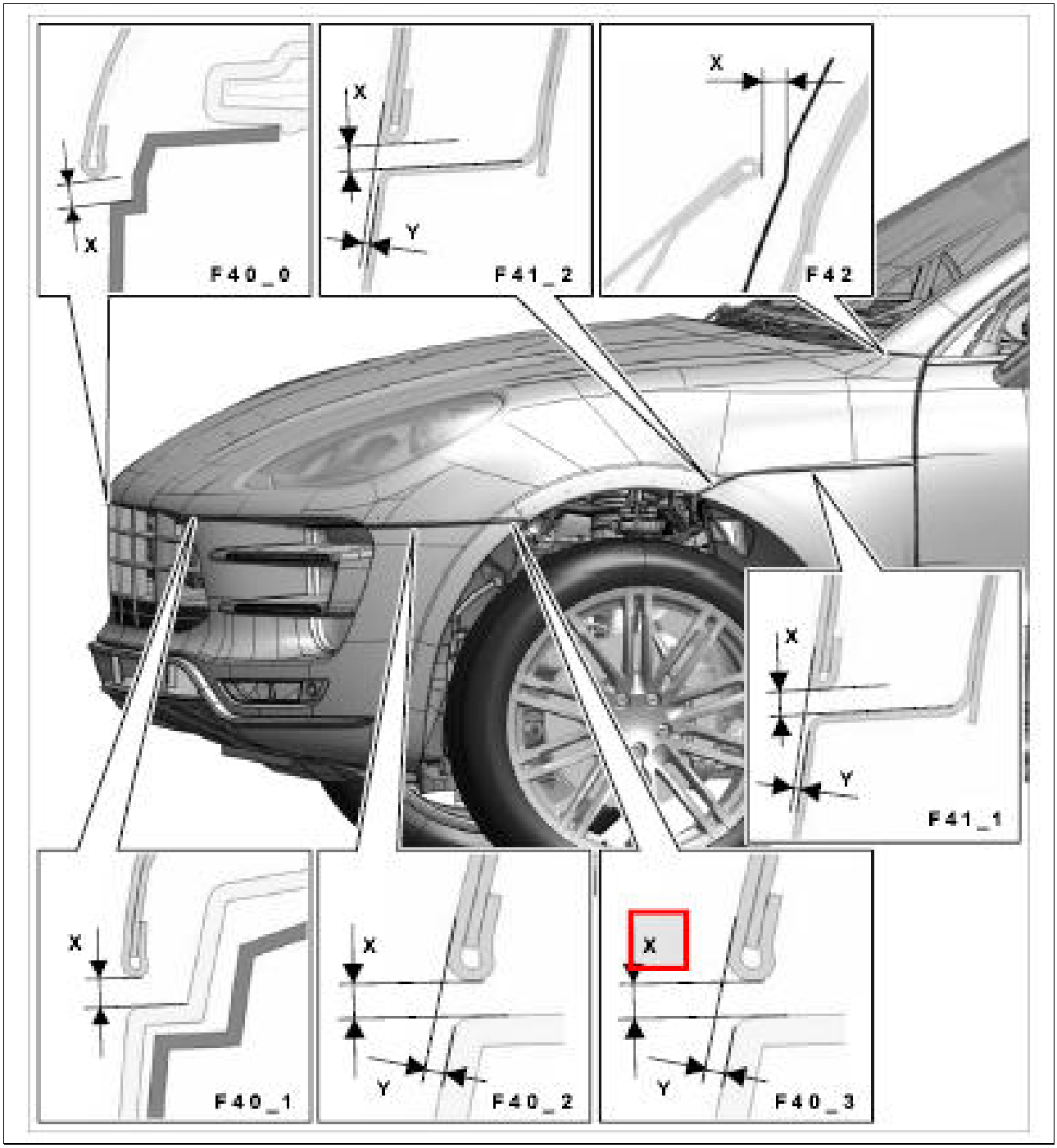

Courtesy of PORSCHE CARS NORTH AMERICA, INC.

F40_3 - → Gap dimension: 1 mm

Fig 43: Identifying Gap Dimensions For Body Front Section (F41)

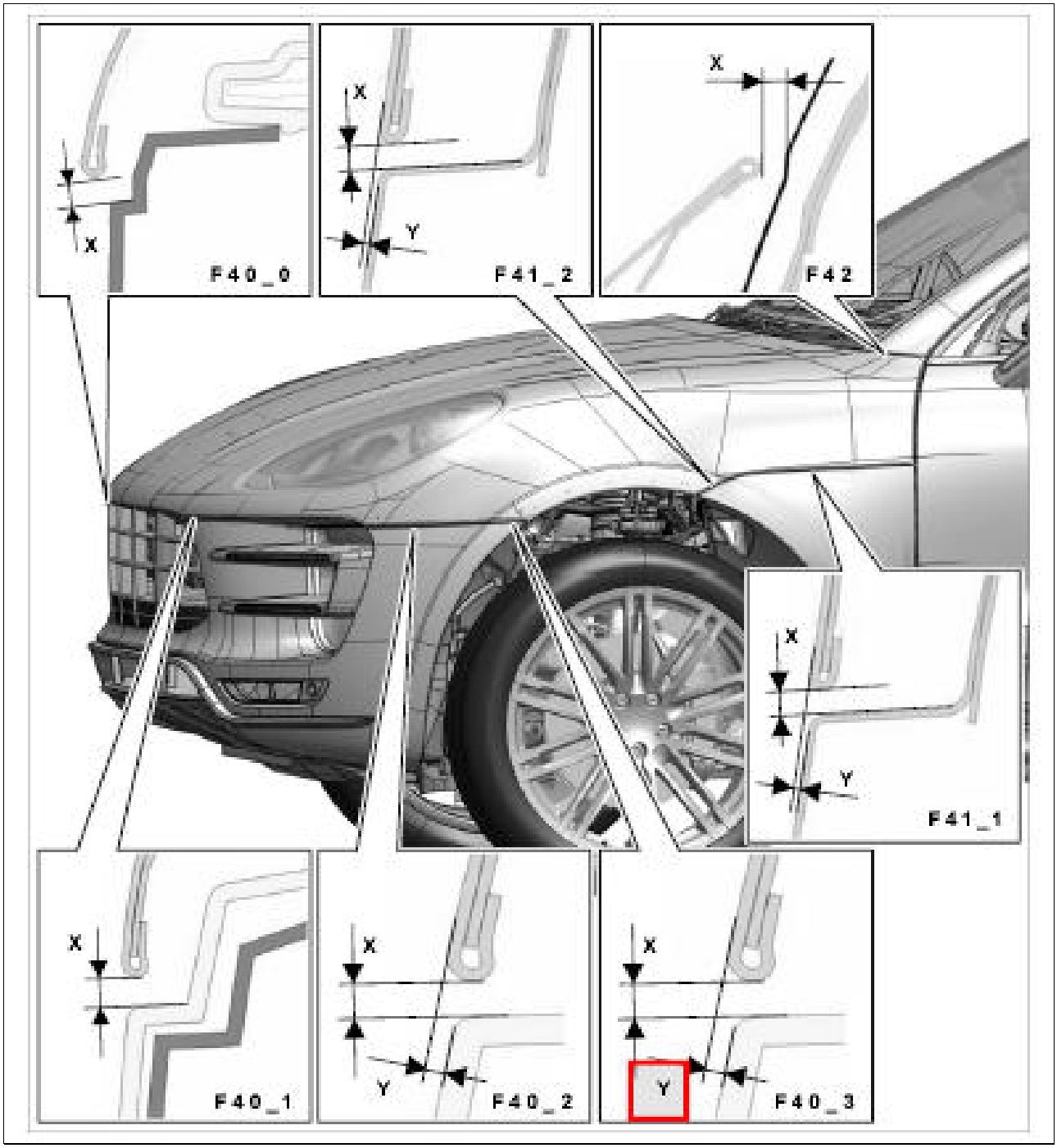

Courtesy of PORSCHE CARS NORTH AMERICA, INC.

F41_1 - → Gap dimension: 3.5 mm+/-0.5 mm

Fig 44: Identifying Gap Dimensions For Body Front Section

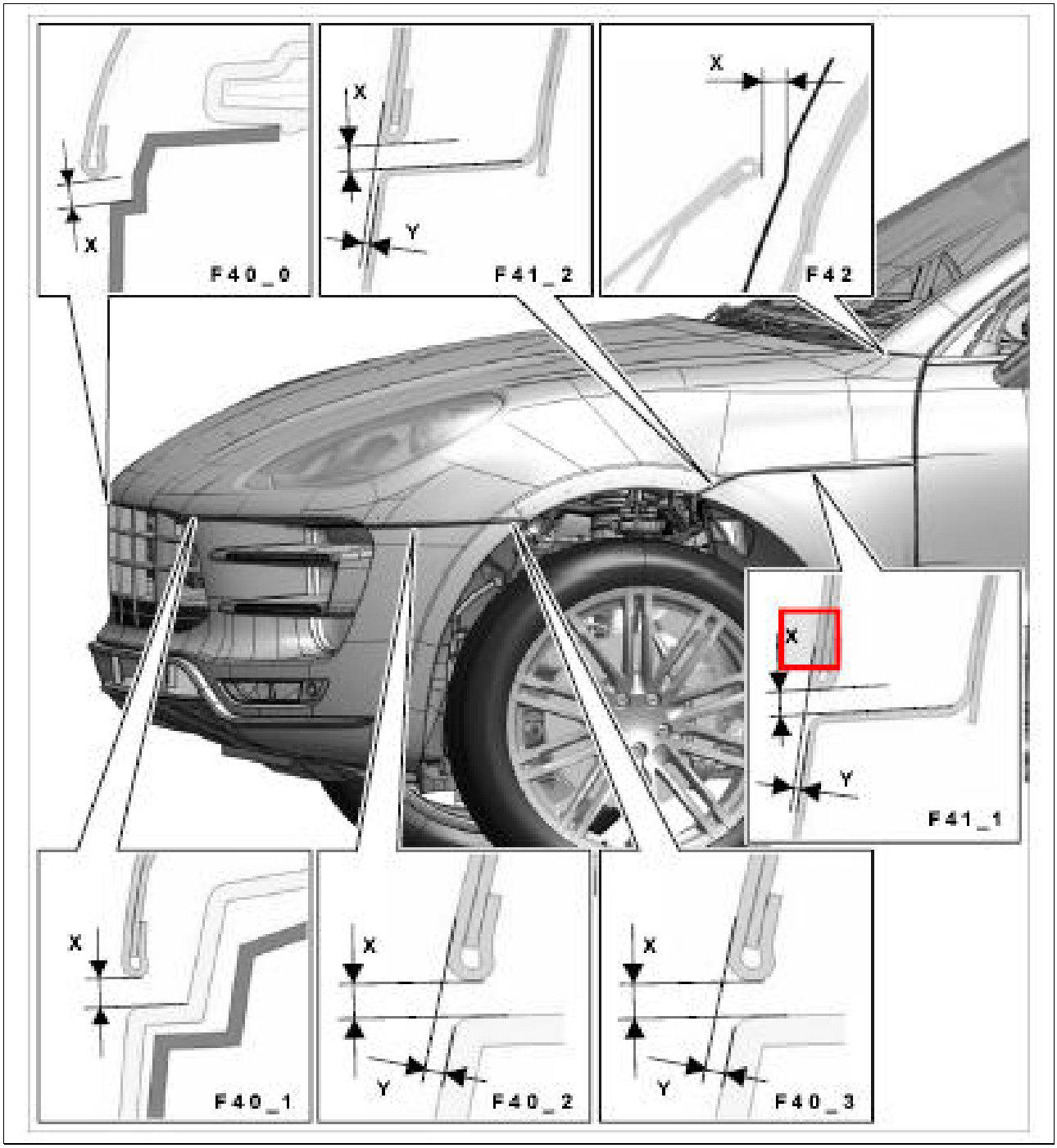

Courtesy of PORSCHE CARS NORTH AMERICA, INC.

F41_1 - → Gap dimension: 1 mm

Fig 45: Identifying Gap Dimensions For Body Front Section

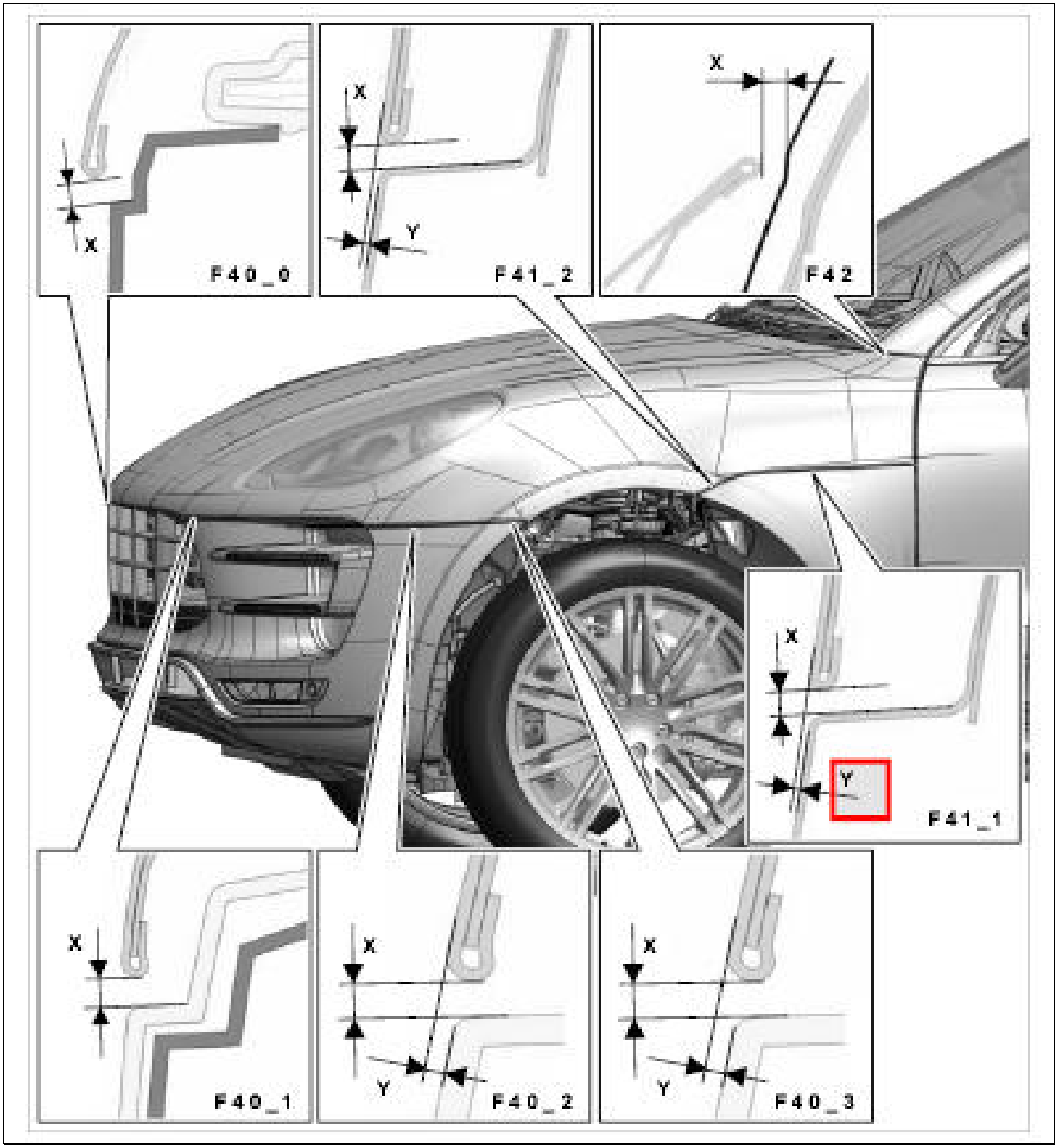

Courtesy of PORSCHE CARS NORTH AMERICA, INC.

F41_2 - → Gap dimension: 3.5 mm+/-0.5 mm

Fig 46: Identifying Gap Dimensions For Body Front Section

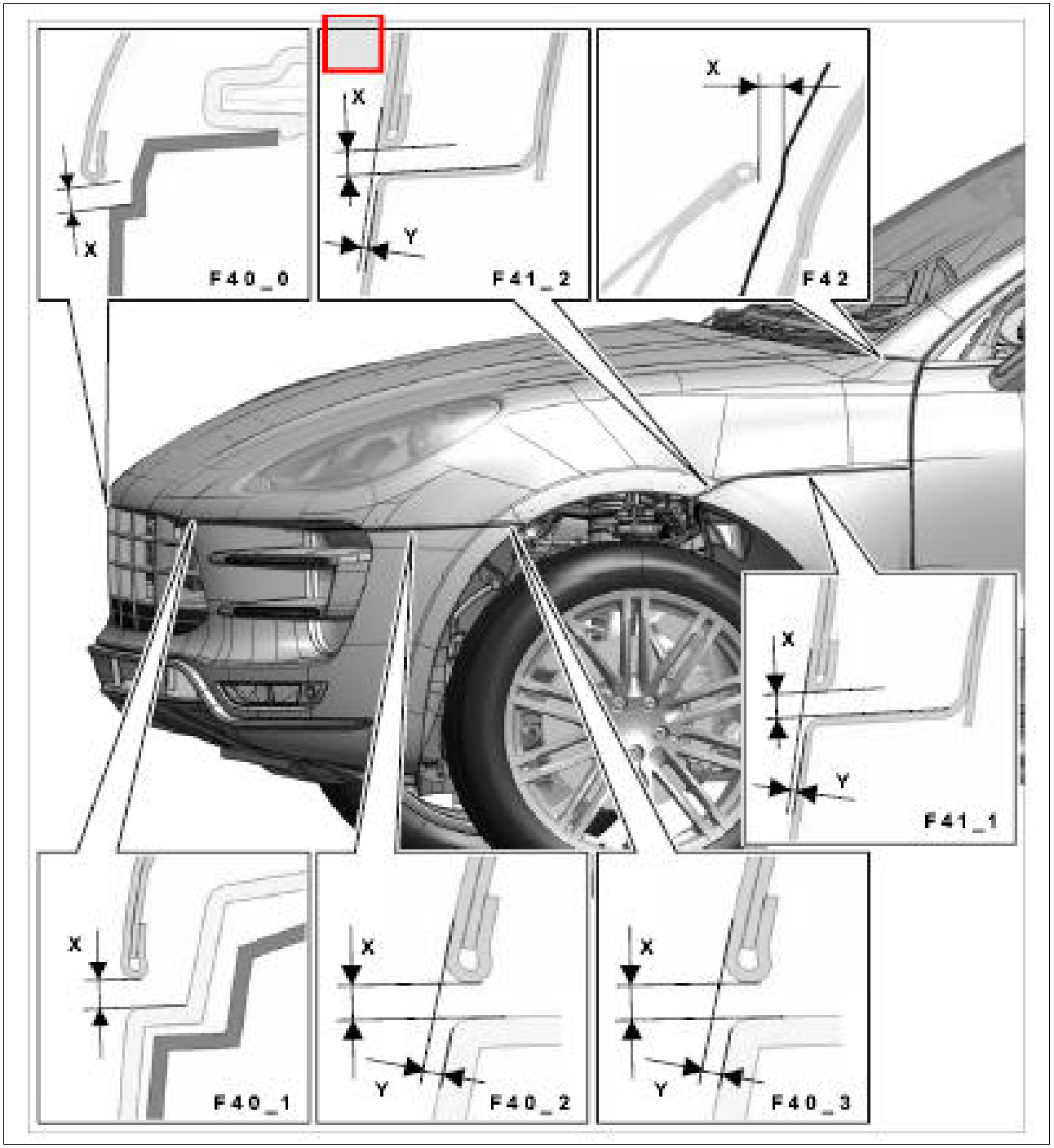

Courtesy of PORSCHE CARS NORTH AMERICA, INC.

F41_2 - → Gap dimension: 1.5 mm

Fig 47: Identifying Gap Dimensions For Body Front Section (F42)

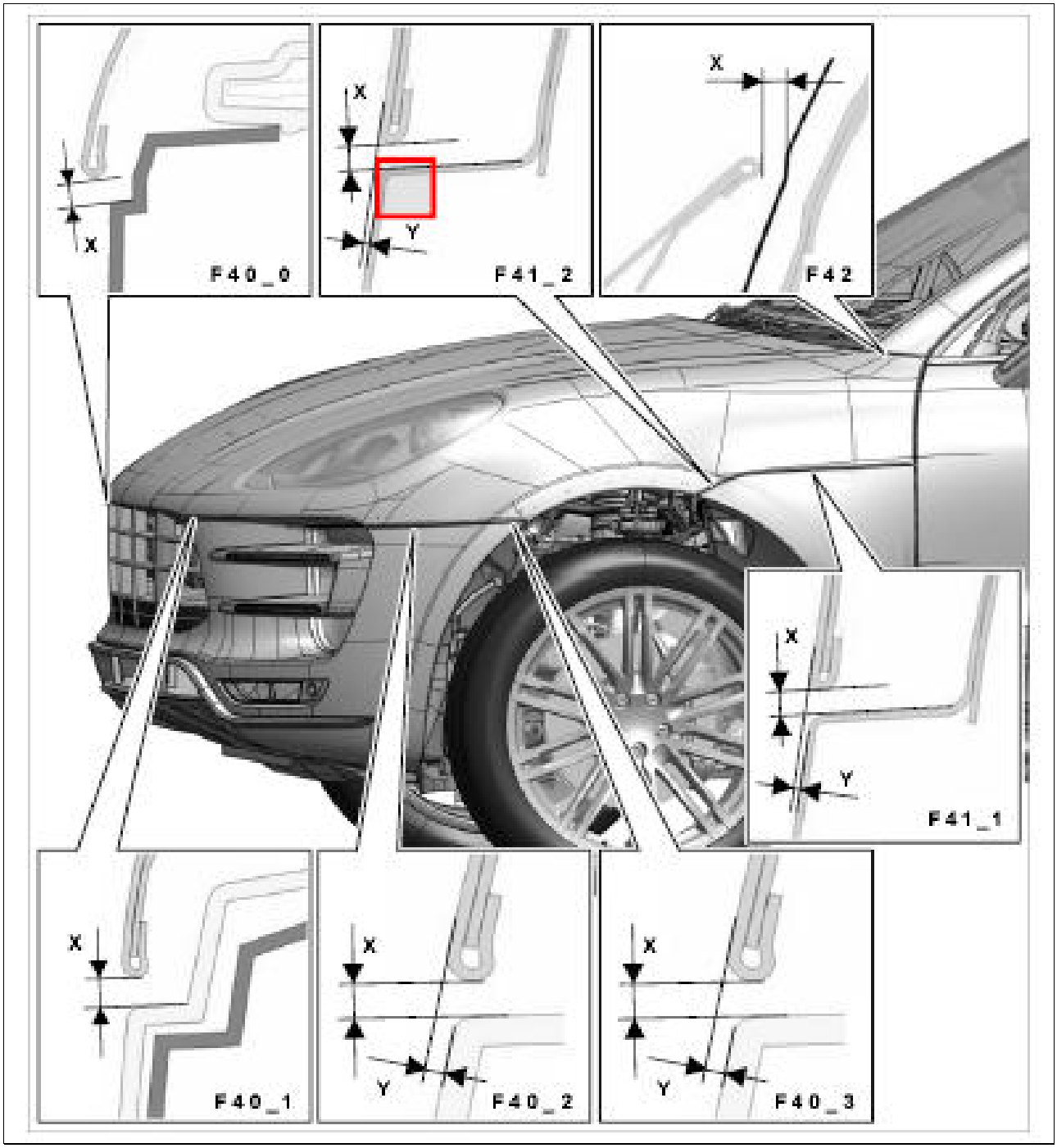

Courtesy of PORSCHE CARS NORTH AMERICA, INC.

F42 - → Gap dimension: 4.5 mm

Fig 48: Identifying Gap Dimensions For Body Front Section

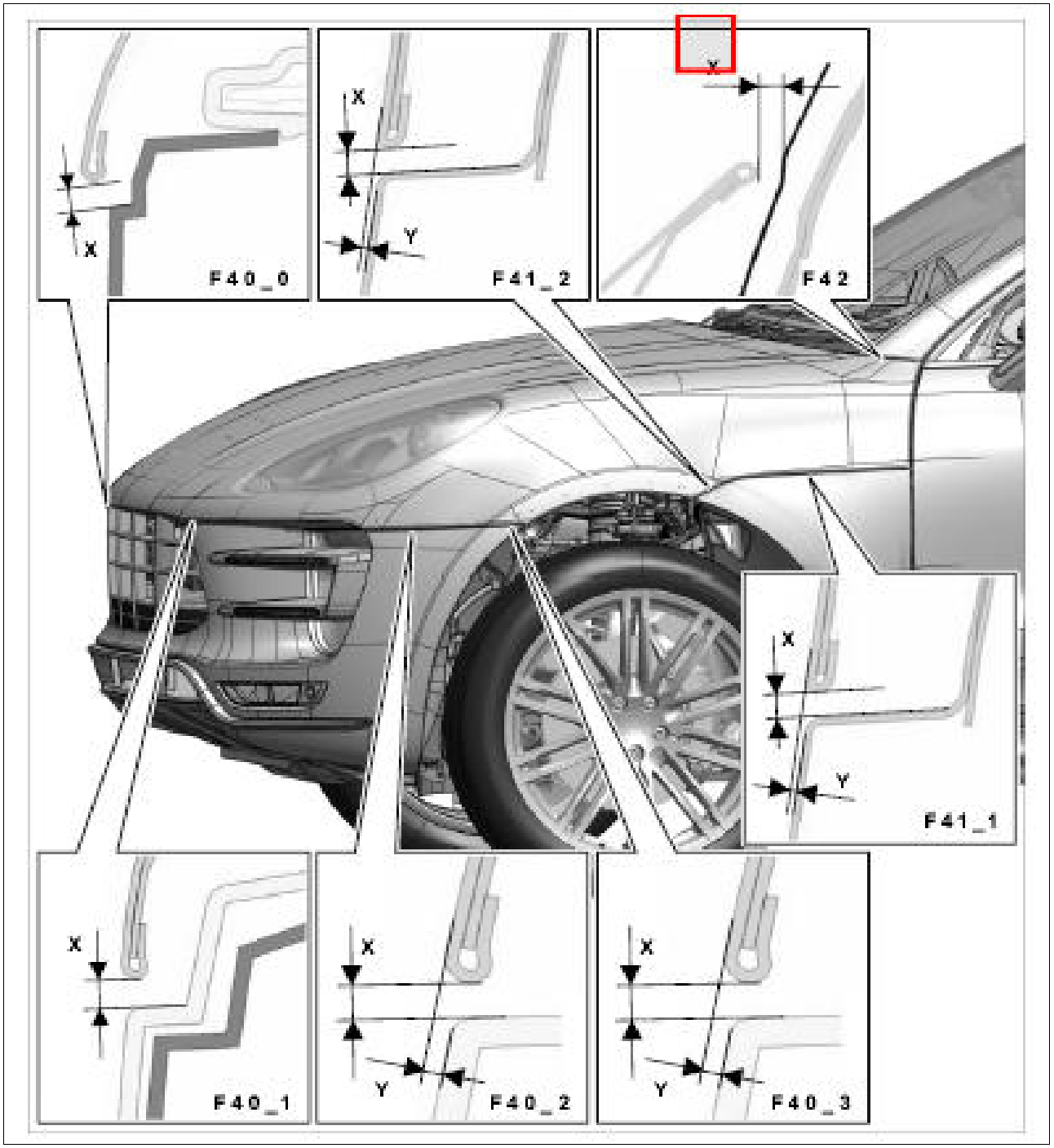

Courtesy of PORSCHE CARS NORTH AMERICA, INC.

Gap dimensions for windscreen

Fig 49: Identifying Gap Dimensions For Windscreen

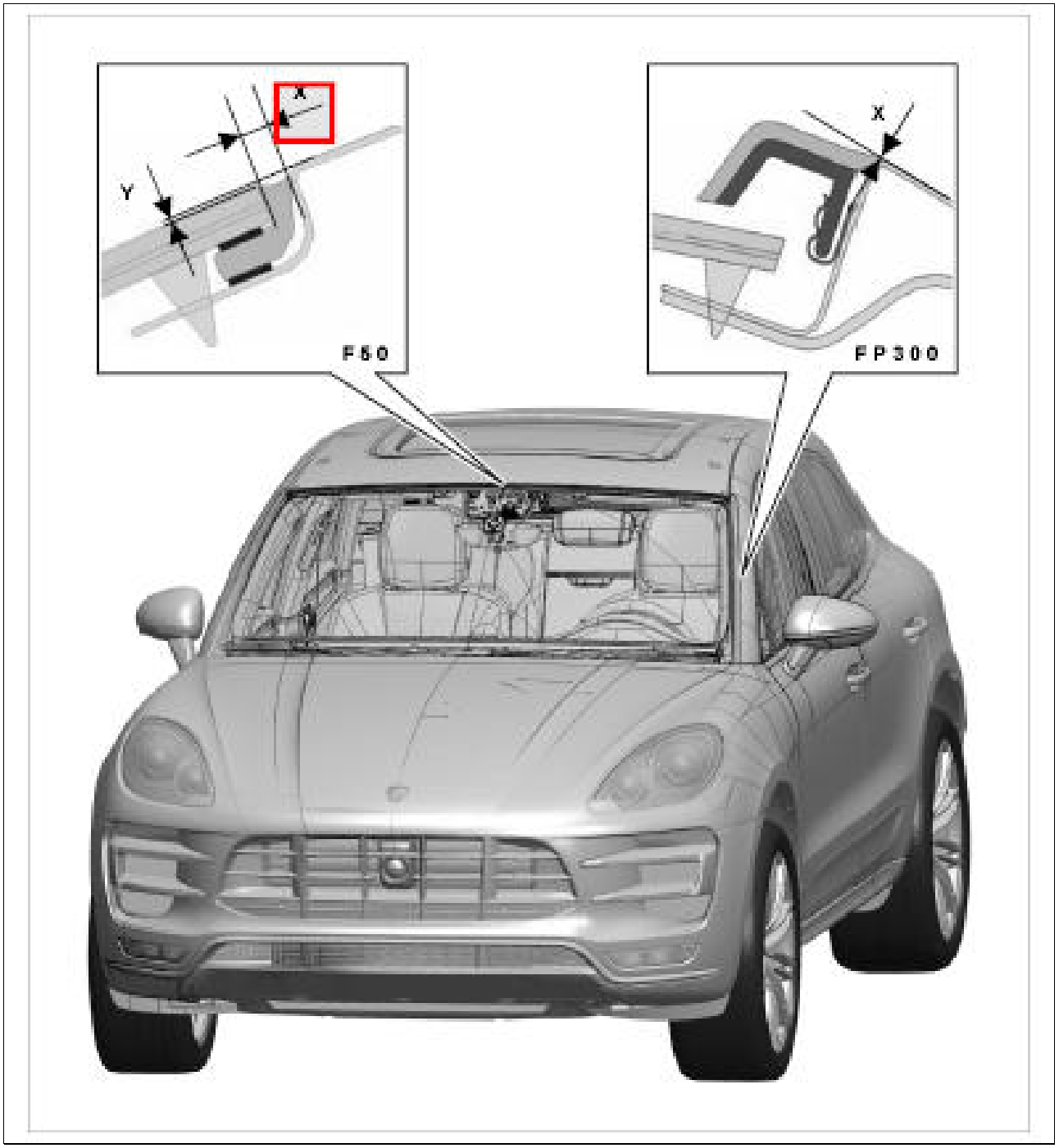

Courtesy of PORSCHE CARS NORTH AMERICA, INC.

F50 - → Gap dimension: 3.2 mm+/-0.5 mm

Fig 50: Identifying Gap Dimensions For Windscreen (F50)

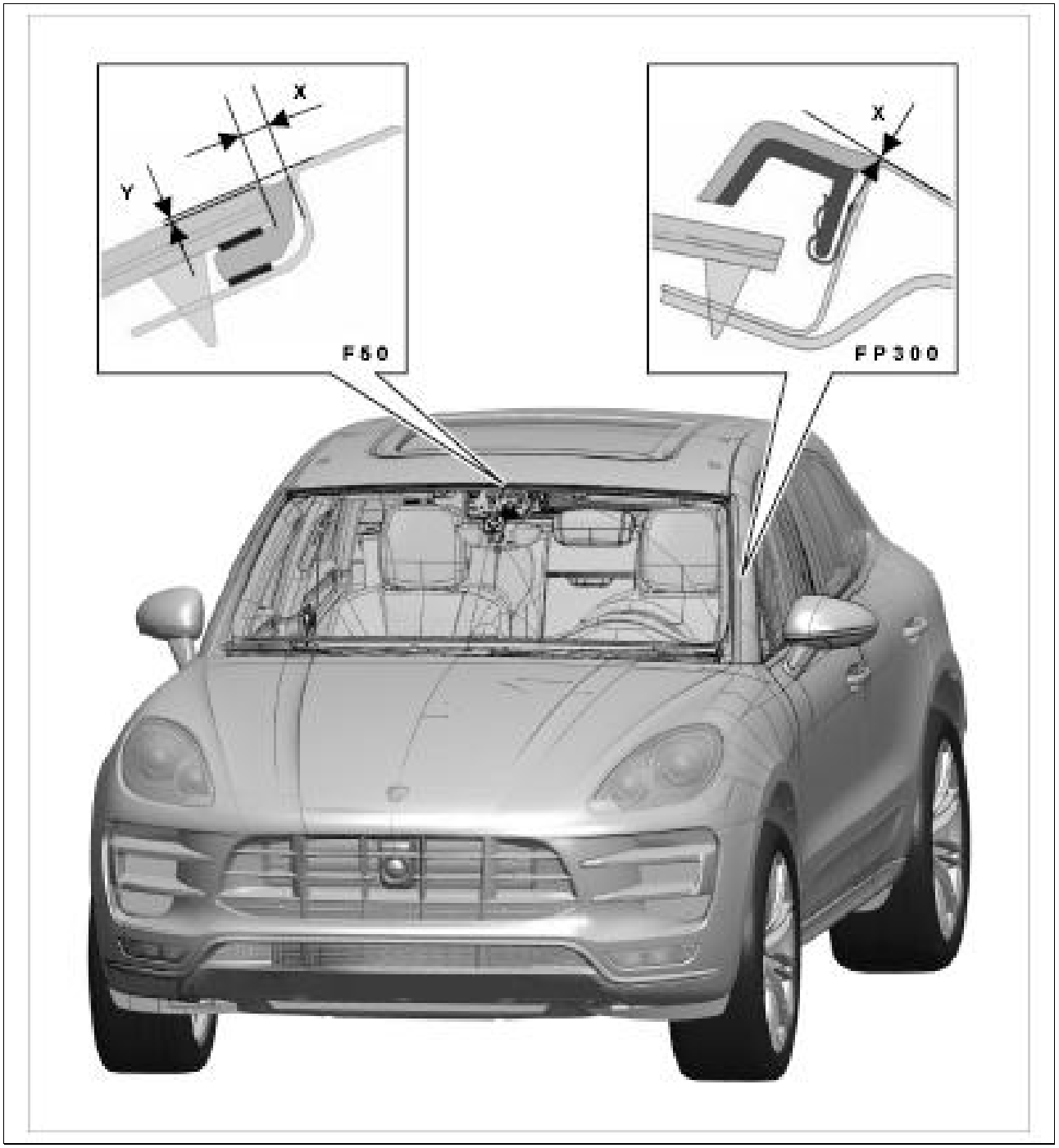

Courtesy of PORSCHE CARS NORTH AMERICA, INC.

F50 - → Gap dimension: 0.5 mm

Fig 51: Identifying Gap Dimensions For Windscreen (FP300)

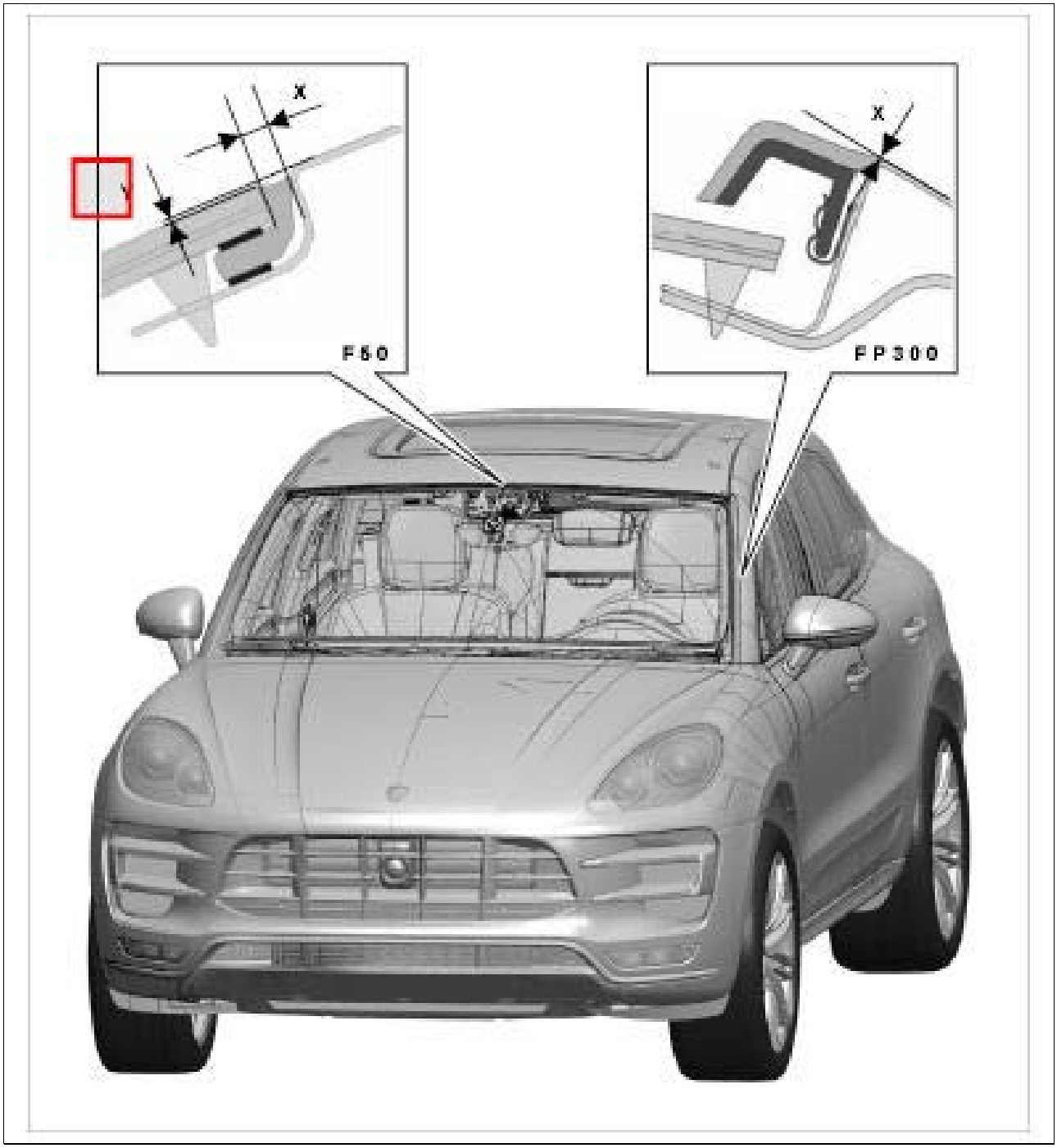

Courtesy of PORSCHE CARS NORTH AMERICA, INC.

FP300 - → Gap dimension: 0.5 mm

Fig 52: Identifying Gap Dimensions For Windscreen

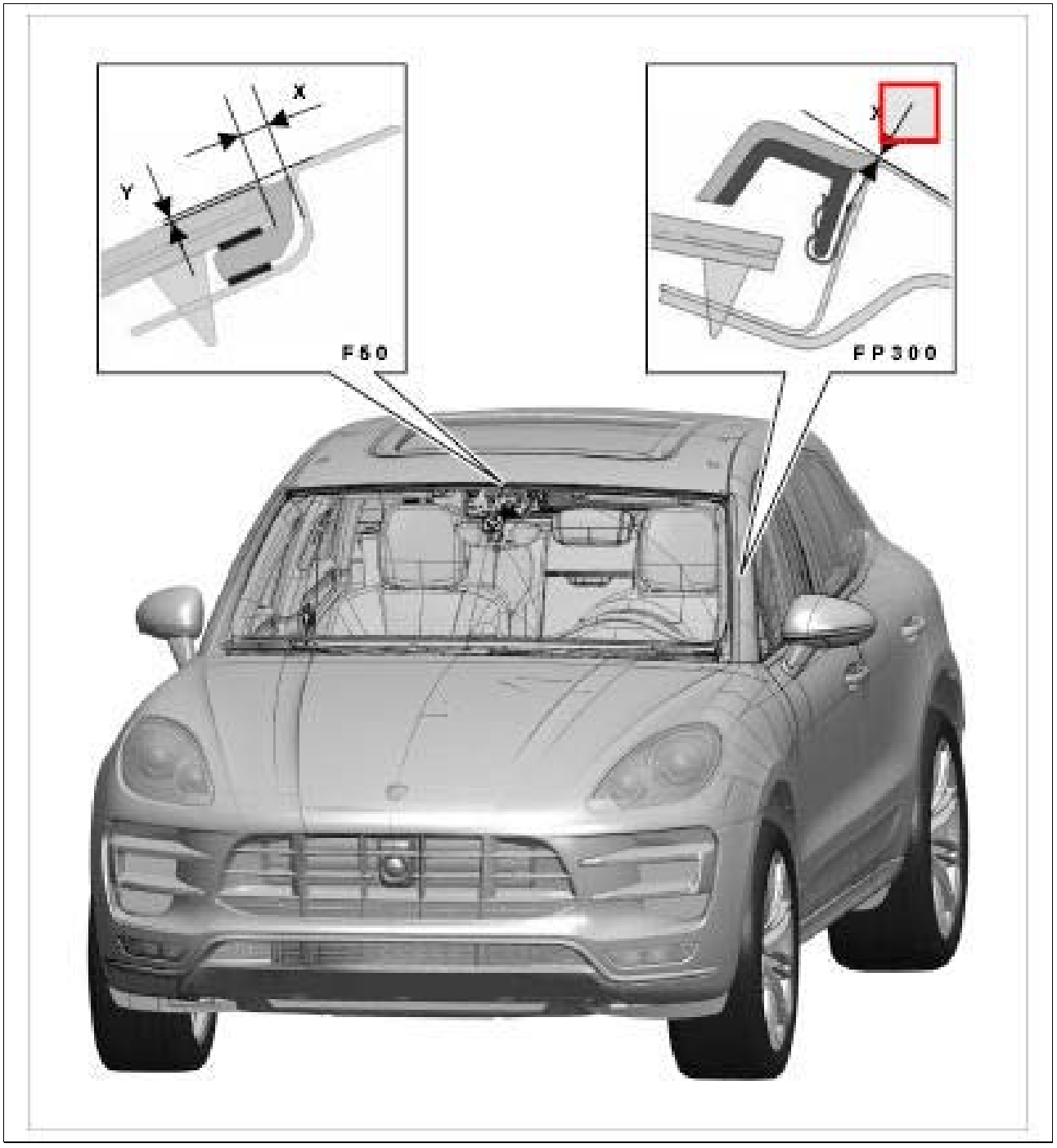

Courtesy of PORSCHE CARS NORTH AMERICA, INC.

Gap dimensions for roof and sliding roof

Fig 53: Identifying Gap Dimensions For Roof (D10)

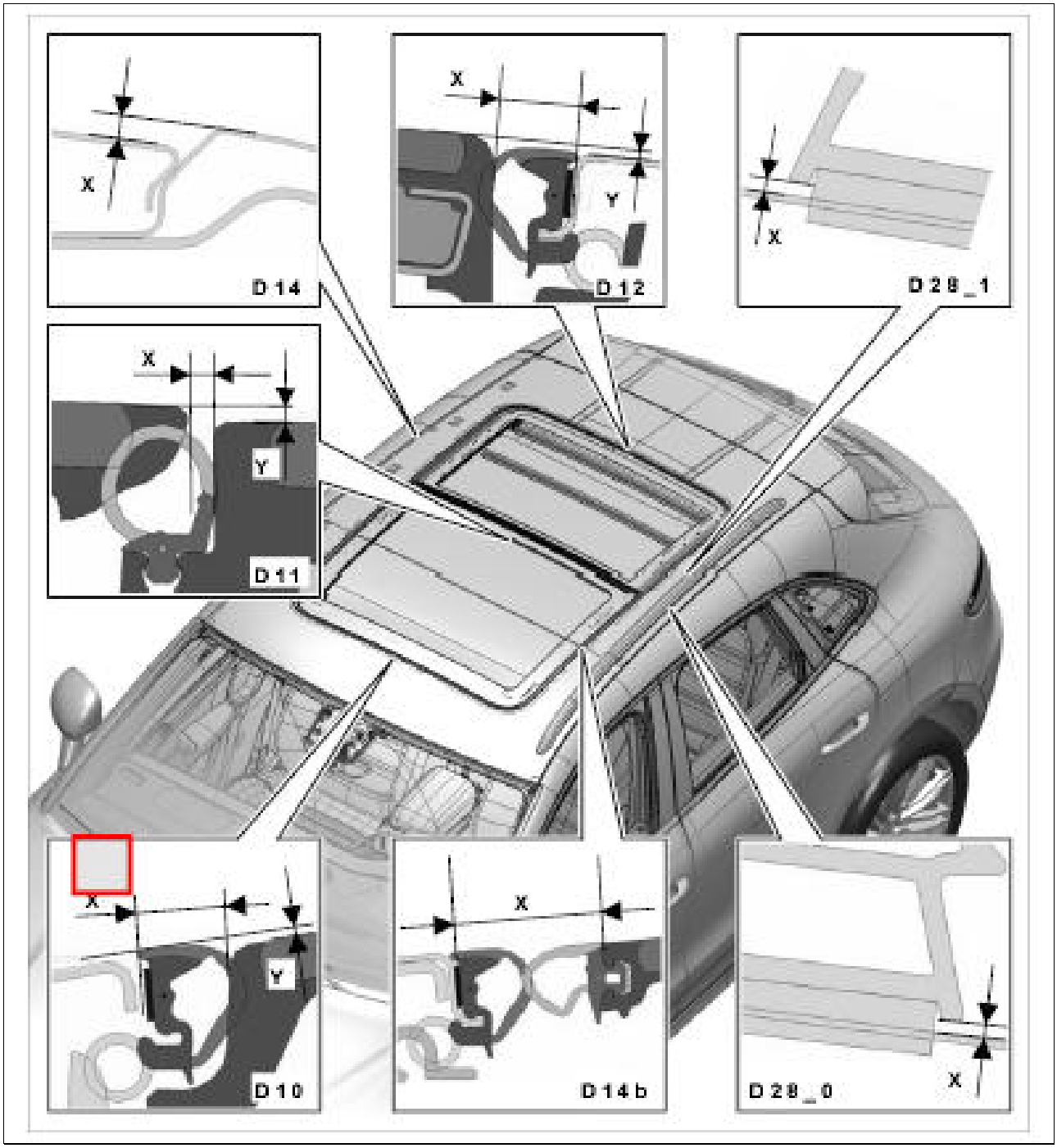

Courtesy of PORSCHE CARS NORTH AMERICA, INC.

D10 - → Gap dimension: 10 mm+/-1.2 mm

Fig 54: Identifying Gap Dimensions For Roof (D10)

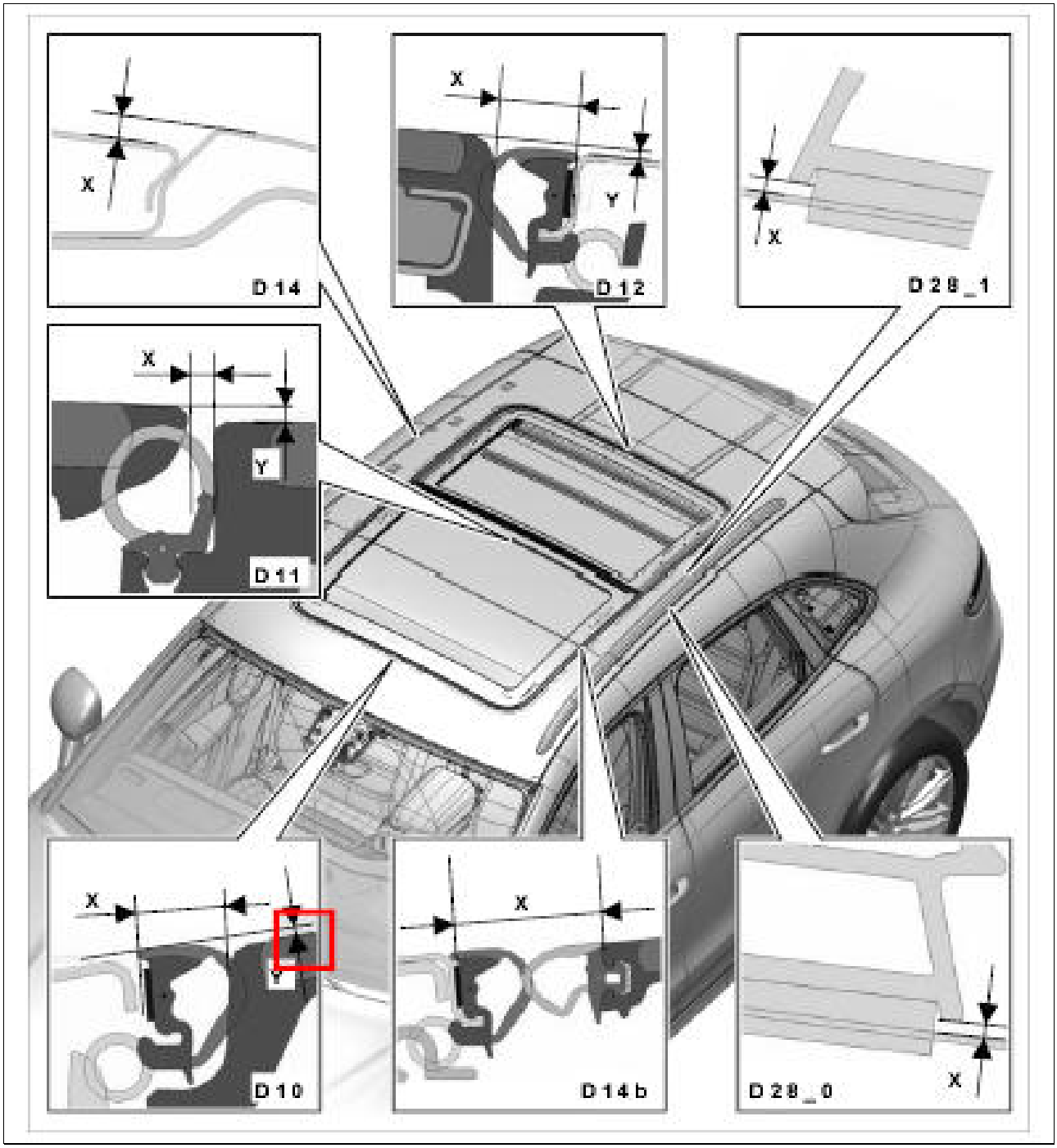

Courtesy of PORSCHE CARS NORTH AMERICA, INC.

D10 - → Gap dimension: 1 mm

Fig 55: Identifying Gap Dimensions For Roof (D11)

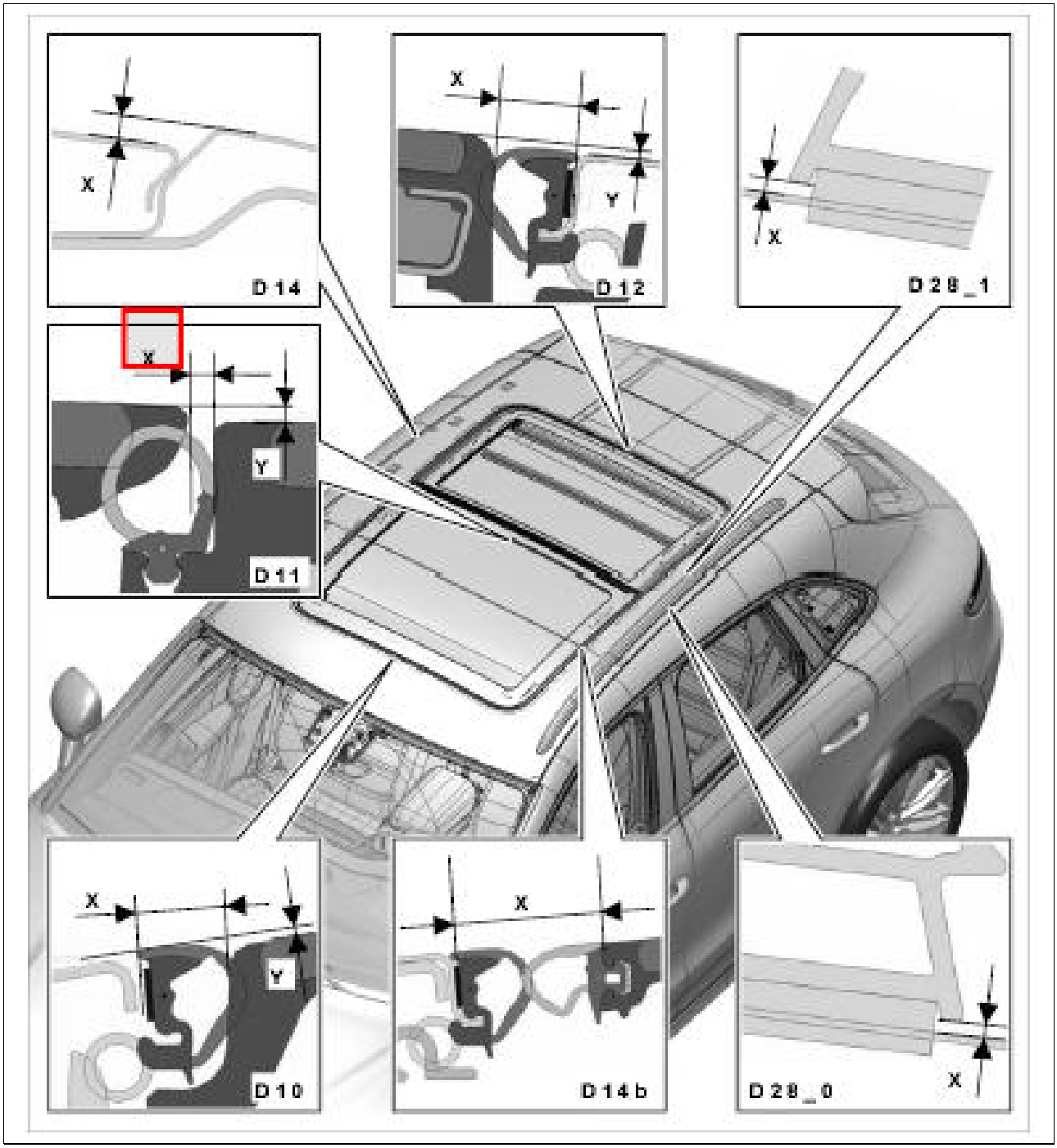

Courtesy of PORSCHE CARS NORTH AMERICA, INC.

D11 - → Gap dimension: 2 mm+/-0.5 mm

Fig 56: Identifying Gap Dimensions For Roof (D11)

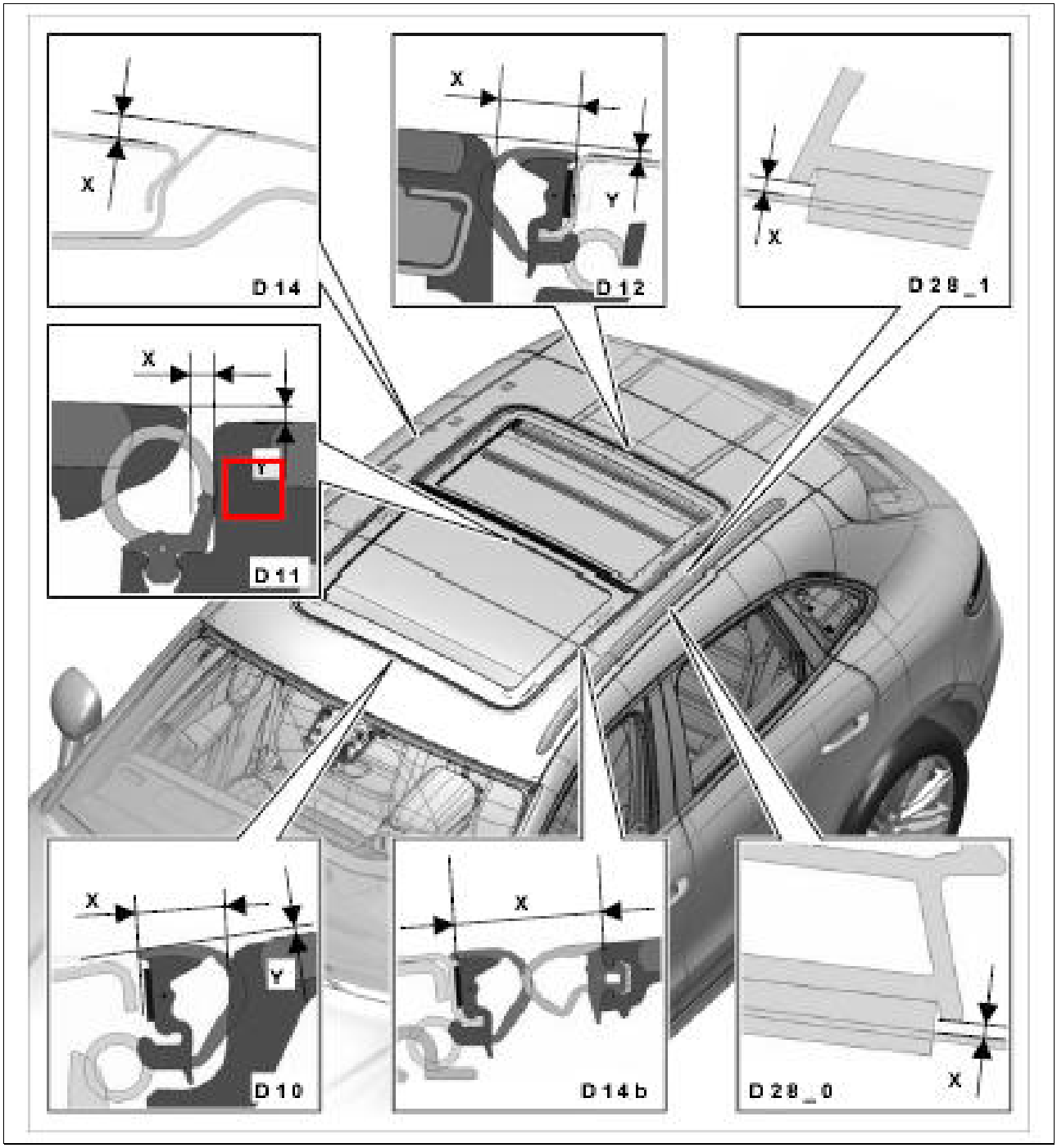

Courtesy of PORSCHE CARS NORTH AMERICA, INC.

D10 - → Gap dimension: 1 mm

Fig 57: Identifying Gap Dimensions For Roof (D12)

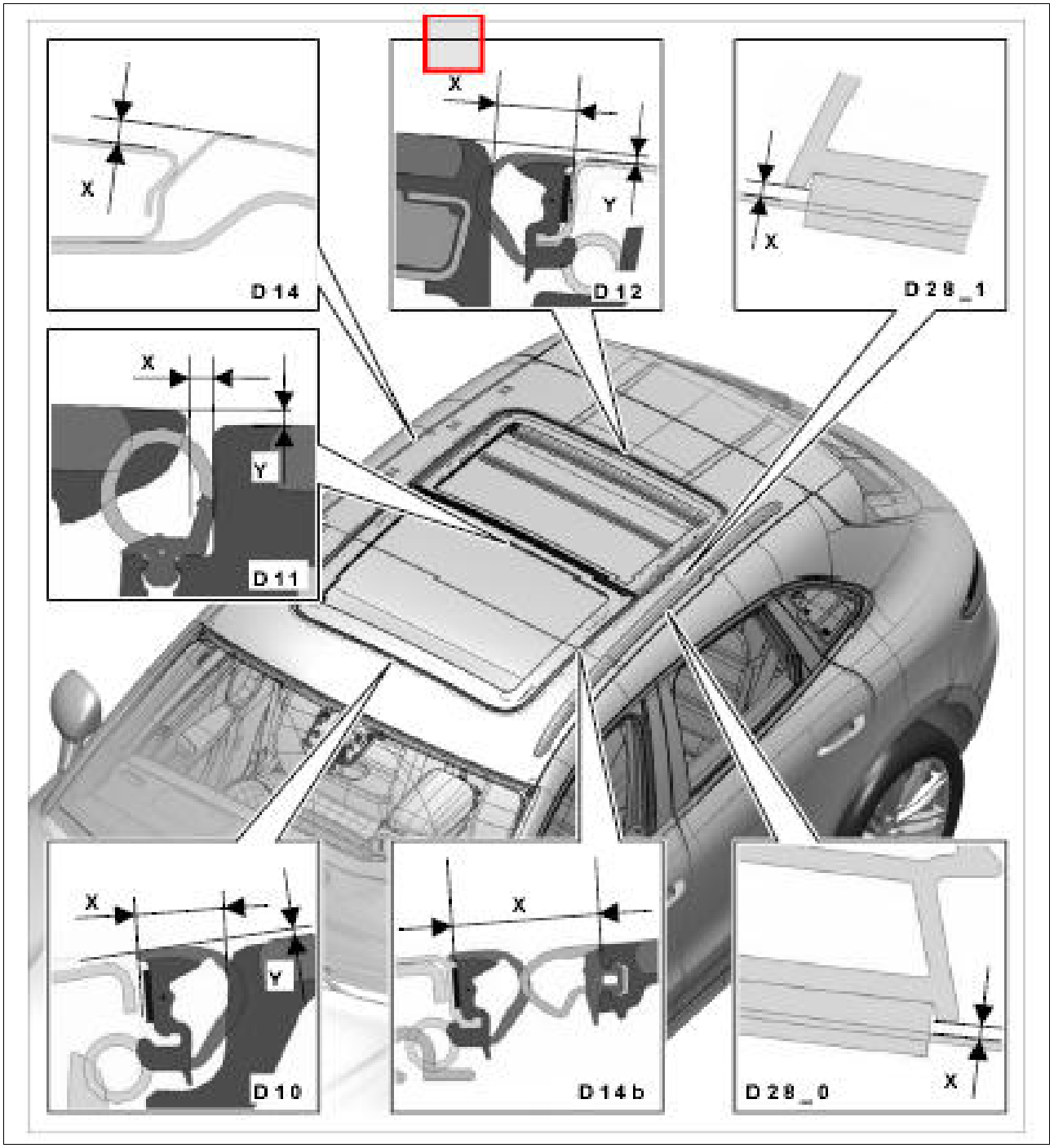

Courtesy of PORSCHE CARS NORTH AMERICA, INC.

D12 - → Gap dimension: 10 mm+/1.2 mm

Fig 58: Identifying Gap Dimensions For Roof (D12)

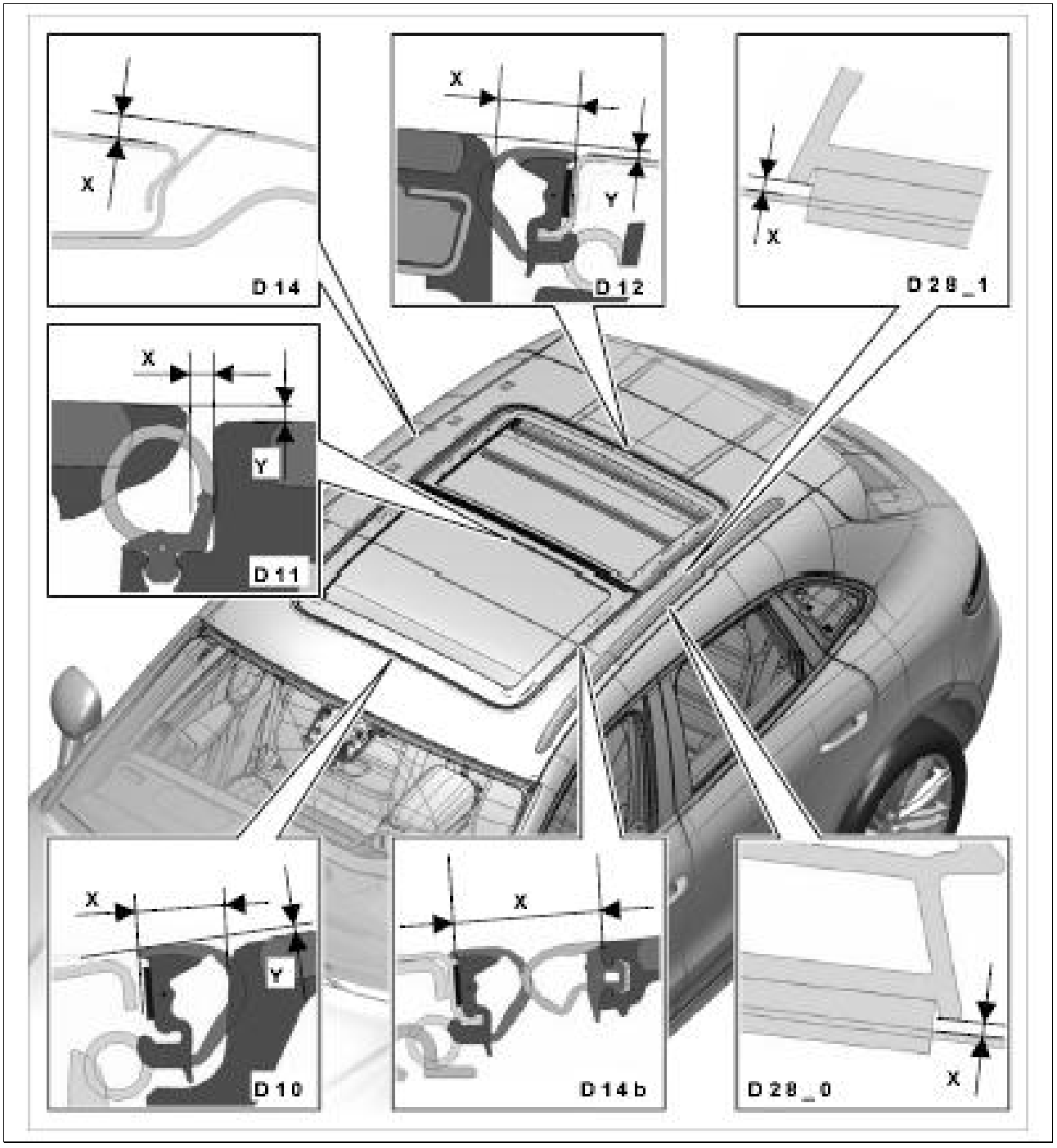

Courtesy of PORSCHE CARS NORTH AMERICA, INC.

D12 - → Gap dimension: 1 mm

Fig 59: Identifying Gap Dimensions For Roof (D14)

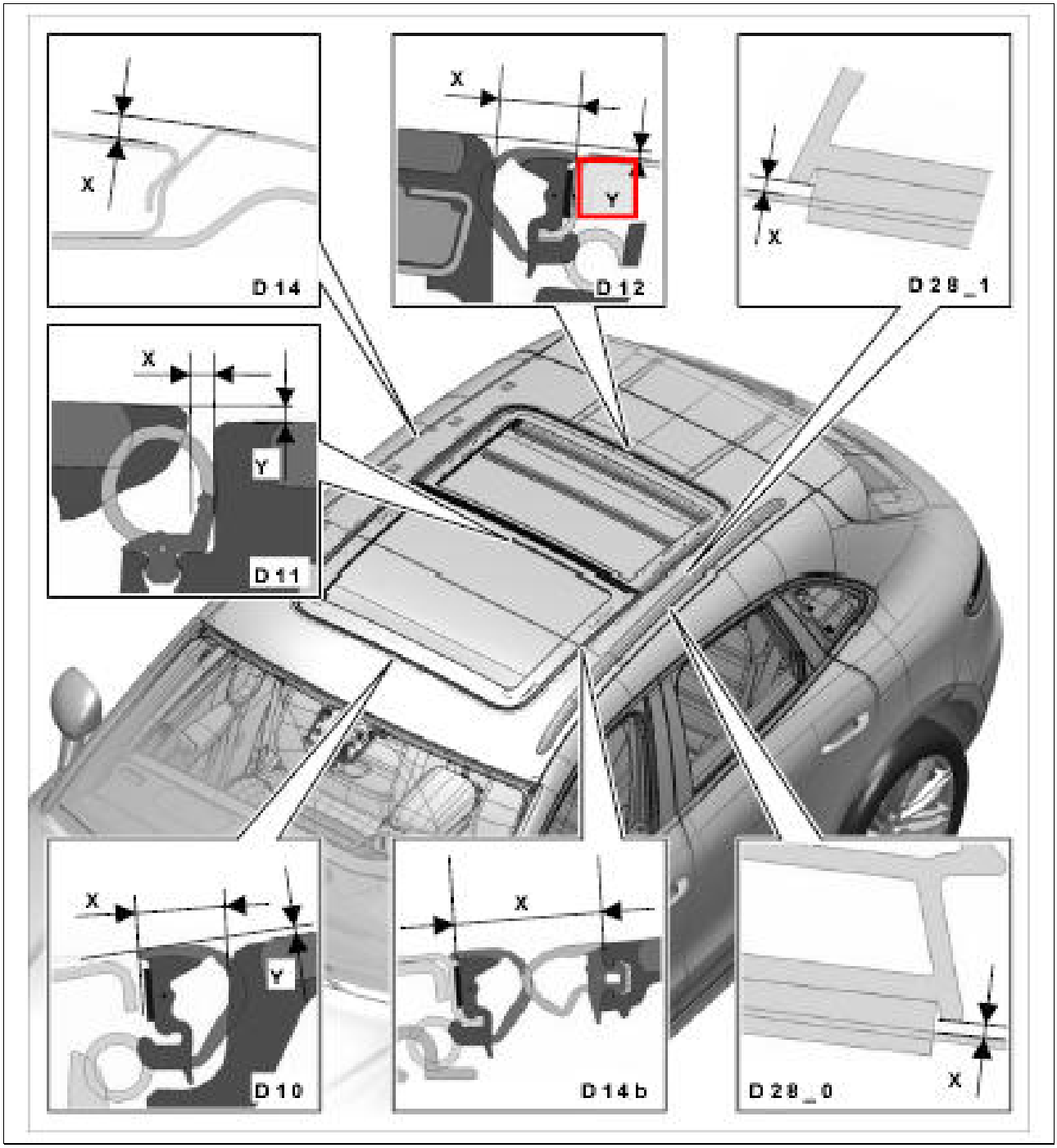

Courtesy of PORSCHE CARS NORTH AMERICA, INC.

D14 - → Gap dimension: 3 mm+/1 mm

Fig 60: Identifying Gap Dimensions For Roof (D14B)

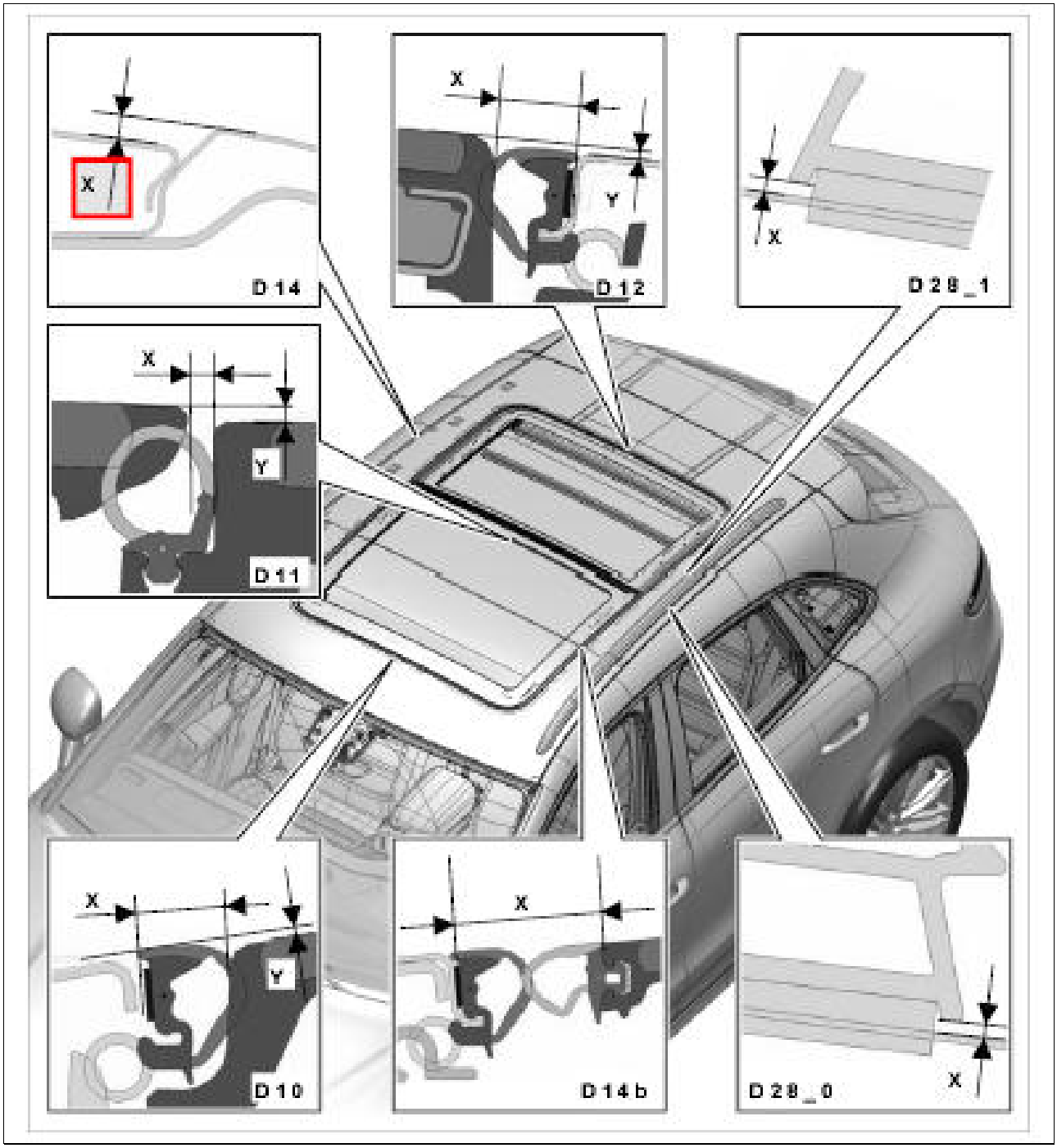

Courtesy of PORSCHE CARS NORTH AMERICA, INC.

D114b - → Gap dimension: 22 mm+/1.2 mm

Fig 61: Identifying Gap Dimensions For Roof (D28)

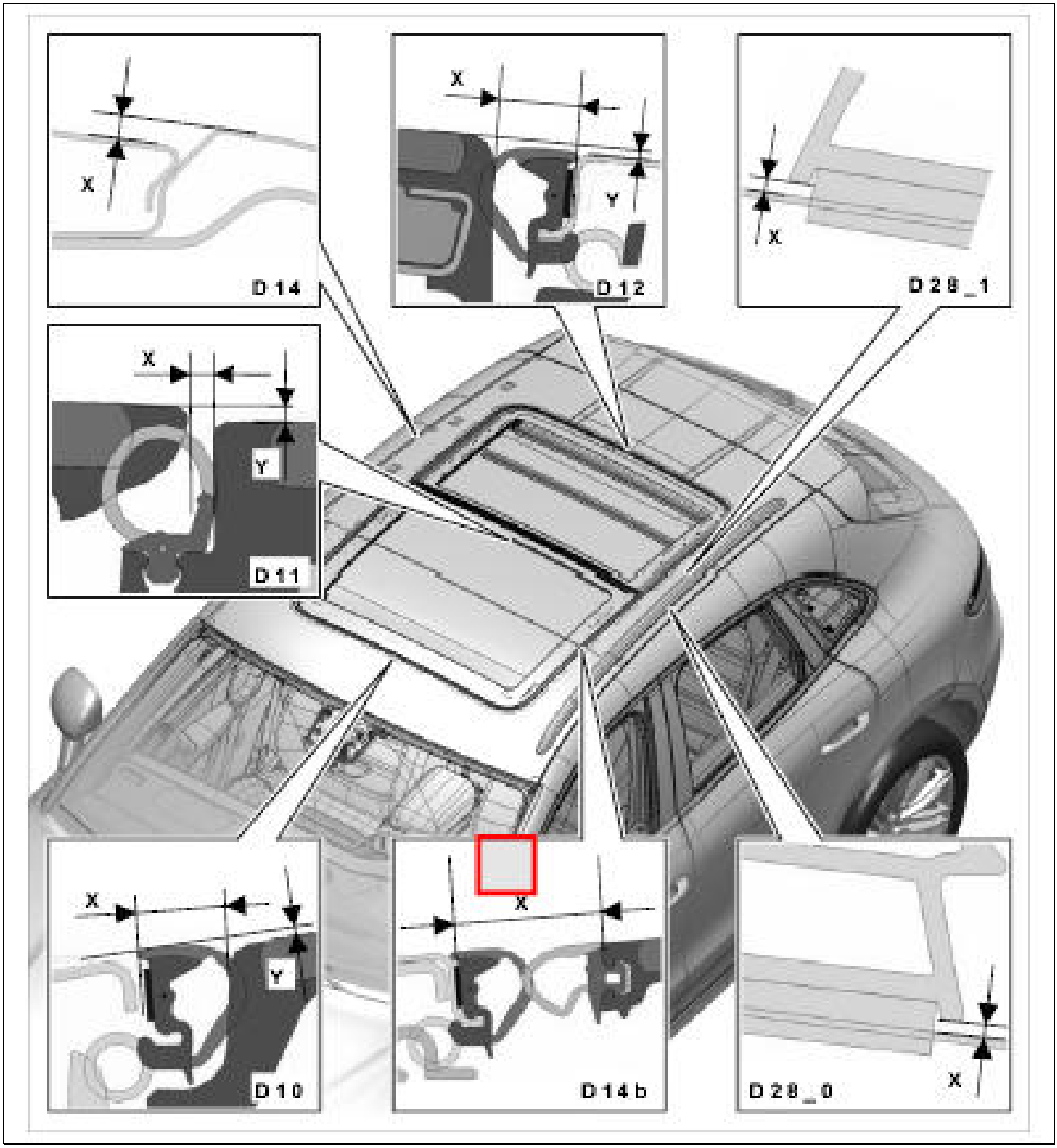

Courtesy of PORSCHE CARS NORTH AMERICA, INC.

D28_0 - → Gap dimension: 1.5 mm+/-0.75 mm

Fig 62: Identifying Gap Dimensions For Roof (D28)

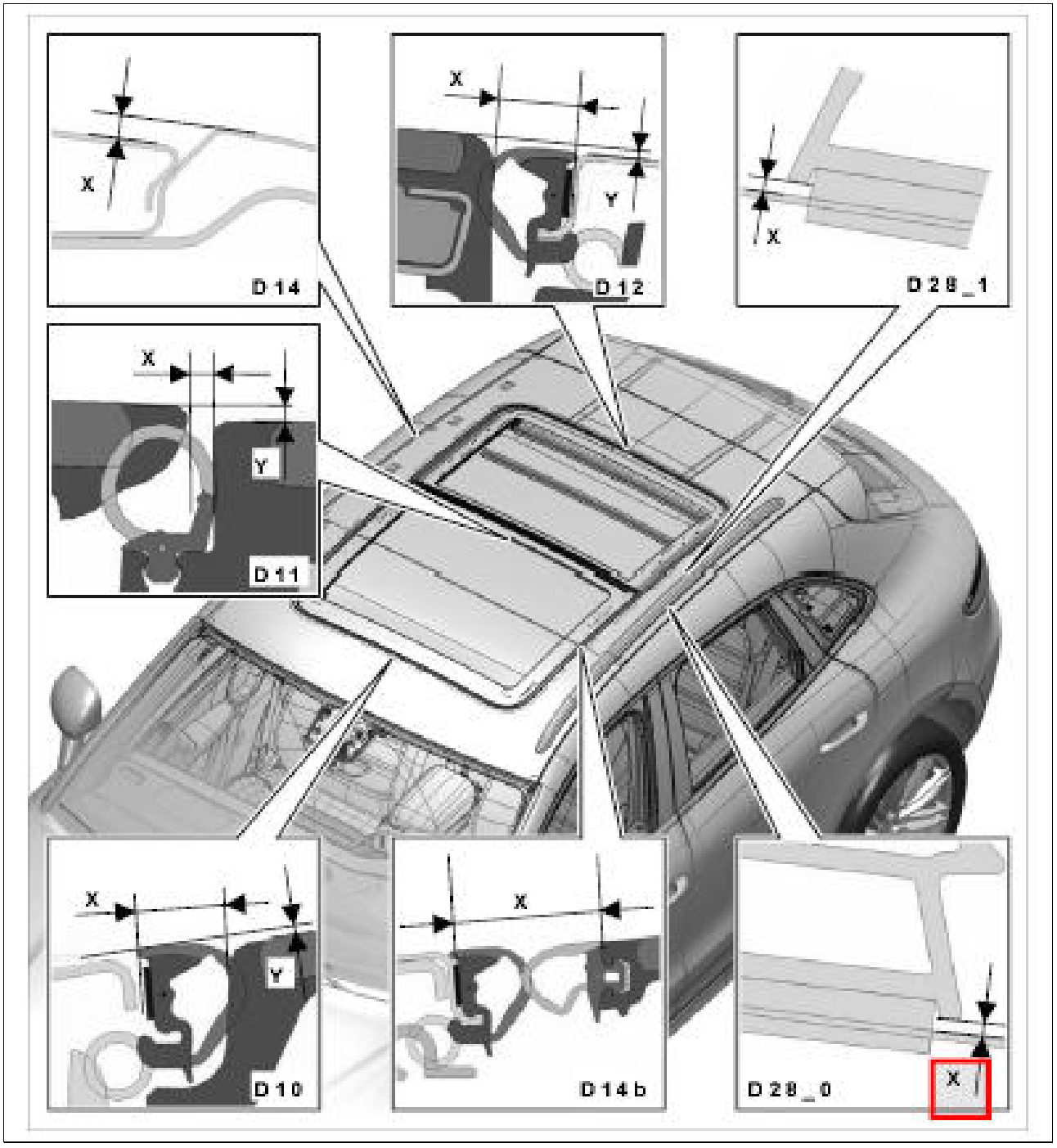

Courtesy of PORSCHE CARS NORTH AMERICA, INC.

D28_1 - → Gap dimension: 1.5 mm+/-0.7 mm

Fig 63: Identifying Gap Dimensions For Front Door Roof

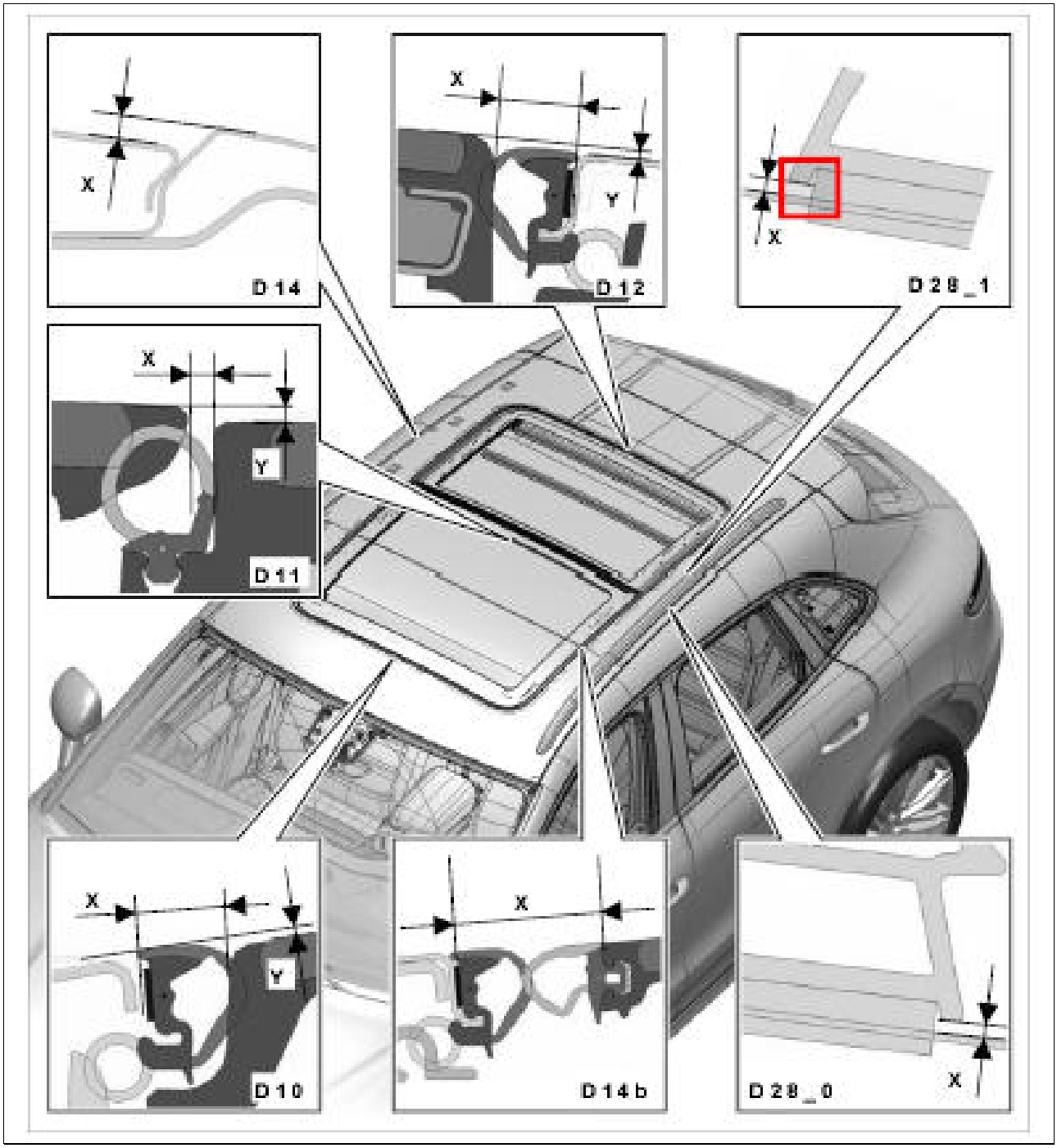

Courtesy of PORSCHE CARS NORTH AMERICA, INC.

Gap dimensions for front door/rear door/side window

Fig 64: Identifying Gap Dimensions For Roof (S20)

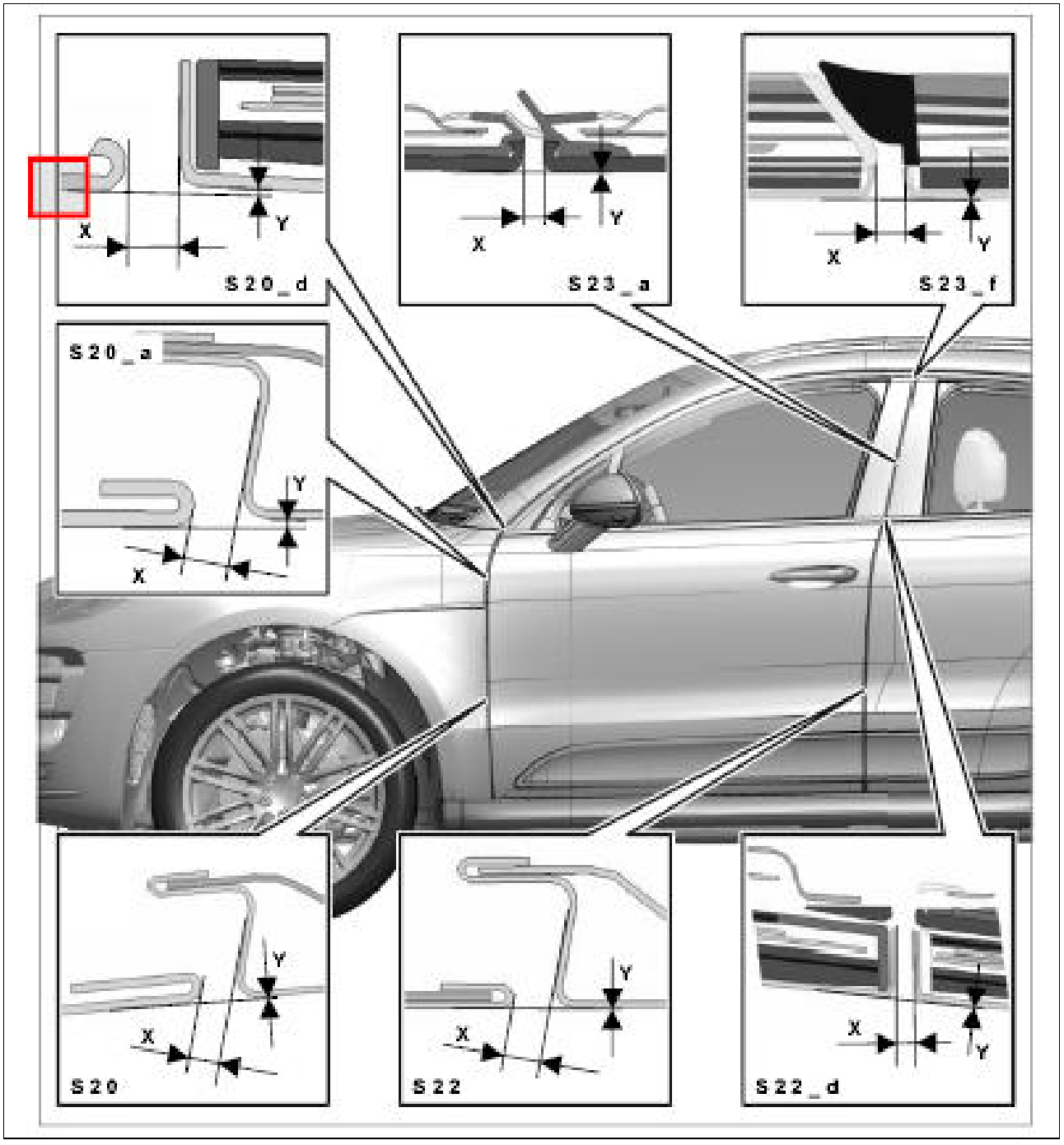

Courtesy of PORSCHE CARS NORTH AMERICA, INC.

S20_d - → Gap dimension: 4.2 mm+/-1 mm

Fig 65: Identifying Gap Dimensions For Front Door (S20)

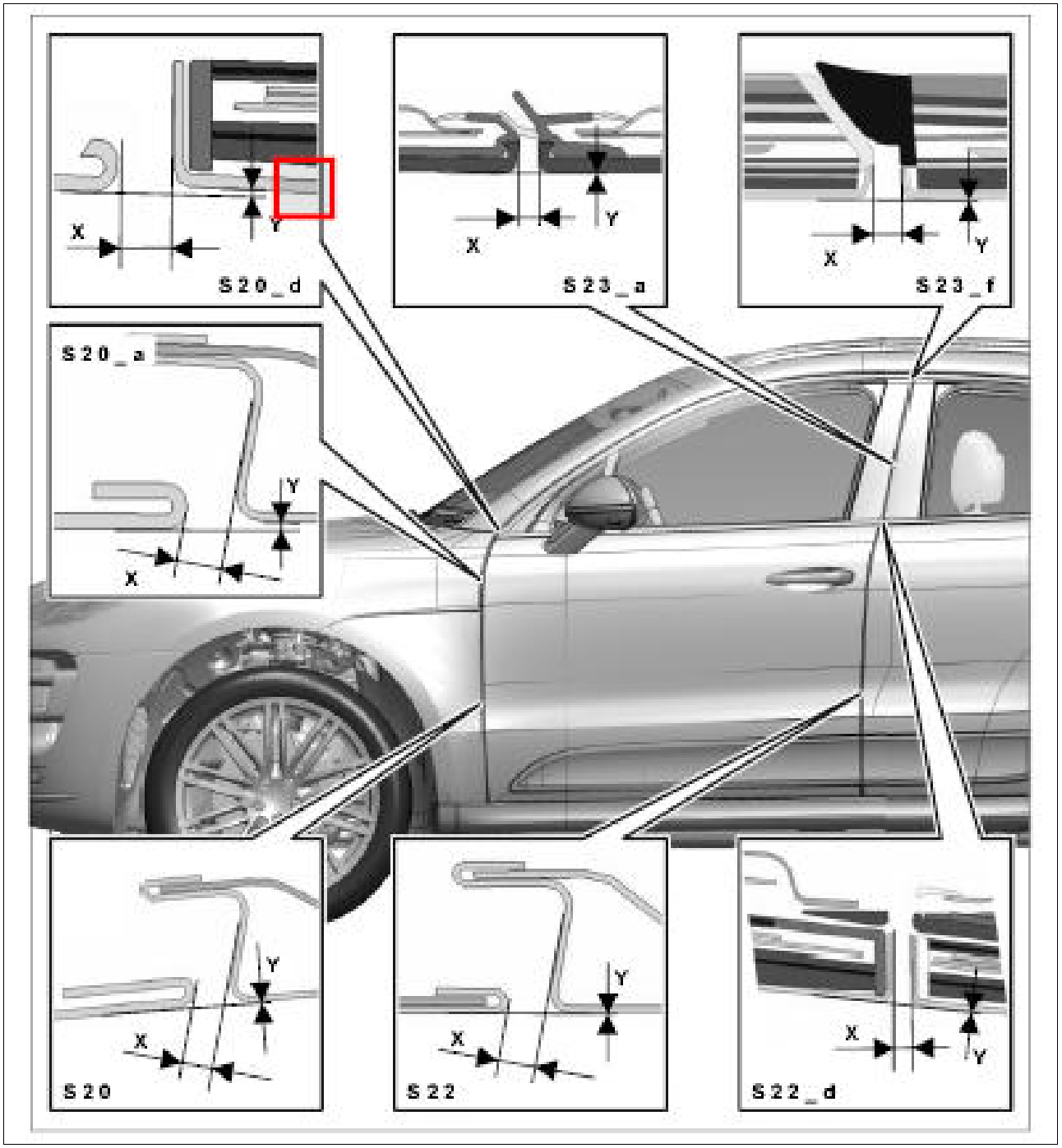

Courtesy of PORSCHE CARS NORTH AMERICA, INC.

S20_d - → Gap dimension: 1 mm

Fig 66: Identifying Gap Dimensions For Front Door (S23)

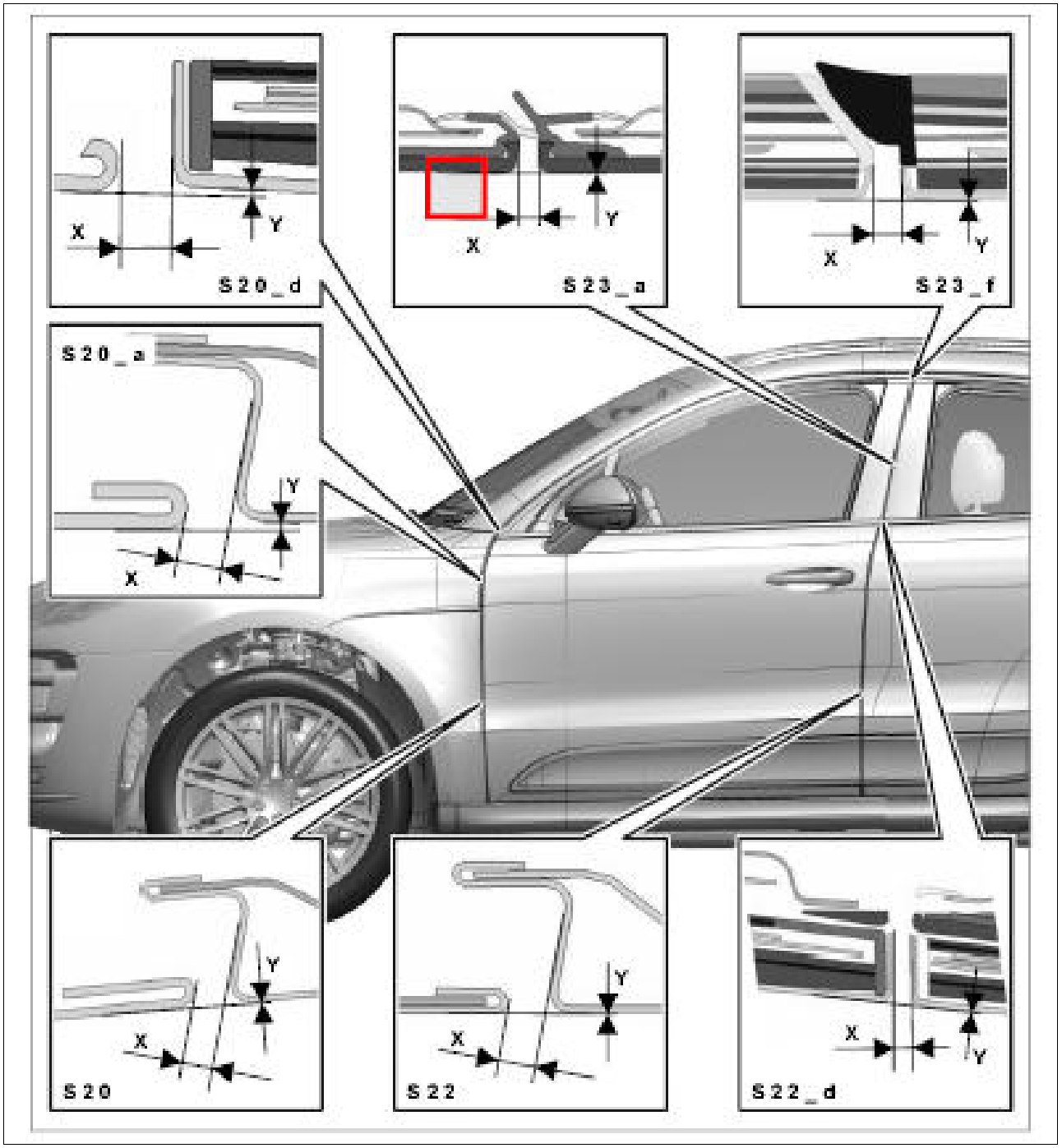

Courtesy of PORSCHE CARS NORTH AMERICA, INC.

S23_a - → Gap dimension: 4.2 mm+/-1 mm

Fig 67: Identifying Gap Dimensions For Front Door (S23)

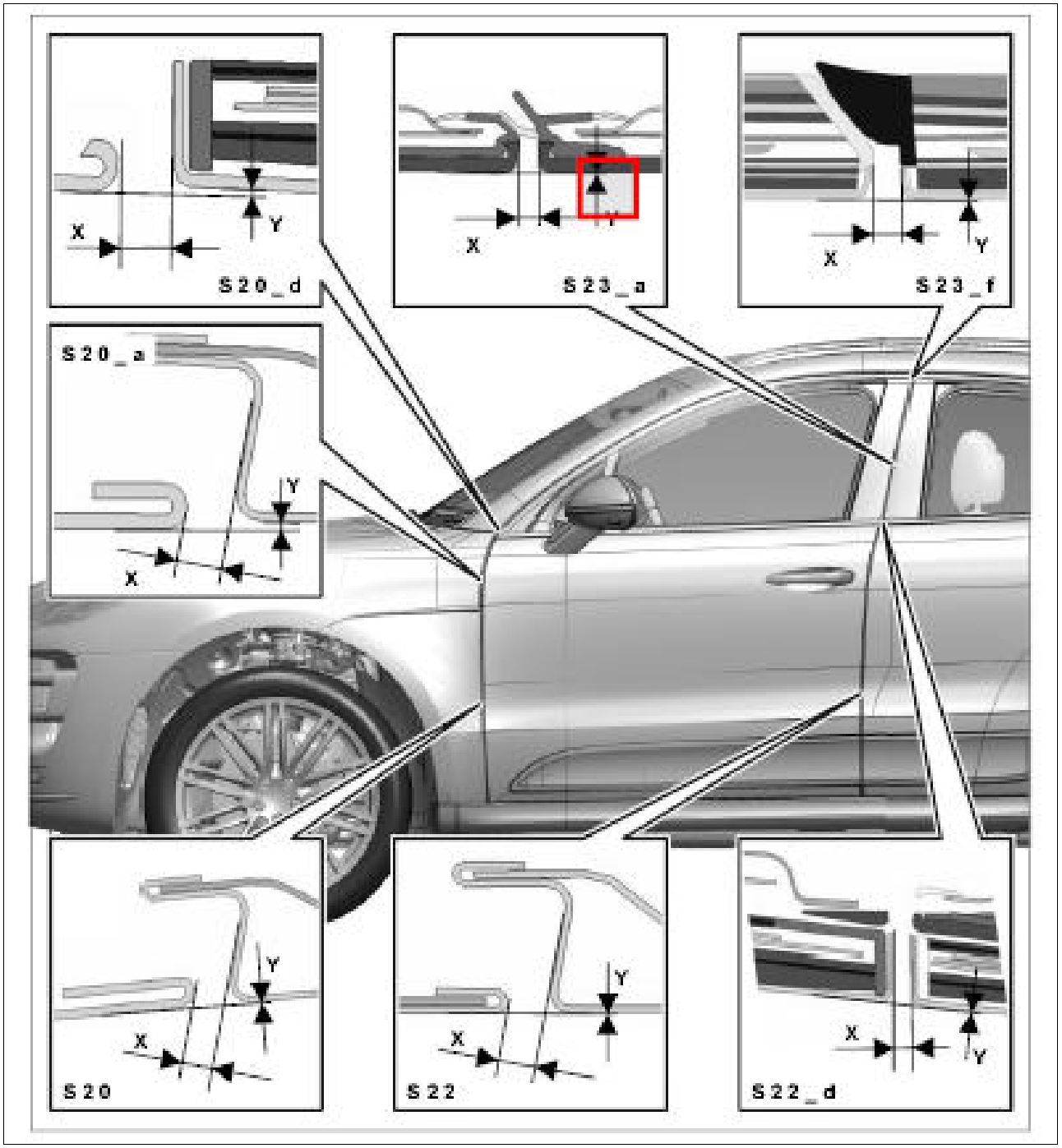

Courtesy of PORSCHE CARS NORTH AMERICA, INC.

S23_a - → Gap dimension: 0 mm

Fig 68: Identifying Gap Dimensions For Front Door (S23)

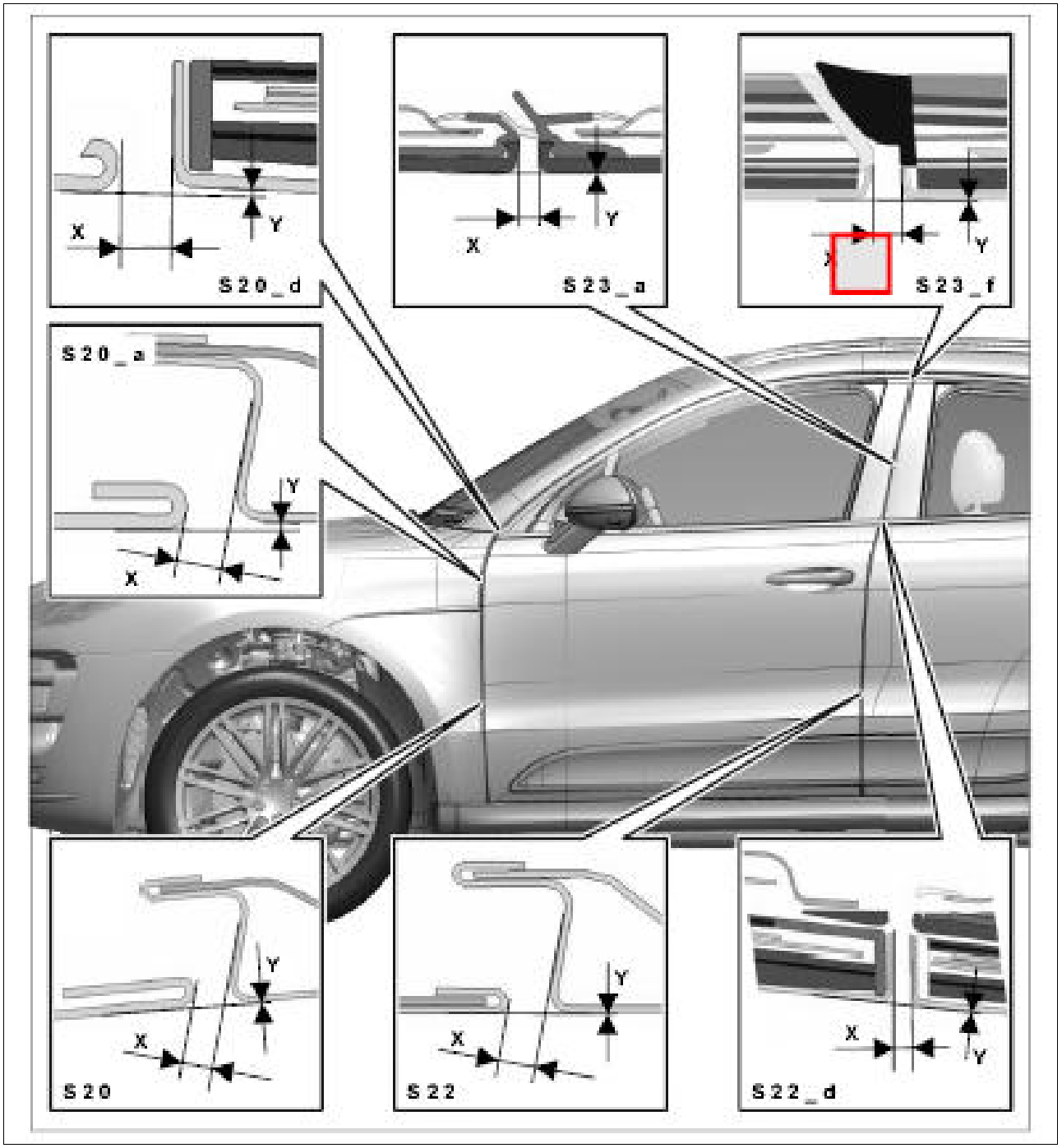

Courtesy of PORSCHE CARS NORTH AMERICA, INC.

S23_f - → Gap dimension: 4.2 mm+/-1 mm

Fig 69: Identifying Gap Dimensions For Front Door (S23)

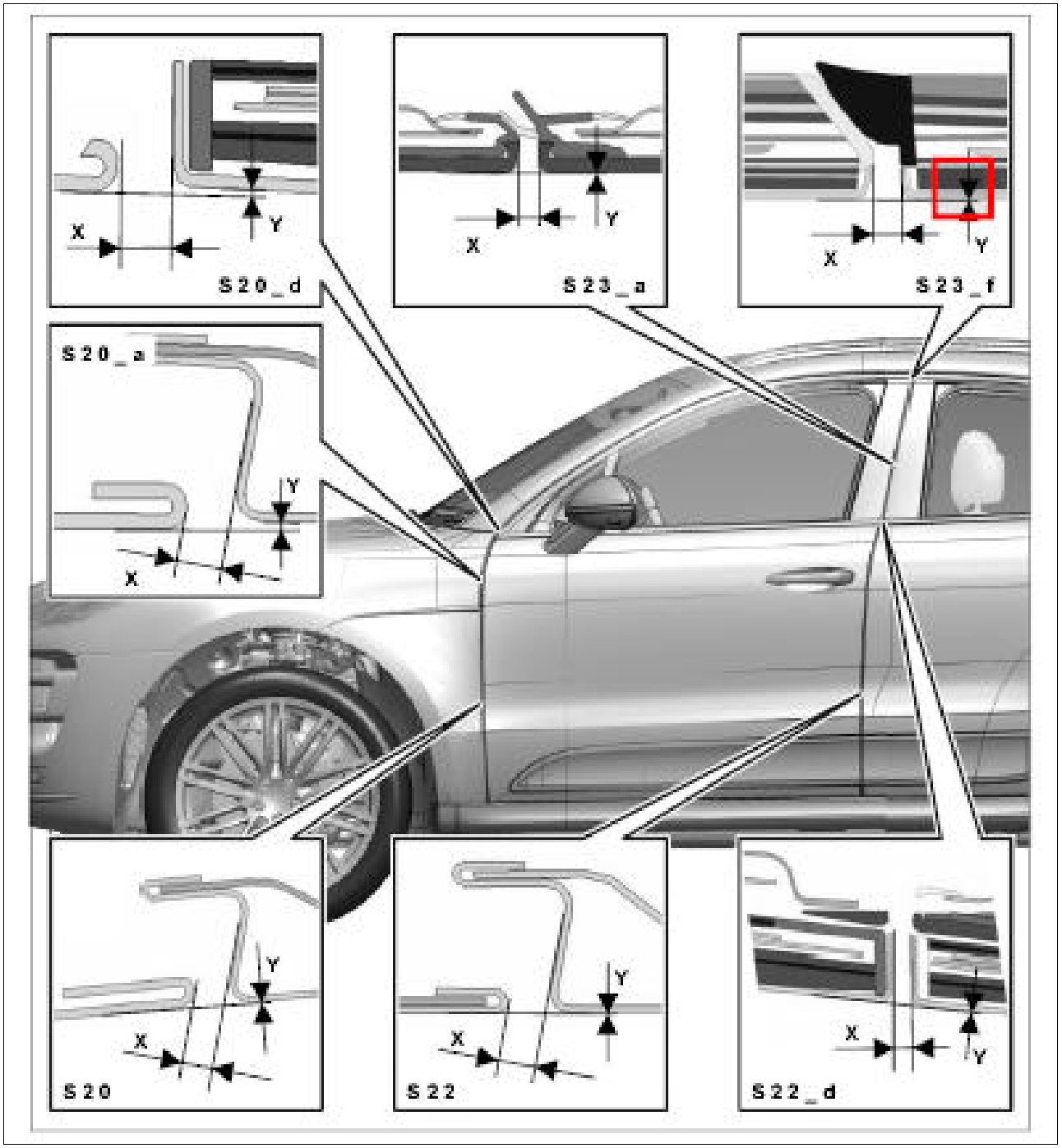

Courtesy of PORSCHE CARS NORTH AMERICA, INC.

S23_f - → Gap dimension: 0 mm

Fig 70: Identifying Gap Dimensions For Front Door (S20)

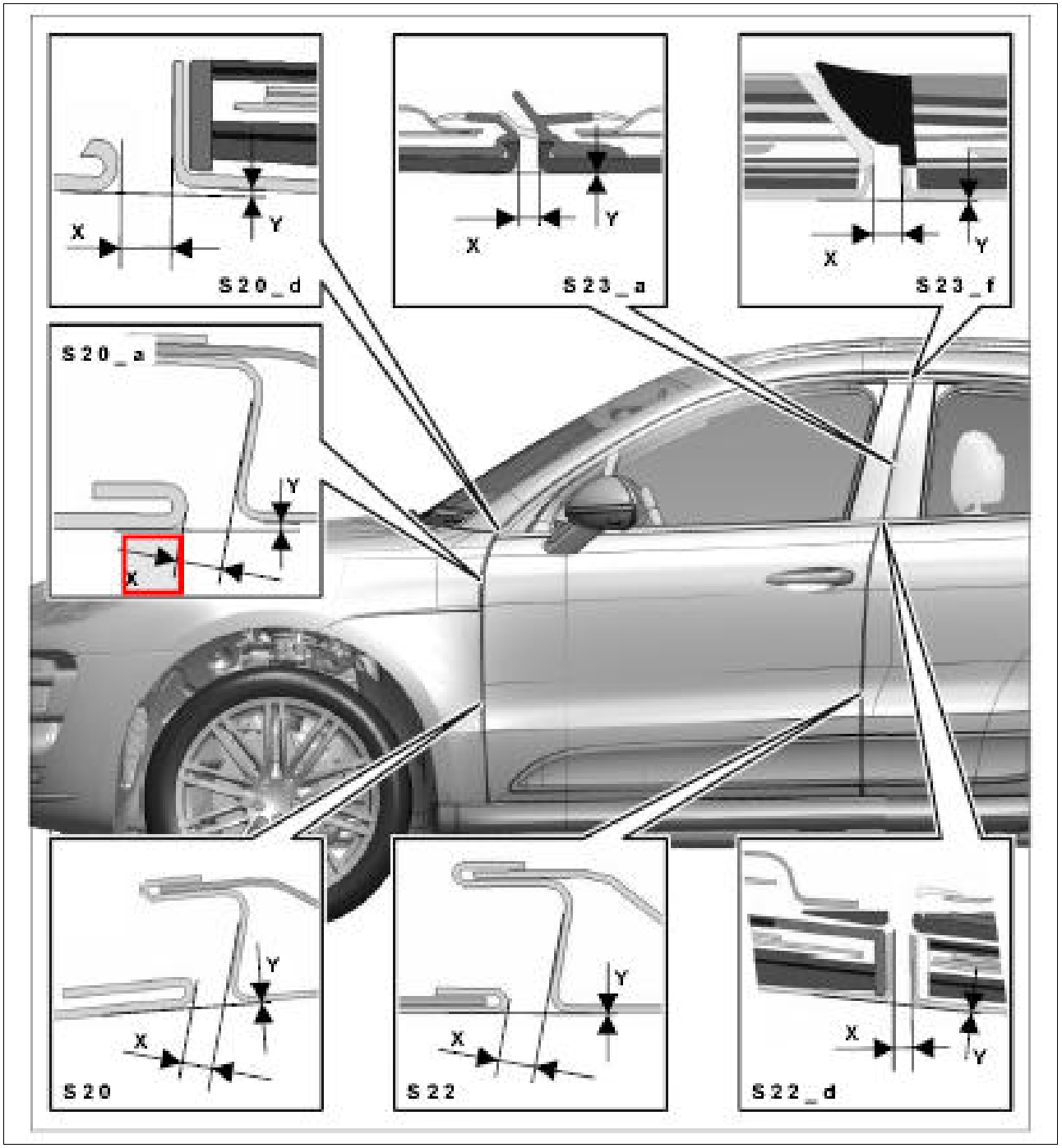

Courtesy of PORSCHE CARS NORTH AMERICA, INC.

S20_a - → Gap dimension: 4.1 mm+/-0.5 mm

Fig 71: Identifying Gap Dimensions For Front Door (S20)

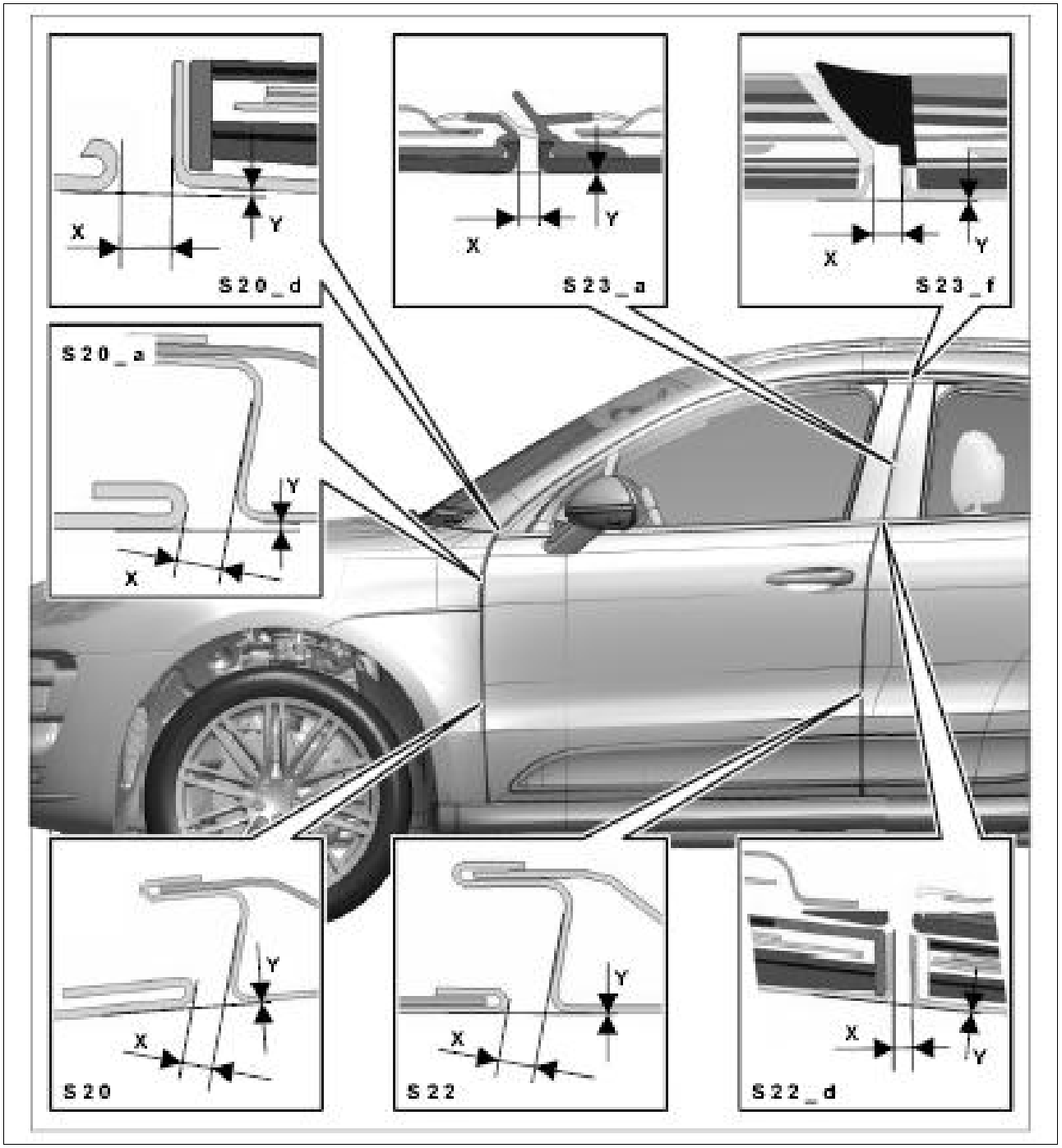

Courtesy of PORSCHE CARS NORTH AMERICA, INC.

S20_a - → Gap dimension: 1 mm

Fig 72: Identifying Gap Dimensions For Front Door (S20)

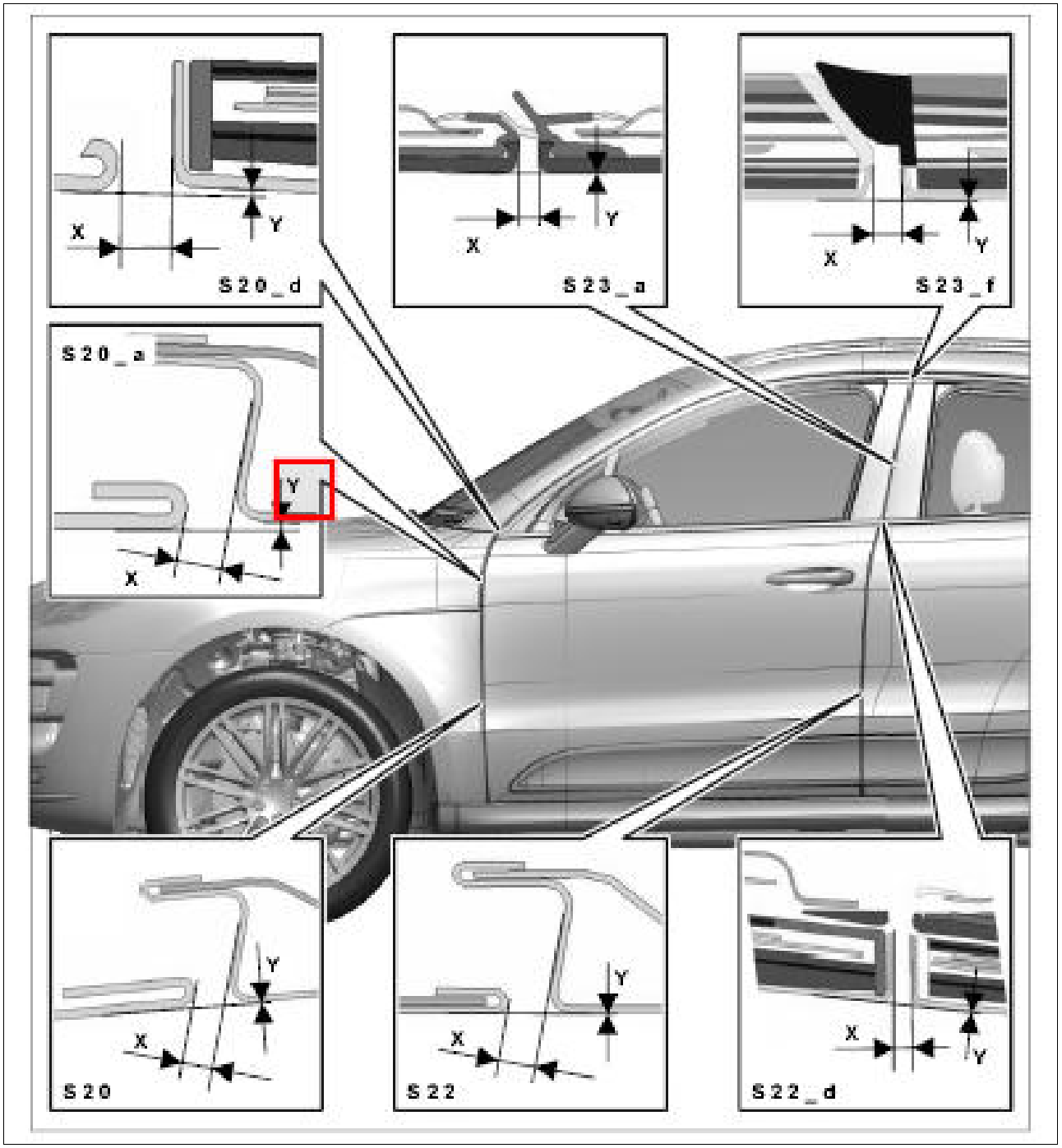

Courtesy of PORSCHE CARS NORTH AMERICA, INC.

S20 - → Gap dimension: 4.1 mm+/-0.5 mm

Fig 73: Identifying Gap Dimensions For Front Door

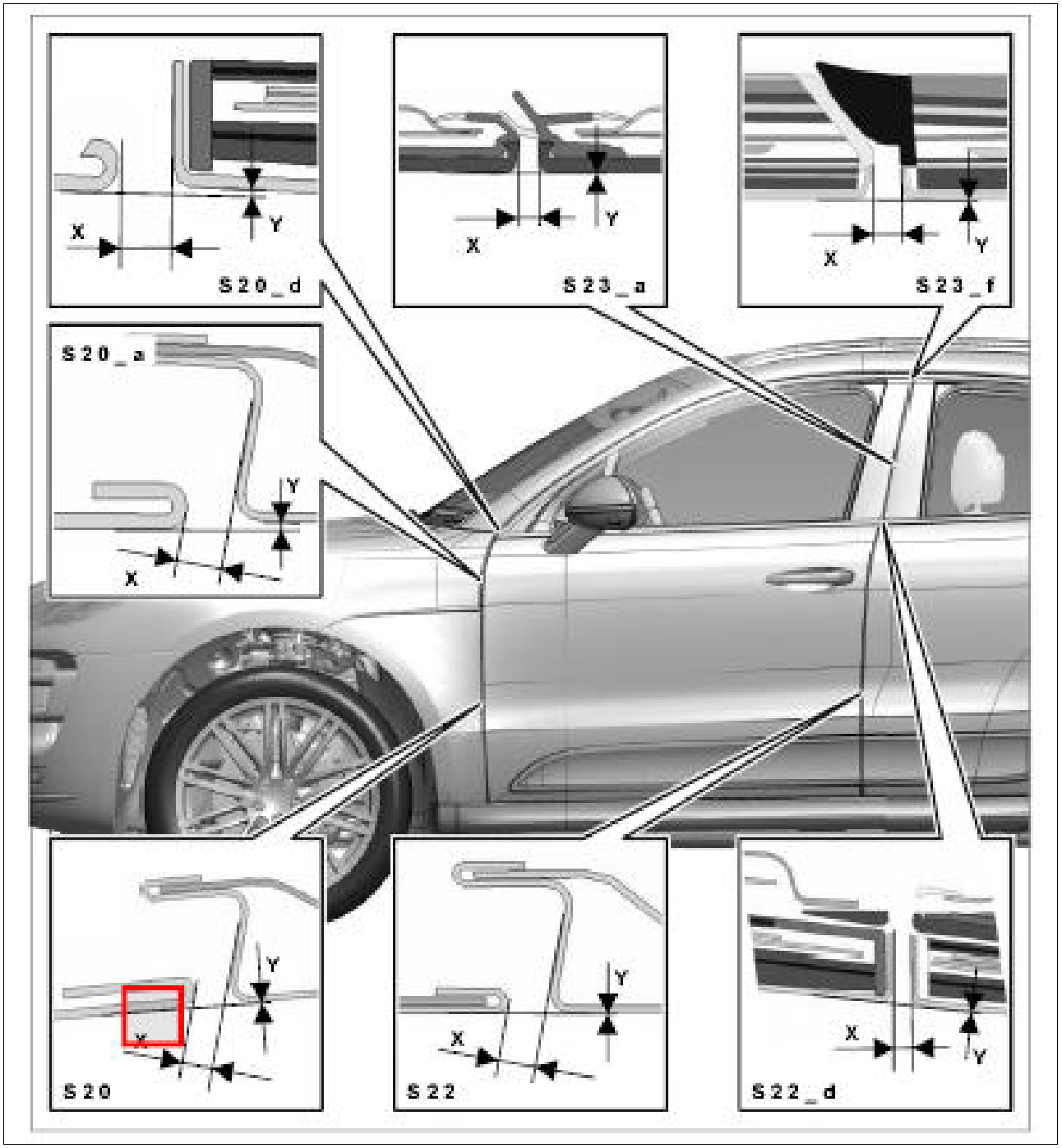

Courtesy of PORSCHE CARS NORTH AMERICA, INC.

S20 - → Gap dimension: 0 mm

Fig 74: Identifying Gap Dimensions For Front Door (S22)

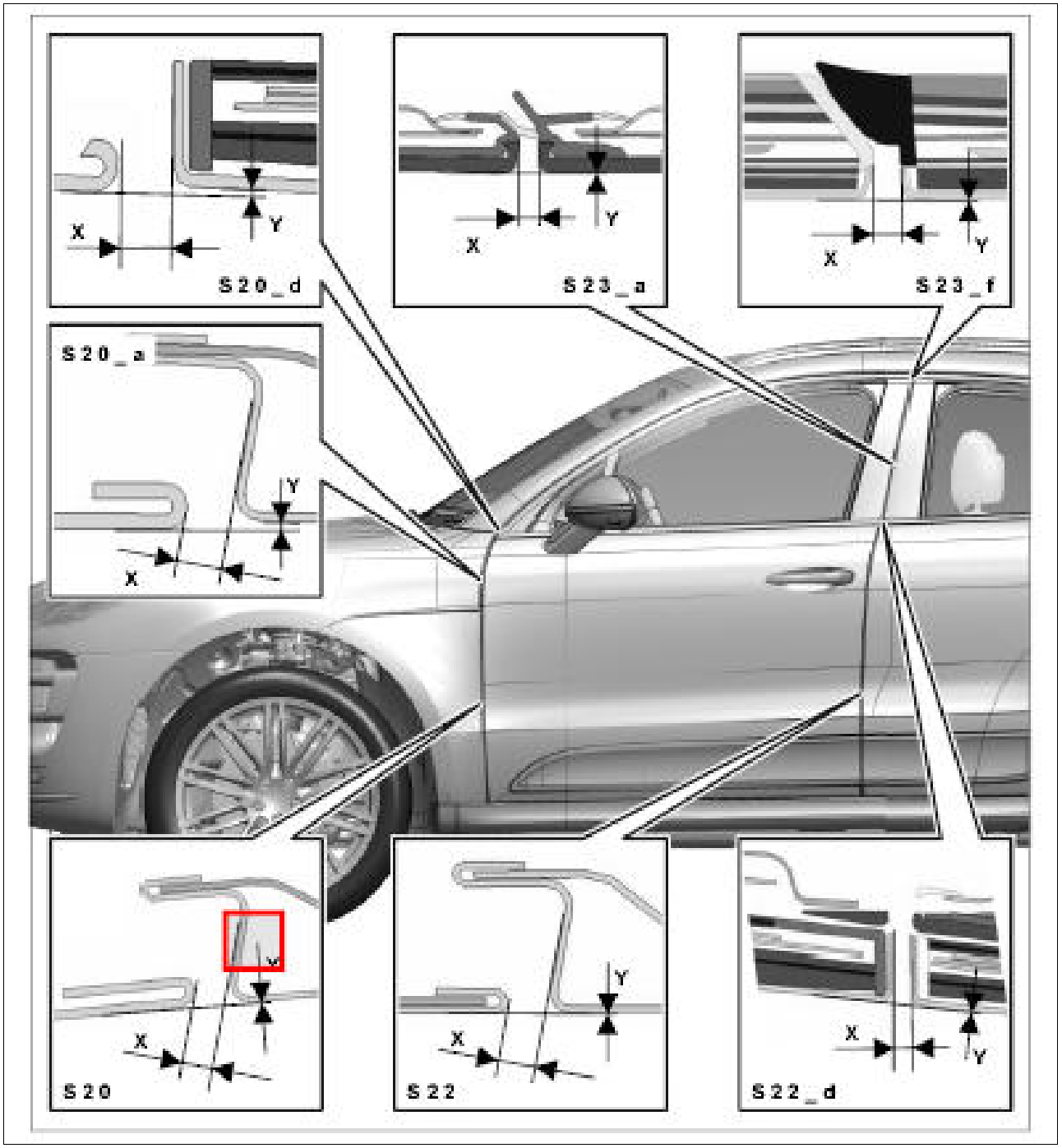

Courtesy of PORSCHE CARS NORTH AMERICA, INC.

S22 - → Gap dimension: 4.2 mm+/-0.5 mm

Fig 75: Identifying Gap Dimensions For Front Door

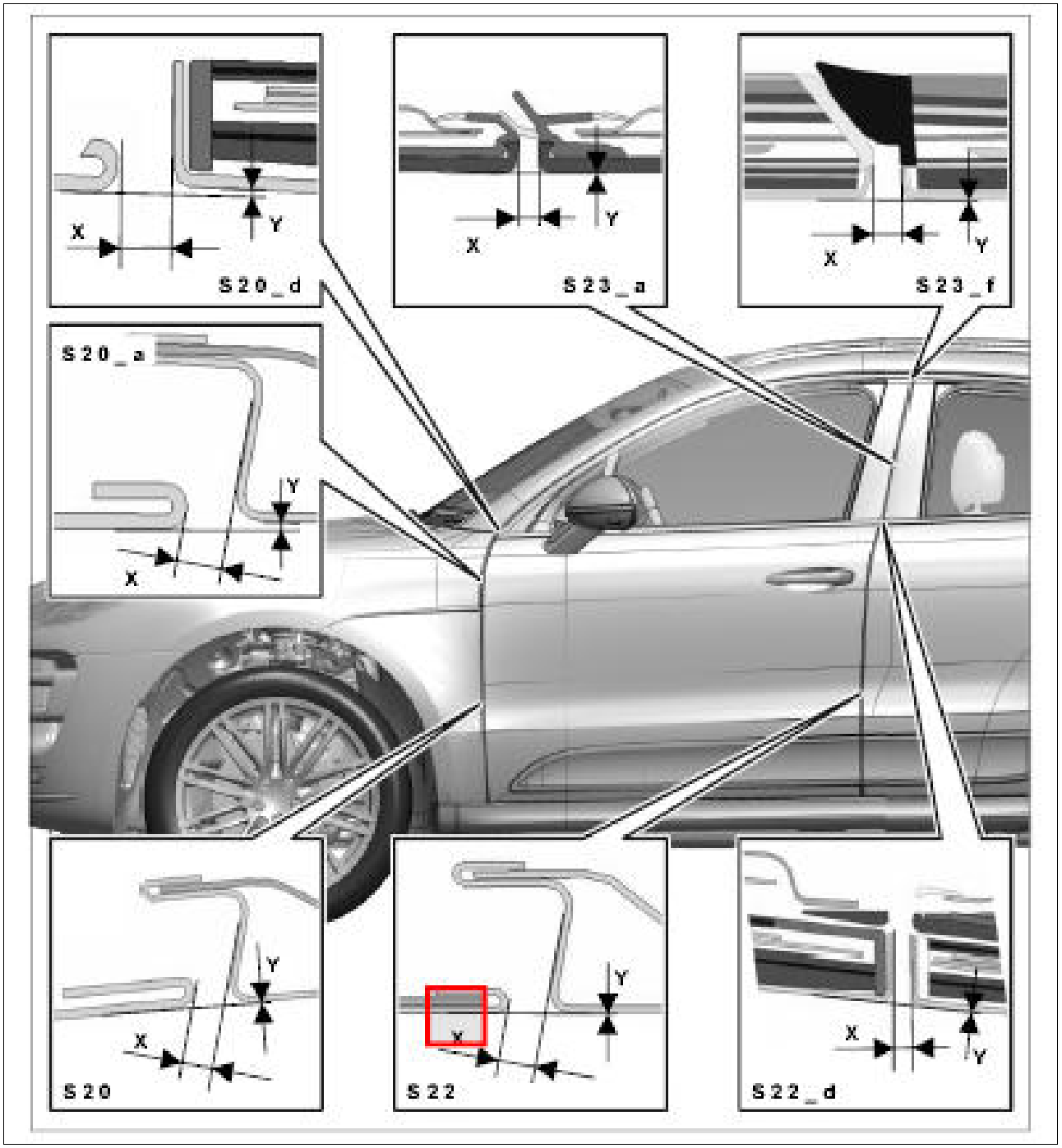

Courtesy of PORSCHE CARS NORTH AMERICA, INC.

S22 - → Gap dimension: 0 mm

Fig 76: Identifying Gap Dimensions For Front Door

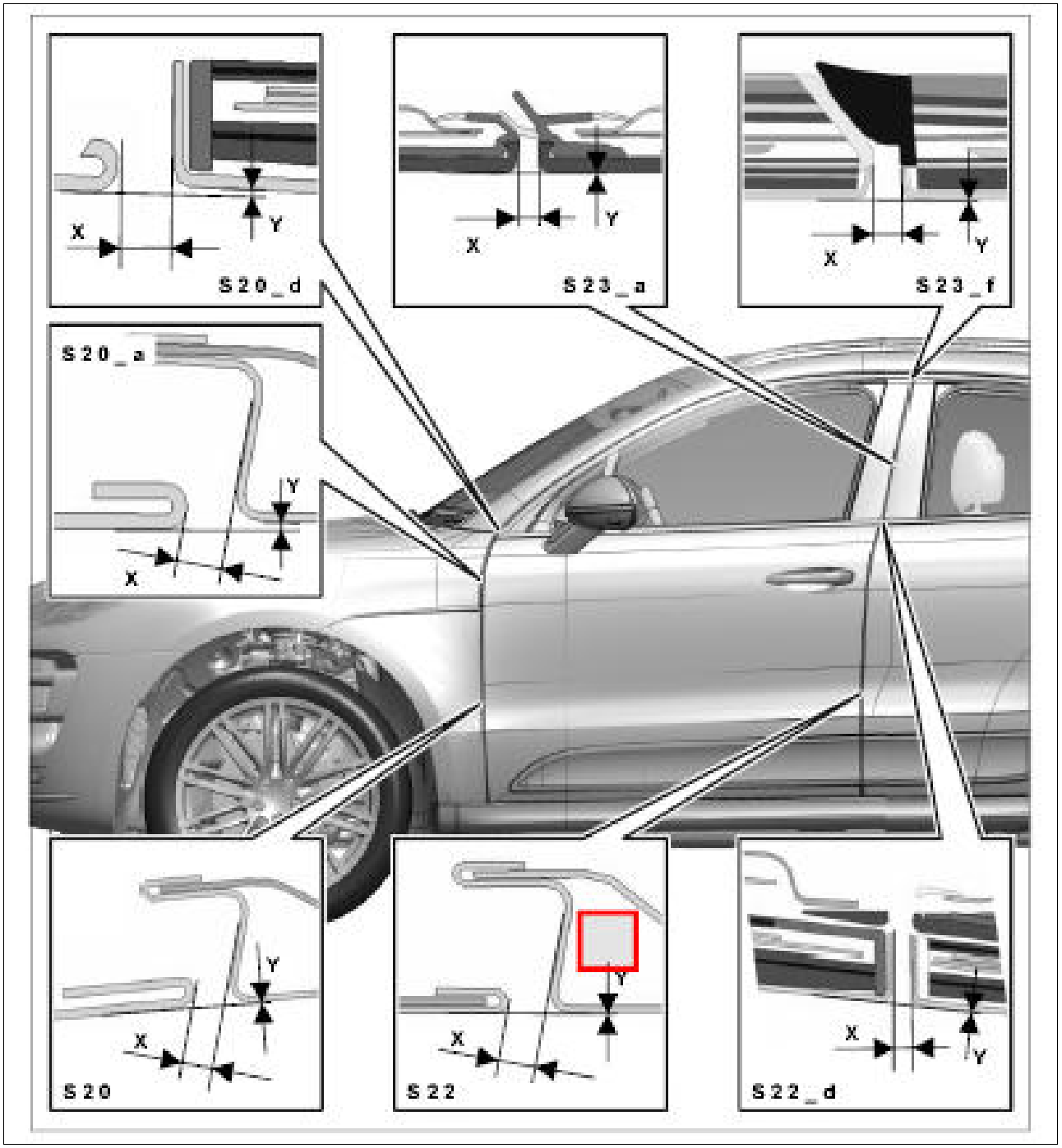

Courtesy of PORSCHE CARS NORTH AMERICA, INC.

S22_d - → Gap dimension: 4.2 mm+/-1 mm

Fig 77: Identifying Gap Dimensions For Front Door

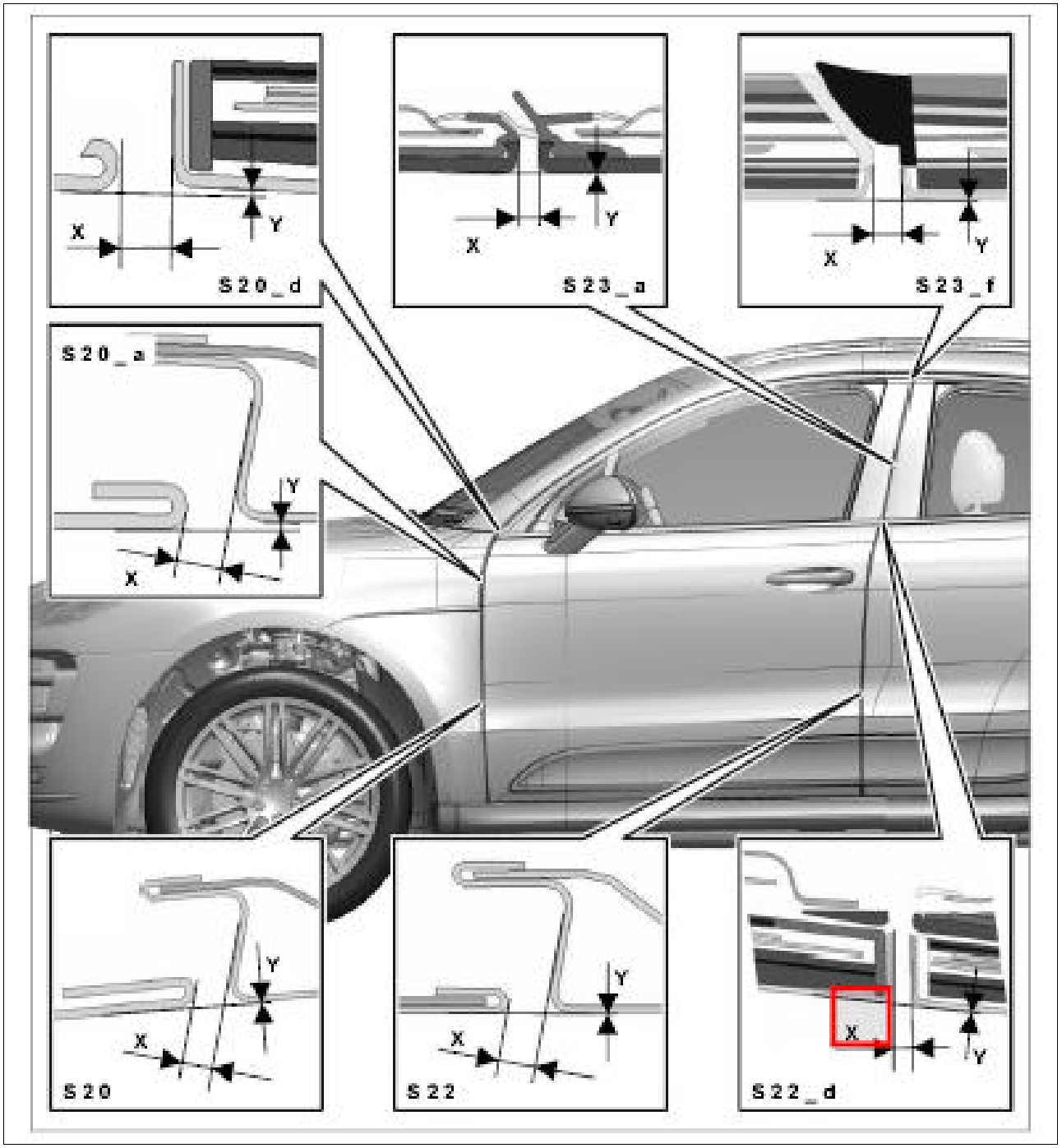

Courtesy of PORSCHE CARS NORTH AMERICA, INC.

S22_d - → Gap dimension: 0 mm

Fig 78: Identifying Gap Dimensions For Front Door

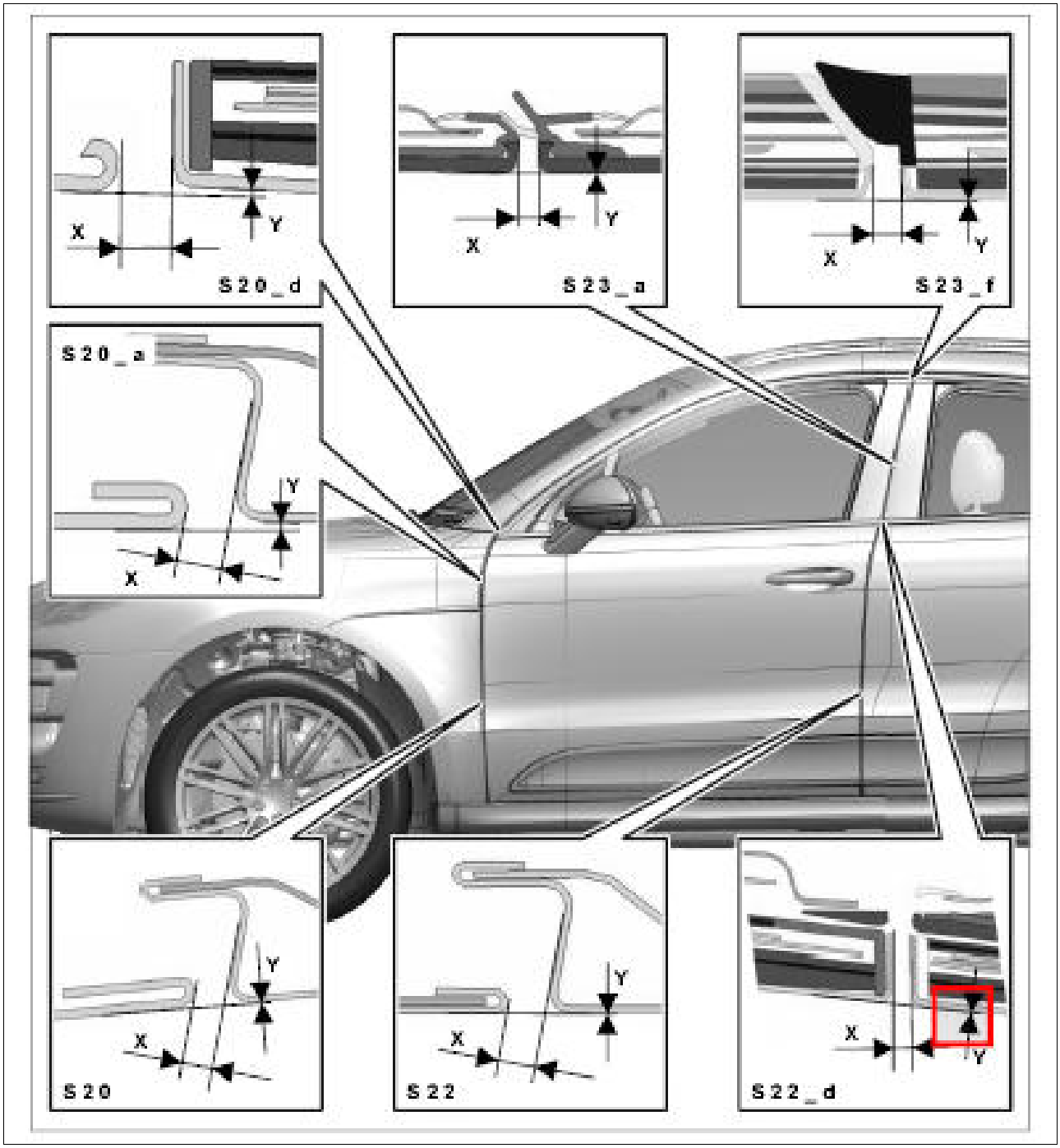

Courtesy of PORSCHE CARS NORTH AMERICA, INC.

Fig 79: Identifying Gap Dimensions For Front To Rear Door (S21)

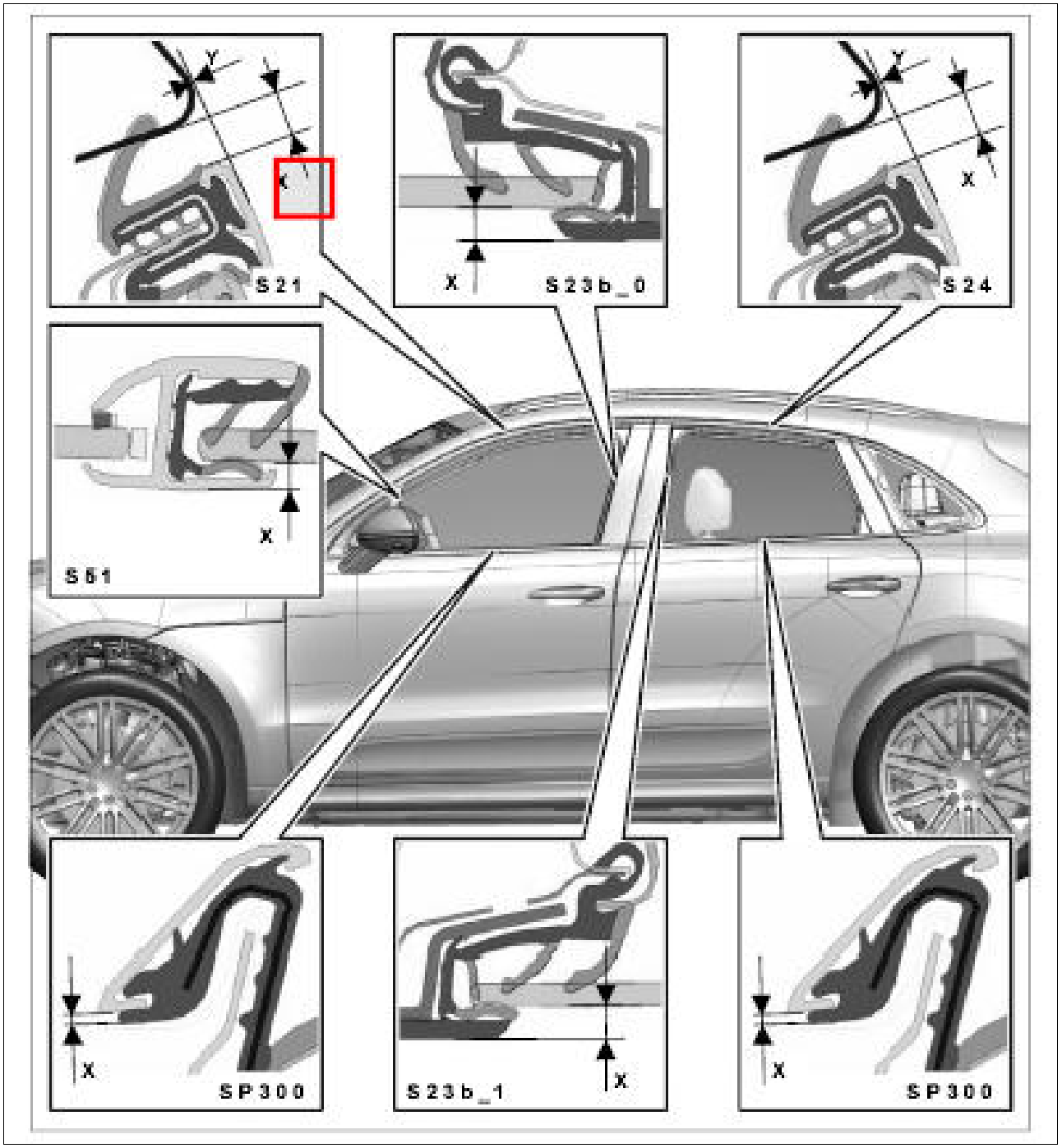

Courtesy of PORSCHE CARS NORTH AMERICA, INC.

S21 - → Gap dimension: 4.5 mm+/-2 mm

Fig 80: Identifying Gap Dimensions For Front To Rear Door

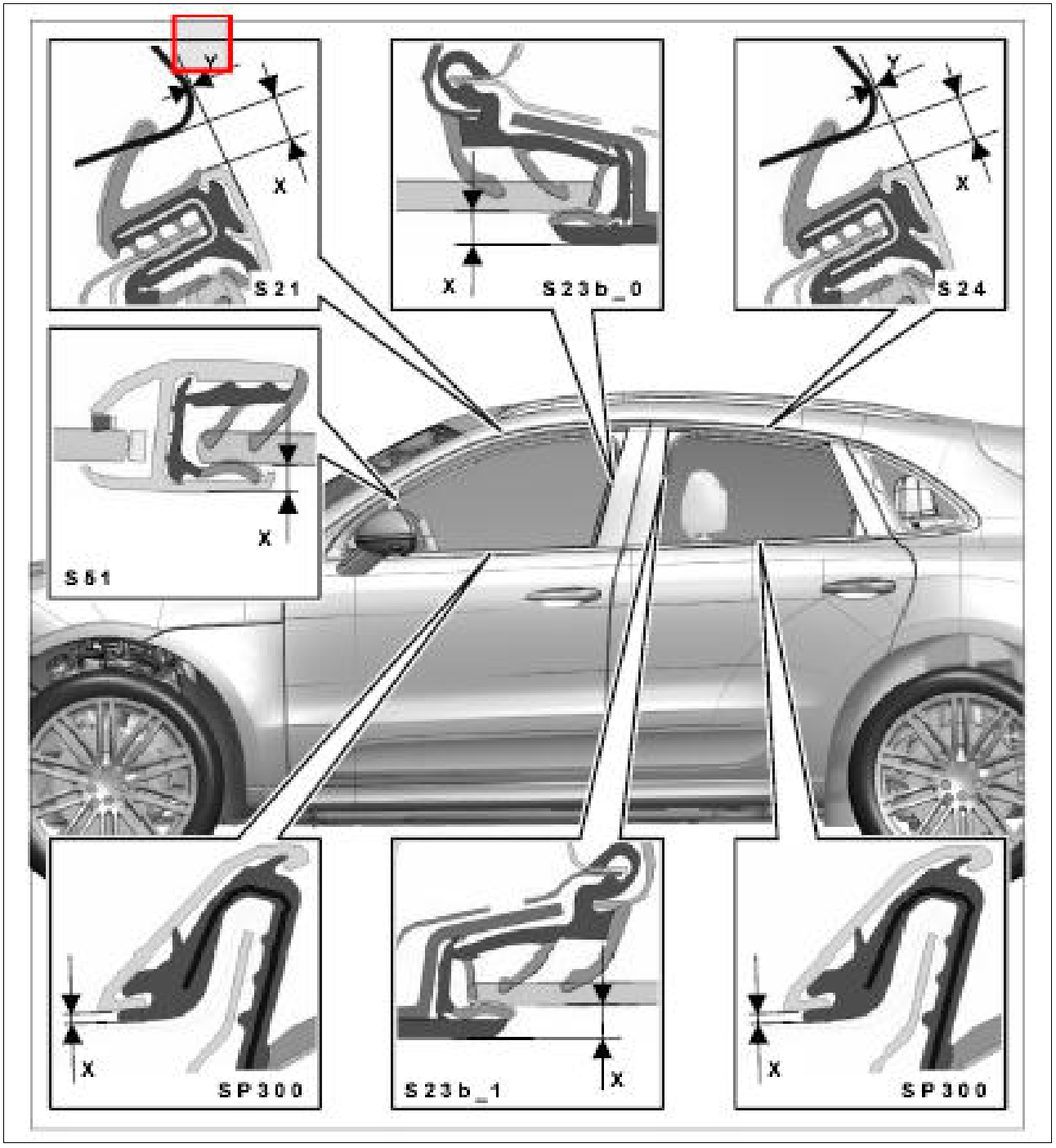

Courtesy of PORSCHE CARS NORTH AMERICA, INC.

S21 - → Gap dimension: 0 mm

Fig 81: Identifying Gap Dimensions For Front To Rear Door (S23B)

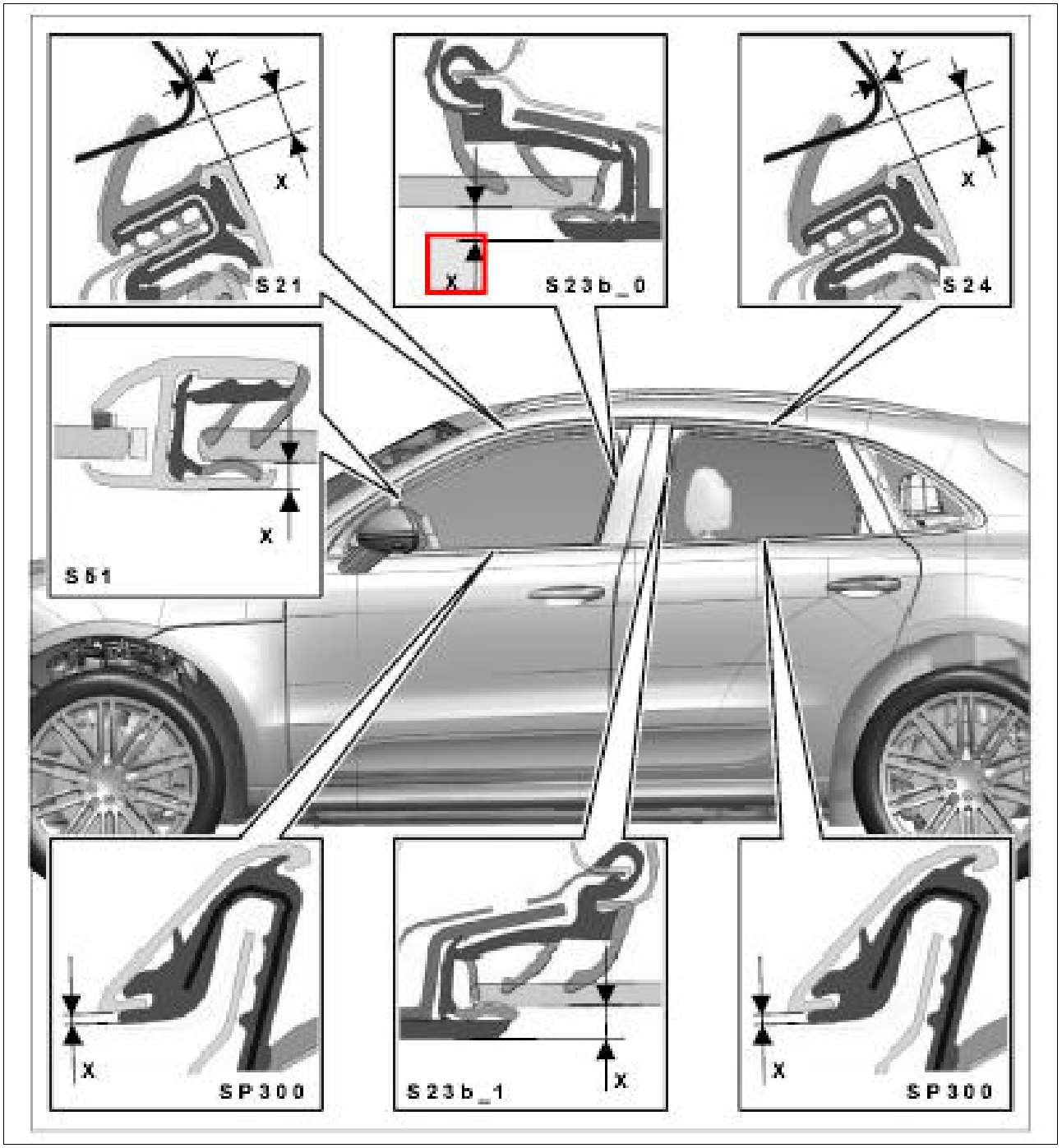

Courtesy of PORSCHE CARS NORTH AMERICA, INC.

S23b_0 - → Gap dimension: 4.5 mm+/-1 mm

Fig 82: Identifying Gap Dimensions Of Front To Rear Door (S24)

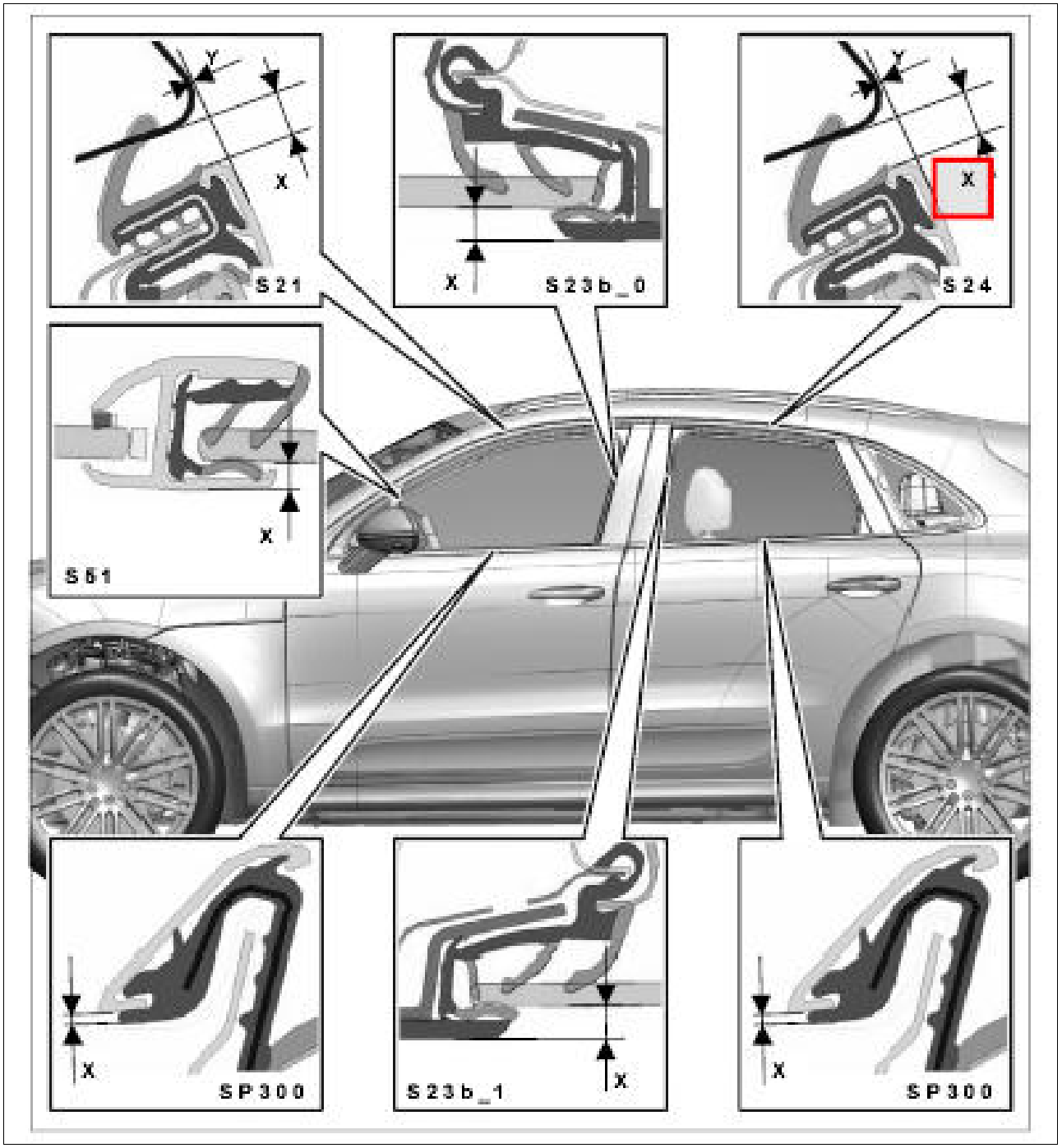

Courtesy of PORSCHE CARS NORTH AMERICA, INC.

S24 - → Gap dimension: 4.5 mm+/-2 mm

Fig 83: Identifying Gap Dimensions For Front To Rear Door (S24)

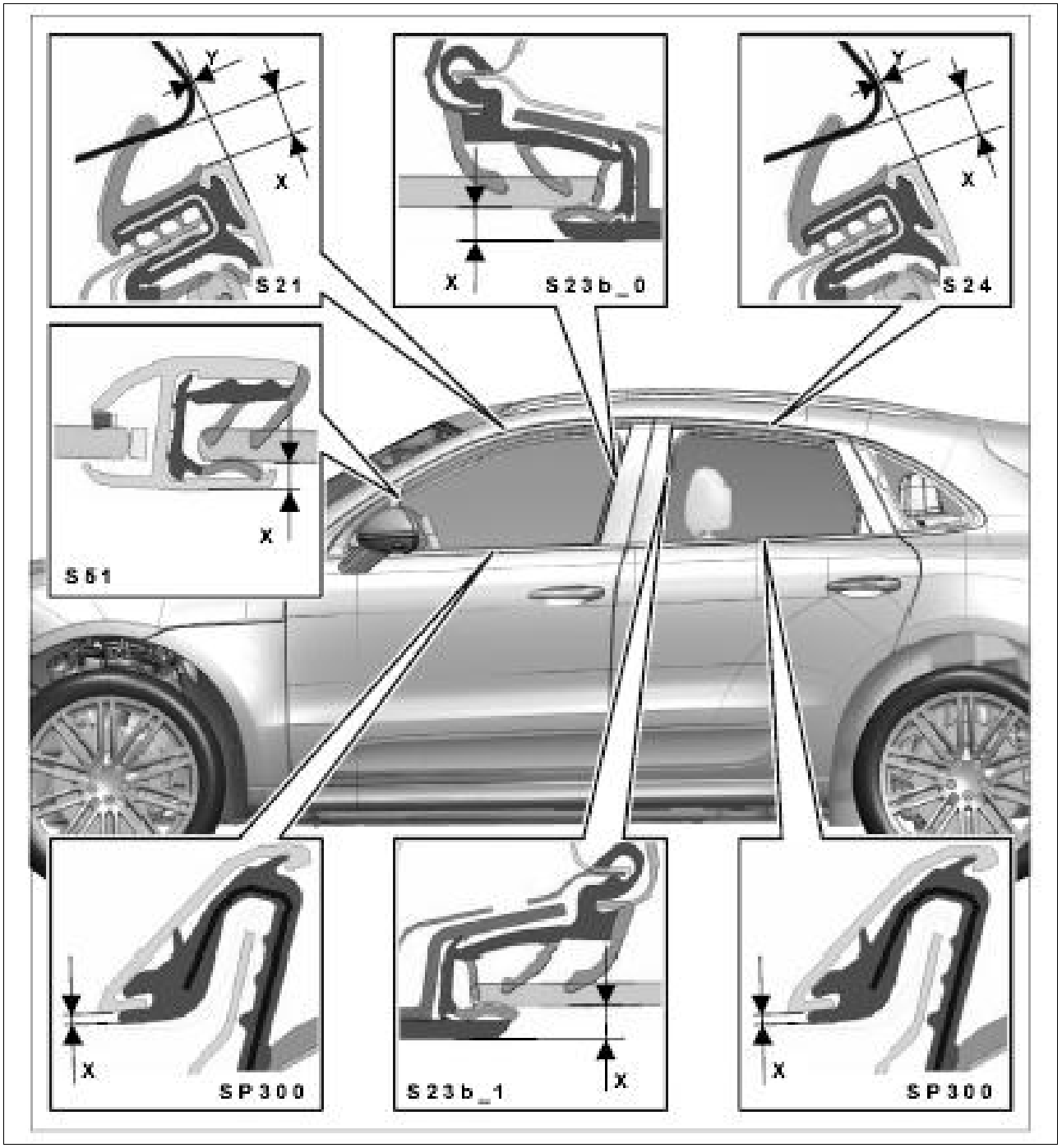

Courtesy of PORSCHE CARS NORTH AMERICA, INC.

S24 - → Gap dimension: 0 mm

Fig 84: Identifying Gap Dimensions For Front To Rear Door (S51)

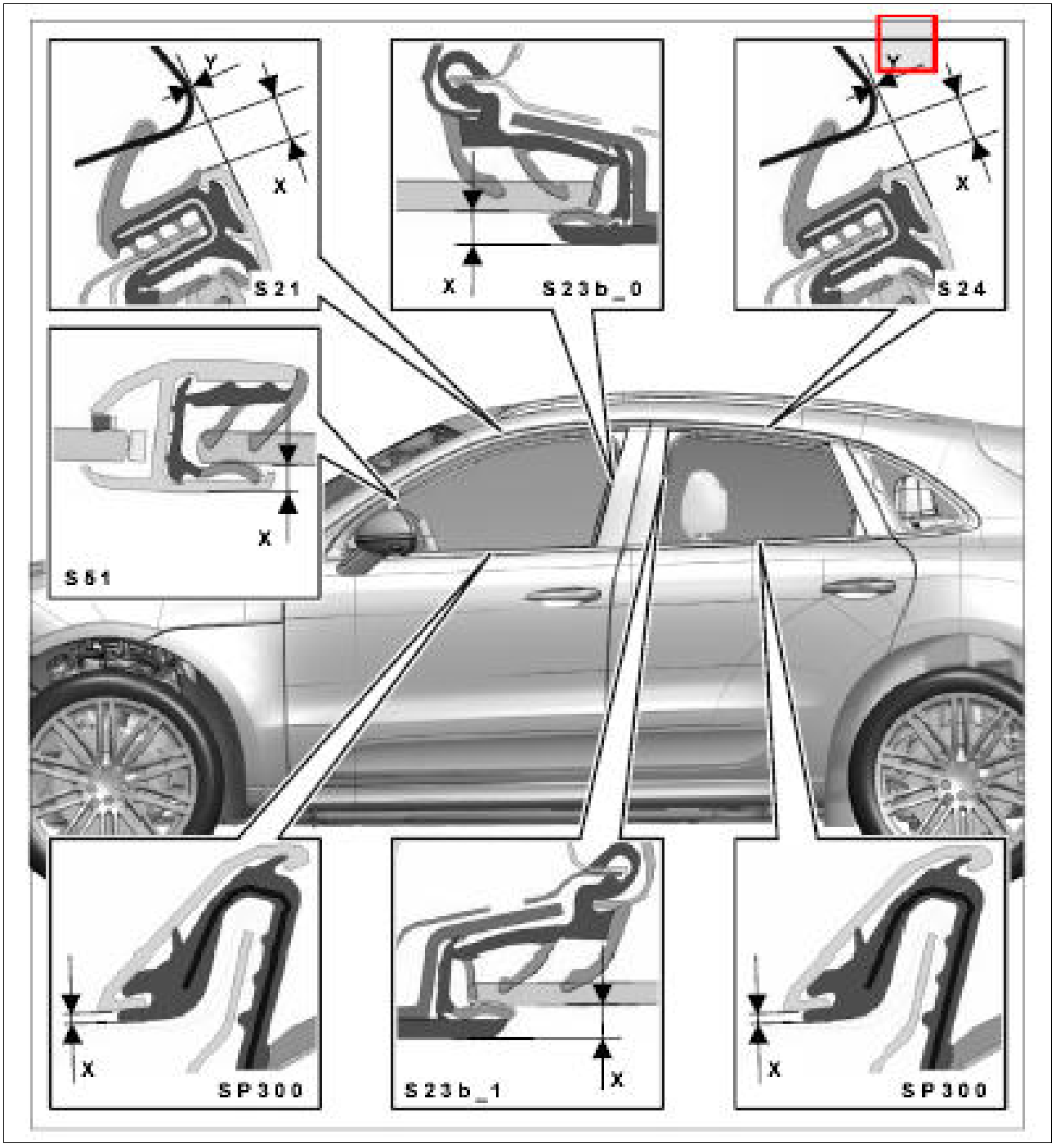

Courtesy of PORSCHE CARS NORTH AMERICA, INC.

S51 - → Gap dimension: 4.1 mm+/-1 mm

Fig 85: Identifying Gap Dimensions For Front To Rear Door (SP300)

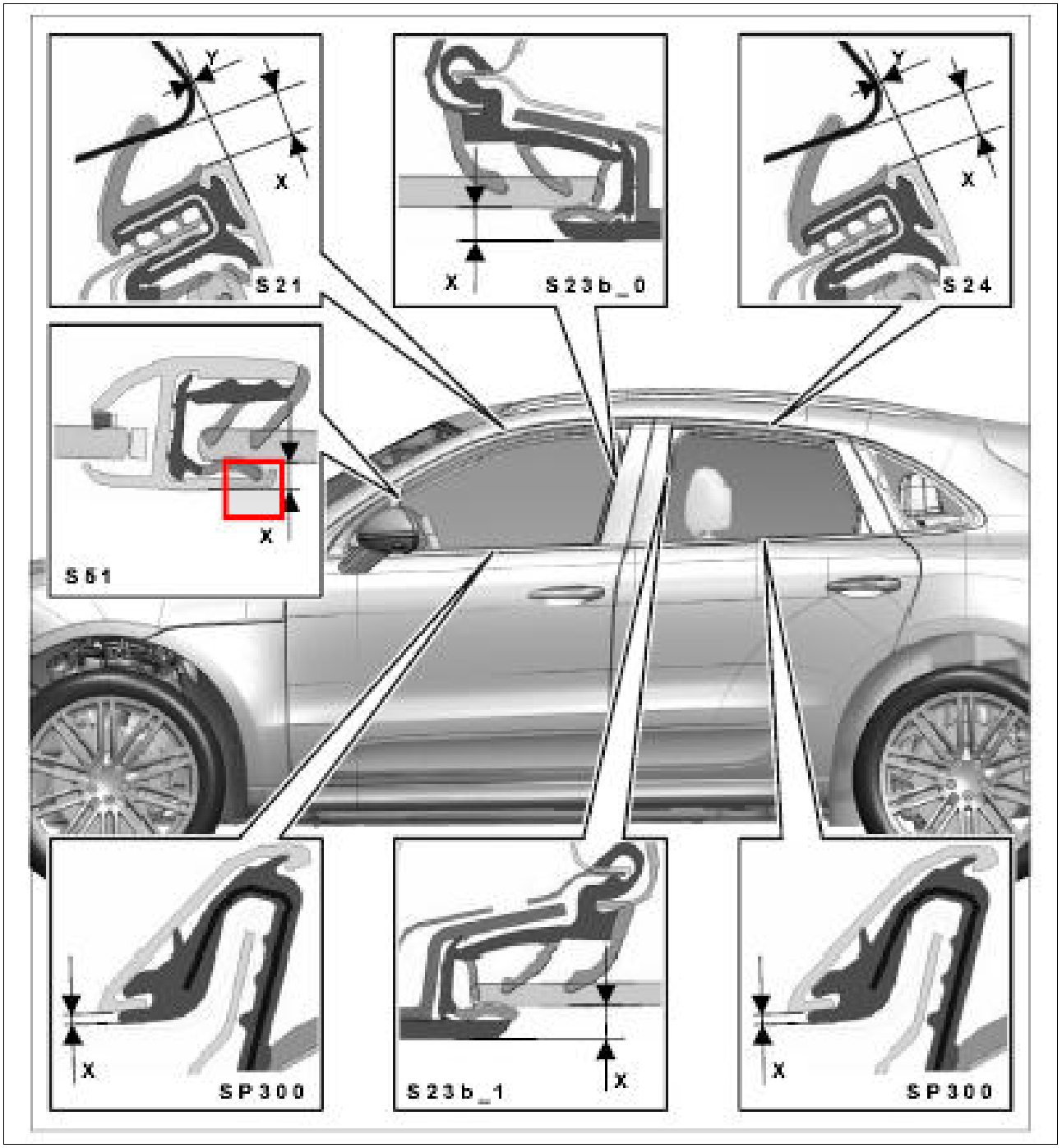

Courtesy of PORSCHE CARS NORTH AMERICA, INC.

SP300 - → Gap dimension: 0.8 mm+/-0.5 mm

Fig 86: Identifying Gap Dimensions For Front To Rear Door (S23B)

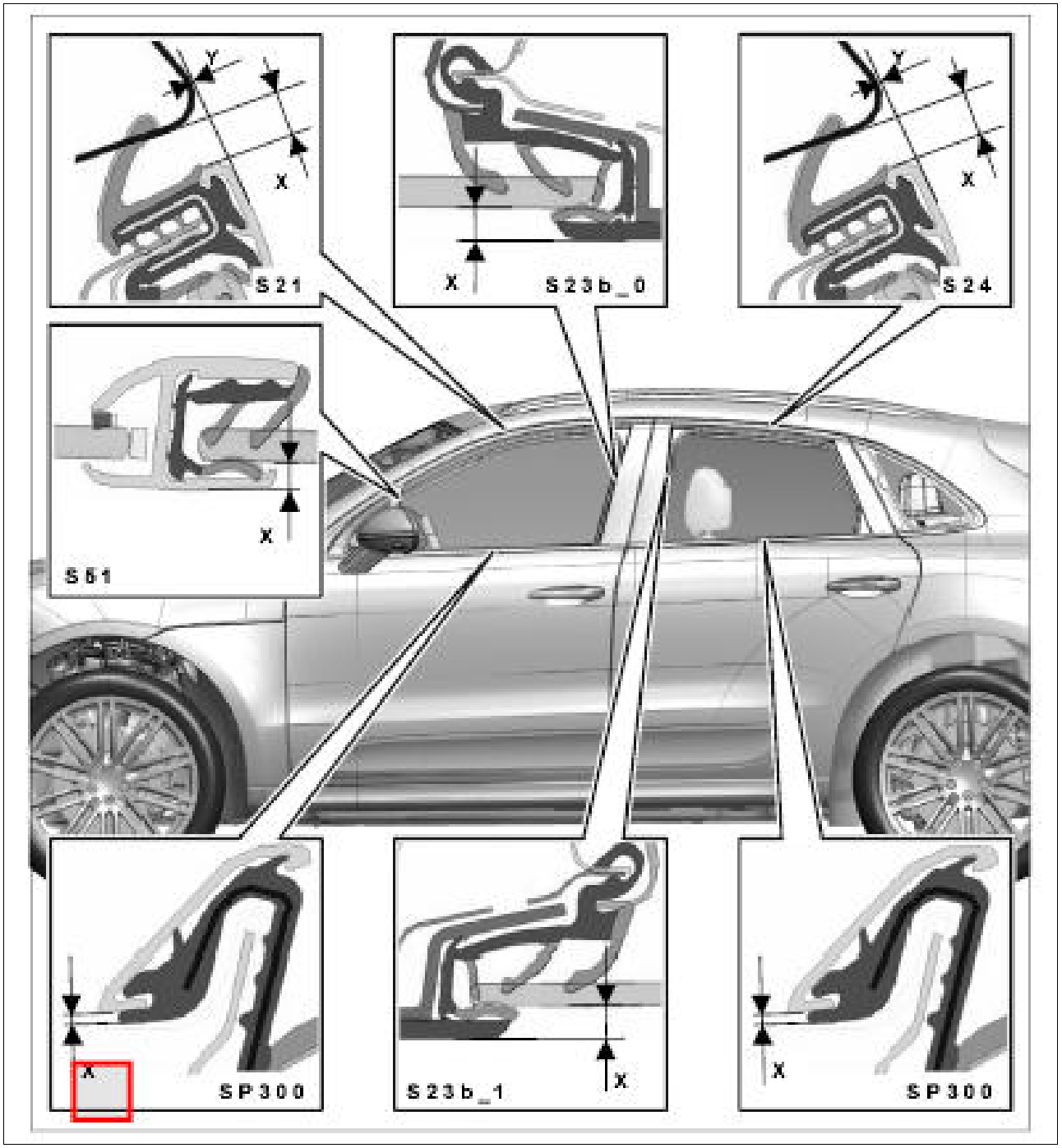

Courtesy of PORSCHE CARS NORTH AMERICA, INC.

S23b_1 - → Gap dimension: 4.5 mm+/-1 mm

Fig 87: Identifying Gap Dimensions For Front To Rear Door (SP300)

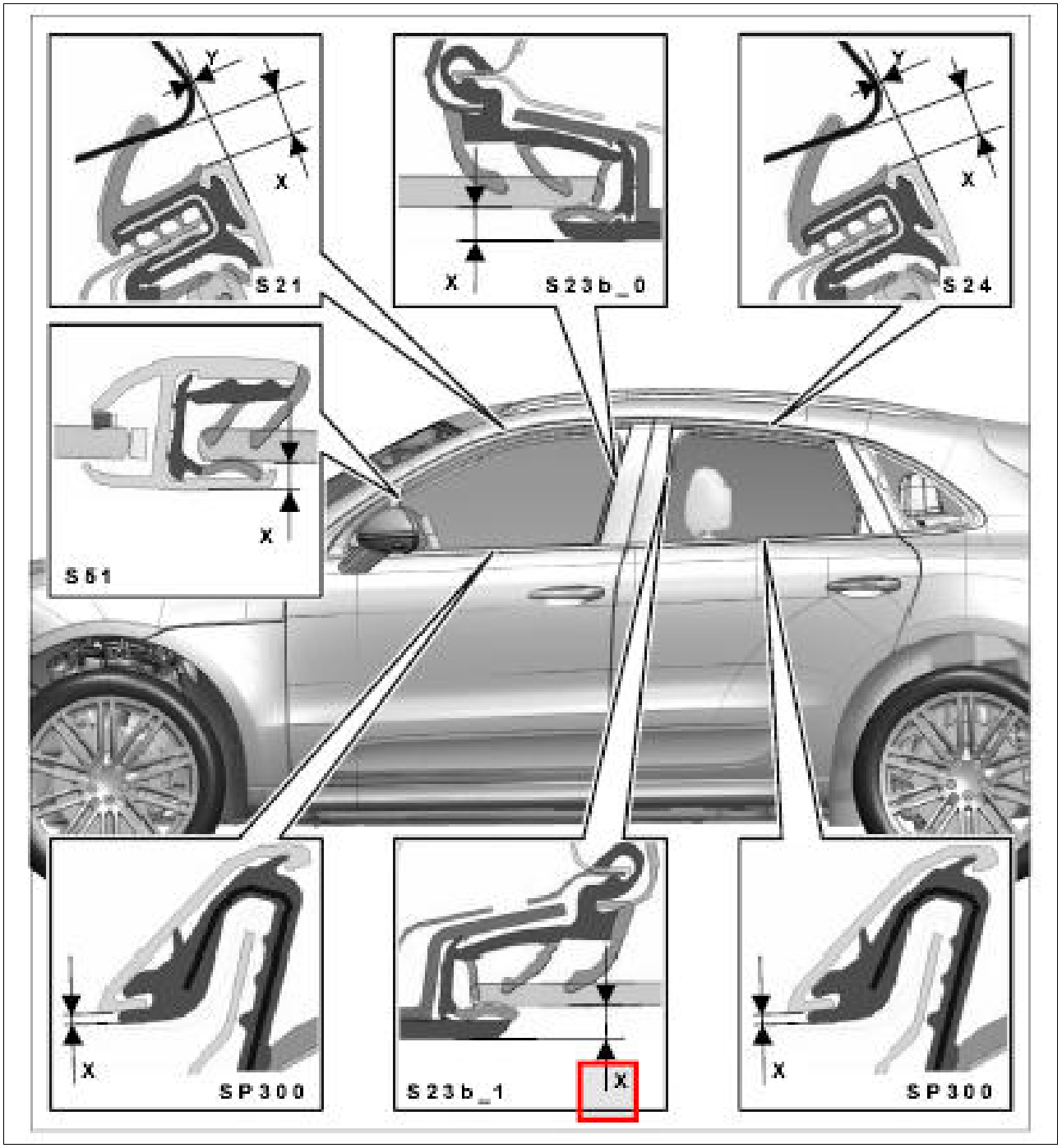

Courtesy of PORSCHE CARS NORTH AMERICA, INC.

SP300 - → Gap dimension: 0.8 mm+/-0.5 mm

Fig 88: Identifying Gap Dimensions For Front To Rear Door

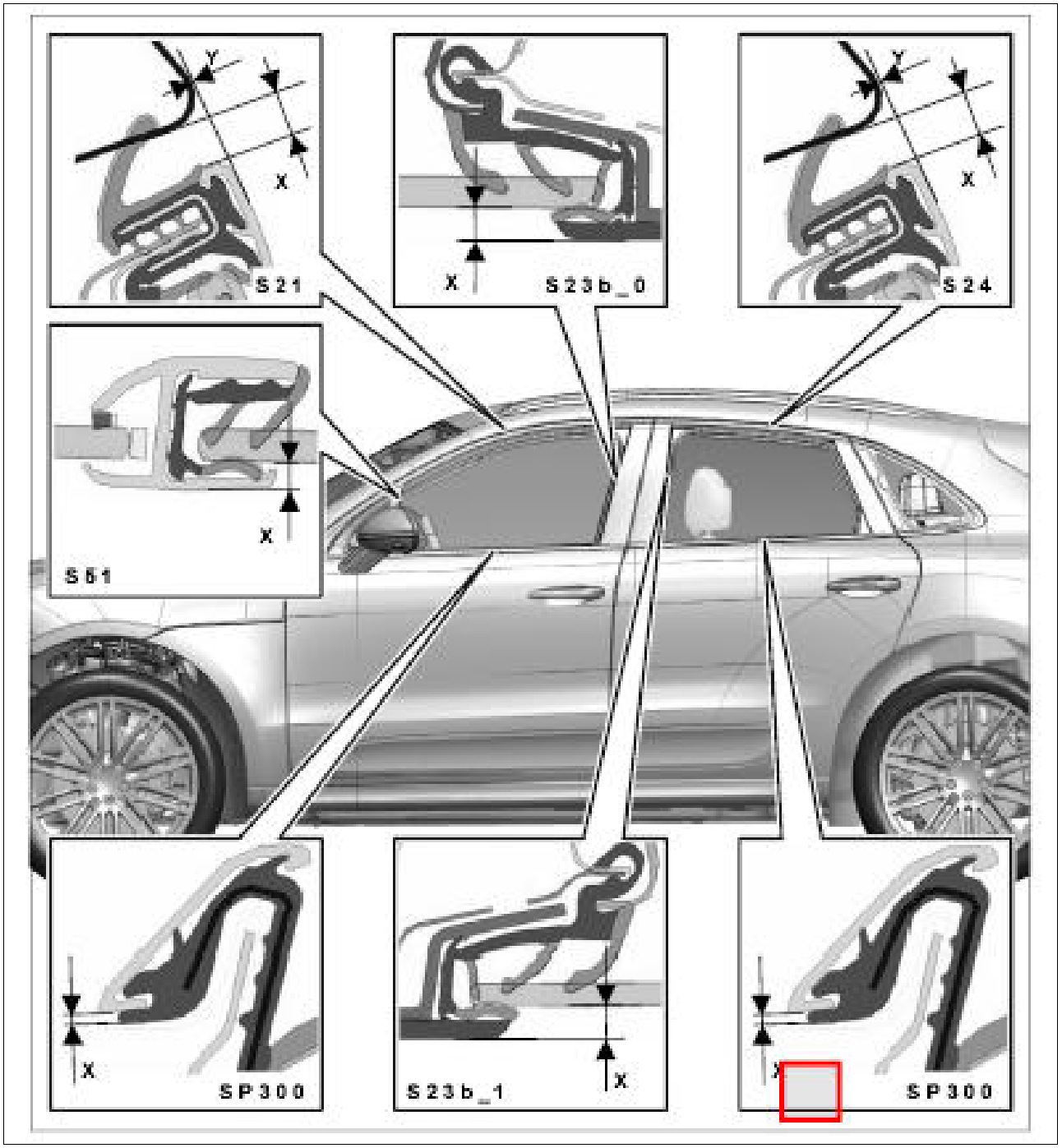

Courtesy of PORSCHE CARS NORTH AMERICA, INC.

Fig 89: Identifying Gap Dimensions For Rear Side Window (S25)

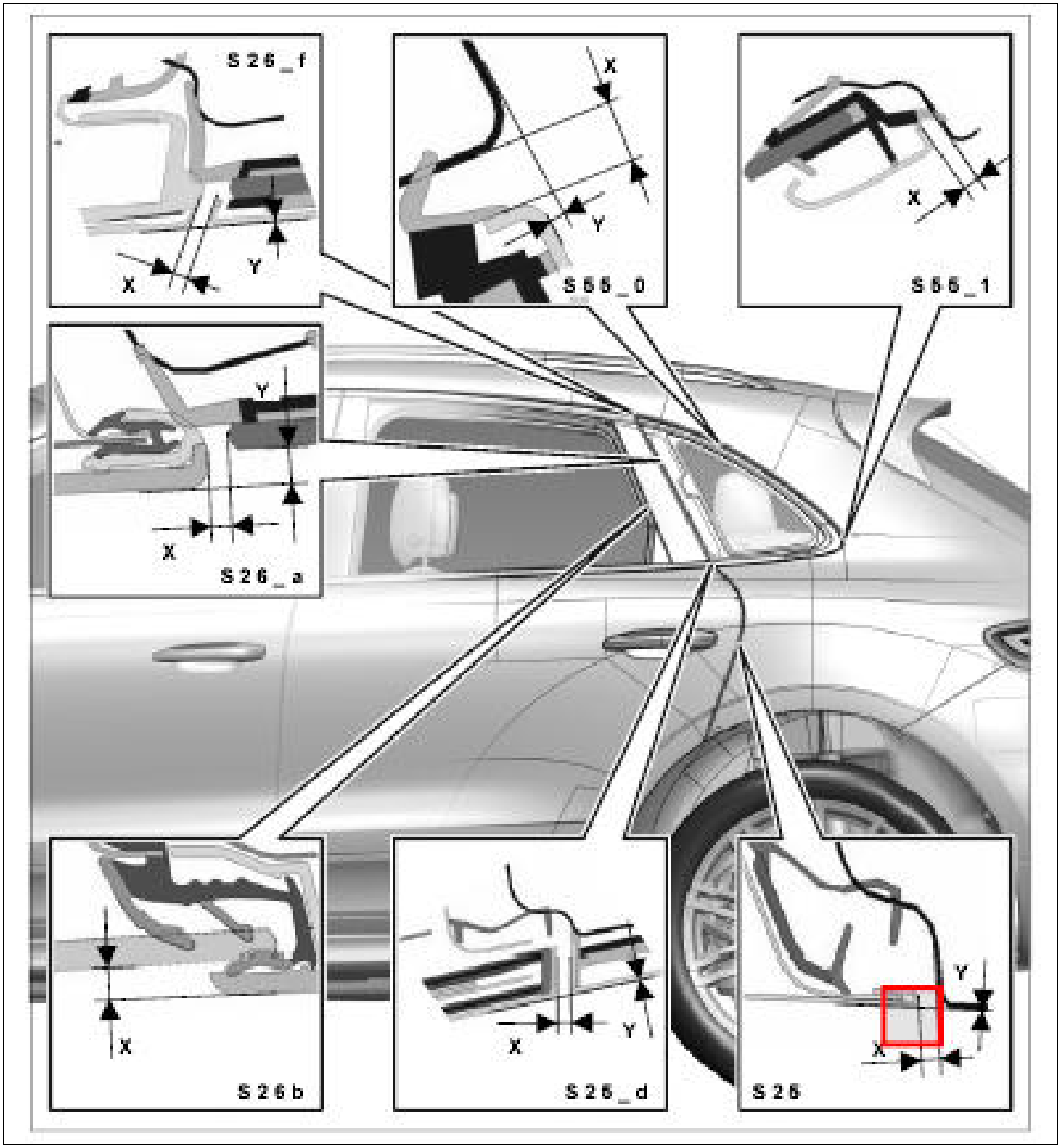

Courtesy of PORSCHE CARS NORTH AMERICA, INC.

S25 - → Gap dimension: 3.5 mm+/-0.5 mm

Fig 90: Identifying Gap Dimensions For Rear Side Window (S25)

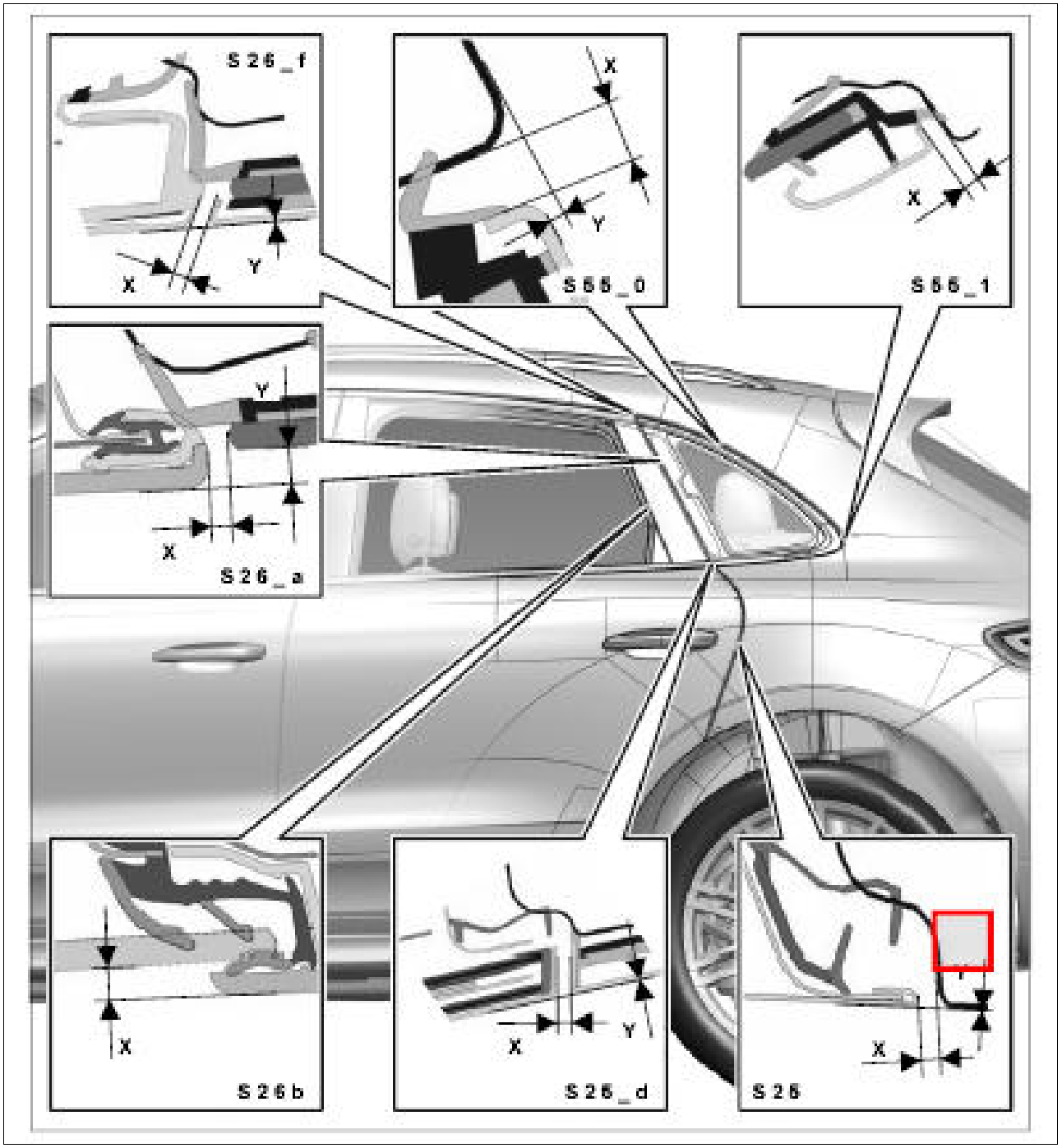

Courtesy of PORSCHE CARS NORTH AMERICA, INC.

S25 - → Gap dimension: 0 mm

Fig 91: Identifying Gap Dimensions For Rear Side Window (S26B)

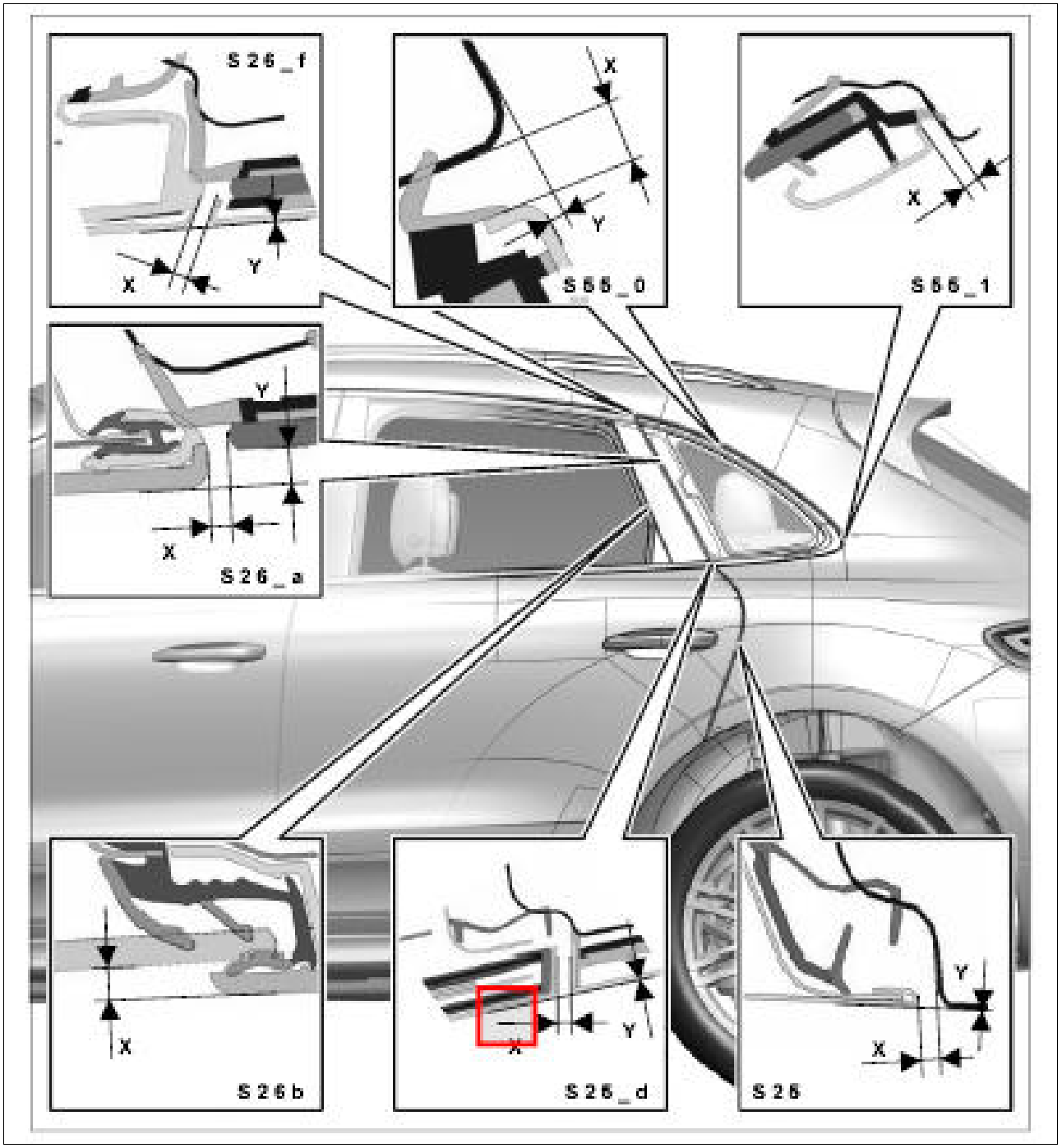

Courtesy of PORSCHE CARS NORTH AMERICA, INC.

S25_d - → Gap dimension: 3.5 mm+/-1 mm

Fig 92: Identifying Gap Dimensions For Rear Side Window (S26)

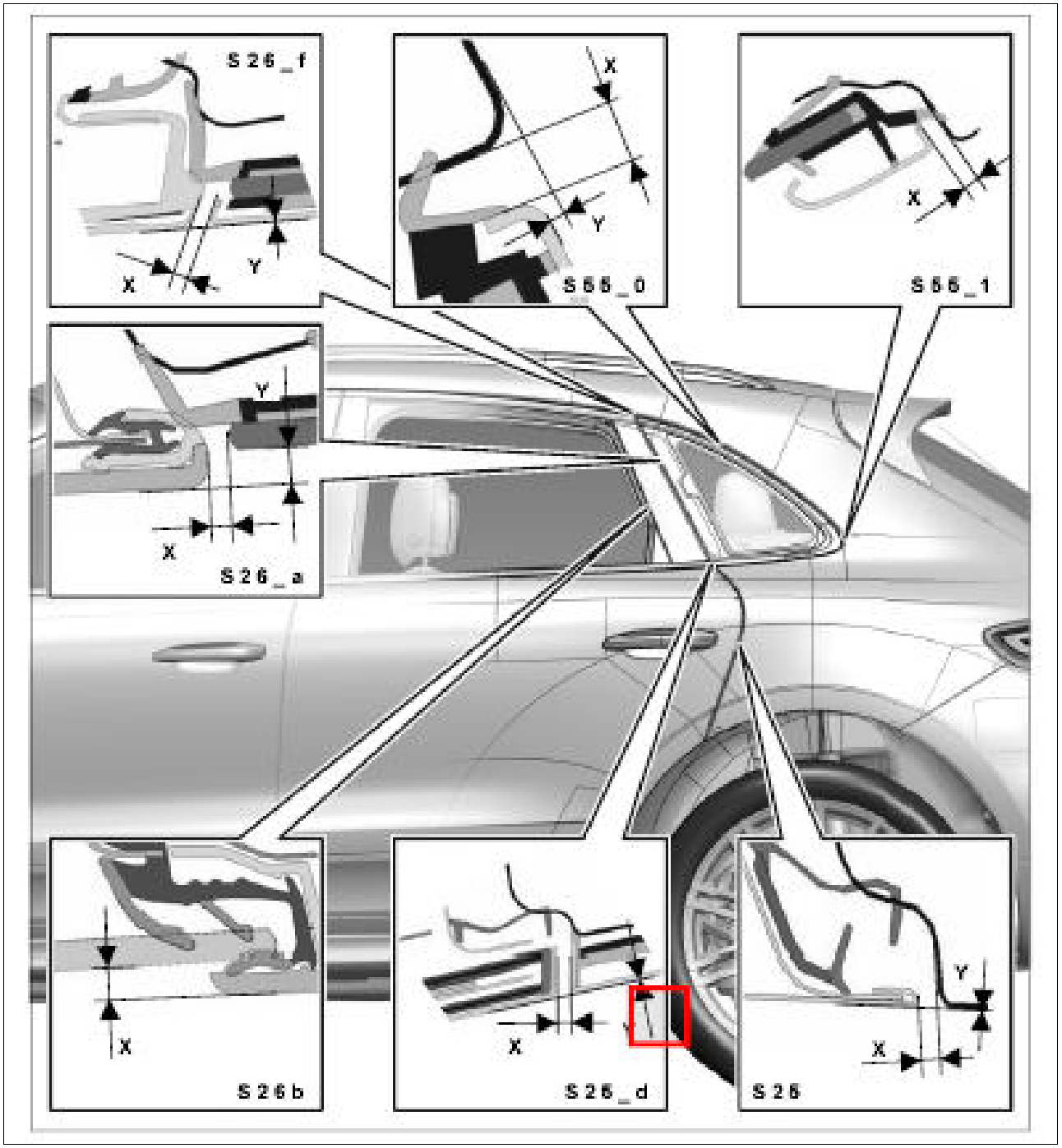

Courtesy of PORSCHE CARS NORTH AMERICA, INC.

S25_d - → Gap dimension: 0 mm

Fig 93: Identifying Gap Dimensions For Rear Side Window (S26)

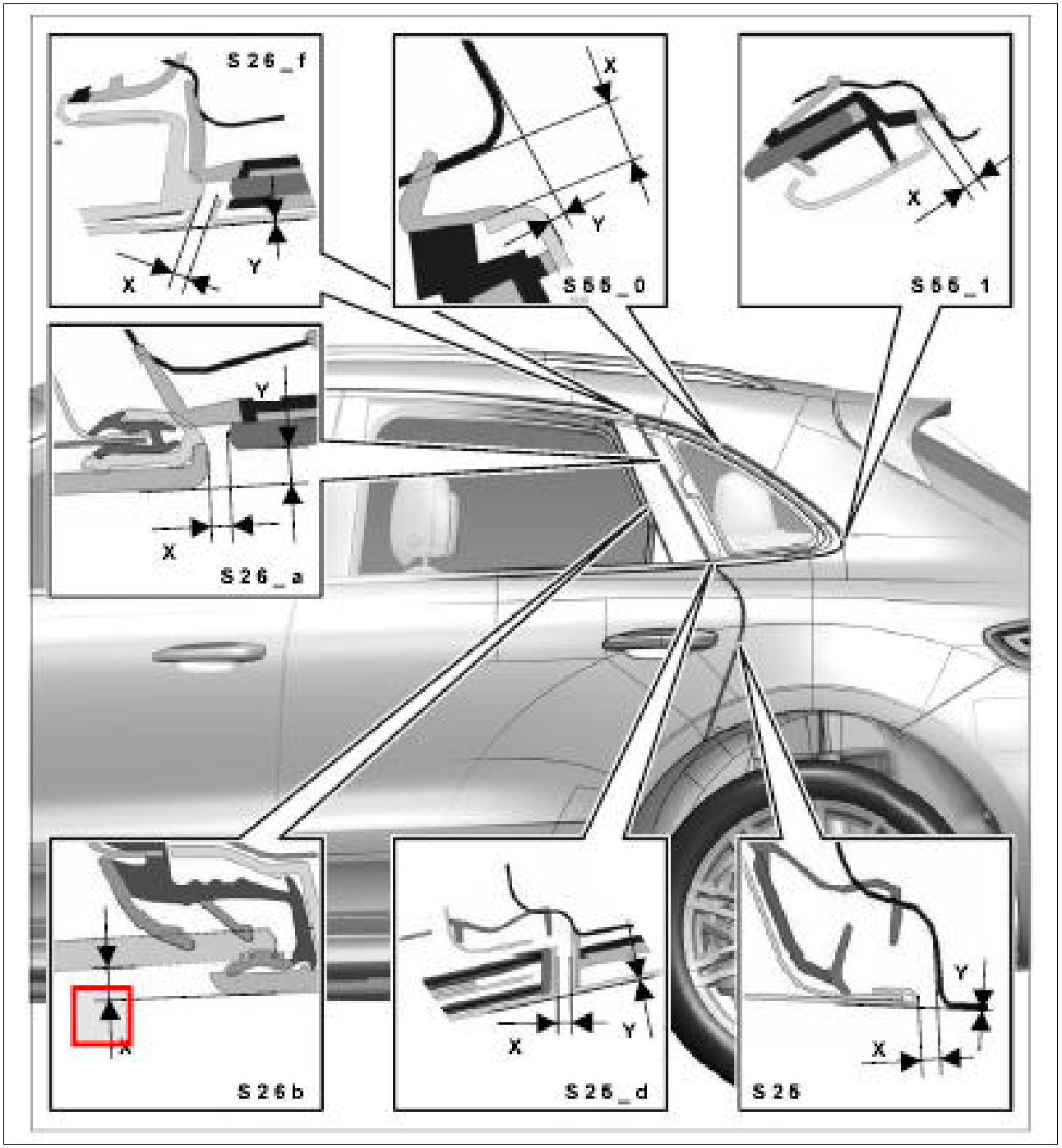

Courtesy of PORSCHE CARS NORTH AMERICA, INC.

S26b - → Gap dimension: 4.6 mm+/-1 mm

Fig 94: Identifying Gap Dimensions For Rear Side Window

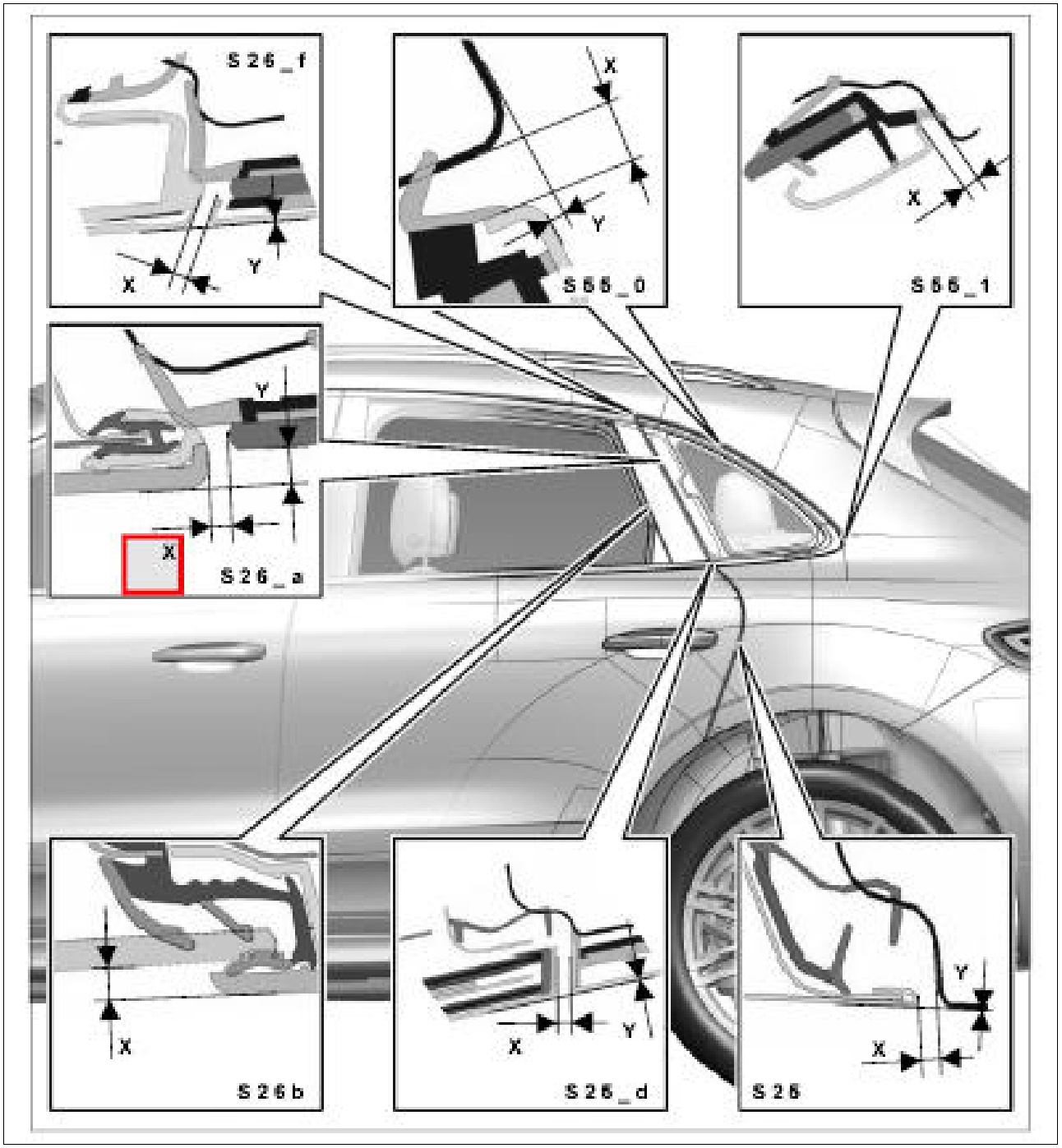

Courtesy of PORSCHE CARS NORTH AMERICA, INC.

S26_a - → Gap dimension: 3.5 mm+/-1 mm

Fig 95: Identifying Gap Dimensions For Rear Side Window

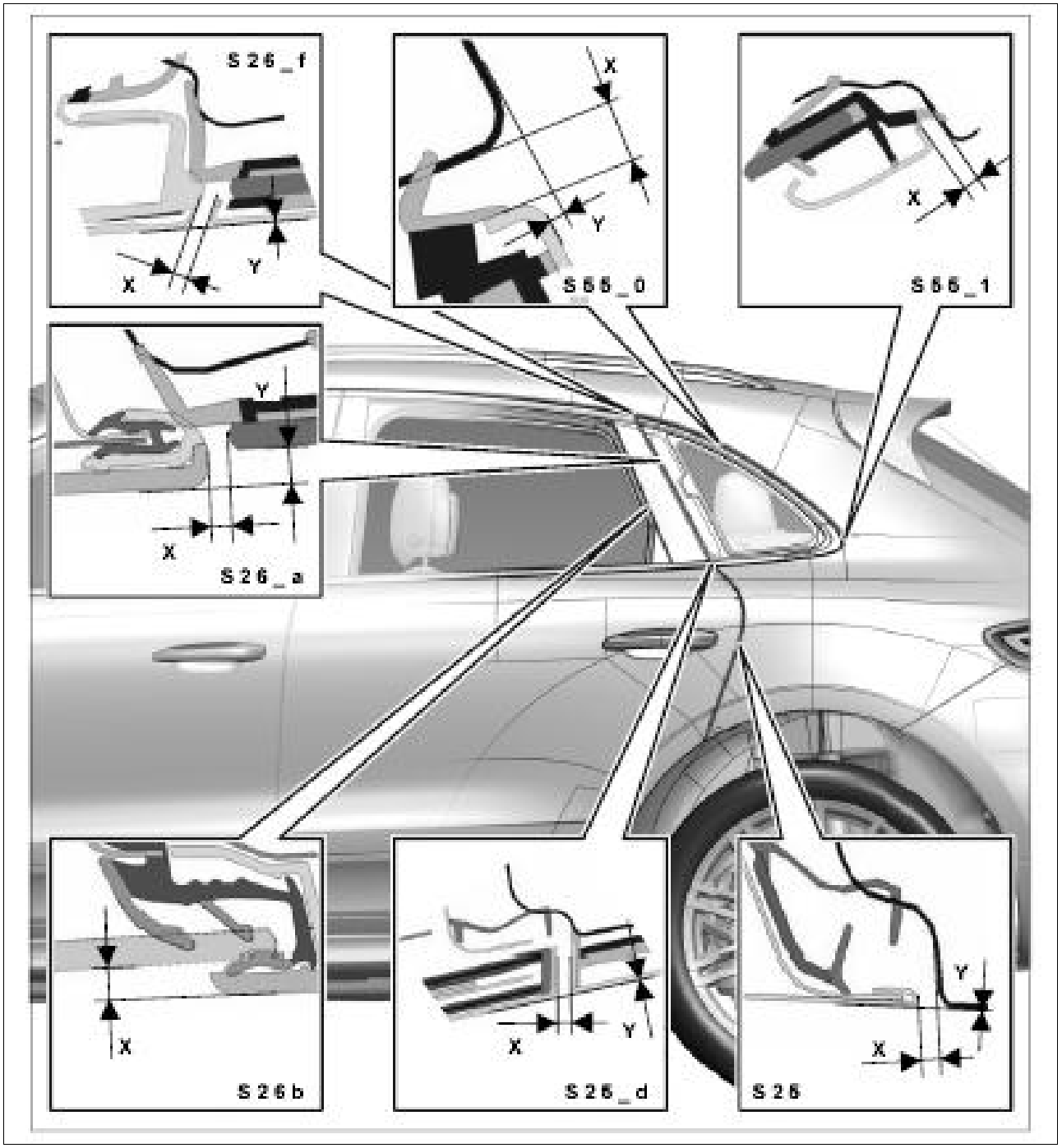

Courtesy of PORSCHE CARS NORTH AMERICA, INC.

S26_a - → Gap dimension: 4.2 mm+/-1 mm

Fig 96: Identifying Gap Dimensions For Rear Side Window (S55)

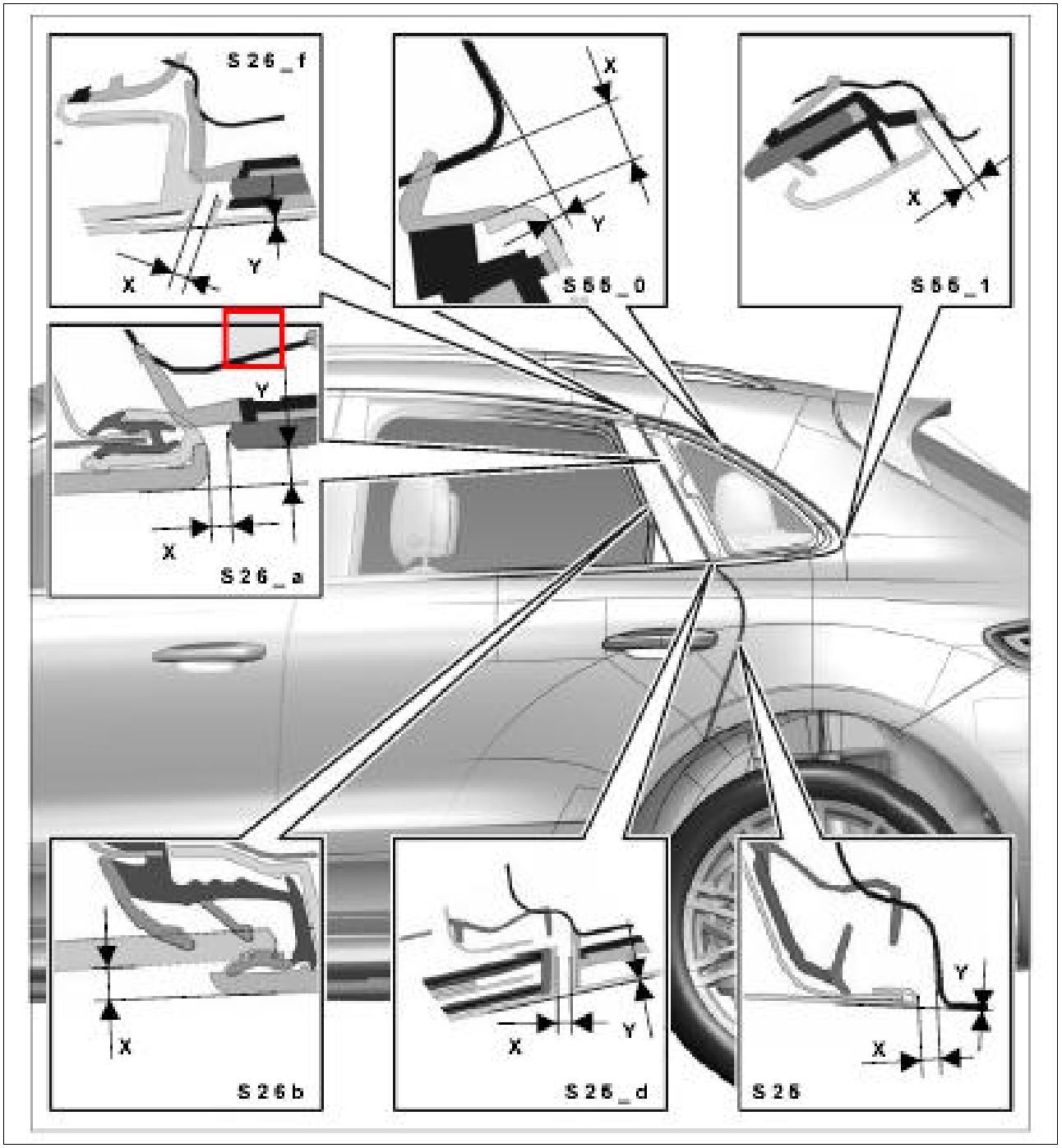

Courtesy of PORSCHE CARS NORTH AMERICA, INC.

S26_f - → Gap dimension: 3.5 mm+/-1 mm

Fig 97: Identifying Gap Dimensions For Rear Side Window (S55)

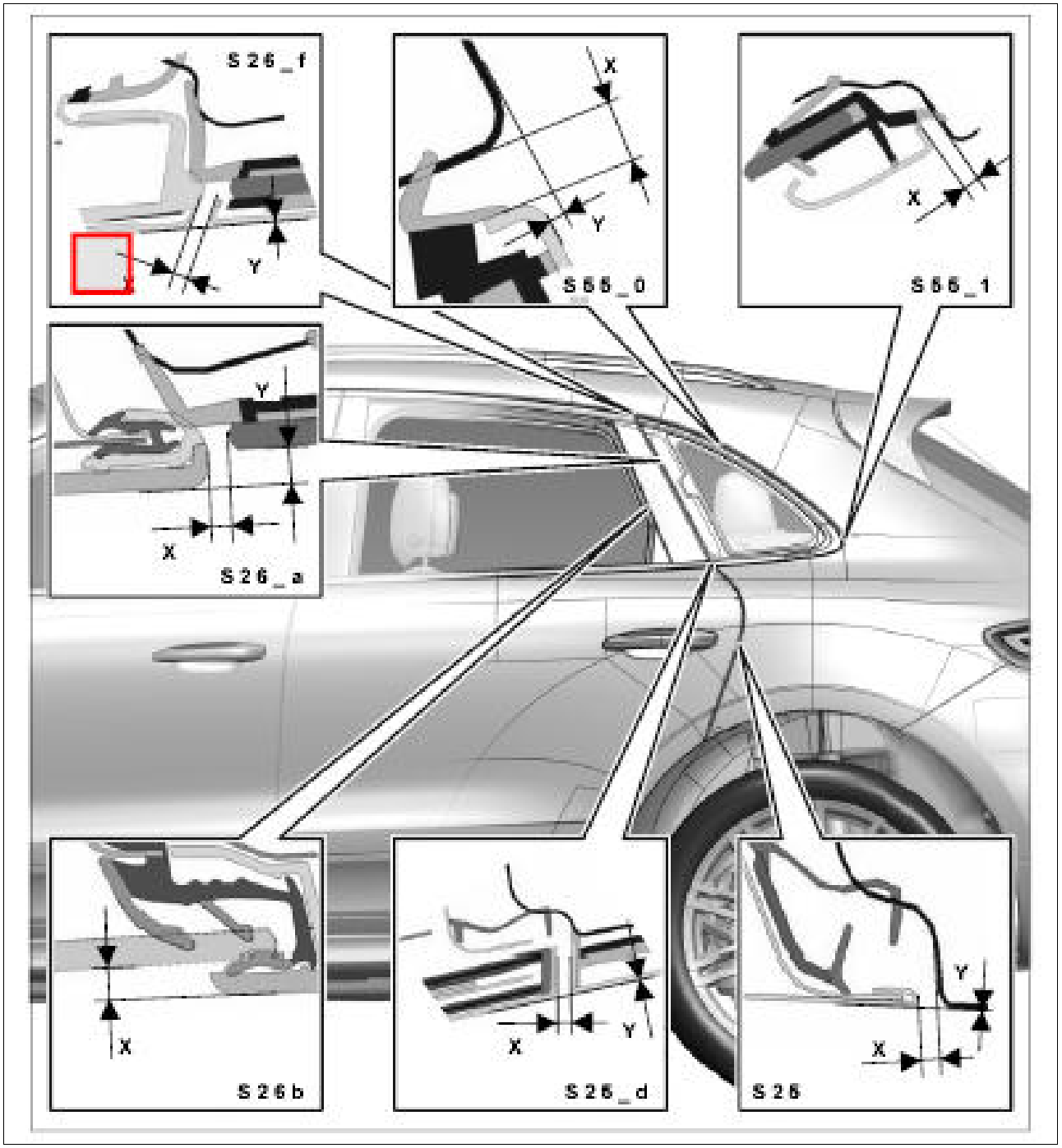

Courtesy of PORSCHE CARS NORTH AMERICA, INC.

S26_f - → Gap dimension: 0.3 mm

Fig 98: Identifying Gap Dimensions For Rear Side Window

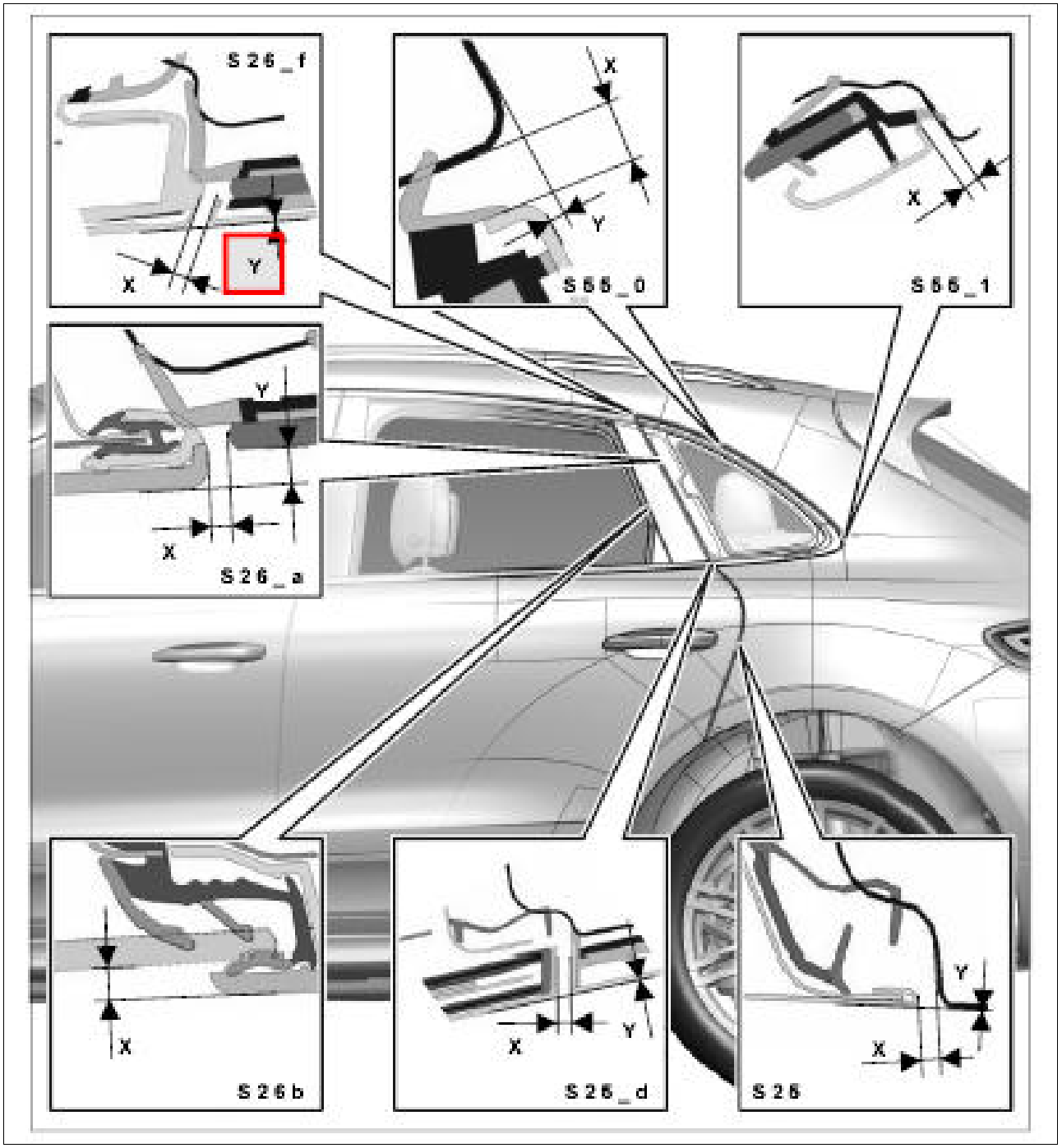

Courtesy of PORSCHE CARS NORTH AMERICA, INC.

S55_0 - → Gap dimension: 4.5 mm+/-1.5 mm

Fig 99: Identifying Gap Dimensions For Rear Side Window

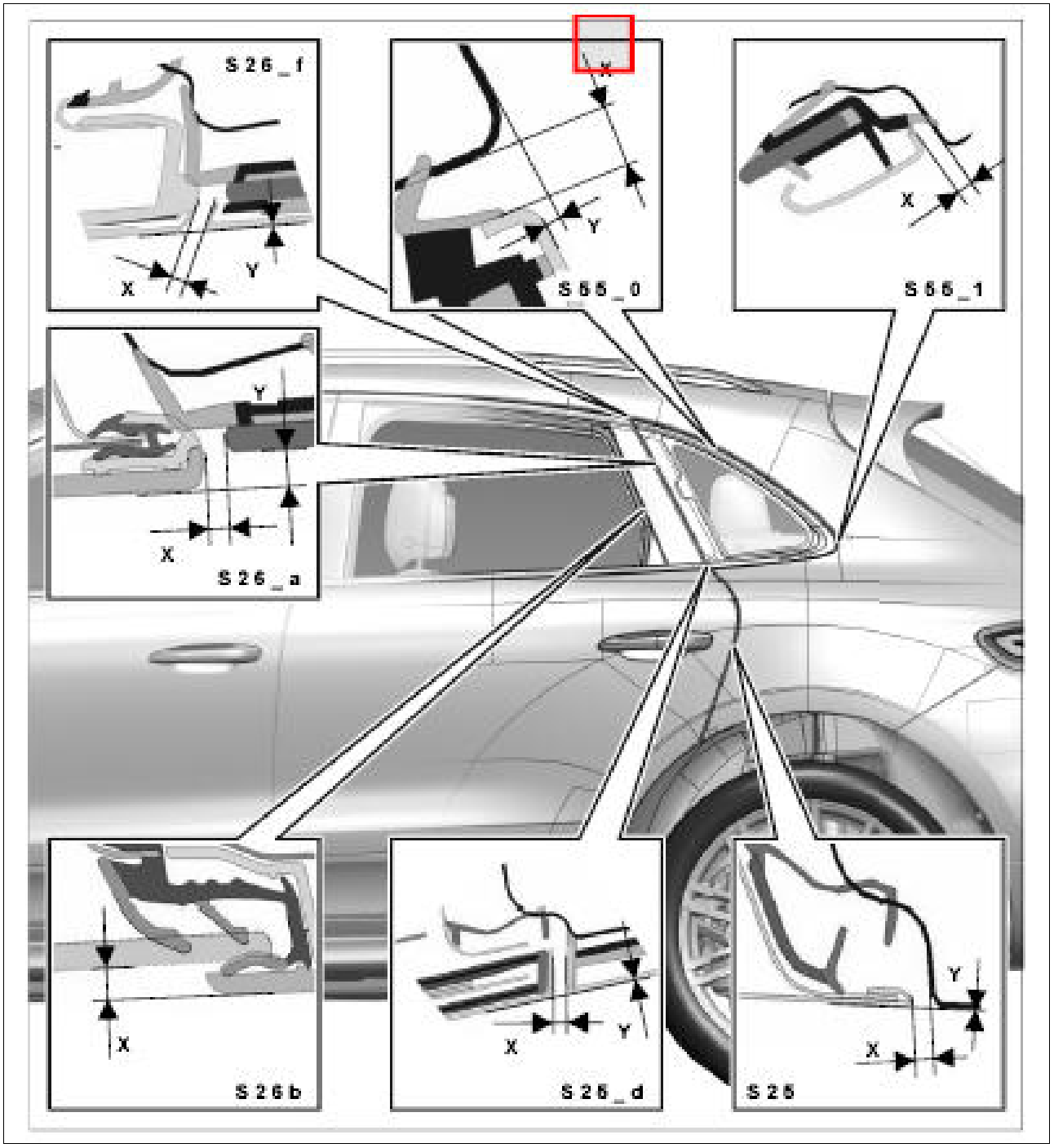

Courtesy of PORSCHE CARS NORTH AMERICA, INC.

S55_0 - → Gap dimension: 0.8 mm+/-1 mm

Fig 100: Identifying Gap Dimensions For Rear Side Window

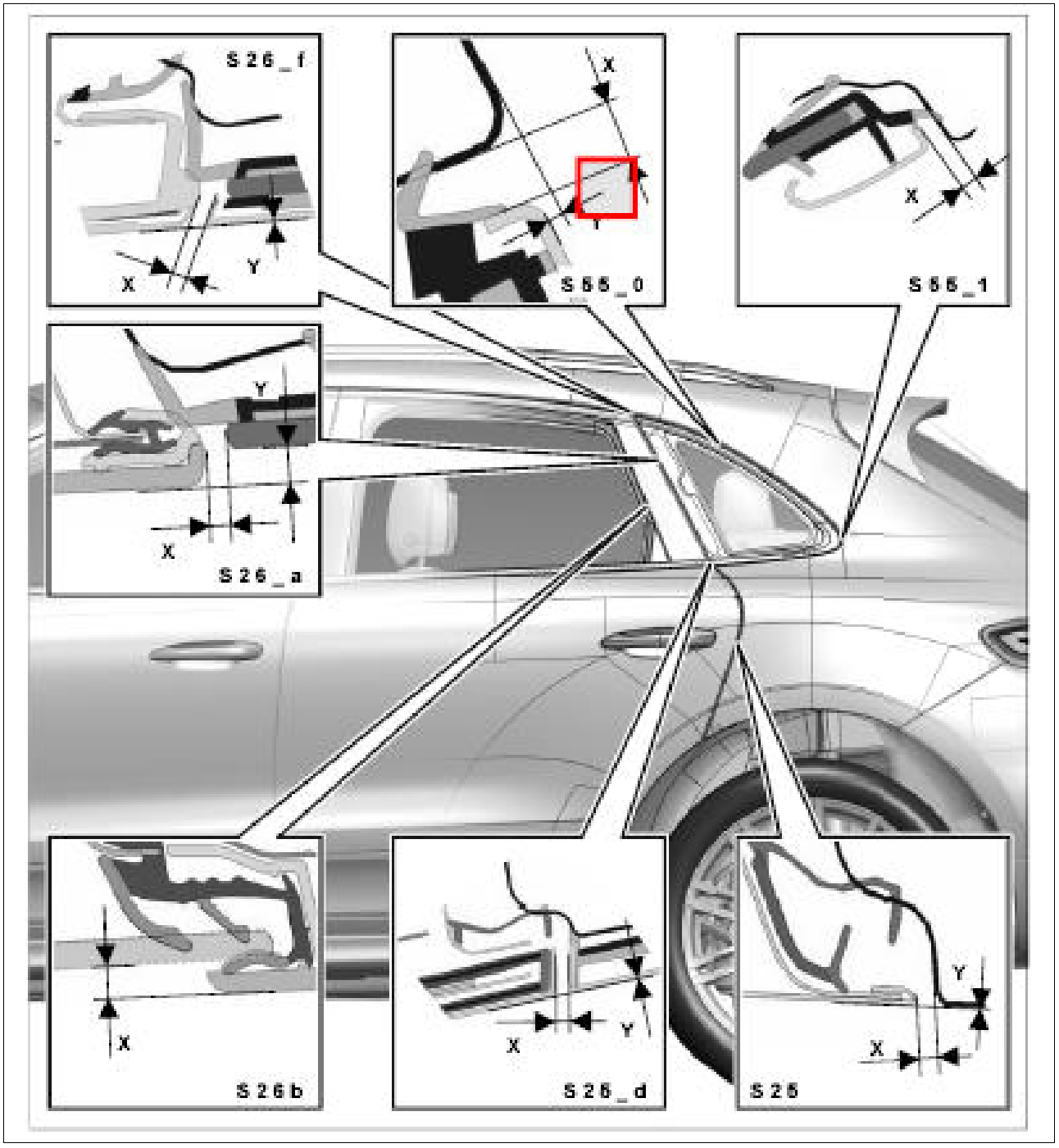

Courtesy of PORSCHE CARS NORTH AMERICA, INC.

S55_1 - → Gap dimension: 3.8 mm+/-0.8 mm

Fig 101: Identifying Gap Dimensions For Rear Side Window Sill Cover

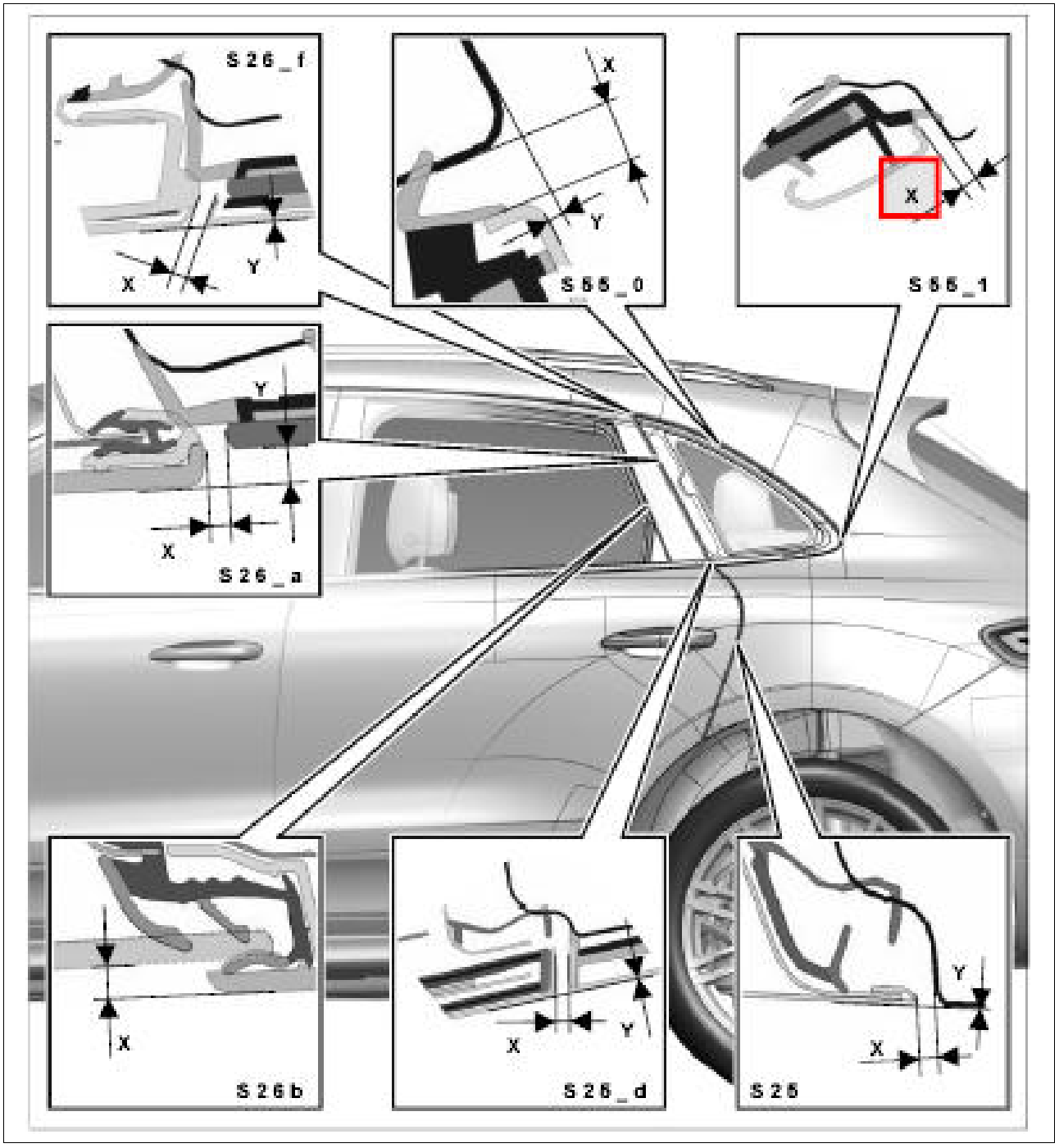

Courtesy of PORSCHE CARS NORTH AMERICA, INC.

Gap dimensions for sill cover

Fig 102: Identifying Gap Dimensions For Sill Cover (S11)

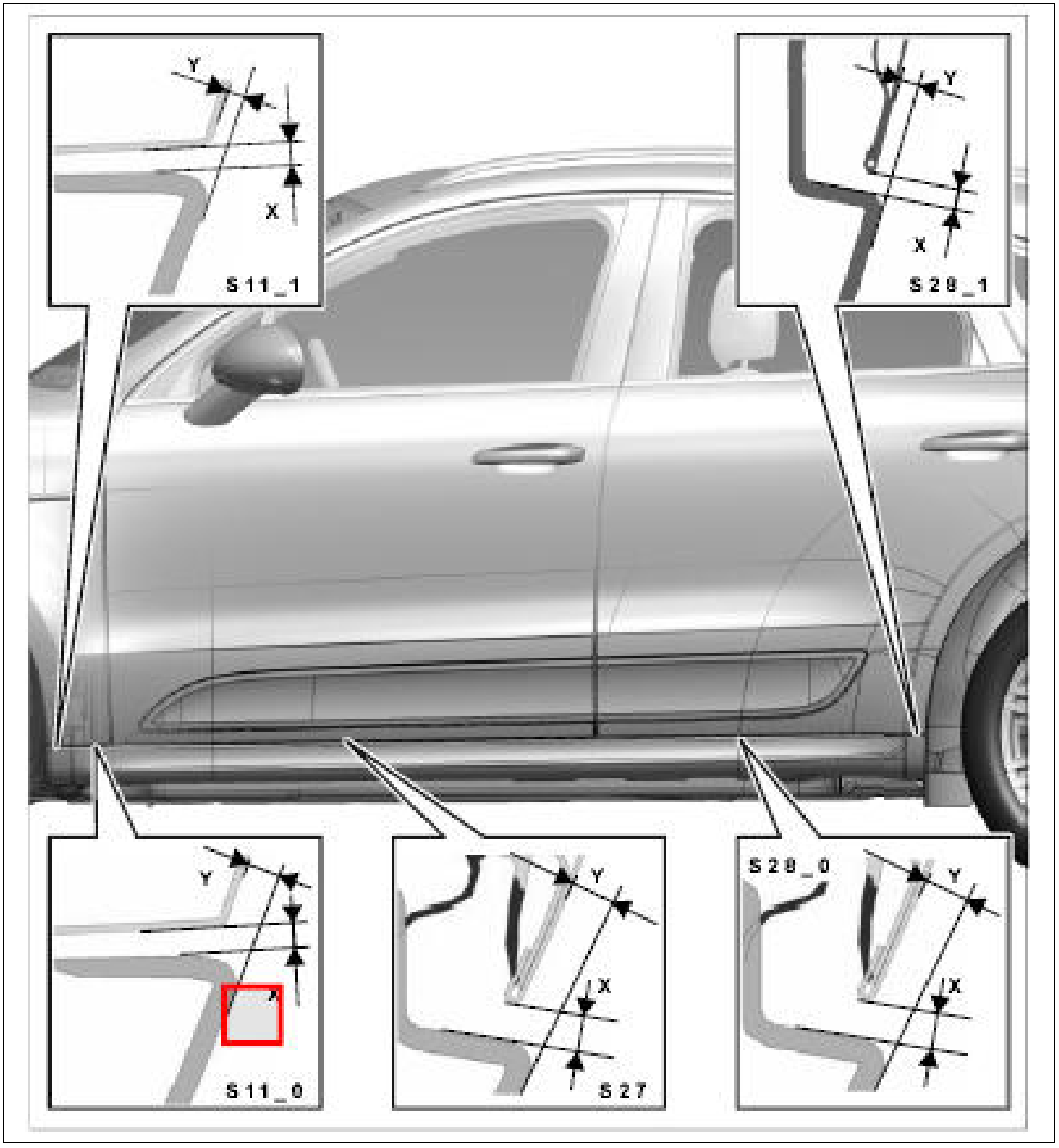

Courtesy of PORSCHE CARS NORTH AMERICA, INC.

S11_0 - → Gap dimension: 4 mm+/-1.5 mm

Fig 103: Identifying Gap Dimensions For Sill Cover (S11)

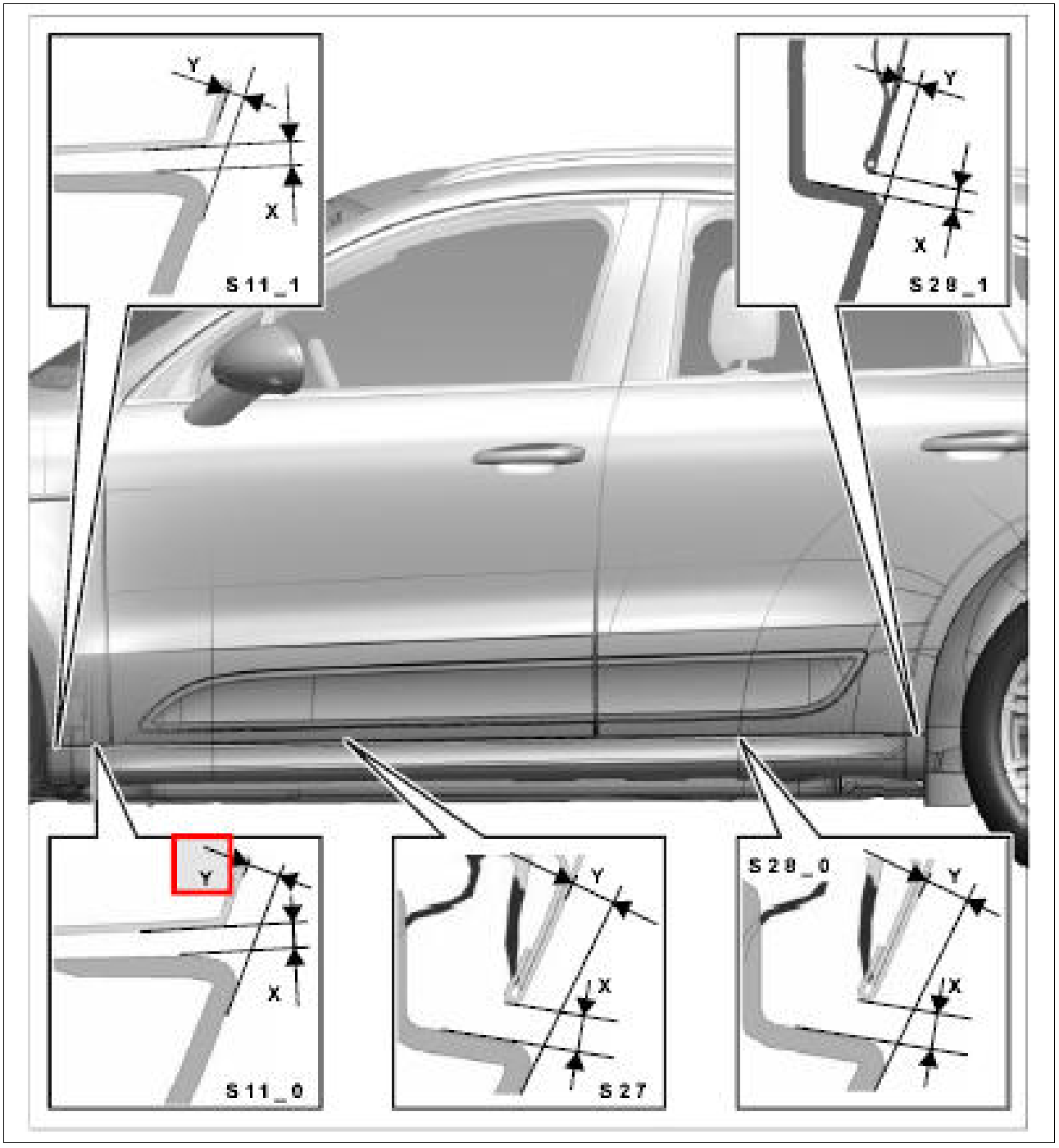

Courtesy of PORSCHE CARS NORTH AMERICA, INC.

S11_0 - → Gap dimension: 5 mm+/-1.5 mm

Fig 104: Identifying Gap Dimensions For Sill Cover

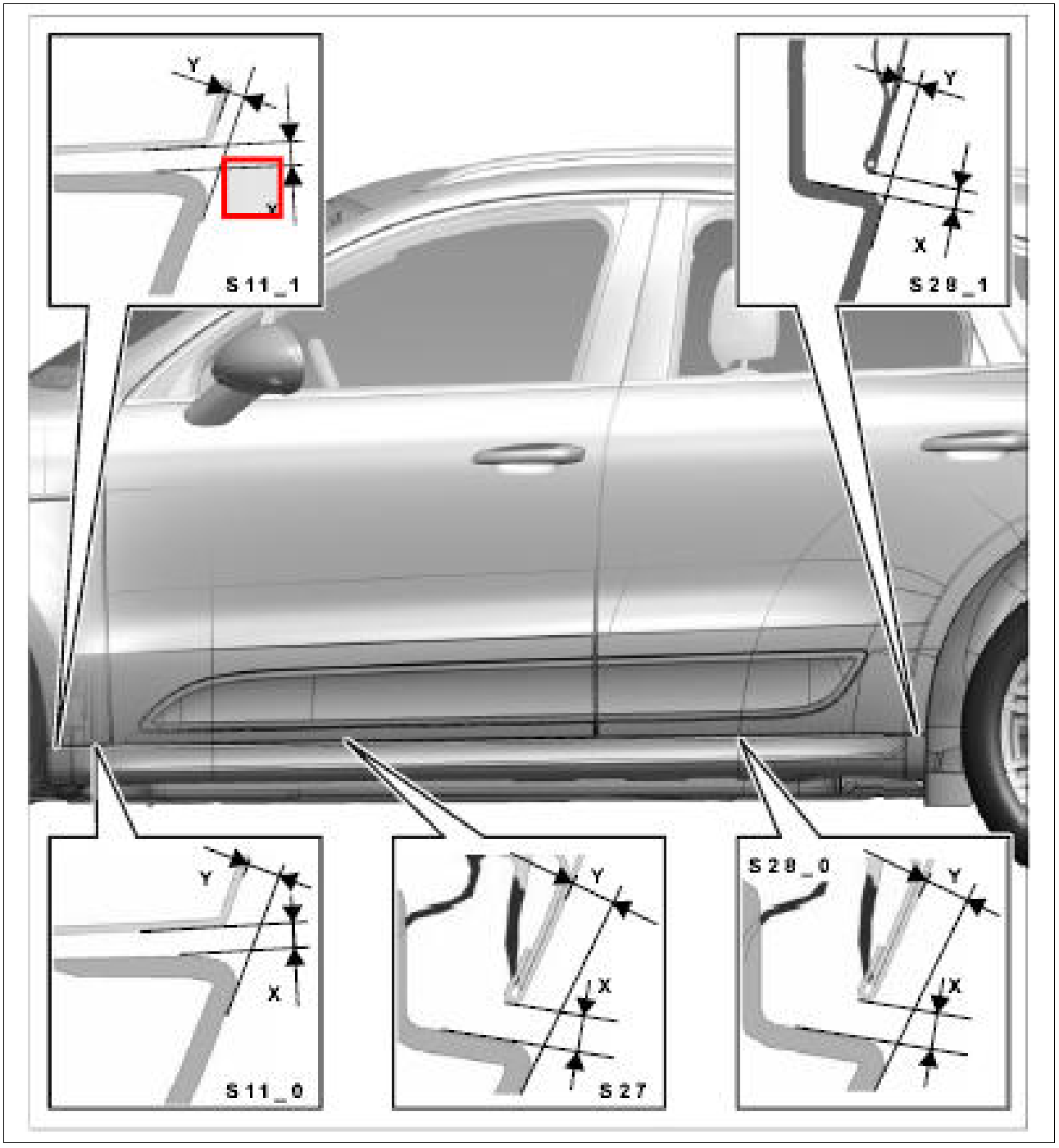

Courtesy of PORSCHE CARS NORTH AMERICA, INC.

S11_1 - → Contact force: 4 mm+/-1.5 mm

Fig 105: Identifying Gap Dimensions For Sill Cover

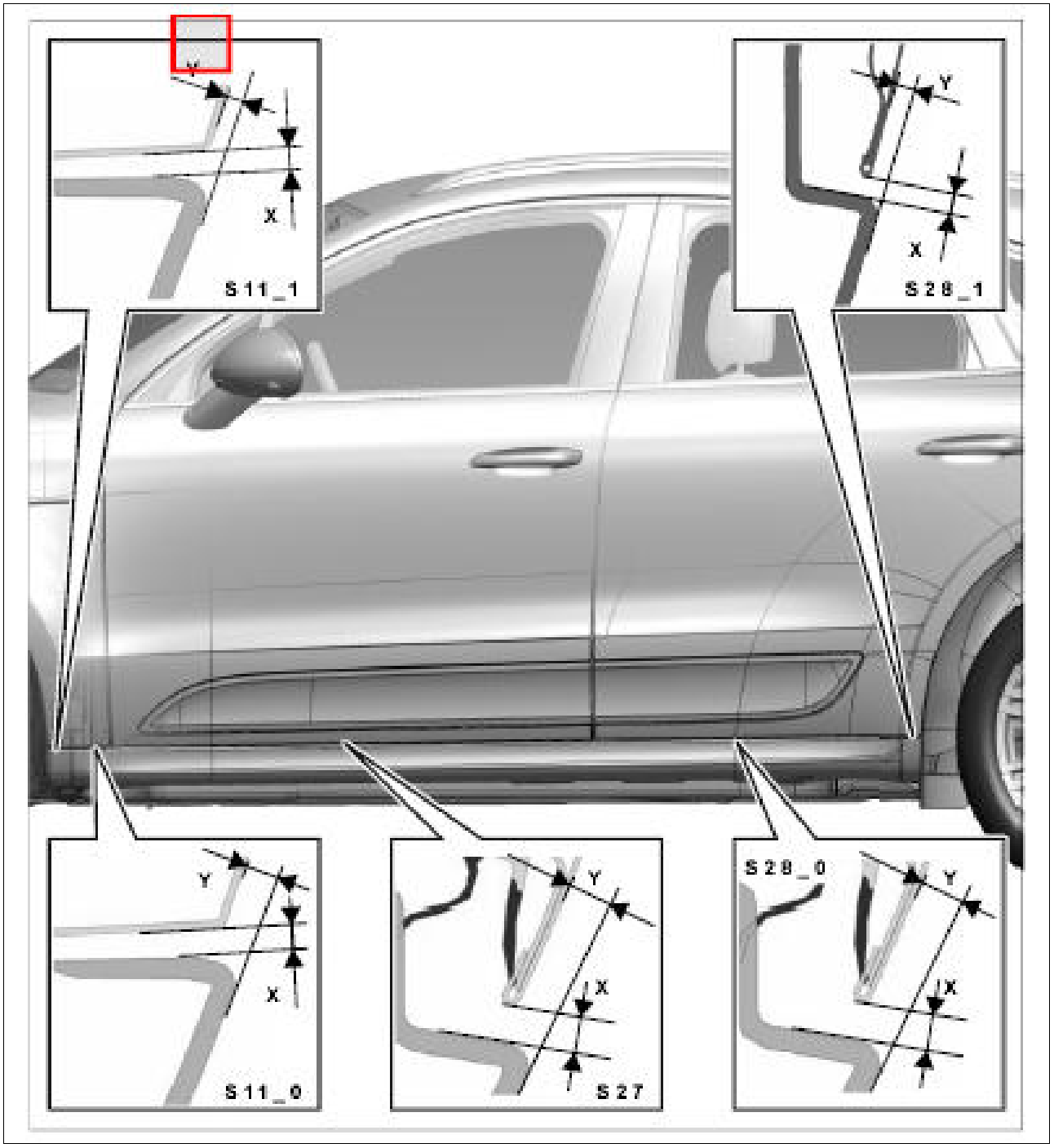

Courtesy of PORSCHE CARS NORTH AMERICA, INC.

S11_1 - → Gap dimension: 5 mm+/-1.5 mm

Fig 106: Identifying Gap Dimensions For Sill Cover (S27)

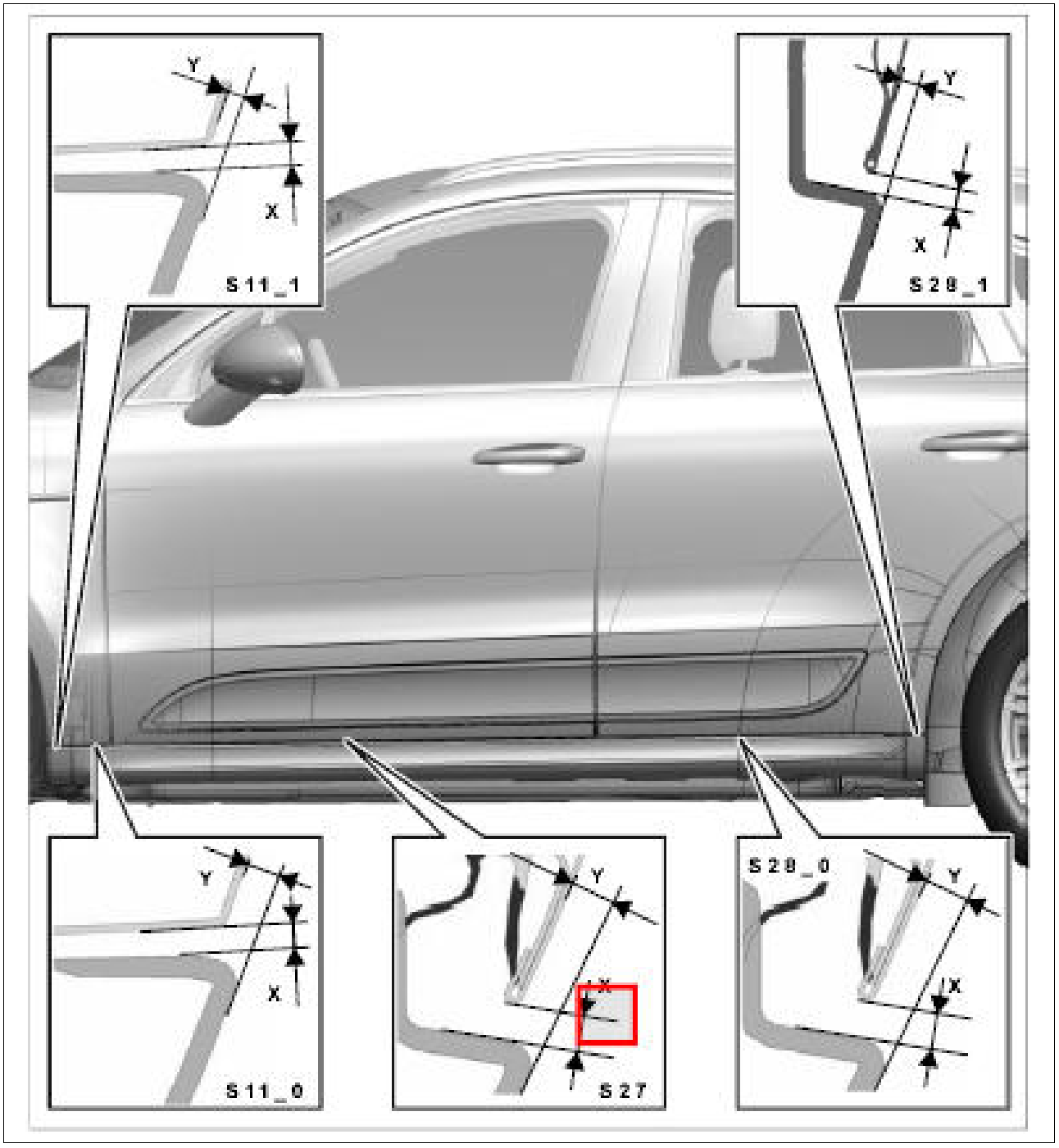

Courtesy of PORSCHE CARS NORTH AMERICA, INC.

S27 - → Gap dimension: 4 mm+/-1.5 mm

Fig 107: Identifying Gap Dimensions For Sill Cover (S27)

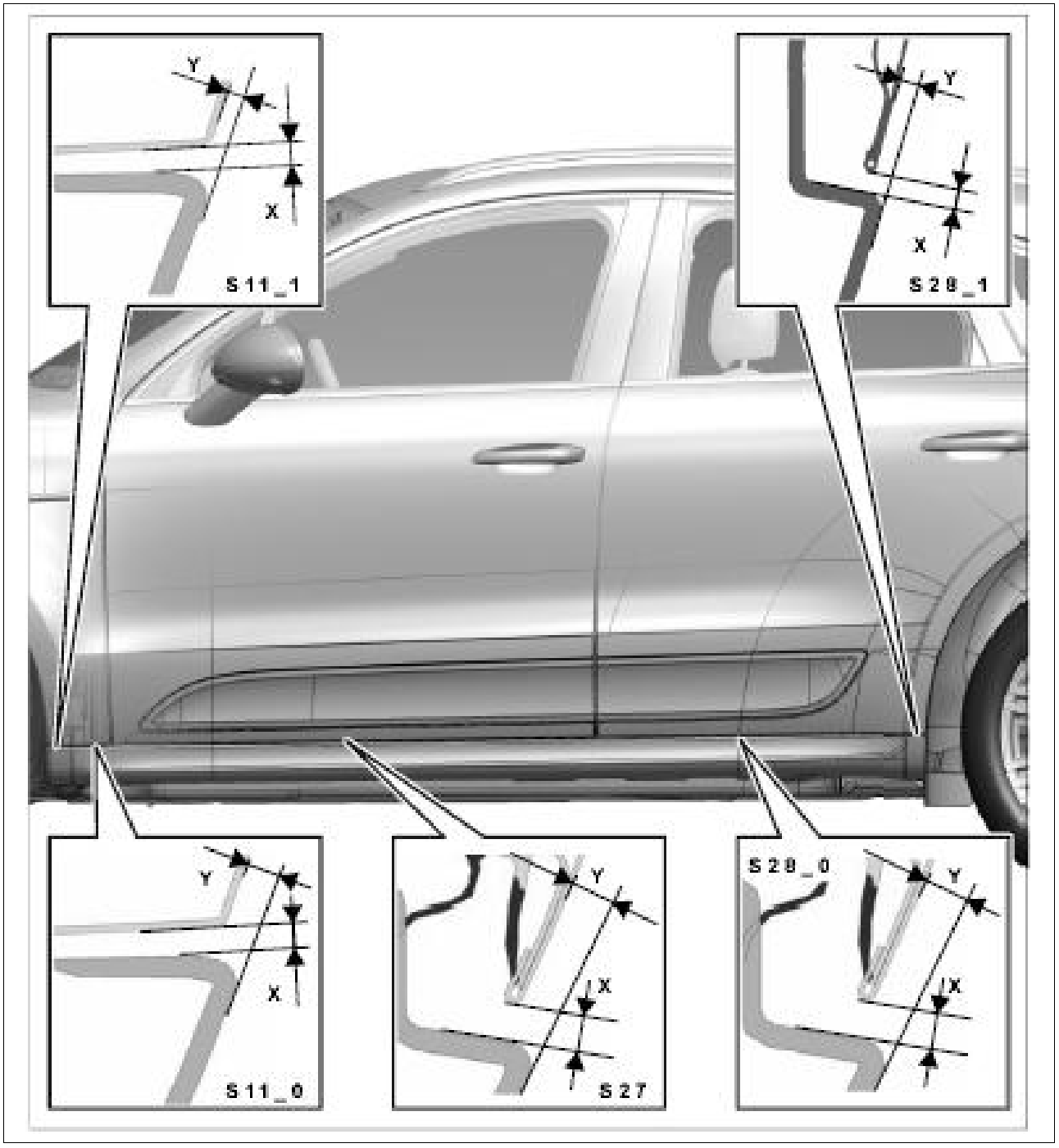

Courtesy of PORSCHE CARS NORTH AMERICA, INC.

S27 - → Gap dimension: 5 mm+/-1.5 mm

Fig 108: Identifying Gap Dimensions For Sill Cover (S28)

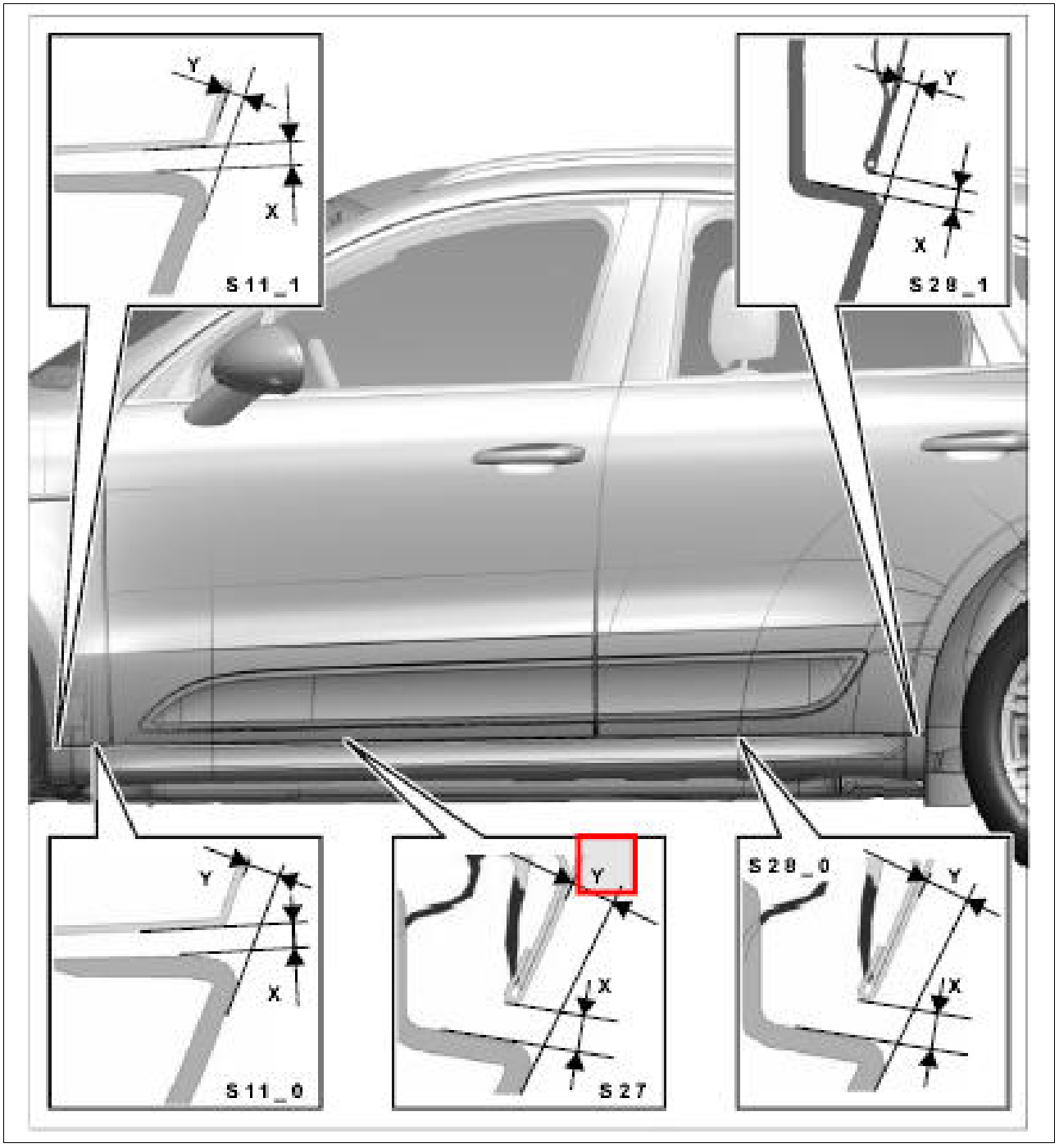

Courtesy of PORSCHE CARS NORTH AMERICA, INC.

S28_0 - → Gap dimension: 4 mm+/-1.5 mm

Fig 109: Identifying Gap Dimensions For Sill Cover

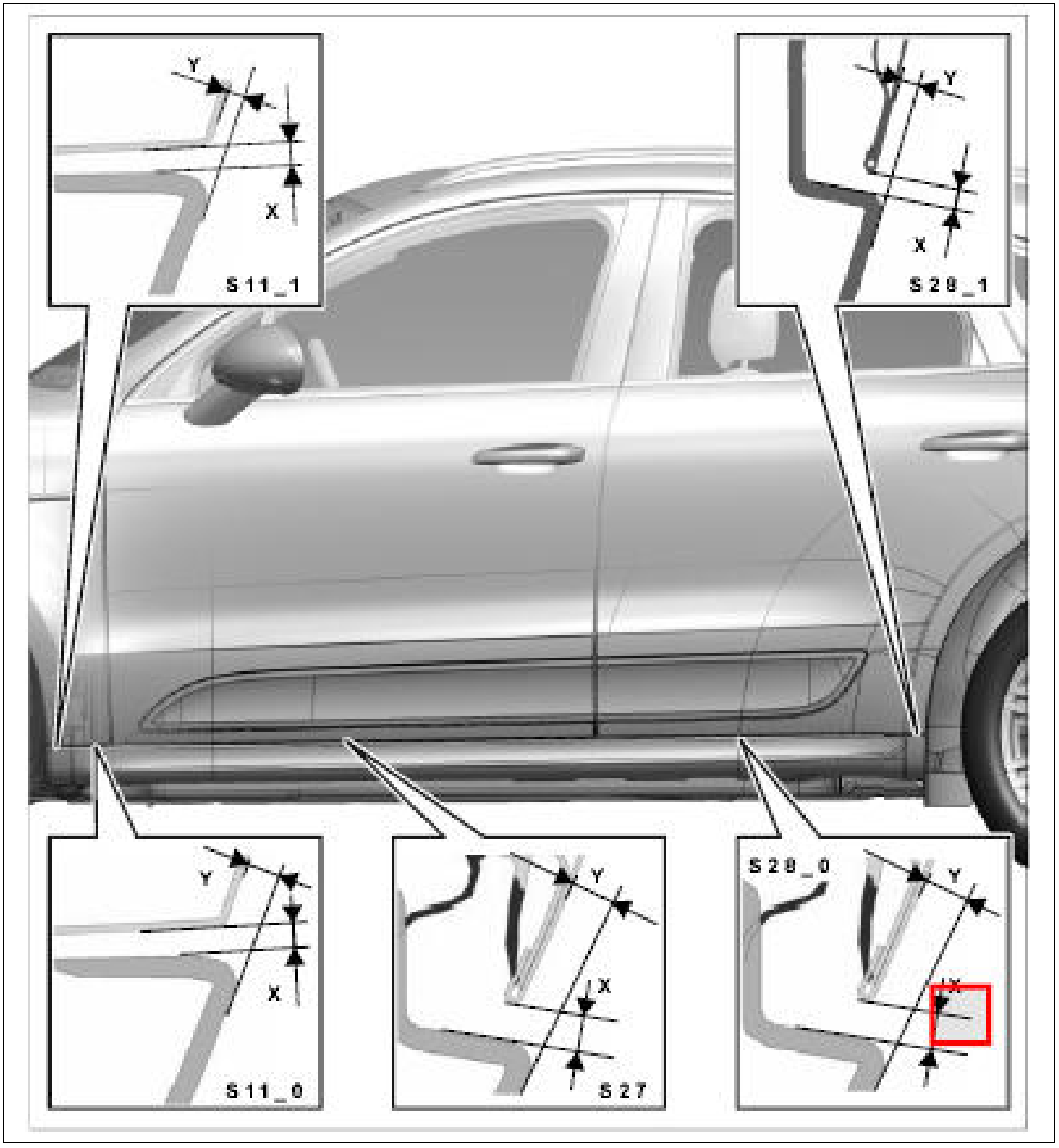

Courtesy of PORSCHE CARS NORTH AMERICA, INC.

S28_0 - → Gap dimension: 5 mm+/-1.5 mm

Fig 110: Identifying Gap Dimensions For Sill Cover

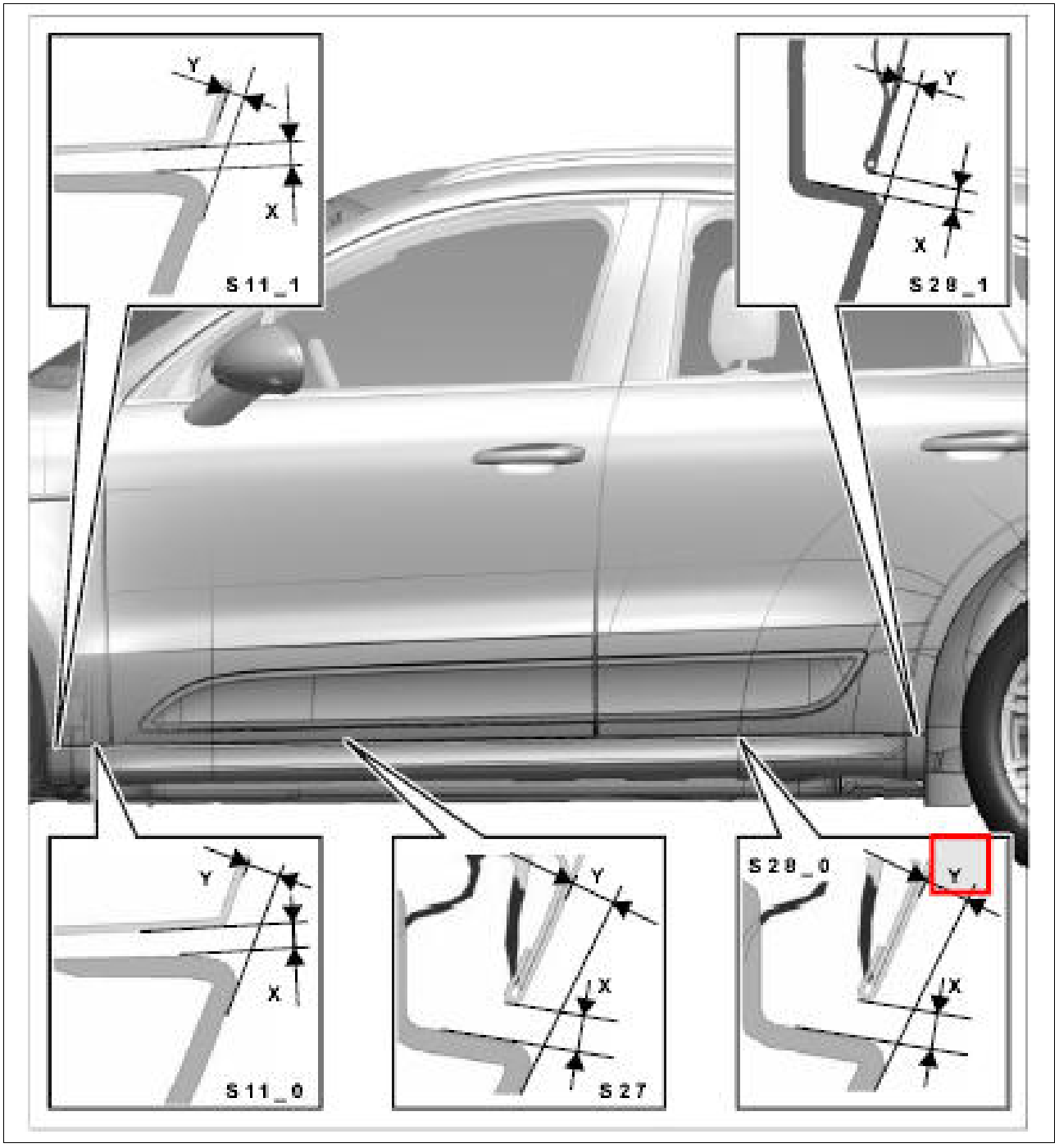

Courtesy of PORSCHE CARS NORTH AMERICA, INC.

S28_1 - → Gap dimension: 4 mm+/-1.5 mm

Fig 111: Identifying Gap Dimensions For Sill Cover

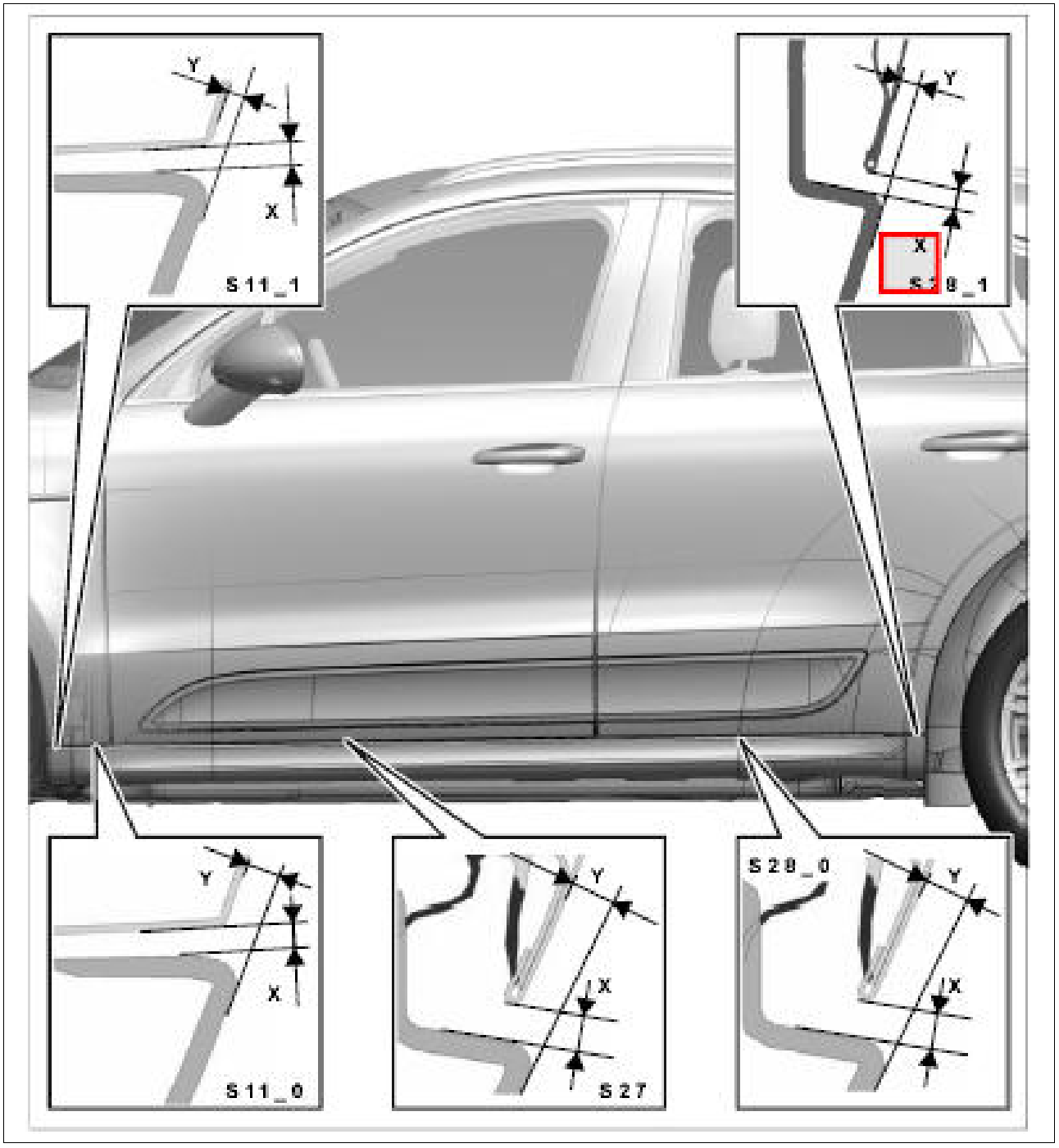

Courtesy of PORSCHE CARS NORTH AMERICA, INC.

S28_1 - → Gap dimension: 5 mm+/-1.5 mm

Fig 112: Identifying Gap Dimensions For Sill Cover

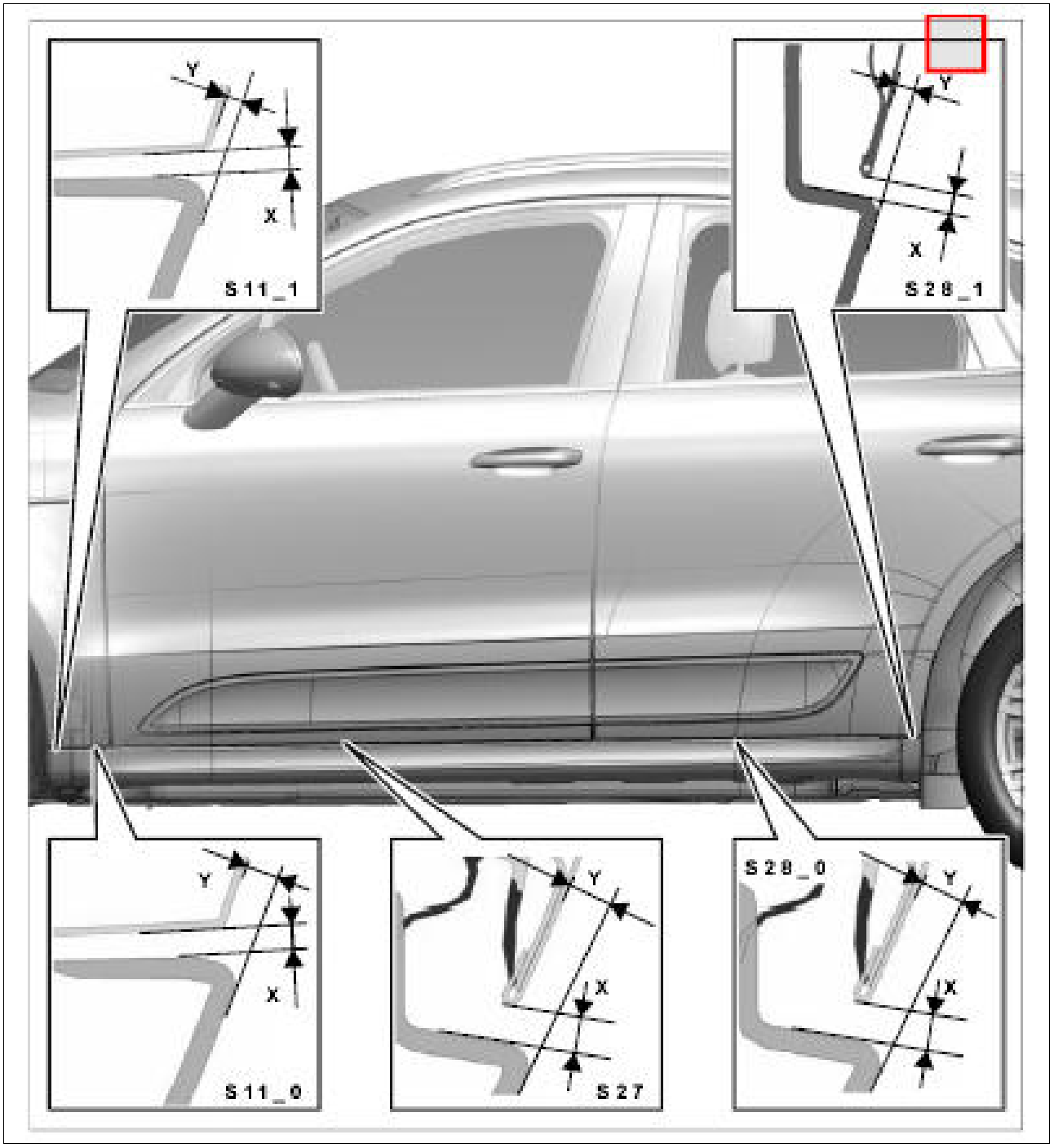

Courtesy of PORSCHE CARS NORTH AMERICA, INC.

Gap dimensions for tank cap

Fig 113: Identifying Gap Dimensions For Filler Flap (S40)

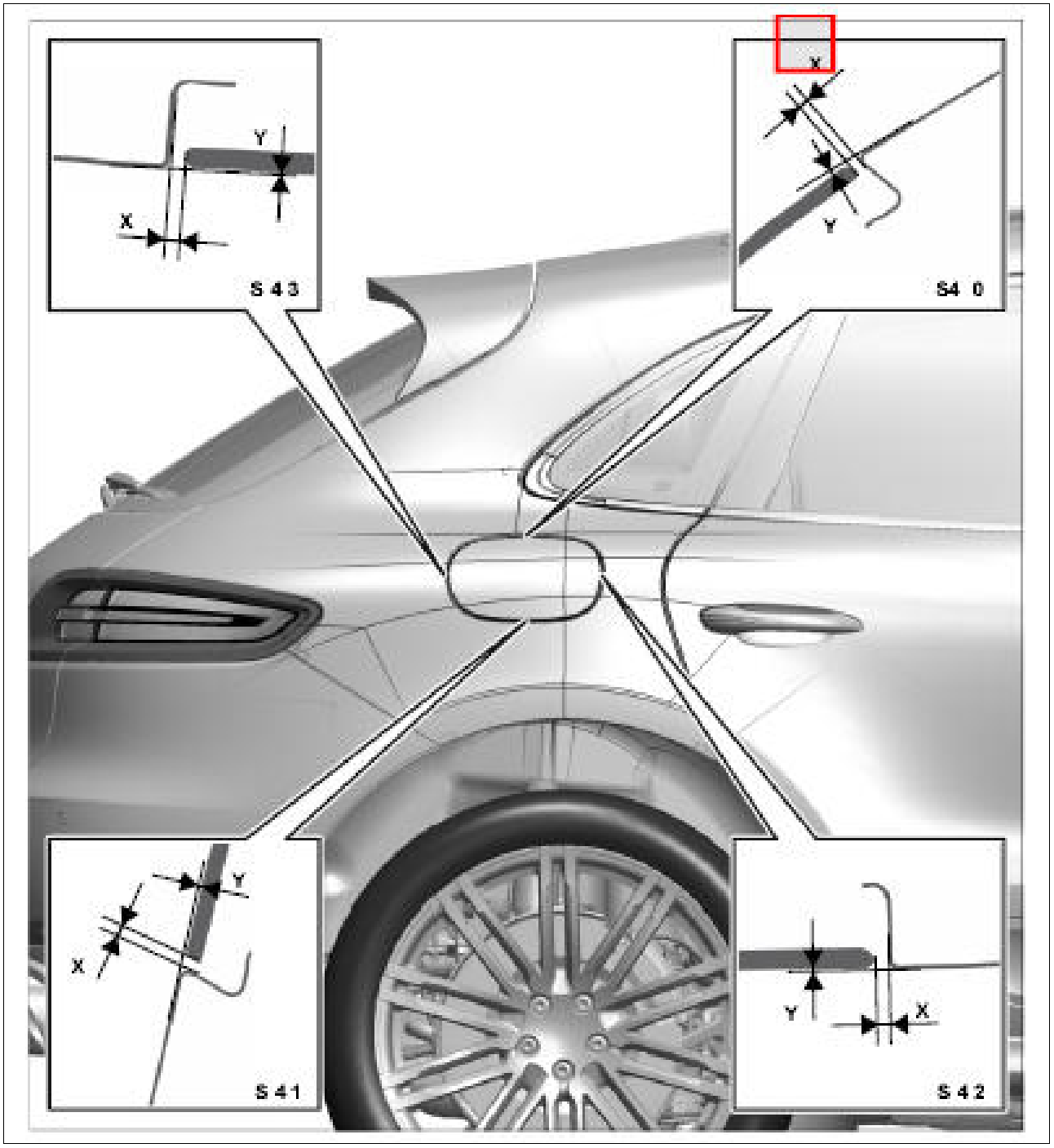

Courtesy of PORSCHE CARS NORTH AMERICA, INC.

S40 - → Gap dimension: 2 mm+/-0.5 mm

Fig 114: Identifying Gap Dimensions For Filler Flap

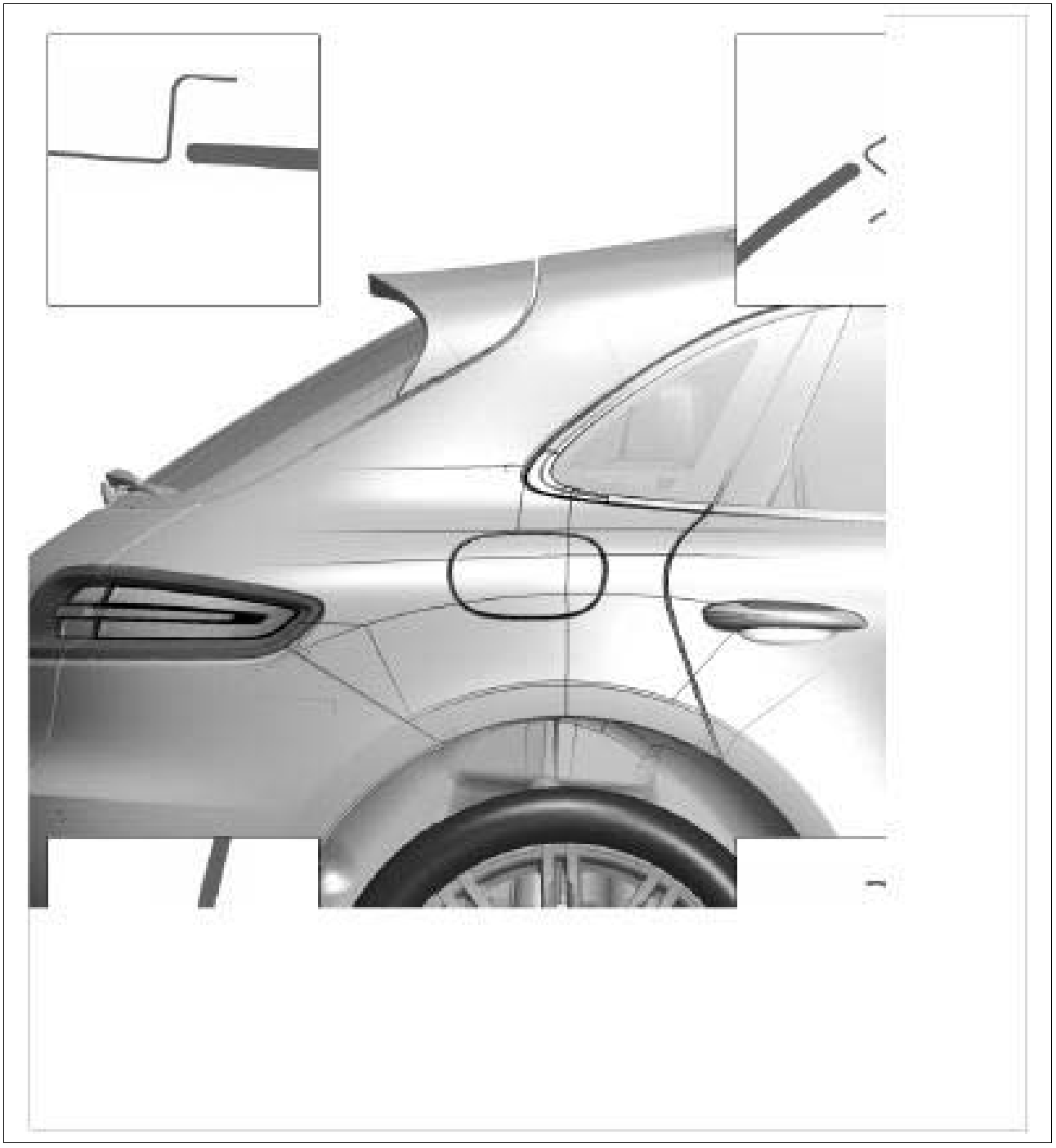

Courtesy of PORSCHE CARS NORTH AMERICA, INC.

S40 - → Gap dimension: 0.25 mm

Fig 115: Identifying Gap Dimensions For Filler Flap (S41)

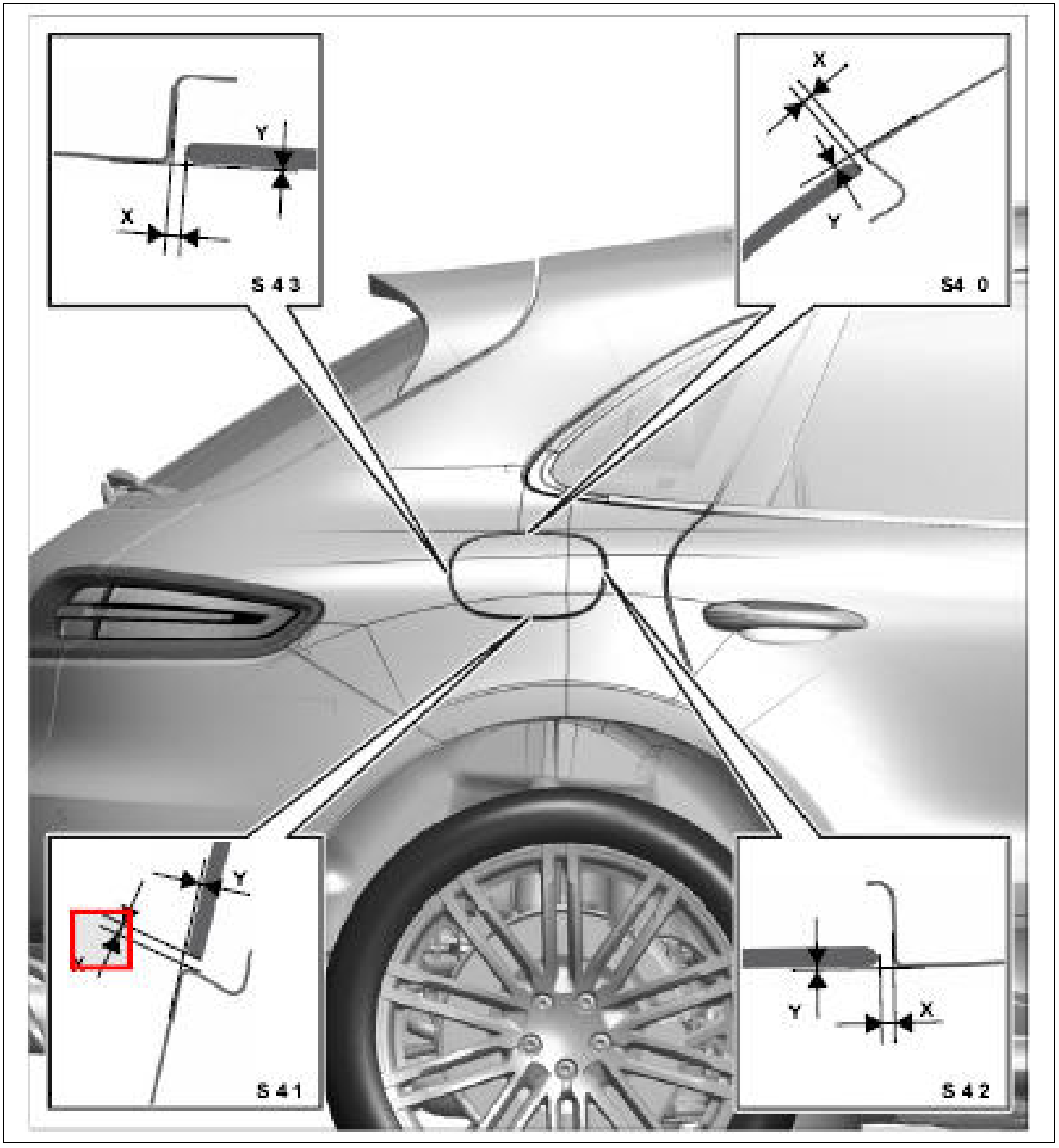

Courtesy of PORSCHE CARS NORTH AMERICA, INC.

S41 - → Gap dimension: 2.3 mm+/-0.5 mm

Fig 116: Identifying Gap Dimensions For Filler Flap

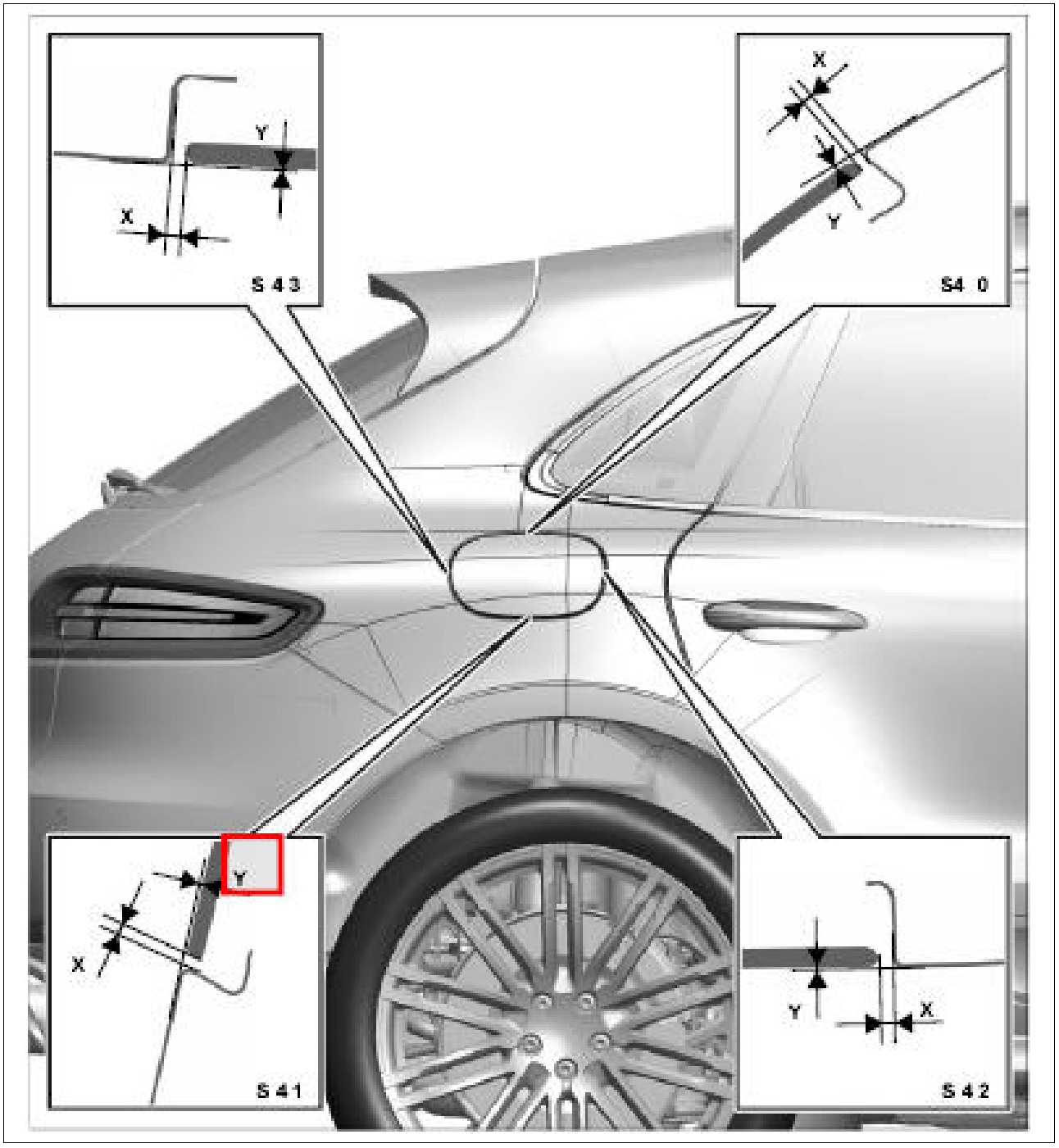

Courtesy of PORSCHE CARS NORTH AMERICA, INC.

S41 - → Gap dimension: 0.25 mm

Fig 117: Identifying Gap Dimensions For Filler Flap (S42)

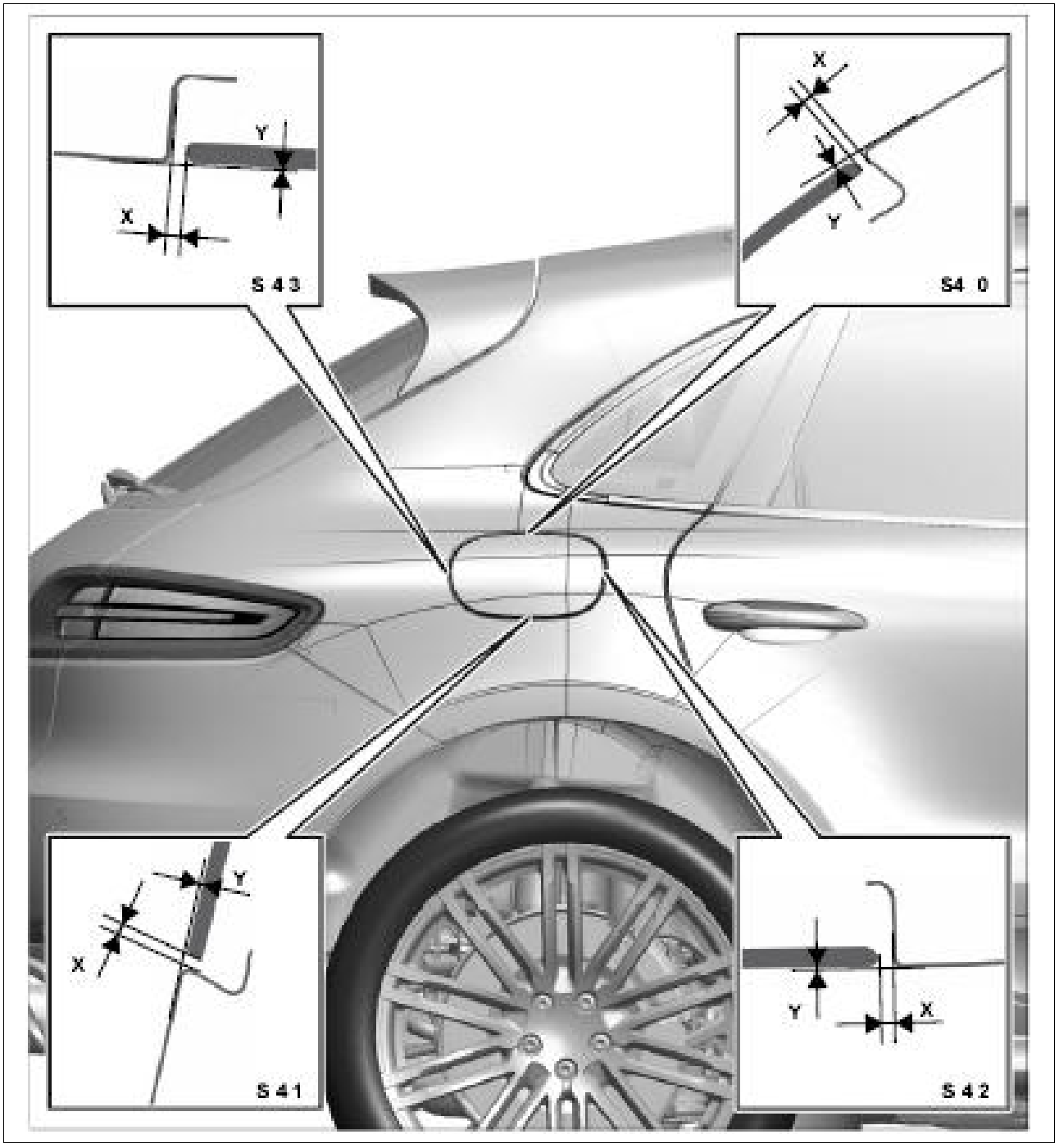

Courtesy of PORSCHE CARS NORTH AMERICA, INC.

S42 - → Gap dimension: 2.3 mm+/-0.5 mm

Fig 118: Identifying Gap Dimensions For Filler Flap

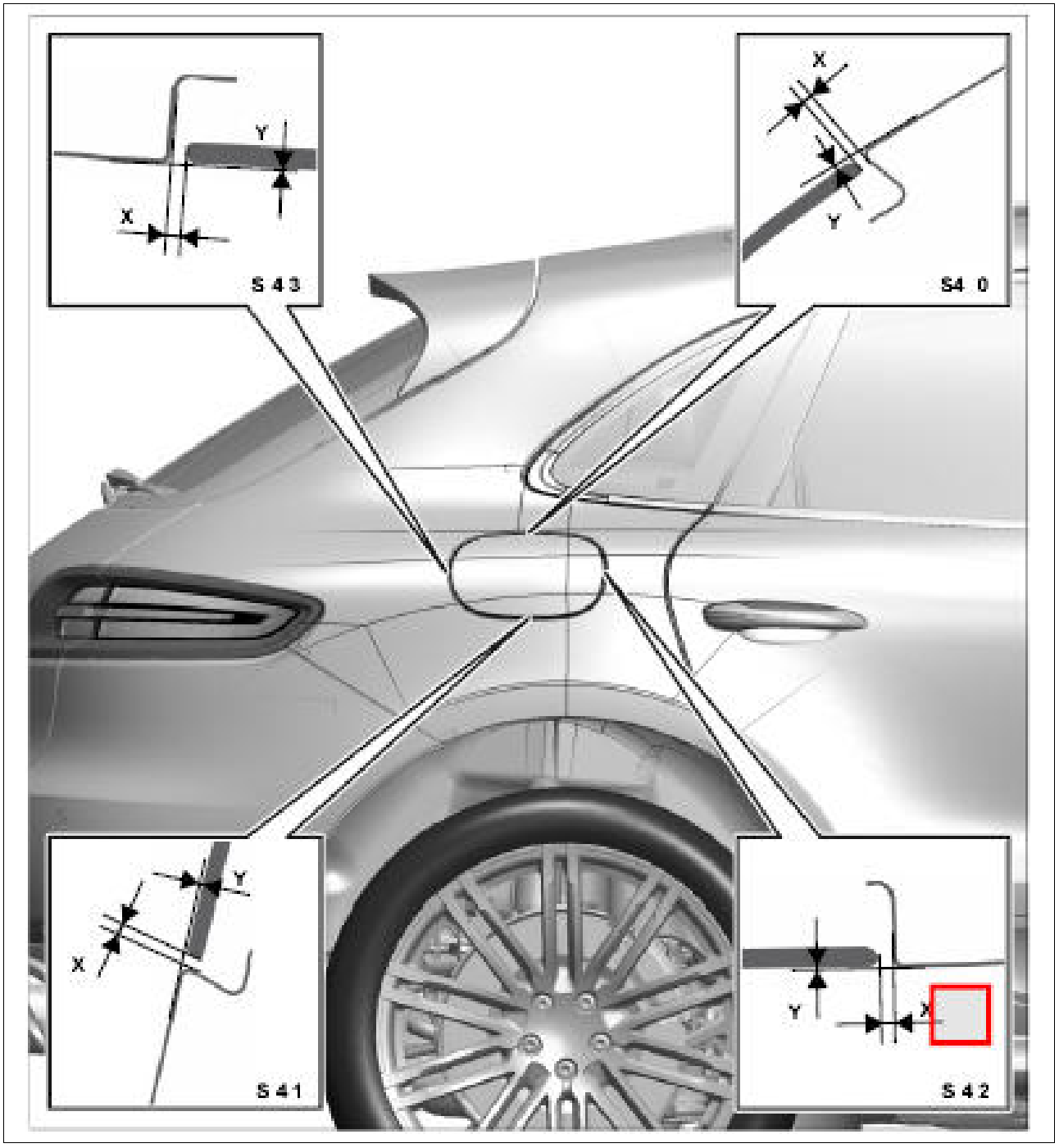

Courtesy of PORSCHE CARS NORTH AMERICA, INC.

S42 - → Gap dimension: 0.25 mm

Fig 119: Identifying Gap Dimensions For Filler Flap (S43)

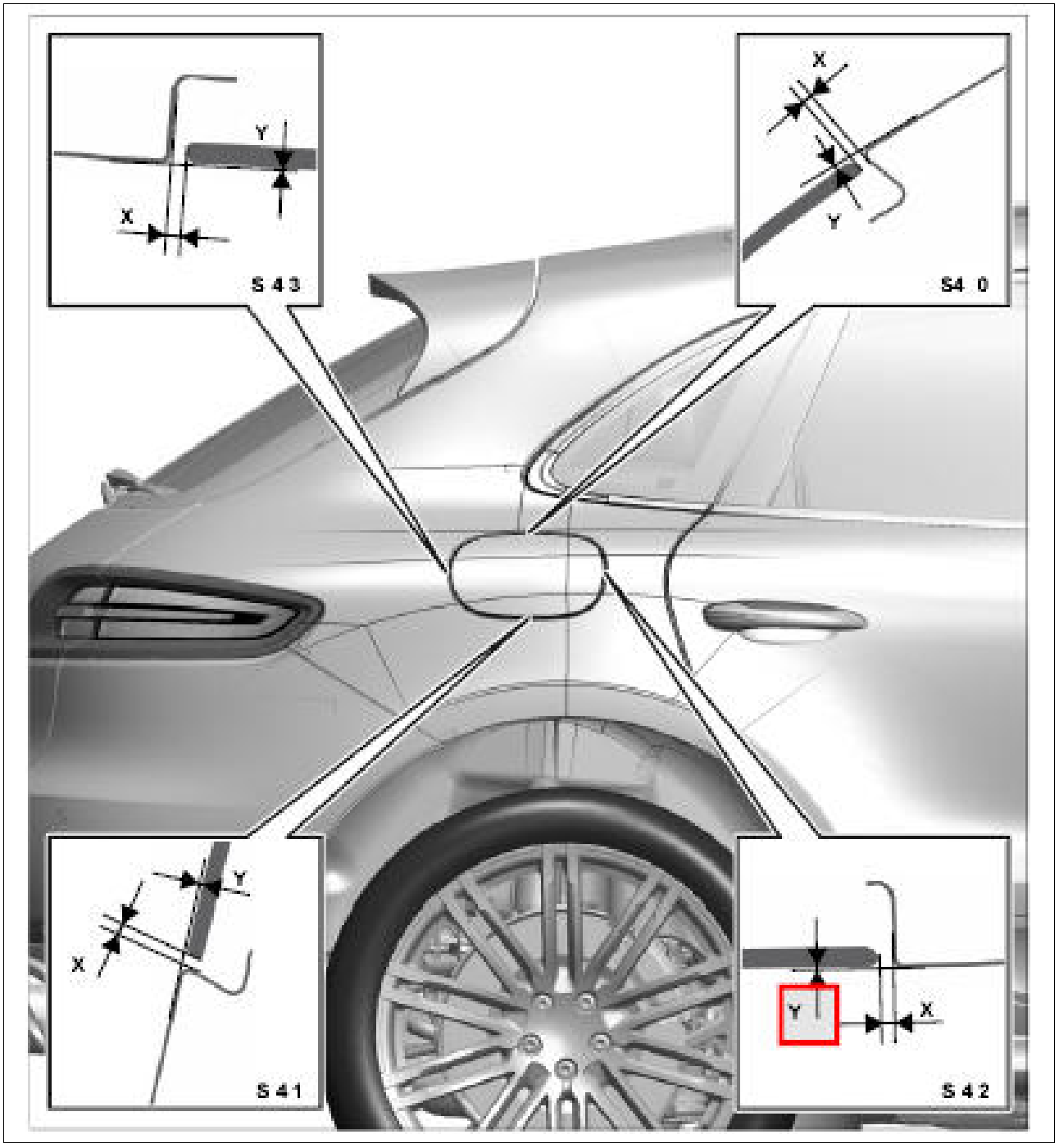

Courtesy of PORSCHE CARS NORTH AMERICA, INC.

S43 - → Gap dimension: 2.3 mm+/-0.5 mm

Fig 120: Identifying Gap Dimensions For Filler Flap

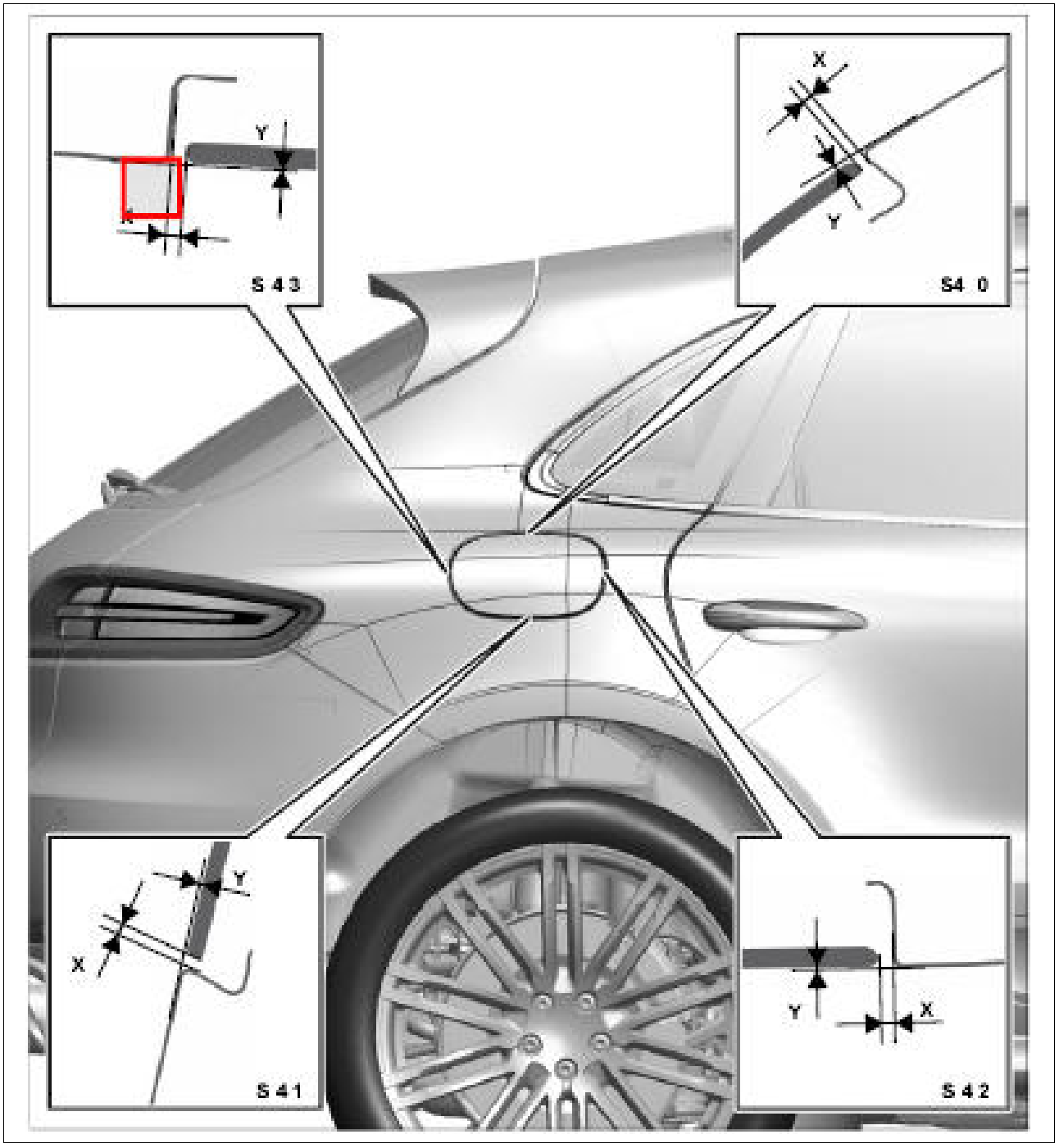

Courtesy of PORSCHE CARS NORTH AMERICA, INC.

S43 - → Gap dimension: -0.25 mm

Fig 121: Identifying Gap Dimensions For Filler Flap

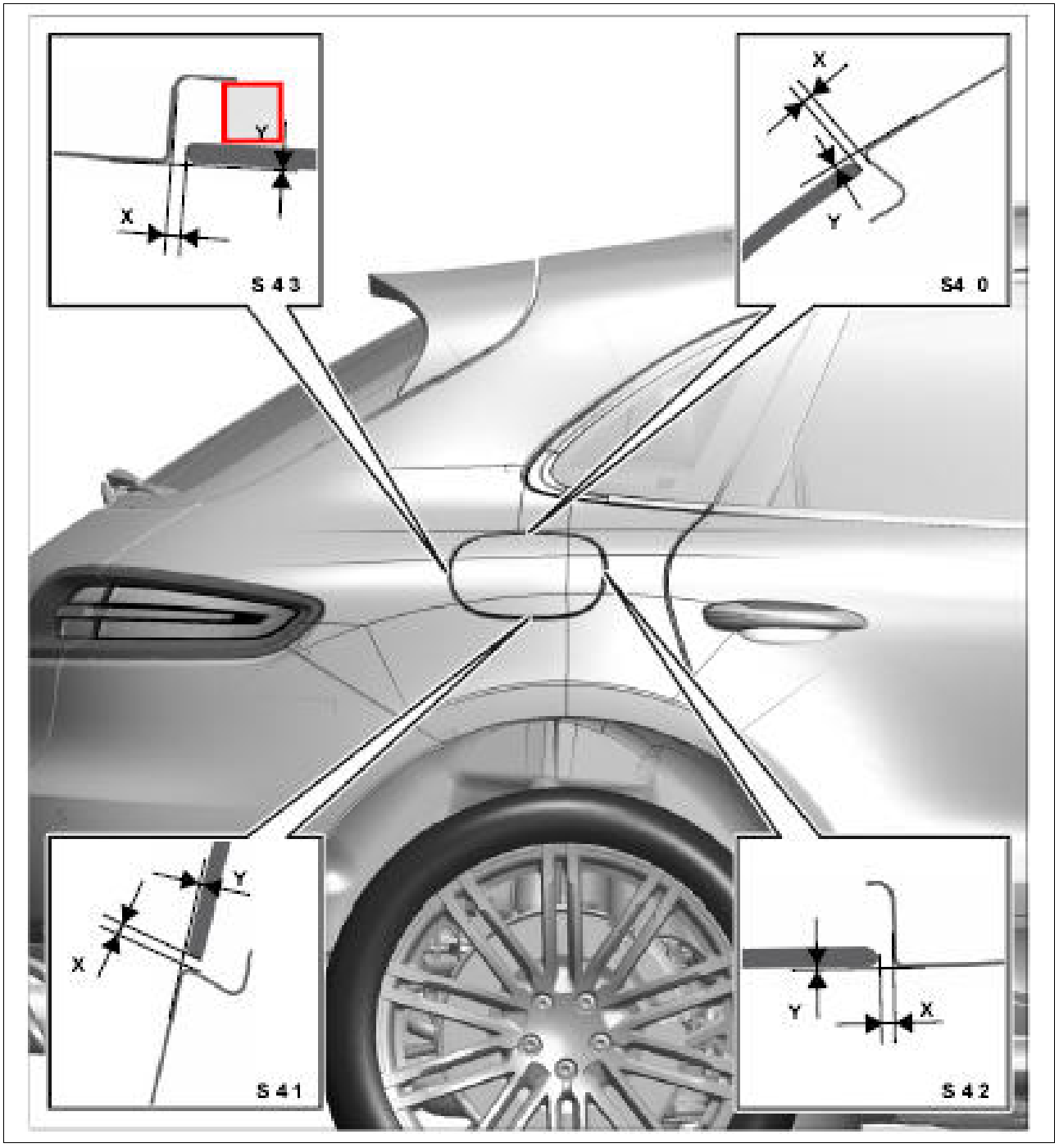

Courtesy of PORSCHE CARS NORTH AMERICA, INC.

Gap dimensions for tail lights

Fig 122: Identifying Gap Dimensions For Tail Light (H11)

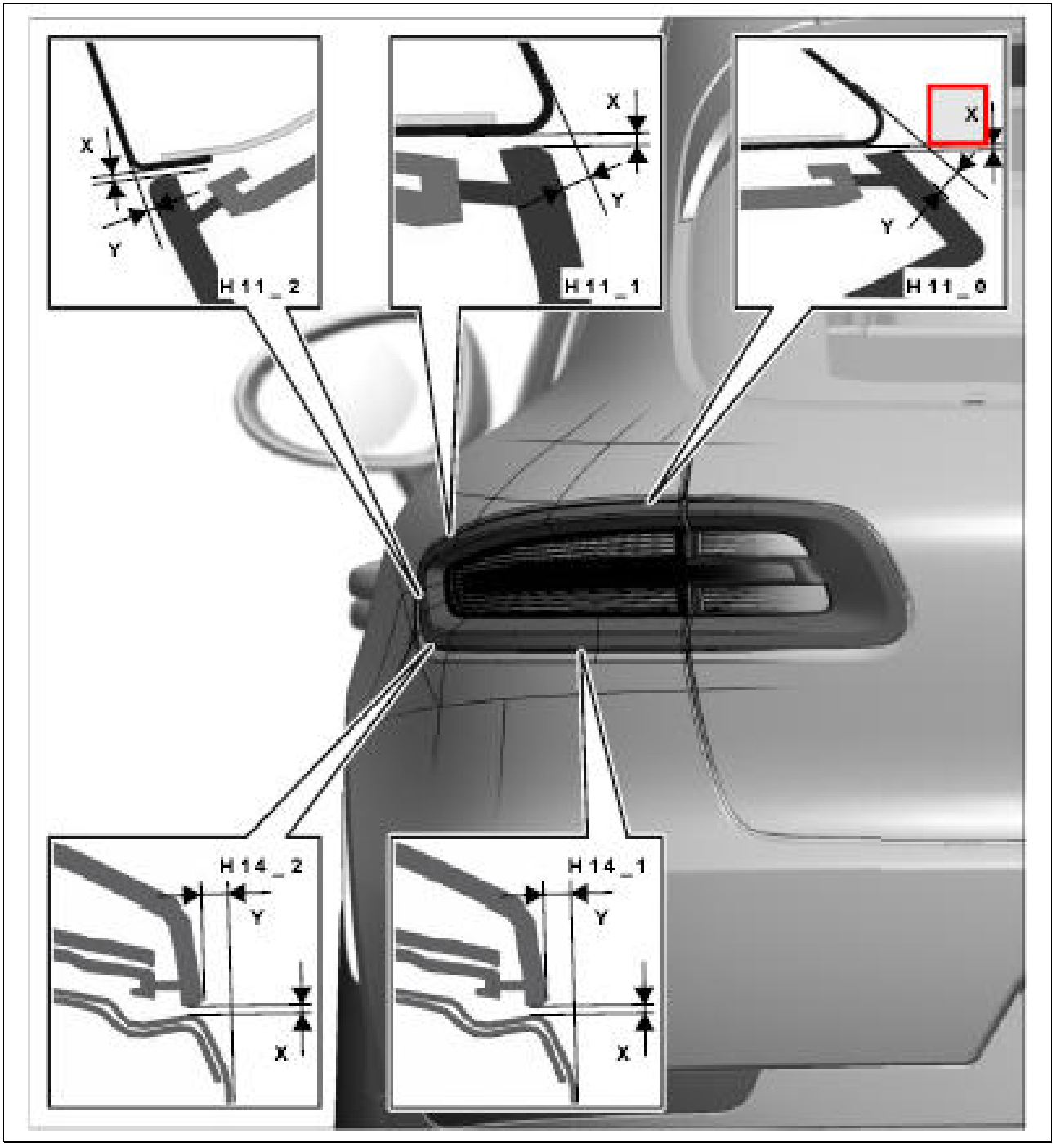

Courtesy of PORSCHE CARS NORTH AMERICA, INC.

H11_0 - → Gap dimension: 1 mm+/-0.8 mm

Fig 123: Identifying Gap Dimensions For Tail Light

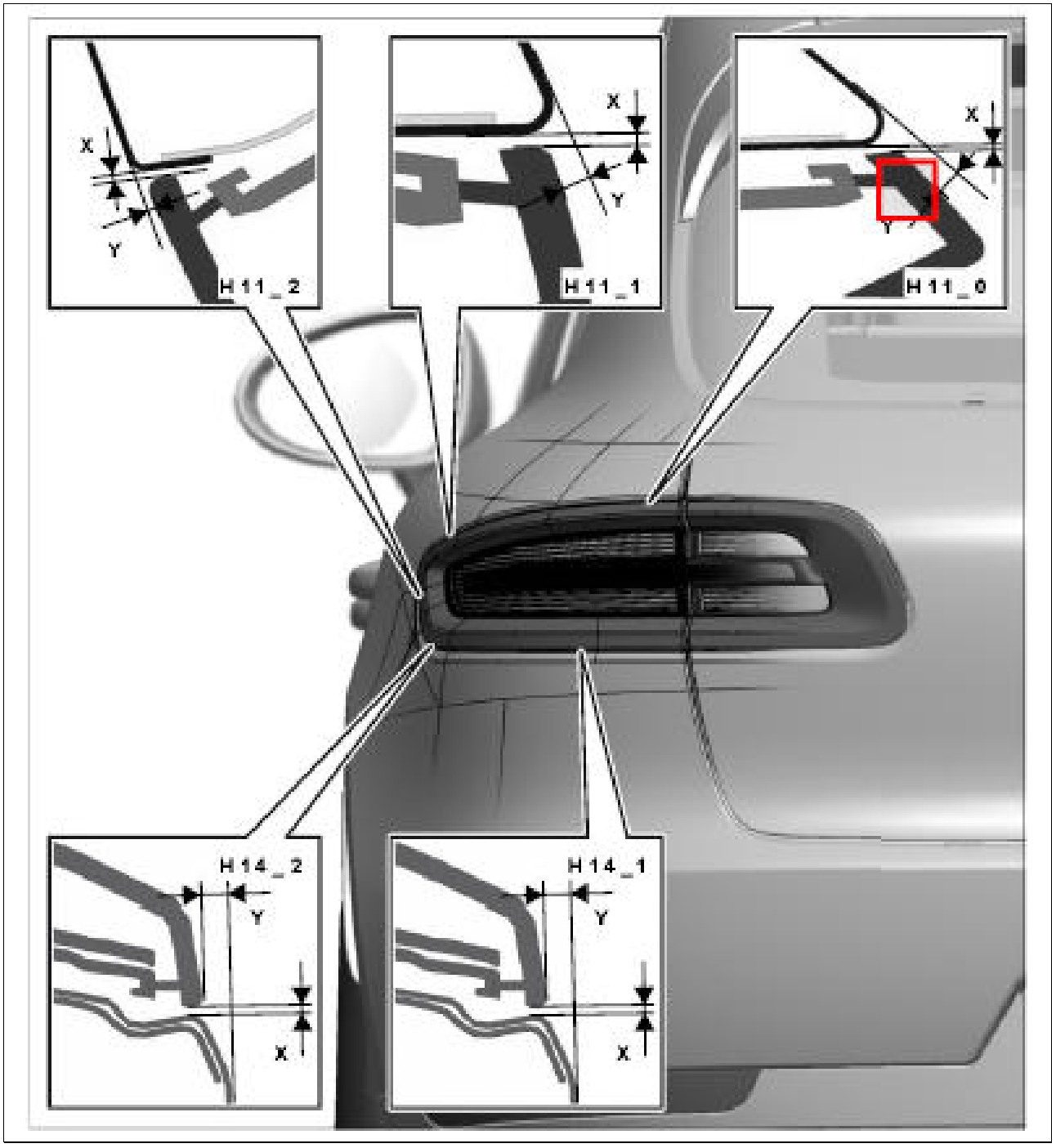

Courtesy of PORSCHE CARS NORTH AMERICA, INC.

H11_0 - → Gap dimension: -4.5 mm+/-0.5 mm

Fig 124: Identifying Gap Dimensions For Tail Light

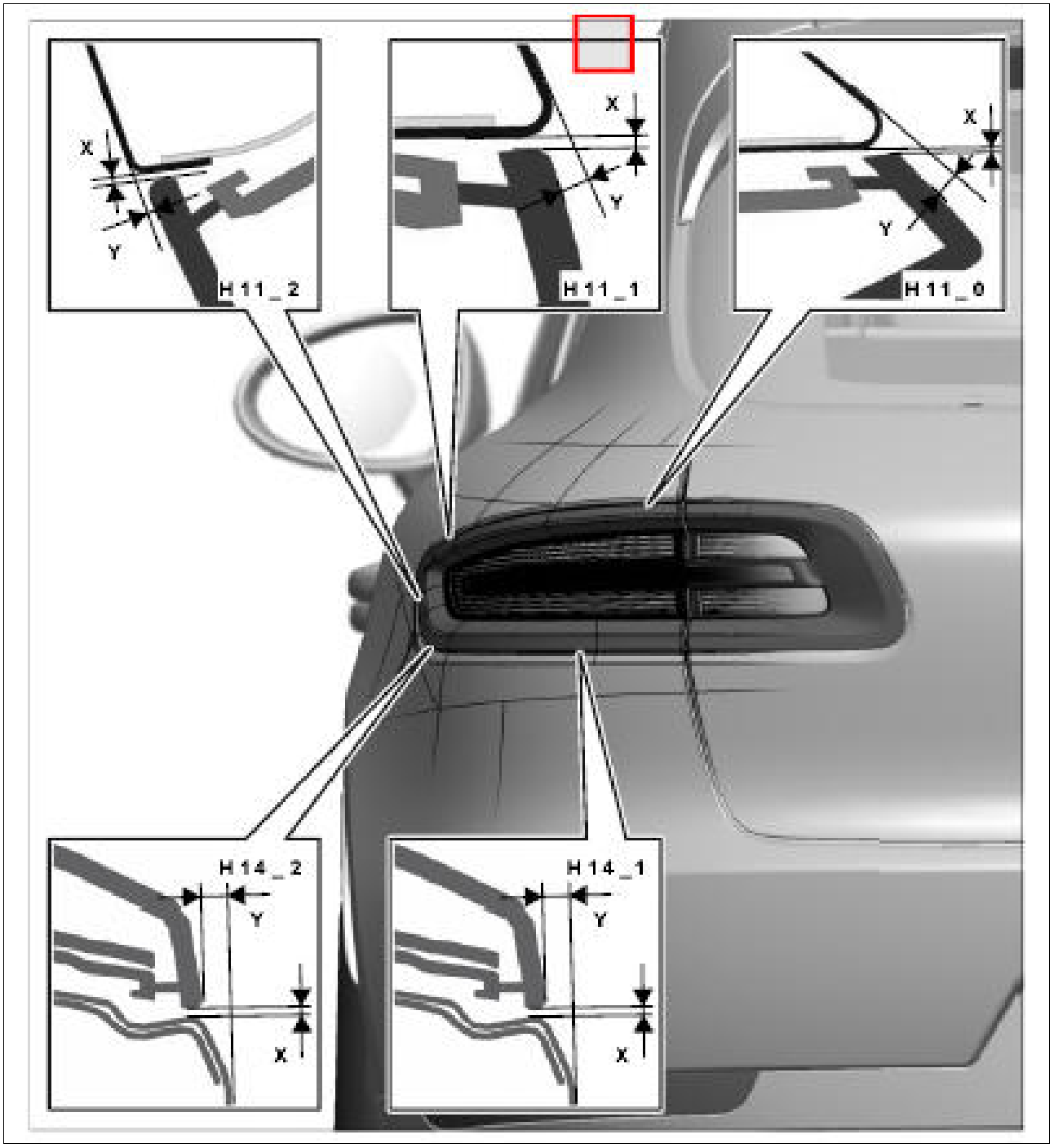

Courtesy of PORSCHE CARS NORTH AMERICA, INC.

H11_1 - → Gap dimension: 1 mm+/-0.8 mm

Fig 125: Identifying Gap Dimensions For Tail Light

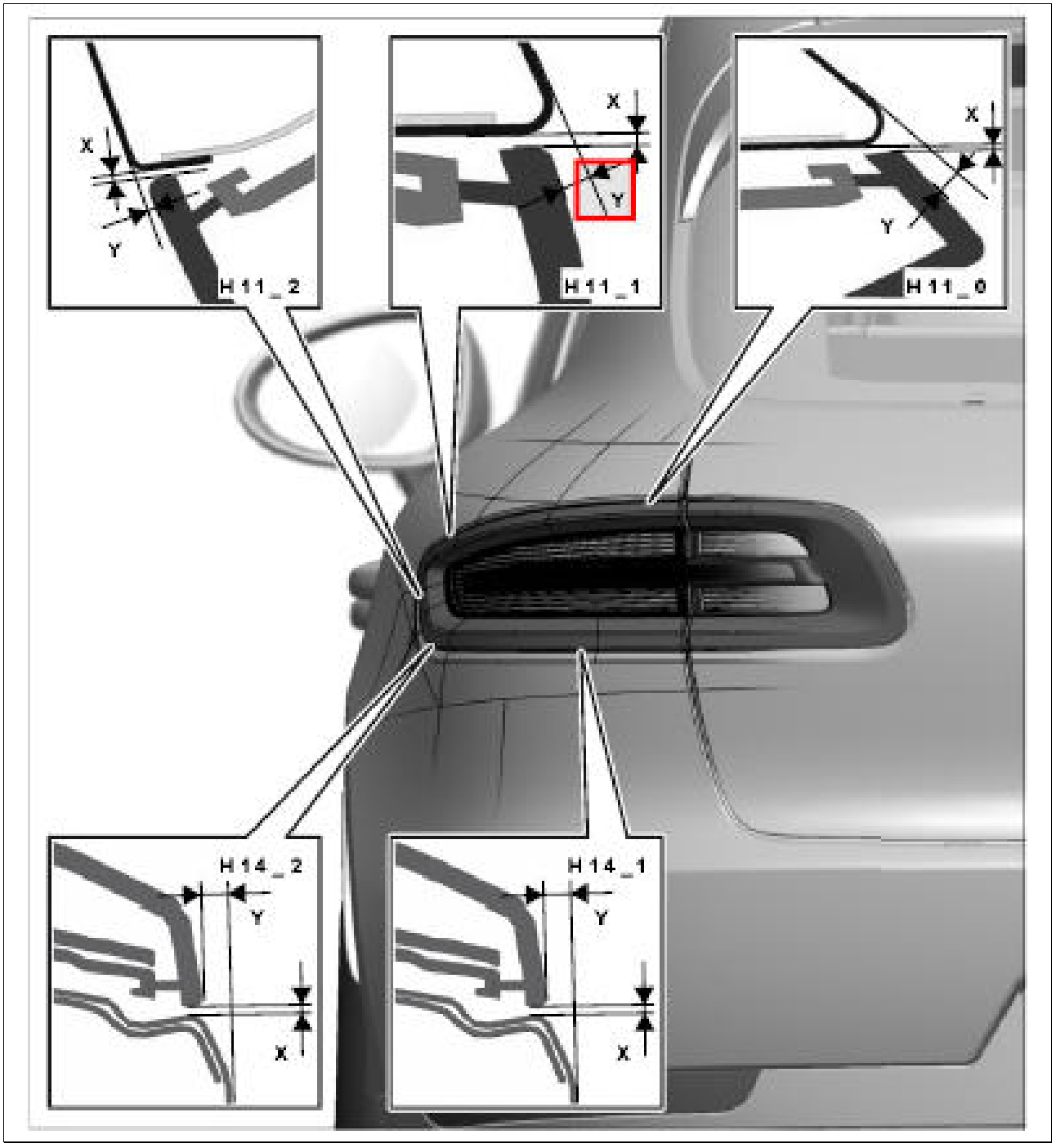

Courtesy of PORSCHE CARS NORTH AMERICA, INC.

H11_1 - → Gap dimension: -2 mm+/-0.5 mm

Fig 126: Identifying Gap Dimensions For Tail Light

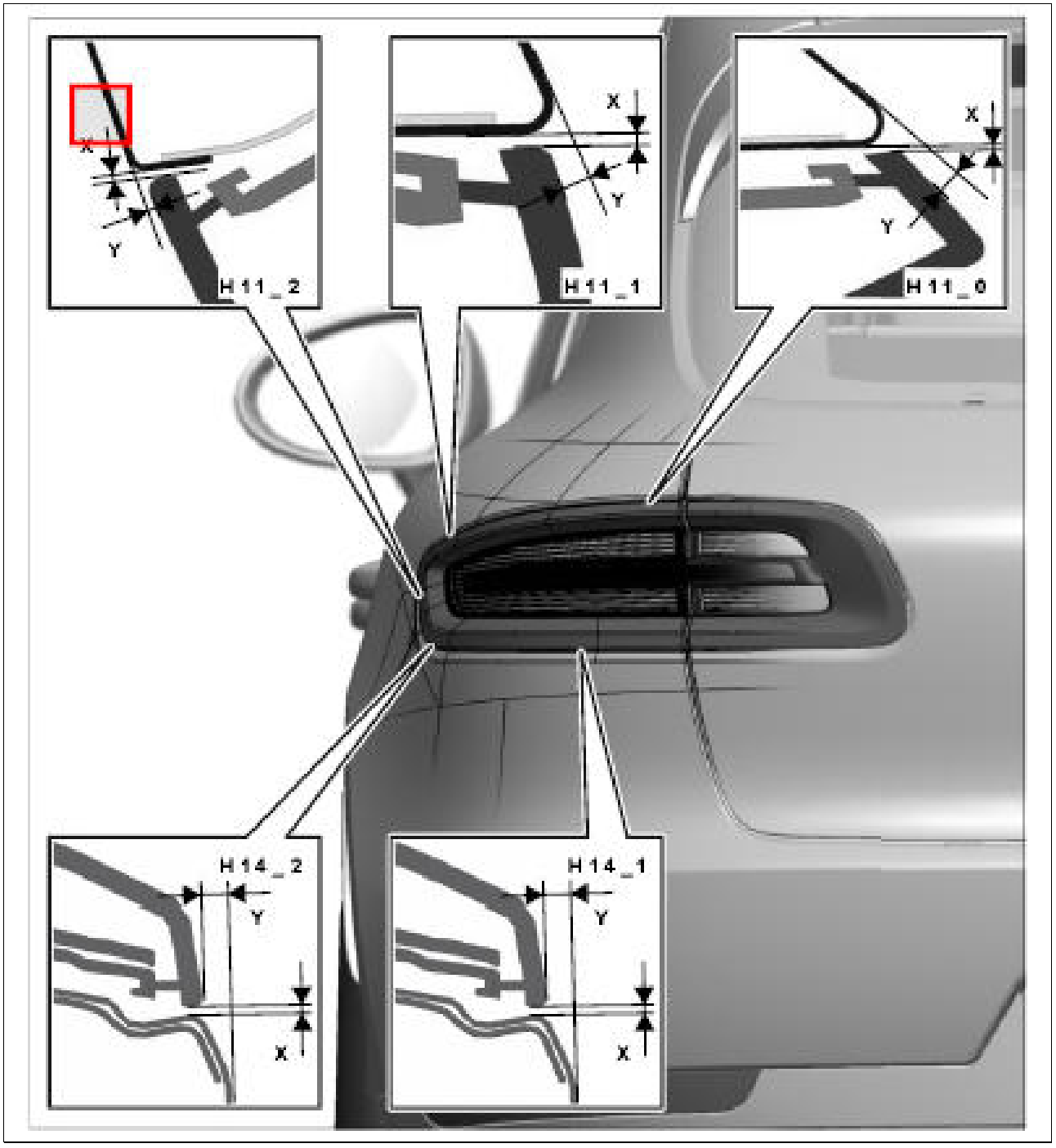

Courtesy of PORSCHE CARS NORTH AMERICA, INC.

H11_2 - → Gap dimension: 1 mm+/-0.8 mm

Fig 127: Identifying Gap Dimensions For Tail Light

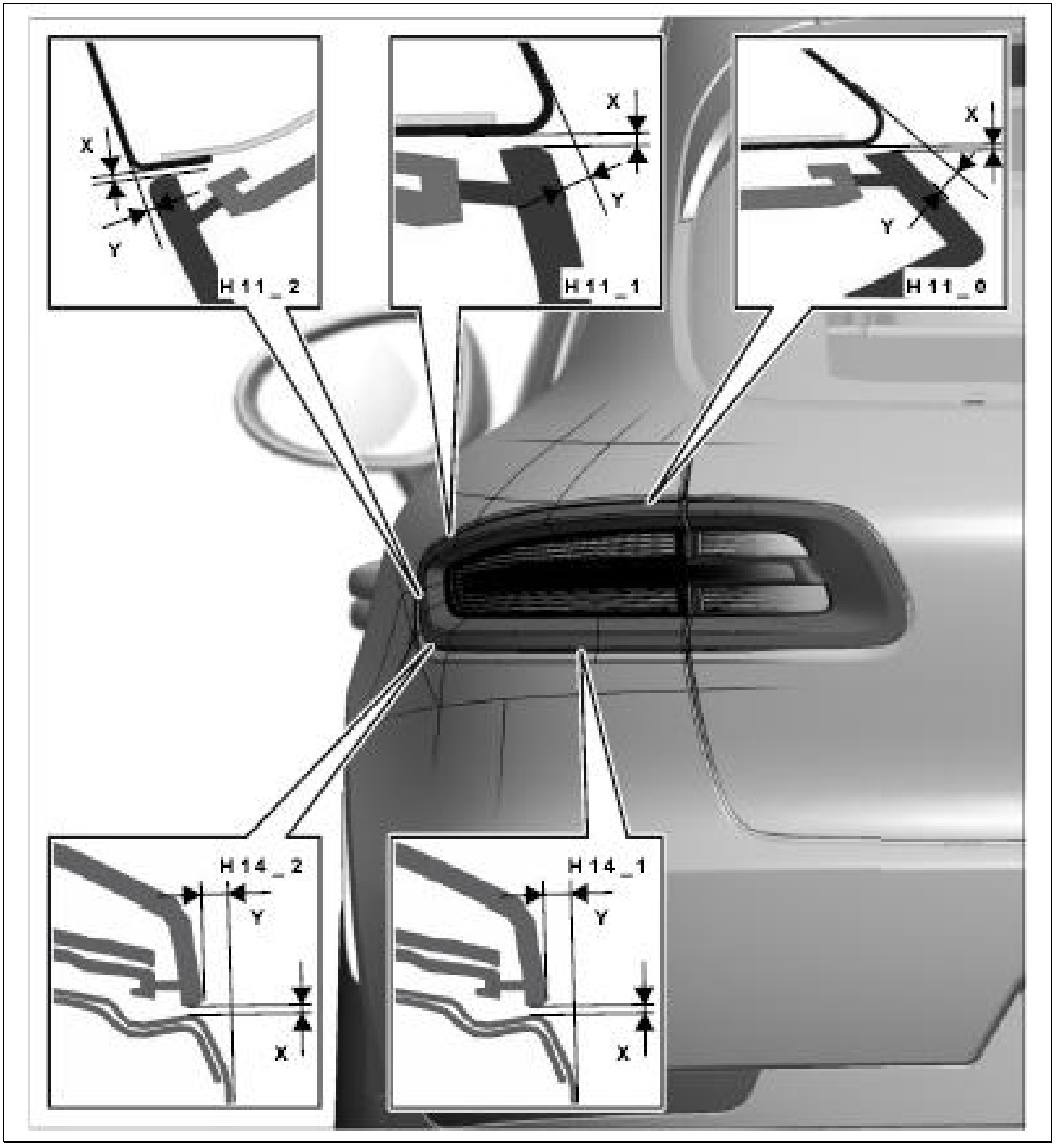

Courtesy of PORSCHE CARS NORTH AMERICA, INC.

H11_2 - → Gap dimension: 1 mm+/-0.8 mm

Fig 128: Identifying Gap Dimensions For Tail Light (H14)

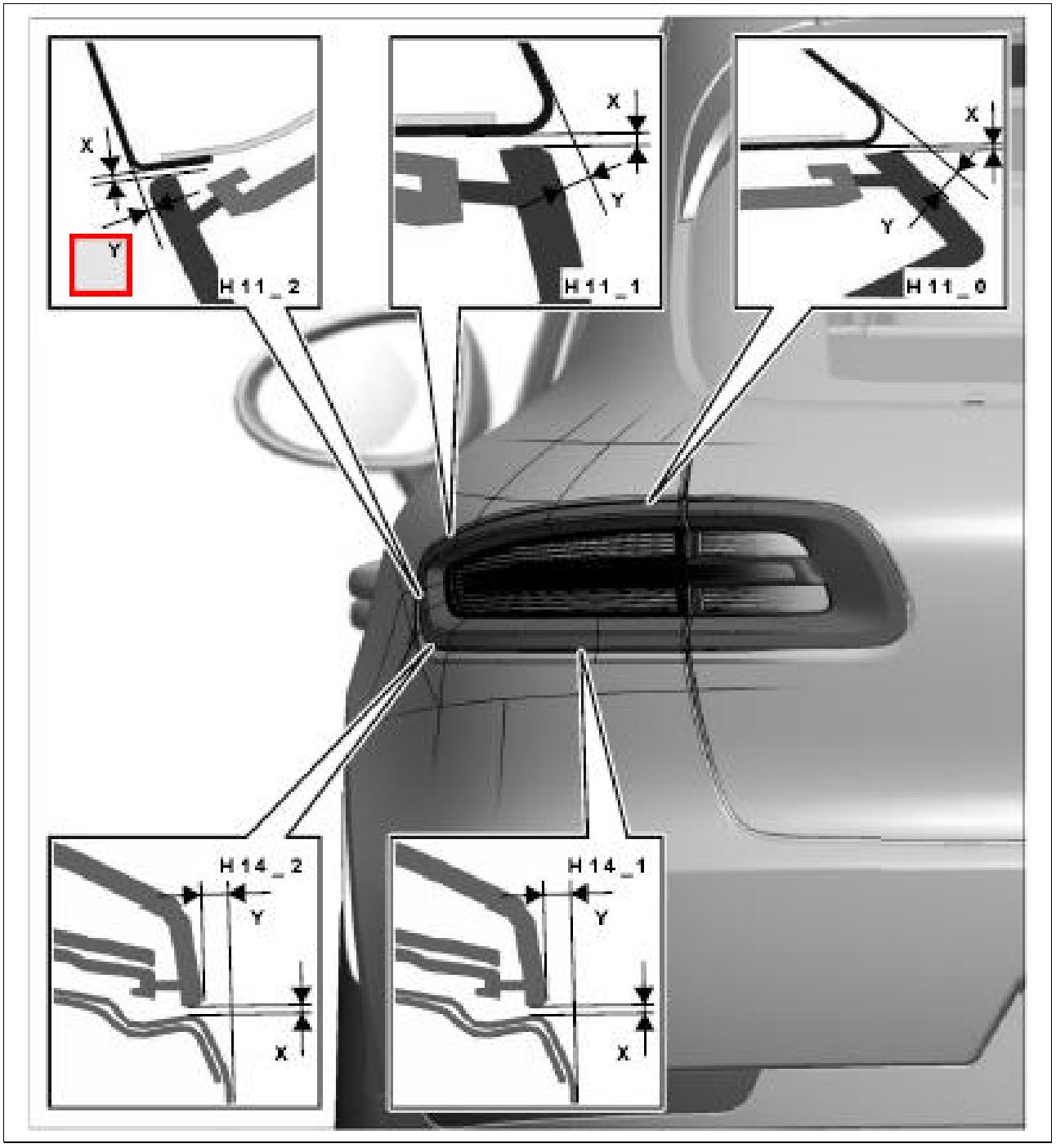

Courtesy of PORSCHE CARS NORTH AMERICA, INC.

H14_1 - → Gap dimension: 1 mm+/-0.8 mm

Fig 129: Identifying Gap Dimensions For Tail Light

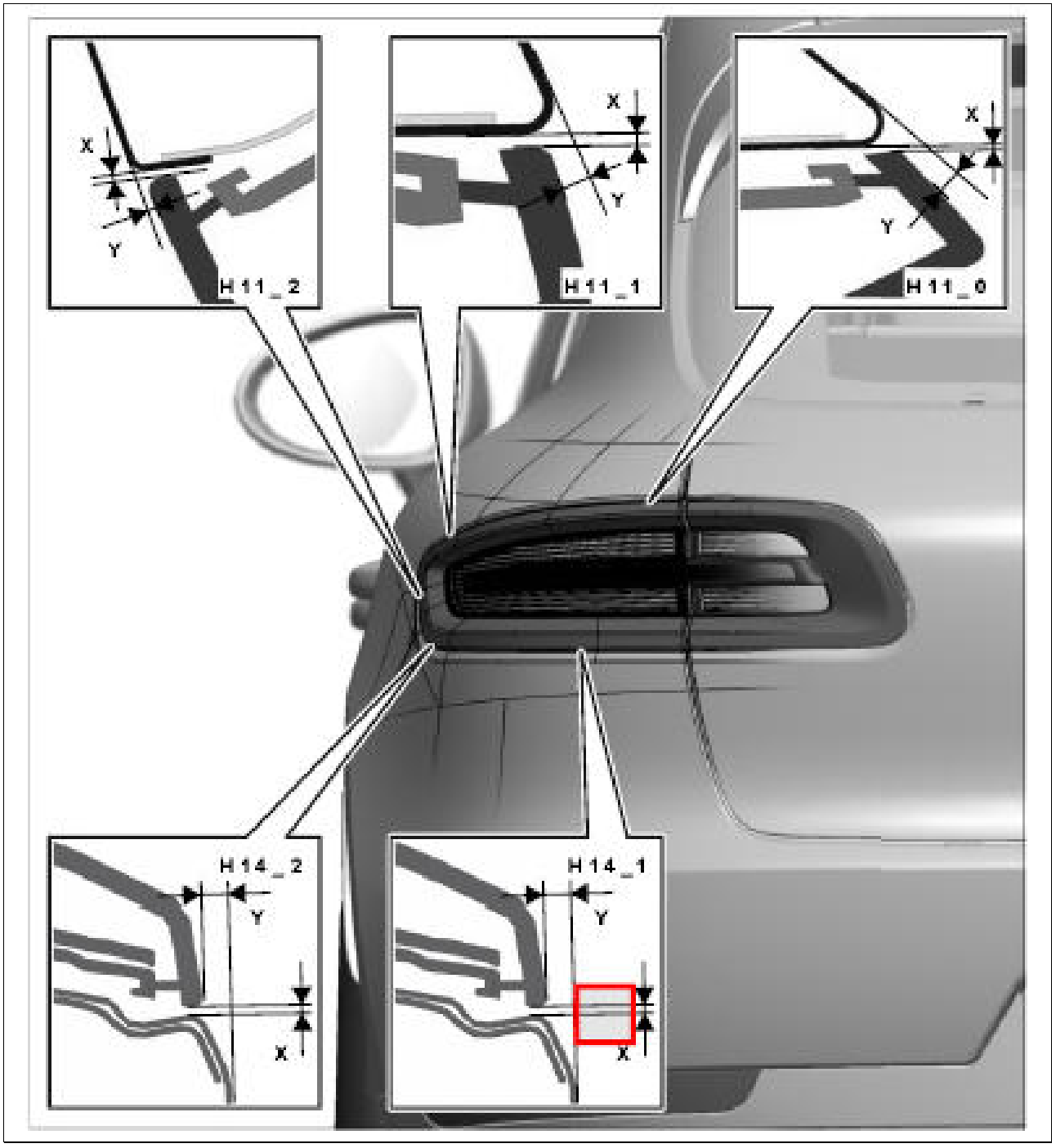

Courtesy of PORSCHE CARS NORTH AMERICA, INC.

H14_1 - → Gap dimension: -3.8 mm+/-0.5 mm

Fig 130: Identifying Gap Dimensions For Tail Light

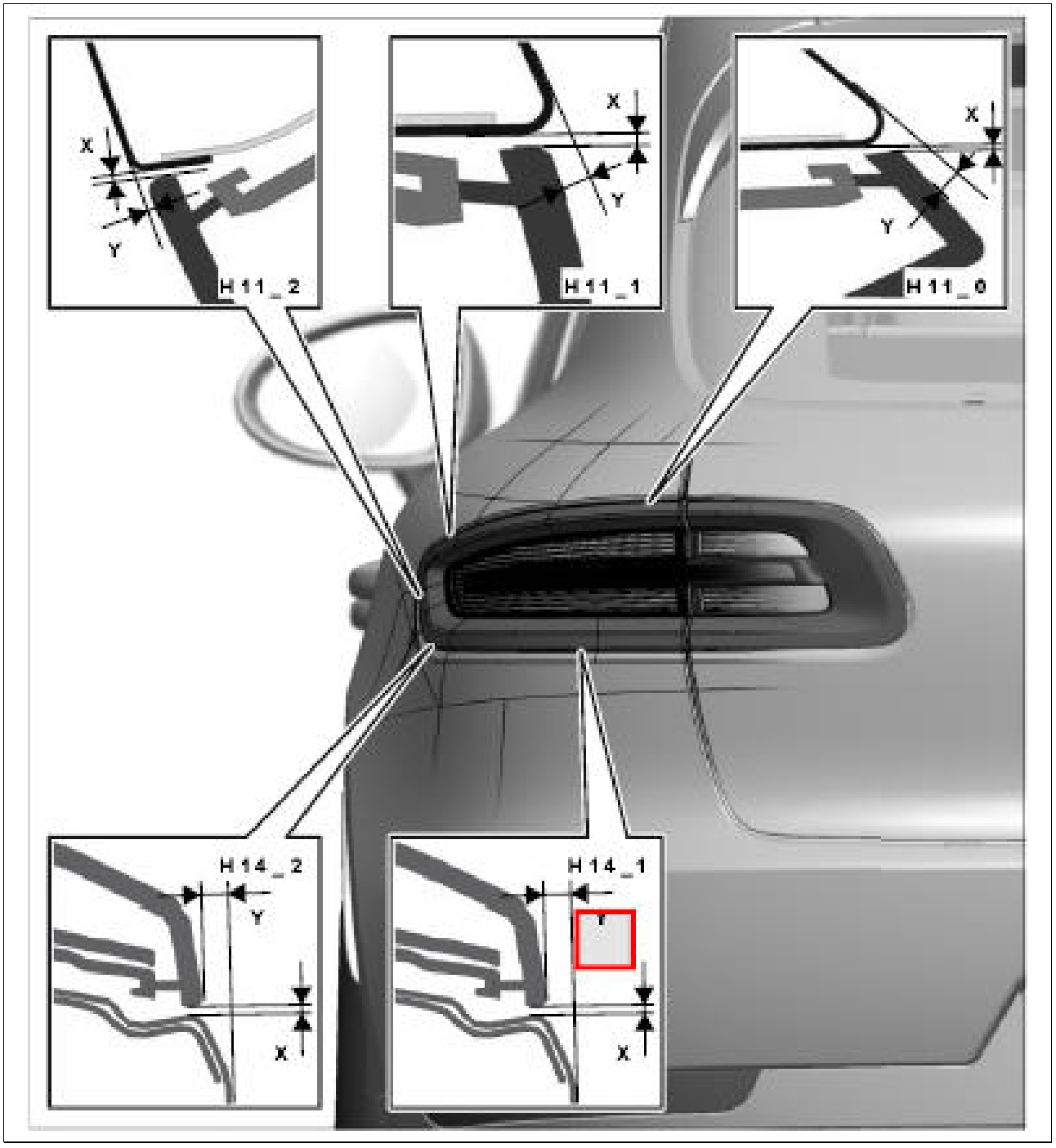

Courtesy of PORSCHE CARS NORTH AMERICA, INC.

H14_2 - → Gap dimension: 1 mm+/-0.5 mm

Fig 131: Identifying Gap Dimensions For Tail Light

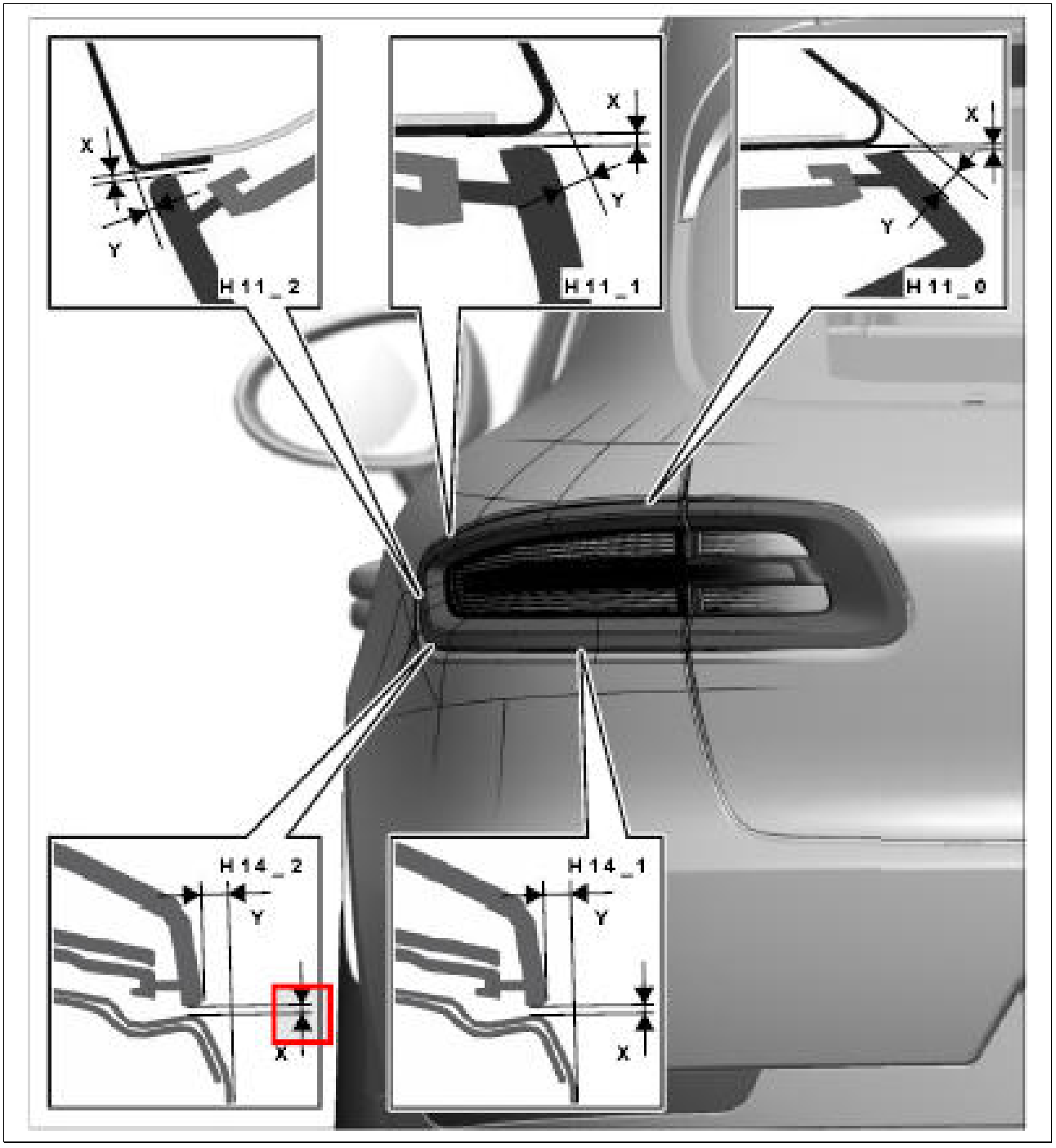

Courtesy of PORSCHE CARS NORTH AMERICA, INC.

H14_2 - → Gap dimension: 1 mm+/-0.5 mm

Fig 132: Identifying Gap Dimensions For Tail Light

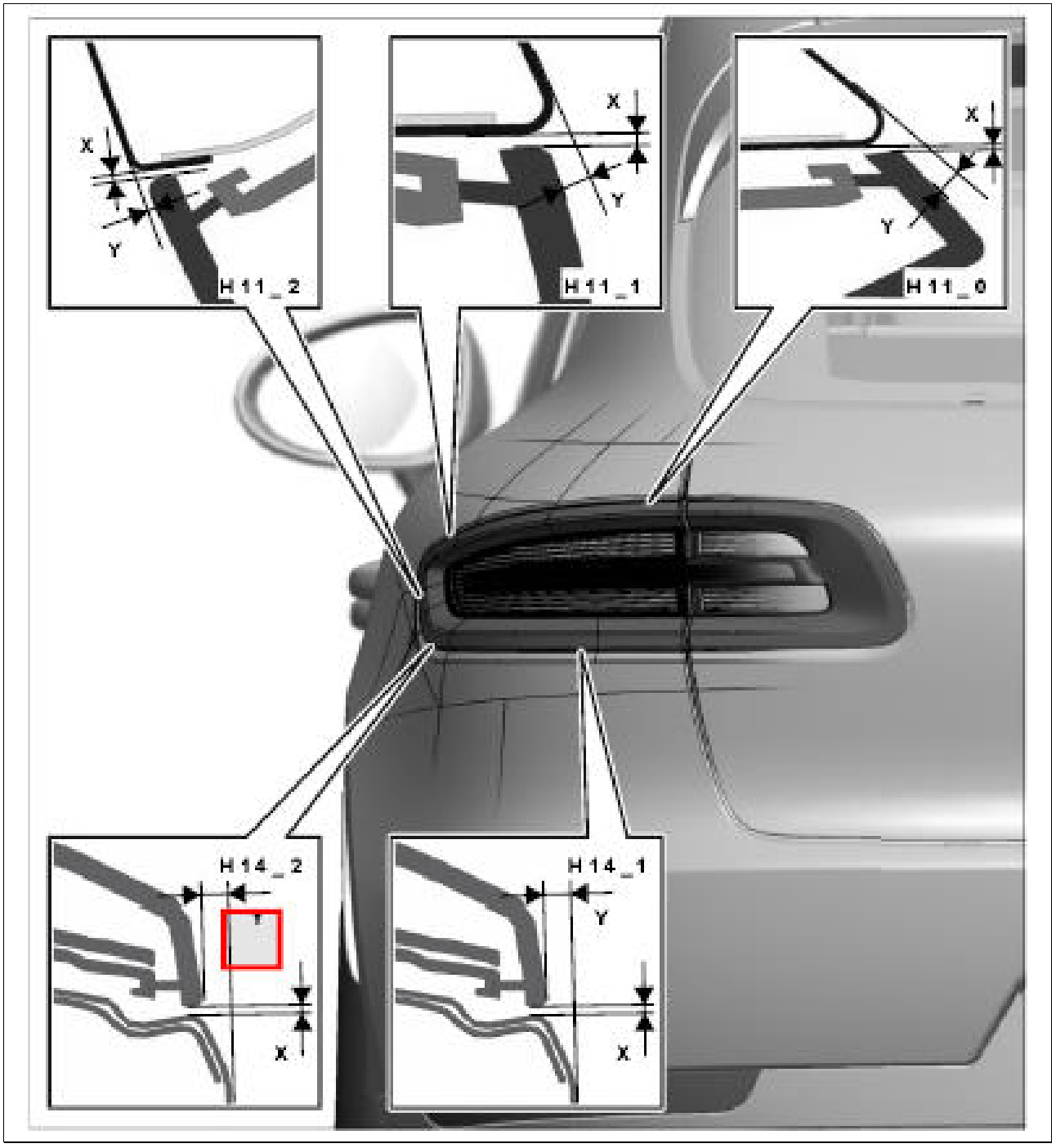

Courtesy of PORSCHE CARS NORTH AMERICA, INC.

Fig 133: Identifying Inner Gap Dimensions For Tail Light

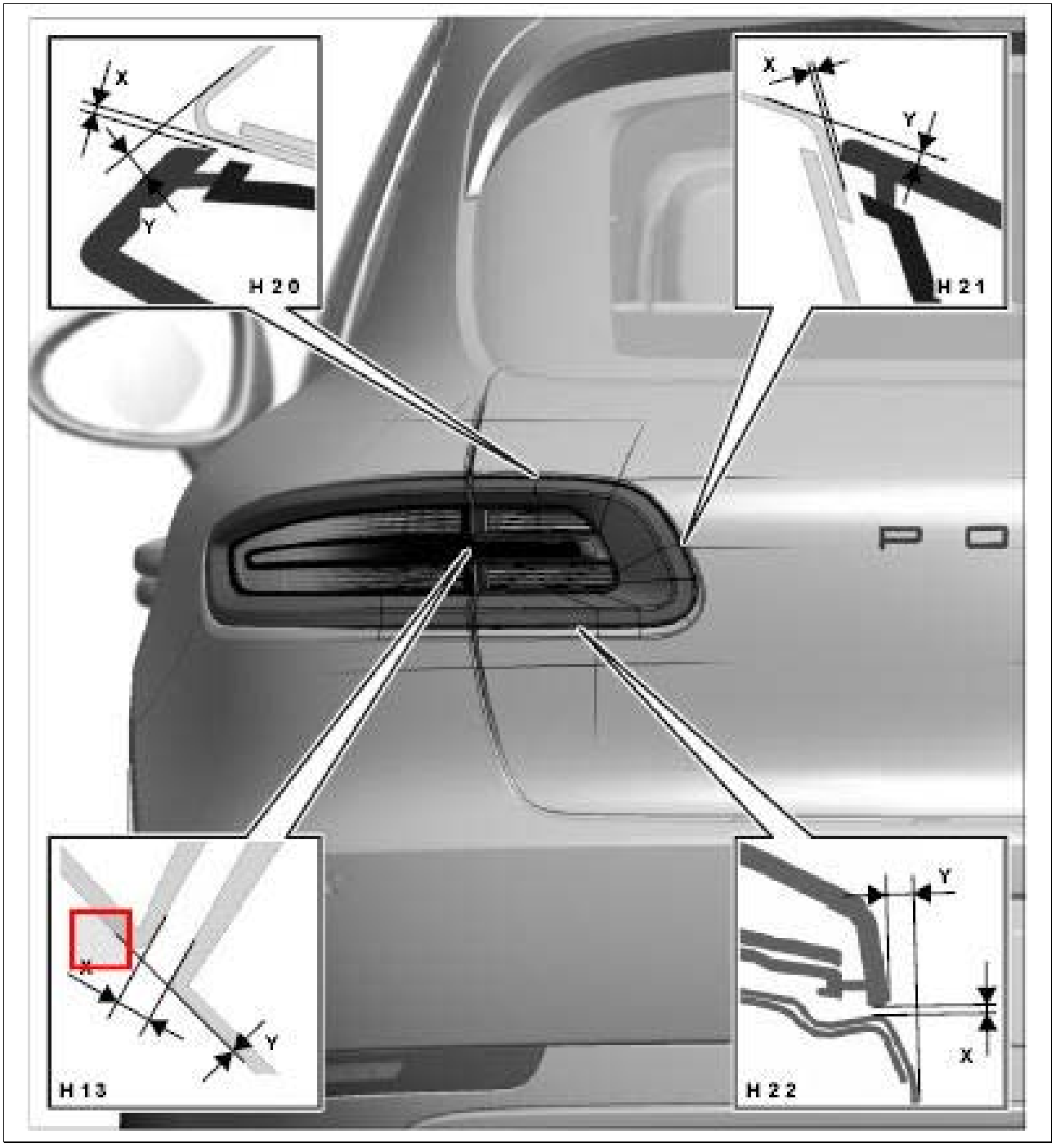

Courtesy of PORSCHE CARS NORTH AMERICA, INC.

H13 - → Gap dimension: 4 mm+/-0.8 mm

Fig 134: Identifying Inner Gap Dimensions For Tail Light (H13)

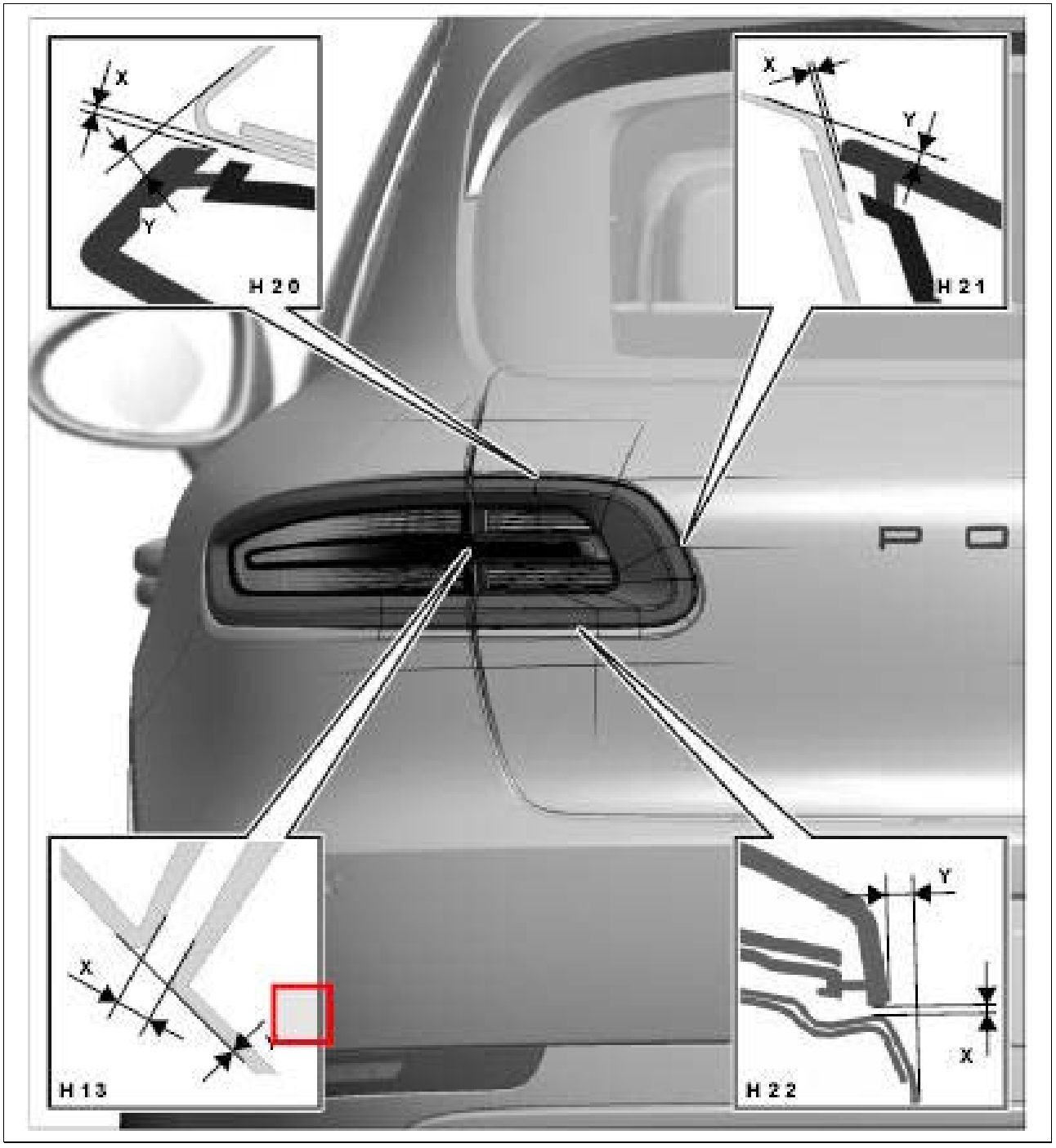

Courtesy of PORSCHE CARS NORTH AMERICA, INC.

H13 - → Gap dimension: 0 mm+/-0.8 mm

Fig 135: Identifying Inner Gap Dimensions For Tail Light (H20)

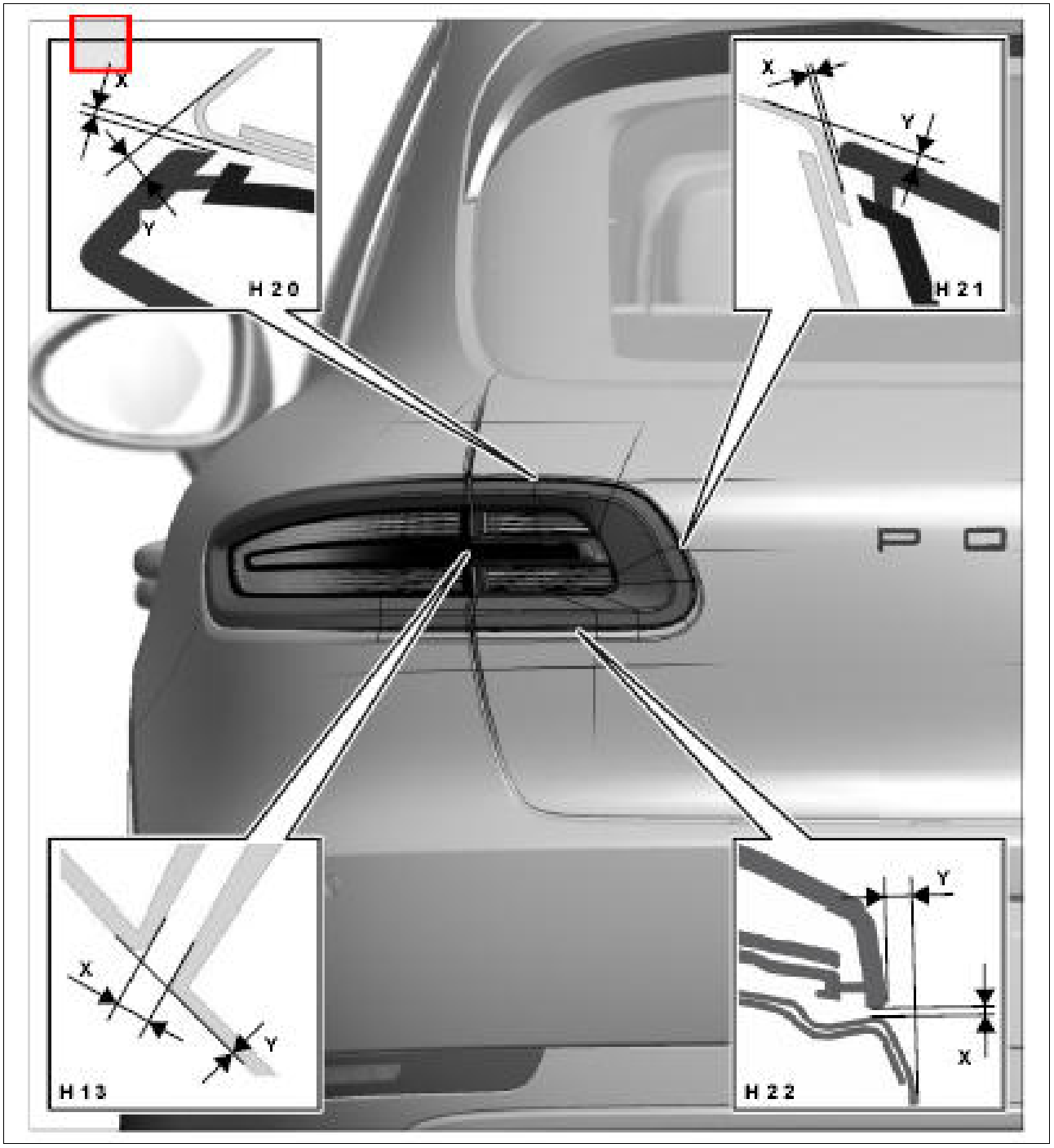

Courtesy of PORSCHE CARS NORTH AMERICA, INC.

H20 - → Gap dimension: 1 mm+/-0.8 mm

Fig 136: Identifying Inner Gap Dimensions For Tail Light (H20)

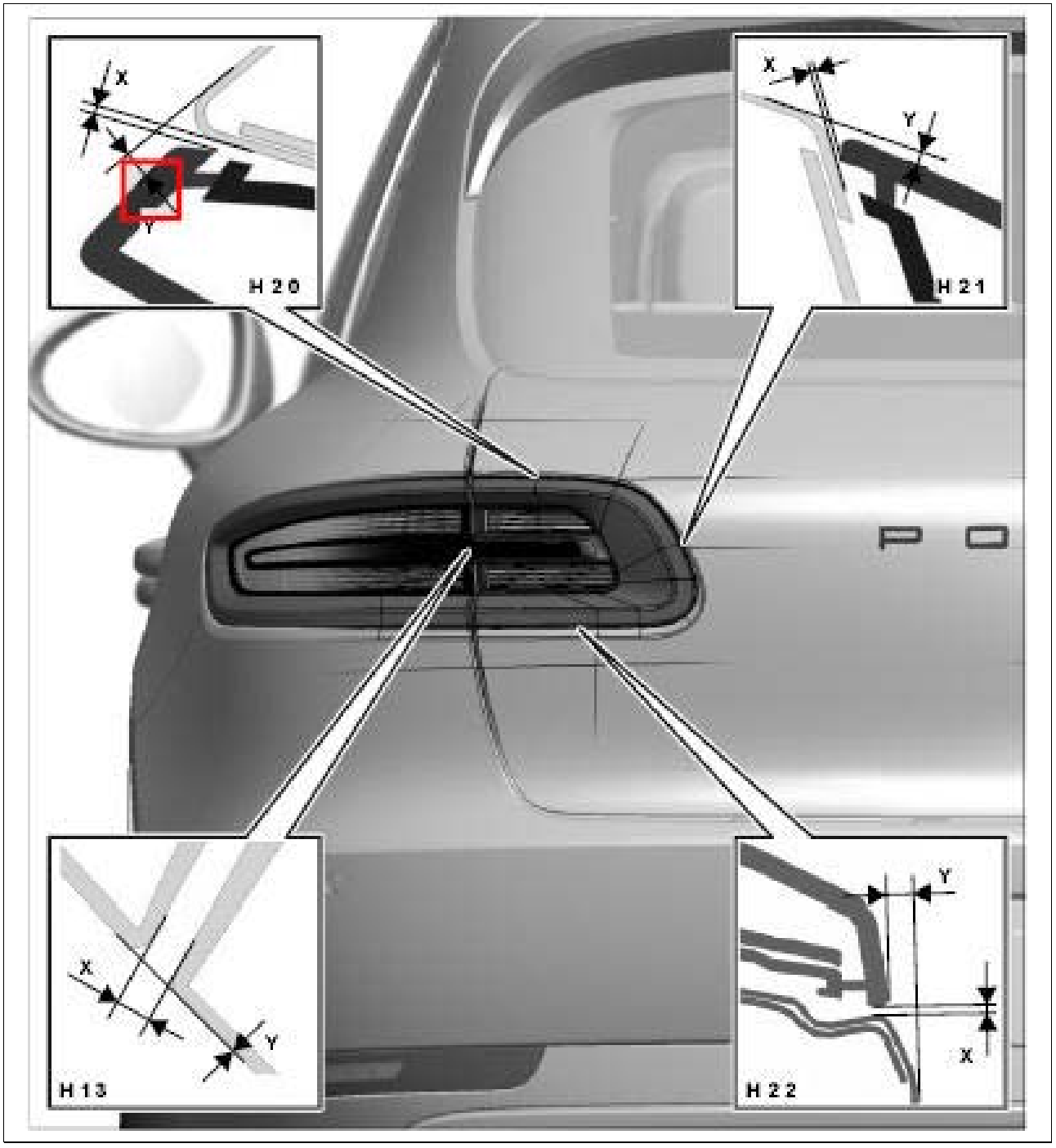

Courtesy of PORSCHE CARS NORTH AMERICA, INC.

H20 - → Gap dimension: -4.5 mm+/-0.5 mm

Fig 137: Identifying Inner Gap Dimensions For Tail Light (H21)

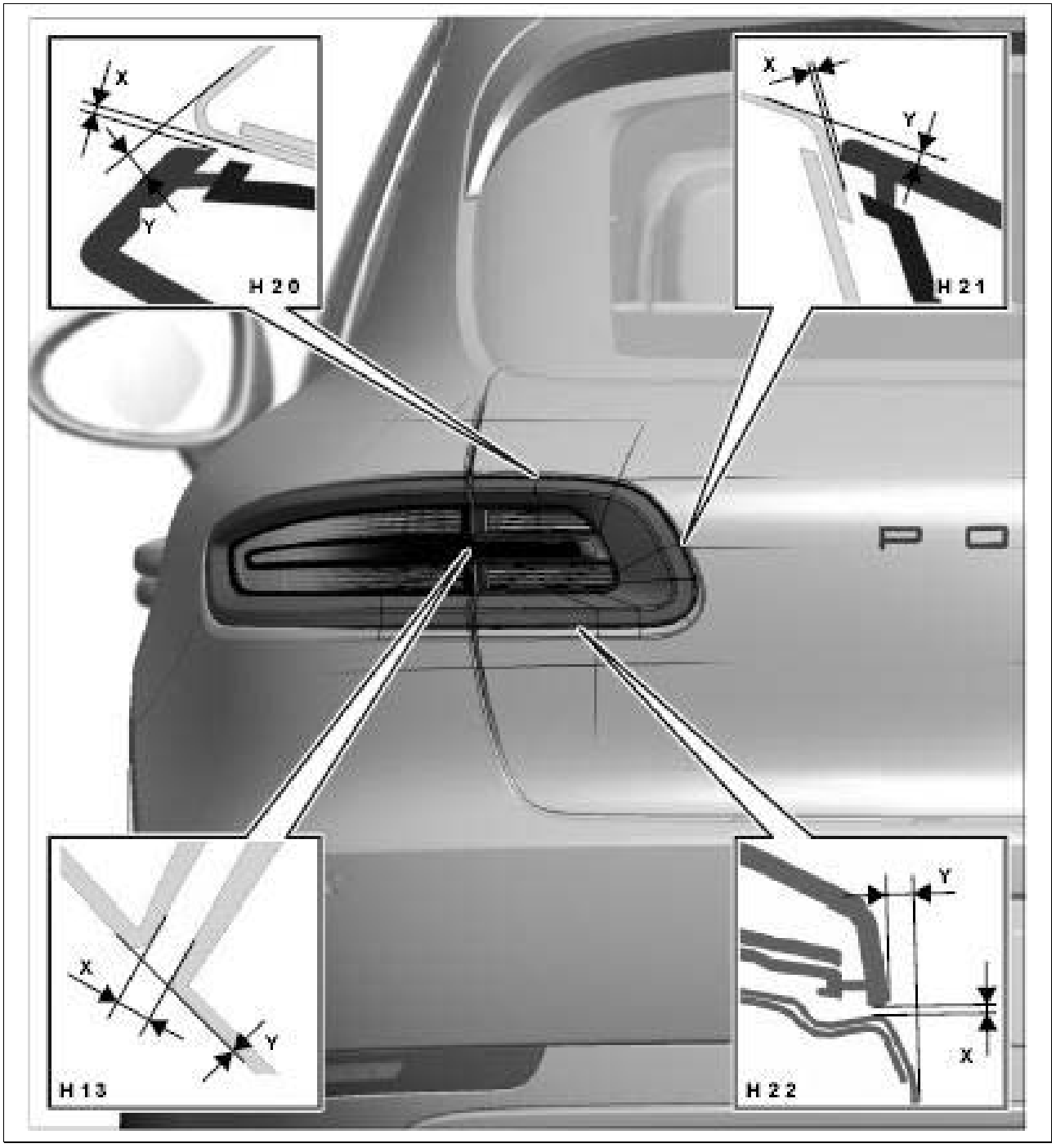

Courtesy of PORSCHE CARS NORTH AMERICA, INC.

H21 - → Gap dimension: 1 mm+/-0.8 mm

Fig 138: Identifying Inner Gap Dimensions For Tail Light (H21)

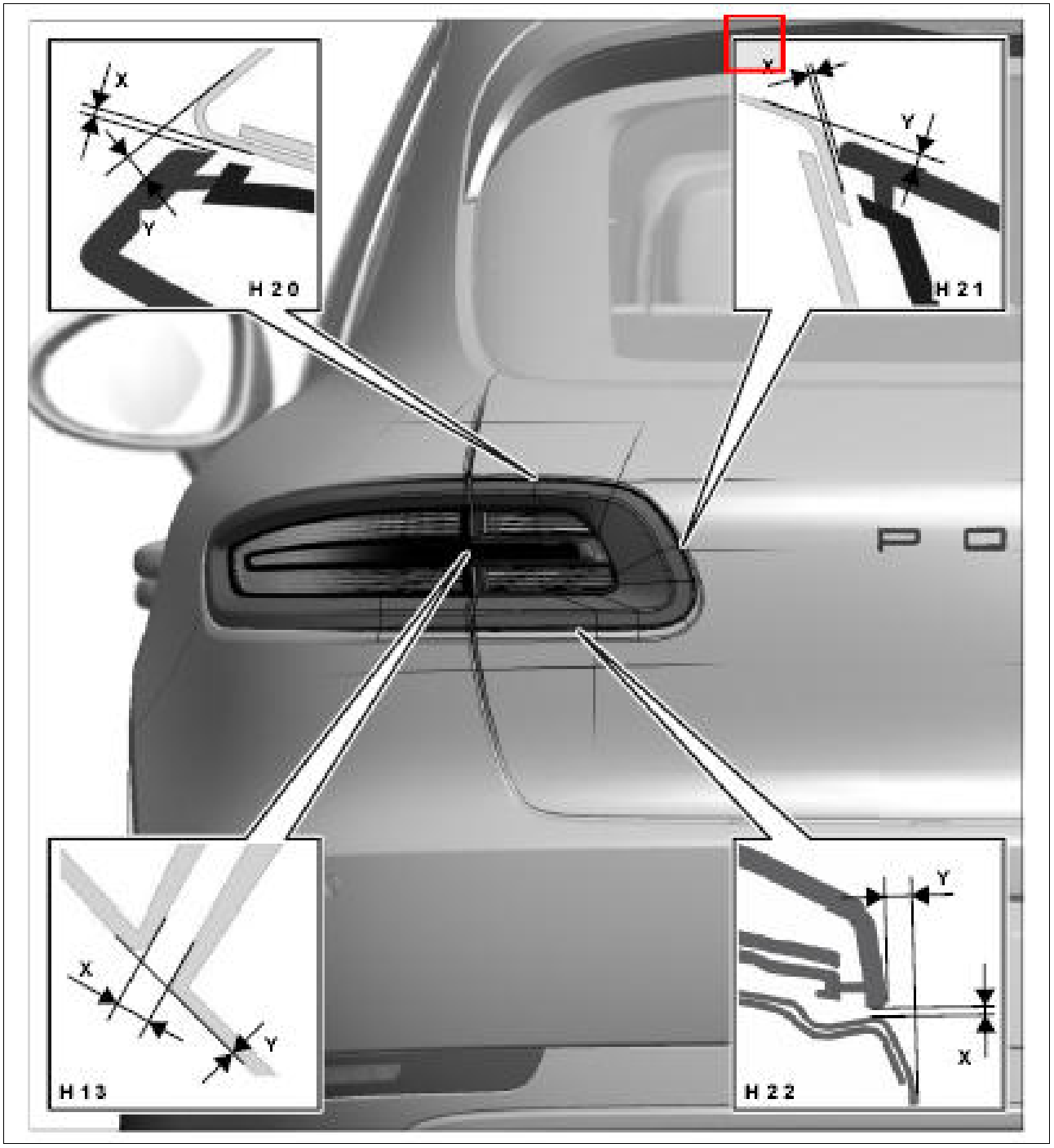

Courtesy of PORSCHE CARS NORTH AMERICA, INC.

H21 - → Gap dimension: -2 mm+/-0.5 mm

Fig 139: Identifying Inner Gap Dimensions For Tail Light (H22)

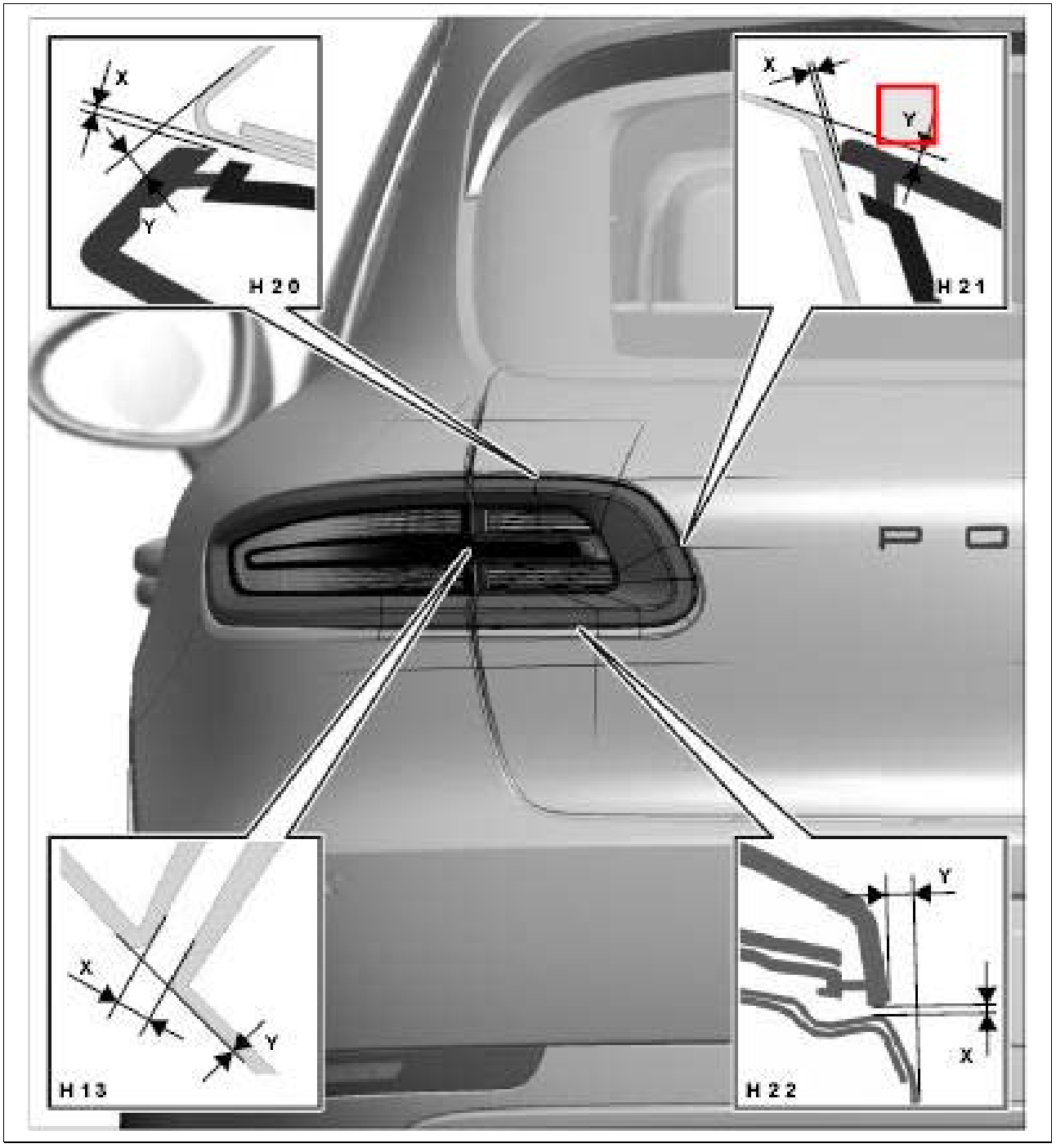

Courtesy of PORSCHE CARS NORTH AMERICA, INC.

H22 - → Gap dimension: 1 mm+/-0.8 mm

Fig 140: Identifying Inner Gap Dimensions For Tail Light (H22)

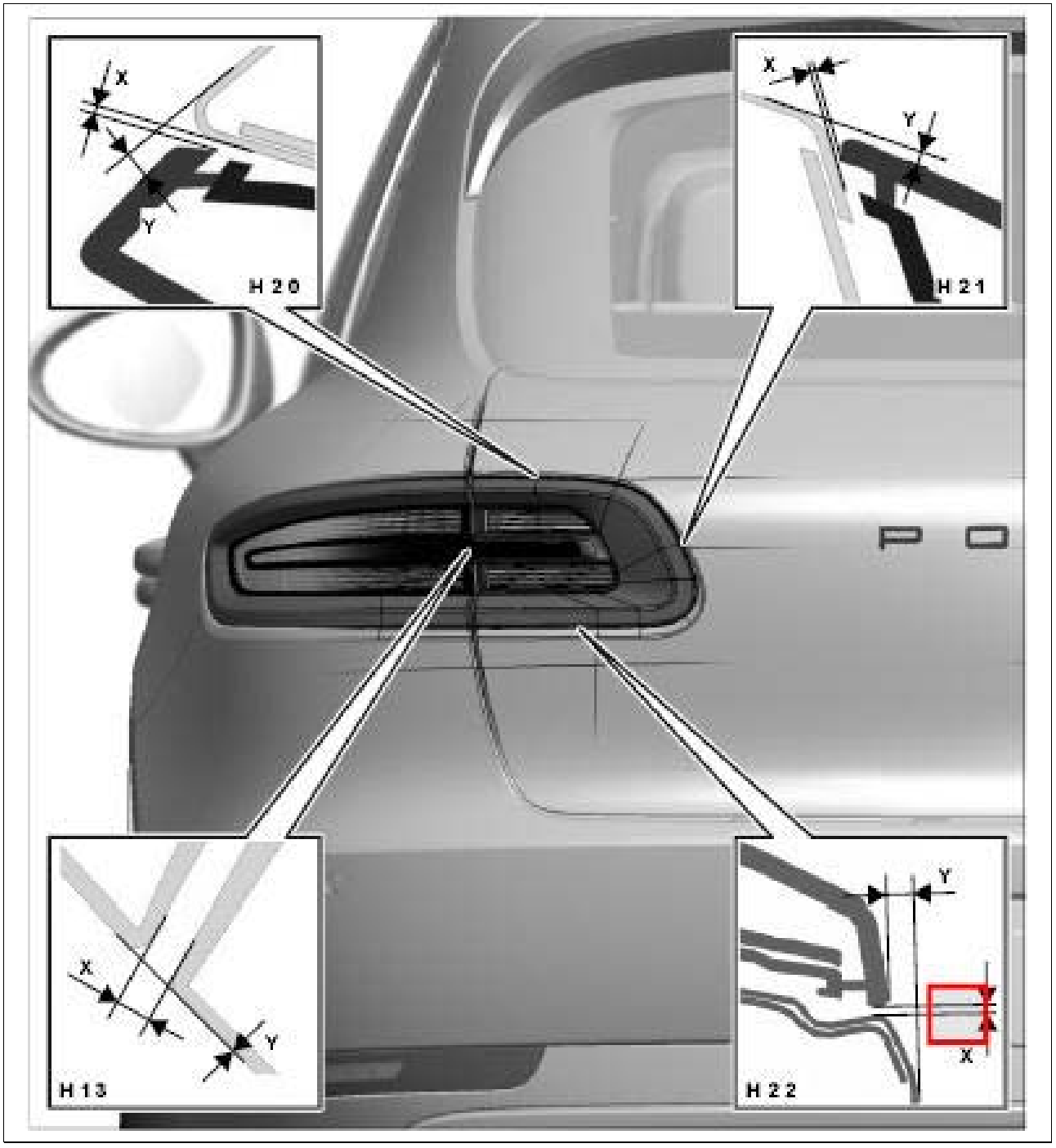

Courtesy of PORSCHE CARS NORTH AMERICA, INC.

H22 - → Gap dimension: -3.8 mm+/-0.5 mm

Fig 141: Identifying Gap Dimensions For Tail Light

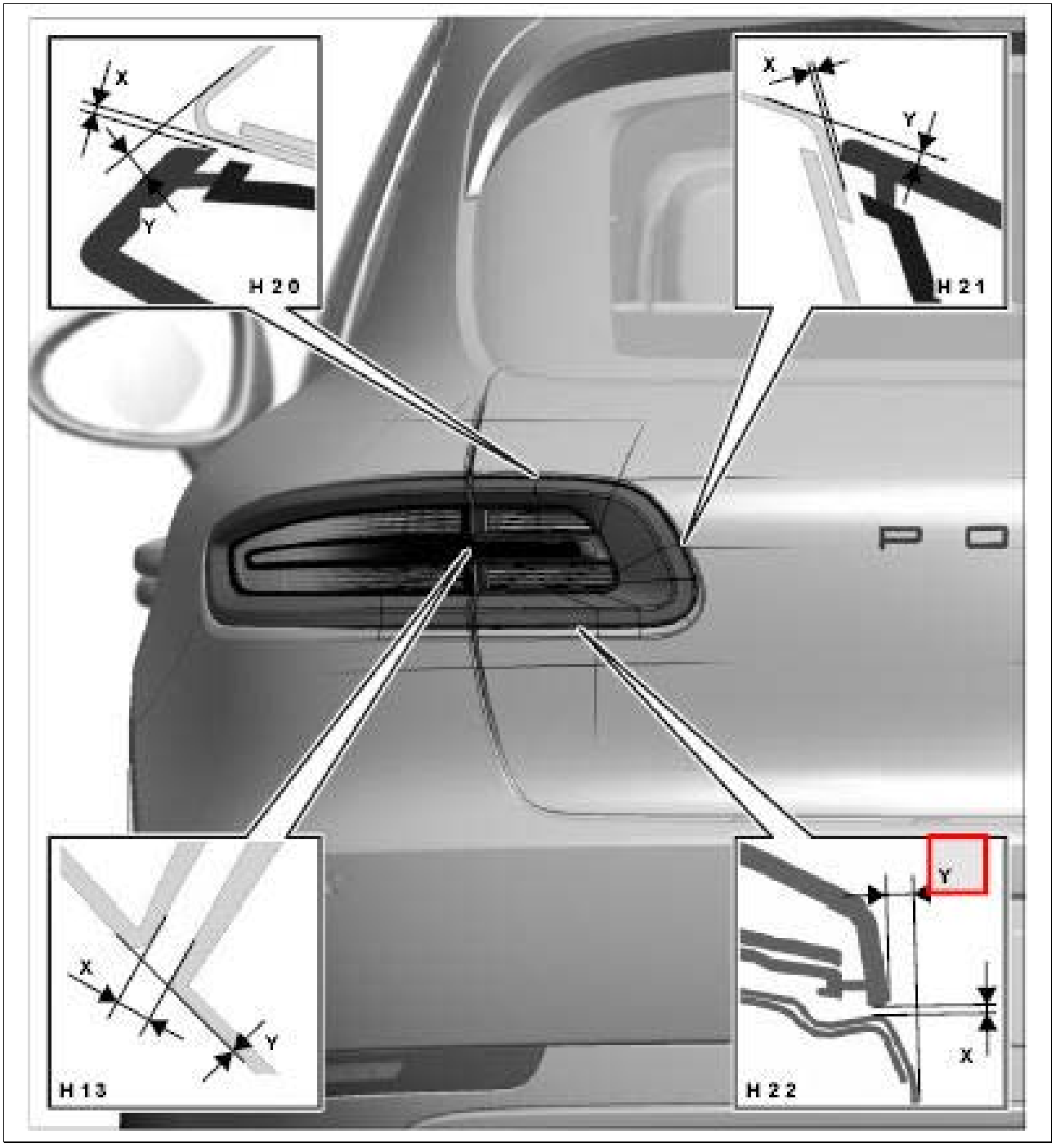

Courtesy of PORSCHE CARS NORTH AMERICA, INC.

Gap dimensions for rear end

Fig 142: Identifying Gap Dimensions For Rear End (H30)

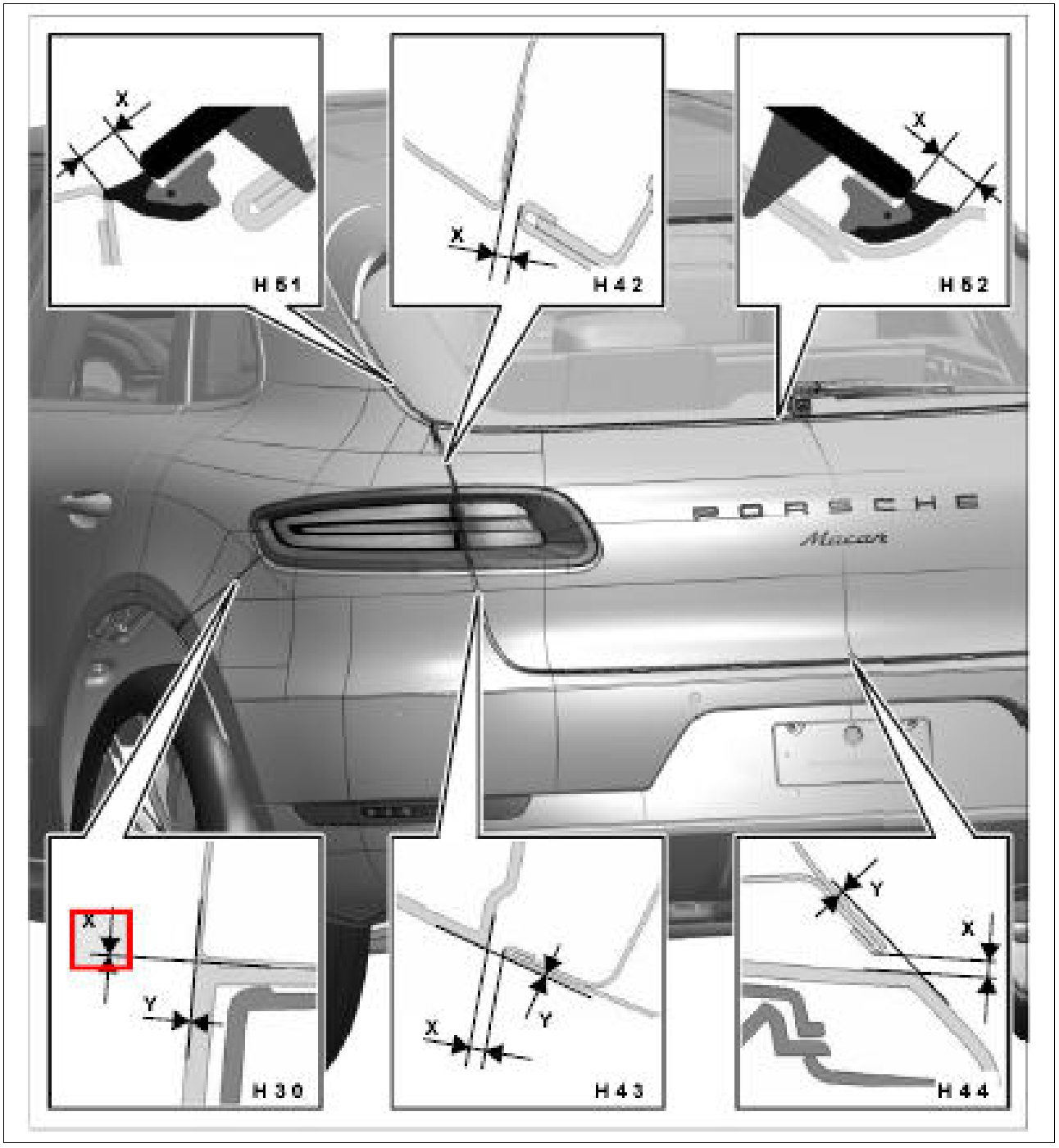

Courtesy of PORSCHE CARS NORTH AMERICA, INC.

H30 - → Gap dimension: 0 mm+0.5 mm

Fig 143: Identifying Gap Dimensions For Rear End (H30)

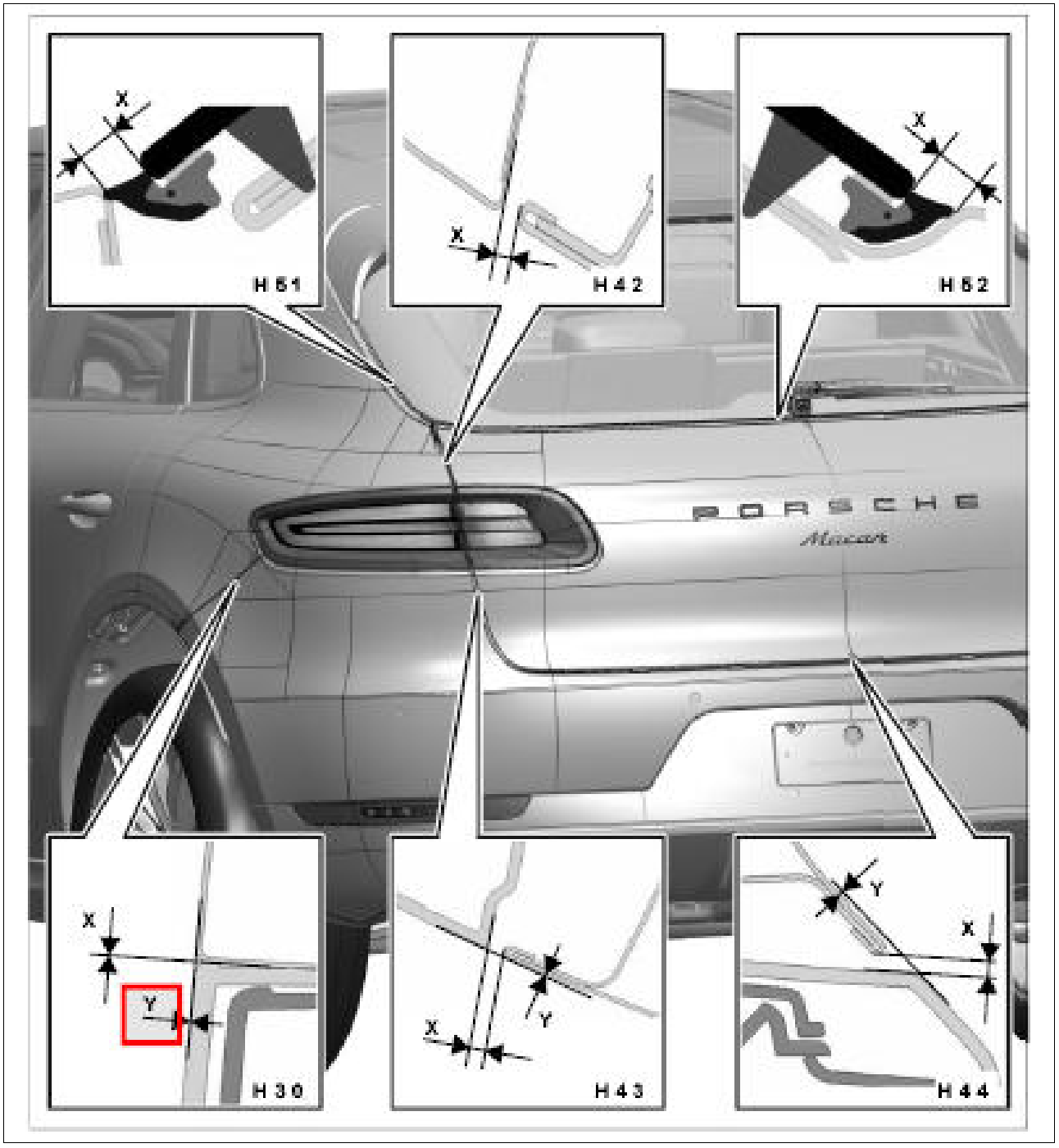

Courtesy of PORSCHE CARS NORTH AMERICA, INC.

H30 - → Gap dimension: 0 mm+/-0.8 mm

Fig 144: Identifying Gap Dimensions For Rear End (H42)

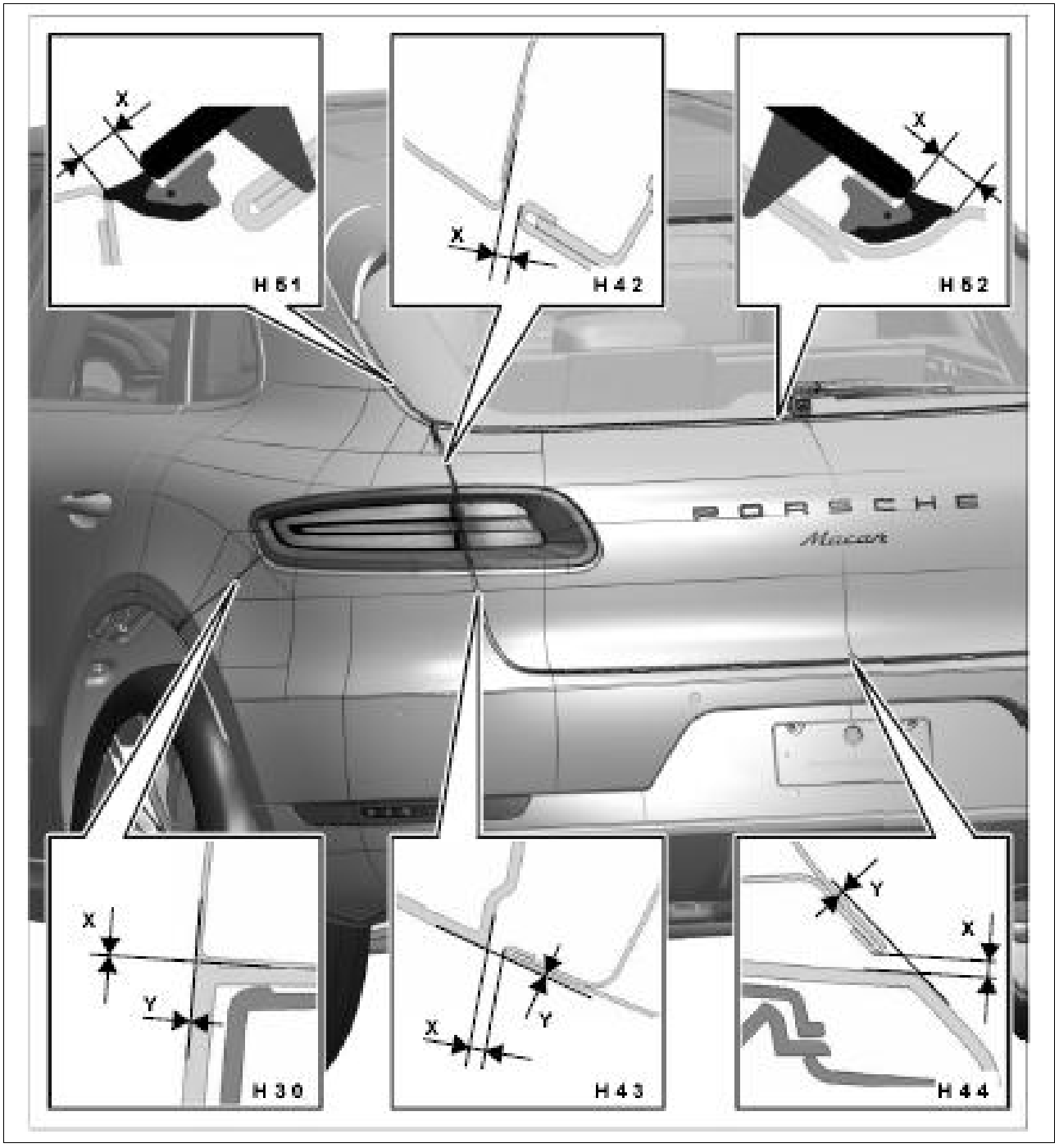

Courtesy of PORSCHE CARS NORTH AMERICA, INC.

H42 - → Gap dimension: 4 mm+0.7 mm-0.9 mm

Fig 145: Identifying Gap Dimensions For Rear End (H43)

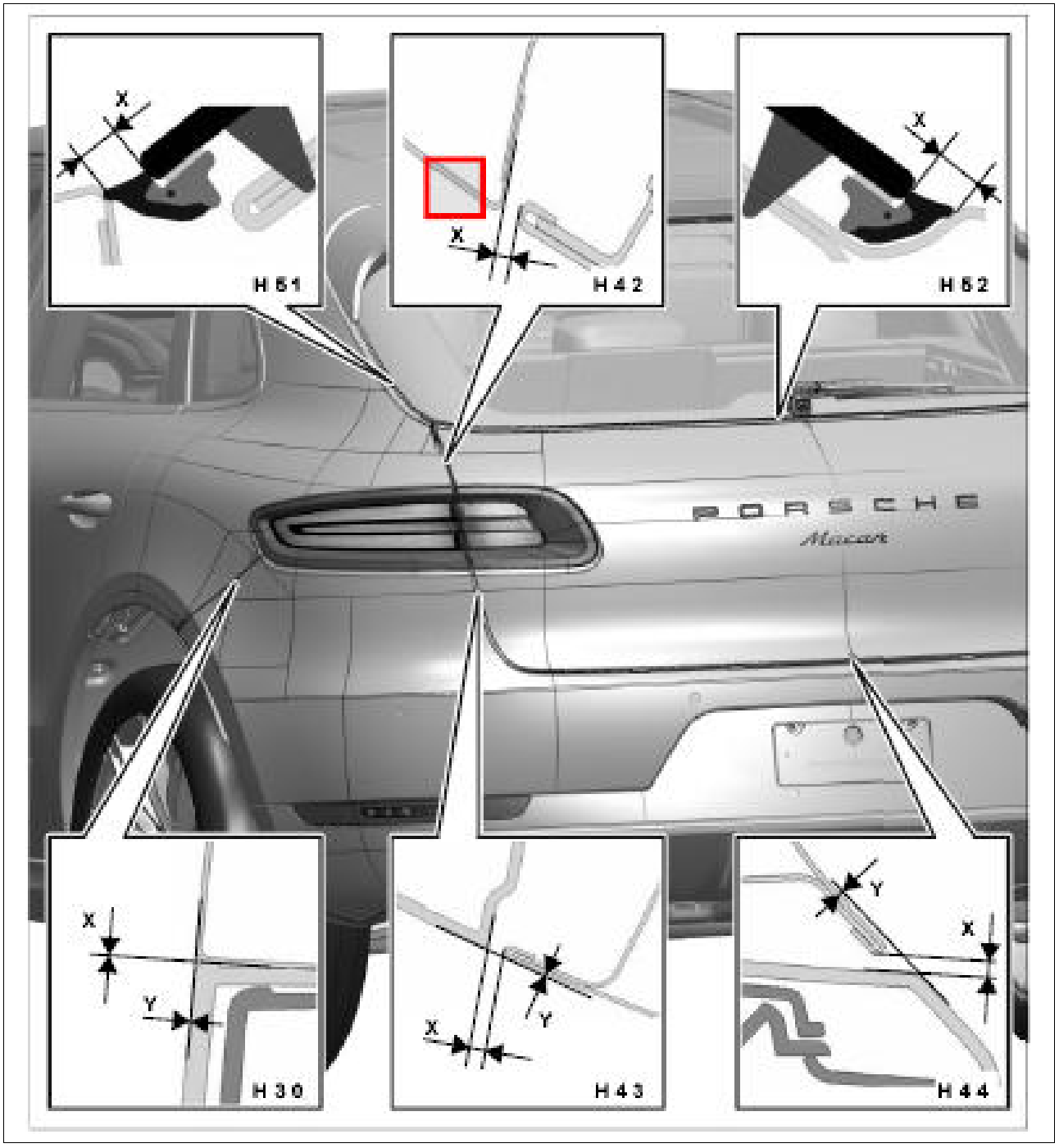

Courtesy of PORSCHE CARS NORTH AMERICA, INC.

H43 - → Gap dimension: 4 mm+/-0.8 mm

Fig 146: Identifying Gap Dimensions For Rear End (H43)

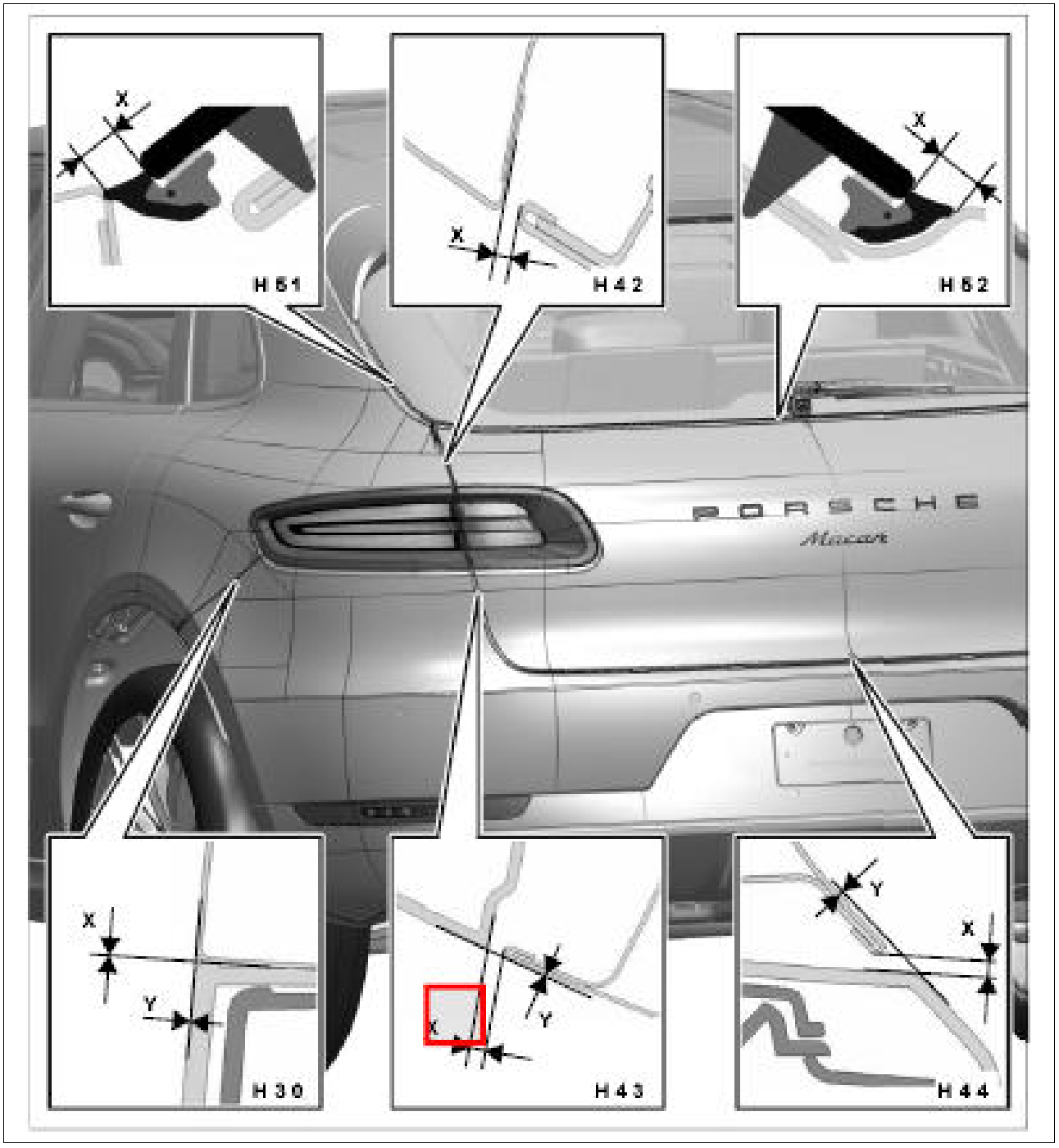

Courtesy of PORSCHE CARS NORTH AMERICA, INC.

H43 - → Gap dimension: 4 mm+/-0.8 mm

Fig 147: Identifying Gap Dimensions For Rear End

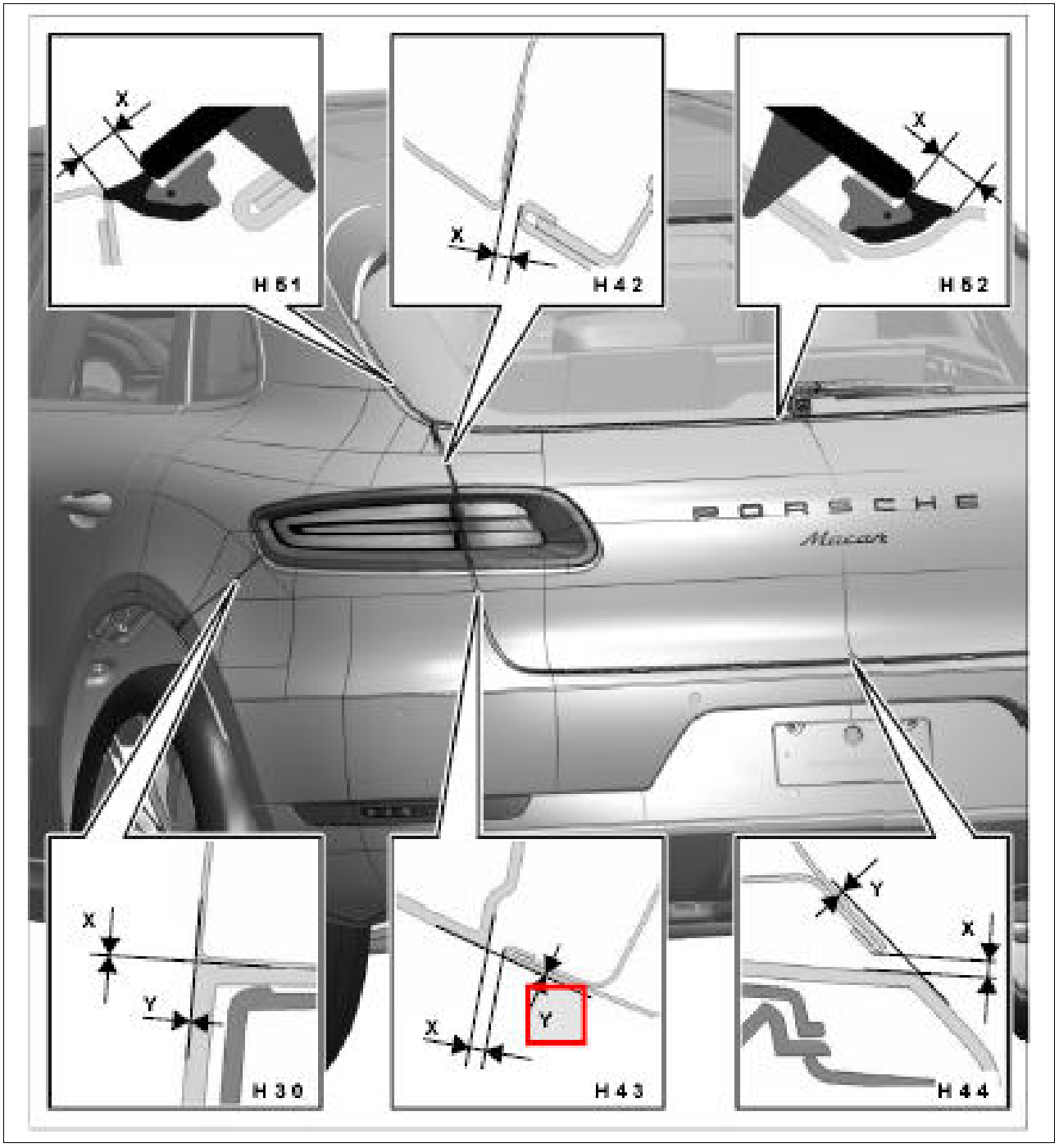

Courtesy of PORSCHE CARS NORTH AMERICA, INC.

Fig 148: Identifying Gap Dimensions For Rear Apron

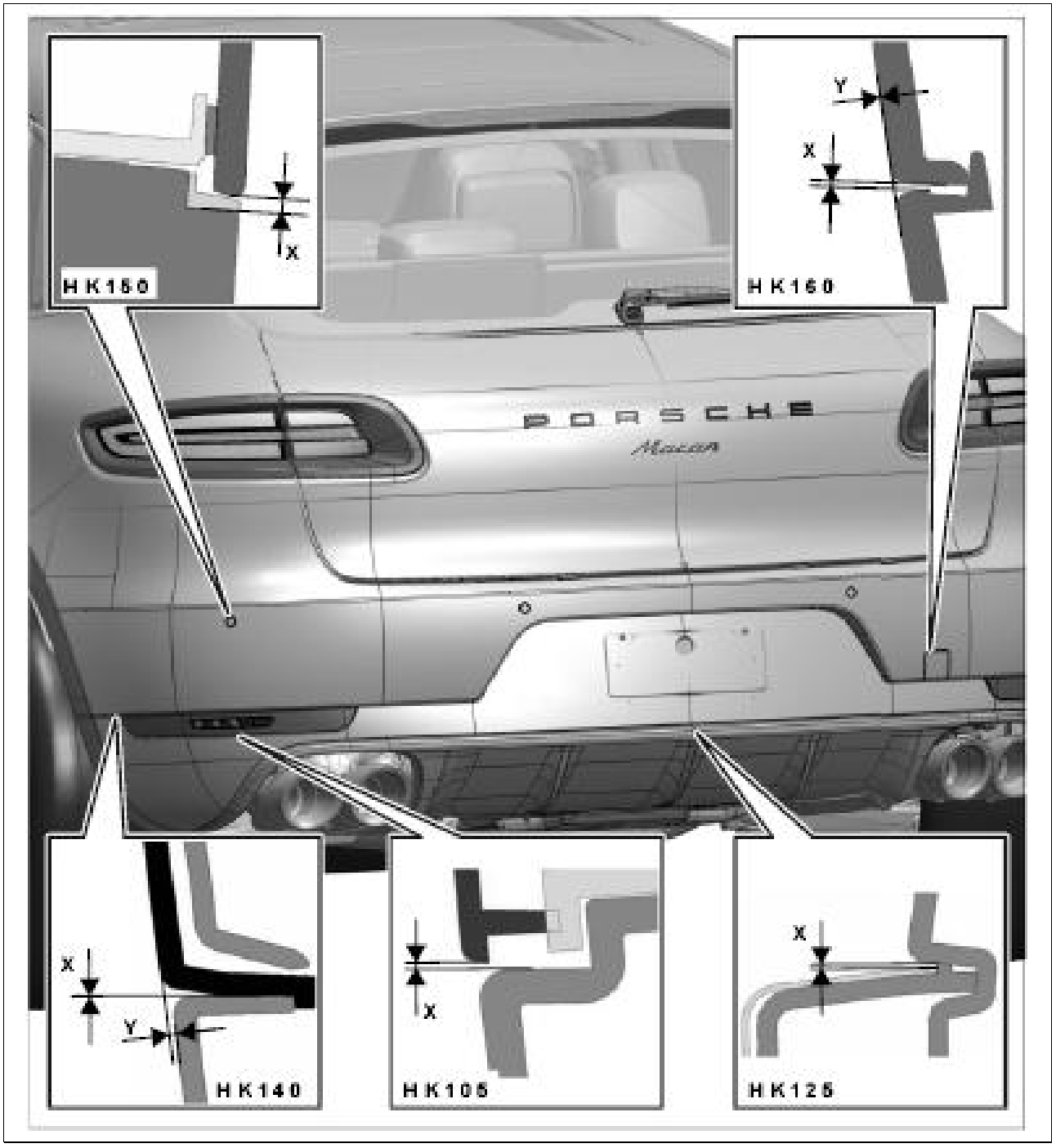

Courtesy of PORSCHE CARS NORTH AMERICA, INC.

Gap dimensions - 55 - Rear lid

Location	Description	Type	Basic value	Tolerance 1	Tolerance 2
Rear lid/rear spoiler to roof	R1 (gap)	Gap dimension	6 mm	+/-1.1 mm	

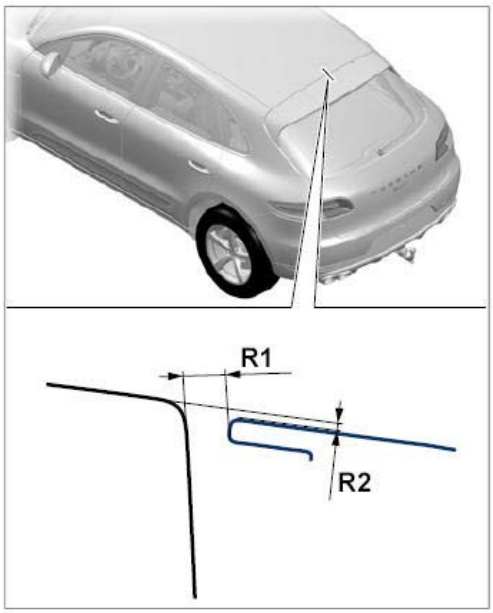

Rear lid/rear spoiler

Rear lid/rear spoiler to roof	R2 (offset)	Gap dimension	-1.5 mm	+/-1.1 mm	

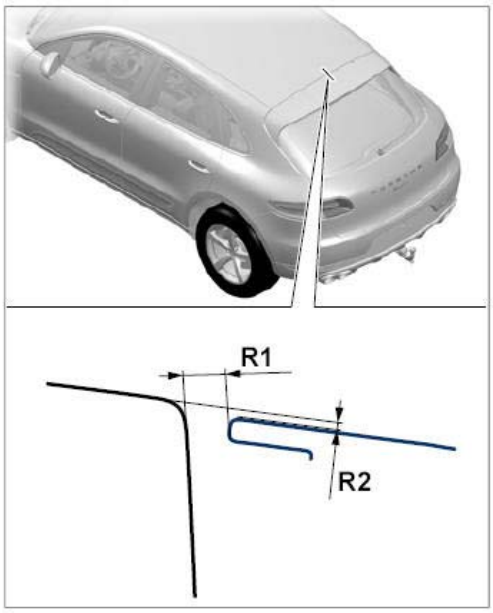

Rear lid/rear spoiler to roof

Rear lid to side panel	R3 (gap)	Gap dimension	4 mm	+0.7 mm	-0.9 mm

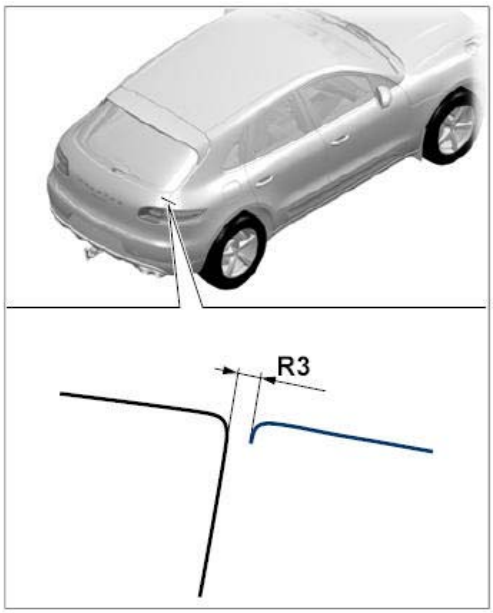

Rear lid to side panel

Rear lid to side panel	R3b (offset)	Gap dimension	0 mm	+/-0.6 mm	

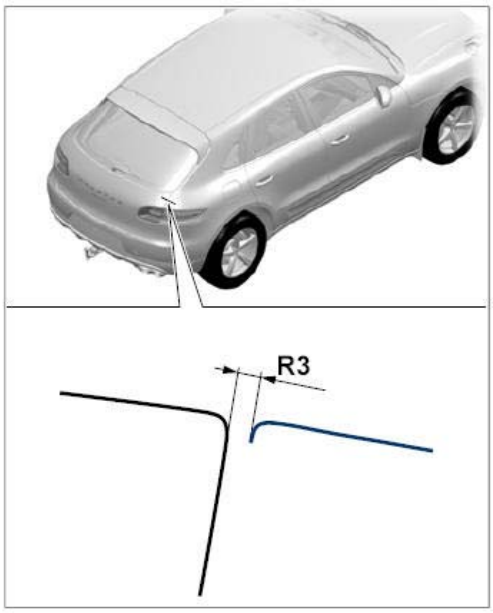

Rear lid to side panel

Rear lid to rear apron	R4 (gap)	Gap dimension	4 mm	+/-0.8 mm	

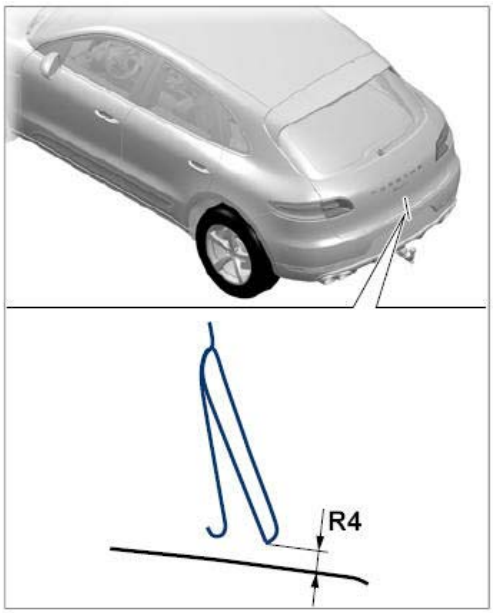

Rear lid to rear apron

WM 5X00IN SEAM SEALS (ALL MODELS) > TECHNICAL VALUES

Location	Description	Type	Basic value	Tolerance 1	Tolerance 2
Dimension X		Distance	50 mm		

WM 5X00IN SEAM SEALS (ALL MODELS) > SEAM SEALS

Information

Smooth off seam seal with a spatula after applying it to the marked areas.

1. Coat area **-I-** with body sealant.

Fig 1: Identifying Front Flap



Courtesy of PORSCHE CARS NORTH AMERICA, INC.

Information

Smooth off seam seal with a spatula after applying it to the marked areas.

2. Apply body sealing compound in area **-I-** .

Fig 2: Identifying Front Door



Courtesy of PORSCHE CARS NORTH AMERICA, INC.

Information

Smooth off seam seal with a spatula after applying it to the marked areas.

3. Apply body sealing compound in area **-I-** .

Fig 3: Identifying Rear Door

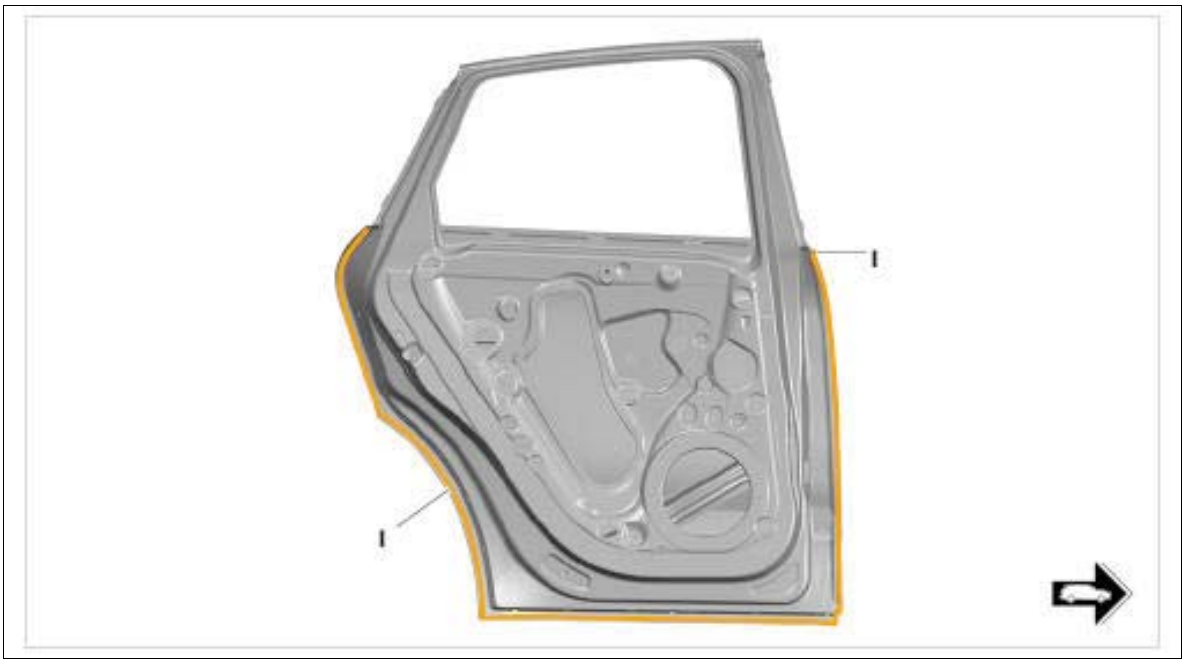

Courtesy of PORSCHE CARS NORTH AMERICA, INC.

Information

Smooth off seam seal with a spatula after applying it to the marked areas.

4. Apply body sealing compound in area **-I-** .

Fig 4: Identifying Front And Rear Door Hinges

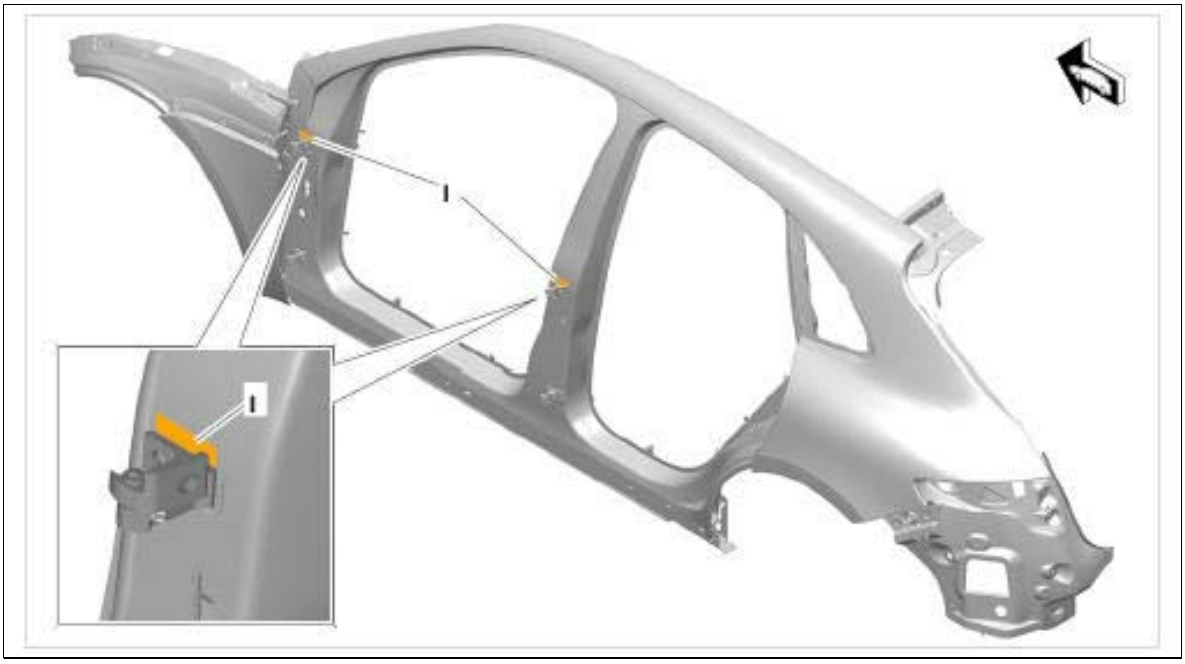

Courtesy of PORSCHE CARS NORTH AMERICA, INC.

5. Seal fresh cut in area **-A-** with body sealing compound.

Information

Smooth off seam seal with a spatula after applying it to the marked areas.

1. 5.1. Apply body sealing compound in area **-B;C & D-** .

Fig 5: Identifying Rear Side Section Applying Area

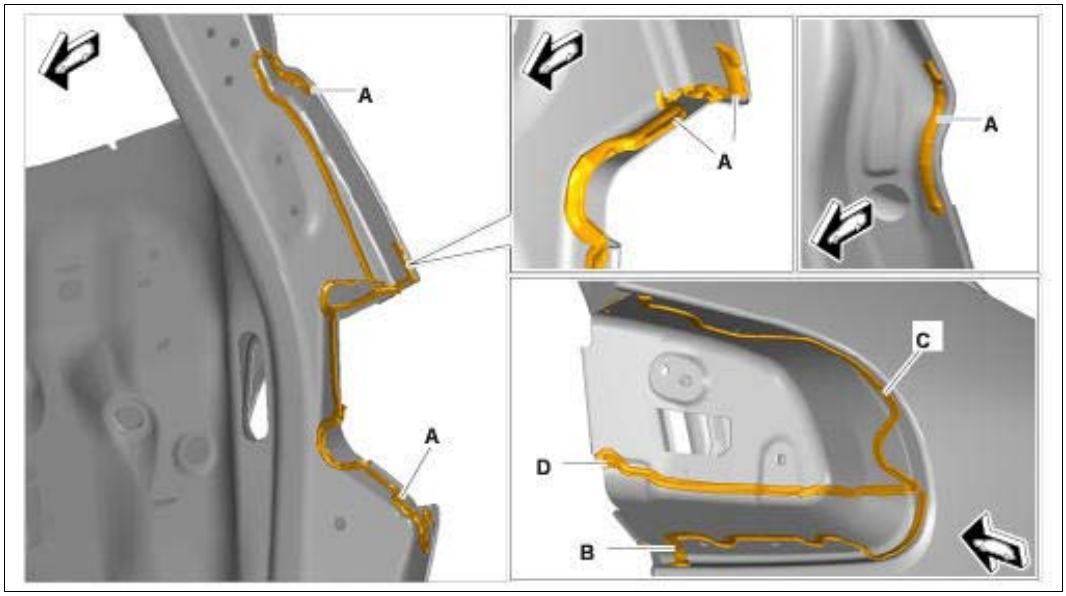

Courtesy of PORSCHE CARS NORTH AMERICA, INC.

6. Seal fresh cut in area **-E-** with body sealant → BODY SEALANT 000.043.303.60 and smooth it off.

Information

Smooth off seam seal with a spatula after applying it to the marked areas.

1. 6.1. Coat area **-A-** with body sealant.

Fig 6: Identifying Tailgate Coating Area

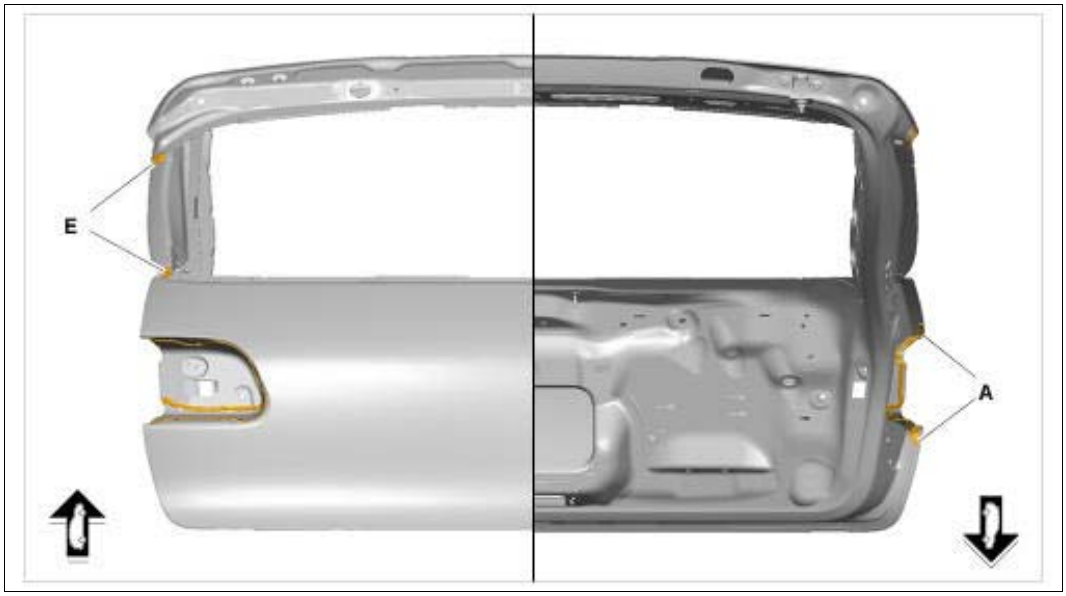

Courtesy of PORSCHE CARS NORTH AMERICA, INC.

If the sealing specifications are not observed, there is a **higher risk of water leaking in** at the tailgate. The following overview shows the positions on the rear lid **-A, B, C-** at which additional sealing measures are required.

Fig 7: Positioning Rear Lid Area

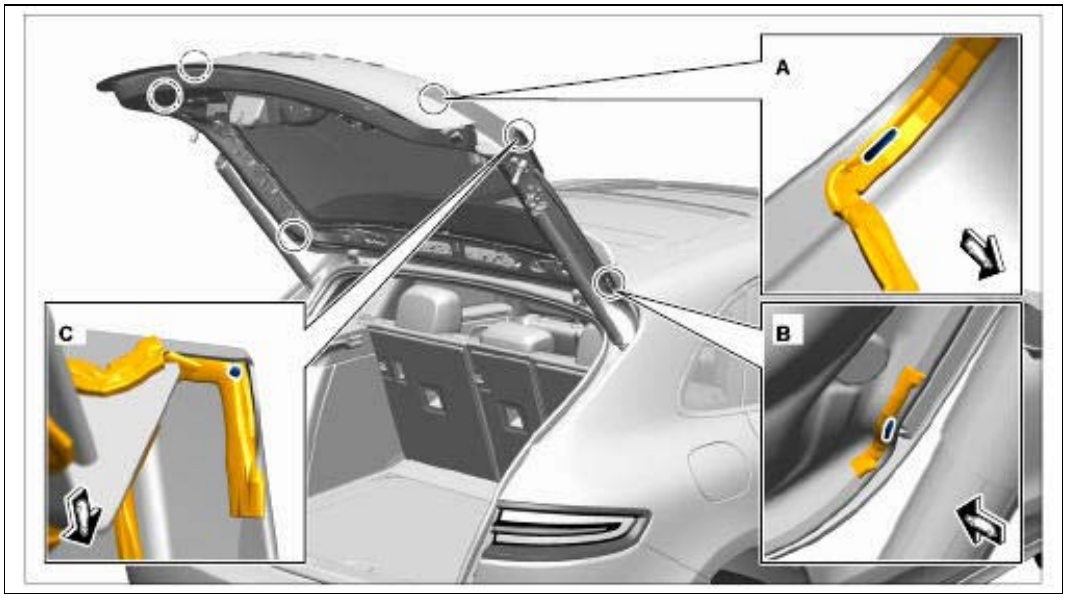

Courtesy of PORSCHE CARS NORTH AMERICA, INC.

Information

Smooth off seam seal with a spatula after applying it to the marked areas.

7. Coat the areas of the rear lid shown with body sealant → BODY SEALANT 000.043.207.67.

Fig 8: Identifying Seam Seals On Rear Lid

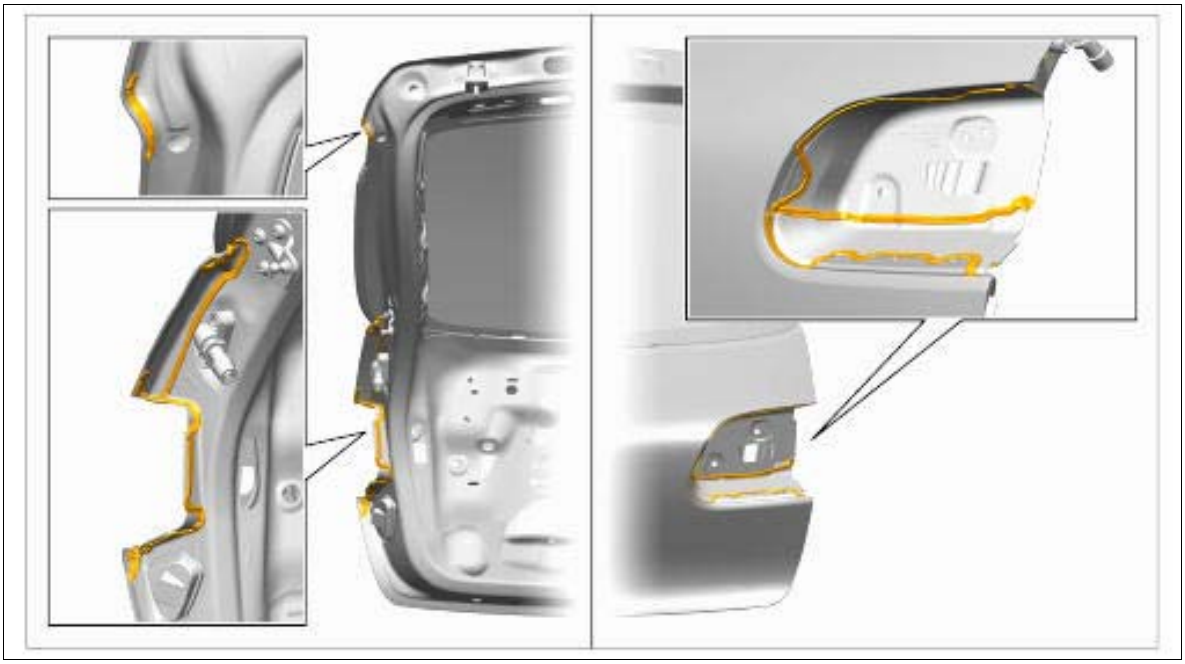

Courtesy of PORSCHE CARS NORTH AMERICA, INC.

Information

Smooth off seam seal with a spatula after applying it to the marked areas.

8. Rework the rear lid at certain points on the cut-out for the tail light.

Fig 9: Applying Sealing Compound

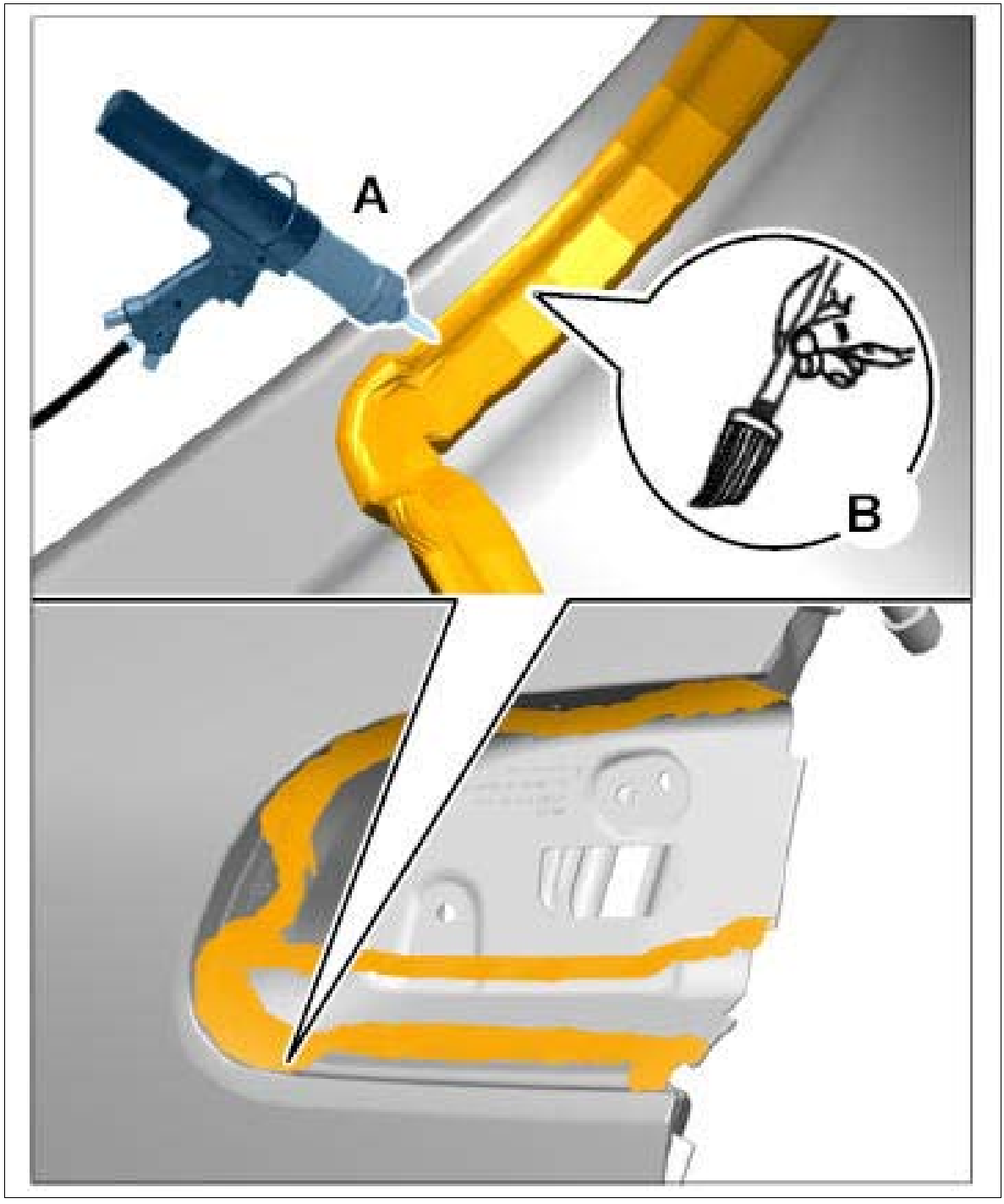

Courtesy of PORSCHE CARS NORTH AMERICA, INC.

1. 8.1. Apply body sealant → BODY SEALANT 000.043.303.60 as shown as an example and spread it out evenly.
2. 8.2. Spread the body sealant → BODY SEALANT 000.043.303.60 towards the edges in order to guarantee leak-tightness. Smooth out even the smallest holes.

9. A leak test must be carried out on the rear lid after applying the seam seal. To do this, follow the instructions for carrying out the leak test in the document → WE9000 WE90 Workshop campaign - Checking rear lid and reworking it if necessary .

Information

Smooth off seam seal with a spatula after applying it to the marked areas.

10. Coat area **-I-** with body sealant.

Fig 10: Identifying Body Front Section

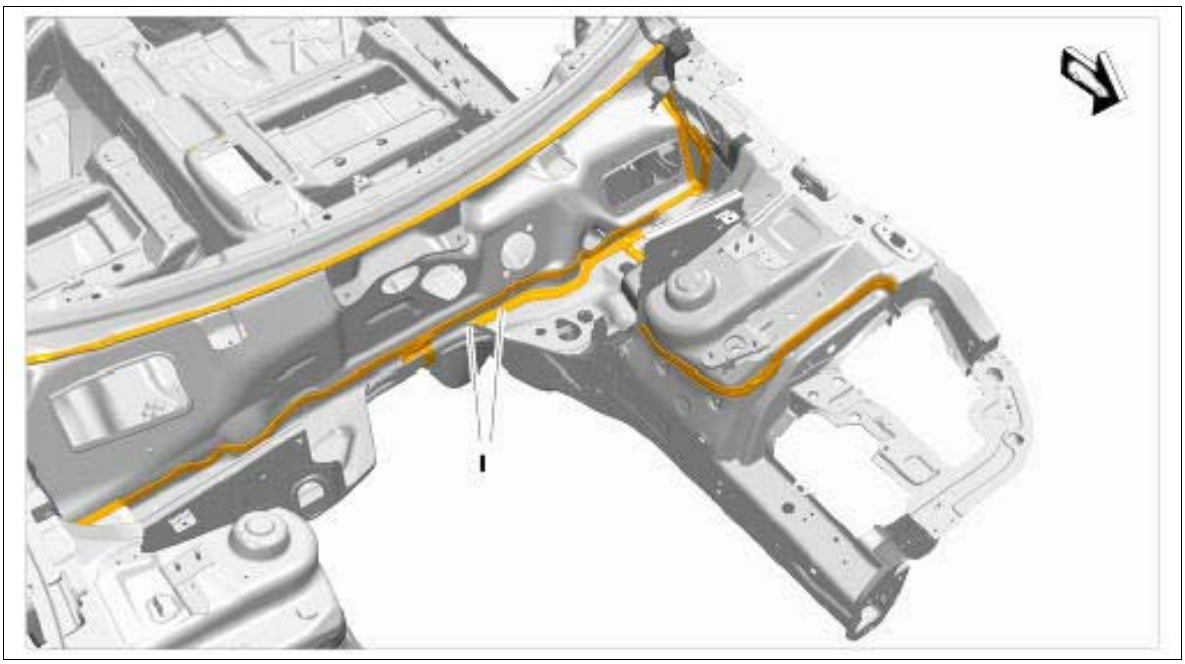

Courtesy of PORSCHE CARS NORTH AMERICA, INC.

11. Area **-I-** overlapping emerging adhesive.

Fig 11: Identifying Front Flap Hinge Area

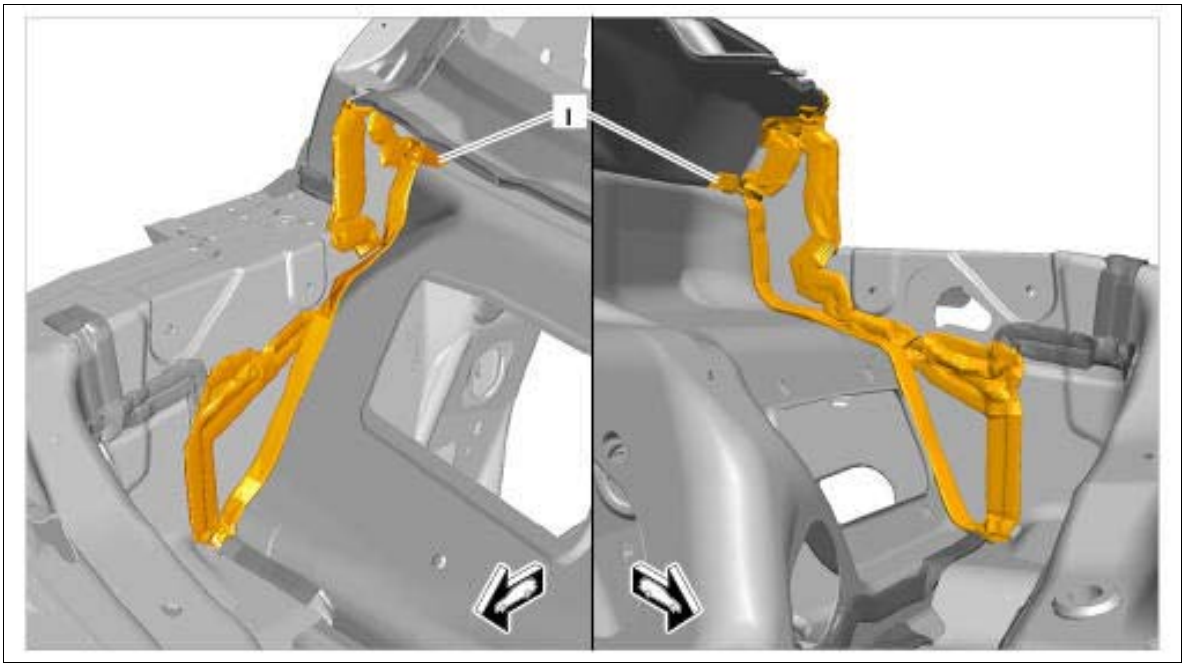

Courtesy of PORSCHE CARS NORTH AMERICA, INC.

Information

Smooth off seam seal with a spatula after applying it to the marked areas.

12. Apply body sealing compound in area **-I-** .

Fig 12: Applying Body Sealing Compound Area

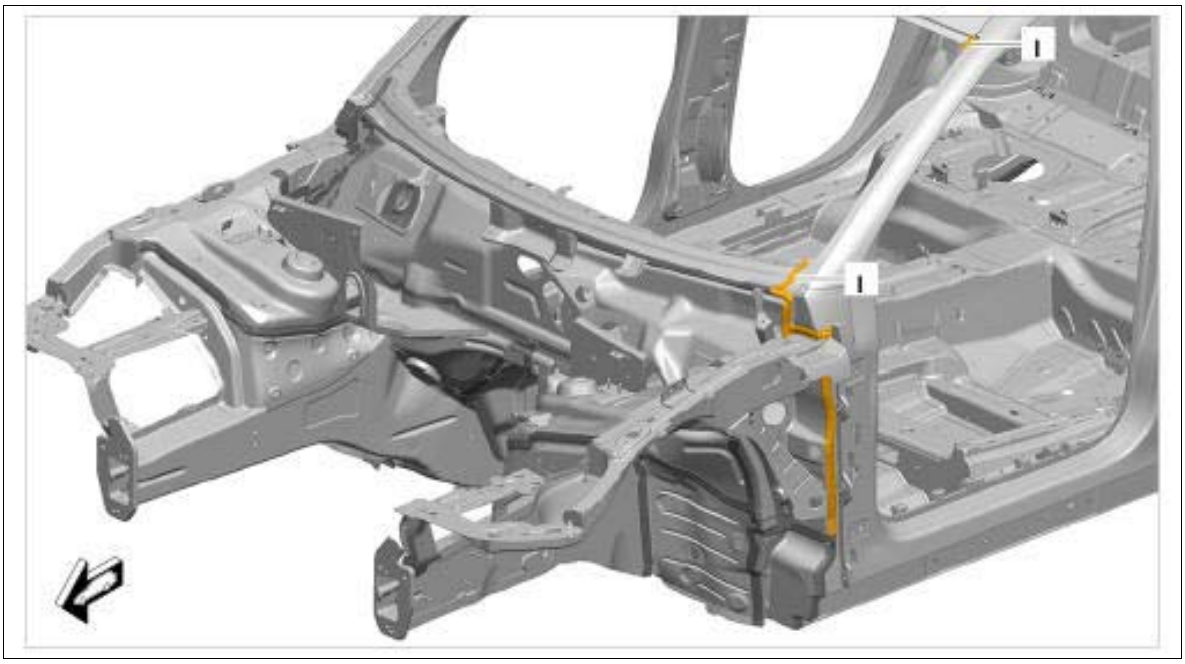

Courtesy of PORSCHE CARS NORTH AMERICA, INC.

Information

Smooth off seam seal with a spatula after applying it to the marked areas.

13. Apply body sealing compound in area **-I-** .

Fig 13: Identifying Front Wheel Housing

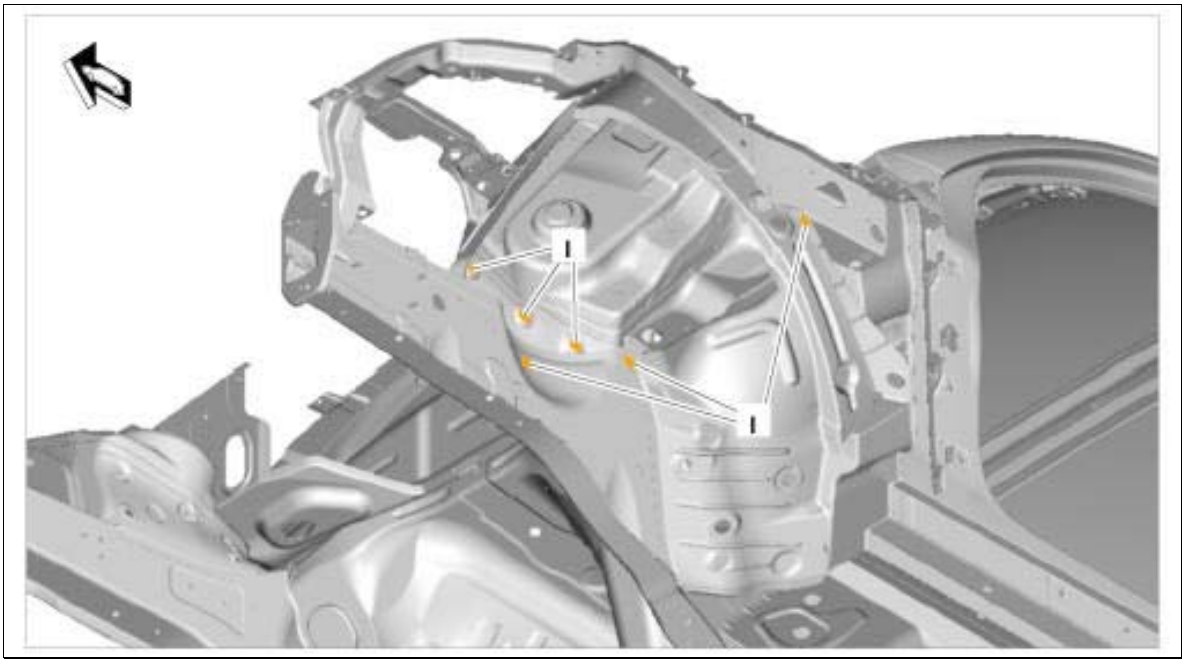

Courtesy of PORSCHE CARS NORTH AMERICA, INC.

Information

Smooth off seam seal with a spatula after applying it to the marked areas.

14. Apply body sealing compound in area **-I-** .

Fig 14: Identifying Front Plenum Panel Area

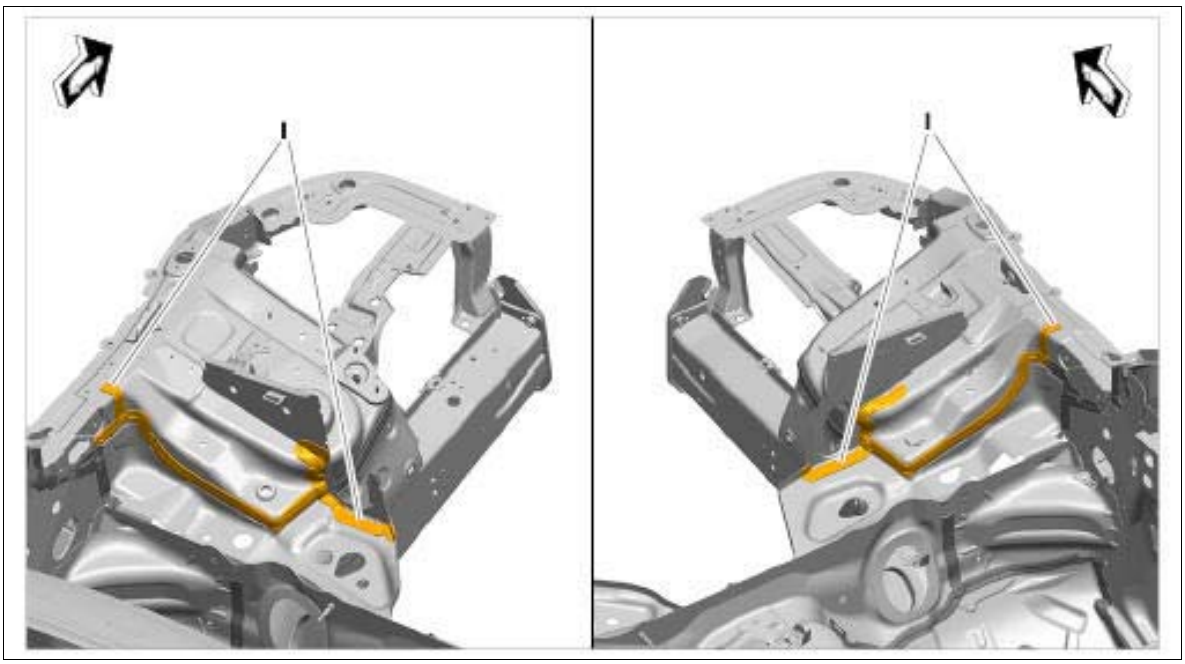

Courtesy of PORSCHE CARS NORTH AMERICA, INC.

Fig 15: Identifying Front Spring Strut Mount

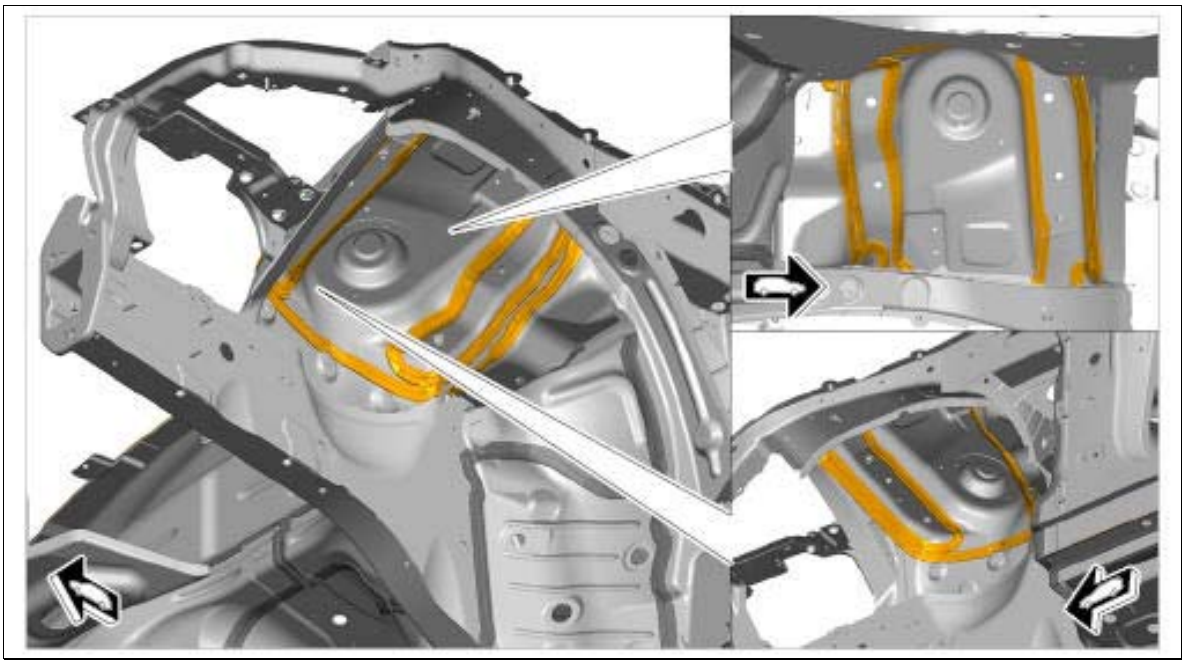

Courtesy of PORSCHE CARS NORTH AMERICA, INC.

Information

Smooth off seam seal with a spatula after applying it to the marked areas.

15. Apply body sealing compound in area **-I-** .

Fig 16: Identifying Front Wheel Housing Area

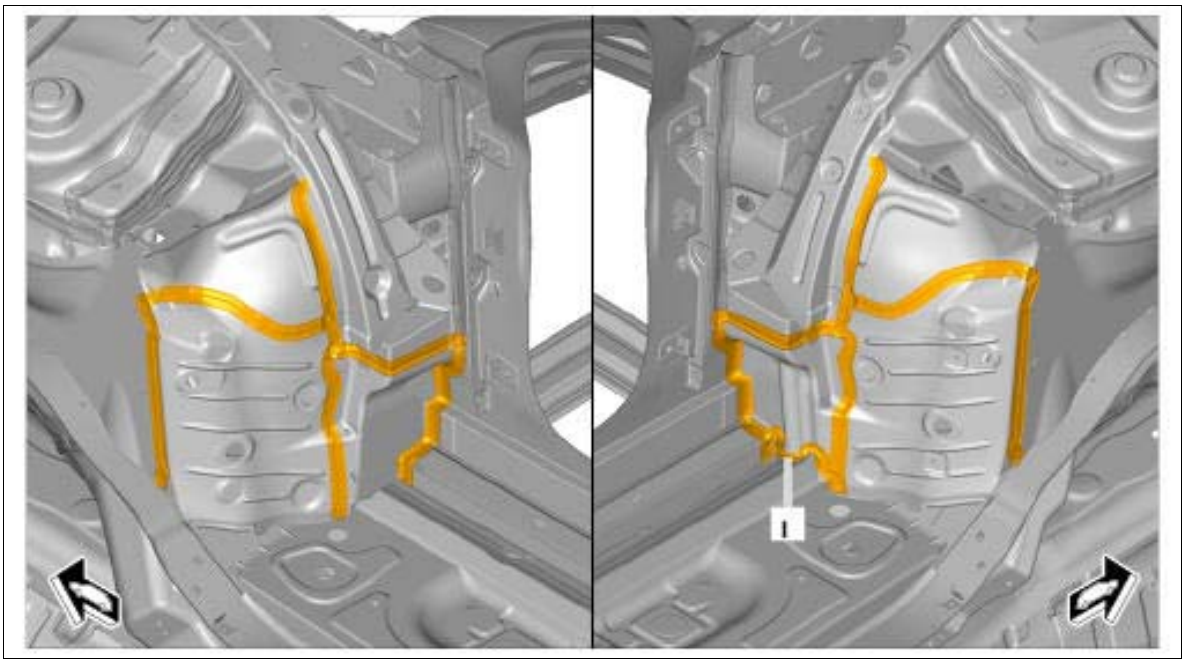

Courtesy of PORSCHE CARS NORTH AMERICA, INC.

Fig 17: Identifying Inner Floorpan

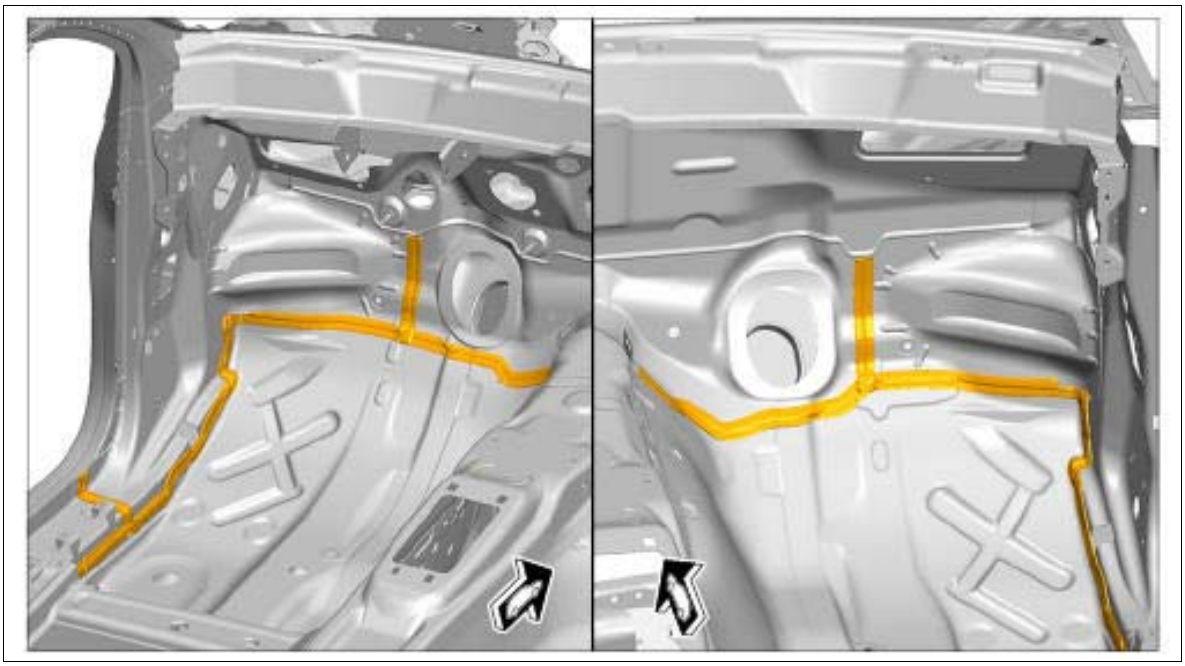

Courtesy of PORSCHE CARS NORTH AMERICA, INC.

Information

Smooth off seam seal with a spatula after applying it to the marked areas.

16. Apply body sealing compound in area **-I-** .

    1. 16.1. Area **-X-** overlapping bonded seam. → **Distance: 50 mm**

    Fig 18: Identifying Inner Rear Side Member And Tunnel Area

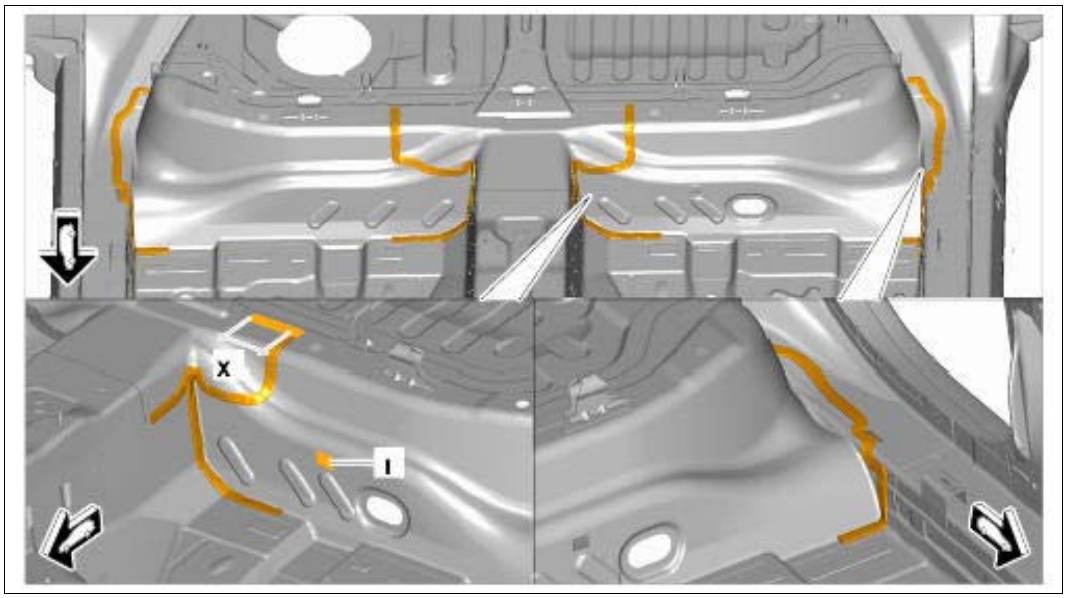

Courtesy of PORSCHE CARS NORTH AMERICA, INC.

17. Seal fresh cut in area **-I-** with body sealing compound and smooth off.

    1. 17.1. Area **-A-** - visible seam.

    Fig 19: Identifying Rear Water Drain And Tail Light Area

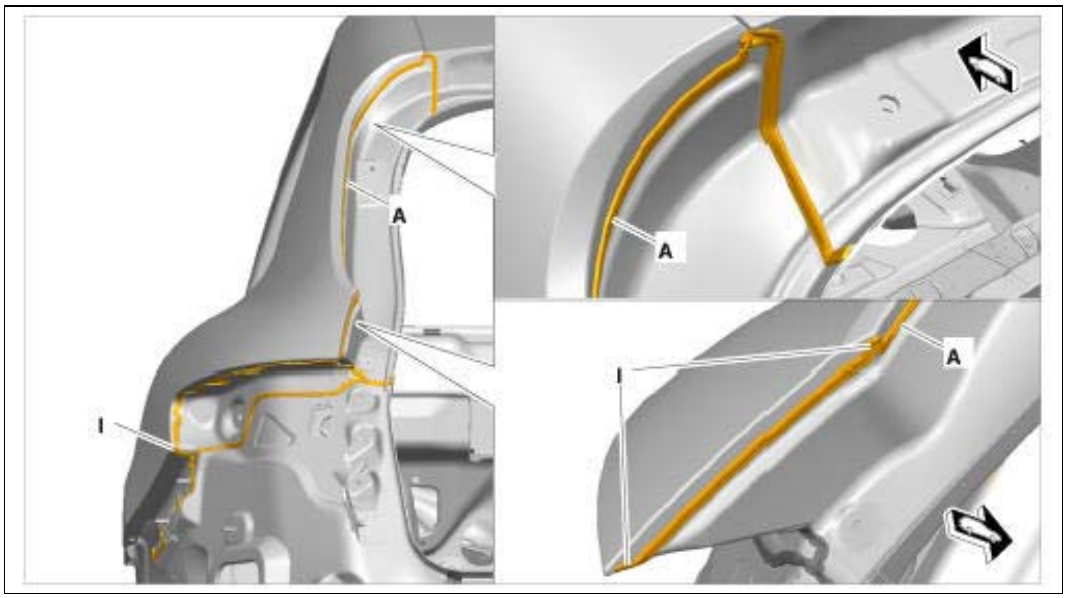

Courtesy of PORSCHE CARS NORTH AMERICA, INC.

Information

Smooth off seam seal with a spatula after applying it to the marked areas.

18. Apply body sealing compound in area **-A;B-** .

1. 18.1. Seal fresh cut in area **-C-** with body sealing compound and smooth off.

Fig 20: Identifying Tail Light Cut Area

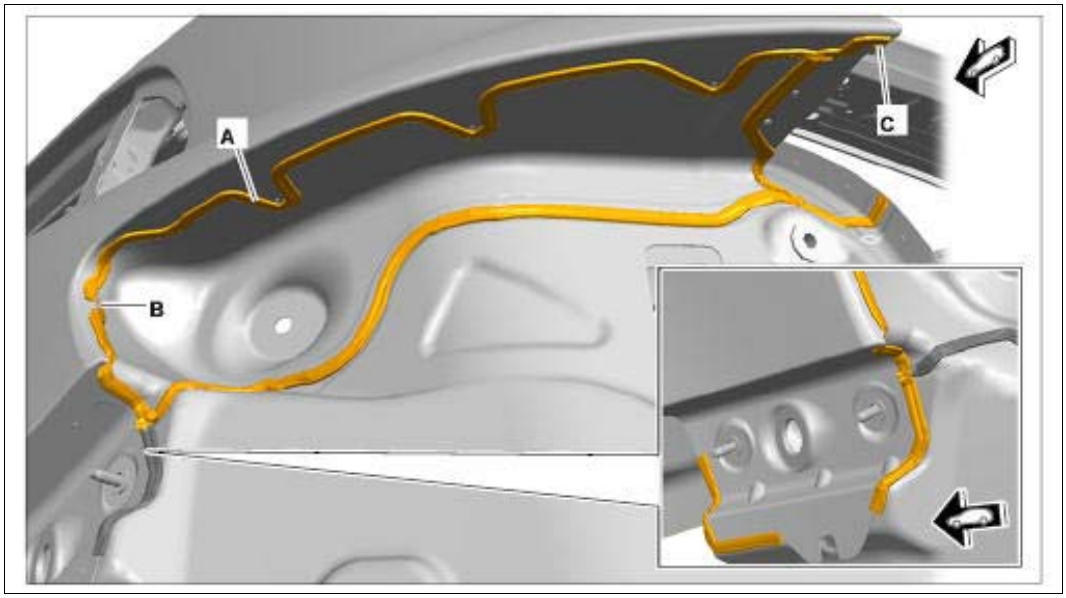

Courtesy of PORSCHE CARS NORTH AMERICA, INC.

19. Seal off drain seams in area **-I-** .

Fig 21: Identifying Rear Closing Panel Area

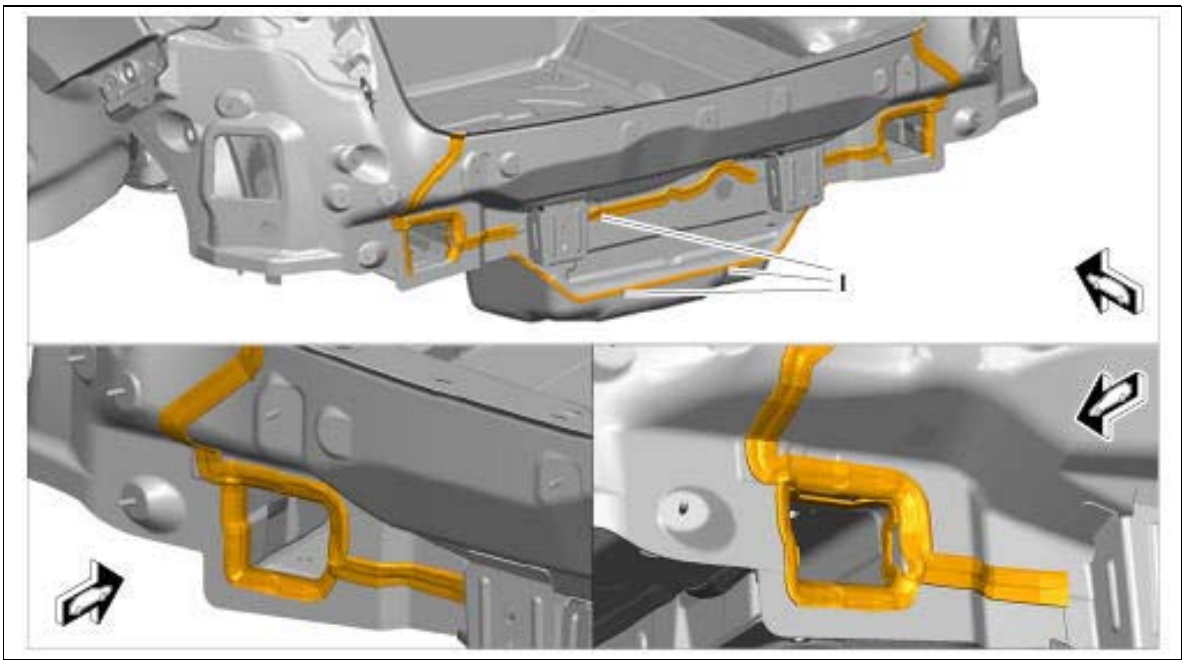

Courtesy of PORSCHE CARS NORTH AMERICA, INC.

Information

Smooth off seam seal with a spatula after applying it to the marked areas.

20. Apply body sealing compound in area **-I-** .

Fig 22: Identifying Front Side Member

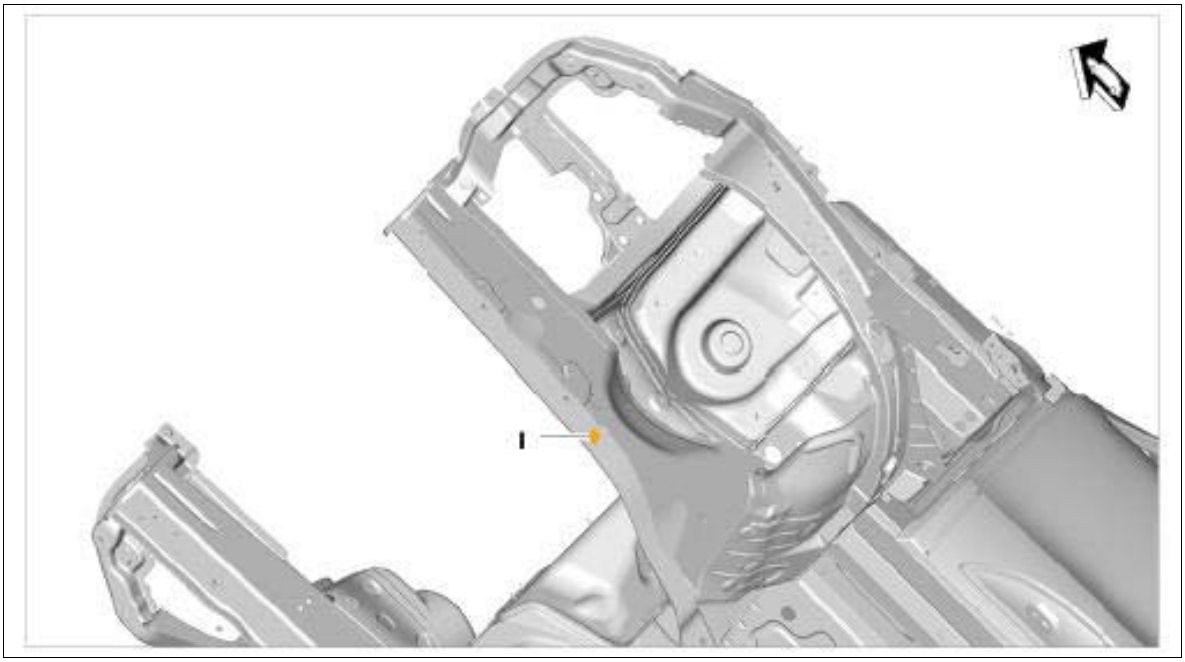

Courtesy of PORSCHE CARS NORTH AMERICA, INC.

21. Keep drain seams clear in area **-A-** .

Information

Smooth off seam seal with a spatula after applying it to the marked areas.

1. 21.1. Apply body sealing compound in area **-I-** .

Fig 23: Identifying Underbody Sealing Compound Area

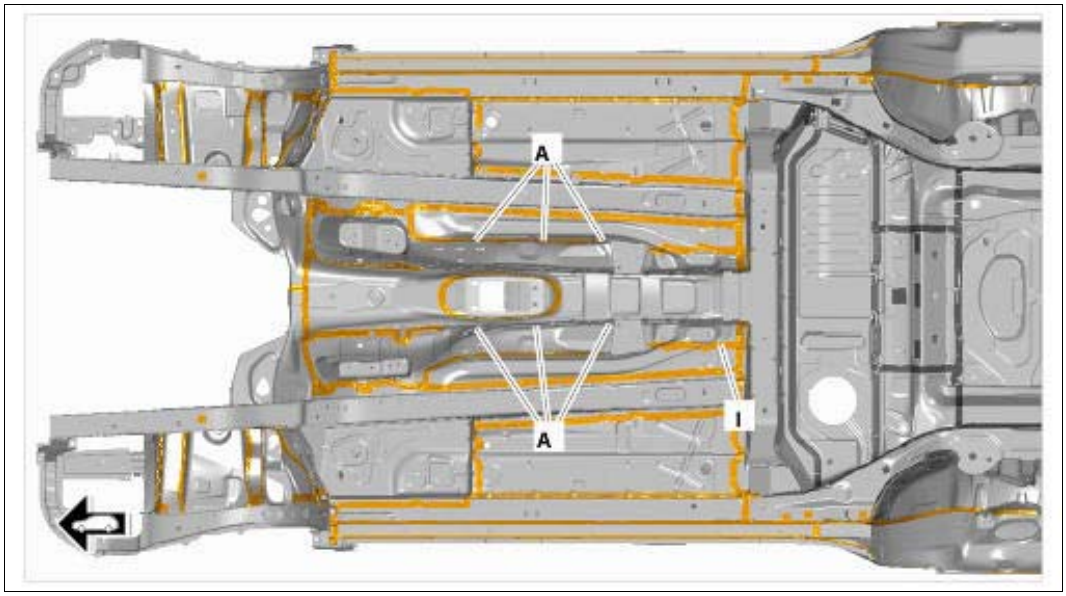

Courtesy of PORSCHE CARS NORTH AMERICA, INC.

Fig 24: Identifying Side Member Closing Element

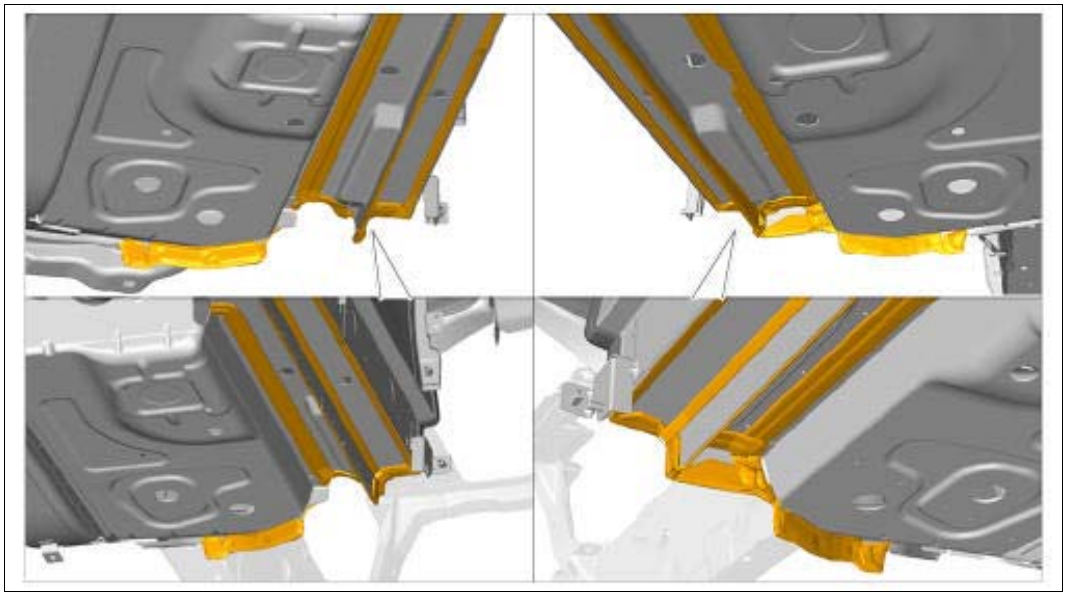

Courtesy of PORSCHE CARS NORTH AMERICA, INC.

22. Keep drain seams clear in area **-A-** .

    Information

    Smooth off seam seal with a spatula after applying it to the marked areas.

    1. 22.1. Apply body sealing compound in area **-I-** .

23. Close off drain seams in area **-A-** .

    Information

Fig 25: Identifying Front Tunnel Area

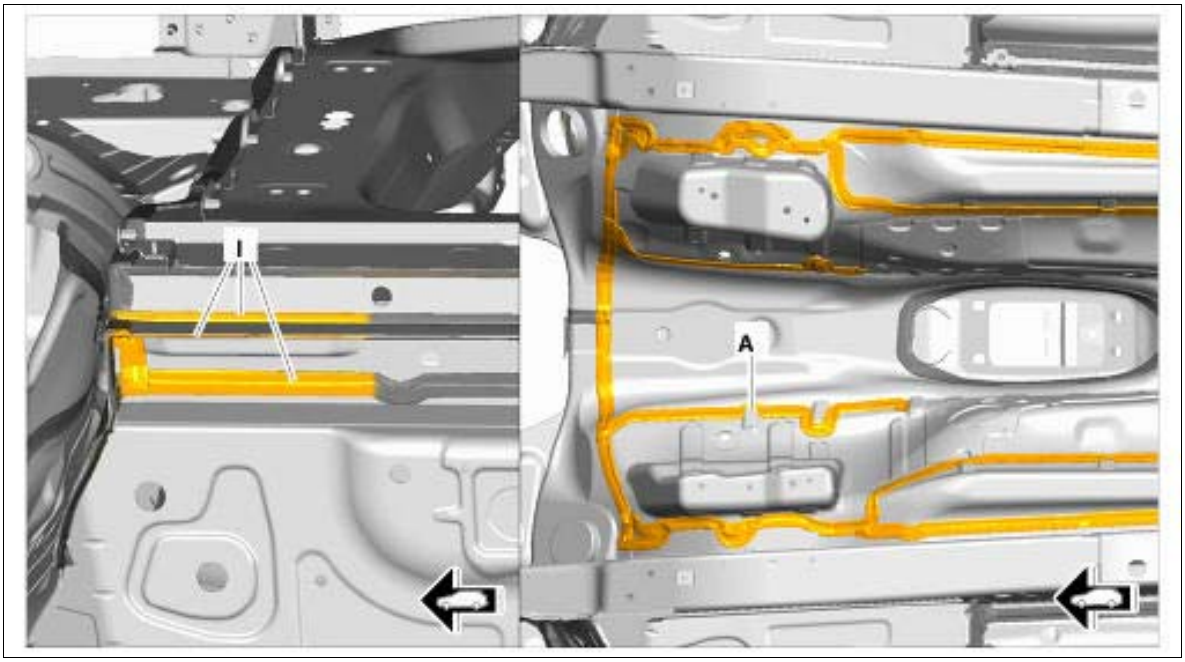

Courtesy of PORSCHE CARS NORTH AMERICA, INC.

Smooth off seam seal with a spatula after applying it to the marked areas.

1. 23.1. Apply body sealing compound in area **-L-** .

   Fig 26: Identifying Rear End And Side Member Area

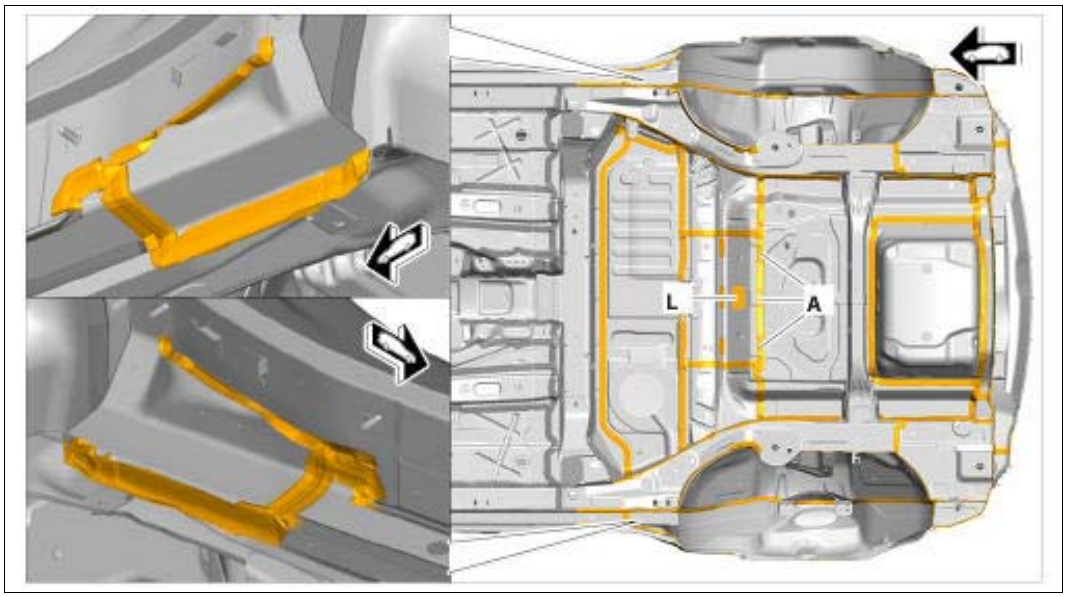

   Courtesy of PORSCHE CARS NORTH AMERICA, INC.

   Information

   Smooth off seam seal with a spatula after applying it to the marked areas.

24. Apply body sealing compound in area **-I-** .

Fig 27: Identifying Rear Side And Cross Member Area

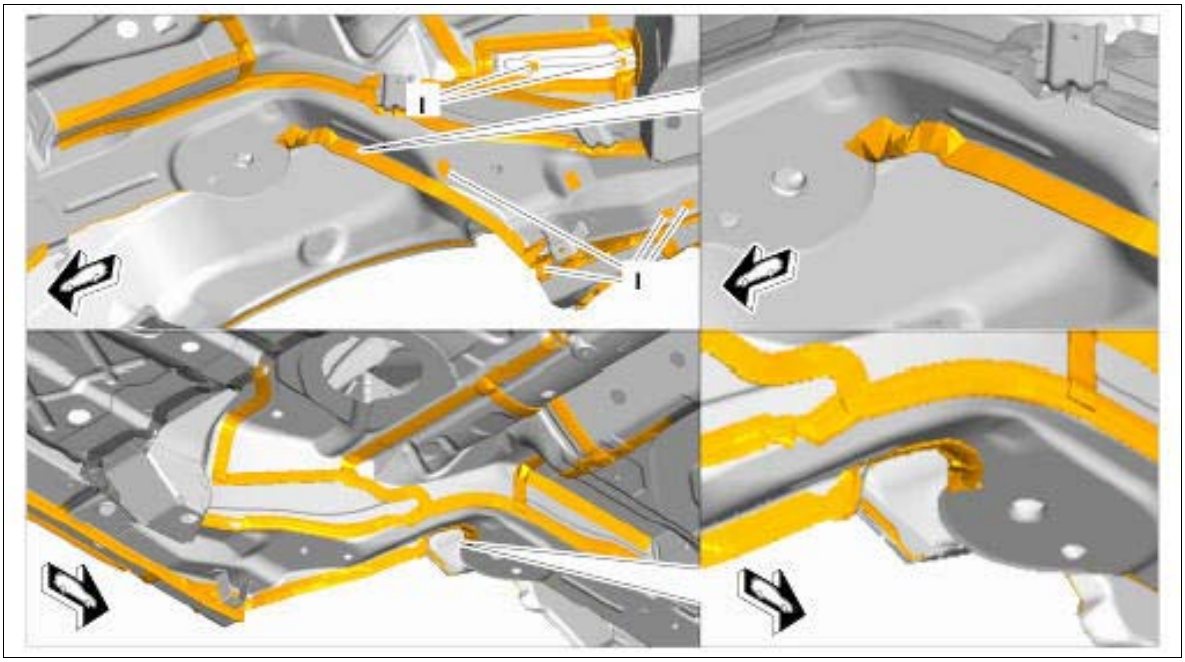

Courtesy of PORSCHE CARS NORTH AMERICA, INC.

Fig 28: Identifying Rear Corner Panel And Side Member Area

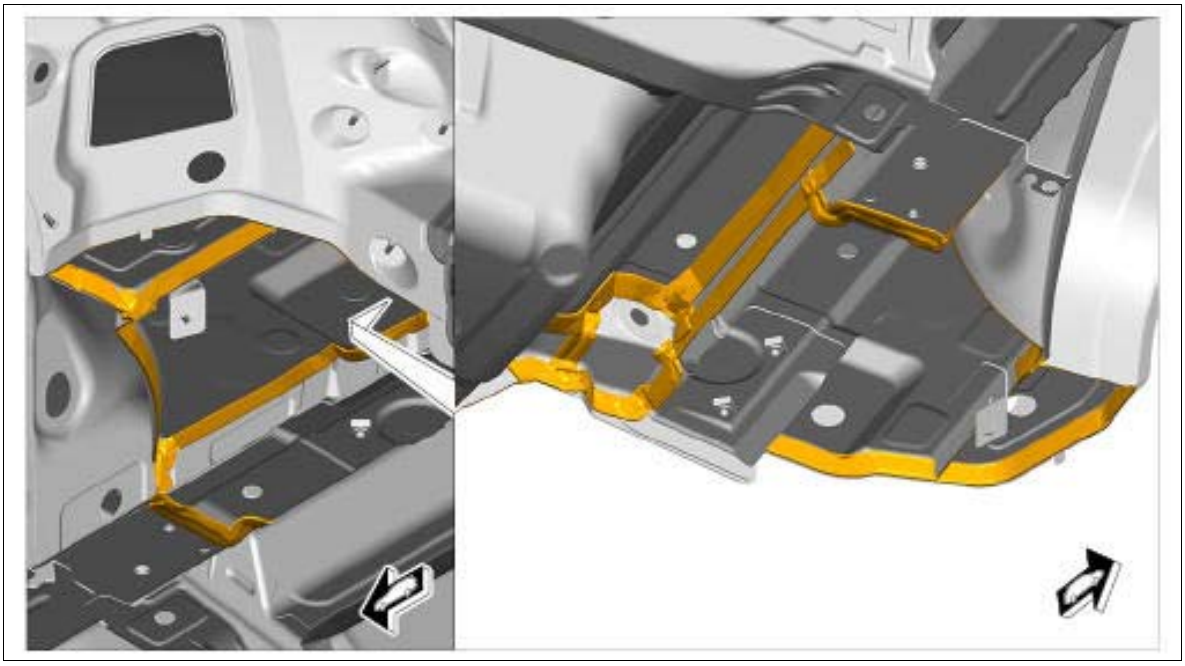

Courtesy of PORSCHE CARS NORTH AMERICA, INC.

25. Remove body sealing compound in area **-A-** .

Fig 29: Removing Rear Wheel Housing

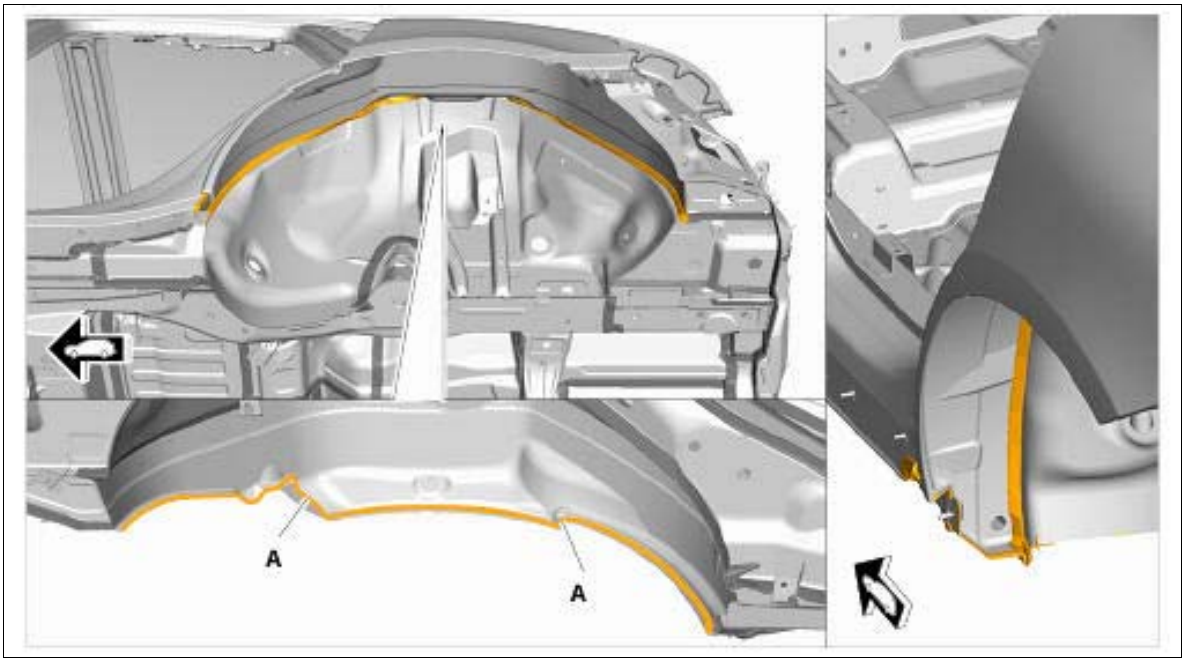

Courtesy of PORSCHE CARS NORTH AMERICA, INC.

26. Keep drain seams clear in area **-B-** .

    1. 26.1. Area **-A-** overlapping bonded seam.

       Fig 30: Removing Inner Rear Wheel Housing And Spring Strut Mount

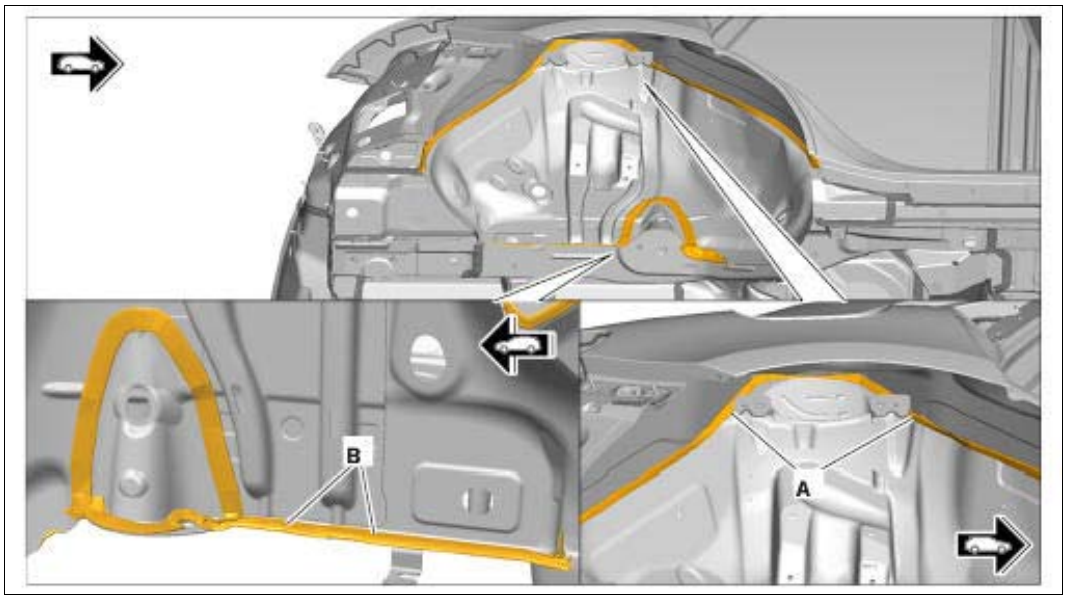

Courtesy of PORSCHE CARS NORTH AMERICA, INC.

WM 5X00IN UNDERBODY PROTECTION (ALL MODELS) > TECHNICAL VALUES

Location	Description	Type	Basic value	Tolerance 1	Tolerance 2
Front side member		Layer thickness	1, 000 µm	+300 µm	
Floor section, left & right		Layer thickness	1, 000 µm	+300 µm	
Bracket, left & right		Layer thickness	1, 000 µm	+300 µm	
Rear end section reinforcement, left & right		Layer thickness	1, 000 µm	+300 µm	
End bracket, left & right		Layer thickness	1, 000 µm	+300 µm	
Battery console		Layer thickness	200 µm	+200 µm	
Closing element, left & right		Layer thickness	500 µm	+200 µm	
Reinforcement, left & right		Layer thickness	500 µm	+200 µm	
Spring strut mount, left & right		Layer thickness	500 µm	200 µm	
Wheel housing extension		Layer thickness	500 µm	200 µm	
Damper housing		Layer thickness	500 µm	+200 µm	

WM 5X00IN UNDERBODY PROTECTION (ALL MODELS) > UNDERBODY PROTECTION

Information

- In the case of repair work, the standard chipping protection/undersealing of the body structure must be restored according to the following illustrations after painting and prior to unit assembly.
- The undersealing can only be applied to primed sheetmetal.

Fig 1: Identifying Front Side Member

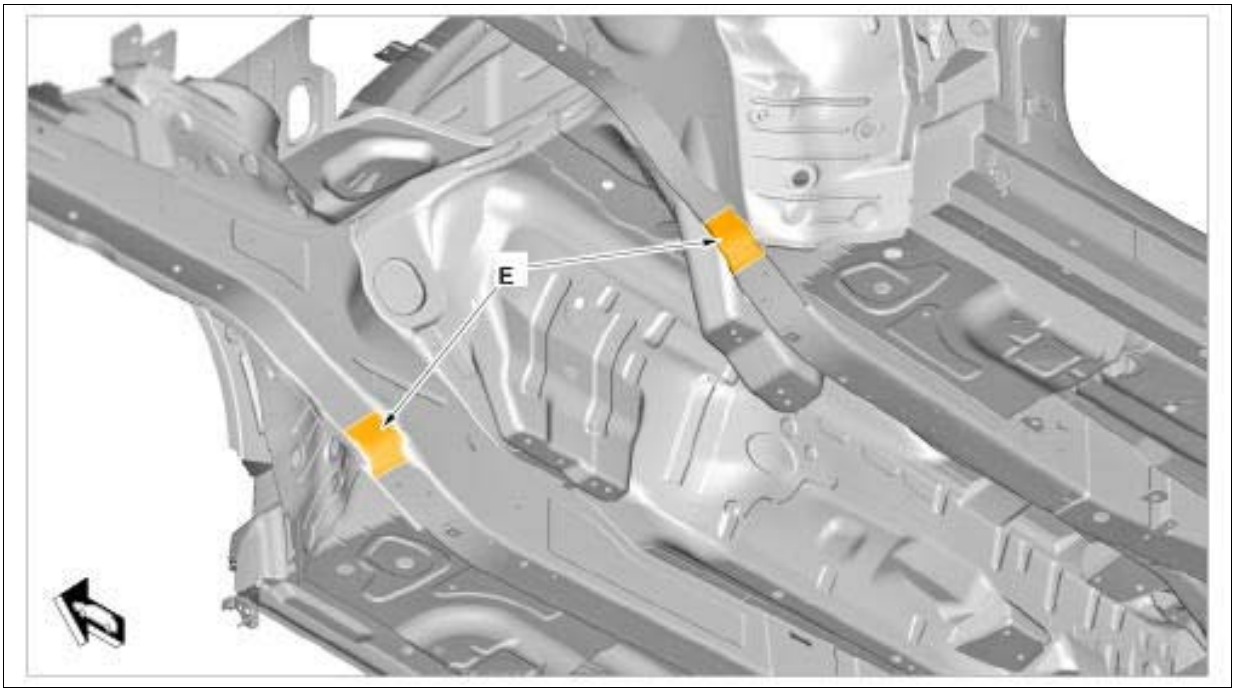

Courtesy of PORSCHE CARS NORTH AMERICA, INC.

E - Front side member → **Layer thickness: 1, 000 µm+300 µm**

F - Floor section, left & right → **Layer thickness: 1, 000 µm+300 µm**

G - Bracket, left & right → **Layer thickness: 1, 000 µm+300 µm**

H - Rear end section reinforcement, left & right → **Layer thickness: 1, 000 µm+300 µm**

J - End bracket, left & right → **Layer thickness: 1, 000 µm+300 µm**

K - Battery console → **Layer thickness: 200 µm+200 µm**

Fig 2: Identifying Battery Console/Rear Closing Panel

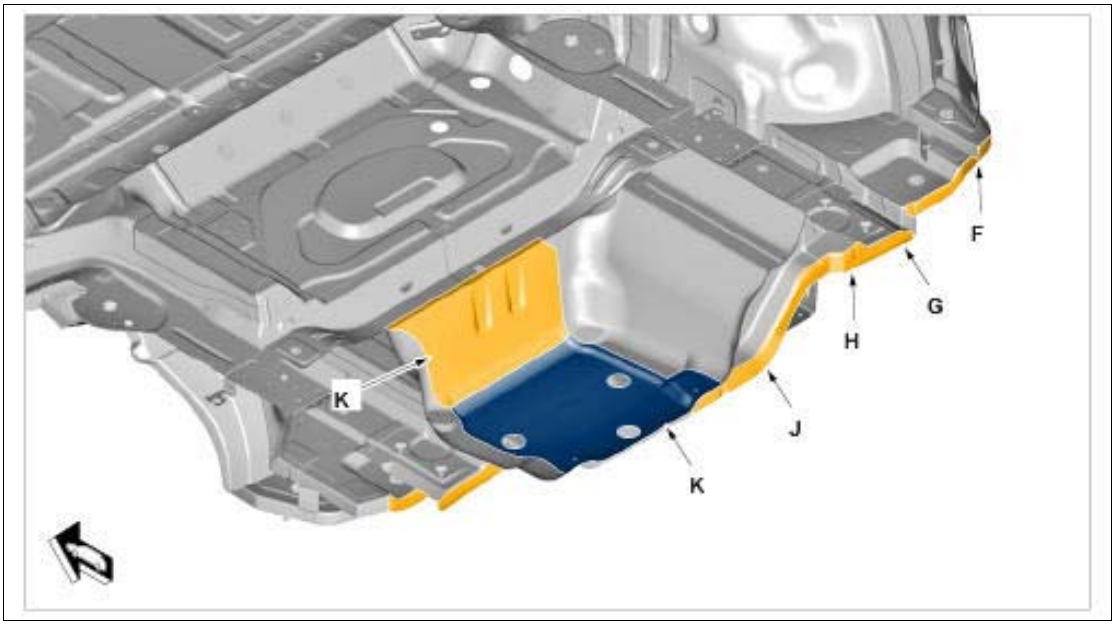

Courtesy of PORSCHE CARS NORTH AMERICA, INC.

Fig 3: Identifying Spring Strut Dome

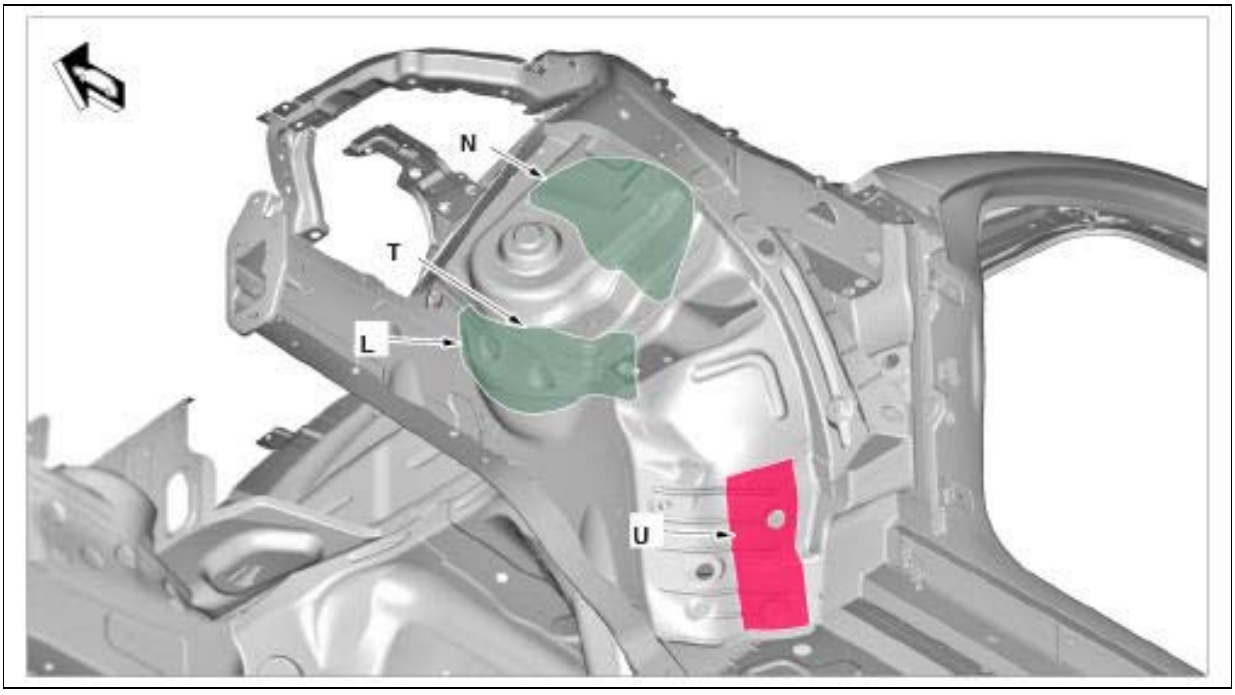

Courtesy of PORSCHE CARS NORTH AMERICA, INC.

L - Closing element, left & right → **Layer thickness: 500 µm+200 µm**

N - Reinforcement, left & right → **Layer thickness: 500 µm+200 µm**

T - Spring strut mount, left & right → **Layer thickness: 500 µm200 µm**

U - Wheel housing extension → **Layer thickness: 500 µm200 µm**

Fig 4: Identifying Rear Wheel Housing

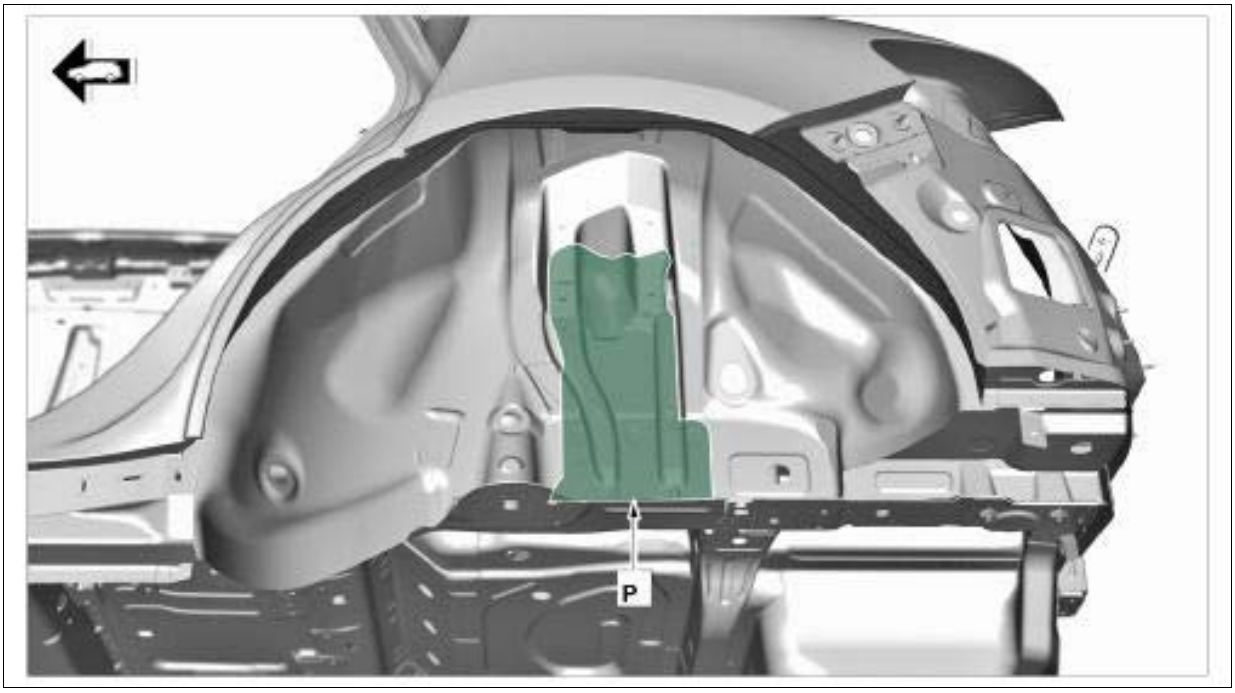

Courtesy of PORSCHE CARS NORTH AMERICA, INC.

P - Damper housing → **Layer thickness: 500 µm+200 µm**

WM 5X00IN CAVITY PRESERVATION (ALL MODELS) > CAVITY PRESERVATION

Information

- In the case of repair, the standard cavity preservation material must be applied to body accessories according to the following illustrations.
- The cavity preservation must be applied after completion of the assembly work.

Fig 1: Identifying Cavity Preservation Positions

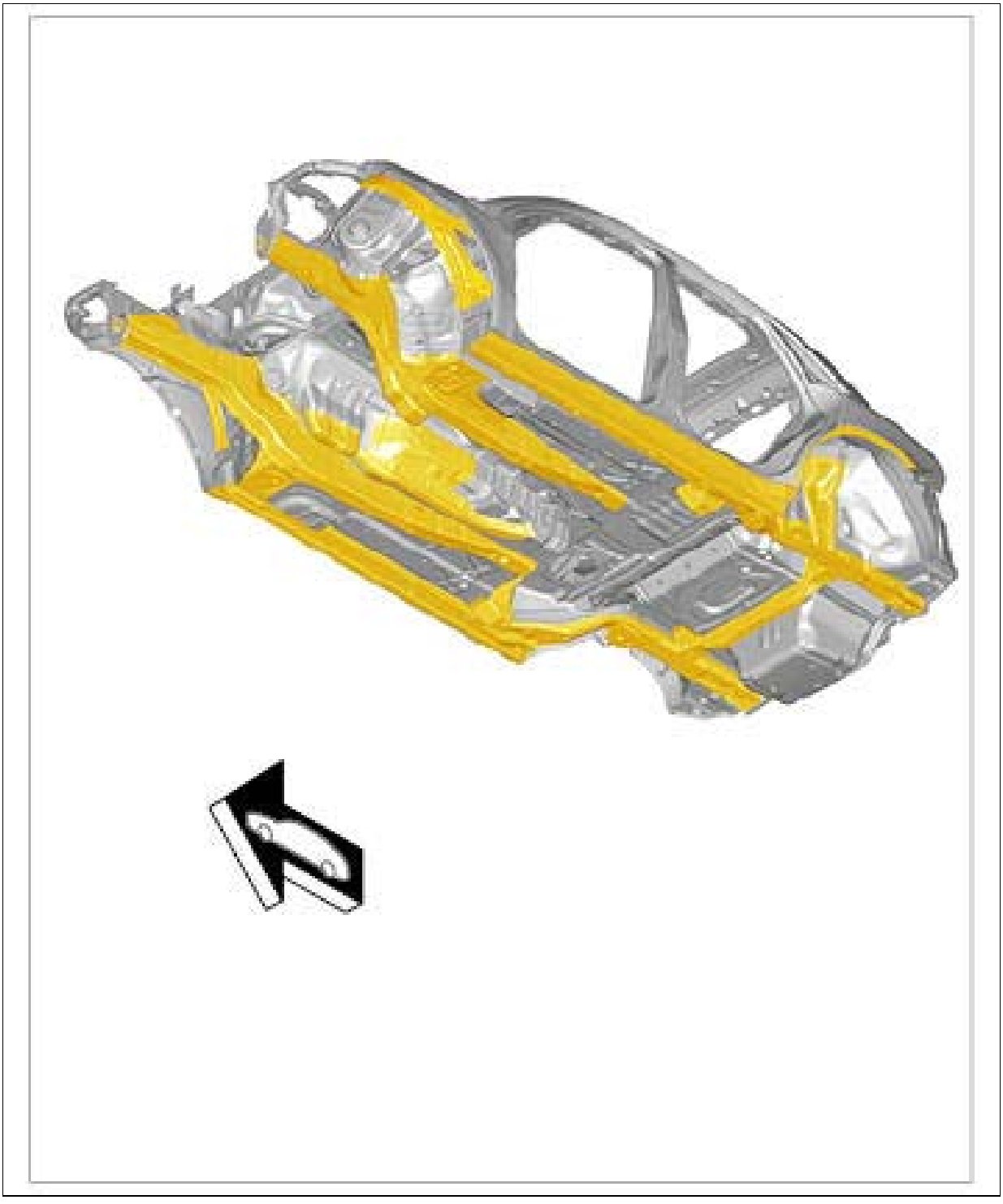

Courtesy of PORSCHE CARS NORTH AMERICA, INC.

Fig 2: Identifying Rear Floor And Cross Member Area

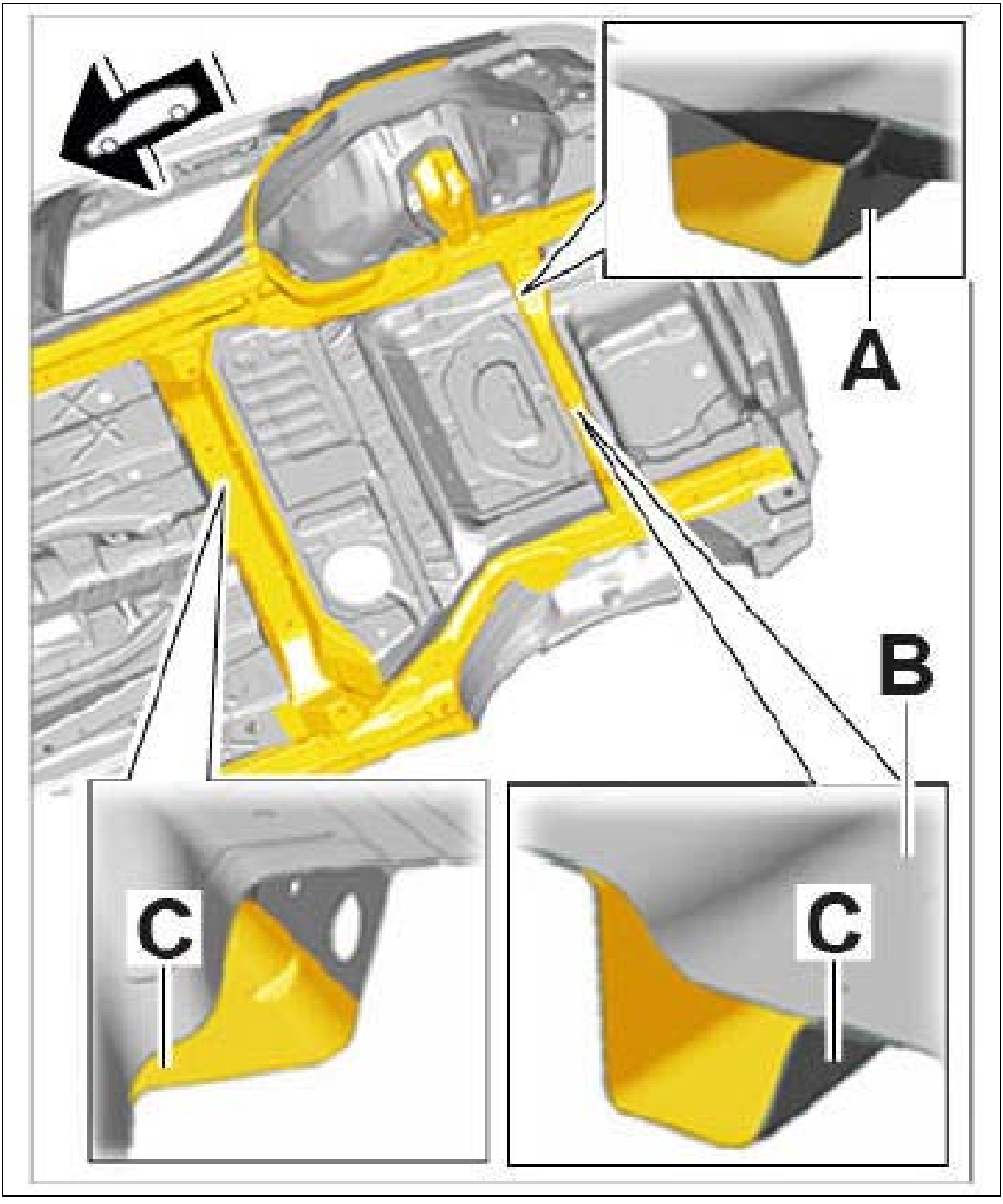

Courtesy of PORSCHE CARS NORTH AMERICA, INC.

A. Cross member

B. Rear floor

C. Cross member

Fig 3: Identifying Rear Wheel Housing Area

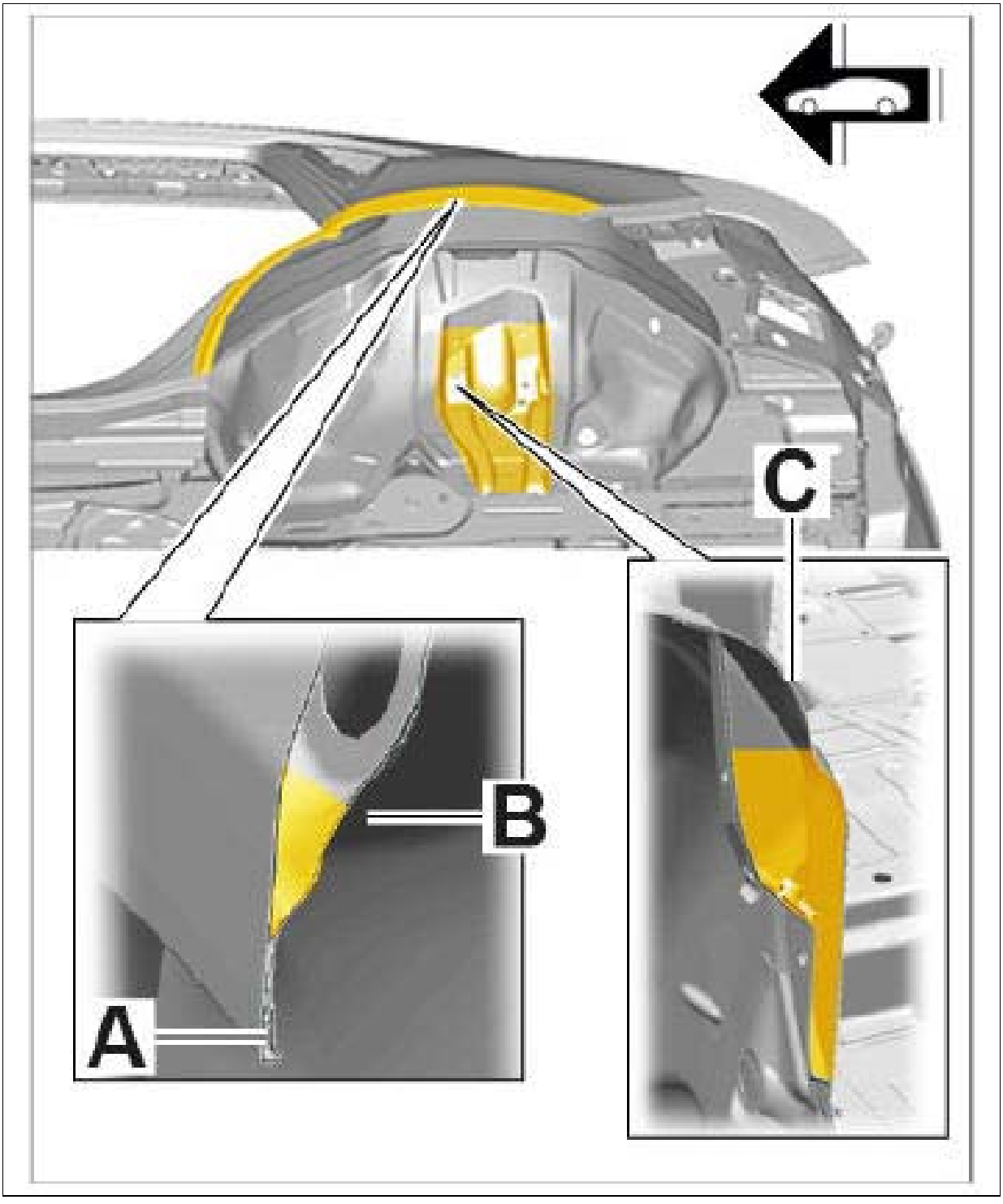

Courtesy of PORSCHE CARS NORTH AMERICA, INC.

A. Side panel

B. Rear wheel housing, outer

C. Rear wheel housing, inner

Fig 4: Identifying Longitudinal Member For Front Wheel Housing

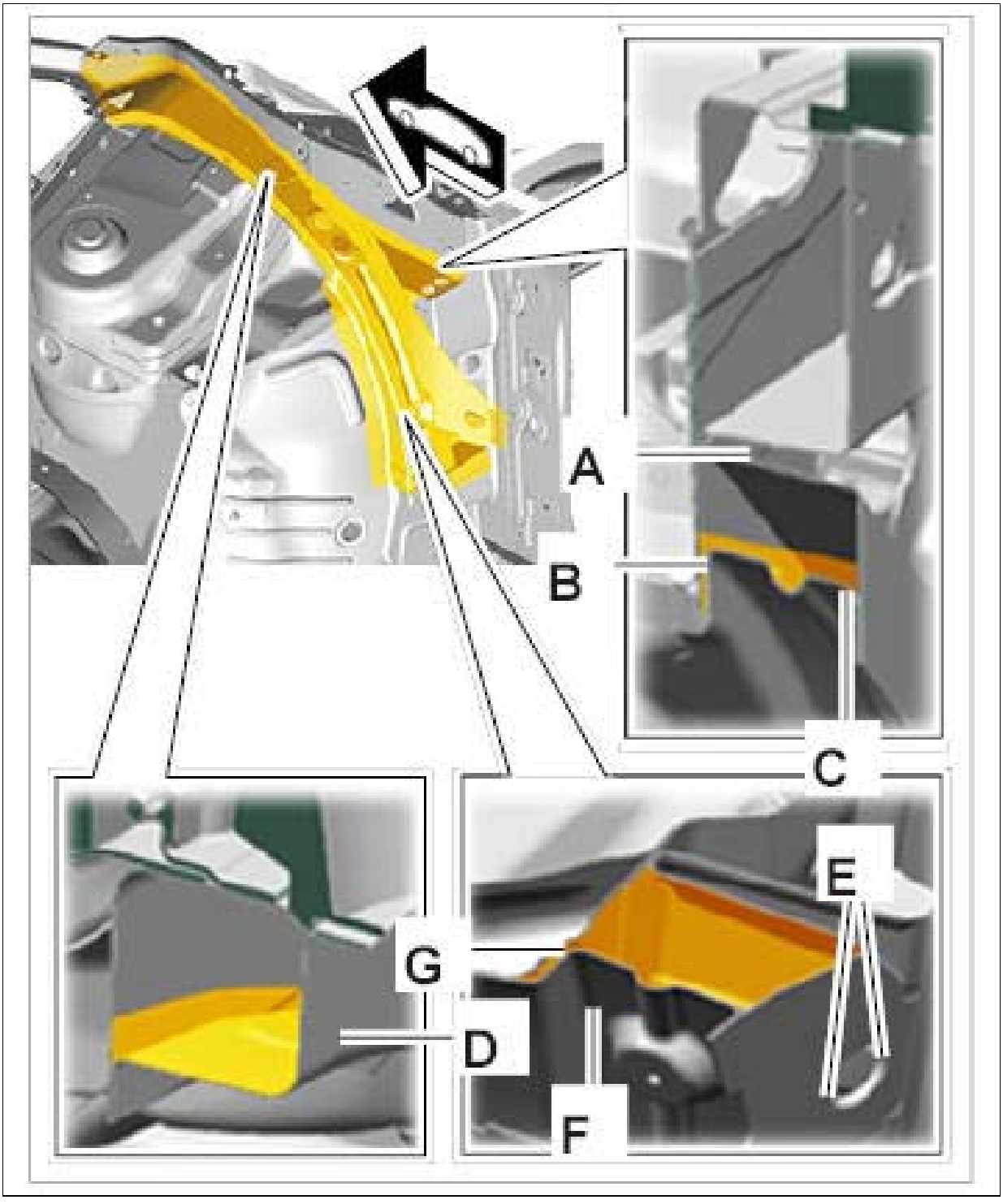

Courtesy of PORSCHE CARS NORTH AMERICA, INC.

A. Connecting piece

B. Lower A-pillar, inner

C. Reinforcement part

D. Connecting piece

E. Upper side member closing element

F. Closing element

G. Lower A-pillar, inner

Fig 5: Identifying Spring Strut Dome/Headlight Mounting Area

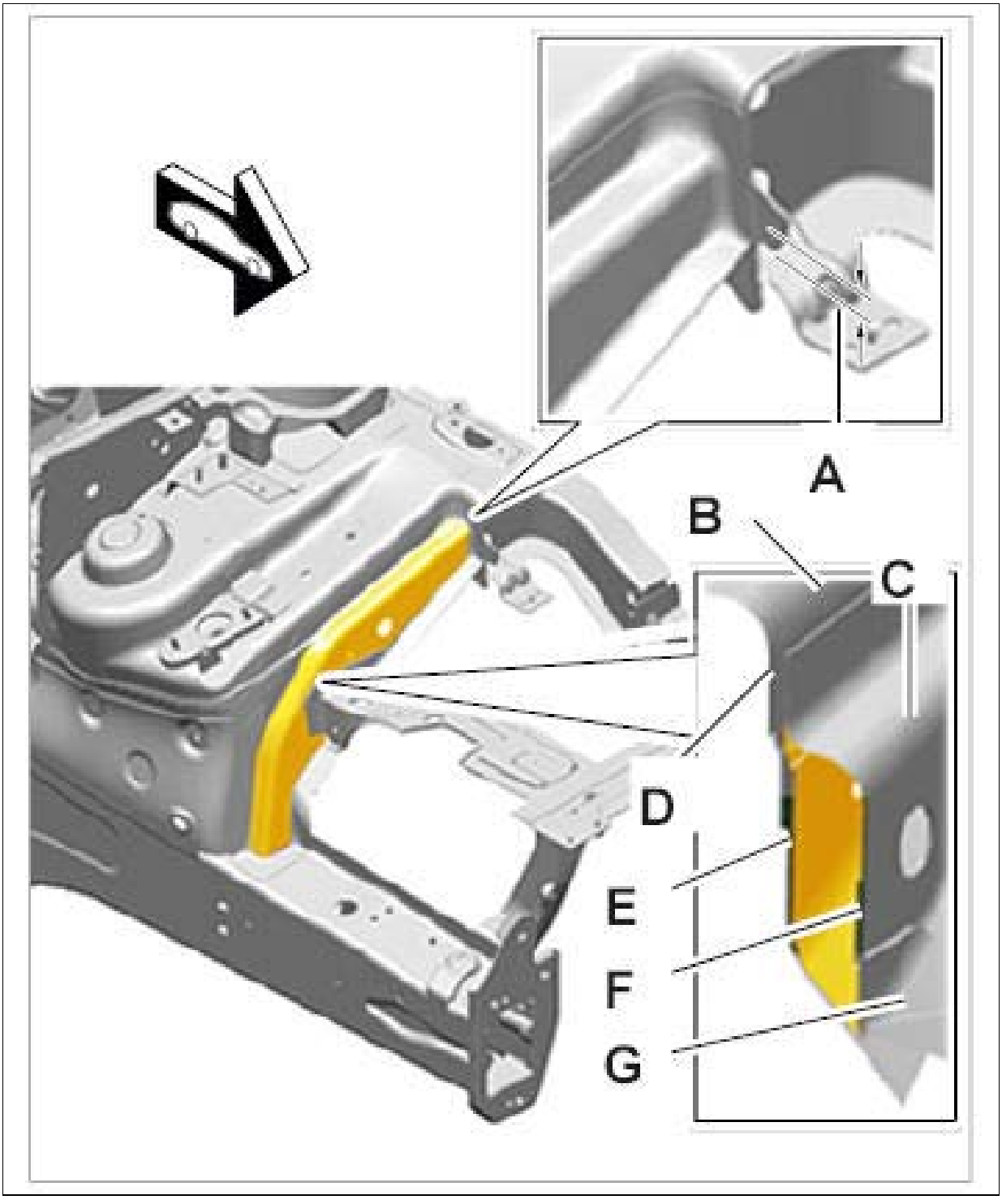

Courtesy of PORSCHE CARS NORTH AMERICA, INC.

B - Closing element

C - Support

D - Reinforcement

E - Reinforcement

F - Support reinforcement

G - ABS support block

Fig 6: Identifying Front Door

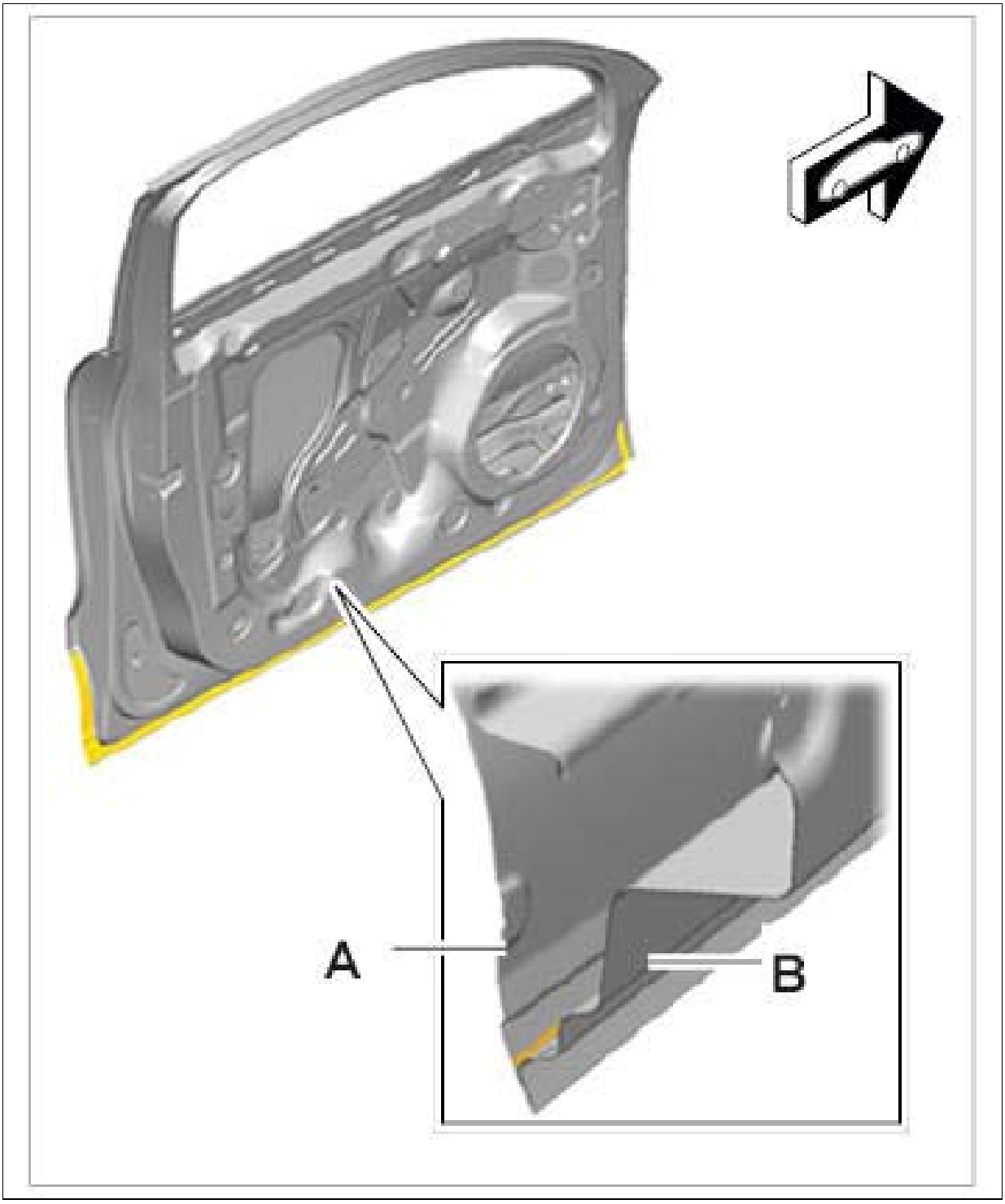

Courtesy of PORSCHE CARS NORTH AMERICA, INC.

A. Door, outer part

B. Door, inner part

Fig 7: Identifying Front Side Member/Spring Strut Dome Area

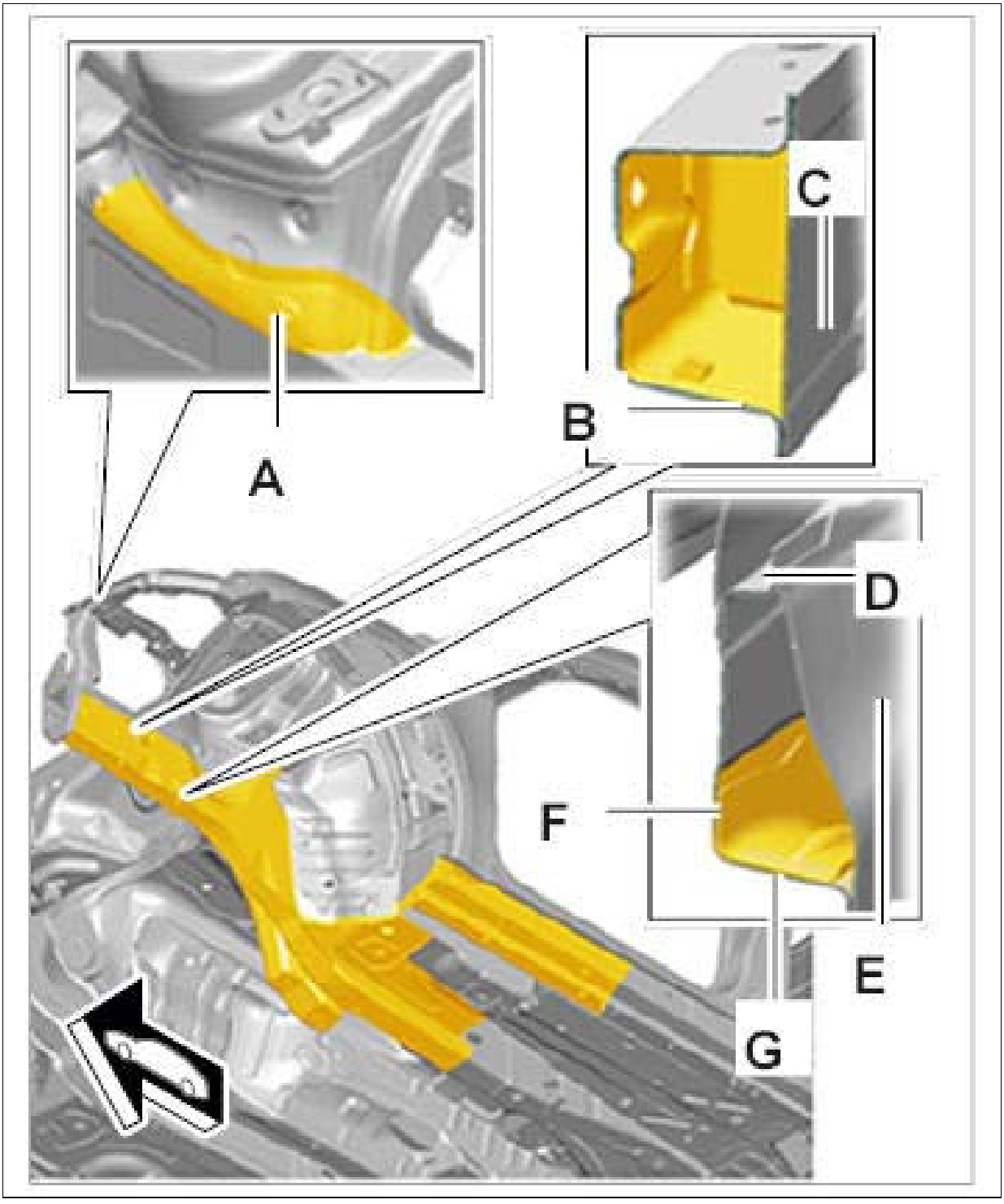

Courtesy of PORSCHE CARS NORTH AMERICA, INC.

A. Front side member/spring strut mount, left & right (coat surface with wax)

B. Front side member

C. Closing element

D. Front side member/spring strut mount, left & right (coat surface with wax)

E. Closing element

F. Front side member

G. Bulkhead part

Fig 8: Identifying Front Side Member Area

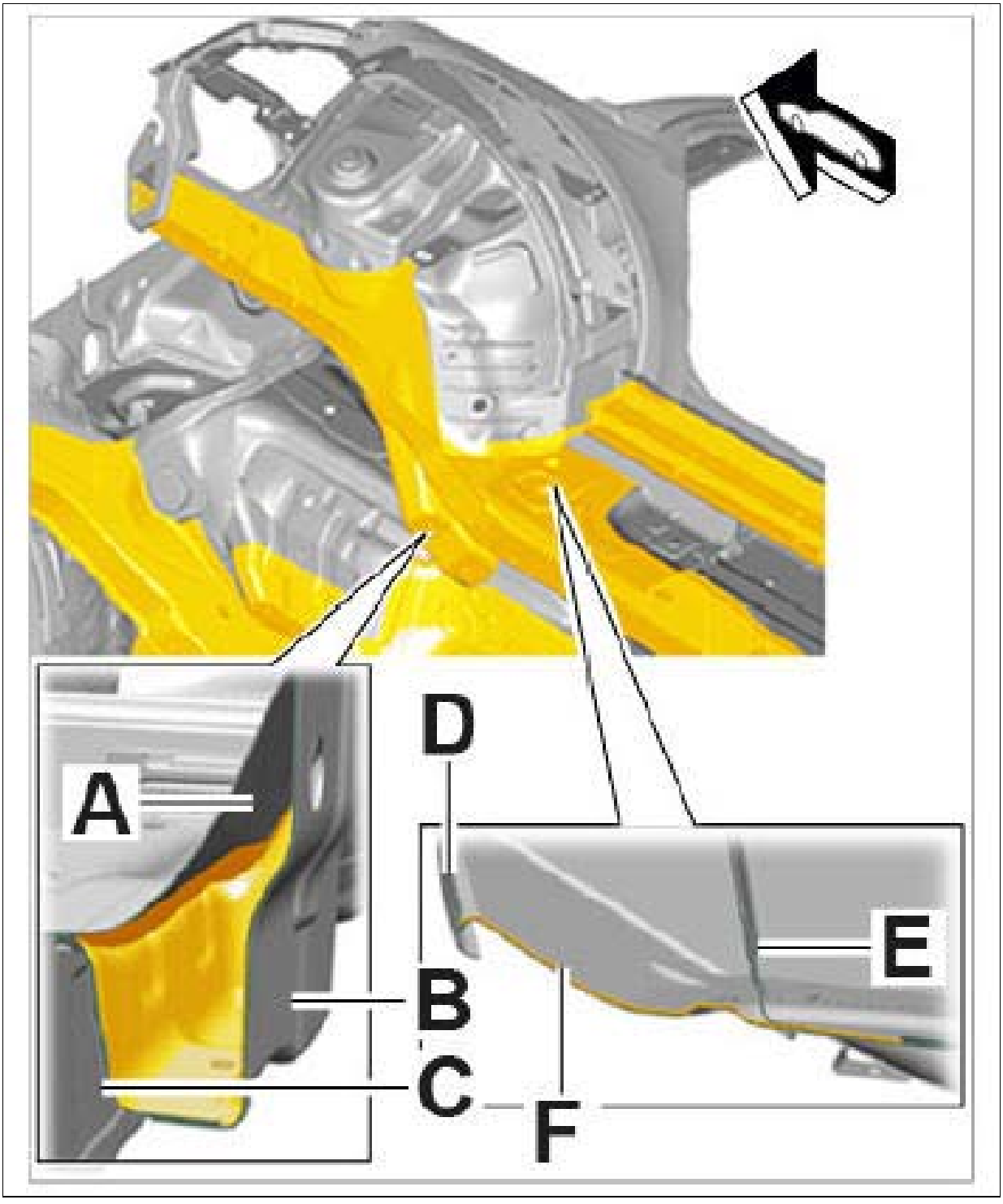

Courtesy of PORSCHE CARS NORTH AMERICA, INC.

A. Tunnel insert

B. Transmission bracket reinforcement

C. Bracket reinforcement, left & right

D. Wheel arch extension

E. Reinforcement

F. Front suspension/stabiliser suspension, left & right

Fig 9: Identifying Floorpan Area

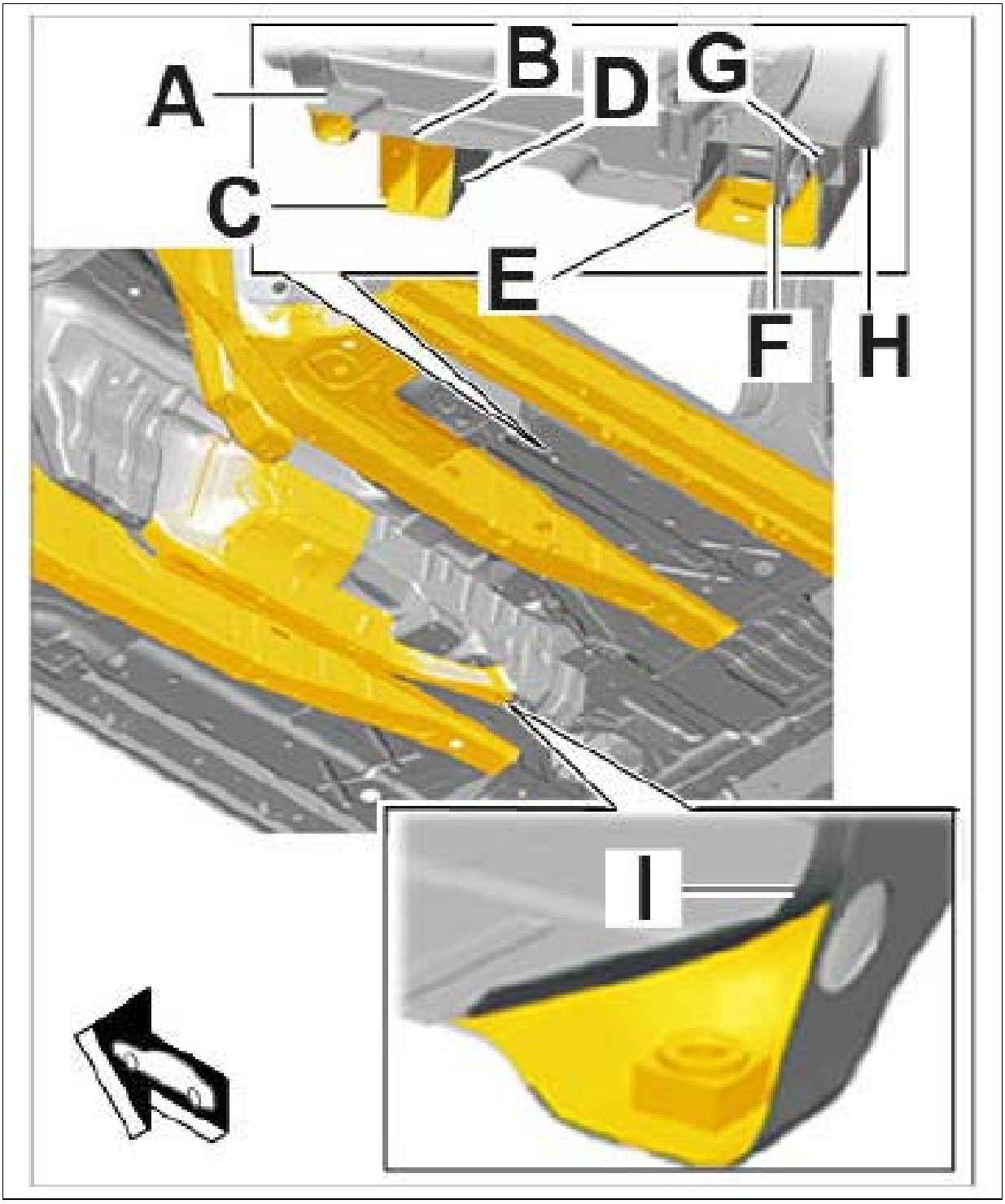

Courtesy of PORSCHE CARS NORTH AMERICA, INC.

A. Tunnel insert

B. Front floor section, left & right

C. Front side member, left & right

D. Closing element

E. Inner side member, left & right

F. Bar element of rear side member

G. Side member reinforcement, left & right

H. Outer side panel, left & right

I. Tunnel insert

Fig 10: Identifying Rear Side Member Area

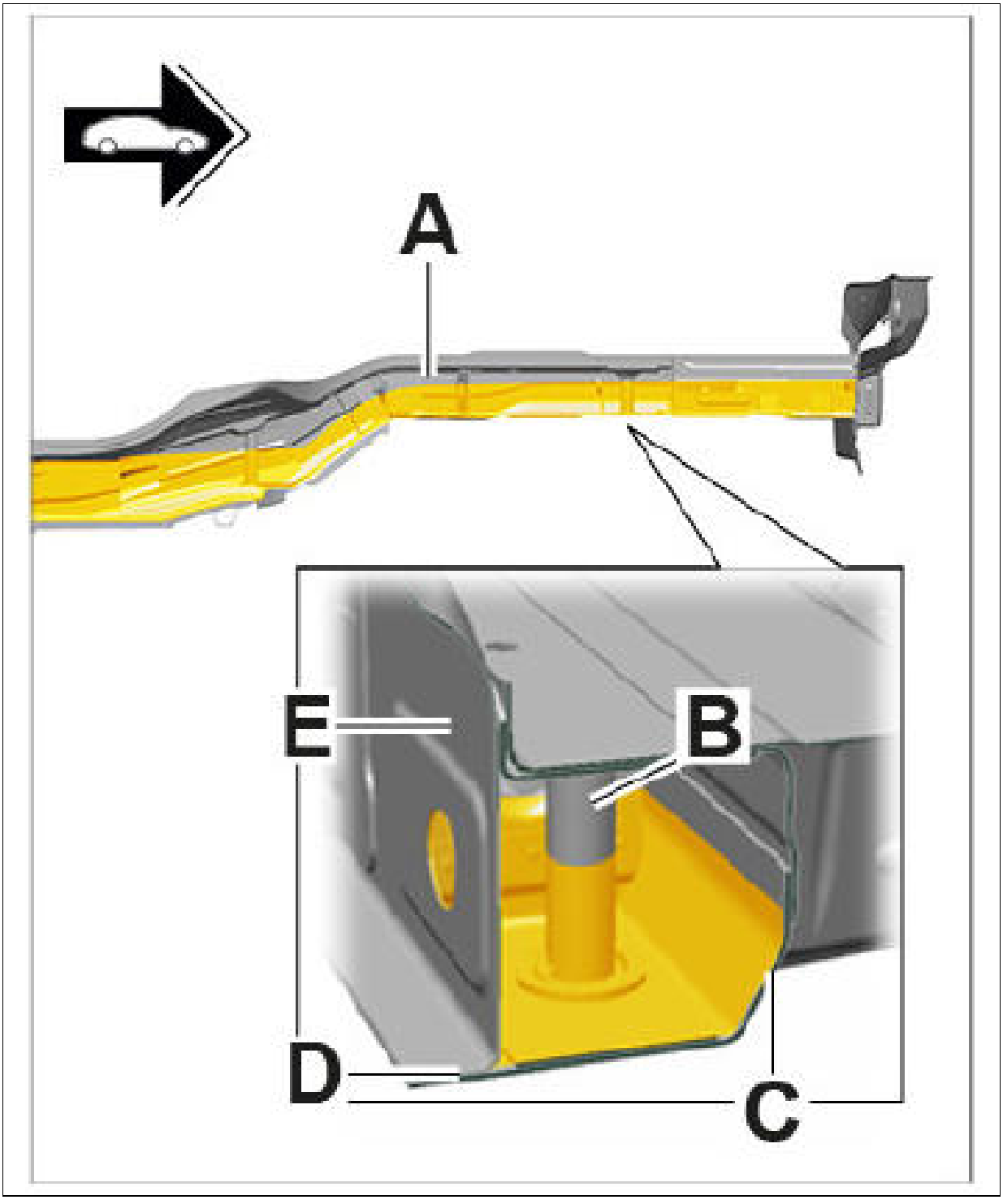

Courtesy of PORSCHE CARS NORTH AMERICA, INC.

A. Rear side member, left & right

B. Reinforcement

C. Rear side member

D. Rear side member, outer edge

E. Rear wheel housing, inner

WM 5X00IN VEHICLE IDENTIFICATION NUMBER (ALL MODELS) > ENCODING VEHICLE IDENTIFICATION NUMBER

Fig 1: Identifying Encoding Vehicle Identification Number

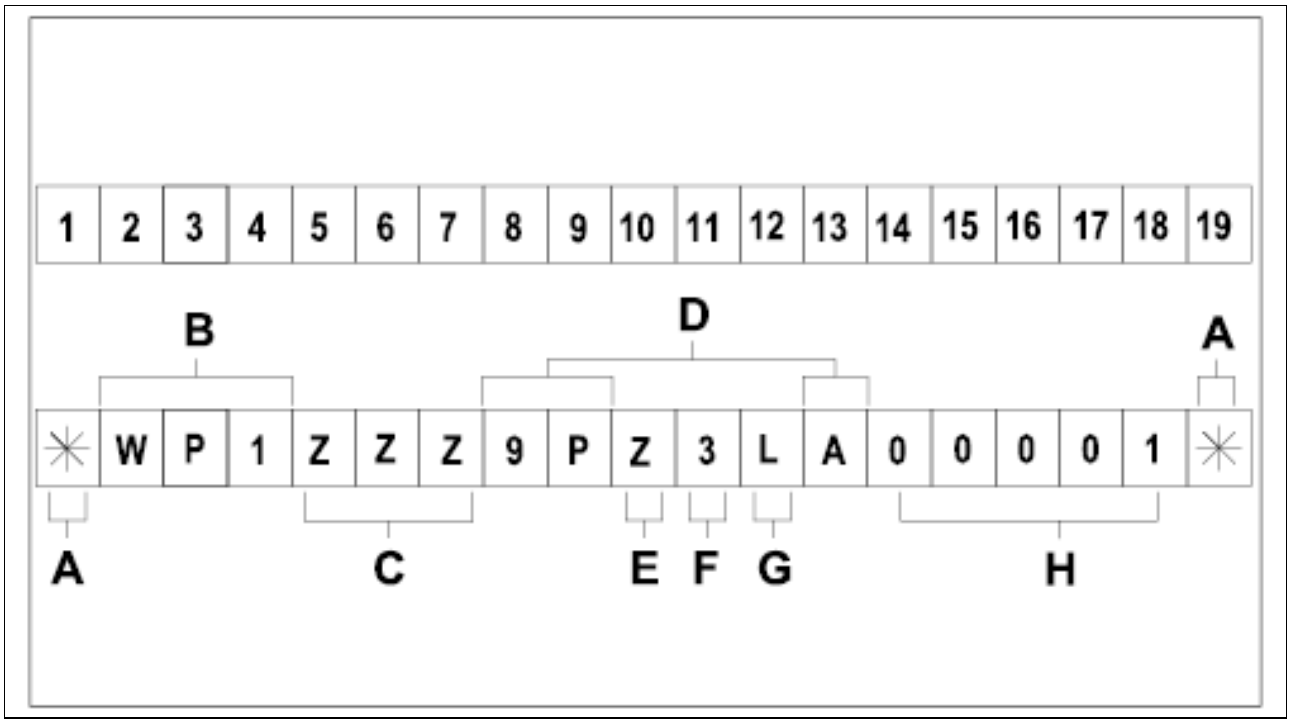

Courtesy of PORSCHE CARS NORTH AMERICA, INC.

A. Delimiters (positions 1 and 19)

B. World Manufacturer Code (positions 2 - 4)

C. Type code USA/CAN./MEX./BRAZ./CHI./KOR., filler "ZZZ" for RoW (positions 5 - 7), Production date for India (positions 6 - 7)

D. Type (positions 8 - 9, 13), USA/CAN. position 8 encrypted

E. Test digit for USA, filler Z for RoW (position 10)

F. Model year (position 11, encrypted)

G. Production plant (position 12)

H. Serial number (positions 14 - 18)

WM 5X00IN VEHICLE IDENTIFICATION NUMBER (ALL MODELS) > ENCODING VEHICLE IDENTIFICATION NUMBER > MODEL YEAR ALLOCATION

Code Model year	Year
A	2010
B	2011
C	2012
E	2013
E	2014
F	2015
G	2016
H	2017
J	2018
K	2019

WM 5X00IN VEHICLE IDENTIFICATION NUMBER (ALL MODELS) > ENCODING VEHICLE IDENTIFICATION NUMBER > ALLOCATION OF POSITION 8 - MODEL TYPE

- Only for USA/Canada, position 8

Code Model type	Number
A	9
B	8
C	7
E	6
E	5
F	4
G	3
H	2
J	1
K	0

WM 5X00IN VEHICLE IDENTIFICATION NUMBER (ALL MODELS) > ENCODING VEHICLE IDENTIFICATION NUMBER > ALLOCATION OF PRODUCTION MONTH

- Only for India, position 6

Code Production month	Month
A	January
B	February
C	March
E	April
E	May
F	June
G	July
H	August
J	September
K	October
L	November
M	December

WM 5X00IN VEHICLE IDENTIFICATION NUMBER (ALL MODELS) > ENCODING VEHICLE IDENTIFICATION NUMBER > ALLOCATION OF PRODUCTION YEAR

- Only for India, position 7

Code Production year	Year
8	2008
9	2009
A	2010
B	2011
C	2012
E	2013
E	2014
F	2015
G	2016
H	2017
J	2018
K	2019

WM 5X00IN REPLACING IDENTIFICATION PLATE (ALL MODELS) > REPLACING IDENTIFICATION PLATE

1. A new identification plate must be affixed after replacing sheetmetal parts.
    1. 1.1. The identification plate must be ordered from the importer for the respective country.
    2. 1.2. When ordering the identification plate **-1-** , the vehicle identification number **-2-** must be specified.

    Fig 1: Identification Plate Installation Position

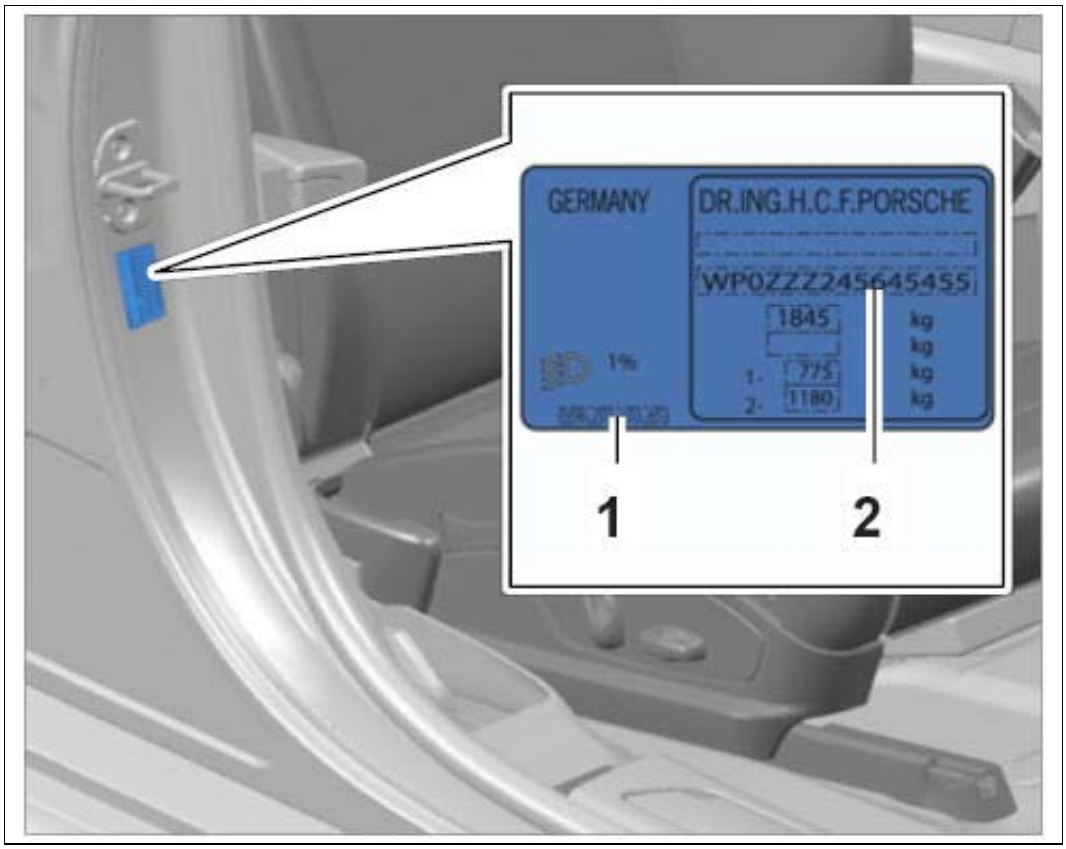

Courtesy of PORSCHE CARS NORTH AMERICA, INC.

WM 5X00IN DIAGRAM: STOPPER PLAN (ALL MODELS) > UNPAINTED BODYSHELL

NOTE: Removing stoppers

- *Risk of corrosion*
- *Uncontrolled water leakage*

→ Body apertures that are sealed with stoppers at the factory must be re-sealed with the stoppers provided following disassembly or repair work.

Fig 1: Identifying Front Side Member/Plenum Panel

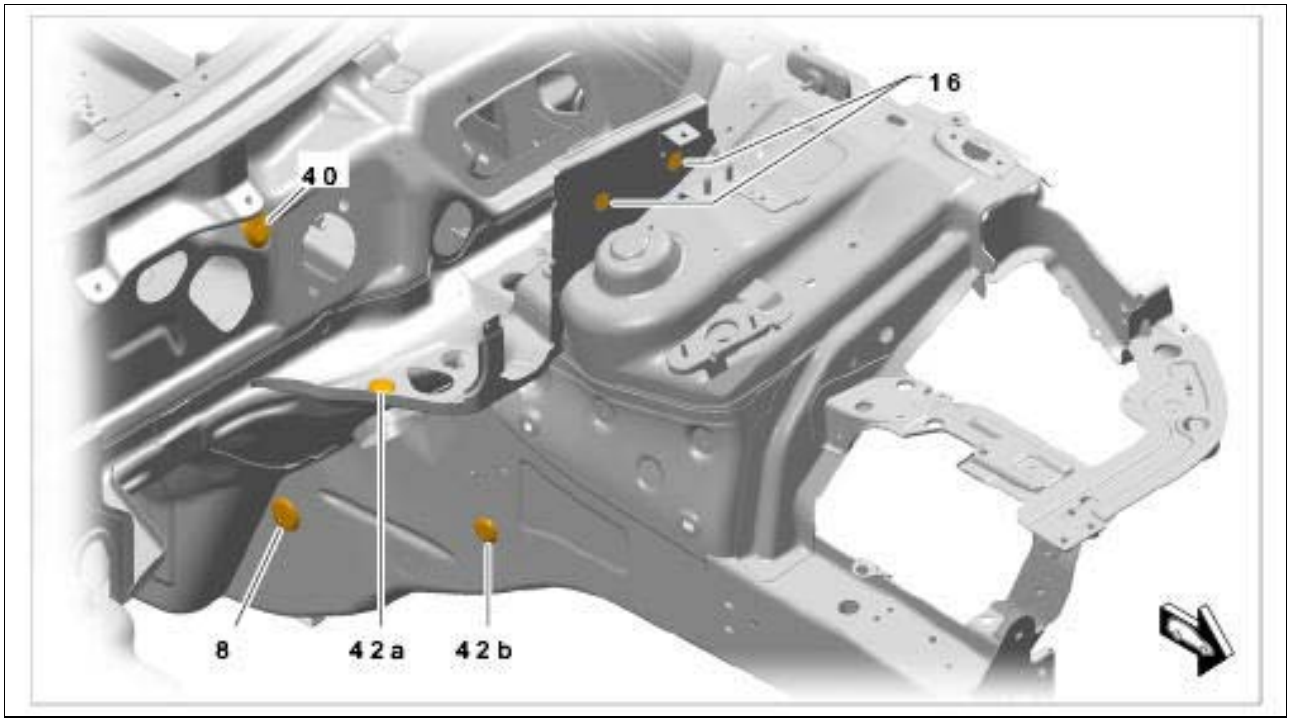

Courtesy of PORSCHE CARS NORTH AMERICA, INC.

8 - Front side member, left & right (2x)

16 - Plenum panel, left side (2x)

40 - Firewall, left only (1x)

42a - Lower part of plenum panel, left (1x)

42b - Front side member, left & right (2x)

Fig 2: Identifying Outer Front Side Member/A-Pillar Reinforcement

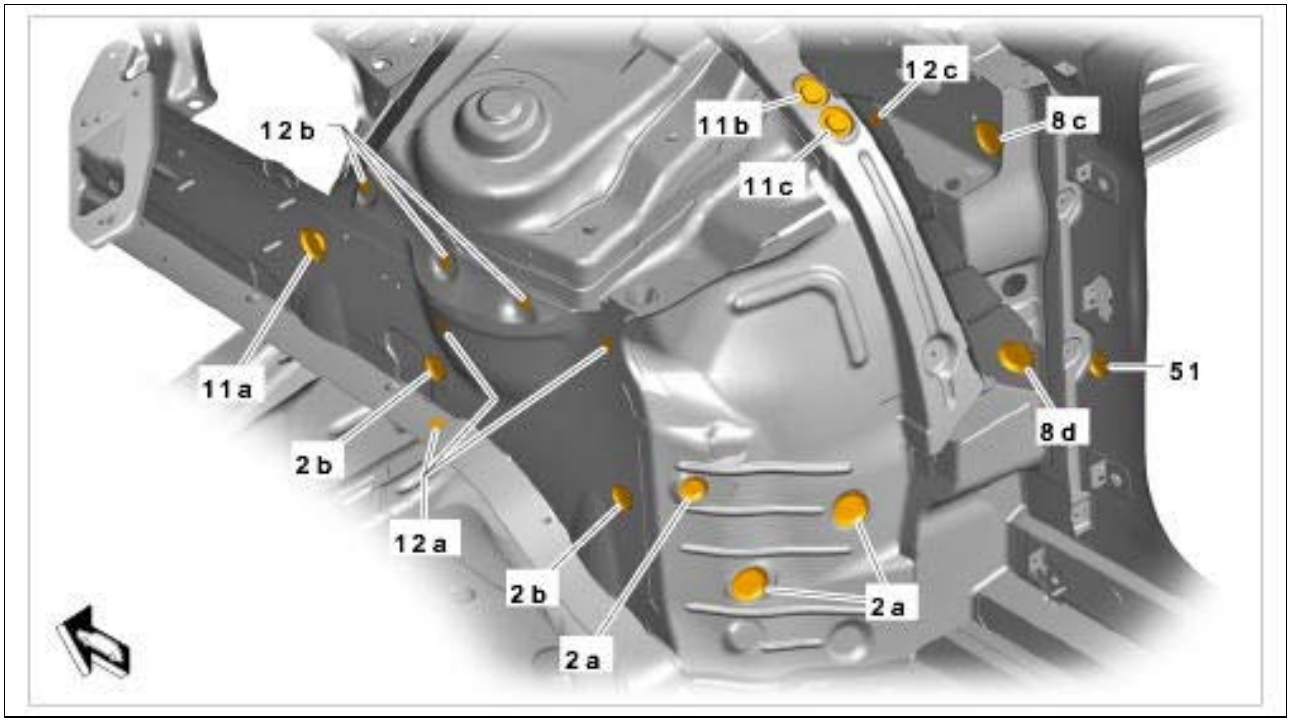

Courtesy of PORSCHE CARS NORTH AMERICA, INC.

2a - Wheel arch extension, left & right (2x)

2b - Closing element, left & right (4x)

8a - Wheel arch extension, left & right (4x)

8c - Reinforcement, left & right (2x)

8d - Upper closing element, left & right (2x)

11a - Closing element, left (2x)

11b - Closing element for A-pillar node, left & right (2x)

11c - Closing element for A-pillar node, left (2x)

12a - Closing element, left & right (6x)

12b - Spring strut mount, left & right (6x)

12c - Closing element for A-pillar node, left & right (2x)

51 - Outer side panel (2x)

Fig 3: Identifying Inner A-Pillar/Front Panel

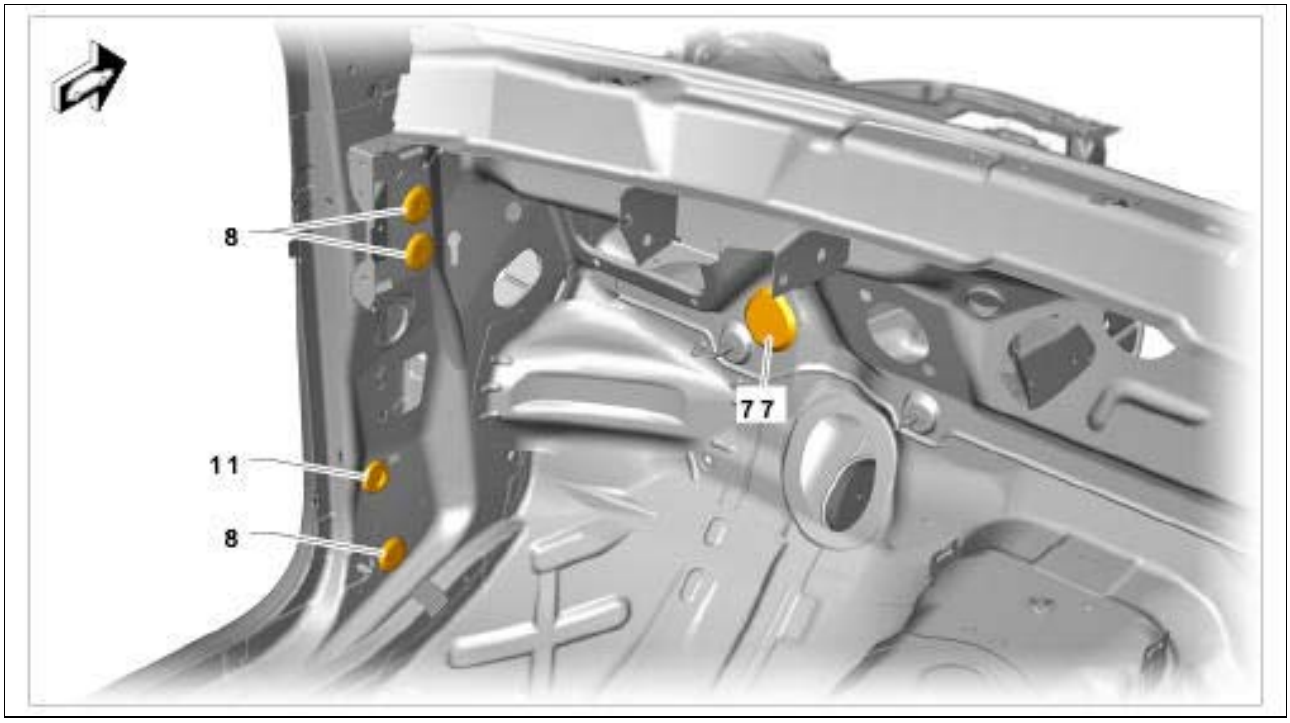

Courtesy of PORSCHE CARS NORTH AMERICA, INC.

8 - Inner A-pillar, left & right (6x)

11 - Inner A-pillar, left & right (2x)

77 - Firewall (LHD vehicles only) (1x)

Fig 4: Identifying Rear Closing Panel/Boot Floor Plate

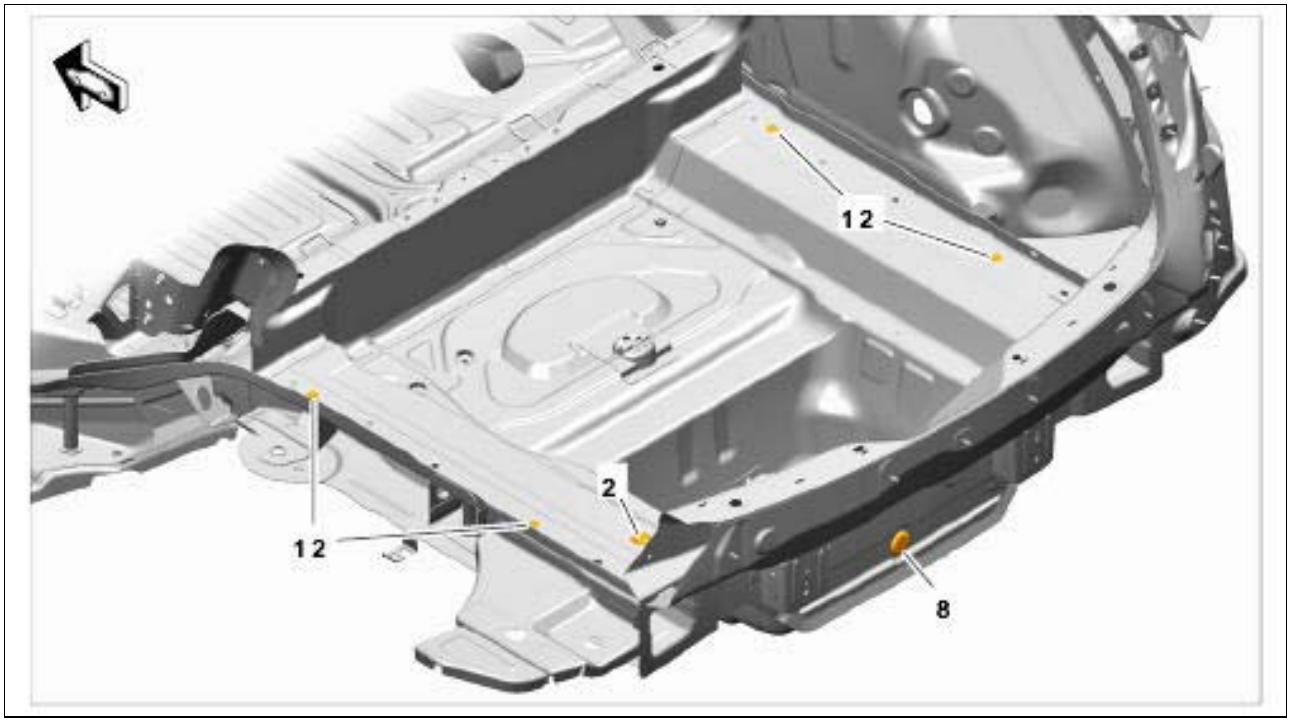

Courtesy of PORSCHE CARS NORTH AMERICA, INC.

2 - Floor, rear left (1x)

8 - Transverse lock support (1x)

12 - Longitudinal member extension, left & right (4x)

Information

Do not install stoppers until after you have applied wax.

Fig 5: Identifying Underbody/Side Member

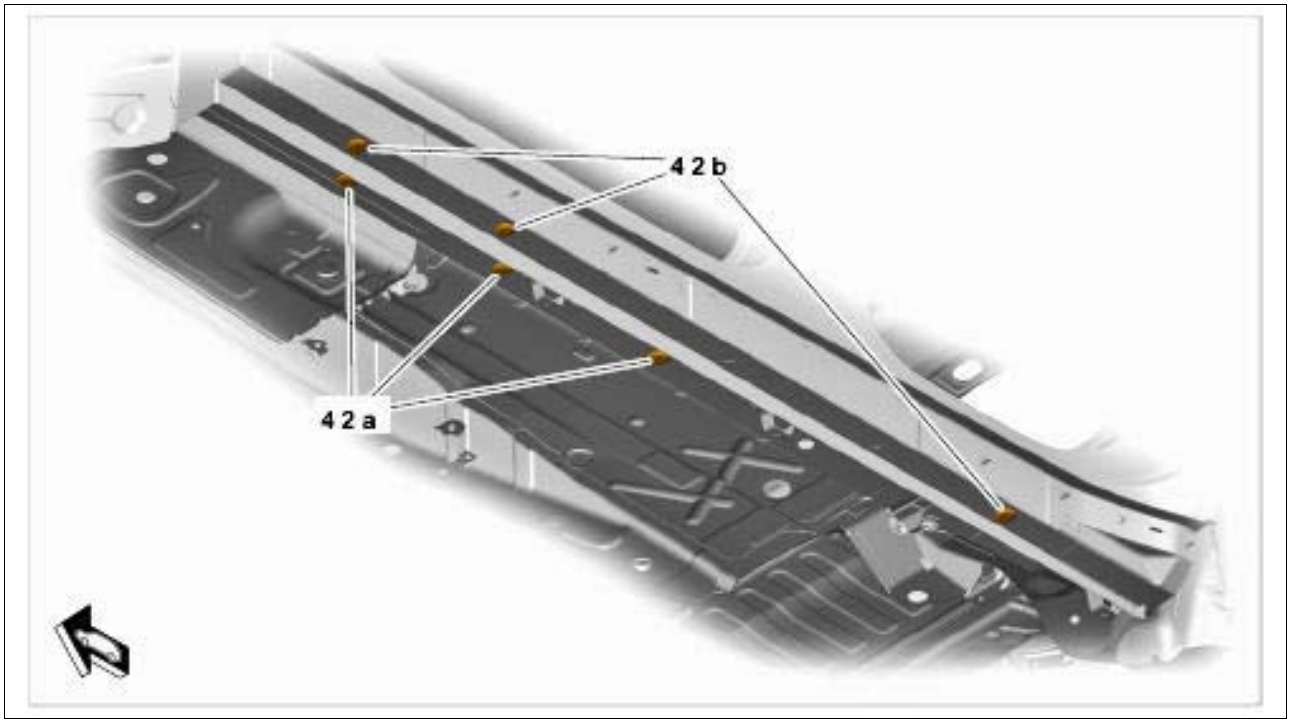

Courtesy of PORSCHE CARS NORTH AMERICA, INC.

42a - Inner side member, left & right (6x)

42b - Side member reinforcement, left & right (6x)

Fig 6: Identifying Floorpan/Tunnel

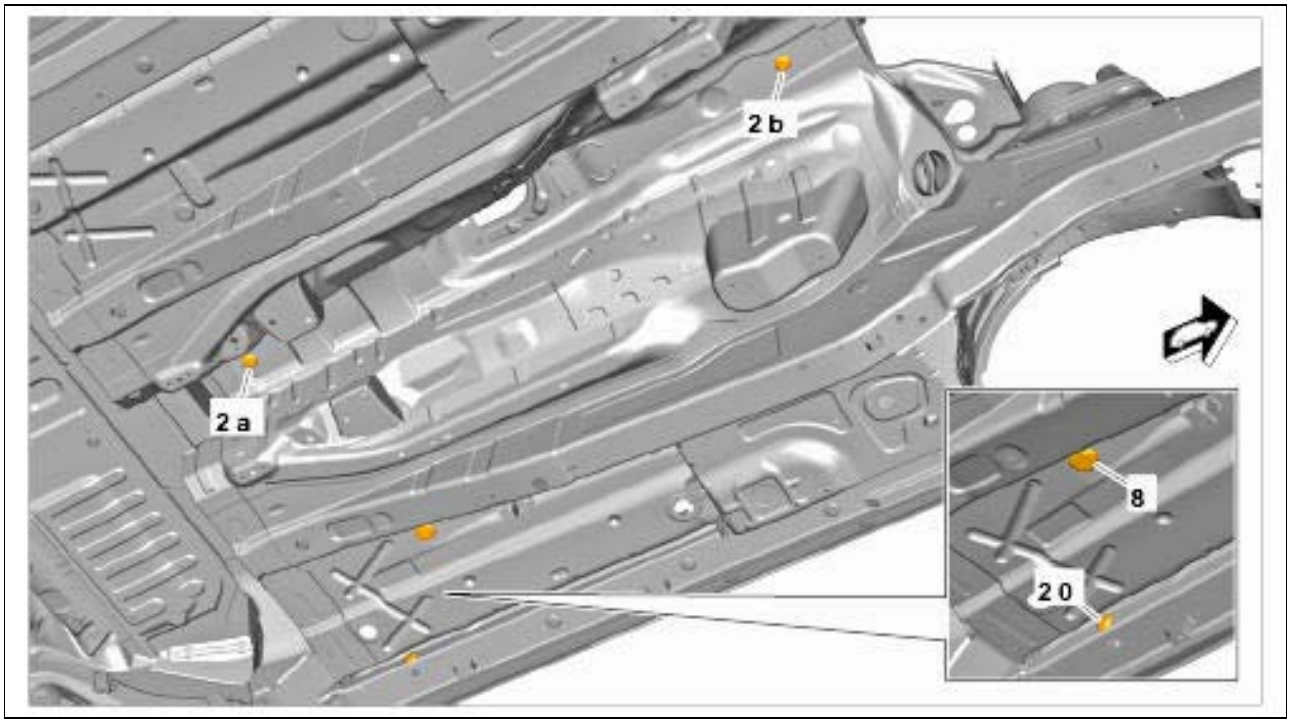

Courtesy of PORSCHE CARS NORTH AMERICA, INC.

2a - Tunnel insert (1x)

2b - Tunnel insert (1x)

8 - Front floor section, left & right (2x)

20 - Inner side member, left & right (2x)

Fig 7: Identifying Rear Side Member/Rear Wheel Housing

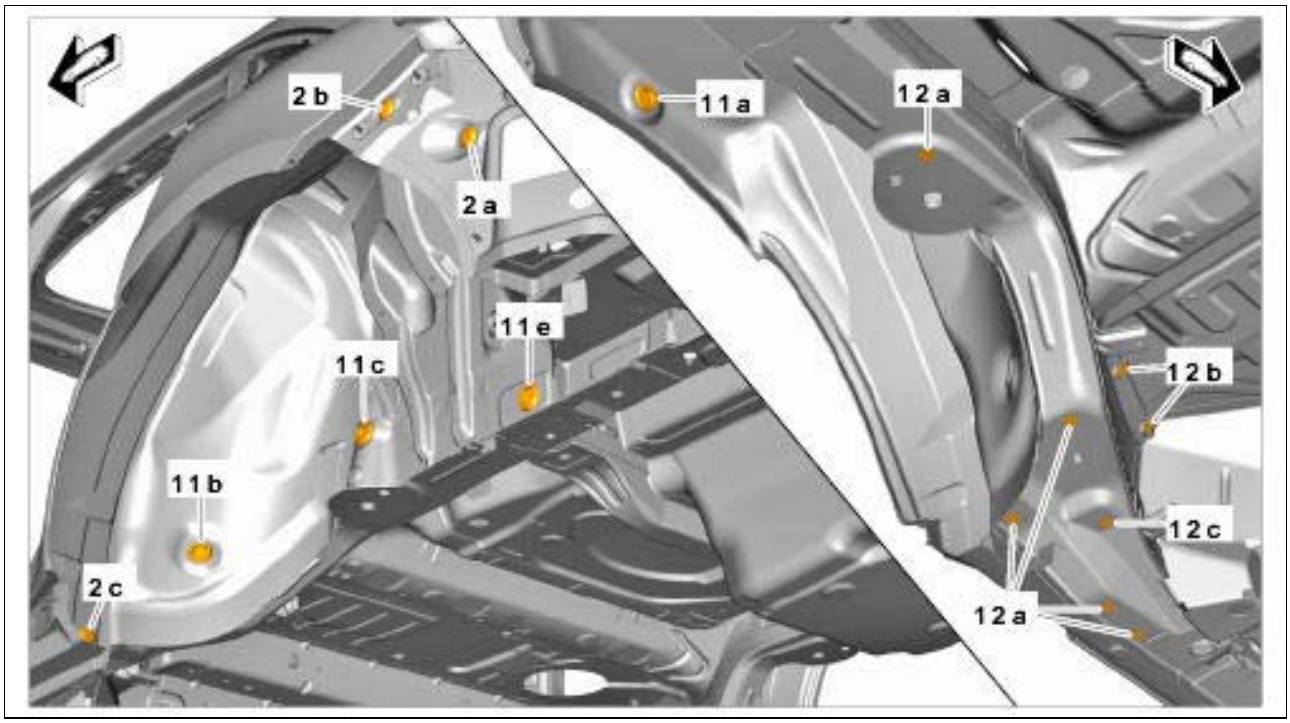

Courtesy of PORSCHE CARS NORTH AMERICA, INC.

2a - Bumper holder, left & right (2x)

2b - Outer side panel, left & right (2x)

2c - Outer rear wheel housing, left & right (2x)

11a - Outer rear wheel housing, left & right (2x)

11b - Inner rear wheel housing, left & right (2x)

11c - Rear wheel housing closing element, left & right (2x)

11e - Inner rear wheel housing, left & right (2x)

12a - Rear side member, left & right (10x)

12b - Floor reinforcement, left only (2x)

12c - Rear side member, left (1x)

Fig 8: Identifying Rear Floor/Battery Console Area

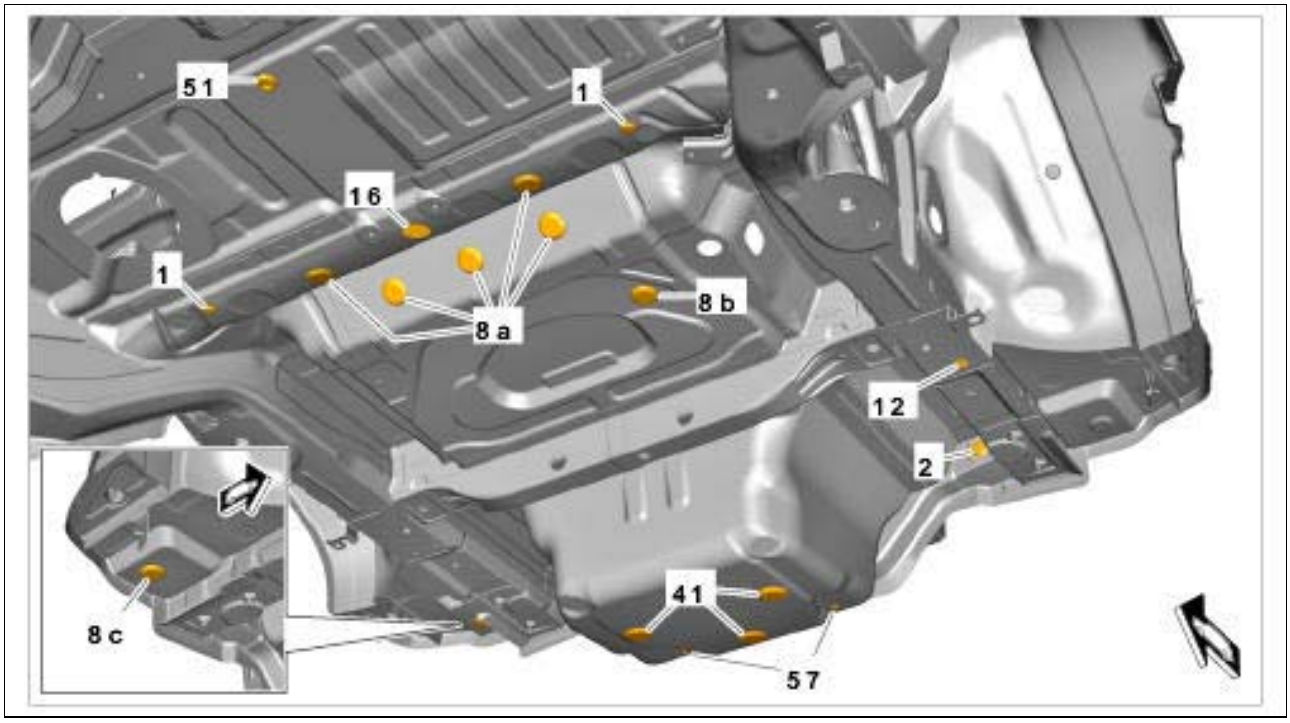

Courtesy of PORSCHE CARS NORTH AMERICA, INC.

1 - Connecting piece (2x)

2 - Holder, left & right (2x)

8a - Centre part of cross member (5x)

8b - Floor, rear (1x)

8c - Floor, right (1x)

12 - Longitudinal member, left (1x)

16 - Centre part of cross member (1x)

41 - Battery console (3x)

51 - Floor, rear (1x)

57 - Battery console (2x)

Fig 9: Identifying Floorpan

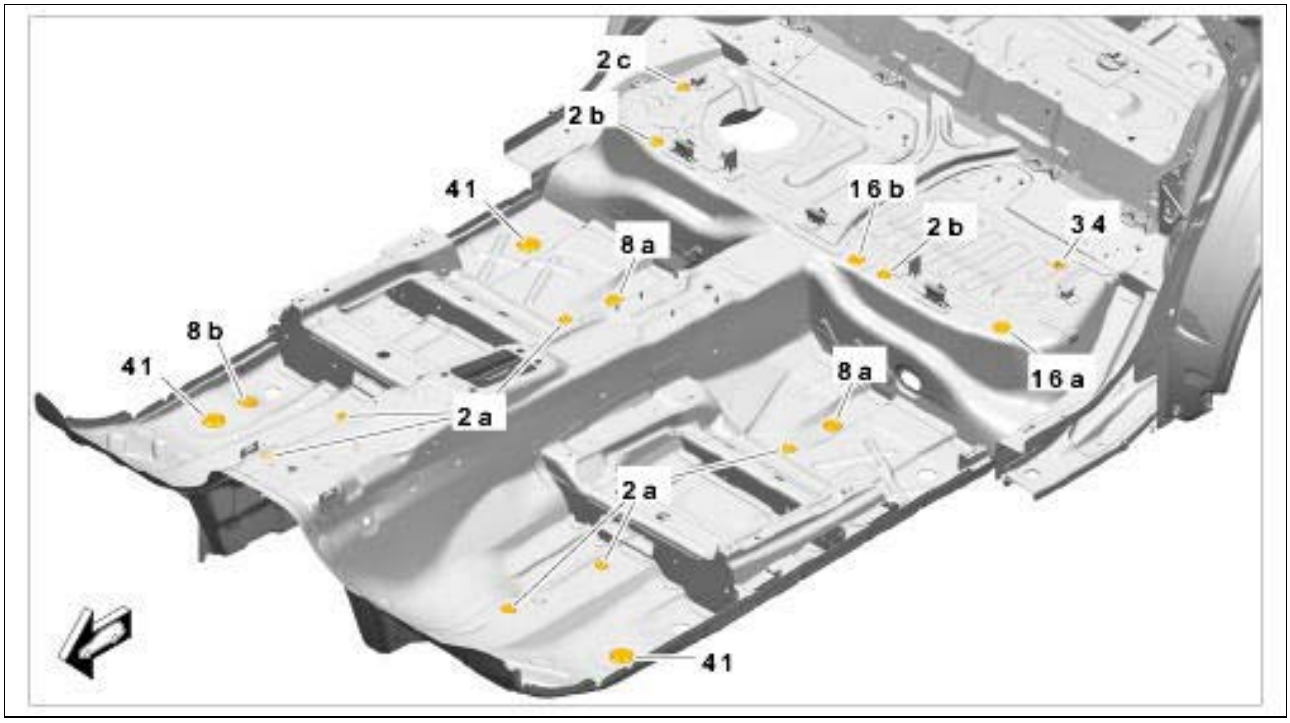

Courtesy of PORSCHE CARS NORTH AMERICA, INC.

2a - Front & rear floor section, left & right (6x)

2b - Floor end section (2x)

2c - Front & rear floor section, right only (1x)

8a - Front floor section, left & right (2x)

8b - Front floor section, right (1x)

16a - Floor end section, left only (1x)

16b - Closing element, left only (1x)

34 - Rear floor section, left only (1x)

41 - Front floor section, left (1x) & right (2x)

WM 5X00IN WORK SEQUENCE FOR ACCIDENT REPAIRS (ALL MODELS) > WORK SEQUENCE FOR ACCIDENT REPAIRS > PROCEDURE FOR ACCIDENT REPAIRS

1. Determine scope of damage
2. Expose the area to be repaired
3. Make an economic or technical decision: Should parts be repaired or replaced?
4. Determine the scope of replacement parts and order the parts

See "REPAIRS " below.

See "REPLACEMENT " below.

5. If necessary, prime and seal the seam areas
6. If necessary, renew the stone impact protection
7. Paint the repaired area
8. If necessary, touch up the undersealing
9. Seal cavities
10. Fit accessories

WM 5X00IN WORK SEQUENCE FOR ACCIDENT REPAIRS (ALL MODELS) > WORK SEQUENCE FOR ACCIDENT REPAIRS > REPAIR

1. Cover undamaged areas of the vehicle
2. Reshape damaged areas
3. Fill or apply body solder to reshaped areas
4. Apply fine filler on repair areas

WM 5X00IN WORK SEQUENCE FOR ACCIDENT REPAIRS (ALL MODELS) > WORK SEQUENCE FOR ACCIDENT REPAIRS > REPLACEMENT

1. Cover undamaged areas of the vehicle so that they are protected against fire
2. Disconnect battery
3. Pre-paint new parts from the inside
4. Roughly cut out damaged areas
5. Cut out remaining pieces
6. Fit new parts in, then check the gap dimensions with the accessories fitted
7. Protect panel flanges against corrosion
8. Weld in new parts
9. Grind visible weld seams flat; if necessary apply body solder or filler

WM 5X00IN PROCEDURE FOR DAMAGE DIAGNOSIS (ALL MODELS) > TOOLS

Designation	Type	Number	Description	
Measuring unit, professional	Workshop equipment	WE 1397		

WM 5X00IN PROCEDURE FOR DAMAGE DIAGNOSIS (ALL MODELS) > INSTRUCTIONS

Information

- Porsche AG recommends that you perform damage diagnosis using an electronic measuring system (e.g. Measuring unit, professional WE 1397).

Information

- A body is constructed so that it has deformation zones in the front and rear areas. These deformation zones enable absorption of impact energy through their special design. The bearing structure in these areas is adapted to provide optimum energy reduction in the event of a crash.
- Due to the vehicle dimensions in the side area of the body, deformation zones cannot be provided for absorbing energy. The impact energy can only be absorbed to a lesser extent here through the deformation of doors and pillars. This is also the case for the roof area where only the roof skin can absorb impact energy to a very small extent. In these areas, occupant protection is guaranteed by a rigid design of the passenger cell.
- The aim of this design is to absorb the impact energy in defined areas to keep the passenger cell as free of damage as possible in the event of a crash. If the passenger cell has been deformed as a result of a crash, the damage in this case can often only be repaired by replacing body parts.
- In general, an impact occurs diagonally or offset to the vehicle axle so that mixed forms are usually the result of a front and side impact or a rear and side impact. The deformation is not always restricted to the impact area. Due to inertia forces of masses, such as the chassis, drive line, occupants of the vehicle and load or the body itself, deformation can also occur in the opposite areas.
- The following work sequence is designed to help you to correctly determine the scope of damage to vehicles damaged in an accident.

WM 5X00IN PROCEDURE FOR DAMAGE DIAGNOSIS (ALL MODELS) > PROCEDURE FOR DAMAGE DIAGNOSIS

1. Identify impact points on the exterior panelling or wheels.
2. Remove accessories that restrict the view of the impact area.
3. Check unit mounts, chassis parts and steering parts for deformation and cracks.
4. Determine the scope of damage to the body.

   See: IDENTIFIABLE DEFORMATIONS ON THE BODY STRUCTURE

See: NO IDENTIFIABLE DEFORMATIONS ON THE BODY STRUCTURE

5. Repair vehicle, if necessary.

WM 5X00IN PROCEDURE FOR DAMAGE DIAGNOSIS (ALL MODELS) > IDENTIFIABLE DEFORMATIONS ON THE BODY STRUCTURE

1. Visual inspection of the structural parts for creasing and bending, starting from the point of impact toward the center of the vehicle
2. Visual inspection of the structural parts at the joints for gaping panel joints (e.g. entry area at the side member under the rubber seal of the door)
3. Check the body structure using an electronic measuring system or a straightening bench system.
4. Decide whether the vehicle is technically repairable
5. Decide whether the vehicle is economically repairable

   Repair vehicle, if necessary.

WM 5X00IN PROCEDURE FOR DAMAGE DIAGNOSIS (ALL MODELS) > NO IDENTIFIABLE DEFORMATIONS ON THE BODY STRUCTURE

1. Check seam joining line on the accessories

   → WM 5X00IN GAP DIMENSIONS
2. Check accessories for paint abrasion (accessories that were impacted during the crash)
3. Drive the vehicle onto a lifting platform and raise it. Measure screw points using an electronic measuring system (e.g. **Measuring unit, professional WE 1397**) and compare with the required values.
4. Determine the extent of any damage to chassis components

   Measure the chassis electronically if necessary

   → 449503 SUSPENSION ALIGNMENT, COMPLETE
5. Decide whether the vehicle has to be repaired

Repair the vehicle, if necessary.

WM 5X00IN DIAGRAM - KEY TO SYMBOLS FOR WELDING WORK (ALL MODELS) > DIAGRAM - KEYS TO SYMBOLS FOR WELDING WORK

A. Spot seam, single row

B. Spot seam, double row

C. Spot seam, double row offset

Fig 1: Identifying Resistance Spot-Welding

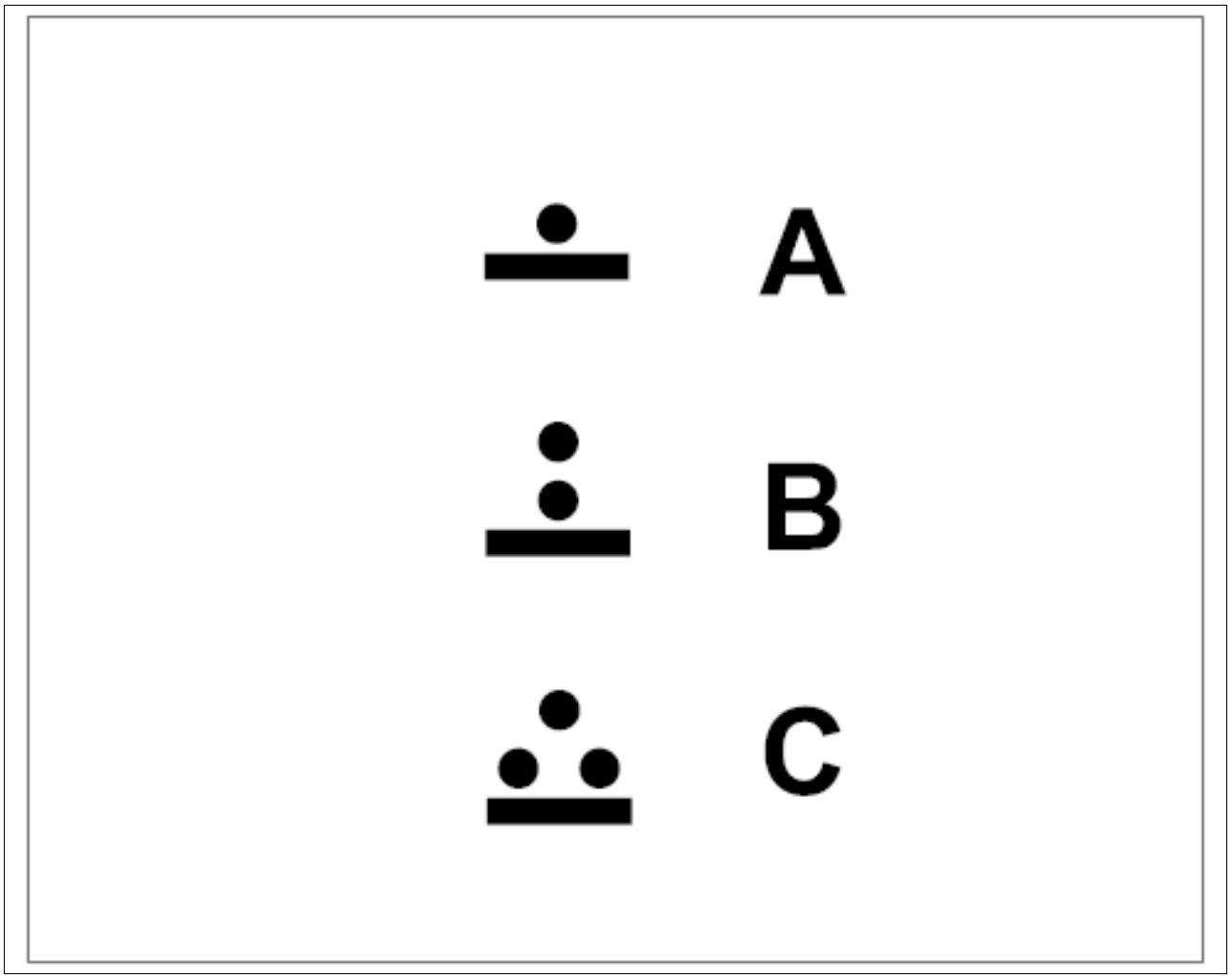

Courtesy of PORSCHE CARS NORTH AMERICA, INC.

WM 5X00IN DIAGRAM - KEY TO SYMBOLS FOR WELDING WORK (ALL MODELS) > DIAGRAM - KEYS TO SYMBOLS FOR WELDING WORK > INERT GAS WELDING (MAG PROCEDURE)

A. Plug weld

B. Stitch weld

C. Full weld

D. Intermittent full weld

Fig 1: Identifying Inert Gas Welding (MAG Procedure)

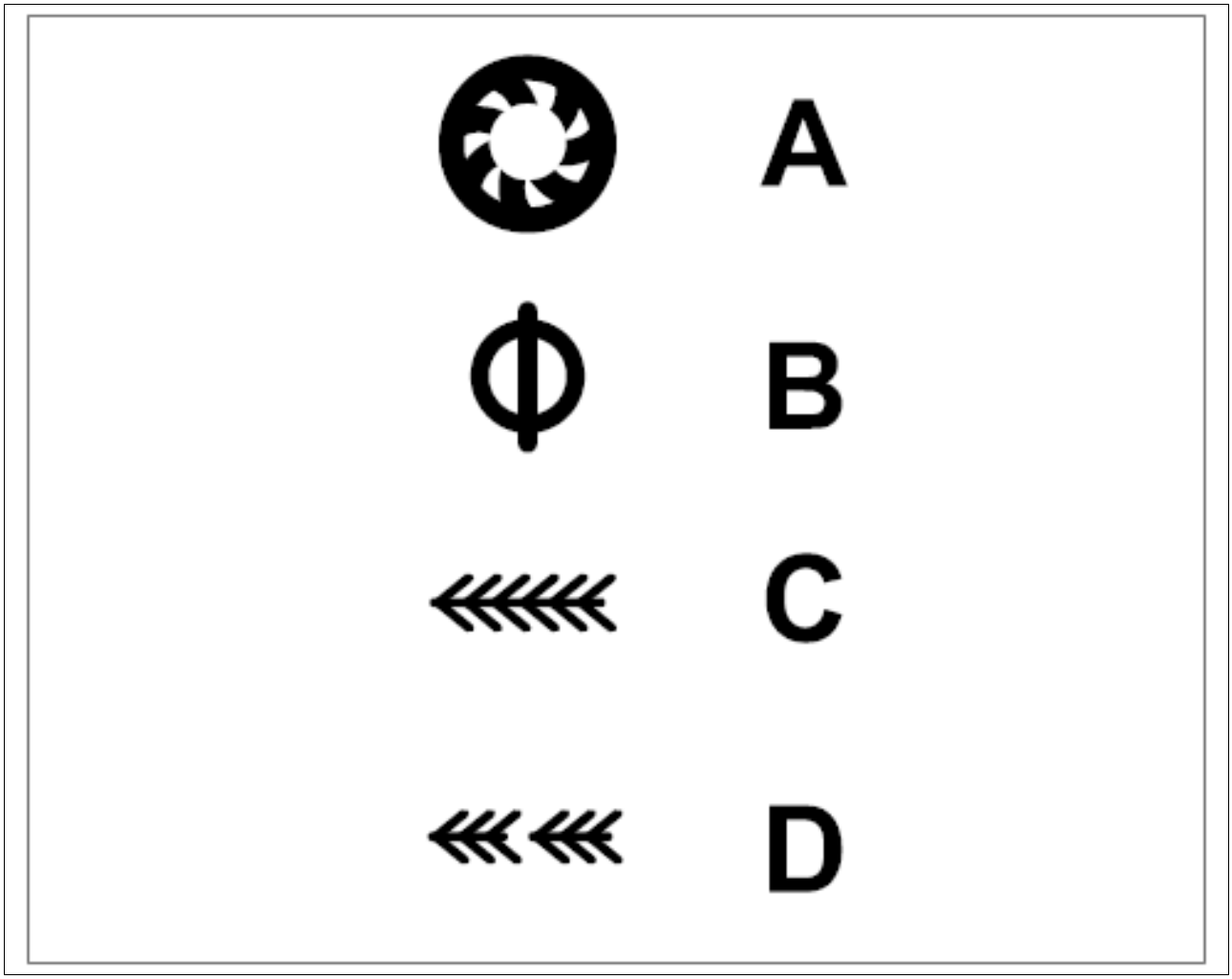

Courtesy of PORSCHE CARS NORTH AMERICA, INC.

WM 5X00IN DIAGRAM - KEY TO SYMBOLS FOR WELDING WORK (ALL MODELS) > DIAGRAM - KEYS TO SYMBOLS FOR WELDING WORK > GAS WELDING

A. Brazing

Fig 1: Identifying Gas Welding

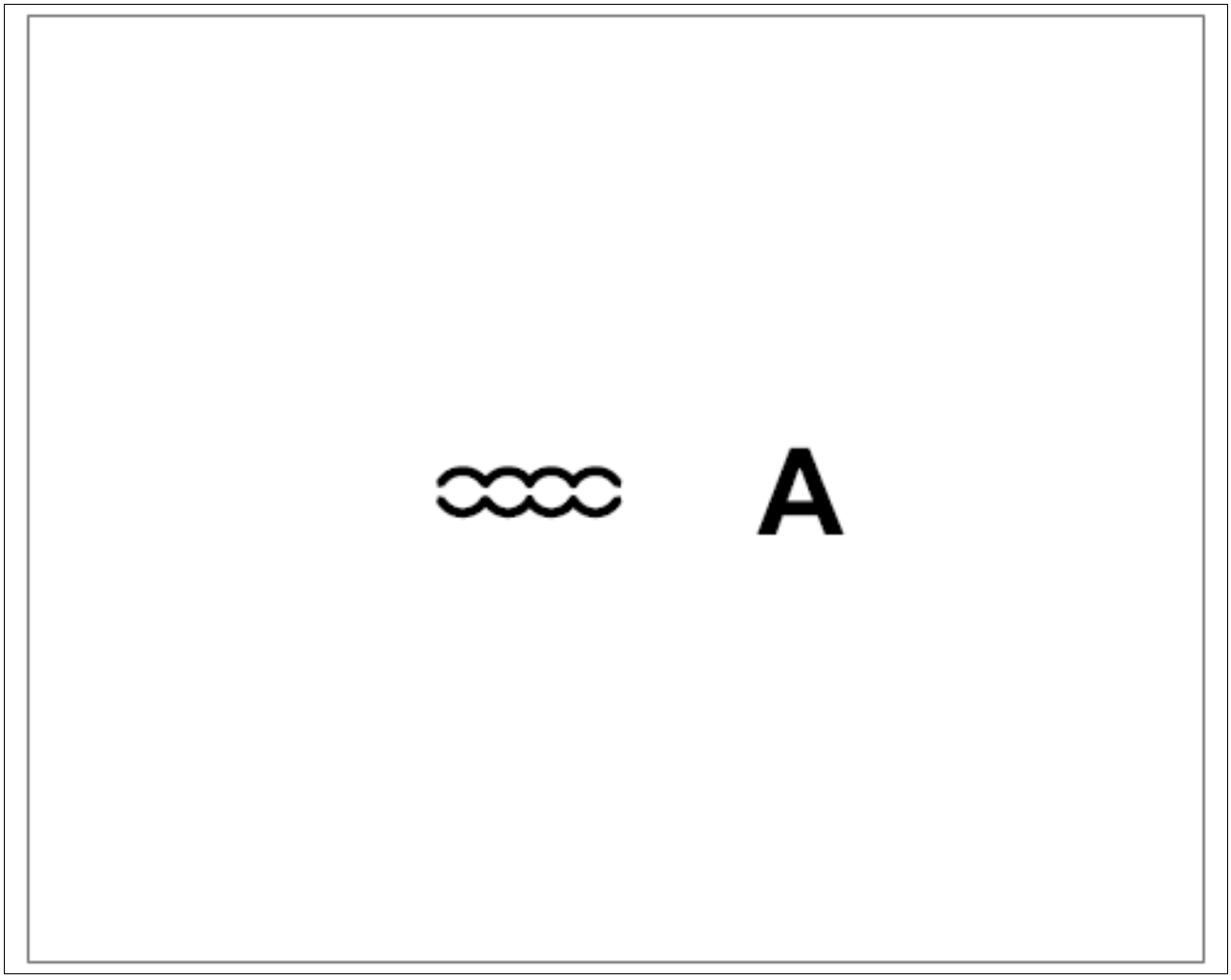

Courtesy of PORSCHE CARS NORTH AMERICA, INC.

WM 5X00IN EXTERIOR COLOURS (ALL MODELS) > EXTERIOR COLORS - SOLID

Order code	Color code	Designation	2013	2014	2015	2016	2017	2018
0Q	C9A	White	X	X	X			
A1	041	Black		X	X			

WM 5X00IN EXTERIOR COLOURS (ALL MODELS) > EXTERIOR COLORS - METALLIC

Order code	Color code	Designation	2013	2014	2015	2016	2017	2018
2T	C9X	Jet Black Metallic	X	X	X			
NO	M7S	Achat Grey Metallic	X	X	X			

S2	M7U	Rhodium Silver Metallic	X	X	X			
4Q	M8Y	Mahogany Metallic		X	X			
4T	C1Y	Palladium Metallic		X	X			
N4	M5X	Dark Blue Metallic		X	X			
N1	M5J	Sapphire Blue Metallic		X	X			
2Y	S9R	Carrara White Metallic			X			

WM 5X00IN EXTERIOR COLOURS (ALL MODELS) > EXTERIOR COLORS - SPECIAL COLOR

Order code	Color code	Designation	2013	2014	2015	2016	2017	2018
U8	M1R	Aurum Metallic		X	X			
L4	8M5	Impulse red metallic		X	X			

WM 600619 REMOVING AND INSTALLING ROOF ASSEMBLY (PANORAMA ROOF) (ALL MODELS) > TECHNICAL VALUES

Location	Description	Type	Basic value	Tolerance 1	Tolerance 2
Fastening screw for bracket		Tightening torque	8 Nm (6 ftlb.)		
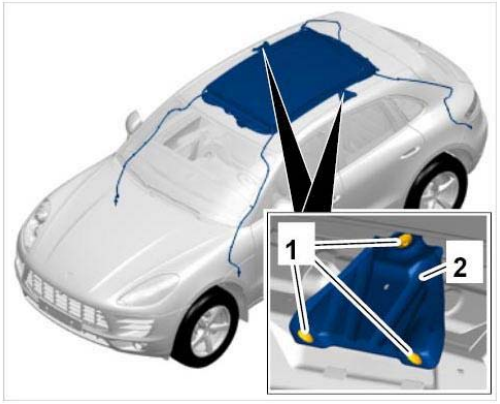 Removing bracket					
Fastening screws for roof assembly	Observe specified tightening sequence	Tightening torque	8 Nm (6 ftlb.)		
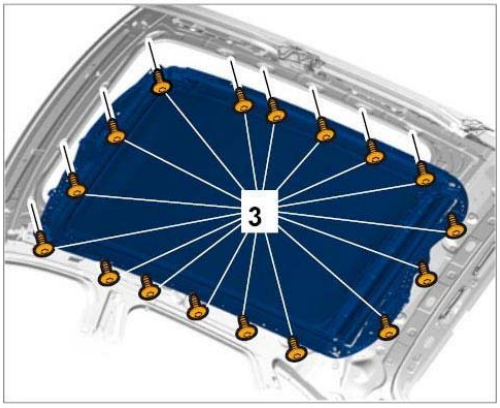 Installing roof assembly					
Securing roof assembly to body		Diameter	8 mm (6 ftlb.)		

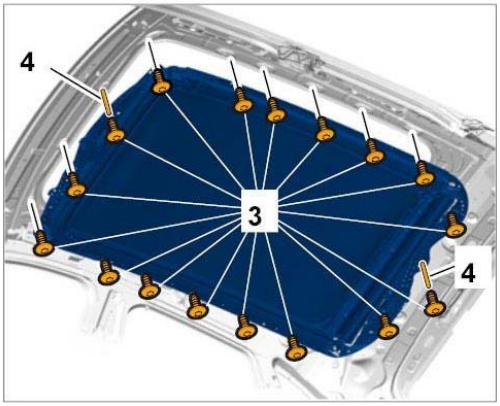

Positioning roof assembly

WM 600619 REMOVING AND INSTALLING ROOF ASSEMBLY (PANORAMA ROOF) (ALL MODELS) > PRELIMINARY WORK

1. Remove headliner. → Removing headliner

WM 600619 REMOVING AND INSTALLING ROOF ASSEMBLY (PANORAMA ROOF) (ALL MODELS) > REMOVING ROOF ASSEMBLY (PANORAMA ROOF)

NOTE: Voltage peaks

- *Risk of damage to load or to the control unit*

→ Remove the ignition key and switch off load before disconnecting or removing load.

NOTE: Sliding-roof frame removed/fitted incorrectly

- *Risk of damage to seats*

→ Fold rear seat assembly over and tilt the front-seat backrests back.

Information

- Some of the repair illustrations show only one side of the vehicle.
- Naturally, some steps also have to be performed on the opposite side of the vehicle as well.

Fig 1: Identifying Panorama Roof Position

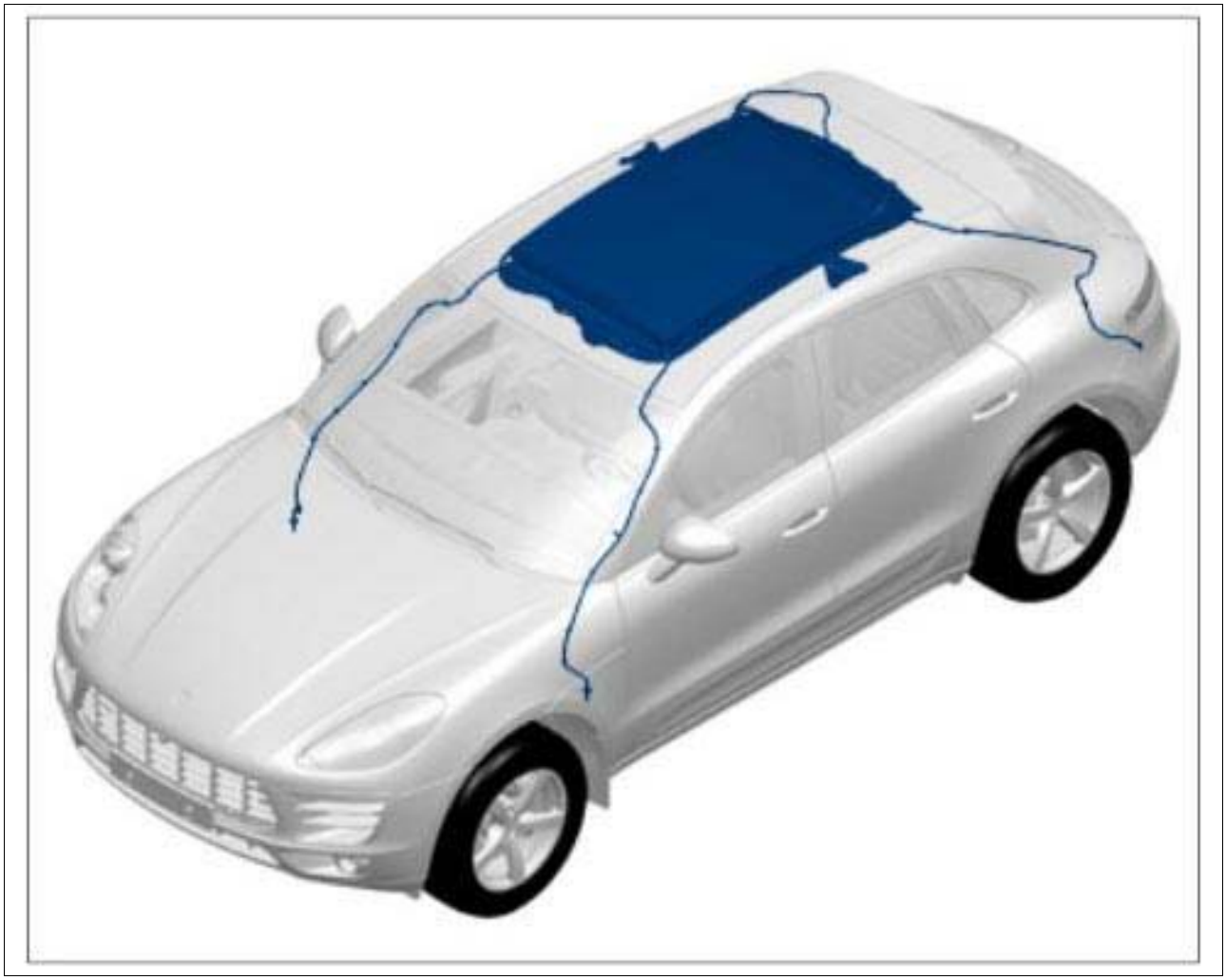

Courtesy of PORSCHE CARS NORTH AMERICA, INC.

1. Pull front and rear water drain hoses **-1-** off the connection piece **-2-** .

Fig 2: Disconnecting Water Drains

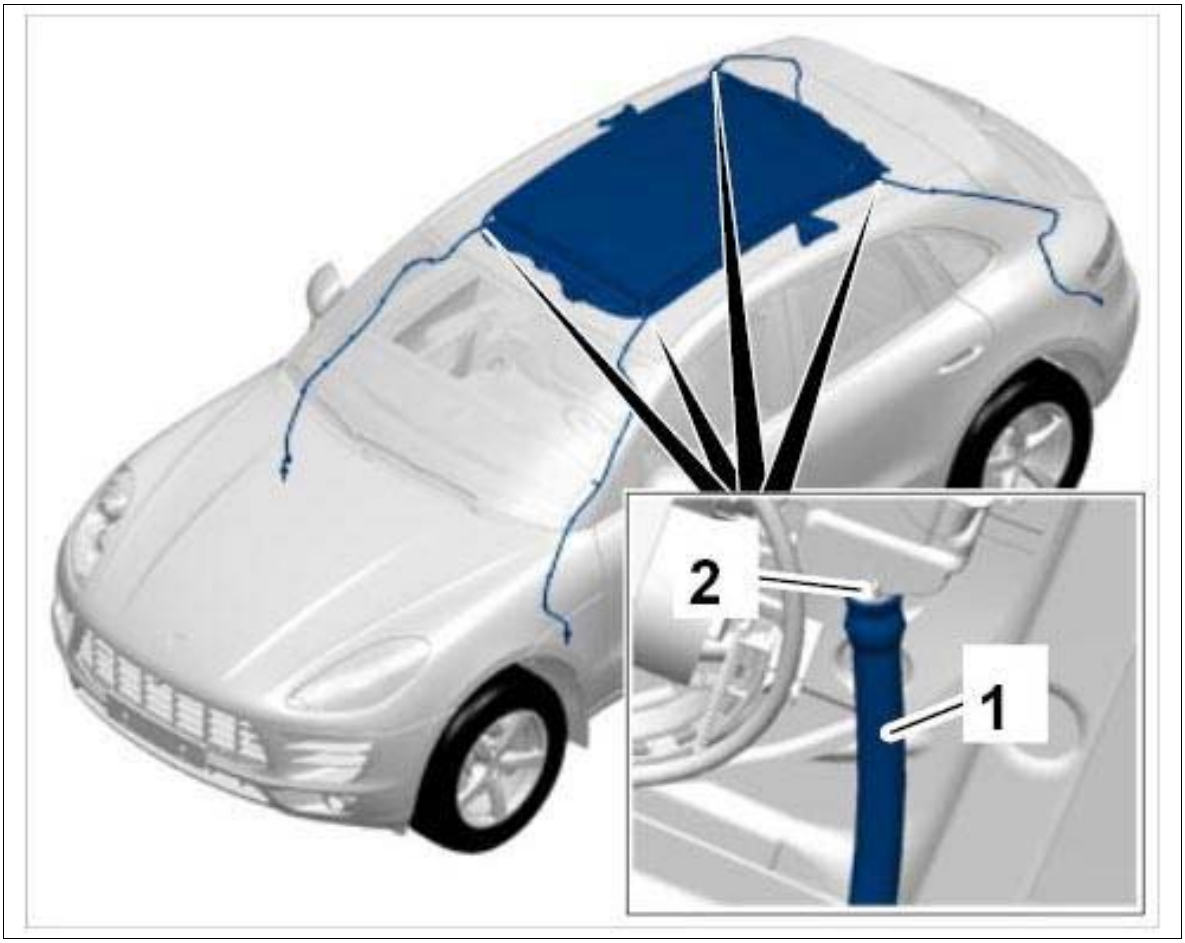

Courtesy of PORSCHE CARS NORTH AMERICA, INC.

2. Release plug connection for front wiring harness **-a-** and disconnect it **-A-** .

Fig 3: Disconnecting Wire Harness

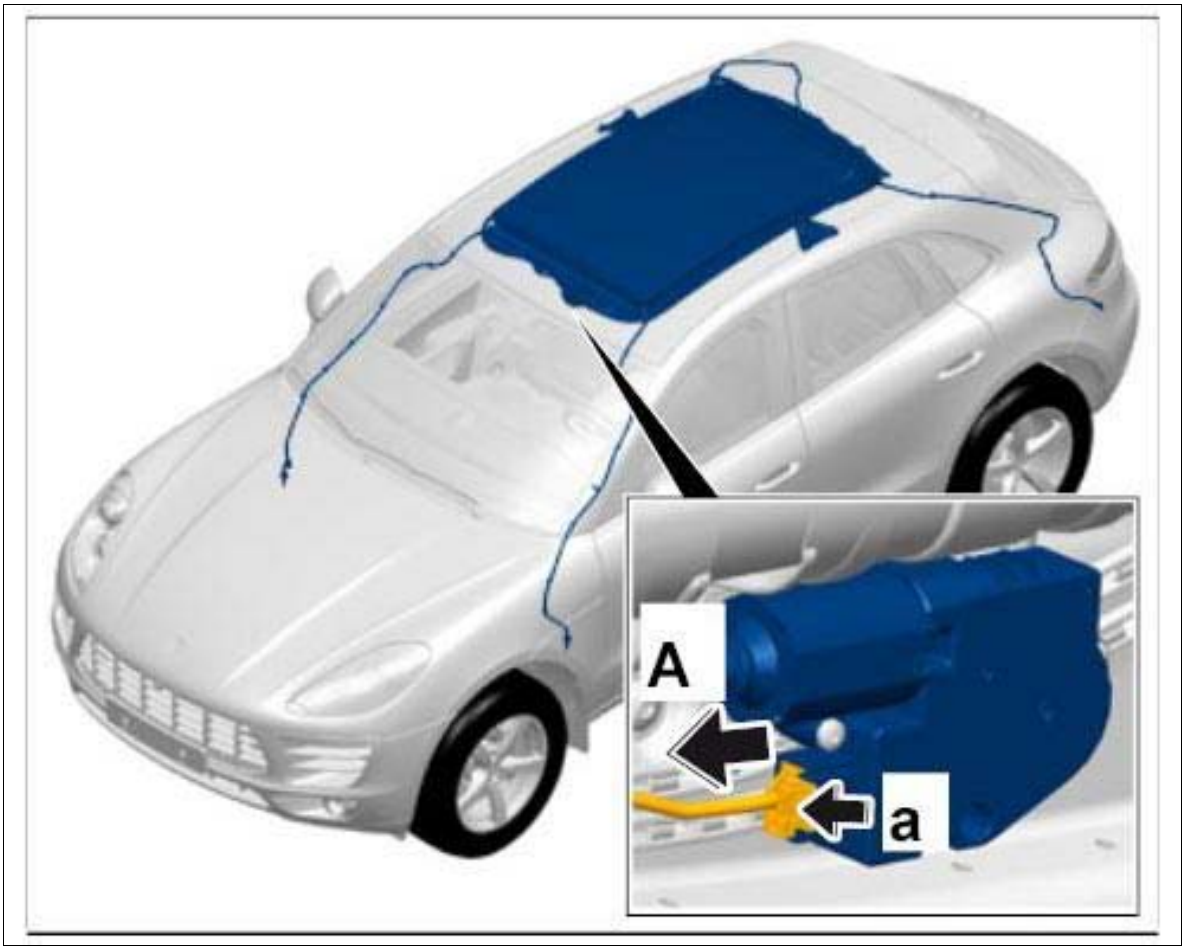

Courtesy of PORSCHE CARS NORTH AMERICA, INC.

3. Loosen the roof assembly. (Get another person to hold the roof assembly to prevent it from falling down)

    1. 3.1. Unclip wiring harness mounting.

    2. 3.2. Unscrew fastening screws **-1-** on the side brackets **-2-** .

Fig 4: Removing Side Bracket

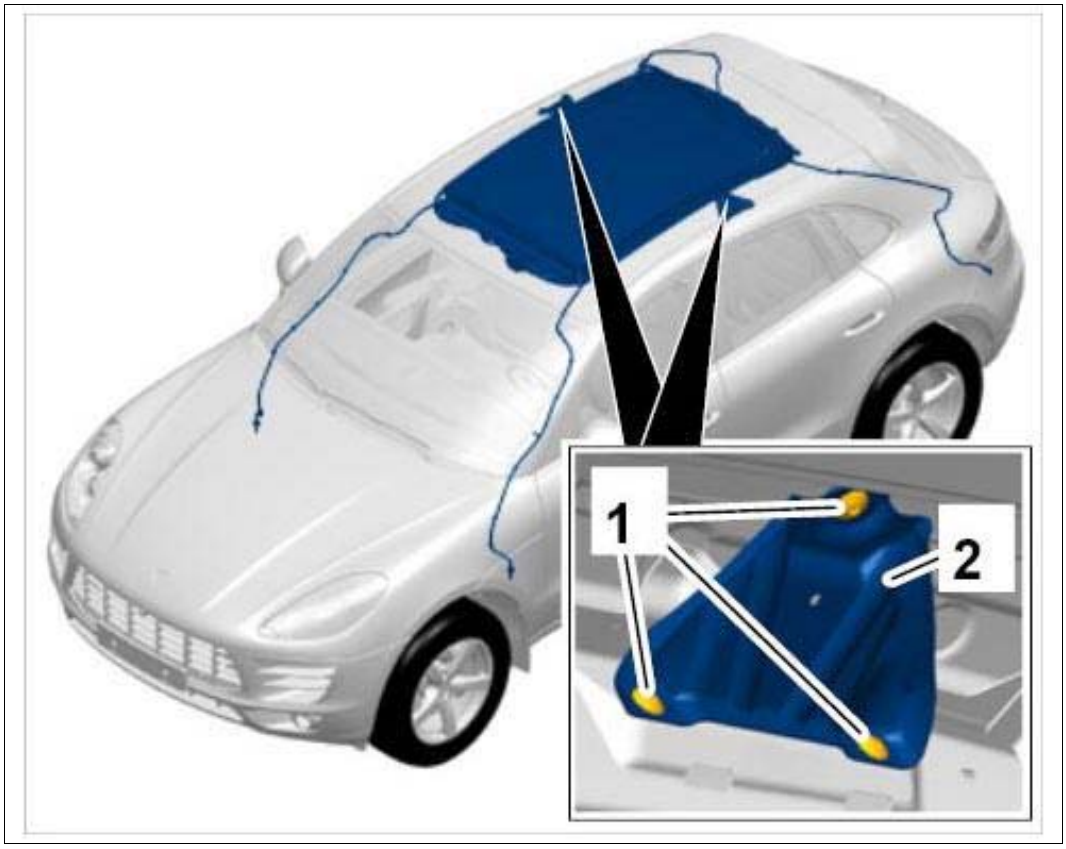

Courtesy of PORSCHE CARS NORTH AMERICA, INC.

3. 3.3. Unscrew fastening screws (15 ea.) **-3-** for the roof assembly, working from back to front.

Fig 5: Removing Roof Assembly

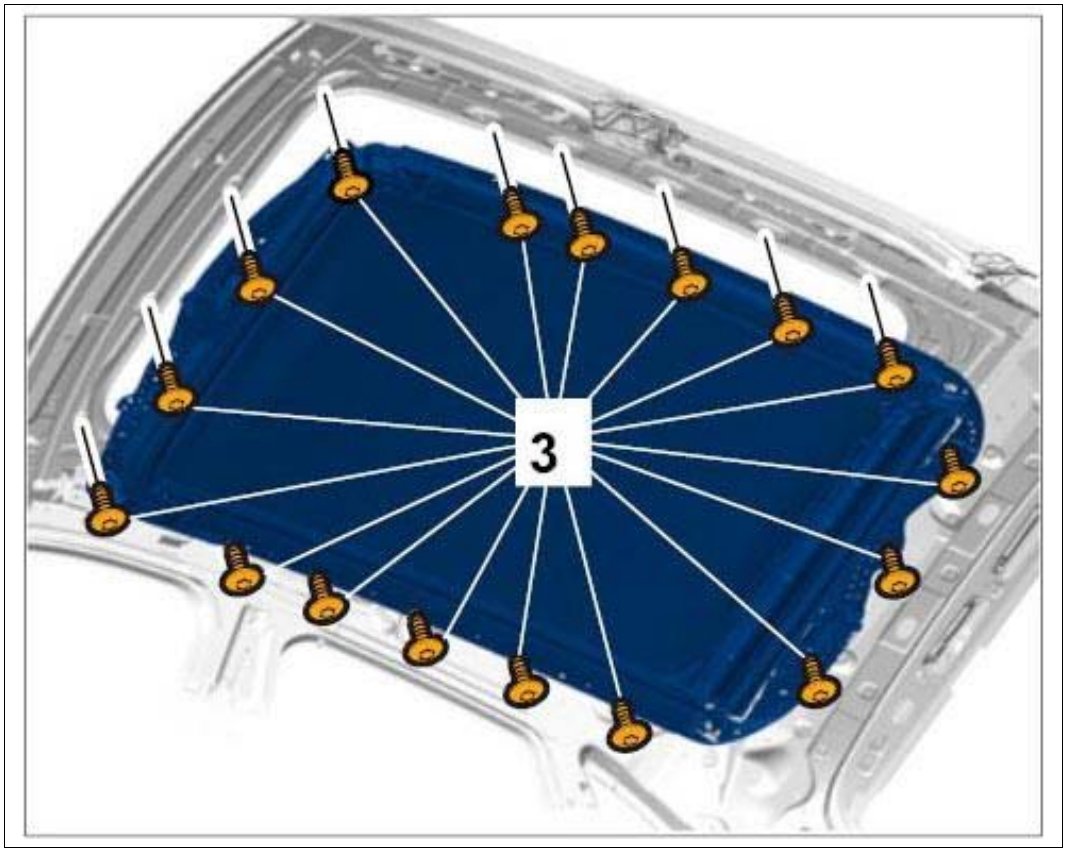

Courtesy of PORSCHE CARS NORTH AMERICA, INC.

4. 3.4. Lower the roof assembly with the help of another person and pull it out of the passenger compartment through the rear lid opening.

WM 600619 REMOVING AND INSTALLING ROOF ASSEMBLY (PANORAMA ROOF) (ALL MODELS) > INSTALLING ROOF ASSEMBLY (PANORAMA ROOF)

Information

- Some of the repair illustrations show only one side of the vehicle.
- Naturally, some steps also have to be performed on the opposite side of the vehicle as well.

1. Installation is performed in reverse order to removal.
2. Place the roof assembly in installation position.
    1. 2.1. Guide the roof assembly through the rear lid opening into the passenger compartment with the help of another person.
    2. 2.2. Press the roof assembly up and position it.
    3. 2.3. Screw in fastening screws so that the roof assembly can still be moved slightly.
    4. 2.4. Move the roof assembly until the locating bores are free.

5. 2.5. Secure the roof assembly at the locating bores **-4-** using the punches **Diameter 8 mm (6 ftlb.)** .

Fig 1: Positioning Roof Assembly

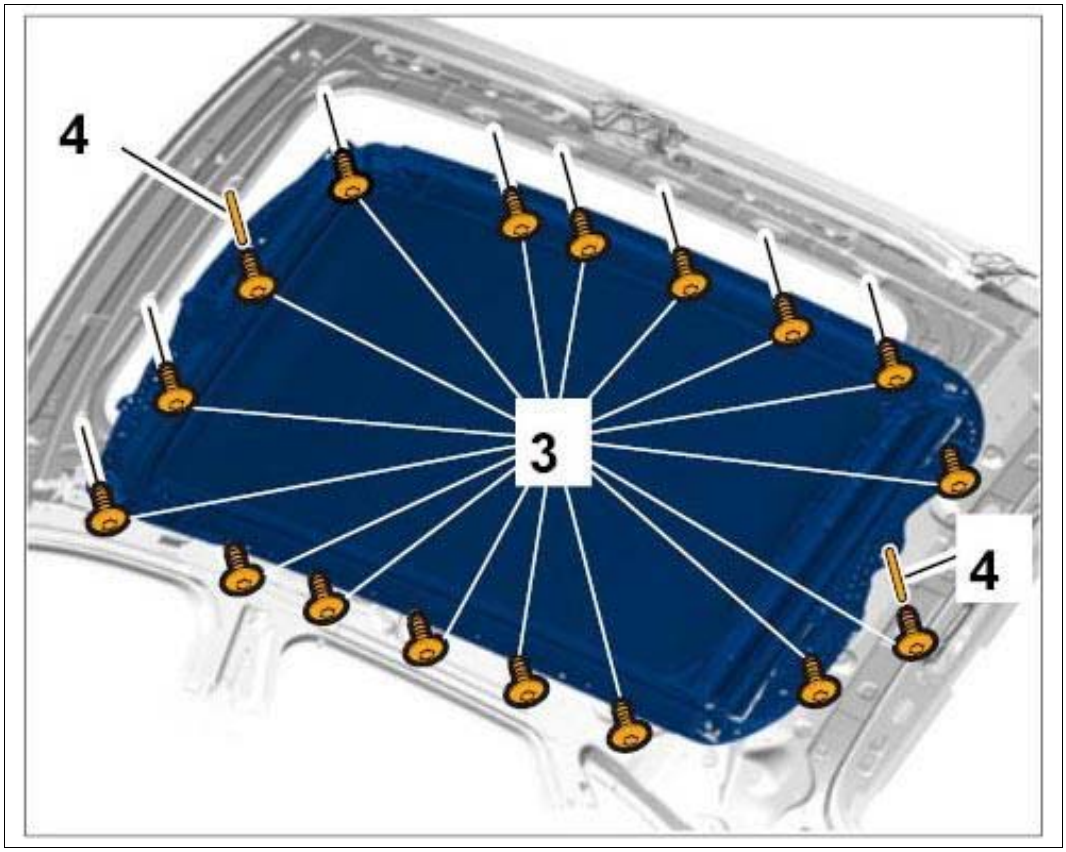

Courtesy of PORSCHE CARS NORTH AMERICA, INC.

3. Check that the outer seal is positioned correctly.

4. Secure the roof assembly.

    1. 4.1. Tighten fastening screws **-3-** from front to rear in alternating sequence at the left and right to **Tightening torque 8 Nm (6 ftlb.)** until secure.

Fig 2: Installing Roof Assembly

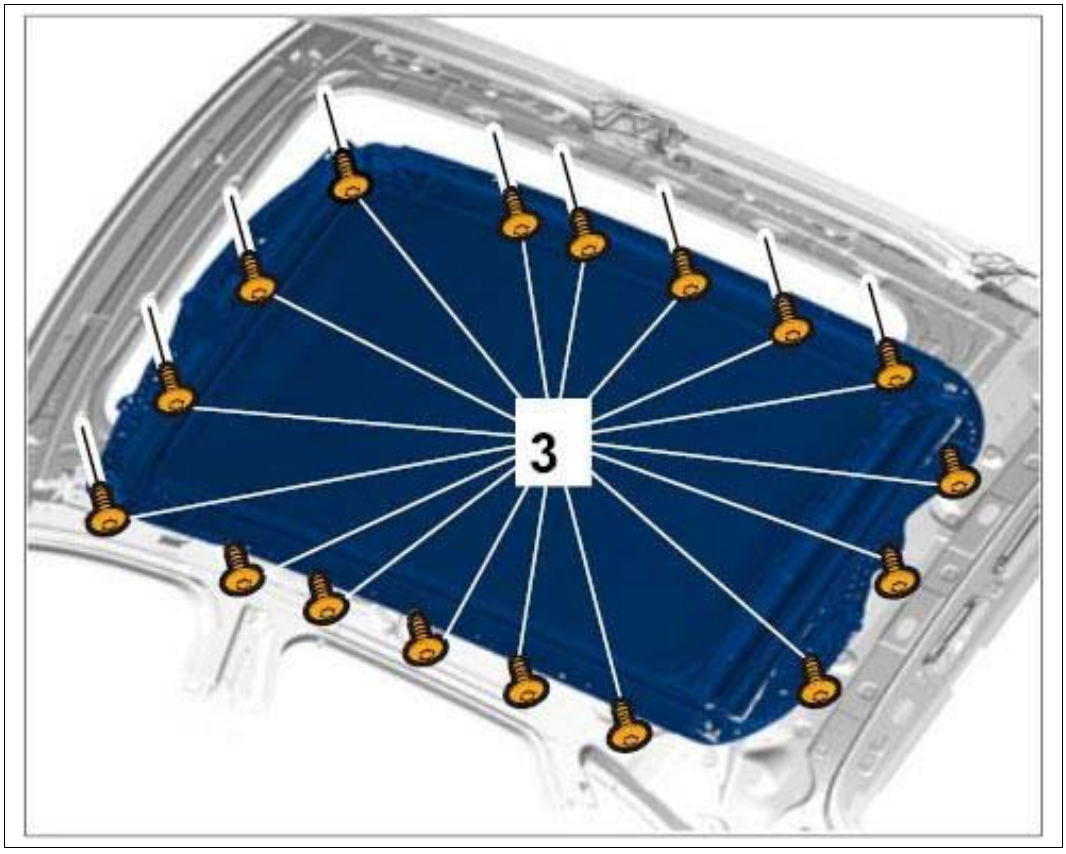

Courtesy of PORSCHE CARS NORTH AMERICA, INC.

2. 4.2. Remove the punches **-4-** from the roof assembly.
3. 4.3. Screw in fastening screws **-1-** on the brackets **-2-** and tighten to **Tightening torque 8 Nm (6 ftlb.)** until secure.

Fig 3: Installing Bracket

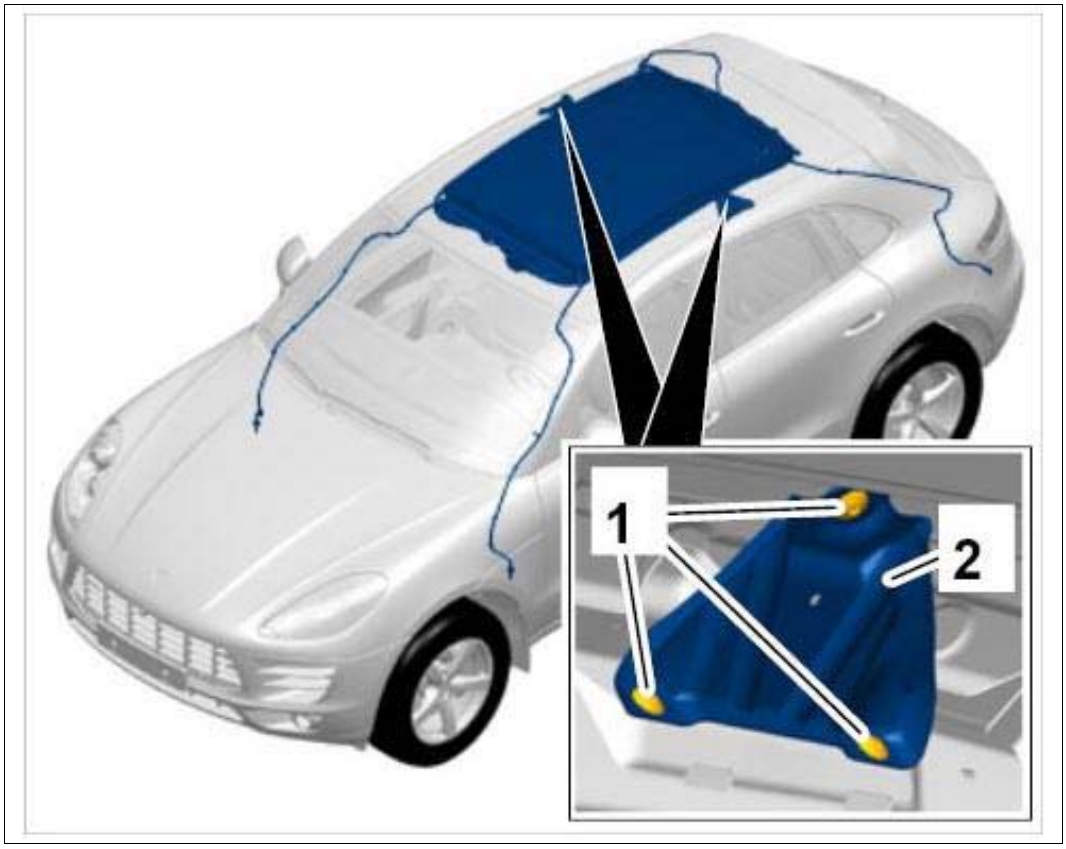

Courtesy of PORSCHE CARS NORTH AMERICA, INC.

WM 600619 REMOVING AND INSTALLING ROOF ASSEMBLY (PANORAMA ROOF) (ALL MODELS) > SUBSEQUENT WORK

1. Install headliner. → Installing headliner
2. Teach the end position. → 601419 REMOVING AND INSTALLING MOTOR FOR GLASS SLIDING ROOF

WM 600625 PROGRAMMING/TEACHING ROOF ASSEMBLY (PANORAMA ROOF) (ALL MODELS) > PROGRAMMING/TEACHING ROOF ASSEMBLY (PANORAMA ROOF) END POSITION

Information

The end positions are lost and must be re-taught in the following situations:

- After disconnecting or connecting the vehicle battery
- When the vehicle battery is completely flat or after jump-lead starting
- After emergency operation

- After changing the electric fuse
- After replacing the glass panel, motor, powered sunroof mechanism or sun blind

NOTE: Electrically moved components

- *Risk of damage to components*

→ Move objects out of the range of movement.

The force limiters are not available when storing the end positions. The panorama roof and sun blind therefore close with full force!

1. Park the vehicle and start the engine.

   Information

   When storing the end positions, always save the settings for the panorama roof and sun blind fully one after the other. If one of the processes is interrupted, it is not possible to start the process for the other drive mechanism.

2. Press the actuating button for the panorama roof forward towards Close and keep it pressed until the panorama roof is closed fully and has stopped moving. The process for storing the end position will start after approx. 10 seconds.
3. Press the actuating button for the sun blind forward towards Close and keep it pressed until the sun blind is closed fully and has stopped moving. The process for storing the end position will start after approx. 10 seconds.
4. Check that the panorama roof and sun blind operate correctly.

WM 601219 REMOVING AND INSTALLING SWITCH FOR SLIDING ROOF (ALL MODELS) > INFORMATION

1. The sliding roof switch is integrated into the front roof trim panel and cannot be replaced separately.

   → Removing front roof trim panel

WM 601419 REMOVING AND INSTALLING MOTOR FOR GLASS SLIDING ROOF (ALL MODELS) > TECHNICAL VALUES

Location	Description	Type	Basic value	Tolerance 1	Tolerance 2
Glass sunroof motor to glass sunroof frame	Internal Torx screw, M5 x 28, replace	Tightening torque	2 Nm (1.5 ftlb.)		

WM 601419 REMOVING AND INSTALLING MOTOR FOR GLASS SLIDING ROOF (ALL MODELS) > PRELIMINARY WORK

1. Detach front roof trim panel with lines still connected from the headliner. → Removing front roof trim panel

WM 601419 REMOVING AND INSTALLING MOTOR FOR GLASS SLIDING ROOF (ALL MODELS) > REMOVING MOTOR FOR GLASS SLIDING ROOF

WARNING: Electrically moved components

- *Danger of limbs being trapped or severed*

→ Switch off electric power to drive motor.

→ Make sure it does not switch on again.

→ Check that there is no electric charge.

Information

Always comply with the regulations for handling ESD-sensitive components!

- Assembly work may only be carried out if the mechanic is wearing the working clothes and shoes approved by Porsche.
- The new part must only be removed from the ESD (electrostatic discharge) protective packaging just before installation and at the position at which the part is to be installed.
- Never touch the electric pins and plug contacts.

Information

The glass sliding roof motor is located on the glass sliding roof frame at the front.

The sun blind motor is located on the glass sliding roof frame at the rear.

The control units for the panorama roof system are installed in the glass sliding roof motor and sun blind motor.

1. Switch off ignition and pull remote control out of ignition lock.
2. Pull out locking mechanism on electric plug connection **-1- (-a-)** , press release **-b-** and pull electric plug connection off the motor for the glass sliding roof **-2-** .

Fig 1: Disconnecting Electric Plug Connection

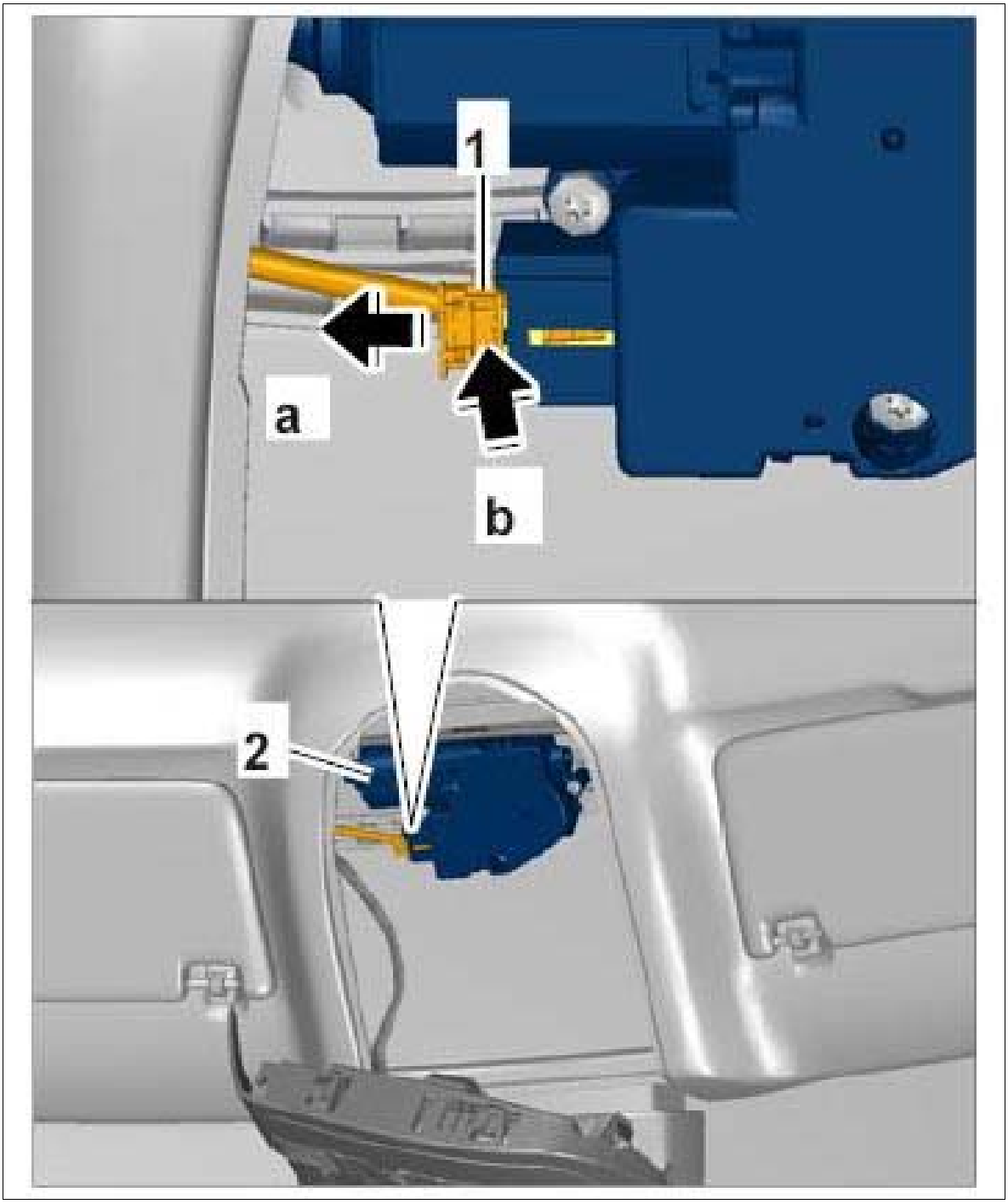

Courtesy of PORSCHE CARS NORTH AMERICA, INC.

3. Unscrew fastening screws **-1-** and remove motor for glass sliding roof **-2-** from the glass sliding roof frame.

Fig 2: Removing Glass Sliding Roof Motor

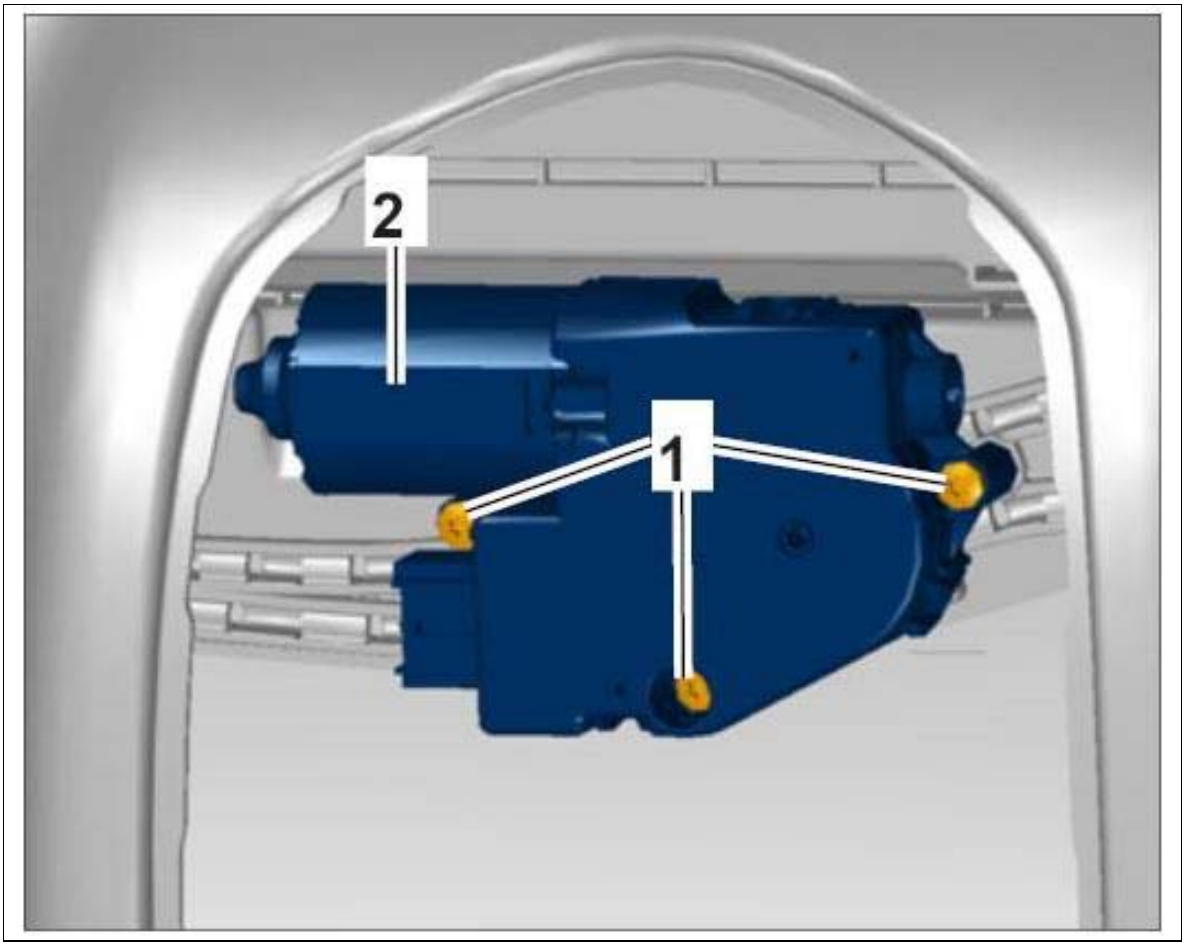

Courtesy of PORSCHE CARS NORTH AMERICA, INC.

WM 601419 REMOVING AND INSTALLING MOTOR FOR GLASS SLIDING ROOF (ALL MODELS) > INSTALLING MOTOR FOR GLASS SLIDING ROOF

WARNING: Electrically moved components

- *Danger of limbs being trapped or severed*

→ Switch off electric power to drive motor.

→ Make sure it does not switch on again.

→ Check that there is no electric charge.

Information

Always comply with the regulations for handling ESD-sensitive components!

- Assembly work may only be carried out if the mechanic is wearing the working clothes and shoes

approved by Porsche.

- The new part must only be removed from the ESD (electrostatic discharge) protective packaging just before installation and at the position at which the part is to be installed.
- Never touch the electric pins and plug contacts.

1. Installation is performed in reverse order to removal.
2. Replace and tighten fastening screws for motor for glass sliding roof on glass sliding roof frame. **Tightening torque 2 Nm (1.5 ftlb.)**

WM 601419 REMOVING AND INSTALLING MOTOR FOR GLASS SLIDING ROOF (ALL MODELS) > SUBSEQUENT WORK

1. Install front roof trim panel. → Installing front roof trim panel
2. Program/teach roof assembly (panorama roof). → 600625 PROGRAMMING/TEACHING ROOF ASSEMBLY (PANORAMA ROOF)

WM 602855 REPLACING FRAME FOR ROOF ASSEMBLY (ALL MODELS) > DISASSEMBLING FRAME FOR ROOF ASSEMBLY (PANORAMA ROOF)

The drive mechanism remains in the frame while carrying out the repairs described here. Spare Parts: → FRAME

1. Remove roof assembly (panorama roof). → Removing Roof Assembly (Panorama Roof)
2. Remove both roof assembly panels (panorama roof). → Removing Roof Assembly Panels (Panorama Roof)
3. Remove sun blind. → Removing Sun Blind
4. Remove motor for roof assembly (panorama roof). → Removing Motor For Glass Sliding Roof
5. Remove motor for sun blind. → Removing Motor For Sun Blind
6. Remove air deflector for panorama roof. → Removing Air Deflector

WM 602855 REPLACING FRAME FOR ROOF ASSEMBLY (ALL MODELS) > ASSEMBLING FRAME FOR ROOF ASSEMBLY (PANORAMA ROOF)

1. Install motor for roof assembly (panorama roof). → Installing Motor For Glass Sliding Roof
2. Install motor for sun blind. → Installing Motor For Sun Blind
3. Install sun blind. → Installing Sun Blind
4. Install air deflector for panorama roof. → Installing Air Deflector

5. Install roof assembly panels (panorama roof). → Installing Roof Assembly Panels (Panorama Roof)
6. Install roof assembly (panorama roof). → Installing Roof Assembly (Panorama Roof)
7. Teach the roof system. → WM 600625 PROGRAMMING/TEACHING ROOF ASSEMBLY (PANORAMA ROOF)

WM 603319 REMOVING AND INSTALLING AIR DEFLECTOR (ALL MODELS) > REMOVING AIR DEFLECTOR

Information

- Some of the repair illustrations show only one side of the vehicle.
- Naturally, some steps also have to be performed on the opposite side of the vehicle as well.

Fig 1: Identifying Air Deflector Installation Position



Courtesy of PORSCHE CARS NORTH AMERICA, INC.

1. Open the front glass panel fully.
2. Disengage tension spring **-1-** for air deflector **-2-** at the left and right.

Fig 2: Identifying Air Deflector Tension Spring

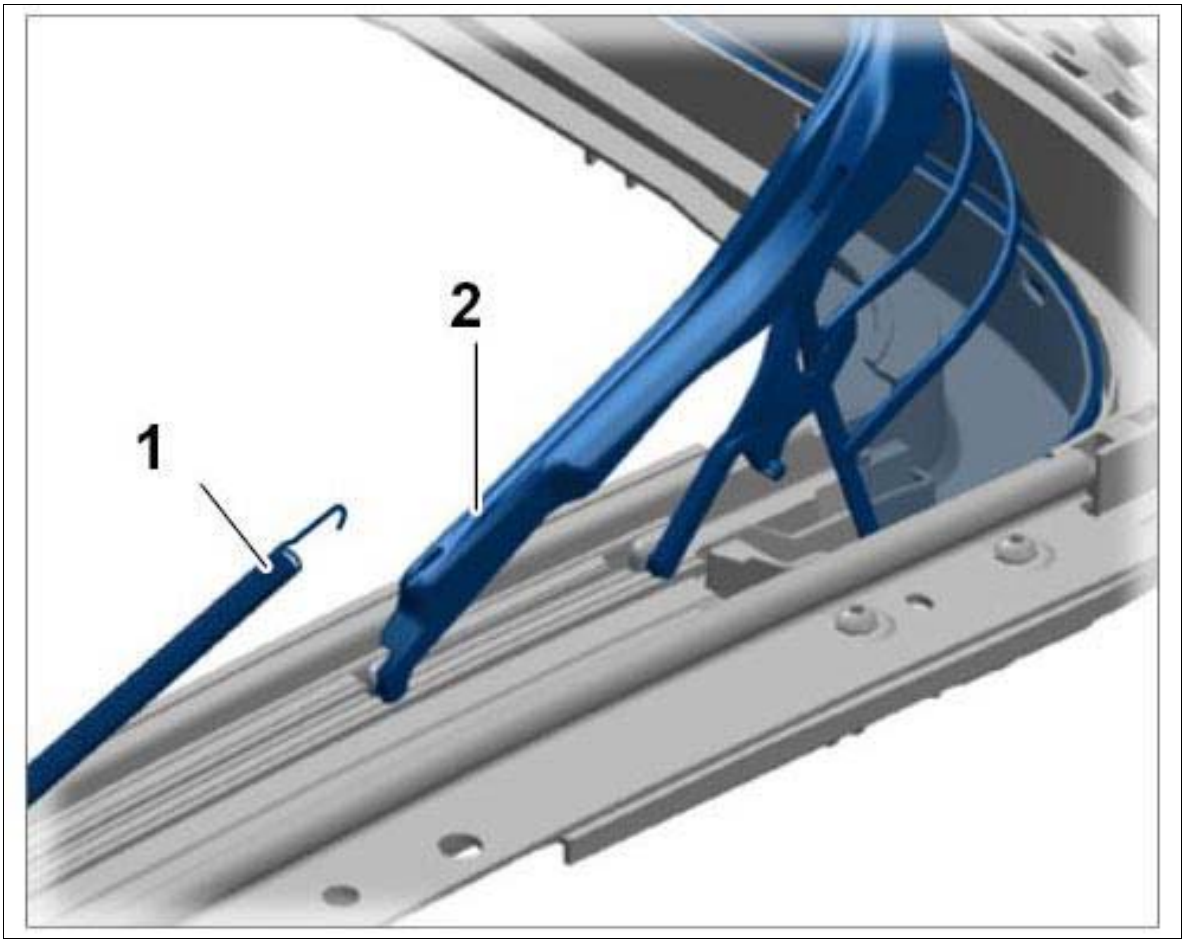

Courtesy of PORSCHE CARS NORTH AMERICA, INC.

3. Carefully unclip net piping **-1-** from the clamping strip, starting at the sides.

Fig 3: Disengaging Net Piping

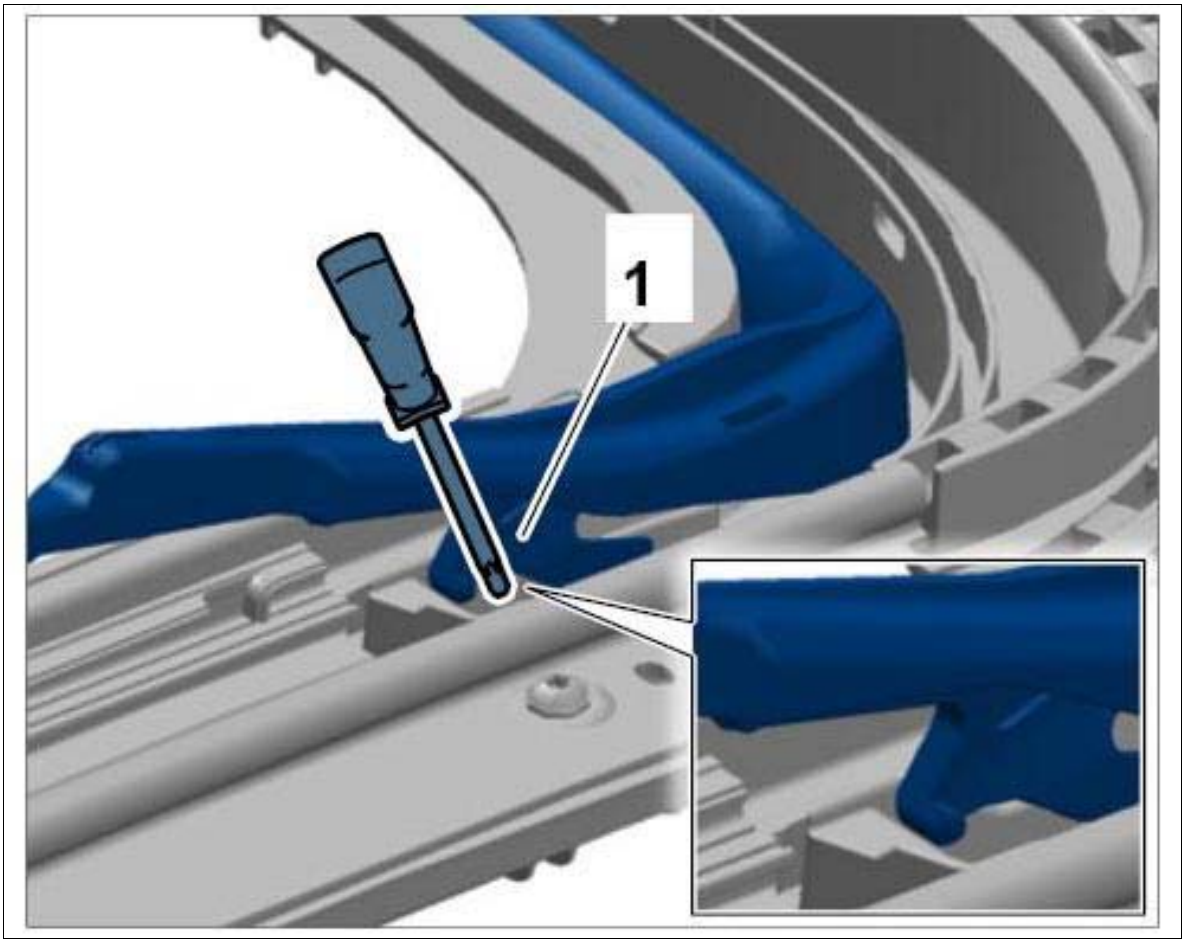

Courtesy of PORSCHE CARS NORTH AMERICA, INC.

4. Pull knock-out lever **-1-** for air deflector forward out of the guide rail.

Fig 4: Removing Air Deflector

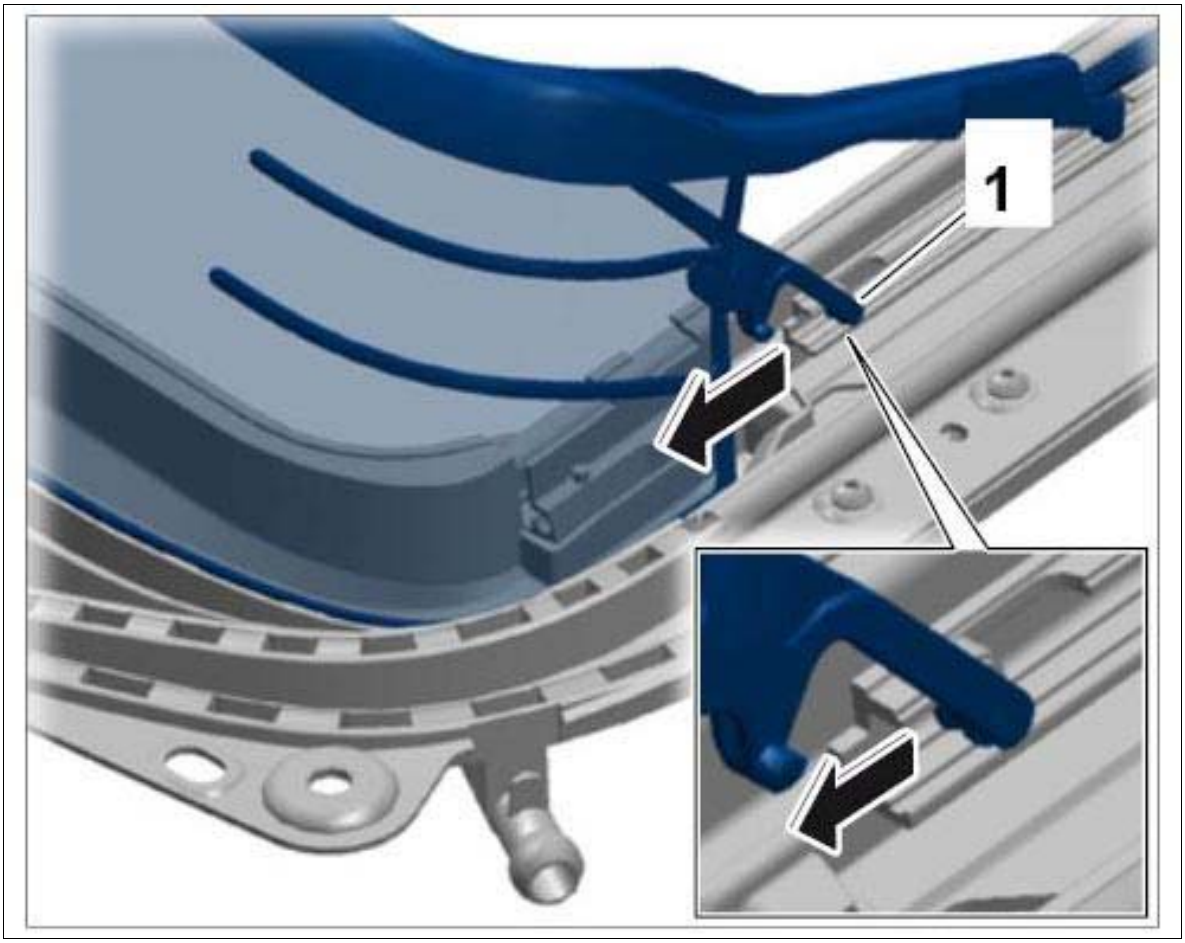

Courtesy of PORSCHE CARS NORTH AMERICA, INC.

5. Remove air deflector.

WM 603319 REMOVING AND INSTALLING AIR DEFLECTOR (ALL MODELS) > INSTALLING AIR DEFLECTOR

1. Installation is performed in reverse order to removal.

WM 604019 REMOVING AND INSTALLING SLIDING-ROOF PANEL (ALL MODELS) > TECHNICAL VALUES

Location	Description	Type	Basic value	Tolerance 1	Tolerance 2
Fastening screw for sliding-roof panel		Tightening torque	7 Nm (5 ftlb.)		

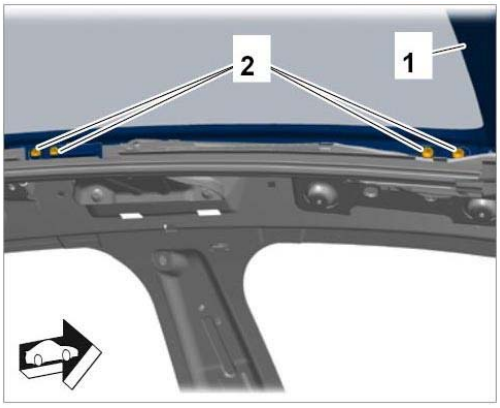

Removing front panel

WM 604019 REMOVING AND INSTALLING SLIDING-ROOF PANEL (ALL MODELS) > REMOVING ROOF ASSEMBLY PANELS (PANORAMA ROOF)

Information

- Some of the repair illustrations show only one side of the vehicle.
- Naturally, some steps also have to be performed on the opposite side of the vehicle as well.

1. Lift up the glass panel **-2-** until the side panels **-1-** are accessible.
2. Push panels **-1-** off the passenger compartment to the rear and remove them **-A-** .

Fig 1: Removing Panels

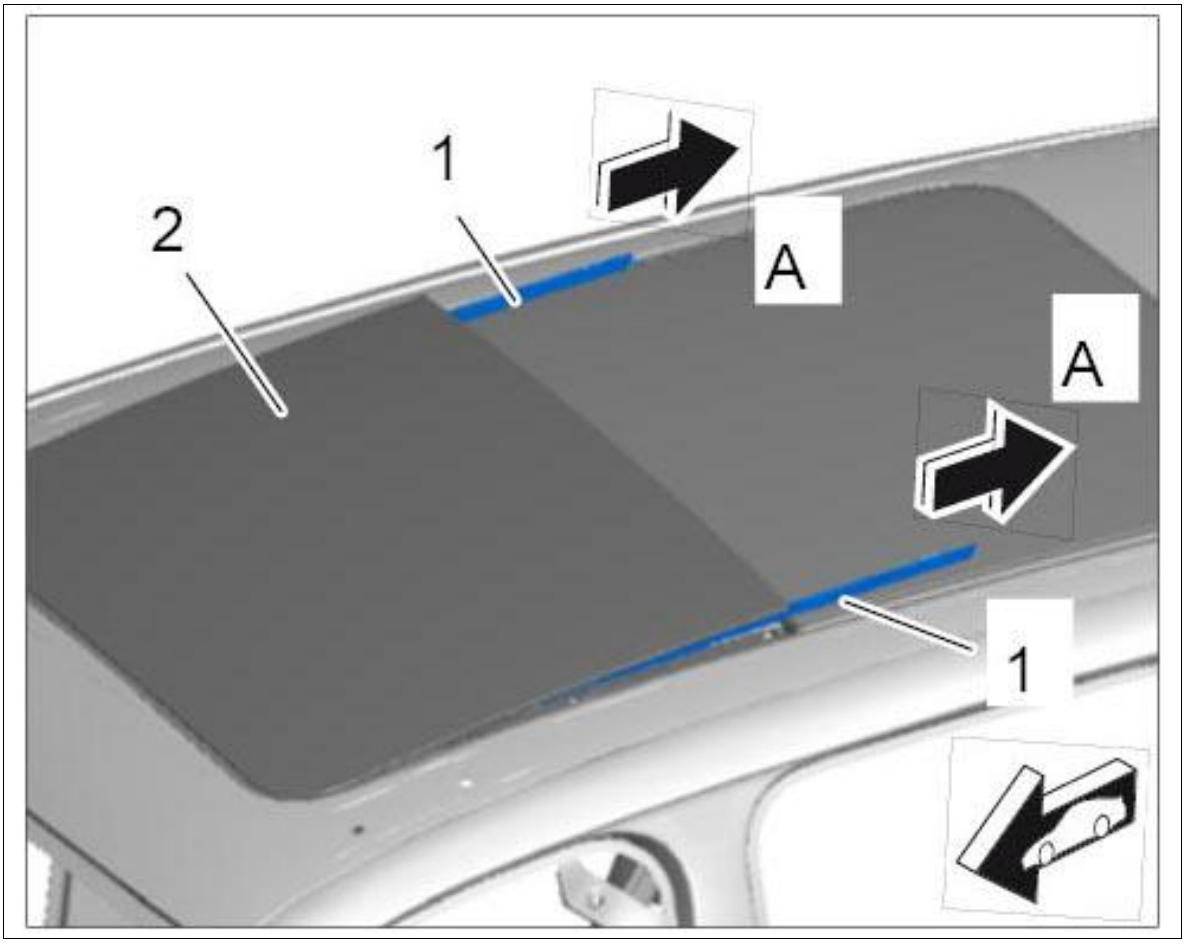

Courtesy of PORSCHE CARS NORTH AMERICA, INC.

3. Unscrew fastening screws **-2-** on the glass panel **-1-** .

Fig 2: Removing Front Panel

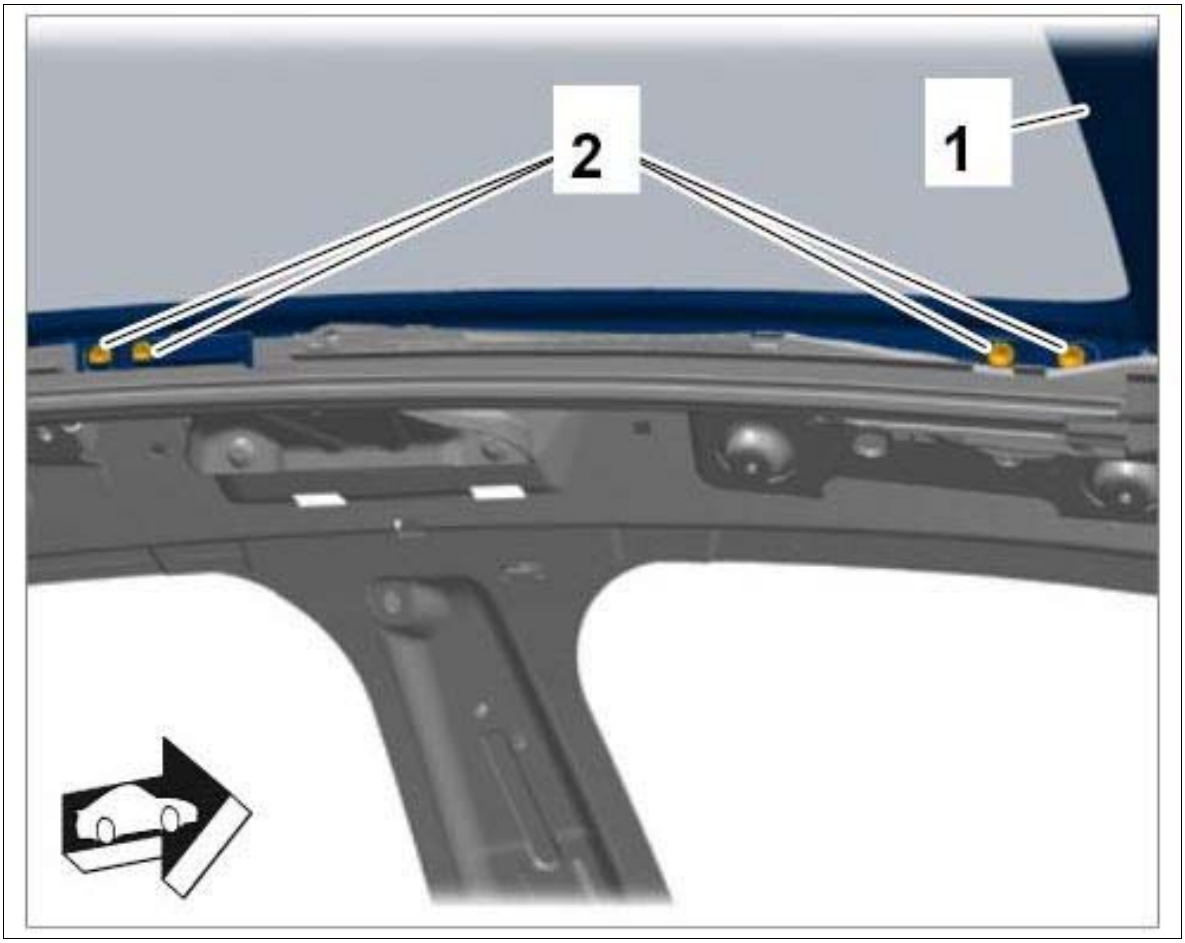

Courtesy of PORSCHE CARS NORTH AMERICA, INC.

4. Lift the glass panel up and remove it.

WM 604019 REMOVING AND INSTALLING SLIDING-ROOF PANEL (ALL MODELS) > INSTALLING ROOF ASSEMBLY PANELS (PANORAMA ROOF)

1. Installation is performed in reverse order to removal.
2. Adjust gap dimensions of front panel → 6X00IN41 GAP DIMENSIONS .
    1. 2.1. When positioning the panel, check that there is an equal gap between the panel and roof aperture. Align the panel in the longitudinal and transverse direction if necessary.
3. Tighten roof assembly panel to **Tightening torque 7 Nm (5 ftlb.)** .

WM 604019 REMOVING AND INSTALLING SLIDING-ROOF PANEL (ALL MODELS) > SUBSEQUENT WORK

1. Perform a function test and re-initialize end position of the glass sliding roof if necessary.
2. Reinitializes end positions of glass sliding roof.
    1. 2.1. Press button for glass sliding roof forward and keep it pressed. Glass sliding roof closes, opens by approx. 200 mm and then closes again.
    2. 2.2. Release button for glass sliding roof. Standardization run is complete.

WM 604019 REMOVING AND INSTALLING REAR SLIDING-ROOF PANEL (ALL MODELS) > TECHNICAL VALUES

Location	Description	Type	Basic value	Tolerance 1	Tolerance 2
Fastening screw for rear sliding-roof panel		Tightening torque	7 Nm (5 ftlb.)		

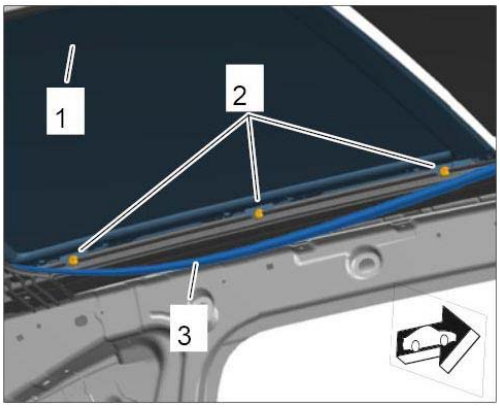

Removing rear panel

WM 604019 REMOVING AND INSTALLING REAR SLIDING-ROOF PANEL (ALL MODELS) > REMOVING REAR SLIDING-ROOF PANEL

1. Open the sun blind fully.
2. Pull acoustic seal **-3-** off the assembly frame until the fastening screws **-2-** are accessible.
3. Unscrew fastening screws **-2-** on the glass panel **-1-** .

Fig 1: Removing Rear Lid

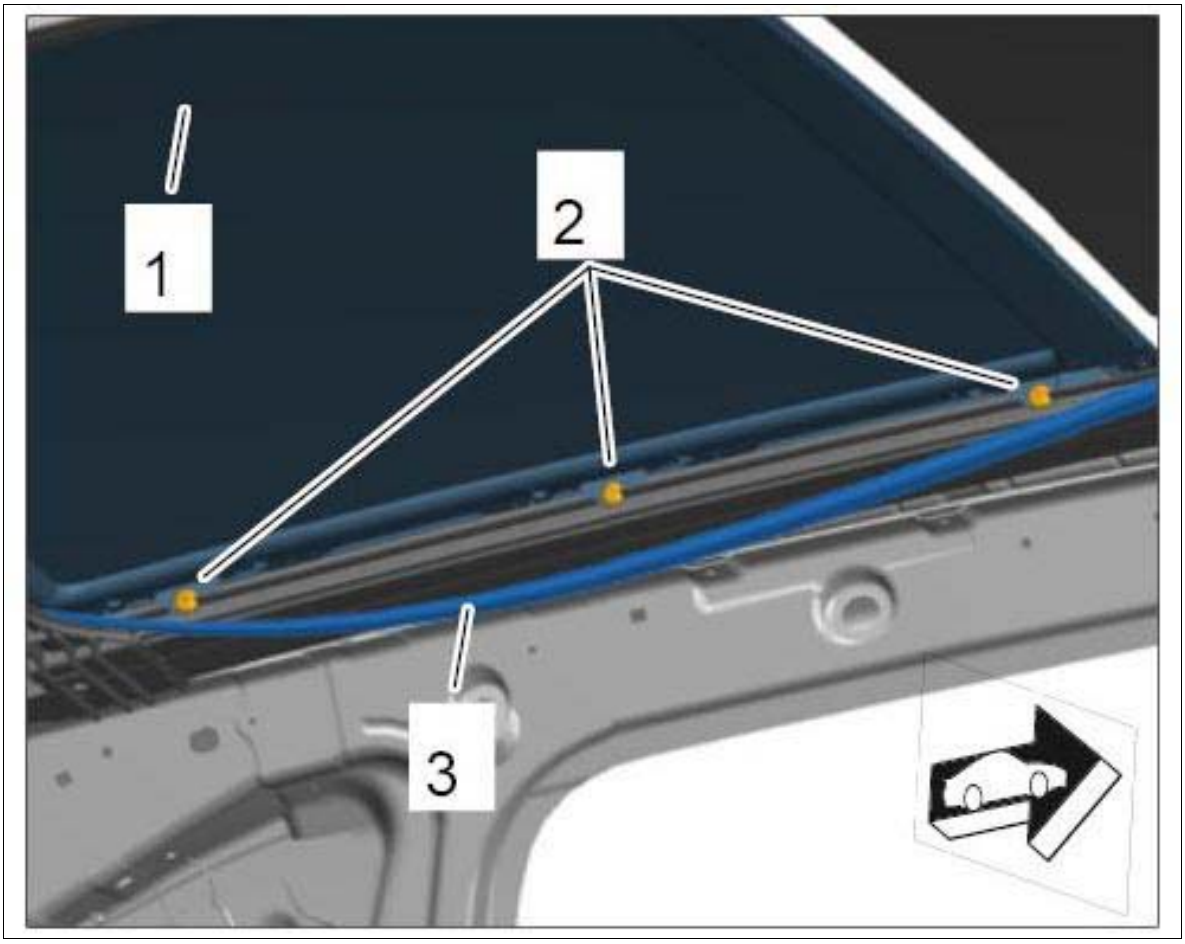

Courtesy of PORSCHE CARS NORTH AMERICA, INC.

4. Raise the front panel **-4-** .
5. Slide the rear glass panel **-1-** slightly under the front glass panel **-4- (-A-)** .
6. Only lift the rear part of the rear glass panel **-1-** out of the roof cut-out **-B-** .
7. Guide out the rear glass panel **-1-** by moving it up at an angle **-C-** over the roof and under the front glass panel **-4-** .

Fig 2: Removing Rear Panel

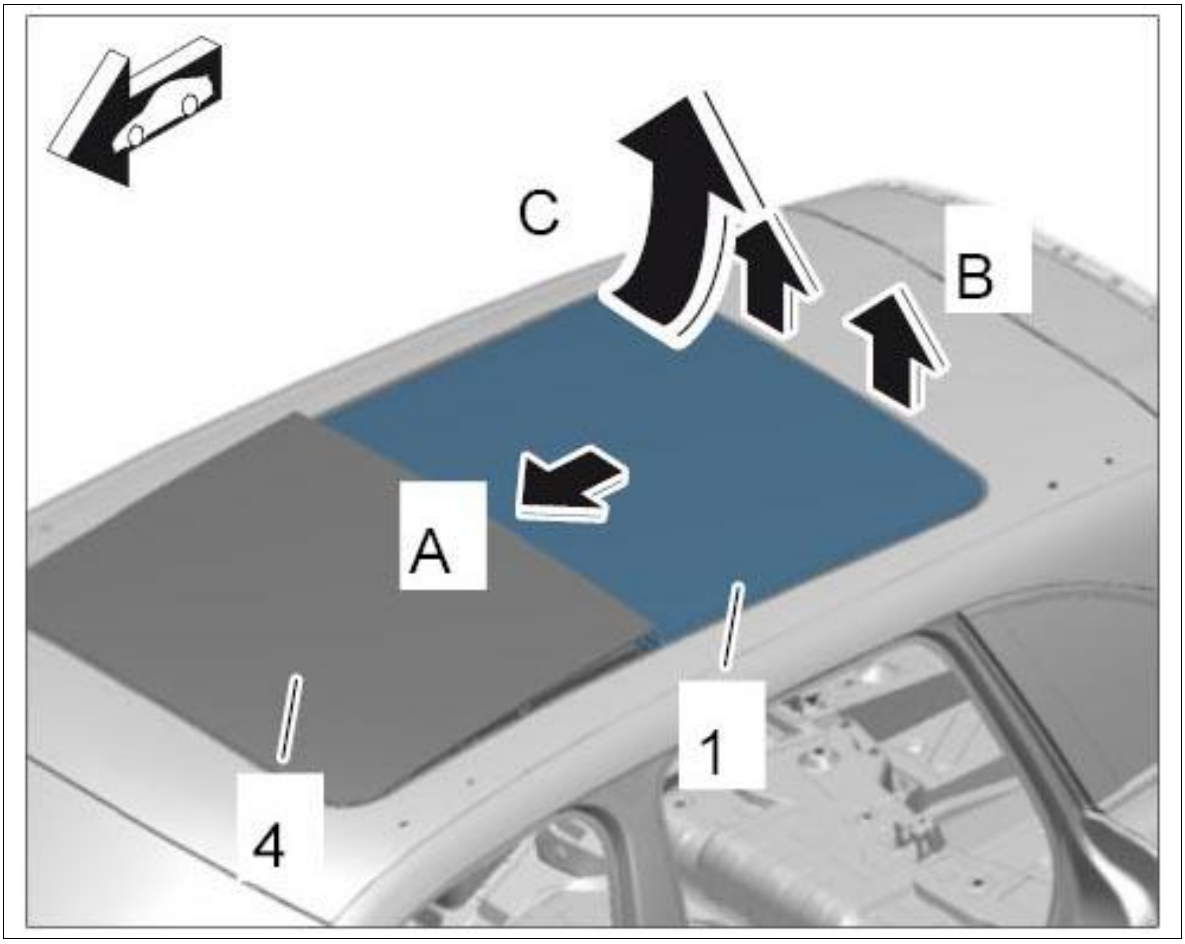

Courtesy of PORSCHE CARS NORTH AMERICA, INC.

WM 604019 REMOVING AND INSTALLING REAR SLIDING-ROOF PANEL (ALL MODELS) > INSTALLING REAR SLIDING-ROOF PANEL

Information

Always use new screws when installing the glass panel.

1. Installation is performed in reverse order to removal.
2. Adjust gap dimensions of rear lid → 6X00IN41 GAP DIMENSIONS .
    1. 2.1. When positioning the panel, check that there is an equal gap between the panel and roof aperture. Align the panel in the longitudinal and transverse direction if necessary.
3. Tighten fastening screw for rear sliding-roof panel to **Tightening torque 7 Nm (5 ftlb.)** until secure.

WM 604019 REMOVING AND INSTALLING REAR SLIDING-ROOF PANEL (ALL MODELS) > SUBSEQUENT WORK

1. Perform a function test and reinitialize end position of the glass sliding roof if necessary.
2. Reinitializes end positions of glass sliding roof.
    1. 2.1. Press button for glass sliding roof forward and keep it pressed. Glass sliding roof closes, opens by approx. 200 mm and then closes again.
    2. 2.2. Release button for glass sliding roof. Standardization run is complete.

WM 605455 REPLACING SEALS FOR ROOF ASSEMBLY (ALL MODELS) > TOOLS

Designation	Type	Number	Description	
film eraser	Commercially available tool	Nr.174 Pos.1		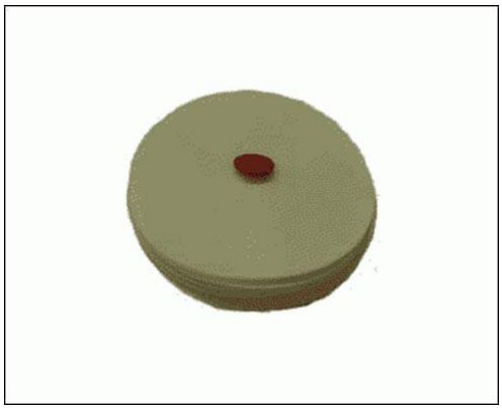

WM 605455 REPLACING SEALS FOR ROOF ASSEMBLY (ALL MODELS) > PRELIMINARY WORK > PRELIMINARY WORK FOR REPLACING SEAL FOR ROOF ASSEMBLY SEAL (BODY SIDE)

1. Move front roof panel to the open position.
2. Remove rear panel. → Removing Rear Sliding-Roof Panel

WM 605455 REPLACING SEALS FOR ROOF ASSEMBLY (ALL MODELS) > PRELIMINARY WORK > PRELIMINARY WORK FOR REPLACING SEAL FOR REAR PANEL

1. Remove rear panel. → Removing Rear Sliding-Roof Panel

WM 605455 REPLACING SEALS FOR ROOF ASSEMBLY (ALL MODELS) >

REPLACING SEAL FOR ROOF ASSEMBLY (BODY SIDE)

1. Pull outer seal **-1-** off the bonding surface **-3-** on the roof **-2-** .

   Fig 1: Replacing Seal On Body Side

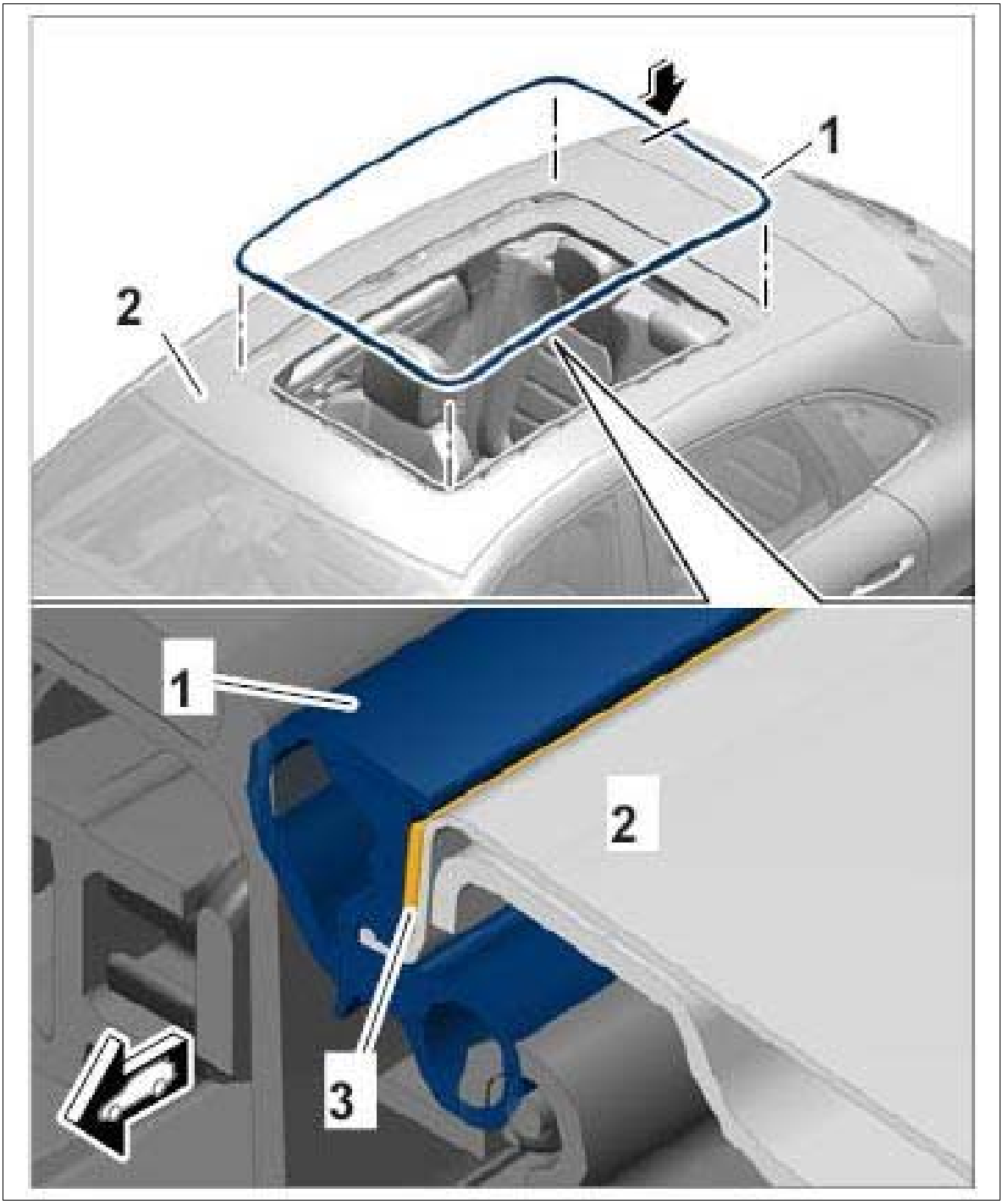

Courtesy of PORSCHE CARS NORTH AMERICA, INC.

2. Remove any adhesive residue from the roof using an erasing disc **film eraser Nr.174 Pos.1** .

   Information

   1. Immediately before sticking on, wash off the areas on which you intend to stick the seal using isopropanol to ensure that all traces of silicone, grease and oil are completely

removed.

3. Clean bonding surface with isopropanol.
4. Centre the new outer seal **-1-** with the gap **-arrow-** facing the middle of the rear roof cut-out.
5. Pull off protective film on the adhesive tape **-3-** and press the seal evenly onto the roof **-2-** .
6. Press the outer seal firmly onto the roof by pressing it on evenly twice all the way around using a press-on roller.

WM 605455 REPLACING SEALS FOR ROOF ASSEMBLY (ALL MODELS) > REPLACING SEAL FOR ROOF ASSEMBLY (BODY SIDE) > REPLACING SEAL FOR REAR PANEL

1. Remove seal for rear panel.
    1. 1.1. Pull off seal at the side **-4-** of the rear glass panel **-2-** sideways.
    2. 1.2. Pull off seal at the front **-3-** of the rear glass panel **-2-** in an upward direction.

Fig 1: Replacing Rear Panel Seal

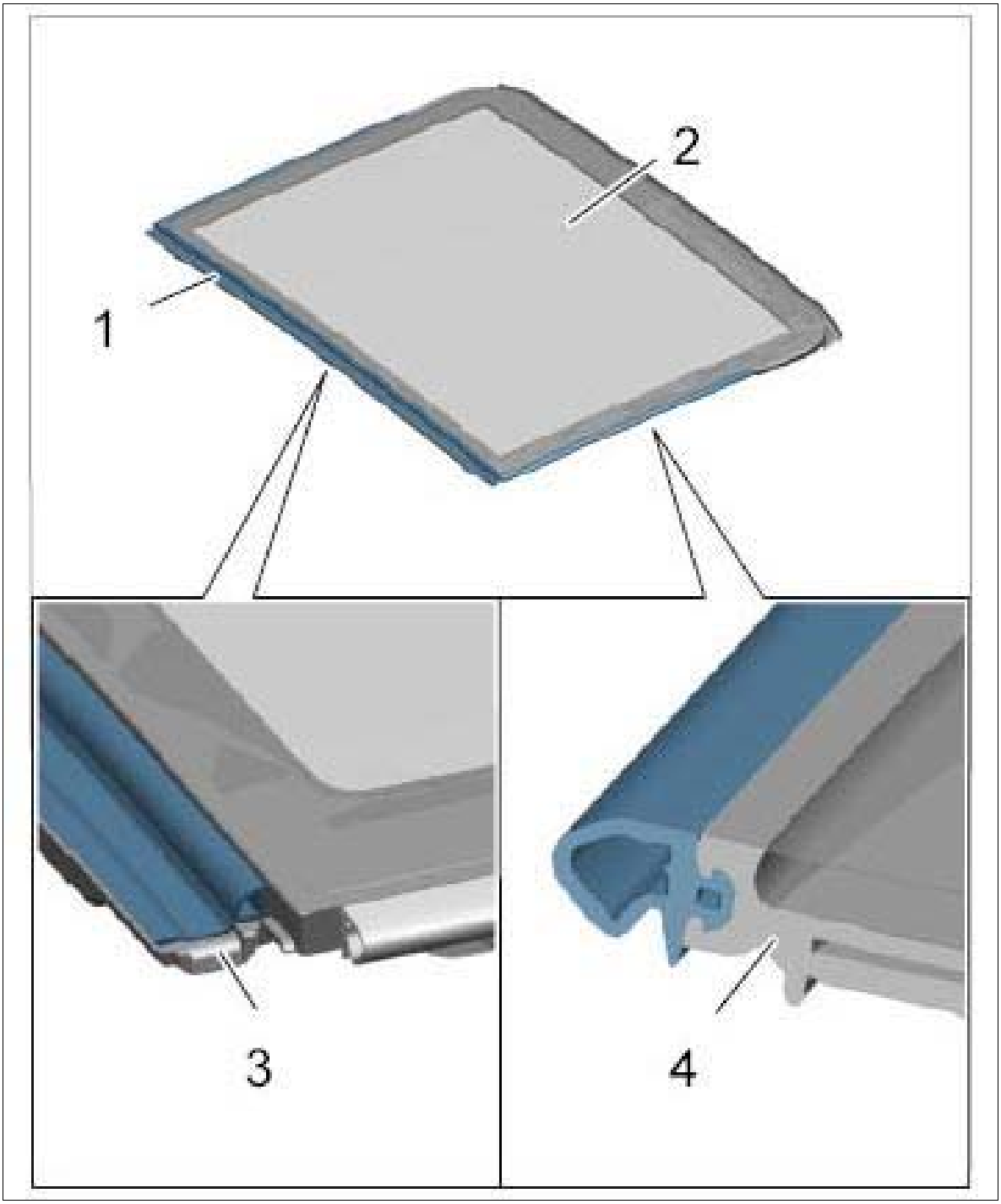

Courtesy of PORSCHE CARS NORTH AMERICA, INC.

2. Install seal for rear panel.

Information

To make installation easier, the area should be moistened with a soapy solution.

1. 2.1. Press seal at the front **-3-** into the front mounting from above and center it.
2. 2.2. Press seal at the side **-4-** into the mounting on the glass panel.

WM 605455 REPLACING SEALS FOR ROOF ASSEMBLY (ALL MODELS) > SUBSEQUENT WORK > SUBSEQUENT WORK FOR REPLACING ROOF ASSEMBLY SEAL (BODY SIDE)

1. Install rear sliding-roof panel. → Installing Rear Sliding-Roof Panel
2. Close the front lid.

WM 605455 REPLACING SEALS FOR ROOF ASSEMBLY (ALL MODELS) > SUBSEQUENT WORK > SUBSEQUENT WORK FOR REPLACING SEAL FOR REAR PANEL

1. Install rear lid. → Installing Roof Assembly Panels (Panorama Roof)

WM 606519 REMOVING AND INSTALLING CONTROL UNIT FOR SLIDING ROOF (ALL MODELS) > INFORMATION

The sliding roof control unit is integrated in the motor for the glass sliding roof and cannot be replaced separately. → 601419 REMOVING AND INSTALLING MOTOR FOR GLASS SLIDING ROOF

WM 607019 REMOVING AND INSTALLING SUN BLIND (ALL MODELS) > TECHNICAL VALUES

Location	Description	Type	Basic value	Tolerance 1	Tolerance 2
Fastening screw for roll-up sunblind		Tightening torque	2.5 Nm (2 ftlb.)		

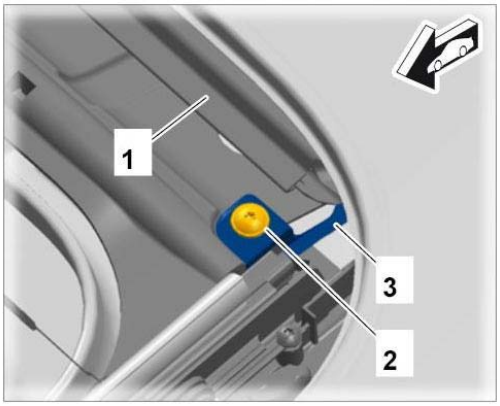

Removing guide

WM 607019 REMOVING AND INSTALLING SUN BLIND (ALL MODELS) > PRELIMINARY WORK

1. Open the sun blind fully.
2. Remove rear sliding-roof panel. → Removing Rear Sliding-Roof Panel
3. Remove headliner. → Removing headliner

WM 607019 REMOVING AND INSTALLING SUN BLIND (ALL MODELS) > REMOVING SUN BLIND

Information

- The number of fastening screws, fixing clips, plug connections, holders and trim panels can vary depending on equipment.
- The illustrations for removing and installing the drive mechanism are shown only on one equipment variant and may differ from the actual equipment variant.
- Some steps must be carried out automatically.
- Some of the repair illustrations show only one side of the vehicle.

1. Detach strut from sun blind.
    1. 1.1. Press down the locking mechanism **-3-** on the left side **-A-** .
    2. 1.2. Push aluminum section **-4-** fully to the left side **-B-** .

Fig 1: Releasing Left Strut

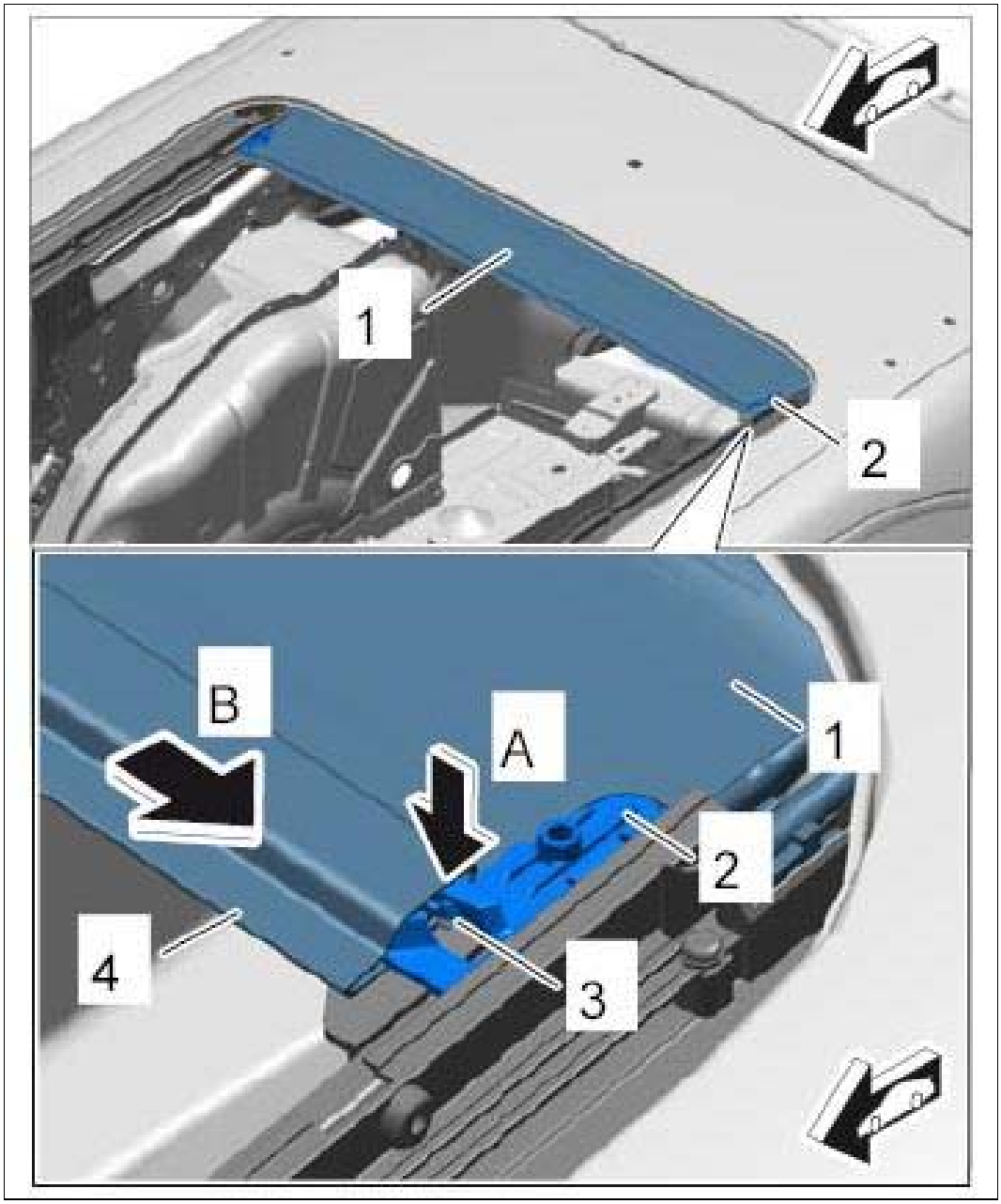

Courtesy of PORSCHE CARS NORTH AMERICA, INC.

3. 1.3. On the opposite side, push the aluminum section **-4-** towards the rear and off the sun blind slider **-2- (-C-)** .

Fig 2: Loosening Right Strut

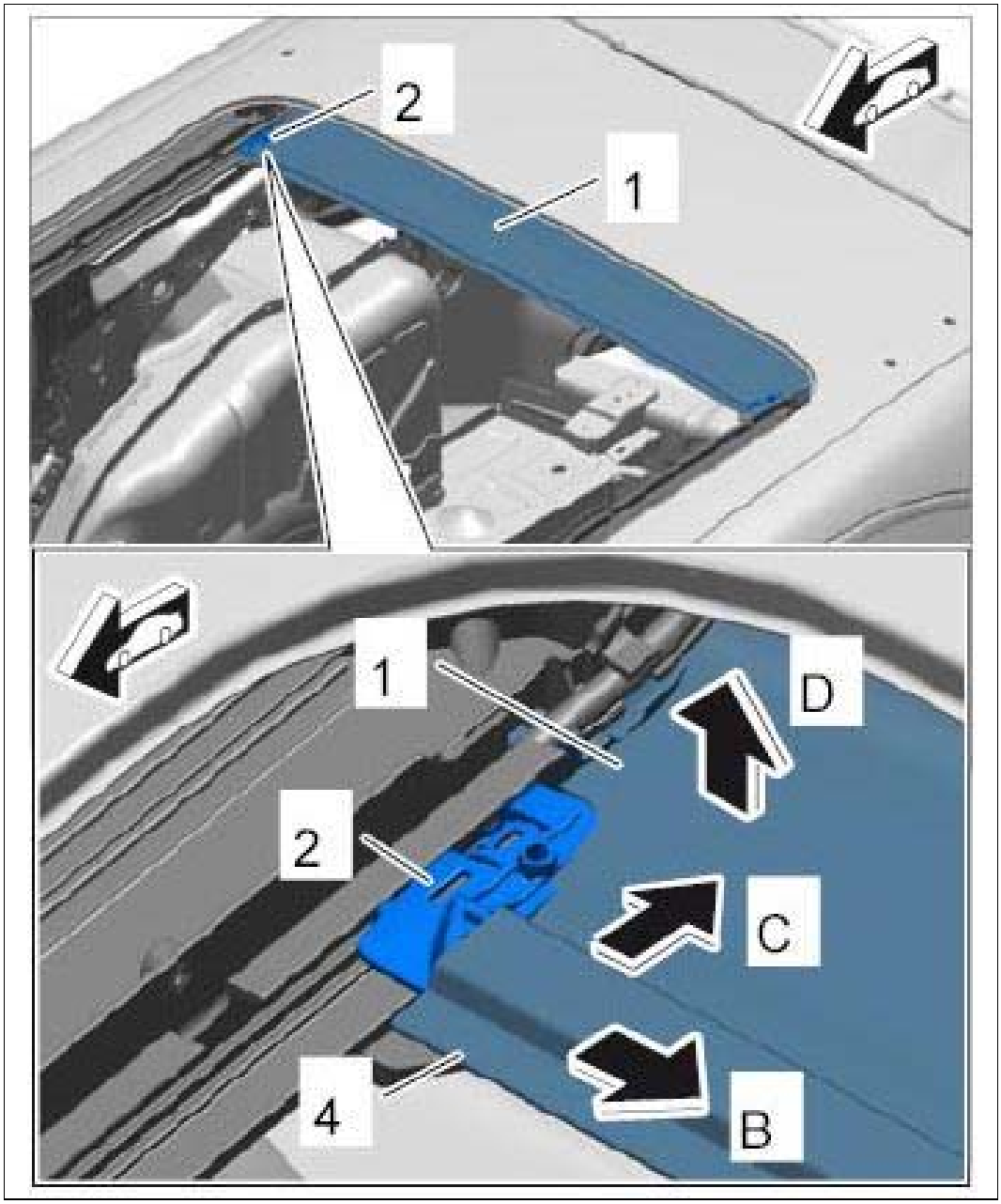

Courtesy of PORSCHE CARS NORTH AMERICA, INC.

4. 1.4. Pull aluminum section **-4-** completely off the sun blind **-1-** at the side.

   Remove safety clip **-1-** on the aluminum section.

Fig 3: Identifying Safety Clip

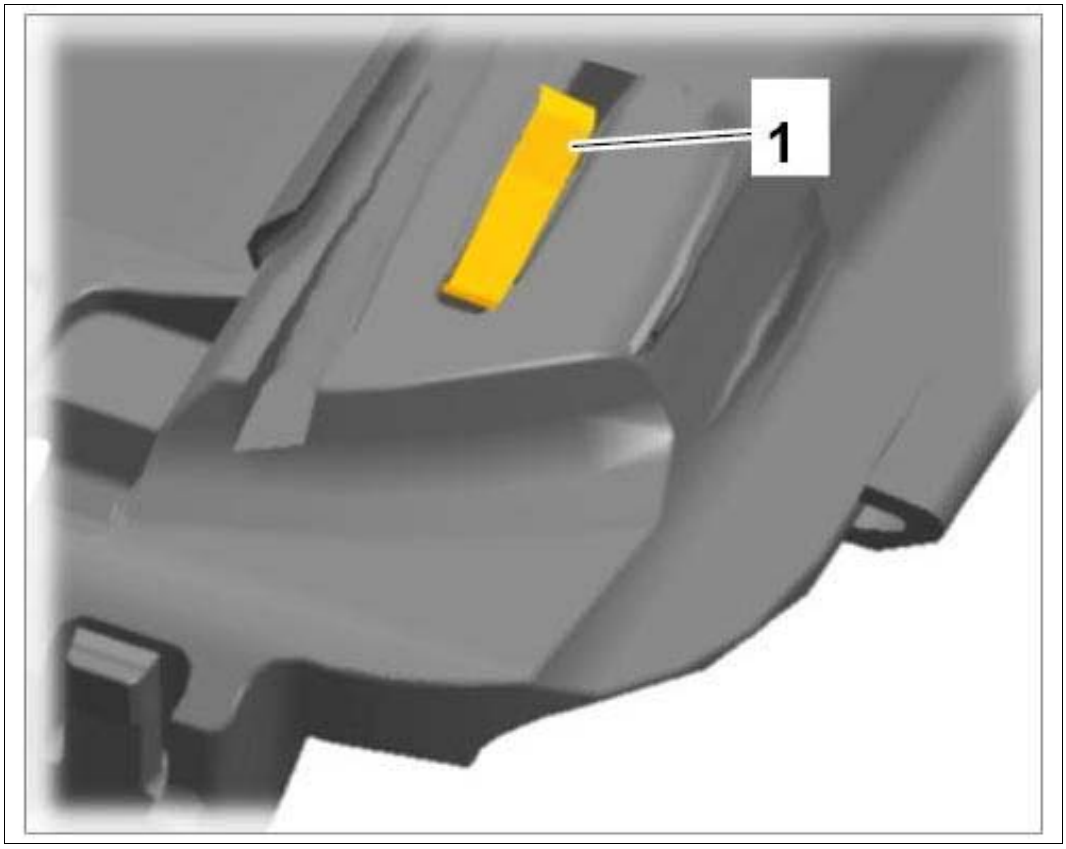

Courtesy of PORSCHE CARS NORTH AMERICA, INC.

2. Carefully lift up the locking hook on the sun blind slider **-2-** using a flat screwdriver **-3- (-A-)** and remove the sun blind **-1-** together with the driver **-4-** from the sun blind slider **-2-** by pulling it towards the rear **-B-** .

Fig 4: Removing Sun Blind

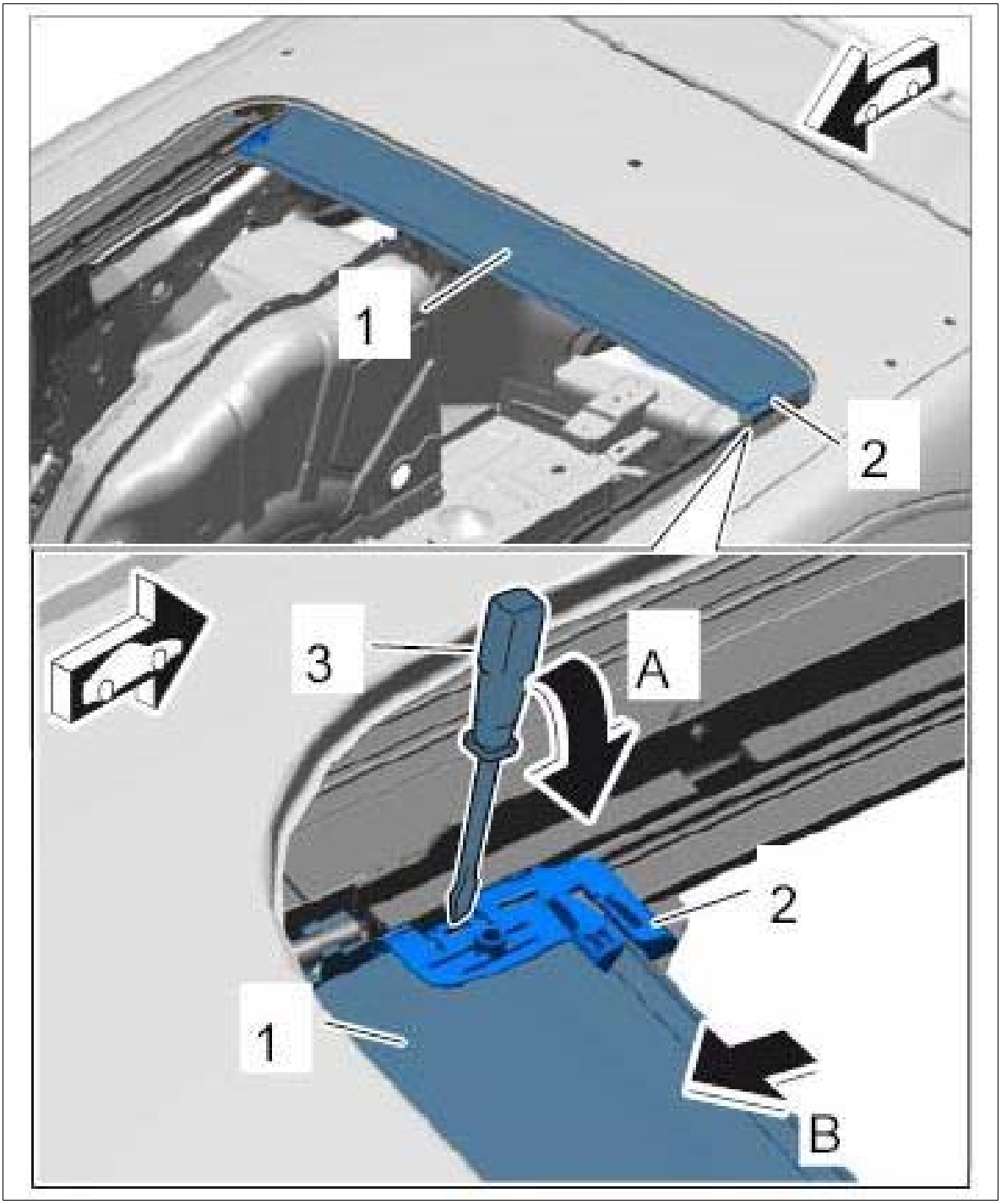

Courtesy of PORSCHE CARS NORTH AMERICA, INC.

3. Unscrew and remove fastening screw **-2-** for the sun blind **-1-** on the sun blind slider **-3-** .

   Loosen barbed hook and press fabric centering element to the rear until the fabric centering element can be lifted.

Fig 5: Removing Sun Blind Fastening Screw

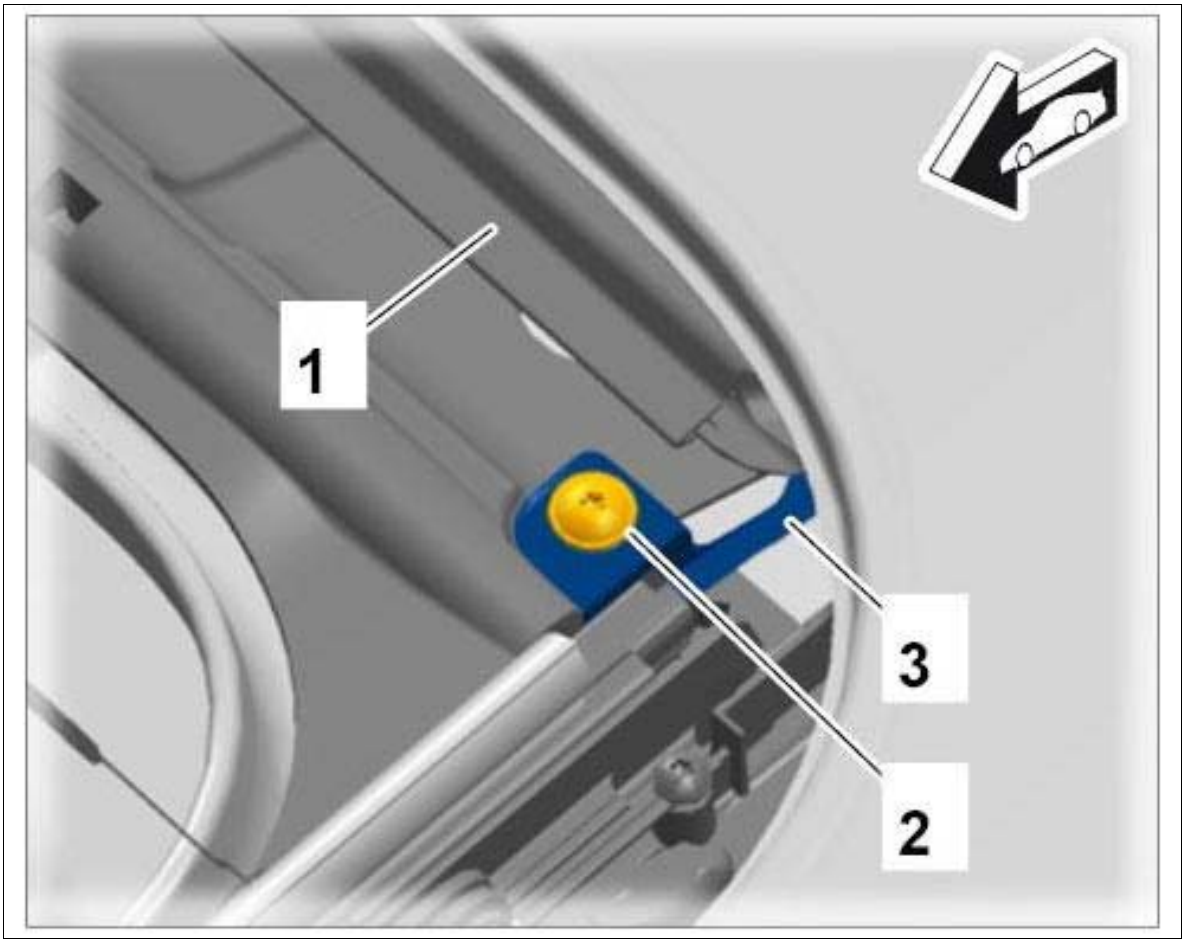

Courtesy of PORSCHE CARS NORTH AMERICA, INC.

4. Loosen fastening screws on panorama roof frame as far as the middle.
5. Pull the sun blind **-1-** complete with the sun blind holders **-2-** and drivers **-4-** out of the sun blind module **-3- (-arrow-)** .

Fig 6: Pulling Sun Blind

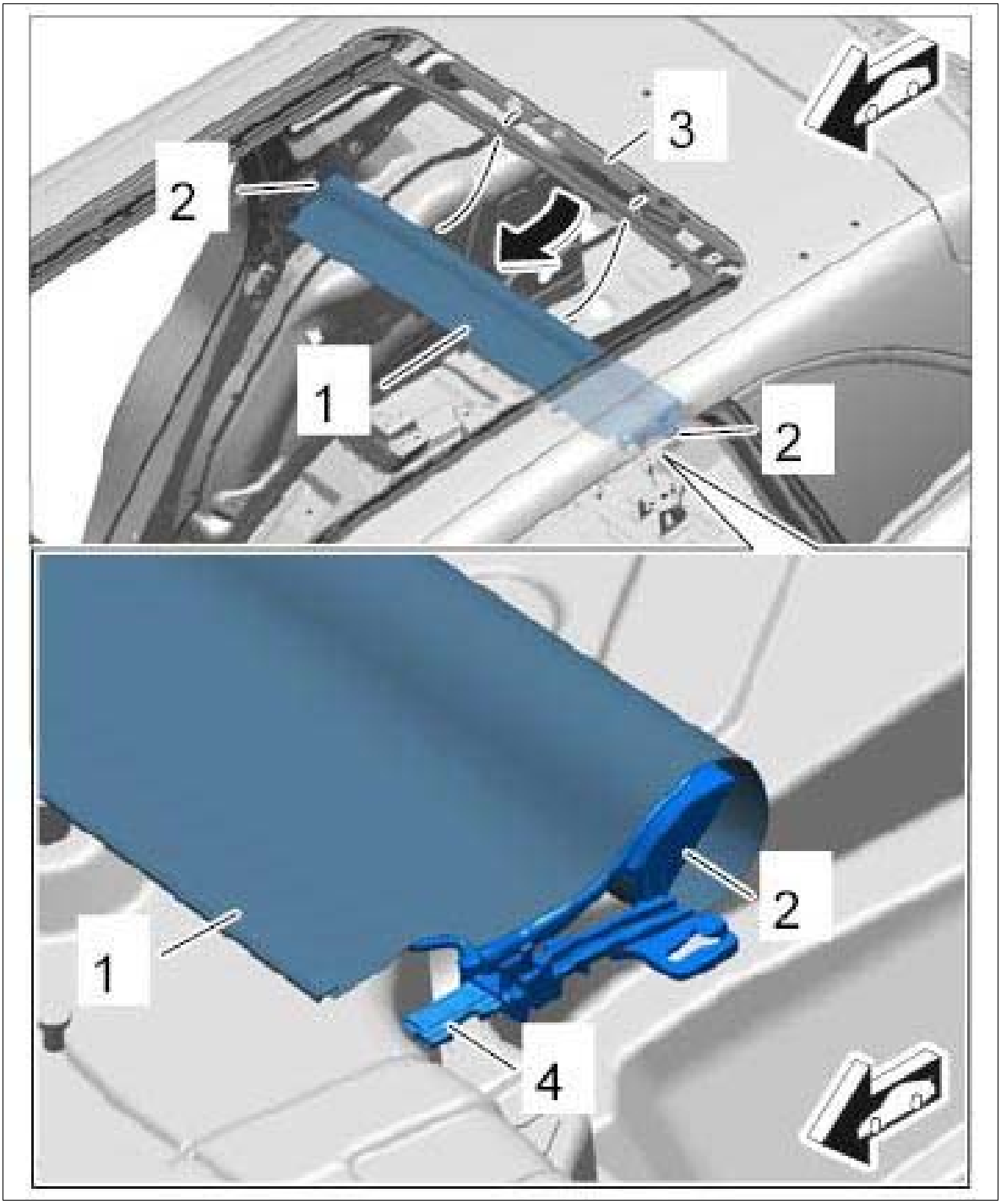

Courtesy of PORSCHE CARS NORTH AMERICA, INC.

WM 607019 REMOVING AND INSTALLING SUN BLIND (ALL MODELS) > INSTALLING SUN BLIND

1. Installation is performed in reverse order to removal.
2. Tighten fastening screw for sun blind to **Tightening torque 2.5 Nm (2 ftlb.)** until secure.

WM 607019 REMOVING AND INSTALLING SUN BLIND (ALL MODELS) > SUBSEQUENT WORK

Information

After installing the sun blind, check that it moves perfectly and smoothly. To do this, move the sun blind drive mechanism forwards and backwards at the motor by hand by actuating it manually using a commercially available hexagon wrench and check that the sun blind fabric folds and moves correctly.

1. Install rear panel. → Installing Rear Sliding-Roof Panel
2. Install headliner. → Installing headliner
3. **Carry out standardization if necessary**
4. Switch on ignition.
5. Reinitializes end positions of the sun blind.
    1. 5.1. Press sun blind button forward and keep it pressed.
    2. 5.2. The sun blind closes as far as its limit stop and then opens again.
    3. 5.3. The sun blind button must remain pressed for the entire duration of the standardization run.
    4. 5.4. Release the sun blind when the standardization run is complete.

WM 607219 REMOVING AND INSTALLING MOTOR FOR SUN BLIND (ALL MODELS) > TECHNICAL VALUES

Location	Description	Type	Basic value	Tolerance 1	Tolerance 2
Sun blind motor to glass sunroof frame	Internal Torx screw, M5 x 28, replace	Tightening torque	2 Nm (1.5 ftlb.)		

WM 607219 REMOVING AND INSTALLING MOTOR FOR SUN BLIND (ALL MODELS) > PRELIMINARY WORK

1. Remove headliner. → Removing headliner

WM 607219 REMOVING AND INSTALLING MOTOR FOR SUN BLIND (ALL MODELS) > REMOVING MOTOR FOR SUN BLIND

WARNING: Electrically moved components

- *Danger of limbs being trapped or severed*

→ Switch off electric power to drive motor.

→ Make sure it does not switch on again.

→ Check that there is no electric charge.

Information

Always comply with the regulations for handling ESD-sensitive components!

- Assembly work may only be carried out if the mechanic is wearing the working clothes and shoes approved by Porsche.
- The new part must only be removed from the ESD (electrostatic discharge) protective packaging just before installation and at the position at which the part is to be installed.
- Never touch the electric pins and plug contacts.

Information

The glass sliding roof motor is located on the glass sliding roof frame at the front.

The sun blind motor is located on the glass sliding roof frame at the rear.

The control units for the panorama roof system are installed in the glass sliding roof motor and sun blind motor.

1. Switch off ignition and pull remote control out of ignition lock.
2. Pull out locking mechanism on electric plug connection **-1- (-a-)** , press release **-b-** and pull electric plug connection off the motor for the sunblind **-2-** .

Fig 1: Disconnecting Sun Blind Motor Electric Plug Connection (Glass Sliding Roof Motor)

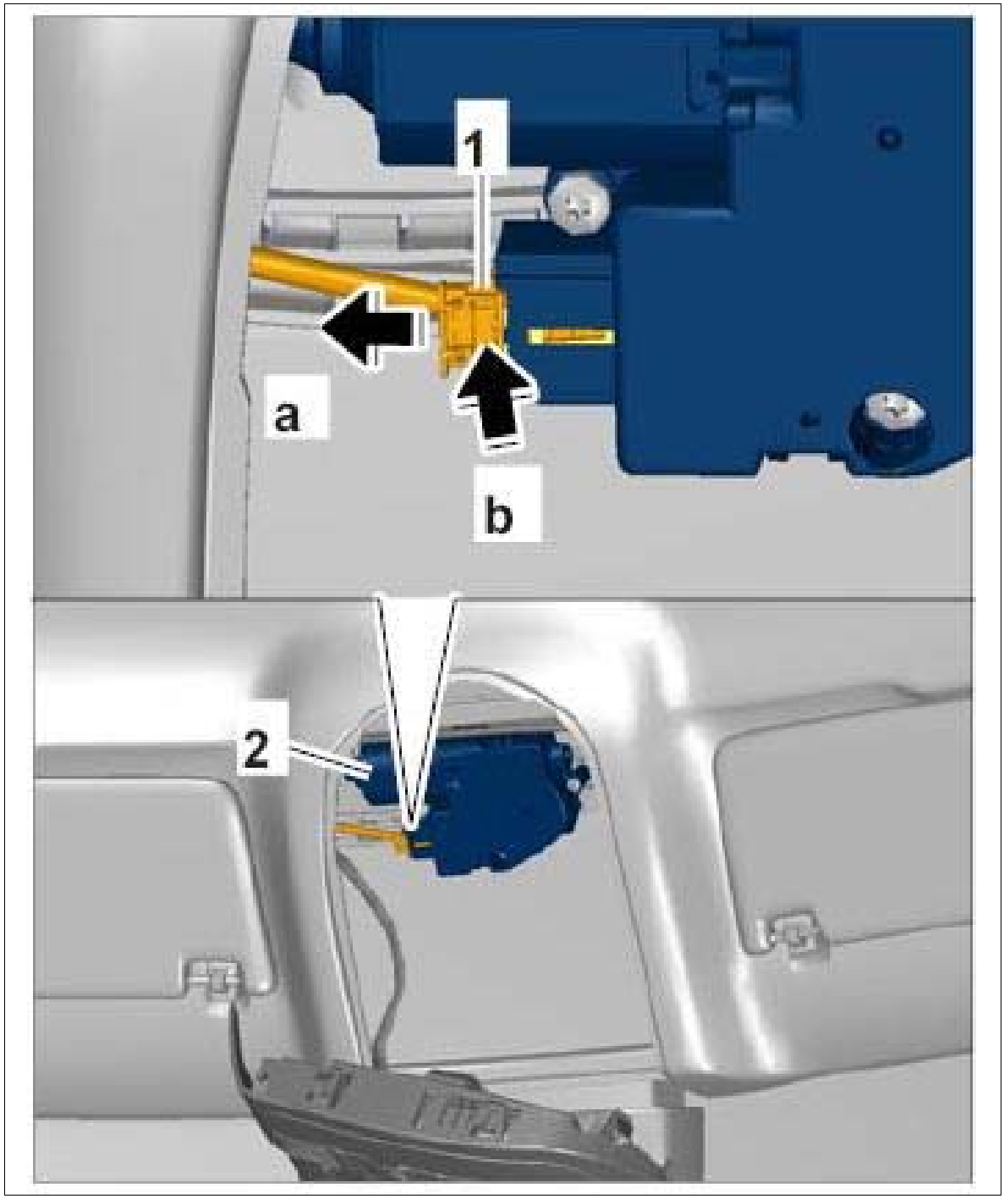

Courtesy of PORSCHE CARS NORTH AMERICA, INC.

3. Unscrew fastening screws **-1-** and remove motor for sun blind **-2-** from the glass sliding roof frame.

Fig 2: Removing Sun Blind Motor (Glass Sliding Roof Motor)

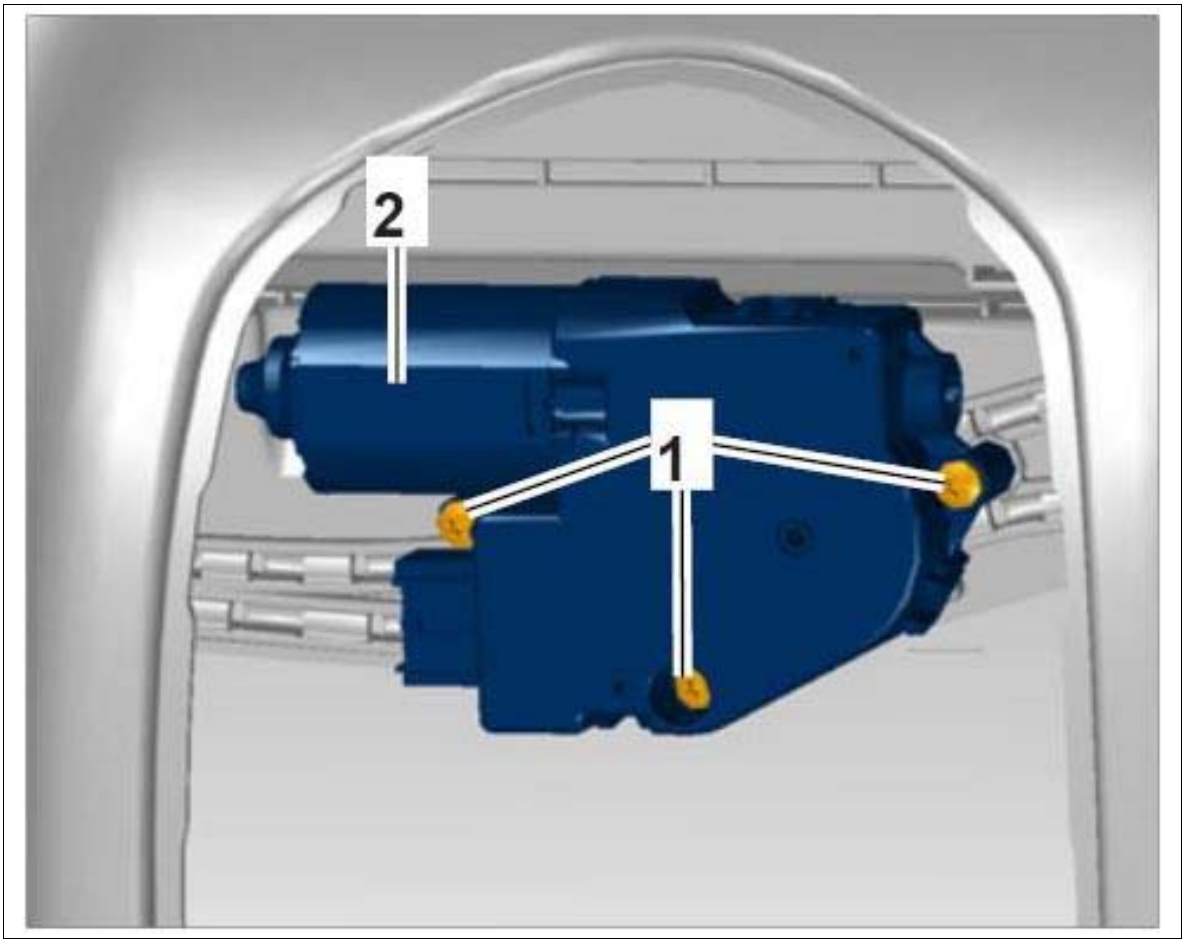

Courtesy of PORSCHE CARS NORTH AMERICA, INC.

WM 607219 REMOVING AND INSTALLING MOTOR FOR SUN BLIND (ALL MODELS) > INSTALLING MOTOR FOR SUN BLIND

WARNING: Electrically moved components

- *Danger of limbs being trapped or severed*

→ Switch off electric power to drive motor.

→ Make sure it does not switch on again.

→ Check that there is no electric charge.

Information

Always comply with the regulations for handling ESD-sensitive components!

- Assembly work may only be carried out if the mechanic is wearing the working clothes and shoes

approved by Porsche.

- The new part must only be removed from the ESD (electrostatic discharge) protective packaging just before installation and at the position at which the part is to be installed.
- Never touch the electric pins and plug contacts.

1. Installation is performed in reverse order to removal.
2. Replace and tighten fastening screws securing motor for sun blind to glass sliding roof frame. **Tightening torque 2 Nm (1.5 ftlb.)**

WM 607219 REMOVING AND INSTALLING MOTOR FOR SUN BLIND (ALL MODELS) > SUBSEQUENT WORK

1. Install headliner. → Installing headliner
2. Program/teach roof assembly (panorama roof). → 600625 PROGRAMMING/TEACHING ROOF ASSEMBLY (PANORAMA ROOF)

Service Manual: 63 - BUMPERS -- (95B) - MACAN

WM 631019 REMOVING AND INSTALLING FRONT BUMPER (ALL MODELS) > TECHNICAL VALUES

Location	Description	Type	Basic value	Tolerance 1	Tolerance 2
Bumper to front carrier		Tightening torque	20 Nm (15 ftlb.)		

WM 631019 REMOVING AND INSTALLING FRONT BUMPER (ALL MODELS) > PRELIMINARY WORK

1. Remove cooling-air flaps. → 193519 REMOVING AND INSTALLING COOLING-AIR FLAPS

WM 631019 REMOVING AND INSTALLING FRONT BUMPER (ALL MODELS) > REMOVING FRONT BUMPER

Information

- The number of fastening screws, fixing clips, plug connections, holders and trim panels can vary depending on equipment.
- The illustrations for removing and installing the drive mechanism are shown only on one equipment variant and may differ from the actual equipment variant.
- Some steps must be carried out automatically.
- Some of the repair illustrations show only one side of the vehicle.

1. Guide cables **-2-** and tabs **-4-** out of the styrofoam impact absorber **-1-** .
2. Remove styrofoam impact absorber **-1-** .
3. Unclip ventilation guides **-3-** and fold them inwards.

Fig 1: Identifying Front Bumper Cables And Tabs



Courtesy of PORSCHE CARS NORTH AMERICA, INC.

4. Unscrew fastening screws **-1-** , remove bracket **-2-** with horn and set aside with line connected.

5. Remove bumper **-3-** by pulling it forward.

    1. 5.1. Lever off bumper **-3-** on the bracket using a mounting lever and pull it forward to remove it.

    Fig 2: Identifying Front Bumper Fastening Screws

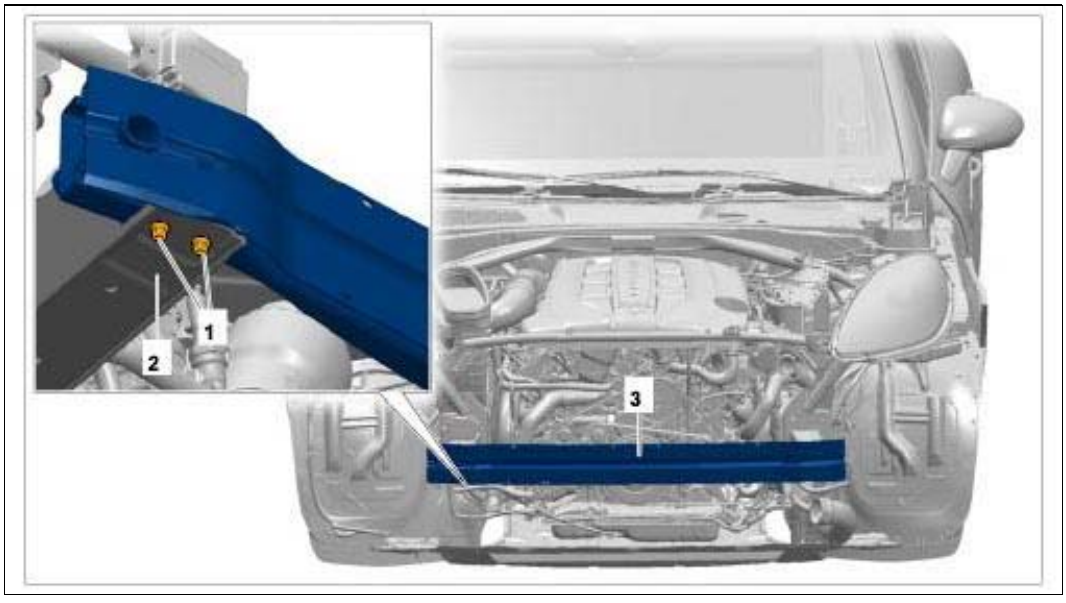

Courtesy of PORSCHE CARS NORTH AMERICA, INC.

WM 631019 REMOVING AND INSTALLING FRONT BUMPER (ALL MODELS) > INSTALLING FRONT BUMPER

Installation is performed in reverse order. Pay particular attention to the following:

1. Tighten fastening screws on the bumper to the specified torque. **Tightening torque: 20 Nm (15 ftlb.)**

WM 631019 REMOVING AND INSTALLING FRONT BUMPER (ALL MODELS) > SUBSEQUENT WORK

1. Install cooling-air flaps. → INSTALLING COOLING-AIR FLAPS .

WM 631519 REMOVING AND INSTALLING FRONT APRON (ALL MODELS) > TECHNICAL VALUES

Location	Description	Type	Basic value	Tolerance 1	Tolerance 2
Wheel housing liner to body	Screw	Tightening torque	2 Nm (1.5 ftlb.)		
Front apron to inner lock carrier		Tightening torque	8 Nm (6 ftlb.)		
Front apron to outer lock carrier		Tightening torque	8 Nm (6 ftlb.)		
Front apron to front retaining strip		Tightening torque	2 Nm (1.5 ftlb.)		
Front apron to lower lock carrier		Tightening torque	2 Nm (1.5 ftlb.)		
Front apron to side lock carrier		Tightening torque	2 Nm (1.5 ftlb.)		

WM 631519 REMOVING AND INSTALLING FRONT APRON (ALL MODELS) > PRELIMINARY WORK

1. Remove cover for front underbody. → 519219 REMOVING AND INSTALLING COVER FOR FRONT UNDERBODY .
2. Remove cover for front lock support. → 703919 REMOVING AND INSTALLING COVER FOR FRONT LOCK SUPPORT .

3. Remove front trim panel. → 700219 REMOVING AND INSTALLING FRONT TRIM PANEL .

WM 631519 REMOVING AND INSTALLING FRONT APRON (ALL MODELS) > REMOVING FRONT APRON

Information

- The number of fastening screws, fixing clips, plug connections, holders and trim panels can vary depending on equipment.
- The illustrations for removing and installing the drive mechanism are shown only on one equipment variant and may differ from the actual equipment variant.
- Some steps must be carried out automatically.
- Some of the repair illustrations show only one side of the vehicle.

1. Unscrew bottom fastening screws **-1-** .

Fig 1: Identifying Front Spoiler



Courtesy of PORSCHE CARS NORTH AMERICA, INC.

2. Unscrew fastening screws **-1-** and loosen wheel housing liner **-2-** in the front area.
3. Unscrew fastening screws **-3-** .
4. Release and disconnect electric plug connections **-4-** .
5. Unclip fixing clip **-5-** .

Fig 2: Identifying Front Apron In Wheel Housing

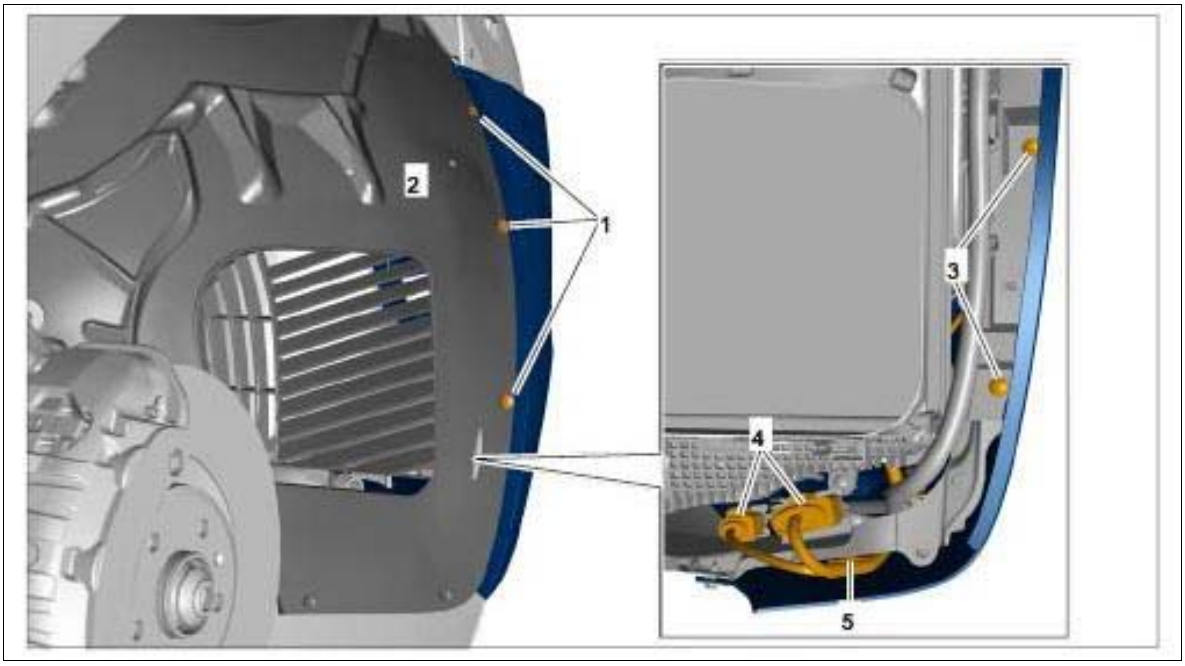

Courtesy of PORSCHE CARS NORTH AMERICA, INC.

6. Unscrew fastening screws at the side **-1-** .
7. Unscrew fastening screws at the top **-2-** .
8. Unclip front apron **-3-** and remove it by pulling it forward.

Fig 3: Identifying Front Apron (Top And Sides)

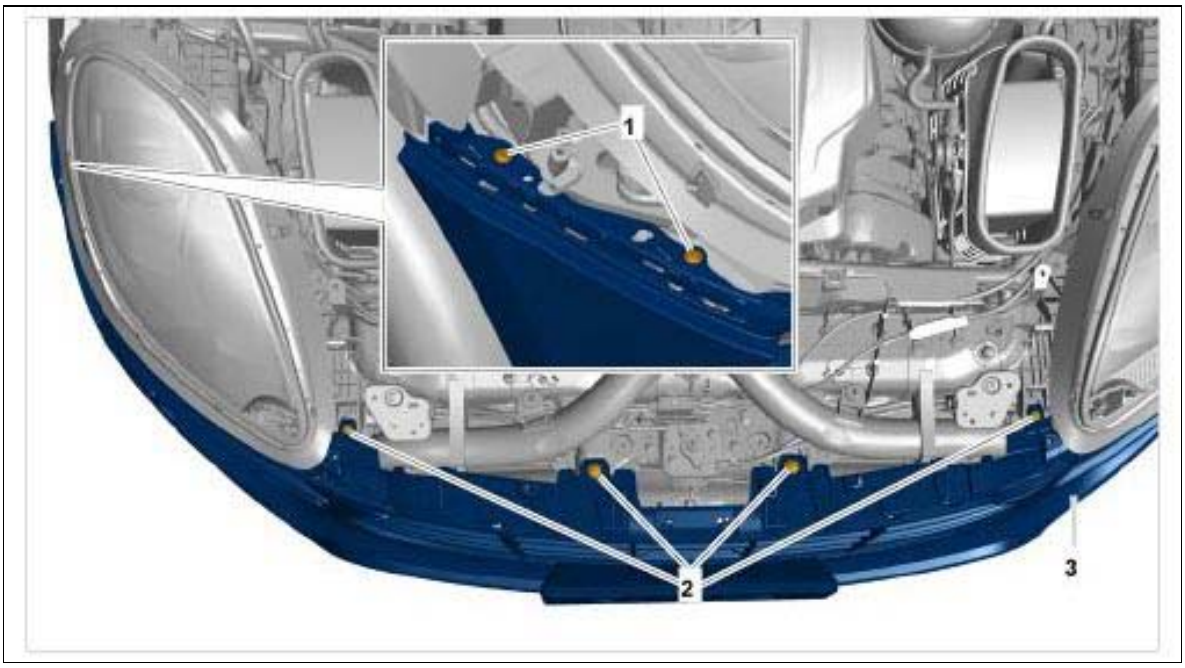

Courtesy of PORSCHE CARS NORTH AMERICA, INC.

WM 631519 REMOVING AND INSTALLING FRONT APRON (ALL MODELS) > INSTALLING FRONT APRON

Installation is performed in reverse order. Pay particular attention to the following:

1. Tighten fastening screws securing front apron to inner lock carrier to the specified tightening torque. **Tightening torque: 8 Nm (6 ftlb.)**
2. Tighten fastening screws securing front apron to retaining strip to the specified tightening torque. **Tightening torque: 2 Nm (1.5 ftlb.)**
3. Tighten fastening screws securing front apron to outer lock carrier to the specified tightening torque. **Tightening torque: 8 Nm (6 ftlb.)**
4. Tighten fastening screws securing front apron to lock carrier at the bottom to the specified tightening torque. **Tightening torque: 2 Nm (1.5 ftlb.)**
5. Tighten fastening screws securing front apron to lock carrier at the sides to the specified tightening torque. **Tightening torque: 2 Nm (1.5 ftlb.)**
6. Tighten fastening screws securing wheel housing liner to lock carrier to the specified tightening torque. **Tightening torque: 2 Nm (1.5 ftlb.)**

WM 631519 REMOVING AND INSTALLING FRONT APRON (ALL MODELS) > SUBSEQUENT WORK

1. Install cover for front lock support. → INSTALLING COVER FOR FRONT LOCK SUPPORT .
2. Install cover for front underbody. → INSTALLING COVER FOR FRONT UNDERBODY .
3. Install front trim panel. → INSTALLING FRONT TRIM PANEL .

WM 631537 DISASSEMBLING AND ASSEMBLING FRONT APRON (ALL MODELS) > PRELIMINARY WORK

1. Remove front apron. → 631519 REMOVING AND INSTALLING FRONT APRON

WM 631537 DISASSEMBLING AND ASSEMBLING FRONT APRON (ALL MODELS) > DISASSEMBLING AND ASSEMBLING

1. Remove number plate cover. → 668319 REMOVING AND INSTALLING NUMBER PLATE COVER
2. Remove front wire harness **-6-** . → WM 971619 REMOVING AND INSTALLING WIRE HARNESS FOR FRONT-END
3. Remove fog lights **-5-** . → 946419 REMOVING AND INSTALLING FOG LIGHTS

4. Remove front air grille **-2-** . → 660419 REMOVING AND INSTALLING FRONT AIR GRILLE
5. Remove auxiliary headlights **-3-** . → 947119 REMOVING AND INSTALLING AUXILIARY HEADLIGHTS
6. Remove ParkAssist sensors **-4-** . → 917519 REMOVING AND INSTALLING PARKASSIST SENSOR
7. Remove radiator grille **-1-** . → 660519 REMOVING AND INSTALLING RADIATOR GRILLE
8. Remove skid plate. (Only for Turbo vehicles) → 631619 REMOVING AND INSTALLING SKID PLATE
9. Remove front spoiler **-7-** . → 660319 REMOVING AND INSTALLING FRONT SPOILER

Assemble in reverse order.

Fig 1: Identifying Front Apron

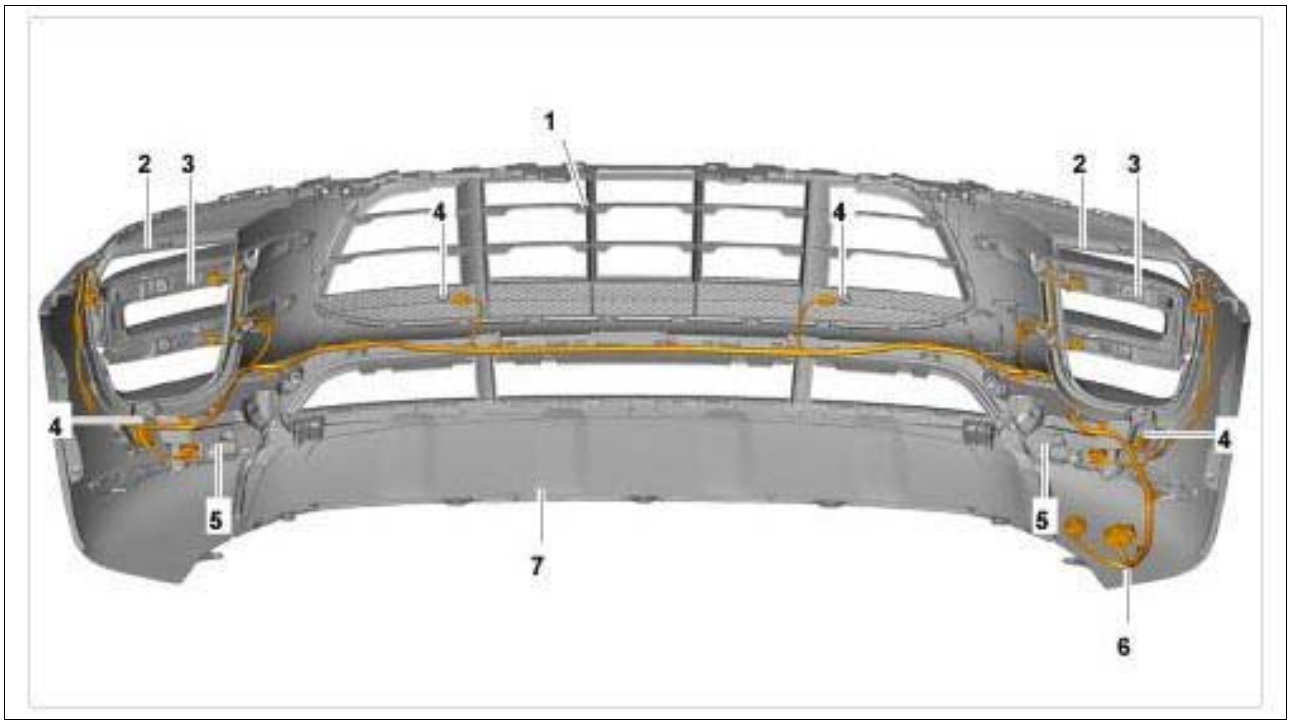

Courtesy of PORSCHE CARS NORTH AMERICA, INC.

WM 631537 DISASSEMBLING AND ASSEMBLING FRONT APRON (ALL MODELS) > SUBSEQUENT WORK

1. Install front apron. → INSTALLING FRONT APRON .

WM 631619 REMOVING AND INSTALLING SKID PLATE (ALL MODELS) > PRELIMINARY WORK

1. Raise the vehicle. → 4X00IN LIFTING THE VEHICLE
2. Remove number plate cover. → 668319 REMOVING AND INSTALLING NUMBER PLATE COVER

WM 631619 REMOVING AND INSTALLING SKID PLATE (ALL MODELS) > REMOVING SKID PLATE

1. Remove fastening clamps **-arrows-** .
2. Unclip skid plate **-2-** on the front apron **-3-** .
3. Guide out tabs **-1-** on the front apron **-3-** and remove skid plate **-2-** .

Fig 1: Locating Skid Plate On Front Apron

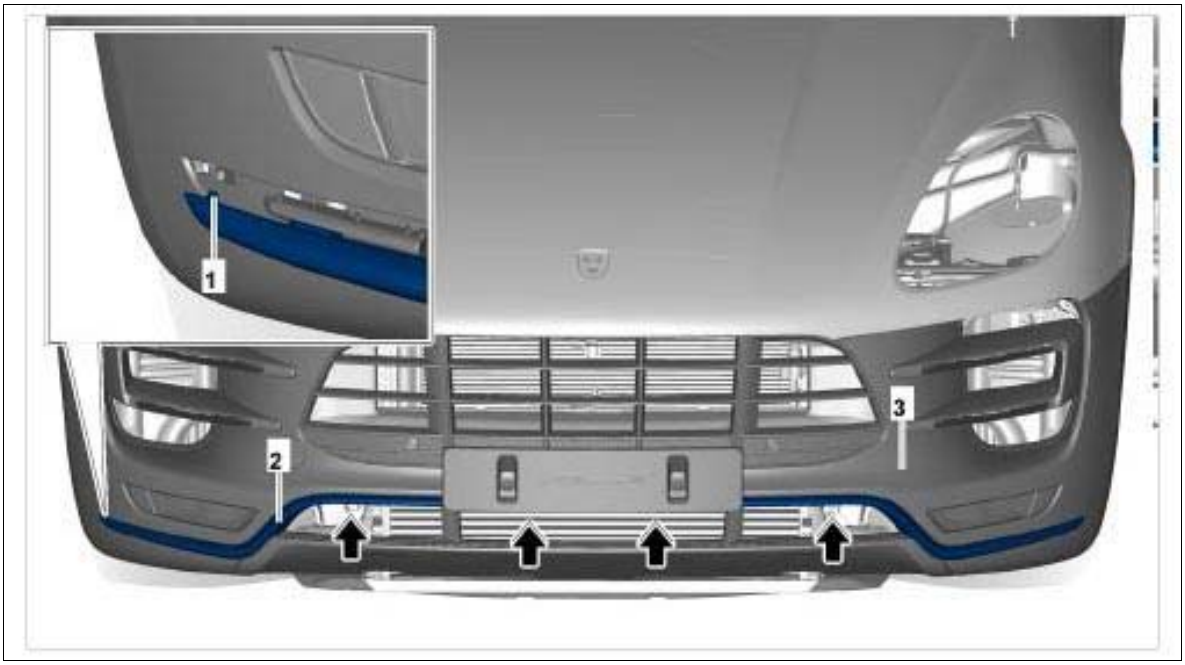

Courtesy of PORSCHE CARS NORTH AMERICA, INC.

WM 631619 REMOVING AND INSTALLING SKID PLATE (ALL MODELS) > INSTALLING SKID PLATE

Installation is performed in reverse order.

WM 631619 REMOVING AND INSTALLING SKID PLATE (ALL MODELS) > SUBSEQUENT WORK

1. Install number plate cover. → INSTALLING NUMBER PLATE COVER .
2. Lower the vehicle. → 4X00IN LIFTING THE VEHICLE

WM 631719 REMOVING AND INSTALLING FRONT RETAINING STRIP (ALL MODELS) > TECHNICAL VALUES

Location	Description	Type	Basic value	Tolerance 1	Tolerance 2
Retaining strip to lock carrier	Screw	Tightening torque	9.7 Nm (7.5 ftlb.)		

WM 631719 REMOVING AND INSTALLING FRONT RETAINING STRIP (ALL MODELS) > PRELIMINARY WORK

1. Remove front apron. → 631519 REMOVING AND INSTALLING FRONT APRON
2. Remove spray nozzle for headlight washer system. → 927219 REMOVING AND INSTALLING SPRAY NOZZLE FOR HEADLIGHT WASHER SYSTEM

WM 631719 REMOVING AND INSTALLING FRONT RETAINING STRIP (ALL MODELS) > REMOVING FRONT RETAINING STRIP

Information

- The number of fastening screws, fixing clips, plug connections, holders and trim panels can vary depending on equipment.
- The illustrations for removing and installing the drive mechanism are shown only on one equipment variant and may differ from the actual equipment variant.
- Some steps must be carried out automatically.
- Some of the repair illustrations show only one side of the vehicle.

1. Lift up rubber headlight seal **-1-** at the front.
2. Unscrew fastening screws **-2, 3-** .
3. Lift front headlight up slightly, carefully guide out retaining strip **-4-** close to the headlight **-arrow-** and remove it.

Fig 1: Locating Right Retaining Strip (Front)

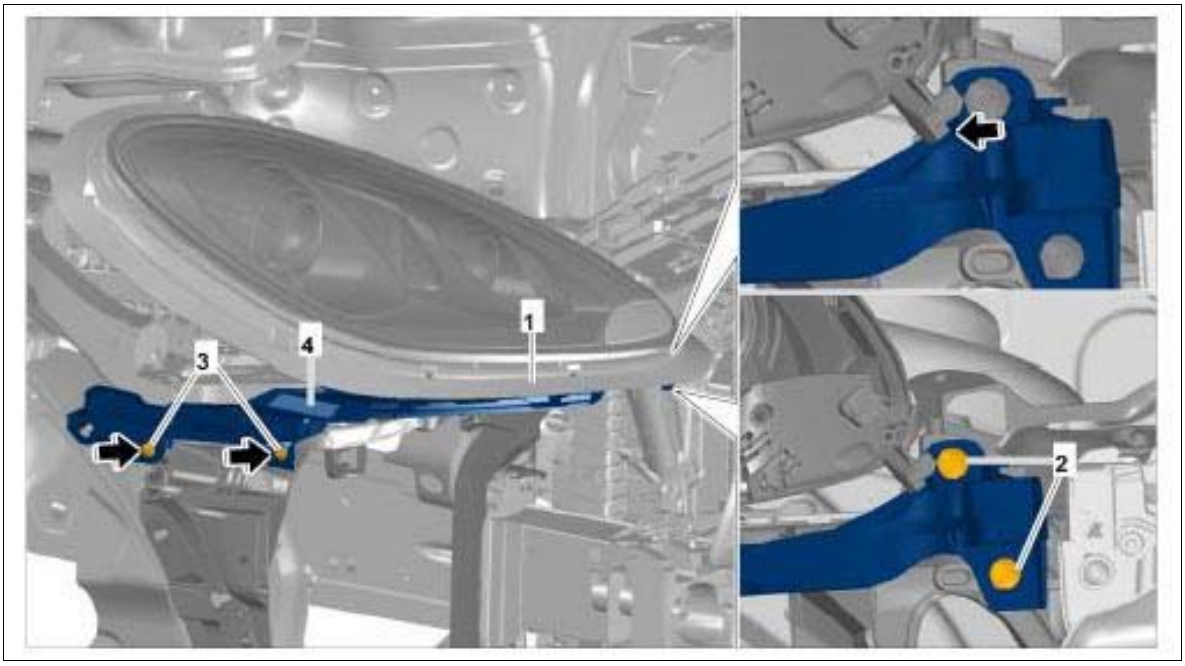

Courtesy of PORSCHE CARS NORTH AMERICA, INC.

WM 631719 REMOVING AND INSTALLING FRONT RETAINING STRIP (ALL MODELS) > INSTALLING FRONT RETAINING STRIP

Installation is performed in reverse order. Pay particular attention to the following:

1. Tighten fastening screws to the specified torque. **Tightening torque: 9.7 Nm (7.5 ftlb.)**

WM 631719 REMOVING AND INSTALLING FRONT RETAINING STRIP (ALL MODELS) > SUBSEQUENT WORK

1. Install spray nozzle for headlight washer system. → INSTALLING SPRAY NOZZLE FOR HEADLIGHT WASHER SYSTEM .
2. Install front apron. → INSTALLING FRONT APRON .

WM 633319 REMOVING AND INSTALLING FRONT CARRIER (ALL MODELS) > TECHNICAL VALUES

Location	Description	Type	Basic value	Tolerance 1	Tolerance 2
Carrier to body	Tapping screw	Tightening torque	4.5 Nm (3 ftlb.)		

Carrier to body		Tightening torque	55 Nm (41 ftlb.)		

WM 633319 REMOVING AND INSTALLING FRONT CARRIER (ALL MODELS) > PRELIMINARY WORK

1. Remove front bumper. → 631019 REMOVING AND INSTALLING FRONT BUMPER

WM 633319 REMOVING AND INSTALLING FRONT CARRIER (ALL MODELS) > REMOVING FRONT CARRIER

1. Unscrew fastening screw **-1-** .
2. Unscrew fastening screws **-2-** and remove carrier **-3-** .

Fig 1: Identifying Front Carrier Fastening Screws

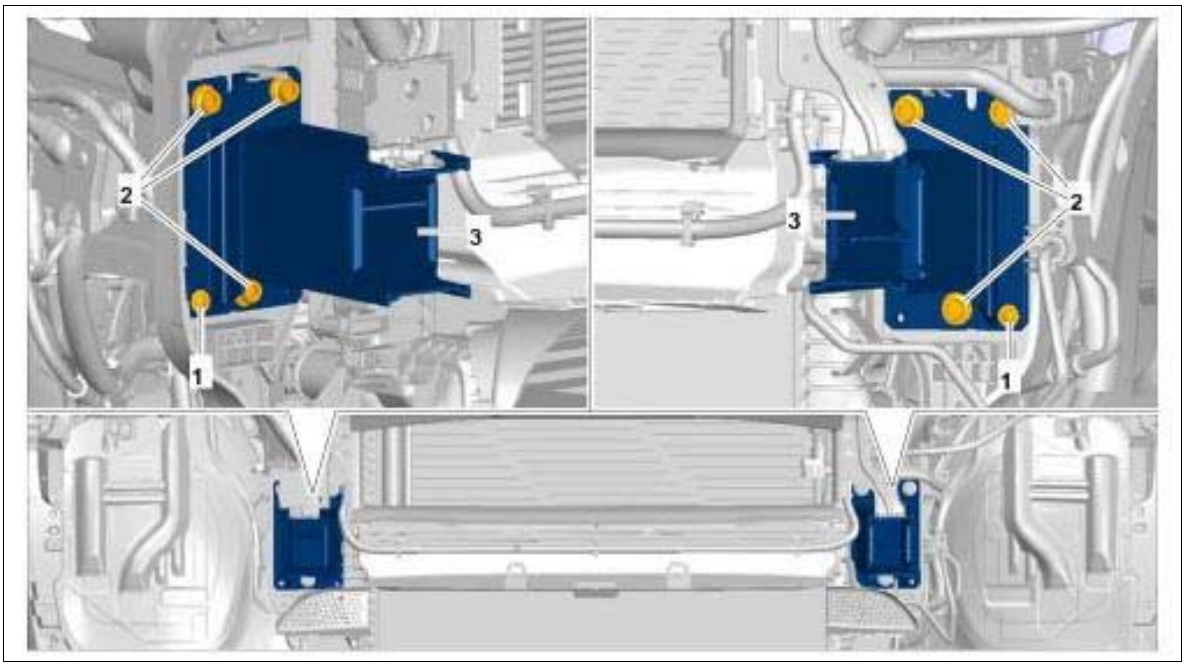

Courtesy of PORSCHE CARS NORTH AMERICA, INC.

WM 633319 REMOVING AND INSTALLING FRONT CARRIER (ALL MODELS) > INSTALLING FRONT CARRIER

Installation is performed in reverse order. Pay particular attention to the following:

1. Tighten fastening screws to the specified torque. **Tightening torque: 55 Nm (41 ftlb.)**
2. Tighten fastening screws to the specified torque. **Tightening torque: 4.5 Nm (3 ftlb.)**

WM 633319 REMOVING AND INSTALLING FRONT CARRIER (ALL MODELS) > SUBSEQUENT WORK

1. Install front bumper. → INSTALLING FRONT BUMPER .

WM 635019 REMOVING AND INSTALLING REAR BUMPER (ALL MODELS) > TECHNICAL VALUES

Location	Description	Type	Basic value	Tolerance 1	Tolerance 2
Fastening screws securing bumper to body	Item 1	Tightening torque	40 Nm (30 ftlb.)		

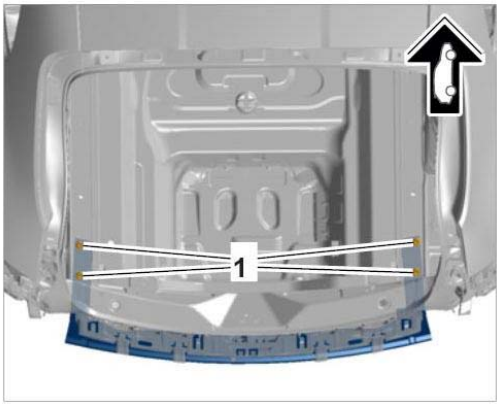

Bumper mounting

WM 635019 REMOVING AND INSTALLING REAR BUMPER (ALL MODELS) > PREPARATORY WORK

1. Remove center trim panel on luggage compartment. → 700619 REMOVING AND INSTALLING CENTER TRIM PANEL FOR LUGGAGE COMPARTMENT (LUGGAGE COMPARTMENT COVER)
2. Remove trim panel for luggage compartment at the sides. → 700619 REMOVING AND INSTALLING TRIM PANEL FOR LUGGAGE COMPARTMENT (LUGGAGE COMPARTMENT COVER) AT THE SIDES
3. Remove rear apron. → WM 635519 REMOVING AND INSTALLING REAR APRON (ALL MODELS) .

WM 635019 REMOVING AND INSTALLING REAR BUMPER (ALL MODELS) > REMOVING REAR BUMPER

Fig 1: Identifying Rear Bumper Installation Position



Courtesy of PORSCHE CARS NORTH AMERICA, INC.

1. Unscrew and remove fastening screws **-1-** at the left and right of the bumper.

Fig 2: Identifying Bumper Fastening Screws

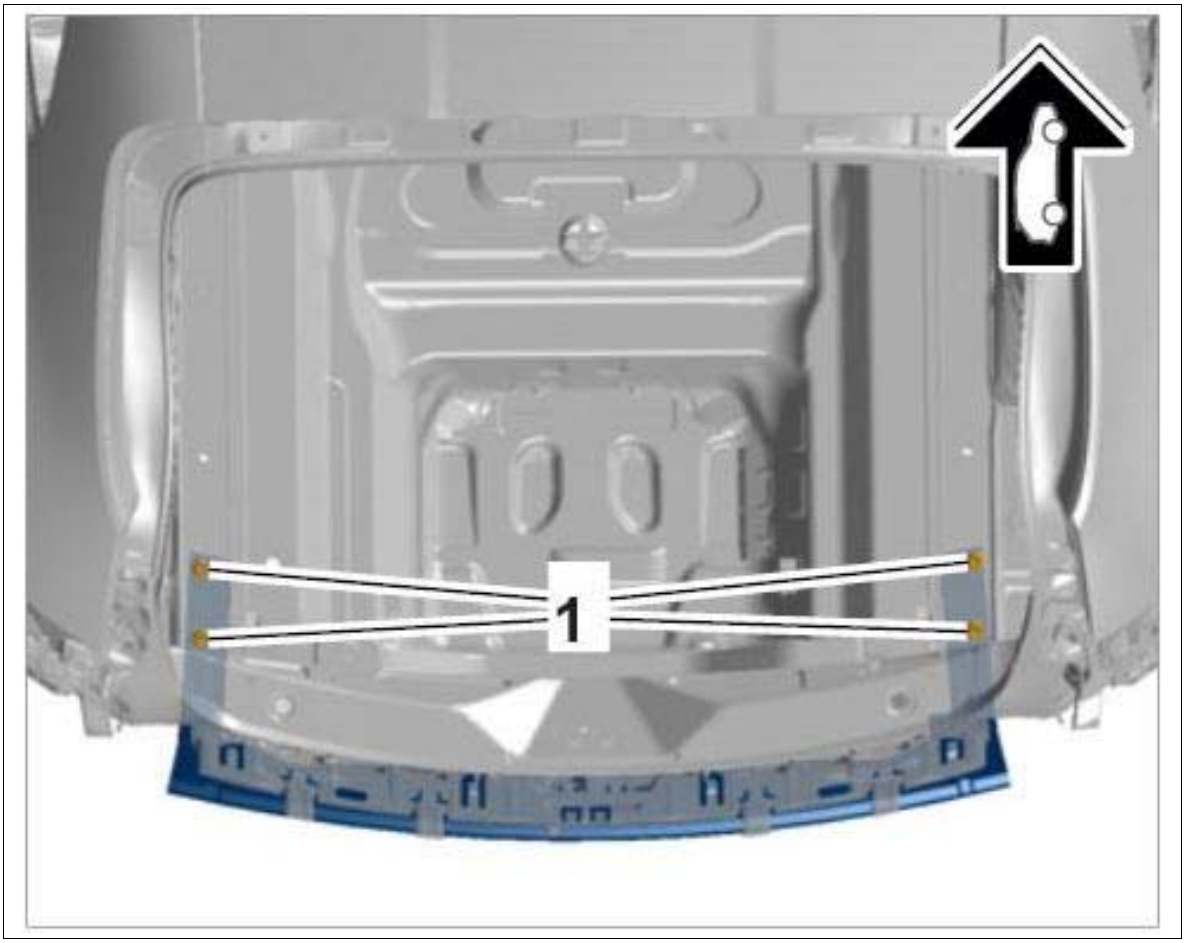

Courtesy of PORSCHE CARS NORTH AMERICA, INC.

2. Pull the bumper out to the rear.

WM 635019 REMOVING AND INSTALLING REAR BUMPER (ALL MODELS) > INSTALLING REAR BUMPER

Information

- The self-locking nuts and screws must always be replaced.

Information

- There must be no underbody protection, sealing material or wax at the screw-on points.

1. Installation is performed in reverse order to removal.
2. Tighten the bumper to **Tightening torque: 40 Nm (30 ftlb.)** until secure.

WM 635019 REMOVING AND INSTALLING REAR BUMPER (ALL MODELS) >

SUBSEQUENT WORK

1. Install rear apron. → INSTALLING REAR APRON .
2. Install trim panel for luggage compartment at the sides. → INSTALLING TRIM PANEL FOR LUGGAGE COMPARTMENT (LUGGAGE COMPARTMENT COVER) AT THE SIDES .
3. Install center trim panel for luggage compartment. → INSTALLING CENTER TRIM PANEL FOR LUGGAGE COMPARTMENT (LUGGAGE COMPARTMENT COVER) .

WM 635519 REMOVING AND INSTALLING REAR APRON (ALL MODELS) > TOOLS

Designation	Type	Number	Description	
torque screwdriver	Commercially available tool	Nr.89 Pos.5		

WM 635519 REMOVING AND INSTALLING REAR APRON (ALL MODELS) > TECHNICAL VALUES

Location	Description	Type	Basic value	Tolerance 1	Tolerance 2
Rear panel to underbody	Item 1	Tightening torque	2 Nm (1.5 ftlb.)		
Rear apron to rear retaining strip	Item 1	Tightening torque	2 Nm (1.5 ftlb.)		
Rear apron to wing	Item 2	Tightening torque	2 Nm (1.5 ftlb.)		
Guide pin for tailgate	Item 2	Tightening torque	10 Nm (7.5 ftlb.)		
Wheel housing liner to body	screw	Tightening torque	2 Nm (1.5 ftlb.)		

WM 635519 REMOVING AND INSTALLING REAR APRON (ALL MODELS) > PRELIMINARY WORK

1. Raise the vehicle. → 4X00IN LIFTING THE VEHICLE .

WM 635519 REMOVING AND INSTALLING REAR APRON (ALL MODELS) > REMOVING REAR APRON

Information

- The number of fastening screws, fixing clips, plug connections, holders and trim panels can vary depending on equipment.
- The illustrations for removing and installing the drive mechanism are shown only on one equipment variant and may differ from the actual equipment variant.
- Some steps must be carried out automatically.
- Some of the repair illustrations show only one side of the vehicle.

Fig 1: Locating Position Of Rear Apron

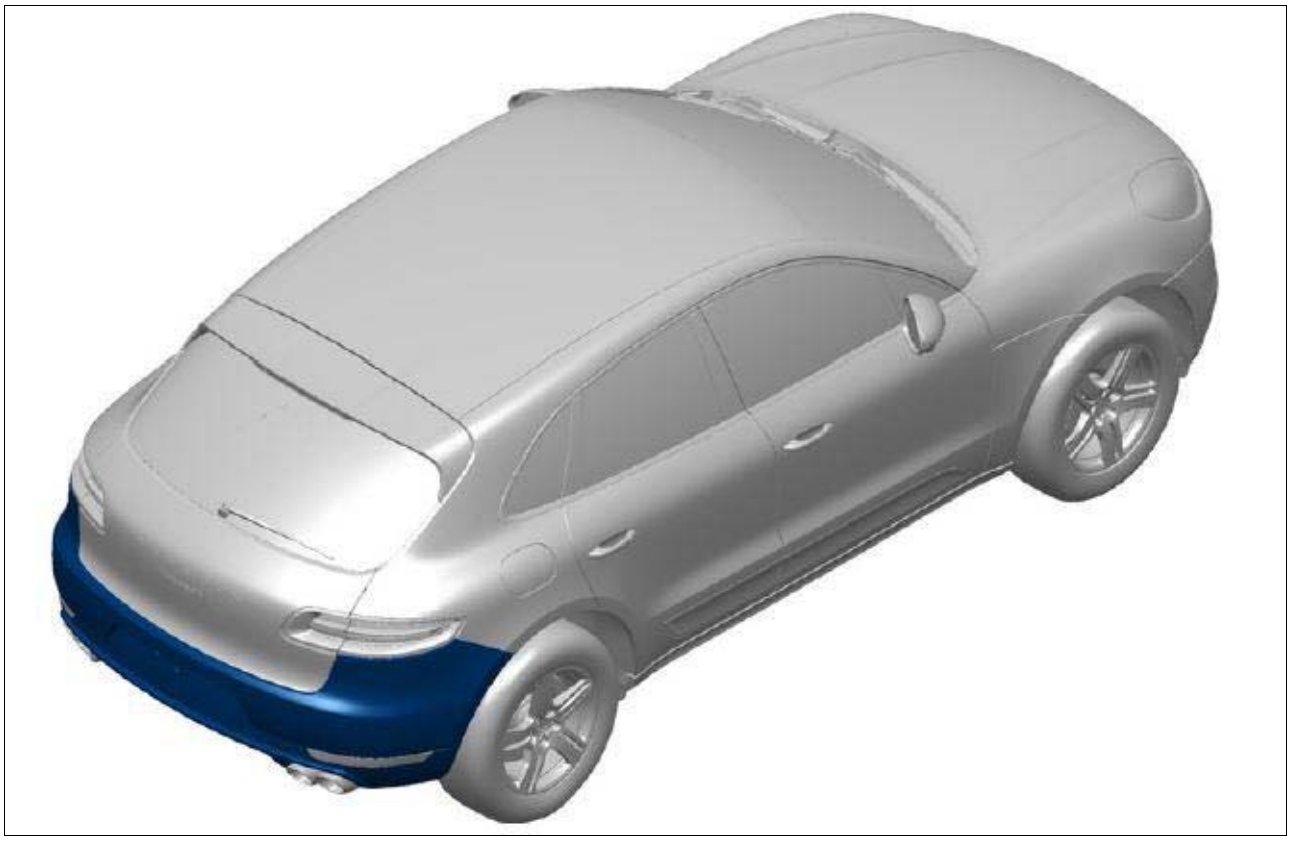

Courtesy of PORSCHE CARS NORTH AMERICA, INC.

1. Unscrew screws **-1-** for the rear panel **-3-** on the underbody.

Fig 2: Locating Position Of Rear Panel

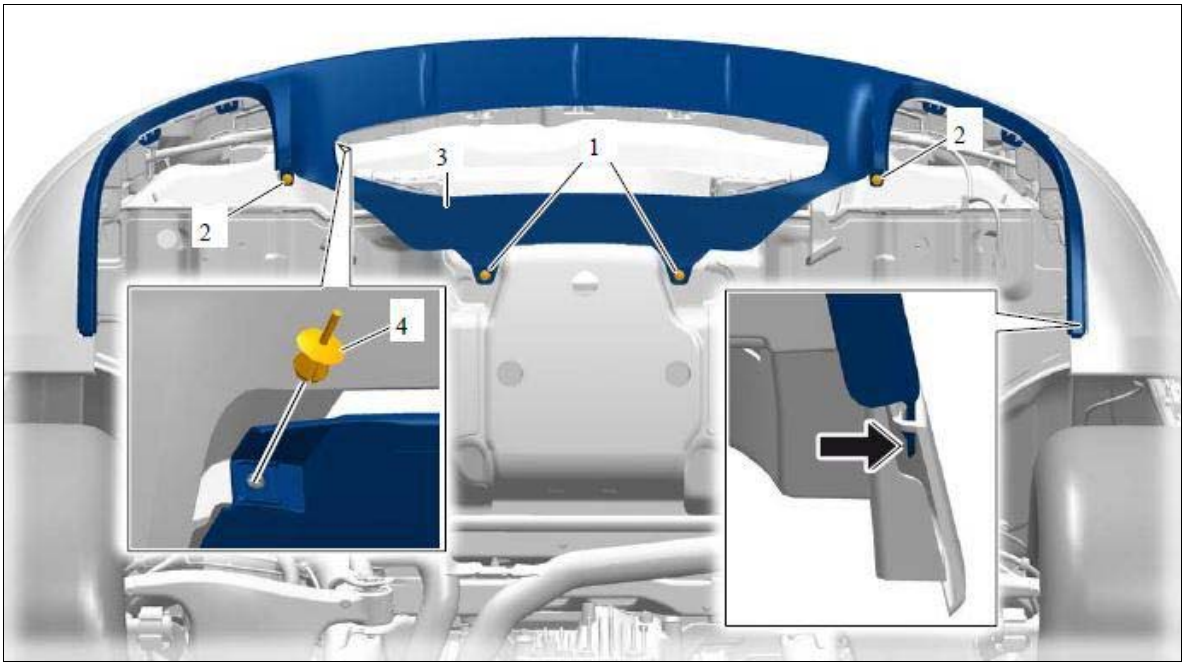

Courtesy of PORSCHE CARS NORTH AMERICA, INC.

2. Open rear lid.
3. Unscrew fastening screws **-2-** and remove guide pins for rear lid.
4. Unclip and remove trim panels **-1-** on the reversing lights and remove reversing lights. → 947419 Removing and installing reversing light.
5. Unscrew fastening screws on the rear retaining strip **-3-** .

Fig 3: Locating Position Of Trim Panel And Rear Apron

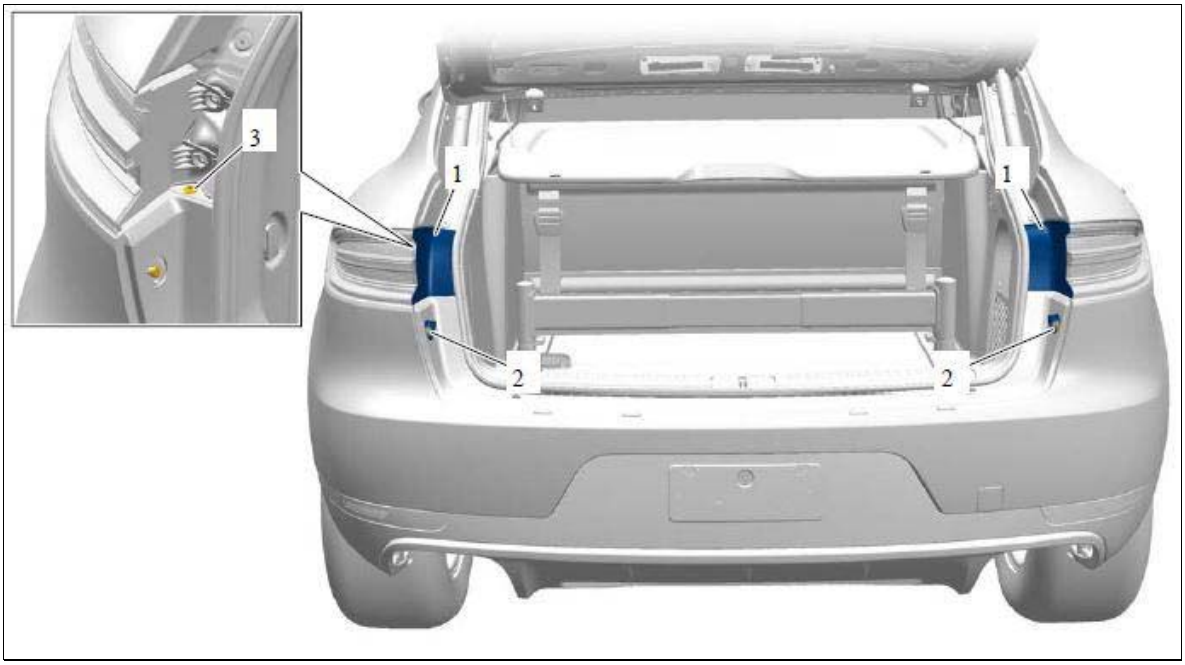

Courtesy of PORSCHE CARS NORTH AMERICA, INC.

6. Remove side trim panel at the right **-1-** in the luggage compartment.
7. Open fixing clip **-2-** .
8. Release and disconnect electric plug connections **-3-** .

Fig 4: Locating Wire Harness For Rear Apron

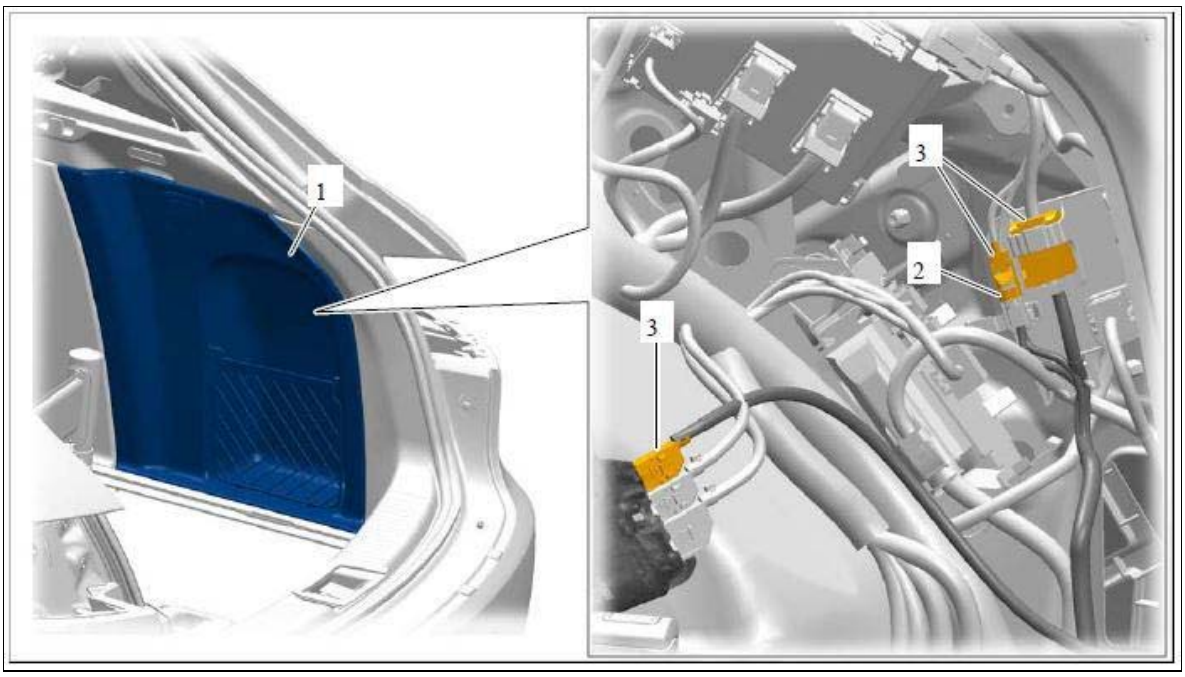

Courtesy of PORSCHE CARS NORTH AMERICA, INC.

9. Unscrew fastening screws **-1-** on the rear wheel housing liners.
10. Unscrew fastening screws on the retaining strip **-2-** .

Fig 5: Locating Mounting For Rear Apron At Wheel Housing

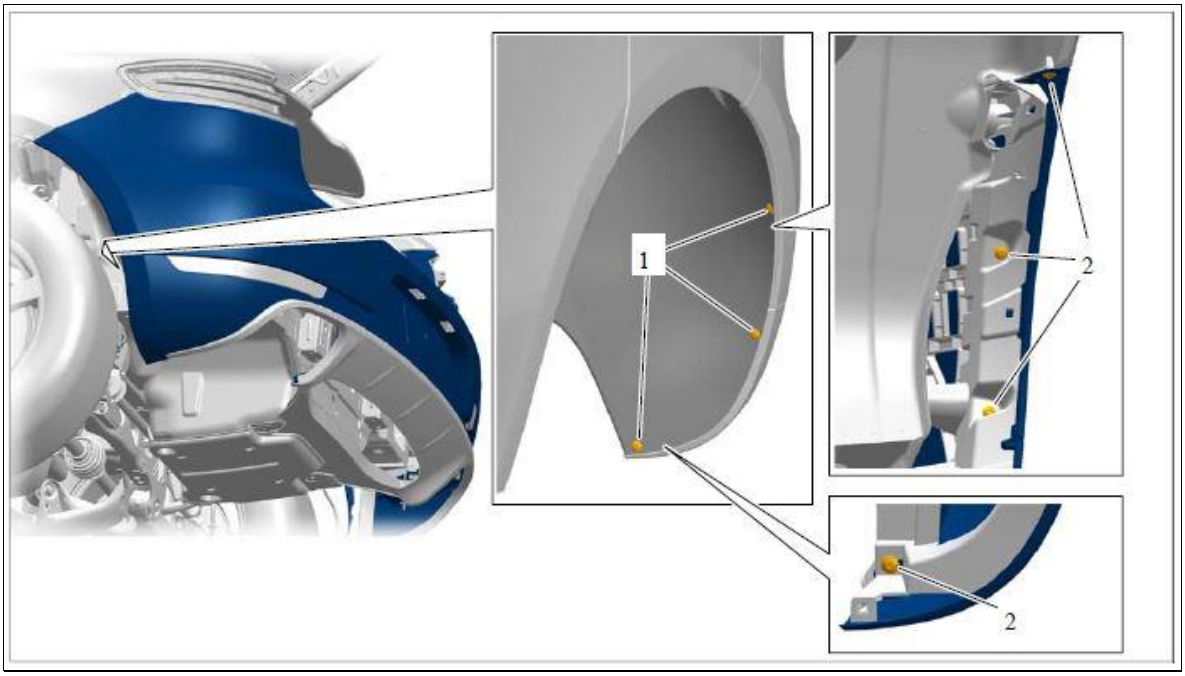

Courtesy of PORSCHE CARS NORTH AMERICA, INC.

11. Remove rear apron by pulling it to the rear.

    1. 11.1 Remove rear apron to the rear until the wire harness is accessible.

    2. 11.2 Remove seal for wire harness at the body, guide wire harness out completely through the bore and remove rear apron.

WM 635519 REMOVING AND INSTALLING REAR APRON (ALL MODELS) > INSTALLING REAR APRON

Installation is performed in reverse order. Pay particular attention to the following:

1. Before installation, an adhesive strip of Teflon tape must be affixed at the transition points to the tail lights on the rear apron to prevent damage.

   Fig 1: Affixing Adhesive Strip At Transition Points



Courtesy of PORSCHE CARS NORTH AMERICA, INC.

2. Tighten fastening screws securing rear apron to wing using torque screwdriver Nr.89 Pos.5. **Tightening torque: 2 Nm (1.5 ftlb.)** .

3. Tighten fastening screws on retaining strip to **Tightening torque: 2 Nm (1.5 ftlb.)** .

4. Tighten fastening screws on the underbody to **Tightening torque: 2 Nm (1.5 ftlb.)** .

5. Tighten fastening screws on the wheel housing liners to **Tightening torque: 2 Nm (1.5 ftlb.)** .
6. Tighten fastening screws on guide pins for the tailgate to **Tightening torque: 10 Nm (7.5 ftlb.)** .
7. Remove adhesive strip.

WM 635519 REMOVING AND INSTALLING REAR APRON (ALL MODELS) > SUBSEQUENT WORK

1. Lower the vehicle.
2. **On vehicles with Lane Change Assist, the control unit must be calibrated.** → CALIBRATING CONTROL UNIT FOR LANE CHANGE ASSIST .

WM 635537 DISASSEMBLING AND ASSEMBLING REAR APRON (ALL MODELS) > TECHNICAL VALUES

Location	Description	Type	Basic value	Tolerance 1	Tolerance 2
Wheel cover to rear apron	Tapping screw	Tightening torque	2 Nm (1.5 ftlb.)		

WM 635537 DISASSEMBLING AND ASSEMBLING REAR APRON (ALL MODELS) > PRELIMINARY WORK

1. Remove rear skirt. → 636819 REMOVING AND INSTALLING REAR SKIRT

WM 635537 DISASSEMBLING AND ASSEMBLING REAR APRON (ALL MODELS) > DISASSEMBLING AND ASSEMBLING REAR APRON

Information

- The number of fastening screws, fixing clips, plug connections, holders and trim panels can vary depending on equipment.
- The illustrations for removing and installing the drive mechanism are shown only on one equipment variant and may differ from the actual equipment variant.
- Some steps must be carried out automatically.
- Some of the repair illustrations show only one side of the vehicle.

1. Remove wire harness for ParkAssist. → 975919 REMOVING AND INSTALLING WIRE HARNESS FOR PARKASSIST

2. Remove ParkAssist sensors **-3-** . → 917519 REMOVING AND INSTALLING PARKASSIST SENSOR
3. Unclip cover for towing lug **-4-** and guide out bracket.
4. Unscrew fastening screws **-1-** for wheel covers.
5. Remove wheel covers.

Fig 1: Disassembling Rear Apron

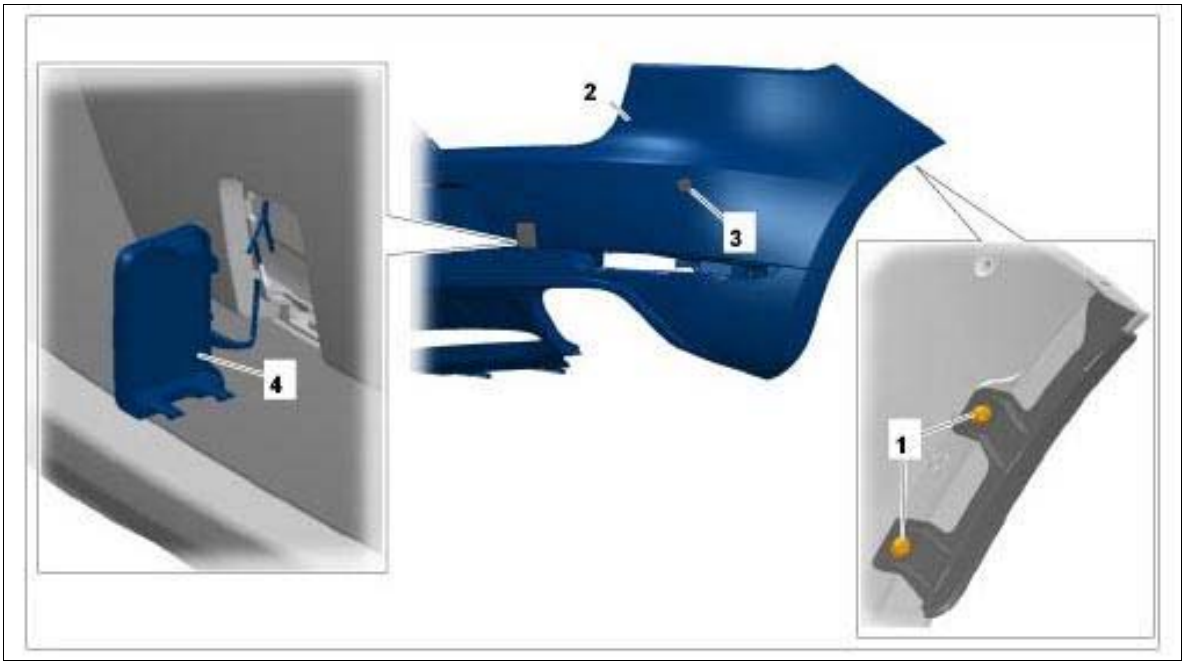

Courtesy of PORSCHE CARS NORTH AMERICA, INC.

Assemble in reverse order. Pay particular attention to the following:

6. Tighten fastening screws for wheel covers to the specified tightening torque. **Tightening torque: 2 Nm (1.5 ftlb.)**

WM 635537 DISASSEMBLING AND ASSEMBLING REAR APRON (ALL MODELS) > SUBSEQUENT WORK

1. Install rear skirt. → INSTALLING REAR SKIRT .

WM 635719 REMOVING AND INSTALLING REAR RETAINING STRIP (ALL MODELS) > TECHNICAL VALUES

Location	Description	Type	Basic value	Tolerance 1	Tolerance 2
Retaining strip to body	Collar nut	Tightening torque	9.7 Nm (7.5 ftlb.)		

WM 635719 REMOVING AND INSTALLING REAR RETAINING STRIP (ALL MODELS) > PRELIMINARY WORK

1. Remove rear apron. → WM 635519 REMOVING AND INSTALLING REAR APRON (ALL MODELS) .

WM 635719 REMOVING AND INSTALLING REAR RETAINING STRIP (ALL MODELS) > REMOVING REAR RETAINING STRIP > REMOVING REAR RETAINING STRIP (REAR SECTION)

1. Remove tail light and take off retaining strip (rear section). → 943119 REMOVING AND INSTALLING TAIL LIGHT .

WM 635719 REMOVING AND INSTALLING REAR RETAINING STRIP (ALL MODELS) > REMOVING REAR RETAINING STRIP > REMOVING REAR RETAINING STRIP (FRONT SECTION)

Information

- The number of fastening screws, fixing clips, plug connections, holders and trim panels can vary depending on equipment.
- The illustrations for removing and installing the drive mechanism are shown only on one equipment variant and may differ from the actual equipment variant.
- Some steps must be carried out automatically.
- Some of the repair illustrations show only one side of the vehicle.

1. Unscrew and remove fastening nuts **-1-** .
2. Remove retaining strip (front section) **-2-** .

Fig 1: Identifying Rear Retaining Strip (Front Section)



Courtesy of PORSCHE CARS NORTH AMERICA, INC.

WM 635719 REMOVING AND INSTALLING REAR RETAINING STRIP (ALL MODELS) > REMOVING REAR RETAINING STRIP > REMOVING REAR RETAINING STRIP (CENTRAL SECTION)

1. Unclip electric wire harness **-1, 2-** on retaining strip (central section) **-4-** .
2. Release and disconnect electric plug connection **-3-** .
3. Unscrew fastening nuts **-1-** and remove rear retaining strip (central section) **-4-** .

Fig 1: Identifying Rear Retaining Strip (Central Section)

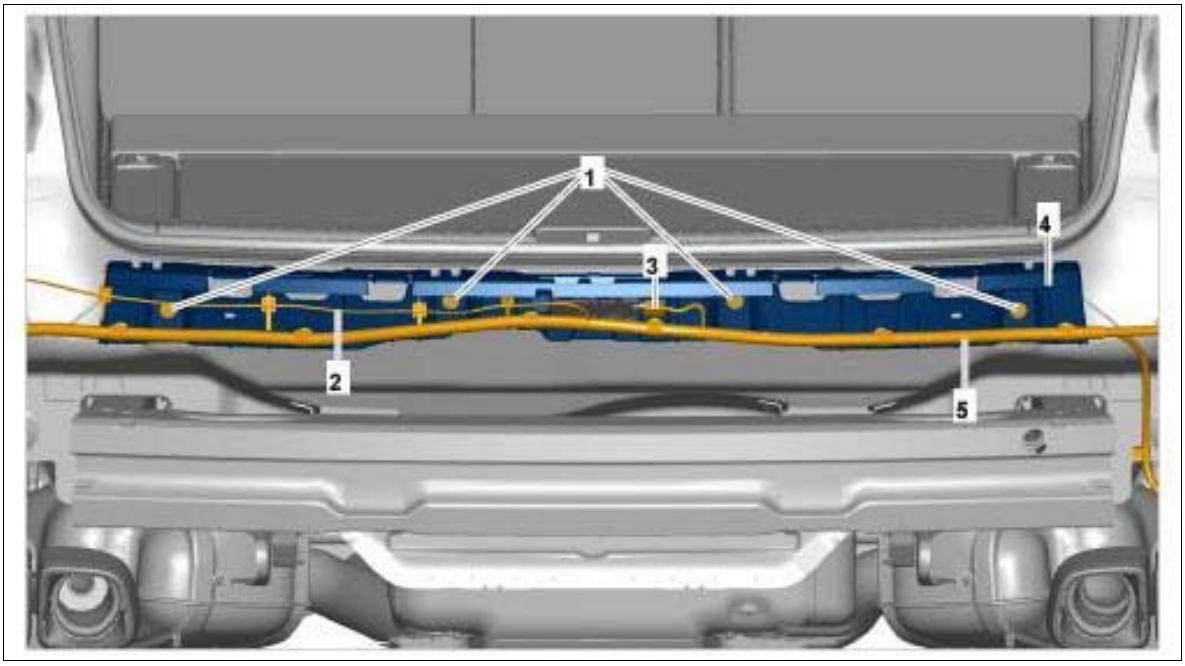

Courtesy of PORSCHE CARS NORTH AMERICA, INC.

WM 635719 REMOVING AND INSTALLING REAR RETAINING STRIP (ALL MODELS) > INSTALLING REAR RETAINING STRIP

Installation is performed in reverse order. Pay particular attention to the following:

1. Tighten fastening nuts to the specified tightening torque. **Tightening torque: 9.7 Nm (7.5 ftlb.)**

WM 635719 REMOVING AND INSTALLING REAR RETAINING STRIP (ALL MODELS) > SUBSEQUENT WORK

1. Install rear apron. → INSTALLING REAR APRON .

WM 636819 REMOVING AND INSTALLING REAR SKIRT (ALL MODELS) > PRELIMINARY WORK

1. Remove rear apron. → WM 635519 REMOVING AND INSTALLING REAR APRON (ALL MODELS) .

WM 636819 REMOVING AND INSTALLING REAR SKIRT (ALL MODELS) > REMOVING

REAR SKIRT

1. Remove rear panel **-4-** . → REMOVING REAR APRON .
2. Remove reversing lights **-6-** . → 947419 REMOVING AND INSTALLING REVERSING LIGHT .
3. Remove wire harness for ParkAssist **-5-** at the rear skirt **-7-** . → 975919 REMOVING AND INSTALLING WIRE HARNESS FOR PARKASSIST .
4. Remove reversing camera **-2-** . → 914319 REMOVING AND INSTALLING REVERSING CAMERA .
5. Remove number plate lights. → 942919 REMOVING AND INSTALLING NUMBER PLATE LIGHT .
6. Release expansion rivets **-1-** and remove them.
7. Unclip rear skirt **-7-** at the rear apron **-3-** and remove it.

Fig 1: Identifying Rear Skirt

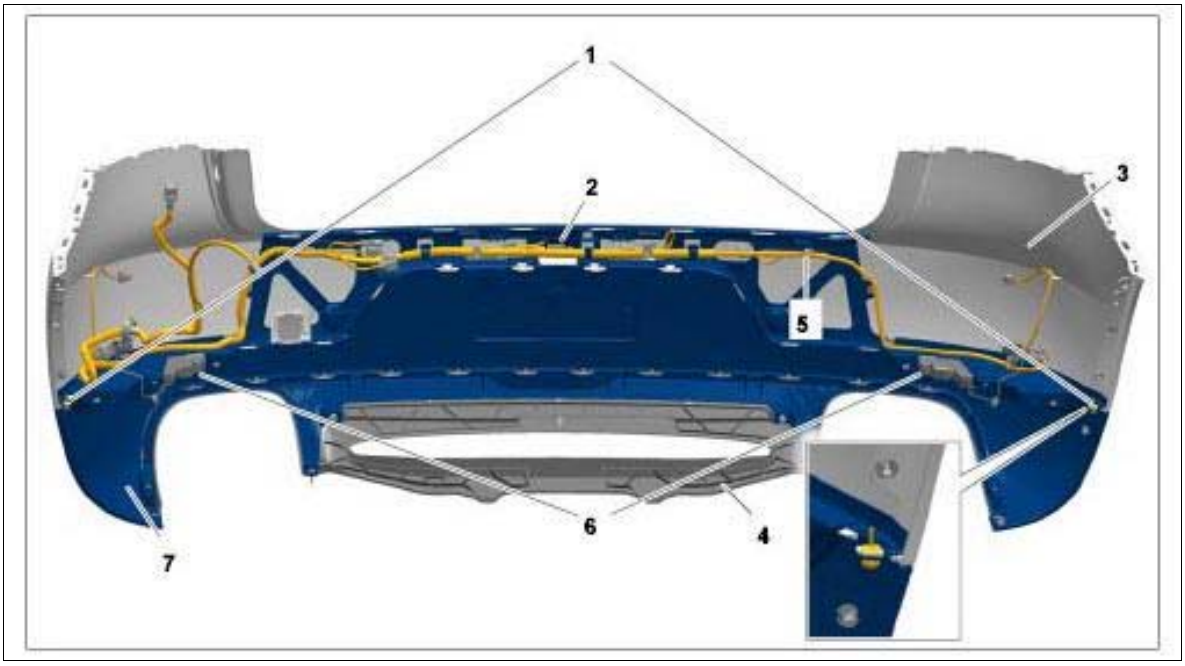

Courtesy of PORSCHE CARS NORTH AMERICA, INC.

WM 636819 REMOVING AND INSTALLING REAR SKIRT (ALL MODELS) > INSTALLING REAR SKIRT

Information

Check that all fixing clips are positioned fully and correctly.

Check that the fixing clips are not bent or broken.

Replace damaged or missing clips with new ones.

Installation is performed in reverse order.

WM 636819 REMOVING AND INSTALLING REAR SKIRT (ALL MODELS) > SUBSEQUENT WORK

1. Install rear apron. → INSTALLING REAR APRON .

WM 641219 REMOVING AND INSTALLING WINDSCREEN (ALL MODELS) > PRELIMINARY WORK

1. Remove rear-view mirror. → Removing Interior Rear-View Mirror
2. On vehicles with a rain sensor - Remove rain sensor. → Removing Rain Sensor
3. On vehicles with a telephone - Remove antenna for telephone. → Removing mobile communication antenna
4. Remove cowl panel cover. → Removing cowl panel cover
5. Remove A-pillar trim panel at the left and right. → Removing A-pillar trim panel
6. Remove sun visors. → Removing Sun Visor
7. Detach headliner at the front. → Removing headliner
8. Remove molding for windscreen. → Removing molding for windscreen

WM 641219 REMOVING AND INSTALLING WINDSCREEN (ALL MODELS) > TOOLS AND MATERIALS

The following tools and materials are required for removing and installing the rear window with 2-component adhesive:

Fig 1: Identifying Special Tools Kit

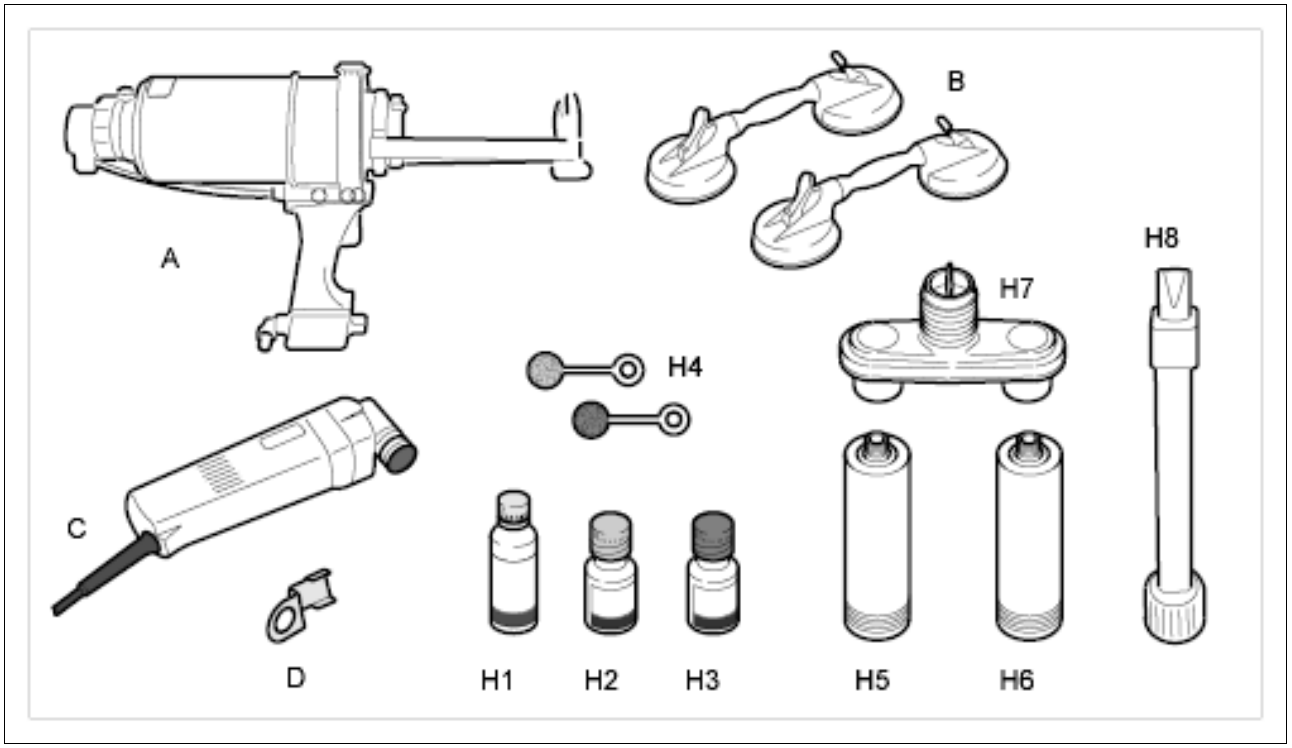

Courtesy of PORSCHE CARS NORTH AMERICA, INC.

A - Double cartridge gun VAS 5237

B - Suction cups VAG 1344

C - Special electric cutter (fine) VAG 1561 A

D - Flashing knife, U-type 639.031.130.22

H - 2-component window adhesive 000.043.300.94, contains set components H1-H8

H1 - Cleaning solution

H2 - Primer

H3 - Activator

H4 - Swab

H5 - Cartridge, component A

H6 - Cartridge, component B

H7 - Mixing nozzle

H8 - Processing nozzle

Fig 2: Identifying Special Tools Kit

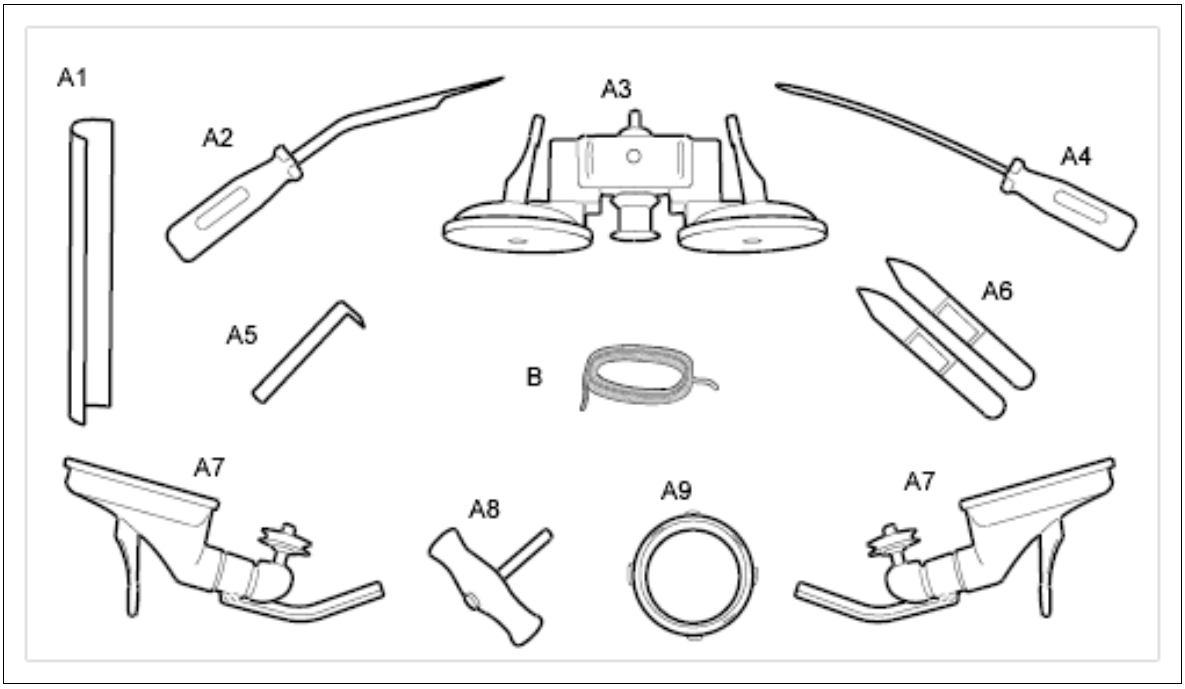

Courtesy of PORSCHE CARS NORTH AMERICA, INC.

A - Removal kit for flush bonded windows VAG 1474 B, contains set components A1-A9

B - Cutting thread

A1 - Guide rail

A2 - Cutting tool (wire holder)

A3 - Spooling device

A4 - Awl

A5 - Guide rail

A6 - Spatula

A7 - Steering roller with arm bracket

A8 - Handle

A9 - Square cutting wire

WM 641219 REMOVING AND INSTALLING WINDSCREEN (ALL MODELS) > REMOVING WINDSCREEN

WARNING: Vehicle windows removed and installed incorrectly

- *Danger of cuts*

- *Risk of eye injuries*

→ Wear personal protective gear.

→ Always shut off power supply when replacing cutting knife.

1. Remove the windscreen.

    1. 1.1. Remove the windscreen using the cutting-wire separating device.

        Information

        1. The procedure for removing car windows is described in → 6X00IN GENERAL INFORMATION ON REMOVING CAR WINDOWS.

Fig 1: Removing Windscreen

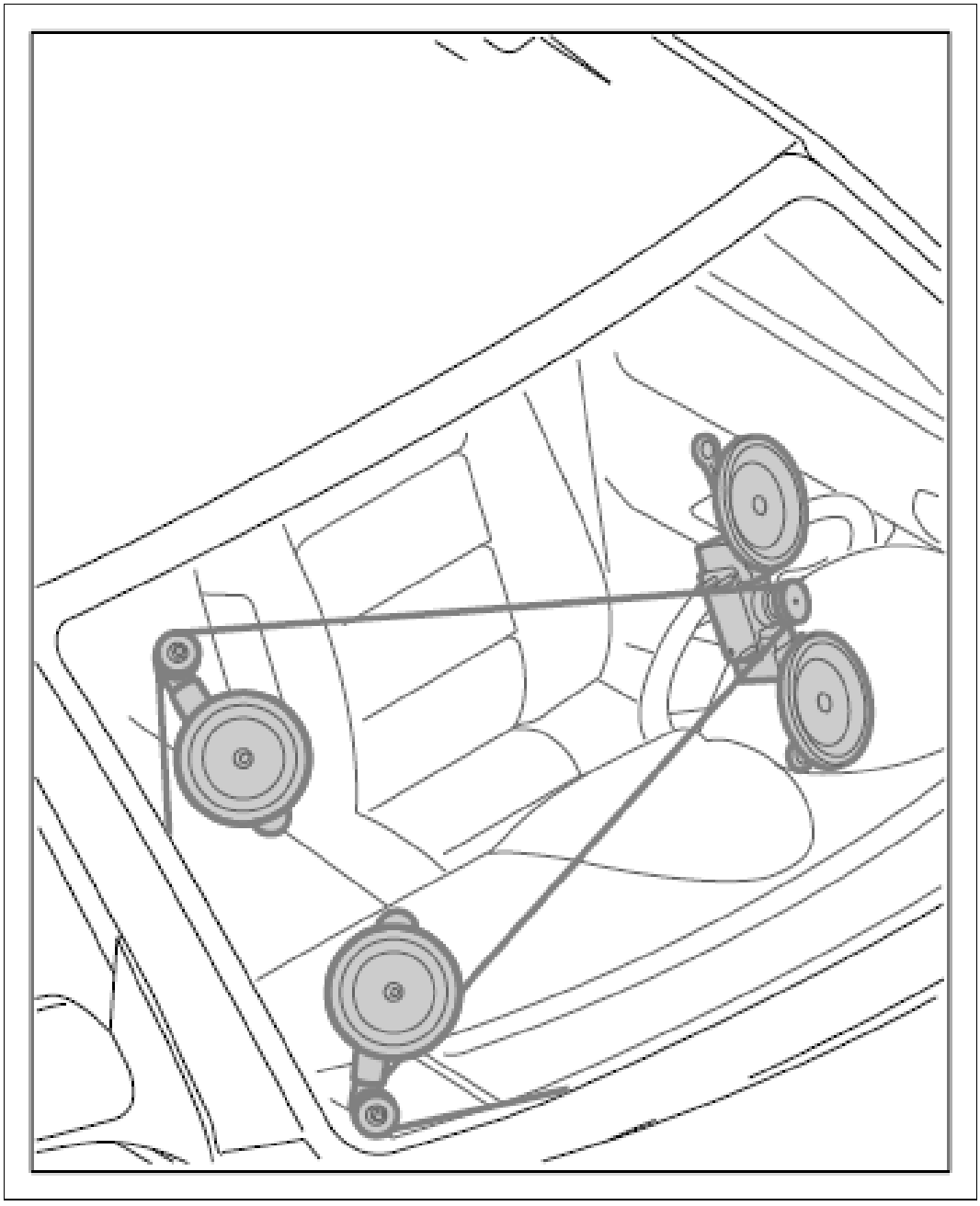

Courtesy of PORSCHE CARS NORTH AMERICA, INC.

WM 641219 REMOVING AND INSTALLING WINDSCREEN (ALL MODELS) > PREPARING WINDOW APERTURE FOR INSTALLATION

1. Remove adhesive from the body.

    1. 1.1. When removing adhesive residue **-1-** from the body using the cutting tool **-C-** and flashing knife **-D-** , ensure that only a surface coating of adhesive remains **-2-** .

    Information

1. The surface coating of adhesive residue helps new adhesive to stick. Keep cut surfaces clean and free of grease and do not clean with cleaning solution.

   Fig 1: Removing Adhesive

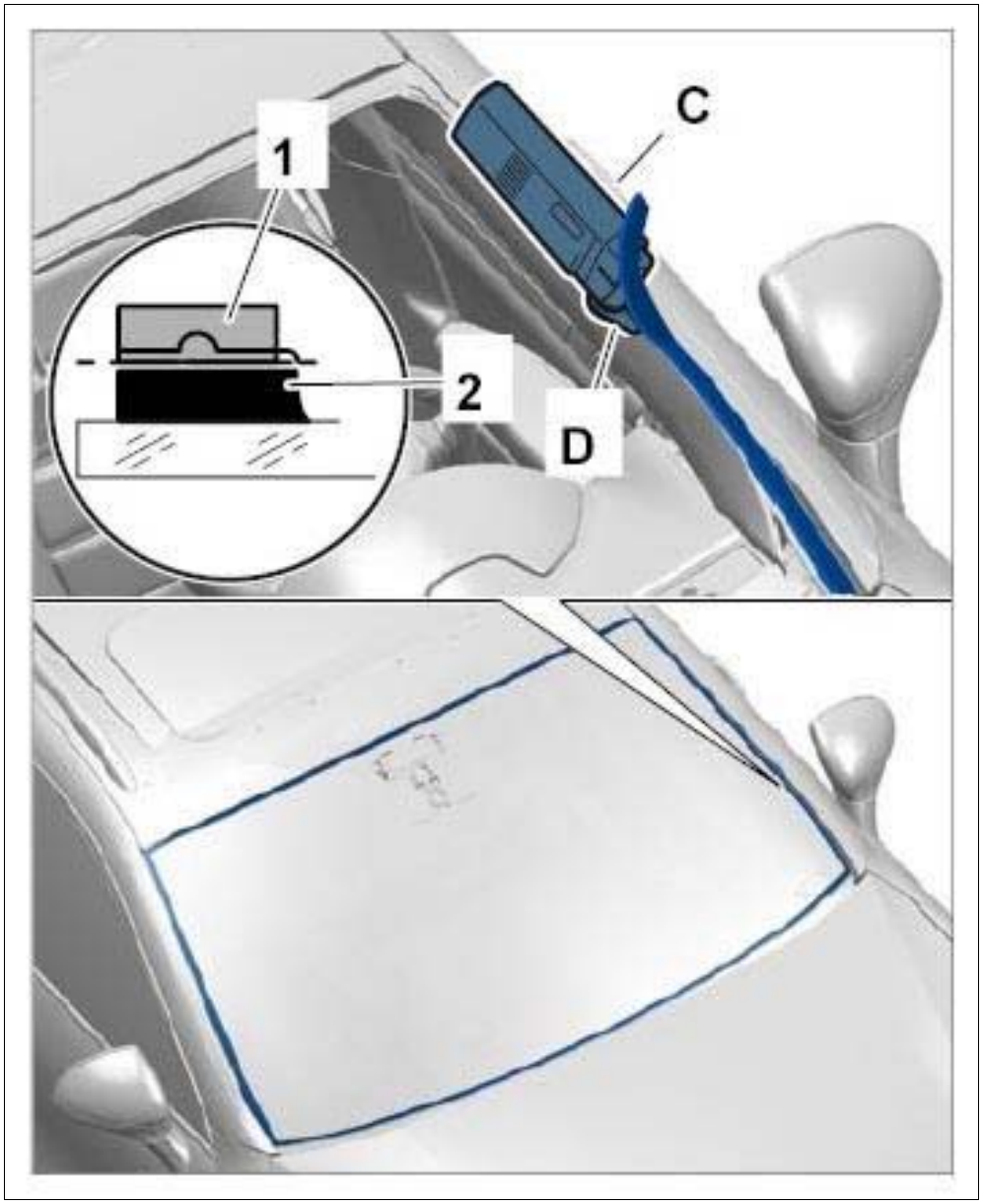

Courtesy of PORSCHE CARS NORTH AMERICA, INC.

2. Clean and prime paint damage and newly built-up paint surfaces in the window aperture of the body.

    1. 2.1. Clean new paint surfaces and damage to the top coat paint in the non-visible area of the window aperture in the body with cleaning solution **-H1-** and touch up with primer **-H2-** .

       Information

        1. A drying time of at least 10 minutes must be observed between cleaning the bonding surface and applying primer! Always ensure that no cleaning solution residues remain on the body.

Fig 2: Cleaning Window Aperture And Activating Adhesive

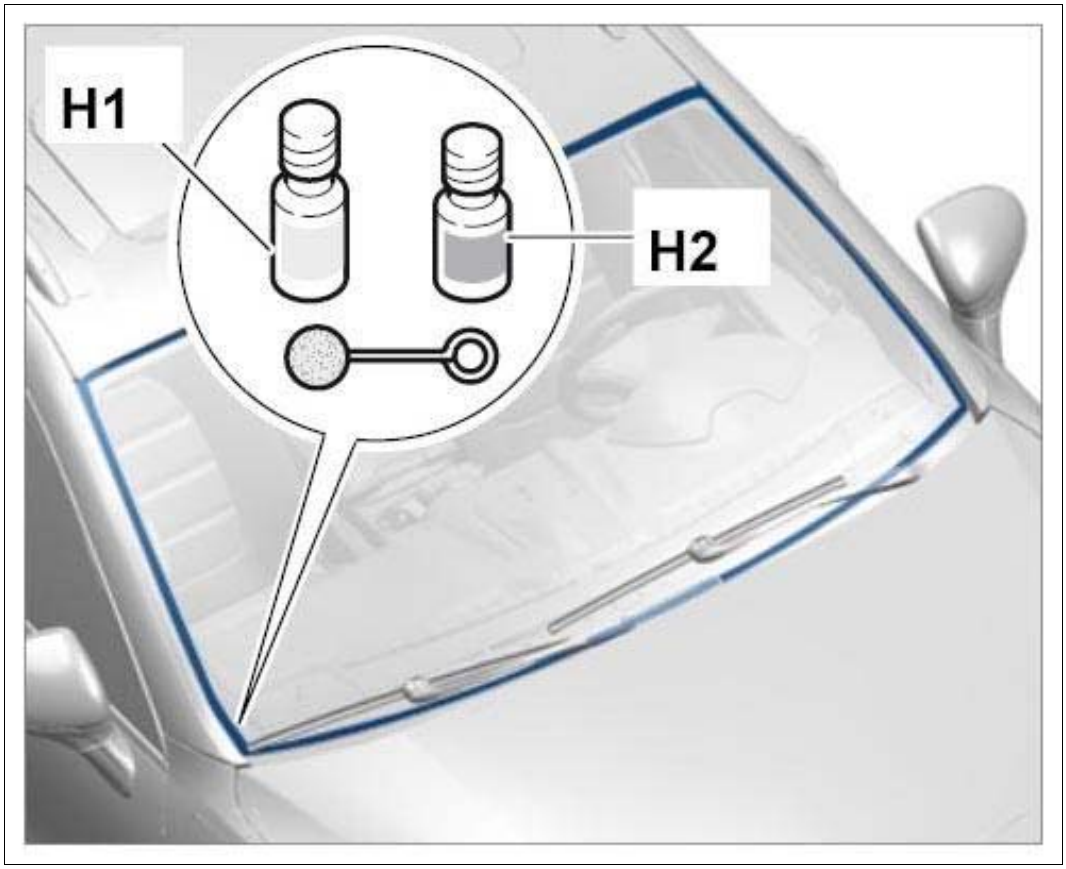

Courtesy of PORSCHE CARS NORTH AMERICA, INC.

WM 641219 REMOVING AND INSTALLING WINDSCREEN (ALL MODELS) > PREPARING WINDSCREEN FOR INSTALLATION > PREPARING WINDSCREEN FOR INSTALLATION (RE-INSTALLATION ONLY)

Information

- The removed windscreen can be reinstalled if there was no prior damage to the windscreen and the windscreen was removed without damage.

1. Remove adhesive from the windscreen.

Fig 1: Removing Adhesive From Windscreen

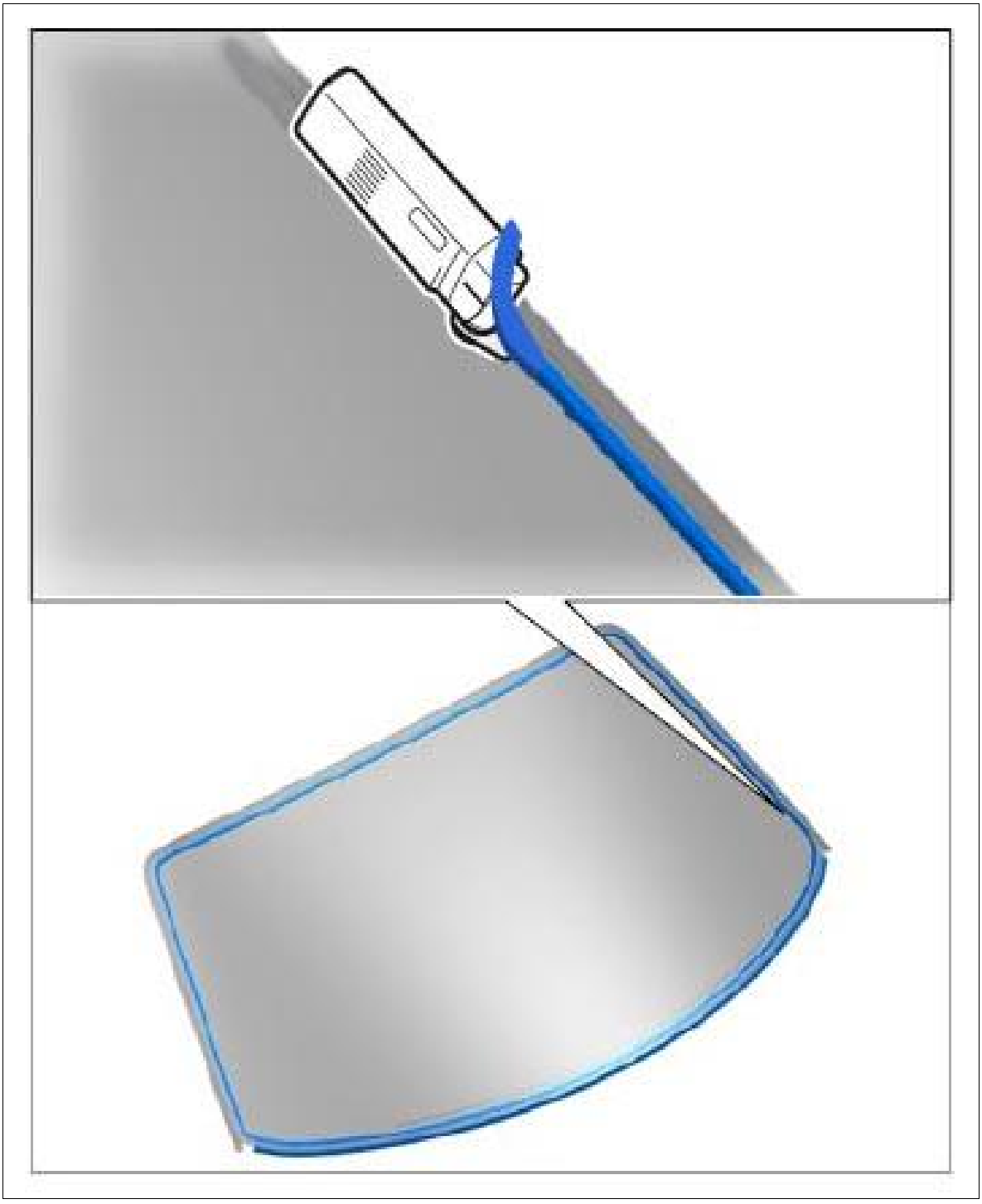

Courtesy of PORSCHE CARS NORTH AMERICA, INC.

1. 1.1. Fit cutter **-C-** with the flashing knife **-D-** and remove adhesive residue from the windscreen, ensuring that a surface coating of adhesive remains.

   Information

   1. The remaining adhesive helps new adhesive to stick. Keep cut surfaces clean and free of grease and do not clean with cleaning solution.

2. Check the foam element around the chassis number for damage and replace it if necessary.

3. Activate the bonding section of the windscreen.

    1. 3.1. During long idle periods, apply activator to the adhesive residue that was cut back.

        Fig 2: Applying Activator

        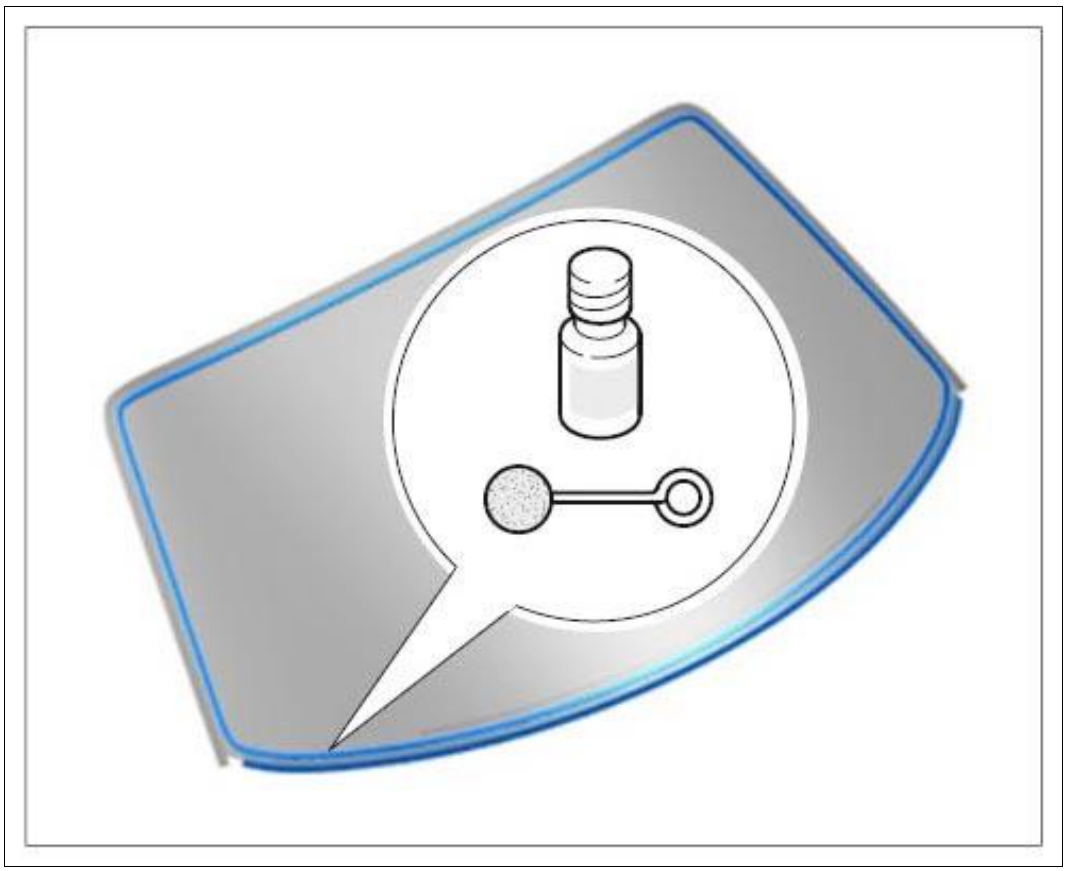

        Courtesy of PORSCHE CARS NORTH AMERICA, INC.

WM 641219 REMOVING AND INSTALLING WINDSCREEN (ALL MODELS) > PREPARING WINDSCREEN FOR INSTALLATION > PREPARING WINDSCREEN FOR INSTALLATION (NEW WINDSCREEN)

1. Clean and prime the window.

Fig 1: Cleaning Windscreen

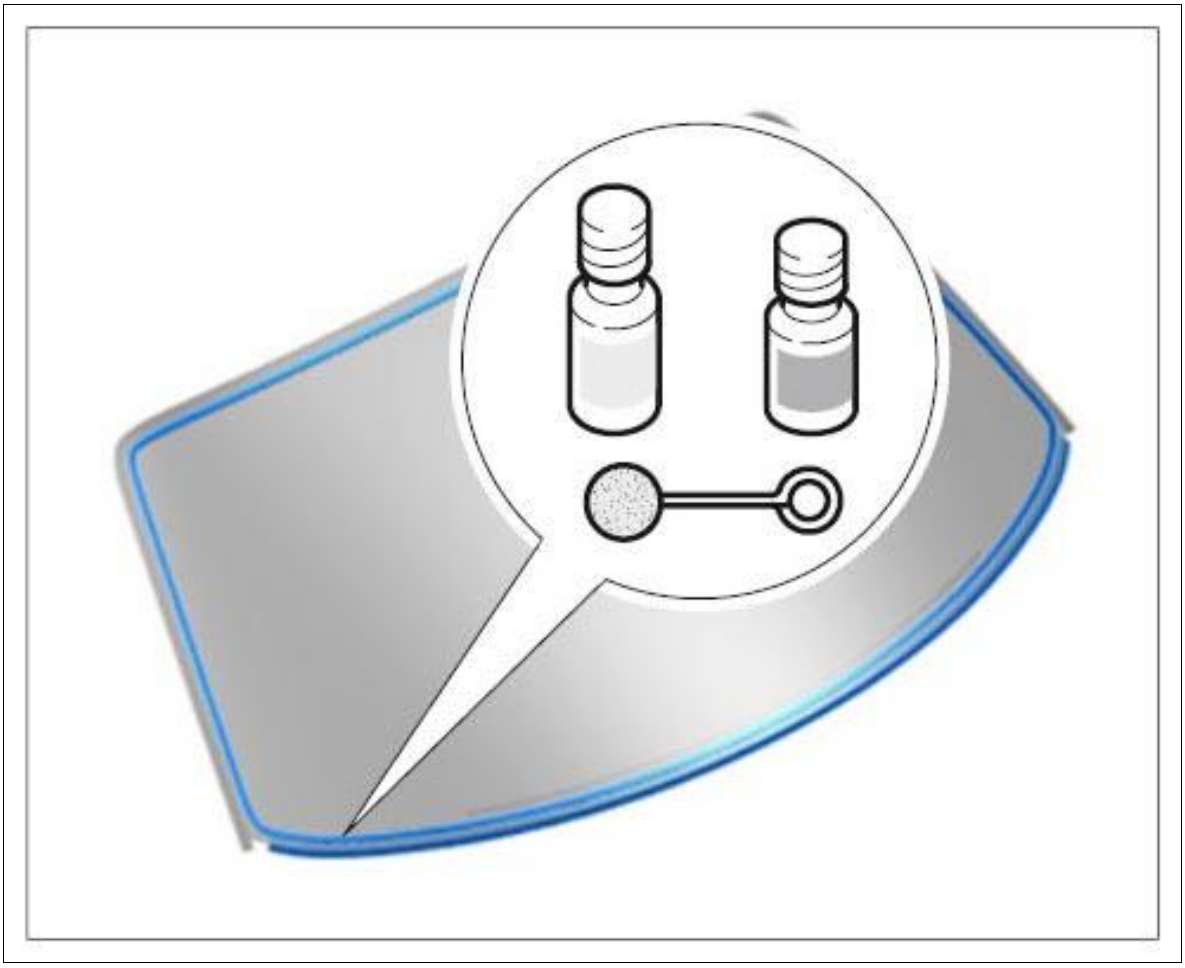

Courtesy of PORSCHE CARS NORTH AMERICA, INC.

1. 1.1. Clean glass with cleaning solution.
2. 1.2. Apply primer to the marked area of the window flange.

Information

1. A ventilation period of at least 10 minutes must be observed between the cleaning of the glass and the application of primer! No cleaning solution residues may remain on the windscreen.

WM 641219 REMOVING AND INSTALLING WINDSCREEN (ALL MODELS) > INSTALLING WINDSCREEN

Information

- Only with new windscreens

Information

- The removed windscreen can be reinstalled if there was no prior damage to the windscreen and

the windscreen was removed without damage.

Information

- Two persons are needed to insert and adjust the windscreen.

⚠ *CAUTION: Danger of material damage if specified curing time of adhesive is not observed! In order to ensure that the bonded joint is sufficiently strong, the following conditions must be adhered to:*

- *The vehicle must not be used until the curing time has elapsed.*
- *Curing time: 2 hours*
- *Temperature: at least 10 °C*
- *Fixing time: approx. 1 hour*

1. Prepare 2-component adhesive for processing. → 6X00IN WORKING WITH PORSCHE 2-COMPONENT WINDOW ADHESIVE

   Information

   1. The adhesive has an open time of -15 min- , which means that the bonding material must be applied and the component must be affixed within this period of time.
   2. When applying the adhesive, it is essential to ensure that the adhesive bead overlaps by approx. 30 mm at the beginning and at the end.

Fig 1: Identifying Adhesive Bead

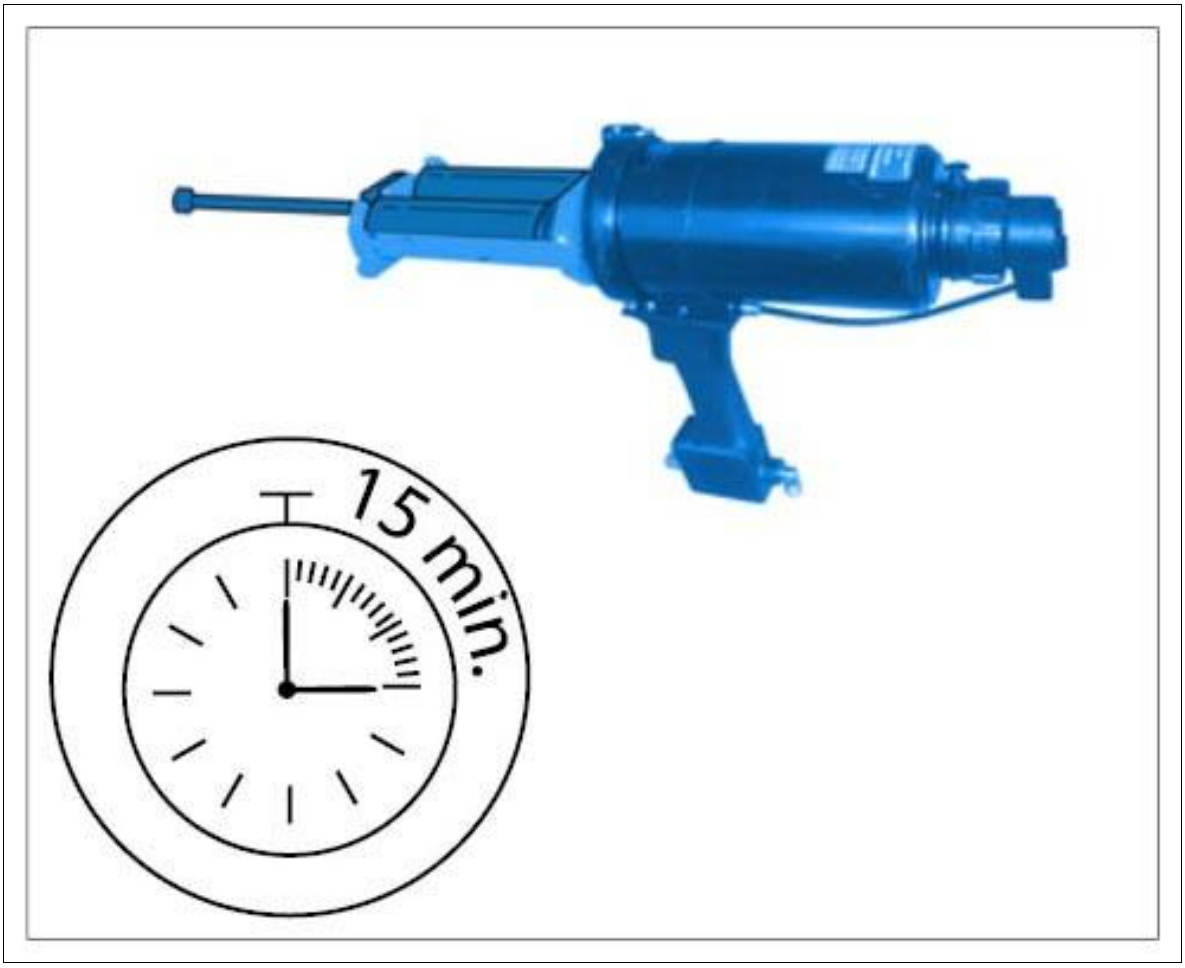

Courtesy of PORSCHE CARS NORTH AMERICA, INC.

Information

1. To ensure that the substance is completely mixed, apply a 30-mm long bead of fresh adhesive to a piece of cardboard before processing.

2. Apply adhesive to the windscreen.

    1. 2.1. Using a bonding gun **-A-** , apply 2-component adhesive to the rear window along the preliminary coat and on the primer in the form of a triangular bead measuring **-X = approx. 15 mm-** .

Fig 2: Applying Adhesive To Windscreen

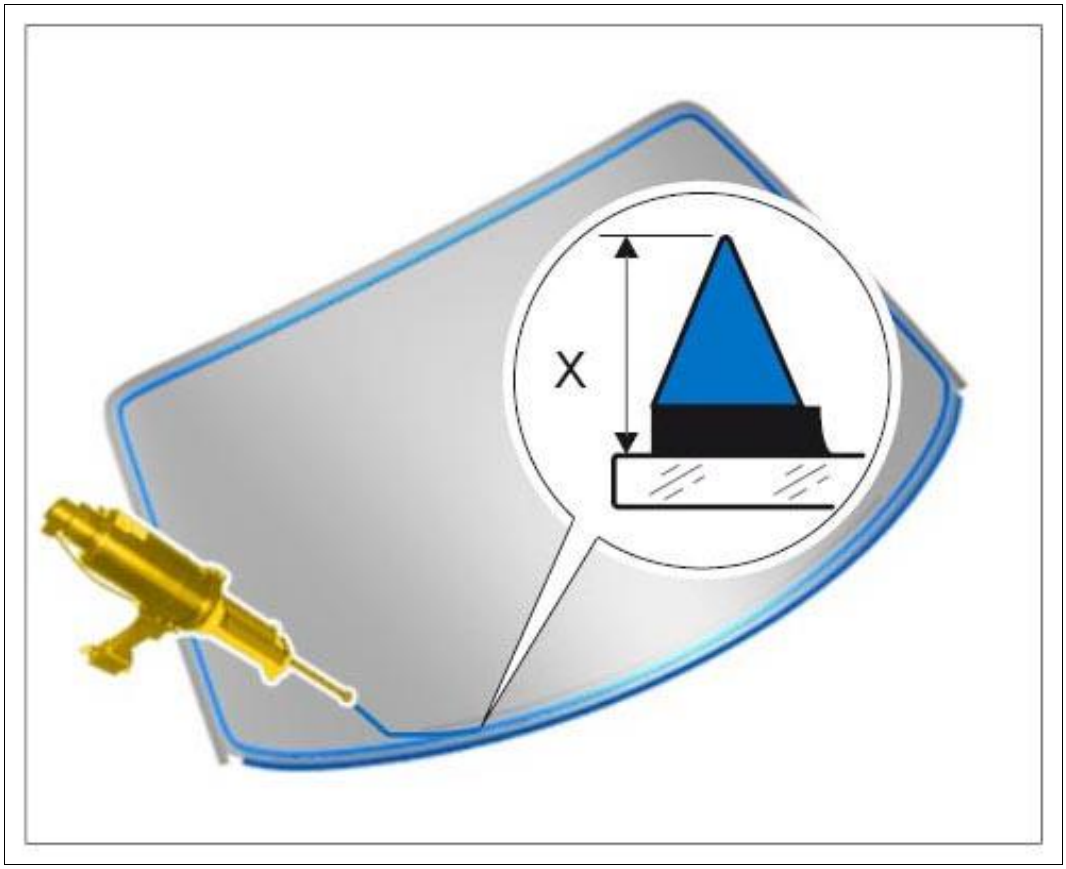

Courtesy of PORSCHE CARS NORTH AMERICA, INC.

3. Insert the windscreen into the body.
    1. 3.1. Affix suction cups to the windscreen.
    2. 3.2. Guide the windscreen into the window aperture.
    3. 3.3. Push the windscreen up against the seal.
    4. 3.4. Insert the windscreen at the sides of the window aperture and lower it (**do not press at the sides**).
    5. 3.5. Press the bottom of the windscreen onto the body as far as the guide stop.
    6. 3.6. Adjust gap dimension of windscreen with respect to the roof. → 641219 REMOVING AND INSTALLING WINDSCREEN

        Information

        1. Only if the windscreen is re-installed
    7. 3.7. Secure the windscreen with adhesive tape **-1-** to prevent it from slipping.

Fig 3: Securing Windscreen

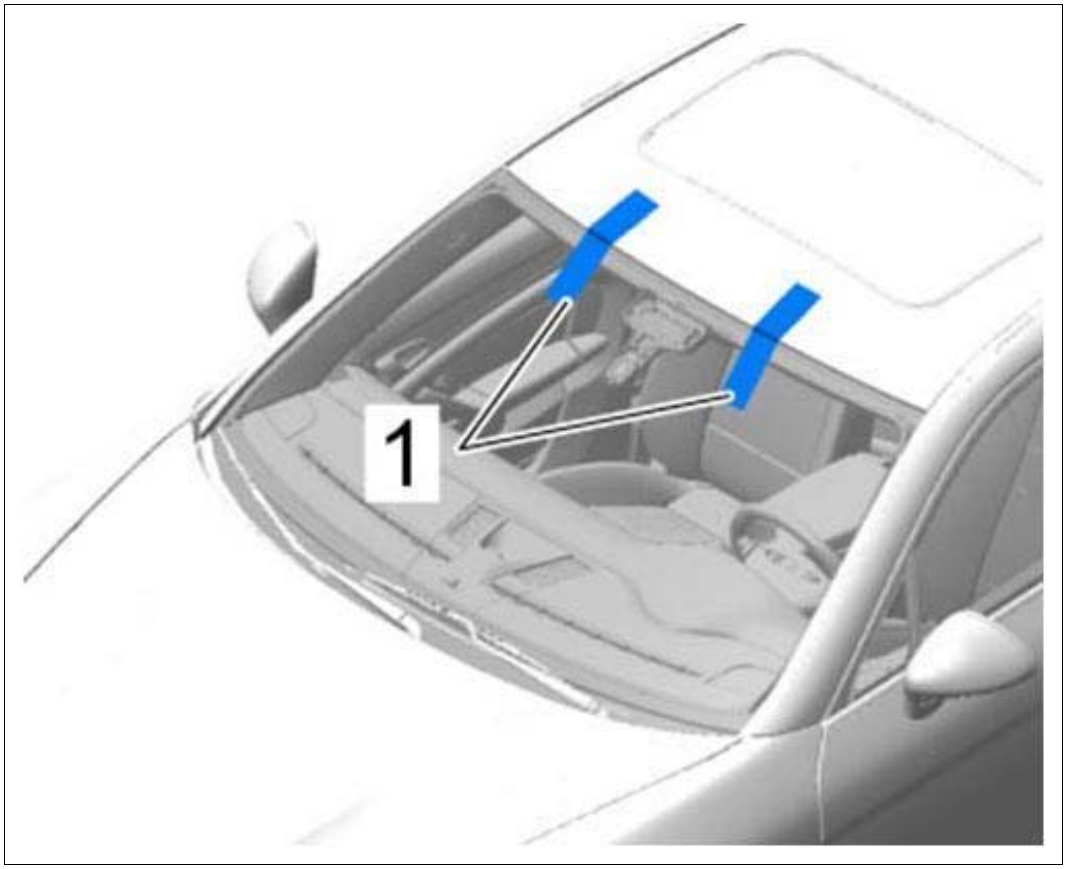

Courtesy of PORSCHE CARS NORTH AMERICA, INC.

4. Adhesive that has oozed out must be removed immediately and the affected fields of vision must be cleaned using cleaning solution **-H1-** .

Fig 4: Removing Emerging Adhesive Residue

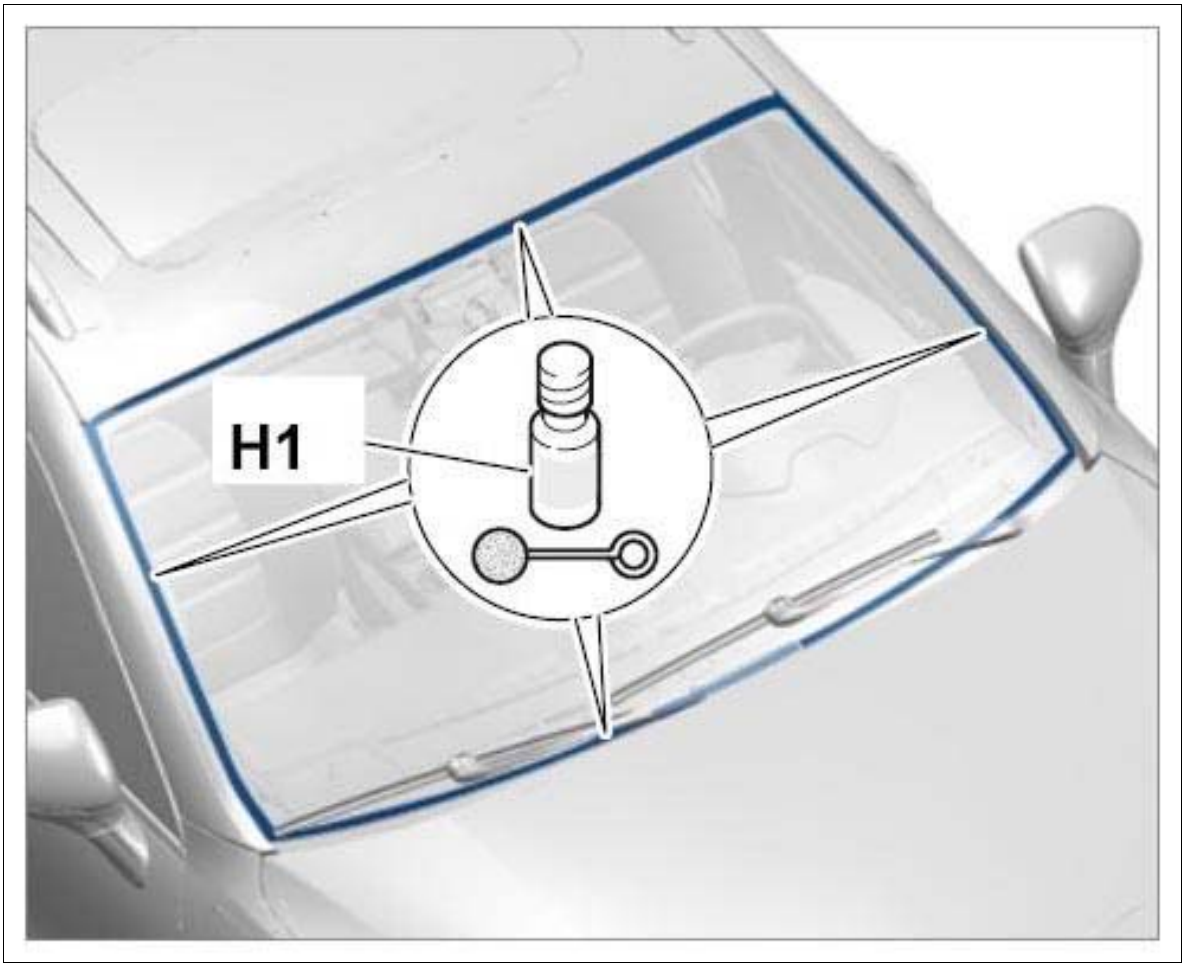

Courtesy of PORSCHE CARS NORTH AMERICA, INC.

WM 641219 REMOVING AND INSTALLING WINDSCREEN (ALL MODELS) > SUBSEQUENT WORK

1. Secure headliner at the front. → Installing headliner
2. Install sun visor. → Installing Sun Visor
3. Install cowl panel cover.
4. On vehicles with a rain sensor - Install rain sensor. → Installing Rain Sensor
5. On vehicles with a telephone - Install antenna for telephone. → Installing mobile communication antenna
6. On vehicles with front camera - Calibrate front camera. → 9638K2 CALIBRATING FRONT CAMERA
7. Install interior rear-view mirror. → Installing Interior Rear-View Mirror
8. Install A-pillar trim panel at the left and right. → Installing A-pillar trim panel

9. Install molding for windscreen. → Installing molding for windscreen

WM 642919 REMOVING AND INSTALLING FRONT CORNER WINDOW PANE (ALL MODELS) > TECHNICAL VALUES

Location	Description	Type	Basic value	Tolerance 1	Tolerance 2
Corner window to inner door		Tightening torque	4.5 Nm (4 ftlb.)		
Corner window to outer door		Tightening torque	4.5 Nm (4 ftlb.)		

WM 642919 REMOVING AND INSTALLING FRONT CORNER WINDOW PANE (ALL MODELS) > PRELIMINARY WORK

1. Remove trim frame. → 666355 REPLACING TRIM FRAME FOR FRONT DOOR WINDOW
2. Remove front window guide. → Removing Front Window Guide

WM 642919 REMOVING AND INSTALLING FRONT CORNER WINDOW PANE (ALL MODELS) > REMOVING FRONT CORNER WINDOW PANE

Information

- The number of fastening screws, fixing clips, plug connections, holders and trim panels can vary depending on equipment.
- The illustrations for removing and installing the drive mechanism are shown only on one equipment variant and may differ from the actual equipment variant.
- Some steps must be carried out automatically.
- Some of the repair illustrations show only one side of the vehicle.

1. Disengage door control unit **-1-** at the door inner panel and set it aside with lines connected.

   → WM 577355 REPLACING DOOR CONTROL UNIT (ALL MODELS)

2. Remove adhesive pad **-2-** .
3. Guide rubber seal **-3-** out of the door inner panel.
4. Unscrew screws **-4-** .

   Mounting for corner window pane, inner

5. Unscrew screw **-1-** .

6. Carefully push corner window pane **-2-** to the rear **-arrow-** .

   Mounting for corner window pane, outer

7. Swivel front corner window pane **-1-** inwards **-arrow A-** and guide corner window pane **-1-** with window guide up **-arrow B-** out of the door.

   Fig 1: Removing Corner Window Pane

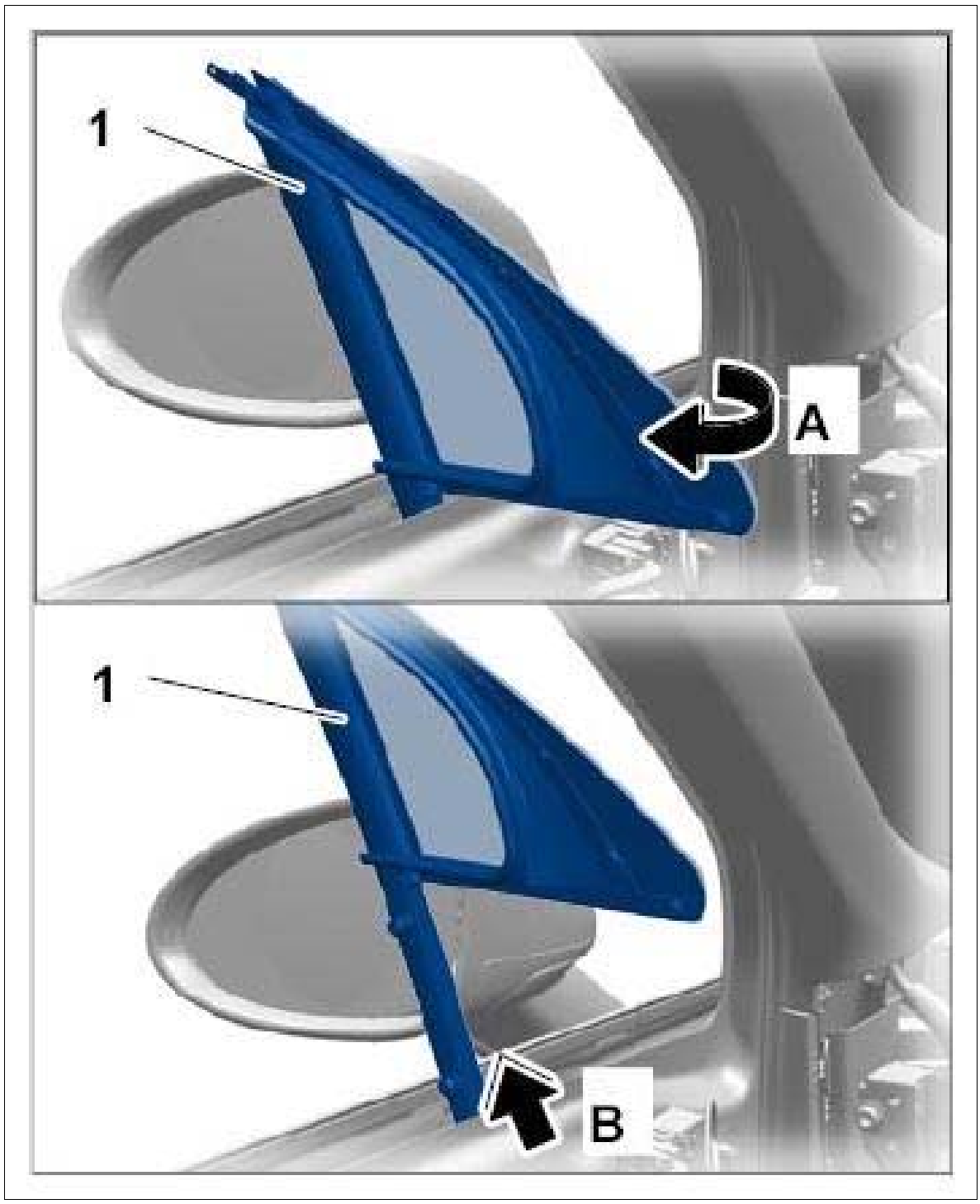

Courtesy of PORSCHE CARS NORTH AMERICA, INC.

WM 642919 REMOVING AND INSTALLING FRONT CORNER WINDOW PANE (ALL MODELS) > INSTALLING FRONT CORNER WINDOW PANE

Installation is performed in reverse order. Pay particular attention to the following:

1. Tighten screw to the specified torque. **Tightening torque 4.5 Nm (4 ftlb.)**
2. Tighten screws to the specified torque. **Tightening torque 4.5 Nm (4 ftlb.)**
3. Replace adhesive pad.
4. Check that all rubber guides are fitted correctly.

WM 642919 REMOVING AND INSTALLING FRONT CORNER WINDOW PANE (ALL MODELS) > SUBSEQUENT WORK

1. Install front window guide. → Installing Front Window Guide
2. Install trim frame. → 666355 REPLACING TRIM FRAME FOR FRONT DOOR WINDOW

WM 642949 REWORKING (COATING) FRONT CORNER WINDOW PANE (ALL MODELS) > GENERAL WARNING NOTES > WARNING NOTE FOR HYDROPHOBIC WINDOW

NOTE: Smears

- *Impaired vision and dazzling*

→ A coating may only be applied to the side windows.

→ Never apply a coating on the windscreen in particular.

WM 642949 REWORKING (COATING) FRONT CORNER WINDOW PANE (ALL MODELS) > PRELIMINARY WORK

Information

- The hydrophobic coating is extremely durable. If the hydrophobic characteristics are reduced, a new coating can be applied to the windows without any special measures.
- Check whether new coating needs to be applied by examining drops of water on the windows.

Spray on water using a water spray bottle with an atomiser and check the hydrophobic coating by examining the drops.

- Drop size if hydrophobic coating is OK

  Fig 1: Identifying Drop Size - Hydrophobic Coating OK

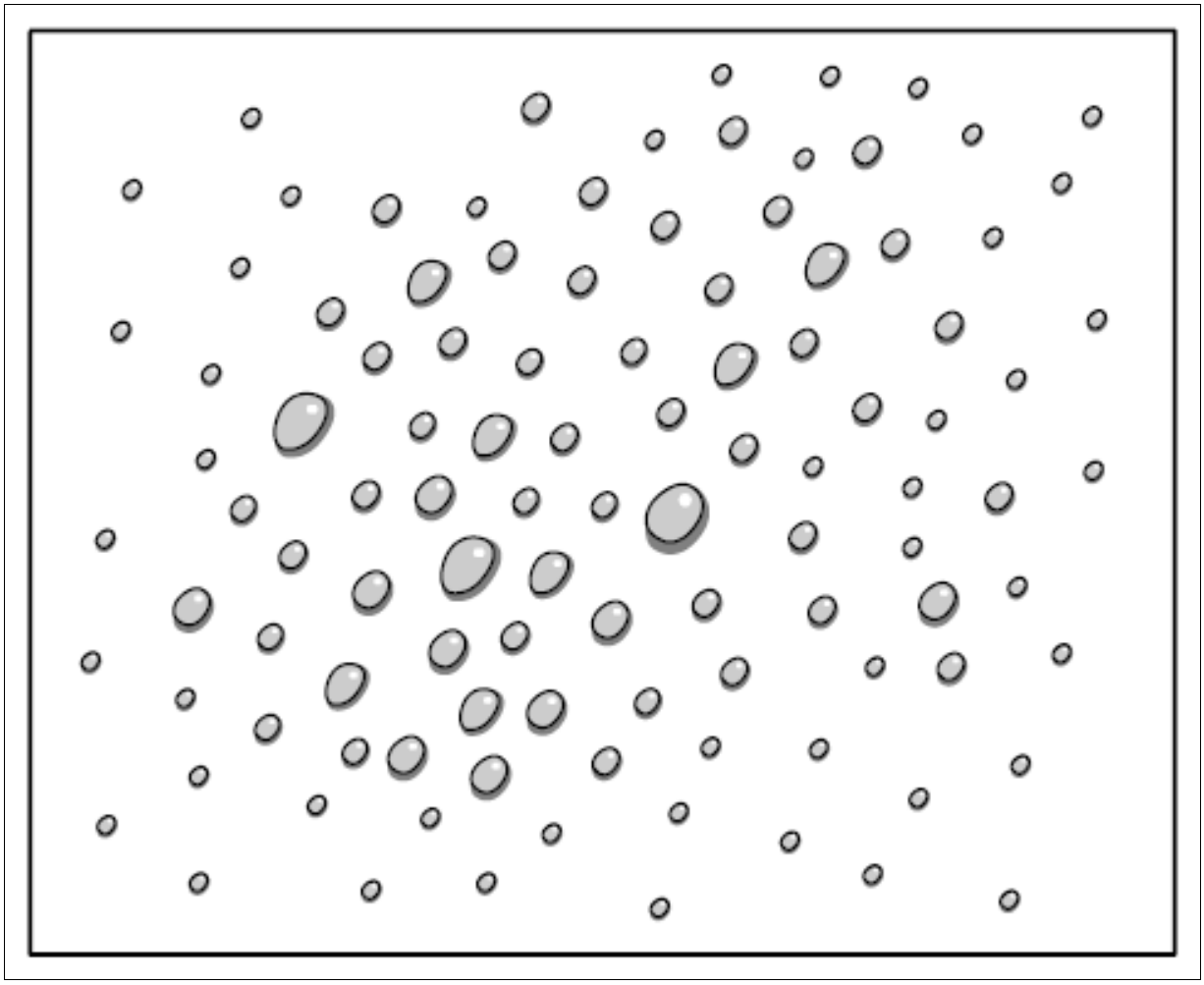

Courtesy of PORSCHE CARS NORTH AMERICA, INC.

- Drop size if coating is worn.

Fig 2: Identifying Drop Size - Hydrophobic Coating Worn

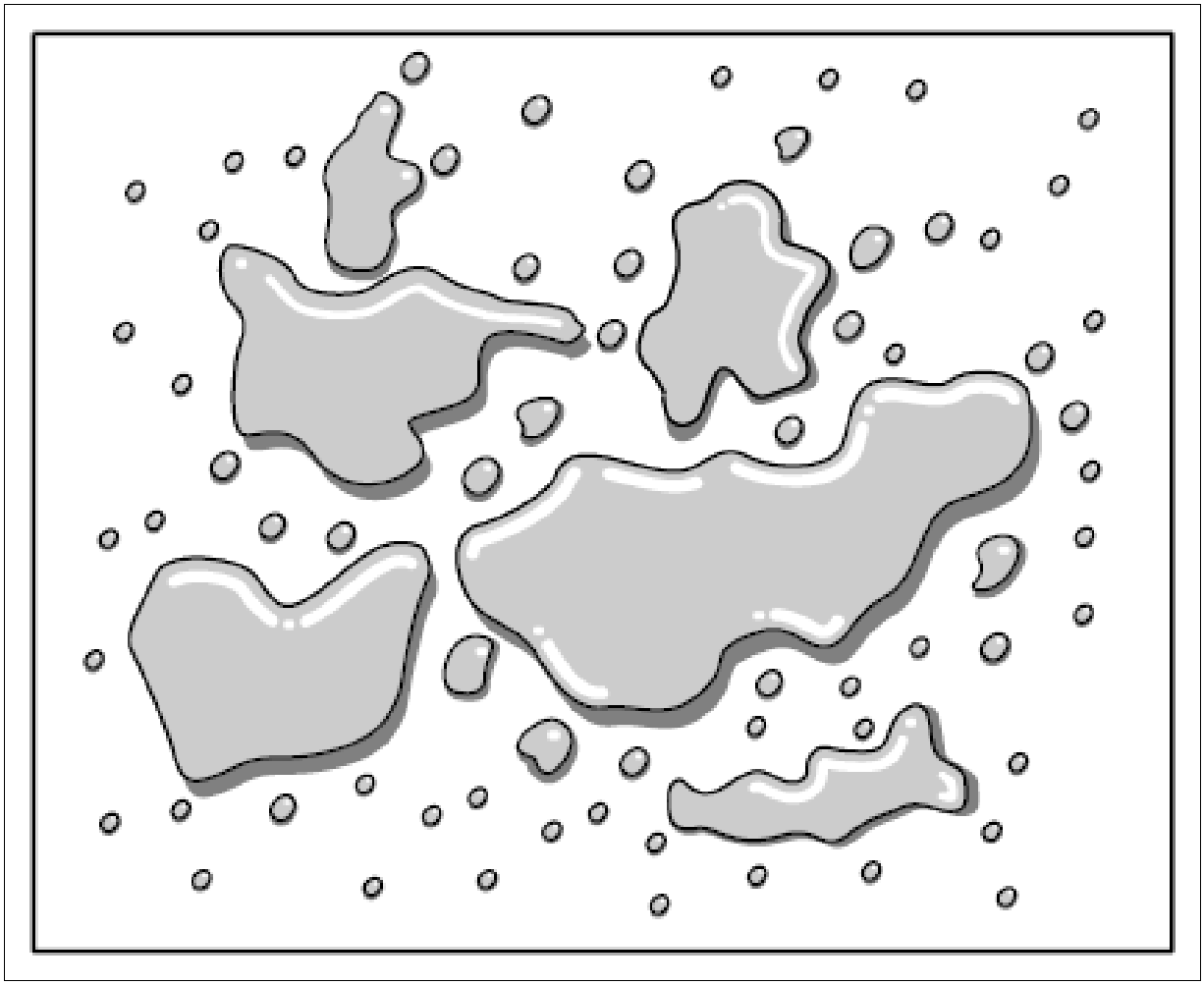

Courtesy of PORSCHE CARS NORTH AMERICA, INC.

WM 642949 REWORKING (COATING) FRONT CORNER WINDOW PANE (ALL MODELS) > CHECKING WINDOW GLASS

Information

Mixed hydrophobic coating agent must be used within 24 hours!

1. Pour the entire contents of the Component 2 bottle into the Component 1 bottle.
2. Close the bottle tightly again and shake well immediately for at least three minutes.

WM 642949 REWORKING (COATING) FRONT CORNER WINDOW PANE (ALL MODELS) > CHECKING WINDOW GLASS > CLEANING WINDOW SURFACES

Information

The window must be coated immediately after being polished.

1. Clean the window using commercially available glass cleaner.
2. Shake the polish well before use.
3. Dampen polishing cloths with water, apply polish and buff for several minutes.
4. Allow the film of polish to dry and then wipe it off completely.

WM 642949 REWORKING (COATING) FRONT CORNER WINDOW PANE (ALL MODELS) > APPLYING COATING

Information

- The hydrophobic coating must not come into contact with water or other fluids for at least 30 minutes after applying the coating.
  1. Apply hydrophobic coating agent as a flat liquid film and rub immediately and uniformly with a paper towel.
  2. A grey fog forms on the treated surface following application. Polish off this grey fog completely using a new, dry and clean paper towel.
  3. The coating must not come into contact with water or other fluids for at least 30 minutes.
- Dried-on coating agent can be softened by rubbing it with the cloth soaked in coating agent and then wiping it off with a clean paper towel.

WM 644019 REMOVING AND INSTALLING FRONT DOOR WINDOW (ALL MODELS) > PRELIMINARY WORK

1. Remove front door panel. → Removing front door panel
2. Remove power window motor. → Removing Power Window Motor
3. Remove front loudspeakers. → Removing front loudspeakers

WM 644019 REMOVING AND INSTALLING FRONT DOOR WINDOW (ALL MODELS) > REMOVING FRONT DOOR WINDOW

1. Guide out rubber seal **-1-** at the cover **-2-** .
2. Guide out wire harness **-3-** at the brackets for the cover **-2-** .
3. Unclip cover **-2-** on door inner panel, guide out door release cable at the cover **-2-** and remove cover **-2-** .

Fig 1: Identifying Cover On Front Door Inner Panel

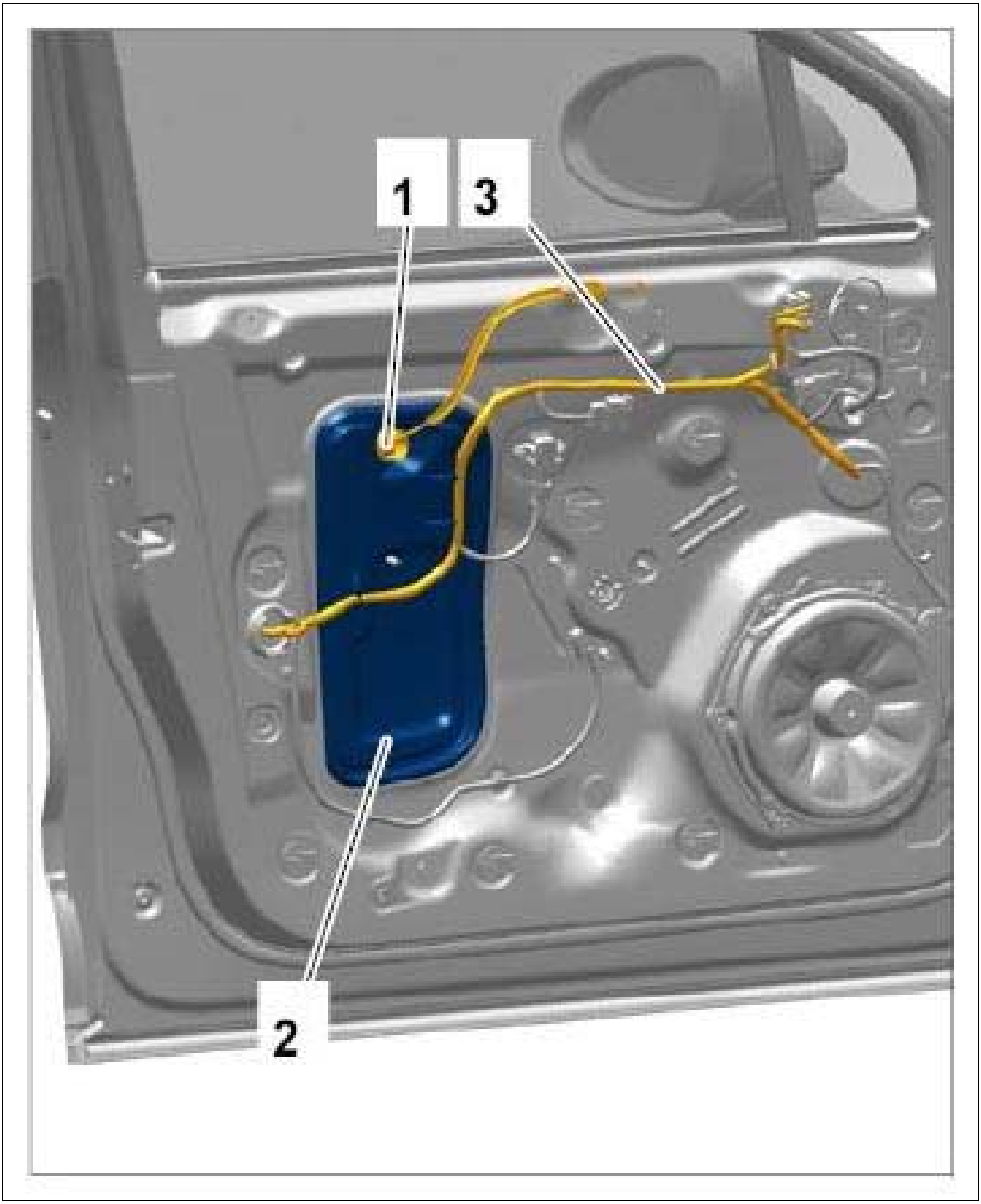

Courtesy of PORSCHE CARS NORTH AMERICA, INC.

4. Slide the window down until the mountings **-4-** are accessible through the cut-outs in the door inner panel.
5. Loosen door window glass **-1-** from the relevant mounting points **-4-** on the power windows mechanism.
    1. 5.1. Actuate locking mechanism **-2-** and remove limit stop **-3-** on the power windows mechanism.

Move door window glass **-1-** down until the locking mechanism **-5-** is accessible.

Actuate locking mechanism **-5-** using a suitable tool **-arrow A-** and carefully raise the door window glass **-1- (-arrow B-)** .

2. 5.2. Pull door window glass **-1-** fully up **-arrow B-** out of the mounting points **-4-** .

Fig 2: Releasing Door Window Mounting

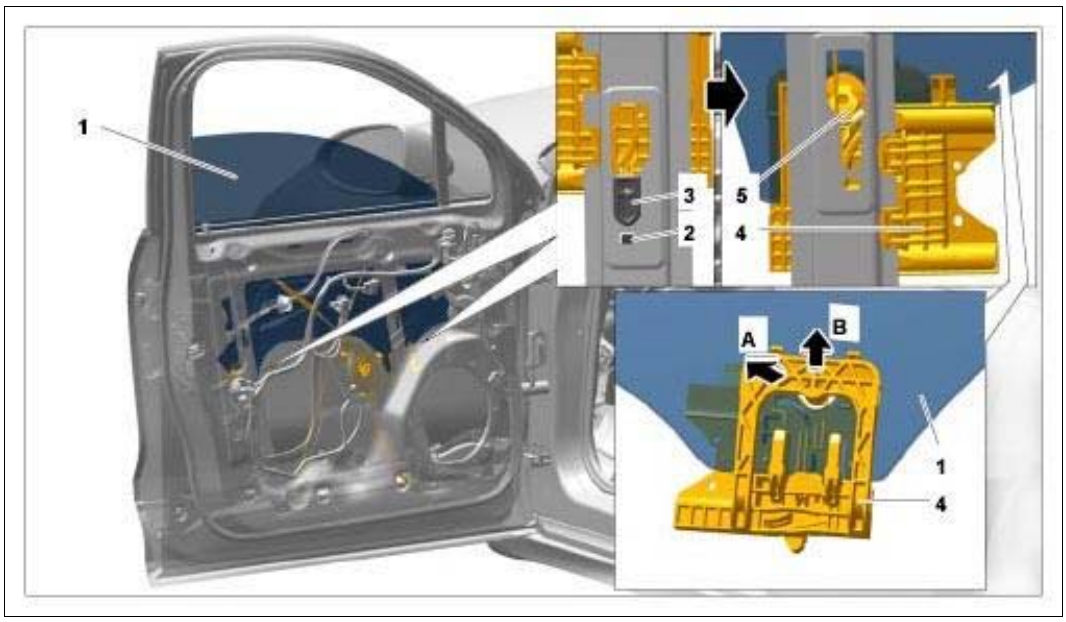

Courtesy of PORSCHE CARS NORTH AMERICA, INC.

6. Pull door window glass **-1-** up slightly, tilt it forward at an angle **-arrow A-** and pull it up **-arrow B-** out of the window guide.

Fig 3: Removing Door Window Glass

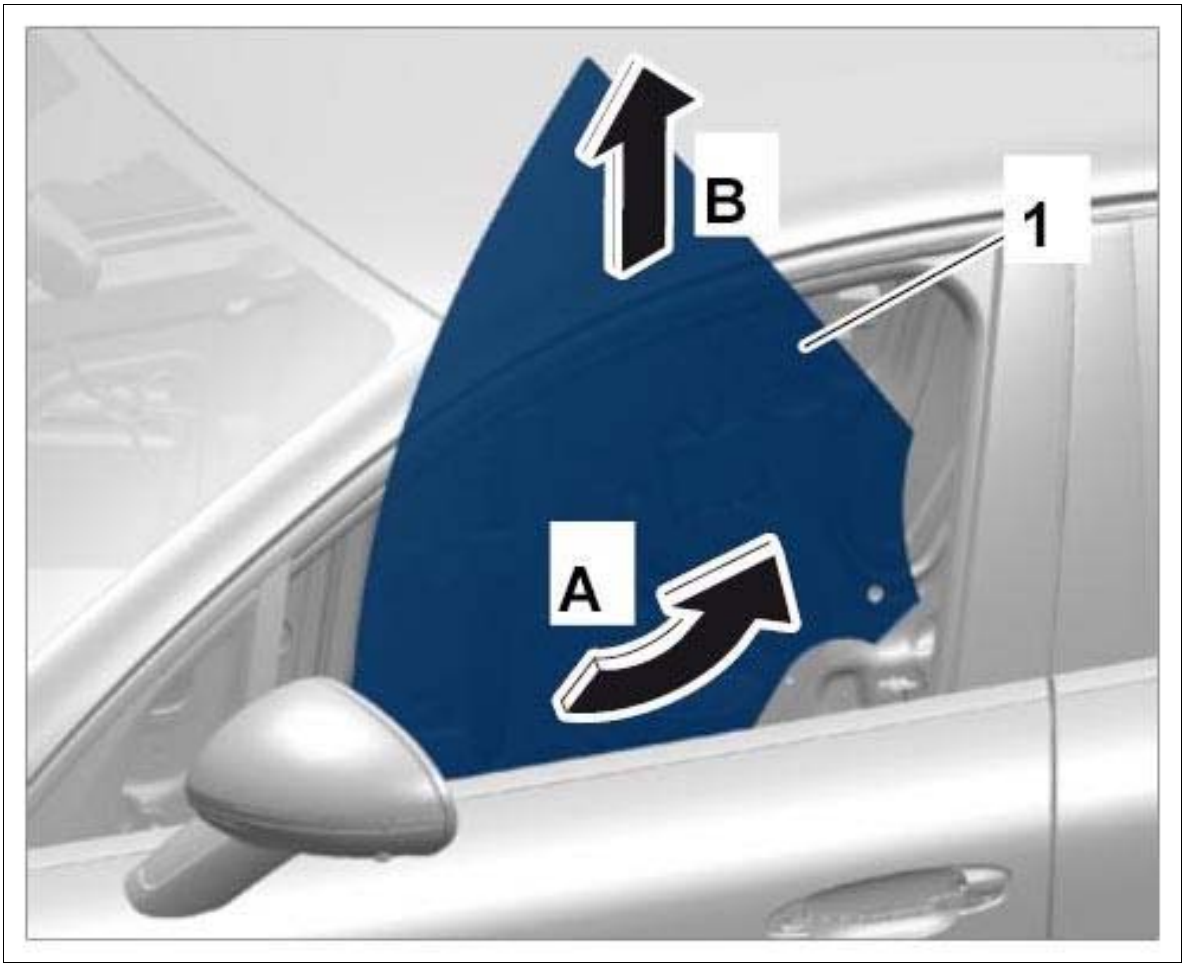

Courtesy of PORSCHE CARS NORTH AMERICA, INC.

WM 644019 REMOVING AND INSTALLING FRONT DOOR WINDOW (ALL MODELS) > INSTALLING FRONT DOOR WINDOW

Installation is performed in reverse order.

WM 644019 REMOVING AND INSTALLING FRONT DOOR WINDOW (ALL MODELS) > SUBSEQUENT WORK

1. Install front loudspeakers. → Installing front loudspeakers
2. Install power window motor. → Installing Power Window Motor
3. Install front door panel. → Installing front door panel

WM 644049 REWORKING (COATING) FRONT DOOR WINDOW (ALL MODELS) >

GENERAL WARNING NOTES

NOTE: Smears

- *Impaired vision and dazzling*

→ A coating may only be applied to the side windows.

→ Never apply a coating on the windscreen in particular.

WM 644049 REWORKING (COATING) FRONT DOOR WINDOW (ALL MODELS) > PRELIMINARY WORK

Information

- The hydrophobic coating is extremely durable. If the hydrophobic characteristics are reduced, a new coating can be applied to the windows without any special measures.
- Check whether new coating needs to be applied by examining drops of water on the windows.

Spray on water using a water spray bottle with an atomiser and check the hydrophobic coating by examining the drops.

- Drop size if hydrophobic coating is OK

Fig 1: Identifying Drop Size - Hydrophobic Coating OK

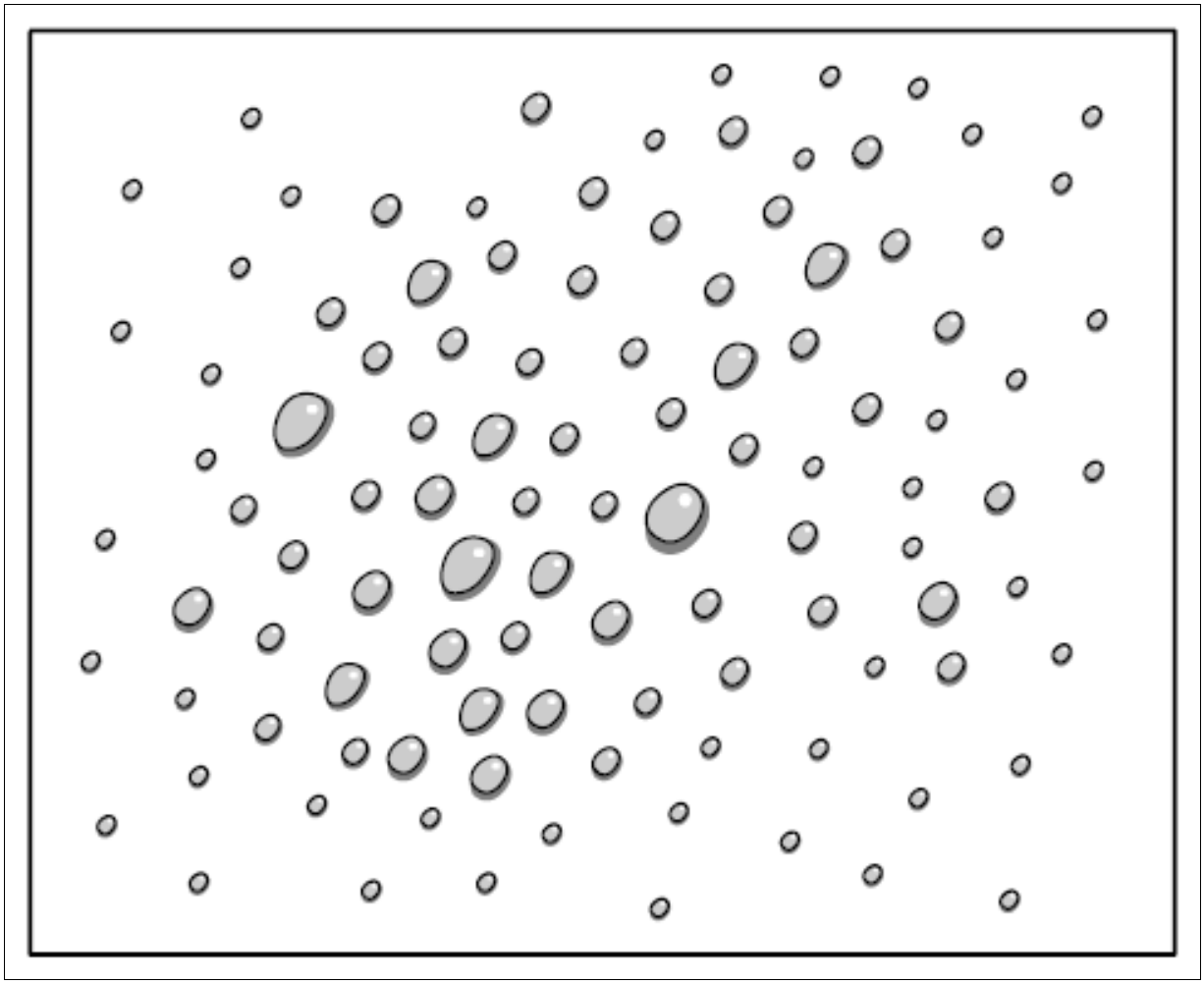

Courtesy of PORSCHE CARS NORTH AMERICA, INC.

- Drop size if coating is worn.

Fig 2: Identifying Drop Size - Hydrophobic Coating Worn

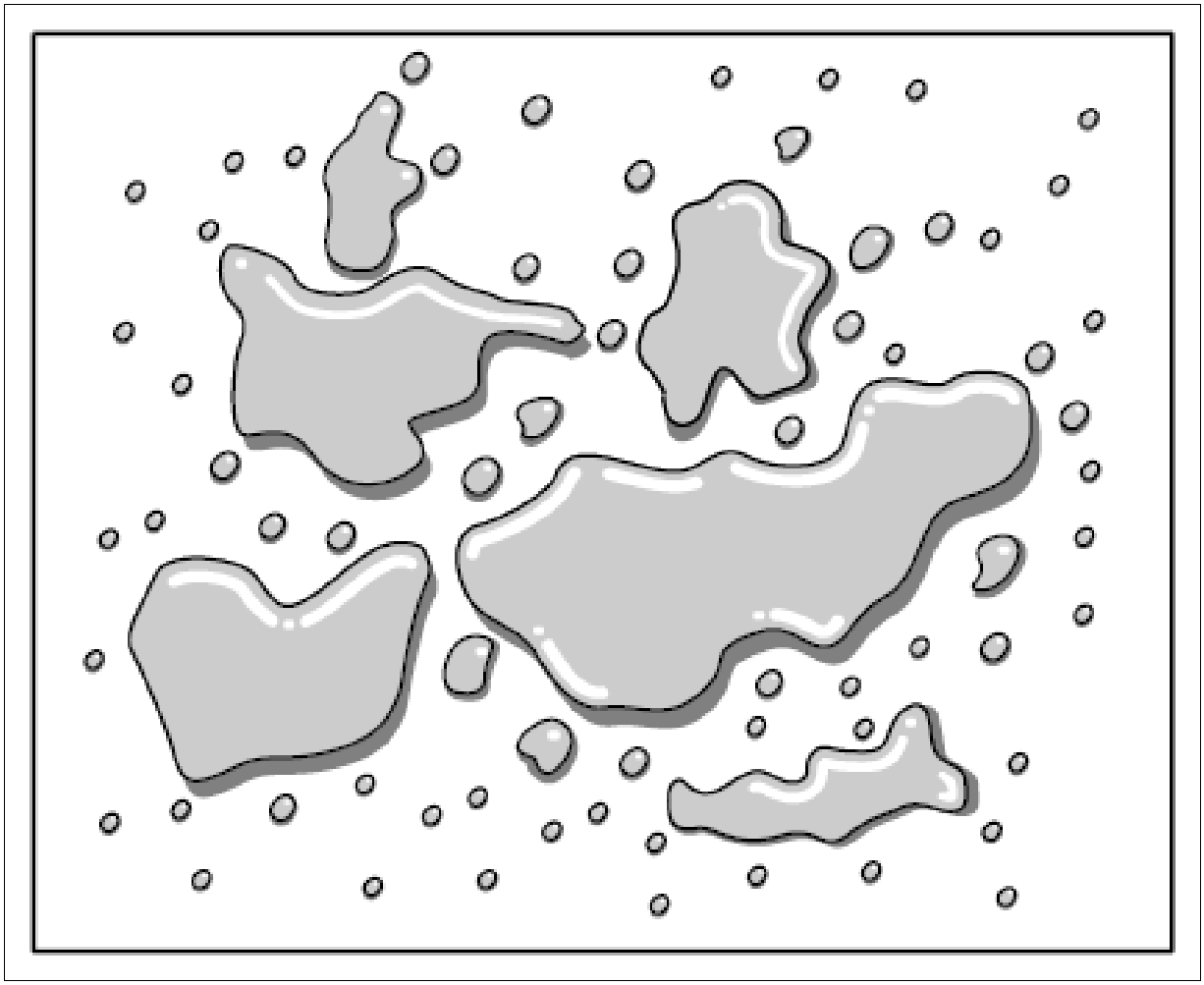

Courtesy of PORSCHE CARS NORTH AMERICA, INC.

WM 644049 REWORKING (COATING) FRONT DOOR WINDOW (ALL MODELS) > PRELIMINARY WORK > PREPARING COMPONENTS FOR PROCESSING

Information

Mixed hydrophobic coating agent must be used within 24 hours!

1. Pour the entire contents of the Component 2 bottle into the Component 1 bottle.
2. Close the bottle tightly again and shake well immediately for at least three minutes.

WM 644049 REWORKING (COATING) FRONT DOOR WINDOW (ALL MODELS) > PRELIMINARY WORK > CLEANING WINDOW SURFACES

Information

The window must be coated immediately after being polished.

1. Clean the window using commercially available glass cleaner.
2. Shake the polish well before use.
3. Dampen polishing cloths with water, apply polish and buff for several minutes.
4. Allow the film of polish to dry and then wipe it off completely.

WM 644049 REWORKING (COATING) FRONT DOOR WINDOW (ALL MODELS) > APPLYING COATING

Information

- The hydrophobic coating must not come into contact with water or other fluids for at least 30 minutes after applying the coating.
  1. Apply hydrophobic coating agent as a flat liquid film and rub immediately and uniformly with a paper towel.
  2. A grey fog forms on the treated surface following application. Polish off this grey fog completely using a new, dry and clean paper towel.
  3. The coating must not come into contact with water or other fluids for at least 30 minutes.
  - Dried-on coating agent can be softened by rubbing it with the cloth soaked in coating agent and then wiping it off with a clean paper towel.

WM 644519 REMOVING AND INSTALLING FRONT WINDOW GUIDE (ALL MODELS) > PRELIMINARY WORK

1. Remove front door window. → Removing Front Door Window
2. Remove trim frame for front door window. → 666355 REPLACING TRIM FRAME FOR FRONT DOOR WINDOW
3. Remove B-pillar cover. → Removing B-pillar cover

WM 644519 REMOVING AND INSTALLING FRONT WINDOW GUIDE (ALL MODELS) > REMOVING FRONT WINDOW GUIDE

Information

- The number of fastening screws, fixing clips, plug connections, holders and trim panels can vary depending on equipment.
- The illustrations for removing and installing the drive mechanism are shown only on one equipment variant and may differ from the actual equipment variant.

- Some steps must be carried out automatically.
- Some of the repair illustrations show only one side of the vehicle.

1. Loosen rubber lip **-1-** of the window guide **-2-** in area **-arrow A-** on the sheetmetal seam **-3-** .
2. Fold over window guide **-2-** in area **-arrow B-** and pull window guide **-2-** off the door.

Fig 1: Loosening Window Guide

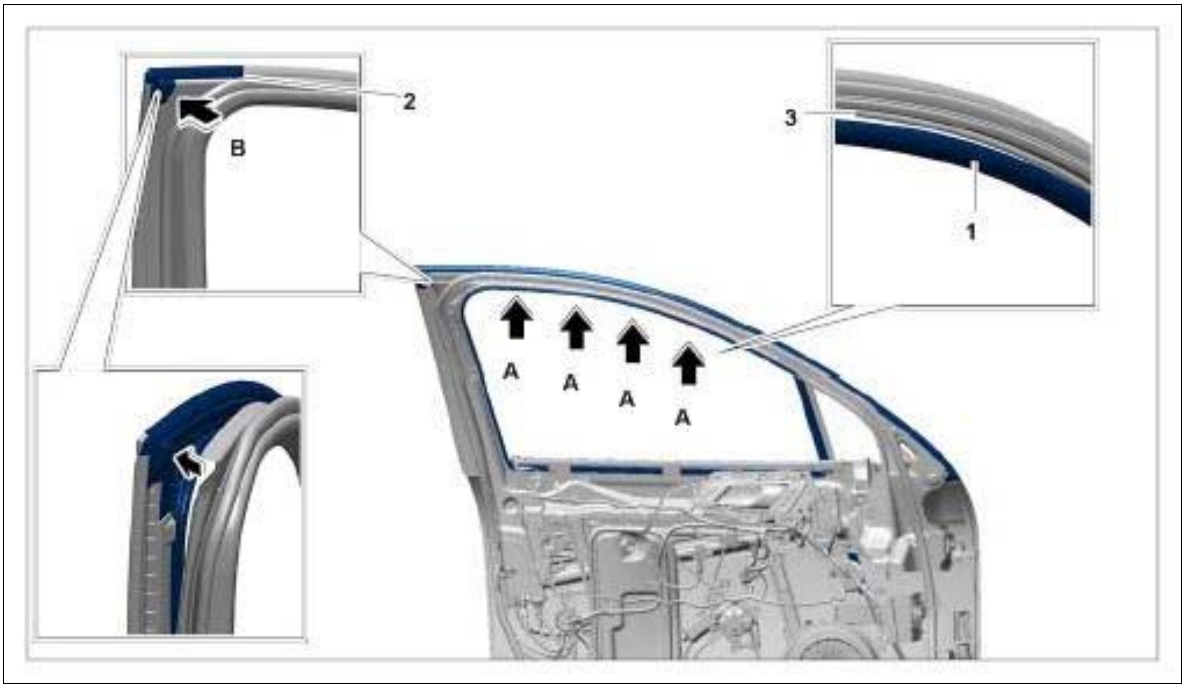

Courtesy of PORSCHE CARS NORTH AMERICA, INC.

3. Loosen window guide **-1-** in the upper area **-arrow A-** from the door.
4. Pull window guide **-1-** to the rear and out of the guide **-2-** .
5. Loosen window guide **-1-** in the front area **-arrow B-** from the door.
6. Pull window guide **-1-** up completely **-arrow C-** and remove it from the guide **-2-** .

Fig 2: Removing Window Guide

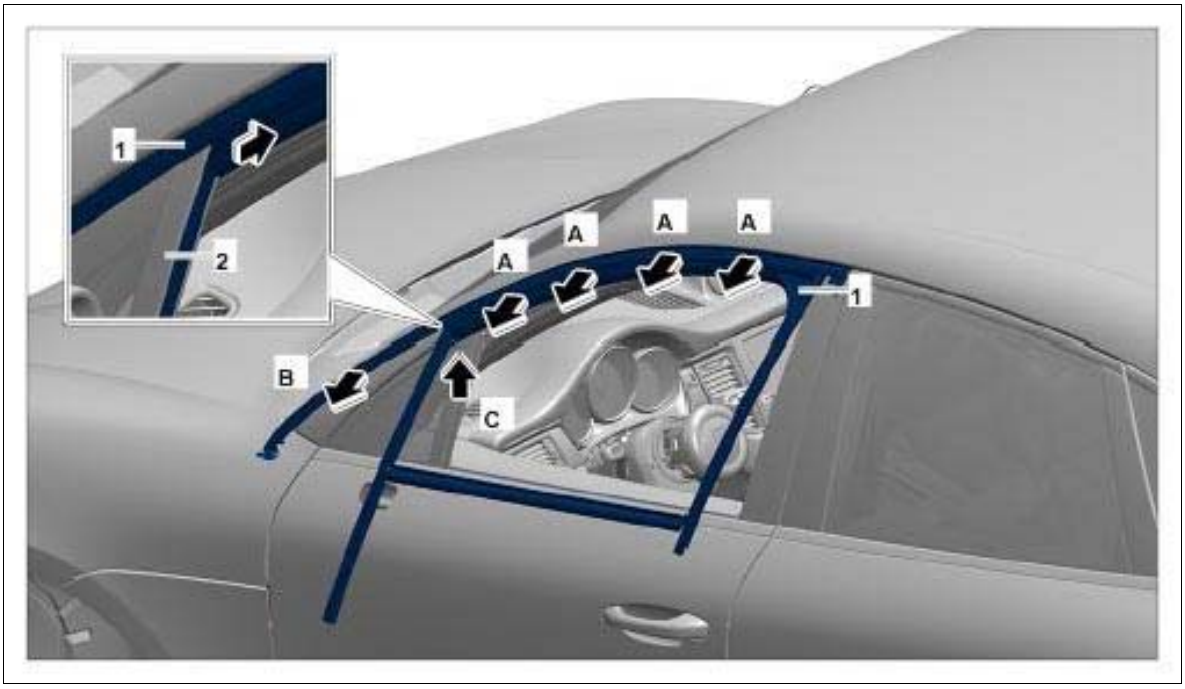

Courtesy of PORSCHE CARS NORTH AMERICA, INC.

WM 644519 REMOVING AND INSTALLING FRONT WINDOW GUIDE (ALL MODELS) > INSTALLING FRONT WINDOW GUIDE

Installation is performed in reverse order. Pay particular attention to the following:

1. Coat window guide with rubber lubricant before fitting.
2. Check that the window guide is fitted correctly.

WM 644519 REMOVING AND INSTALLING FRONT WINDOW GUIDE (ALL MODELS) > SUBSEQUENT WORK

1. Install B-pillar cover. → Installing B-pillar cover
2. Install front door window. → Installing Front Door Window
3. Install trim frame for front door window. → 666355 REPLACING TRIM FRAME FOR FRONT DOOR WINDOW

WM 644619 REMOVING AND INSTALLING REAR WINDOW GUIDE (ALL MODELS) > PRELIMINARY WORK

1. Remove C-pillar cover. → Removing C-pillar cover

WM 644619 REMOVING AND INSTALLING REAR WINDOW GUIDE (ALL MODELS) > REMOVING REAR WINDOW GUIDE

1. Loosen rubber seal **-1-** on the door and turn it inside out.
2. Loosen rubber seal **-2-** on the door and turn it inside out.
3. Loosen rubber seal **-3-** on the door and turn it inside out.
4. Pull window guide **-4-** up out of the door.

Fig 1: Loosening Window Guide

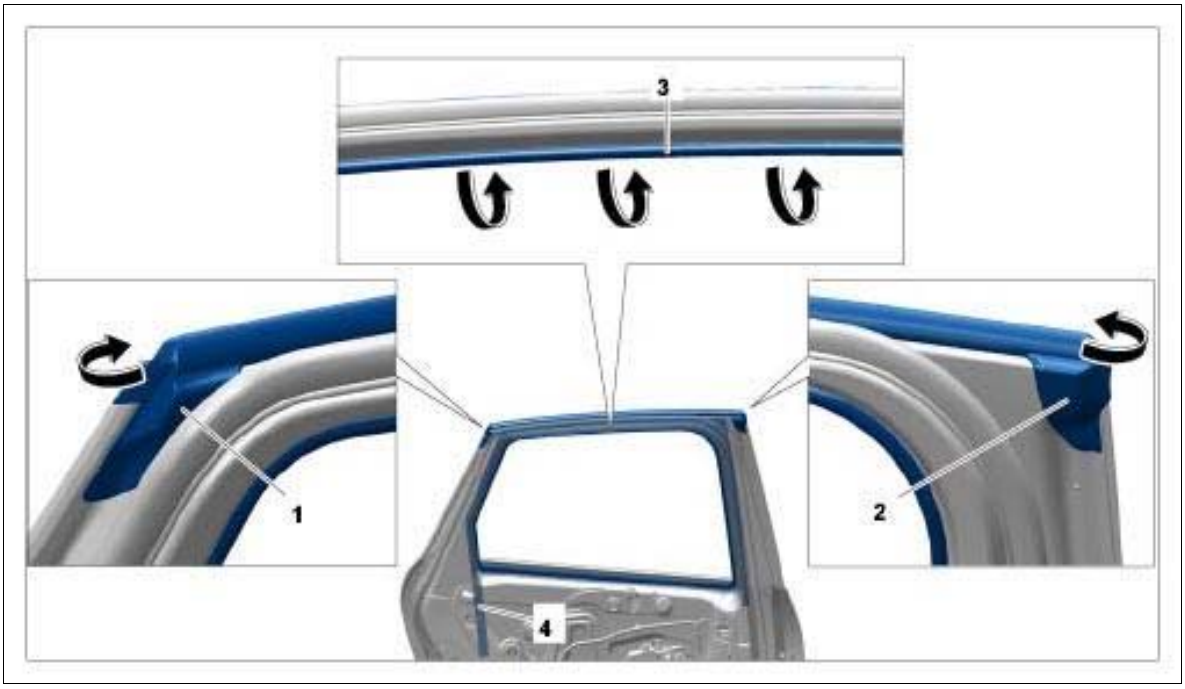

Courtesy of PORSCHE CARS NORTH AMERICA, INC.

5. Pull window guide **-1-** off the door at the top.

Fig 2: Removing Window Guide

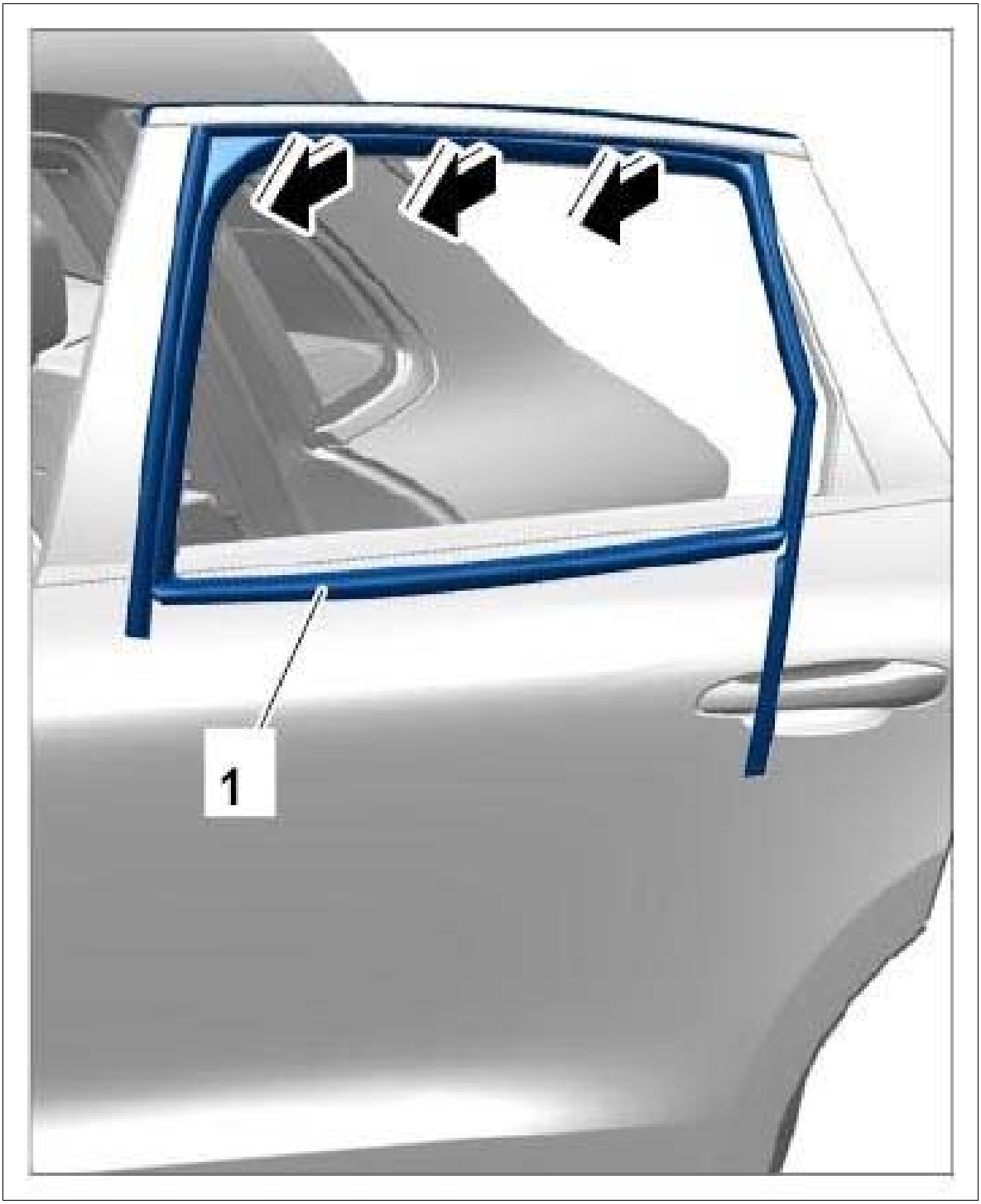

Courtesy of PORSCHE CARS NORTH AMERICA, INC.

WM 644619 REMOVING AND INSTALLING REAR WINDOW GUIDE (ALL MODELS) > INSTALLING REAR WINDOW GUIDE

Installation is performed in reverse order. Pay particular attention to the following:

1. Coat window guide with rubber lubricant before fitting.
2. Check that the window guide is fitted correctly.

WM 644619 REMOVING AND INSTALLING REAR WINDOW GUIDE (ALL MODELS) > SUBSEQUENT WORK

1. Install C-pillar cover. → Installing C-pillar cover

WM 645219 REMOVING AND INSTALLING FRONT POWER WINDOWS (ALL MODELS) > TECHNICAL VALUES

Location	Description	Type	Basic value	Tolerance 1	Tolerance 2
Front power window motor to front door	Internal Torx screw, Ø 5 x 22	Tightening torque	3.3 Nm (2 ftlb.)		
Fastening nut for power windows		Tightening torque	7.5 Nm (5.5 ftlb.)		

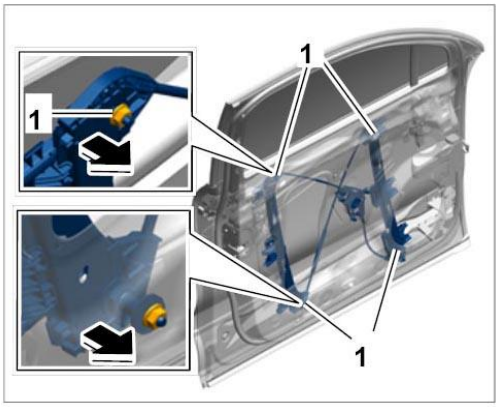

Removing power windows mechanism

WM 645219 REMOVING AND INSTALLING FRONT POWER WINDOWS (ALL MODELS) > PRELIMINARY WORK

Remove front door panel. → Removing front door panel

WM 645219 REMOVING AND INSTALLING FRONT POWER WINDOWS (ALL MODELS) > REMOVING FRONT POWER WINDOWS

Fig 1: Identifying Power Windows Mechanism Position

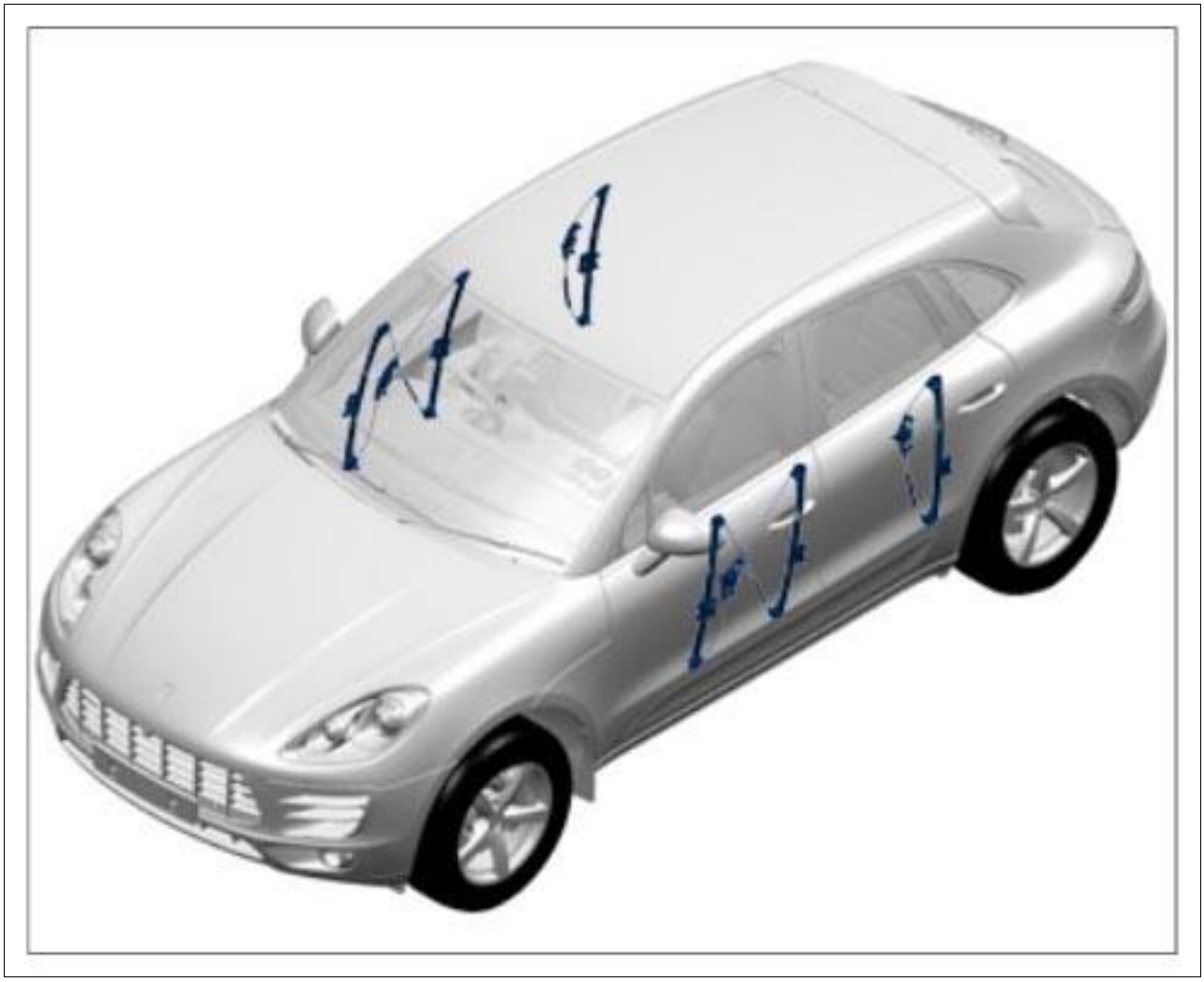

Courtesy of PORSCHE CARS NORTH AMERICA, INC.

1. Unclip cover on door inner panel, guide out door release cable at the cover and remove cover.
2. Disconnect electric plug connection for power window motor.
    1. 2.1. Press release button **-b-** and disconnect electric plug connection **-1-** .
3. Unscrew fastening screws **-2-** and remove power window motor **-3-** .

Fig 2: Removing Front Power Window Motor

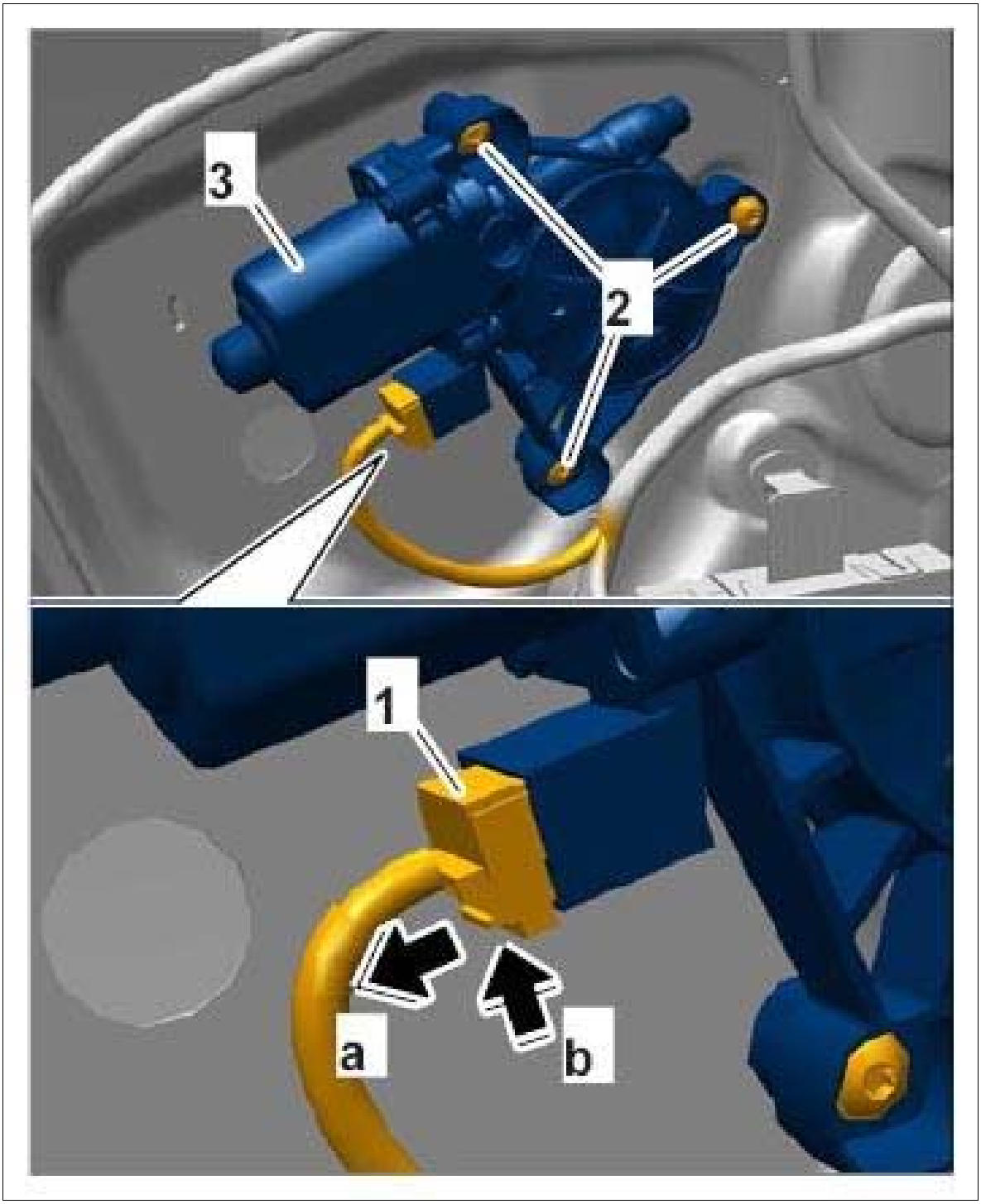

Courtesy of PORSCHE CARS NORTH AMERICA, INC.

4. Slide the window down until the mountings **-4-** are accessible through the cut-outs in the door inner panel.

5. Loosen door window glass at the power windows mechanism.

    1. 5.1. Actuate locking mechanism **-2-** and remove limit stop **-3-** on the power windows mechanism.

Move door window glass **-1-** down until the locking mechanism **-5-** is accessible.

Actuate locking mechanism **-5-** using a suitable tool **-arrow A-** and carefully raise the door window glass **-1- (-arrow B-)** .

2. 5.2. Pull door window glass **-1-** fully up **-arrow B-** out of the mounting points **-4-** .

Fig 3: Releasing Door Window Mounting

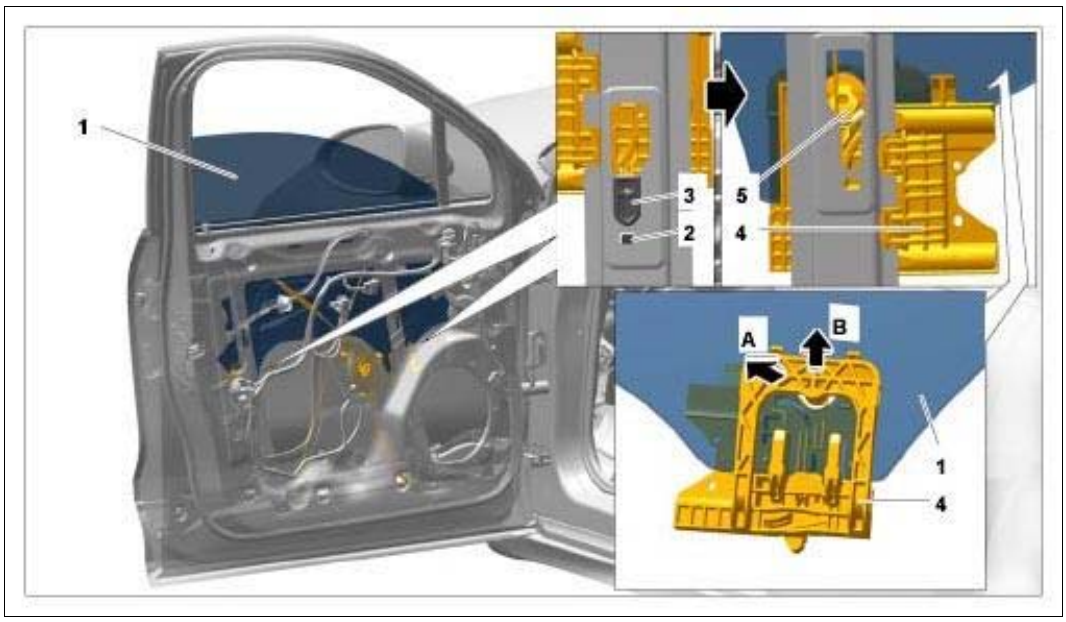

Courtesy of PORSCHE CARS NORTH AMERICA, INC.

6. Slide door window glass up fully and secure it to prevent it from falling down.
7. Remove stopper at the top of the bodyshell of the door.
8. Loosen fastening nuts **-1-** at the top and unscrew and remove fastening nuts at the bottom **-1-** .

Fig 4: Removing Power Windows Mechanism

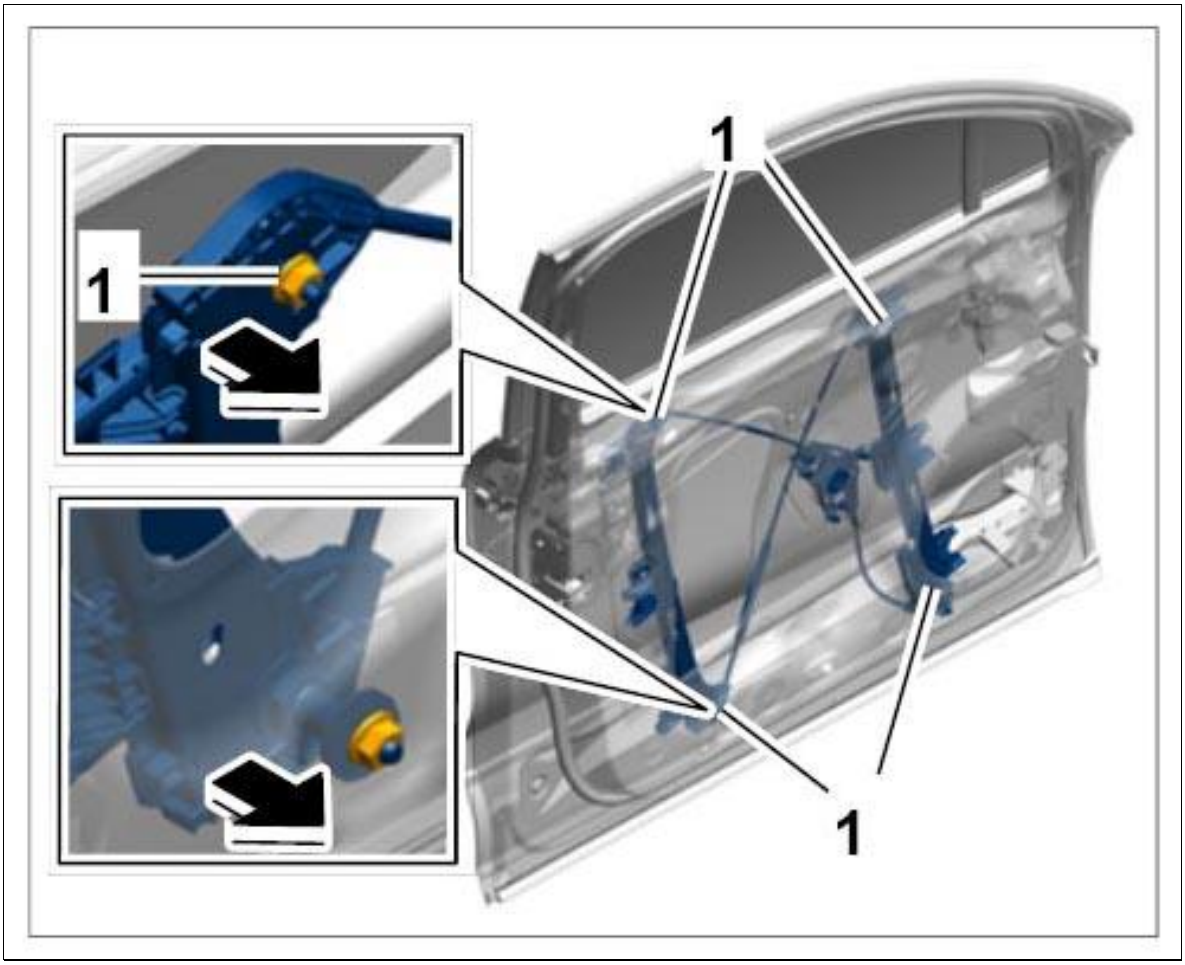

Courtesy of PORSCHE CARS NORTH AMERICA, INC.

9. Press mounting clip for power window motor together using a suitable tool and unclip it from the bodyshell of the door.
10. Guide out power windows mechanism at the top and remove through the opening in the bodyshell of the door.

WM 645219 REMOVING AND INSTALLING FRONT POWER WINDOWS (ALL MODELS) > INSTALLING FRONT POWER WINDOWS

1. Installation is performed in reverse order to removal.
2. Tighten fastening nut for power windows mechanism to **Tightening torque 7.5 Nm (5.5 ftlb.)** .
3. Tighten fastening screws for power window motor to **Tightening torque 3.3 Nm (2 ftlb.)** .

WM 645219 REMOVING AND INSTALLING FRONT POWER WINDOWS (ALL MODELS) > SUBSEQUENT WORK

1. Install front door panel. → Removing front door panel
2. Teach end positions of front power window motor.
    1. 2.1. Pull rocker switch and close window fully.
    2. 2.2. Pull rocker switch again. (The upper end position is stored).
    3. 2.3. Press rocker switch and open window fully.
    4. 2.4. Press rocker switch again. (The lower end position is stored).

WM 645419 REMOVING AND INSTALLING POWER WINDOW MOTOR (ALL MODELS) > TECHNICAL VALUES

Location	Description	Type	Basic value	Tolerance 1	Tolerance 2
Front power window motor to front door	Internal Torx screw, Ø 5 x 22	Tightening torque	3.3 Nm (2 ftlb.)		

WM 645419 REMOVING AND INSTALLING POWER WINDOW MOTOR (ALL MODELS) > PRELIMINARY WORK

1. Remove front door panel. → Removing front door panel

WM 645419 REMOVING AND INSTALLING POWER WINDOW MOTOR (ALL MODELS) > REMOVING POWER WINDOW MOTOR

WARNING: Electrically moved components

- *Danger of limbs being trapped or severed*

→ Switch off electric power to drive motor.

→ Make sure it does not switch on again.

→ Check that there is no electric charge.

1. Switch off ignition and pull remote control out of ignition lock.
2. Pull out locking mechanism **-a-** , press release button **-b-** and pull off electric plug connection **-1-** .
3. Unscrew fastening screws **-2-** and remove front power window motor **-3-** .

Fig 1: Removing Front Power Window Motor

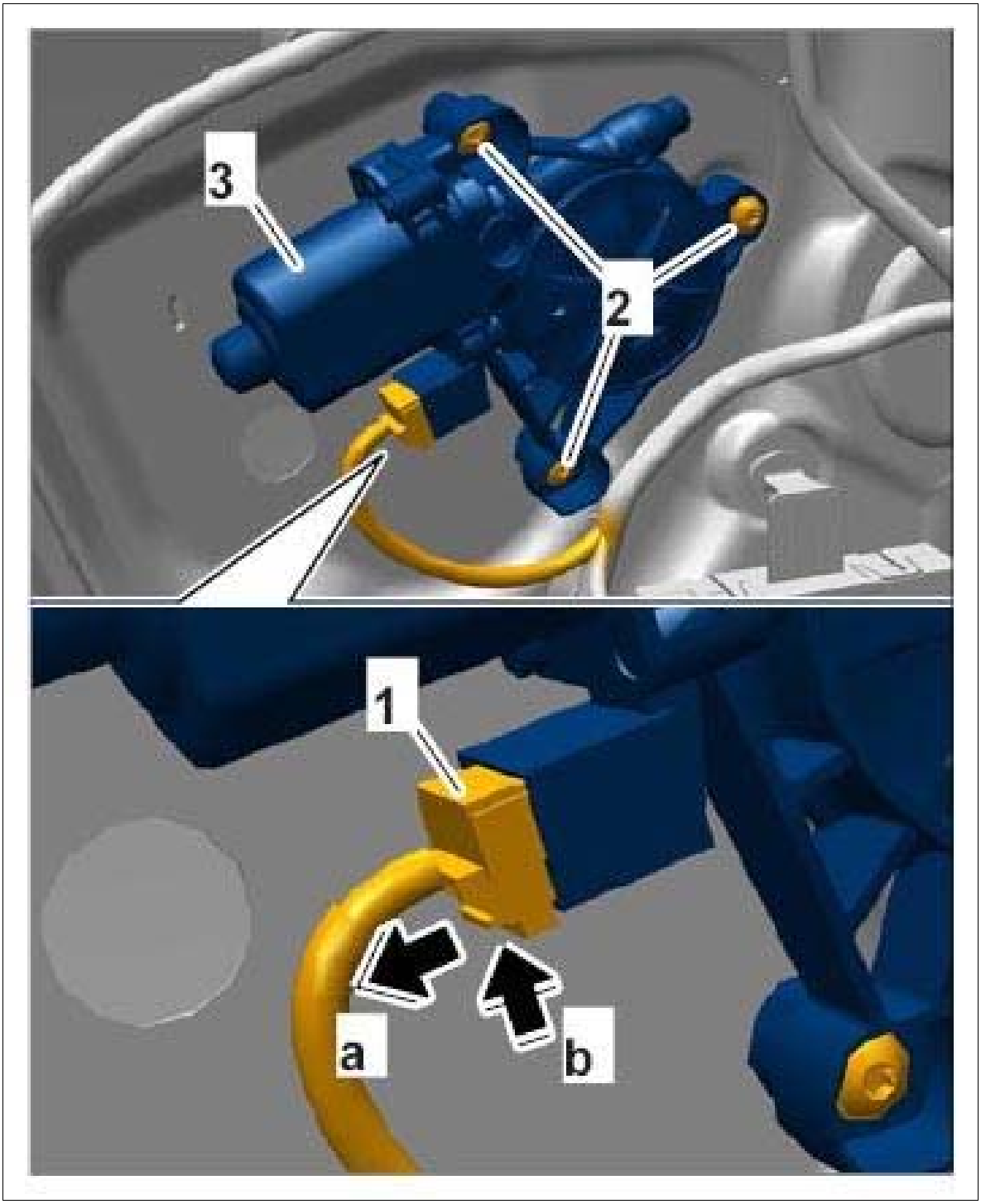

Courtesy of PORSCHE CARS NORTH AMERICA, INC.

WM 645419 REMOVING AND INSTALLING POWER WINDOW MOTOR (ALL MODELS) > INSTALLING POWER WINDOW MOTOR

1. Installation is performed in reverse order to removal.

2. Tighten fastening screws used to secure front power window motor to front door. **Tightening torque 3.3 Nm (2 ftlb.)**

WM 645419 REMOVING AND INSTALLING POWER WINDOW MOTOR (ALL MODELS) > SUBSEQUENT WORK

1. Install front door panel. → Installing front door panel
2. Teach end positions of front power window motor.
    1. 2.1. Pull rocker switch and close window fully.
    2. 2.2. Pull rocker switch again. (The upper end position is stored).
    3. 2.3. Press rocker switch and open window fully.
    4. 2.4. Press rocker switch again. (The lower end position is stored).

WM 645819 REMOVING AND INSTALLING SWITCH FOR FRONT POWER WINDOWS (ALL MODELS) > TECHNICAL VALUES

Location	Description	Type	Basic value	Tolerance 1	Tolerance 2
Armrest to door panel	Internal Torx screw, Ø 5 x 14	Tightening torque	2.3 Nm (1.5 ftlb.)		

WM 645819 REMOVING AND INSTALLING SWITCH FOR FRONT POWER WINDOWS (ALL MODELS) > PRELIMINARY WORK

1. Remove front door panel. → Removing front door panel

WM 645819 REMOVING AND INSTALLING SWITCH FOR FRONT POWER WINDOWS (ALL MODELS) > REMOVING SWITCH FOR FRONT POWER WINDOWS

1. Carefully disengage insulating mat **-1-** from the fastening hooks **-arrows-** and remove it.

Fig 1: Removing Insulating Mat

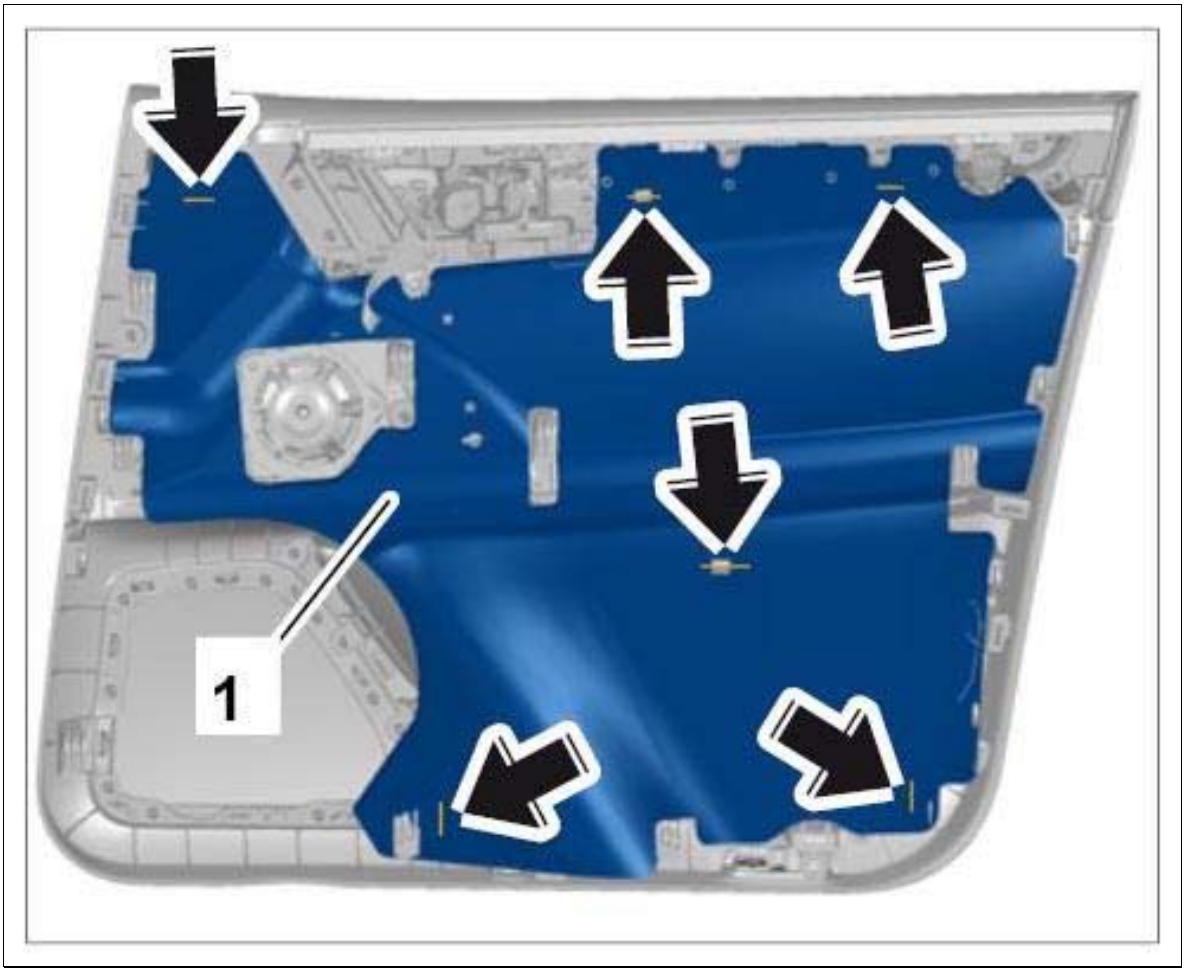

Courtesy of PORSCHE CARS NORTH AMERICA, INC.

2. Disconnect electric plug connection **-1-** at the light for ambient lighting.
3. Unscrew fastening screw **-2-** on the rebound strap **-3-** .
4. Unscrew fastening screws **-4-** on the armrest.

Fig 2: Removing Armrest

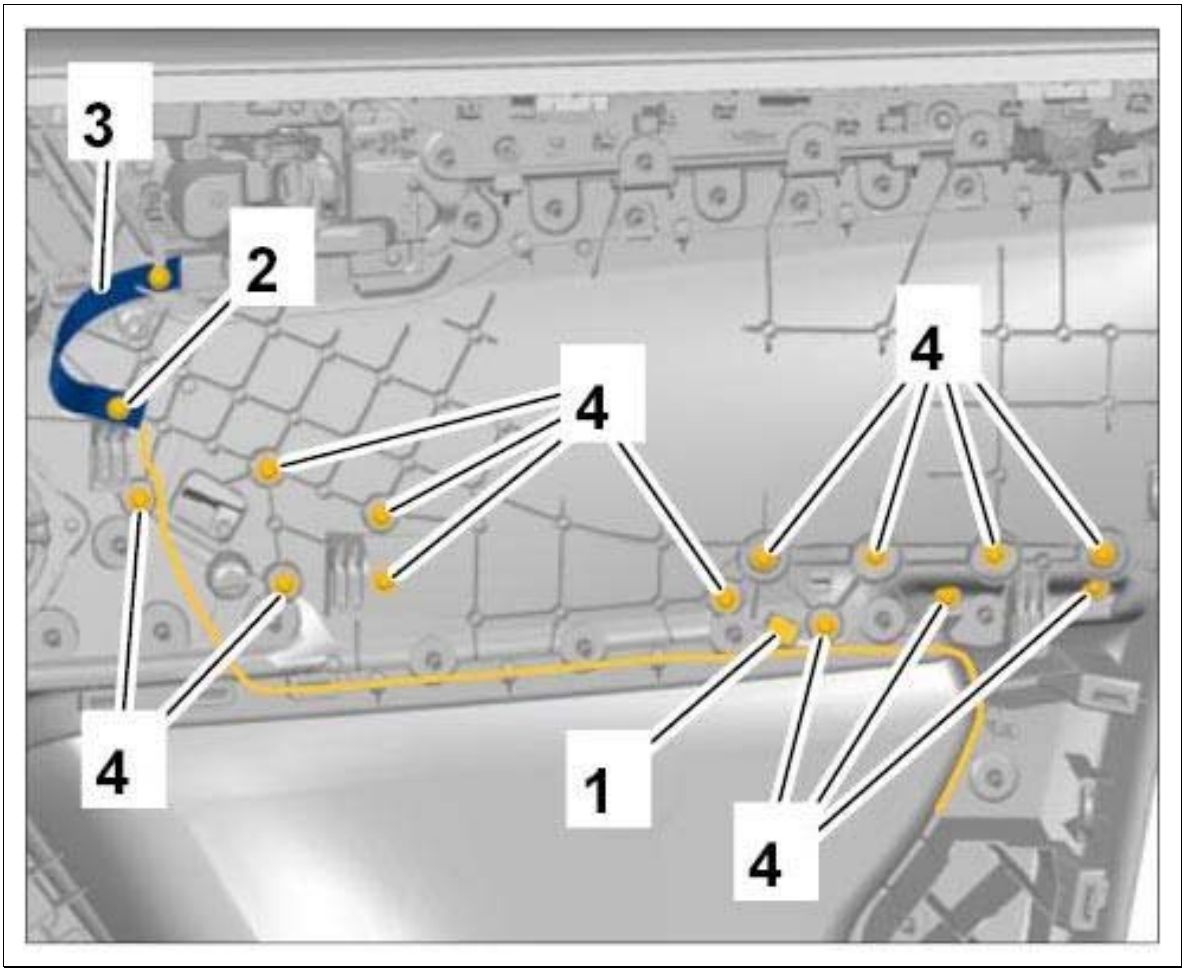

Courtesy of PORSCHE CARS NORTH AMERICA, INC.

5. Press the catches **-a-** and press the front power windows switch **-1-** out of the armrest by dimension **-b-** .

   b - 5 mm

Fig 3: Loosening Front Power Windows Switch

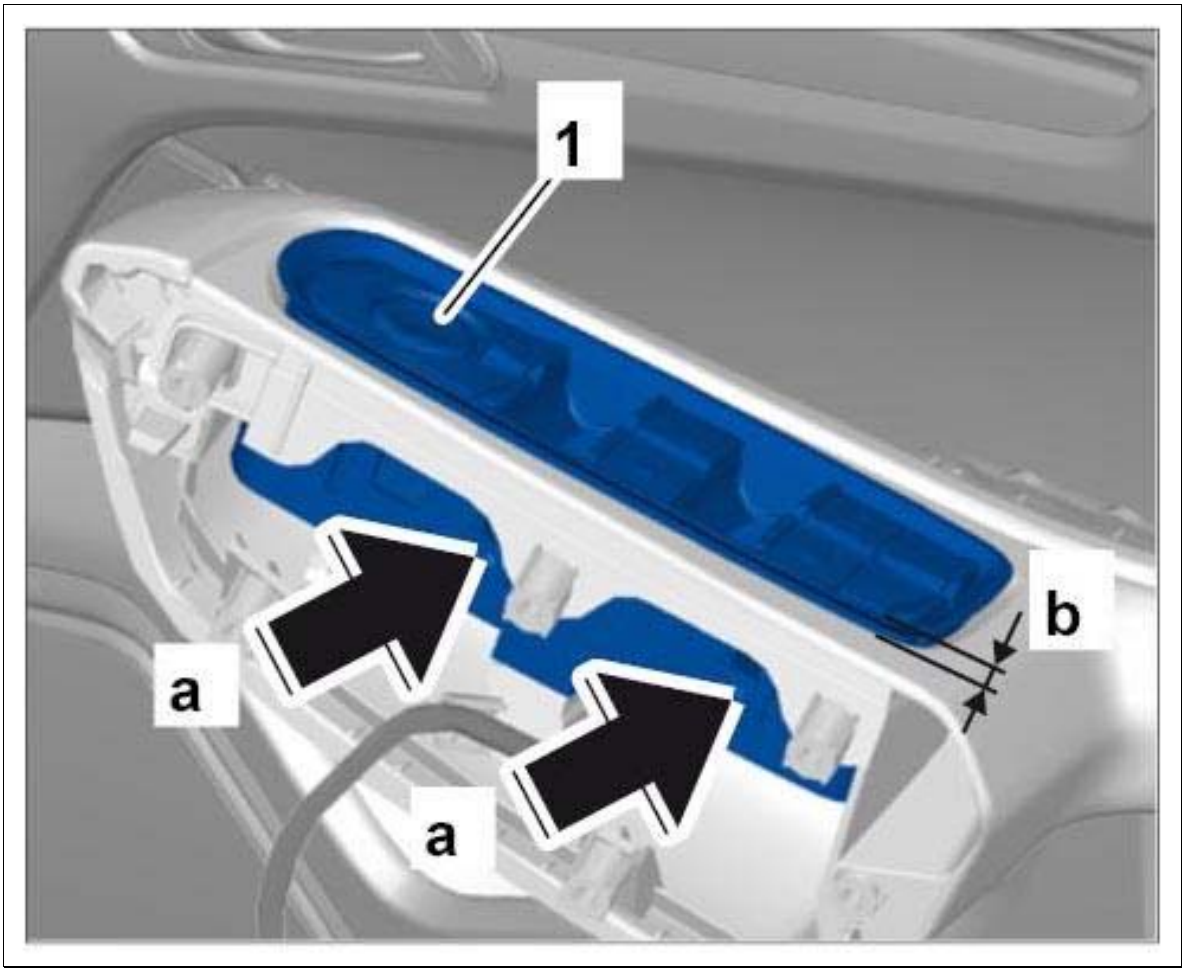

Courtesy of PORSCHE CARS NORTH AMERICA, INC.

6. Reach in behind the front power windows switch **-1-** , press the inner catches **-a-** and press the front power windows switch out of the armrest.

Fig 4: Removing Front Power Windows Switch

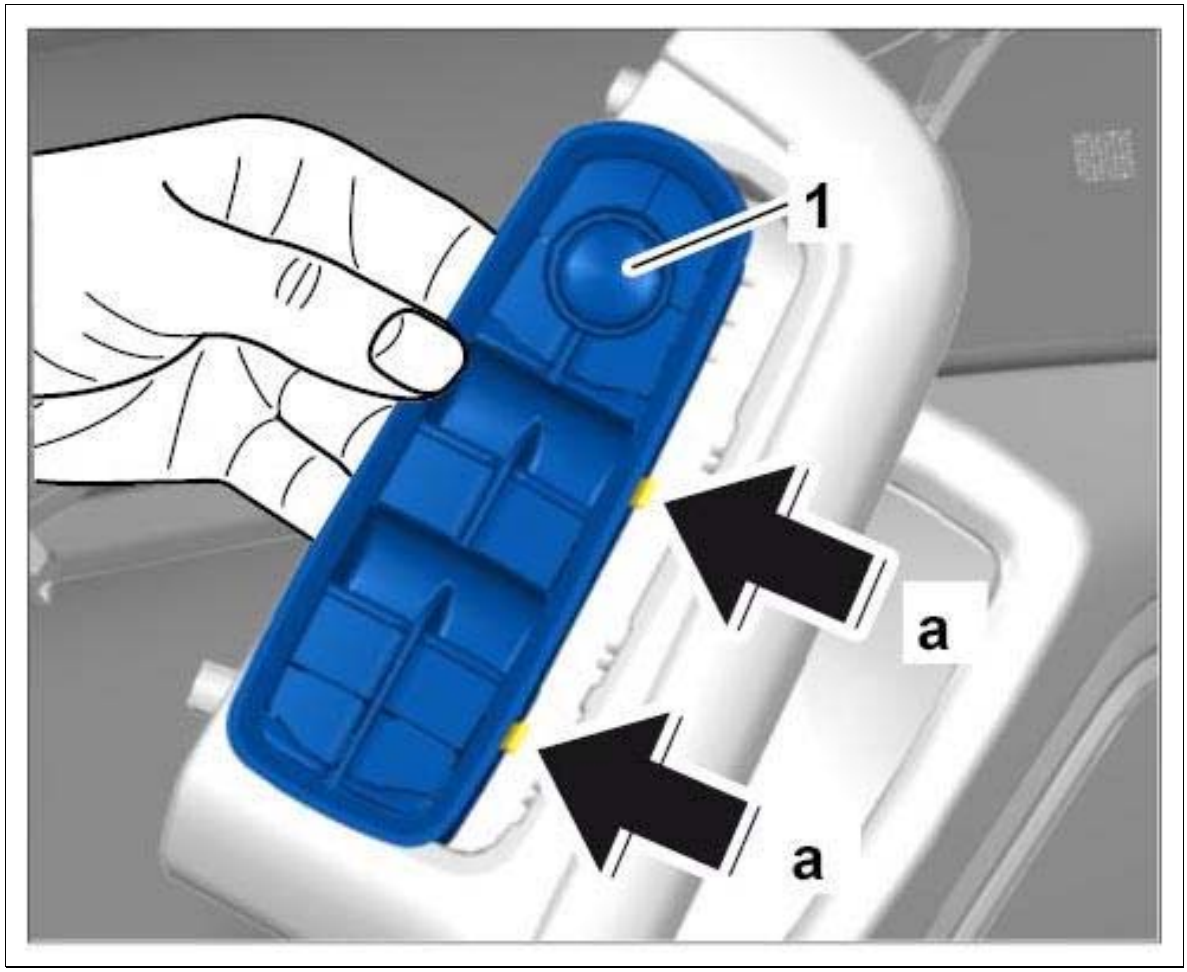

Courtesy of PORSCHE CARS NORTH AMERICA, INC.

7. Release electric plug connection **-1- (-a-)** and pull it off the front power windows switch **-2-** .

Fig 5: Disconnecting Electric Plug Connection

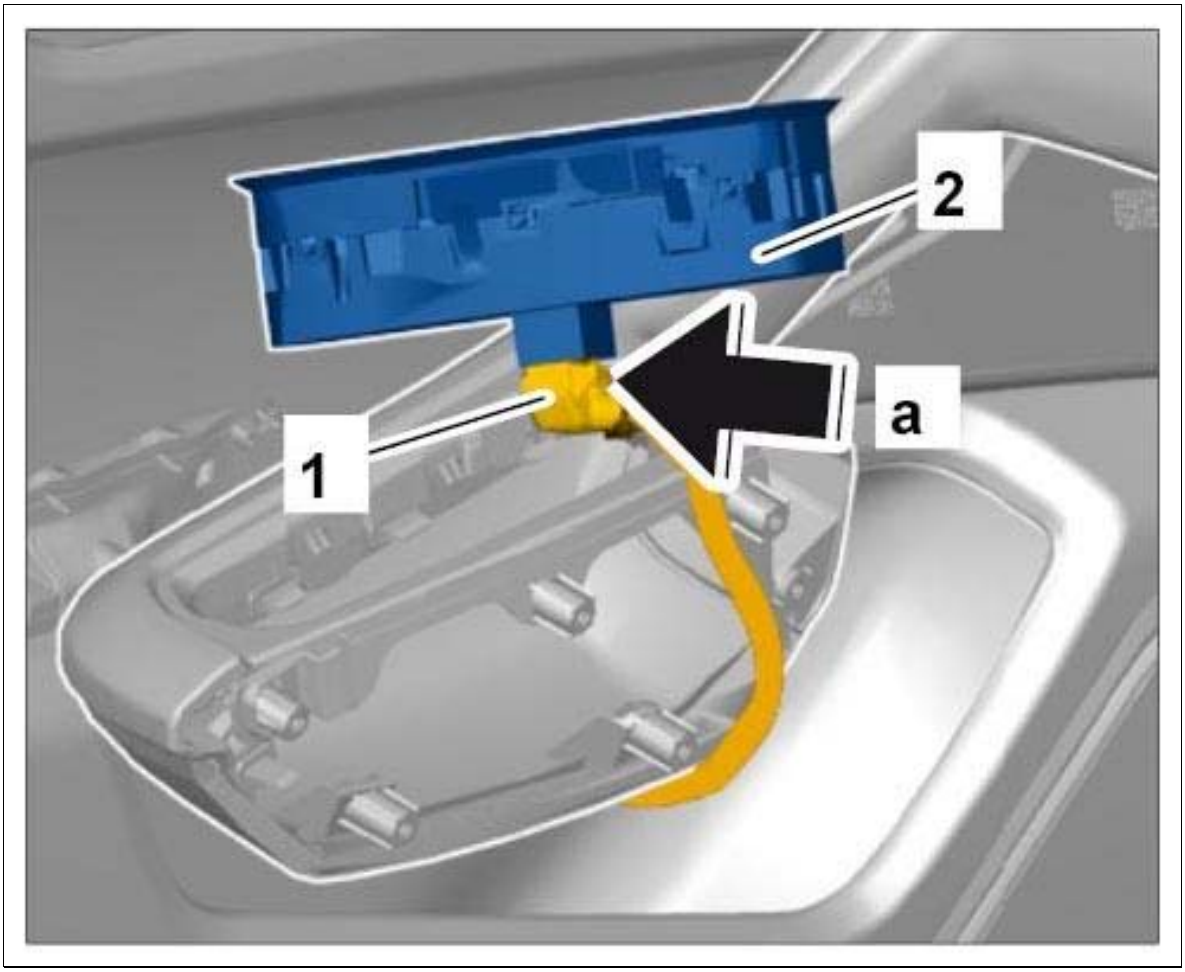

Courtesy of PORSCHE CARS NORTH AMERICA, INC.

WM 645819 REMOVING AND INSTALLING SWITCH FOR FRONT POWER WINDOWS (ALL MODELS) > INSTALLING SWITCH FOR FRONT POWER WINDOWS

1. Installation is performed in reverse order to removal.
2. Tighten fastening screws for rebound strap and armrest. **Tightening torque 2.3 Nm (1.5 ftlb.)**

WM 645819 REMOVING AND INSTALLING SWITCH FOR FRONT POWER WINDOWS (ALL MODELS) > SUBSEQUENT WORK

1. Install front door panel. → Installing front door panel

WM 645819 REMOVING AND INSTALLING SWITCH FOR REAR POWER WINDOWS (ALL MODELS) > TECHNICAL VALUES

Location	Description	Type	Basic value	Tolerance 1	Tolerance 2
Armrest to door panel	Internal Torx screw, Ø 5 x 14	Tightening torque	2.3 Nm (1.5 ftlb.)		

WM 645819 REMOVING AND INSTALLING SWITCH FOR REAR POWER WINDOWS (ALL MODELS) > PRELIMINARY WORK

1. Remove rear door panel. → Removing rear door panel

WM 645819 REMOVING AND INSTALLING SWITCH FOR REAR POWER WINDOWS (ALL MODELS) > REMOVING SWITCH FOR REAR POWER WINDOWS

1. Carefully disengage insulating mat **-1-** from the fastening hooks **-arrows-** and remove it.

   Fig 1: Removing Insulating Mat

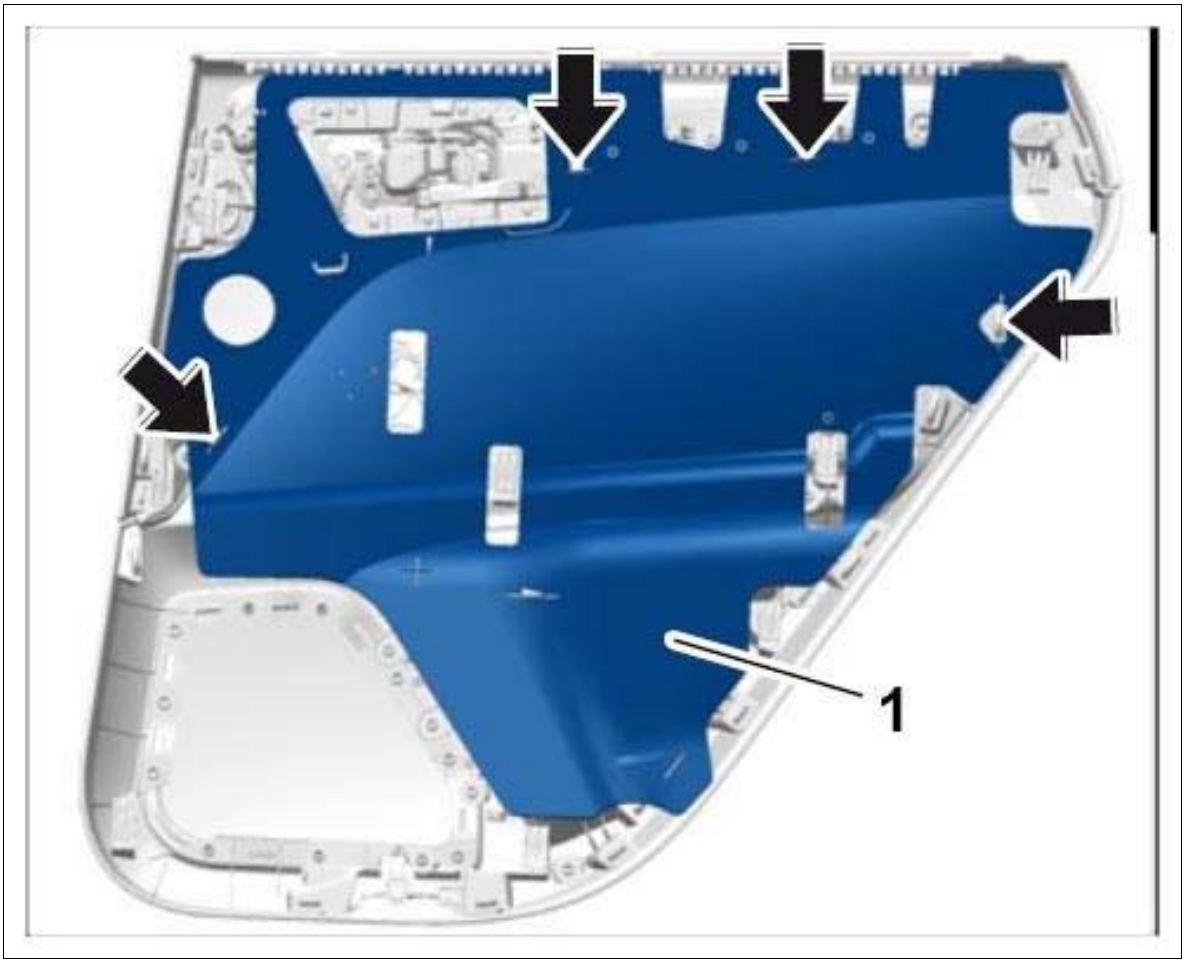

Courtesy of PORSCHE CARS NORTH AMERICA, INC.

2. Disconnect electric plug connection **-1-** at the light for ambient lighting.
3. Unscrew fastening screws **-2-** on the armrest and remove armrest.

Fig 2: Removing Armrest

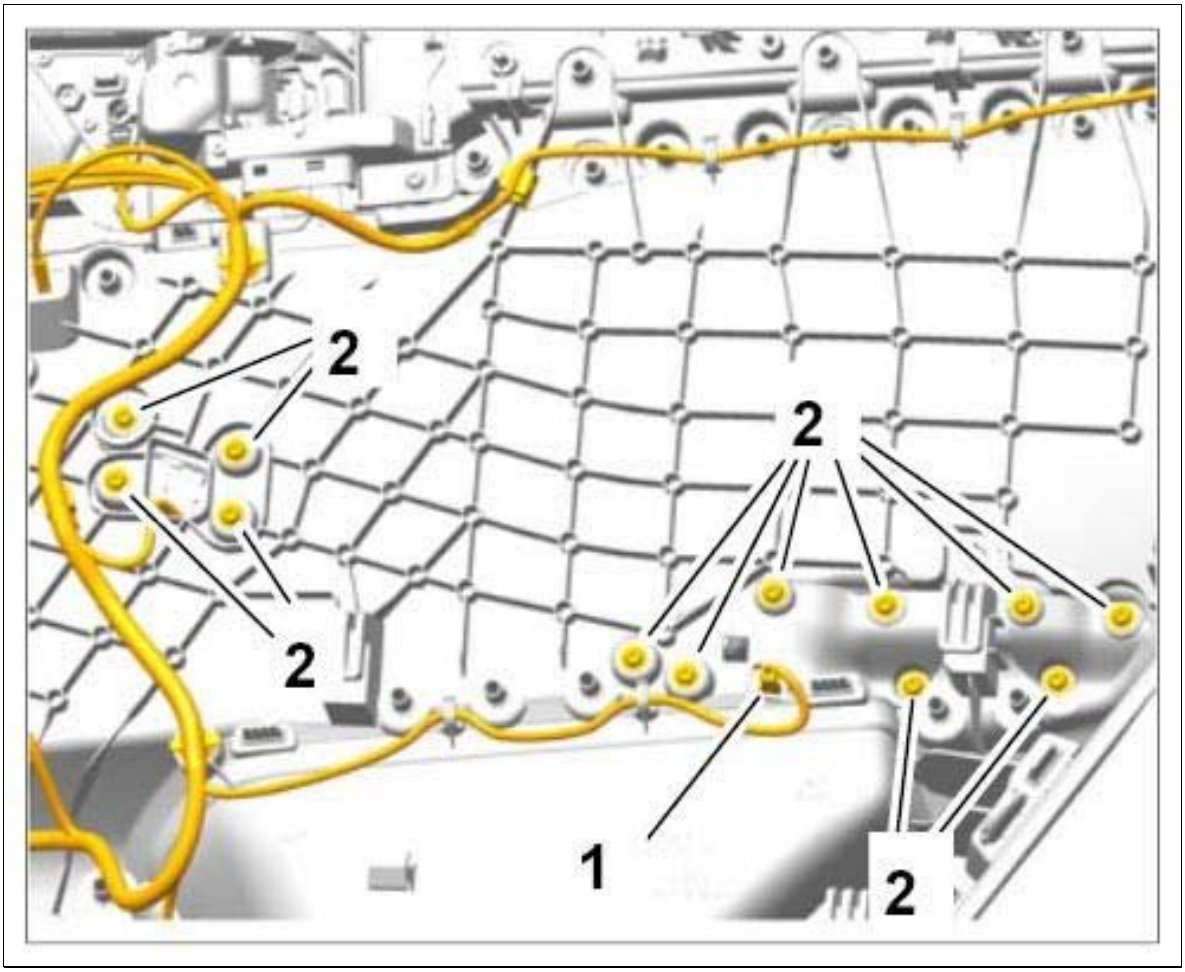

Courtesy of PORSCHE CARS NORTH AMERICA, INC.

4. Press the catches **-a-** and push the rear power windows switch **-1-** up out of the armrest.

Fig 3: Removing Rear Power Windows Switch

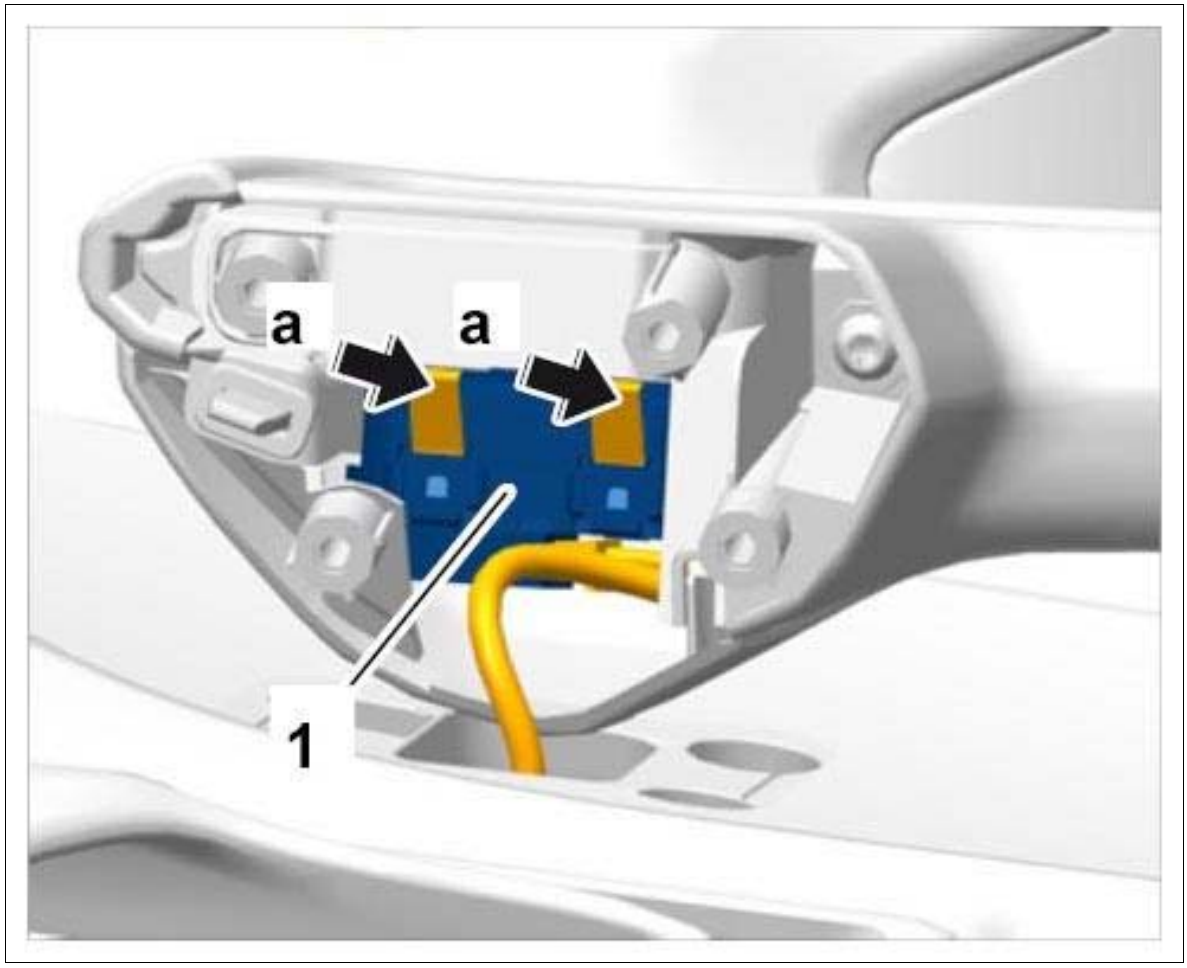

Courtesy of PORSCHE CARS NORTH AMERICA, INC.

5. Disconnect electric plug connection **-1-** from the rear power windows switch **-2-** .

Fig 4: Disconnecting Electric Plug Connection

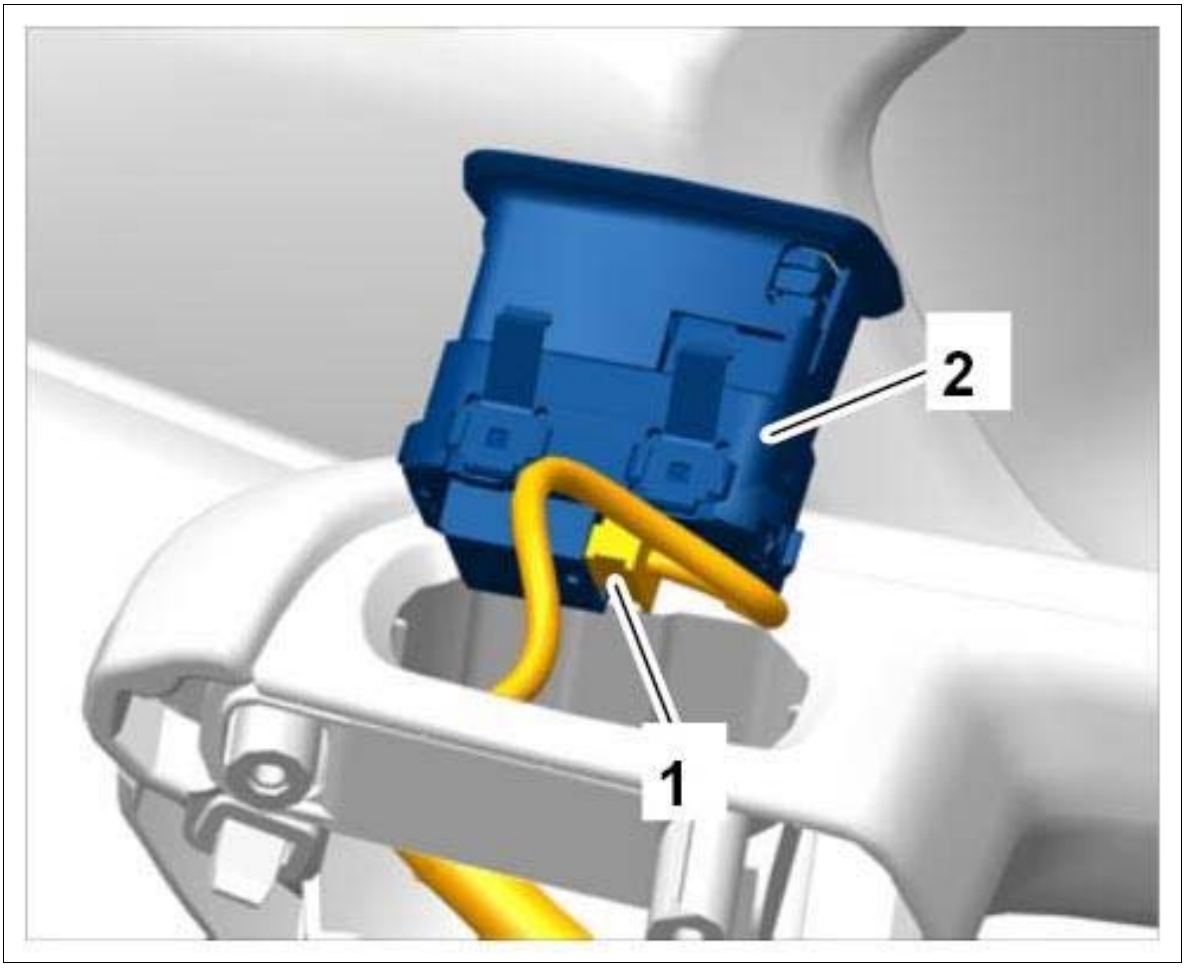

Courtesy of PORSCHE CARS NORTH AMERICA, INC.

WM 645819 REMOVING AND INSTALLING SWITCH FOR REAR POWER WINDOWS (ALL MODELS) > INSTALLING SWITCH FOR REAR POWER WINDOWS

1. Installation is performed in reverse order to removal.
2. Tighten fastening screws for the armrest. **Tightening torque 2.3 Nm (1.5 ftlb.)**

WM 645819 REMOVING AND INSTALLING SWITCH FOR REAR POWER WINDOWS (ALL MODELS) > SUBSEQUENT WORK

1. Install rear door panel. → Installing rear door panel

WM 646019 REMOVING AND INSTALLING REAR DOOR WINDOW (ALL MODELS) > PRELIMINARY WORK

1. Remove B-pillar cover. → Removing B-pillar cover

WM 646019 REMOVING AND INSTALLING REAR DOOR WINDOW (ALL MODELS) > REMOVING REAR DOOR WINDOW

1. Swivel door window back slightly into the door **-A-** and pull it up and out **-B-** carefully.

Fig 1: Removing Door Window

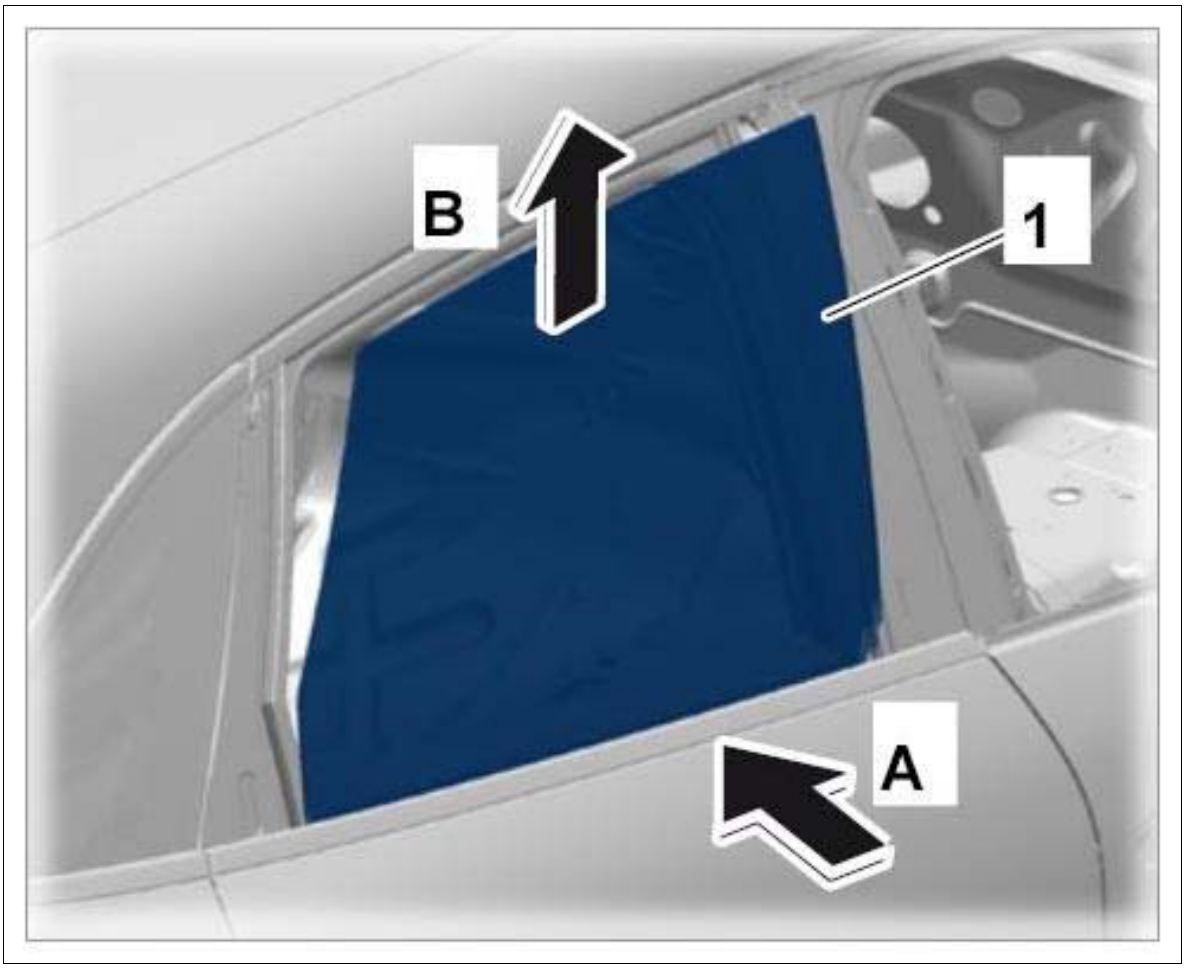

Courtesy of PORSCHE CARS NORTH AMERICA, INC.

WM 646019 REMOVING AND INSTALLING REAR DOOR WINDOW (ALL MODELS) > INSTALLING REAR DOOR WINDOW

Installation is performed in reverse order.

1. Check that the rubber guides are fitted correctly.

WM 646019 REMOVING AND INSTALLING REAR DOOR WINDOW (ALL MODELS) >

SUBSEQUENT WORK

1. Install B-pillar cover. → Installing B-pillar cover

WM 646119 REMOVING AND INSTALLING REAR POWER WINDOW MOTOR (ALL MODELS) > TECHNICAL VALUES

Location	Description	Type	Basic value	Tolerance 1	Tolerance 2
Rear power window motor to rear door	Internal Torx screw, Ø 5 x 22	Tightening torque	3.3 Nm (2 ftlb.)		

WM 646119 REMOVING AND INSTALLING REAR POWER WINDOW MOTOR (ALL MODELS) > PRELIMINARY WORK

1. Remove rear door panel. → Removing rear door panel

WM 646119 REMOVING AND INSTALLING REAR POWER WINDOW MOTOR (ALL MODELS) > REMOVING REAR POWER WINDOW MOTOR

WARNING: Electrically moved components

- *Danger of limbs being trapped or severed*

→ Switch off electric power to drive motor.

→ Make sure it does not switch on again.

→ Check that there is no electric charge.

1. Switch off ignition and pull remote control out of ignition lock.
2. Pull out locking mechanism **-a-** , press release button **-b-** and pull off electric plug connection **-1-** .
3. Unscrew fastening screws **-2-** and remove rear power window motor **-3-** .

Fig 1: Removing Rear Power Window Motor

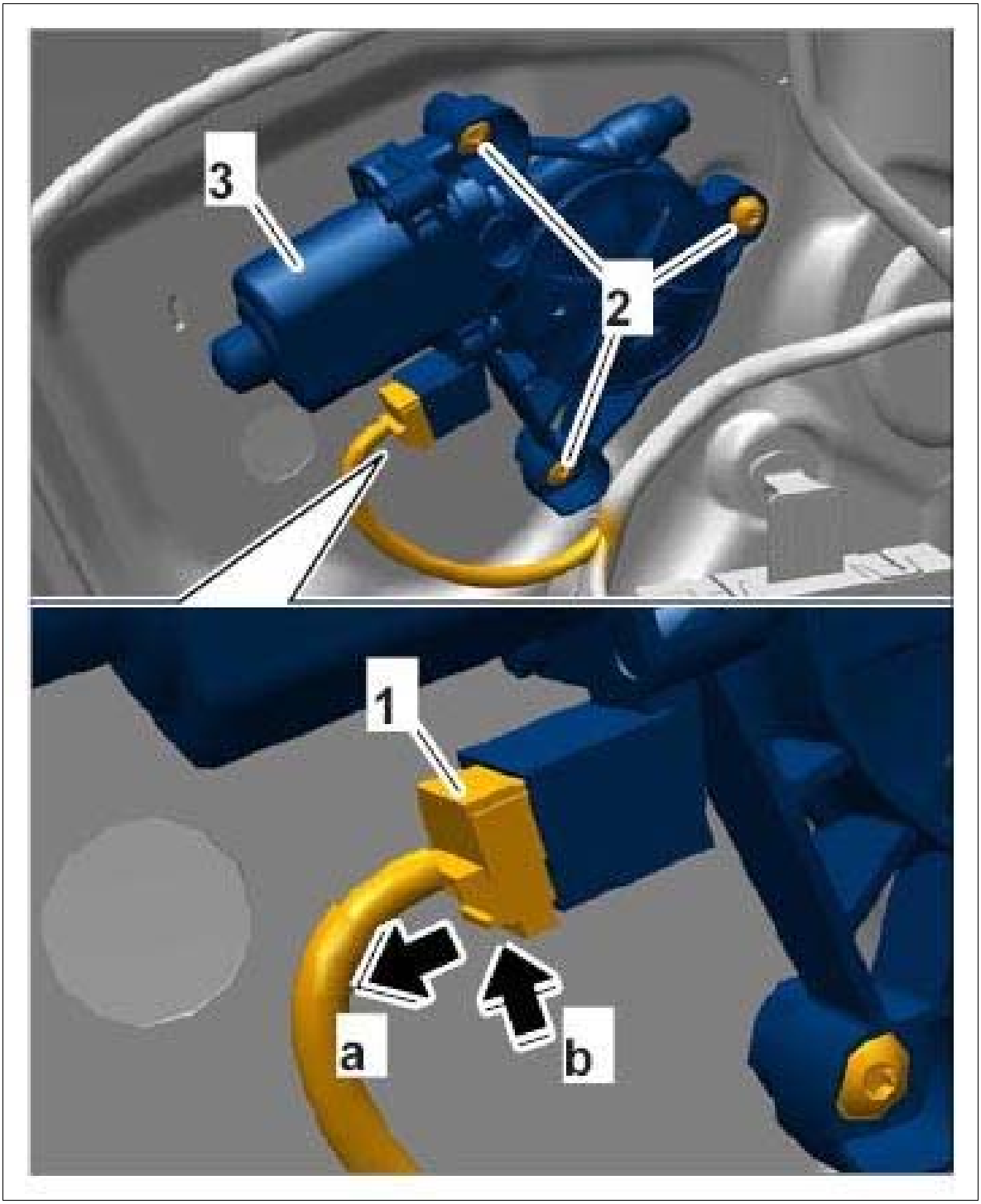

Courtesy of PORSCHE CARS NORTH AMERICA, INC.

WM 646119 REMOVING AND INSTALLING REAR POWER WINDOW MOTOR (ALL MODELS) > INSTALLING REAR POWER WINDOW MOTOR

1. Installation is performed in reverse order to removal.

2. Screw in and tighten fastening screws used to secure rear power window motor to rear door.
   Tightening torque 3.3 Nm (2 ftlb.)

WM 646119 REMOVING AND INSTALLING REAR POWER WINDOW MOTOR (ALL MODELS) > SUBSEQUENT WORK

1. Install rear door panel. → Installing rear door panel
2. Teach end positions of rear power window motor.
    1. 2.1. Pull rocker switch and close window fully.
    2. 2.2. Pull rocker switch again. (The upper end position is stored).
    3. 2.3. Press rocker switch and open window fully.
    4. 2.4. Press rocker switch again. (The lower end position is stored).

WM 647119 REMOVING AND INSTALLING REAR POWER WINDOWS (ALL MODELS) > TECHNICAL VALUES

Location	Description	Type	Basic value	Tolerance 1	Tolerance 2
Rear power window motor to rear door	Internal Torx screw, Ø 5 x 22	Tightening torque	3.3 Nm (2 ftlb.)		
Fastening nut for rear window lifter		Tightening torque	7.5 Nm (5.5 ftlb.)		

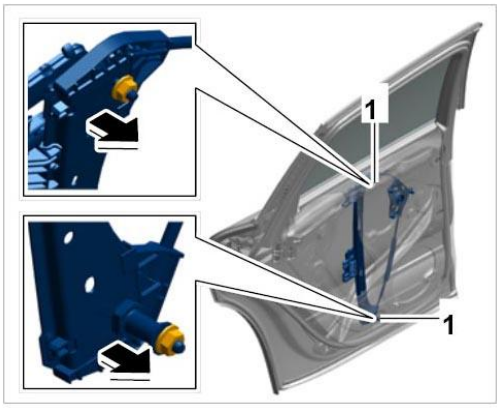

Removing power windows mechanism

WM 647119 REMOVING AND INSTALLING REAR POWER WINDOWS (ALL MODELS) > PRELIMINARY WORK

1. Remove rear door panel. → Removing rear door panel

WM 647119 REMOVING AND INSTALLING REAR POWER WINDOWS (ALL MODELS) > REMOVING REAR POWER WINDOWS

Fig 1: Identifying Power Windows Mechanism Position

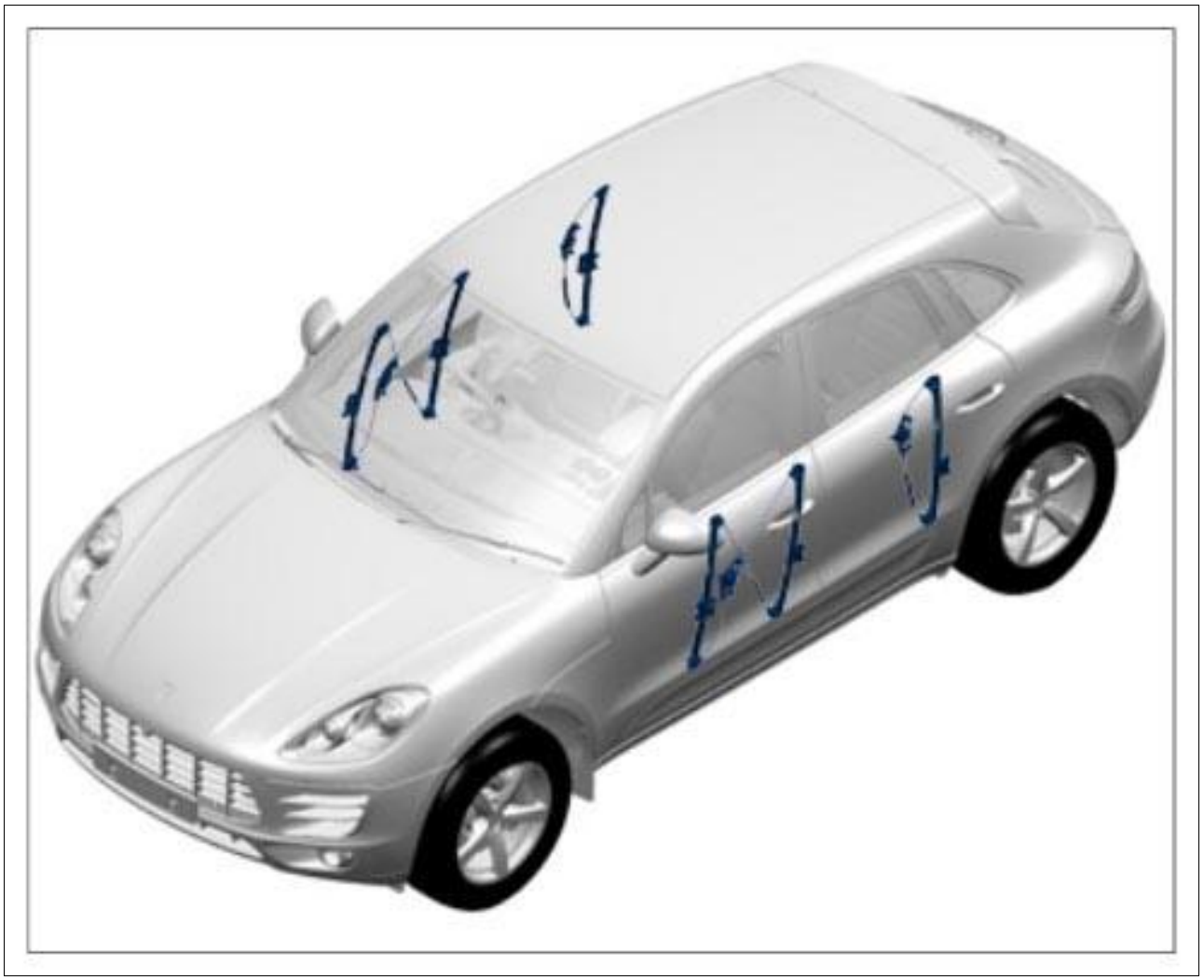

Courtesy of PORSCHE CARS NORTH AMERICA, INC.

1. Unclip cover on door inner panel, guide out door release cable at the cover and remove cover.
2. Disconnect electric plug connection for power window motor.
    1. 2.1. Press release button **-b-** and disconnect electric plug connection **-1-** .
3. Unscrew fastening screws **-2-** and remove power window motor **-3-** .

Fig 2: Removing Rear Power Window Motor

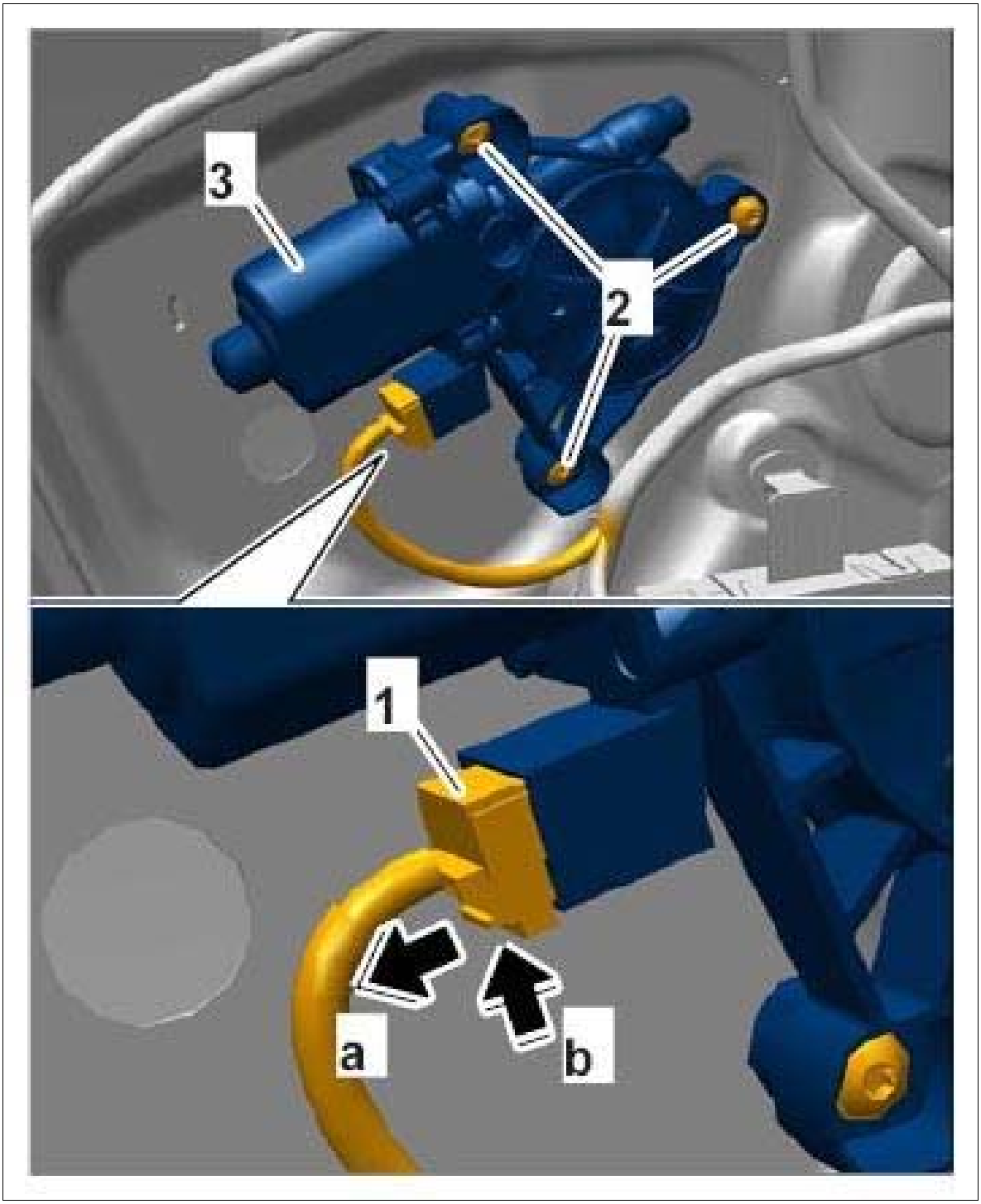

Courtesy of PORSCHE CARS NORTH AMERICA, INC.

4. Loosen door window glass at the power windows mechanism.

    1. 4.1. Actuate locking mechanism **-2-** and remove limit stop **-3-** on the power windows mechanism.

       Move door window glass **-1-** down until the locking mechanism **-5-** is accessible.

       Actuate locking mechanism **-5-** using a suitable tool **-arrow A-** and carefully raise

the door window glass **-1- (-arrow B-)** .

2. 4.2. Pull door window glass **-1-** fully up **-arrow B-** out of the mounting points **-4-** .

Fig 3: Releasing Door Window Mounting (Shown On Front Door)

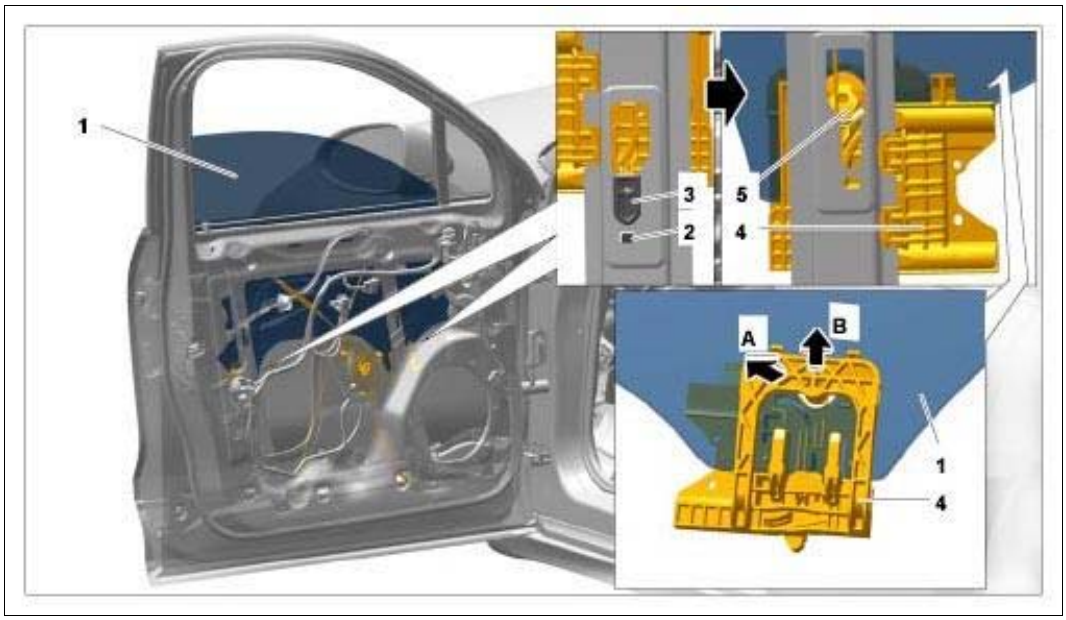

Courtesy of PORSCHE CARS NORTH AMERICA, INC.

5. Slide door window glass up fully and secure it to prevent it from falling down.

6. Remove stopper at the top of the bodyshell of the door.

    1. 6.1. Loosen fastening nut at the top and unscrew and remove fastening nuts at the bottom.

Fig 4: Removing Power Windows Mechanism

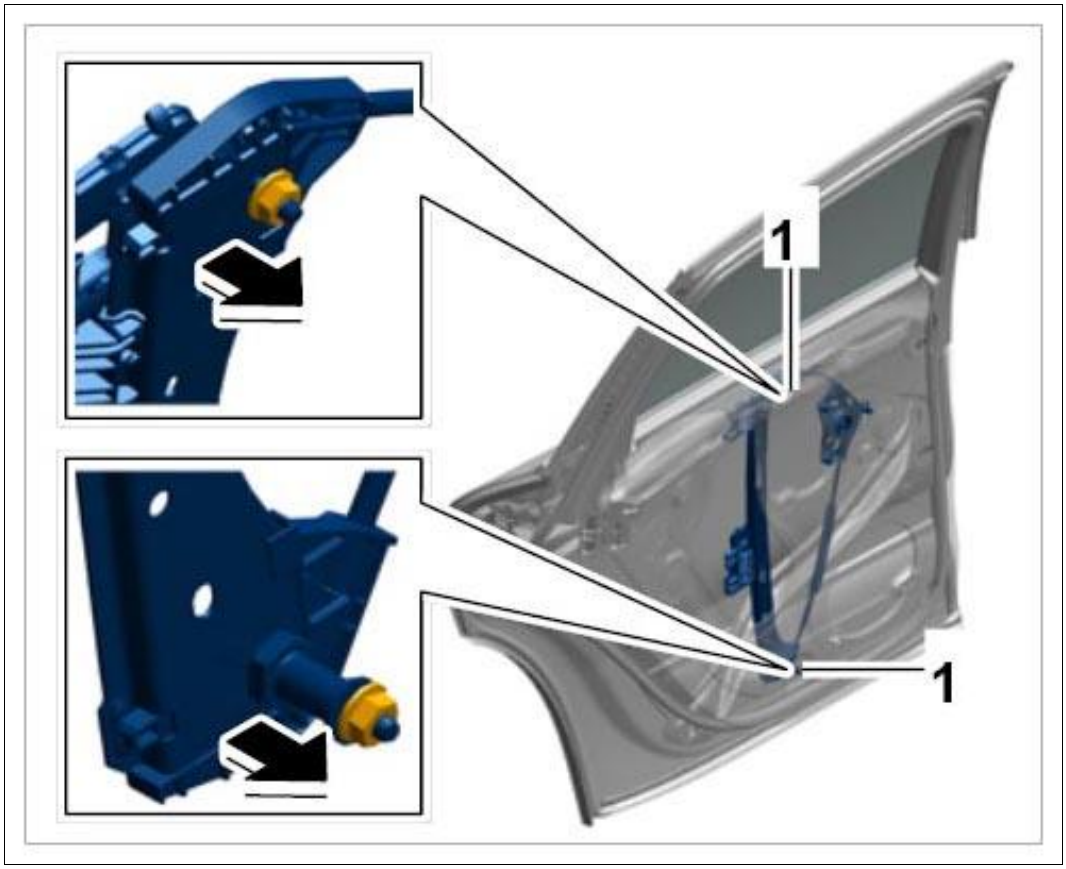

Courtesy of PORSCHE CARS NORTH AMERICA, INC.

7. Press mounting clip for power window motor together using a suitable tool and unclip it from the bodyshell of the door.
8. Guide out power windows mechanism at the top and remove through the opening in the bodyshell of the door.

WM 647119 REMOVING AND INSTALLING REAR POWER WINDOWS (ALL MODELS) > INSTALLING REAR POWER WINDOWS

1. Installation is performed in reverse order to removal.
2. Tighten fastening nut for power windows mechanism to **Tightening torque 7.5 Nm (5.5 ftlb.)** .
3. Tighten fastening screws for power window motor to **Tightening torque 3.3 Nm (2 ftlb.)** .

WM 647119 REMOVING AND INSTALLING REAR POWER WINDOWS (ALL MODELS) > SUBSEQUENT WORK

1. Install rear door panel. → Installing rear door panel

2. Teach end positions of front power window motor.
    1. 2.1. Pull rocker switch and close window fully.
    2. 2.2. Pull rocker switch again. (The upper end position is stored).
    3. 2.3. Press rocker switch and open window fully.
    4. 2.4. Press rocker switch again. (The lower end position is stored).

WM 647519 REMOVING AND INSTALLING REAR SIDE WINDOW (ALL MODELS) > TECHNICAL VALUES

Location	Description	Type	Basic value	Tolerance 1	Tolerance 2
Fastening nut for side window		Tightening torque	6 Nm (4.5 ftlb.)		

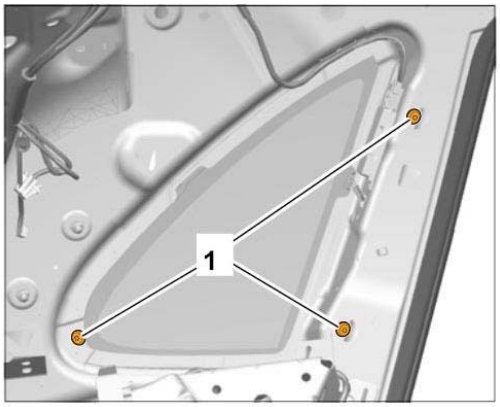

Side window mounting

WM 647519 REMOVING AND INSTALLING REAR SIDE WINDOW (ALL MODELS) > PRELIMINARY WORK

1. Detach C-pillar trim panel. → Removing C-pillar trim panel
2. Remove D-pillar trim panel. → Removing D-pillar trim panel

WM 647519 REMOVING AND INSTALLING REAR SIDE WINDOW (ALL MODELS) > REMOVING REAR SIDE WINDOW

Fig 1: Identifying Side Window Installation Position



Courtesy of PORSCHE CARS NORTH AMERICA, INC.

1. Release connector **-1-** for antenna amplifier and disconnect plug connection.

Fig 2: Disconnecting Plug Connection



Courtesy of PORSCHE CARS NORTH AMERICA, INC.

2. Unscrew and remove fastening nuts **-1-** for side window.

Fig 3: Identifying Side Window Fastening Nuts

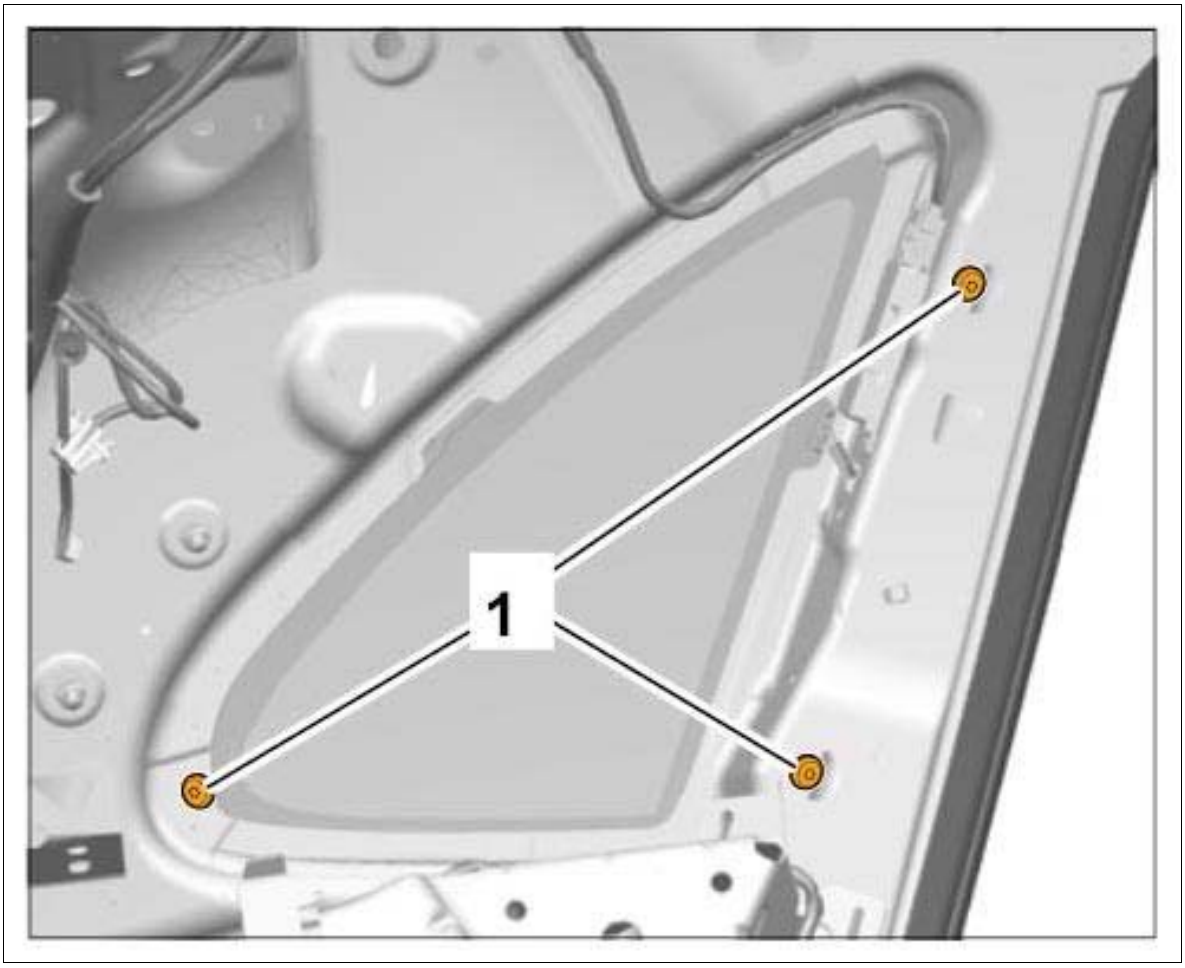

Courtesy of PORSCHE CARS NORTH AMERICA, INC.

3. Remove side window.

WM 647519 REMOVING AND INSTALLING REAR SIDE WINDOW (ALL MODELS) > INSTALLING REAR SIDE WINDOW

1. Installation is performed in reverse order to removal.
2. Tighten fastening nuts to the specified tightening torque **Tightening torque 6 Nm (4.5 ftlb.)** until secure.

WM 647519 REMOVING AND INSTALLING REAR SIDE WINDOW (ALL MODELS) > SUBSEQUENT WORK

1. Detach C-pillar trim panel. → Removing C-pillar trim panel
2. Install D-pillar trim panel. → Installing D-pillar trim panel

WM 648619 REMOVING AND INSTALLING REAR WINDOW (ALL MODELS) > PRELIMINARY WORK

1. Remove tailgate trim panel. → Removing tailgate trim panel
2. Remove wiper motor. → Removing Wiper Motor For Rear Window Washer
3. Remove rear spoiler. → Removing rear spoiler

WM 648619 REMOVING AND INSTALLING REAR WINDOW (ALL MODELS) > TOOLS AND MATERIALS

The following tools and materials are required for removing and installing the rear window with 2-component adhesive:

Fig 1: Identifying Special Tools Kit

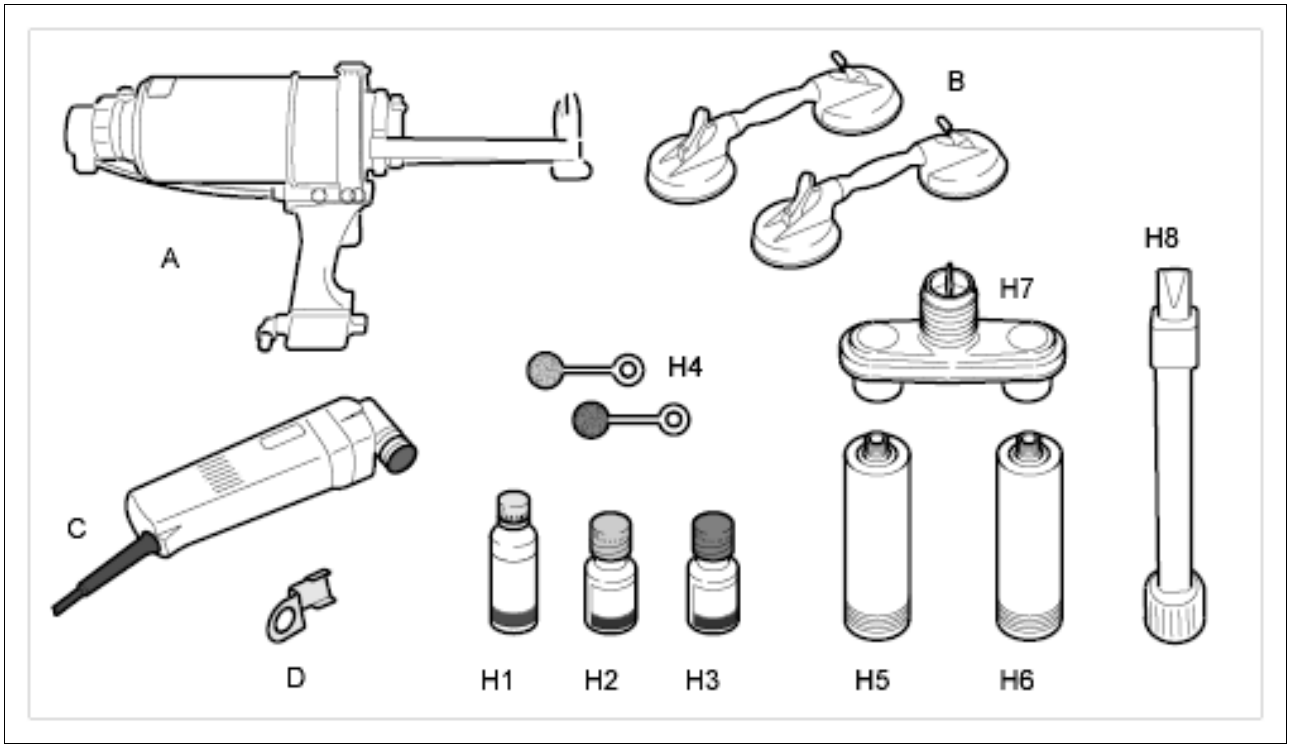

Courtesy of PORSCHE CARS NORTH AMERICA, INC.

A - Double cartridge gun VAS 5237

B - Suction cups VAG 1344

C - Special electric cutter (fine) VAG 1561 A

D - Flashing knife, U-type 639.031.130.22

H - 2-component window adhesive 000.043.300.94, contains set components H1-H8

H1 - Cleaning solution

H2 - Primer

H3 - Activator

H4 - Swab

H5 - Cartridge, component A

H6 - Cartridge, component B

H7 - Mixing nozzle

H8 - Processing nozzle

Fig 2: Identifying Special Tools Kit

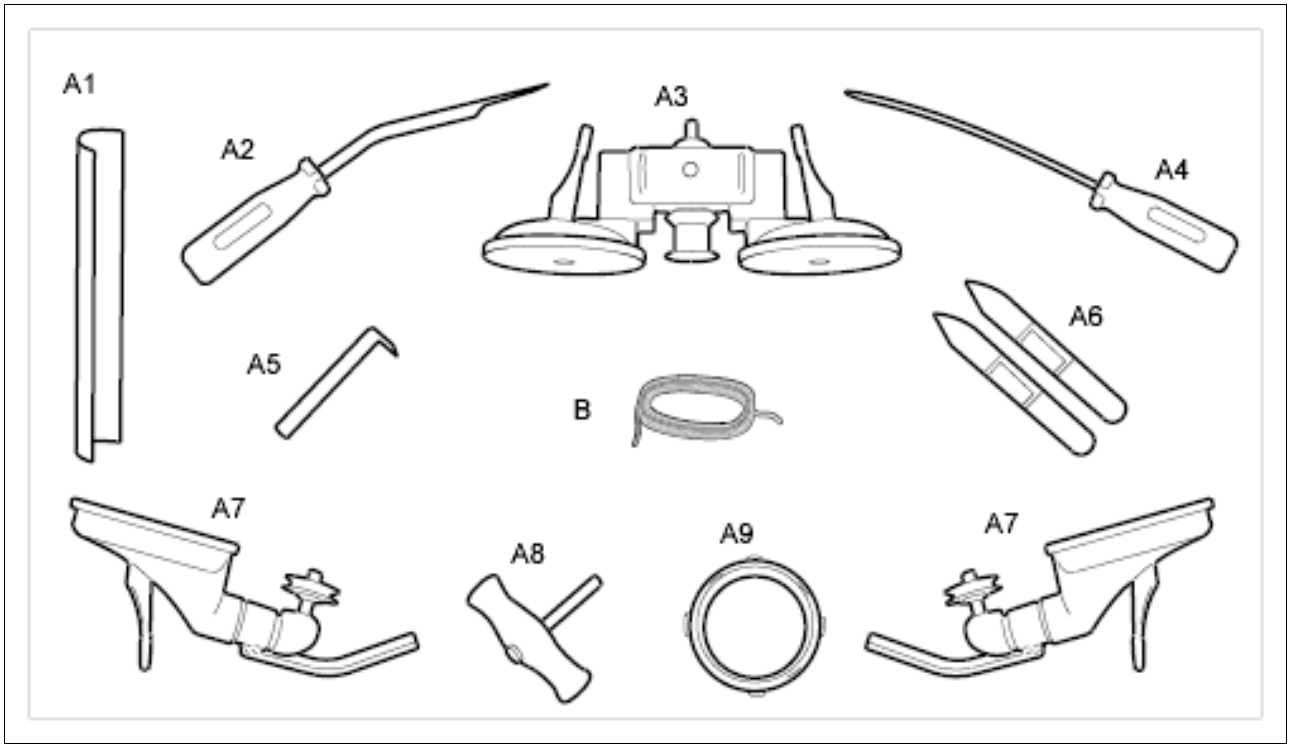

Courtesy of PORSCHE CARS NORTH AMERICA, INC.

A - Removal kit for flush bonded windows VAG 1474 B, contains set components A1-A9

B - Cutting thread

A1 - Guide rail

A2 - Cutting tool (wire holder)

A3 - Spooling device

A4 - Awl

A5 - Guide rail

A6 - Spatula

A7 - Steering roller with arm bracket

A8 - Handle

A9 - Square cutting wire

WM 648619 REMOVING AND INSTALLING REAR WINDOW (ALL MODELS) > REMOVING REAR WINDOW

Information

- Make sure not to damage the heated rear window connections when removing the glass with the cutting wire.
- Cut up to just before the connection.
- Slacken the cutting wire.
- Guide the cutting wire past the connection on the inside.

Fig 1: Cutting Wire Past Electric Connection

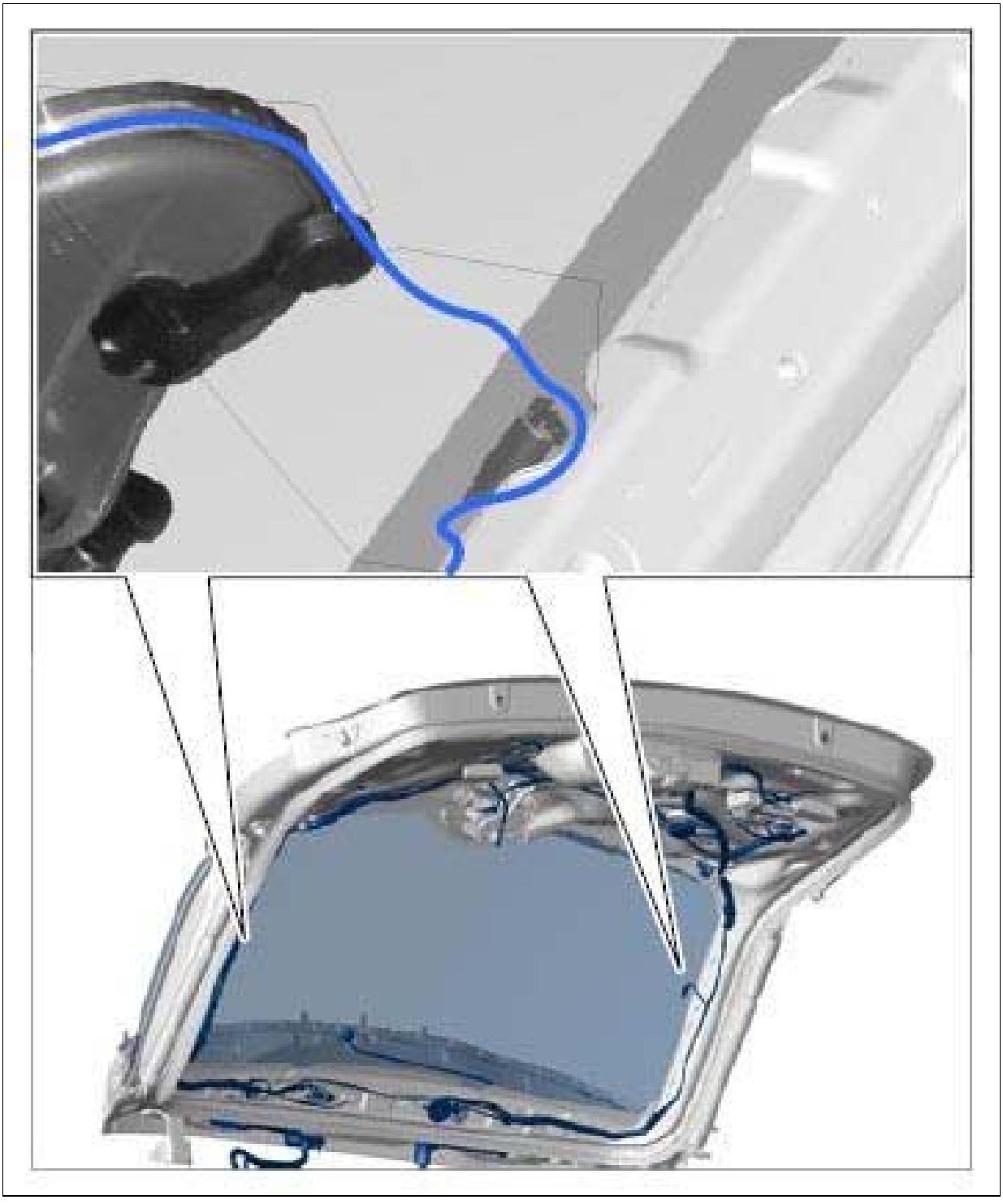

Courtesy of PORSCHE CARS NORTH AMERICA, INC.

- Counter with an awl.

Fig 2: Identifying Counter With AWL

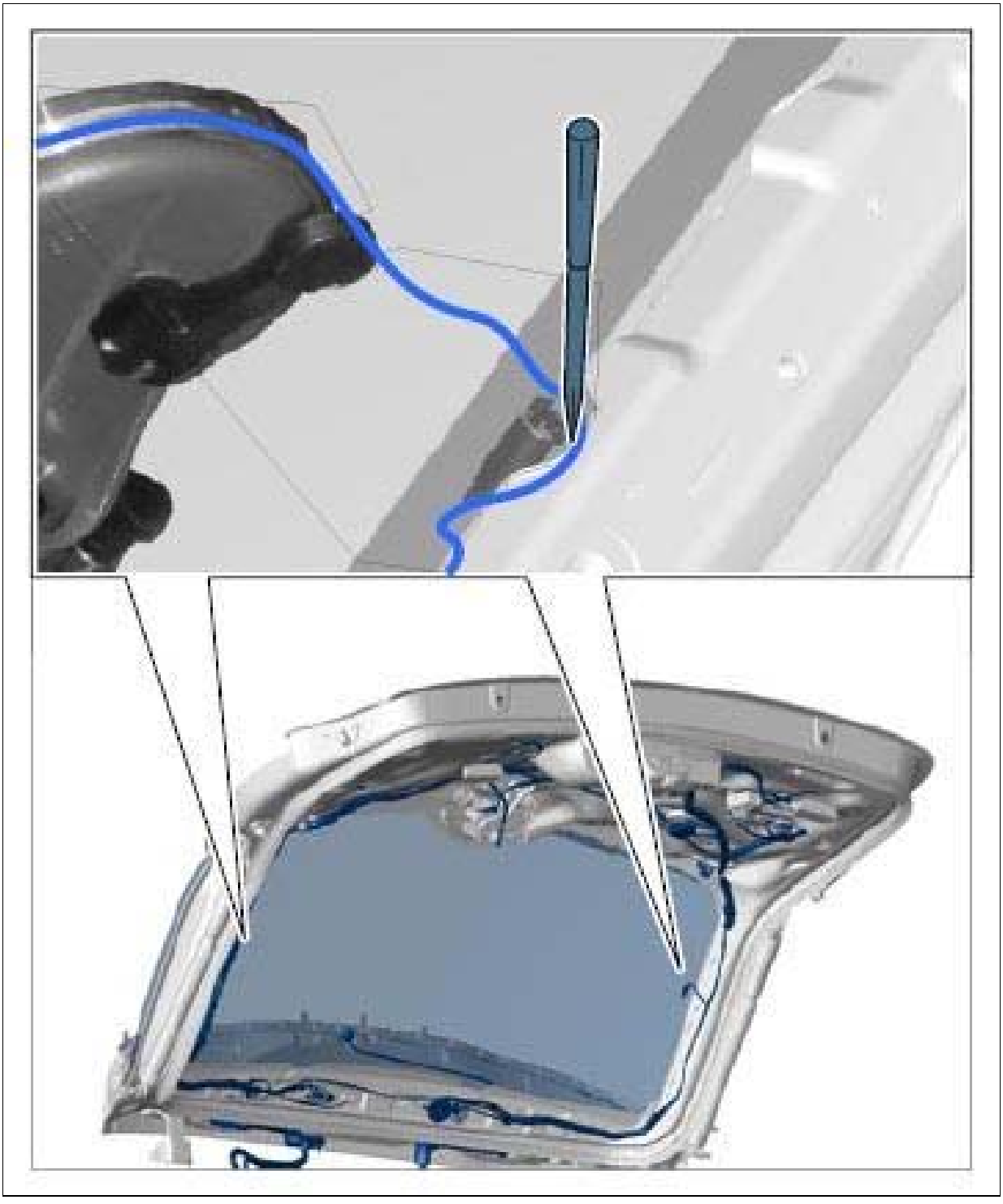

Courtesy of PORSCHE CARS NORTH AMERICA, INC.

- Make sure that the cutting wire does not press against the electric connection when separating the glass.
- Continue separating the window glass.
    1. Remove rubber sleeve from the wiper arm.
    2. Release and disconnect electric plug connections for the antenna amplifier control unit.

→ Removing antenna control unit

3. Release and disconnect electric plug connections on antenna amplifier. → Removing antenna amplifier
4. Disconnect electric plug connections for rear window heating. → Removing wire harness for tailgate at the left
5. Release and disconnect electric plug connections on actuating cylinders for the rear lid.

   → Removing actuating cylinder for rear lid
6. Fix plug connections for the antenna amplifier control unit and antenna amplifier in place on the rear window using adhesive tape.
7. Affix adhesive tape **-1-** to the top right corner of the rear window at the rear lid.

Fig 3: Identifying Adhesive Tape Position

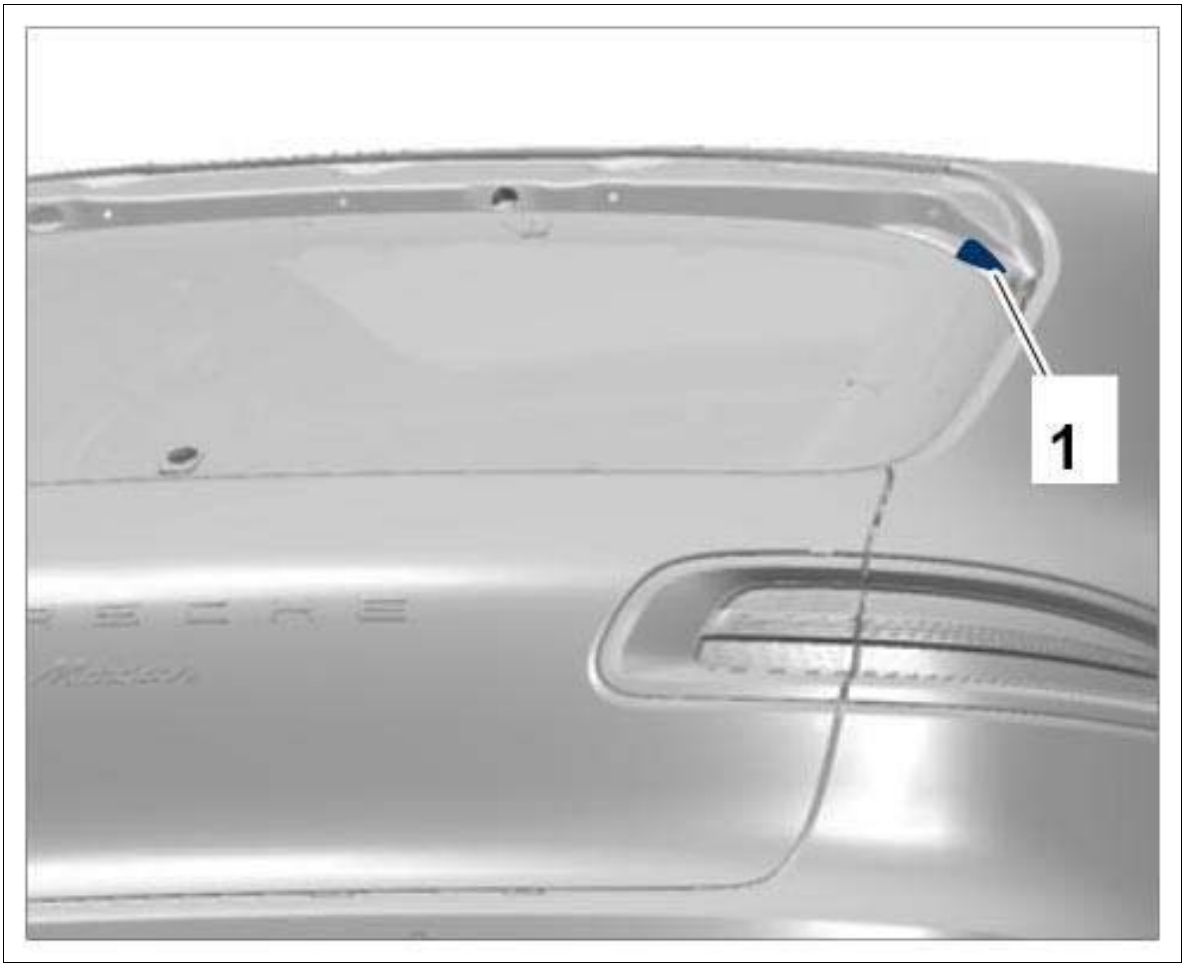

Courtesy of PORSCHE CARS NORTH AMERICA, INC.

WARNING: Vehicle windows removed and installed incorrectly

1. Danger of cuts

2. Risk of eye injuries

→ Wear personal protective gear.

→ Always shut off power supply when replacing cutting knife.

8. Apply a bead of adhesive from inside out in the area protected by the adhesive tape using the scratch awl.

   Information

   1. The procedure for removing car windows is described in → 6X00IN GENERAL INFORMATION ON REMOVING CAR WINDOWS .

9. Remove rear window using the cutting-wire separating device.

   Fig 4: Removing Rear Window Using Cutting-Wire Separating Device



Courtesy of PORSCHE CARS NORTH AMERICA, INC.

WM 648619 REMOVING AND INSTALLING REAR WINDOW (ALL MODELS) > PREPARING WINDOW APERTURE FOR INSTALLATION

1. Remove adhesive on the body.

   Information

1. The surface coating of adhesive residue helps new adhesive to stick. Keep cut surfaces clean and free of grease and do not clean with cleaning solution.

    1. 1.1. When removing adhesive residue from the body using a cutter and flashing knife, ensure that a surface coating of adhesive remains.

    Fig 1: Removing Adhesive Residue From Rear Lid

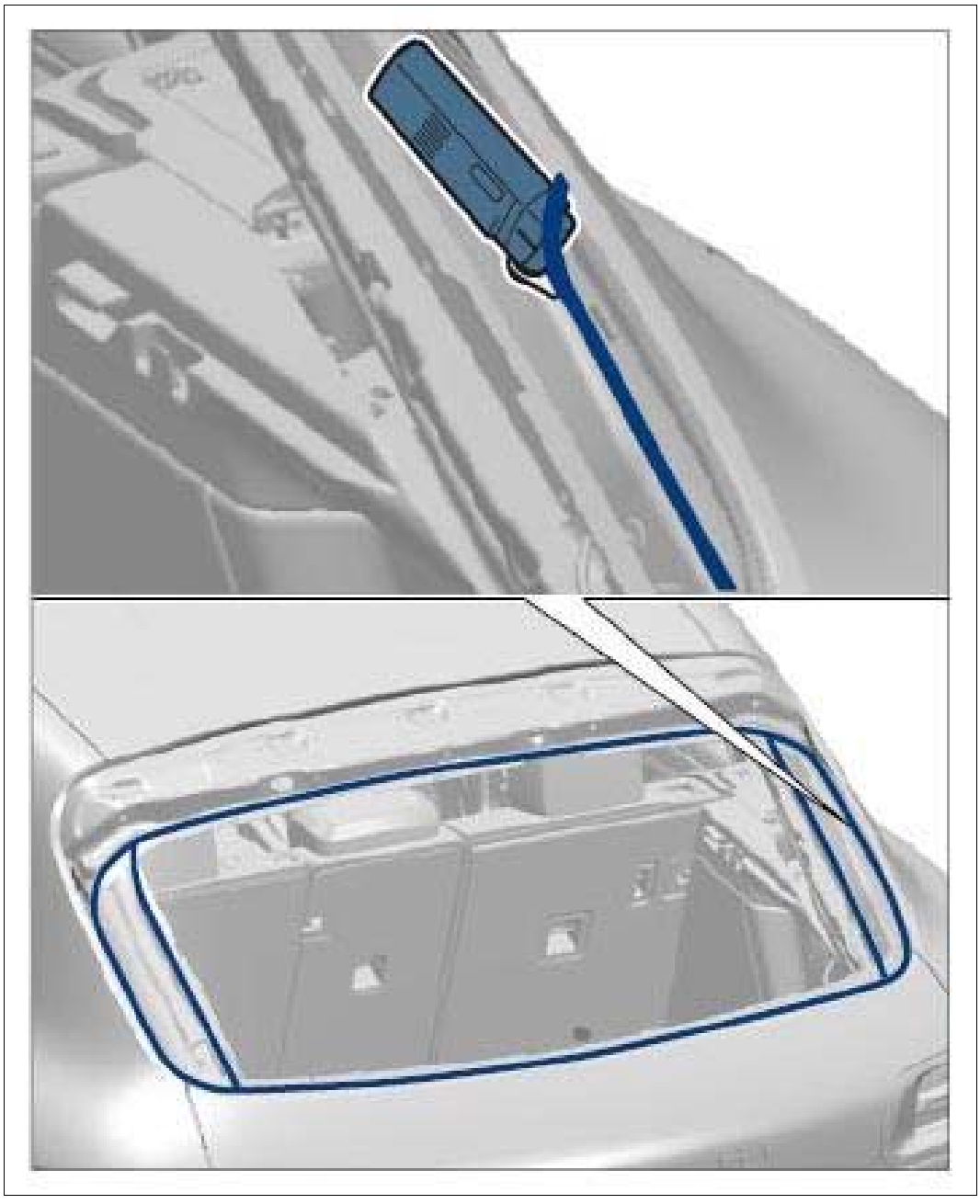

Courtesy of PORSCHE CARS NORTH AMERICA, INC.

2. Clean new paint areas or damaged paint surfaces in the non-visible area of the window aperture in the body with cleaning solution **-H1-** and coat with primer **-H2-** .

Information

1. A drying time of at least 10 minutes must be observed between cleaning the bonding surface and applying primer! Always ensure that no cleaning solution residues remain on

the body.

Fig 2: Identifying Window Paint Damage Area

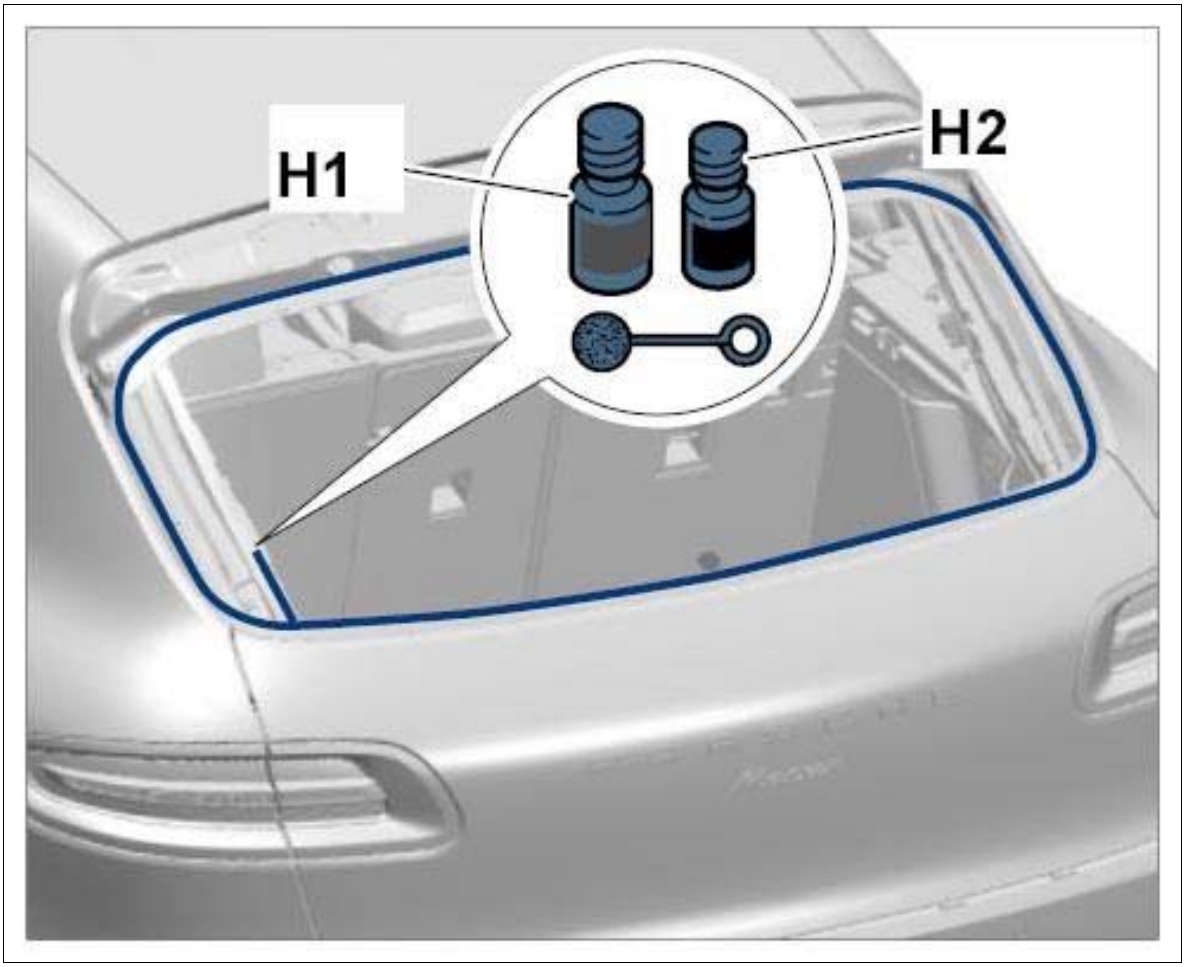

Courtesy of PORSCHE CARS NORTH AMERICA, INC.

WM 648619 REMOVING AND INSTALLING REAR WINDOW (ALL MODELS) > PREPARING REAR WINDOW FOR INSTALLATION

Information

- The removed rear window can be reinstalled if there was no prior damage to the rear window and the rear window was removed without damage.

Information

- Replace the seal at the bottom of the rear window.

1. Remove adhesive from the rear window.

    1. 1.1. Fit cutter **-C-** with the flashing knife **-D-** and remove adhesive residue from the rear window, ensuring that a surface coating of adhesive remains.

        Information

1. The remaining adhesive helps new adhesive to stick. Keep cut surfaces clean and free of grease and do not clean with cleaning solution.

Fig 1: Removing Adhesive From Rear Window

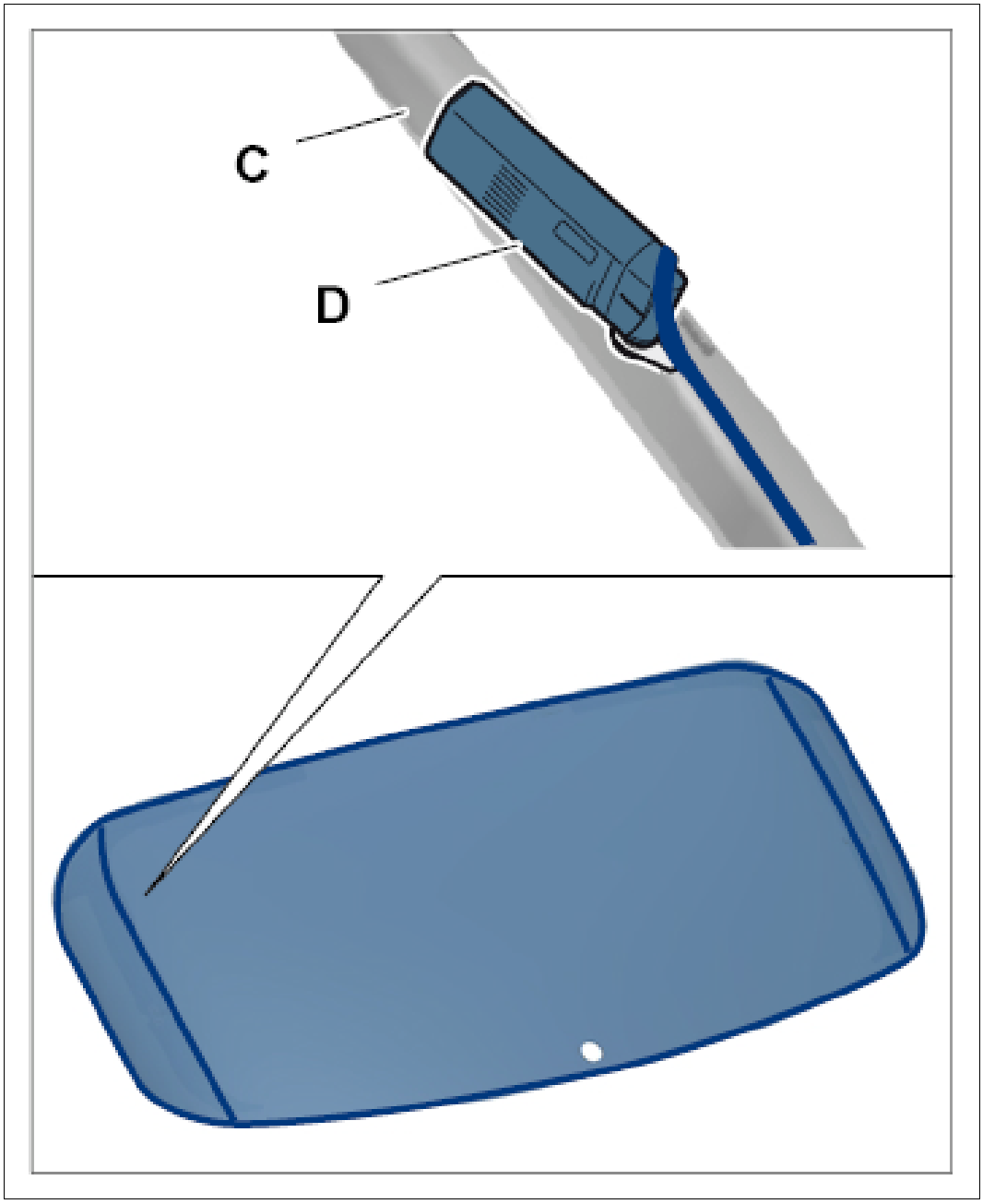

Courtesy of PORSCHE CARS NORTH AMERICA, INC.

2. Apply activator to the bonding section of the rear window.

    1. 2.1. During long idle periods, apply activator **-H3-** to the remaining adhesive.

Fig 2: Applying Activator

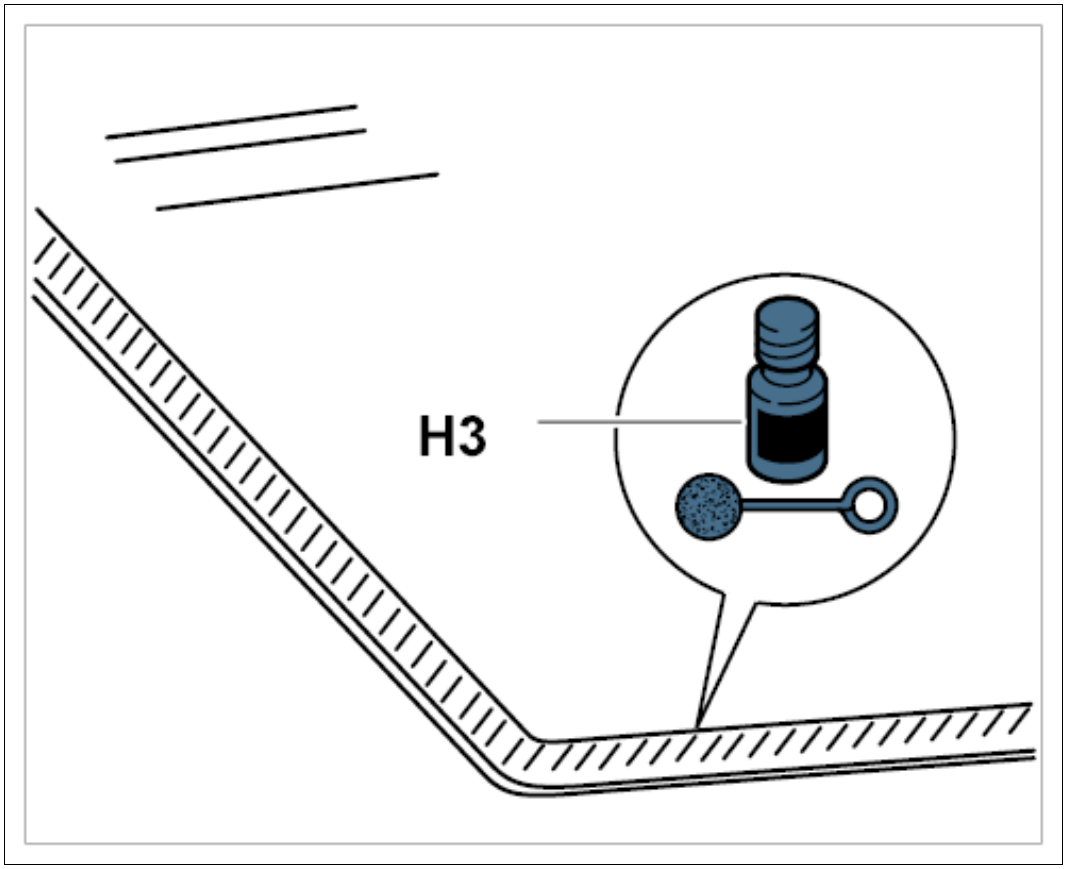

Courtesy of PORSCHE CARS NORTH AMERICA, INC.

WM 648619 REMOVING AND INSTALLING REAR WINDOW (ALL MODELS) > PREPARING REAR WINDOW FOR INSTALLATION > PREPARING REAR WINDOW FOR INSTALLATION (NEW REAR WINDOW)

1. Clean and prime the glass.
    1. 1.1. Clean the window glass with cleaning solution **-H1-** .
    2. 1.2. Apply primer **-H2-** to the glass flange close to the marking.

Fig 1: Cleaning Glass

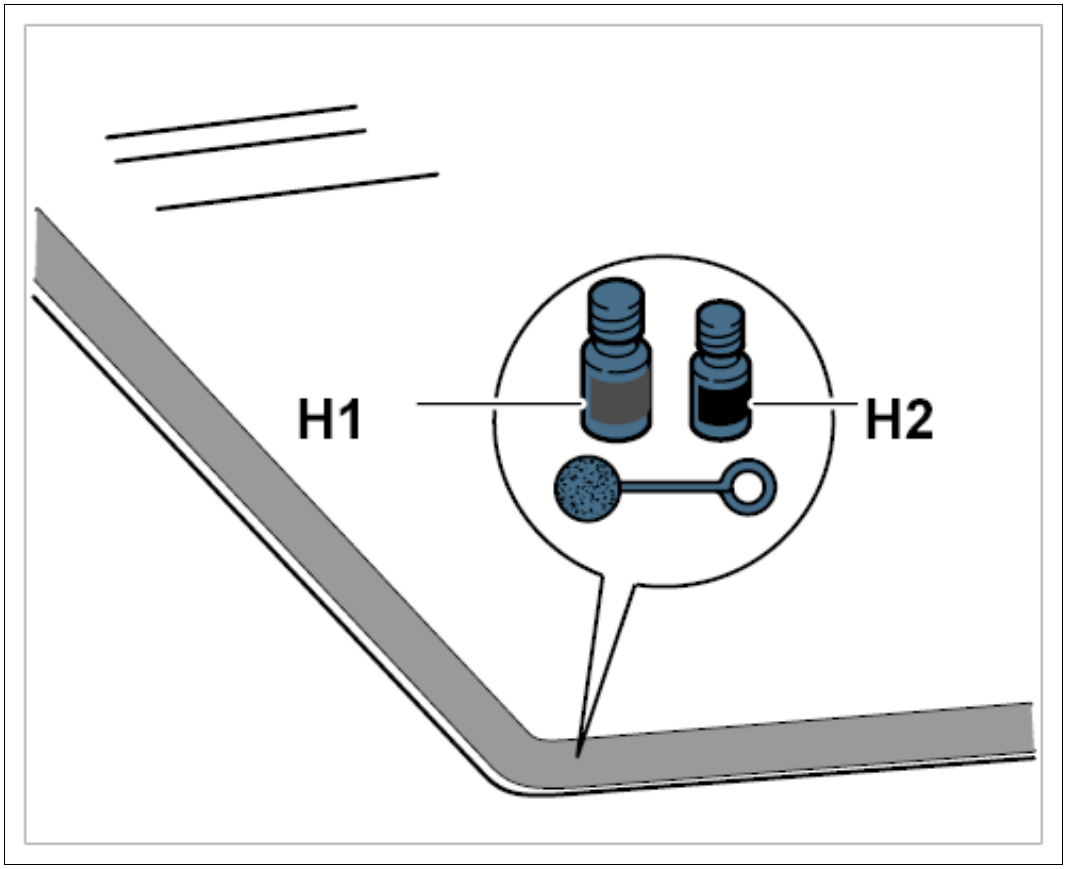

Courtesy of PORSCHE CARS NORTH AMERICA, INC.

Information

1. A ventilation period of at least 10 minutes must be observed between the cleaning of the glass and the application of primer! No cleaning solution residues may remain on the windscreen.

WM 648619 REMOVING AND INSTALLING REAR WINDOW (ALL MODELS) > INSTALLING REAR WINDOW

⚠ *CAUTION: Danger of material damage if specified curing time of adhesive is not observed! In order to ensure that the bonded joint is sufficiently strong, the following conditions must be adhered to:*

- *The vehicle must not be used until the curing time has elapsed.*
- *Curing time: 2 hours*
- *Temperature: at least 10 °C*
- *Fixing time: approx. 1 hour*

Information

- The removed rear window can be reinstalled if there was no prior damage to the rear window and the rear window was removed without damage.

Information

- Check stop bits.
- Replace damaged or missing stop bits.

1. Prepare 2-component adhesive for processing. → 6X00IN WORKING WITH PORSCHE 2-COMPONENT WINDOW ADHESIVE

   Information

   1. The adhesive has an open time of -15 min- , which means that the bonding material must be applied and the component must be affixed within this period of time.
   2. To ensure that the substance is completely mixed, apply a 30-mm long bead of fresh adhesive to a piece of cardboard before processing.

      Fig 1: Identifying Adhesive Bead

      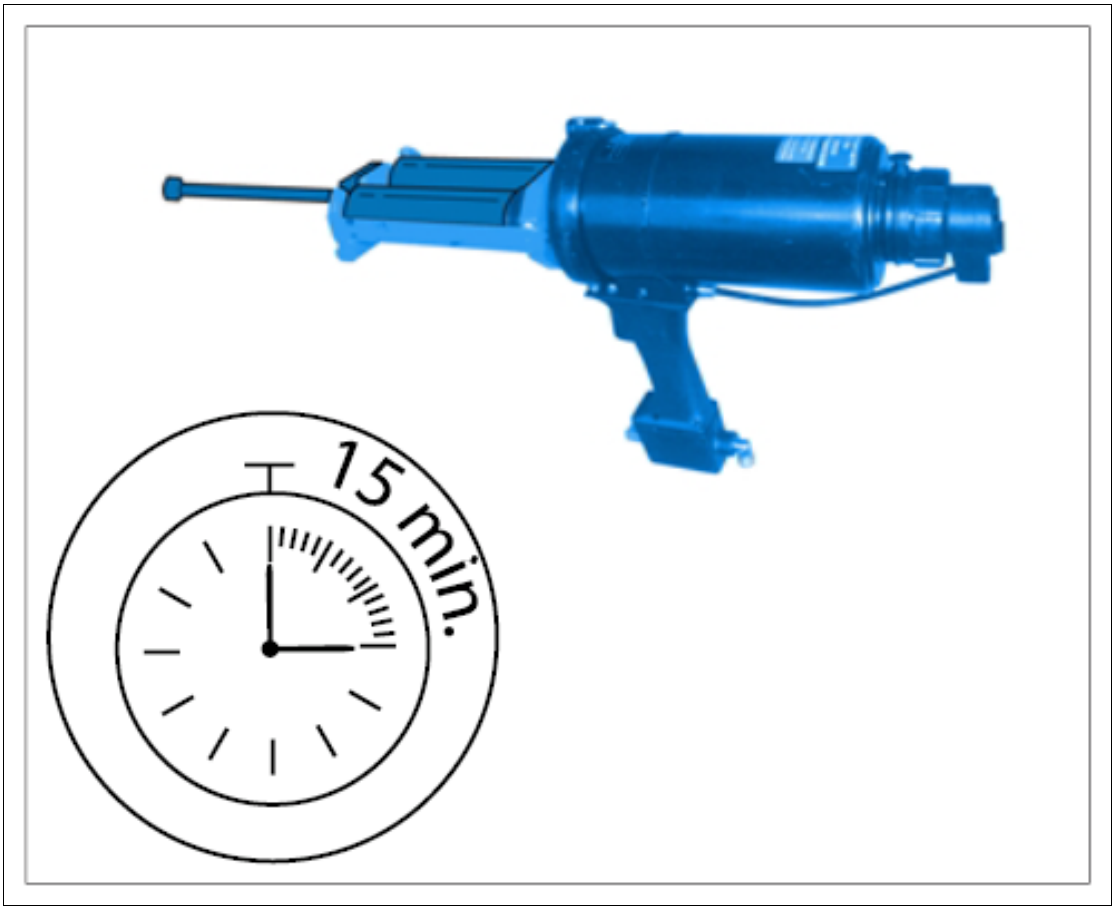

      Courtesy of PORSCHE CARS NORTH AMERICA, INC.

2. Apply adhesive to the rear window.

   1. 2.1. Apply 2-component adhesive using the bonding gun **-A-** to the rear window along the precoating or on the primer in the form of a triangular bead measuring **-X =**

approx. 15 mm- .

Information

1. When applying the adhesive, it is essential to ensure that the adhesive bead overlaps by approx. 30 mm at the beginning and at the end.

Fig 2: Applying Adhesive To Rear Window

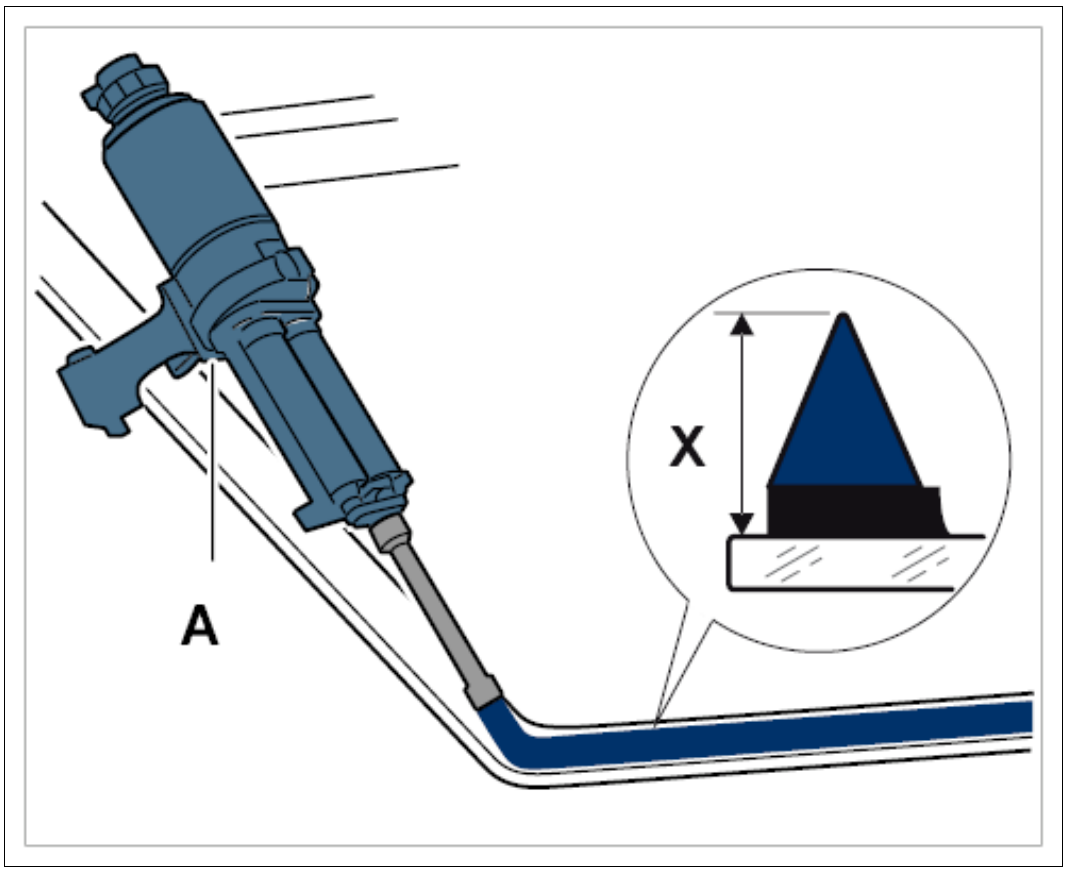

Courtesy of PORSCHE CARS NORTH AMERICA, INC.

Information

1. Two persons are needed to insert, position and secure the rear window.

3. Close the rear lid and insert the rear window into the body.

Fig 3: Inserting Rear Window



Courtesy of PORSCHE CARS NORTH AMERICA, INC.

1. 3.1. Affix suction cups to the rear window.
2. 3.2. Guide the rear window into the window aperture at the top.
3. 3.3. Insert the rear window at the sides of the window aperture and lower it.
4. 3.4. Press the rear window uniformly into the body.
5. 3.5. Adjust the size of the gap by moving the rear window. → 648619 REMOVING AND INSTALLING REAR WINDOW - section on "Technical values"
6. 3.6. Secure the rear window to the top of the rear lid with adhesive tape **-1-** to prevent it from slipping.

Fig 4: Securing Rear Window

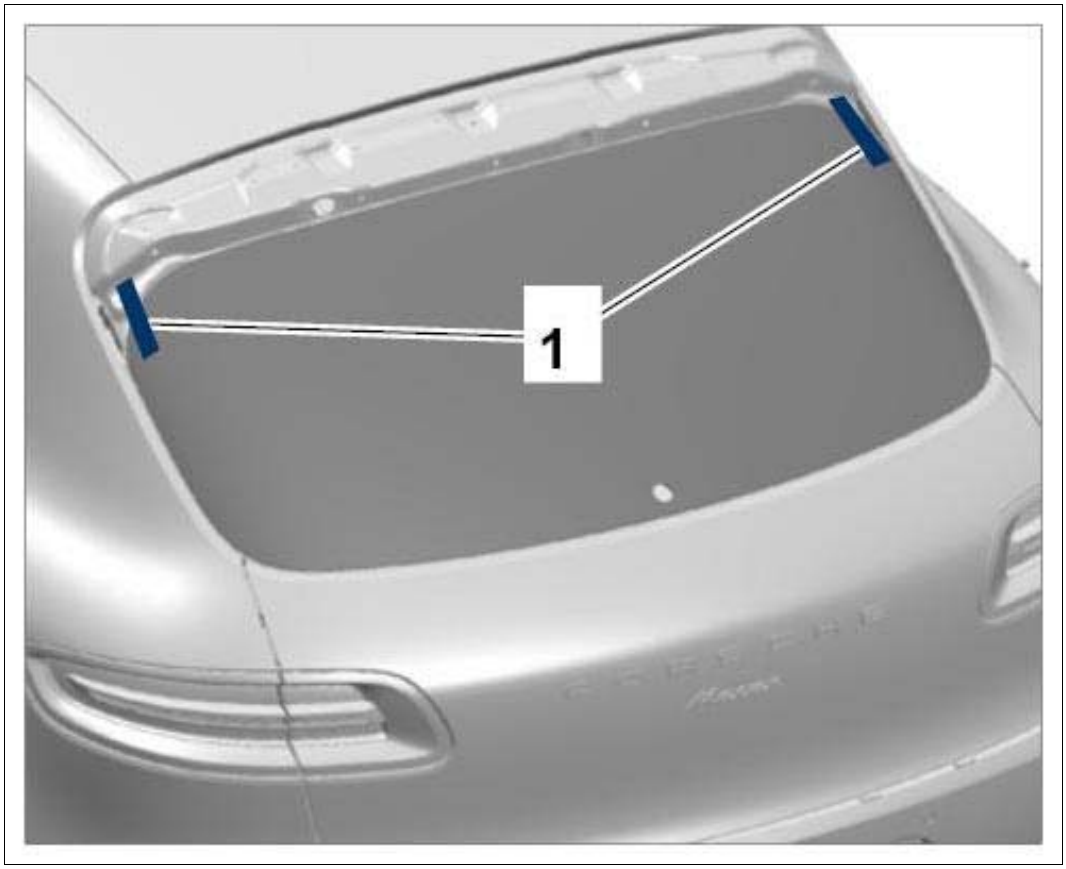

Courtesy of PORSCHE CARS NORTH AMERICA, INC.

4. Clean visible areas.

    1. 4.1. Adhesive that has oozed out must be removed immediately and the affected fields of vision must be cleaned using cleaning agent **-H1-** .

Fig 5: Removing Adhesive Compound

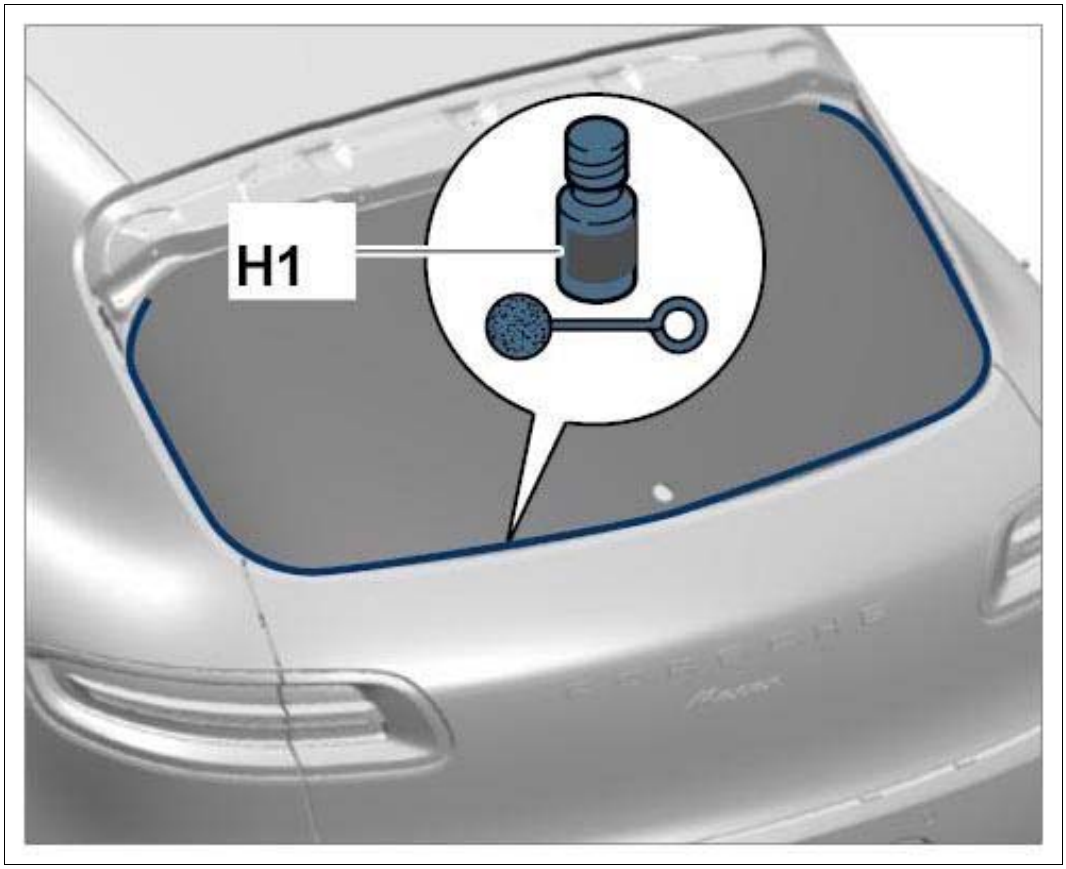

Courtesy of PORSCHE CARS NORTH AMERICA, INC.

5. Fit rubber sleeve on the wiper arm.
6. Plug in and lock electric plug connections for the antenna amplifier control unit. → Installing antenna control unit
7. Plug in and lock electric plug connections on the antenna amplifier. → Installing antenna amplifier
8. Plug in electric plug connections for rear window heating. → Installing wire harness for tailgate at the left
9. Plug in and lock electric plug connections on actuating cylinders for the rear lid. → Installing actuating cylinder for rear lid

WM 648619 REMOVING AND INSTALLING REAR WINDOW (ALL MODELS) > SUBSEQUENT WORK

1. Install wiper motor. → Installing Wiper Motor For Rear Window Washer
2. Install rear spoiler. → Installing rear spoiler
3. Install tailgate trim panel.

WM 660319 REMOVING AND INSTALLING FRONT SPOILER (ALL MODELS) > TECHNICAL VALUES

Location	Description	Type	Basic value	Tolerance 1	Tolerance 2
Front apron to lower lock carrier		Tightening torque	2 Nm (1.5 ftlb.)		

WM 660319 REMOVING AND INSTALLING FRONT SPOILER (ALL MODELS) > PRELIMINARY WORK

1. Remove skid plate. → Removing Skid Plate
2. Remove cover for front underbody. → Removing cover for front underbody

WM 660319 REMOVING AND INSTALLING FRONT SPOILER (ALL MODELS) > REMOVING FRONT SPOILER

Information

- The number of fastening screws, fixing clips, plug connections, holders and trim panels can vary depending on equipment.
- The illustrations for removing and installing the drive mechanism are shown only on one equipment variant and may differ from the actual equipment variant.
- Some steps must be carried out automatically.
- Some of the repair illustrations show only one side of the vehicle.

1. Unscrew fastening screws **-1-** .
2. Unclip front spoiler **-2-** on the front apron **-3-** .
3. Guide tabs **-4-** out of the front apron **-3-** and remove front spoiler **-2-** .

Fig 1: Identifying Front Spoiler And Tabs



Courtesy of PORSCHE CARS NORTH AMERICA, INC.

WM 660319 REMOVING AND INSTALLING FRONT SPOILER (ALL MODELS) > INSTALLING FRONT SPOILER

Installation is performed in reverse order. Pay particular attention to the following:

1. Tighten fastening screws to the specified torque. **Tightening torque 2 Nm (1.5 ftlb.)**

WM 660319 REMOVING AND INSTALLING FRONT SPOILER (ALL MODELS) > SUBSEQUENT WORK

1. Install cover for front underbody. → Installing cover for front underbody
2. Install skid plate. → Installing Skid Plate

WM 660319 REMOVING AND INSTALLING FRONT SPOILER (ALL MODELS) > PRELIMINARY WORK

1. Remove front apron. → Removing Front Apron

WM 660319 REMOVING AND INSTALLING FRONT SPOILER (ALL MODELS) >

REMOVING FRONT SPOILER

Information

- The number of fastening screws, fixing clips, plug connections, holders and trim panels can vary depending on equipment.
- The illustrations for removing and installing the drive mechanism are shown only on one equipment variant and may differ from the actual equipment variant.
- Some steps must be carried out automatically.
- Some of the repair illustrations show only one side of the vehicle.

1. Release expansion rivets **-1-** and pull them out.
2. Release all fixing clips **-2-** and unclip front spoiler from front apron.
3. Remove front spoiler.

Fig 1: Removing Front Spoiler

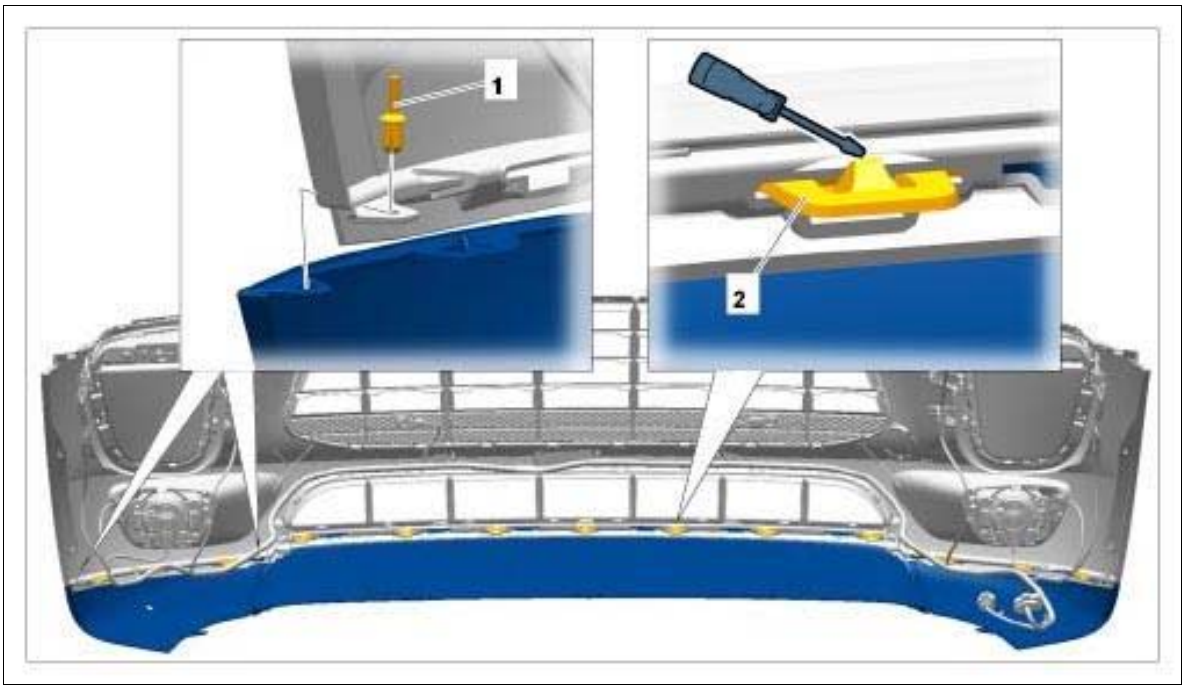

Courtesy of PORSCHE CARS NORTH AMERICA, INC.

WM 660319 REMOVING AND INSTALLING FRONT SPOILER (ALL MODELS) > INSTALLING FRONT SPOILER

Information

Check that all fixing clips are positioned fully and correctly.

Check that the fixing clips are not bent or broken.

Replace damaged or missing clips with new ones.

Installation is performed in reverse order.

WM 660319 REMOVING AND INSTALLING FRONT SPOILER (ALL MODELS) > SUBSEQUENT WORK

1. Install front apron. → Installing Front Apron

WM 660419 REMOVING AND INSTALLING FRONT AIR GRILLE (ALL MODELS) > TECHNICAL VALUES

Location	Description	Type	Basic value	Tolerance 1	Tolerance 2
Auxiliary headlight to front apron	Internal Torx screw, Ø 5 x 16	Tightening torque	123456789 Nm		

WM 660419 REMOVING AND INSTALLING FRONT AIR GRILLE (ALL MODELS) > PRELIMINARY WORK

1. Remove front apron. → Removing Front Apron

WM 660419 REMOVING AND INSTALLING FRONT AIR GRILLE (ALL MODELS) > REMOVING FRONT AIR GRILLE

Information

- The number of fastening screws, fixing clips, plug connections, holders and trim panels can vary depending on equipment.
- The illustrations for removing and installing the drive mechanism are shown only on one equipment variant and may differ from the actual equipment variant.
- Some steps must be carried out automatically.
- Some of the repair illustrations show only one side of the vehicle.

1. Remove fog lights **-3-** . → Removing fog lights
2. Disconnect electric plug connections **-1-** on the auxiliary headlight and guide out wire harness **-5-** at the air grille **-2-** .
3. Unscrew fastening screws **-4-** .
4. Unclip air grille **-2-** on the front apron and remove it.

Fig 1: Identifying Front Right Air Grille



Courtesy of PORSCHE CARS NORTH AMERICA, INC.

WM 660419 REMOVING AND INSTALLING FRONT AIR GRILLE (ALL MODELS) > INSTALLING FRONT AIR GRILLE

Installation is performed in reverse order. Pay particular attention to the following:

1. Tighten fastening screws to the specified torque. **Tightening torque 123456789 Nm**

WM 660419 REMOVING AND INSTALLING FRONT AIR GRILLE (ALL MODELS) > SUBSEQUENT WORK

1. Install front apron. → Installing Front Apron

WM 660519 REMOVING AND INSTALLING RADIATOR GRILLE (ALL MODELS) > PRELIMINARY WORK

1. Remove front apron. → Removing Front Apron

WM 660519 REMOVING AND INSTALLING RADIATOR GRILLE (ALL MODELS) > REMOVING RADIATOR GRILLE

1. Disconnect electric plug connections at the ParkAssist sensors **-2-** and unclip wire harness **-3-** at the radiator grille **-1-** .
2. Remove fog lights **-4-** . (Only for Turbo vehicles) → Removing fog lights
3. Unclip radiator grille **-1-** on the front apron and remove it.

Fig 1: Identifying Radiator Grille



Courtesy of PORSCHE CARS NORTH AMERICA, INC.

WM 660519 REMOVING AND INSTALLING RADIATOR GRILLE (ALL MODELS) > INSTALLING RADIATOR GRILLE

Installation is performed in reverse order.

WM 660519 REMOVING AND INSTALLING RADIATOR GRILLE (ALL MODELS) > SUBSEQUENT WORK

1. Install front apron. → Installing Front Apron

WM 660719 REMOVING AND INSTALLING FRONT LOGO (ALL MODELS) > REMOVING FRONT LOGO

Fig 1: Identifying Front Logo Position

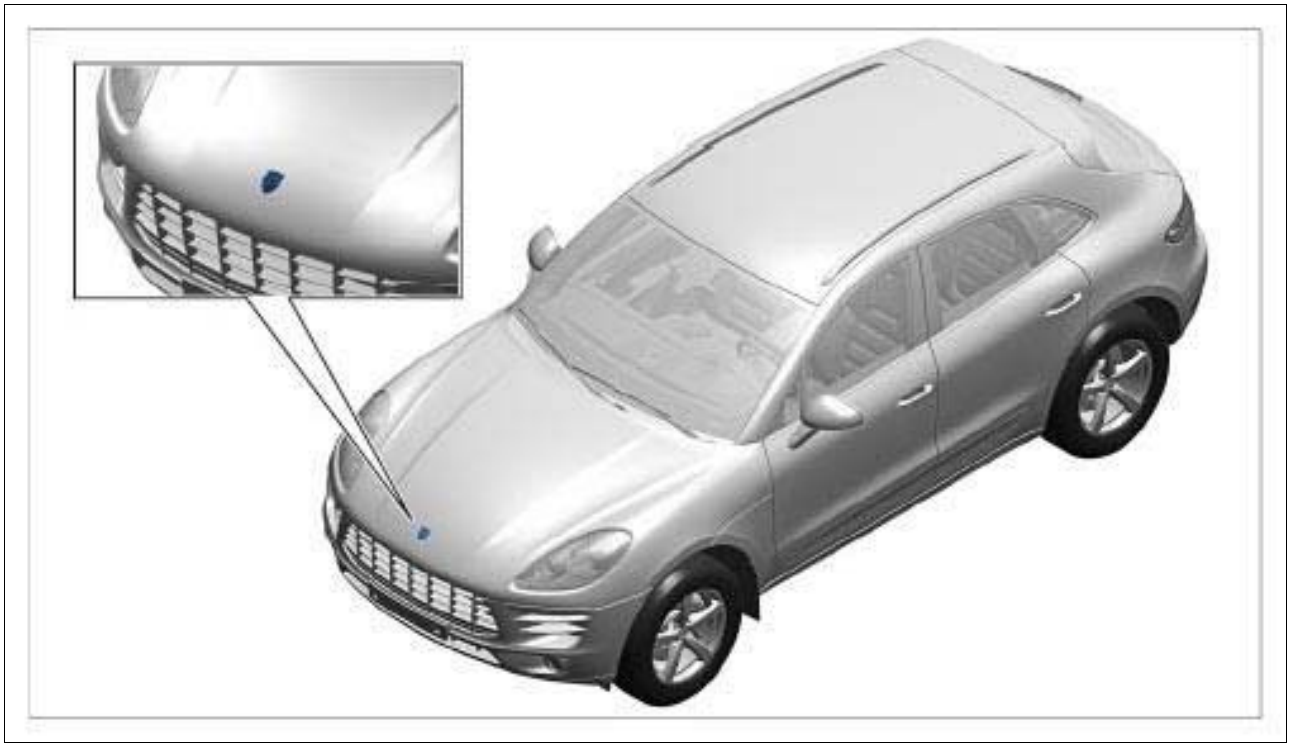

Courtesy of PORSCHE CARS NORTH AMERICA, INC.

1. Open the front lid.
2. Remove logo.

Fig 2: Removing Logo And Base

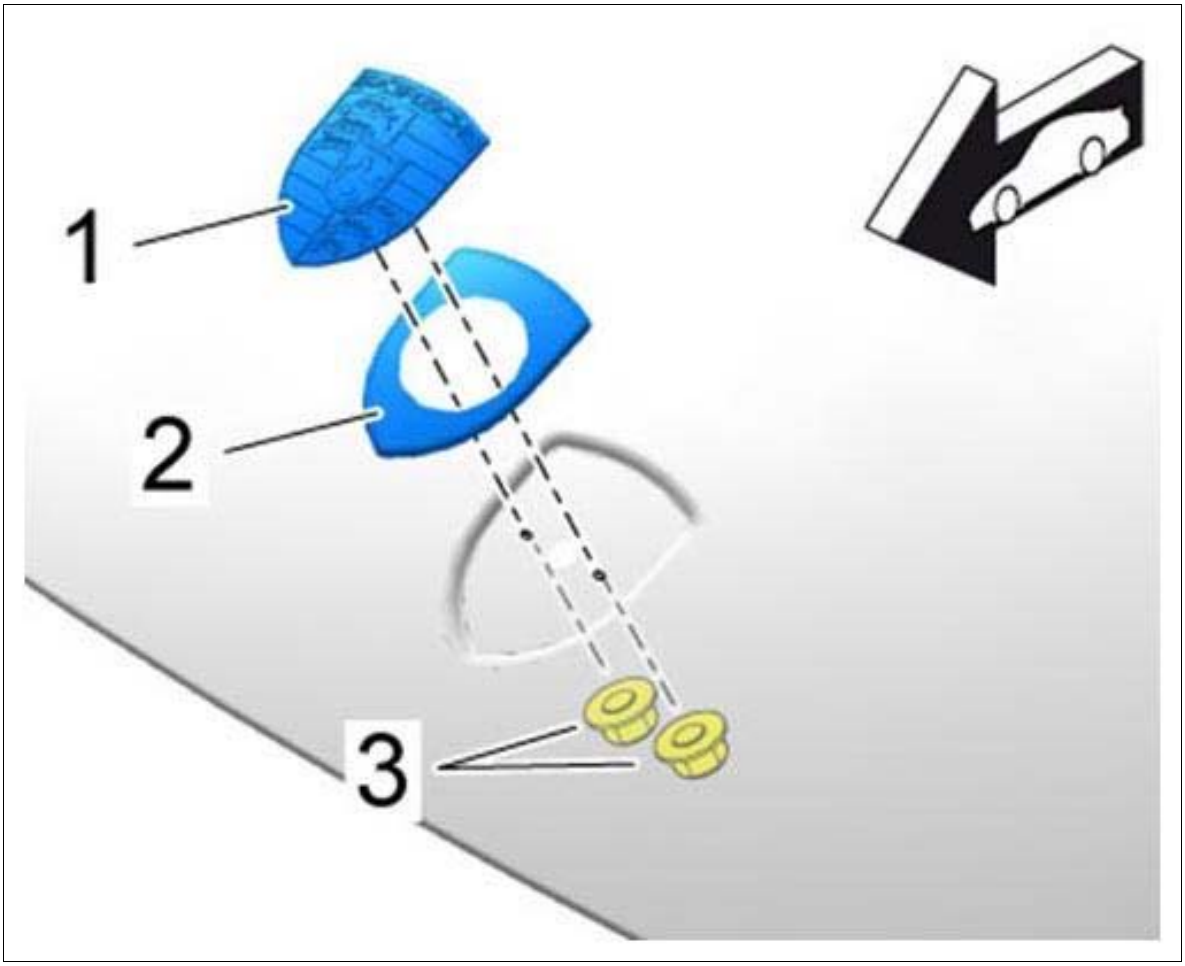

Courtesy of PORSCHE CARS NORTH AMERICA, INC.

1. 2.1. Screw off fastening nuts **-3-** .
2. 2.2. Remove logo **-1-** and base **-2-** .

WM 660719 REMOVING AND INSTALLING FRONT LOGO (ALL MODELS) > INSTALLING FRONT LOGO

Information

The fastening nuts for the logo must always be replaced.

1. The logo is installed in reverse order to removal.

WM 661319 REMOVING AND INSTALLING VENT GUIDE (ALL MODELS) > PRELIMINARY WORK

1. Remove front apron. → Removing Front Apron

WM 661319 REMOVING AND INSTALLING VENT GUIDE (ALL MODELS) > REMOVING VENT GUIDE > REMOVING VENTILATION GUIDE

1. Unclip ventilation guides **-2, 4-** at the sides of the holder **-arrow-** and swivel them aside.
2. Pull outside temperature sensor **-3-** out of the right ventilation guide **-4-** .
3. Guide ventilation guides **-2, 4-** out of the air guide **-1-** and remove them.

Fig 1: Removing Ventilation Guide

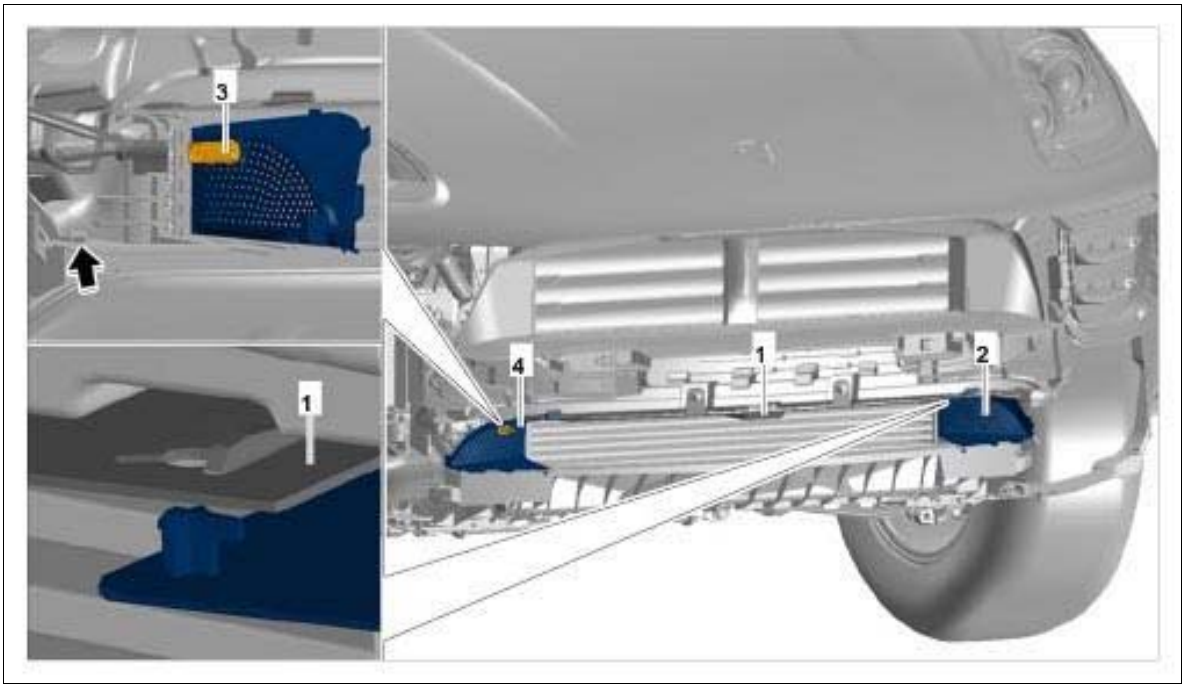

Courtesy of PORSCHE CARS NORTH AMERICA, INC.

WM 661319 REMOVING AND INSTALLING VENT GUIDE (ALL MODELS) > INSTALLING VENT GUIDE > INSTALLING VENTILATION GUIDE

Installation is performed in reverse order.

WM 661319 REMOVING AND INSTALLING VENT GUIDE (ALL MODELS) > SUBSEQUENT WORK

1. Install front apron. → Installing Front Apron

WM 662219 REMOVING AND INSTALLING COVER FOR FRONT DOOR (ALL MODELS) > TECHNICAL VALUES

Location	Description	Type	Basic value	Tolerance 1	Tolerance 2
Temperature		Nominal value	+15°C		
Humidity		Nominal value	50 %	+/-10 %	
Standing time		Nominal value	72 h		

WM 662219 REMOVING AND INSTALLING COVER FOR FRONT DOOR (ALL MODELS) > REMOVING COVER FOR FRONT DOOR

Information

- The number of fastening screws, fixing clips, plug connections, holders and trim panels can vary depending on equipment.
- The illustrations for removing and installing the drive mechanism are shown only on one equipment variant and may differ from the actual equipment variant.
- Some steps must be carried out automatically.
- Some of the repair illustrations show only one side of the vehicle.

Information

- The cover may be damaged during removal, depending on the type of cover.
- An undamaged cover can be re-fitted after replacing the adhesive strips.
- A damaged cover must be replaced.

1. Remove cover **-1-** from the door all the way around using a plastic wedge, starting at the rear **-arrow-** .

Fig 1: Loosening Cover

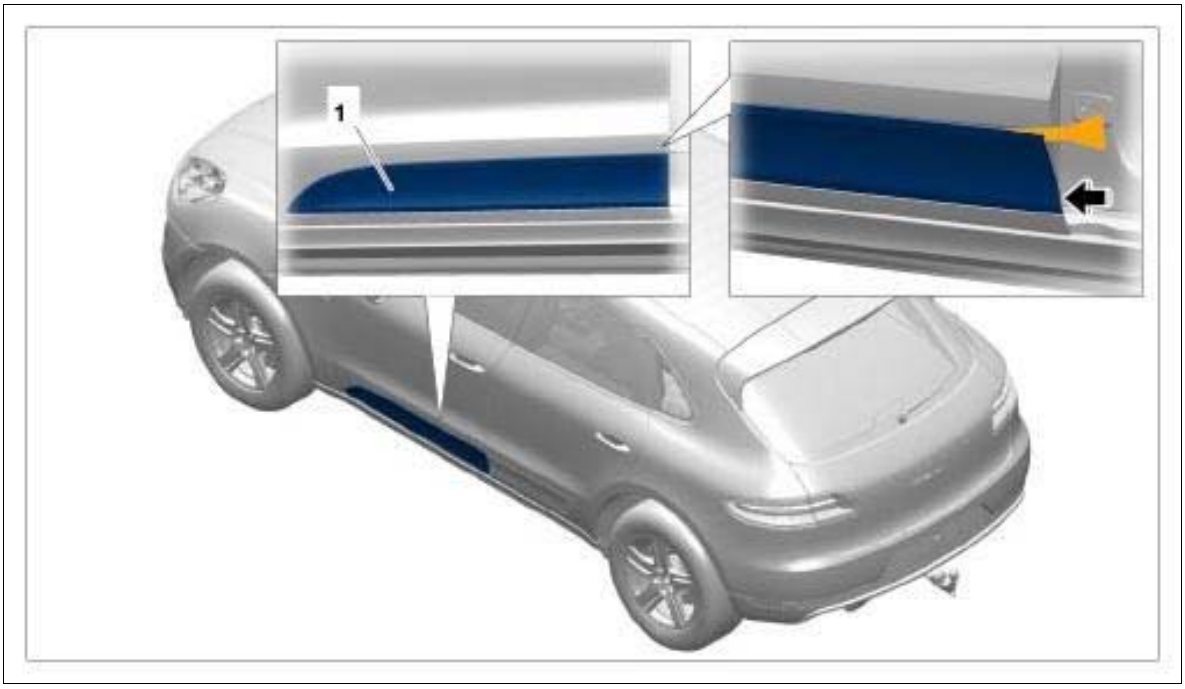

Courtesy of PORSCHE CARS NORTH AMERICA, INC.

2. Detach cover **-1-** from the door and guide out locking hooks **-2-** (only if fitted).
3. Remove cover **-1-** .
4. Remove adhesive residue **-3-** from the door and cover **-1-** .

Fig 2: Removing Door Cover

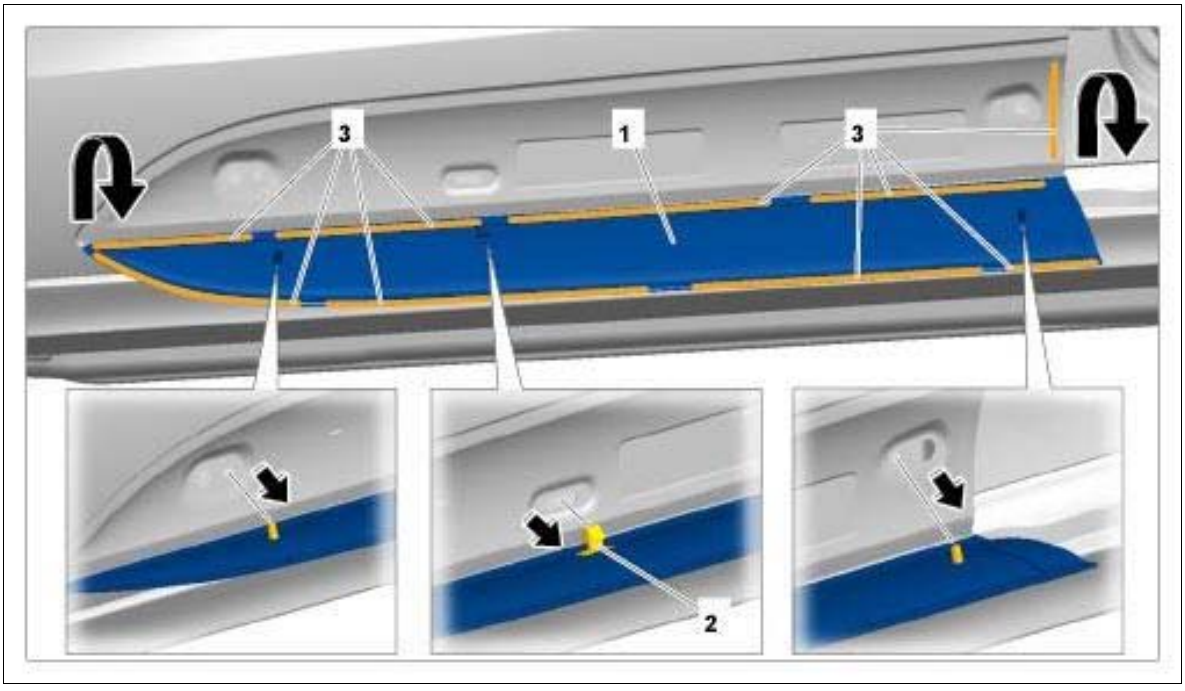

Courtesy of PORSCHE CARS NORTH AMERICA, INC.

WM 662219 REMOVING AND INSTALLING COVER FOR FRONT DOOR (ALL MODELS) > INSTALLING COVER FOR FRONT DOOR

Information

- Carefully clean any dirt, grease, wax and other impurities off the installation area of the body using isopropanol.
- Always use a clean cloth.
- The room and object temperature must be at least → Nominal value: +15°C.
- Humidity should be → Nominal value: 50 %+/-10 % .
- Do not touch the bonding surface again after removing the protective paper.
- Wear clean gloves during the bonding process in order to guarantee adequate adhesion.
- The parts must have been bonded for at least → Nominal value: 72 h before washing the vehicle in a car wash.

1. Clean the door close to the cover **-1-** .
2. Affix new adhesive strips **-3-** on the cover **-1-** and remove protective paper from the adhesive strips **-3-** .
3. Guide locking hooks **-2-** into door (only if fitted).
4. Align guide pins with the bores in the door and press cover **-1-** onto the door.

Fig 1: Fitting Door Cover

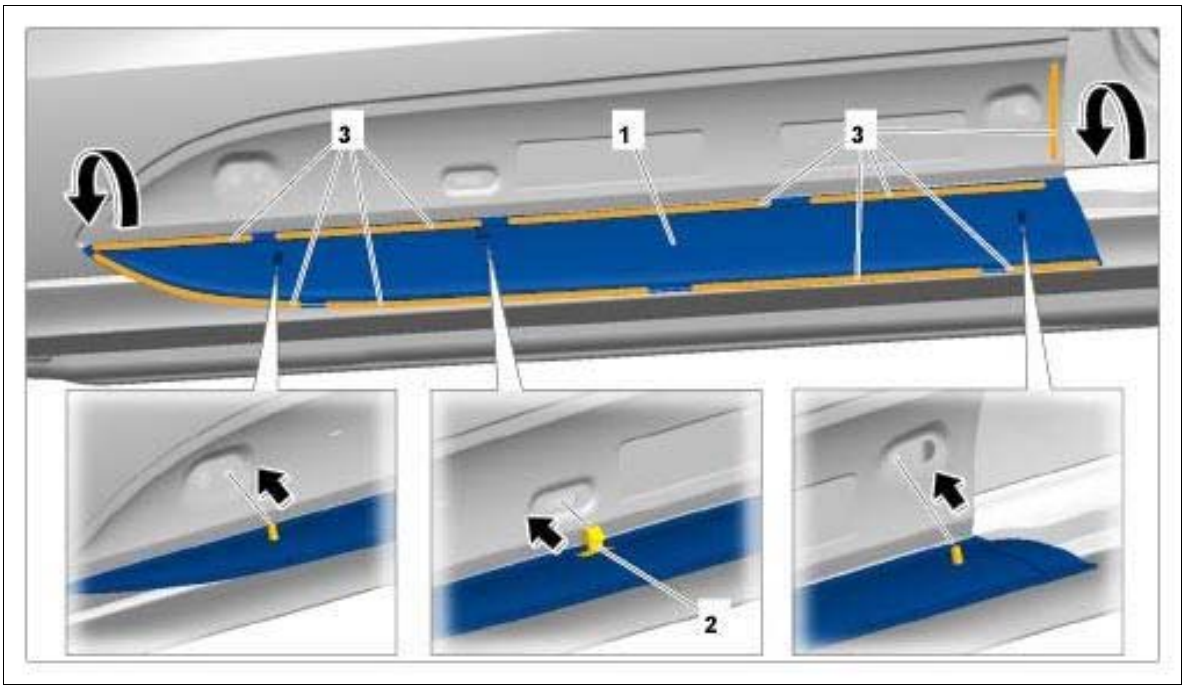

Courtesy of PORSCHE CARS NORTH AMERICA, INC.

WM 662619 REMOVING AND INSTALLING SIDE STEP (SKIDPAD) (ALL MODELS) > TECHNICAL VALUES

Location	Description	Type	Basic value	Tolerance 1	Tolerance 2
Fastening nut on bracket for front step	Item 1	Tightening torque	6 Nm (4.5 ftlb.)		
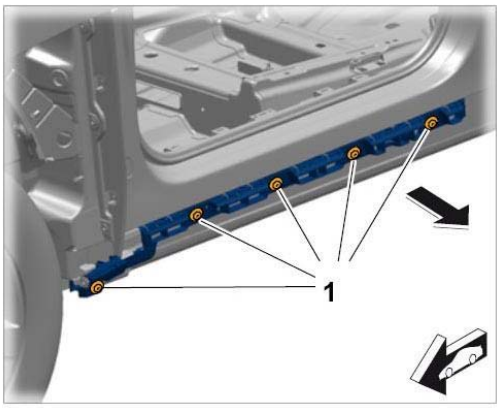 Bracket for front step					
Fastening screw securing step to underbody	Item 1	Tightening torque	2.5 Nm (2 ftlb.)		
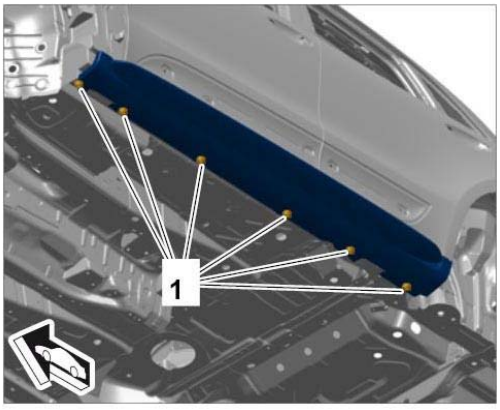 Bottom of step					

WM 662619 REMOVING AND INSTALLING SIDE STEP (SKIDPAD) (ALL MODELS) > PRELIMINARY WORK

1. Remove front door. → Removing Front Door
2. Remove rear door. → Removing Rear Door
3. Loosen wheel housing liner in the front step area. → Removing front wheel housing liner

4. When removing the support rail for the step, loosen the wheel housing liner at the rear of the step.

   → Removing rear wheel housing liner

WM 662619 REMOVING AND INSTALLING SIDE STEP (SKIDPAD) (ALL MODELS) > REMOVING SIDE STEP

Information

Cover add-on parts and adjacent areas.

Protect components against scratching and damage.

Information

- The number of fastening screws, fixing clips, plug connections, holders and trim panels can vary depending on equipment.
- The illustrations for removing and installing the drive mechanism are shown only on one equipment variant and may differ from the actual equipment variant.
- Some steps must be carried out automatically.
- Some of the repair illustrations show only one side of the vehicle.

Fig 1: Identifying Side Step ↓ Position



Courtesy of PORSCHE CARS NORTH AMERICA, INC.

1. Unscrew and remove fastening screws **-1-** securing the bottom of the step to the underbody.

Fig 2: Identifying Bottom Step To Underbody

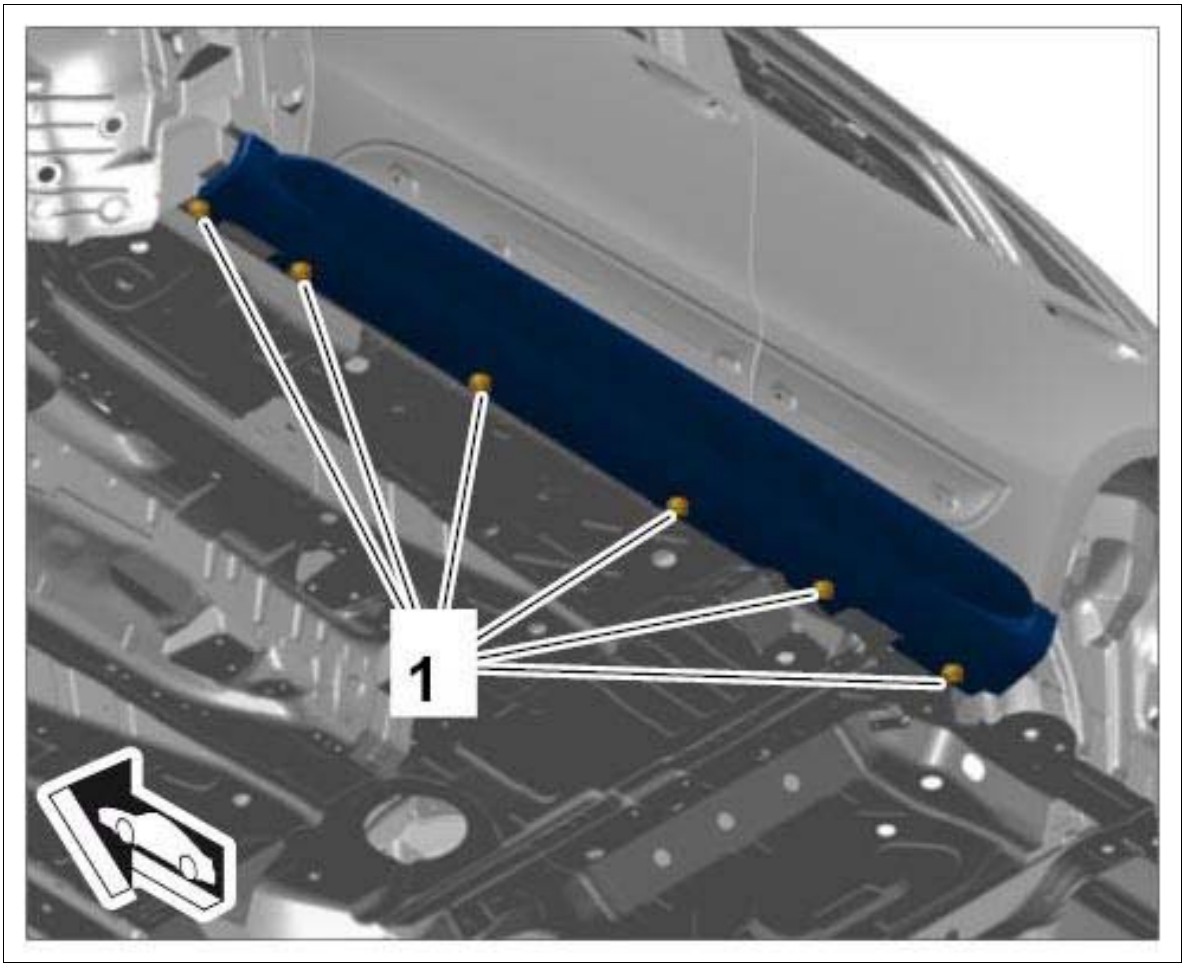

Courtesy of PORSCHE CARS NORTH AMERICA, INC.

2. Unclip step.

    1. 2.1. Unclip the step, starting from the rear **-A-** , using an assembly wedge and remove it **-B-** .

Fig 3: Removing Rear Step

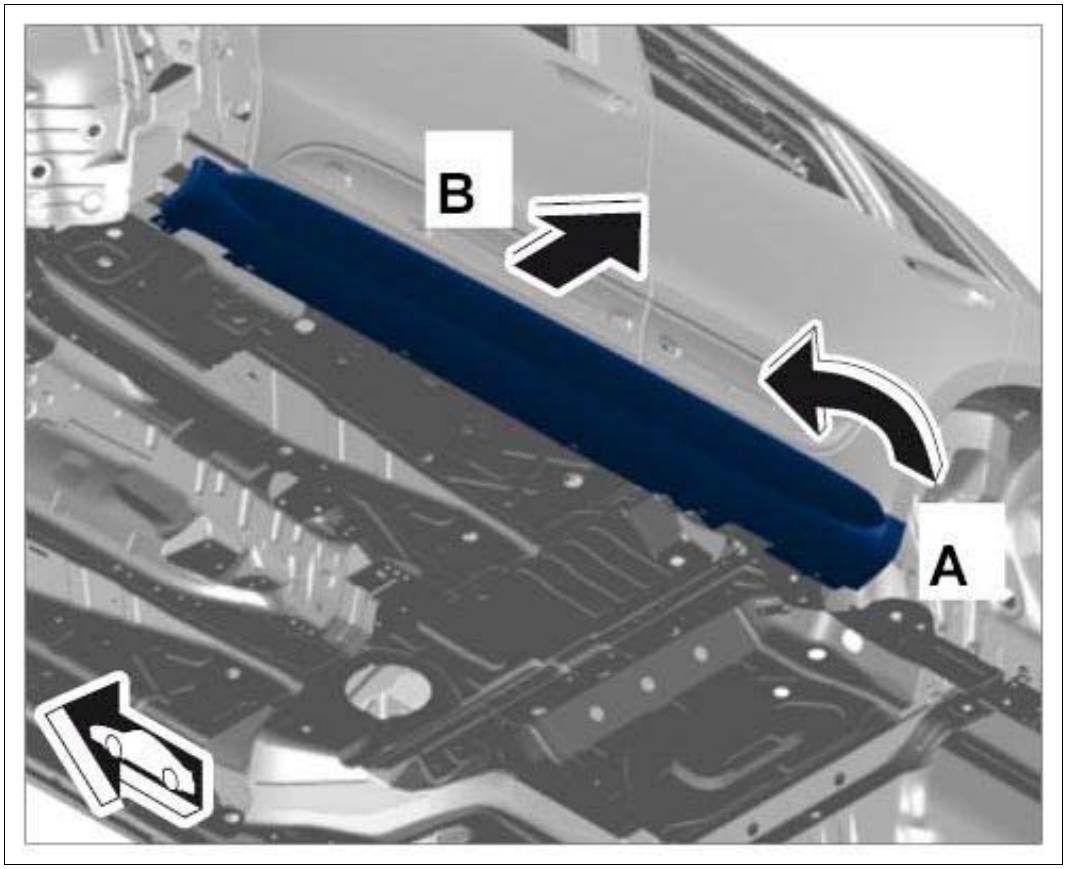

Courtesy of PORSCHE CARS NORTH AMERICA, INC.

WM 662619 REMOVING AND INSTALLING SIDE STEP (SKIDPAD) (ALL MODELS) > REMOVING SIDE STEP > REMOVING SUPPORT RAIL FOR STEP

1. Unscrew and remove fastening nuts **-1-** for support rail for rear running board.

Fig 1: Removing Rear Step Support Rail

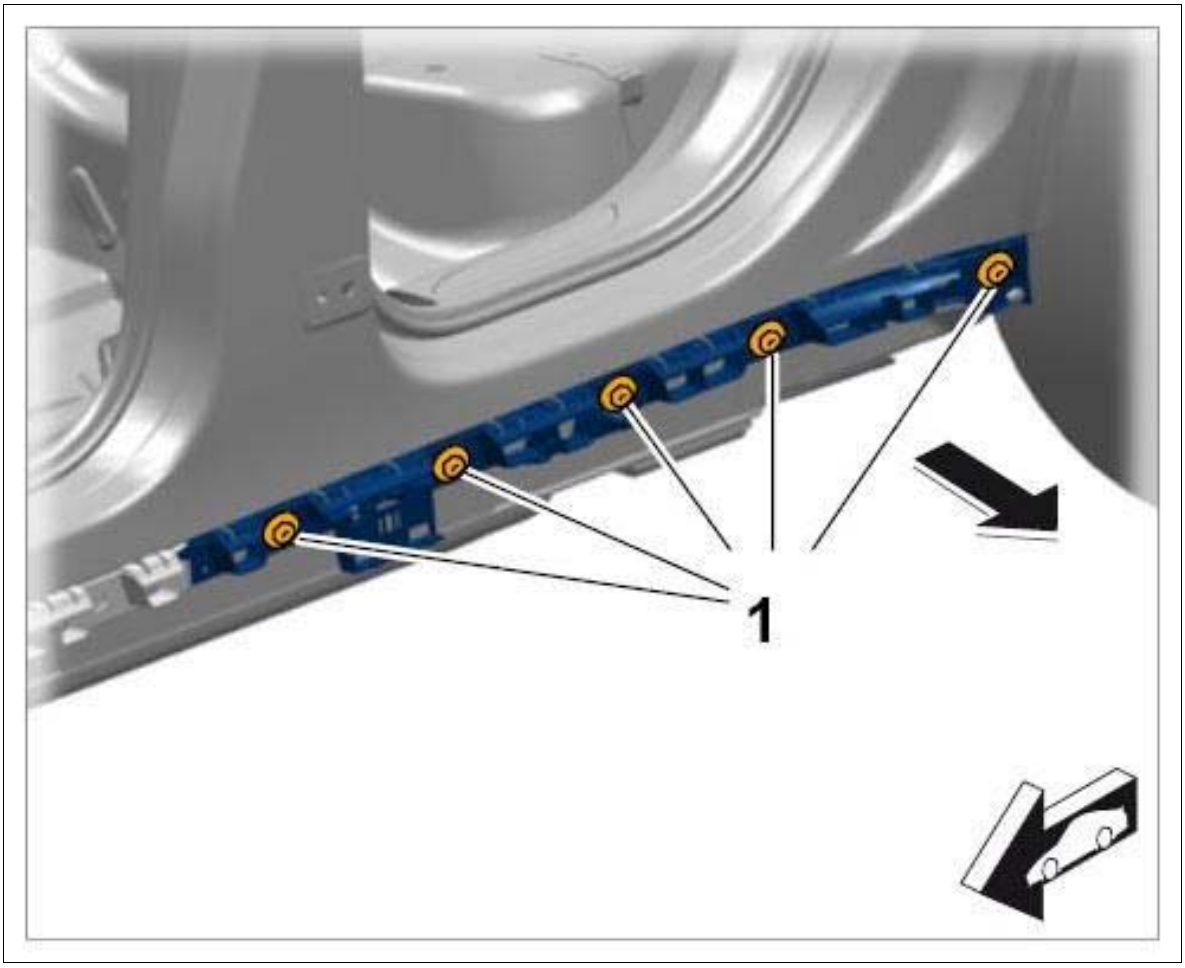

Courtesy of PORSCHE CARS NORTH AMERICA, INC.

2. Unscrew and remove fastening nuts **-1-** for support rail for front step.

Fig 2: Removing Front Step Support Rail

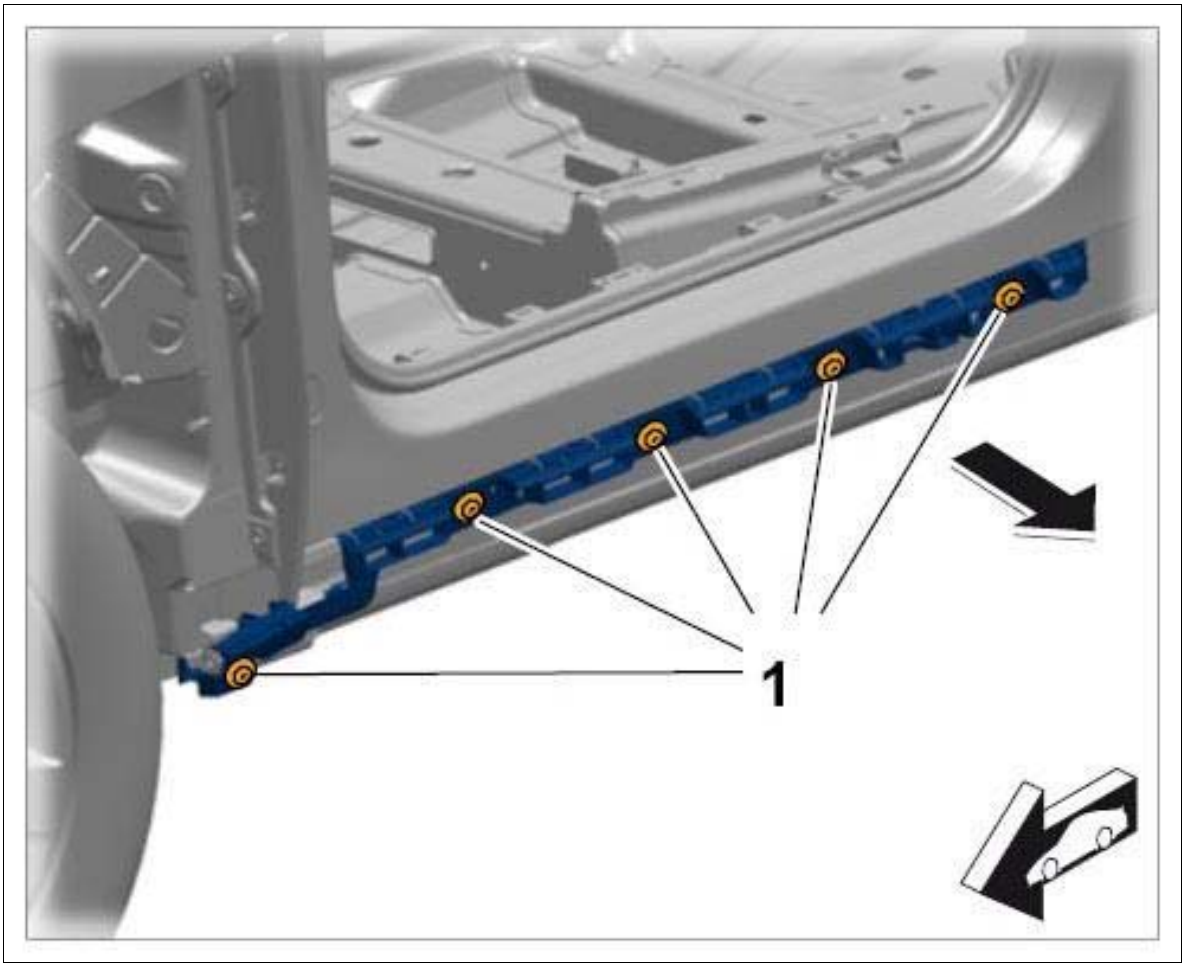

Courtesy of PORSCHE CARS NORTH AMERICA, INC.

WM 662619 REMOVING AND INSTALLING SIDE STEP (SKIDPAD) (ALL MODELS) > INSTALLING SIDE STEP > INSTALLING SUPPORT RAIL FOR STEP

1. Installation is performed in reverse order to removal.
2. Position support rail, starting at the front, and tighten fastening nuts at the front and rear to **Tightening torque 6 Nm (4.5 ftlb.)** .

WM 662619 REMOVING AND INSTALLING SIDE STEP (SKIDPAD) (ALL MODELS) > INSTALLING SIDE STEP > INSTALLING SIDE STEP

Information

Cover add-on parts and adjacent areas.

Protect components against scratching and damage.

1. Installation is performed in reverse order to removal.
2. Position and clip in step, making sure that the clips lock with an audible click. Check that the step is fitted correctly.
3. Tighten fastening screw securing the step to the underbody to **Tightening torque 2.5 Nm (2 ftlb.)** .

WM 662619 REMOVING AND INSTALLING SIDE STEP (SKIDPAD) (ALL MODELS) > SUBSEQUENT WORK

1. Secure rear wheel housing liner. → Installing rear wheel housing liner
2. Secure front wheel housing liner. → Installing front wheel housing liner
3. Install rear door. → Installing Rear Door
4. Install front door. → Installing Front Door

WM 663119 REMOVING AND INSTALLING DOOR ENTRY GUARD (ALL MODELS) > TECHNICAL VALUES

Location	Description	Type	Basic value	Tolerance 1	Tolerance 2
Fastening nut on door entry guard bracket	Item 1	Tightening torque	6 Nm (4.5 ftlb.)		
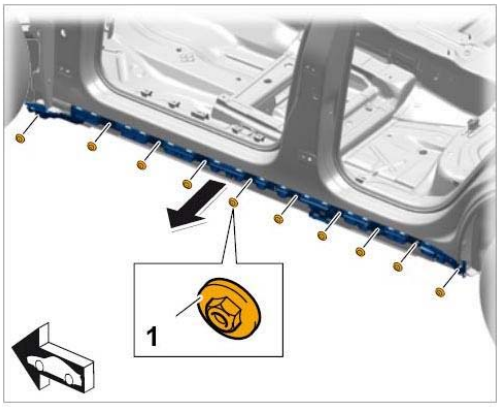 Support rail for door entry guard					
Fastening screws for door entry guard		Tightening torque	2.5 Nm (2 ftlb.)		

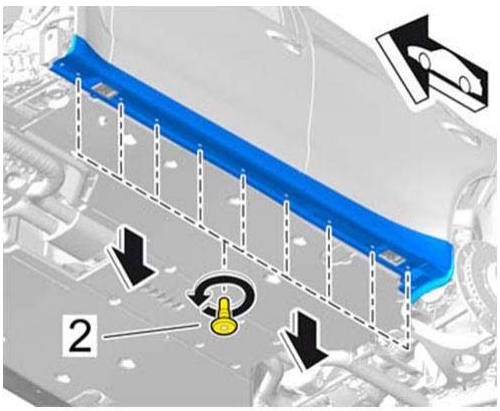

Door entry guard mounting

WM 663119 REMOVING AND INSTALLING DOOR ENTRY GUARD (ALL MODELS) > PRELIMINARY WORK

1. Loosen wheel housing liner in the door entry guard area. → Removing front wheel housing liner

WM 663119 REMOVING AND INSTALLING DOOR ENTRY GUARD (ALL MODELS) > REMOVING DOOR ENTRY GUARD

Information

The door entry guard can only be installed and removed when the doors are open. The illustration shows the vehicle without doors for the sake of clarity.

Information

- The number of fastening screws, fixing clips, plug connections, holders and trim panels can vary depending on equipment.
- The illustrations for removing and installing the drive mechanism are shown only on one equipment variant and may differ from the actual equipment variant.
- Some steps must be carried out automatically.
- Some of the repair illustrations show only one side of the vehicle.

1. Unscrew front fastening screws **-1-** .

Fig 1: Removing Screw On Front Door Entry Guard

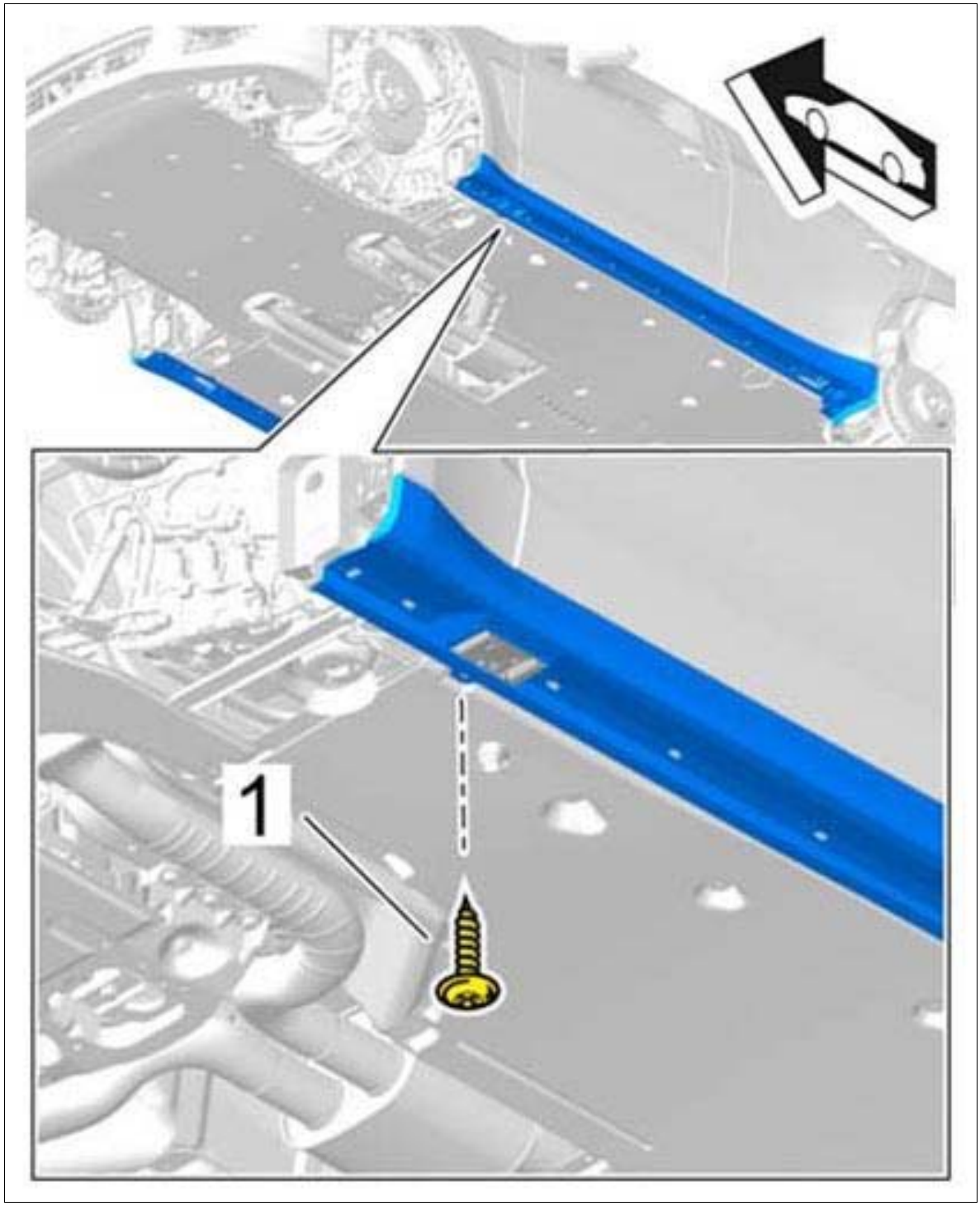

Courtesy of PORSCHE CARS NORTH AMERICA, INC.

Unscrew rear fastening screw **-1-** .

Fig 2: Removing Screw On Rear Door Entry Guard

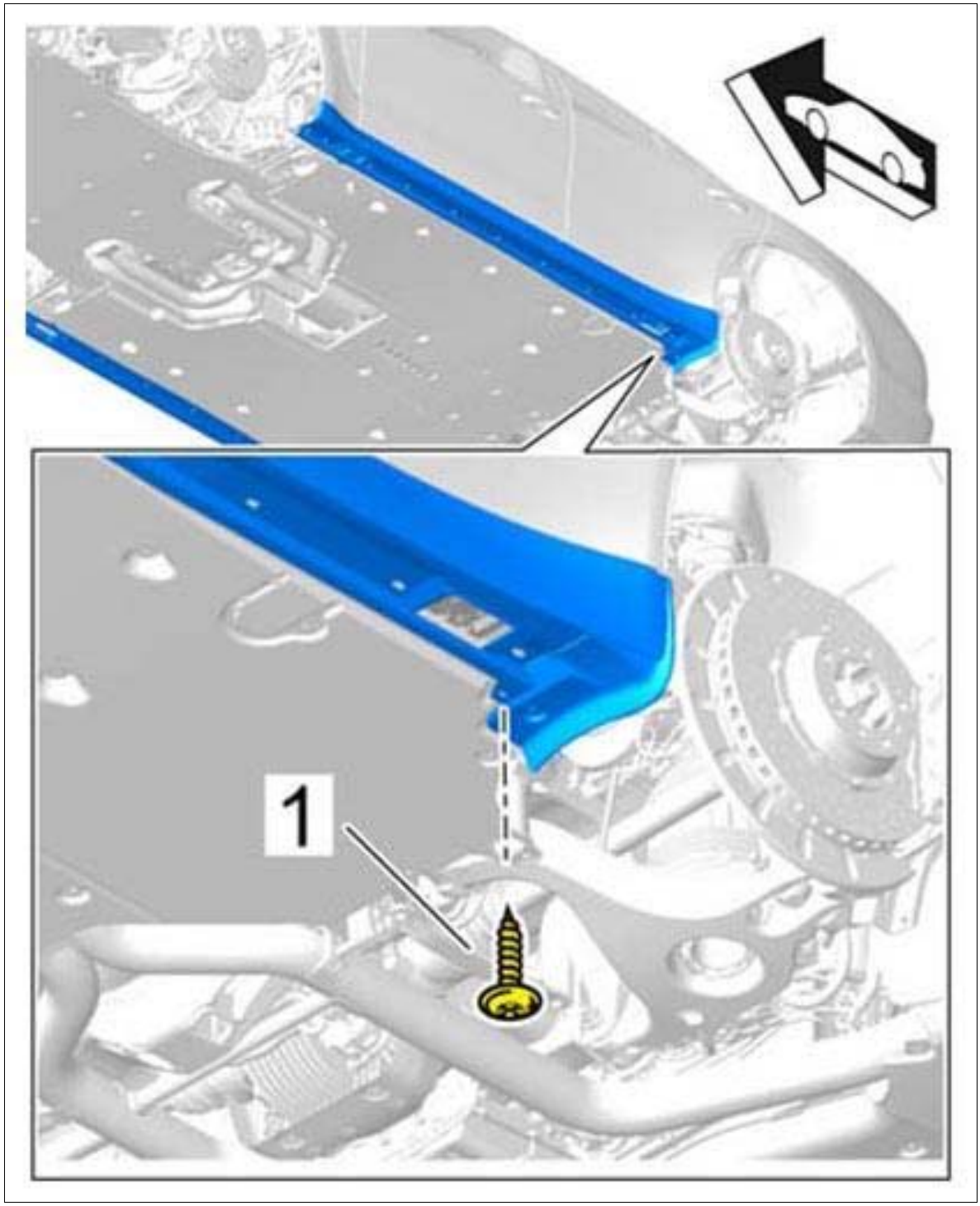

Courtesy of PORSCHE CARS NORTH AMERICA, INC.

2. Unscrew fastening screws on the door entry guard **-2-** .

Fig 3: Removing Door Entry Guard Mounting

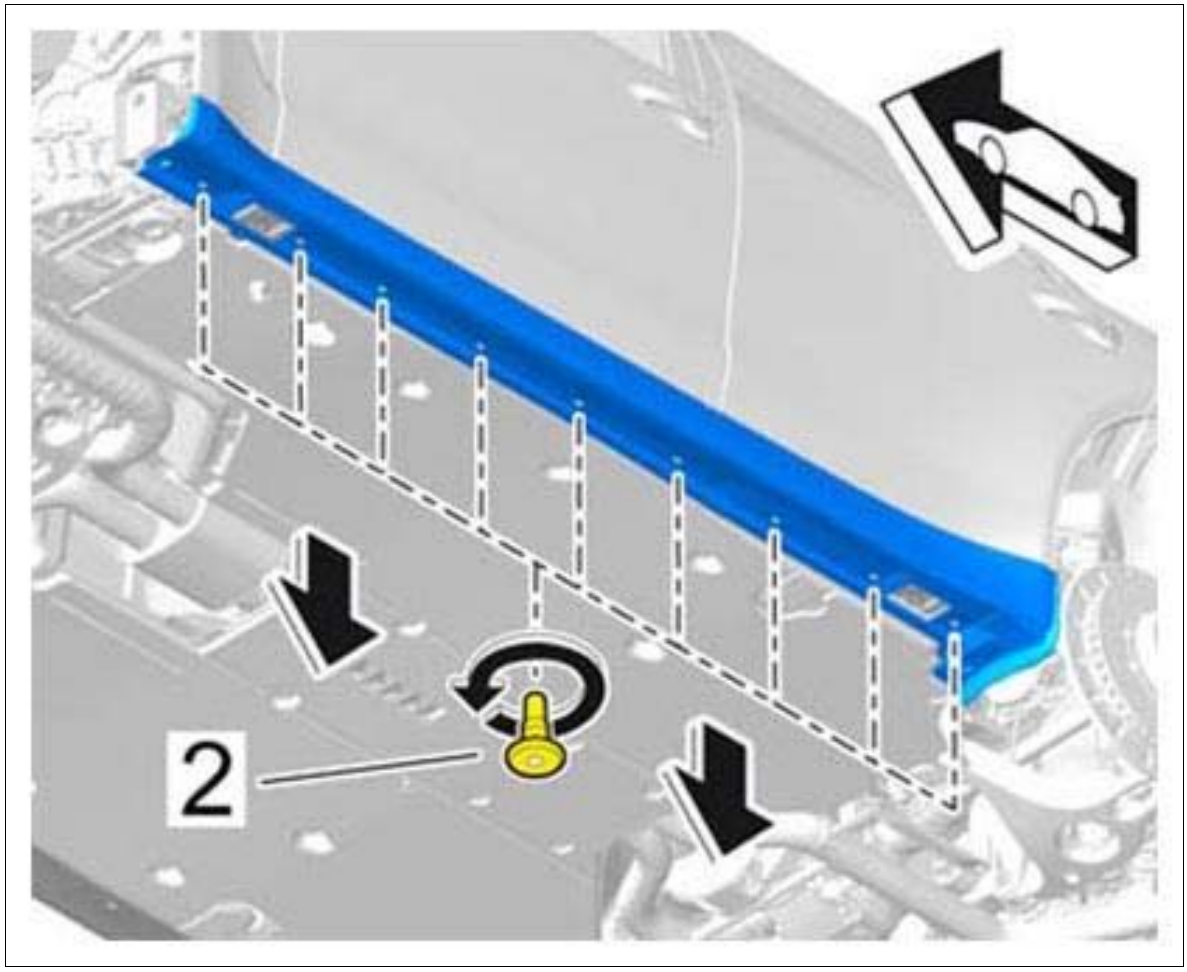

Courtesy of PORSCHE CARS NORTH AMERICA, INC.

3. Unclip door entry guard.

    1. 3.1. Unclip door entry guard in direction **-A-** , starting from the front. Then, unclip door entry guard completely in direction **-B-** .

Fig 4: Removing Door Entry Guard

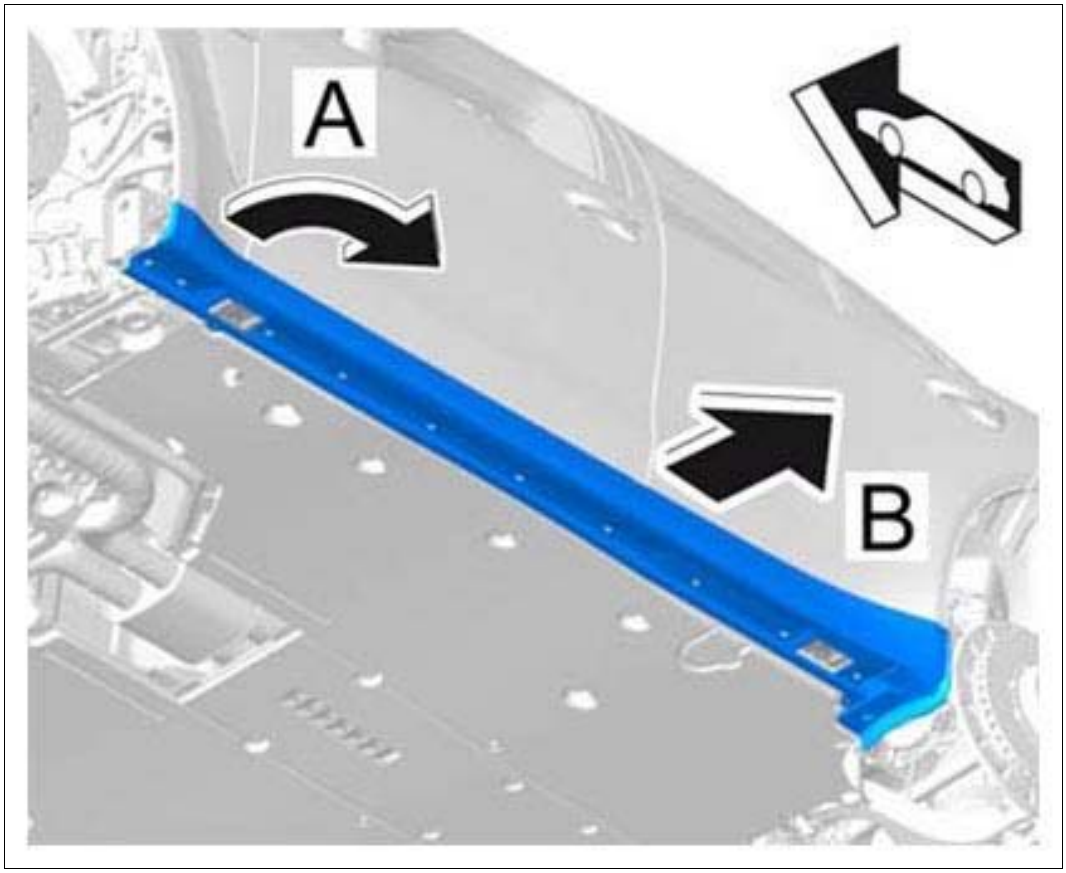

Courtesy of PORSCHE CARS NORTH AMERICA, INC.

Fig 5: Removing Door Entry Guard

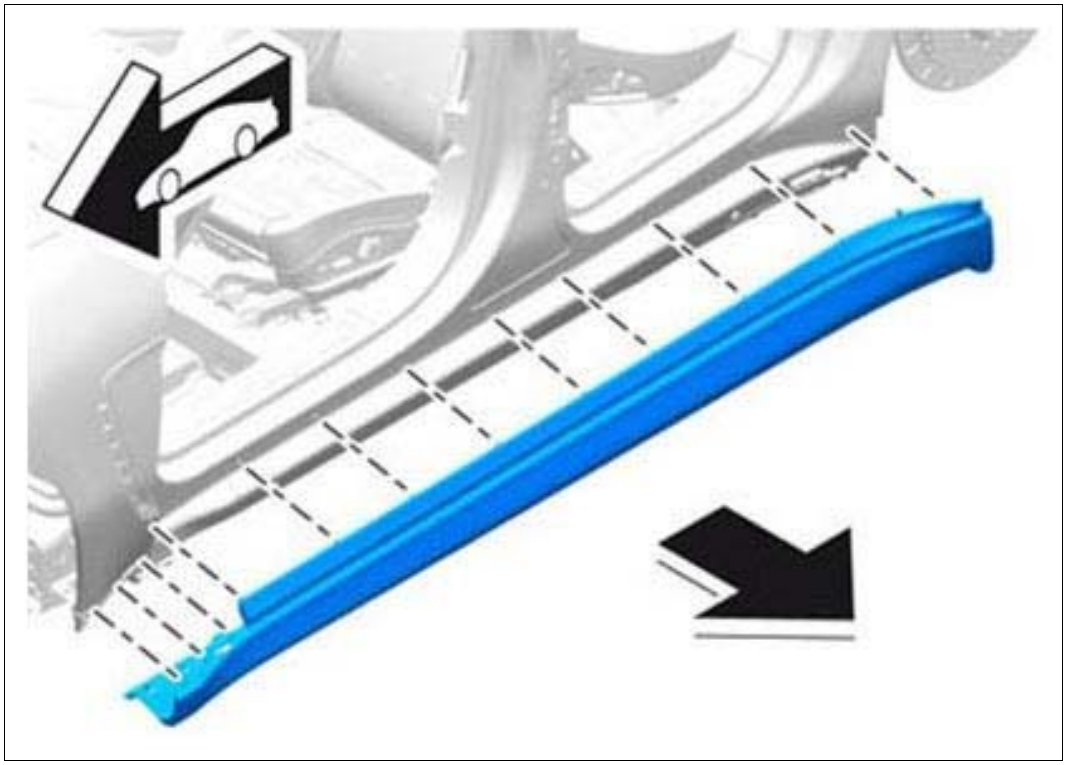

Courtesy of PORSCHE CARS NORTH AMERICA, INC.

4. Remove door entry guard.

   Information

   Cover add-on parts and adjacent areas.

   Protect components against scratching and damage.

   1. 4.1. Guide door entry guard out of the door gap at the front and rear

Fig 6: Removing Door Entry Guard



Courtesy of PORSCHE CARS NORTH AMERICA, INC.

WM 663119 REMOVING AND INSTALLING DOOR ENTRY GUARD (ALL MODELS) > REMOVING DOOR ENTRY GUARD > REMOVING SUPPORT RAIL FOR DOOR ENTRY GUARD

1. Unscrew and remove fastening screws on lower part of front wing to make it easier to remove the door entry guard.
2. Remove fastening screw for the rear wheel housing liner.
    1. 2.1. Unscrew and remove fastening nuts **-1-** securing support rail for door entry guard, starting from the rear.
    2. 2.2. Remove support rail, starting from the rear.

Fig 1: Removing Door Entry Guard Support Rail

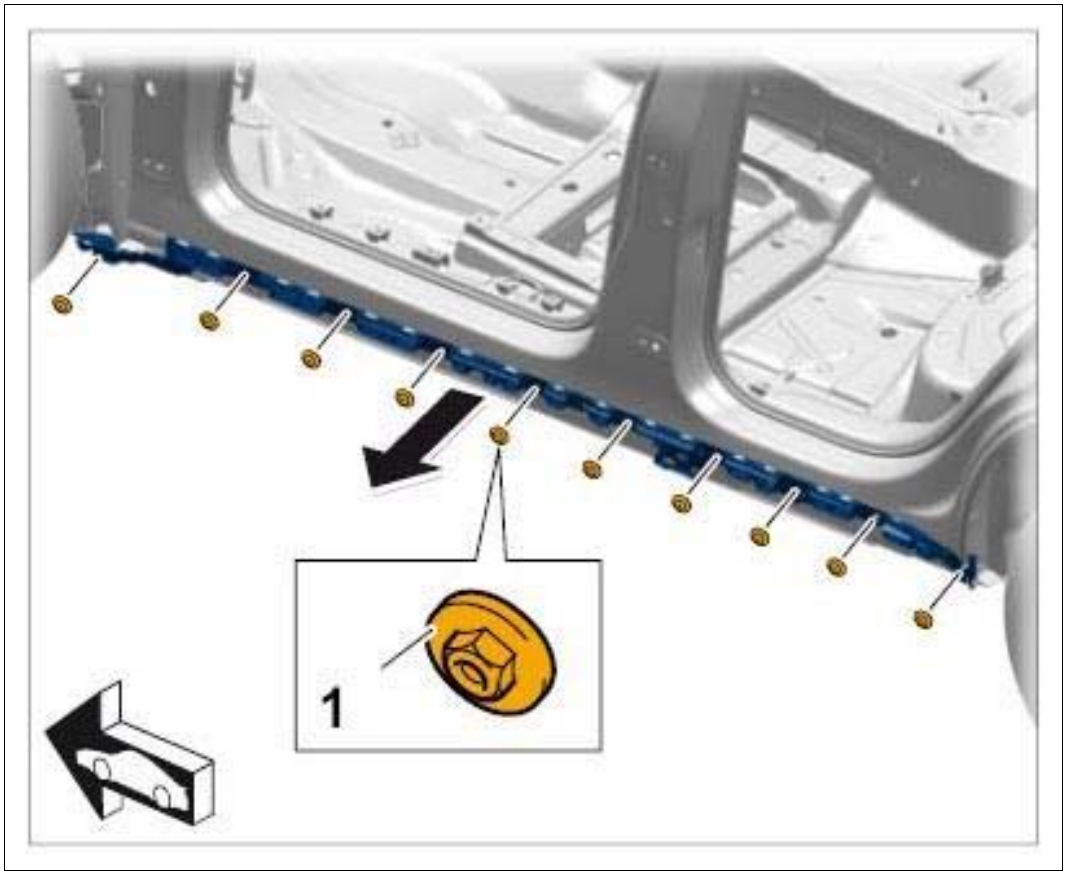

Courtesy of PORSCHE CARS NORTH AMERICA, INC.

WM 663119 REMOVING AND INSTALLING DOOR ENTRY GUARD (ALL MODELS) > INSTALLING DOOR ENTRY GUARD > INSTALLING SUPPORT RAIL FOR DOOR ENTRY GUARD

1. Position support rail, starting at the front, and tighten fastening nuts at the front and rear to **Tightening torque 6 Nm (4.5 ftlb.)** .

WM 663119 REMOVING AND INSTALLING DOOR ENTRY GUARD (ALL MODELS) > INSTALLING DOOR ENTRY GUARD > INSTALLING DOOR ENTRY GUARD

Information

The door entry guard can only be installed and removed when the doors are open. The illustration shows the vehicle without doors for the sake of clarity.

Information

Cover add-on parts and adjacent areas.

Protect components against scratching and damage.

1. Installation is performed in reverse order to removal.
2. Clip in door entry guard until the clips lock with an audible click. Check that the door entry guard is fitted correctly.
3. Tighten fastening screws securing door entry guard to the underbody to **Tightening torque 2.5 Nm (2 ftlb.)** .

WM 663119 REMOVING AND INSTALLING DOOR ENTRY GUARD (ALL MODELS) > SUBSEQUENT WORK

1. Secure front wheel housing liner. →Installing front wheel housing liner

WM 663355 REPLACING ROOF MOLDING (ALL MODELS) > PRELIMINARY WORK

1. Remove rear window channel seal.

WM 663355 REPLACING ROOF MOLDING (ALL MODELS) > REMOVING REAR DOOR MOLDING > REMOVING ROOF MOLDING

Information

- The number of fastening screws, fixing clips, plug connections, holders and trim panels can vary depending on equipment.
- The illustrations for removing and installing the drive mechanism are shown only on one equipment variant and may differ from the actual equipment variant.
- Some steps must be carried out automatically.
- Some of the repair illustrations show only one side of the vehicle.

Information

The molding cannot be removed without damaging it irreparably and must always be replaced.

Fig 1: Identifying Roof Molding Installation Position

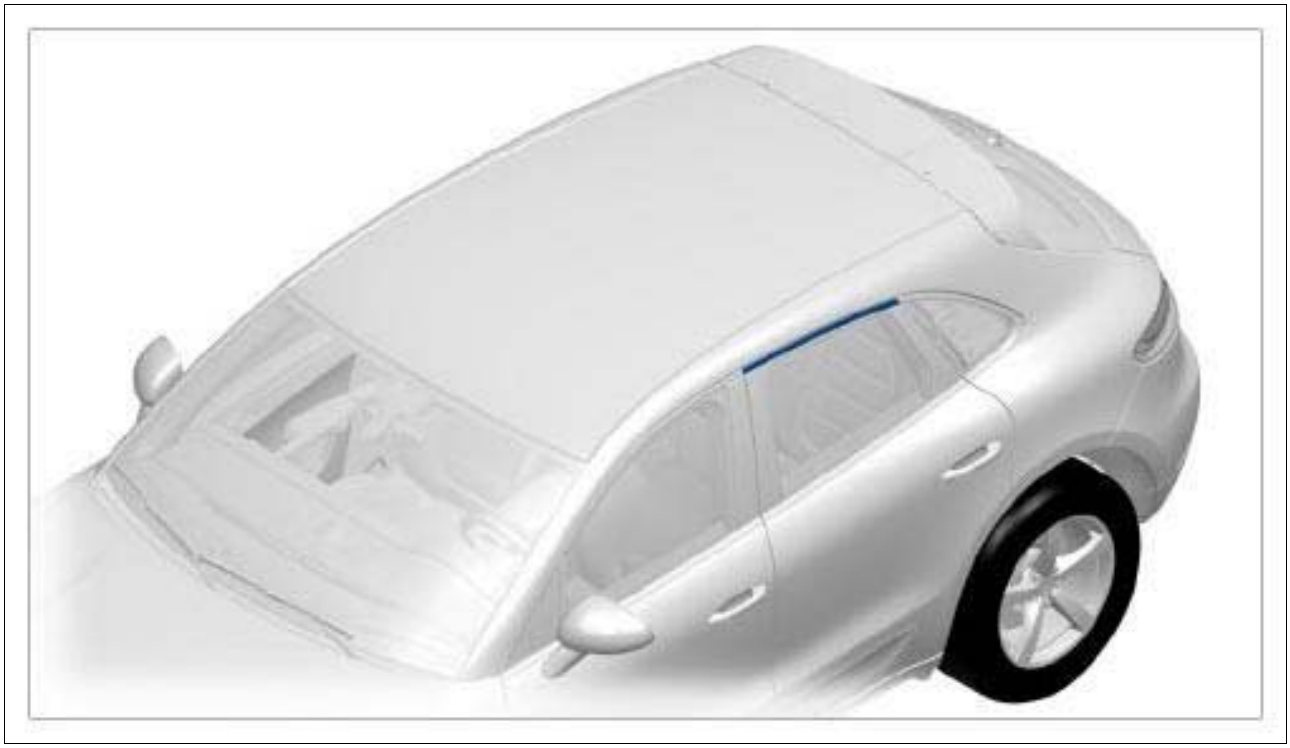

Courtesy of PORSCHE CARS NORTH AMERICA, INC.

1. Open the rear door window fully.
2. Loosen roof molding **-1-** - starting in the rear area **-arrow A-** - from the window guide **-2-** using a plastic wedge and pull off roof molding **-1-** .

Fig 2: Removing Roof Molding

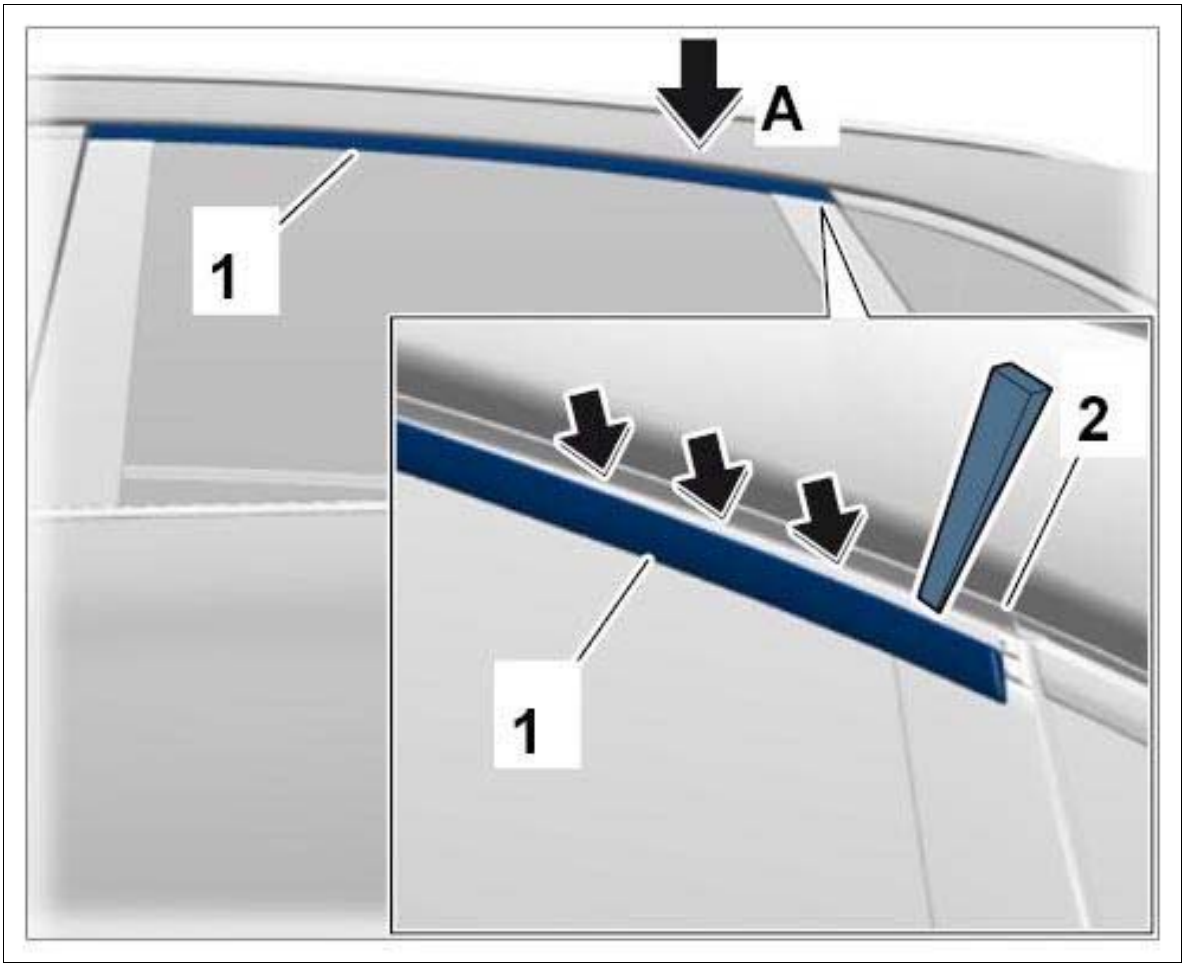

Courtesy of PORSCHE CARS NORTH AMERICA, INC.

WM 663355 REPLACING ROOF MOLDING (ALL MODELS) > REMOVING REAR DOOR MOLDING > REPLACING ROOF MOLDING

1. Coat new roof molding **-1-** and window guide **-2-** with a light coating of rubber lubricant before installation.

Fig 1: Coating Roof Molding And Window Guide

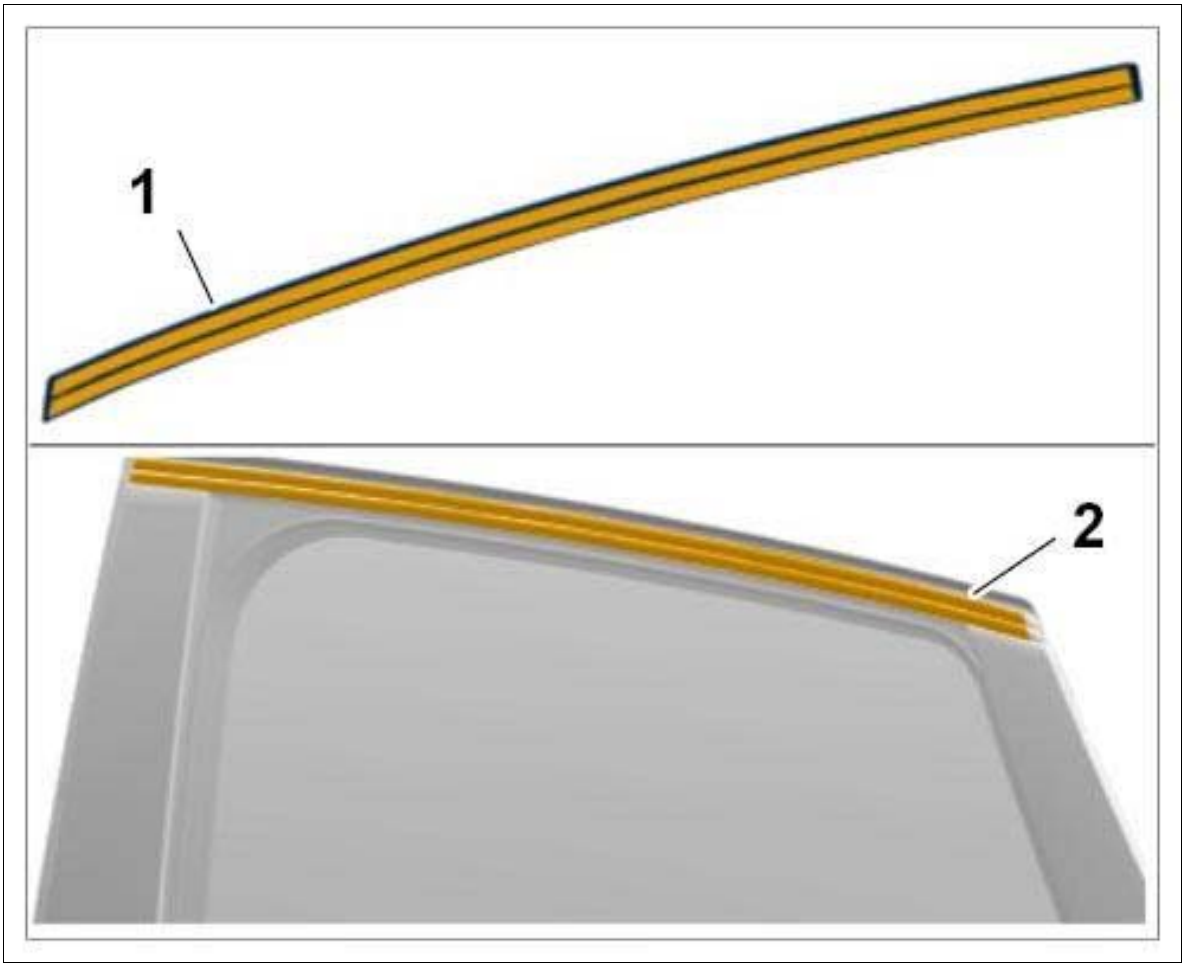

Courtesy of PORSCHE CARS NORTH AMERICA, INC.

2. Install roof molding.

    1. 2.1. Align roof molding **-1-** on the window guide and starting at the front, fit it on the window guide by pressing it on uniformly.

    2. 2.2. Make sure that the profile strips of the roof molding **-2-** engage correctly in the profile of the window guide **-3-** .

Fig 2: Installing Roof Molding

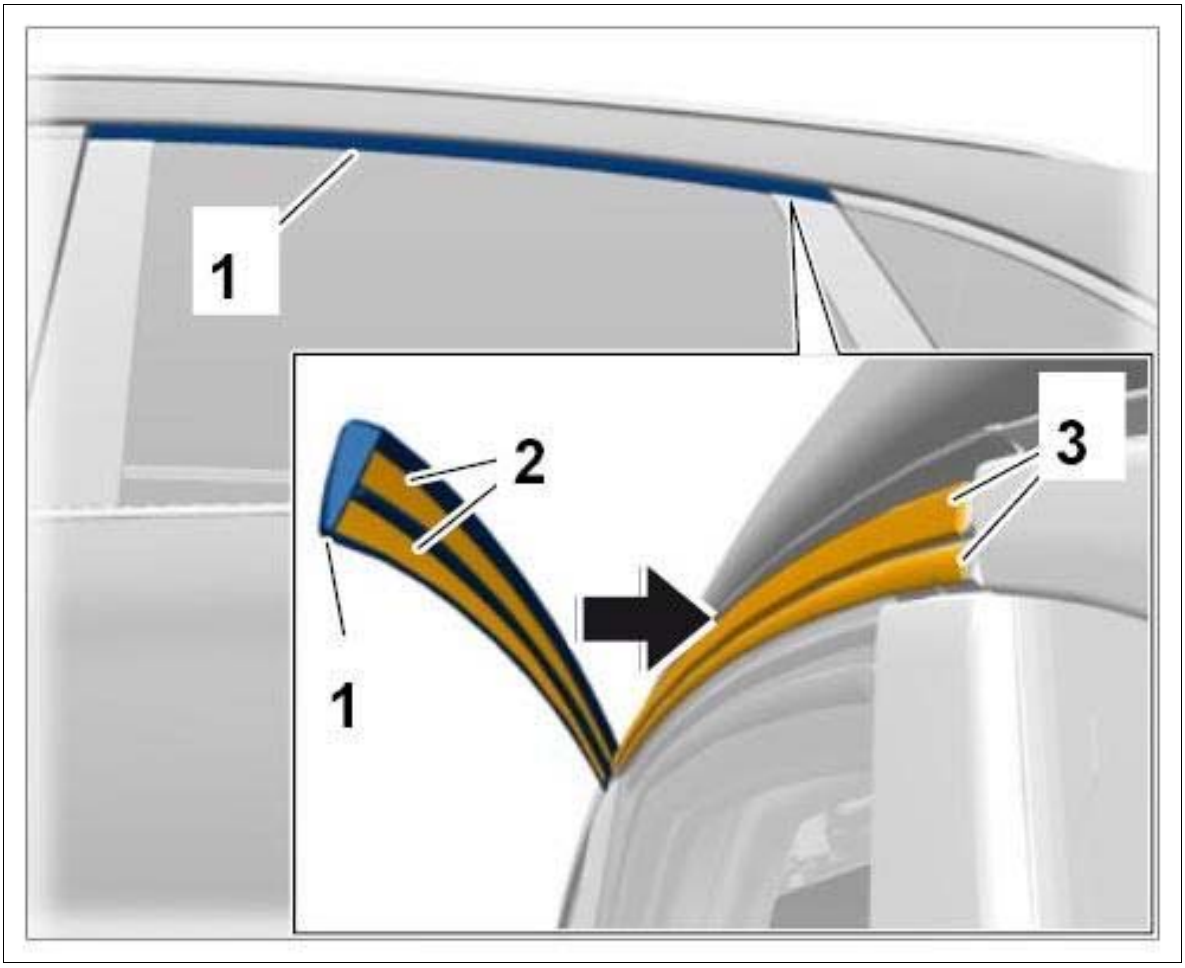

Courtesy of PORSCHE CARS NORTH AMERICA, INC.

WM 664219 REMOVING AND INSTALLING COVER FOR REAR DOOR (ALL MODELS) > TECHNICAL VALUES

Location	Description	Type	Basic value	Tolerance 1	Tolerance 2
Temperature		Nominal value	+15°C		
Humidity		Nominal value	50 %	+/-10 %	
Standing time		Nominal value	72 h		

WM 664219 REMOVING AND INSTALLING COVER FOR REAR DOOR (ALL MODELS) > REMOVING COVER FOR REAR DOOR

Information

- The number of fastening screws, fixing clips, plug connections, holders and trim panels can vary

depending on equipment.

- The illustrations for removing and installing the drive mechanism are shown only on one equipment variant and may differ from the actual equipment variant.
- Some steps must be carried out automatically.
- Some of the repair illustrations show only one side of the vehicle.

Information

- The cover may be damaged during removal, depending on the type of cover.
- An undamaged cover can be re-fitted after replacing the adhesive strips.
- A damaged cover must be replaced.

1. Remove cover **-1-** from the door all the way around using a plastic wedge, starting at the front **-arrow-** .

   Fig 1: Loosening Cover

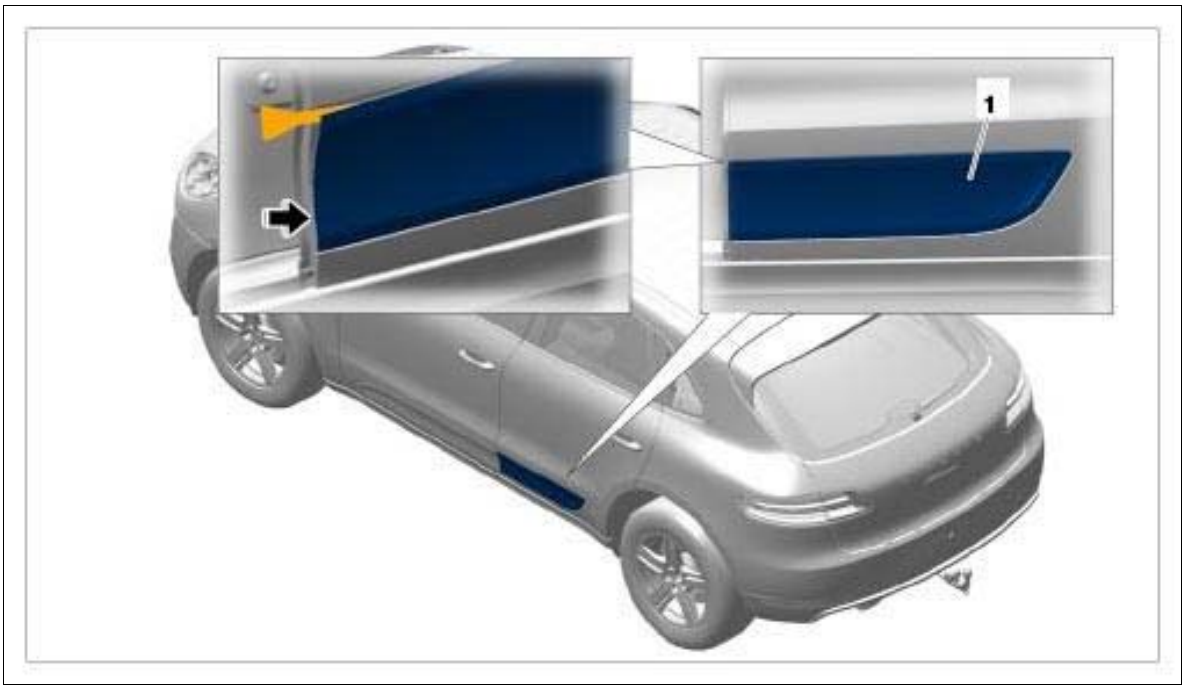

Courtesy of PORSCHE CARS NORTH AMERICA, INC.

2. Detach cover **-1-** from the door and guide out locking hooks **-3-** . (Only if fitted)
3. Remove cover **-1-** .
4. Remove adhesive residue **-2-** from the door and cover **-1-** .

Fig 2: Removing Cover

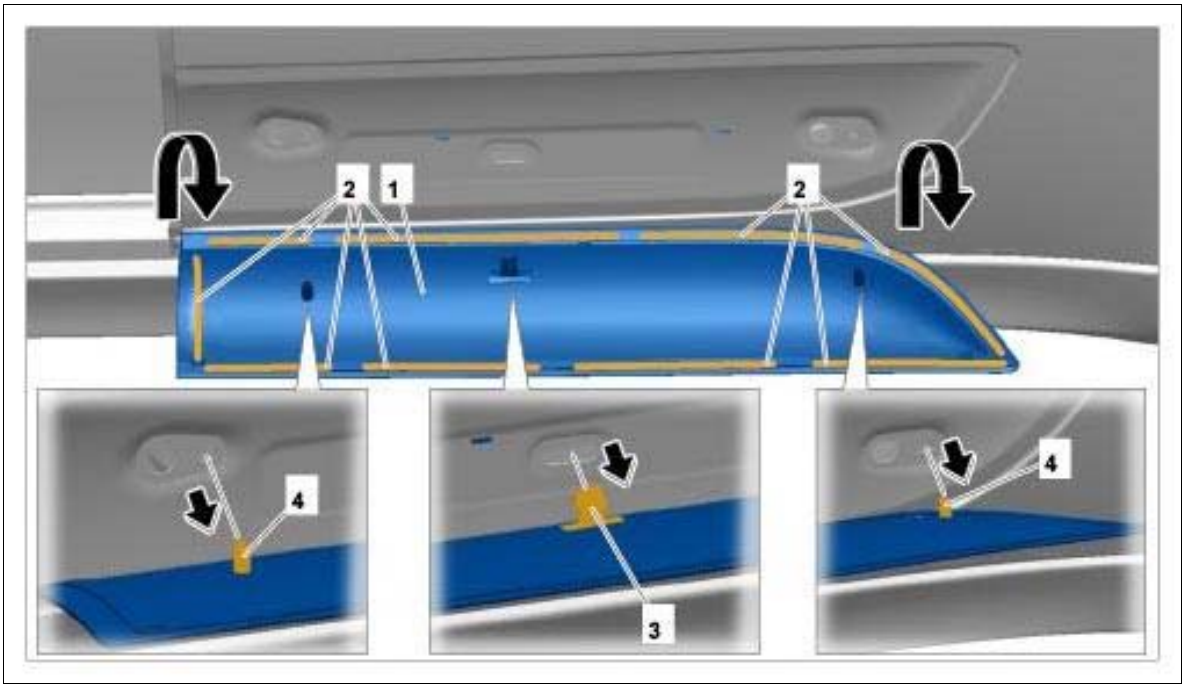

Courtesy of PORSCHE CARS NORTH AMERICA, INC.

WM 664219 REMOVING AND INSTALLING COVER FOR REAR DOOR (ALL MODELS) > INSTALLING COVER FOR REAR DOOR

Information

- Carefully clean any dirt, grease, wax and other impurities off the installation area of the body using isopropanol.
- Always use a clean cloth.
- The room and object temperature must be at least → Nominal value: +15°C.
- Humidity should be → Nominal value: 50 %+/-10 %.
- Do not touch the bonding surface again after removing the protective paper.
- Wear clean gloves during the bonding process in order to guarantee adequate adhesion.
- The parts must have been bonded for at least → Nominal value: 72 h before washing the vehicle in a car wash.

1. Clean the door close to the cover **-1-** .
2. Affix new adhesive strips **-2-** on the cover **-1-** or remove protective film from the bonding surfaces **-2-** .
3. Guide locking hooks **-3-** into door (only if fitted).
4. Align guide pins **-4-** with the bores in the door and press cover **-1-** onto the door.

Fig 1: Fitting Cover

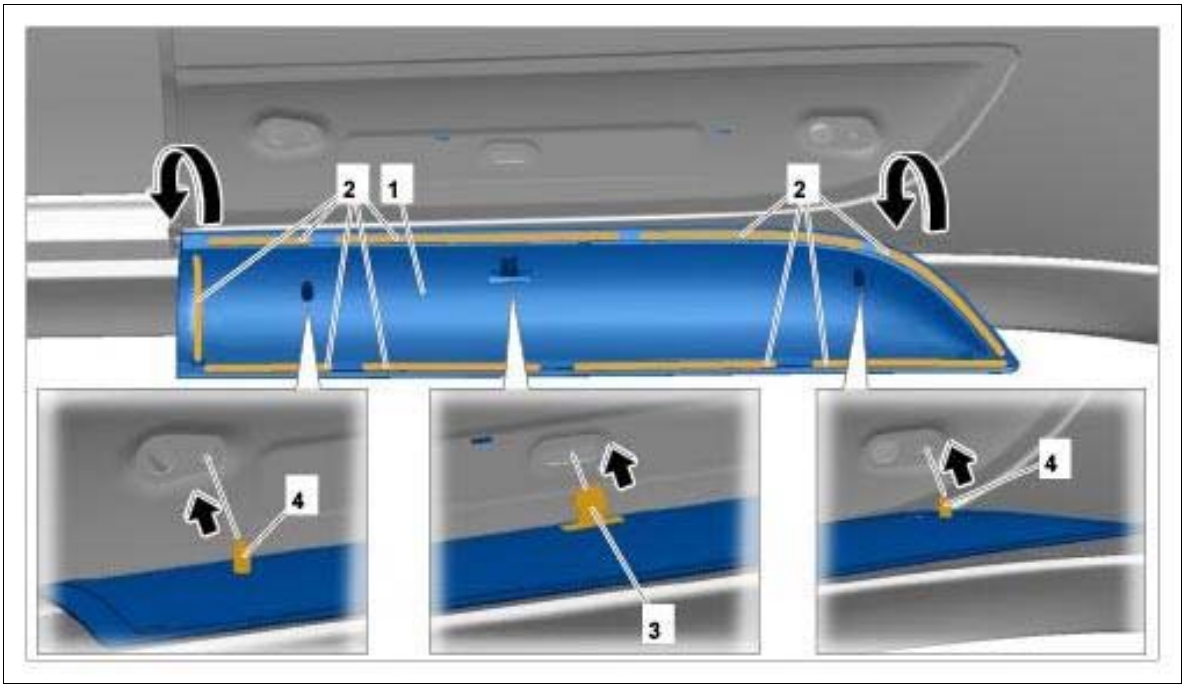

Courtesy of PORSCHE CARS NORTH AMERICA, INC.

WM 665419 REMOVING AND INSTALLING SWITCH FOR REAR-VIEW MIRROR (ALL MODELS) > INFORMATION

The rear-view mirror switch is integrated in the power windows switch at the front left and cannot be removed and installed separately. → 645819 REMOVING AND INSTALLING SWITCH FOR FRONT POWER WINDOWS

WM 665819 REMOVING AND INSTALLING REAR SPOILER (ALL MODELS) > TECHNICAL VALUES

Location	Description	Type	Basic value	Tolerance 1	Tolerance 2
Fastening screw for rear spoiler	Item 3	Tightening torque	6 Nm (4.5 ftlb.)		

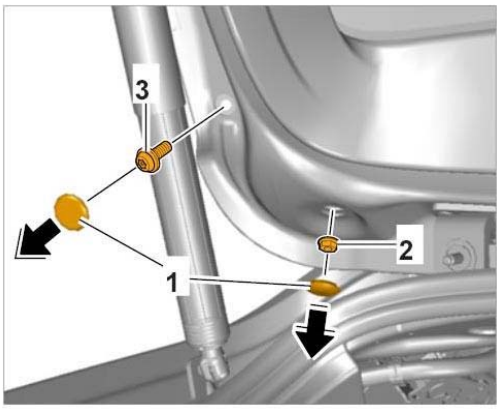

Loosening rear spoiler

Fastening nut for rear spoiler	Item 2	Tightening torque	6 Nm (4.5 ftlb.)		

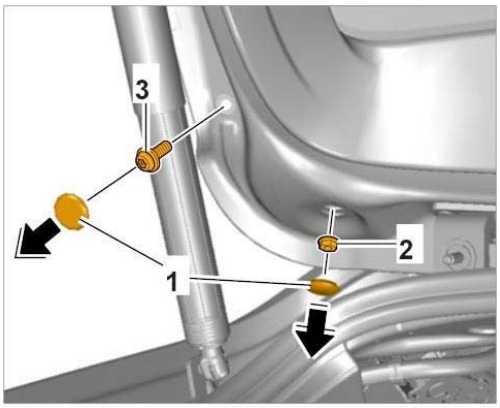

Loosening rear spoiler

WM 665819 REMOVING AND INSTALLING REAR SPOILER (ALL MODELS) > PRELIMINARY WORK

1. Remove additional brake light. → 947019 REMOVING AND INSTALLING ADDITIONAL BRAKE LIGHT
2. Remove trim panel for rear wall. → 709219 REMOVING AND INSTALLING TAILGATE TRIM PANEL

WM 665819 REMOVING AND INSTALLING REAR SPOILER (ALL MODELS) > REMOVING REAR SPOILER

Fig 1: Identifying Rear Spoiler Position

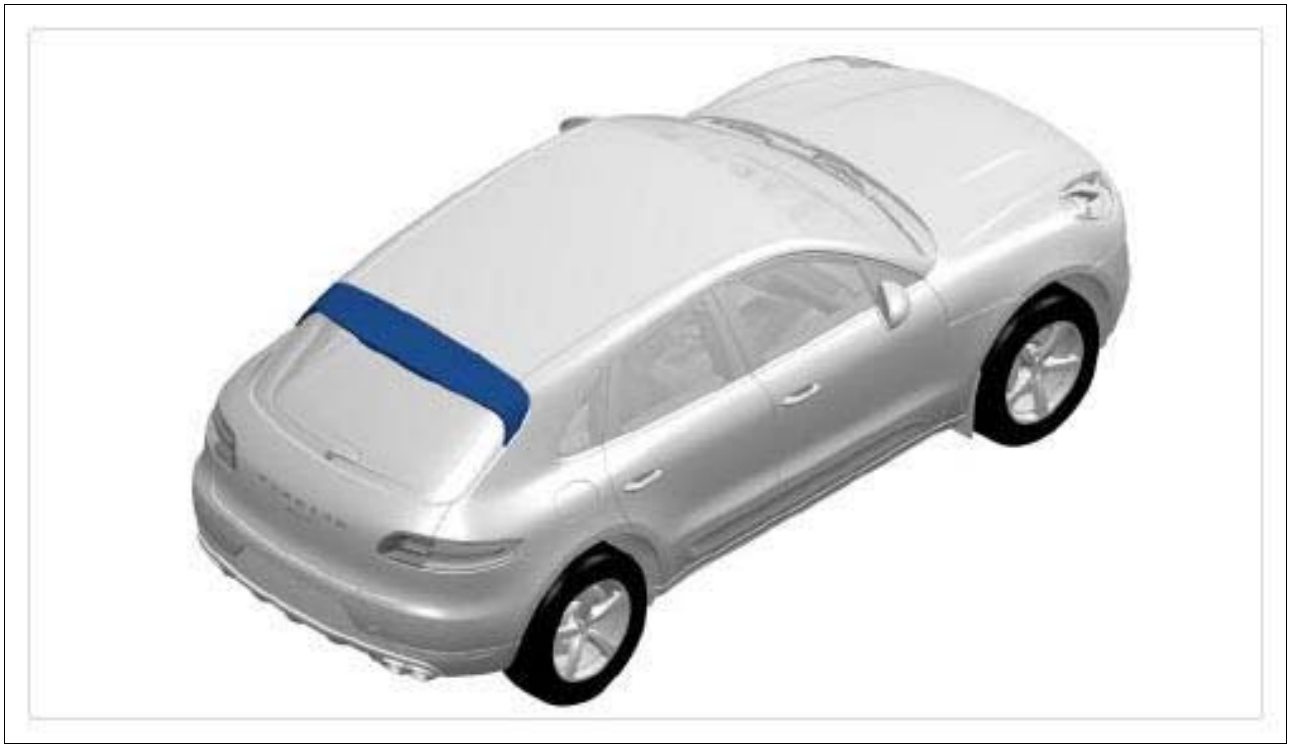

Courtesy of PORSCHE CARS NORTH AMERICA, INC.

1. Release washer fluid line from spray nozzle using a screwdriver **-1-** and remove it.

Fig 2: Removing Washer Fluid Line

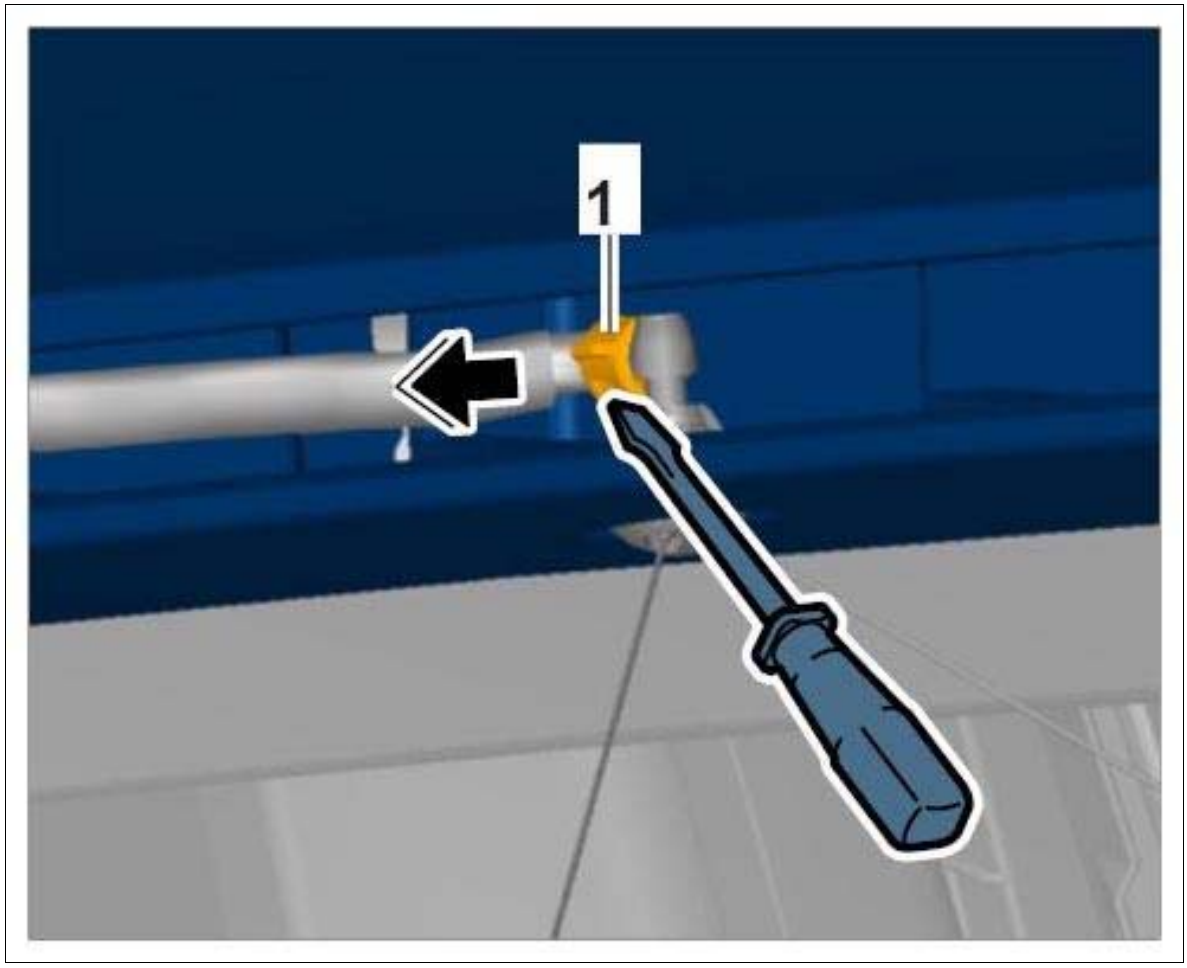

Courtesy of PORSCHE CARS NORTH AMERICA, INC.

2. Release electric plug connection **-1-** for antenna cable and disconnect it.

Fig 3: Removing Antenna Cable Plug Connection

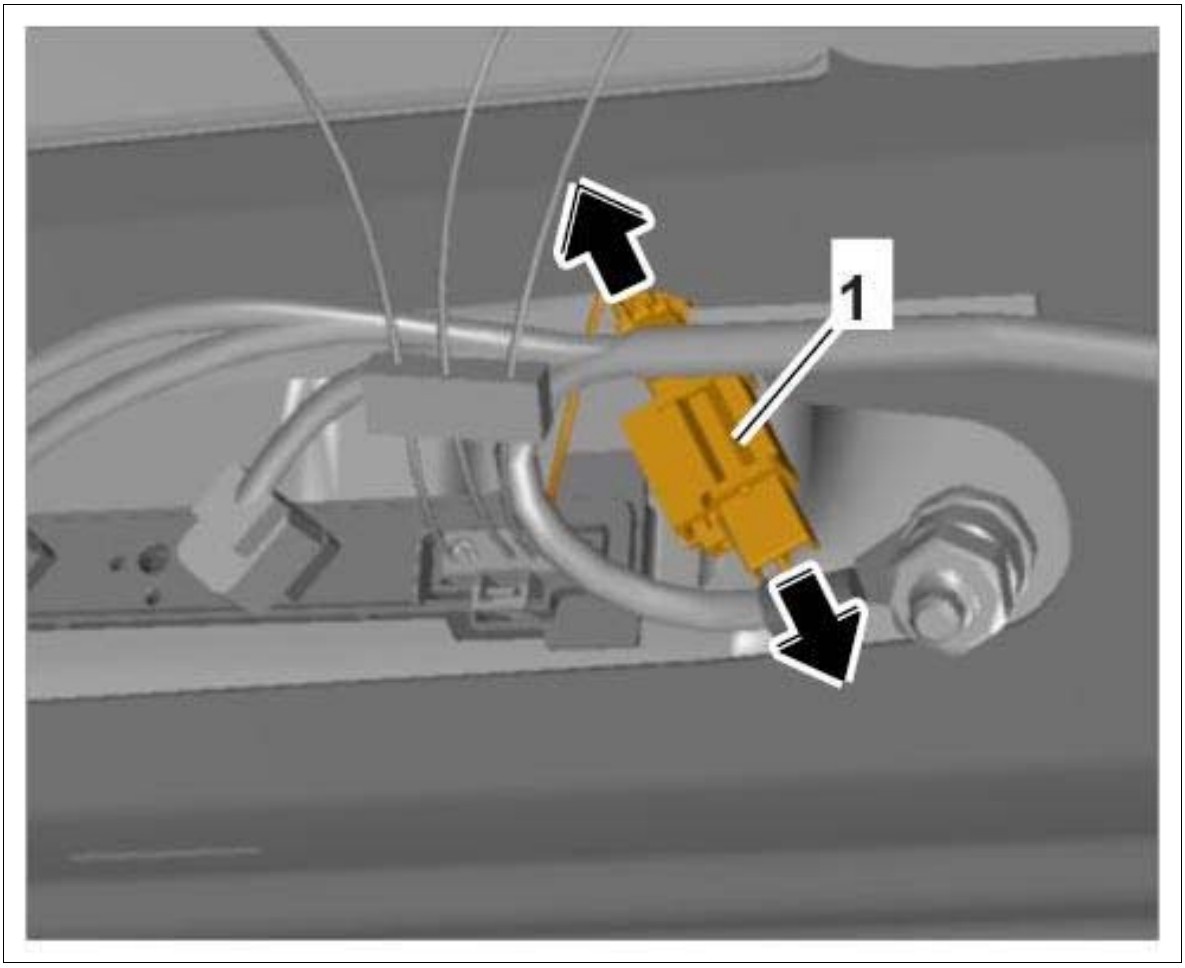

Courtesy of PORSCHE CARS NORTH AMERICA, INC.

3. Remove caps **-1-** on rear spoiler.
    1. 3.1. Unscrew and remove fastening nut **-2-** .
    2. 3.2. Unscrew and remove fastening screw **-3-** .

Fig 4: Loosening Rear Spoiler

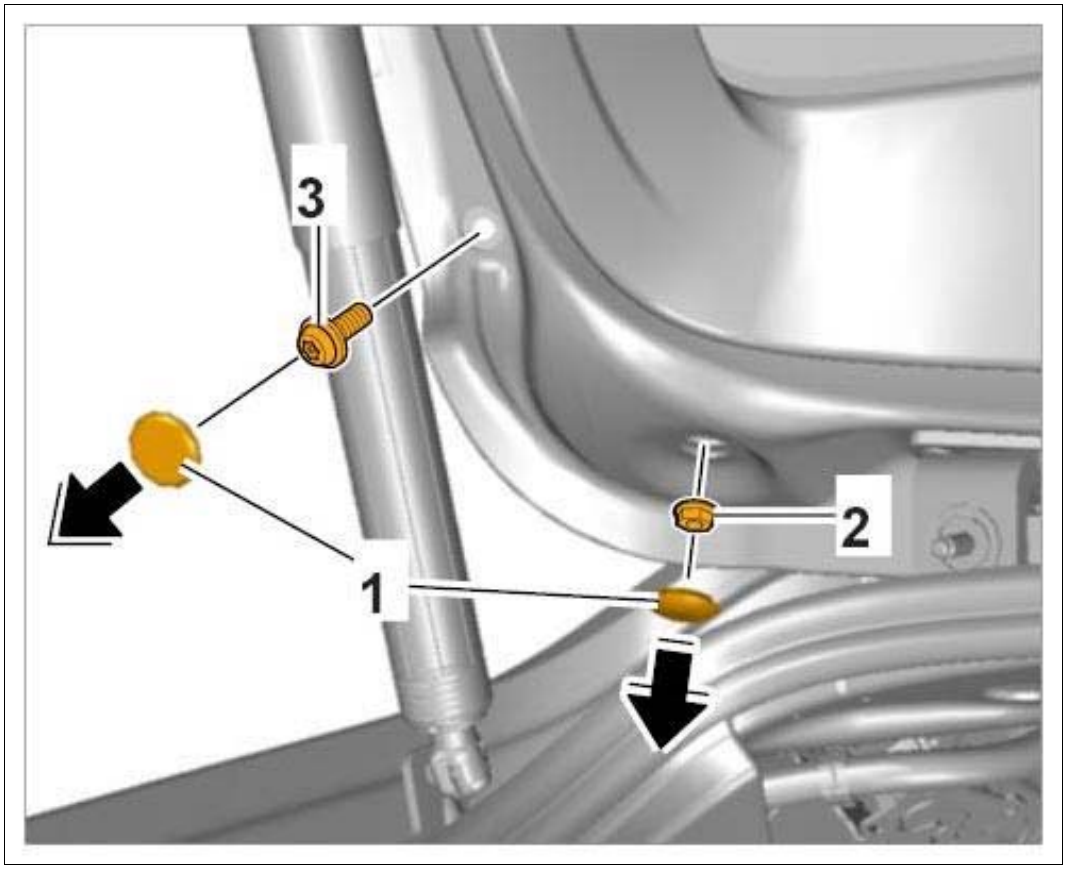

Courtesy of PORSCHE CARS NORTH AMERICA, INC.

4. Carefully unclip rear spoiler -1 - from the bracket by pulling it to the rear **-arrow -** .

Fig 5: Removing Rear Spoiler



Courtesy of PORSCHE CARS NORTH AMERICA, INC.

5. Pull out wiring harness and washer fluid line.
6. Remove rear spoiler.

WM 665819 REMOVING AND INSTALLING REAR SPOILER (ALL MODELS) > INSTALLING REAR SPOILER

1. Installation is performed in reverse order to removal.
2. Tighten fastening screw to **Tightening torque 6 Nm (4.5 ftlb.)** until secure.
3. Tighten fastening nut to **Tightening torque 6 Nm (4.5 ftlb.)** until secure.

WM 665819 REMOVING AND INSTALLING REAR SPOILER (ALL MODELS) > SUBSEQUENT WORK

1. Install tailgate trim panel. → Installing tailgate trim panel

2. Install additional brake light. → Installing additional brake light

WM 666119 REMOVING AND INSTALLING MOLDING FOR WINDSCREEN (ALL MODELS) > REMOVING MOLDING FOR WINDSCREEN

Information

- Some of the repair illustrations show only one side of the vehicle.
- Naturally, some steps also have to be performed on the opposite side of the vehicle as well.

1. Unclip molding **-1-** from top to bottom **-arrow-** .

Fig 1: Removing Windscreen Molding

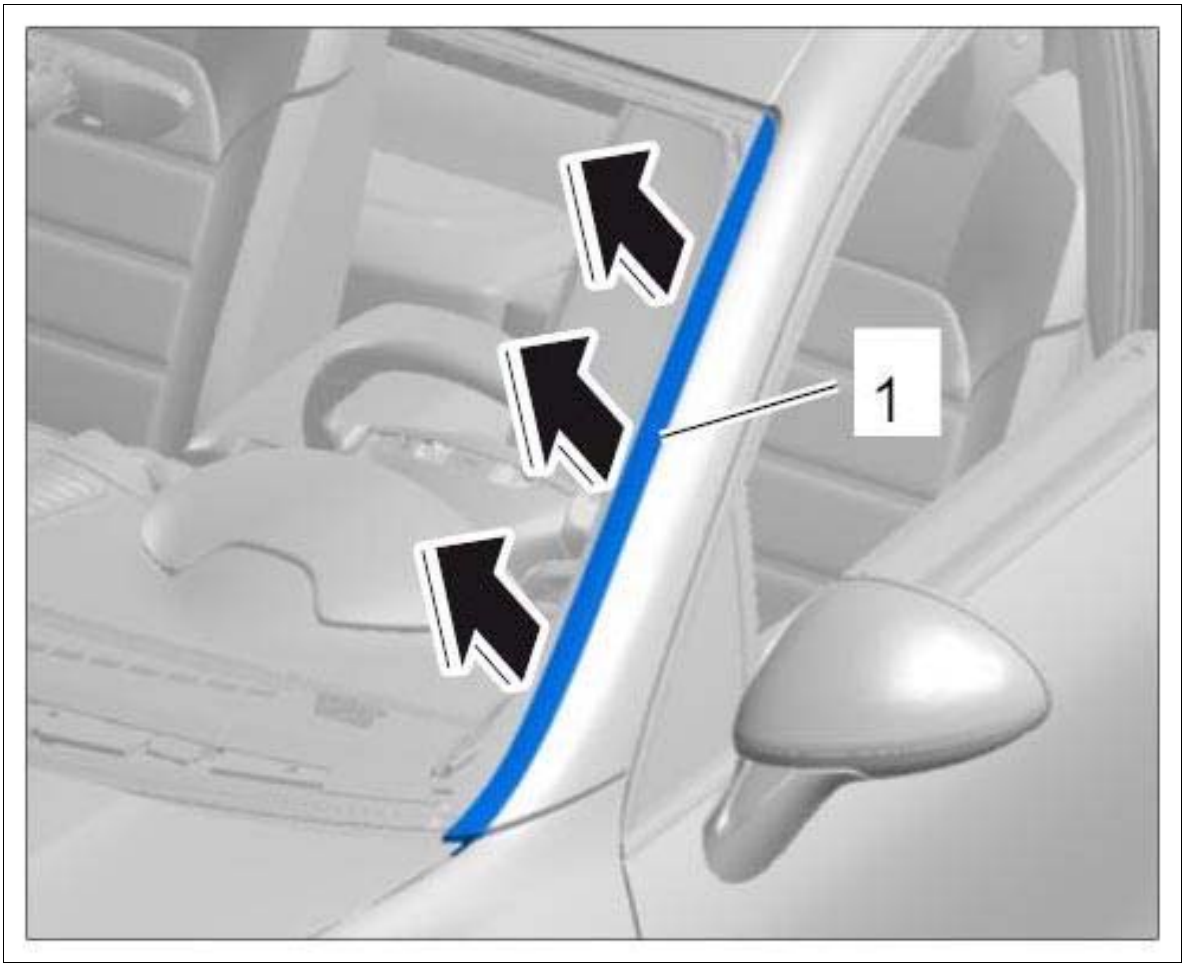

Courtesy of PORSCHE CARS NORTH AMERICA, INC.

WM 666119 REMOVING AND INSTALLING MOLDING FOR WINDSCREEN (ALL MODELS) > INSTALLING MOLDING FOR WINDSCREEN

1. Fit molding **-1-** at the top and clip it into the attachment strip from top to bottom **-arrow-** .

Fig 1: Installing Windscreen Molding

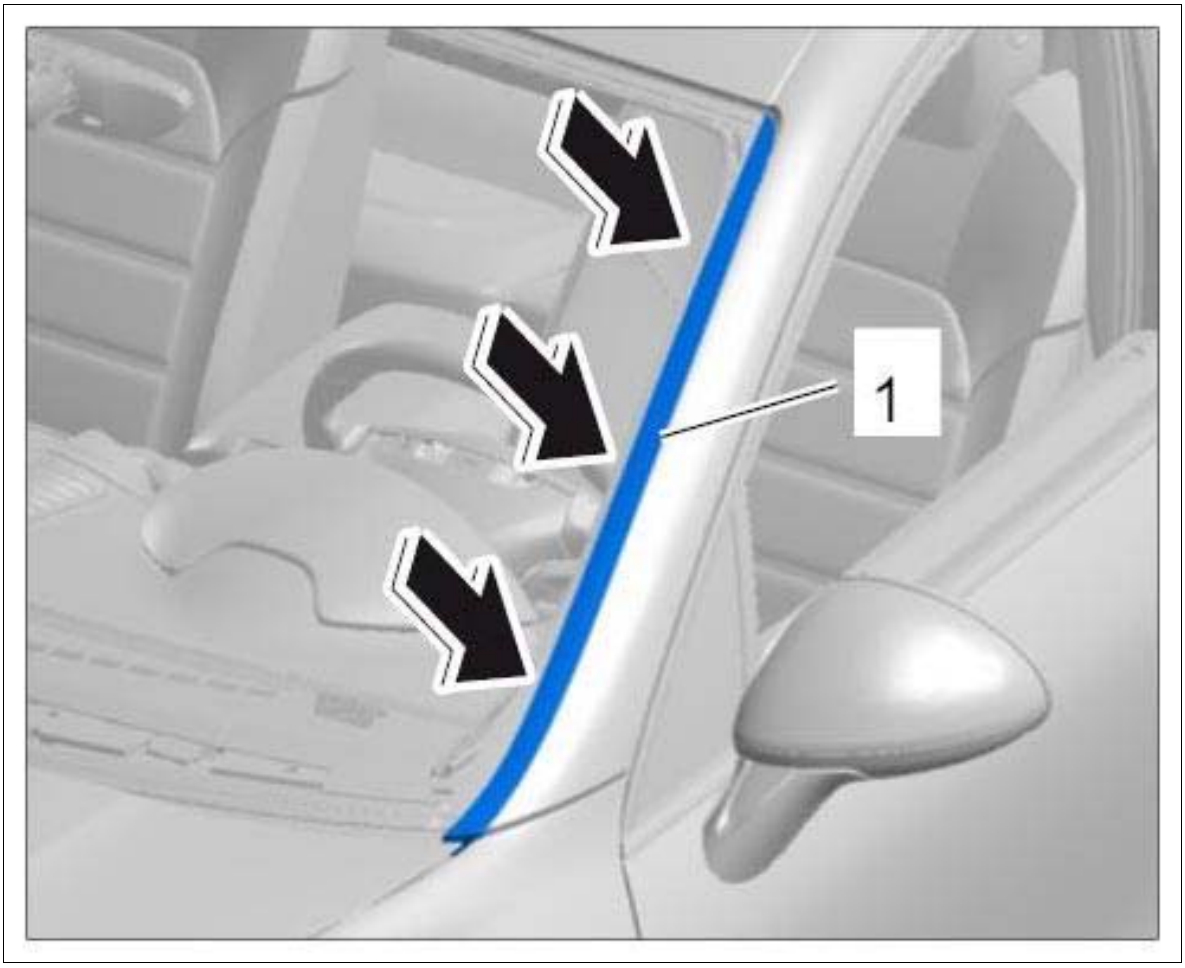

Courtesy of PORSCHE CARS NORTH AMERICA, INC.

2. Check that the molding is fitted correctly.

WM 666219 REMOVING AND INSTALLING SWITCH FOR TRAILER HITCH (ALL MODELS) > PRELIMINARY WORK

1. Loosen side trim panel for luggage compartment at the rear right. → Removing side trim panel for rear luggage compartment

WM 666219 REMOVING AND INSTALLING SWITCH FOR TRAILER HITCH (ALL MODELS) > REMOVING SWITCH FOR TRAILER HITCH

1. Release and disconnect electric plug connection **-1- (-a-)** .
2. Press the locks **-b-** and push switch for trailer hitch **-2-** out of the retaining frame.

Fig 1: Removing Trailer Hitch Switch

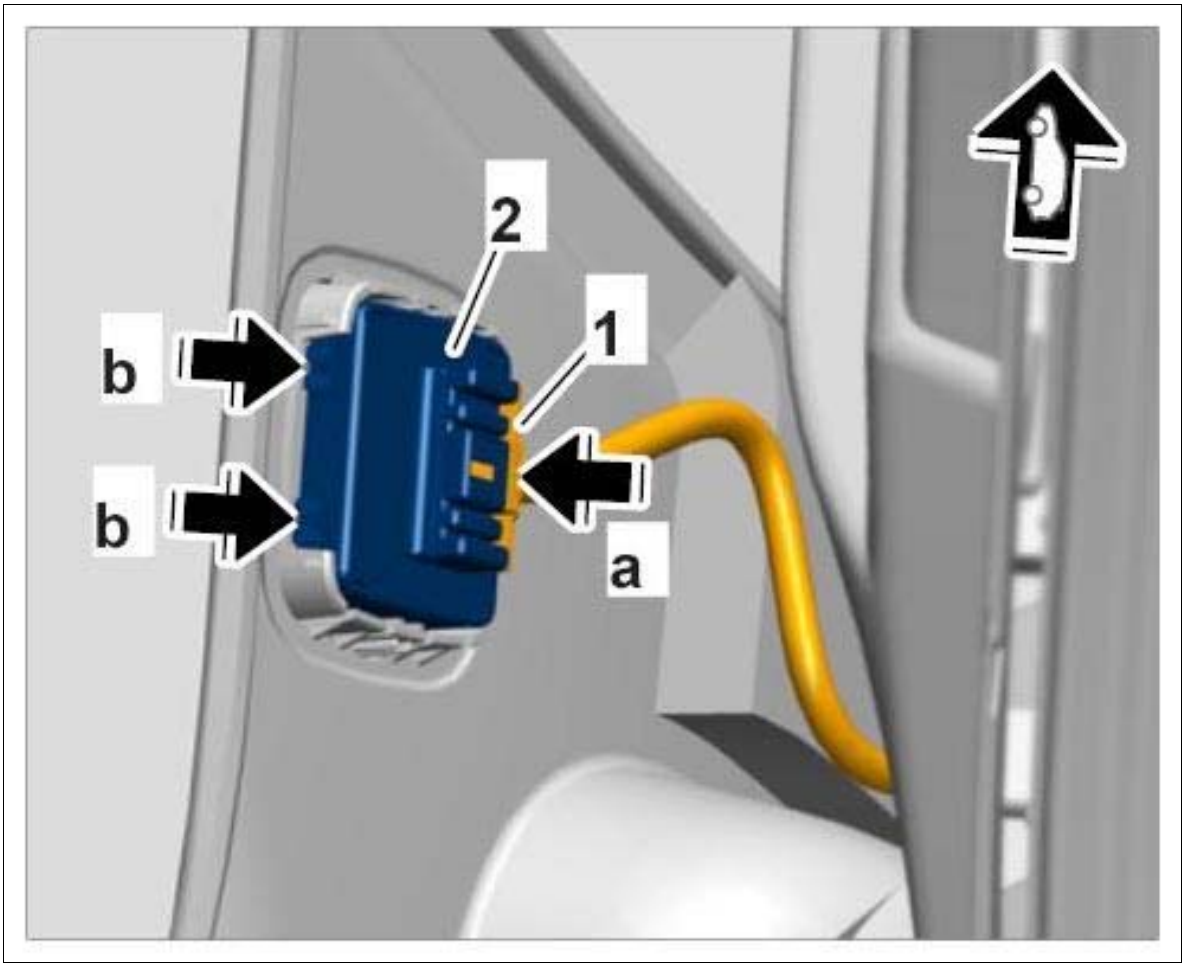

Courtesy of PORSCHE CARS NORTH AMERICA, INC.

WM 666219 REMOVING AND INSTALLING SWITCH FOR TRAILER HITCH (ALL MODELS) > INSTALLING SWITCH FOR TRAILER HITCH

1. Installation is performed in reverse order to removal.

WM 666219 REMOVING AND INSTALLING SWITCH FOR TRAILER HITCH (ALL MODELS) > SUBSEQUENT WORK

1. Install side trim panel for luggage compartment at the rear right. → Installing side trim panel for rear luggage compartment

WM 666355 REPLACING TRIM FRAME FOR FRONT DOOR WINDOW (ALL MODELS) > PRELIMINARY WORK

1. Remove front window channel seal.

WM 666355 REPLACING TRIM FRAME FOR FRONT DOOR WINDOW (ALL MODELS) > REPLACING TRIM FRAME FOR FRONT DOOR WINDOW

Information

- The number of fastening screws, fixing clips, plug connections, holders and trim panels can vary depending on equipment.
- The illustrations for removing and installing the drive mechanism are shown only on one equipment variant and may differ from the actual equipment variant.
- Some steps must be carried out automatically.
- Some of the repair illustrations show only one side of the vehicle.

Information

The molding cannot be removed without damaging it irreparably and must always be replaced.

Removal:

1. Open the front door window fully.
2. Loosen trim frame **-1-** - starting in the rear area **-arrow A-** - from the window guide **-2-** using a plastic wedge and pull off trim frame **-1-** .

Fig 1: Removing Trim Frame

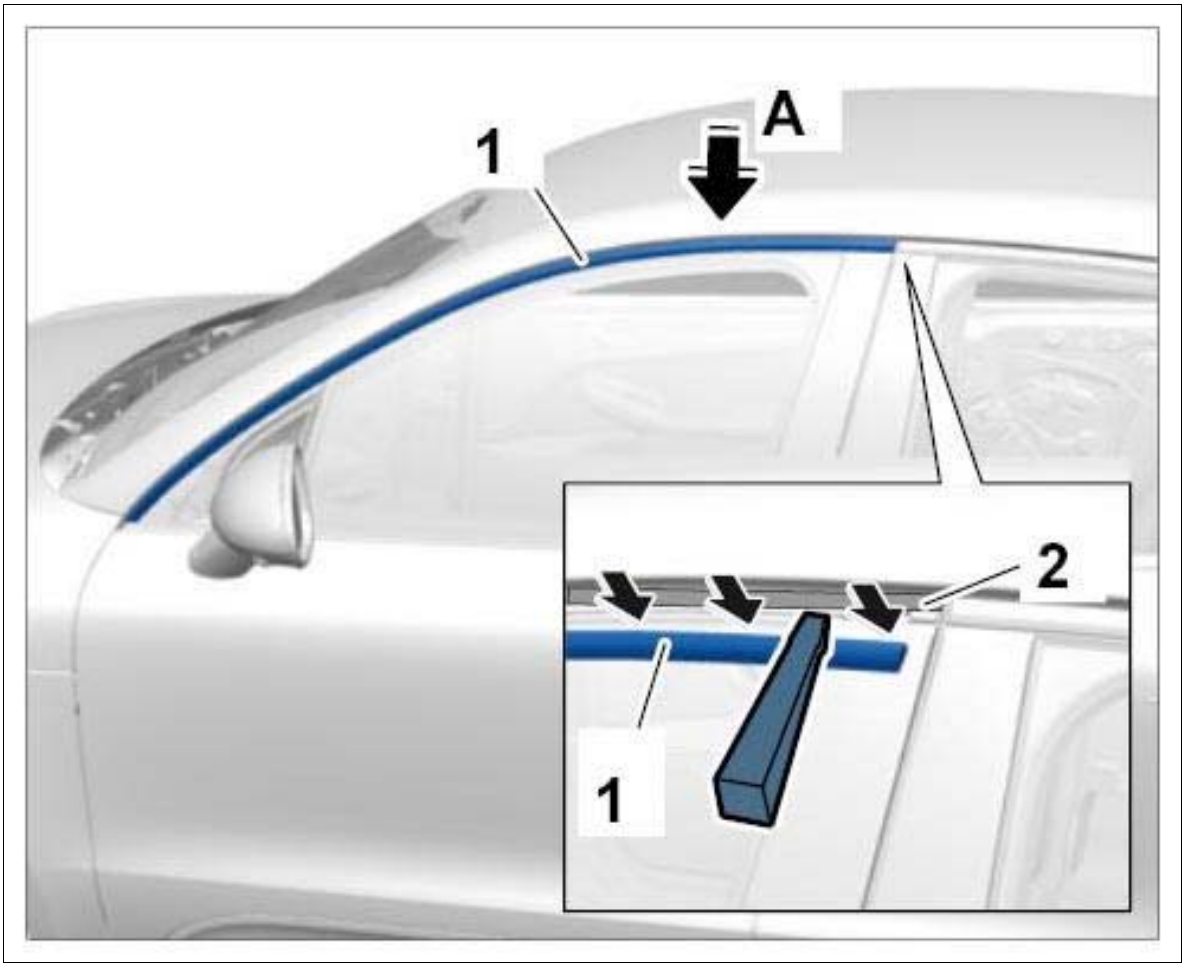

Courtesy of PORSCHE CARS NORTH AMERICA, INC.

Installation:

3. Coat new trim frame **-1-** and window guide with rubber lubricant before installation.
4. Align trim frame **-1-** on the window guide and starting at the front **-arrow A-** , fit it on the window guide by pressing it on uniformly.
5. Make sure that the profile strips **-2-** of the trim frame **-1-** engage correctly in the profile **-3-** of the window guide.

Fig 2: Fitting Trim Frame

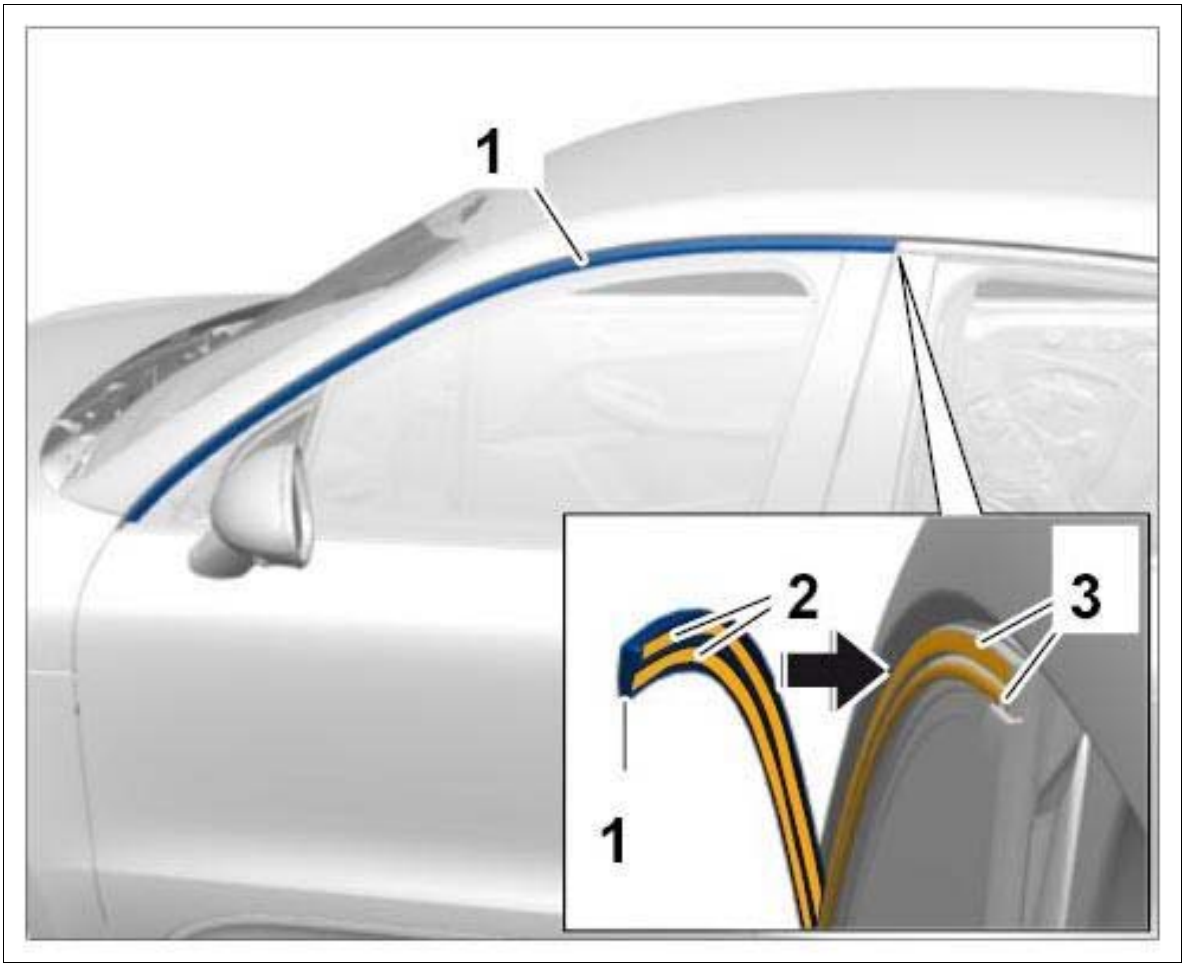

Courtesy of PORSCHE CARS NORTH AMERICA, INC.

6. Pull protective film off the trim frame.

WM 666355 REPLACING TRIM FRAME FOR FRONT DOOR WINDOW (ALL MODELS) > SUBSEQUENT WORK

1. Install front window channel seal.

WM 666419 REMOVING AND INSTALLING TRAILER HITCH MOTOR (ALL MODELS) > INFORMATION

The trailer hitch motor is integrated into the trailer hitch and cannot be replaced separately. → Removing Switch For Trailer Hitch

WM 667819 REMOVING AND INSTALLING MIRROR GLASS (ALL MODELS) >

REMOVING MIRROR GLASS

Information

- The number of fastening screws, fixing clips, plug connections, holders and trim panels can vary depending on equipment.
- The illustrations for removing and installing the drive mechanism are shown only on one equipment variant and may differ from the actual equipment variant.
- Some steps must be carried out automatically.
- Some of the repair illustrations show only one side of the vehicle.

1. Press mirror glass **-1-** inwards on the inside **-A-** and carefully unclip it from the adjustment mechanism on the outside **-B-** .

   Fig 1: Removing Mirror Glass

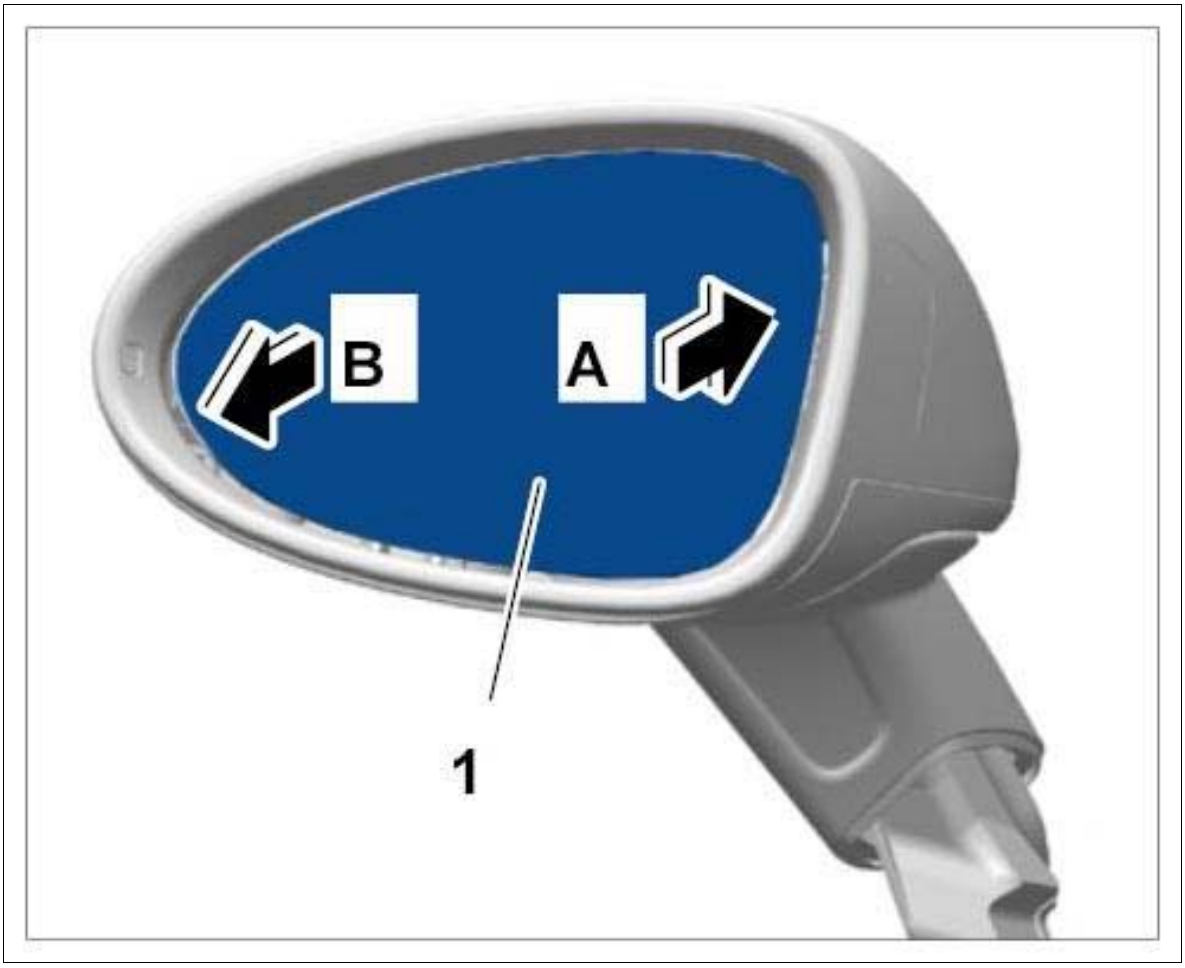

Courtesy of PORSCHE CARS NORTH AMERICA, INC.

2. Unclip plug connection **-2-** from the bracket **-3-** .
3. Release and disconnect plug connection **-2-** .
4. Release and disconnect plug connections **-4-** .

Fig 2: Identifying Electric Plug Connections

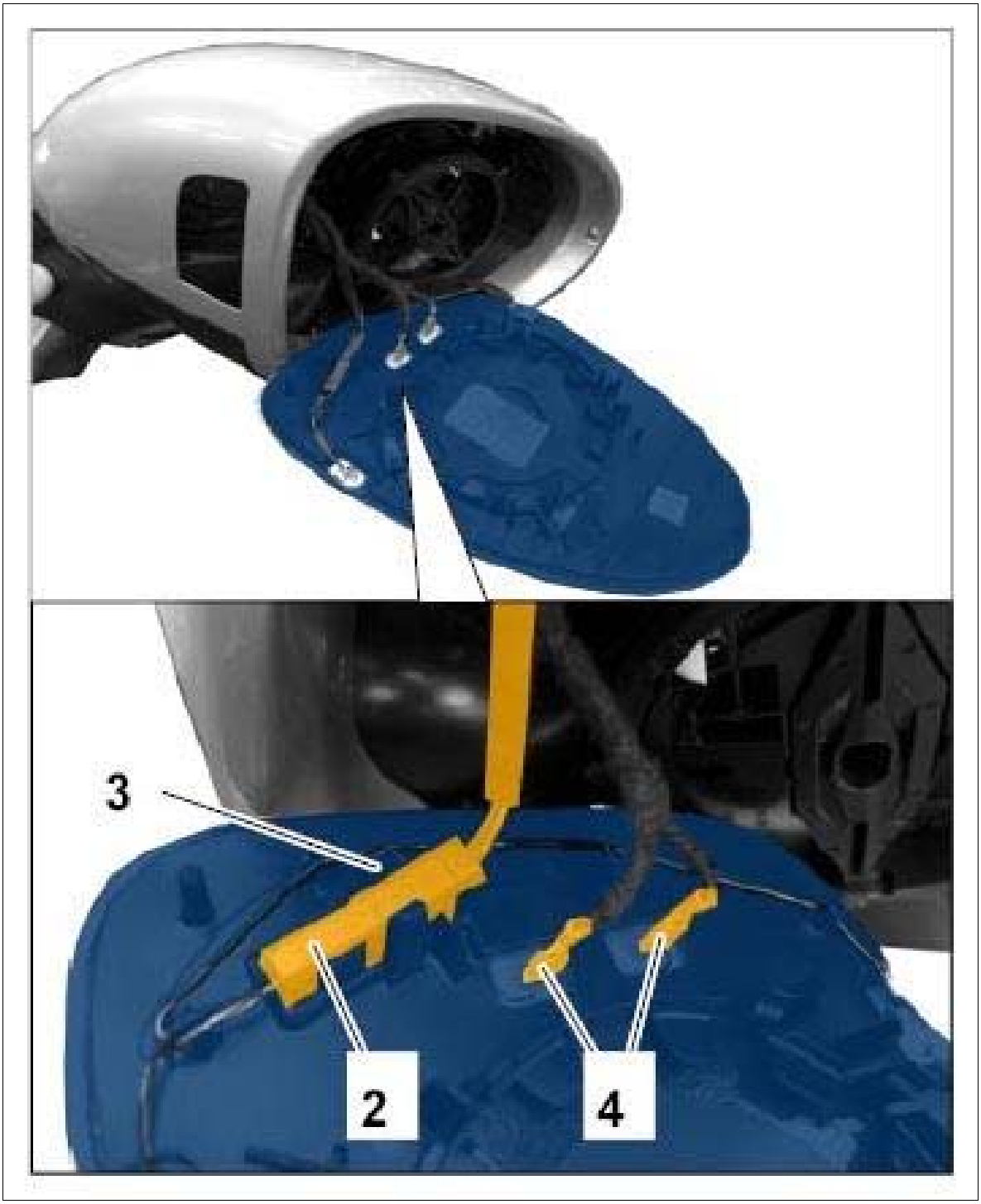

Courtesy of PORSCHE CARS NORTH AMERICA, INC.

WM 667819 REMOVING AND INSTALLING MIRROR GLASS (ALL MODELS) > INSTALLING MIRROR GLASS

Installation is performed in reverse order.

1. Carry out a function test.

WM 667919 REMOVING AND INSTALLING COVER FOR V-SHAPED MIRROR BASE (ALL MODELS) > TECHNICAL VALUES

Location	Description	Type	Basic value	Tolerance 1	Tolerance 2
Rotary plate to cover		Tightening torque	5 Nm (3.5 ftlb.)	+/-0.1 Nm (+/-0.1 ftlb.)	
Cover to mirror base		Tightening torque	20 Nm (15 ftlb.)		

WM 667919 REMOVING AND INSTALLING COVER FOR V-SHAPED MIRROR BASE (ALL MODELS) > PRELIMINARY WORK

1. Remove rear-view mirror housing (lower part). → Removing Rear-View Mirror Housing (Lower Part)
2. Remove rear-view mirror. →Removing Rear-View Mirror

WM 667919 REMOVING AND INSTALLING COVER FOR V-SHAPED MIRROR BASE (ALL MODELS) > REMOVING COVER FOR V-SHAPED MIRROR BASE

1. Carefully release upper cover **-1-** using a plastic wedge **-2-** , guide out the wire harness **-3-** and remove the cover **-1-** by pulling it upwards.

Fig 1: Loosening Cover

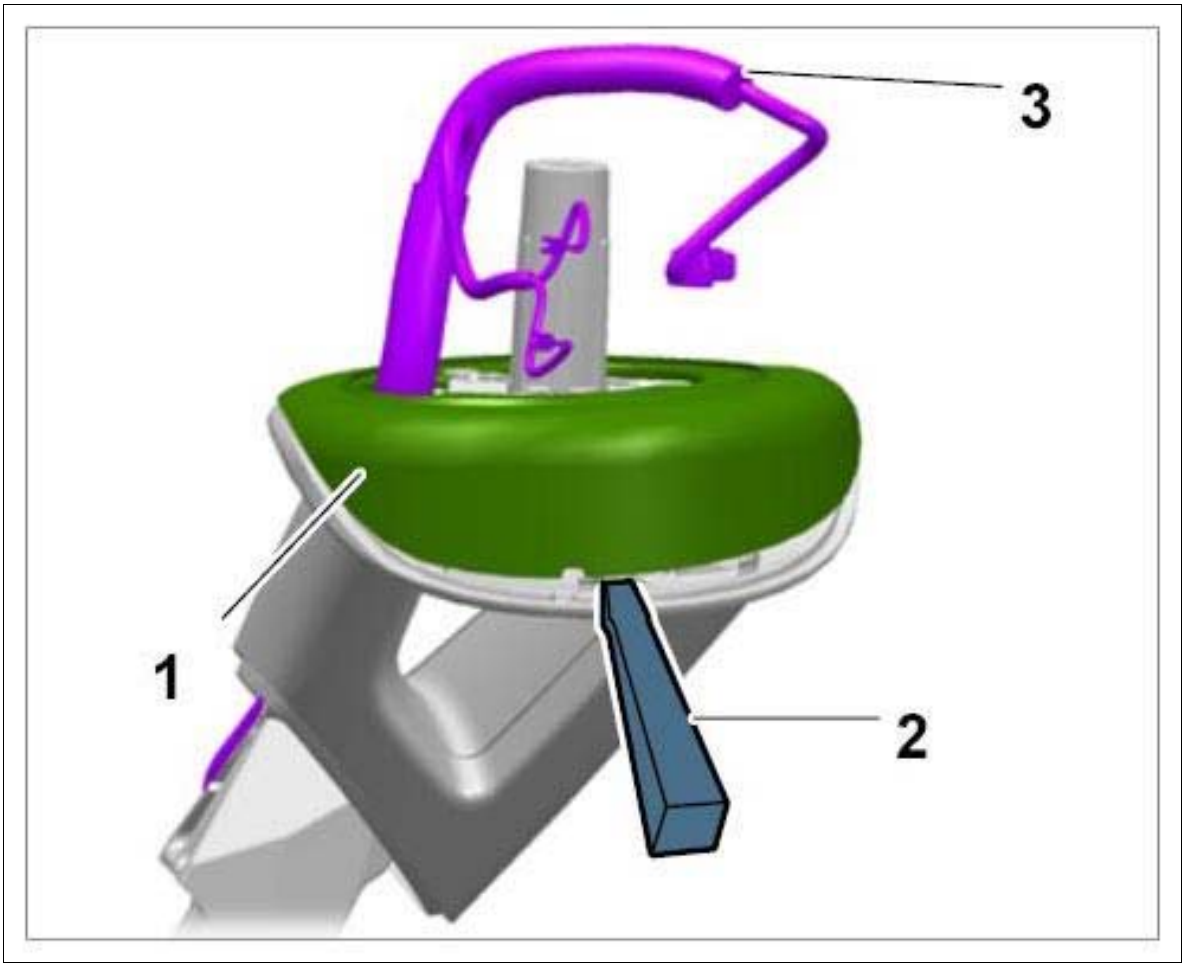

Courtesy of PORSCHE CARS NORTH AMERICA, INC.

2. Remove rotary plate.

    1. 2.1. Unscrew fastening screws **-1-** .
    2. 2.2. Guide out wire harness **-2-** and remove rotary plate **-3-** .

Fig 2: Removing Fastening Screws

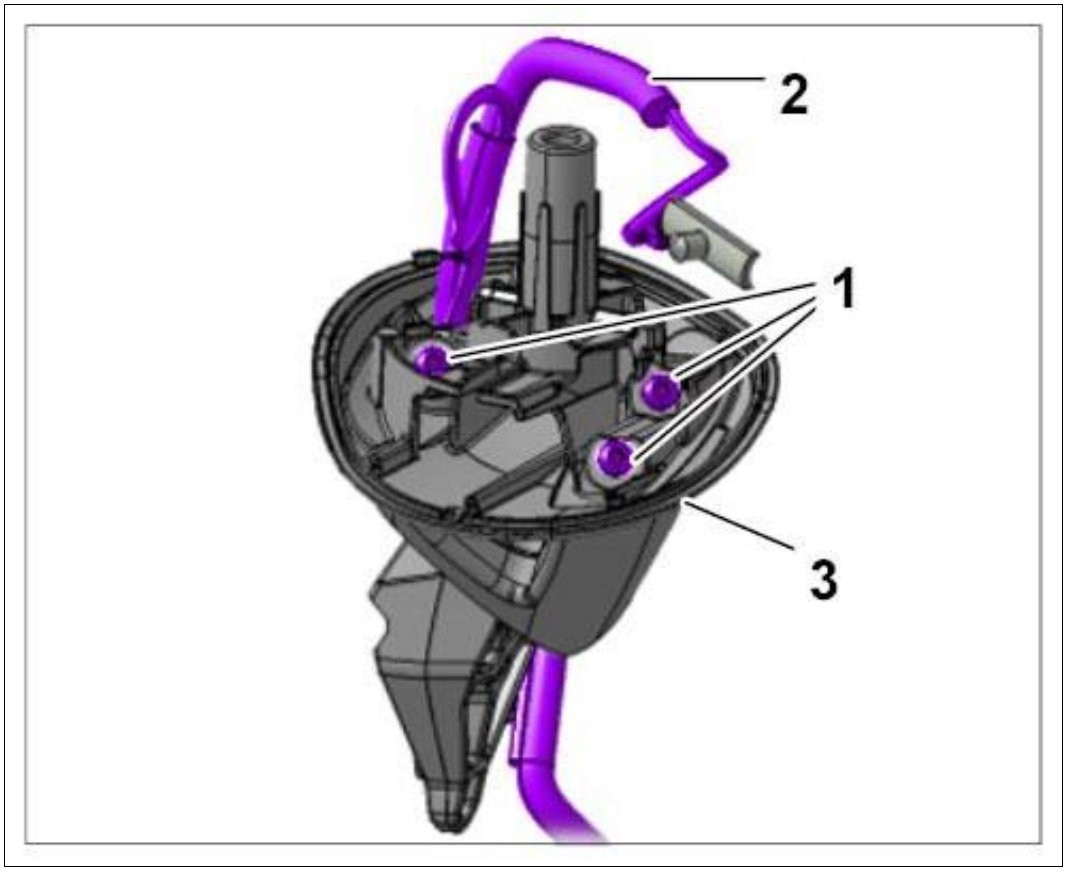

Courtesy of PORSCHE CARS NORTH AMERICA, INC.

3. Unclip and remove lower seal **-1-** on the cover of the V-shaped mirror base **-2-** .

Fig 3: Removing Lower Seal

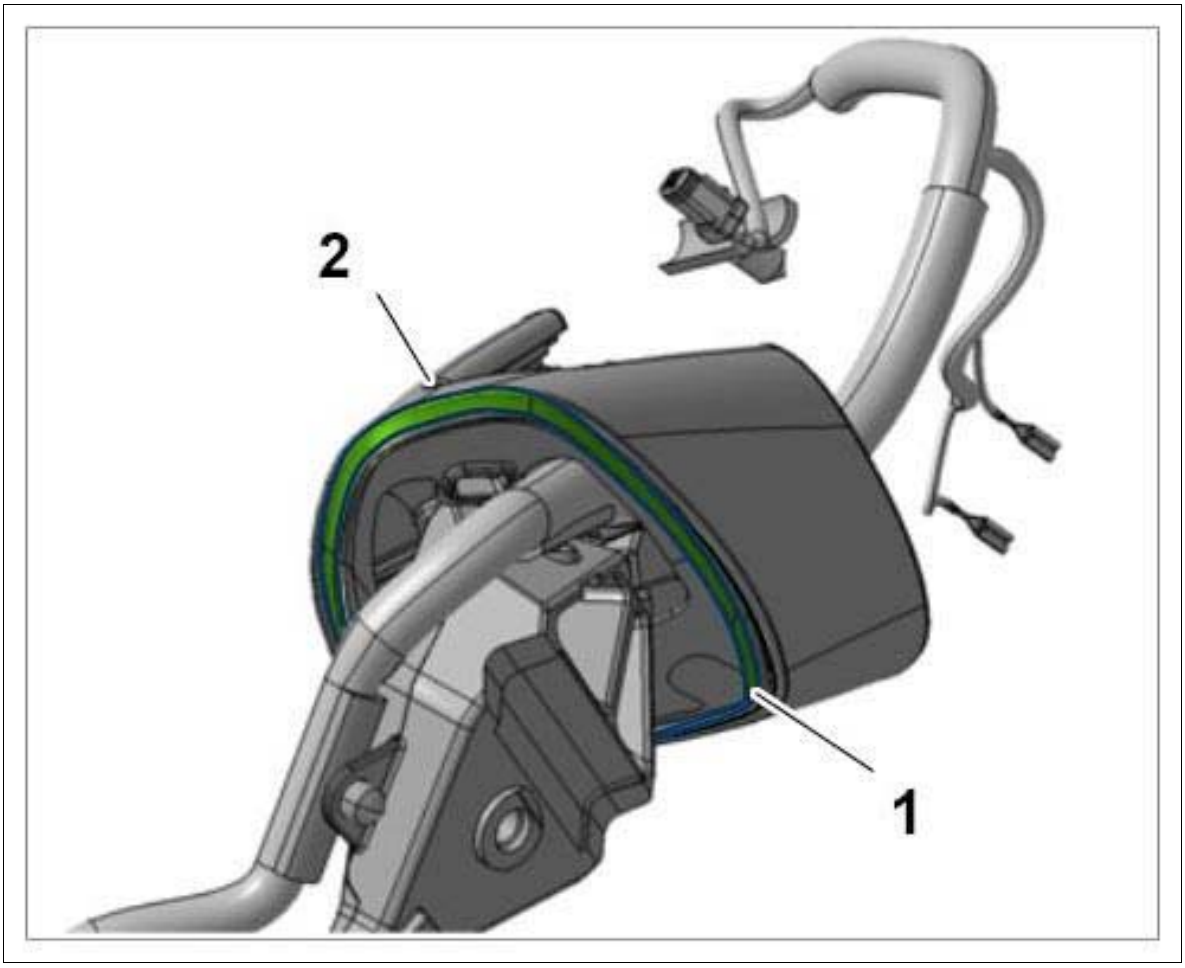

Courtesy of PORSCHE CARS NORTH AMERICA, INC.

4. Unclip and remove inner cover for V-shaped mirror base **-1-** .

   Unscrew fastening screw **-2-** .

Fig 4: Removing Inner Cover

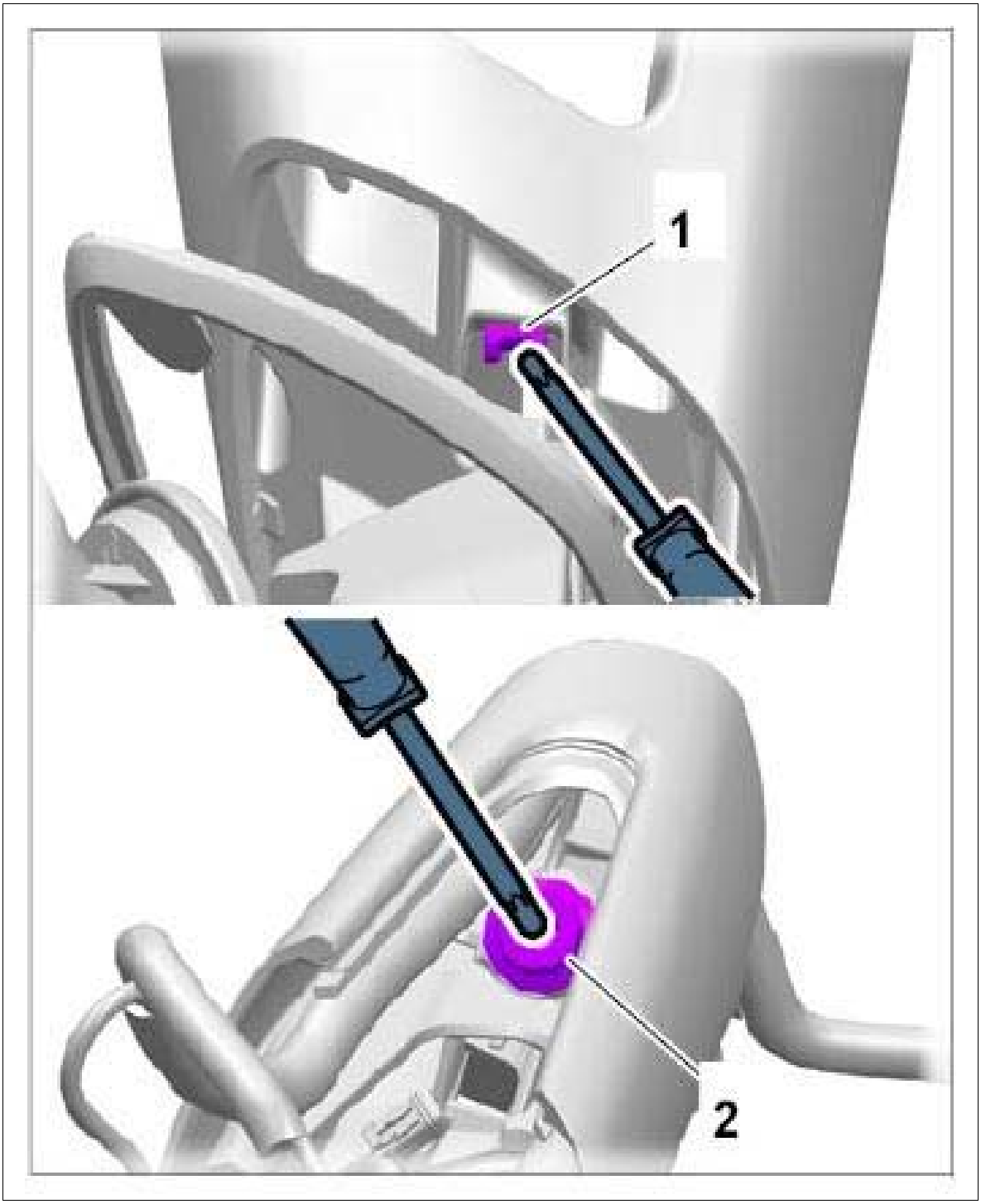

Courtesy of PORSCHE CARS NORTH AMERICA, INC.

5. Guide out wire harness **-1-** and remove mirror base **-2-** by pulling it downwards.

Fig 5: Removing Mirror Base

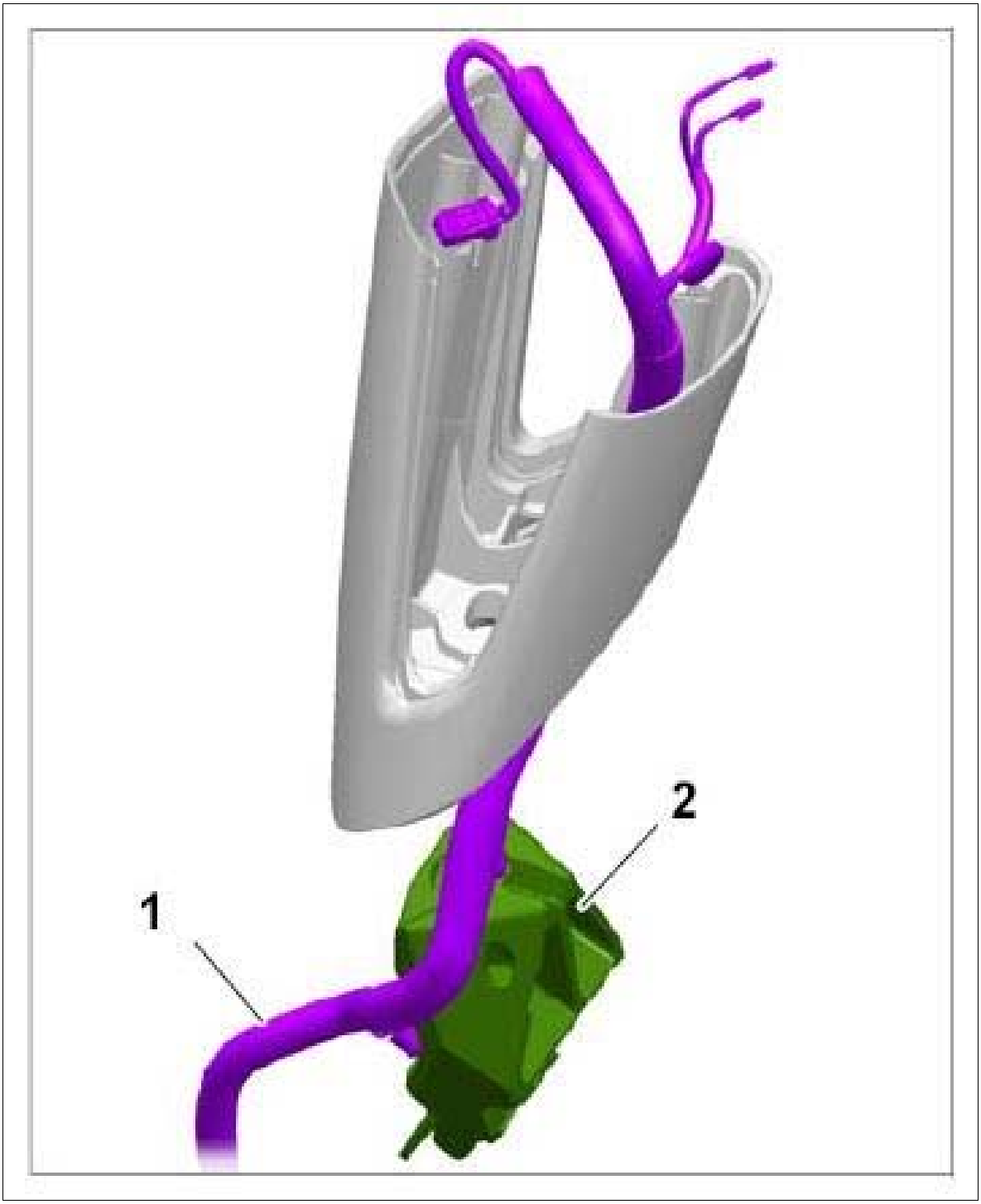

Courtesy of PORSCHE CARS NORTH AMERICA, INC.

WM 667919 REMOVING AND INSTALLING COVER FOR V-SHAPED MIRROR BASE (ALL MODELS) > INSTALLING COVER FOR V-SHAPED MIRROR BASE

Installation is performed in reverse order. Pay particular attention to the following:

1. Tighten screws to the specified torque.

   Tightening torque 5 Nm (3.5 ftlb.) +/-0.1 Nm (+/-0.1 ftlb.)

   Tightening torque 20 Nm (15 ftlb.)

WM 667919 REMOVING AND INSTALLING COVER FOR V-SHAPED MIRROR BASE (ALL MODELS) > SUBSEQUENT WORK

1. Install rear-view mirror housing (lower part). → Installing Rear-View Mirror Housing (Lower Part)
2. Install rear-view mirror. → Installing Rear-View Mirror

WM 667919 REMOVING AND INSTALLING REAR-VIEW MIRROR HOUSING (UPPER PART) (ALL MODELS) > TECHNICAL VALUES

Location	Description	Type	Basic value	Tolerance 1	Tolerance 2
Upper part of housing to bracket		Tightening torque	1.4 Nm (1 ftlb.)		

WM 667919 REMOVING AND INSTALLING REAR-VIEW MIRROR HOUSING (UPPER PART) (ALL MODELS) > PRELIMINARY WORK

1. Remove mirror glass. → Removing Mirror Glass

WM 667919 REMOVING AND INSTALLING REAR-VIEW MIRROR HOUSING (UPPER PART) (ALL MODELS) > REMOVING REAR-VIEW MIRROR HOUSING (UPPER PART)

Information

- The number of fastening screws, fixing clips, plug connections, holders and trim panels can vary depending on equipment.
- The illustrations for removing and installing the drive mechanism are shown only on one equipment variant and may differ from the actual equipment variant.
- Some steps must be carried out automatically.
- Some of the repair illustrations show only one side of the vehicle.

1. Remove screws **-1-** .
2. Move upper part of housing **-2-** in the lower, front area **-arrow-** forward and up at the same

time and unclip at the lower part of the housing.

3. Unclip lower part of housing from brackets **-3-** on the direction indicator light.
4. Guide upper part of housing **-2-** out of the brackets **-4-** and lift it up until the electric plug connections are accessible.

Fig 1: Removing Rear-View Mirror Housing (Upper Part)

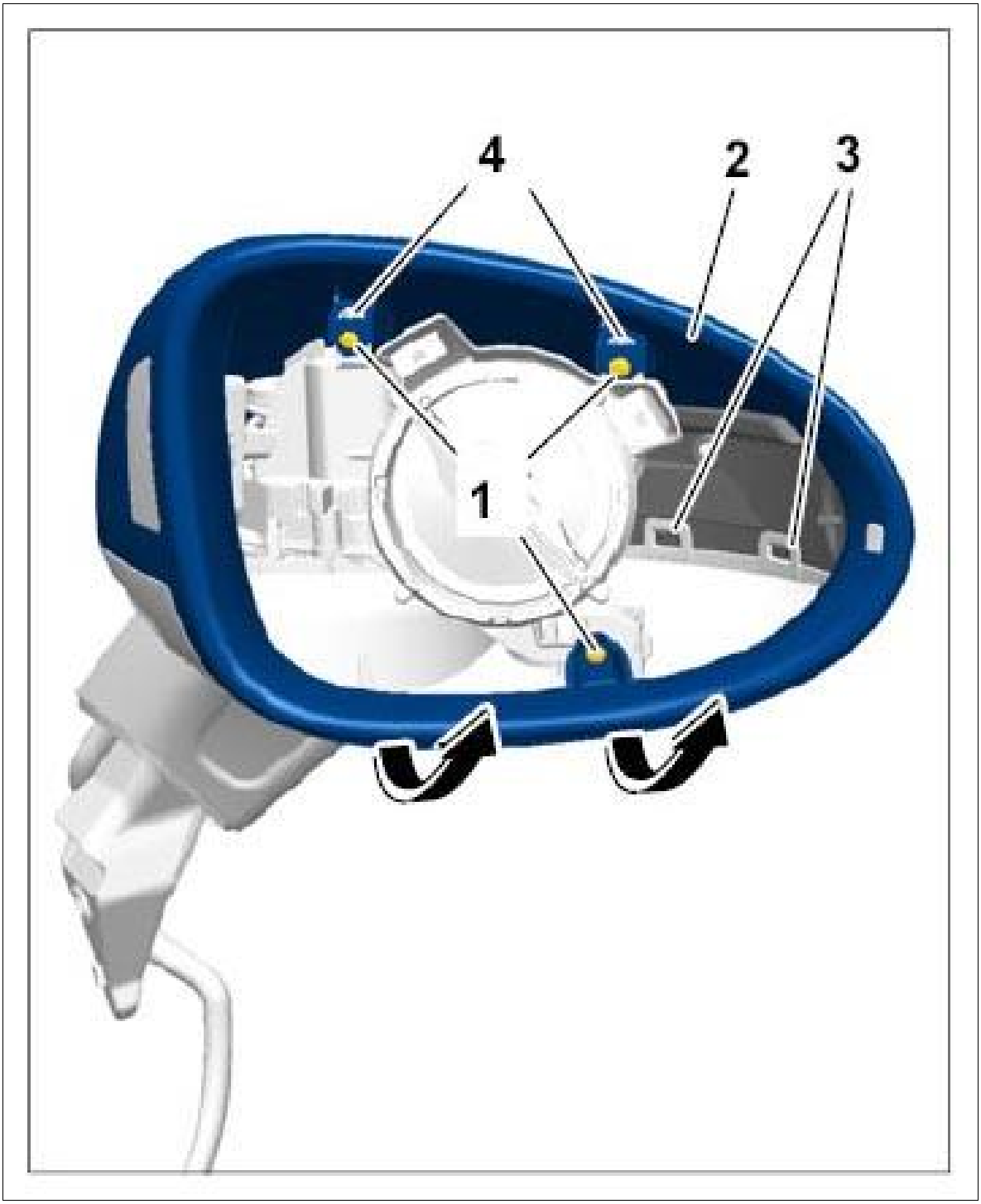

Courtesy of PORSCHE CARS NORTH AMERICA, INC.

5. Disconnect electric plug connections **-1-** .

6. Remove upper part of housing **-2-** .

Fig 2: Identifying Electric Plug Connections

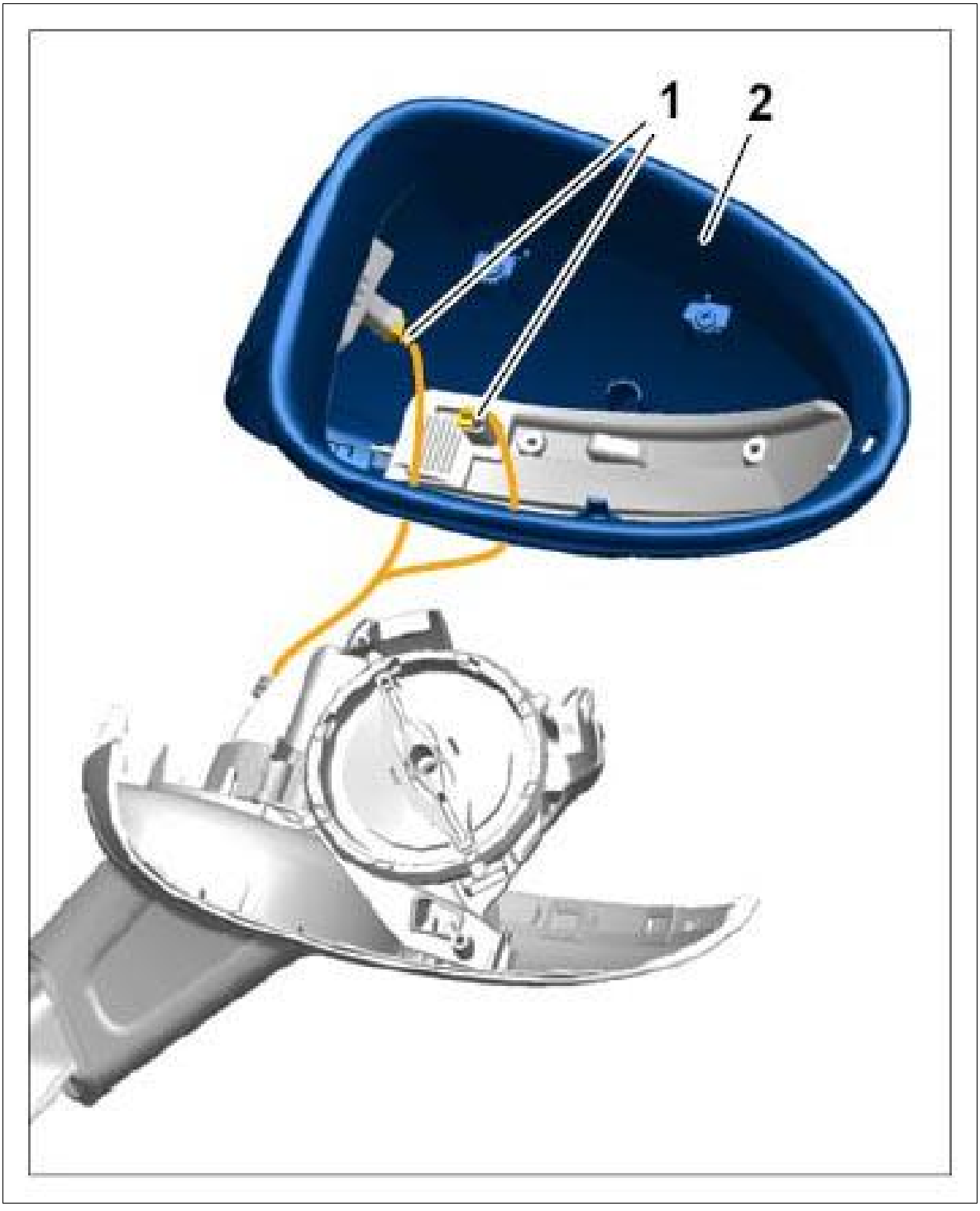

Courtesy of PORSCHE CARS NORTH AMERICA, INC.

WM 667919 REMOVING AND INSTALLING REAR-VIEW MIRROR HOUSING (UPPER PART) (ALL MODELS) > INSTALLING REAR-VIEW MIRROR HOUSING (UPPER PART)

Installation is performed in reverse order. Pay particular attention to the following:

1. Tighten screws to the specified torque. **Tightening torque 1.4 Nm (1 ftlb.)**

WM 667919 REMOVING AND INSTALLING REAR-VIEW MIRROR HOUSING (UPPER PART) (ALL MODELS) > SUBSEQUENT WORK

1. Install mirror glass. → Installing Mirror Glass

WM 667919 REMOVING AND INSTALLING REAR-VIEW MIRROR HOUSING (LOWER PART) (ALL MODELS) > TECHNICAL VALUES

Location	Description	Type	Basic value	Tolerance 1	Tolerance 2
Bracket to mirror base		Tightening torque	20 Nm (15 ftlb.)		

WM 667919 REMOVING AND INSTALLING REAR-VIEW MIRROR HOUSING (LOWER PART) (ALL MODELS) > PRELIMINARY WORK

1. Remove rear-view mirror housing (upper part). → Removing Rear-View Mirror Housing (Upper Part)

WM 667919 REMOVING AND INSTALLING REAR-VIEW MIRROR HOUSING (LOWER PART) (ALL MODELS) > REMOVING REAR-VIEW MIRROR HOUSING (LOWER PART)

Information

- The number of fastening screws, fixing clips, plug connections, holders and trim panels can vary depending on equipment.
- The illustrations for removing and installing the drive mechanism are shown only on one equipment variant and may differ from the actual equipment variant.
- Some steps must be carried out automatically.
- Some of the repair illustrations show only one side of the vehicle.

1. Unscrew screw **-1-** .
2. Remove plastic washer **-2-** .
3. Remove coil spring **-3-** .
4. Remove plastic washer **-4-** .
5. Unclip wire harness **-5-** at the mirror bracket **-6-** .

6. Release and disconnect electric plug connection **-7-** .
7. Pull electric plug connection **-8-** out of the bracket, then release and disconnect it.

Fig 1: Releasing Rear-View Mirror Housing (Lower Part)

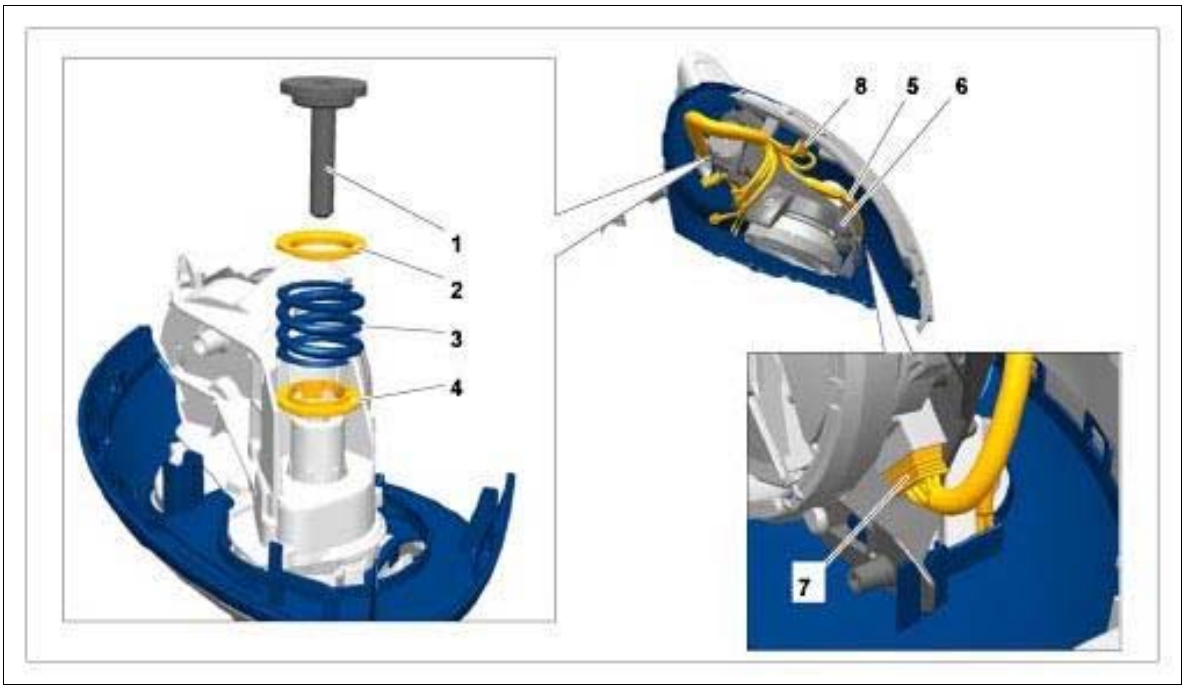

Courtesy of PORSCHE CARS NORTH AMERICA, INC.

8. Unclip mirror bracket **-1-** on lower part of housing **-2- (-arrows-)** , guide it out of the bracket **-3-** and remove it.
9. Unclip area lighting **-4-** from lower part of housing **-2-** and disconnect electric plug connection.
10. Guide out wire harness **-5-** at lower part of housing **-2-** and remove lower part of housing **-2-** .

Fig 2: Removing Rear-View Mirror Housing (Lower Part)

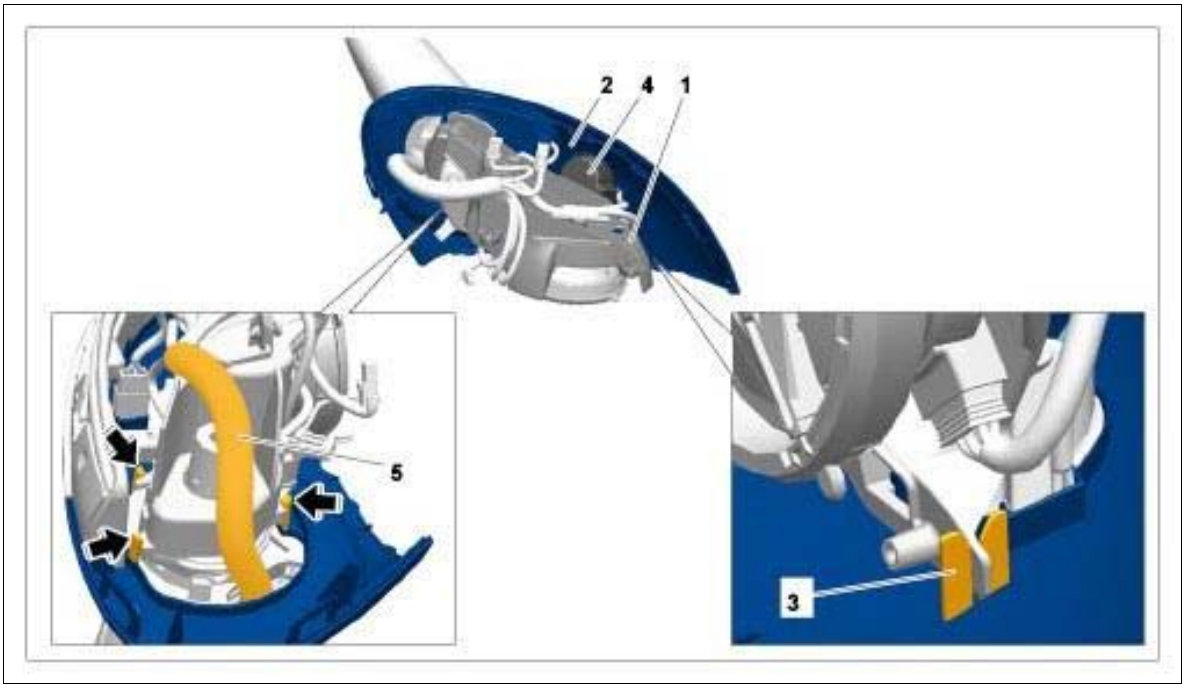

Courtesy of PORSCHE CARS NORTH AMERICA, INC.

WM 667919 REMOVING AND INSTALLING REAR-VIEW MIRROR HOUSING (LOWER PART) (ALL MODELS) > INSTALLING REAR-VIEW MIRROR HOUSING (LOWER PART)

Installation is performed in reverse order. Pay particular attention to the following:

1. Tighten screw to the specified torque. **Tightening torque 20 Nm (15 ftlb.)**
2. Check that the plastic washers are fitted at the correct position.

WM 667919 REMOVING AND INSTALLING REAR-VIEW MIRROR HOUSING (LOWER PART) (ALL MODELS) > SUBSEQUENT WORK

1. Install rear-view mirror housing (upper part). → Installing Rear-View Mirror Housing (Upper Part)

WM 667919 REMOVING AND INSTALLING COVER FOR MIRROR BASE (ALL MODELS) > TECHNICAL VALUES

Location	Description	Type	Basic value	Tolerance 1	Tolerance 2
Cover to mirror base		Tightening torque	0.9 Nm (0.5 ftlb.)		

WM 667919 REMOVING AND INSTALLING COVER FOR MIRROR BASE (ALL MODELS) > PRELIMINARY WORK

1. Remove rear-view mirror housing (lower part). → Removing Rear-View Mirror Housing (Lower Part)
2. Remove rear-view mirror. → Removing Rear-View Mirror

WM 667919 REMOVING AND INSTALLING COVER FOR MIRROR BASE (ALL MODELS) > REMOVING COVER FOR MIRROR BASE

1. Unclip top cover **-1-** by pulling it upwards.
2. Guide out wire harness **-2-** on the top cover **-1-** and remove cover **-1-** .

   Fig 1: Locating Wire Harness On Top Cover

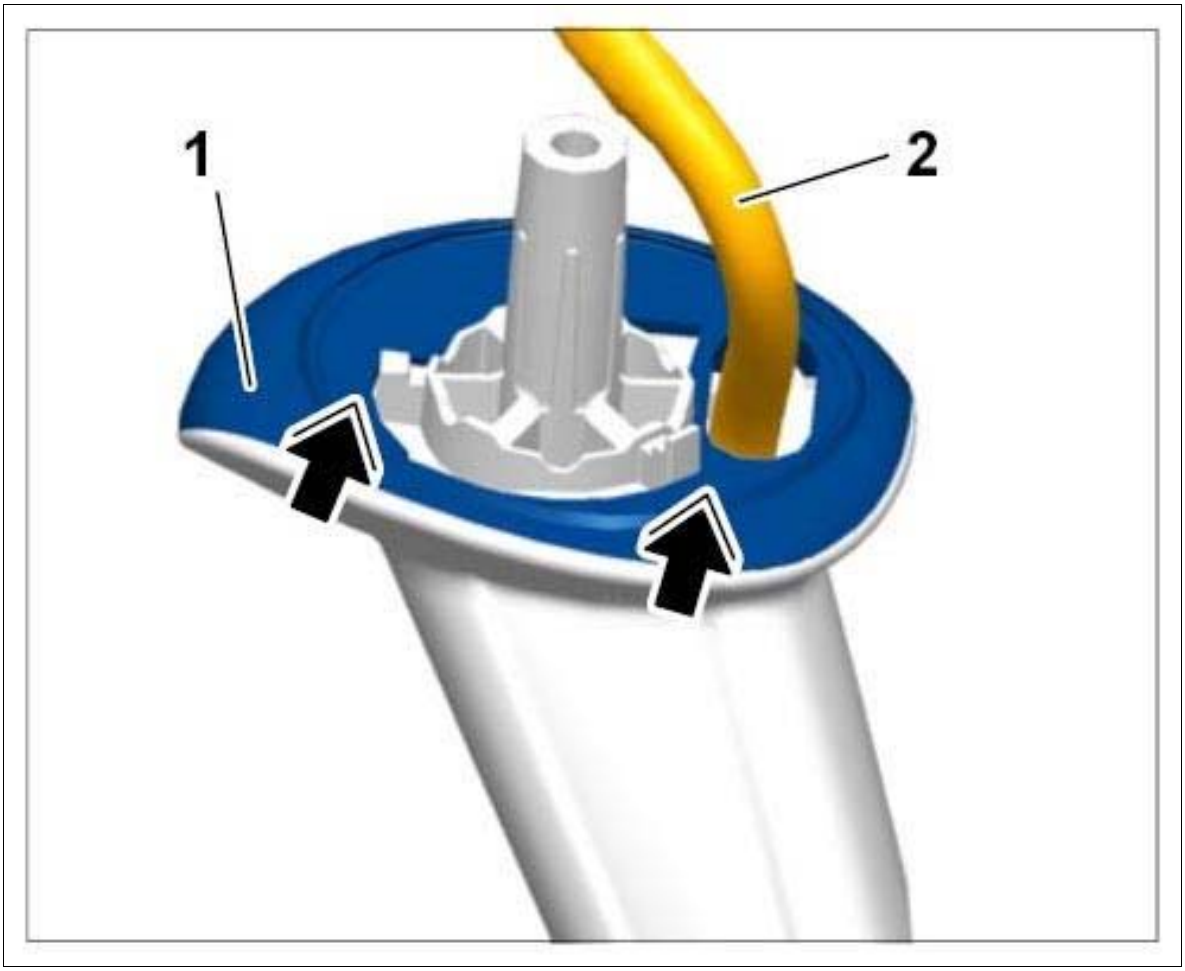

Courtesy of PORSCHE CARS NORTH AMERICA, INC.

3. Unclip lower seal **-1-** on the mirror base cover, guide out wire harness **-2-** and remove seal **-1-** .

Fig 2: Identifying Lower Seal On Mirror Base Cover

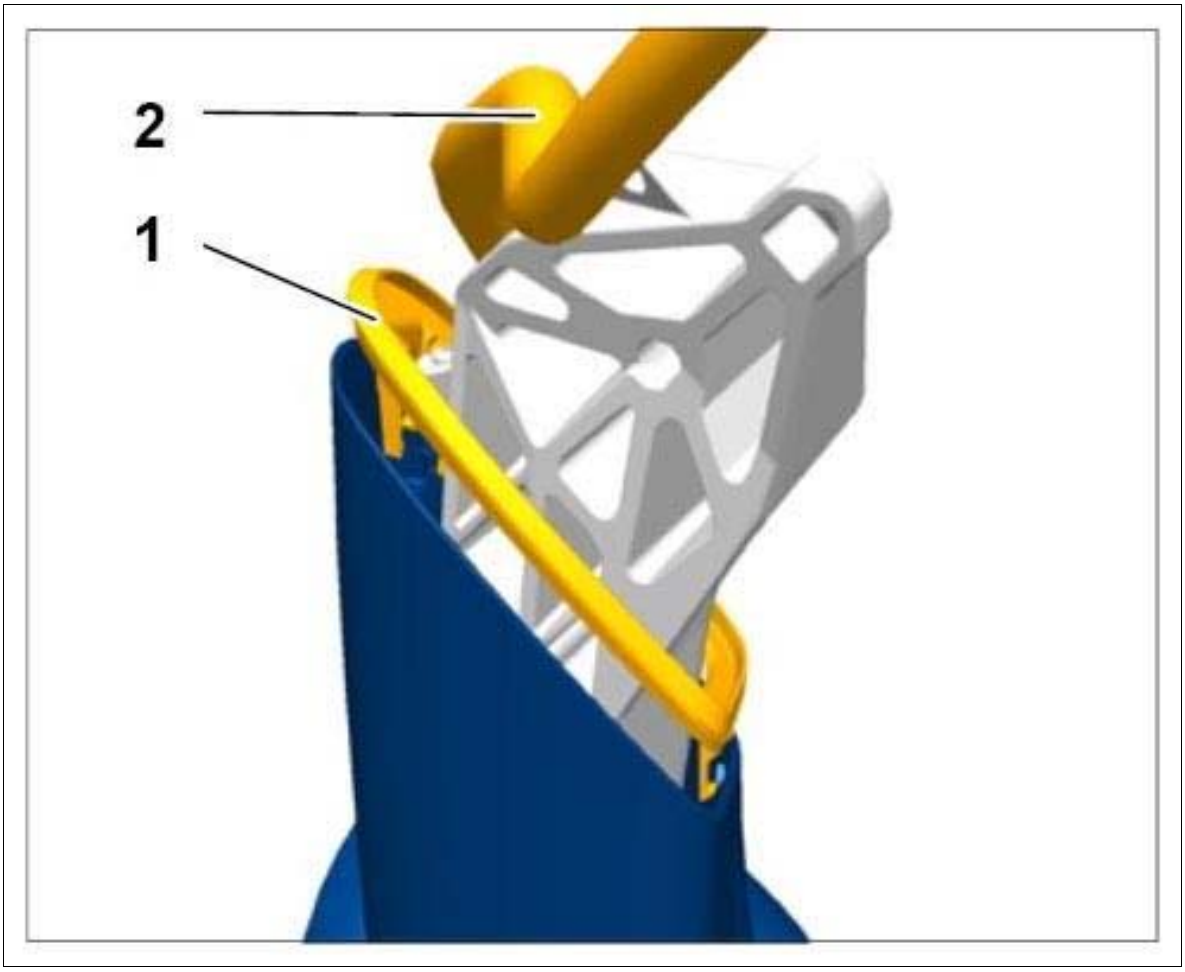

Courtesy of PORSCHE CARS NORTH AMERICA, INC.

4. Unscrew bottom screw **-1-** .
5. Unscrew top screw **-2-** .
6. Pull cover **-3-** out of the brackets.
7. Guide out and remove cover **-3-** on mirror base.

Fig 3: Removing Mirror Base Cover

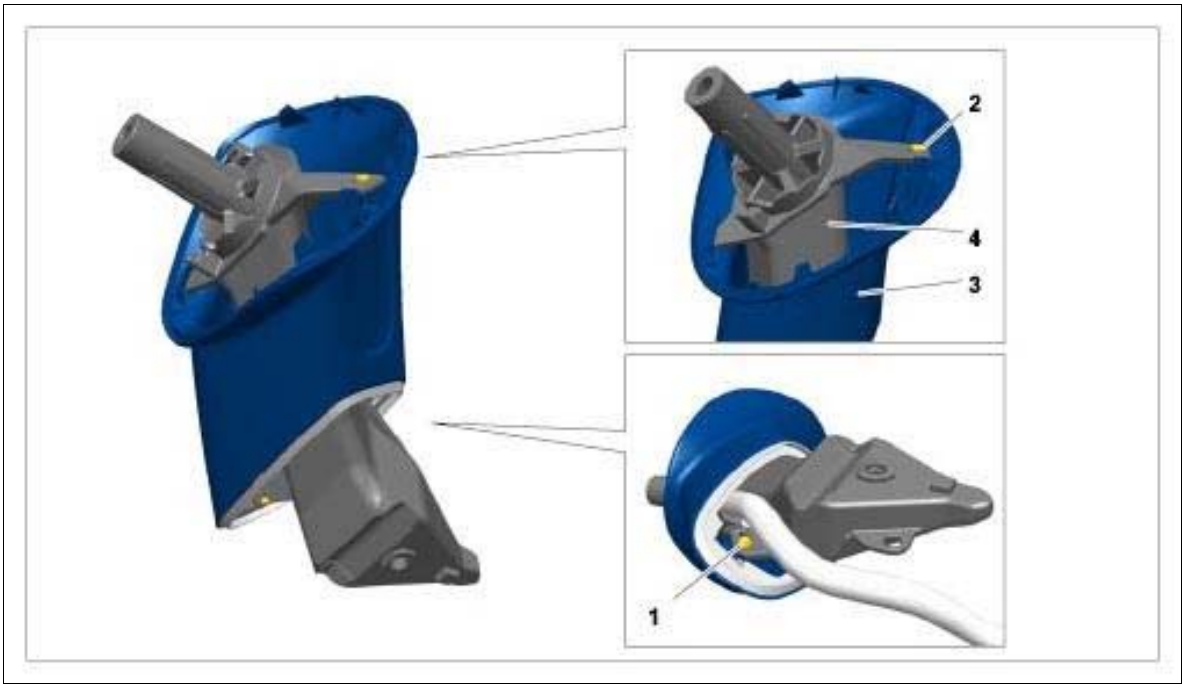

Courtesy of PORSCHE CARS NORTH AMERICA, INC.

WM 667919 REMOVING AND INSTALLING COVER FOR MIRROR BASE (ALL MODELS) > INSTALLING COVER FOR MIRROR BASE

Installation is performed in reverse order. Pay particular attention to the following:

1. Tighten screws to the specified torque. **Tightening torque 0.9 Nm (0.5 ftlb.)**

WM 667919 REMOVING AND INSTALLING COVER FOR MIRROR BASE (ALL MODELS) > SUBSEQUENT WORK

1. Install rear-view mirror housing (lower part). → Installing Rear-View Mirror Housing (Lower Part)
2. Install rear-view mirror. → Installing Rear-View Mirror

WM 668219 REMOVING AND INSTALLING MIRROR ADJUSTING MOTOR (MIRROR GLASS) (ALL MODELS) > TECHNICAL VALUES

Location	Description	Type	Basic value	Tolerance 1	Tolerance 2
Adjusting motor to bracket		Tightening torque	1.4 Nm (1 ftlb.)		

WM 668219 REMOVING AND INSTALLING MIRROR ADJUSTING MOTOR (MIRROR GLASS) (ALL MODELS) > PRELIMINARY WORK

1. Remove mirror glass. → Removing Mirror Glass

WM 668219 REMOVING AND INSTALLING MIRROR ADJUSTING MOTOR (MIRROR GLASS) (ALL MODELS) > REMOVING MIRROR ADJUSTING MOTOR (MIRROR GLASS)

1. Unscrew screw **-1-** .
2. Unclip adjusting motor **-2-** from bracket **-3-** .
3. Disconnect electric plug connection **-4-** and remove adjusting motor **-2-** .

Fig 1: Removing Mirror Adjusting Motor (Mirror Glass)

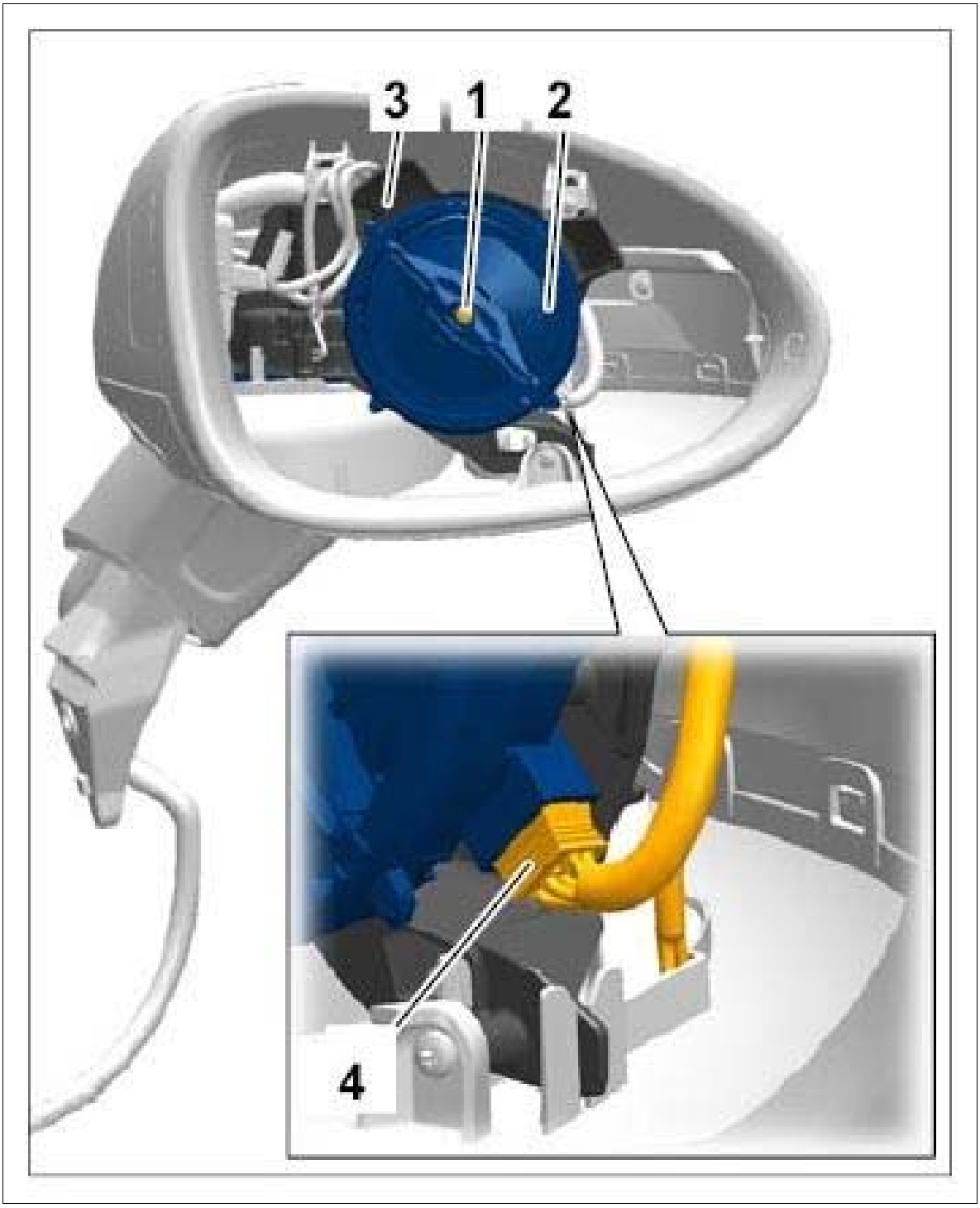

Courtesy of PORSCHE CARS NORTH AMERICA, INC.

WM 668219 REMOVING AND INSTALLING MIRROR ADJUSTING MOTOR (MIRROR GLASS) (ALL MODELS) > INSTALLING MIRROR ADJUSTING MOTOR (MIRROR GLASS)

Installation is performed in reverse order. Pay particular attention to the following:

1. Tighten screw to the specified torque. **Tightening torque 1.4 Nm (1 ftlb.)**
2. Carry out a function test.

WM 668219 REMOVING AND INSTALLING MIRROR ADJUSTING MOTOR (MIRROR GLASS) (ALL MODELS) > SUBSEQUENT WORK

1. Install mirror glass. → Installing Mirror Glass

WM 668219 REMOVING AND INSTALLING MIRROR ADJUSTING MOTOR (FOLDING FUNCTION) (ALL MODELS) > TECHNICAL VALUES

Location	Description	Type	Basic value	Tolerance 1	Tolerance 2
Adjusting motor to bracket		Tightening torque	1.7 Nm (1.5 ftlb.)		

WM 668219 REMOVING AND INSTALLING MIRROR ADJUSTING MOTOR (FOLDING FUNCTION) (ALL MODELS) > PRELIMINARY WORK

1. Remove rear-view mirror housing (lower part). → Removing Rear-View Mirror Housing (Lower Part)

WM 668219 REMOVING AND INSTALLING MIRROR ADJUSTING MOTOR (FOLDING FUNCTION) (ALL MODELS) > REMOVING MIRROR ADJUSTING MOTOR (FOLDING FUNCTION)

1. Remove washer **-1-** .
2. Unscrew screws **-2-** .
3. Pull adjusting motor **-3-** out of the bracket **-4-** .

Fig 1: Removing Mirror Adjusting Motor (Folding Function)

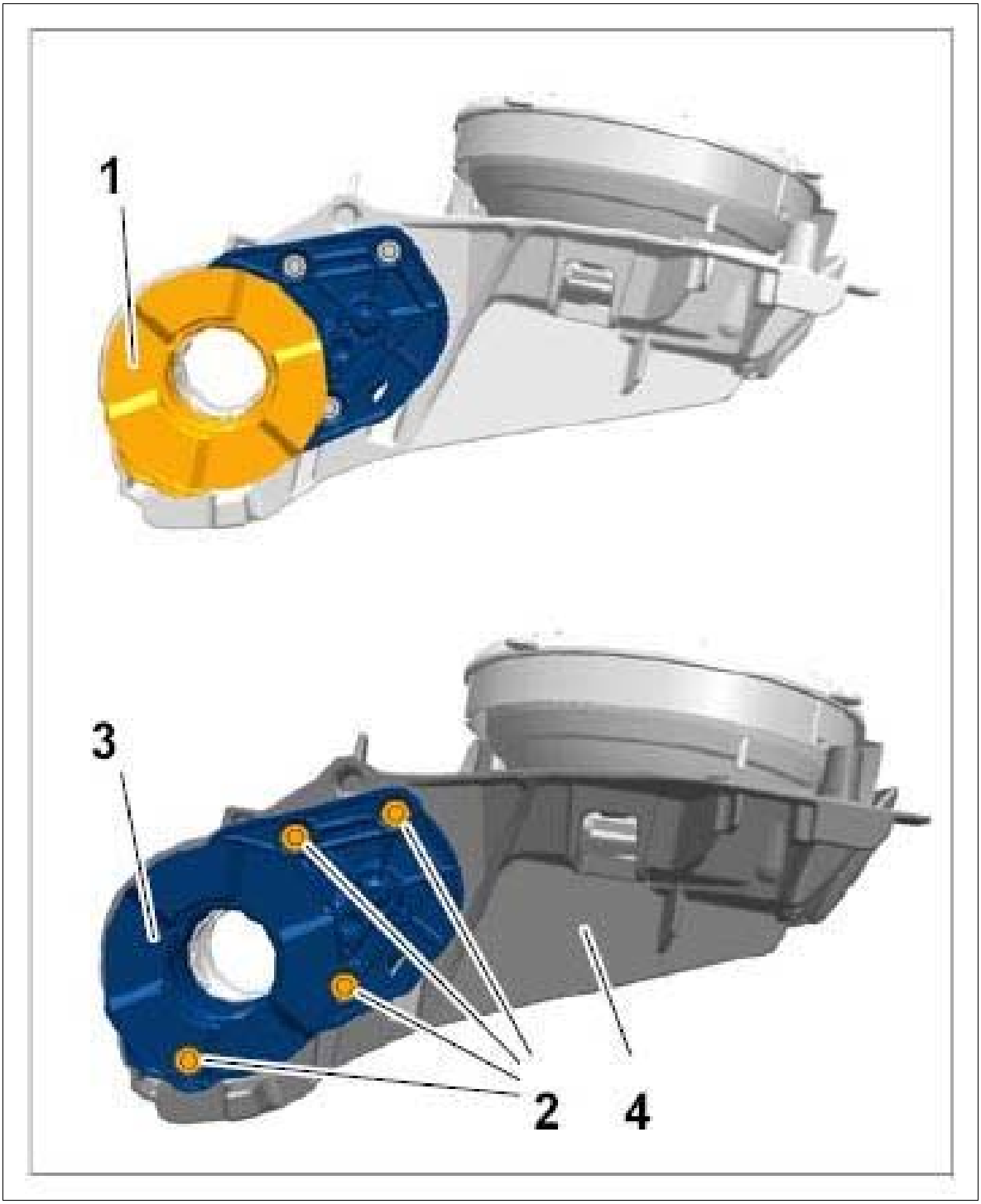

Courtesy of PORSCHE CARS NORTH AMERICA, INC.

WM 668219 REMOVING AND INSTALLING MIRROR ADJUSTING MOTOR (FOLDING FUNCTION) (ALL MODELS) > INSTALLING MIRROR ADJUSTING MOTOR (FOLDING FUNCTION)

Installation is performed in reverse order. Pay particular attention to the following:

1. Tighten screws to the specified torque. **Tightening torque 1.7 Nm (1.5 ftlb.)**
2. Carry out a function test.

WM 668219 REMOVING AND INSTALLING MIRROR ADJUSTING MOTOR (FOLDING FUNCTION) (ALL MODELS) > SUBSEQUENT WORK

1. Install rear-view mirror housing (lower part). → Installing Rear-View Mirror Housing (Lower Part)

WM 668319 REMOVING AND INSTALLING NUMBER PLATE COVER (ALL MODELS) > REMOVING NUMBER PLATE COVER

Information

- The number of fastening screws, fixing clips, plug connections, holders and trim panels can vary depending on equipment.
- The illustrations for removing and installing the drive mechanism are shown only on one equipment variant and may differ from the actual equipment variant.
- Some steps must be carried out automatically.
- Some of the repair illustrations show only one side of the vehicle.

1. Unscrew fastening screws **-1-** and remove number plate **-2-** .
2. Unscrew fastening screws -3, 4- and remove number plate cover.

Fig 1: Removing Number Plate Cover

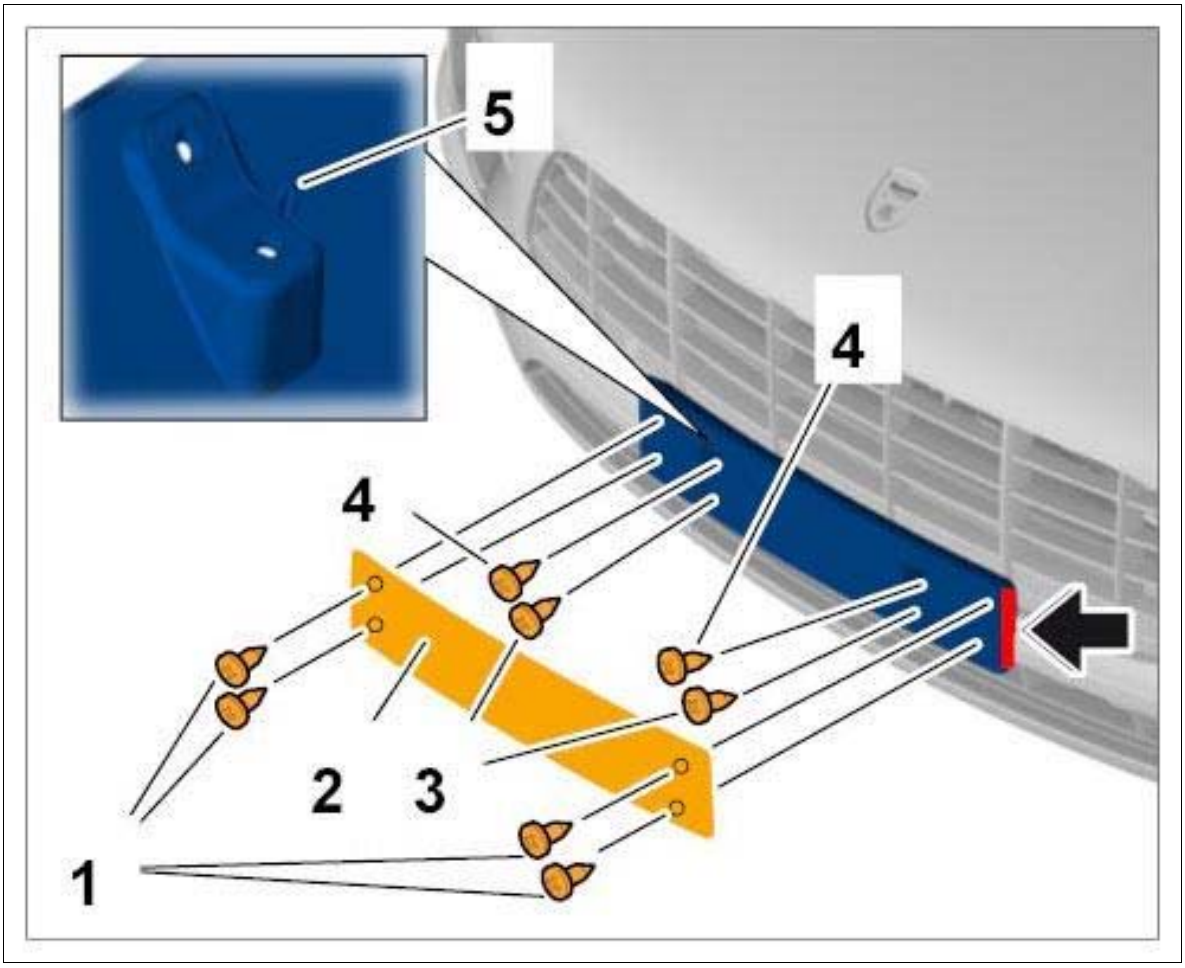

Courtesy of PORSCHE CARS NORTH AMERICA, INC.

WM 668319 REMOVING AND INSTALLING NUMBER PLATE COVER (ALL MODELS) > INSTALLING NUMBER PLATE COVER

Information

Self-tapping screws are used to secure the number plate cover. When fitting the number plate cover for the first time (e.g. on a new front apron), the screws can be screwed directly into the front apron. There is no need to drill any holes.

Installation is performed in reverse order. During initial fitting or after replacing the front apron, the following steps must be carried out:

1. Remove any guide pins **-5-** on the number plate cover.
2. Centre the number plate cover, making sure that the side contour is positioned correctly **-arrow-** .
3. Screw in top fastening screws **-4-** .
4. Screw in bottom fastening screws **-3-** .

Fig 1: Removing Number Plate Cover

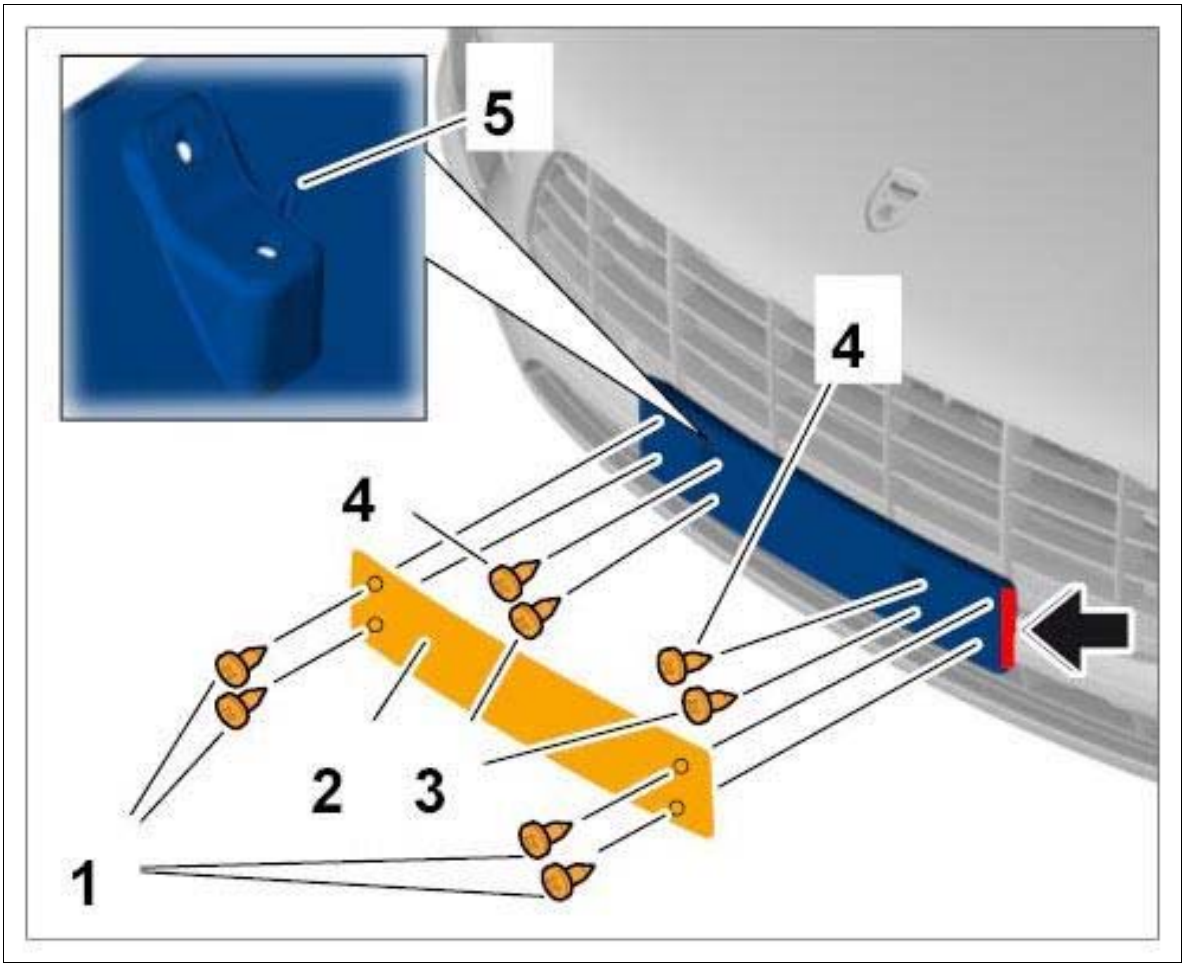

Courtesy of PORSCHE CARS NORTH AMERICA, INC.

WM 668919 REMOVING AND INSTALLING REAR-VIEW MIRROR (ALL MODELS) > TECHNICAL VALUES

Location	Description	Type	Basic value	Tolerance 1	Tolerance 2
Rear-view mirror to door		Tightening torque	23 Nm (17 ftlb.)		

WM 668919 REMOVING AND INSTALLING REAR-VIEW MIRROR (ALL MODELS) > PRELIMINARY WORK

1. Remove front door panel. → Removing front door panel

WM 668919 REMOVING AND INSTALLING REAR-VIEW MIRROR (ALL MODELS) >

REMOVING REAR-VIEW MIRROR

Information

- The number of fastening screws, fixing clips, plug connections, holders and trim panels can vary depending on equipment.
- The illustrations for removing and installing the drive mechanism are shown only on one equipment variant and may differ from the actual equipment variant.
- Some steps must be carried out automatically.
- Some of the repair illustrations show only one side of the vehicle.

1. Disconnect electric plug connections **-1-** .
2. Guide rubber seal **-2-** out of the door inner panel.
3. Pull off adhesive pad **-3-** .
4. Hold rear-view mirror **-4-** securely and unscrew screw **-5-** .
5. Remove rear-view mirror **-4-** and guide wire harness **-6-** out of the door.

Fig 1: Removing Rear-View Mirror

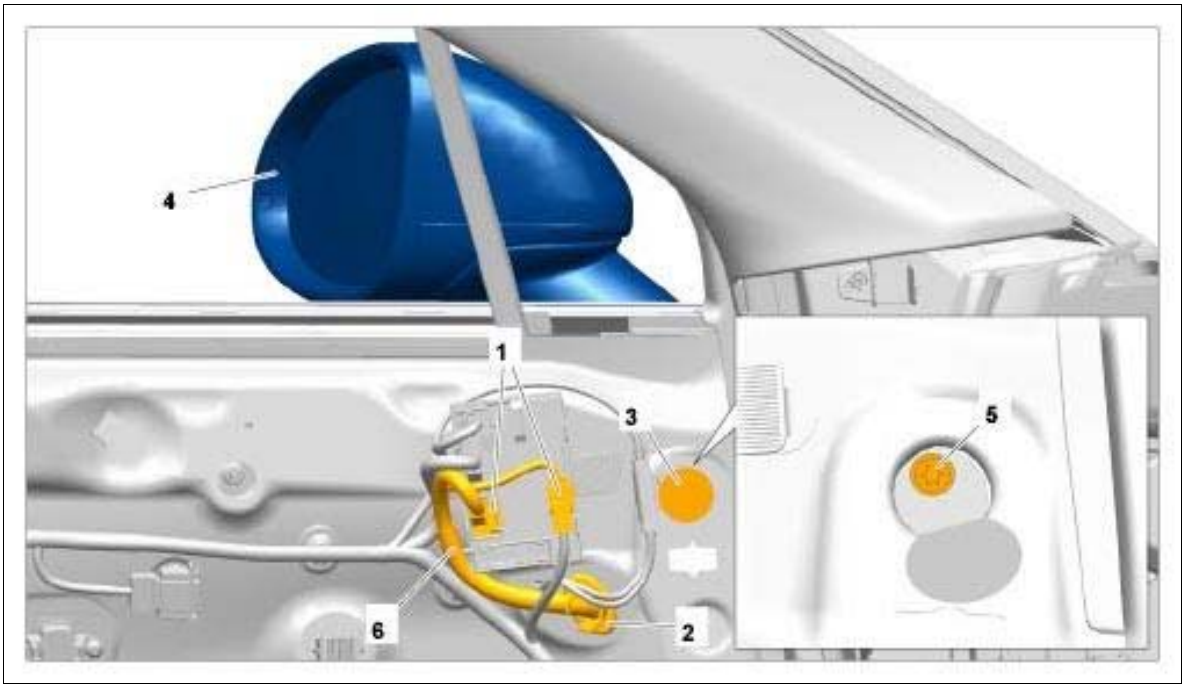

Courtesy of PORSCHE CARS NORTH AMERICA, INC.

WM 668919 REMOVING AND INSTALLING REAR-VIEW MIRROR (ALL MODELS) > INSTALLING REAR-VIEW MIRROR

Installation is performed in reverse order. Pay particular attention to the following:

1. Tighten screw to the specified torque. **Tightening torque 23 Nm (17 ftlb.)**

2. Replace adhesive pad.

WM 668919 REMOVING AND INSTALLING REAR-VIEW MIRROR (ALL MODELS) > SUBSEQUENT WORK

1. Install front door panel. → Installing front door panel

WM 669319 REMOVING AND INSTALLING MIRROR BASE (ALL MODELS) > PRELIMINARY WORK

1. Remove cover for mirror base. → Removing Cover For Mirror Base

WM 669319 REMOVING AND INSTALLING MIRROR BASE (ALL MODELS) > REMOVING MIRROR BASE

1. Unclip wire harness **-1-** at the mirror base **-2-** .

Fig 1: Identifying Rear-View Mirror Wire Harness

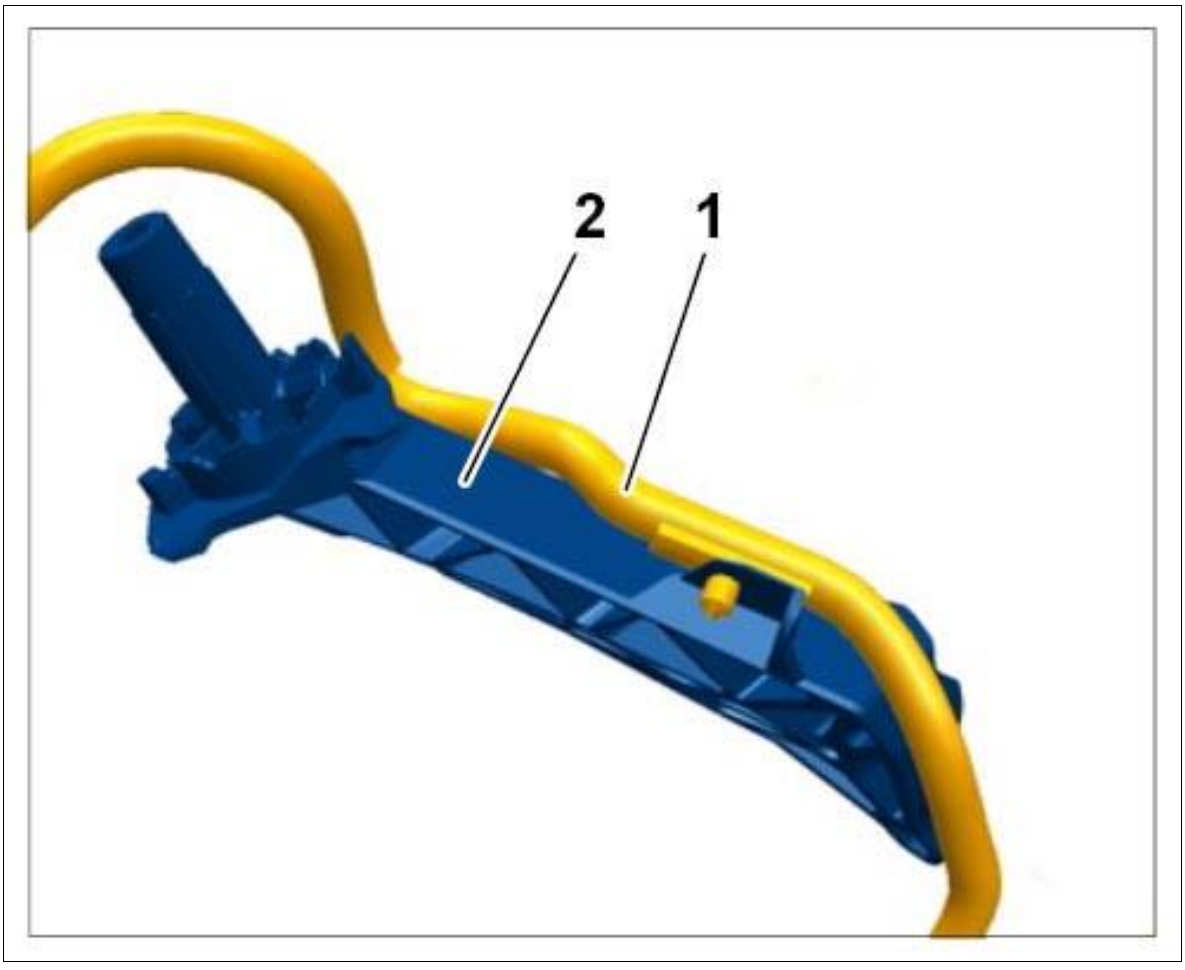

Courtesy of PORSCHE CARS NORTH AMERICA, INC.

WM 669319 REMOVING AND INSTALLING MIRROR BASE (ALL MODELS) > INSTALLING MIRROR BASE

Installation is performed in reverse order.

WM 669319 REMOVING AND INSTALLING MIRROR BASE (ALL MODELS) > SUBSEQUENT WORK

1. Install cover for mirror base. → Installing Cover For Mirror Base

WM 669419 REMOVING AND INSTALLING B-PILLAR COVER (ALL MODELS) > TECHNICAL VALUES

Location	Description	Type	Basic value	Tolerance 1	Tolerance 2
Cover to front door	Tapping screw	Tightening torque	2.5 Nm (2 ftlb.)		

WM 669419 REMOVING AND INSTALLING B-PILLAR COVER (ALL MODELS) > PRELIMINARY WORK

1. Remove front door panel. → Removing front door panel
2. Remove power window motor. → Removing Power Window Motor
3. Remove front loudspeakers. → Removing front loudspeakers

WM 669419 REMOVING AND INSTALLING B-PILLAR COVER (ALL MODELS) > REMOVING B-PILLAR COVER

Information

- The number of fastening screws, fixing clips, plug connections, holders and trim panels can vary depending on equipment.
- The illustrations for removing and installing the drive mechanism are shown only on one equipment variant and may differ from the actual equipment variant.
- Some steps must be carried out automatically.
- Some of the repair illustrations show only one side of the vehicle.

1. Guide out rubber seal **-1-** at the cover **-2-** .

2. Guide out wire harness **-3-** at the brackets for the cover **-2-** .

3. Unclip cover **-2-** from door inner panel, guide out door release cable at the cover **-2-** and remove cover **-2-** .

Fig 1: Identifying Cover On Front Door Inner Panel

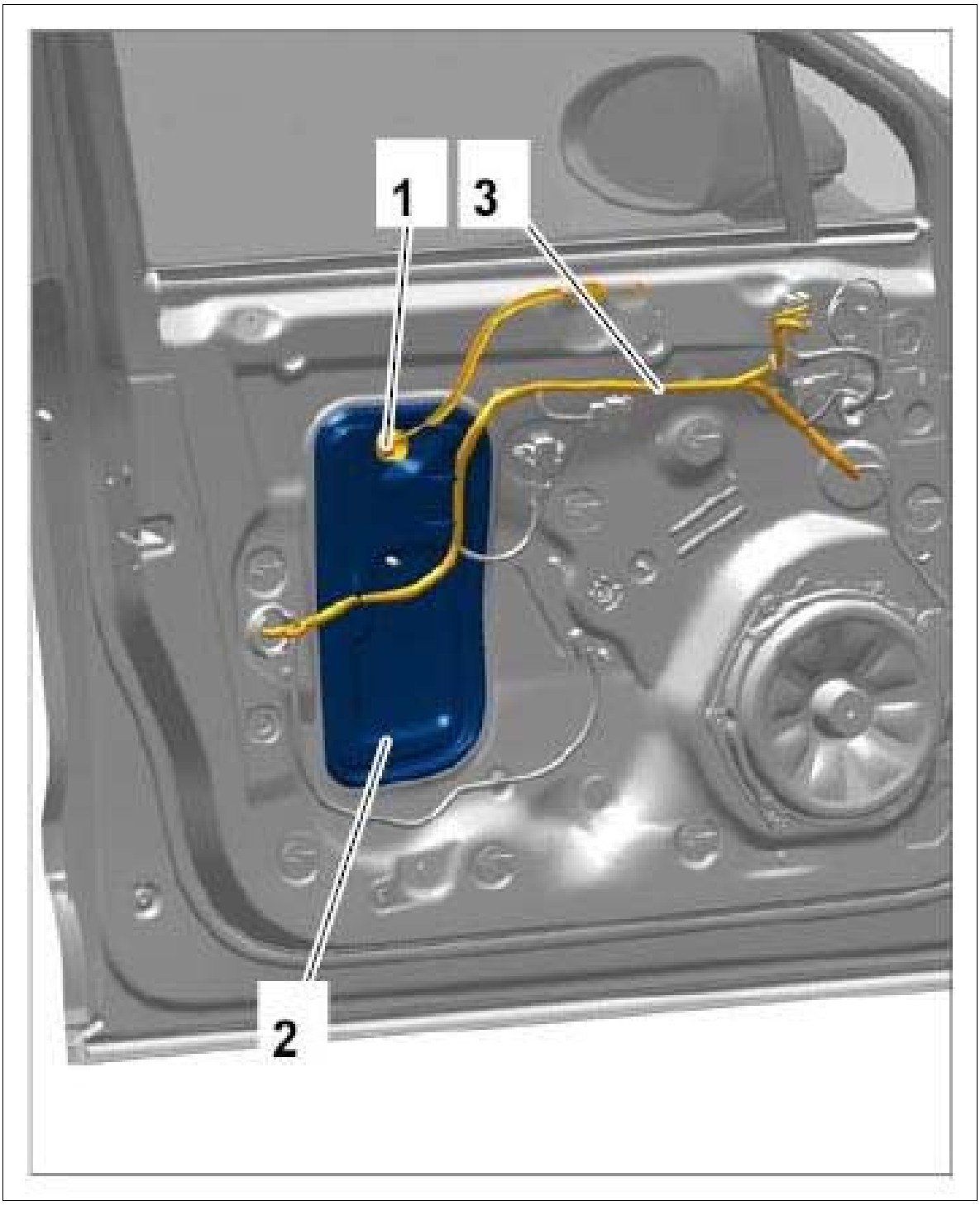

Courtesy of PORSCHE CARS NORTH AMERICA, INC.

4. Loosen and remove window frame cover from the door.

Fig 2: Identifying Window Frame Cover



Courtesy of PORSCHE CARS NORTH AMERICA, INC.

5. Slide the window down until the mountings **-4-** are accessible through the cut-outs in the door inner panel.

6. Loosen door window glass **-1-** from the relevant mounting points **-4-** on the power windows mechanism.

    1. 6.1. Actuate locking mechanism **-2-** and remove limit stop **-3-** on the power windows mechanism.

Move door window glass **-1-** down until the locking mechanism **-5-** is accessible.

Actuate locking mechanism **-5-** using a suitable tool **-arrow A-** and carefully raise the door window glass **-1- (-arrow B-)** .

2. 6.2. Pull door window glass **-1-** fully up **-arrow B-** out of the mounting points **-4-** .

Fig 3: Releasing Door Window Mounting

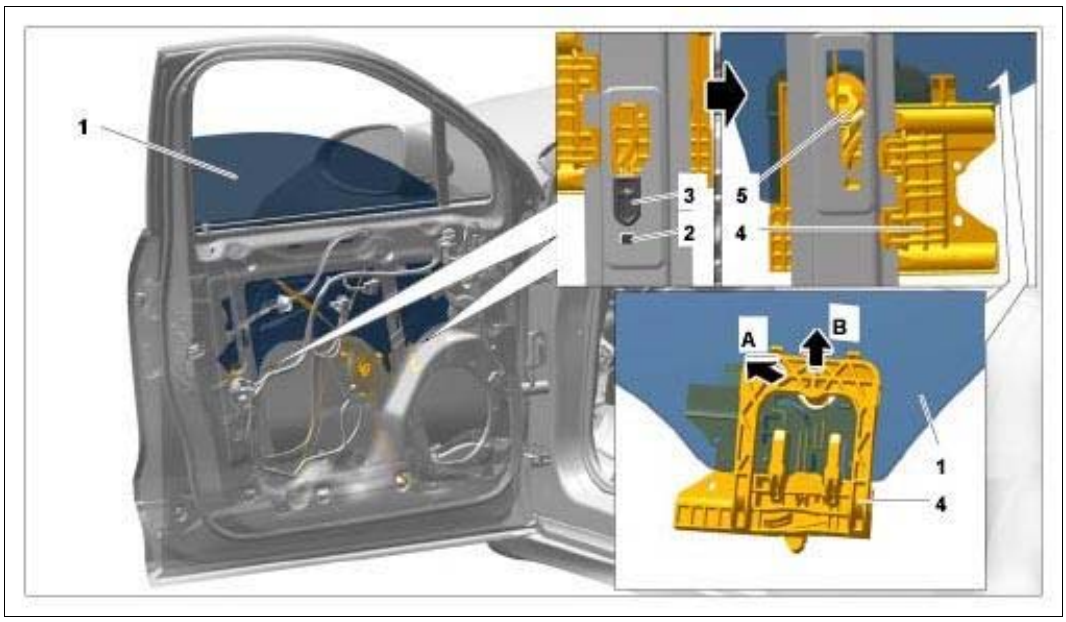

Courtesy of PORSCHE CARS NORTH AMERICA, INC.

7. Pull inner rubber seal **-1-** in the side area of the cover and at the bottom out of the door frame.

8. Carefully adjust the door window glass **-2-** until the screws **-3-** are accessible.

9. Unscrew screws **-3-** .

Fig 4: Loosening Rubber Seal And Screws

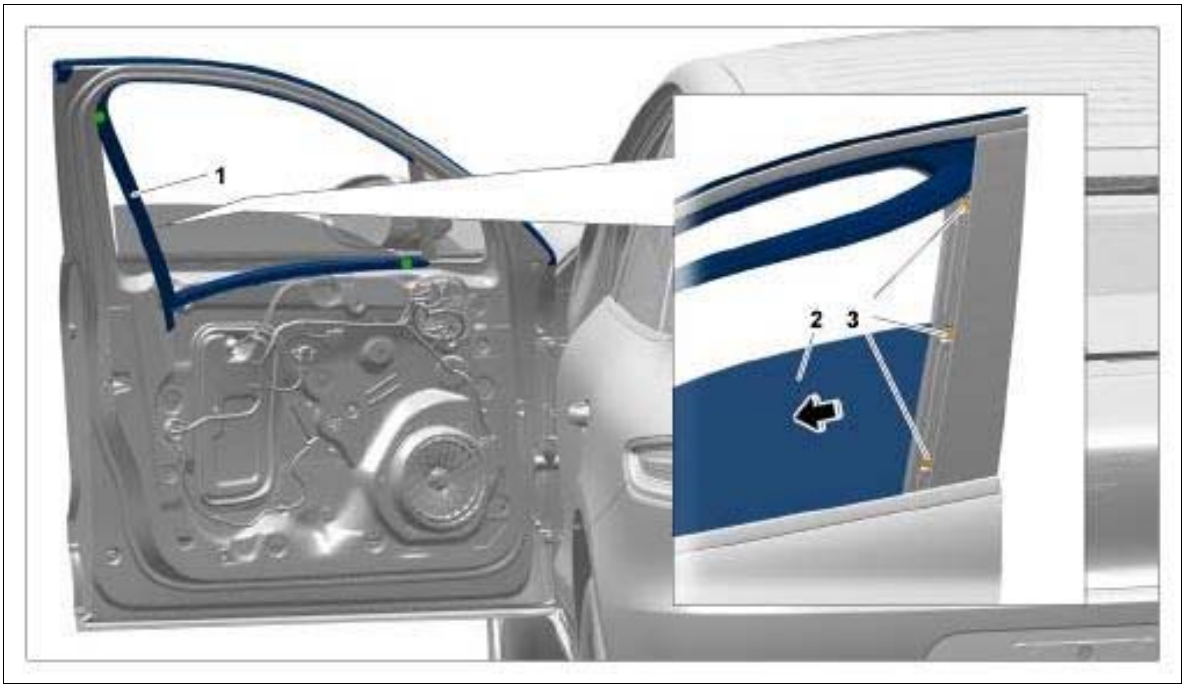

Courtesy of PORSCHE CARS NORTH AMERICA, INC.

10. Slide the cover **-1-** down slightly **-arrow A-** , detach it from the door and then guide it up and out **-arrow B-** .

Fig 5: Sliding Cover

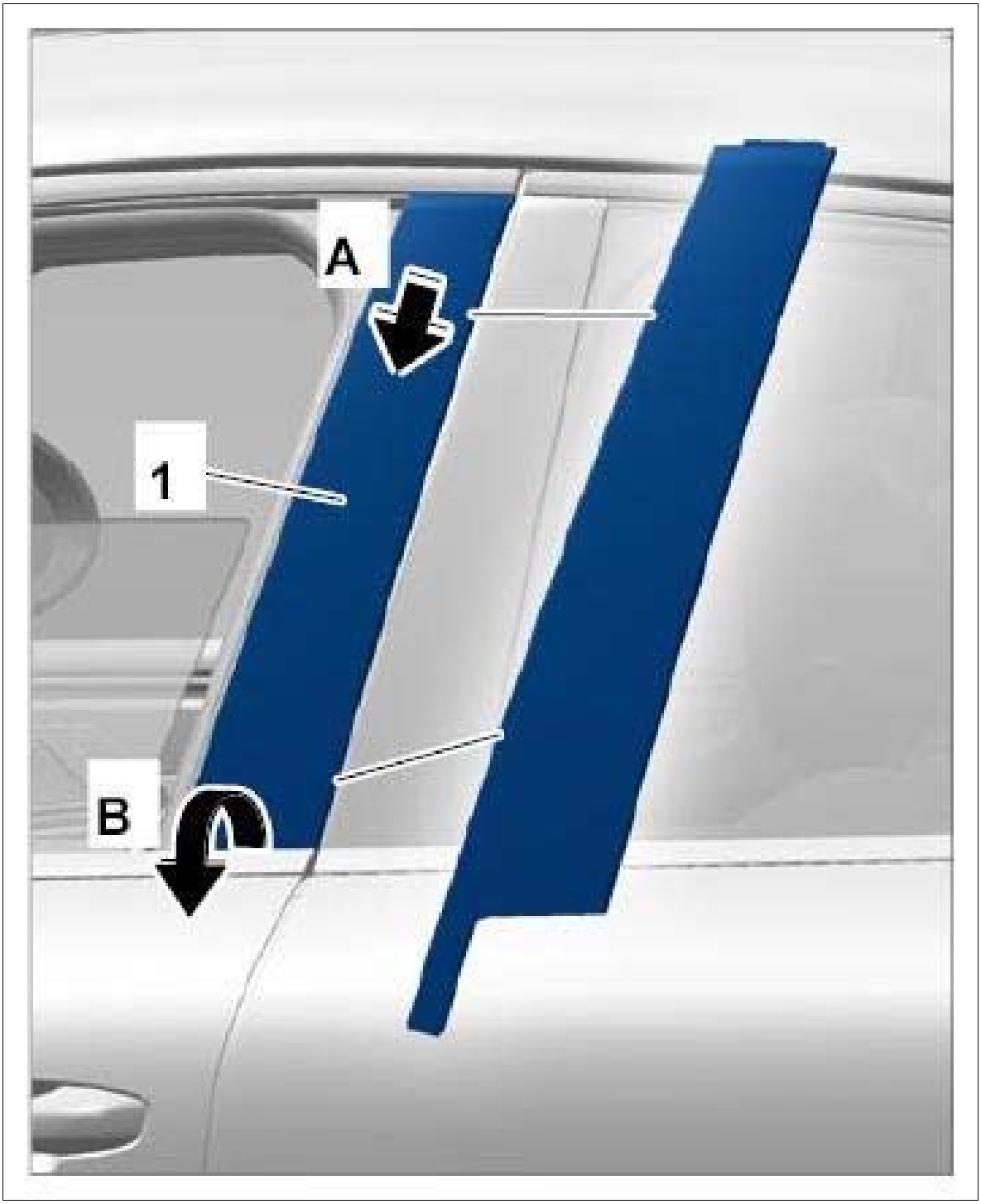

Courtesy of PORSCHE CARS NORTH AMERICA, INC.

WM 669419 REMOVING AND INSTALLING B-PILLAR COVER (ALL MODELS) > INSTALLING B-PILLAR COVER

Information

Check that all fixing clips are positioned fully and correctly.

Check that the fixing clips are not bent or broken.

Replace damaged or missing clips with new ones.

Installation is performed in reverse order. Pay particular attention to the following:

1. Tighten screws to the specified torque. **Tightening torque 2.5 Nm (2 ftlb.)**
2. Check that all rubber guides are fitted correctly.

WM 669419 REMOVING AND INSTALLING B-PILLAR COVER (ALL MODELS) > SUBSEQUENT WORK

1. Install front loudspeakers. → Installing front loudspeakers
2. Install power window motor. → Installing Power Window Motor
3. Install front door panel. → Installing front door panel

WM 669419 REMOVING AND INSTALLING C-PILLAR COVER (ALL MODELS) > TECHNICAL VALUES

Location	Description	Type	Basic value	Tolerance 1	Tolerance 2
Cover to rear of rear door		Tightening torque	2.5 Nm (2 ftlb.)		

WM 669419 REMOVING AND INSTALLING C-PILLAR COVER (ALL MODELS) > PRELIMINARY WORK

1. Remove rear door window. → Removing Rear Door Window

WM 669419 REMOVING AND INSTALLING C-PILLAR COVER (ALL MODELS) > REMOVING C-PILLAR COVER

Information

- The number of fastening screws, fixing clips, plug connections, holders and trim panels can vary depending on equipment.
- The illustrations for removing and installing the drive mechanism are shown only on one equipment variant and may differ from the actual equipment variant.
- Some steps must be carried out automatically.

- Some of the repair illustrations show only one side of the vehicle.

1. Unscrew screw **-1-** .
2. Loosen rubber seal **-2-** on the cover.
3. Unscrew screws **-3-** .

Fig 1: Loosening Rubber Seal And Screws

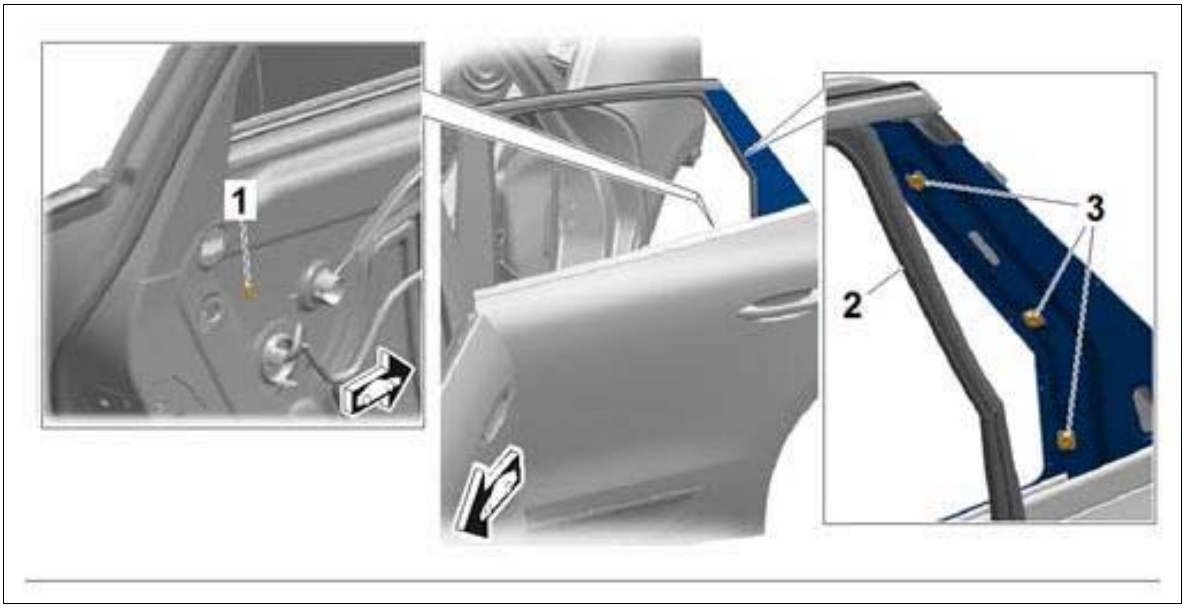

Courtesy of PORSCHE CARS NORTH AMERICA, INC.

4. Slide the cover **-1-** down slightly **-arrow A-** , detach it from the door and then guide it up and out **-arrow B-** .

Fig 2: Removing C-Pillar Cover

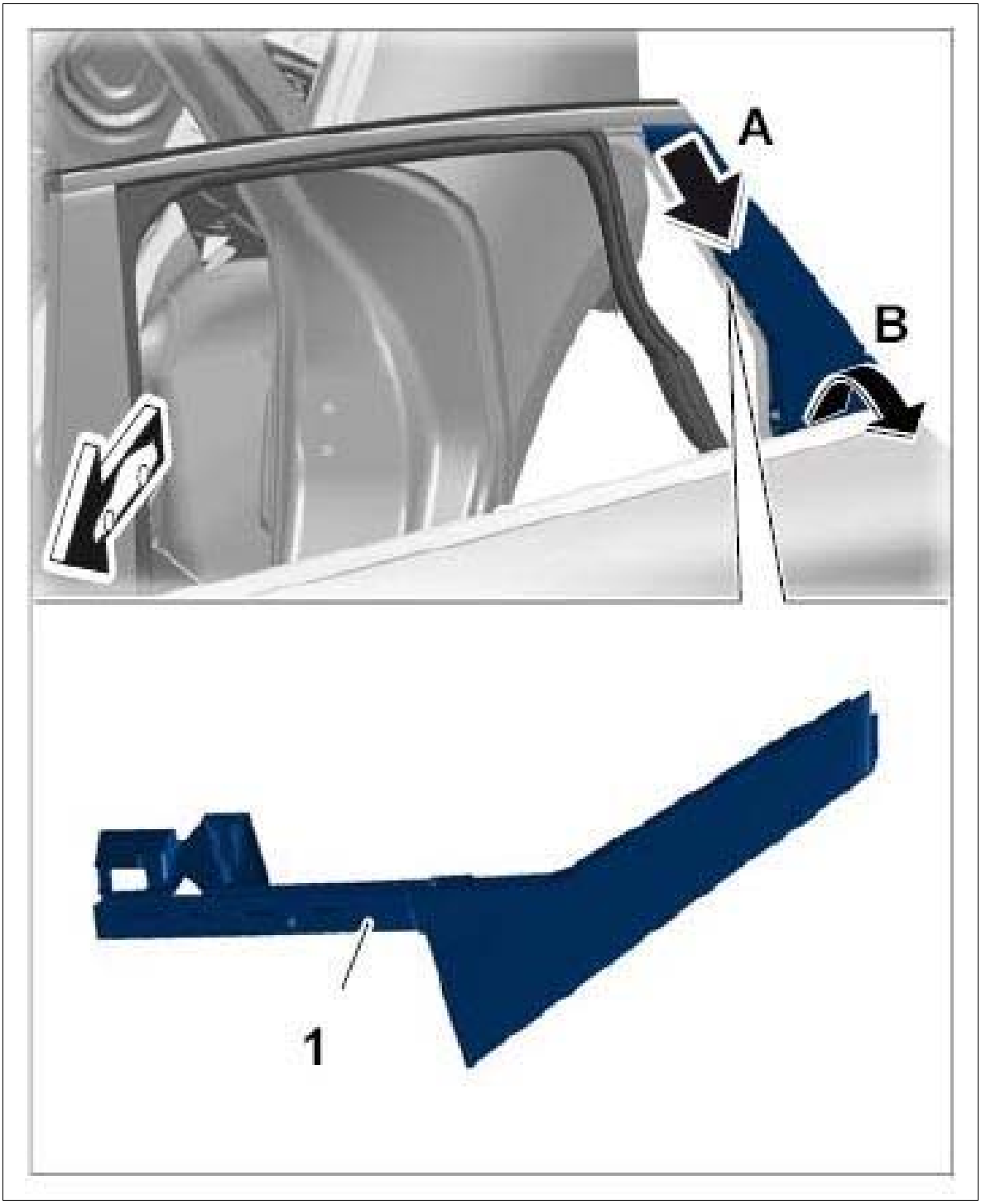

Courtesy of PORSCHE CARS NORTH AMERICA, INC.

WM 669419 REMOVING AND INSTALLING C-PILLAR COVER (ALL MODELS) > INSTALLING C-PILLAR COVER

Information

Check that all fixing clips are positioned fully and correctly.

Check that the fixing clips are not bent or broken.

Replace damaged or missing clips with new ones.

Installation is performed in reverse order. Pay particular attention to the following:

1. Tighten screws to the specified torque. **Tightening torque 2.5 Nm (2 ftlb.)**
2. Check that all rubber guides are fitted correctly.

WM 669419 REMOVING AND INSTALLING C-PILLAR COVER (ALL MODELS) > SUBSEQUENT WORK

1. Install rear door window. → Installing Rear Door Window

WM 669419 REMOVING AND INSTALLING REAR B-PILLAR COVER (ALL MODELS) > TECHNICAL VALUES

Location	Description	Type	Basic value	Tolerance 1	Tolerance 2
Cover to rear door	Tapping screw	Tightening torque	2.5 Nm (2 ftlb.)		

WM 669419 REMOVING AND INSTALLING REAR B-PILLAR COVER (ALL MODELS) > PRELIMINARY WORK

1. Remove rear door panel. → Removing rear door panel
2. Remove rear power window motor. → Removing Rear Power Window Motor

WM 669419 REMOVING AND INSTALLING REAR B-PILLAR COVER (ALL MODELS) > REMOVING REAR B-PILLAR COVER

Information

- The number of fastening screws, fixing clips, plug connections, holders and trim panels can vary depending on equipment.
- The illustrations for removing and installing the drive mechanism are shown only on one equipment variant and may differ from the actual equipment variant.
- Some steps must be carried out automatically.
- Some of the repair illustrations show only one side of the vehicle.

1. Remove window frame cover **-1-** .

Fig 1: Identifying Window Frame Cover

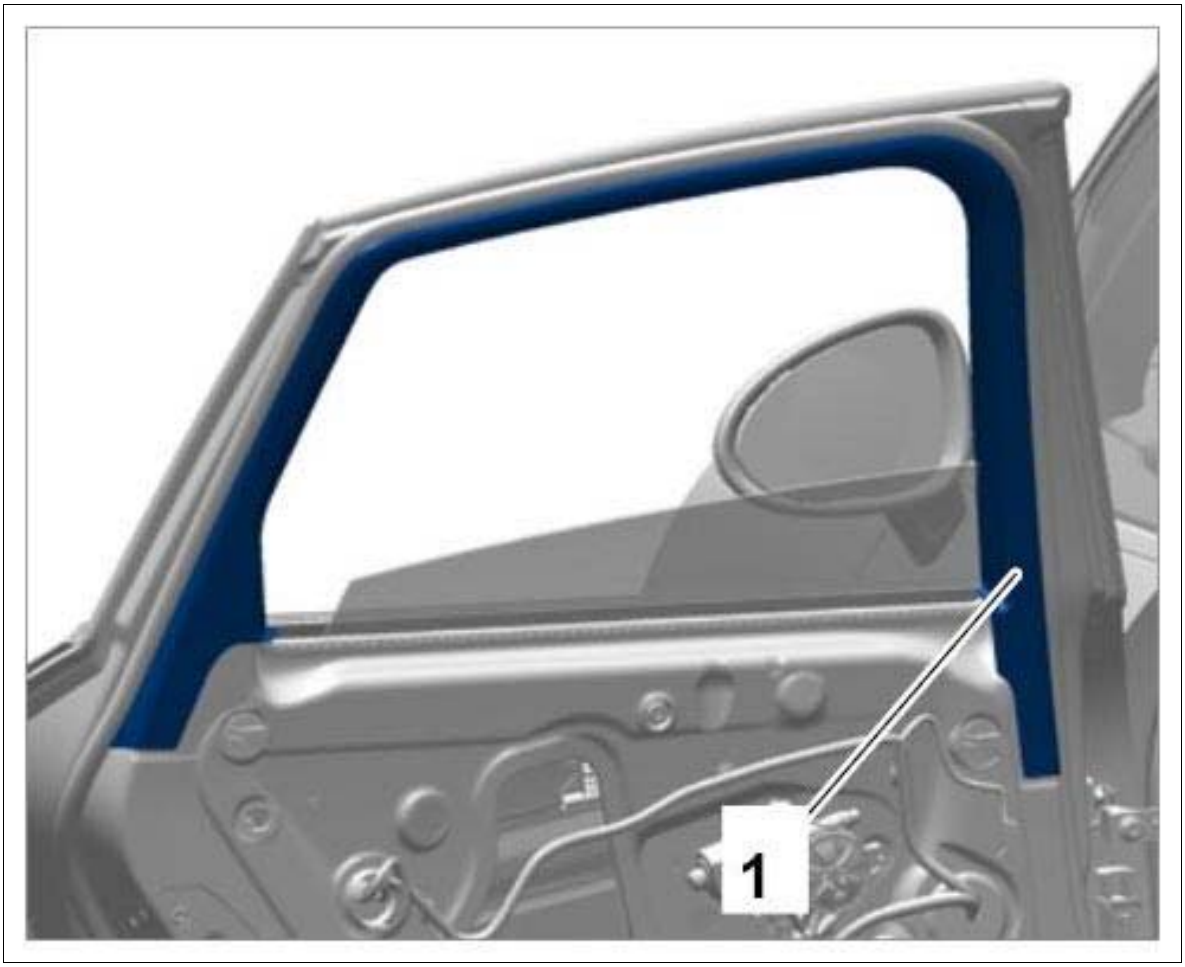

Courtesy of PORSCHE CARS NORTH AMERICA, INC.

2. Remove cover **-1-** for door inner panel.

Fig 2: Identifying Door Inner Panel Cover

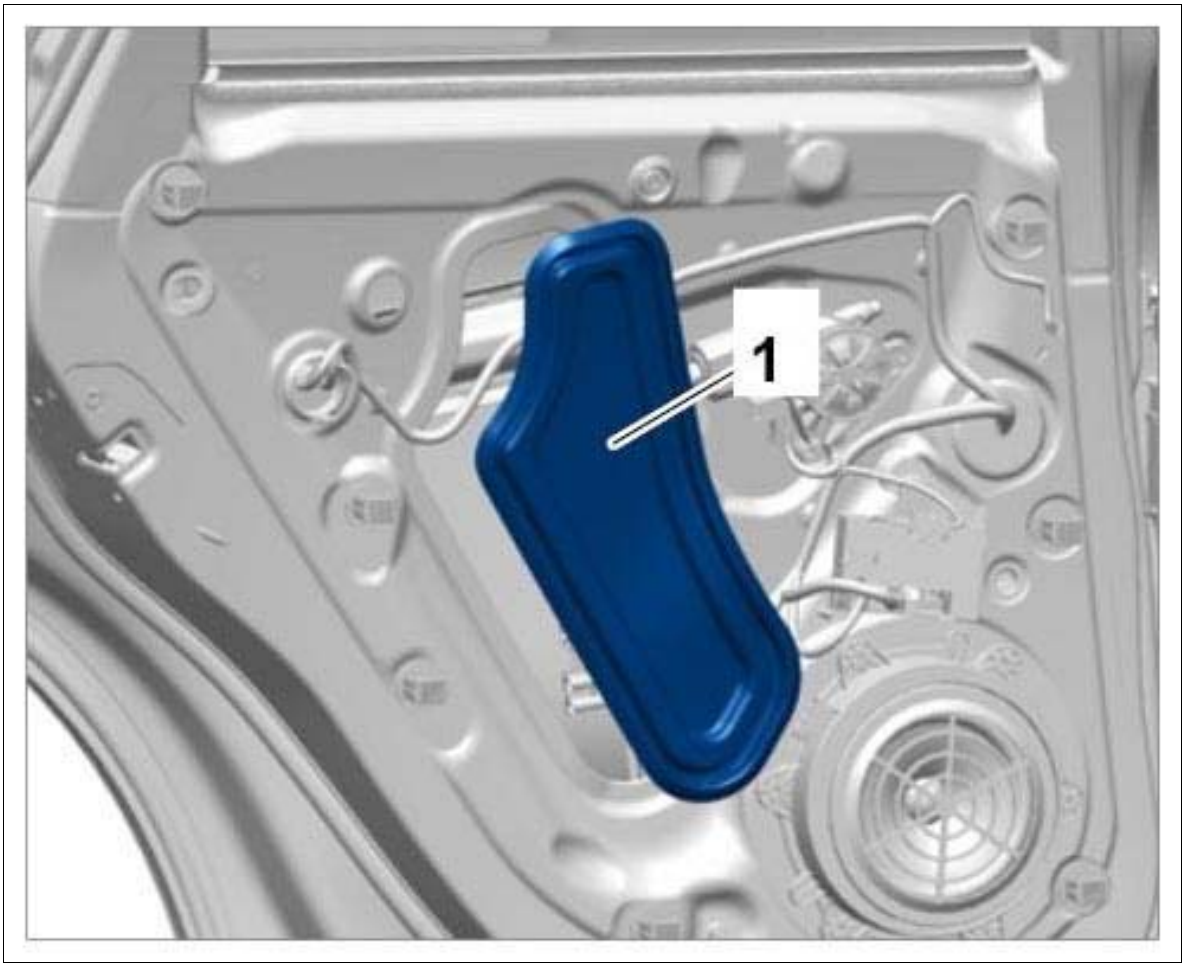

Courtesy of PORSCHE CARS NORTH AMERICA, INC.

3. Slide door window glass down until the mounting **-4-** is accessible through the door inner panel.

4. Loosen door window glass **-1-** from the mounting point **-4-** on the power windows mechanism.

    1. 4.1. Actuate locking mechanism **-2-** and remove limit stop **-3-** on the power windows mechanism.

       Move door window glass **-1-** down until the locking mechanism **-5-** is accessible.

       Actuate locking mechanism **-5-** using a suitable tool **-arrow A-** and carefully raise the door window glass **-1- (-arrow B-)** .

    2. 4.2. Pull door window glass **-1-** fully up **-arrow B-** out of the mounting point **-4-** .

Fig 3: Releasing Door Window Mounting

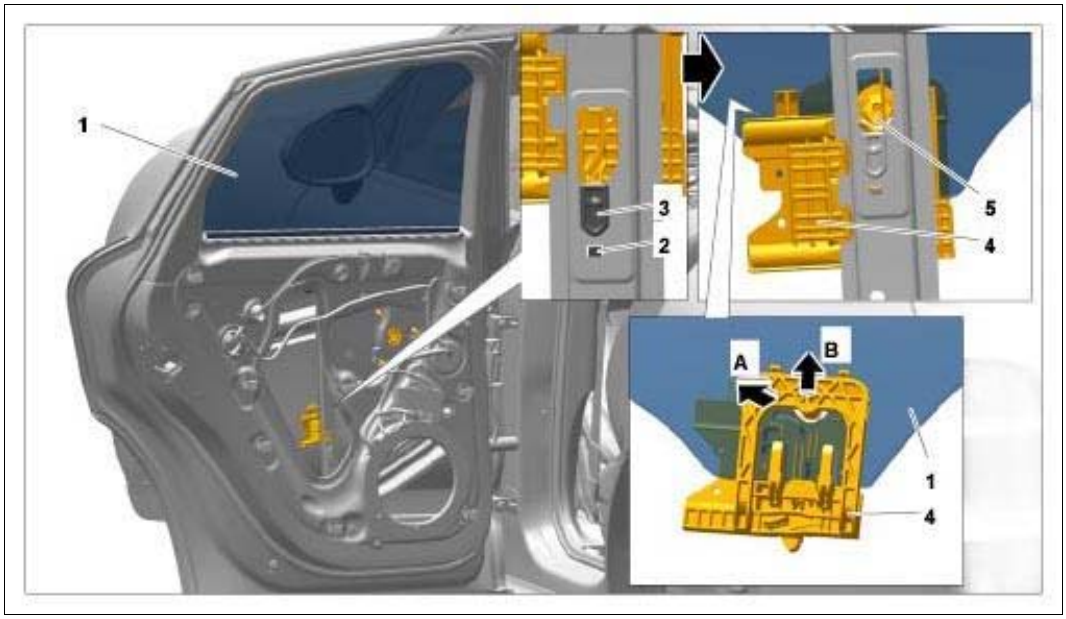

Courtesy of PORSCHE CARS NORTH AMERICA, INC.

5. Pull inner rubber seal **-1-** in the side area of the cover and at the bottom out of the door frame.
6. Carefully adjust the door window glass **-2-** until the screws **-3-** are accessible.
7. Unscrew screws **-3-** .

Fig 4: Loosening Rubber Seal And Screws

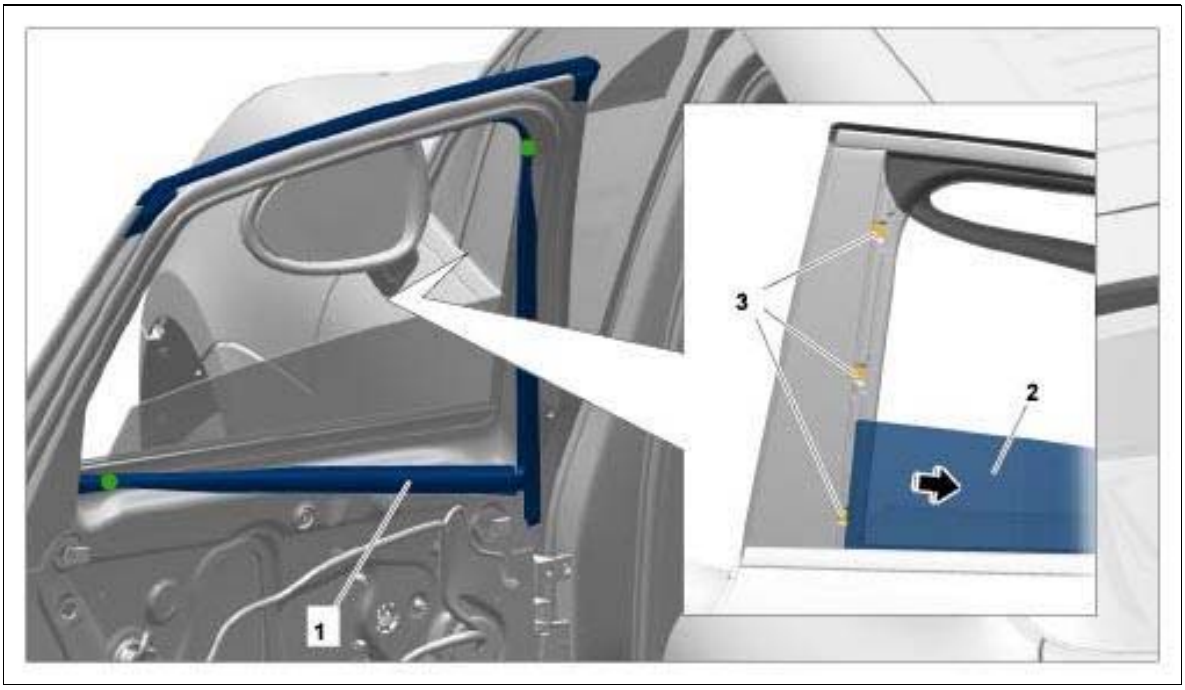

Courtesy of PORSCHE CARS NORTH AMERICA, INC.

8. Slide the cover **-1-** down slightly **-arrow A-** , detach it from the door and then guide it up and out **-arrow B-** .

Fig 5: Sliding Cover

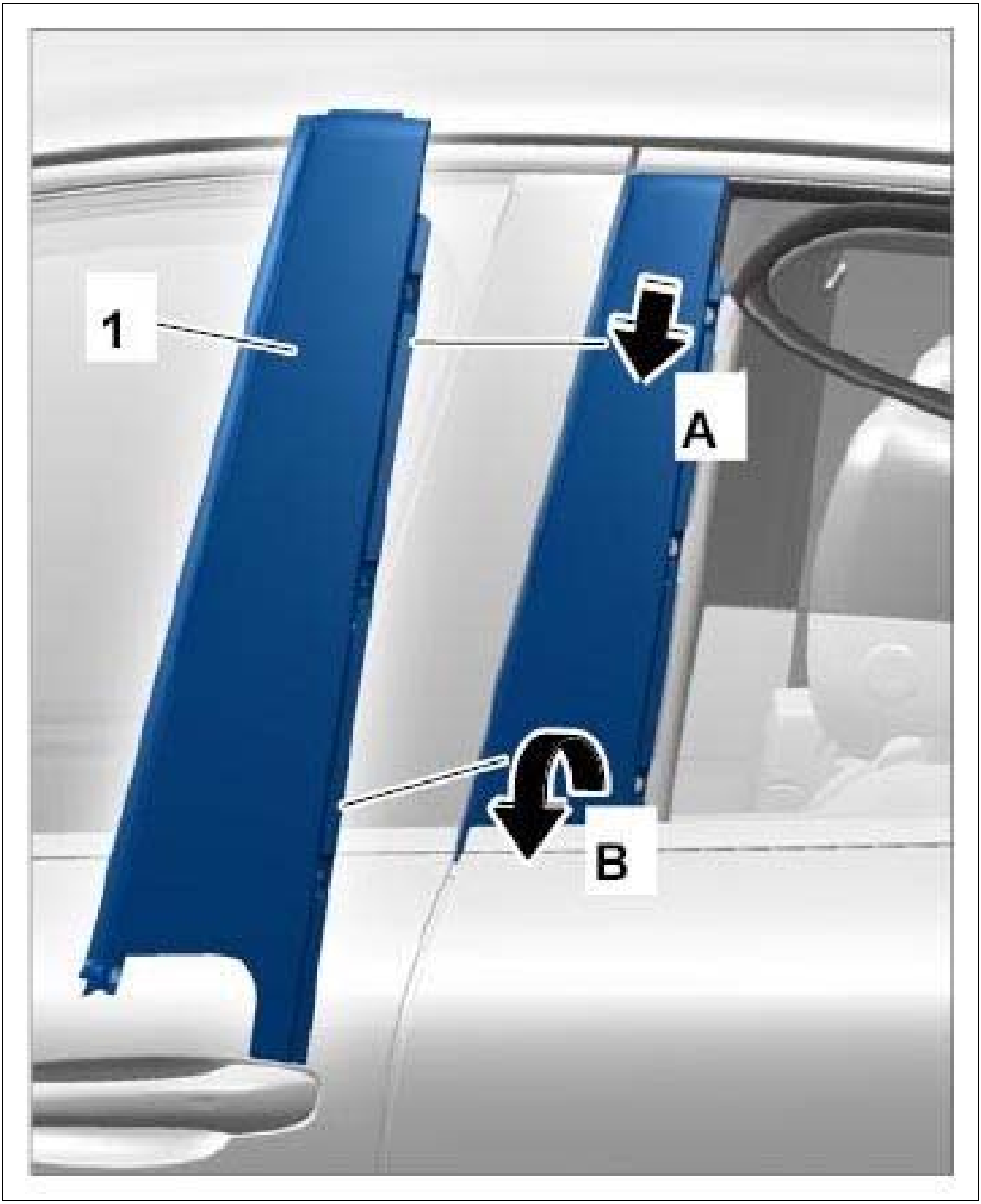

Courtesy of PORSCHE CARS NORTH AMERICA, INC.

WM 669419 REMOVING AND INSTALLING REAR B-PILLAR COVER (ALL MODELS) > INSTALLING REAR B-PILLAR COVER

Information

Check that all fixing clips are positioned fully and correctly.

Check that the fixing clips are not bent or broken.

Replace damaged or missing clips with new ones.

Installation is performed in reverse order. Pay particular attention to the following:

1. Tighten screws to the specified torque. **Tightening torque 2.5 Nm (2 ftlb.)**
2. Check that all rubber guides are fitted correctly.

WM 669419 REMOVING AND INSTALLING REAR B-PILLAR COVER (ALL MODELS) > SUBSEQUENT WORK

1. Install rear power window motor. → Installing Rear Power Window Motor
2. Install rear door panel. → Installing rear door panel

WM 669619 REMOVING AND INSTALLING TRAILER HITCH CONTROL UNIT (ALL MODELS) > TOOLS

Designation	Type	Number	Description	
PIWIS Tester II	Special tool	9818		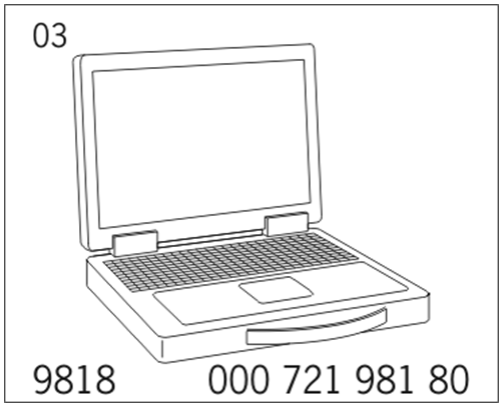

WM 669619 REMOVING AND INSTALLING TRAILER HITCH CONTROL UNIT (ALL MODELS) > PRELIMINARY WORK

1. Remove inner part of side trim panel for rear luggage compartment at the right. → Removing side trim panel for rear luggage compartment

WM 669619 REMOVING AND INSTALLING TRAILER HITCH CONTROL UNIT (ALL MODELS) > REMOVING TRAILER HITCH CONTROL UNIT

NOTE: Voltage peaks

- *Risk of damage to load or to the control unit*

→ Remove the ignition key and switch off load before disconnecting or removing load.

1. Switch off ignition and pull remote control out of ignition lock.
2. Disengage retaining clips **-a-** and remove trailer hitch control unit **-1-** from the holder **-2-** .

Fig 1: Loosening Trailer Hitch Control Unit From Holder

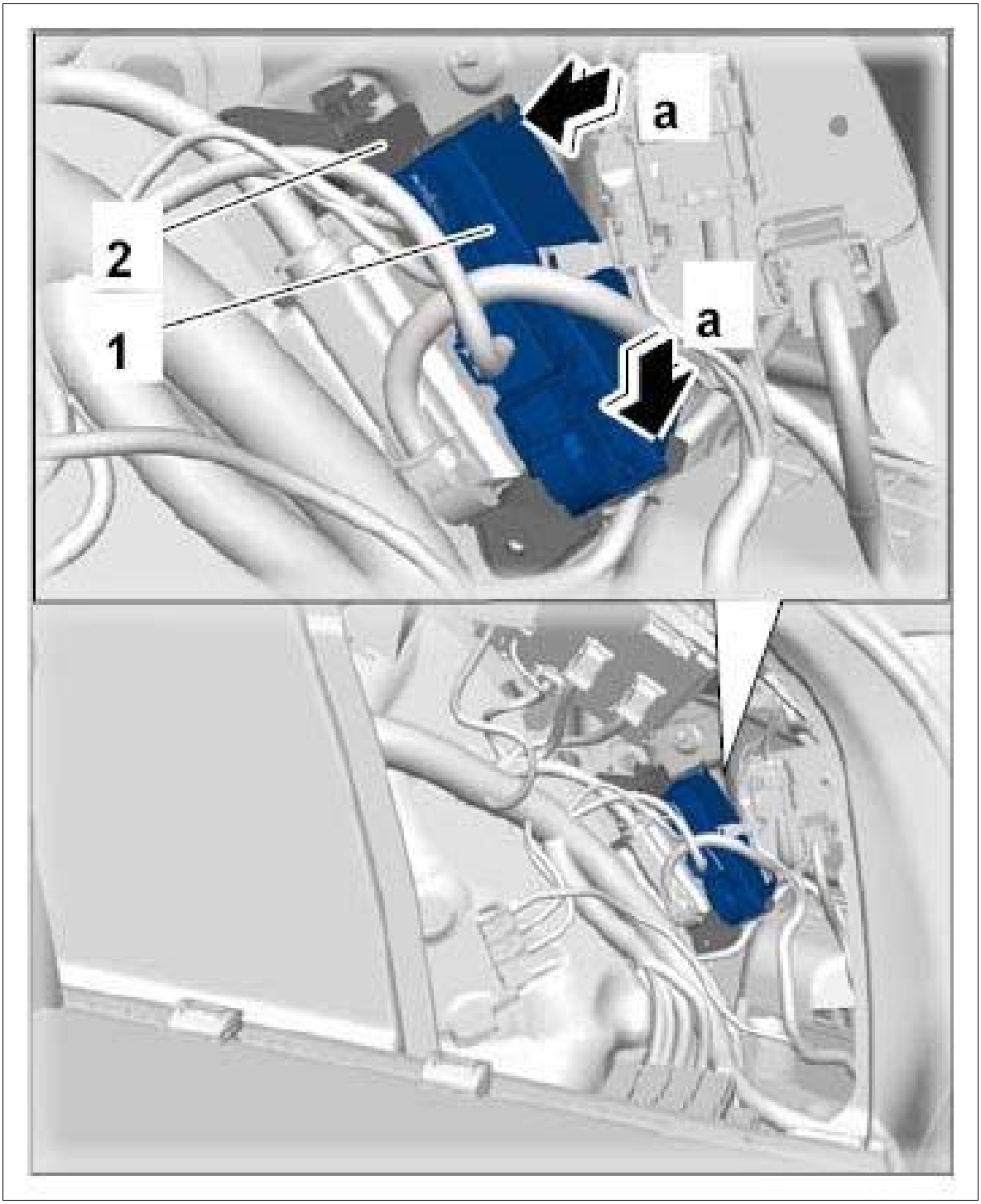

Courtesy of PORSCHE CARS NORTH AMERICA, INC.

Information

Always comply with the regulations for handling ESD-sensitive components!

1. Assembly work may only be carried out if the mechanic is wearing the working clothes and shoes approved by Porsche.
2. The new part must only be removed from the ESD (electrostatic discharge) protective

packaging just before installation and at the position at which the part is to be installed.

3. Never touch the electric pins and plug contacts.

3. Disconnect electric plug connections.

1. 3.1. Press release tabs **-a-** and disconnect electric plug connections **-1-** from the trailer hitch control unit **-2-** .

2. 3.2. Press release tab **-b-** , swivel clip **-3-** aside and disconnect electric plug connection **-4-** .

Fig 2: Disconnecting Electric Plug Connections

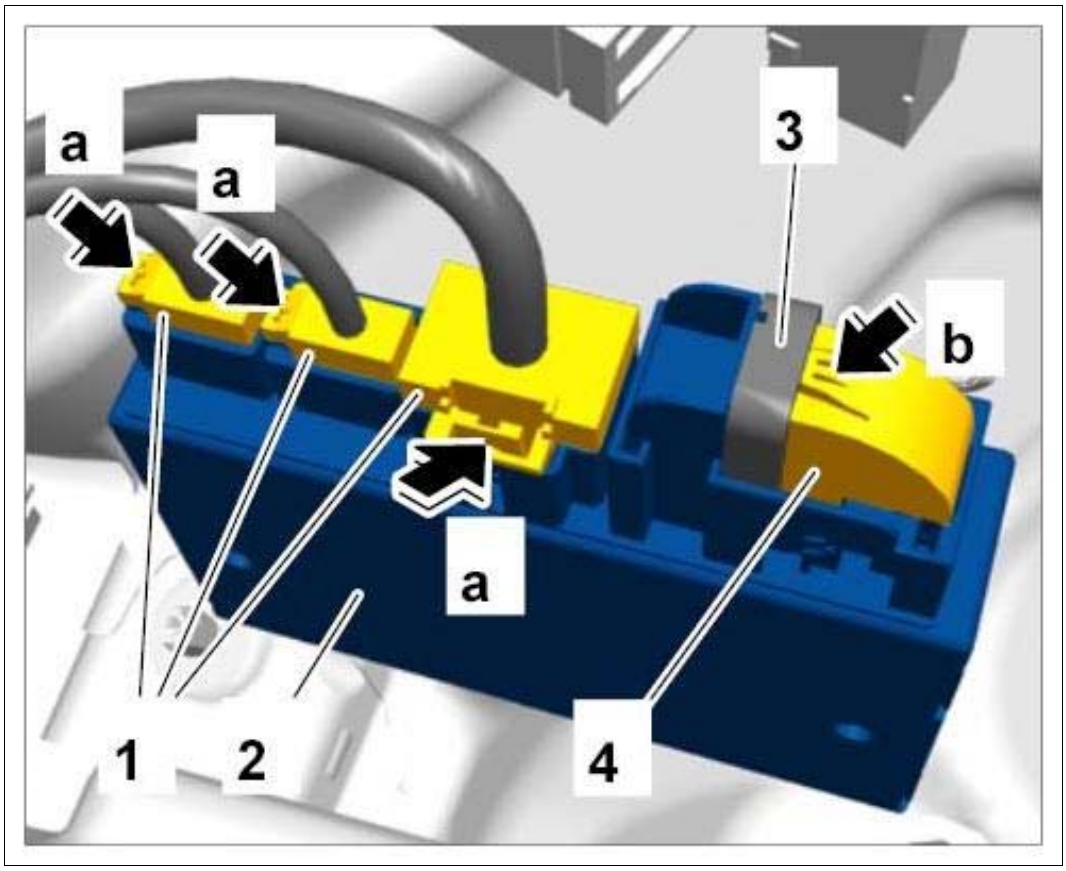

Courtesy of PORSCHE CARS NORTH AMERICA, INC.

WM 669619 REMOVING AND INSTALLING TRAILER HITCH CONTROL UNIT (ALL MODELS) > INSTALLING TRAILER HITCH CONTROL UNIT

Information

Always comply with the regulations for handling ESD-sensitive components!

- Assembly work may only be carried out if the mechanic is wearing the working clothes and shoes approved by Porsche.
- The new part must only be removed from the ESD (electrostatic discharge) protective packaging just before installation and at the position at which the part is to be installed.

- Never touch the electric pins and plug contacts.

1. Installation is performed in reverse order to removal.

WM 669619 REMOVING AND INSTALLING TRAILER HITCH CONTROL UNIT (ALL MODELS) > SUBSEQUENT WORK

1. Install inner part of side trim panel for rear luggage compartment at the right. → Installing side trim panel for rear luggage compartment
2. If the trailer hitch control unit was replaced, teach the new trailer hitch control unit to suit the vehicle using **PIWIS Tester II 9818** . → 669655 REPLACING TRAILER HITCH CONTROL UNIT

WM 669655 REPLACING TRAILER HITCH CONTROL UNIT (ALL MODELS) > TOOLS

Designation	Type	Number	Description	
PIWIS Tester II	Special tool	9818		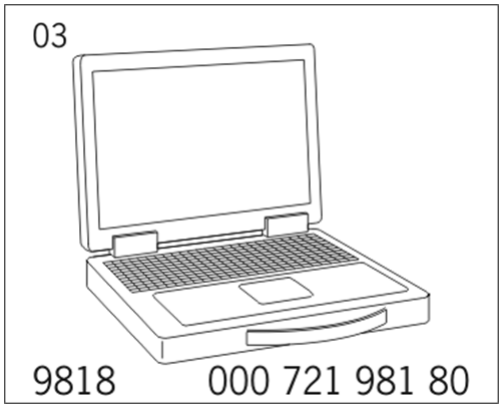

WM 669655 REPLACING TRAILER HITCH CONTROL UNIT (ALL MODELS) > TECHNICAL VALUES

Location	Description	Type	Basic value	Tolerance 1	Tolerance 2
Current rating		Nominal value	40 A		

WM 669655 REPLACING TRAILER HITCH CONTROL UNIT (ALL MODELS) > PRELIMINARY WORK

1. Replace trailer hitch control unit. → 669619 REMOVING AND INSTALLING TRAILER HITCH CONTROL UNIT

WM 669655 REPLACING TRAILER HITCH CONTROL UNIT (ALL MODELS) > REPLACING TRAILER HITCH CONTROL UNIT

NOTE: Voltage drop

- *Risk of irreparable damage to control unit*
- *Risk of damage to control unit*
- *Fault entries in the control unit*
- *Coding in the control unit is aborted*
- *Malfunctions in control unit, even during programming*

→ Prior to disconnecting the control unit, switch off ignition and remove ignition key.

→ Ensure that the power supply is not interrupted during programming.

→ Connect a battery charger with a current rating of at least → **Nominal value: 40 A** to the vehicle battery.

Information

The **PIWIS Tester II 9818** instructions take precedence since the description may be different with later Tester releases.

The procedure described here has been structured in general terms. Different text or additional information may appear in **PIWIS Tester II 9818** .

1. **PIWIS Tester II 9818** must be connected to the vehicle before starting **PIWIS Tester II 9818** . Switch on ignition.
2. Start the diagnostic application and select the required vehicle type.
3. Select the **Trailer hitch (AHK)** control unit in the **overview** .
4. **Codings/adaptations** must now be selected. Then press [F12] to continue.
5. Wait for confirmation that **coding was completed successfully** . Then press [F12] to continue.
6. **Drive links/checks** must now be selected.
7. **Select Initialisation of trailer hitch control unit.**
8. Select the status **All adoption values** and press [F8] to start the standardisation process.
9. Erase the fault memory and switch off ignition.
10. **PIWIS Tester II 9818** must now be disconnected from the vehicle.
11. Disconnect the battery charger from the vehicle.

WM 680519 REMOVING AND INSTALLING FRONT INNER DOOR SILL TRIM (MACAN, MACAN S, MACAN TURBO) > TECHNICAL VALUES

Location	Description	Type	Basic value	Tolerance 1	Tolerance 2
Front door sill trim to body		Tightening torque	2.5 Nm (2 ftlb.)		

WM 680519 REMOVING AND INSTALLING FRONT INNER DOOR SILL TRIM (MACAN, MACAN S, MACAN TURBO) > PRELIMINARY WORK

1. Remove release handle for front lid.
2. Remove front left side-section trim panel. → 702419 REMOVING AND INSTALLING FRONT SIDE-SECTION TRIM PANEL .

WM 680519 REMOVING AND INSTALLING FRONT INNER DOOR SILL TRIM (MACAN, MACAN S, MACAN TURBO) > REMOVING FRONT INNER DOOR SILL TRIM

Information

- The number of fastening screws, fixing clips, plug connections, holders and trim panels can vary depending on equipment.
- The illustrations for removing and installing the drive mechanism are shown only on one equipment variant and may differ from the actual equipment variant.
- Some steps must be carried out automatically.
- Some of the repair illustrations show only one side of the vehicle.

1. Unscrew fastening screw **-3-** .
2. Lift up door sill trim **-1-** in the rear area **-arrow-** and unclip it.
3. Unclip fixing clips **-4-** on the side member and lift door sill trim **-1-** up slightly.
4. Unclip fixing clips **-5-** on the body.
5. Guide out door sill trim **-1-** at the release mechanism **-2-** and footrest and remove it.

Fig 1: Removing Front Inner Door Sill Trim



Courtesy of PORSCHE CARS NORTH AMERICA, INC.

WM 680519 REMOVING AND INSTALLING FRONT INNER DOOR SILL TRIM (MACAN, MACAN S, MACAN TURBO) > INSTALLING FRONT INNER DOOR SILL TRIM

Installation is performed in reverse order. Pay particular attention to the following:

1. Tighten fastening screw to the specified torque. **Tightening torque: 2.5 Nm (2 ftlb.)**
2. Place rubber door seal over the door sill trim.

WM 680519 REMOVING AND INSTALLING FRONT INNER DOOR SILL TRIM (MACAN, MACAN S, MACAN TURBO) > SUBSEQUENT WORK

1. Install front left side-section trim panel. → INSTALLING FRONT SIDE-SECTION TRIM PANEL .
2. Install release handle for front lid.

WM 680519 REMOVING AND INSTALLING REAR INNER DOOR SILL TRIM (MACAN, MACAN S, MACAN TURBO) > TECHNICAL VALUES

Location	Description	Type	Basic value	Tolerance 1	Tolerance 2
Rear door sill trim to body		Tightening torque	5.6 Nm (4 ftlb.)		

WM 680519 REMOVING AND INSTALLING REAR INNER DOOR SILL TRIM (MACAN, MACAN S, MACAN TURBO) > PRELIMINARY WORK

1. Remove rear seat airbag. → 696419 REMOVING AND INSTALLING REAR SEAT AIRBAG
2. Remove rear backrest. → 724719 REMOVING AND INSTALLING REAR BACKREST
3. Remove side trim panel for rear luggage compartment. → 700319 REMOVING AND INSTALLING SIDE TRIM PANEL FOR REAR LUGGAGE COMPARTMENT
4. Remove lower part of B-pillar trim panel. → 706719 REMOVING AND INSTALLING LOWER PART OF B-PILLAR TRIM PANEL

WM 680519 REMOVING AND INSTALLING REAR INNER DOOR SILL TRIM (MACAN, MACAN S, MACAN TURBO) > REMOVING REAR INNER DOOR SILL TRIM

Information

- The number of fastening screws, fixing clips, plug connections, holders and trim panels can vary depending on equipment.
- The illustrations for removing and installing the drive mechanism are shown only on one equipment variant and may differ from the actual equipment variant.
- Some steps must be carried out automatically.
- Some of the repair illustrations show only one side of the vehicle.

1. Unclip cover **-1-** and remove it.
2. Unscrew fastening screw **-2-** .

Fig 1: Removing Rear Door Sill Trim Cover



Courtesy of PORSCHE CARS NORTH AMERICA, INC.

3. Unclip door sill trim **-1-** at all fastening points and remove it.

Fig 2: Removing Rear Door Sill Trim



Courtesy of PORSCHE CARS NORTH AMERICA, INC.

WM 680519 REMOVING AND INSTALLING REAR INNER DOOR SILL TRIM (MACAN,

MACAN S, MACAN TURBO) > INSTALLING REAR INNER DOOR SILL TRIM

Information

Check that all fixing clips are positioned fully and correctly.

Check that the fixing clips are not bent or broken.

Replace damaged or missing clips with new ones.

Installation is performed in reverse order. Pay particular attention to the following:

1. Place rubber door seal over trim panel.
2. Tighten fastening screw to the specified torque. **Tightening torque: 5.6 Nm (4 ftlb.)**

WM 680519 REMOVING AND INSTALLING REAR INNER DOOR SILL TRIM (MACAN, MACAN S, MACAN TURBO) > SUBSEQUENT WORK

1. Install lower part of B-pillar trim panel. → INSTALLING LOWER PART OF B-PILLAR TRIM PANEL .
2. Install side trim panel for rear luggage compartment. → INSTALLING SIDE TRIM PANEL FOR REAR LUGGAGE COMPARTMENT .
3. Install rear backrest. → INSTALLING REAR BACKREST .
4. Install rear seat airbag. → INSTALLING REAR SIDE AIRBAG .

WM 681119 REMOVING AND INSTALLING GLOVE COMPARTMENT LOCK (MACAN, MACAN S, MACAN TURBO) > REMOVING GLOVE COMPARTMENT LOCK

Information

- The number of fastening screws, fixing clips, plug connections, holders and trim panels can vary depending on equipment.
- The illustrations for removing and installing the drive mechanism are shown only on one equipment variant and may differ from the actual equipment variant.
- Some steps must be carried out automatically.
- Some of the repair illustrations show only one side of the vehicle.

1. Move passenger seat to the rearmost position.
2. Remove key bit **-1-** from the ignition key and insert it into the lock cylinder **-2-** .
3. Press and hold the release handle **-3-** .
4. Pull out safety clip **-4-** .

5. Remove lock cylinder **-2-** by pulling it forward.

    1. 5.1. Push the lock cylinder **-2-** forward from the back using a screwdriver and remove it.

    Fig 1: Removing Glove Compartment Lock

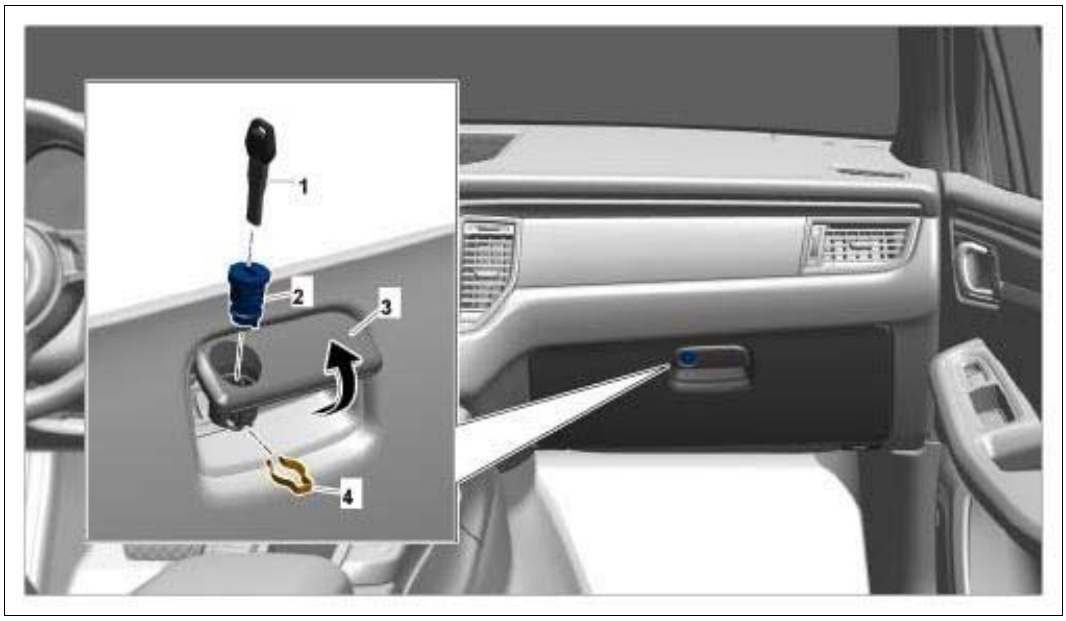

Courtesy of PORSCHE CARS NORTH AMERICA, INC.

WM 681119 REMOVING AND INSTALLING GLOVE COMPARTMENT LOCK (MACAN, MACAN S, MACAN TURBO) > INSTALLING GLOVE COMPARTMENT LOCK

1. Press and hold the release handle.
2. Insert safety clip into cut-out.
3. Insert lock cylinder into the cut-out and engage by turning it.
4. Checking that the lock is working properly.
5. Pull off key bit and fit on the ignition key.
6. Move passenger seat into its initial position.

WM 681419 REMOVING AND INSTALLING CENTER CONSOLE TRIM (MACAN, MACAN S, MACAN TURBO) > REMOVING CENTER CONSOLE TRIM

Information

- The number of fastening screws, fixing clips, plug connections, holders and trim panels can vary depending on equipment.
- The illustrations for removing and installing the drive mechanism are shown only on one equipment

variant and may differ from the actual equipment variant.

- Some steps must be carried out automatically.
- Some of the repair illustrations show only one side of the vehicle.

1. Move front seats to the rearmost position.
2. Pull up trim **-1-** in the rear area and unclip it on the center console.
3. Unclip and remove trim **-1-** at the side of the center console.

Fig 1: Removing Center Console Trim

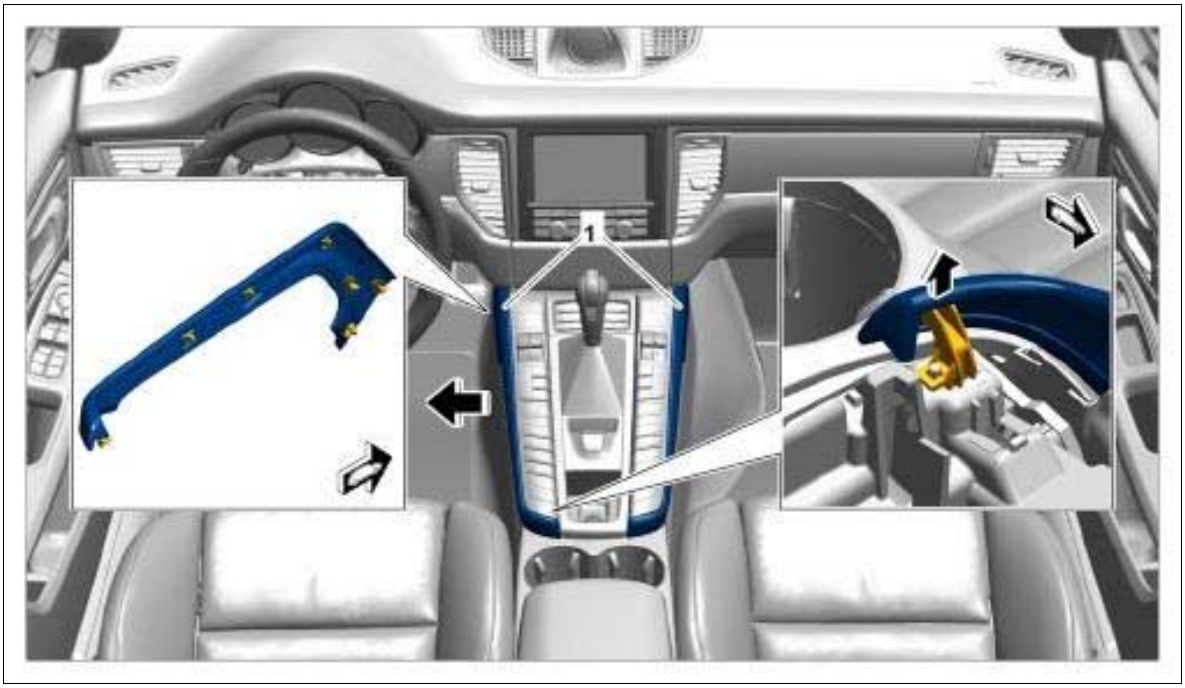

Courtesy of PORSCHE CARS NORTH AMERICA, INC.

WM 681419 REMOVING AND INSTALLING CENTER CONSOLE TRIM (MACAN, MACAN S, MACAN TURBO) > INSTALLING CENTER CONSOLE TRIM

Information

Check that all fixing clips are positioned fully and correctly.

Check that the fixing clips are not bent or broken.

Replace damaged or missing clips with new ones.

Installation is performed in reverse order.

WM 681519 REMOVING AND INSTALLING GLOVE COMPARTMENT (MACAN, MACAN S, MACAN TURBO) > TECHNICAL VALUES

Location	Description	Type	Basic value	Tolerance 1	Tolerance 2
Glove compartment to dashboard		Tightening torque	3 Nm (2 ftlb.)		

WM 681519 REMOVING AND INSTALLING GLOVE COMPARTMENT (MACAN, MACAN S, MACAN TURBO) > PRELIMINARY WORK

1. Remove dashboard molding on passenger's side. → 705819 REMOVING AND INSTALLING DASHBOARD MOLDING ON PASSENGER'S SIDE
2. Remove outer dashboard trim panel at the right. → 701619 REMOVING AND INSTALLING OUTER DASHBOARD TRIM PANEL
3. Remove dashboard trim panel. → 701619 REMOVING AND INSTALLING DASHBOARD TRIM PANEL

WM 681519 REMOVING AND INSTALLING GLOVE COMPARTMENT (MACAN, MACAN S, MACAN TURBO) > REMOVING GLOVE COMPARTMENT

Information

- The number of fastening screws, fixing clips, plug connections, holders and trim panels can vary depending on equipment.
- The illustrations for removing and installing the drive mechanism are shown only on one equipment variant and may differ from the actual equipment variant.
- Some steps must be carried out automatically.
- Some of the repair illustrations show only one side of the vehicle.

1. Remove ground cable for the battery. → 270619 REMOVING AND INSTALLING BATTERY
2. Unscrew bottom fastening screws **-1-** .
3. Unscrew fastening screw **-2-** at the sides.
4. Unscrew top fastening screws **-4-** .
5. Open glove compartment and unscrew fastening screws **-3-** .

Fig 1: Locating Glove Compartment Fastening Screws

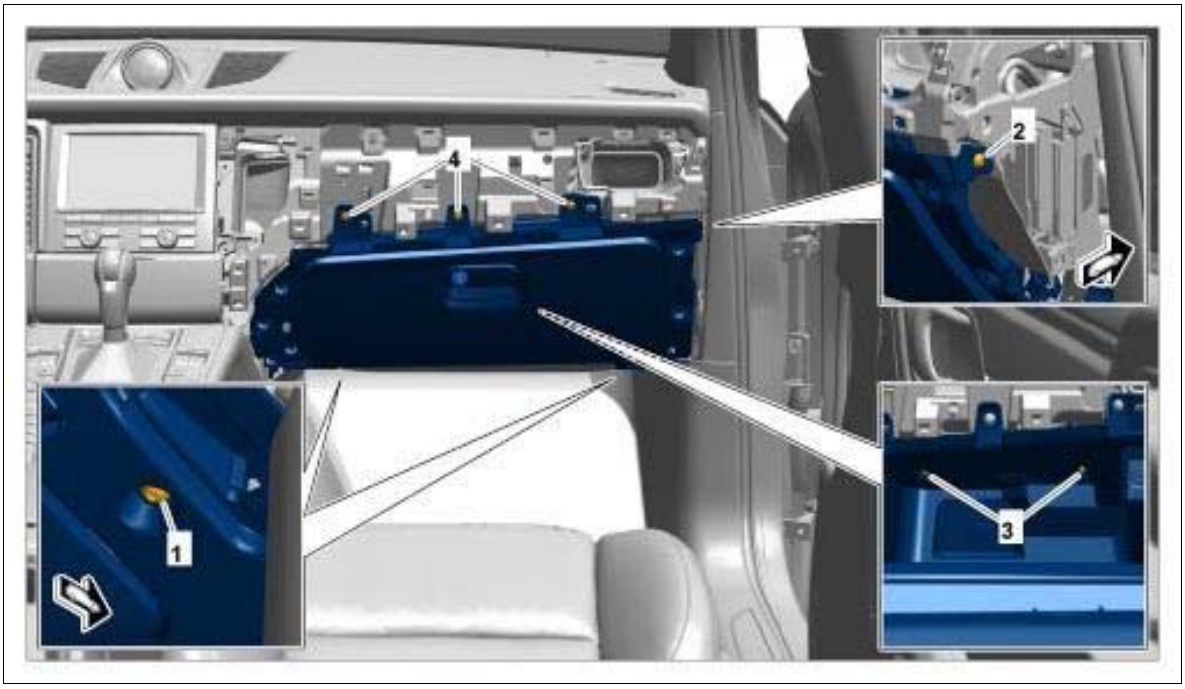

Courtesy of PORSCHE CARS NORTH AMERICA, INC.

6. Pull glove compartment **-1-** forward and remove from the dashboard.
7. Release and disconnect electric plug connection **-2-** .
8. Remove glove compartment **-1-** .

Fig 2: Removing Glove Compartment

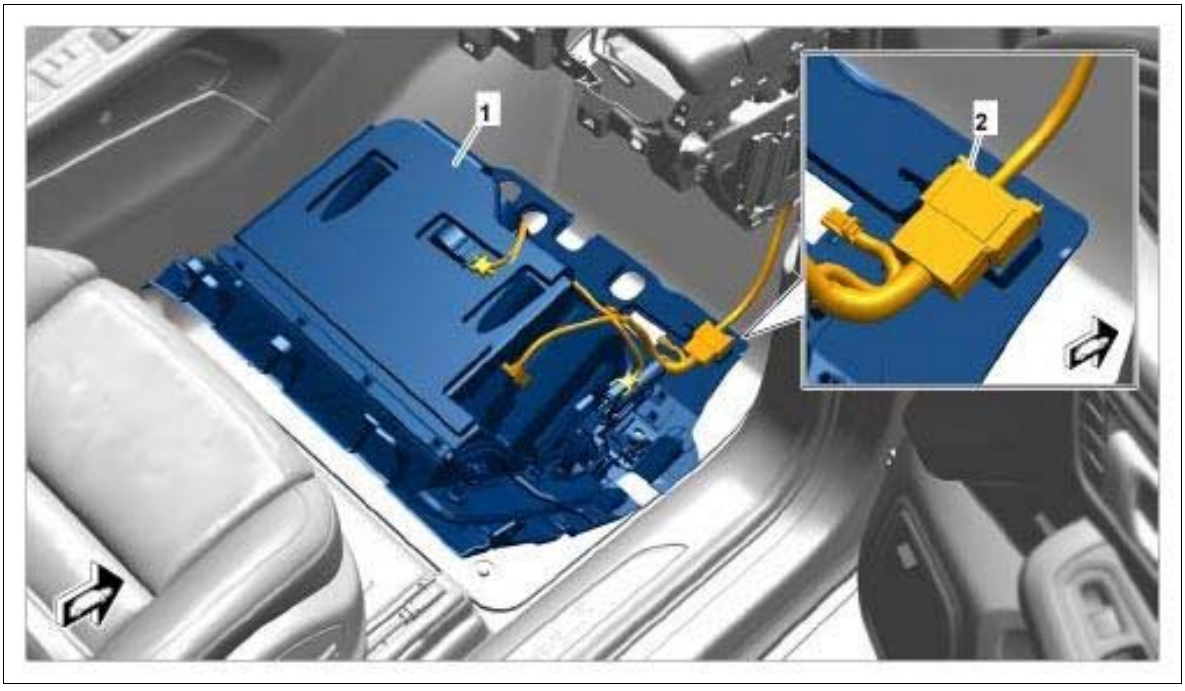

Courtesy of PORSCHE CARS NORTH AMERICA, INC.

WM 681519 REMOVING AND INSTALLING GLOVE COMPARTMENT (MACAN, MACAN S, MACAN TURBO) > INSTALLING GLOVE COMPARTMENT

Installation is performed in reverse order. Pay particular attention to the following:

1. Tighten fastening screws to the specified torque. **Tightening torque: 3 Nm (2 ftlb.)**

WM 681519 REMOVING AND INSTALLING GLOVE COMPARTMENT (MACAN, MACAN S, MACAN TURBO) > SUBSEQUENT WORK

1. Install dashboard trim panel. → INSTALLING DASHBOARD TRIM PANEL .
2. Install outer dashboard trim panel. → REMOVING DASHBOARD TRIM PANEL
3. Install dashboard molding on passenger's side. → INSTALLING DASHBOARD MOLDING ON PASSENGER'S SIDE .

WM 681619 REMOVING AND INSTALLING ODDMENTS TRAY (MACAN, MACAN S, MACAN TURBO) > PRELIMINARY WORK

1. Remove center console trims. → 681419 REMOVING AND INSTALLING CENTER CONSOLE TRIM .
2. Remove upper part of center console cover. → 681919 REMOVING AND INSTALLING UPPER PART OF CENTER CONSOLE COVER .
3. Remove covering frame for center console. → 683419 REMOVING AND INSTALLING COVERING FRAME FOR CENTER CONSOLE .
4. Remove console for telephone. → 918819 REMOVING AND INSTALLING CONSOLE FOR TELEPHONE .

WM 681619 REMOVING AND INSTALLING ODDMENTS TRAY (MACAN, MACAN S, MACAN TURBO) > REMOVING ODDMENTS TRAY

Information

- The number of fastening screws, fixing clips, plug connections, holders and trim panels can vary depending on equipment.
- The illustrations for removing and installing the drive mechanism are shown only on one equipment variant and may differ from the actual equipment variant.
- Some steps must be carried out automatically.
- Some of the repair illustrations show only one side of the vehicle.

1. Lift up oddments tray **-1-** in the upper area of lock **-2-** and unclip oddments tray **-1-** from the center console at the same time.

   Fig 1: Lifting Up Oddments Tray

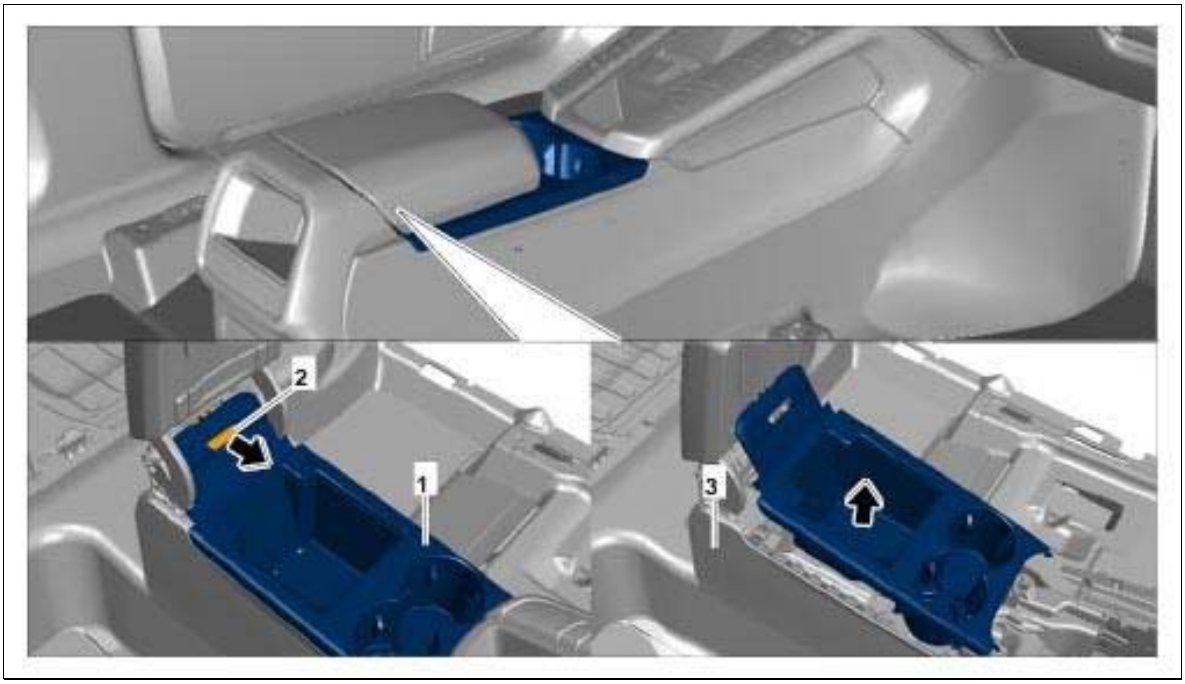

Courtesy of PORSCHE CARS NORTH AMERICA, INC.

2. Lift up oddments tray **-1-** until the 12 V socket **-2-** can be accessed by reaching into the center console from the rear.
3. Reach into the center console and press 12 V socket **-2-** in direction of arrow **-arrow A -** from the rear so that it comes out of the bracket.
4. Carefully guide out oddments tray **-1-** in the front area **-arrow B-** and remove it from the center console.

Fig 2: Removing Oddments Tray

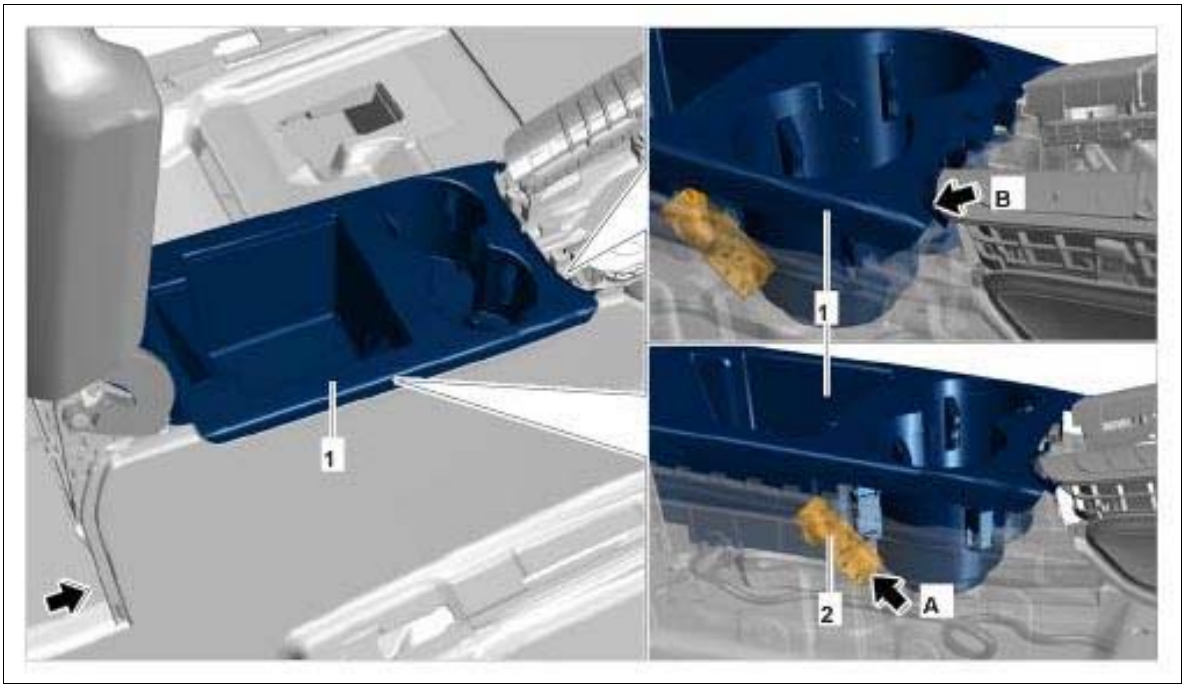

Courtesy of PORSCHE CARS NORTH AMERICA, INC.

5. Release electric plug connection **-1-** at the 12 V socket and disconnect it.
6. Remove USB connection **-2-** from the bracket.
7. Remove AUX connection **-3-** from the bracket.
8. Unclip fixing clip **-4-** at the oddments tray and guide electric line for telephone console out of the oddments tray.
9. Remove oddments tray.

Fig 3: Identifying Electric Plug Connections

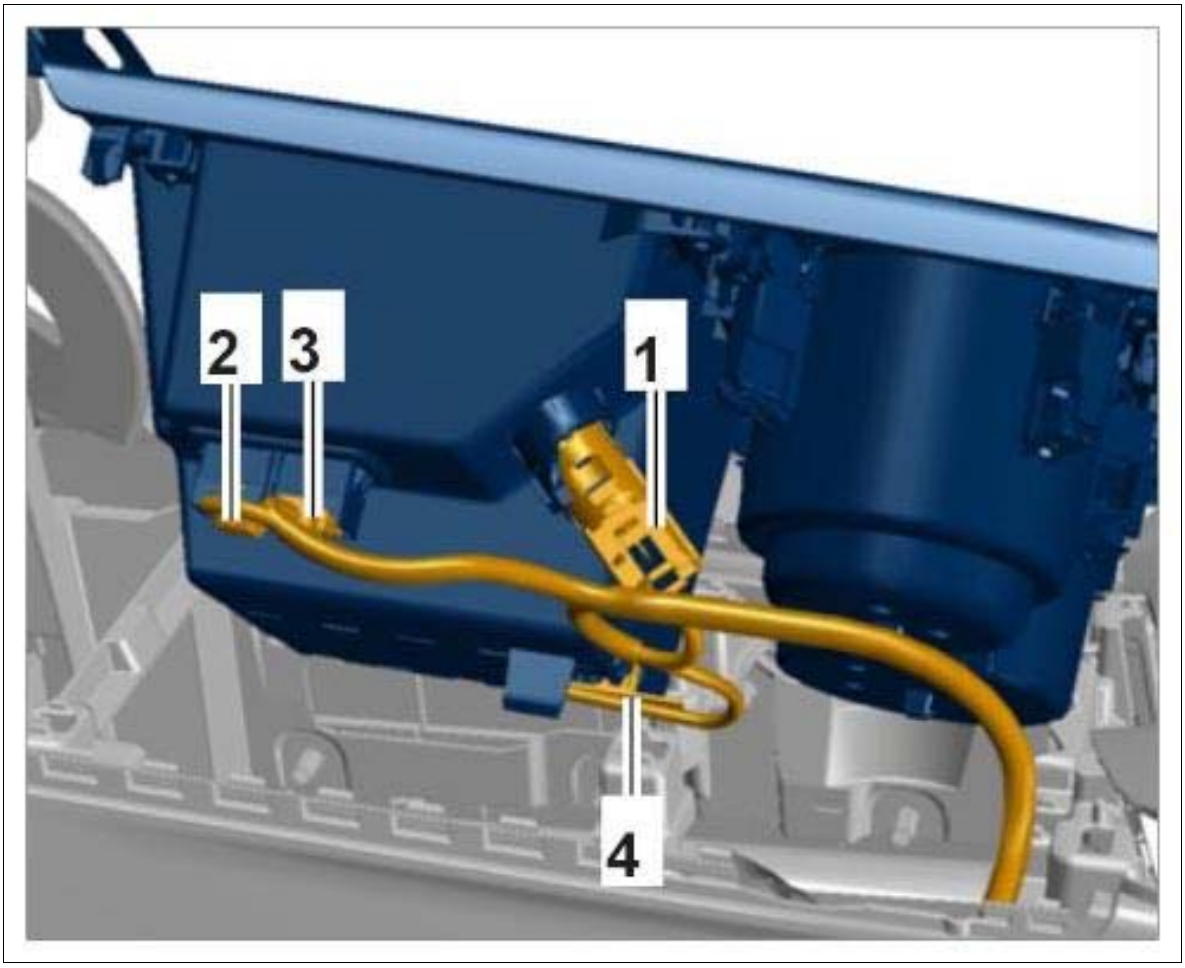

Courtesy of PORSCHE CARS NORTH AMERICA, INC.

WM 681619 REMOVING AND INSTALLING ODDMENTS TRAY (MACAN, MACAN S, MACAN TURBO) > INSTALLING ODDMENTS TRAY

Information

Check that all fixing clips are positioned fully and correctly.

Check that the fixing clips are not bent or broken.

Replace damaged or missing clips with new ones.

Installation is performed in reverse order.

WM 681619 REMOVING AND INSTALLING ODDMENTS TRAY (MACAN, MACAN S, MACAN TURBO) > SUBSEQUENT WORK

1. Install telephone console. → INSTALLING TELEPHONE CONSOLE .

2. Install covering frame for center console. → INSTALLING COVERING FRAME FOR CENTER CONSOLE .

   Install upper part of center console cover. → INSTALLING UPPER PART OF CENTER CONSOLE COVER .

3. Install center console trims. → INSTALLING CENTER CONSOLE TRIM .

WM 681719 REMOVING AND INSTALLING CENTER CONSOLE (MACAN, MACAN S, MACAN TURBO) > TECHNICAL VALUES

Location	Description	Type	Basic value	Tolerance 1	Tolerance 2
Center console to selector support		Tightening torque	8 Nm (6 ftlb.)		
Center console to cardan tunnel		Tightening torque	20 Nm (15 ftlb.)		

WM 681719 REMOVING AND INSTALLING CENTER CONSOLE (MACAN, MACAN S, MACAN TURBO) > PRELIMINARY WORK

1. Remove oddments tray. → 681619 REMOVING AND INSTALLING ODDMENTS TRAY
2. Remove switch console. → 962719 REMOVING AND INSTALLING SWITCH CONSOLE

WM 681719 REMOVING AND INSTALLING CENTER CONSOLE (MACAN, MACAN S, MACAN TURBO) > REMOVING CENTER CONSOLE

1. Release and disconnect electric plug connection **-1-** on the selector support.
2. Unclip electric wire harnesses **-2, 3-** at the center console **-4-** and set them aside.

Fig 1: Locating Electric Lines At Center Console

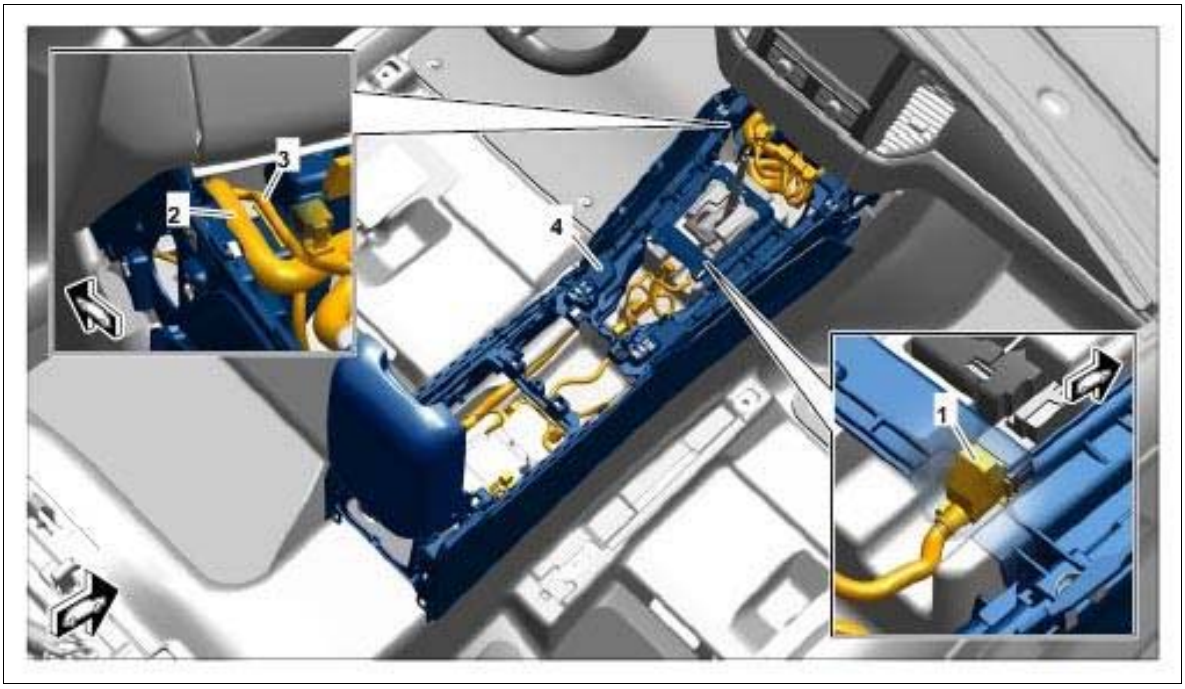

Courtesy of PORSCHE CARS NORTH AMERICA, INC.

3. Press seal **-1-** to one side and unscrew and remove fastening nuts **-2-** .
4. Press seal **-1-** to one side and unscrew fastening nuts **-3-** .
5. Press selector support down slightly.
6. Unscrew and remove fastening nuts **-4-** .

   Lift up center console at the rear and pull it to the rear.
7. Remove centring pin **-5-** from the bracket **-6-** .
8. Guide out center console at the trim panels and remove it to the rear.

Fig 2: Locating Center Console Mounting Fasteners

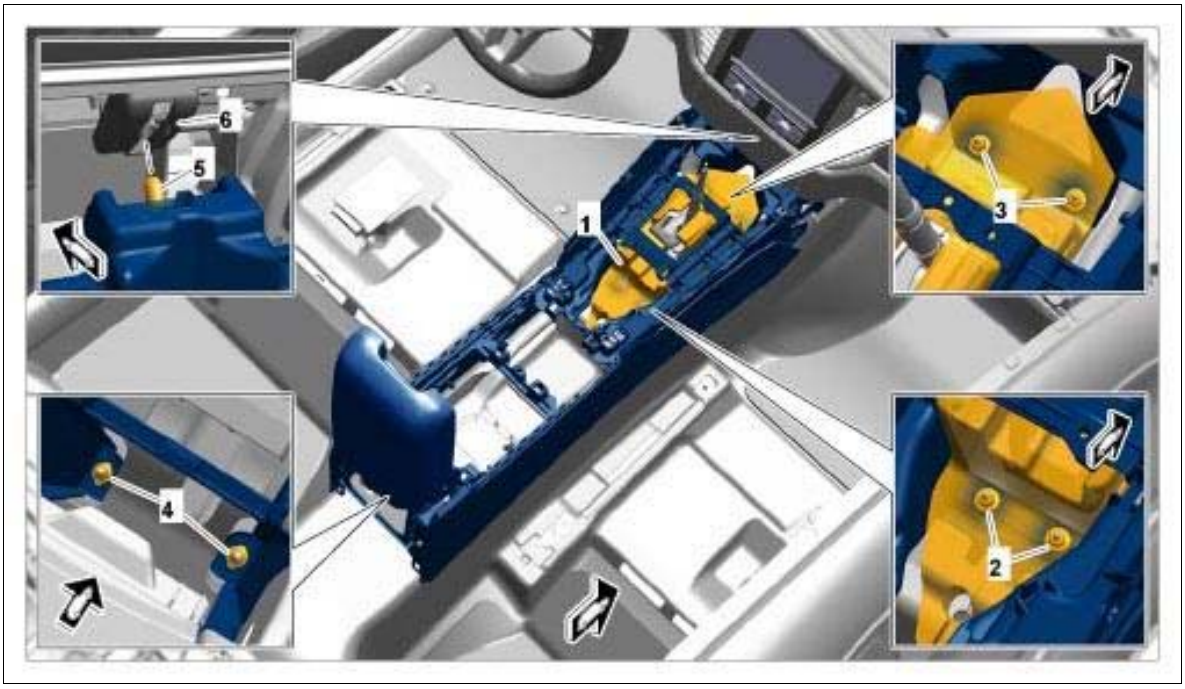

Courtesy of PORSCHE CARS NORTH AMERICA, INC.

WM 681719 REMOVING AND INSTALLING CENTER CONSOLE (MACAN, MACAN S, MACAN TURBO) > INSTALLING CENTER CONSOLE

Installation is performed in reverse order. Pay particular attention to the following:

1. Tighten fastening nuts securing center console to selector support to the specified torque.
   Tightening torque: 8 Nm (6 ftlb.)
2. Tighten fastening nuts securing center console to cardan tunnel to the specified torque.
   Tightening torque: 20 Nm (15 ftlb.)

WM 681719 REMOVING AND INSTALLING CENTER CONSOLE (MACAN, MACAN S, MACAN TURBO) > SUBSEQUENT WORK

1. Install switch console. → INSTALLING SWITCH CONSOLE .
2. Install oddments tray. → INSTALLING ODDMENTS TRAY .

WM 681919 REMOVING AND INSTALLING UPPER PART OF CENTER CONSOLE COVER (MACAN, MACAN S, MACAN TURBO) > PRELIMINARY WORK

1. Remove selector knob. → 370419 REMOVING AND INSTALLING SELECTOR KNOB

WM 681919 REMOVING AND INSTALLING UPPER PART OF CENTER CONSOLE COVER (MACAN, MACAN S, MACAN TURBO) > REMOVING UPPER PART OF CENTER CONSOLE COVER

Information

- The number of fastening screws, fixing clips, plug connections, holders and trim panels can vary depending on equipment.
- The illustrations for removing and installing the drive mechanism are shown only on one equipment variant and may differ from the actual equipment variant.
- Some steps must be carried out automatically.
- Some of the repair illustrations show only one side of the vehicle.

1. Unclip cover by pulling it up off the center console.
2. Release electric plug connection at the 12 V socket and disconnect it.
3. Release and disconnect electric plug connection on the parking brake controls.
4. Remove cover.

Fig 1: Removing Upper Part Of Center Console Cover

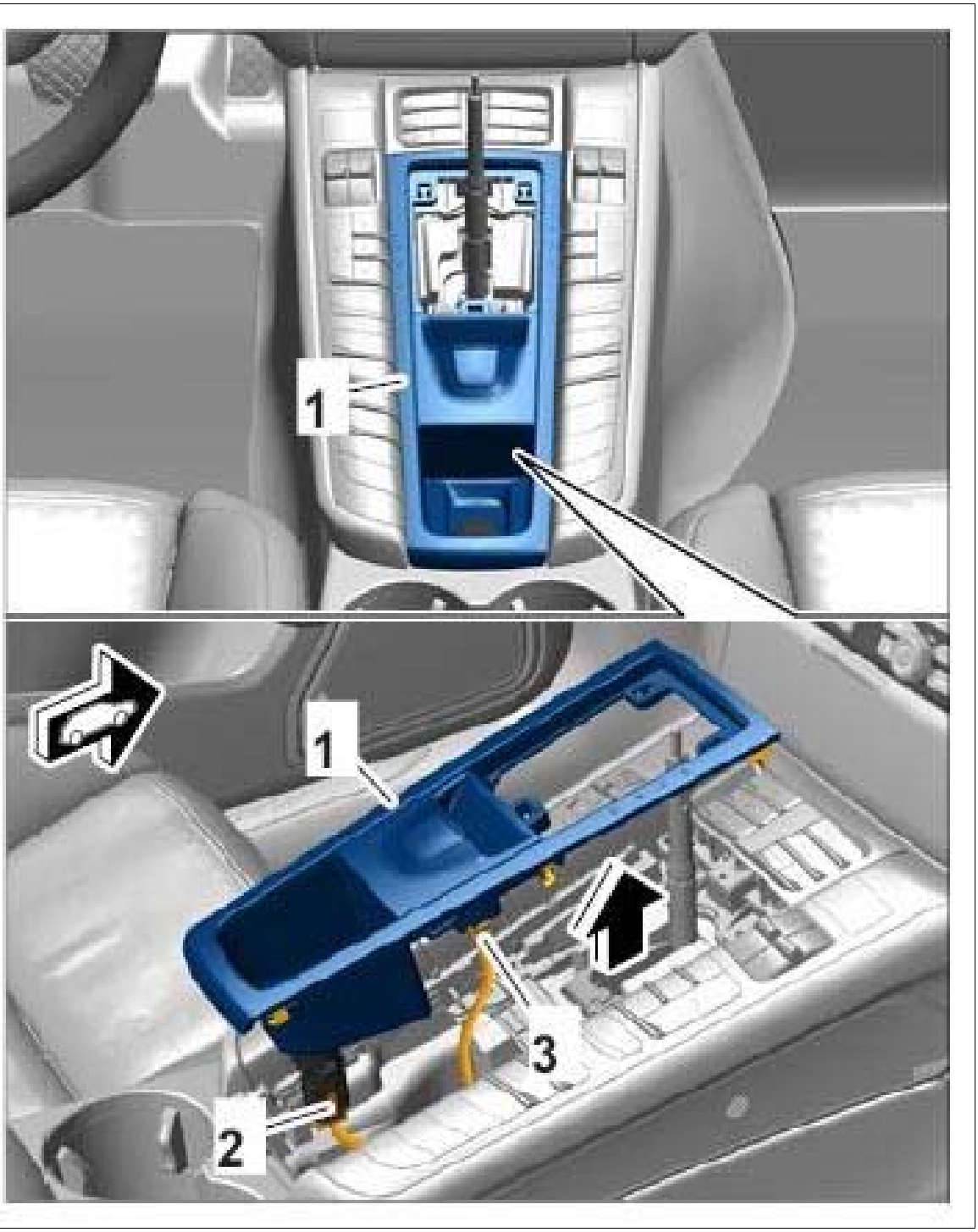

Courtesy of PORSCHE CARS NORTH AMERICA, INC.

WM 681919 REMOVING AND INSTALLING UPPER PART OF CENTER CONSOLE COVER (MACAN, MACAN S, MACAN TURBO) > INSTALLING UPPER PART OF CENTER CONSOLE COVER

Information

Check that all fixing clips are positioned fully and correctly.

Check that the fixing clips are not bent or broken.

Replace damaged or missing clips with new ones.

Installation is performed in reverse order.

WM 682019 REMOVING AND INSTALLING FRONT ASHTRAY (MACAN, MACAN S, MACAN TURBO) > TECHNICAL VALUES

Location	Description	Type	Basic value	Tolerance 1	Tolerance 2
Ashtray to center console cover		Tightening torque	1.5 Nm (1 ftlb.)		

WM 682019 REMOVING AND INSTALLING FRONT ASHTRAY (MACAN, MACAN S, MACAN TURBO) > PRELIMINARY WORK

1. Remove upper part of center console cover. → 681919 REMOVING AND INSTALLING UPPER PART OF CENTER CONSOLE COVER

WM 682019 REMOVING AND INSTALLING FRONT ASHTRAY (MACAN, MACAN S, MACAN TURBO) > REMOVING FRONT ASHTRAY

Information

- The number of fastening screws, fixing clips, plug connections, holders and trim panels can vary depending on equipment.
- The illustrations for removing and installing the drive mechanism are shown only on one equipment variant and may differ from the actual equipment variant.
- Some steps must be carried out automatically.
- Some of the repair illustrations show only one side of the vehicle.

1. Unscrew fastening screws **-1-** .
2. Disengage ashtray **-2-** on the cover **-3-** and remove it.

Fig 1: Disengaging Front Ashtray From Trim Peice

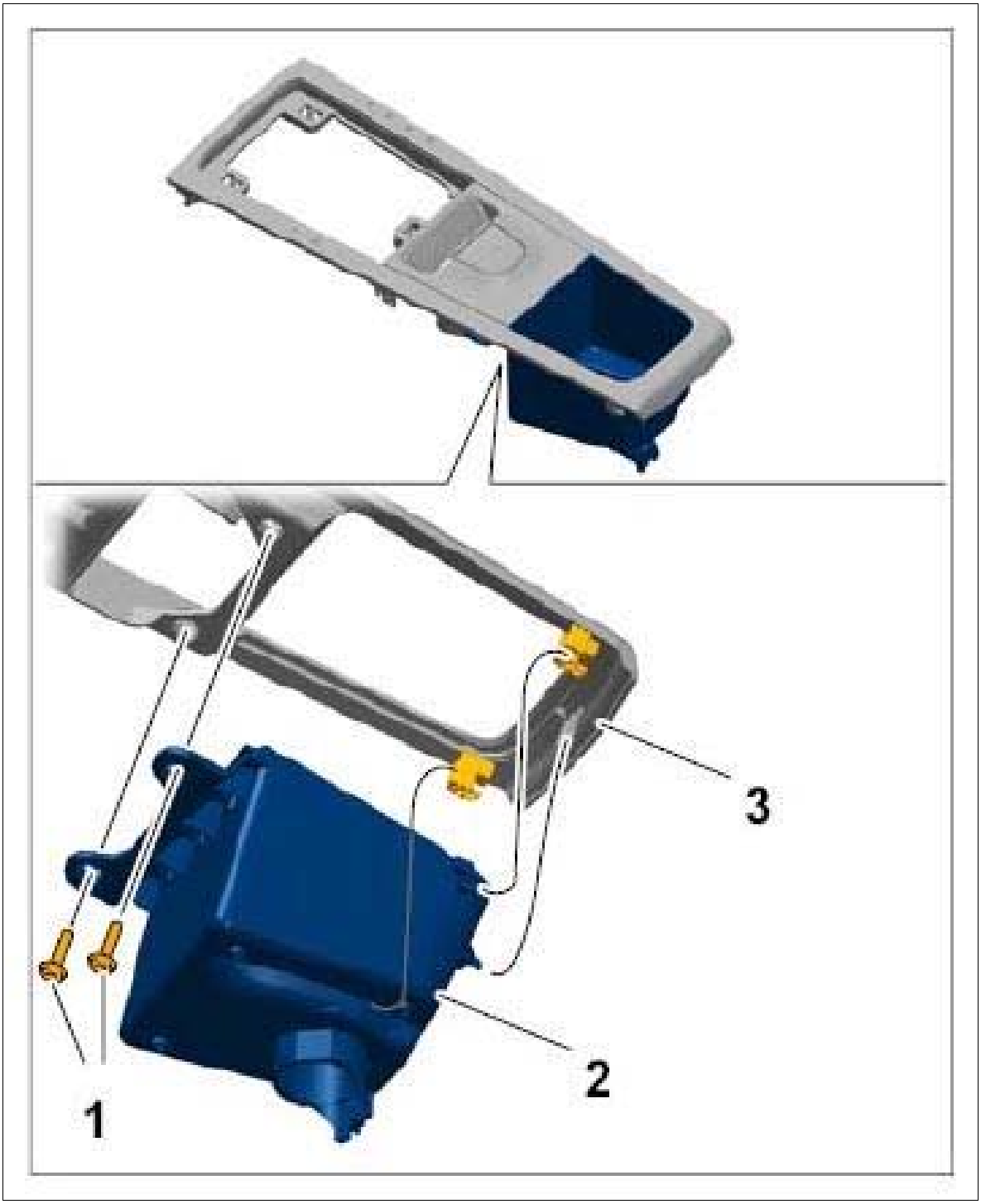

Courtesy of PORSCHE CARS NORTH AMERICA, INC.

WM 682019 REMOVING AND INSTALLING FRONT ASHTRAY (MACAN, MACAN S, MACAN TURBO) > INSTALLING FRONT ASHTRAY

Installation is performed in reverse order. Pay particular attention to the following:

1. Tighten fastening screws to the specified torque. **Tightening torque: 1.5 Nm (1 ftlb.)**

WM 682019 REMOVING AND INSTALLING FRONT ASHTRAY (MACAN, MACAN S, MACAN TURBO) > SUBSEQUENT WORK

1. Install upper part of center console cover. → INSTALLING UPPER PART OF CENTER CONSOLE COVER .

WM 682119 REMOVING AND INSTALLING REAR ASHTRAY (MACAN, MACAN S, MACAN TURBO) > REMOVING REAR ASHTRAY

Information

- The number of fastening screws, fixing clips, plug connections, holders and trim panels can vary depending on equipment.
- The illustrations for removing and installing the drive mechanism are shown only on one equipment variant and may differ from the actual equipment variant.
- Some steps must be carried out automatically.
- Some of the repair illustrations show only one side of the vehicle.

1. Open ashtray **-1-** .
2. Fold the ashtray **-1-** down completely.
3. Unclip fixing clip **-2-** by pulling it forward out of the bracket **-3- (-arrow A-)** .
4. Disconnect electric plug connection **-4-** .

Fig 1: Removing Rear Ashtray

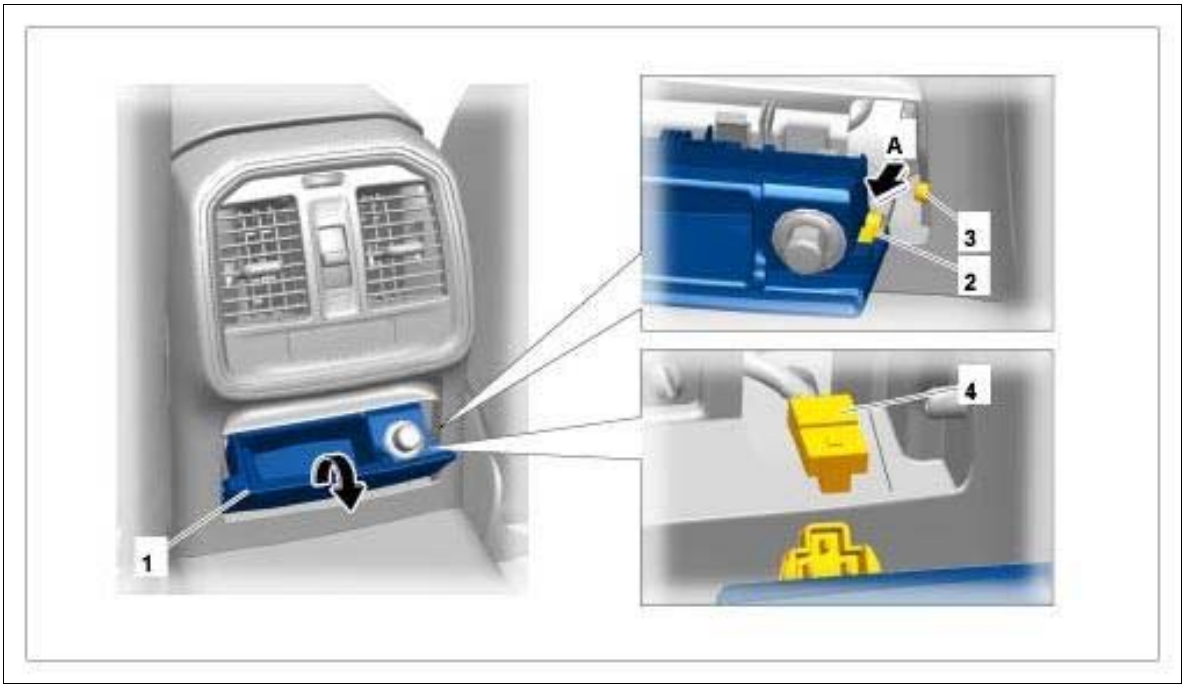

Courtesy of PORSCHE CARS NORTH AMERICA, INC.

WM 682119 REMOVING AND INSTALLING REAR ASHTRAY (MACAN, MACAN S, MACAN TURBO) > INSTALLING REAR ASHTRAY

Installation is performed in reverse order.

WM 682219 REMOVING AND INSTALLING DASHBOARD TRIM PANEL (MACAN, MACAN S, MACAN TURBO) > TECHNICAL VALUES

Location	Description	Type	Basic value	Tolerance 1	Tolerance 2
Trim panel to dashboard		Tightening torque	4 Nm (3 ftlb.)		

WM 682219 REMOVING AND INSTALLING DASHBOARD TRIM PANEL (MACAN, MACAN S, MACAN TURBO) > PRELIMINARY WORK

1. Remove dashboard molding on driver's side at the right. → 70581902 REMOVING AND INSTALLING DASHBOARD MOLDING ON DRIVER'S SIDE AT THE RIGHT
2. Remove dashboard molding on passenger's side. → 705819 REMOVING AND INSTALLING DASHBOARD MOLDING ON PASSENGER'S SIDE

WM 682219 REMOVING AND INSTALLING DASHBOARD TRIM PANEL (MACAN, MACAN S, MACAN TURBO) > REMOVING DASHBOARD TRIM PANEL

Information

- The number of fastening screws, fixing clips, plug connections, holders and trim panels can vary depending on equipment.
- The illustrations for removing and installing the drive mechanism are shown only on one equipment variant and may differ from the actual equipment variant.
- Some steps must be carried out automatically.
- Some of the repair illustrations show only one side of the vehicle.

1. Open trim panel **-1-** .
2. Unscrew fastening screws **-2-** .
3. Guide trim panel **-1-** out of the dashboard and remove it.

Fig 1: Identifying Dashboard Trim Panel

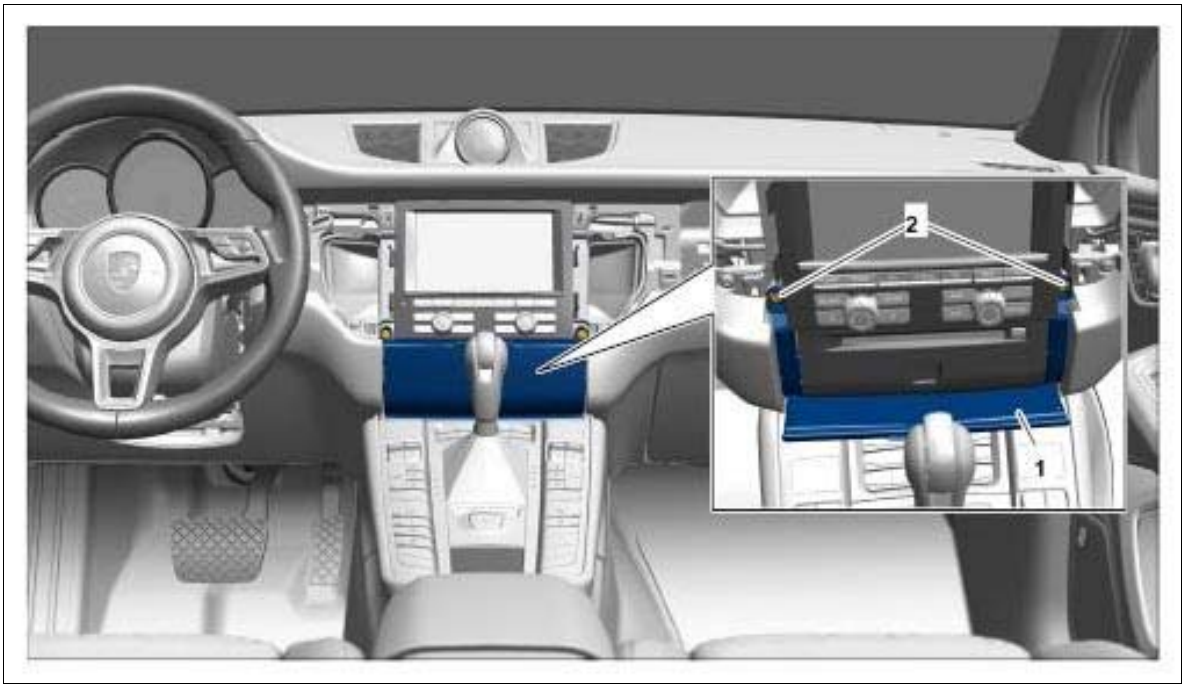

Courtesy of PORSCHE CARS NORTH AMERICA, INC.

WM 682219 REMOVING AND INSTALLING DASHBOARD TRIM PANEL (MACAN, MACAN S, MACAN TURBO) > INSTALLING DASHBOARD TRIM PANEL

Installation is performed in reverse order. Pay particular attention to the following:

1. Tighten fastening screws to the specified torque. **Tightening torque: 4 Nm (3 ftlb.)**

WM 682219 REMOVING AND INSTALLING DASHBOARD TRIM PANEL (MACAN, MACAN S, MACAN TURBO) > SUBSEQUENT WORK

1. Install dashboard molding on driver's side at the right. → INSTALLING DASHBOARD MOLDING ON DRIVER'S SIDE AT THE RIGHT .
2. Install dashboard molding on passenger's side. → INSTALLING DASHBOARD MOLDING ON PASSENGER'S SIDE .

WM 682319 REMOVING AND INSTALLING SUN VISOR (MACAN, MACAN S, MACAN TURBO) > TECHNICAL VALUES

Location	Description	Type	Basic value	Tolerance 1	Tolerance 2
Center bearing for sun visor on body		Tightening torque	5 Nm (3.5 ftlb.)		

WM 682319 REMOVING AND INSTALLING SUN VISOR (MACAN, MACAN S, MACAN TURBO) > REMOVING SUN VISOR

Information

- The number of fastening screws, fixing clips, plug connections, holders and trim panels can vary depending on equipment.
- The illustrations for removing and installing the drive mechanism are shown only on one equipment variant and may differ from the actual equipment variant.
- Some steps must be carried out automatically.
- Some of the repair illustrations show only one side of the vehicle.

1. Swivel sunvisor down.
2. Unclip covers **-1-** .
3. Adjust the sun visor so that the front fixing clip **-2-** is accessible.

Fig 1: Removing Sunvisor Clip Covers

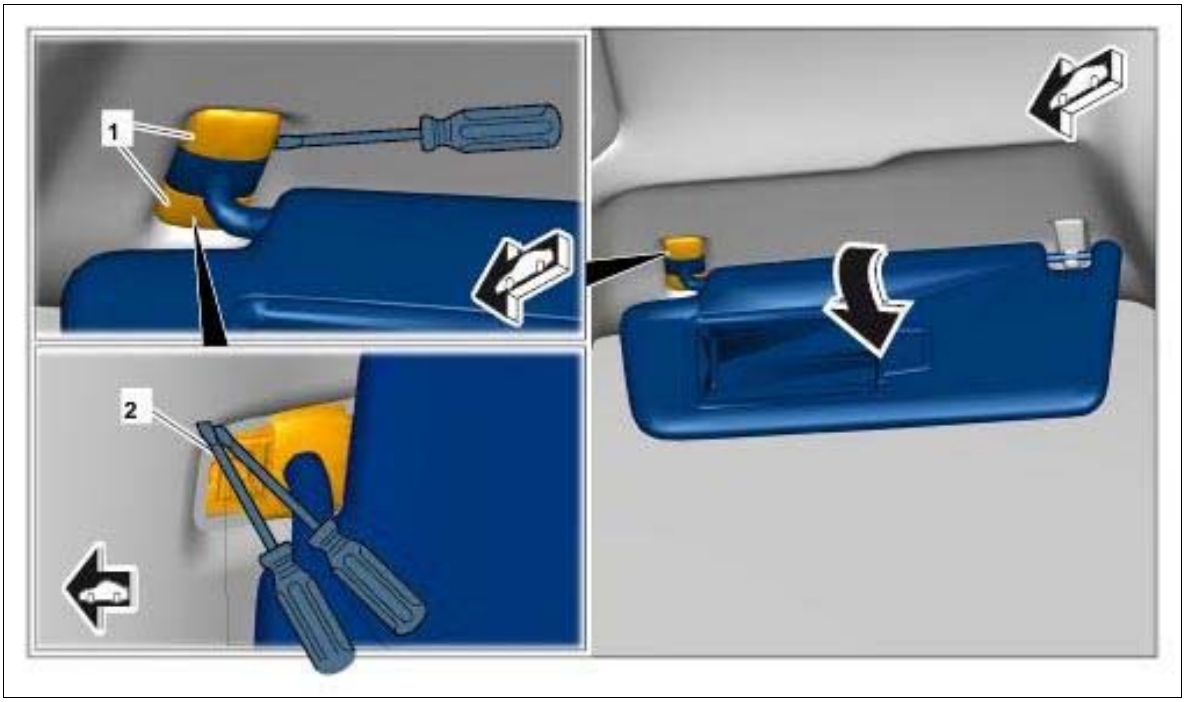

Courtesy of PORSCHE CARS NORTH AMERICA, INC.

Pull sun visor down slightly and leave it there to facilitate further disassembly. This will prevent the fixing clips from locking again.

4. Loosen front fixing clip from the roof lining.

    1. 4.1. Guide two screwdrivers (1.2 x 6.5 mm) **-3-** into the openings **-2-** on the fixing clip. This actuates the tabs **-1-** on the fixing clip and moves them inwards.

    2. 4.2. Pull the sun visor down until the front fixing clip is loosened from the roof lining.

        Fig 2: Pulling Sun Visor Fixing Clip

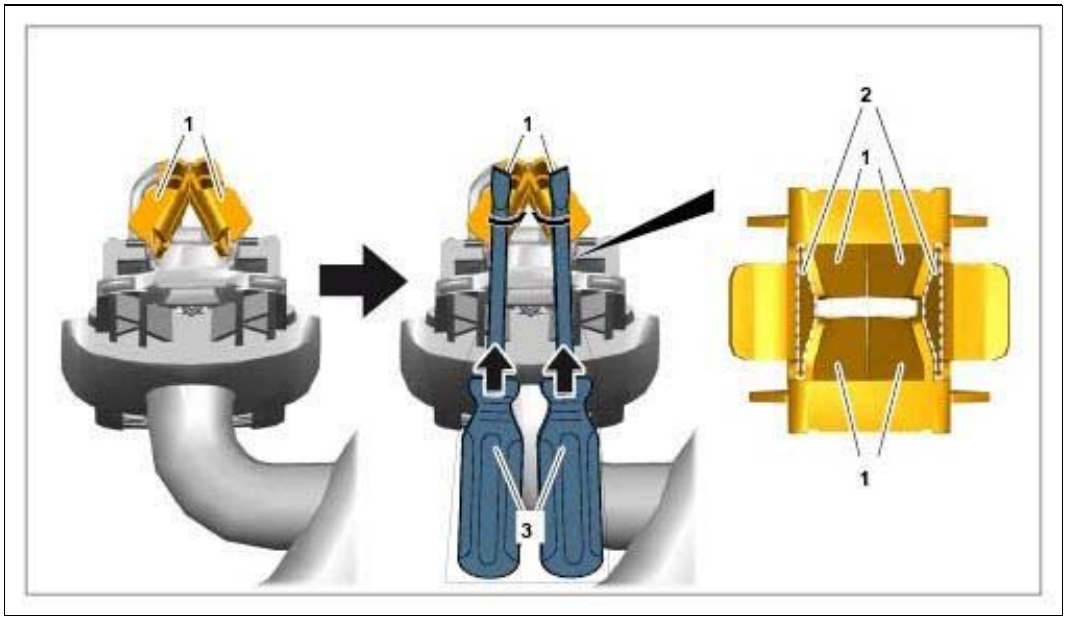

Courtesy of PORSCHE CARS NORTH AMERICA, INC.

5. Remove screwdriver from the front fixing clip and loosen rear fixing clip from the roof lining.
6. Unclip sun visor at the center bearing.
7. Pull the sun visor down until the two fixing clips are loosened completely from the roof lining.
8. Loosen adhesive tape on the inner roof lining and guide electric line through the opening in the roof lining until the electric plug connection **-3-** is accessible.
9. Loosen electric plug connection **-3-** from the foam sleeve **-2-** , loosen adhesive tape **-1-** if necessary and disconnect plug connection **-3-** .
10. Remove sun visor.

Fig 3: Identifying Electric Line

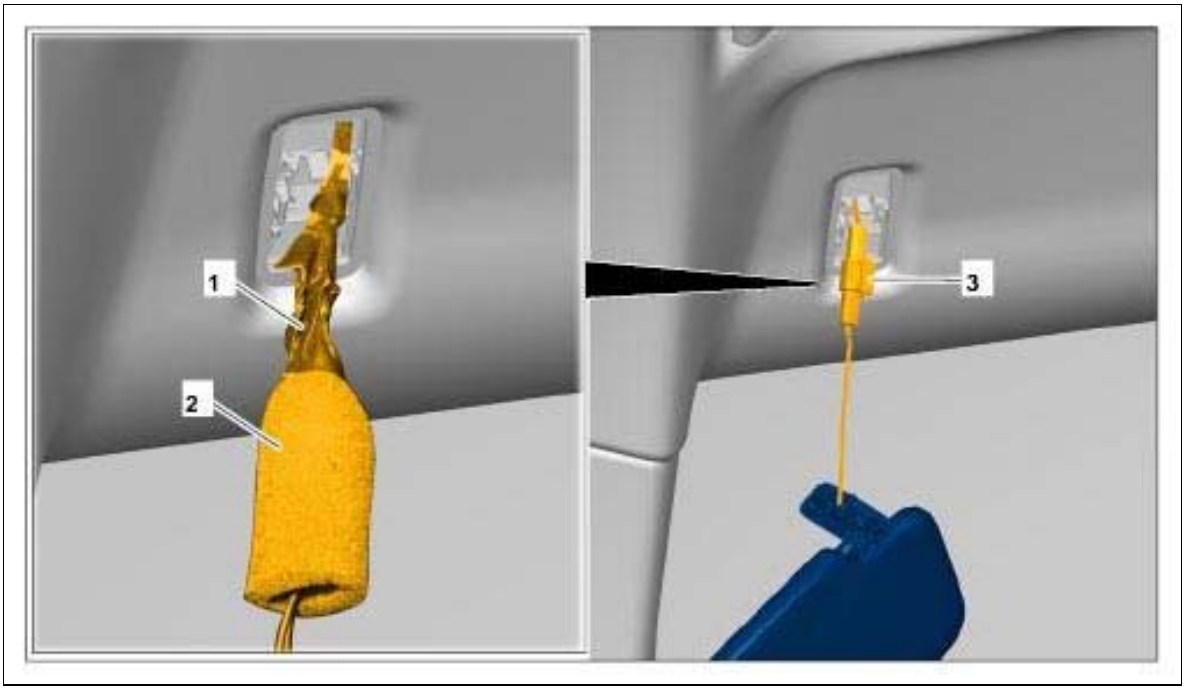

Courtesy of PORSCHE CARS NORTH AMERICA, INC.

WM 682319 REMOVING AND INSTALLING SUN VISOR (MACAN, MACAN S, MACAN TURBO) > REMOVING SUN VISOR > REMOVING CENTER BEARING FOR SUN VISOR

1. Unclip cover **-2-** in the upper area and swivel it upwards.
2. Unscrew fastening screw **-3-** .
3. Guide center bearing **-1-** out of the roof lining and remove it.

Fig 1: Removing Sun Visor Center Bearing

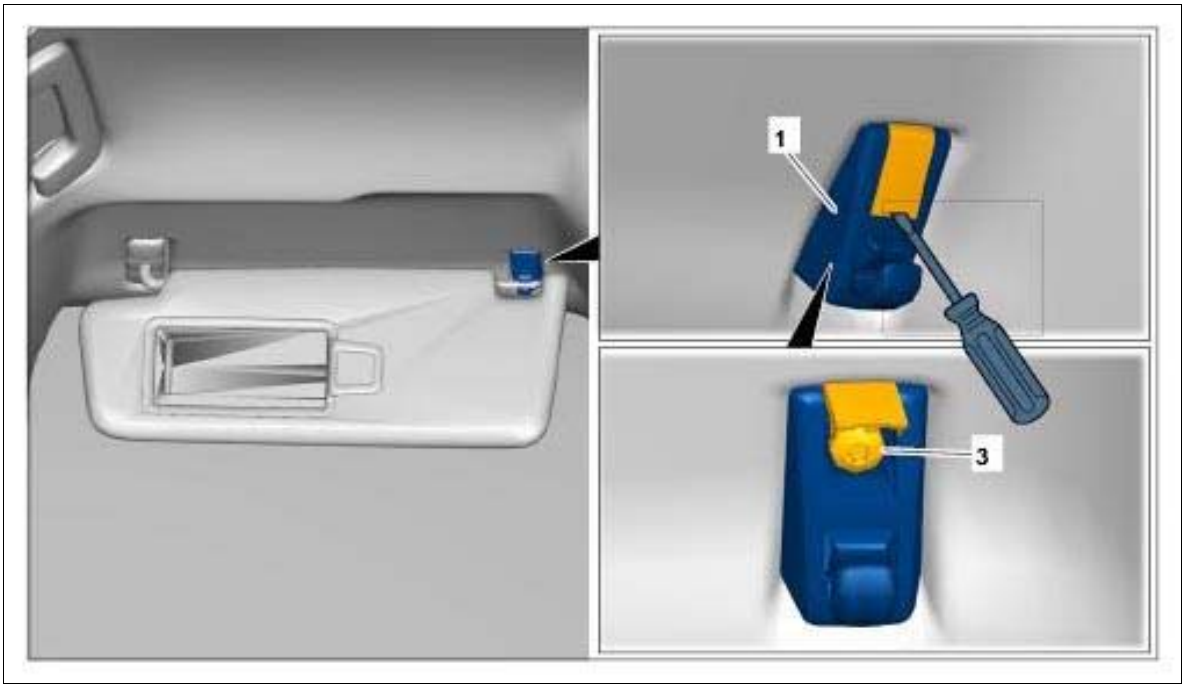

Courtesy of PORSCHE CARS NORTH AMERICA, INC.

WM 682319 REMOVING AND INSTALLING SUN VISOR (MACAN, MACAN S, MACAN TURBO) > INSTALLING SUN VISOR > INSTALLING CENTER BEARING FOR SUN VISOR

Installation is performed in reverse order. Pay particular attention to the following:

1. Tighten fastening screw to the specified torque. **Tightening torque: 5 Nm (3.5 ftlb.)**

WM 682319 REMOVING AND INSTALLING SUN VISOR (MACAN, MACAN S, MACAN TURBO) > INSTALLING SUN VISOR > INSTALLING SUN VISOR

Information

Check that all fixing clips are positioned fully and correctly.

Check that the fixing clips are not bent or broken.

Replace damaged or missing clips with new ones.

Installation is performed in reverse order. Pay particular attention to the following:

1. Check that the fixing clips have engaged correctly.
2. Perform a function test on the light.

WM 682719 REMOVING AND INSTALLING INTERIOR REAR-VIEW MIRROR (MACAN, MACAN S, MACAN TURBO) > PRELIMINARY WORK

1. Remove front roof trim panel. → 708319 REMOVING AND INSTALLING FRONT ROOF TRIM PANEL
2. On vehicles with GPS antenna: Remove GPS antenna. → 911319 REMOVING AND INSTALLING GPS ANTENNA

WM 682719 REMOVING AND INSTALLING INTERIOR REAR-VIEW MIRROR (MACAN, MACAN S, MACAN TURBO) > REMOVING INTERIOR REAR-VIEW MIRROR

Information

- The number of fastening screws, fixing clips, plug connections, holders and trim panels can vary depending on equipment.
- The illustrations for removing and installing the drive mechanism are shown only on one equipment variant and may differ from the actual equipment variant.
- Some steps must be carried out automatically.
- Some of the repair illustrations show only one side of the vehicle.

1. Remove left and right caps.
    1. 1.1. Insert a narrow screwdriver between the caps **-2-** and press them apart carefully **-arrow-** .

Fig 1: Removing Caps



Courtesy of PORSCHE CARS NORTH AMERICA, INC.

2. 1.2. Remove caps.

2. Remove rear-view mirror.

1. 2.1. Turn the rear-view mirror anti-clockwise until it comes to a stop **-A-** .

Fig 2: Removing Rear-View Mirror

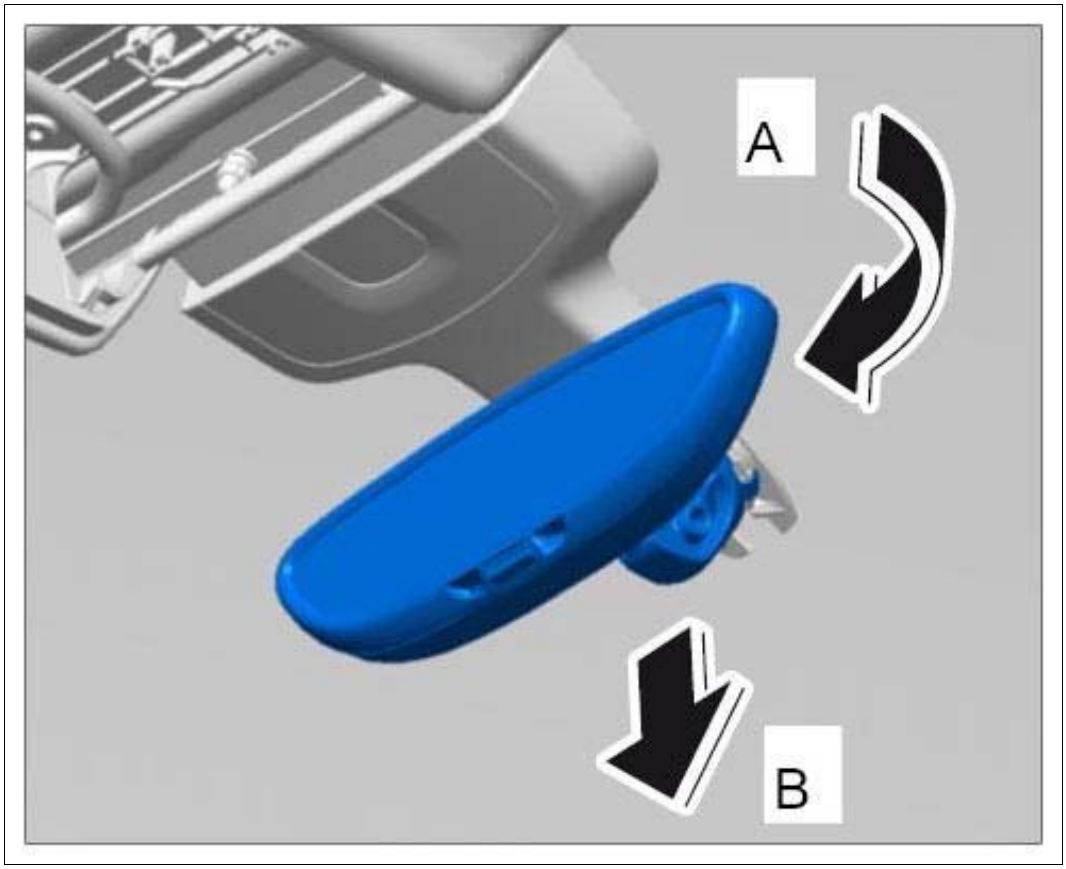

Courtesy of PORSCHE CARS NORTH AMERICA, INC.

2. 2.2. Remove the rear-view mirror by pulling it downwards **-B-** .

3. Unclip cover **-1-** in a downward direction using a suitable tool.

Fig 3: Removing Rear-View Mirror Cover

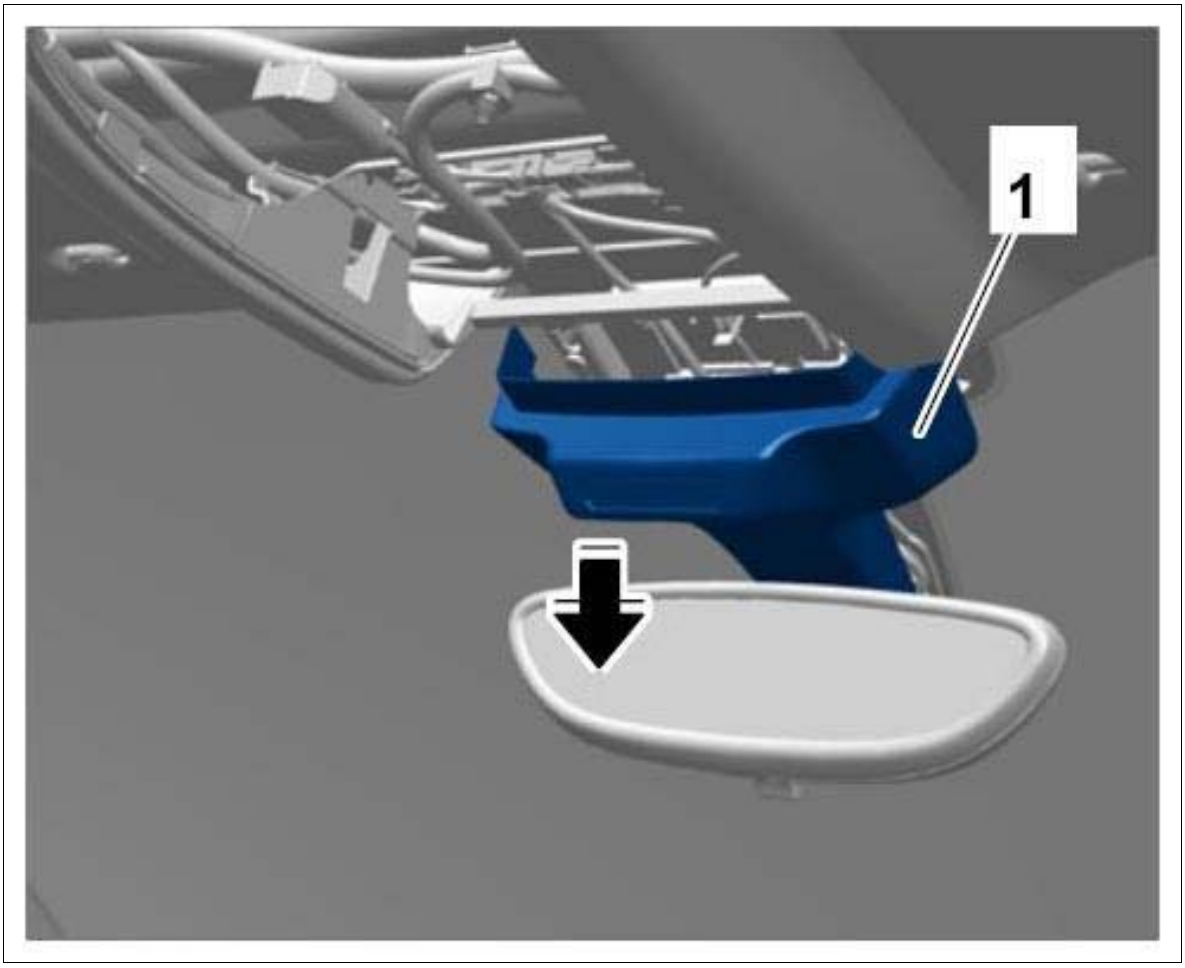

Courtesy of PORSCHE CARS NORTH AMERICA, INC.

4. Release electric plug connections and disconnect connector, then remove cover by pulling it downwards.
5. Carefully pull the cable and plug connection for the rear-view mirror out of the guide.

WM 682719 REMOVING AND INSTALLING INTERIOR REAR-VIEW MIRROR (MACAN, MACAN S, MACAN TURBO) > INSTALLING INTERIOR REAR-VIEW MIRROR

1. Installation is performed in reverse order to removal.

WM 682719 REMOVING AND INSTALLING INTERIOR REAR-VIEW MIRROR (MACAN, MACAN S, MACAN TURBO) > SUBSEQUENT WORK

1. Install front roof trim panel. → INSTALLING FRONT ROOF TRIM PANEL .
2. On vehicles with GPS antenna: Install GPS antenna. → INSTALLING GPS ANTENNA .

WM 683019 REMOVING AND INSTALLING FRONT CUPHOLDER (MACAN, MACAN S, MACAN TURBO) > TECHNICAL VALUES

Location	Description	Type	Basic value	Tolerance 1	Tolerance 2
Fastening screw securing cupholder to oddments tray		Tightening torque	1.5 Nm (1 ftlb.)		

WM 683019 REMOVING AND INSTALLING FRONT CUPHOLDER (MACAN, MACAN S, MACAN TURBO) > PRELIMINARY WORK

1. Remove oddments tray. → 681619 REMOVING AND INSTALLING ODDMENTS TRAY

WM 683019 REMOVING AND INSTALLING FRONT CUPHOLDER (MACAN, MACAN S, MACAN TURBO) > REMOVING FRONT CUPHOLDER

Information

- The number of fastening screws, fixing clips, plug connections, holders and trim panels can vary depending on equipment.
- The illustrations for removing and installing the drive mechanism are shown only on one equipment variant and may differ from the actual equipment variant.
- Some steps must be carried out automatically.
- Some of the repair illustrations show only one side of the vehicle.

1. Unscrew fastening screws **-1-** .
2. Remove cupholder **-2-** from oddments tray **-3-** .

Fig 1: Identifying Front Cupholder Screws

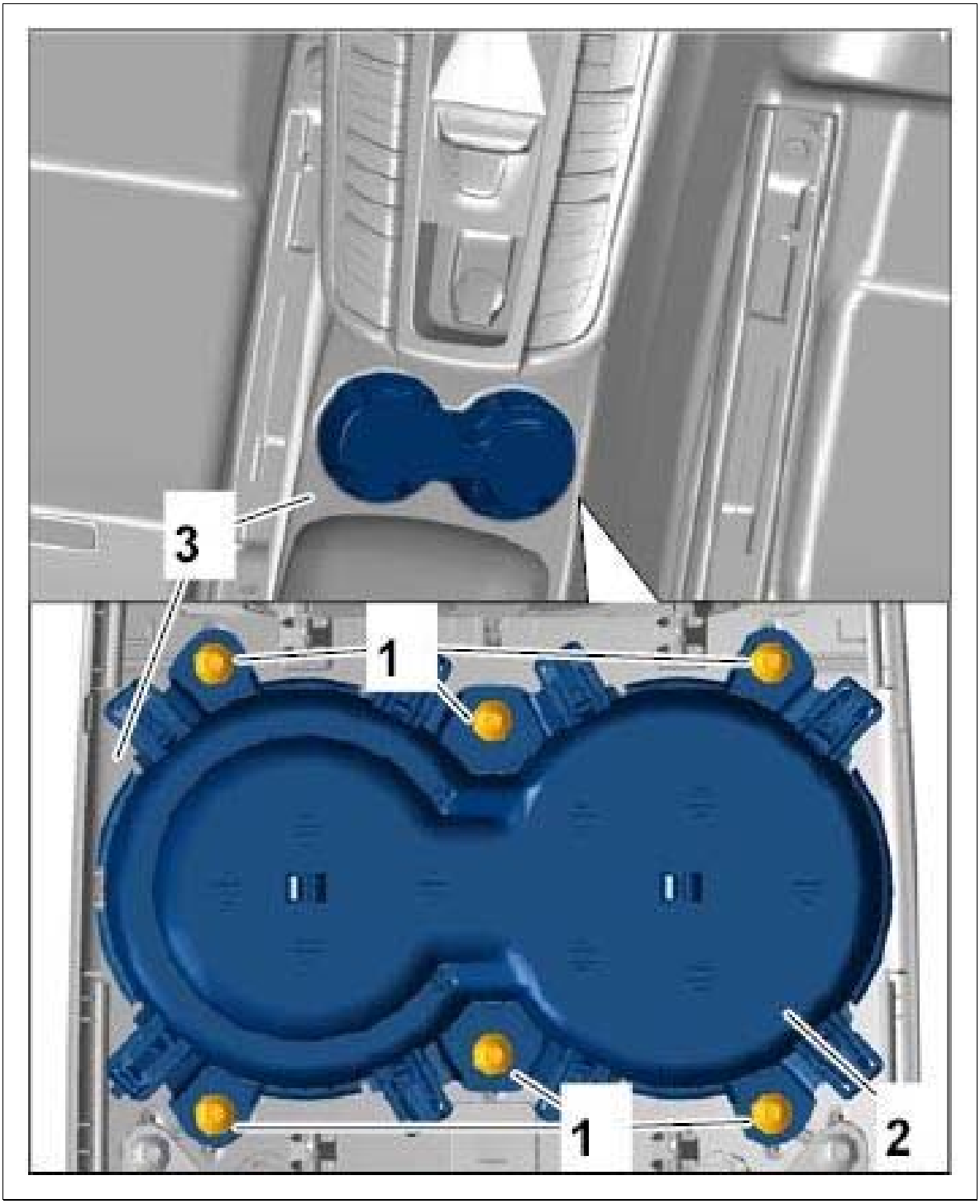

Courtesy of PORSCHE CARS NORTH AMERICA, INC.

WM 683019 REMOVING AND INSTALLING FRONT CUPHOLDER (MACAN, MACAN S, MACAN TURBO) > INSTALLING FRONT CUPHOLDER

Installation is performed in reverse order. Pay particular attention to the following:

1. Tighten fastening screws to the specified torque. **Tightening torque: 1.5 Nm (1 ftlb.)**

WM 683419 REMOVING AND INSTALLING COVERING FRAME FOR CENTER CONSOLE (MACAN, MACAN S, MACAN TURBO) > REMOVING COVERING FRAME FOR CENTER CONSOLE

Information

- The number of fastening screws, fixing clips, plug connections, holders and trim panels can vary depending on equipment.
- The illustrations for removing and installing the drive mechanism are shown only on one equipment variant and may differ from the actual equipment variant.
- Some steps must be carried out automatically.
- Some of the repair illustrations show only one side of the vehicle.

1. Move front seats to the very front position.
2. Unclip covering frame **-1-** in the upper area **-arrows-** on the center console **-2-** and guide it out.
3. Unclip covering frame **-1-** at all fixing clips and remove from the center console **-2-** .

   Fig 1: Removing Center Console Covering Frame

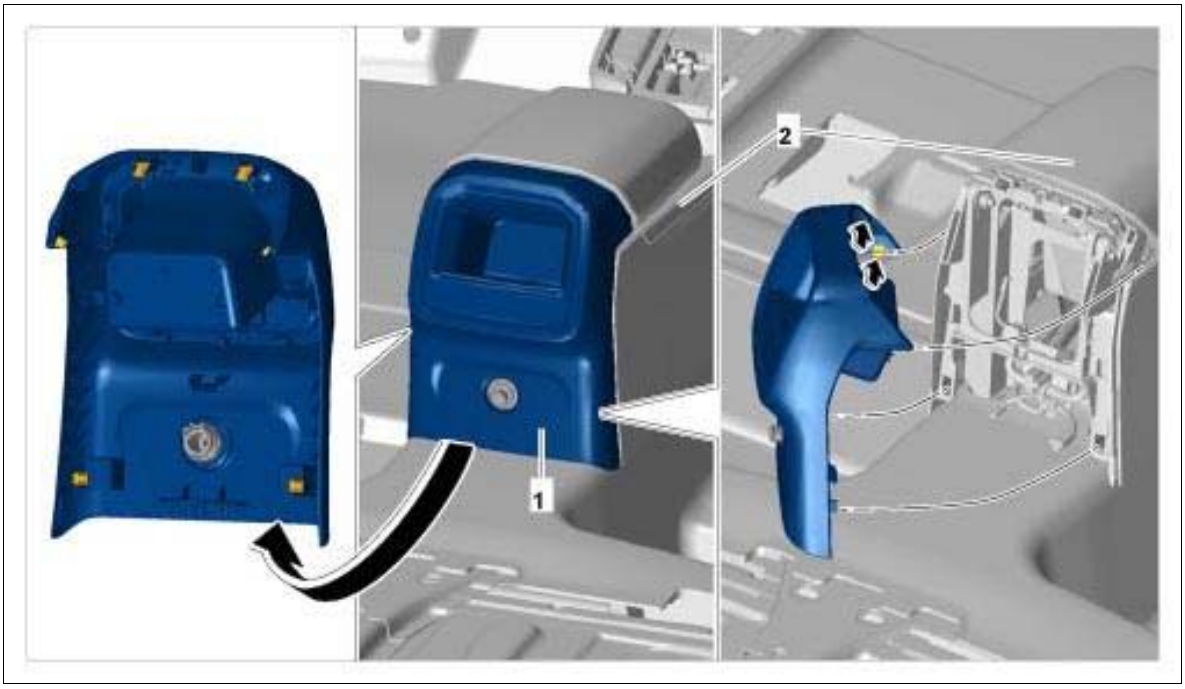

Courtesy of PORSCHE CARS NORTH AMERICA, INC.

4. Release electric plug connection **-1-** for the 12 V socket and disconnect it.
5. Release and disconnect electric plug connections **-2-** at the rear seat heating controls.

6. Release electric plug connection **-3-** for KESSY antenna and disconnect it.
7. Remove covering frame **-4-** .

Fig 2: Identifying Covering Frame Electric Plug Connections

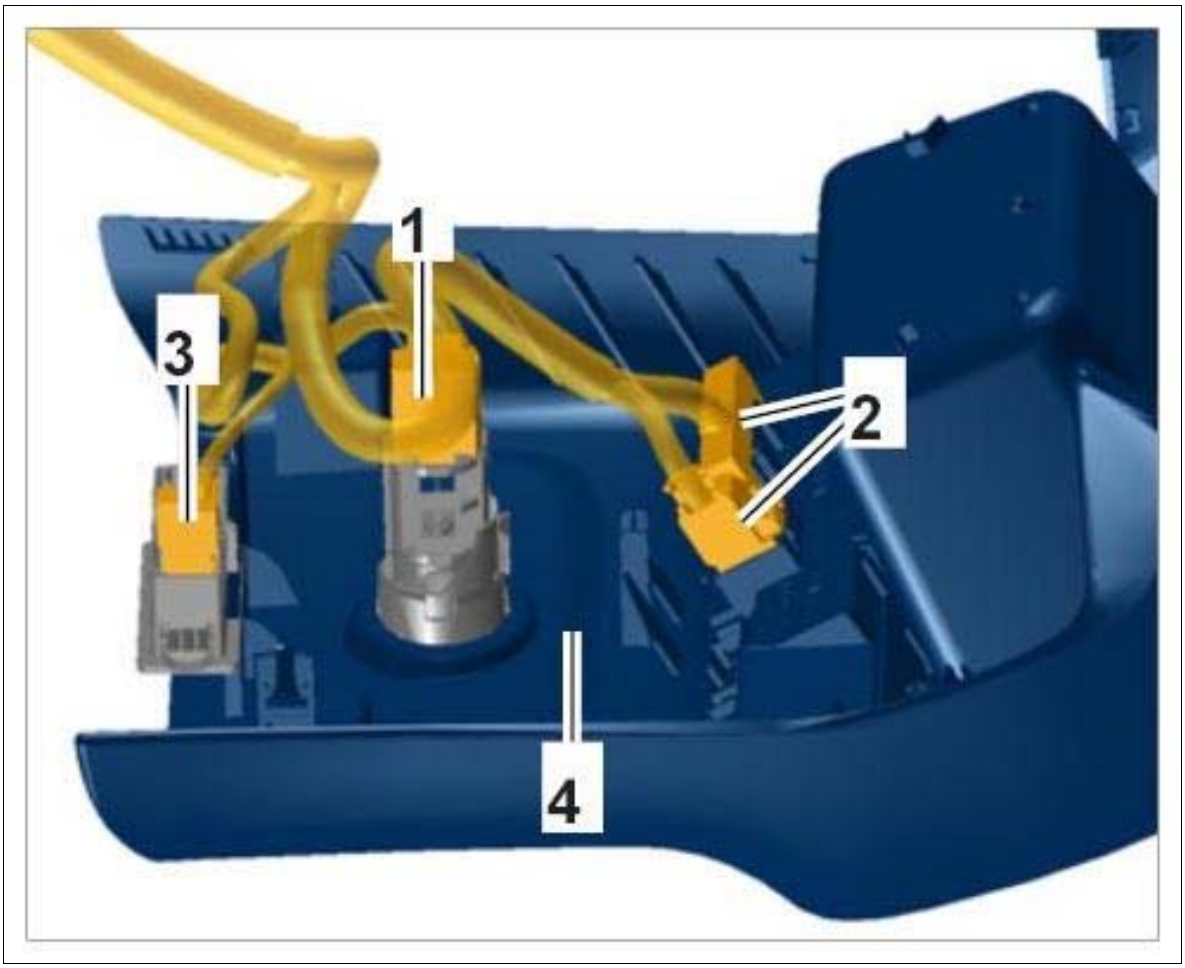

Courtesy of PORSCHE CARS NORTH AMERICA, INC.

WM 683419 REMOVING AND INSTALLING COVERING FRAME FOR CENTER CONSOLE (MACAN, MACAN S, MACAN TURBO) > INSTALLING COVERING FRAME FOR CENTER CONSOLE

Information

Check that all fixing clips are positioned fully and correctly.

Check that the fixing clips are not bent or broken.

Replace damaged or missing clips with new ones.

Installation is performed in reverse order.

WM 683519 REMOVING AND INSTALLING FRONT GRAB HANDLE (MACAN, MACAN S, MACAN TURBO) > TECHNICAL VALUES

Location	Description	Type	Basic value	Tolerance 1	Tolerance 2
Grab handle to body		Tightening torque	5 Nm (3.5 ftlb.)		

WM 683519 REMOVING AND INSTALLING FRONT GRAB HANDLE (MACAN, MACAN S, MACAN TURBO) > REMOVING FRONT GRAB HANDLE

Information

- The number of fastening screws, fixing clips, plug connections, holders and trim panels can vary depending on equipment.
- The illustrations for removing and installing the drive mechanism are shown only on one equipment variant and may differ from the actual equipment variant.
- Some steps must be carried out automatically.
- Some of the repair illustrations show only one side of the vehicle.

1. Swivel grab handle **-3-** down and hold it securely.
2. Unclip covers **-2-** in the upper area and swivel them downwards.
3. Unscrew fastening screws **-1-** and remove grab handle **-3-** .

Fig 1: Removing Front Grab Handle

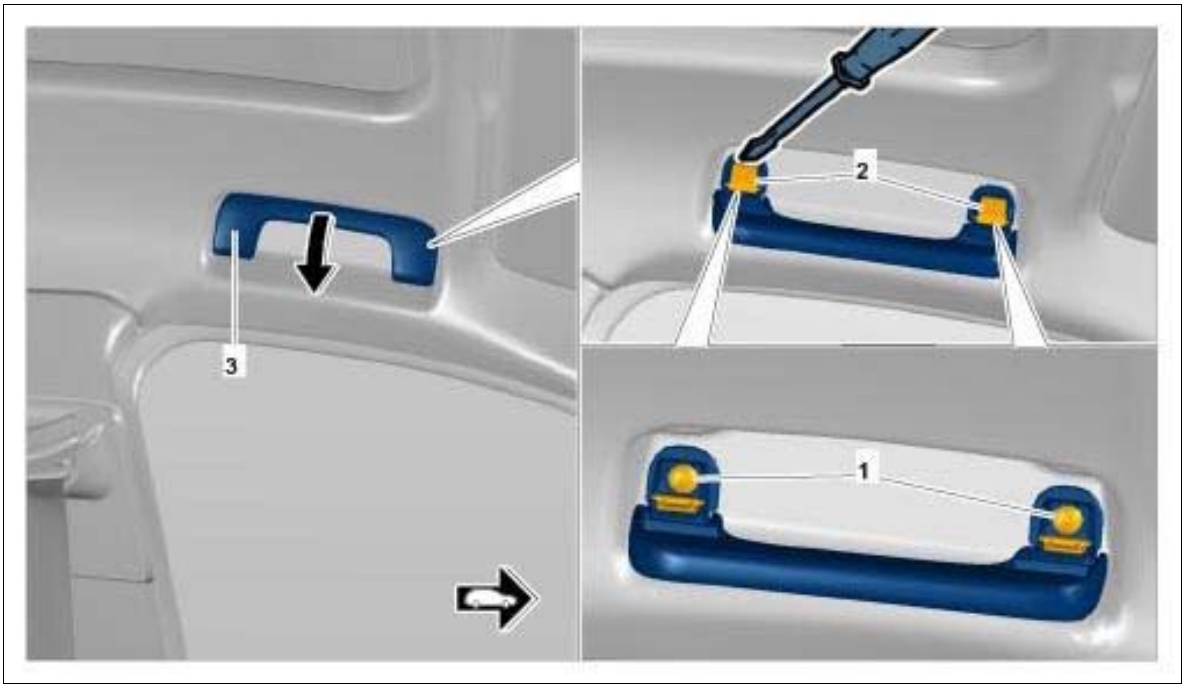

Courtesy of PORSCHE CARS NORTH AMERICA, INC.

WM 683519 REMOVING AND INSTALLING FRONT GRAB HANDLE (MACAN, MACAN S, MACAN TURBO) > INSTALLING FRONT GRAB HANDLE

Installation is performed in reverse order. Pay particular attention to the following:

1. Tighten fastening screws to the specified torque. **Tightening torque: 5 Nm (3.5 ftlb.)**

WM 683719 REMOVING AND INSTALLING REAR GRAB HANDLE (MACAN, MACAN S, MACAN TURBO) > TECHNICAL VALUES

Location	Description	Type	Basic value	Tolerance 1	Tolerance 2
Grab handle to body		Tightening torque	5 Nm (3.5 ftlb.)		

WM 683719 REMOVING AND INSTALLING REAR GRAB HANDLE (MACAN, MACAN S, MACAN TURBO) > REMOVING REAR GRAB HANDLE

Information

- The number of fastening screws, fixing clips, plug connections, holders and trim panels can vary depending on equipment.
- The illustrations for removing and installing the drive mechanism are shown only on one equipment variant and may differ from the actual equipment variant.
- Some steps must be carried out automatically.
- Some of the repair illustrations show only one side of the vehicle.

1. Swivel grab handle **-3-** down and hold it securely.
2. Unclip covers **-2-** in the upper area and swivel them downwards.
3. Unscrew fastening screws **-1-** and remove grab handle **-3-** .

Fig 1: Removing Rear Grab Handle

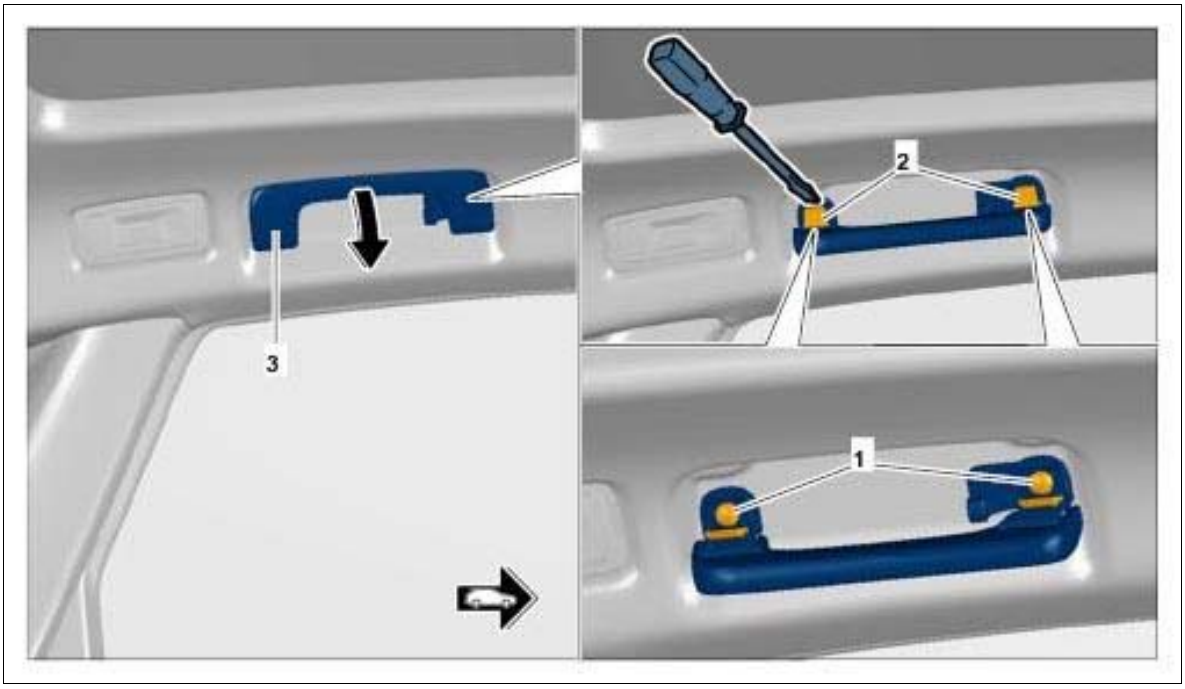

Courtesy of PORSCHE CARS NORTH AMERICA, INC.

WM 683719 REMOVING AND INSTALLING REAR GRAB HANDLE (MACAN, MACAN S, MACAN TURBO) > INSTALLING REAR GRAB HANDLE

Installation is performed in reverse order. Pay particular attention to the following:

1. Tighten fastening screws to the specified torque. **Tightening torque: 5 Nm (3.5 ftlb.)**

WM 684819 REMOVING AND INSTALLING COVER FOR ODDMENTS TRAY (MACAN, MACAN S, MACAN TURBO) > TECHNICAL VALUES

Location	Description	Type	Basic value	Tolerance 1	Tolerance 2
Threaded connection between oddments tray cover and center console		Tightening torque	4 Nm (3 ftlb.)		

WM 684819 REMOVING AND INSTALLING COVER FOR ODDMENTS TRAY (MACAN, MACAN S, MACAN TURBO) > PRELIMINARY WORK

1. Remove covering frame for center console. → 683419 REMOVING AND INSTALLING COVERING FRAME FOR CENTER CONSOLE

WM 684819 REMOVING AND INSTALLING COVER FOR ODDMENTS TRAY (MACAN, MACAN S, MACAN TURBO) > REMOVING COVER FOR ODDMENTS TRAY

Information

- The number of fastening screws, fixing clips, plug connections, holders and trim panels can vary depending on equipment.
- The illustrations for removing and installing the drive mechanism are shown only on one equipment variant and may differ from the actual equipment variant.
- Some steps must be carried out automatically.
- Some of the repair illustrations show only one side of the vehicle.

1. Counter at the screw **-1-** and loosen nut **-2-** .
2. Remove washer **-3-** .
3. Remove plastic washer **-4-** .
4. Pull out screw **-1-** .
5. Remove washer **-5-** .

Fig 1: Removing Oddments Tray Cover

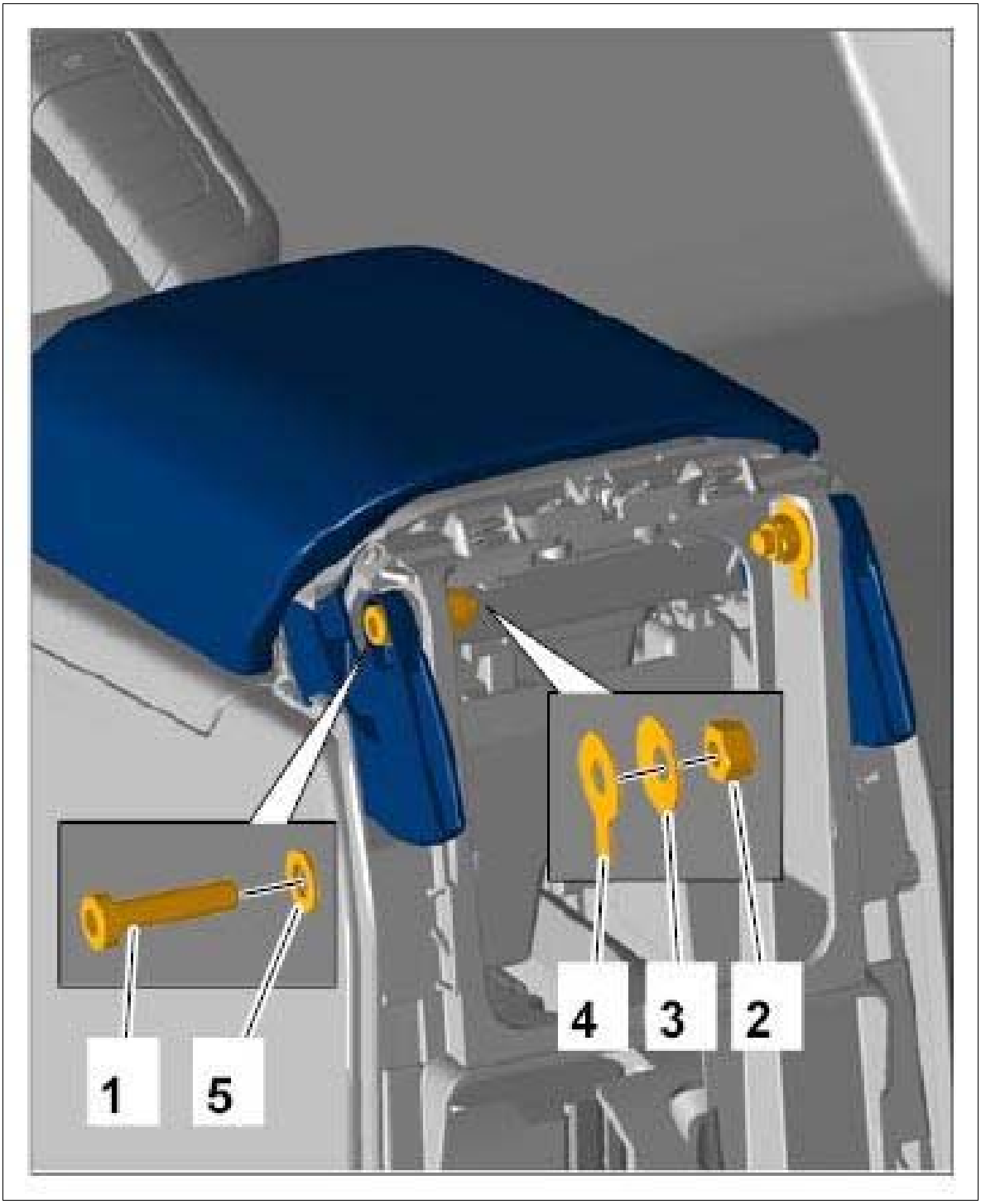

Courtesy of PORSCHE CARS NORTH AMERICA, INC.

6. Open lid **-1-** and remove from the center console **-arrow A-** .

7. Remove plastic guide pads **-2-** .

Fig 2: Removing Oddments Tray Cover

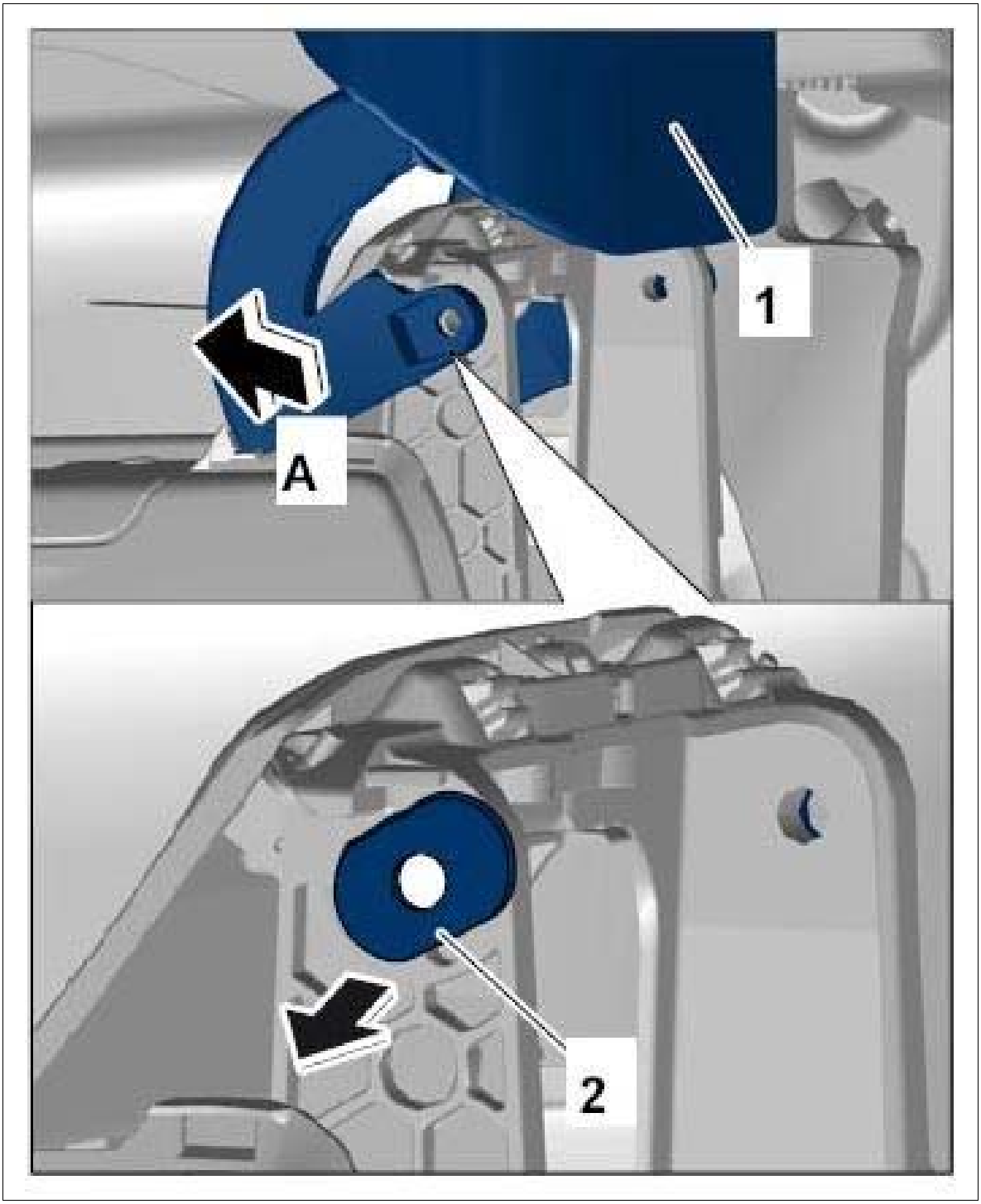

Courtesy of PORSCHE CARS NORTH AMERICA, INC.

WM 684819 REMOVING AND INSTALLING COVER FOR ODDMENTS TRAY (MACAN, MACAN S, MACAN TURBO) > INSTALLING COVER FOR ODDMENTS TRAY

1. Position and secure plastic guide pads **-1-** with centring devices **-2-** on the center console.

2. Guide cover **-3-** onto center console.

Fig 1: Installing Oddments Tray Cover

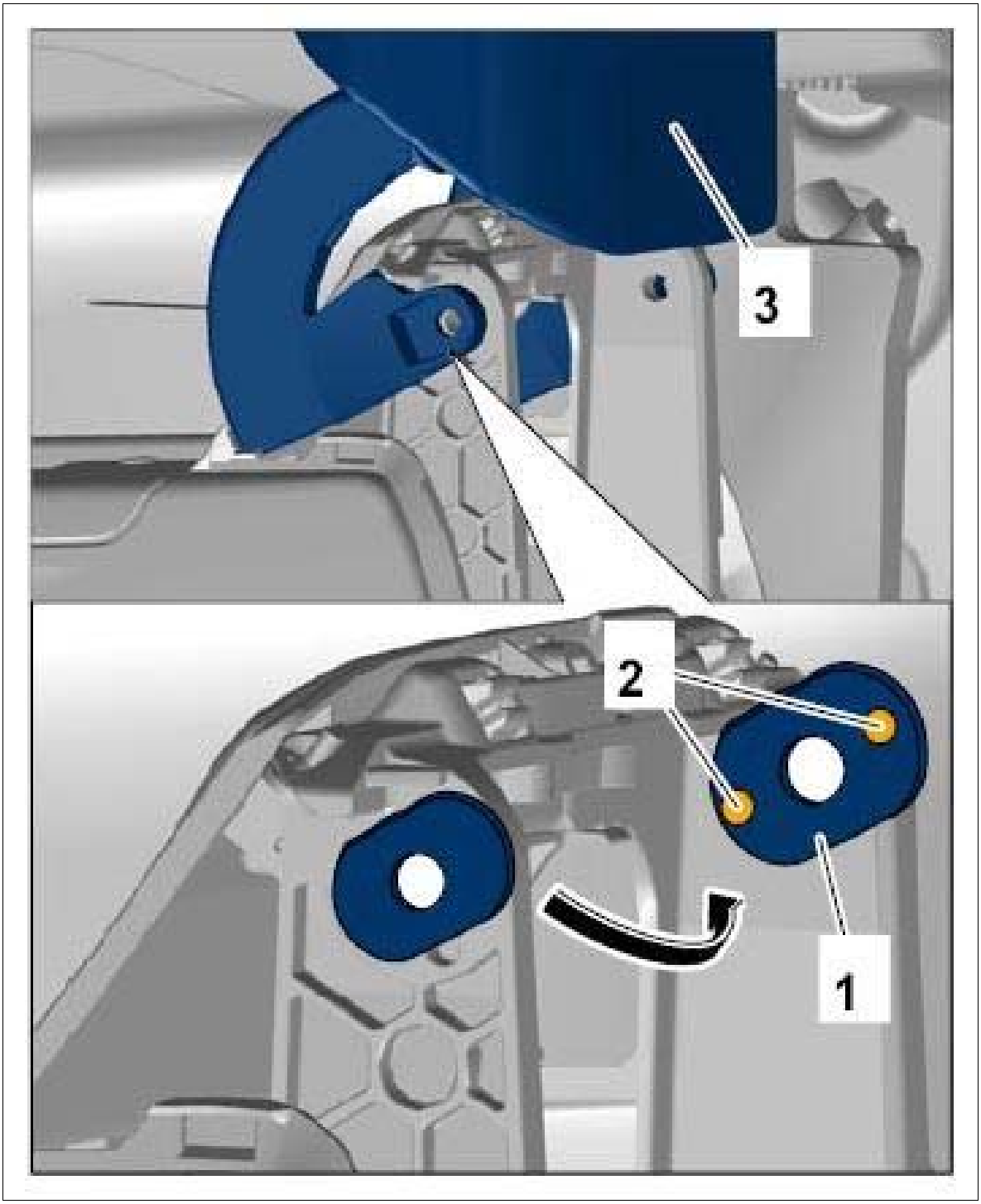

Courtesy of PORSCHE CARS NORTH AMERICA, INC.

Further installation is performed in reverse order. Pay particular attention to the following:

3. Counter at the screw and tighten nut to the specified torque. **Tightening torque: 4 Nm (3 ftlb.)**

WM 684819 REMOVING AND INSTALLING COVER FOR ODDMENTS TRAY (MACAN, MACAN S, MACAN TURBO) > SUBSEQUENT WORK

1. Install covering frame for center console. → INSTALLING COVERING FRAME FOR CENTER CONSOLE .

WM 689319 REMOVING AND INSTALLING FIRE EXTINGUISHER (MACAN, MACAN S, MACAN TURBO) > TECHNICAL VALUES

Location	Description	Type	Basic value	Tolerance 1	Tolerance 2
Fastening screw for fire extinguisher holder	Item 1	Tightening torque	8 Nm (6 ftlb.)	+/-1 Nm (+/-0.5 ftlb.)	

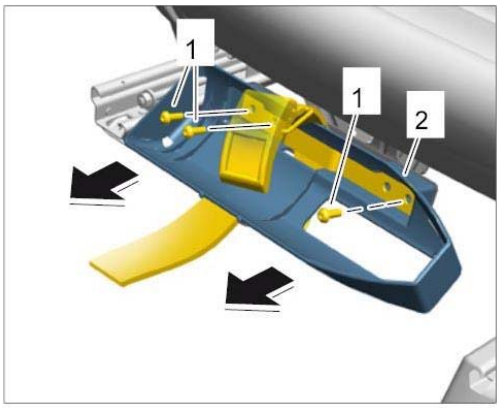

Installing tray

WM 689319 REMOVING AND INSTALLING FIRE EXTINGUISHER (MACAN, MACAN S, MACAN TURBO) > COMPONENT INFORMATION > INSTALLATION POSITION

Fig 1: Locating Fire Extinguisher Position



Courtesy of PORSCHE CARS NORTH AMERICA, INC.

WM 689319 REMOVING AND INSTALLING FIRE EXTINGUISHER (MACAN, MACAN S, MACAN TURBO) > REMOVING FIRE EXTINGUISHER

1. Release restraining strap **-1-** by pressing the button **-arrow-** .

Fig 1: Removing Fire Extinguisher

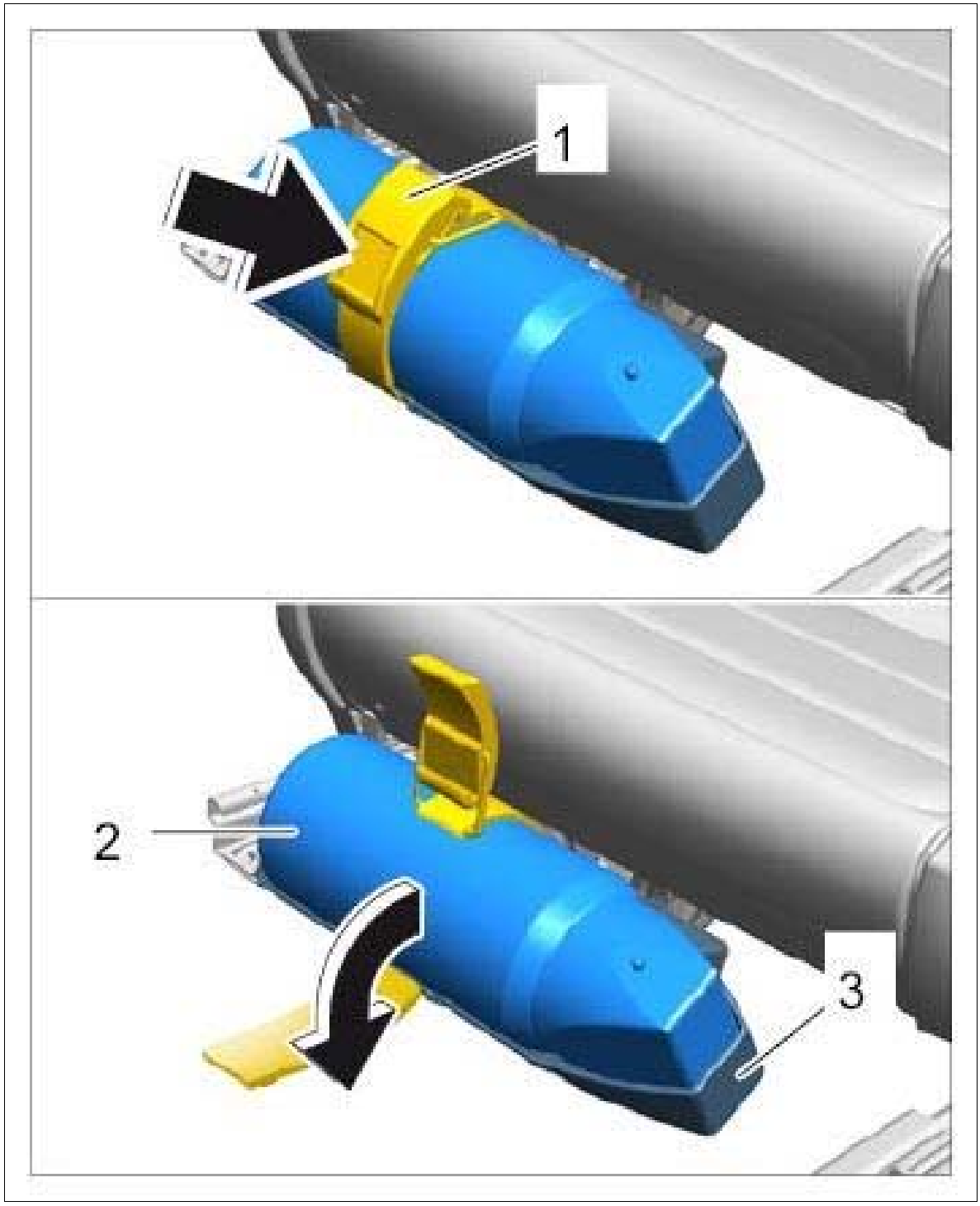

Courtesy of PORSCHE CARS NORTH AMERICA, INC.

2. Remove fire extinguisher **-2-** from the tray **-3- (-arrow-)** .

WM 689319 REMOVING AND INSTALLING FIRE EXTINGUISHER (MACAN, MACAN S, MACAN TURBO) > REMOVING HOLDER FOR FIRE EXTINGUISHER

1. Move front seat to the uppermost position.
2. Unscrew fastening screws **-1-** and remove holder **-2- (-arrows-)** .

Fig 1: Removing Fire Extinguisher Holder

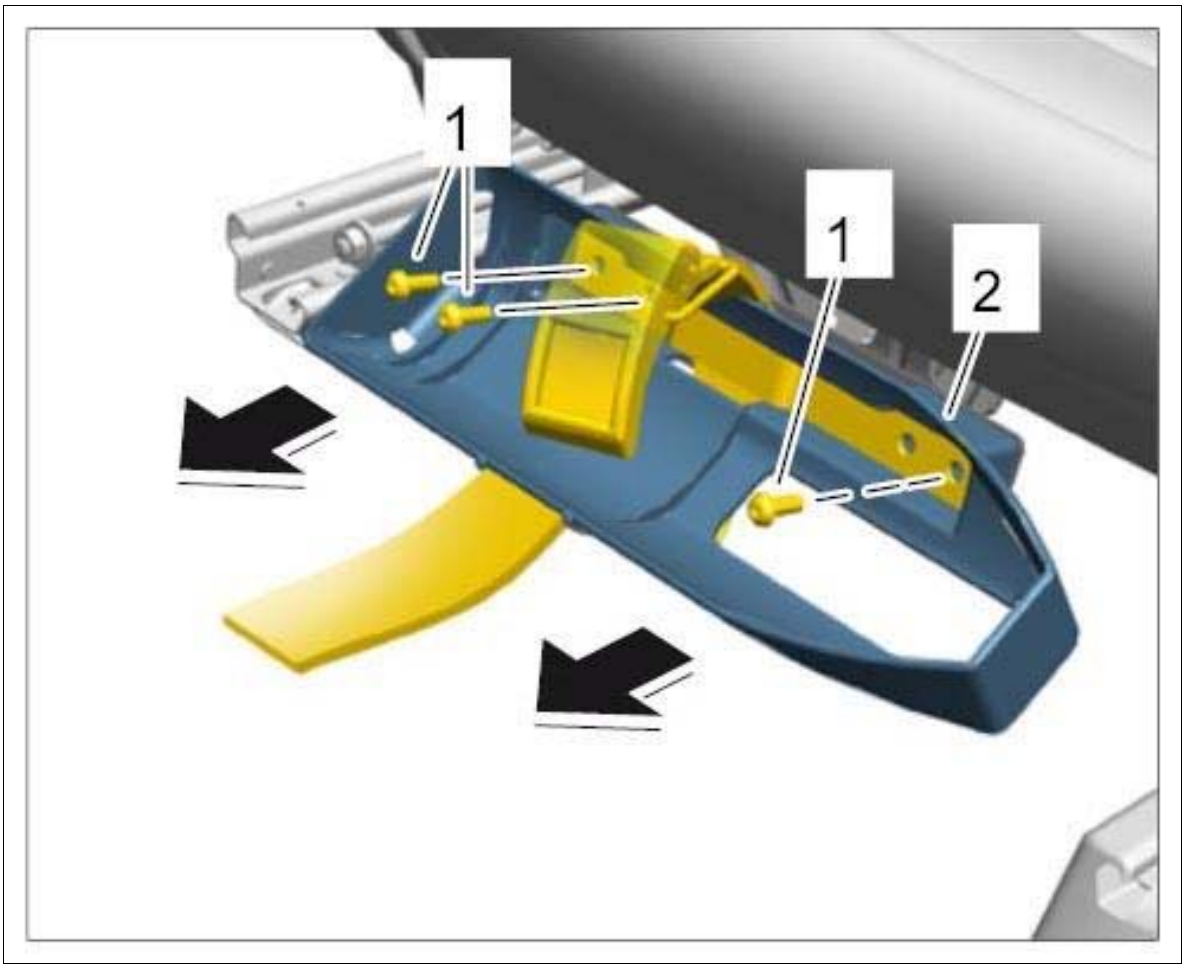

Courtesy of PORSCHE CARS NORTH AMERICA, INC.

WM 689319 REMOVING AND INSTALLING FIRE EXTINGUISHER (MACAN, MACAN S, MACAN TURBO) > INSTALLING FIRE EXTINGUISHER > INSTALLING HOLDER FOR FIRE EXTINGUISHER

1. Secure holder for fire extinguisher. **Tightening torque: 8 Nm (6 ftlb.) +/-1 Nm (+/-0.5 ftlb.)**

WM 689319 REMOVING AND INSTALLING FIRE EXTINGUISHER (MACAN, MACAN S, MACAN TURBO) > INSTALLING FIRE EXTINGUISHER > INSTALLING FIRE EXTINGUISHER

1. Position fire extinguisher in the holder and secure with the restraining strap.

WM 689619 REMOVING AND INSTALLING SUN BLIND ON DOOR WINDOW (MACAN, MACAN S, MACAN TURBO) > TECHNICAL VALUES

Location	Description	Type	Basic value	Tolerance 1	Tolerance 2
Sun blind to door panel		Tightening torque	2.3 Nm (1.5 ftlb.)		

WM 689619 REMOVING AND INSTALLING SUN BLIND ON DOOR WINDOW (MACAN, MACAN S, MACAN TURBO) > PRELIMINARY WORK

1. Remove rear door panel. → 707319 REMOVING AND INSTALLING REAR DOOR PANEL

WM 689619 REMOVING AND INSTALLING SUN BLIND ON DOOR WINDOW (MACAN, MACAN S, MACAN TURBO) > REMOVING SUN BLIND ON DOOR WINDOW

Information

- The number of fastening screws, fixing clips, plug connections, holders and trim panels can vary depending on equipment.
- The illustrations for removing and installing the drive mechanism are shown only on one equipment variant and may differ from the actual equipment variant.
- Some steps must be carried out automatically.
- Some of the repair illustrations show only one side of the vehicle.

1. Roll the sun blind **-2-** in fully.
2. Unclip trim **-1-** and remove it.
3. Unscrew fastening screws **-4-** .
4. Press sun blind **-2-** out of the guiding groove **-3-** on the door panel in direction of arrow.
5. Remove sun blind **-2-** from the door panel.

Fig 1: Removing Sun Blind From Door Panel

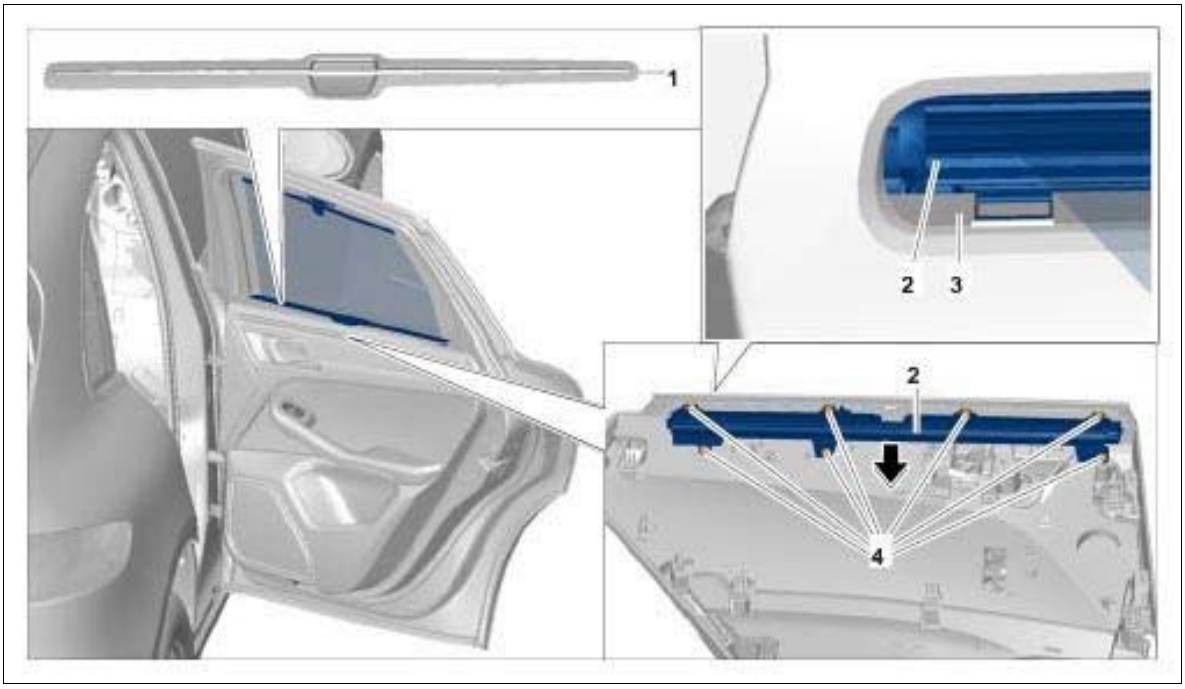

Courtesy of PORSCHE CARS NORTH AMERICA, INC.

WM 689619 REMOVING AND INSTALLING SUN BLIND ON DOOR WINDOW (MACAN, MACAN S, MACAN TURBO) > INSTALLING SUN BLIND ON DOOR WINDOW

Installation is performed in reverse order. Pay particular attention to the following:

1. Tighten fastening screws to the specified torque. **Tightening torque: 2.3 Nm (1.5 ftlb.)**

WM 689619 REMOVING AND INSTALLING SUN BLIND ON DOOR WINDOW (MACAN, MACAN S, MACAN TURBO) > SUBSEQUENT WORK

1. Install rear door panel. → INSTALLING REAR DOOR PANEL .

Service Manual: 70 - LININGS, INSULATION -- (95B) - MACAN

WM 700219 REMOVING AND INSTALLING FRONT TRIM PANEL (ALL MODELS) > TECHNICAL VALUES

Location	Description	Type	Basic value	Tolerance 1	Tolerance 2
Front trim panel to body	Tapping screw	Tightening torque	2 Nm (1.5 ftlb.)		

WM 700219 REMOVING AND INSTALLING FRONT TRIM PANEL (ALL MODELS) > PRELIMINARY WORK

Remove cover for front lock support. → Removing Cover For Front Lock Support

WM 700219 REMOVING AND INSTALLING FRONT TRIM PANEL (ALL MODELS) > REMOVING FRONT TRIM PANEL

Information

- The number of fastening screws, fixing clips, plug connections, holders and trim panels can vary depending on equipment.
- The illustrations for removing and installing the drive mechanism are shown only on one equipment variant and may differ from the actual equipment variant.
- Some steps must be carried out automatically.
- Some of the repair illustrations show only one side of the vehicle.

1. Pull expansion rivets **-3-** out of the front and rear section.
2. Unclip front section at the front **-arrows-** .
3. Guide front section out of the tabs **-2-** and remove it.
4. Unscrew fastening screw **-1-** , then guide tab on the rear section out of the lock support cover and remove trim panel.

Fig 1: Locating Front Trim Panel

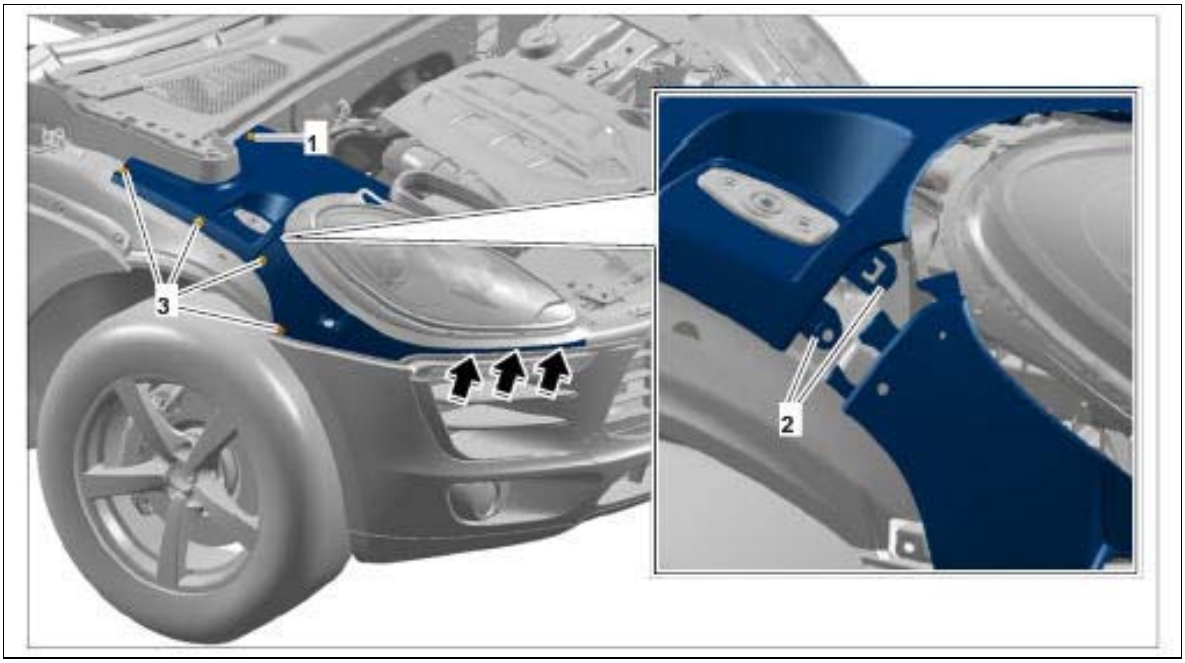

Courtesy of PORSCHE CARS NORTH AMERICA, INC.

WM 700219 REMOVING AND INSTALLING FRONT TRIM PANEL (ALL MODELS) > INSTALLING FRONT TRIM PANEL

Installation is performed in reverse order. Pay particular attention to the following:

1. Tighten fastening screw to the specified torque. **Tightening torque 2 Nm (1.5 ftlb.)**

WM 700219 REMOVING AND INSTALLING FRONT TRIM PANEL (ALL MODELS) > SUBSEQUENT WORK

Install cover for front lock support. → Installing Cover For Front Lock Support

WM 700319 REMOVING AND INSTALLING SIDE TRIM PANEL FOR REAR LUGGAGE COMPARTMENT (ALL MODELS) > PRELIMINARY WORK

1. Remove cover for rear lock support. → Removing Cover For Rear Lock Support

WM 700319 REMOVING AND INSTALLING SIDE TRIM PANEL FOR REAR LUGGAGE COMPARTMENT (ALL MODELS) > REMOVING SIDE TRIM PANEL FOR REAR LUGGAGE COMPARTMENT

Information

- The number of fastening screws, fixing clips, plug connections, holders and trim panels can vary depending on equipment.
- The illustrations for removing and installing the drive mechanism are shown only on one equipment variant and may differ from the actual equipment variant.
- Some steps must be carried out automatically.
- Some of the repair illustrations show only one side of the vehicle.

1. Fold out inner part **-1-** of side trim panel **-2-** .

   Only carry out Step 2 when removing the right side trim panel and on vehicles with a trailer hitch:

2. Release electric plug connection at the trailer hitch switch and disconnect it. → Removing Switch For Trailer Hitch
3. Guide out inner part **-1-** at the side trim panel **-2-** and remove it.
4. Fold the relevant rear seat forward.
5. Unclip side trim panel **-2-** at the body and fold it aside.
6. Release and disconnect electric plug connection at the luggage compartment lamp.

   Only carry out Step 7 when removing the left side trim panel.

7. Release and disconnect electric plug connection at the 12 V plug socket **-3-** .
8. Guide side trim panel **-2-** up and remove it.

Fig 1: Locating Side Luggage Compartment Trim Panel

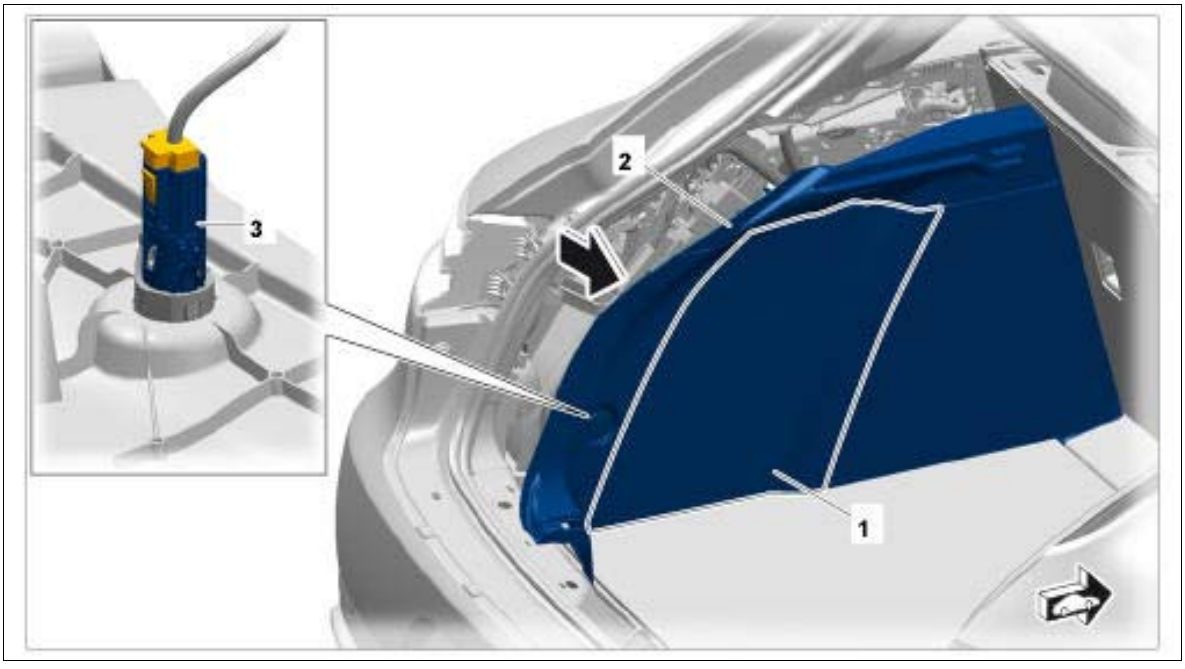

Courtesy of PORSCHE CARS NORTH AMERICA, INC.

WM 700319 REMOVING AND INSTALLING SIDE TRIM PANEL FOR REAR LUGGAGE COMPARTMENT (ALL MODELS) > REMOVING SIDE TRIM PANEL FOR REAR LUGGAGE COMPARTMENT > REMOVING UPPER PART OF SIDE TRIM PANEL FOR LUGGAGE COMPARTMENT

1. Unclip cover **-1-** .
2. Unclip upper trim panel **-2-** .
3. Guide the seat belt **-3-** out and remove upper trim panel **-2-** .

Fig 1: Removing Upper Trim Panel

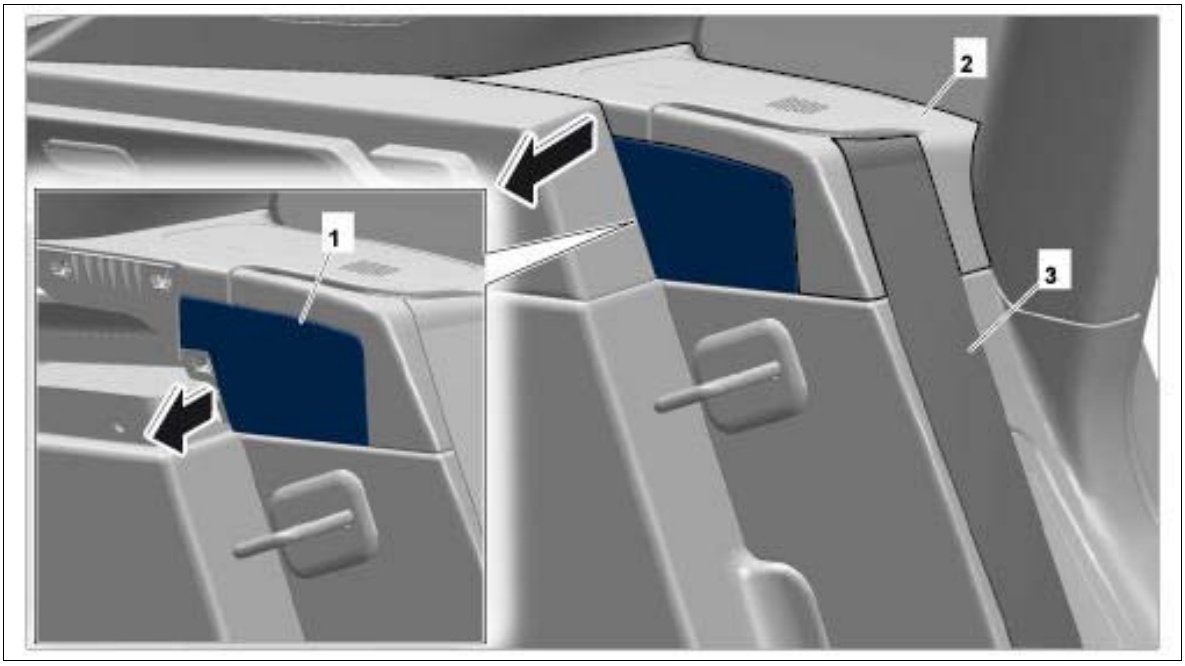

Courtesy of PORSCHE CARS NORTH AMERICA, INC.

WM 700319 REMOVING AND INSTALLING SIDE TRIM PANEL FOR REAR LUGGAGE COMPARTMENT (ALL MODELS) > INSTALLING SIDE TRIM PANEL FOR REAR LUGGAGE COMPARTMENT

Information

Check that all fixing clips are positioned fully and correctly.

Check that the fixing clips are not bent or broken.

Replace damaged or missing clips with new ones.

Installation is performed in reverse order. Pay particular attention to the following:

1. Place rubber seal for rear door panel over the side trim panel.

WM 700319 REMOVING AND INSTALLING SIDE TRIM PANEL FOR REAR LUGGAGE COMPARTMENT (ALL MODELS) > SUBSEQUENT WORK

1. Install cover for rear lock support. → Installing Cover For Rear Lock Support

WM 700419 REMOVING AND INSTALLING INSULATION FOR FRONT LID (ALL MODELS) > REMOVING INSULATION FOR FRONT LID

Fig 1: Identifying Front Lid Position



Courtesy of PORSCHE CARS NORTH AMERICA, INC.

1. Open the engine compartment lid.
2. Carefully insert a suitable tool between the insulation **-1-** and retaining clips.
    1. 2.1. Push locking lug of retaining clip towards **-A-** .
    2. 2.2. Disengage and remove retaining clips. **-B-**

Fig 2: Removing Front Lid Insulation

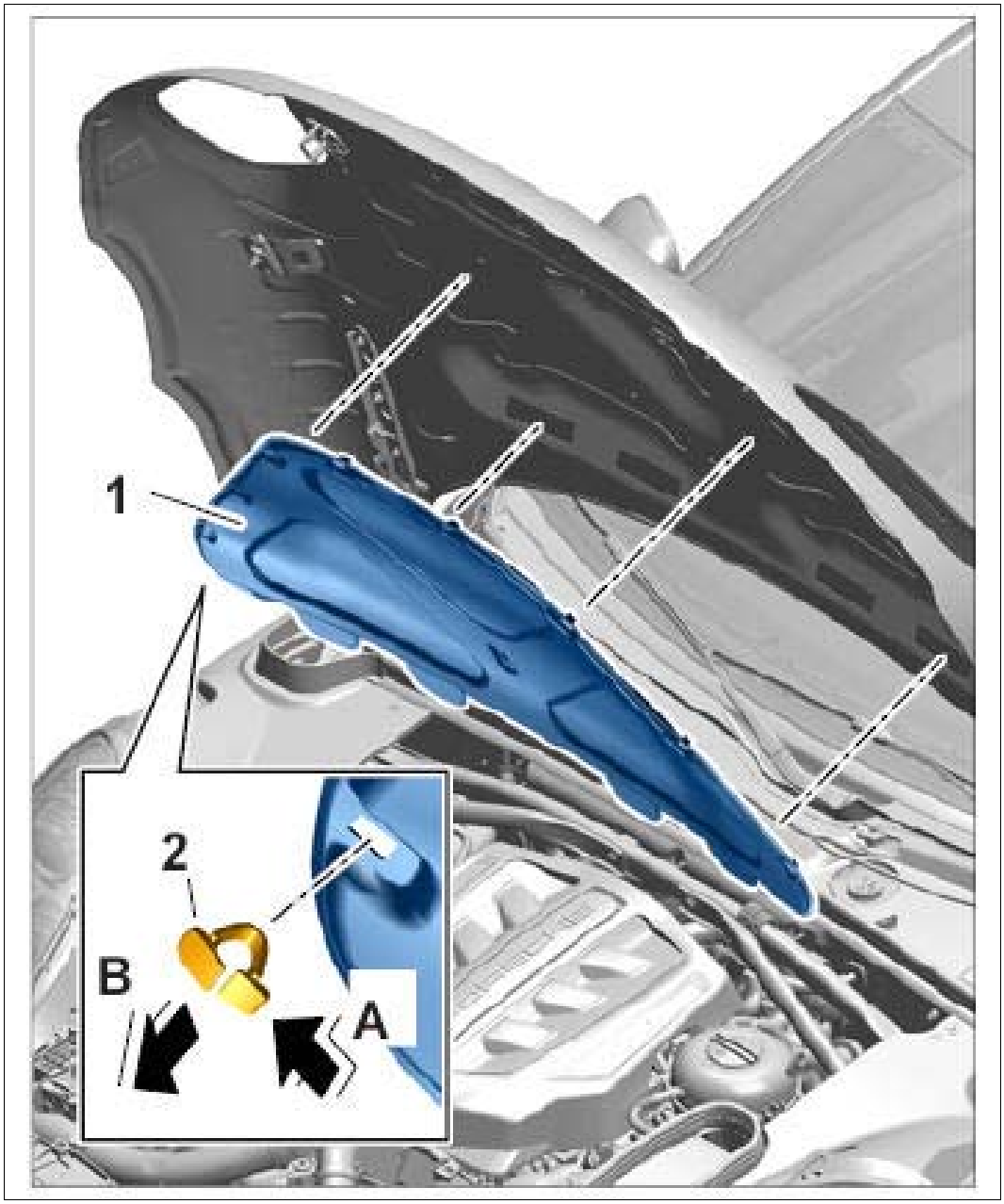

Courtesy of PORSCHE CARS NORTH AMERICA, INC.

3. Remove the insulation by pulling it forward.

WM 700419 REMOVING AND INSTALLING INSULATION FOR FRONT LID (ALL MODELS) > INSTALLING INSULATION FOR FRONT LID

Information

Check that all fixing clips are positioned fully and correctly.

Check that the fixing clips are not bent or broken.

Replace damaged or missing clips with new ones.

1. Installation is performed in reverse order to removal.

WM 700619 REMOVING AND INSTALLING CENTRE TRIM PANEL FOR LUGGAGE COMPARTMENT (LUGGAGE COMPARTMENT COVER) (ALL MODELS) > REMOVING CENTRE TRIM PANEL FOR LUGGAGE COMPARTMENT (LUGGAGE COMPARTMENT COVER) > REMOVING CENTRE TRIM PANEL ON LUGGAGE COMPARTMENT

1. Lift up center part of luggage compartment cover **-1-** and pull it to the rear.

   Fig 1: Identifying Centre Luggage Compartment Cover

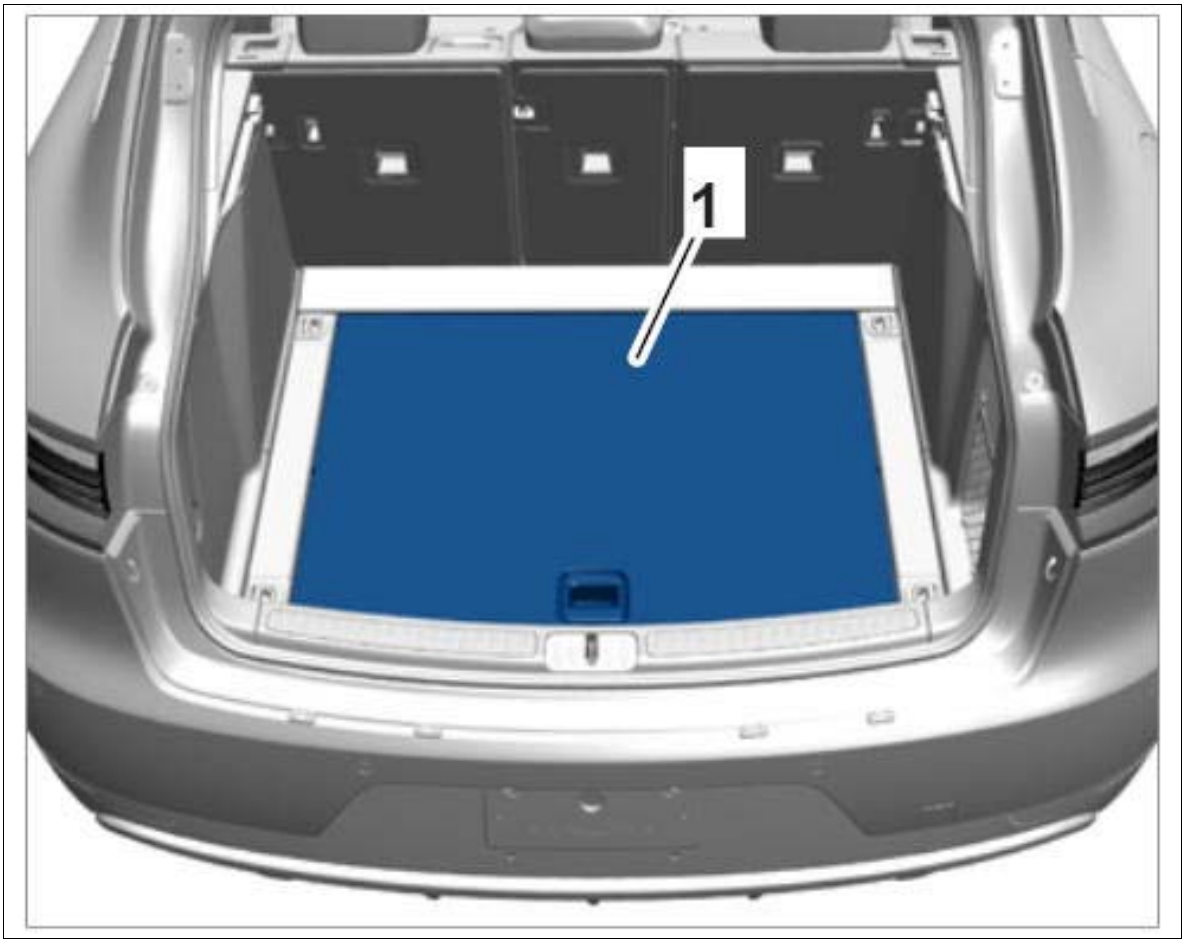

Courtesy of PORSCHE CARS NORTH AMERICA, INC.

2. Remove center luggage compartment cover by pulling it upwards.

WM 700619 REMOVING AND INSTALLING CENTRE TRIM PANEL FOR LUGGAGE COMPARTMENT (LUGGAGE COMPARTMENT COVER) (ALL MODELS) > REMOVING CENTRE TRIM PANEL FOR LUGGAGE COMPARTMENT (LUGGAGE COMPARTMENT COVER) > REMOVING CENTRE LUGGAGE COMPARTMENT COVER AT THE REAR

1. Swivel rear luggage compartment cover **-1-** upwards and pull it to the rear and out of the bracket **-arrow-** .

Fig 1: Removing Rear Luggage Compartment Cover

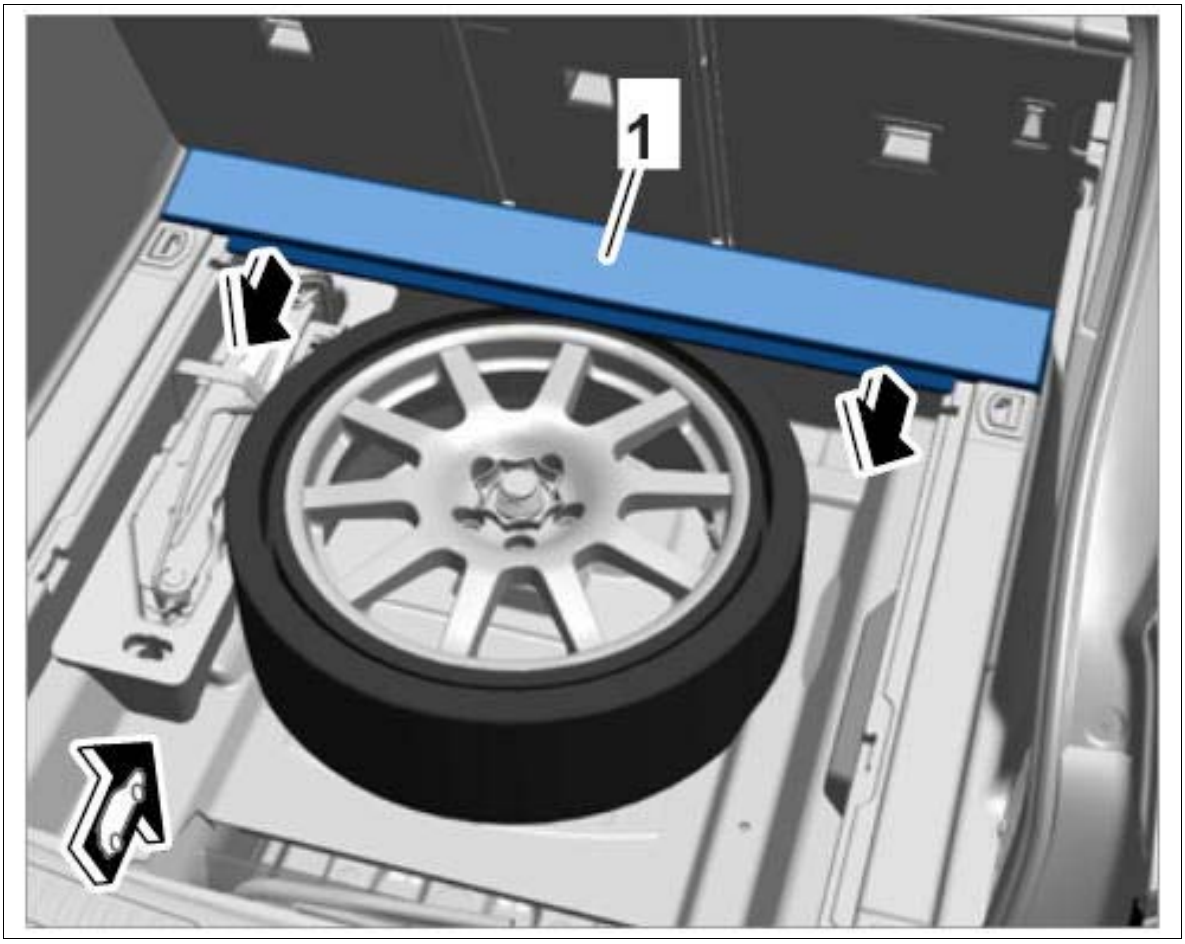

Courtesy of PORSCHE CARS NORTH AMERICA, INC.

WM 700619 REMOVING AND INSTALLING CENTRE TRIM PANEL FOR LUGGAGE COMPARTMENT (LUGGAGE COMPARTMENT COVER) (ALL MODELS) > INSTALLING CENTRE TRIM PANEL FOR LUGGAGE COMPARTMENT (LUGGAGE COMPARTMENT COVER)

1. Installation is performed in reverse order to removal.

WM 700619 REMOVING AND INSTALLING TRIM PANEL FOR LUGGAGE COMPARTMENT (LUGGAGE COMPARTMENT COVER) AT THE SIDES (ALL MODELS) > TECHNICAL VALUES

Location	Description	Type	Basic value	Tolerance 1	Tolerance 2
Fastening		Tightening	8 Nm (6 ftlb.)		

screw for lashing point		torque			

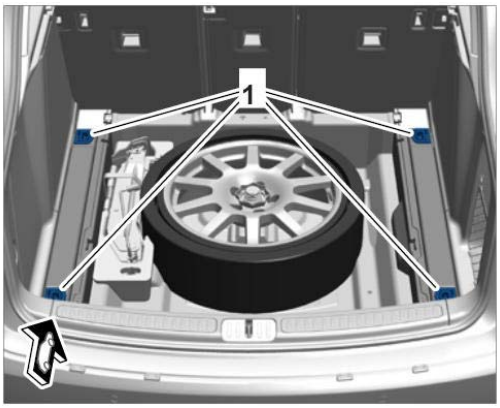

Lashing points

WM 700619 REMOVING AND INSTALLING TRIM PANEL FOR LUGGAGE COMPARTMENT (LUGGAGE COMPARTMENT COVER) AT THE SIDES (ALL MODELS) > PRELIMINARY WORK

1. Remove center luggage compartment cover. → Removing Centre Trim Panel For Luggage Compartment (Luggage Compartment Cover)

WM 700619 REMOVING AND INSTALLING TRIM PANEL FOR LUGGAGE COMPARTMENT (LUGGAGE COMPARTMENT COVER) AT THE SIDES (ALL MODELS) > REMOVING TRIM PANEL FOR LUGGAGE COMPARTMENT (LUGGAGE COMPARTMENT COVER) AT THE SIDES

1. Fold up the tabs at the lashing points and unscrew and remove fastening screws **-1-** .

Fig 1: Identifying Luggage Compartment Trim Panel Lashing Points

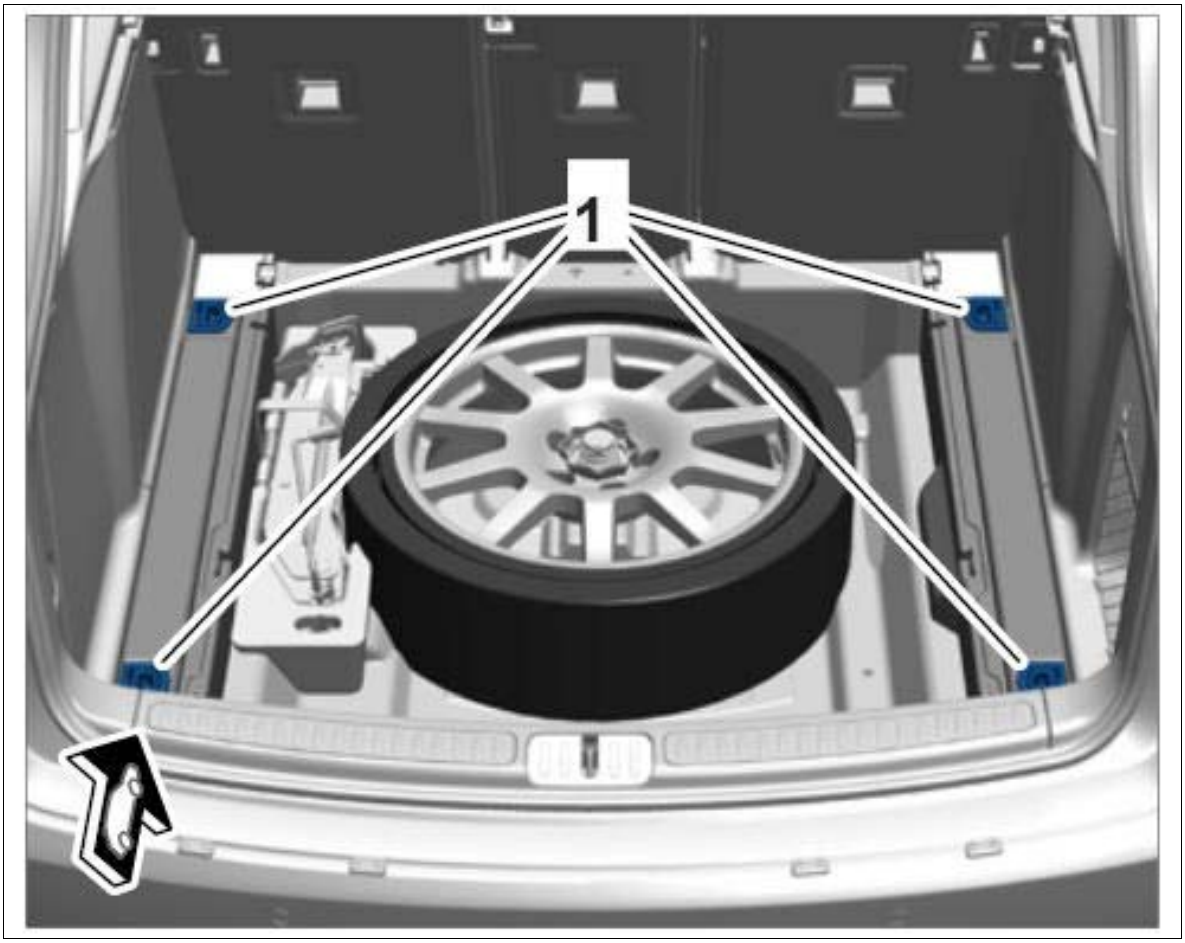

Courtesy of PORSCHE CARS NORTH AMERICA, INC.

2. Remove lashing points by pulling them up.
3. Remove side luggage compartment cover **-1-** by pulling it up out of the bracket.

Fig 2: Removing Side Luggage Compartment Cover

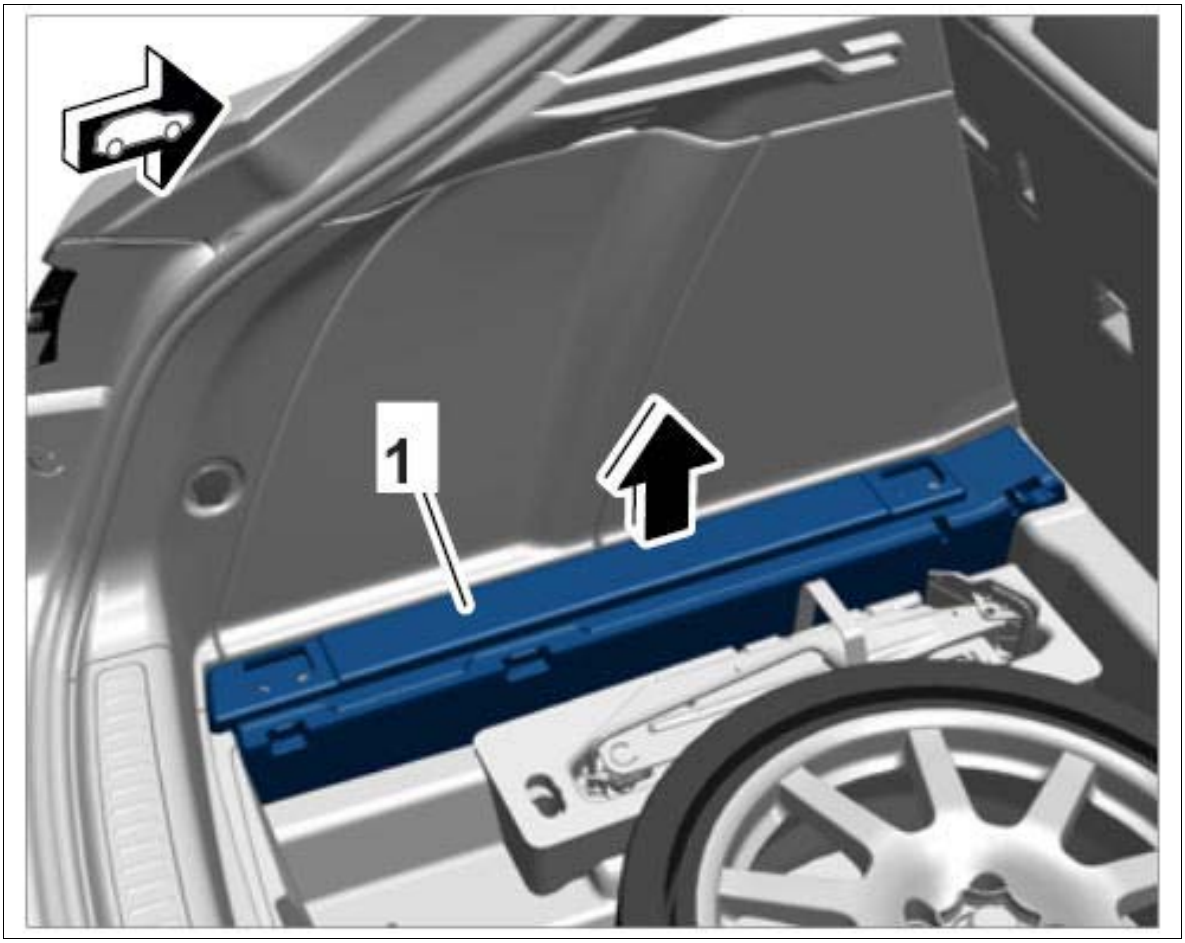

Courtesy of PORSCHE CARS NORTH AMERICA, INC.

WM 700619 REMOVING AND INSTALLING TRIM PANEL FOR LUGGAGE COMPARTMENT (LUGGAGE COMPARTMENT COVER) AT THE SIDES (ALL MODELS) > INSTALLING TRIM PANEL FOR LUGGAGE COMPARTMENT (LUGGAGE COMPARTMENT COVER) AT THE SIDES > INSTALLING TRIM PANEL FOR LUGGAGE COMPARTMENT (LUGGAGE COMPARTMENT COVER) AT THE SIDES

1. Installation is performed in reverse order to removal.
2. Tighten lashing points to the specified tightening torque **Tightening torque 8 Nm (6 ftlb.)** until secure

WM 700619 REMOVING AND INSTALLING TRIM PANEL FOR LUGGAGE COMPARTMENT (LUGGAGE COMPARTMENT COVER) AT THE SIDES (ALL MODELS) > SUBSEQUENT WORK

1. Install luggage compartment cover at the center. → Installing Centre Trim Panel For Luggage

Compartment (Luggage Compartment Cover)

WM 701619 REMOVING AND INSTALLING DASHBOARD TRIM PANEL (ALL MODELS) > REMOVING DASHBOARD TRIM PANEL

Information

- The number of fastening screws, fixing clips, plug connections, holders and trim panels can vary depending on equipment.
- The illustrations for removing and installing the drive mechanism are shown only on one equipment variant and may differ from the actual equipment variant.
- Some steps must be carried out automatically.
- Some of the repair illustrations show only one side of the vehicle.

1. Unclip trim **-1-** at the dashboard and remove it.

    1. 1.1. Position a suitable tool at the cut-out **-2-** between the trim panel **-1-** and dashboard.
    2. 1.2. Unclip trim panel **-1-** near the fixing clips on the dashboard.
    3. 1.3. Guide trim **-1-** out of the brackets **-3-** for the side-section trim panel at the front and remove it.

Fig 1: Removing Outer Dashboard Trim Panel

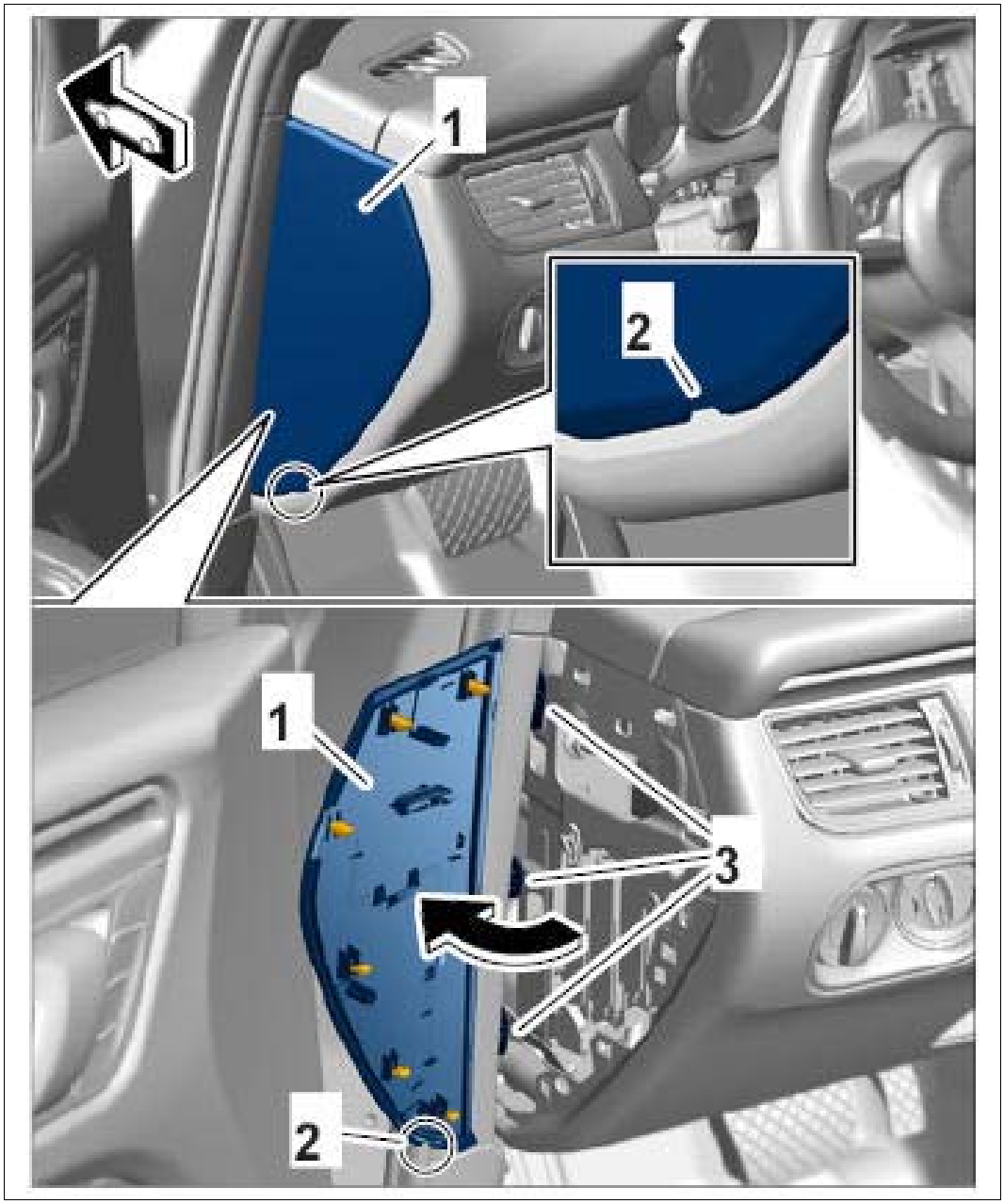

Courtesy of PORSCHE CARS NORTH AMERICA, INC.

WM 701619 REMOVING AND INSTALLING DASHBOARD TRIM PANEL (ALL MODELS) > INSTALLING DASHBOARD TRIM PANEL

Information

Check that all fixing clips are positioned fully and correctly.

Check that the fixing clips are not bent or broken.

Replace damaged or missing clips with new ones.

Installation is performed in reverse order.

WM 701819 REMOVING AND INSTALLING DASHBOARD (ALL MODELS) > TECHNICAL VALUES

Location	Description	Type	Basic value	Tolerance 1	Tolerance 2
Upper air guide to dashboard bracket		Tightening torque	3 Nm (2 ftlb.)		
Lower air guide to dashboard bracket		Tightening torque	1.5 Nm (1 ftlb.)		
Dashboard to lower bracket		Tightening torque	3 Nm (2 ftlb.)		
Dashboard to upper bracket		Tightening torque	3 Nm (2 ftlb.)		
Airbag to dashboard		Tightening torque	9 Nm (6.5 ftlb.)		
Airbag bracket to dashboard bracket		Tightening torque	4.5 Nm (3 ftlb.)		

WM 701819 REMOVING AND INSTALLING DASHBOARD (ALL MODELS) > PRELIMINARY WORK

1. Remove glove compartment. → Removing Glove Compartment
2. Remove trim panel under dashboard at the left. → Removing Trim Panel Under Dashboard At The Left
3. Remove PCM display and operator control unit. → Removing PCM display and operator control unit
4. Remove cover for dashboard (defroster trim). → Removing Cover For Dashboard (Defroster Trim)
5. Remove cover for left loudspeaker. → Removing Cover For Left Loudspeaker
6. Remove cover for right loudspeaker. → Removing Cover For Right Loudspeaker
7. Remove steering wheel. → Removing And Installing Steering Wheel
8. Remove instrument cluster. → Removing Instrument Cluster

WM 701819 REMOVING AND INSTALLING DASHBOARD (ALL MODELS) > REMOVING DASHBOARD

Information

- The number of fastening screws, fixing clips, plug connections, holders and trim panels can vary depending on equipment.
- The illustrations for removing and installing the drive mechanism are shown only on one equipment variant and may differ from the actual equipment variant.
- Some steps must be carried out automatically.
- Some of the repair illustrations show only one side of the vehicle.

1. Cover center console with protective mat.
2. Unscrew fastening screws **-1, 2-** .
3. Unscrew fastening screw **-3-** .
4. Release and disconnect electric plug connections **-4, 5-** on temperature sensors.
5. Remove side air guides.

Fig 1: Removing Side Air Guides

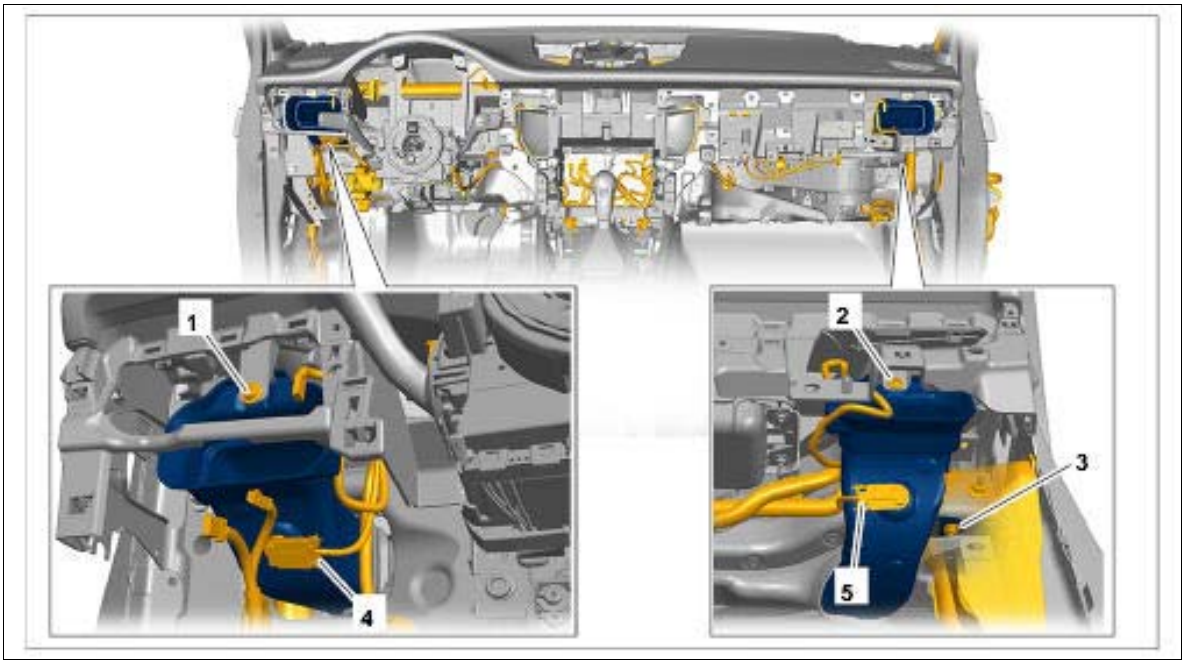

Courtesy of PORSCHE CARS NORTH AMERICA, INC.

6. Unscrew fastening screws **-1-** for passenger's airbag.
7. Unscrew fastening screw **-2-** securing holder to bracket.
8. Unscrew side fastening screws **-3-** securing bracket to dashboard.

Fig 2: Identifying Passenger Airbag And Side Mounting

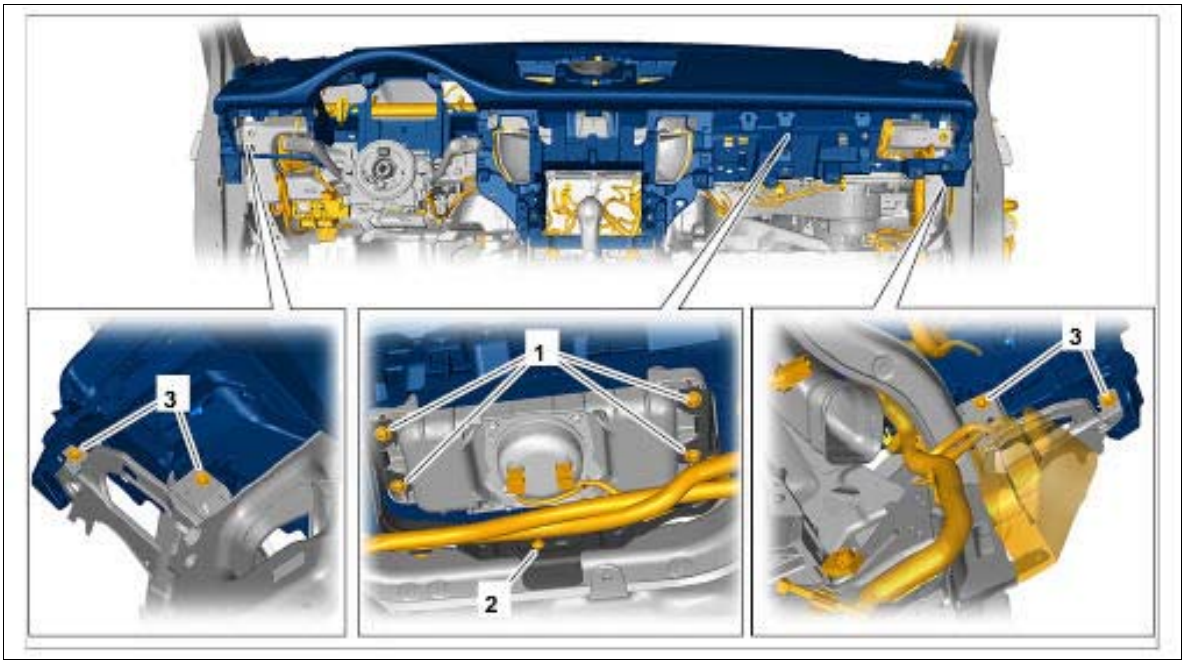

Courtesy of PORSCHE CARS NORTH AMERICA, INC.

9. Unscrew fastening screw **-3-** .
10. Unscrew fastening screws **-2-** .
11. Unscrew fastening screws **-1-** .

Fig 3: Identifying Front Mounting Screws

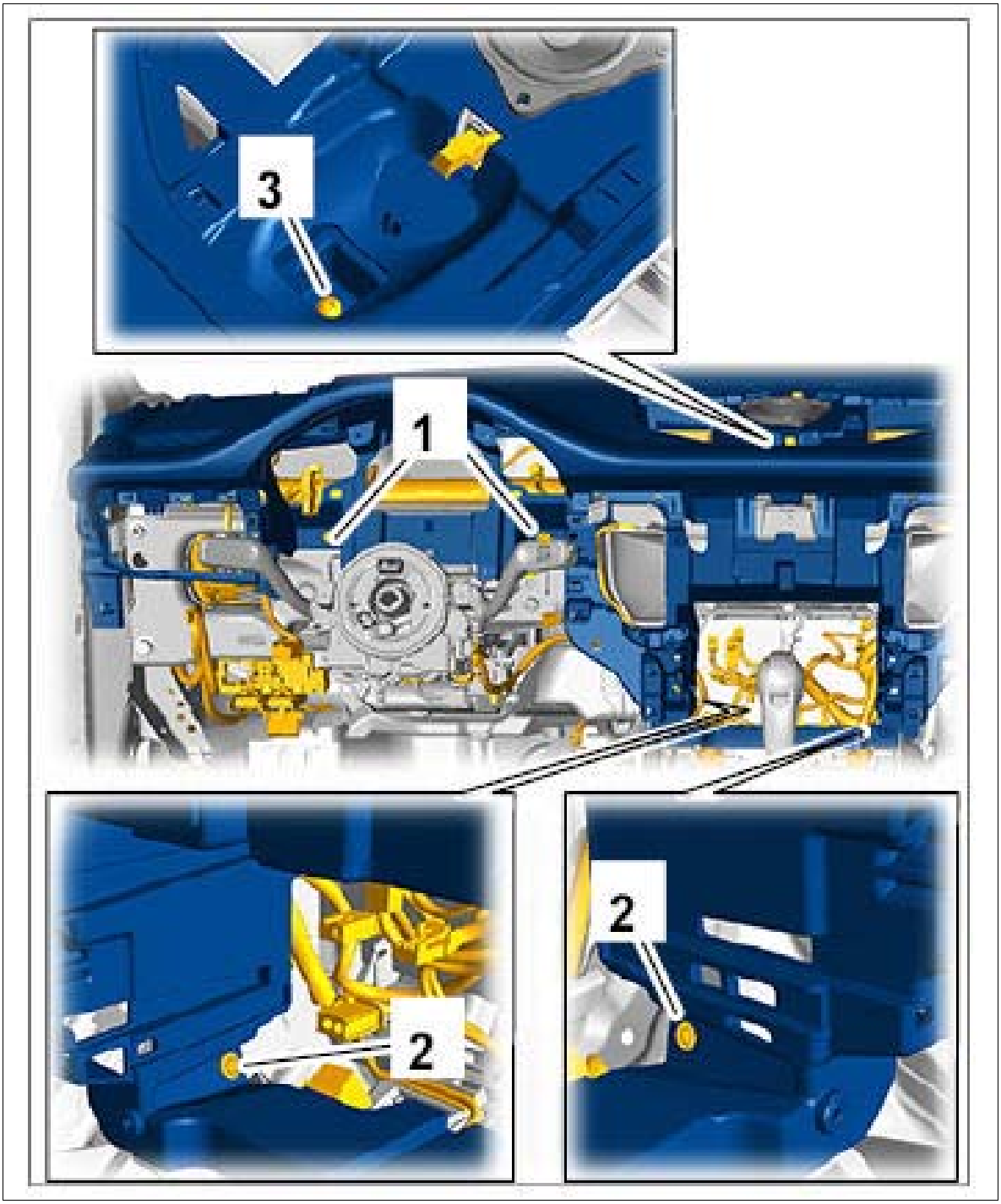

Courtesy of PORSCHE CARS NORTH AMERICA, INC.

12. Pull dashboard forward and lift it up slightly.
13. Guide all electric lines **-1-** through the dashboard.

Fig 4: Identifying Dashboard Electric Lines

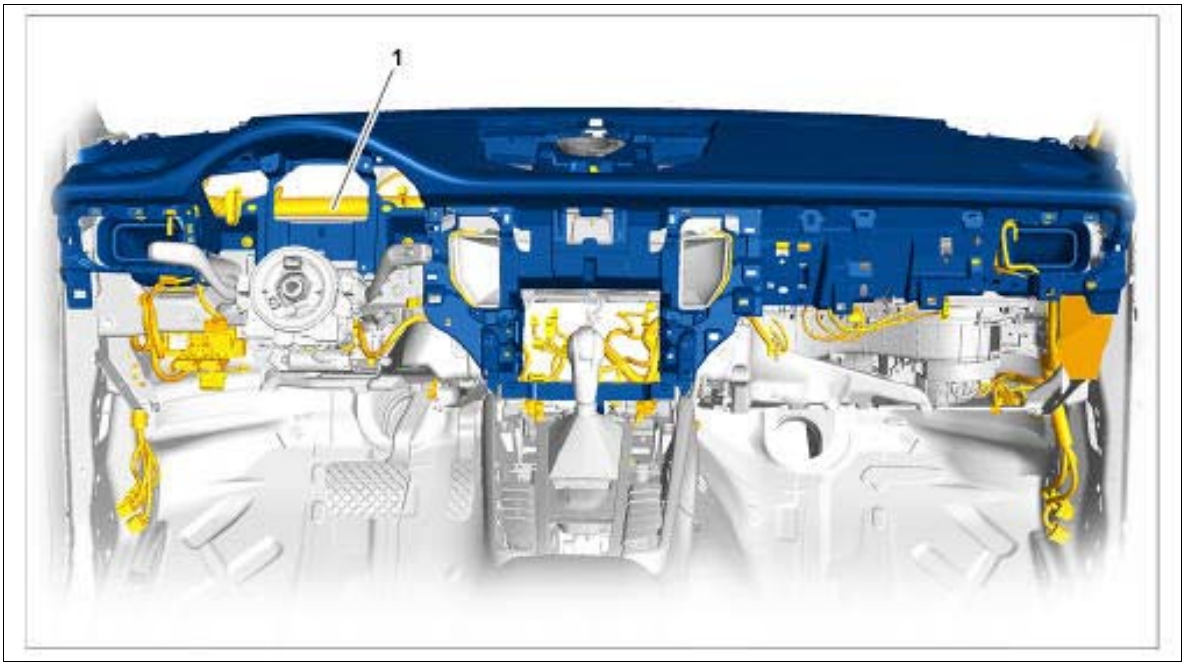

Courtesy of PORSCHE CARS NORTH AMERICA, INC.

14. Release and disconnect electric plug connections **-1-** for loudspeakers.

    1. 14.1. Note: Remove the loudspeakers when replacing the dashboard

15. Unclip electric line **-2-** at the dashboard.

    The help of another person is needed for Step 16.

16. Remove dashboard.

Fig 5: Identifying Electric Plug Connections

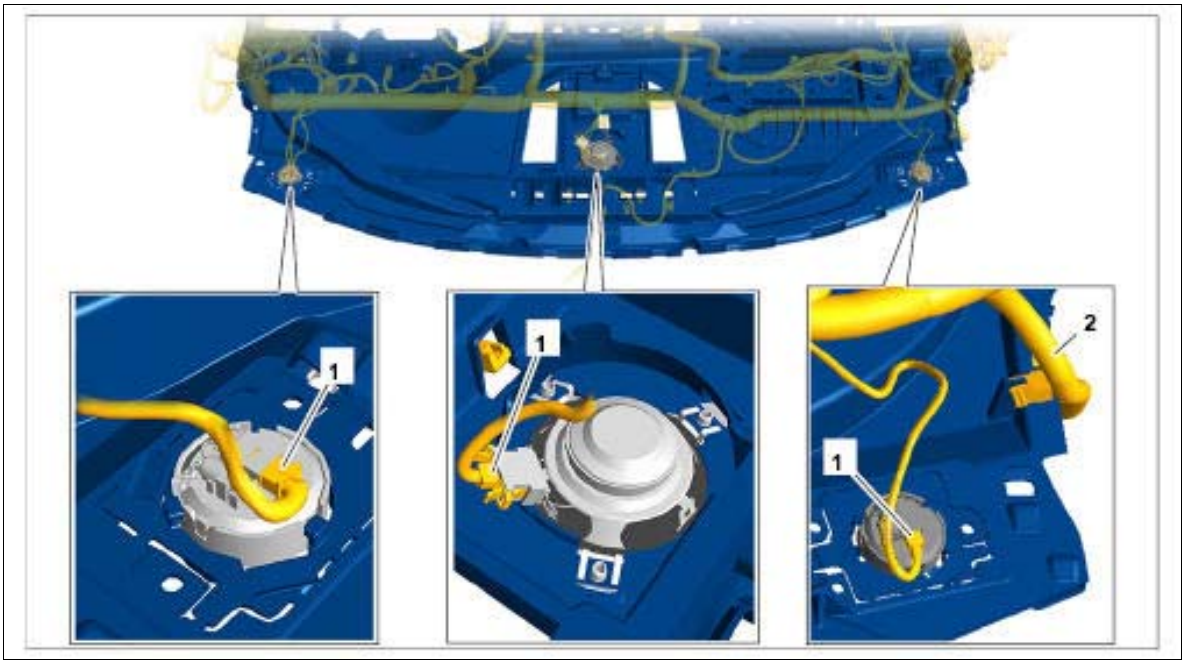

Courtesy of PORSCHE CARS NORTH AMERICA, INC.

WM 701819 REMOVING AND INSTALLING DASHBOARD (ALL MODELS) > INSTALLING DASHBOARD

Installation is performed in reverse order. Pay particular attention to the following:

1. Engage tabs **-1-** for the dashboard **-2-** in brackets **-3-** on the body.
2. Check that the dashboard is fitted correctly at the contact surfaces.
3. The electric lines must be routed correctly and must not be kinked or trapped.

Fig 1: Removing Dashboard Holder

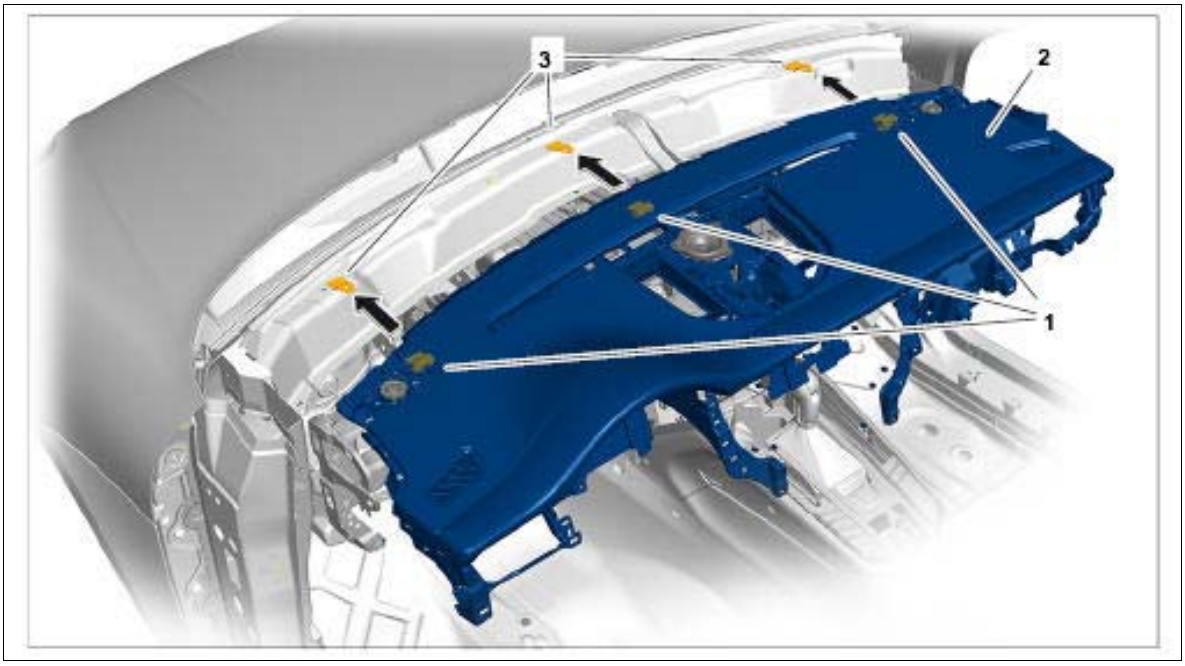

Courtesy of PORSCHE CARS NORTH AMERICA, INC.

4. Tighten top fastening screws securing the dashboard to the bracket to the specified torque.
   Tightening torque 3 Nm (2 ftlb.)
5. Tighten bottom fastening screws securing the dashboard to the bracket to the specified torque.
   Tightening torque 3 Nm (2 ftlb.)
6. Tighten fastening screw securing airbag bracket to dashboard bracket to the specified torque.
   Tightening torque 4.5 Nm (3 ftlb.)
7. Tighten fastening screws securing passenger's airbag to dashboard to the specified torque.
   Tightening torque 9 Nm (6.5 ftlb.)
8. Tighten fastening screws securing lower air guide to bracket to the specified torque.
   Tightening torque 1.5 Nm (1 ftlb.)
9. Tighten fastening screws securing upper air guide to bracket to the specified torque.
   Tightening torque 3 Nm (2 ftlb.)

WM 701819 REMOVING AND INSTALLING DASHBOARD (ALL MODELS) > SUBSEQUENT WORK

1. Install instrument cluster. → Installing Instrument Cluster
2. Install glove compartment. → Installing Glove Compartment
3. Install steering wheel. → Installing Steering Wheel
4. Install trim panel under dashboard at the left. → Installing Trim Panel Under Dashboard At The Left
5. Install PCM display and operator control unit. → Installing PCM display and operator control unit
6. Install cover for dashboard (defroster trim). → Installing Cover For Dashboard (Defroster Trim)
7. Install cover for left loudspeaker. → Installing Cover For Left Loudspeaker
8. Install cover for right loudspeaker. → Installing Cover For Right Loudspeaker

WM 701919 REMOVING AND INSTALLING TRIM PANEL UNDER DASHBOARD AT THE RIGHT (ALL MODELS) > TECHNICAL VALUES

Location	Description	Type	Basic value	Tolerance 1	Tolerance 2
Fastening screws for trim panel under dashboard		Tightening torque	3 Nm (2 ftlb.)		

WM 701919 REMOVING AND INSTALLING TRIM PANEL UNDER DASHBOARD AT THE RIGHT (ALL MODELS) > PRELIMINARY WORK

1. Remove dashboard molding on passenger's side. → Removing Dashboard Molding On Passenger's Side
2. Remove dashboard trim panel at the right. → Removing Dashboard Trim Panel

WM 701919 REMOVING AND INSTALLING TRIM PANEL UNDER DASHBOARD AT THE RIGHT (ALL MODELS) > REMOVING TRIM PANEL UNDER DASHBOARD AT THE RIGHT

Information

- The number of fastening screws, fixing clips, plug connections, holders and trim panels can vary

depending on equipment.

- The illustrations for removing and installing the drive mechanism are shown only on one equipment variant and may differ from the actual equipment variant.
- Some steps must be carried out automatically.
- Some of the repair illustrations show only one side of the vehicle.

1. Unscrew fastening screws **-1-** .
2. Unclip trim panel **-2-** at the dashboard and remove trim panel **-2-** .

Fig 1: Identifying Trim Panel Under Dashboard (Right)

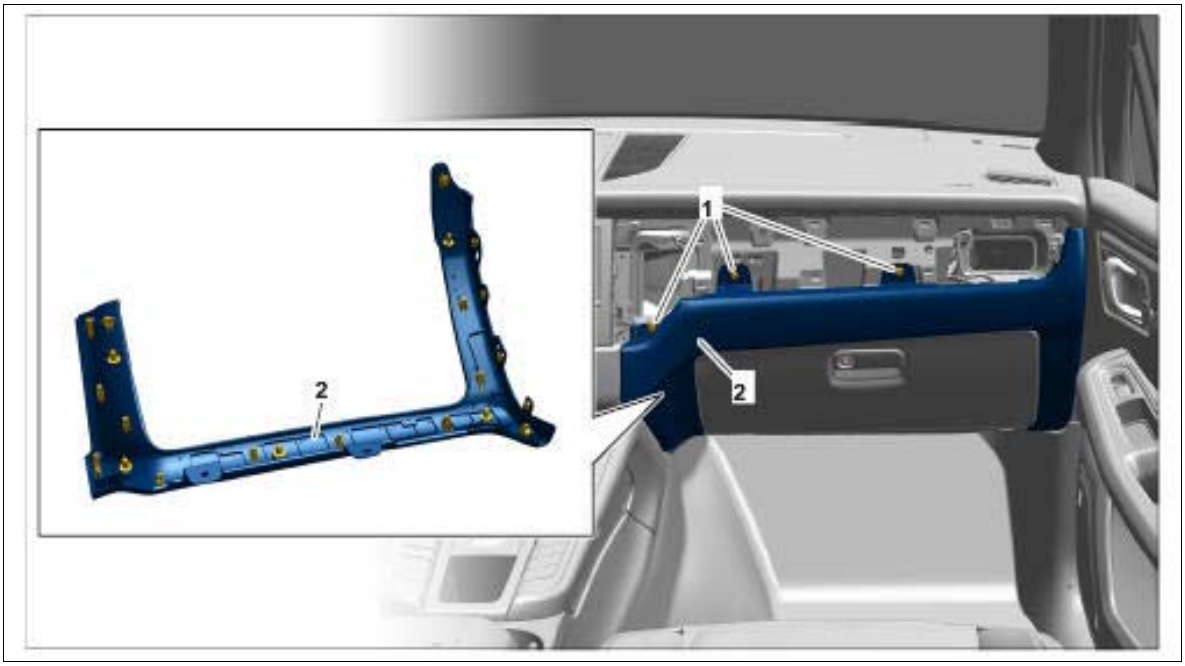

Courtesy of PORSCHE CARS NORTH AMERICA, INC.

WM 701919 REMOVING AND INSTALLING TRIM PANEL UNDER DASHBOARD AT THE RIGHT (ALL MODELS) > INSTALLING TRIM PANEL UNDER DASHBOARD AT THE RIGHT

Information

Check that all fixing clips are positioned fully and correctly.

Check that the fixing clips are not bent or broken.

Replace damaged or missing clips with new ones.

Installation is performed in reverse order. Pay particular attention to the following:

1. Tighten fastening screws to the specified torque. **Tightening torque 3 Nm (2 ftlb.)**

WM 701919 REMOVING AND INSTALLING TRIM PANEL UNDER DASHBOARD AT THE RIGHT (ALL MODELS) > SUBSEQUENT WORK

1. Install dashboard trim panel at the right. → Installing Dashboard Trim Panel
2. Install dashboard molding on passenger's side. → Installing Dashboard Trim Panel

WM 701919 REMOVING AND INSTALLING TRIM PANEL UNDER DASHBOARD AT THE LEFT (ALL MODELS) > TECHNICAL VALUES

Location	Description	Type	Basic value	Tolerance 1	Tolerance 2
Fastening screws for trim panel under dashboard		Tightening torque	4.5 Nm (3 ftlb.)		

WM 701919 REMOVING AND INSTALLING TRIM PANEL UNDER DASHBOARD AT THE LEFT (ALL MODELS) > PRELIMINARY WORK

1. Remove dashboard molding on driver's side at the right. → Removing Dashboard Molding On Driver's Side At The Right
2. Remove trim panel for dashboard at the left. → Removing Dashboard Trim Panel

WM 701919 REMOVING AND INSTALLING TRIM PANEL UNDER DASHBOARD AT THE LEFT (ALL MODELS) > REMOVING TRIM PANEL UNDER DASHBOARD AT THE LEFT

Information

- The number of fastening screws, fixing clips, plug connections, holders and trim panels can vary depending on equipment.
- The illustrations for removing and installing the drive mechanism are shown only on one equipment variant and may differ from the actual equipment variant.
- Some steps must be carried out automatically.
- Some of the repair illustrations show only one side of the vehicle.

1. Move front seat to the rearmost position.
2. Unscrew fastening screws **-1-** at the bottom of the dashboard.
3. Unscrew fastening screw **-2-** at the left of the dashboard.
4. Unscrew fastening screw **-3-** at the front of the dashboard.

5. Unclip trim panel **-4-** on dashboard and pull it down slightly.

Fig 1: Removing Trim Panel Under Dashboard

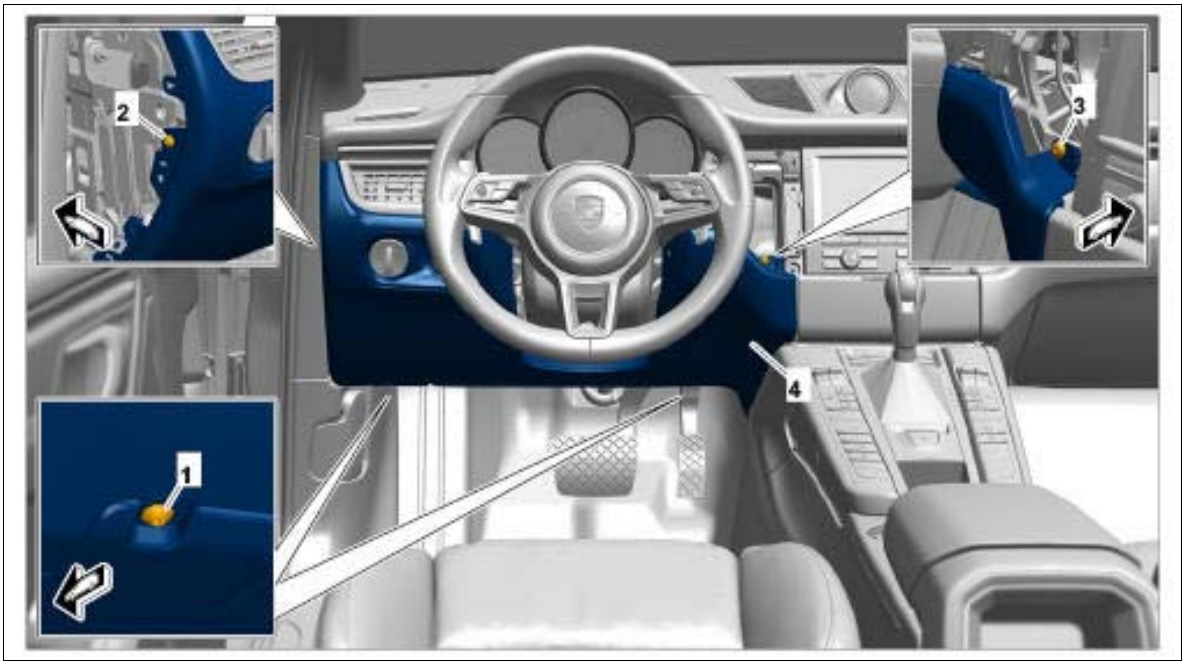

Courtesy of PORSCHE CARS NORTH AMERICA, INC.

6. Disconnect electric plug connections at the rotary light switch **-1-** , ignition starter switch light **-2-** , ignition starter switch **-3-** and temperature sensor **-4-** .
7. Release and disconnect electric plug connection at the footwell light.
8. Remove diagnostic socket **-5-** on the trim panel **-6-** .
9. Guide out tab for footrest **-7-** at the trim panel **-6-** and remove trim panel **-6-** .

Fig 2: Identifying Trim Panel Under Dashboard

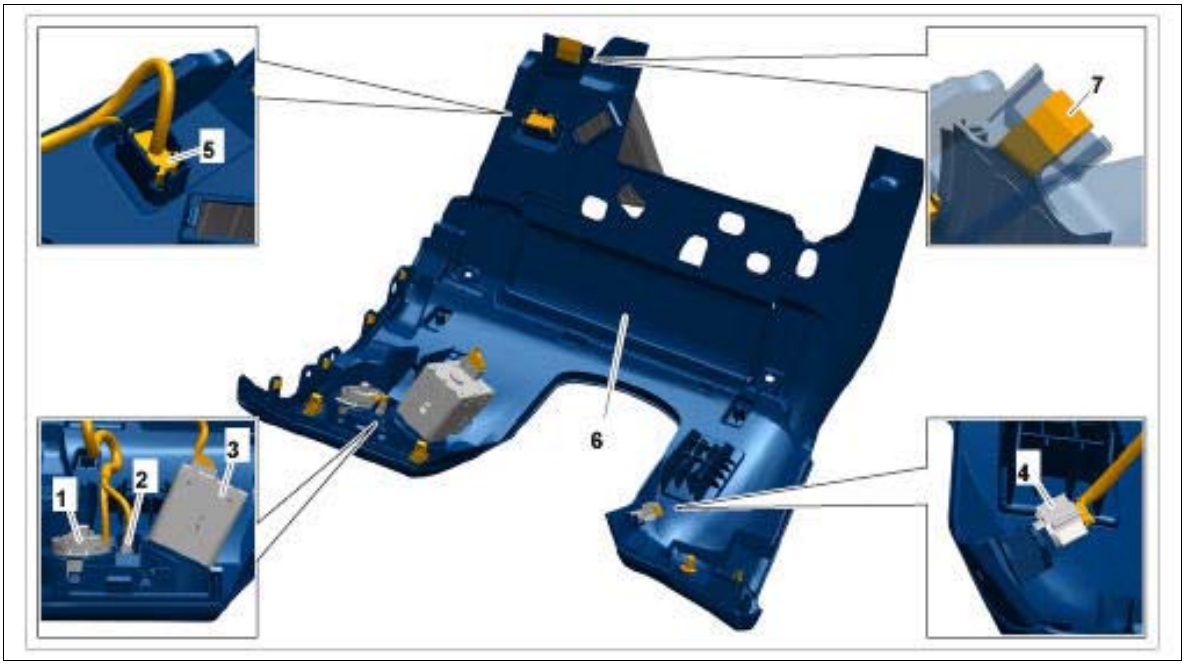

Courtesy of PORSCHE CARS NORTH AMERICA, INC.

WM 701919 REMOVING AND INSTALLING TRIM PANEL UNDER DASHBOARD AT THE LEFT (ALL MODELS) > INSTALLING TRIM PANEL UNDER DASHBOARD AT THE LEFT

Information

Check that all fixing clips are positioned fully and correctly.

Check that the fixing clips are not bent or broken.

Replace damaged or missing clips with new ones.

Installation is performed in reverse order. Pay particular attention to the following:

1. Tighten fastening screws to the specified torque. **Tightening torque 4.5 Nm (3 ftlb.)**

WM 701919 REMOVING AND INSTALLING TRIM PANEL UNDER DASHBOARD AT THE LEFT (ALL MODELS) > SUBSEQUENT WORK

1. Install dashboard molding on driver's side (right). → Installing Dashboard Molding On Driver's Side At The Right
2. Install left dashboard trim panel. → Installing Dashboard Trim Panel

WM 702019 REMOVING AND INSTALLING COVER FOR DASHBOARD (DEFROSTER TRIM) (ALL MODELS) > PRELIMINARY WORK

1. Remove cover for center loudspeaker. → Removing Cover For Centre Loudspeaker

WM 702019 REMOVING AND INSTALLING COVER FOR DASHBOARD (DEFROSTER TRIM) (ALL MODELS) > REMOVING COVER FOR DASHBOARD (DEFROSTER TRIM)

1. Unclip cover **-1-** from dashboard and lift it up slightly.
2. Disconnect electric plug connection **-2-** .
3. Remove cover **-1-** .

Fig 1: Removing Defroster Trim

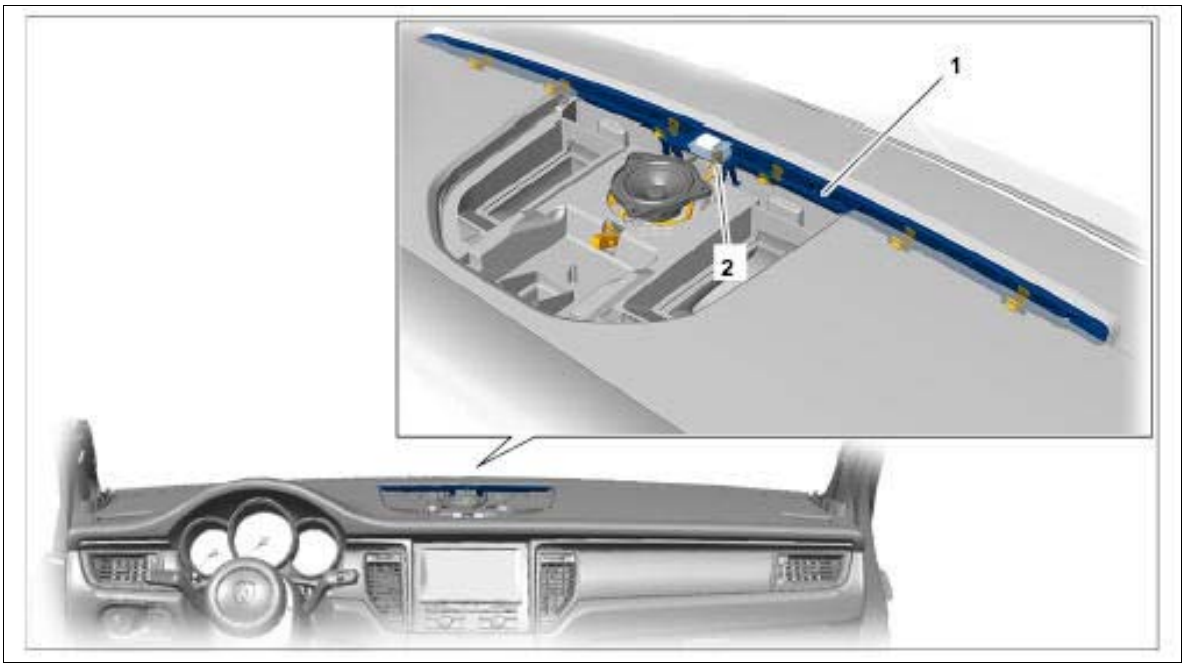

Courtesy of PORSCHE CARS NORTH AMERICA, INC.

WM 702019 REMOVING AND INSTALLING COVER FOR DASHBOARD (DEFROSTER TRIM) (ALL MODELS) > INSTALLING COVER FOR DASHBOARD (DEFROSTER TRIM)

Installation is performed in reverse order.

WM 702019 REMOVING AND INSTALLING COVER FOR DASHBOARD (DEFROSTER TRIM) (ALL MODELS) > SUBSEQUENT WORK

1. Install cover for center loudspeaker. →Installing Cover For Centre Loudspeaker

WM 702019 REMOVING AND INSTALLING COVER FOR DEFROSTER (ALL MODELS) > PRELIMINARY WORK

1. Remove cover for center loudspeaker → Removing Cover For Centre Loudspeaker .

WM 702019 REMOVING AND INSTALLING COVER FOR DEFROSTER (ALL MODELS) > REMOVING COVER FOR DEFROSTER

1. Carefully remove cover (defroster trim) using a plastic wedge.

   Fig 1: Removing Cover (Defroster Trim)

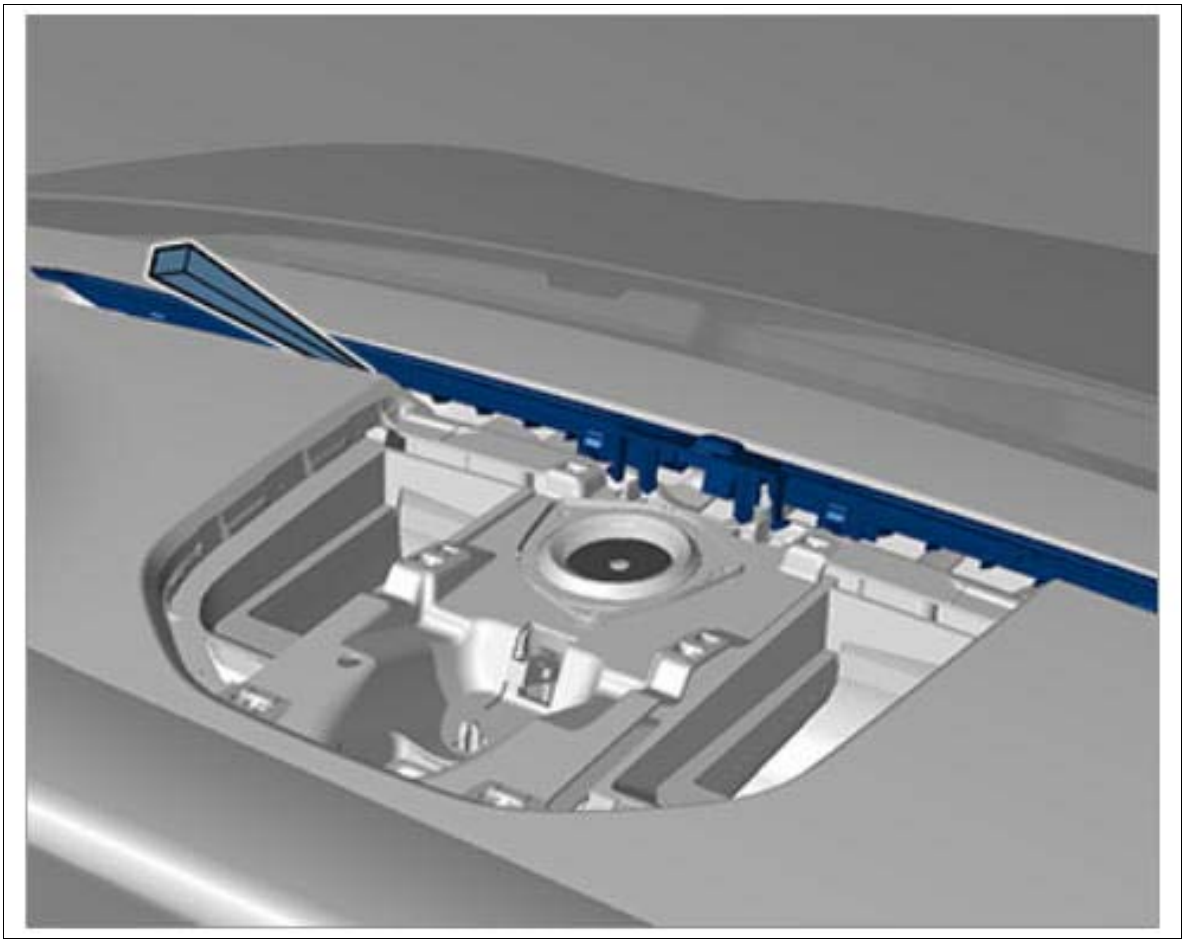

Courtesy of PORSCHE CARS NORTH AMERICA, INC.

2. Remove sun sensor **-1-** by pressing the clips **-2-** on the cover (defroster trim) **-3-** together.

Fig 2: Removing Sun Sensor And Clips

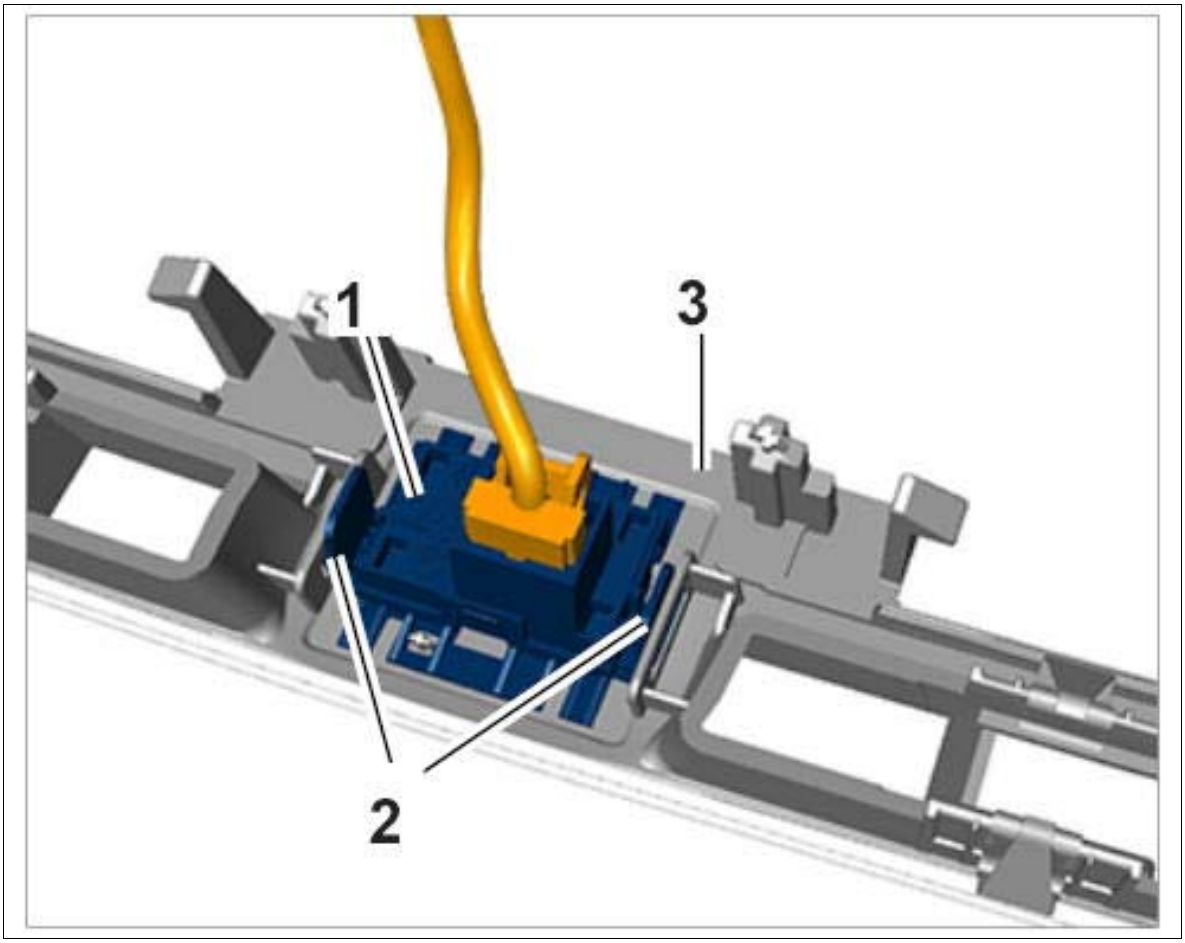

Courtesy of PORSCHE CARS NORTH AMERICA, INC.

WM 702019 REMOVING AND INSTALLING COVER FOR DEFROSTER (ALL MODELS) > INSTALLING COVER FOR DEFROSTER

1. Installation is performed in reverse order.

   Always check the sun sensor coding **-arrows-** .

Fig 1: Locating Sun Sensor Coding

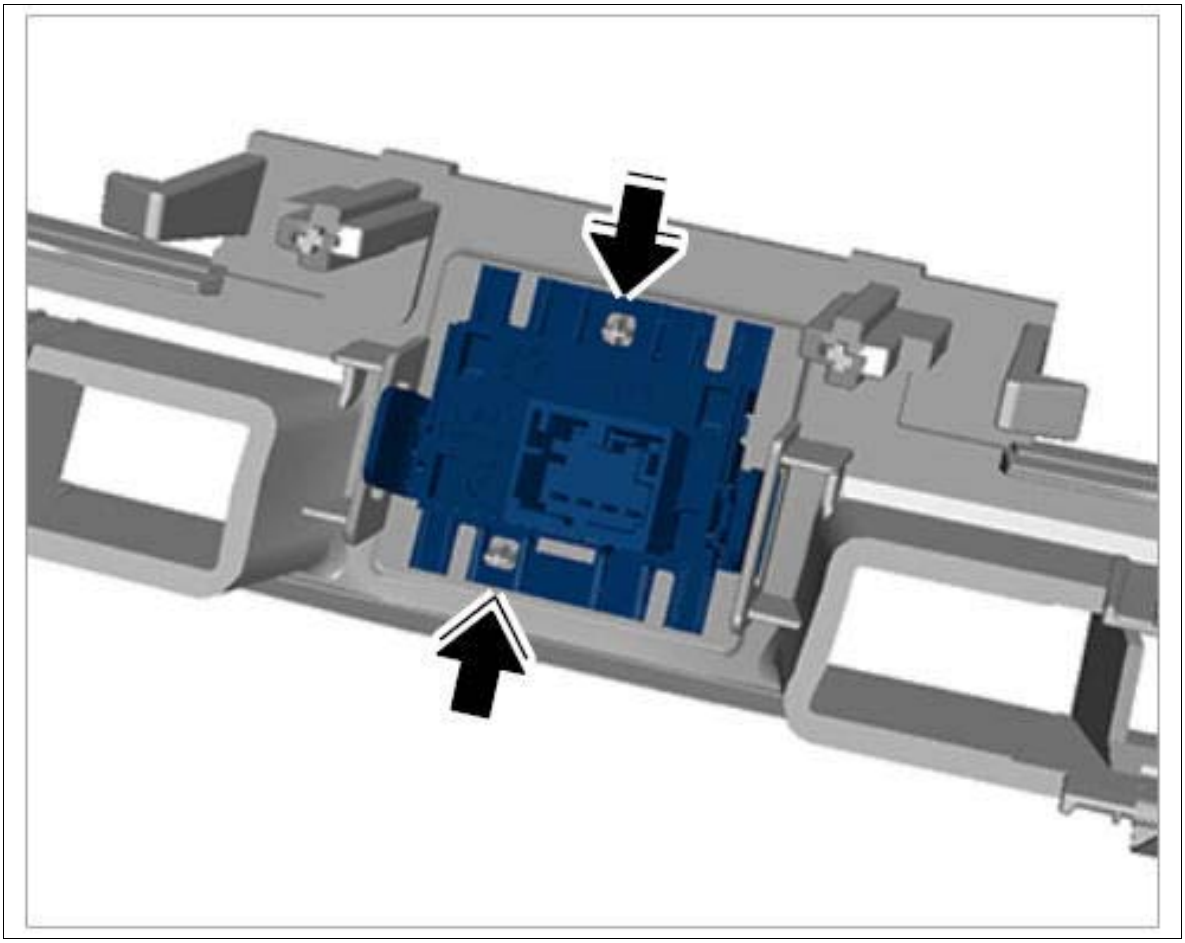

Courtesy of PORSCHE CARS NORTH AMERICA, INC.

WM 702019 REMOVING AND INSTALLING COVER FOR DEFROSTER (ALL MODELS) > SUBSEQUENT WORK

1. Install cover for center loudspeaker → Installing Cover For Centre Loudspeaker .

WM 702419 REMOVING AND INSTALLING FRONT SIDE-SECTION TRIM PANEL (ALL MODELS) > PRELIMINARY WORK

1. Remove dashboard trim panel. → Removing Dashboard Trim Panel

WM 702419 REMOVING AND INSTALLING FRONT SIDE-SECTION TRIM PANEL (ALL MODELS) > REMOVING FRONT SIDE-SECTION TRIM PANEL

Information

- The number of fastening screws, fixing clips, plug connections, holders and trim panels can vary depending on equipment.
- The illustrations for removing and installing the drive mechanism are shown only on one equipment variant and may differ from the actual equipment variant.
- Some steps must be carried out automatically.
- Some of the repair illustrations show only one side of the vehicle.

1. Reach into the lower area and unclip locking lug **-5-** on door sill trim **-4-** .
2. Unclip trim panel **-3-** at the body and guide it out at the rubber door seal **-2-** .
3. Pull trim panel **-3-** down off the tab on the A-pillar trim panel **-1-** and remove it.

Fig 1: Removing Front Side-Section Trim Panel



Courtesy of PORSCHE CARS NORTH AMERICA, INC.

WM 702419 REMOVING AND INSTALLING FRONT SIDE-SECTION TRIM PANEL (ALL MODELS) > INSTALLING FRONT SIDE-SECTION TRIM PANEL

Information

Check that all fixing clips are positioned fully and correctly.

Check that the fixing clips are not bent or broken.

Replace damaged or missing clips with new ones.

1. Engage trim panel by pressing it onto the tab on the A-pillar trim panel.
2. Engage lower locking lugs on the trim panel by pressing on to door sill trim.

3. Place rubber door seal over trim panel.

WM 702419 REMOVING AND INSTALLING FRONT SIDE-SECTION TRIM PANEL (ALL MODELS) > SUBSEQUENT WORK

1. Install dashboard trim panel. → Installing Dashboard Trim Panel

WM 703519 REMOVING AND INSTALLING FOOTREST (ALL MODELS) > PRELIMINARY WORK

1. Remove front inner door sill trim. → Removing Front Inner Door Sill Trim

WM 703519 REMOVING AND INSTALLING FOOTREST (ALL MODELS) > REMOVING FOOTREST

Information

- The number of fastening screws, fixing clips, plug connections, holders and trim panels can vary depending on equipment.
- The illustrations for removing and installing the drive mechanism are shown only on one equipment variant and may differ from the actual equipment variant.
- Some steps must be carried out automatically.
- Some of the repair illustrations show only one side of the vehicle.

1. Remove floor mat **-4-** .
2. Unclip footrest **-1-** at the carpet.
3. Guide tab **-3-** out of the trim panel under the dashboard **-2-** .
4. Remove footrest **-1-** .

Fig 1: Removing Footrest

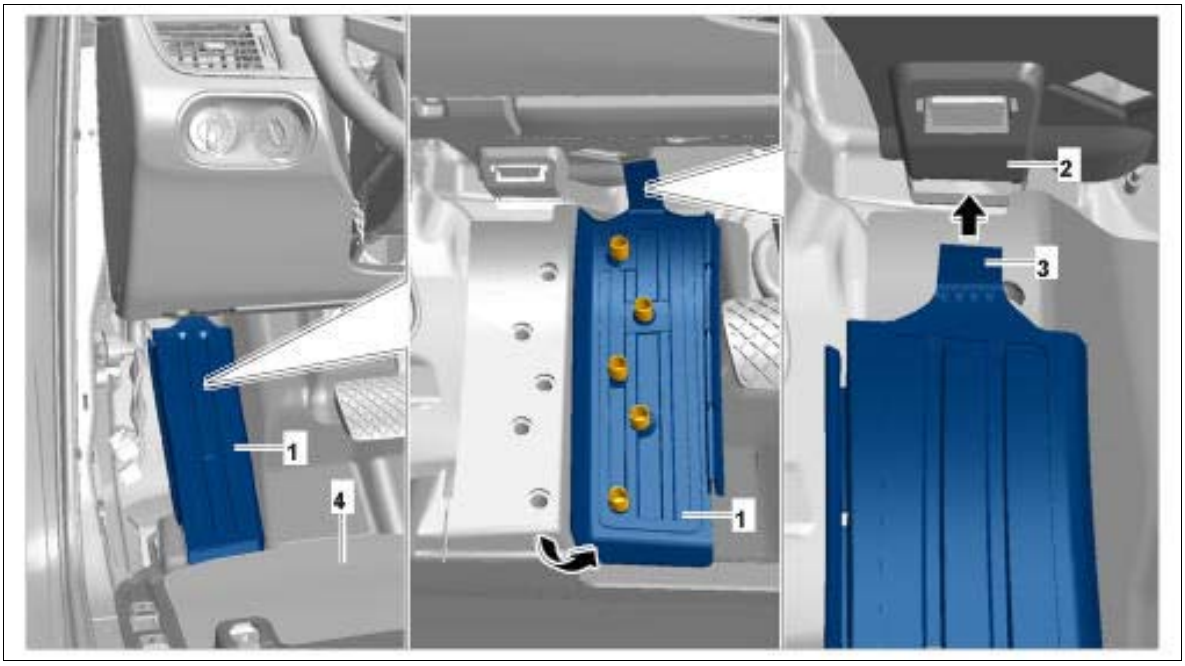

Courtesy of PORSCHE CARS NORTH AMERICA, INC.

WM 703519 REMOVING AND INSTALLING FOOTREST (ALL MODELS) > INSTALLING FOOTREST

Installation is performed in reverse order.

WM 703519 REMOVING AND INSTALLING FOOTREST (ALL MODELS) > SUBSEQUENT WORK

1. Install front inner door sill trim. → Installing Front Inner Door Sill Trim

WM 703919 REMOVING AND INSTALLING COVER FOR FRONT LOCK SUPPORT (ALL MODELS) > REMOVING COVER FOR FRONT LOCK SUPPORT

Information

- The number of fastening screws, fixing clips, plug connections, holders and trim panels can vary depending on equipment.
- The illustrations for removing and installing the drive mechanism are shown only on one equipment variant and may differ from the actual equipment variant.
- Some steps must be carried out automatically.
- Some of the repair illustrations show only one side of the vehicle.

1. Remove retaining clip **-1-** and pull off release handle **-2-** .
2. Pull expansion rivets **-3-** out of the cover **-4-** .
3. Unclip cover **-4-** for lock support and remove it.
    1. 3.1. Unclip cover **-4-** by pulling it up off the lock support and guide side tabs **-5-** out of the front trim panel **-arrow-** .

    Fig 1: Removing Front Lock Support Cover

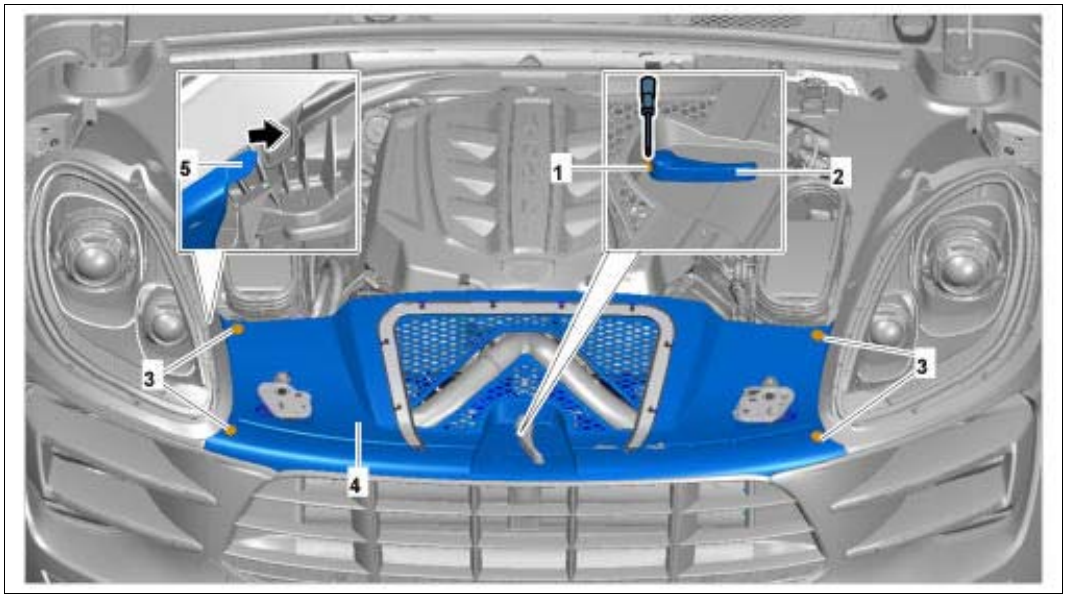

Courtesy of PORSCHE CARS NORTH AMERICA, INC.

WM 703919 REMOVING AND INSTALLING COVER FOR FRONT LOCK SUPPORT (ALL MODELS) > INSTALLING COVER FOR FRONT LOCK SUPPORT

Information

Check that all fixing clips are positioned fully and correctly.

Check that the fixing clips are not bent or broken.

Replace damaged or missing clips with new ones.

Installation is performed in reverse order. Pay particular attention to the following:

1. First fit retaining clip on the release handle and then fit release handle on the release mechanism.

WM 703919 REMOVING AND INSTALLING COVER FOR REAR LOCK SUPPORT (ALL MODELS) > TECHNICAL VALUES

Location	Description	Type	Basic value	Tolerance 1	Tolerance 2

Cover for rear lock support to body	Fastening nut	Tightening torque	2.5 Nm (2 ftlb.)		

WM 703919 REMOVING AND INSTALLING COVER FOR REAR LOCK SUPPORT (ALL MODELS) > REMOVING COVER FOR REAR LOCK SUPPORT

Information

- The number of fastening screws, fixing clips, plug connections, holders and trim panels can vary depending on equipment.
- The illustrations for removing and installing the drive mechanism are shown only on one equipment variant and may differ from the actual equipment variant.
- Some steps must be carried out automatically.
- Some of the repair illustrations show only one side of the vehicle.

1. Open rear lid.
2. Open cover **-1-** on the luggage compartment floor.
    1. 2.1. Remove luggage safety system elements from the work area if necessary and open cover **-1-** .
3. Unscrew and remove fastening nuts **-2-** .
4. Unclip cover **-3-** by pulling it upwards and remove it.

Fig 1: Identifying Rear Lock Support Cover

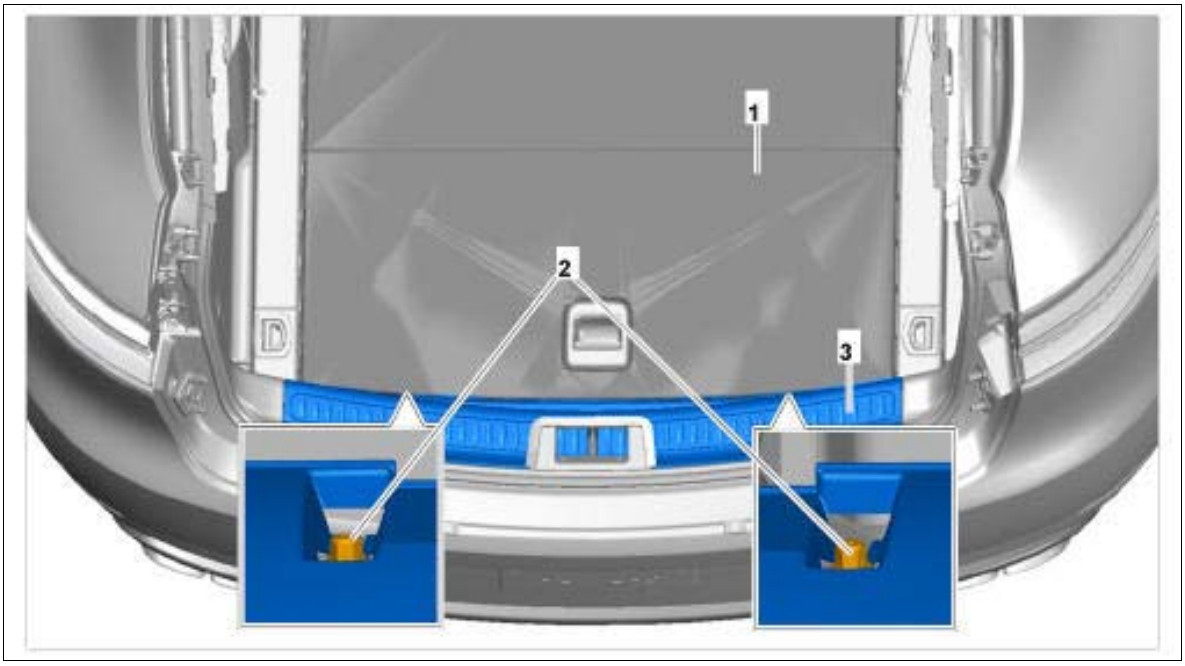

Courtesy of PORSCHE CARS NORTH AMERICA, INC.

WM 703919 REMOVING AND INSTALLING COVER FOR REAR LOCK SUPPORT (ALL MODELS) > INSTALLING COVER FOR REAR LOCK SUPPORT

Information

Check that all fixing clips are positioned fully and correctly.

Check that the fixing clips are not bent or broken.

Replace damaged or missing clips with new ones.

Installation is performed in reverse order. Pay particular attention to the following:

1. Tighten fastening nuts to the specified tightening torque. **Tightening torque 2.5 Nm (2 ftlb.)**

WM 704119 REMOVING AND INSTALLING CARPET (ALL MODELS) > PRELIMINARY WORK

1. Remove front seats. → Removing front seat
2. Remove rear seat. → Removing rear seat
3. Remove front inner door sill trim. → Removing Front Inner Door Sill Trim
4. Remove lower part of B-pillar trim panel. → Removing Lower Part Of B-Pillar Trim Panel
5. Remove center console. → Removing Center Console
6. Remove footrest. → Removing Footrest

WM 704119 REMOVING AND INSTALLING CARPET (ALL MODELS) > REMOVING CARPET

Information

- The number of fastening screws, fixing clips, plug connections, holders and trim panels can vary depending on equipment.
- The illustrations for removing and installing the drive mechanism are shown only on one equipment variant and may differ from the actual equipment variant.
- Some steps must be carried out automatically.
- Some of the repair illustrations show only one side of the vehicle.

1. Carefully lift up rear scuff plate **-1-** in the front area and remove carpet **-2-** .
2. Lift carpet **-2-** in the rear area **-arrow A-** .
3. Guide all electric lines out of the carpet **-2-** .

4. Disengage the carpet **-2-** at the sides from the retaining pivot **-3-** .
5. Pull carpet **-2-** back slightly.
6. Press carpet **-2-** together slightly in the footwells, guide it out at the trim panels **-4-** and remove it by pulling it to the rear.
7. Remove carpet **-2-** .

Fig 1: Removing Carpet



Courtesy of PORSCHE CARS NORTH AMERICA, INC.

WM 704119 REMOVING AND INSTALLING CARPET (ALL MODELS) > INSTALLING CARPET

Installation is performed in reverse order. Pay particular attention to the following:

1. Check that the footwell vents are seated correctly in the carpet.

WM 704119 REMOVING AND INSTALLING CARPET (ALL MODELS) > SUBSEQUENT WORK

1. Install rear seat. → Installing rear seat
2. Install lower part of B-pillar trim panel. → Installing Lower Part Of B-Pillar Trim Panel
3. Install front inner door sill trim. → Installing Front Inner Door Sill Trim
4. Install center console. → Installing Center Console
5. Install front seats. → Installing front seat

WM 705719 REMOVING AND INSTALLING A-PILLAR TRIM PANEL (ALL MODELS) > TECHNICAL VALUES

Location	Description	Type	Basic value	Tolerance 1	Tolerance 2
A-pillar trim panel to body		Tightening torque	5.6 Nm (4 ftlb.)		

WM 705719 REMOVING AND INSTALLING A-PILLAR TRIM PANEL (ALL MODELS) > PRELIMINARY WORK

1. Remove front side-section trim panel. → Removing Front Side-Section Trim Panel

WM 705719 REMOVING AND INSTALLING A-PILLAR TRIM PANEL (ALL MODELS) > REMOVING A-PILLAR TRIM PANEL

Information

- The number of fastening screws, fixing clips, plug connections, holders and trim panels can vary depending on equipment.
- The illustrations for removing and installing the drive mechanism are shown only on one equipment variant and may differ from the actual equipment variant.
- Some steps must be carried out automatically.
- Some of the repair illustrations show only one side of the vehicle.

1. Unclip cover **-1-** .
2. Unscrew fastening screw **-2-** .
3. Unclip A-pillar trim panel **-3-** . Make sure that the fixing clips **-4-** are loosened completely from the A-pillar.
4. Guide trim panel **-3-** out of the dashboard mounting **-5-** in direction of arrow.

Fig 1: Removing A-Pillar Trim Panel

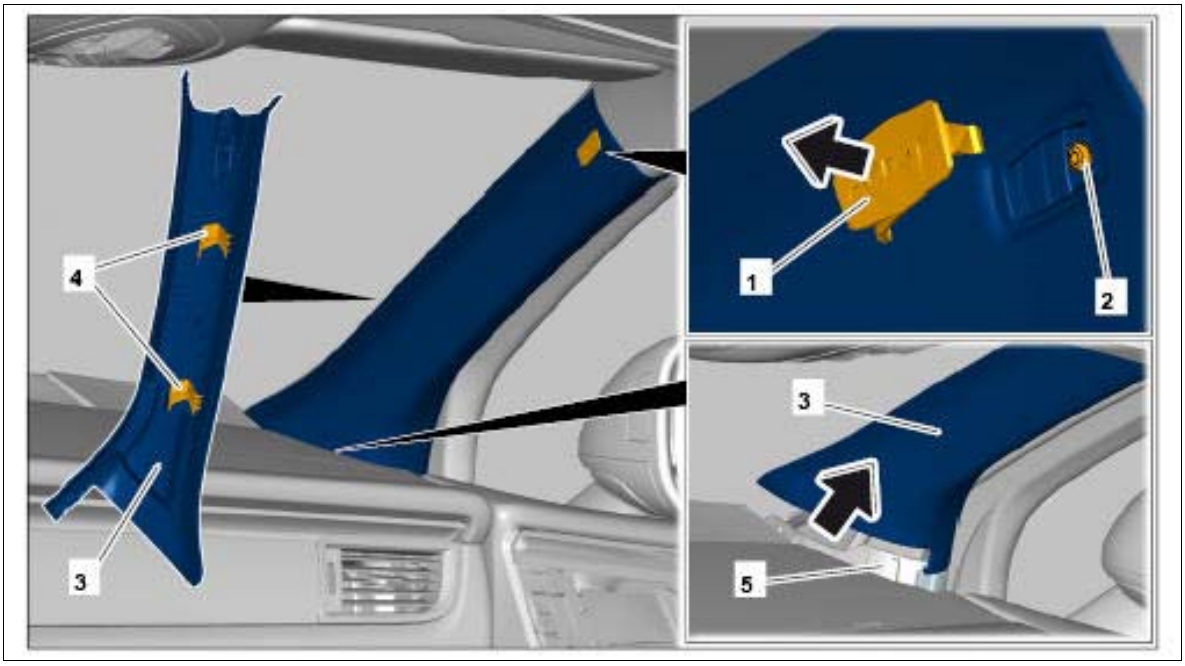

Courtesy of PORSCHE CARS NORTH AMERICA, INC.

WM 705719 REMOVING AND INSTALLING A-PILLAR TRIM PANEL (ALL MODELS) > INSTALLING A-PILLAR TRIM PANEL

Information

Check that all fixing clips are positioned fully and correctly.

Check that the fixing clips are not bent or broken.

Replace damaged or missing clips with new ones.

Installation is performed in reverse order. Pay particular attention to the following:

1. Place rubber door seal over trim panel.
2. Tighten fastening screw to the specified torque. **Tightening torque 5.6 Nm (4 ftlb.)**

WM 705719 REMOVING AND INSTALLING A-PILLAR TRIM PANEL (ALL MODELS) > SUBSEQUENT WORK

1. Install front side-section trim panel. → Installing Front Side-Section Trim Panel

WM 705819 REMOVING AND INSTALLING DASHBOARD MOLDING ON PASSENGER'S SIDE (ALL MODELS) > TOOLS

Designation	Type	Number	Description	
Hook	VW tool	3438		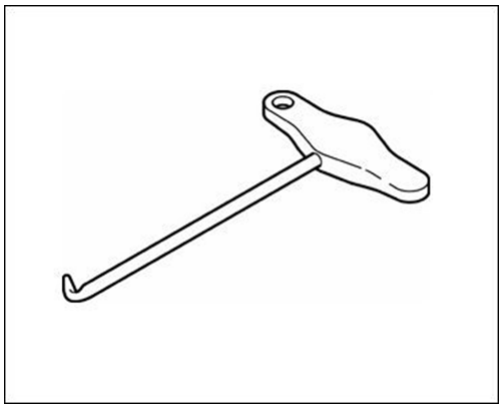

WM 705819 REMOVING AND INSTALLING DASHBOARD MOLDING ON PASSENGER'S SIDE (ALL MODELS) > REMOVING DASHBOARD MOLDING ON PASSENGER'S SIDE

Information

- The number of fastening screws, fixing clips, plug connections, holders and trim panels can vary depending on equipment.
- The illustrations for removing and installing the drive mechanism are shown only on one equipment variant and may differ from the actual equipment variant.
- Some steps must be carried out automatically.
- Some of the repair illustrations show only one side of the vehicle.

1. Open cover flap on navigation system.
2. Open closing flaps on the air vents using adjusting wheels **-1-** .
3. Move both vane tabs **-2-** to center position.

Fig 1: Identifying Closing Flap And Vane Tab

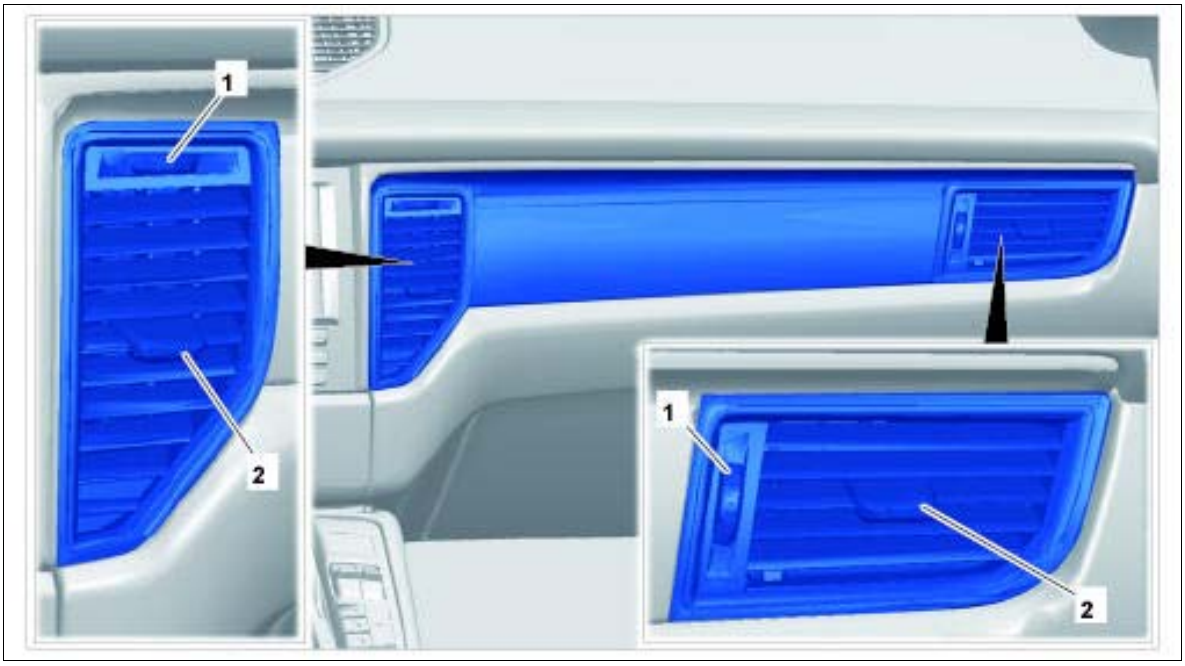

Courtesy of PORSCHE CARS NORTH AMERICA, INC.

4. Guide puller hook in the upper area **-1-** into the left air vent and make sure that the hook **-2-** engages securely in the housing **-3-** . Suitable tool: **Hook 3438**
5. Hold puller hook tightly and release the left crash clamp using a screwdriver.
6. Pull on the puller hook until the air vent with molding disengages from the dashboard.

Fig 2: Positioning Puller Hook (Left)

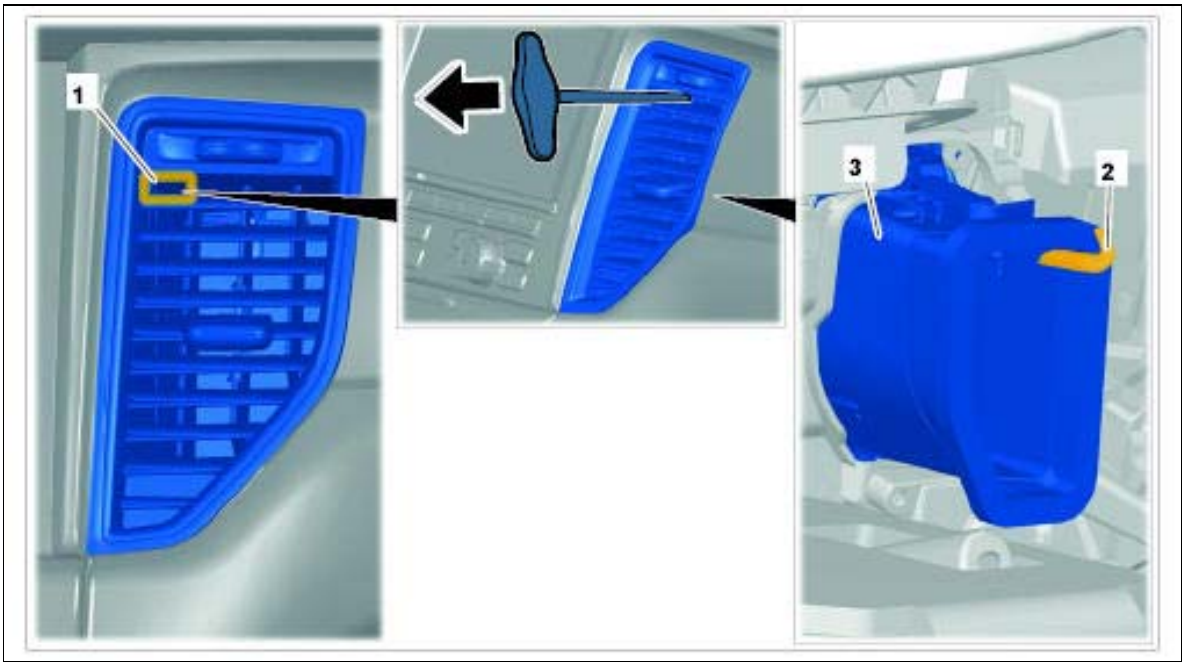

Courtesy of PORSCHE CARS NORTH AMERICA, INC.

7. Guide puller hook in the upper area **-1-** into the right air vent and make sure that the hook **-2-**

engages securely in the housing **-3-** .

8. Hold puller hook tightly and release the right crash clamp using a screwdriver.
9. Pull on the puller hook until the air vent with molding disengages from the dashboard.

Fig 3: Positioning Puller Hook (Right)



Courtesy of PORSCHE CARS NORTH AMERICA, INC.

10. Pull air vent with molding **-1-** out of the dashboard. On vehicles with illuminated air vents, disconnect electric plug connections **-2, 3-** .

Fig 4: Disconnecting Electric Plug Connection

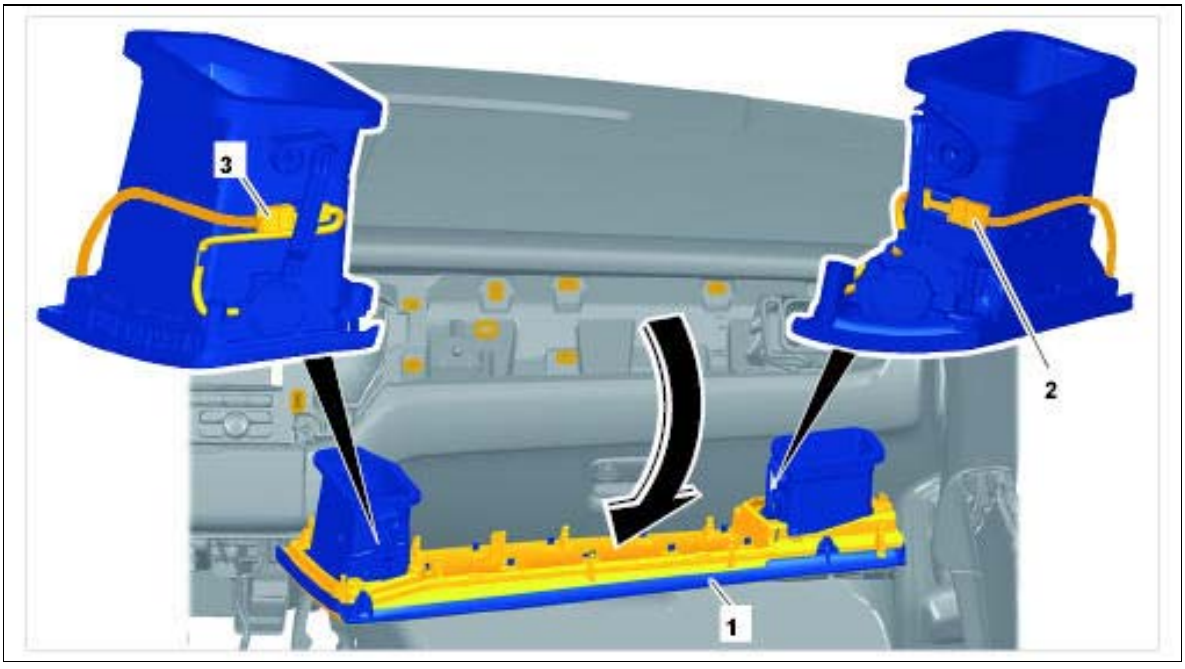

Courtesy of PORSCHE CARS NORTH AMERICA, INC.

11. Unscrew fastening screws **-1-** on the left air vent and disconnect air vent from the molding.

Fig 5: Identifying Right Centre Air Vent

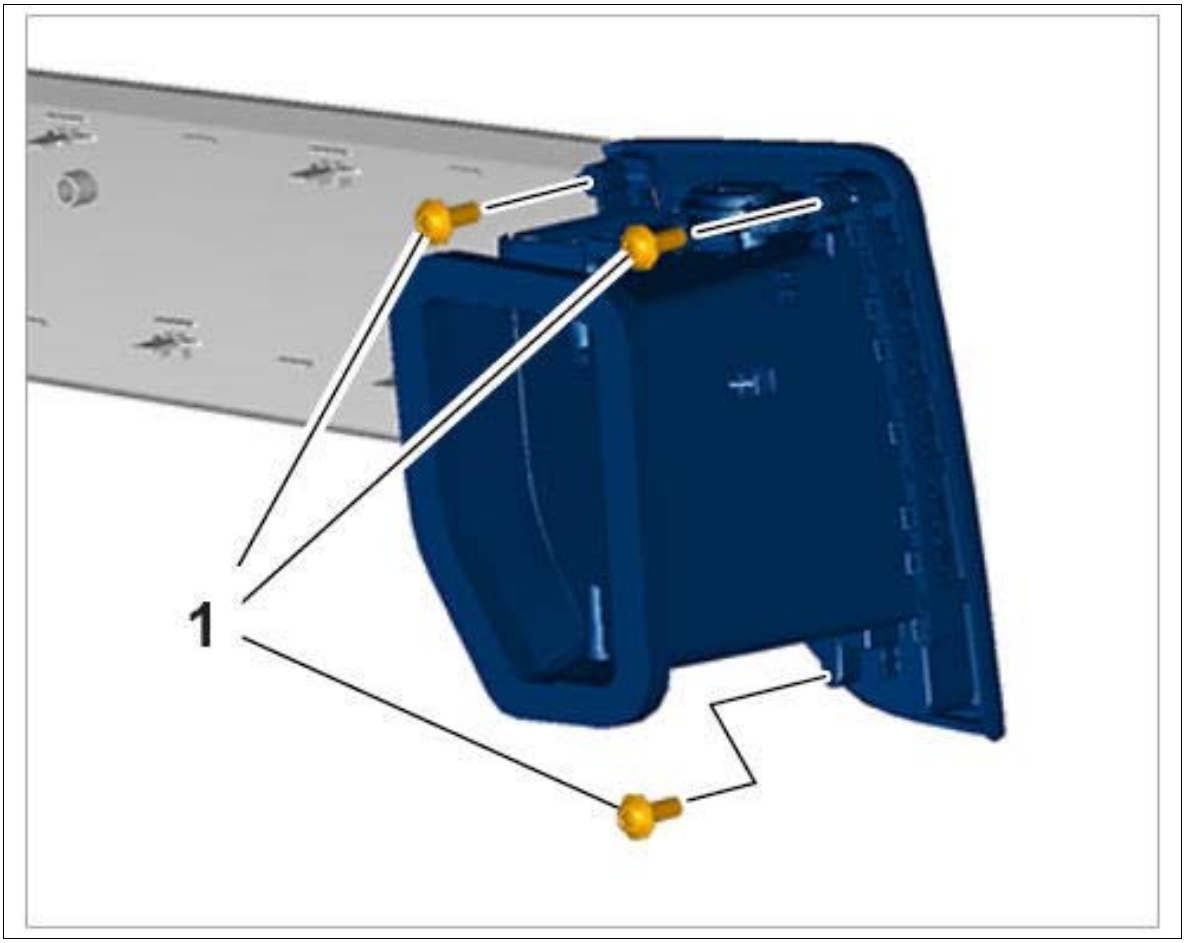

Courtesy of PORSCHE CARS NORTH AMERICA, INC.

12. Unscrew fastening screws **-1-** on the right air vent and disconnect air vent from the molding.

Fig 6: Identifying Right Door Window Air Vent

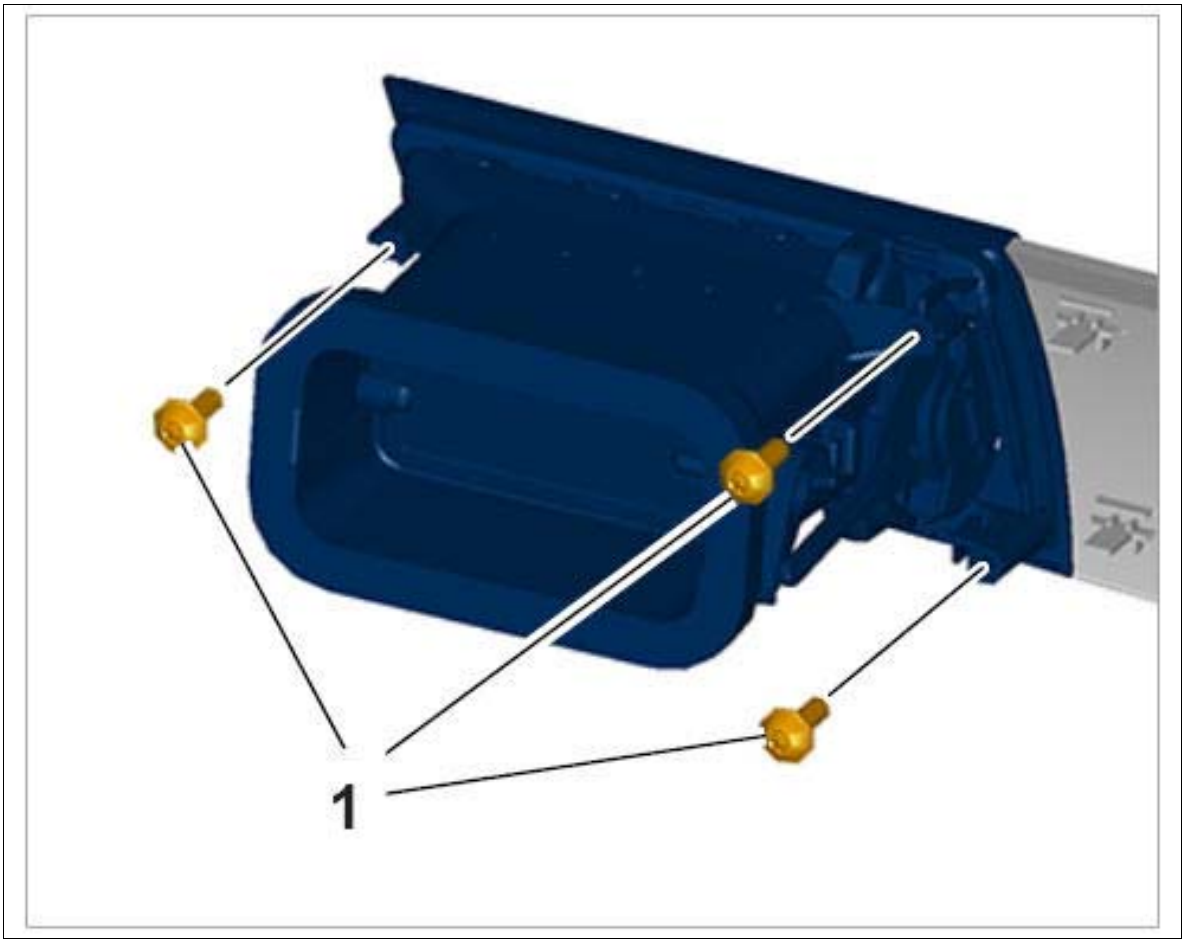

Courtesy of PORSCHE CARS NORTH AMERICA, INC.

WM 705819 REMOVING AND INSTALLING DASHBOARD MOLDING ON PASSENGER'S SIDE (ALL MODELS) > INSTALLING DASHBOARD MOLDING ON PASSENGER'S SIDE

Information

Check that the fixing clips are not bent or broken.

Replace missing or damaged fixing clips with new ones.

Make sure that all fastening clips have engaged correctly.

Check that they are fitted correctly.

1. Position molding and screw it to the air vents.
2. On vehicles with illuminated air vents, connect electric plug connections.
3. Position air vents with molding on the dashboard and engage them in the fixing clips.

WM 705819 REMOVING AND INSTALLING DASHBOARD MOLDING ON DRIVER'S SIDE AT THE LEFT AND RIGHT (ALL MODELS) > TOOLS

Designation	Type	Number	Description	
Hook	VW tool	3438		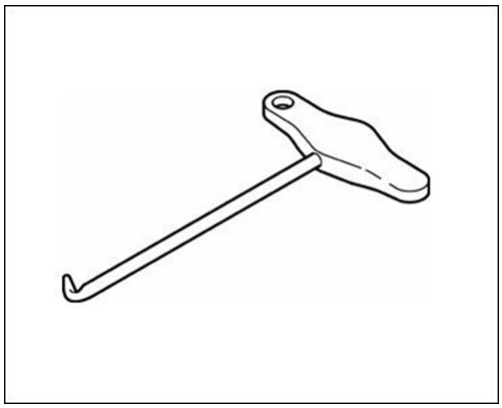

WM 705819 REMOVING AND INSTALLING DASHBOARD MOLDING ON DRIVER'S SIDE AT THE LEFT AND RIGHT (ALL MODELS) > REMOVING DASHBOARD MOLDING ON DRIVER'S SIDE AT THE LEFT

Information

- The number of fastening screws, fixing clips, plug connections, holders and trim panels can vary depending on equipment.
- The illustrations for removing and installing the drive mechanism are shown only on one equipment variant and may differ from the actual equipment variant.
- Some steps must be carried out automatically.
- Some of the repair illustrations show only one side of the vehicle.

1. Cover steering-column switch and steering wheel with a protective mat.
2. Open closing flap on the air vent using adjusting wheel **-1-** .
3. Move vane tab **-2-** to center position.

Fig 1: Identifying Closing Flap And Vane Tab



Courtesy of PORSCHE CARS NORTH AMERICA, INC.

4. Guide puller hook in the upper area **-1-** into the air vent and make sure that the hook **-2-** engages securely in the housing **-3-** . Suitable tool: **Hook 3438**
5. Pull on the puller hook until the air vent with molding disengages from the dashboard.
6. Guide puller hook in the upper area **-4-** into the air vent and make sure that the hook **-5-** engages securely in the housing **-3-** .
7. Pull on the puller hook until the air vent with molding disengages from the dashboard.

Fig 2: Positioning Puller Hook

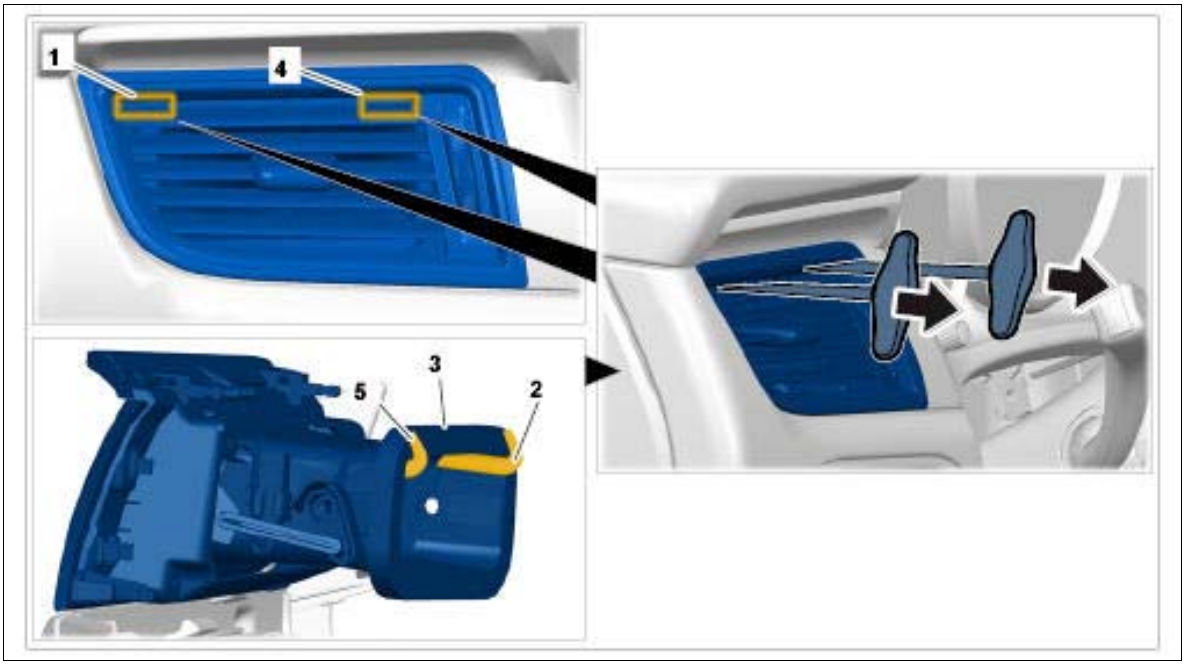

Courtesy of PORSCHE CARS NORTH AMERICA, INC.

8. Pull air vent with molding **-1-** out of the dashboard. On vehicles with illuminated air vents, disconnect electric plug connection **-2-** .

Fig 3: Disconnecting Electric Plug Connection

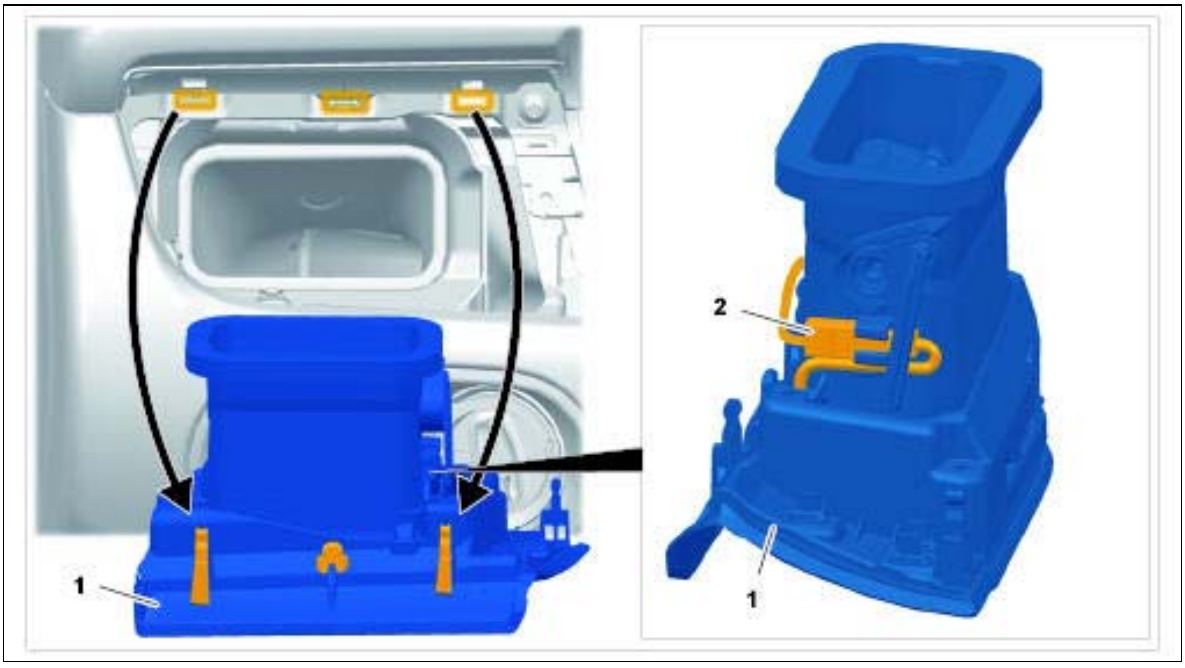

Courtesy of PORSCHE CARS NORTH AMERICA, INC.

9. Unscrew fastening screws **-1-** on the molding and disconnect molding from the air vent.

Fig 4: Identifying Left Door Window Air Vent

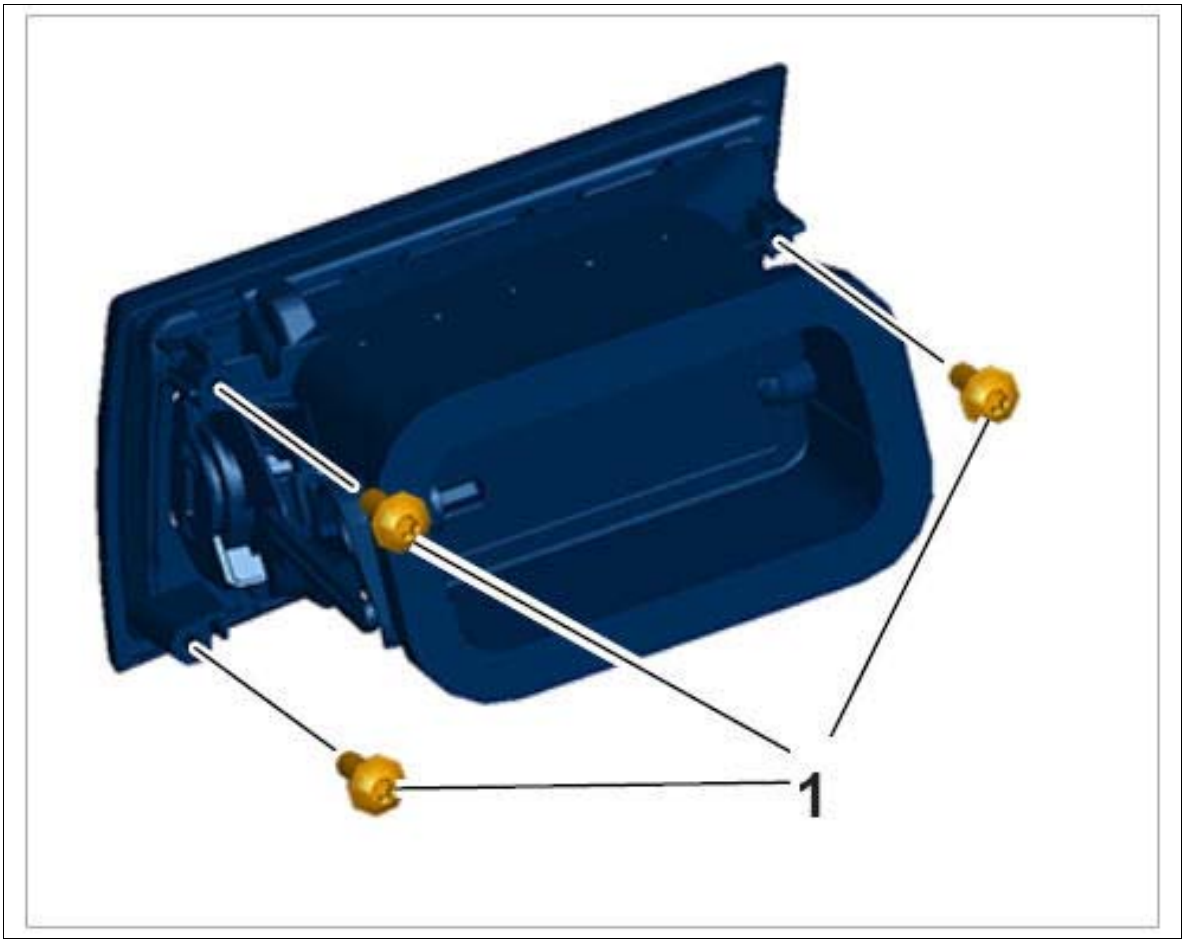

Courtesy of PORSCHE CARS NORTH AMERICA, INC.

WM 705819 REMOVING AND INSTALLING DASHBOARD MOLDING ON DRIVER'S SIDE AT THE LEFT AND RIGHT (ALL MODELS) > INSTALLING DASHBOARD MOLDING ON DRIVER'S SIDE AT THE LEFT

Information

Check that the fixing clips are not bent or broken.

Replace missing or damaged fixing clips with new ones.

Make sure that all fastening clips have engaged correctly.

Check that they are fitted correctly.

1. Position molding and screw it to the air vent.
2. On vehicles with illuminated air vents, connect electric plug connection.
3. Position air vent with molding on the dashboard and engage it in the fixing clips.

WM 705819 REMOVING AND INSTALLING DASHBOARD MOLDING ON DRIVER'S SIDE AT THE RIGHT (ALL MODELS) > TOOLS

Designation	Type	Number	Description	
Hook	VW tool	3438		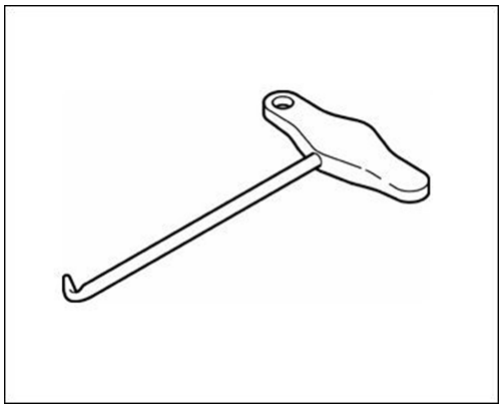

WM 705819 REMOVING AND INSTALLING DASHBOARD MOLDING ON DRIVER'S SIDE AT THE RIGHT (ALL MODELS) > REMOVING DASHBOARD MOLDING ON DRIVER'S SIDE AT THE RIGHT

Information

- The number of fastening screws, fixing clips, plug connections, holders and trim panels can vary depending on equipment.
- The illustrations for removing and installing the drive mechanism are shown only on one equipment variant and may differ from the actual equipment variant.
- Some steps must be carried out automatically.
- Some of the repair illustrations show only one side of the vehicle.

1. Cover steering-column switch and steering wheel with a protective mat.
2. Open cover flap on navigation system.
3. Open closing flap on the air vent using adjusting wheel **-1-** .
4. Move vane tab **-2-** to center position.

Fig 1: Identifying Closing Flap And Vane Tab

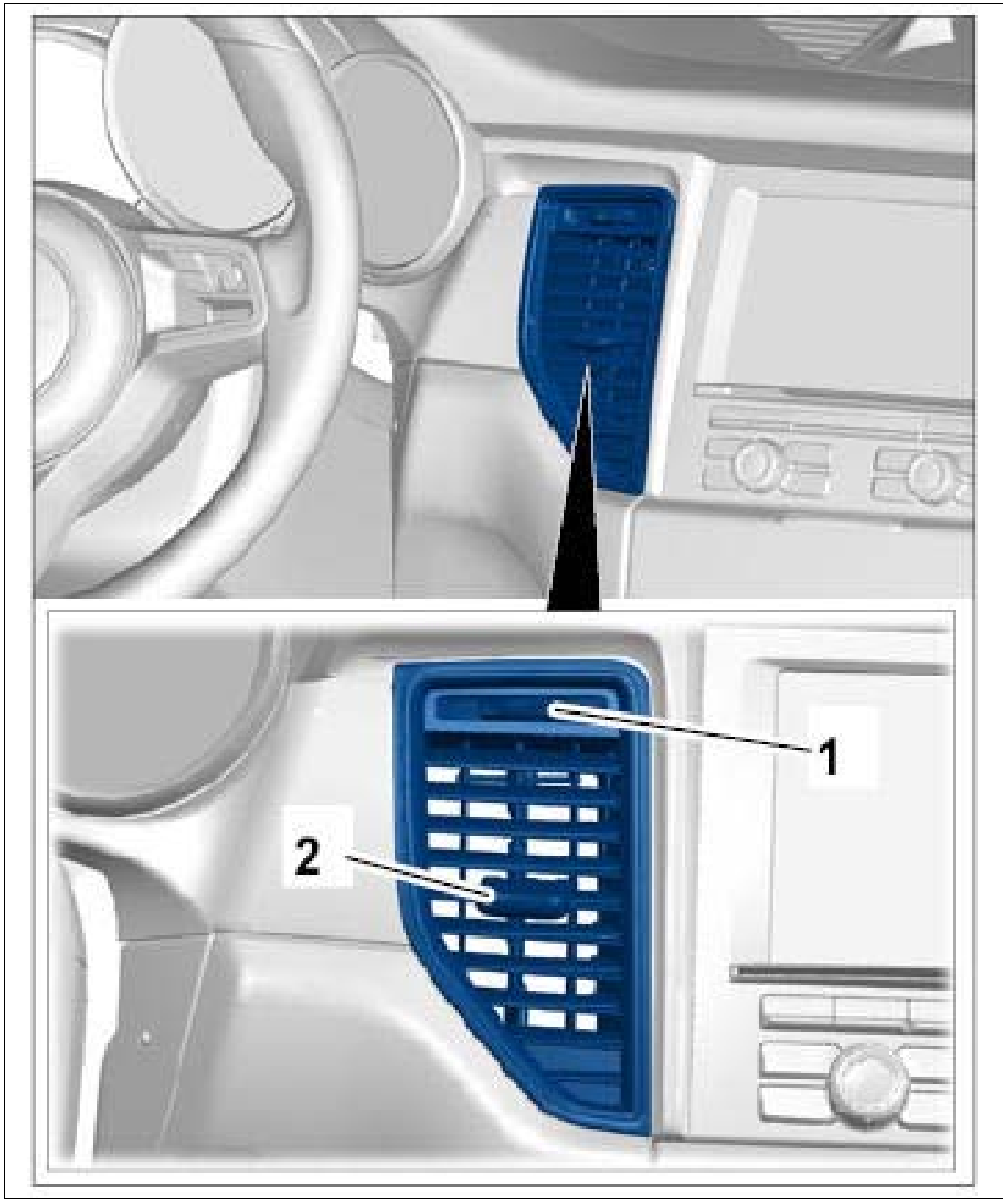

Courtesy of PORSCHE CARS NORTH AMERICA, INC.

5. Guide puller hook in the upper area **-1-** into the air vent and make sure that the hook **-2-** engages securely in the housing **-3-** . Suitable tool: **Hook 3438**
6. Pull on the puller hook until the molding disengages from the dashboard.

Fig 2: Positioning Puller Hook

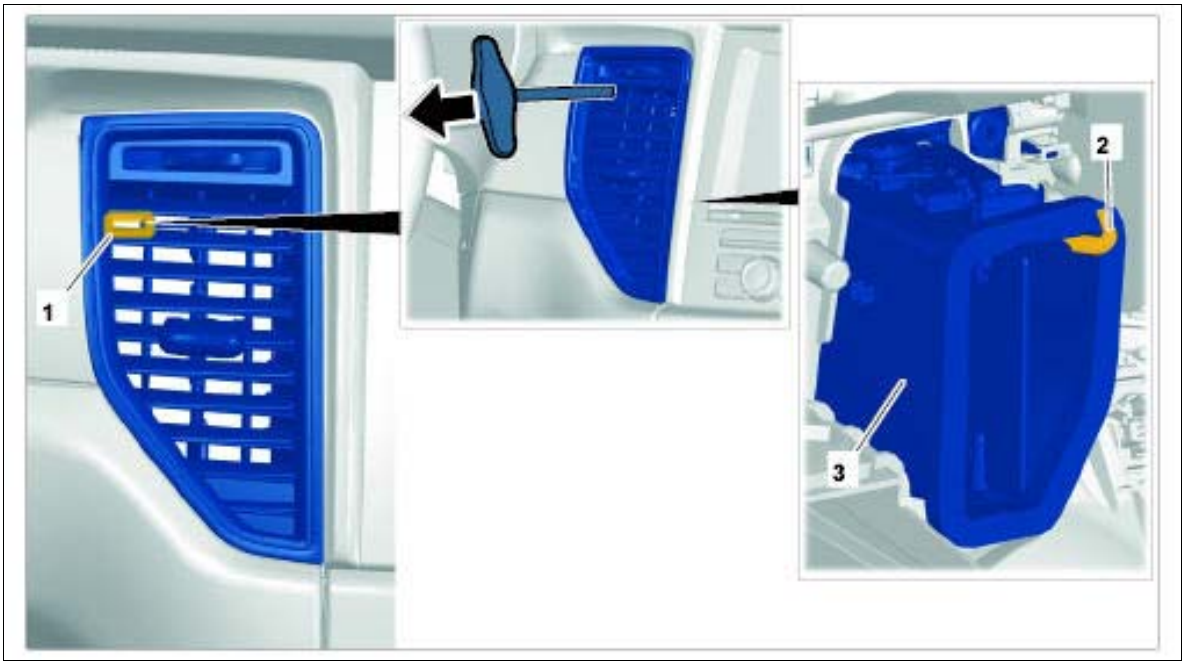

Courtesy of PORSCHE CARS NORTH AMERICA, INC.

7. Pull air vent with molding **-1-** out of the dashboard. On vehicles with illuminated air vents, disconnect electric plug connection **-2-** .

Fig 3: Disconnecting Electric Plug Connection

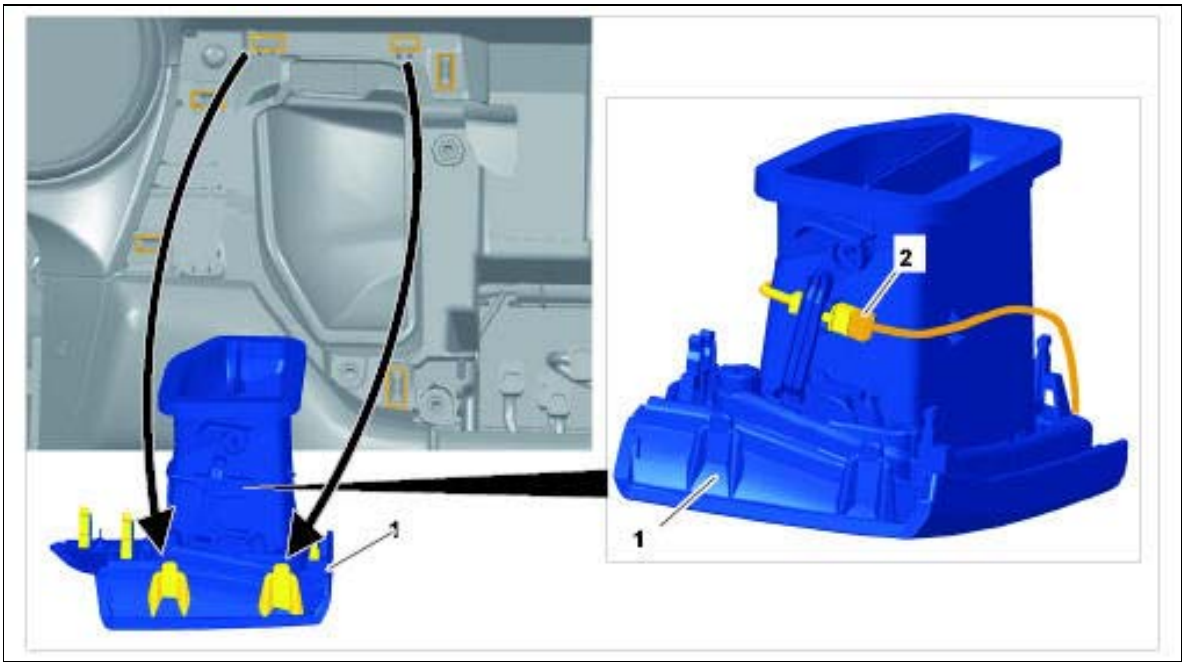

Courtesy of PORSCHE CARS NORTH AMERICA, INC.

8. Unscrew fastening screws **-1-** on the molding and disconnect molding from the air vent.

Fig 4: Identifying Left Centre Air Vent

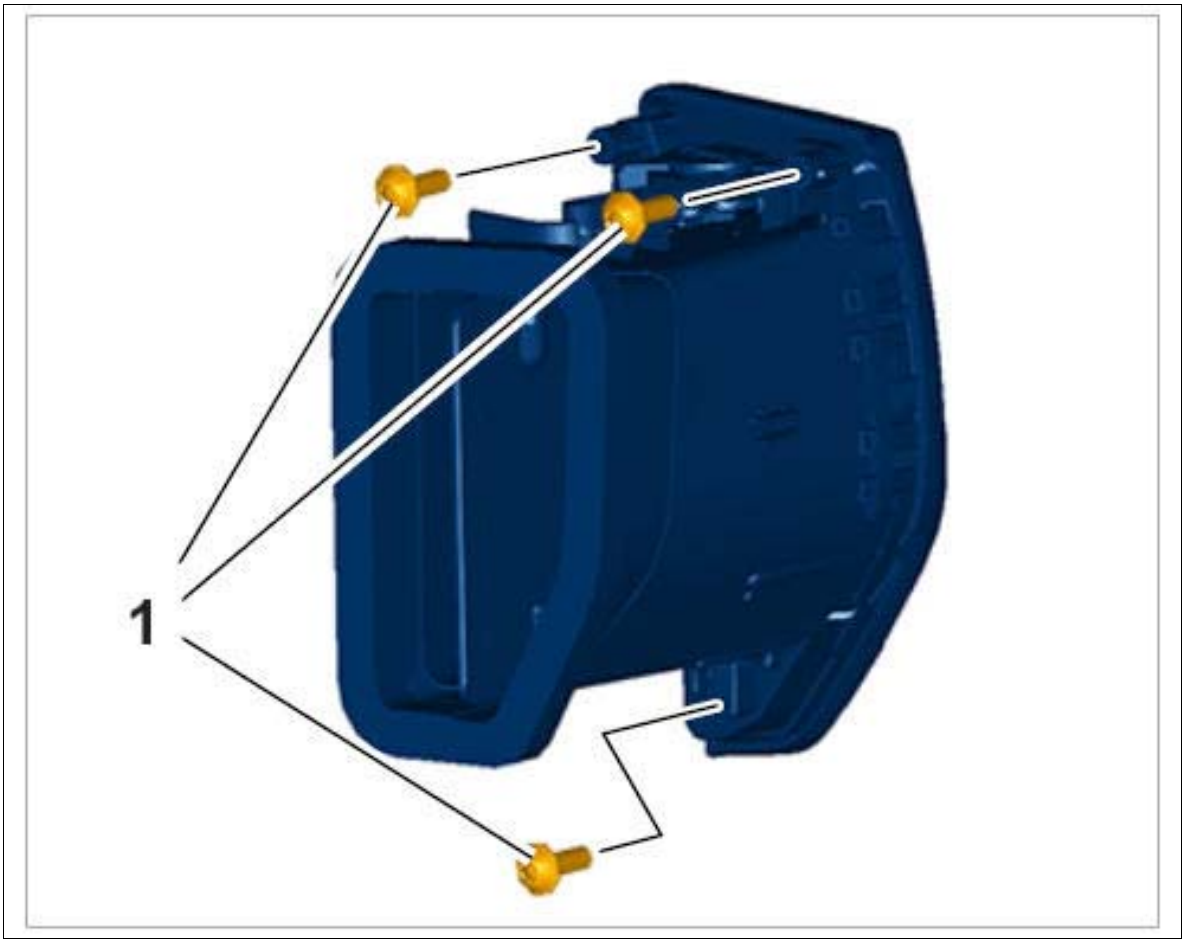

Courtesy of PORSCHE CARS NORTH AMERICA, INC.

WM 705819 REMOVING AND INSTALLING DASHBOARD MOLDING ON DRIVER'S SIDE AT THE RIGHT (ALL MODELS) > INSTALLING DASHBOARD MOLDING ON DRIVER'S SIDE AT THE RIGHT

Information

Check that the fixing clips are not bent or broken.

Replace missing or damaged fixing clips with new ones.

Make sure that all fastening clips have engaged correctly.

Check that they are fitted correctly.

1. Position molding and screw it to the air vent.
2. On vehicles with illuminated air vents, connect electric plug connection.
3. Position air vent with molding on the dashboard and engage it in the fixing clips.

WM 705919 REMOVING AND INSTALLING FRONT DOOR PANEL (ALL MODELS) > TECHNICAL VALUES

Location	Description	Type	Basic value	Tolerance 1	Tolerance 2
Fastening screw for door panel		Tightening torque	3.5 Nm (2.5 ftlb.)	+/-0.5 Nm (+/- 0.5 ftlb.)	

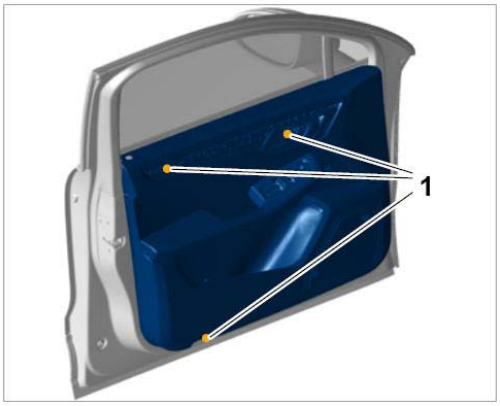

Door panel mounting

WM 705919 REMOVING AND INSTALLING FRONT DOOR PANEL (ALL MODELS) > PRELIMINARY WORK

1. Remove trim for door panel. → Removing Trim For Front Door Panel

WM 705919 REMOVING AND INSTALLING FRONT DOOR PANEL (ALL MODELS) > REMOVING FRONT DOOR PANEL

Fig 1: Identifying Door Panel Installation Position



Courtesy of PORSCHE CARS NORTH AMERICA, INC.

1. Unclip cover **-1-** on door opener using a suitable tool.

Fig 2: Removing Cover On Door Opener

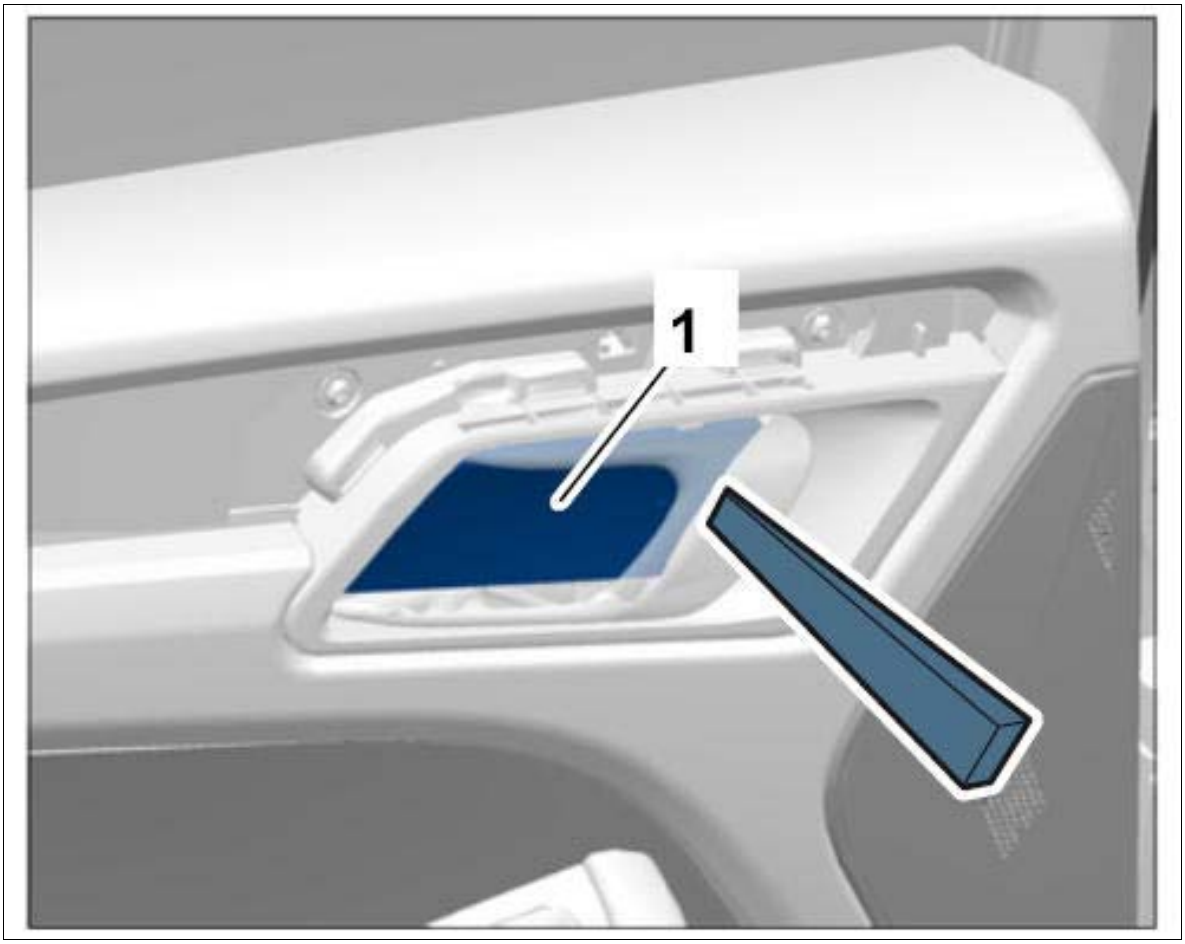

Courtesy of PORSCHE CARS NORTH AMERICA, INC.

2. Unclip reflector or door light **-1-** using a suitable tool and release and disconnect plug connection.

Fig 3: Removing Light Door Panel

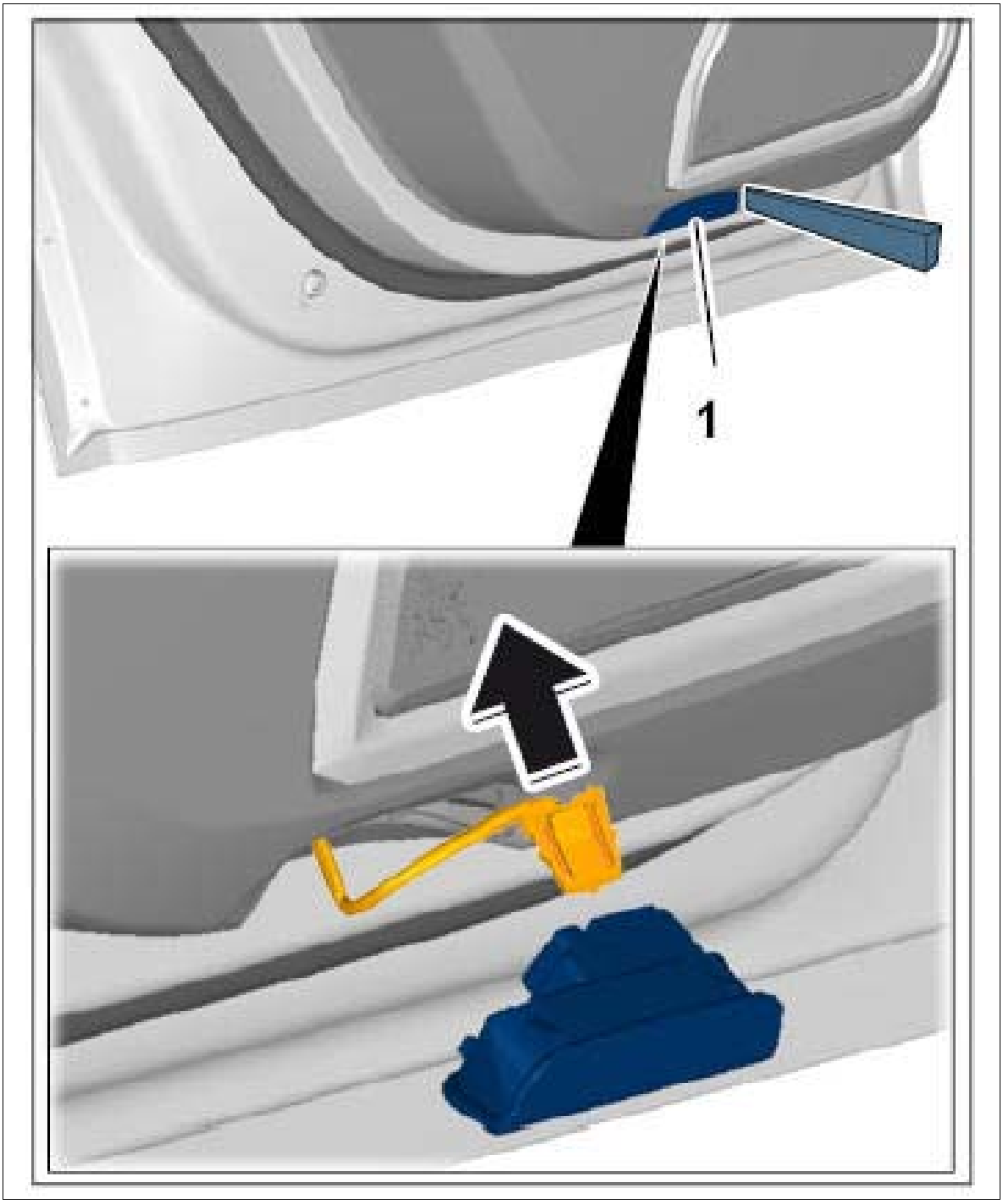

Courtesy of PORSCHE CARS NORTH AMERICA, INC.

3. Unscrew and remove fastening screws **-1-** on door panel.

Fig 4: Identifying Door Panel Fastening Screws

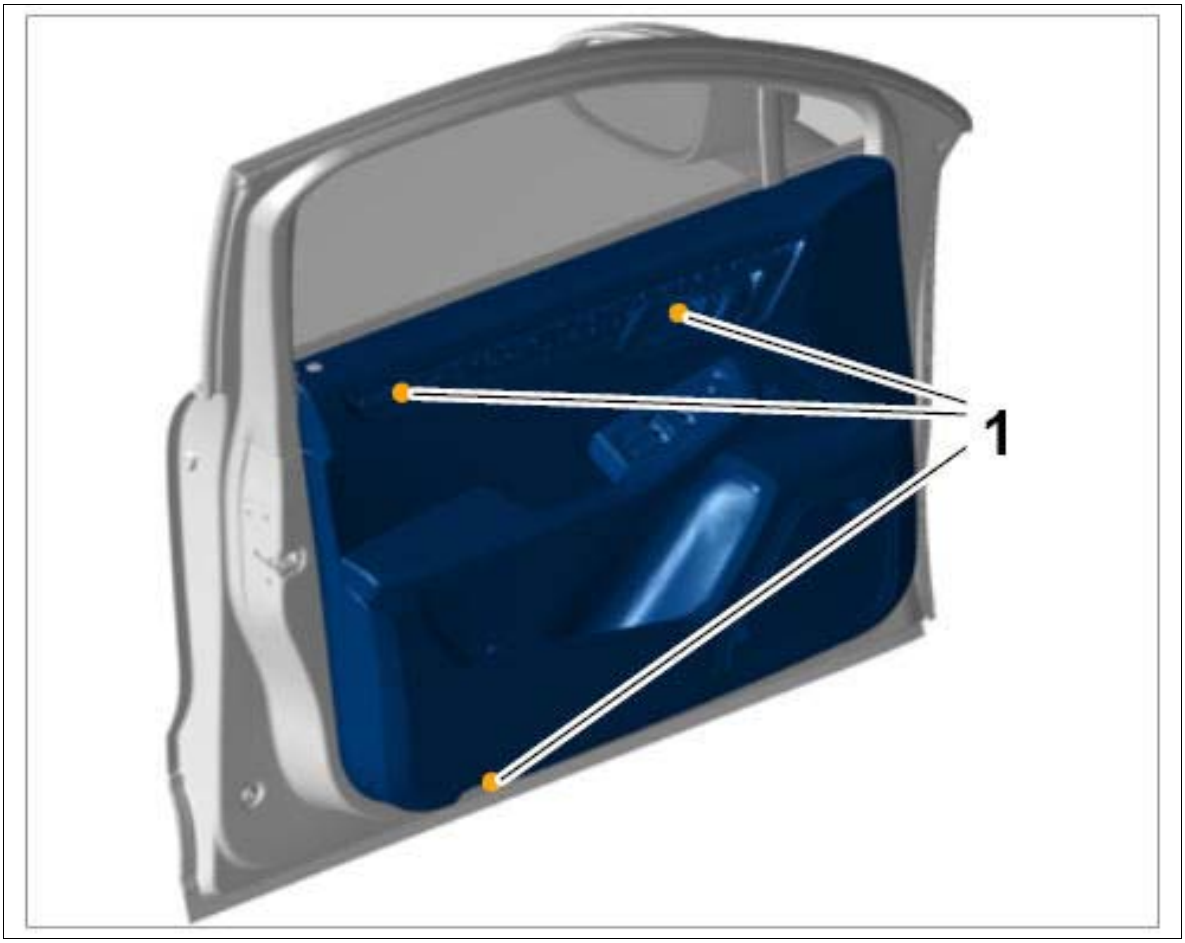

Courtesy of PORSCHE CARS NORTH AMERICA, INC.

4. Guide door panel up out of the bracket and swivel it to the rear.
5. Disengage cable for door opener.
    1. 5.1. Spread locking lugs outwards **-A-** .
    2. 5.2. Remove cable by pulling it to the rear out of the guide **-2- (-B-)** .
    3. 5.3. Swivel cable in direction of arrow until the driver at the front is free **-C-** .
    4. 5.4. Remove the driver from the door opener **-D-** .

Fig 5: Disengaging Door Opener Cable

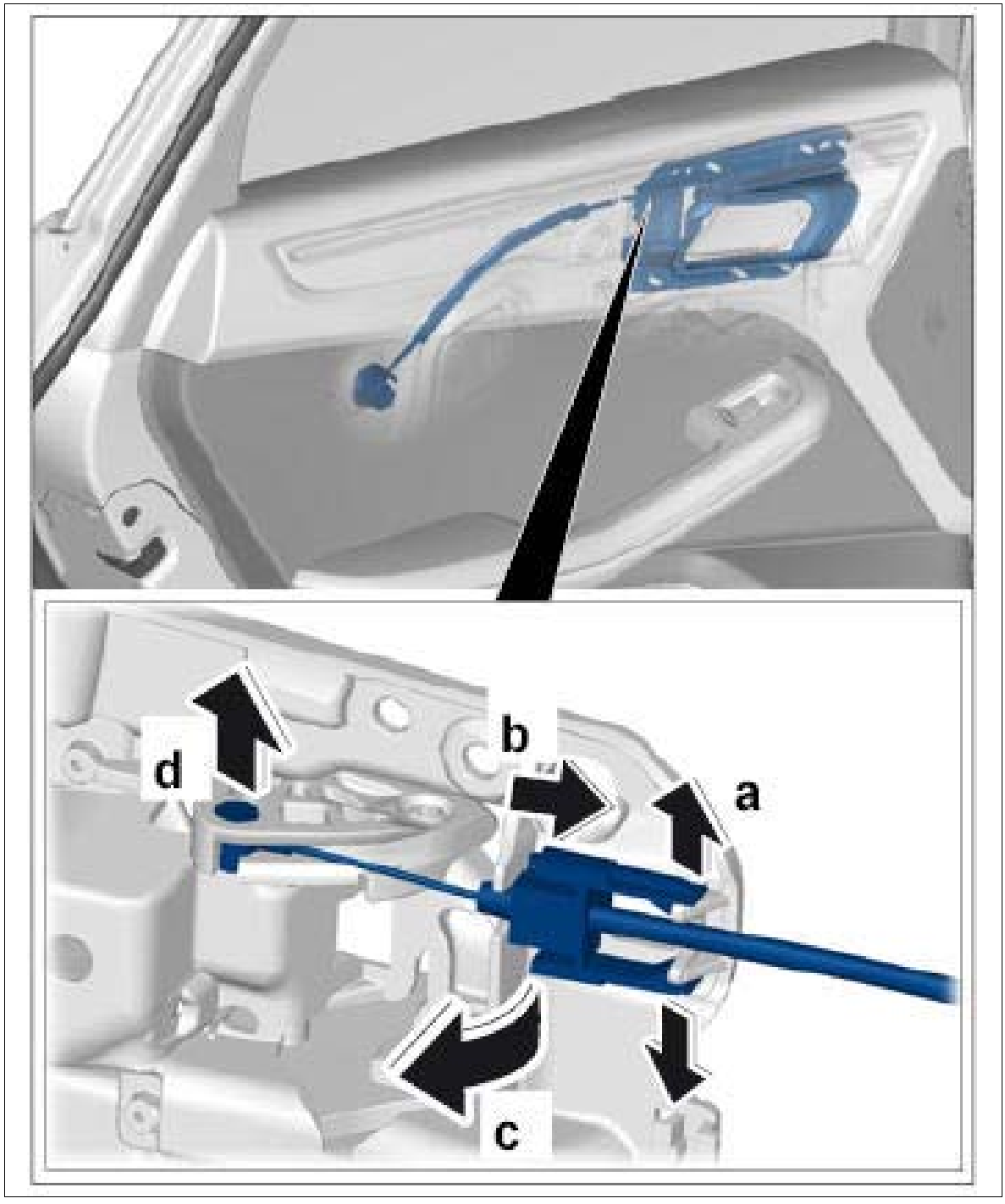

Courtesy of PORSCHE CARS NORTH AMERICA, INC.

6. Release and disconnect plug connection for wire harness at the door control unit.
7. Release and disconnect plug connections for loudspeaker wire harness.

WM 705919 REMOVING AND INSTALLING FRONT DOOR PANEL (ALL MODELS) > INSTALLING FRONT DOOR PANEL

1. Installation is performed in reverse order to removal.
2. Tighten fastening screws for door panel to **Tightening torque 3.5 Nm (2.5 ftlb.) +/-0.5 Nm (+/-0.5 ftlb.)** until secure.

WM 705919 REMOVING AND INSTALLING FRONT DOOR PANEL (ALL MODELS) > SUBSEQUENT WORK

1. Install trim for front door panel. → Installing Trim For Front Door Panel

WM 706119 REMOVING AND INSTALLING TRIM FOR FRONT DOOR PANEL (ALL MODELS) > REMOVING TRIM FOR FRONT DOOR PANEL

Fig 1: Identifying Front Trim Position

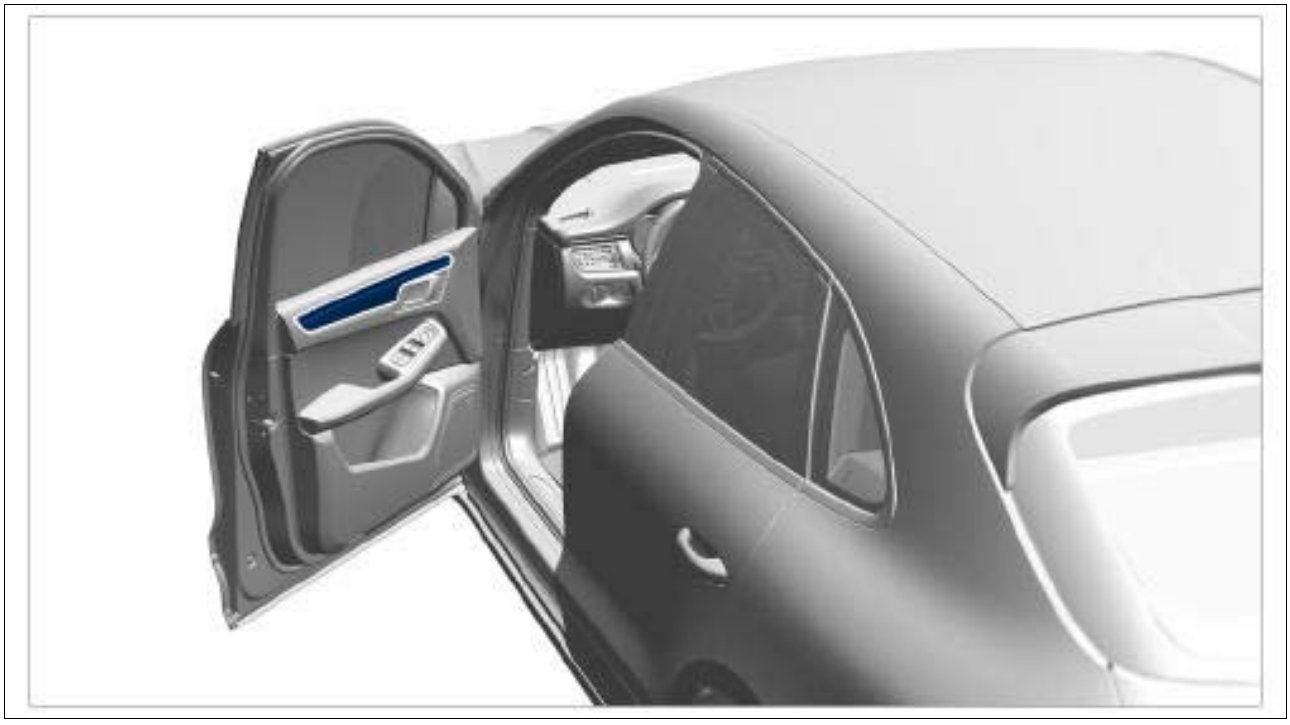

Courtesy of PORSCHE CARS NORTH AMERICA, INC.

1. Unclip trim for door panel to the rear using a suitable tool.

Fig 2: Removing Door Panel Trim

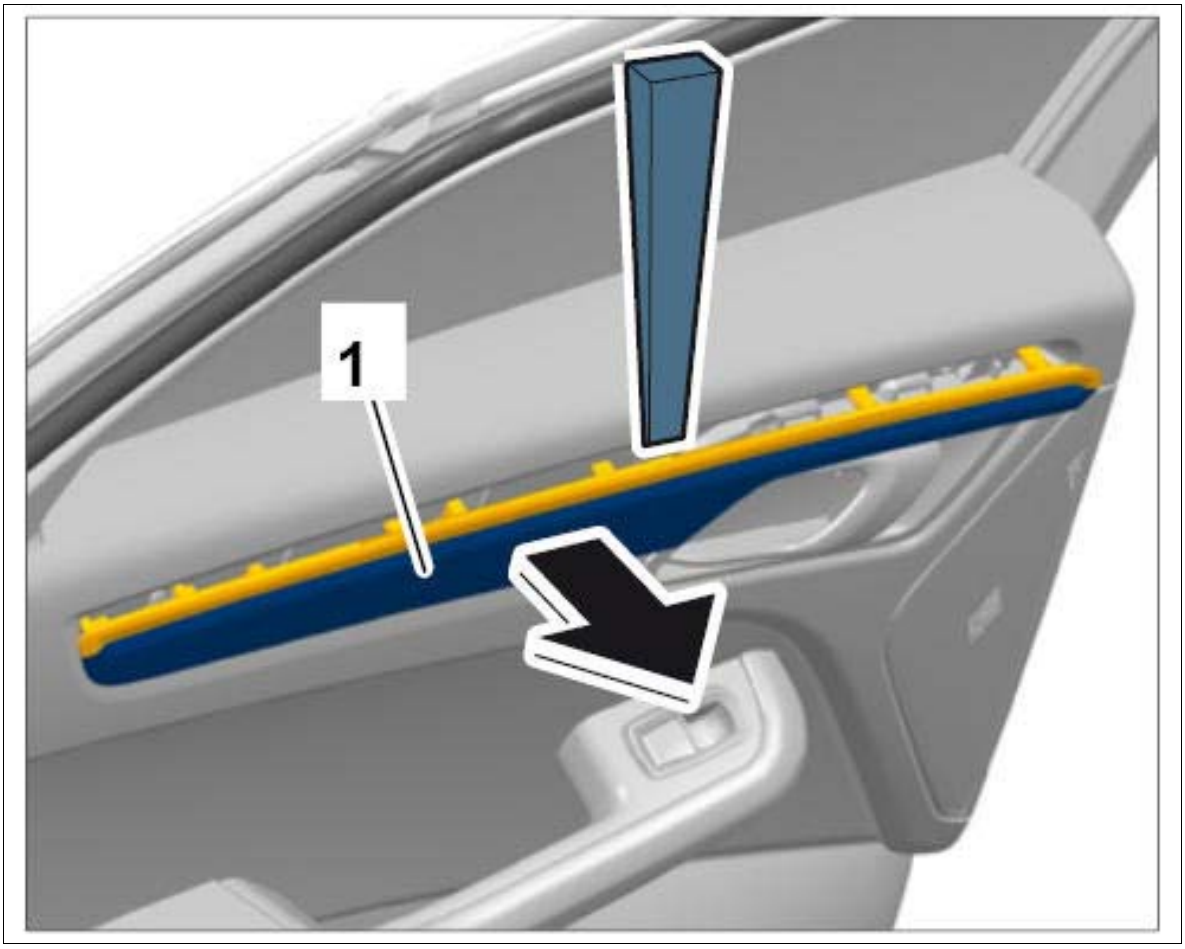

Courtesy of PORSCHE CARS NORTH AMERICA, INC.

2. Push trim back until the hooks are released, then remove trim.

Fig 3: Removing Trim

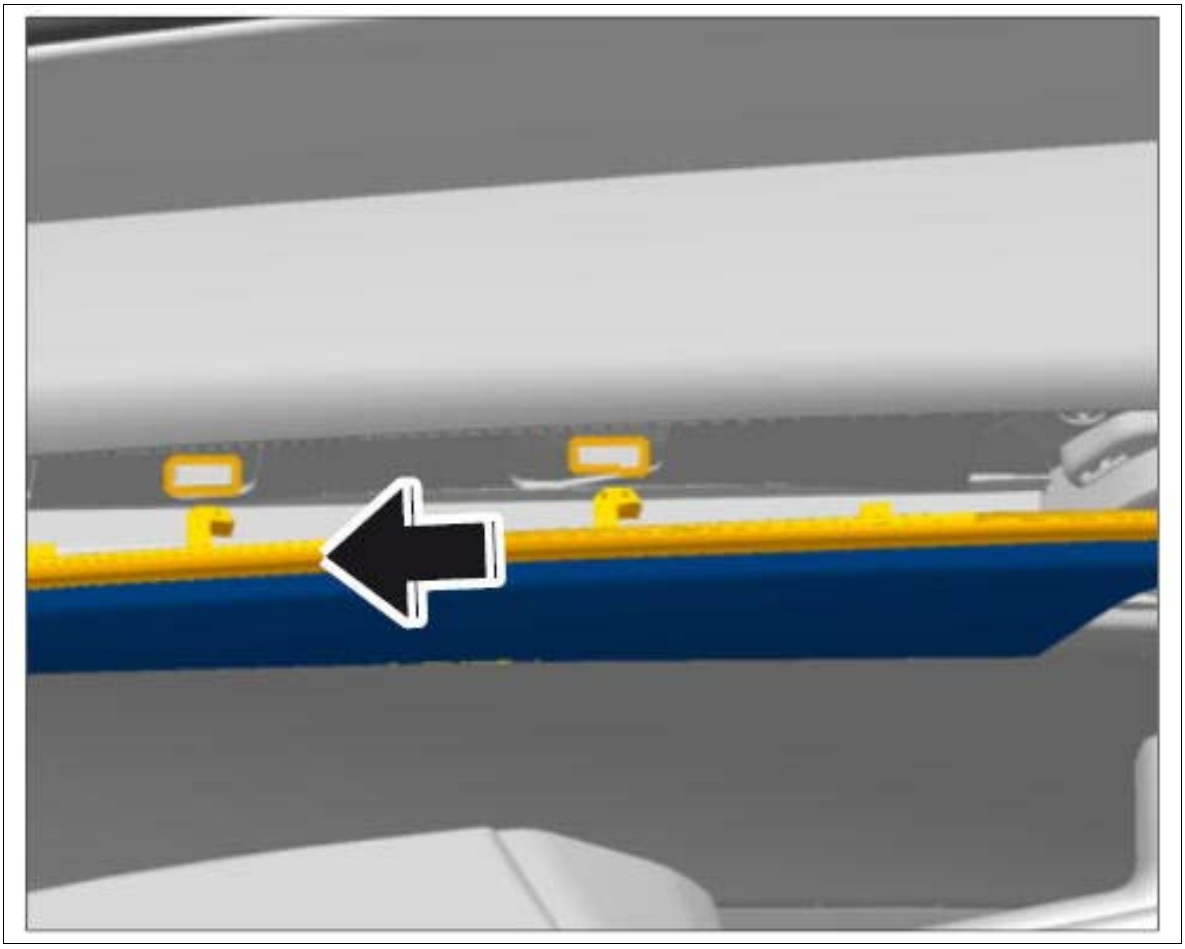

Courtesy of PORSCHE CARS NORTH AMERICA, INC.

WM 706119 REMOVING AND INSTALLING TRIM FOR FRONT DOOR PANEL (ALL MODELS) > INSTALLING TRIM FOR FRONT DOOR PANEL

Information

Check that the fixing clips are not bent or broken.

Replace missing or damaged fixing clips with new ones.

Make sure that all fastening clips have engaged correctly.

Check that they are fitted correctly.

1. Installation is performed in reverse order to removal.

WM 706119 REMOVING AND INSTALLING TRIM FOR REAR DOOR PANEL (ALL MODELS) > REMOVING TRIM FOR REAR DOOR PANEL

Fig 1: Identifying Door Trim Position

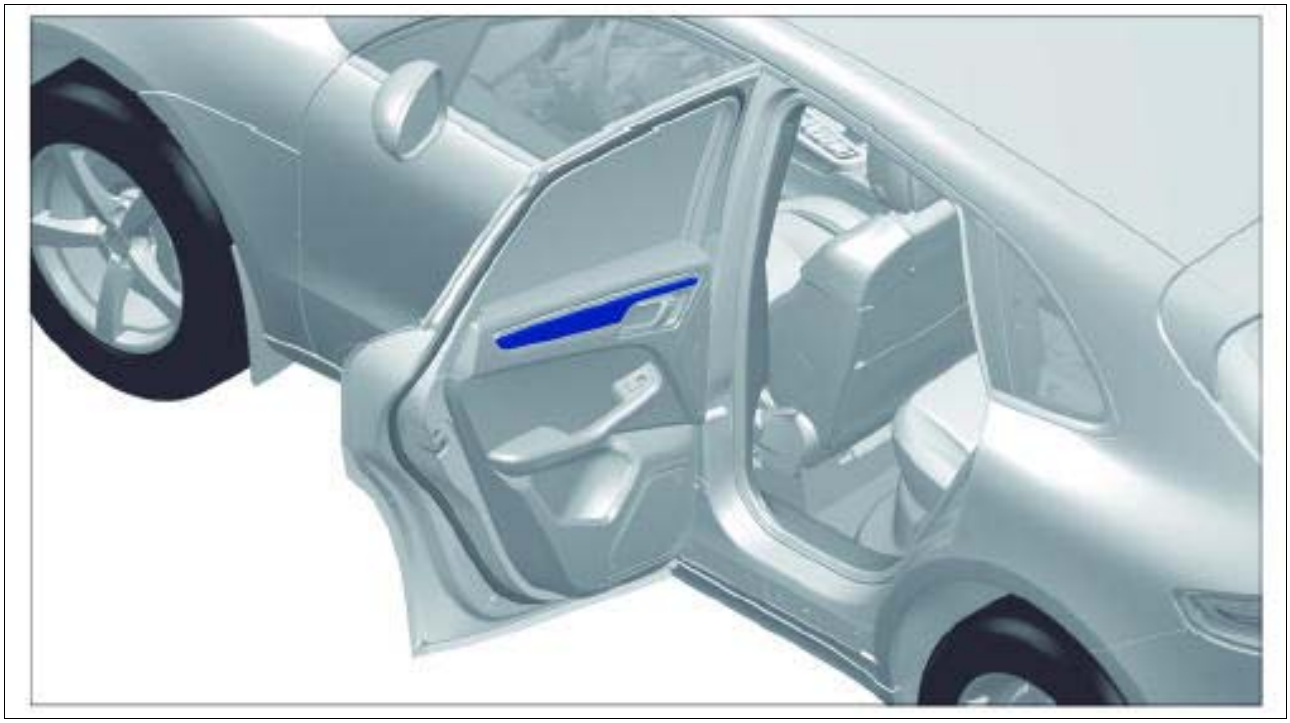

Courtesy of PORSCHE CARS NORTH AMERICA, INC.

1. Unclip trim **-1-** for door panel from front to rear using a suitable tool.

Fig 2: Removing Trim

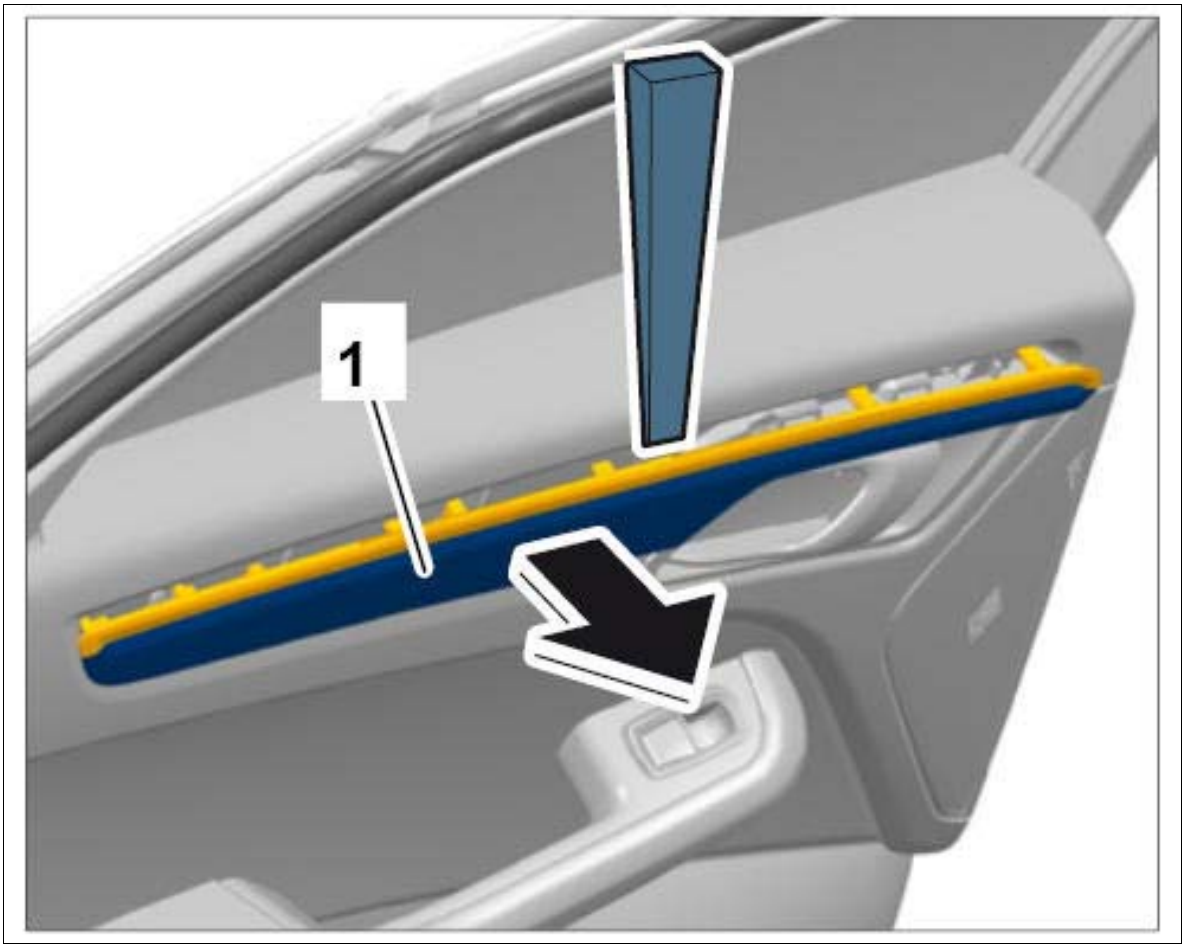

Courtesy of PORSCHE CARS NORTH AMERICA, INC.

2. Push trim back **-arrow-** until the hooks are released, then remove trim.

Fig 3: Removing Trim

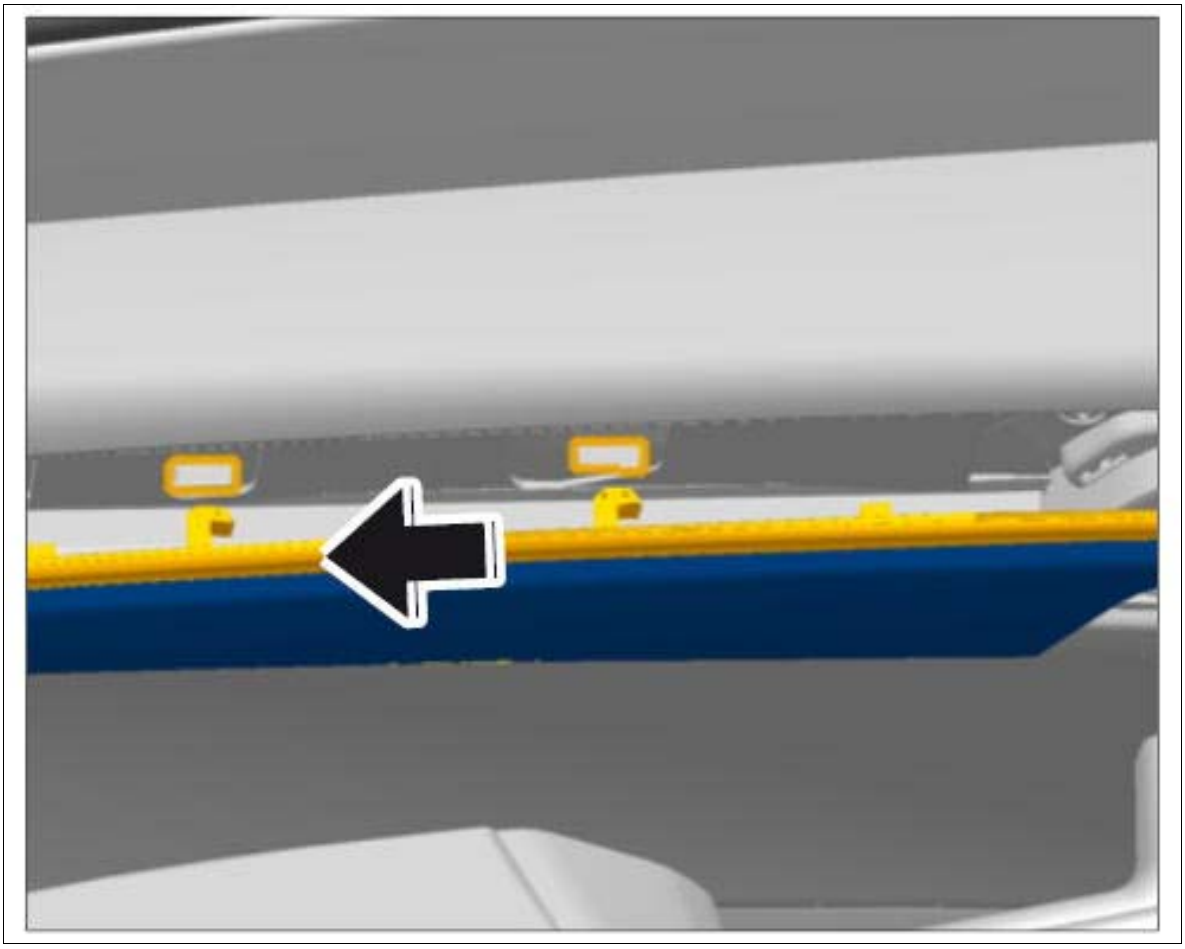

Courtesy of PORSCHE CARS NORTH AMERICA, INC.

WM 706119 REMOVING AND INSTALLING TRIM FOR REAR DOOR PANEL (ALL MODELS) > INSTALLING TRIM FOR REAR DOOR PANEL > INSTALLING TRIM FOR REAR DOOR

1. Installation is performed in reverse order to removal.

WM 706719 REMOVING AND INSTALLING LOWER PART OF B-PILLAR TRIM PANEL (ALL MODELS) > PRELIMINARY WORK

1. Remove upper part of B-pillar trim panel. → Removing Upper Part Of B-Pillar Trim Panel

WM 706719 REMOVING AND INSTALLING LOWER PART OF B-PILLAR TRIM PANEL (ALL MODELS) > REMOVING LOWER PART OF B-PILLAR TRIM PANEL

Information

- The number of fastening screws, fixing clips, plug connections, holders and trim panels can vary depending on equipment.
- The illustrations for removing and installing the drive mechanism are shown only on one equipment variant and may differ from the actual equipment variant.
- Some steps must be carried out automatically.
- Some of the repair illustrations show only one side of the vehicle.

1. Unclip front inner door sill trim in the rear area at the body.
2. Unclip trim panel **-1-** in the upper area on the B-pillar.
3. Unclip and remove trim panel **-1-** at the bottom at the side member.

Fig 1: Removing Lower Part Of B-Pillar Trim Panel

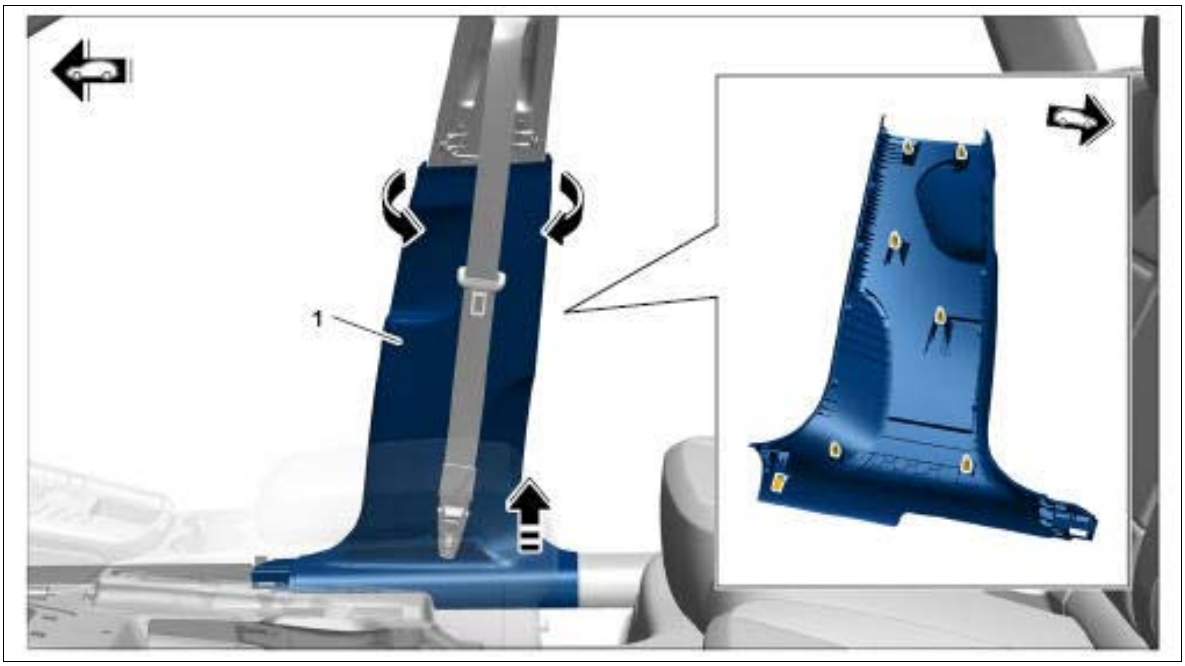

Courtesy of PORSCHE CARS NORTH AMERICA, INC.

WM 706719 REMOVING AND INSTALLING LOWER PART OF B-PILLAR TRIM PANEL (ALL MODELS) > INSTALLING LOWER PART OF B-PILLAR TRIM PANEL

Information

Check that all fixing clips are positioned fully and correctly.

Check that the fixing clips are not bent or broken.

Replace damaged or missing clips with new ones.

Installation is performed in reverse order. Pay particular attention to the following:

1. Fit and clip in centring device and fixing clips on the side member first.
2. Place rubber door seal over the trim panel.

WM 706719 REMOVING AND INSTALLING UPPER PART OF B-PILLAR TRIM PANEL (ALL MODELS) > REMOVING UPPER PART OF B-PILLAR TRIM PANEL

Information

- The number of fastening screws, fixing clips, plug connections, holders and trim panels can vary depending on equipment.
- The illustrations for removing and installing the drive mechanism are shown only on one equipment variant and may differ from the actual equipment variant.
- Some steps must be carried out automatically.
- Some of the repair illustrations show only one side of the vehicle.

1. Set height adjustment **-1-** to the lowest position.
2. Remove seat belt mount at the front seat. → Removing front three-point belt
3. Disengage trim panel **-2-** from the fixing clips in the lower area.
4. Guide belt strap and belt latch out through the trim panel **-2-** .
5. Guide out tabs **-3-** in direction of arrow and remove trim panel **-2-** .

Fig 1: Removing Upper B-Pillar Trim Panel

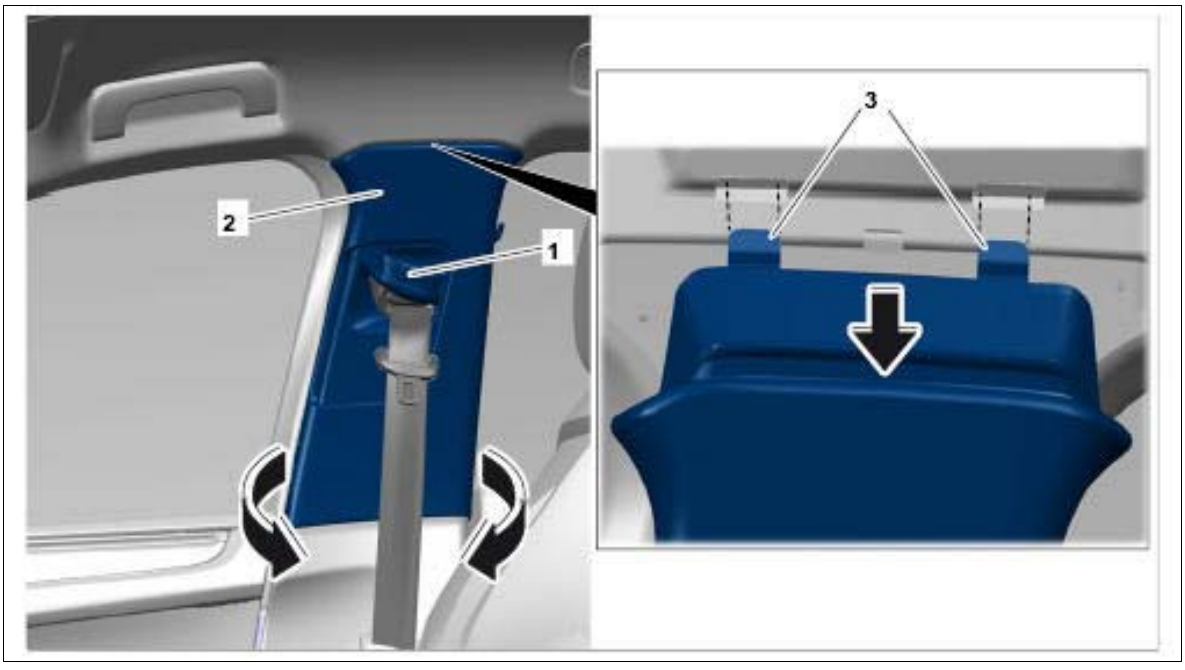

Courtesy of PORSCHE CARS NORTH AMERICA, INC.

WM 706719 REMOVING AND INSTALLING UPPER PART OF B-PILLAR TRIM PANEL (ALL MODELS) > INSTALLING UPPER PART OF B-PILLAR TRIM PANEL

Information

Check that all fixing clips are positioned fully and correctly.

Check that the fixing clips are not bent or broken.

Replace damaged or missing clips with new ones.

1. Move seat-belt height adjustment **-1-** and sliding unit **-2-** to the lowest position.
2. Guide belt strap and belt latch in through the sliding unit **-2-** .
3. Guide tabs on the trim panel **-3-** into the mountings on the body.
4. Insert retaining pivot for seat-belt height adjustment **-1-** into the cut-out on the sliding unit **-2-** .
5. Engage trim panel **-3-** in the fixing clips.
6. Fit seat belt mount at the front seat. → Installing front three-point belt
7. Place rubber door seal over the trim panel **-3-** .
8. Check that seat-belt height adjustment **-1-** is working properly.

Fig 1: Installing Upper B-Pillar Trim Panel

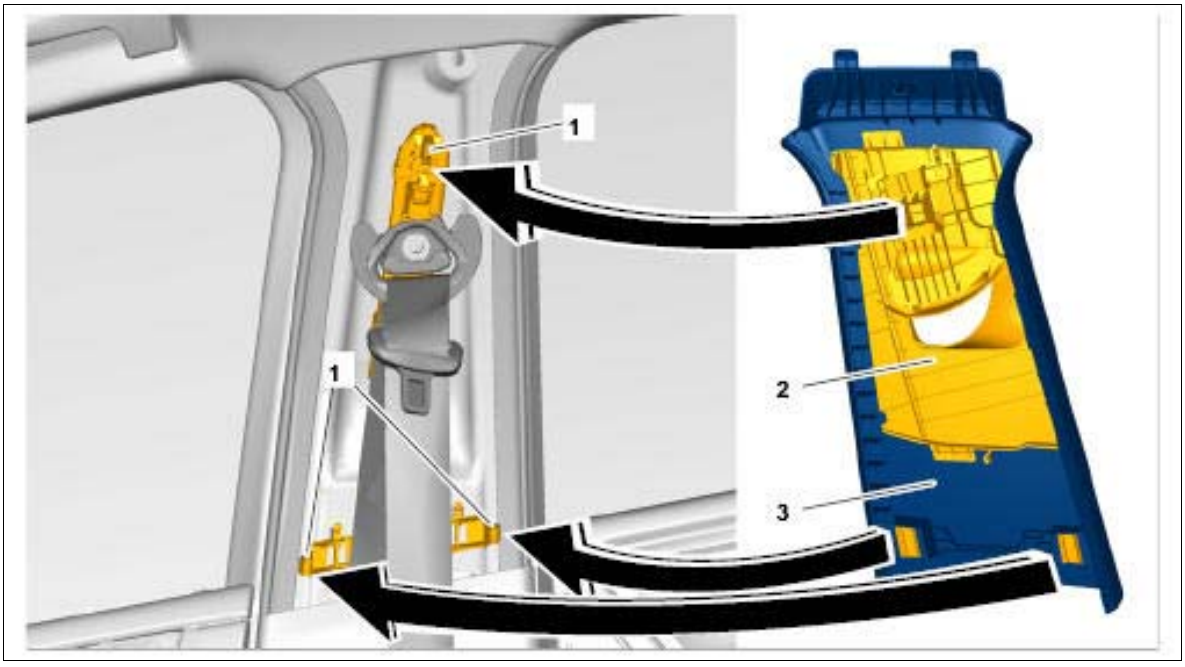

Courtesy of PORSCHE CARS NORTH AMERICA, INC.

WM 706819 REMOVING AND INSTALLING C-PILLAR TRIM PANEL (ALL MODELS) > TECHNICAL VALUES

Location	Description	Type	Basic value	Tolerance 1	Tolerance 2
Belt guide clip to body		Tightening torque	20 Nm (15 ftlb.)		

WM 706819 REMOVING AND INSTALLING C-PILLAR TRIM PANEL (ALL MODELS) > REMOVING C-PILLAR TRIM PANEL

Information

- The number of fastening screws, fixing clips, plug connections, holders and trim panels can vary depending on equipment.
- The illustrations for removing and installing the drive mechanism are shown only on one equipment variant and may differ from the actual equipment variant.
- Some steps must be carried out automatically.
- Some of the repair illustrations show only one side of the vehicle.

1. Remove upper part of side trim panel for luggage compartment. → Removing Side Trim Panel For Rear Luggage Compartment
2. Remove side airbag and loosen rear inner door sill trim at the top of the C-pillar. → Removing Rear Inner Door Sill Trim
3. Unscrew fastening screws and remove belt guide clips **-1-** .
4. Unclip C-pillar trim panel **-2-** .
5. Guide tab **-3-** out of mounting **-4-** and remove trim panel **-2-** .

Fig 1: Removing C-Pillar Trim Panel



Courtesy of PORSCHE CARS NORTH AMERICA, INC.

WM 706819 REMOVING AND INSTALLING C-PILLAR TRIM PANEL (ALL MODELS) > INSTALLING C-PILLAR TRIM PANEL

Information

Check that all fixing clips are positioned fully and correctly.

Check that the fixing clips are not bent or broken.

Replace damaged or missing clips with new ones.

Installation is performed in reverse order. Pay particular attention to the following:

1. Place rubber door seal over the trim panel.
2. Tighten fastening screws to the specified torque. **Tightening torque 20 Nm (15 ftlb.)**

WM 706919 REMOVING AND INSTALLING D-PILLAR TRIM PANEL (ALL MODELS) > PRELIMINARY WORK

1. Remove side trim panel for rear luggage compartment. → Removing Side Trim Panel For Rear Luggage Compartment

WM 706919 REMOVING AND INSTALLING D-PILLAR TRIM PANEL (ALL MODELS) >

REMOVING D-PILLAR TRIM PANEL

Information

- The number of fastening screws, fixing clips, plug connections, holders and trim panels can vary depending on equipment.
- The illustrations for removing and installing the drive mechanism are shown only on one equipment variant and may differ from the actual equipment variant.
- Some steps must be carried out automatically.
- Some of the repair illustrations show only one side of the vehicle.

1. Unclip trim panel **-1-** on D-pillar and remove it.
2. Release and disconnect electric plug connection **-2-** on the loudspeaker.
3. Remove trim panel **-1-** .

Fig 1: Removing D-Pillar Trim Panel

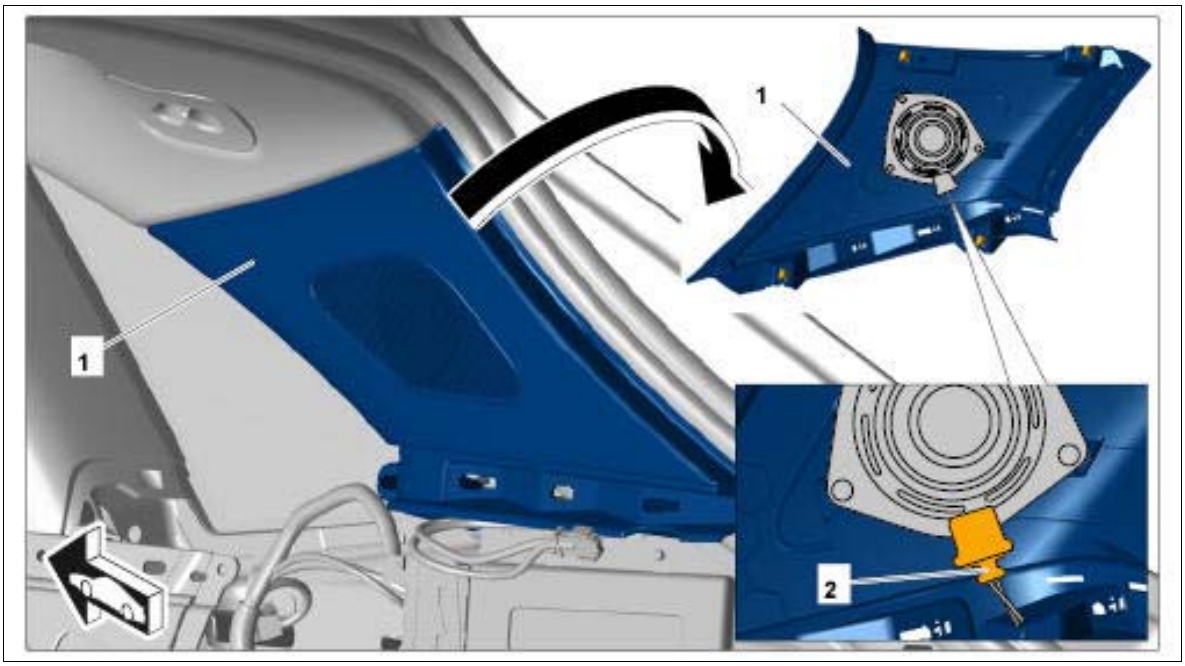

Courtesy of PORSCHE CARS NORTH AMERICA, INC.

WM 706919 REMOVING AND INSTALLING D-PILLAR TRIM PANEL (ALL MODELS) > INSTALLING D-PILLAR TRIM PANEL > INSTALLING D-PILLAR TRIM PANEL

Information

Check that all fixing clips are positioned fully and correctly.

Check that the fixing clips are not bent or broken.

Replace damaged or missing clips with new ones.

Installation is performed in reverse order. Pay particular attention to the following:

1. Place rubber seal for rear door panel over the trim panel.

WM 706919 REMOVING AND INSTALLING D-PILLAR TRIM PANEL (ALL MODELS) > SUBSEQUENT WORK

1. Install side trim panel for rear luggage compartment. → Installing Side Trim Panel For Rear Luggage Compartment

WM 707319 REMOVING AND INSTALLING REAR DOOR PANEL (ALL MODELS) > TECHNICAL VALUES

Location	Description	Type	Basic value	Tolerance 1	Tolerance 2
Fastening screw for door panel		Tightening torque	3.5 Nm (2.5 ftlb.)	+/-0.5 Nm (+/- 0.5 ftlb.)	
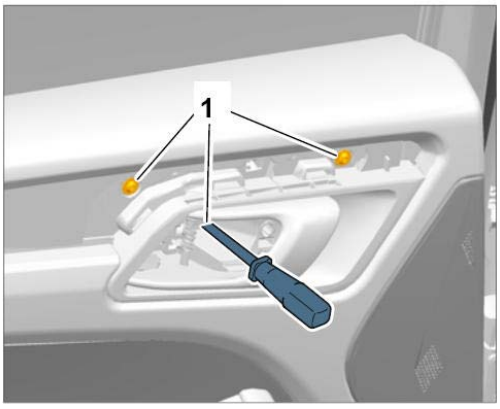 Door panel mounting					
Fastening screw for door panel, bottom		Tightening torque	3.5 Nm (2.5 ftlb.)	+/-0.5 Nm (+/- 0.5 ftlb.)	
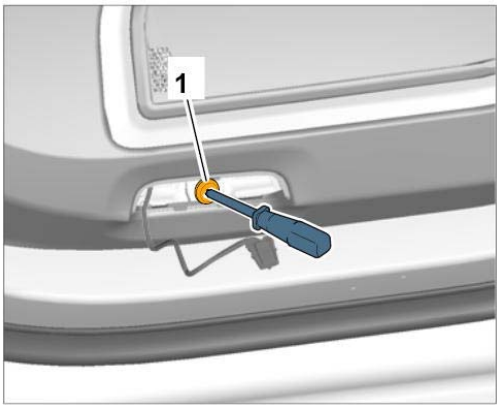 Mounting at bottom of door					

WM 707319 REMOVING AND INSTALLING REAR DOOR PANEL (ALL MODELS) > PRELIMINARY WORK

1. Remove trim for door panel. → Removing Trim For Rear Door Panel

WM 707319 REMOVING AND INSTALLING REAR DOOR PANEL (ALL MODELS) > REMOVING REAR DOOR PANEL

Information

- The number of fastening screws, fixing clips, plug connections, holders and trim panels can vary depending on equipment.
- The illustrations for removing and installing the drive mechanism are shown only on one equipment variant Mounting at bottom of door and may differ from the actual equipment variant.
- Some steps must be carried out automatically.
- Some of the repair illustrations show only one side of the vehicle.

Fig 1: Identifying Rear Door Panel Position



Courtesy of PORSCHE CARS NORTH AMERICA, INC.

1. Unclip cover **-1-** on door opener using a suitable tool.

Fig 2: Removing Cover On Door Opener

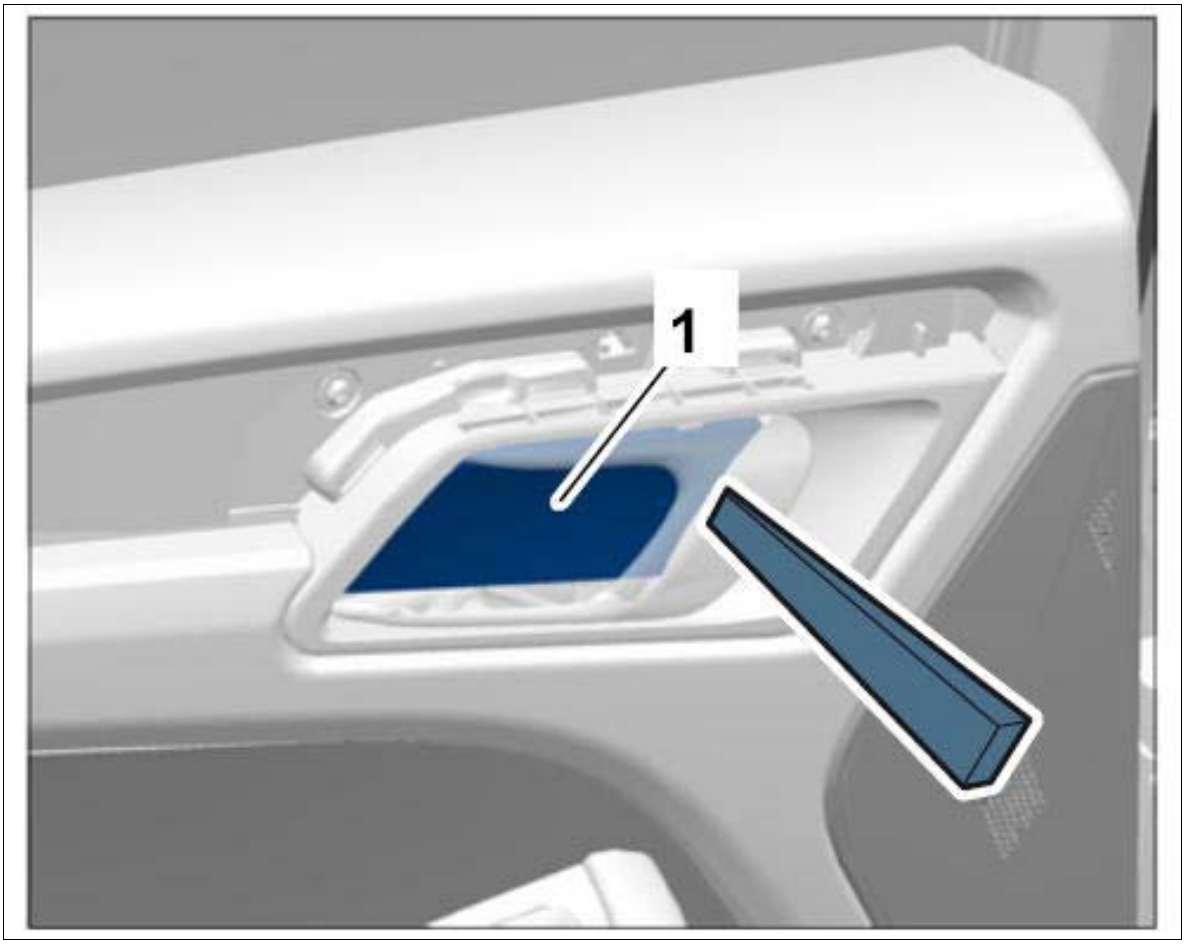

Courtesy of PORSCHE CARS NORTH AMERICA, INC.

2. Unscrew and remove fastening screws **-1-** on door panel.

Fig 3: Removing Door Panel Fastening Screws

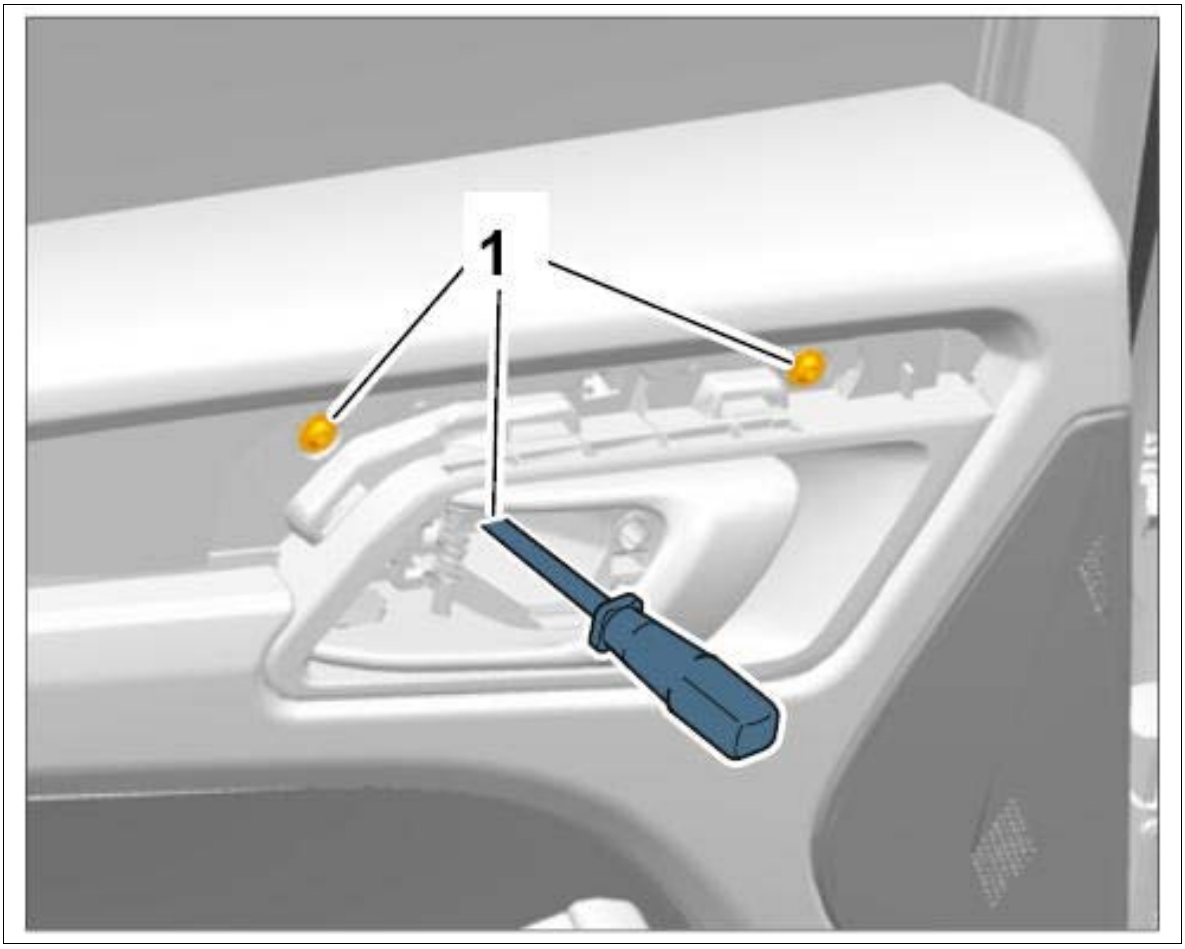

Courtesy of PORSCHE CARS NORTH AMERICA, INC.

3. Unclip door light or reflector **-1-** using a suitable tool and disconnect plug connection.

Fig 4: Removing Door Panel Light

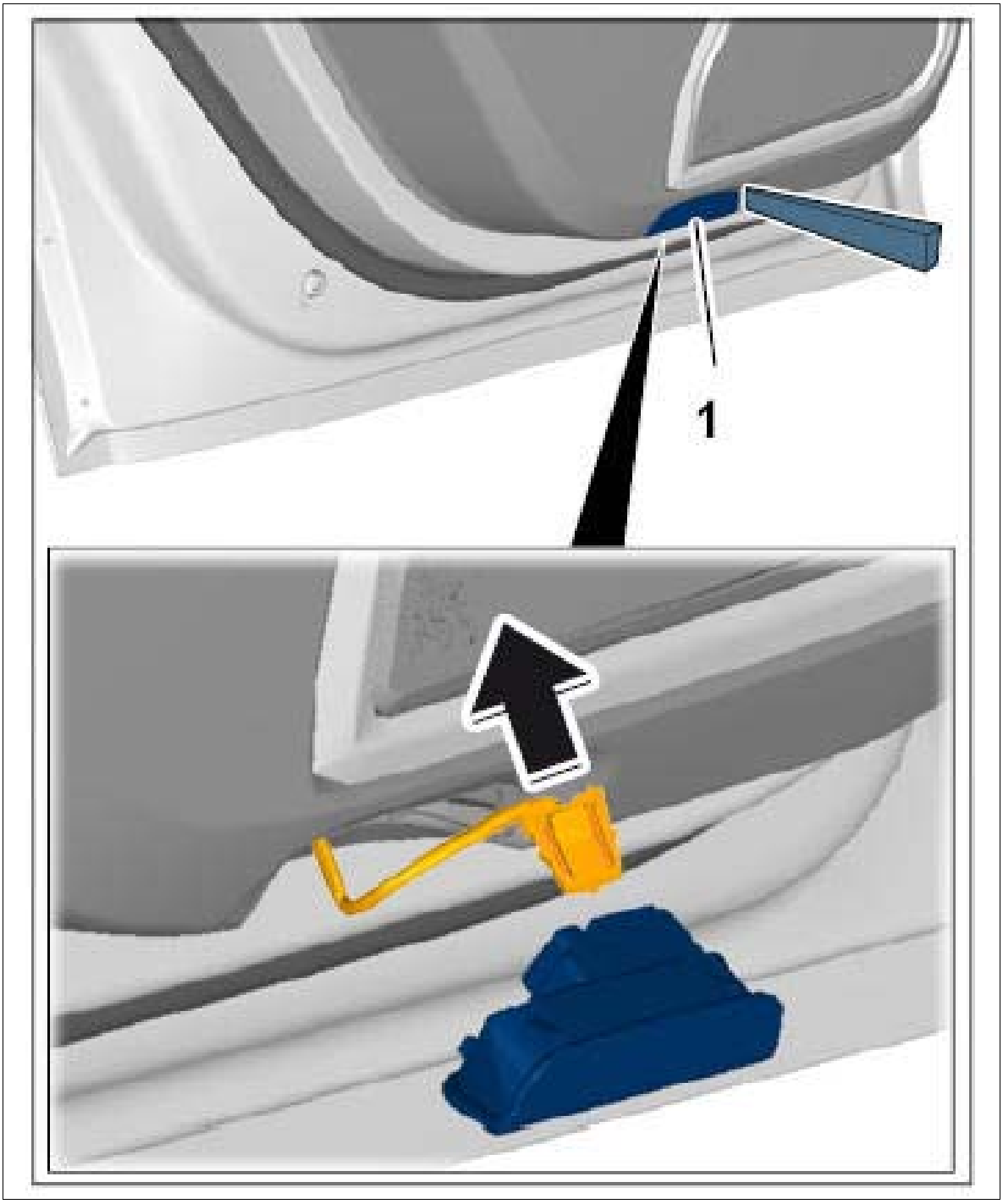

Courtesy of PORSCHE CARS NORTH AMERICA, INC.

4. Unscrew and remove fastening screw **-1-** at the bottom of the trim panel.

Fig 5: Removing Door Fastening Screw (Bottom)

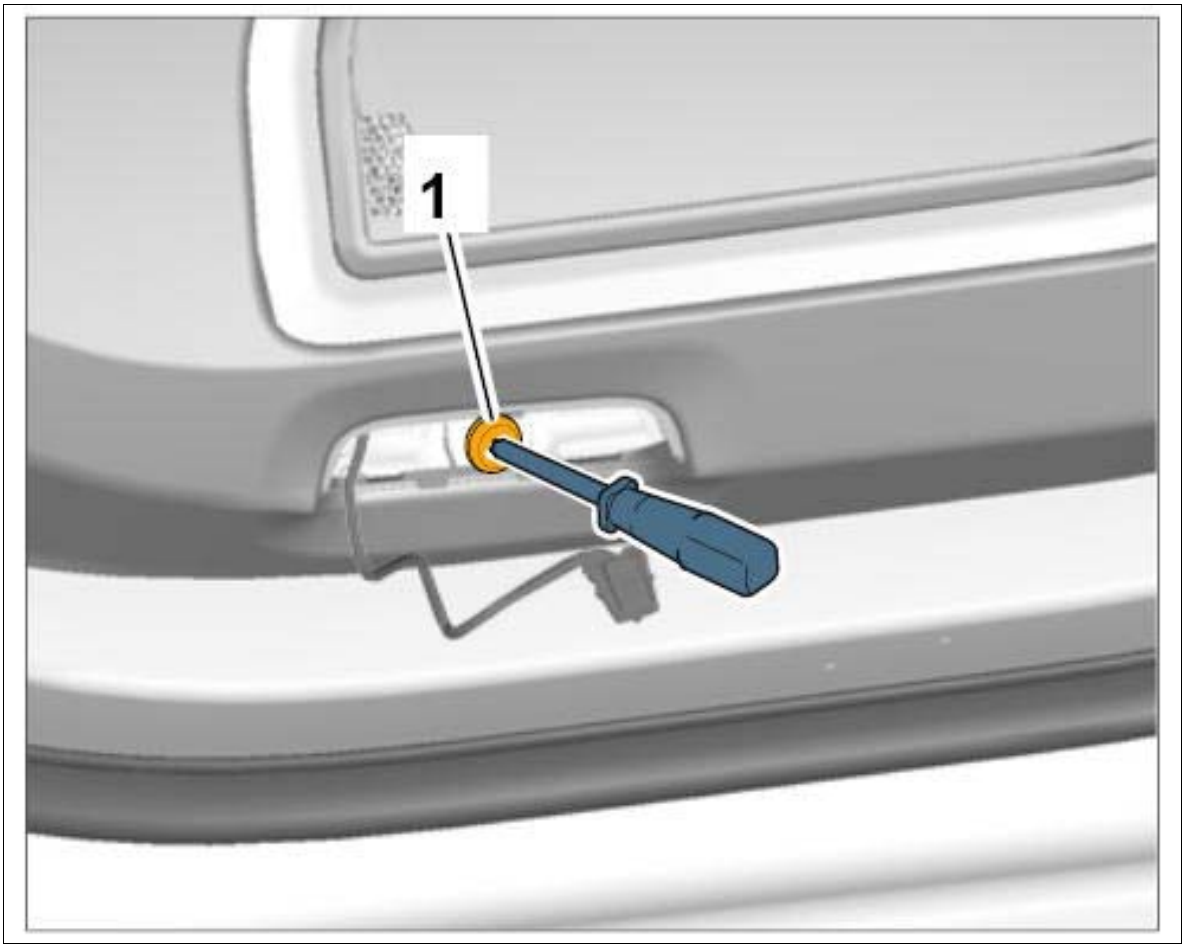

Courtesy of PORSCHE CARS NORTH AMERICA, INC.

5. Guide door panel up out of the bracket and swivel it forward.
6. Disengage cable for door opener.
    1. 6.1. Spread locking lugs outwards **-A-** .
    2. 6.2. Remove cable by pulling it to the rear out of the guide **-2- (-B-)** .
    3. 6.3. Swivel cable in direction of arrow until the driver at the front is free **-C-** .
    4. 6.4. Remove driver from the door opener **-D-** .

Fig 6: Disengaging Door Opener Cable

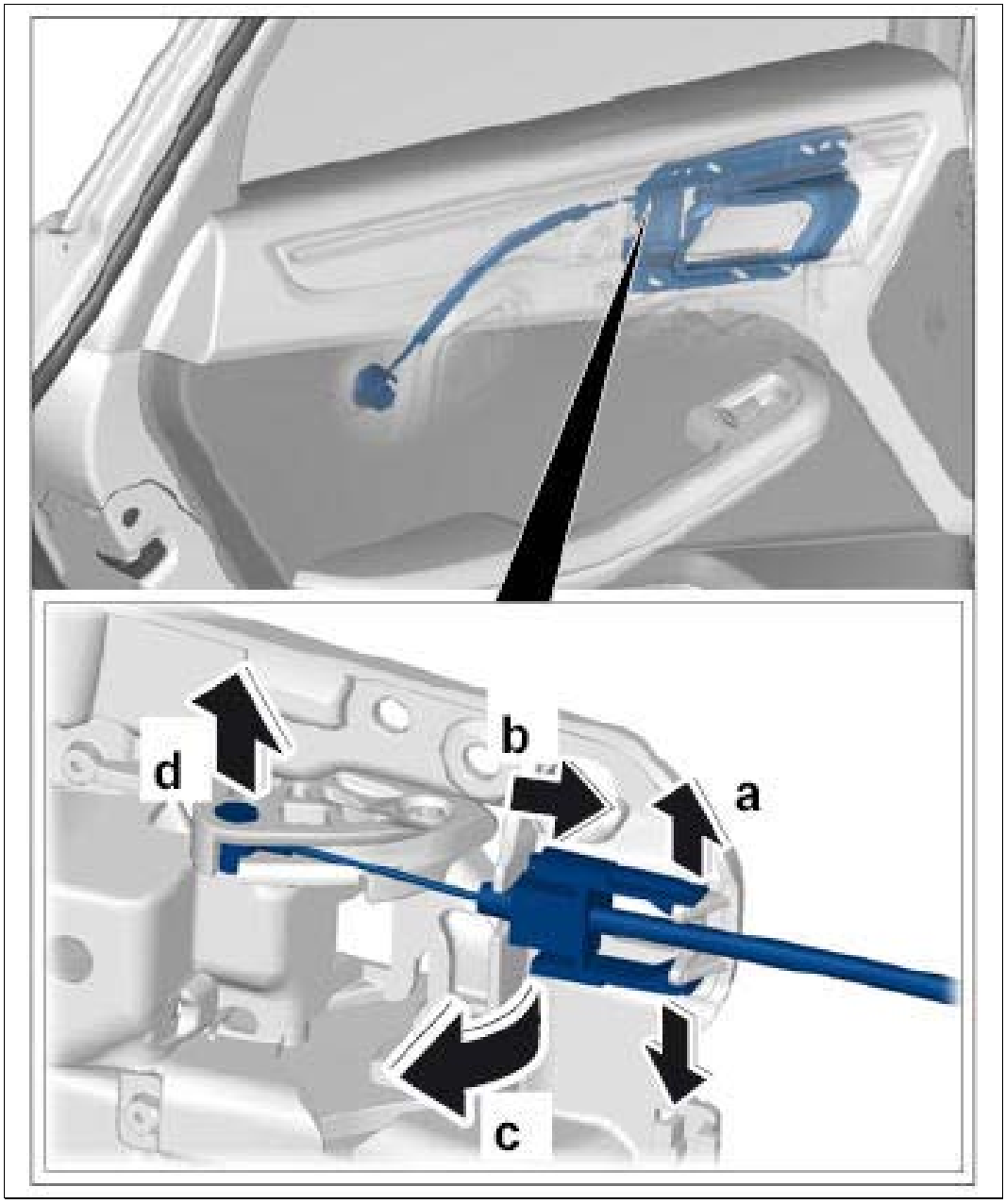

Courtesy of PORSCHE CARS NORTH AMERICA, INC.

7. Release and disconnect plug connection for wire harness at the door control unit.

WM 707319 REMOVING AND INSTALLING REAR DOOR PANEL (ALL MODELS) > INSTALLING REAR DOOR PANEL

1. Installation is performed in reverse order to removal.
2. Tighten fastening screw for door panel to **Tightening torque 3.5 Nm (2.5 ftlb.) +/-0.5 Nm (+/-0.5 ftlb.)** until secure.
3. Tighten fastening screw for door panel at the bottom to **Tightening torque 3.5 Nm (2.5 ftlb.)**

+/-0.5 Nm (+/- 0.5 ftlb.) until secure.

WM 707319 REMOVING AND INSTALLING REAR DOOR PANEL (ALL MODELS) > SUBSEQUENT WORK

1. Install trim for rear door panel. → Installing Trim For Rear Door Panel

WM 708319 REMOVING AND INSTALLING FRONT ROOF TRIM PANEL (ALL MODELS) > REMOVING FRONT ROOF TRIM PANEL

NOTE: Voltage peaks

- *Risk of damage to load or to the control unit*

→ Switch off ignition and remove remote control before disconnecting or removing load.

Information

- The number of fastening screws, fixing clips, plug connections, holders and trim panels can vary depending on equipment.
- The illustrations for removing and installing the drive mechanism are shown only on one equipment variant and may differ from the actual equipment variant.
- Some steps must be carried out automatically.
- Some of the repair illustrations show only one side of the vehicle.

Fig 1: Identifying Roof Trim Panel Installation Position

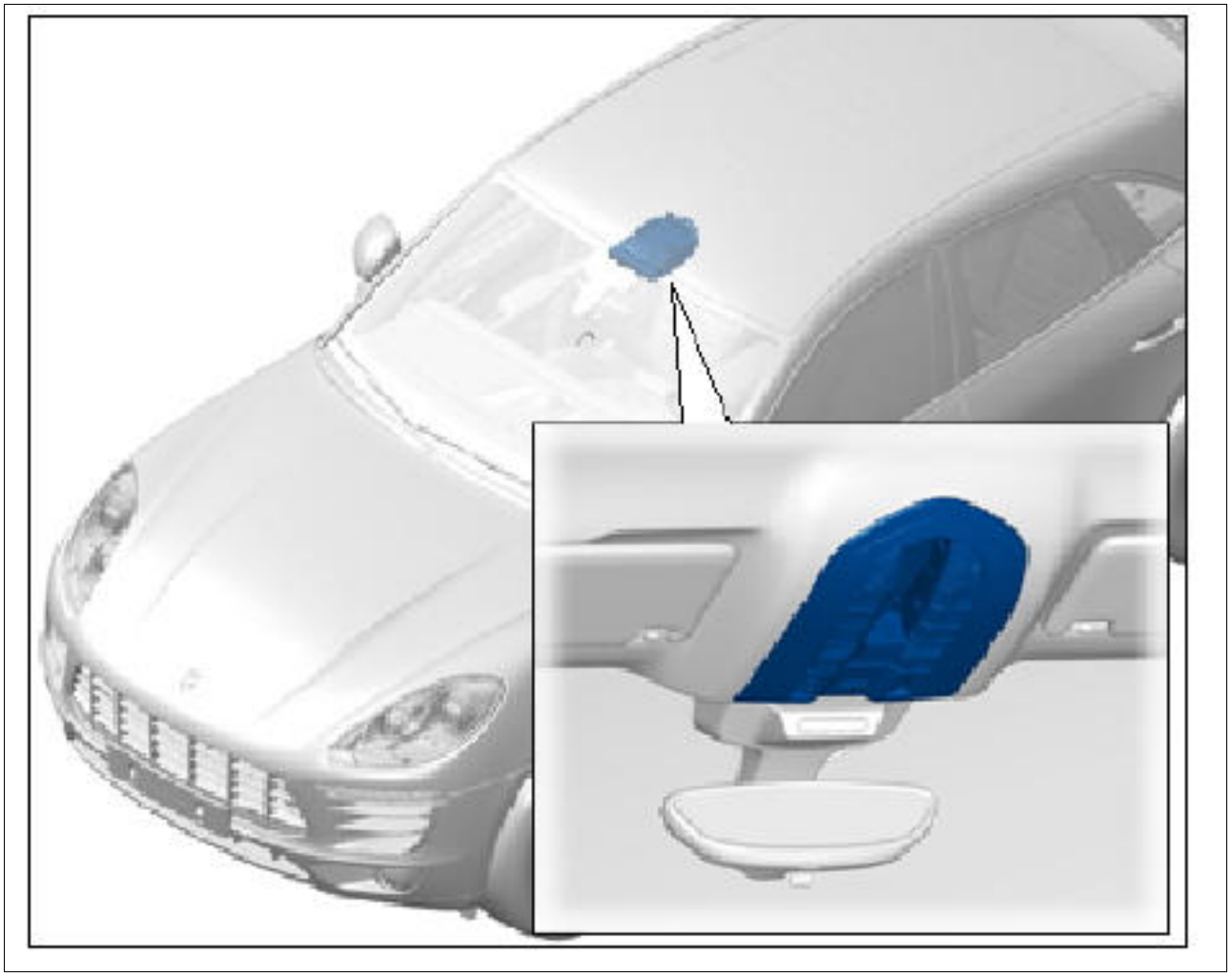

Courtesy of PORSCHE CARS NORTH AMERICA, INC.

1. Unclip trim for headliner.

Fig 2: Removing Trim

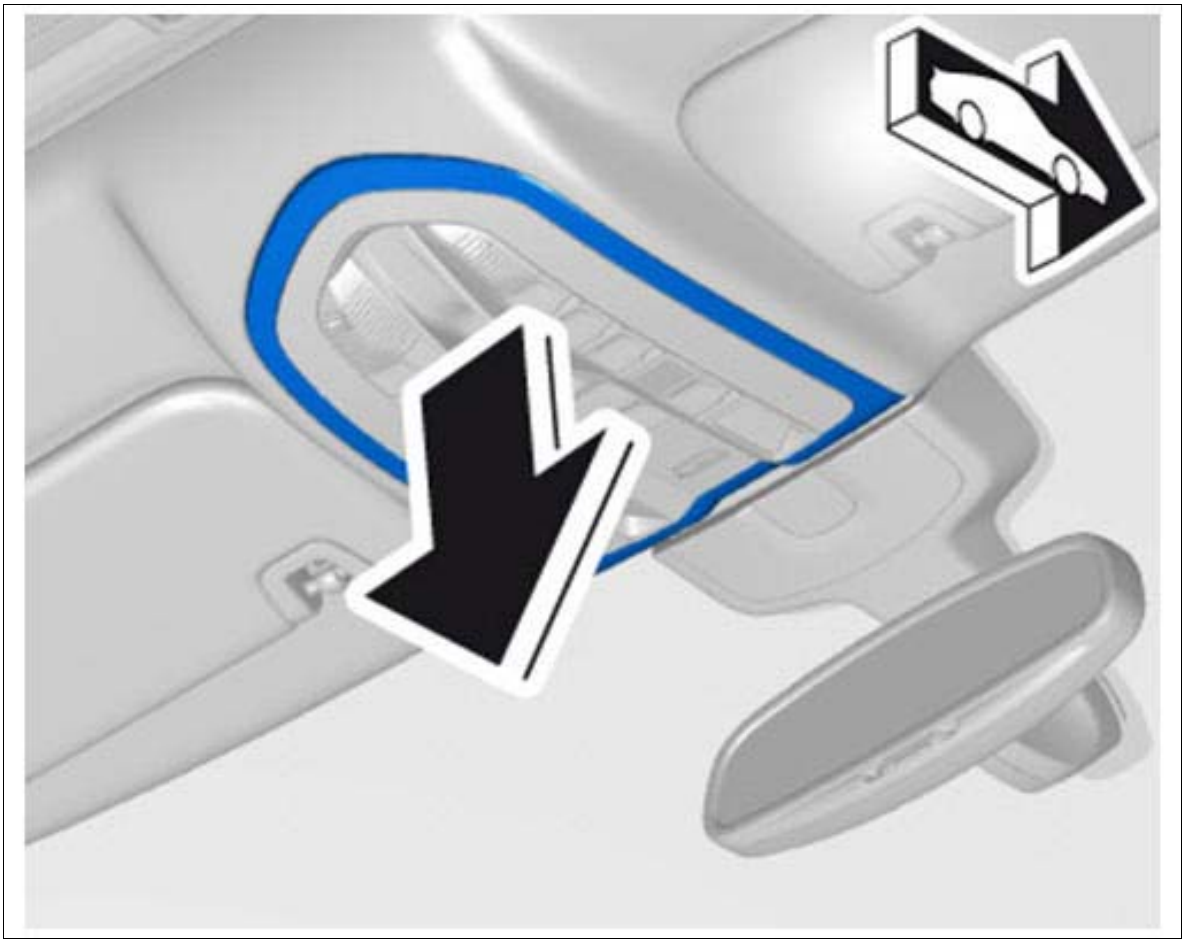

Courtesy of PORSCHE CARS NORTH AMERICA, INC.

2. Unclip headliner at the two side cut-outs **-A-** and swivel it downwards **-B-** .

Fig 3: Removing Headliner

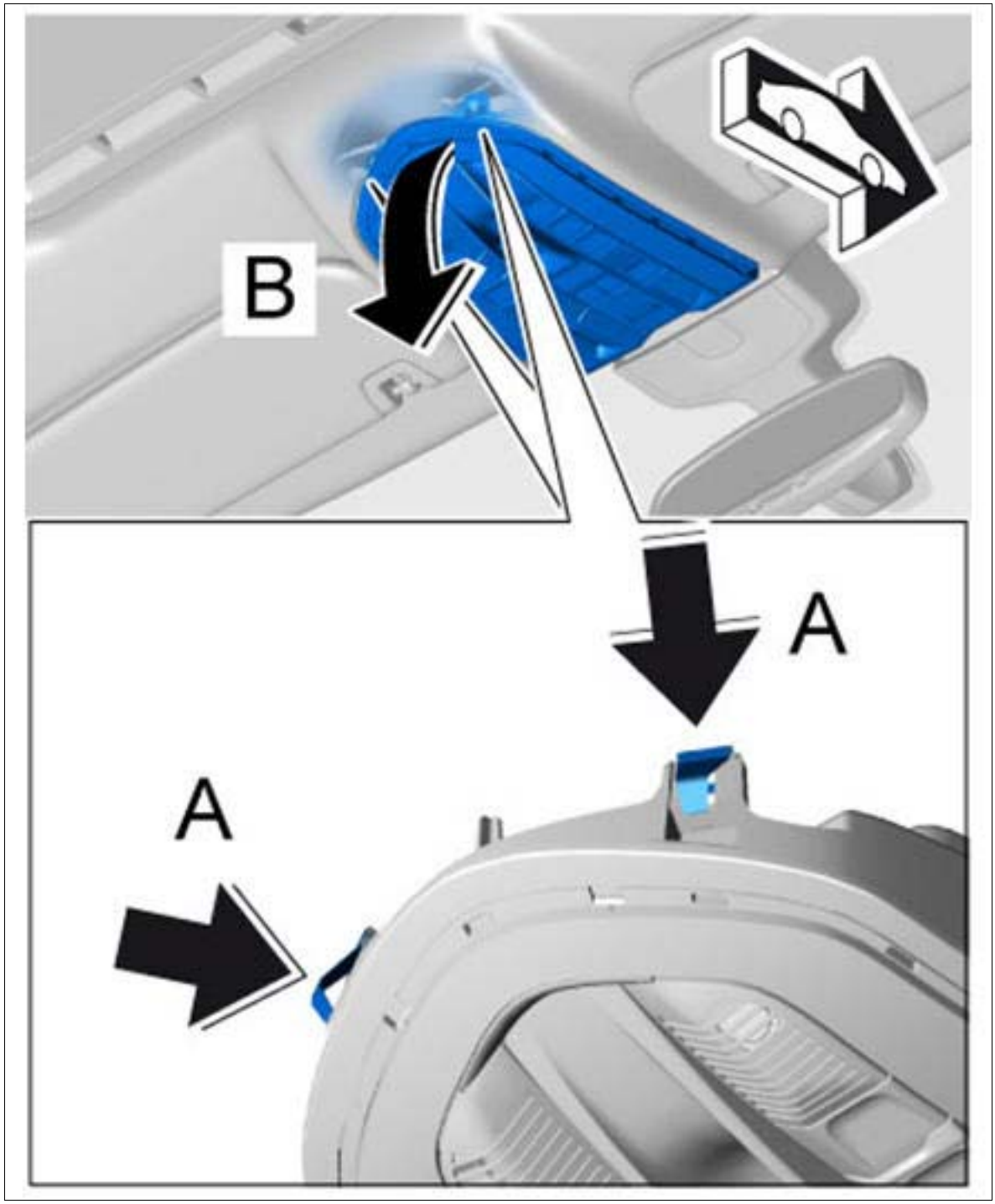

Courtesy of PORSCHE CARS NORTH AMERICA, INC.

3. Lift headliner off towards the rear.

Fig 4: Lifting Headliner

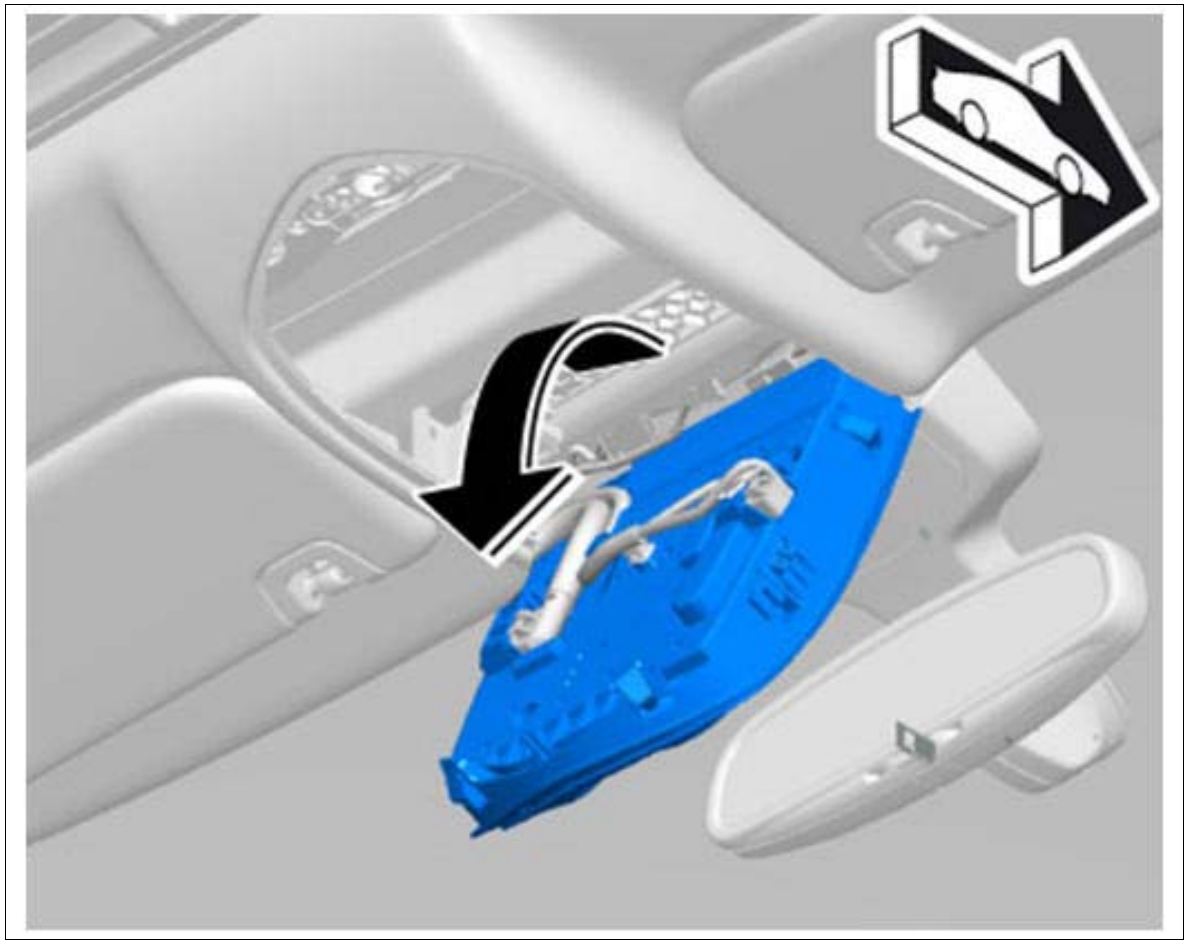

Courtesy of PORSCHE CARS NORTH AMERICA, INC.

4. Disconnect wire harness.
    1. 4.1. Release plug connections **-a-** and pull them off **-B-** .
    2. 4.2. Unclip fastening clip for wire harness **-C-** .

Fig 5: Disconnecting Wire Harness

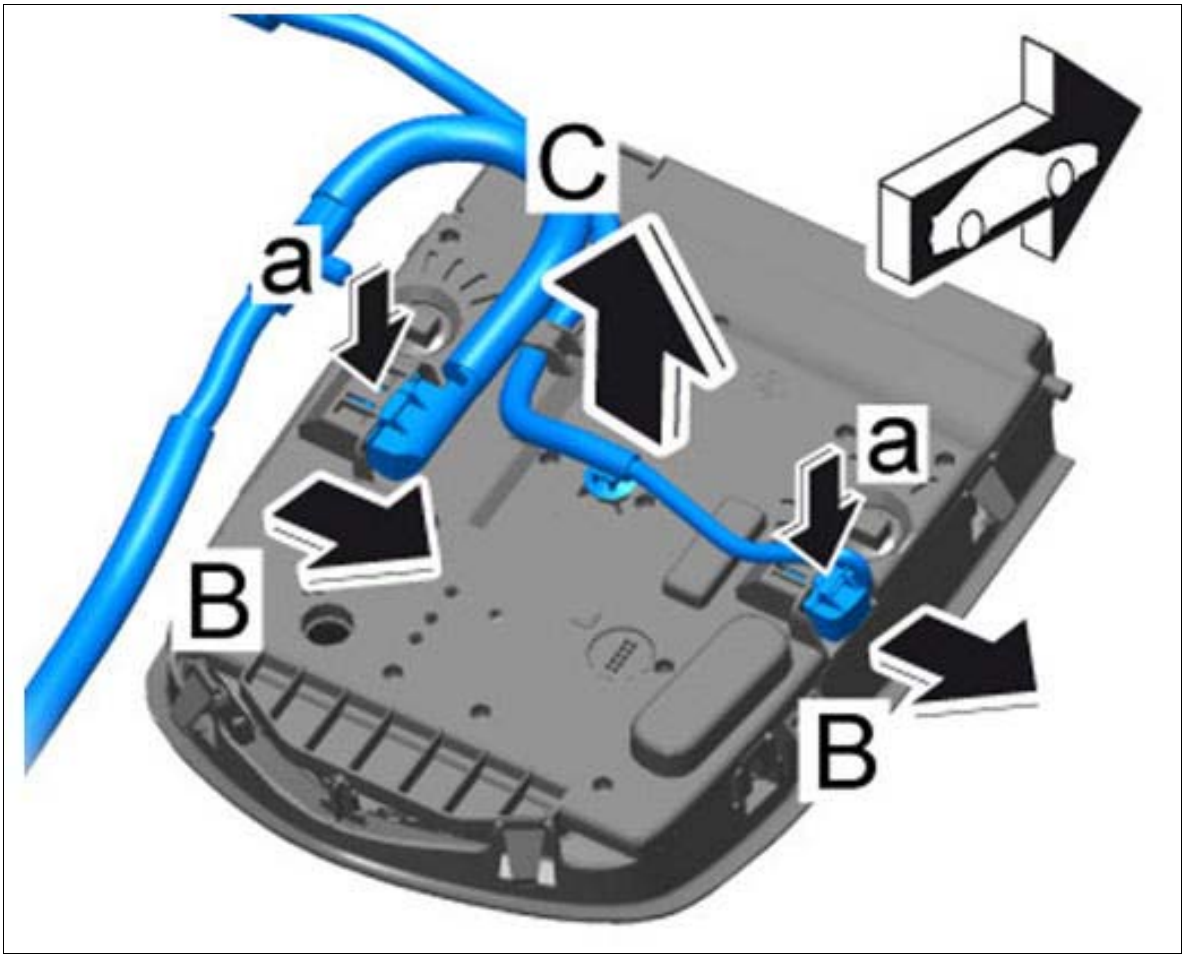

Courtesy of PORSCHE CARS NORTH AMERICA, INC.

WM 708319 REMOVING AND INSTALLING FRONT ROOF TRIM PANEL (ALL MODELS) > INSTALLING FRONT ROOF TRIM PANEL

Information

Check that the fixing clips are not bent or broken.

Replace missing or damaged fixing clips with new ones.

Make sure that all fastening clips have engaged correctly.

Check that they are fitted correctly.

1. Installation is performed in reverse order to removal.

WM 708355 REPLACING ROOF CONSOLE (ALL MODELS) > TOOLS

Designation	Type	Number	Description	
Battery charger 45A	Service equipment	WE 1393		
PIWIS Tester II	Special tool	9818		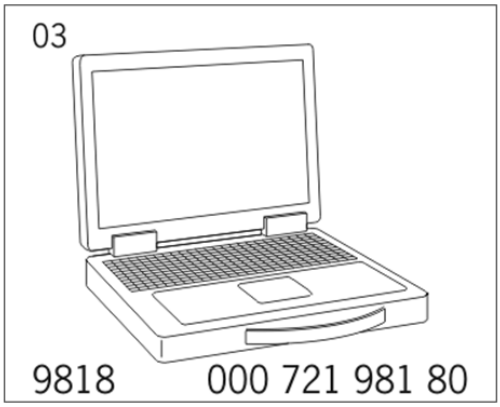

WM 708355 REPLACING ROOF CONSOLE (ALL MODELS) > PRELIMINARY WORK

1. Remove and install roof console. →Removing Front Roof Trim Panel

WM 708355 REPLACING ROOF CONSOLE (ALL MODELS) > TEACHING ROOF CONSOLE

Tools:

- **PIWIS Tester II 9818** with PIWIS Tester test software version **14.300** (or higher) installed.
- Suitable battery charger (charging current of at least 40 A), e.g. **Battery charger 45A WE 1393**

Procedure:

Information

The procedure described here is based on the PIWIS Tester II test software version **14.300** .

The PIWIS Tester instructions take precedence and in the event of a discrepancy, these are the instructions that must be followed.

A discrepancy may arise with later software versions for example.

1. Connect a battery charger with a current rating of **at least 40 A** to the jump-start terminals in the engine compartment.
2. Switch on the ignition using the **original driver's key.**

   To do this, replace the control panel in the ignition lock with the original driver's key if necessary.
3. **PIWIS Tester II 9818** with software version **14.300** (or higher) installed must be connected to the vehicle communication module (VCI) via the **USB cable.** Then, connect the communication

module to the vehicle and switch on the PIWIS Tester.

4. On the PIWIS Tester start screen, call up the → **'Diagnostics'** menu and select the relevant vehicle type.

   The diagnostic application is then started and the control unit selection screen is populated.

5. Re-code rear-end electronics control unit automatically.

    1. 5.1. In the control unit selection screen (→ **'Overview'** menu), select the → **'Rear-end electronics'** control unit and press [>>] to confirm your selection → see Fig 1.

       Fig 1: Screen Display - Control Unit Selection - Rear-End Electronics

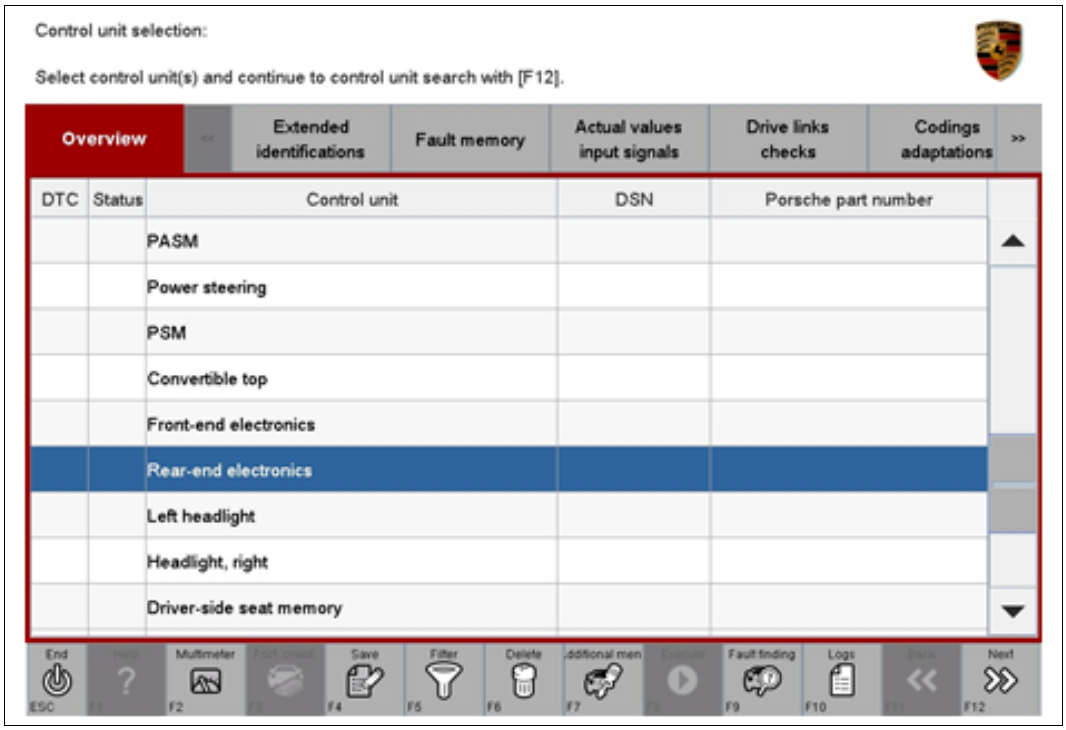

Courtesy of PORSCHE CARS NORTH AMERICA, INC.

    2. 5.2. Once the 'Rear-end electronics' control unit has been found and is displayed in the overview, select the → **'Codings/adaptations'** menu.

    3. 5.3. Select the → **'Automatic coding'** function and press [>>] to start coding → see Fig 2.

Fig 2: Screen Display - Automatic Coding

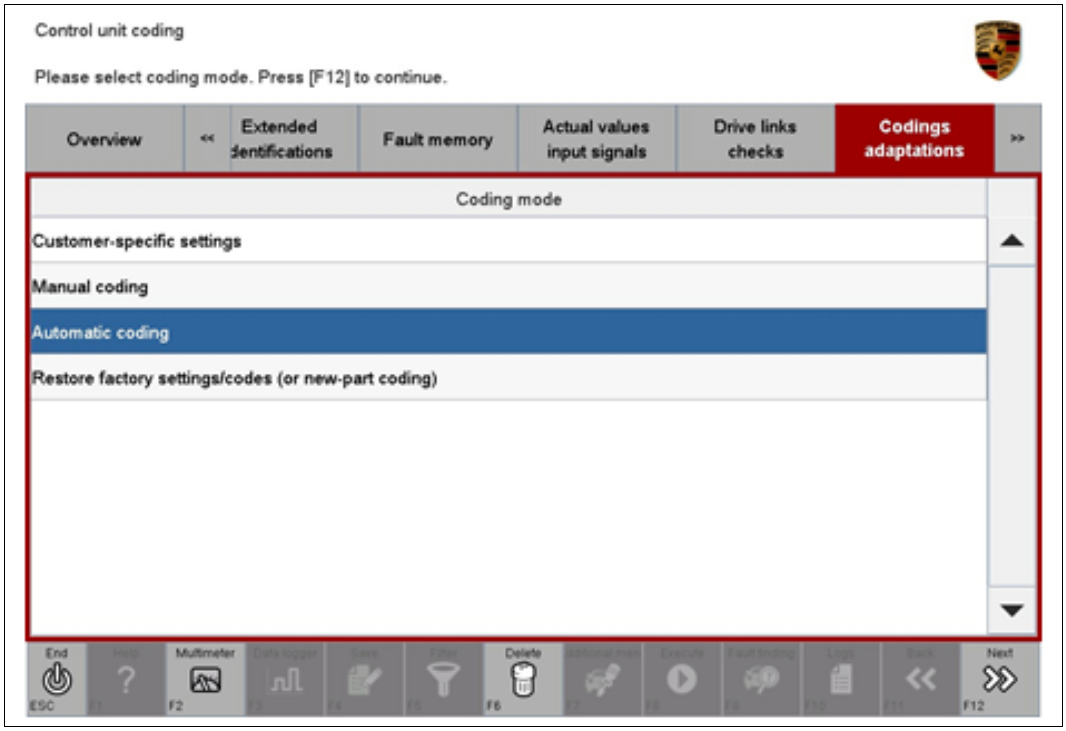

Courtesy of PORSCHE CARS NORTH AMERICA, INC.

4. 5.4. When coding is complete, the message "Coding has been completed successfully" is displayed and a tick appears in the 'Status' box → see Fig 3.

   If coding is not completed successfully (error message "Coding was not completed successfully"), coding must be **repeated** .

Fig 3: Screen Display - Coding Successful

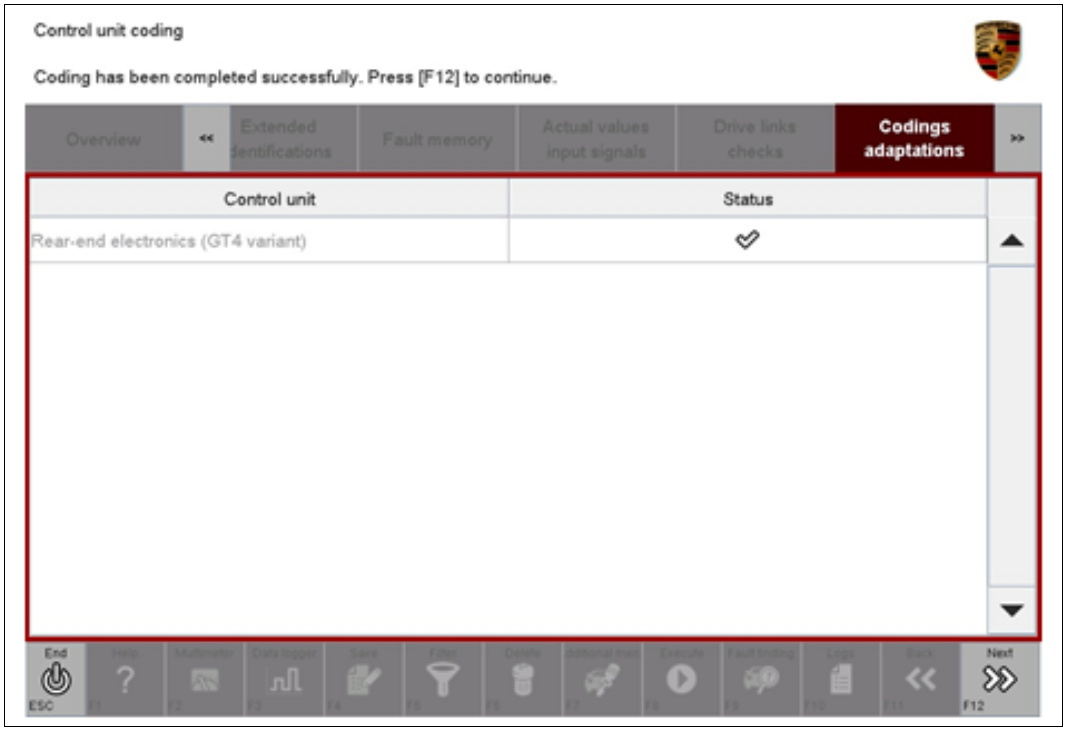

Courtesy of PORSCHE CARS NORTH AMERICA, INC.

5. 5.5. Once coding has been completed successfully, press [>>] to return to the start page of the → **'Codings/adaptations'** menu.

6. Teach the roof console to suit the vehicle.

    1. 6.1. Select the → **'Drive links/checks'** menu on the PIWIS Tester.

    2. 6.2. Select the → **'Teach'** function and press [>>] to confirm your selection → see Fig 4.

Fig 4: Screen Display - Teach Function

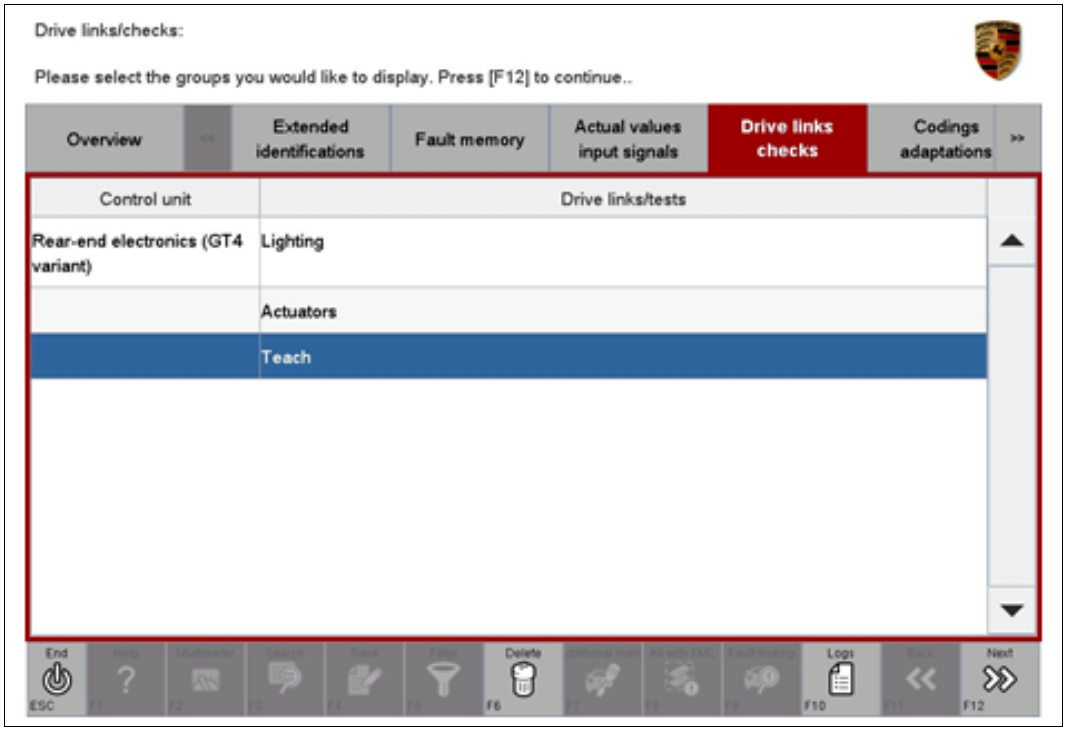

Courtesy of PORSCHE CARS NORTH AMERICA, INC.

3. 6.3. Select the → **'Teach roof console'** function and press [>>] to confirm your selection → see Fig 5.

   Fig 5: Screen Display - Teaching Roof Console

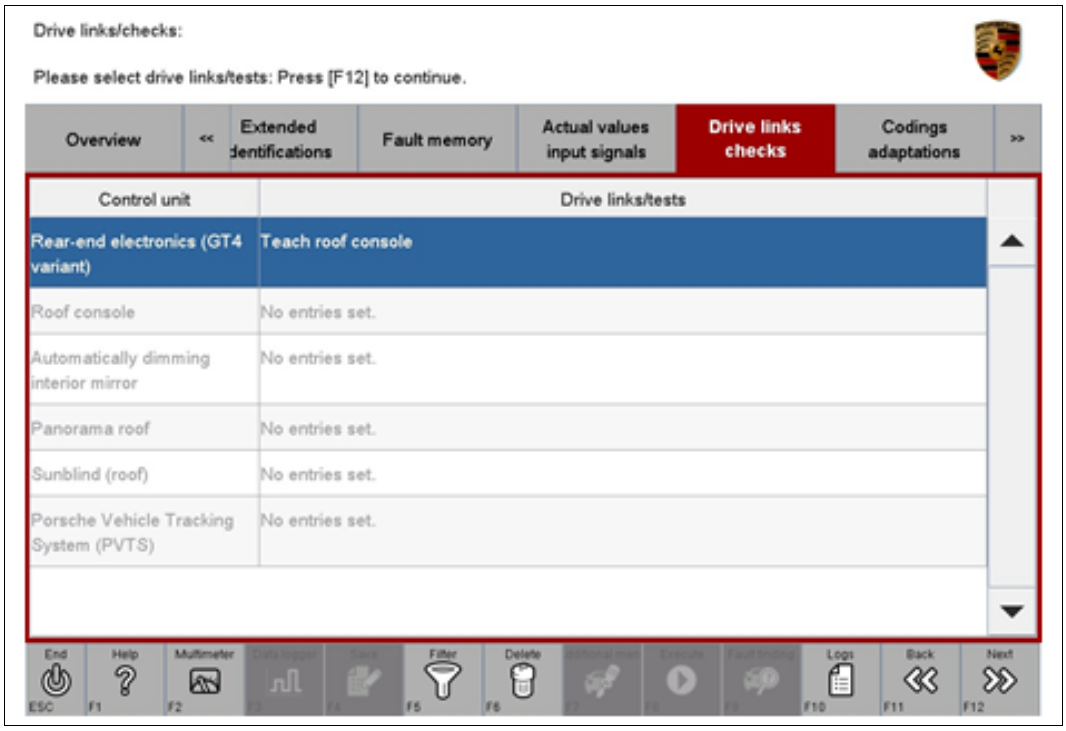

Courtesy of PORSCHE CARS NORTH AMERICA, INC.

4. 6.4. Start the → **'Teach roof console'** function by pressing [F8].

Once the roof console has been taught, the message **"Successful execution without return value"** appears in the PIWIS Tester display → see Fig 6.

If the roof console cannot be taught successfully, the process must be **repeated** .

Fig 6: Screen Display - Roof Console Taught Successfully

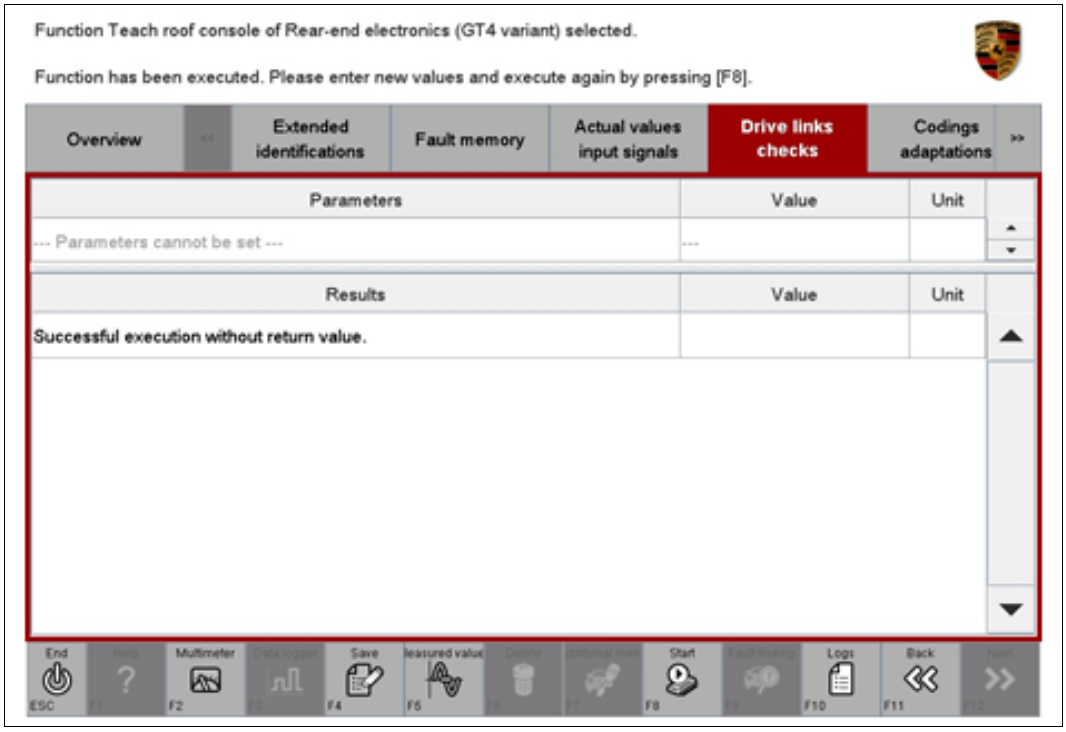

Courtesy of PORSCHE CARS NORTH AMERICA, INC.

5. 6.5. Once the roof console has been taught successfully, press [<<] to return to the start page of the → **'Drive links/checks'** menu.
6. 6.6. Select the → **'Overview'** menu and press [<<] to return to the control unit selection screen.

7. Read out and erase fault memories.

1. 7.1. In the control unit selection screen (→ **'Overview'** menu), press [F7] to call up the → **'Additional menu'** (→ see Fig 7).

Fig 7: Screen Display - Control Unit Selection

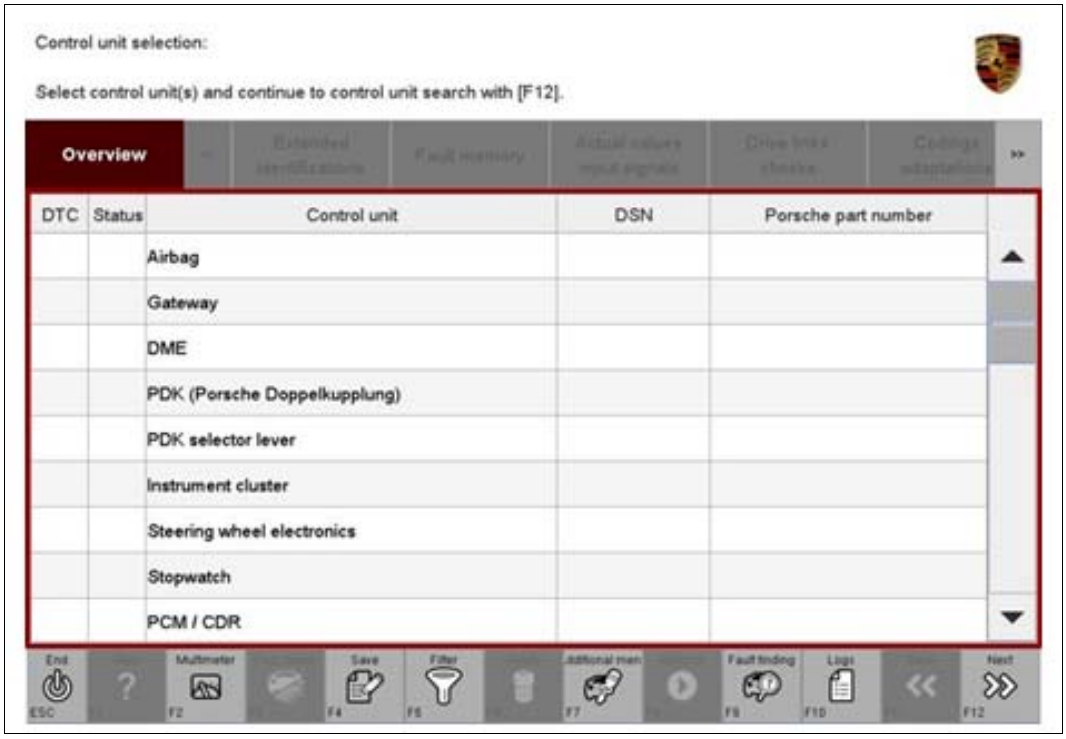

Courtesy of PORSCHE CARS NORTH AMERICA, INC.

2. 7.2. Select the function → **'Read all fault memories and erase if required'** and press [>>] to confirm → see Fig 8.

   The fault memories of the control units are read out.

Fig 8: Screen Display - Erasing Fault Memories

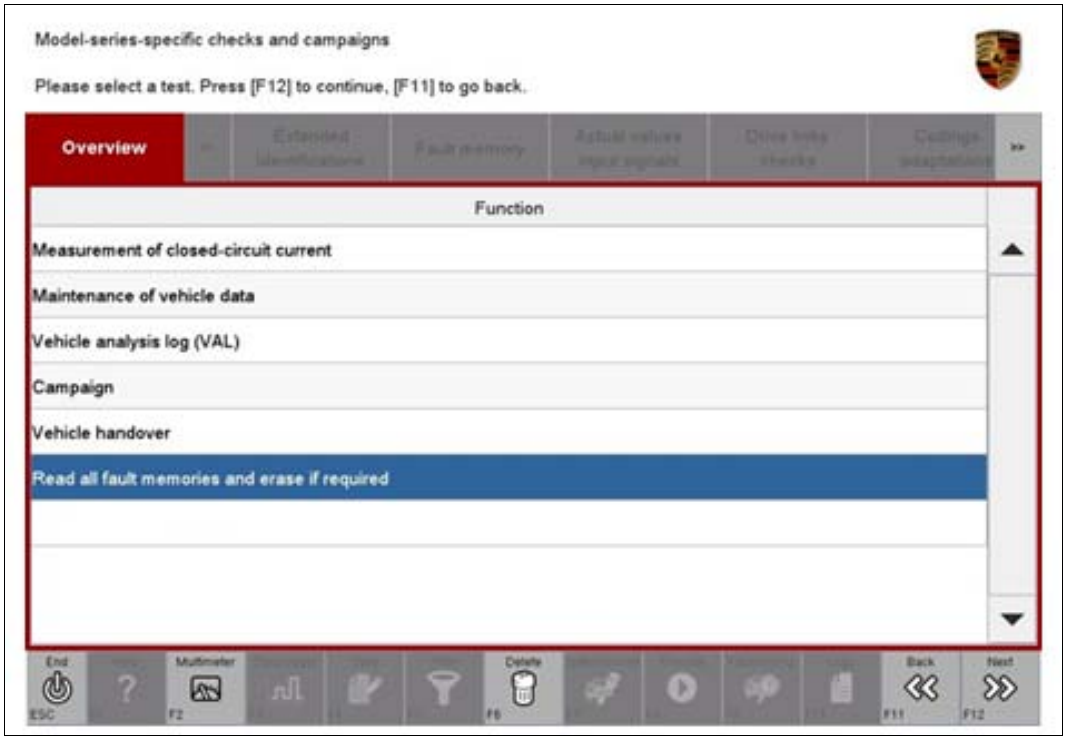

Courtesy of PORSCHE CARS NORTH AMERICA, INC.

3. 7.3. Once you have read out the fault memories, delete the fault memory entries by pressing [F8].
4. 7.4. Confirm the query as to whether you really want to delete all fault memory entries and press [>>] ("Yes") to confirm.

   The faults stored in the fault memories of the various control units are deleted.

   Information

   The fault memories of individual control units (e.g. fault memories of the control units for front-end electronics, rear-end electronics, etc.) cannot be erased, proceed as follows:

   1. Switch off ignition.
   2. Disconnect the PIWIS Tester diagnostic connector from the diagnostic socket.
   3. Lock the vehicle using the driver's key.
   4. Wait approx. 1 minute before unlocking the vehicle again.
   5. Plug the PIWIS Tester diagnostic connector into the diagnostic socket again and restore communication with the vehicle.
   6. Read out the fault memories of these control units again and erase the fault memories separately.

   If control units are found to have faults, which cannot be erased and are not caused by replacing the roof console, these faults must be found and corrected.

5. 7.5. Once you have erased the fault memories, select the → **'Overview'** menu and press [<<] to return to the control unit selection screen → see Fig 9.

Fig 9: Screen Display - Control Unit Selection

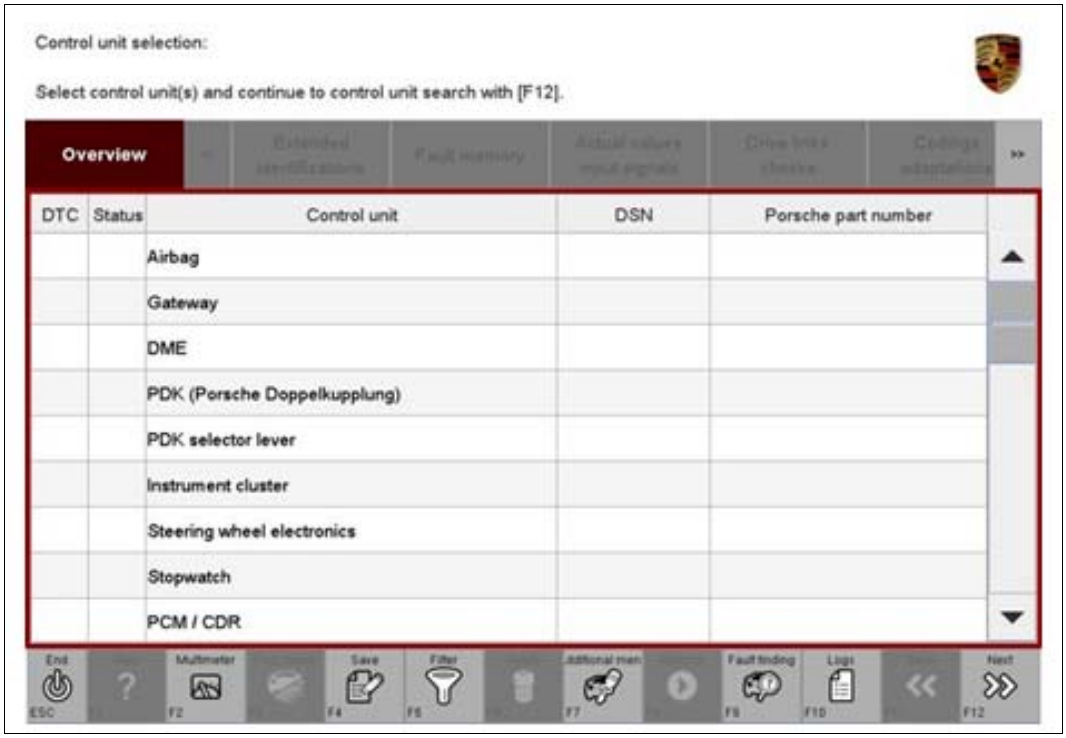

Courtesy of PORSCHE CARS NORTH AMERICA, INC.

8. Switch off ignition.
9. Disconnect the PIWIS Tester from the vehicle.
10. Switch off and disconnect the battery charger.
11. On vehicles with Porsche Entry & Drive, replace the original driver's key in the ignition lock with the control panel again.

WM 708419 REMOVING AND INSTALLING HEADLINER (ALL MODELS) > TECHNICAL VALUES

Location	Description	Type	Basic value	Tolerance 1	Tolerance 2
Fastening screw for lower roof console		Tightening torque	5 Nm (3.5 ftlb.)		

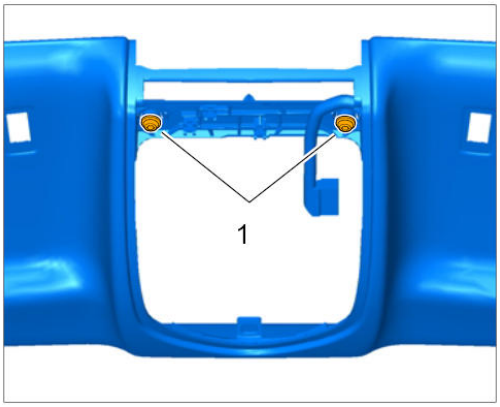

Screws securing roof console to headliner

Fastening screw for luggage net cover holder		Tightening torque	9 Nm (6.5 ftlb.)		

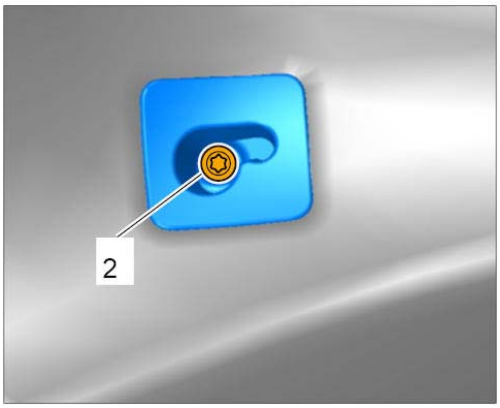

Screws securing holder for rear luggage net cover

WM 708419 REMOVING AND INSTALLING HEADLINER (ALL MODELS) > PRELIMINARY WORK

1. Remove A-pillar trim panel. → Removing A-Pillar Trim Panel
2. Remove upper part of B-pillar trim panel. → Removing Upper Part Of B-Pillar Trim Panel
3. Remove C-pillar trim panel. → Removing C-Pillar Trim Panel
4. Remove D-pillar trim panel. → Removing D-Pillar Trim Panel
5. Remove front roof trim panel. → Removing Front Roof Trim Panel
6. Remove sun visors. → Removing Sun Visor
7. Remove front grab handle. → Removing Front Grab Handle
8. Remove rear grab handle. → Removing Rear Grab Handle

WM 708419 REMOVING AND INSTALLING HEADLINER (ALL MODELS) > REMOVING HEADLINER

Information

- The number of fastening screws, fixing clips, plug connections, holders and trim panels can vary depending on equipment.
- The illustrations for removing and installing the drive mechanism are shown only on one equipment variant and may differ from the actual equipment variant.
- Some steps must be carried out automatically.
- Some of the repair illustrations show only one side of the vehicle.

Information

Make sure that the roof cover does not buckle.

Fig 1: Identifying Headliner Position

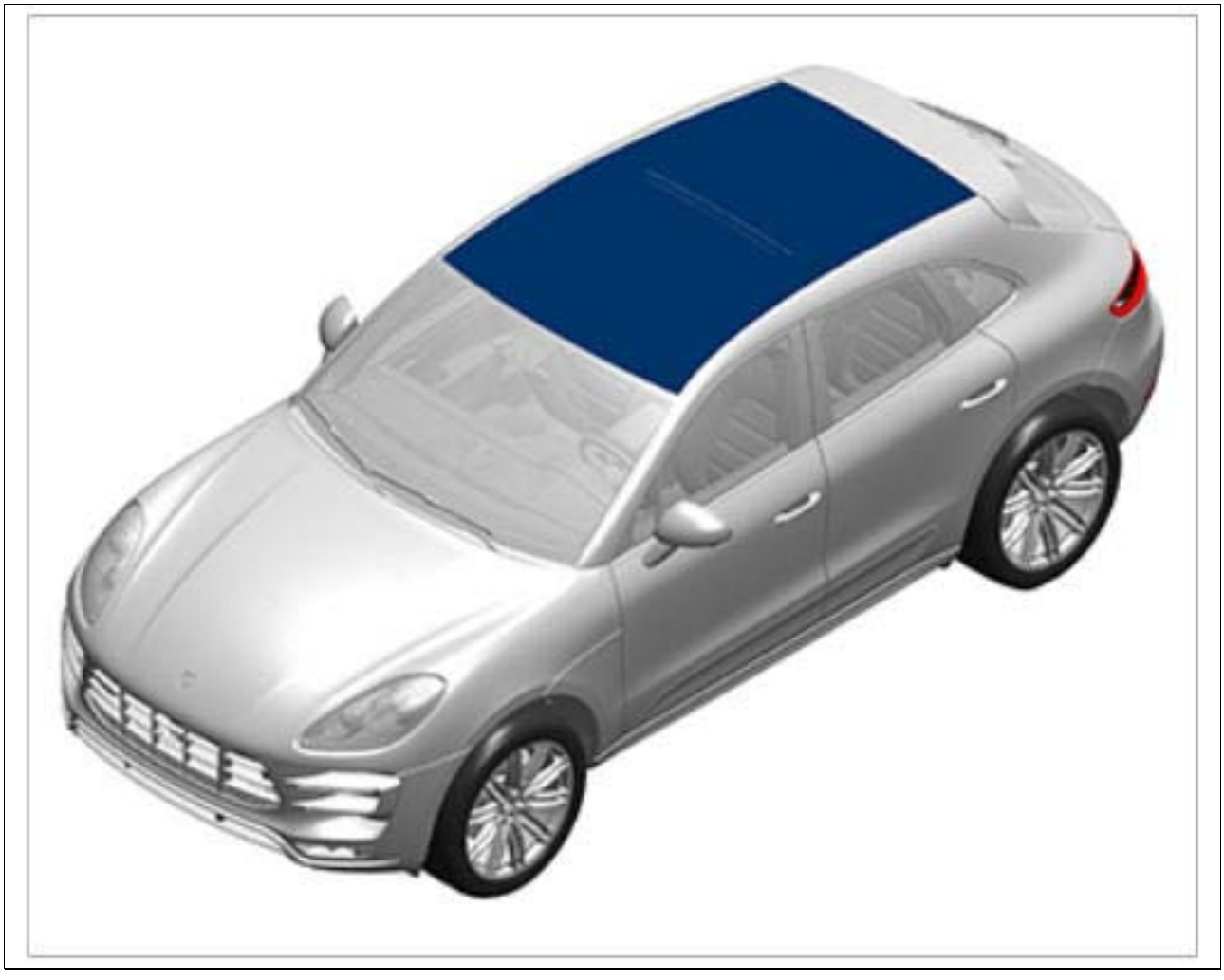

Courtesy of PORSCHE CARS NORTH AMERICA, INC.

1. Unscrew screws **-1-** for headliner under the roof console.

Fig 2: Detaching Headliner (Front)

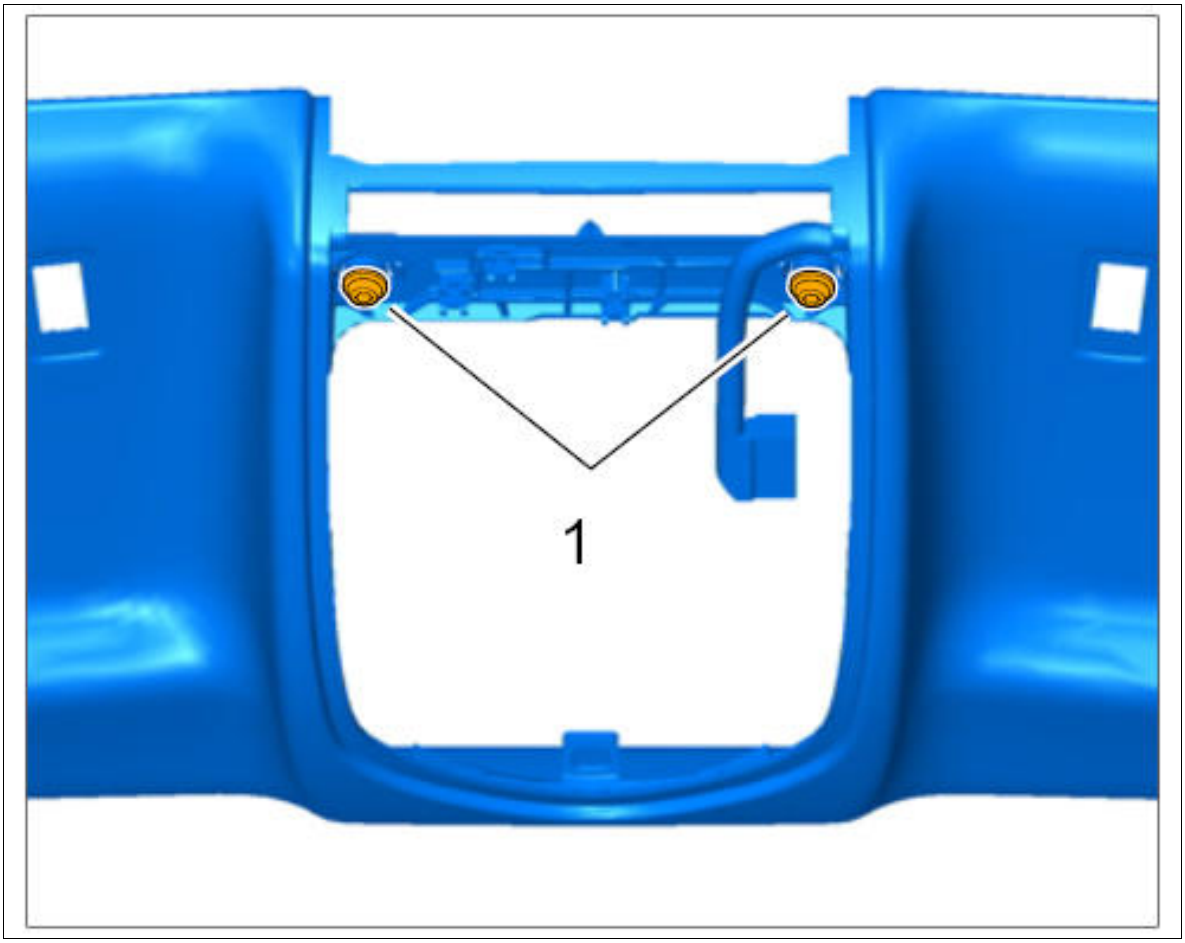

Courtesy of PORSCHE CARS NORTH AMERICA, INC.

2. **Only for vehicles with Panoramic roof**

   Carefully unclip headliner in the roof cut-out area on the cover strip.

Fig 3: Removing Headliner On Panoramic Roof

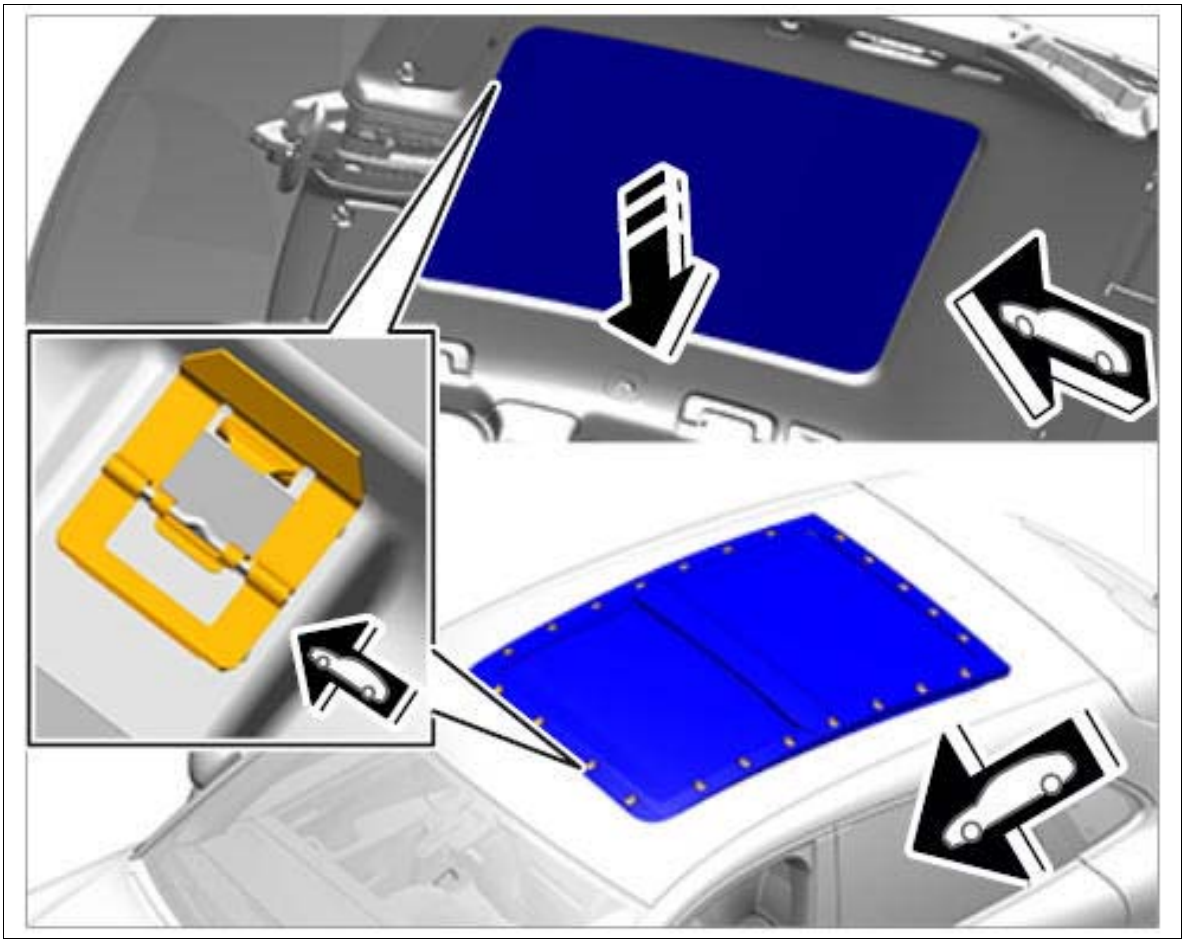

Courtesy of PORSCHE CARS NORTH AMERICA, INC.

1. 2.1. Check fixing clips on the headliner close to the roof aperture for deformation and replace them if necessary.

3. Unscrew and remove screws **-2-** on bracket for luggage compartment net cover at the D-pillar.

Fig 4: Loosening Rear Luggage Net Cover Bracket

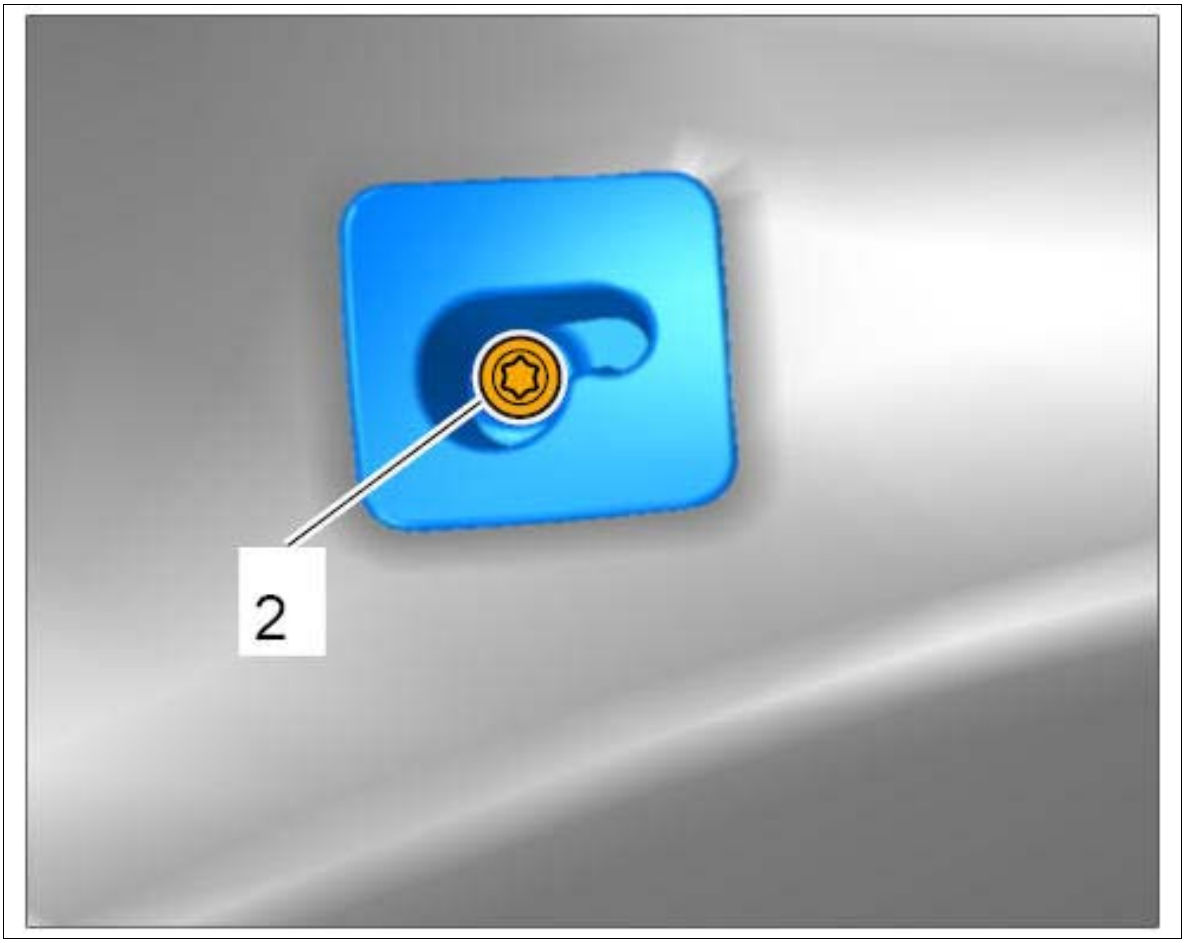

Courtesy of PORSCHE CARS NORTH AMERICA, INC.

4. Loosen and unclip headliner at the rear attachment points **-3-** on the body.

Fig 5: Detaching Rear Roof Trim Panel

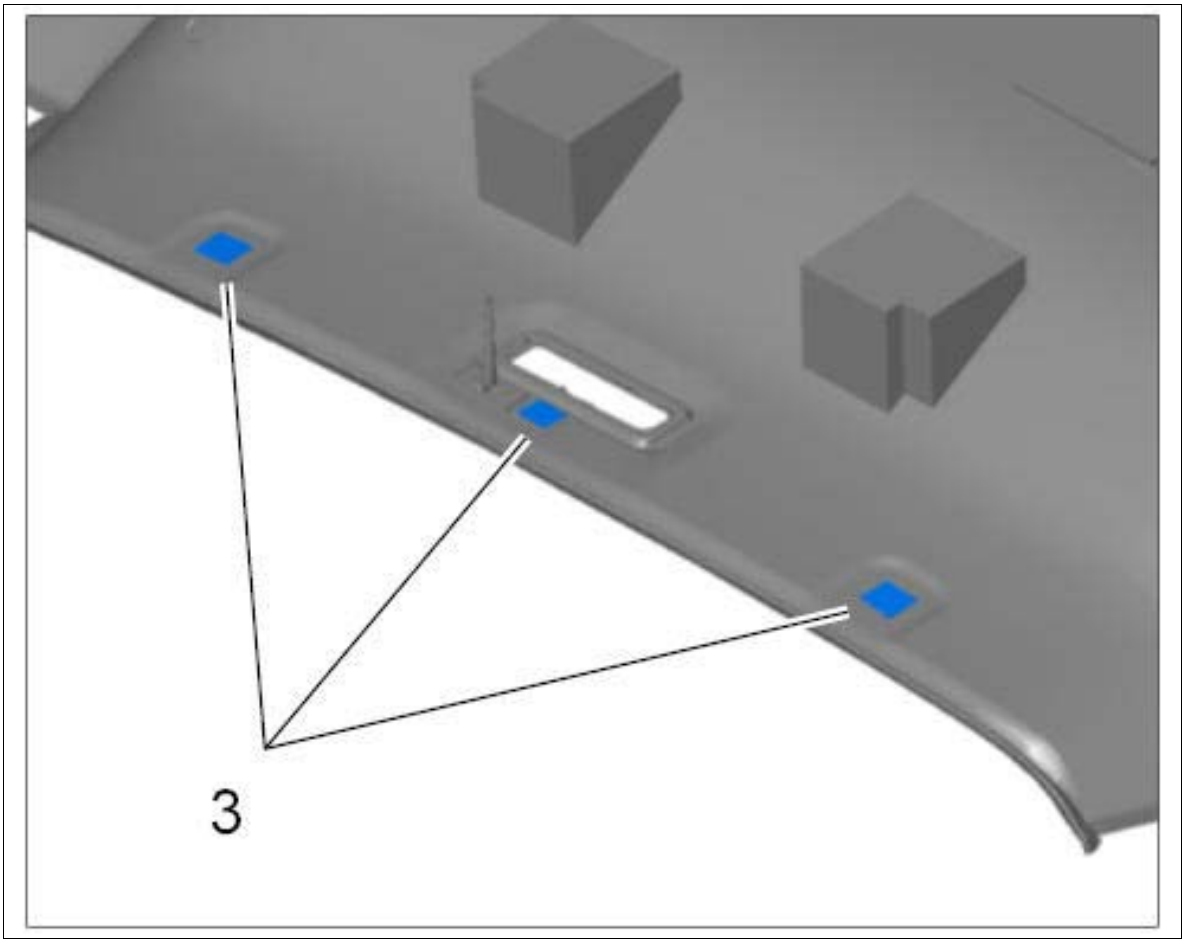

Courtesy of PORSCHE CARS NORTH AMERICA, INC.

5. Fold over the rear seat backrest.
6. Move the driver and passenger seat all the way forward and down.
7. Move the driver and passenger seat backrest back as far as possible.
8. Three people are needed in order to remove the headliner.
    1. 8.1. Position of first person: Driver's side
    2. 8.2. Position of second person: Passenger's side
    3. 8.3. Position of third person: Luggage compartment
9. Remove headliner.
    1. 9.1. Lower the headliner **-1-** on the passenger's side down as far as possible **-A-** .
    2. 9.2. Pull the headliner **-1-** out towards the rear through the cut-out in the tailgate **-B-** .

Fig 6: Removing Headliner

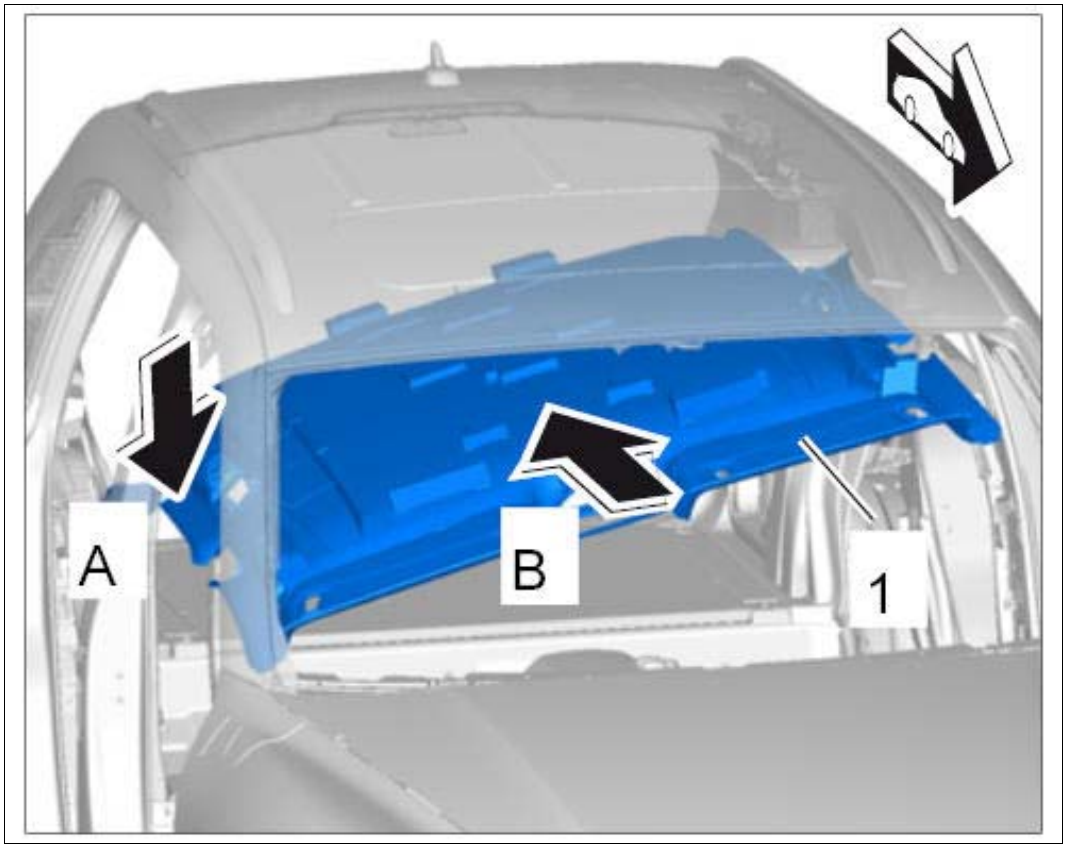

Courtesy of PORSCHE CARS NORTH AMERICA, INC.

WM 708419 REMOVING AND INSTALLING HEADLINER (ALL MODELS) > INSTALLING HEADLINER

Information

Make sure that the roof cover does not buckle.

Information

Check that the fixing clips are not bent or broken.

Replace missing or damaged fixing clips with new ones.

Make sure that all fastening clips have engaged correctly.

Check that they are fitted correctly.

1. Installation is performed in reverse order to removal.
2. Tighten fastening screw under the roof console to **Tightening torque 5 Nm (3.5 ftlb.)** .
3. Tighten fastening screw on the net cover holder to **Tightening torque 9 Nm (6.5 ftlb.)** .

WM 708419 REMOVING AND INSTALLING HEADLINER (ALL MODELS) > SUBSEQUENT WORK

1. Install A-pillar trim panel. → Installing A-Pillar Trim Panel
2. Install upper part of B-pillar trim panel. → Installing Upper Part Of B-Pillar Trim Panel
3. Install C-pillar trim panel. → Installing C-Pillar Trim Panel
4. Install D-pillar trim panel. → Installing D-Pillar Trim Panel
5. Install front roof trim panel. → Installing Front Roof Trim Panel
6. Install sun visor. → Installing Sun Visor
7. Install front grab handle. → Installing Front Grab Handle
8. Install rear grab handle. → Installing Rear Grab Handle

WM 708719 REMOVING AND INSTALLING TRIM PANEL FOR REAR LID (ALL MODELS) > TECHNICAL VALUES

Location	Description	Type	Basic value	Tolerance 1	Tolerance 2
Fastening screws for storage box		Tightening torque	1.5 Nm (1 ftlb.)		
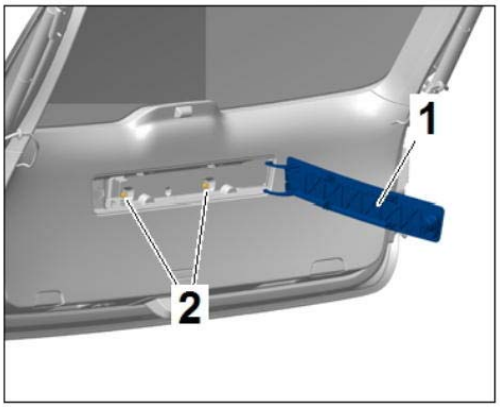 Storage box lid					
Fastening screw for finger plate		Tightening torque	1.5 Nm (1 ftlb.)		

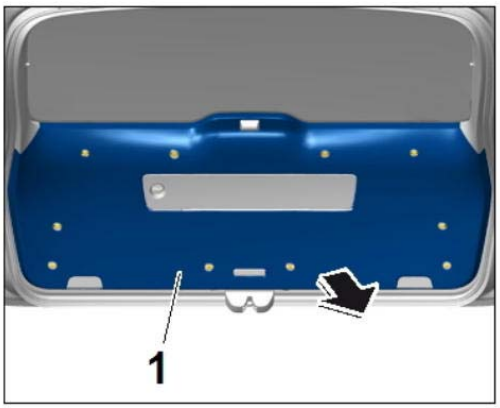

Arrangement of retaining clips

WM 708719 REMOVING AND INSTALLING TRIM PANEL FOR REAR LID (ALL MODELS) > REMOVING TRIM PANEL FOR REAR LID

Information

To reduce the unclipping forces and thereby the risk of damage during removal, the removal steps must be carried out at the accessible connection points using a suitable tool.

Fig 1: Identifying Rear Lid Trim Panel Position



Courtesy of PORSCHE CARS NORTH AMERICA, INC.

1. Release light **-1-** using a small screwdriver **-a-** and pull it out of the trim panel.

Fig 2: Removing Warning Light

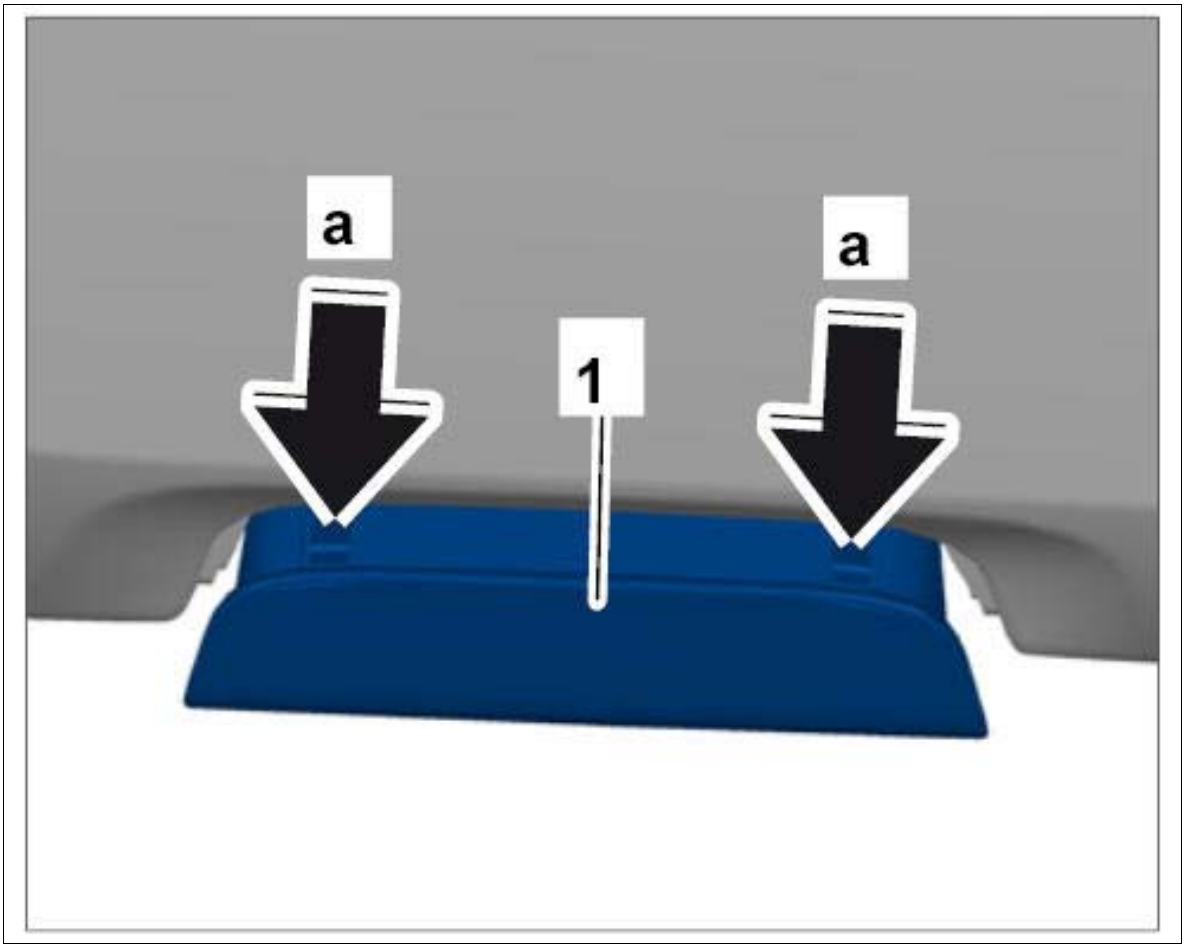

Courtesy of PORSCHE CARS NORTH AMERICA, INC.

2. Release electric plug connection **-1- (-a-)** and pull off the light **-2-** .

Fig 3: Disconnecting Electric Plug Connection

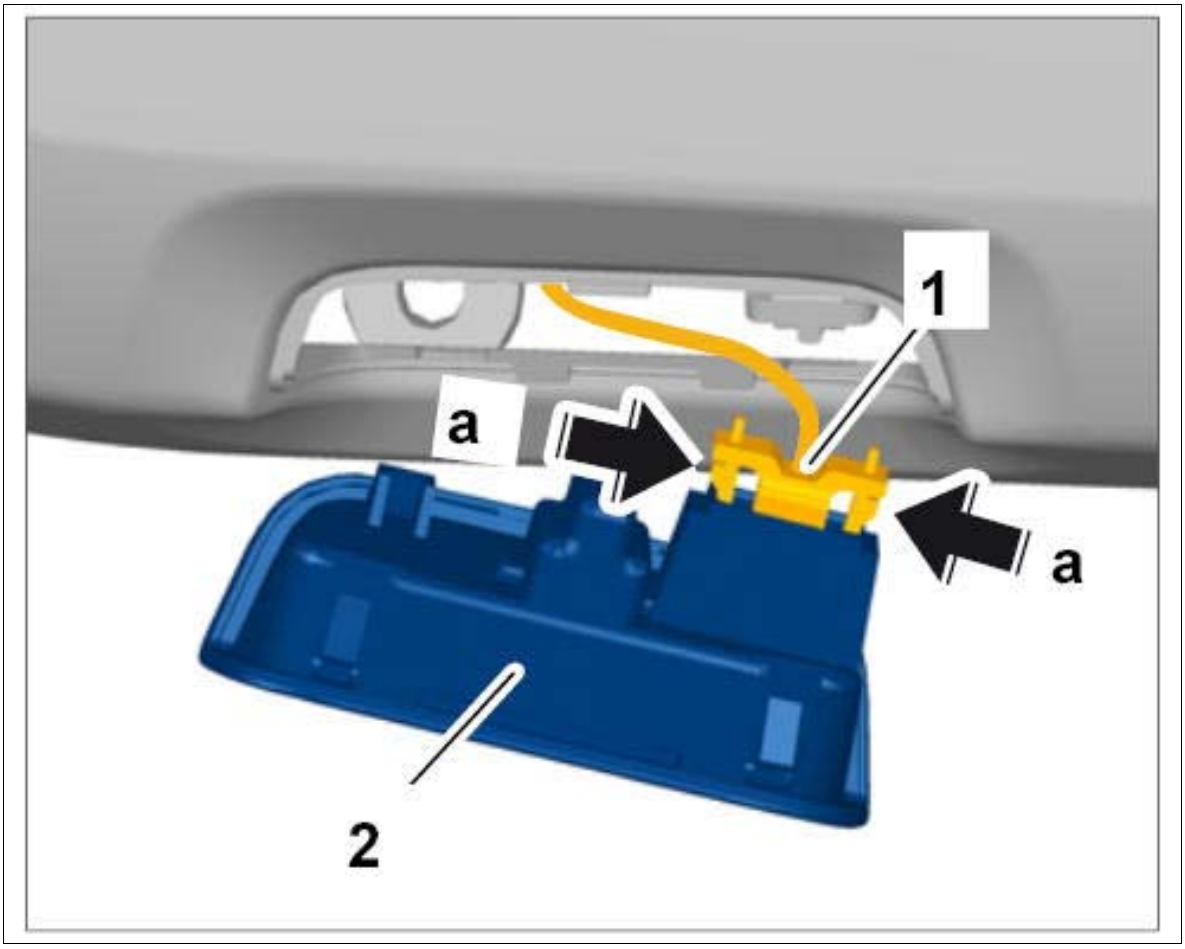

Courtesy of PORSCHE CARS NORTH AMERICA, INC.

3. Open lid of storage box **-1-** for warning triangle and unscrew and remove fastening screws **-2-** .

Fig 4: Identifying Storage Box Lid

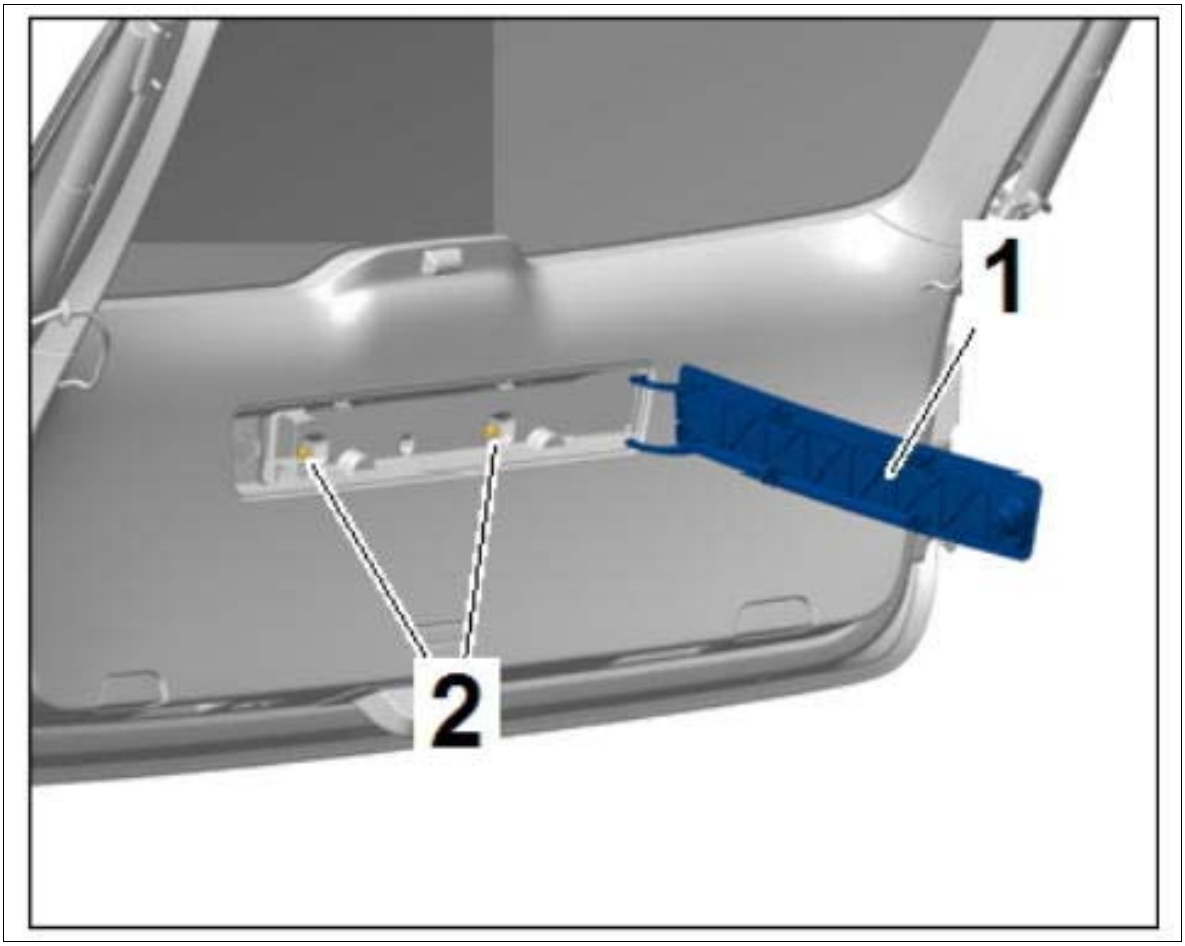

Courtesy of PORSCHE CARS NORTH AMERICA, INC.

4. Remove lid release switch. → Removing Rear Lid Release Switch
5. Unscrew and remove fastening screws **-1-** for finger plate at the left and right.

Fig 5: Identifying Finger Plate Fastening Screws

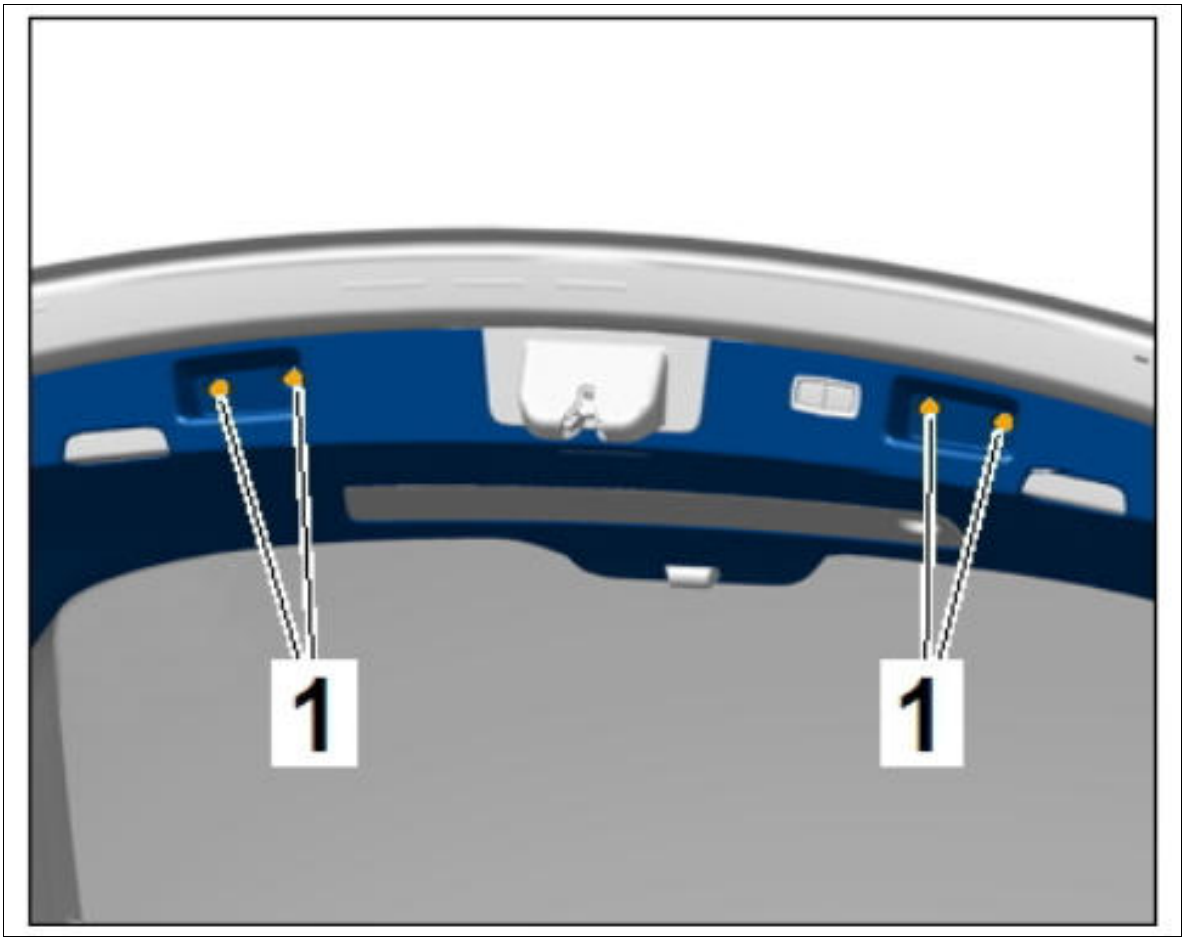

Courtesy of PORSCHE CARS NORTH AMERICA, INC.

6. Carefully loosen the clips **-marking-** on the lower part of the trim panel **-1-** at the marked areas using a suitable tool.

Fig 6: Removing Lower Part Of Trim Panel Retaining Clips

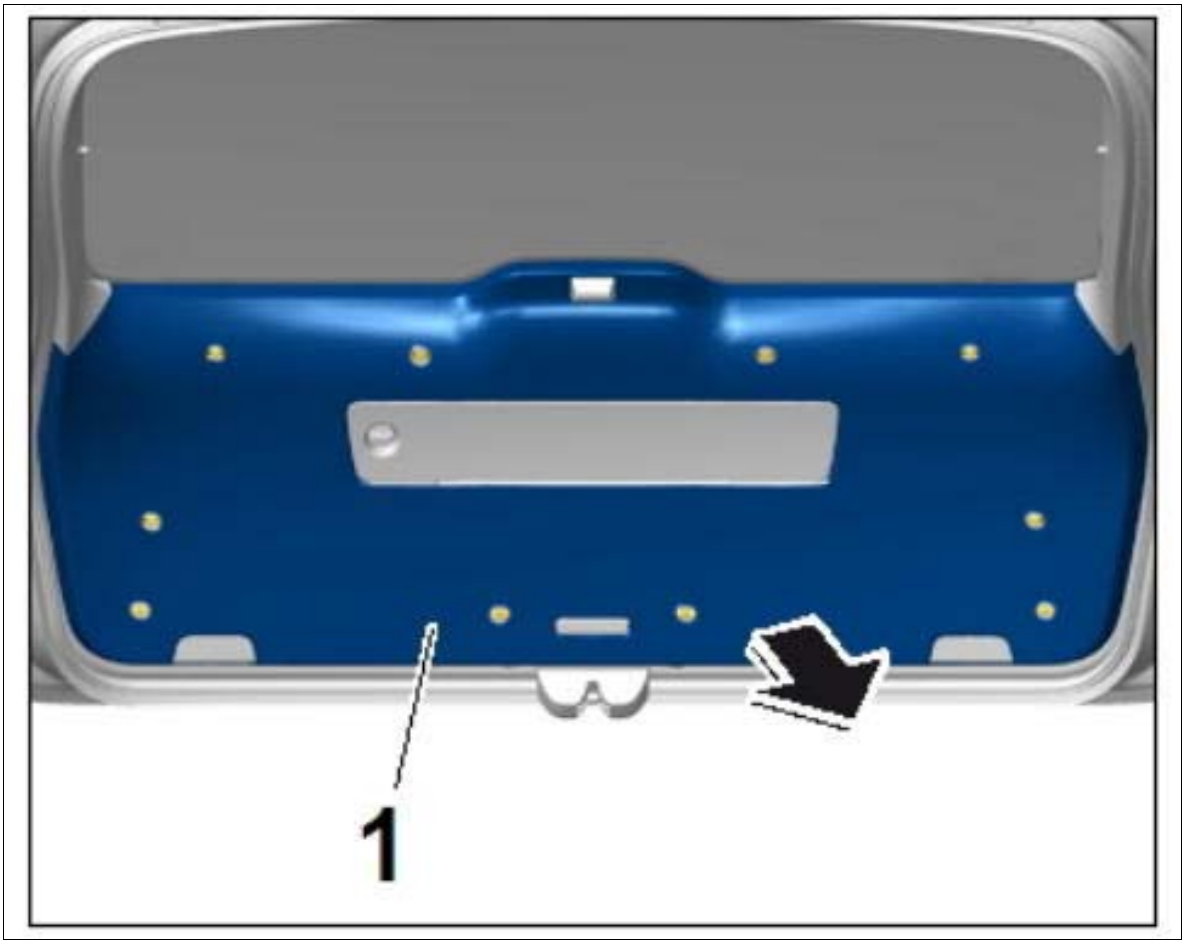

Courtesy of PORSCHE CARS NORTH AMERICA, INC.

7. Remove trim panel.

WM 708719 REMOVING AND INSTALLING TRIM PANEL FOR REAR LID (ALL MODELS) > INSTALLING TRIM PANEL FOR REAR LID

Information

Check that the fixing clips are not bent or broken.

Replace missing or damaged fixing clips with new ones.

Make sure that all fastening clips have engaged correctly.

Check that they are fitted correctly.

1. Installation is performed in reverse order to removal.
2. Tighten fastening screw for storage bin to **Tightening torque 1.5 Nm (1 ftlb.)** until secure.
3. Tighten fastening screw for finger plate to **Tightening torque 1.5 Nm (1 ftlb.)** until secure.

WM 709019 REMOVING AND INSTALLING COVER FOR CENTRE LOUDSPEAKER (ALL MODELS) > REMOVING COVER FOR CENTRE LOUDSPEAKER

Information

- The number of fastening screws, fixing clips, plug connections, holders and trim panels can vary depending on equipment.
- The illustrations for removing and installing the drive mechanism are shown only on one equipment variant and may differ from the actual equipment variant.
- Some steps must be carried out automatically.
- Some of the repair illustrations show only one side of the vehicle.

1. Unclip cover **-1-** from the dashboard.
2. Lift up cover **-1-** , release and disconnect electric plug connection **-2-** on the stopwatch or compass and remove cover **-1-** .

Fig 1: Removing Centre Loudspeaker Cover

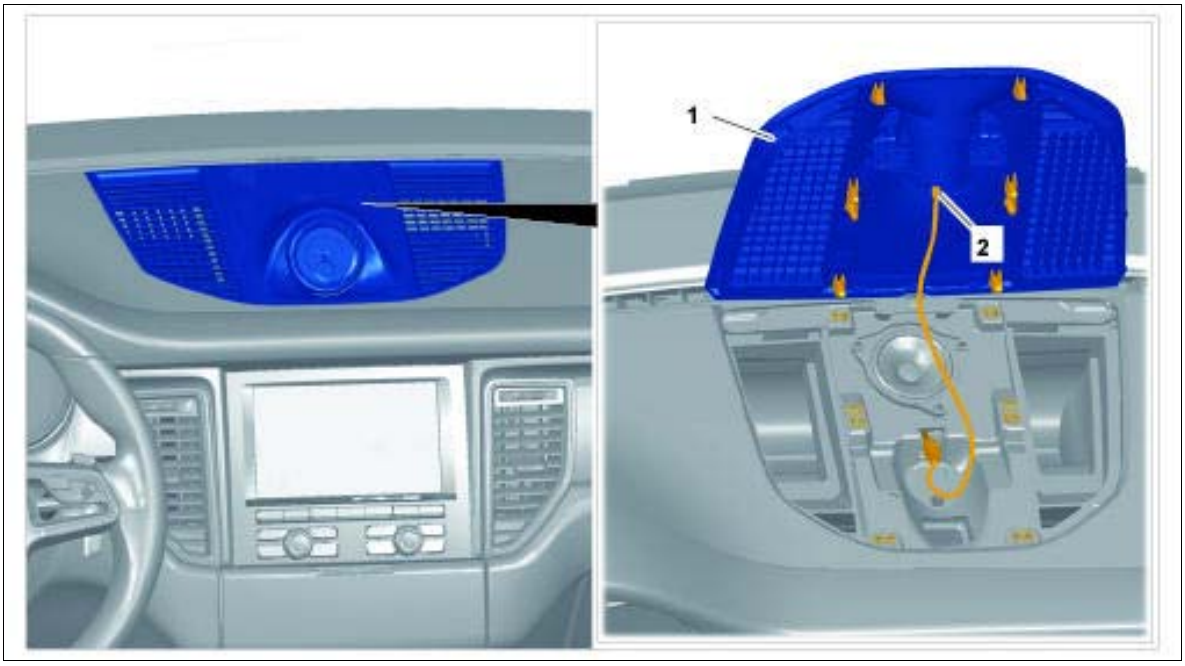

Courtesy of PORSCHE CARS NORTH AMERICA, INC.

WM 709019 REMOVING AND INSTALLING COVER FOR CENTRE LOUDSPEAKER (ALL MODELS) > INSTALLING COVER FOR CENTRE LOUDSPEAKER

Installation is performed in reverse order.

WM 709019 REMOVING AND INSTALLING COVER FOR LEFT LOUDSPEAKER (ALL MODELS) > PRELIMINARY WORK

1. Remove A-pillar trim panel at the left. → Removing A-Pillar Trim Panel

WM 709019 REMOVING AND INSTALLING COVER FOR LEFT LOUDSPEAKER (ALL MODELS) > REMOVING COVER FOR LEFT LOUDSPEAKER

Information

- The number of fastening screws, fixing clips, plug connections, holders and trim panels can vary depending on equipment.
- The illustrations for removing and installing the drive mechanism are shown only on one equipment variant and may differ from the actual equipment variant.
- Some steps must be carried out automatically.
- Some of the repair illustrations show only one side of the vehicle.

1. Pull rubber molding **-1-** up out of the dashboard.
2. Unclip and remove cover **-2-** on dashboard.

Fig 1: Removing Left Loudspeaker Cover

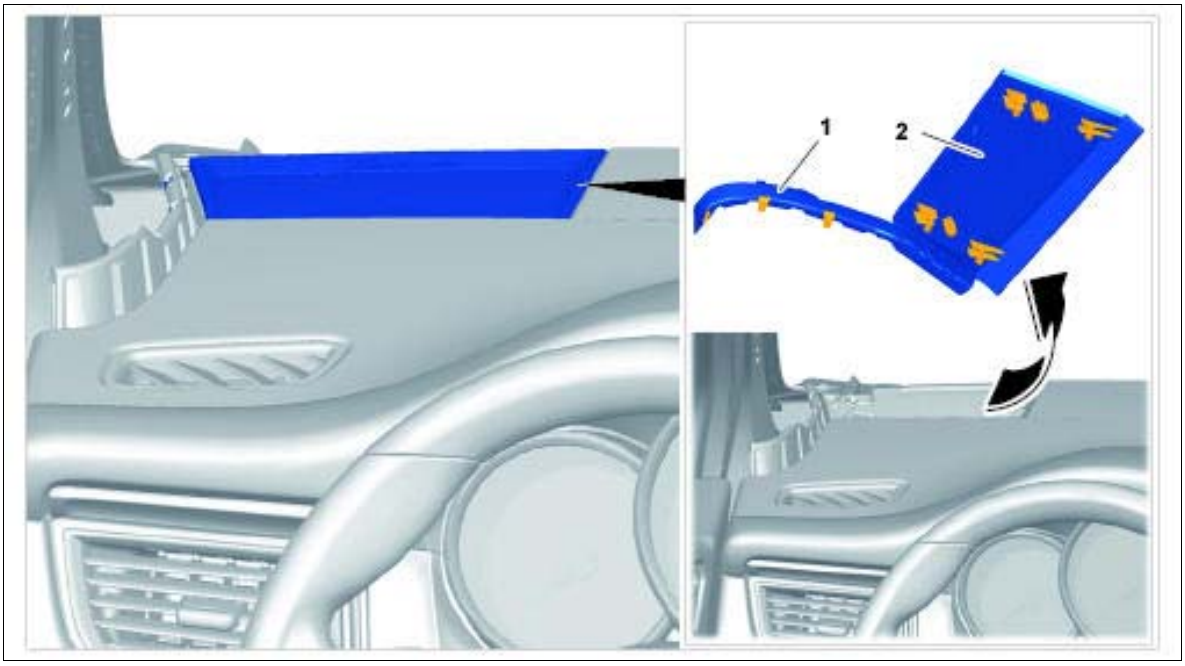

Courtesy of PORSCHE CARS NORTH AMERICA, INC.

WM 709019 REMOVING AND INSTALLING COVER FOR LEFT LOUDSPEAKER (ALL MODELS) > INSTALLING COVER FOR LEFT LOUDSPEAKER

Information

Check that all fixing clips are positioned fully and correctly.

Check that the fixing clips are not bent or broken.

Replace damaged or missing clips with new ones.

Installation is performed in reverse order.

WM 709019 REMOVING AND INSTALLING COVER FOR LEFT LOUDSPEAKER (ALL MODELS) > SUBSEQUENT WORK

1. Install A-pillar trim panel at the left. → Installing A-Pillar Trim Panel

WM 709019 REMOVING AND INSTALLING COVER FOR RIGHT LOUDSPEAKER (ALL MODELS) > PRELIMINARY WORK

1. Remove A-pillar trim panel at the right. → Removing A-Pillar Trim Panel

WM 709019 REMOVING AND INSTALLING COVER FOR RIGHT LOUDSPEAKER (ALL MODELS) > REMOVING COVER FOR RIGHT LOUDSPEAKER

Information

- The number of fastening screws, fixing clips, plug connections, holders and trim panels can vary depending on equipment.
- The illustrations for removing and installing the drive mechanism are shown only on one equipment variant and may differ from the actual equipment variant.
- Some steps must be carried out automatically.
- Some of the repair illustrations show only one side of the vehicle.

1. Pull rubber molding **-1-** up out of the dashboard.
2. Unclip and remove cover **-2-** on dashboard.

Fig 1: Removing Right Loudspeaker Cover

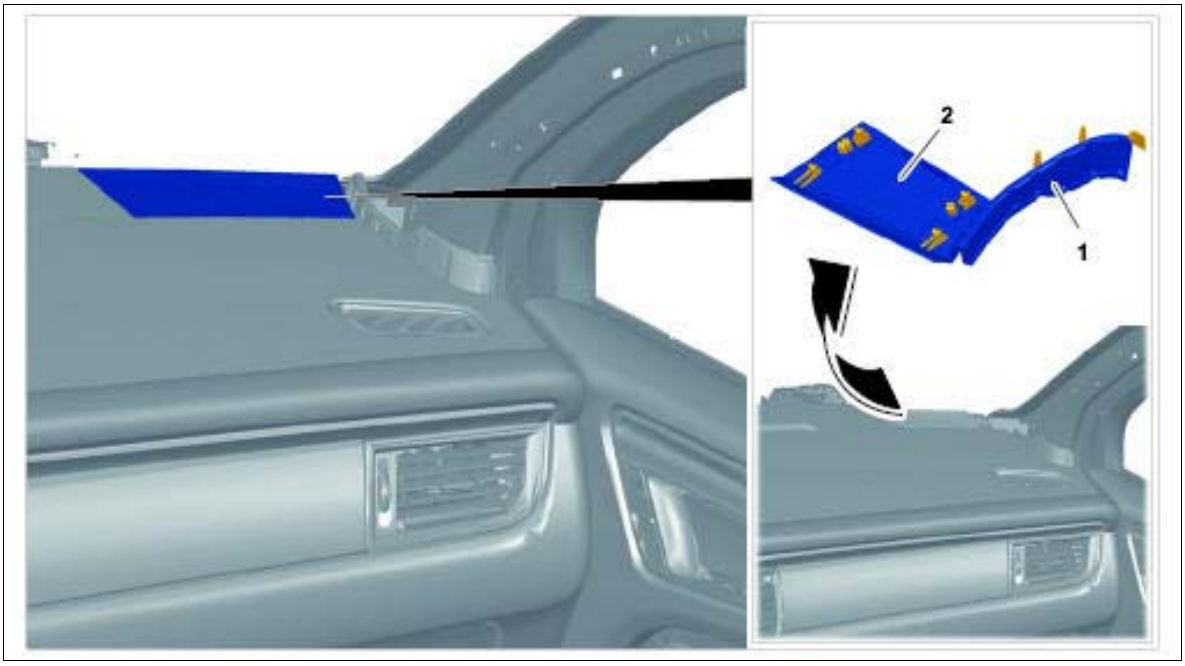

Courtesy of PORSCHE CARS NORTH AMERICA, INC.

WM 709019 REMOVING AND INSTALLING COVER FOR RIGHT LOUDSPEAKER (ALL MODELS) > INSTALLING COVER FOR RIGHT LOUDSPEAKER

Information

Check that all fixing clips are positioned fully and correctly.

Check that the fixing clips are not bent or broken.

Replace damaged or missing clips with new ones.

Installation is performed in reverse order.

WM 709019 REMOVING AND INSTALLING COVER FOR RIGHT LOUDSPEAKER (ALL MODELS) > SUBSEQUENT WORK

1. Install A-pillar trim panel at the right. → Installing A-Pillar Trim Panel

WM 709219 REMOVING AND INSTALLING TAILGATE TRIM PANEL (ALL MODELS) > PRELIMINARY WORK

1. Remove trim panel for rear lid. → Removing Trim Panel For Rear Lid

WM 709219 REMOVING AND INSTALLING TAILGATE TRIM PANEL (ALL MODELS) > REMOVING TAILGATE TRIM PANEL

Fig 1: Identifying Tailgate Trim Panel Position



Courtesy of PORSCHE CARS NORTH AMERICA, INC.

1. Unscrew and remove fastening screws **-1-** at the left and right.

Fig 2: Identifying Trim Panel Fastening Screws



Courtesy of PORSCHE CARS NORTH AMERICA, INC.

2. Carefully unclip trim panel at the positions shown **-arrow-** using a suitable tool.

Fig 3: Removing Trim Panel

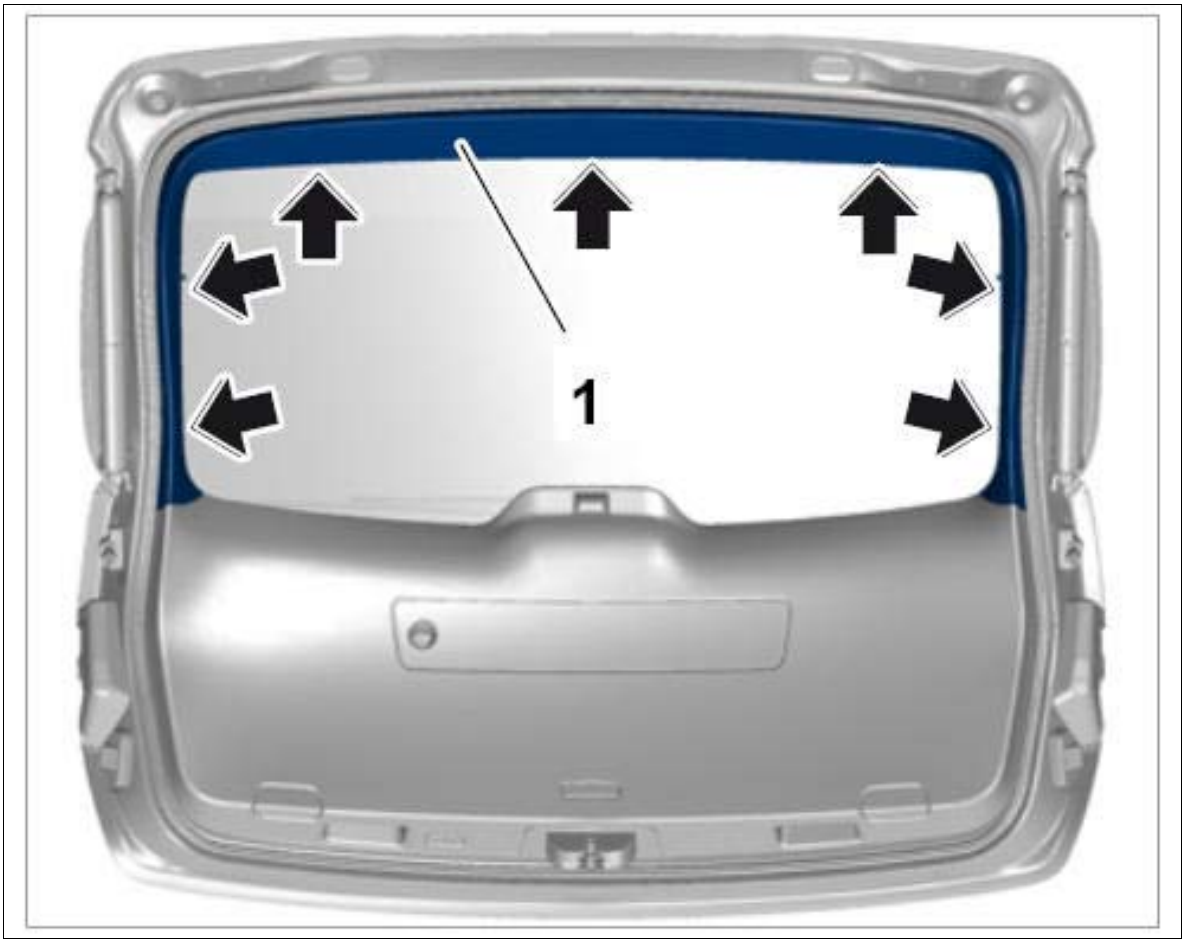

Courtesy of PORSCHE CARS NORTH AMERICA, INC.

3. Remove trim panel.

WM 709219 REMOVING AND INSTALLING TAILGATE TRIM PANEL (ALL MODELS) > INSTALLING TAILGATE TRIM PANEL

Information

Check that the fixing clips are not bent or broken.

Replace missing or damaged fixing clips with new ones.

Make sure that all fastening clips have engaged correctly.

Check that they are fitted correctly.

1. Installation is performed in reverse order to removal.

WM 709219 REMOVING AND INSTALLING TAILGATE TRIM PANEL (ALL MODELS) >

SUBSEQUENT WORK

1. Install trim panel for rear lid. → Installing Trim Panel For Rear Lid

Service Manual: 72 - SEAT FRAMES -- (95B) - MACAN

WM 720119 REMOVING AND INSTALLING FRONT SEAT (ALL MODELS) > TECHNICAL VALUES

Location	Description	Type	Basic value	Tolerance 1	Tolerance 2
Fastening screws for front seat rail		Tightening torque	50 Nm (37 ftlb.)	+/-7.5 Nm (+/- 5.5 ftlb.)	



Tightening fastening screws on front seat rail

Location	Description	Type	Basic value	Tolerance 1	Tolerance 2
Fastening screws for rear seat rail		Tightening torque	50 Nm (37 ftlb.)	+/-7.5 Nm (+/- 5.5 ftlb.)	

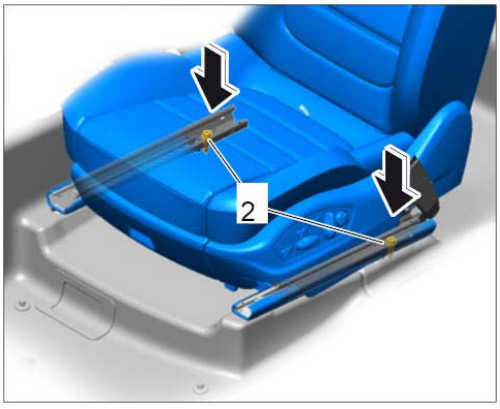

Securing front seat to seat frame at the rear

WM 720119 REMOVING AND INSTALLING FRONT SEAT (ALL MODELS) > COMPONENT INFORMATION > INSTALLATION POSITION

Fig 1: Identifying Front Seat Installation Position

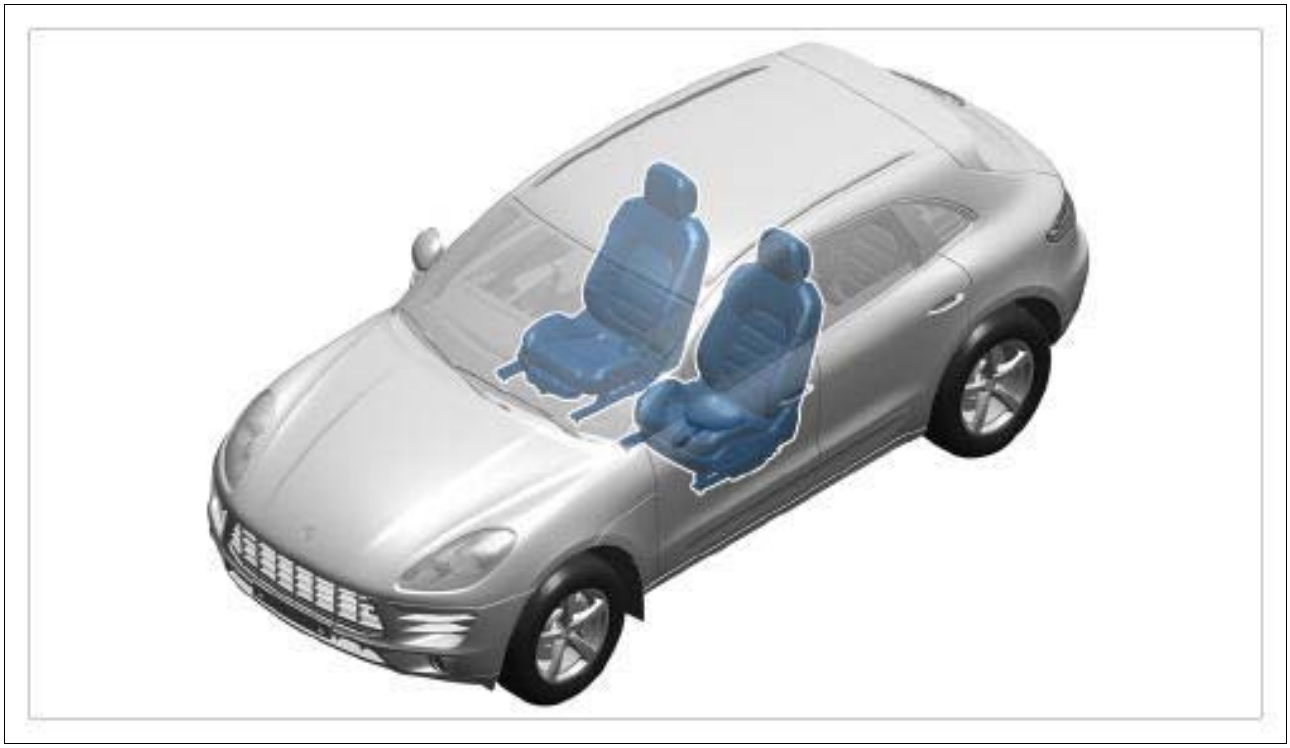

Courtesy of PORSCHE CARS NORTH AMERICA, INC.

WM 720119 REMOVING AND INSTALLING FRONT SEAT (ALL MODELS) > REMOVING FRONT SEAT

WARNING: Incorrect handling of airbag units

- *Triggering of airbag unit.*
- *System faults can occur.*

→ Switch off ignition and remove ignition key or remote control (hand-held transmitter).

→ A power supply (e.g. battery charger) must not be connected to the external power supply/jump-lead starting terminals.

→ Disconnect the battery and insulate the ground strap so that all contact with a ground carrier is avoided.

→ Wait 1 minute after disconnecting the battery.

→ Only pull off connector on the triggering unit after the waiting time has elapsed.

→ Make sure that no foreign objects are located in front of the airbag unit during installation.

→ Replace damaged parts during removal.

→ Always position airbag units so that the blow-out opening is facing upwards, e.g. crest on driver's airbag.

→ Do not position anything on the airbag units.

→ If removed for an extended period, the airbag units must be stored in a safe place.

→ Airbag units must not come into contact with grease, oil, detergents, liquids, or similar substances.

→ Do not expose airbag units to temperatures above 90°.

→ Do not remove the short-circuit spring on the plug-in contacts.

→ Ignition and preparations may only be carried out by skilled staff, supervised by a second responsible person.

→ Before disposal, the airbag unit must be rendered harmless by electrical ignition performed in accordance with all precautionary measures, thereby preventing it from being used incorrectly.

Information

In the case of faulty fore-and-aft or vertical adjustment, the seat can only be removed together with the seat frame. → 720919 REMOVING AND INSTALLING FRONT SEAT FRAME

Information

- Some of the repair illustrations show only one side of the vehicle.
- Naturally, some steps also have to be performed on the opposite side of the vehicle as well.

1. Move backrest all the way forward. Move front seat all the way up and all the way forward.
2. Release caps **-1-** by pulling them upwards and pull them off the rear seat rails.

Fig 1: Identifying Caps On Rear Seat Rail

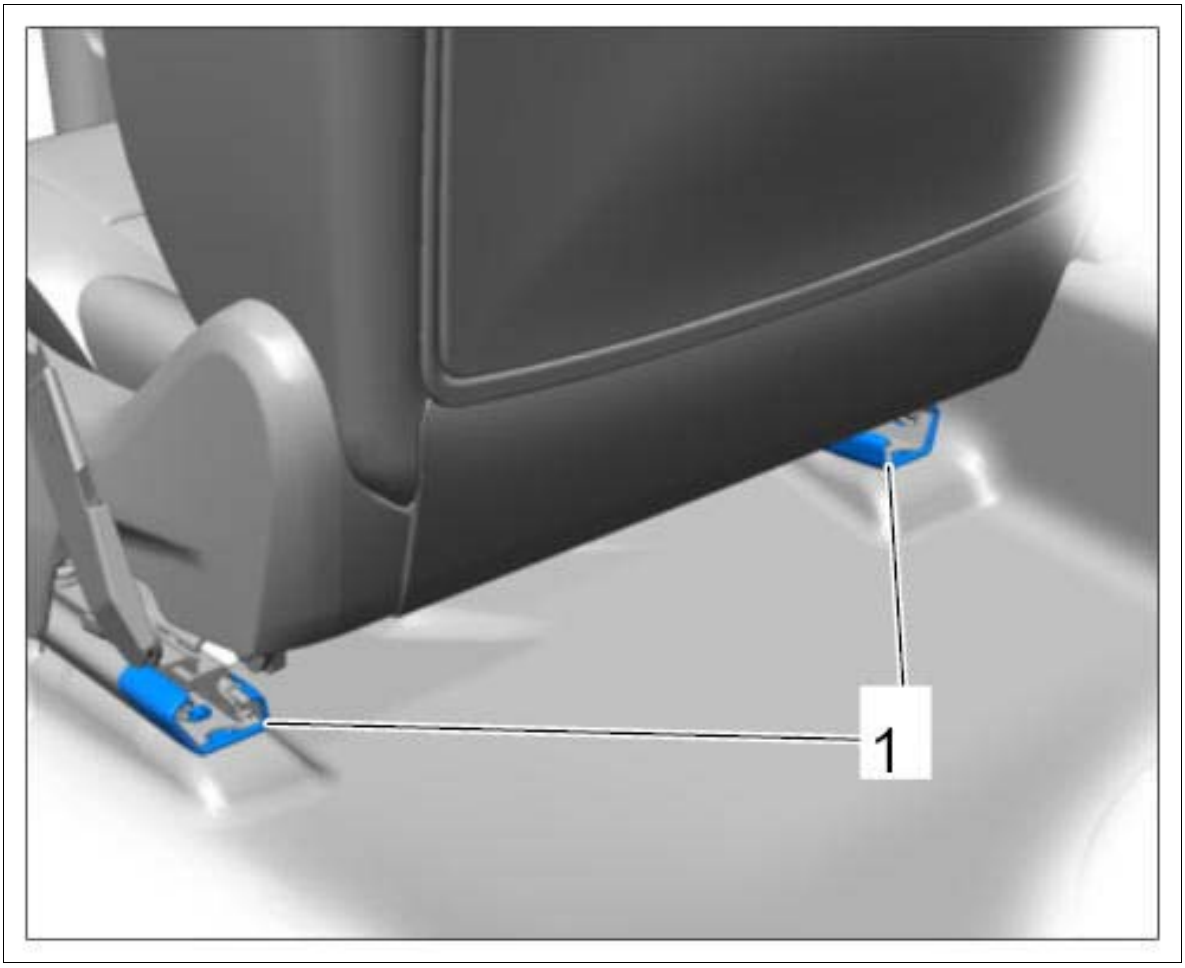

Courtesy of PORSCHE CARS NORTH AMERICA, INC.

3. Unscrew fastening screws on the rear seat rails **-2-** .

Fig 2: Removing Fastening Screws On Rear Seat Rail

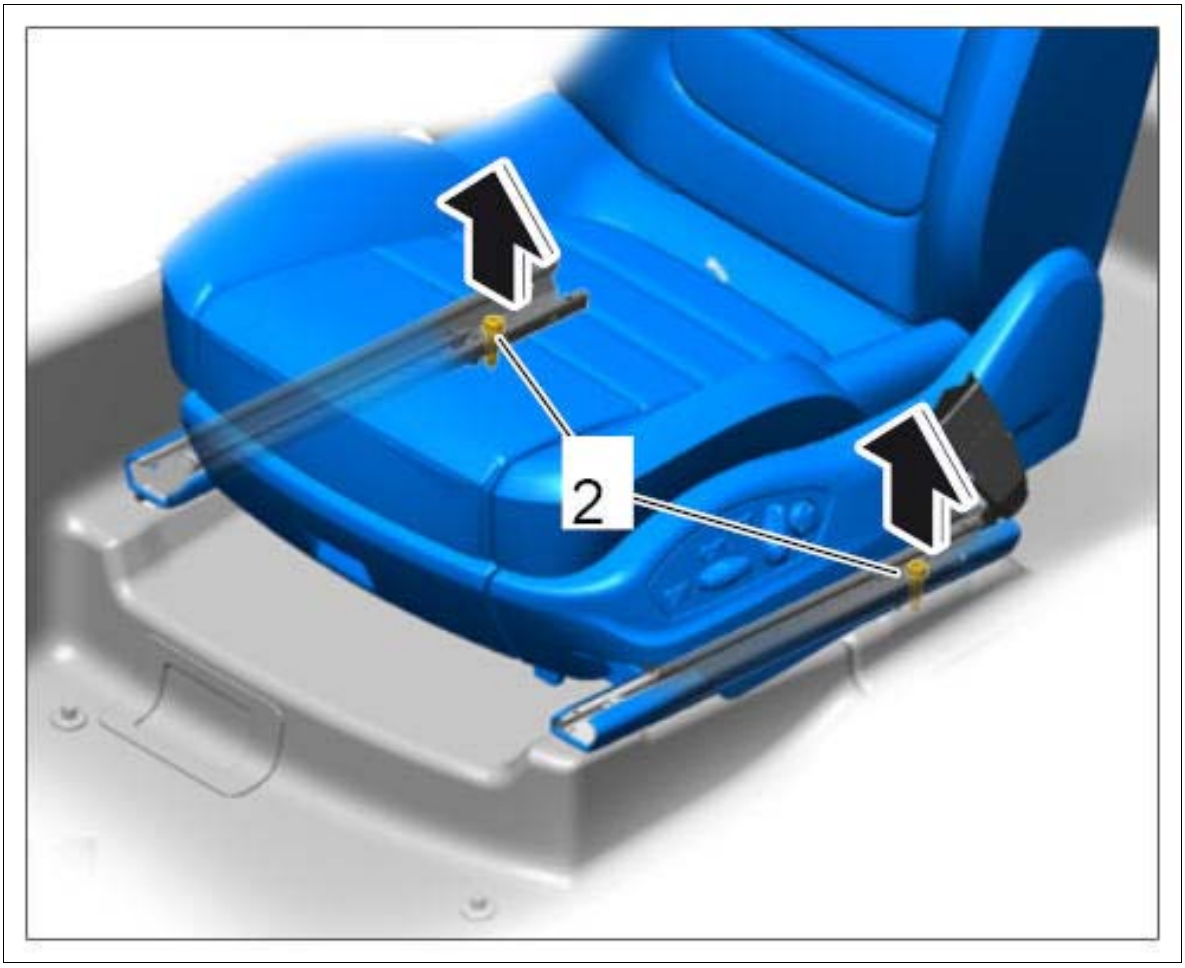

Courtesy of PORSCHE CARS NORTH AMERICA, INC.

4. Remove seat belt mount.

    1. 4.1. Disengage cap **-1-** and slide it over the seat belt mount **-2-** .

Fig 3: Identifying Seat Belt Mount On Front Seat

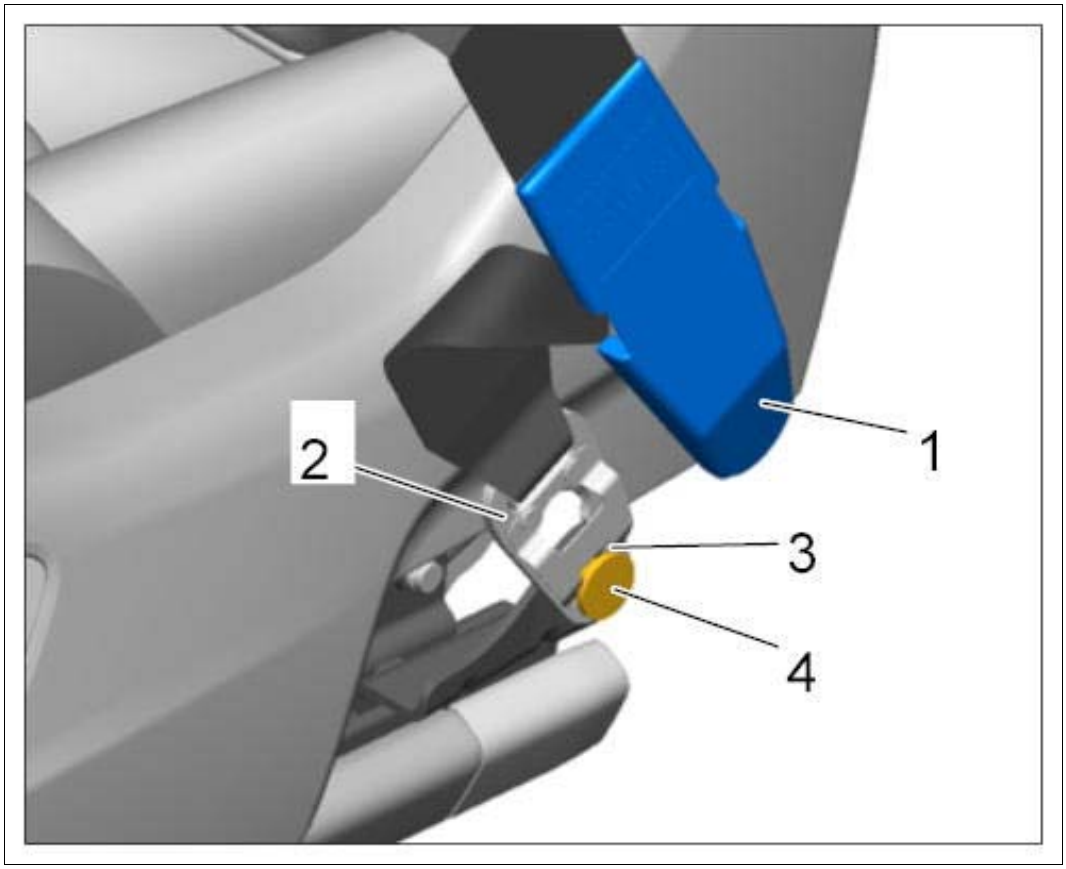

Courtesy of PORSCHE CARS NORTH AMERICA, INC.

2. 4.2. Release retaining clip **-3-** on the seat belt mount using a suitable screwdriver **-arrow A-** .
3. 4.3. Push seat belt mount over the retaining pin **-arrow B-** until the locking lug under the retaining pin loosens the clip.

Fig 4: Releasing Seat Belt Mount

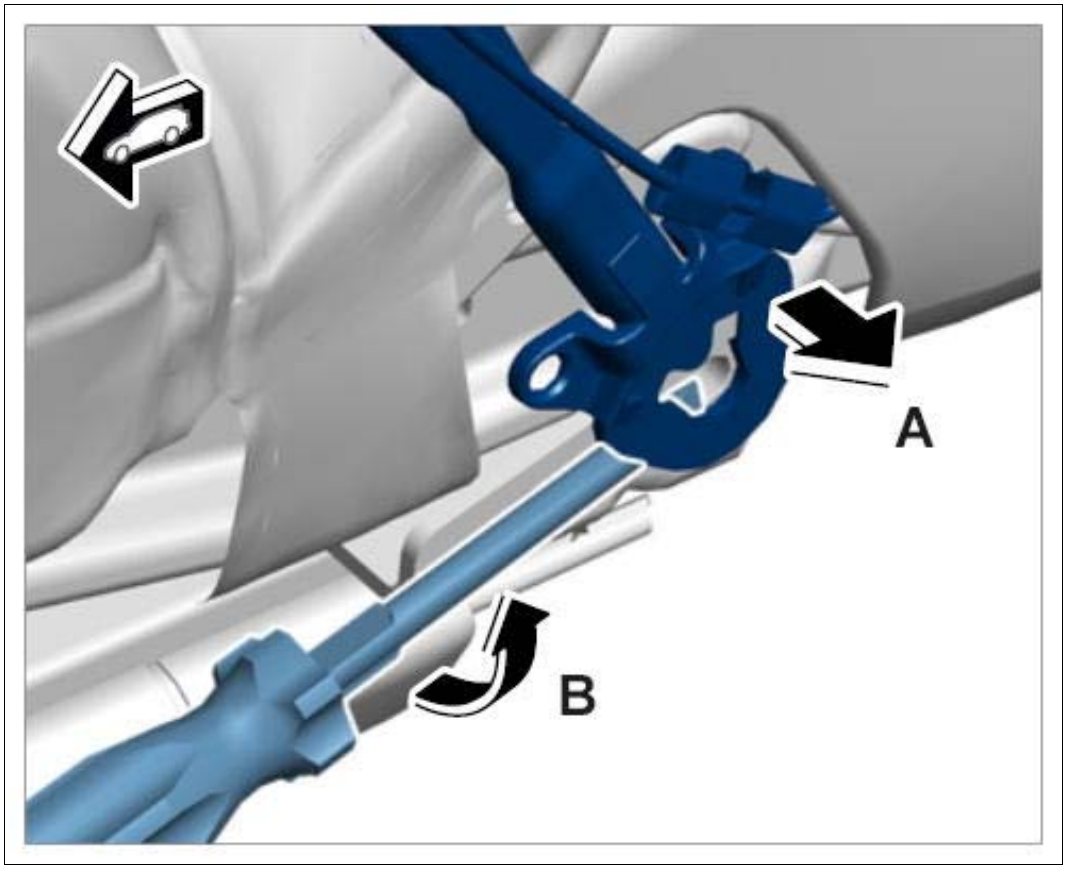

Courtesy of PORSCHE CARS NORTH AMERICA, INC.

4. 4.4. Remove seat belt mount from the retaining pin.

5. Move the front seat back fully and lower the rear seat surface.

6. Remove remote control. Disconnect the battery. Route or isolate ground strap so that all contact with a ground carrier (e.g. body, seat frame) is avoided. → 2X00IN WORK INSTRUCTIONS AFTER DISCONNECTING THE BATTERY .

7. Release caps **-3-** and remove them from the front seat rails.

Fig 5: Identifying Caps On Front Seat Rail

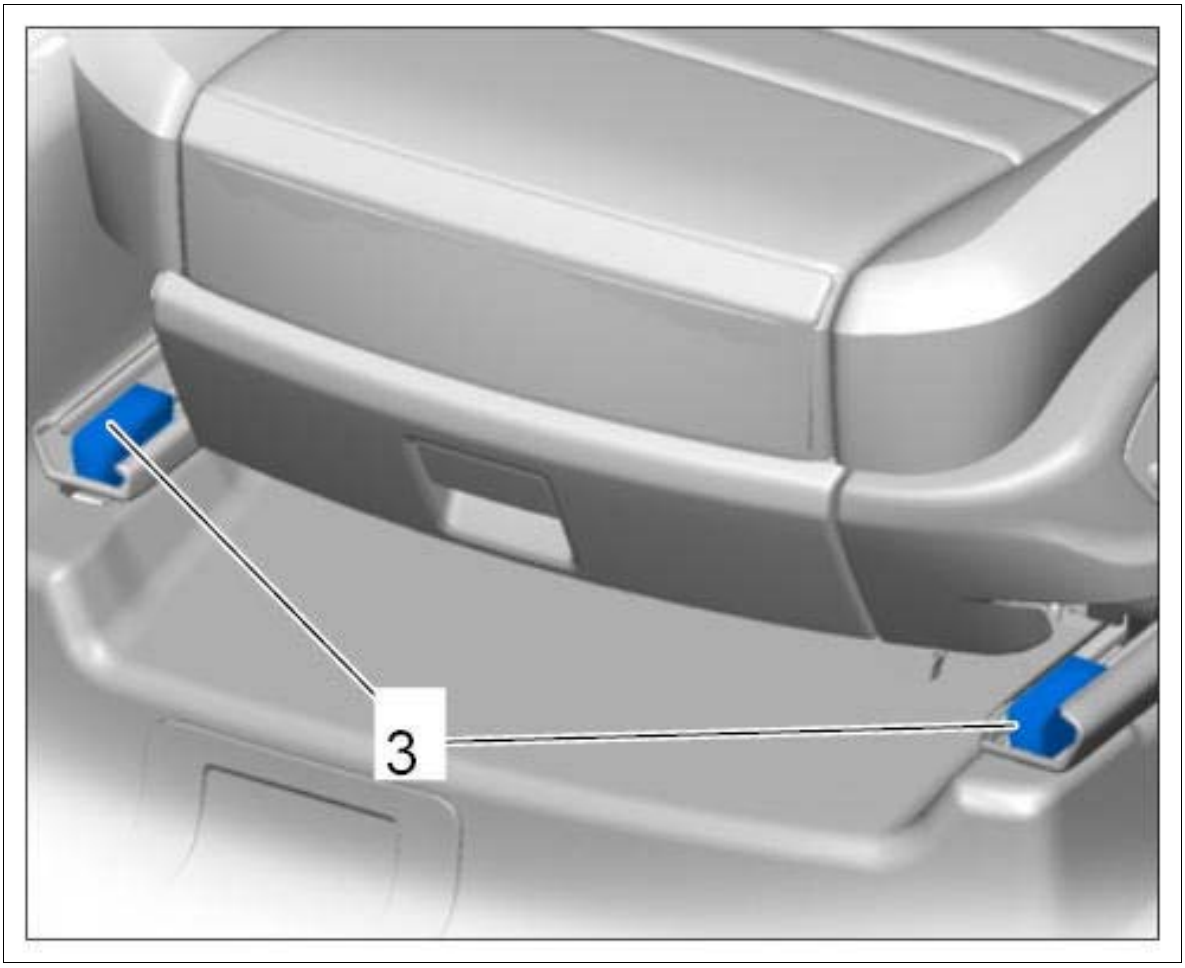

Courtesy of PORSCHE CARS NORTH AMERICA, INC.

8. Unscrew and remove fastening screws on the front seat rail **-4-** .

Fig 6: Removing Fastening Screws On Front Seat Rail



Courtesy of PORSCHE CARS NORTH AMERICA, INC.

9. Fold the front seat back.
10. Release and disconnect electric plug connections for the front seat **-1, 2 and 3-** .

Fig 7: Identifying Electric Plug Connections

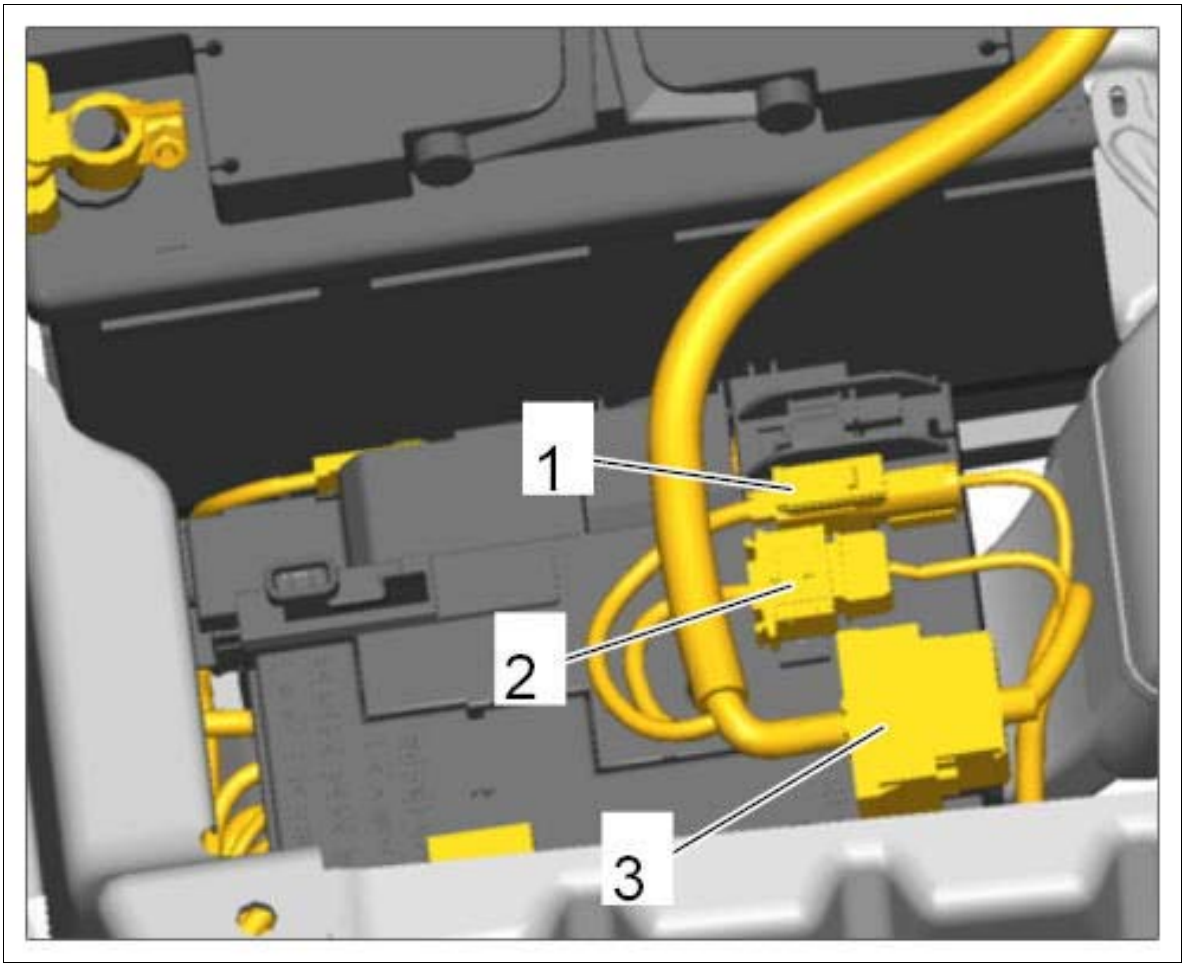

Courtesy of PORSCHE CARS NORTH AMERICA, INC.

Information

The number of electric plug connections can vary, depending on equipment.

11. Carefully remove the front seat.

WM 720119 REMOVING AND INSTALLING FRONT SEAT (ALL MODELS) > INSTALLING FRONT SEAT

WARNING: Incorrect handling of safety bolts

- *Danger of injury*
- *Loss of torque*

→ Always use new fastening screws and nuts following removal.

→ Observe specified tightening torques.

→ Carry out a visual inspection of all re-used parts.

Information

- Some of the repair illustrations show only one side of the vehicle.
- Naturally, some steps also have to be performed on the opposite side of the vehicle as well.

Information

Always replace the fastening screws on the front seat after customer service and reworking. The micro-self-locking or self-tapping screws must not be treated, greased or loosened and then screwed on again.

1. Place front seat in the vehicle and tilt it backwards.
2. Plug in electric plug connections for driver's seat **-1, 2 and 3-** .

   Fig 1: Identifying Driver Seat Electric Plug Connections

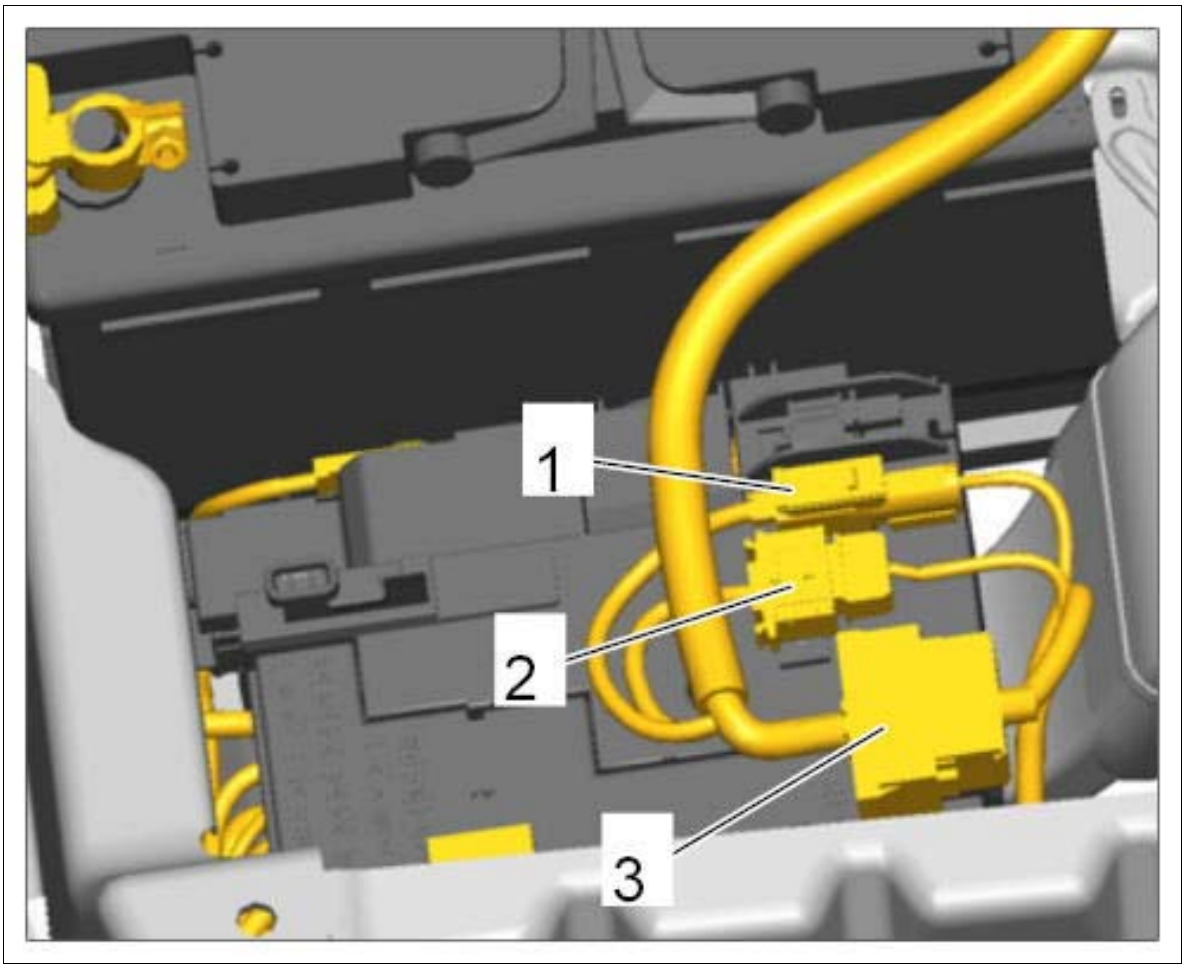

Courtesy of PORSCHE CARS NORTH AMERICA, INC.

Information

The number of electric plug connections can vary, depending on equipment.

3. Fold the front seat forward **-arrow A-** and align it on the seat frame with the centering pins **-arrow B-** .

Fig 2: Positioning Front Seat On Seat Frame

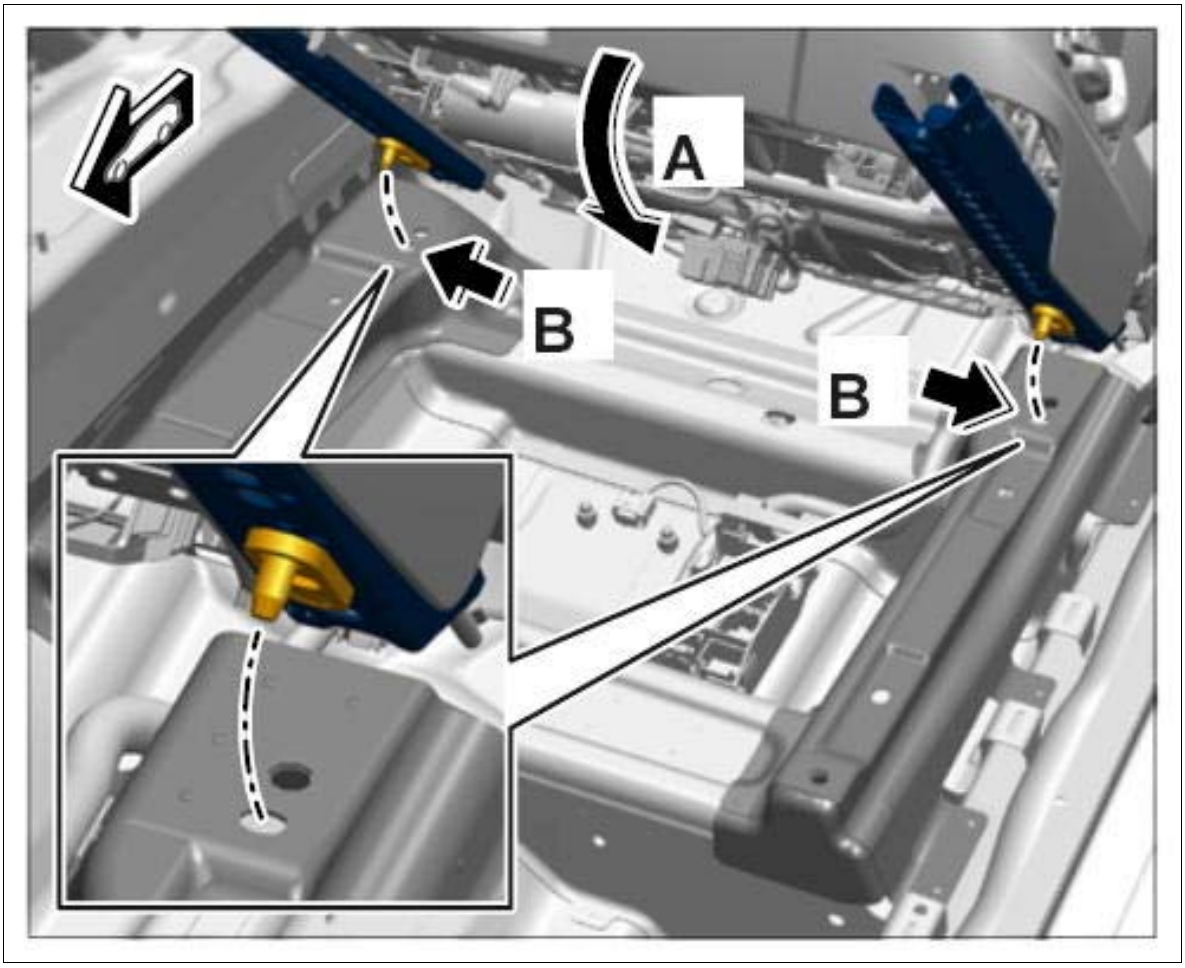

Courtesy of PORSCHE CARS NORTH AMERICA, INC.

4. Connect the battery → 2X00IN WORK INSTRUCTIONS AFTER DISCONNECTING THE BATTERY .

5. Move front seat all the way back. Screw in front fastening screws **-4-** only until the seat rails are touching the seat frame.

Fig 3: Tightening Fastening Screws On Front Seat Rail



Courtesy of PORSCHE CARS NORTH AMERICA, INC.

6. Move the front seat all the way forward and secure it to the seat frame at the rear with the fastening screws **-2-** . **Tightening torque 50 Nm (37 ftlb.) +/-7.5 Nm (+/-5.5 ftlb.)** .

Fig 4: Securing Front Seat To Seat Frame (Rear)

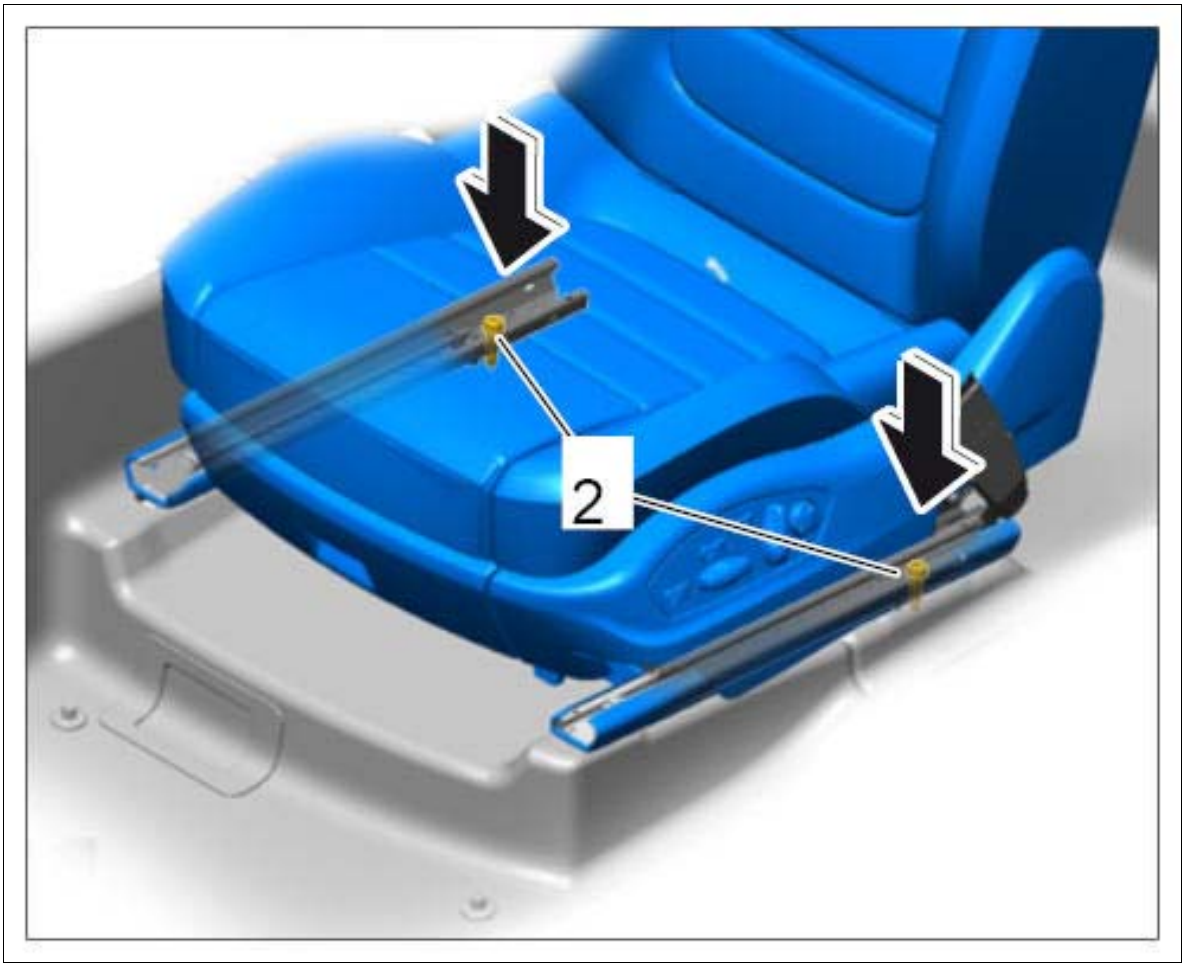

Courtesy of PORSCHE CARS NORTH AMERICA, INC.

7. Carefully fit the rear caps **-1-** .

Fig 5: Identifying Caps On Rear Seat Rail

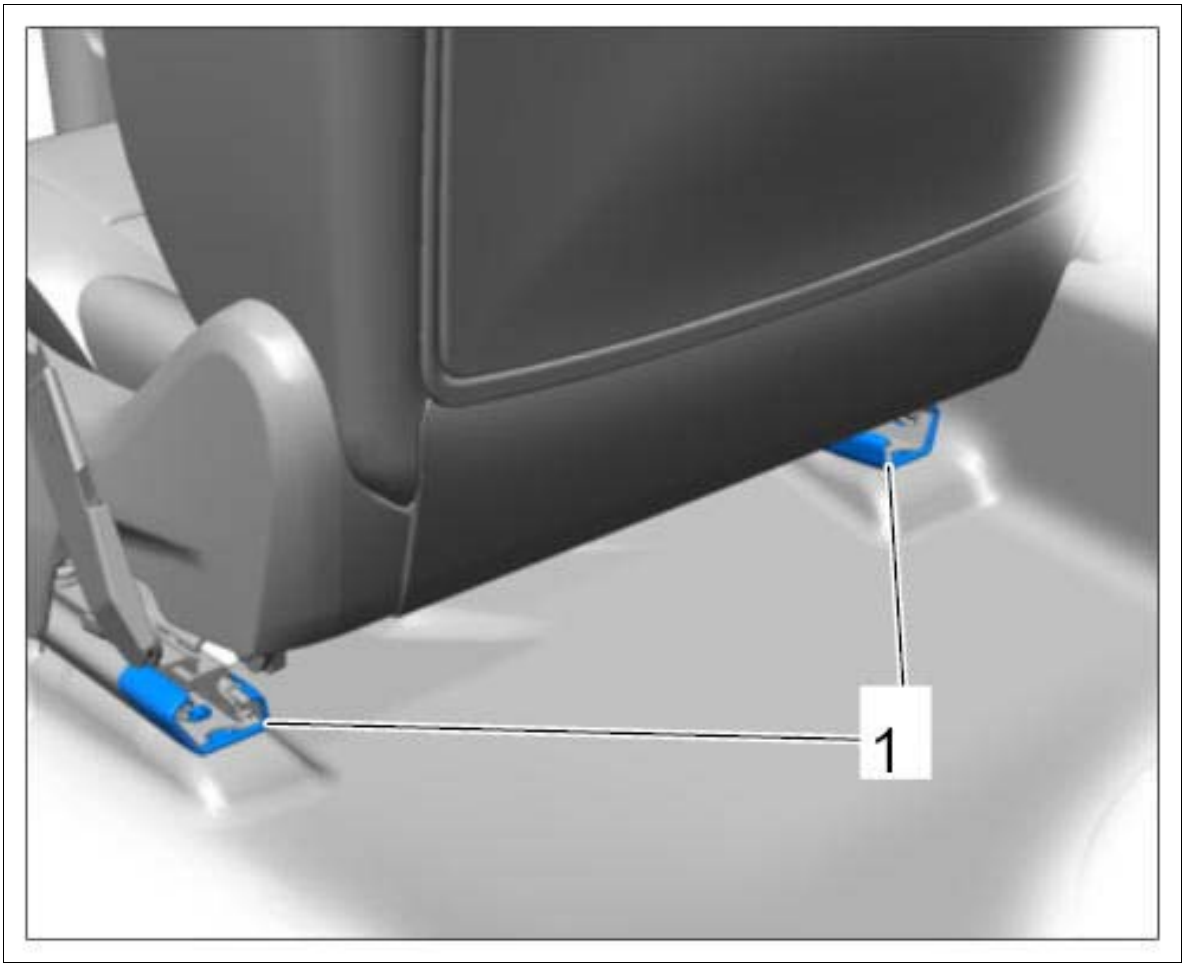

Courtesy of PORSCHE CARS NORTH AMERICA, INC.

8. Move the front seat all the way back and secure it to the seat frame at the front by tightening the fastening screws **-4-** to **Tightening torque 50 Nm (37 ftlb.) +/-7.5 Nm (+/-5.5 ftlb.)** .

Fig 6: Tightening Fastening Screws On Front Seat Rail



Courtesy of PORSCHE CARS NORTH AMERICA, INC.

9. Fit the caps at the front **-3-** on the seat rail.

Fig 7: Identifying Caps On Front Seat Rail

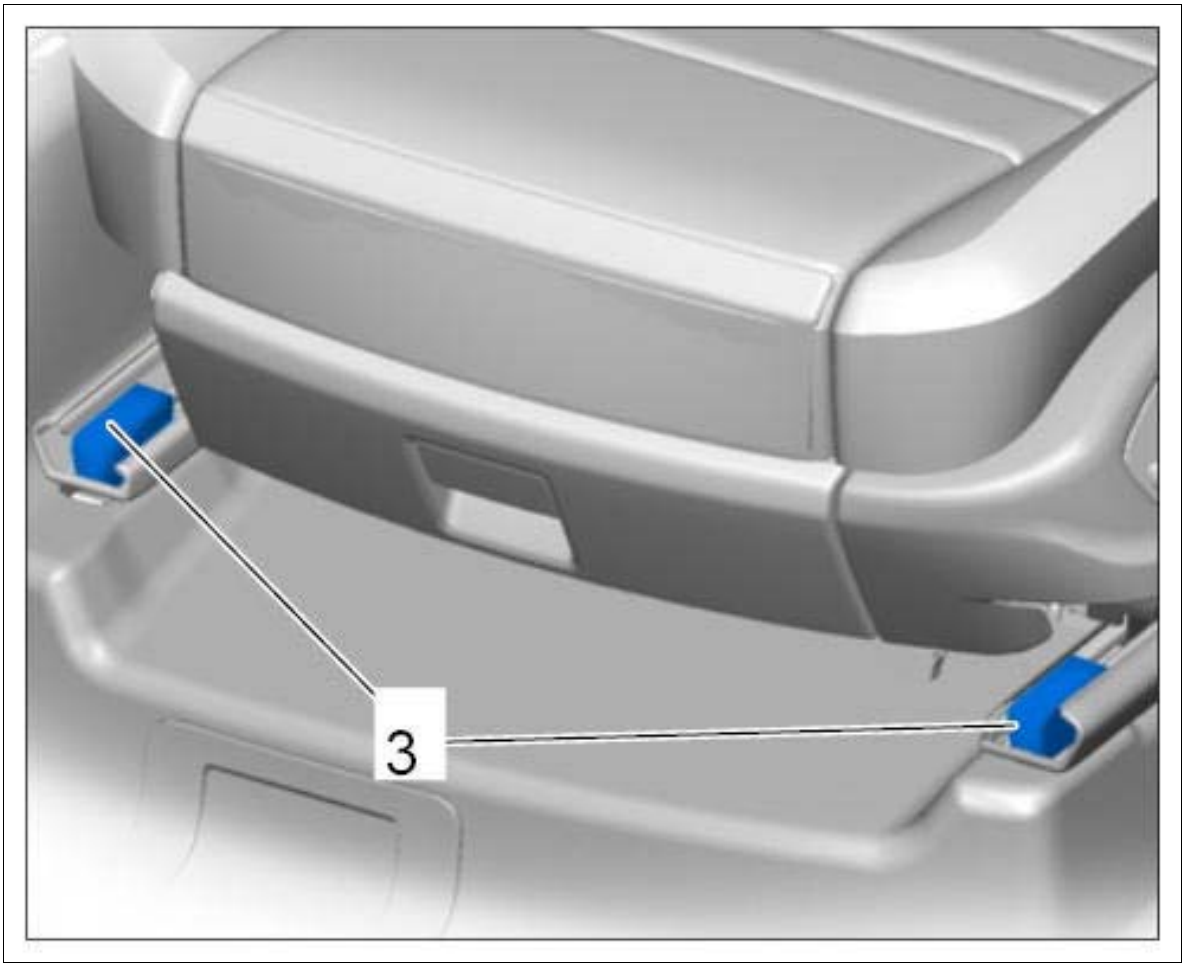

Courtesy of PORSCHE CARS NORTH AMERICA, INC.

Information

Do not twist the three-point belt during installation!

10. Install seat belt mount.

> *NOTE: Incorrect handling of spring plate on seat belt mount*
>
> *1. The seat belt must be replaced.*

→ Only bend the spring plate up as far as required to allow you to push the seat belt mount off the mounting pin.

→ The spring plate must be touching the mounting pin during installation with preload.

1. 10.1. Position seat belt mount **-2-** on the retaining pin **-4-** and pull upward until the retaining clip **-3-** locks with an audible click.

Fig 8: Identifying Seat Belt Mount On Front Seat

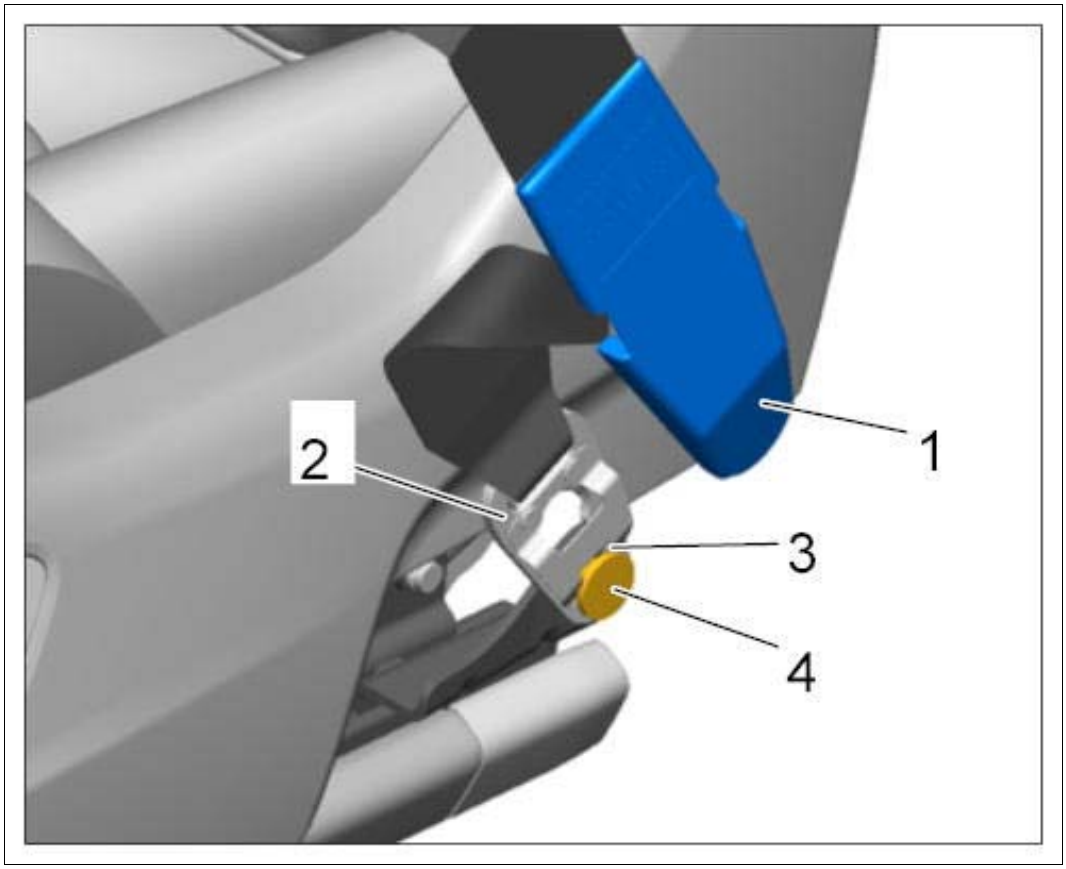

Courtesy of PORSCHE CARS NORTH AMERICA, INC.

2. 10.2. Pull on the belt strap. The retaining clip **-3-** must engage fully on the holder.
3. 10.3. Push the cap **-1-** over the seat belt mount **-2-** and lock it. The label on the seat belt must be pushed into the cap when you push the cover down.

WM 720119 REMOVING AND INSTALLING FRONT SEAT (ALL MODELS) > SUBSEQUENT WORK

1. **Vehicles with seat memory: Carry out standardization.** → 729355 REPLACING CONTROL UNIT FOR MEMORY SEAT ADJUSTMENT

WM 720619 REMOVING AND INSTALLING AIR CUSHION SWITCH (ALL MODELS) > INFORMATION

The air cushion switch cannot be removed separately. It is integrated in the seat adjustment switch. → 728619 REMOVING AND INSTALLING SEAT ADJUSTMENT SWITCH .

WM 720919 REMOVING AND INSTALLING FRONT SEAT FRAME (ALL MODELS) >

COMPONENT INFORMATION > INSTALLATION POSITION

Fig 1: Identifying Front Seat Frame Installation Position



Courtesy of PORSCHE CARS NORTH AMERICA, INC.

WM 720919 REMOVING AND INSTALLING FRONT SEAT FRAME (ALL MODELS) > REMOVING FRONT SEAT FRAME

1. Remove backrest frame. → Removing Backrest Frame

WM 720919 REMOVING AND INSTALLING FRONT SEAT FRAME (ALL MODELS) > INSTALLING FRONT SEAT FRAME

1. Install backrest frame. → Installing Backrest Frame

WM 720955 REPLACING FRONT SEAT FRAME (ALL MODELS) > COMPONENT INFORMATION > INSTALLATION POSITION

Fig 1: Identifying Front Seat Frame Installation Position



Courtesy of PORSCHE CARS NORTH AMERICA, INC.

WM 720955 REPLACING FRONT SEAT FRAME (ALL MODELS) > PRELIMINARY WORK

1. Remove backrest frame. → Removing Backrest Frame

WM 720955 REPLACING FRONT SEAT FRAME (ALL MODELS) > REPLACING FRONT SEAT FRAME

1. Remove padding for front seat. → Removing Padding For Front Seat
2. Remove air cushion for seat. → Removing Air Cushion For Seat

3. **On passenger's side only:** Remove front seat occupancy detection system. → Loosening Padding For Front Seat
4. Remove front belt lock. → Removing front belt lock
5. Remove control unit for memory seat adjustment. → Removing Control Unit For Memory Seat Adjustment
6. Remove wire harness for power seats. → Removing wire harness for power seats
7. Replace front power seat frame.
8. Install wire harness for power seats. → Installing wire harness for power seats
9. Install control unit for memory seat adjustment. → Installing Control Unit For Memory Seat Adjustment
10. Install front belt lock. → Installing front belt lock
11. **On passenger's side only:** Install front seat occupancy detection system. → Securing Padding For Front Seat
12. Install air cushion for seat. → Installing Air Cushion For Seat
13. Remove padding for front seat. → Removing Padding For Front Seat

WM 720955 REPLACING FRONT SEAT FRAME (ALL MODELS) > SUBSEQUENT WORK

1. Install backrest frame. → Installing Backrest Frame

WM 721419 REMOVING AND INSTALLING AIR CUSHION FOR SEAT (ALL MODELS) > COMPONENT INFORMATION > INSTALLATION POSITION

Fig 1: Identifying Seat Air Cushion Installation Position



Courtesy of PORSCHE CARS NORTH AMERICA, INC.

WM 721419 REMOVING AND INSTALLING AIR CUSHION FOR SEAT (ALL MODELS) > PRELIMINARY WORK

1. Remove padding for front seat. → Removing Padding For Front Seat

WM 721419 REMOVING AND INSTALLING AIR CUSHION FOR SEAT (ALL MODELS) > REMOVING AIR CUSHION FOR SEAT

1. Release and pull off the pressure line (red) **-1-** under the seat.

Fig 1: Disconnecting Pressure Line Under Seat

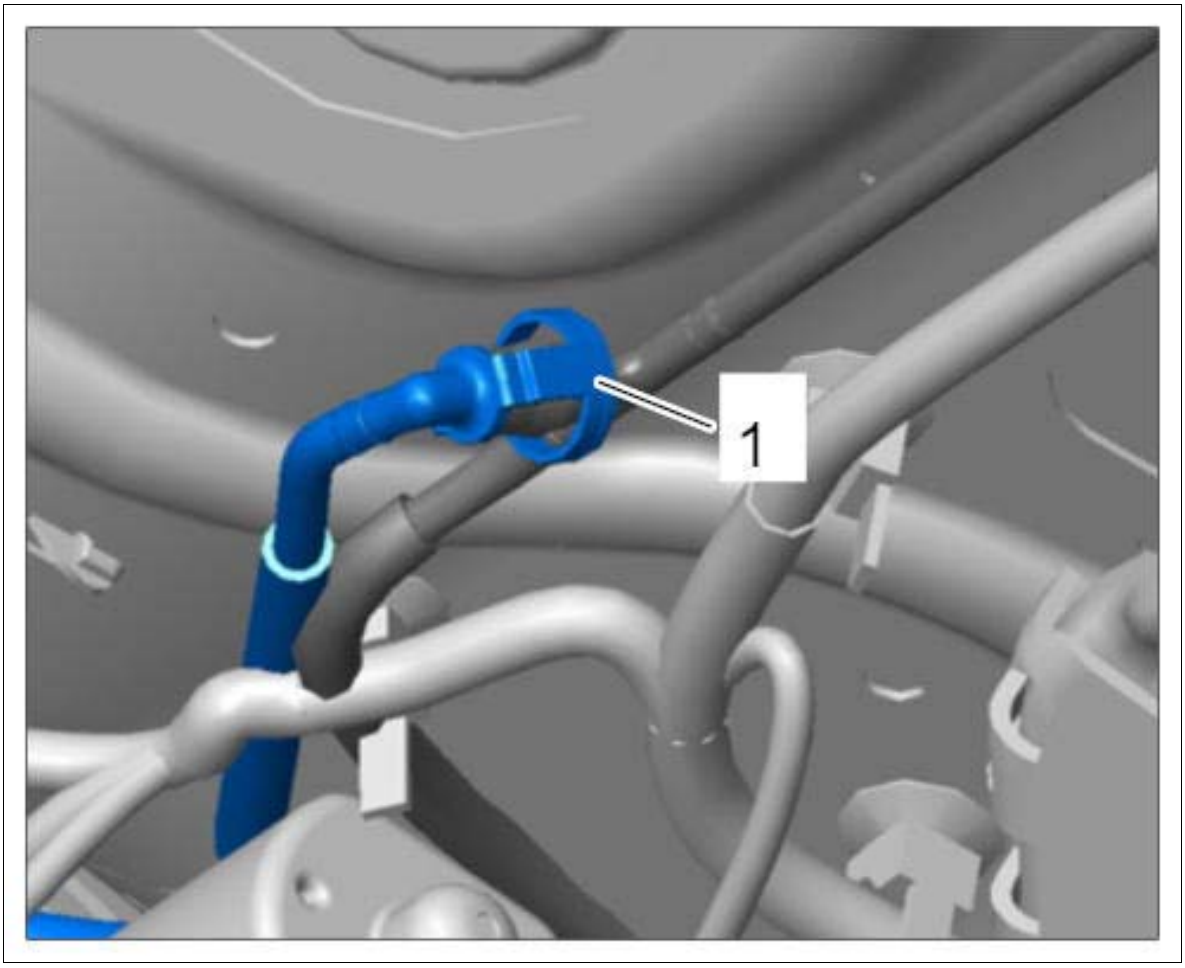

Courtesy of PORSCHE CARS NORTH AMERICA, INC.

2. Unclip fixing clips **-1-** on both air cushions **-2-** from the brackets.
3. Pull both air cushions **-2-** through the cut-out in the seat frame **-A-** .

Fig 2: Loosening Seat Air Cushions

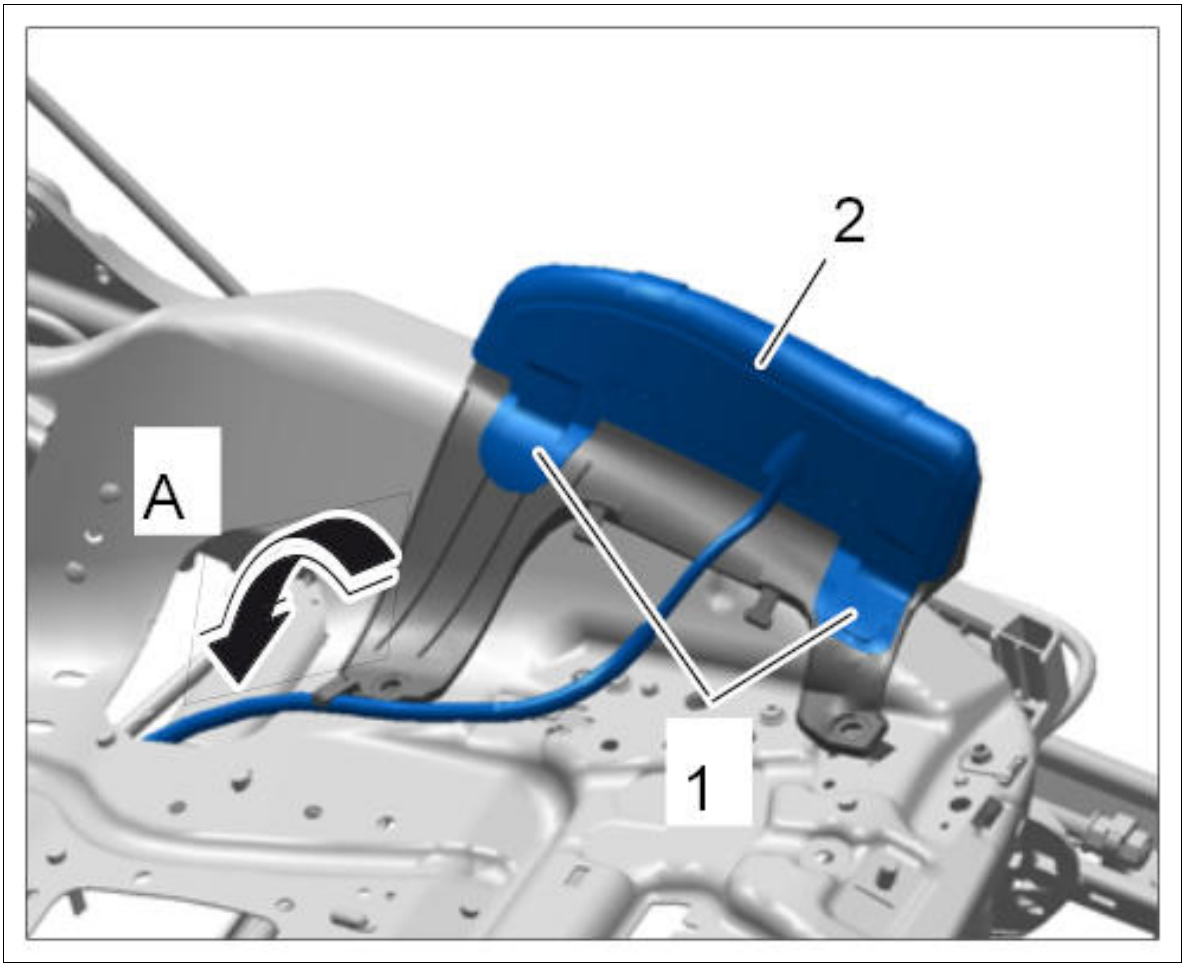

Courtesy of PORSCHE CARS NORTH AMERICA, INC.

WM 721419 REMOVING AND INSTALLING AIR CUSHION FOR SEAT (ALL MODELS) > INSTALLING AIR CUSHION FOR SEAT

1. Pull both air cushions **-1-** up through the cut-outs in the seat frame from below **-A-** .
2. Clip fixing clips **-2-** for both air cushions **-1-** into the brackets.

Fig 1: Fitting Seat Air Cushion

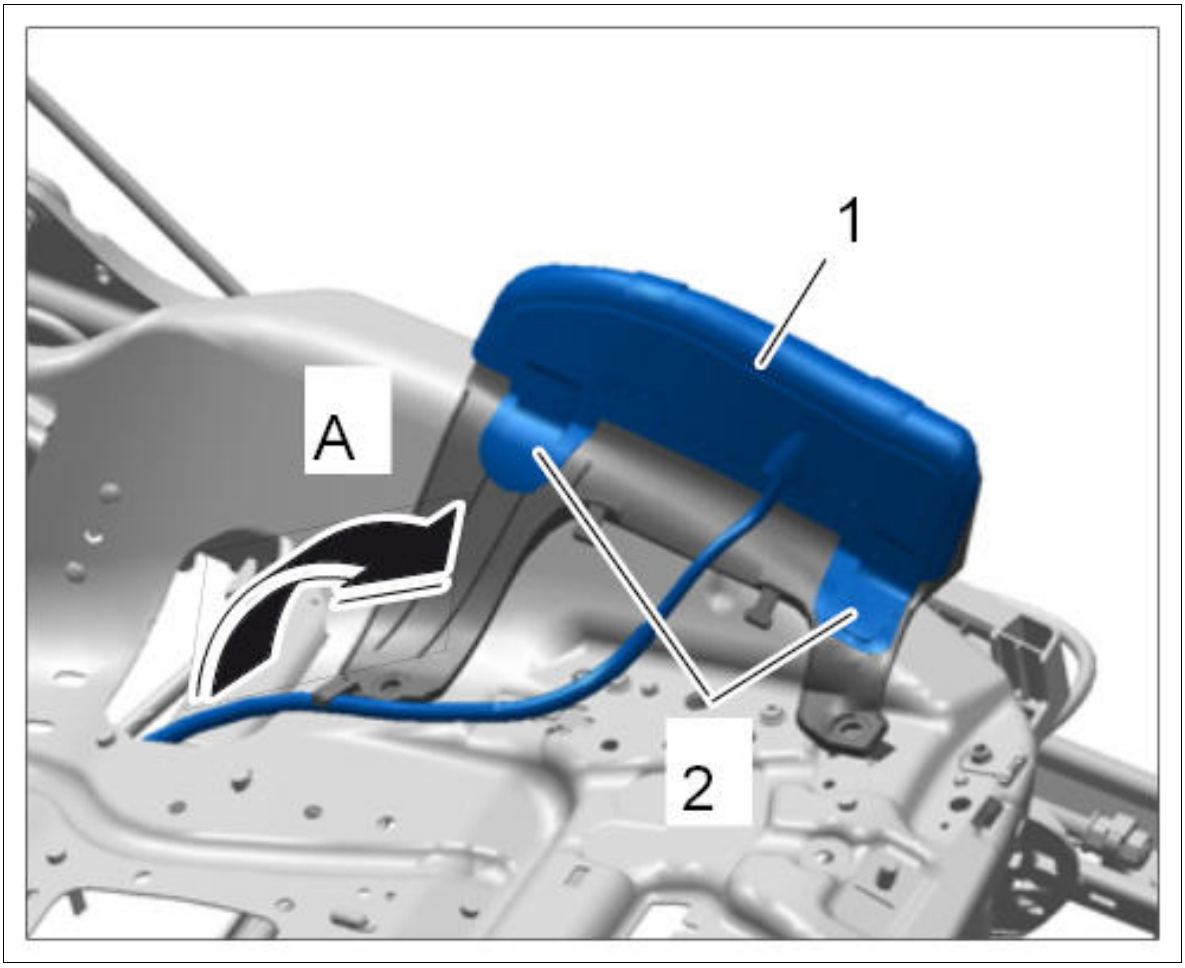

Courtesy of PORSCHE CARS NORTH AMERICA, INC.

3. Fit the pressure line (red) **-1-** under the seat.

Fig 2: Fitting Pressure Line Under Seat

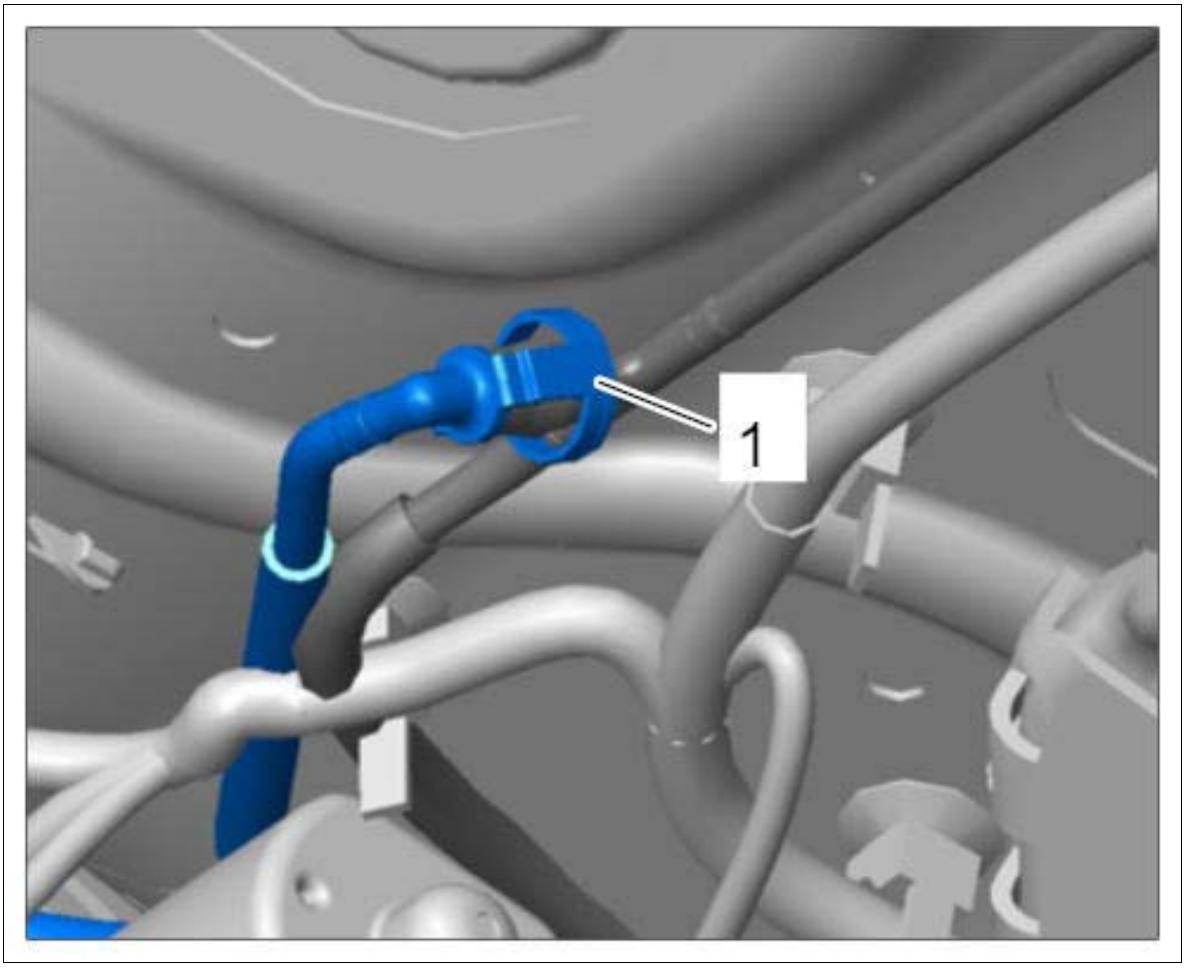

Courtesy of PORSCHE CARS NORTH AMERICA, INC.

WM 721419 REMOVING AND INSTALLING AIR CUSHION FOR SEAT (ALL MODELS) > SUBSEQUENT WORK

1. Install padding for front seat. → Installing Padding For Front Seat

WM 721619 REMOVING AND INSTALLING TRIM PANEL FOR SEAT (ALL MODELS) > TECHNICAL VALUES

Location	Description	Type	Basic value	Tolerance 1	Tolerance 2
Fastening screw for storage compartment on seat	Item 1	Tightening torque	7.5 Nm (5.5 ftlb.)	+/-0.5 Nm (+/-0.5 ftlb.)	

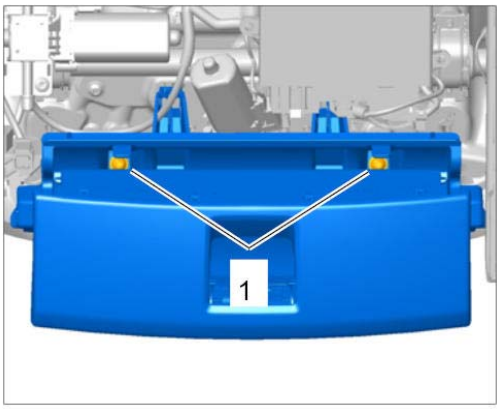

Loosening storage compartment

WM 721619 REMOVING AND INSTALLING TRIM PANEL FOR SEAT (ALL MODELS) > COMPONENT INFORMATION > INSTALLATION POSITION

Fig 1: Identifying Trim Panel Installation Position

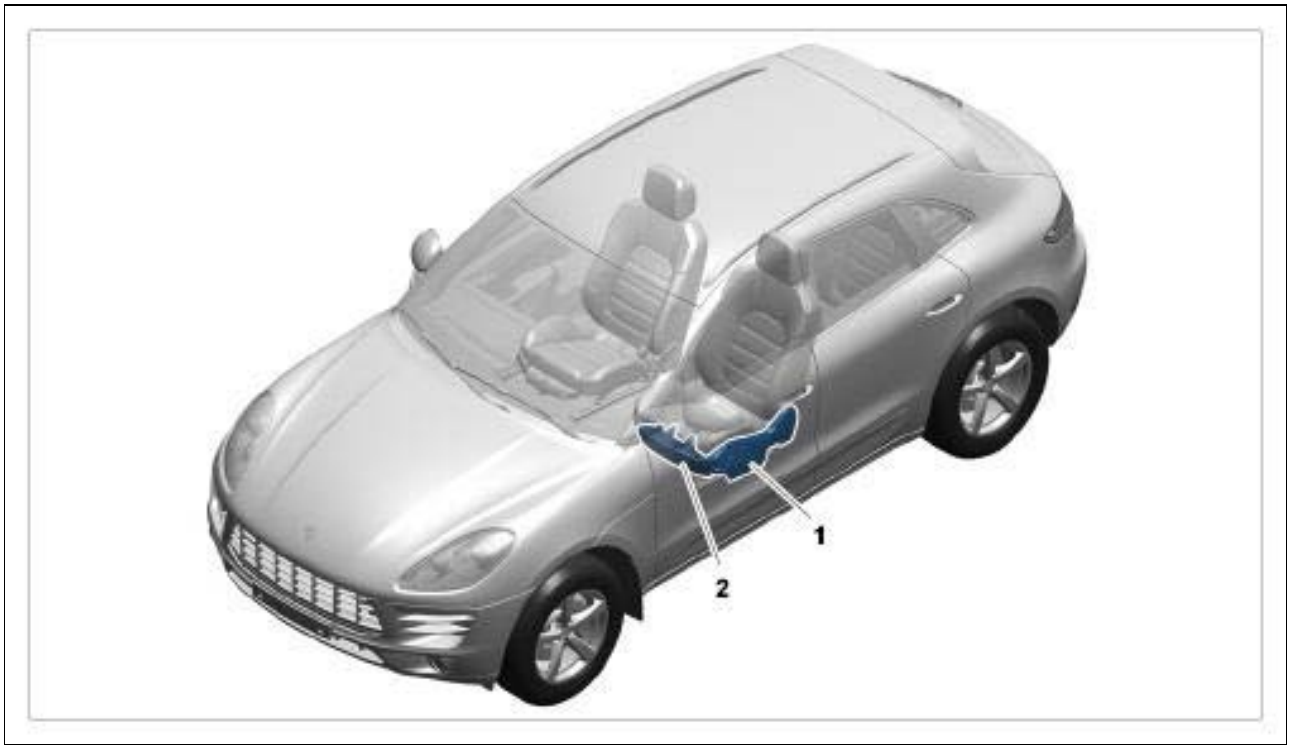

Courtesy of PORSCHE CARS NORTH AMERICA, INC.

1. Trim panel for seat
2. Storage compartment on seat

WM 721619 REMOVING AND INSTALLING TRIM PANEL FOR SEAT (ALL MODELS) > PRELIMINARY WORK > PRELIMINARY WORK FOR TRIM PANEL FOR SEAT

1. Open storage compartment.
2. **Only for seat trim panel on passenger's side and seats with fire extinguisher:** Remove fire extinguisher. → Installing Fire Extinguisher

WM 721619 REMOVING AND INSTALLING TRIM PANEL FOR SEAT (ALL MODELS) > PRELIMINARY WORK > PRELIMINARY WORK FOR STORAGE COMPARTMENT ON SEAT

1. Remove front seat. → Removing Front Seat

WM 721619 REMOVING AND INSTALLING TRIM PANEL FOR SEAT (ALL MODELS) > REMOVING TRIM PANEL FOR SEAT

1. Move front seat to the rearmost and highest position.
2. Press pin up out of expansion rivet **-1-** and pull out expansion rivet.
3. Press trim panel for seat **-2-** in the rear area outwards **-arrow A-** and upwards at the same time **-arrow B-** .

Fig 1: Detaching Seat Trim Panel

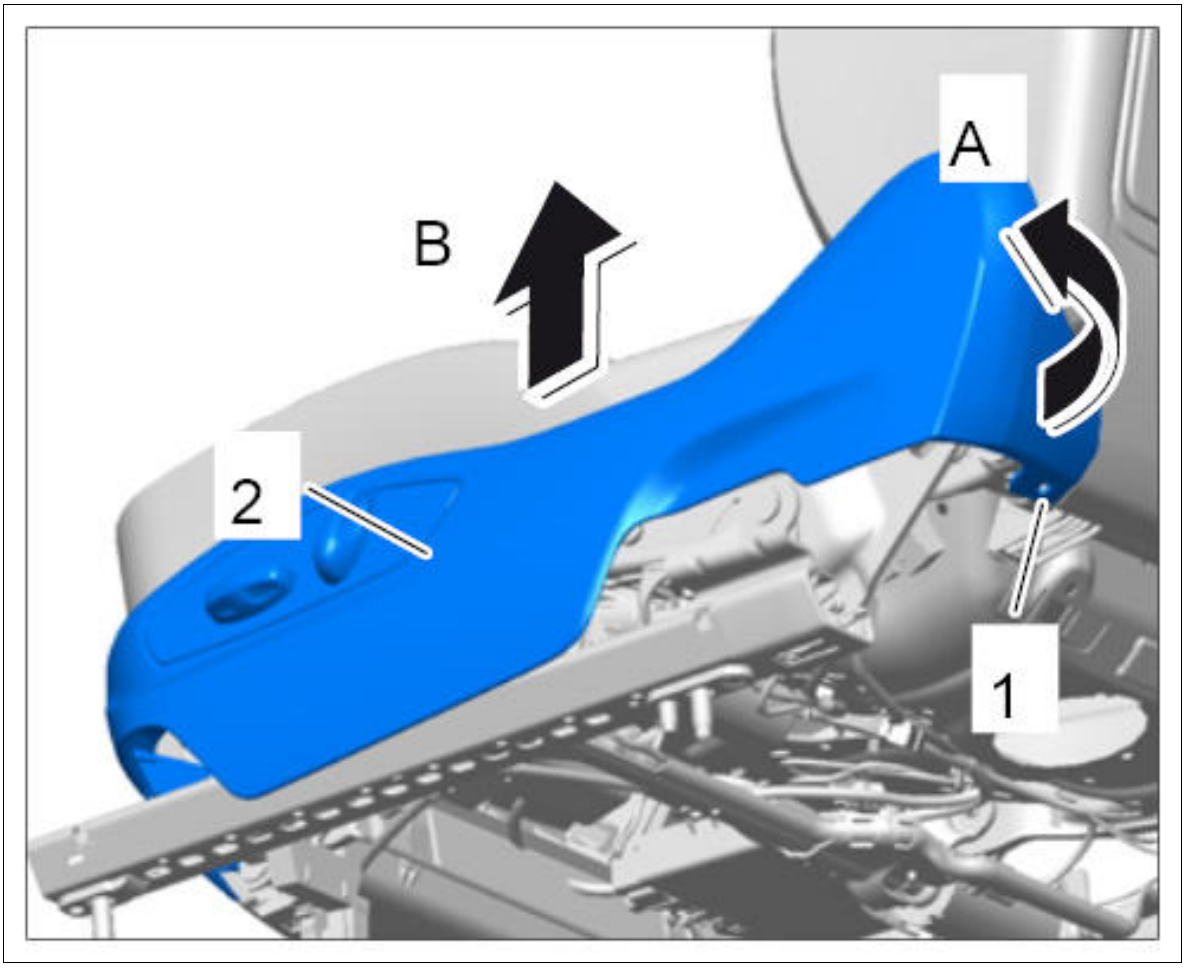

Courtesy of PORSCHE CARS NORTH AMERICA, INC.

4. Pull trim panel for seat **-2-** forward out of the bracket **-3-** at the inside **-arrow C-** . To do this, press the locking mechanism on the bracket **-3-** .

Fig 2: Removing Seat Trim Panel

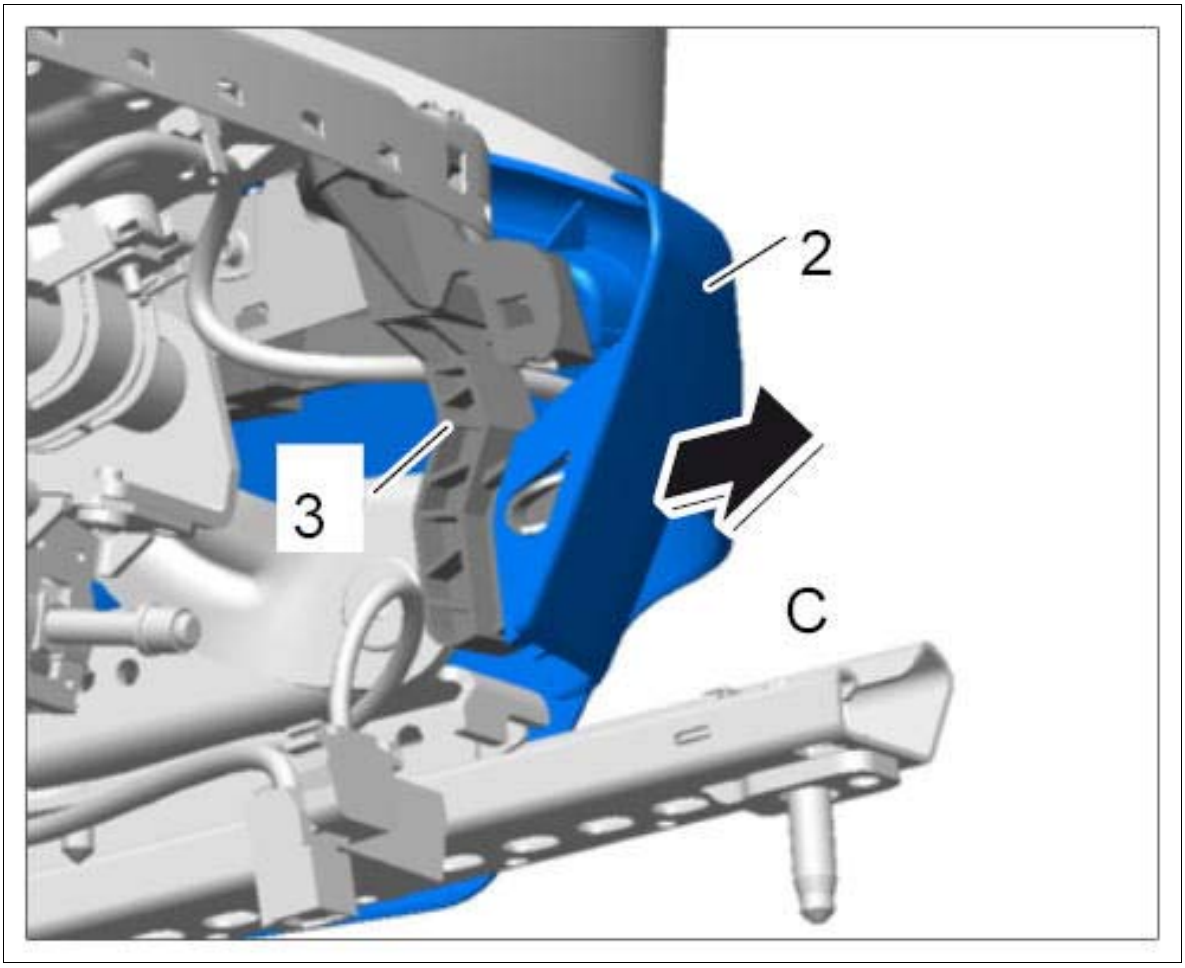

Courtesy of PORSCHE CARS NORTH AMERICA, INC.

5. Release electric plug connection for seat adjustment **-arrow a-** and disconnect it **-arrow A-** .

Fig 3: Disconnecting Seat Adjustment Plug Connection

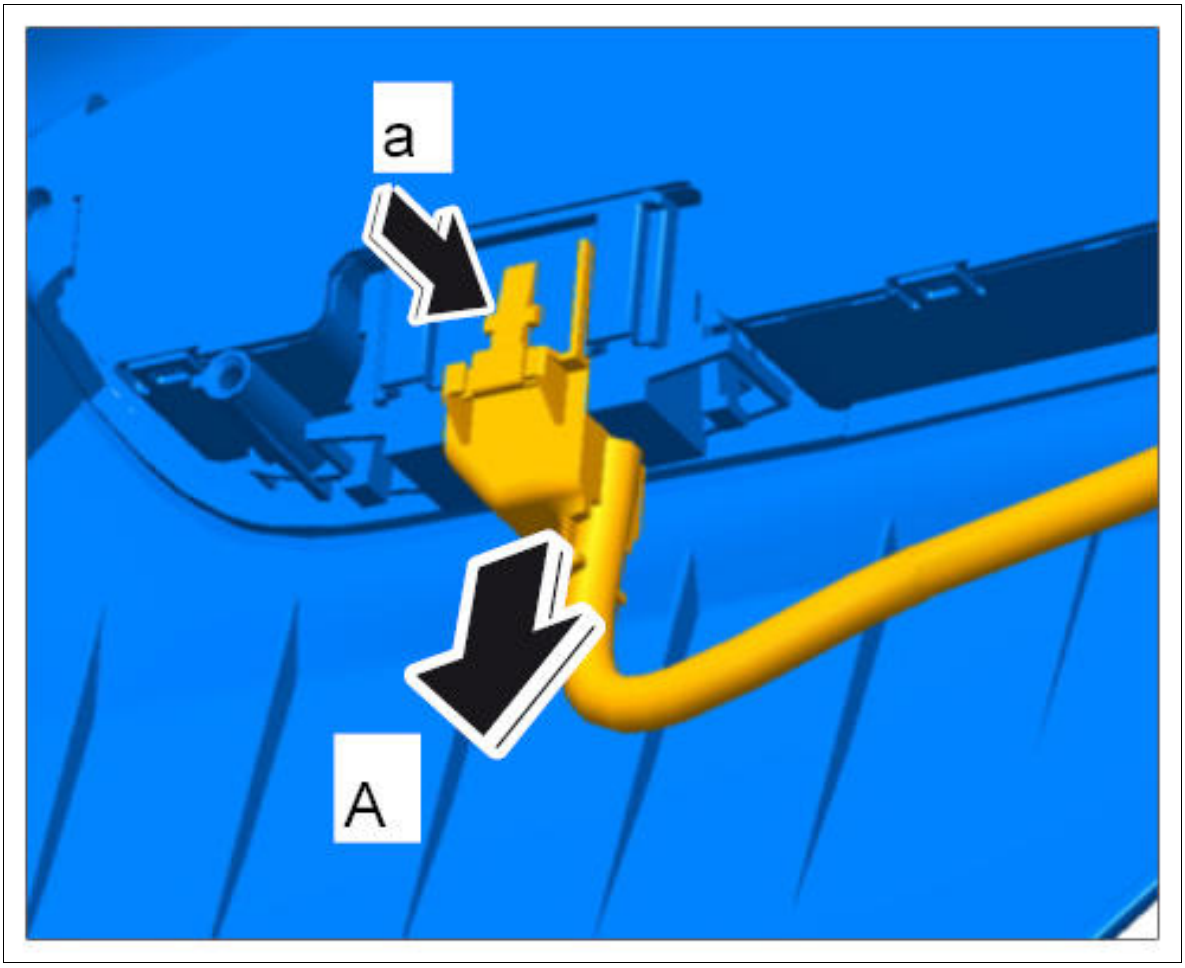

Courtesy of PORSCHE CARS NORTH AMERICA, INC.

WM 721619 REMOVING AND INSTALLING TRIM PANEL FOR SEAT (ALL MODELS) > REMOVING TRIM PANEL FOR SEAT > REMOVING STORAGE COMPARTMENT FOR SEAT

1. Open the storage compartment.
2. Unscrew fastening screws **-1-** .

Fig 1: Loosening Storage Compartment

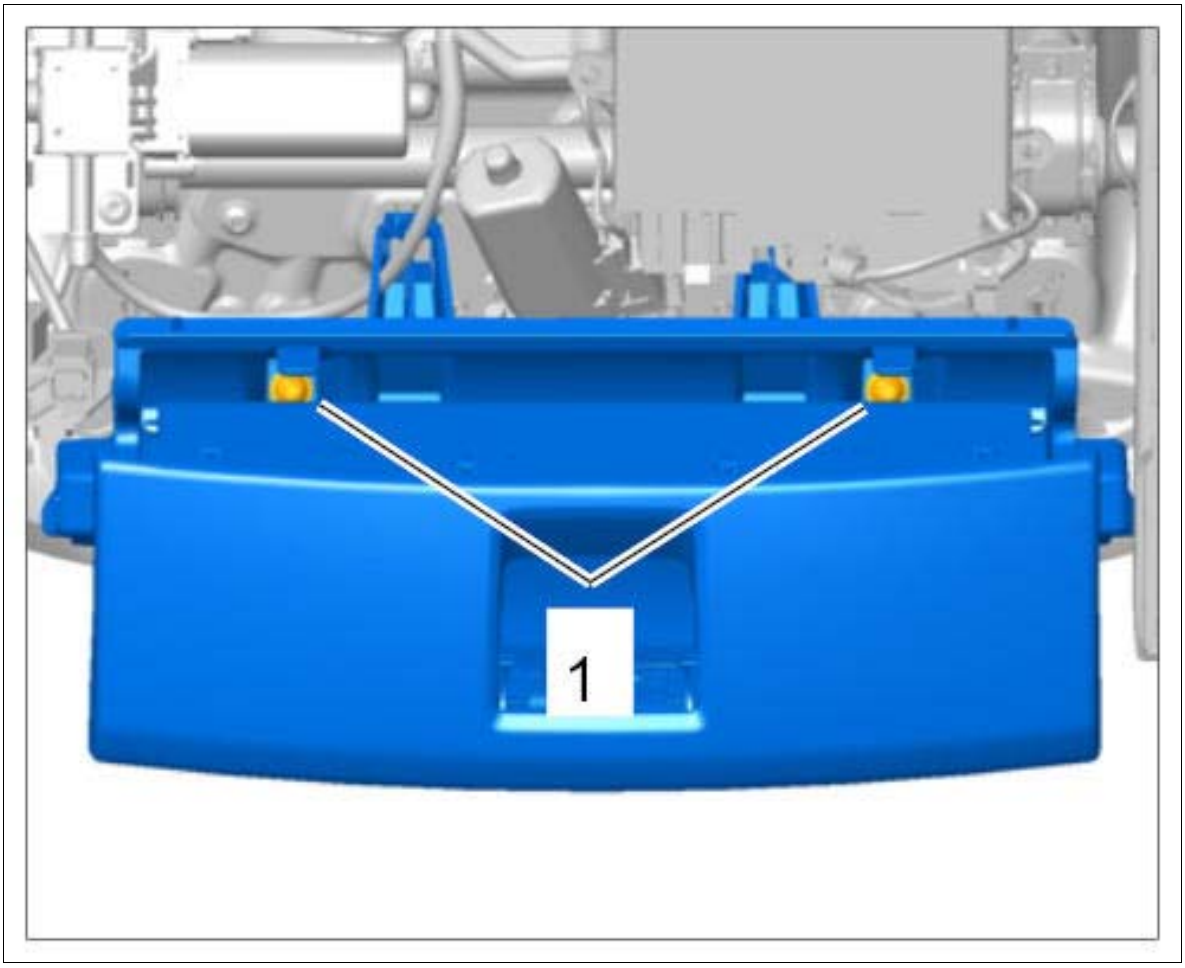

Courtesy of PORSCHE CARS NORTH AMERICA, INC.

3. Release locking mechanism **-1-** at the side using a plastic wedge **-arrow A-** .
4. Push the bottom of the storage compartment to the rear **-arrow B-** and remove it from the guides **-2-** .

Fig 2: Removing Storage Compartment

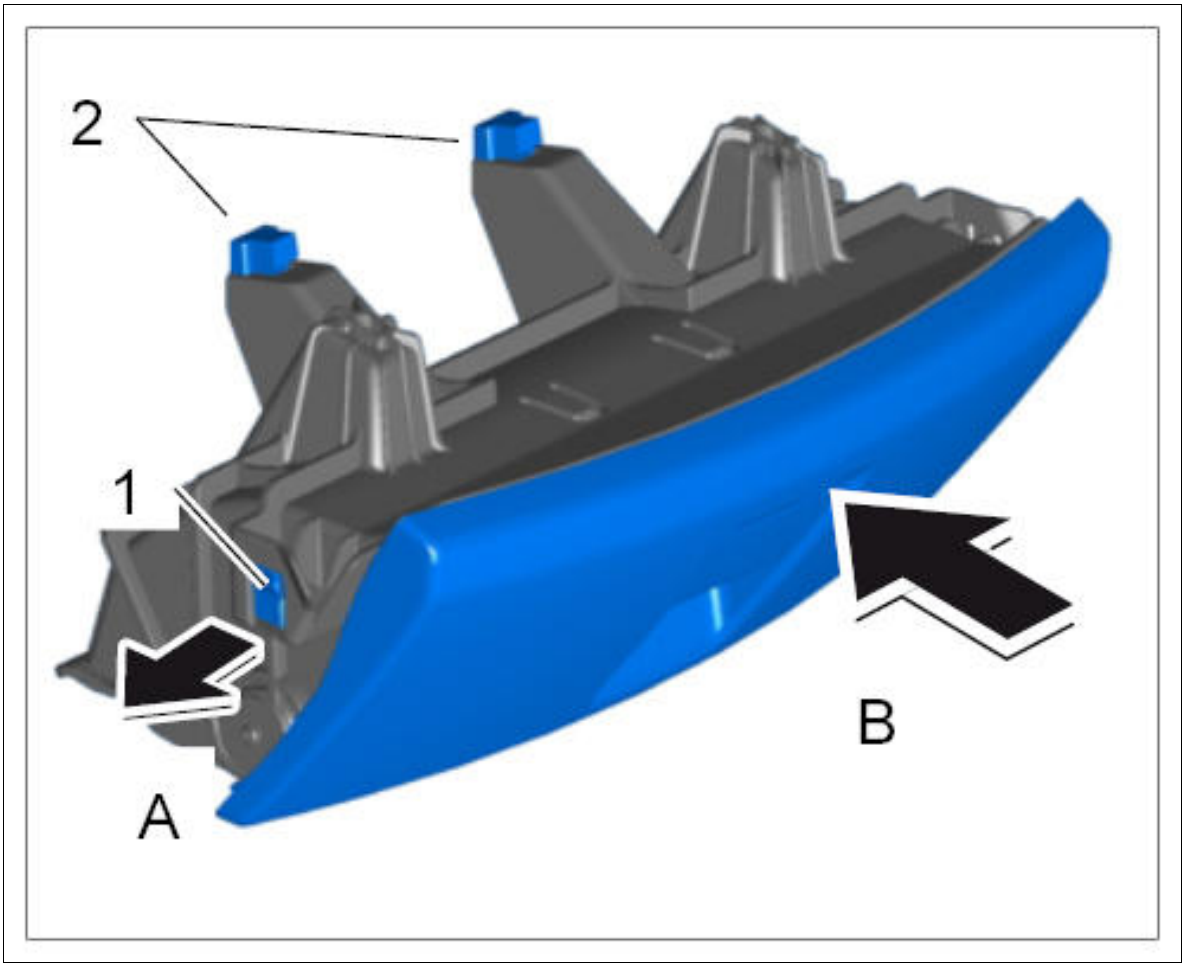

Courtesy of PORSCHE CARS NORTH AMERICA, INC.

WM 721619 REMOVING AND INSTALLING TRIM PANEL FOR SEAT (ALL MODELS) > INSTALLING TRIM PANEL FOR SEAT

Information

Fixing clips on the seat frame will be damaged irreparably during removal. Replace expansion rivets and fixing clips during installation and do not re-use them.

1. Connect electric plug connection for seat adjustment **-arrow A-** and lock it **-arrow a-** .

Fig 1: Connecting Seat Adjustment Plug Connection

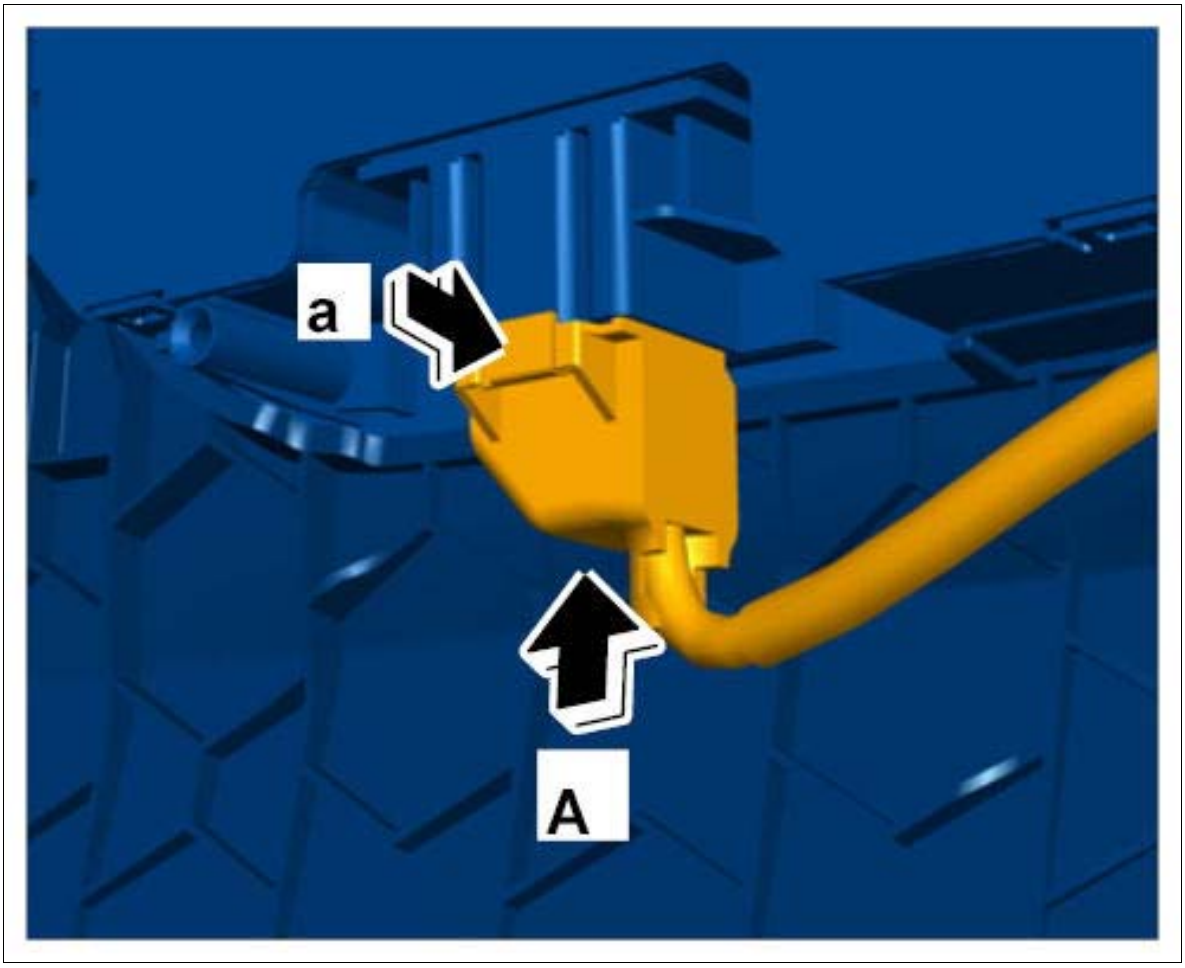

Courtesy of PORSCHE CARS NORTH AMERICA, INC.

Information

Check that the wiring harness for the seat adjustment is correctly routed:

Route the wiring harness **-1-** in the front area **under** the bracket **-2-** and in the **side** area along the bracket **-2-** . In the side area, position the wiring harnesses above the sealing surface **-3-** .

Fig 2: Identifying Seat Adjustment Wiring Harness

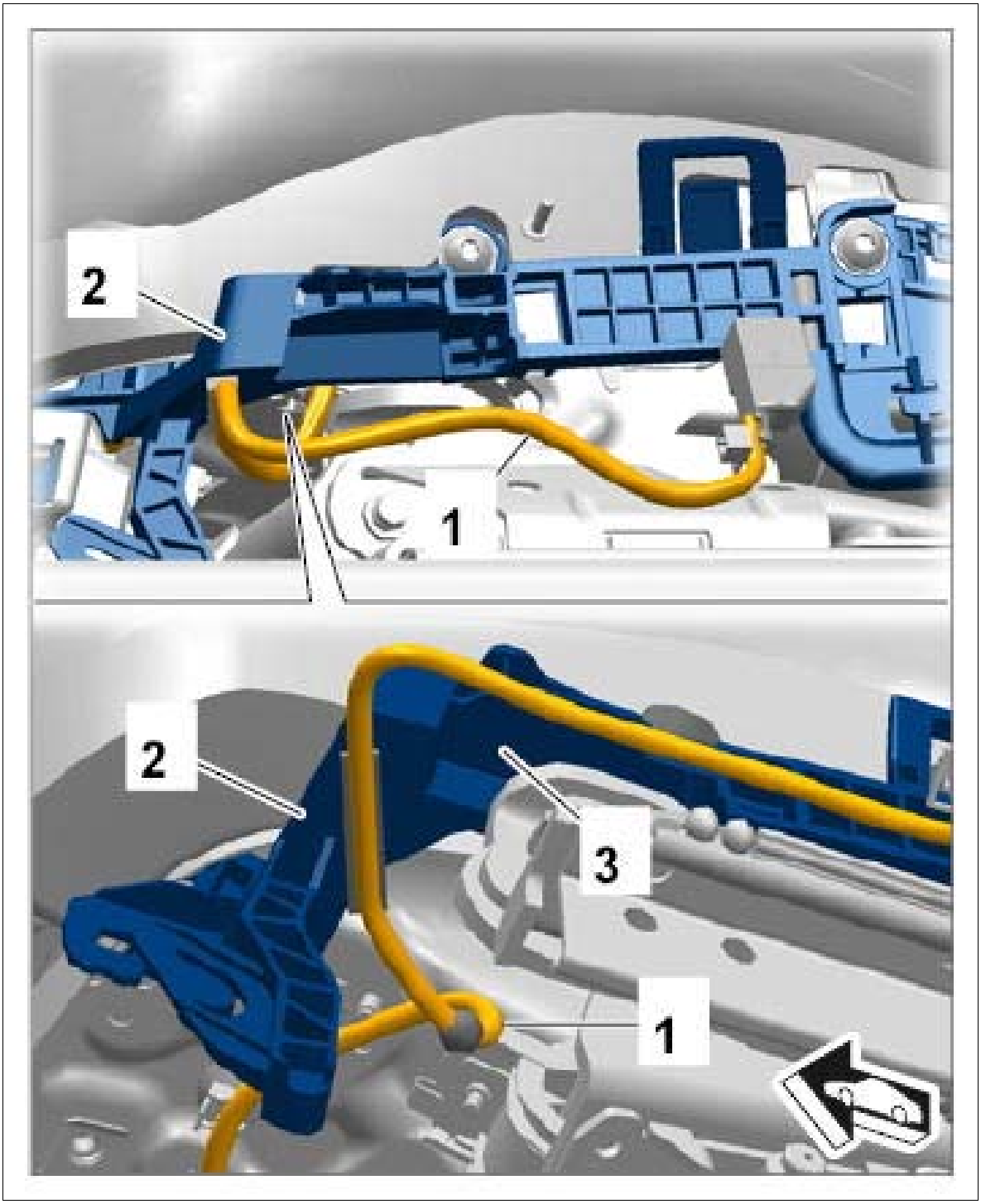

Courtesy of PORSCHE CARS NORTH AMERICA, INC.

Once correctly routed, secure the wiring harness in the clips or with tie-wraps.

2. Fit trim panel for seat **-2-** at the front **-arrow C-** and guide it in at the rear from above **-arrow B-** into the seat **-arrow A-** .

3. Secure trim panel for seat **-2-** with the expansion rivets **-1-** .

Fig 3: Installing Seat Trim Panel

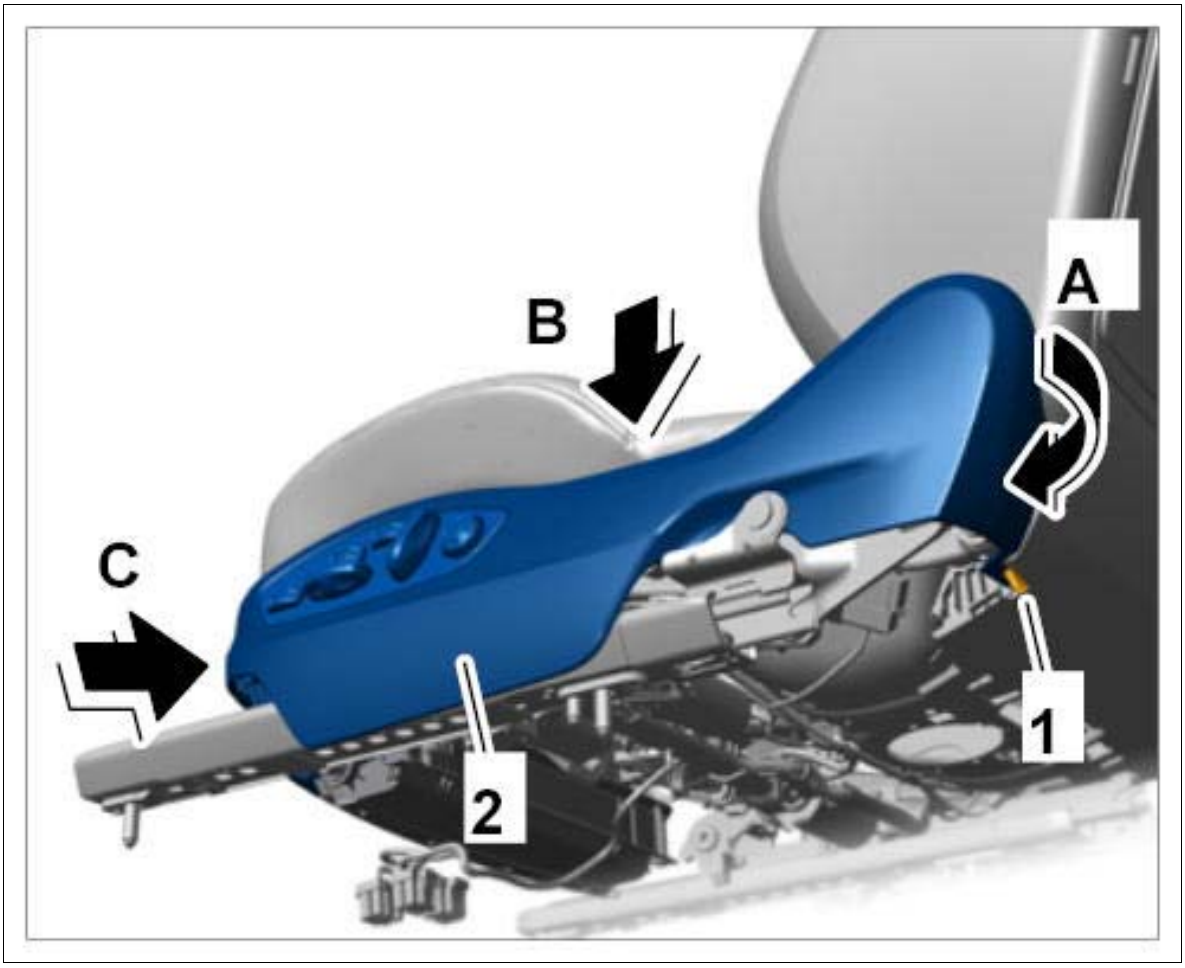

Courtesy of PORSCHE CARS NORTH AMERICA, INC.

WM 721619 REMOVING AND INSTALLING TRIM PANEL FOR SEAT (ALL MODELS) > INSTALLING TRIM PANEL FOR SEAT > INSTALLING STORAGE COMPARTMENT FOR SEAT

1. Insert storage compartment for seat with the rear pins **-1-** into the guide and pull it forward **-arrow A-** .
2. Close side locking mechanism **-2- (-arrow B-)** .

Fig 1: Installing Storage Compartment

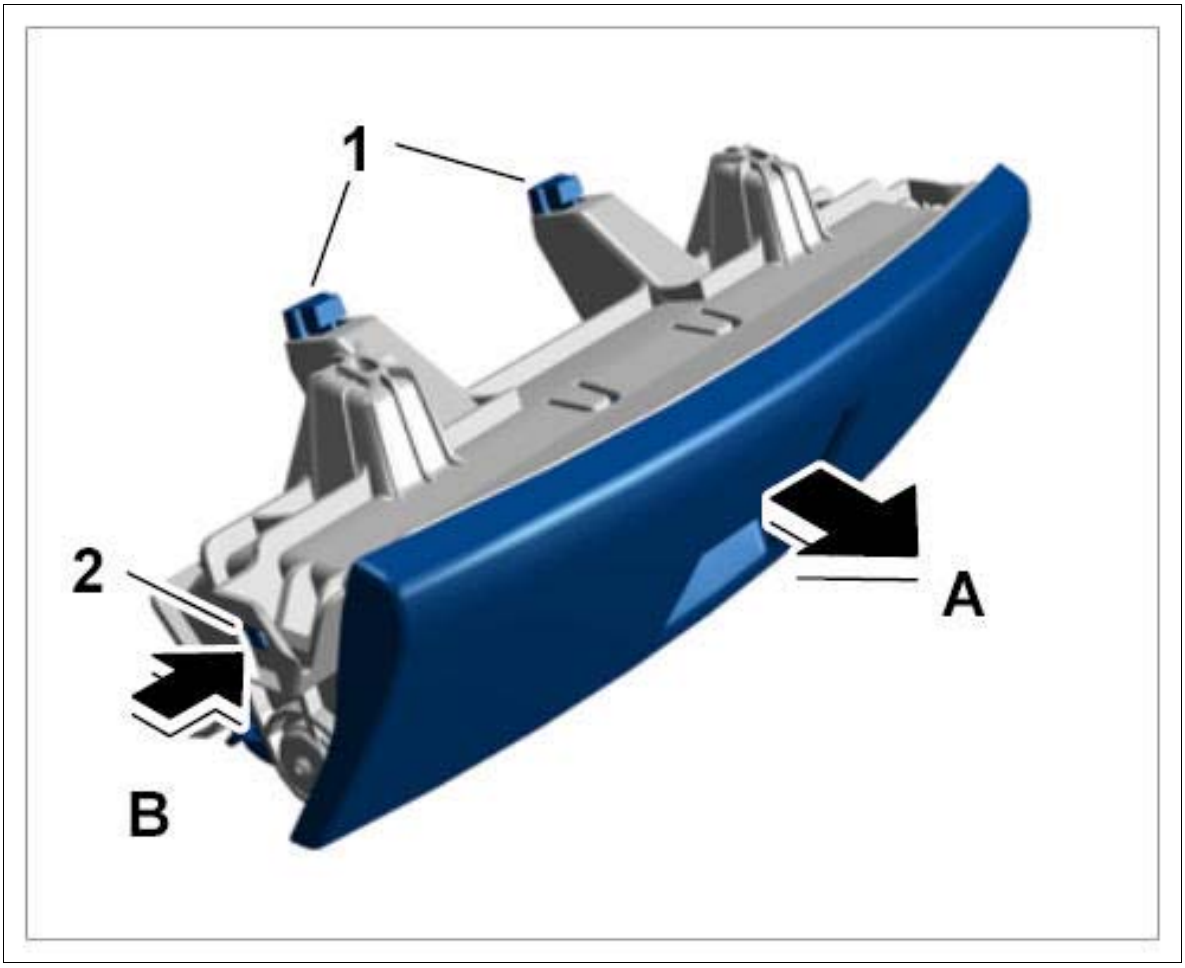

Courtesy of PORSCHE CARS NORTH AMERICA, INC.

3. Tighten fastening screws **-1-** , **Tightening torque 7.5 Nm (5.5 ftlb.) +/-0.5 Nm (+/-0.5 ftlb.)**

Fig 2: Securing Storage Compartment

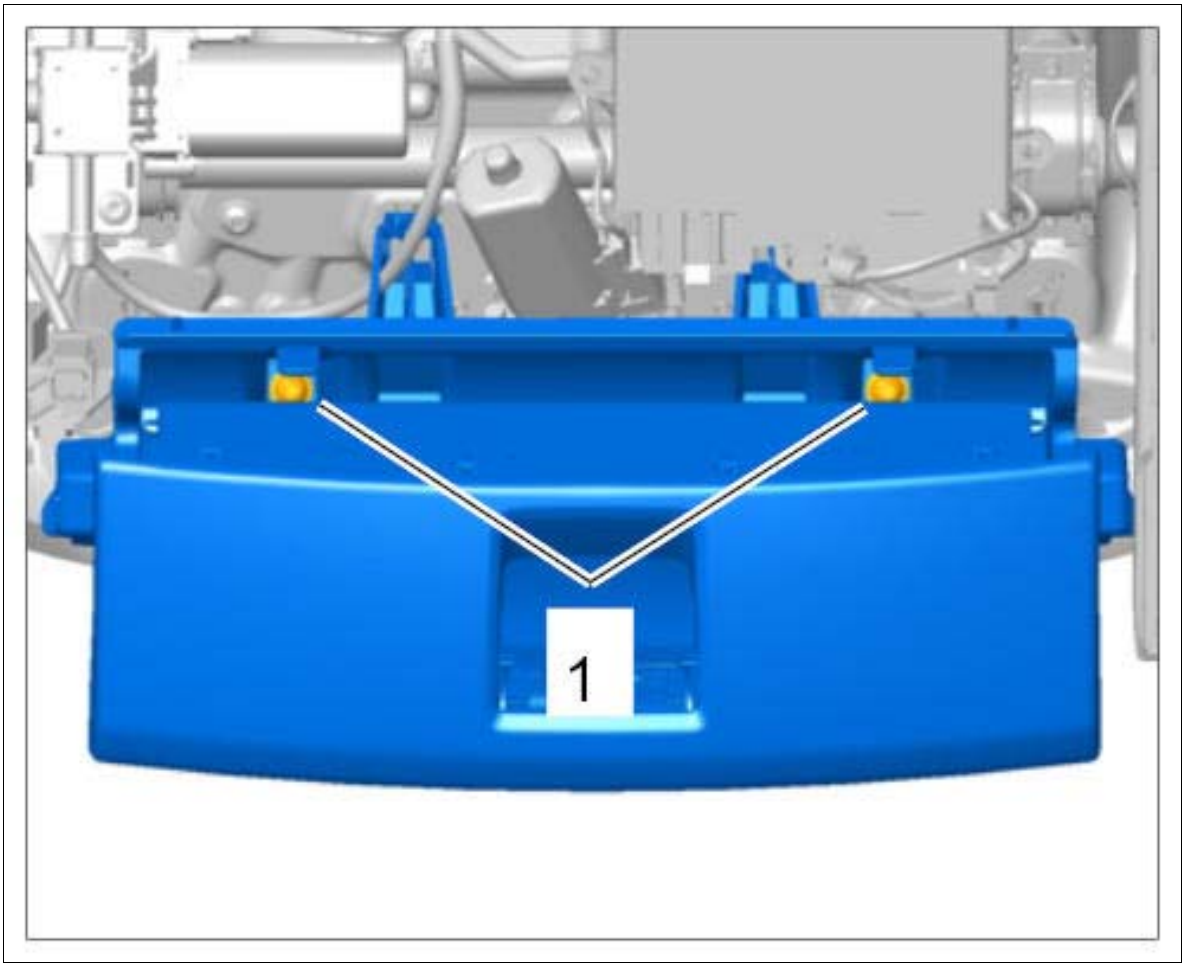

Courtesy of PORSCHE CARS NORTH AMERICA, INC.

4. Close storage compartment.

WM 721619 REMOVING AND INSTALLING TRIM PANEL FOR SEAT (ALL MODELS) > SUBSEQUENT WORK > SUBSEQUENT WORK FOR STORAGE COMPARTMENT ON SEAT

1. Install front seat. → Installing Front Seat

WM 721619 REMOVING AND INSTALLING TRIM PANEL FOR SEAT (ALL MODELS) > SUBSEQUENT WORK > SUBSEQUENT WORK FOR TRIM PANEL FOR SEAT

1. **Only for seats with storage compartment:** Close storage compartment.
2. **Only for seat trim panel on passenger's side and seats with fire extinguisher:** Install fire extinguisher. → Installing Fire Extinguisher

WM 721719 REMOVING AND INSTALLING AIR CUSHION FOR BACKREST (ALL MODELS) > TECHNICAL VALUES

Location	Description	Type	Basic value	Tolerance 1	Tolerance 2
Fastening screw securing holder for air cushion on backrest	Item 1	Tightening torque	2.5 Nm (2 ftlb.)	+/-0.3 Nm (+/- 0.2 ftlb.)	

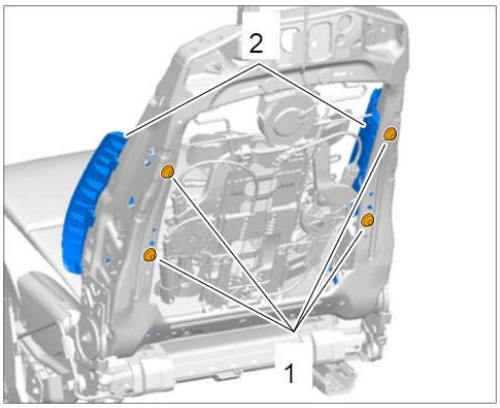

Removing air cushion for backrest

WM 721719 REMOVING AND INSTALLING AIR CUSHION FOR BACKREST (ALL MODELS) > COMPONENT INFORMATION > INSTALLATION POSITION

Fig 1: Identifying Backrest Air Cushion Installation Position



Courtesy of PORSCHE CARS NORTH AMERICA, INC.

WM 721719 REMOVING AND INSTALLING AIR CUSHION FOR BACKREST (ALL MODELS) > PRELIMINARY WORK

1. Remove padding for front backrest. → Removing Padding For Front Backrest

WM 721719 REMOVING AND INSTALLING AIR CUSHION FOR BACKREST (ALL MODELS) > REMOVING AIR CUSHION FOR BACKREST

1. Open connection point on the air cushion **-3-** and cut tie-wrap **-1-** on the pressure line **-2-** .

Fig 1: Disconnecting Pressure Line

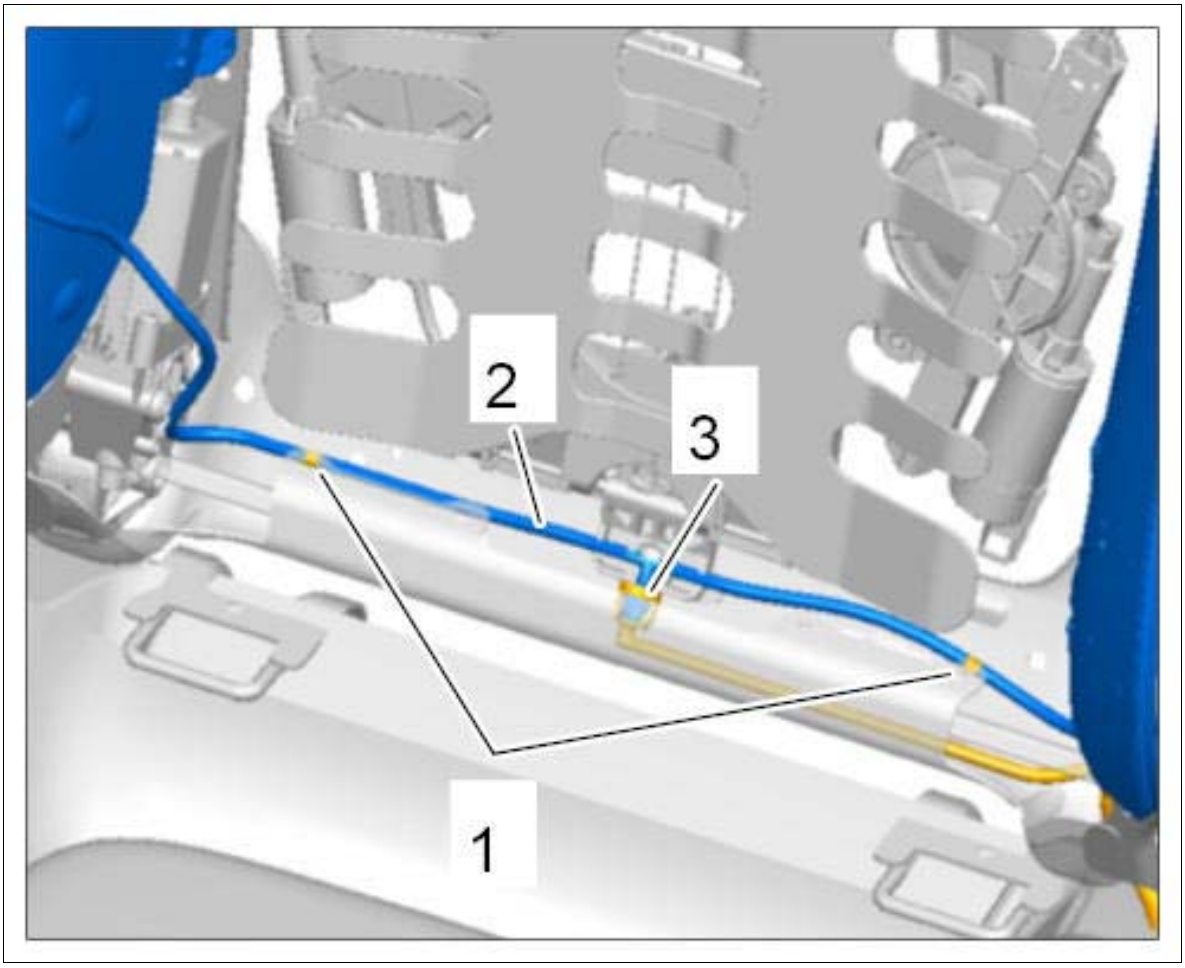

Courtesy of PORSCHE CARS NORTH AMERICA, INC.

2. Loosen fastening screws **-1-** on holder for air cushion for backrest **-2-** .

Fig 2: Detaching Backrest Air Cushion

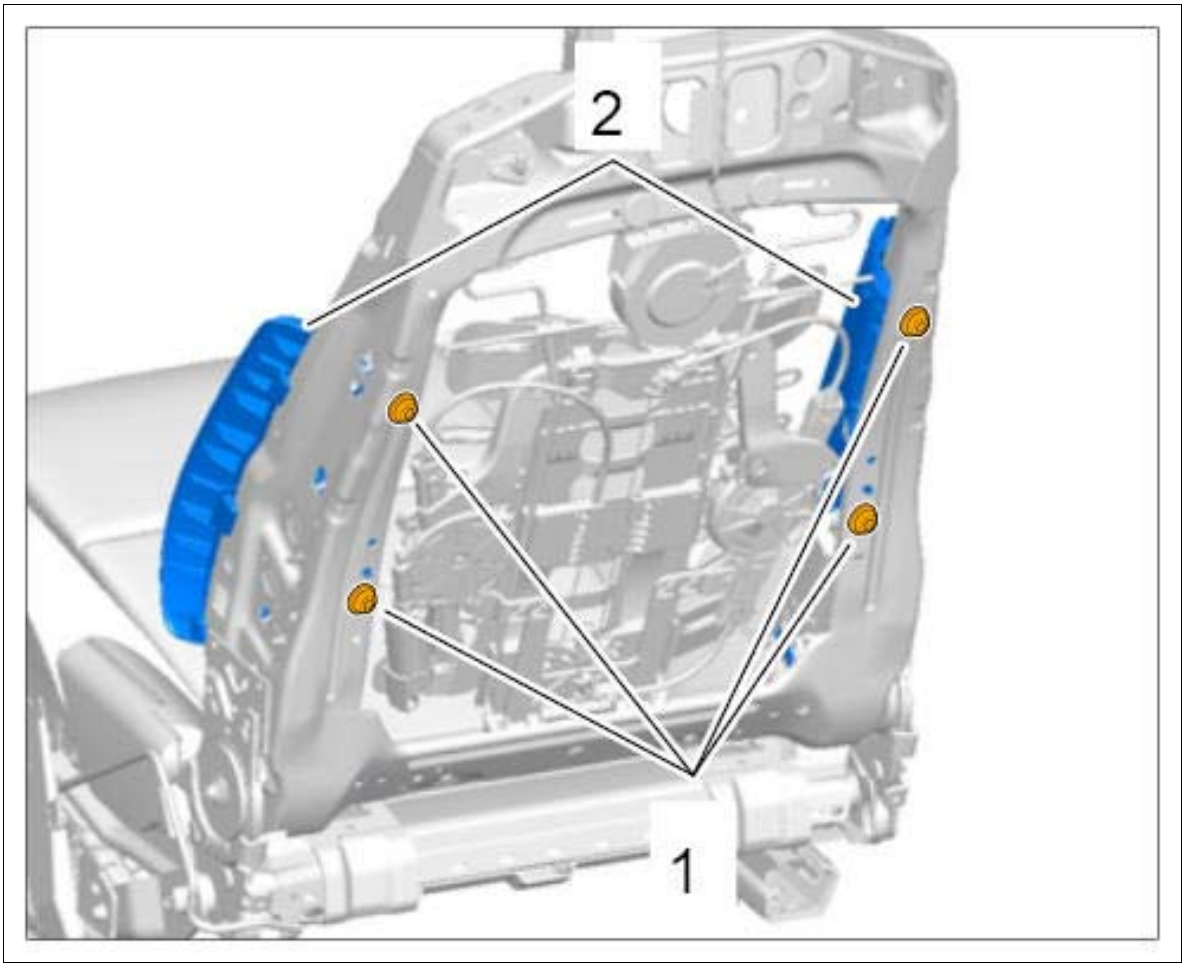

Courtesy of PORSCHE CARS NORTH AMERICA, INC.

3. On the left side, release locking mechanisms **-2-** on the control valve **-1- (-A-)** and remove control valve **-B-** .

Fig 3: Disconnecting Control Valve

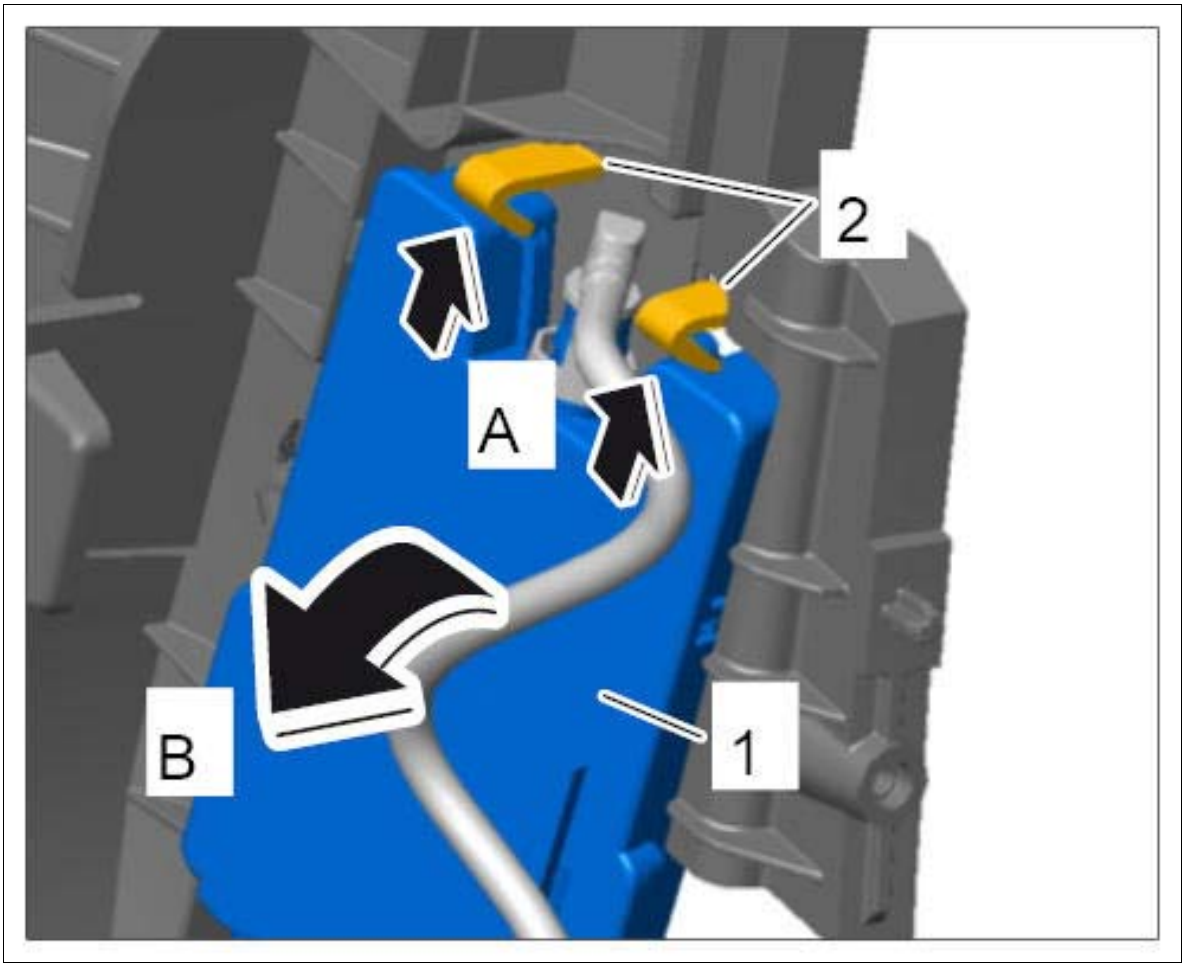

Courtesy of PORSCHE CARS NORTH AMERICA, INC.

4. Remove air cushion for backrest.

WM 721719 REMOVING AND INSTALLING AIR CUSHION FOR BACKREST (ALL MODELS) > INSTALLING AIR CUSHION FOR BACKREST

1. On the left side, fit the control valve **-1- (-A-)** and engage it in the locking mechanisms **-2-** .

Fig 1: Securing Control Valve

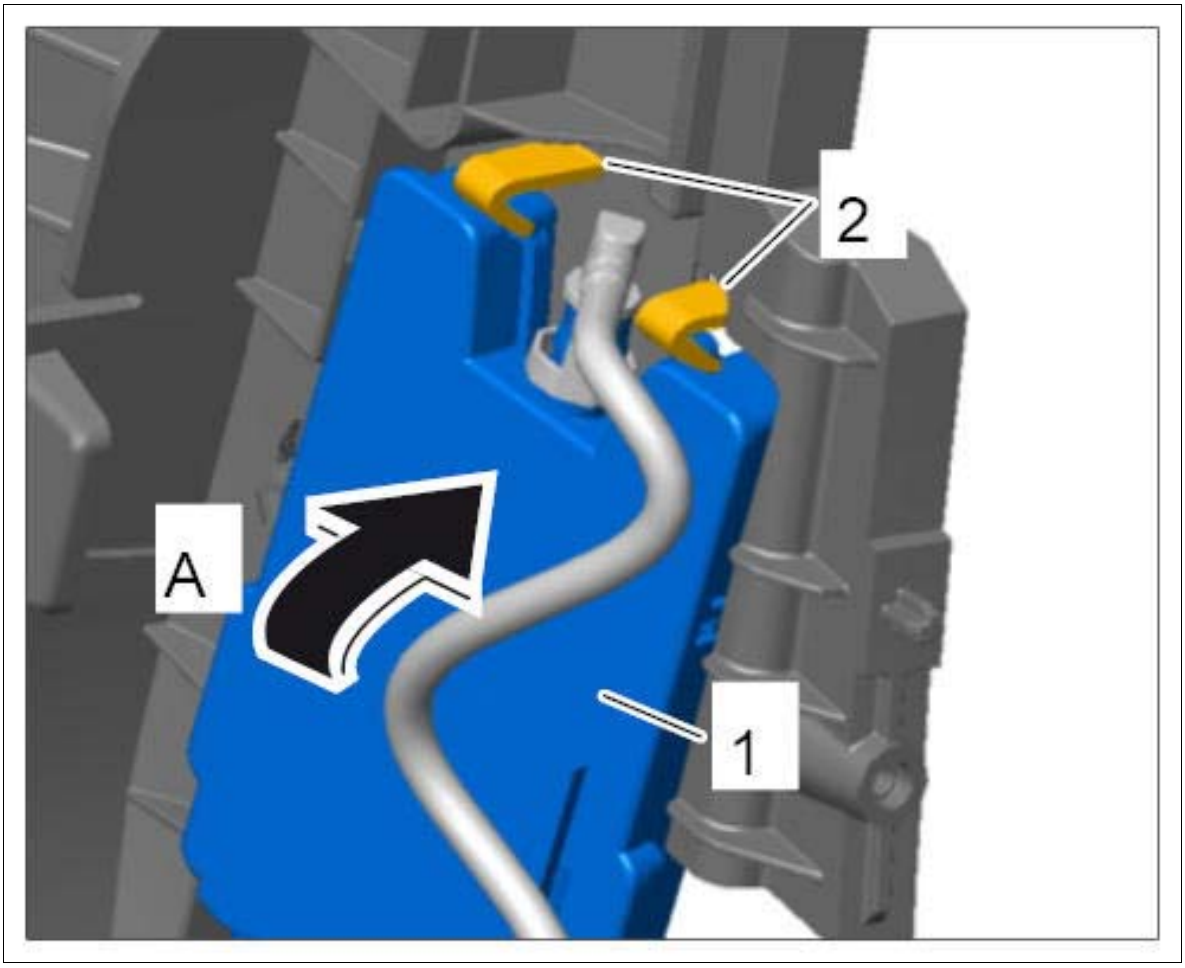

Courtesy of PORSCHE CARS NORTH AMERICA, INC.

2. Position holder for air cushion for backrest **-2-** and tighten the fastening screws **-1-** until secure **Tightening torque 2.5 Nm (2 ftlb.) +/-0.3 Nm (+/-0.2 ftlb.)** .

Fig 2: Securing Backrest Air Cushion

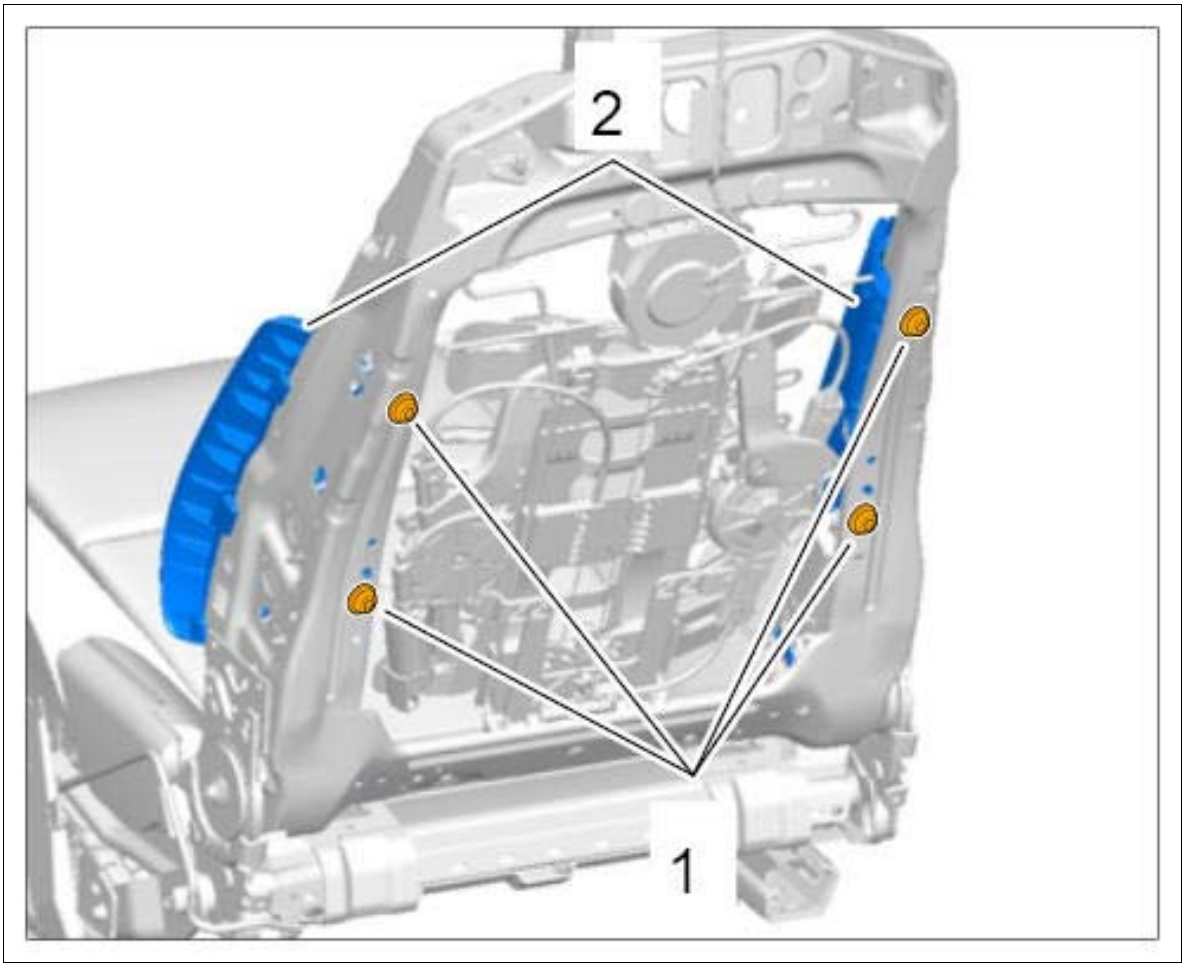

Courtesy of PORSCHE CARS NORTH AMERICA, INC.

3. Connect pressure line **-2-** for air cushions at the connection point **-3-** .
4. Fit tie-wrap **-1-** on the pressure line.

Fig 3: Securing Air Line

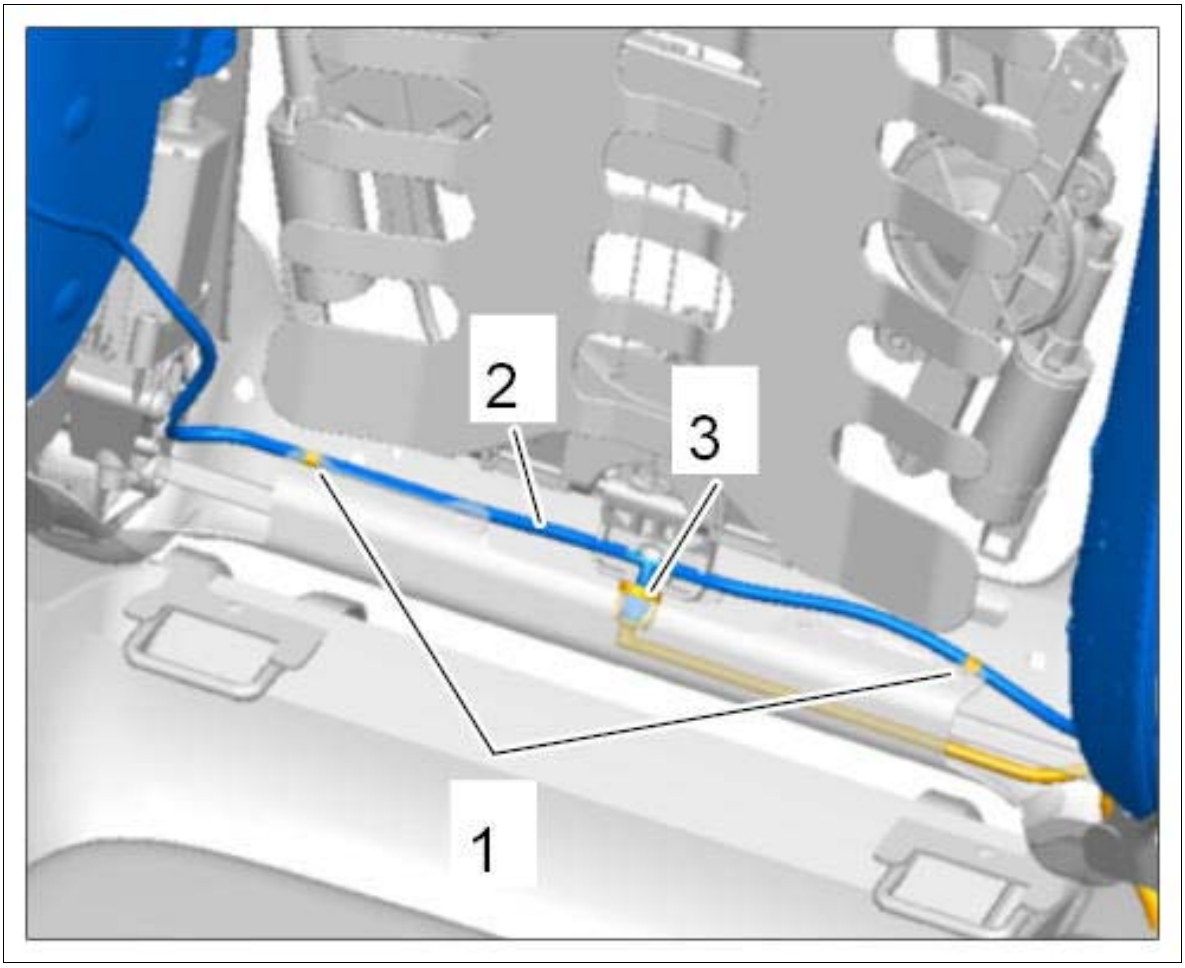

Courtesy of PORSCHE CARS NORTH AMERICA, INC.

WM 721719 REMOVING AND INSTALLING AIR CUSHION FOR BACKREST (ALL MODELS) > SUBSEQUENT WORK

1. Install padding for front backrest. → Installing Padding For Front Backrest

WM 721919 REMOVING AND INSTALLING BACKREST FRAME (ALL MODELS) > TECHNICAL VALUES

Location	Description	Type	Basic value	Tolerance 1	Tolerance 2
Fastening screw securing side bracket to seat	Item 5	Tightening torque	7.5 Nm (5.5 ftlb.)	+/-0.5 Nm (+/- 0.5 ftlb.)	

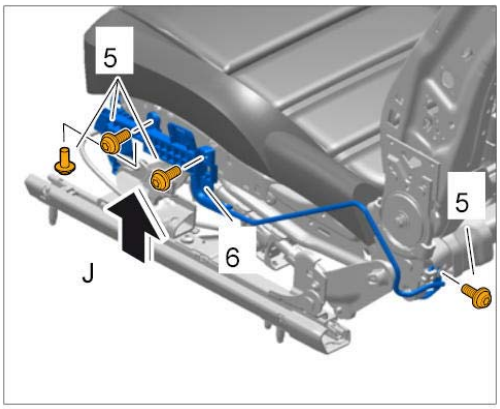

Securing bracket at the sides

Fastening screws securing backrest frame to seat frame	Item 1	Tightening torque	33 Nm (24 ftlb.)	+/-3 Nm (+/- 2 ftlb.)	

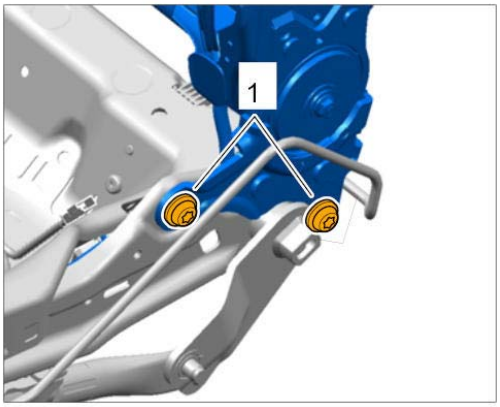

Removing backrest frame

WM 721919 REMOVING AND INSTALLING BACKREST FRAME (ALL MODELS) > COMPONENT INFORMATION > INSTALLATION POSITION

Fig 1: Identifying Backrest Frame Installation Position



Courtesy of PORSCHE CARS NORTH AMERICA, INC.

WM 721919 REMOVING AND INSTALLING BACKREST FRAME (ALL MODELS) > PRELIMINARY WORK

Information

The required preliminary work and subsequent work can vary depending on equipment.

The instructions provided in the document are for vehicles with the maximum possible equipment.

1. Remove side cover for backrest and disengage rear cover for backrest at the underside of the seat. → Removing Cover For Backrest
2. Remove side trim panel for front seat, without storage tray. → Removing Trim Panel For Seat
3. Disconnect pressure line (red) under the seat. → Removing Control Valve For Air Cushion
4. Disconnect wire harness for side airbag at the underside of the seat. → Removing side airbag

5. **On vehicles with heated seats:** Unplug electric plug connection for seat heating for backrest and disconnect wire harness. → Removing Padding For Front Backrest

WM 721919 REMOVING AND INSTALLING BACKREST FRAME (ALL MODELS) > REMOVING BACKREST FRAME

1. Release two electric plug connections under the seat **-arrows a-** and disconnect them **-arrows A-** .

   Fig 1: Disconnecting Backrest Wire Harness

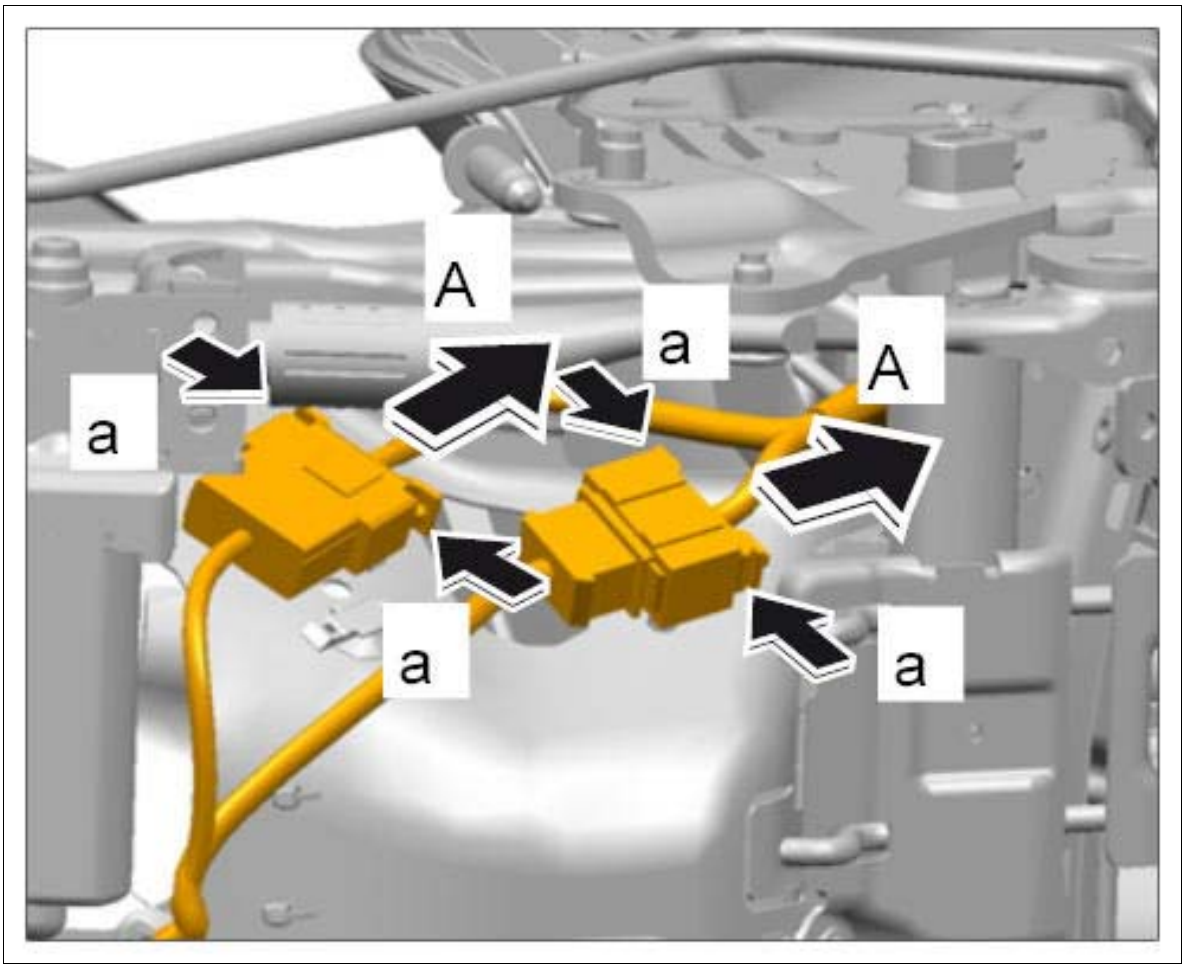

Courtesy of PORSCHE CARS NORTH AMERICA, INC.

2. Pull out fixing clip **-1-** and detach cover for rear seat surface **-2- (-arrow A-)** .

Fig 2: Loosening Rear Seat Cover

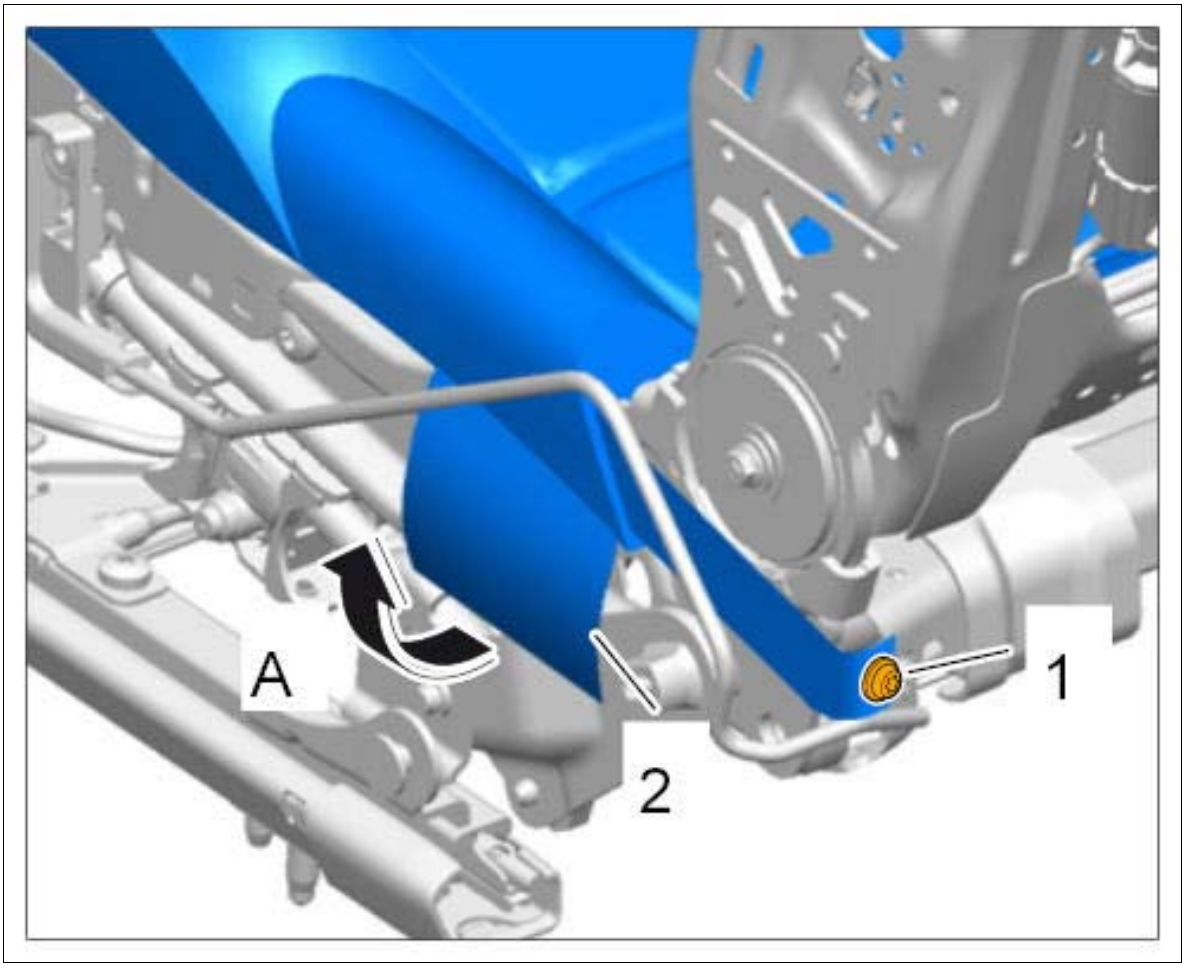

Courtesy of PORSCHE CARS NORTH AMERICA, INC.

3. Unscrew fastening screws **-3-** , pull bracket **-4-** down **-arrow B-** out of the catches and detach cover on seat frame.

Fig 3: Loosening Bracket (Sides)

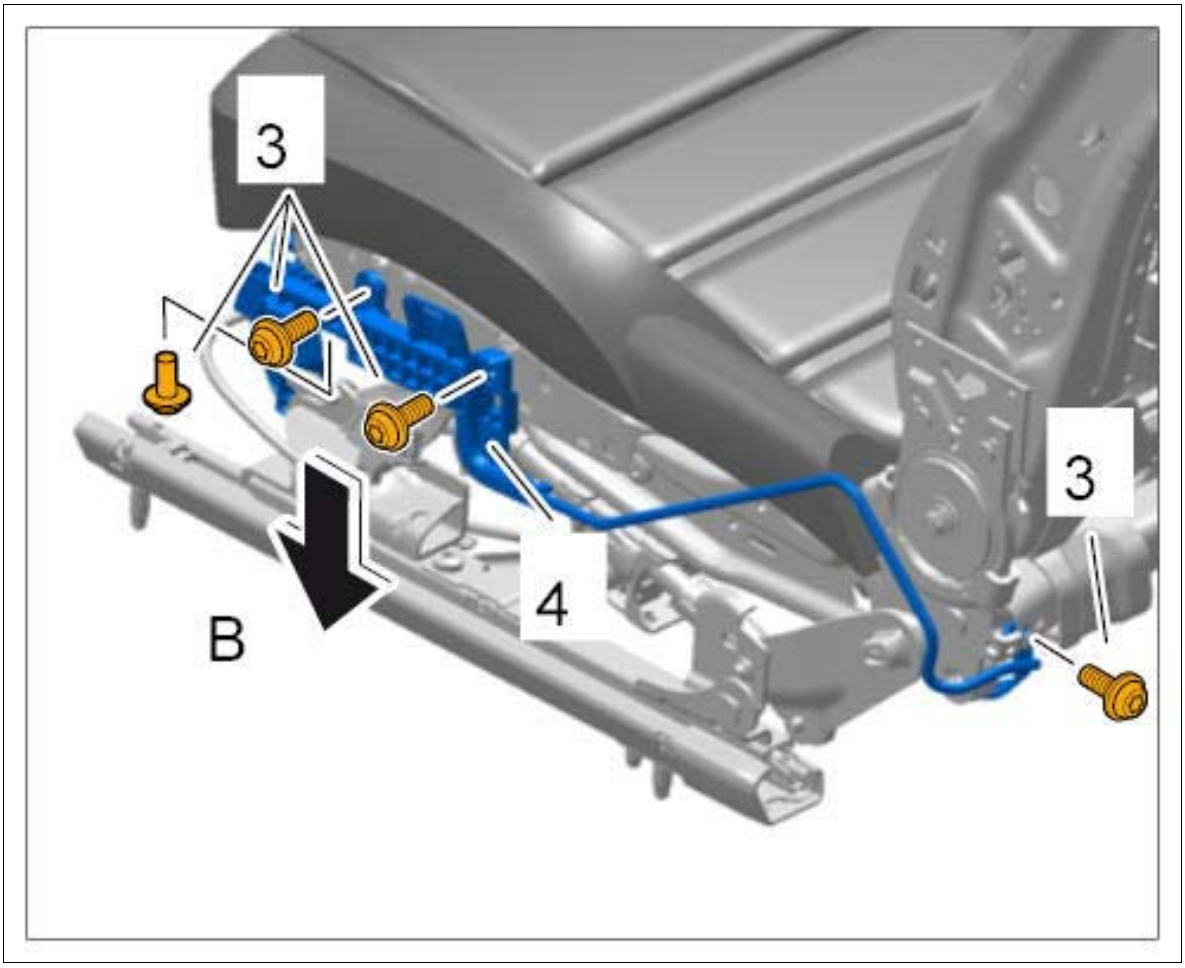

Courtesy of PORSCHE CARS NORTH AMERICA, INC.

A second mechanic is required:

4. **First mechanic:** Unscrew two fastening screws **-1-** from the backrest frame on both sides.

Fig 4: Removing Backrest Frame

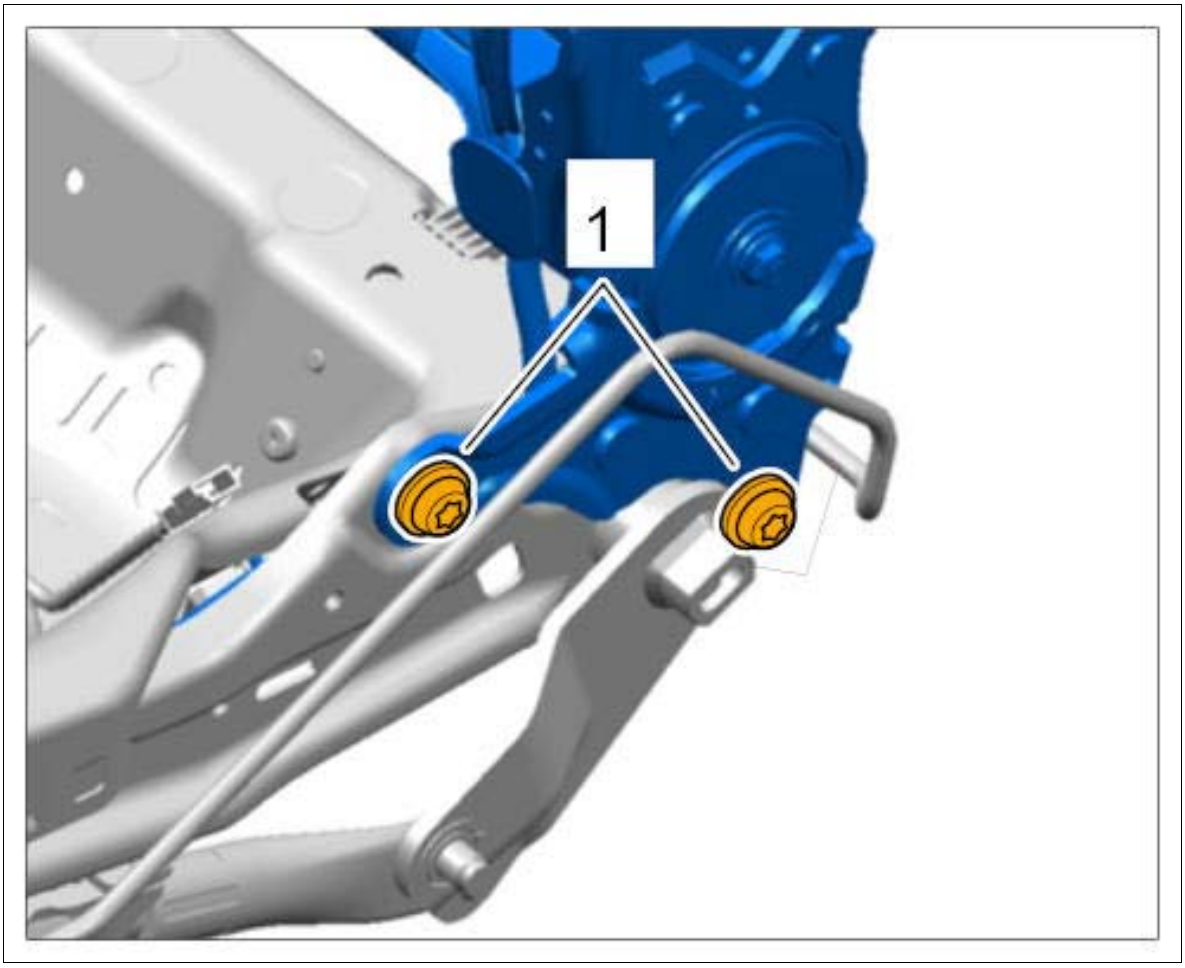

Courtesy of PORSCHE CARS NORTH AMERICA, INC.

5. **Second mechanic:** Pull electric lines through between the seat frame and seat padding.

WM 721919 REMOVING AND INSTALLING BACKREST FRAME (ALL MODELS) > INSTALLING BACKREST FRAME

A second mechanic is required:

1. **First mechanic:** Fit backrest frame.
    1. 1.1. Fit backrest frame on seat frame.
    2. 1.2. Pull electric line through between the seat frame and seat padding.
2. **Second mechanic:** Tighten two fastening screws **-1-** for the backrest frame on both sides **Tightening torque 33 Nm (24 ftlb.) +/-3 Nm (+/-2 ftlb.)** .

Fig 1: Removing Backrest Frame

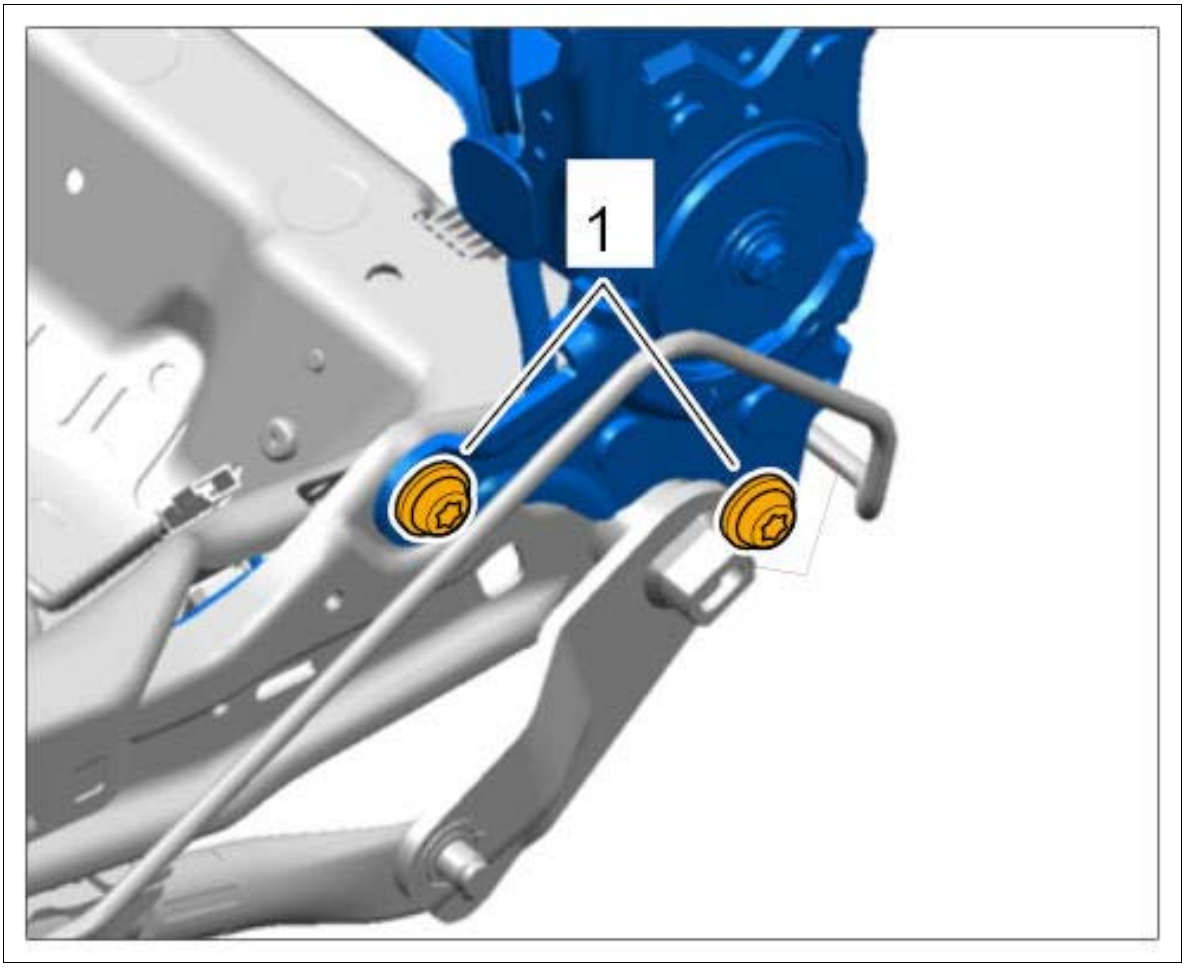

Courtesy of PORSCHE CARS NORTH AMERICA, INC.

3. Engage the bracket **-6-** from below **-arrow J-** .
4. Tighten fastening screws **-5-** (**Tightening torque 7.5 Nm (5.5 ftlb.) +/-0.5 Nm (+/-0.5 ftlb.)**).

Fig 2: Securing Bracket (Sides)

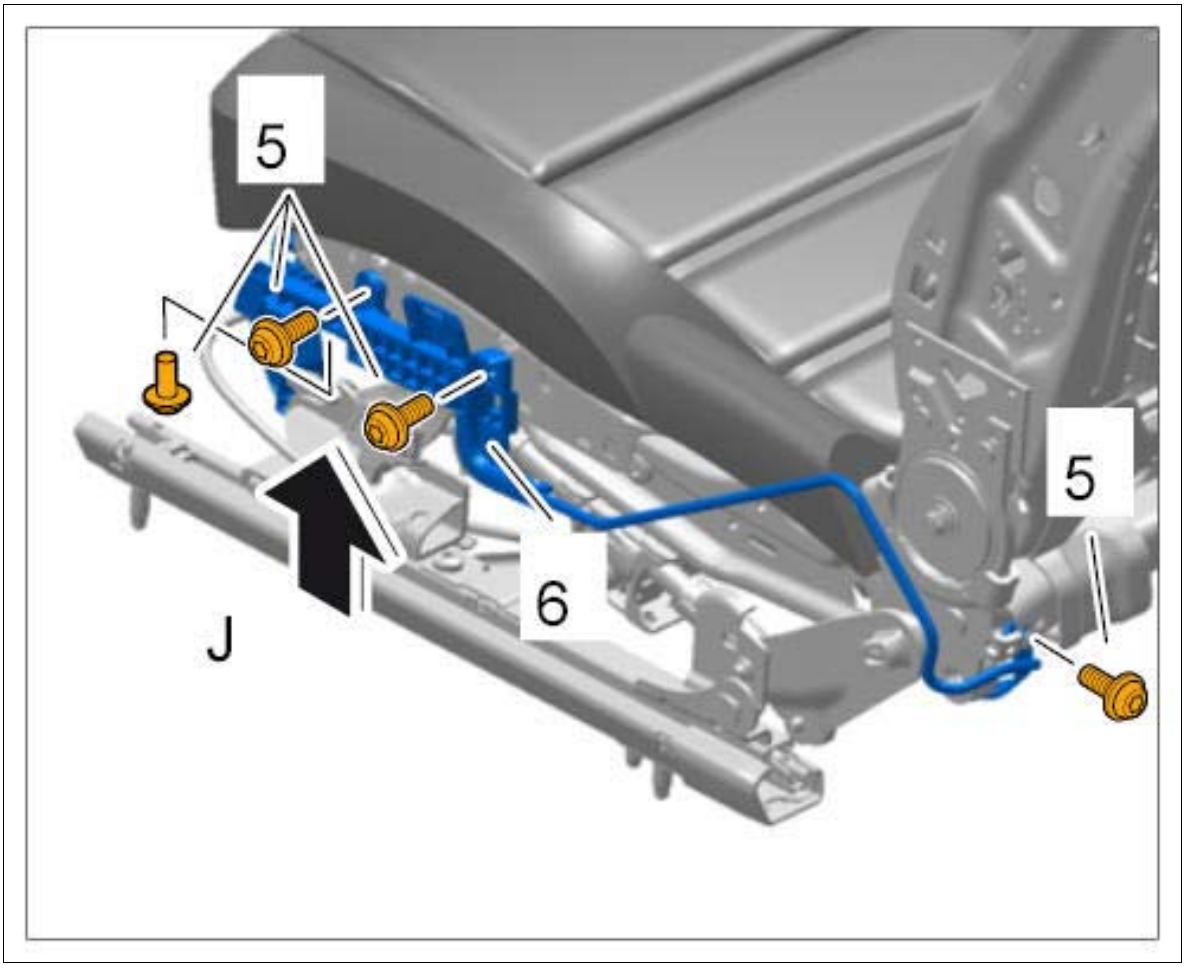

Courtesy of PORSCHE CARS NORTH AMERICA, INC.

5. Fit fixing clip **-7-** .
6. Engage rear side cover **-8-** on the seat frame **-arrow K-** .

Fig 3: Securing Cover (Back)

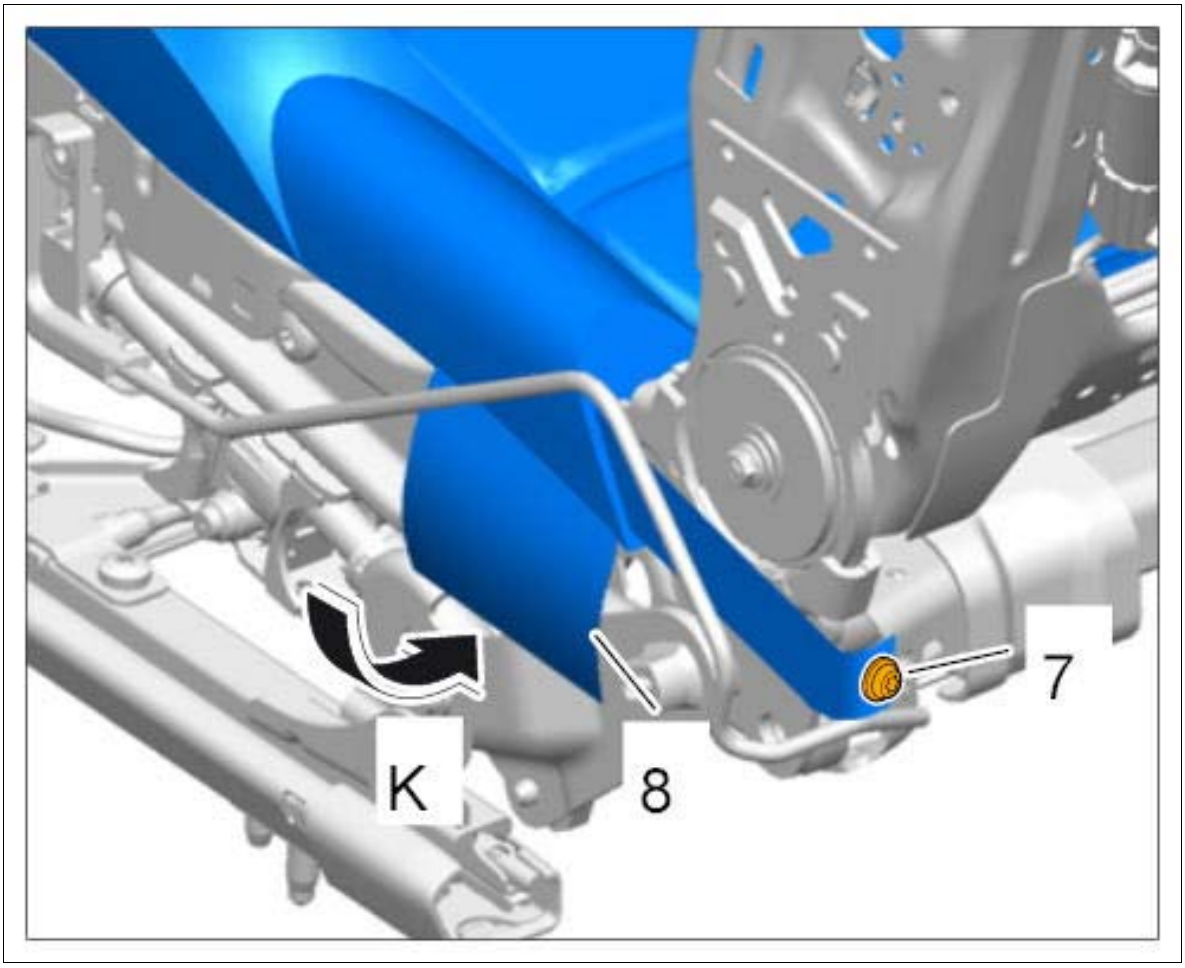

Courtesy of PORSCHE CARS NORTH AMERICA, INC.

7. Plug in two electric plug connections on the underside of the seat **-arrows A-** until the connector engages securely.

Fig 4: Installing Backrest Wire Harness Connector

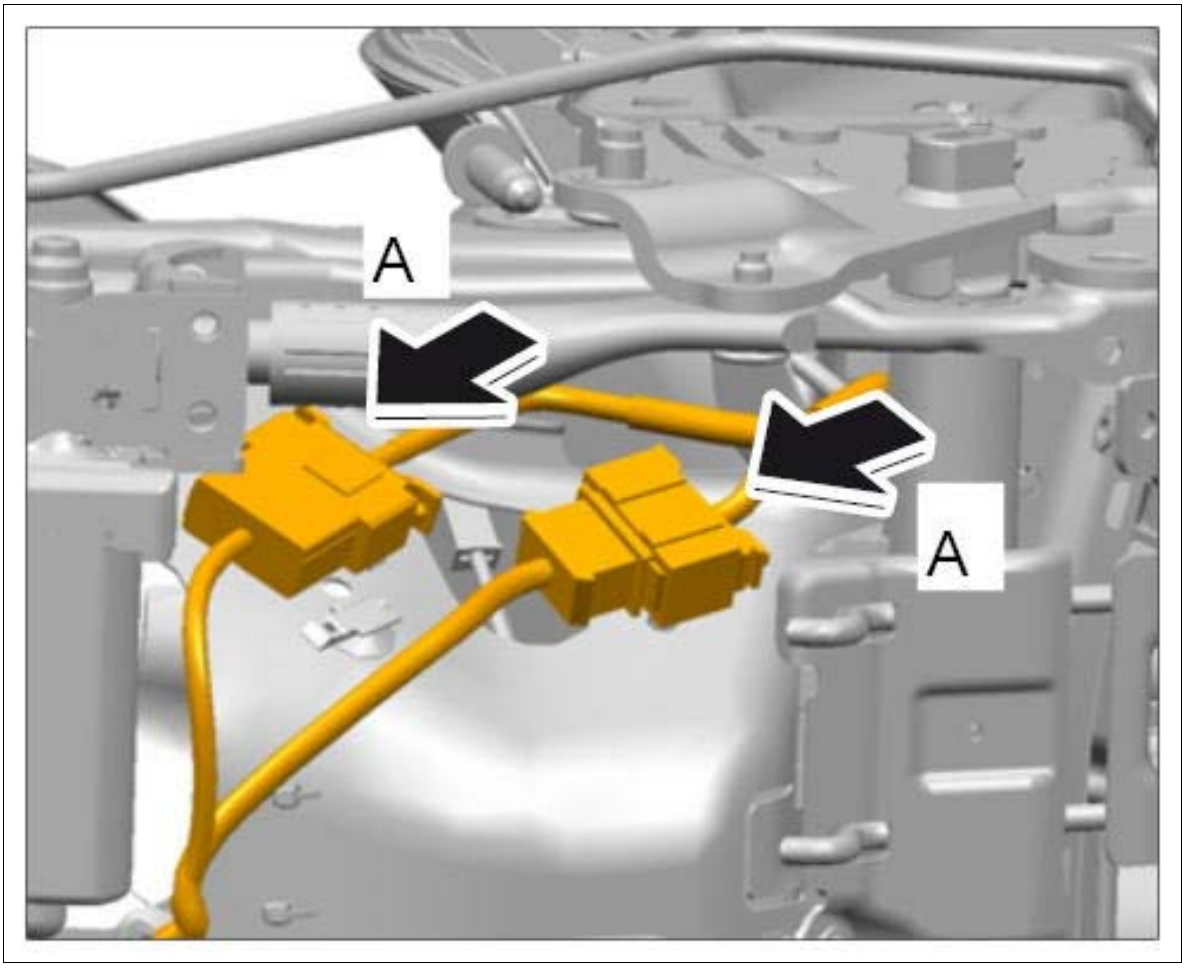

Courtesy of PORSCHE CARS NORTH AMERICA, INC.

WM 721919 REMOVING AND INSTALLING BACKREST FRAME (ALL MODELS) > SUBSEQUENT WORK

Information

The required preliminary work and subsequent work can vary depending on equipment.

The instructions provided in the document are for vehicles with the maximum possible equipment.

1. **On vehicles with heated seats:** Connect electric plug connection for seat heating for backrest and secure wire harness. → Installing Padding For Front Backrest
2. Secure wire harness for side airbag at the underside of the seat. → Installing side airbag
3. Secure pressure line (red) under the seat. → Installing Control Valve For Air Cushion
4. Install side trim panel for front seat, without storage tray. → Installing Trim Panel For Seat 1
5. Install side cover for backrest and engage rear cover for backrest at the underside of the seat. → Installing Cover For Backrest

WM 721955 REPLACING BACKREST FRAME (ALL MODELS) > COMPONENT INFORMATION > INSTALLATION POSITION

Fig 1: Identifying Backrest Frame Installation Position



Courtesy of PORSCHE CARS NORTH AMERICA, INC.

WM 721955 REPLACING BACKREST FRAME (ALL MODELS) > PRELIMINARY WORK

1. Remove backrest frame. → Removing Backrest Frame

WM 721955 REPLACING BACKREST FRAME (ALL MODELS) > REPLACING BACKREST FRAME

Information

The required steps can vary depending on equipment.

The instructions provided in the document are for vehicles with the maximum possible equipment.

1. Remove padding for front backrest. → Removing Padding For Front Backrest
2. Remove headrest guide **-1-** .
    1. 2.1. Press in fixing clips **-2-** on the left and right and pull headrest guide up and out **-arrow-** .

    Fig 1: Removing Headrest Guide

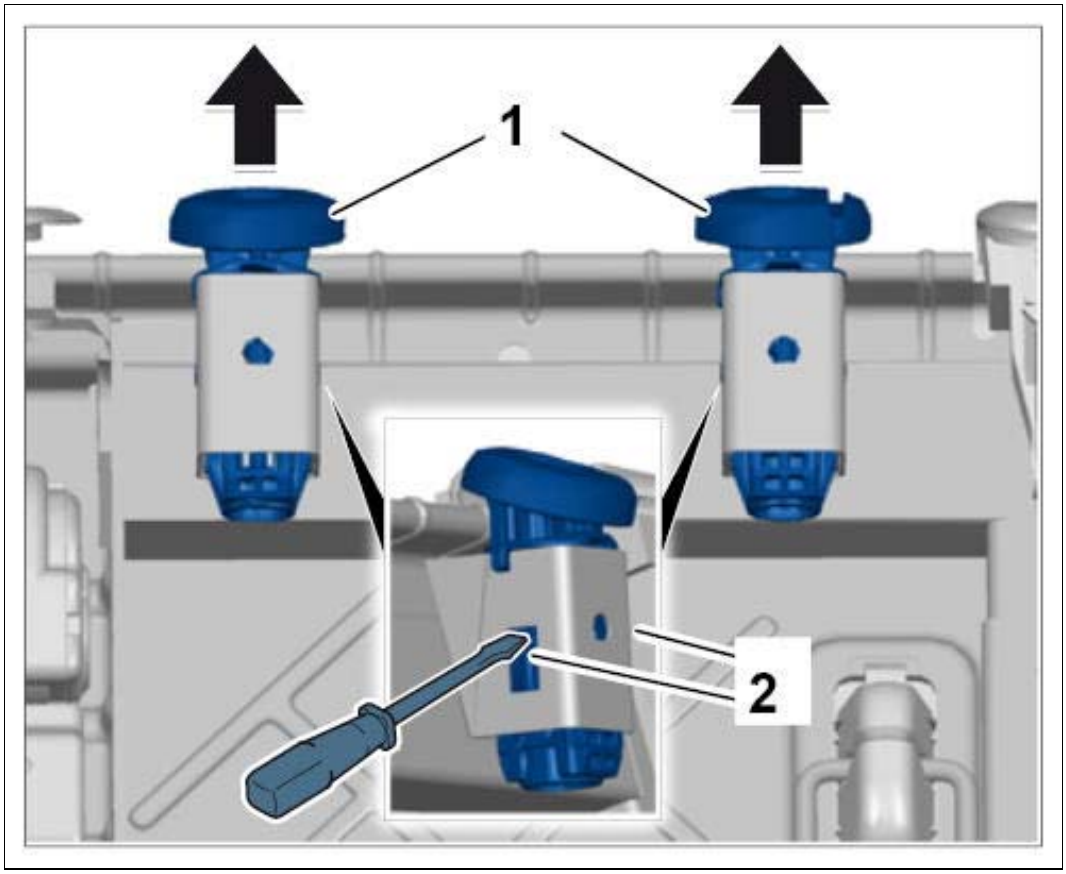

Courtesy of PORSCHE CARS NORTH AMERICA, INC.

3. Remove lumbar support. → Removing Lumbar Support
4. Remove air cushion for backrests. → Removing Air Cushion For Backrest

   Remove motor for air cushion. → Removing Motor For Air Cushion
5. Remove motor for backrest adjustment. → Replacing Front Seat Frame
6. Remove suction fan for backrest surface. → Removing Suction Fan For Backrest Surface
7. Remove side airbag. → Removing side airbag
8. Remove wire harness for backrest.
9. Replace backrest frame.
10. Position wire harness for backrest.

11. Install side airbag. → Installing side airbag
12. Install suction fan for backrest surface. → Installing Suction Fan For Backrest Surface
13. Install motor for backrest adjustment. → Replacing Front Seat Frame
14. Install motor for air cushion. → Installing Motor For Air Cushion
15. Install air cushion for backrest. → Installing Air Cushion For Backrest
16. Install lumbar support. → Installing Lumbar Support
17. Install headrest guide.
18. Install padding for front backrest. → Installing Padding For Front Backrest

WM 721955 REPLACING BACKREST FRAME (ALL MODELS) > SUBSEQUENT WORK

1. Install backrest frame. → Installing Backrest Frame

WM 722619 REMOVING AND INSTALLING COVER FOR BACKREST (ALL MODELS) > COMPONENT INFORMATION > INSTALLATION POSITION

Fig 1: Identifying Backrest Cover Installation Position

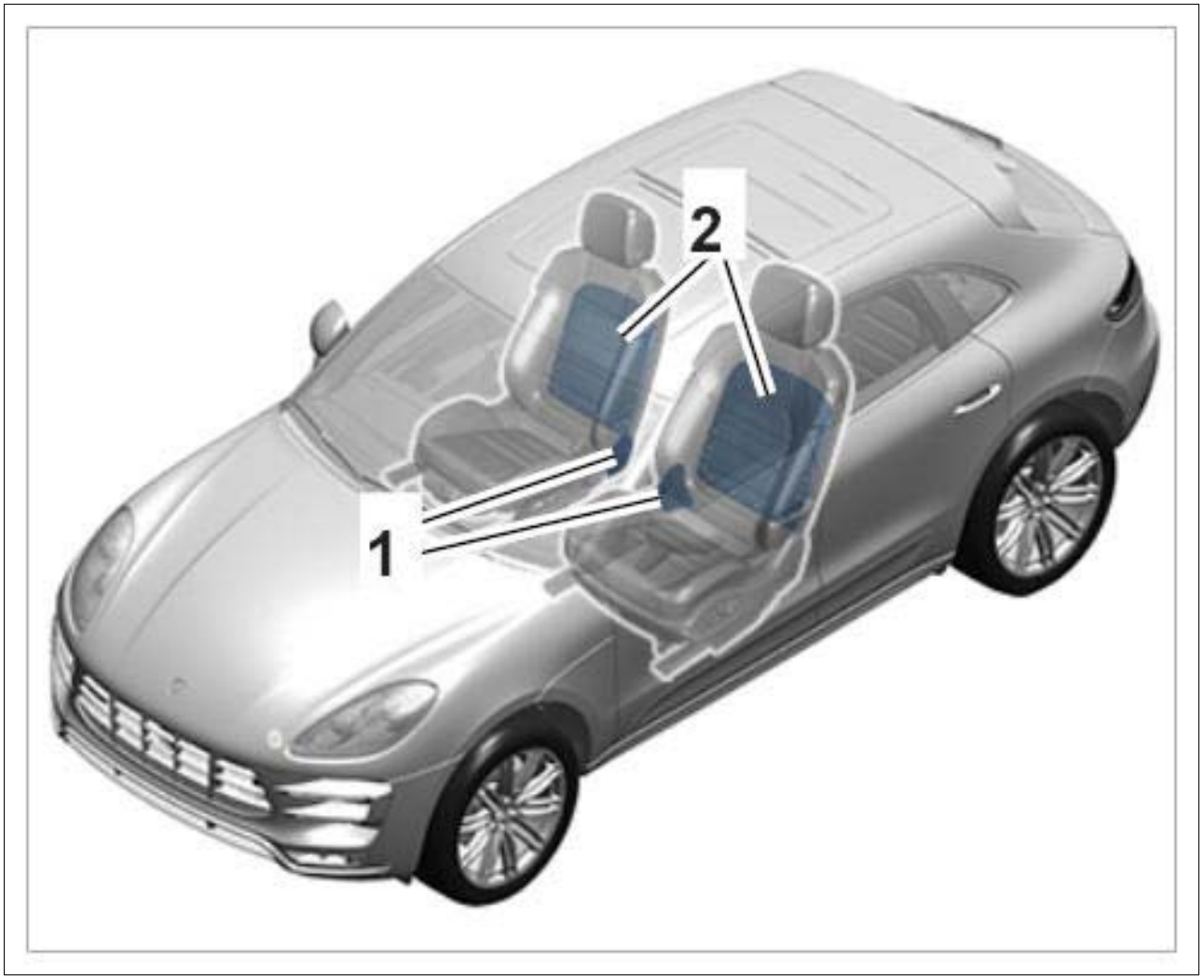

Courtesy of PORSCHE CARS NORTH AMERICA, INC.

1. Side cover for backrest
2. Rear cover for backrest

WM 722619 REMOVING AND INSTALLING COVER FOR BACKREST (ALL MODELS) > PRELIMINARY WORK > PRELIMINARY WORK FOR SIDE BACKREST COVER

1. Remove front seat. → Removing Front Seat

WM 722619 REMOVING AND INSTALLING COVER FOR BACKREST (ALL MODELS) > REMOVING COVER FOR BACKREST > REMOVING SIDE COVER FOR BACKREST

1. Move front seat to the rearmost and highest position.
2. Press in expansion rivet pins **-1-** and pull out expansion rivets.

3. Disengage side cover for backrest **-2-** by pulling it to the rear and remove it at the front by pulling it upwards.

Fig 1: Removing Backrest Side Cover

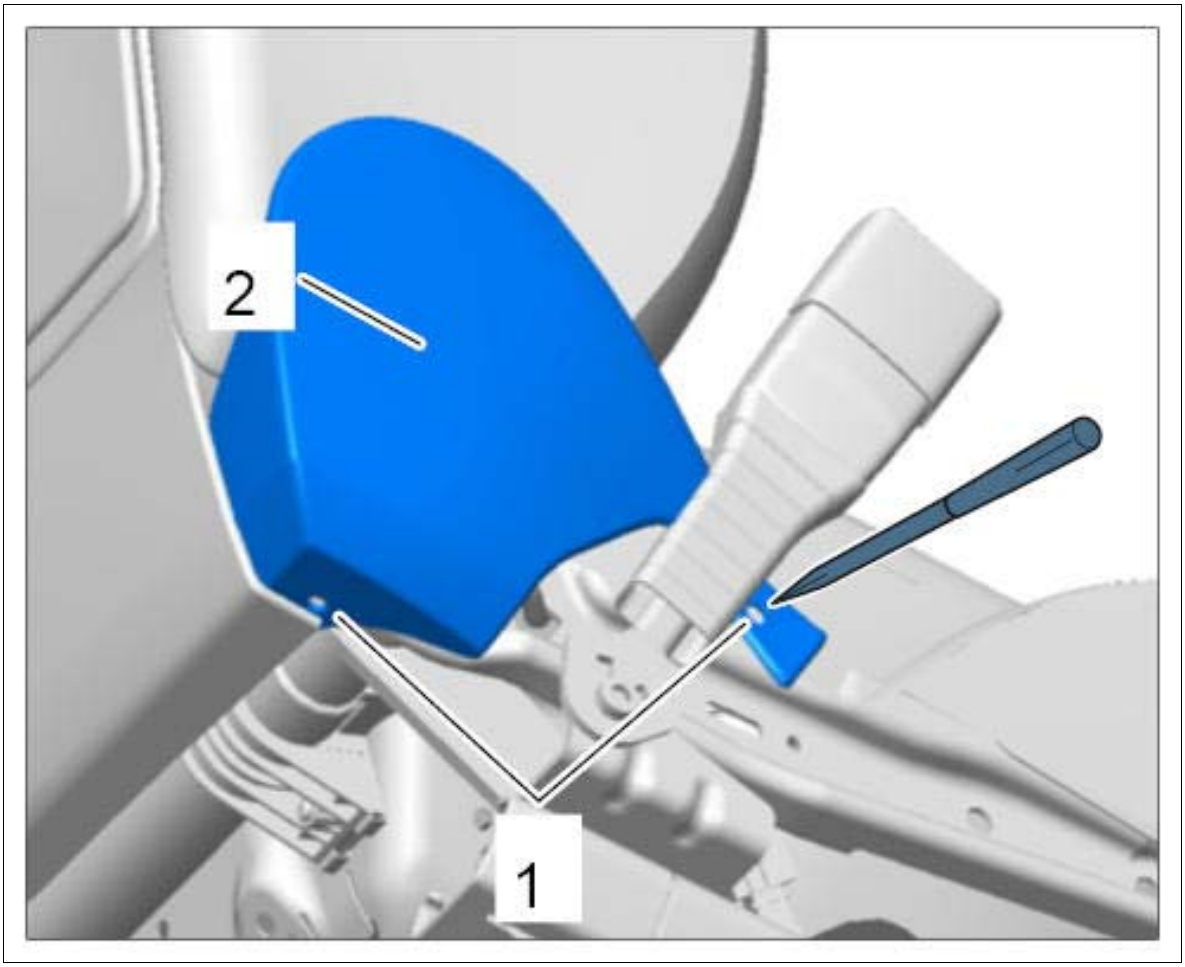

Courtesy of PORSCHE CARS NORTH AMERICA, INC.

WM 722619 REMOVING AND INSTALLING COVER FOR BACKREST (ALL MODELS) > REMOVING COVER FOR BACKREST > REMOVING REAR COVER FOR BACKREST

1. Loosen the two top fixing clips **-2-** on the rear cover for backrest **-1- (-arrows A-)** .

Fig 1: Loosening Backrest Rear Cover

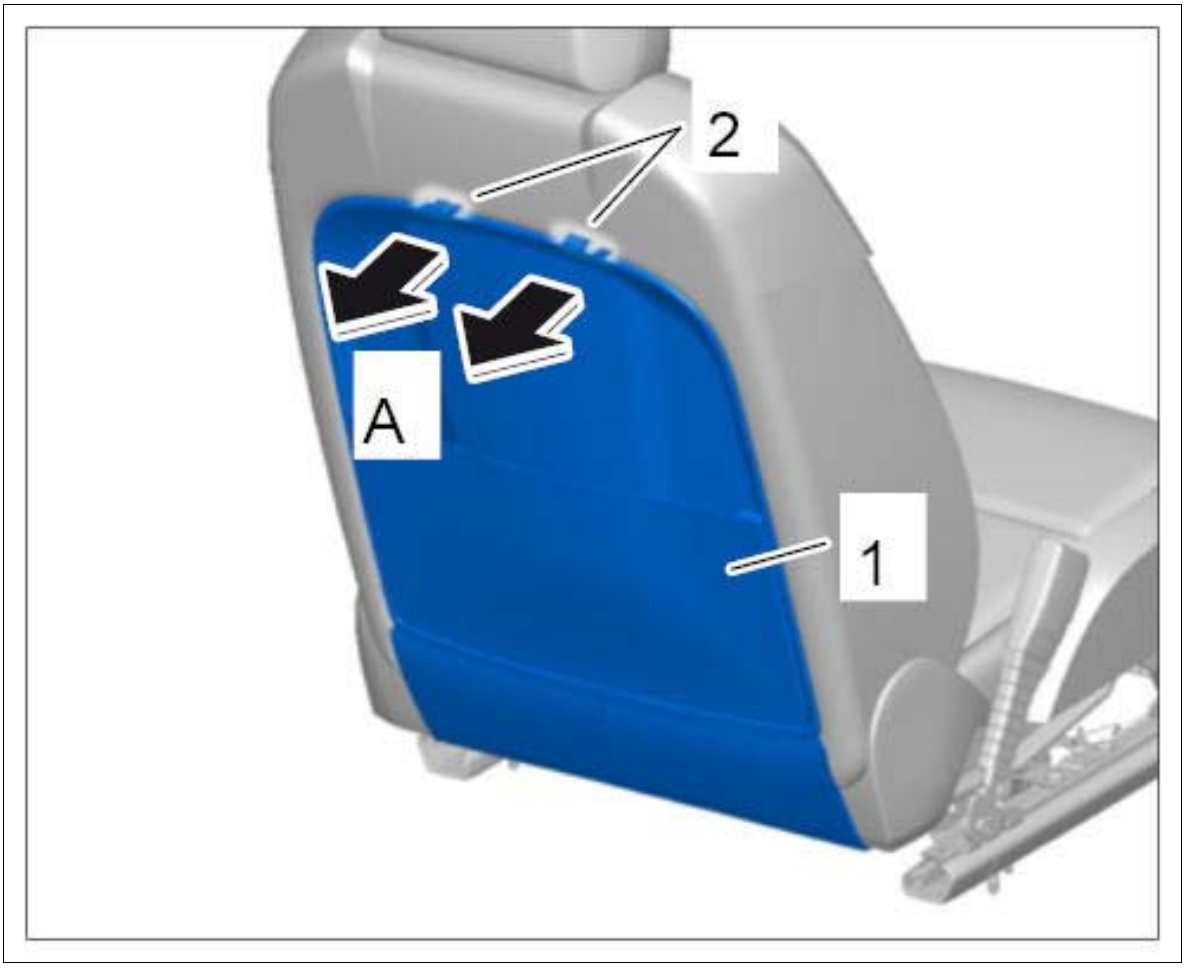

Courtesy of PORSCHE CARS NORTH AMERICA, INC.

2. Disengage rear cover for backrest **-1-** on the underside of the front seat **-2-** .

Fig 2: Disengaging Backrest Rear Cover

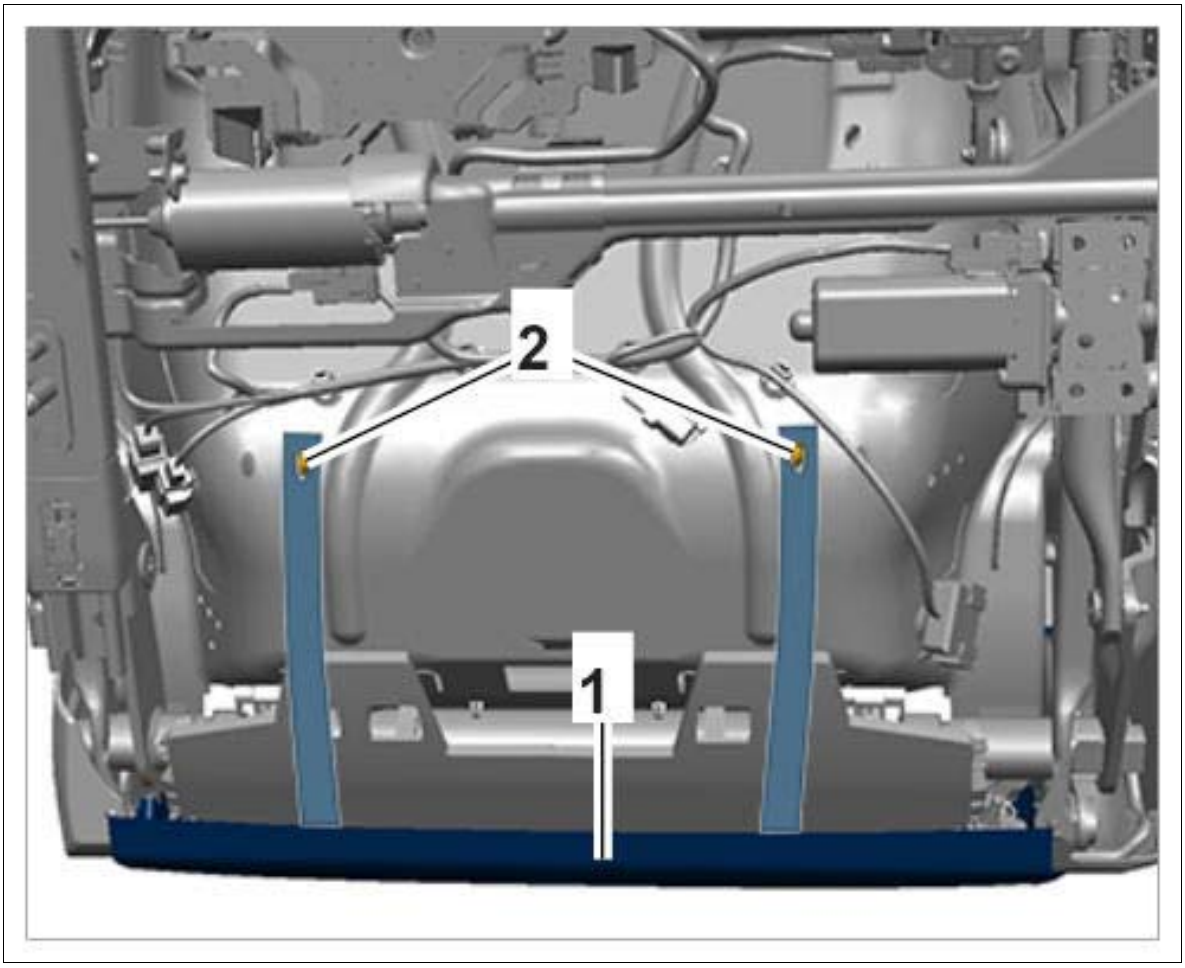

Courtesy of PORSCHE CARS NORTH AMERICA, INC.

3. Pull rear cover for backrest **-1-** up out of the bracket **-3- (-arrow B-)** .

Fig 3: Removing Backrest Rear Cover

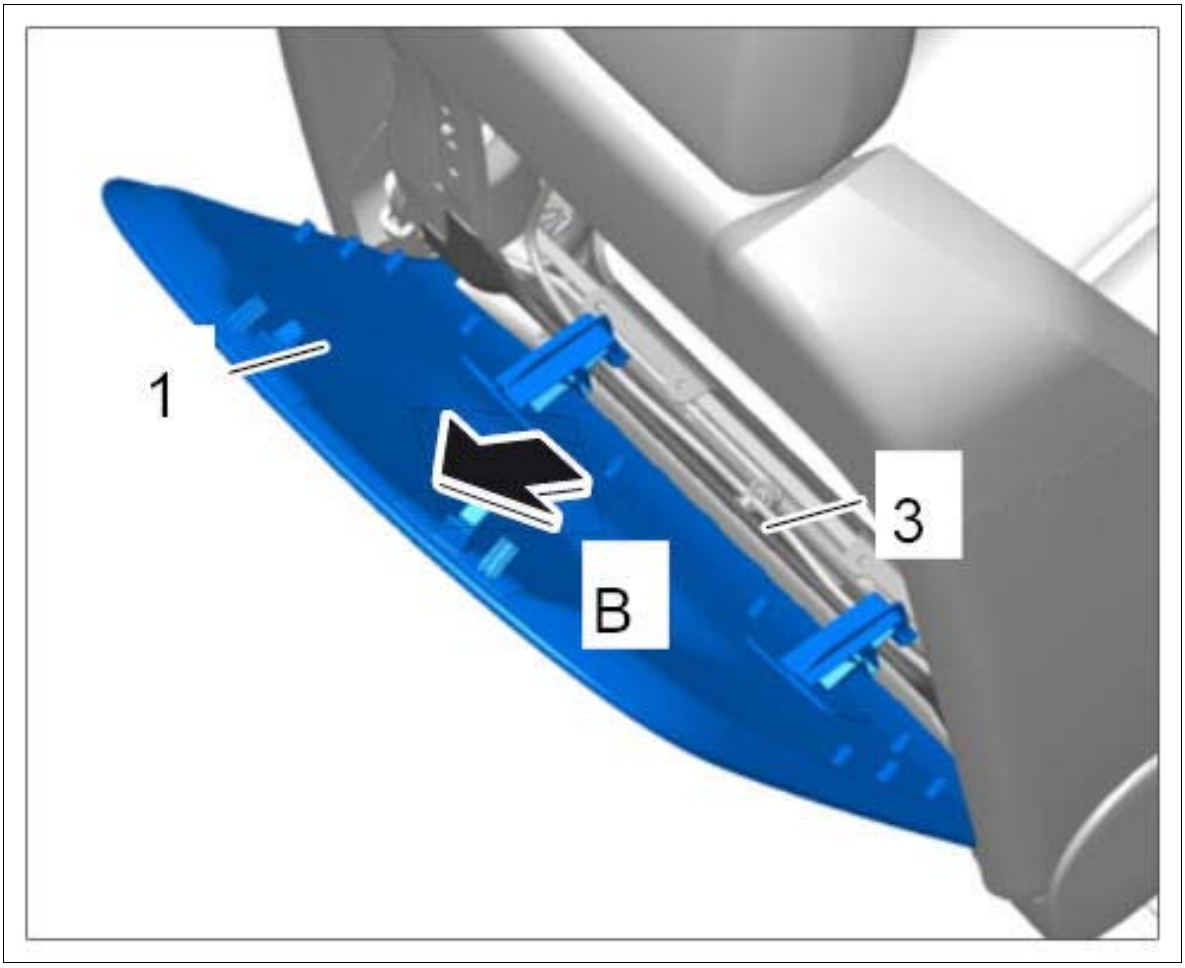

Courtesy of PORSCHE CARS NORTH AMERICA, INC.

WM 722619 REMOVING AND INSTALLING COVER FOR BACKREST (ALL MODELS) > INSTALLING COVER FOR BACKREST > INSTALLING REAR COVER FOR BACKREST

1. Insert rear cover for backrest **-1-** down into the bracket **-2-** .
2. Lock fixing clips **-3-** for rear cover for backrest in the backrest **-arrows-** .

Fig 1: Installing Backrest Rear Cover

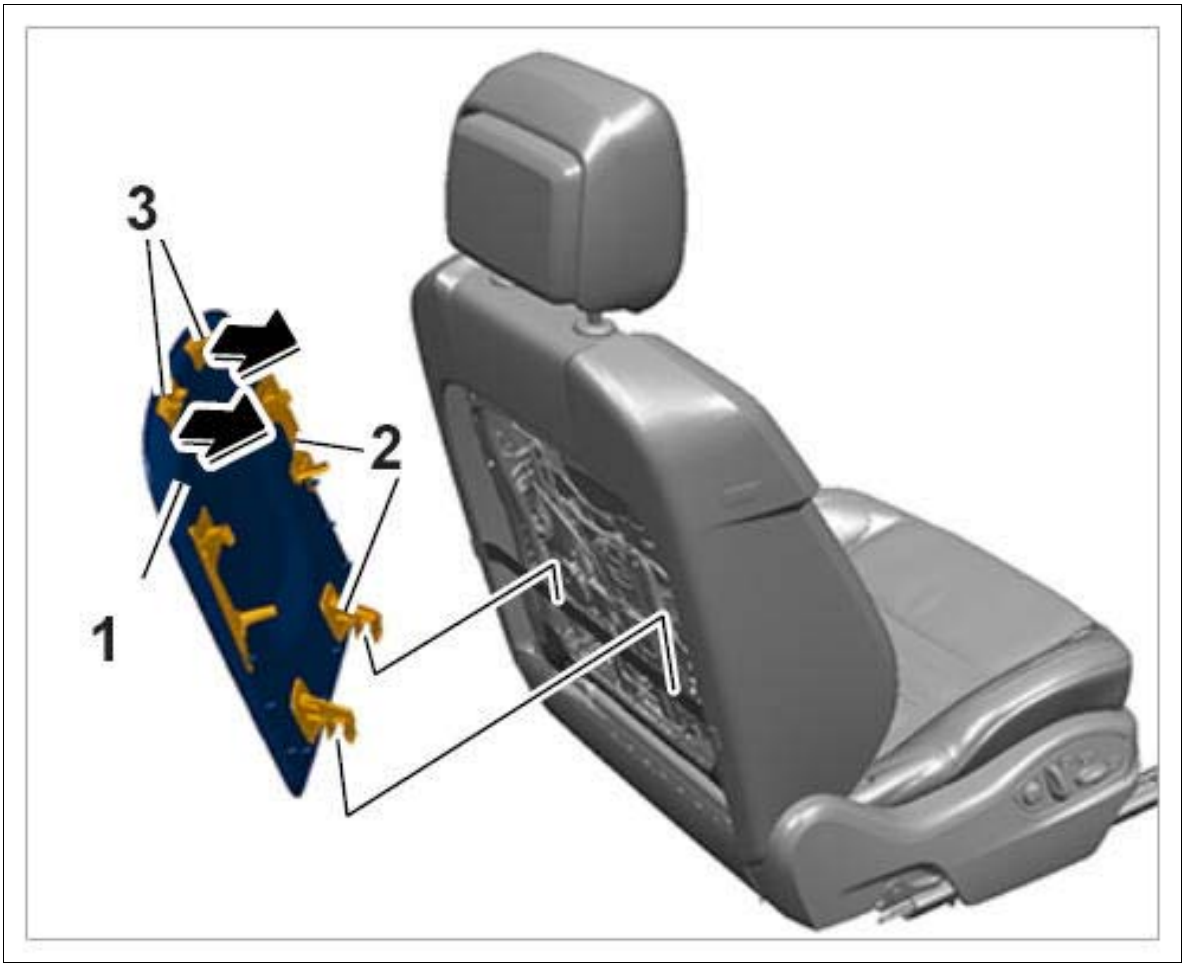

Courtesy of PORSCHE CARS NORTH AMERICA, INC.

3. Engage rear cover for backrest **-1-** on the underside of the front seat **-2-** .

Fig 2: Engaging Backrest Cover

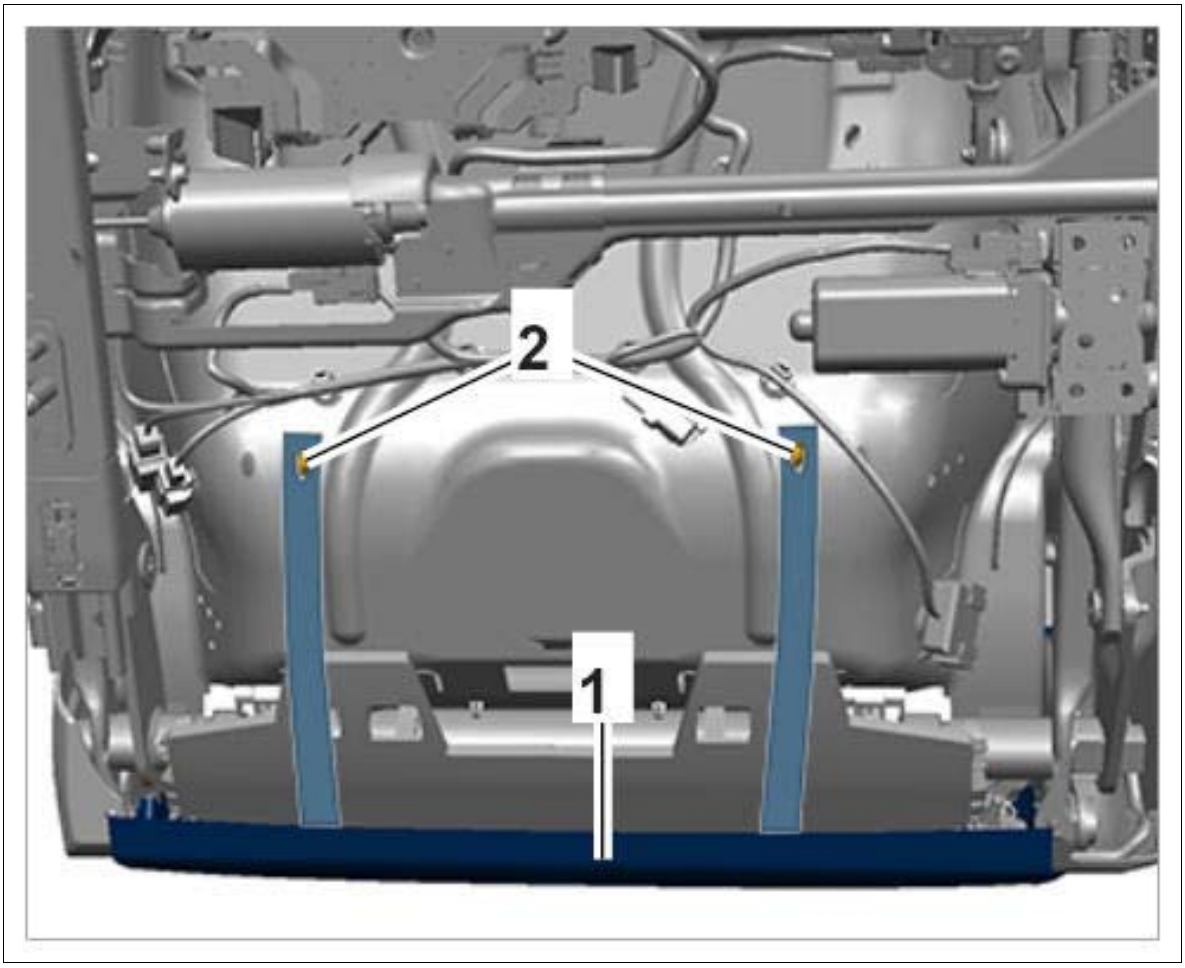

Courtesy of PORSCHE CARS NORTH AMERICA, INC.

WM 722619 REMOVING AND INSTALLING COVER FOR BACKREST (ALL MODELS) > INSTALLING COVER FOR BACKREST > INSTALLING SIDE COVER FOR BACKREST

1. Install side cover for backrest **-2-** .
2. Press in expansion rivets **-1-** and secure with the pins.

Fig 1: Installing Backrest Side Cover

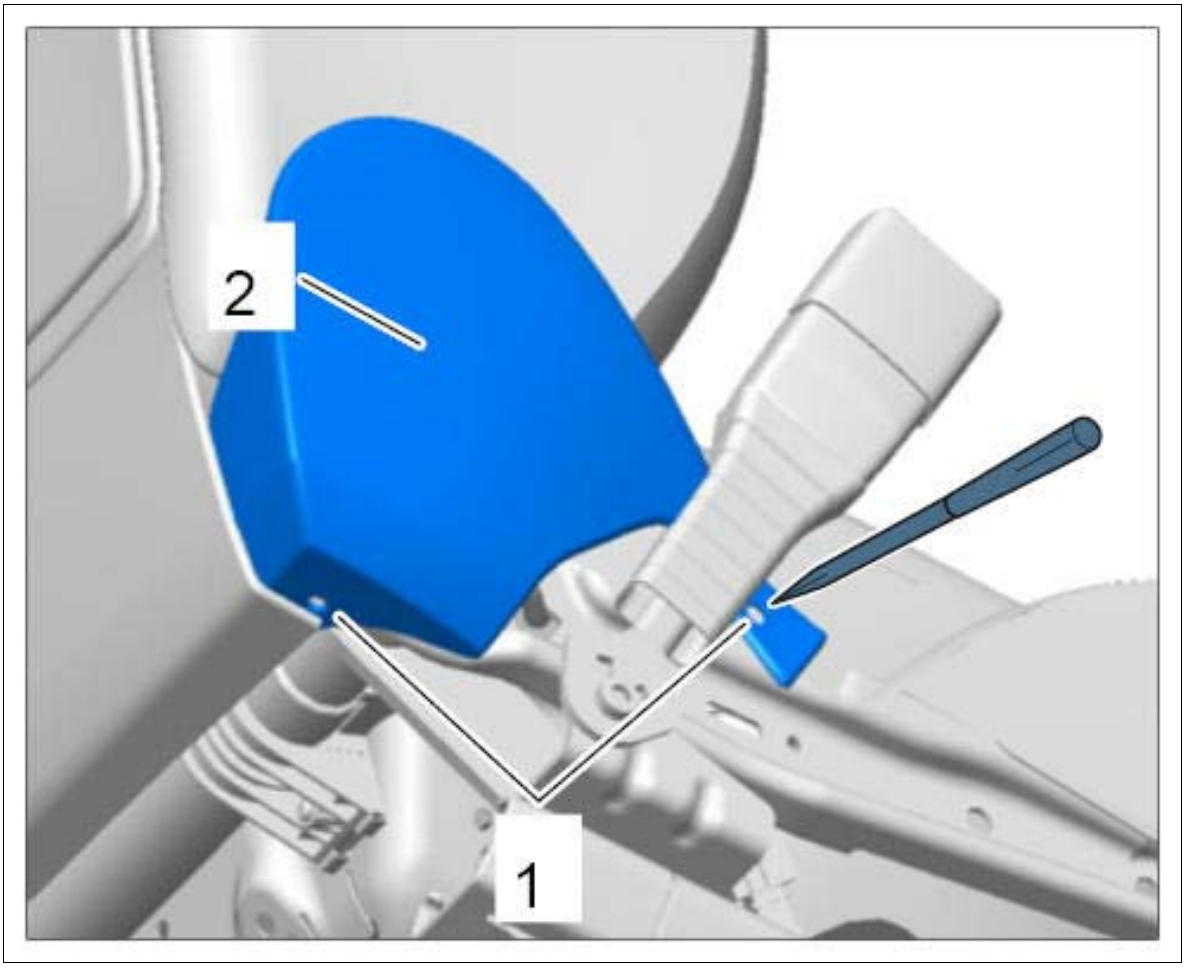

Courtesy of PORSCHE CARS NORTH AMERICA, INC.

WM 722619 REMOVING AND INSTALLING COVER FOR BACKREST (ALL MODELS) > SUBSEQUENT WORK > SUBSEQUENT WORK FOR SIDE BACKREST COVER

1. Install front seat. → Installing Front Seat

WM 723419 REMOVING AND INSTALLING LUMBAR SUPPORT (ALL MODELS) > COMPONENT INFORMATION > INSTALLATION POSITION

Fig 1: Identifying Lumbar Support Installation Position



Courtesy of PORSCHE CARS NORTH AMERICA, INC.

WM 723419 REMOVING AND INSTALLING LUMBAR SUPPORT (ALL MODELS) > PRELIMINARY WORK

1. Remove padding for front backrest. → Removing Padding For Front Backrest

WM 723419 REMOVING AND INSTALLING LUMBAR SUPPORT (ALL MODELS) > REMOVING LUMBAR SUPPORT

1. Release and disconnect electric plug connection for lumbar support adjustment motor **-1-** and lumbar curvature motor **-2- (-a-)** .

Fig 1: Removing Motors Connectors

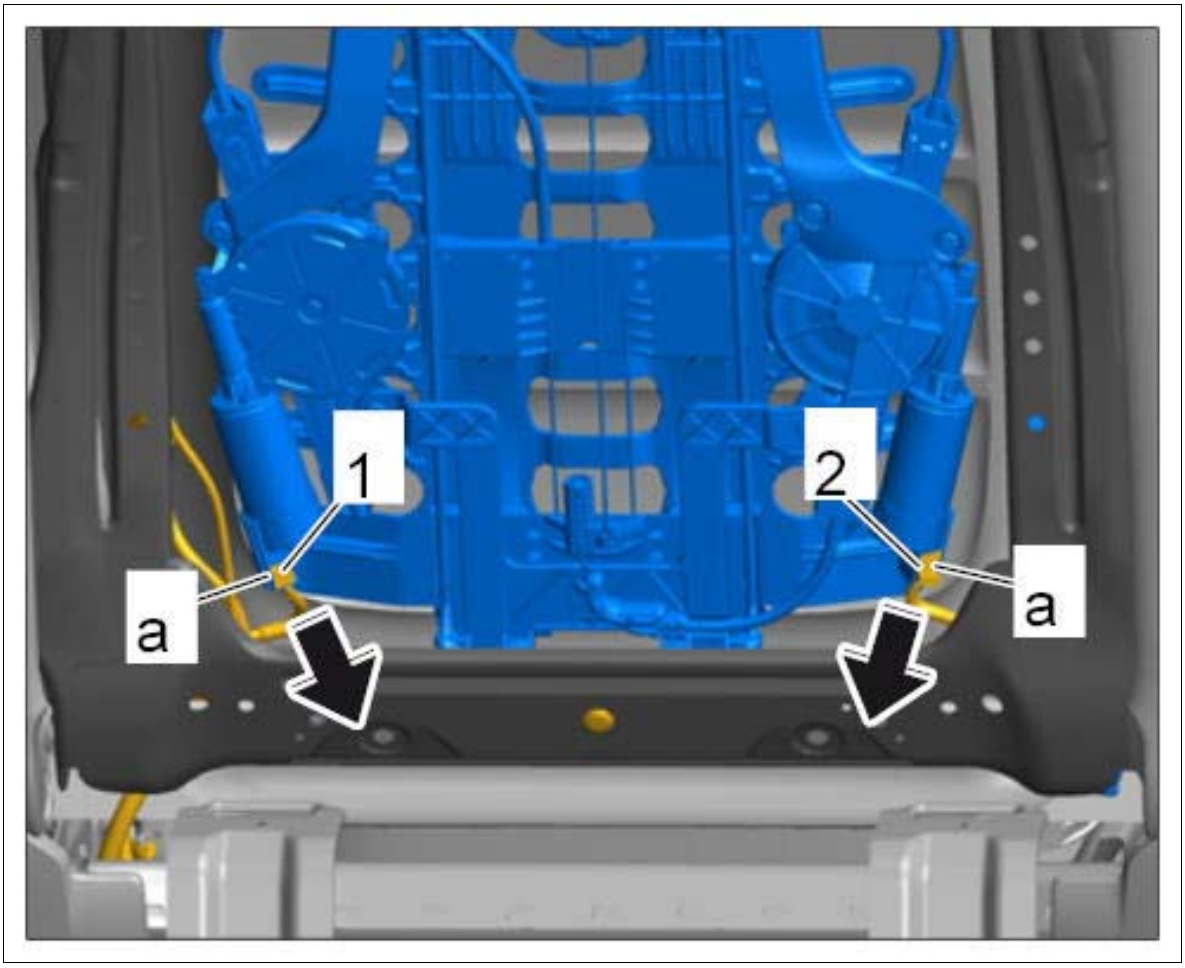

Courtesy of PORSCHE CARS NORTH AMERICA, INC.

2. Drill out blind rivets **-3-** using a suitable drill bit.

Fig 2: Drilling Out Blind Rivets

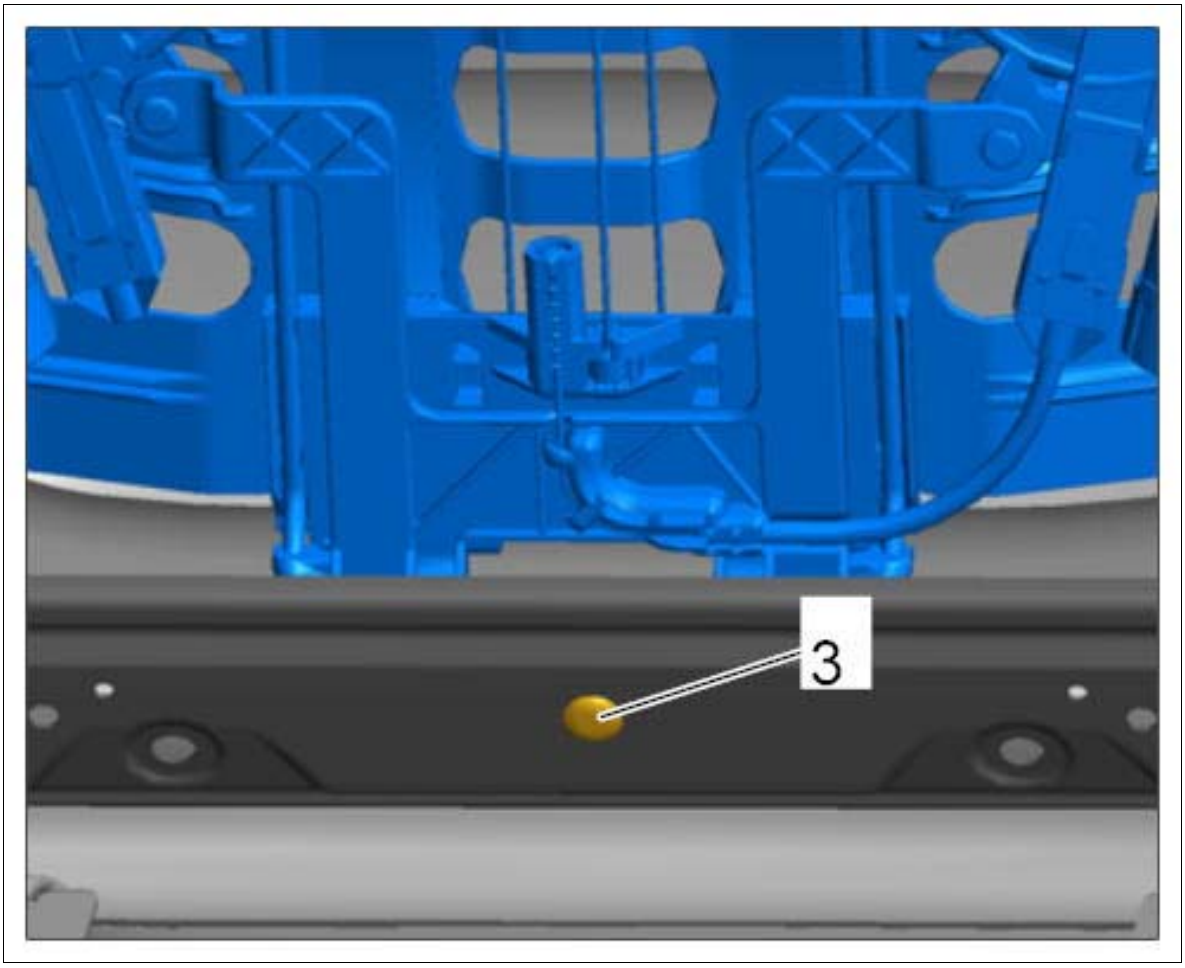

Courtesy of PORSCHE CARS NORTH AMERICA, INC.

3. Fold the lumbar support up **-arrow A-** and press the retaining bars **-4-** at the left and right together.

   Disengage retaining bars **-4-** from the backrest frame **-arrow B-** .

Fig 3: Removing Lumbar Support

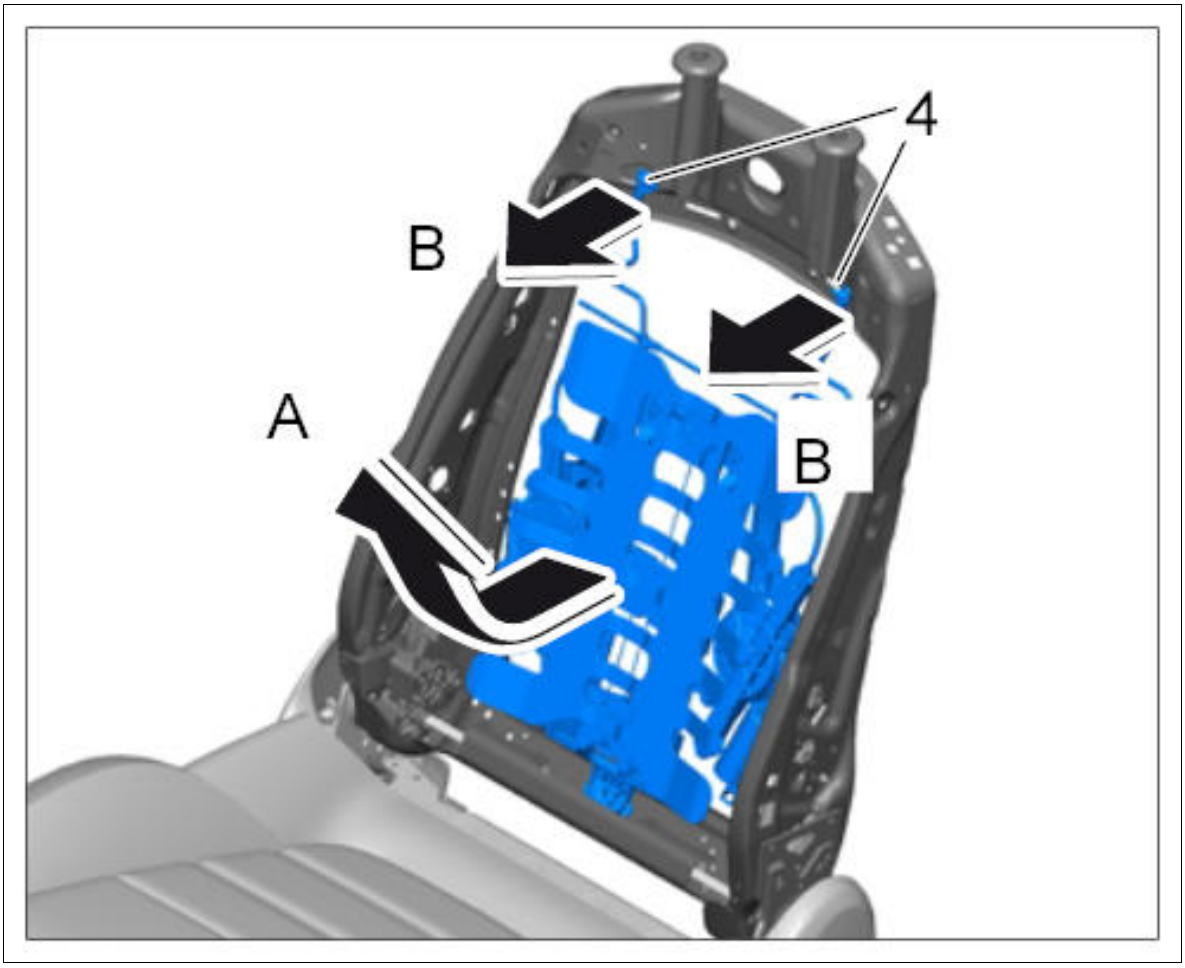

Courtesy of PORSCHE CARS NORTH AMERICA, INC.

4. Remove the complete lumbar support from the backrest frame.

WM 723419 REMOVING AND INSTALLING LUMBAR SUPPORT (ALL MODELS) > INSTALLING LUMBAR SUPPORT

1. Press the retaining bars **-4-** together and engage them in the backrest frame **-arrow A-** .
2. Fold down lumbar support **-arrow B-** .

Fig 1: Positioning Lumbar Support

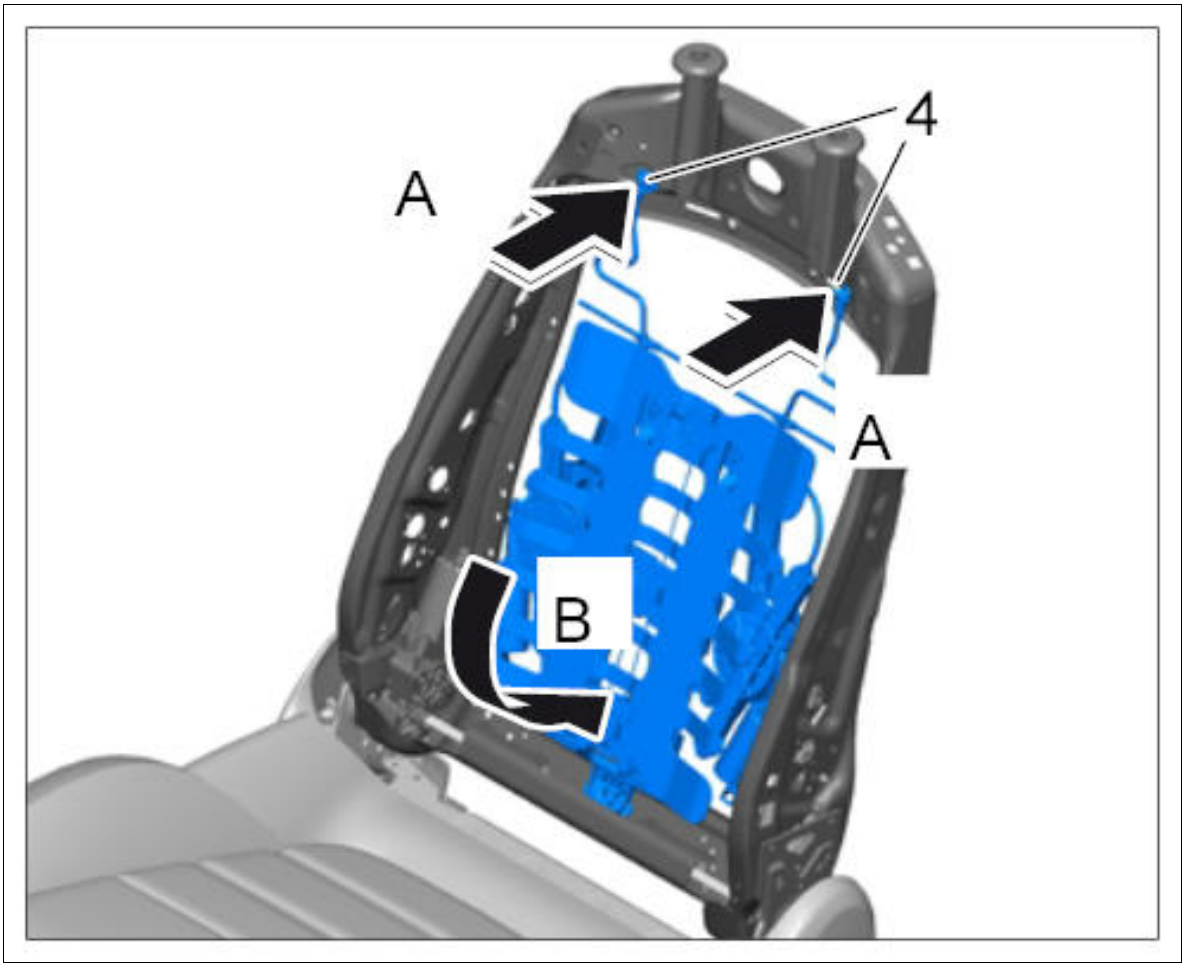

Courtesy of PORSCHE CARS NORTH AMERICA, INC.

3. Join the lumbar support and backrest frame using a new blind rivet **-3-** .

Fig 2: Attaching Lumbar Support And Backrest Frame Using Blind Rivet

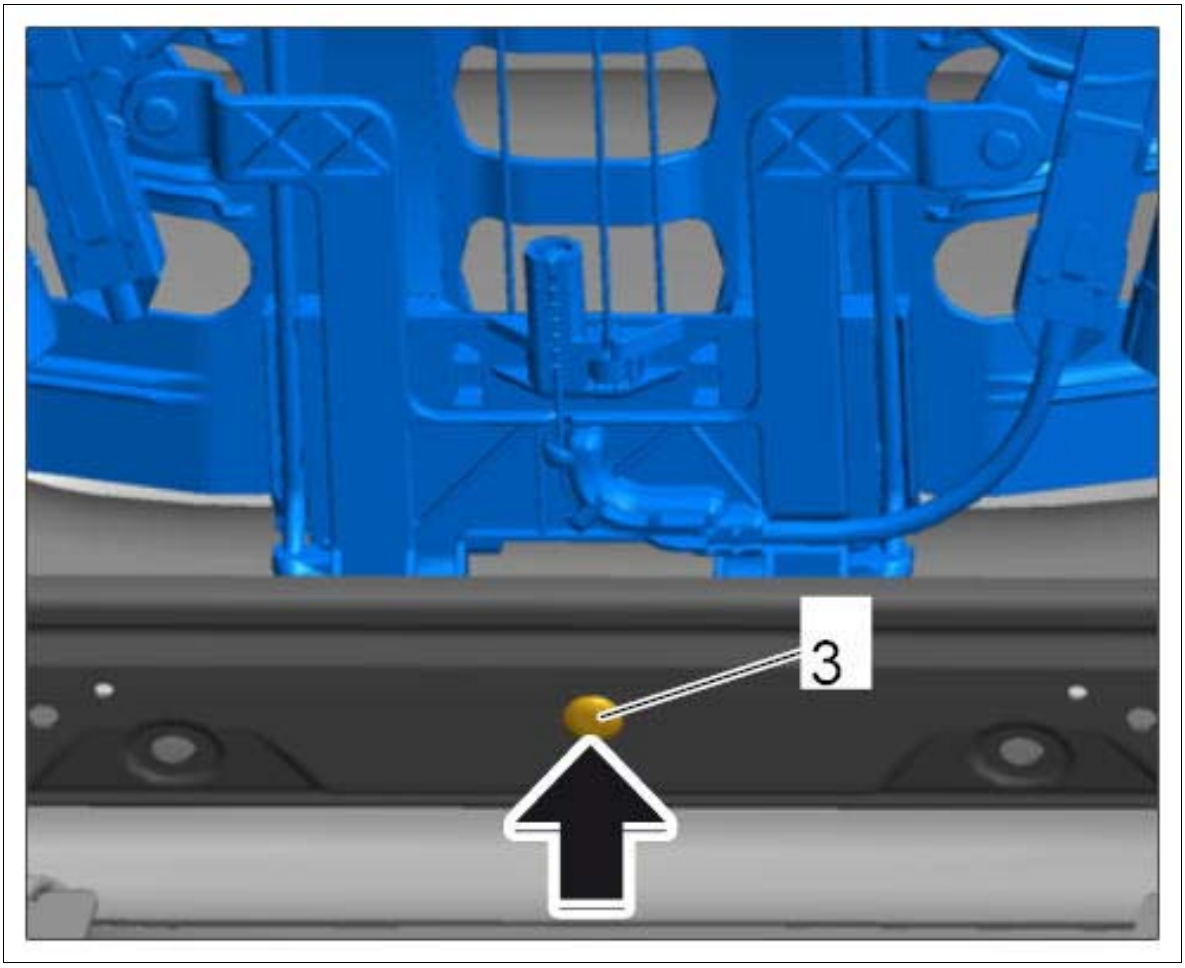

Courtesy of PORSCHE CARS NORTH AMERICA, INC.

4. Plug in electric plug connections for lumbar support adjustment motor **-1-** and lumbar curvature motor **-2- (-arrows-)** until they engage securely.

Fig 3: Installing Lumbar Motors Connectors

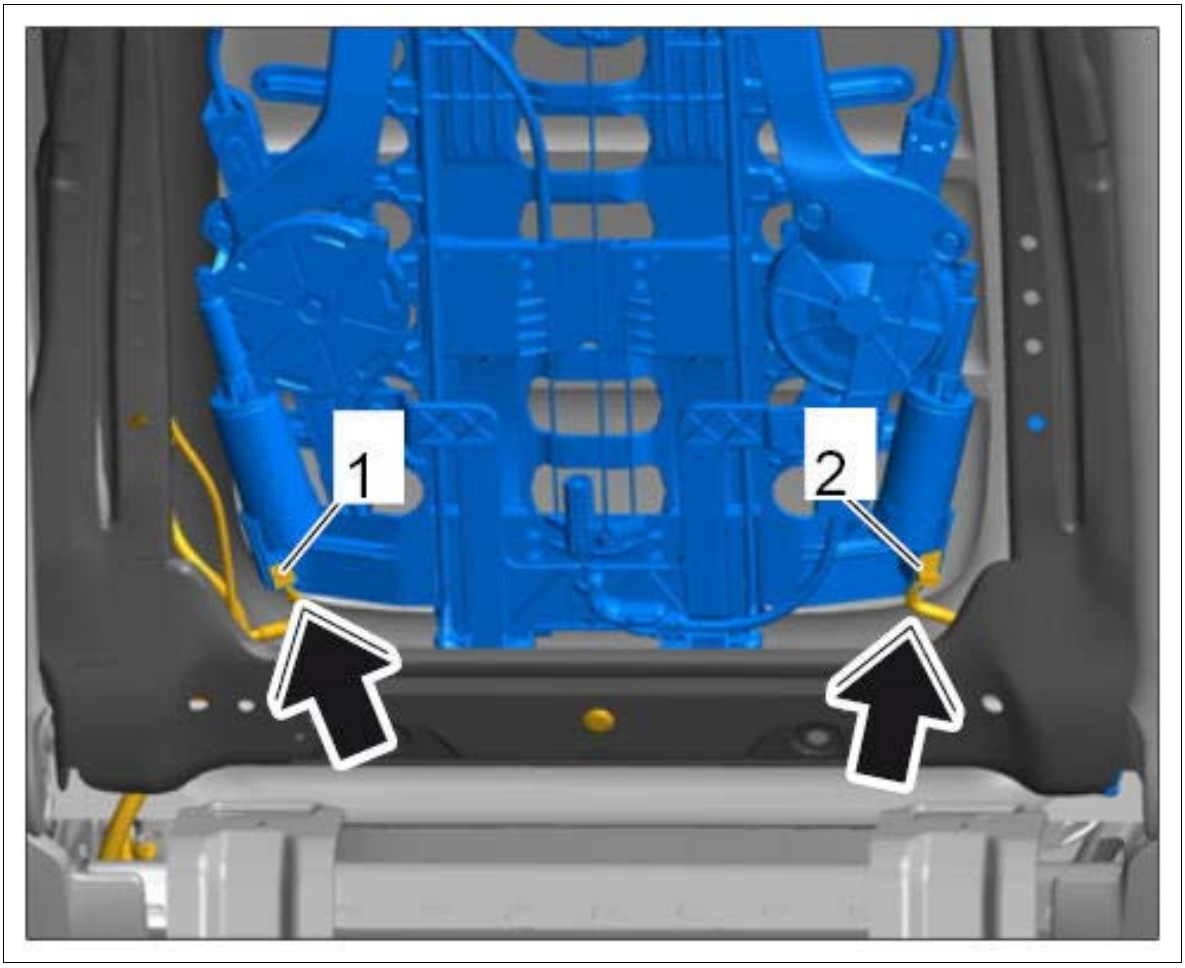

Courtesy of PORSCHE CARS NORTH AMERICA, INC.

WM 723419 REMOVING AND INSTALLING LUMBAR SUPPORT (ALL MODELS) > SUBSEQUENT WORK

1. Install padding for front backrest. → Installing Padding For Front Backrest

WM 723619 REMOVING AND INSTALLING MOTOR FOR LUMBAR SUPPORT ADJUSTMENT AND LUMBAR CURVATURE (ALL MODELS) > INFORMATION > COMPONENT INFORMATION

Fig 1: Identifying Lumbar Support Adjustment Motor Installation Position



Courtesy of PORSCHE CARS NORTH AMERICA, INC.

1. Motor for lumbar support adjustment
2. Motor for lumbar curvature

WM 723619 REMOVING AND INSTALLING MOTOR FOR LUMBAR SUPPORT ADJUSTMENT AND LUMBAR CURVATURE (ALL MODELS) > PRELIMINARY WORK

1. Remove padding for front backrest. → Removing Padding For Front Backrest
2. Remove side airbag. → Removing side airbag

WM 723619 REMOVING AND INSTALLING MOTOR FOR LUMBAR SUPPORT ADJUSTMENT AND LUMBAR CURVATURE (ALL MODELS) > REMOVING MOTOR FOR LUMBAR SUPPORT ADJUSTMENT AND LUMBAR CURVATURE > REMOVING MOTOR FOR LUMBAR SUPPORT ADJUSTMENT

Information

Before removing the motor, move the lumbar support to the middle in order to take the strain off the cable. If it is not possible to disengage the cable when the lumbar support is in the top position or if it is blocked, the cable may have to be cut.

1. Release electric plug connection **-arrow a-** and disconnect it **-arrow A-** .

Fig 1: Disconnecting Connector

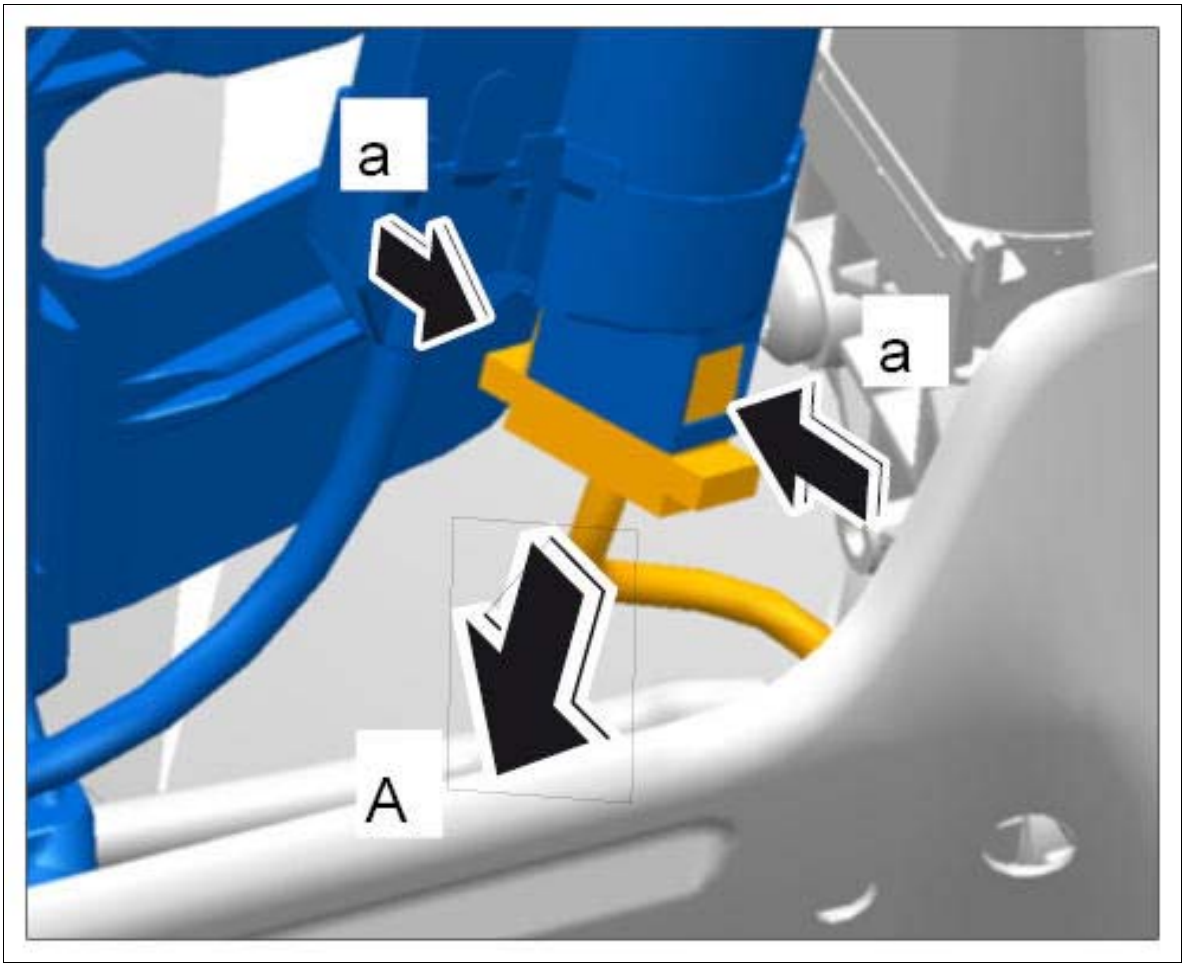

Courtesy of PORSCHE CARS NORTH AMERICA, INC.

2. Remove cable from the bracket **-arrow-** .

Fig 2: Removing Cable From Bracket

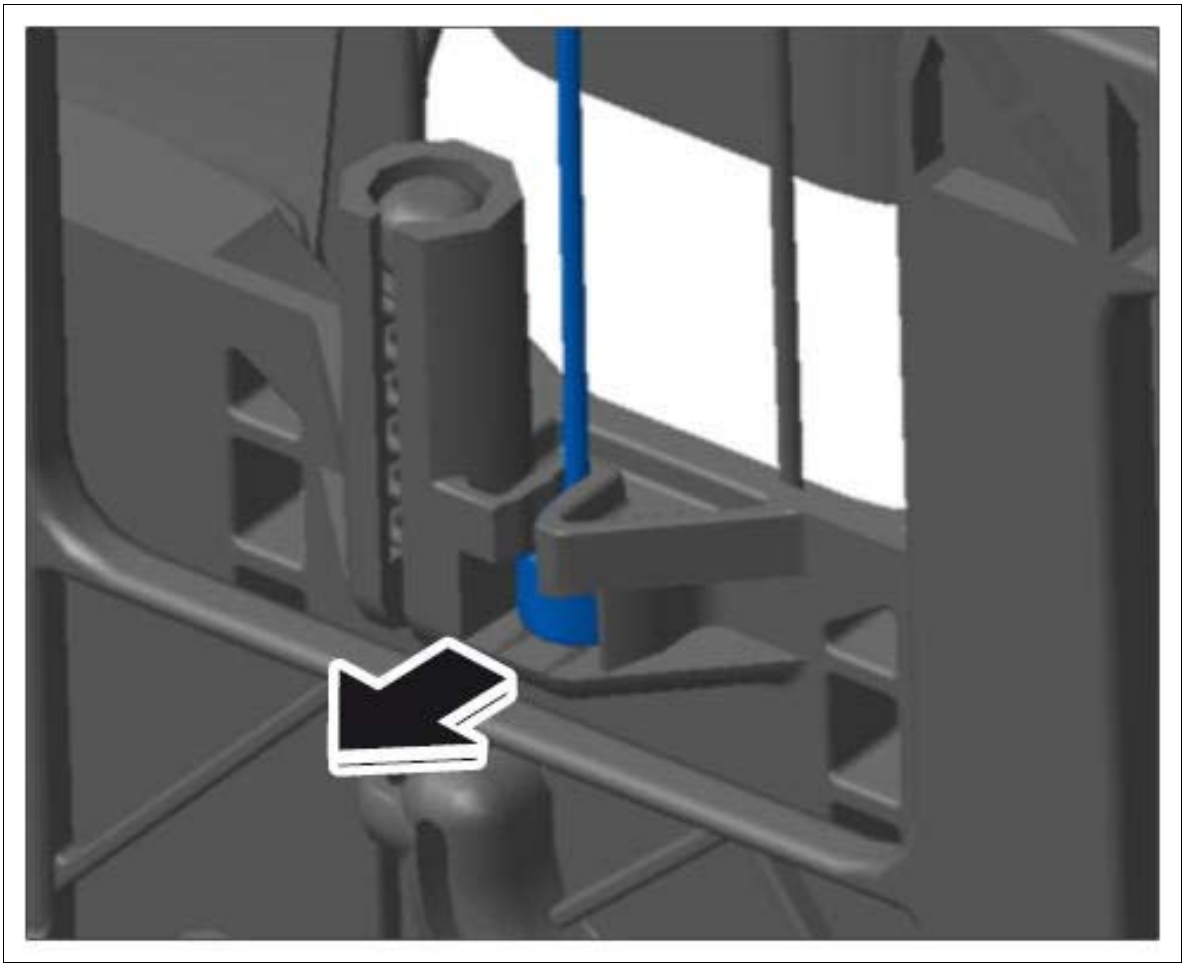

Courtesy of PORSCHE CARS NORTH AMERICA, INC.

3. Remove cable sleeve from the brackets **-arrows-** .

Fig 3: Removing Cable Sleeve

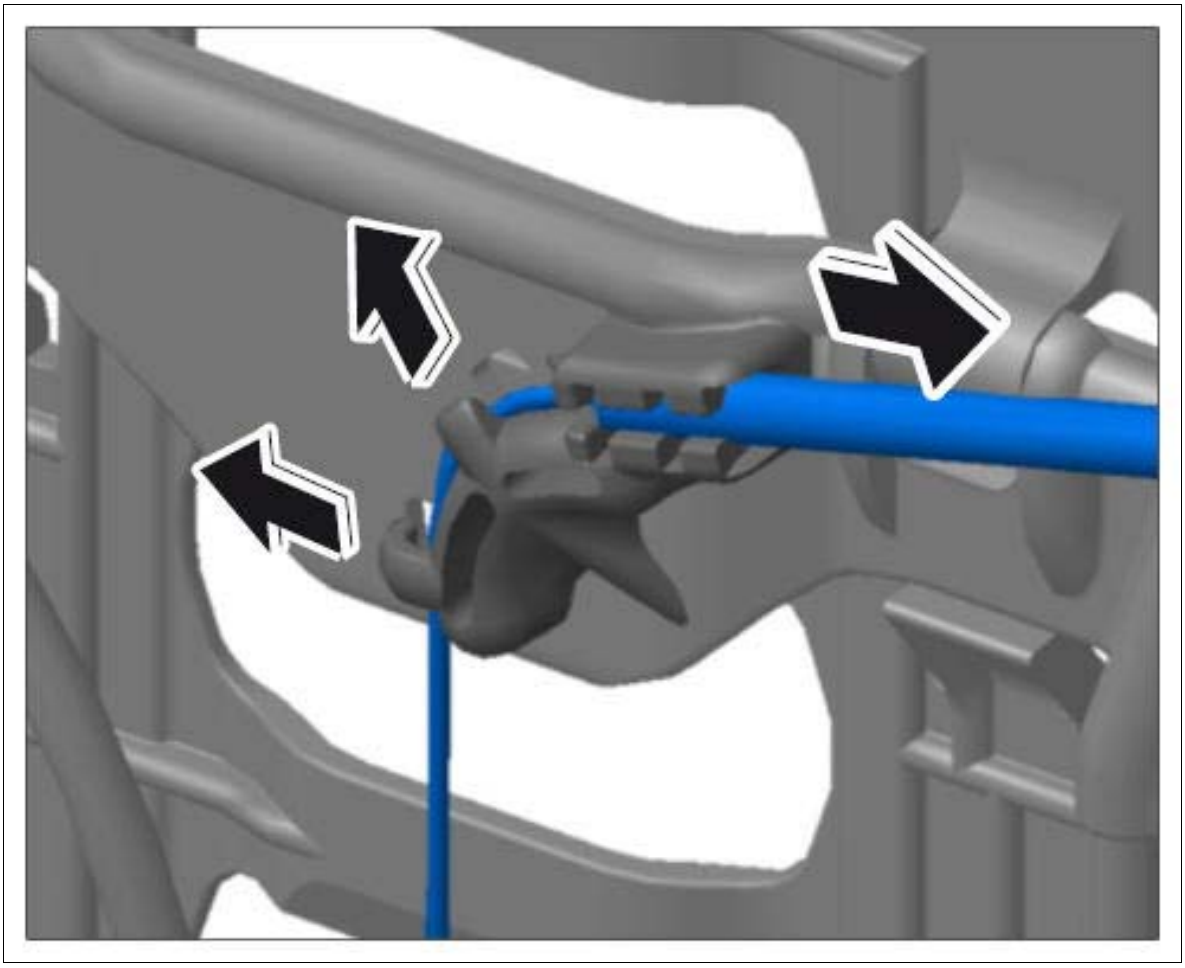

Courtesy of PORSCHE CARS NORTH AMERICA, INC.

4. Disengage the cable at the lumbar support **-arrow A-** and then disengage the cable from the brackets **-arrow B-** .

Fig 4: Disengaging Lumbar Support Cable

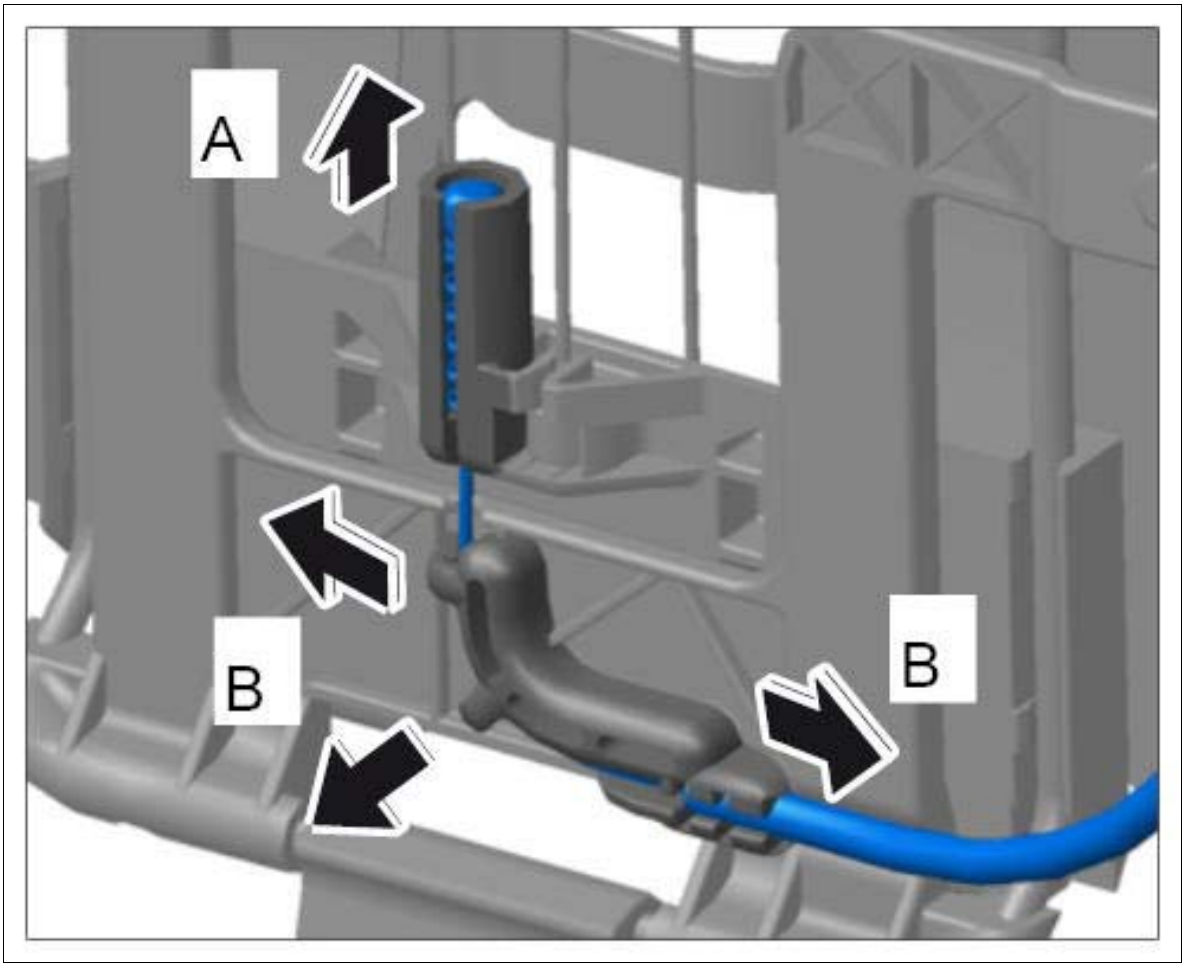

Courtesy of PORSCHE CARS NORTH AMERICA, INC.

5. Carefully disengage the bottom clip by turning it slightly **-A-** .
6. Disengage motor for lumbar support adjustment **-1-** by pulling it upwards **-B-** .

Fig 5: Disengaging Lumbar Support Adjustment Motor

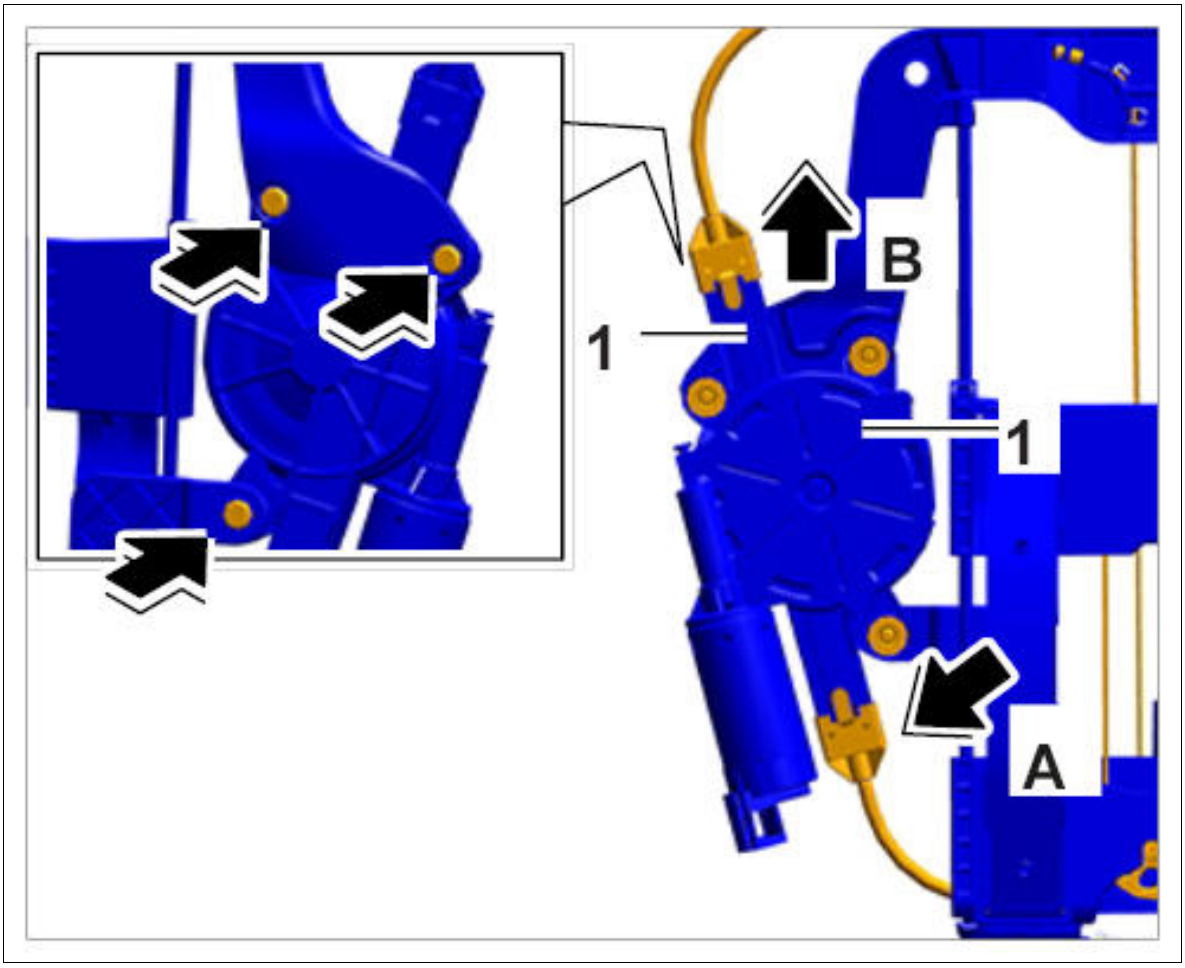

Courtesy of PORSCHE CARS NORTH AMERICA, INC.

WM 723619 REMOVING AND INSTALLING MOTOR FOR LUMBAR SUPPORT ADJUSTMENT AND LUMBAR CURVATURE (ALL MODELS) > REMOVING MOTOR FOR LUMBAR SUPPORT ADJUSTMENT AND LUMBAR CURVATURE > REMOVING MOTOR FOR LUMBAR CURVATURE

1. Release electric plug connection **-arrow a-** and disconnect it **-arrow A-** .

Fig 1: Disconnecting Connector On Lumbar Curvature Motor

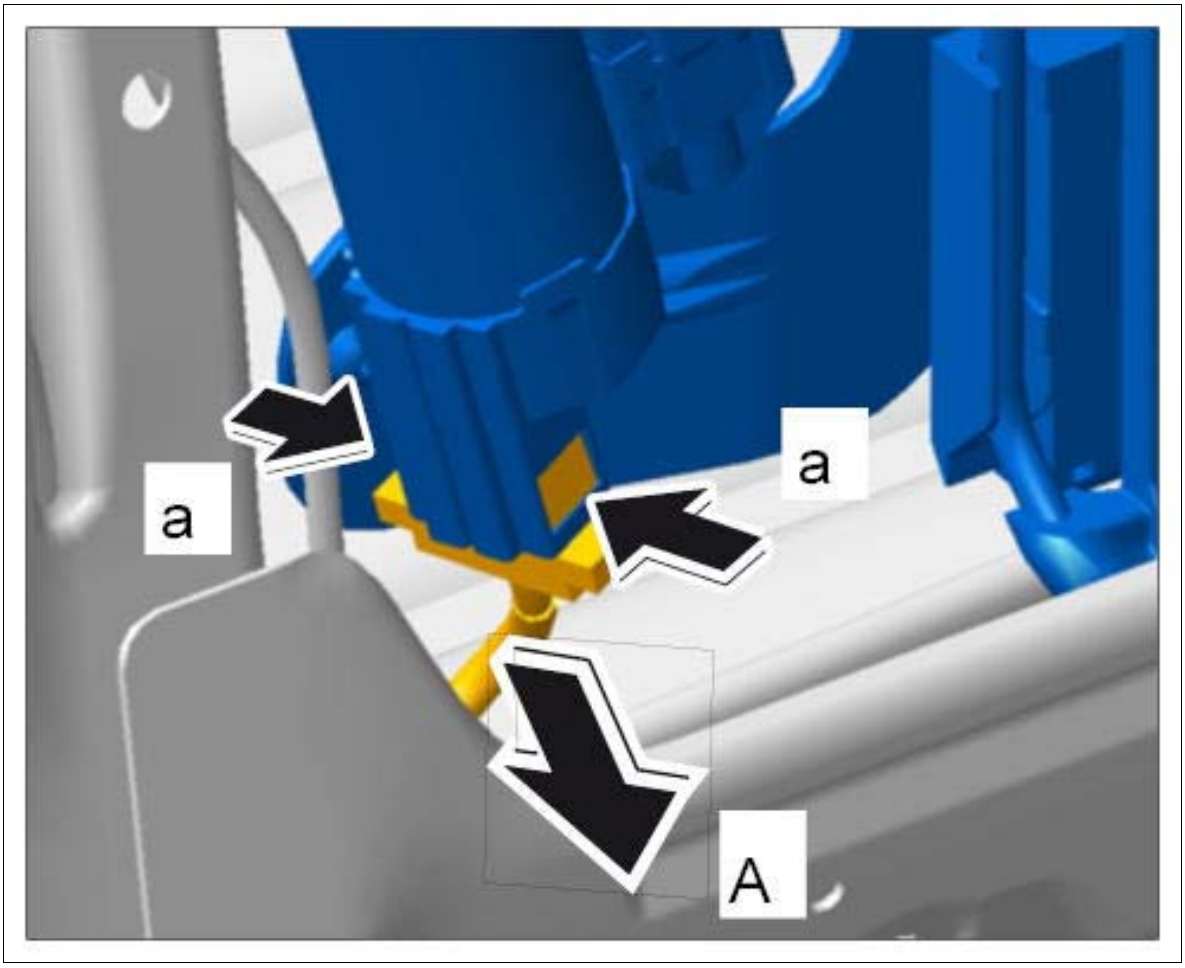

Courtesy of PORSCHE CARS NORTH AMERICA, INC.

2. Disengage cable sleeve for lumbar curvature by pulling it up out of the guide **-arrow A-** and then disengage the cable at the side **-arrow B-** .

Fig 2: Disengaging Cable Sleeve

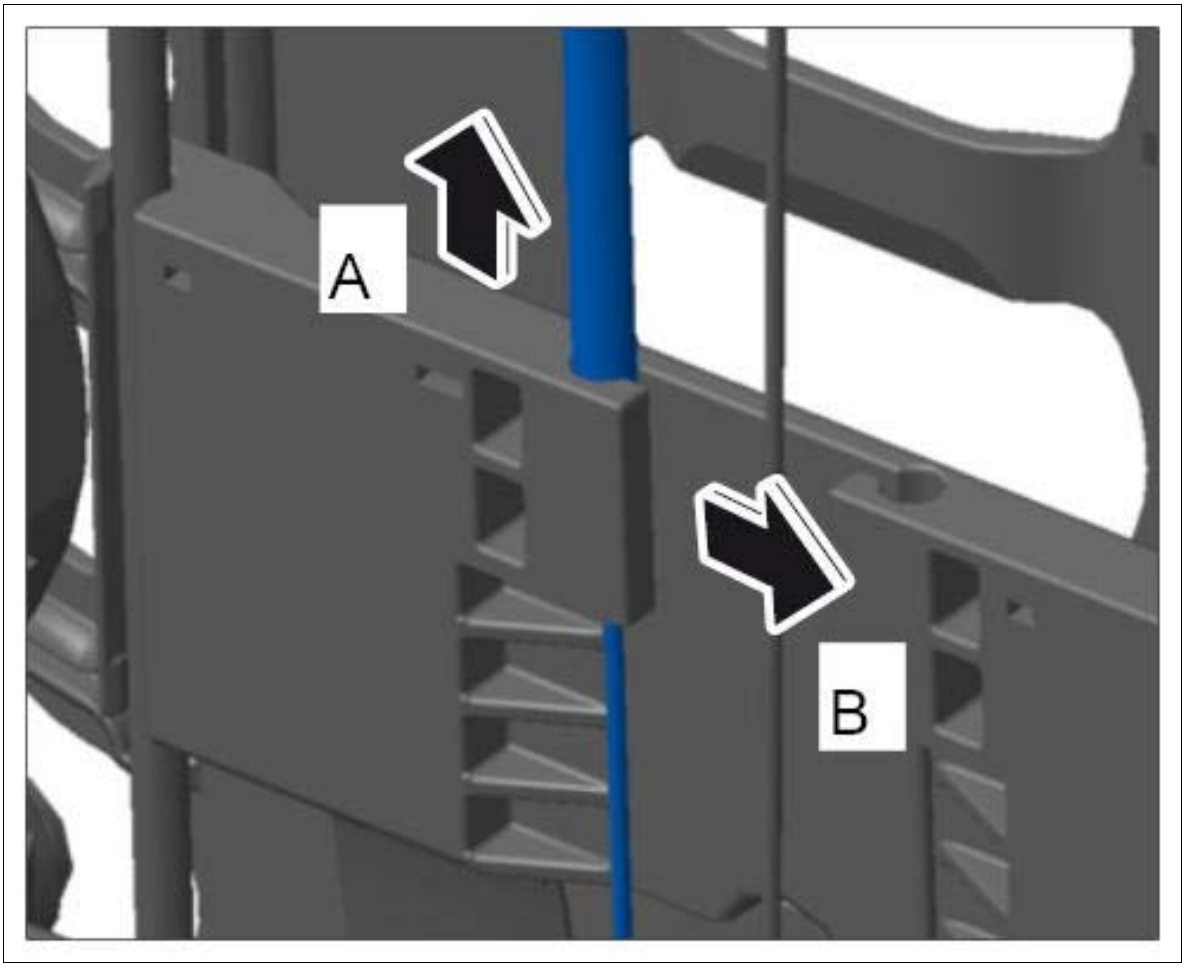

Courtesy of PORSCHE CARS NORTH AMERICA, INC.

3. Disengage cable. To do this, slide the cable nipple up and out **-arrow A-** and pull the cable at the side out of the bracket **-arrow B-** .

Fig 3: Disengaging Cable

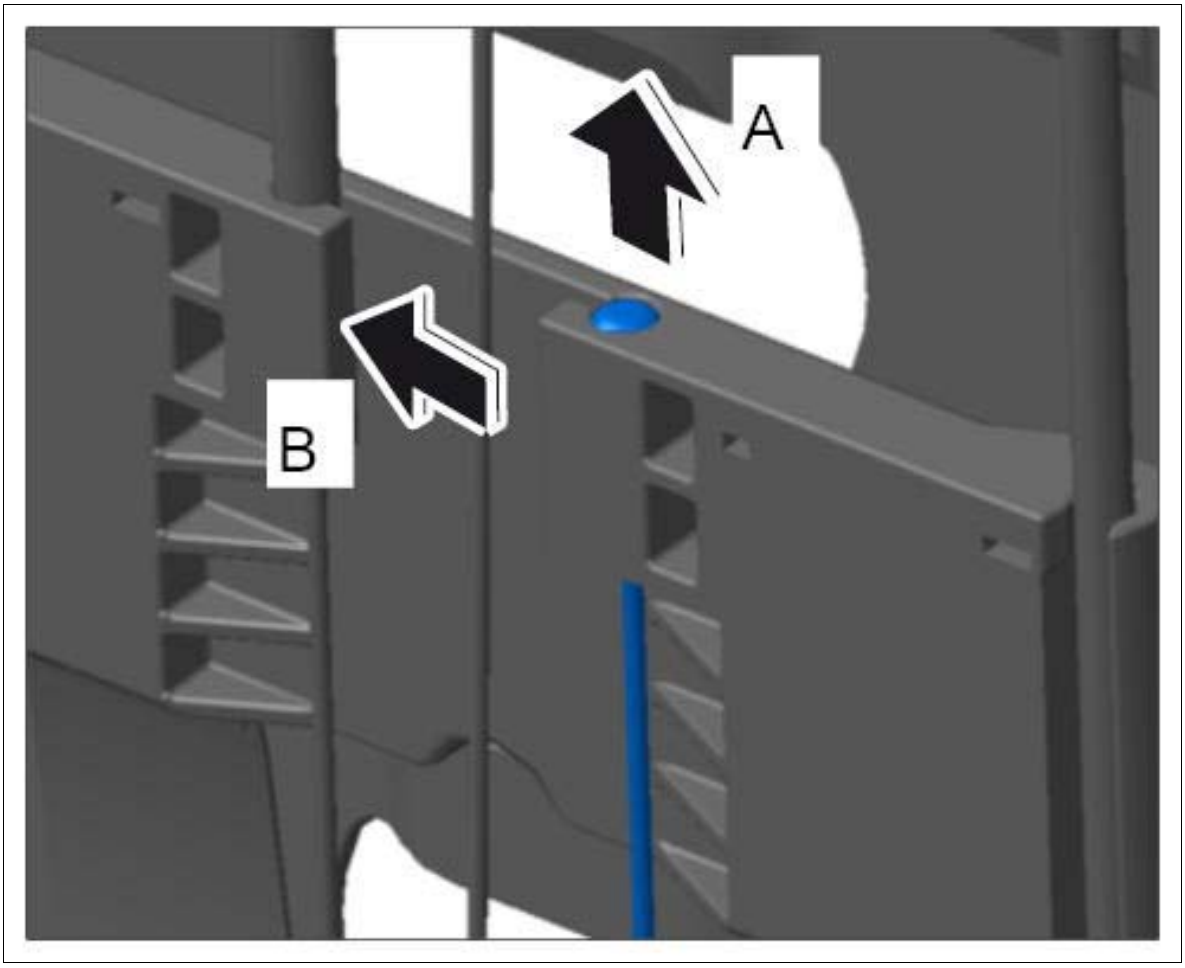

Courtesy of PORSCHE CARS NORTH AMERICA, INC.

4. Remove deflection roller **-1-** together with the cable completely in a downward direction.

   Remove operating cable.

Fig 4: Removing Deflection Roller

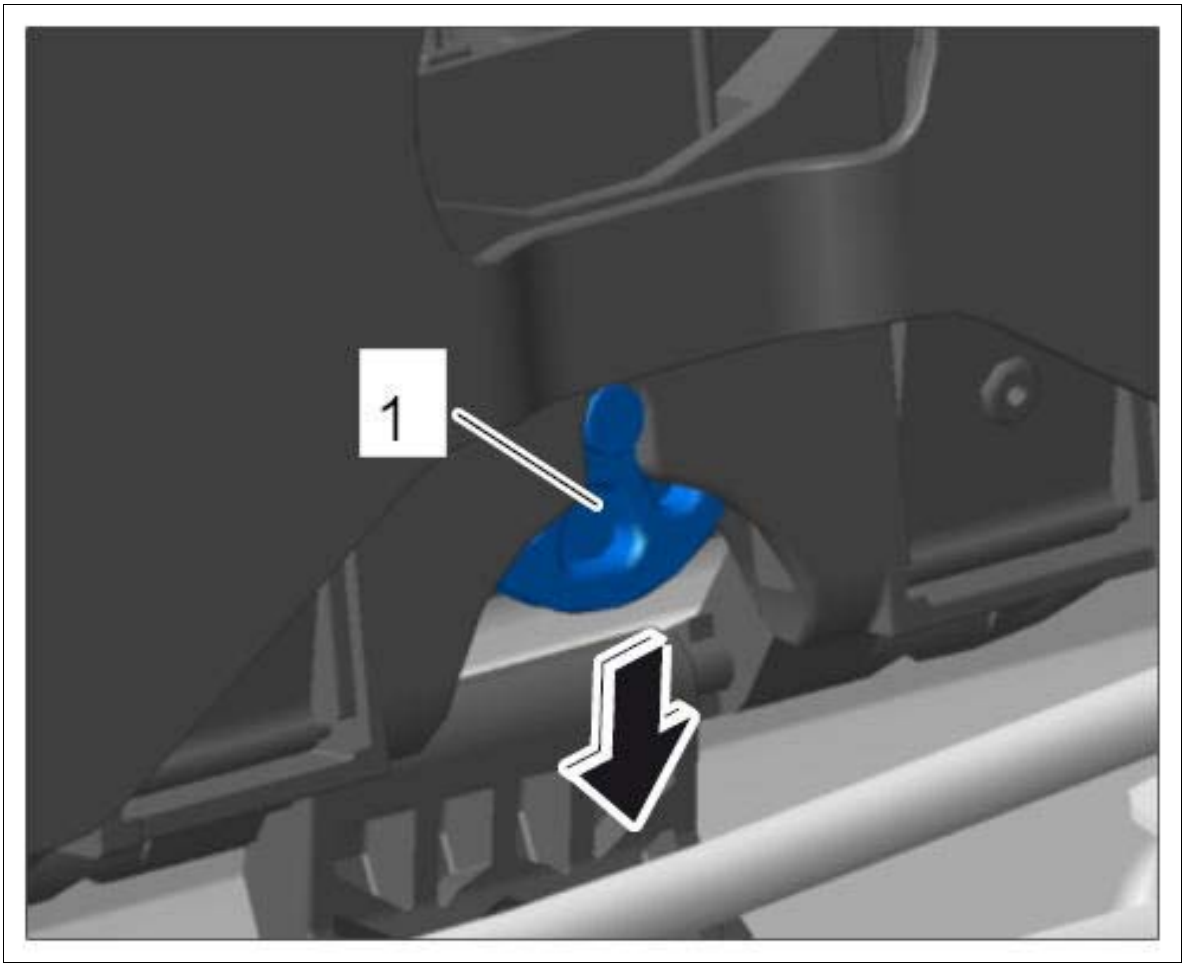

Courtesy of PORSCHE CARS NORTH AMERICA, INC.

5. Carefully disengage the bottom clip by turning it slightly **-A-** .
6. Disengage motor for lumbar curvature **-2-** by pulling it upwards **-B-** .

Fig 5: Disengaging Lumbar Curvature Motor

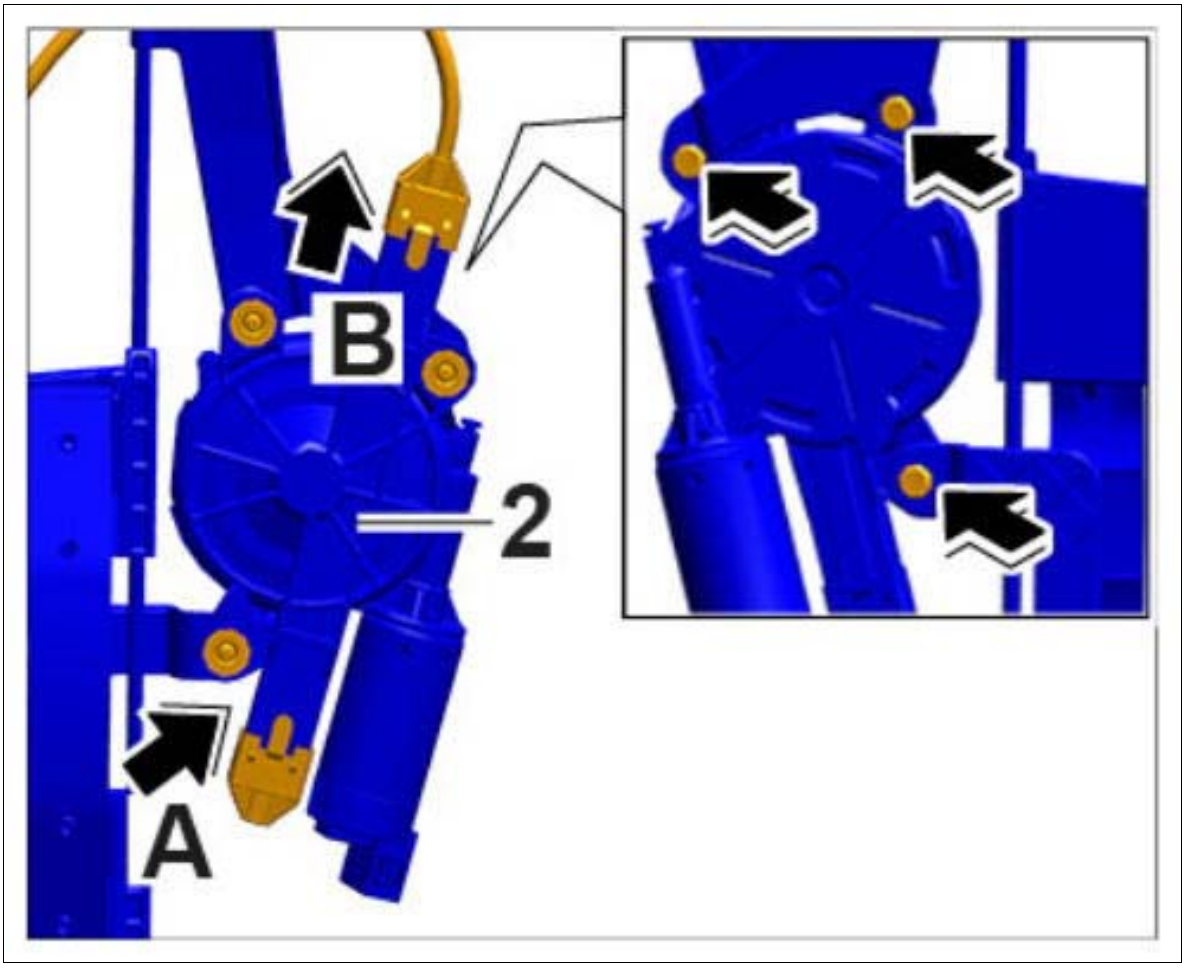

Courtesy of PORSCHE CARS NORTH AMERICA, INC.

WM 723619 REMOVING AND INSTALLING MOTOR FOR LUMBAR SUPPORT ADJUSTMENT AND LUMBAR CURVATURE (ALL MODELS) > INSTALLING MOTOR FOR LUMBAR SUPPORT ADJUSTMENT AND LUMBAR CURVATURE > INSTALLING MOTOR FOR LUMBAR SUPPORT ADJUSTMENT

1. Fit motor for lumbar support adjustment with holder **-1-** at the top of the backrest frame **-A-** , then turn it slightly to engage it **-B-** .

Fig 1: Engaging Lumbar Support Adjustment Motor

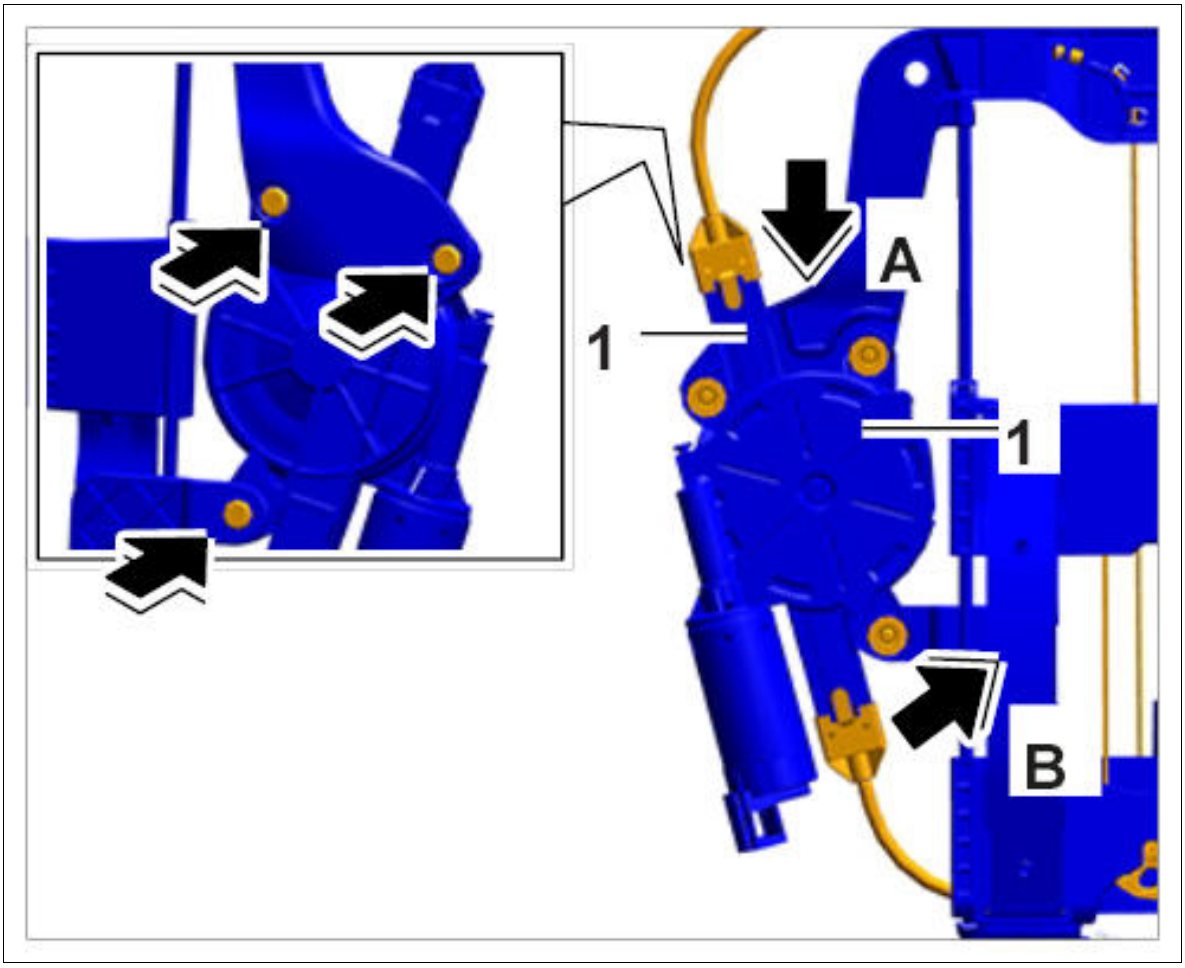

Courtesy of PORSCHE CARS NORTH AMERICA, INC.

2. Engage the cable sleeve at the bracket **-arrows-** for the lumbar support.

Fig 2: Engaging Cable Sleeve On Lumbar Support

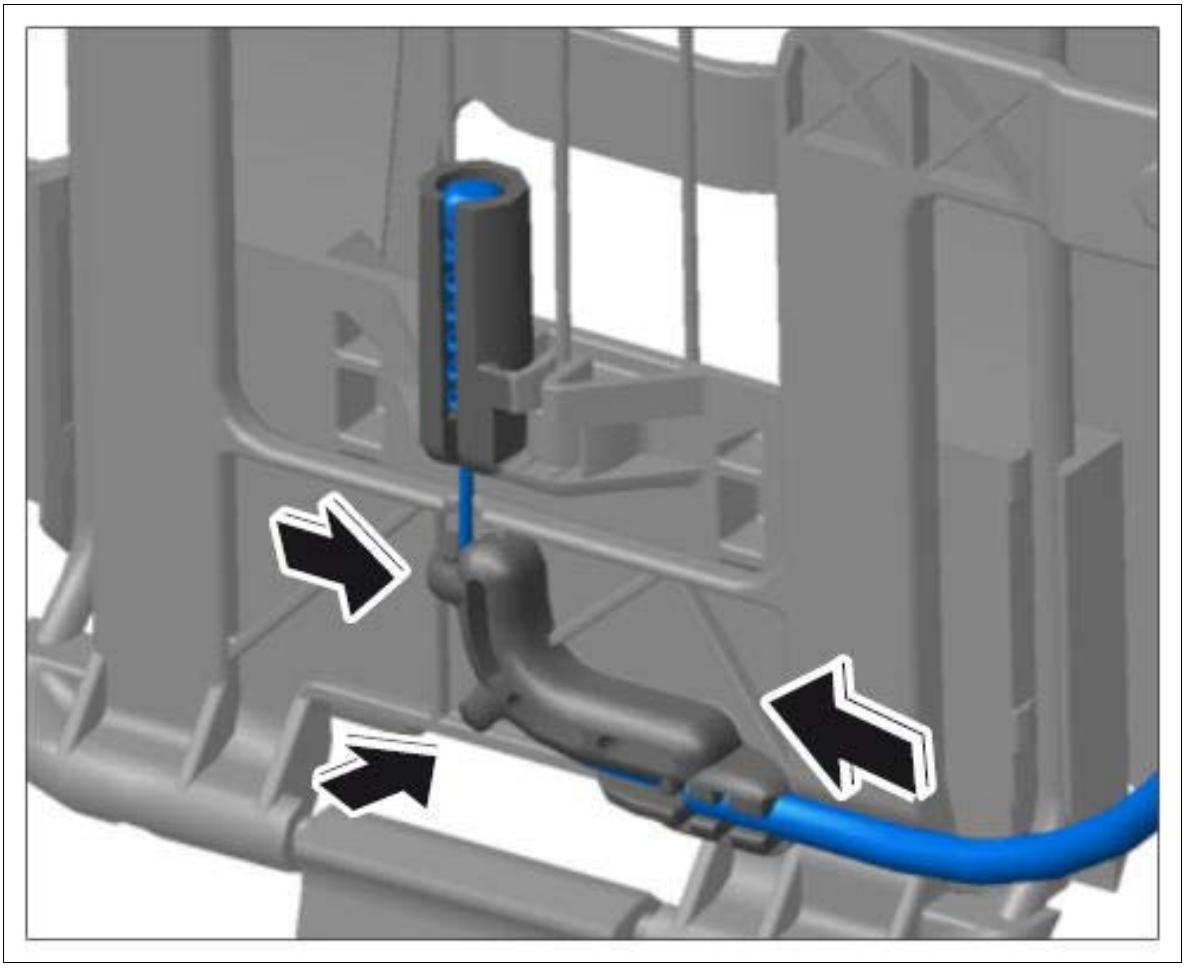

Courtesy of PORSCHE CARS NORTH AMERICA, INC.

3. Engage operating cable with spring in the lumbar support **-arrow-** .

Fig 3: Engaging Cable With Spring

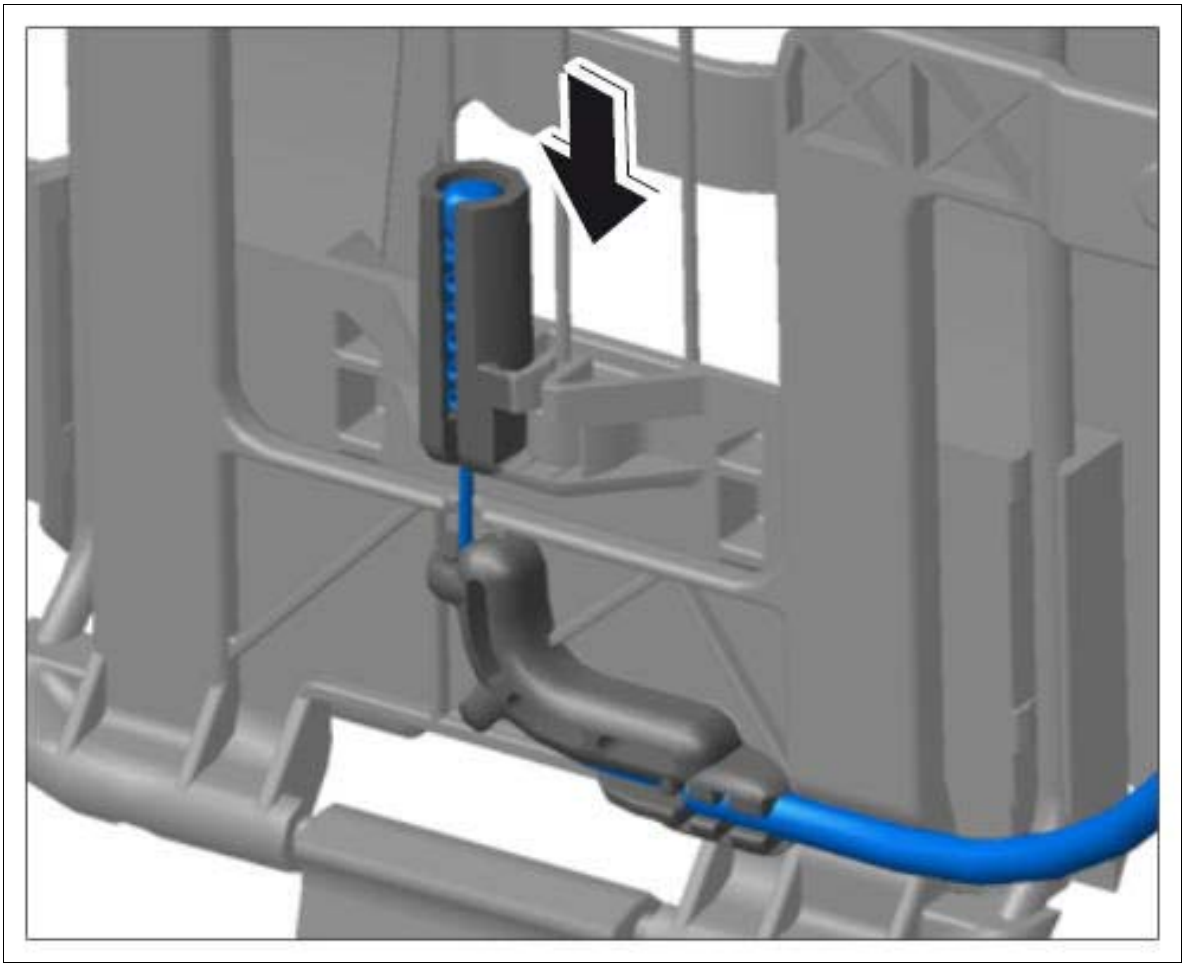

Courtesy of PORSCHE CARS NORTH AMERICA, INC.

4. Engage the cable sleeve in the brackets.

Fig 4: Engaging Cable Sleeve In Bracket

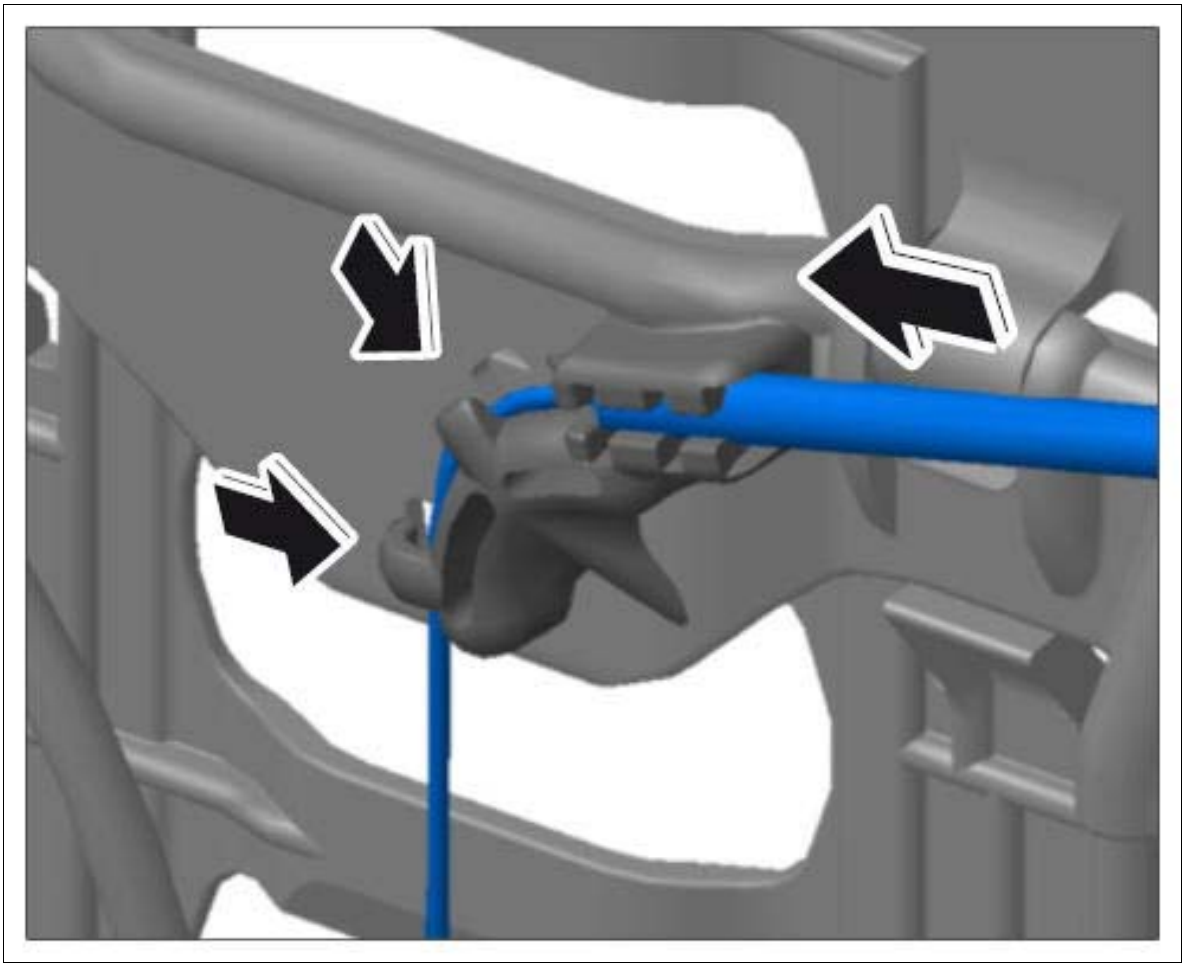

Courtesy of PORSCHE CARS NORTH AMERICA, INC.

5. Engage the operating cable in the bracket **-arrows-** .

Fig 5: Engaging Operating Cable In Bracket

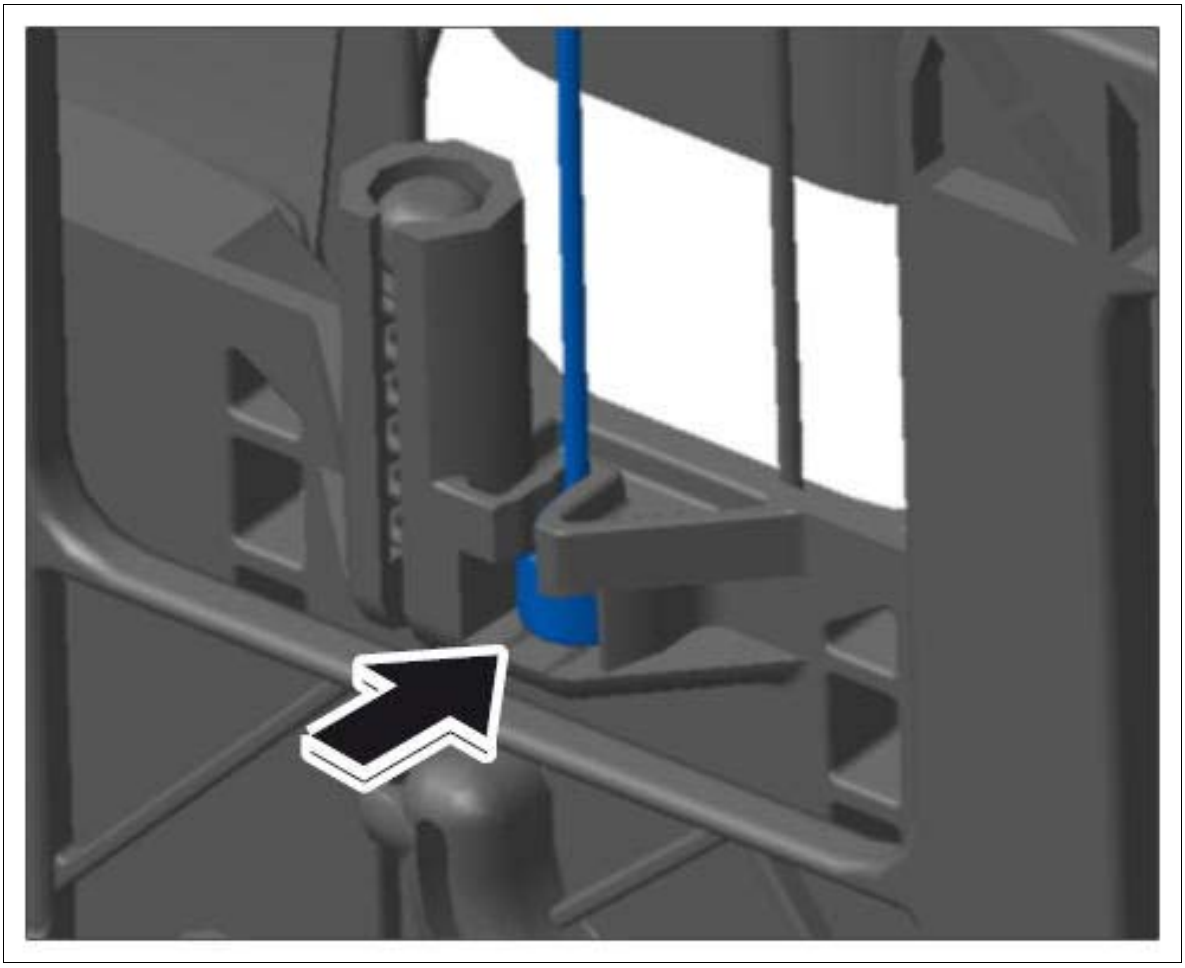

Courtesy of PORSCHE CARS NORTH AMERICA, INC.

6. Plug in electric plug connection on the motor for lumbar support adjustment **-arrow -** until the locking mechanism engages securely.

Fig 6: Installing Connector On Lumbar Support Adjustment Motor



Courtesy of PORSCHE CARS NORTH AMERICA, INC.

WM 723619 REMOVING AND INSTALLING MOTOR FOR LUMBAR SUPPORT ADJUSTMENT AND LUMBAR CURVATURE (ALL MODELS) > INSTALLING MOTOR FOR LUMBAR SUPPORT ADJUSTMENT AND LUMBAR CURVATURE > INSTALLING MOTOR FOR LUMBAR CURVATURE

1. Fit motor for lumbar curvature with holder **-2-** at the top of the backrest frame **-A-** , then turn it slightly to engage it **-B-** .

Fig 1: Engaging Lumbar Curvature Motor

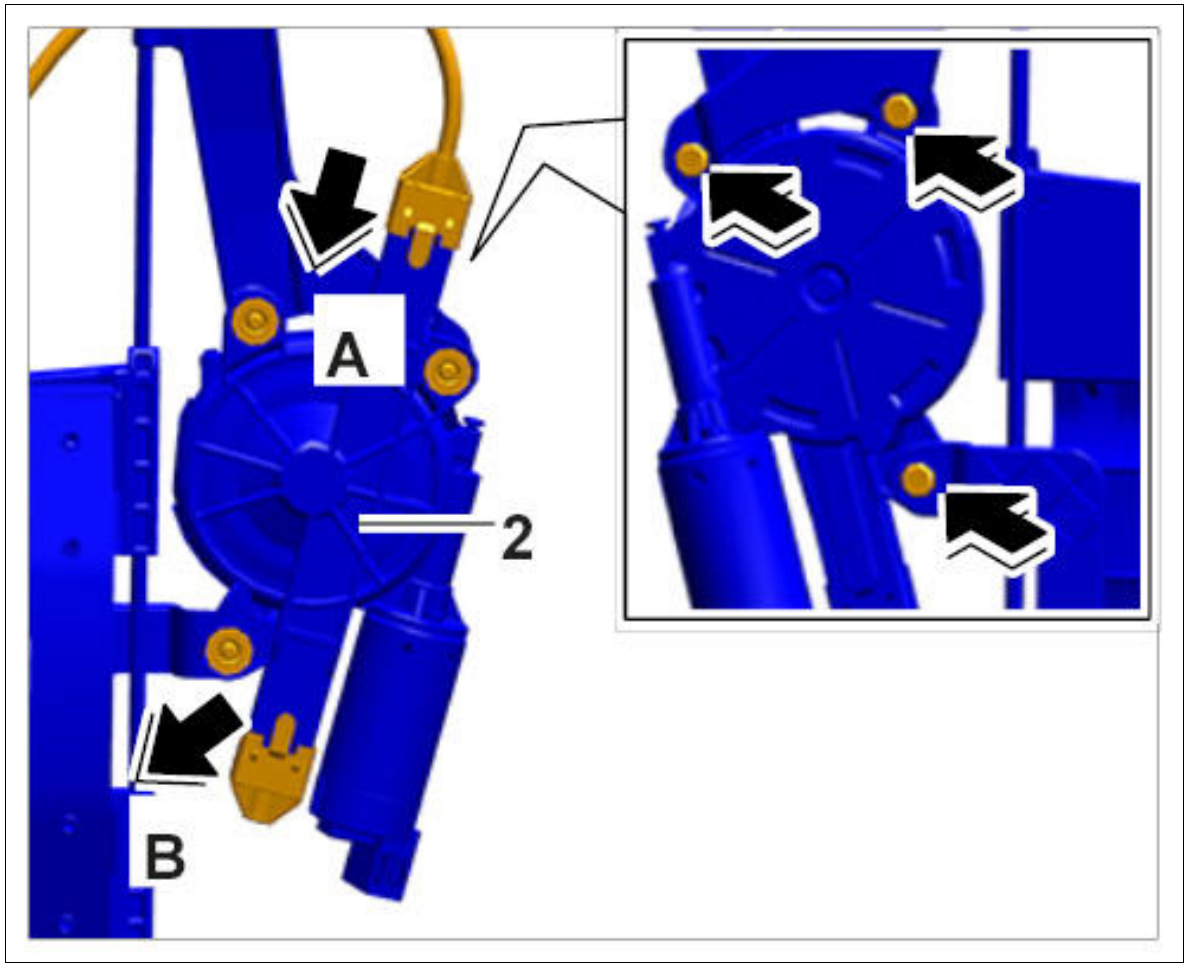

Courtesy of PORSCHE CARS NORTH AMERICA, INC.

2. Completely engage operating cable with deflection roller **-1-** .

Fig 2: Engaging Deflection Roller

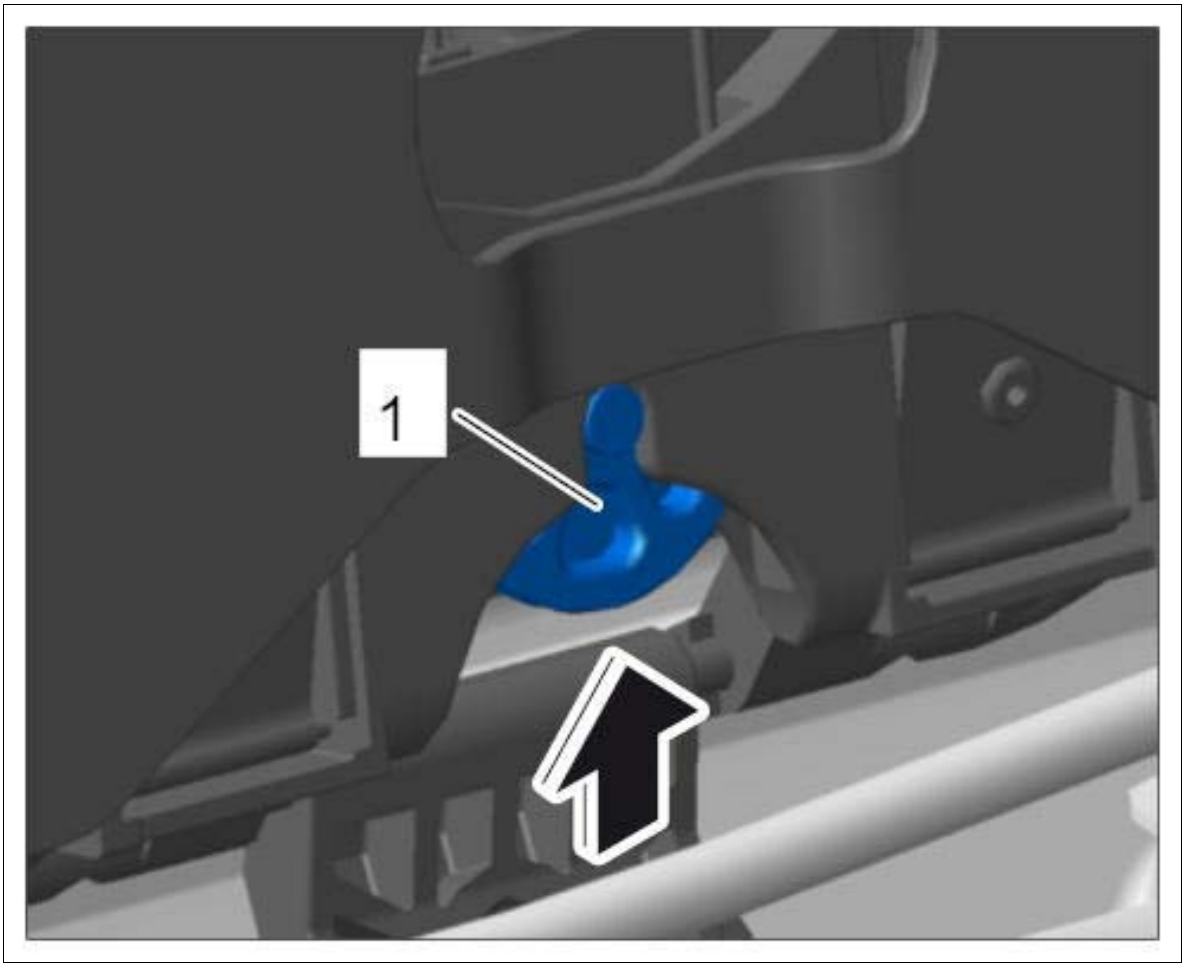

Courtesy of PORSCHE CARS NORTH AMERICA, INC.

3. Engage the operating cable at the side **-arrow A-** and then the cable nipple from above **-arrow B-** into the bracket.

Fig 3: Engaging Cable Nipple

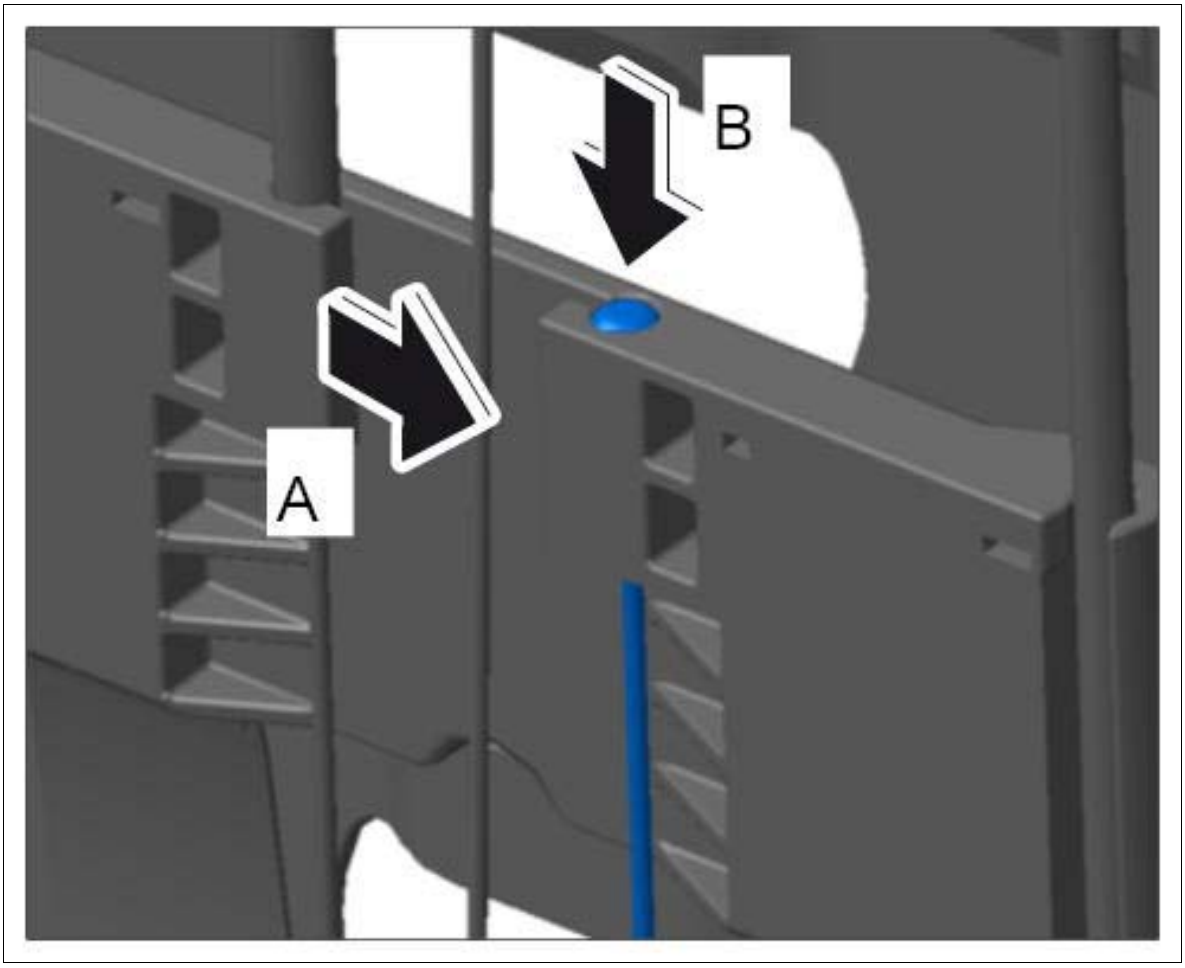

Courtesy of PORSCHE CARS NORTH AMERICA, INC.

4. First engage the operating cable at the side **-arrow A-** and then the cable sleeve from above **-arrow B-** into the guide.

Fig 4: Engaging Cable Sleeve

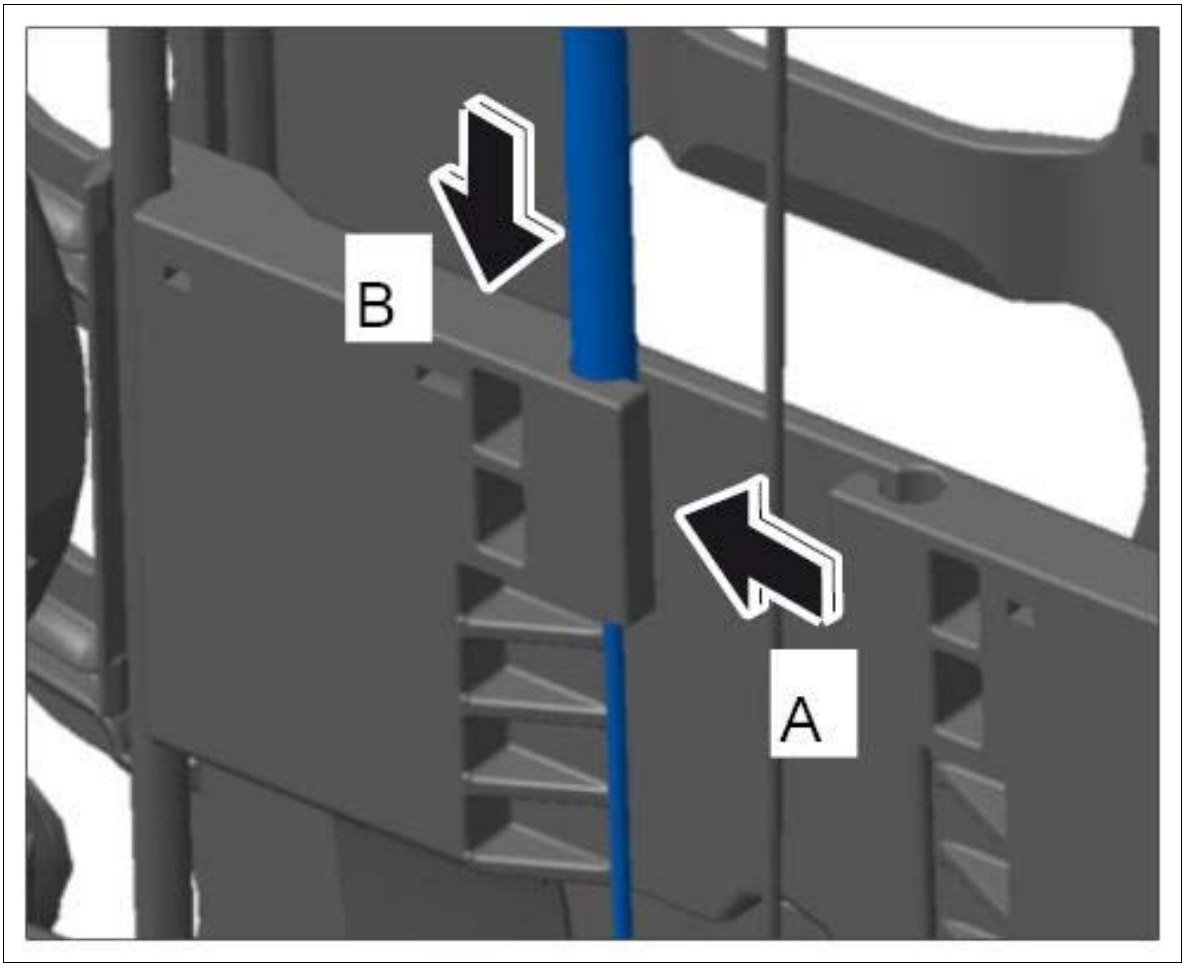

Courtesy of PORSCHE CARS NORTH AMERICA, INC.

5. Plug in electric plug connection on the motor for lumbar curvature **-arrow-** until the locking mechanism engages securely.

Fig 5: Installing Lumbar Curvature Motor Connector

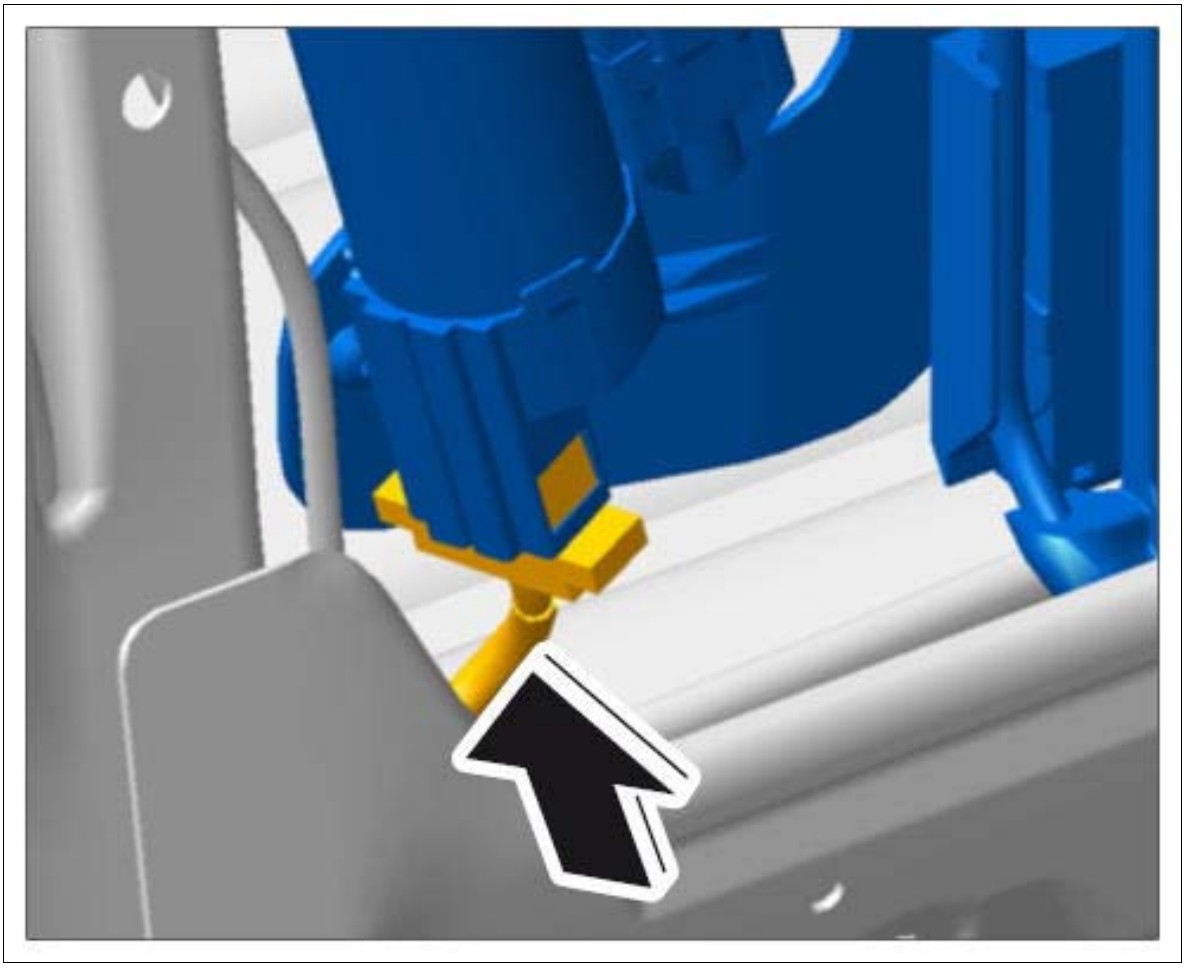

Courtesy of PORSCHE CARS NORTH AMERICA, INC.

WM 723619 REMOVING AND INSTALLING MOTOR FOR LUMBAR SUPPORT ADJUSTMENT AND LUMBAR CURVATURE (ALL MODELS) > SUBSEQUENT WORK

1. Install side airbag. → Installing side airbag
2. Install padding for front backrest. → Installing Padding For Front Backrest

WM 723819 REMOVING AND INSTALLING CONTROL VALVE FOR AIR CUSHION (ALL MODELS) > PRELIMINARY WORK

1. Remove padding for front backrest. → Removing Padding For Front Backrest

WM 723819 REMOVING AND INSTALLING CONTROL VALVE FOR AIR CUSHION (ALL MODELS) > REMOVING CONTROL VALVE FOR AIR CUSHION

1. Release and pull off the pressure line (red) **-1-** under the seat.

Fig 1: Disconnecting Pressure Line Under Seat

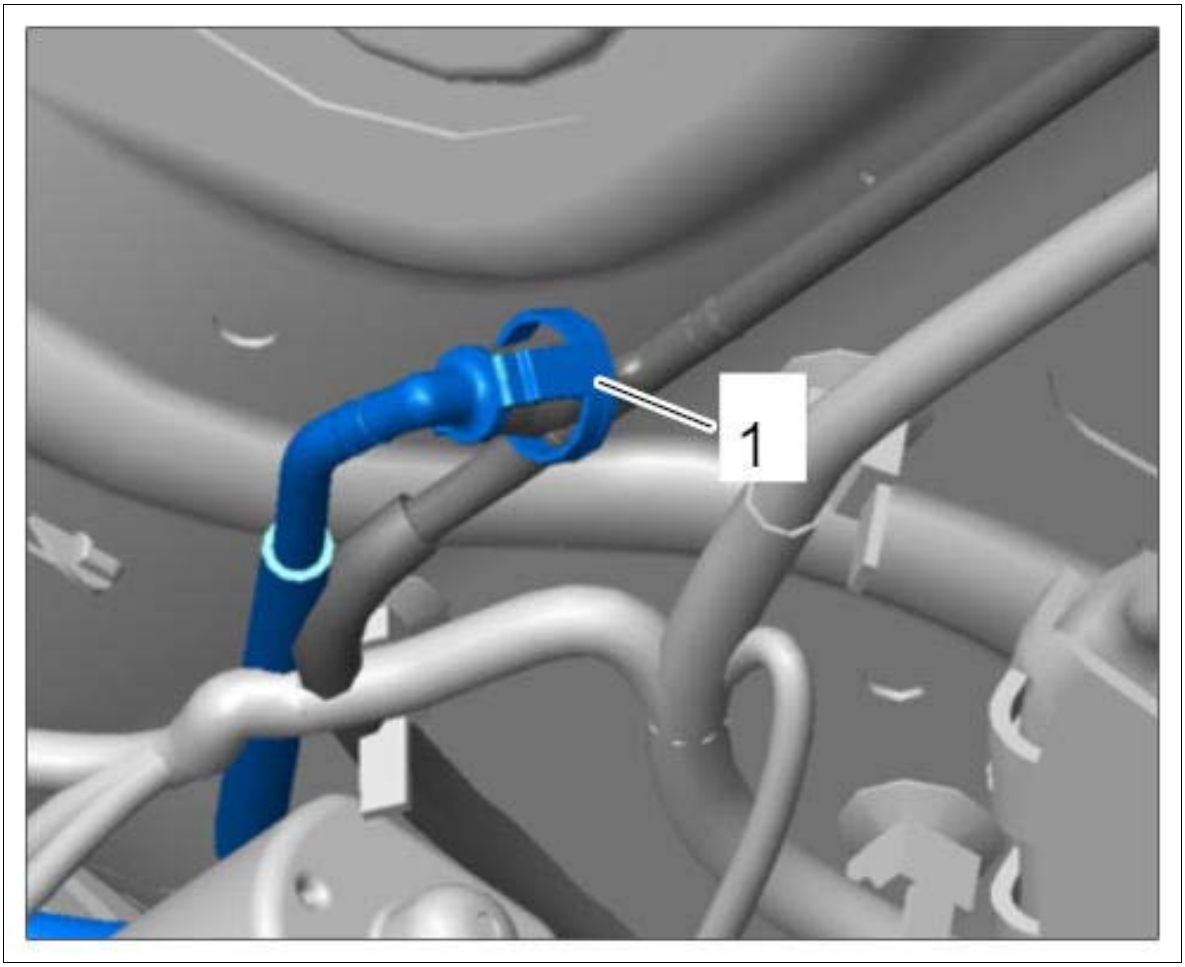

Courtesy of PORSCHE CARS NORTH AMERICA, INC.

2. Pull the pressure line (red) through between the backrest frame and seat.
3. Release control valve pressure line (green) **-3-** from the air cushion pressure line (green) **-2-** and pull it off. Do not loosen tie-wraps **-1-** .

Fig 2: Disconnecting Air Cushion Pressure Line

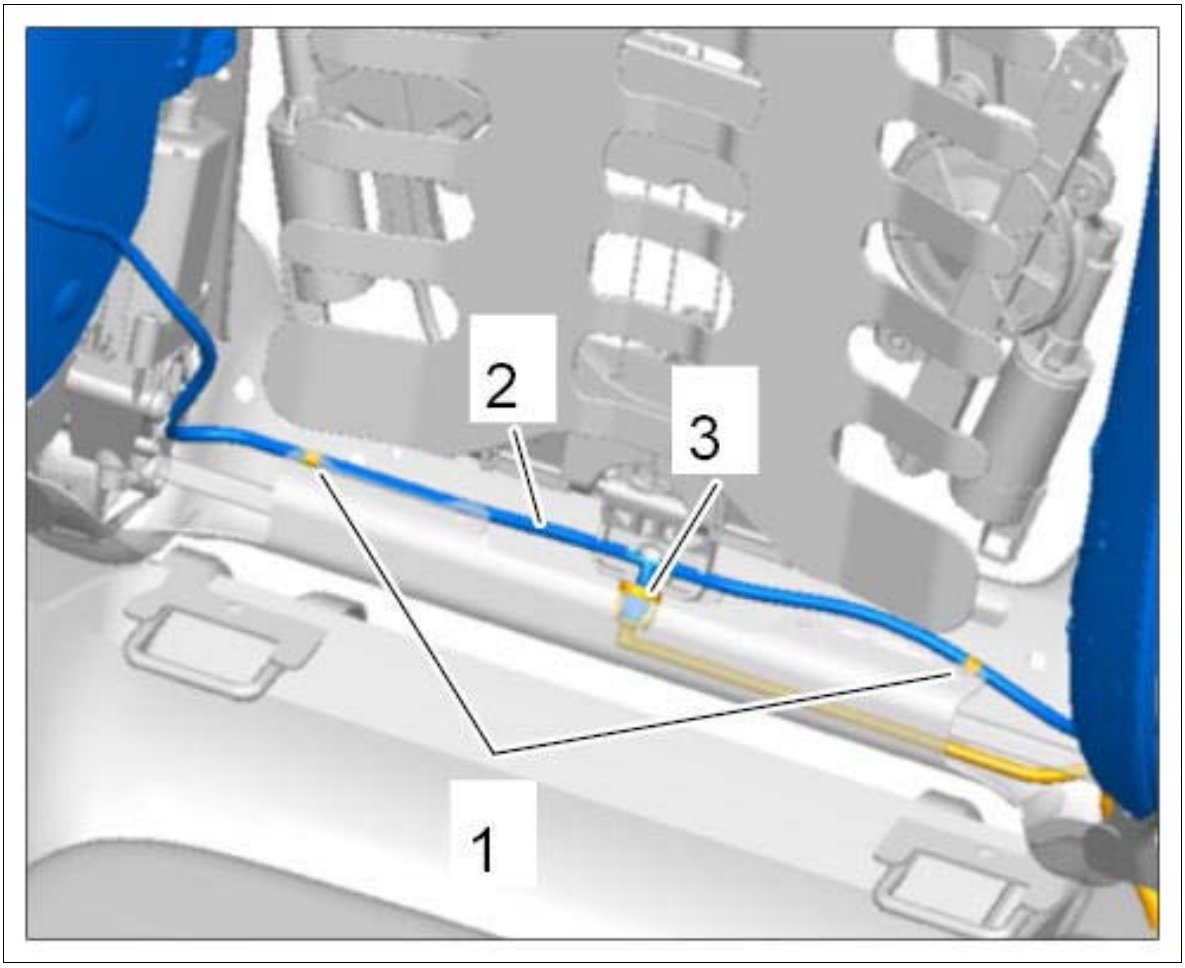

Courtesy of PORSCHE CARS NORTH AMERICA, INC.

4. Unscrew two fastening screws from the backrest air cushion. → Removing Air Cushion For Backrest

5. Release locking mechanisms **-2-** on the control valve **-1- (-A-)** and remove the control valve **-B-** .

Fig 3: Disconnecting Control Valve

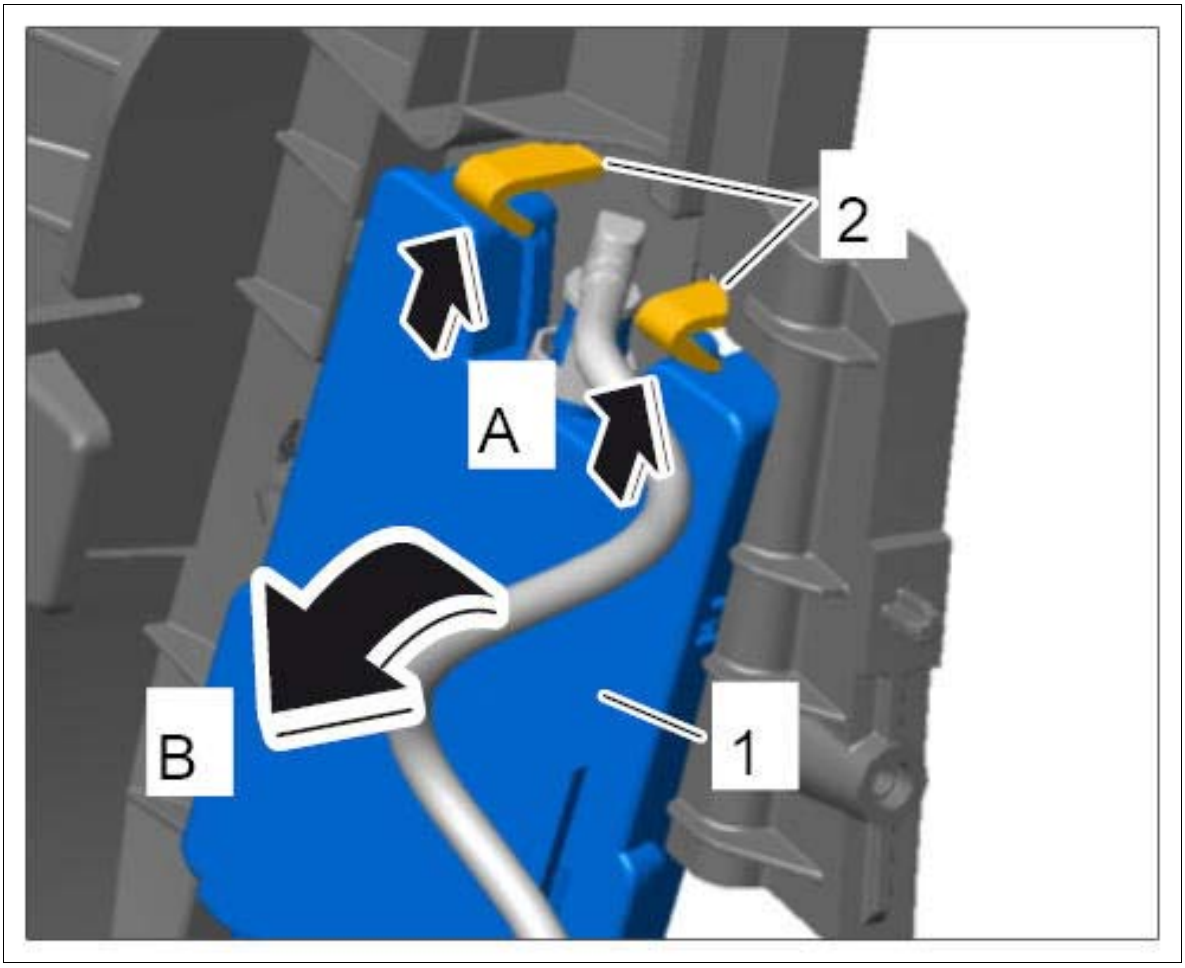

Courtesy of PORSCHE CARS NORTH AMERICA, INC.

6. Release pressure line (blue) **-3-** from the control valve and pull it off.

Fig 4: Disconnecting Pressure Line And Connector

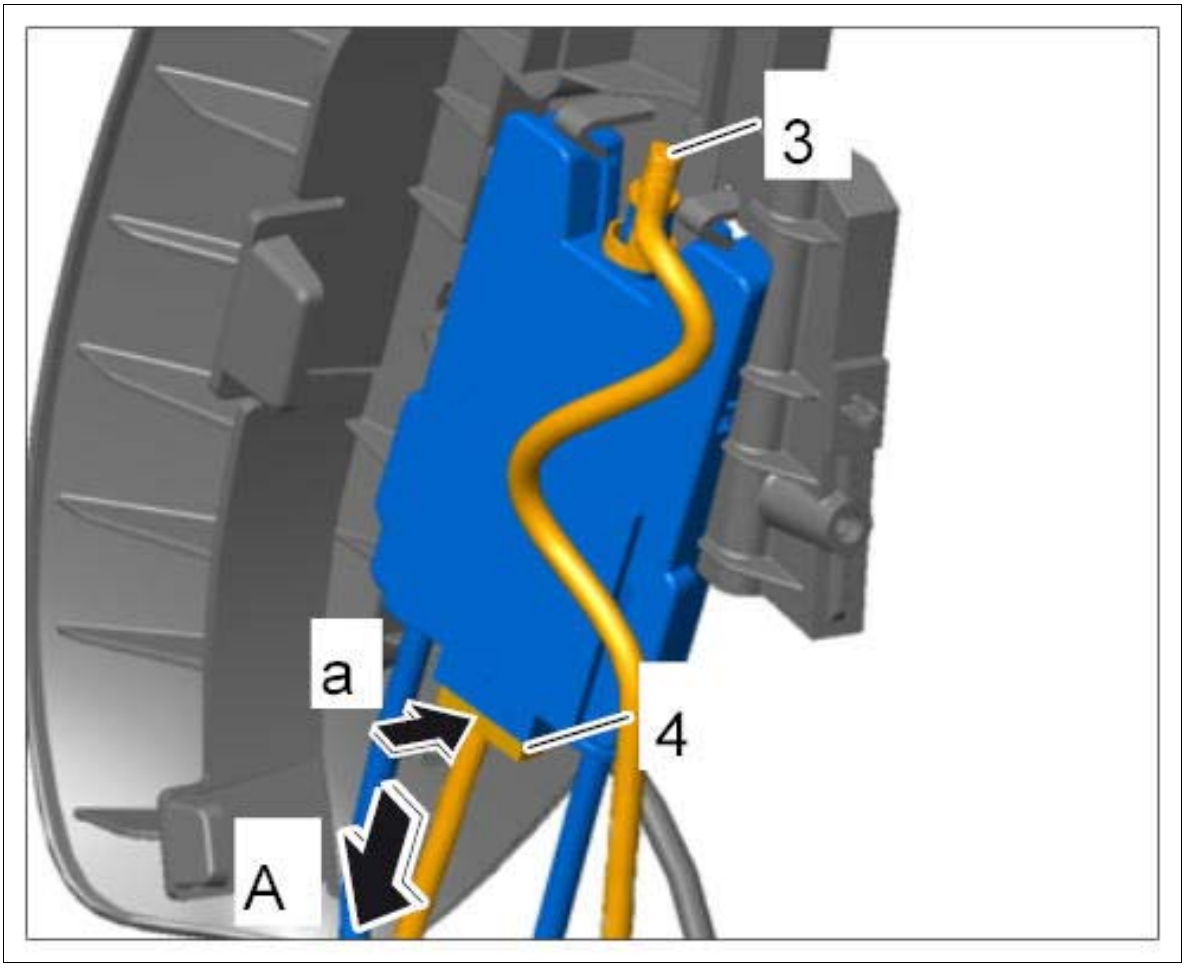

Courtesy of PORSCHE CARS NORTH AMERICA, INC.

7. Release electric plug connection **-4- (-a-)** and disconnect it **-A-** .

WM 723819 REMOVING AND INSTALLING CONTROL VALVE FOR AIR CUSHION (ALL MODELS) > INSTALLING CONTROL VALVE FOR AIR CUSHION

1. Connect the pressure line (blue) **-3-** to the control valve.

Fig 1: Connecting Pressure Line And Connector

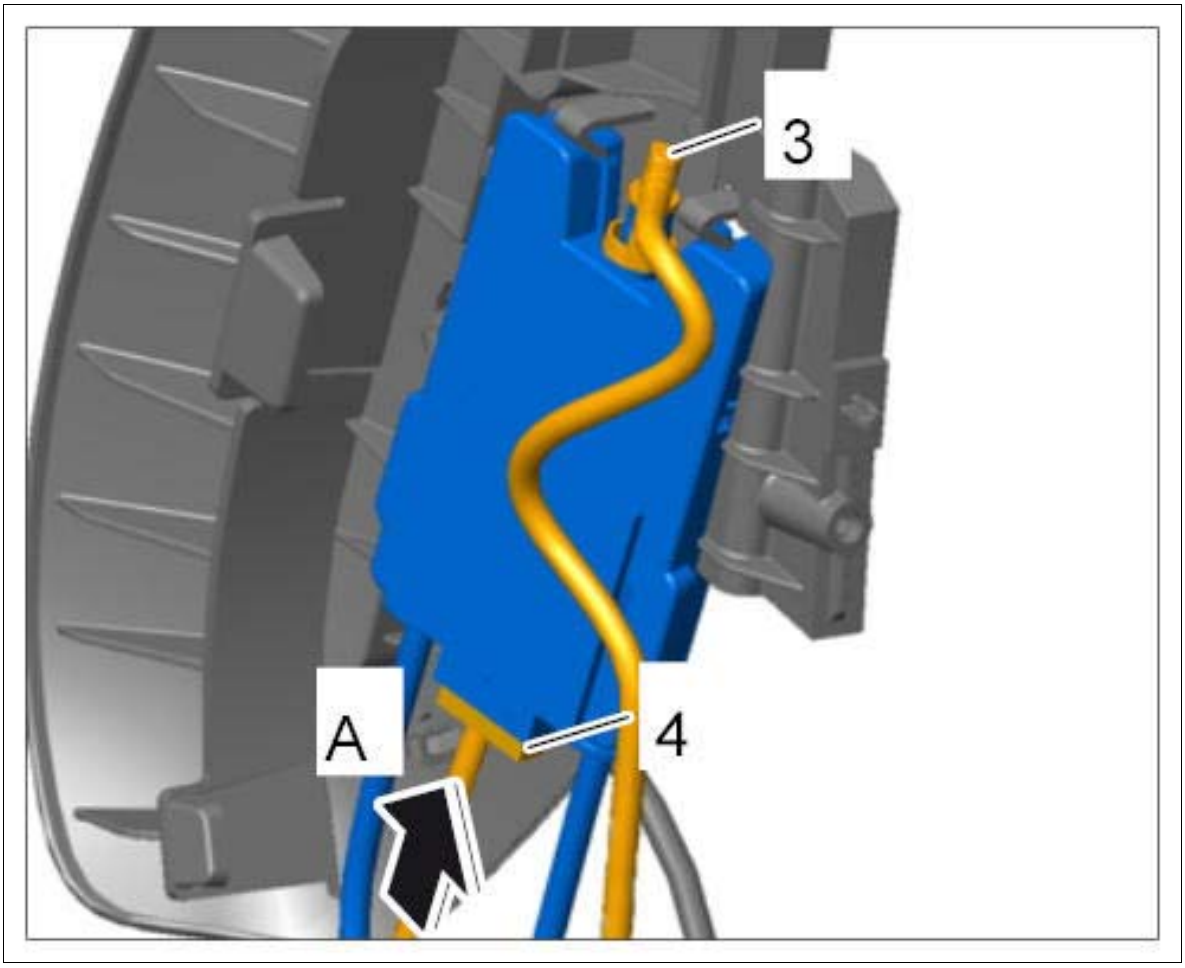

Courtesy of PORSCHE CARS NORTH AMERICA, INC.

2. Insert electric plug connection **-4- (-A-)** until the connector engages securely.
3. Fit the control valve **-1- (-A-)** and engage it in the locking mechanisms **-2-** .

Fig 2: Securing Control Valve

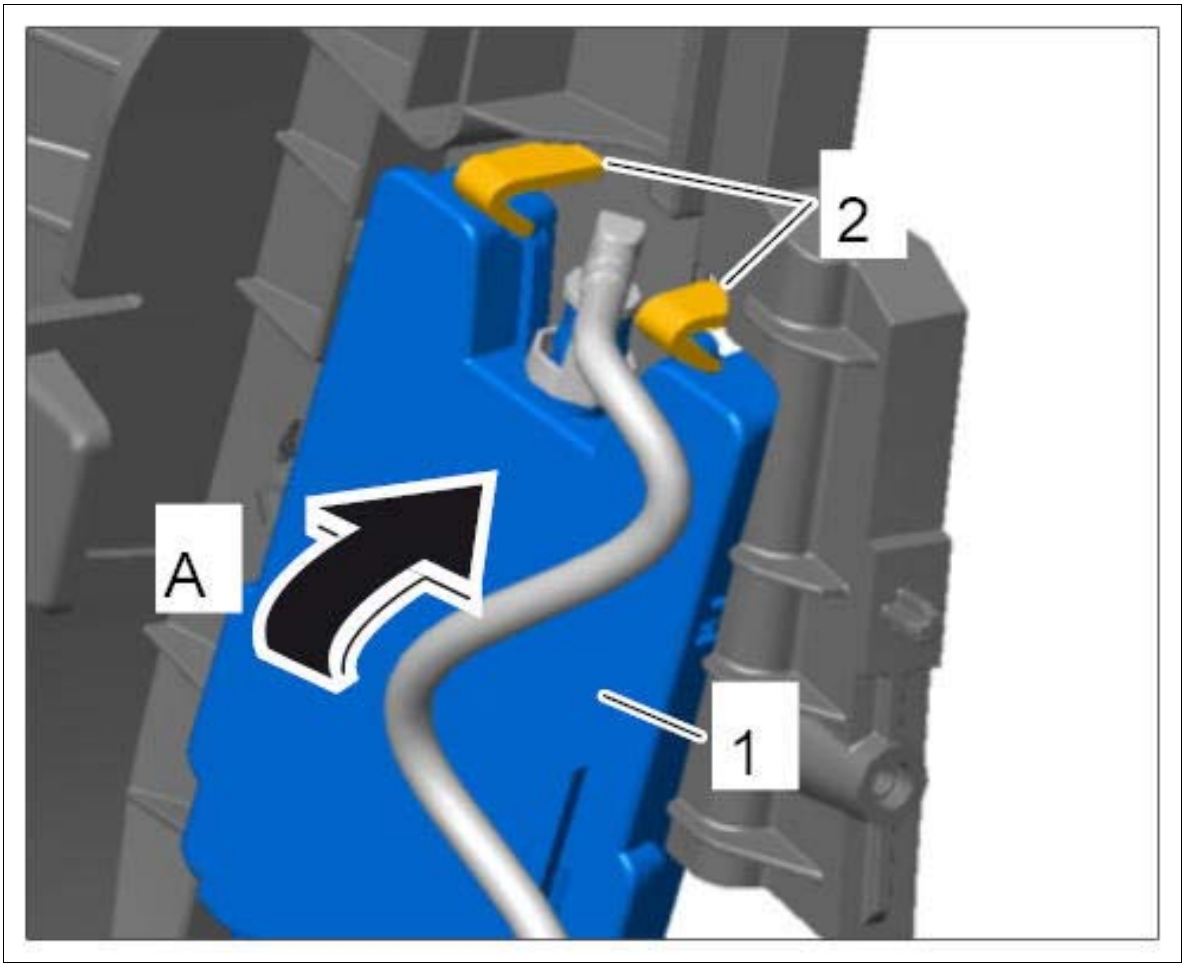

Courtesy of PORSCHE CARS NORTH AMERICA, INC.

4. Screw in two fastening screws for the backrest air cushion. → Installing Air Cushion For Backrest -

5. Connect control valve pressure line (green) **-3-** to the air cushion pressure line (green) **-2-** .

Fig 3: Securing Pressure Line

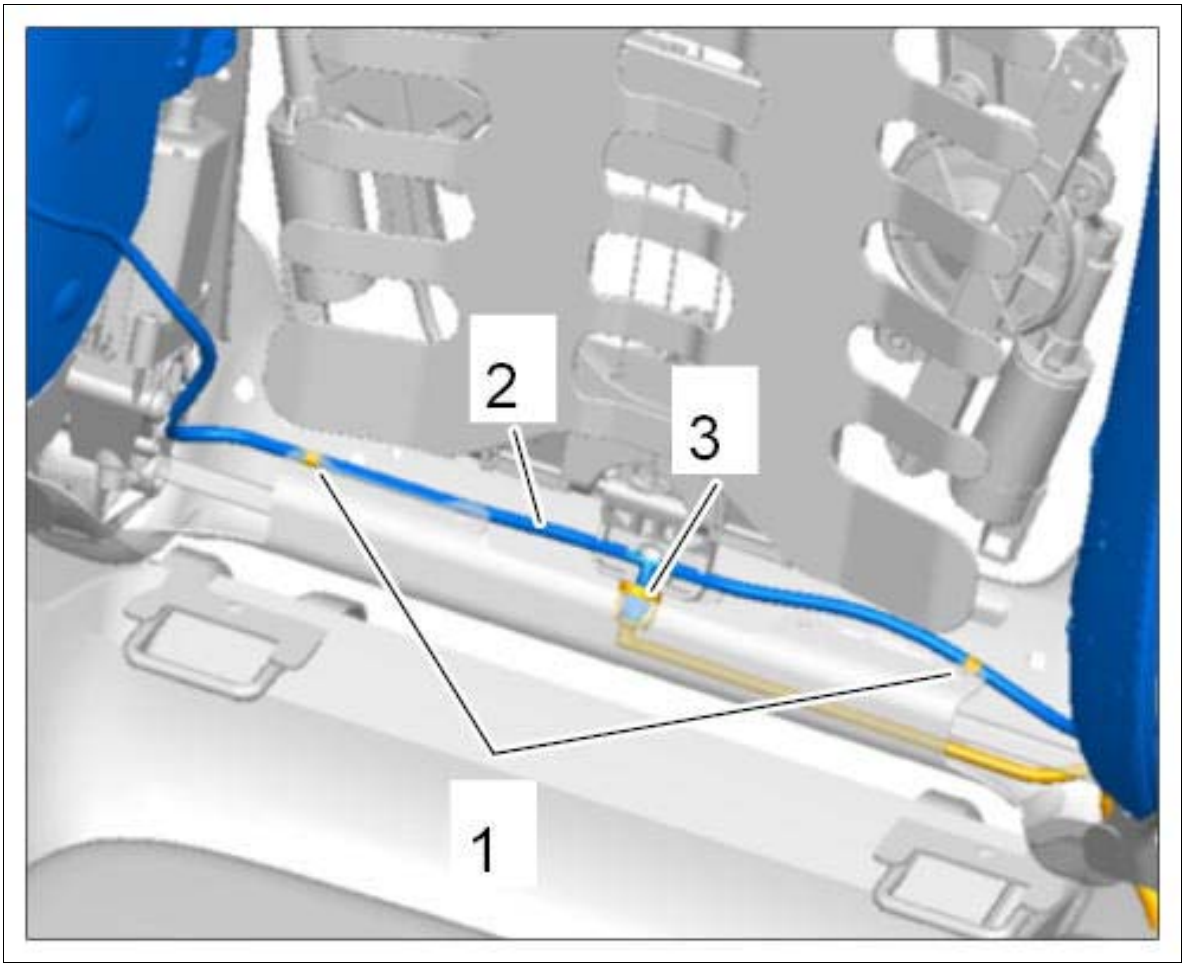

Courtesy of PORSCHE CARS NORTH AMERICA, INC.

6. Pull the pressure line (red) through between the backrest frame and seat.
7. Fit the pressure line (red) **-1-** under the seat.

Fig 4: Fitting Pressure Line Under Seat

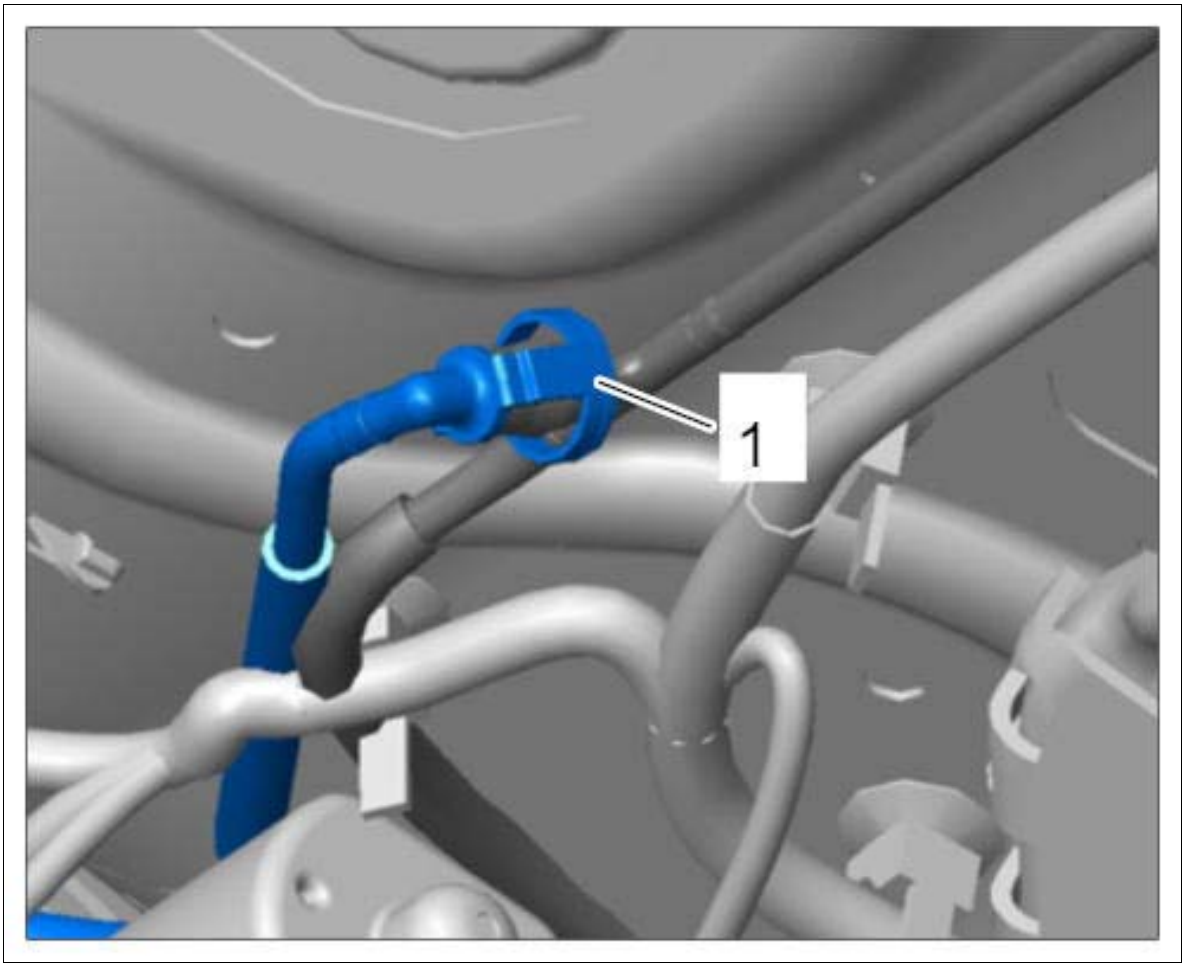

Courtesy of PORSCHE CARS NORTH AMERICA, INC.

WM 723819 REMOVING AND INSTALLING CONTROL VALVE FOR AIR CUSHION (ALL MODELS) > SUBSEQUENT WORK

1. Install padding for front backrest. → Installing Padding For Front Backrest

WM 723919 REMOVING AND INSTALLING MOTOR FOR AIR CUSHION (ALL MODELS) > PRELIMINARY WORK

1. Remove padding for front backrest. → Removing Padding For Front Backrest

WM 723919 REMOVING AND INSTALLING MOTOR FOR AIR CUSHION (ALL MODELS) > REMOVING MOTOR FOR AIR CUSHION

Fig 1: Identifying Air Cushion Motor Position



Courtesy of PORSCHE CARS NORTH AMERICA, INC.

1. Unscrew two fastening screws from the backrest air cushion. → Removing Air Cushion For Backrest
2. Release fixing clip **-2-** for the motor **-1-** .
3. Disconnect electric plug connection **-3-** .

Fig 2: Removing Air Cushion Motor

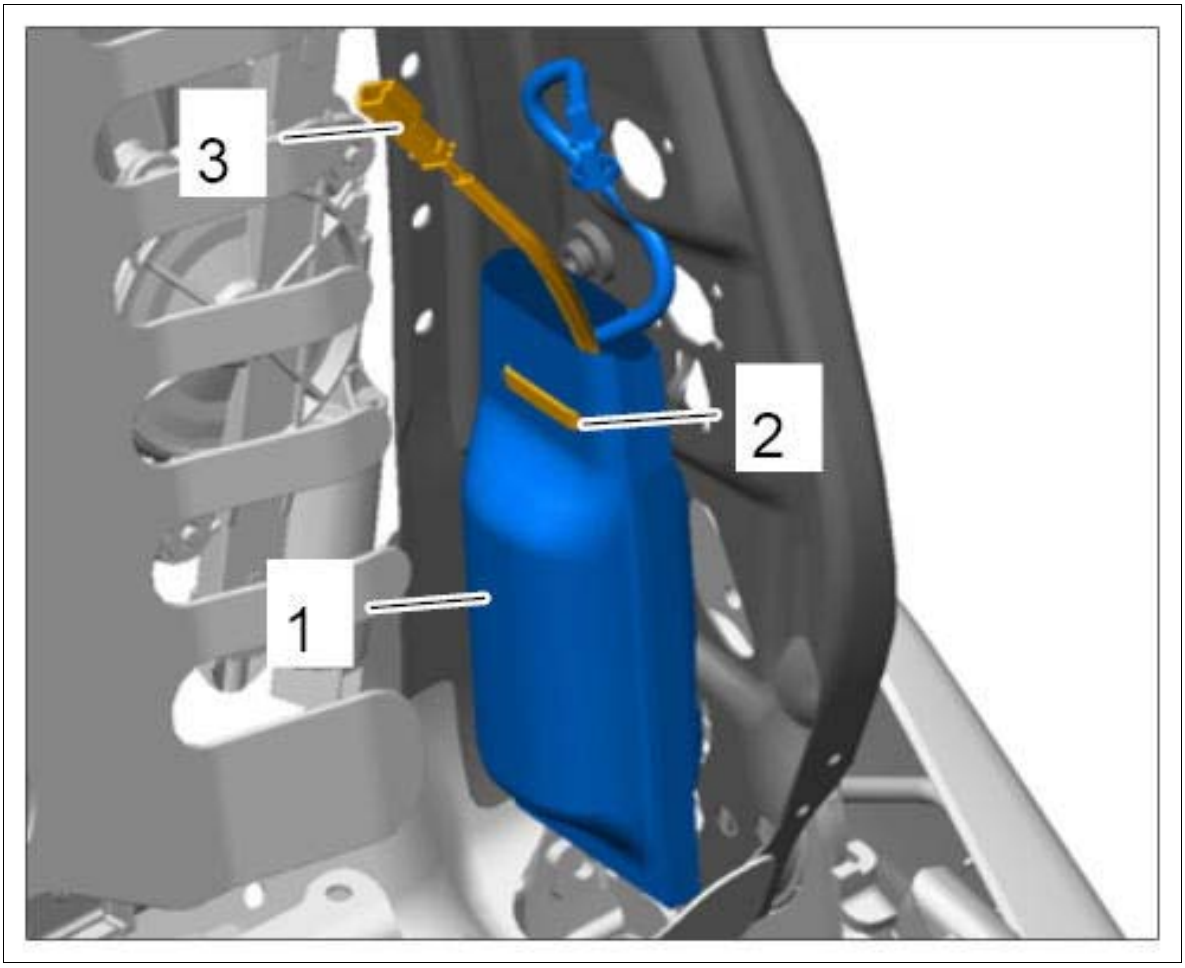

Courtesy of PORSCHE CARS NORTH AMERICA, INC.

4. Release pressure line (blue) **-3-** from the control valve and pull it off.

Fig 3: Disconnecting Pressure Line And Connector

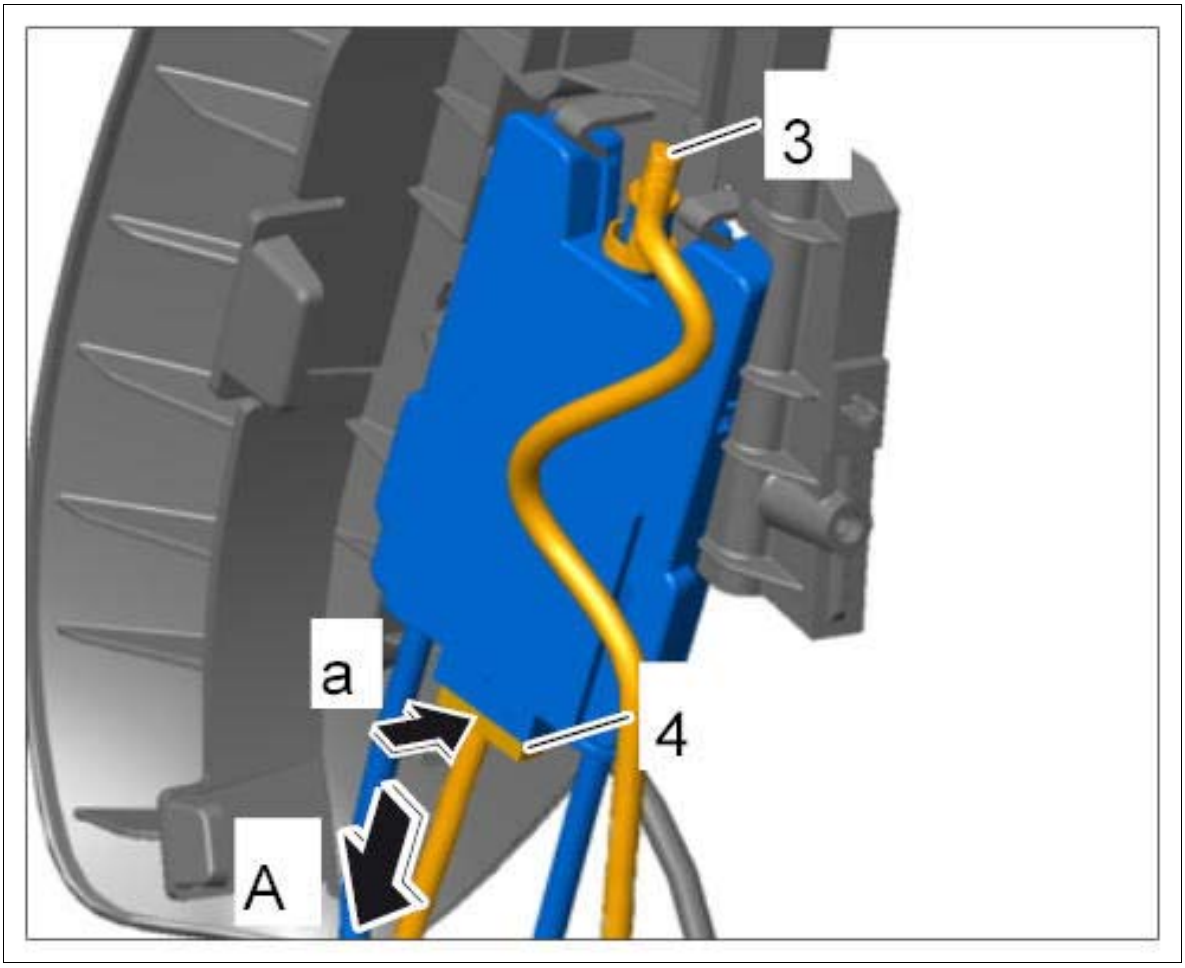

Courtesy of PORSCHE CARS NORTH AMERICA, INC.

WM 723919 REMOVING AND INSTALLING MOTOR FOR AIR CUSHION (ALL MODELS) > INSTALLING MOTOR FOR AIR CUSHION

1. Clip in fixing clip **-2-** for the motor **-1-** .
2. Plug in electric plug connection **-3-** .

Fig 1: Installing Air Cushion Motor

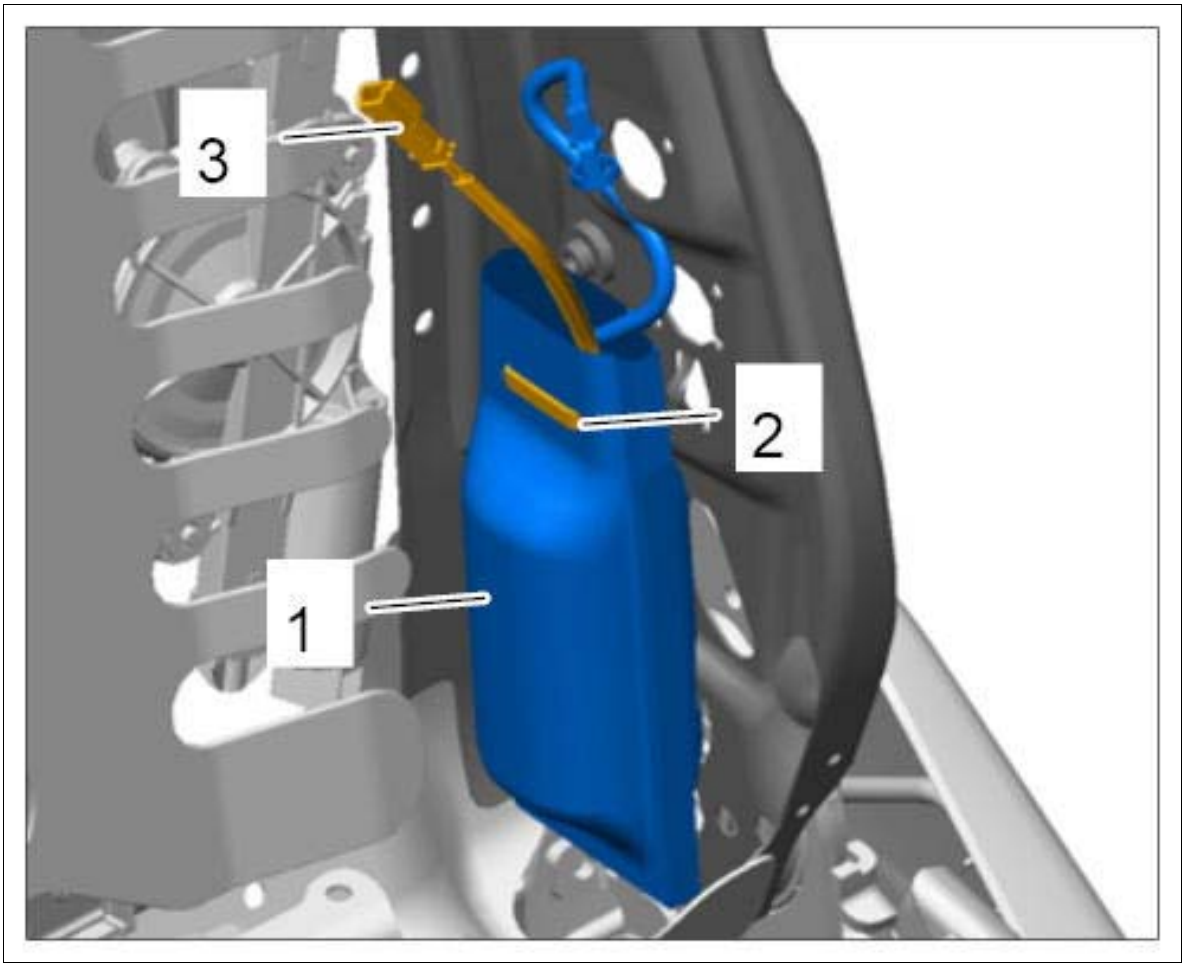

Courtesy of PORSCHE CARS NORTH AMERICA, INC.

3. Connect the pressure line (blue) **-3-** to the control valve.

Fig 2: Connecting Pressure Line And Connector

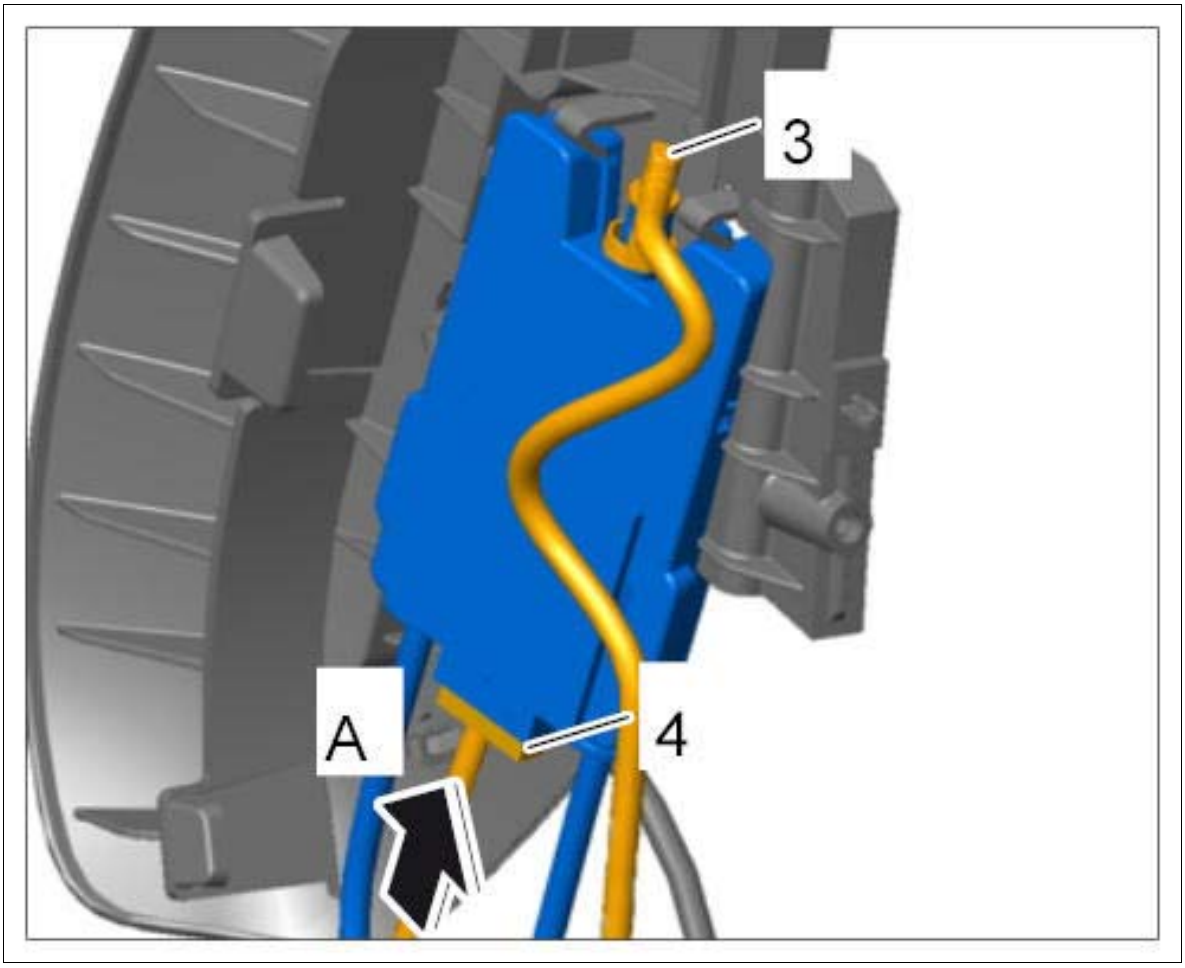

Courtesy of PORSCHE CARS NORTH AMERICA, INC.

4. Screw in two fastening screws for the backrest air cushion. → Installing Air Cushion For Backrest

WM 723919 REMOVING AND INSTALLING MOTOR FOR AIR CUSHION (ALL MODELS) > SUBSEQUENT WORK

1. Install padding for front backrest. → Installing Padding For Front Backrest

WM 724719 REMOVING AND INSTALLING REAR BACKREST (ALL MODELS) > TECHNICAL VALUES

Location	Description	Type	Basic value	Tolerance 1	Tolerance 2
Fastening screws for supporting bow		Tightening torque	12 Nm (9 ftlb.)		

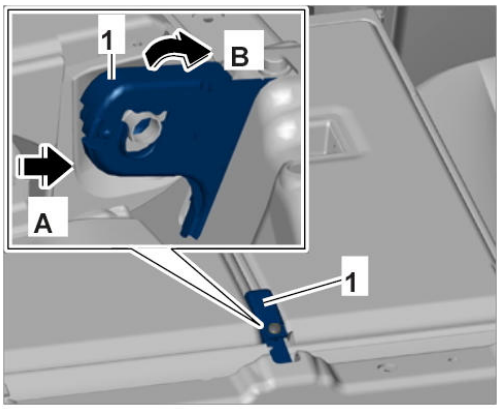

Securing supporting bow

Fastening screw for rear belt lock		Tightening torque	50 Nm (37 ftlb.)		

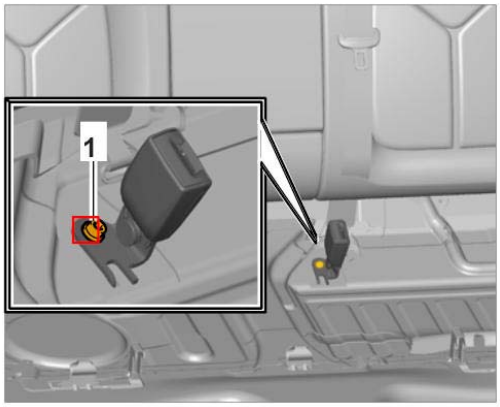

Loosening seat-belt buckle

WM 724719 REMOVING AND INSTALLING REAR BACKREST (ALL MODELS) > COMPONENT INFORMATION > INSTALLATION POSITION

Fig 1: Identifying Backrest Installation Position



Courtesy of PORSCHE CARS NORTH AMERICA, INC.

WM 724719 REMOVING AND INSTALLING REAR BACKREST (ALL MODELS) > PRELIMINARY WORK

1. Remove rear seat. → Removing Rear Seat

WM 724719 REMOVING AND INSTALLING REAR BACKREST (ALL MODELS) > REMOVING REAR BACKREST > REMOVING REAR LEFT BACKREST

1. Loosen seat-belt buckle for middle seat from the body.

Fig 1: Loosening Seat-Belt Buckle

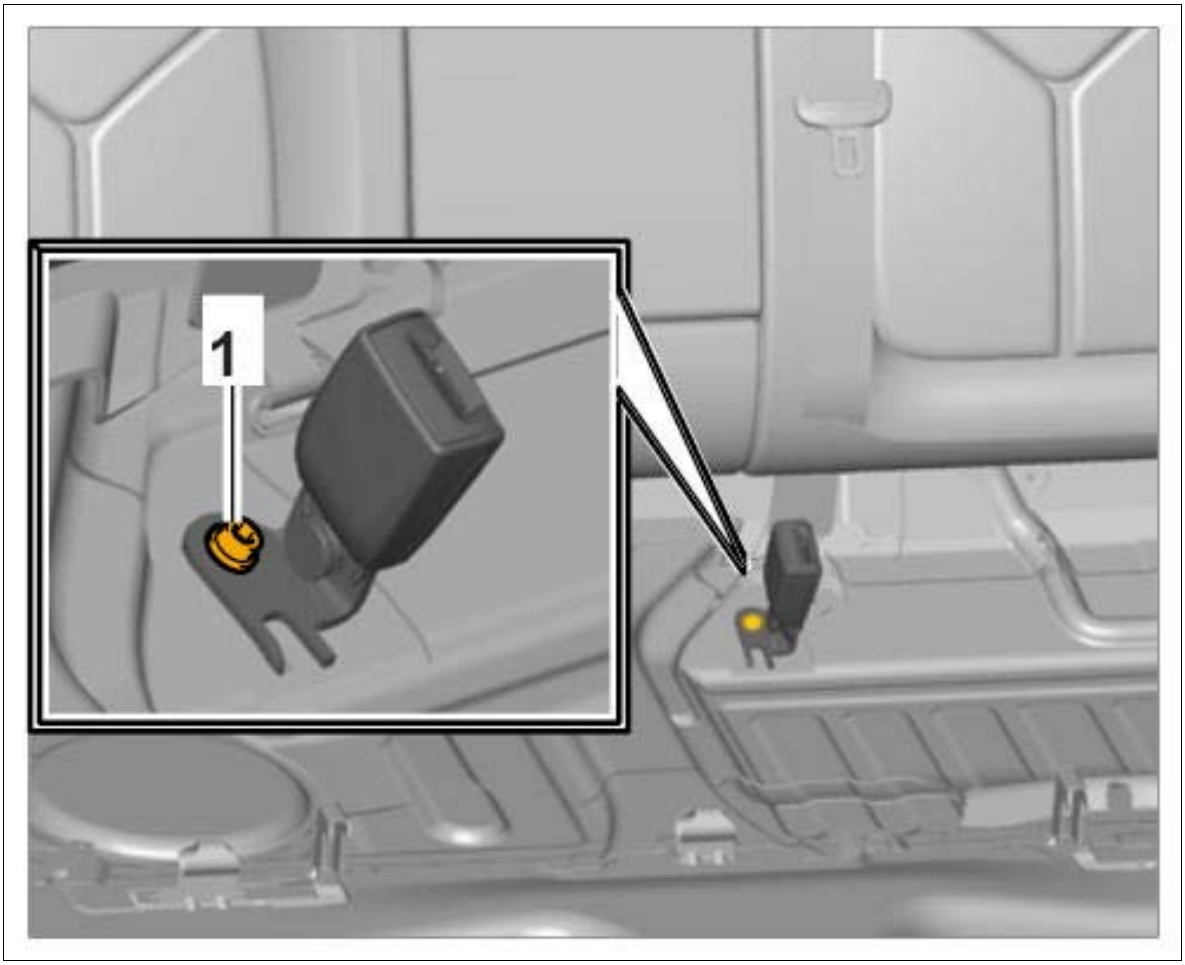

Courtesy of PORSCHE CARS NORTH AMERICA, INC.

2. Fold load-through provision forward.
3. Unscrew and remove fastening screw **-1-** for left supporting bow **-2-** .

   Remove supporting bow by moving it upwards **-arrow A-** and unhooking it and pulling it forward out of the cross bolt **-arrow B-** .

Fig 2: Removing Supporting Bow

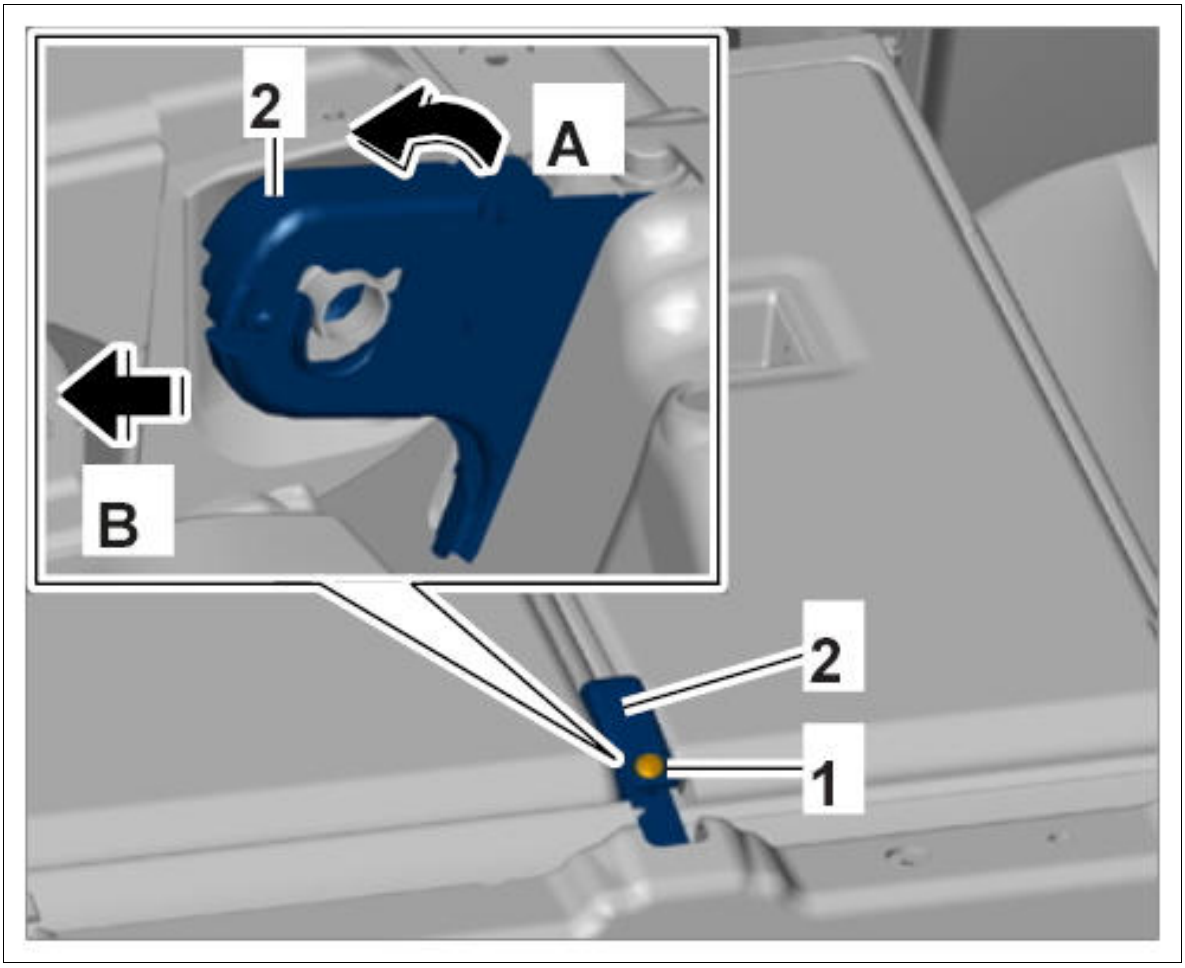

Courtesy of PORSCHE CARS NORTH AMERICA, INC.

4. Lift rear left backrest **-1-** out of the center mount **-2-** and remove it **-arrow A-** .

Fig 3: Removing Rear Backrest

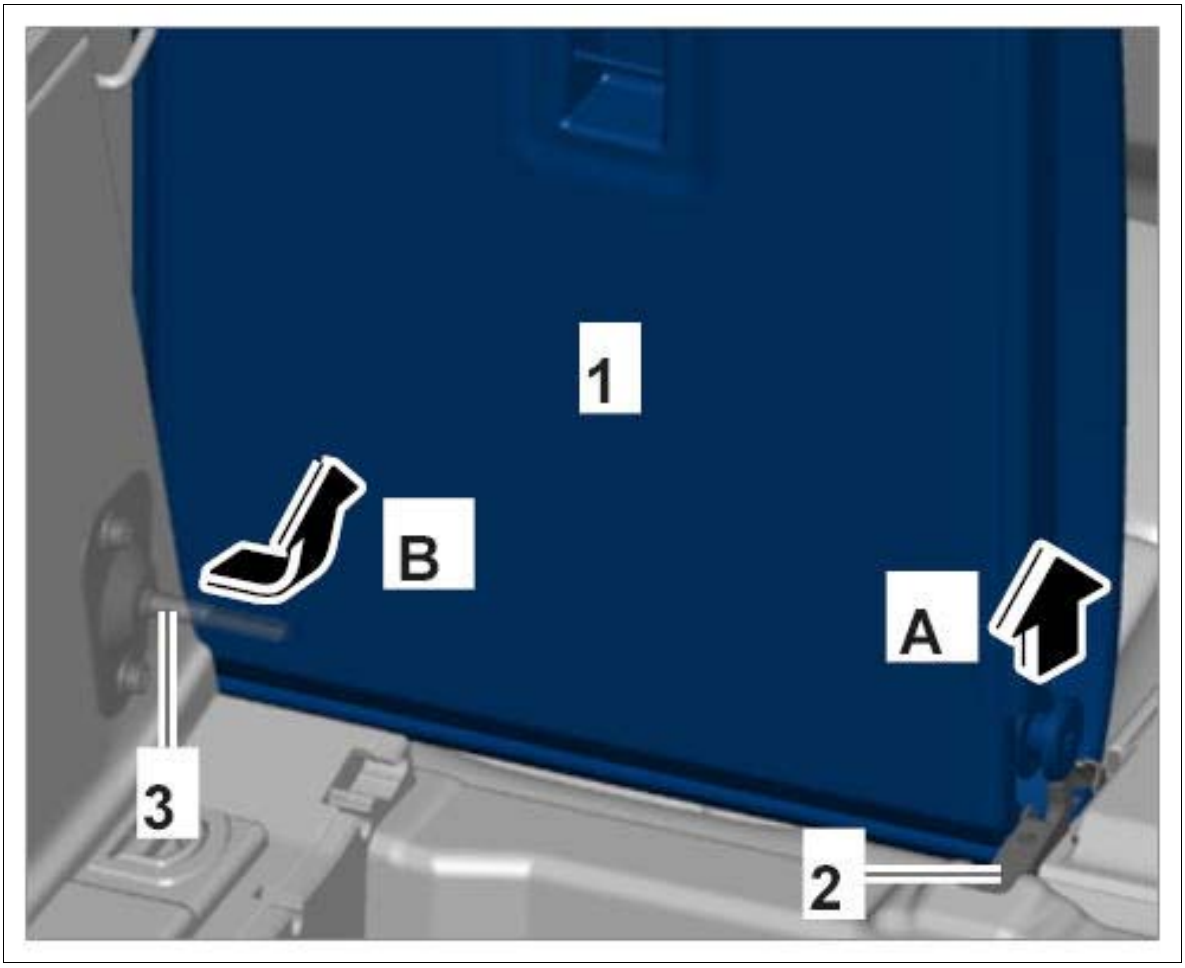

Courtesy of PORSCHE CARS NORTH AMERICA, INC.

5. Pull rear left backrest **-1-** towards the center of the vehicle and remove it from the mount on the body **-3- (-arrow B-)** .
6. **Only for vehicles with heated seats:** Disconnect electric plug connection between the rear seat and backrest.

WM 724719 REMOVING AND INSTALLING REAR BACKREST (ALL MODELS) > REMOVING REAR BACKREST > REMOVING REAR RIGHT BACKREST

Information

- The illustrations show the other side as an example.
- The removal and installation procedure for this side is practically identical.

1. Fold load-through provision and rear right backrest forward.
2. Unscrew and remove fastening screw **-1-** for right supporting bow **-2-** .

   Remove supporting bow by moving it upwards **-arrow A-** and unhooking it and pulling it forward

out of the cross bolt **-arrow B-** .

Fig 1: Removing Supporting Bow

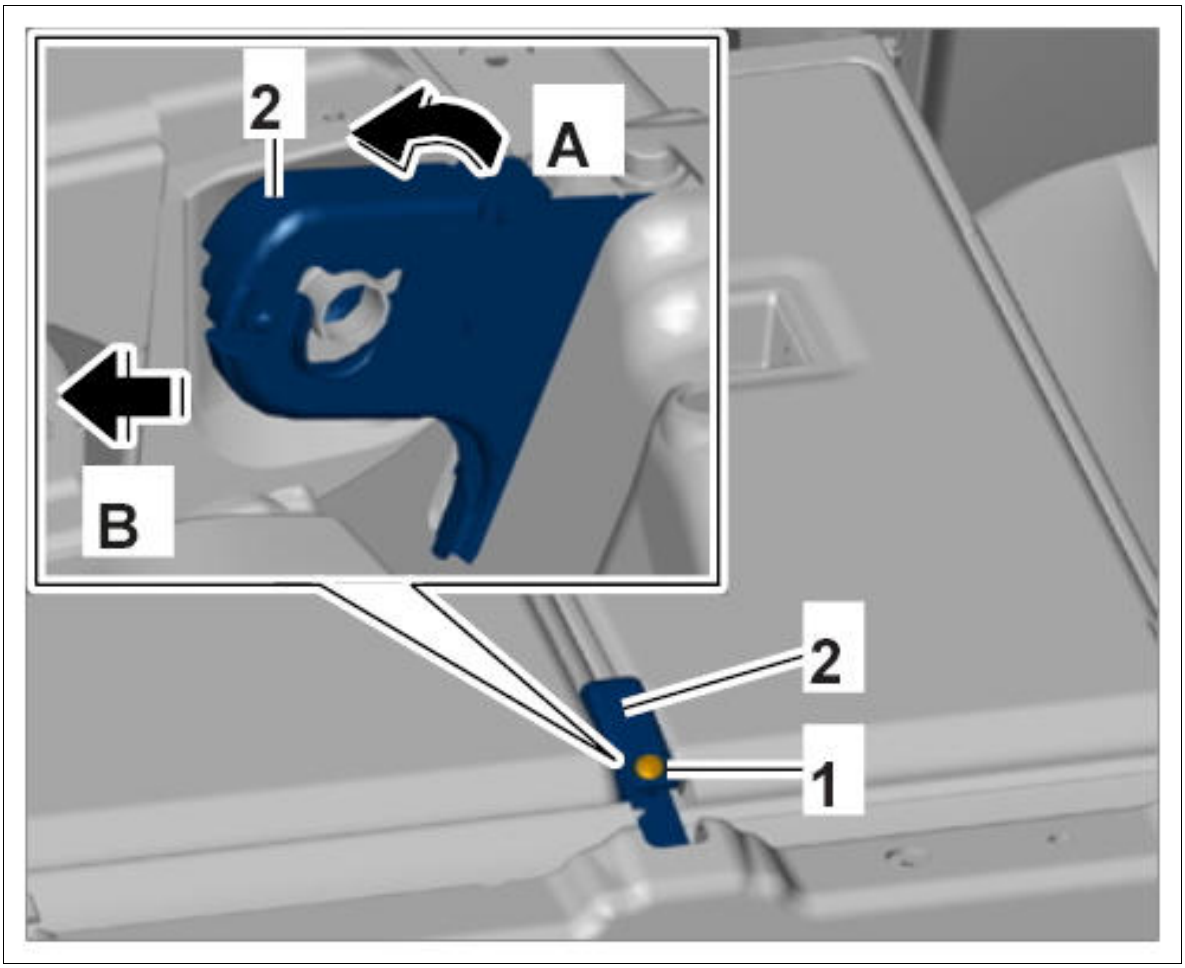

Courtesy of PORSCHE CARS NORTH AMERICA, INC.

3. Lift rear right backrest **-1-** out of the center mount **-2-** and remove it **-arrow A-** .
4. Pull rear right backrest **-1-** towards the center of the vehicle and remove it from the mount on the body **-3- (-arrow B-)** .

Fig 2: Removing Rear Backrest

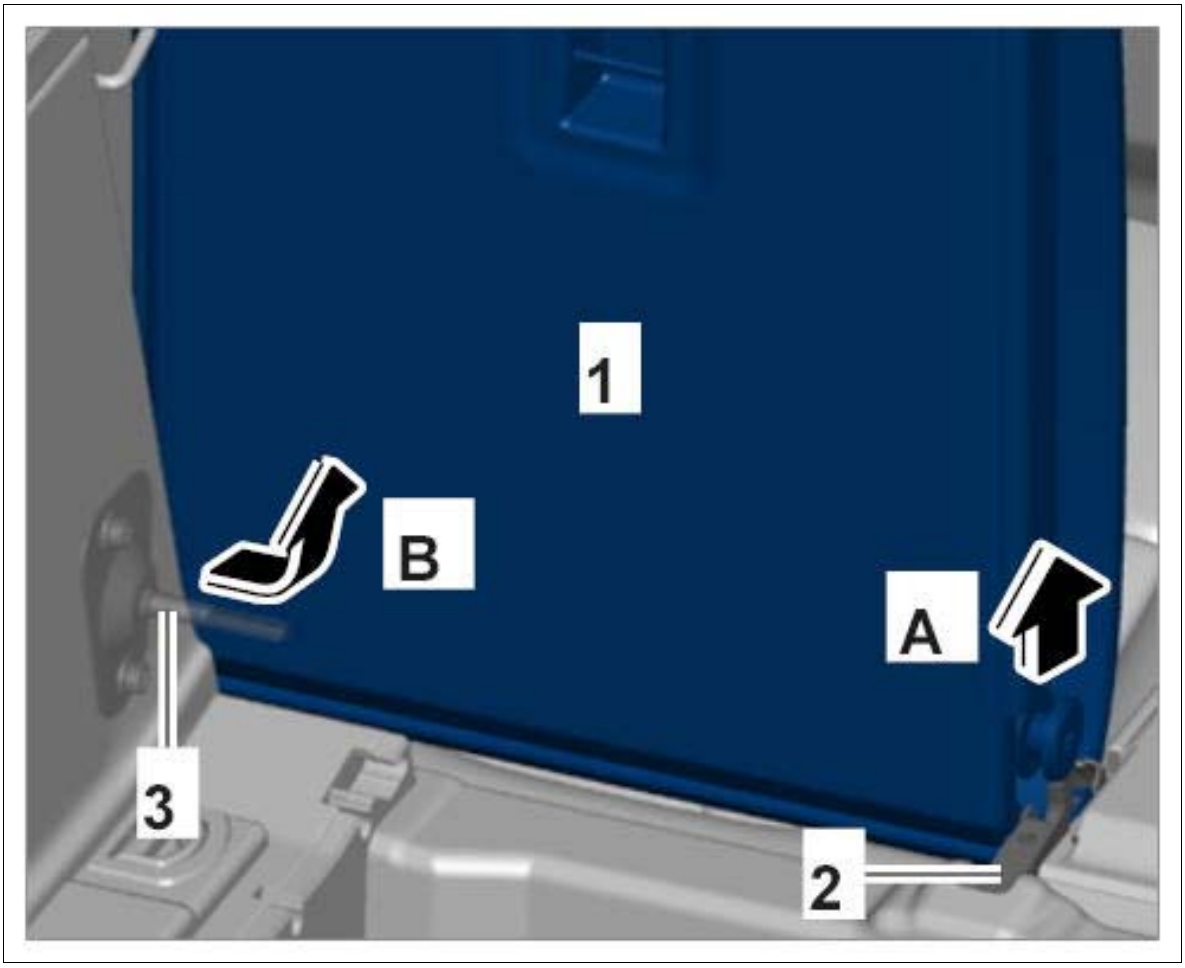

Courtesy of PORSCHE CARS NORTH AMERICA, INC.

5. **Only for vehicles with heated seats:** Disconnect electric plug connection between the rear seat and backrest.

WM 724719 REMOVING AND INSTALLING REAR BACKREST (ALL MODELS) > INSTALLING REAR BACKREST > INSTALLING REAR LEFT BACKREST

WARNING: Incorrect handling of safety bolts

- *Danger of injury*
- *Loss of torque*

→ Always use new fastening screws and nuts following removal.

→ Observe specified tightening torques.

→ Carry out a visual inspection of all re-used parts.

1. Guide rear left backrest **-1-** into the mount on the body **-2- (-arrow A-)** .
2. **Only for vehicles with heated seats:** Connect electric plug connection between the rear seat and backrest.
3. Guide rear left backrest **-1-** into the center mount **-3- (-arrow B-)** .
4. Install supporting bow **-1- (-arrows-)** and secure it **Tightening torque 12 Nm (9 ftlb.)** .

Information

Fig 1: Installing Rear Backrest

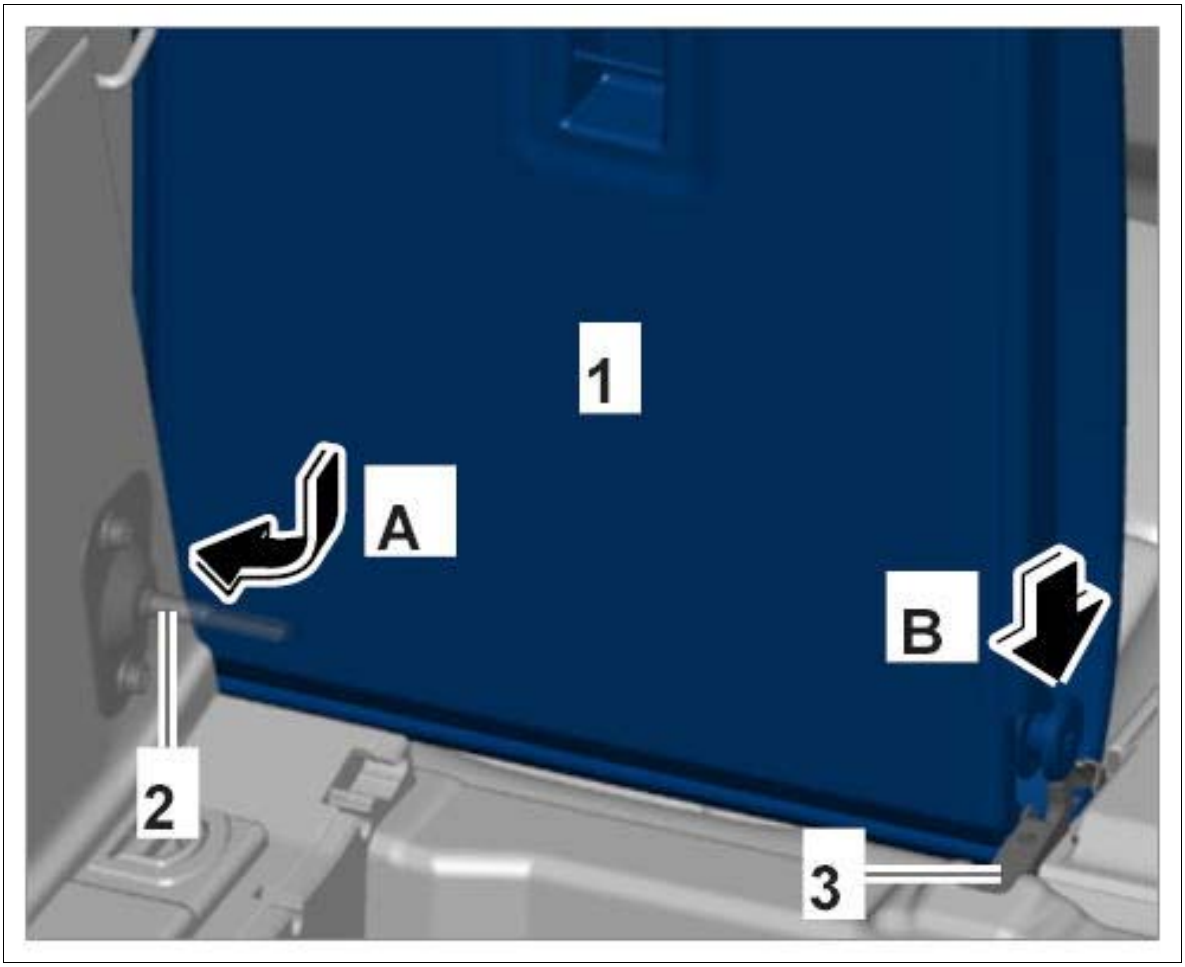

Courtesy of PORSCHE CARS NORTH AMERICA, INC.

Always replace the fastening screws on the seat assembly after customer service and reworking. Micro-self-locking or self-tapping screws must not be modified, greased or loosened and then screwed in again.

Fig 2: Securing Supporting Bow

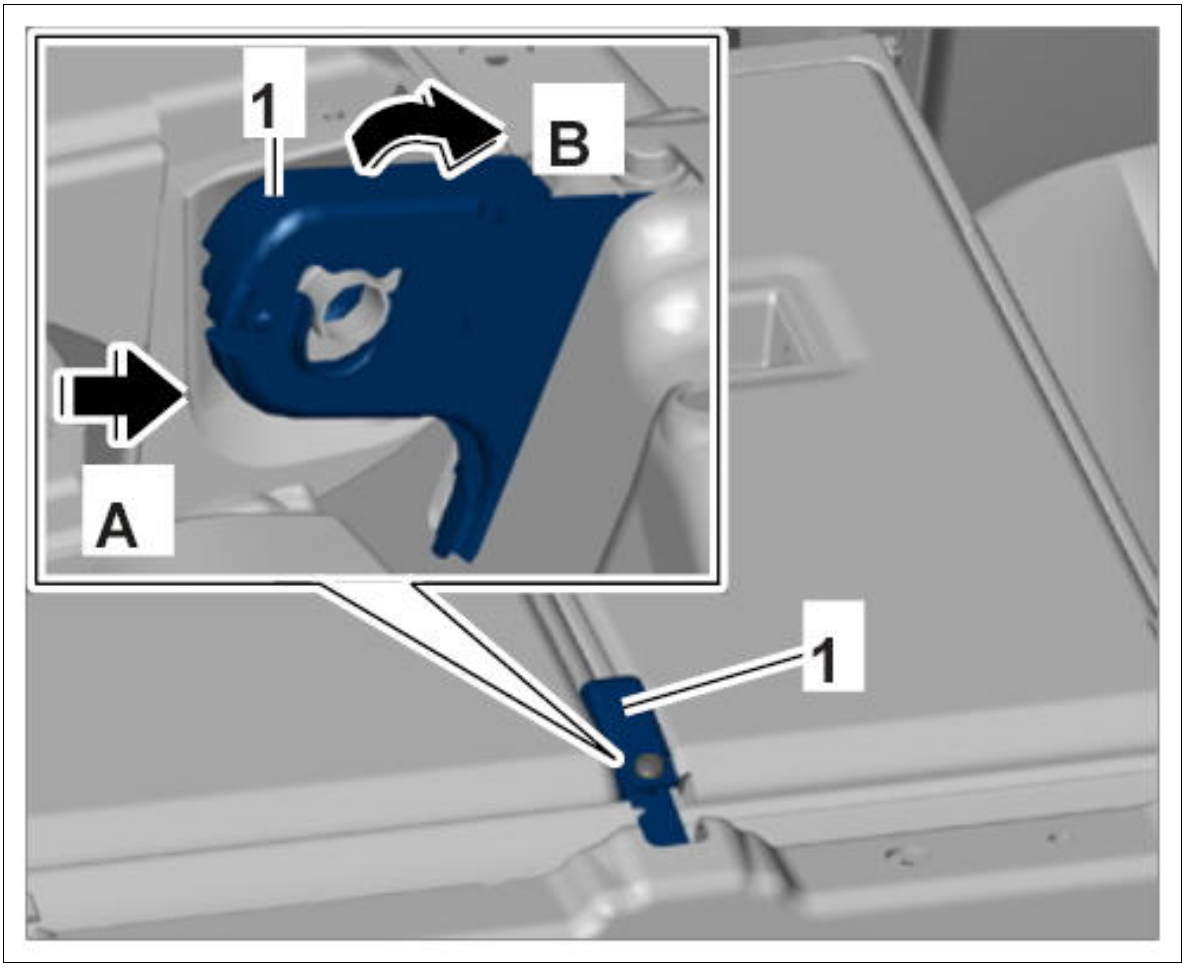

Courtesy of PORSCHE CARS NORTH AMERICA, INC.

5. Screw seat-belt buckle for middle seat to the body. **Tightening torque 50 Nm (37 ftlb.)**

Fig 3: Securing Seat-Belt Buckle

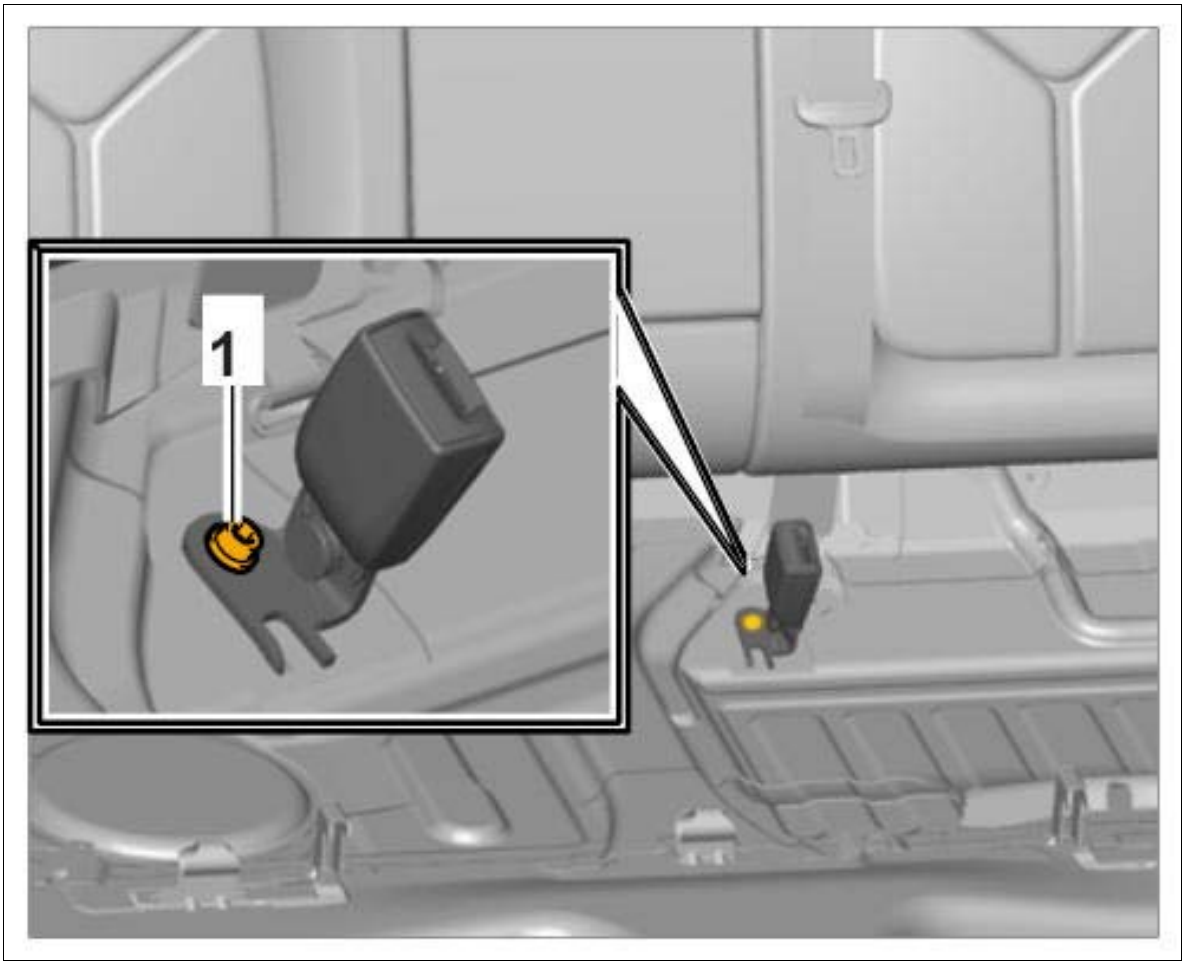

Courtesy of PORSCHE CARS NORTH AMERICA, INC.

WM 724719 REMOVING AND INSTALLING REAR BACKREST (ALL MODELS) > INSTALLING REAR BACKREST > INSTALLING REAR RIGHT BACKREST

Information

- The illustrations show the other side as an example.
- The removal and installation procedure for this side is practically identical.

1. Guide rear right backrest **-1-** into the mount on the body **-2- (-arrow A-)** .
2. **Only for vehicles with heated seats:** Connect electric plug connection between the rear seat and backrest.
3. Guide rear right backrest **-1-** into the center mount **-3- (-arrow B-)** .
4. Install supporting bow **-1- (-arrows-)** and secure it **Tightening torque 12 Nm (9 ftlb.)** .

Information

Fig 1: Installing Rear Backrest

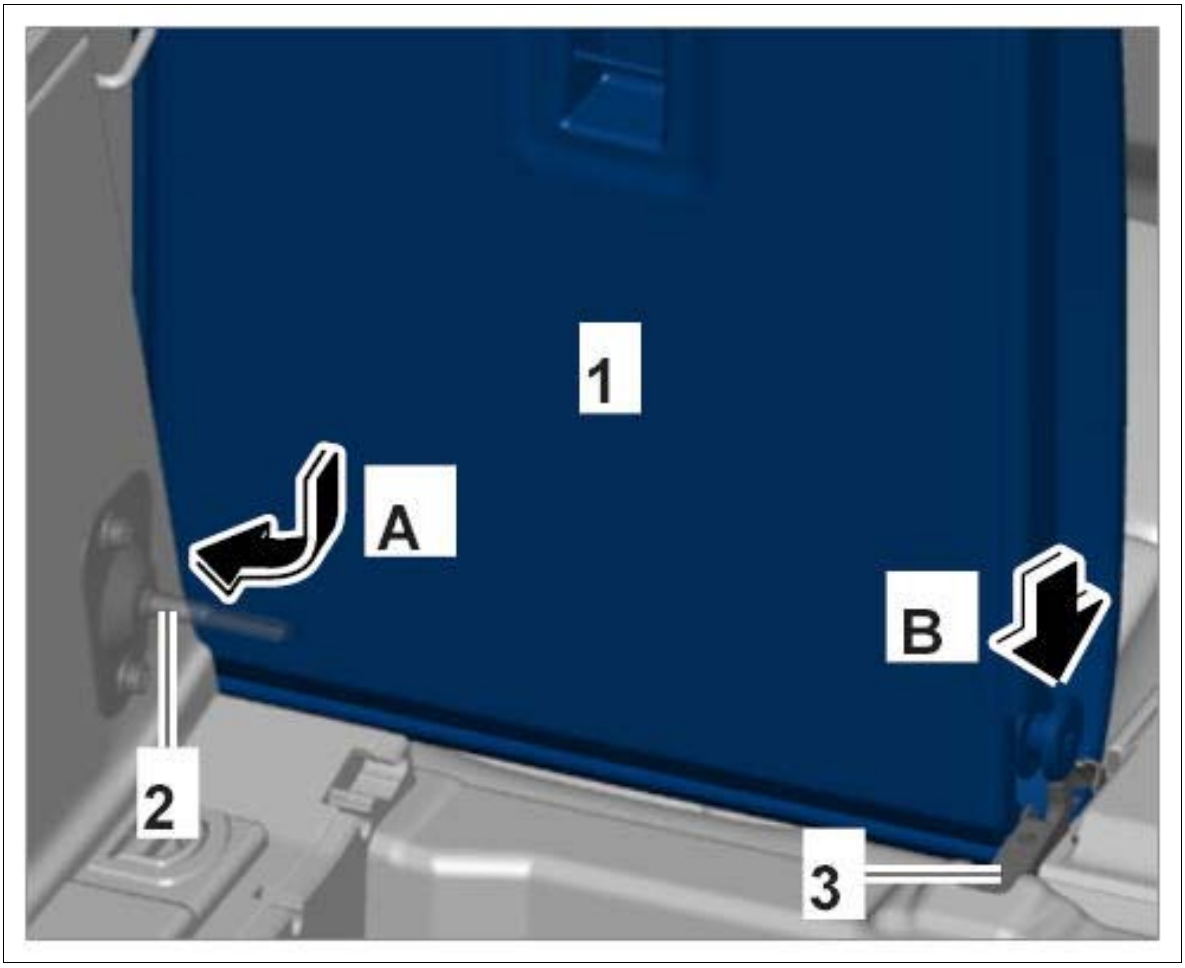

Courtesy of PORSCHE CARS NORTH AMERICA, INC.

Always replace the fastening screws on the seat assembly after customer service and reworking.

Micro-self-locking or self-tapping screws must not be modified, greased or loosened and then screwed in again.

Fig 2: Securing Supporting Bow

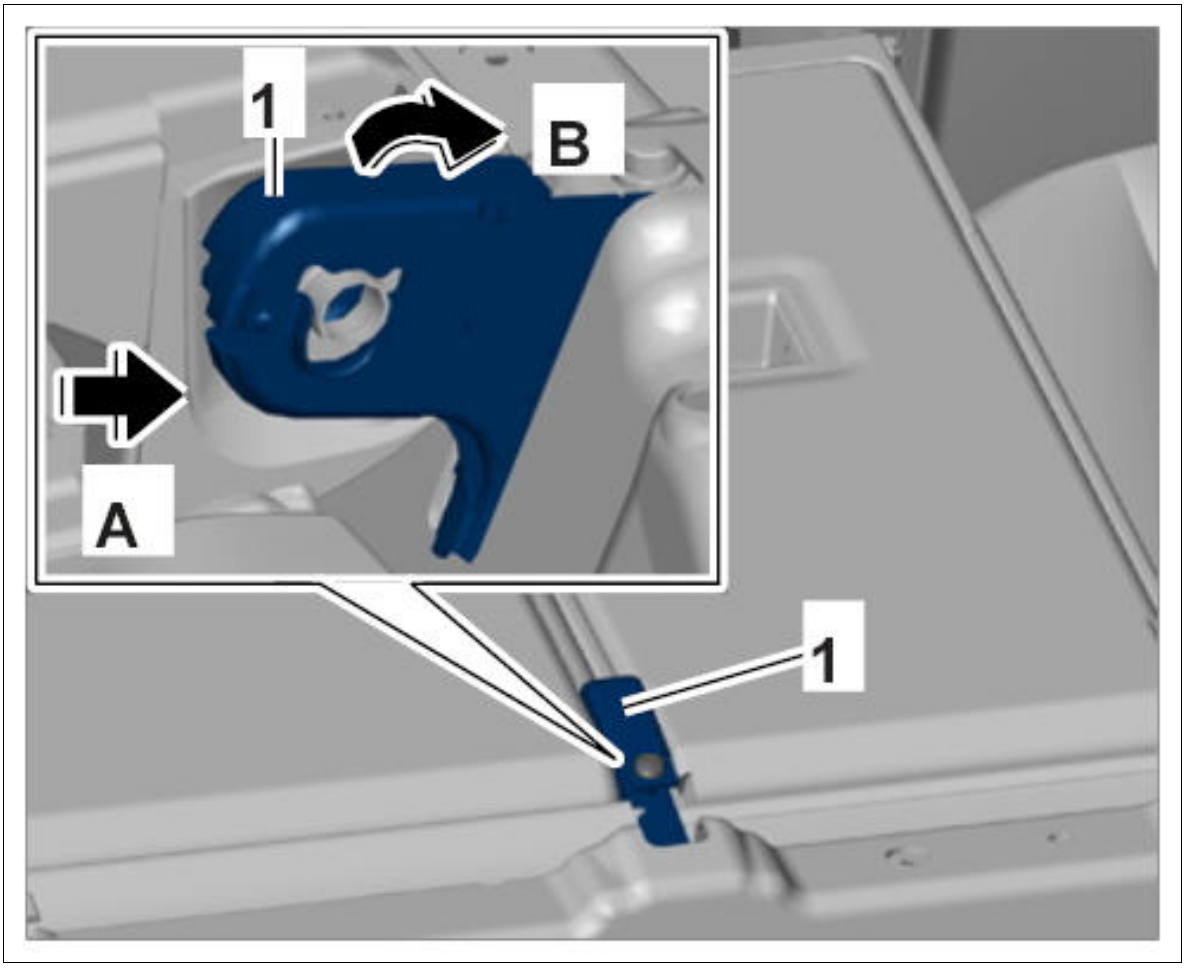

Courtesy of PORSCHE CARS NORTH AMERICA, INC.

WM 724719 REMOVING AND INSTALLING REAR BACKREST (ALL MODELS) > SUBSEQUENT WORK

1. Install rear seat. → Installing Rear Seat

WM 724755 REPLACING REAR BACKREST (ALL MODELS) > COMPONENT INFORMATION > INSTALLATION POSITION

Fig 1: Identifying Backrest Installation Position



Courtesy of PORSCHE CARS NORTH AMERICA, INC.

WM 724755 REPLACING REAR BACKREST (ALL MODELS) > PRELIMINARY WORK

1. Remove rear backrest. → Removing Rear Backrest

WM 724755 REPLACING REAR BACKREST (ALL MODELS) > REPLACING REAR BACKREST

1. Remove padding for rear backrest. → Removing Padding For Rear Backrest
2. Remove headrest guide **-1-** .
    1. 2.1. Press in fixing clips **-2-** on the left and right and pull headrest guide up and out **-arrow-** .

Fig 1: Removing Headrest Guide

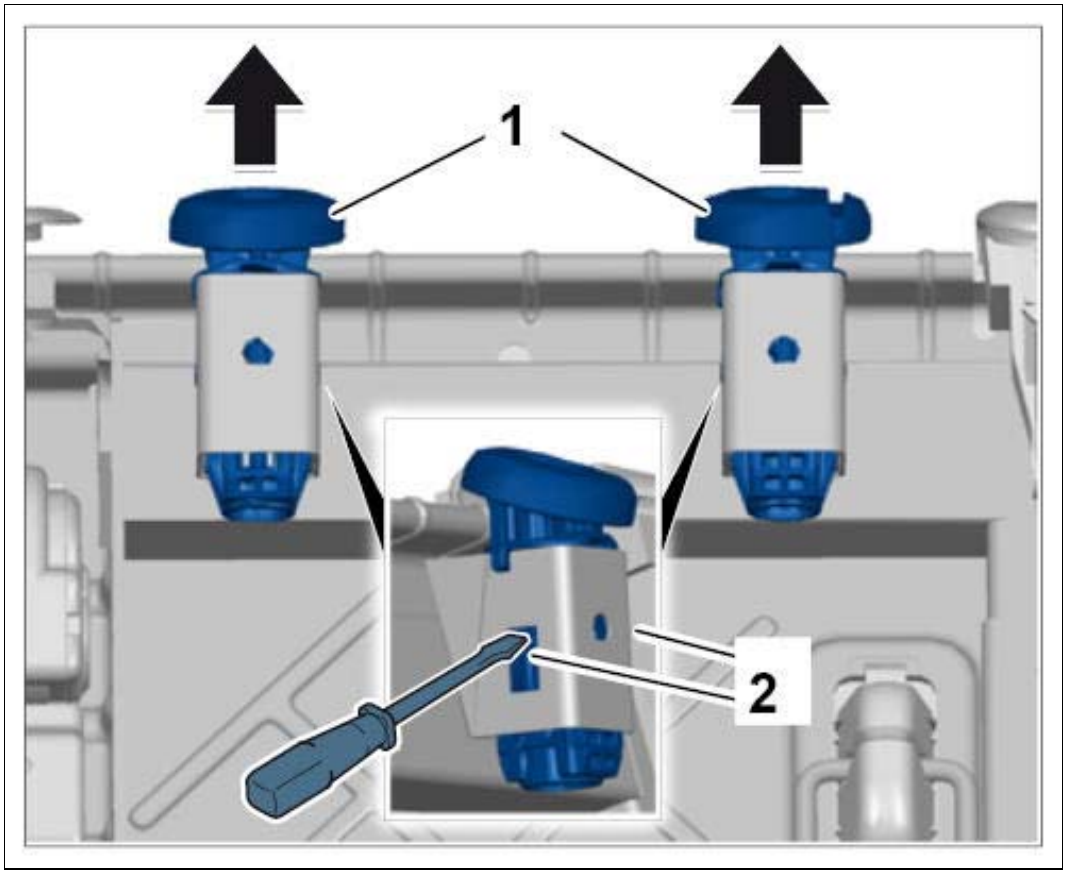

Courtesy of PORSCHE CARS NORTH AMERICA, INC.

3. Remove covers for lashing points **-1-** .

    1. 3.1. Carefully press in fixing clips **-2-** for the covers and remove cover to the rear **-arrow-** .

Fig 2: Removing Covers For Lashing Points

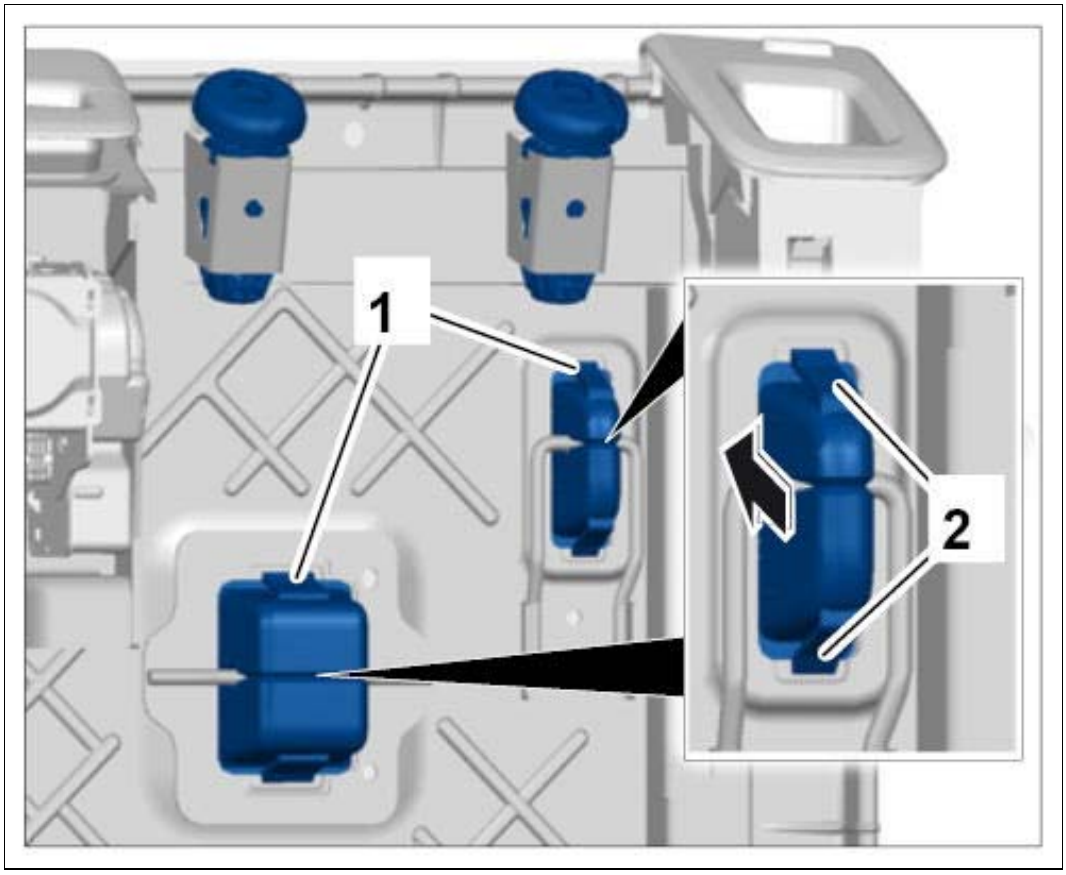

Courtesy of PORSCHE CARS NORTH AMERICA, INC.

4. Remove lock for rear backrest. → Removing Lock For Rear Backrest
5. Remove three-point belt for middle seat **(only necessary for left rear backrest).** → Removing rear three-point belt
6. Replace rear backrest.
7. Install three-point belt for middle seat **(only necessary for left rear backrest).** → Installing rear three-point belt
8. Install lock for rear backrest. → Installing Lock For Rear Backrest
9. Clip in and secure covers for latching points.
10. Install headrest guide.
11. Install padding for rear backrest. → Installing Padding For Rear Backrest

WM 724755 REPLACING REAR BACKREST (ALL MODELS) > SUBSEQUENT WORK

1. Install rear backrest. → Installing Rear Backrest

WM 724819 REMOVING AND INSTALLING REAR SEAT (ALL MODELS) > COMPONENT INFORMATION > INSTALLATION POSITION

Fig 1: Identifying Rear Seat Installation Position

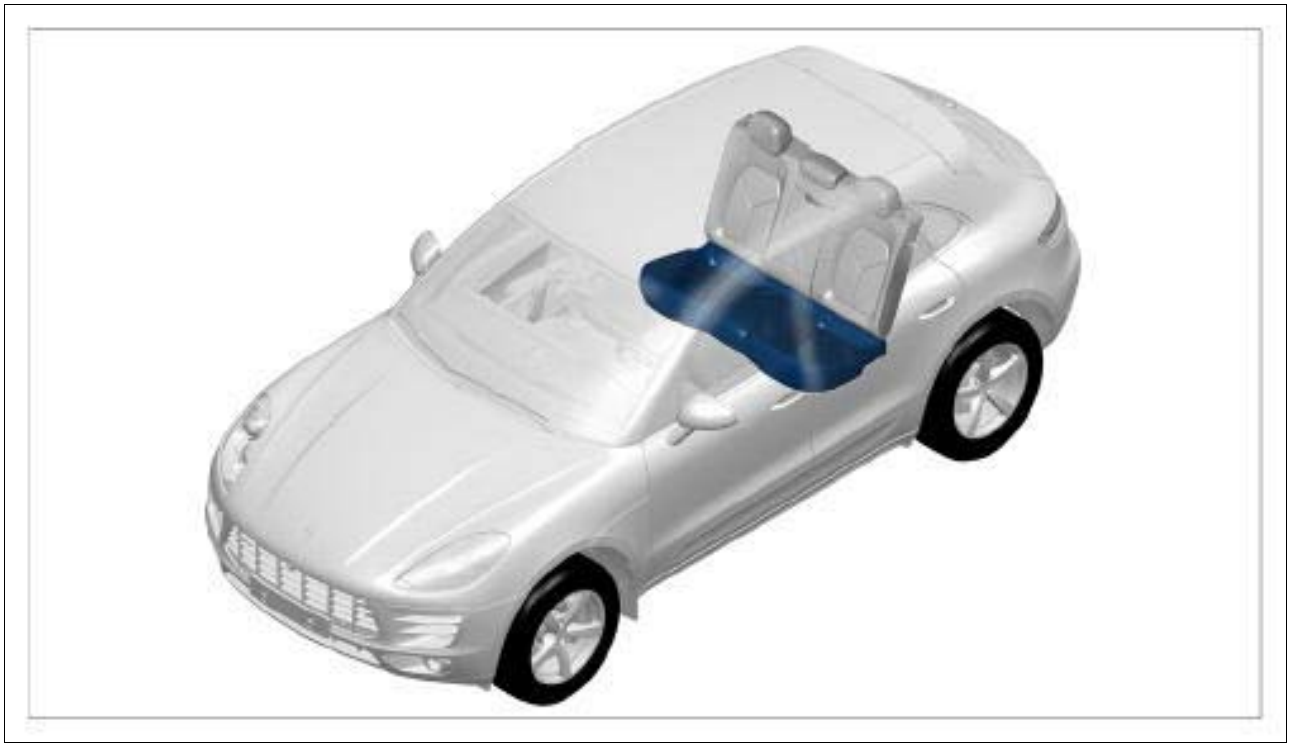

Courtesy of PORSCHE CARS NORTH AMERICA, INC.

WM 724819 REMOVING AND INSTALLING REAR SEAT (ALL MODELS) > REMOVING REAR SEAT

1. Remove ISOFIX cover.
    1. 1.1. Pull ISOFIX trims **-1-** up and remove them.
    2. 1.2. Press ISOFIX cover **-2-** down and pull it forward out of the ISOFIX clip.

Fig 1: Removing ISOFIX Cover

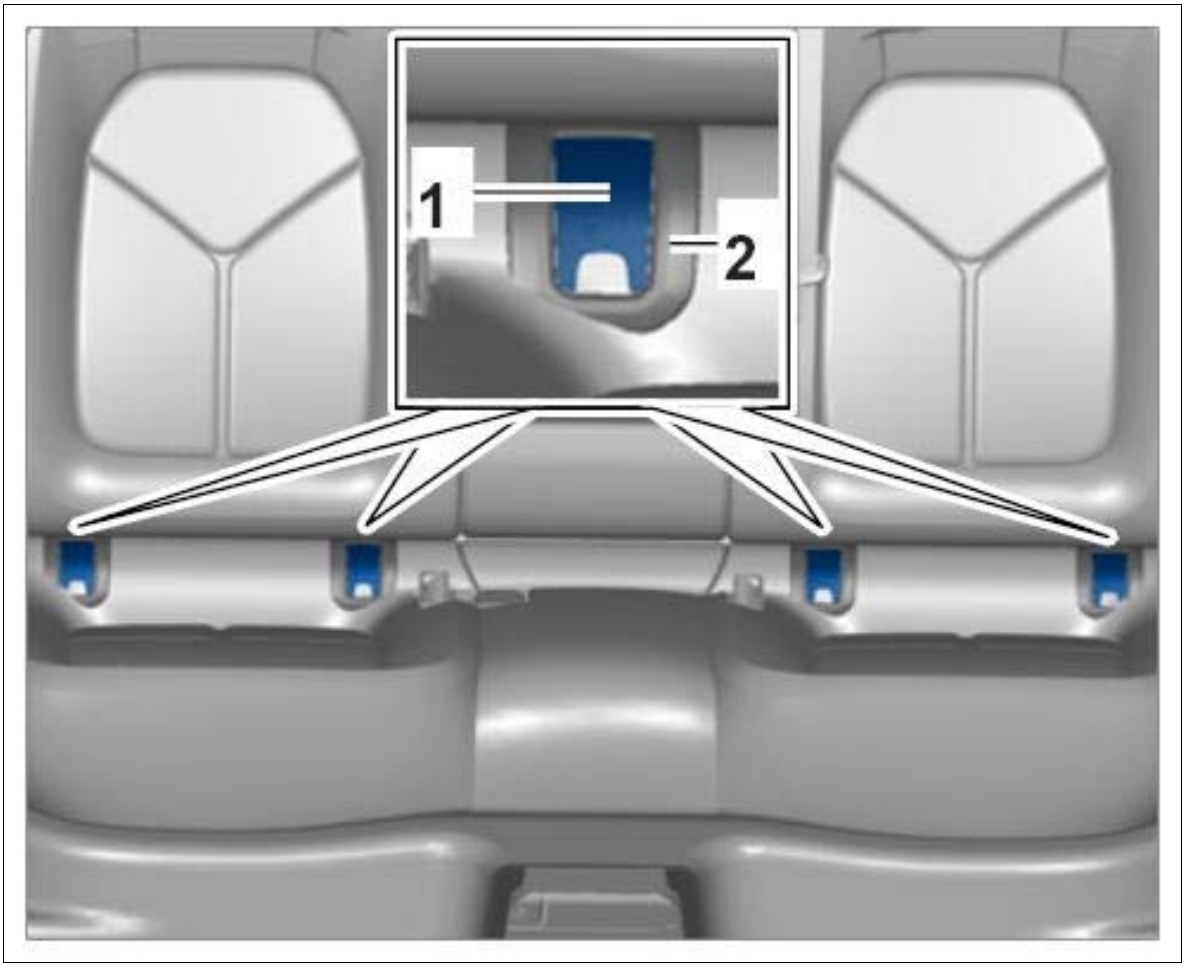

Courtesy of PORSCHE CARS NORTH AMERICA, INC.

2. Pull up entire surface of rear seat **-1-** at the front **-arrows-** .
3. Guide seat-belt buckles **-2-** out towards the holes in the rear seat and adjust rear seat to upright position.

Fig 2: Removing Rear Seat

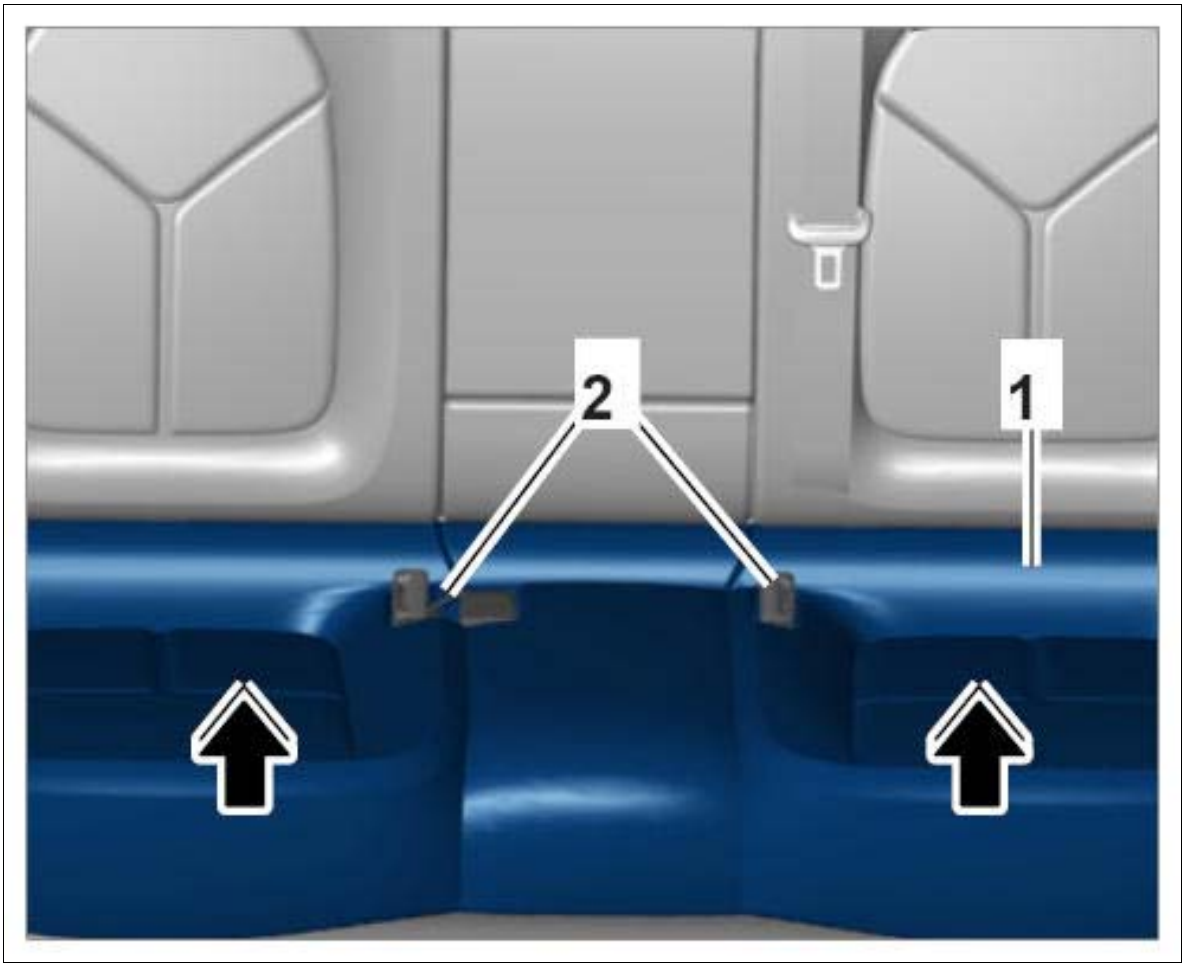

Courtesy of PORSCHE CARS NORTH AMERICA, INC.

4. Disconnect electric plug connections **-1-** for heating elements.

Information

The number of electric plug connections can vary, depending on vehicle equipment.

Fig 3: Disconnecting Electric Plug Connection

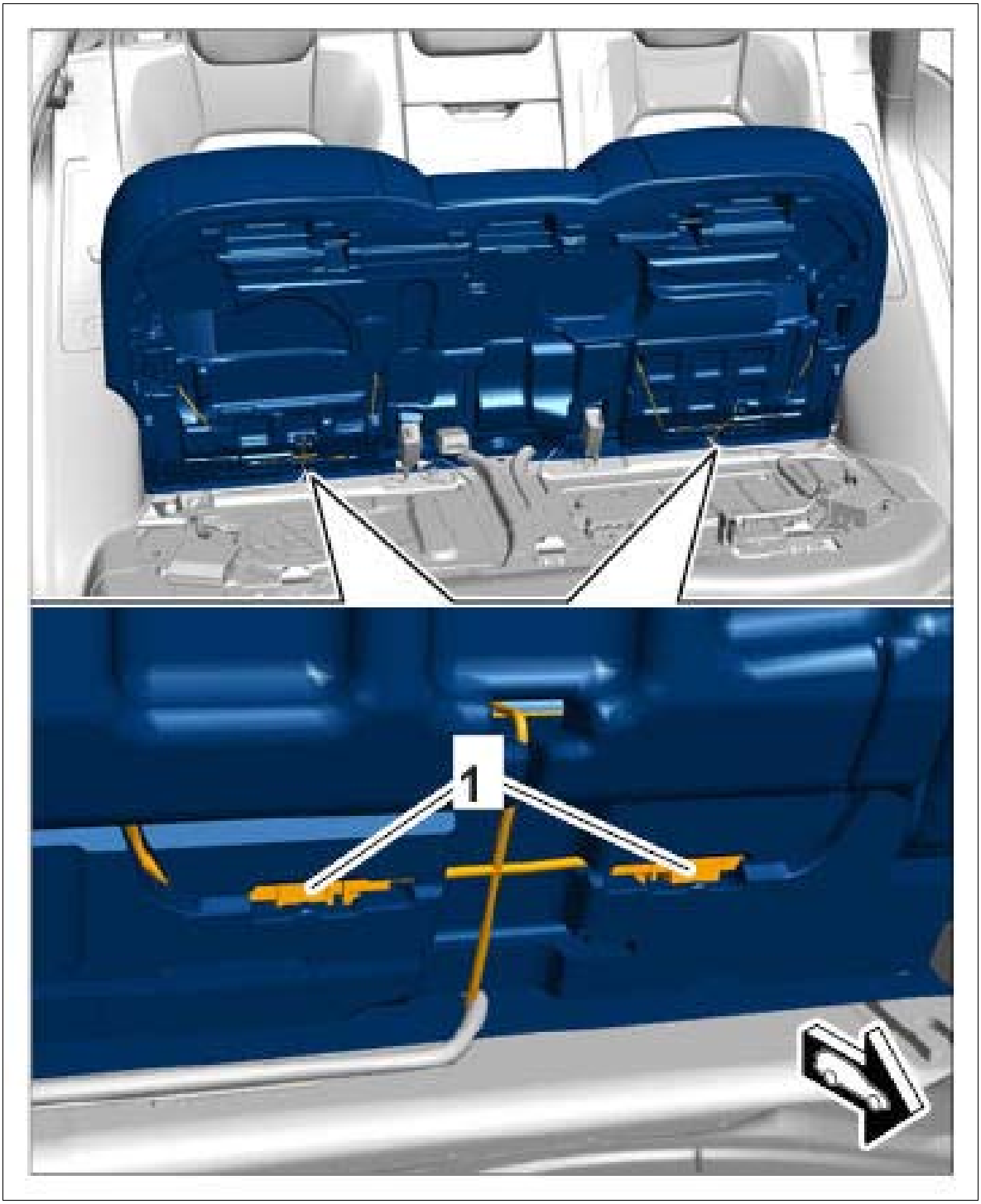

Courtesy of PORSCHE CARS NORTH AMERICA, INC.

5. Remove rear seat.

WM 724819 REMOVING AND INSTALLING REAR SEAT (ALL MODELS) > INSTALLING REAR SEAT

1. Connect electric plug connection **-1-** for heating elements.

   Information

   The number of electric plug connections can vary, depending on vehicle equipment.

   Fig 1: Disconnecting Electric Plug Connection

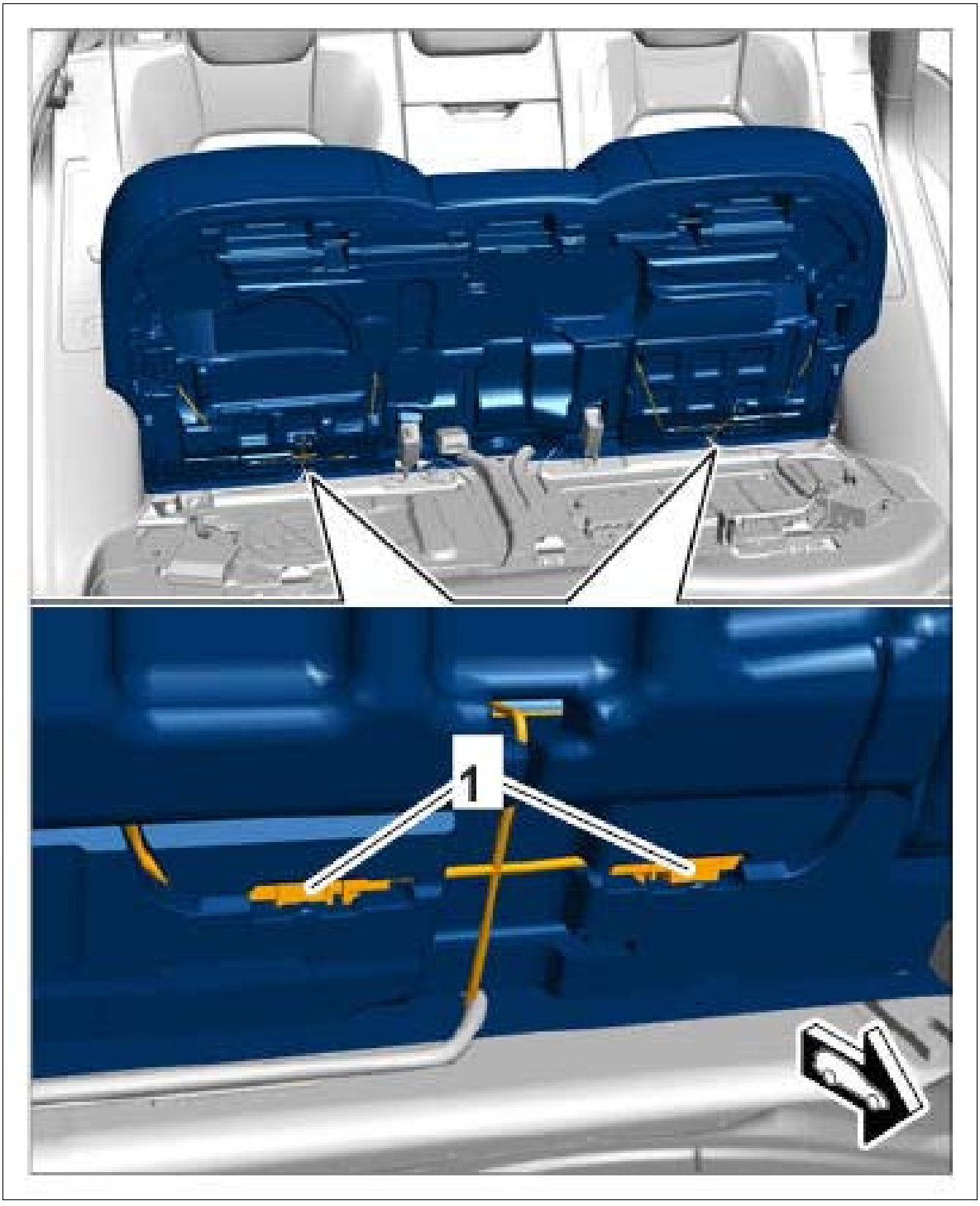

Courtesy of PORSCHE CARS NORTH AMERICA, INC.

2. Pull seat-belt buckles **-1-** through the openings in the rear seat **-2-** .

Fig 2: Installing Rear Seat

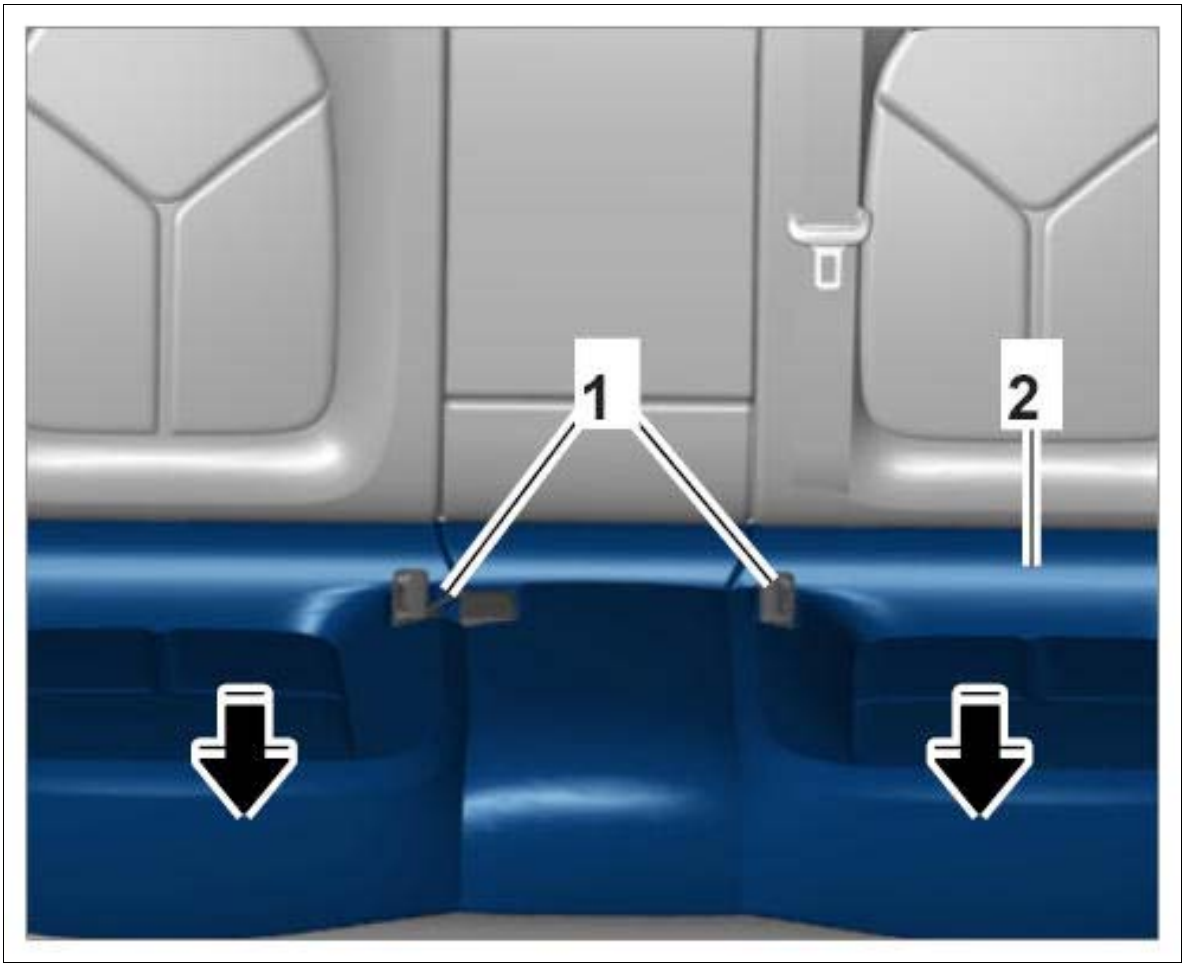

Courtesy of PORSCHE CARS NORTH AMERICA, INC.

3. Align rear seat mounting with the appropriate holders on the body and press down firmly **-arrows-** .
4. Install ISOFIX covers.
    1. 4.1. Install ISOFIX covers **-1-** and lock them by pushing them upwards.

Fig 3: Installing ISOFIX Covers

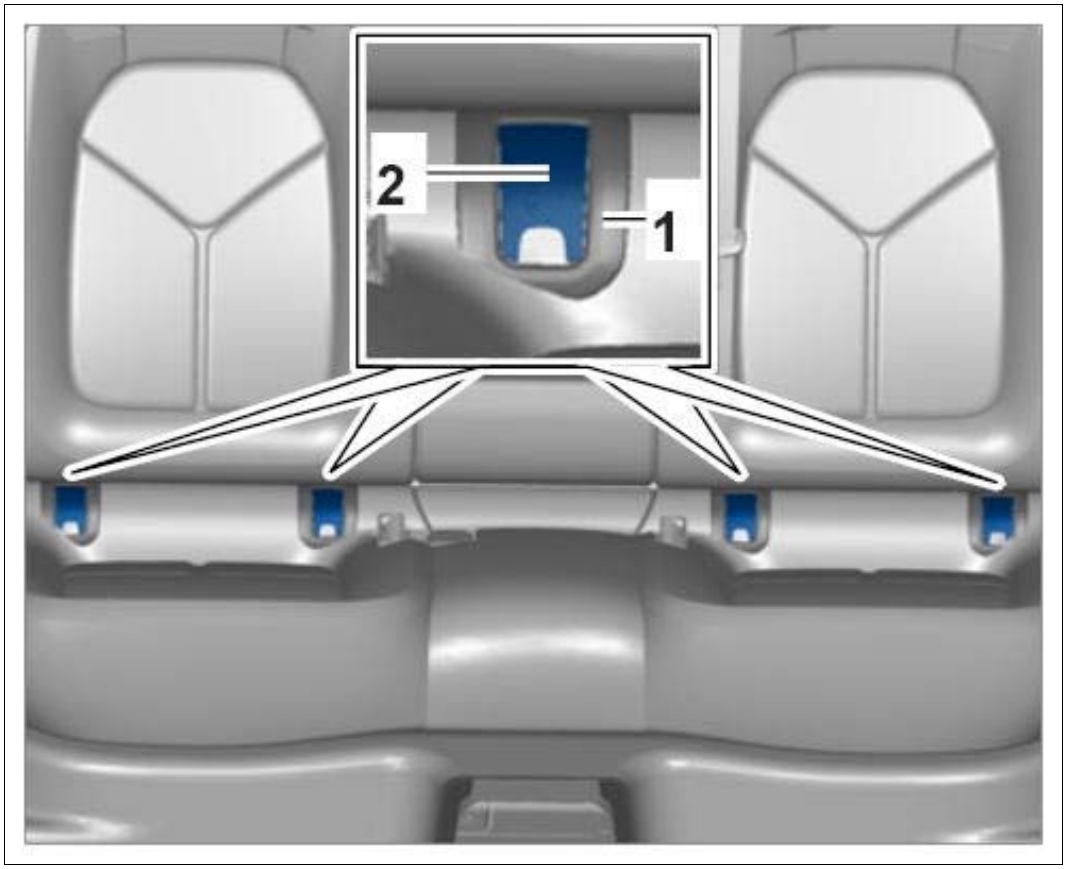

Courtesy of PORSCHE CARS NORTH AMERICA, INC.

2. 4.2. Install ISOFIX trims **-2-** .

WM 726719 REMOVING AND INSTALLING MOUNT FOR REAR BACKREST (AT BACKREST SIDE) (ALL MODELS) > TECHNICAL VALUES

Location	Description	Type	Basic value	Tolerance 1	Tolerance 2
Mount for load-through provision (on backrest side)	Item 1	Tightening torque	39 Nm (29 ftlb.)		

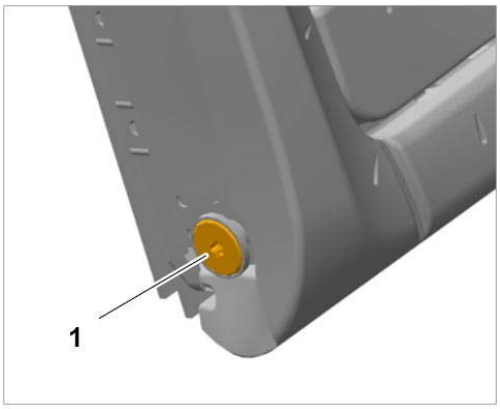

Removing load-through provision mount

Inner mount for rear backrest (on backrest side)	Item 2	Tightening torque	39 Nm (29 ftlb.)		

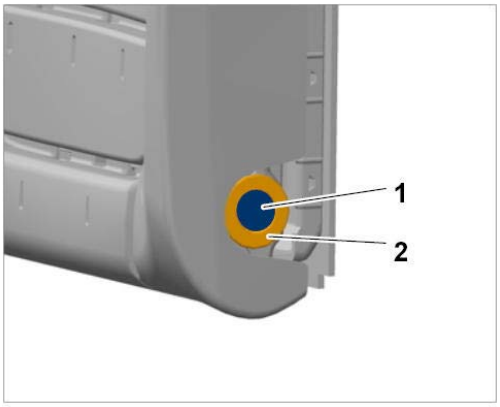

Removing inner mount for rear backrest

WM 726719 REMOVING AND INSTALLING MOUNT FOR REAR BACKREST (AT BACKREST SIDE) (ALL MODELS) > COMPONENT INFORMATION > INSTALLATION POSITION

1. Inner mount for rear backrest (on backrest side)
2. Outer mount for rear backrest (on backrest side)
3. Load-through provision mount

Fig 1: Identifying Rear Backrest Mount Installation Position (Backrest Side)

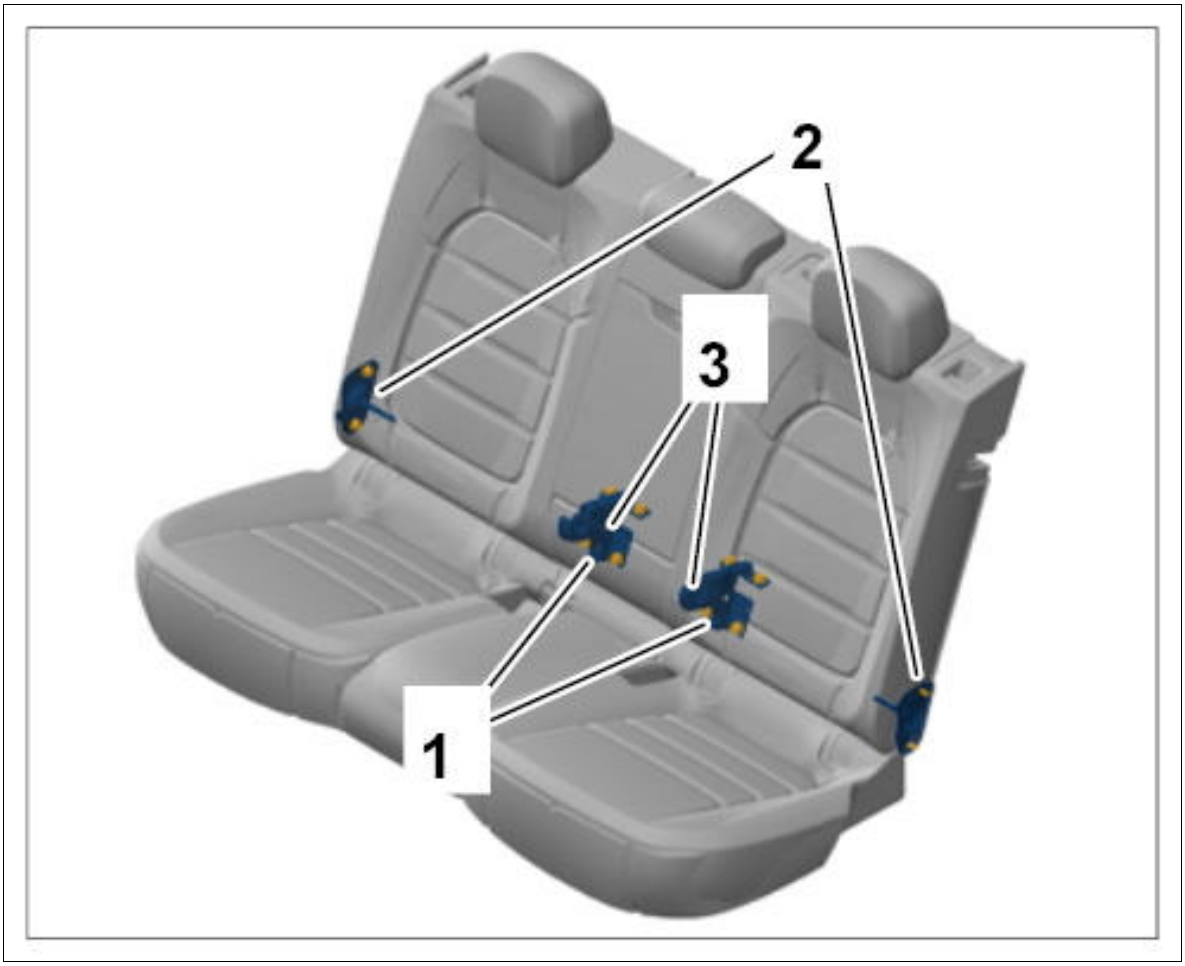

Courtesy of PORSCHE CARS NORTH AMERICA, INC.

WM 726719 REMOVING AND INSTALLING MOUNT FOR REAR BACKREST (AT BACKREST SIDE) (ALL MODELS) > PRELIMINARY WORK

1. Remove the rear backrest. → Removing Rear Backrest

WM 726719 REMOVING AND INSTALLING MOUNT FOR REAR BACKREST (AT BACKREST SIDE) (ALL MODELS) > REMOVING MOUNT FOR REAR BACKREST (ON BACKREST SIDE) > REMOVING INNER MOUNT FOR REAR BACKREST (ON BACKREST SIDE)

1. Loosen the adhesive pad **-1-** from the inner mount **-2-** .
2. Unscrew the inner mount for the rear backrest (on the backrest side) **-2-** .

Fig 1: Removing Rear Backrest Inner Mount

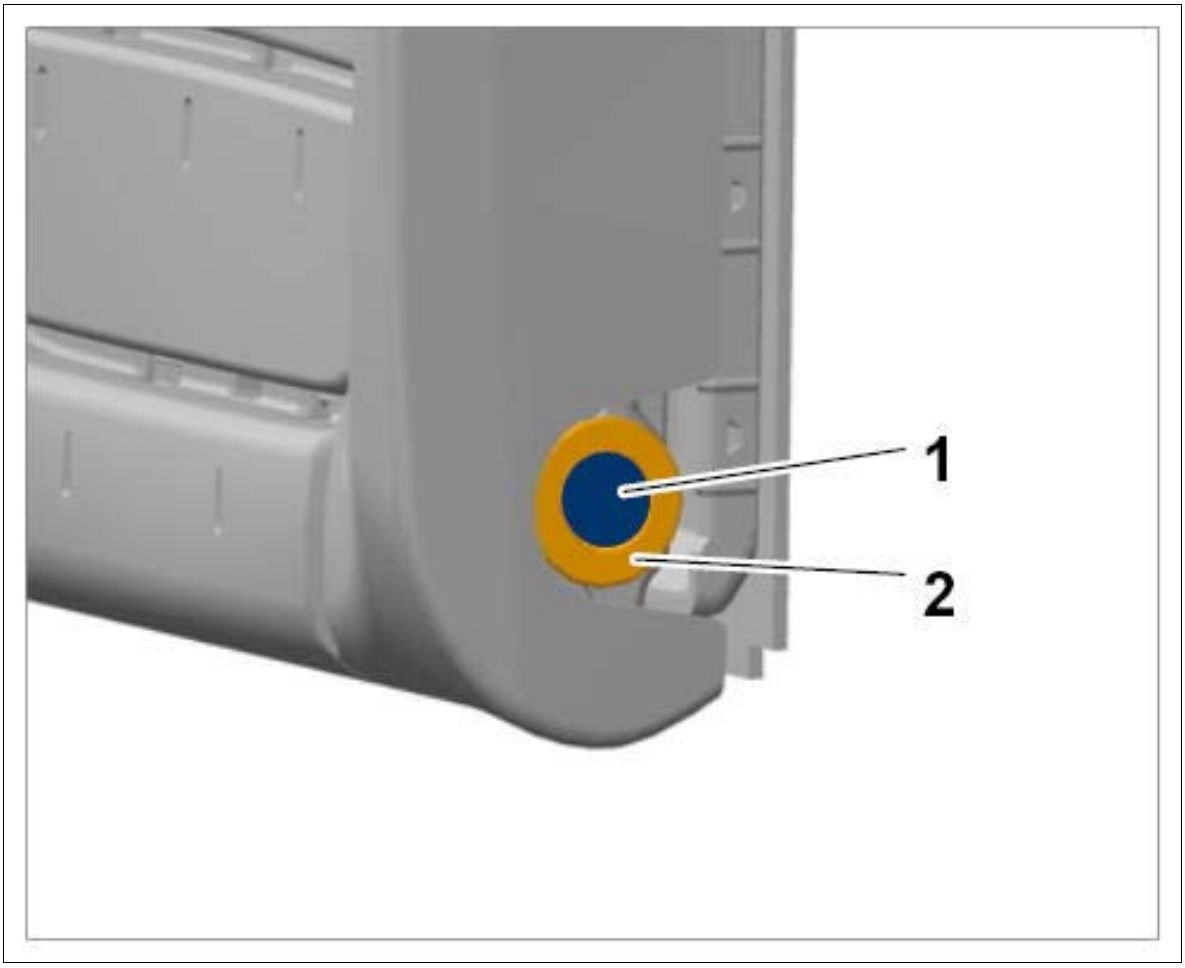

Courtesy of PORSCHE CARS NORTH AMERICA, INC.

WM 726719 REMOVING AND INSTALLING MOUNT FOR REAR BACKREST (AT BACKREST SIDE) (ALL MODELS) > REMOVING MOUNT FOR REAR BACKREST (ON BACKREST SIDE) > REMOVING OUTER MOUNT FOR REAR BACKREST (ON BACKREST SIDE)

1. Unclip the outer mount for the rear backrest on the backrest side **-1-** using a plastic wedge **-2-** .

Fig 1: Removing Rear Backrest Outer Mount

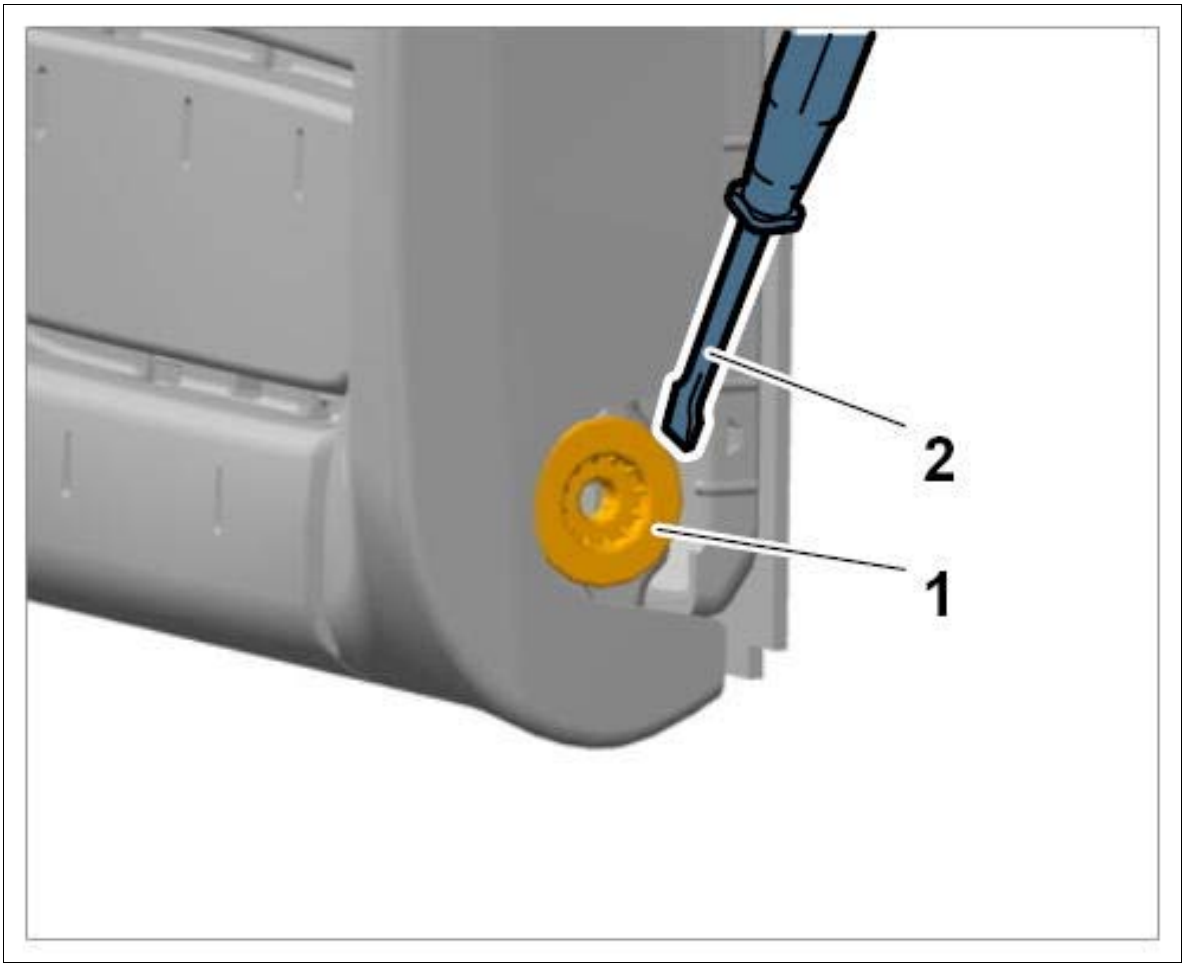

Courtesy of PORSCHE CARS NORTH AMERICA, INC.

WM 726719 REMOVING AND INSTALLING MOUNT FOR REAR BACKREST (AT BACKREST SIDE) (ALL MODELS) > REMOVING MOUNT FOR REAR BACKREST (ON BACKREST SIDE) > REMOVING LOAD-THROUGH PROVISION MOUNT (ON BACKREST SIDE)

1. Unscrew the load-through provision mounts (on the backrest side) **-1-** .

Fig 1: Removing Load-Through Provision Mount

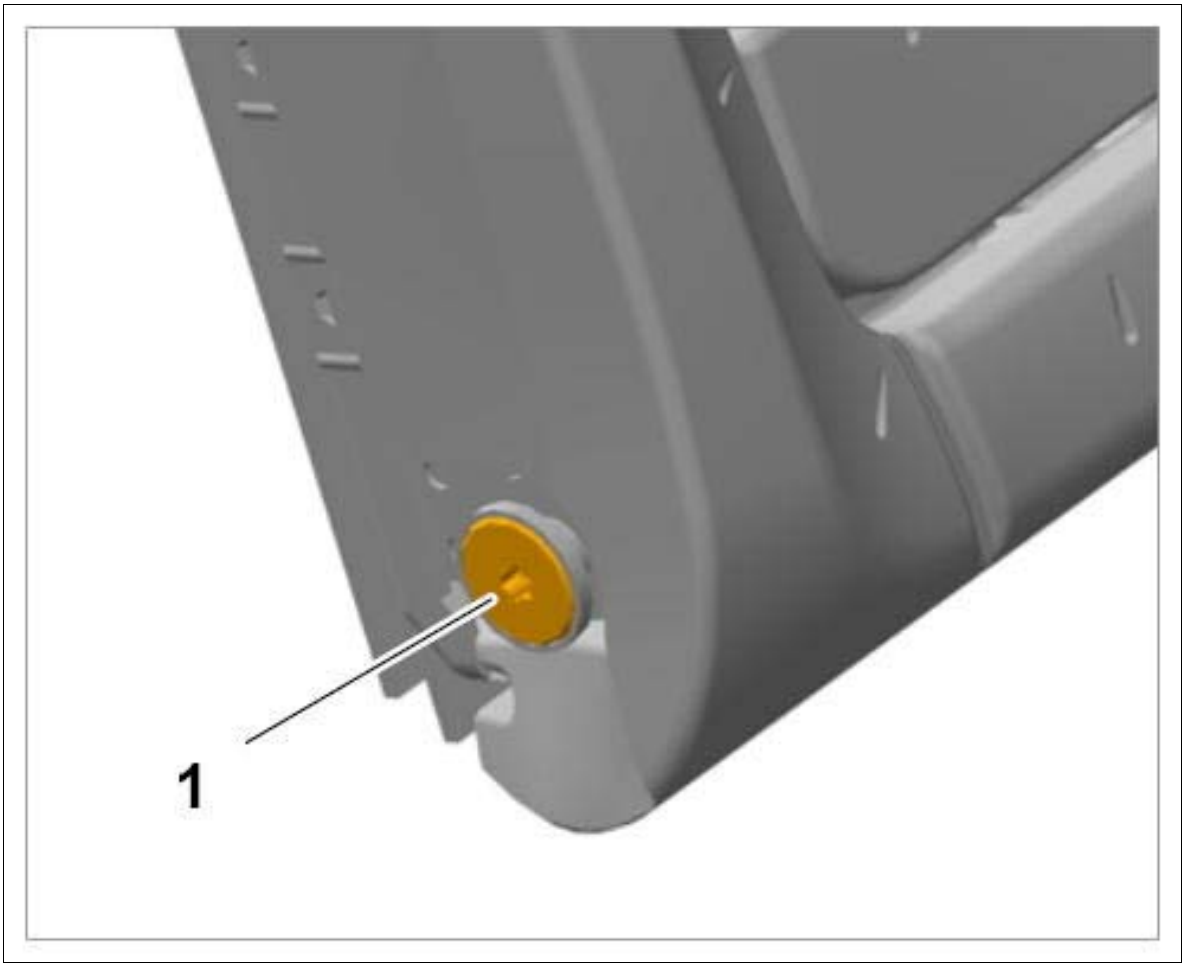

Courtesy of PORSCHE CARS NORTH AMERICA, INC.

WM 726719 REMOVING AND INSTALLING MOUNT FOR REAR BACKREST (AT BACKREST SIDE) (ALL MODELS) > INSTALLING MOUNT FOR REAR BACKREST (ON BACKREST SIDE) > INSTALLING LOAD-THROUGH PROVISION MOUNT (ON BACKREST SIDE)

1. Secure the fastening screws for the load-through provision mount (on the backrest side).
   Tightening torque 39 Nm (29 ftlb.)

Fig 1: Installing Load-Through Provision Mount

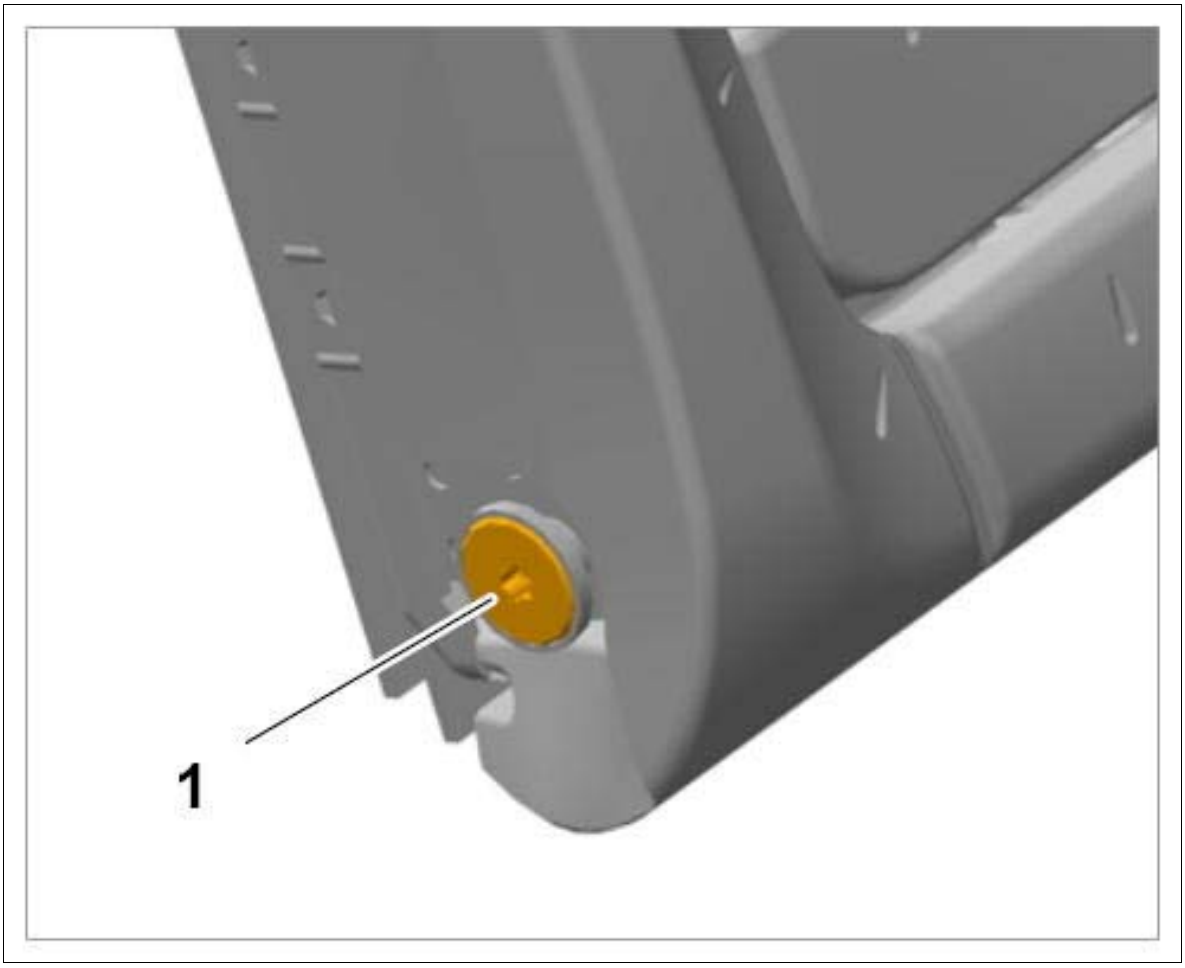

Courtesy of PORSCHE CARS NORTH AMERICA, INC.

WM 726719 REMOVING AND INSTALLING MOUNT FOR REAR BACKREST (AT BACKREST SIDE) (ALL MODELS) > INSTALLING MOUNT FOR REAR BACKREST (ON BACKREST SIDE) > INSTALLING OUTER MOUNT FOR REAR BACKREST (ON BACKREST SIDE)

1. Clip in the outer mount for the rear backrest on the backrest side **-1-** and press firmly.

Fig 1: Installing Rear Backrest Outer Mount

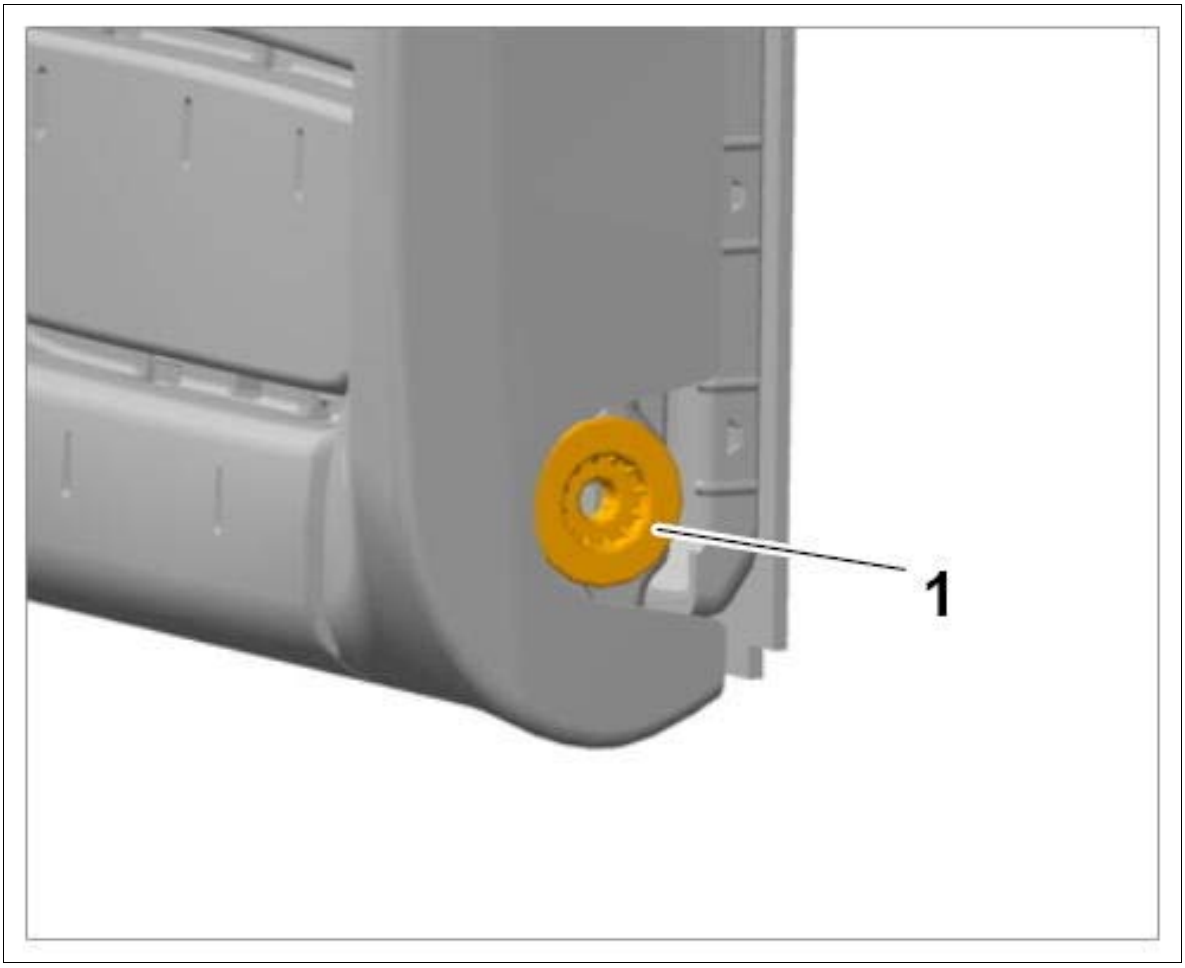

Courtesy of PORSCHE CARS NORTH AMERICA, INC.

WM 726719 REMOVING AND INSTALLING MOUNT FOR REAR BACKREST (AT BACKREST SIDE) (ALL MODELS) > INSTALLING MOUNT FOR REAR BACKREST (ON BACKREST SIDE) > INSTALLING INNER MOUNT FOR REAR BACKREST (ON BACKREST SIDE)

1. Tighten the fastening screw for the inner mount on the backrest side. **Tightening torque 39 Nm (29 ftlb.)**

Fig 1: Installing Rear Backrest Inner Mount

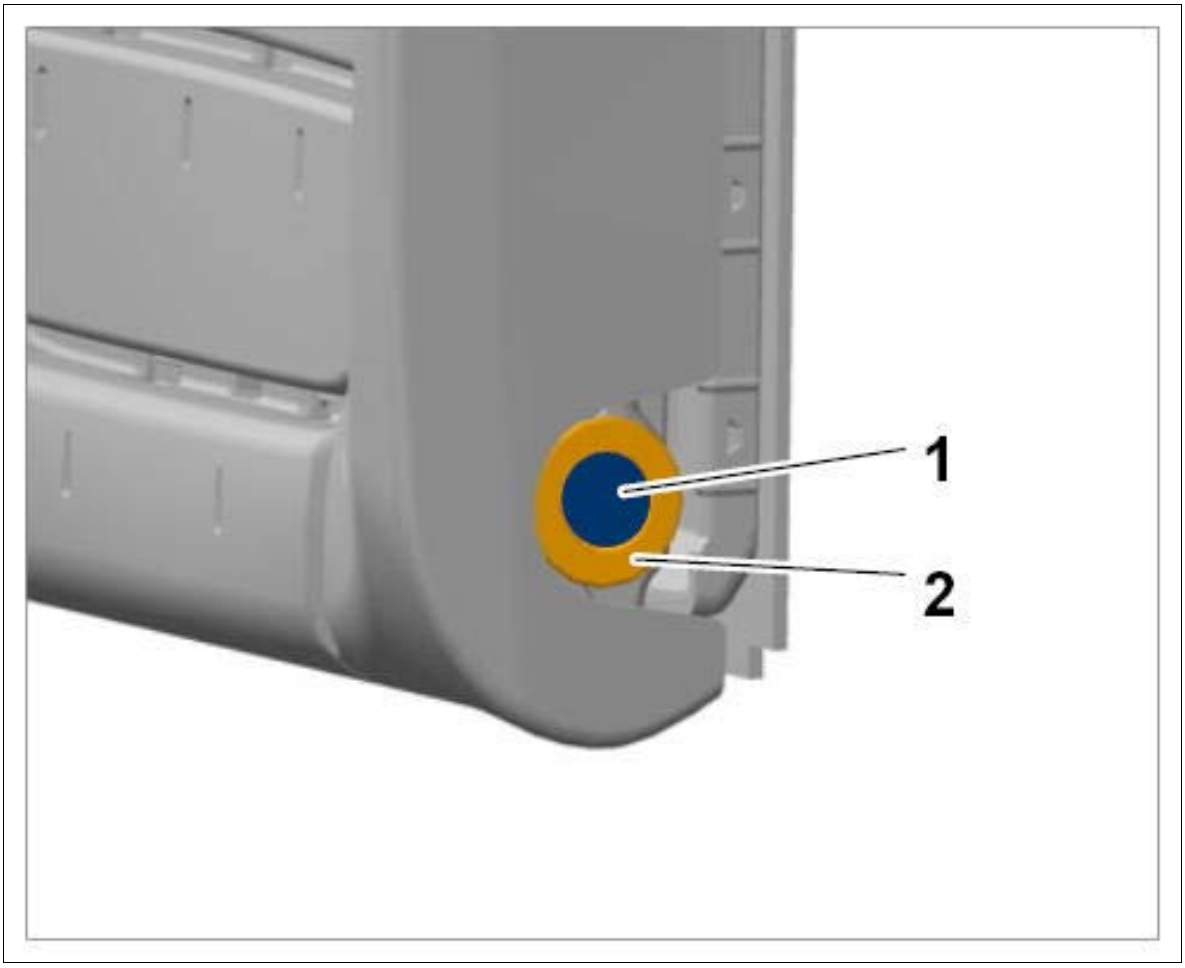

Courtesy of PORSCHE CARS NORTH AMERICA, INC.

2. Affix the adhesive pad in the center of the fastening screw.

WM 726719 REMOVING AND INSTALLING MOUNT FOR REAR BACKREST (AT BACKREST SIDE) (ALL MODELS) > SUBSEQUENT WORK

1. Install the rear backrest. → Installing Rear Backrest

WM 726719 REMOVING AND INSTALLING MOUNT FOR REAR BACKREST (ON BODY SIDE) (ALL MODELS) > TECHNICAL VALUES

Location	Description	Type	Basic value	Tolerance 1	Tolerance 2
Fastening screw for inner backrest mount (on body side)		Tightening torque	20 Nm (15 ftlb.)		

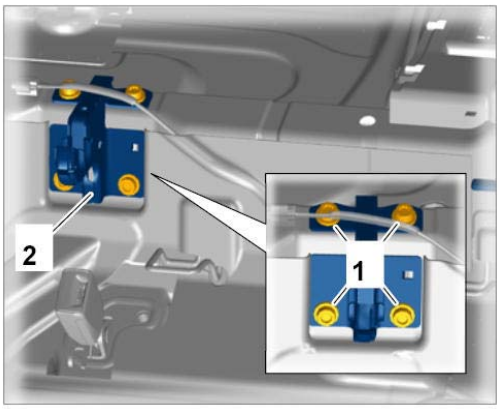

Removing inner mount for rear backrest

Fastening screw for outer backrest mount (on body side)		Tightening torque	20 Nm (15 ftlb.)		

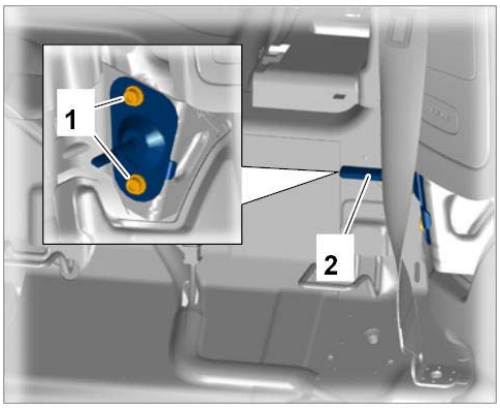

Removing outer mount for backrest

WM 726719 REMOVING AND INSTALLING MOUNT FOR REAR BACKREST (ON BODY SIDE) (ALL MODELS) > COMPONENT INFORMATION > INSTALLATION POSITION

1. Inner mount for rear backrest (on body side)
2. Outer mount for rear backrest (on body side)

Fig 1: Identifying Rear Backrest Mount Installation Position (Body Side)

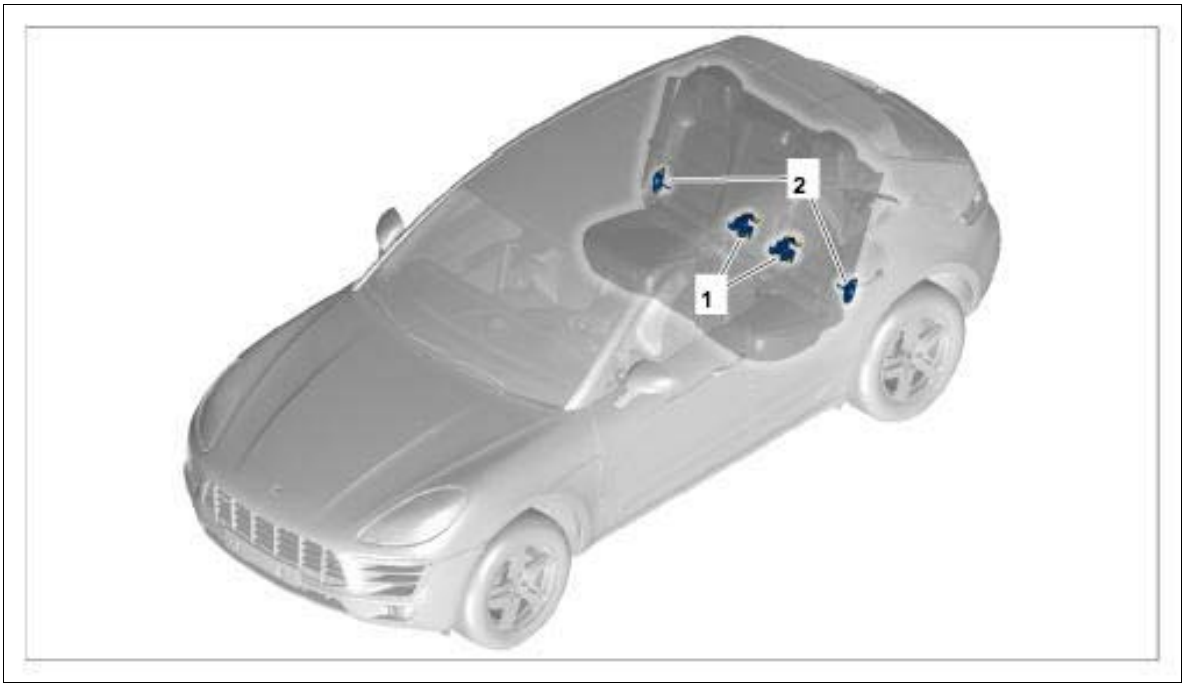

Courtesy of PORSCHE CARS NORTH AMERICA, INC.

WM 726719 REMOVING AND INSTALLING MOUNT FOR REAR BACKREST (ON BODY SIDE) (ALL MODELS) > PRELIMINARY WORK > PRELIMINARY WORK FOR INNER MOUNT FOR REAR BACKREST

1. Remove rear backrest. → Removing Rear Backrest
2. Disconnect plug connection for KESSY antenna.
3. Fold back carpet for luggage compartment.

WM 726719 REMOVING AND INSTALLING MOUNT FOR REAR BACKREST (ON BODY SIDE) (ALL MODELS) > PRELIMINARY WORK > PRELIMINARY WORK FOR OUTER MOUNT FOR REAR BACKREST

1. → Removing Rear Inner Door Sill Trim

WM 726719 REMOVING AND INSTALLING MOUNT FOR REAR BACKREST (ON BODY SIDE) (ALL MODELS) > REMOVING MOUNT FOR REAR BACKREST (ON BODY SIDE) > REMOVING INNER MOUNT FOR REAR BACKREST (ON BODY SIDE)

1. Unscrew and remove fastening screws **-1-** for inner mount for rear backrest at the body **-2-** .

Fig 1: Removing Rear Backrest Inner Mount

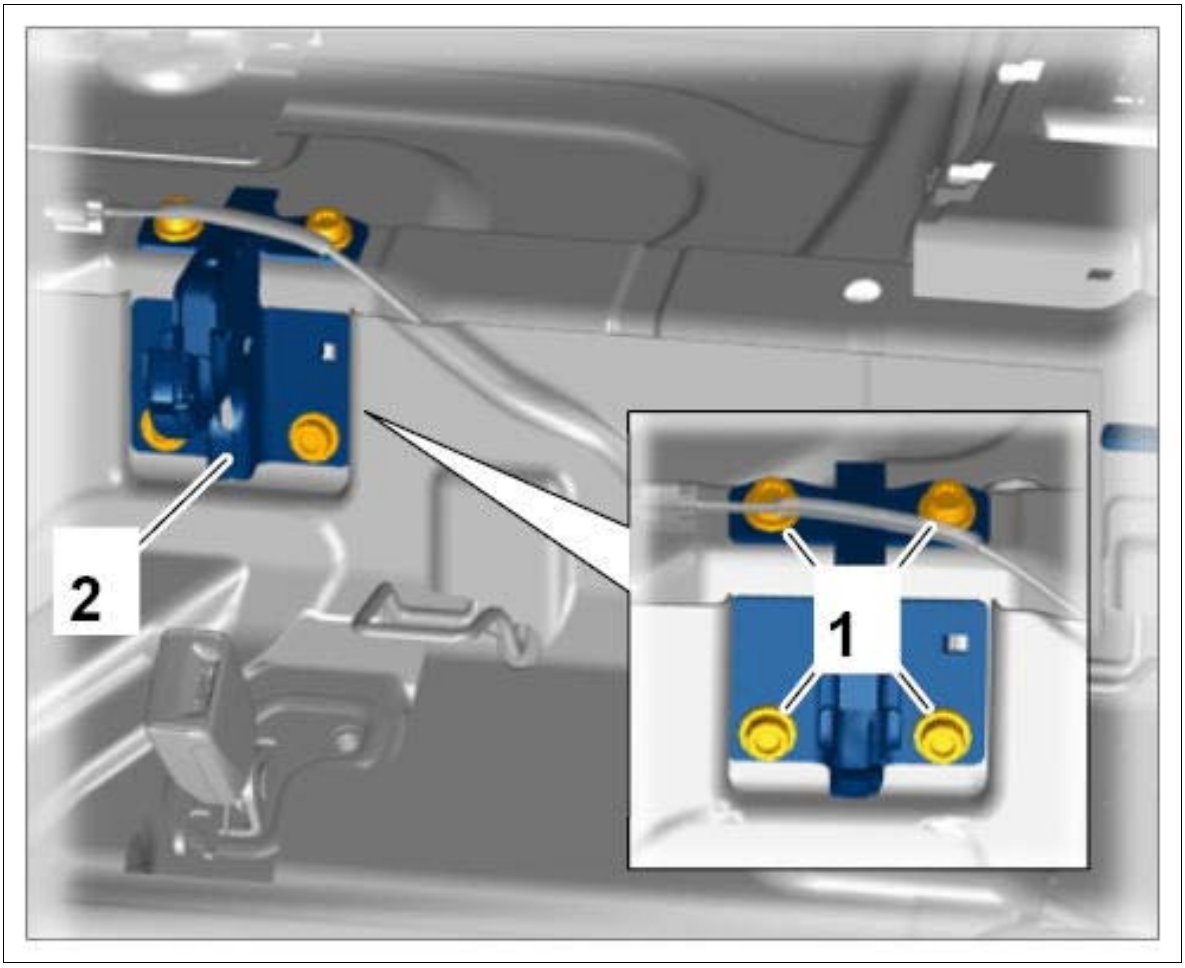

Courtesy of PORSCHE CARS NORTH AMERICA, INC.

WM 726719 REMOVING AND INSTALLING MOUNT FOR REAR BACKREST (ON BODY SIDE) (ALL MODELS) > REMOVING MOUNT FOR REAR BACKREST (ON BODY SIDE) > REMOVING OUTER MOUNT FOR REAR BACKREST (ON BODY SIDE)

1. Unscrew and remove fastening screws **-1-** for outer mount for rear backrest at the body **-2-** .

Fig 1: Removing Backrest Outer Mount

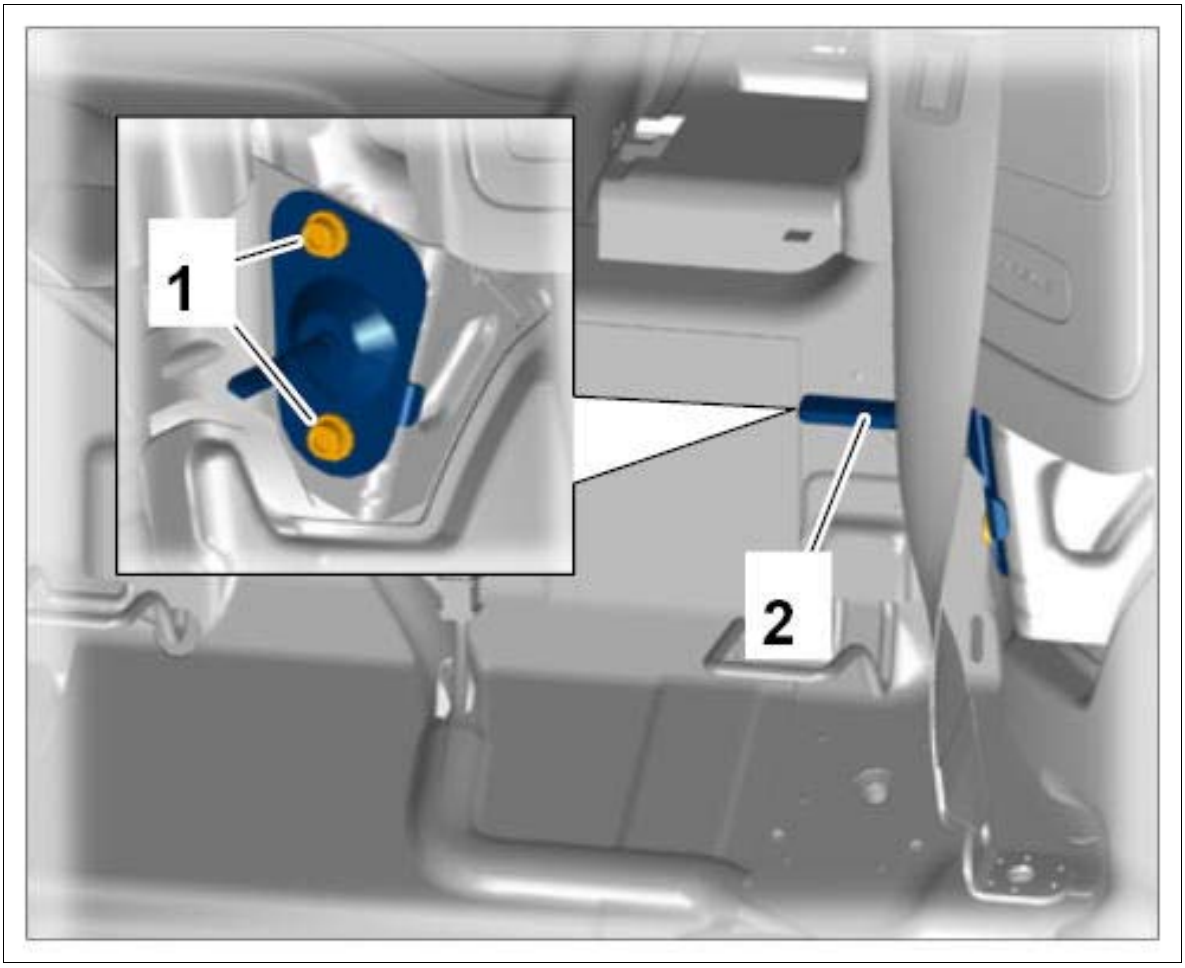

Courtesy of PORSCHE CARS NORTH AMERICA, INC.

WM 726719 REMOVING AND INSTALLING MOUNT FOR REAR BACKREST (ON BODY SIDE) (ALL MODELS) > INSTALLING MOUNT FOR REAR BACKREST (ON BODY SIDE) > INSTALLING INNER MOUNT FOR REAR BACKREST (ON BODY SIDE)

1. Fit and tighten fastening screws **-1-** for inner mount for rear backrest at the body **-2-** .
   Tightening torque 20 Nm (15 ftlb.)

Fig 1: Removing Rear Backrest Inner Mount

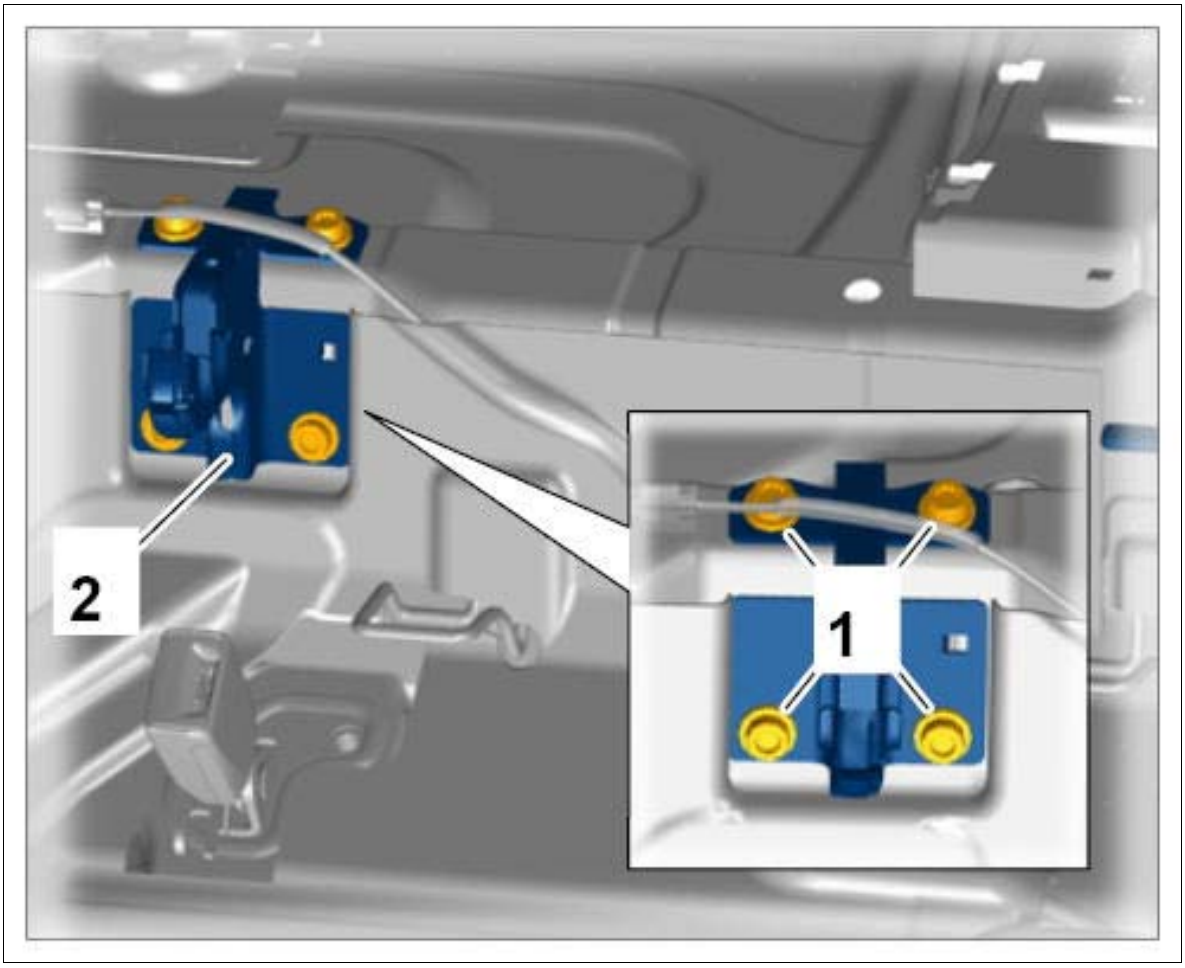

Courtesy of PORSCHE CARS NORTH AMERICA, INC.

WM 726719 REMOVING AND INSTALLING MOUNT FOR REAR BACKREST (ON BODY SIDE) (ALL MODELS) > INSTALLING MOUNT FOR REAR BACKREST (ON BODY SIDE) > INSTALLING OUTER MOUNT FOR REAR BACKREST (ON BODY SIDE)

1. Fit and tighten fastening screws **-1-** for outer mount for rear backrest at the body **-2-** .
   Tightening torque 20 Nm (15 ftlb.)

Fig 1: Removing Backrest Outer Mount

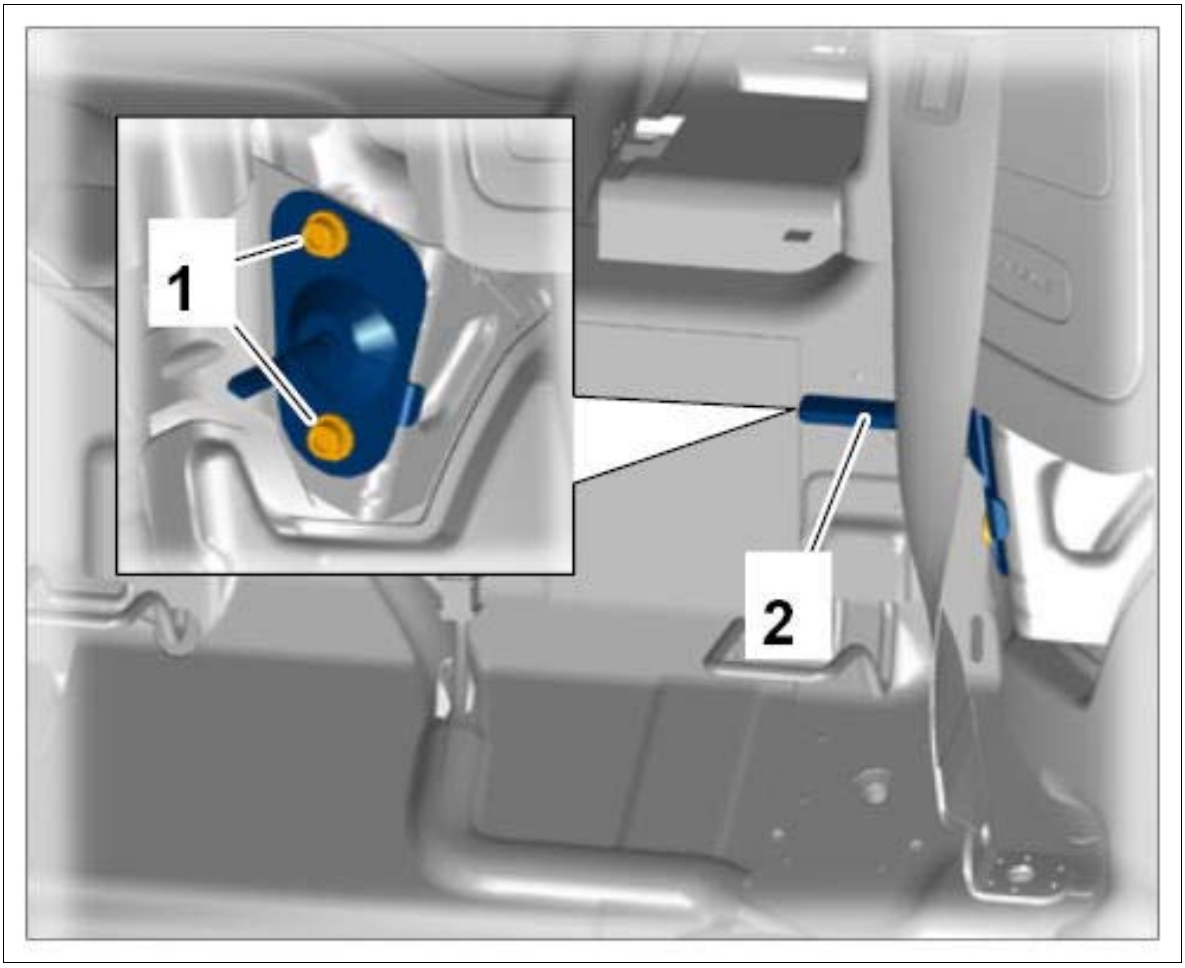

Courtesy of PORSCHE CARS NORTH AMERICA, INC.

WM 726719 REMOVING AND INSTALLING MOUNT FOR REAR BACKREST (ON BODY SIDE) (ALL MODELS) > SUBSEQUENT WORK > SUBSEQUENT WORK FOR INNER MOUNT FOR REAR BACKREST

1. Connect plug connection for KESSY antenna.
2. Move carpet for luggage compartment to its initial position.
3. Install rear backrest. → Installing Rear Backrest

WM 726719 REMOVING AND INSTALLING MOUNT FOR REAR BACKREST (ON BODY SIDE) (ALL MODELS) > SUBSEQUENT WORK > SUBSEQUENT WORK FOR OUTER MOUNT FOR REAR BACKREST

1. → Installing Rear Inner Door Sill Trim

WM 726819 REMOVING AND INSTALLING LOCK FOR REAR BACKREST (ALL MODELS) > TECHNICAL VALUES

Location	Description	Type	Basic value	Tolerance 1	Tolerance 2
Fastening screws for rear backrest lock	Item 1	Tightening torque	26 Nm (19 ftlb.)		
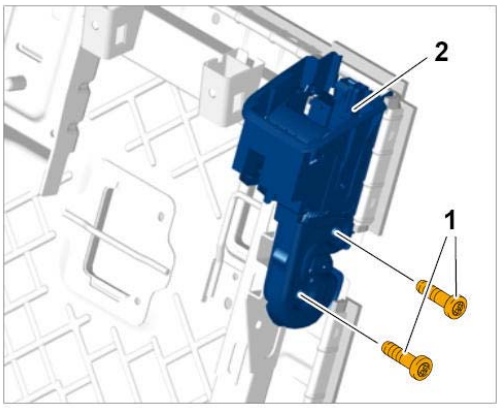 Removing backrest lock					
Fastening screw for rear backrest lock, center	Item 1	Tightening torque	26 Nm (19 ftlb.)		
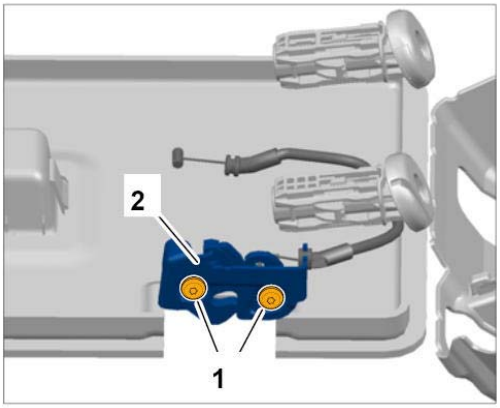 Removing backrest lock					
Fastening screws for upper trim panel on load-through provision	Item 1 to 4	Tightening torque	3.5 Nm (2.5 ftlb.)		



Installing upper trim panel on load-through provision

WM 726819 REMOVING AND INSTALLING LOCK FOR REAR BACKREST (ALL MODELS) > COMPONENT INFORMATION > INSTALLATION POSITION

Fig 1: Identifying Rear Backrest Lock Installation Position



Courtesy of PORSCHE CARS NORTH AMERICA, INC.

WM 726819 REMOVING AND INSTALLING LOCK FOR REAR BACKREST (ALL MODELS) > PRELIMINARY WORK > PRELIMINARY WORK FOR LOCK FOR REAR BACKREST AT THE LEFT AND RIGHT

1. Remove outer rear headrest. → Removing Headrest

WM 726819 REMOVING AND INSTALLING LOCK FOR REAR BACKREST (ALL MODELS) > PRELIMINARY WORK > PRELIMINARY WORK FOR LOCK FOR REAR BACKREST AT THE CENTRE

1. Remove armrest with cover (rear). → Removing Armrest With Cover (Rear)
2. Remove center rear headrest. → Removing Headrest

WM 726819 REMOVING AND INSTALLING LOCK FOR REAR BACKREST (ALL MODELS) > REMOVING LOCK FOR REAR BACKREST > REMOVING LOCK FOR REAR BACKREST AT THE LEFT AND RIGHT

1. Remove rear backrest. → Removing Rear Backrest
2. Unclip the outer mount for the rear backrest on the backrest side **-1-** using a plastic wedge **-2-** .

Fig 1: Removing Rear Backrest Outer Mount

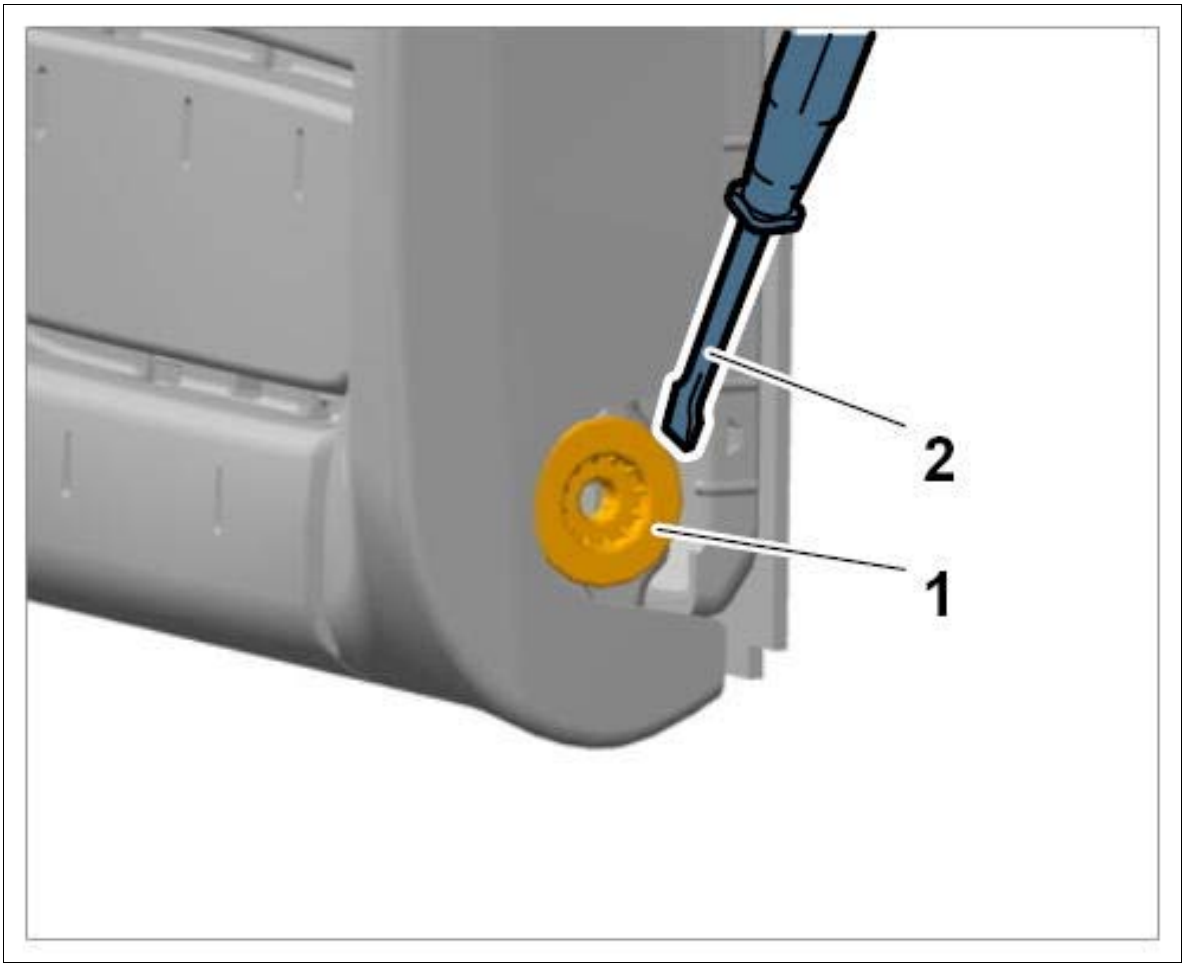

Courtesy of PORSCHE CARS NORTH AMERICA, INC.

3. Pull cover for backrest lock **-1-** off the backrest ↓**-2- (-arrow-)** .

Fig 2: Removing Backrest Lock Cover

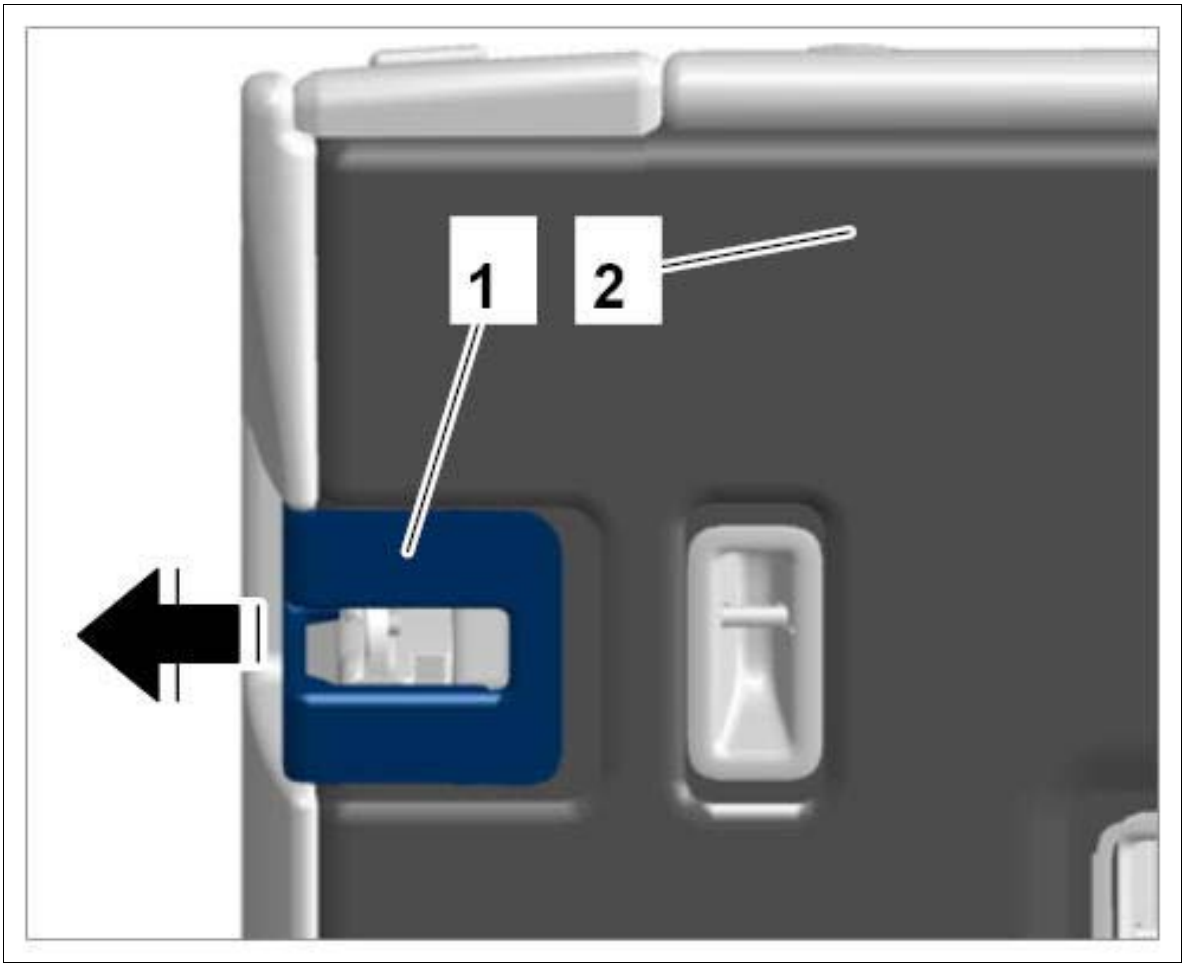

Courtesy of PORSCHE CARS NORTH AMERICA, INC.

4. Pull off cover for backrest locking mechanism **-1-** in an upward direction using a suitable tool (e.g. a hook) **-2- (-arrow-)** .

Fig 3: Removing Cover On Backrest Locking Mechanism

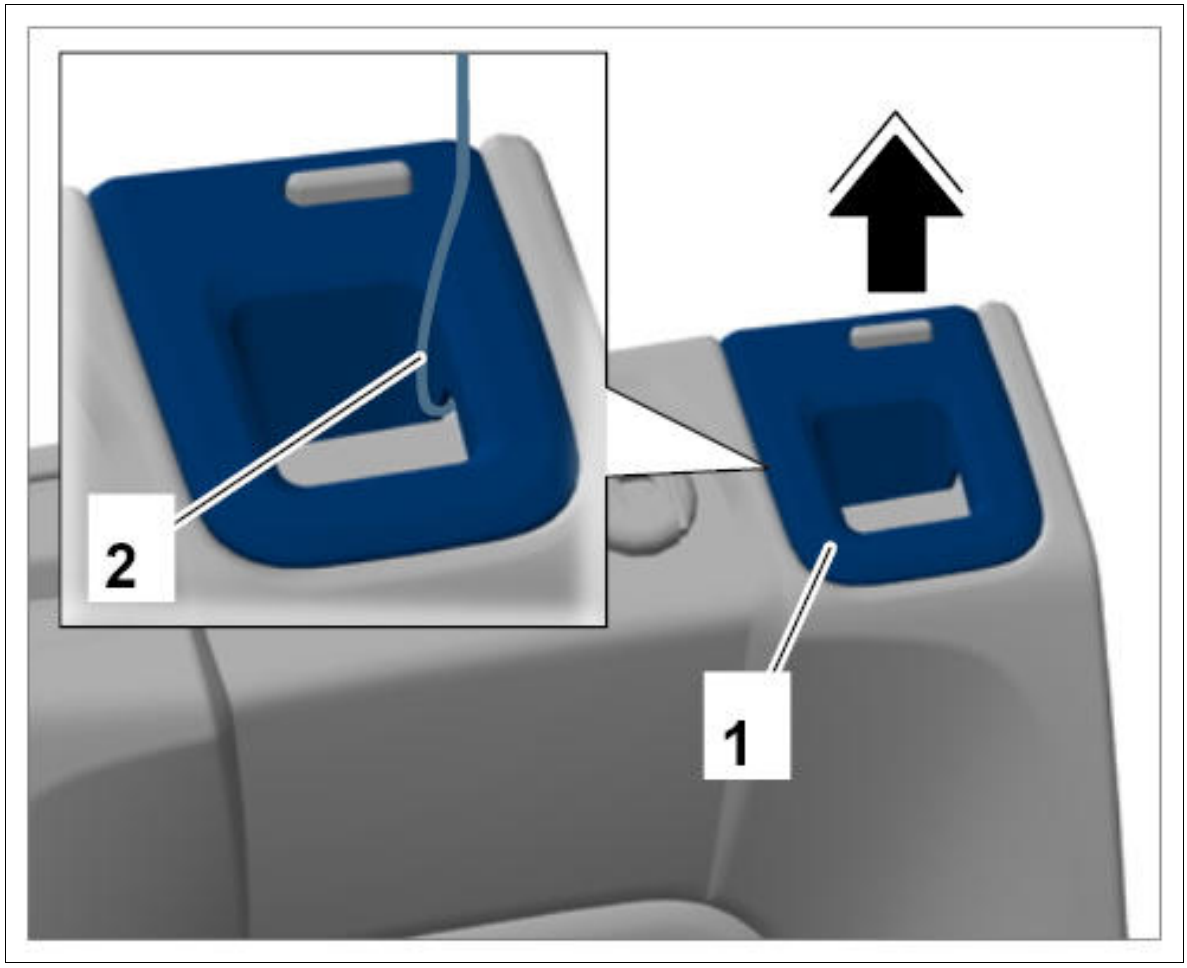

Courtesy of PORSCHE CARS NORTH AMERICA, INC.

5. Loosen cover close to the backrest lock and close to the cover for the locking mechanism.
6. Loosen fastening screws **-1-** and remove lock for rear backrest **-2-** .

Fig 4: Removing Rear Backrest Lock

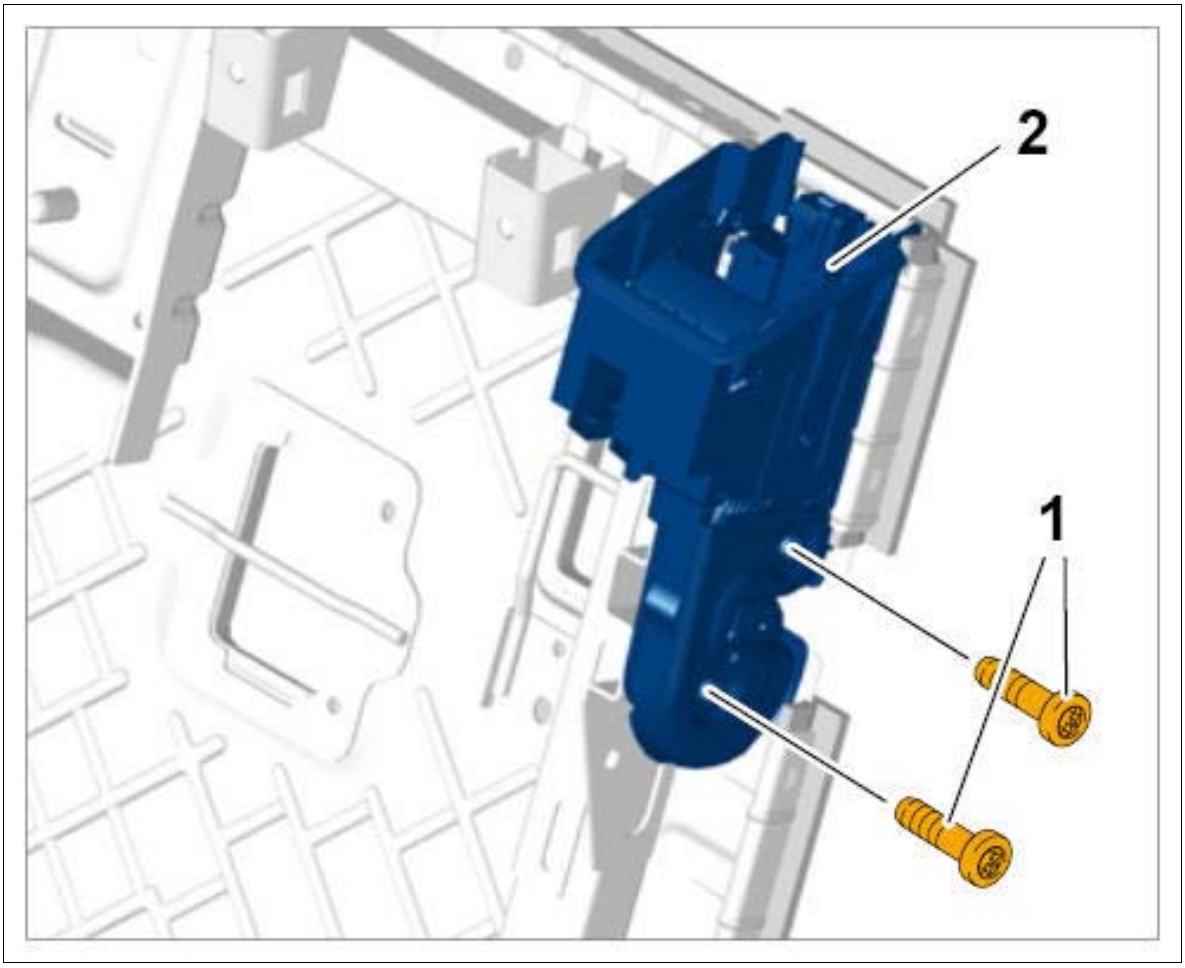

Courtesy of PORSCHE CARS NORTH AMERICA, INC.

WM 726819 REMOVING AND INSTALLING LOCK FOR REAR BACKREST (ALL MODELS) > REMOVING LOCK FOR REAR BACKREST > REMOVING LOCK FOR REAR BACKREST AT THE CENTRE

1. Loosen clip fastenings **-1-** in the lower area of the front trim cover **-2-** using a plastic wedge **-3-** and remove front trim cover by lifting it up **-arrows-** .

Fig 1: Removing Front Trim Cover

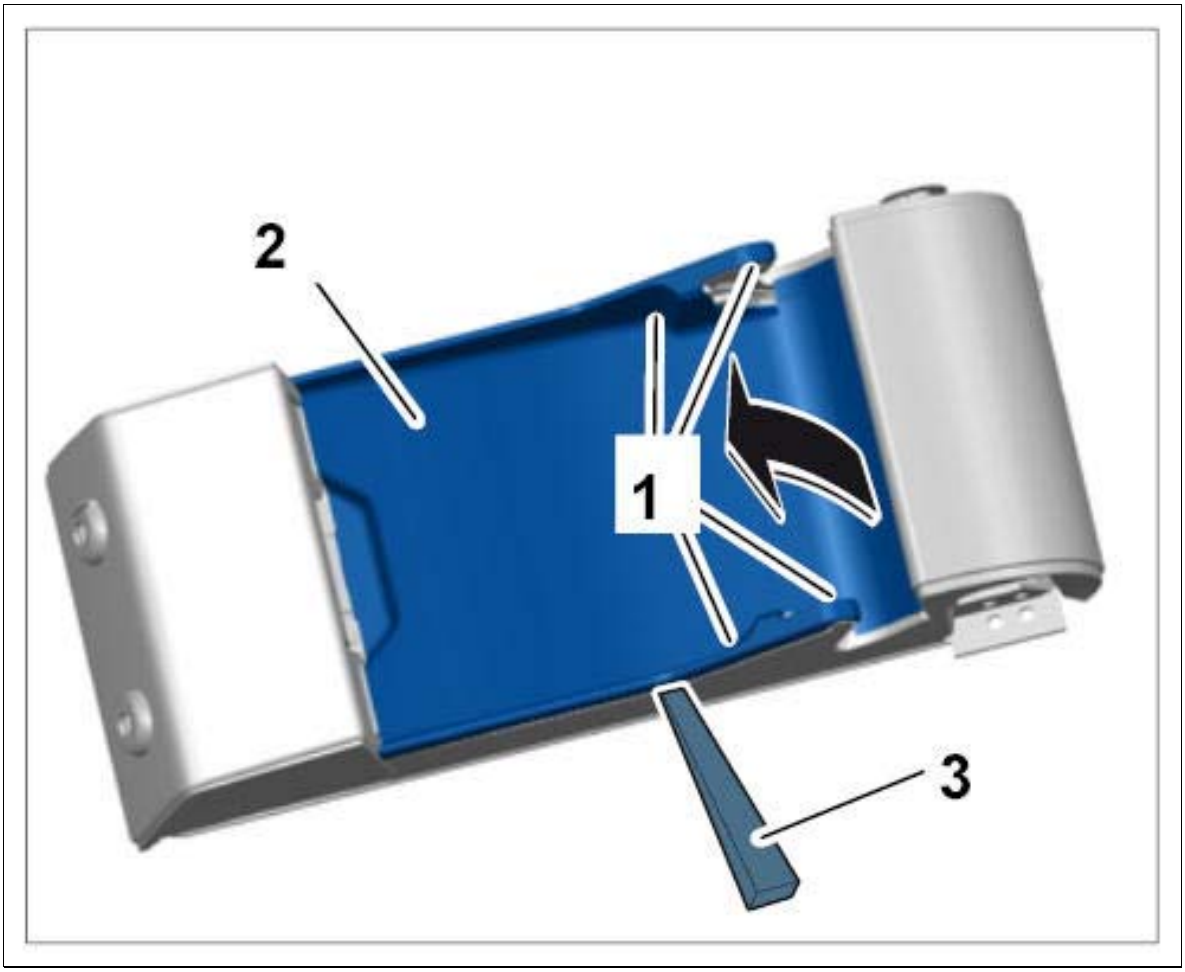

Courtesy of PORSCHE CARS NORTH AMERICA, INC.

2. Pull cover for backrest lock **-1-** off the load-through provision **-2- (-arrow-)** .

Fig 2: Removing Backrest Lock Cover From Load-Through Provision

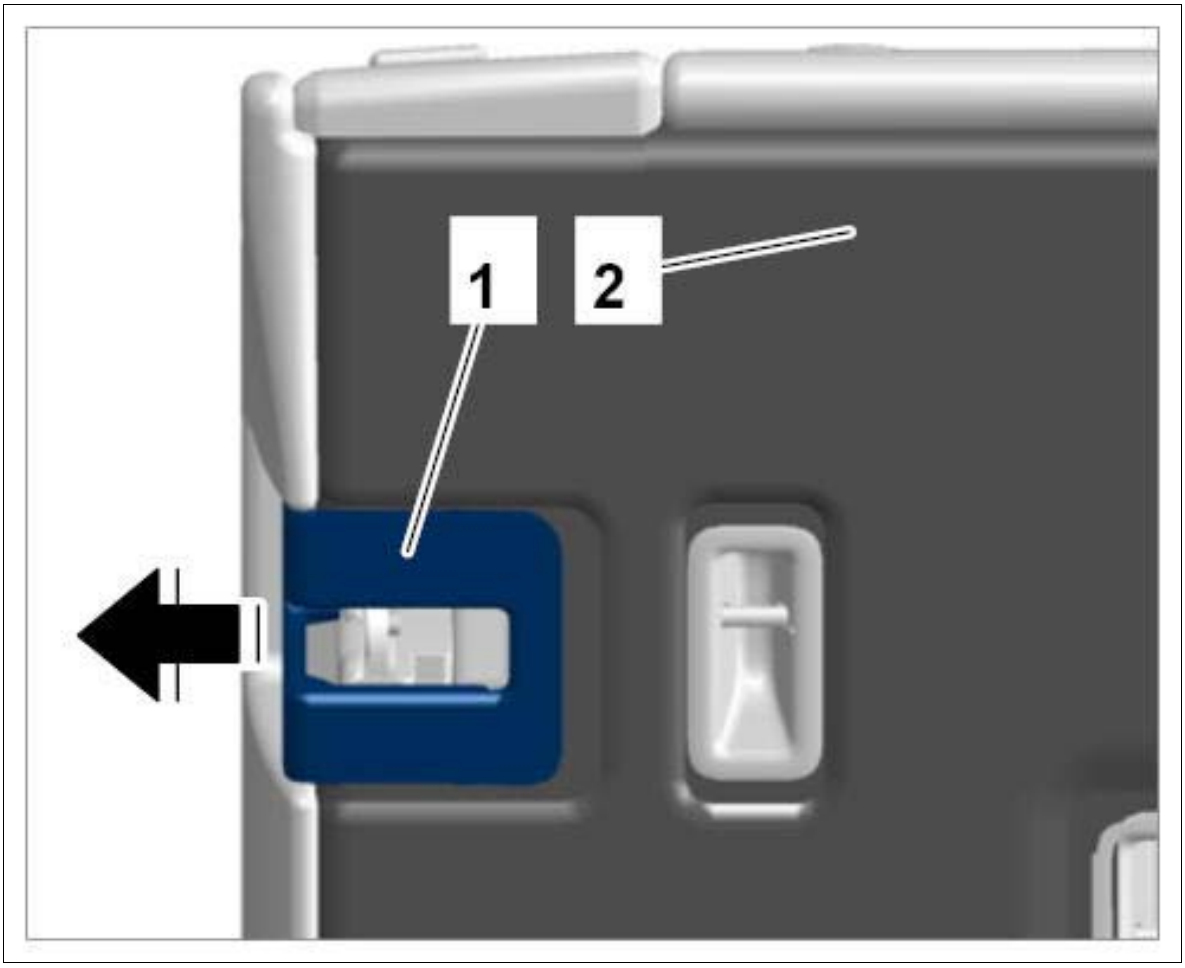

Courtesy of PORSCHE CARS NORTH AMERICA, INC.

3. Loosen cover piping in the **top and side area (-marking-)** .

Fig 3: Loosening Cover Piping

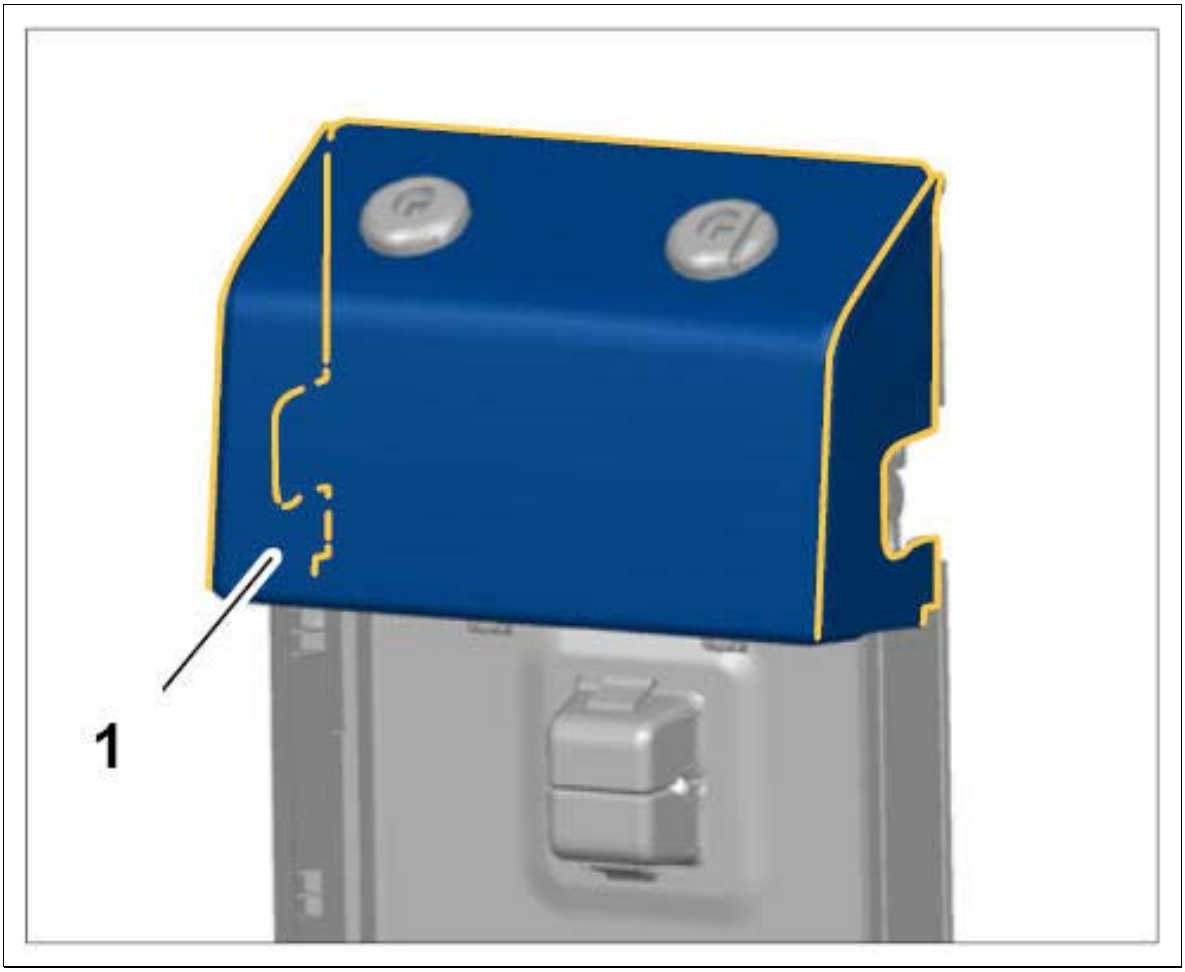

Courtesy of PORSCHE CARS NORTH AMERICA, INC.

4. Remove upper trim panel on load-through provision.

    1. 4.1. Unscrew two fastening screws **-1-** .

Fig 4: Removing Upper Trim Panel On Load-Through Provision



Courtesy of PORSCHE CARS NORTH AMERICA, INC.

2. 4.2. Fold down cover **-arrows-** .
3. 4.3. Loosen two fastening screws **-2-** and fold upper trim panel upwards.
4. 4.4. Disengage operating cable for lock for rear backrest at the center.
    1. 4.4.1. Disengage operating cable at the seat belt mount **-arrow-** .

Fig 5: Loosening Backrest Operating Cable Lock

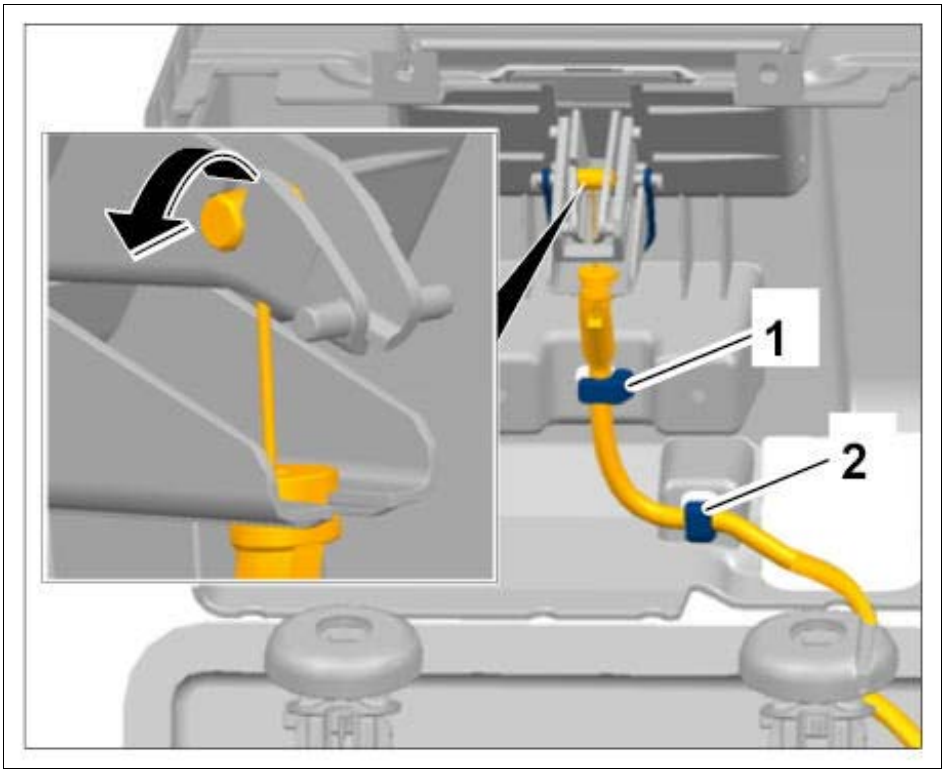

Courtesy of PORSCHE CARS NORTH AMERICA, INC.

2. 4.4.2. Disengage operating cable at the fixing clips **-1 and 2-** .

5. Loosen fastening screws **-1-** for backrest lock **-2-** and remove backrest lock.

Fig 6: Removing Backrest Lock

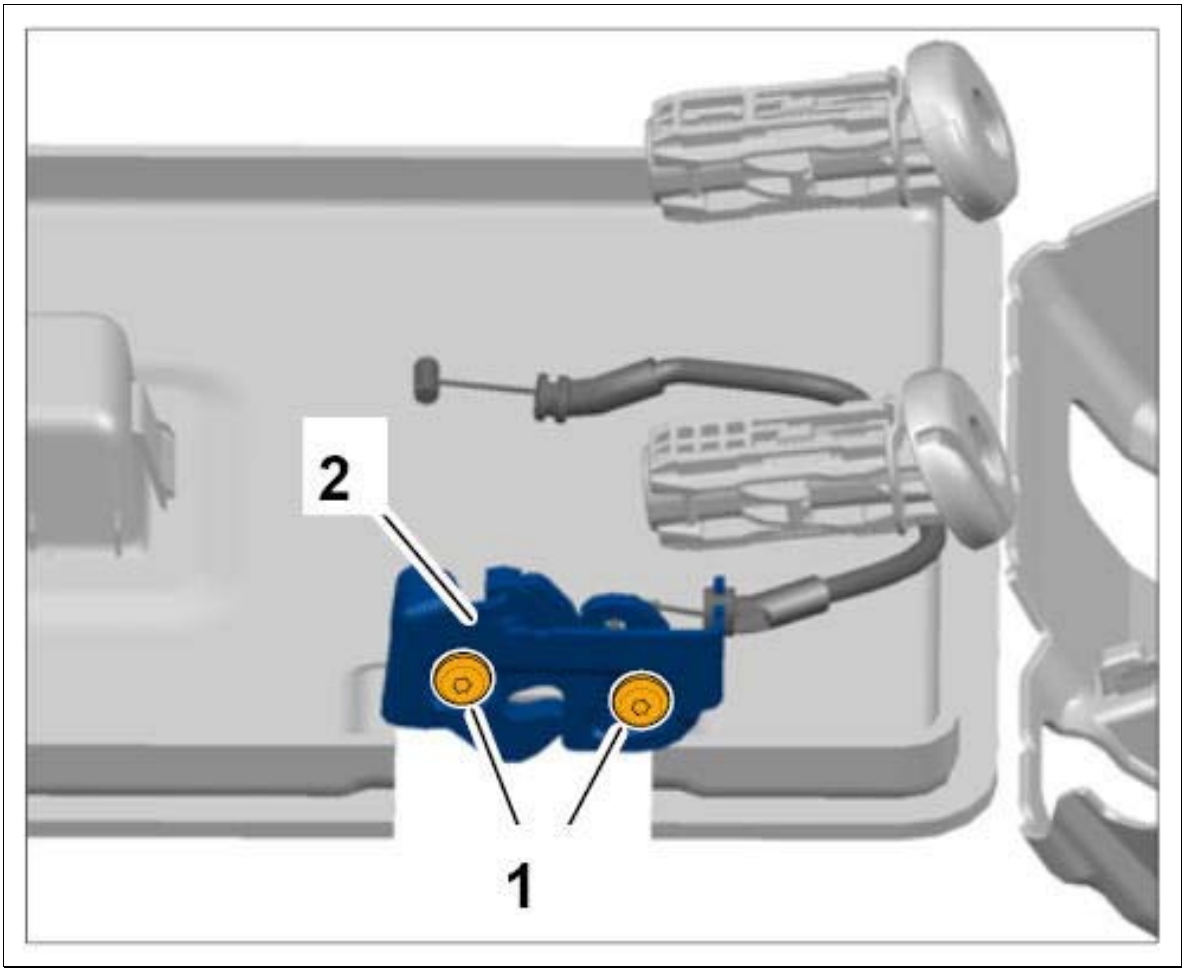

Courtesy of PORSCHE CARS NORTH AMERICA, INC.

WM 726819 REMOVING AND INSTALLING LOCK FOR REAR BACKREST (ALL MODELS) > INSTALLING LOCK FOR REAR BACKREST > INSTALLING LOCK FOR REAR BACKREST AT THE LEFT AND RIGHT

1. Position lock for rear backrest **-2-** and secure it. **Tightening torque 26 Nm (19 ftlb.)**

Fig 1: Installing Backrest Lock

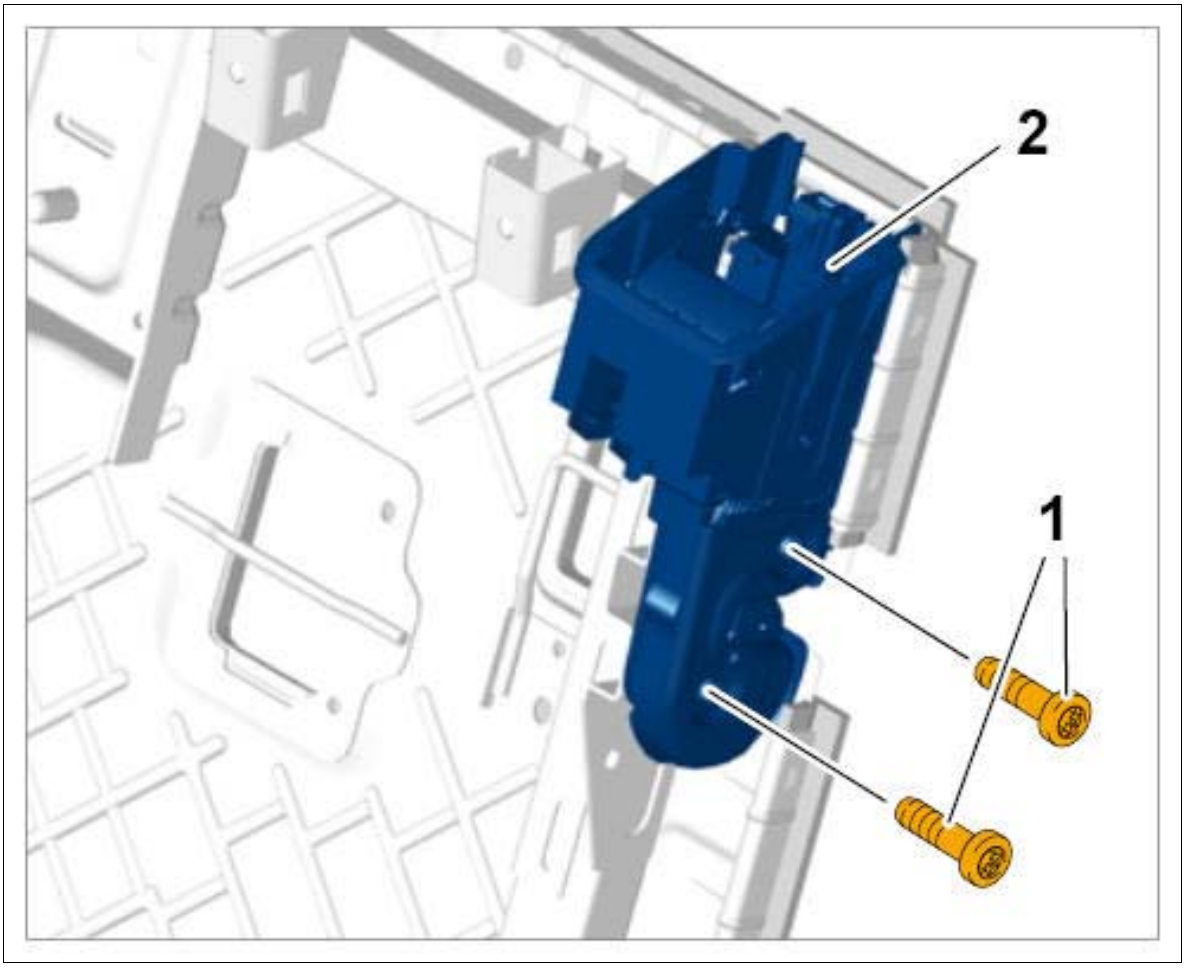

Courtesy of PORSCHE CARS NORTH AMERICA, INC.

Information

1. Replace fastening screws with new fastening screws before installation.
2. Self-locking nuts and screws must always be replaced before installation.

2. Secure cover close to the backrest lock and close to the cover for the locking mechanism.
3. Fit cover on locking mechanism for backrest **-1-** from above and clip it in **-arrow-** .

Fig 2: Installing Locking Mechanism Cover

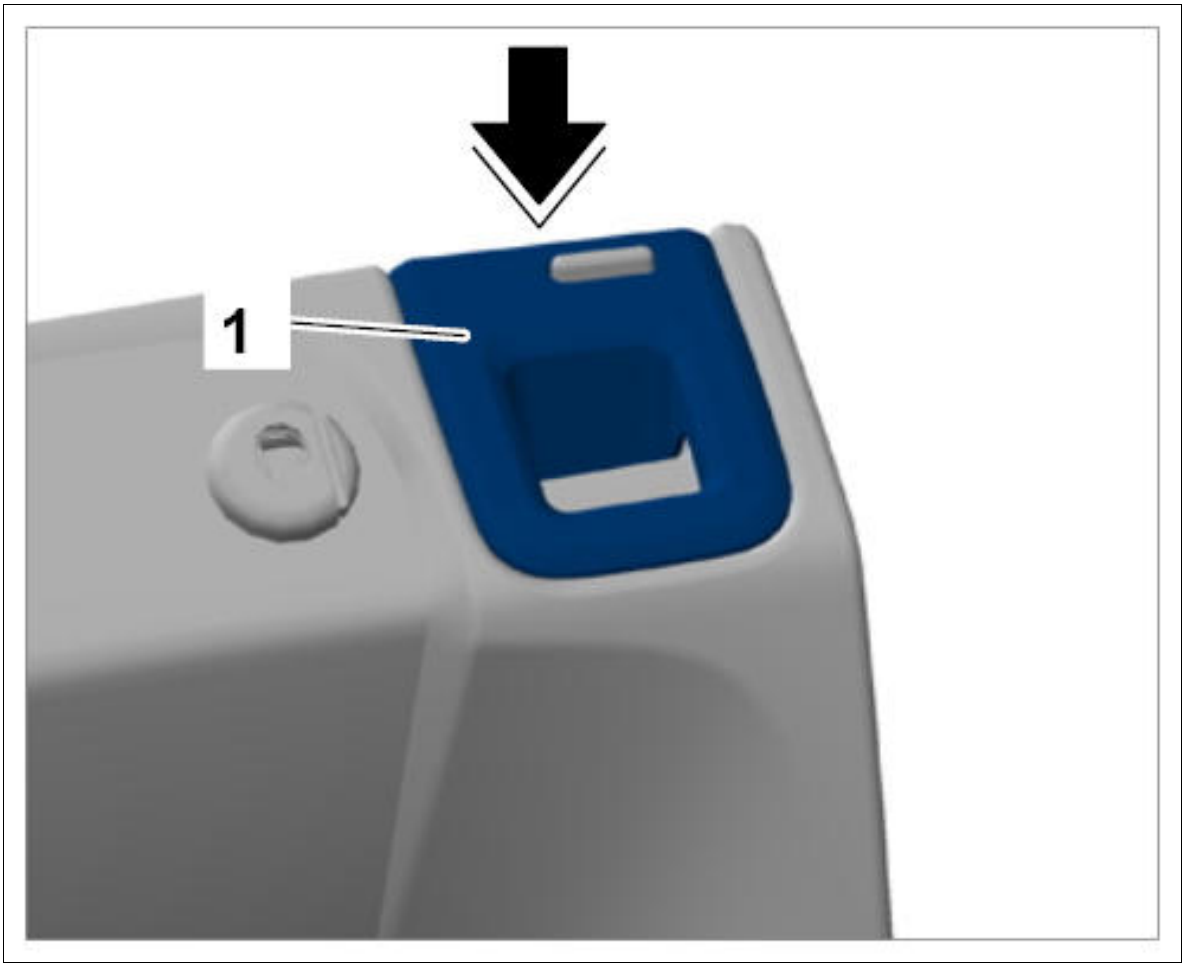

Courtesy of PORSCHE CARS NORTH AMERICA, INC.

4. Fit cover on lock for backrest **-1-** at the sides and press it on securely **-arrow-** .

Fig 3: Installing Lock Cover

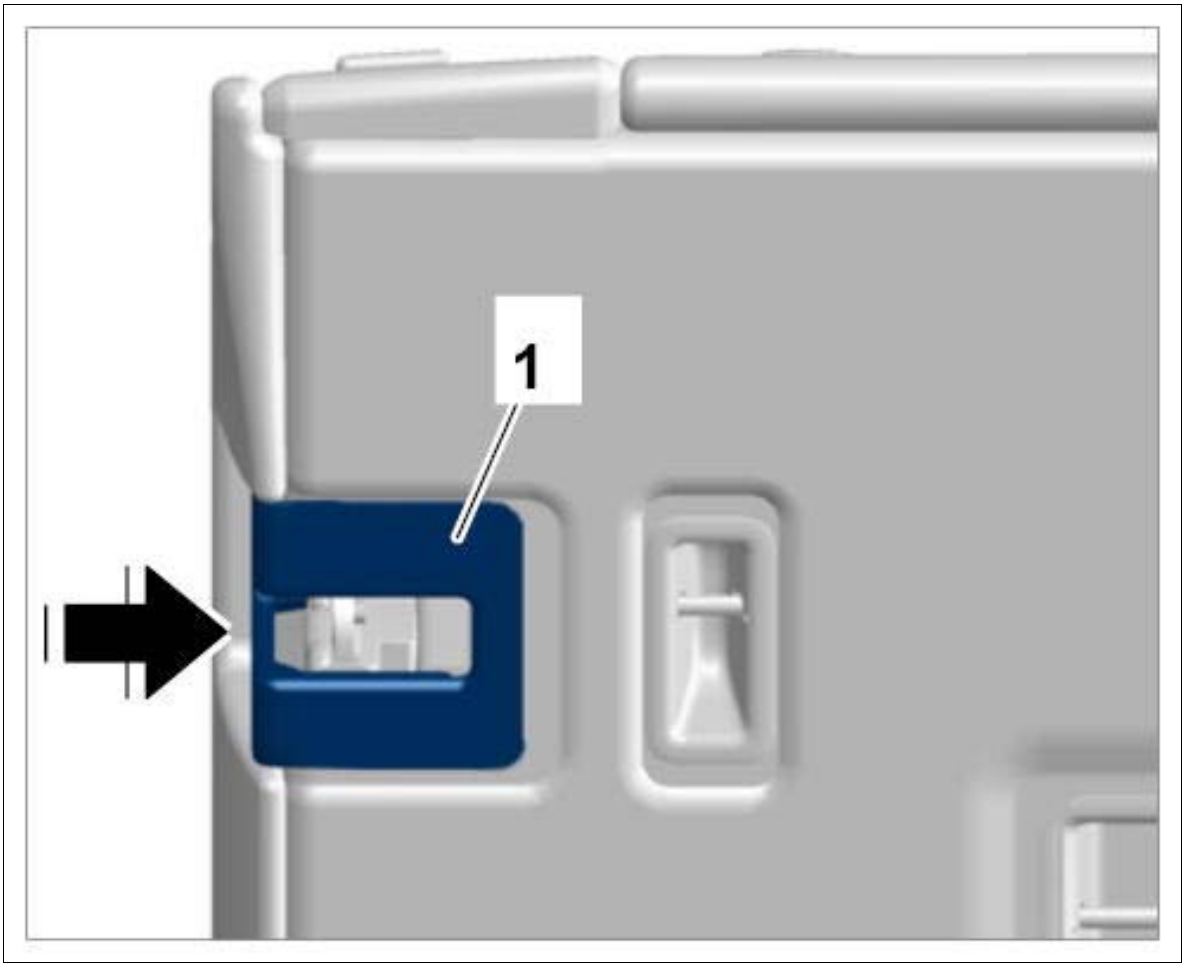

Courtesy of PORSCHE CARS NORTH AMERICA, INC.

5. Clip in the outer mount for the rear backrest on the backrest side **-1-** and press firmly.

Fig 4: Installing Rear Backrest Outer Mount

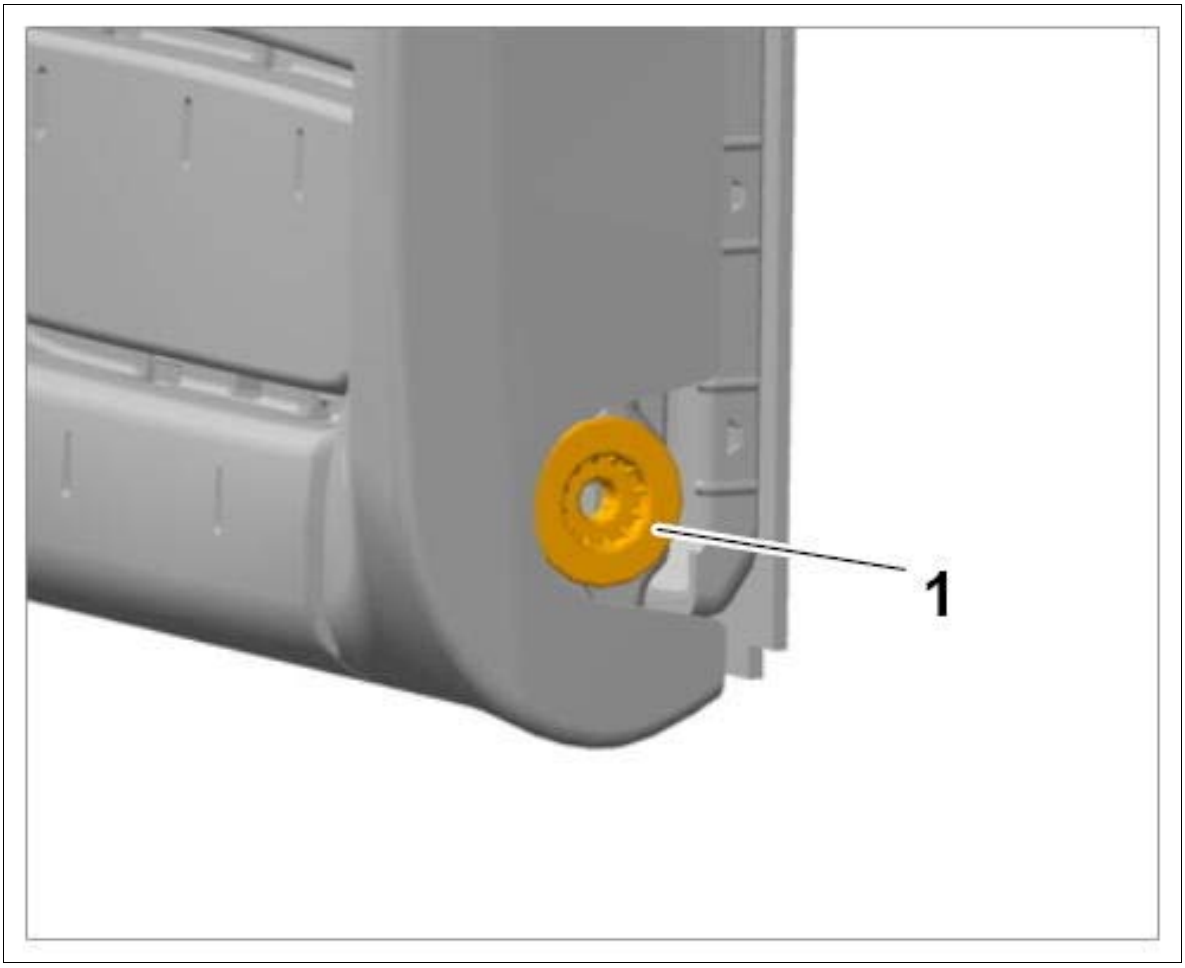

Courtesy of PORSCHE CARS NORTH AMERICA, INC.

6. Install rear backrest. → Installing Rear Backrest

WM 726819 REMOVING AND INSTALLING LOCK FOR REAR BACKREST (ALL MODELS) > INSTALLING LOCK FOR REAR BACKREST > INSTALLING LOCK FOR REAR BACKREST AT THE CENTRE

1. Tighten fastening screws **-1-** for backrest lock **-2-** (**Tightening torque 26 Nm (19 ftlb.)**).

Fig 1: Installing Backrest Lock

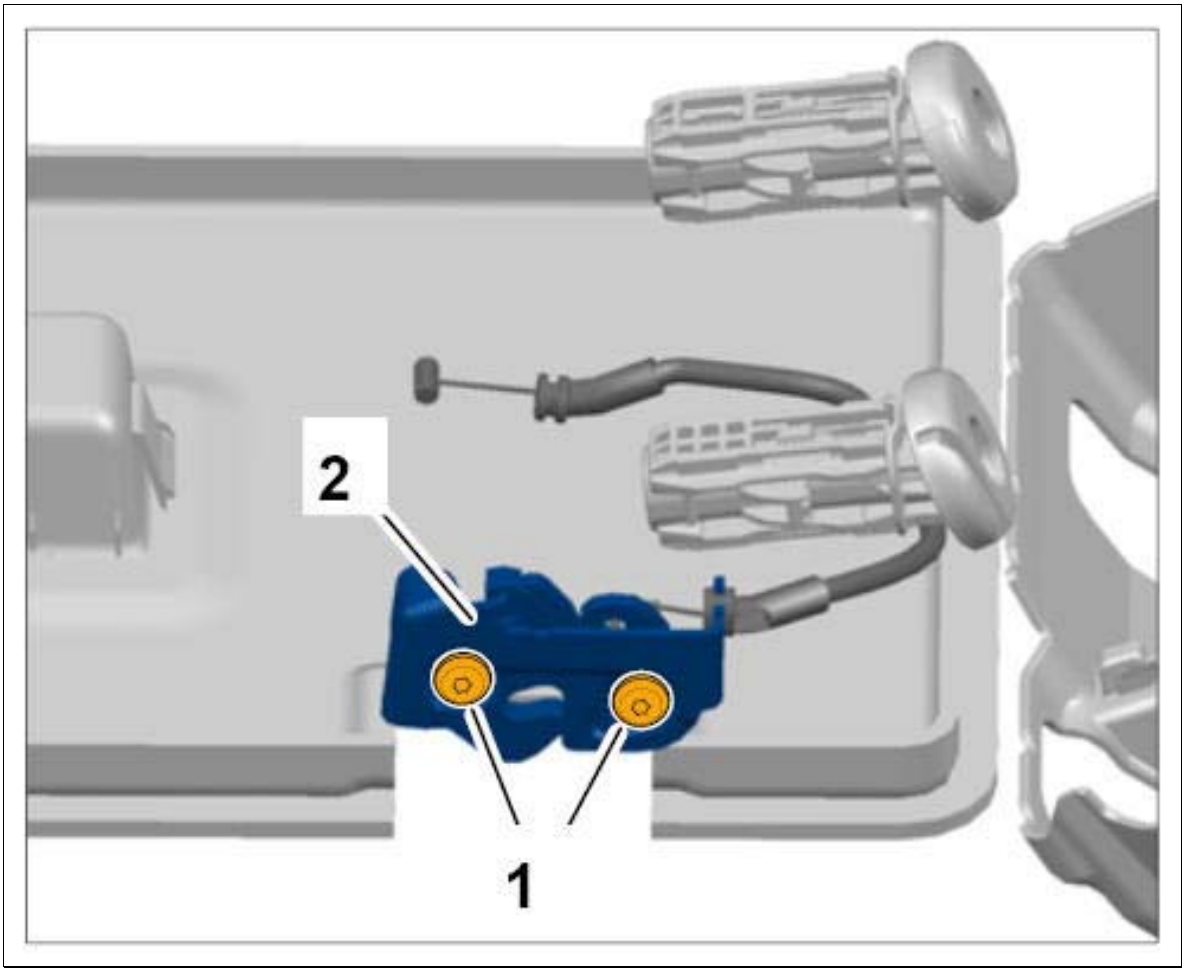

Courtesy of PORSCHE CARS NORTH AMERICA, INC.

2. Install upper trim panel on load-through provision.
    1. 2.1. Engage operating cable for lock for rear backrest at the center.
        1. 2.1.1. Engage operating cable at the seat belt mount **-arrow-** .

Fig 2: Engaging Operating Cable

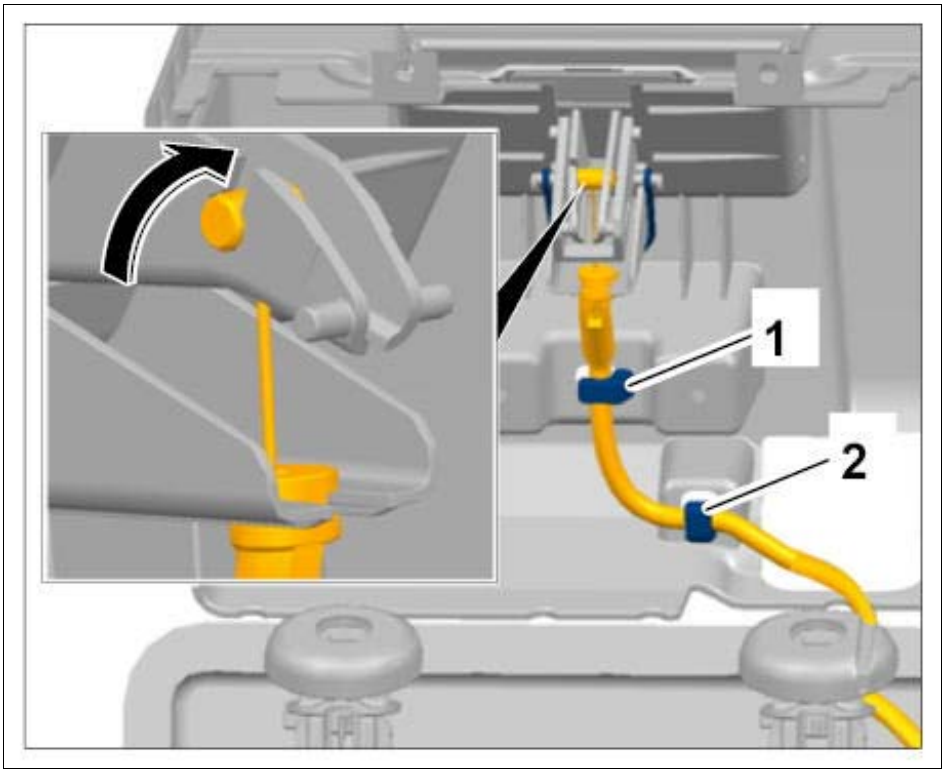

Courtesy of PORSCHE CARS NORTH AMERICA, INC.

2. 2.1.2. Engage operating cable at the fixing clips **-1 and 2-** .

2. 2.2. Tighten fastening screws **-1, 2, 3, 4-** (**Tightening torque 3.5 Nm (2.5 ftlb.)**).

Fig 3: Installing Upper Trim Panel On Load-Through Provision



Courtesy of PORSCHE CARS NORTH AMERICA, INC.

3. 2.3. Press cover piping into the retaining strips all the way around.

3. Fit cover on lock for backrest **-1-** at the sides and press it on securely **-arrow-** .

Fig 4: Installing Backrest Lock Cover

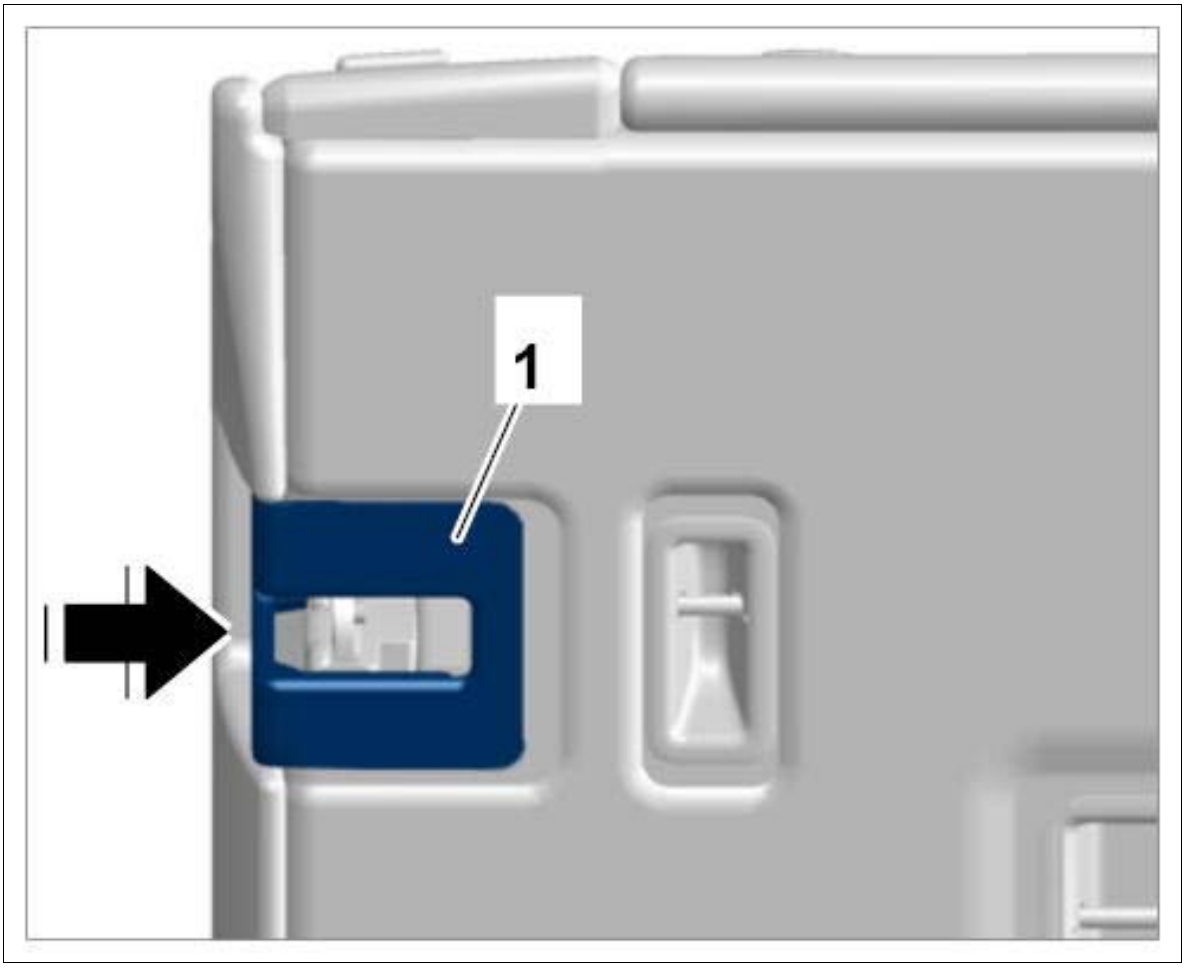

Courtesy of PORSCHE CARS NORTH AMERICA, INC.

4. Install front trim cover **-1-** on the load-through provision **-2-** in such a way that the clip fastenings lock with an audible click in the lower area **-arrows-** .

Fig 5: Installing Front Trim Cover

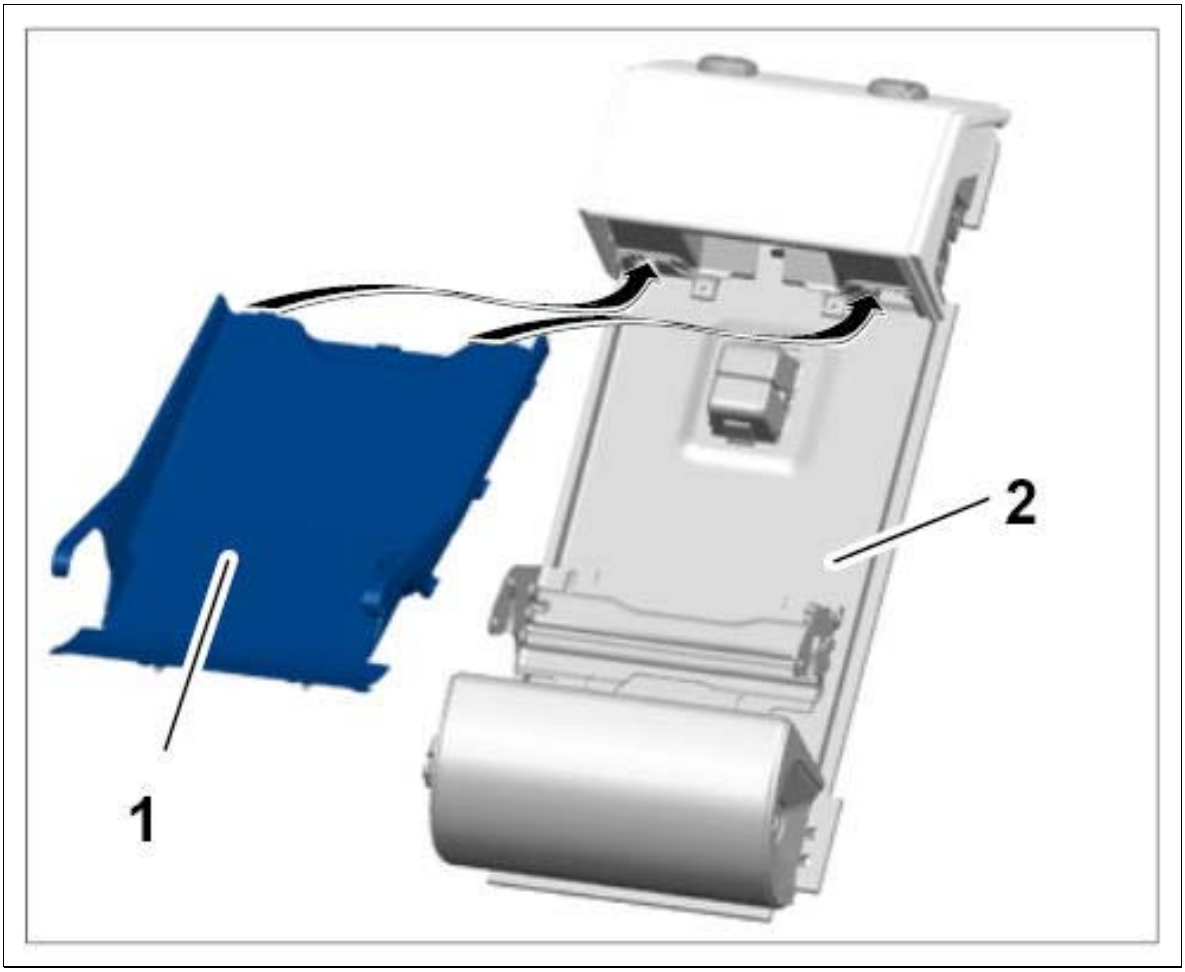

Courtesy of PORSCHE CARS NORTH AMERICA, INC.

WM 726819 REMOVING AND INSTALLING LOCK FOR REAR BACKREST (ALL MODELS) > SUBSEQUENT WORK > SUBSEQUENT WORK FOR LOCK FOR REAR BACKREST AT THE LEFT AND RIGHT

1. Install rear headrest. → Installing Headrest

WM 726819 REMOVING AND INSTALLING LOCK FOR REAR BACKREST (ALL MODELS) > SUBSEQUENT WORK > SUBSEQUENT WORK FOR LOCK FOR CENTRE REAR BACKREST

1. Install center rear headrest. → Installing Headrest
2. Install armrest with cover (rear). → Installing Armrest With Cover

WM 728019 REMOVING AND INSTALLING HEADREST (ALL MODELS) > COMPONENT INFORMATION > INSTALLATION POSITION

Fig 1: Identifying Headrests Installation Position



Courtesy of PORSCHE CARS NORTH AMERICA, INC.

WM 728019 REMOVING AND INSTALLING HEADREST (ALL MODELS) > REMOVING HEADREST > REMOVING FRONT HEADREST

1. Push adjusting knob **-A-** and pull headrest up as far as possible.
2. Press down cushion beside the right-hand headrest guide **-B-** .

   Information

   The locking mechanism is on the right-hand side of the vehicle on all outer headrests and must always be pressed towards the left-hand side of the vehicle.

3. Press locking mechanism inwards with your finger **-C-** and pull the headrest up **-D-** and out at the same time.

Fig 1: Removing Front Headrest

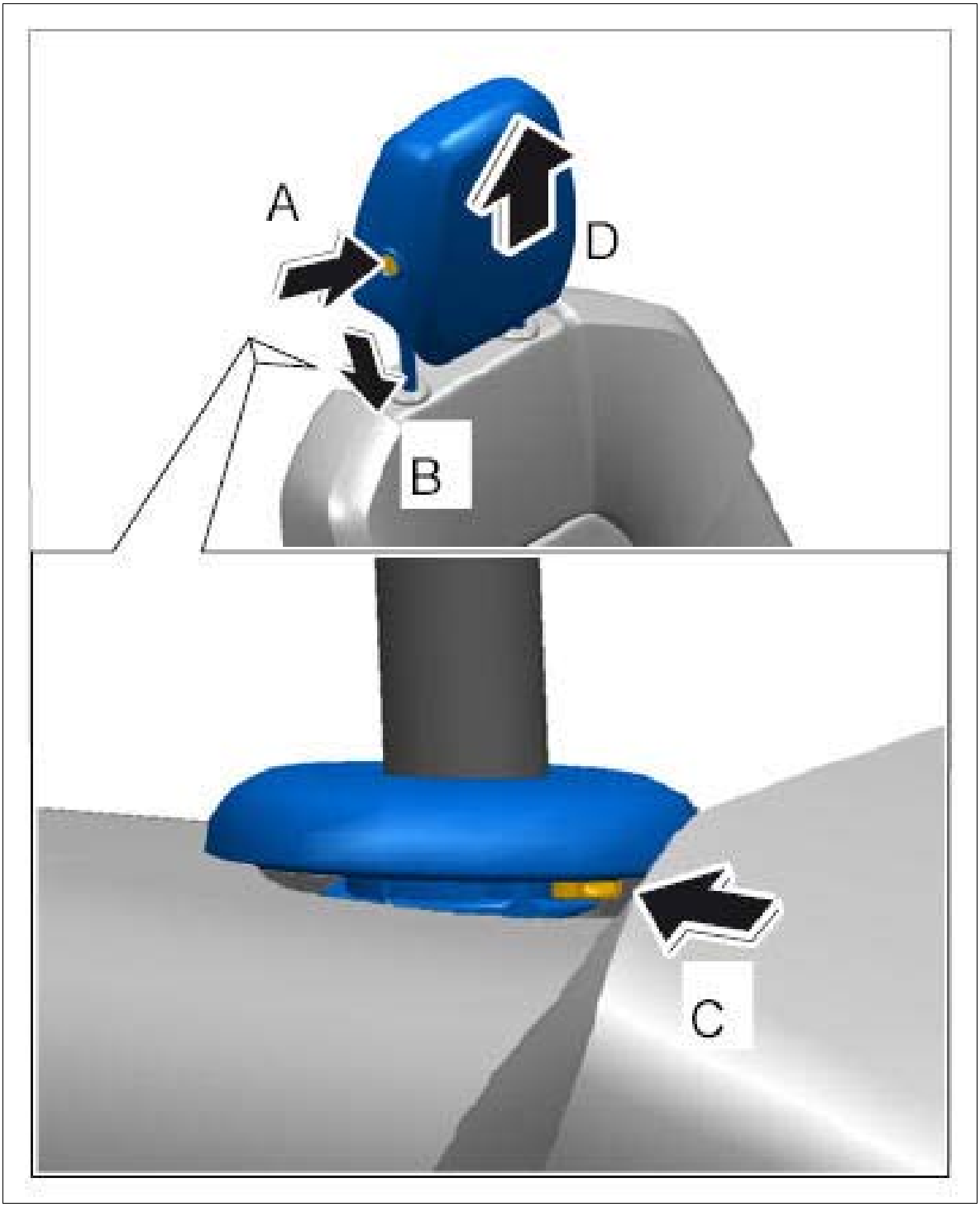

Courtesy of PORSCHE CARS NORTH AMERICA, INC.

WM 728019 REMOVING AND INSTALLING HEADREST (ALL MODELS) > REMOVING HEADREST > REMOVING REAR HEADREST

1. Fold rear backrest **-1-** forward.

2. Press in adjustment buttons **-2-** at the sides and pull headrest **-3-** up and out **-arrow-** .

Fig 1: Removing Rear Headrest

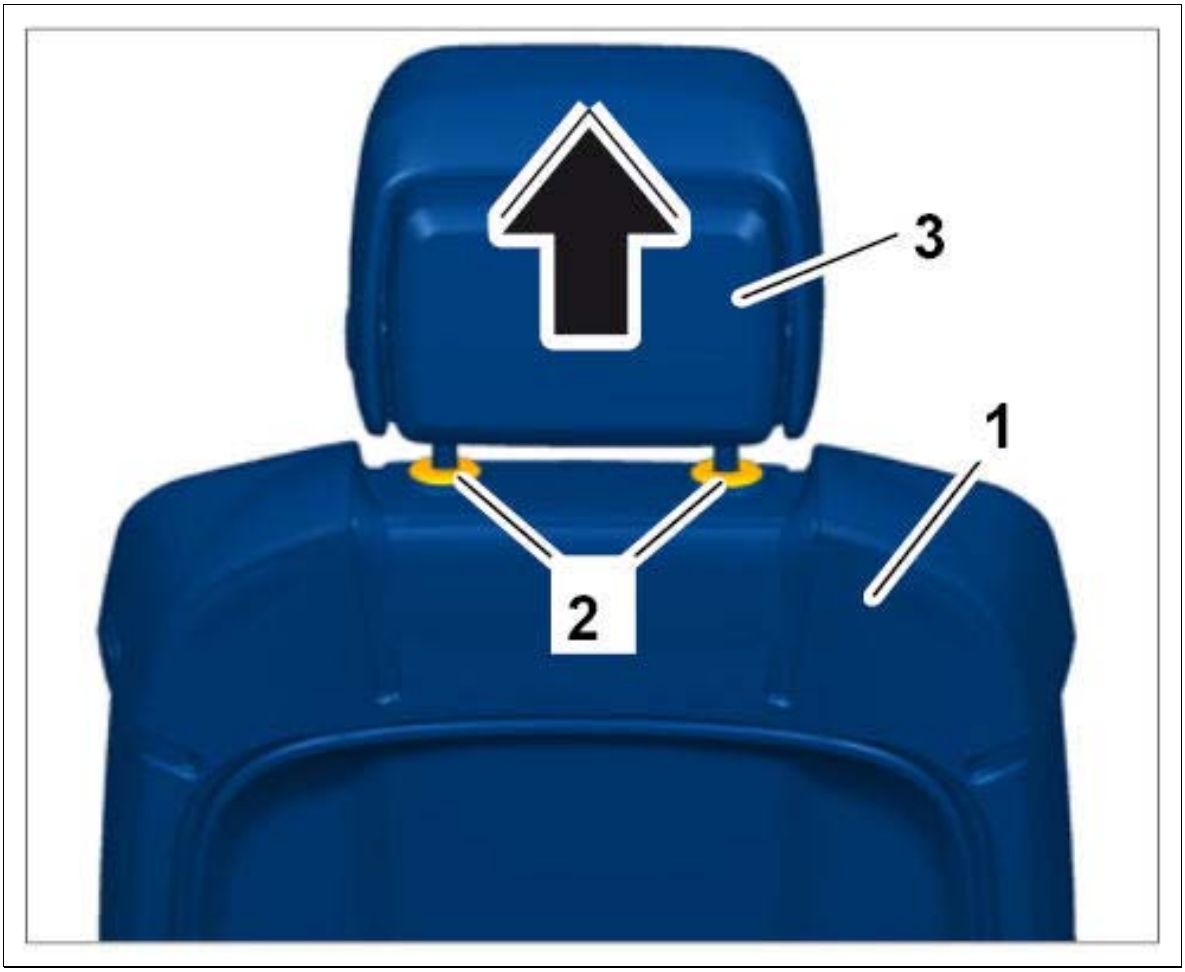

Courtesy of PORSCHE CARS NORTH AMERICA, INC.

WM 728019 REMOVING AND INSTALLING HEADREST (ALL MODELS) > INSTALLING HEADREST > INSTALLING REAR HEADREST

1. Guide the headrest **-1-** into the holes in the rear backrest **-2-** from above and press downwards **-arrow-** .

Fig 1: Installing Rear Headrest

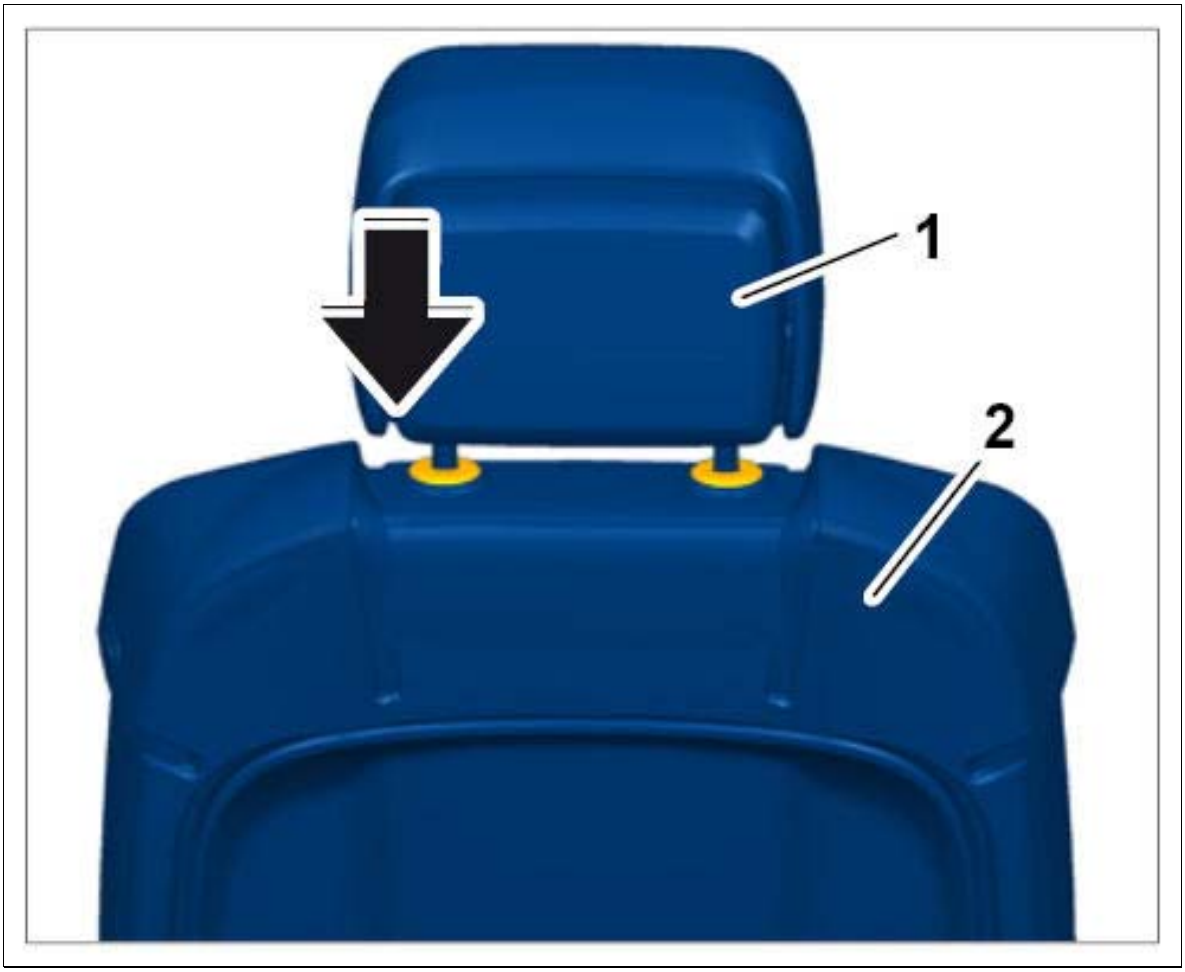

Courtesy of PORSCHE CARS NORTH AMERICA, INC.

2. Lock the backrest in upright position.

WM 728019 REMOVING AND INSTALLING HEADREST (ALL MODELS) > INSTALLING HEADREST > INSTALLING FRONT HEADREST

1. Push headrest into the headrest guides.
2. Press adjusting knob **-A-** and push headrest down **-B-** until the locking lug engages at the limit stop.

Fig 1: Installing Front Headrest

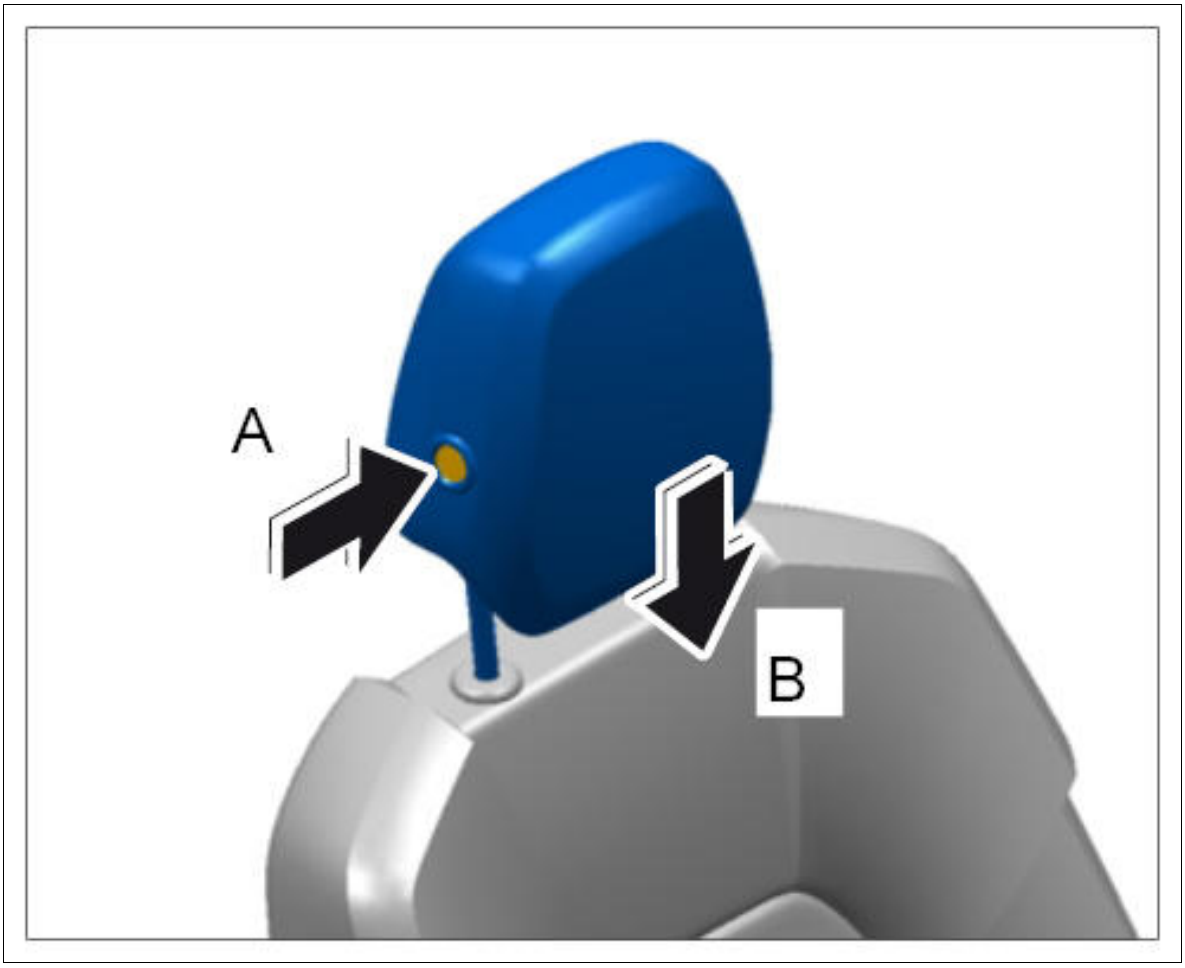

Courtesy of PORSCHE CARS NORTH AMERICA, INC.

WM 728619 REMOVING AND INSTALLING SEAT ADJUSTMENT SWITCH (ALL MODELS) > PRELIMINARY WORK

1. Remove outside of front seat trim. → Removing Trim Panel For Seat

WM 728619 REMOVING AND INSTALLING SEAT ADJUSTMENT SWITCH (ALL MODELS) > REMOVING SEAT ADJUSTMENT SWITCH

Fig 1: Identifying Seat Adjustment Switch Position



Courtesy of PORSCHE CARS NORTH AMERICA, INC.

1. Unscrew three fastening screws **-1-** .

Fig 2: Removing Seat Adjustment Switch

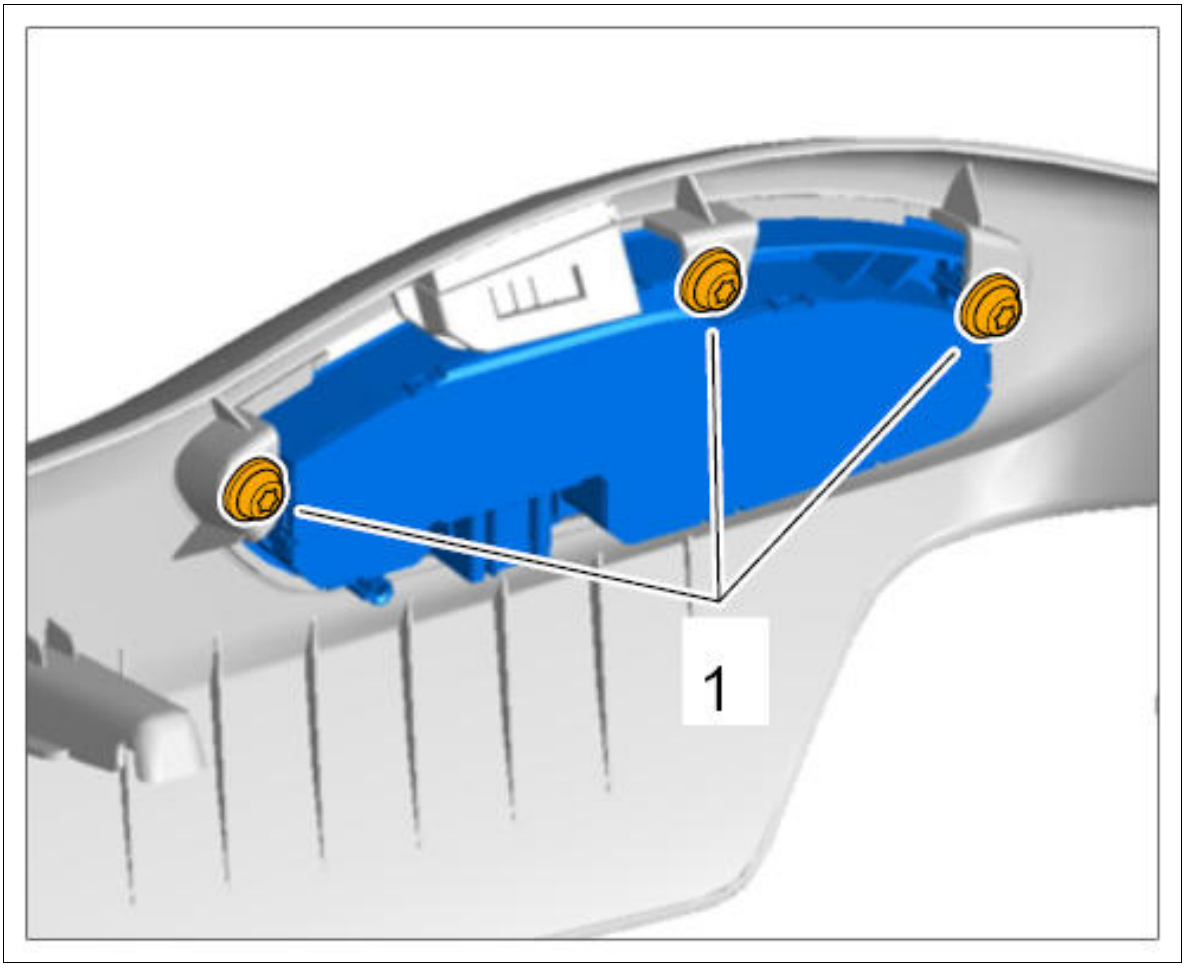

Courtesy of PORSCHE CARS NORTH AMERICA, INC.

WM 728619 REMOVING AND INSTALLING SEAT ADJUSTMENT SWITCH (ALL MODELS) > INSTALLING SEAT ADJUSTMENT SWITCH

1. Screw in three fastening screws **-1-** .

Fig 1: Installing Seat Adjustment Switch

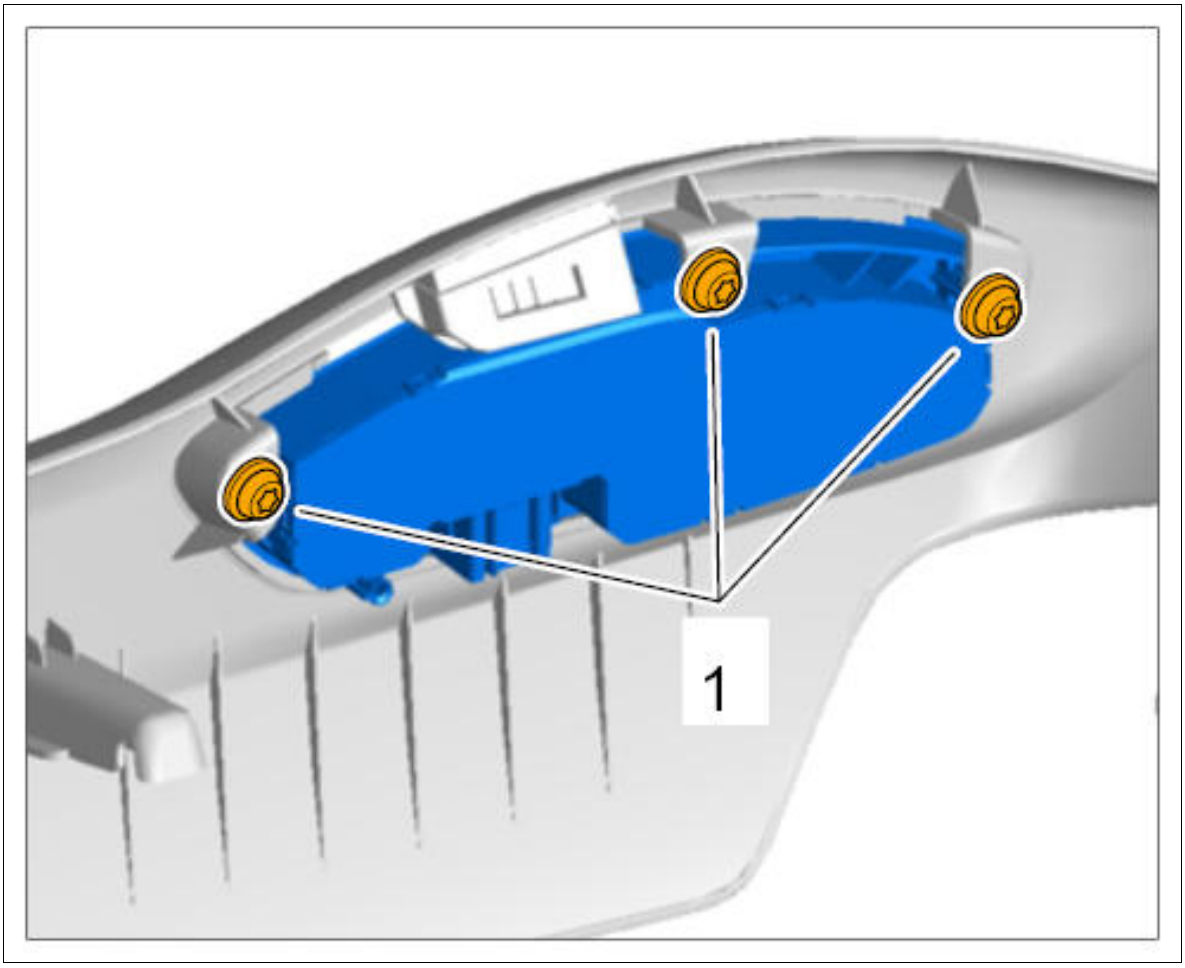

Courtesy of PORSCHE CARS NORTH AMERICA, INC.

WM 728619 REMOVING AND INSTALLING SEAT ADJUSTMENT SWITCH (ALL MODELS) > SUBSEQUENT WORK

1. Install outside of front seat trim. → Installing Trim Panel For Seat

WM 728719 REMOVING AND INSTALLING MOTOR FOR SEAT ADJUSTMENT (ALL MODELS) > PRELIMINARY WORK

1. Remove the front seat. → Removing Front Seat

WM 728719 REMOVING AND INSTALLING MOTOR FOR SEAT ADJUSTMENT (ALL MODELS) > REMOVING MOTOR FOR SEAT ADJUSTMENT

Fig 1: Identifying Seat Adjustment Motor Position



Courtesy of PORSCHE CARS NORTH AMERICA, INC.

1. Push out locking mechanism for cover for motor **-2-** from the rear and unclip cover for motor **-1- (-A-)** .
2. Disconnect electric plug connection **-3-** at the motor **-B-** .

Fig 2: Removing Motor Cover

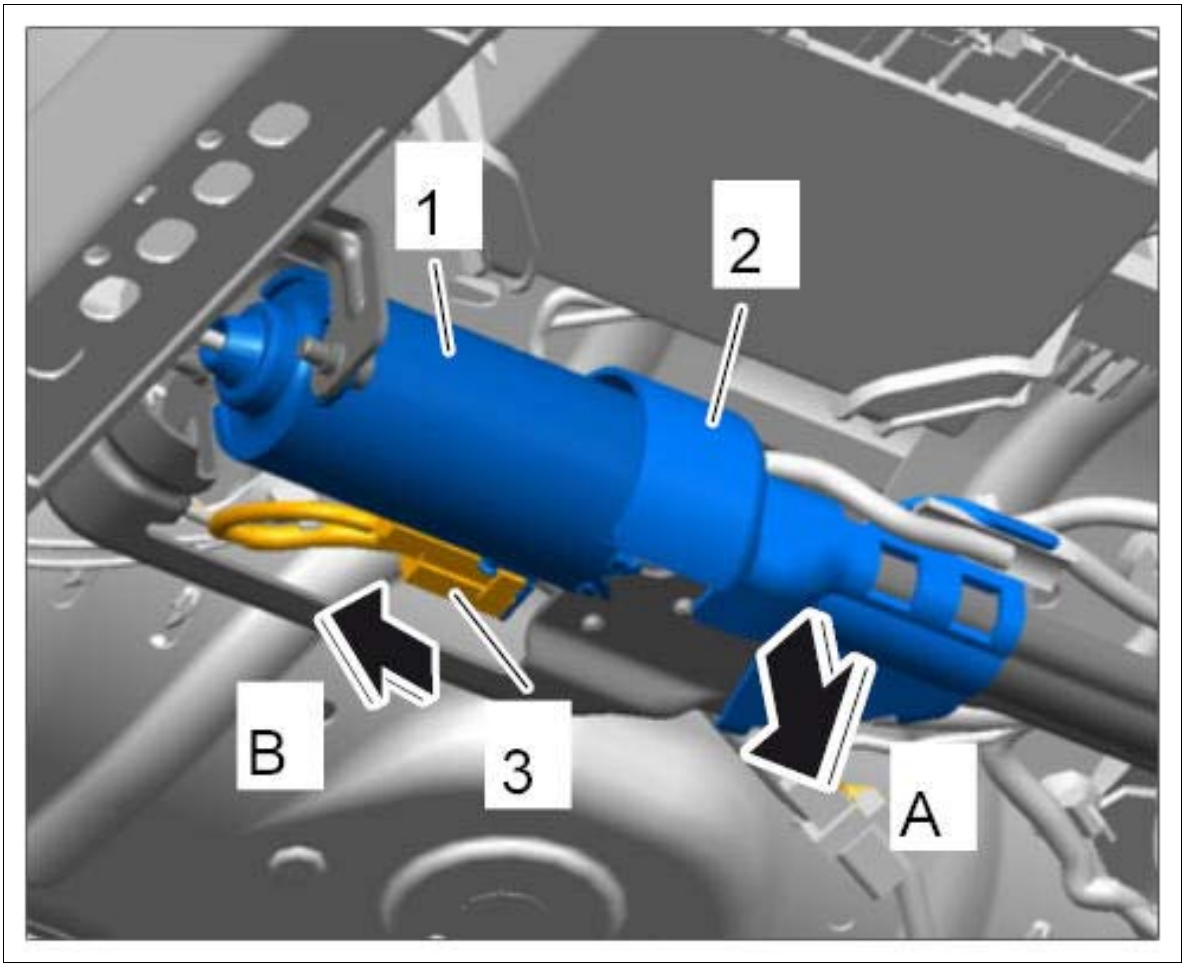

Courtesy of PORSCHE CARS NORTH AMERICA, INC.

3. Unscrew two fastening screws **-4-** .

Fig 3: Loosening Motor

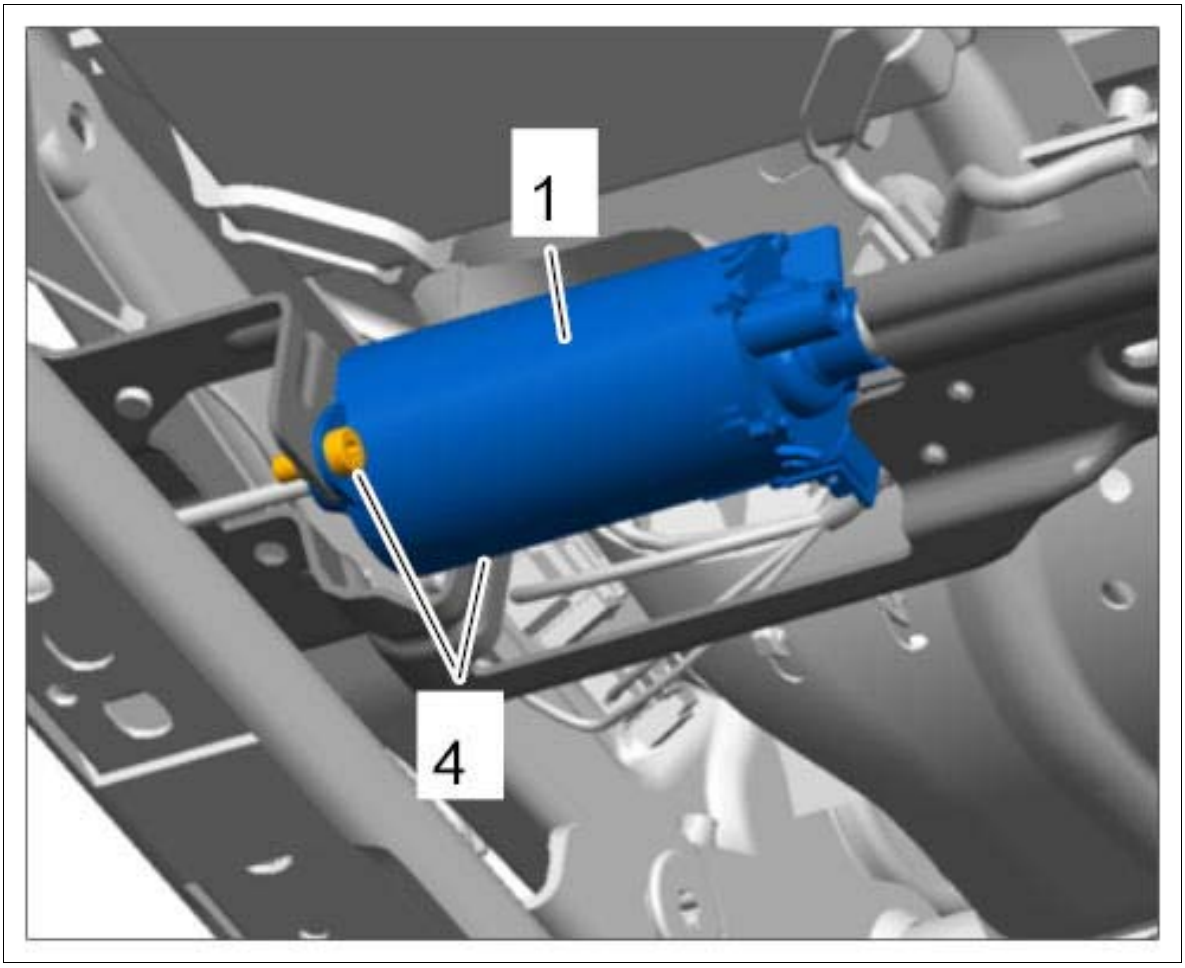

Courtesy of PORSCHE CARS NORTH AMERICA, INC.

4. Unclip fixing clip **-5-** for the long drive shaft **-6- (-C-)** .

Fig 4: Loosening Long Drive Shaft

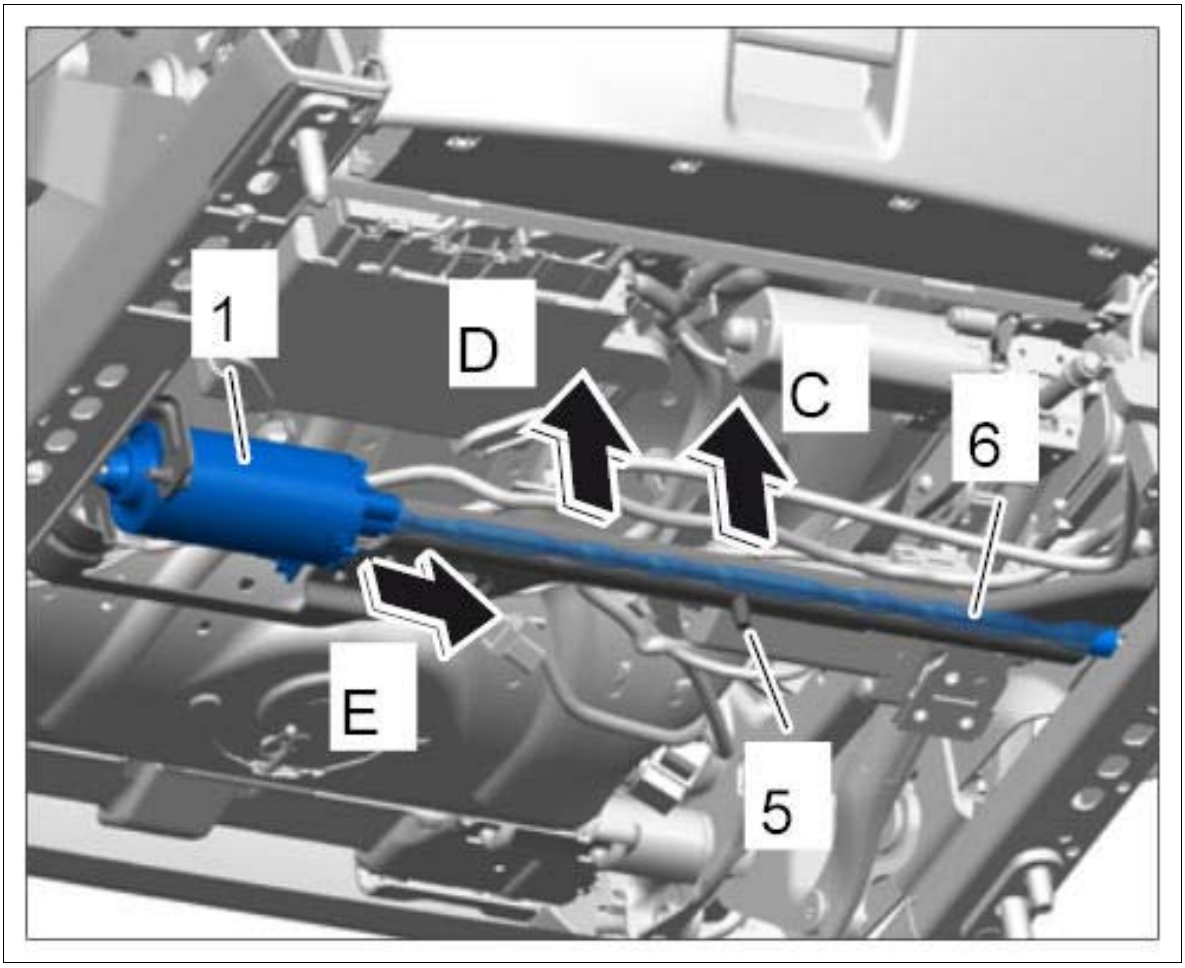

Courtesy of PORSCHE CARS NORTH AMERICA, INC.

5. Carefully bend the long drive shaft **-6- (-D-)** and pull it off the motor **-1- (-E-)** .
6. Unclip the motor **-1-** from the seat frame **-7- (-F-)** and pull it off the short drive shaft **-8- (-G-)** .

Fig 5: Disconnecting Motor From Short Drive Shaft

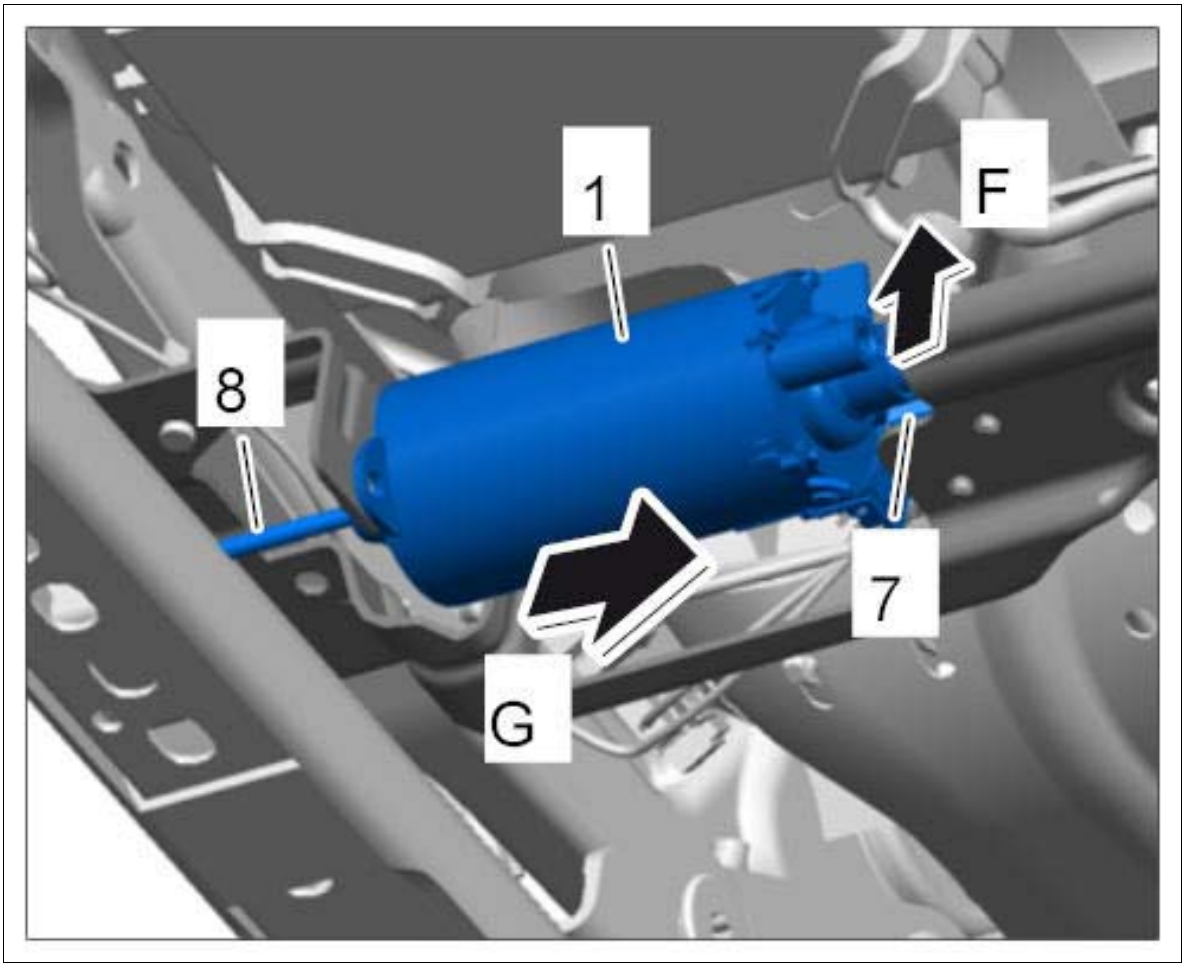

Courtesy of PORSCHE CARS NORTH AMERICA, INC.

WM 728719 REMOVING AND INSTALLING MOTOR FOR SEAT ADJUSTMENT (ALL MODELS) > INSTALLING MOTOR FOR SEAT ADJUSTMENT

1. Fit the motor **-1-** on the short drive shaft **-8- (-A-)** and engage it in the seat frame **-7- (-B-)** .

Fig 1: Fitting Motor On Short Drive Shaft

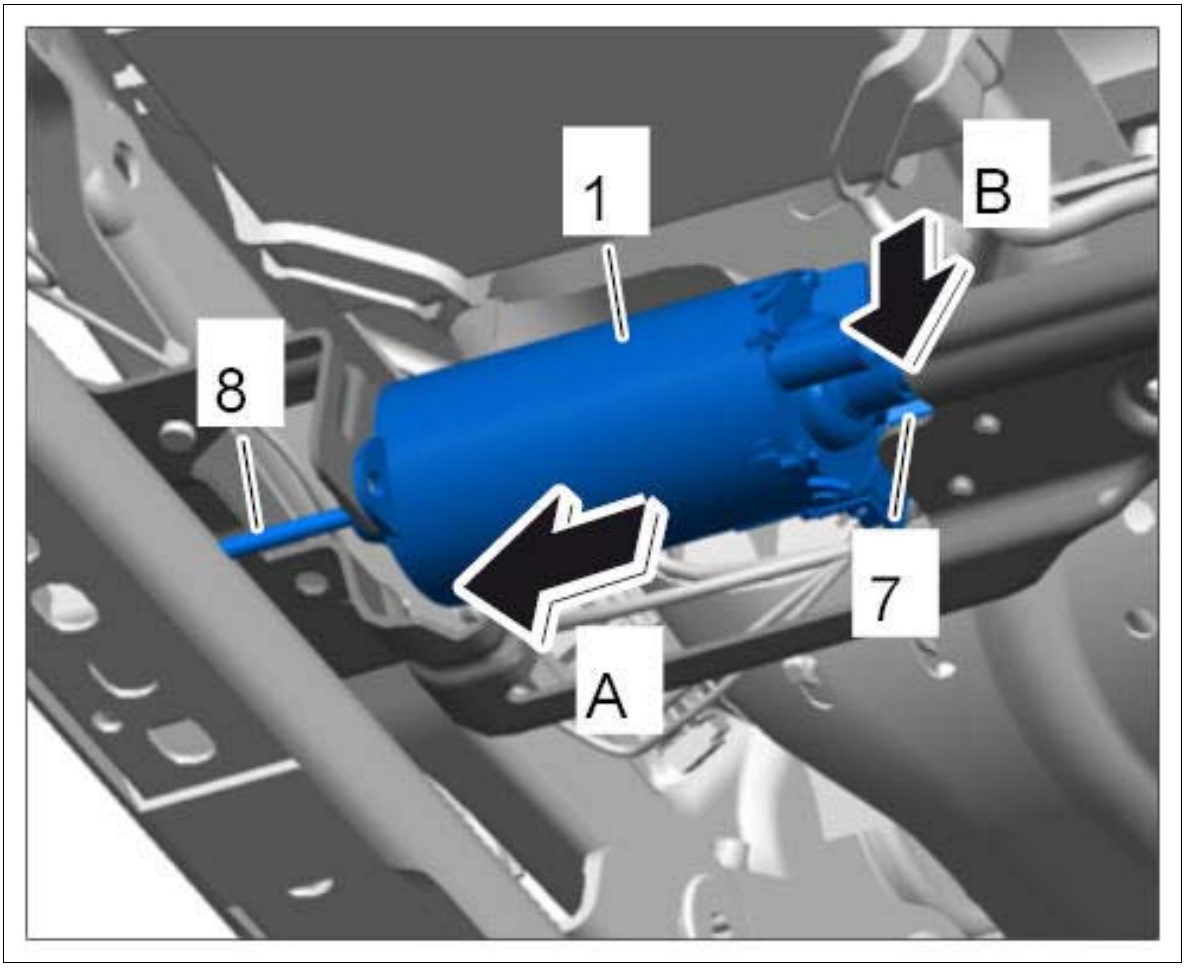

Courtesy of PORSCHE CARS NORTH AMERICA, INC.

2. Carefully bend the long drive shaft **-6- (-C-)** and connect it to the motor **-1- (-D-)** .
3. Clip in fixing clip **-5-** for the long drive shaft **-6- (-E-)** .

Fig 2: Connecting Long Drive Shaft To Motor

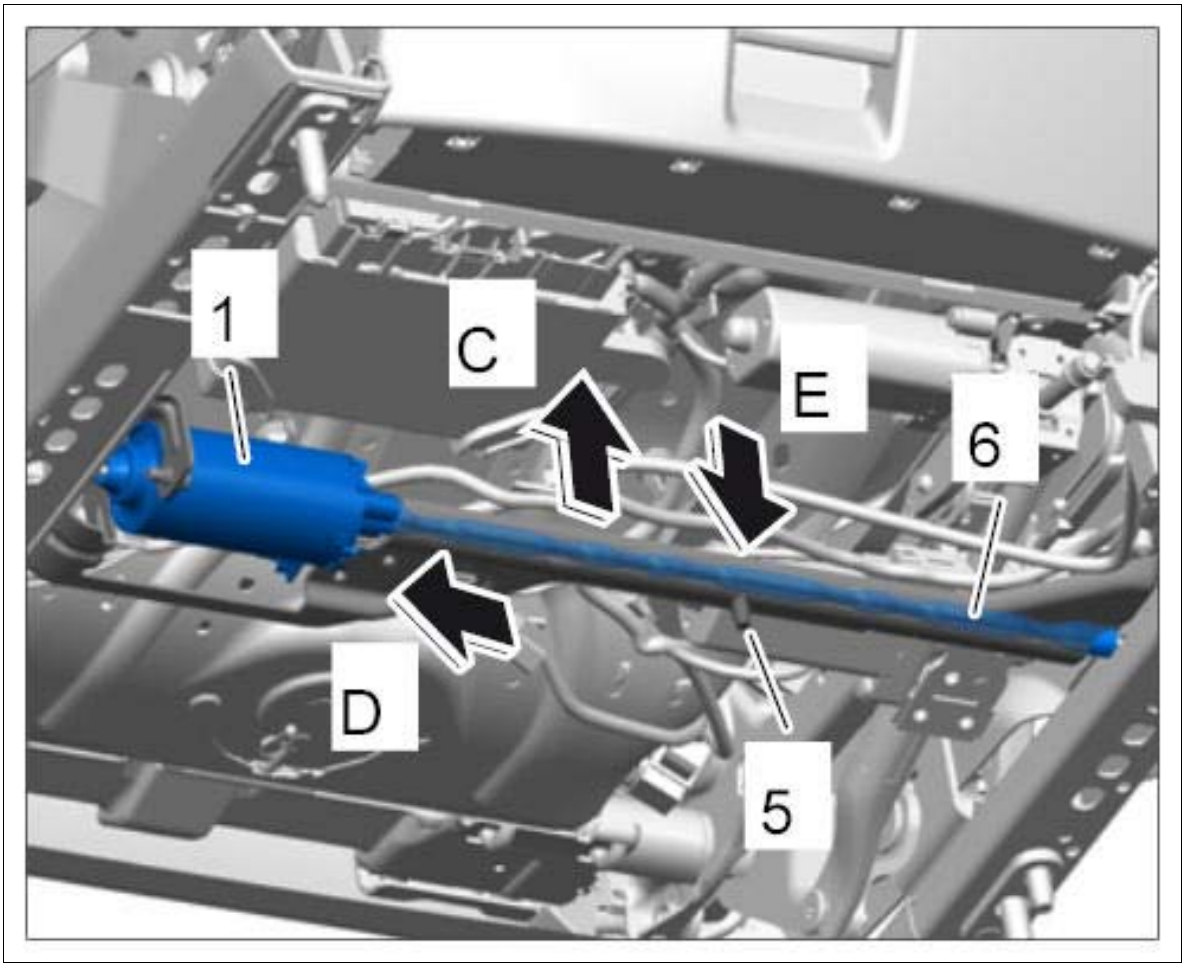

Courtesy of PORSCHE CARS NORTH AMERICA, INC.

4. Screw in two fastening screws **-4-** .

Fig 3: Securing Motor

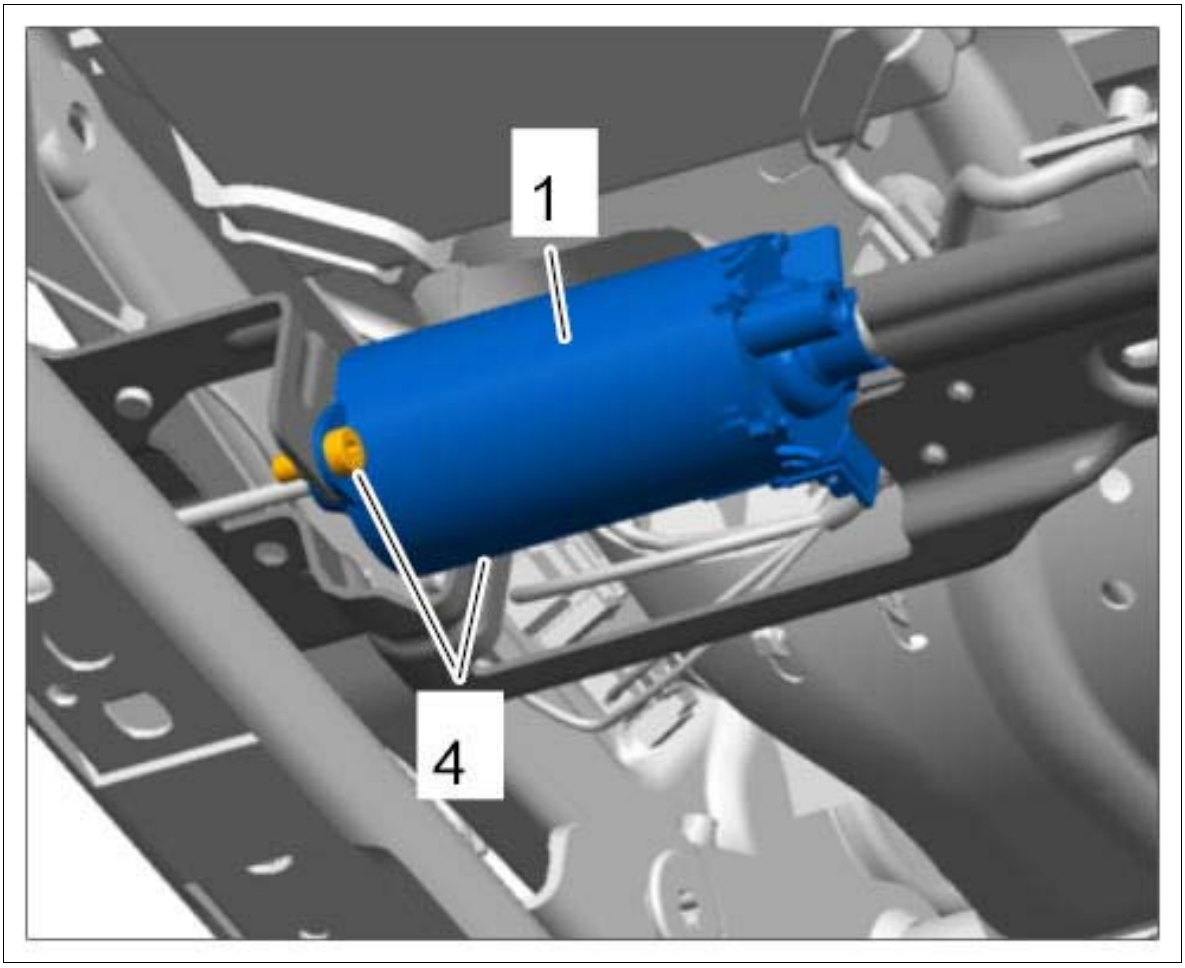

Courtesy of PORSCHE CARS NORTH AMERICA, INC.

5. Plug in electric plug connection **-3-** on the motor **-F-** .
6. Clip in cover **-2-** for motor **-1- (-G-)** and lock it.

Fig 4: Installing Motor Cover

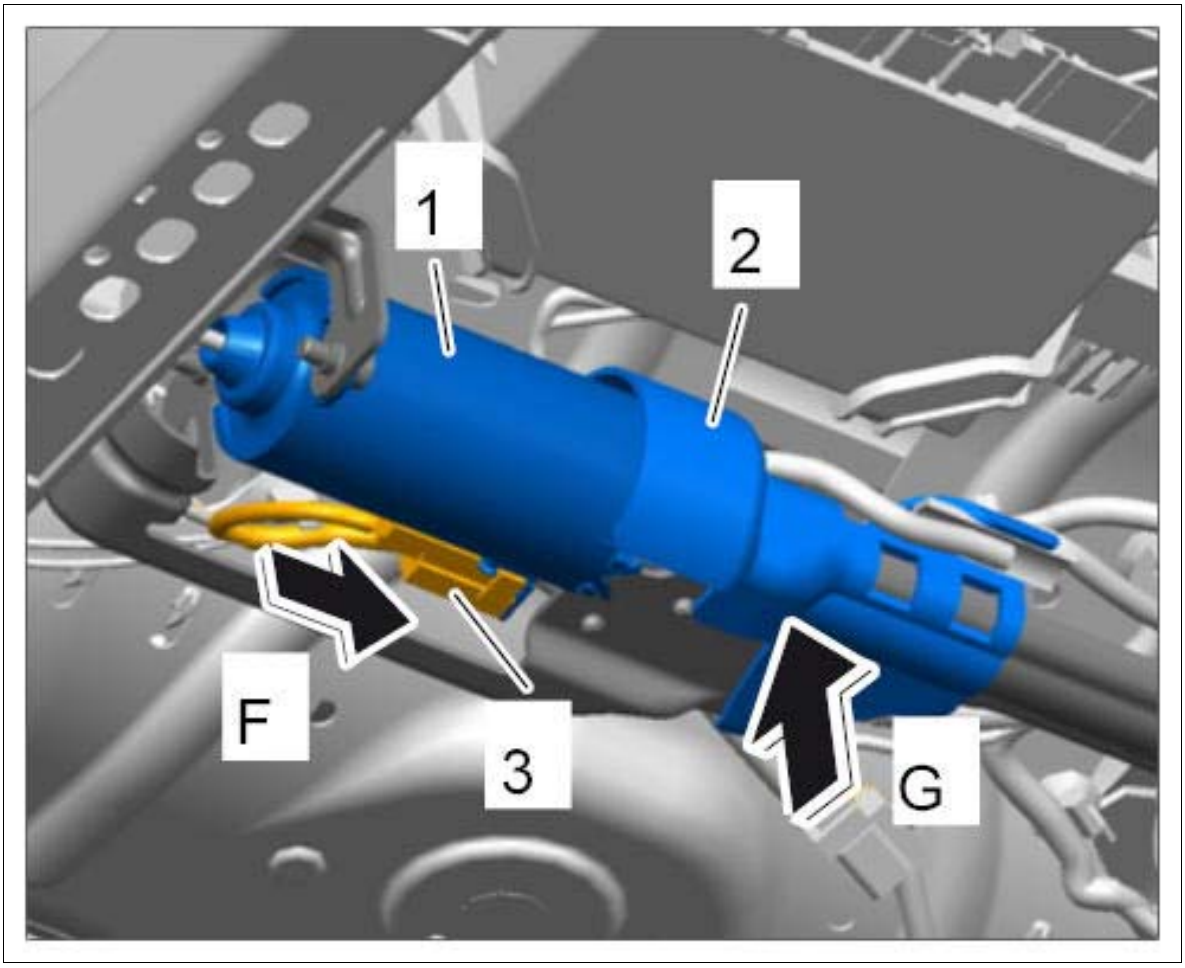

Courtesy of PORSCHE CARS NORTH AMERICA, INC.

WM 728719 REMOVING AND INSTALLING MOTOR FOR SEAT ADJUSTMENT (ALL MODELS) > SUBSEQUENT WORK

1. Install the front seat. → Installing Front Seat

WM 728819 REMOVING AND INSTALLING MOTOR FOR FRONT VERTICAL ADJUSTMENT (SEAT ANGLE) (ALL MODELS) > INFORMATION

The motor for front vertical adjustment (seat angle) cannot be replaced separately. It can only be replaced together with the front seat frame. → 720955 REPLACING FRONT SEAT FRAME

WM 728919 REMOVING AND INSTALLING MOTOR FOR BACKREST ADJUSTMENT (ALL MODELS) > INFORMATION

The backrest adjustment motor cannot be replaced separately. It can only be replaced together with the front seat frame. → 720955 REPLACING FRONT SEAT FRAME

WM 729219 REMOVING AND INSTALLING MOTOR FOR REAR VERTICAL ADJUSTMENT (ALL MODELS) > INFORMATION

The motor for rear vertical adjustment cannot be replaced separately. It can only be replaced together with the front seat frame. → 720955 REPLACING FRONT SEAT FRAME

WM 729319 REMOVING AND INSTALLING CONTROL UNIT FOR MEMORY SEAT ADJUSTMENT (ALL MODELS) > TOOLS

Designation	Type	Number	Description	
PIWIS Tester II	Special tool	9818		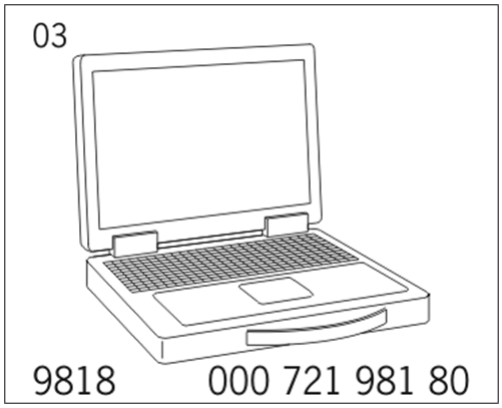

WM 729319 REMOVING AND INSTALLING CONTROL UNIT FOR MEMORY SEAT ADJUSTMENT (ALL MODELS) > PRELIMINARY WORK

1. Remove left front seat. → Removing Front Seat

WM 729319 REMOVING AND INSTALLING CONTROL UNIT FOR MEMORY SEAT ADJUSTMENT (ALL MODELS) > REMOVING CONTROL UNIT FOR MEMORY SEAT ADJUSTMENT

NOTE: Voltage peaks

- *Risk of damage to load or to the control unit*

→ Remove the ignition key and switch off load before disconnecting or removing load.

Information

Always comply with the regulations for handling ESD-sensitive components!

- Assembly work may only be carried out if the mechanic is wearing the working clothes and shoes approved by Porsche.
- The new part must only be removed from the ESD (electrostatic discharge) protective packaging just before installation and at the position at which the part is to be installed.
- Never touch the electric pins and plug contacts.

1. Release clip **-1- (-a-)** , swivel it aside **-b-** and remove electric plug connection from the control unit for memory seat adjustment **-2-** .
2. Release electric plug connection **-3- (-c-)** and pull it off the control unit for memory seat adjustment.

Fig 1: Disconnecting Electric Plug Connections

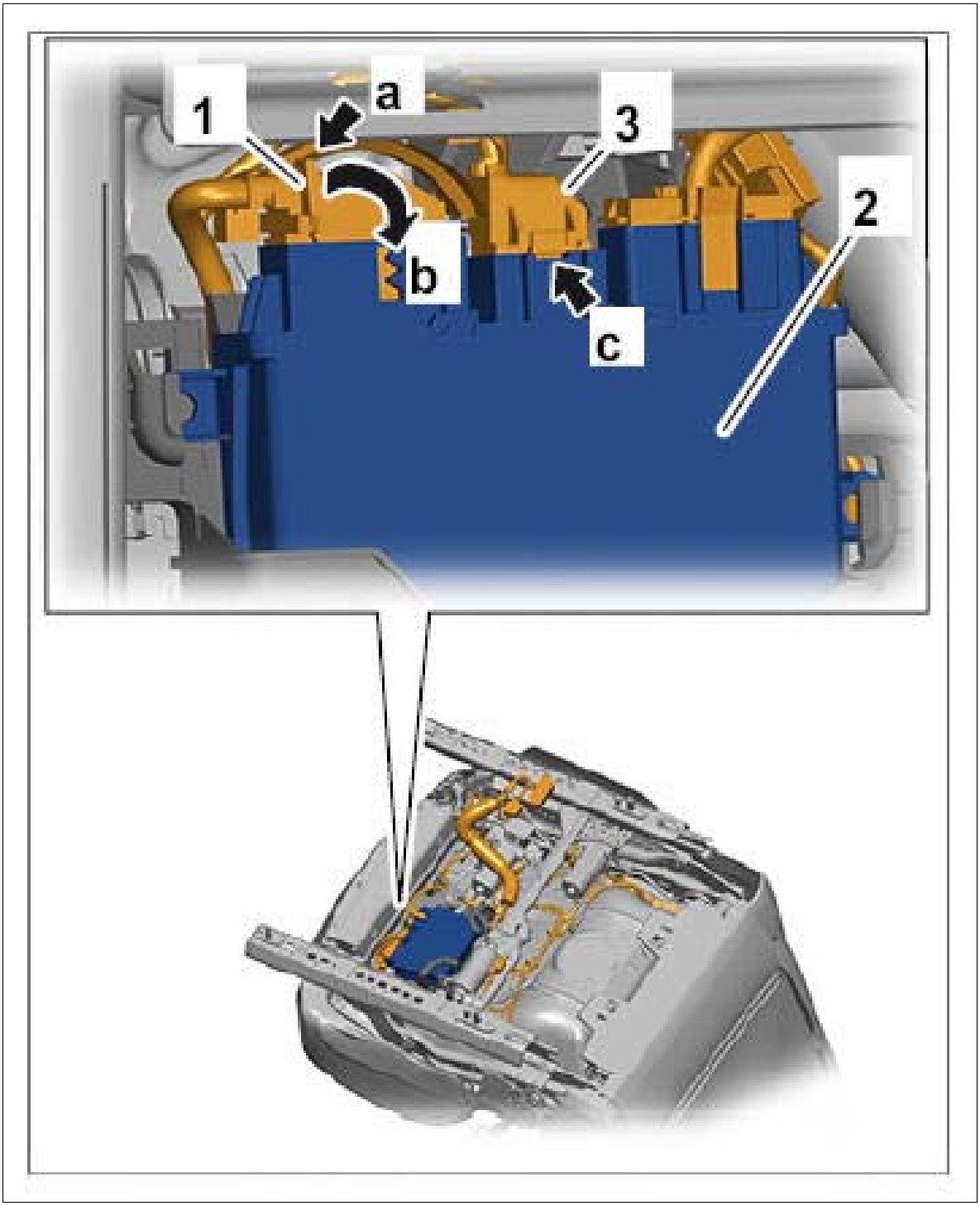

Courtesy of PORSCHE CARS NORTH AMERICA, INC.

3. Release electric plug connection **-1- (-a-)** and pull it off the control unit for memory seat adjustment **-2-** .

Fig 2: Disconnecting Electric Plug Connection

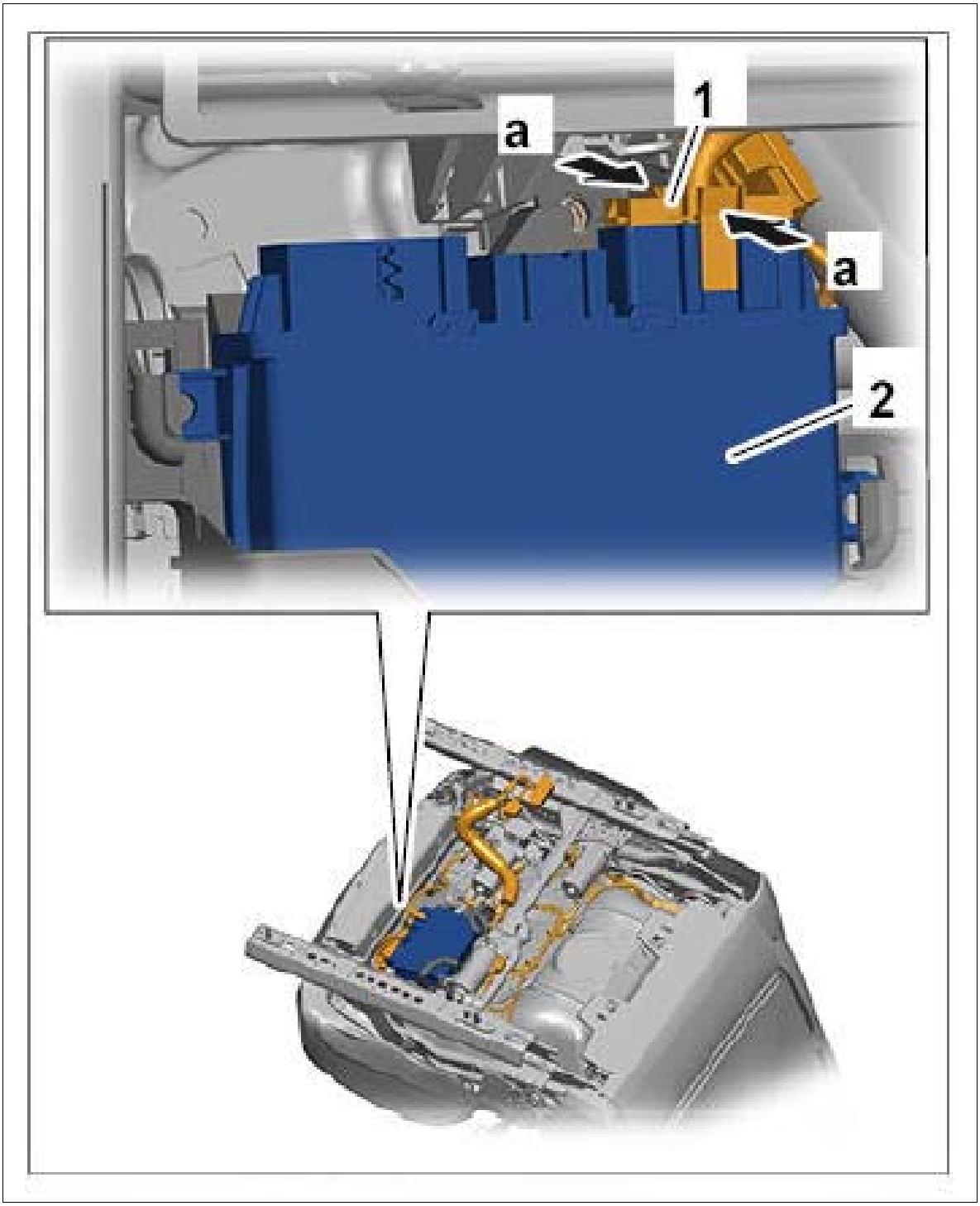

Courtesy of PORSCHE CARS NORTH AMERICA, INC.

4. Disengage control unit for memory seat adjustment **-1-** by moving it forward out of the holder **-2-** and remove it.

Fig 3: Removing Memory Seat Adjustment Control Unit

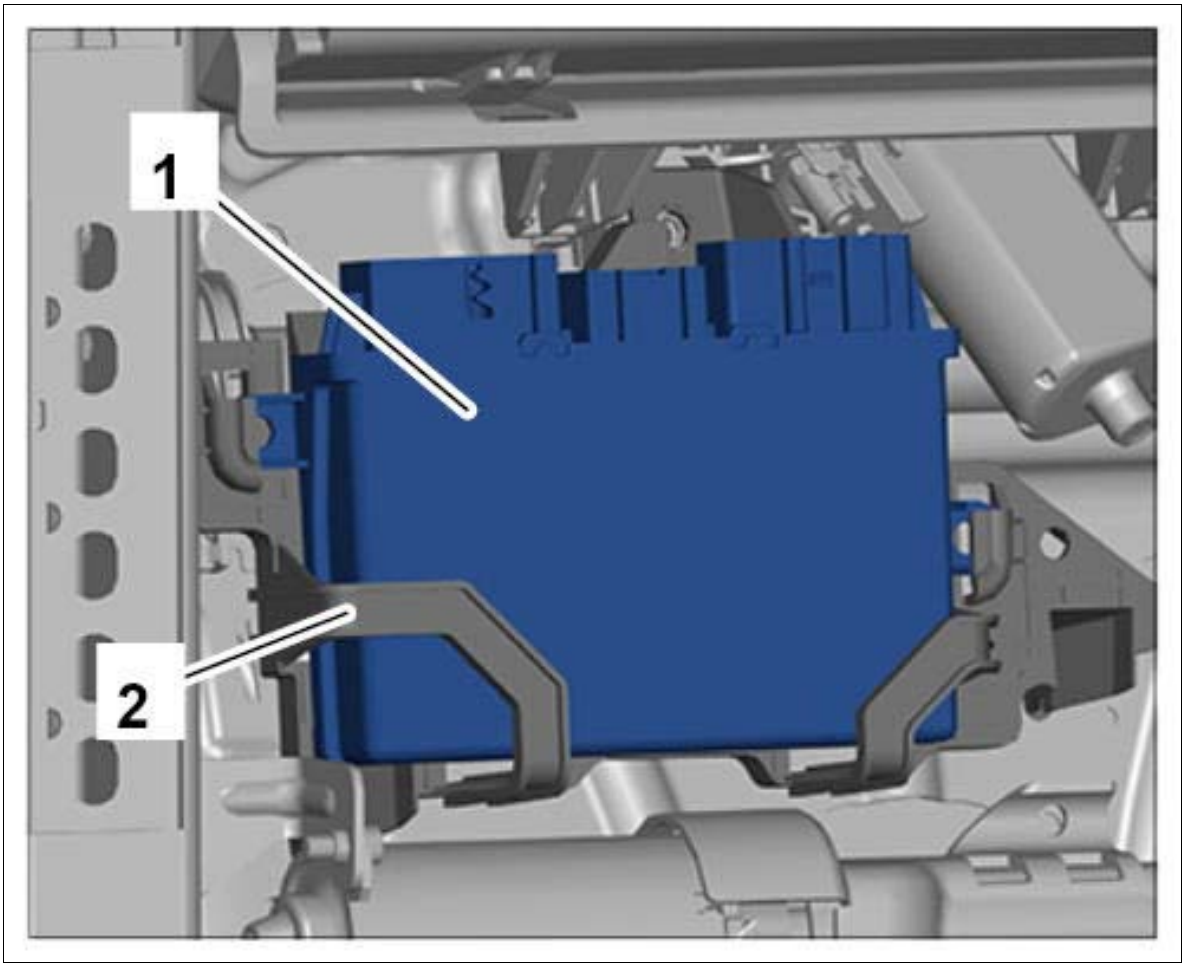

Courtesy of PORSCHE CARS NORTH AMERICA, INC.

WM 729319 REMOVING AND INSTALLING CONTROL UNIT FOR MEMORY SEAT ADJUSTMENT (ALL MODELS) > INSTALLING CONTROL UNIT FOR MEMORY SEAT ADJUSTMENT

1. Installation is performed in reverse order to removal.

WM 729319 REMOVING AND INSTALLING CONTROL UNIT FOR MEMORY SEAT ADJUSTMENT (ALL MODELS) > SUBSEQUENT WORK

1. Install left front seat. → Installing Front Seat
2. If the control unit for memory seat adjustment was replaced, teach the new control unit for memory seat adjustment to suit the vehicle using **PIWIS Tester II 9818.** → 729355 REPLACING CONTROL UNIT FOR MEMORY SEAT ADJUSTMENT

WM 729355 REPLACING CONTROL UNIT FOR MEMORY SEAT ADJUSTMENT (ALL MODELS) > TOOLS

Designation	Type	Number	Description	
PIWIS Tester II	Special tool	9818		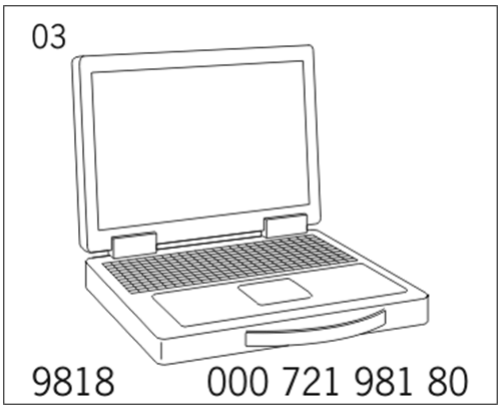

WM 729355 REPLACING CONTROL UNIT FOR MEMORY SEAT ADJUSTMENT (ALL MODELS) > TECHNICAL VALUES

Location	Description	Type	Basic value	Tolerance 1	Tolerance 2
Current rating		Nominal value	40 A		

WM 729355 REPLACING CONTROL UNIT FOR MEMORY SEAT ADJUSTMENT (ALL MODELS) > PRELIMINARY WORK

Replace control unit for memory seat adjustment. → 729319 REMOVING AND INSTALLING CONTROL UNIT FOR MEMORY SEAT ADJUSTMENT

WM 729355 REPLACING CONTROL UNIT FOR MEMORY SEAT ADJUSTMENT (ALL MODELS) > REPLACING CONTROL UNIT FOR MEMORY SEAT ADJUSTMENT

NOTE: Voltage drop

- *Risk of irreparable damage to control unit*
- *Risk of damage to control unit*
- *Fault entries in the control unit*
- *Coding in the control unit is aborted*
- *Malfunctions in control unit, even during programming*

→ Prior to disconnecting the control unit, switch off ignition and remove ignition key.

→ Ensure that the power supply is not interrupted during programming.

→ Connect a battery charger with a current rating of at least → **Nominal value: 40 A** to the vehicle battery.

Information

The **PIWIS Tester II 9818** instructions take precedence since the description may be different with later Tester releases.

The procedure described here has been structured in general terms. Different text or additional information may appear in **PIWIS Tester II 9818** .

1. Connect the PIWIS Tester to the vehicle and start the diagnostic application. Switch on ignition.
2. Select vehicle type.
3. Select the **Driver/Passenger seat memory** control unit in the **overview** and press [F12] to continue.
4. **Codings/adaptations** must now be selected.
5. **Automatic coding** must now be selected. Then press [F12] to continue.
6. The Tester displays the message **Automatic coding has been completed successfully.** Press [F12] to continue.
7. **Maintenance/repairs** must then be selected.

   Information

   For some equipment variants, standardization must be performed on both the driver's side and passenger's side.
8. Select **Standardize seat motors.** Press [F12] and start by pressing [F8].
9. Follow the instructions on the Tester.
10. The seat automatically moves to various seat positions. When the seat remains stationary for a few minutes, press [F12] to continue.

11. Read out the fault memory and erase it if necessary.
12. Carry out a function test.

WM 729419 REMOVING AND INSTALLING SWITCH FOR MEMORY SEAT ADJUSTMENT (ALL MODELS) > PRELIMINARY WORK

1. Remove front door panel. → Removing Front Door Panel

WM 729419 REMOVING AND INSTALLING SWITCH FOR MEMORY SEAT ADJUSTMENT (ALL MODELS) > REMOVING SWITCH FOR MEMORY SEAT ADJUSTMENT

1. Disconnect electric plug connection **-1-** for memory seat adjustment switch **-2-** .

   Fig 1: Disconnecting Electric Plug Connection

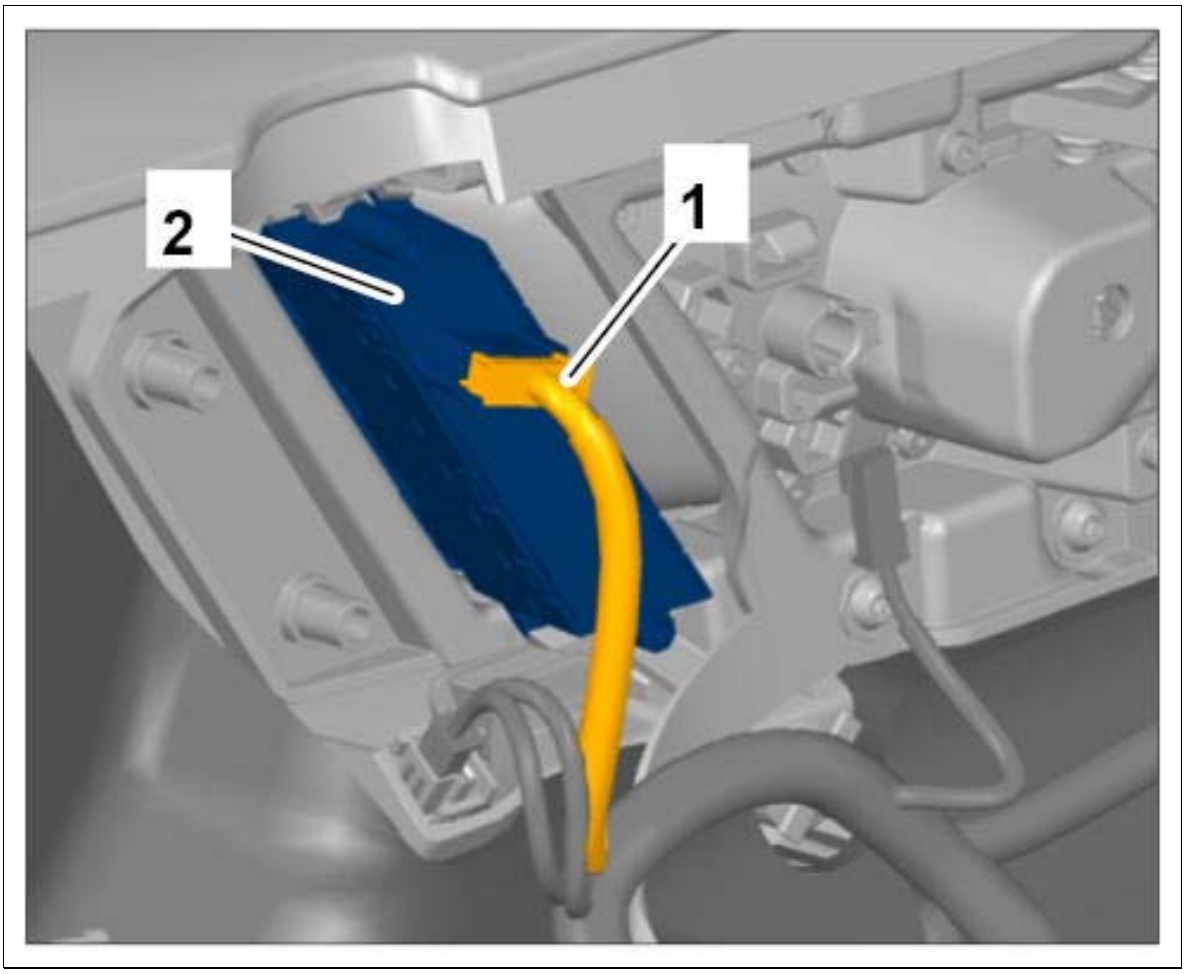

Courtesy of PORSCHE CARS NORTH AMERICA, INC.

2. Disengage upper locking mechanisms **-a-** and lift memory seat adjustment switch **-1-** up slightly.

3. Disengage lower locking mechanisms **-b-** and remove memory seat adjustment switch.

Fig 2: Removing Memory Seat Adjustment Switch

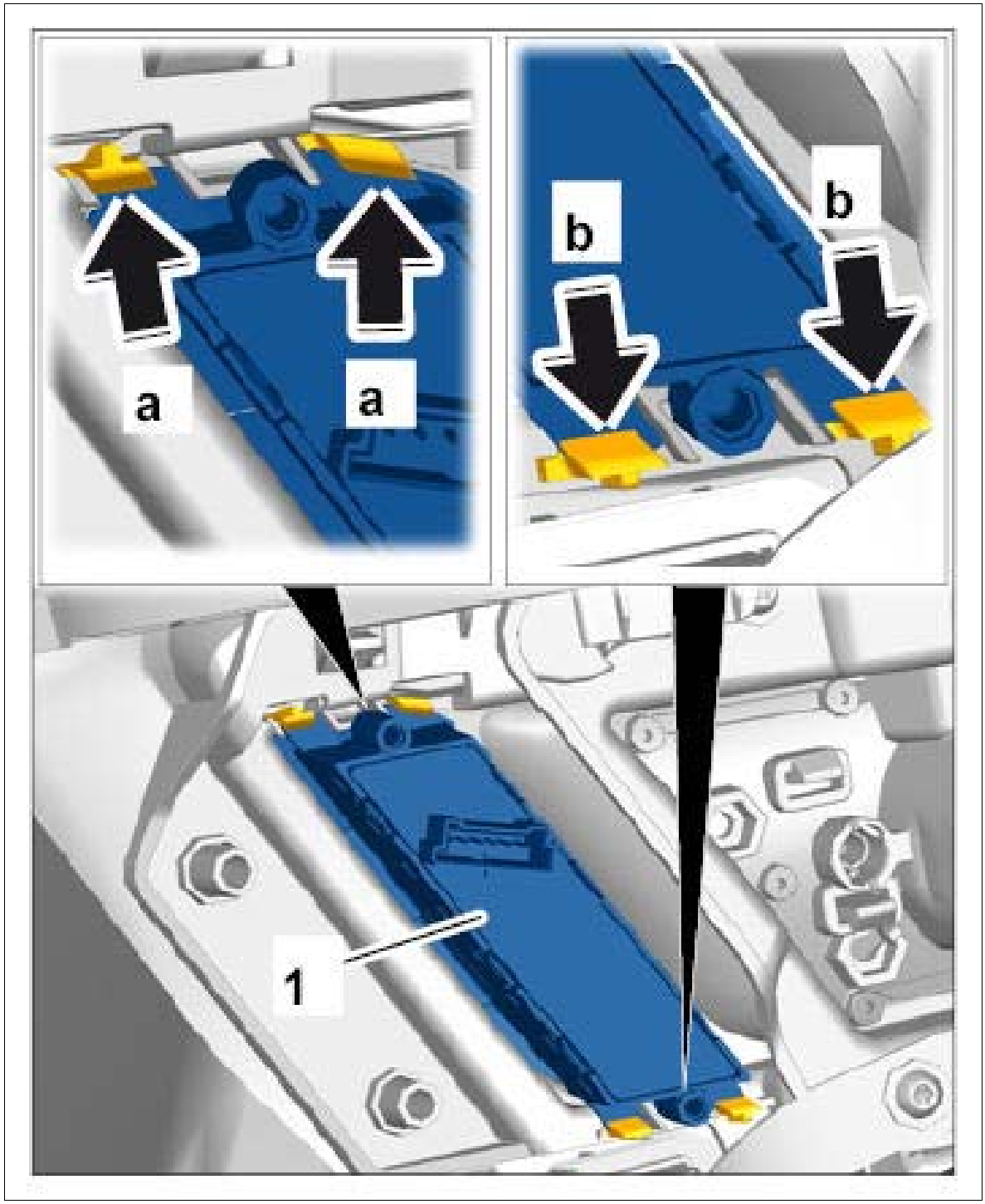

Courtesy of PORSCHE CARS NORTH AMERICA, INC.

WM 729419 REMOVING AND INSTALLING SWITCH FOR MEMORY SEAT ADJUSTMENT (ALL MODELS) > INSTALLING SWITCH FOR MEMORY SEAT ADJUSTMENT

1. Installation is performed in reverse order to removal.

WM 729419 REMOVING AND INSTALLING SWITCH FOR MEMORY SEAT ADJUSTMENT (ALL MODELS) > SUBSEQUENT WORK

1. Install front door panel. → Installing Front Door Panel

WM 729719 REMOVING AND INSTALLING MOTOR FOR ANGLE ADJUSTMENT (ALL MODELS) > INFORMATION

The angle adjustment motor cannot be replaced separately. It can only be replaced together with the front seat frame. → 720955 REPLACING FRONT SEAT FRAME

WM 740819 REMOVING AND INSTALLING FRONT SEAT-SURFACE EXTENSION (ALL MODELS) > TECHNICAL VALUES

Location	Description	Type	Basic value	Tolerance 1	Tolerance 2
Fastening screw securing seat-surface extension to seat	Item 2	Tightening torque	7.5 Nm (5.5 ftlb.)	+/-0.5 Nm (+/-0.5 ftlb.)	

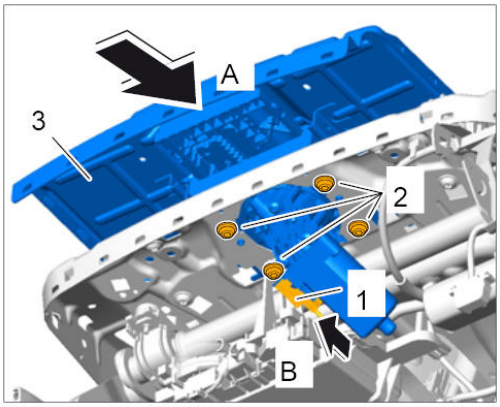

Installing seat-surface extension

WM 740819 REMOVING AND INSTALLING FRONT SEAT-SURFACE EXTENSION (ALL MODELS) > COMPONENT INFORMATION > INSTALLATION POSITION

Fig 1: Identifying Seat-Surface Extension Installation Position



Courtesy of PORSCHE CARS NORTH AMERICA, INC.

WM 740819 REMOVING AND INSTALLING FRONT SEAT-SURFACE EXTENSION (ALL MODELS) > PRELIMINARY WORK

Remove padding for front seat. → Removing Padding For Front Seat

WM 740819 REMOVING AND INSTALLING FRONT SEAT-SURFACE EXTENSION (ALL MODELS) > REMOVING FRONT SEAT-SURFACE EXTENSION

1. Disconnect electric plug connection **-1-** on the motor **-arrow A-** .
2. Unscrew four fastening screws **-2-** on the seat-surface extension.
3. Remove seat-surface extension **-3-** and motor in an upward direction **-arrow B-** .

Fig 1: Removing Seat-Surface Extension

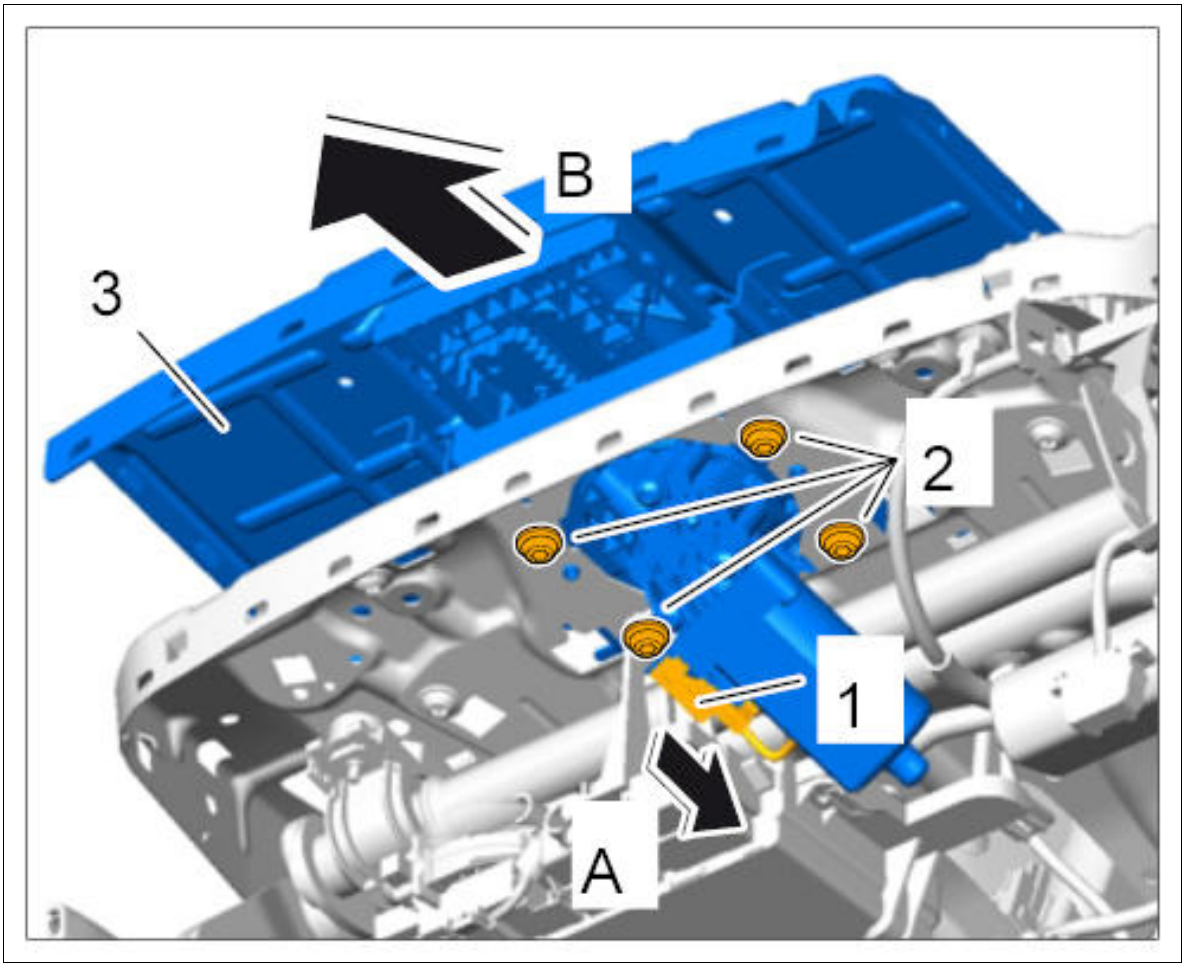

Courtesy of PORSCHE CARS NORTH AMERICA, INC.

WM 740819 REMOVING AND INSTALLING FRONT SEAT-SURFACE EXTENSION (ALL MODELS) > INSTALLING FRONT SEAT-SURFACE EXTENSION

1. Insert bracket **-1-** for control unit for memory seat adjustment into the seat frame **-arrows A-** .

Fig 1: Inserting Memory Seat Adjustment Control Unit Bracket

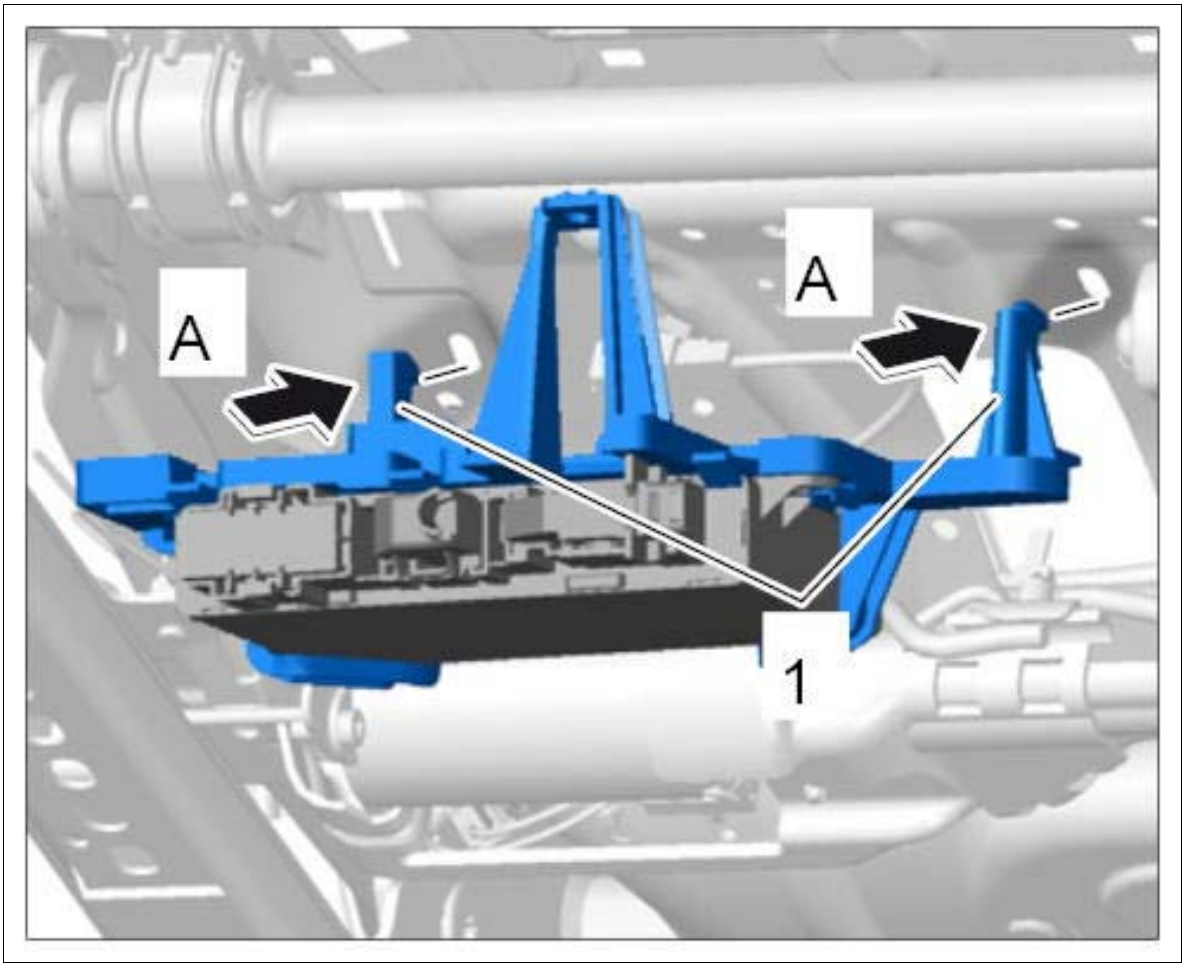

Courtesy of PORSCHE CARS NORTH AMERICA, INC.

2. Insert seat-surface extension **-3-** into the seat frame **-arrow A-** .
3. Tighten four fastening screws **-2-** on the seat-surface extension **Tightening torque 7.5 Nm (5.5 ftlb.) +/-0.5 Nm (+/-0.5 ftlb.)**
4. Plug in electric plug connection **-1- (-arrow B-)** .

Fig 2: Installing Seat-Surface Extension

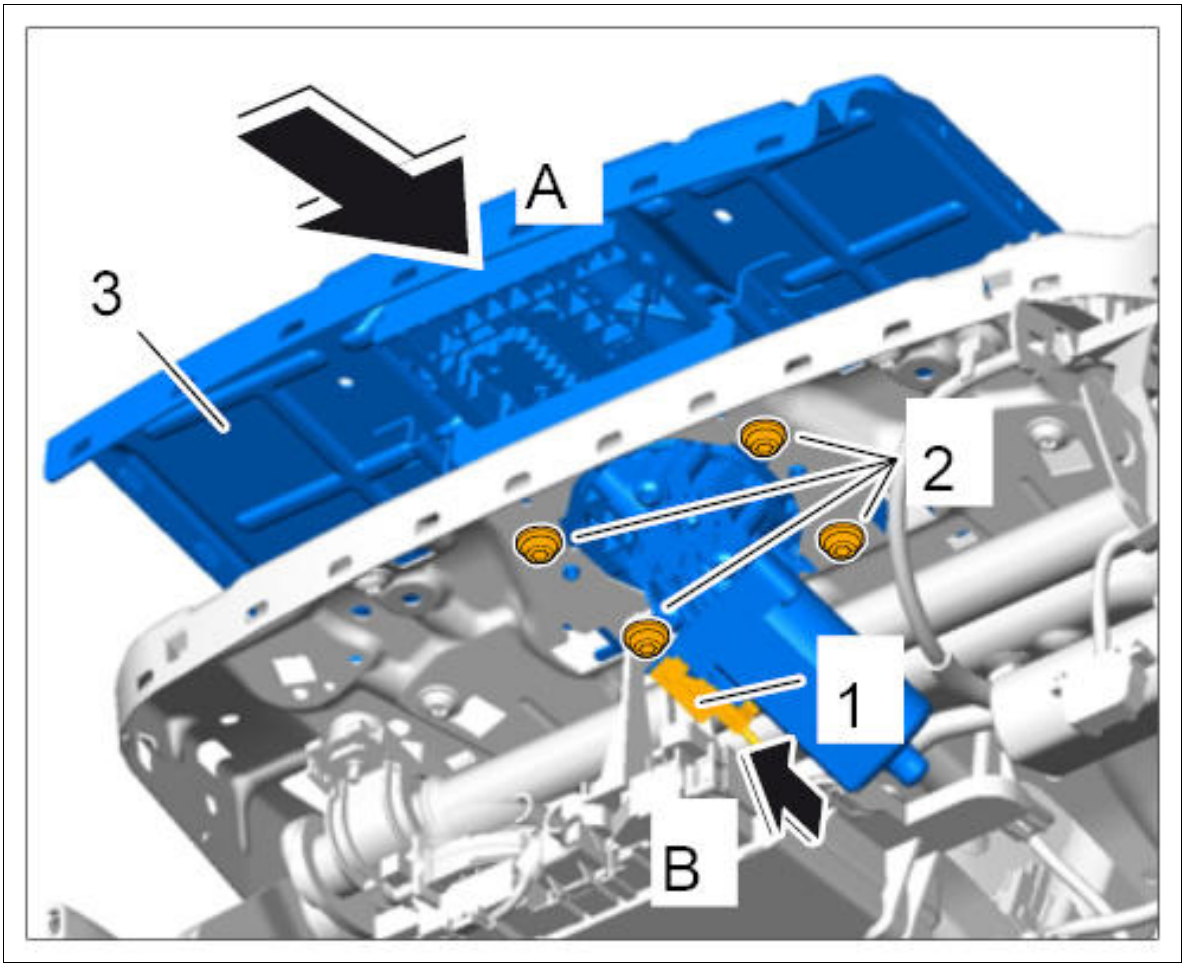

Courtesy of PORSCHE CARS NORTH AMERICA, INC.

WM 740819 REMOVING AND INSTALLING FRONT SEAT-SURFACE EXTENSION (ALL MODELS) > SUBSEQUENT WORK

1. Install padding for front seat. → Installing Padding For Front Seat

WM 740919 REMOVING AND INSTALLING SUCTION FAN FOR SEAT SURFACE (ALL MODELS) > INFORMATION > COMPONENT INFORMATION

Fig 1: Identifying Seat Surface Suction Fan Installation Position



Courtesy of PORSCHE CARS NORTH AMERICA, INC.

WM 740919 REMOVING AND INSTALLING SUCTION FAN FOR SEAT SURFACE (ALL MODELS) > PRELIMINARY WORK

1. Remove padding for front seat. → Removing Padding For Front Seat

WM 740919 REMOVING AND INSTALLING SUCTION FAN FOR SEAT SURFACE (ALL MODELS) > REMOVING SUCTION FAN FOR SEAT SURFACE

1. Remove expansion rivet **-1-** .

Fig 1: Identifying Expansion Rivet

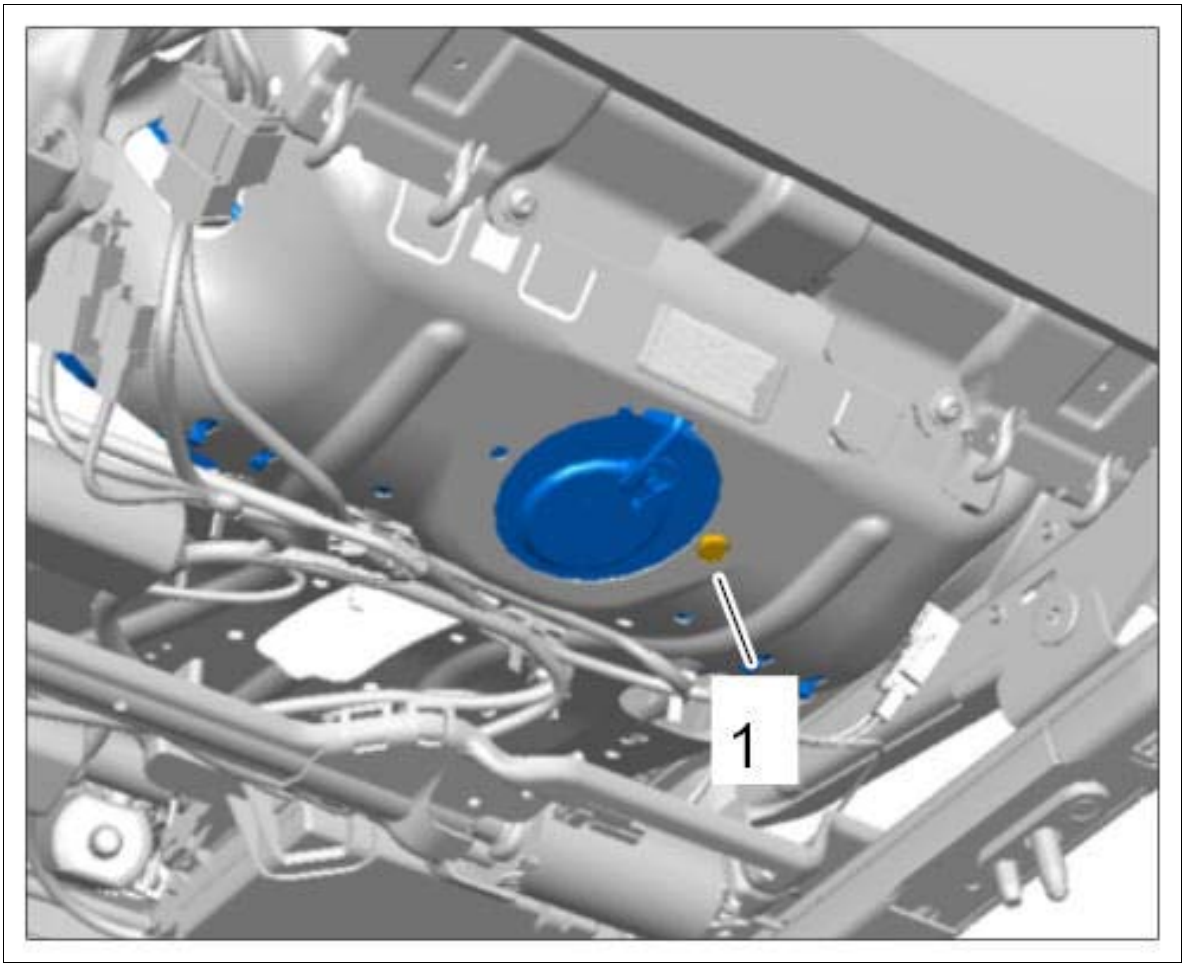

Courtesy of PORSCHE CARS NORTH AMERICA, INC.

2. Disconnect electric plug connection **-arrows-** for suction fan.

Fig 2: Disconnecting Suction Fan Connector

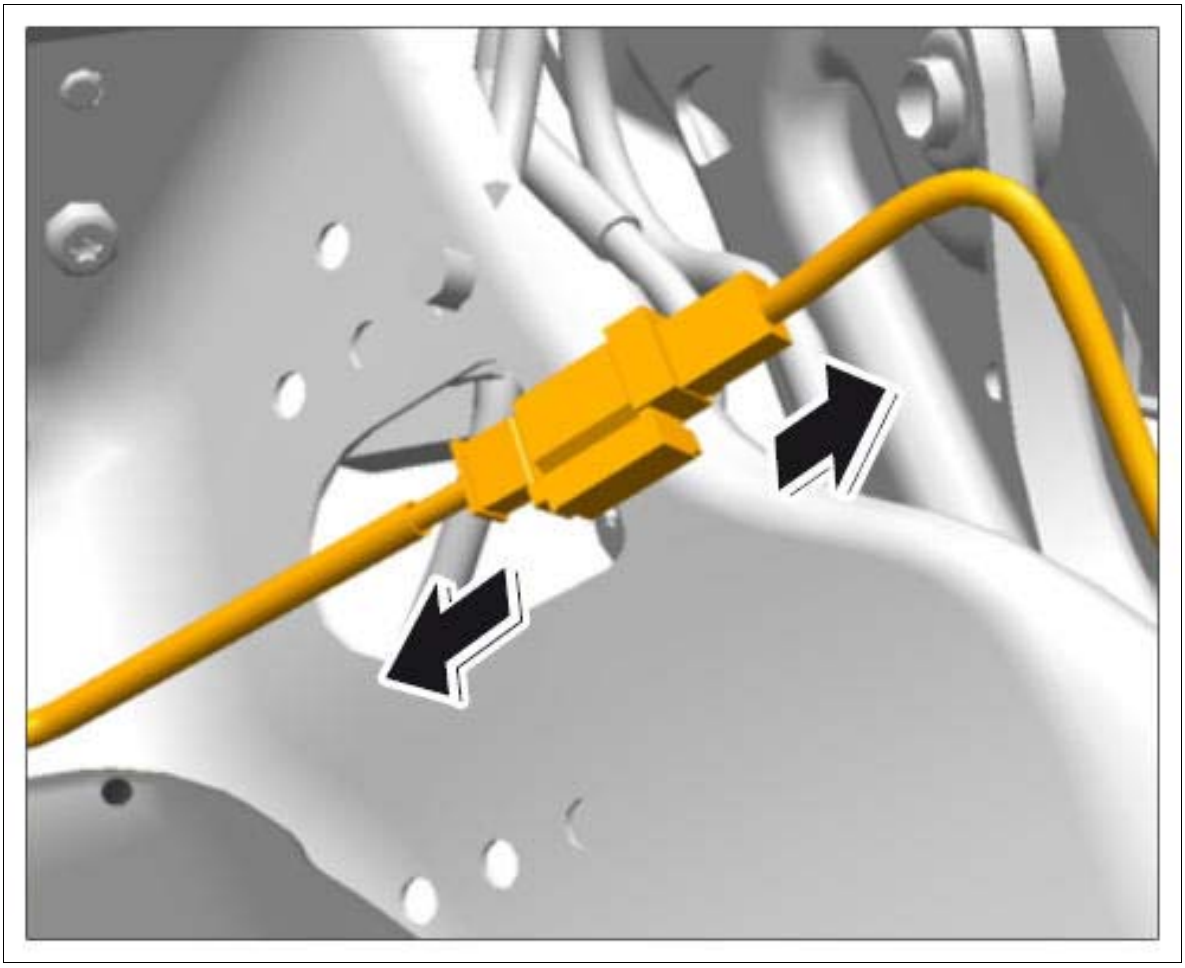

Courtesy of PORSCHE CARS NORTH AMERICA, INC.

3. Unclip the suction fan together with the bracket and remove it by pulling it upwards.

Fig 3: Removing Suction Fan

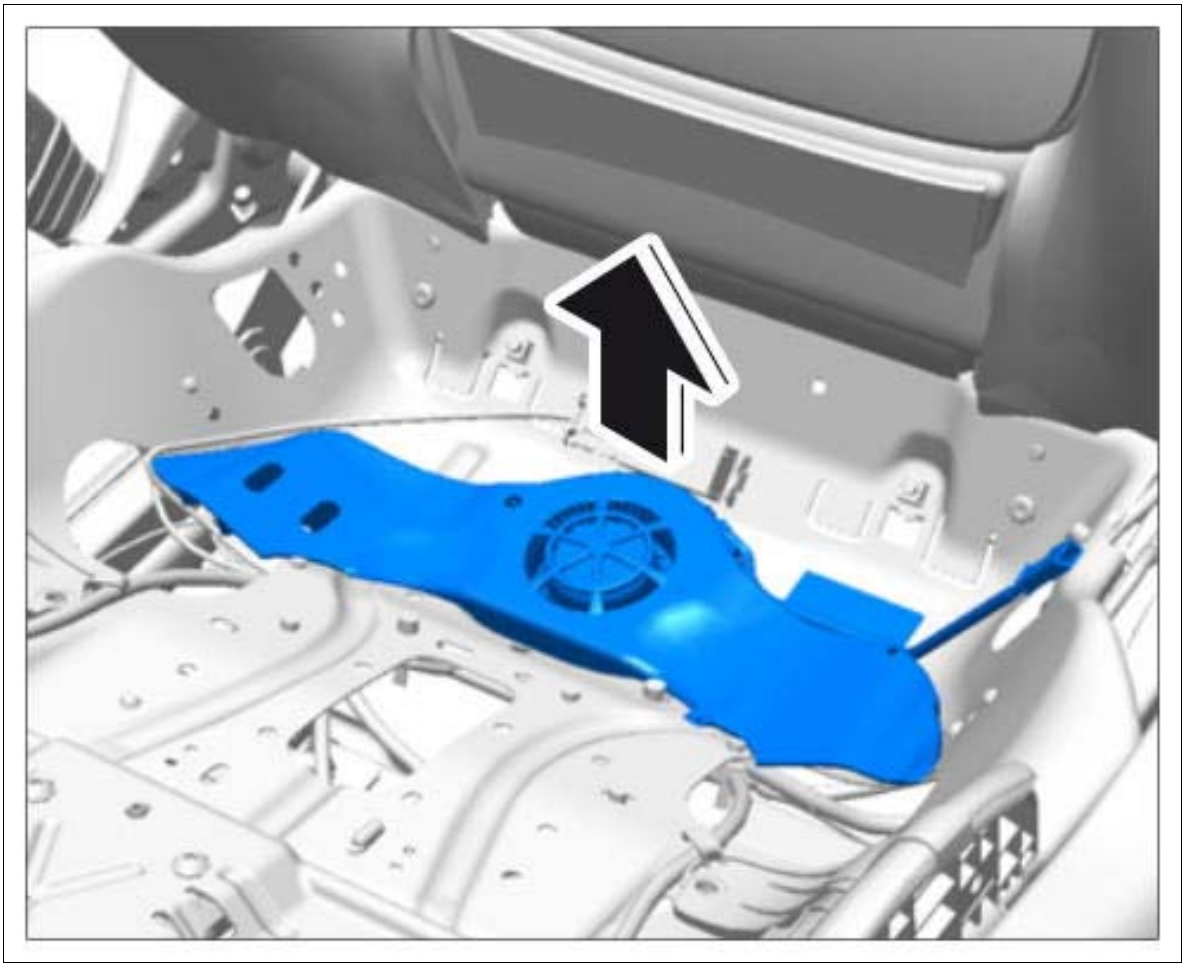

Courtesy of PORSCHE CARS NORTH AMERICA, INC.

WM 740919 REMOVING AND INSTALLING SUCTION FAN FOR SEAT SURFACE (ALL MODELS) > INSTALLING SUCTION FAN FOR SEAT SURFACE

Information

Fixing clips on the seat frame will be damaged irreparably during removal. Replace expansion rivets and fixing clips during installation and do not re-use them.

1. Position suction fan together with the bracket on the seat surface.
2. Clip in the bracket and secure the suction fan on the seat surface with an expansion rivet **-1-** .

Fig 1: Identifying Expansion Rivet

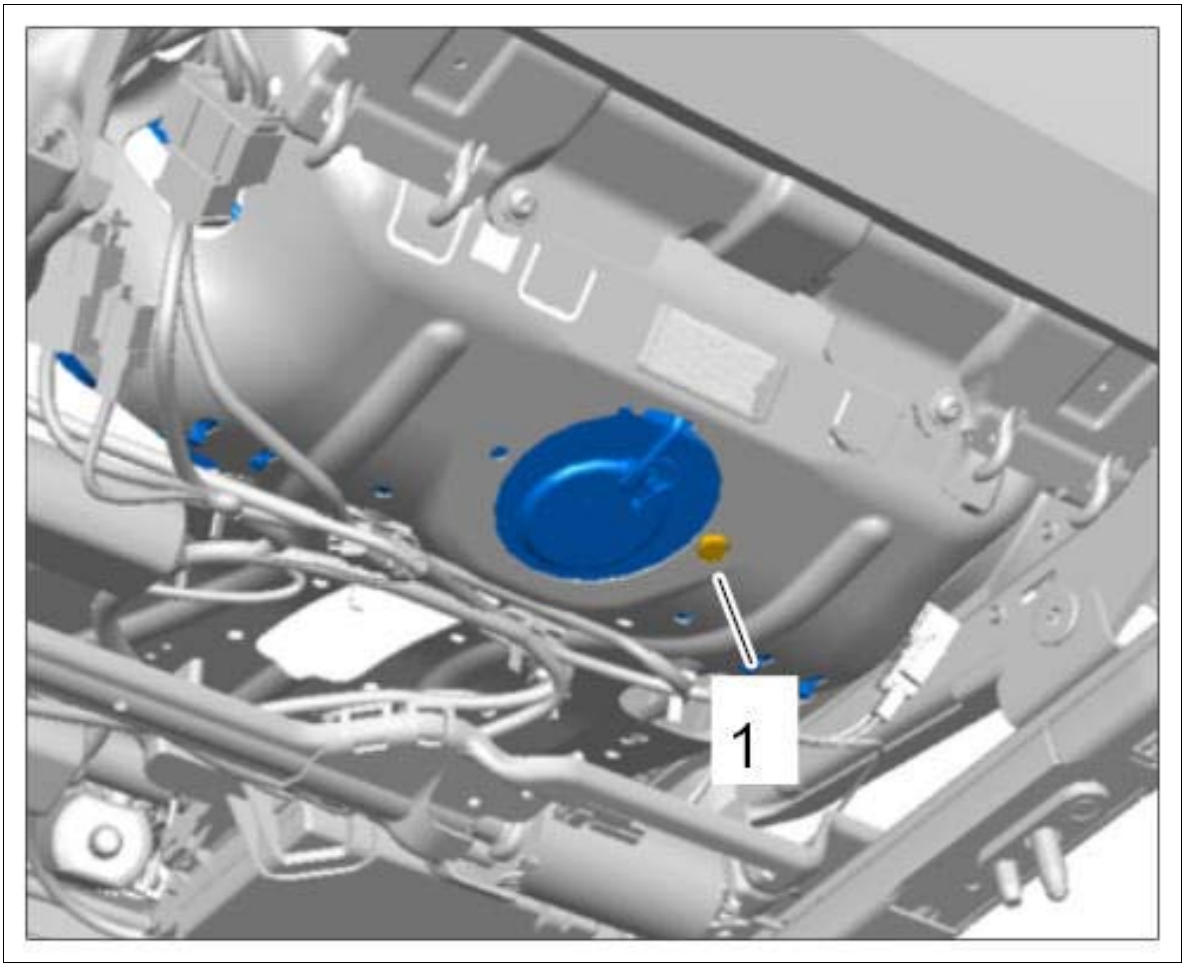

Courtesy of PORSCHE CARS NORTH AMERICA, INC.

3. Plug in electric plug connection **-arrows-** for suction fan.

Fig 2: Installing Suction Fan Connector

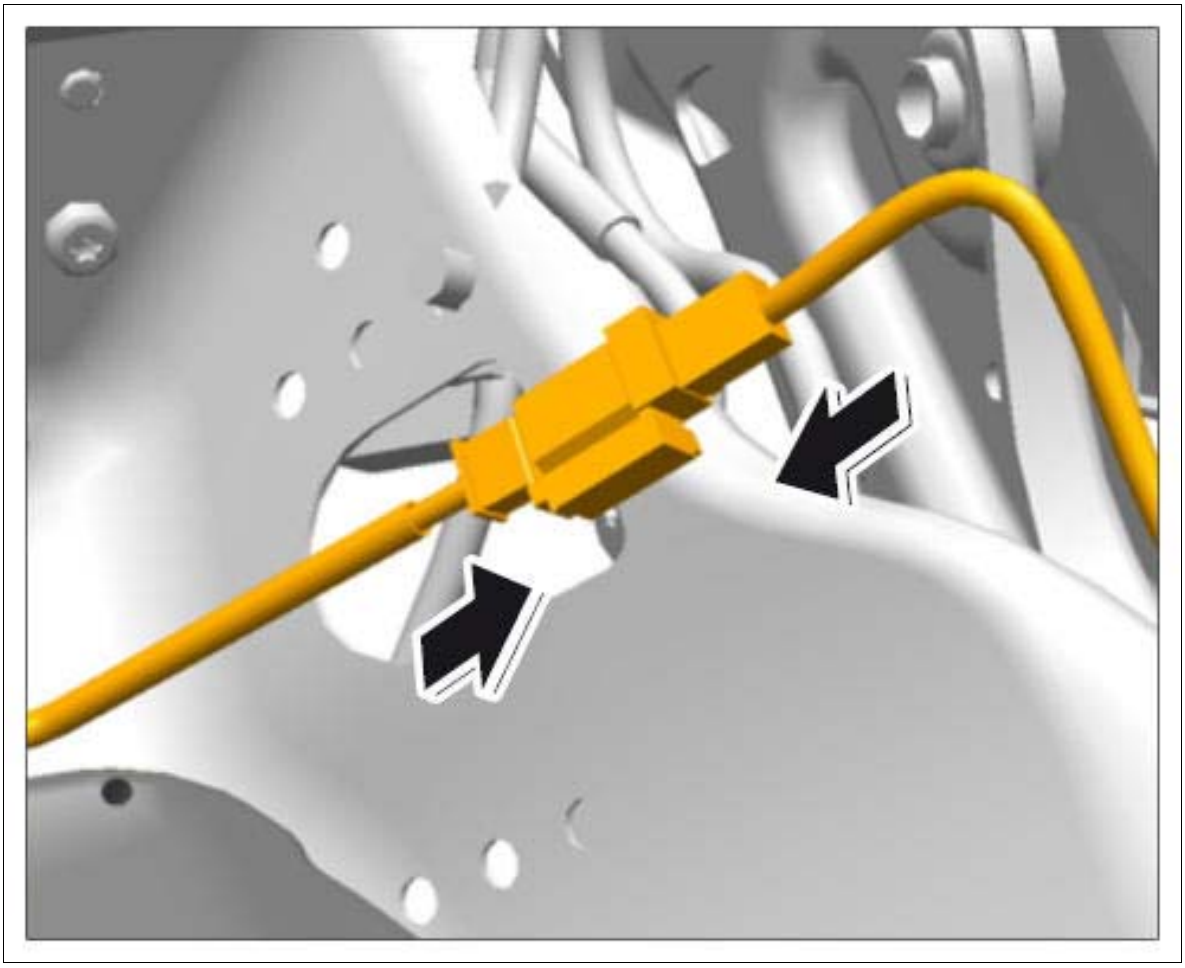

Courtesy of PORSCHE CARS NORTH AMERICA, INC.

WM 740919 REMOVING AND INSTALLING SUCTION FAN FOR SEAT SURFACE (ALL MODELS) > SUBSEQUENT WORK

1. Install padding for front seat. → Installing Padding For Front Seat

WM 741019 REMOVING AND INSTALLING PADDING FOR FRONT SEAT (ALL MODELS) > TECHNICAL VALUES

Location	Description	Type	Basic value	Tolerance 1	Tolerance 2
Fastening screw securing side bracket to seat	Item 5	Tightening torque	7.5 Nm (5.5 ftlb.)	+/-0.5 Nm (+/-0.5 ftlb.)	

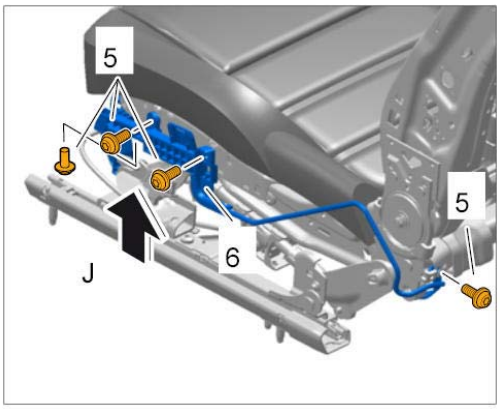

Securing bracket at the sides

WM 741019 REMOVING AND INSTALLING PADDING FOR FRONT SEAT (ALL MODELS) > COMPONENT INFORMATION > INSTALLATION POSITION OF PADDING FOR FRONT SEAT

Fig 1: Identifying Front Seat Padding Installation Position



Courtesy of PORSCHE CARS NORTH AMERICA, INC.

WM 741019 REMOVING AND INSTALLING PADDING FOR FRONT SEAT (ALL MODELS) > PRELIMINARY WORK

1. Move seat to its highest position.
2. Remove seat-surface extension fully.
3. Remove side trim panel on seat. → Removing cover for backrest
4. Remove side cover for backrest. → Removing trim panel for seat

WM 741019 REMOVING AND INSTALLING PADDING FOR FRONT SEAT (ALL MODELS) > REMOVING PADDING FOR FRONT SEAT

1. **On vehicles with heated seats:** Disconnect connector for seat heating.
    1. 1.1. Release electric plug connection for seat heating **-1- (-arrows a-)** and disconnect it **-arrow A-** .
    2. 1.2. Release electric plug connection for seat heating for seat-surface extension **-2- (-arrows b-)** and disconnect it **-arrow B-** .

Fig 1: Disconnecting Seat Heating Connector

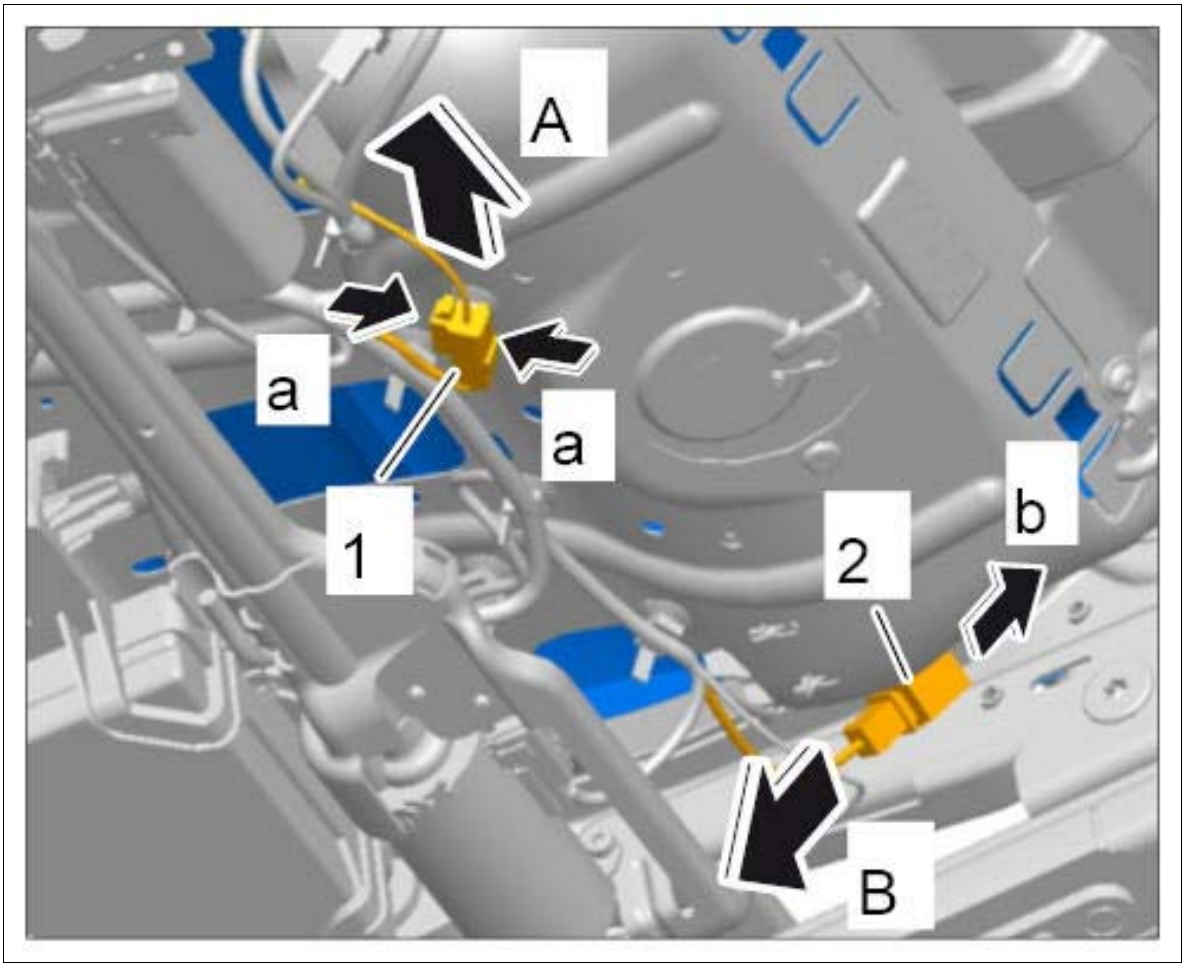

Courtesy of PORSCHE CARS NORTH AMERICA, INC.

2. Remove fixing clip **-1-** .
3. Disengage the cover at the sides **-2- (-arrow A-)** .

Fig 2: Detaching Rear Cover

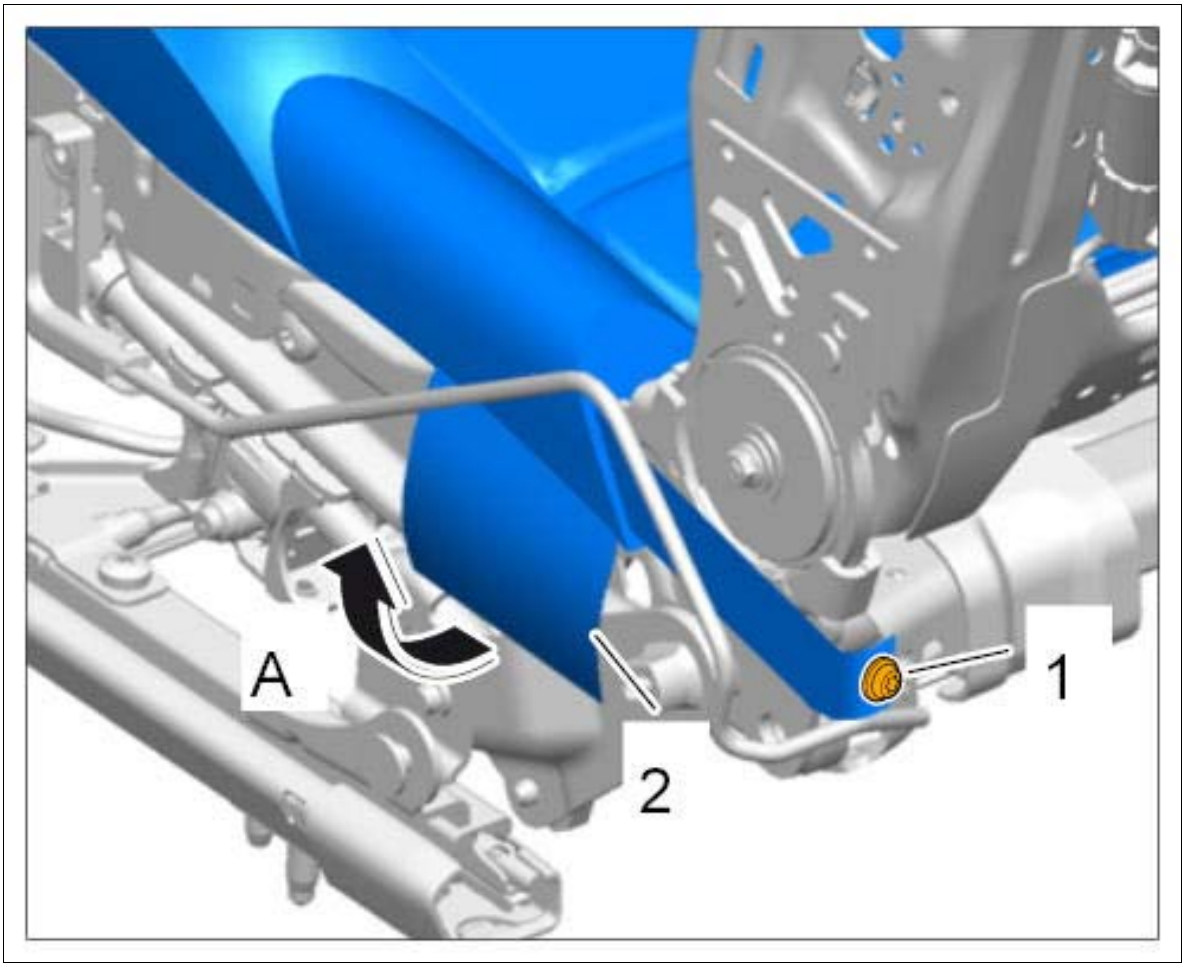

Courtesy of PORSCHE CARS NORTH AMERICA, INC.

4. Unscrew fastening screws **-3-** and pull the bracket **-4-** down out of the catches **-arrow B-** .

Fig 3: Loosening Bracket (Sides)

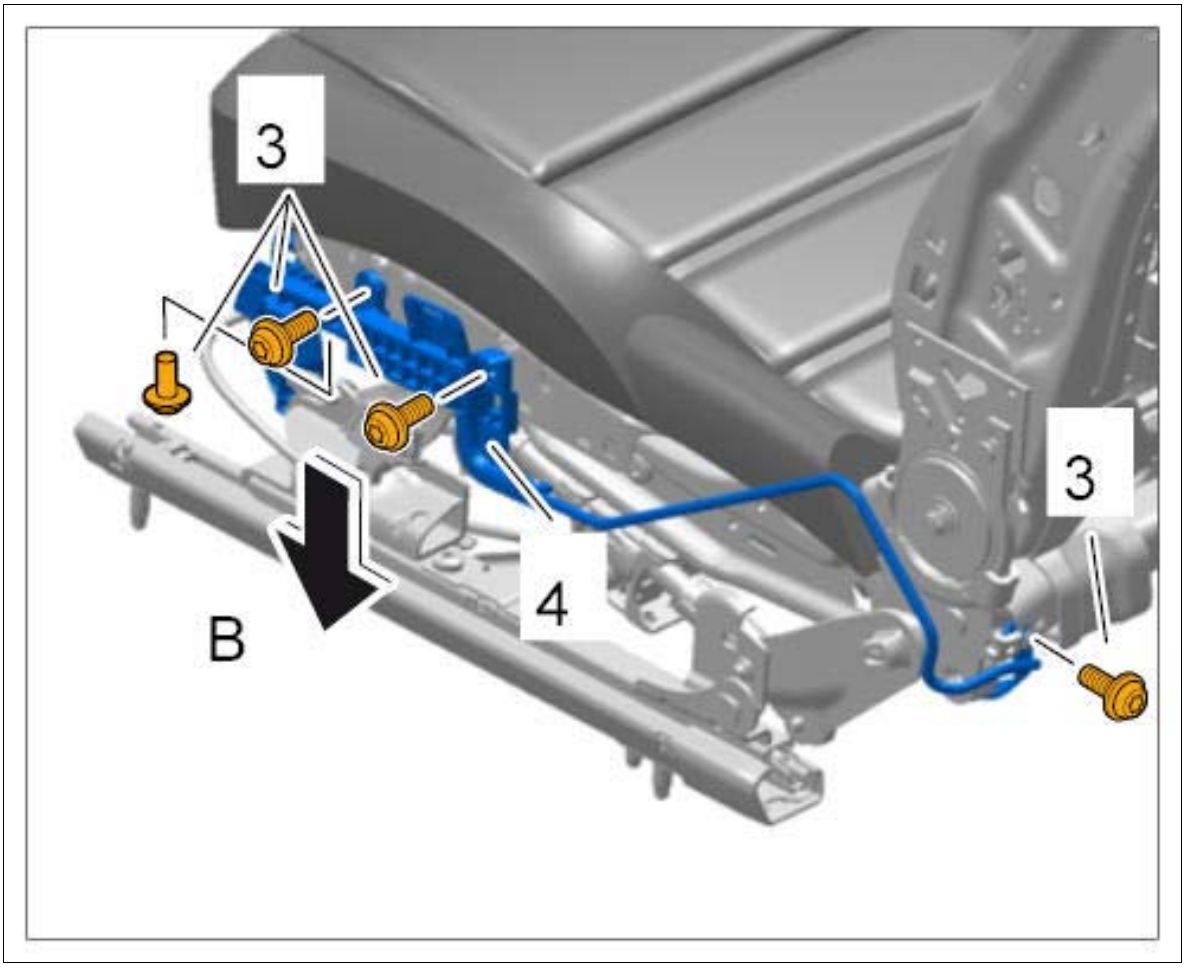

Courtesy of PORSCHE CARS NORTH AMERICA, INC.

5. Detach the cover at the sides **-arrows C-** .

Fig 4: Disengaging Cover (Sides)

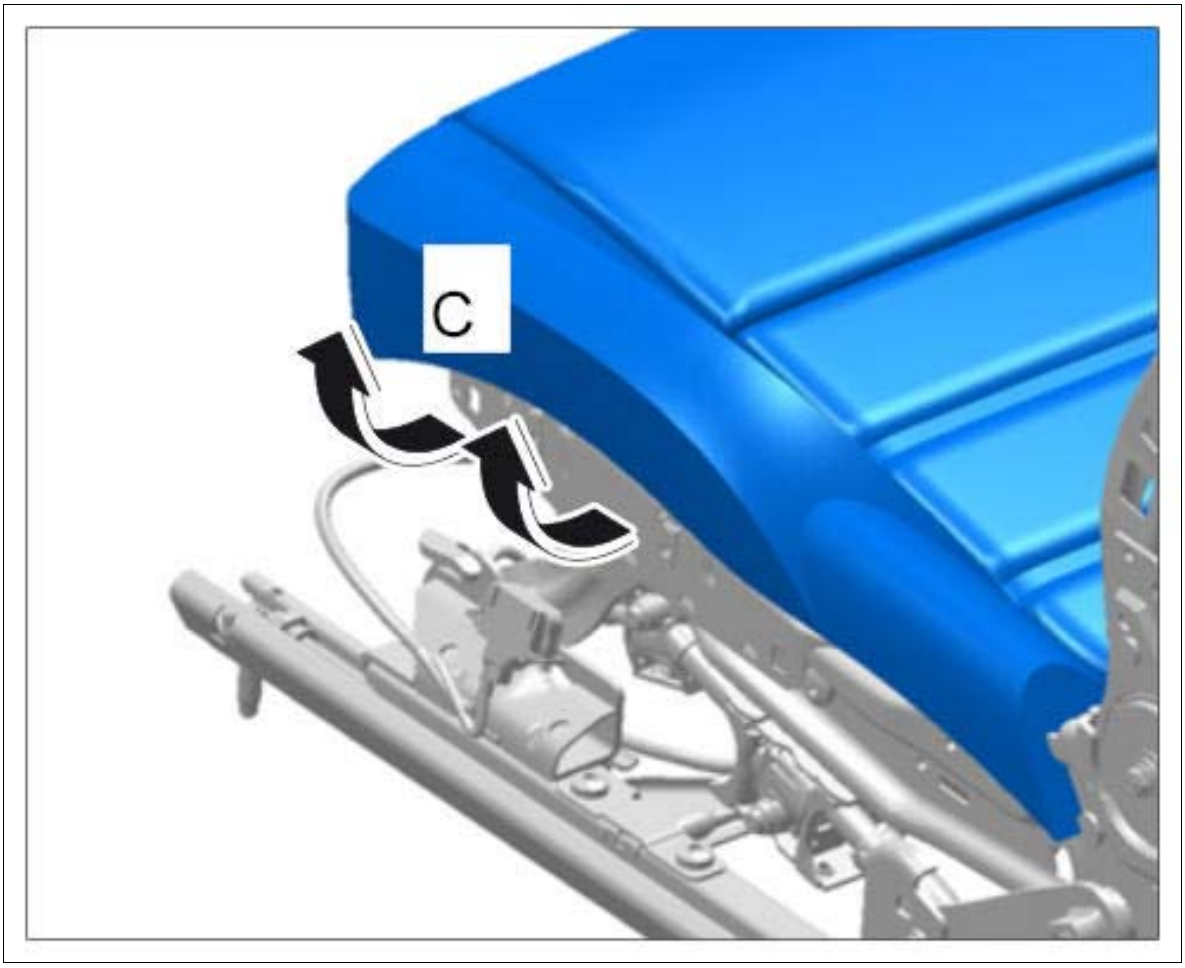

Courtesy of PORSCHE CARS NORTH AMERICA, INC.

6. Disengage the cover at the front **-arrows D-** .
7. **On vehicles with seat-surface extension:** Disengage the cover on the seat-surface extension **-arrows E-** .

Fig 5: Disengaging Cover (Front)

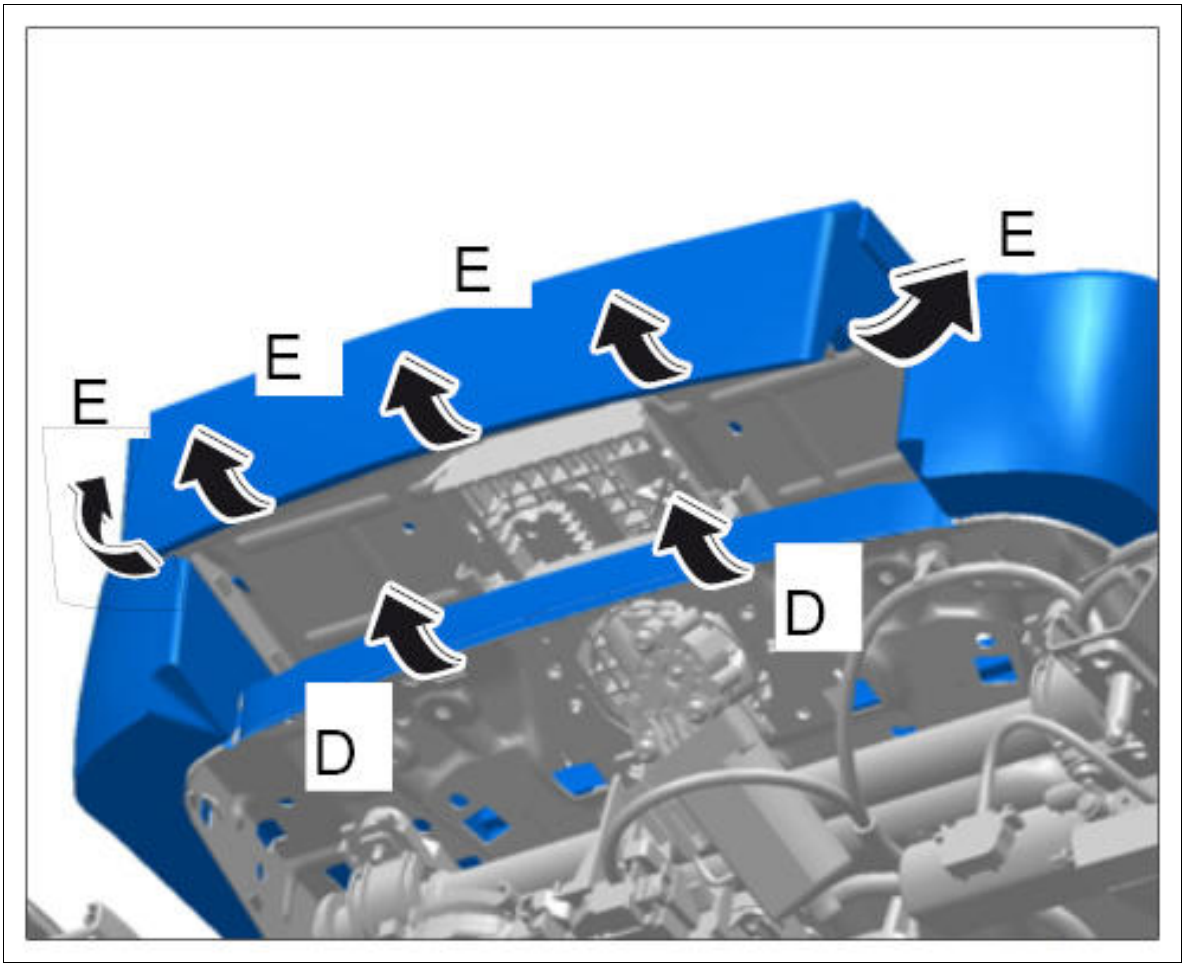

Courtesy of PORSCHE CARS NORTH AMERICA, INC.

8. Press in expansion rivet pin **-5-** and pull out the expansion rivet.
9. Detach the cover at the rear **-arrow F-** .

Fig 6: Detaching Cover (Sides)

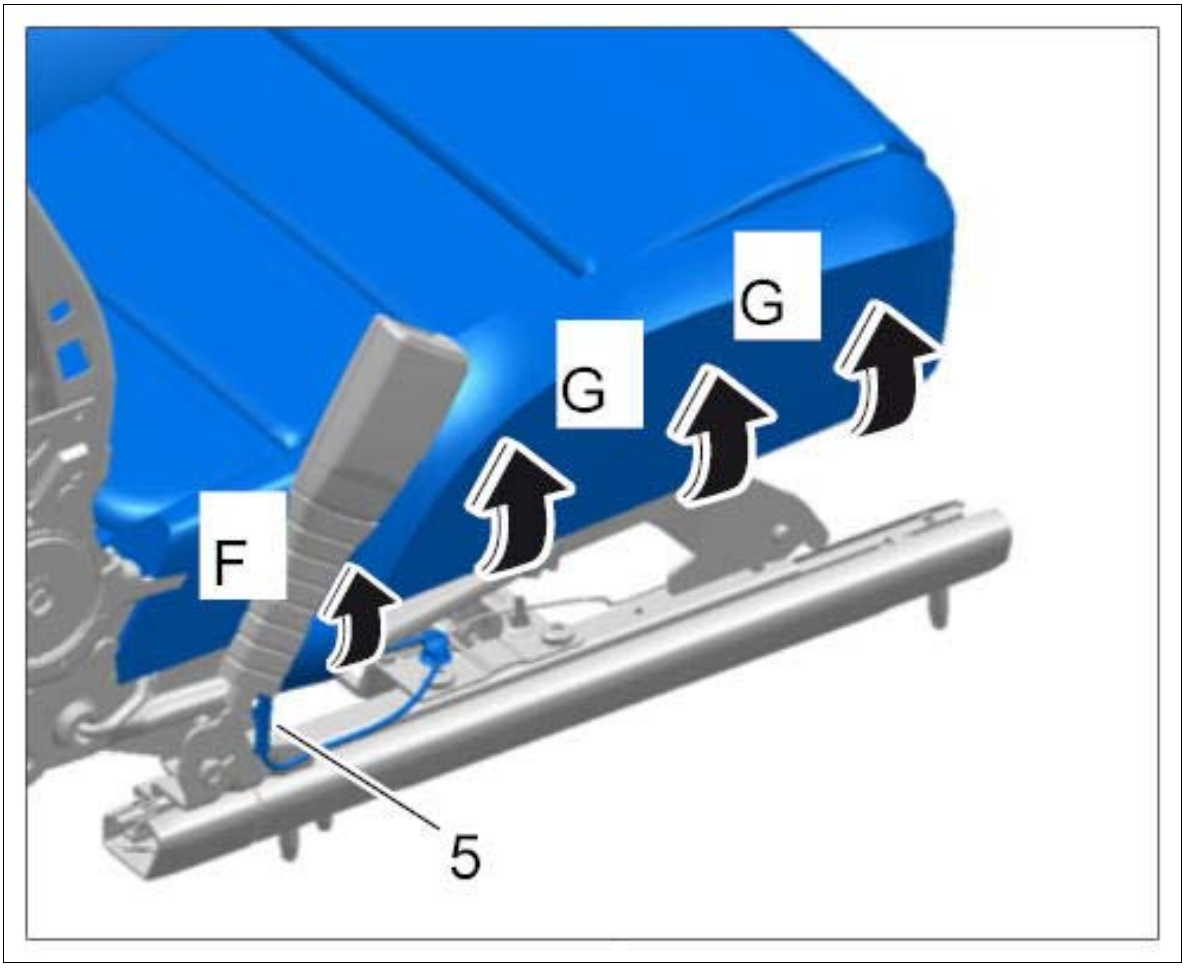

Courtesy of PORSCHE CARS NORTH AMERICA, INC.

10. Detach the cover at the sides **-arrows G-** .
11. Detach the cover at the rear **-arrows H-** .

Fig 7: Disengaging Cover (Rear)

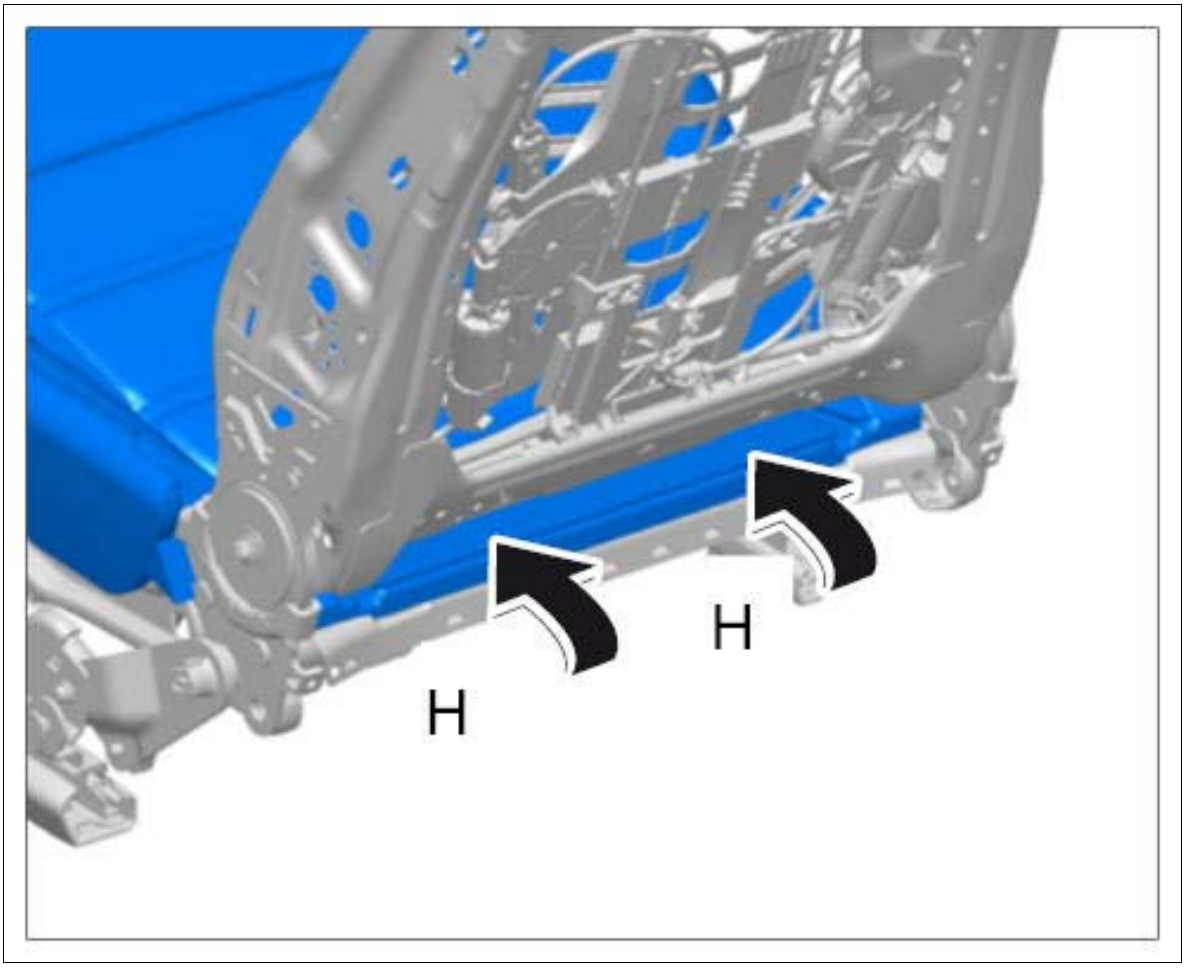

Courtesy of PORSCHE CARS NORTH AMERICA, INC.

12. Pull the cover forward between the padding for the seat and backrest **-arrows I-** .

Fig 8: Pulling Cover Forward

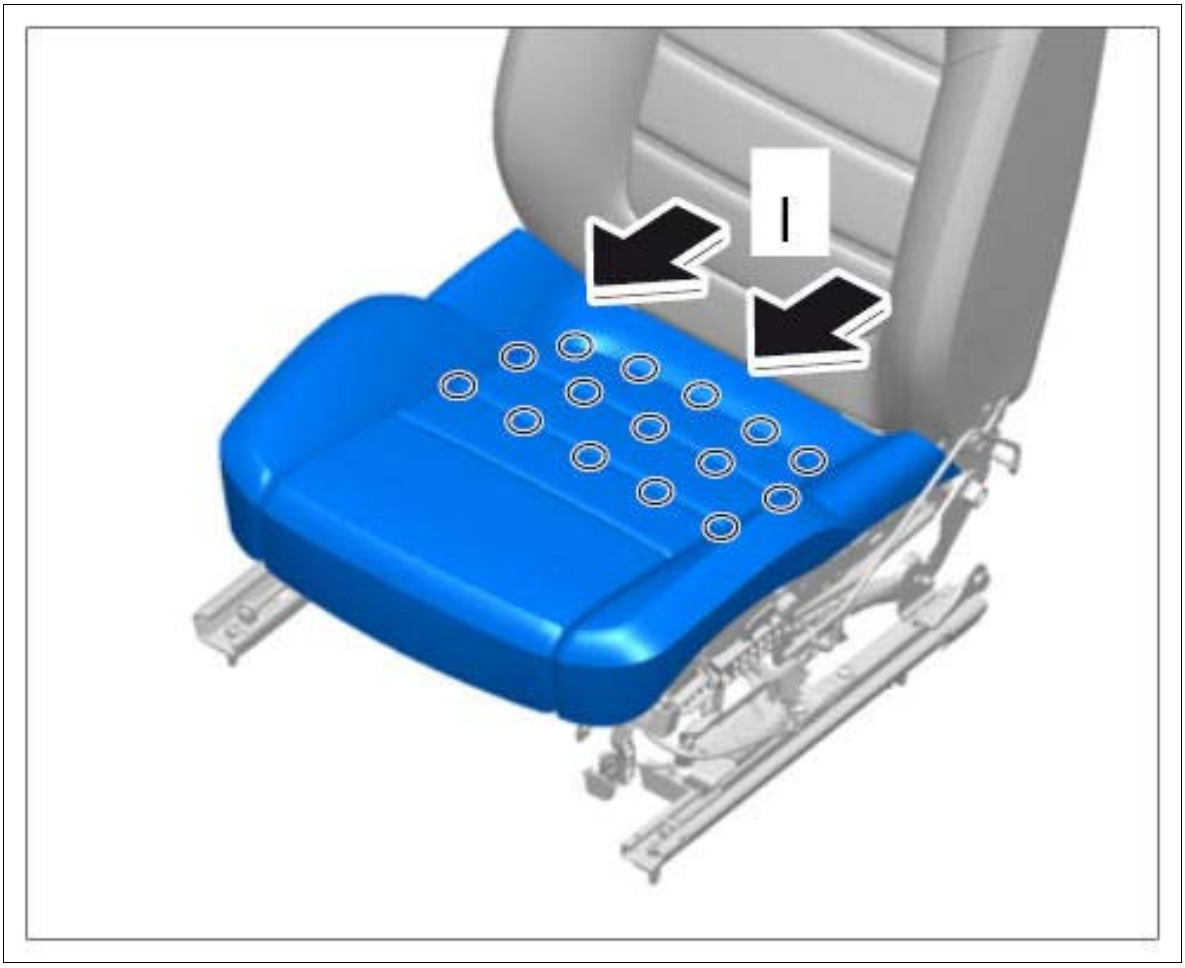

Courtesy of PORSCHE CARS NORTH AMERICA, INC.

13. **On vehicles with seat-surface extension:** Disengage seat extension straps at both sides.

Fig 9: Disengaging Straps On Seat-Surface Extension

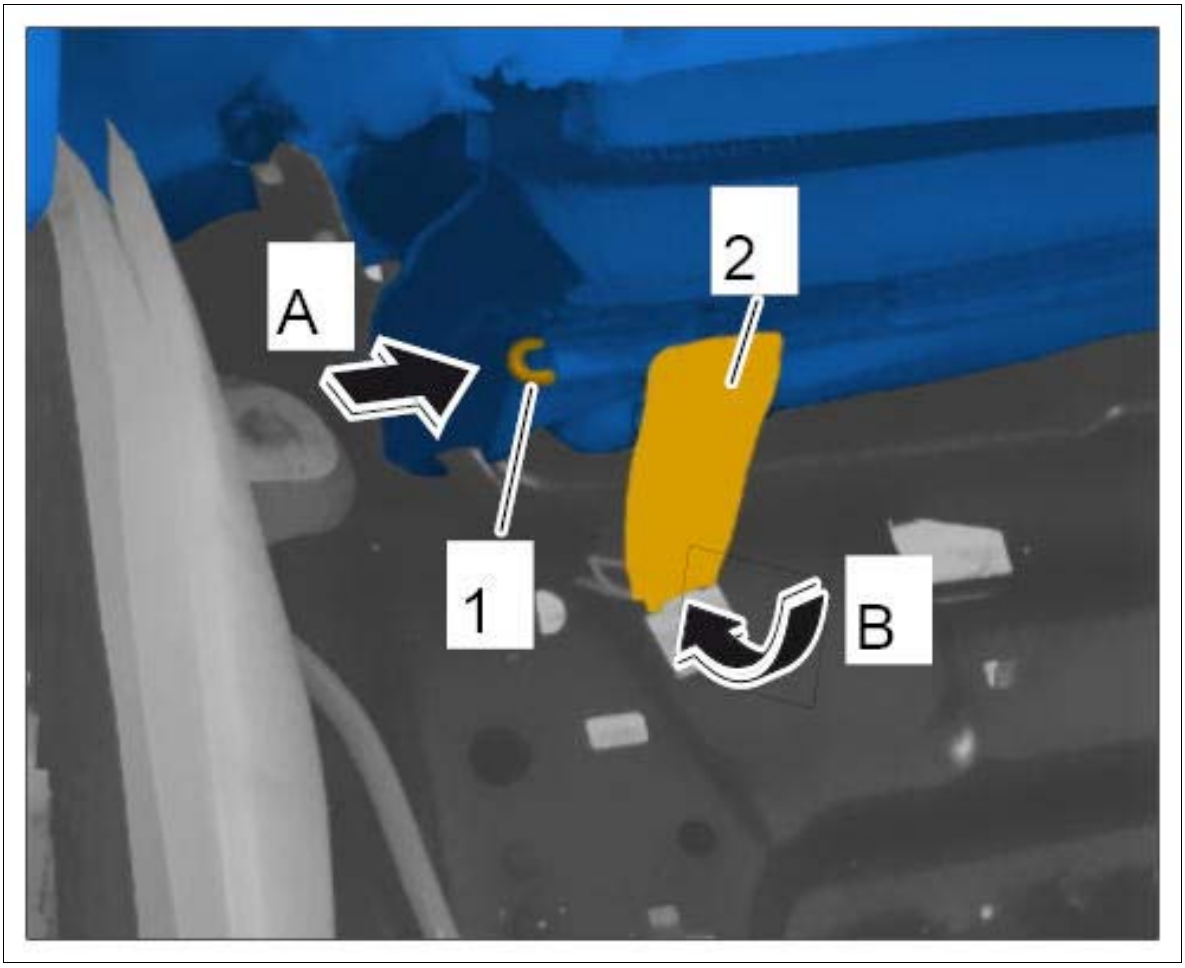

Courtesy of PORSCHE CARS NORTH AMERICA, INC.

1. 13.1. Lift up padding for rear seat.
2. 13.2. Push back the bar **-1-** on the cover **-arrow A-** .
3. 13.3. Disengage strap for seat-surface extension **-2-** and guide it through in a downward direction **-arrow B-** .

14. Remove seat cover together with the padding from the seat frame.

WM 741019 REMOVING AND INSTALLING PADDING FOR FRONT SEAT (ALL MODELS) > INSTALLING PADDING FOR FRONT SEAT

1. Fit seat cover with padding on the seat frame.
2. **On vehicles with seat-surface extension:** Engage seat extension straps at both sides.

Fig 1: Engaging Seat-Surface Extension Straps

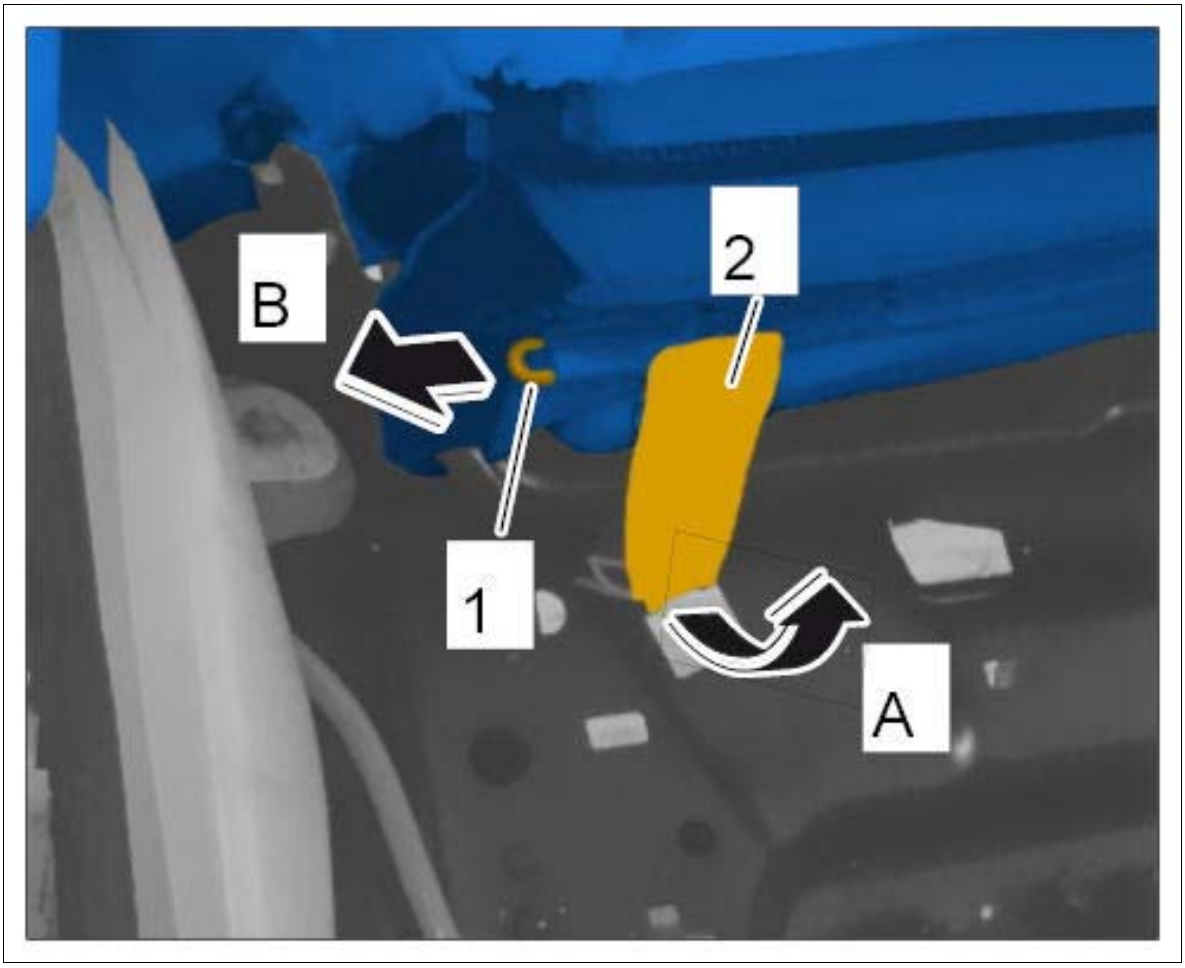

Courtesy of PORSCHE CARS NORTH AMERICA, INC.

1. 2.1. Lift up padding for rear seat.
2. 2.2. Guide seat-surface extension strap **-2-** through from top to bottom **-arrow A-** and slide it onto the bar **-arrow B-** .
3. 2.3. Slide the bar **-1-** through the seat-surface extension strap **-2-** and the tab on the cover **-3-** .

3. Pull the cover back between the padding for the seat and backrest **-arrows C-** .

Fig 2: Pulling Cover To Rear

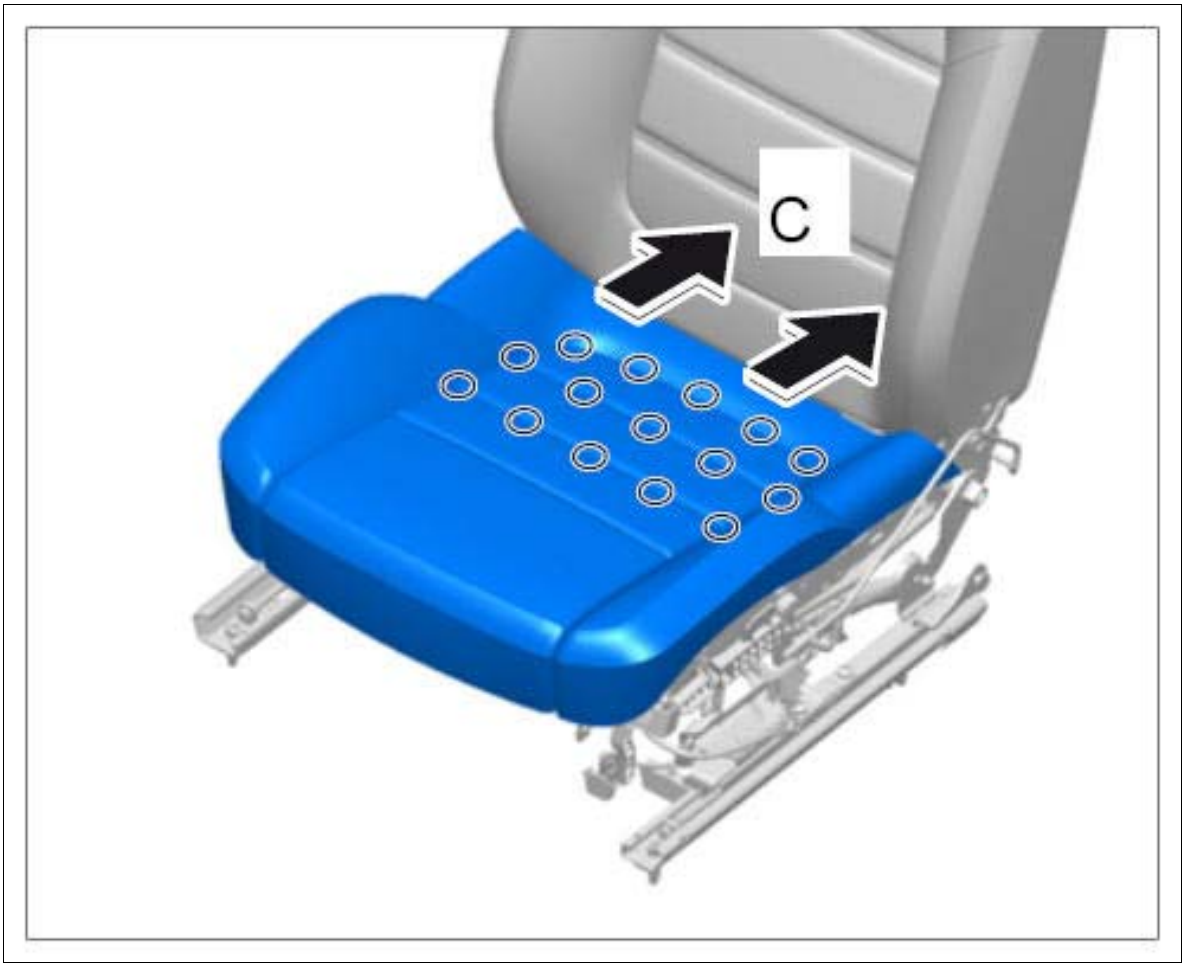

Courtesy of PORSCHE CARS NORTH AMERICA, INC.

4. Attach the cover at the rear **-arrows D-** .

Fig 3: Engaging Rear Cover

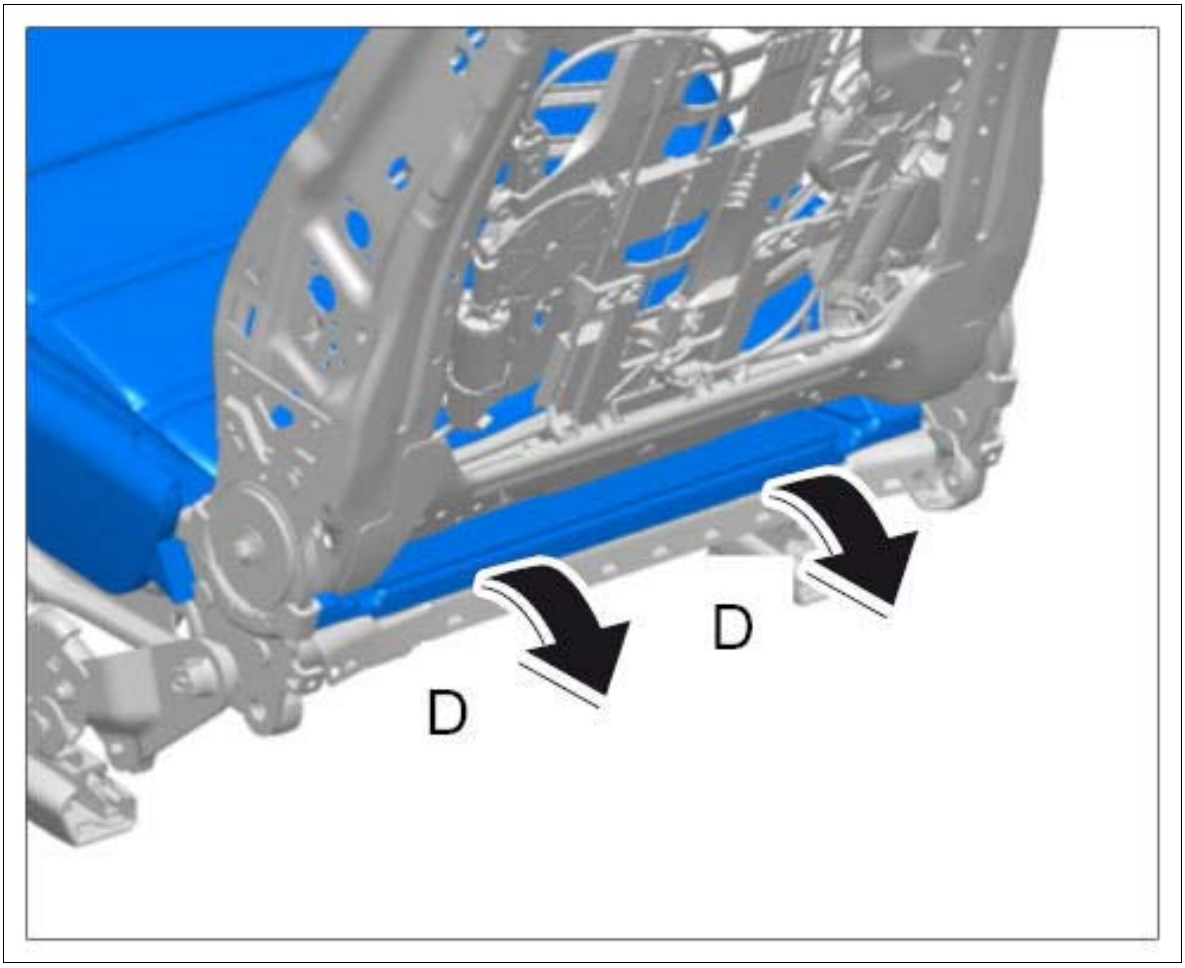

Courtesy of PORSCHE CARS NORTH AMERICA, INC.

5. Attach the cover at the rear **-arrow E-** .
6. Attach the cover at the sides **-arrows F-** .
7. Fit expansion rivet **-4-** .

Information

Fig 4: Securing Sides Cover

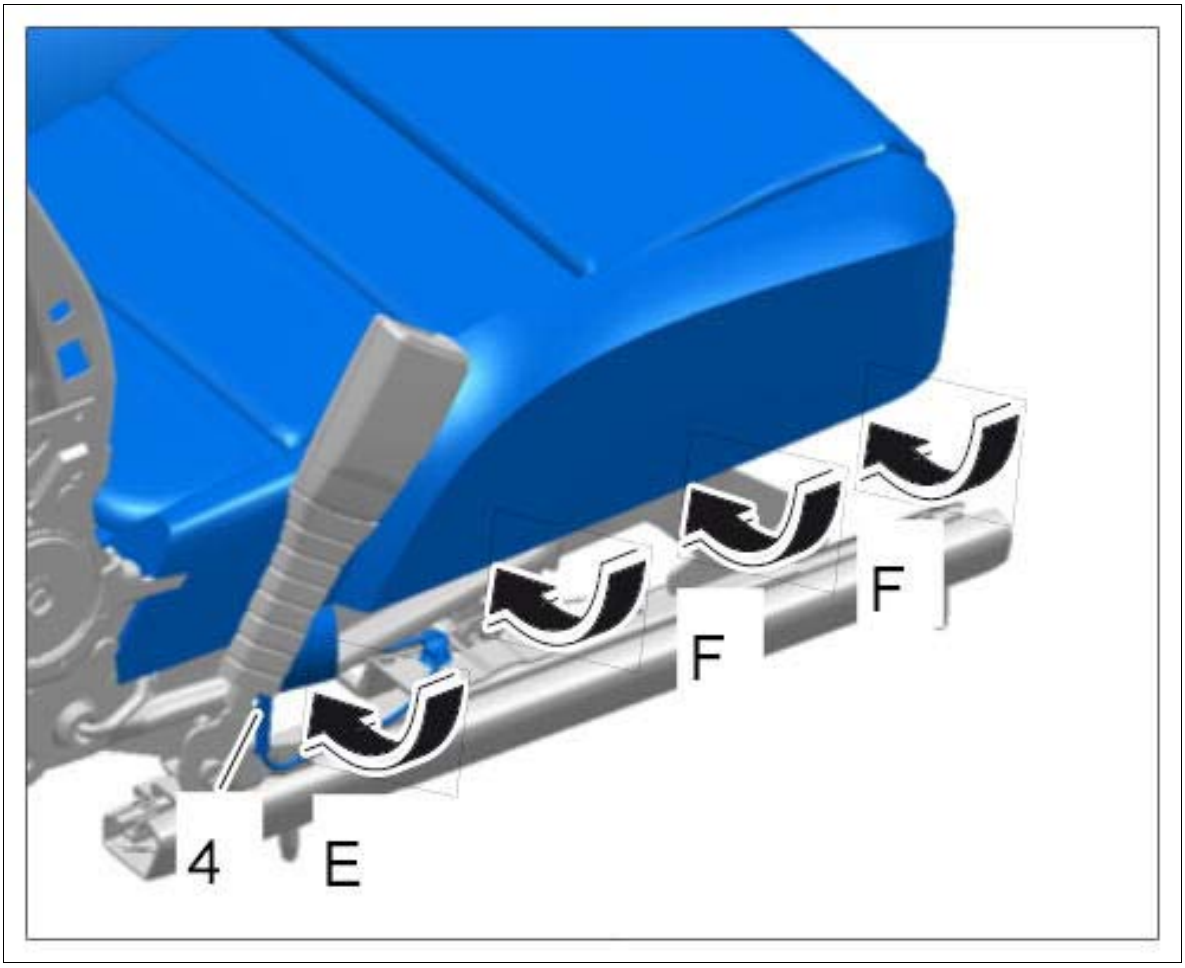

Courtesy of PORSCHE CARS NORTH AMERICA, INC.

Fixing clips on the seat frame will be damaged irreparably during removal. Replace expansion rivets and fixing clips during installation and do not re-use them.

8. Attach the cover at the front **-arrows G-** .
9. **On vehicles with seat-surface extension:** Attach the cover on the seat-surface extension **-arrows H-** .

Fig 5: Attaching Front Cover

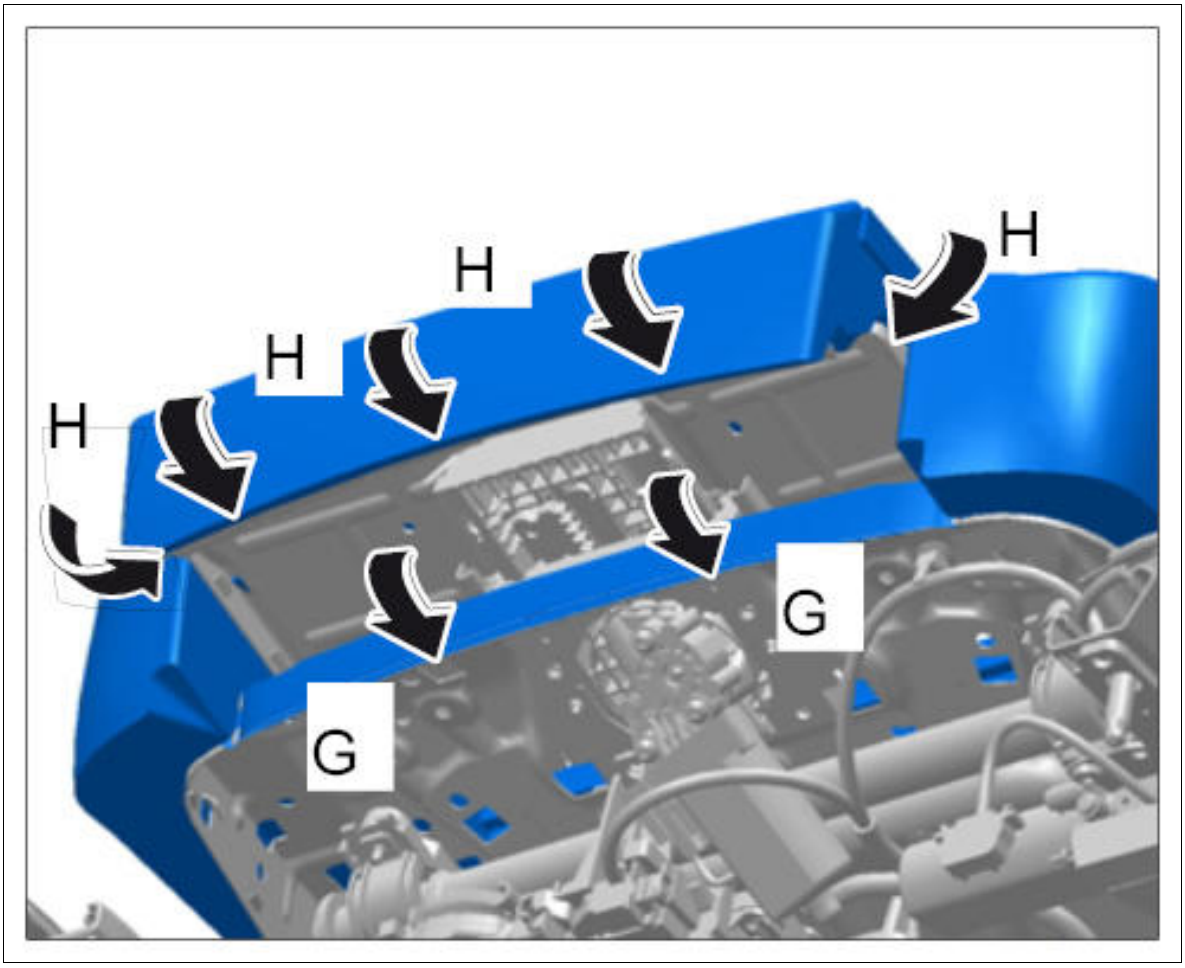

Courtesy of PORSCHE CARS NORTH AMERICA, INC.

10. Attach the cover at the sides **-arrows I-** .

Fig 6: Attaching Sides Cover

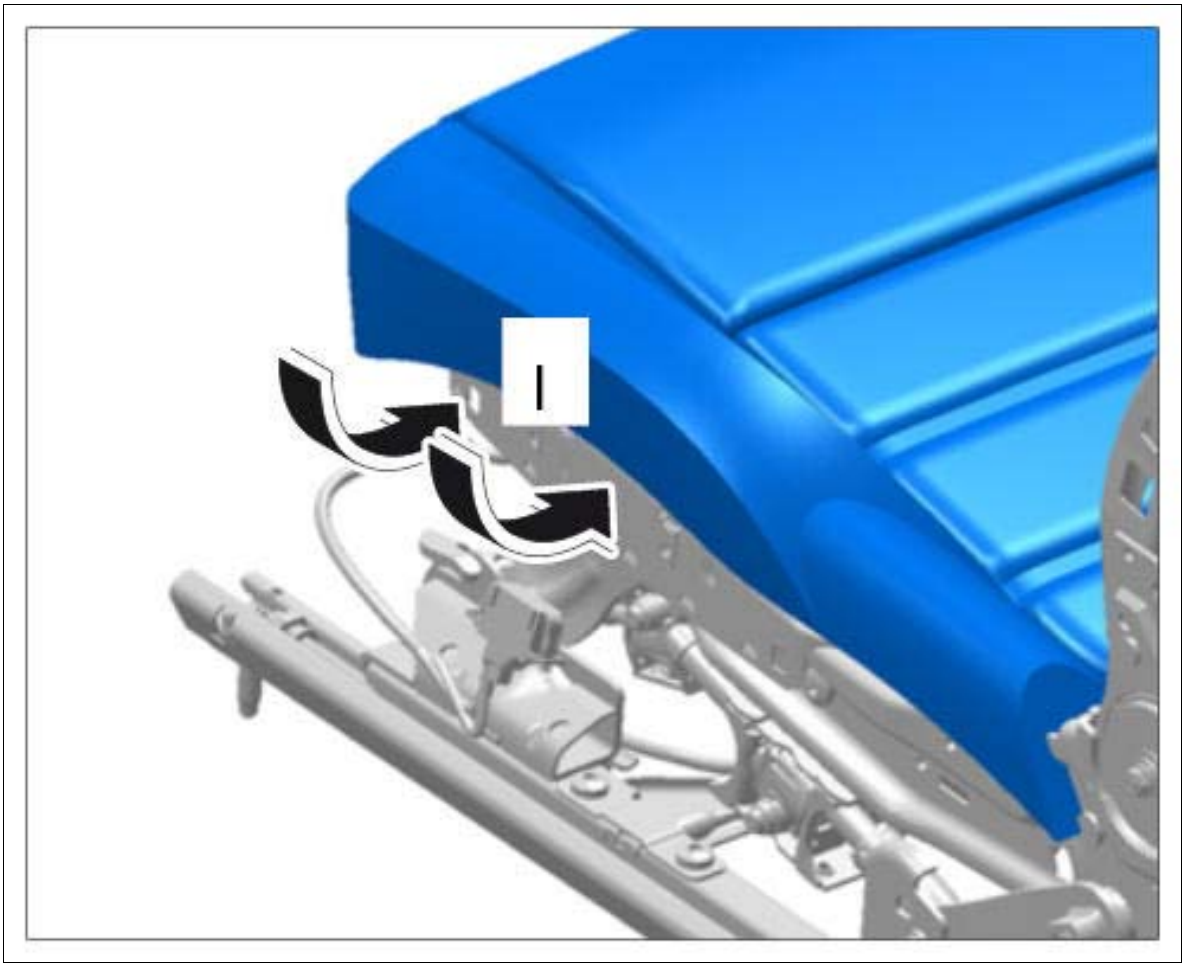

Courtesy of PORSCHE CARS NORTH AMERICA, INC.

11. Engage the bracket **-6-** from below **-arrow J-** .
12. Tighten fastening screws **-5-** (**Tightening torque 7.5 Nm (5.5 ftlb.) +/-0.5 Nm (+/-0.5 ftlb.)**).

Fig 7: Securing Sides Bracket

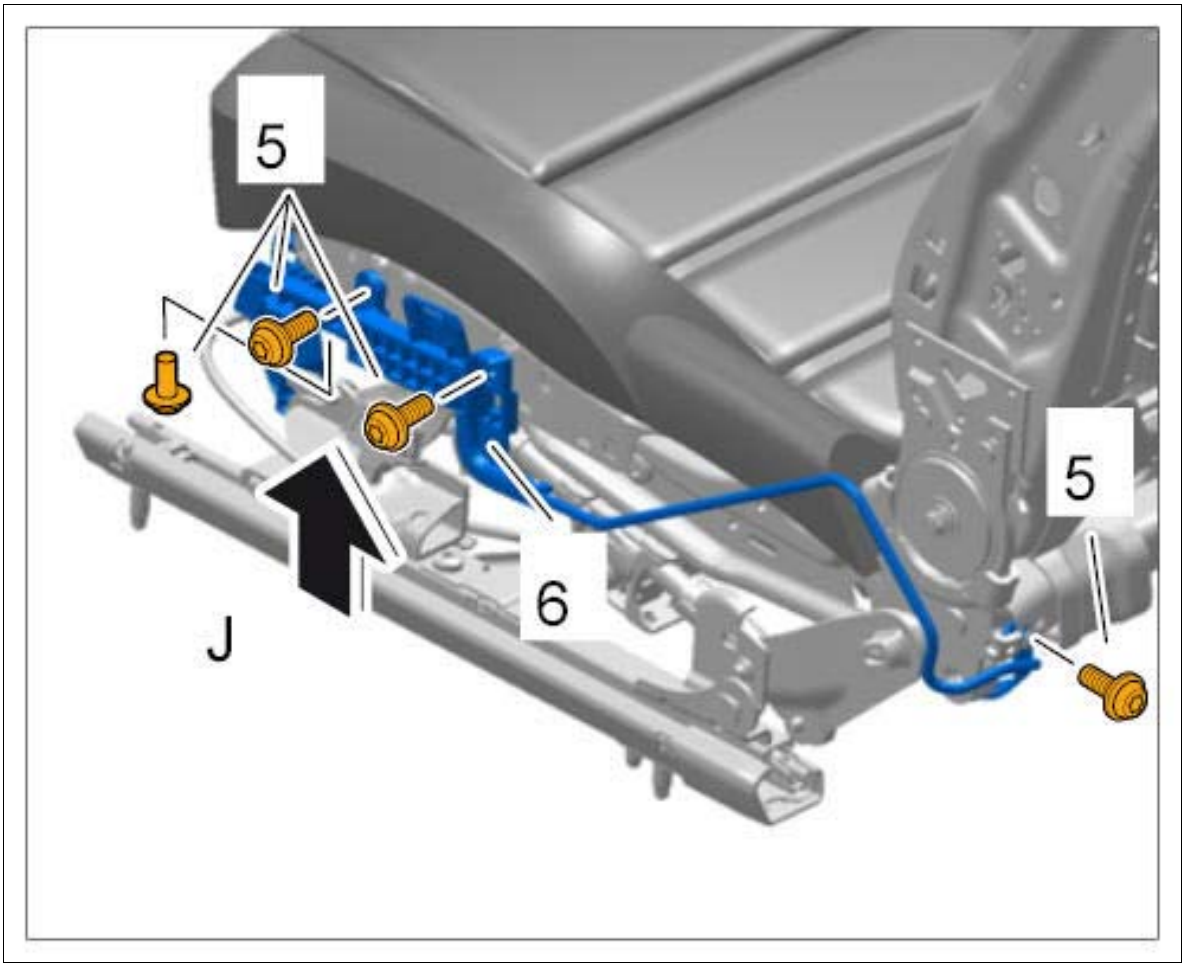

Courtesy of PORSCHE CARS NORTH AMERICA, INC.

13. Fit fixing clip **-7-** .

    Information

    Fixing clips on the seat frame will be damaged irreparably during removal. Replace expansion rivets and fixing clips during installation and do not re-use them.

14. Attach the cover at the rear **-8- (-arrow K-)** .

Fig 8: Securing Back Cover

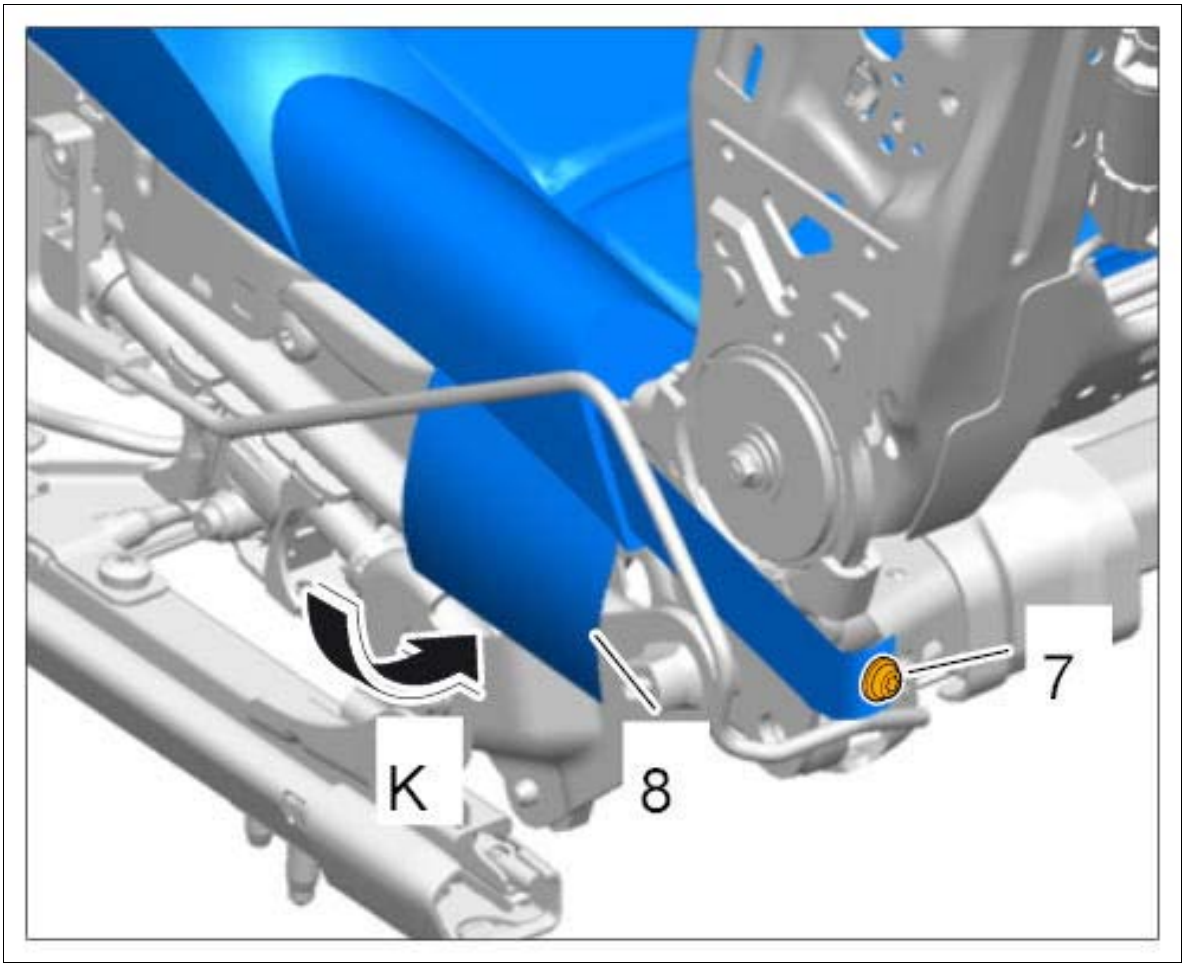

Courtesy of PORSCHE CARS NORTH AMERICA, INC.

15. **On vehicles with heated seats:** Plug in connector for seat heating.

    1. 15.1. Plug in electric plug connection for seat heating **-1- (-arrow A-)** until the connector engages securely.

    2. 15.2. Plug in electric plug connection for seat heating for seat-surface extension **-2- (-arrow B-)** until the connector engages securely.

Fig 9: Installing Seat Heating Connector

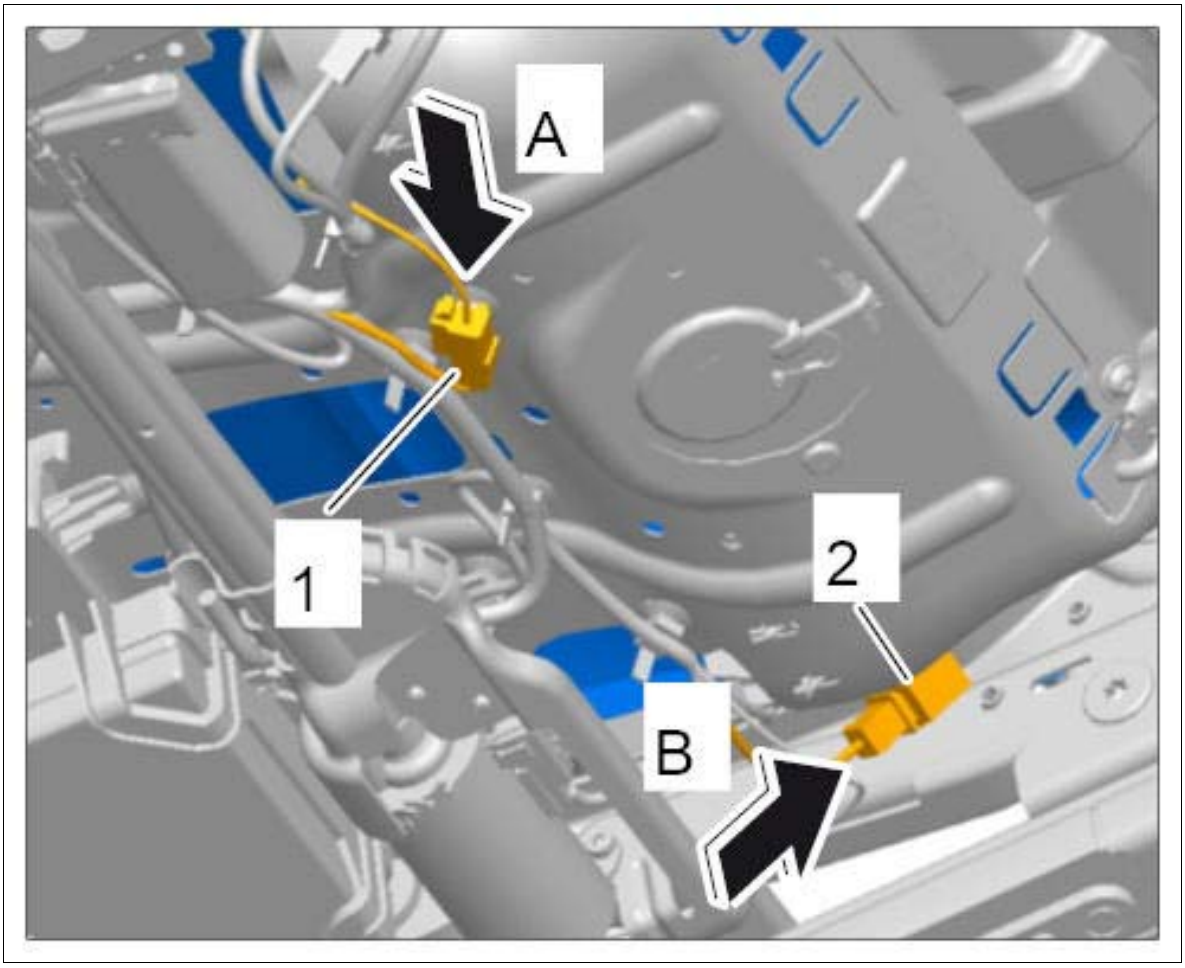

Courtesy of PORSCHE CARS NORTH AMERICA, INC.

WM 741019 REMOVING AND INSTALLING PADDING FOR FRONT SEAT (ALL MODELS) > SUBSEQUENT WORK

1. Install side cover for backrest. → Installing trim panel for seat
2. Install side trim panel for seat. → Installing cover for backrest

WM 741055 REPLACING PADDING FOR FRONT SEAT (ALL MODELS) > TOOLS

Designation	Type	Number	Description	

cushion clip pliers	Commercially available tool	Nr.130		

WM 741055 REPLACING PADDING FOR FRONT SEAT (ALL MODELS) > COMPONENT INFORMATION > INSTALLATION POSITION OF PADDING FOR FRONT SEAT

Fig 1: Identifying Front Seat Padding Installation Position



Courtesy of PORSCHE CARS NORTH AMERICA, INC.

WM 741055 REPLACING PADDING FOR FRONT SEAT (ALL MODELS) > PRELIMINARY WORK

1. Remove padding for front seat. → Removing Padding For Front Seat

WM 741055 REPLACING PADDING FOR FRONT SEAT (ALL MODELS) > LOOSENING PADDING FOR FRONT SEAT

1. Place padding for front seat on a clean surface.
2. Cut open cushion clips using side cutters and remove the cover from the padding.

Fig 1: Detaching Front Seat Padding From Cover (Basic/Comfort)

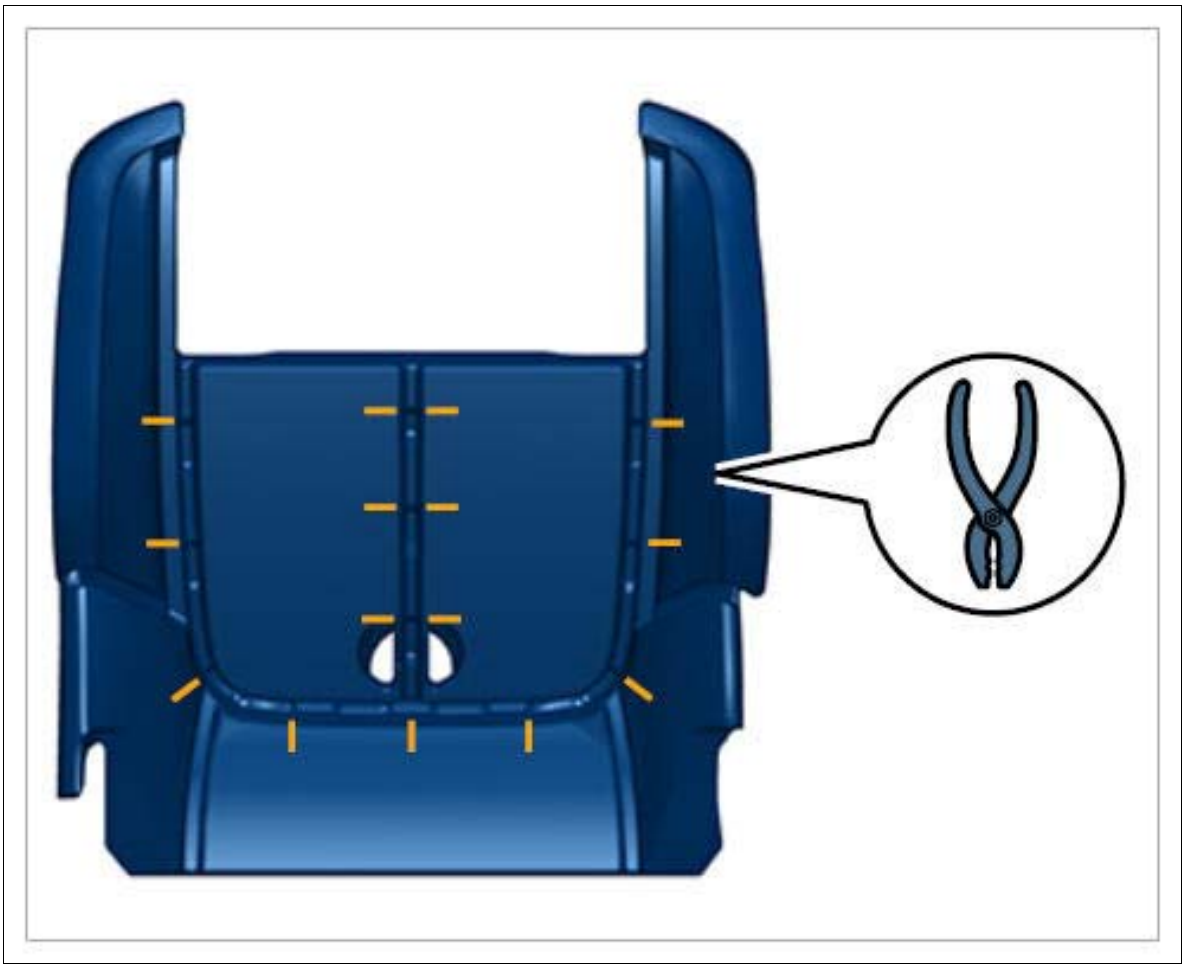

Courtesy of PORSCHE CARS NORTH AMERICA, INC.

Fig 2: Detaching Front Seat Padding From Cover (Sport)

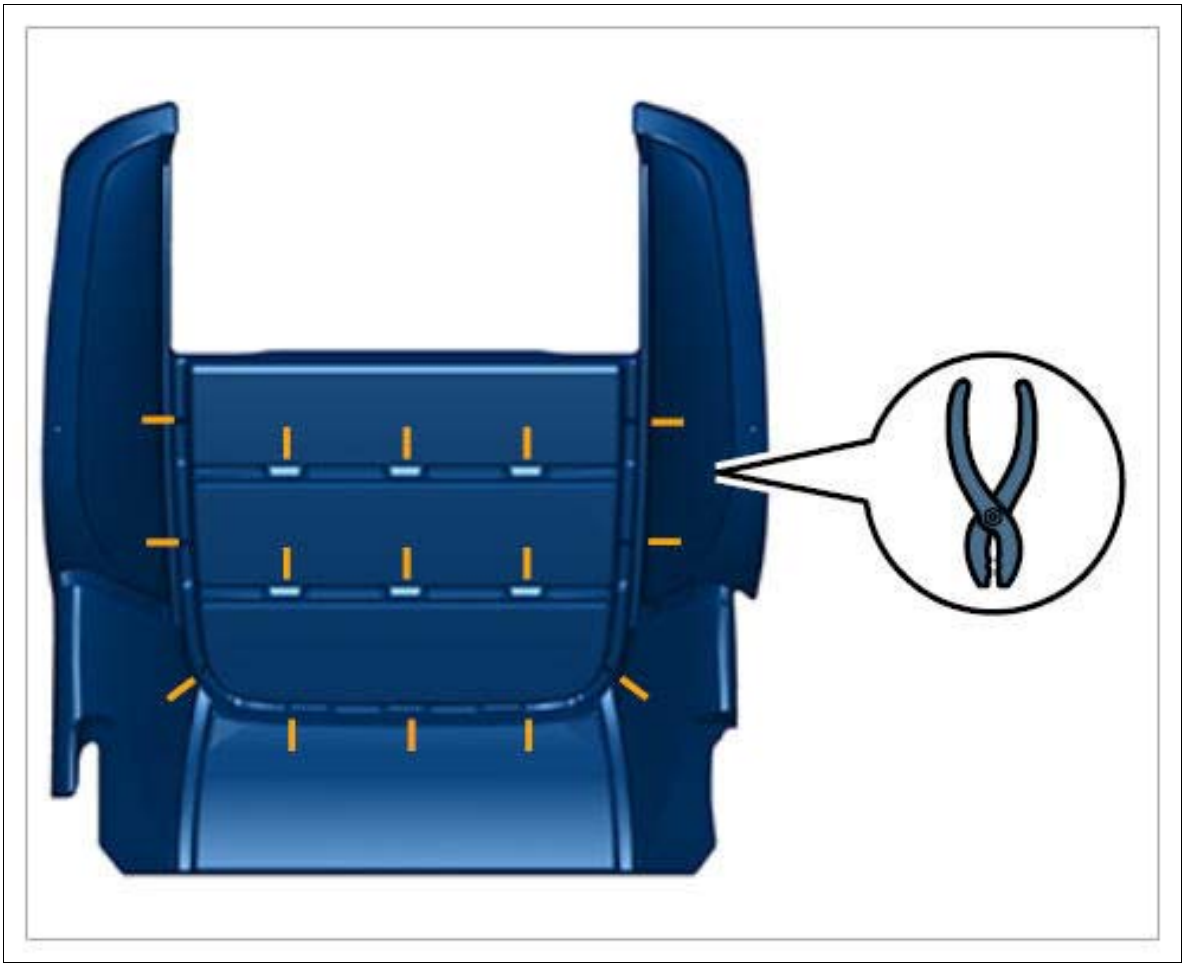

Courtesy of PORSCHE CARS NORTH AMERICA, INC.

WM 741055 REPLACING PADDING FOR FRONT SEAT (ALL MODELS) > SECURING PADDING FOR FRONT SEAT

1. Place cover on the padding for the front seat and align contour with the padding.
2. Use **cushion clip pliers Nr.130** and new cushion clips to secure the cover on the padding in the specified sequence.

Fig 1: Securing Front Seat Cover To Padding (Basic/Comfort)

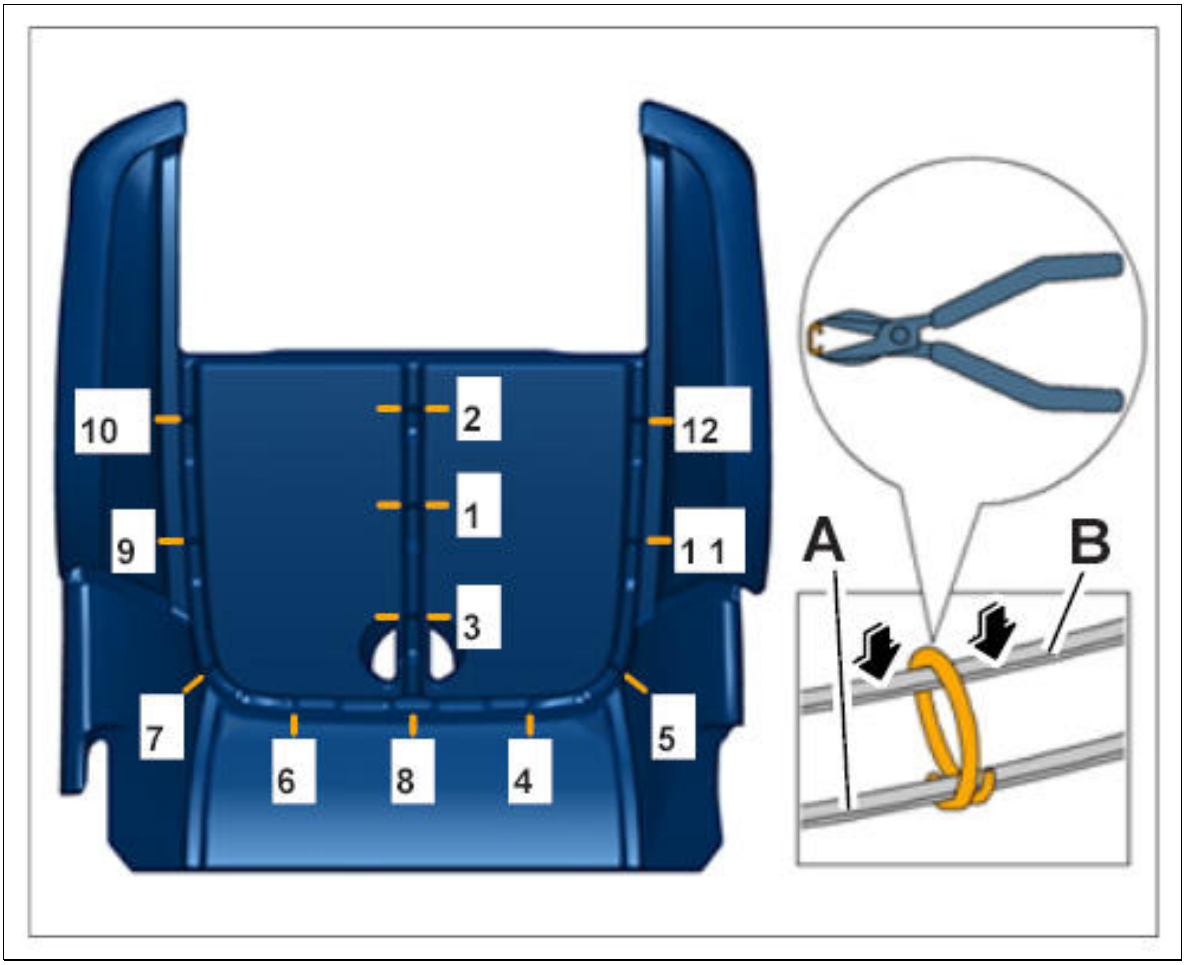

Courtesy of PORSCHE CARS NORTH AMERICA, INC.

Fig 2: Securing Front Seat Cover To Padding (Sport)

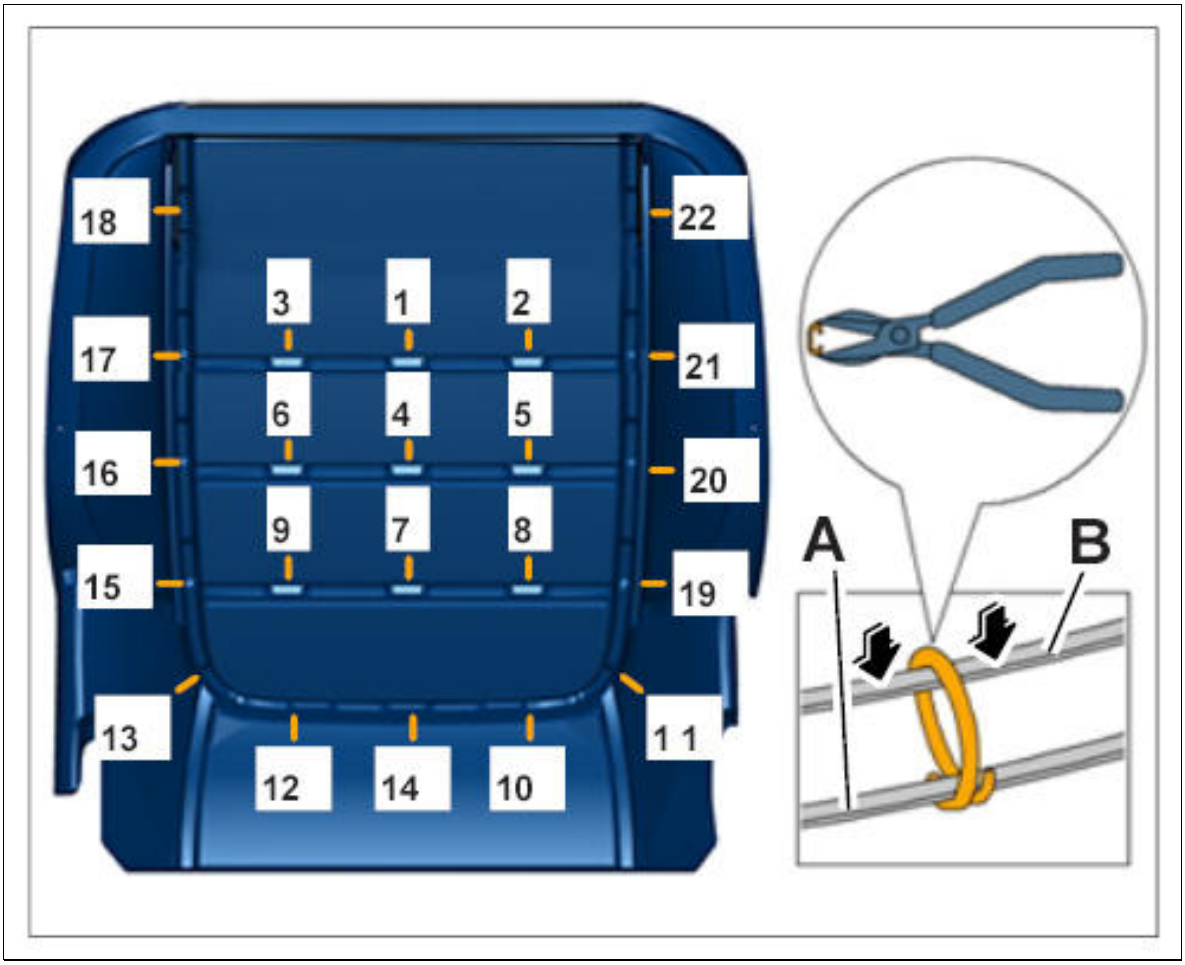

Courtesy of PORSCHE CARS NORTH AMERICA, INC.

WM 741055 REPLACING PADDING FOR FRONT SEAT (ALL MODELS) > SUBSEQUENT WORK

1. Install padding for front seat. → Installing Padding For Front Seat

WM 741319 REMOVING AND INSTALLING COVER FOR FRONT SEAT (ALL MODELS) > TECHNICAL VALUES

Location	Description	Type	Basic value	Tolerance 1	Tolerance 2
Fastening screw securing side bracket to seat	Item 5	Tightening torque	7.5 Nm (5.5 ftlb.)	+/-0.5 Nm (+/-0.5 ftlb.)	

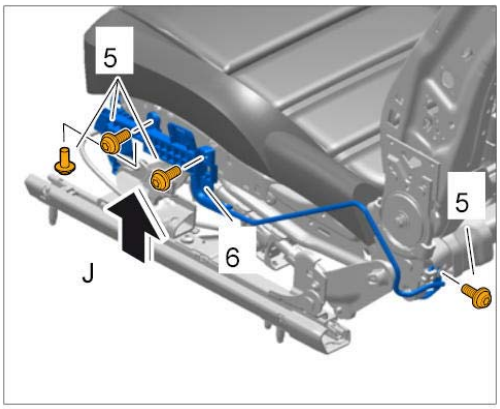

Securing bracket at the sides

WM 741319 REMOVING AND INSTALLING COVER FOR FRONT SEAT (ALL MODELS) > COMPONENT INFORMATION > INSTALLATION POSITION

Fig 1: Identifying Front Seat Cover Installation Position



Courtesy of PORSCHE CARS NORTH AMERICA, INC.

WM 741319 REMOVING AND INSTALLING COVER FOR FRONT SEAT (ALL MODELS) > PRELIMINARY WORK

1. Move seat to its highest position.
2. Remove seat-surface extension fully.
3. Remove side trim panel on seat. → Removing cover for backrest
4. Remove side cover for backrest. → Removing trim panel for seat

WM 741319 REMOVING AND INSTALLING COVER FOR FRONT SEAT (ALL MODELS) > REMOVING COVER FOR FRONT SEAT

1. **On vehicles with heated seats:** Disconnect connector for seat heating.
    1. 1.1. Release electric plug connection for seat heating **-1- (-arrows a-)** and disconnect it **-arrow A-** .
    2. 1.2. Release electric plug connection for seat heating for seat-surface extension **-2- (-arrows b-)** and disconnect it **-arrow B-** .

    Fig 1: Disconnecting Seat Heating Connector

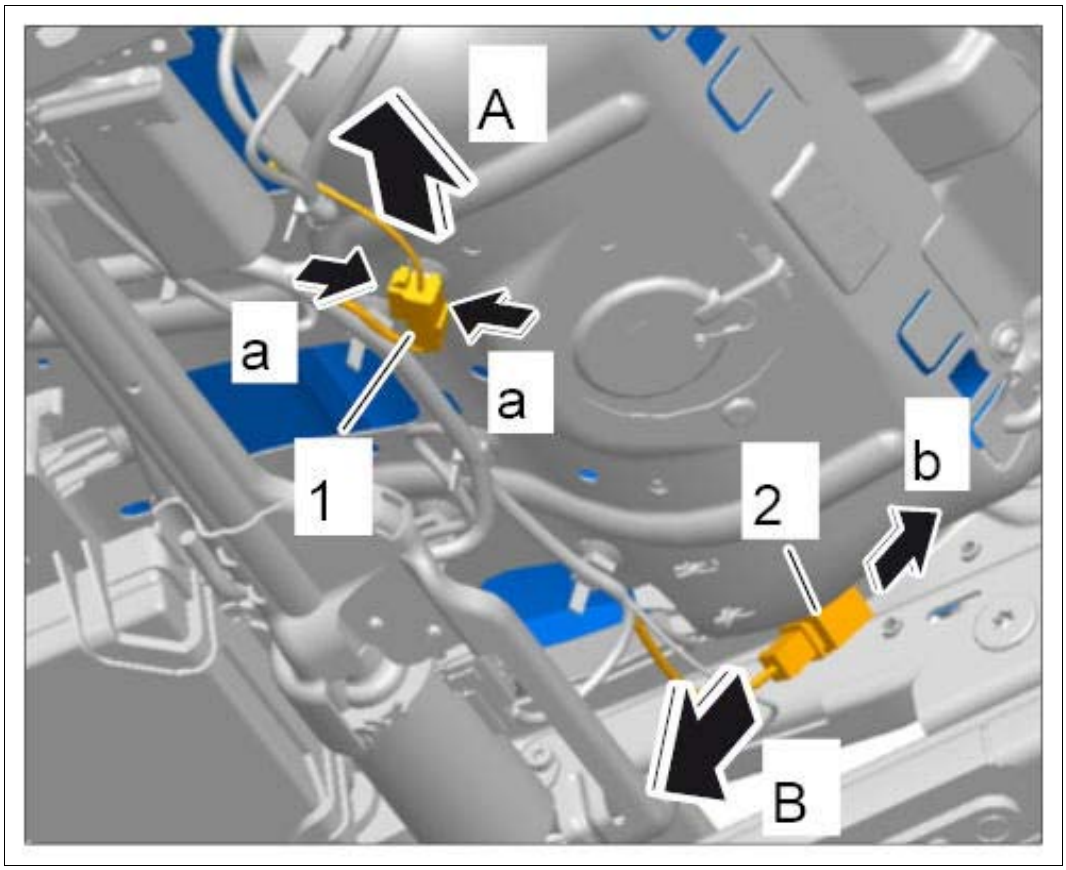

Courtesy of PORSCHE CARS NORTH AMERICA, INC.

2. Remove fixing clip **-1-** .

3. Disengage the cover at the sides **-2- (-arrow A-)** .

Fig 2: Detaching Rear Cover

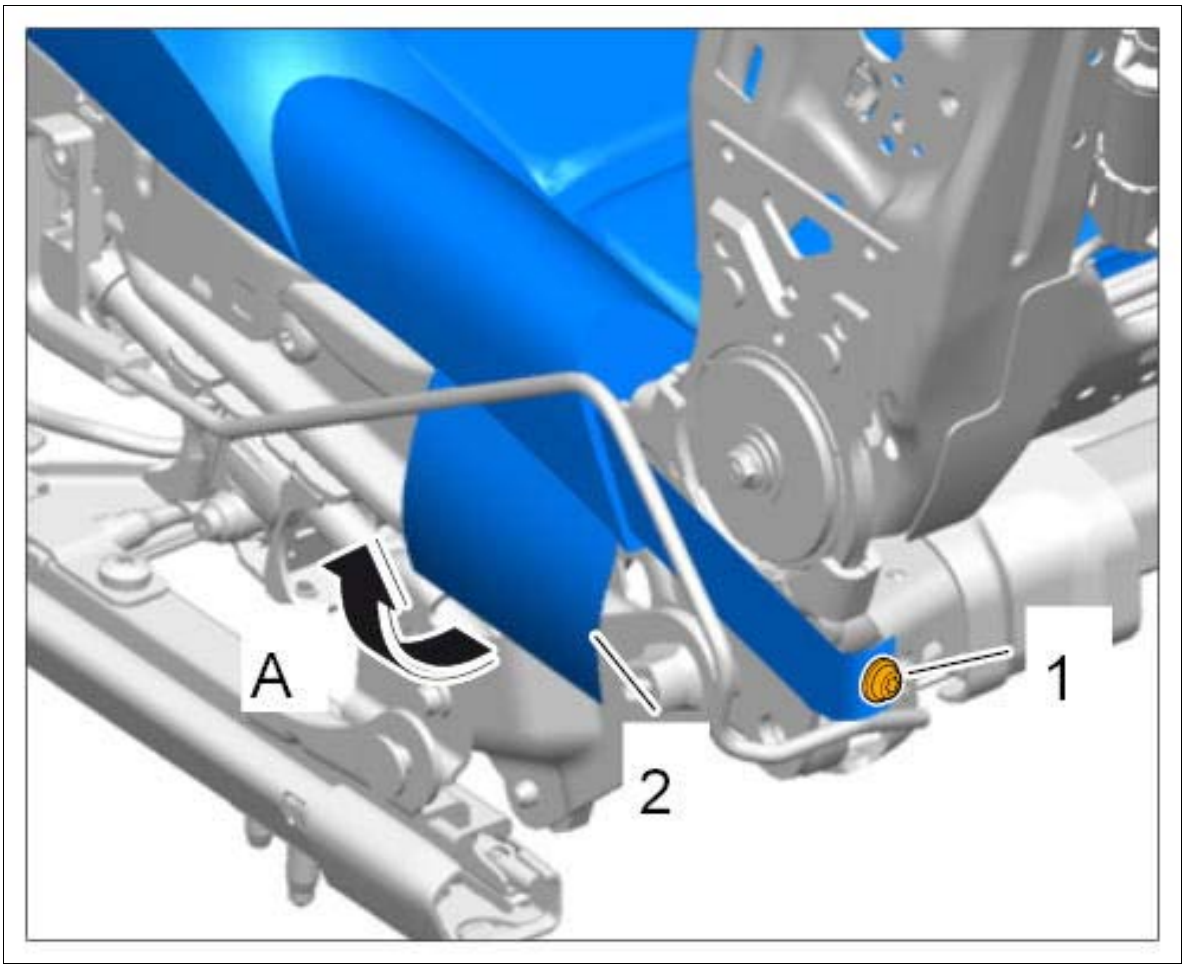

Courtesy of PORSCHE CARS NORTH AMERICA, INC.

4. Unscrew fastening screws **-3-** and pull the bracket **-4-** down out of the catches **-arrow B-** .

Fig 3: Loosening Sides Bracket

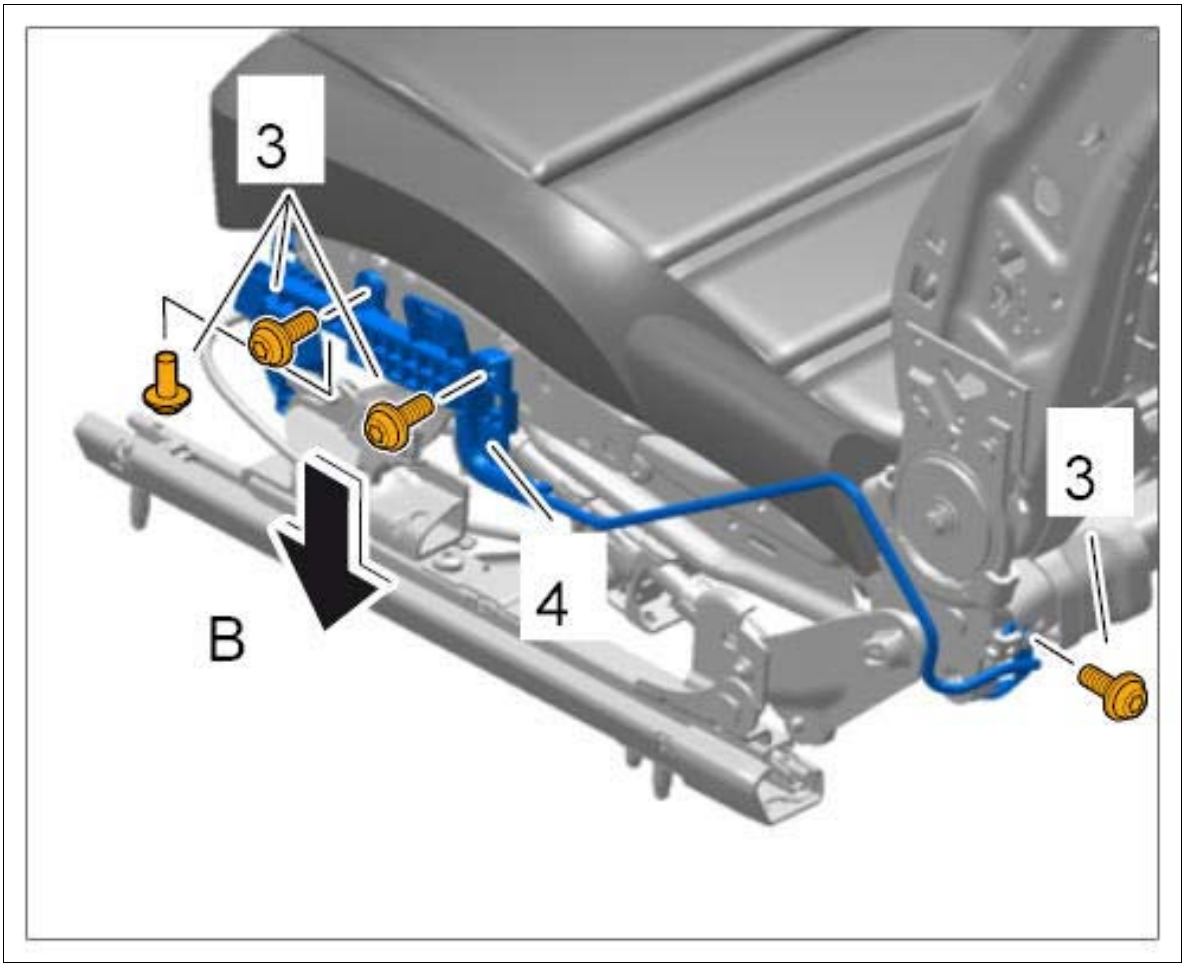

Courtesy of PORSCHE CARS NORTH AMERICA, INC.

5. Disengage the cover at the sides **-arrows C-** .

Fig 4: Disengaging Sides Cover

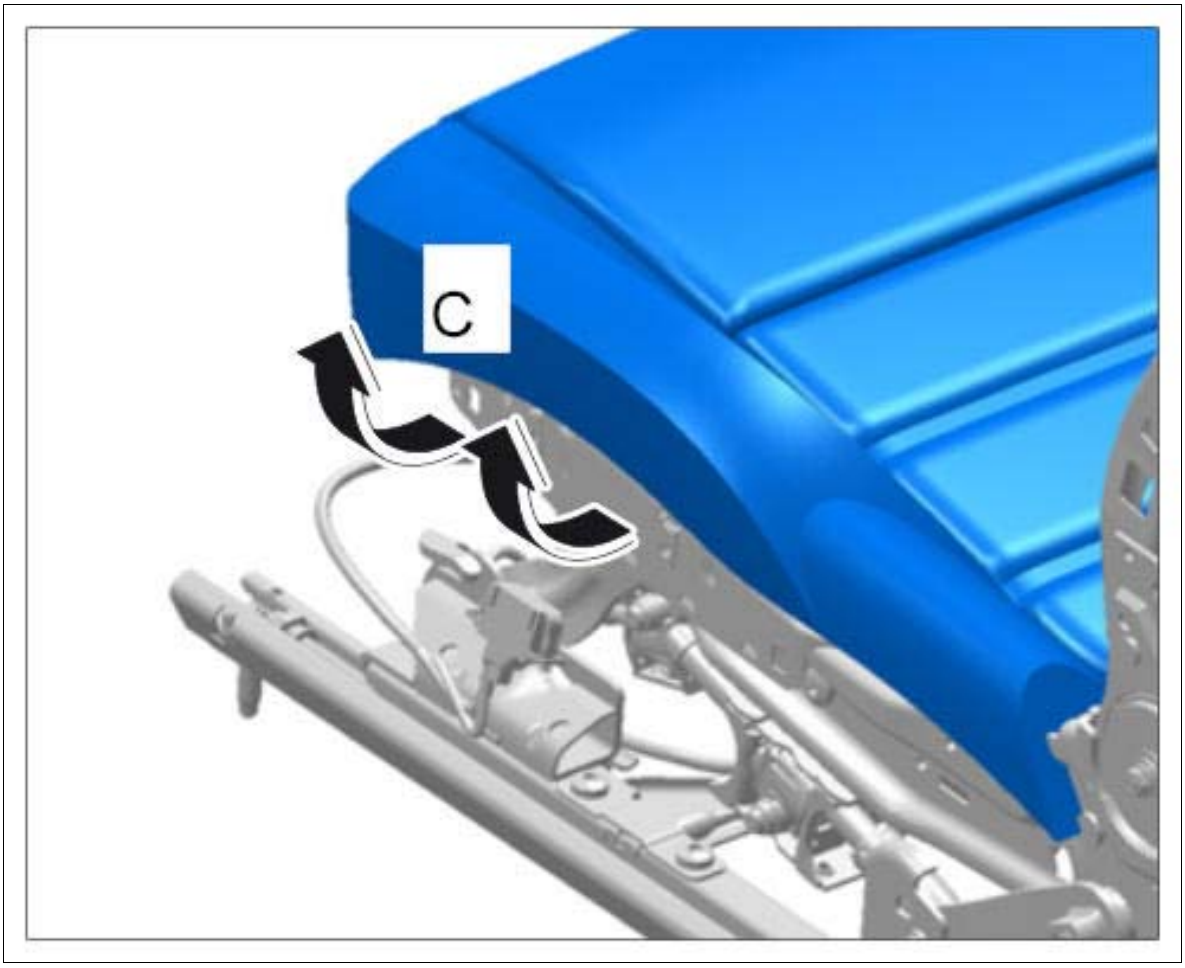

Courtesy of PORSCHE CARS NORTH AMERICA, INC.

6. Disengage the cover at the front **-arrows D-** .
7. **On vehicles with seat-surface extension:** Disengage the cover on the seat-surface extension **-arrows E-** .

Fig 5: Disengaging Front Cover

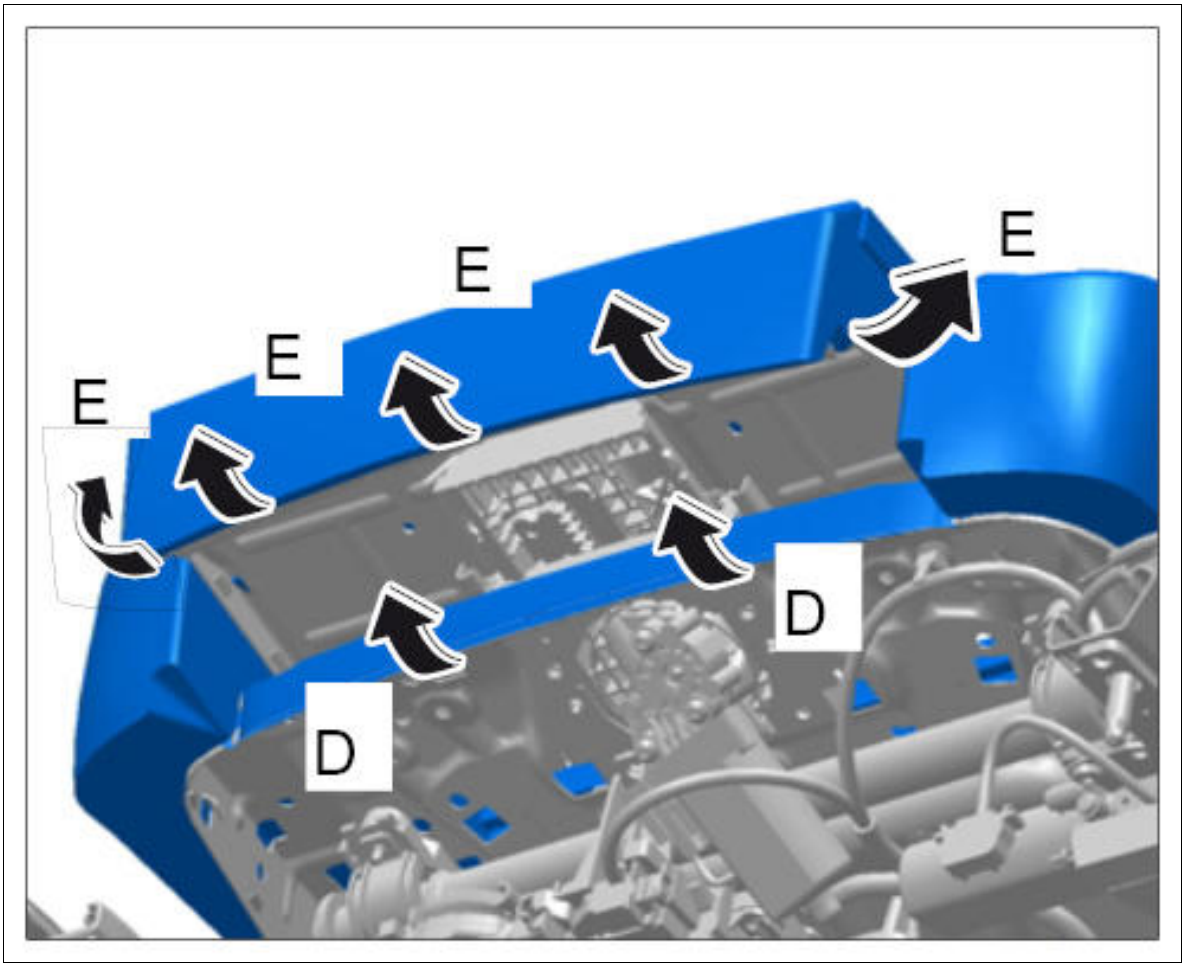

Courtesy of PORSCHE CARS NORTH AMERICA, INC.

8. Press in expansion rivet pin **-5-** and pull out the expansion rivet.
9. Disengage the cover at the rear **-arrow F-** .
10. Disengage the cover at the sides **-arrow G-** .

Fig 6: Detaching Sides Cover

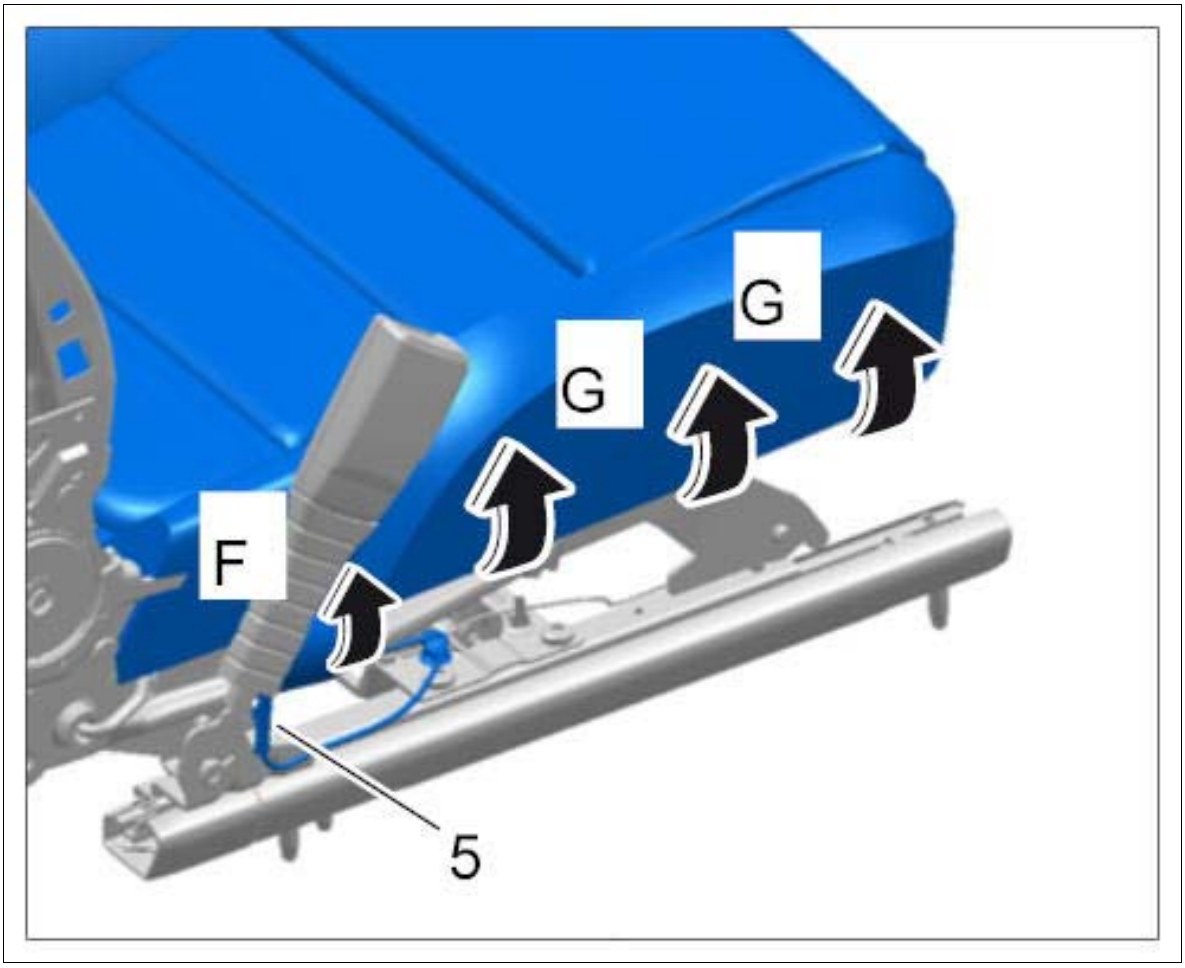

Courtesy of PORSCHE CARS NORTH AMERICA, INC.

11. Disengage the cover at the rear **-arrows H-** .

Fig 7: Disengaging Rear Cover

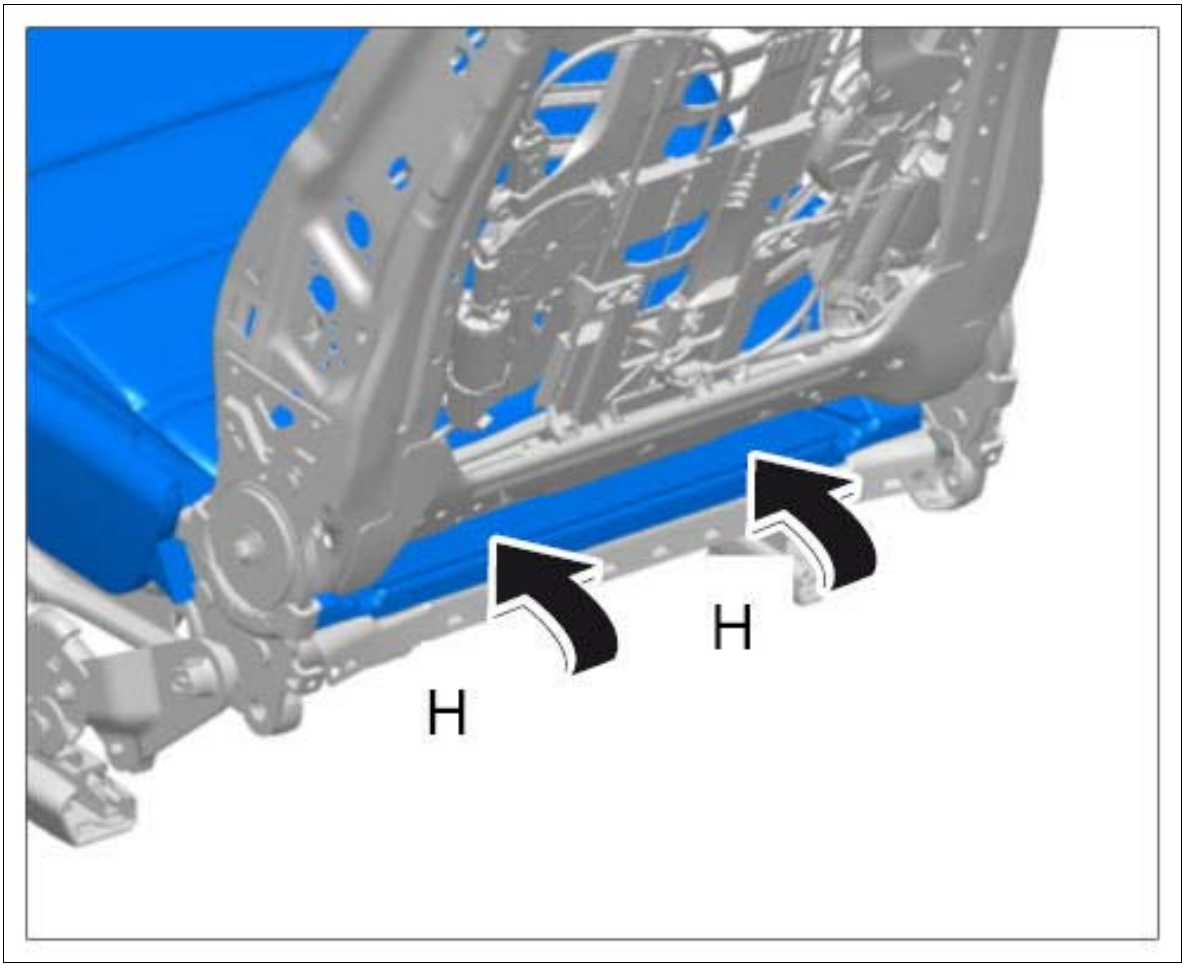

Courtesy of PORSCHE CARS NORTH AMERICA, INC.

12. Pull the cover forward between the padding for the seat and backrest **-arrows I-** .

Fig 8: Pulling Cover Forward

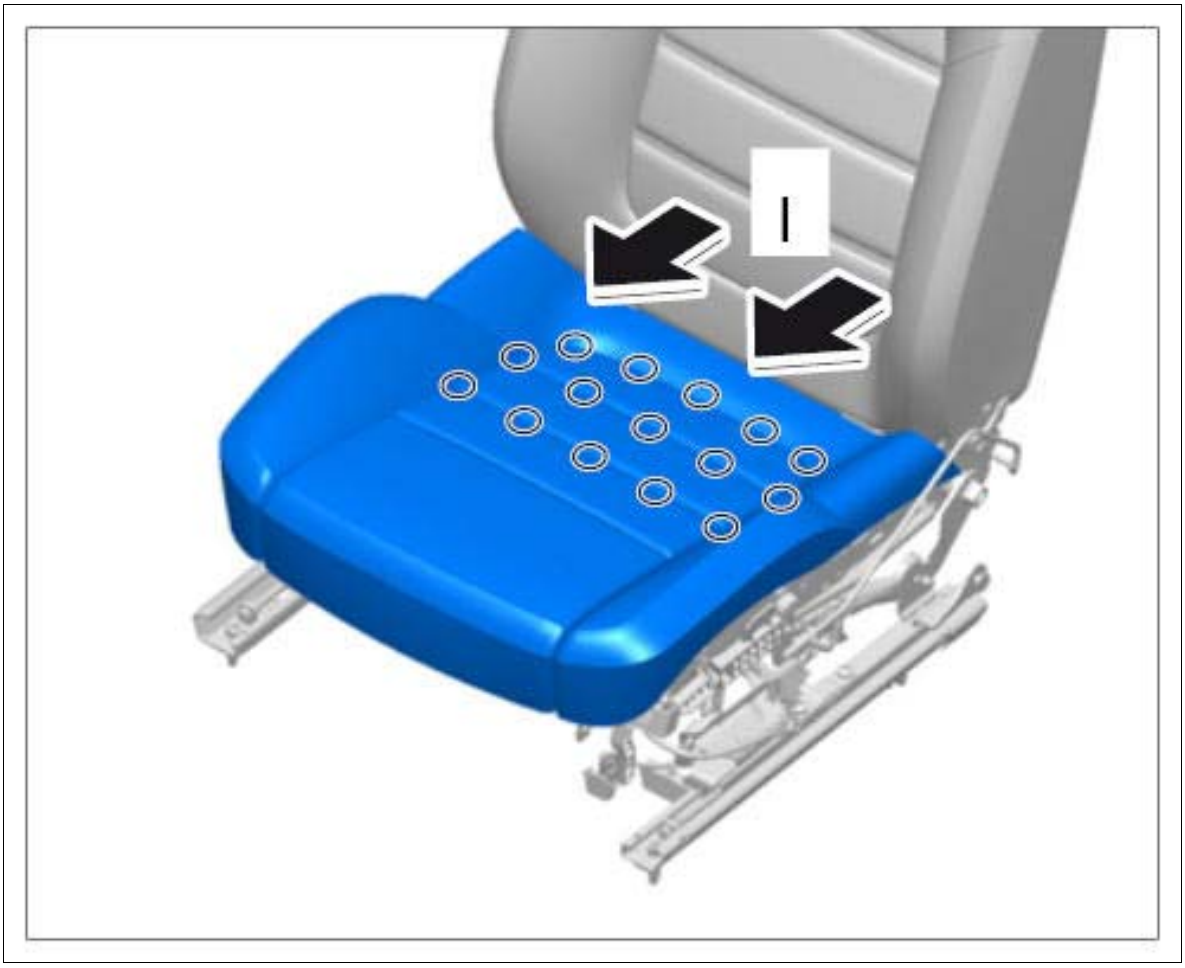

Courtesy of PORSCHE CARS NORTH AMERICA, INC.

13. **On vehicles with seat-surface extension:** Disengage seat extension straps at both sides.

Fig 9: Disengaging Straps On Seat-Surface Extension

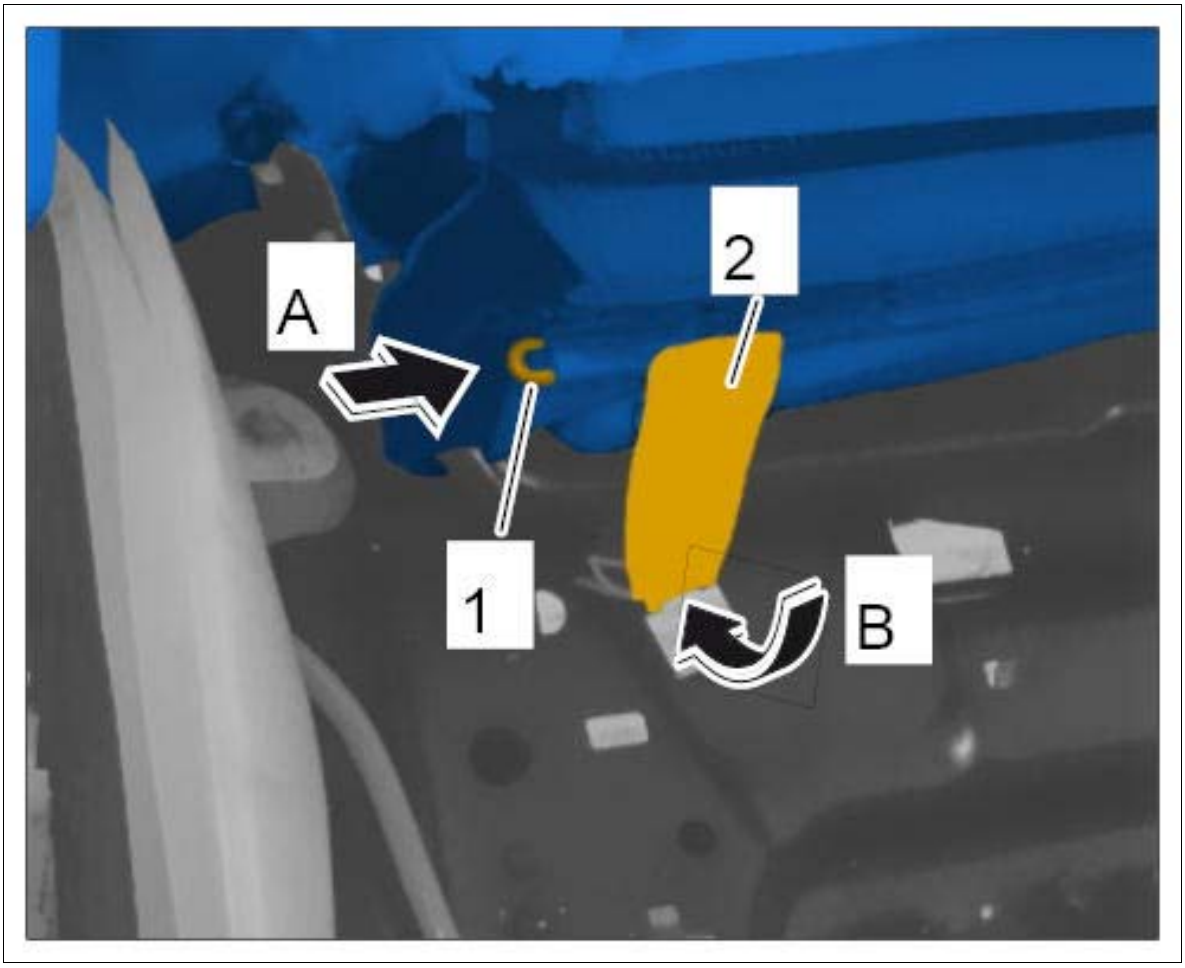

Courtesy of PORSCHE CARS NORTH AMERICA, INC.

1. 13.1. Lift up padding for rear seat.
2. 13.2. Push back the bar **-1-** on the cover **-arrow A-** .
3. 13.3. Disengage strap for seat-surface extension **-2-** and guide it through in a downward direction **-arrow B-** .

14. Remove seat cover together with the padding from the seat frame.

WM 741319 REMOVING AND INSTALLING COVER FOR FRONT SEAT (ALL MODELS) > INSTALLING COVER FOR FRONT SEAT

1. Fit seat cover with padding on the seat frame.
2. **On vehicles with seat-surface extension:** Engage seat extension straps at both sides.
    1. 2.1. Lift up padding for rear seat.
    2. 2.2. Guide seat-surface extension strap **-2-** through from top to bottom **-arrow A-** and slide it onto the bar **-arrow B-** .

Fig 1: Engaging Seat-Surface Extension Straps

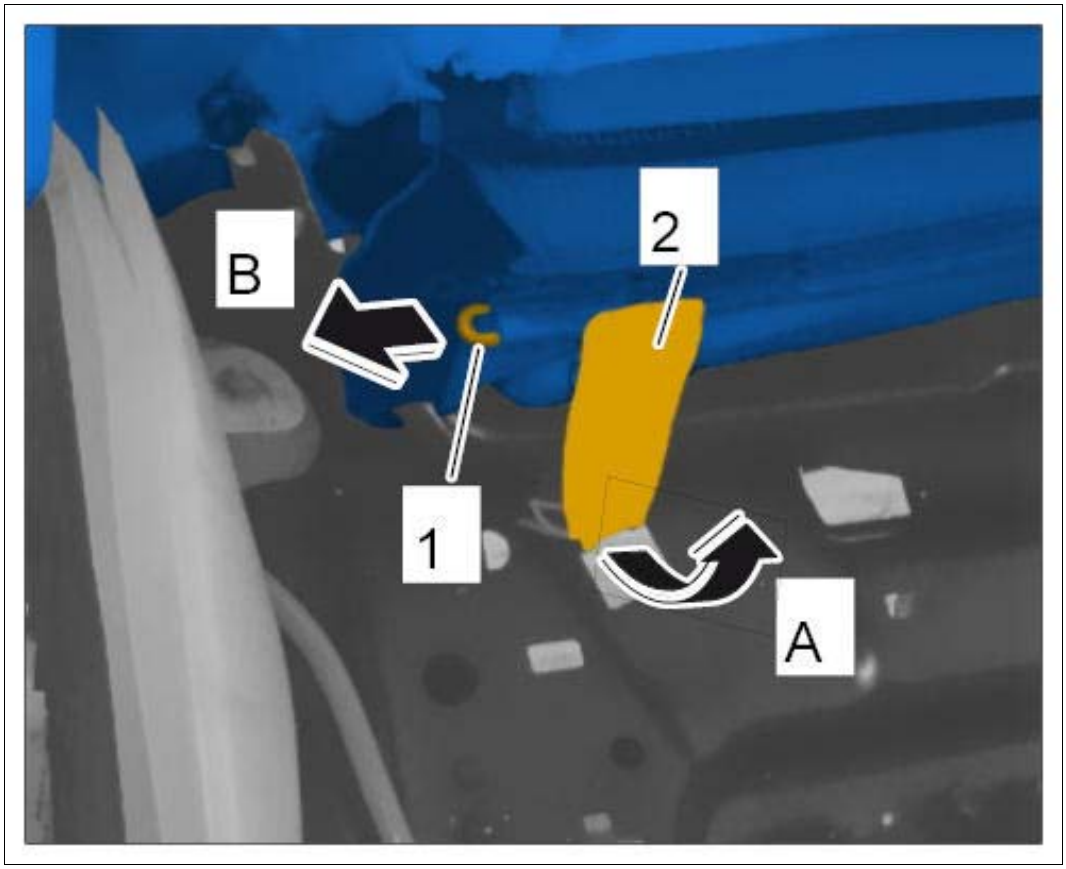

Courtesy of PORSCHE CARS NORTH AMERICA, INC.

3. 2.3. Slide the bar **-1-** through the seat-surface extension strap **-2-** and the tab on the cover **-3-** .

3. Pull the cover back between the padding for the seat and backrest **-arrows C-** .

Fig 2: Pulling Cover To Rear

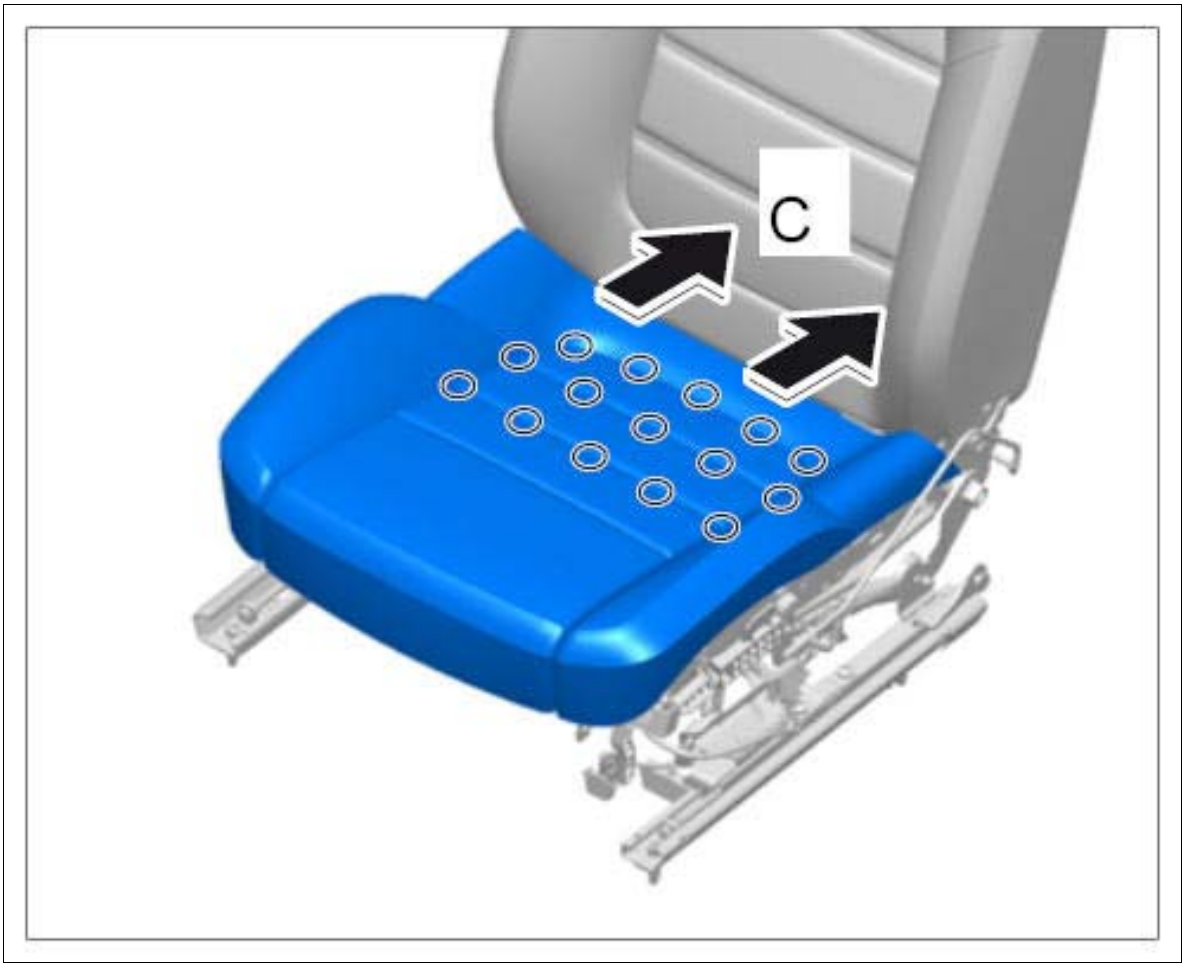

Courtesy of PORSCHE CARS NORTH AMERICA, INC.

4. Attach the cover at the rear **-arrows D-** .

Fig 3: Attaching Rear Cover

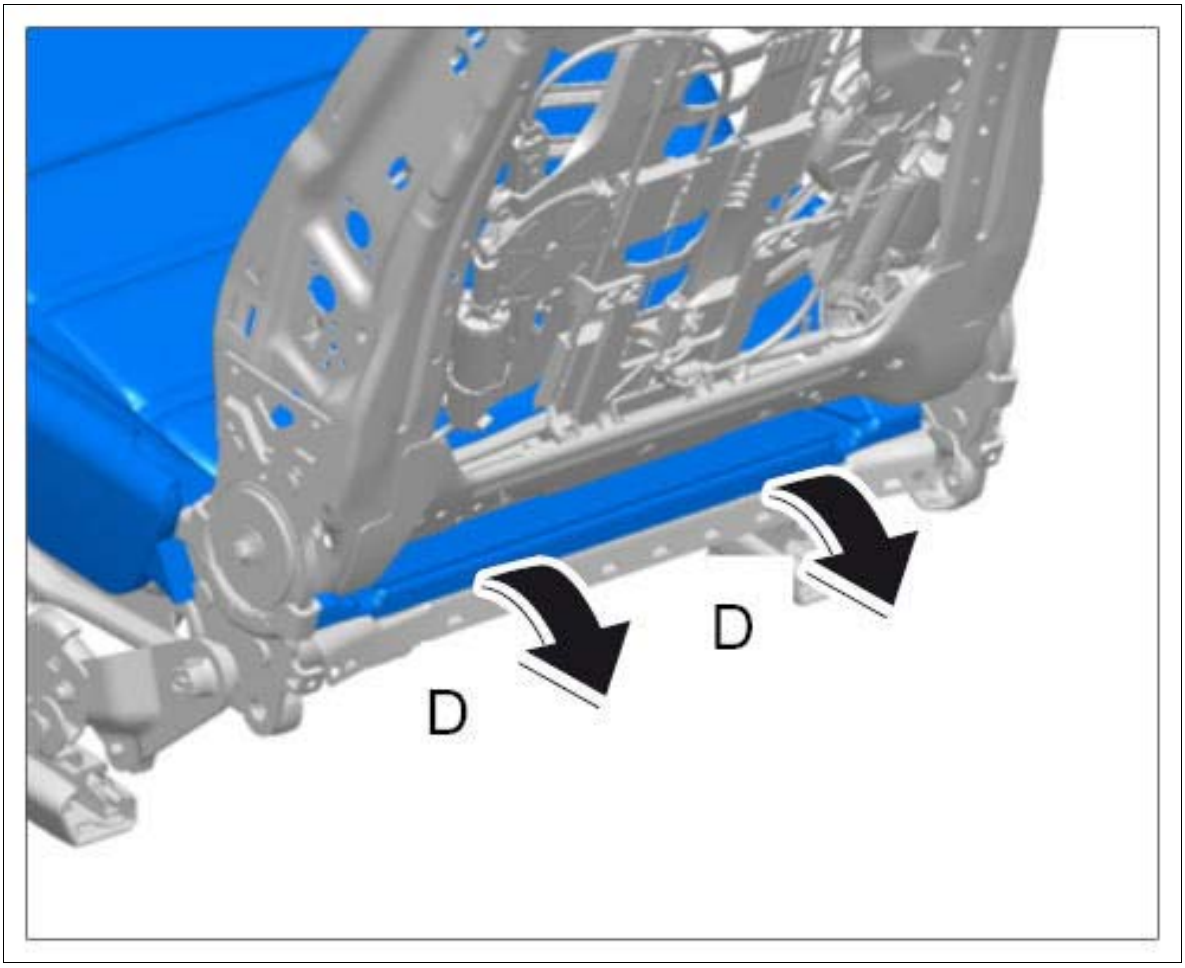

Courtesy of PORSCHE CARS NORTH AMERICA, INC.

5. Attach the cover at the rear **-arrow E-** .
6. Attach the cover at the sides **-arrows F-** .
7. Fit expansion rivet **-4-** .

Information

Fig 4: Securing Sides Cover

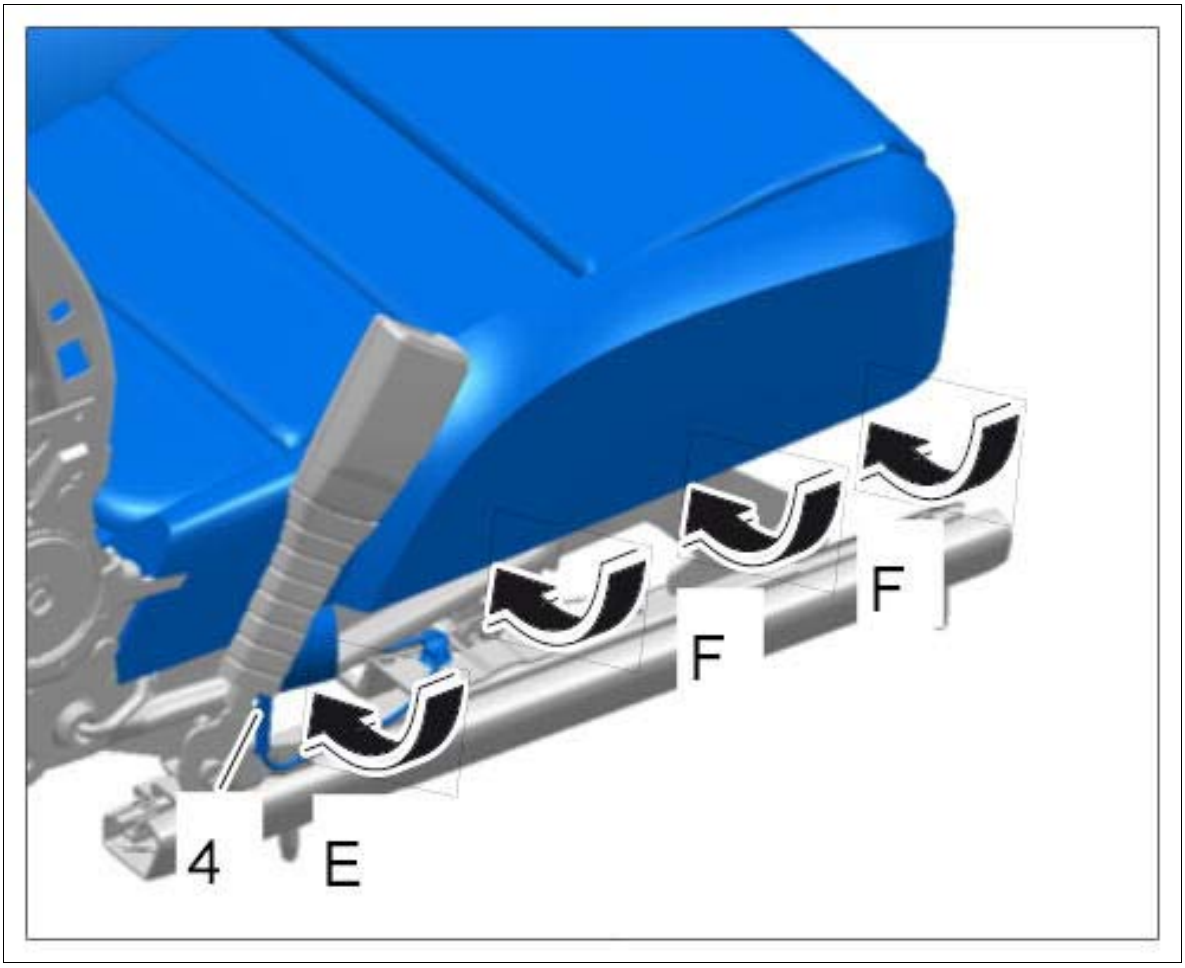

Courtesy of PORSCHE CARS NORTH AMERICA, INC.

Fixing clips on the seat frame will be damaged irreparably during removal. Replace expansion rivets and fixing clips during installation and do not re-use them.

8. Attach the cover at the front **-arrows G-** .
9. **On vehicles with seat-surface extension:** Attach the cover on the seat-surface extension **-arrows H-** .

Fig 5: Attaching Front Cover

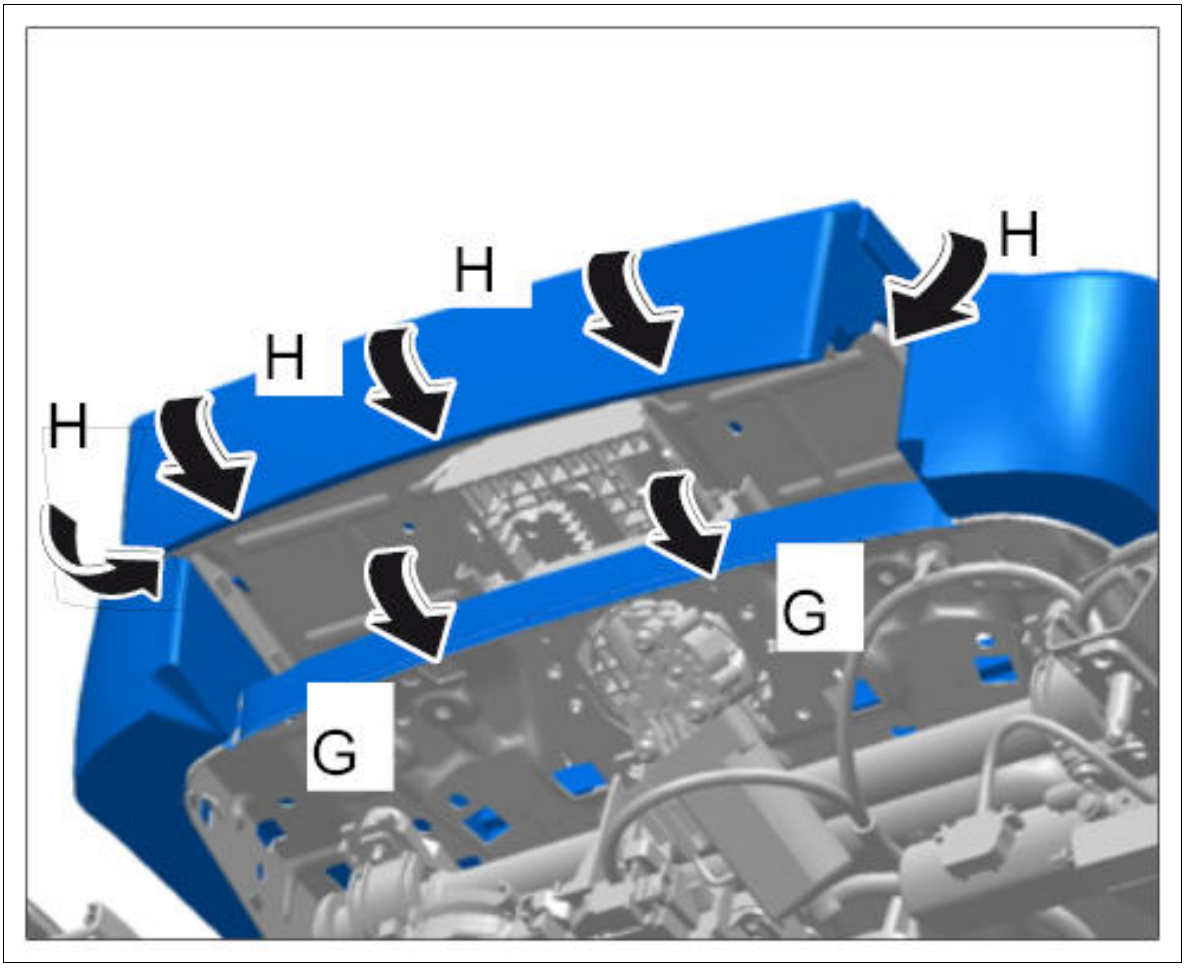

Courtesy of PORSCHE CARS NORTH AMERICA, INC.

10. Attach the cover at the sides **-arrows I-** .

Fig 6: Attaching Sides Cover

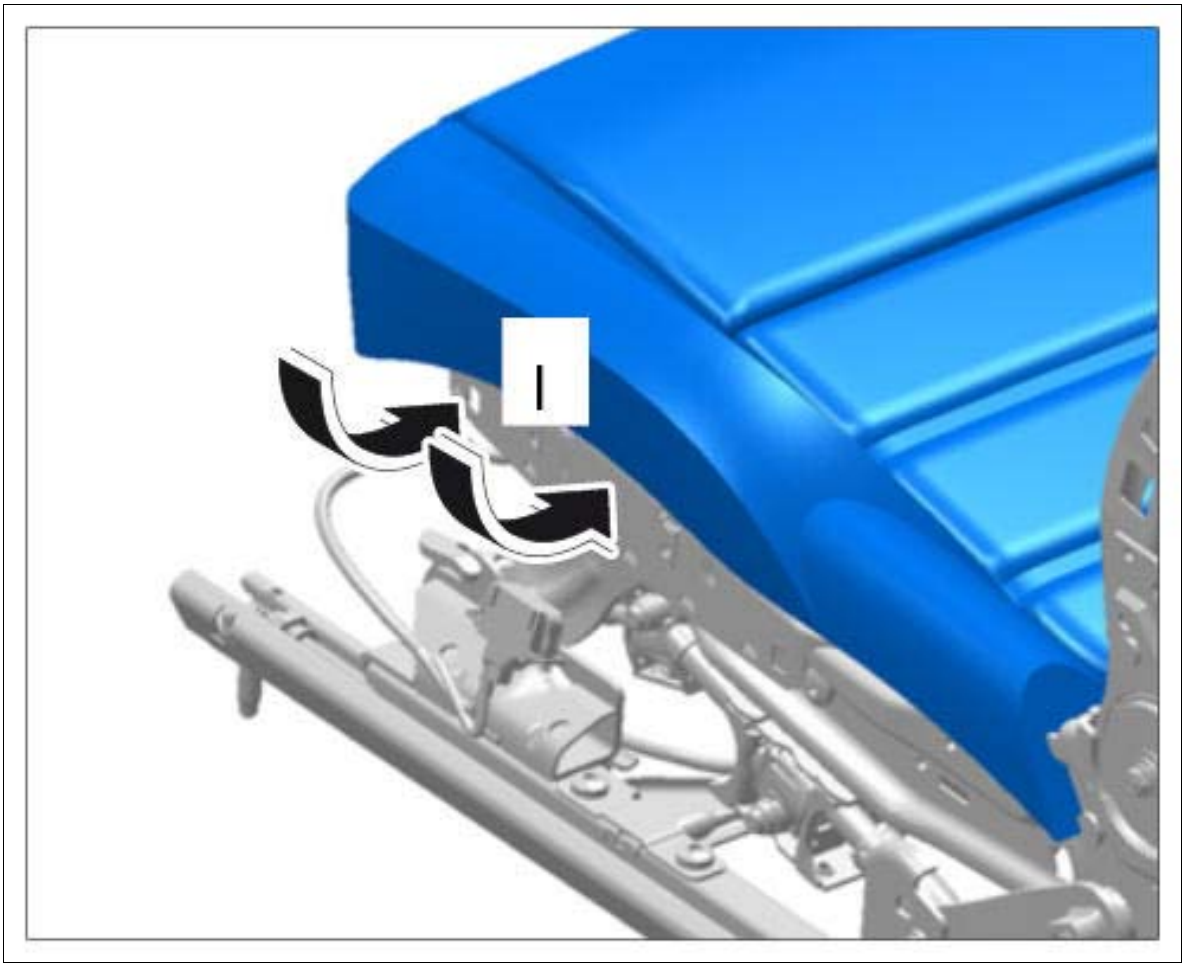

Courtesy of PORSCHE CARS NORTH AMERICA, INC.

11. Engage the bracket **-6-** from below **-arrow J-** .
12. Tighten fastening screws **-5-** (**Tightening torque 7.5 Nm (5.5 ftlb.) +/-0.5 Nm (+/-0.5 ftlb.)**).

Fig 7: Securing Sides Bracket

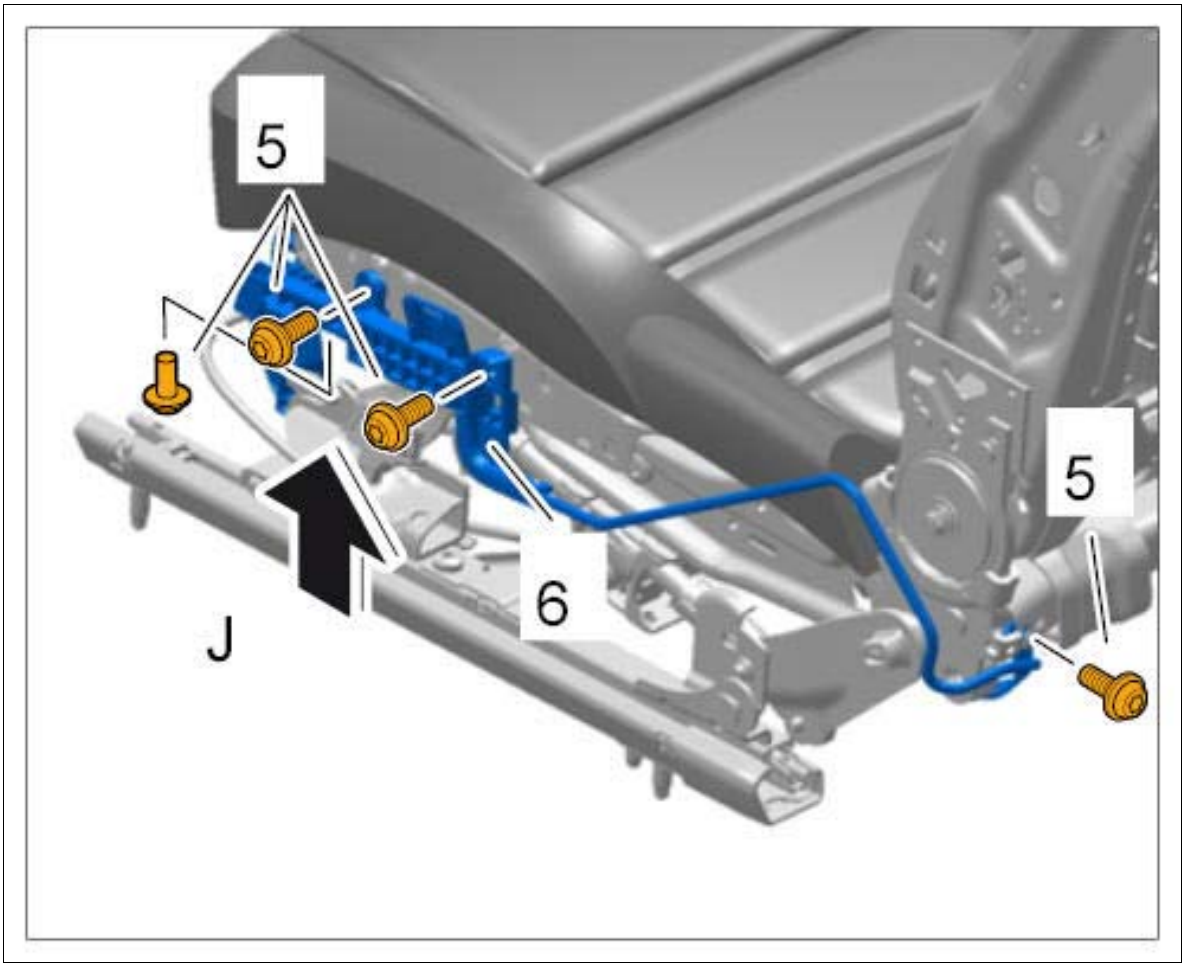

Courtesy of PORSCHE CARS NORTH AMERICA, INC.

13. Fit fixing clip **-7-** .

    Information

    Fixing clips on the seat frame will be damaged irreparably during removal. Replace expansion rivets and fixing clips during installation and do not re-use them.

14. Attach cover at the rear **-8- (-arrow K-)** .

Fig 8: Securing Rear Cover

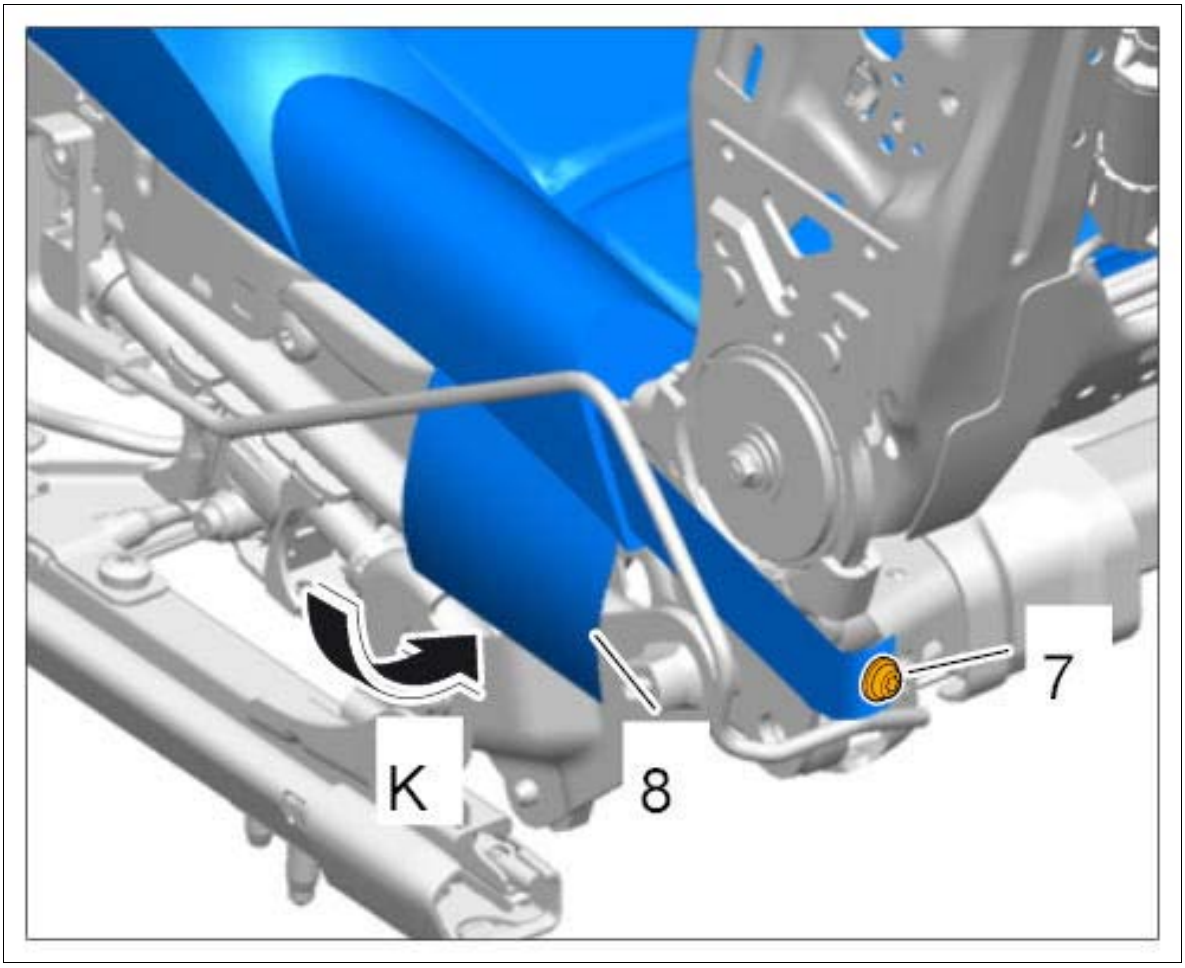

Courtesy of PORSCHE CARS NORTH AMERICA, INC.

15. **On vehicles with heated seats:** Plug in connector for seat heating.

Fig 9: Installing Seat Heating Connector

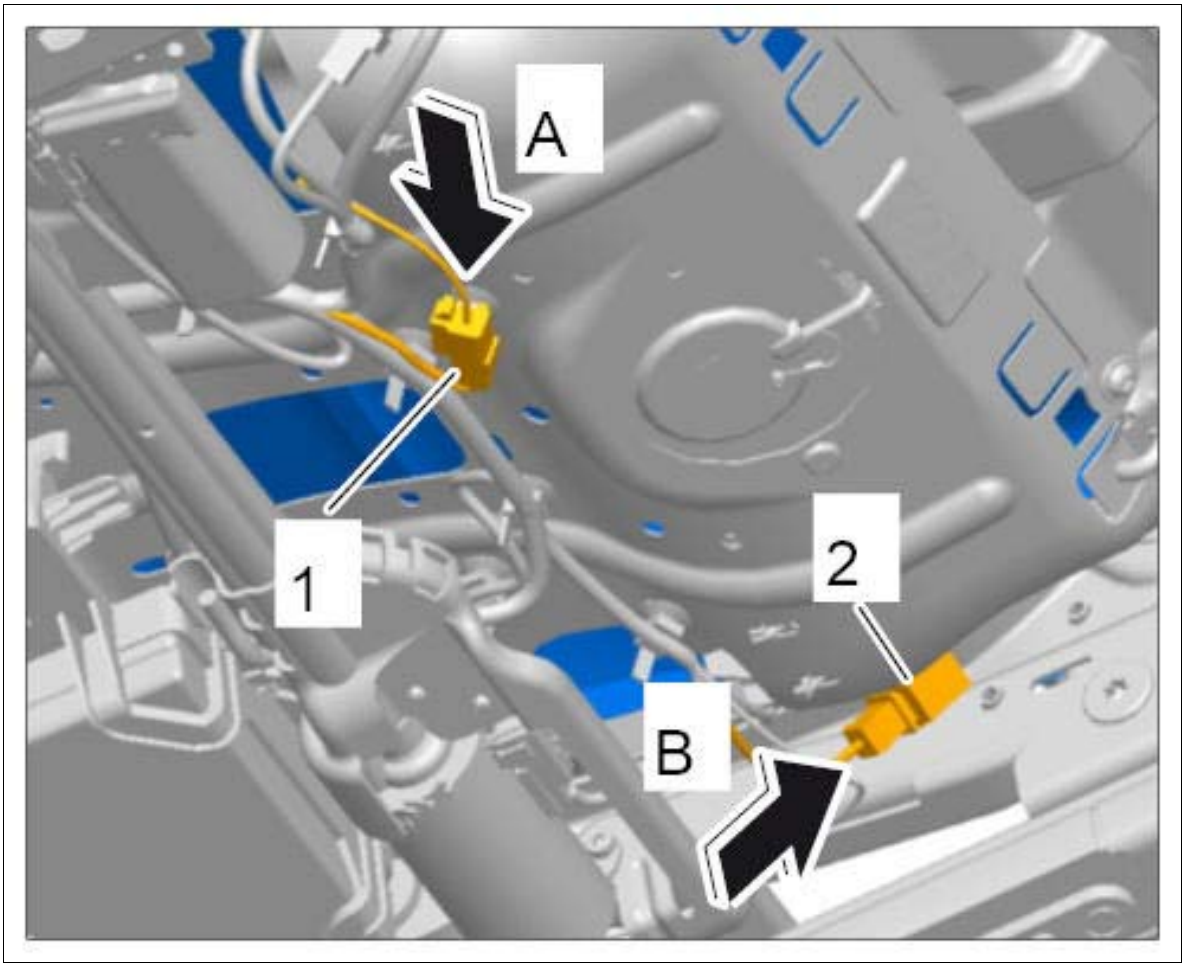

Courtesy of PORSCHE CARS NORTH AMERICA, INC.

1. 15.1. Plug in electric plug connection for seat heating **-1- (-arrow A-)** until the connector engages securely.
2. 15.2. Plug in electric plug connection for seat heating for seat-surface extension **-2- (-arrow B-)** until the connector engages securely.

WM 741319 REMOVING AND INSTALLING COVER FOR FRONT SEAT (ALL MODELS) > SUBSEQUENT WORK

1. Install side cover for backrest. → Installing trim panel for seat
2. Install side trim panel for seat. → Installing cover for backrest

WM 741355 REPLACING COVER FOR FRONT SEAT (ALL MODELS) > TOOLS

Designation	Type	Number	Description	

cushion clip pliers	Commercially available tool	Nr.130		

WM 741355 REPLACING COVER FOR FRONT SEAT (ALL MODELS) > COMPONENT INFORMATION > INSTALLATION POSITION

Fig 1: Identifying Front Seat Cover Installation Position



Courtesy of PORSCHE CARS NORTH AMERICA, INC.

WM 741355 REPLACING COVER FOR FRONT SEAT (ALL MODELS) > PRELIMINARY WORK

1. Remove cover for front seat. → Removing Cover For Front Seat

WM 741355 REPLACING COVER FOR FRONT SEAT (ALL MODELS) > LOOSENING COVER FOR FRONT SEAT

1. Place padding for front seat on a clean surface.
2. Cut open cushion clips using side cutters and remove the cover from the padding.

Fig 1: Detaching Front Seat Padding From Cover (Basic/Comfort)

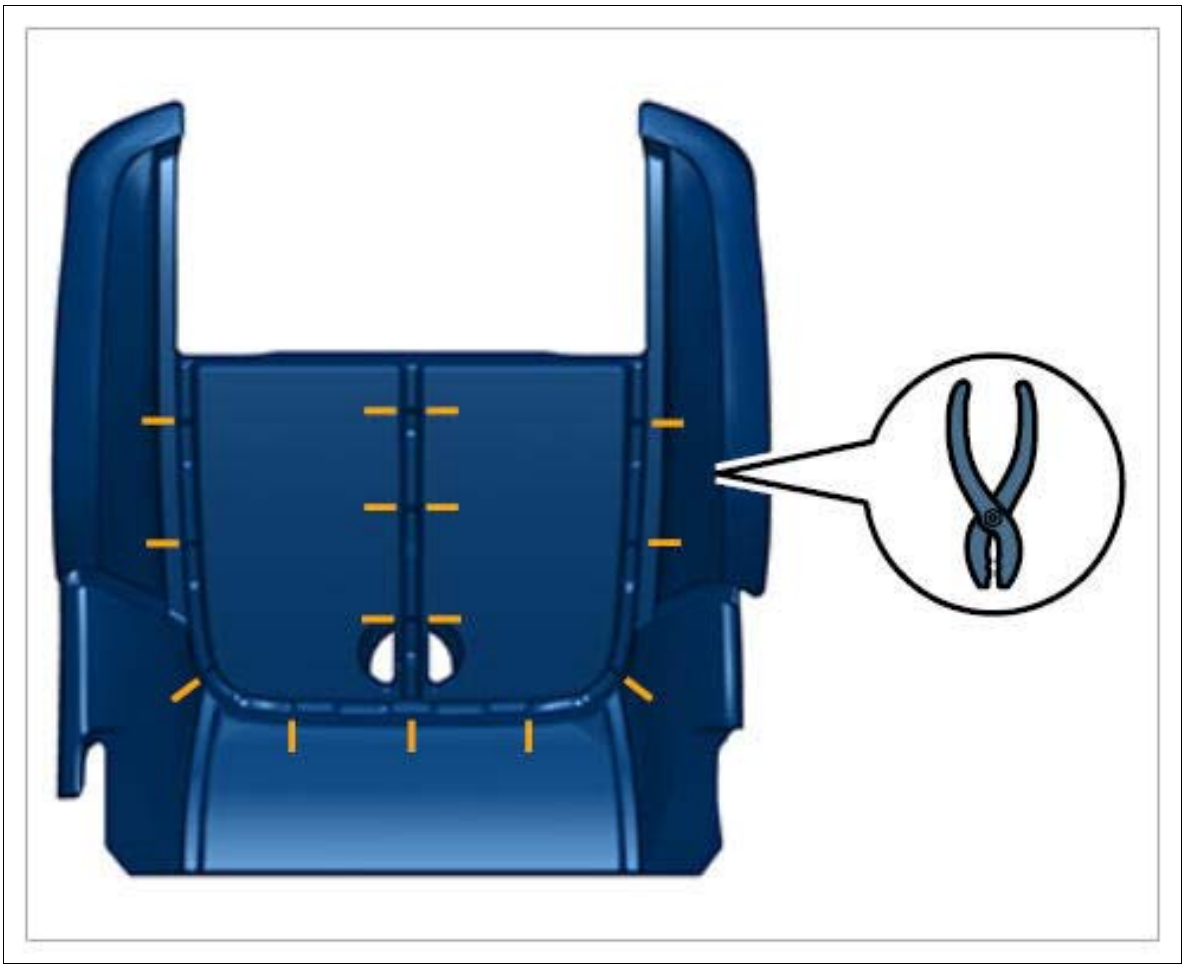

Courtesy of PORSCHE CARS NORTH AMERICA, INC.

Fig 2: Detaching Front Seat Padding From Cover (Sport)

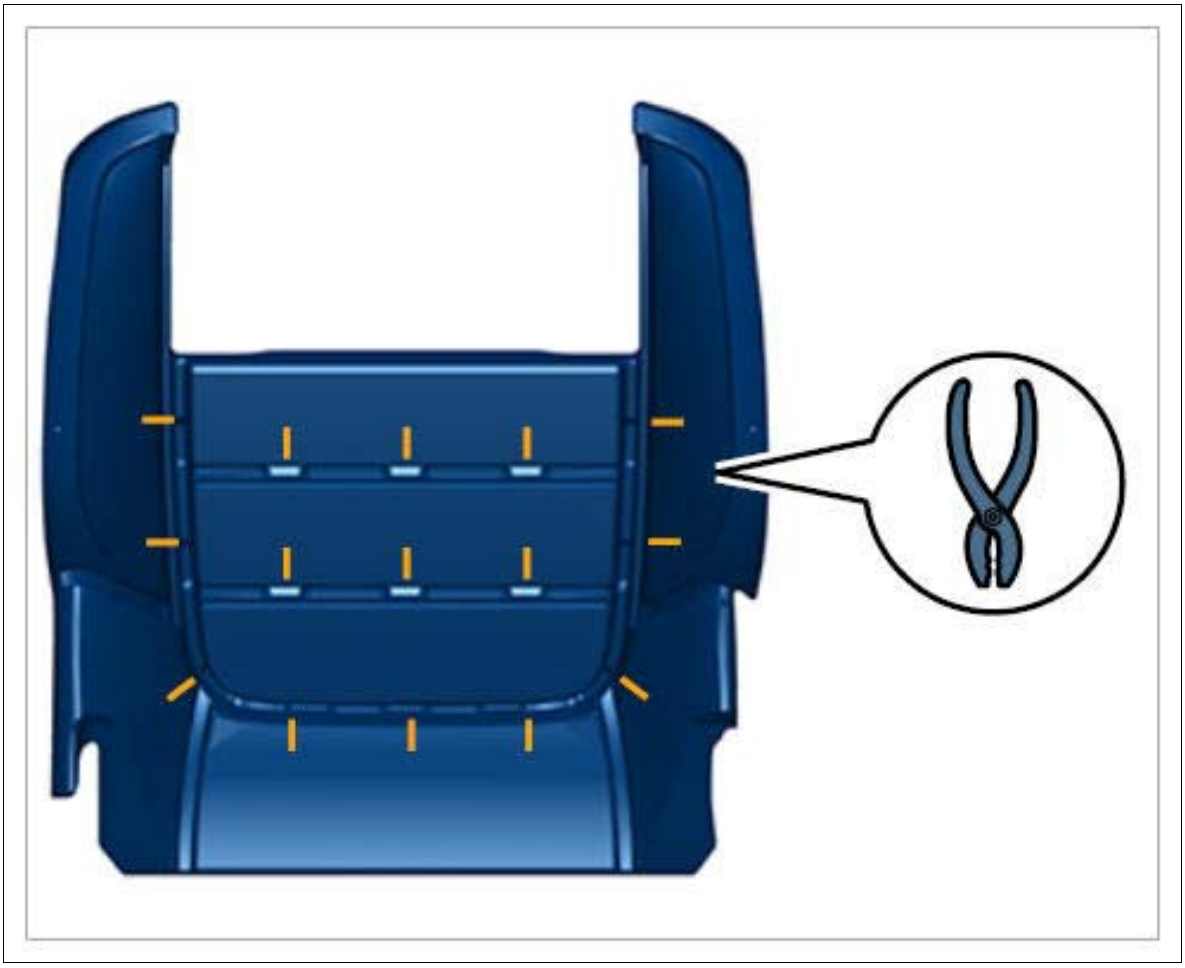

Courtesy of PORSCHE CARS NORTH AMERICA, INC.

WM 741355 REPLACING COVER FOR FRONT SEAT (ALL MODELS) > SECURING COVER FOR FRONT SEAT

1. Place cover on the padding for the front seat and align contour with the padding.
2. Secure the cover to the padding using **cushion clip pliers Nr.130** and new cushion clips.

Fig 1: Securing Front Seat Cover To Padding (Basic/Comfort)

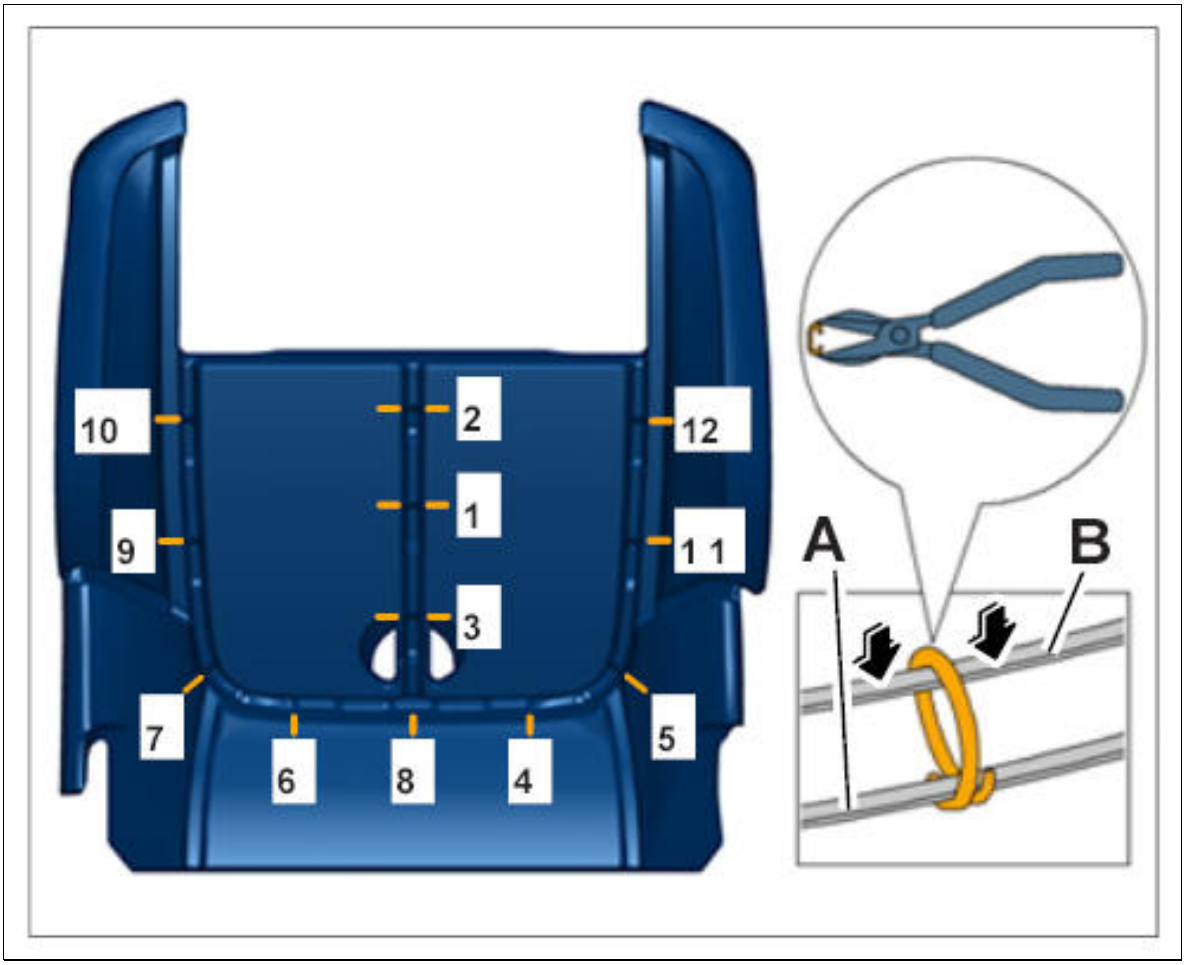

Courtesy of PORSCHE CARS NORTH AMERICA, INC.

Fig 2: Securing Front Seat Cover To Padding (Sport)

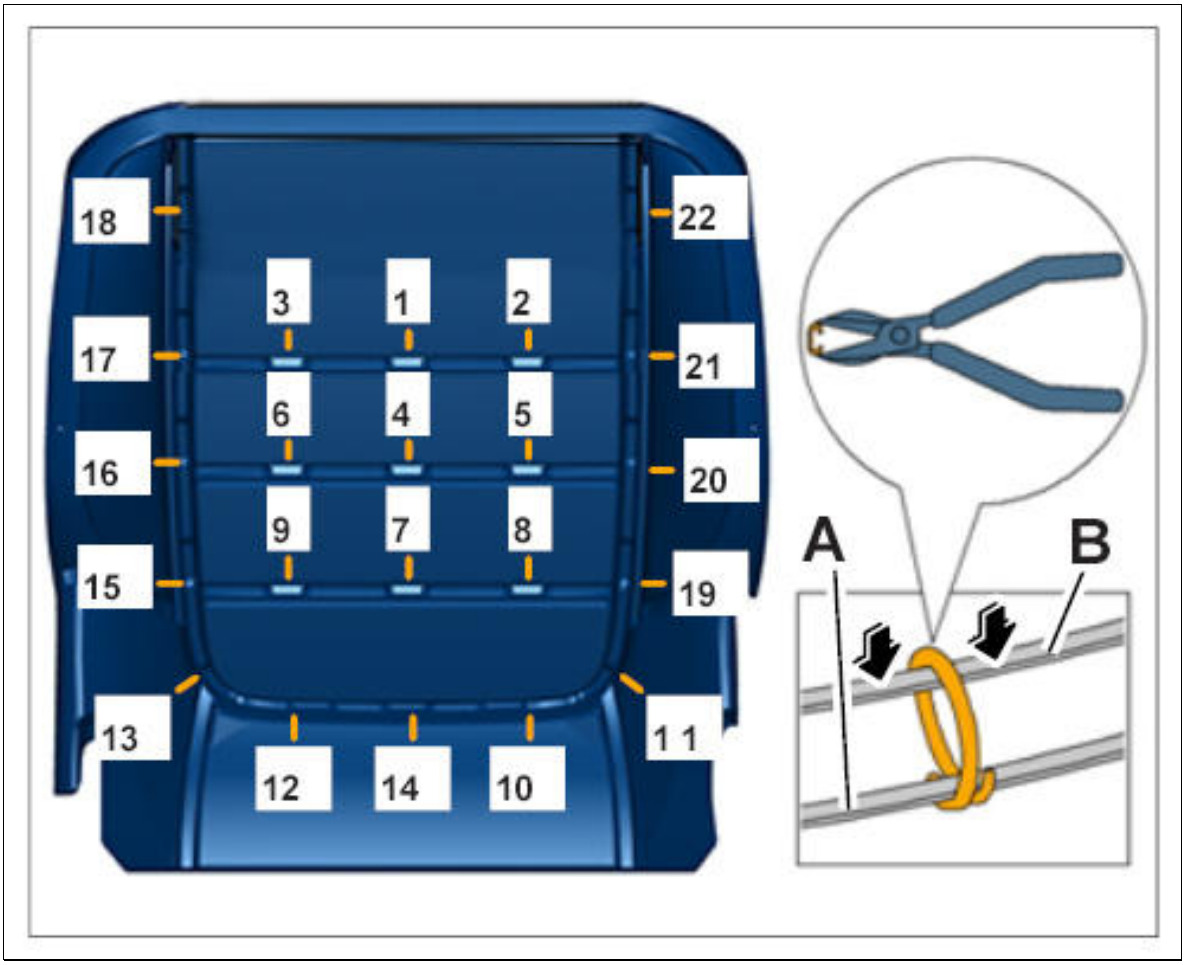

Courtesy of PORSCHE CARS NORTH AMERICA, INC.

WM 741355 REPLACING COVER FOR FRONT SEAT (ALL MODELS) > SUBSEQUENT WORK

1. Install cover for front seat. → Installing Cover For Front Seat

WM 741619 REMOVING AND INSTALLING SUCTION FAN FOR BACKREST SURFACE (ALL MODELS) > INFORMATION > COMPONENT INFORMATION

Fig 1: Identifying Backrest Surface Suction Fan Installation Position



Courtesy of PORSCHE CARS NORTH AMERICA, INC.

WM 741619 REMOVING AND INSTALLING SUCTION FAN FOR BACKREST SURFACE (ALL MODELS) > PRELIMINARY WORK

1. Remove cover for backrest. → Removing cover for backrest

WM 741619 REMOVING AND INSTALLING SUCTION FAN FOR BACKREST SURFACE (ALL MODELS) > REMOVING SUCTION FAN FOR BACKREST SURFACE

1. Detach cover for rear backrest at the top **-arrow-** .

Fig 1: Disengaging Cover



Courtesy of PORSCHE CARS NORTH AMERICA, INC.

2. Unplug electric plug connection for suction fan **-arrows-** .

Fig 2: Removing Suction Fan Connector

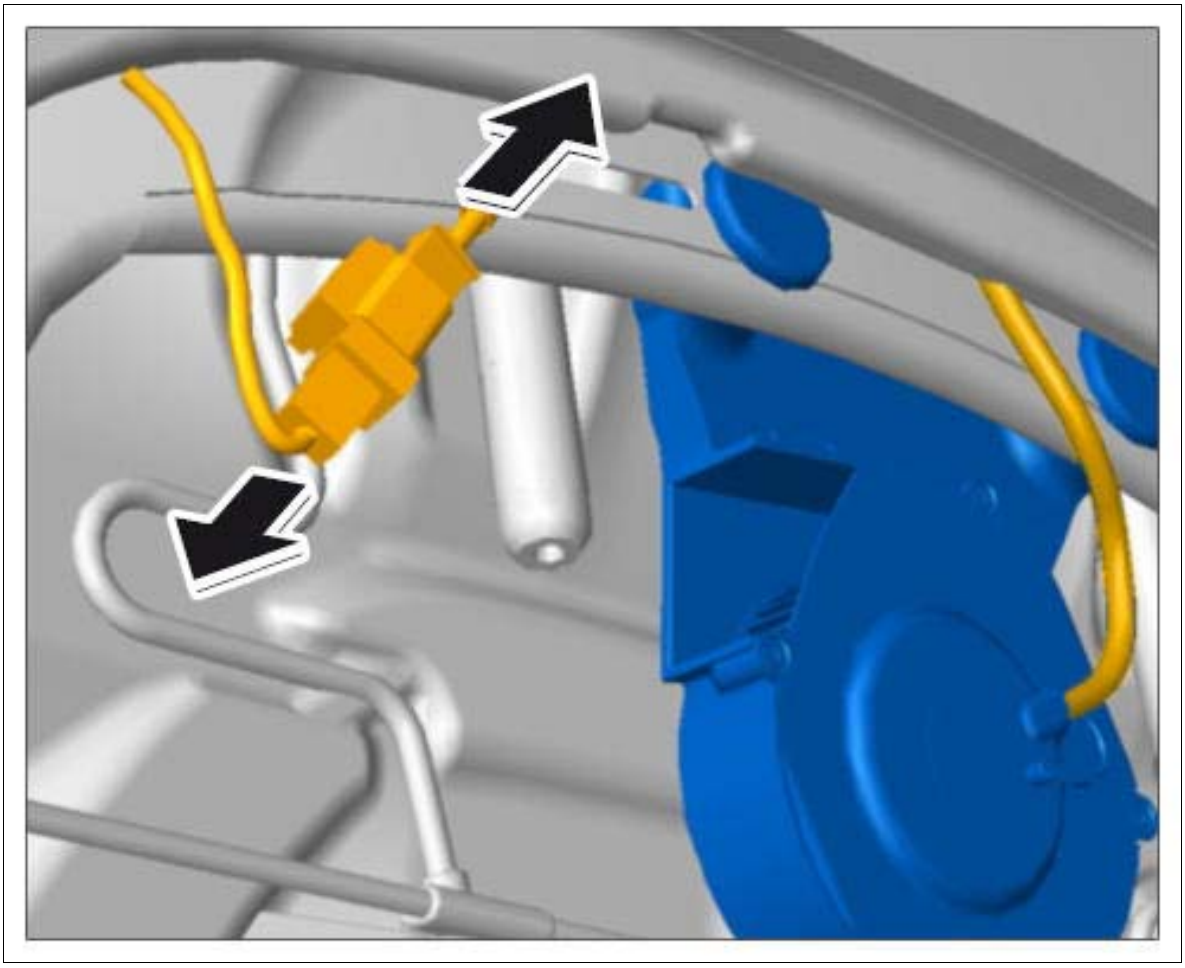

Courtesy of PORSCHE CARS NORTH AMERICA, INC.

3. Remove fastenings for suction fan.
    1. 3.1. Press plastic pins **-1-** through the expansion rivets **-2-** using a suitable mandrel.
    2. 3.2. Remove expansion rivets **-2-** by pulling them towards the rear.

Fig 3: Identifying Expansion Rivets

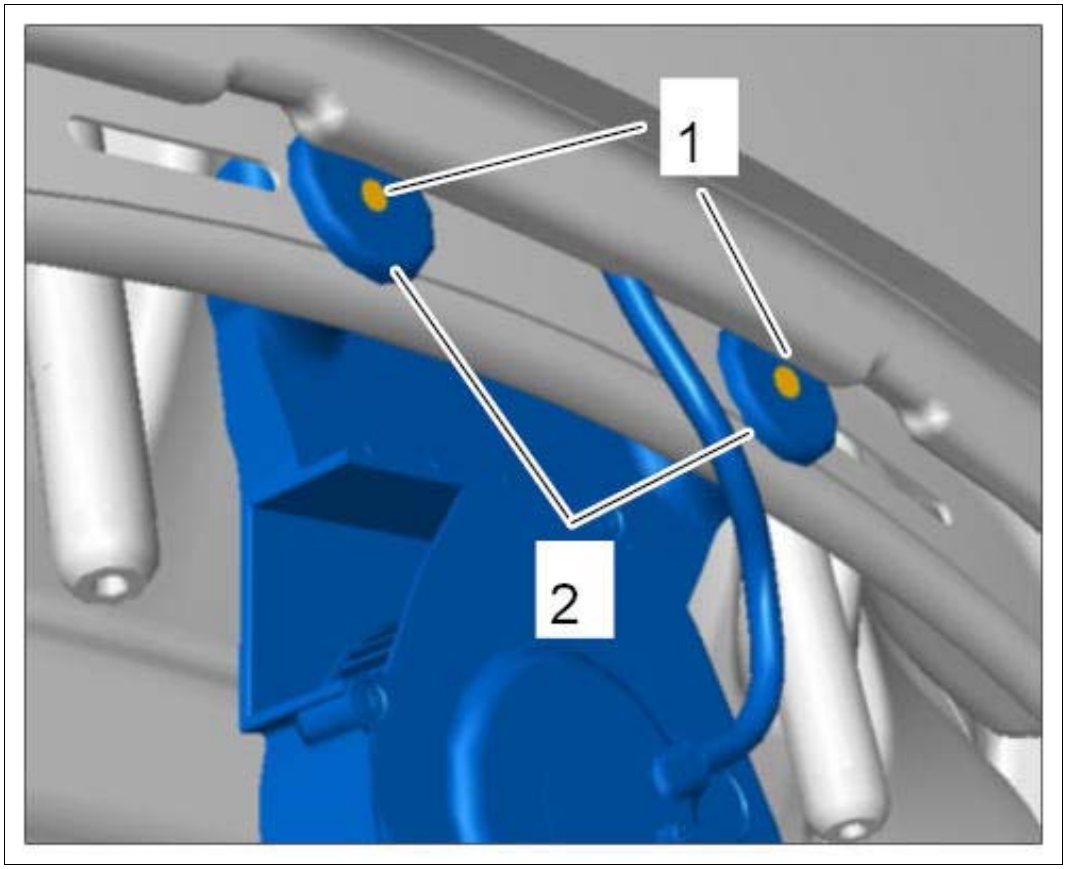

Courtesy of PORSCHE CARS NORTH AMERICA, INC.

4. Pull suction fan **-1-** out of the rubber flange (air guide) **-2- (-arrow-)** and remove it by pulling it towards the rear.

Fig 4: Removing Suction Fan

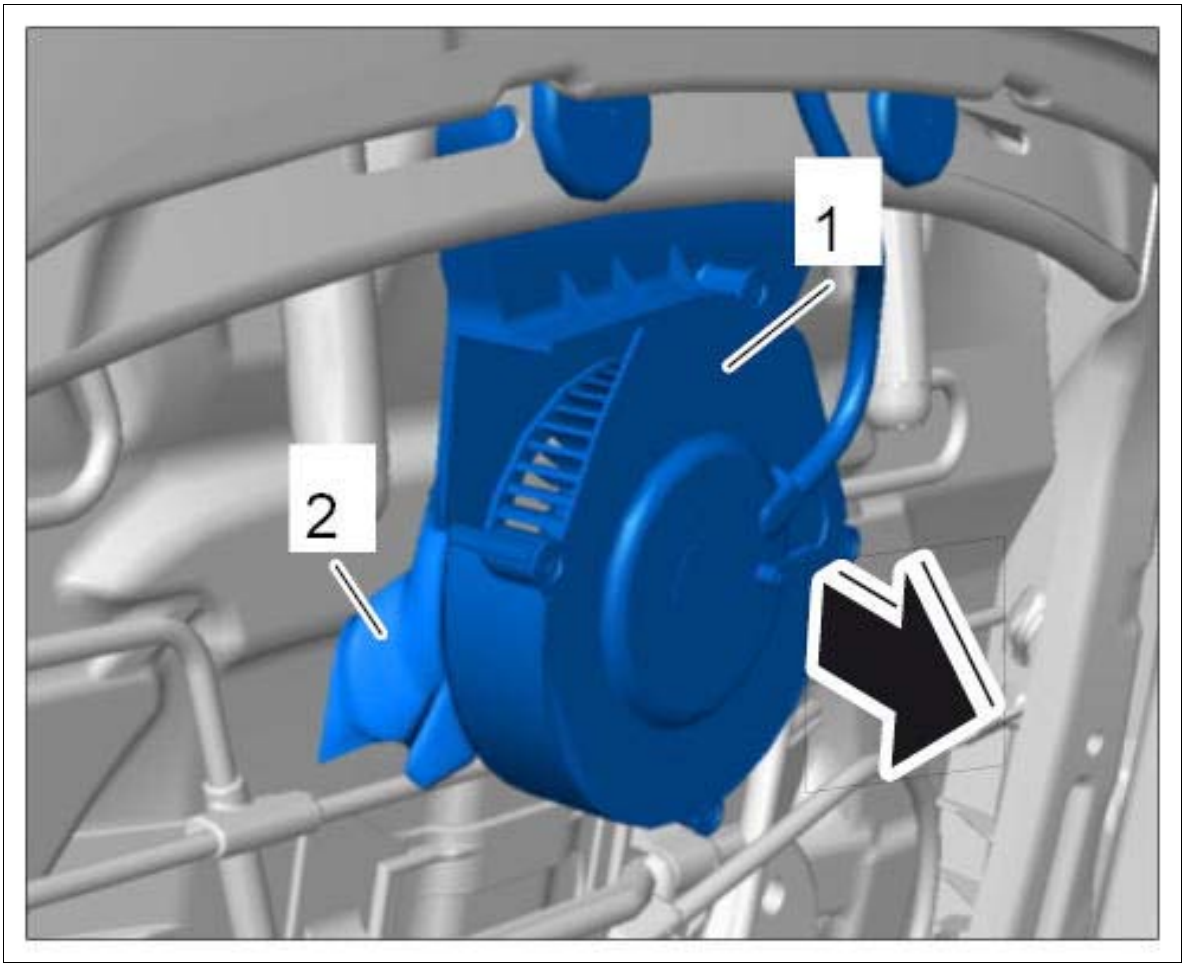

Courtesy of PORSCHE CARS NORTH AMERICA, INC.

WM 741619 REMOVING AND INSTALLING SUCTION FAN FOR BACKREST SURFACE (ALL MODELS) > INSTALLING SUCTION FAN FOR BACKREST SURFACE

Information

Fixing clips on the seat frame will be damaged irreparably during removal. Replace expansion rivets and fixing clips during installation and do not re-use them.

1. Position suction fan **-1-** on the backrest frame and insert it into the rubber flange (air guide) **-2- (-arrow-)** .

Fig 1: Positioning Suction Fan

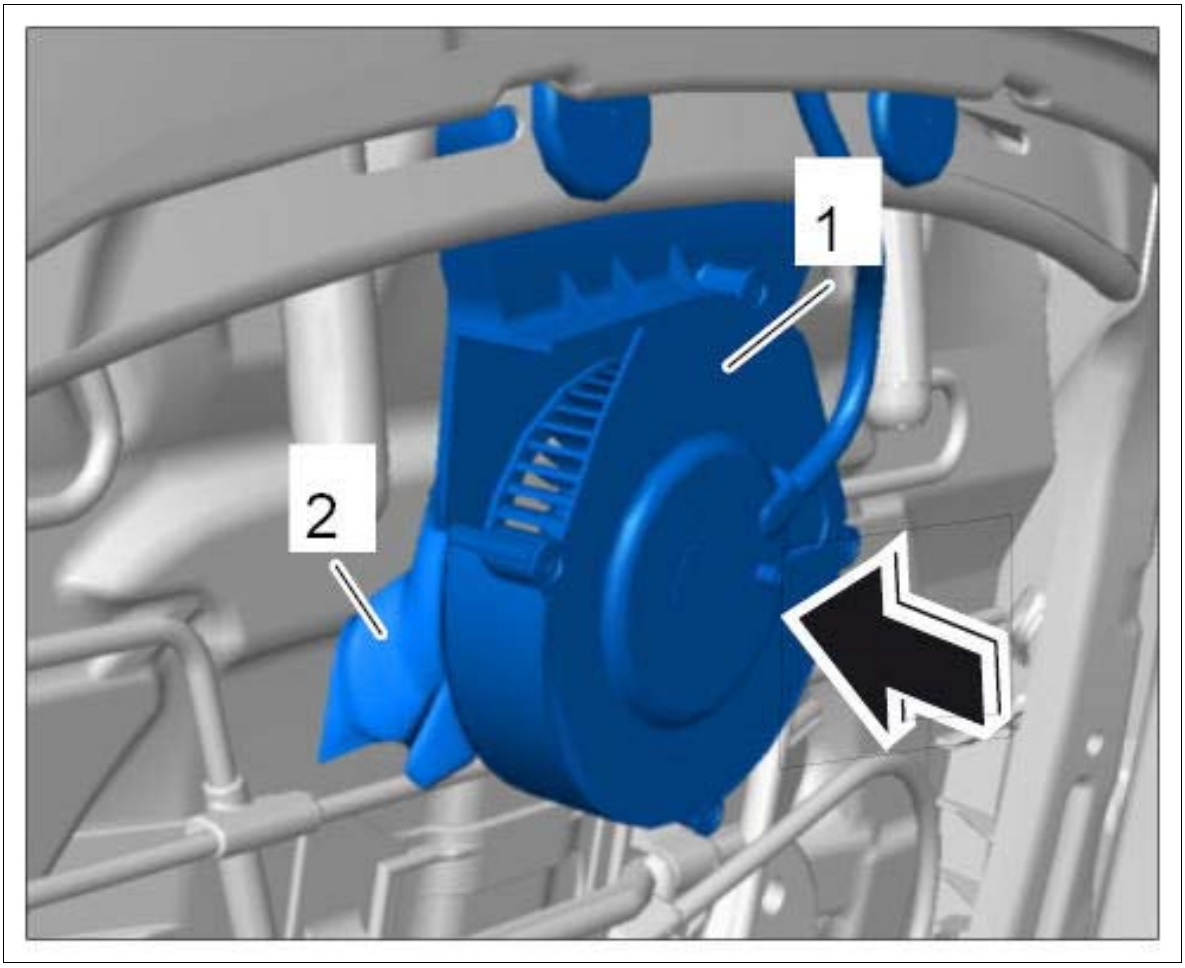

Courtesy of PORSCHE CARS NORTH AMERICA, INC.

2. Secure the suction fan on the backrest frame with two plastic expansion rivets **-2-** .

    1. 2.1. Fit expansion rivets **-2-** .

    2. 2.2. Fit plastic pins **-1-** on the expansion rivets **-2-** and press them through using a mandrel.

Fig 2: Identifying Expansion Rivets

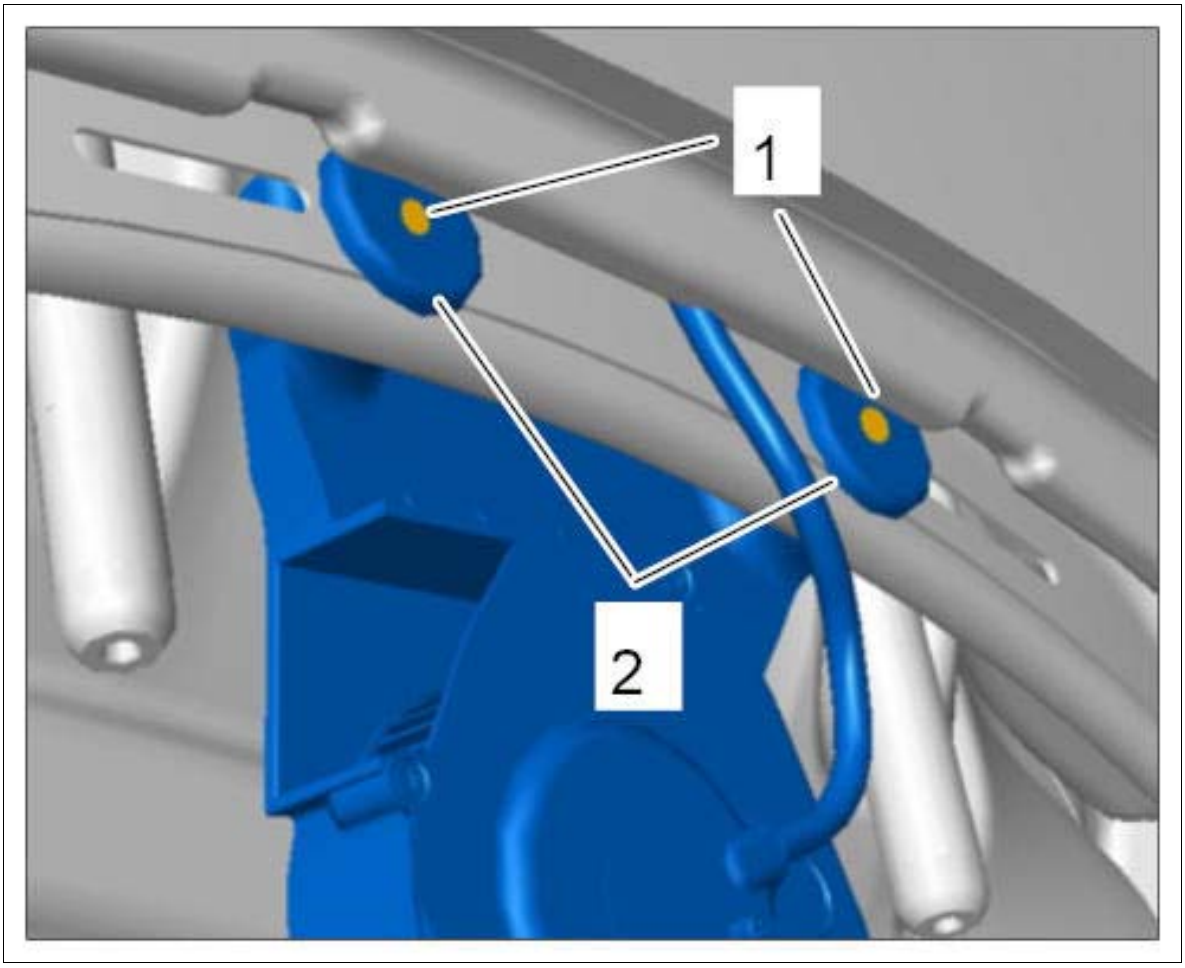

Courtesy of PORSCHE CARS NORTH AMERICA, INC.

3. Plug in electric plug connection for suction fan **-arrows-** .

Fig 3: Installing Suction Fan Connector

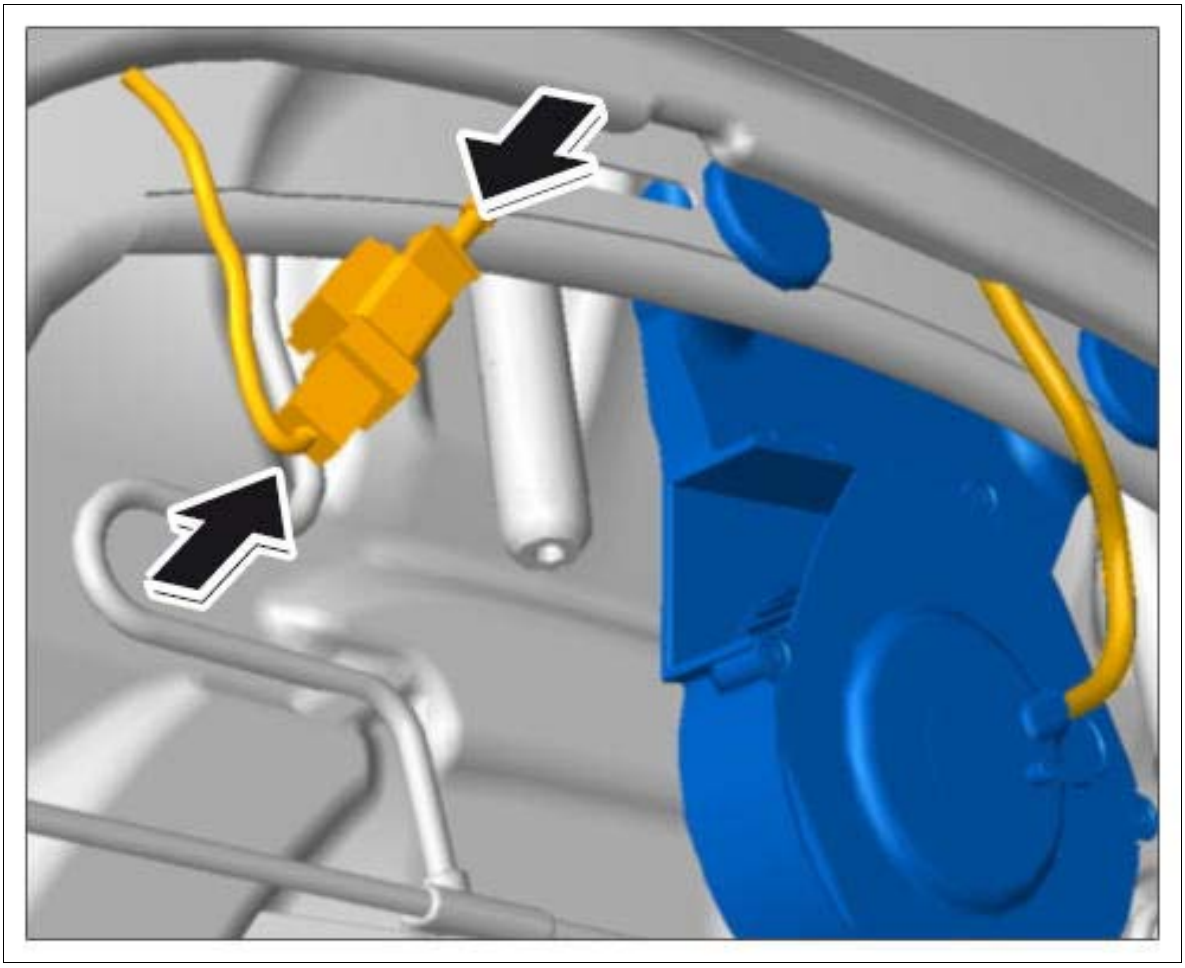

Courtesy of PORSCHE CARS NORTH AMERICA, INC.

4. Attach cover for rear backrest at the top **-arrow-** .

Fig 4: Attaching Cover



Courtesy of PORSCHE CARS NORTH AMERICA, INC.

WM 741619 REMOVING AND INSTALLING SUCTION FAN FOR BACKREST SURFACE (ALL MODELS) > SUBSEQUENT WORK

1. Install cover for backrest. → Installing cover for backrest

WM 741719 REMOVING AND INSTALLING PADDING FOR FRONT BACKREST (ALL MODELS) > TECHNICAL VALUES

Location	Description	Type	Basic value	Tolerance 1	Tolerance 2
ISOFIX fastening screw	Item 3	Tightening torque	7.5 Nm (5.5 ftlb.)	+/-0.5 Nm (+/-0.5 ftlb.)	

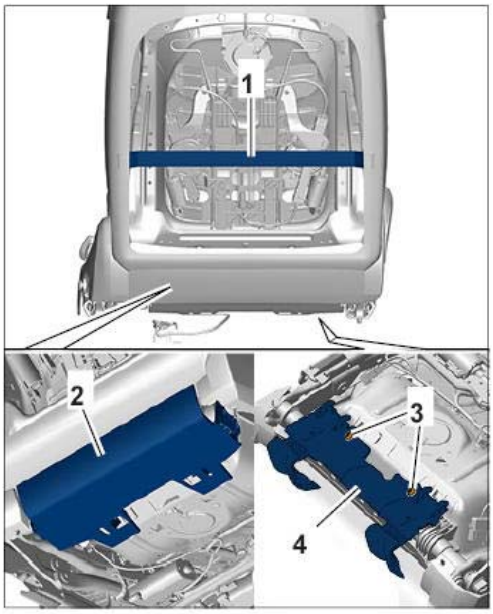

Loosening restraining strap

WM 741719 REMOVING AND INSTALLING PADDING FOR FRONT BACKREST (ALL MODELS) > COMPONENT INFORMATION > INSTALLATION POSITION OF PADDING FOR FRONT BACKREST

Fig 1: Identifying Front Backrest Padding Installation Position

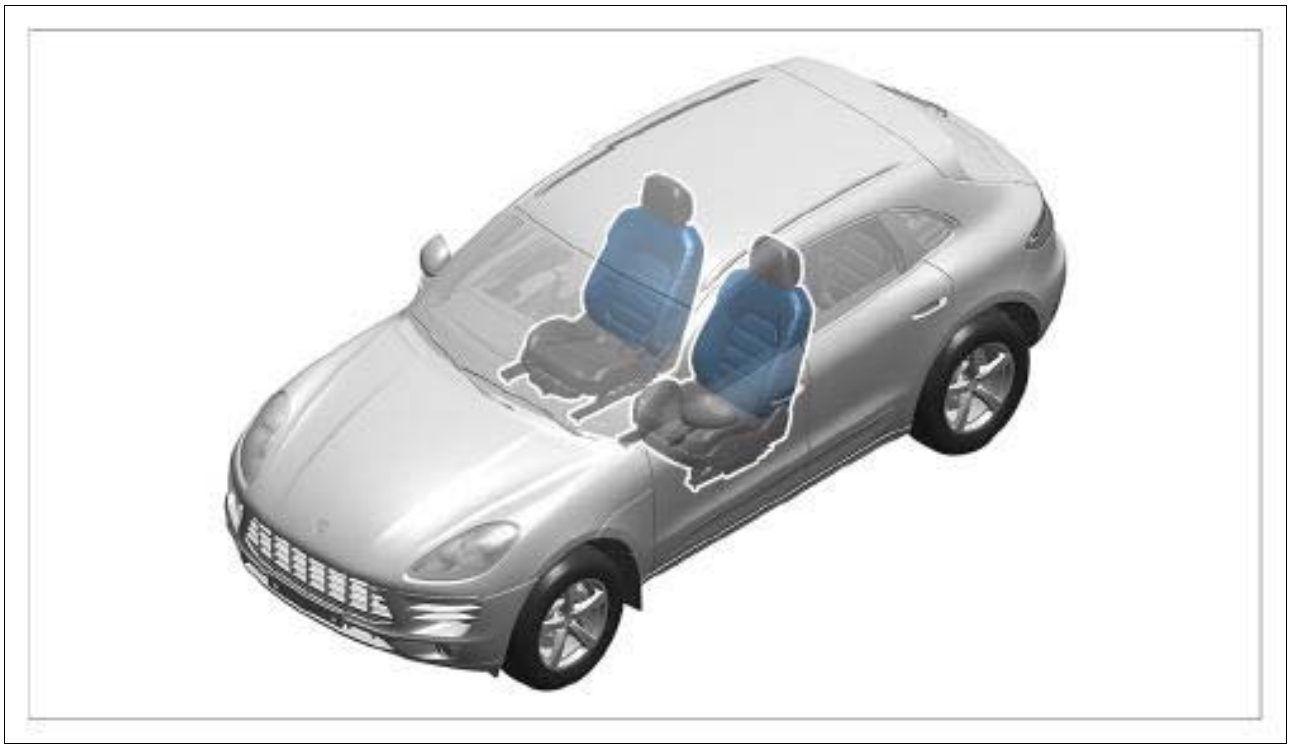

Courtesy of PORSCHE CARS NORTH AMERICA, INC.

WM 741719 REMOVING AND INSTALLING PADDING FOR FRONT BACKREST (ALL MODELS) > PRELIMINARY WORK

1. Remove front headrest. → Removing headrest
2. Remove backrest cover. → Removing cover for backrest
3. Remove trim panel for front seat (without storage tray). → Removing trim panel for seat

WM 741719 REMOVING AND INSTALLING PADDING FOR FRONT BACKREST (ALL MODELS) > REMOVING PADDING FOR FRONT BACKREST

Information

Detach padding from the cover and secure it, see → Loosening Padding For Front Backrest

1. Disengage cover from the cut-out for the backrest cover all the way around **-arrows-** .
2. Pull out fixing clips **-1-** .

Fig 1: Detaching Cover From Backrest Cover Cut-Out

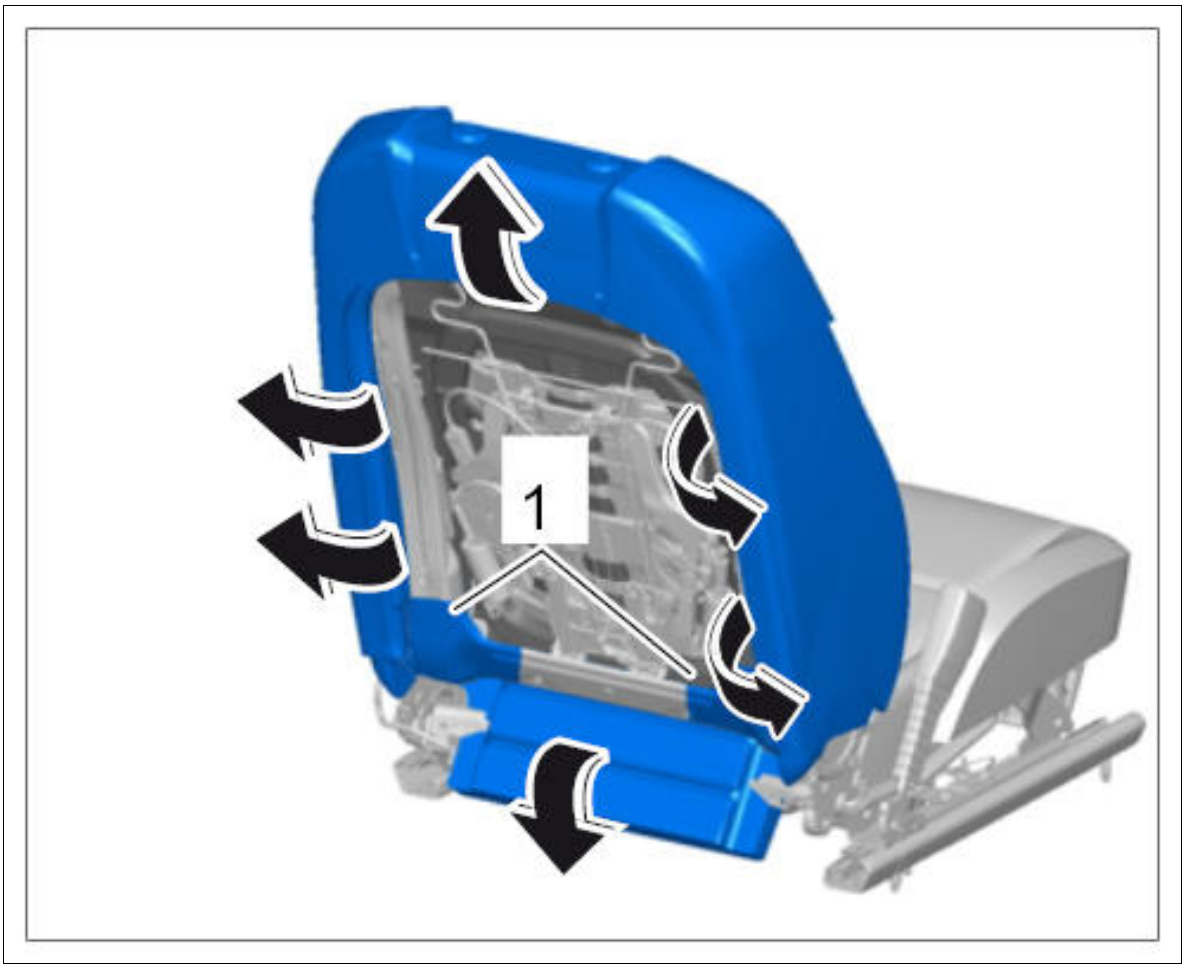

Courtesy of PORSCHE CARS NORTH AMERICA, INC.

3. Disengage restraining strap **-1-** for the cover at the left and right.

4. Unclip rear seat cover **-2-** by pulling it downwards.

5. Loosen fastening screws **-3-** for ISOFIX clips **-4-** .

Fig 2: Loosening Restraining Strap

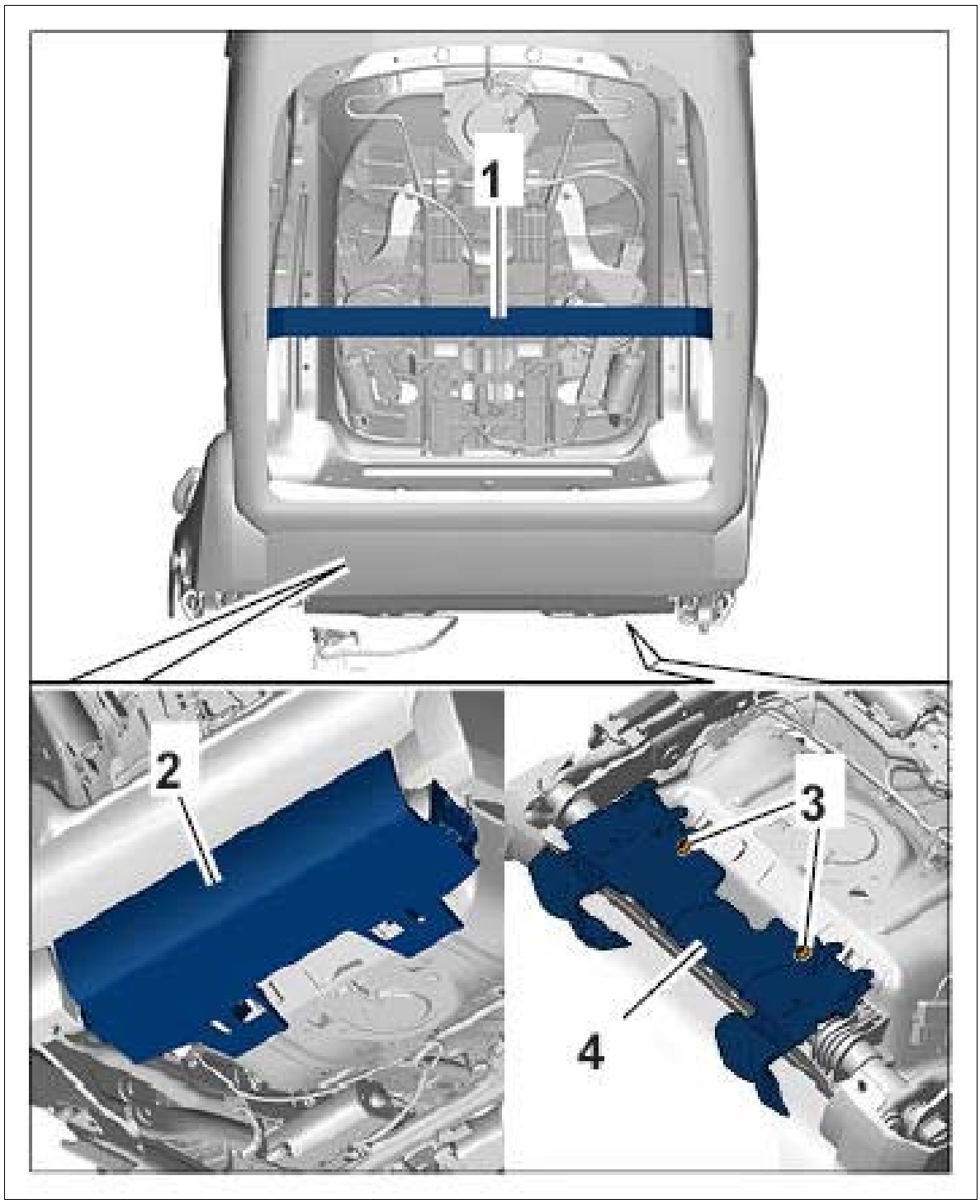

Courtesy of PORSCHE CARS NORTH AMERICA, INC.

6. Release and disconnect electric plug connection for seat heating at the underside of the seat.

Fig 3: Disconnecting Seat Heating Connector

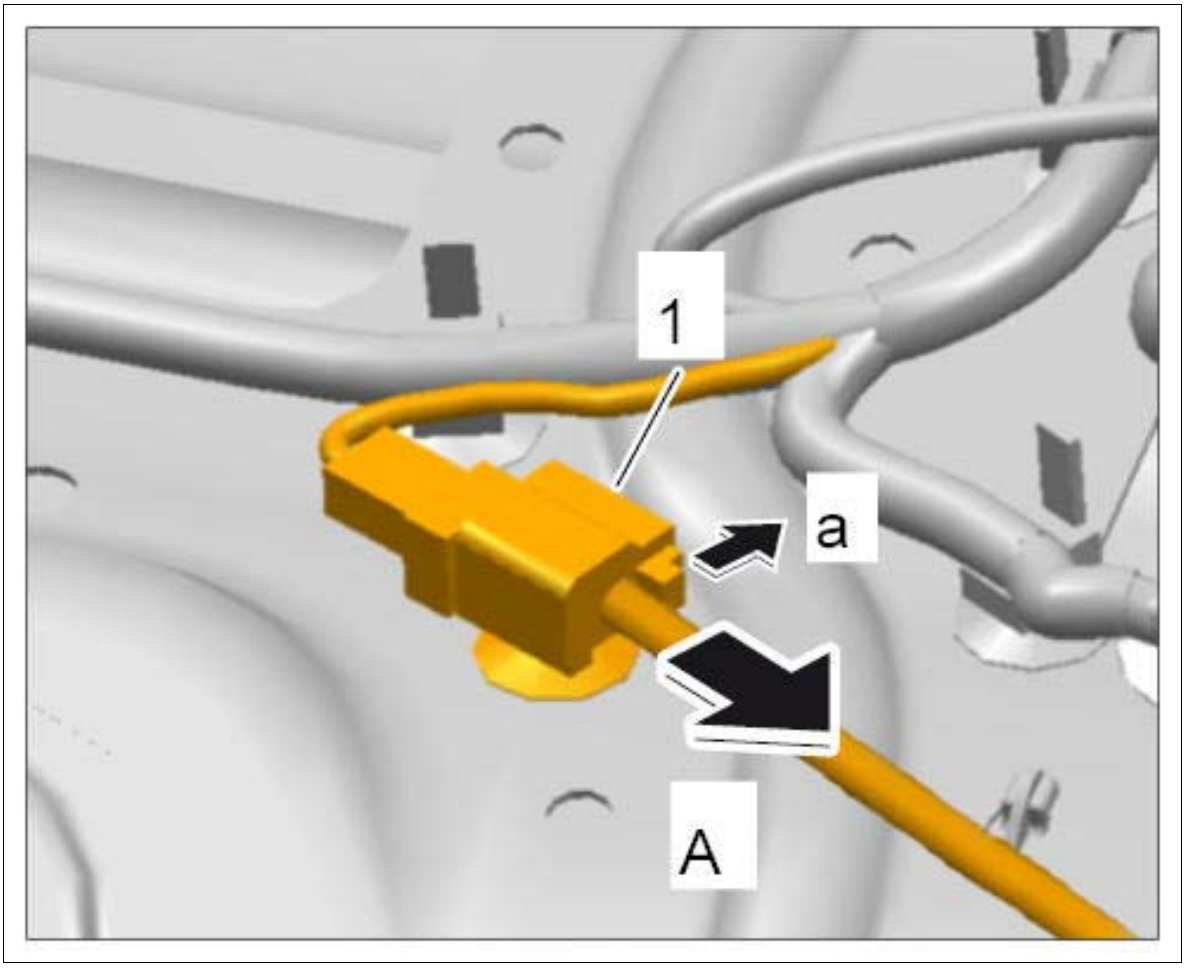

Courtesy of PORSCHE CARS NORTH AMERICA, INC.

7. Carefully place cover over the ends of the headrest guides.
8. Pull padding with cover forward between the seat surface and backrest **-arrow A-** .
9. Remove padding with cover by pulling it upwards **-arrow B-** .

Fig 4: Removing Padding

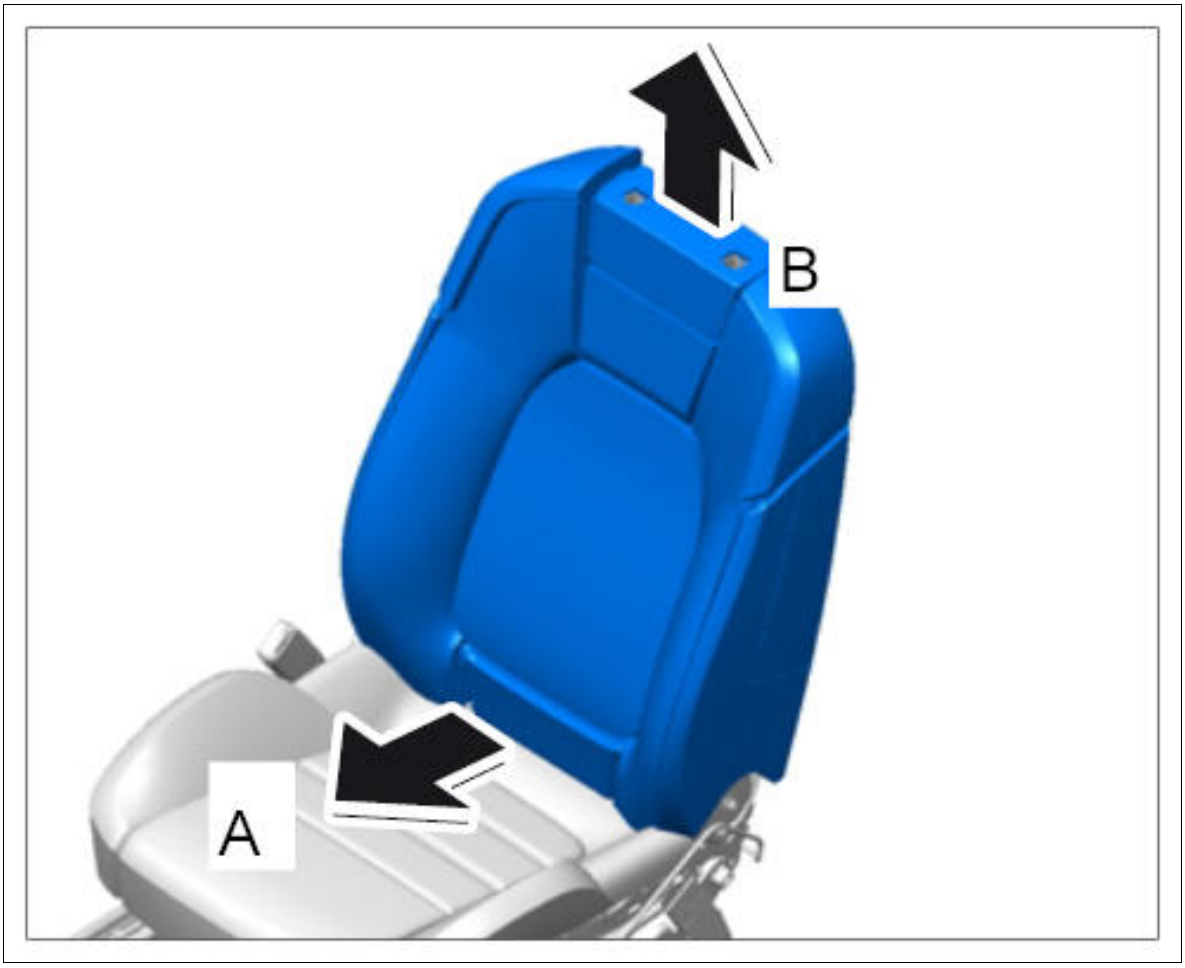

Courtesy of PORSCHE CARS NORTH AMERICA, INC.

WM 741719 REMOVING AND INSTALLING PADDING FOR FRONT BACKREST (ALL MODELS) > INSTALLING PADDING FOR FRONT BACKREST

Information

Detach padding from the cover and secure it, see → Loosening Padding For Front Backrest

1. Pull padding with cover over the backrest frame from above.
2. Align padding with cover on the backrest frame **-arrows A-** .
3. Pull the cover and padding back between the seat surface and backrest **-arrows B-** .

Fig 1: Aligning Backrest Cover

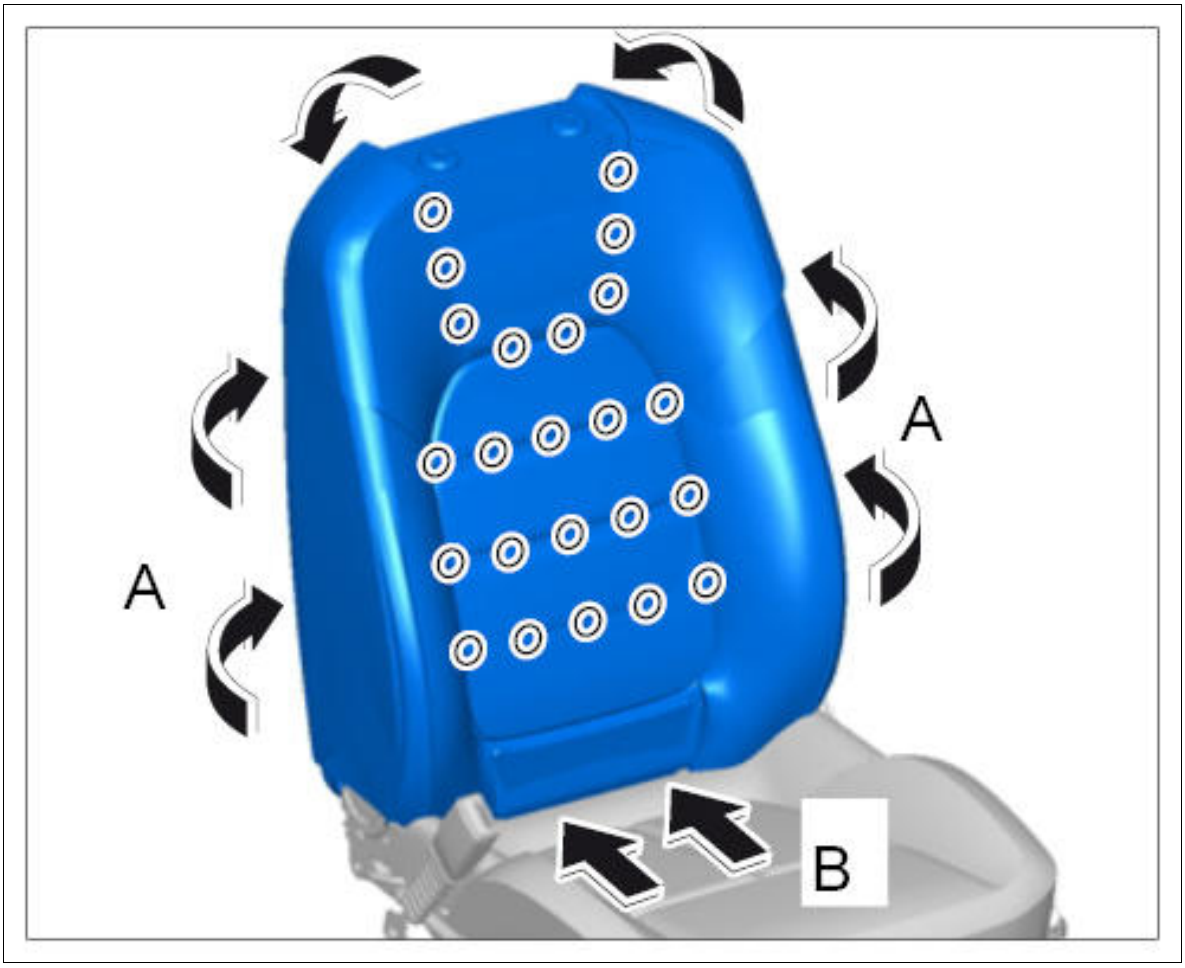

Courtesy of PORSCHE CARS NORTH AMERICA, INC.

4. Plug in electric plug connection for seat heating **-1- (-A-)** until the connector engages securely.

Fig 2: Installing Seat Heating Connector

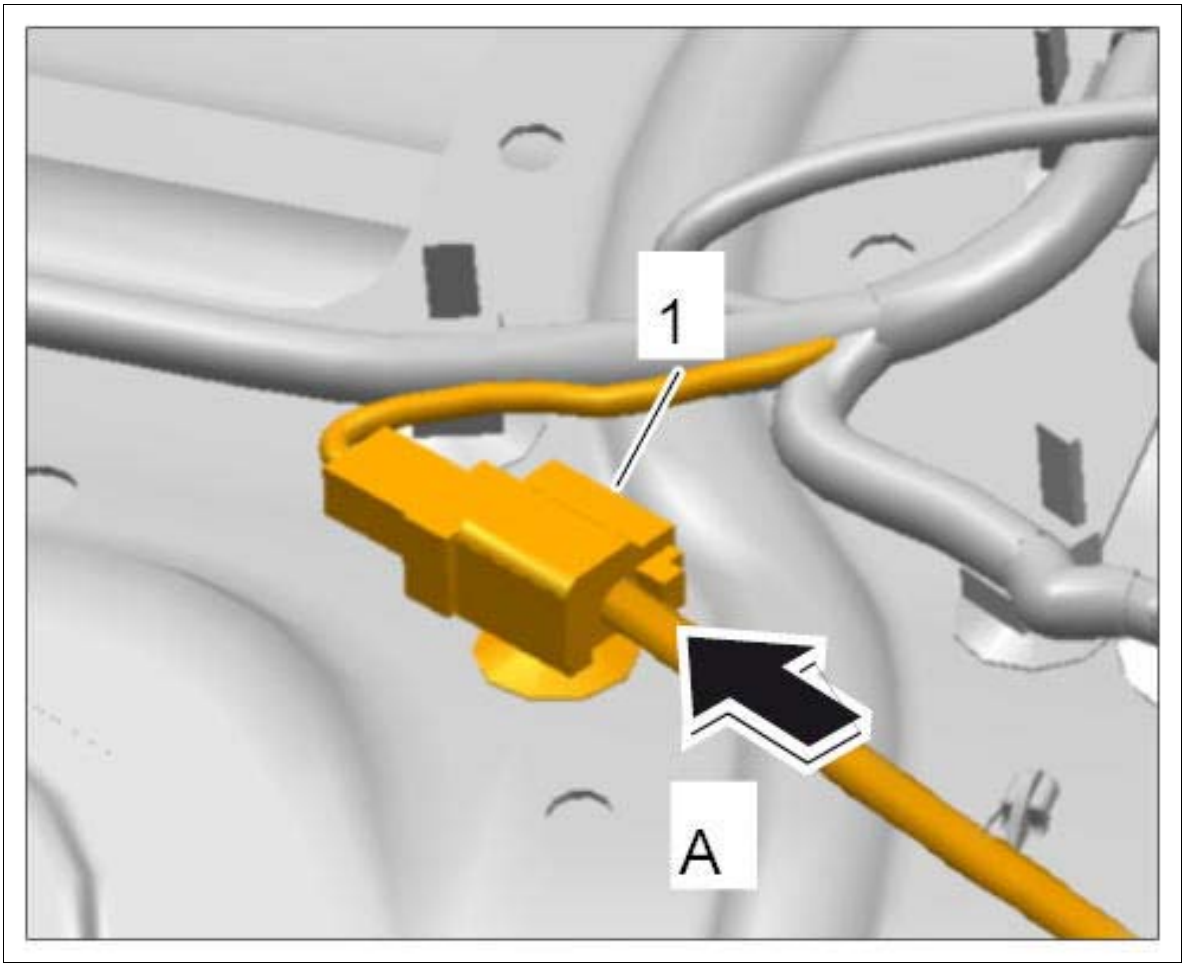

Courtesy of PORSCHE CARS NORTH AMERICA, INC.

5. Tighten fastening screws **-3-** for ISOFIX clips **-4-** (**Tightening torque 7.5 Nm (5.5 ftlb.) +/-0.5 Nm (+/-0.5 ftlb.)**).
6. Clip in seat cover at the rear **-2-** in an upward direction.
7. Engage restraining strap **-1-** at the left and right.

Fig 3: Securing Restraining Strap

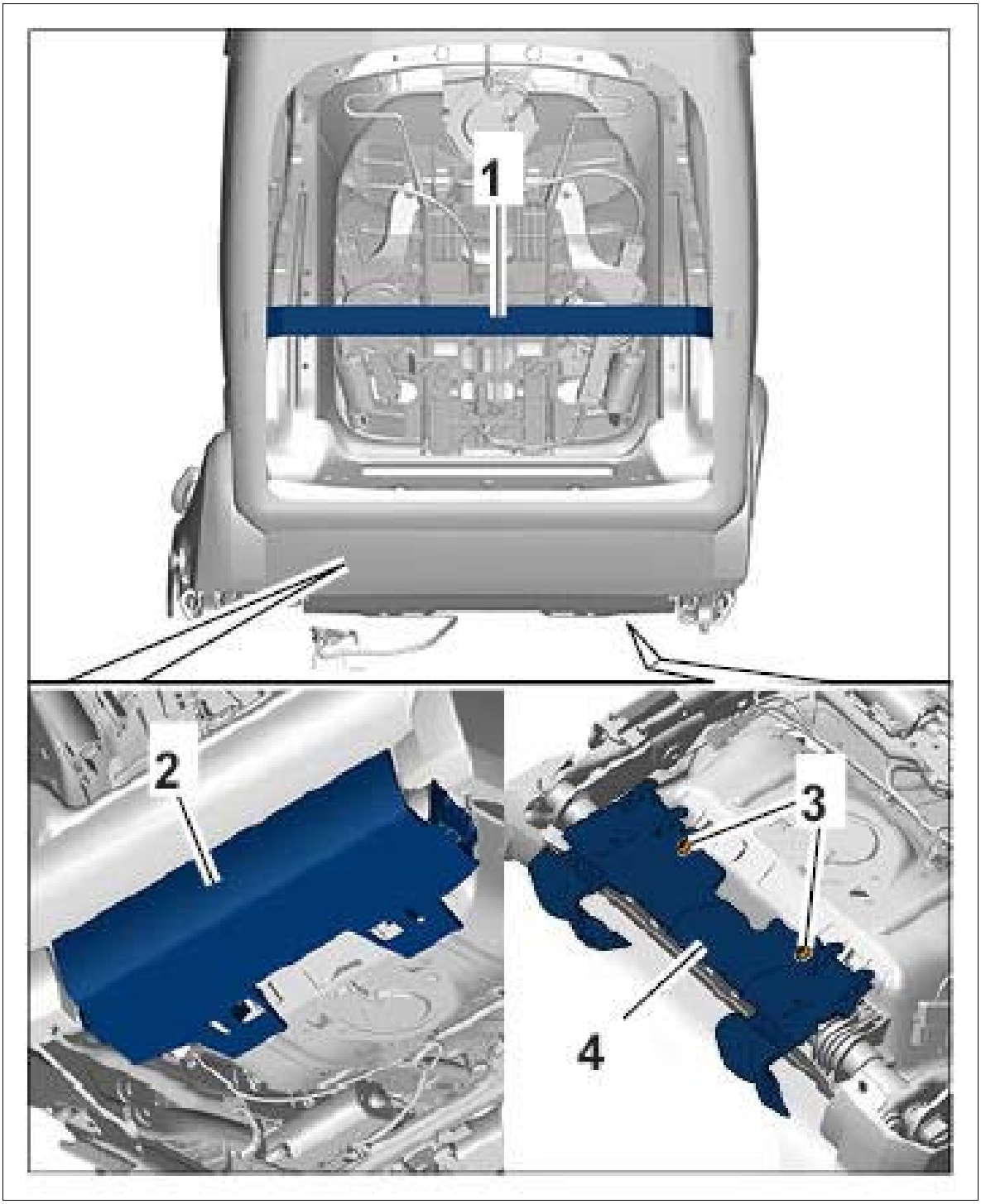

Courtesy of PORSCHE CARS NORTH AMERICA, INC.

8. Fit fixing clips **-1-** .

Fig 4: Engaging Cover In Backrest Cover Cut-Out

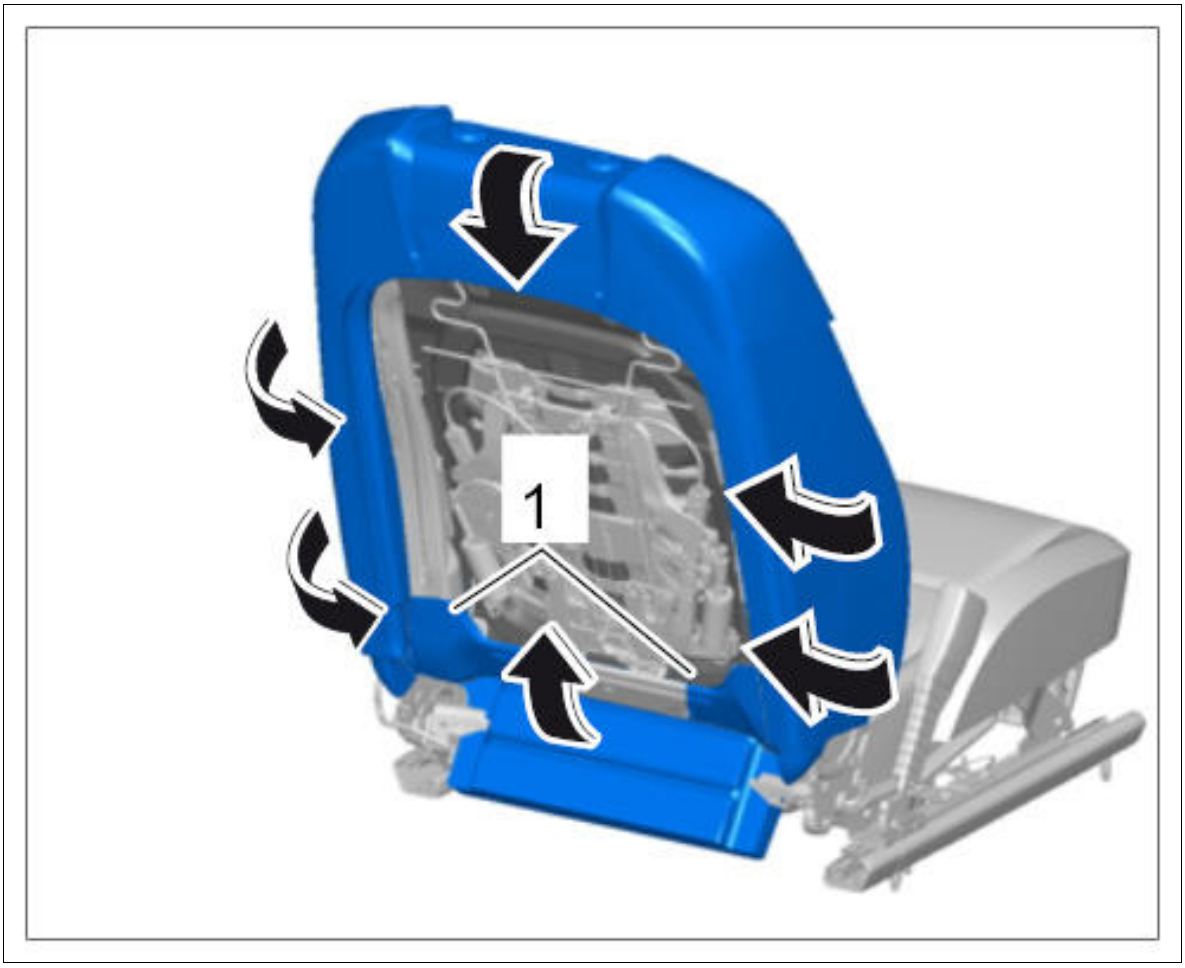

Courtesy of PORSCHE CARS NORTH AMERICA, INC.

9. Engage the cover in the cut-out for the backrest cover all the way around **-arrows-** .

WM 741719 REMOVING AND INSTALLING PADDING FOR FRONT BACKREST (ALL MODELS) > SUBSEQUENT WORK

1. Install trim panel for front seat (without storage tray). → Installing trim panel for seat
2. Install backrest cover. → Installing cover for backrest
3. Install front headrest. → Installing headrest

WM 741755 REPLACING PADDING FOR FRONT BACKREST (ALL MODELS) > TOOLS

Designation	Type	Number	Description	

cushion clip pliers	Commercially available tool	Nr.130		

WM 741755 REPLACING PADDING FOR FRONT BACKREST (ALL MODELS) > COMPONENT INFORMATION > INSTALLATION POSITION OF PADDING FOR FRONT BACKREST

Fig 1: Identifying Front Backrest Padding Installation Position

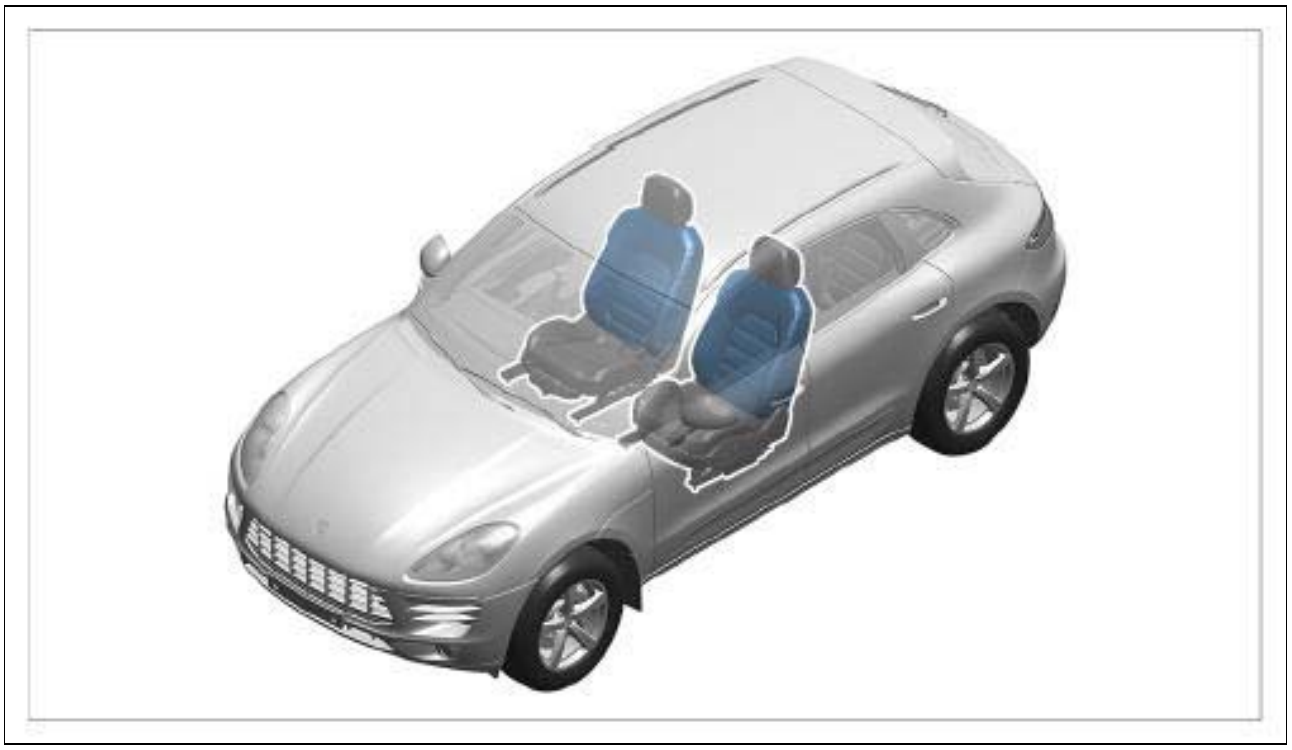

Courtesy of PORSCHE CARS NORTH AMERICA, INC.

WM 741755 REPLACING PADDING FOR FRONT BACKREST (ALL MODELS) > PRELIMINARY WORK

Remove padding for front backrest. → Removing Padding For Front Backrest

WM 741755 REPLACING PADDING FOR FRONT BACKREST (ALL MODELS) > LOOSENING PADDING FOR FRONT BACKREST

1. Place padding for front backrest on a clean surface.
2. Cut open cushion clips using side cutters and remove the cover from the padding.

   Fig 1: Detaching Front Backrest Padding From Cover (Basic/Comfort)

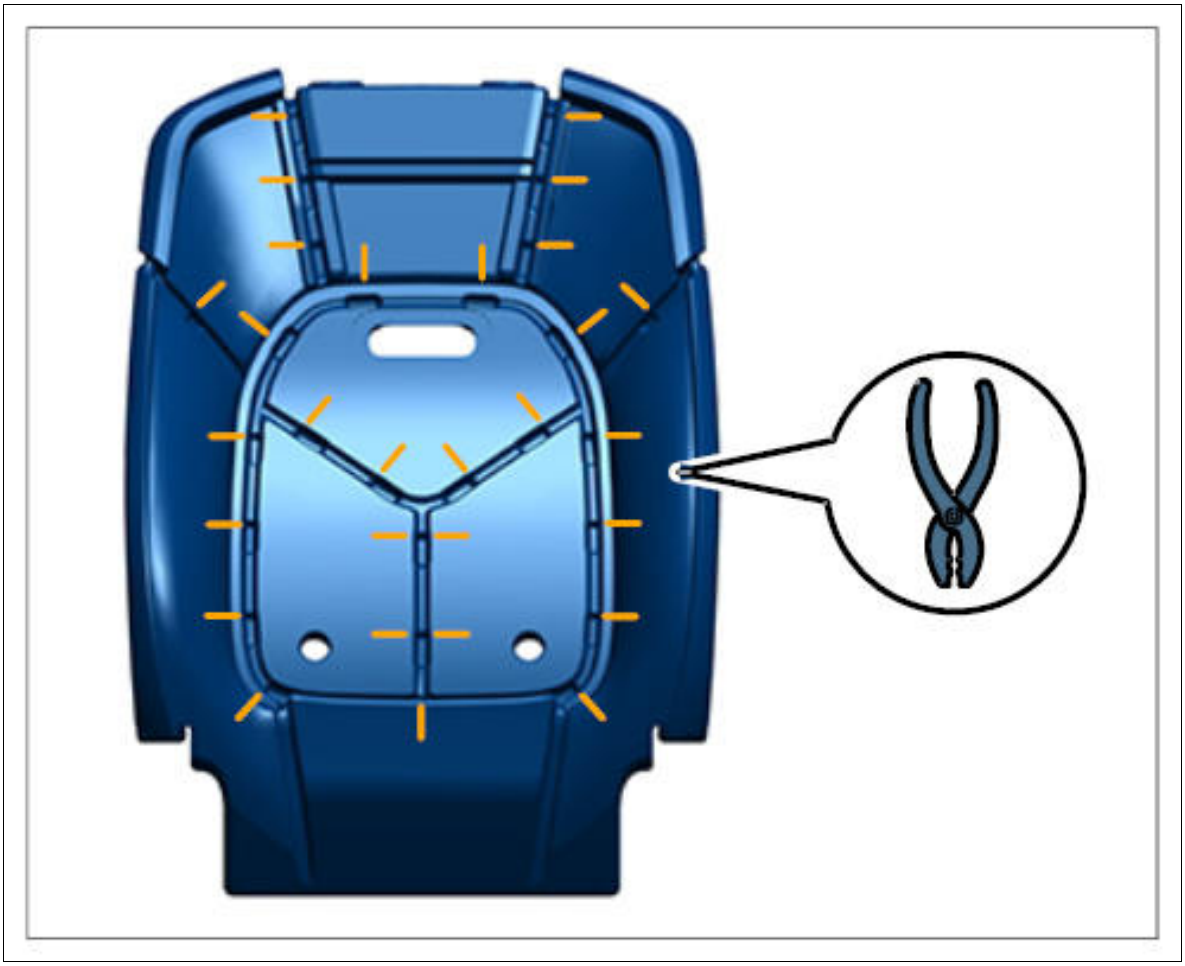

Courtesy of PORSCHE CARS NORTH AMERICA, INC.

Fig 2: Detaching Front Backrest Padding From Cover (Sport)

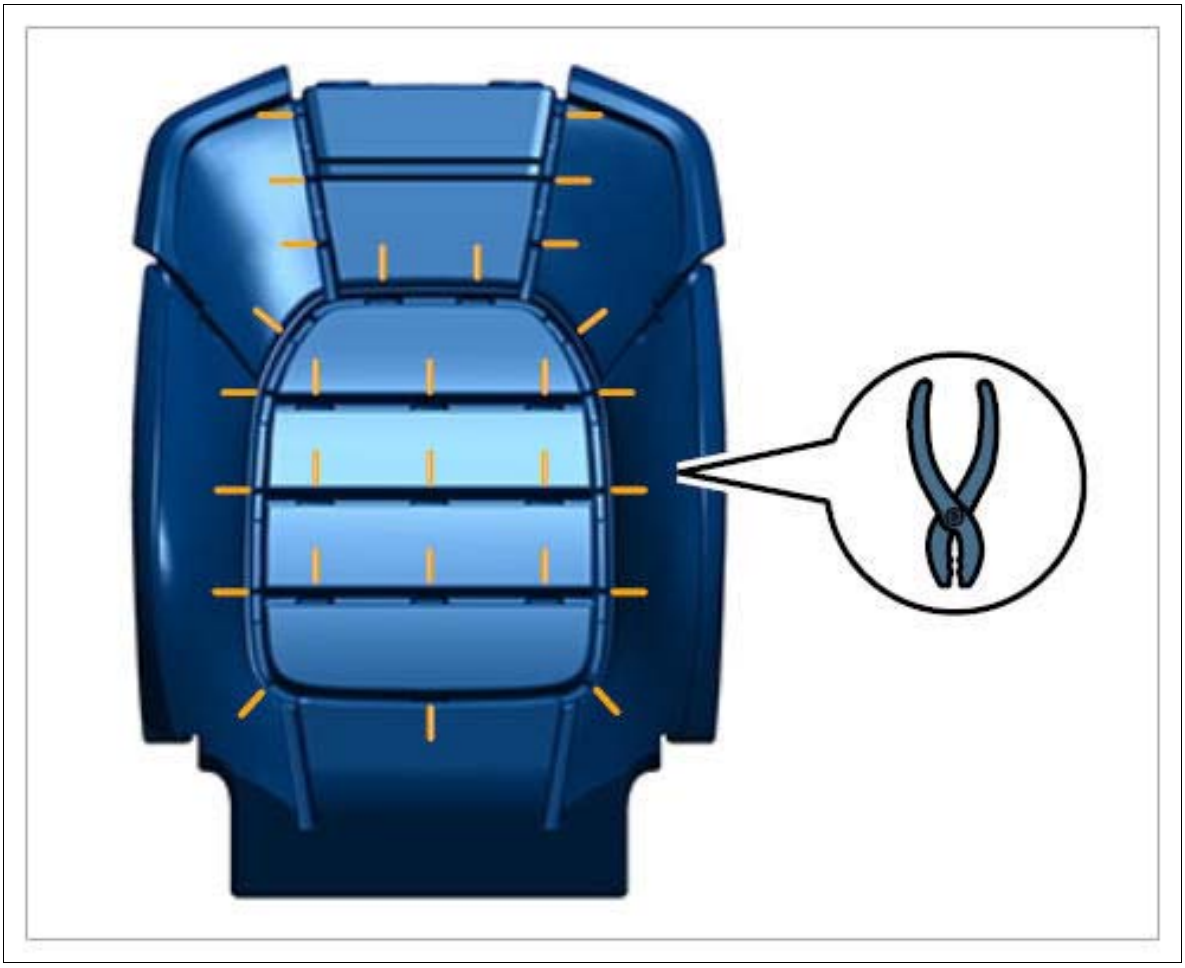

Courtesy of PORSCHE CARS NORTH AMERICA, INC.

WM 741755 REPLACING PADDING FOR FRONT BACKREST (ALL MODELS) > SECURING PADDING FOR FRONT BACKREST

1. Place cover on the padding and align contour of the padding.
2. Use **cushion clip pliers Nr.130** and new cushion clips to secure the cover on the padding in the specified sequence.

Fig 1: Securing Cover On Front Backrest Padding (Basic/Comfort)

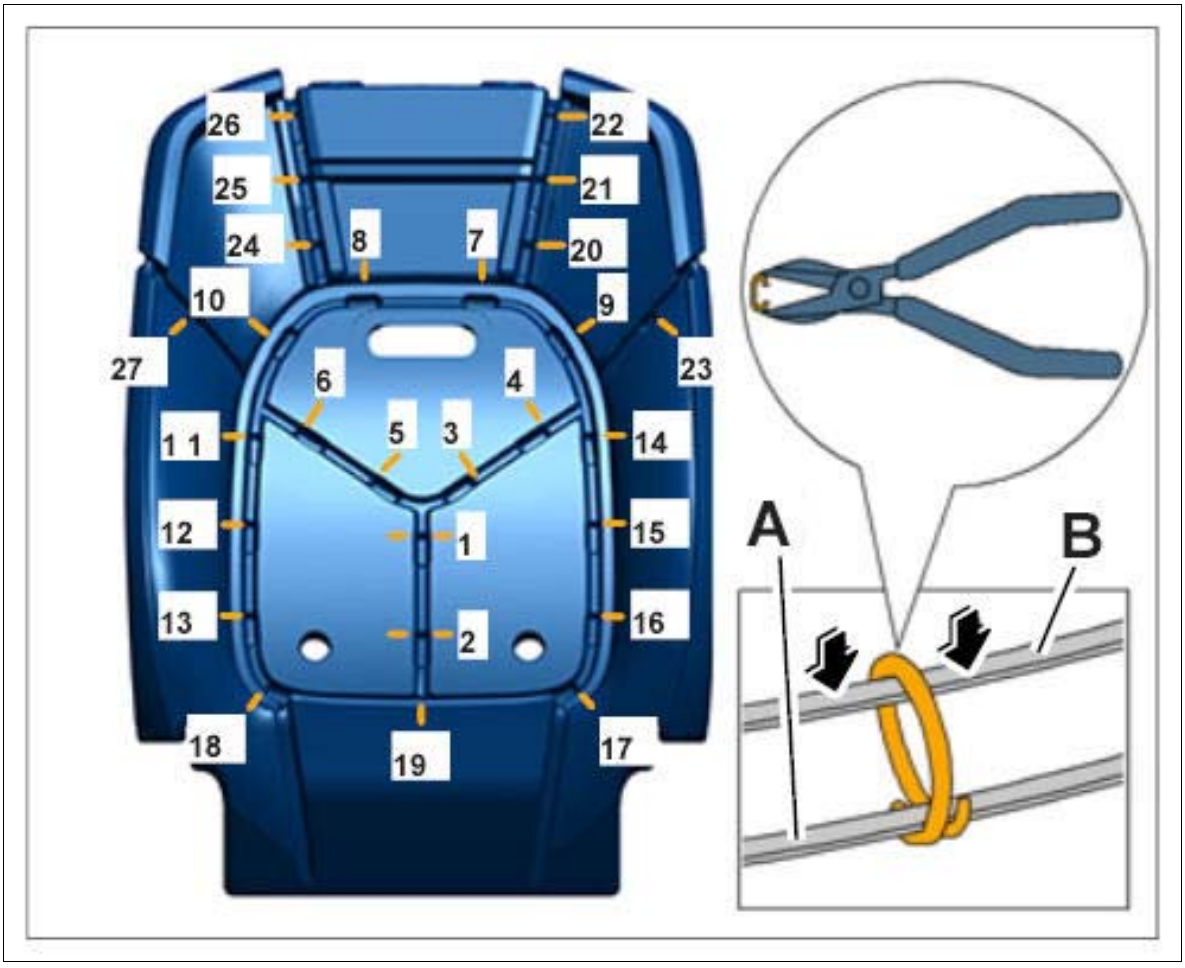

Courtesy of PORSCHE CARS NORTH AMERICA, INC.

Fig 2: Securing Cover On Front Backrest Padding (Sport)

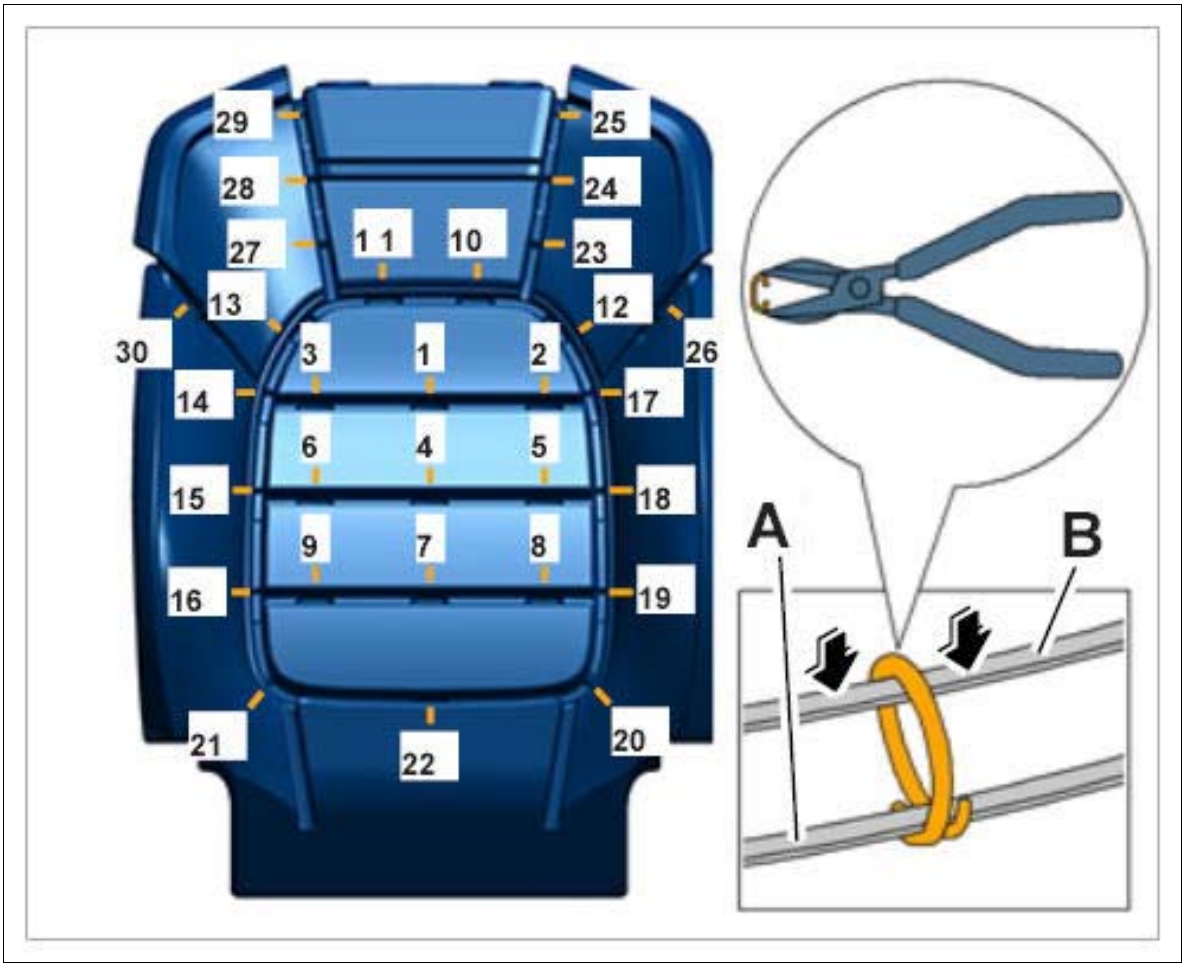

Courtesy of PORSCHE CARS NORTH AMERICA, INC.

WM 741755 REPLACING PADDING FOR FRONT BACKREST (ALL MODELS) > SUBSEQUENT WORK

1. Install padding for front backrest. → Installing Padding For Front Backrest

WM 741919 REMOVING AND INSTALLING COVER FOR FRONT BACKREST (ALL MODELS) > TECHNICAL VALUES

Location	Description	Type	Basic value	Tolerance 1	Tolerance 2
ISOFIX fastening screw	Item 3	Tightening torque	7.5 Nm (5.5 ftlb.)	+/-0.5 Nm (+/-0.5 ftlb.)	

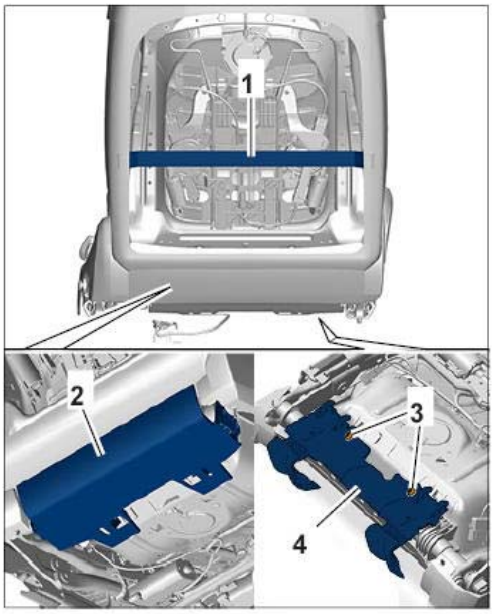

Loosening restraining strap

WM 741919 REMOVING AND INSTALLING COVER FOR FRONT BACKREST (ALL MODELS) > COMPONENT INFORMATION > INSTALLATION POSITION OF COVER FOR FRONT BACKREST

Fig 1: Identifying Front Backrest Cover Installation Position

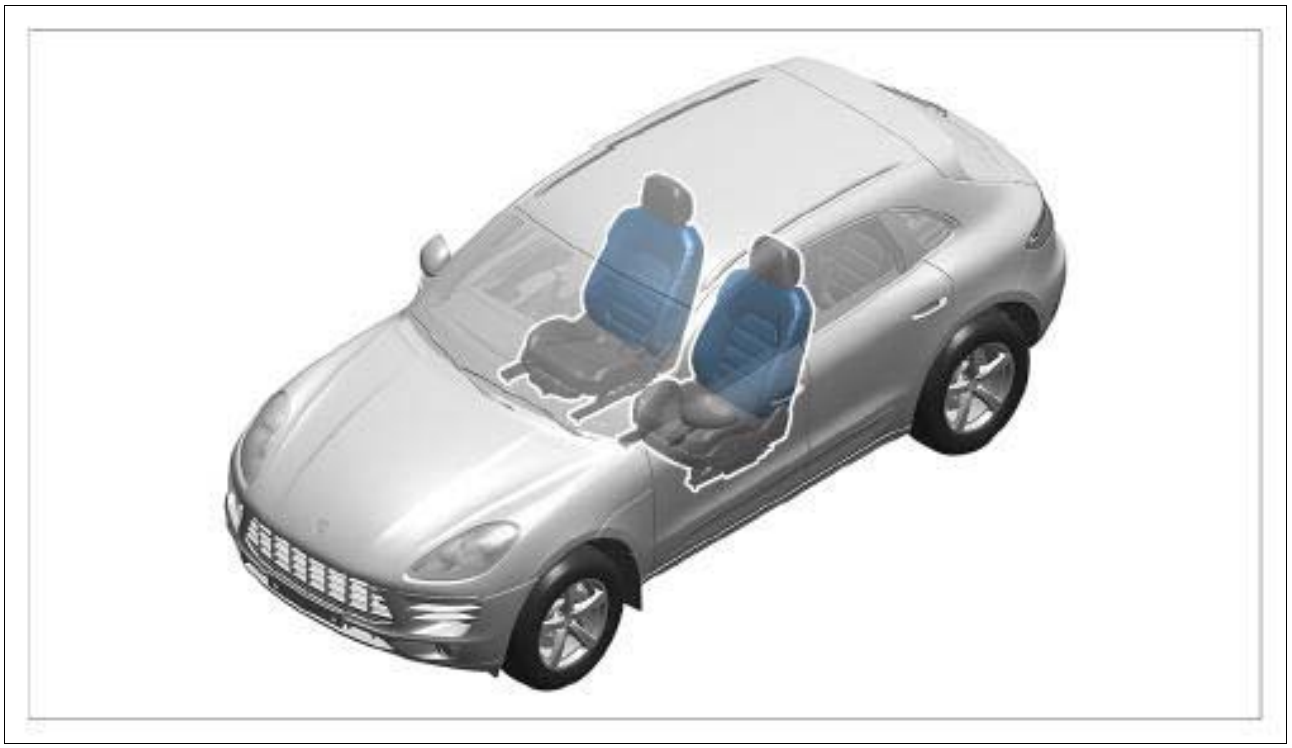

Courtesy of PORSCHE CARS NORTH AMERICA, INC.

WM 741919 REMOVING AND INSTALLING COVER FOR FRONT BACKREST (ALL MODELS) > PRELIMINARY WORK

1. Remove front headrest. → Removing headrest
2. Remove backrest cover. → Removing cover for backrest
3. Remove trim panel for front seat (without storage tray). → Removing trim panel for seat

WM 741919 REMOVING AND INSTALLING COVER FOR FRONT BACKREST (ALL MODELS) > REMOVING COVER FOR FRONT BACKREST

Information

Detach padding from the cover and secure it, see → Loosening Cover For Rear Backrest

1. Disengage cover from the cut-out for the backrest cover all the way around **-arrows-** .
2. Pull out fixing clips **-1-** .

Fig 1: Disengaging Cover From Backrest Cover Cut-Out

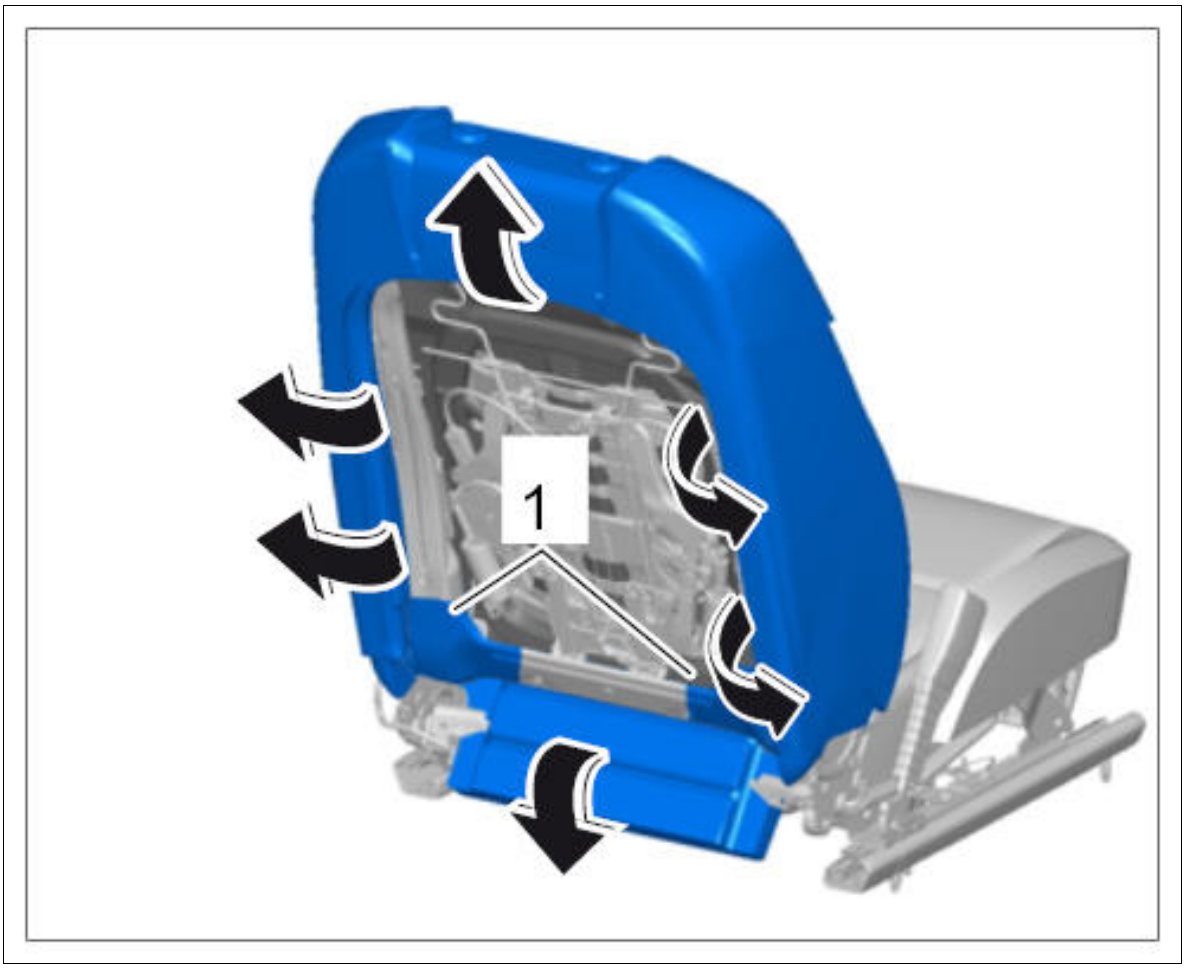

Courtesy of PORSCHE CARS NORTH AMERICA, INC.

3. Disengage restraining strap **-1-** for the cover at the left and right.

4. Unclip rear seat cover **-2-** by pulling it downwards.

5. Loosen fastening screws **-3-** for ISOFIX clips **-4-** .

Fig 2: Loosening Restraining Strap

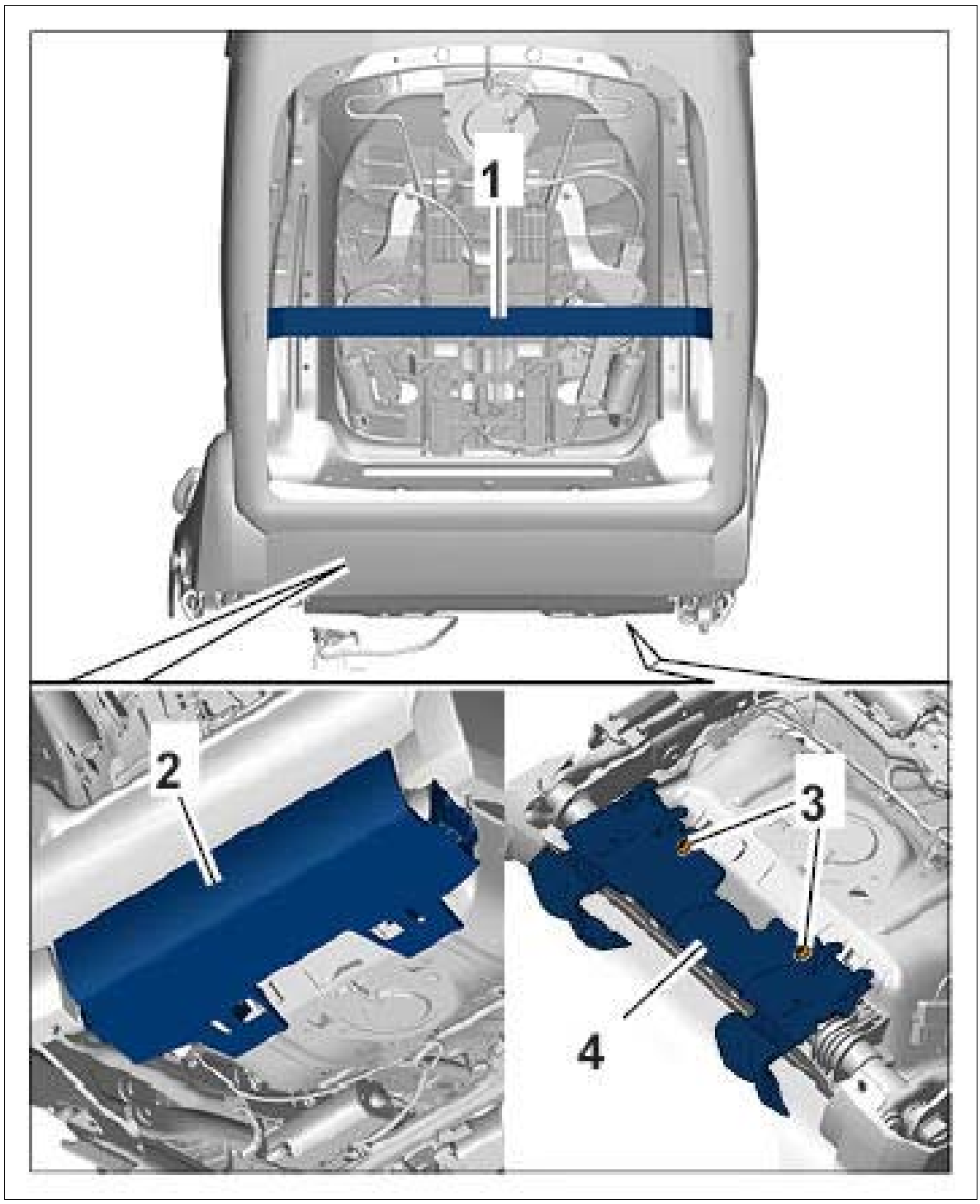

Courtesy of PORSCHE CARS NORTH AMERICA, INC.

6. Release and disconnect electric plug connection for seat heating at the underside of the seat.

Fig 3: Disconnecting Seat Heating Connector

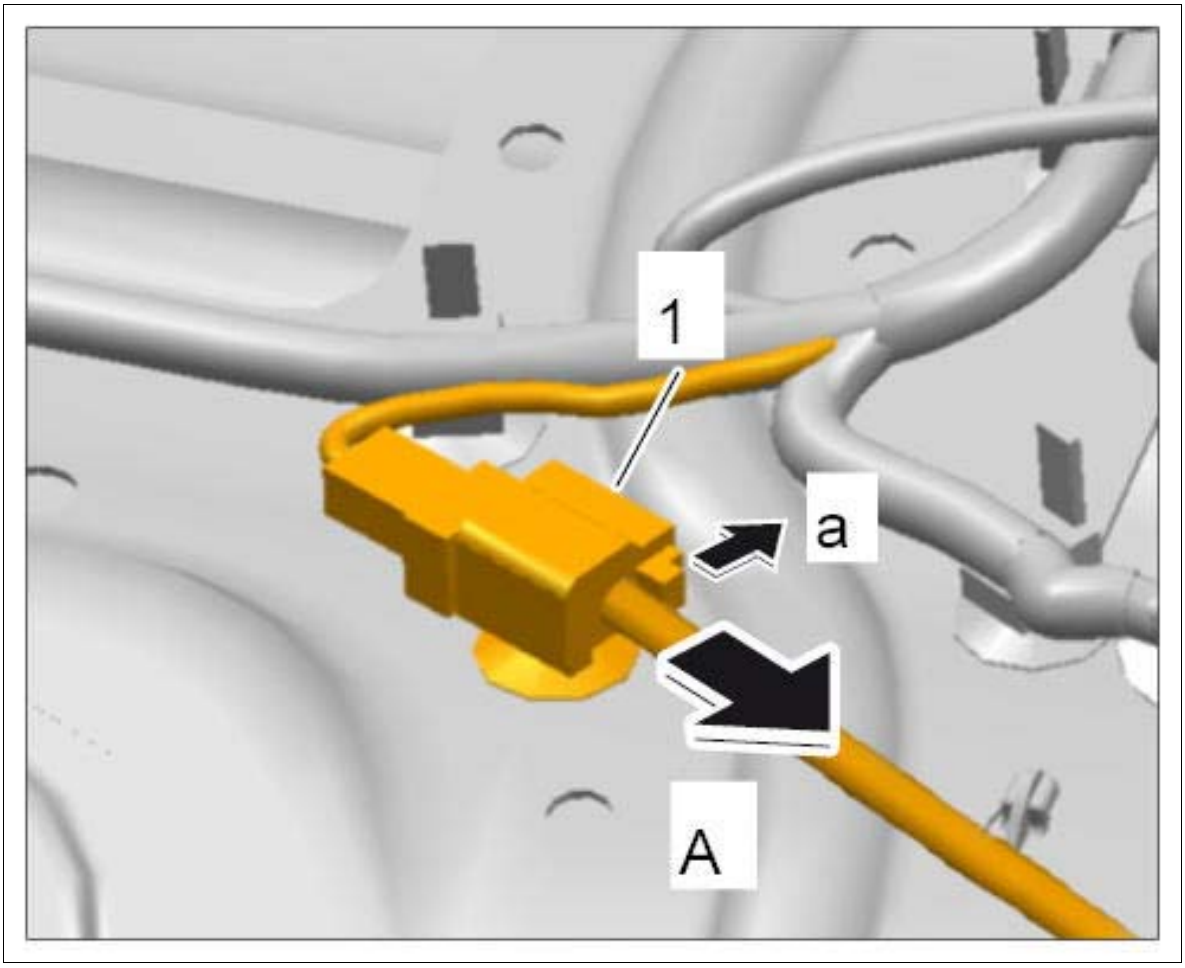

Courtesy of PORSCHE CARS NORTH AMERICA, INC.

7. Carefully place cover over the ends of the headrest guides.
8. Pull padding with cover forward between the seat surface and backrest **-arrow A-** .
9. Remove padding with cover by pulling it upwards **-arrow B-** .

Fig 4: Removing Padding

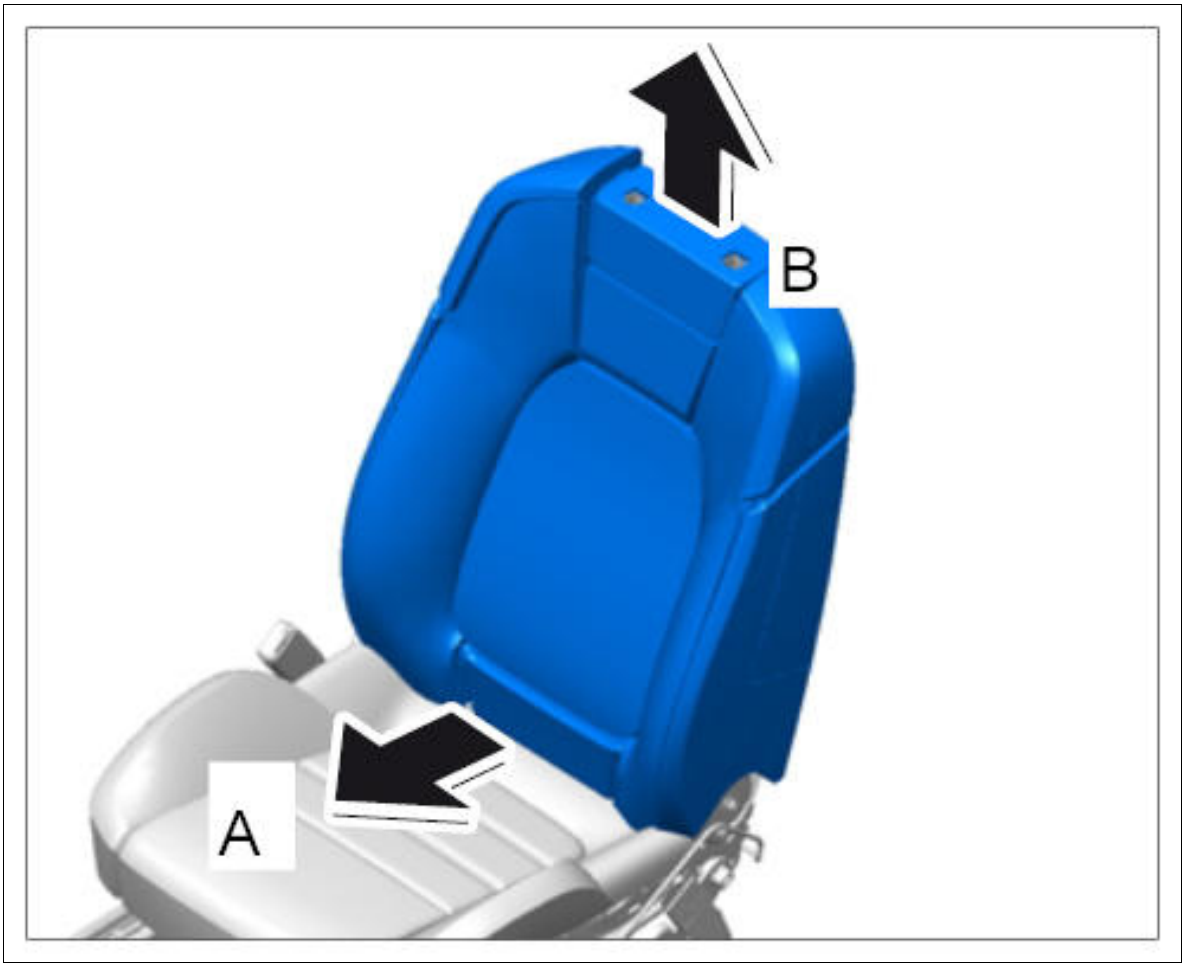

Courtesy of PORSCHE CARS NORTH AMERICA, INC.

WM 741919 REMOVING AND INSTALLING COVER FOR FRONT BACKREST (ALL MODELS) > INSTALLING COVER FOR FRONT BACKREST

Information

Detach padding from the cover and secure it, see → Loosening Cover For Front Backrest

1. Pull padding with cover over the backrest frame from above.
2. Align padding with cover on the backrest frame **-arrows A-** .
3. Pull the cover and padding back between the seat surface and backrest **-arrows B-** .

Fig 1: Aligning Backrest Cover

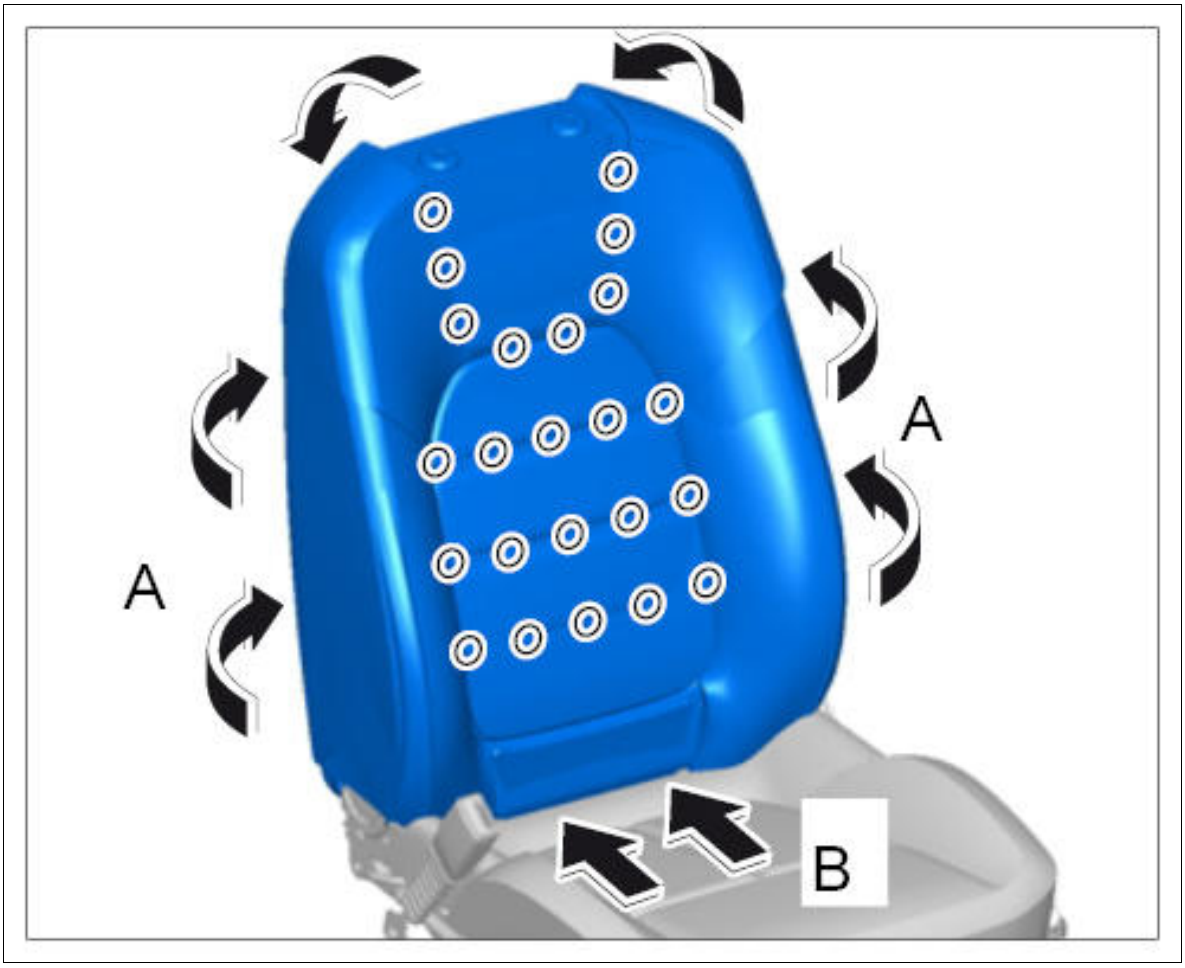

Courtesy of PORSCHE CARS NORTH AMERICA, INC.

4. Plug in electric plug connection for seat heating **-1- (-A-)** until the connector engages securely.

Fig 2: Installing Seat Heating Connector

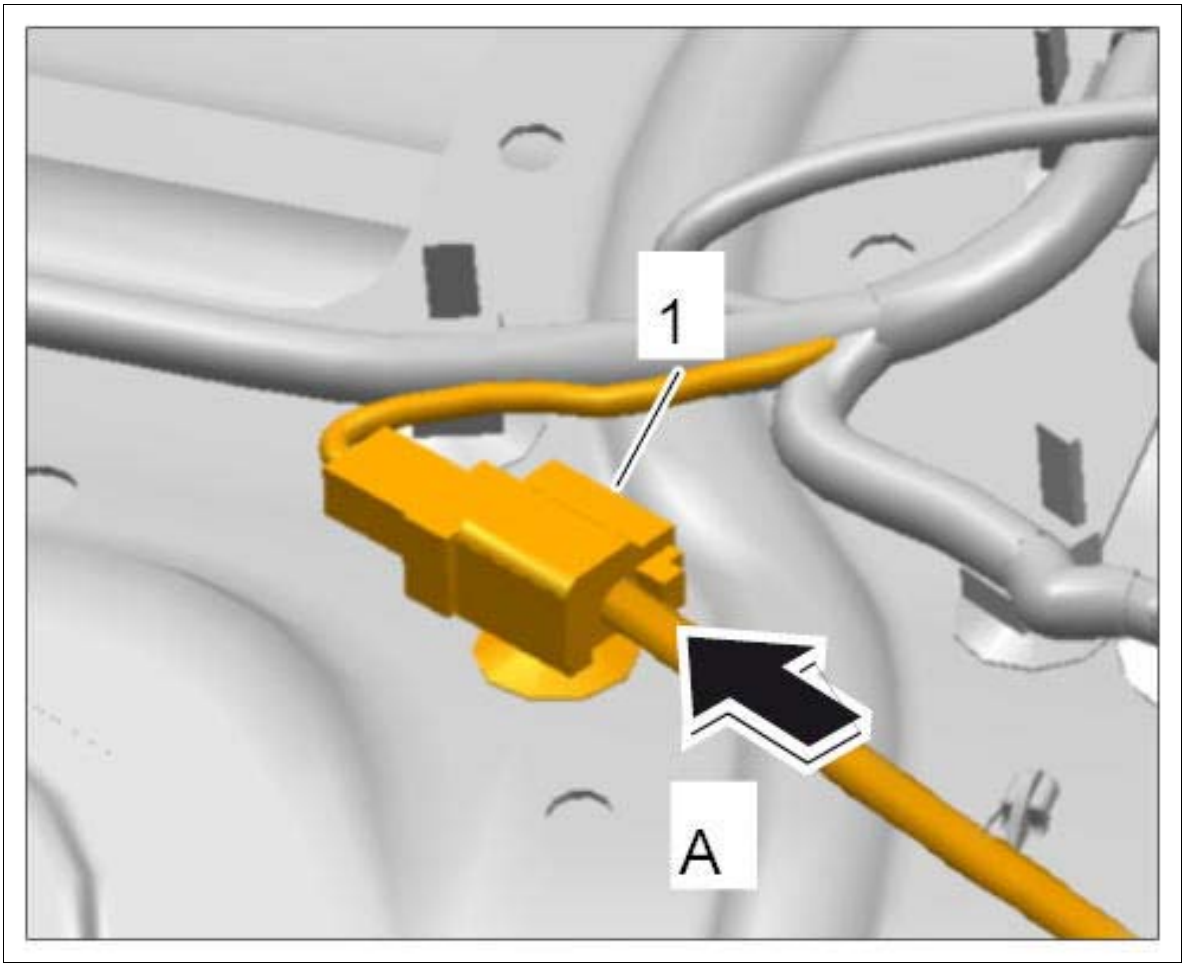

Courtesy of PORSCHE CARS NORTH AMERICA, INC.

5. Tighten fastening screws **-3-** for ISOFIX clips **-4-** (**Tightening torque 7.5 Nm (5.5 ftlb.) +/-0.5 Nm (+/-0.5 ftlb.)**).
6. Clip in seat cover at the rear **-2-** in an upward direction.
7. Engage restraining strap **-1-** at the left and right.

Fig 3: Securing Restraining Strap

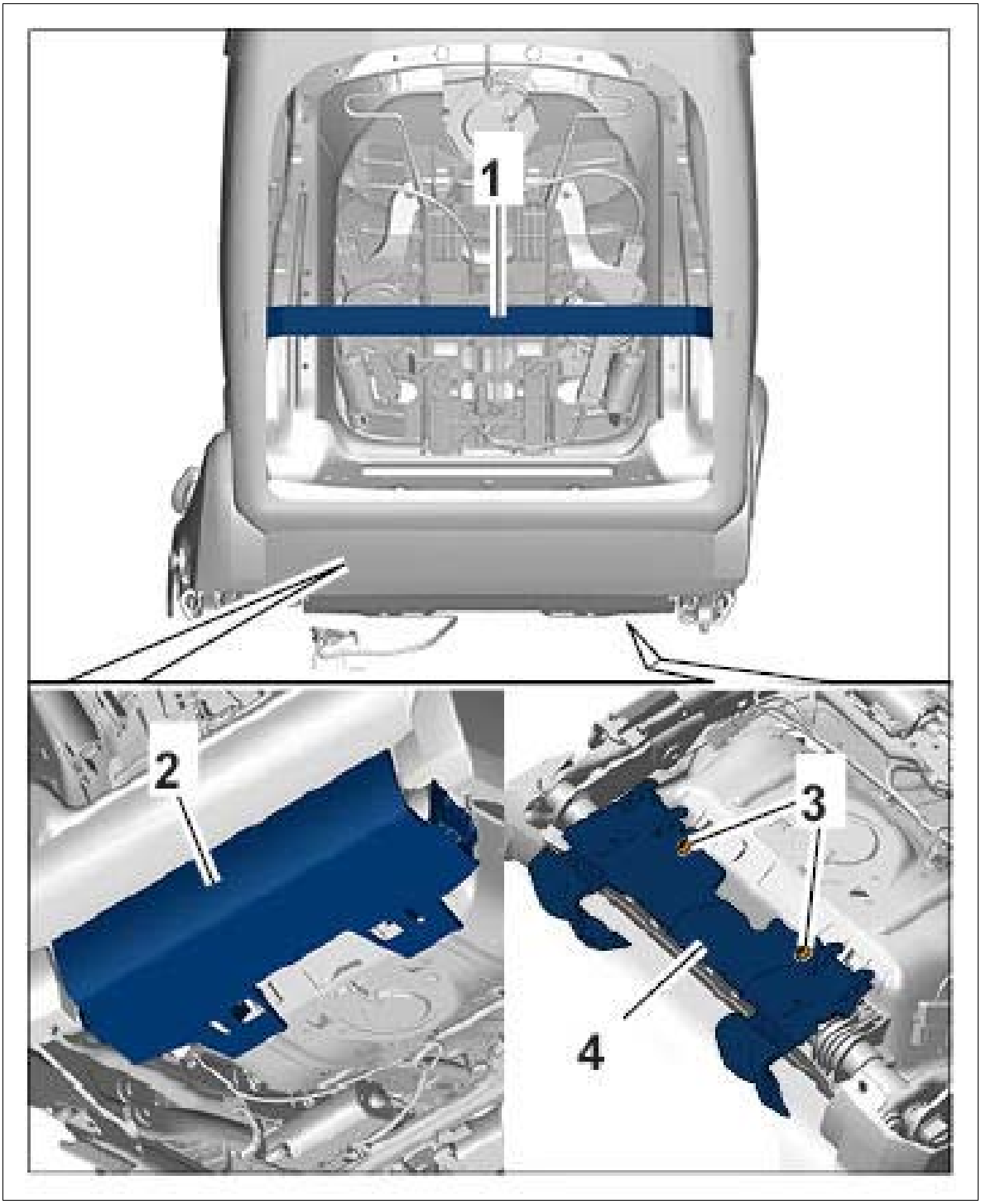

Courtesy of PORSCHE CARS NORTH AMERICA, INC.

8. Fit fixing clips **-1-** .

Fig 4: Engaging Cover In Backrest Cover Cut-Out

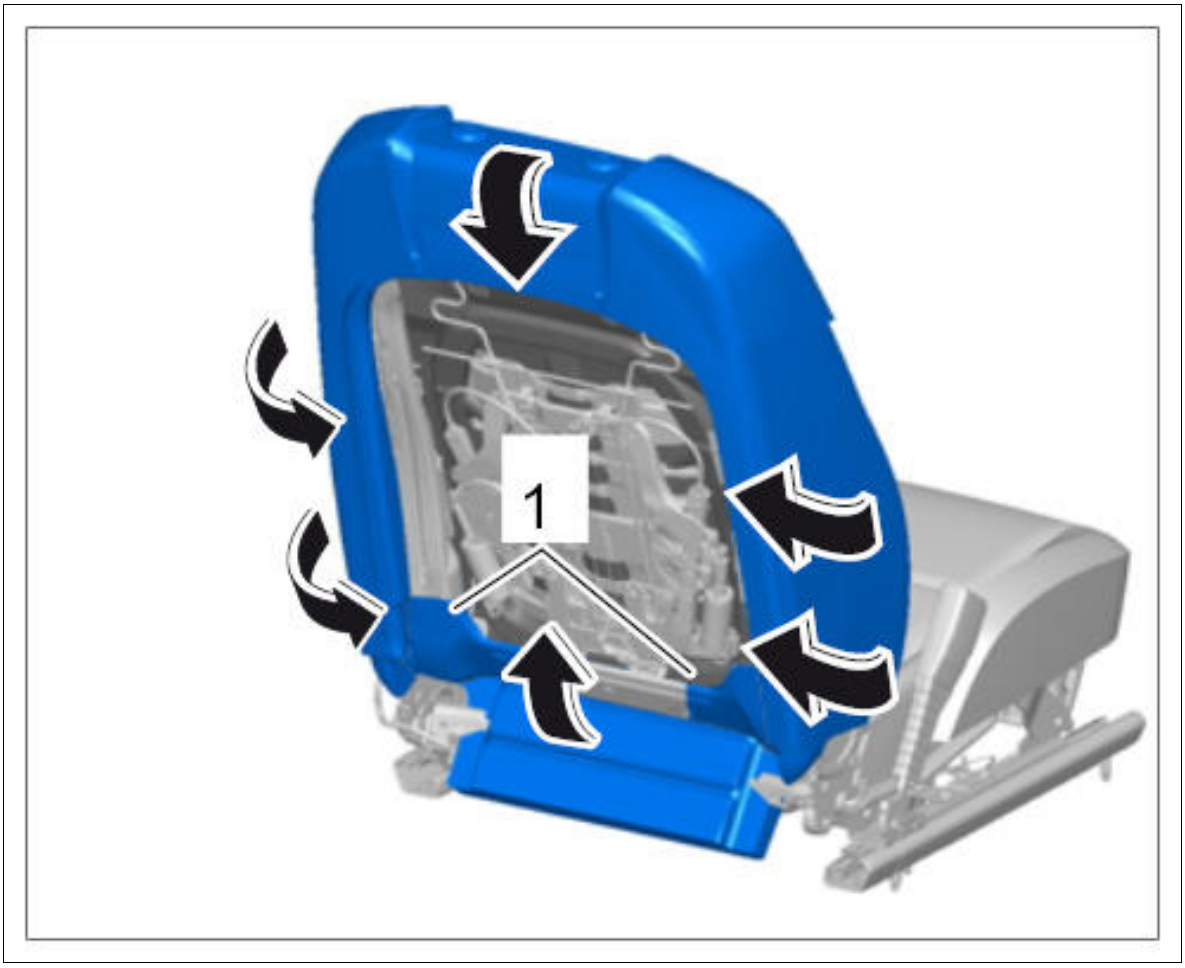

Courtesy of PORSCHE CARS NORTH AMERICA, INC.

9. Engage the cover in the cut-out for the backrest cover all the way around **-arrows-** .

WM 741919 REMOVING AND INSTALLING COVER FOR FRONT BACKREST (ALL MODELS) > SUBSEQUENT WORK

1. Install trim panel for front seat (without storage tray). →Installing trim panel for seat
2. Install backrest cover. → Installing cover for backrest
3. Install front headrest. → Installing headrest

WM 741955 REPLACING COVER FOR FRONT BACKREST (ALL MODELS) > TOOLS

Designation	Type	Number	Description	

cushion clip pliers	Commercially available tool	Nr.130		

WM 741955 REPLACING COVER FOR FRONT BACKREST (ALL MODELS) > COMPONENT INFORMATION > INSTALLATION POSITION OF COVER FOR FRONT BACKREST

Fig 1: Identifying Front Backrest Cover Installation Position

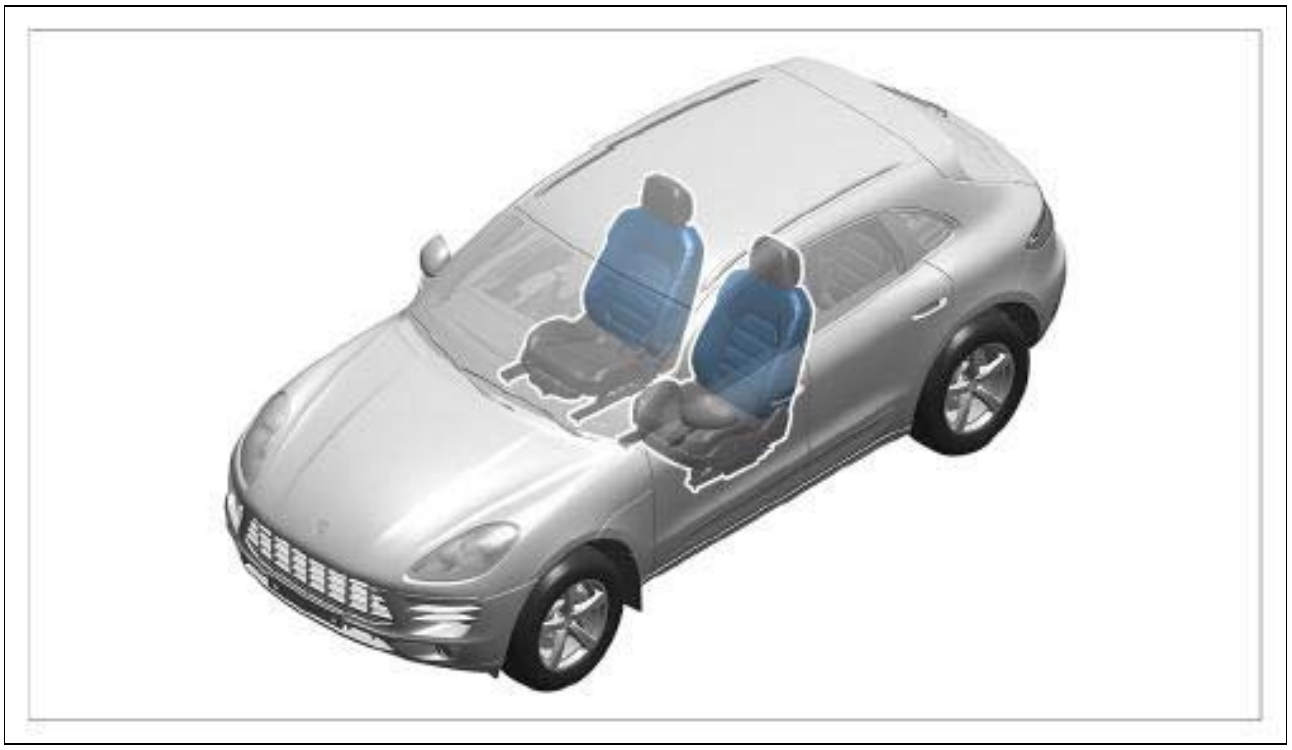

Courtesy of PORSCHE CARS NORTH AMERICA, INC.

WM 741955 REPLACING COVER FOR FRONT BACKREST (ALL MODELS) > PRELIMINARY WORK

1. Remove cover for front backrest. → Removing Cover For Front Backrest

WM 741955 REPLACING COVER FOR FRONT BACKREST (ALL MODELS) > LOOSENING COVER FOR FRONT BACKREST

1. Place padding for front backrest on a clean surface.
2. Cut open cushion clips using side cutters and remove the cover from the padding.

Fig 1: Detaching Front Backrest Padding From Cover (Basic/Comfort)

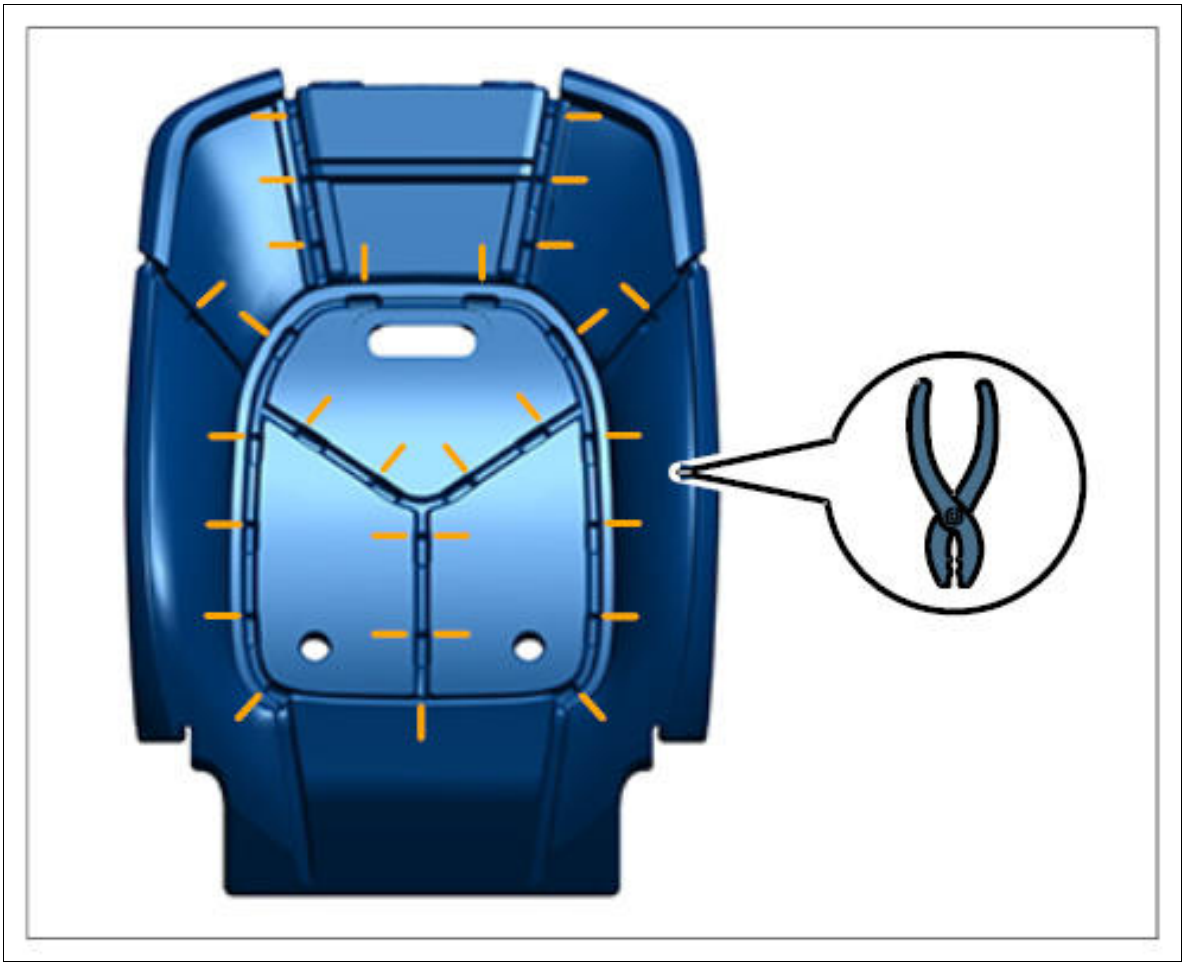

Courtesy of PORSCHE CARS NORTH AMERICA, INC.

Fig 2: Detaching Front Backrest Padding From Cover (Sport)

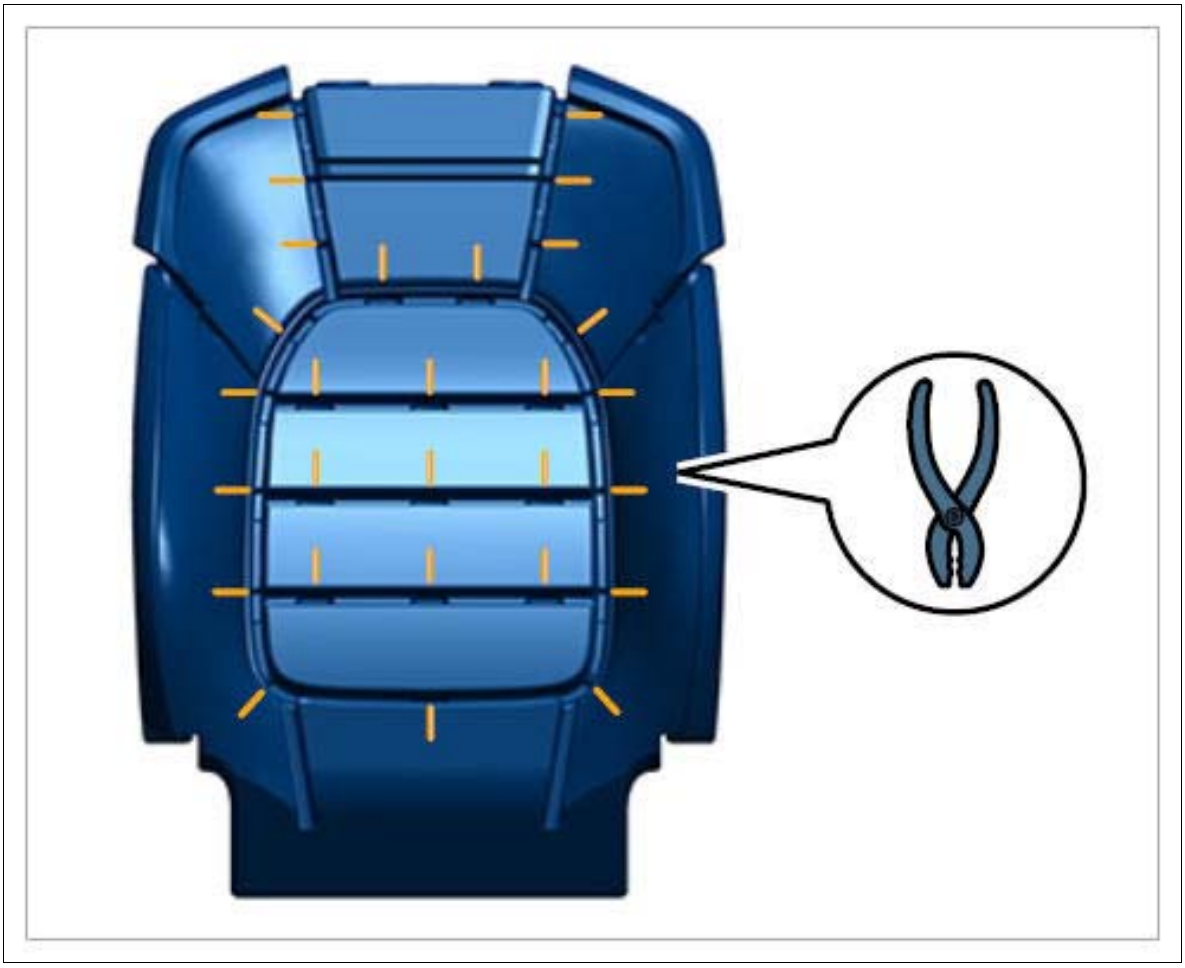

Courtesy of PORSCHE CARS NORTH AMERICA, INC.

WM 741955 REPLACING COVER FOR FRONT BACKREST (ALL MODELS) > SECURING COVER FOR FRONT BACKREST

1. Place cover on the padding and align contour of the padding.
2. Use **cushion clip pliers Nr.130** and new cushion clips to secure the cover on the padding in the specified sequence.

Fig 1: Securing Cover On Front Backrest Padding (Basic/Comfort)

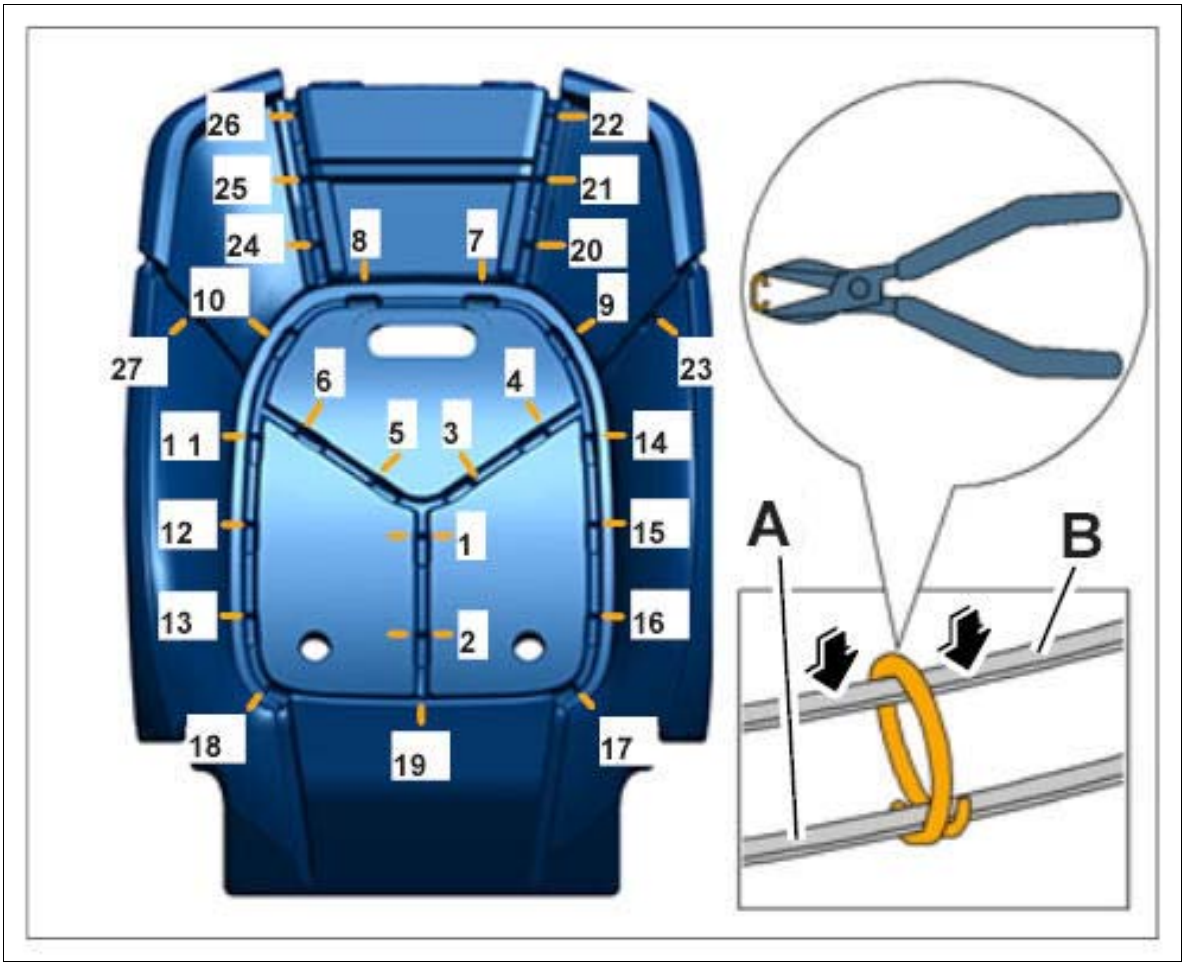

Courtesy of PORSCHE CARS NORTH AMERICA, INC.

Fig 2: Securing Cover On Front Backrest Padding (Sport)

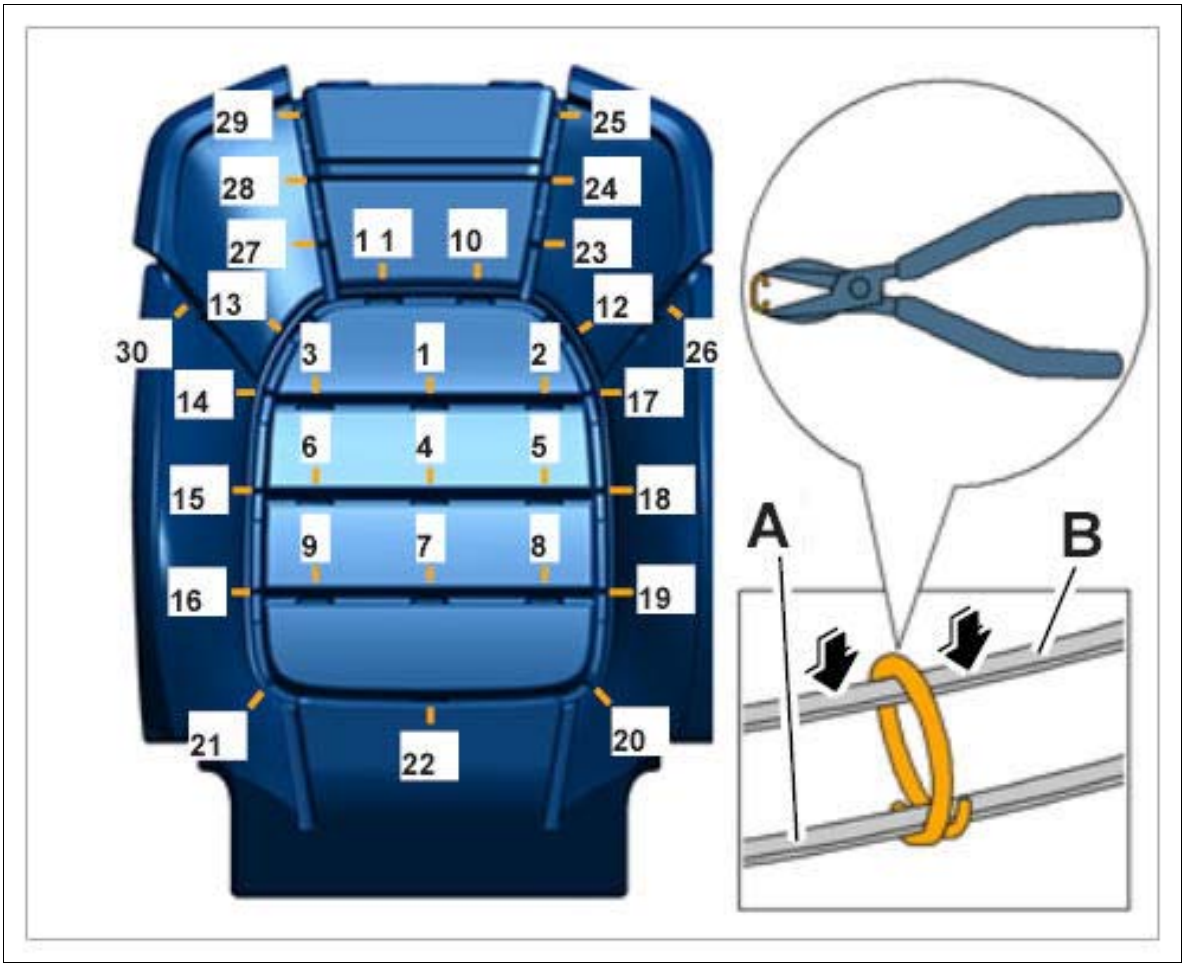

Courtesy of PORSCHE CARS NORTH AMERICA, INC.

WM 741955 REPLACING COVER FOR FRONT BACKREST (ALL MODELS) > SUBSEQUENT WORK

1. Install cover for front backrest. → Installing Cover For Front Backrest

WM 742319 REMOVING AND INSTALLING BACKREST POCKET (ALL MODELS) > COMPONENT INFORMATION > INSTALLATION POSITION

Fig 1: Identifying Backrest Pocket Installation Position

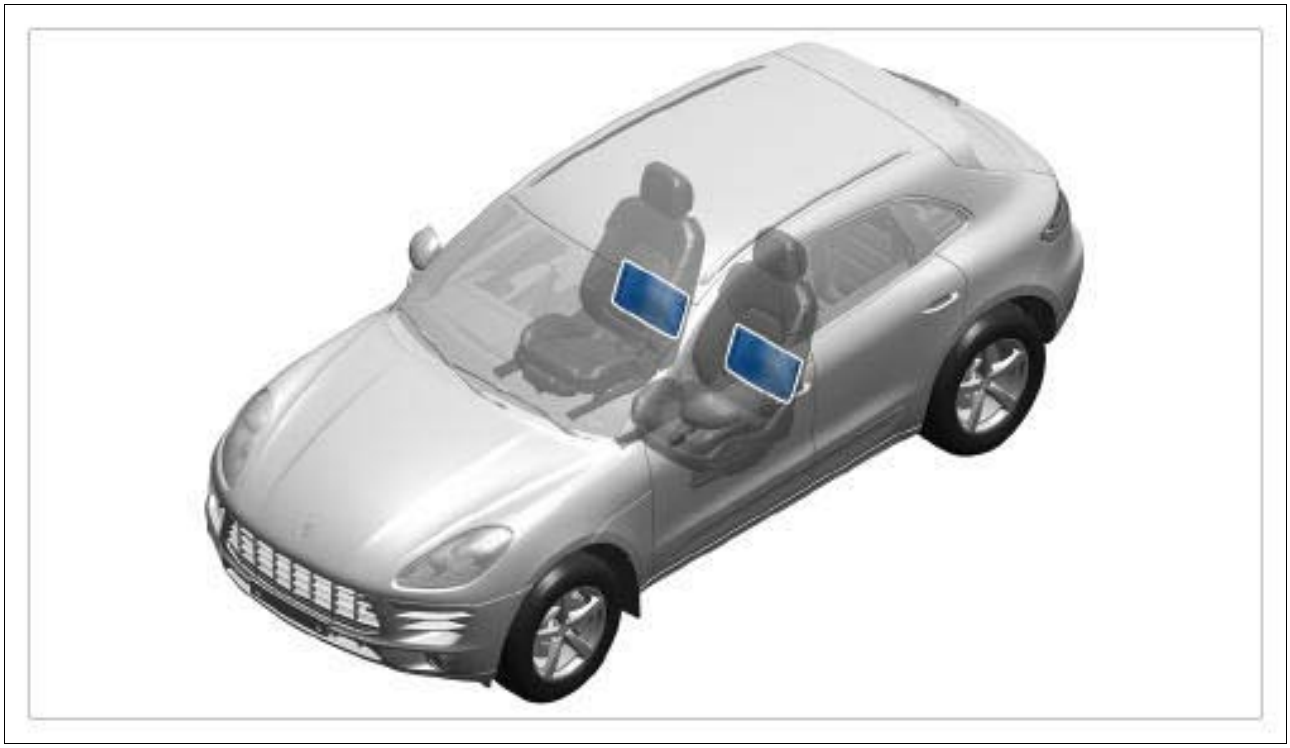

Courtesy of PORSCHE CARS NORTH AMERICA, INC.

WM 742319 REMOVING AND INSTALLING BACKREST POCKET (ALL MODELS) > REMOVING BACKREST POCKET

1. Remove backrest pocket. → Removing cover for backrest

   Information

   The backrest pocket is removed and installed together with the **rear** cover for the backrest.

WM 742319 REMOVING AND INSTALLING BACKREST POCKET (ALL MODELS) > INSTALLING BACKREST POCKET

1. Install backrest pocket. → Installing cover for backrest

   Information

   The backrest pocket is removed and installed together with the **rear** cover for the backrest.

WM 742419 REMOVING AND INSTALLING SEAT HEATING SWITCH (ALL MODELS) > INFORMATION

1. The seat heating switch is integrated into the switch console and cannot be replaced separately. → 962719 REMOVING AND INSTALLING SWITCH CONSOLE

WM 742619 REMOVING AND INSTALLING REGULATOR FOR REAR HEATED SEATS (ALL MODELS) > PRELIMINARY WORK

1. Remove covering frame for center console. → Removing Covering Frame For Center Console

WM 742619 REMOVING AND INSTALLING REGULATOR FOR REAR HEATED SEATS (ALL MODELS) > REMOVING REGULATOR FOR REAR HEATED SEATS

1. Remove storage compartment **-1-** with regulator for rear heated seats **-2-** from covering frame for center console **-3-** .
    1. 1.1. Unscrew fastening screws **-4-** .
    2. 1.2. Disengage side locking mechanisms **-a-** and remove storage compartment with regulator for rear heated seats from covering frame for center console.

    Fig 1: Removing Storage Compartment With Rear Heated Seats Regulator

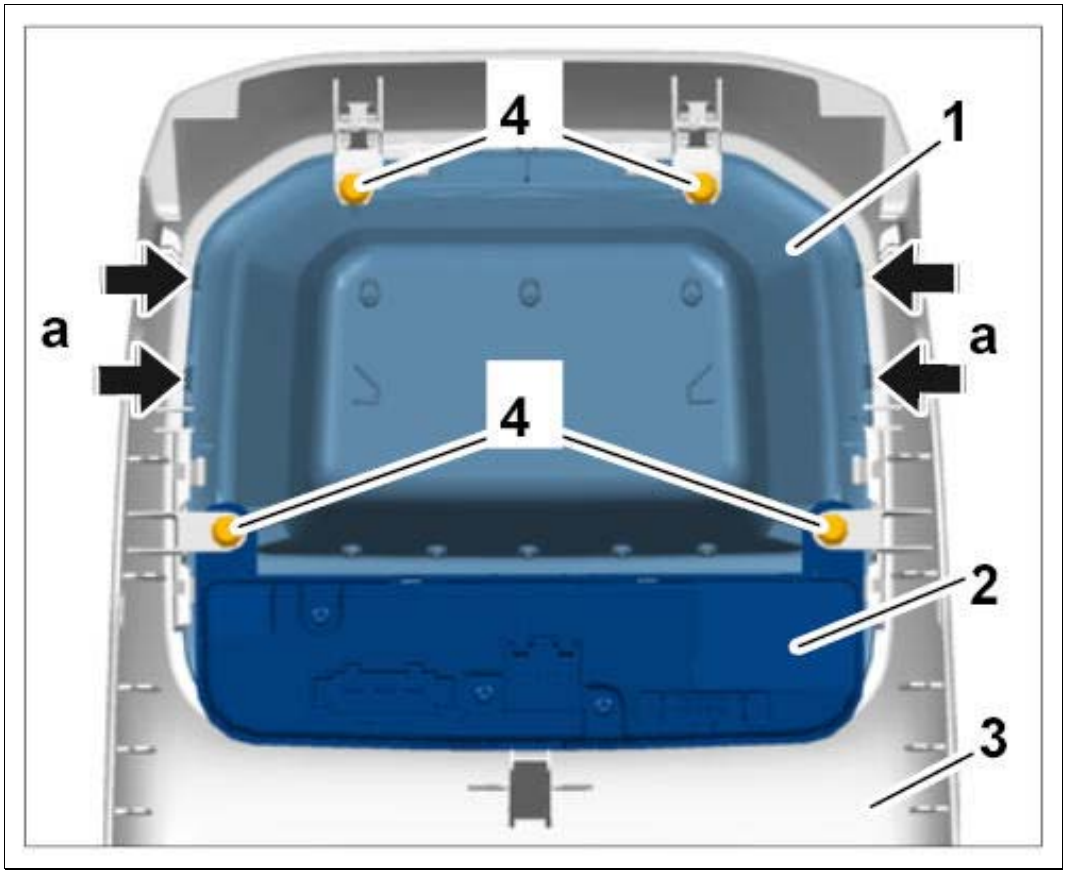

Courtesy of PORSCHE CARS NORTH AMERICA, INC.

2. Carefully disengage locking mechanisms **-1-** at the top and bottom of the storage compartment **-2-** and pull regulator for rear heated seats **-3-** out of the storage compartment.

Fig 2: Removing Rear Heated Seats Regulator

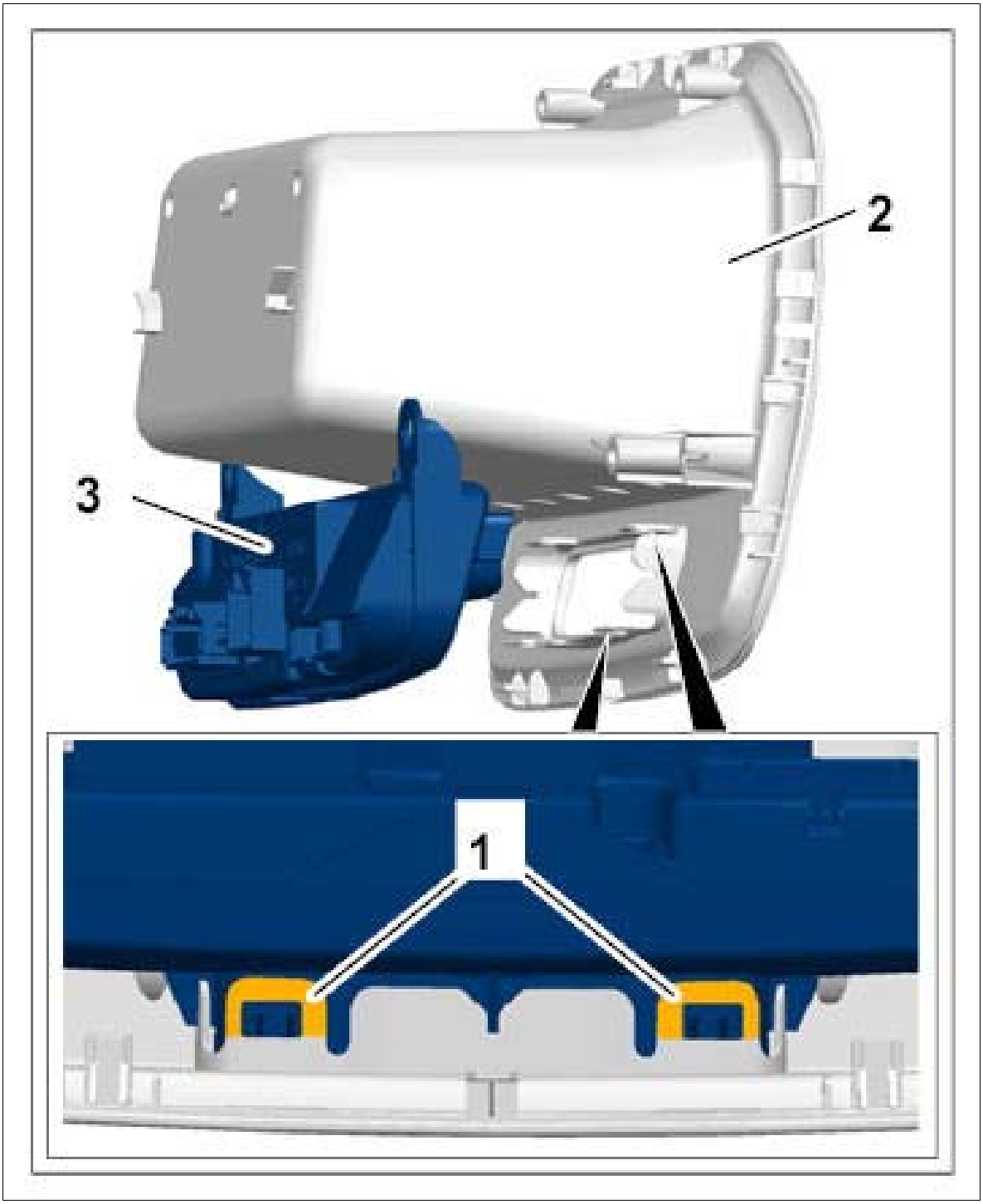

Courtesy of PORSCHE CARS NORTH AMERICA, INC.

WM 742619 REMOVING AND INSTALLING REGULATOR FOR REAR HEATED SEATS (ALL MODELS) > INSTALLING REGULATOR FOR REAR HEATED SEATS

1. Installation is performed in reverse order to removal.

WM 742619 REMOVING AND INSTALLING REGULATOR FOR REAR HEATED SEATS (ALL MODELS) > SUBSEQUENT WORK

1. Install covering frame for center console. → Installing Covering Frame For Center Console

WM 742855 REPLACING HEATING ELEMENT FOR FRONT SEAT (ALL MODELS) > INFORMATION

The heating element for the front seat cannot be replaced separately. It can only be replaced together with the front padding. → 741055 REPLACING PADDING FOR FRONT SEAT

WM 742955 REPLACING HEATING ELEMENT FOR FRONT BACKREST (ALL MODELS) > INFORMATION

The heating element for the front backrest cannot be replaced separately. It can only be replaced together with padding for front backrest → 741755 REPLACING PADDING FOR FRONT BACKREST or cover for front backrest → 741955 REPLACING COVER FOR FRONT BACKREST .

WM 743055 REPLACING HEATING ELEMENT FOR REAR SEAT (ALL MODELS) > INFORMATION

The heating element for the rear seat cannot be replaced separately. It can only be replaced together with the rear seat cushion or cover for rear seat. → 744955 REPLACING PADDING FOR REAR SEAT SURFACE → 745055 REPLACING COVER FOR REAR SEAT

WM 743155 REPLACING HEATING ELEMENT FOR REAR BACKREST (ALL MODELS) > INFORMATION

The heating element for the rear backrest cannot be replaced separately. It can only be replaced together with padding for rear backrest or cover for rear backrest. → 745255 REPLACING PADDING FOR REAR BACKREST → 745355 REPLACING COVER FOR REAR BACKREST

WM 744919 REMOVING AND INSTALLING PADDING FOR REAR SEAT SURFACE (ALL MODELS) > COMPONENT INFORMATION > INSTALLATION POSITION

Fig 1: Identifying Rear Seat Surface Padding Installation Position

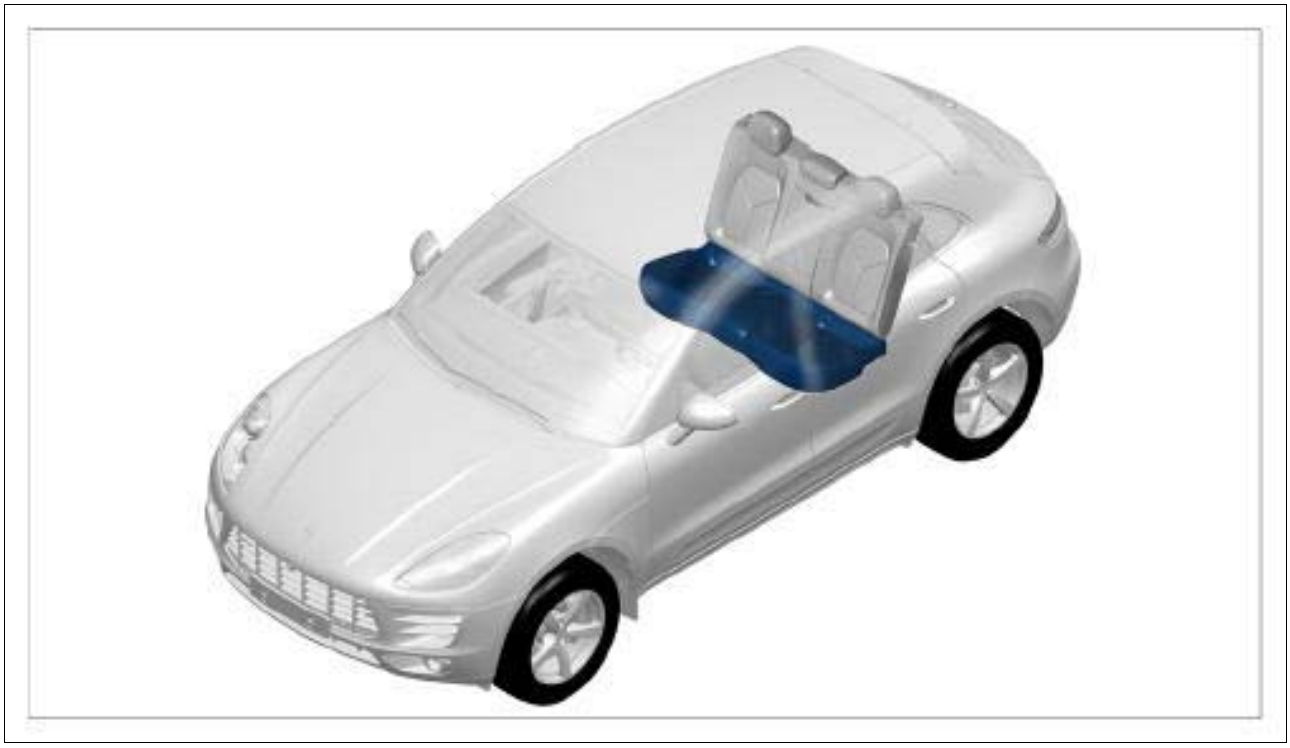

Courtesy of PORSCHE CARS NORTH AMERICA, INC.

WM 744919 REMOVING AND INSTALLING PADDING FOR REAR SEAT SURFACE (ALL MODELS) > PRELIMINARY WORK

1. Remove rear seat. → Removing rear seat

WM 744919 REMOVING AND INSTALLING PADDING FOR REAR SEAT SURFACE (ALL MODELS) > REMOVING PADDING FOR REAR SEAT SURFACE

1. Place rear seat on a clean surface with the top side down.
2. Unclip cover tensioner **-1- (-arrows-)** .
3. Loosen cover piping **-2-** from the retaining strips **-3-** all the way around.

   Information

Fig 1: Loosening Rear Seat Cover

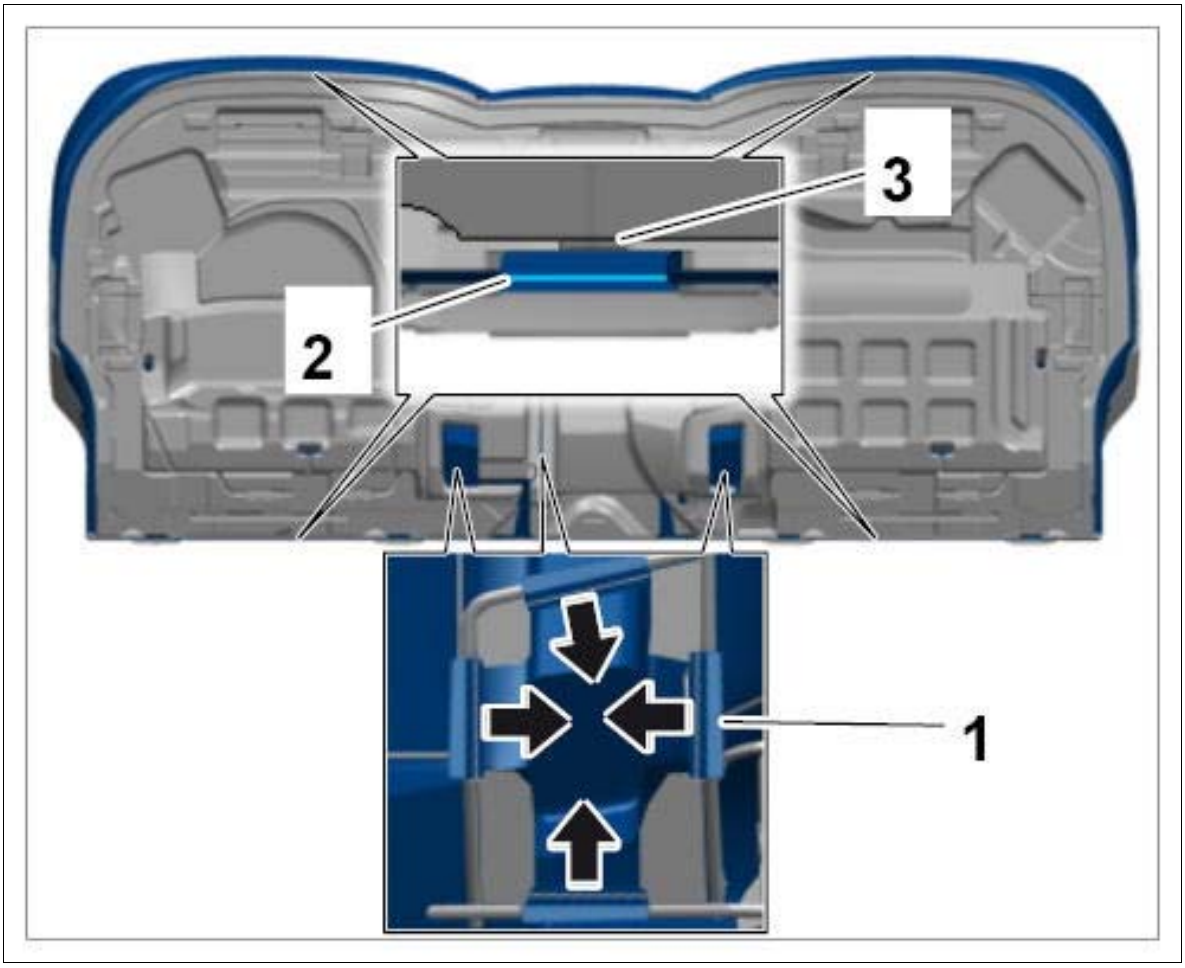

Courtesy of PORSCHE CARS NORTH AMERICA, INC.

Detach padding from the cover and secure it, see → Loosening Padding For Rear Seat Surface

WM 744919 REMOVING AND INSTALLING PADDING FOR REAR SEAT SURFACE (ALL MODELS) > INSTALLING PADDING FOR REAR SEAT SURFACE

Information

Detach padding from the cover and secure it, see → Loosening Padding For Rear Seat Surface

1. Clip in cover tensioner **-1- (-arrows-)** .
2. Clip cover piping **-2-** into the retaining strip **-3-** all the way around.

Fig 1: Installing Cover Tensioner

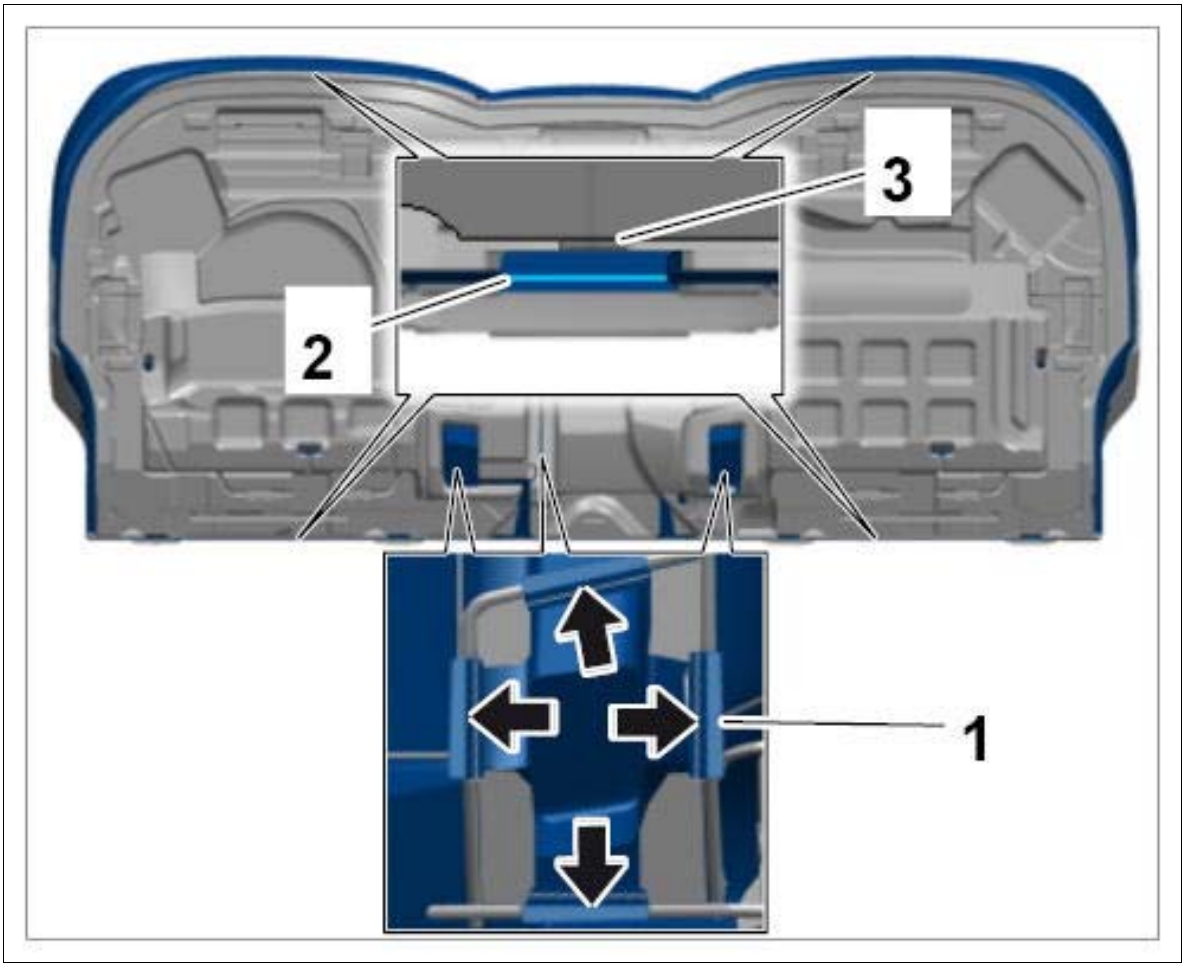

Courtesy of PORSCHE CARS NORTH AMERICA, INC.

WM 744919 REMOVING AND INSTALLING PADDING FOR REAR SEAT SURFACE (ALL MODELS) > SUBSEQUENT WORK

1. Install rear seat. → Installing rear seat

WM 744955 REPLACING PADDING FOR REAR SEAT SURFACE (ALL MODELS) > TOOLS

Designation	Type	Number	Description	

cushion clip pliers	Commercially available tool	Nr.130		

WM 744955 REPLACING PADDING FOR REAR SEAT SURFACE (ALL MODELS) > COMPONENT INFORMATION > INSTALLATION POSITION

Fig 1: Identifying Rear Seat Surface Padding Installation Position

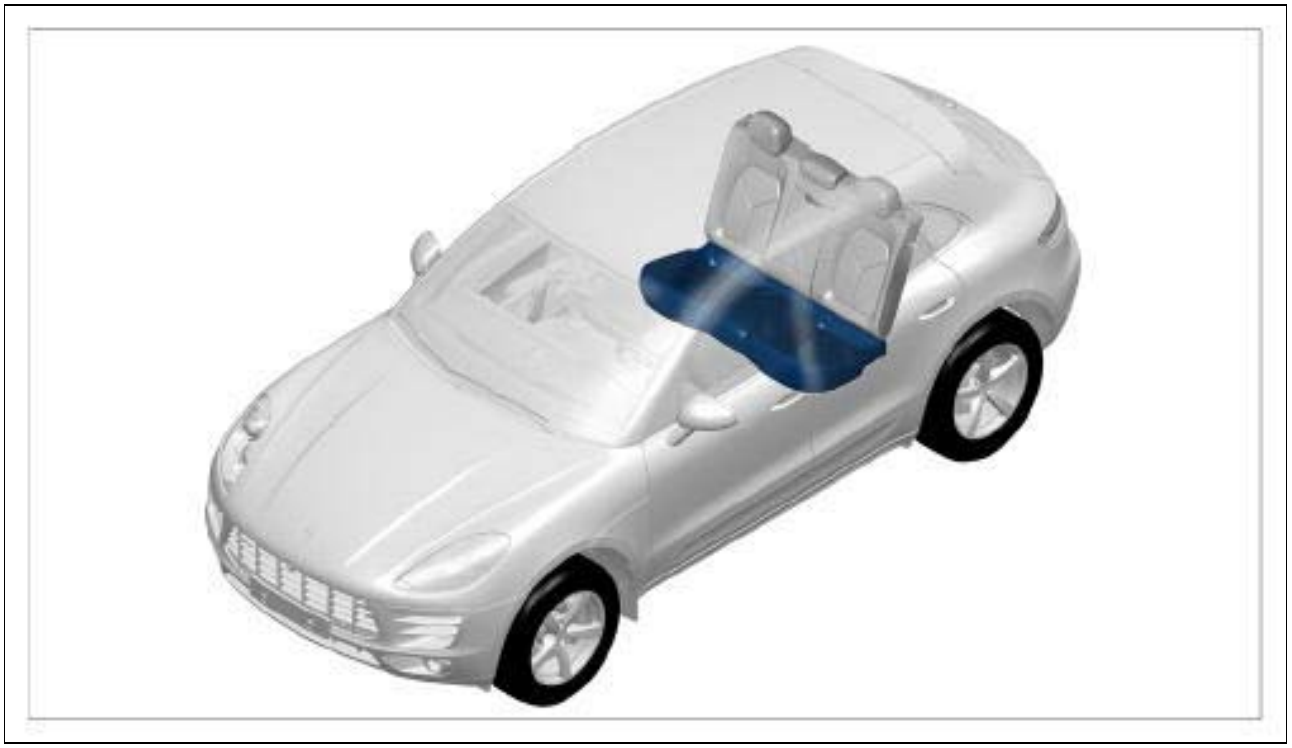

Courtesy of PORSCHE CARS NORTH AMERICA, INC.

WM 744955 REPLACING PADDING FOR REAR SEAT SURFACE (ALL MODELS) > PRELIMINARY WORK

1. Remove padding for rear seat surface. → Removing Padding For Rear Seat Surface

WM 744955 REPLACING PADDING FOR REAR SEAT SURFACE (ALL MODELS) > LOOSENING PADDING FOR REAR SEAT SURFACE

1. Cut metal cushion clips (**-markings-**) using side cutters.

Fig 1: Removing Rear Seat Cover (Basic/Comfort)

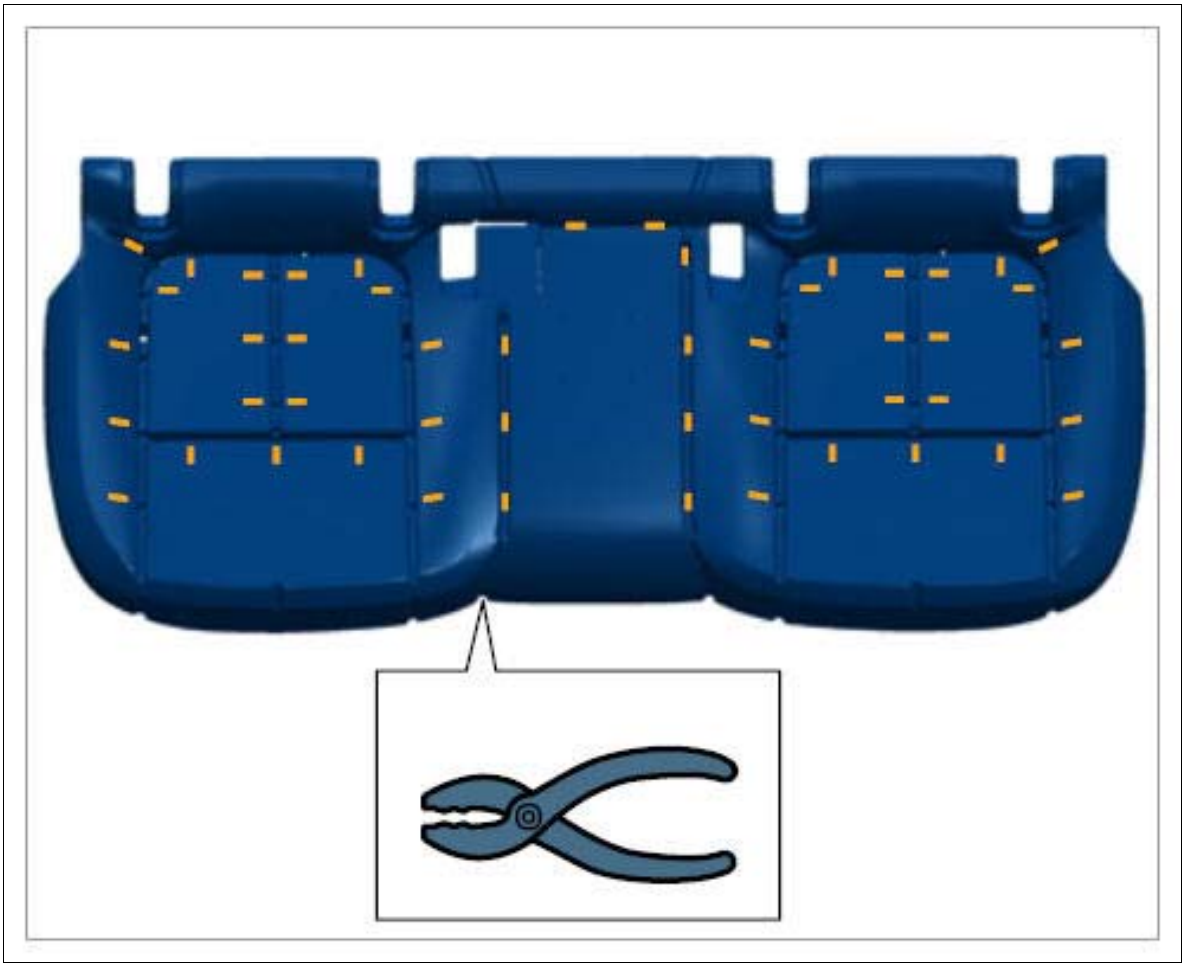

Courtesy of PORSCHE CARS NORTH AMERICA, INC.

Fig 2: Removing Rear Seat Cover (Sport)

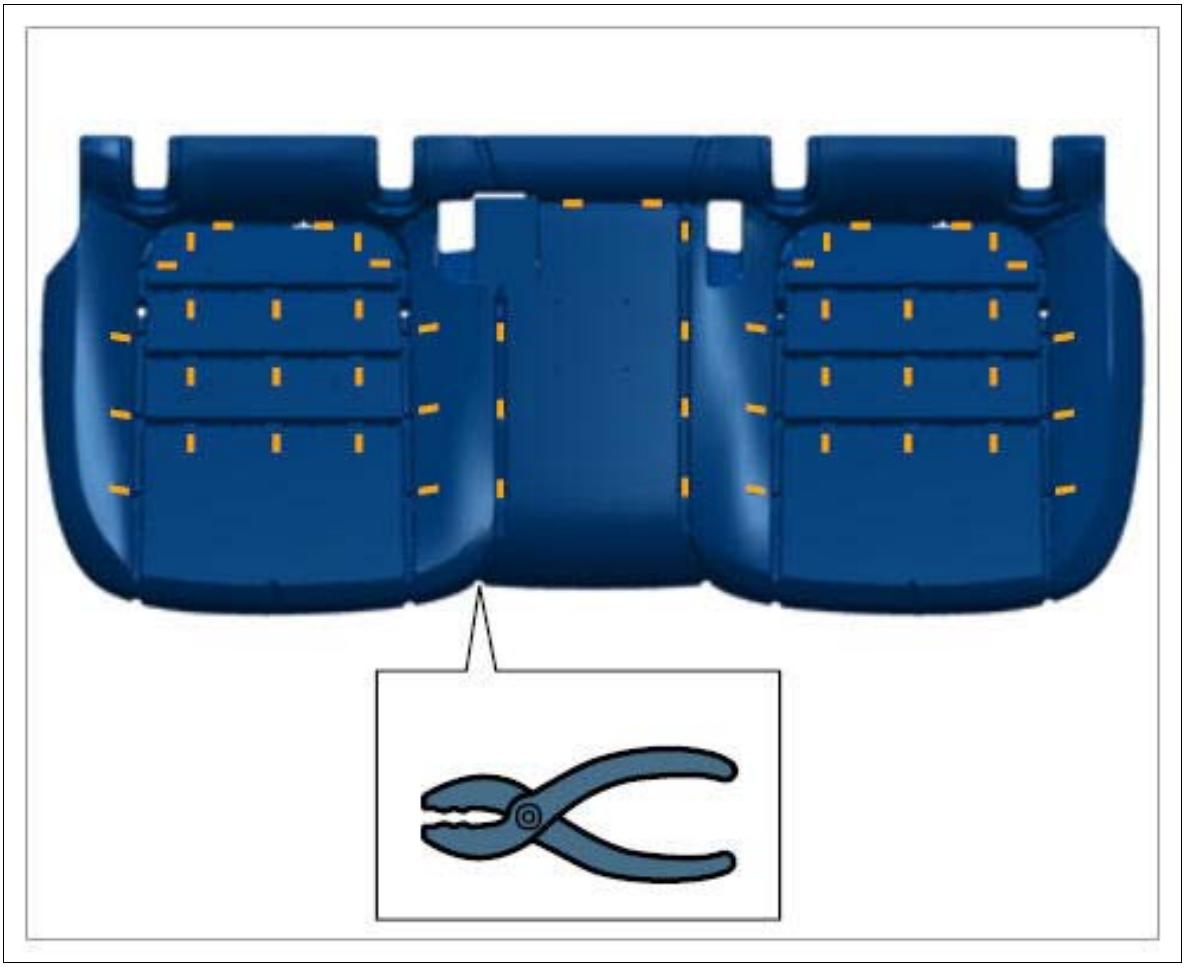

Courtesy of PORSCHE CARS NORTH AMERICA, INC.

2. Remove remaining parts of cushion clips and detach padding from the cover.
3. **For vehicles with heated seats:** Disconnect electric plug connections, disconnect electric lines from the cushion carrier and remove with the cover.

WM 744955 REPLACING PADDING FOR REAR SEAT SURFACE (ALL MODELS) > SECURING PADDING FOR REAR SEAT SURFACE

1. Position seat cover on the padding.
2. **For vehicles with heated seats:** Pull electric plug connection for seat heating **-1-** through the openings in the padding **-2-** , connect them and secure lines in the padding.

Fig 1: Connecting Electric Plug Connection

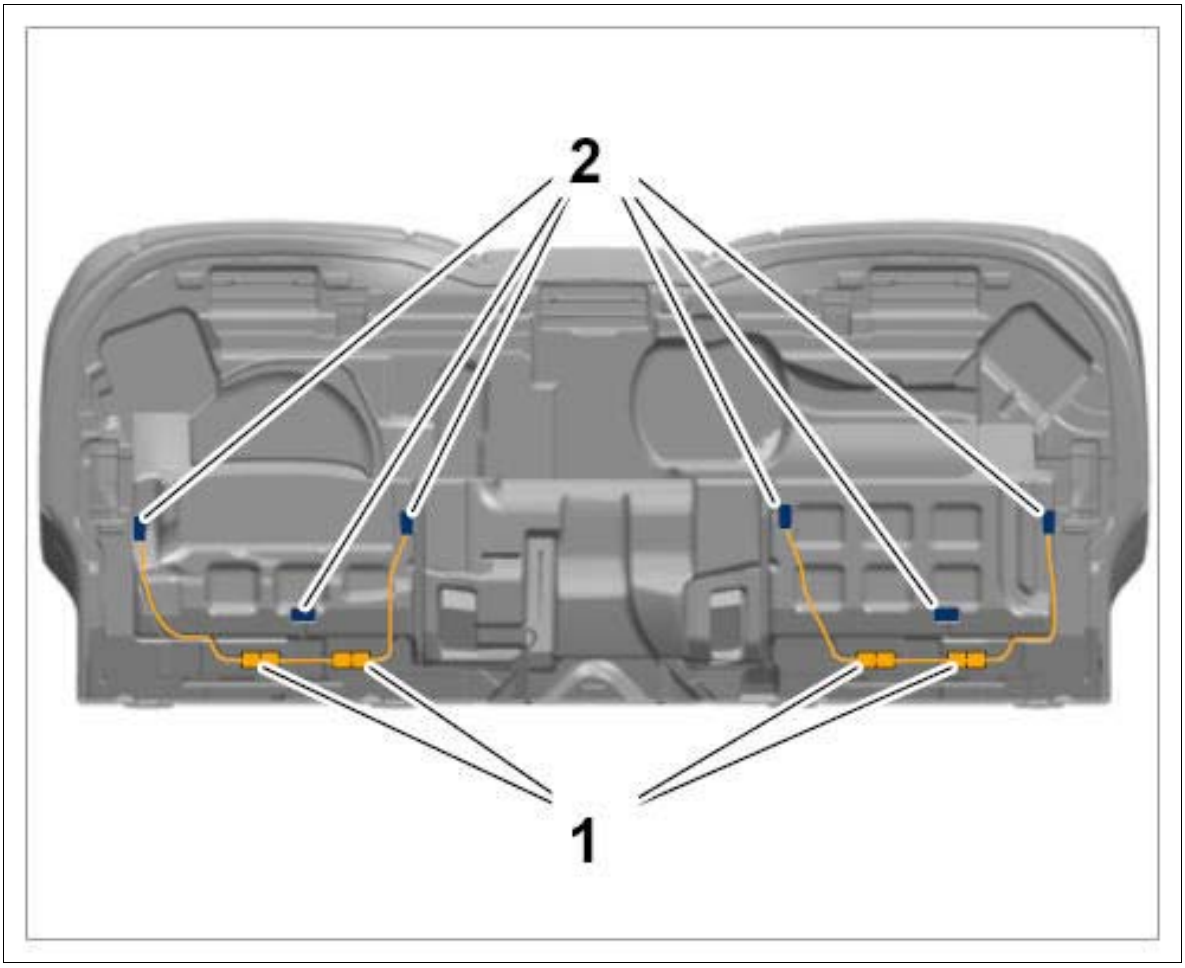

Courtesy of PORSCHE CARS NORTH AMERICA, INC.

3. Secure cushion clips.

   Secure metal struts in the cover **-A-** using **cushion clip pliers Nr.130** in the sequence shown **-1 - 47-** and **-1 - 51-** to the fastening points on the padding **-B-** .

Fig 2: Installing Rear Seat Cover (Basic/Comfort)

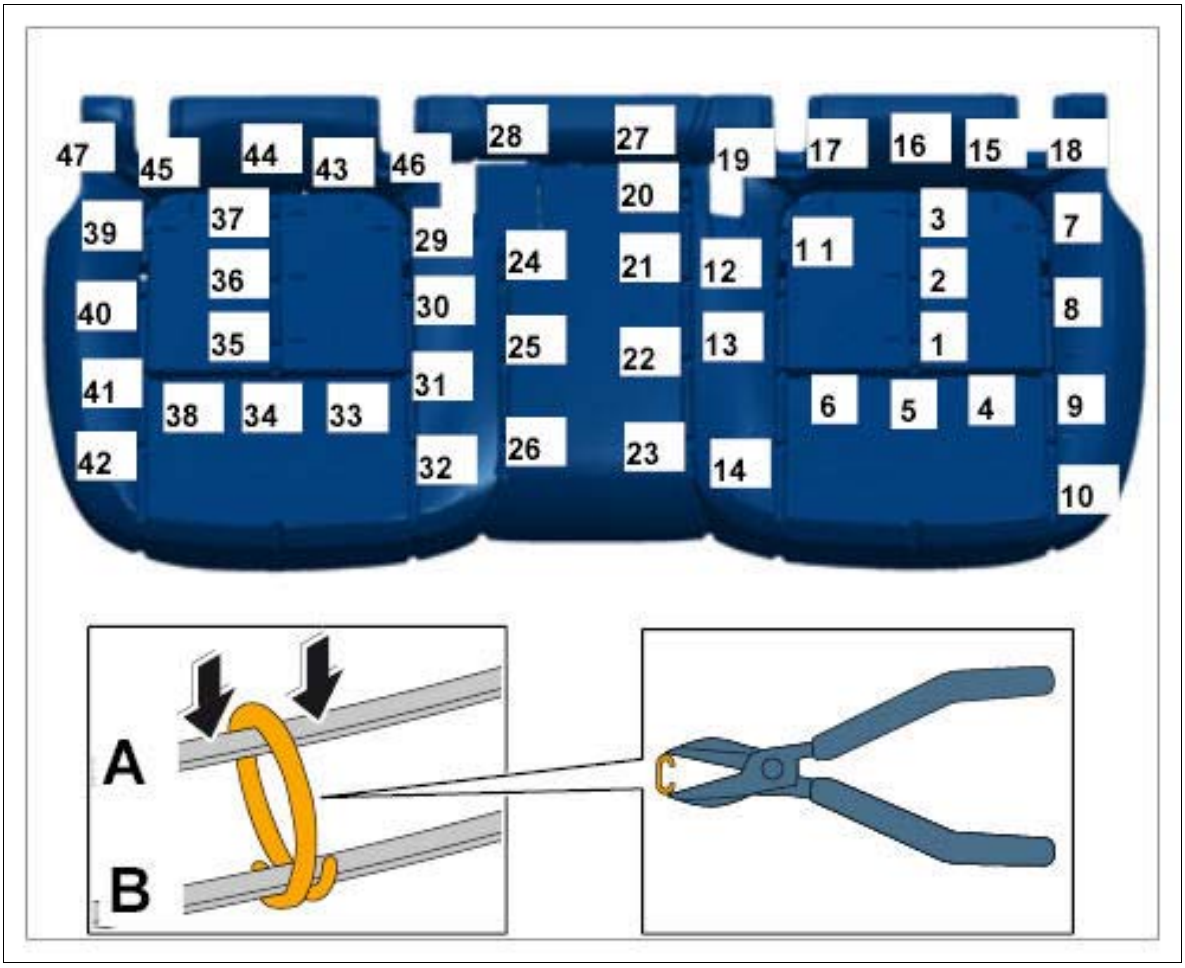

Courtesy of PORSCHE CARS NORTH AMERICA, INC.

Fig 3: Installing Rear Seat Cover (Sport)

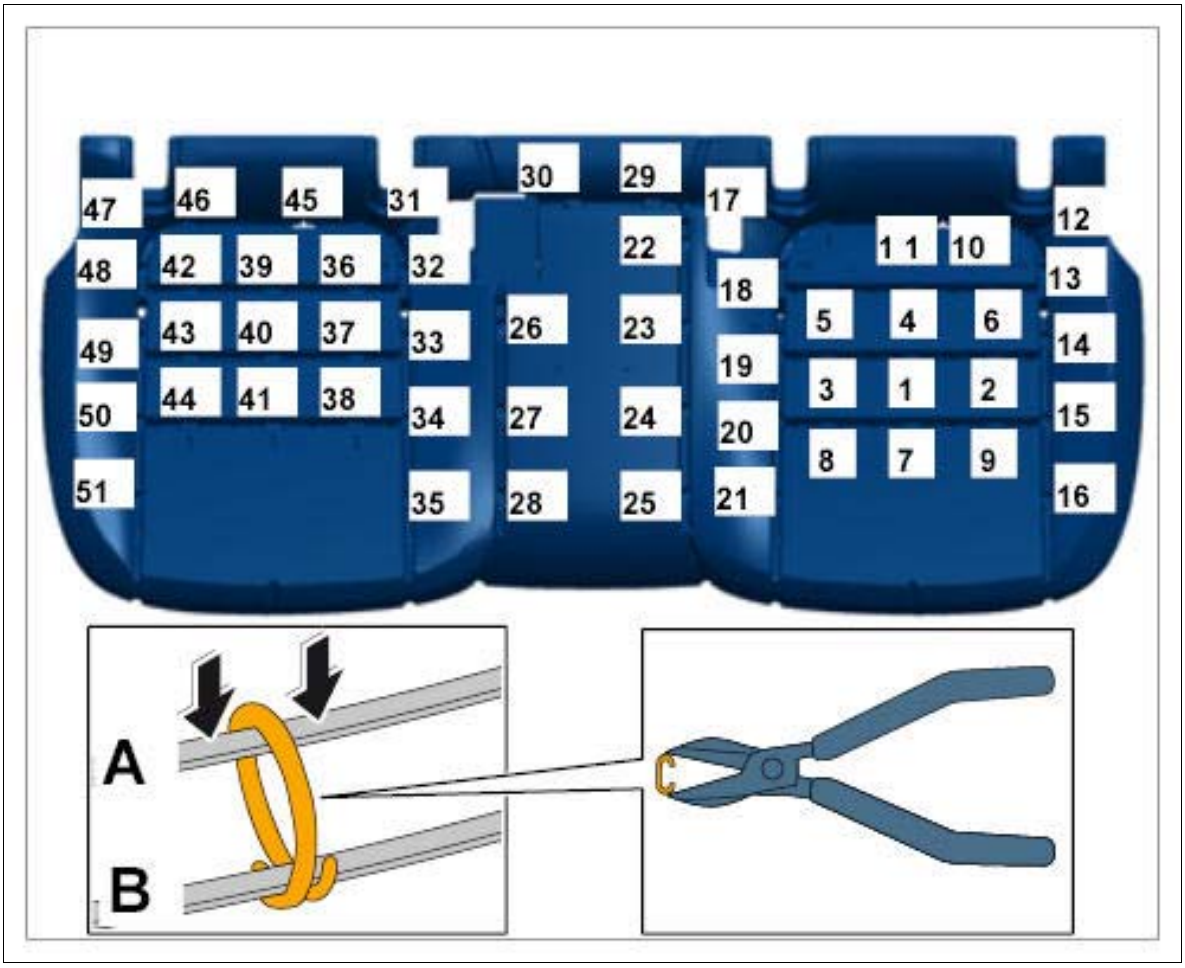

Courtesy of PORSCHE CARS NORTH AMERICA, INC.

WM 744955 REPLACING PADDING FOR REAR SEAT SURFACE (ALL MODELS) > SUBSEQUENT WORK

1. Install padding for rear seat surface. → Installing Padding For Rear Seat Surface

WM 745019 REMOVING AND INSTALLING COVER FOR REAR SEAT (ALL MODELS) > COMPONENT INFORMATION > INSTALLATION POSITION

Fig 1: Identifying Rear Seat Cover Installation Position

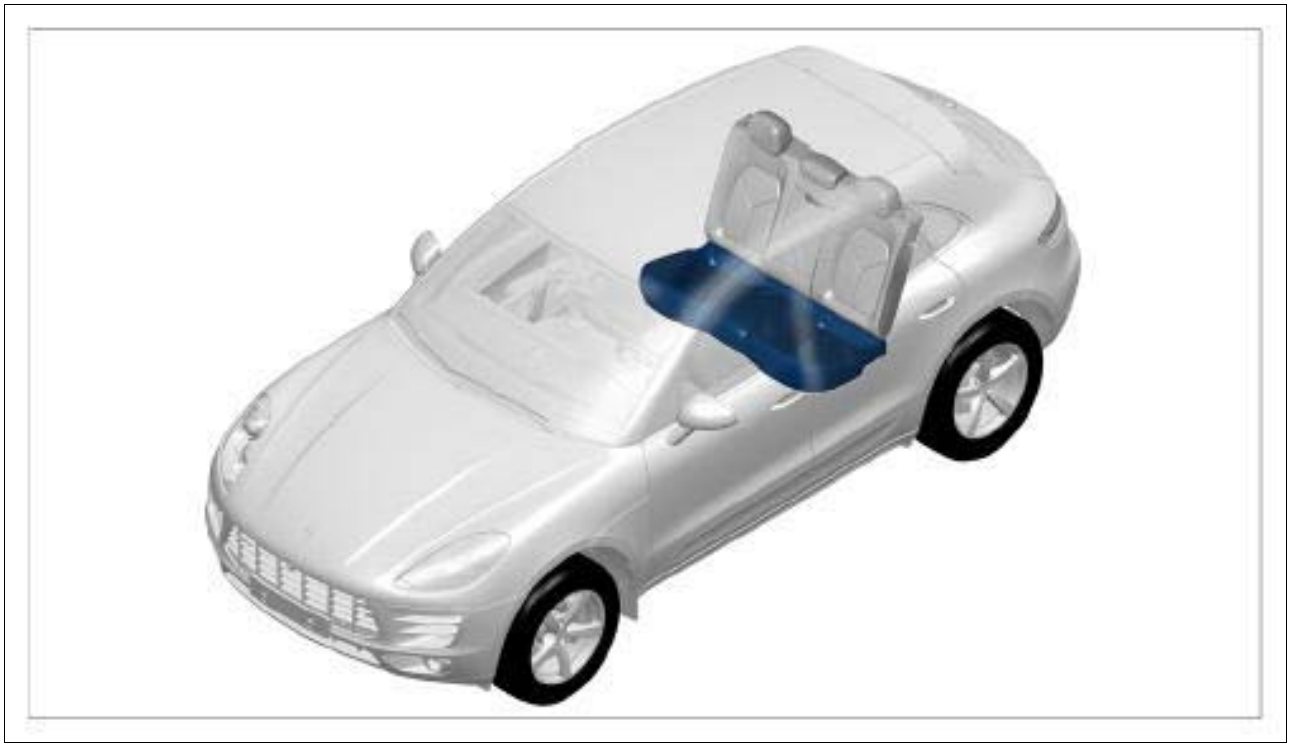

Courtesy of PORSCHE CARS NORTH AMERICA, INC.

WM 745019 REMOVING AND INSTALLING COVER FOR REAR SEAT (ALL MODELS) > PRELIMINARY WORK

1. Remove rear seat. → Removing rear seat

WM 745019 REMOVING AND INSTALLING COVER FOR REAR SEAT (ALL MODELS) > REMOVING COVER FOR REAR SEAT

1. Place rear seat on a clean surface with the top side down.
2. Loosen cover tensioner **-1- (-arrows-)** .
3. Loosen cover piping **-2-** from the retaining strips **-3-** all the way around.

Fig 1: Loosening Rear Seat Cover Tensioner

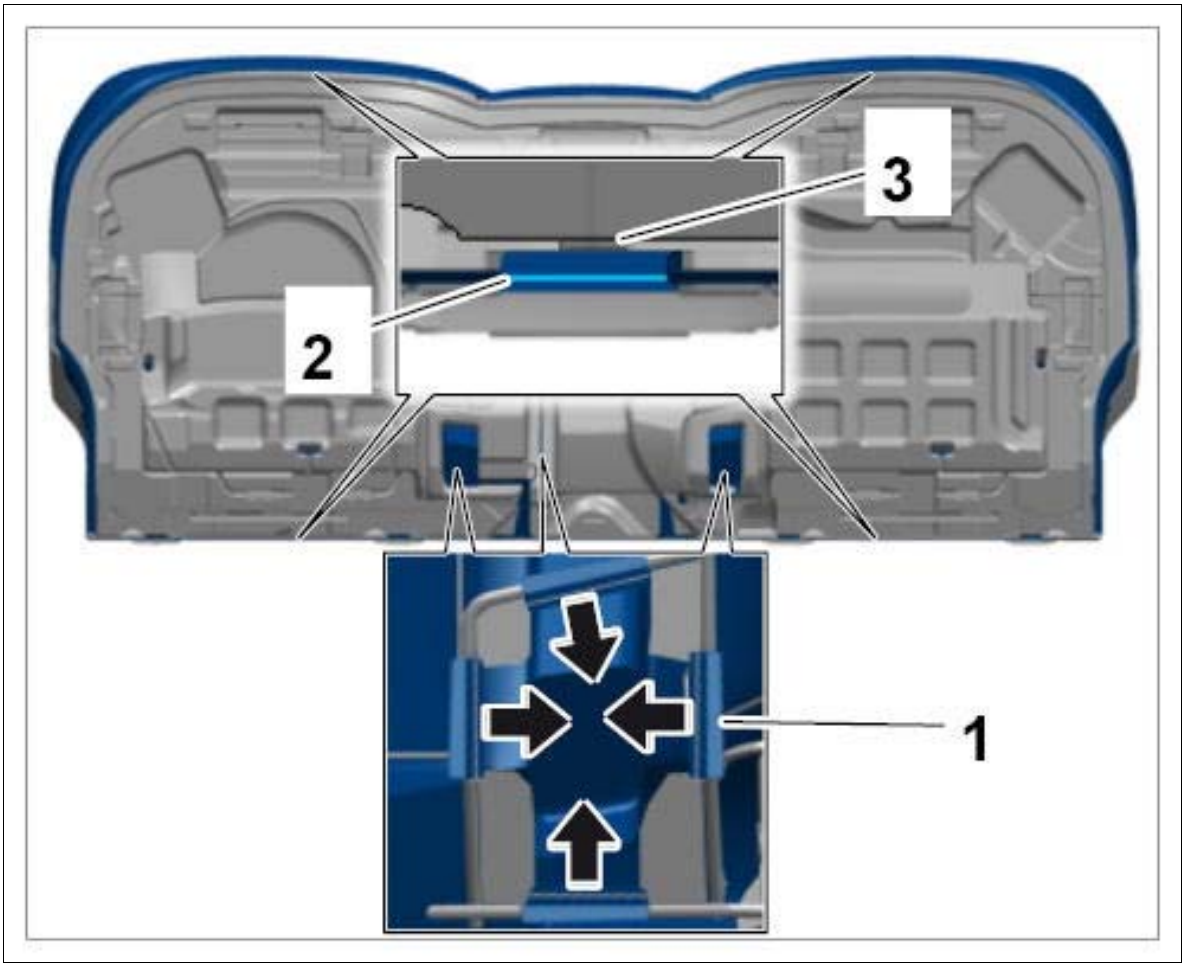

Courtesy of PORSCHE CARS NORTH AMERICA, INC.

Information

Detach padding from the cover and secure it, see → Loosening Cover For Rear Seat

WM 745019 REMOVING AND INSTALLING COVER FOR REAR SEAT (ALL MODELS) > INSTALLING COVER FOR REAR SEAT

Information

Detach padding from the cover and secure it, see → Loosening Cover For Rear Seat

1. Secure cover tensioner **-1- (-arrows-)** .
2. Secure cover piping **-2-** into the retaining strip **-3-** all the way around.

Fig 1: Securing Cover Tensioner On Rear Seat

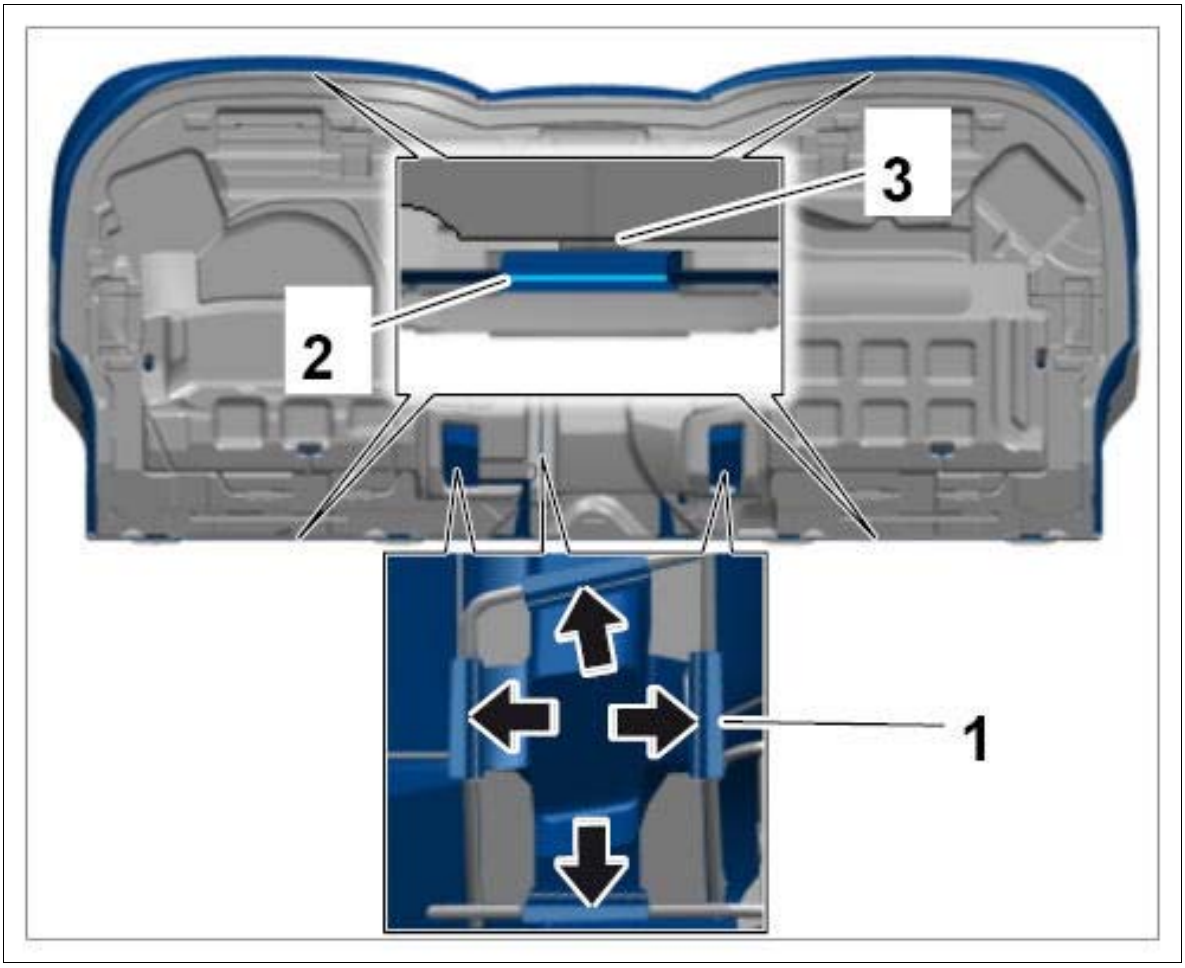

Courtesy of PORSCHE CARS NORTH AMERICA, INC.

WM 745019 REMOVING AND INSTALLING COVER FOR REAR SEAT (ALL MODELS) > SUBSEQUENT WORK

1. Install rear seat. → Installing rear seat

WM 745055 REPLACING COVER FOR REAR SEAT (ALL MODELS) > TOOLS

Designation	Type	Number	Description	

cushion clip pliers	Commercially available tool	Nr.130		

WM 745055 REPLACING COVER FOR REAR SEAT (ALL MODELS) > COMPONENT INFORMATION > INSTALLATION POSITION

Fig 1: Identifying Rear Seat Cover Installation Position

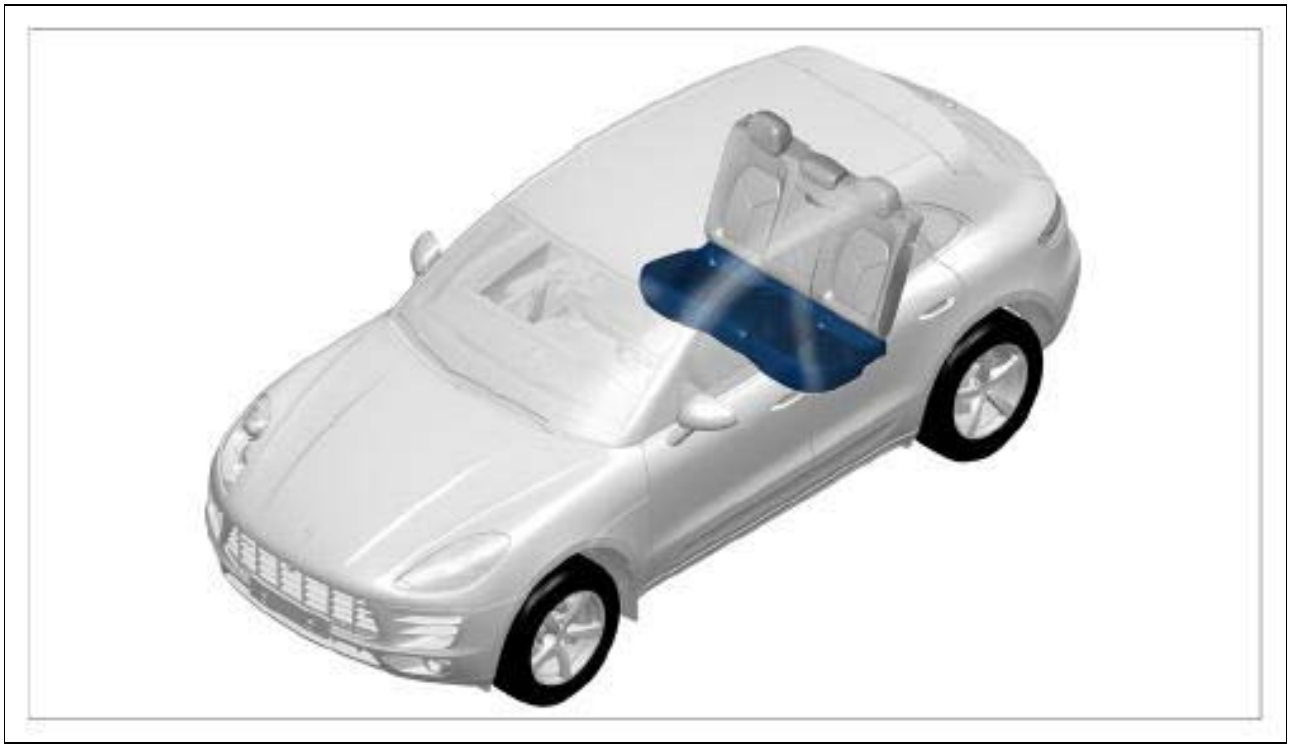

Courtesy of PORSCHE CARS NORTH AMERICA, INC.

WM 745055 REPLACING COVER FOR REAR SEAT (ALL MODELS) > PRELIMINARY WORK

1. Install cover for rear seat. → Installing Cover For Rear Seat

WM 745055 REPLACING COVER FOR REAR SEAT (ALL MODELS) > LOOSENING COVER FOR REAR SEAT

1. Cut metal cushion clips (**-markings-**) using side cutters.

Fig 1: Removing Rear Seat Cover (Basic/Comfort)

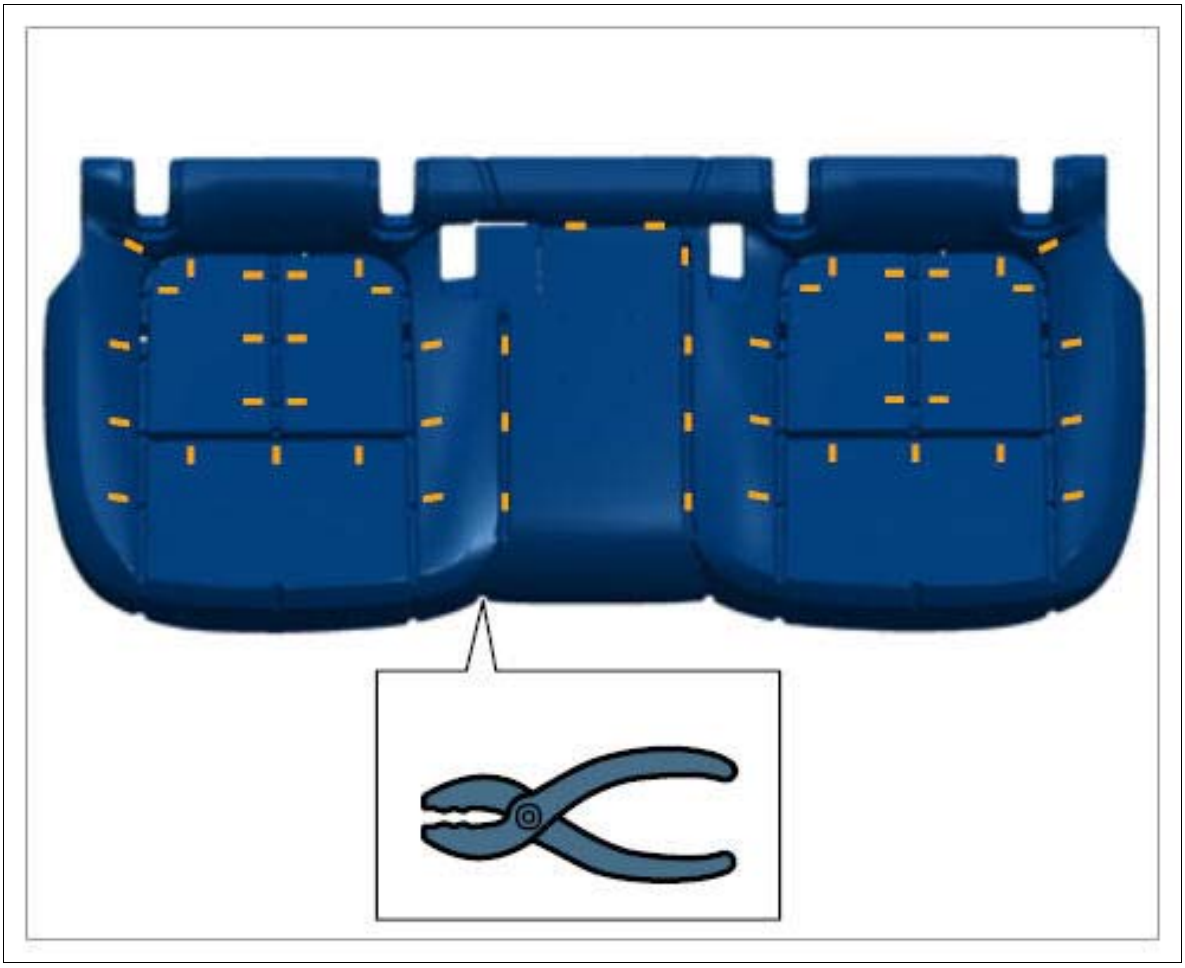

Courtesy of PORSCHE CARS NORTH AMERICA, INC.

Fig 2: Removing Rear Seat Cover (Sport)

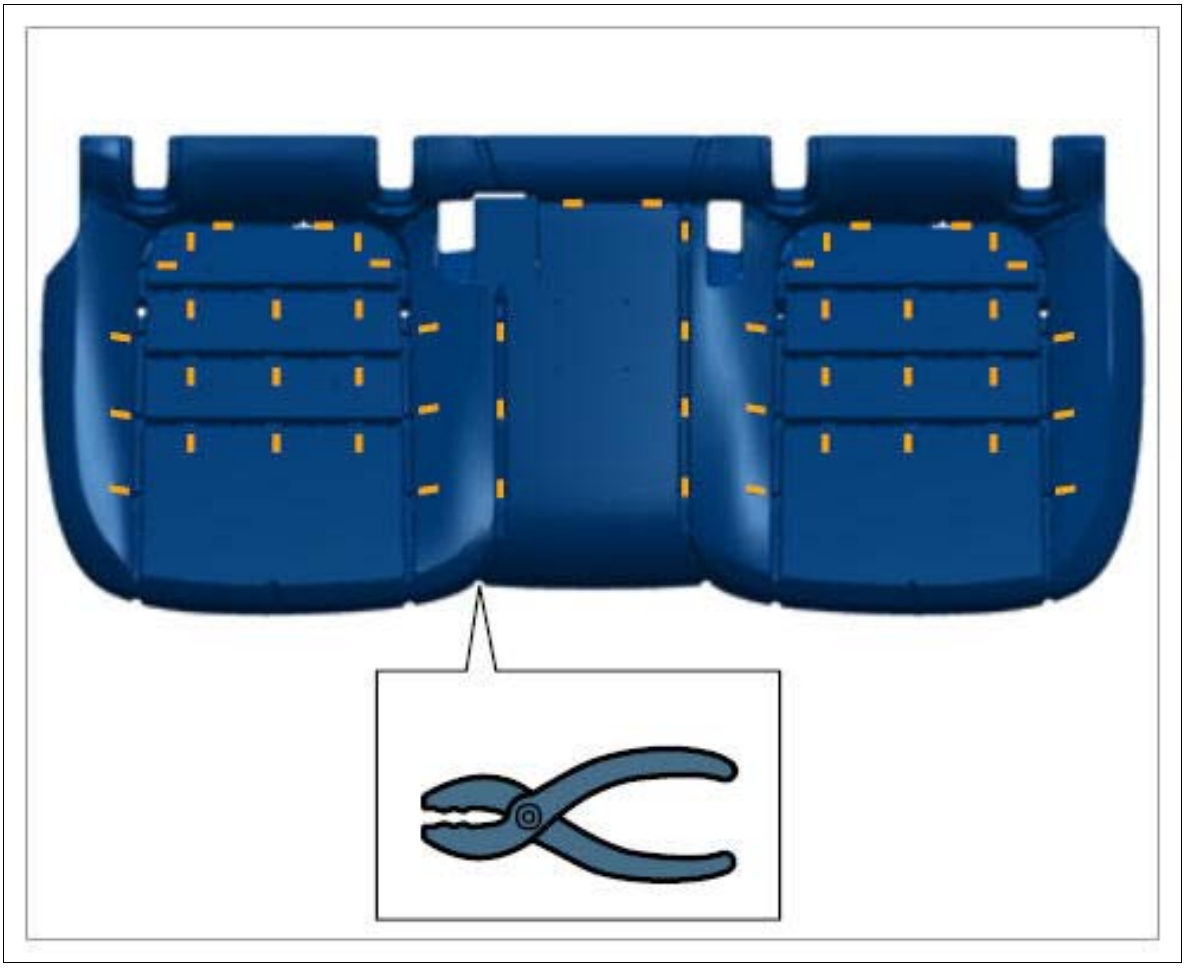

Courtesy of PORSCHE CARS NORTH AMERICA, INC.

2. Remove remaining parts of cushion clips and detach padding from the cover.
3. **For vehicles with heated seats:** Loosen electric lines from the cushion carrier and remove with the cover.

WM 745055 REPLACING COVER FOR REAR SEAT (ALL MODELS) > SECURING COVER FOR REAR SEAT

1. Position seat cover on the padding.
2. **For vehicles with heated seats:** Pull electric plug connection for seat heating **-1-** through the openings in the padding **-2-** , connect them and secure lines in the padding.

Fig 1: Connecting Electric Plug Connection

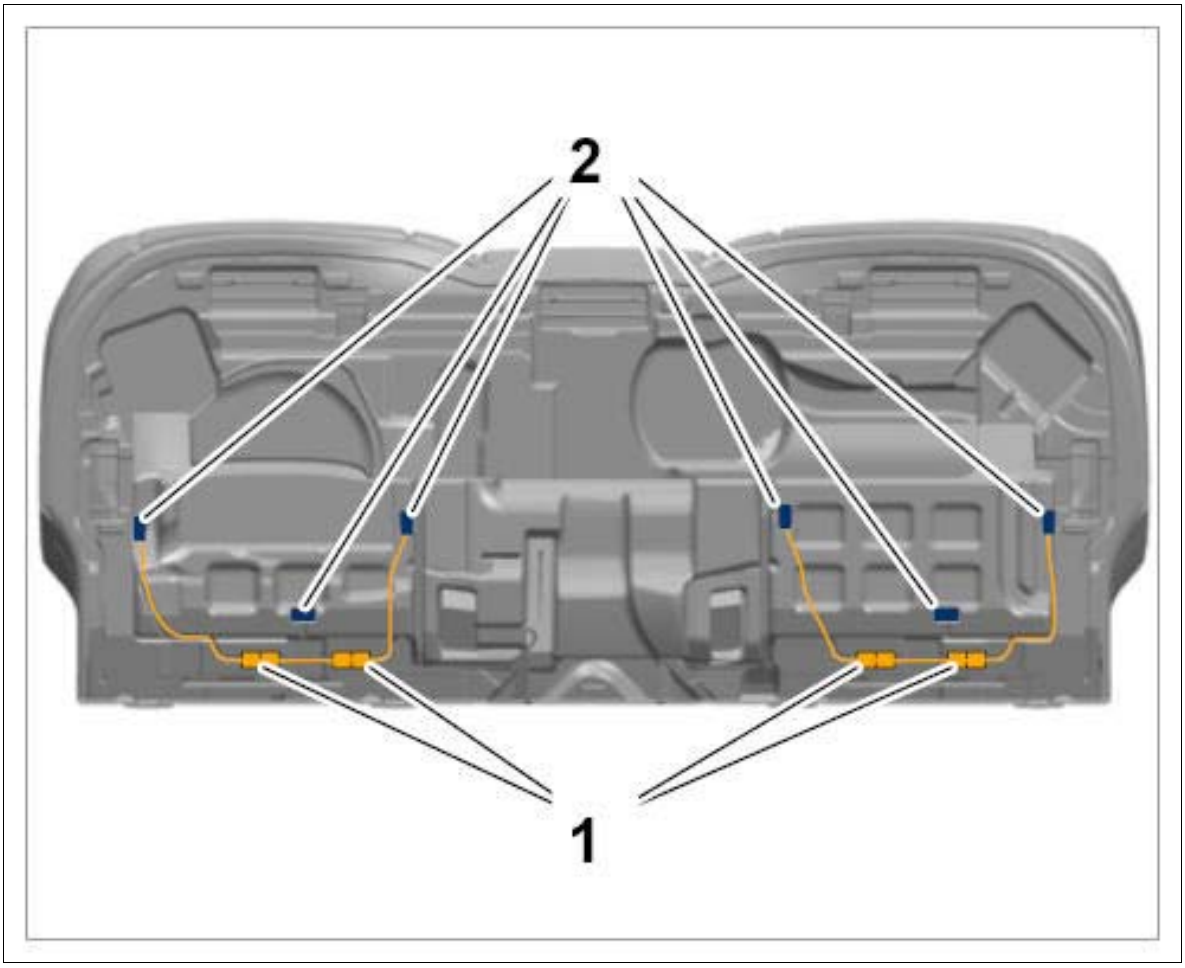

Courtesy of PORSCHE CARS NORTH AMERICA, INC.

3. Secure cushion clips.

   Secure metal struts in the cover **-A-** using **cushion clip pliers Nr.130** in the sequence shown **-1 - 47-** and **-1 - 51-** to the fastening points on the padding **-B-** .

Fig 2: Installing Rear Seat Cover (Basic/Comfort)

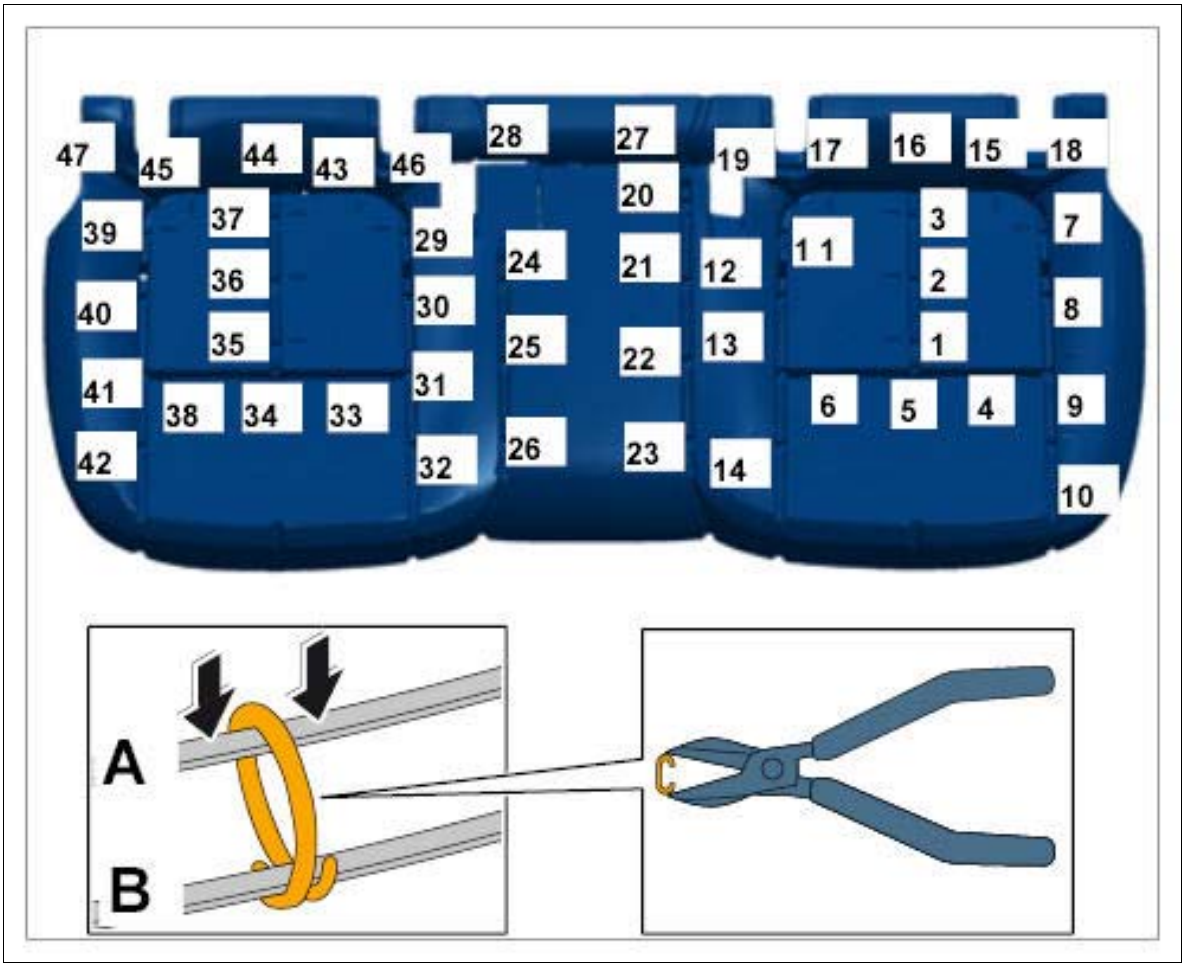

Courtesy of PORSCHE CARS NORTH AMERICA, INC.

Fig 3: Installing Rear Seat Cover (Sport)

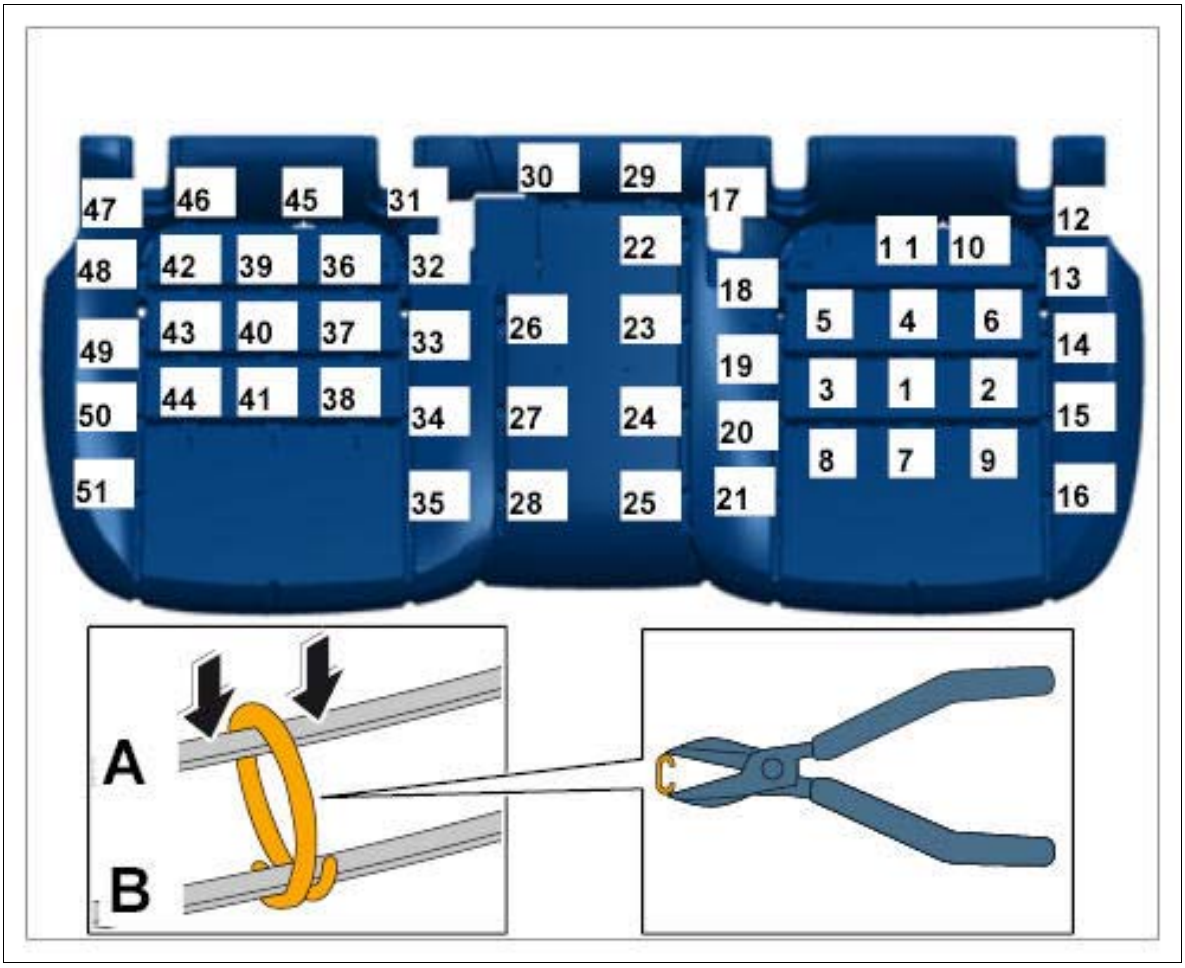

Courtesy of PORSCHE CARS NORTH AMERICA, INC.

WM 745055 REPLACING COVER FOR REAR SEAT (ALL MODELS) > SUBSEQUENT WORK

1. Install cover for rear seat. → Installing Cover For Rear Seat

WM 745219 REMOVING AND INSTALLING PADDING FOR REAR BACKREST (ALL MODELS) > COMPONENT INFORMATION > INSTALLATION POSITION

Fig 1: Identifying Backrest Installation Position



Courtesy of PORSCHE CARS NORTH AMERICA, INC.

WM 745219 REMOVING AND INSTALLING PADDING FOR REAR BACKREST (ALL MODELS) > PRELIMINARY WORK

1. Remove backrest. → Removing rear backrest
2. Remove headrest. → Removing headrest

WM 745219 REMOVING AND INSTALLING PADDING FOR REAR BACKREST (ALL MODELS) > REMOVING PADDING FOR REAR BACKREST

1. Pull cover for backrest lock **-1-** off the backrest **-2- (-arrow-)** .

Fig 1: Removing Backrest Lock Cover

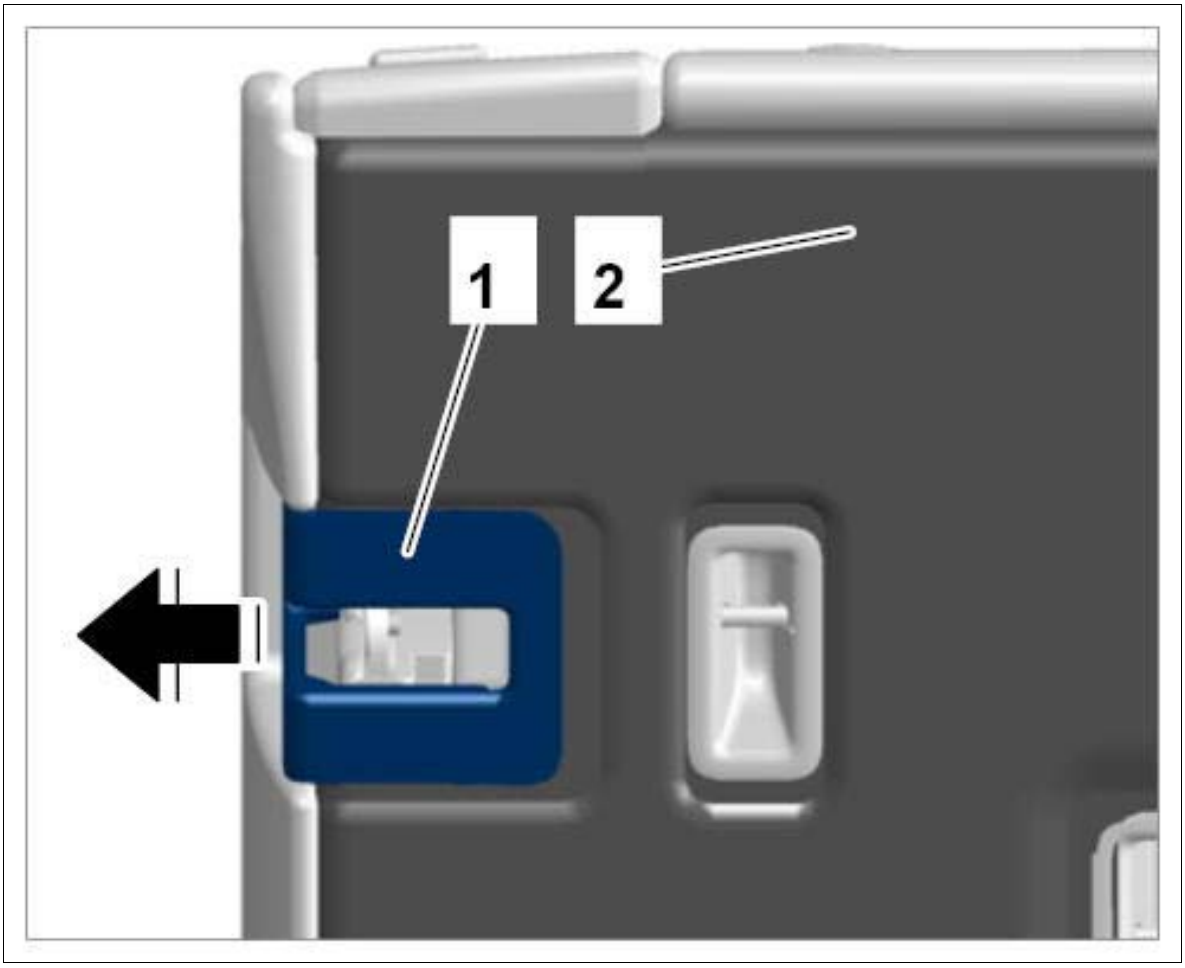

Courtesy of PORSCHE CARS NORTH AMERICA, INC.

2. Pull off cover for backrest locking mechanism **-1-** in an upward direction using a suitable tool (e.g. a hook) **-2- (-arrow-**).

Fig 2: Removing Cover On Backrest Locking Mechanism

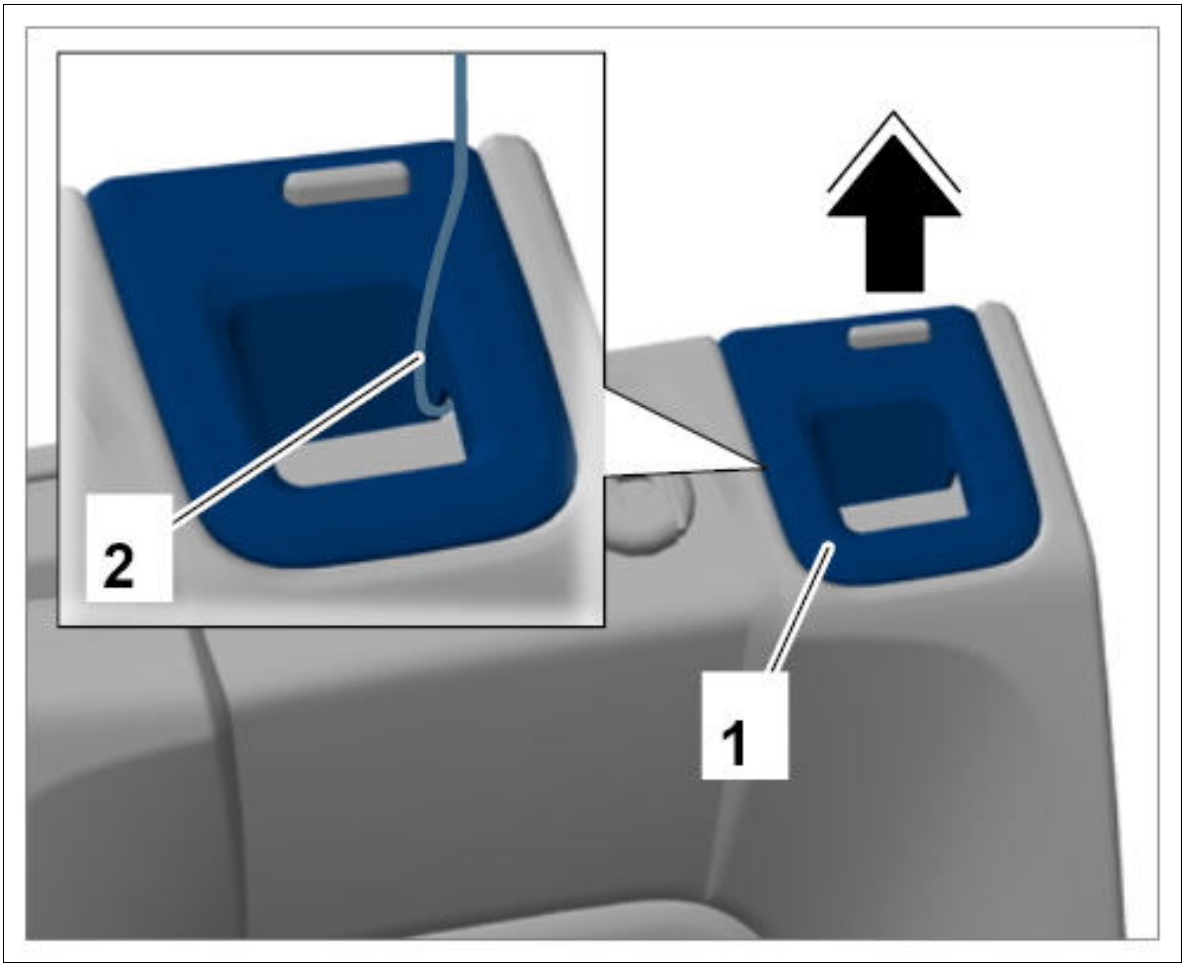

Courtesy of PORSCHE CARS NORTH AMERICA, INC.

3. Loosen cover piping **-1-** all the way around (**-A, B, C, D-**) and remove it from the backrest **-2-** . To do this, carefully open the retaining strip **-3-** using a plastic wedge and pull out the cover piping **-1-** .

Fig 3: Loosening Cover Piping On Rear Backrest

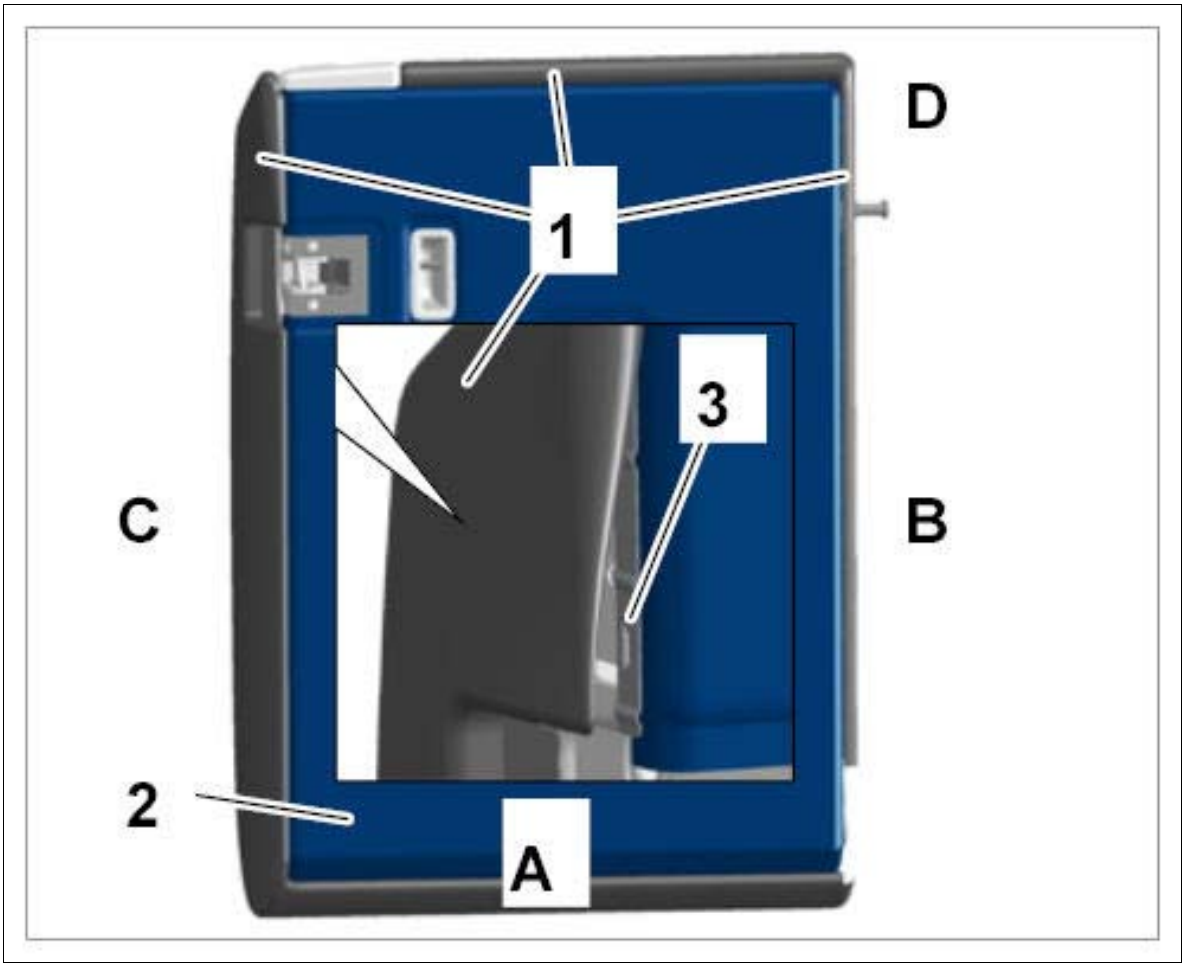

Courtesy of PORSCHE CARS NORTH AMERICA, INC.

4. Remove padding with cover

Information

Detach padding from the cover and secure it, see → Detaching Padding For Rear Backrest

WM 745219 REMOVING AND INSTALLING PADDING FOR REAR BACKREST (ALL MODELS) > INSTALLING PADDING FOR REAR BACKREST

Information

Detach padding from the cover and secure it, see → Detaching Padding For Rear Backrest

1. Secure cover piping **-1-** . To do this, start from the top and moving to the underside of the backrest (**-A, B, C, D-**), press the cover piping **-1-** into the retaining strips **-2-** .

Fig 1: Installing Cover Piping On Rear Backrest

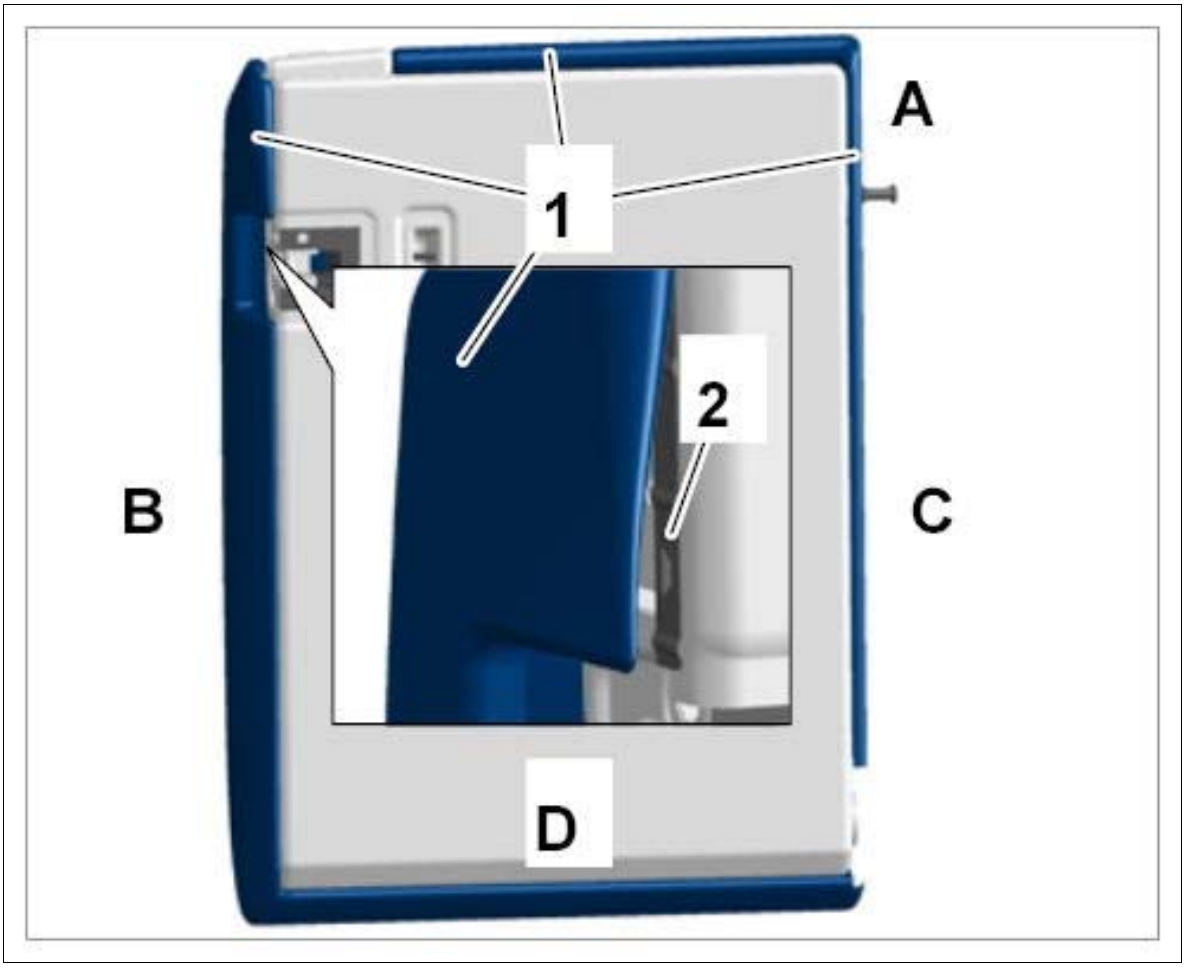

Courtesy of PORSCHE CARS NORTH AMERICA, INC.

2. Fit cover on locking mechanism for backrest **-1-** from above and clip it in **-arrow-** .

Fig 2: Installing Locking Mechanism Cover

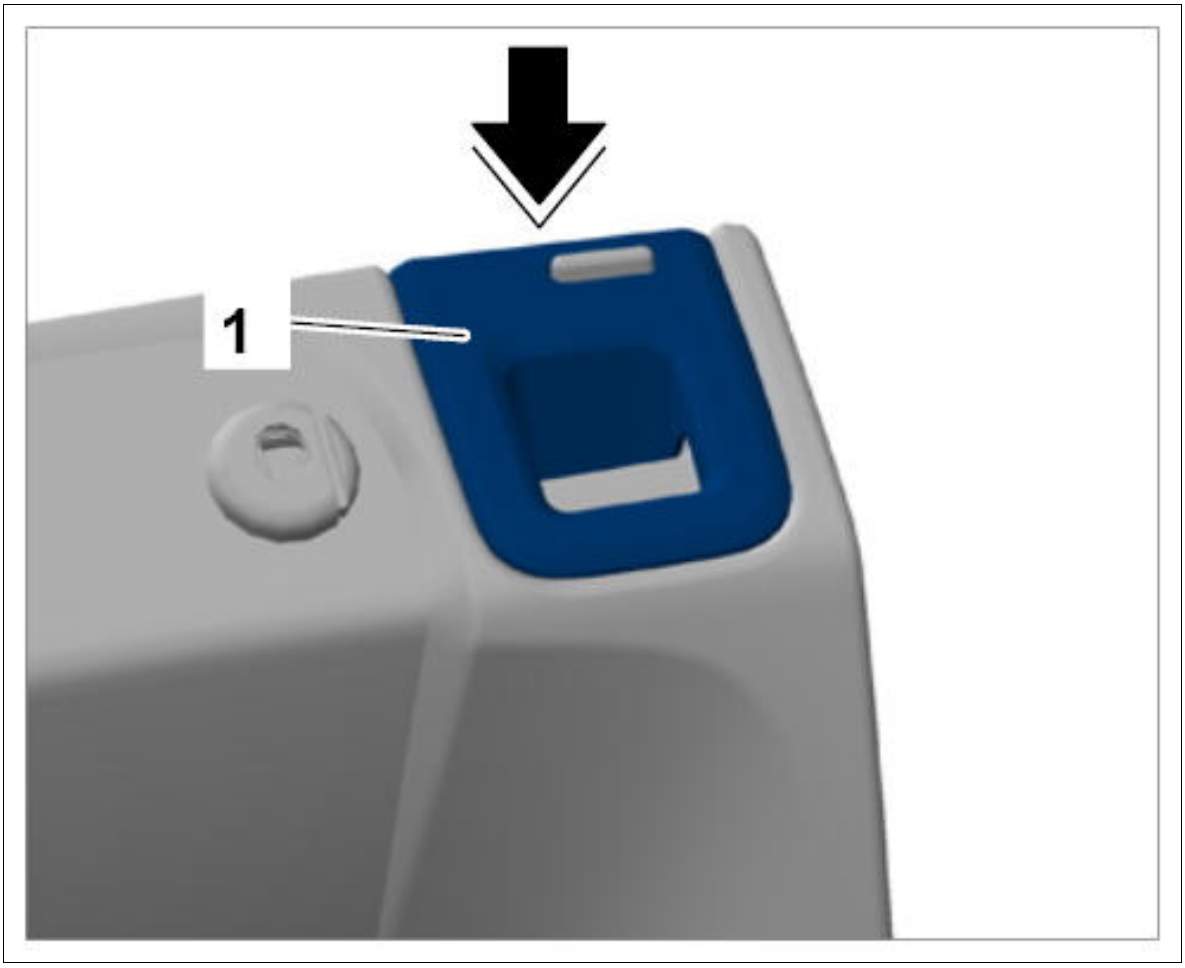

Courtesy of PORSCHE CARS NORTH AMERICA, INC.

3. Fit cover on lock for backrest **-1-** at the sides and press it on securely **-arrow-** .

Fig 3: Installing Backrest Lock Cover

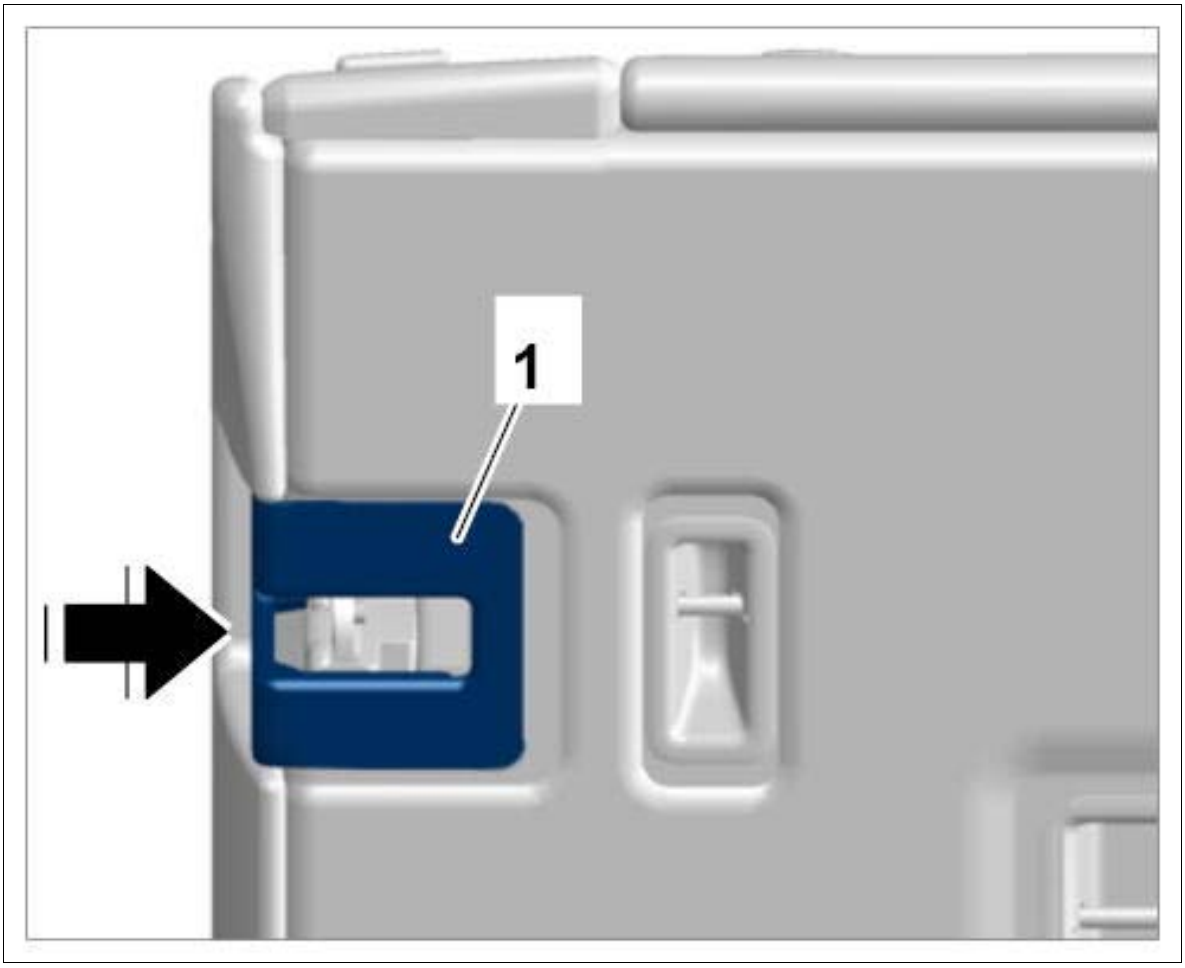

Courtesy of PORSCHE CARS NORTH AMERICA, INC.

WM 745219 REMOVING AND INSTALLING PADDING FOR REAR BACKREST (ALL MODELS) > SUBSEQUENT WORK

1. Install headrest. → Installing headrest
2. Install rear backrest. → Installing rear backrest

WM 745255 REPLACING PADDING FOR REAR BACKREST (ALL MODELS) > TOOLS

Designation	Type	Number	Description	

cushion clip pliers	Commercially available tool	Nr.130		

WM 745255 REPLACING PADDING FOR REAR BACKREST (ALL MODELS) > COMPONENT INFORMATION > INSTALLATION POSITION

Fig 1: Identifying Backrest Installation Position



Courtesy of PORSCHE CARS NORTH AMERICA, INC.

WM 745255 REPLACING PADDING FOR REAR BACKREST (ALL MODELS) > PRELIMINARY WORK

1. Remove padding for rear backrest. → Removing Padding For Rear Backrest

WM 745255 REPLACING PADDING FOR REAR BACKREST (ALL MODELS) > DETACHING PADDING FOR REAR BACKREST

1. Remove cushion clips.

    1. 1.1. Cut metal cushion clips (**-markings-**) using side cutters.

        Fig 1: Cutting Cushion Clips

        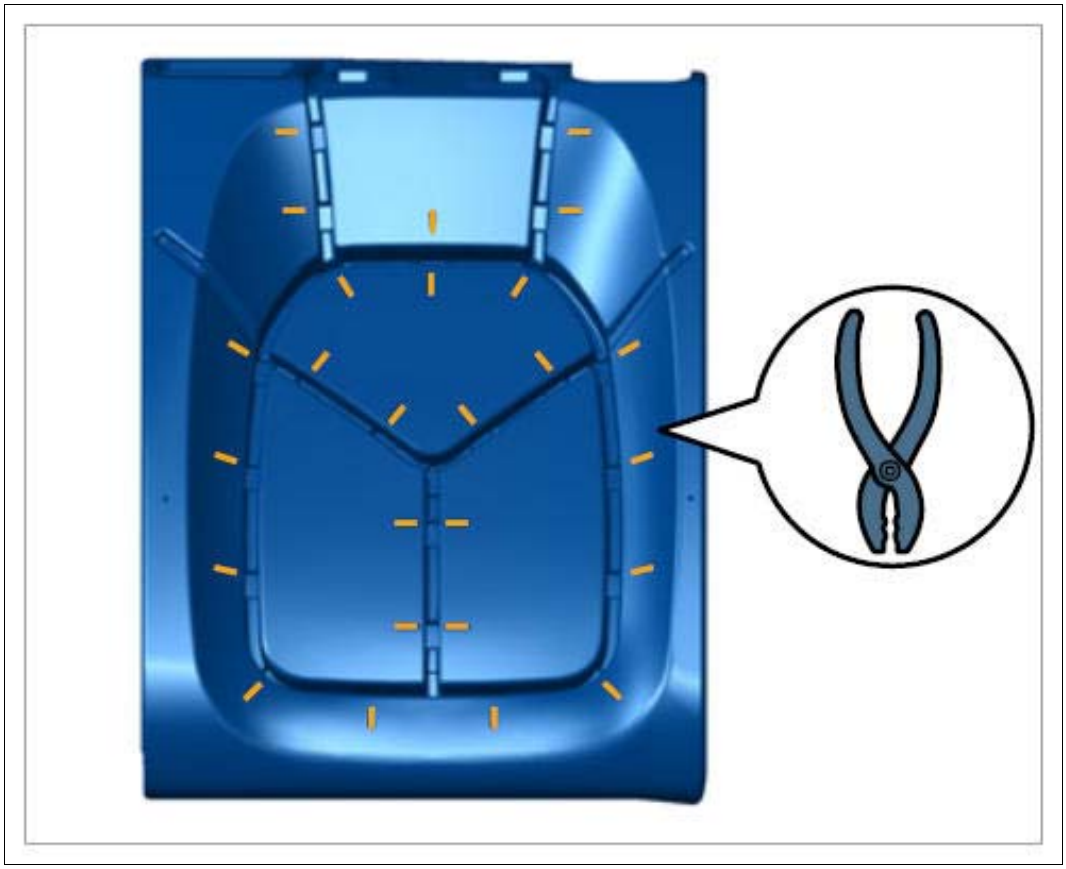

        Courtesy of PORSCHE CARS NORTH AMERICA, INC.

    2. 1.2. Remove remaining parts of cushion clips.

2. **For vehicles with heated seats:** Disconnect electric plug connection for heated seats.

3. Detach padding for rear backrest **-1-** from the cover **-2- (-arrow-)** .

Fig 2: Removing Rear Backrest Padding

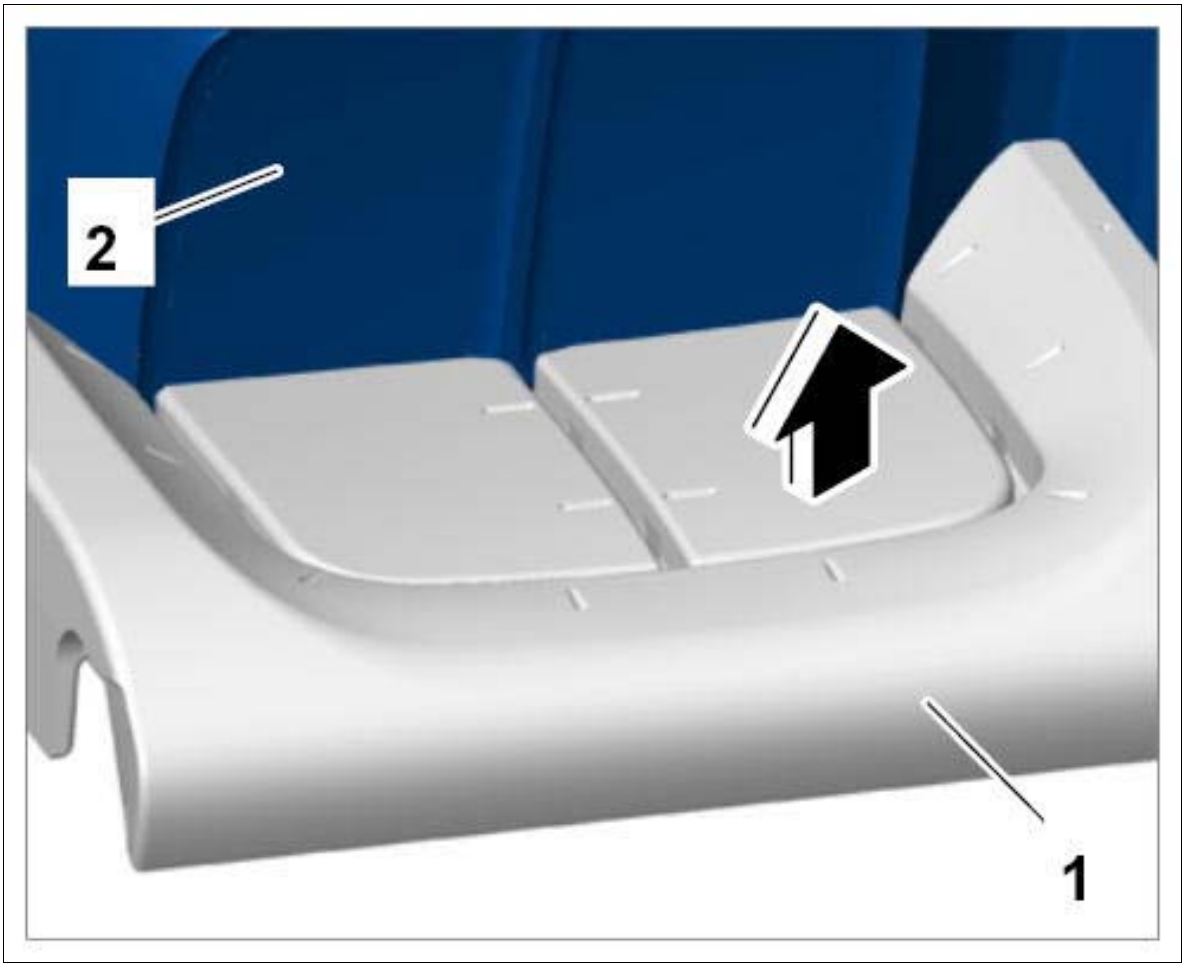

Courtesy of PORSCHE CARS NORTH AMERICA, INC.

WM 745255 REPLACING PADDING FOR REAR BACKREST (ALL MODELS) > SECURING PADDING FOR REAR BACKREST

Information

- Always replace metal cushion clips.
- Reuse plastic cushion clips. Replace defective cushion clips.

1. Align cover **-1-** over the padding for the rear backrest **-arrows-** .

Fig 1: Aligning Cover



Courtesy of PORSCHE CARS NORTH AMERICA, INC.

2. **For vehicles with heated seats:** Connect electric plug connection for heated seats.
3. Fasten cushion clips.

   Secure the metal struts in the cover **-1-** using **cushion clip pliers Nr.130** in the sequence shown (**-arrow A to arrow I-)** to the metal struts of the padding **-2-** .

Fig 2: Securing Metal Struts In Cover

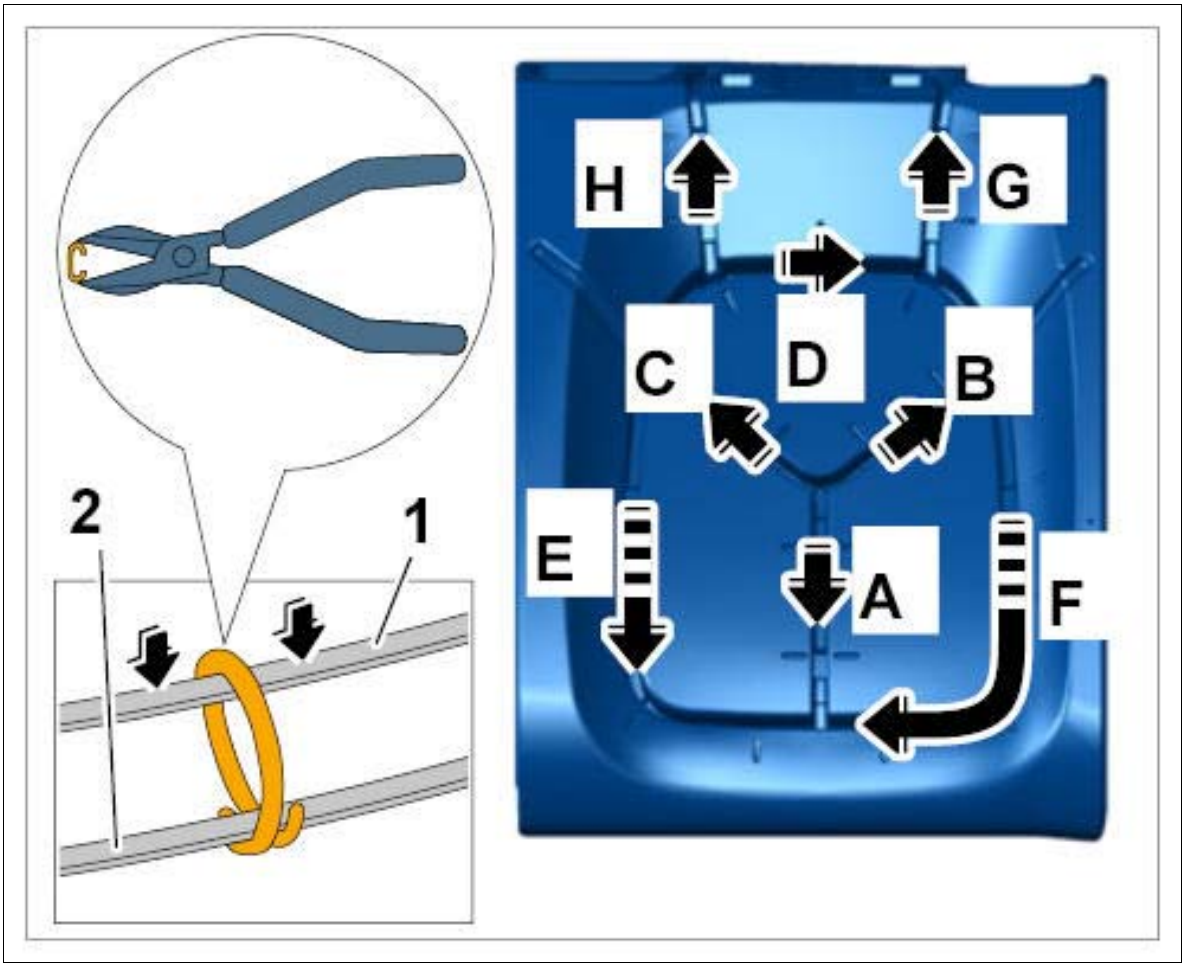

Courtesy of PORSCHE CARS NORTH AMERICA, INC.

WM 745255 REPLACING PADDING FOR REAR BACKREST (ALL MODELS) > SUBSEQUENT WORK

1. Install padding for rear backrest. → Installing Padding For Rear Backrest

WM 745319 REMOVING AND INSTALLING COVER FOR REAR BACKREST (ALL MODELS) > COMPONENT INFORMATION > INSTALLATION POSITION

Fig 1: Identifying Backrest Installation Position



Courtesy of PORSCHE CARS NORTH AMERICA, INC.

WM 745319 REMOVING AND INSTALLING COVER FOR REAR BACKREST (ALL MODELS) > PRELIMINARY WORK

1. Remove backrest. → Removing rear backrest
2. Remove headrest. → Removing headrest

WM 745319 REMOVING AND INSTALLING COVER FOR REAR BACKREST (ALL MODELS) > REMOVING COVER FOR REAR BACKREST

1. Pull cover for backrest lock **-1-** off the backrest **-2- (-arrow-)** .

Fig 1: Removing Backrest Lock Cover

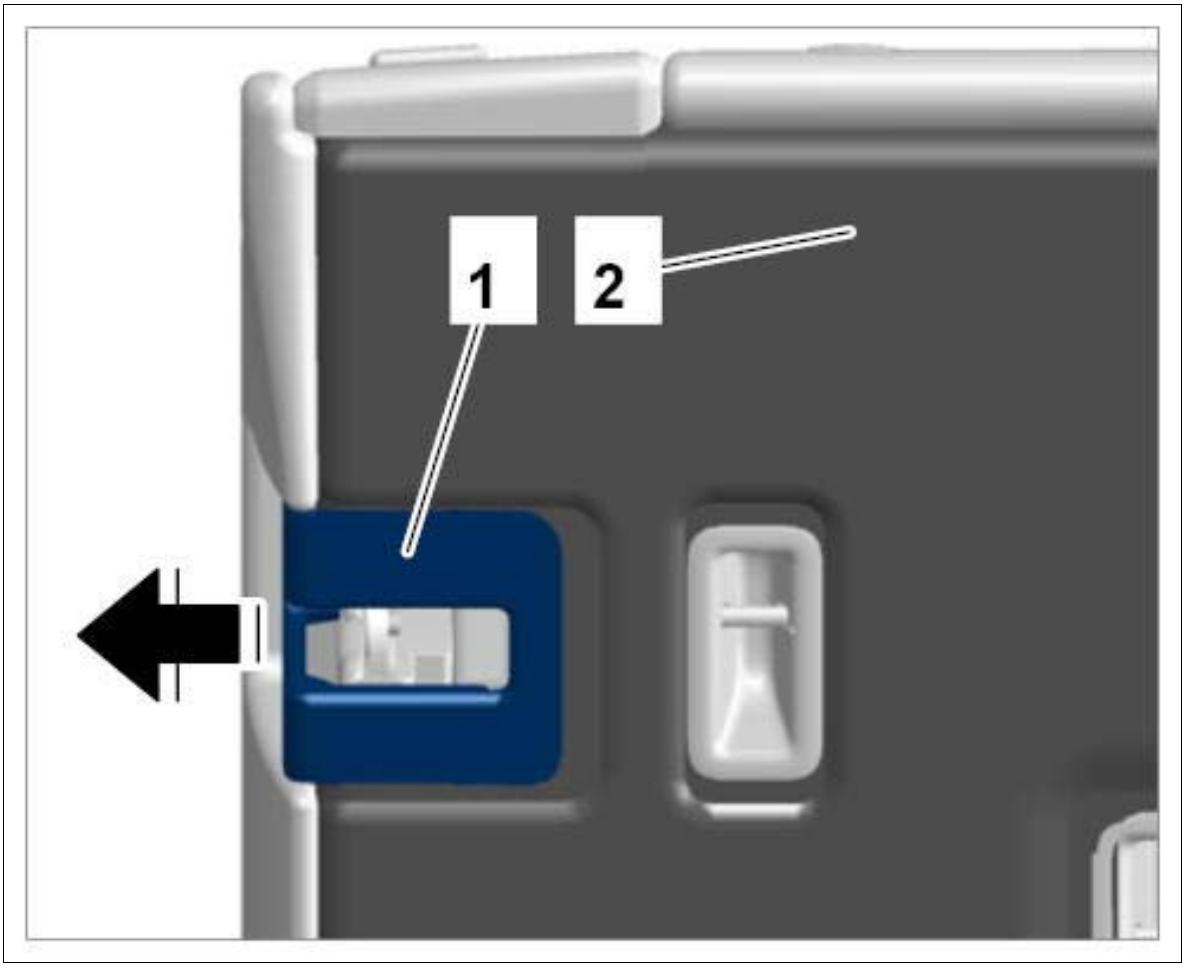

Courtesy of PORSCHE CARS NORTH AMERICA, INC.

2. Pull off cover for backrest locking mechanism **-1-** in an upward direction using a suitable tool (e.g. a hook) **-2- (-arrow-)** .

Fig 2: Removing Rear Backrest Locking Mechanism Cover

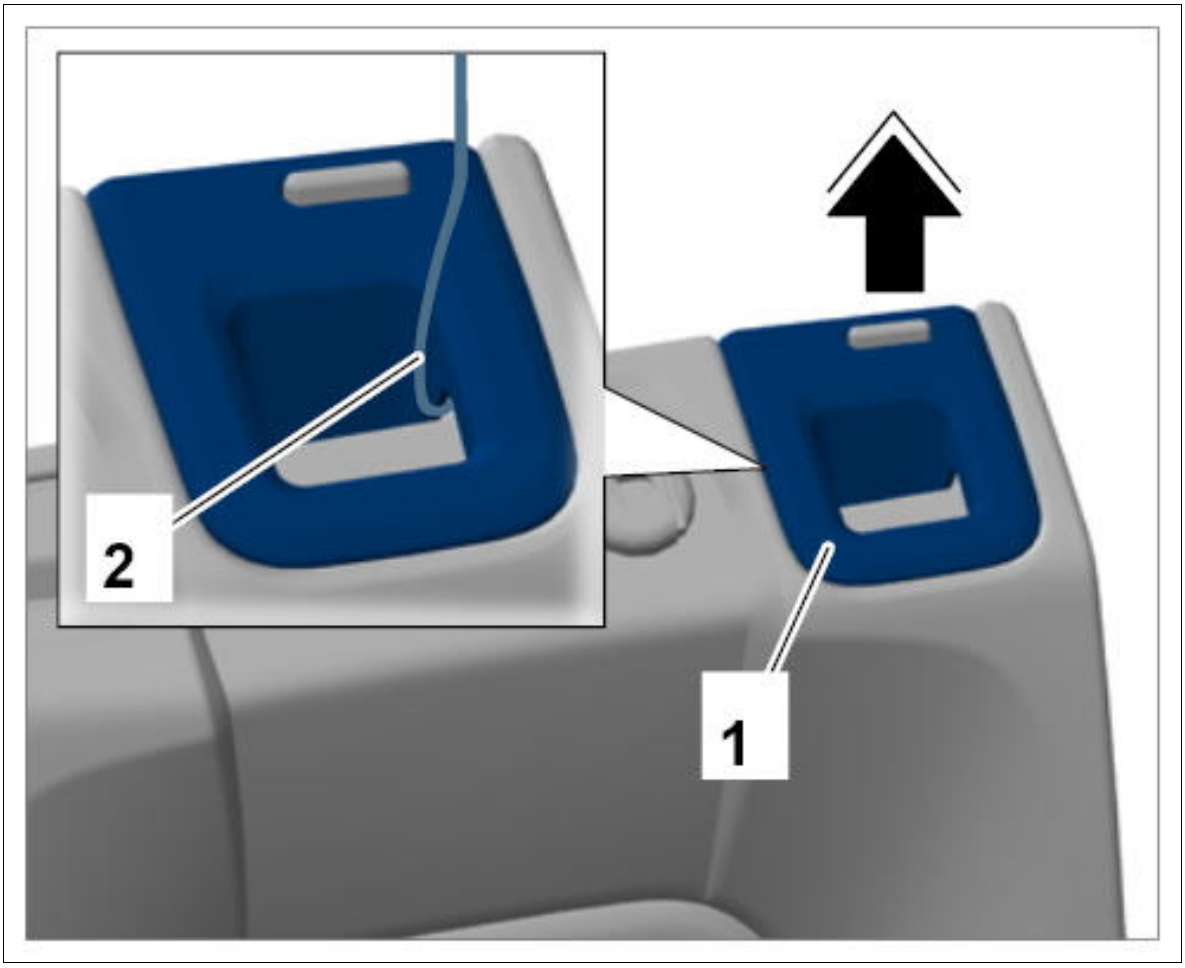

Courtesy of PORSCHE CARS NORTH AMERICA, INC.

3. Loosen cover piping **-1-** all the way around (**-A, B, C, D-**) and remove it from the backrest **-2-** . To do this, carefully open the retaining strips **-3-** using a plastic wedge and pull out the cover piping **-1-** .

Fig 3: Loosening Cover Piping On Rear Backrest

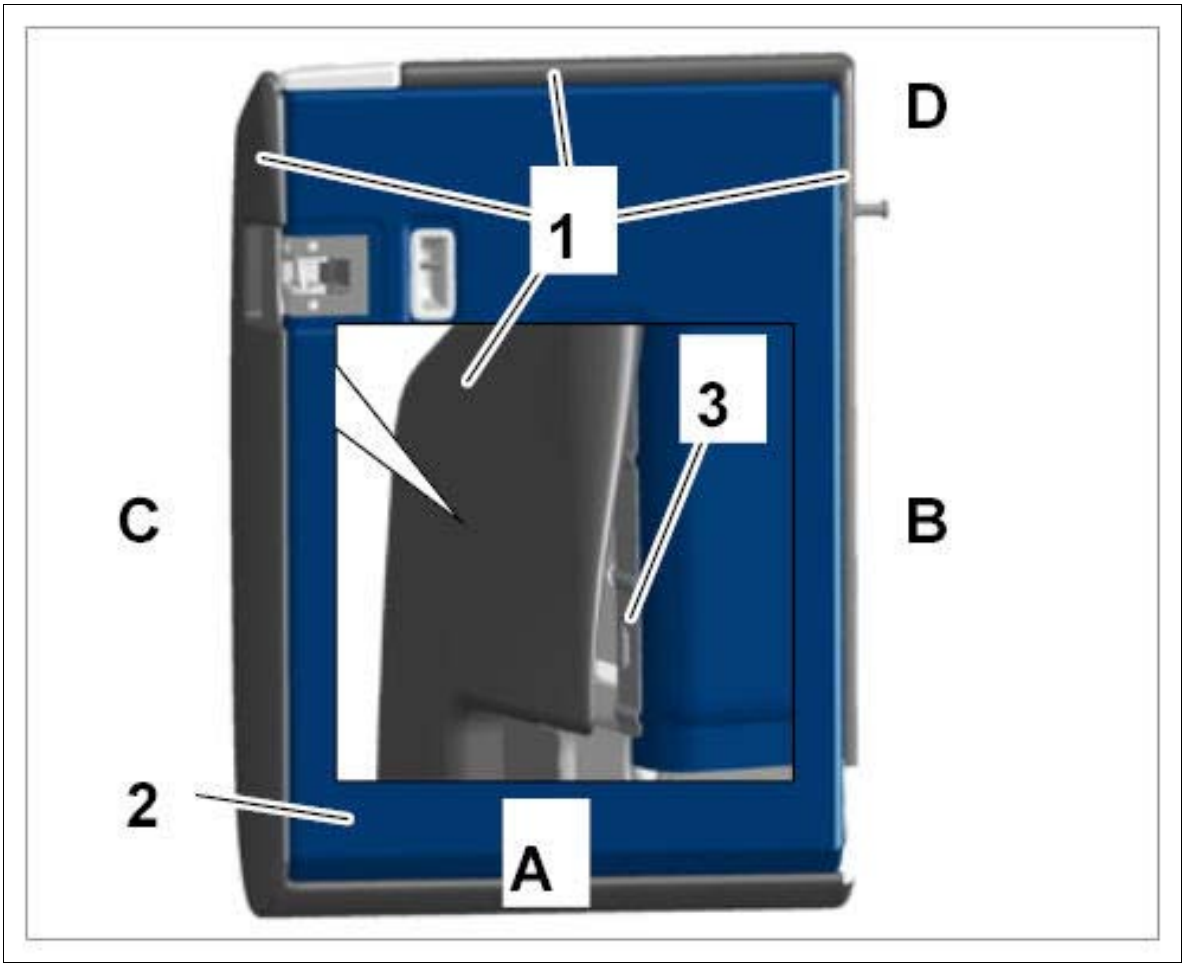

Courtesy of PORSCHE CARS NORTH AMERICA, INC.

4. Remove cover with padding.

   Information

   Detach cover from the padding and secure it, see → Loosening Cover For Rear Backrest

WM 745319 REMOVING AND INSTALLING COVER FOR REAR BACKREST (ALL MODELS) > INSTALLING COVER FOR REAR BACKREST

Information

Detach cover from the padding and secure it, see → Loosening Cover For Rear Backrest

1. Secure cover piping **-1-** . To do this, start from the top and moving to the underside of the backrest (**-A, B, C, D-**), press the cover piping **-1-** into the retaining strips **-2-** .

Fig 1: Installing Cover Piping On Rear Backrest

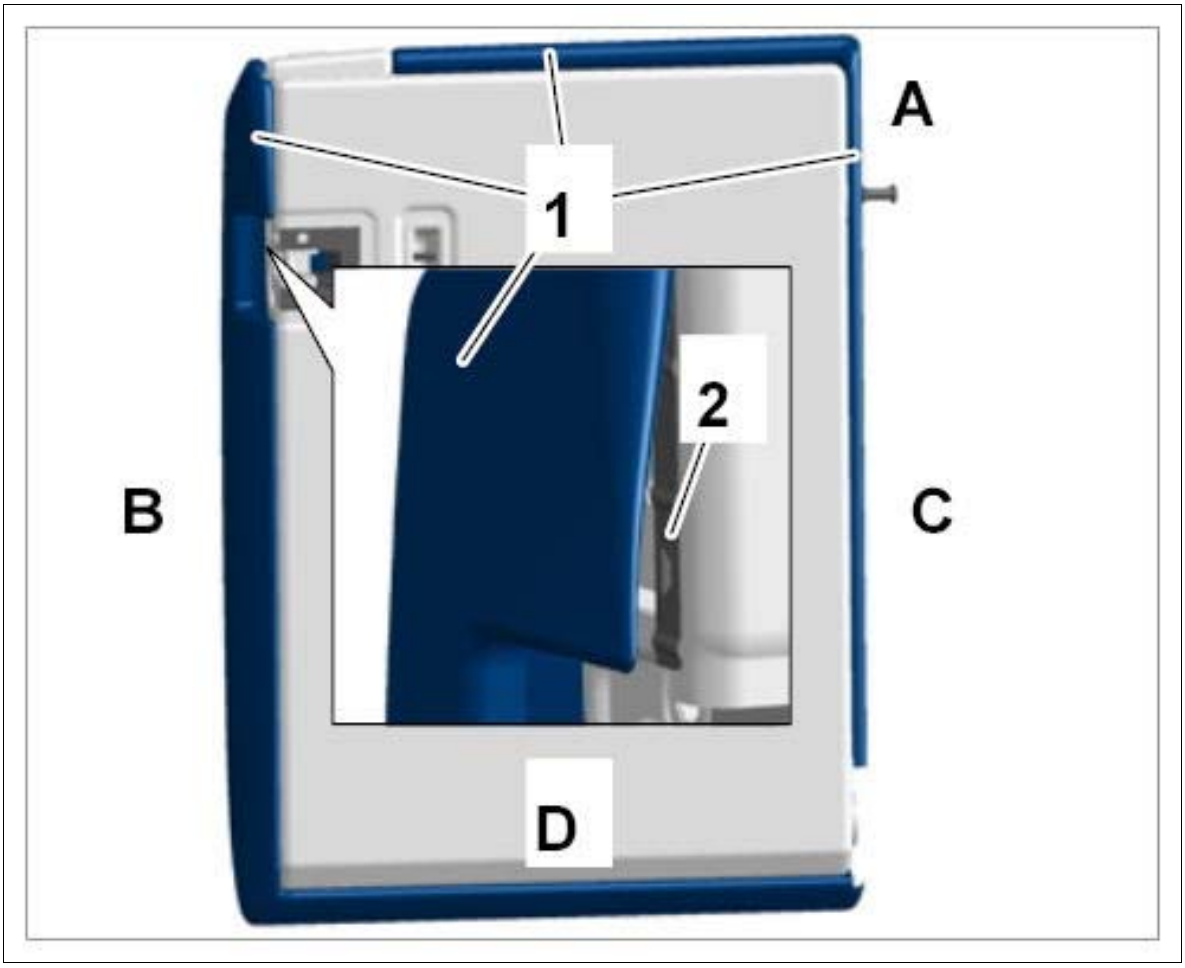

Courtesy of PORSCHE CARS NORTH AMERICA, INC.

2. Fit cover on locking mechanism for backrest **-1-** from above and clip it in **-arrow-** .

Fig 2: Installing Cover On Backrest Locking Mechanism

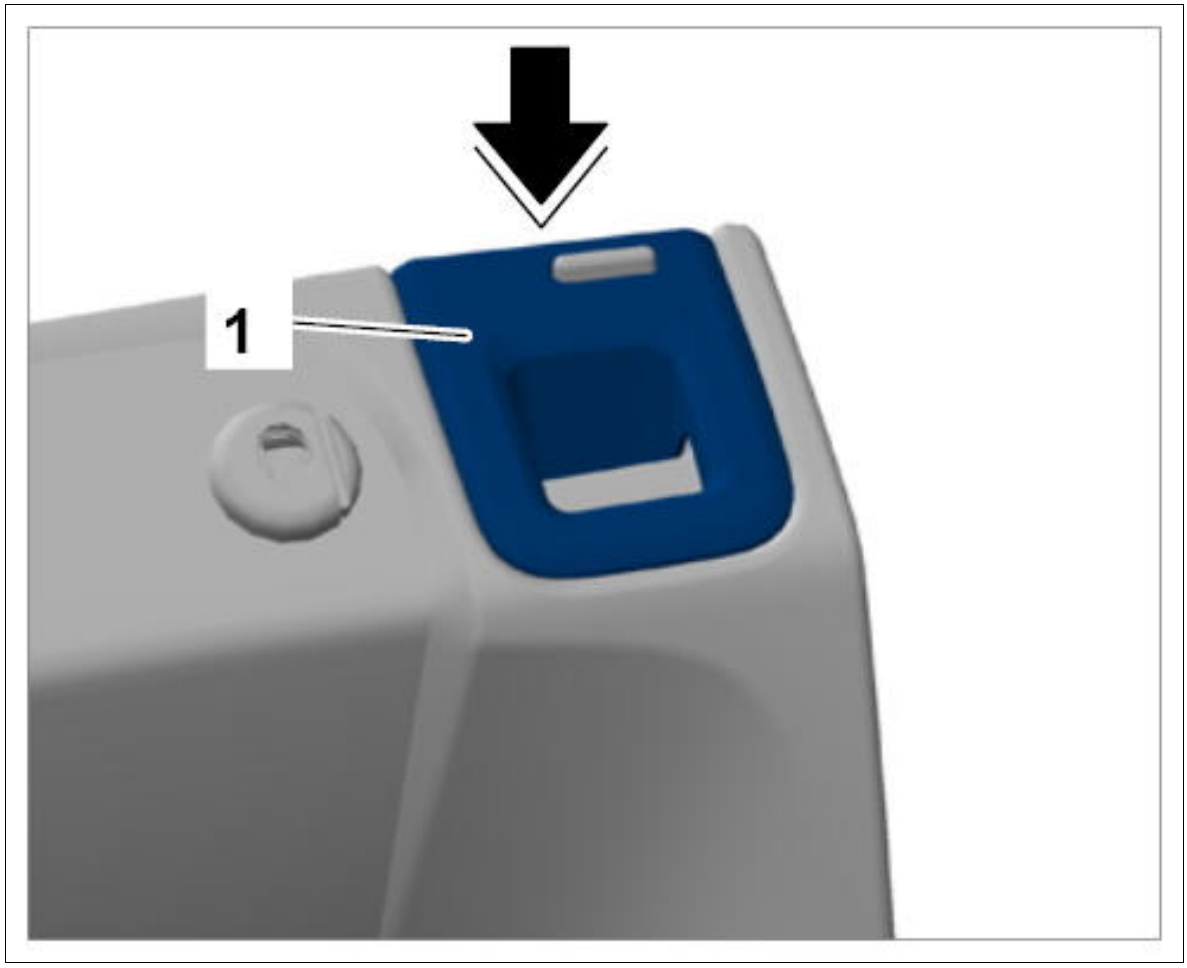

Courtesy of PORSCHE CARS NORTH AMERICA, INC.

3. Fit cover on lock for backrest **-1-** at the sides and press it on securely **-arrow-** .

Fig 3: Installing Backrest Lock Cover

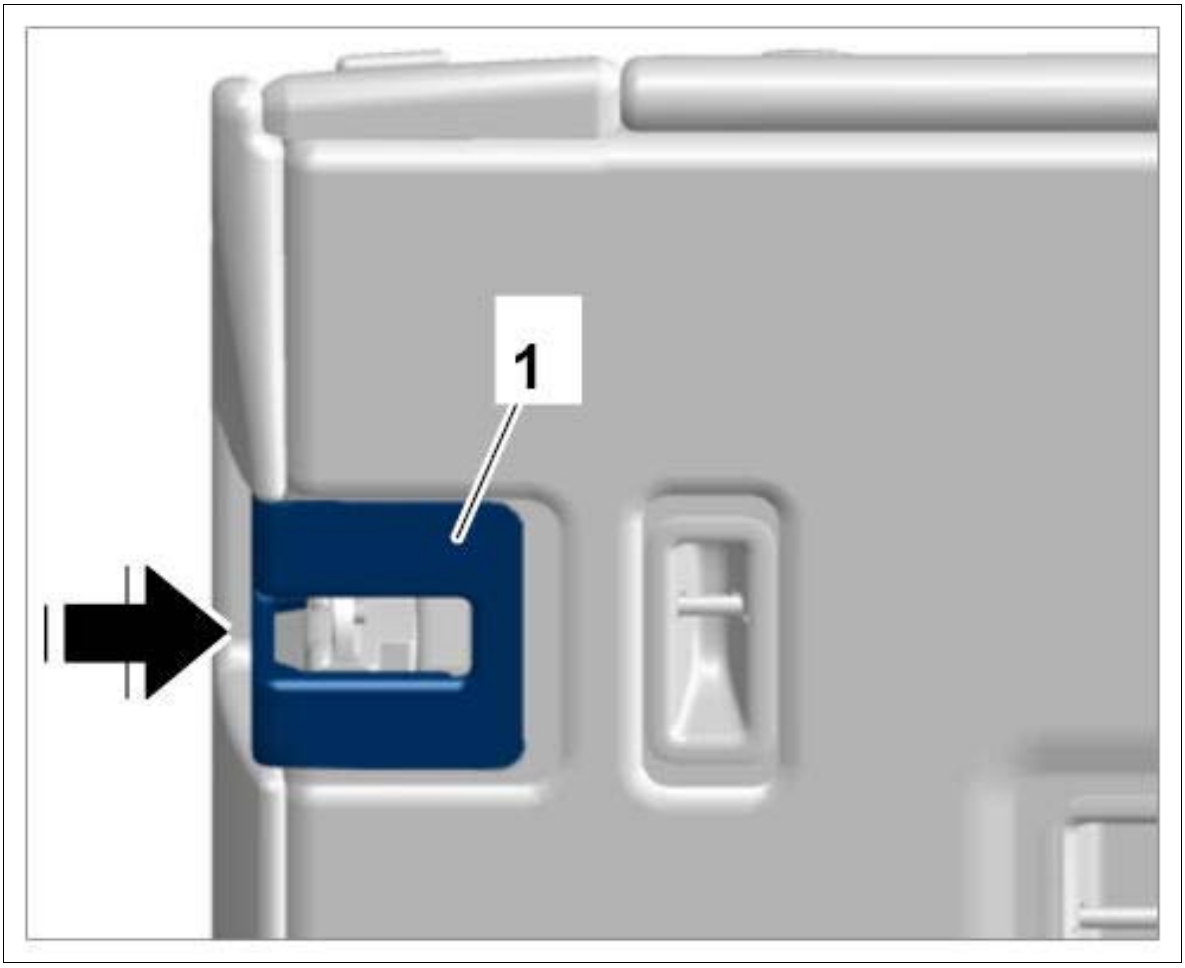

Courtesy of PORSCHE CARS NORTH AMERICA, INC.

WM 745319 REMOVING AND INSTALLING COVER FOR REAR BACKREST (ALL MODELS) > SUBSEQUENT WORK

1. Install headrest. → Installing headrest
2. Install rear backrest. → Installing rear backrest

WM 745355 REPLACING COVER FOR REAR BACKREST (ALL MODELS) > TOOLS

Designation	Type	Number	Description	

cushion clip pliers	Commercially available tool	Nr.130		

WM 745355 REPLACING COVER FOR REAR BACKREST (ALL MODELS) > COMPONENT INFORMATION > INSTALLATION POSITION

Fig 1: Identifying Rear Backrest Cover Installation Position



Courtesy of PORSCHE CARS NORTH AMERICA, INC.

WM 745355 REPLACING COVER FOR REAR BACKREST (ALL MODELS) > PRELIMINARY WORK

1. Remove cover for rear backrest. → Removing Cover For Rear Backrest

WM 745355 REPLACING COVER FOR REAR BACKREST (ALL MODELS) > LOOSENING COVER FOR REAR BACKREST

1. Remove cushion clips.

    1. 1.1. Cut metal cushion clips (**-markings-**) using side cutters.

    Fig 1: Cutting Cushion Clips

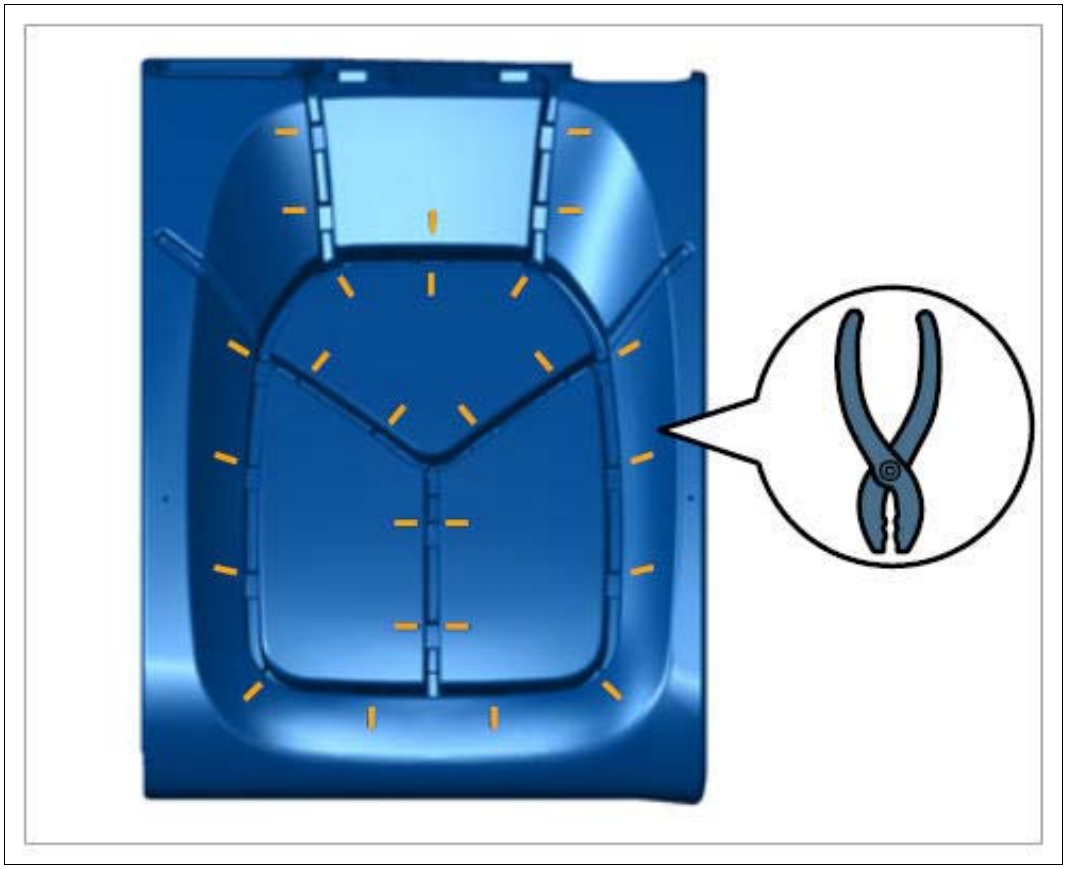

Courtesy of PORSCHE CARS NORTH AMERICA, INC.

    2. 1.2. Remove remaining parts of cushion clips.

2. **Only for vehicles with heated seats:** Disconnect electric plug connection for heated seats.

3. Detach padding for rear backrest **-1-** from the cover **-2- (-arrow-)** .

Fig 2: Removing Rear Backrest Cover

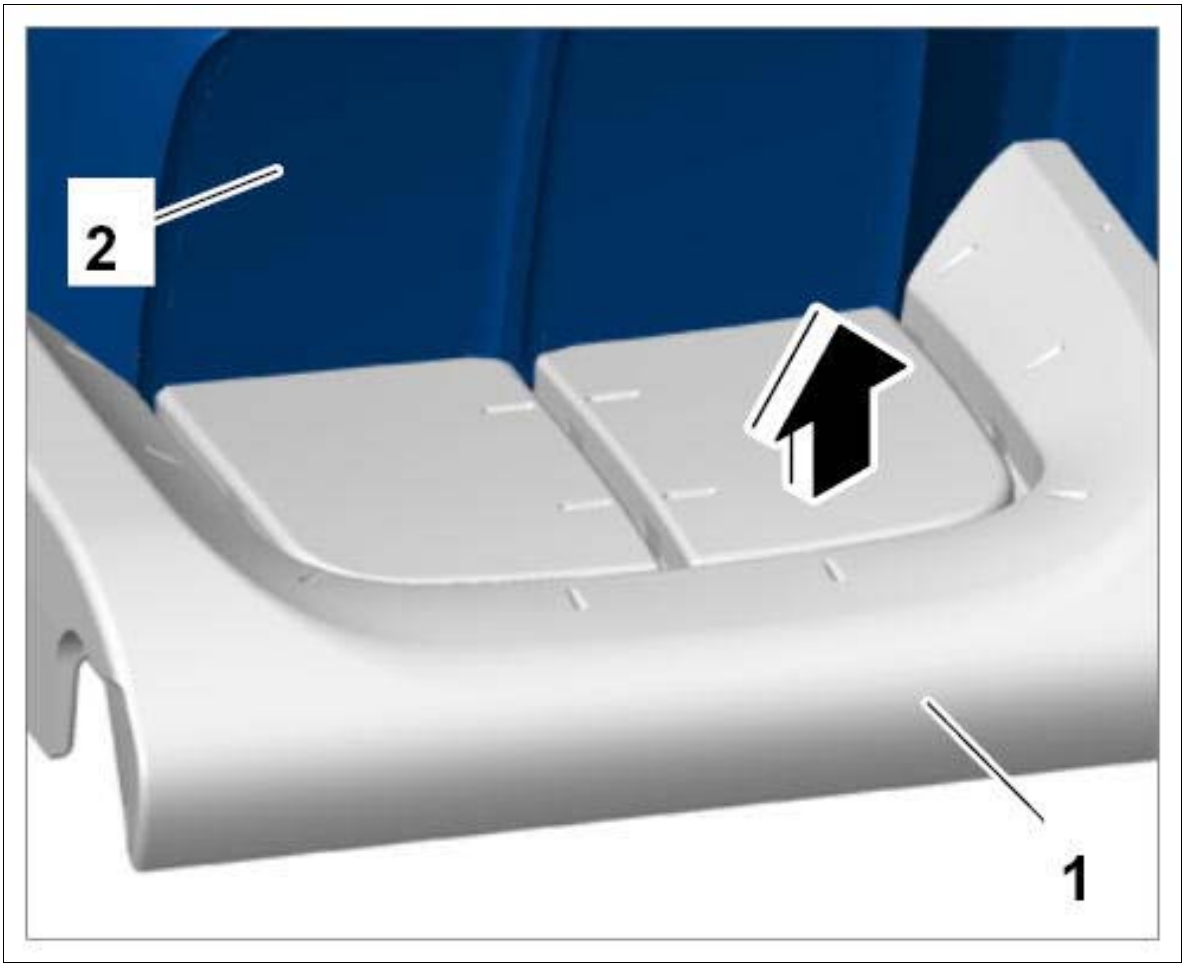

Courtesy of PORSCHE CARS NORTH AMERICA, INC.

WM 745355 REPLACING COVER FOR REAR BACKREST (ALL MODELS) > SECURING COVER FOR REAR BACKREST

Information

- Always replace metal cushion clips.
- Reuse plastic cushion clips. Replace defective cushion clips.

1. Align cover **-1-** over the padding for the rear backrest **-arrows-** .

Fig 1: Aligning Cover



Courtesy of PORSCHE CARS NORTH AMERICA, INC.

2. **Only for vehicles with heated seats:** Connect electric plug connection for heated seats.
3. Fasten cushion clips.

   Secure the metal struts in the cover **-1-** using **cushion clip pliers Nr.130** in the sequence shown (**-arrow A to arrow I-)** to the metal struts of the padding **-2-** .

Fig 2: Securing Metal Struts In Cover

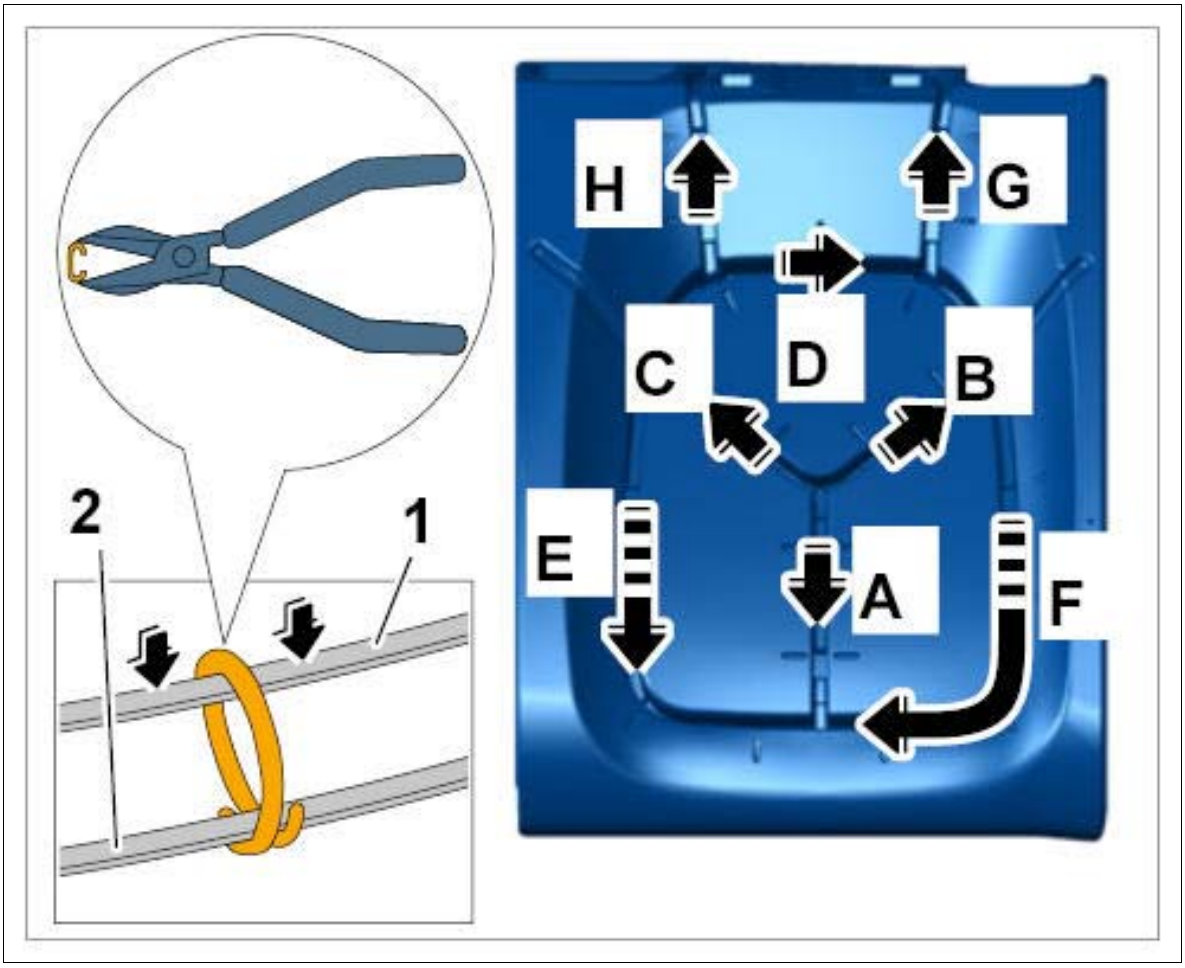

Courtesy of PORSCHE CARS NORTH AMERICA, INC.

WM 745355 REPLACING COVER FOR REAR BACKREST (ALL MODELS) > SUBSEQUENT WORK

1. Install cover for rear backrest. → Installing Cover For Rear Backrest

WM 745519 REMOVING AND INSTALLING ARMREST WITH COVER (REAR) (ALL MODELS) > TECHNICAL VALUES

Location	Description	Type	Basic value	Tolerance 1	Tolerance 2
Fastening screw for armrest on load-through provision	Item 2	Tightening torque	4.5 Nm (3 ftlb.)		

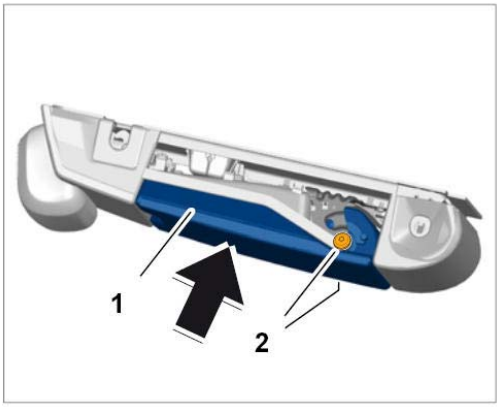

Installing armrest with cover

WM 745519 REMOVING AND INSTALLING ARMREST WITH COVER (REAR) (ALL MODELS) > COMPONENT INFORMATION > INSTALLATION POSITION

Fig 1: Identifying Armrest With Cover Installation Position



Courtesy of PORSCHE CARS NORTH AMERICA, INC.

WM 745519 REMOVING AND INSTALLING ARMREST WITH COVER (REAR) (ALL MODELS) > PRELIMINARY WORK

1. Remove load-through provision. → Removing Load-Through Provision

WM 745519 REMOVING AND INSTALLING ARMREST WITH COVER (REAR) (ALL MODELS) > REMOVING ARMREST WITH COVER (REAR)

1. Unclip side trim covers **-1-** using a plastic wedge **-2-** and move them to the rear **-arrows-** .

   Fig 1: Removing Side Trim Cover

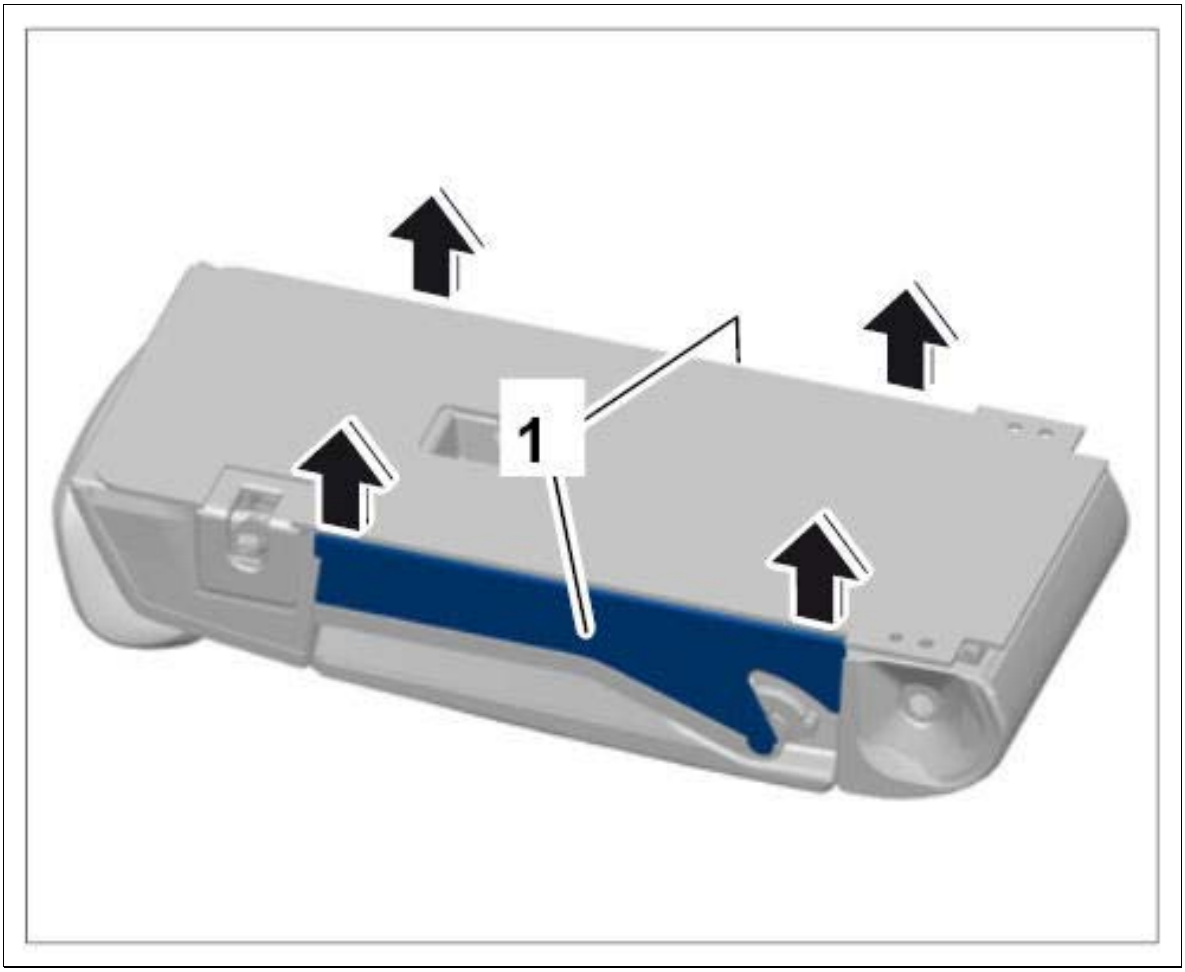

Courtesy of PORSCHE CARS NORTH AMERICA, INC.

2. Loosen fastening screws **-1-** for the armrest **-2-** .
3. Remove armrest with cover **-arrow-** .

Fig 2: Removing Armrest

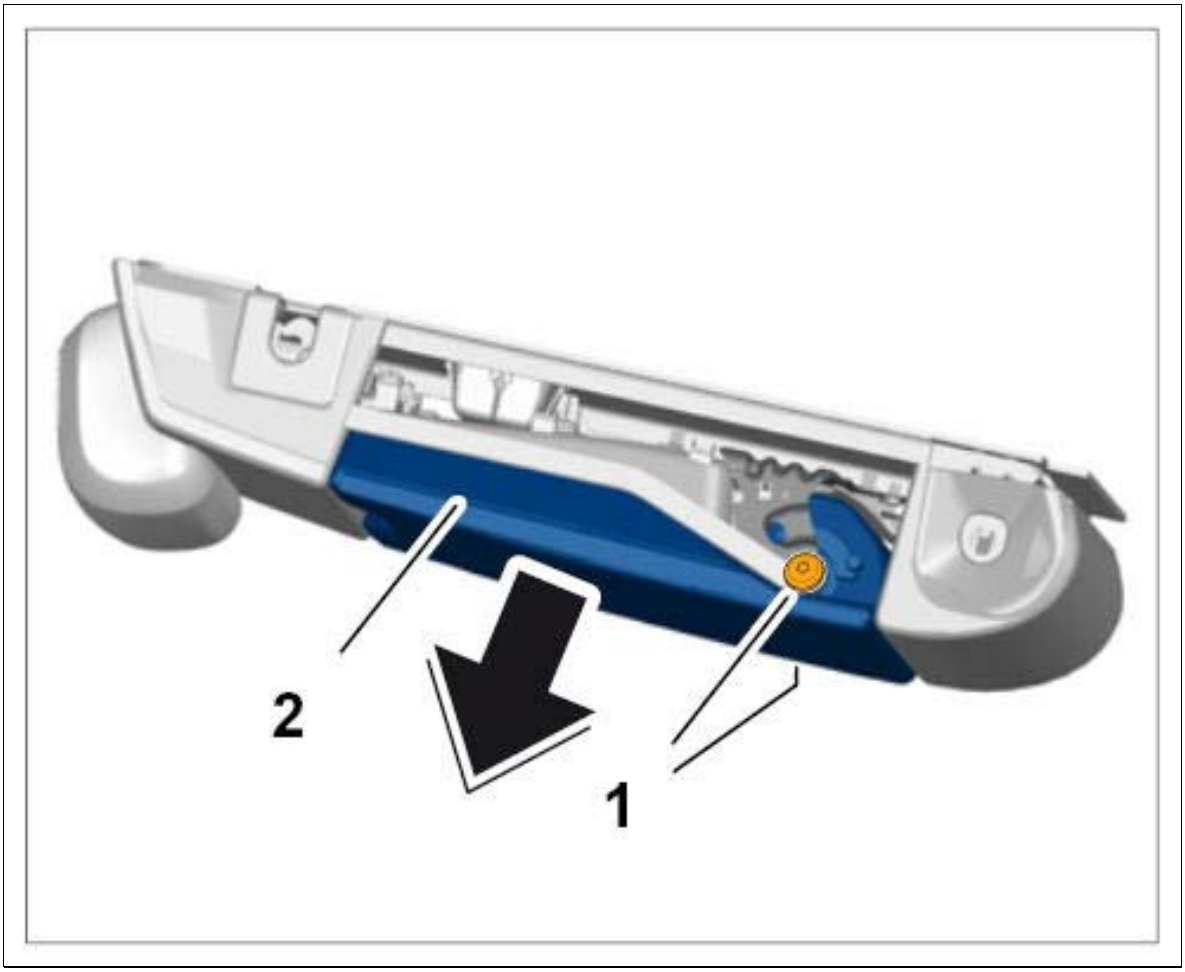

Courtesy of PORSCHE CARS NORTH AMERICA, INC.

WM 745519 REMOVING AND INSTALLING ARMREST WITH COVER (REAR) (ALL MODELS) > INSTALLING ARMREST WITH COVER

1. Position armrest **-1- (-arrow-)** so that the fastening screws **-2-** can be fitted.

Fig 1: Installing Armrest With Cover

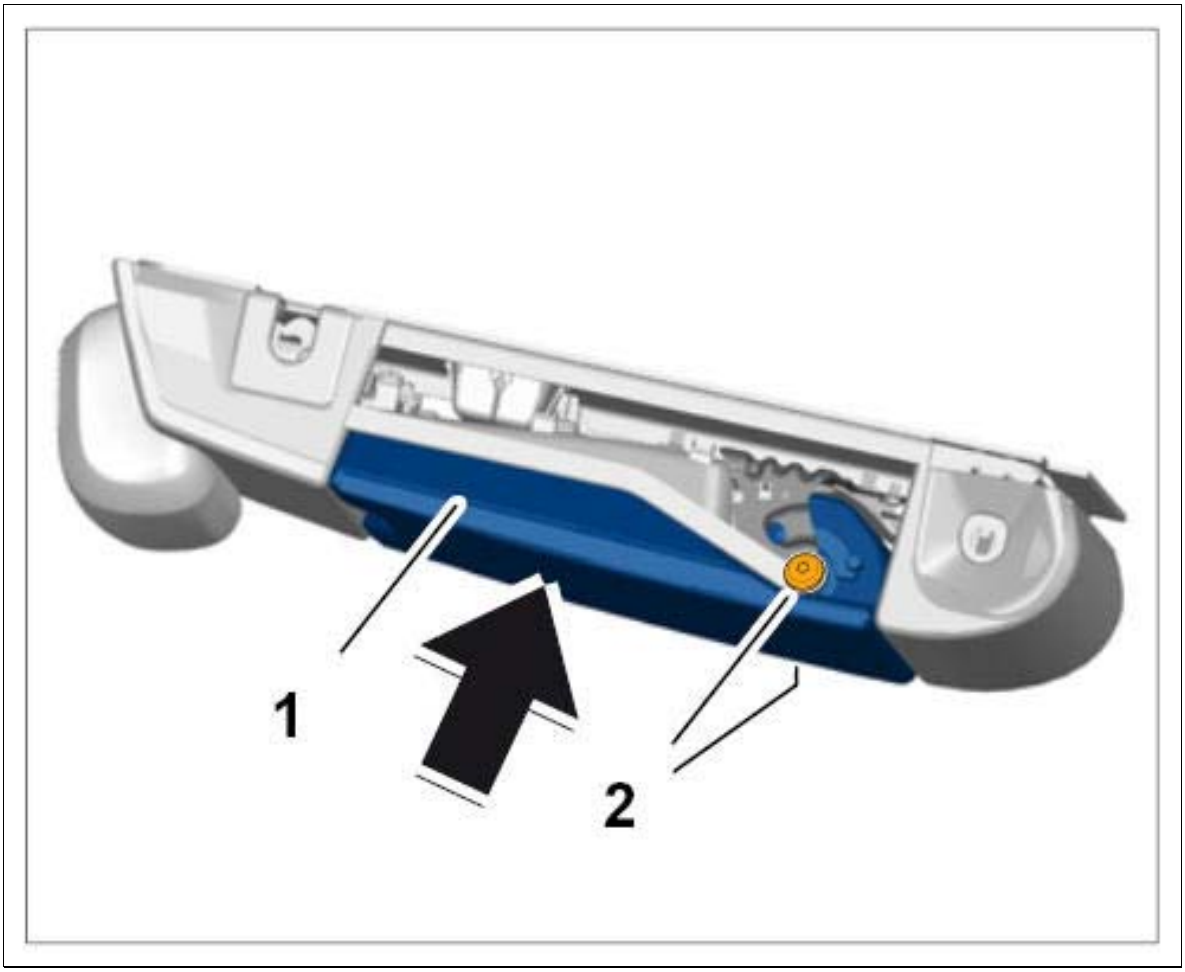

Courtesy of PORSCHE CARS NORTH AMERICA, INC.

2. Tighten fastening screws **-2-** for the armrest **Tightening torque 4.5 Nm (3 ftlb.)** .

   Information

   1. Replace fastening screws with new fastening screws before installation.
   2. Self-locking nuts and screws must always be replaced before installation.

3. Clip side trim covers **-1-** into the load-through provision **-2- (-arrows-)** .

Fig 2: Installing Side Trim Covers

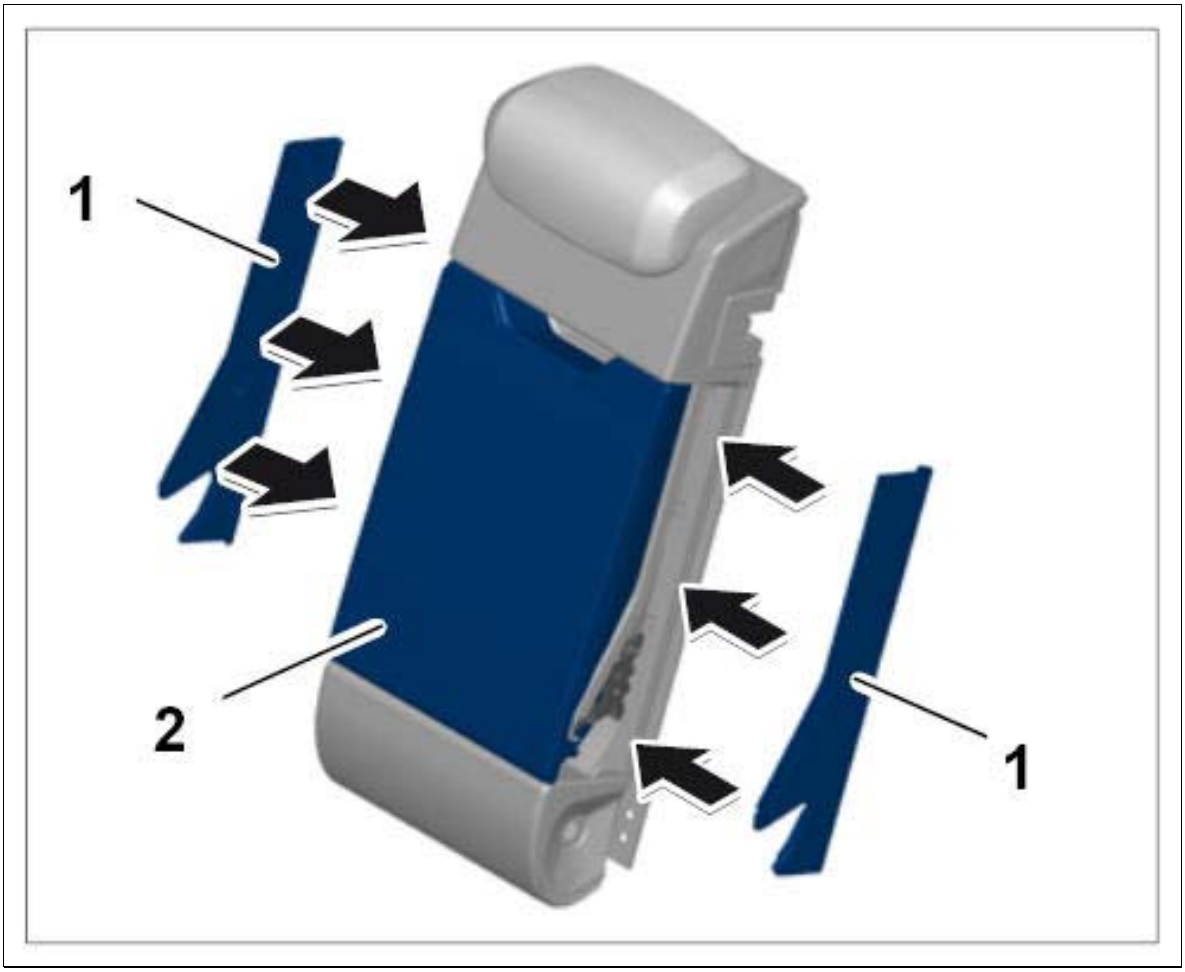

Courtesy of PORSCHE CARS NORTH AMERICA, INC.

WM 745519 REMOVING AND INSTALLING ARMREST WITH COVER (REAR) (ALL MODELS) > SUBSEQUENT WORK

1. Install load-through provision. → Installing Load-Through Provision

WM 745619 REMOVING AND INSTALLING LOAD-THROUGH PROVISION (ALL MODELS) > TECHNICAL VALUES

Location	Description	Type	Basic value	Tolerance 1	Tolerance 2
Fastening screws for supporting bow		Tightening torque	12 Nm (9 ftlb.)		

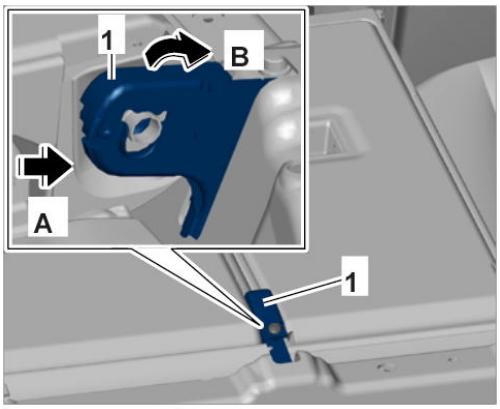

Securing supporting bow

WM 745619 REMOVING AND INSTALLING LOAD-THROUGH PROVISION (ALL MODELS) > COMPONENT INFORMATION > INSTALLATION POSITION

Fig 1: Identifying Load-Through Provision Installation Position



Courtesy of PORSCHE CARS NORTH AMERICA, INC.

WM 745619 REMOVING AND INSTALLING LOAD-THROUGH PROVISION (ALL MODELS) > PRELIMINARY WORK

Remove rear seat. → Removing rear seat

WM 745619 REMOVING AND INSTALLING LOAD-THROUGH PROVISION (ALL MODELS) > REMOVING LOAD-THROUGH PROVISION

1. Fold left and right backrest and load-through provision forward.
2. Unscrew and remove fastening screws **-1-** for the supporting bow **-2-** .
3. Remove supporting bow **-2-** by moving it upwards **-arrow A-** and unhooking it and pulling it forward out of the cross bolt **-arrow B-** .

   Fig 1: Loosening Supporting Bow

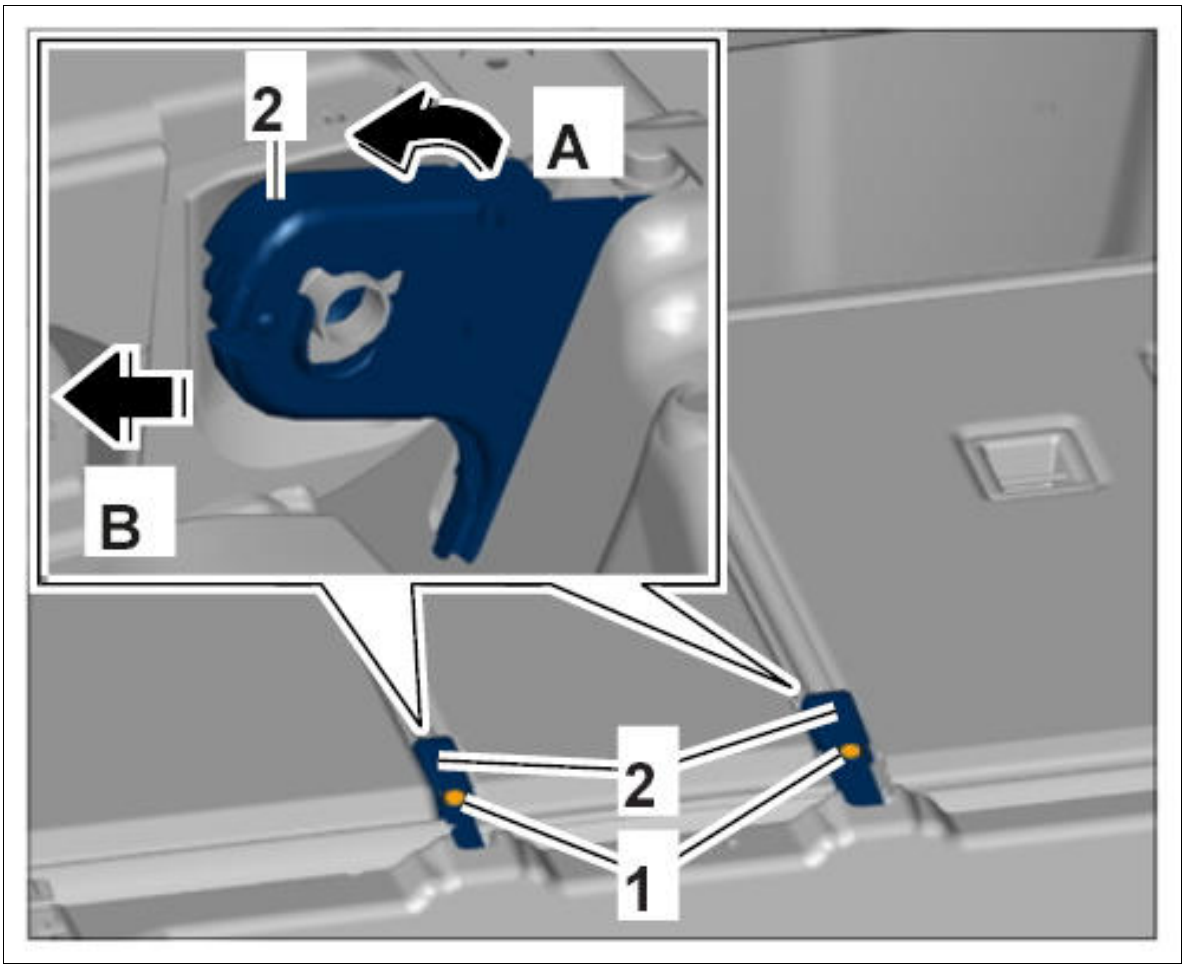

Courtesy of PORSCHE CARS NORTH AMERICA, INC.

4. Lift load-through provision **-1-** out of the mount at the left and right **-arrows-** .

Fig 2: Removing Load-Through Provision

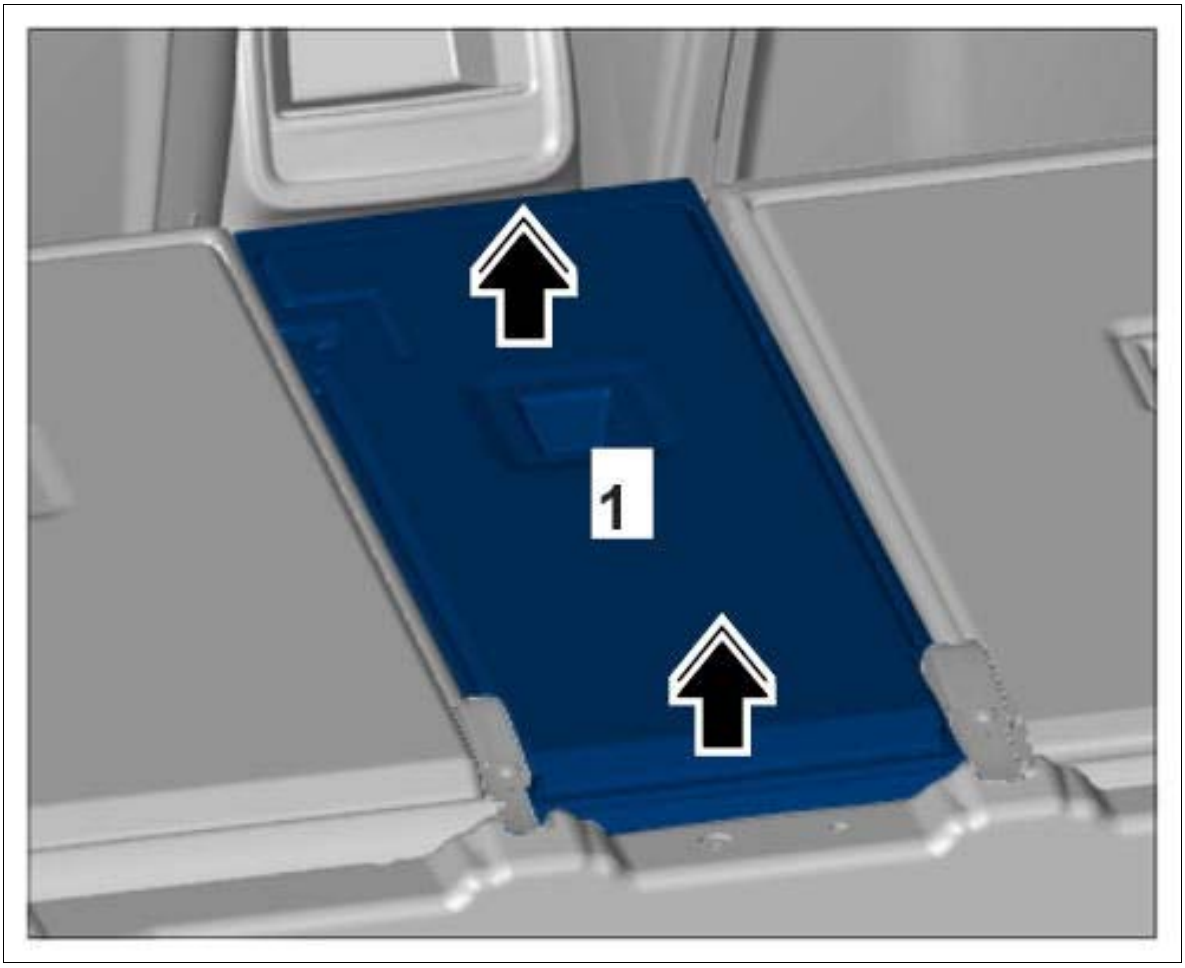

Courtesy of PORSCHE CARS NORTH AMERICA, INC.

WM 745619 REMOVING AND INSTALLING LOAD-THROUGH PROVISION (ALL MODELS) > INSTALLING LOAD-THROUGH PROVISION

1. Fold left and right backrest forward.
2. Position load-through provision **-1-** on the mount on the left and right from above **-arrows-** .

Fig 1: Installing Load-Through Provision

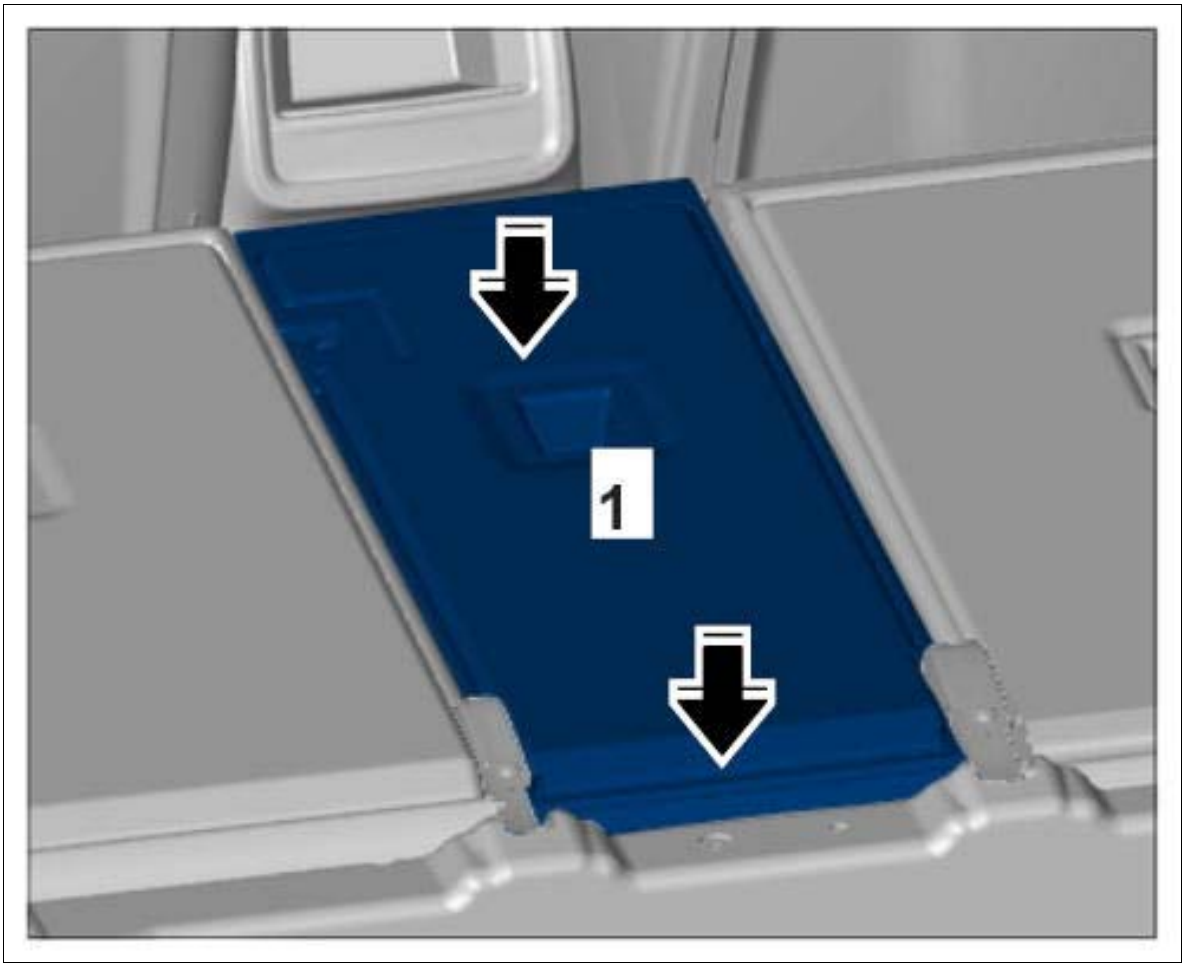

Courtesy of PORSCHE CARS NORTH AMERICA, INC.

3. Position supporting bow **-1-** over the mounts **-arrows-** and tighten securely **Tightening torque 12 Nm (9 ftlb.)** .

   Information

   Always replace the fastening screws on the seat assembly after customer service and reworking. Micro-self-locking or self-tapping screws must not be modified, greased or loosened and then screwed in again.

Fig 2: Positioning Supporting Bow

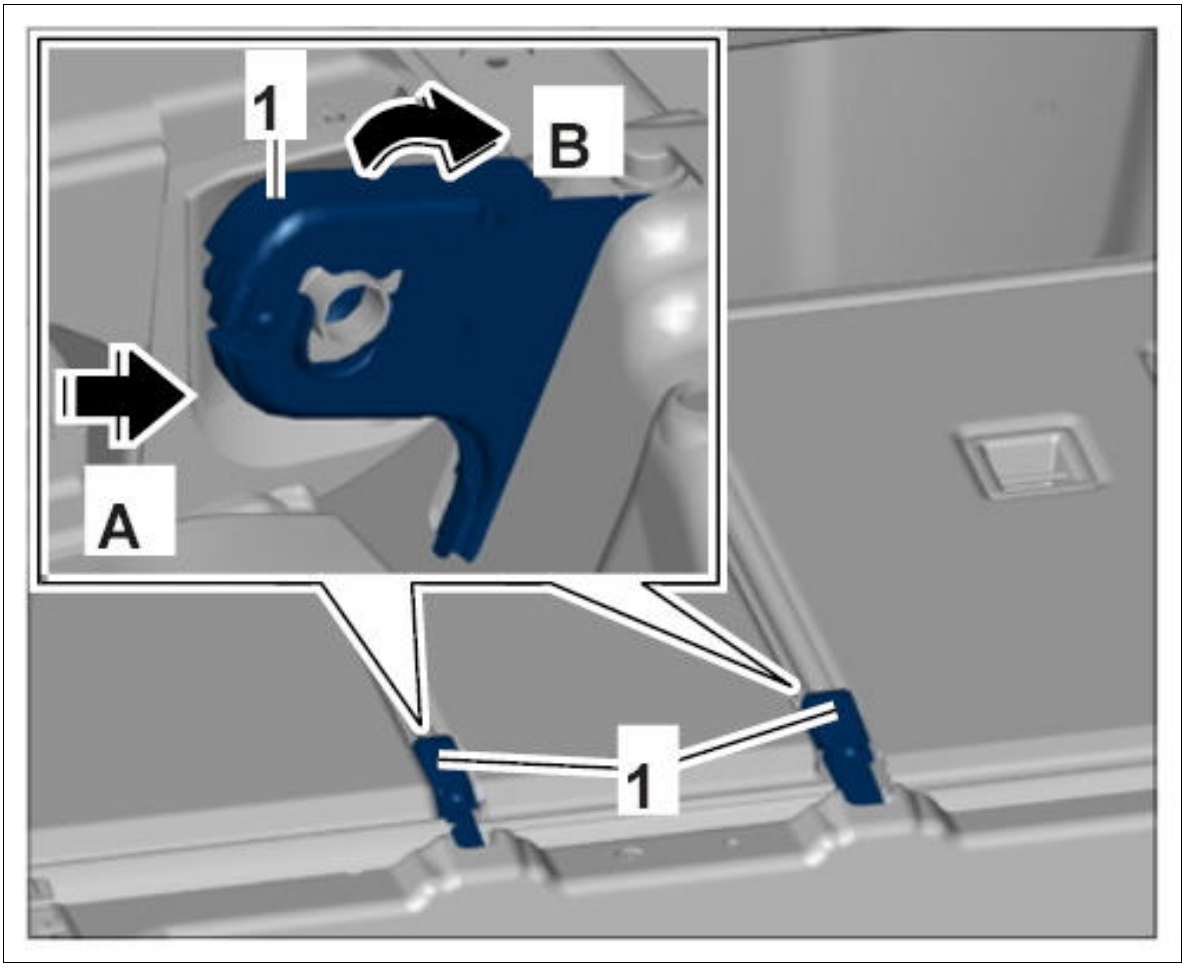

Courtesy of PORSCHE CARS NORTH AMERICA, INC.

WM 745619 REMOVING AND INSTALLING LOAD-THROUGH PROVISION (ALL MODELS) > SUBSEQUENT WORK

Install rear seat. → Installing rear seat

WM 7X00IN TECHNICAL VALUES (ALL MODELS) > TECHNICAL VALUES

Location	Description	Type	Basic value	Tolerance 1	Tolerance 2
Front trim panel to body	Tapping screw	Tightening torque	2 Nm (1.5 ftlb.)		
Cover for rear lock support to body	Fastening nut	Tightening torque	2.5 Nm (2 ftlb.)		
Fastening screws for trim panel under dashboard		Tightening torque	3 Nm (2 ftlb.)		
Fastening screws for trim panel under dashboard		Tightening torque	4.5 Nm (3 ftlb.)		
Fastening screw for lashing point		Tightening torque	8 Nm (6 ftlb.)		
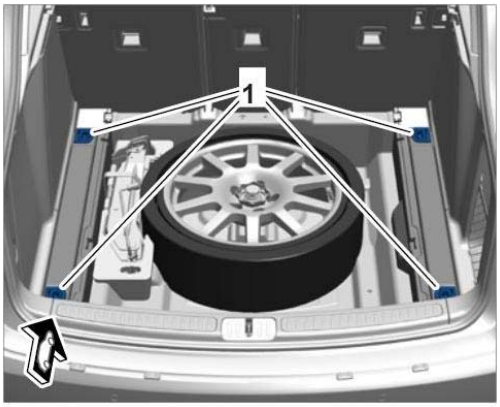 Lashing points					
Armrest to door panel	Internal Torx screw, Ø 5 x 14	Tightening torque	2.3 Nm (1.5 ftlb.)		
Upper air guide to dashboard bracket		Tightening torque	3 Nm (2 ftlb.)		
Lower air guide to dashboard bracket		Tightening torque	1.5 Nm (1 ftlb.)		
Dashboard to lower bracket		Tightening torque	3 Nm (2 ftlb.)		
Dashboard to upper bracket		Tightening torque	3 Nm (2 ftlb.)		
Fastening screws for front seat rail		Tightening torque	50 Nm (37 ftlb.)	+/-7.5 Nm (+/-5.5 ftlb.)	



Tightening fastening screws on front seat rail

Fastening screws for rear seat rail		Tightening torque	50 Nm (37 ftlb.)	+/-7.5 Nm (+/- 5.5 ftlb.)	

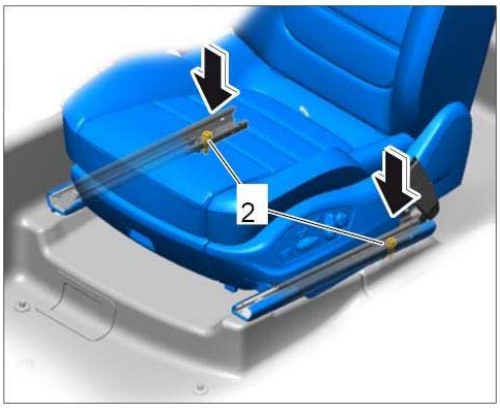

Securing front seat to seat frame at the rear

Fastening screw for storage compartment on seat	Item 1	Tightening torque	7.5 Nm (5.5 ftlb.)	+/-0.5 Nm (+/- 0.5 ftlb.)	

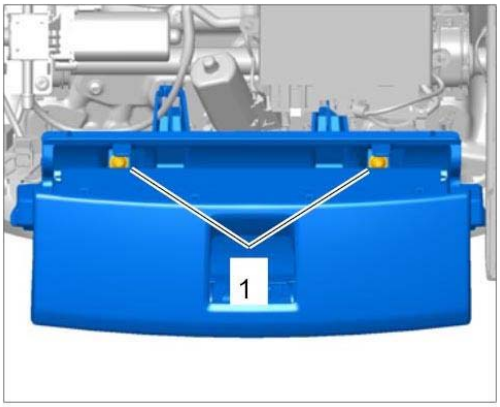

Loosening storage compartment

Fastening screw securing holder for air cushion on backrest	Item 1	Tightening torque	2.5 Nm (2 ftlb.)	+/-0.3 Nm (+/- 0.2 ftlb.)	

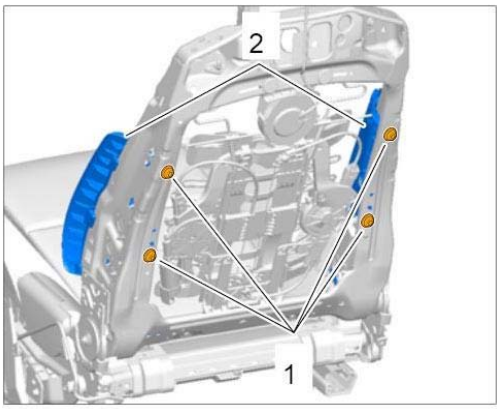

Removing air cushion for backrest

Fastening screw securing seat-surface extension to seat	Item 2	Tightening torque	7.5 Nm (5.5 ftlb.)	+/-0.5 Nm (+/-0.5 ftlb.)	

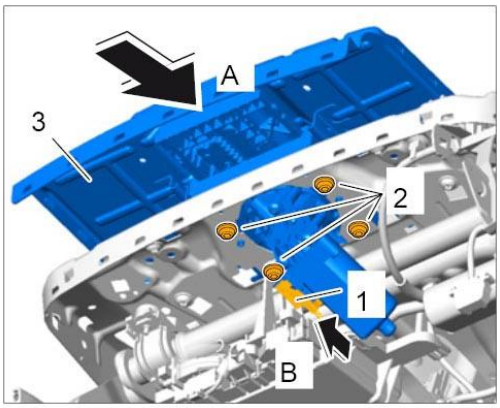

Installing seat-surface extension

Fastening screw securing side bracket to seat	Item 5	Tightening torque	7.5 Nm (5.5 ftlb.)	+/-0.5 Nm (+/-0.5 ftlb.)	

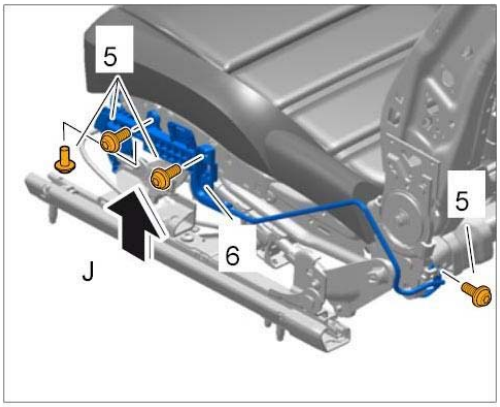

Securing bracket at the sides

ISOFIX fastening screw	Item 3	Tightening torque	7.5 Nm (5.5 ftlb.)	+/-0.5 Nm (+/-0.5 ftlb.)	

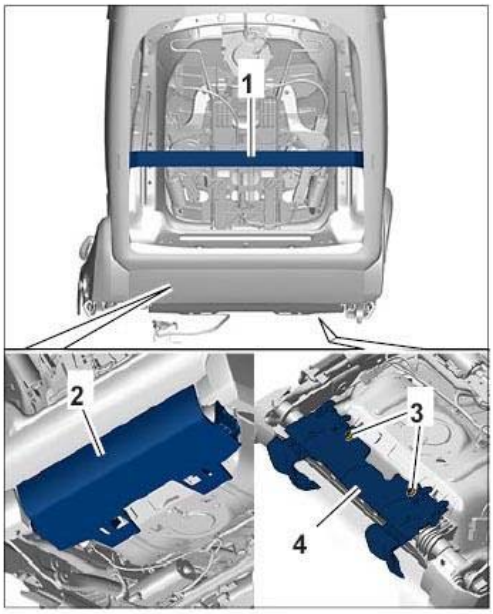

Loosening restraining strap

Fastening screws securing backrest frame to seat frame	Item 1	Tightening torque	33 Nm (24 ftlb.)	+/-3 Nm (+/- 2 ftlb.)	

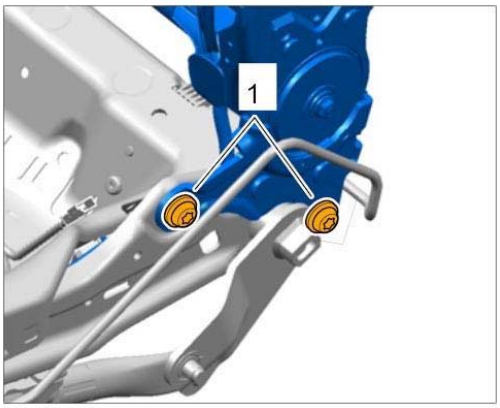

Removing backrest frame

Fastening screws for supporting bow		Tightening torque	12 Nm (9 ftlb.)		

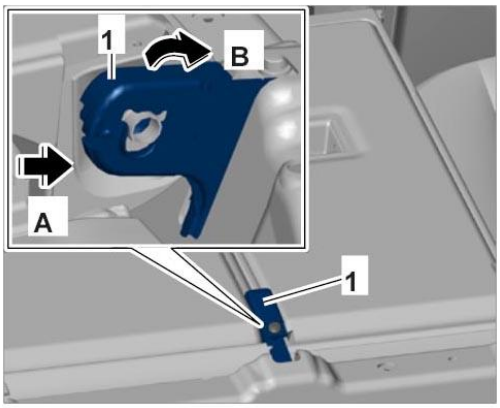

Securing supporting bow					
Fastening screw for inner backrest mount (on body side)		Tightening torque	20 Nm (15 ftlb.)		
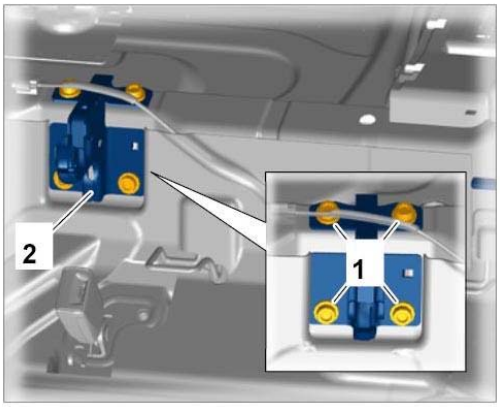 Removing inner mount for rear backrest					
Fastening screw for outer backrest mount (on body side)		Tightening torque	20 Nm (15 ftlb.)		
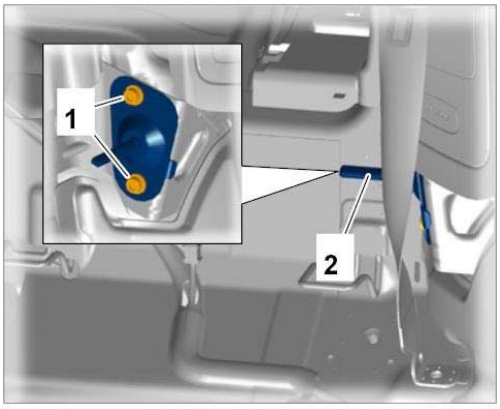 Removing outer mount for backrest					
Mount for load-through provision (on backrest side)	Item 1	Tightening torque	39 Nm (29 ftlb.)		

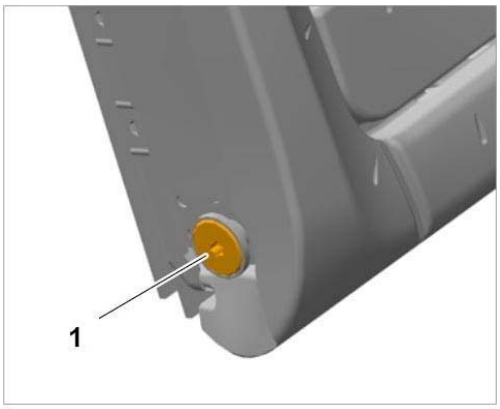

Removing load-through provision mount

Inner mount for rear backrest (on backrest side)	Item 2	Tightening torque	39 Nm (29 ftlb.)		

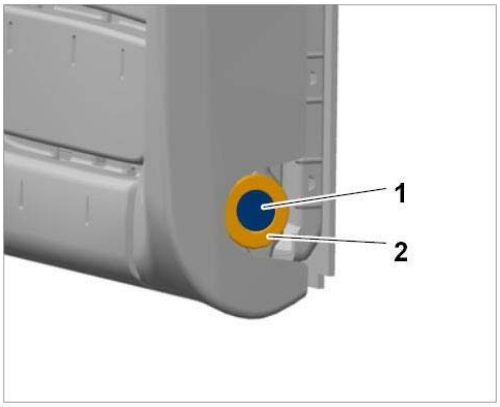

Removing inner mount for rear backrest

Fastening screws for rear backrest lock	Item 1	Tightening torque	26 Nm (19 ftlb.)		

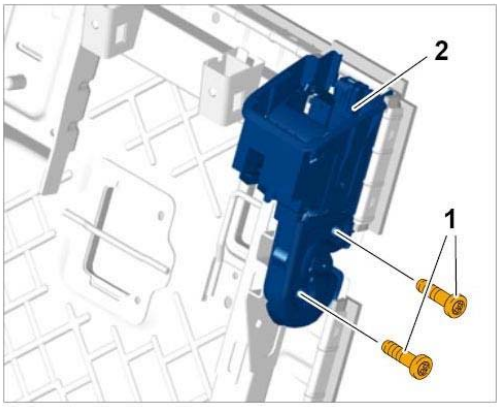

Removing backrest lock

Fastening screw for rear backrest lock, center	Item 1	Tightening torque	26 Nm (19 ftlb.)		

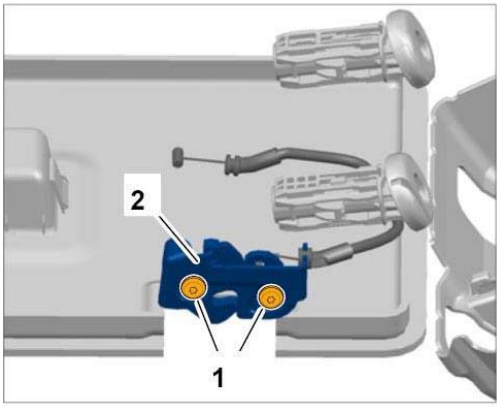

Removing backrest lock

Fastening screws for upper trim panel on load-through provision	Item 1 to 4	Tightening torque	3.5 Nm (2.5 ftlb.)		



Installing upper trim panel on load-through provision

Fastening screw for armrest on load-through provision	Item 2	Tightening torque	4.5 Nm (3 ftlb.)		

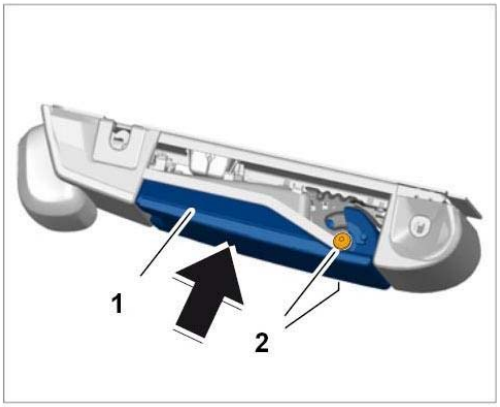

Installing armrest with cover

Fastening screw for door panel		Tightening torque	3.5 Nm (2.5 ftlb.)	+/-0.5 Nm (+/-0.5 ftlb.)	

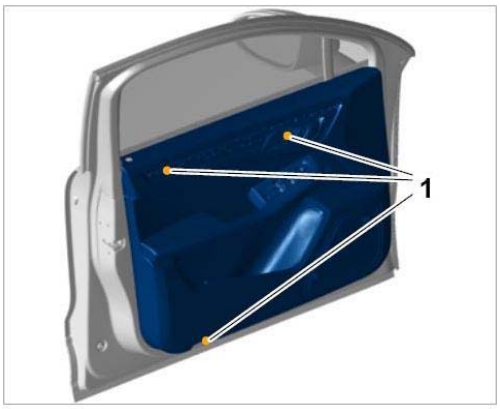

Door panel mounting

Fastening screw for door panel		Tightening torque	3.5 Nm (2.5 ftlb.)	+/-0.5 Nm (+/-0.5 ftlb.)	

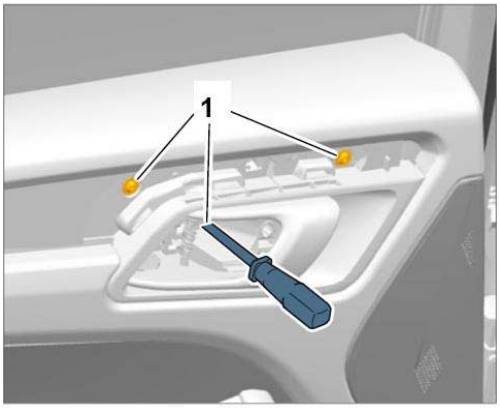

Door panel mounting

Fastening screw for door panel, bottom		Tightening torque	3.5 Nm (2.5 ftlb.)	+/-0.5 Nm (+/-0.5 ftlb.)	

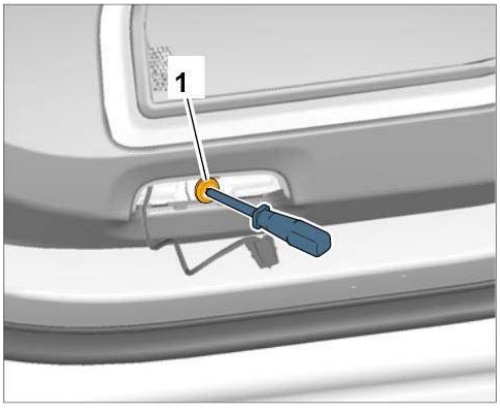

Mounting at bottom of door

A-pillar trim panel to body		Tightening torque	5.6 Nm (4 ftlb.)		
Fastening screw for lower roof console		Tightening torque	5 Nm (3.5 ftlb.)		

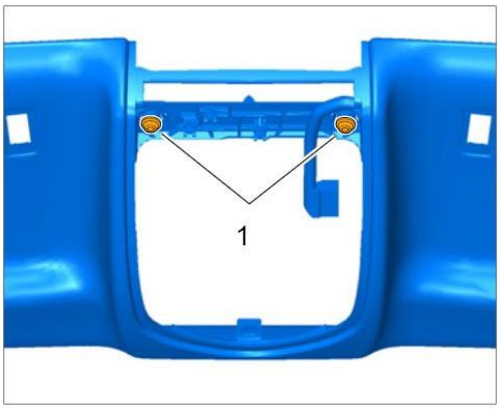

Screws securing roof console to headliner

Fastening screw for luggage net cover holder		Tightening torque	9 Nm (6.5 ftlb.)		

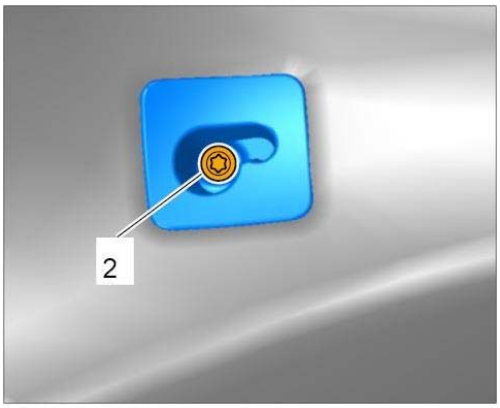

Screws securing holder for rear luggage net cover

Fastening screws for storage box		Tightening torque	1.5 Nm (1 ftlb.)		

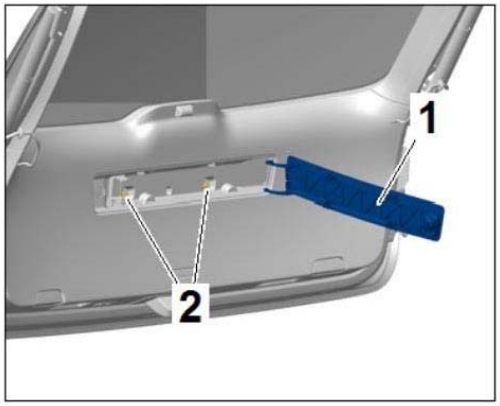

Storage box lid

Fastening screw for finger plate		Tightening torque	1.5 Nm (1 ftlb.)		

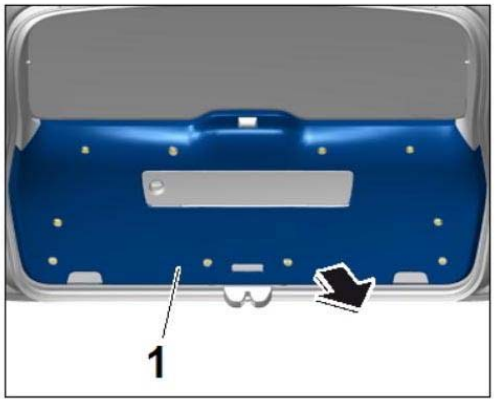

Arrangement of retaining clips

WM 7X00IN TECHNICAL VALUES (ALL MODELS) > TECHNICAL VALUES -70- TRIM PANELS

1. Screw → **Tightening torque: 2 Nm (1.5 ftlb.)**

   Fig 1: Locating Front Trim Panel

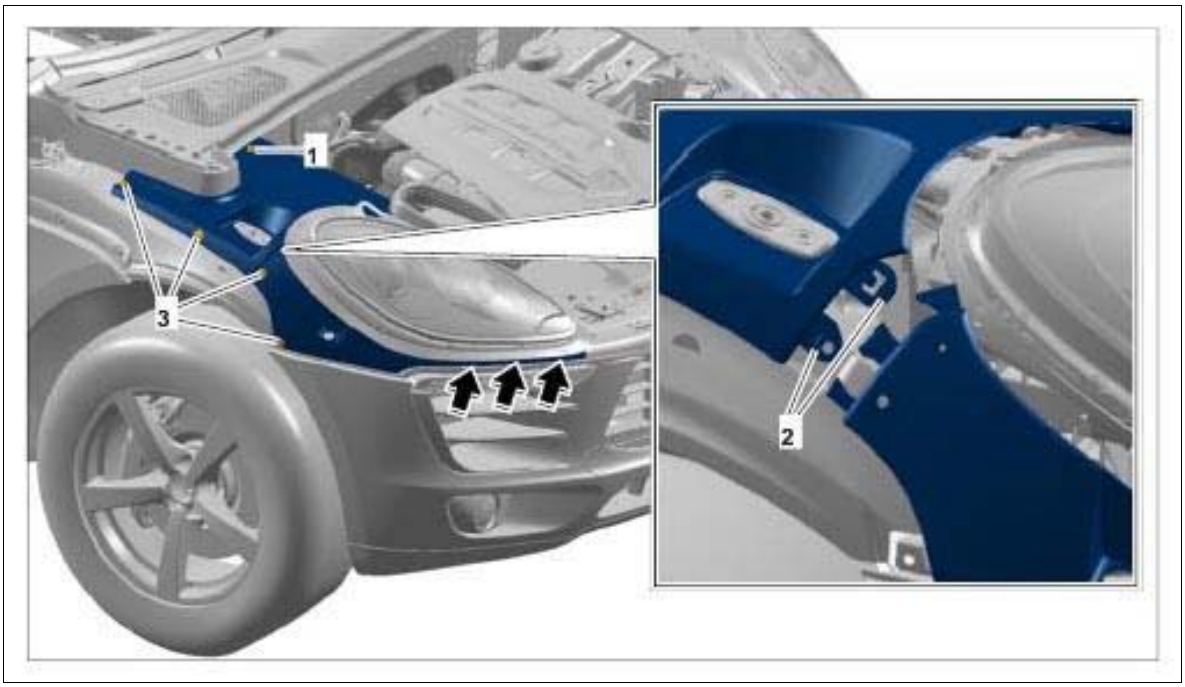

Courtesy of PORSCHE CARS NORTH AMERICA, INC.

2. Nut → **Tightening torque: 2.5 Nm (2 ftlb.)**

Fig 2: Identifying Rear Lock Support Cover And Nut

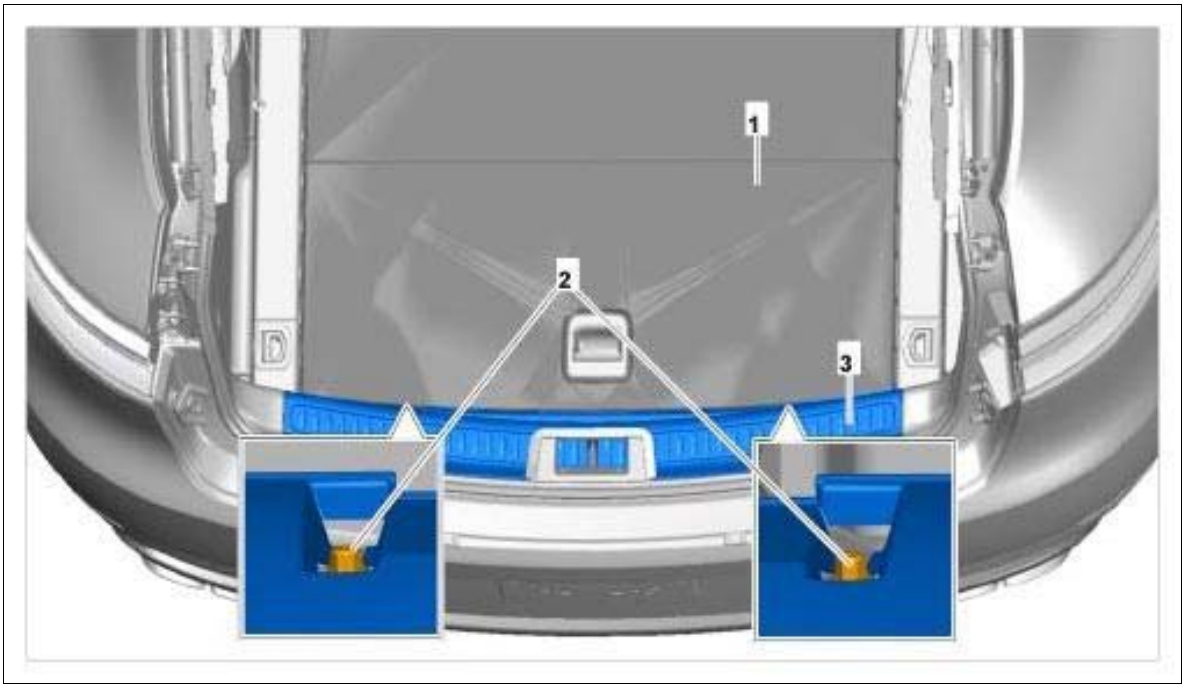

Courtesy of PORSCHE CARS NORTH AMERICA, INC.

Fig 3: Identifying Trim Panel Under Dashboard (Right)

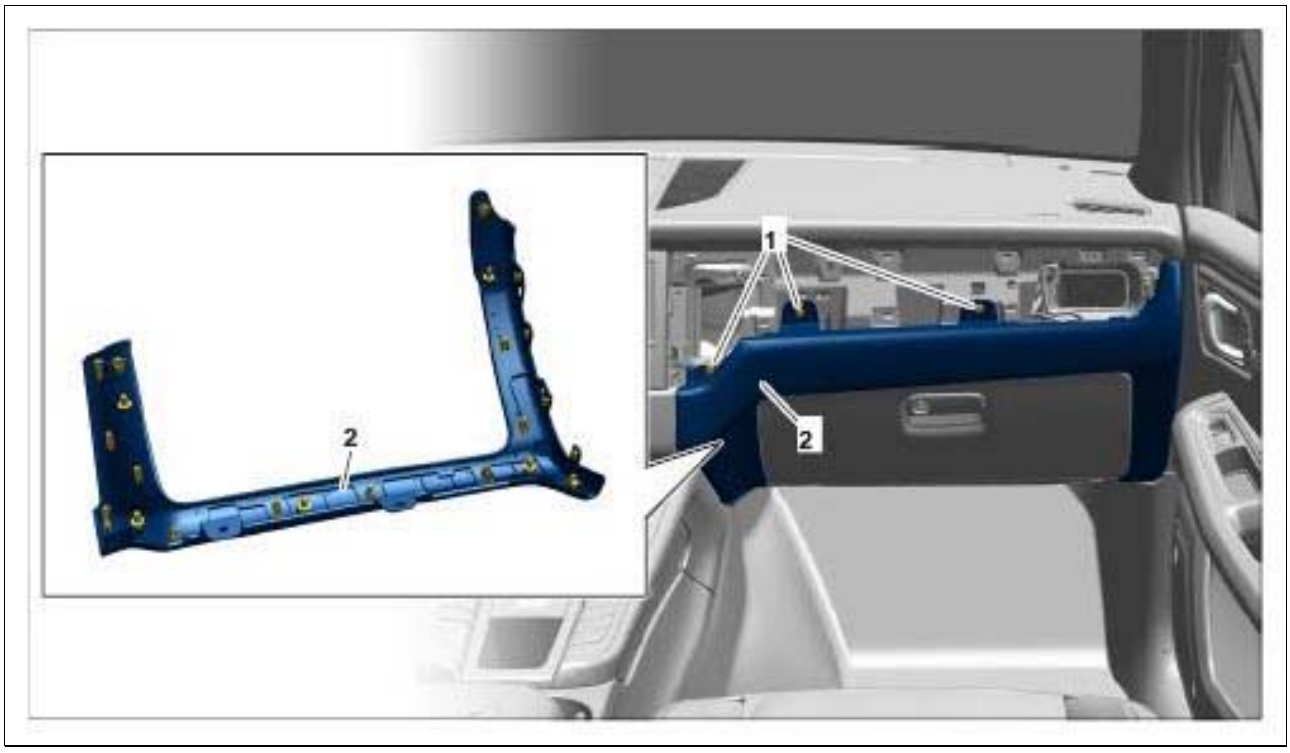

Courtesy of PORSCHE CARS NORTH AMERICA, INC.

1. Screw → **Tightening torque: 3 Nm (2 ftlb.)**

1, 2, 3 - Screw → **Tightening torque: 4.5 Nm (3 ftlb.)**

Fig 4: Identifying Trim Panel Under Dashboard



Courtesy of PORSCHE CARS NORTH AMERICA, INC.

Location	Description	Type	Basic value	Tolerance 1	Tolerance 2
Fastening screw for lashing point		Tightening torque	8 Nm (6 ftlb.)		
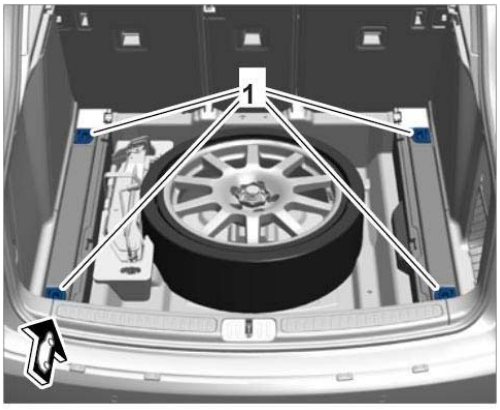 Lashing points					
Armrest to door panel	Internal Torx screw, Ø 5 x 14	Tightening torque	2.3 Nm (1.5 ftlb.)		

WM 7X00IN TECHNICAL VALUES (ALL MODELS) > TECHNICAL VALUES -70- TRIM PANELS > TECHNICAL VALUES -70- DASHBOARD

1, 2 - Screw → **Tightening torque: 3 Nm (2 ftlb.)**

3 - Screw → **Tightening torque: 1.5 Nm (1 ftlb.)**

Fig 1: Identifying Side Air Guides

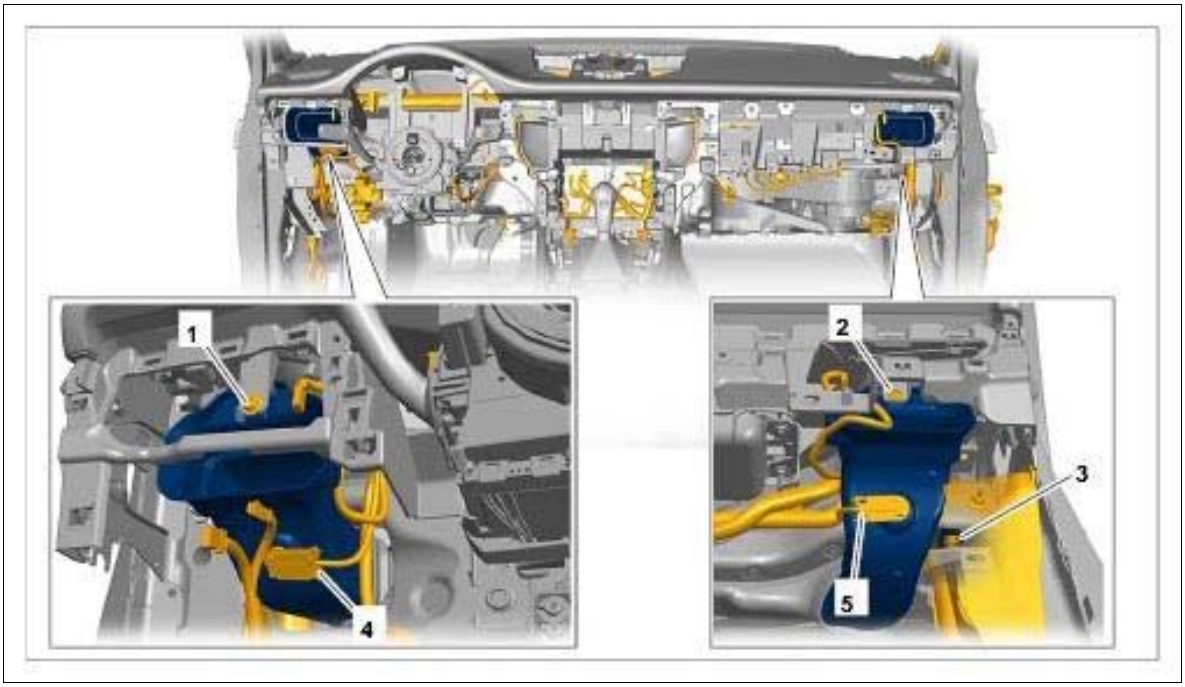

Courtesy of PORSCHE CARS NORTH AMERICA, INC.

Fig 2: Identifying Passenger Airbag And Side Mounting

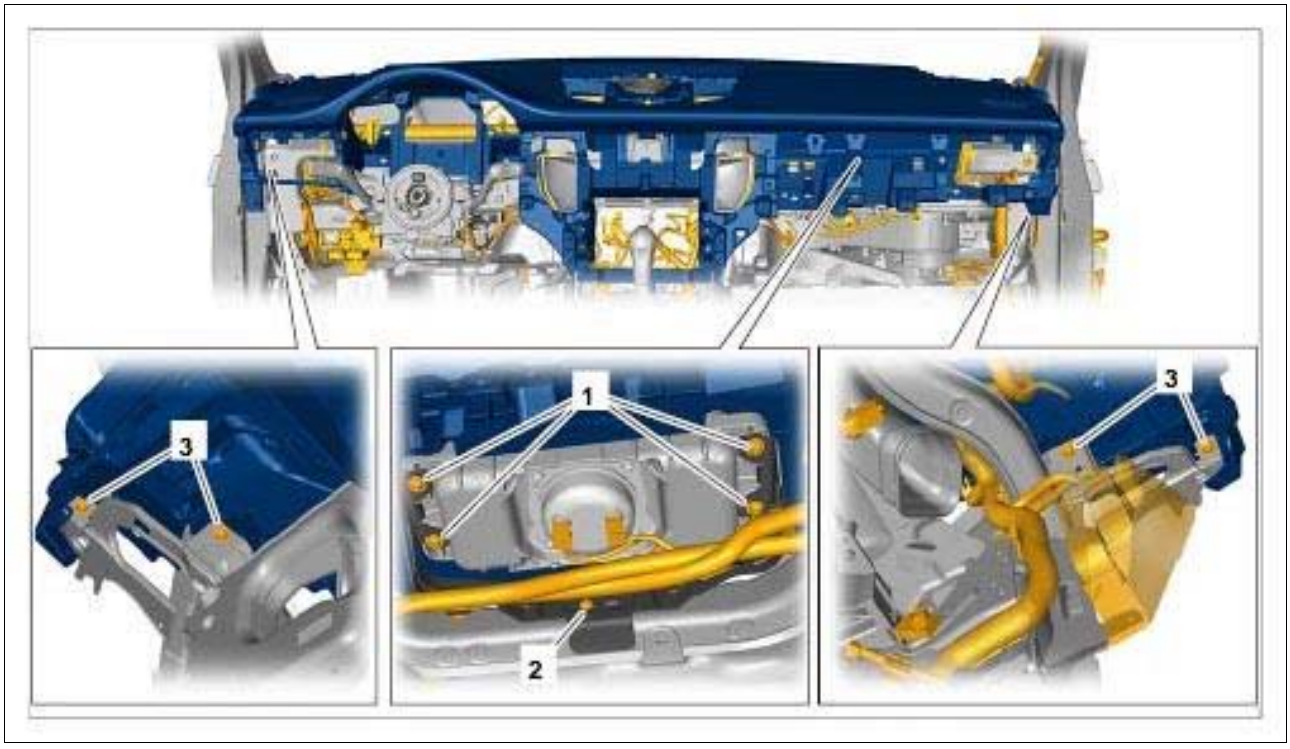

Courtesy of PORSCHE CARS NORTH AMERICA, INC.

3 - Screw → **Tightening torque: 3 Nm (2 ftlb.)**

1, 2, 3 - Screw → **Tightening torque: 3 Nm (2 ftlb.)**

Fig 3: Identifying Front Mounting Screws

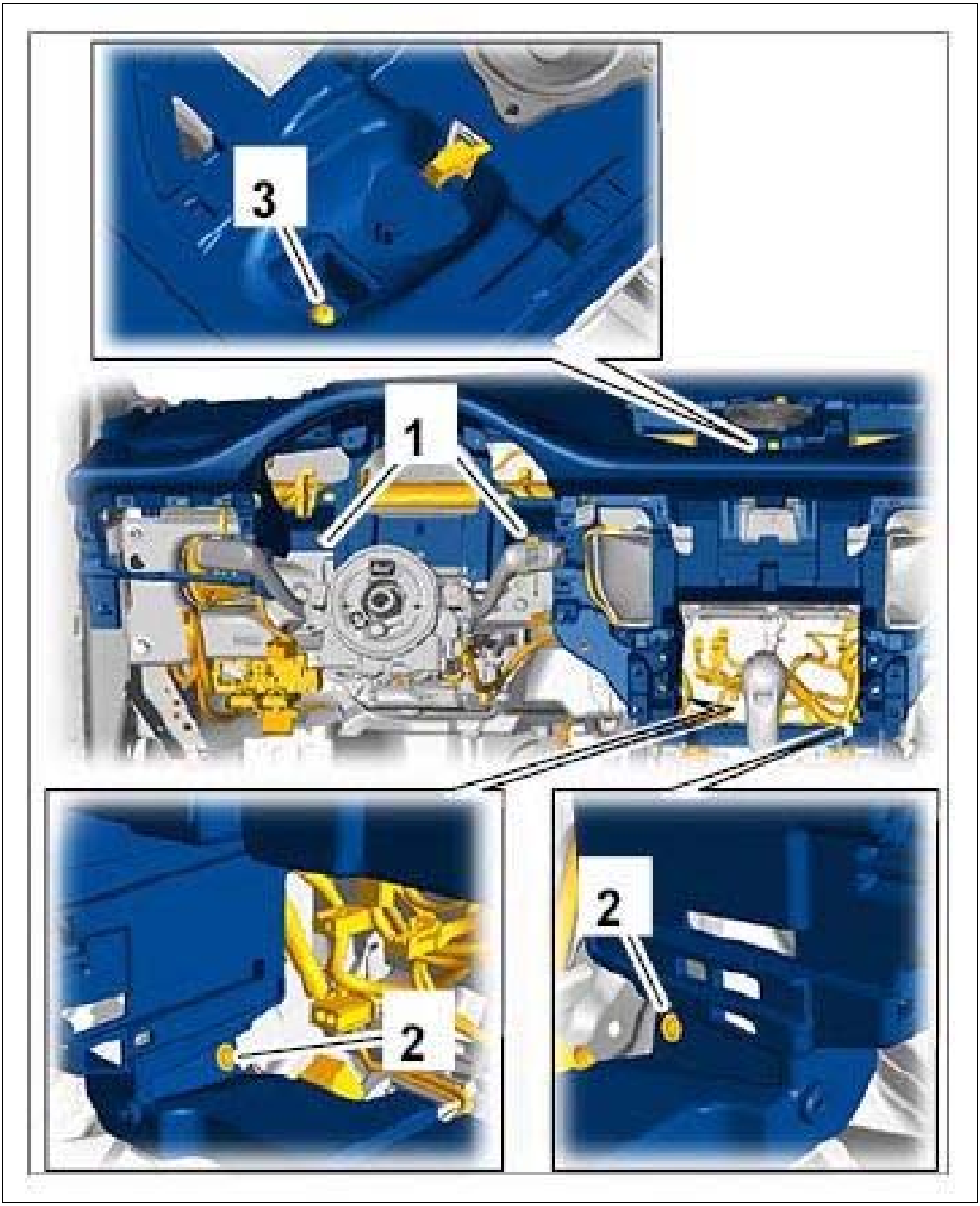

Courtesy of PORSCHE CARS NORTH AMERICA, INC.

WM 7X00IN TECHNICAL VALUES (ALL MODELS) > TECHNICAL VALUES -70- TRIM PANELS > TECHNICAL VALUES - FRONT SEAT

Location	Description	Type	Basic value	Tolerance 1	Tolerance 2

Fastening screws for front seat rail		Tightening torque	50 Nm (37 ftlb.)	+/-7.5 Nm (+/- 5.5 ftlb.)	



Tightening fastening screws on front seat rail

Fastening screws for rear seat rail		Tightening torque	50 Nm (37 ftlb.)	+/-7.5 Nm (+/- 5.5 ftlb.)	

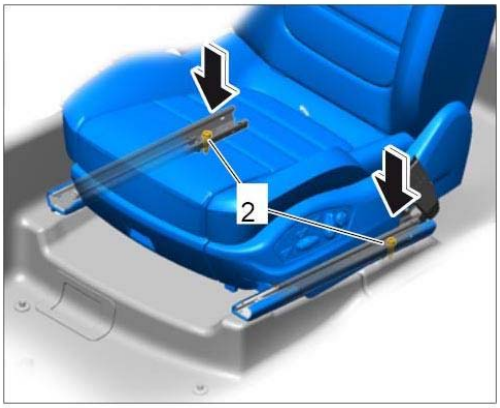

Securing front seat to seat frame at the rear

Fastening screw for storage compartment on seat	Item 1	Tightening torque	7.5 Nm (5.5 ftlb.)	+/-0.5 Nm (+/- 0.5 ftlb.)	

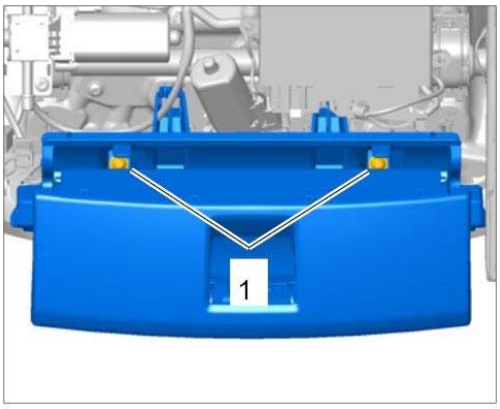

Loosening storage compartment

Fastening screw securing holder for	Item 1	Tightening torque	2.5 Nm (2 ftlb.)	+/-0.3 Nm (+/- 0.2 ftlb.)	

air cushion on backrest					

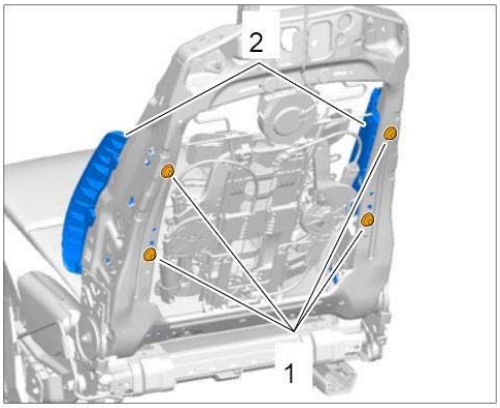

Removing air cushion for backrest

Fastening screw securing seat-surface extension to seat	Item 2	Tightening torque	7.5 Nm (5.5 ftlb.)	+/-0.5 Nm (+/-0.5 ftlb.)	

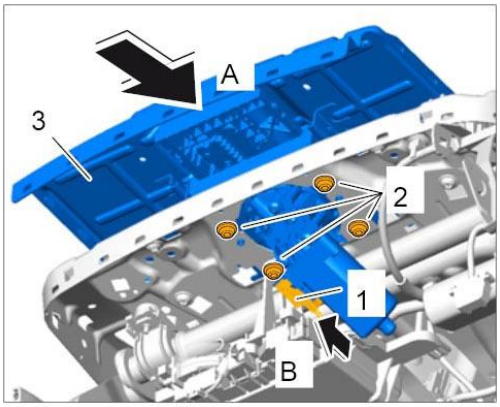

Installing seat-surface extension

Fastening screw securing side bracket to seat	Item 5	Tightening torque	7.5 Nm (5.5 ftlb.)	+/-0.5 Nm (+/-0.5 ftlb.)	

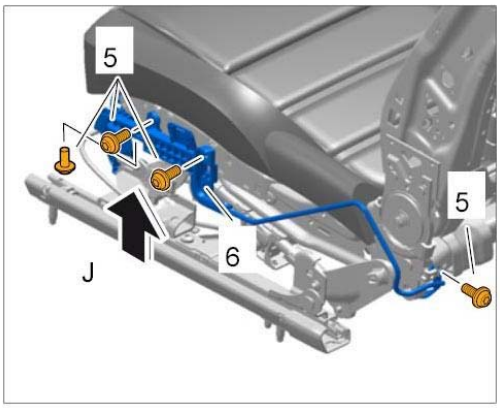

Securing bracket at the sides

ISOFIX fastening screw	Item 3	Tightening torque	7.5 Nm (5.5 ftlb.)	+/-0.5 Nm (+/- 0.5 ftlb.)	

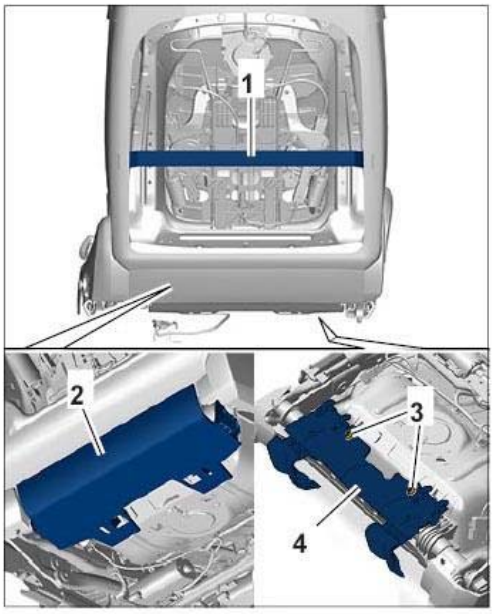

Loosening restraining strap

Fastening screws securing backrest frame to seat frame	Item 1	Tightening torque	33 Nm (24 ftlb.)	+/-3 Nm (+/- 2 ftlb.)	

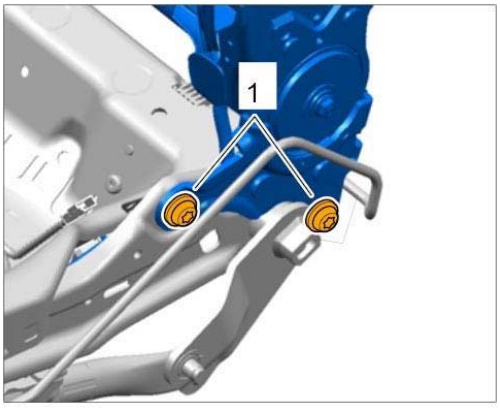

Removing backrest frame

WM 7X00IN TECHNICAL VALUES (ALL MODELS) > TECHNICAL VALUES -70- TRIM PANELS > TECHNICAL VALUES FOR REAR SEAT

Location	Description	Type	Basic value	Tolerance 1	Tolerance 2
Fastening screws for supporting bow		Tightening torque	12 Nm (9 ftlb.)		

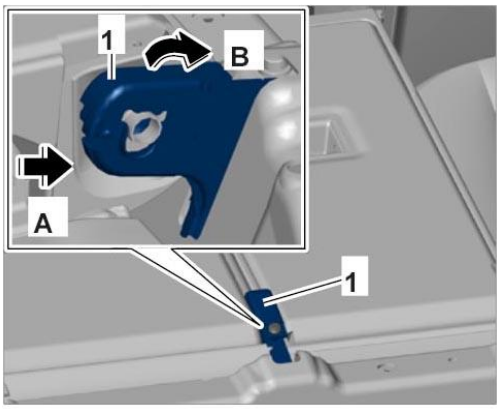

Securing supporting bow

Fastening screw for inner backrest mount (on body side)		Tightening torque	20 Nm (15 ftlb.)		

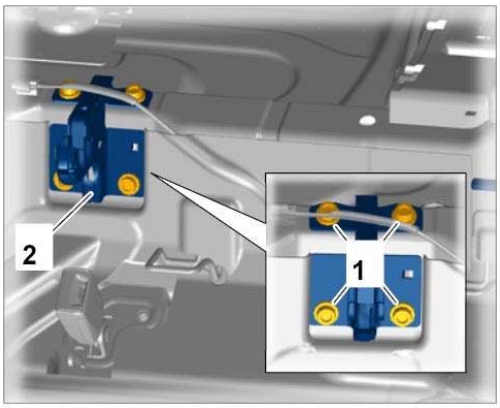

Removing inner mount for rear backrest

Fastening screw for outer backrest mount (on body side)		Tightening torque	20 Nm (15 ftlb.)		

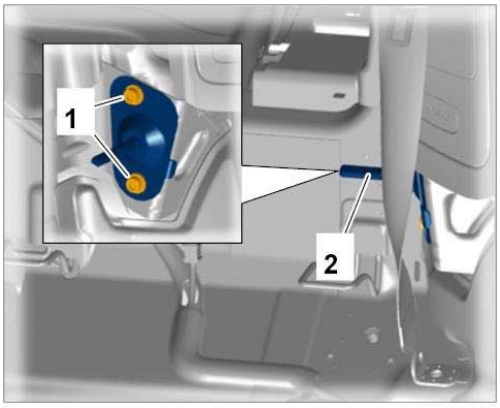

Removing outer mount for backrest

Mount for load-through provision (on	Item 1	Tightening torque	39 Nm (29 ftlb.)		

backrest side)					
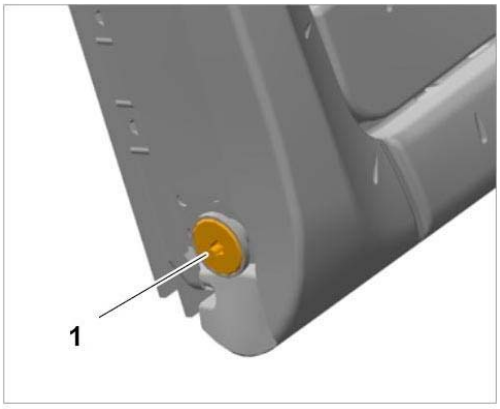 Removing load-through provision mount					
Inner mount for rear backrest (on backrest side)	Item 2	Tightening torque	39 Nm (29 ftlb.)		
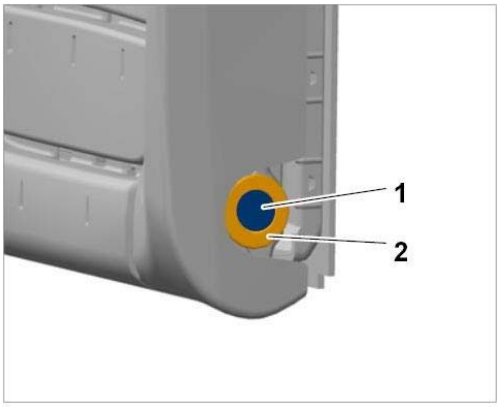 Removing inner mount for rear backrest					
Fastening screws for rear backrest lock	Item 1	Tightening torque	26 Nm (19 ftlb.)		
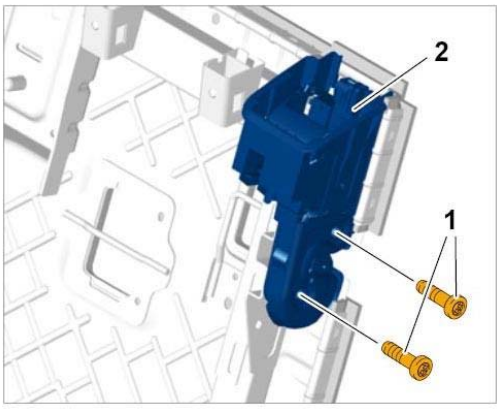 Removing backrest lock					
Fastening screw for rear backrest lock, center	Item 1	Tightening torque	26 Nm (19 ftlb.)		

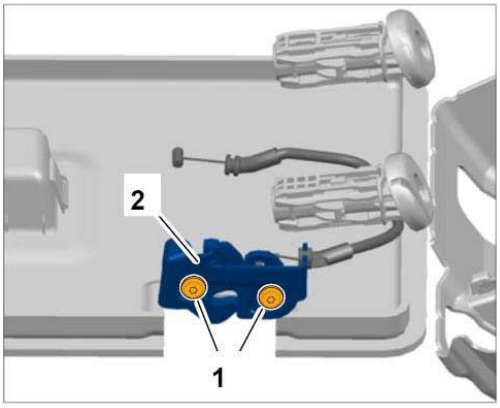

Removing backrest lock

Fastening screws for upper trim panel on load-through provision	Item 1 to 4	Tightening torque	3.5 Nm (2.5 ftlb.)		



Installing upper trim panel on load-through provision

Fastening screw for armrest on load-through provision	Item 2	Tightening torque	4.5 Nm (3 ftlb.)		

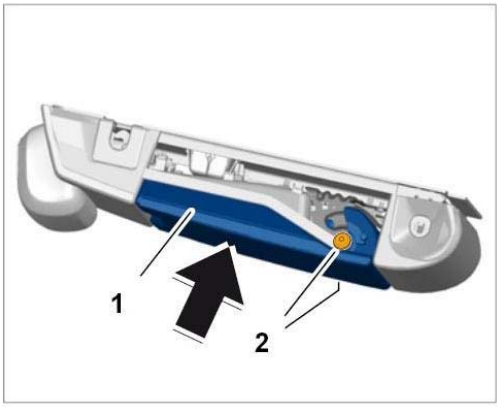

Installing armrest with cover

WM 7X00IN TECHNICAL VALUES (ALL MODELS) > TECHNICAL VALUES -70- TRIM PANELS > TECHNICAL VALUES -70- FRONT DOOR

Location	Description	Type	Basic value	Tolerance 1	Tolerance 2
Fastening screw for door panel		Tightening torque	3.5 Nm (2.5 ftlb.)	+/-0.5 Nm (+/- 0.5 ftlb.)	

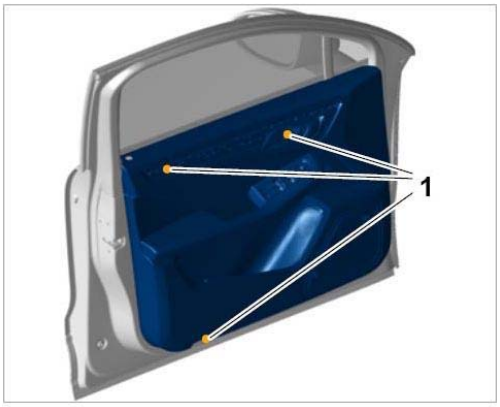

Door panel mounting

WM 7X00IN TECHNICAL VALUES (ALL MODELS) > TECHNICAL VALUES -70- TRIM PANELS > TECHNICAL VALUES -70- REAR DOOR

Location	Description	Type	Basic value	Tolerance 1	Tolerance 2
Fastening screw for door panel		Tightening torque	3.5 Nm (2.5 ftlb.)	+/-0.5 Nm (+/- 0.5 ftlb.)	

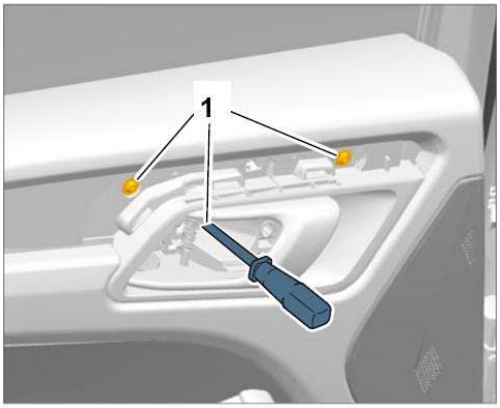

Door panel mounting

Fastening screw for door panel, bottom		Tightening torque	3.5 Nm (2.5 ftlb.)	+/-0.5 Nm (+/- 0.5 ftlb.)	

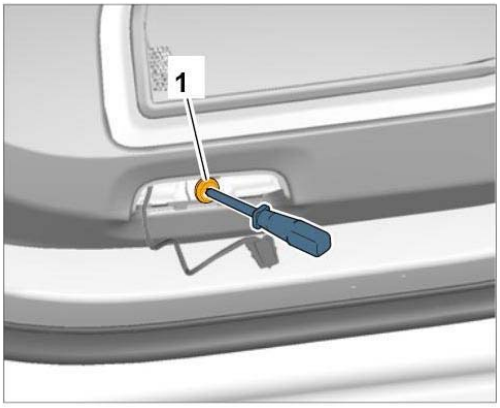

Mounting at bottom of door

WM 7X00IN TECHNICAL VALUES (ALL MODELS) > TECHNICAL VALUES -70- TRIM PANELS > TECHNICAL VALUES -70- LININGS

2 - Screw → **Tightening torque: 5.6 Nm (4 ftlb.)**

Fig 1: Removing A-Pillar Trim Panel

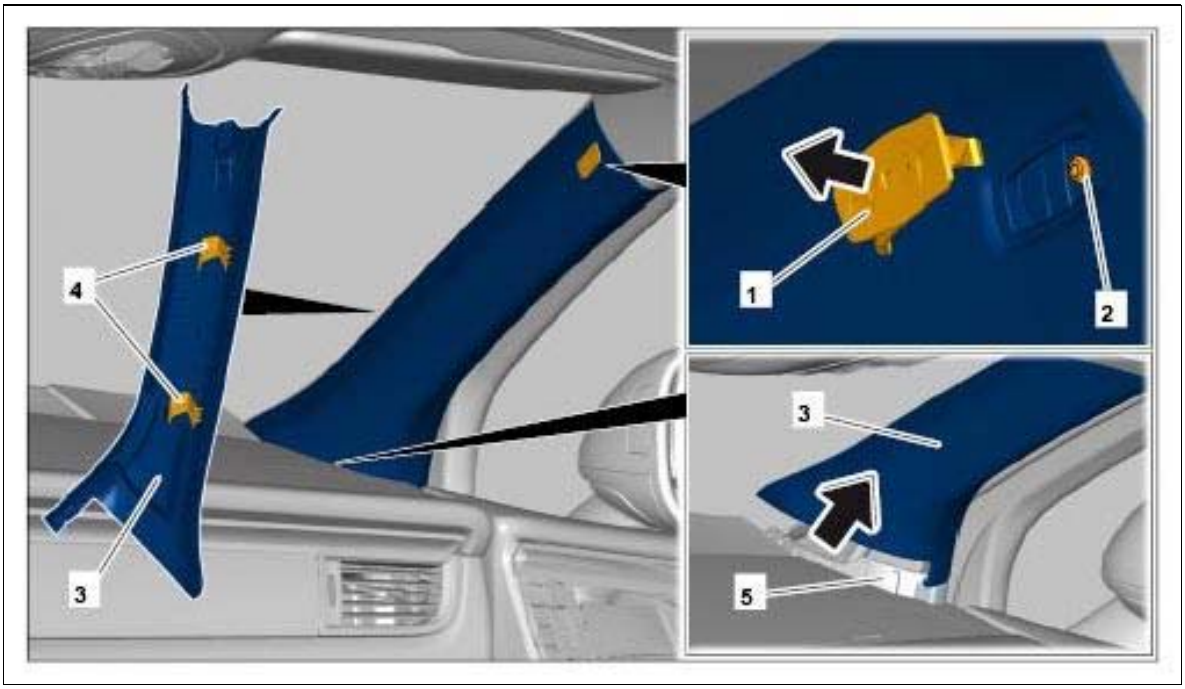

Courtesy of PORSCHE CARS NORTH AMERICA, INC.

Location	Description	Type	Basic value	Tolerance 1	Tolerance 2
Fastening screw for lower roof console		Tightening torque	5 Nm (3.5 ftlb.)		

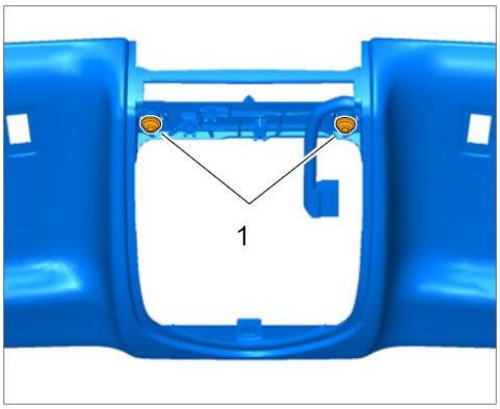

Screws securing roof console to headliner

Fastening screw for luggage net cover holder		Tightening torque	9 Nm (6.5 ftlb.)		

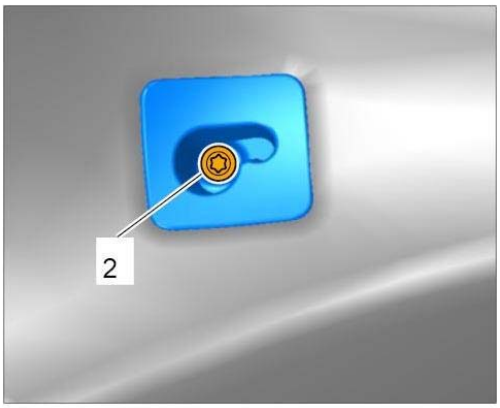

Screws securing holder for rear luggage net cover

WM 7X00IN TECHNICAL VALUES (ALL MODELS) > TECHNICAL VALUES -70- TRIM PANELS > TECHNICAL VALUES -70- REAR LID TRIM PANEL

Location	Description	Type	Basic value	Tolerance 1	Tolerance 2
Fastening screws for storage box		Tightening torque	1.5 Nm (1 ftlb.)		

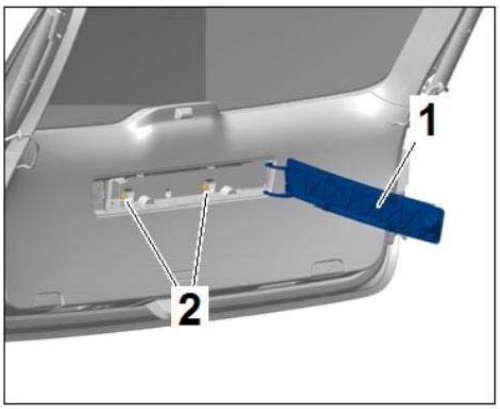

Storage box lid

Fastening screw for finger plate		Tightening torque	1.5 Nm (1 ftlb.)		

Arrangement of retaining clips

WM 7X00IN INSTRUCTIONS FOR THE CARE OF SOFT-TOUCH PAINT SURFACES (ALL MODELS)

⚠ *CAUTION: Risk of damage to the soft-look paint coat if the cleaning agents or solvents available as accessories for cleaning the vehicle interior are used. This also applies to the use of plastic polish from the Tequipment care set. The contents of these agents etch the paint coat (paint swells, rubber-like texture).*

- *Consequently, the paint coat can separate from the substrate when a mechanical load is applied. Furthermore, the surface may shine brightly after using the cleaning agents.*

→ The following procedure is recommended for the care or cleaning of soft-look paint surfaces.

WM 7X00IN INSTRUCTIONS FOR THE CARE OF SOFT-TOUCH PAINT SURFACES (ALL MODELS) > LIGHT SOILING (E.G. DUST)

It is possible to clean light soiling by selecting an option from the following cleaning tools and cleaning fluids:

Cleaning tools	Cleaning fluid	Cleaning procedure
Soft household sponge	Clean water	Gentle wiping movements, do not apply pressure
Soft, lint-free cloth	Water with a small amount of commercially available washing-up liquid added	

	Interior window cleaner (from Porsche care set) *NOTE: Observe cleaning instructions, wipe down with clean water if necessary*	

WM 7X00IN INSTRUCTIONS FOR THE CARE OF SOFT-TOUCH PAINT SURFACES (ALL MODELS) > HEAVY SOILING

It is possible to clean heavy soiling by selecting an option from the following cleaning tools and cleaning fluids:

Cleaning tools	Cleaning fluid	Cleaning procedure
Soft household sponge	Water with a small amount of commercially available washing-up liquid added	Gentle wiping movements, do not apply pressure
Soft, lint-free cloth	Interior window cleaner (from Porsche care set) *NOTE: Observe cleaning instructions, wipe down with clean water if necessary*	
	Solvent naphtha *NOTE: Use solvent naphtha only! Other solvents must not be used!*	

WM 451155 REPLACING FRONT SPEED SENSOR (ALL MODELS) > TECHNICAL VALUES

Location	Description	Type	Basic value	Tolerance 1	Tolerance 2
Speed sensor to wheel bearing housing	M6 x 16 thread	Tightening torque	8 Nm (6 ftlb.)		

WM 451155 REPLACING FRONT SPEED SENSOR (ALL MODELS) > PRELIMINARY WORK

1. Raise the vehicle → 4X00IN LIFTING THE VEHICLE .

WM 451155 REPLACING FRONT SPEED SENSOR (ALL MODELS) > REPLACING FRONT SPEED SENSOR

1. Release and disconnect electric plug connection **-1-** on the speed sensor.
2. Unscrew fastening screw **-2-** .

Fig 1: Identifying Front Speed Sensor Mounting

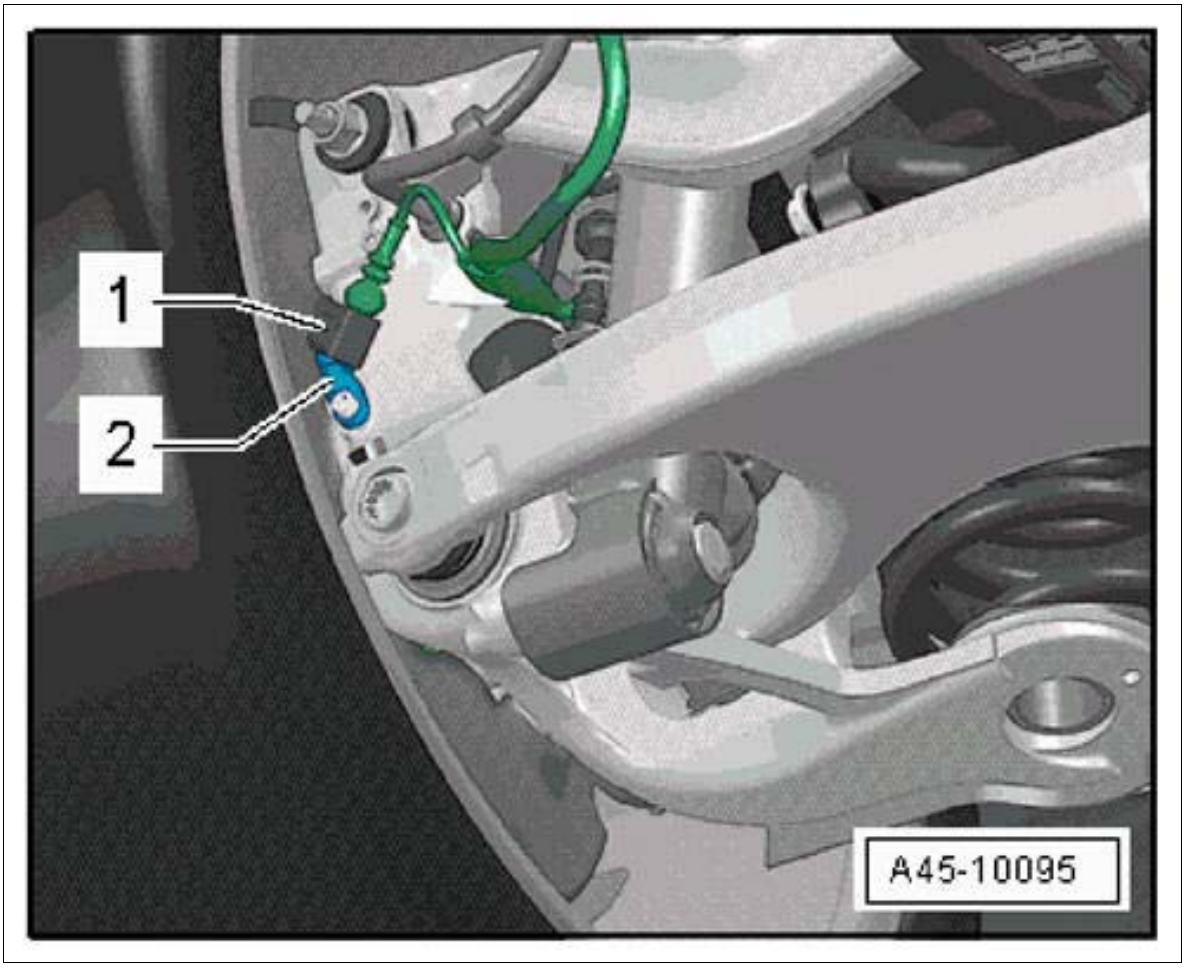

Courtesy of PORSCHE CARS NORTH AMERICA, INC.

3. Pull the speed sensor out of the wheel bearing housing.

WM 451155 REPLACING FRONT SPEED SENSOR (ALL MODELS) > REPLACING FRONT SPEED SENSOR > INSTALLING FRONT SPEED SENSOR

Information

- The speed sensor must be inserted using Optitemp (Optitemp LG2, 25-ml spray can available under Part No. 000.043.204.21).
- The bore for mounting the speed sensor must be free of dirt.
- Observe correct tightening torques.

1. Installation is performed in reverse order.

   Observe the specified tightening torque:

   Speed sensor to wheel bearing housing: **Tightening torque 8 Nm (6 ftlb.)**

WM 451555 REPLACING REAR SPEED SENSOR (ALL MODELS) > TECHNICAL VALUES

Location	Description	Type	Basic value	Tolerance 1	Tolerance 2
Speed sensor to wheel bearing housing	M6 x 16 thread	Tightening torque	8 Nm (6 ftlb.)		

WM 451555 REPLACING REAR SPEED SENSOR (ALL MODELS) > PRELIMINARY WORK

1. Raise the vehicle. → 4X00IN LIFTING THE VEHICLE

WM 451555 REPLACING REAR SPEED SENSOR (ALL MODELS) > REPLACING SPEED SENSOR > REMOVING REAR SPEED SENSOR

1. Release and disconnect electric plug connection **-1-** on the speed sensor.
2. Unscrew fastening screw **-2-** .

Fig 1: Identifying Rear Speed Sensor

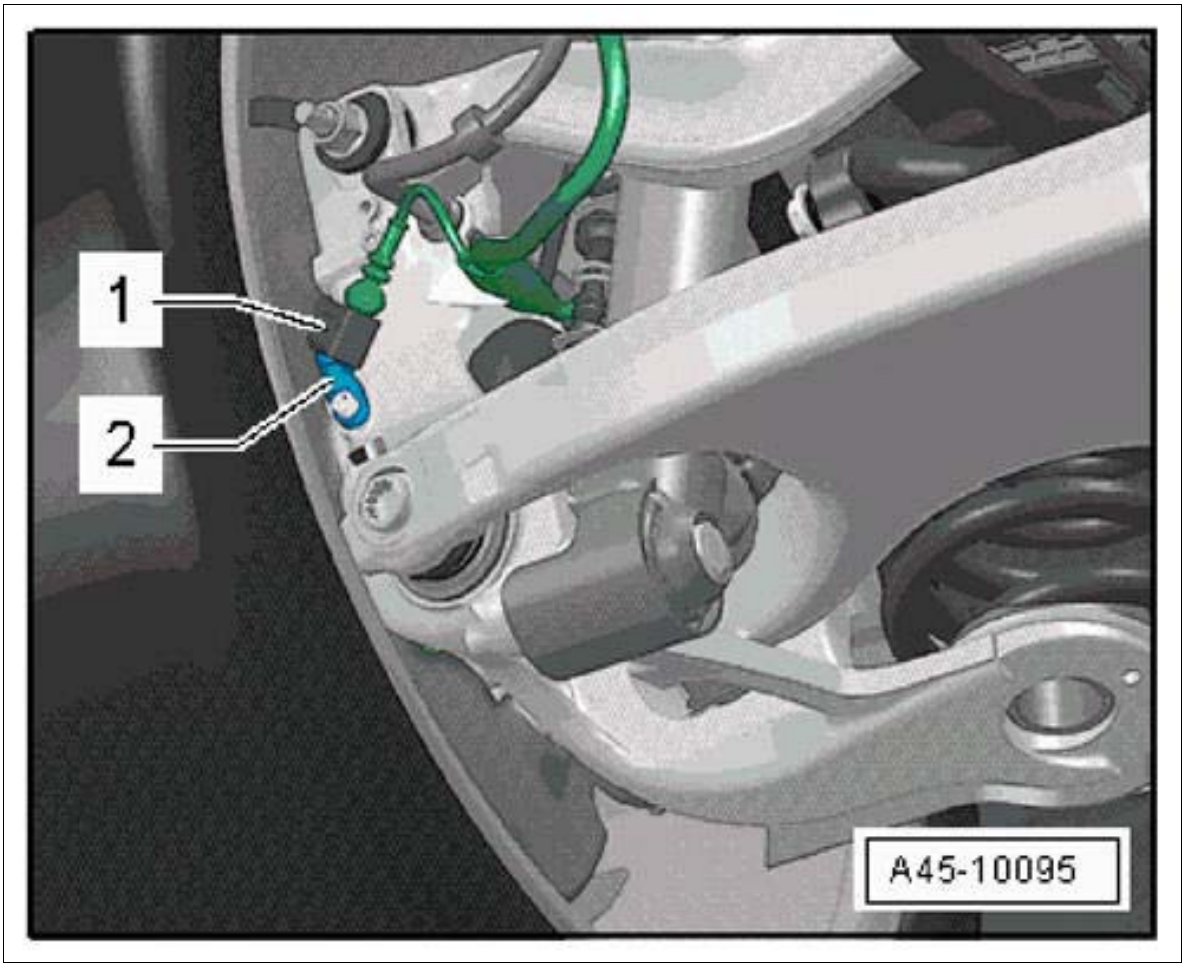

Courtesy of PORSCHE CARS NORTH AMERICA, INC.

3. Pull the speed sensor out of the wheel bearing housing.

WM 451555 REPLACING REAR SPEED SENSOR (ALL MODELS) > REPLACING SPEED SENSOR > INSTALLING REAR SPEED SENSOR

Information

- The speed sensor must be inserted using Optitemp (Optitemp LG2, 25-ml spray can available under Part No. 000.043.204.21).
- The bore for mounting the speed sensor must be free of dirt.
- Observe correct tightening torques.

1. Installation is performed in reverse order.

   Observe the specified tightening torque:

   Speed sensor to wheel bearing housing: **Tightening torque 8 Nm (6 ftlb.)**

WM 453019 REMOVING AND INSTALLING HYDRAULIC UNIT (ALL MODELS) > TOOLS

Designation	Type	Number	Description	
PIWIS Tester II	Special tool	9818		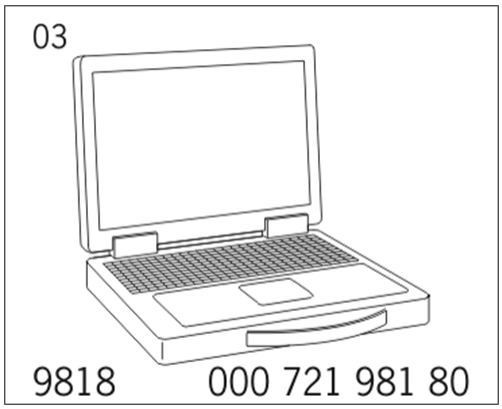

WM 453019 REMOVING AND INSTALLING HYDRAULIC UNIT (ALL MODELS) > TECHNICAL VALUES

Location	Description	Type	Basic value	Tolerance 1	Tolerance 2
Brake line to hydraulic unit (left-hand drive)	All lines on hydraulic unit	Tightening torque	14 Nm (10.5 ftlb.)		
Brake line to hydraulic unit (right-hand drive)	Line: Brake calliper - hydraulic unit	Tightening torque	14 Nm (10.5 ftlb.)		
Brake line to hydraulic unit (right-hand drive)	Line: Brake master cylinder - hydraulic unit	Tightening torque	18 Nm (13 ftlb.)		

WM 453019 REMOVING AND INSTALLING HYDRAULIC UNIT (ALL MODELS) > PRELIMINARY WORK

1. Remove front left trim panel → Removing front trim panel .

WM 453019 REMOVING AND INSTALLING HYDRAULIC UNIT (ALL MODELS) > REMOVING AND INSTALLING HYDRAULIC UNIT > REMOVING HYDRAULIC UNIT

NOTE: Replacing the hydraulic unit/control unit

- *The hydraulic unit forms a single unit with the control unit.*
- *The hydraulic unit and control unit are always replaced together.*
- *When replacing the hydraulic unit/control unit, the new assembly must be to hand before the old one is removed.*
- *The data as well as the coding of the old control unit must be transferred to the new unit before the old one is removed.*

→ When replacing, note the following: → 453055 REPLACING HYDRAULIC UNIT/CONTROL UNIT .

Information

- When fitting the hydraulic connections, the electric plug connections on the control units must remain connected as long as possible. This prevents the plug connections on the hydraulic unit or in the connectors inside from being splashed with brake fluid or water.
- Any damp connector must be wiped dry before being disconnected from the connector on the hydraulic unit. If necessary, provide the connector with a suitable protector.
- Brake fluid on electrical contacts (even thinned brake fluid) leads to corrosion and may cause faults in the system.
- The brake lines must not be bent in the area of the hydraulic unit.
- Clean the interfacing points of the brake lines, but not with cleaning agents.
- Rinse off any brake fluid emerging thoroughly with water.

1. Place a suitable cloth underneath to catch any emerging brake fluid.
2. Disconnect brake lines **-1-** .
    1. 2.1. Mark the brake lines to prevent them from being confused.
    2. 2.2. Unscrew cap screws for the brake lines.
    3. 2.3. Pull brake lines **-1-** out of the bores and close off **immediately** using suitable stoppers.
    4. 2.4. Lay brake lines aside **carefully** , fixing them in place if necessary.

Fig 1: Disconnecting Brake Lines

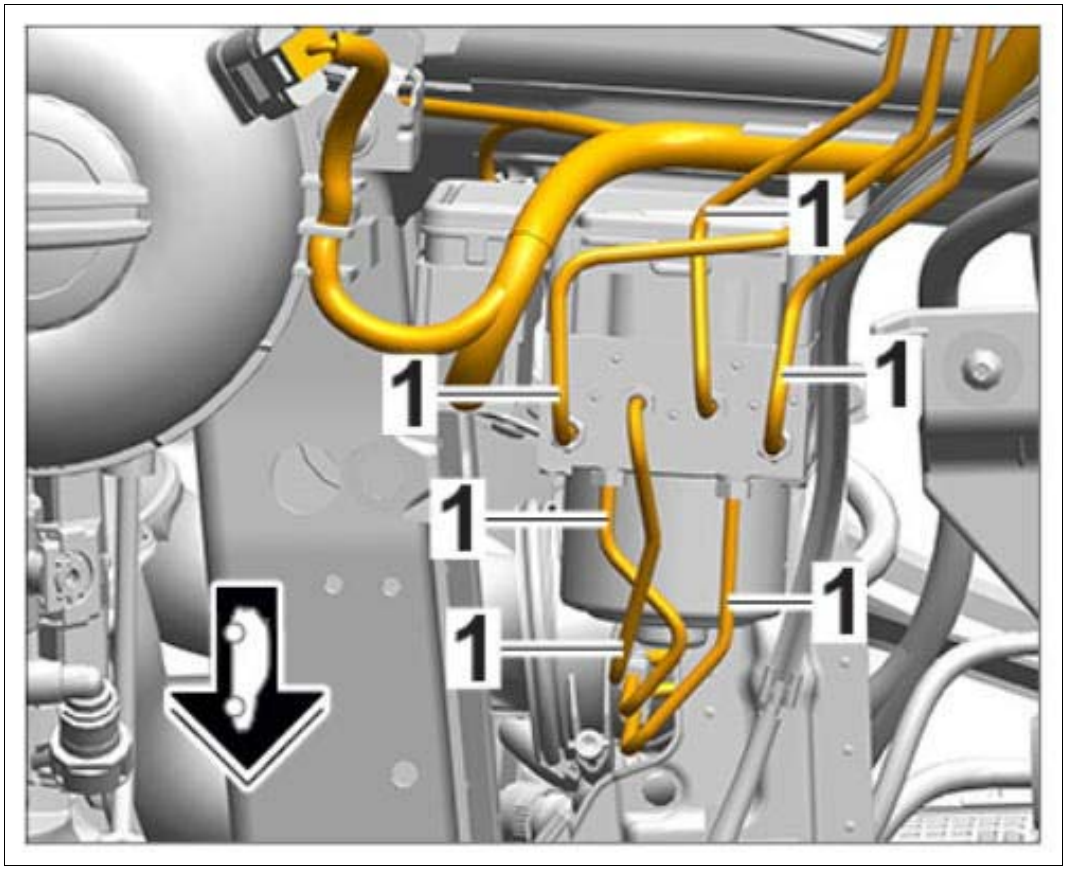

Courtesy of PORSCHE CARS NORTH AMERICA, INC.

3. Pull off electric push-on connector **-2-** .

    1. 3.1. Pull slide lock **-1-** up **-arrow-** .
    2. 3.2. Pull off electric push-on connector **-2-** .

Fig 2: Pulling Electric Push-On Connector

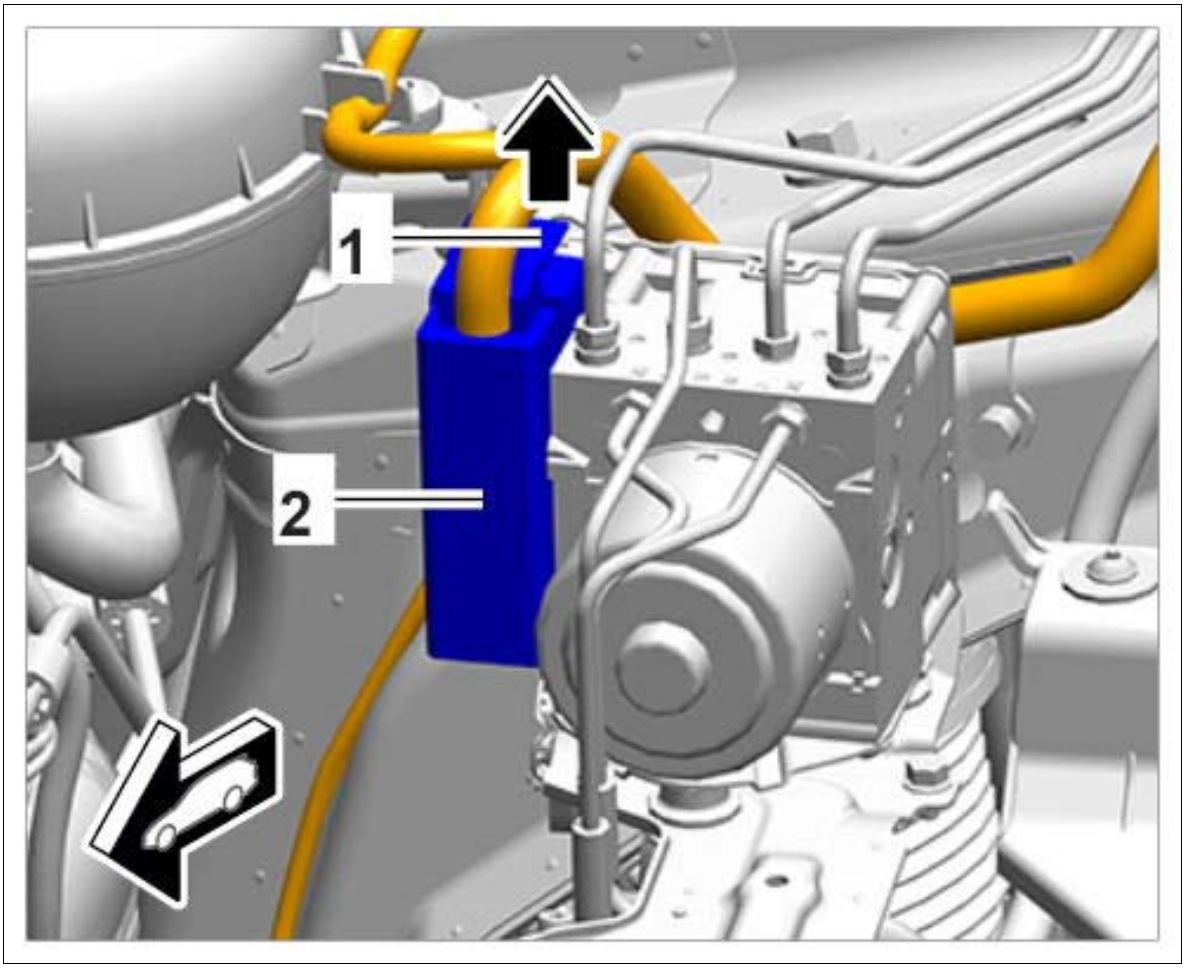

Courtesy of PORSCHE CARS NORTH AMERICA, INC.

4. Pull hydraulic unit together with control unit and holder up and off.

WM 453019 REMOVING AND INSTALLING HYDRAULIC UNIT (ALL MODELS) > REMOVING AND INSTALLING HYDRAULIC UNIT > INSTALLING HYDRAULIC UNIT

1. Installation is performed in reverse order.

   Observe specified tightening torques:

   Only for left-hand drive (LHD) vehicles:

   Brake lines to hydraulic unit: **Tightening torque 14 Nm (10.5 ftlb.)**

   Only for right-hand drive (RHD) vehicles:

   Brake lines (from brake calliper) to hydraulic unit: **Tightening torque 14 Nm (10.5 ftlb.)**

   Brake lines (from brake master cylinder) to hydraulic unit: **Tightening torque 18 Nm (13 ftlb.)**

WM 453019 REMOVING AND INSTALLING HYDRAULIC UNIT (ALL MODELS) > SUBSEQUENT WORK

1. Bleed the brake system
2. Install front left trim panel → Installing front trim panel .
3. Bleed the brake lines **again (following conventional bleeding)** using **PIWIS Tester II 9818** (secondary brake circuit bleeding).

   To do this, select:

   > Control unit overview

   > PSM

   > Maintenance/repairs

   > Bleed brakes

   To finish, follow the menu guidance in **PIWIS Tester II 9818.**
4. If the hydraulic unit was replaced, code the control unit for the hydraulic unit → 453055 REPLACING HYDRAULIC UNIT .
5. Carry out a swap test using **PIWIS Tester II 9818.**

   To do this, select:

   > Control unit overview

   > PSM

   > Maintenance/repairs

   > Hydraulic swap test

   To finish, follow the menu guidance in **PIWIS Tester II 9818.**
6. Perform a function test.
    1. 6.1. During the test drive, perform at least one ABS control operation, taking the road conditions into consideration.
    2. 6.2. On vehicles with PDK transmission, test the HOLD function if possible. If the combination sensor has been taught incorrectly, the Hold function will not be active for inclines of more than 5%!
    3. 6.3. Read out the fault memory. There must not be any stored faults.

WM 453055 REPLACING HYDRAULIC UNIT (ALL MODELS) > TOOLS

Designation	Type	Number	Description	

PIWIS Tester II	Special tool	9818		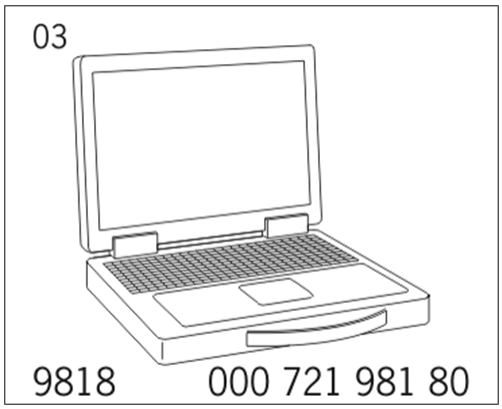

WM 453055 REPLACING HYDRAULIC UNIT (ALL MODELS) > INFORMATION

NOTE: Replacing the hydraulic unit/control unit

- *The hydraulic unit forms a single unit with the control unit.*
- *The hydraulic unit and control unit are always replaced together.*
- *When replacing the hydraulic unit/control unit, the new assembly must be to hand before the old one is removed.*
- *The data as well as the coding of the old control unit must be transferred to the new unit before the old one is removed.*
- *The hydraulic unit/control unit must be calibrated (calibration of hydraulic unit/control unit with combination sensor). Without calibrating, the PSM will have incorrect values or no values.*

→ Procedure

→ The Porsche System Tester must not be disconnected from the diagnostic socket when replacing the hydraulic unit.

→ Read out data from old hydraulic unit/control unit. Switch off the ignition. Pull off connector for hydraulic unit and connect connector to the new hydraulic unit. Switch on ignition. Transfer data.

WM 453055 REPLACING HYDRAULIC UNIT (ALL MODELS) > CODING AND CALIBRATING HYDRAULIC UNIT/CONTROL UNIT > CODING HYDRAULIC UNIT/CONTROL UNIT

Information

Always read the information. → 453055 REPLACING HYDRAULIC UNIT/CONTROL UNIT

- If the hydraulic unit is replaced, the control unit of the hydraulic unit must be coded and calibrated.

- When replacing the hydraulic unit, there are a number of ways to code the hydraulic unit/control unit.

    1. **Control unit replacement**
    2. **Automatic coding using coding rules**
    3. **Manual coding of hydraulic unit using coding rules from the >vehicle I-passport<**

Information

If the hydraulic unit is replaced, the PSM control unit must be coded using the Porsche System Tester. Hydraulic unit and PSM control unit form one unit.

1. **Control unit replacement**

    > Control unit overview

    > PSM

    > Maintenance/repairs

    > Control unit replacement

    If the control unit is faulty (electrical fault) and cannot be read out, continue with Step 2!

2. **Automatic coding of hydraulic unit**

    > Control unit overview

    > PSM

    > Codings/adaptations

    > Automatic coding

    If faults or discrepancies occur during automatic coding, carry out >Manual coding of hydraulic unit< (see Step 3 below).

3. **Manual coding of the hydraulic unit using coding rules from the >vehicle I-passport<**

    Get the vehicle data (coding rules) from the >vehicle I-passport<.

    Carry out >Manual coding of hydraulic unit< using coding rules from the >vehicle I-passport<.

    > Control unit overview

    > PSM

    > Codings/adaptations

    > Manual coding with coding rules

    > Product code

    Select engine variant > [F12]

    Select equipment > [>>]

This completes manual coding.

WM 453055 REPLACING HYDRAULIC UNIT (ALL MODELS) > CODING AND CALIBRATING HYDRAULIC UNIT/CONTROL UNIT > CALIBRATING HYDRAULIC UNIT/CONTROL UNIT

Information

Always read the information. → 453055 REPLACING HYDRAULIC UNIT/CONTROL UNIT

- If the hydraulic unit is replaced, the control unit of the hydraulic unit must be coded and calibrated.

1. Calibrate the combination sensor (includes lateral and axial acceleration sensor and yaw rate sensor) using **PIWIS Tester II 9818.**

   To do this, select:

   > Control unit overview

   > PSM

   > Drive links/checks

   > Calibration of combination sensor

   This completes the calibration process.

WM 456005 INITIALIZING AND CALIBRATING STEERING-ANGLE SENSOR (ALL MODELS) > TOOLS

Designation	Type	Number	Description	
PIWIS Tester II	Special tool	9818		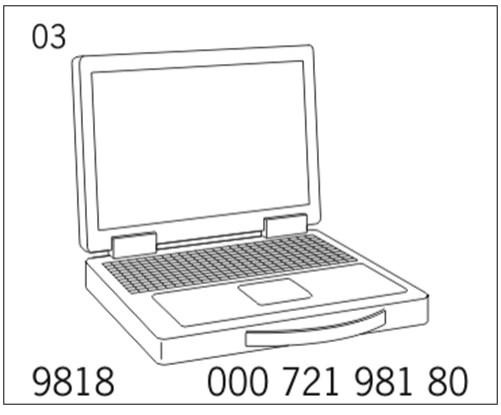

WM 456005 INITIALIZING AND CALIBRATING STEERING-ANGLE SENSOR (ALL MODELS) > TECHNICAL VALUES

Location	Description	Type	Basic value	Tolerance 1	Tolerance 2
Current rating		Nominal value	40 A		

WM 456005 INITIALIZING AND CALIBRATING STEERING-ANGLE SENSOR (ALL MODELS) > CHECKING STEERING-ANGLE SENSOR > INITIALIZING STEERING-ANGLE SENSOR

WARNING: Steering-angle sensor not calibrated or calibrated incorrectly

- *Unexpected vehicle handling*
- *Steering-angle sensor does not function*
- *Malfunction in steering-angle sensor*

→ After working on wheel suspension parts, when replacing the steering-angle sensor and after changing the wheel alignment values, calibrate the steering-angle sensor using **PIWIS Tester II 9818.**

→ Keep the front wheels in straight-ahead position on the measuring platform during calibration.

→ On vehicles with electromechanical steering, also re-teach the electric steering lock settings.

NOTE: Voltage drop

- *Fault entries in the control unit*
- *Coding in the control unit is aborted*

→ Prior to disconnecting the control unit, switch off the ignition and remove the ignition key.

→ Ensure that the power supply is not interrupted during programming.

→ Connect a battery charger with a current rating of at least → **Nominal value: 40 A** to the vehicle battery.

Information

- The steering-angle sensor is integrated into the steering column switch and records the movements of the steering wheel (steering wheel angle). The data is transmitted to the PSM control unit via the CAN bus.
- During initialization, the steering-angle sensor learns its current position (straight-ahead position).
- Calibration must be performed when working on or carrying out subsequent work on the chassis. This is described in detail in the information→ 456005 INITIALIZING AND CALIBRATING STEERING-ANGLE SENSOR

- The calibration results in zero point balancing (exactly straight ahead).
- The steering-angle sensor is calibrated when first fitted and when any work has been carried out on steering and chassis. Examples of this would be opening the steering wiring and alterations to toe and camber.
- Calibration includes initialization.
    1. Turn wheels to straight-ahead position.
    2. From the straight-ahead position, turn steering wheel approx. 6° to the left and 6° to the right (past straight-ahead position).

Following successful initialization, the stored fault code is set to "not present". The PSM indicator light in the instrument cluster goes out.

WM 456005 INITIALIZING AND CALIBRATING STEERING-ANGLE SENSOR (ALL MODELS) > ADJUSTING STEERING-ANGLE SENSOR > CALIBRATING STEERING-ANGLE SENSOR

Information

- The steering-angle sensor must be recalibrated on the measuring platform following repairs to or work on the chassis/steering or if the steering-angle sensor/steering column switch is replaced.
- Calibration includes initialization.
- In order to calibrate the steering-angle sensor correctly, the vehicle must be on the measuring platform, the wheel alignment values must be correct and the steering must be in the straight-ahead position.
- Calibrate the steering-angle sensor by selecting >>Steering wheel electronics>>Maintenance/repairs>>Steering-angle sensor calibration<< in the PIWIS Tester II control unit overview.

The steering-angle sensor must be calibrated by selecting the relevant menu on the Porsche System Tester under the specified test conditions:

1. The chassis is adjusted according to Porsche specifications.
2. Switch on ignition.
3. Turn wheels and steering wheel to straight-ahead position.

   In the straight-ahead position, the steering wheel may be turned by max. ± 2.0° from the horizontal position (steering center position).
4. Enter the security code under the >>Calibrate<< menu in the Porsche System Tester.
5. Turn the steering wheel out of the straight-ahead position (approx. 6° to the left/right) in accordance with the instructions on the Porsche System Tester. Turn the wheels back to the straight-ahead position and follow the instructions on the Porsche System Tester.
6. Following successful calibration, the stored fault code is erased from the fault memory. The

PSM indicator light in the instrument cluster goes out.

7. Once you have calibrated the steering-angle sensor, re-teach the electric steering lock settings. → 489025 POWER-STEERING GEAR: TEACHING STEERING LOCK SETTINGS

WM 456055 REPLACING STEERING-ANGLE SENSOR (ALL MODELS) > REPLACING STEERING-ANGLE SENSOR

The steering-angle sensor is integrated in the steering wheel electronics control unit. See → 916255 REPLACING CONTROL UNIT FOR STEERING WHEEL ELECTRONICS

WM 456155 REPLACING COMBINATION SENSOR (ALL MODELS) > TOOLS

Designation	Type	Number	Description	
PIWIS Tester II	Special tool	9818		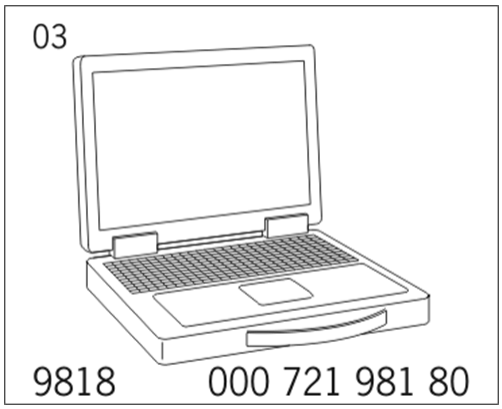

WM 456155 REPLACING COMBINATION SENSOR (ALL MODELS) > PRELIMINARY WORK

1. Remove left front seat → Removing front seat .

WM 456155 REPLACING COMBINATION SENSOR (ALL MODELS) > REPLACING COMBINATION SENSOR

WARNING: Combination sensor not calibrated or calibrated incorrectly

- *Unexpected vehicle handling*
- *Combination sensor does not work*
- *Malfunction in combination sensor*

→ Calibrate the vehicle after installing or replacing the combination sensor using **PIWIS Tester II 9818.**

→ Only perform calibration when the vehicle is positioned horizontally and the brake is not actuated.

Information

The combination sensor is located under the driver seat.

The functions listed below are integrated in the combination sensor:

- Rotation-rate sensor
- Lateral-acceleration sensor
- Axial-acceleration sensor.

1. Cut the bar on the carpet using a sharp knife or scissors → Cutting bar .

Fig 1: Identifying Axial-Acceleration Sensor Cutting Bar

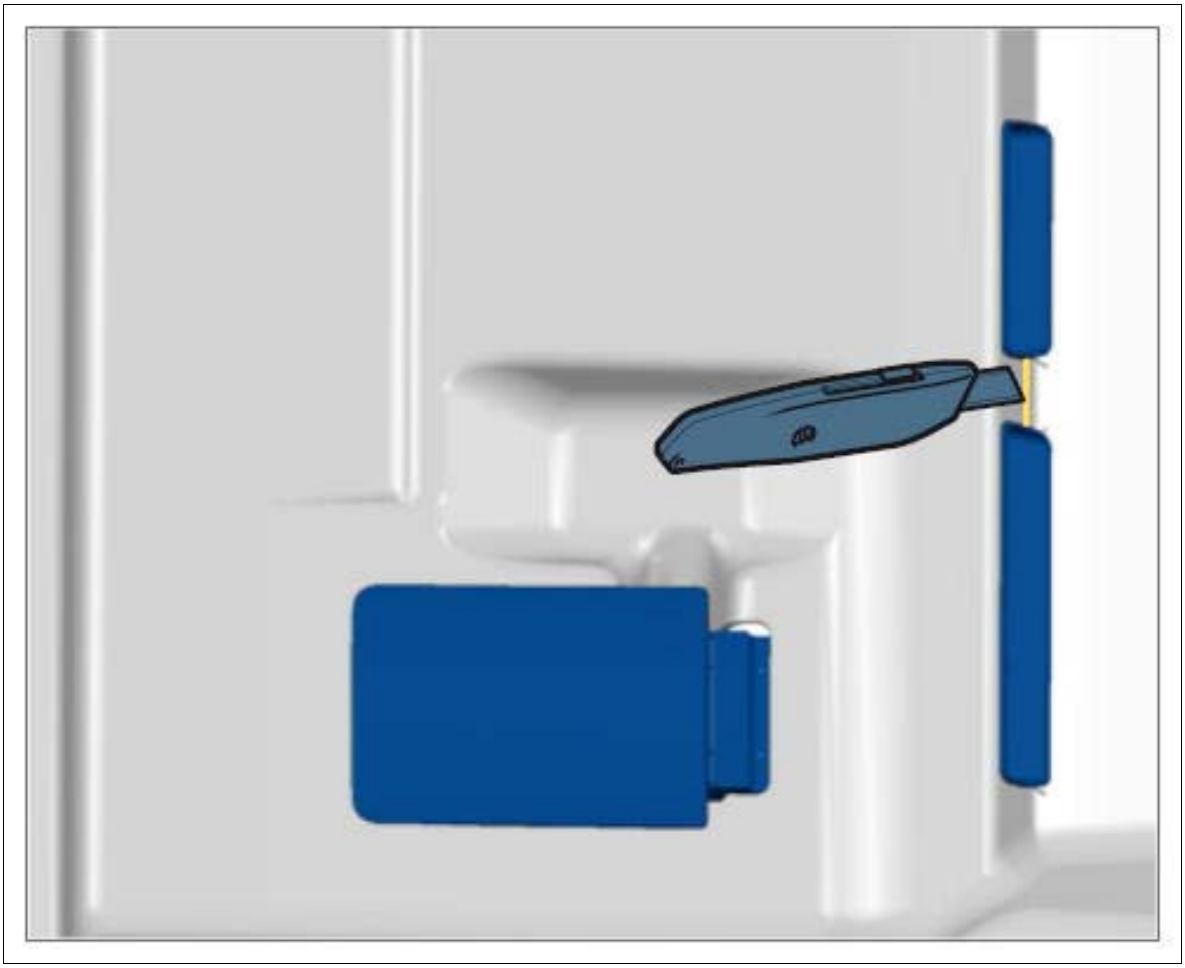

Courtesy of PORSCHE CARS NORTH AMERICA, INC.

2. Remove footwell outlet vent **-arrow-** .

Fig 2: Removing Footwell Outlet Vent

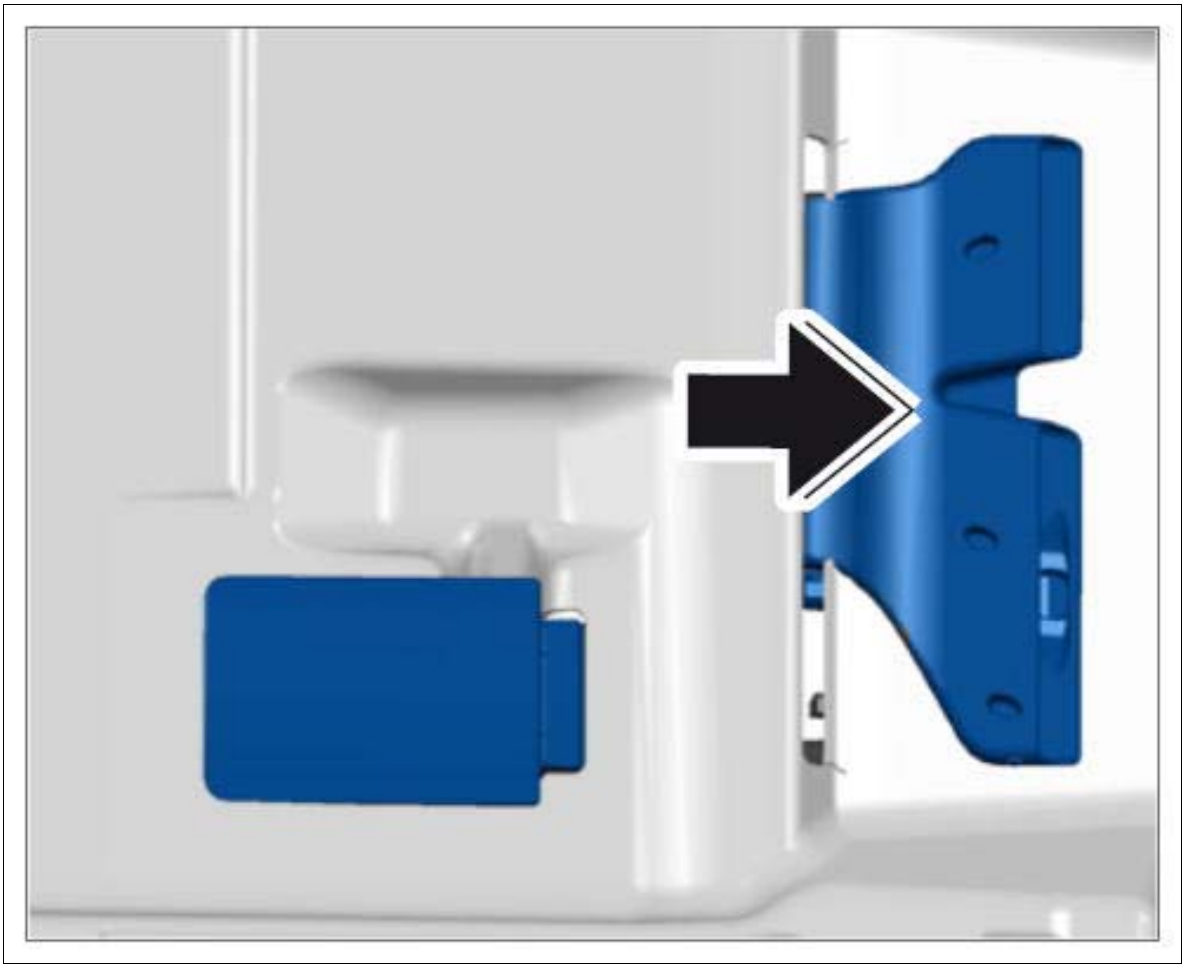

Courtesy of PORSCHE CARS NORTH AMERICA, INC.

3. Screw off fastening nuts **-1-** on the combination sensor **-2-** .

Fig 3: Identifying Combination Sensor Mounting

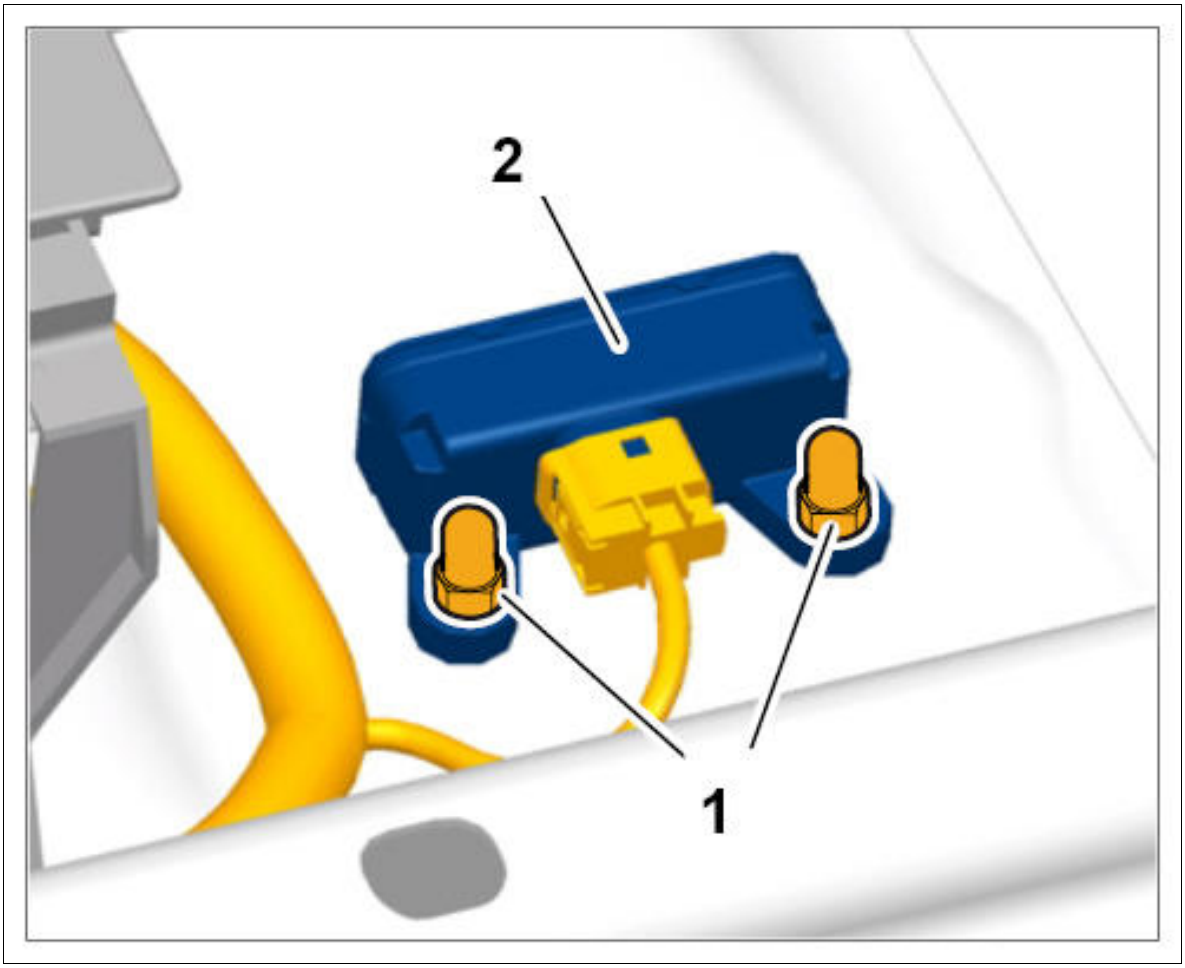

Courtesy of PORSCHE CARS NORTH AMERICA, INC.

4. Remove combination sensor and disconnect connector **-1-** (**-arrow-**).

Fig 4: Disconnecting Connector

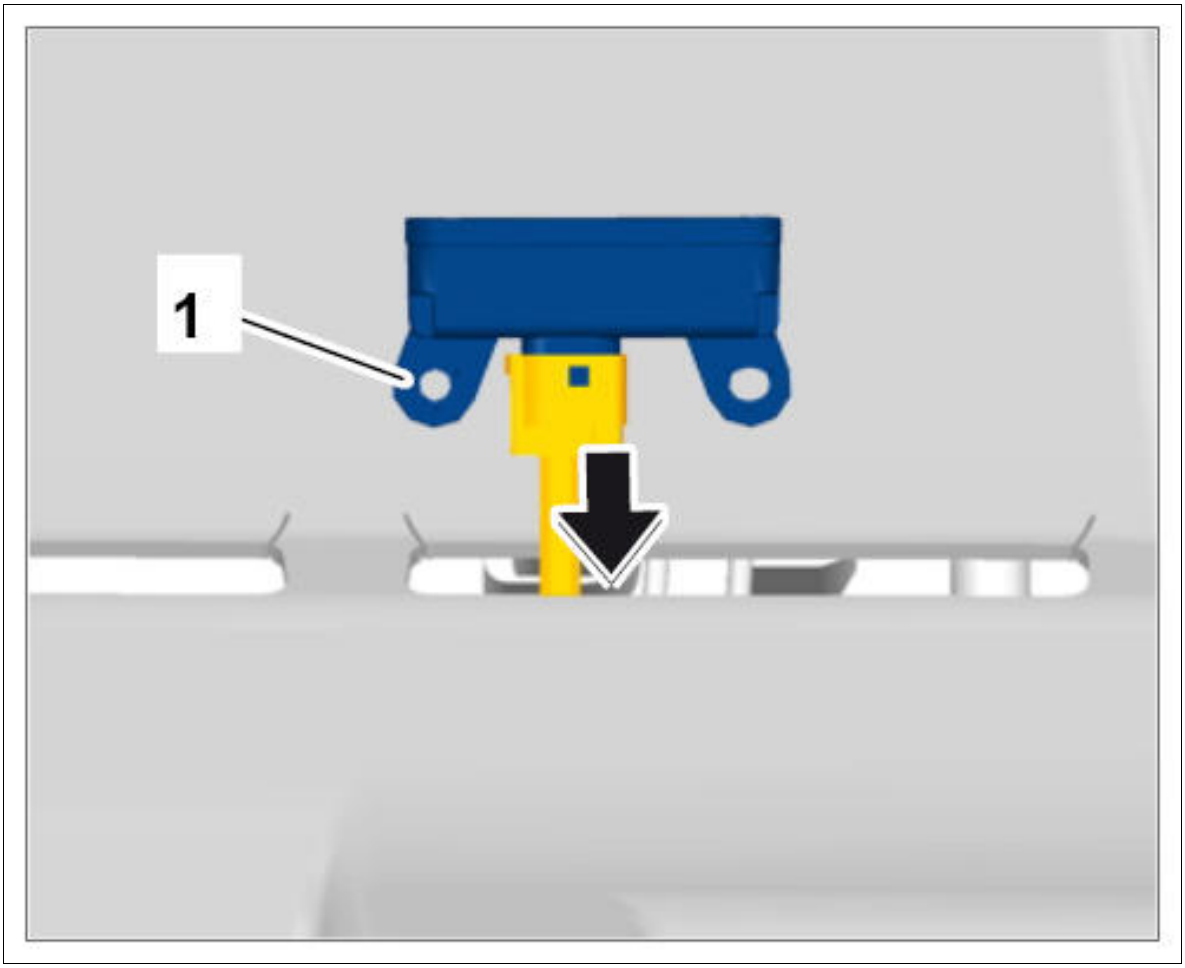

Courtesy of PORSCHE CARS NORTH AMERICA, INC.

WM 456155 REPLACING COMBINATION SENSOR (ALL MODELS) > REPLACING COMBINATION SENSOR > INSTALLING COMBINATION SENSOR

1. Installation is performed in reverse order.

WM 456155 REPLACING COMBINATION SENSOR (ALL MODELS) > SUBSEQUENT WORK

Information

Calibrate the vehicle after installing or replacing the combination sensor.

- Calibration must only be performed when the vehicle is positioned horizontally and the brake is not actuated.

1. Install left front seat → Installing front seat .

2. Calibrate the combination sensor (includes lateral and axial acceleration sensor) using **PIWIS Tester II 9818.**

   To do this, select:

   > Control unit overview

   > PSM

   > Maintenance/repairs

   > Sensor cluster calibration

   Calibration is then complete.

WM 4601IN OVERVIEW OF BRAKE SYSTEMS (ALL MODELS) > OVERVIEW OF BRAKE SYSTEMS > FRONT AXLE

	Steel variant	**PCCB variant**

Size	17"/345 mm	18"/350 mm	18"/360 mm	19"/390 mm
Brake calliper	4-piston 17" wheel	6-piston 18" wheel	6-piston 18" wheel	6-piston 19" wheel
Brake disc diameter/thickness	345 mm x 30 mm	350 mm x 34 mm	360 mm x 36 mm	390 mm x 38 mm
Attachment concept	axial	radial	radial	radial
Macan	**X**			
Macan S		**X**		**Optional**
Macan Turbo			**X**	**Optional**

WM 4601IN OVERVIEW OF BRAKE SYSTEMS (ALL MODELS) > OVERVIEW OF BRAKE SYSTEMS > REAR AXLE

	Steel variant	**PCCB variant**

Size	17"/18"/330 mm	18"/356 mm	19"/370 mm

Brake disc diameter/thickness	330 mm x 22 mm	356 mm x 28 mm	370 mm x 30 mm

Attachment concept	axial	axial	axial
Macan	**X**		
Macan S	**X**		**Optional**
Macan Turbo		**X**	**Optional**

WM 460555 REPLACING BRAKE PEDAL (ALL MODELS) > TOOLS

Designation	Type	Number	Description	

Release tool	VW tool	T40136		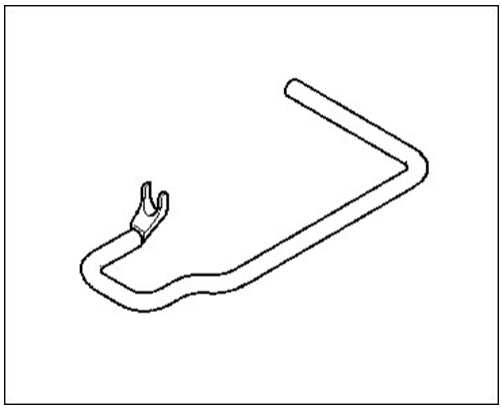

WM 460555 REPLACING BRAKE PEDAL (ALL MODELS) > PRELIMINARY WORK

1. Remove trim panel under dashboard at the left → 70191901 REMOVING AND INSTALLING TRIM PANEL UNDER DASHBOARD AT THE LEFT .
2. Remove footwell outlet vent at the left → 805519 REMOVING AND INSTALLING FRONT FOOTWELL OUTLET VENT .
3. Remove brake light switch → 943619 REMOVING AND INSTALLING BRAKE LIGHT SWITCH .

WM 460555 REPLACING BRAKE PEDAL (ALL MODELS) > REPLACING BRAKE PEDAL

1. Separate brake pedal from brake booster.
    1. 1.1. Press brake pedal towards the brake booster.
    2. 1.2. **Release tool T40136** must be fitted on the ball joint on the push rod.
    3. 1.3. To press the retaining lugs on the mounting off the ball joint on the push rod, pull **release tool T40136** towards the driver's seat and counter at the brake pedal at the same time (the brake pedal must not move towards the driver's seat).
    4. 1.4. **Release tool T40136** and brake pedal must both be pulled towards the driver's seat.
2. Remove pedal bearing shaft.

Fig 1: Removing Pedal Bearing Shaft

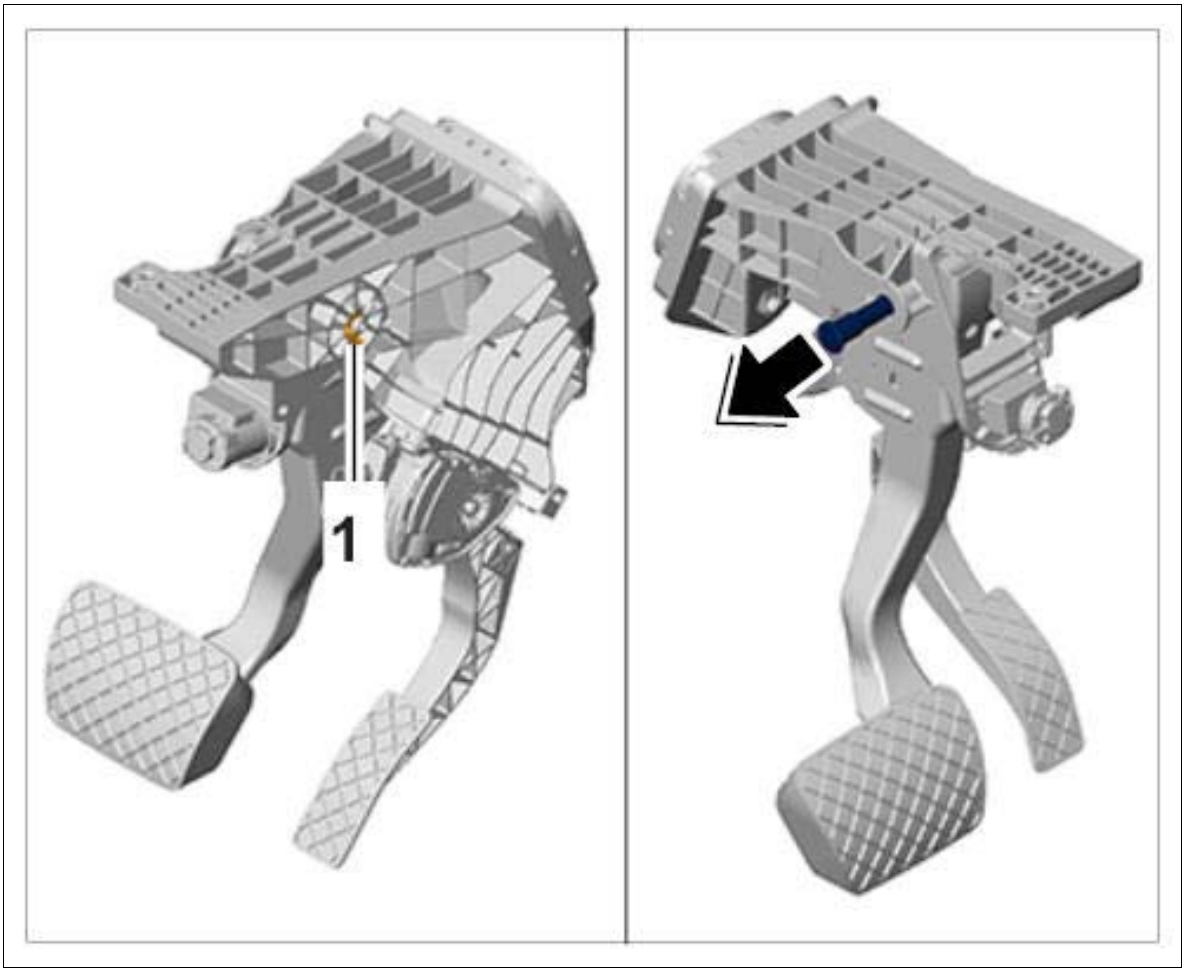

Courtesy of PORSCHE CARS NORTH AMERICA, INC.

1. 2.1. Pull off lock **-1-** .
2. 2.2. Pull pedal bearing shaft out to the left **-arrow-** .

3. Remove the brake pedal by pulling it downwards.

WM 460555 REPLACING BRAKE PEDAL (ALL MODELS) > REPLACING BRAKE PEDAL > INSTALLING BRAKE PEDAL

1. Installation is performed in reverse order.

WM 460555 REPLACING BRAKE PEDAL (ALL MODELS) > SUBSEQUENT WORK

1. Install brake light switch → 943619 REMOVING AND INSTALLING BRAKE LIGHT SWITCH .
2. Install footwell outlet vent at the left → 805519 REMOVING AND INSTALLING FRONT FOOTWELL OUTLET VENT .

3. Install trim panel under dashboard at the left → 70191901 REMOVING AND INSTALLING TRIM PANEL UNDER DASHBOARD AT THE LEFT .

WM 461019 REMOVING AND INSTALLING MOUNTING SADDLE (ALL MODELS) > TOOLS

Designation	Type	Number	Description	
Release tool	VW tool	T40136		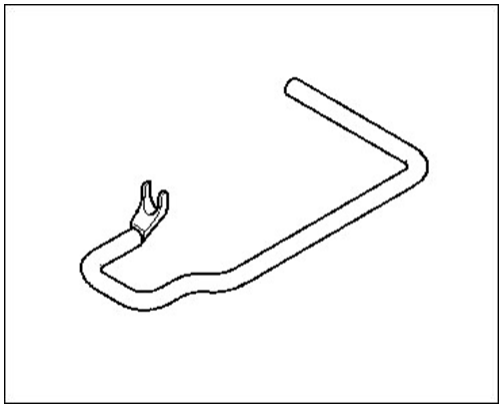

WM 461019 REMOVING AND INSTALLING MOUNTING SADDLE (ALL MODELS) > TECHNICAL VALUES

Location	Description	Type	Basic value	Tolerance 1	Tolerance 2
Pedals to body	Hexagon nut	Tightening torque	9 Nm (6.5 ftlb.)		
Brake booster to pedals	12 point socket	Tightening torque	25 Nm (19 ftlb.)		

WM 461019 REMOVING AND INSTALLING MOUNTING SADDLE (ALL MODELS) > PRELIMINARY WORK

1. Remove cowl panel cover → 508719 REMOVING AND INSTALLING COWL PANEL COVER .
2. Remove steering column → 481519 REMOVING AND INSTALLING STEERING COLUMN .

WM 461019 REMOVING AND INSTALLING MOUNTING SADDLE (ALL MODELS) > REMOVING AND INSTALLING MOUNTING SADDLE > REMOVING MOUNTING SADDLE

1. Unscrew fastening screws **-1-** for the mounting saddle.

Fig 1: Identifying Brake Booster On Mounting Saddle

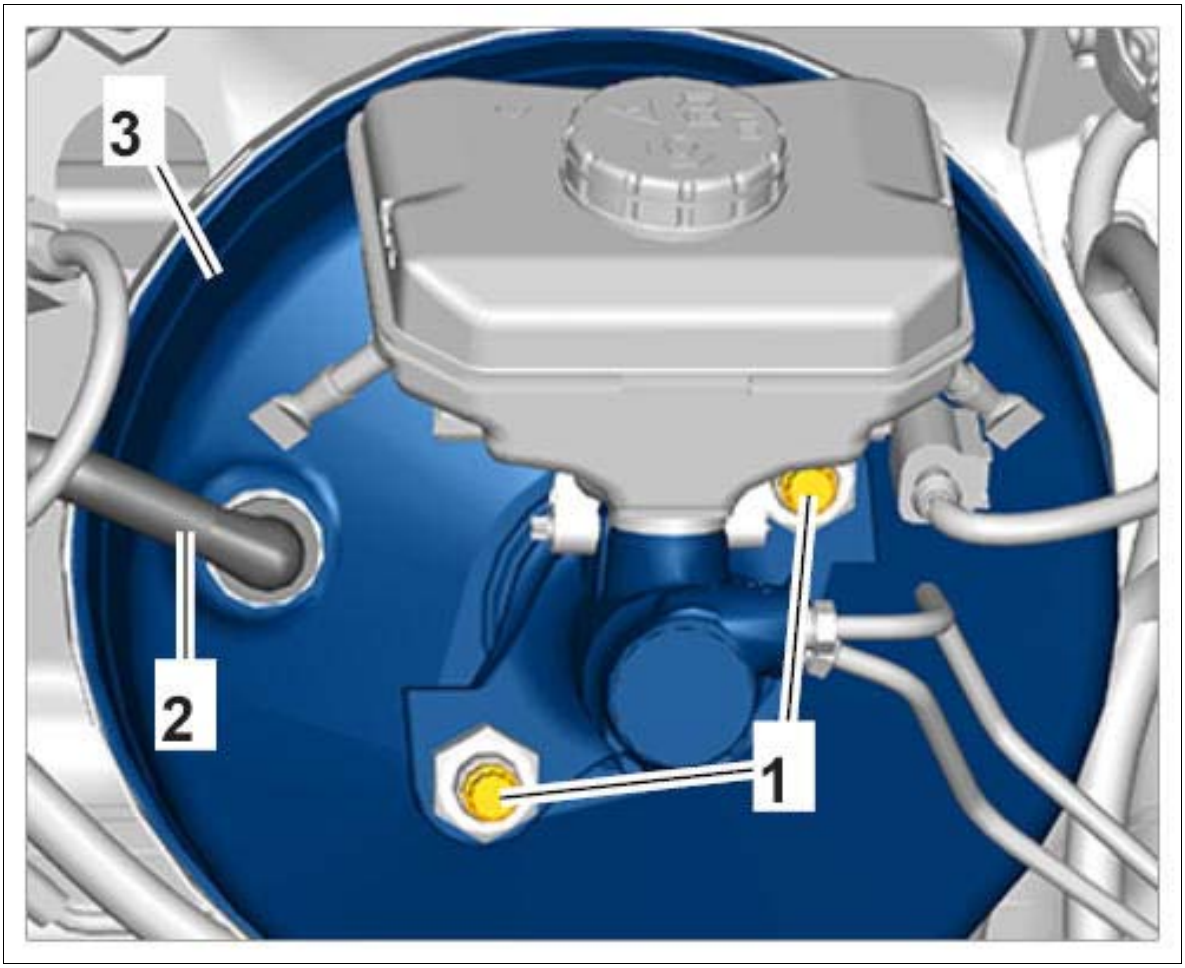

Courtesy of PORSCHE CARS NORTH AMERICA, INC.

2. Separate brake pedal from brake booster.
    1. 2.1. Press brake pedal towards the brake booster.
    2. 2.2. **Release tool T40136** must be fitted on the ball joint on the push rod.
    3. 2.3. To press the retaining lugs on the mounting off the ball joint on the push rod, pull **release tool T40136** towards the driver's seat and counter at the brake pedal at the same time (the brake pedal must not move towards the driver's seat).
    4. 2.4. **Release tool T40136** and brake pedal must both be pulled towards the driver's seat.
3. Pull off connector on accelerator pedal module.

Fig 2: Identifying Accelerator Pedal Module Connector

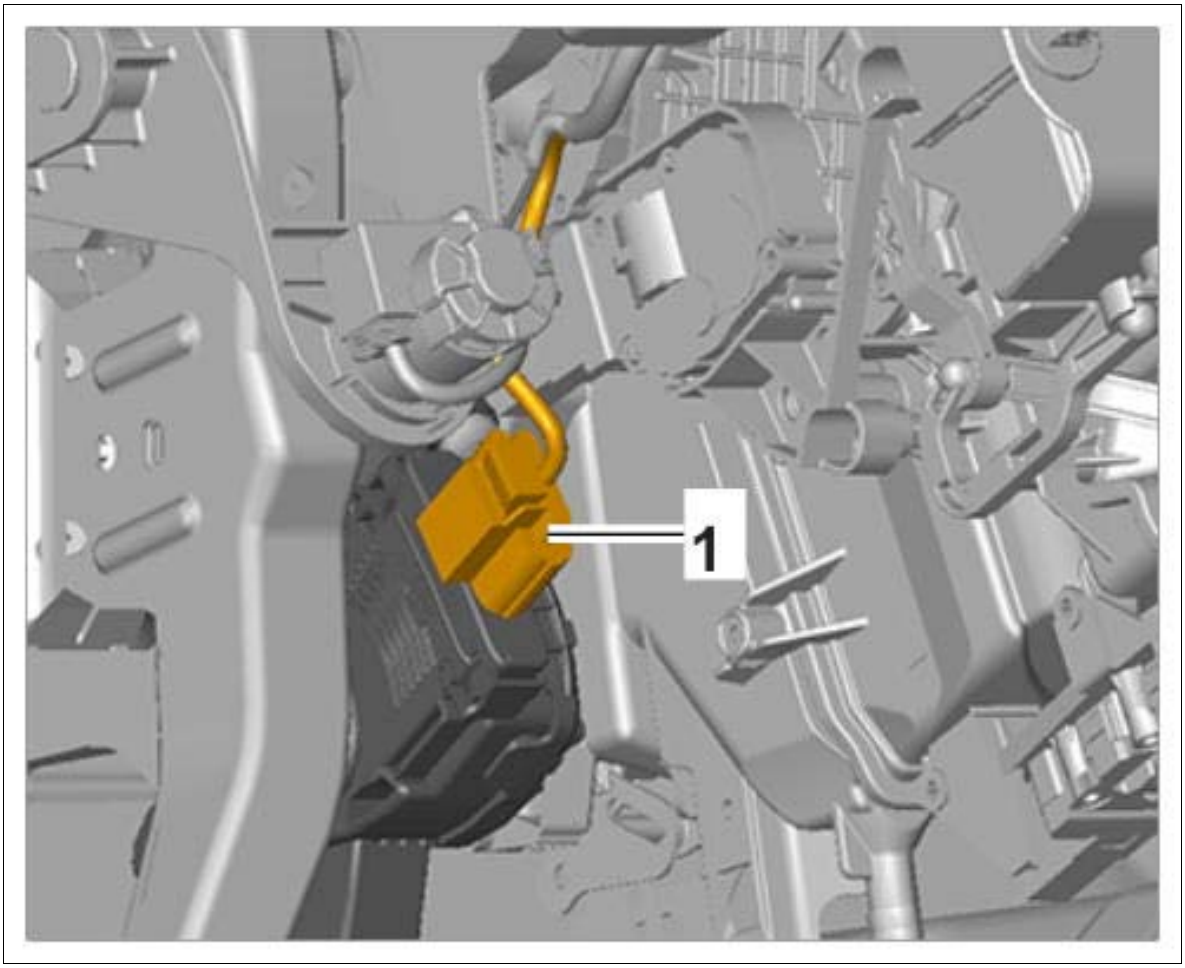

Courtesy of PORSCHE CARS NORTH AMERICA, INC.

4. Screw off nut **-1-** and carefully remove the mounting saddle.

Fig 3: Identifying Mounting Saddle Nut

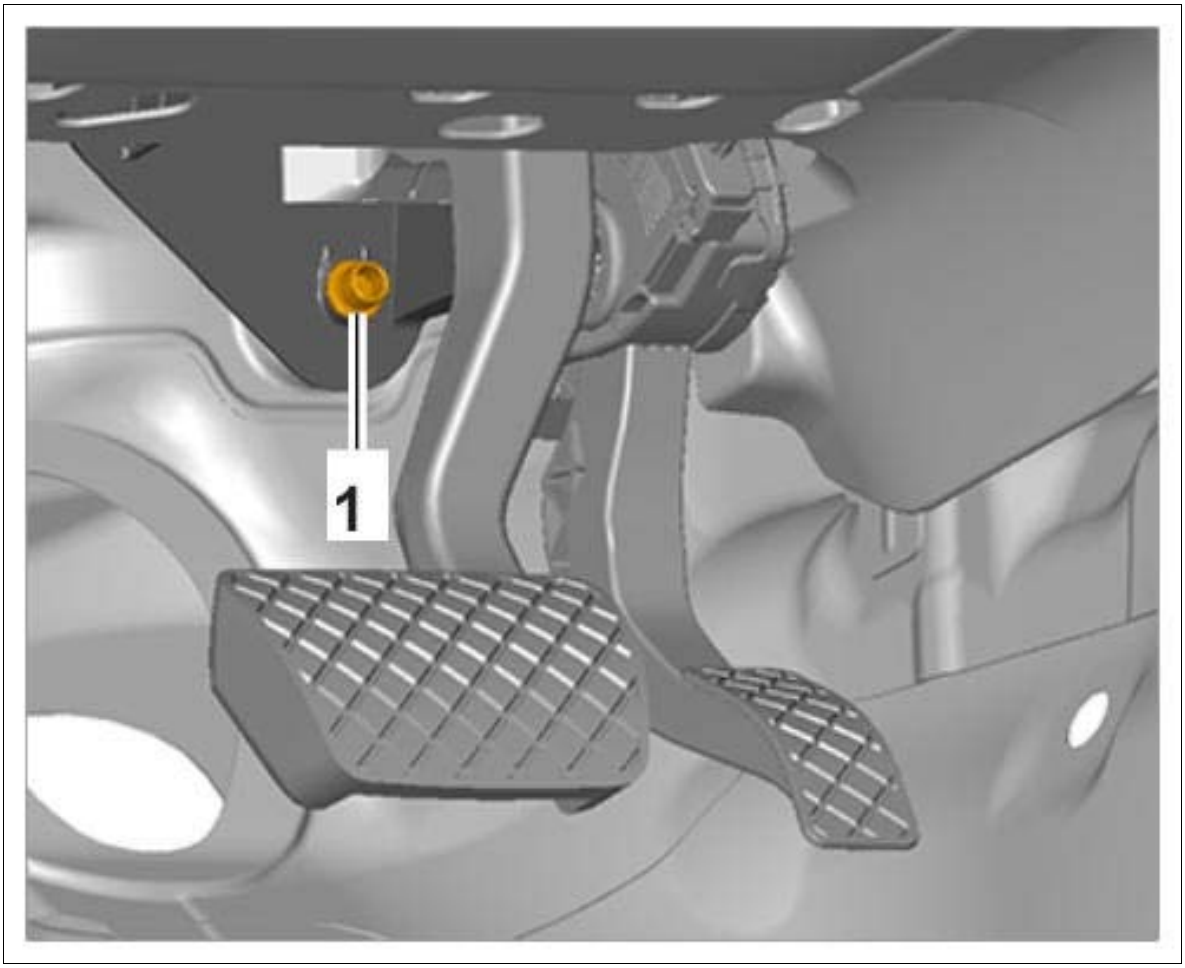

Courtesy of PORSCHE CARS NORTH AMERICA, INC.

WM 461019 REMOVING AND INSTALLING MOUNTING SADDLE (ALL MODELS) > REMOVING AND INSTALLING MOUNTING SADDLE > INSTALLING MOUNTING SADDLE

1. Installation is performed in reverse order.

   Observe specified tightening torques:

   Brake booster to pedals: **Tightening torque 25 Nm (19 ftlb.)**

   Pedals to body: **Tightening torque 9 Nm (6.5 ftlb.)**

WM 461019 REMOVING AND INSTALLING MOUNTING SADDLE (ALL MODELS) > SUBSEQUENT WORK

1. Install steering column → Installing Steering Column .

2. Install cowl panel cover → 508719 REMOVING AND INSTALLING COWL PANEL COVER .

WM 461619 REMOVING AND INSTALLING AIR GUIDE FOR BRAKE DISC (ALL MODELS) > PRELIMINARY WORK

1. Raise the vehicle → 4X00IN LIFTING THE VEHICLE .

WM 461619 REMOVING AND INSTALLING AIR GUIDE FOR BRAKE DISC (ALL MODELS) > REMOVING AND INSTALLING AIR GUIDE FOR BRAKE DISC

Information

The air guide will be damaged irreparably during removal. A new air guide must therefore be fitted whenever the airbag is removed.

1. Remove air guide **-2-** from the tie rod.

Fig 1: Locating Air Guide On Tie Rod

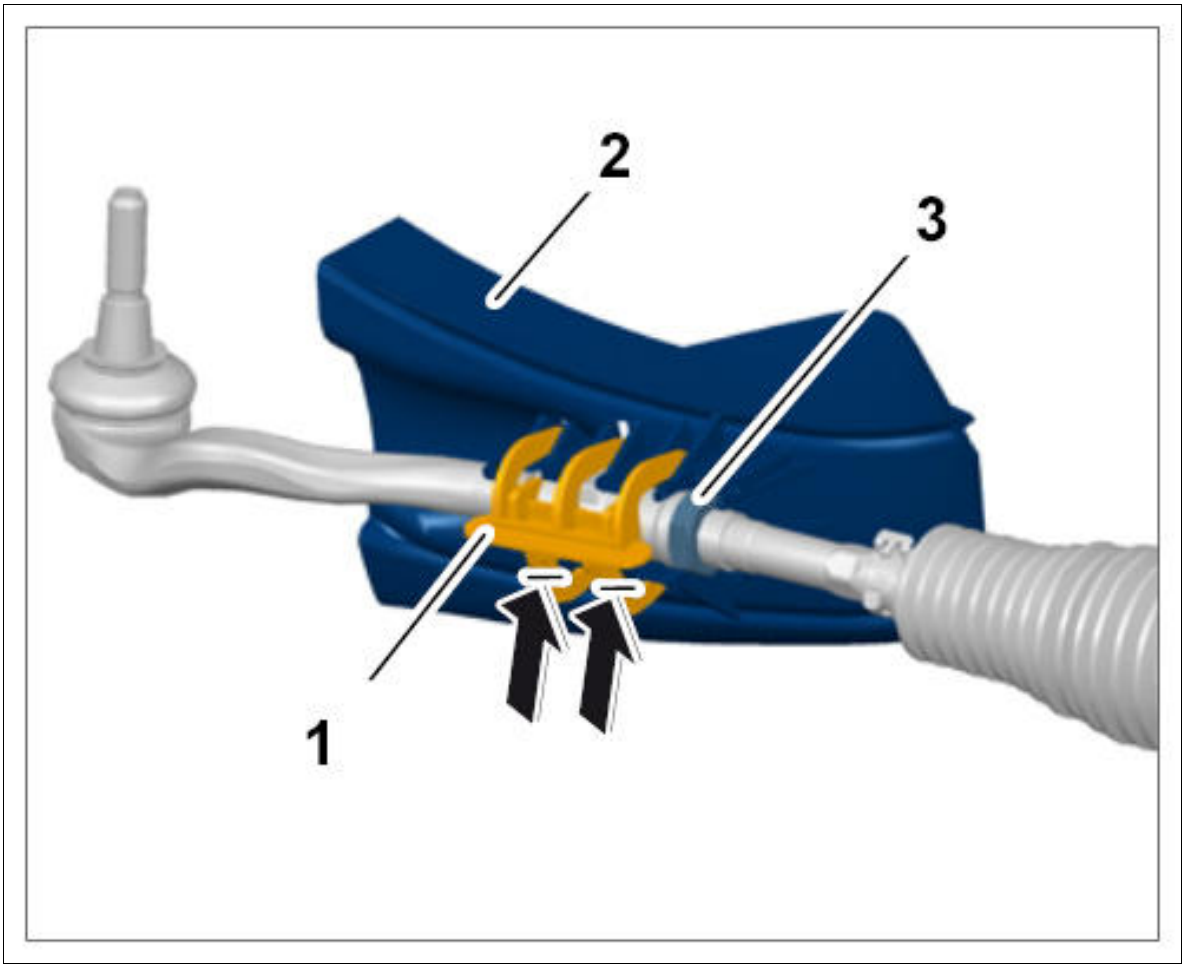

Courtesy of PORSCHE CARS NORTH AMERICA, INC.

1. 1.1. Cut through the lower arms of the clamp **-1-** at the marked positions **-arrows-**

using a suitable tool.

2. 1.2. Remove air guide **-2-** .

WM 461619 REMOVING AND INSTALLING AIR GUIDE FOR BRAKE DISC (ALL MODELS) > REMOVING AND INSTALLING AIR GUIDE FOR BRAKE DISC > INSTALLING AIR GUIDE FOR BRAKE DISC

1. Fit new air guide on the tie rod.

Fig 1: Locating Air Guide On Tie Rod

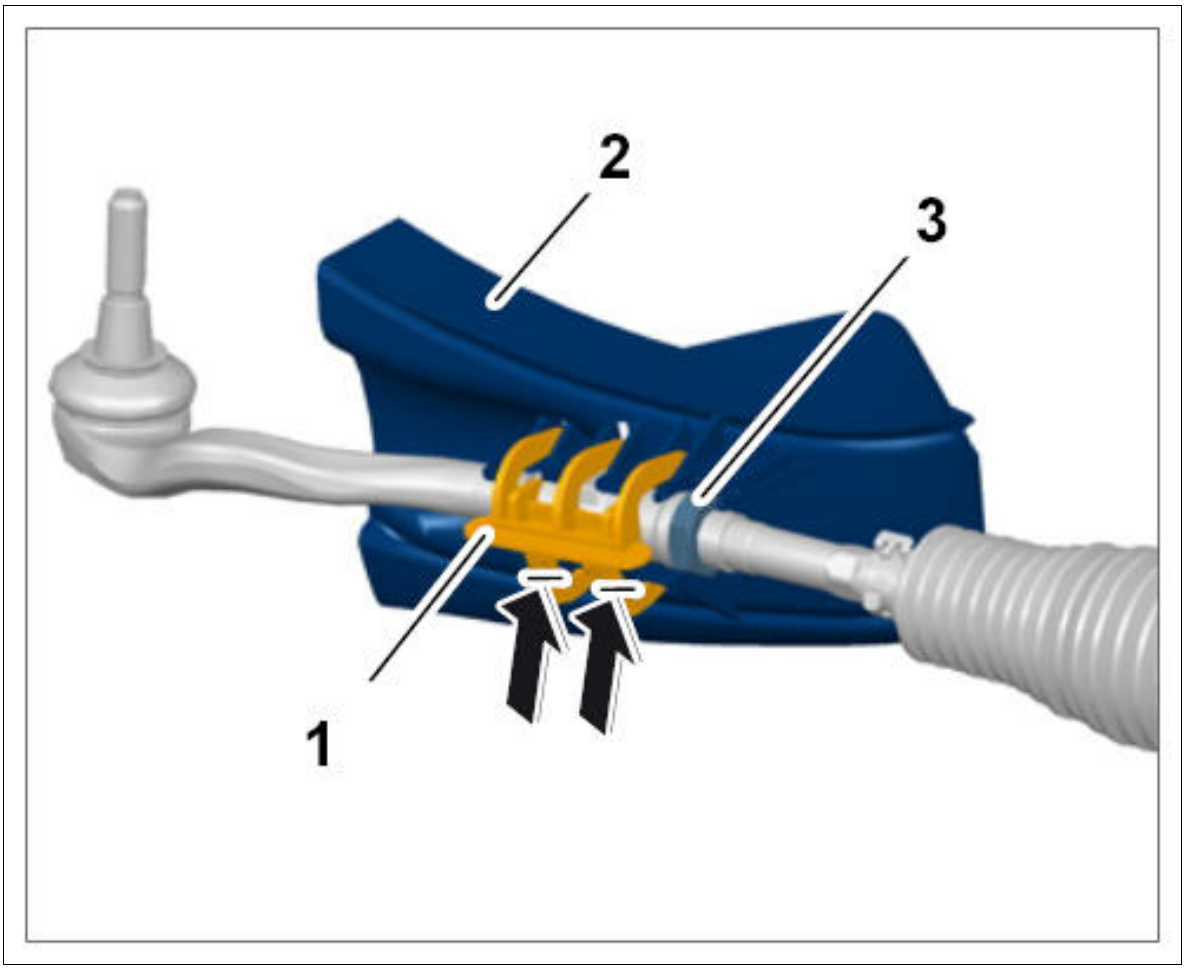

Courtesy of PORSCHE CARS NORTH AMERICA, INC.

1. 1.1. Push the air guide **-2-** onto the tie-rod ball from the front.

   Check position of the lock nut **-3-** in the cut-out of the air guide **-2-** .

2. 1.2. Secure the air guide with a new clamp.

   Check that the clamp locks correctly.

   Check that the clamp is locked correctly through the test lugs **-1-** in the air guide **-2-** .

Fig 2: Identifying Clamp Test Lugs

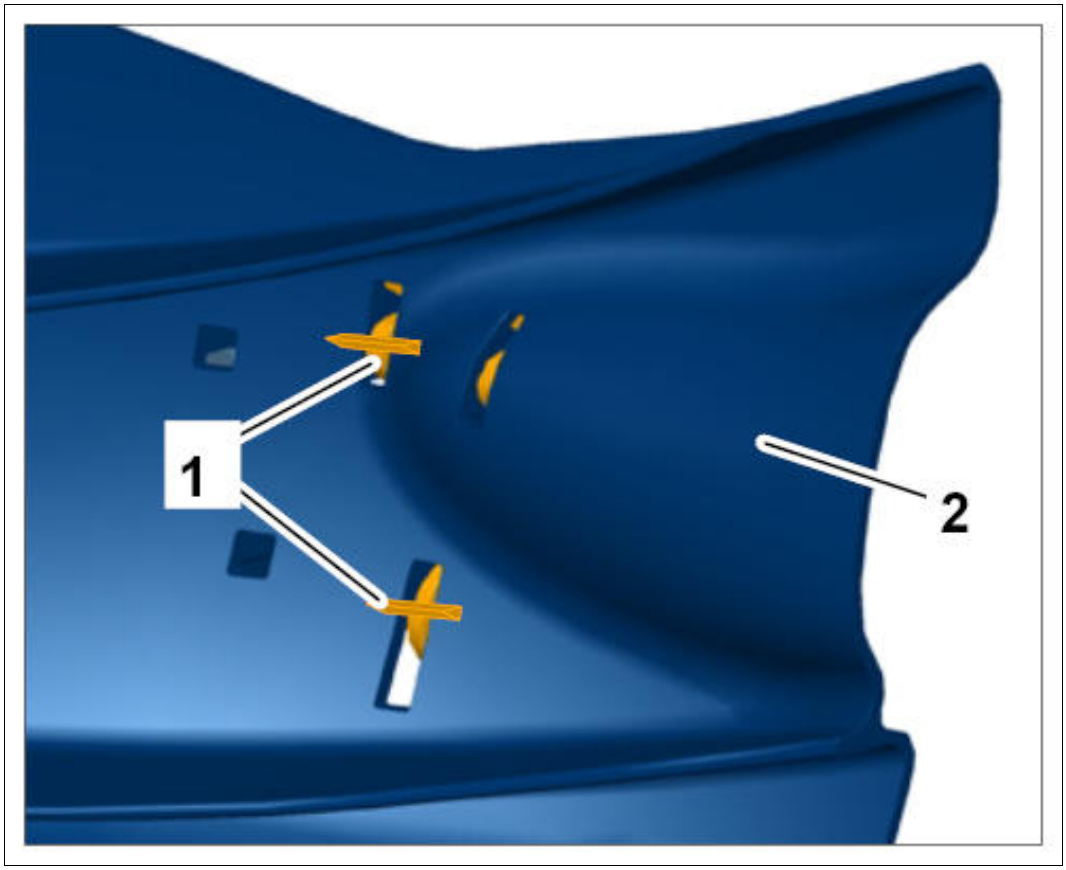

Courtesy of PORSCHE CARS NORTH AMERICA, INC.

WM 463402 PCCB - CHECKING FRONT BRAKE PAD (ALL MODELS) > INFORMATION

Procedure during intermediate maintenance:

Visually inspect the brake pads for wear. **There is no need to remove the wheels unless the brake fluid needs to be changed at the same time.**

Outside of brake pad: Visual inspection through the cut-outs in the rim.

Inside of brake pad: Visual inspection from below with vehicle raised.

Without an aid, the inner brake pad is not or is only partly visible on the rear axle (with the wheel fitted).

A mirror can be used as an aid **-arrow-** .

Fig 1: Checking Brake Pads



Courtesy of PORSCHE CARS NORTH AMERICA, INC.

Procedure during maintenance:

Raise the vehicle → 4X00IN LIFTING THE VEHICLE .

NOTE: Removing/fitting wheels

- *Risk of damage to (ceramic) brake discs*

→ Use two assembly pins when removing and fitting the wheel.

→ Carefully guide the wheel towards the wheel hub, thereby preventing any heavy impact on the (ceramic) brake disc.

Screw the two assembly aids (assembly pins) **-1-** , instead of two wheel bolts, into the wheel hub before removing/fitting the wheel. During removal, first remove the three remaining wheel bolts and remove the wheel carefully without touching the brake discs.

Remove wheel. Use assembly aids (assembly pins) **-1-** .

→ 440519 REMOVING AND INSTALLING WHEEL .

Fig 2: Identifying Assembly Aids (Wheel Bolts)



Courtesy of PORSCHE CARS NORTH AMERICA, INC.

Check brake pad thickness for wear. If in doubt following a visual inspection, you may have to measure the brake pads.

WM 463402 PCCB - CHECKING FRONT BRAKE PAD (ALL MODELS) > CHECKING THICKNESS OF BRAKE PADS

WARNING: Installation of brake pads with the wrong brake pad quality

- *Longer braking distance*
- *More wear on brake pads*

→ Only use the type-specific brake pads.

→ Replace the brake pads when the brake pad wear indicator light comes on, but no later than when there is a residual pad thickness of 2 mm on each axle.

→ Replace the brake discs on each axle upon reaching the wear limits.

Information

- If brake pad wear is indicated by the warning light, the warning contact (sender including wire and plug connection) must also be replaced.
- Replacement of the warning contact can be avoided by replacing the brake pads no later than when the pad thickness is 2.5 mm -arrows- .

  Fig 1: Identifying Thickness Of Brake Pads

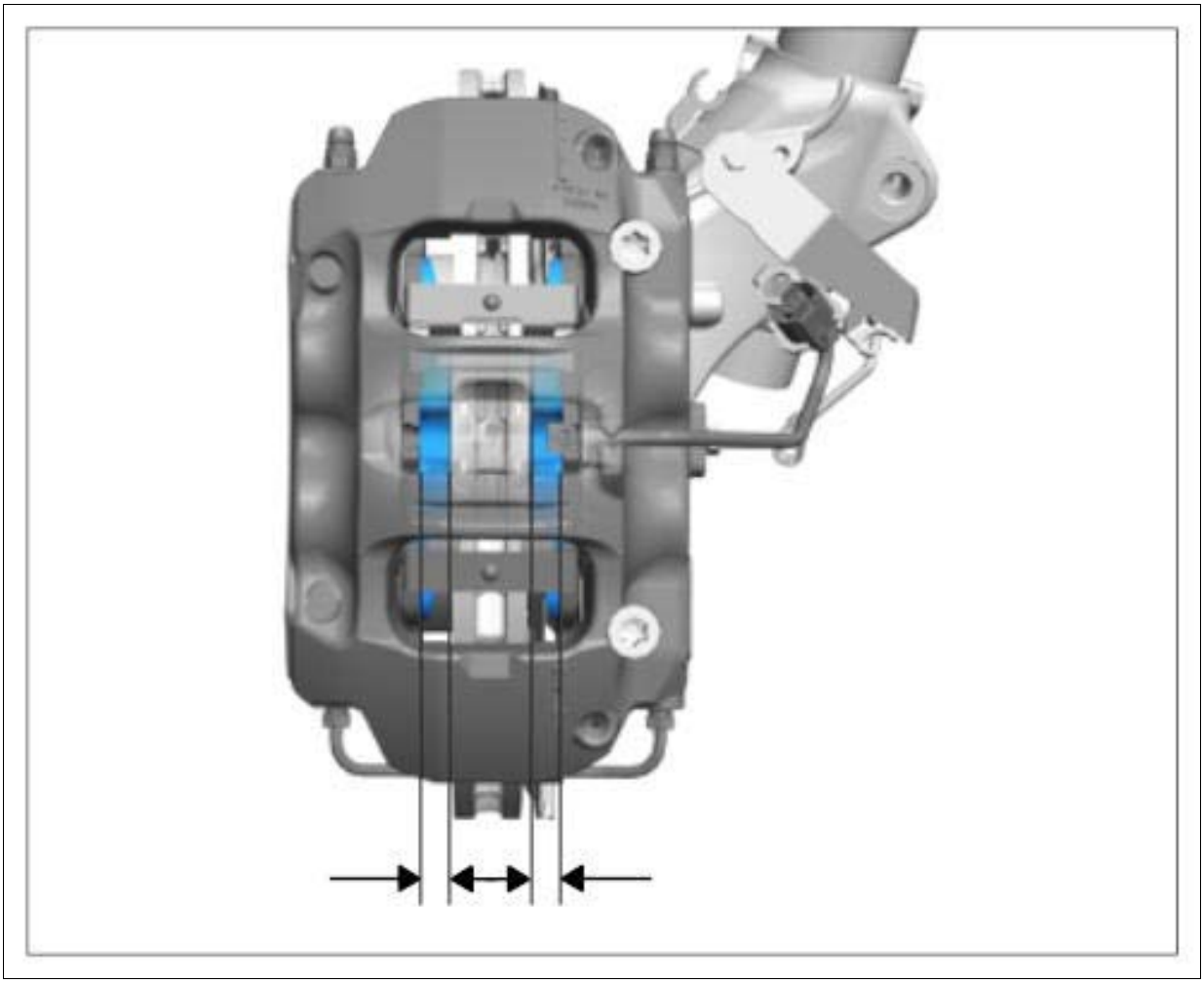

Courtesy of PORSCHE CARS NORTH AMERICA, INC.

- Warning contacts must be replaced if the core of the wire is worn.
- However, if only the plastic part of the warning contact is worn, there is no need to replace it.

1. Raise the vehicle → 4X00IN LIFTING THE VEHICLE .
2. Remove wheel. Use assembly aids (assembly pins) **-1-** .

   → 440519 REMOVING AND INSTALLING WHEEL .

Fig 2: Identifying Assembly Aids (Wheel Bolts)



Courtesy of PORSCHE CARS NORTH AMERICA, INC.

3. Visually inspect the brake pads for wear.

WM 463402 PCCB - CHECKING FRONT BRAKE PAD (ALL MODELS) > SUBSEQUENT WORK

Fit wheel. Use assembly aids (assembly pins) **-1-** .

→ Installing Wheel .

Fig 1: Identifying Assembly Aids



Courtesy of PORSCHE CARS NORTH AMERICA, INC.

WM 463456 REPLACING FRONT PCCB BRAKE PADS (ALL MODELS) > INFORMATION > INFORMATION ON REPLACING FRONT PCCB BRAKE PADS

The procedure for PCCB brake pads is identical to the procedure for conventional brake pads. → 463656 REPLACING FRONT DISC BRAKE PADS

WM 463502 PCCB - CHECKING REAR BRAKE PAD (ALL MODELS) > INFORMATION

Information

The pictures shown in this document may differ from the original.

Procedure during intermediate maintenance:

Visually inspect the brake pads for wear. **There is no need to remove the wheels unless the brake**

fluid needs to be changed at the same time.

Outside of brake pad: Visual inspection through the cut-outs in the rim.

Inside of brake pad: Visual inspection from below with vehicle raised.

Without an aid, the inner brake pad is not or is only partly visible on the rear axle (with the wheel fitted).

A mirror can be used as an aid **-arrow-** .

Fig 1: Checking Brake Pads

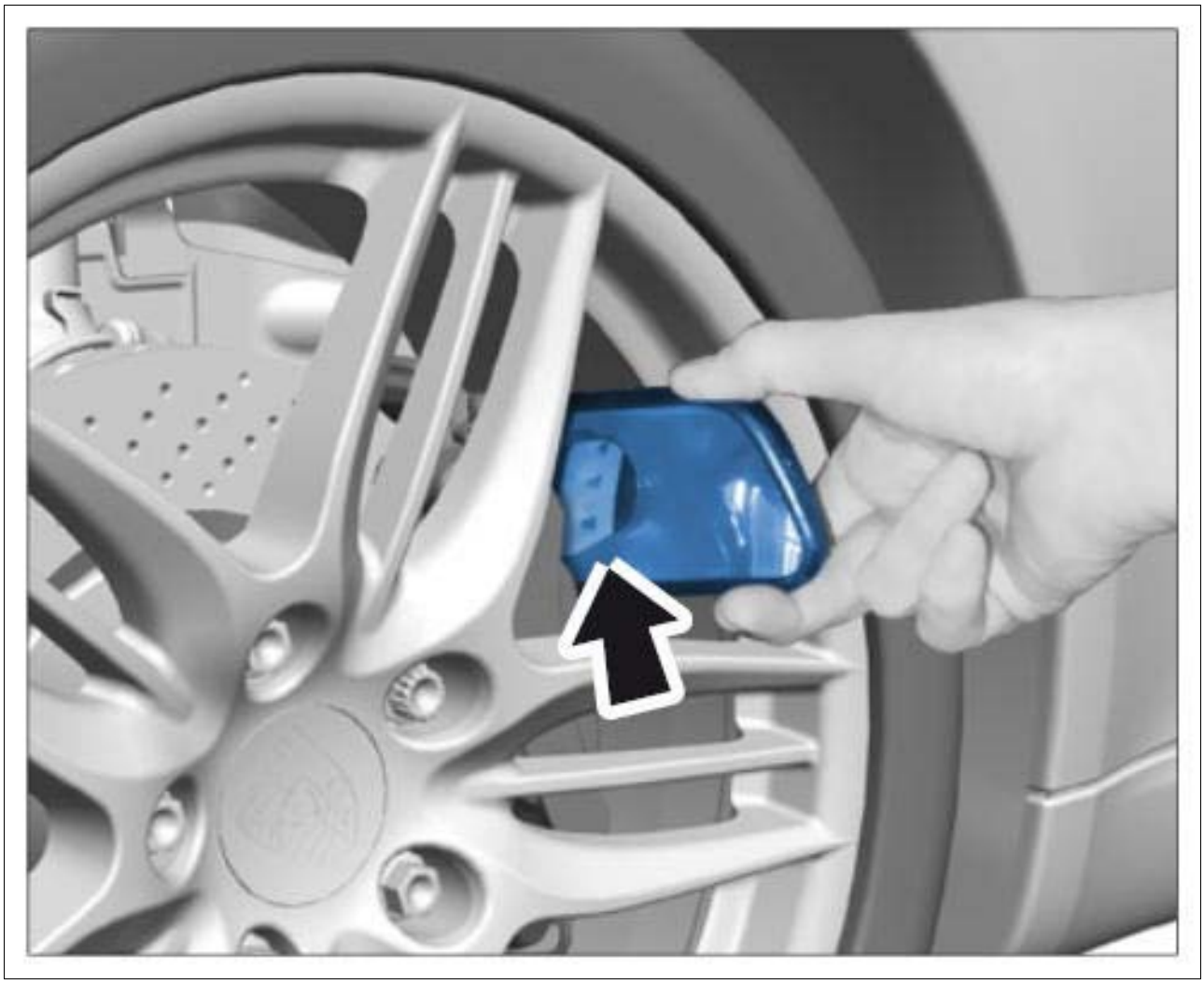

Courtesy of PORSCHE CARS NORTH AMERICA, INC.

Procedure during maintenance:

Raise the vehicle → 4X00IN LIFTING THE VEHICLE .

NOTE: Removing/fitting wheels

- *Risk of damage to (ceramic) brake discs*

→ Use two assembly pins when removing and fitting the wheel.

→ Carefully guide the wheel towards the wheel hub, thereby preventing any heavy impact on the (ceramic) brake disc.

Screw the two assembly aids (assembly pins) **-1-** , instead of two wheel bolts, into the wheel hub before removing/fitting the wheel. During removal, first remove the three remaining wheel bolts and remove the wheel carefully without touching the brake discs.

Remove wheel. Use assembly aids (assembly pins) **-1-** .

→ 440519 REMOVING AND INSTALLING WHEEL .

Fig 2: Identifying Assembly Aids (Front Axle)



Courtesy of PORSCHE CARS NORTH AMERICA, INC.

Check brake pad thickness for wear. If in doubt following a visual inspection, you may have to measure the brake pads.

WM 463502 PCCB - CHECKING REAR BRAKE PAD (ALL MODELS) > CHECKING

THICKNESS OF BRAKE PADS

WARNING: Installation of brake pads with the wrong brake pad quality

- *Longer braking distance*
- *More wear on brake pads*

→ Only use the type-specific brake pads.

→ Replace the brake pads when the brake pad wear indicator light comes on, but no later than when there is a residual pad thickness of 2 mm on each axle.

→ Replace the brake discs on each axle upon reaching the wear limits.

Information

- If brake pad wear is indicated by the warning light, the warning contact (sender including wire and plug connection) must also be replaced.
- Replacing the warning contact can be avoided by replacing the brake pads no later than when the pad thickness is 2.5 mm.
- Warning contacts must be replaced if the core of the wire is worn.
- However, if only the plastic part of the warning contact is worn, there is no need to replace it.

Raise the vehicle → 4X00IN LIFTING THE VEHICLE .

Remove wheel. Use assembly aids (assembly pins) **-1-** .

→ 440519 REMOVING AND INSTALLING WHEEL .

Fig 1: Identifying Assembly Aids (Front Axle)



Courtesy of PORSCHE CARS NORTH AMERICA, INC.

1. Visually inspect the brake pads for wear.

WM 463502 PCCB - CHECKING REAR BRAKE PAD (ALL MODELS) > SUBSEQUENT WORK

Fit wheel. Use assembly aids (assembly pins) **-1-** .

→ Installing Wheel .

Fig 1: Identifying Assembly Aids (Front Axle)



Courtesy of PORSCHE CARS NORTH AMERICA, INC.

WM 463556 REPLACING REAR PCCB BRAKE PADS (ALL MODELS) > INFORMATION > INFORMATION ON REPLACING REAR PCCB BRAKE PADS

The procedure for PCCB brake pads is identical to the procedure for conventional brake pads. → 463856 REPLACING REAR DISC BRAKE PADS

WM 463602 CHECKING THICKNESS OF FRONT BRAKE PADS (ALL MODELS) > INFORMATION

Information

The pictures shown in this document may differ from the original.

Procedure during intermediate maintenance:

Visually inspect the brake pads for wear. **There is no need to remove the wheels unless the brake fluid needs to be changed at the same time.**

Outside of brake pad: Visual inspection through the cut-outs in the rim.

Inside of brake pad: Visual inspection from below with vehicle raised.

Without an aid, the inner brake pad is not or is only partly visible on the rear axle (with the wheel fitted).

A mirror can be used as an aid **-arrow-** .

Fig 1: Checking Brake Pads

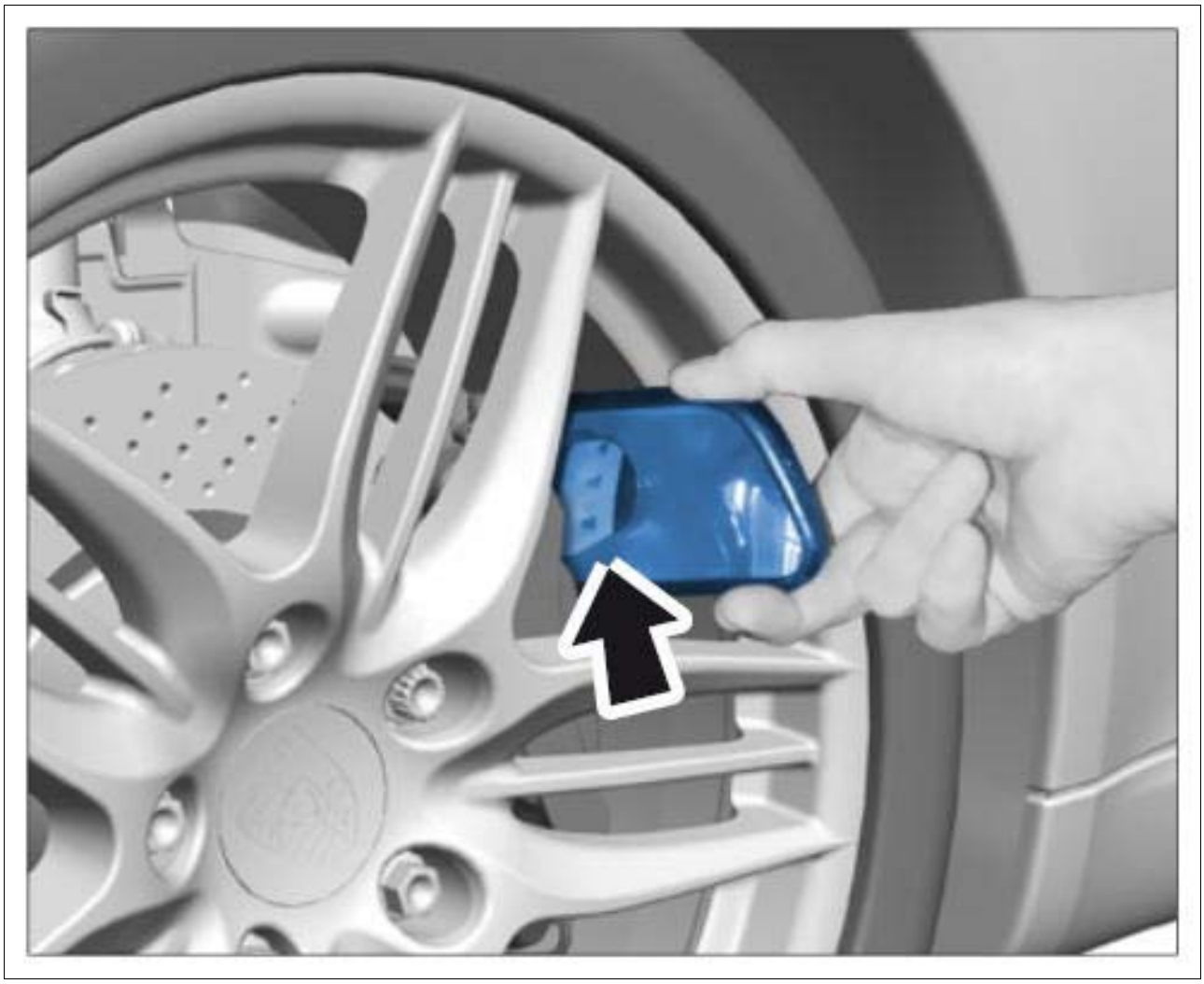

Courtesy of PORSCHE CARS NORTH AMERICA, INC.

Procedure during maintenance:

Raise the vehicle → 4X00IN LIFTING THE VEHICLE .

Remove wheels → 440519 REMOVING AND INSTALLING WHEEL .

Check the brake pad thickness for wear. If in doubt following a visual inspection, you may have to measure the thickness.

WM 463602 CHECKING THICKNESS OF FRONT BRAKE PADS (ALL MODELS) > CHECKING THICKNESS OF BRAKE PADS

WARNING: Installation of brake pads with the wrong brake pad quality

- *Longer braking distance*
- *More wear on brake pads*

→ Only use the type-specific brake pads.

→ Replace the brake pads when the brake pad wear indicator light comes on, but no later than when there is a residual pad thickness of 2 mm on each axle.

→ Replace the brake discs on each axle upon reaching the wear limits.

Information

- If brake pad wear is indicated by the warning light, the warning contact (sender including wire and plug connection) must also be replaced.
- Replacement of the warning contact can be avoided by replacing the brake pads no later than when the pad thickness is 2.5 mm -Arrows- .

Fig 1: Identifying Brake Pads Thickness

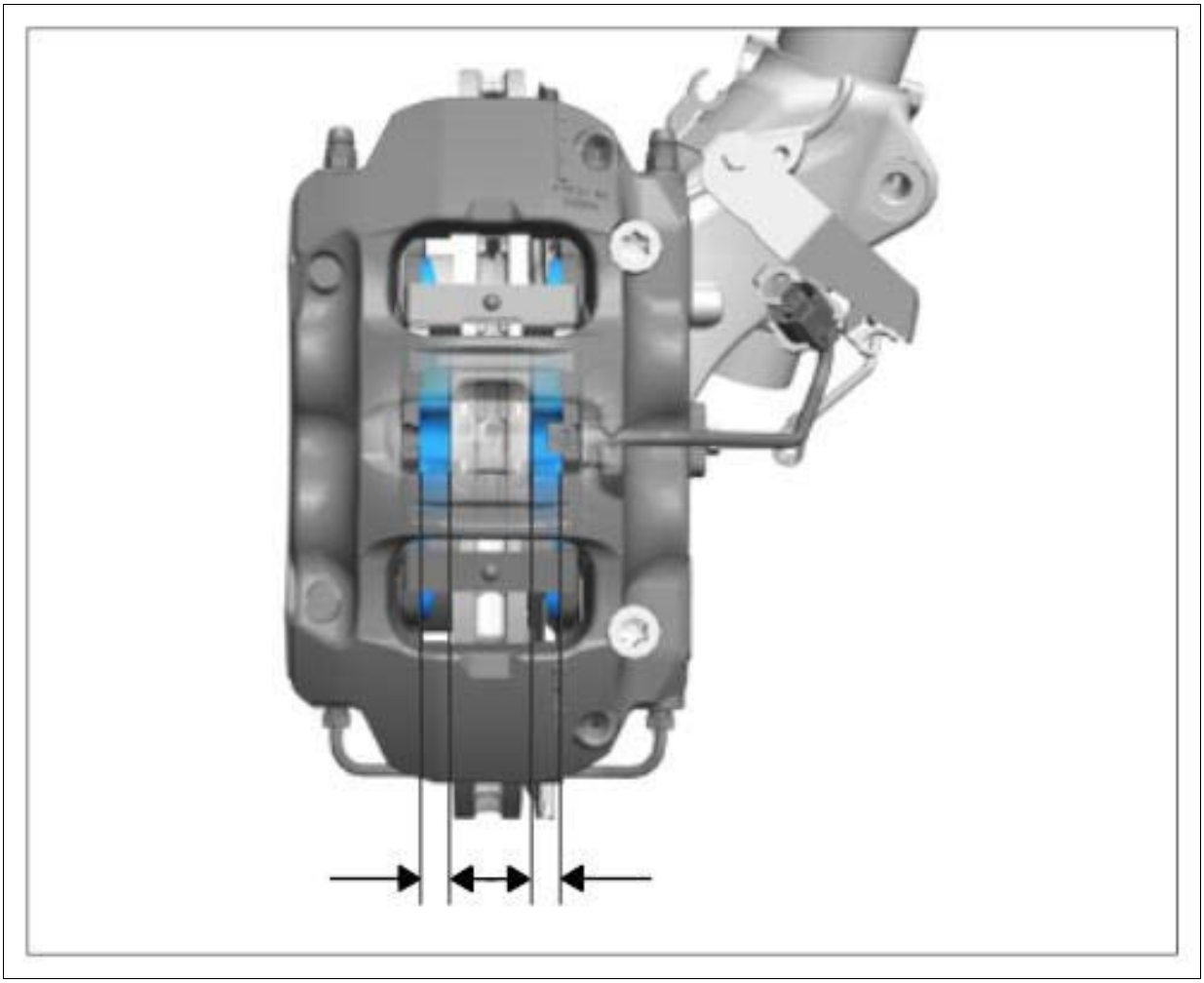

Courtesy of PORSCHE CARS NORTH AMERICA, INC.

- Warning contacts must be replaced if the core of the line is worn.
- However, if only the plastic part of the warning contact is worn, there is no need to replace it.

1. Raise the vehicle → 4X00IN LIFTING THE VEHICLE .
2. Remove wheels → 440519 REMOVING AND INSTALLING WHEEL .
3. Visually inspect the brake pads for wear.

WM 463602 CHECKING THICKNESS OF FRONT BRAKE PADS (ALL MODELS) > SUBSEQUENT WORK

Fit wheel → Installing Wheel .

WM 463656 REPLACING FRONT DISC BRAKE PADS (MACAN S, MACAN TURBO) >

TOOLS

Designation	Type	Number	Description	
piston reset tool (replaces P83)	Commercially available tool	Nr.144		

WM 463656 REPLACING FRONT DISC BRAKE PADS (MACAN S, MACAN TURBO) > PRELIMINARY WORK

1. Raise the vehicle → 4X00IN LIFTING THE VEHICLE .
2. Remove wheel. Use assembly aids (assembly pins) **-1-** . → 440519 REMOVING AND INSTALLING WHEEL .

Fig 1: Identifying Assembly Aids (Wheel Bolts)



Courtesy of PORSCHE CARS NORTH AMERICA, INC.

3. Remove brake calliper and suspend it at a suitable position in the wheel housing (do not open the brake hydraulic system!) → 473919 REMOVING AND INSTALLING FRONT BRAKE CALLIPER .

WM 463656 REPLACING FRONT DISC BRAKE PADS (MACAN S, MACAN TURBO) > REMOVING AND INSTALLING FRONT DISC BRAKE PADS > REMOVING FRONT DISC BRAKE PADS

NOTE: Removing/fitting wheels

- *Risk of damage to (ceramic) brake discs*

→ Carefully guide the wheel towards the wheel hub, thereby preventing any heavy impact on the (ceramic) brake disc.

Information

- To gain better access for assembly work, it is a good idea to turn the wheels fully either to the right or left!

NOTE: Removal of brake calliper

- *Paint defects on brake calliper*

→ Proceed with care when setting back the brake pads.

→ Protect brake calliper from paint defects using a suitable cloth.

1. Carefully set the disc brake pads back slightly and evenly using water pump pliers.
2. Loosen warning contact from the brake calliper.
3. Fit brake piston on the brake calliper between the disc brake pads using **piston reset tool (replaces P83) Nr.144** . Then press the brake pads evenly → Pressing back brake pads .

   Fig 1: Pressing Brake Pads

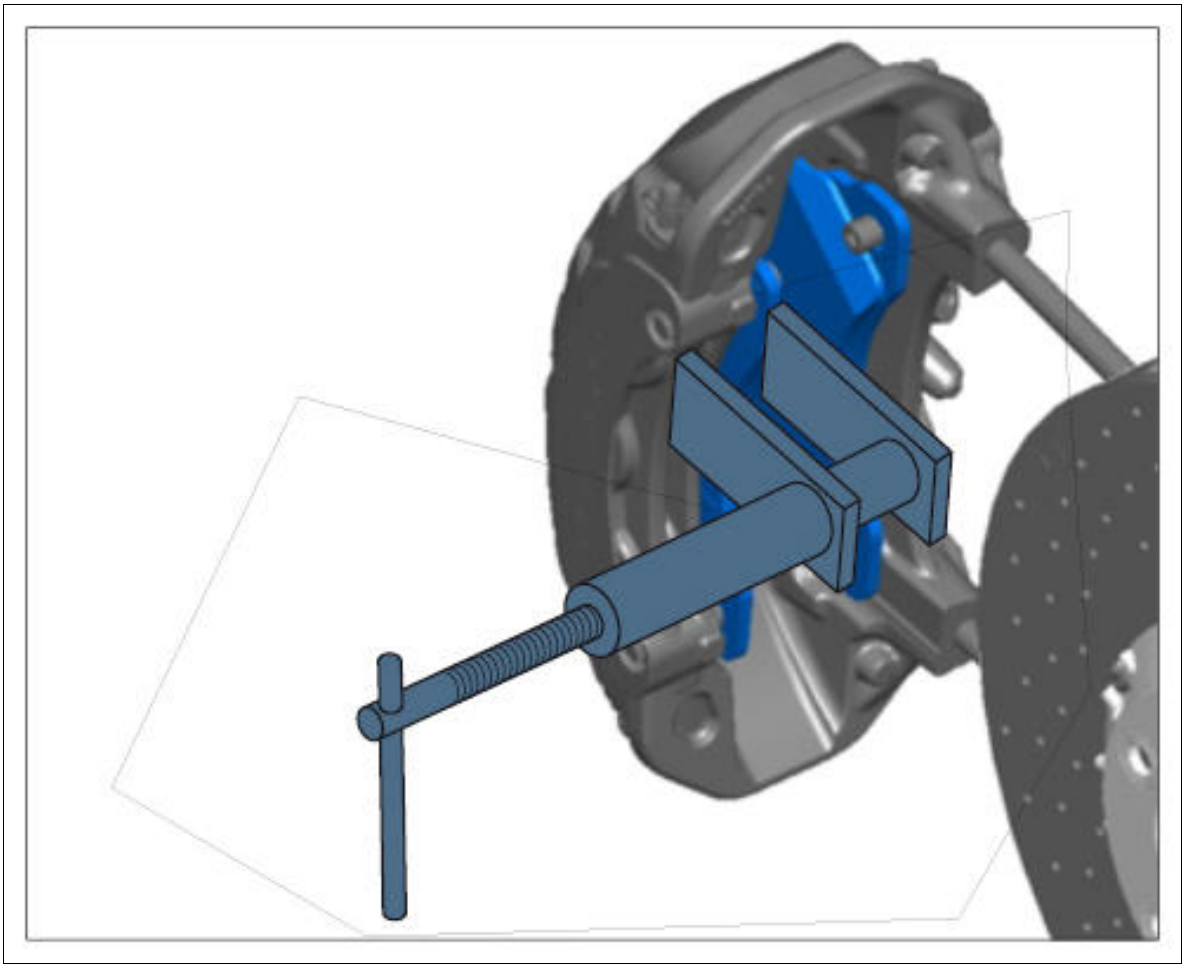

Courtesy of PORSCHE CARS NORTH AMERICA, INC.

Information

If the disc brake pads are still to be used, mark their installation position.

4. Carefully slide a commercially available screwdriver between the disc brake pad/brake calliper and lever the disc brake pad out by turning the screwdriver slightly **-arrows-** . When doing this, make sure not to damage the dust boots on the brake pistons.

   Fig 2: Removing Brake Pads

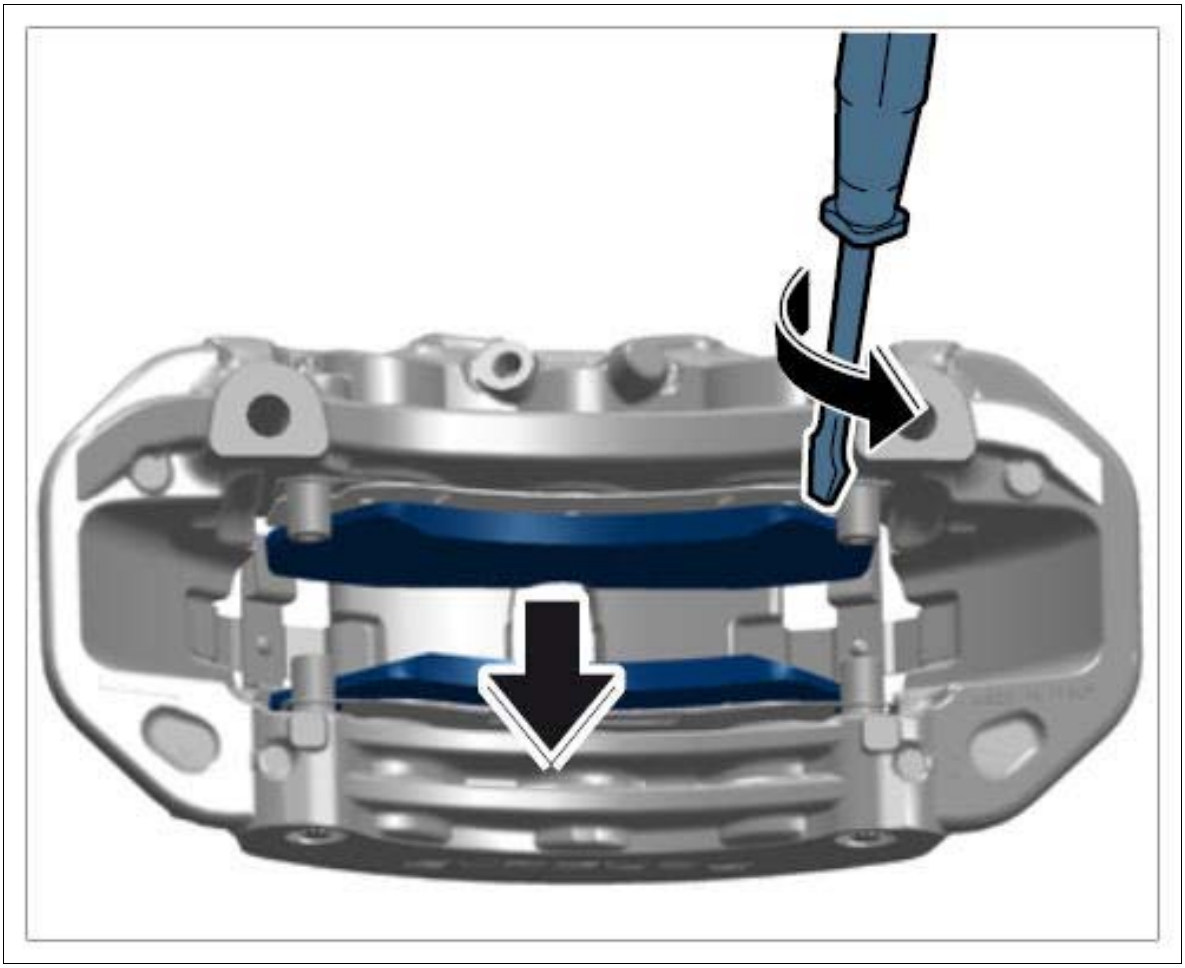

Courtesy of PORSCHE CARS NORTH AMERICA, INC.

5. Remove pad retaining springs.

WM 463656 REPLACING FRONT DISC BRAKE PADS (MACAN S, MACAN TURBO) > REMOVING AND INSTALLING FRONT DISC BRAKE PADS > INSTALLING FRONT DISC BRAKE PADS

WARNING: Old mounting parts fitted on the brake calliper

- *Reduced braking effect*
- *Risk of damage to the brake calliper*

→ Fit new pad retaining springs

→ Fit new fastening screws

WARNING: Installation of brake pads with the wrong brake pad quality

- *Longer braking distance*
- *More wear on brake pads*

→ Only use the type-specific brake pads.

→ Replace the brake pads when the brake pad wear indicator light comes on, but no later than when there is a residual pad thickness of 2 mm on each axle.

→ Replace the brake discs on each axle as soon as the brake pad wear limit is reached.

Information

Applies only to 17" brakes (brake calliper color: Black):

- Brake pads are bonded to the brake piston. Before installation, pull off the protective film on the new brake pads and remove adhesive residue on the brake piston.
- Check running direction of brake pads (marked on brake pad by an arrow)!

Applies to all brakes:

- The back of the pad backing plates must not be greased.
- Check the brake discs for wear. For wear limits, see → 465002 CHECKING FRONT BRAKE DISCS (WEAR ASSESSMENT) → 465102 CHECKING FRONT PCCB BRAKE DISCS (WEAR ASSESSMENT) .
- Brake discs must be clean and free of grease.
- The core of the warning contact wire must not be left exposed! Worn insulation is not important.
- If necessary, remove a little brake fluid from the reservoir by suction in order to prevent an overflow when the disc brake pads are pushed back.
- Use a new repair kit.

1. Fit new pad retaining springs.
2. Place disc brake pad onto the sealing surfaces of the pad retaining springs **-arrows-** .

Fig 1: Installing Brake Pad

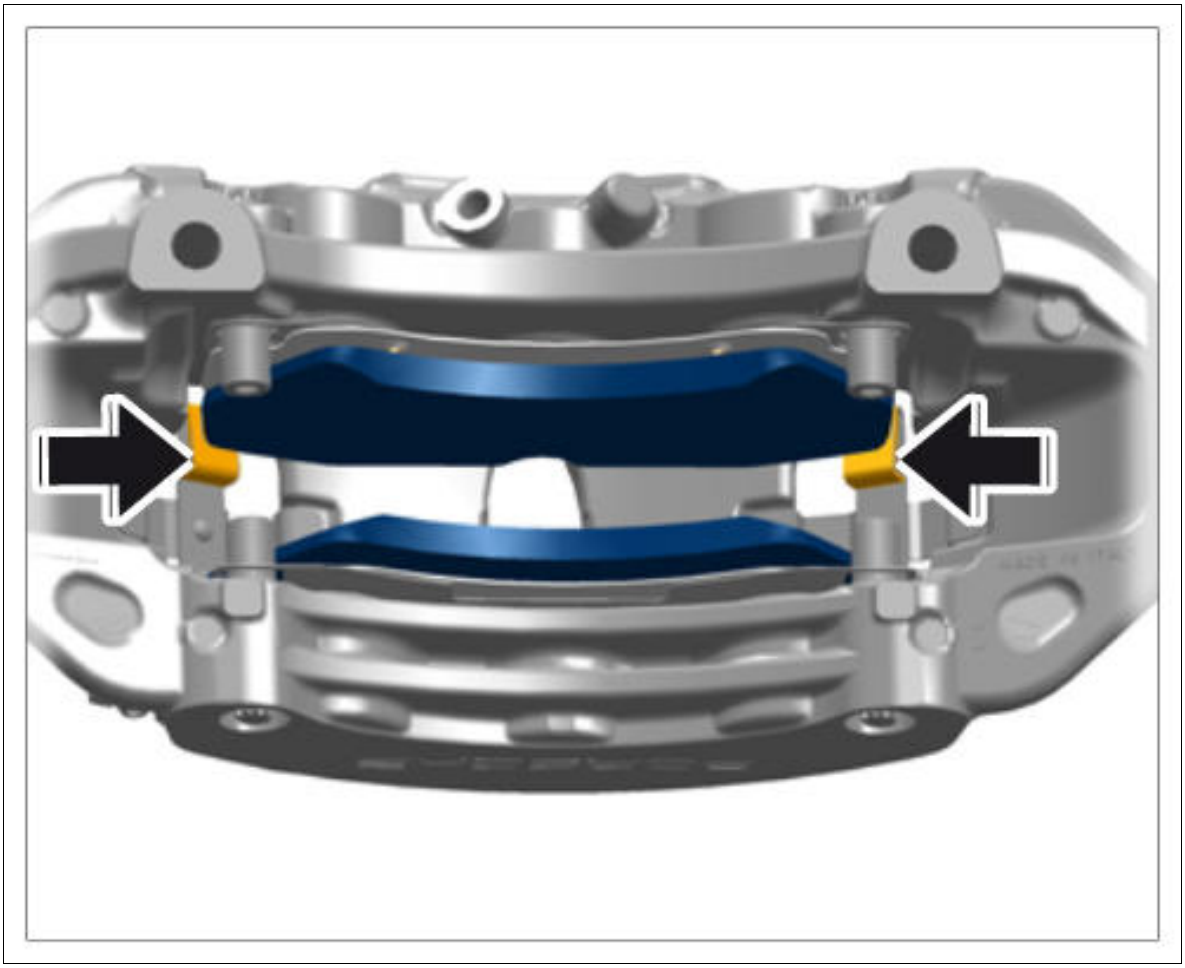

Courtesy of PORSCHE CARS NORTH AMERICA, INC.

3. Press brake pad into the brake calliper with slight pressure and slide it onto the pad retaining pins **-arrows-** .

Fig 2: Positioning Brake Pad

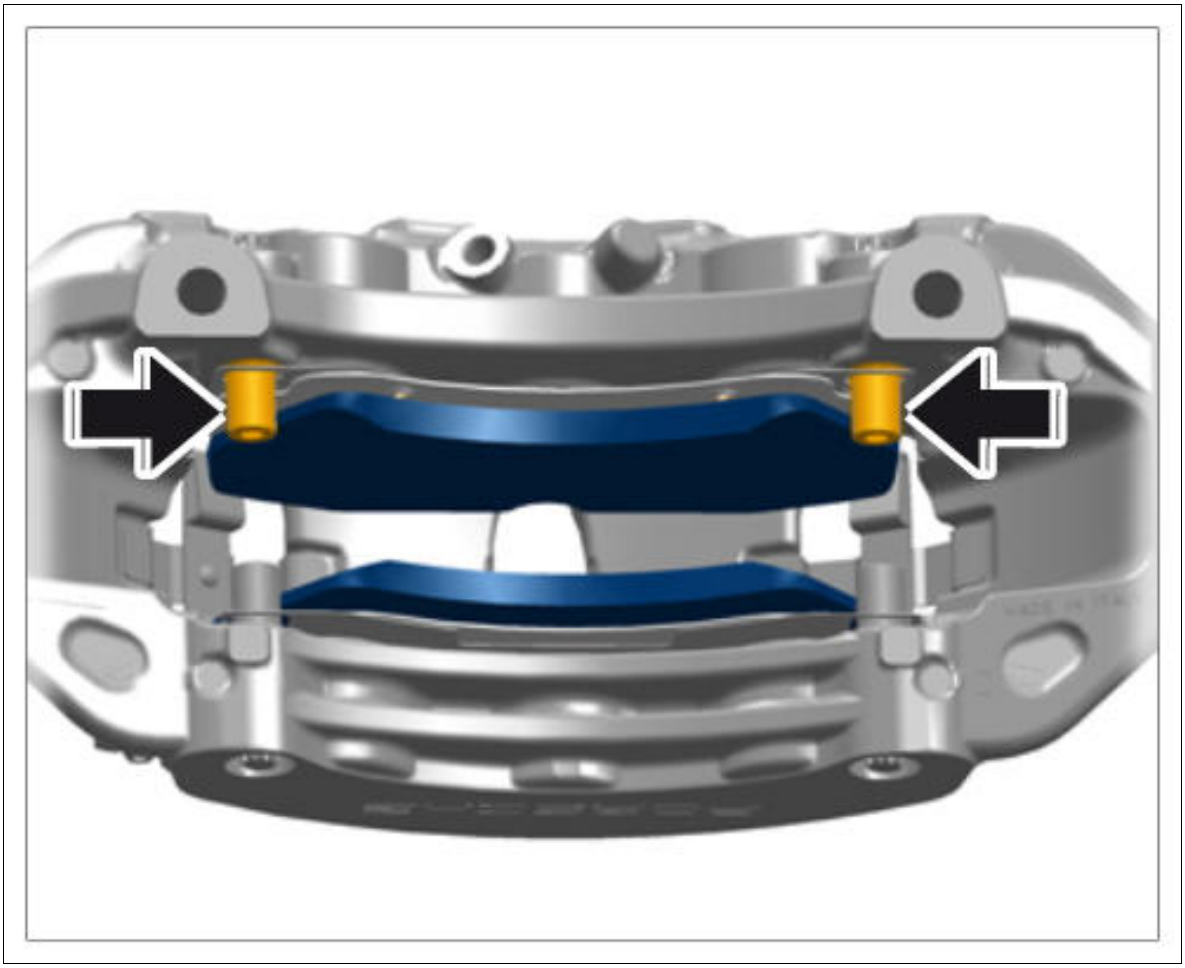

Courtesy of PORSCHE CARS NORTH AMERICA, INC.

4. Fit disc brake pad **-arrow-** .

Fig 3: Installing Brake Pad

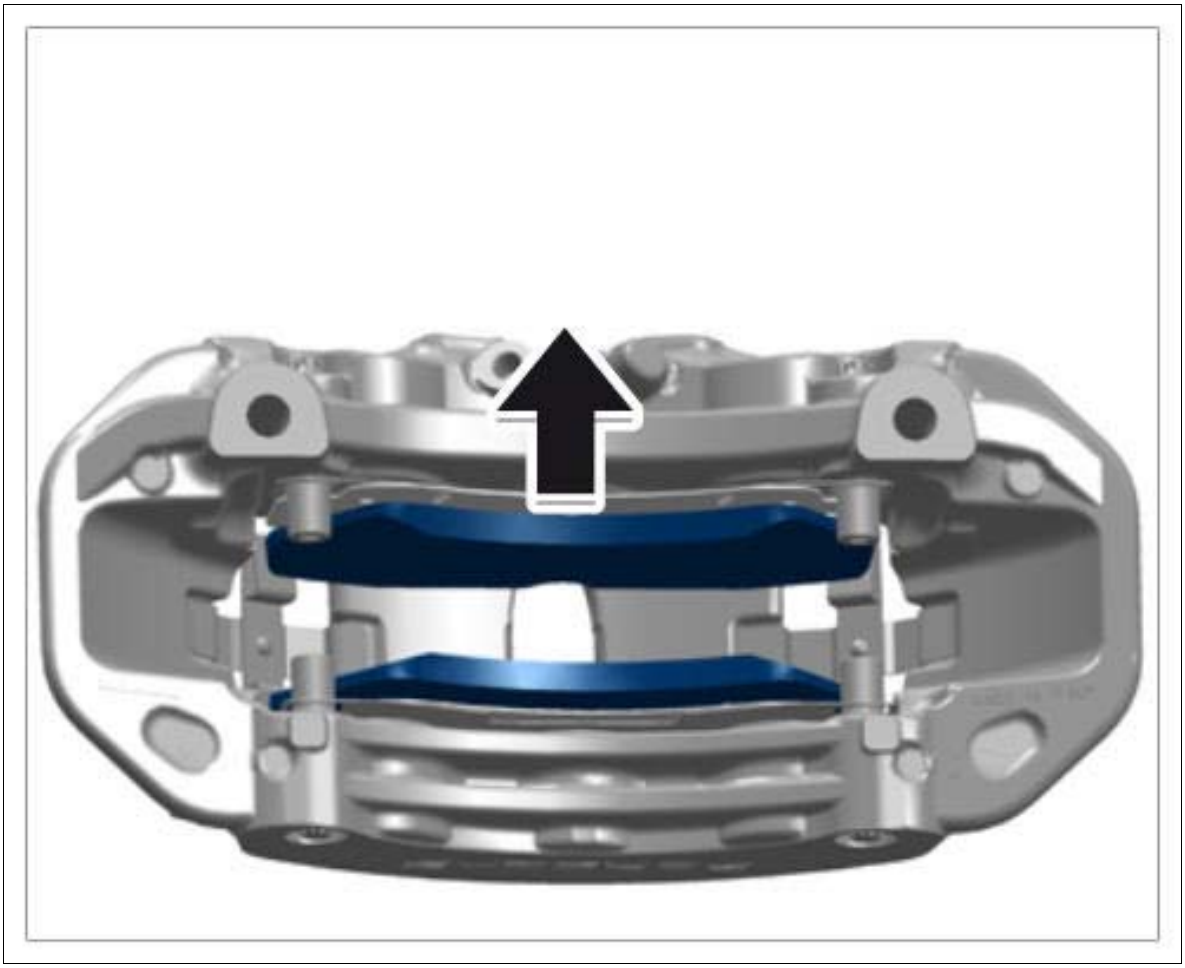

Courtesy of PORSCHE CARS NORTH AMERICA, INC.

5. Fit warning contact.

WM 463656 REPLACING FRONT DISC BRAKE PADS (MACAN S, MACAN TURBO) > SUBSEQUENT WORK

1. Install brake calliper → Installing Front Brake Calliper .

   Information

   New disc brake pads require a bedding-in time of approx. 200 km (125 miles)! Only then do they achieve their best friction coefficient and wear value! During this period, the brakes should only be subjected to full stress at high speed in emergencies!

2. Position disc brake pads by operating the brake several times.
3. Check the brake fluid level and correct it if necessary .
4. Fit wheel. Use assembly aids (assembly pins) **-1-** . → Installing Wheel .

Fig 1: Identifying Brake Assembly Aids



Courtesy of PORSCHE CARS NORTH AMERICA, INC.

WM 463802 CHECKING THICKNESS OF REAR BRAKE PADS (ALL MODELS) > INFORMATION

Information

The pictures shown in this document may differ from the original.

Procedure during intermediate maintenance:

Visually inspect the brake pads for wear. **There is no need to remove the wheels unless the brake fluid needs to be changed at the same time.**

Outside of brake pad: Visual inspection through the cut-outs in the rim.

Inside of brake pad: Visual inspection from below with vehicle raised.

Without an aid, the inner brake pad is not or is only partly visible on the rear axle (with the wheel fitted).

A mirror can be used as an aid **-arrow-** .

Fig 1: Checking Brake Pads



Courtesy of PORSCHE CARS NORTH AMERICA, INC.

Procedure during maintenance:

Raise the vehicle → 4X00IN LIFTING THE VEHICLE .

Remove wheels → 440519 REMOVING AND INSTALLING WHEEL .

Check brake pad thickness for wear. If in doubt following a visual inspection, you may have to measure the brake pads.

WM 463802 CHECKING THICKNESS OF REAR BRAKE PADS (ALL MODELS) > CHECKING THICKNESS OF BRAKE PADS

WARNING: Installation of brake pads with the wrong brake pad quality

- *Longer braking distance*

- *More wear on brake pads*

→ Only use the type-specific brake pads.

→ Replace the brake pads when the brake pad wear indicator light comes on, but no later than when there is a residual pad thickness of 2 mm on each axle.

→ Replace the brake discs on each axle upon reaching the wear limits.

Information

- If brake pad wear is indicated by the warning light, the warning contact (sender including wire and plug connection) must also be replaced.
- Replacing the warning contact can be avoided by replacing the brake pads no later than when the pad thickness is 2.5 mm.
- Warning contacts must be replaced if the core of the wire is worn.
- However, if only the plastic part of the warning contact is worn, there is no need to replace it.

1. Raise the vehicle → 4X00IN LIFTING THE VEHICLE .
2. Remove wheel → 440519 REMOVING AND INSTALLING WHEEL .
3. Visually inspect the brake pads for wear.

WM 463802 CHECKING THICKNESS OF REAR BRAKE PADS (ALL MODELS) > SUBSEQUENT WORK

Fit wheel → Installing Wheel .

WM 463856 REPLACING REAR DISC BRAKE PADS (ALL MODELS) > TOOLS

Designation	Type	Number	Description	
PIWIS Tester II	Special tool	9818		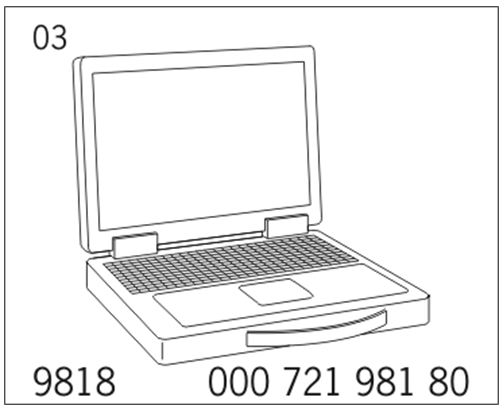

WM 463856 REPLACING REAR DISC BRAKE PADS (ALL MODELS) > TECHNICAL VALUES

Location	Description	Type	Basic value	Tolerance 1	Tolerance 2
Brake calliper to brake carrier	Always use new screws following removal	Tightening torque	35 Nm (26 ftlb.)		

WM 463856 REPLACING REAR DISC BRAKE PADS (ALL MODELS) > PRELIMINARY WORK

1. Raise the vehicle → 4X00IN LIFTING THE VEHICLE .
2. Use **PIWIS Tester II 9818** to move the electric parking brake (EPB) into >>assembly position<<.
    1. 2.1. Select >>Parking brake<< in the control unit overview.
    2. 2.2. Select >>Maintenance/repairs<< >>Assembly position<<.
3. Remove wheel → 440519 REMOVING AND INSTALLING WHEEL .

WM 463856 REPLACING REAR DISC BRAKE PADS (ALL MODELS) > REPLACING REAR DISC BRAKE PADS > REMOVING DISC BRAKE PADS

Fig 1: Identifying Brake Assembly

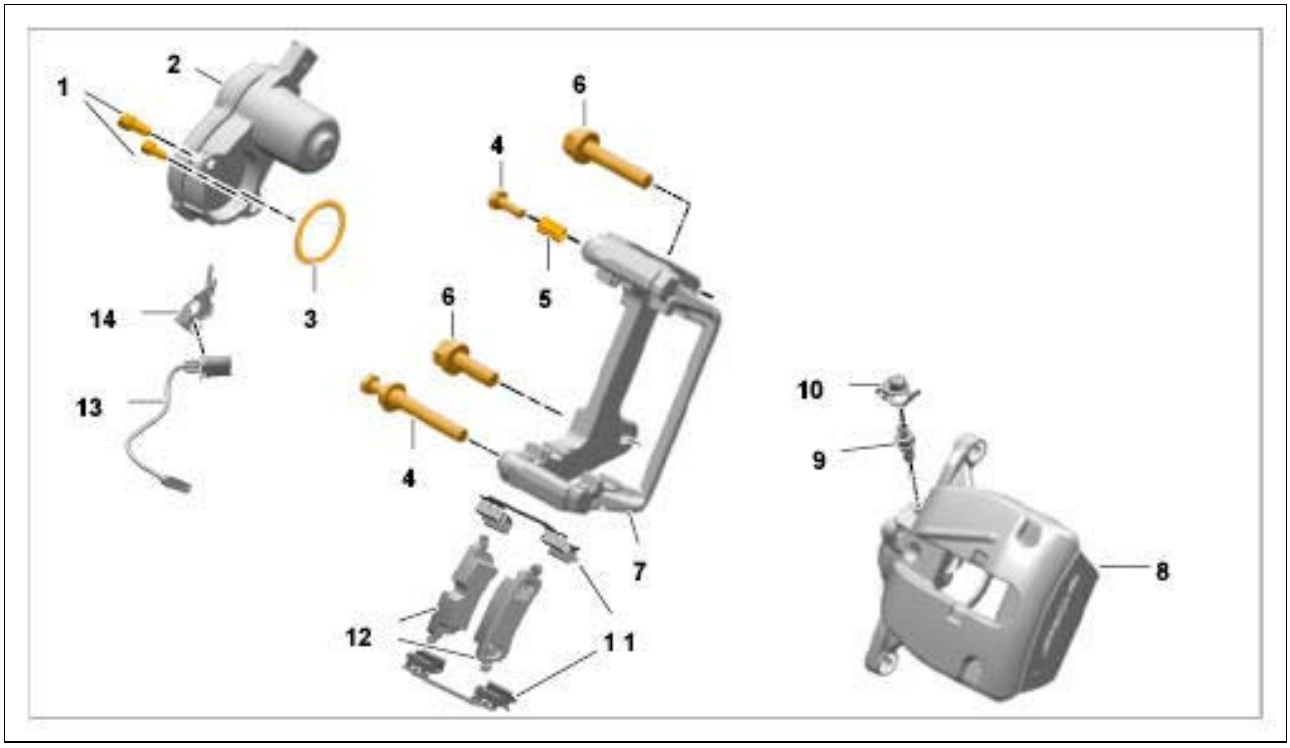

Courtesy of PORSCHE CARS NORTH AMERICA, INC.

1. Fastening screw for EPB actuator
2. EPB actuator
3. Sealing ring
4. Fastening screw securing brake calliper to calliper carrier
5. Contact for brake pad wear indicator
6. Brake calliper
7. Calliper carrier
8. Brake pads
9. Pad retaining bracket
10. Fastening screw securing brake calliper to wheel bearing housing

1. Disconnect plug connection **-1-** for the actuator.

Fig 2: Identifying EPB Plug Connection

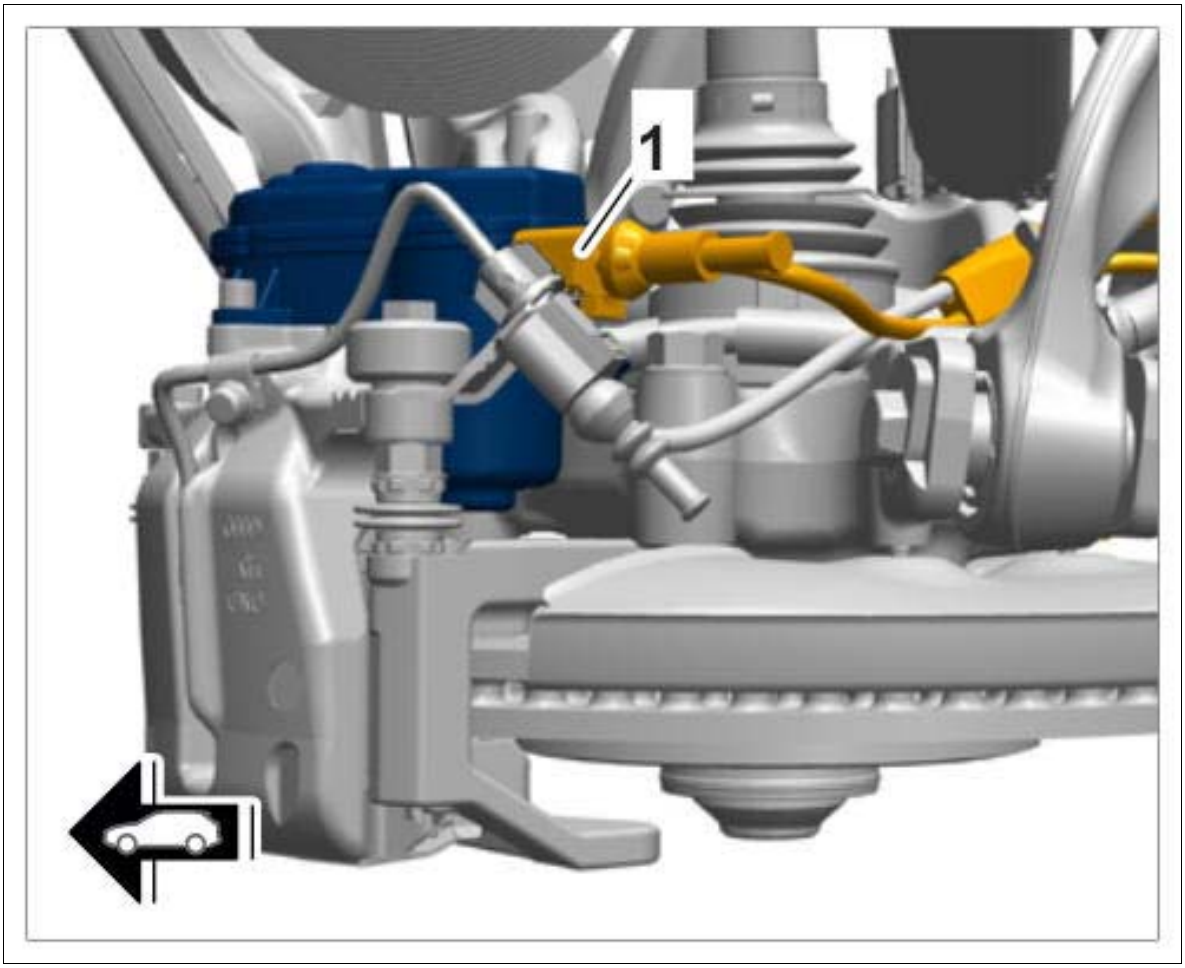

Courtesy of PORSCHE CARS NORTH AMERICA, INC.

2. Release and disconnect electric plug connection **-1-** on the speed sensor.

Fig 3: Identifying Rear Speed Sensor

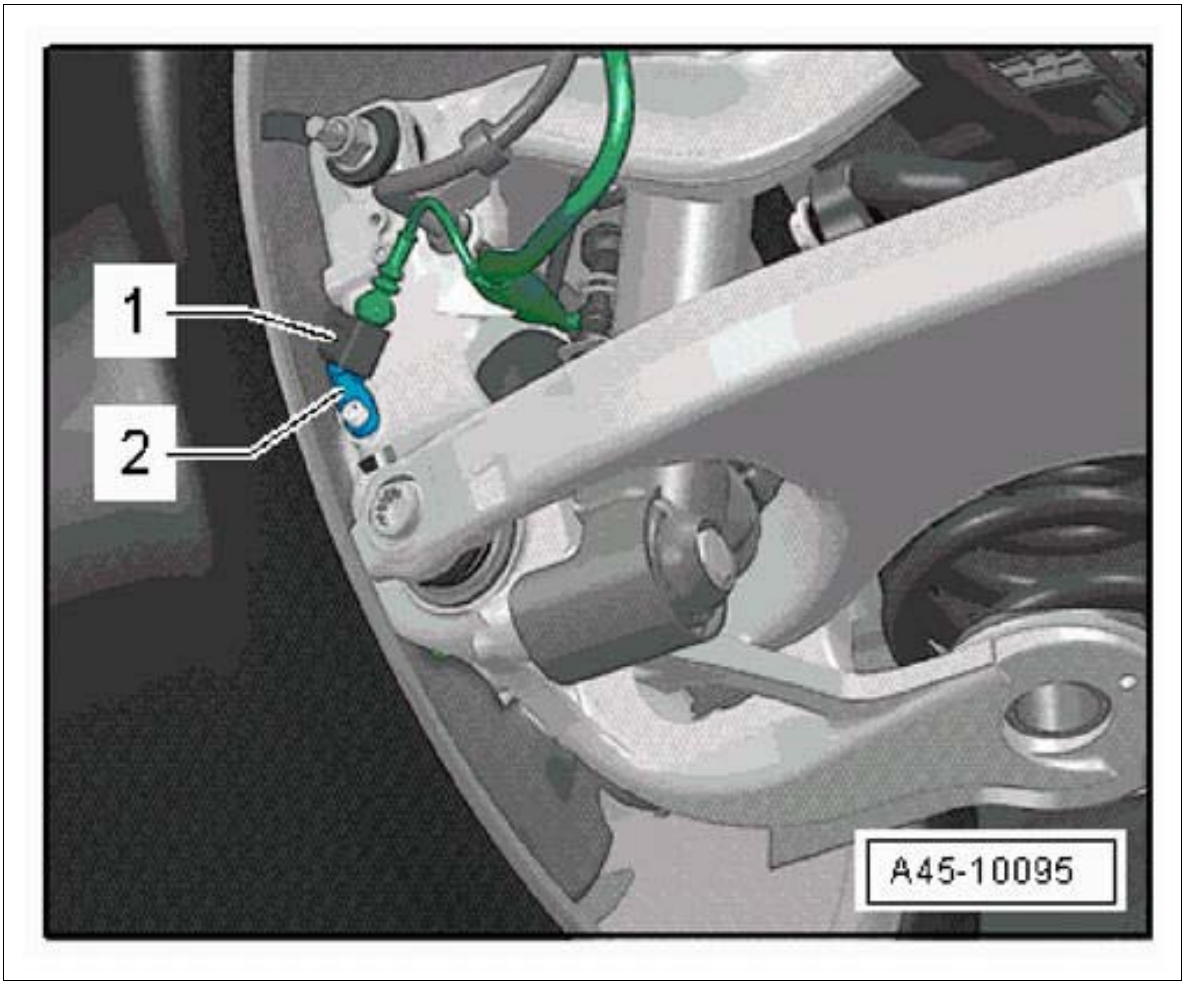

Courtesy of PORSCHE CARS NORTH AMERICA, INC.

3. Unclip brake hose **-1-** and electric line **-2-** from the combination holder **-3-** on the wheel bearing housing.

Fig 4: Identifying Wheel Bearing Housing Combination Holder

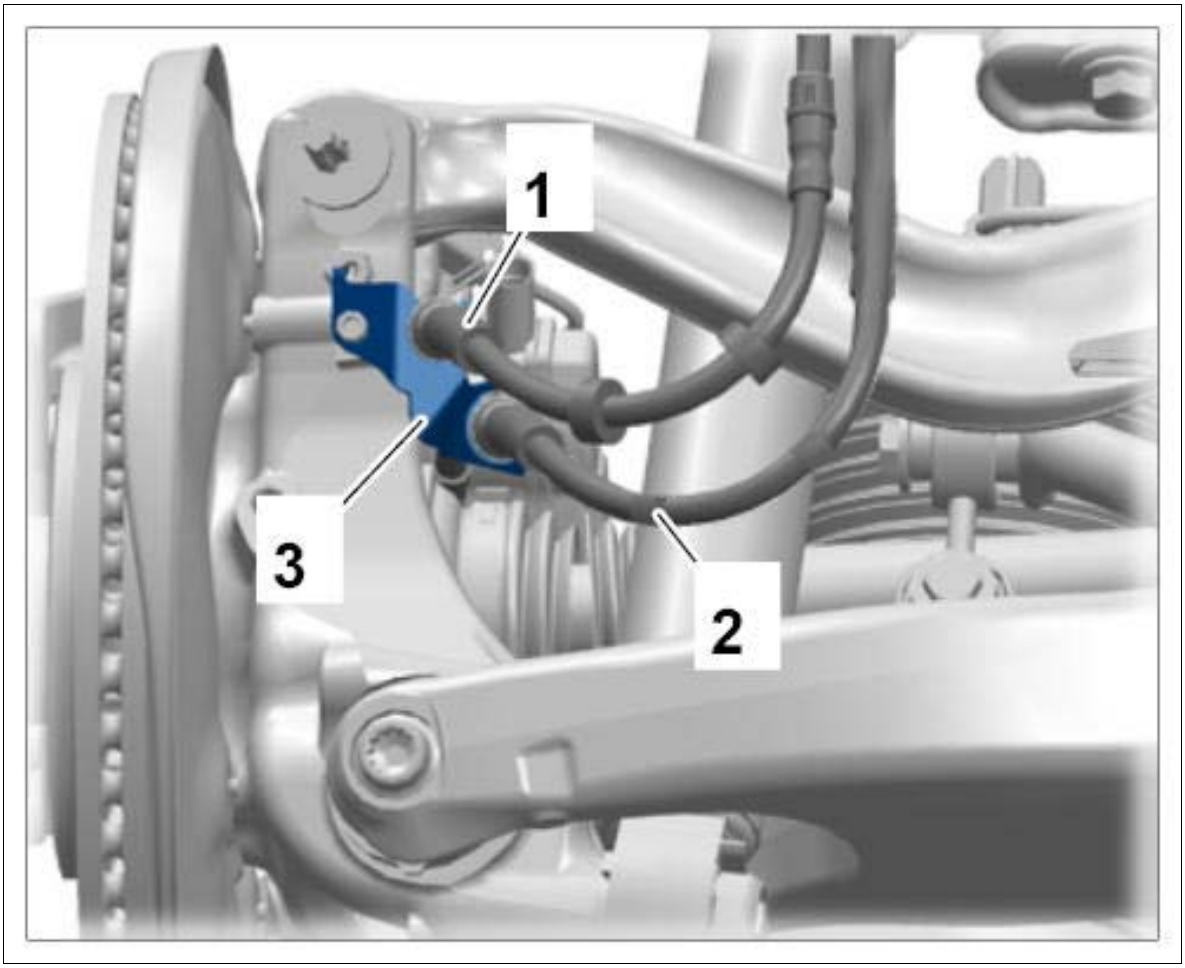

Courtesy of PORSCHE CARS NORTH AMERICA, INC.

4. Loosen contact for brake pad wear indicator **-1-** at the holder **-2-** and pull it out of the brake calliper **-arrow-** .

Fig 5: Locating Brake Pad Wear Indicator Contact

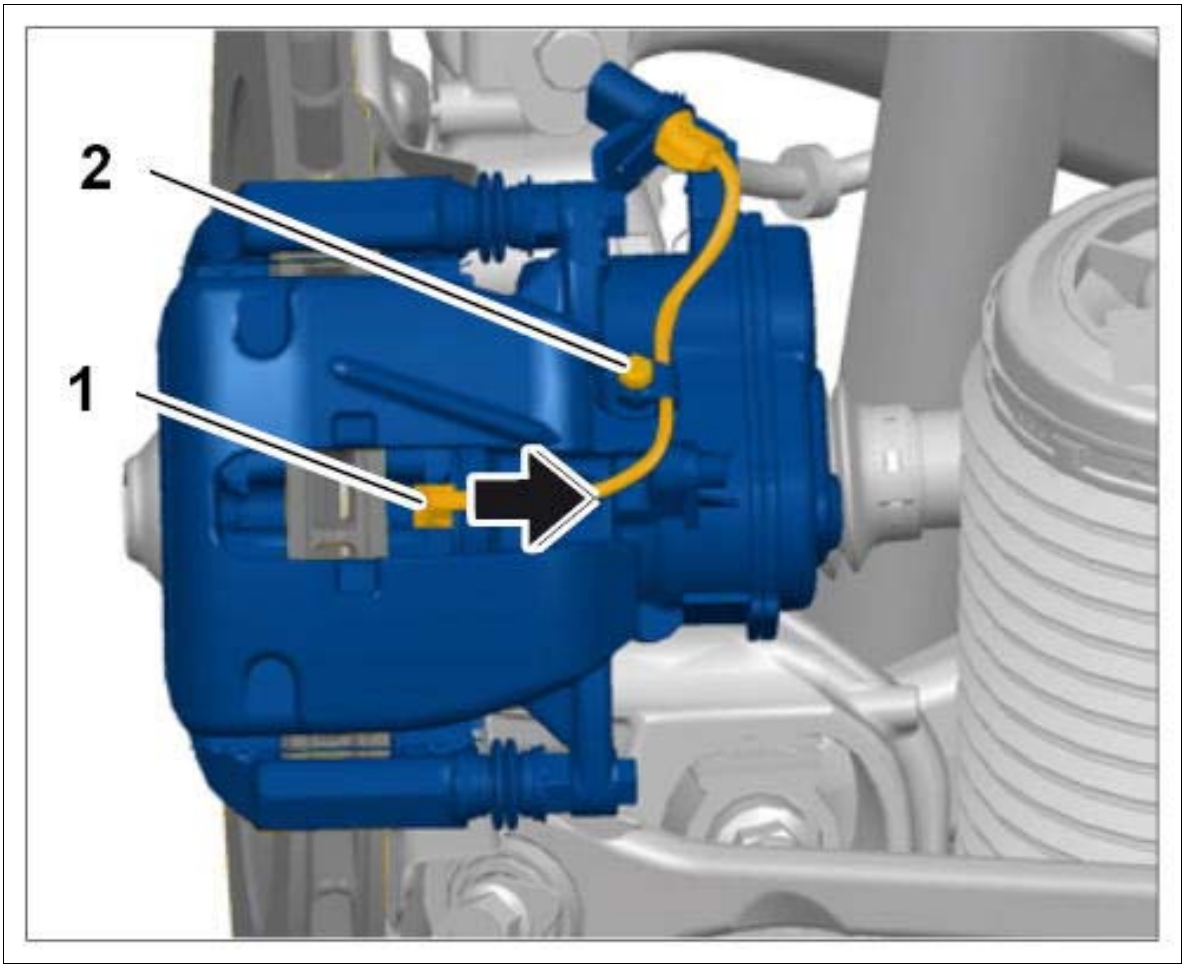

Courtesy of PORSCHE CARS NORTH AMERICA, INC.

5. Unscrew fastening screws **-2-** for the brake calliper on the calliper carrier. Counter at the guide pin at the same time.

Fig 6: Identifying Brake Caliper Mounting Fastening Screws

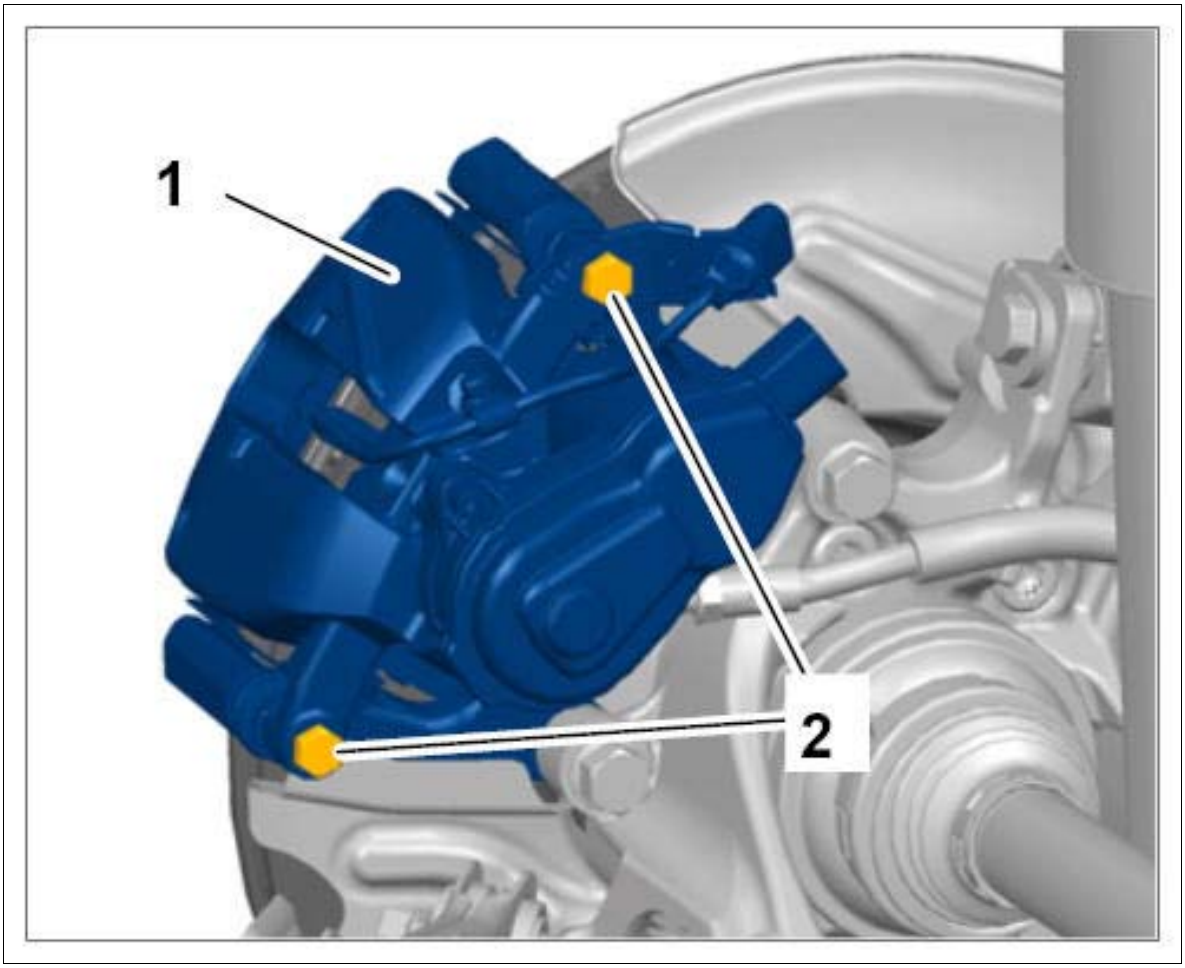

Courtesy of PORSCHE CARS NORTH AMERICA, INC.

Information

1. Do not leave the brake calliper with calliper carrier hanging at the brake hose. The weight must not put excessive strain on the brake hose.
2. A damaged brake hose must be replaced.
3. The brakes and electric parking brake (EPB) must not be actuated when the brake calliper is removed.

6. Remove brake calliper.
7. Remove disc brake pads and pad retaining brackets to the side **-arrows-** .

Fig 7: Identifying Disc Brake Pads & Retaining Brackets

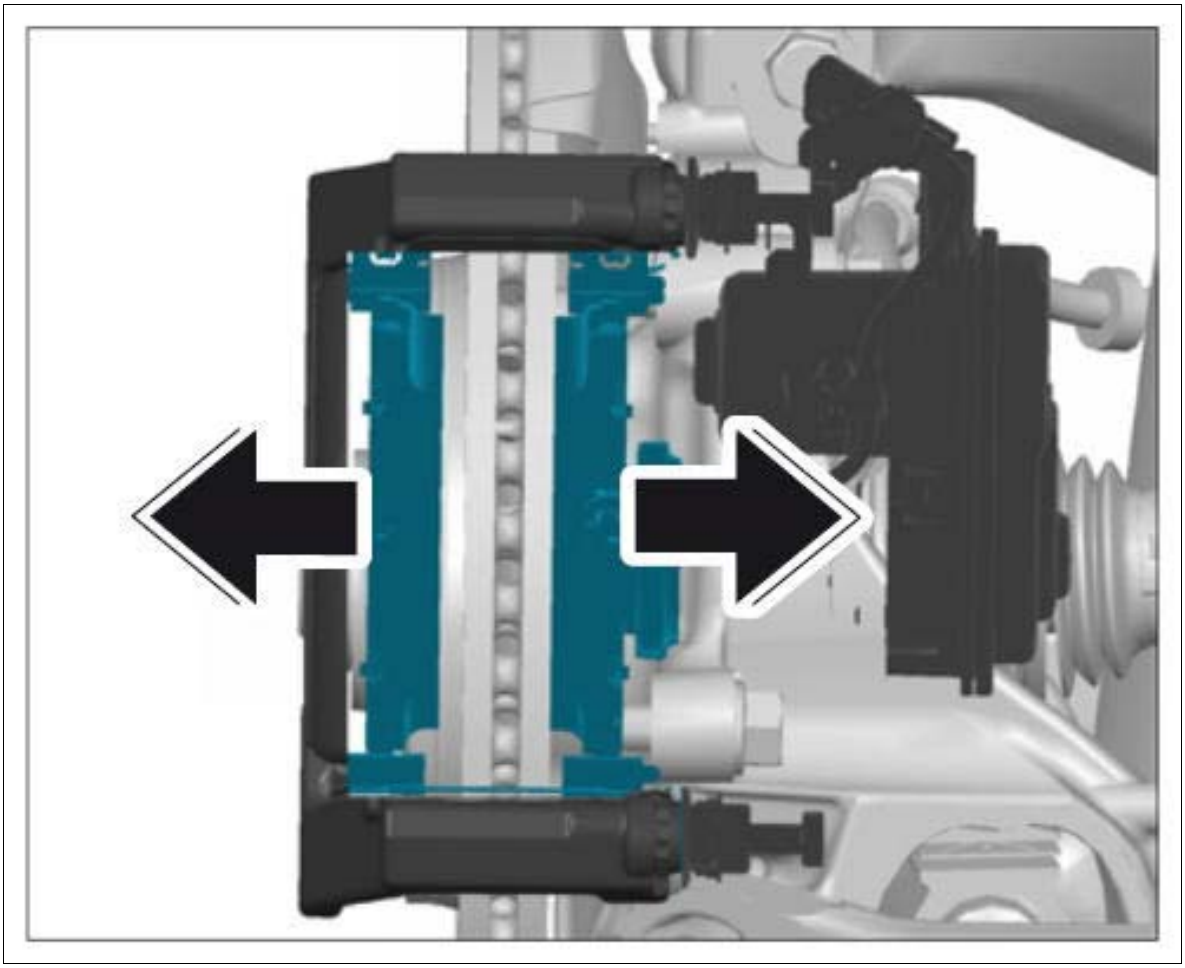

Courtesy of PORSCHE CARS NORTH AMERICA, INC.

WM 463856 REPLACING REAR DISC BRAKE PADS (ALL MODELS) > REPLACING REAR DISC BRAKE PADS > INSTALLING REAR DISC BRAKE PADS

WARNING: Installation of brake pads with the wrong brake pad quality

- *Longer braking distance*
- *More wear on brake pads*

→ Only use the type-specific brake pads.

→ Replace the brake pads when the brake pad wear indicator light comes on, but no later than when there is a residual pad thickness of 2 mm on each axle.

→ Replace the brake discs on each axle as soon as the brake pad wear limit is reached.

WARNING: Old mounting parts fitted on the brake calliper

- *Reduced braking effect*
- *Risk of damage to the brake calliper*

→ Fit new pad retaining springs

Information

When replacing the brake pads, always pay attention to the following:

- The back of the pad backing plates must not be greased.
- Check brake discs for wear. For details of wear limits, see → 465302 CHECKING REAR BRAKE DISCS (WEAR ASSESSMENT) .
- Disc brakes must be clean and free of grease.
- The core of the warning contact wire must not be left exposed! Worn insulation is not important.
- Use a new repair kit (only replace the brake pads on the same axle).

1. Installation is performed in reverse order. Pay particular attention to the following:
    1. Check that all parts are in perfect condition (visual inspection) and replace them if necessary.
    2. Fit new pad retaining brackets.
    3. Make sure that the disc brake pads are seated correctly in the pad retaining brackets **-arrows-** .

Fig 1: Locating Disc Brake Pads

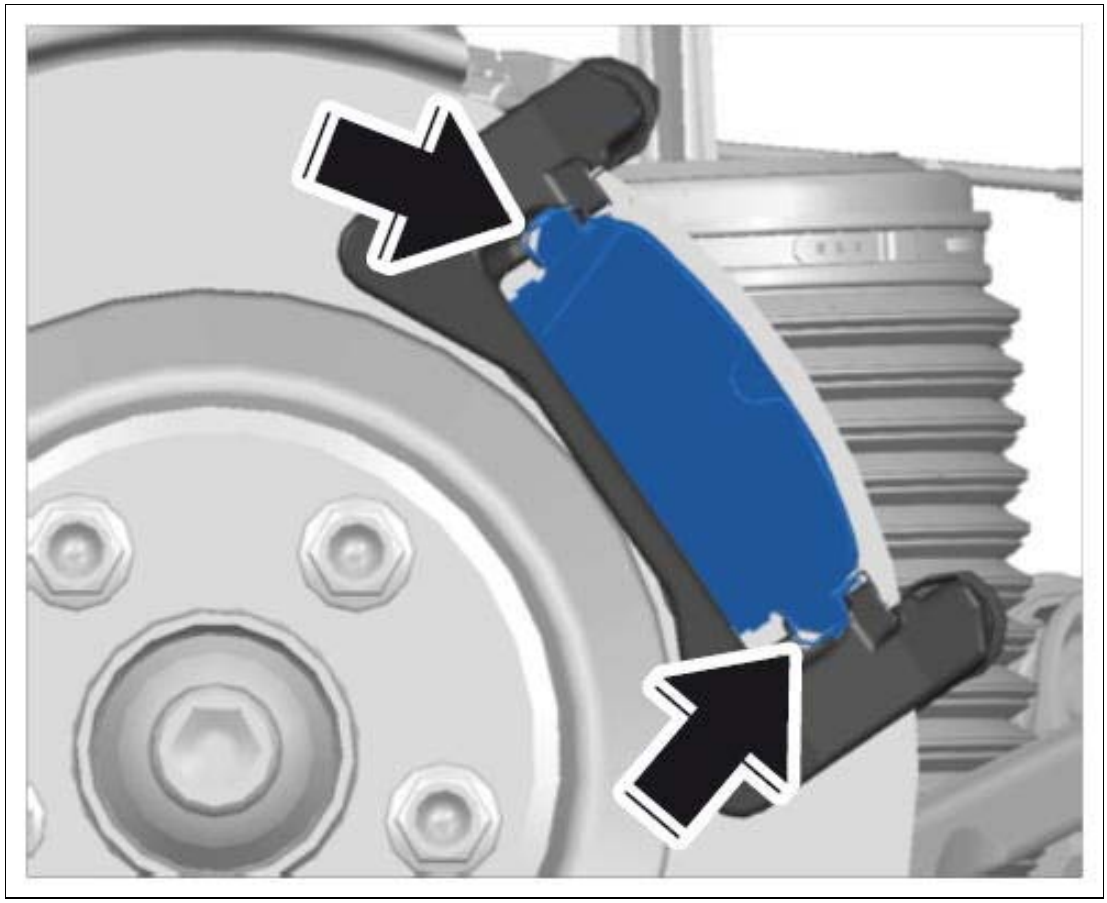

Courtesy of PORSCHE CARS NORTH AMERICA, INC.

Information

Make sure that the brake hose and electric line are clipped in and secured correctly in the combination holder at the wheel bearing housing so that the brake hose and electric line cannot come out of the holders.

4. Clip brake hose dry (without using sliding compound) into the holder at the wheel bearing housing.
5. Observe specified tightening torques:

   Brake calliper to calliper carrier: **Tightening torque 35 Nm (26 ftlb.)**

WM 463856 REPLACING REAR DISC BRAKE PADS (ALL MODELS) > SUBSEQUENT WORK

1. Fit wheel. → Installing Wheel
2. Use **PIWIS Tester II 9818** to start up the electric parking brake (EPB).
    1. 2.1. Select >>Parking brake<< in the control unit overview.

2. 2.2. Select >>Maintenance/repairs<< >>Start-up<<.

WM 465002 CHECKING FRONT BRAKE DISCS (WEAR ASSESSMENT) (ALL MODELS) > TOOLS

Designation	Type	Number	Description	
Adapter plate	Special tool	9510/2		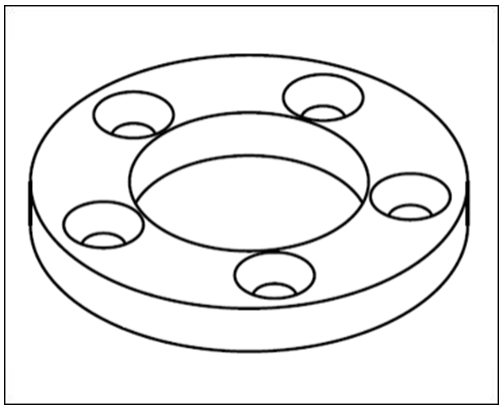
dial gauge set with ball joint arm	Commercially available tool	Nr.147-1		

WM 465002 CHECKING FRONT BRAKE DISCS (WEAR ASSESSMENT) (ALL MODELS) > TECHNICAL VALUES

Location	Description	Type	Basic value	Tolerance 1	Tolerance 2
Brake discs		Maximum crack length	0.5 x a mm		
Brake discs		Maximum crack width	1 mm		
Brake discs		Maximum crack depth	1.5 mm		

WM 465002 CHECKING FRONT BRAKE DISCS (WEAR ASSESSMENT) (ALL MODELS) > INFORMATION > NOTE ON PICTURES SHOWN

Information

- The pictures shown in this document may differ from the original.

WM 465002 CHECKING FRONT BRAKE DISCS (WEAR ASSESSMENT) (ALL MODELS) > INFORMATION > BRAKE DISC WEAR ASSESSMENT - GENERAL

Normally, brake disc replacement is necessary if the thickness is less than the minimum thickness. In rare, isolated cases (of very high loads for long periods) replacement may be necessary due to crack formation. To a certain extent these cracks may be rated as not important. The following service information describe when to replace the brake discs.

Cracks occur as a result of material fatigue due to frequent and extreme thermal expansion fluctuations. Particularly in cases of very high loads for long periods, these thermal expansion fluctuations produce internal stresses. The result may be cracks in the friction surface. These cracks allow relaxation of the friction disc, so that the speed at which the cracks develop is very slow.

The cracks run from the center of the friction surface to the (inner and outer) edges of the brake disc. As different vehicle types have different brake disc sizes, differences arise for the maximum crack length limits.

The maximum crack length limit is calculated as follows:

0.5 x a (**-a-** = width of friction surface in mm).

Fig 1: Identifying Brake Disc Friction Surface Width

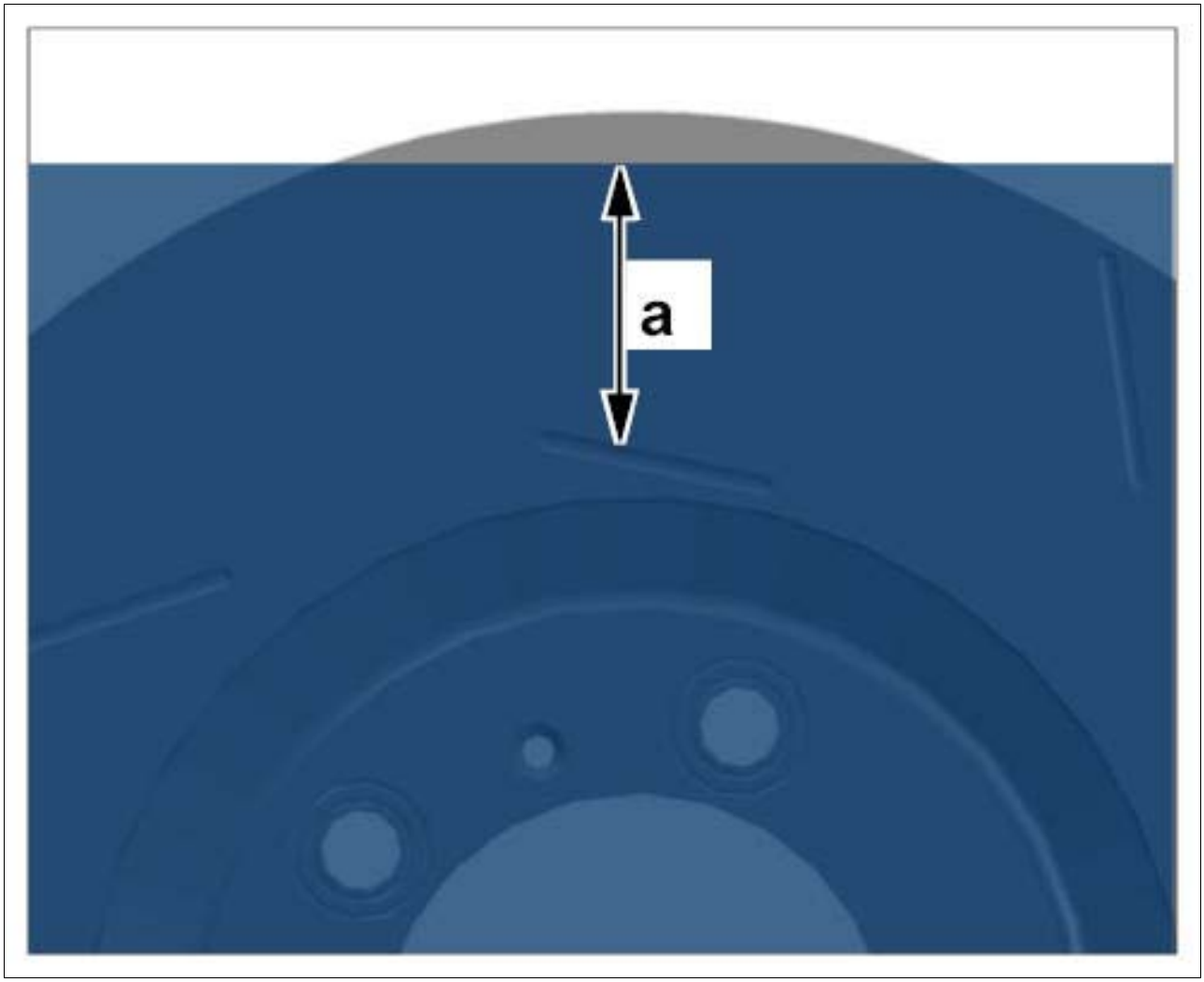

Courtesy of PORSCHE CARS NORTH AMERICA, INC.

Larger cracks impair braking comfort and reduce brake disc strength, therefore making brake disc replacement necessary as a precaution.

Irrespective of the crack length, the brake disc must be replaced if the crack has extended as far as the outer and/or inner edge of the disc.

WM 465002 CHECKING FRONT BRAKE DISCS (WEAR ASSESSMENT) (ALL MODELS) > INFORMATION > BEDDING IN THE BRAKE PADS AND BRAKE DISCS

New brake pads require a bedding-in time of approx. 200 km (124 miles)! Only then do they achieve their best friction coefficient and wear values. During this time, the brakes should be subjected to full stress when travelling at high speed only in emergencies. The slightly reduced braking effect must be compensated for by increased pressure on the brake pedal. The same also applies after replacing or machining brake discs.

WM 465002 CHECKING FRONT BRAKE DISCS (WEAR ASSESSMENT) (ALL MODELS) > CHECKING > CHECKING FRONT BRAKE DISCS - EVALUATING CRACKS

Different vehicle types have different brake disc sizes. This results in differences in terms of maximum crack length limits.

The maximum crack length limit is calculated as follows:

0.5 x a (**-a-** = width of friction surface in mm).

Fig 1: Identifying Brake Disc Friction Surface Width

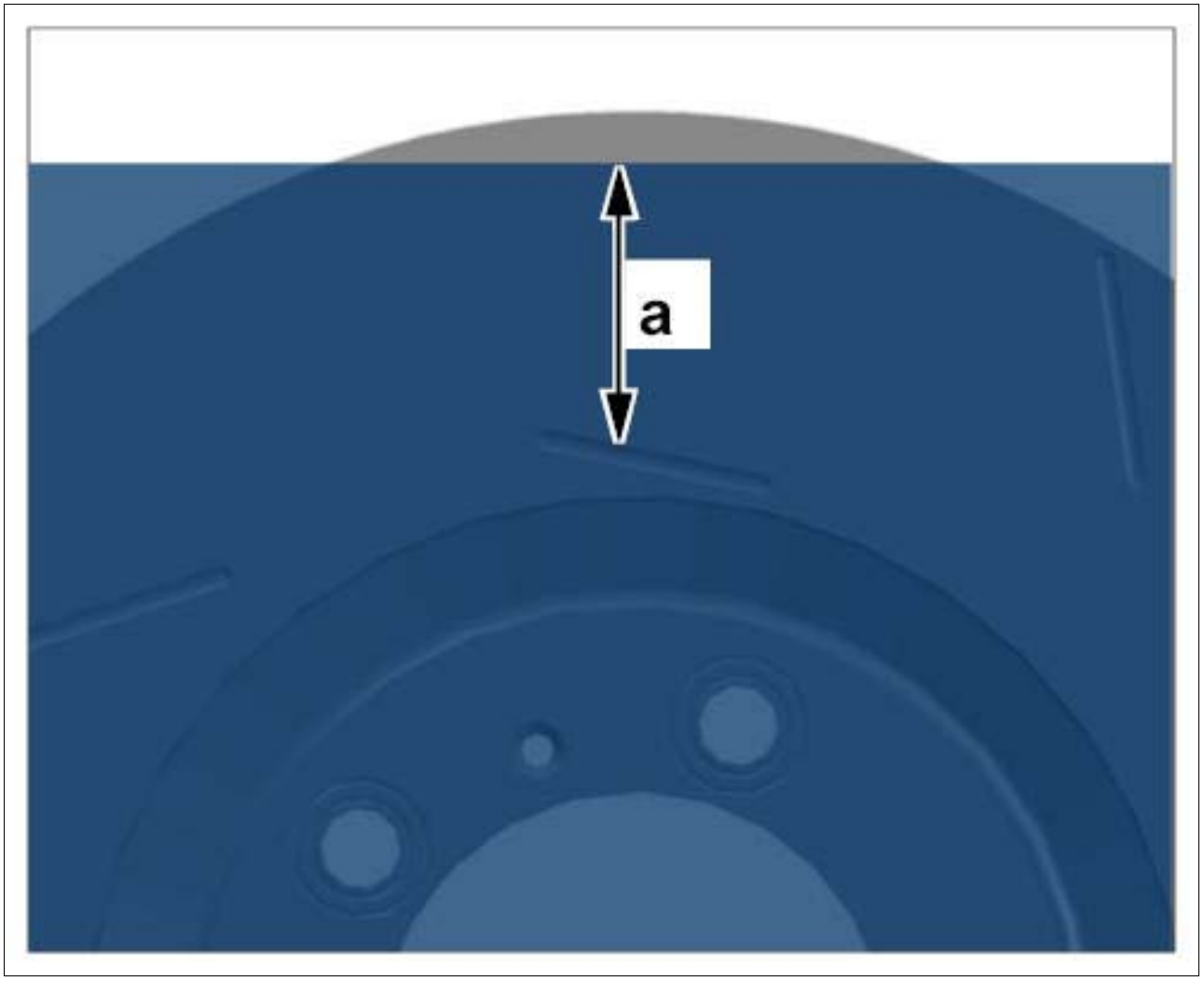

Courtesy of PORSCHE CARS NORTH AMERICA, INC.

The length of a crack can be measured with a steel rule, for example. → Brake discs

Fig 2: Identifying Brake Discs Crack

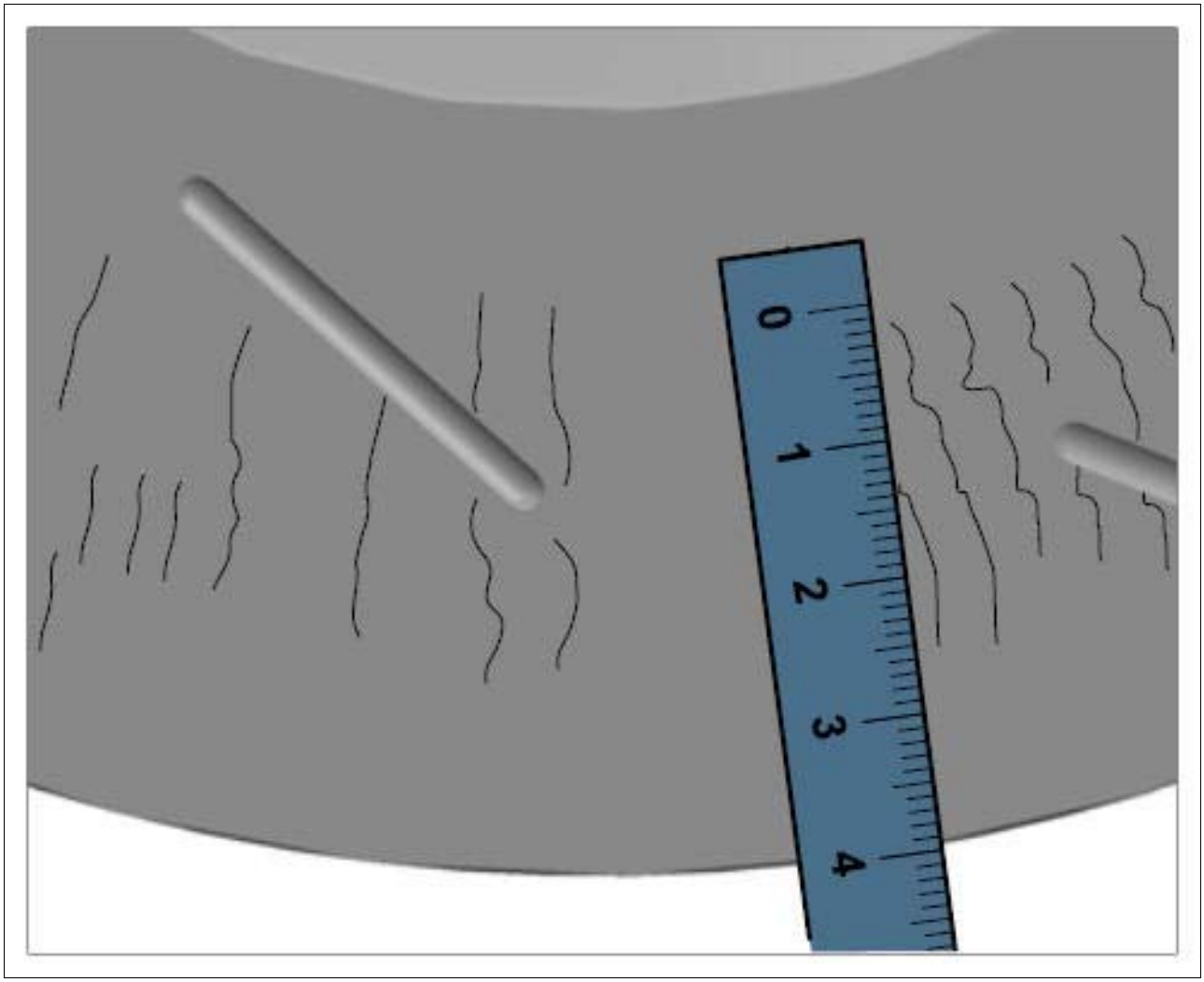

Courtesy of PORSCHE CARS NORTH AMERICA, INC.

Information

Irrespective of the crack length, the brake disc must be replaced if the crack has extended as far as the outer and/or inner edge of the disc.

As a precaution, brake discs must be replaced when:

- the → **Maximum crack length: 0.5 x a mm** (a = friction surface width in mm) is exceeded!
- the → **Maximum crack width: 1 mm** is exceeded!
- the → **Maximum crack depth: 1.5 mm** is exceeded!

WM 465002 CHECKING FRONT BRAKE DISCS (WEAR ASSESSMENT) (ALL MODELS) > CHECKING > CHECKING FRONT BRAKE DISCS - MINIMUM THICKNESS

Information

Normally, brake discs are used until the maximum wear dimension is reached. → WM 4650TW TECHNICAL DATA/BRAKE WEAR LIMIT . Only in a few exceptional cases is it advisable to skim the brake discs (if there is deep scoring or corrosion of the friction surface). In this case only the disc brake dressing machines approved by Porsche AG are to be used .

- Only as new brake discs may be reworked!
- Only rework the brake discs symmetrically, evenly from both sides!

As the pressure force of a brake piston on the brake pad varies in magnitude, different areas of wear arise on the friction surface. The brake disc can basically be divided into two areas of wear:

-A- Outer and inner wear area.

-B- Central wear area.

Fig 1: Identifying Brake Disc Wear Areas

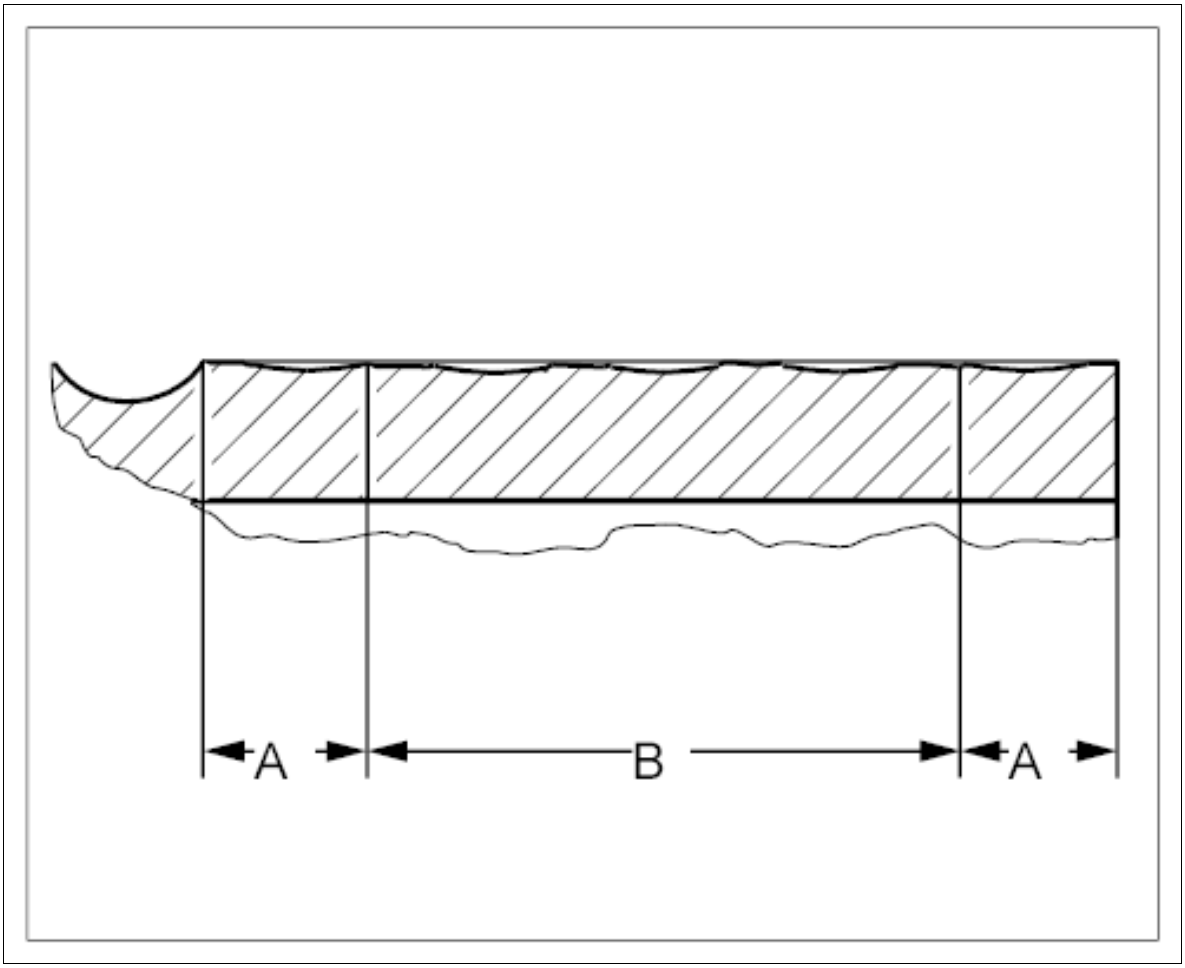

Courtesy of PORSCHE CARS NORTH AMERICA, INC.

The central wear area **-B-** is the area with the highest degree of wear.

Fig 2: Identifying Brake Disc Central Wear Area

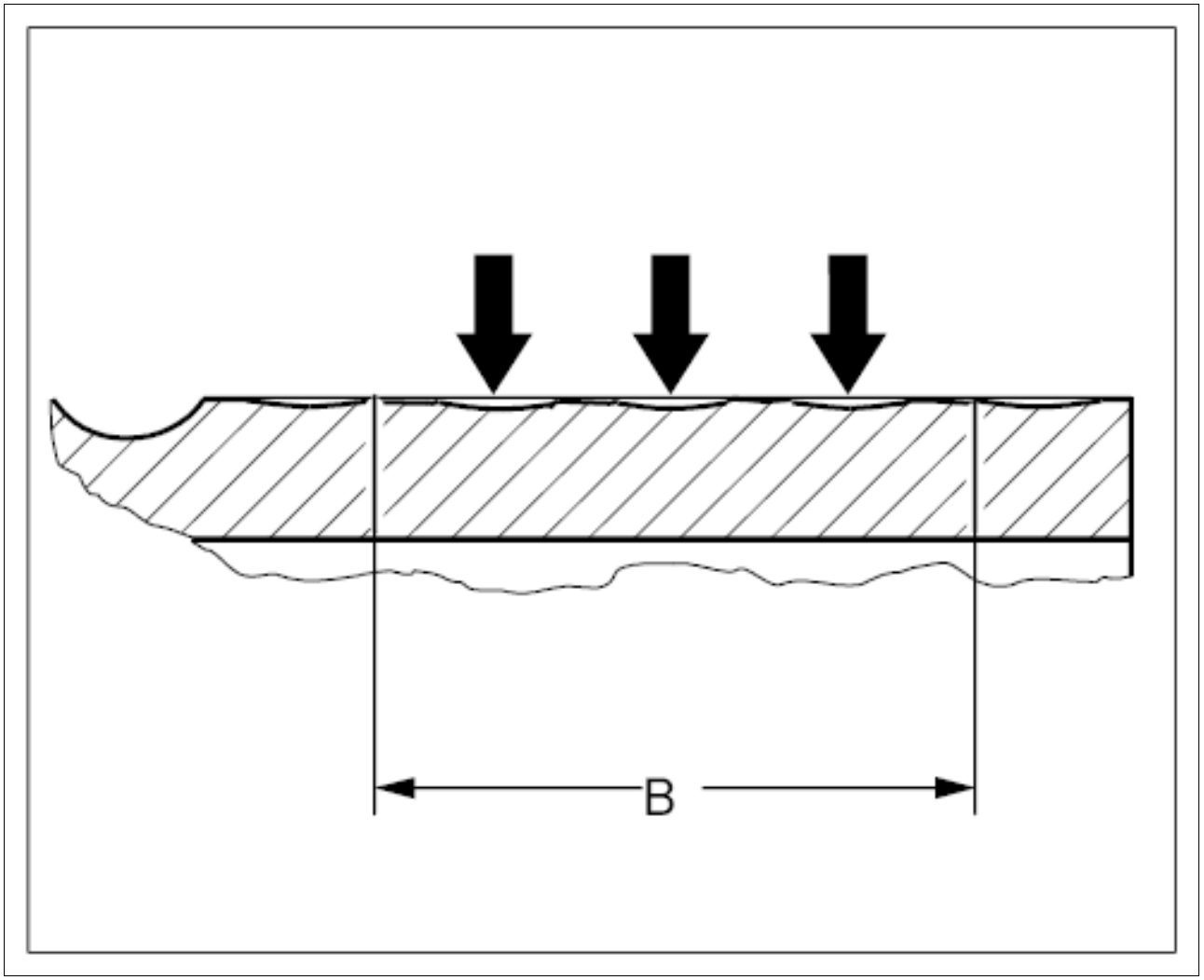

Courtesy of PORSCHE CARS NORTH AMERICA, INC.

- Measure the brake discs using a suitable micrometer at a minimum of three different places (**-A, B, C-**), offset by 120°.

Fig 3: Identifying Brake Disc Thickness Measurement Points

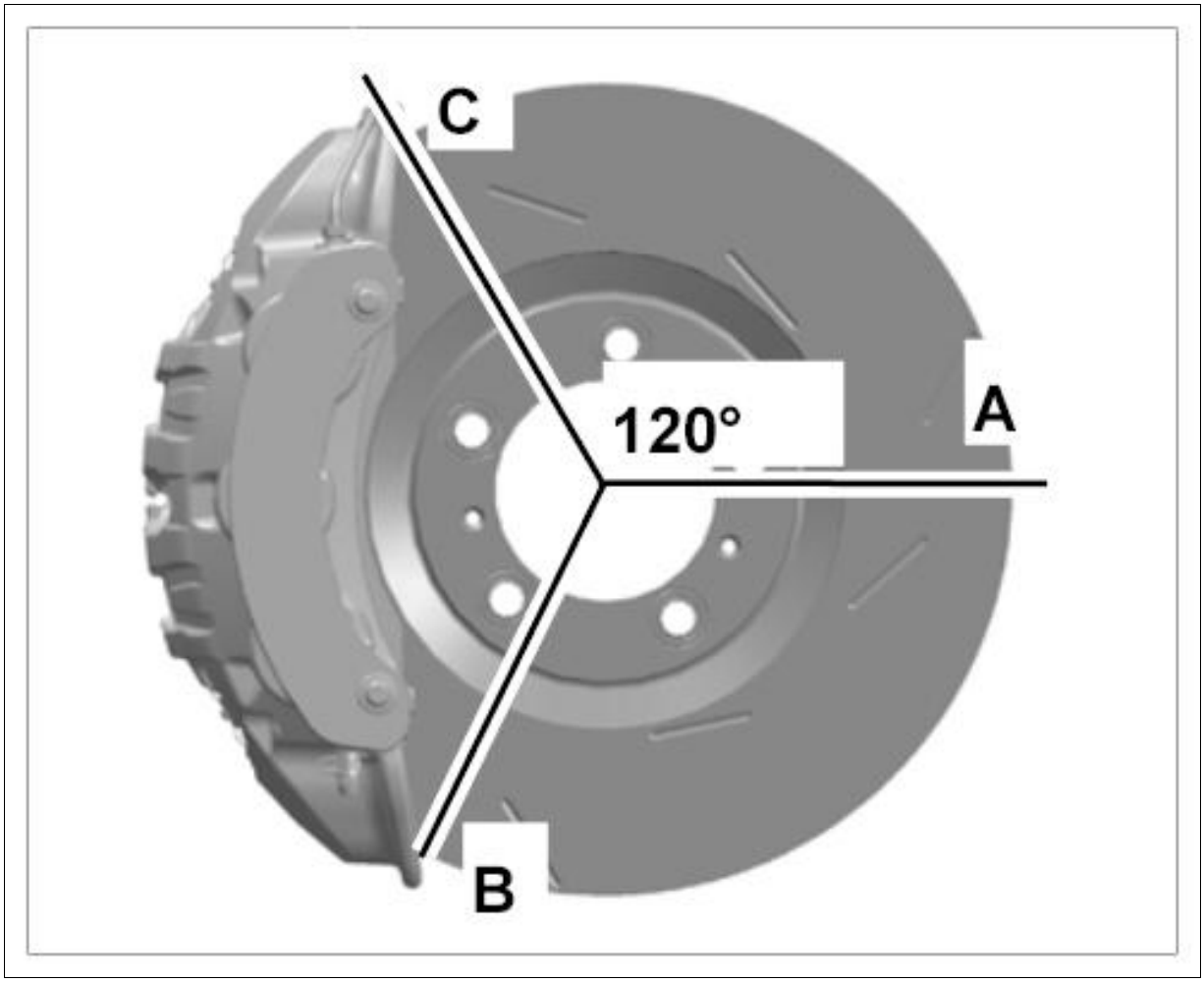

Courtesy of PORSCHE CARS NORTH AMERICA, INC.

WM 465002 CHECKING FRONT BRAKE DISCS (WEAR ASSESSMENT) (ALL MODELS) > CHECKING > CHECKING LATERAL RUNOUT (BRAKE DISC/WHEEL HUB) AND THICKNESS TOLERANCE

Information

Fasten dial gauge set with ball joint arm to wheel bearing housing.

Two adapters are used for checking lateral runout. The brake disc and wheel hub can be measured with these.

WM 465002 CHECKING FRONT BRAKE DISCS (WEAR ASSESSMENT) (ALL MODELS) > CHECKING > CHECKING LATERAL RUNOUT (BRAKE DISC/WHEEL HUB) AND THICKNESS TOLERANCE > BRAKE DISC LATERAL RUNOUT

1. Remove wheel → 440519 REMOVING AND INSTALLING WHEEL

2. **Adapter plate 9510/2** must be fitted and tightened to tightening torque 160 Nm (118 ftlb.). → Adapter plate on wheel hub

   Fig 1: Identifying Wheel Hub Adapter Plate

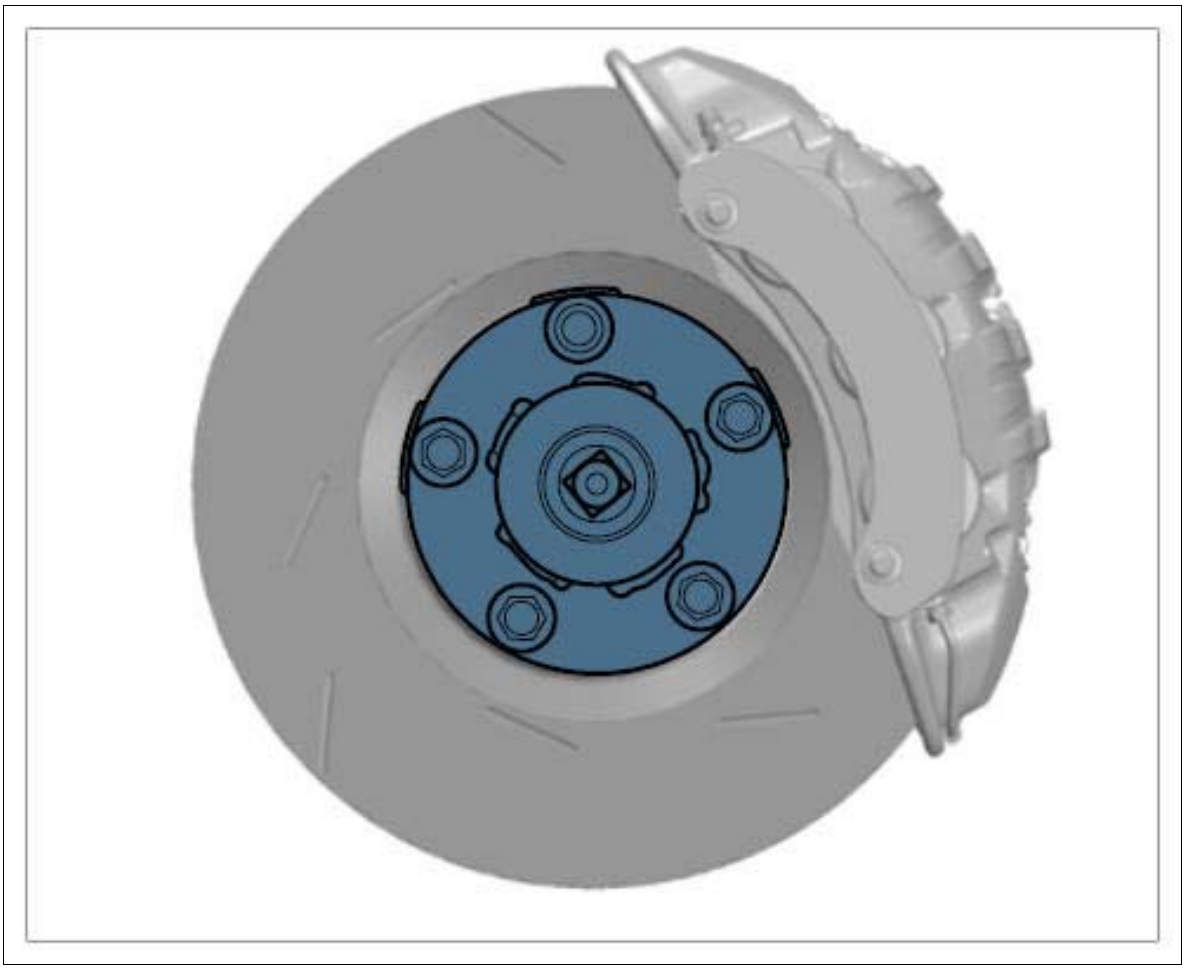

Courtesy of PORSCHE CARS NORTH AMERICA, INC.

3. Fit adapter **dial gauge set with ball joint arm Nr.147-1** at a suitable position on the wheel bearing housing. → Dial gauge on brake disc (shown as an example)

Fig 2: Dial Gauge On Brake Disc

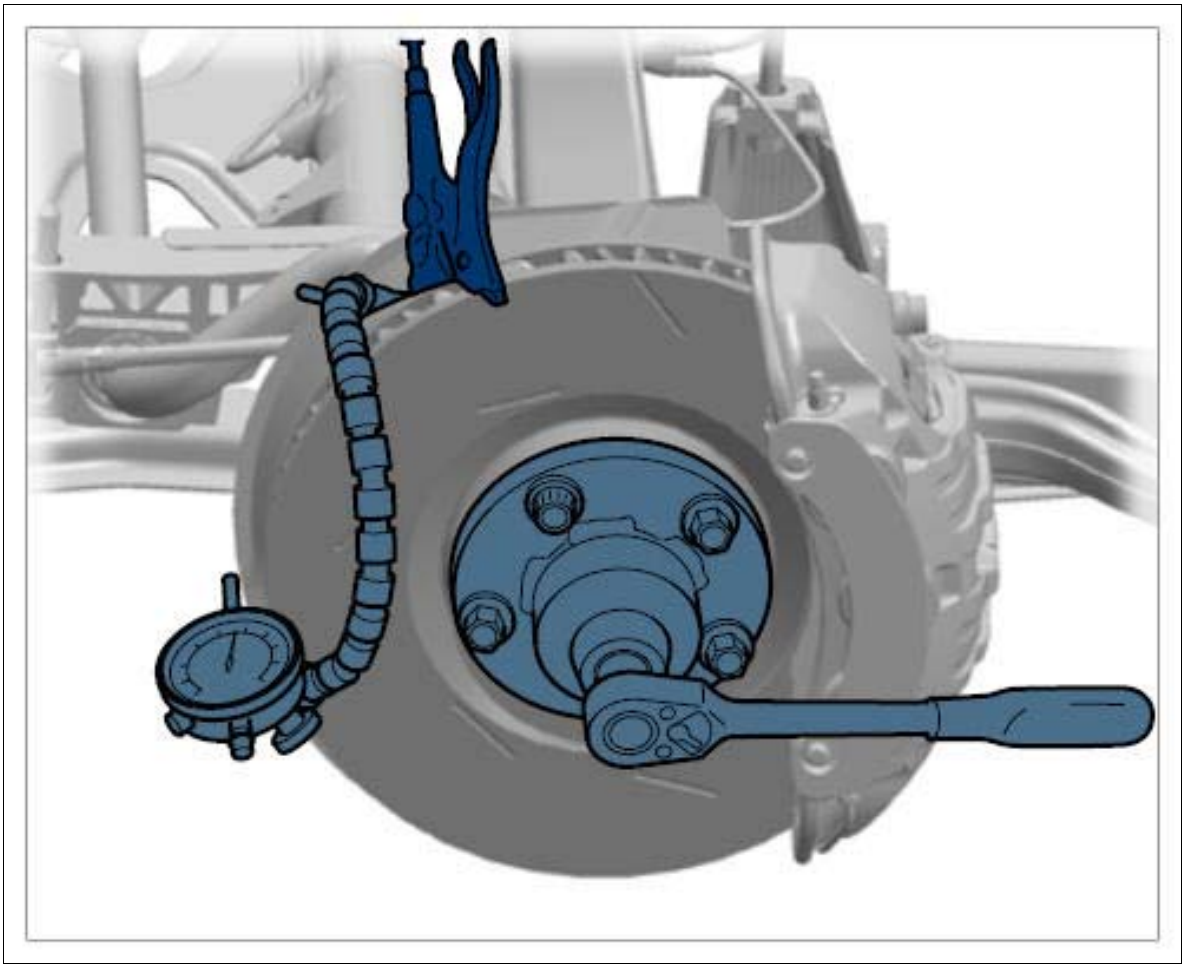

Courtesy of PORSCHE CARS NORTH AMERICA, INC.

4. Fit the dial gauge with some preload and measure the lateral runout at the greatest external diameter of the brake disc.

WM 465002 CHECKING FRONT BRAKE DISCS (WEAR ASSESSMENT) (ALL MODELS) > CHECKING > CHECKING LATERAL RUNOUT (BRAKE DISC/WHEEL HUB) AND THICKNESS TOLERANCE > WHEEL HUB LATERAL RUNOUT

Information

The front face of the wheel hub must not be corroded. If necessary, clean with fine emery cloth.

- Measure the wheel hub lateral runout at the front face of the wheel hub. You should always measure the external and internal diameters of the wheel bolt area.

1. Remove brake disc. → 465019 REMOVING AND INSTALLING FRONT BRAKE DISC
2. Fit adapter **dial gauge set with ball joint arm Nr.147-1** at a suitable position on the wheel bearing housing. Fit the dial gauge with some preload. → Dial gauge on wheel hub

Fig 1: Dial Gauge On Wheel Hub

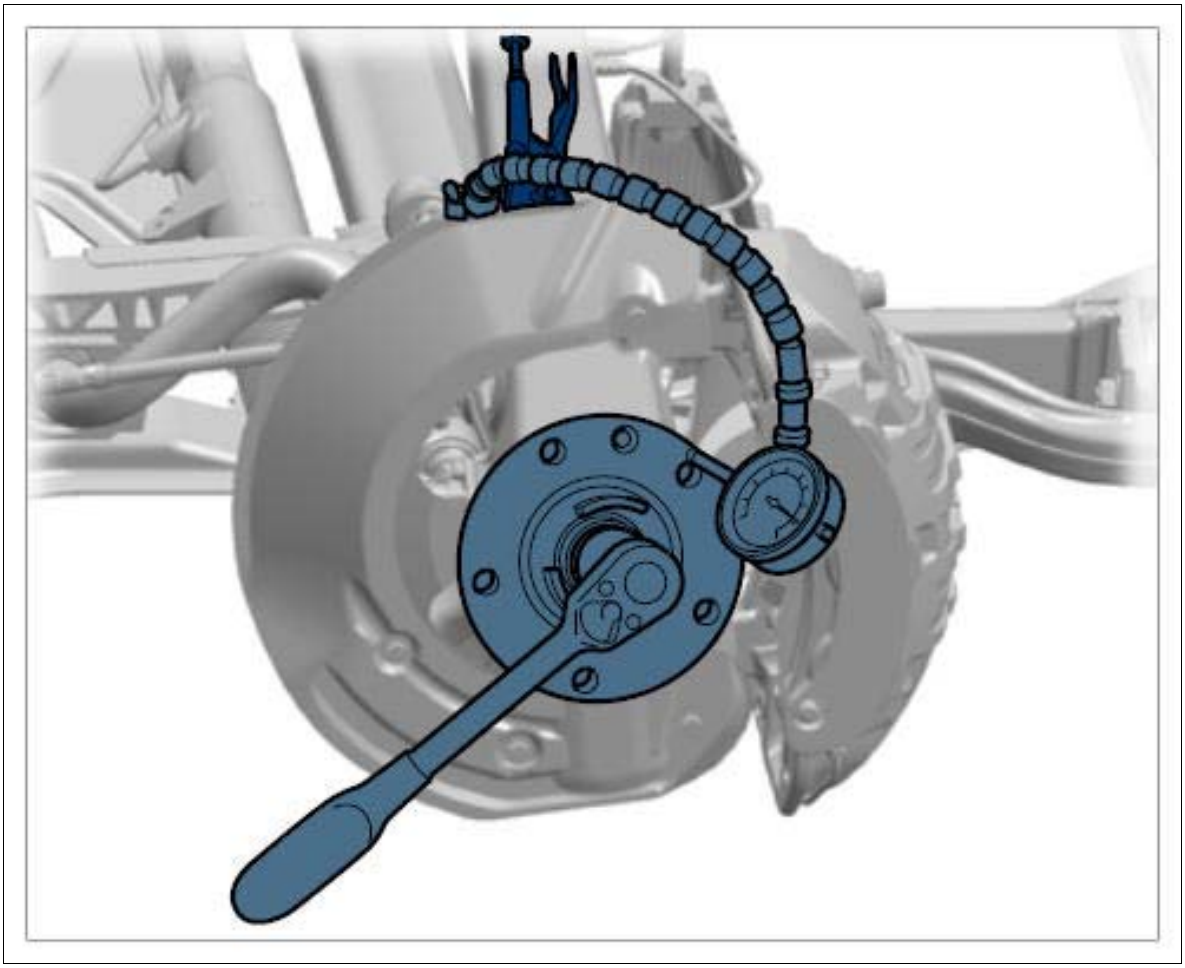

Courtesy of PORSCHE CARS NORTH AMERICA, INC.

WM 465002 CHECKING FRONT BRAKE DISCS (WEAR ASSESSMENT) (ALL MODELS) > CHECKING > CHECKING LATERAL RUNOUT (BRAKE DISC/WHEEL HUB) AND THICKNESS TOLERANCE > BRAKE DISC THICKNESS TOLERANCE

- For details of brake disc thickness tolerance, see Technical data/brake wear limits → 4650TW TECHNICAL DATA/BRAKE WEAR LIMIT .
- Use a suitable micrometer screw gauge to measure the thickness tolerance at approx. 8 points within the braking surface.

WM 465019 REMOVING AND INSTALLING FRONT BRAKE DISC (ALL MODELS) > TECHNICAL VALUES

Location	Description	Type	Basic value	Tolerance 1	Tolerance 2
Brake disc to	M6 x 16 thread	Tightening	10 Nm (7.5		

wheel hub		torque	ftlb.)		

WM 465019 REMOVING AND INSTALLING FRONT BRAKE DISC (ALL MODELS) > PRELIMINARY WORK

1. Remove brake calliper and suspend it at a suitable position in the wheel housing (do not open the brake hydraulic system!) → 473919 REMOVING AND INSTALLING FRONT BRAKE CALLIPER .

WM 465019 REMOVING AND INSTALLING FRONT BRAKE DISC (ALL MODELS) > REMOVING AND INSTALLING FRONT BRAKE DISC > REMOVING FRONT BRAKE DISC

NOTE: Removal of brake calliper

- *Paint defects on brake calliper*

→ Proceed with care when setting back the brake pads.

→ Protect brake calliper from paint defects using a suitable cloth.

1. Loosen fastening screw **-arrow-** and remove brake disc.

Fig 1: Locating Brake Disc Mounting Screw

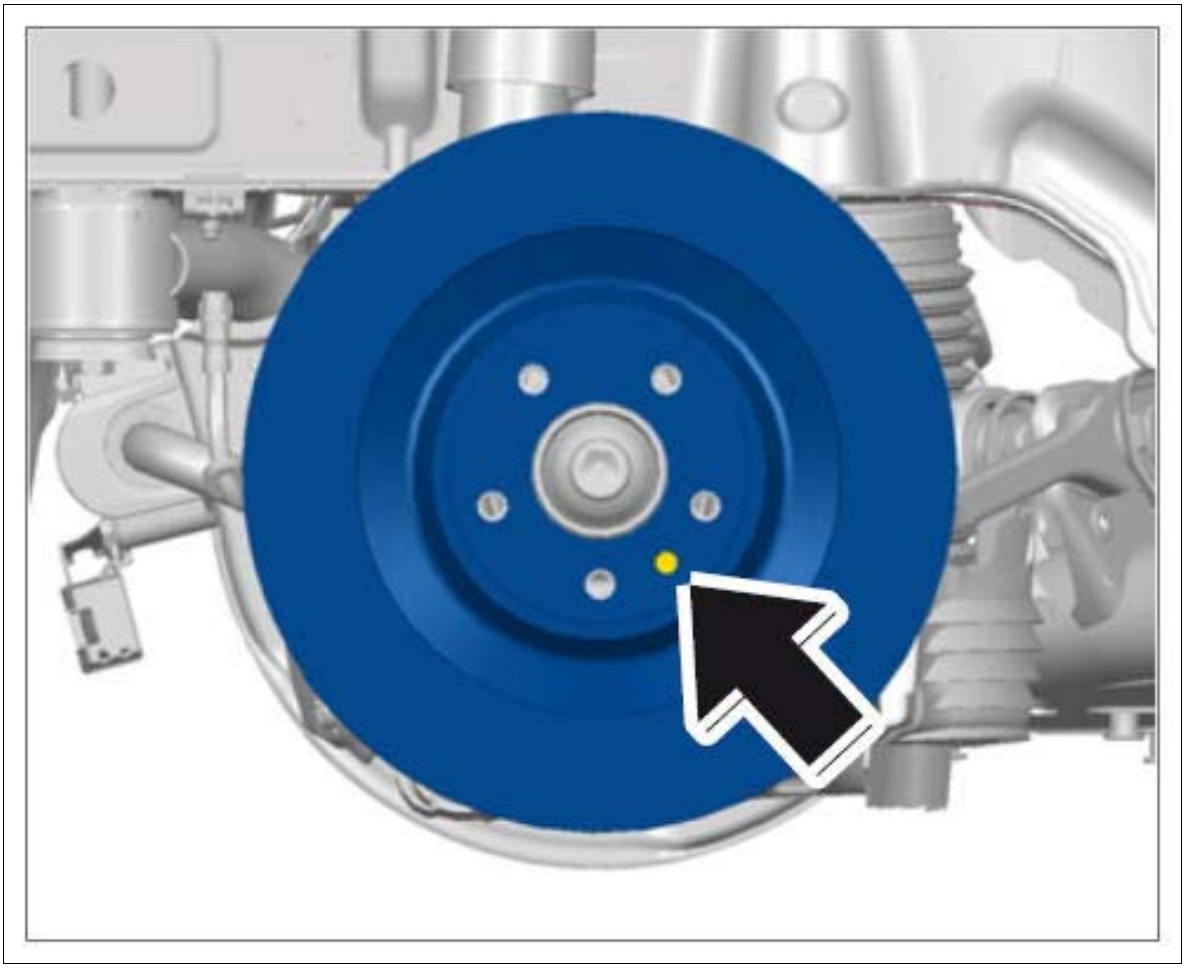

Courtesy of PORSCHE CARS NORTH AMERICA, INC.

WM 465019 REMOVING AND INSTALLING FRONT BRAKE DISC (ALL MODELS) > REMOVING AND INSTALLING FRONT BRAKE DISC > INSTALLING FRONT BRAKE DISC

Do not confuse left and right brake discs during assembly!

Distinguishing feature: Part number! The flat surface of the brake discs is marked with R = right or L = left.

1. Check that all parts are in perfect condition (visual inspection) and replace them if necessary.
2. Clean the flat and centering surfaces on the brake disc and wheel hub.
3. Fit brake disc and tighten fastening screw **-arrow-** . **Tightening torque 10 Nm (7.5 ftlb.)**

Fig 1: Locating Brake Disc Mounting Screw

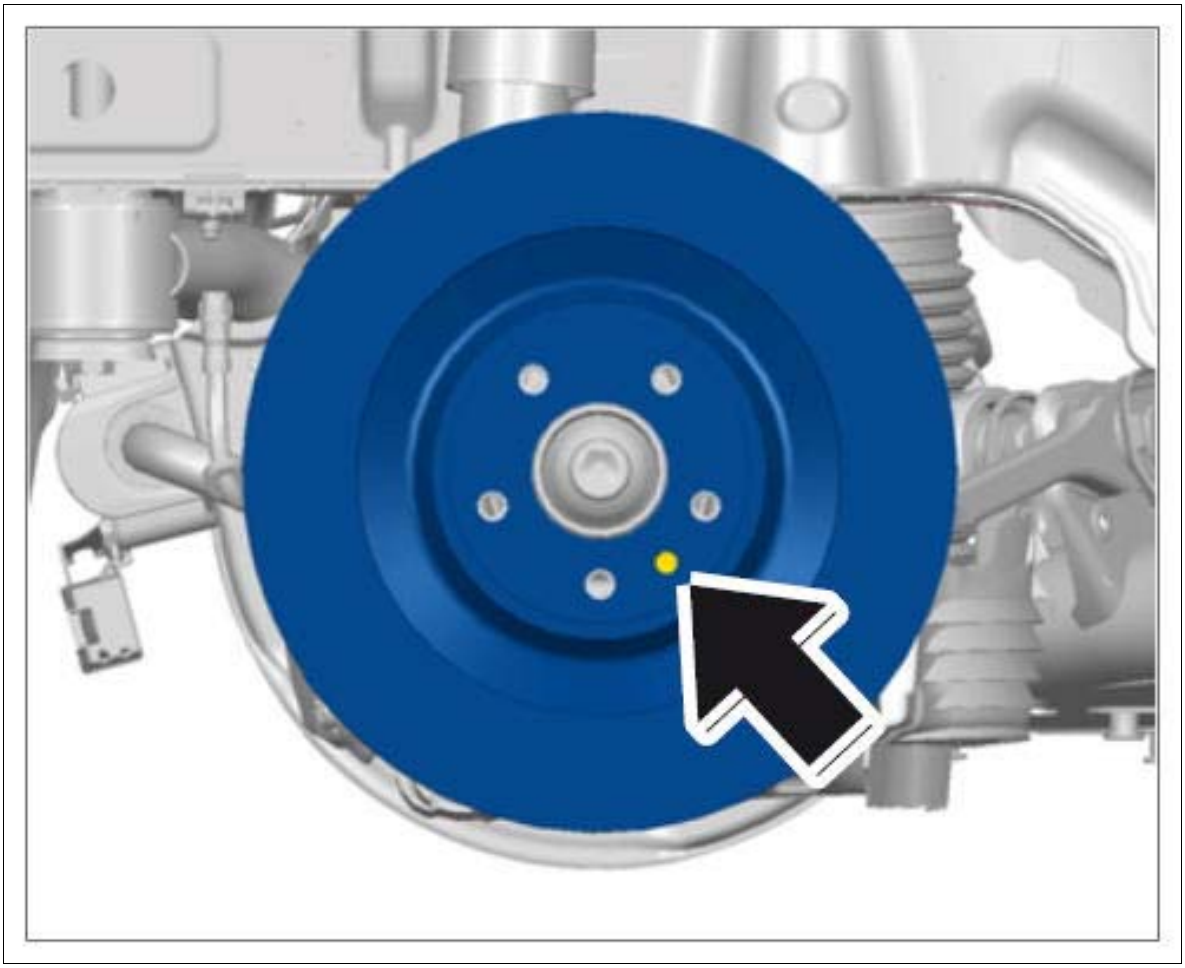

Courtesy of PORSCHE CARS NORTH AMERICA, INC.

WM 465019 REMOVING AND INSTALLING FRONT BRAKE DISC (ALL MODELS) > SUBSEQUENT WORK

1. Install brake calliper → Installing Rear Brake Calliper .

WM 4650TW TECHNICAL DATA/BRAKE WEAR LIMIT (ALL MODELS) > TECHNICAL VALUES

Location	Description	Type	Basic value	Tolerance 1	Tolerance 2
Service brake (footbrake) with grey cast iron brake discs (standard brake) with PSM	Hydraulic dual-circuit brake system with brake-circuit division per axle. Vacuum brake				

(Porsche Stability Management) as standard	booster, internally ventilated brake discs with six-piston aluminum monobloc fixed-calliper brake on front axle and one-piston floating-calliper brake with integrated parking brake on rear axle.				
PSM	Porsche Stability Management (PSM) as standard with functions ABS, ASR (Traction Control TC+, engine drag torque control MSR, ABD, PTM lock control (longitudinal)). Optional: Levelling system, infinite shock absorber adjustment PASM, electronically regulated limited-slip rear differential PTV+				
Tandem brake booster Ø (vacuum)			9/9 Zoll		
Boost ratio			9		
Brake master cylinder Ø			28.57 mm		
Brake-circuit division			24/12 mm		
Brake disc Ø, front			350 mm		
Brake disc Ø, rear			330 mm		

Brake disc thickness, front			34 mm		
Brake disc thickness, rear			22 mm		
Thickness tolerance of brake disc, max.			0.01 mm		
Effective brake disc Ø, front			142.6 mm		
Effective brake disc Ø, rear			144.1 mm		
Piston Ø in brake calliper, front	2 x 36 mm + 2 x 36 mm + 2 x 36 mm				
Piston Ø in brake calliper, rear	43 mm				
Brake pad area per wheel, front			215 cm^2		
Brake pad area per wheel, rear			90.6 cm^2		
Total brake pad area			611.2 cm^2		
Service brake (footbrake) with grey cast iron brake discs (standard brake) with PSM (Porsche Stability Management) as standard	Hydraulic dual-circuit brake system with brake-circuit division per axle. Vacuum brake booster, internally ventilated brake discs with six-piston aluminum monobloc fixed-calliper brake on front axle and one-piston floating-calliper brake with integrated parking brake on rear axle.				
PSM	Porsche Stability Management (PSM) as				

	standard with functions ABS, ASR (Traction Control TC+, engine drag torque control MSR, ABD, PTM lock control (longitudinal)). Optional: Levelling system, infinite shock absorber adjustment PASM, electronically regulated limited-slip rear differential PTV+				
Tandem brake booster Ø (vacuum)			9/9 Zoll		
Boost ratio			9		
Brake master cylinder Ø			28.57 mm		
Brake-circuit division			24/12 mm		
Brake disc Ø, front			360 mm		
Brake disc Ø, rear			356 mm		
Brake disc thickness, front			36 mm		
Brake disc thickness, rear			28 mm		
Thickness tolerance of brake disc, max.			0.01 mm		
Effective brake disc Ø, front			147.2 mm		
Effective brake disc Ø, rear			152.75 mm		
Piston Ø in brake calliper, front	2 x 36 mm + 2 x 36 mm + 2 x 36 mm				

Piston Ø in brake calliper, rear	43 mm			
Brake pad area per wheel, front		234 cm^2		
Brake pad area per wheel, rear		106 cm^2		
Total brake pad area		680 cm^2		
Service brake (foot brake) with ceramic brake discs with PSM (Porsche Stability Management) as standard	Hydraulic dual-circuit brake system with brake-circuit division per axle. Vacuum brake booster, internally ventilated brake discs with six-piston aluminum monobloc fixed-calliper brake on front axle and one-piston floating-calliper brake with integrated parking brake on rear axle.			
PSM	Porsche Stability Management (PSM) as standard with functions ABS, ASR (Traction Control TC+, engine drag torque control MSR, ABD, PTM lock control (longitudinal)). Optional: Levelling system, infinite shock absorber adjustment PASM, electronically regulated limited-slip rear differential PTV+			

Tandem brake booster Ø (vacuum)			9/9 Zoll		
Boost ratio			9		
Brake master cylinder Ø			28.57 mm		
Brake-circuit division			24/12 mm		
Brake disc Ø, front			396 mm		
Brake disc Ø, rear			370 mm		
Brake disc thickness, front			38 mm		
Brake disc thickness, rear			30 mm		
Thickness tolerance of brake disc, max.			0.01 mm		
Effective brake disc Ø, front			164.7 mm		
Effective brake disc Ø, rear			159.75 mm		
Piston Ø in brake calliper, front	6 x 36 mm				
Piston Ø in brake calliper, rear	43 mm				
Brake pad area per wheel, front			230 cm^2		
Brake pad area per wheel, rear			106 cm^2		
Total brake pad area			672 cm^2		
Pad thickness, front	Wear limit 2 mm		approx. 9.5 mm		
Pad thickness, rear	Wear limit 2 mm		approx. 11.5 mm		
Brake disc minimum thickness after machining, front	Only as-new brake discs may be reworked! Only rework the brake		33, 6 mm		

	disc symmetrically, evenly from both sides!				
Brake disc minimum thickness after machining, rear	Only as-new brake discs may be reworked! Only rework the brake disc symmetrically, evenly from both sides!		21, 6 mm		
Brake disc wear dimension, front			32 mm		
Brake disc wear dimension, rear			20 mm		
Peak-to-valley surface roughness of brake disc after machining, max.			0.006 mm		
Thickness tolerance of brake discs after machining, max.			0.02 mm		
Lateral runout of brake disc, max.			0.03 mm		
Lateral runout of wheel hub, max.			0.02 mm		
Lateral runout of brake disc when installed, max.			0.06 mm		
Pad thickness, front	Wear limit 2 mm		approx. 9.5 mm		
Pad thickness, rear	Wear limit 2 mm		approx. 11.5 mm		
Brake disc minimum thickness after machining, front	Only as-new brake discs may be reworked! Only rework the brake disc symmetrically, evenly from both sides!		35, 6 mm		

Brake disc minimum thickness after machining, rear	Only as-new brake discs may be reworked! Only rework the brake disc symmetrically, evenly from both sides!		27, 6 mm		
Brake disc wear dimension, front			34 mm		
Brake disc wear dimension, rear			26 mm		
Peak-to-valley surface roughness of brake disc after machining, max.			0.006 mm		
Thickness tolerance of brake discs after machining, max.			0.02 mm		
Lateral runout of brake disc, max.			0.03 mm		
Lateral runout of wheel hub, max.			0.02 mm		
Lateral runout of brake disc when installed, max.			0.06 mm		
Pad thickness, front	Wear limit 9.9 mm		approx. 15.8 mm		
Pad thickness, rear	Wear limit 8.8 mm		approx. 17.6 mm		
Lateral runout of brake disc, max.		**New**	0.025 mm		
Lateral runout of wheel hub, max.		**New**	0.02 mm		
Lateral runout of brake disc when installed, max.		**New**	0.07 mm		

WM 4650TW TECHNICAL DATA/BRAKE WEAR LIMIT (ALL MODELS) > TECHNICAL DATA > TECHNICAL DATA - MACAN S/DIESEL S BRAKE SYSTEM

Location	Description	Type	Basic value	Tolerance 1	Tolerance 2
Service brake (footbrake) with grey cast iron brake discs (standard brake) with PSM (Porsche Stability Management) as standard	Hydraulic dual-circuit brake system with brake-circuit division per axle. Vacuum brake booster, internally ventilated brake discs with six-piston aluminum monobloc fixed-calliper brake on front axle and one-piston floating-calliper brake with integrated parking brake on rear axle.				
PSM	Porsche Stability Management (PSM) as standard with functions ABS, ASR (Traction Control TC+, engine drag torque control MSR, ABD, PTM lock control (longitudinal)). Optional: Levelling system, infinite shock absorber adjustment PASM, electronically regulated limited-slip rear differential PTV+				
Tandem brake booster Ø (vacuum)			9/9 Zoll		
Boost ratio			9		
Brake master cylinder Ø			28.57 mm		

Brake-circuit division			24/12 mm		
Brake disc Ø, front			350 mm		
Brake disc Ø, rear			330 mm		
Brake disc thickness, front			34 mm		
Brake disc thickness, rear			22 mm		
Thickness tolerance of brake disc, max.			0.01 mm		
Effective brake disc Ø, front			142.6 mm		
Effective brake disc Ø, rear			144.1 mm		
Piston Ø in brake calliper, front	2 x 36 mm + 2 x 36 mm + 2 x 36 mm				
Piston Ø in brake calliper, rear	43 mm				
Brake pad area per wheel, front			215 cm^2		
Brake pad area per wheel, rear			90.6 cm^2		
Total brake pad area			611.2 cm^2		

WM 4650TW TECHNICAL DATA/BRAKE WEAR LIMIT (ALL MODELS) > TECHNICAL DATA > TECHNICAL DATA - MACAN TURBO BRAKE SYSTEM

Location	Description	Type	Basic value	Tolerance 1	Tolerance 2
Service brake (footbrake) with grey cast iron brake discs (standard brake) with PSM (Porsche Stability Management) as standard	Hydraulic dual-circuit brake system with brake-circuit division per axle. Vacuum brake booster, internally ventilated brake discs with six-piston aluminum monobloc fixed-calliper brake on front axle and one-piston floating-calliper brake with integrated parking				

	brake on rear axle.				
PSM	Porsche Stability Management (PSM) as standard with functions ABS, ASR (Traction Control TC+, engine drag torque control MSR, ABD, PTM lock control (longitudinal)). Optional: Levelling system, infinite shock absorber adjustment PASM, electronically regulated limited-slip rear differential PTV+				
Tandem brake booster Ø (vacuum)			9/9 Zoll		
Boost ratio			9		
Brake master cylinder Ø			28.57 mm		
Brake-circuit division			24/12 mm		
Brake disc Ø, front			360 mm		
Brake disc Ø, rear			356 mm		
Brake disc thickness, front			36 mm		
Brake disc thickness, rear			28 mm		
Thickness tolerance of brake disc, max.			0.01 mm		
Effective brake disc Ø, front			147.2 mm		
Effective brake disc Ø, rear			152.75 mm		
Piston Ø in brake calliper, front	2 x 36 mm + 2 x 36 mm + 2 x 36 mm				
Piston Ø in brake calliper, rear	43 mm				
Brake pad area per wheel, front			234 cm^2		
Brake pad area per wheel, rear			106 cm^2		
Total brake pad area			680 cm^2		

WM 4650TW TECHNICAL DATA/BRAKE WEAR LIMIT (ALL MODELS) > TECHNICAL DATA > TECHNICAL DATA - PCCB BRAKE SYSTEM

Location	Description	Type	Basic value	Tolerance 1	Tolerance 2
Service brake (foot brake) with ceramic brake discs with PSM (Porsche Stability Management) as standard	Hydraulic dual-circuit brake system with brake-circuit division per axle. Vacuum brake booster, internally ventilated brake discs with six-piston aluminum monobloc fixed-calliper brake on front axle and one-piston floating-calliper brake with integrated parking brake on rear axle.				
PSM	Porsche Stability Management (PSM) as standard with functions ABS, ASR (Traction Control TC+, engine drag torque control MSR, ABD, PTM lock control (longitudinal)). Optional: Levelling system, infinite shock absorber adjustment PASM, electronically regulated limited-slip rear differential PTV+				
Tandem brake booster Ø (vacuum)			9/9 Zoll		

Boost ratio			9		
Brake master cylinder Ø			28.57 mm		
Brake-circuit division			24/12 mm		
Brake disc Ø, front			396 mm		
Brake disc Ø, rear			370 mm		
Brake disc thickness, front			38 mm		
Brake disc thickness, rear			30 mm		
Thickness tolerance of brake disc, max.			0.01 mm		
Effective brake disc Ø, front			164.7 mm		
Effective brake disc Ø, rear			159.75 mm		
Piston Ø in brake calliper, front	6 x 36 mm				
Piston Ø in brake calliper, rear	43 mm				
Brake pad area per wheel, front			230 cm^2		
Brake pad area per wheel, rear			106 cm^2		
Total brake pad area			672 cm^2		

WM 4650TW TECHNICAL DATA/BRAKE WEAR LIMIT (ALL MODELS) > TEST VALUES AND WEAR LIMITS > TEST VALUES AND WEAR LIMITS FOR MACAN S/DIESEL S BRAKE SYSTEM

Information

Depending on the extent of wear on cast iron brake discs, two condition criteria can make replacement necessary:

- Formation of cracks at advanced stage on the brake disc friction surfaces.

- Minimum brake disc thickness is not retained due to wear (material erosion due to friction) . → 46500200 CHECKING FRONT BRAKE DISCS (WEAR ASSESSMENT) → 46530250 CHECKING REAR BRAKE DISCS (WEAR ASSESSMENT)

Location	Description	Type	Basic value	Tolerance 1	Tolerance 2
Pad thickness, front	Wear limit 2 mm		approx. 9.5 mm		
Pad thickness, rear	Wear limit 2 mm		approx. 11.5 mm		
Brake disc minimum thickness after machining, front	Only as-new brake discs may be reworked! Only rework the brake disc symmetrically, evenly from both sides!		33, 6 mm		
Brake disc minimum thickness after machining, rear	Only as-new brake discs may be reworked! Only rework the brake disc symmetrically, evenly from both sides!		21, 6 mm		
Brake disc wear dimension, front			32 mm		
Brake disc wear dimension, rear			20 mm		
Peak-to-valley surface roughness of brake disc after machining, max.			0.006 mm		
Thickness tolerance of brake discs after machining, max.			0.02 mm		
Lateral runout of brake disc, max.			0.03 mm		
Lateral runout of wheel hub, max.			0.02 mm		
Lateral runout of brake disc when installed, max.			0.06 mm		

Possible complaints

- Damage due to lack of use (rusting). This causes vibrations in the steering wheel, noises and brake pedal pulsation.
- Brake disc becomes distorted as a result of serious driving.
- Too much lateral runout when new brake discs are fitted on dirty or distorted wheel hubs.

Procedure

- Check brake disc for cracks, minimum thickness, lateral runout, thickness tolerance, flatness and surface roughness.
- If necessary, (depending on the actual brake disc thickness and the brake disc wear limit) machine the brake disc using one of the disc brake dressing machines approved by Porsche.
- The brake disc must only be reworked symmetrically, i.e. evenly from both sides! Read the operating instructions for the disc brake dressing machine!

WM 4650TW TECHNICAL DATA/BRAKE WEAR LIMIT (ALL MODELS) > TEST VALUES AND WEAR LIMITS > TEST VALUES AND WEAR LIMITS FOR MACAN TURBO BRAKE SYSTEM

Information

Depending on the extent of wear on cast iron brake discs, two condition criteria can make replacement necessary:

- Formation of cracks at advanced stage on the brake disc friction surfaces.
- Minimum brake disc thickness is not retained due to wear (material erosion due to friction) . → 46500200 CHECKING FRONT BRAKE DISCS (WEAR ASSESSMENT) → 46530250 CHECKING REAR BRAKE DISCS (WEAR ASSESSMENT)

Location	Description	Type	Basic value	Tolerance 1	Tolerance 2
Pad thickness, front	Wear limit 2 mm		approx. 9.5 mm		
Pad thickness, rear	Wear limit 2 mm		approx. 11.5 mm		
Brake disc minimum thickness after machining, front	Only as-new brake discs may be reworked! Only rework the brake disc symmetrically, evenly from both sides!		35, 6 mm		

Brake disc minimum thickness after machining, rear	Only as-new brake discs may be reworked! Only rework the brake disc symmetrically, evenly from both sides!		27, 6 mm		
Brake disc wear dimension, front			34 mm		
Brake disc wear dimension, rear			26 mm		
Peak-to-valley surface roughness of brake disc after machining, max.			0.006 mm		
Thickness tolerance of brake discs after machining, max.			0.02 mm		
Lateral runout of brake disc, max.			0.03 mm		
Lateral runout of wheel hub, max.			0.02 mm		
Lateral runout of brake disc when installed, max.			0.06 mm		

Possible complaints

- Damage due to lack of use (rusting). This causes vibrations in the steering wheel, noises and brake pedal pulsation.
- Brake disc becomes distorted as a result of serious driving.
- Too much lateral runout when new brake discs are fitted on dirty or distorted wheel hubs.

Procedure

- Check brake disc for cracks, minimum thickness, lateral runout, thickness tolerance, flatness and surface roughness.
- If necessary, (depending on the actual brake disc thickness and the brake disc wear limit) machine the brake disc using one of the disc brake dressing machines approved by Porsche.
- The brake disc must only be reworked symmetrically, i.e. evenly from both sides! Read the operating instructions for the disc brake dressing machine!

WM 4650TW TECHNICAL DATA/BRAKE WEAR LIMIT (ALL MODELS) > TEST VALUES AND WEAR LIMITS > TEST VALUES AND WEAR LIMITS FOR PCCB BRAKE SYSTEM

Information

The following condition criteria can make replacement necessary depending on the wear of the PCCB brake discs:

- Surface changes in the brake disc friction surfaces at an advanced stage.
- Minimum brake disc thickness is not retained due to wear (material erosion due to friction).

Information

The PCCB brake disc must not be machined.

Location	Description	Type	Basic value	Tolerance 1	Tolerance 2
Pad thickness, front	Wear limit 9.9 mm		approx. 15.8 mm		
Pad thickness, rear	Wear limit 8.8 mm		approx. 17.6 mm		
Lateral runout of brake disc, max.		New	0.025 mm		
Lateral runout of wheel hub, max.		New	0.02 mm		
Lateral runout of brake disc when installed, max.		New	0.07 mm		

Possible complaints

- Brake disc becomes distorted as a result of serious driving.
- Too much lateral runout when new brake discs are fitted on dirty or distorted wheel hubs.

Procedure

- Check brake disc for cracks, lateral runout, thickness tolerance, flatness and surface roughness.

WM 465102 CHECKING FRONT PCCB BRAKE DISCS (WEAR ASSESSMENT USING TEST EQUIPMENT VAS 6813) (ALL MODELS) > TOOLS

Designation	Type	Number	Description	
test equipment for PCCB brake discs	Workshop equipment	WE 1578		

WM 465102 CHECKING FRONT PCCB BRAKE DISCS (WEAR ASSESSMENT USING TEST EQUIPMENT VAS 6813) (ALL MODELS) > INFORMATION > PCCB BRAKE DISCS WITH NEW FRICTION COATING TECHNOLOGY

Information

The pictures shown in this document may differ from the original.

New measuring method for wear assessment. Wear assessment is performed using **test equipment for PCCB brake discs WE 1578** .

1. Test equipment VAS 6813
2. Laser beam for positioning
3. Measured value display

Fig 1: Identifying Test Equipment VAS 6813

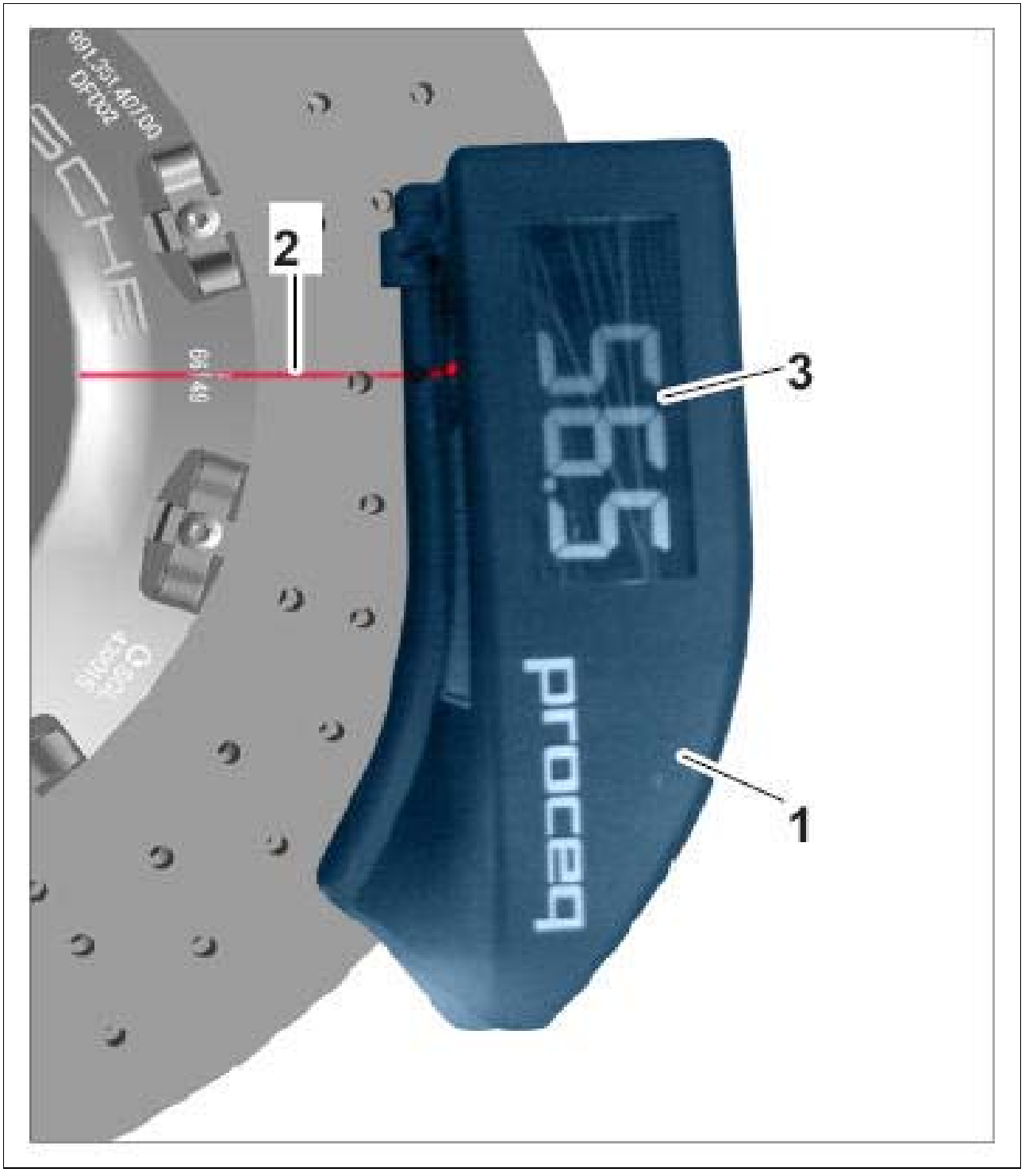

Courtesy of PORSCHE CARS NORTH AMERICA, INC.

Information

- Validity (of measuring method using test equipment VAS 6813) for PCCB brake discs with new friction coating technology. Recognizable by the three markings and values lasered at an offset of 120° (on the brake disc hub) -arrows- .

Fig 2: Locating Friction Coating Technology Mark



Courtesy of PORSCHE CARS NORTH AMERICA, INC.

- VAS 6813 is used to measure the damage to the carbon fibre-reinforced material. The lower this value, the more carbon fibres in the internal structure of the brake disc are damaged (wear caused by the effects of temperature).
- The markings consist of the measuring point numbers 1 to 3 -X- (figure shows number 1), the measurement marking -1- (line), the new value -2- and the wear value -3- .

- If one of the three wear values is reached or if the measured value is less than one of the three wear values, replace the brake discs on both sides of the axle.

Fig 3: Identifying Brake Disc Markings

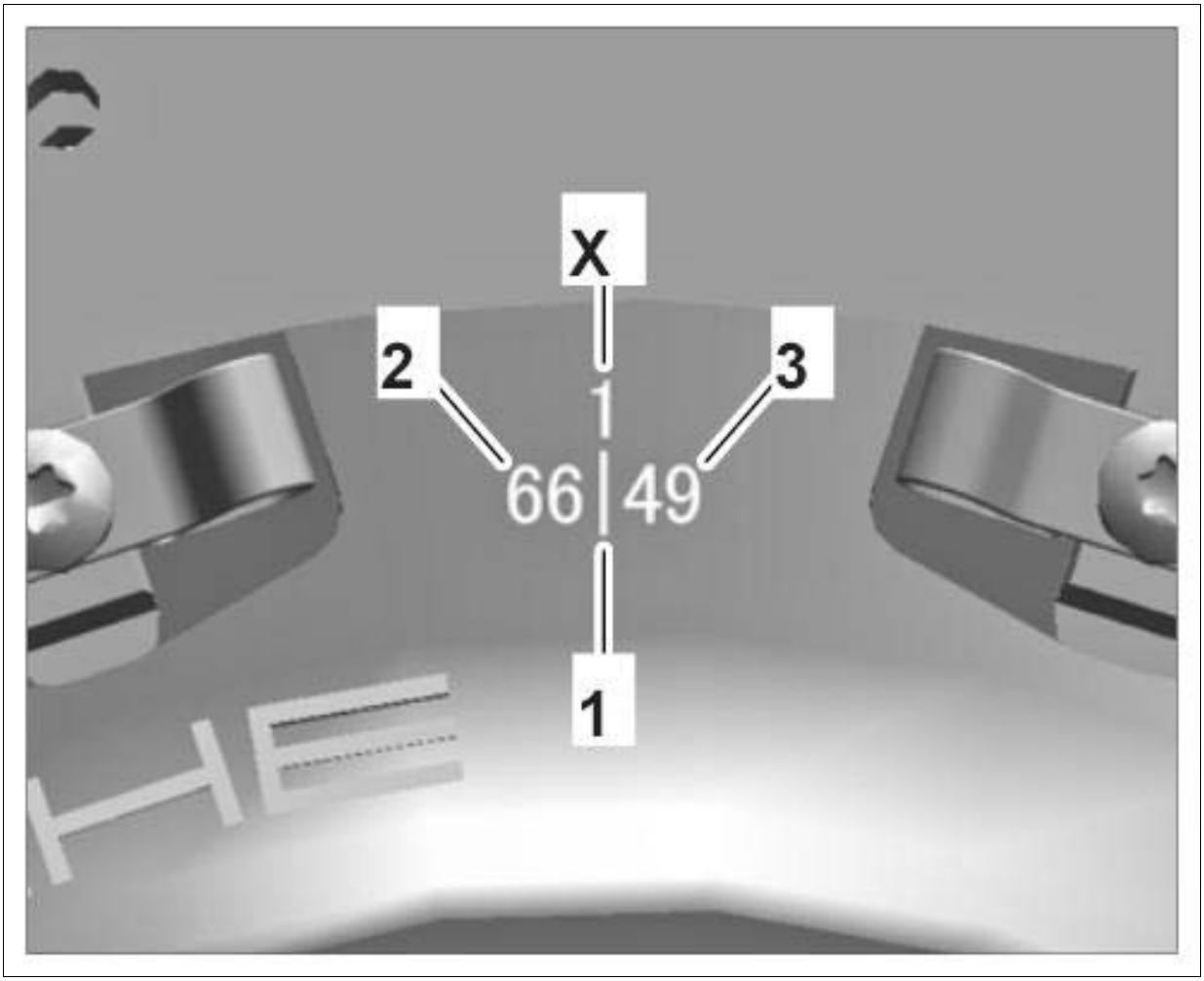

Courtesy of PORSCHE CARS NORTH AMERICA, INC.

Wear indicator plates **-arrows-** on the friction surfaces are **no longer** required with the new friction coating technology.

Fig 4: Locating Brake Disc Wear Indicators

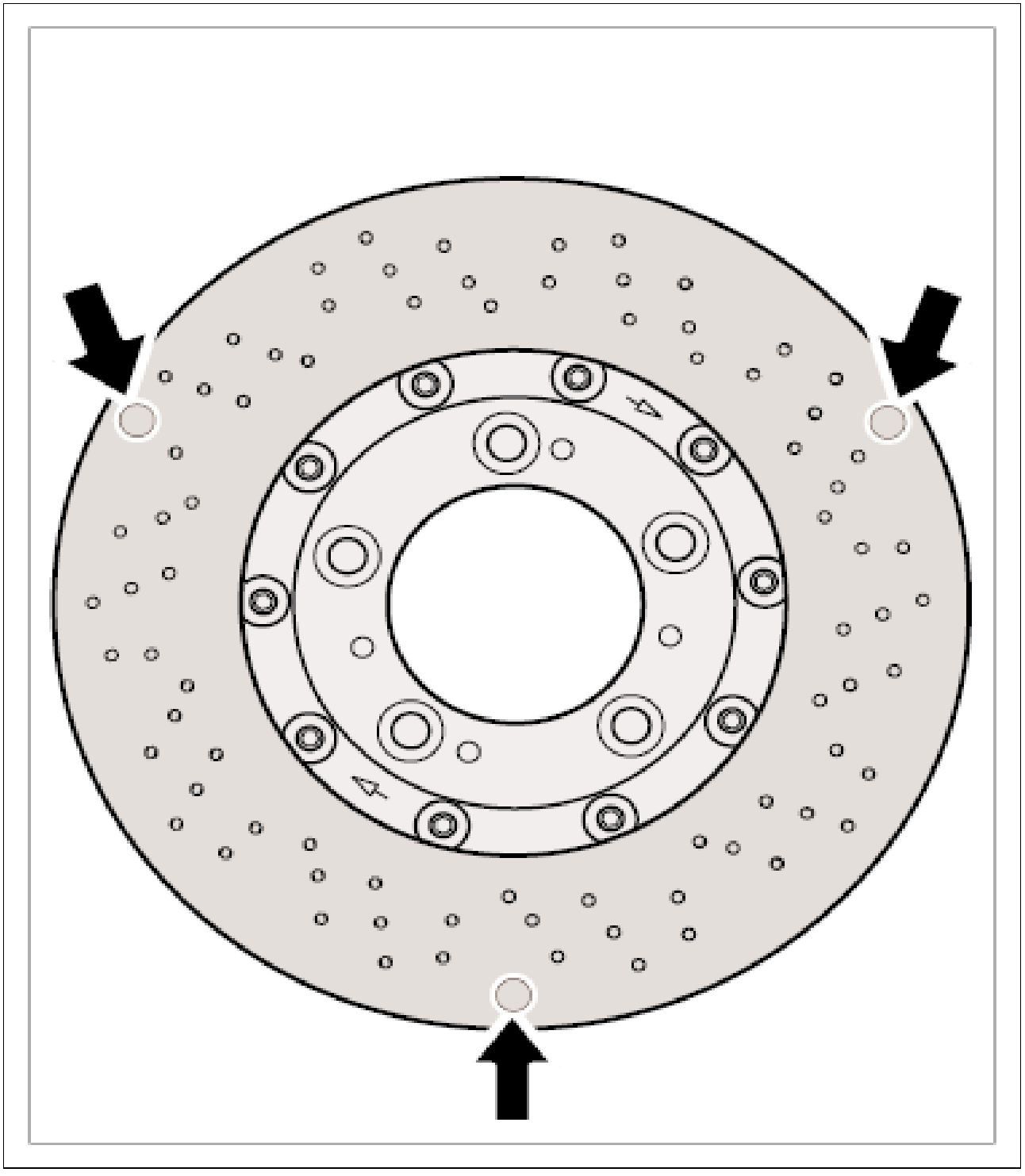

Courtesy of PORSCHE CARS NORTH AMERICA, INC.

WM 465102 CHECKING FRONT PCCB BRAKE DISCS (WEAR ASSESSMENT USING TEST EQUIPMENT VAS 6813) (ALL MODELS) > INFORMATION > INFORMATION ON THE TEST STEPS

Checking involves the following tasks:

1. Determining current actual values (wear condition) using tester VAS 6813 (at the three measurement markings).

   Aligning/positioning tester VAS 6813 **-1-** using a laser beam **-2-** at the measurement marking.

   Observe the required conditions! See: → 465102 CHECKING FRONT PCCB BRAKE DISCS (WEAR ASSESSMENT USING TEST EQUIPMENT VAS 6813)

   Fig 1: Positioning Tester On PCCB Brake Disc

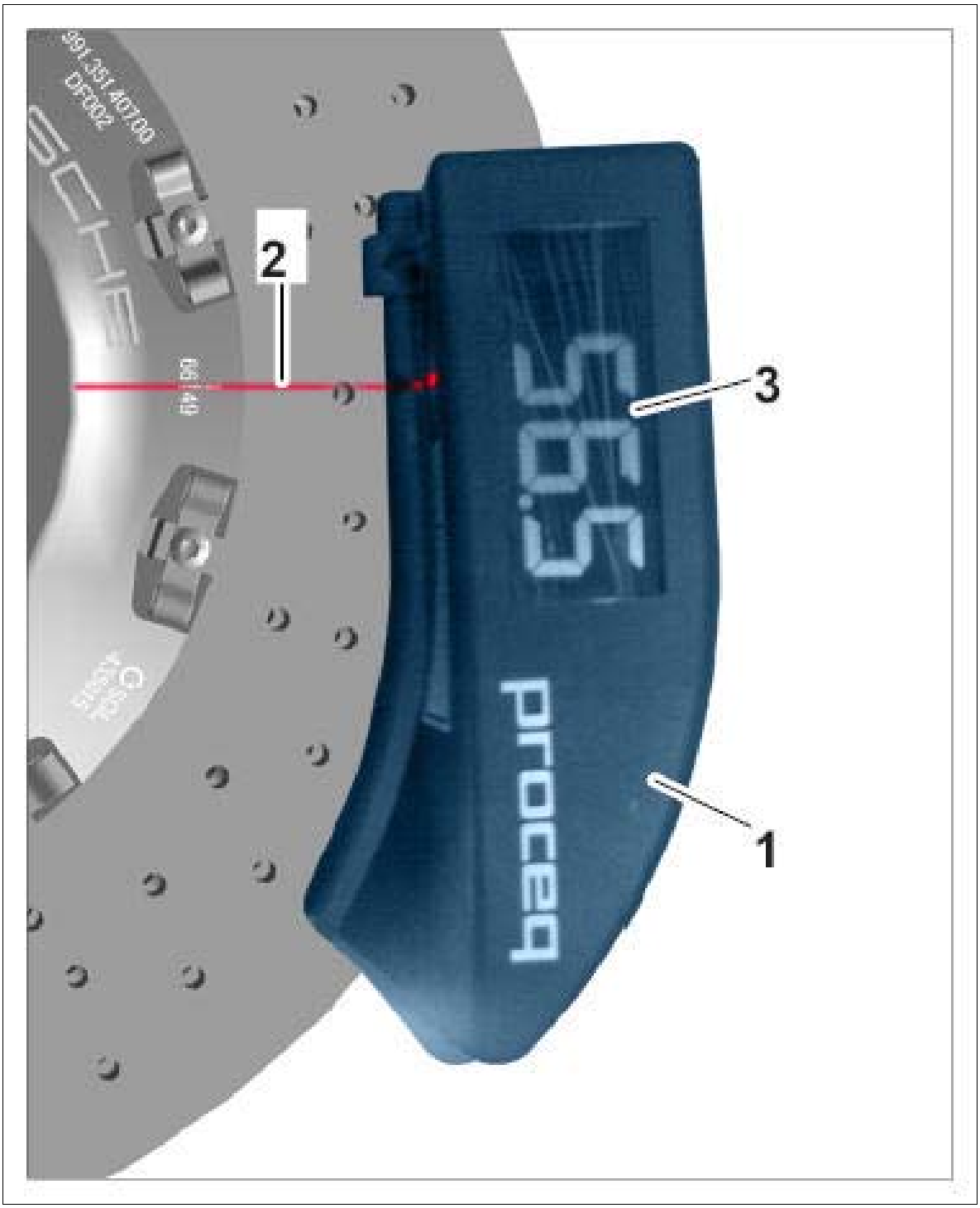

Courtesy of PORSCHE CARS NORTH AMERICA, INC.

2. **Visual inspection of the brake disc friction surfaces for surface changes.**

   Flaking/fractures as a result of unusual usage conditions (e.g. stone chip damage).

   Max. 1.0 cm^2 permitted!

   Surface roughness.

   Surface roughness (Rk), max. 80 µm permitted since this affects braking comfort (noises), braking behavior/pedal pressure and brake pad service life.

   Information

   1. Checking of the minimum brake disc thickness is no longer necessary (measurement no longer shown on brake disc hub).

   Information

   1. Irrespective of wear, a brake disc change may be necessary due to edge damage on the brake disc friction surfaces.
   2. In this case, only one brake disc can be replaced if the measured value (determined using test equipment VAS 6813) and the friction surface of the other PCCB brake disc are still perfectly OK.

3. Check brake discs for edge damage -see Fig 2- (damage due to improper use).

Fig 2: Identifying PCCB Brake Disc Edge Damage Area

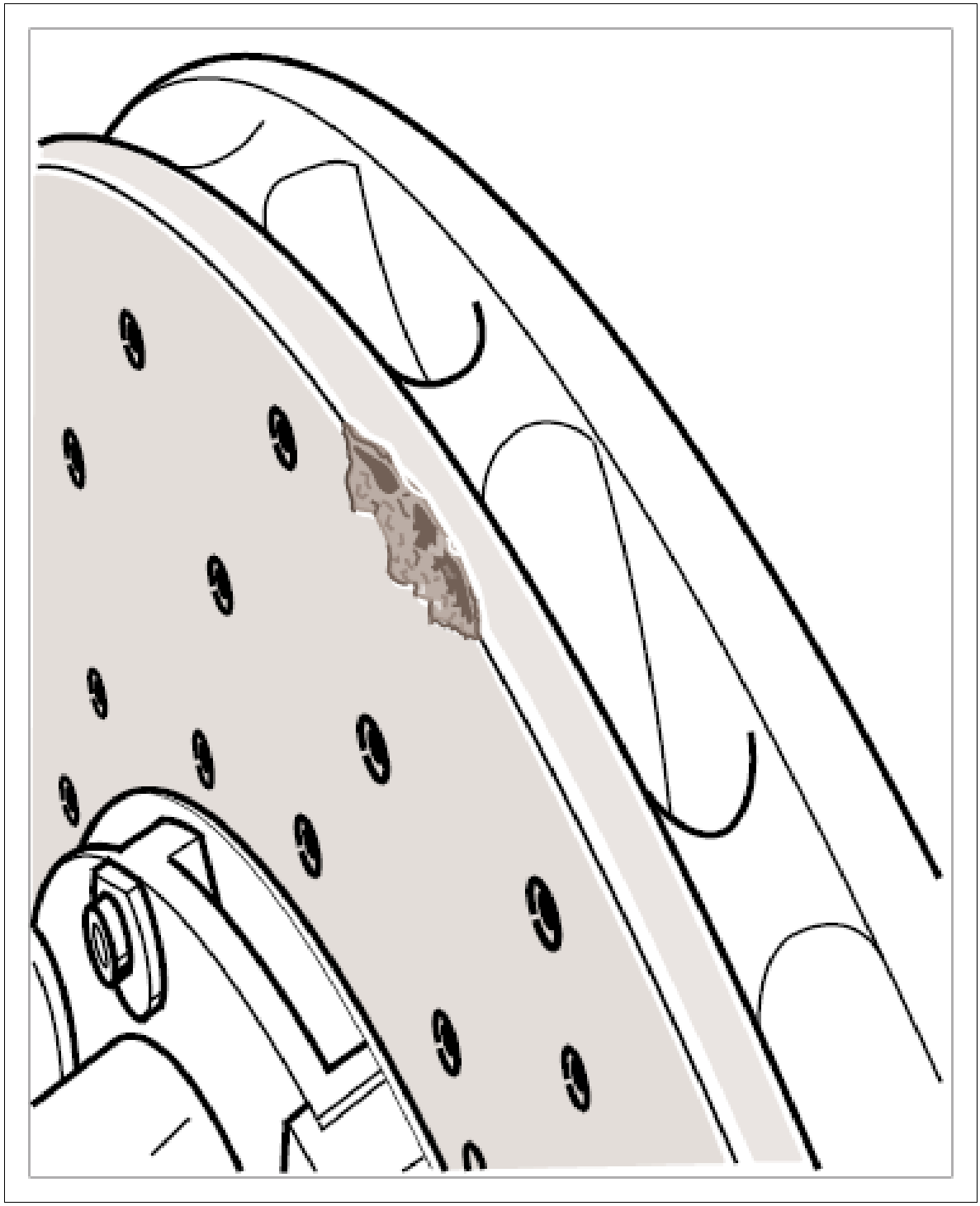

Courtesy of PORSCHE CARS NORTH AMERICA, INC.

1. Max. permissible width/depth = 2 mm (0.08 inches)
2. Max. permitted length = 10 mm (0.39 inches)
3. Max. 3 damaged edge areas permissible

WM 465102 CHECKING FRONT PCCB BRAKE DISCS (WEAR ASSESSMENT USING TEST EQUIPMENT VAS 6813) (ALL MODELS) > BASIC INFORMATION > CRACKS (STRESS-RELIEF MICROSTRUCTURE) IN THE BRAKE DISC FRICTION SURFACE

Cracks in the brake disc friction surfaces are viewed differently to cracks in grey cast iron brake discs. Cracks in PCCB brake discs do not constitute a wear criterion but exist already in new brake discs because of the way in which they are manufactured.

Fig 1: Identifying PCCB Brake Disc Friction Surfaces Area



Courtesy of PORSCHE CARS NORTH AMERICA, INC.

Information

- Due to the composition of different materials in the friction layer and support body, the friction surfaces (even when new) are coated with an uncritical crack pattern (stress-relief microstructure). Individual relaxation cracks sometimes run along the perforated bores.
- The stress-relief microstructure results from the way in which the brake disc surface is manufactured and does not pose a risk to safety. There is also no danger of the friction layers flaking off from the support body, since the friction layers are almost free of internal stresses as a result of the stress-relief microstructure.
- The stress-relief microstructure is sometimes clearly visible in new brake discs and the brake disc chamber side and the side that is opposite to the chamber can differ significantly from one another.

WM 465102 CHECKING FRONT PCCB BRAKE DISCS (WEAR ASSESSMENT USING TEST EQUIPMENT VAS 6813) (ALL MODELS) > BASIC INFORMATION > COATING ON THE PCCB BRAKE DISCS (POSSIBLE CAUSES)

The coating on the PCCB brake discs arises as a result of a high load and high temperatures, for example on a racing circuit. Check the following in such cases:

Fig 1: Identifying Brake Disc Friction Surface Bores

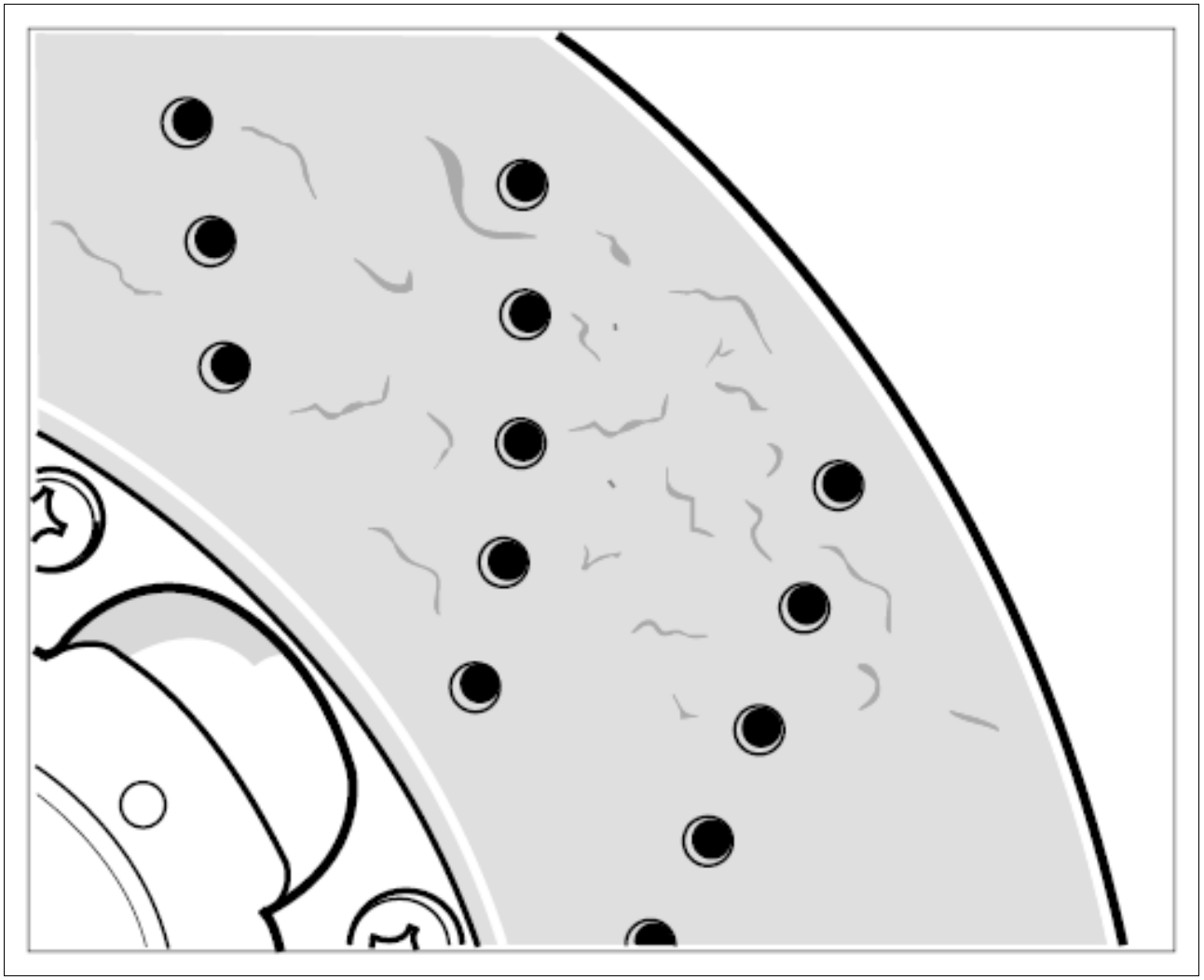

Courtesy of PORSCHE CARS NORTH AMERICA, INC.

- Ventilation (brake cooling): All components are present, secured correctly and undamaged.
- Brake pad quality: Use the appropriate brake pads if the vehicle is being used on a racing circuit.
- The perforation bores -see Fig 1- in the brake discs must not be blocked. Clear them if necessary. To do this, observe the following note.
- If there is a coating on the pads, the brake discs can still be used provided the wear criteria of the brake discs are OK.

WM 465102 CHECKING FRONT PCCB BRAKE DISCS (WEAR ASSESSMENT USING TEST EQUIPMENT VAS 6813) (ALL MODELS) > BASIC INFORMATION > WORKING ON BORES (PERFORATIONS) IN THE BRAKE DISC FRICTION SURFACE

Observe the following warning when cleaning or exposing the bores in the brake disc friction surface!

NOTE: Work cannot be carried out on the bores in the brake disc friction surface

- *Damage to brake discs*

→ Clean the bores on PCCB brake discs with high-pressure cleaning equipment if necessary. Observe the relevant environmental and safety regulations.

→ Do not machine the bores. Drilling or counter-sinking is not permitted.

WM 465102 CHECKING FRONT PCCB BRAKE DISCS (WEAR ASSESSMENT USING TEST EQUIPMENT VAS 6813) (ALL MODELS) > CHECKING PCCB BRAKE DISCS (WEAR ASSESSMENT) > CHECKING BRAKE DISCS FOR MINIMUM WEAR VALUE

Information

The pictures shown in this document may differ from the original.

Information

- PCCB brake discs must be checked for wear during every service and whenever the brake pads are changed! Brake disc remains installed.
- Carry out wear assessment on the brake discs and check the condition of the brake pads before and after every race track use (component temperatures are significantly higher than temperatures during "normal" driving).
- The brake disc temperature must be in the range between 0 and 40 °C during the measurement.
- Check tester before taking measurements and calibrate it if necessary. Follow the operating instructions provided by the equipment manufacturer!
- Position tester on the brake disc.
- Take measurements at three points marked on the brake disc hub.
- Quick measurement with brake calliper fitted.
- Exact measurement in this area with brake calliper removed.
- If the measured value is more than 5 units above the wear value, the quick measurement is sufficient. If the measured values are smaller, remove the brake calliper and perform an exact measurement.

- Note on quick measurement: A metallic heat shield will lower the measured value.

1. Measure values using **test equipment for PCCB brake discs WE 1578** at the three marked measuring points **-arrows-** with the brake disc installed.

   The following description distinguishes between quick measurement (as in 2.) and exact measurement (as in 3.).

   Fig 1: Locating Brake Disc Friction Coating Technology Marking



Courtesy of PORSCHE CARS NORTH AMERICA, INC.

Information

1. The drop in the value using a brake pad set depends very much on the driving conditions.
2. The remaining service life of the brake disc can be estimated using the previously stored data and measured values recorded during service intervals/workshop visits based on the mileage.
3. The value is reduced by 2 to 5 units (depending on axle) for each brake pad set. Not valid for race track use and if brake pads not approved by Porsche are used.
4. Carry out wear assessment on the brake discs and check the condition of the brake pads before and after every race track use (component temperatures are significantly higher than temperatures during "normal" driving).

2. **Quick measurement:** Brake calliper fitted (with or without wheel).

Fig 2: Locating Quick Measurement Tool With Wheel



Courtesy of PORSCHE CARS NORTH AMERICA, INC.

1. 2.1. Measuring procedure: Align laser beam **-2-** onto the measurement marking on the brake disc hub.
    1. Test equipment VAS 6813
    2. Laser beam for positioning

3. Measured value display

Fig 3: Positioning Tester On Brake Disc

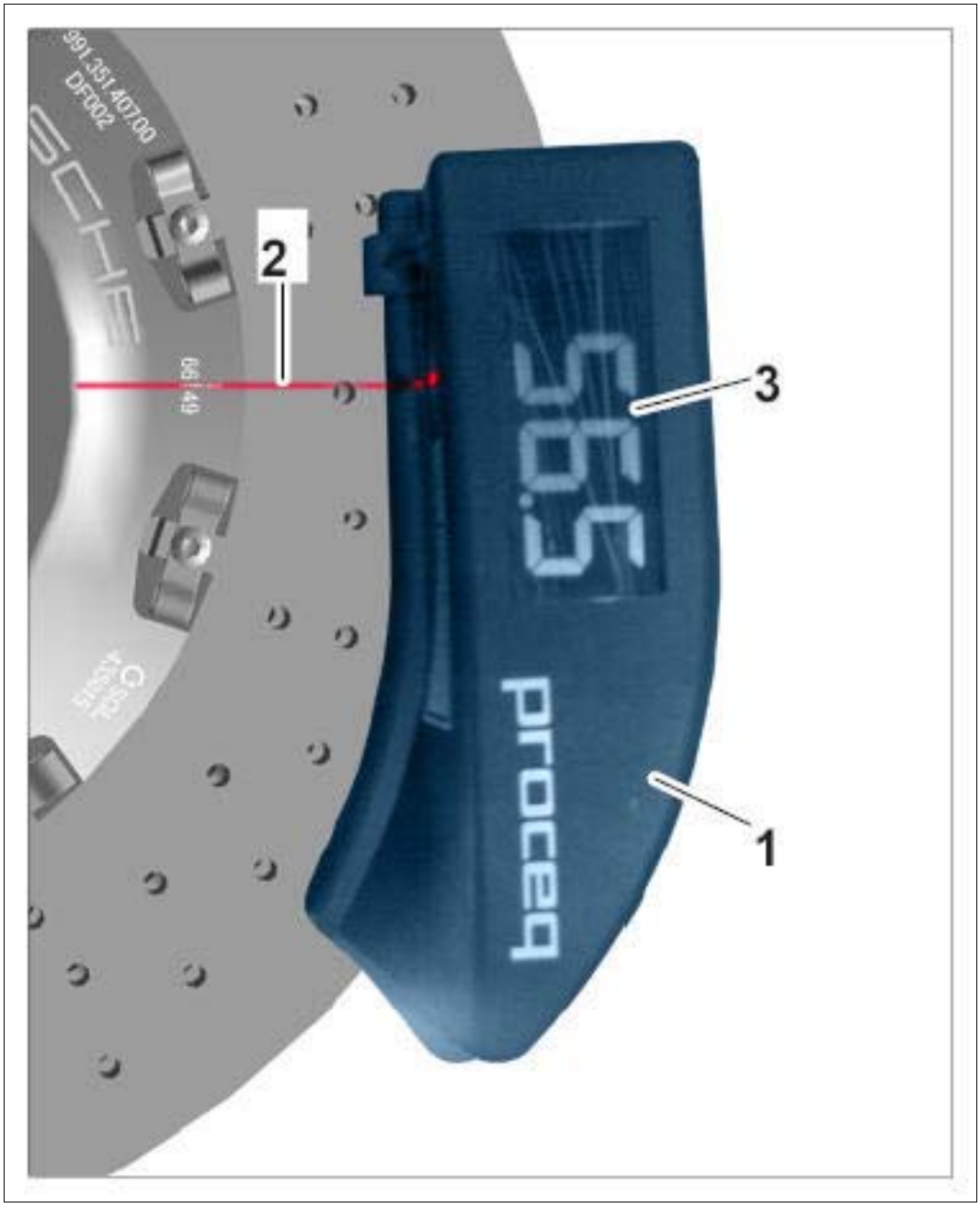

Courtesy of PORSCHE CARS NORTH AMERICA, INC.

When taking measurements, the tester must be positioned over the entire surface of the brake disc with the roller stops and the underside of the device.

Fig 4: Locating Tester On Brake Disc

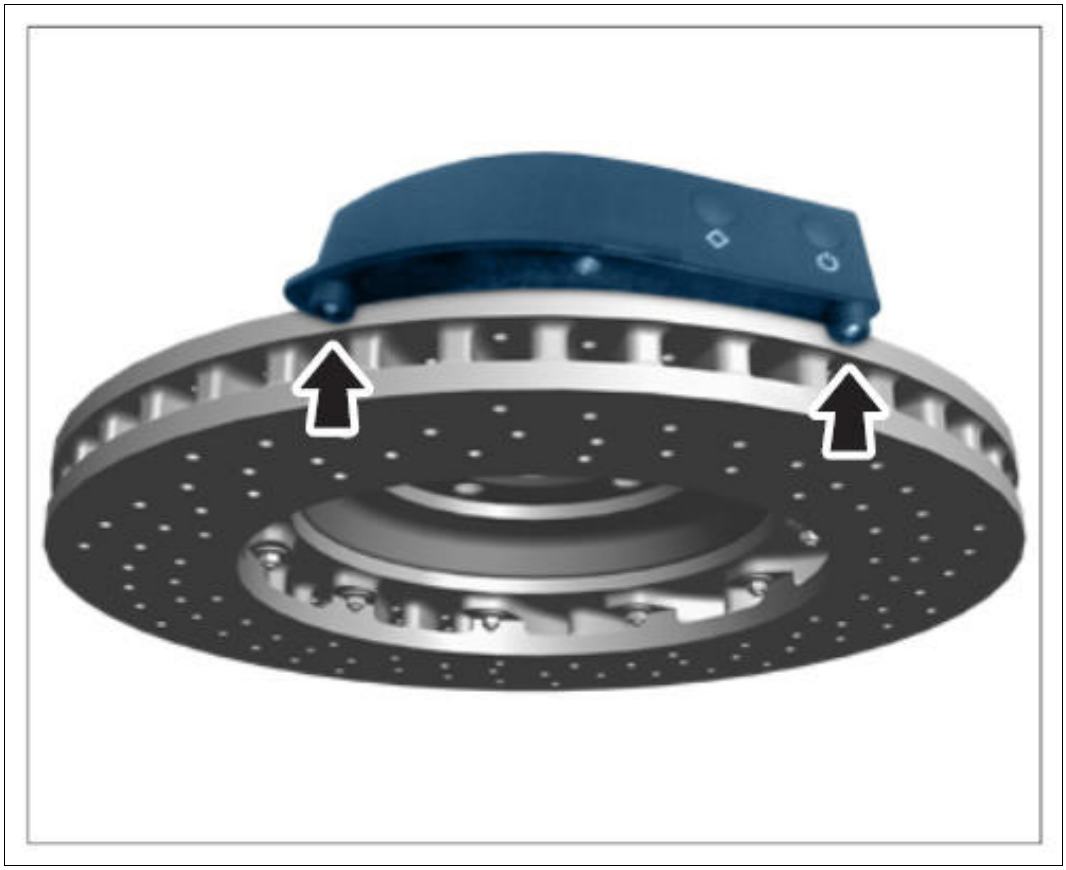

Courtesy of PORSCHE CARS NORTH AMERICA, INC.

2. 2.2. Compare the values you read off with the wear value **-3-** (lower value).

   If the wear value (lower value) is reached or if the measured value is less than the wear value at a measuring point, **carry out an exact measurement** .

Fig 5: Identifying Brake Disc Markings And Values

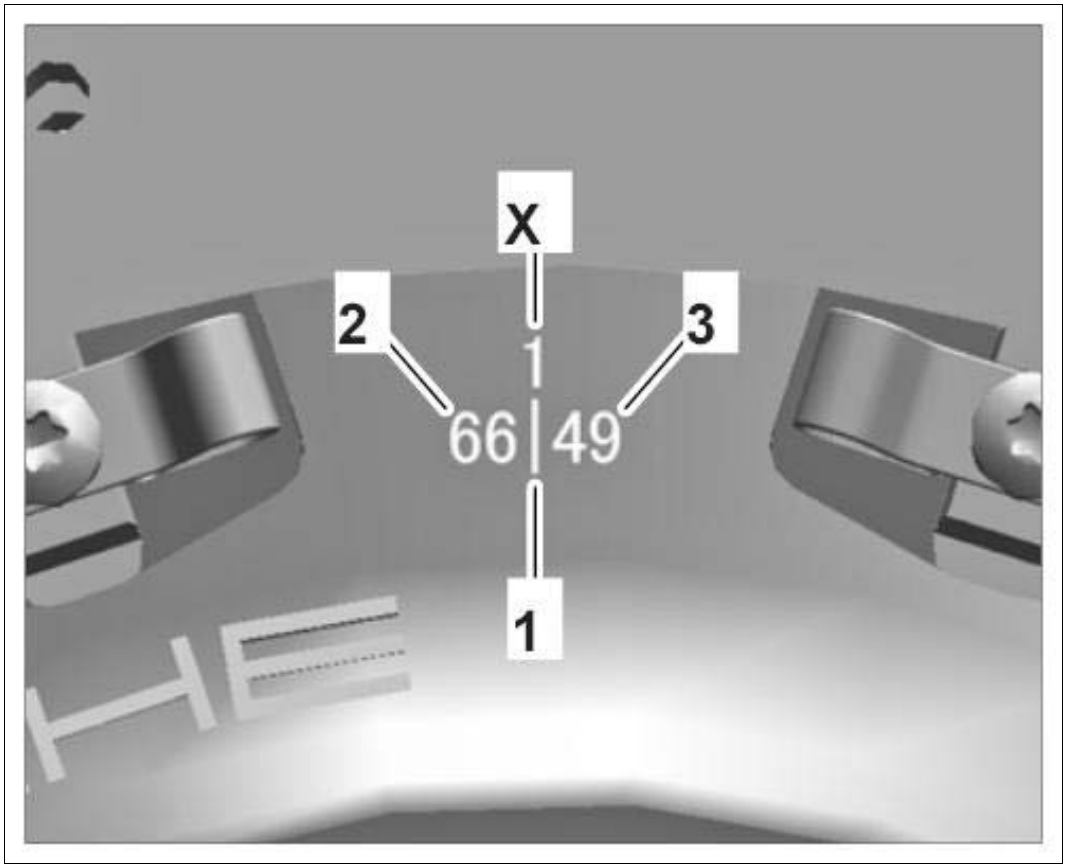

Courtesy of PORSCHE CARS NORTH AMERICA, INC.

3. **Exact measurement: Wheel and brake calliper removed.**

   Turn the measurement marking and brake disc so that the tester can be placed at the position at which the brake calliper was removed.

   The removed brake calliper must not be placed closer than 50 mm to the back of the brake disc when taking measurements.

   Always follow the operating instructions for the tester to make sure you are using it correctly.

   1. 3.1. Measuring procedure: Align laser beam **-2-** onto the measurement marking on the brake disc hub.

      1. Test equipment VAS 6813

      2. Laser beam for positioning

      3. Measured value display

Fig 6: Positioning Tester On Brake Disc

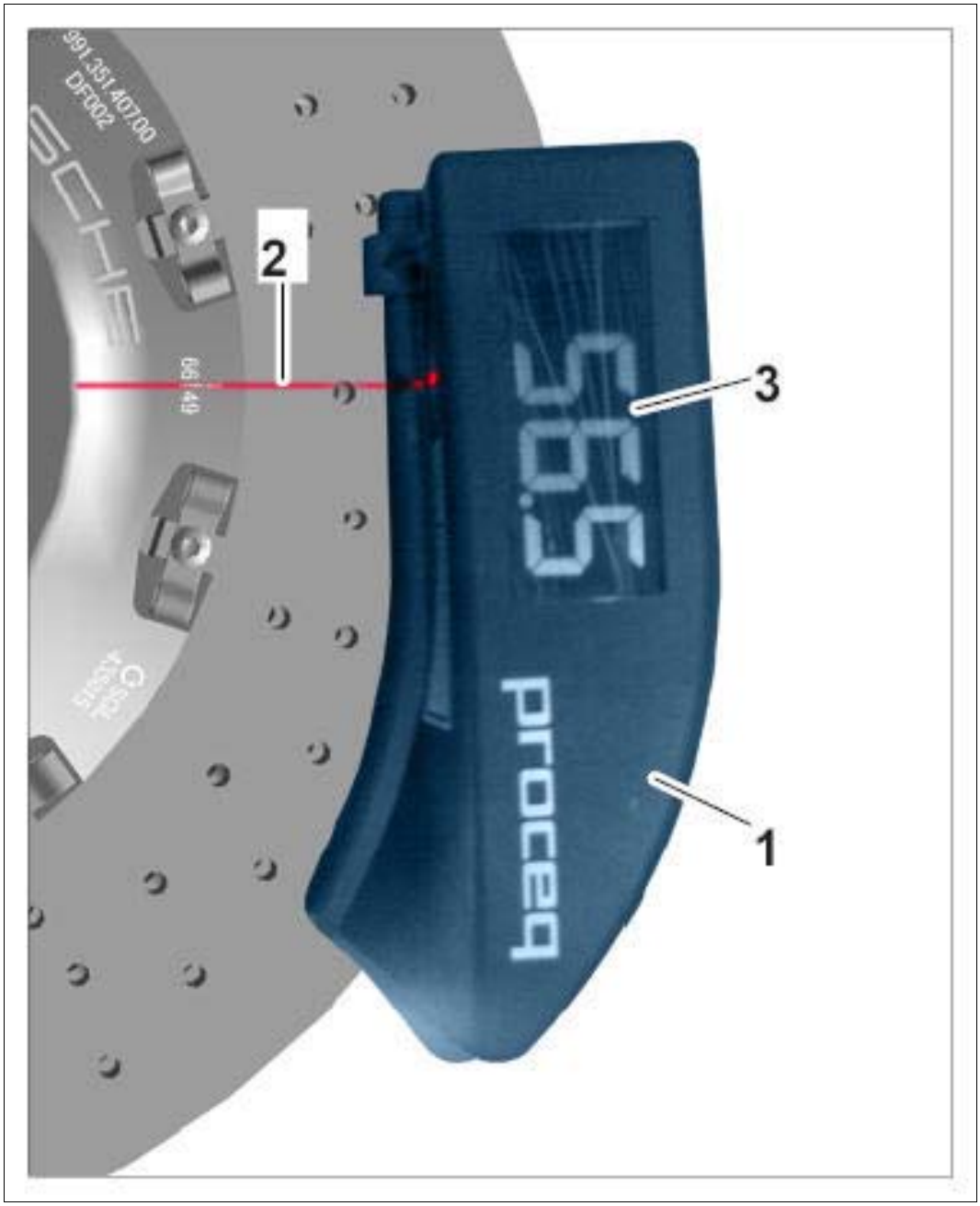

Courtesy of PORSCHE CARS NORTH AMERICA, INC.

When taking measurements, the tester must be positioned over the entire surface of the brake disc with the roller stops and the underside of the device.

Fig 7: Locating Tester On Brake Disc

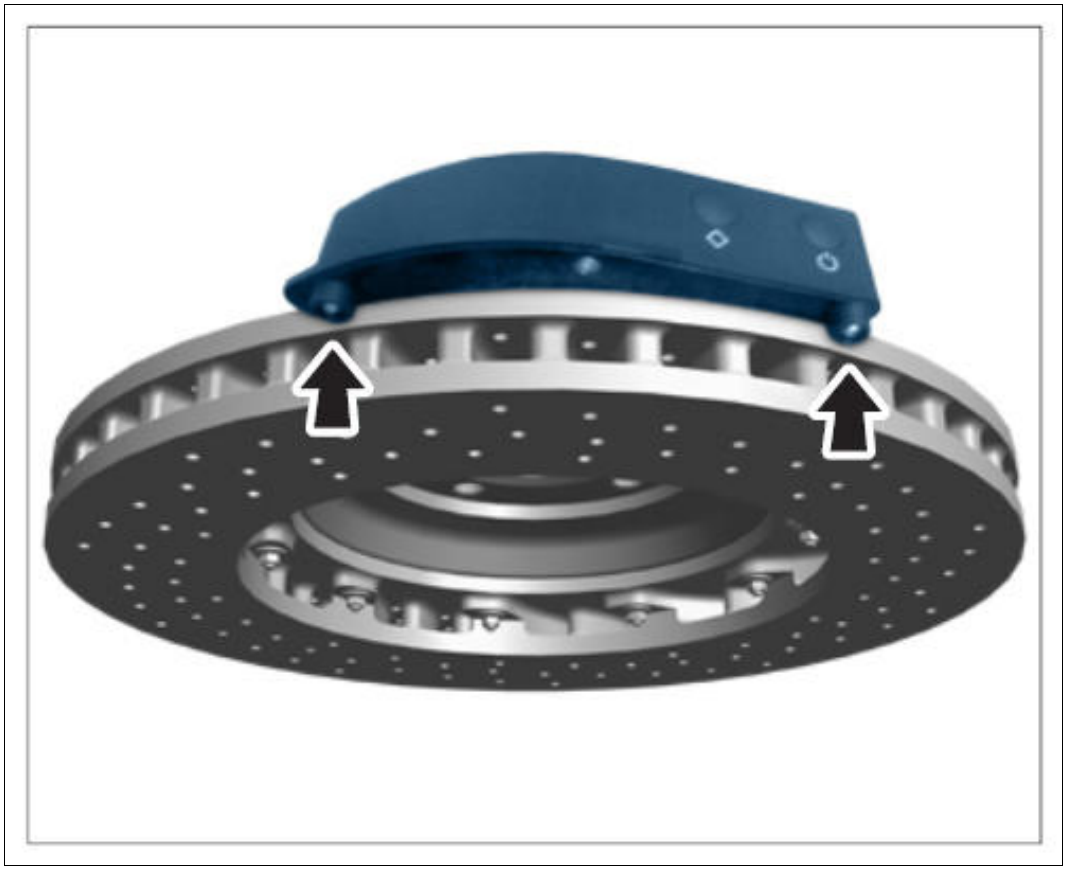

Courtesy of PORSCHE CARS NORTH AMERICA, INC.

2. 3.2. Compare the values you read off with the wear value **-3-** (lower value).

   If the wear value (lower value) is reached or if the measured value is less than the wear value at a measuring point, replace the brake discs on both sides of the axle.

   Applies to exact measurement (not quick measurement).

Fig 8: Identifying Brake Disc Markings And Values

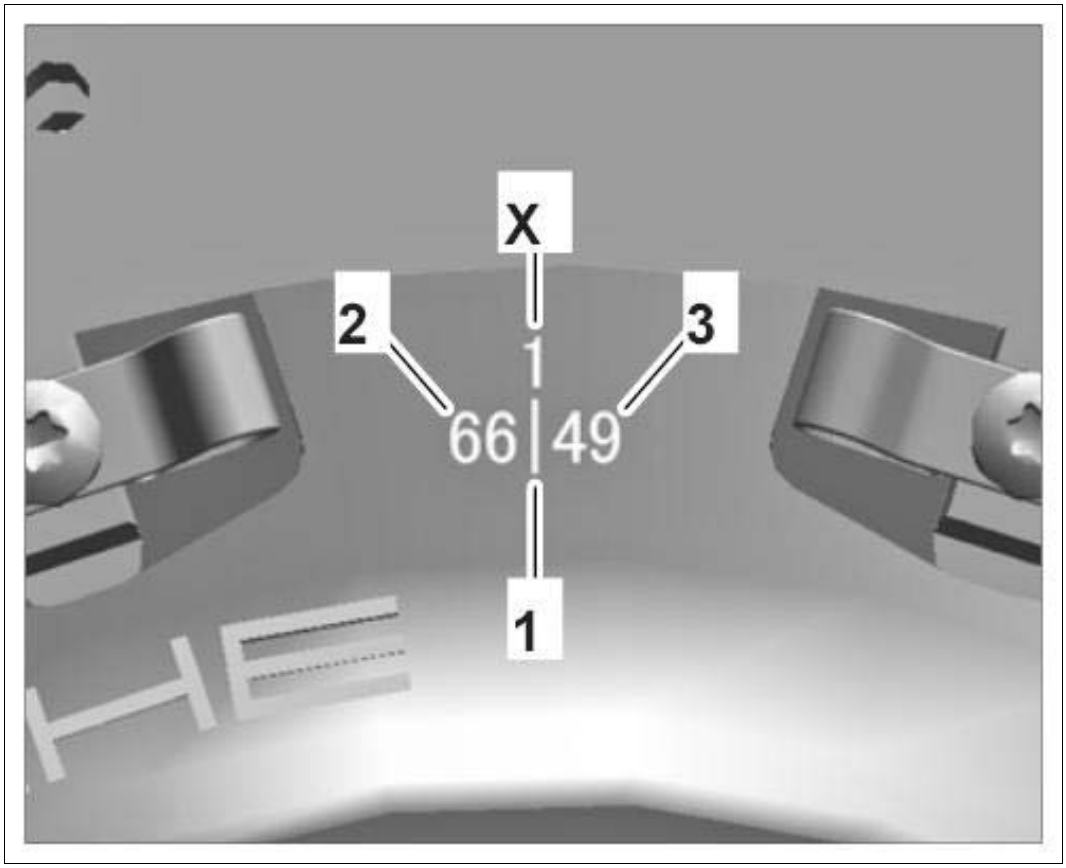

Courtesy of PORSCHE CARS NORTH AMERICA, INC.

WM 465119 REMOVING AND INSTALLING FRONT PCCB BRAKE DISC (ALL MODELS) > INFORMATION > INFORMATION ON REMOVING AND INSTALLING FRONT PCCB BRAKE DISC

Same procedure as for removing and installing front grey cast-iron brake disc. → 465019 REMOVING AND INSTALLING FRONT BRAKE DISC

WM 465302 CHECKING REAR BRAKE DISCS (WEAR ASSESSMENT) (ALL MODELS) > INFORMATION > INFORMATION ON CHECKING REAR BRAKE DISCS (WEAR ASSESSMENT)

Same procedure as for checking front brake discs (wear assessment) → 465002 CHECKING FRONT BRAKE DISCS (WEAR ASSESSMENT) .

WM 465319 REMOVING AND INSTALLING REAR BRAKE DISC (ALL MODELS) > TECHNICAL VALUES

Location	Description	Type	Basic value	Tolerance 1	Tolerance 2
Brake disc to wheel hub	M6 x 16 thread	Tightening torque	10 Nm (7.5 ftlb.)		

WM 465319 REMOVING AND INSTALLING REAR BRAKE DISC (ALL MODELS) > PRELIMINARY WORK

1. Remove brake calliper and suspend it at a suitable position in the wheel housing (do not open the brake hydraulic system!) → 474119 REMOVING AND INSTALLING REAR BRAKE CALLIPER .

WM 465319 REMOVING AND INSTALLING REAR BRAKE DISC (ALL MODELS) > REMOVING AND INSTALLING REAR BRAKE DISC > REMOVING REAR BRAKE DISCS

Information

The brake and electronic parking brake must not be operated when the brake calliper is removed.

1. Unscrew fastening screw **-arrow-** on the brake disc. Hold the brake disc securely while doing this.

Fig 1: Locating Brake Disc Mounting Screw

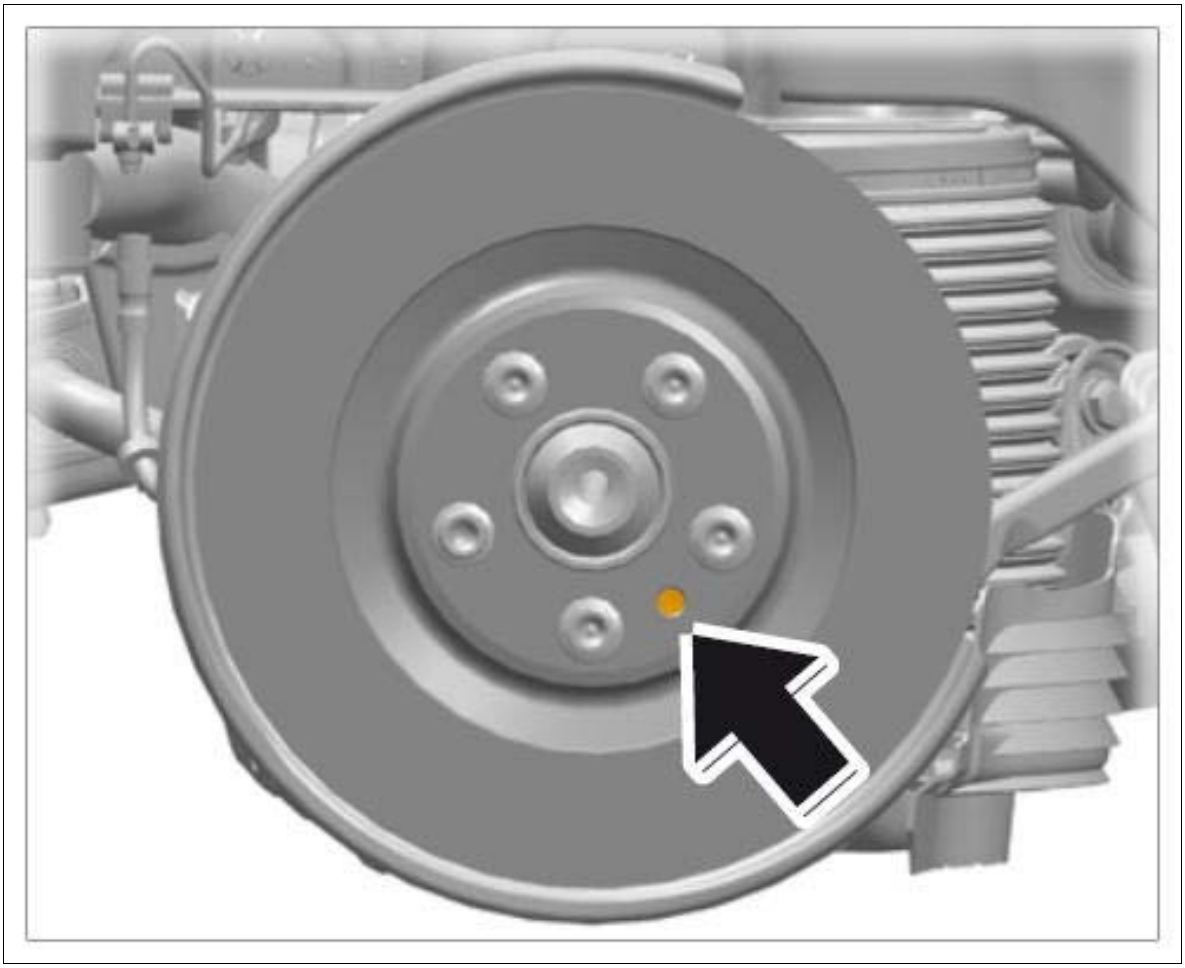

Courtesy of PORSCHE CARS NORTH AMERICA, INC.

2. Remove brake disc from the wheel hub.

WM 465319 REMOVING AND INSTALLING REAR BRAKE DISC (ALL MODELS) > REMOVING AND INSTALLING REAR BRAKE DISC > INSTALLING REAR BRAKE DISC

Do not confuse left and right brake discs during assembly!

Distinguishing feature: Part number! The flat surface of the brake discs is marked with R = right or L = left.

1. Check that all parts are in perfect condition (visual inspection) and replace them if necessary.
2. Clean the flat and centering surfaces on the brake disc and wheel hub.
3. Installation is performed in reverse order.

   Brake disc to wheel hub: **Tightening torque 10 Nm (7.5 ftlb.)**

WM 465319 REMOVING AND INSTALLING REAR BRAKE DISC (ALL MODELS) > SUBSEQUENT WORK

1. Install brake calliper → 474119 REMOVING AND INSTALLING REAR BRAKE CALLIPER .

WM 465402 CHECKING REAR PCCB BRAKE DISCS (WEAR ASSESSMENT USING TEST EQUIPMENT VAS 6813) (ALL MODELS) > INFORMATION > INFORMATION ON CHECKING REAR PCCB BRAKE DISC

Same procedure as for checking front PCCB brake discs → 465102 CHECKING FRONT PCCB BRAKE DISC (WEAR ASSESSMENT) .

WM 465419 REMOVING AND INSTALLING REAR PCCB BRAKE DISC (ALL MODELS) > INFORMATION > INFORMATION ON REMOVING AND INSTALLING REAR PCCB BRAKE DISC

Same procedure as for removing and installing front grey cast-iron brake discs. → 465319 REMOVING AND INSTALLING REAR BRAKE DISC

WM 466119 REMOVING AND INSTALLING ACTUATOR FOR ELECTRIC PARKING BRAKE (ALL MODELS) > PRELIMINARY WORK

1. Remove upper part of center console cover → 681919 REMOVING AND INSTALLING UPPER PART OF CENTRE CONSOLE COVER .

WM 466119 REMOVING AND INSTALLING ACTUATOR FOR ELECTRIC PARKING BRAKE (ALL MODELS) > REMOVING AND INSTALLING ACTUATOR FOR ELECTRIC PARKING BRAKE > REMOVING ACTUATOR FOR ELECTRIC PARKING BRAKE

1. Unscrew fastening screws **-1-** .

Fig 1: Identifying EPB Actuator Mounting



Courtesy of PORSCHE CARS NORTH AMERICA, INC.

2. Remove actuator for electric parking brake.

WM 466119 REMOVING AND INSTALLING ACTUATOR FOR ELECTRIC PARKING BRAKE (ALL MODELS) > REMOVING AND INSTALLING ACTUATOR FOR ELECTRIC PARKING BRAKE > INSTALLING ACTUATOR FOR ELECTRIC PARKING BRAKE

1. Insert actuator for electric parking brake and tighten fastening screws **-1-** .

Fig 1: Identifying EPB Actuator Mounting



Courtesy of PORSCHE CARS NORTH AMERICA, INC.

WM 466119 REMOVING AND INSTALLING ACTUATOR FOR ELECTRIC PARKING BRAKE (ALL MODELS) > SUBSEQUENT WORK

1. Install upper part of center console cover → 681919 REMOVING AND INSTALLING UPPER PART OF CENTRE CONSOLE COVER .

WM 466219 REMOVING AND INSTALLING CONTROL UNIT FOR ELECTRIC PARKING BRAKE (ALL MODELS) > TOOLS

Designation	Type	Number	Description	

PIWIS Tester II	Special tool	9818		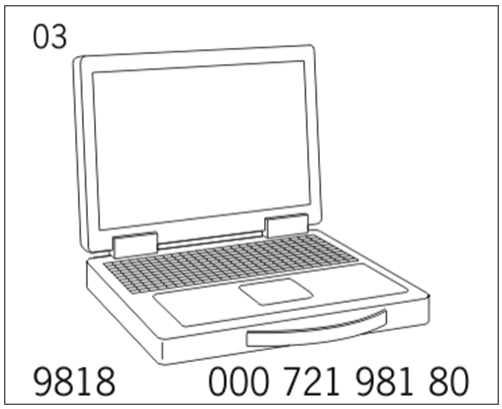

WM 466219 REMOVING AND INSTALLING CONTROL UNIT FOR ELECTRIC PARKING BRAKE (ALL MODELS) > PRELIMINARY WORK

1. Remove inner part of side trim panel for rear luggage compartment at the right. → 700319 REMOVING AND INSTALLING SIDE TRIM PANEL FOR REAR LUGGAGE COMPARTMENT
2. Remove control unit for trailer hitch (do not disconnect electric plug connections). → 669619 REMOVING AND INSTALLING TRAILER HITCH CONTROL UNIT

WM 466219 REMOVING AND INSTALLING CONTROL UNIT FOR ELECTRIC PARKING BRAKE (ALL MODELS) > REMOVING AND INSTALLING EPB CONTROL UNIT > REMOVING EPB CONTROL UNIT

1. Pull control unit **-1-** out of the holder **-2-** (**-arrow-**).

Fig 1: Identifying EPB Control Unit

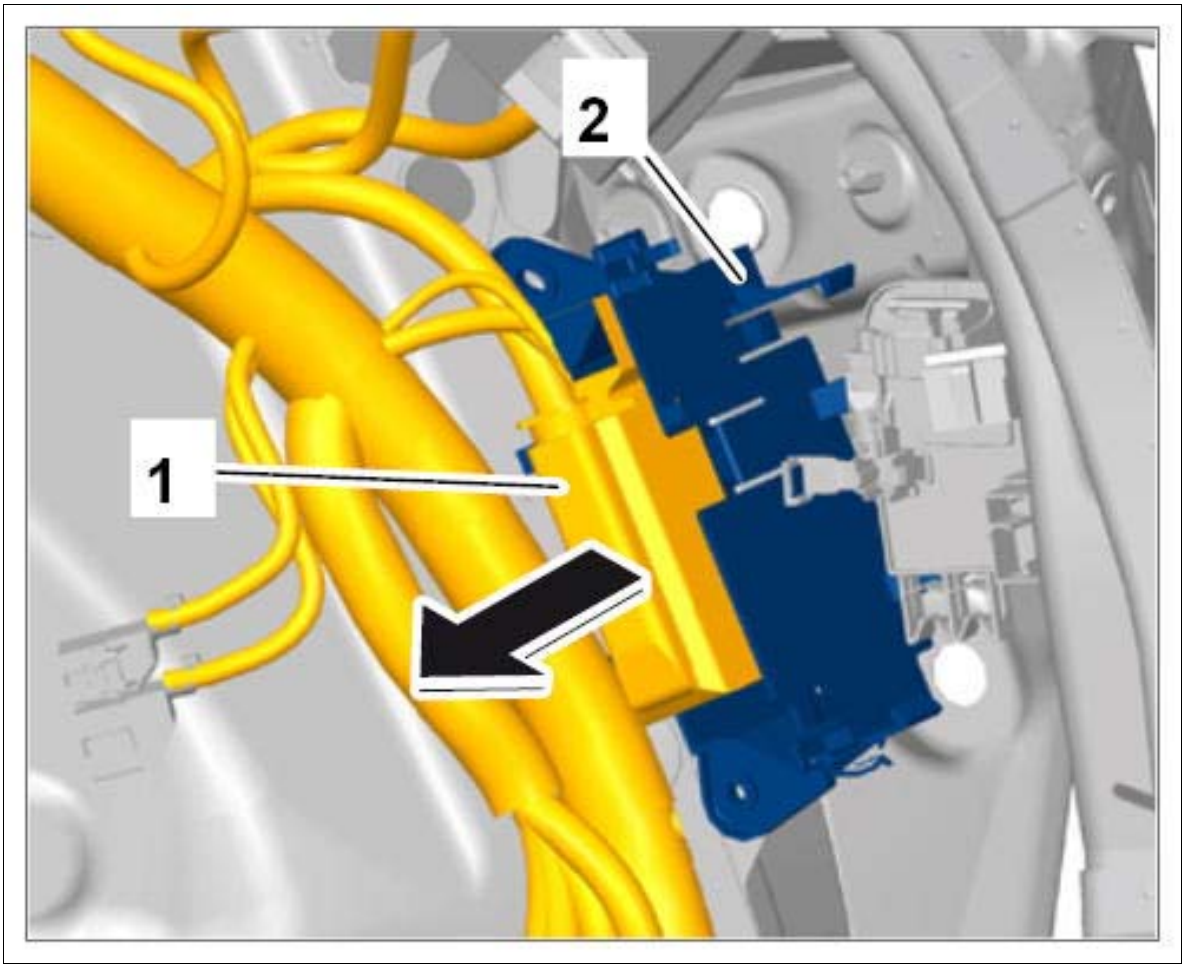

Courtesy of PORSCHE CARS NORTH AMERICA, INC.

2. Release electric connector **-1-** (**-A-**) and disconnect it **-B-** .

Fig 2: Disconnecting Electric Connector

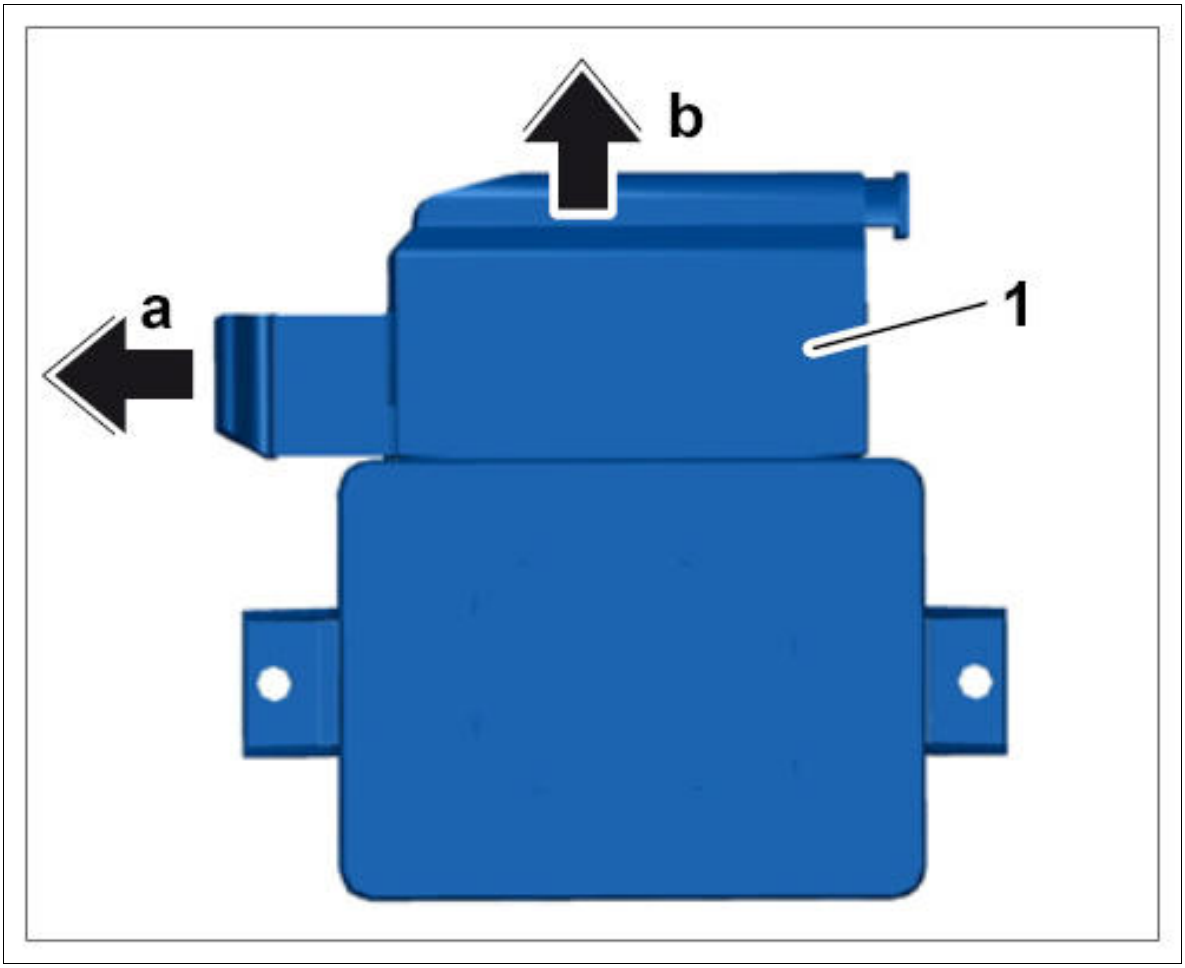

Courtesy of PORSCHE CARS NORTH AMERICA, INC.

WM 466219 REMOVING AND INSTALLING CONTROL UNIT FOR ELECTRIC PARKING BRAKE (ALL MODELS) > REMOVING AND INSTALLING EPB CONTROL UNIT > INSTALLING EPB CONTROL UNIT

1. Installation is performed in reverse order.

WM 466219 REMOVING AND INSTALLING CONTROL UNIT FOR ELECTRIC PARKING BRAKE (ALL MODELS) > SUBSEQUENT WORK

1. Install control unit for trailer hitch → Installing Trailer Hitch Control Unit
2. Install inner part of side trim panel for rear luggage compartment at the right. → Installing side trim panel for rear luggage compartment
3. If the control unit was replaced, the "new" control unit must be taught to suit the vehicle using **PIWIS Tester II 9818** . → 466255 REPLACING CONTROL UNIT FOR ELECTRIC PARKING BRAKE .

WM 466255 REPLACING CONTROL UNIT FOR ELECTRIC PARKING BRAKE (ALL MODELS) > TOOLS

Designation	Type	Number	Description	
PIWIS Tester II	Special tool	9818		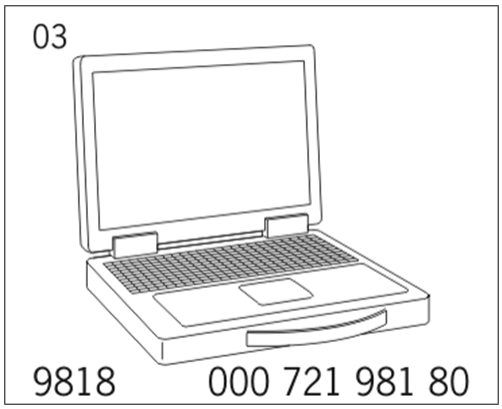

WM 466255 REPLACING CONTROL UNIT FOR ELECTRIC PARKING BRAKE (ALL MODELS) > TECHNICAL VALUES

Location	Description	Type	Basic value	Tolerance 1	Tolerance 2
Current rating		Nominal value	40 A		

WM 466255 REPLACING CONTROL UNIT FOR ELECTRIC PARKING BRAKE (ALL MODELS) > PRELIMINARY WORK

1. Switch off ignition and replace control unit. → 466219 REMOVING AND INSTALLING CONTROL UNIT FOR ELECTRIC PARKING BRAKE .

WM 466255 REPLACING CONTROL UNIT FOR ELECTRIC PARKING BRAKE (ALL MODELS) > CODING CONTROL UNIT FOR ELECTRIC PARKING BRAKE

NOTE: Voltage drop

- *Risk of irreparable damage to control unit*
- *Risk of damage to control unit*
- *Fault entries in the control unit*
- *Coding in the control unit is aborted*

- *Malfunctions in control unit, even during programming*

→ Prior to disconnecting the control unit, switch off ignition and remove ignition key.

→ Ensure that the power supply is not interrupted during programming.

→ Connect a battery charger with a current rating of at least → **Nominal value: 40 A** to the vehicle battery.

Information

The **PIWIS Tester II 9818** instructions take precedence since the description may be different with later Tester releases.

The procedure described here has been structured in general terms. Different text or additional information may appear in **PIWIS Tester II 9818** .

1. Connect the PIWIS Tester to the vehicle and start the PIWIS Tester. Switch on ignition and press [F12] to continue.
2. Select the vehicle type and start the diagnostic application.
3. Select the required control unit, e.g. **Parking brake** in the **overview** .
4. **Maintenance/repairs** must then be selected.
5. **Select Start-up** and press [F12] to continue.
6. Follow the instructions on the Tester.
7. The Tester displays the message **Coding has been completed successfully** . Press [F12] to continue.
8. The Tester confirms that **start-up was completed successfully** . Press [F12] to continue.
9. **Read out the fault memory** and erase it if necessary.
10. Check function of electric parking brake by actuating the lever. The LED in the button may flash after the first function test.
    1. 10.1. If the LED in the button starts flashing after the first function test:
        1. 10.1.1. Perform a further function test. Check function of electric parking brake by actuating the lever.
11. Perform a test drive, check function of electric parking brake by actuating the lever and read out the fault memory.

WM 468519 REMOVING AND INSTALLING EPB ACTUATOR (ALL MODELS) > TOOLS

Designation	Type	Number	Description	

PIWIS Tester II	Special tool	9818		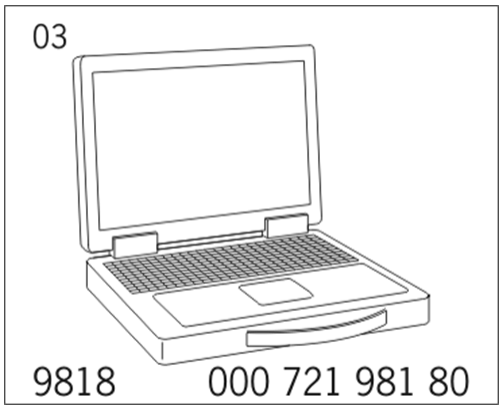

WM 468519 REMOVING AND INSTALLING EPB ACTUATOR (ALL MODELS) > TECHNICAL VALUES

Location	Description	Type	Basic value	Tolerance 1	Tolerance 2
EPB actuator to brake calliper	Always use new screws following removal	Tightening torque	11 Nm (8 ftlb.)		

WM 468519 REMOVING AND INSTALLING EPB ACTUATOR (ALL MODELS) > PRELIMINARY WORK

1. Raise the vehicle. → 4X00IN LIFTING THE VEHICLE
2. Use **PIWIS Tester II 9818** to move the electric parking brake (EPB) into >>assembly position<<.
    1. 2.1. Select >>Parking brake<< in the control unit overview.
    2. 2.2. Select >>Maintenance/repairs<< >>Assembly position<<.
3. Remove wheel. → 440519 REMOVING AND INSTALLING WHEEL

WM 468519 REMOVING AND INSTALLING EPB ACTUATOR (ALL MODELS) > REMOVING AND INSTALLING EPB ACTUATOR > REMOVING EPB ACTUATOR

Fig 1: Identifying Brake Assembly

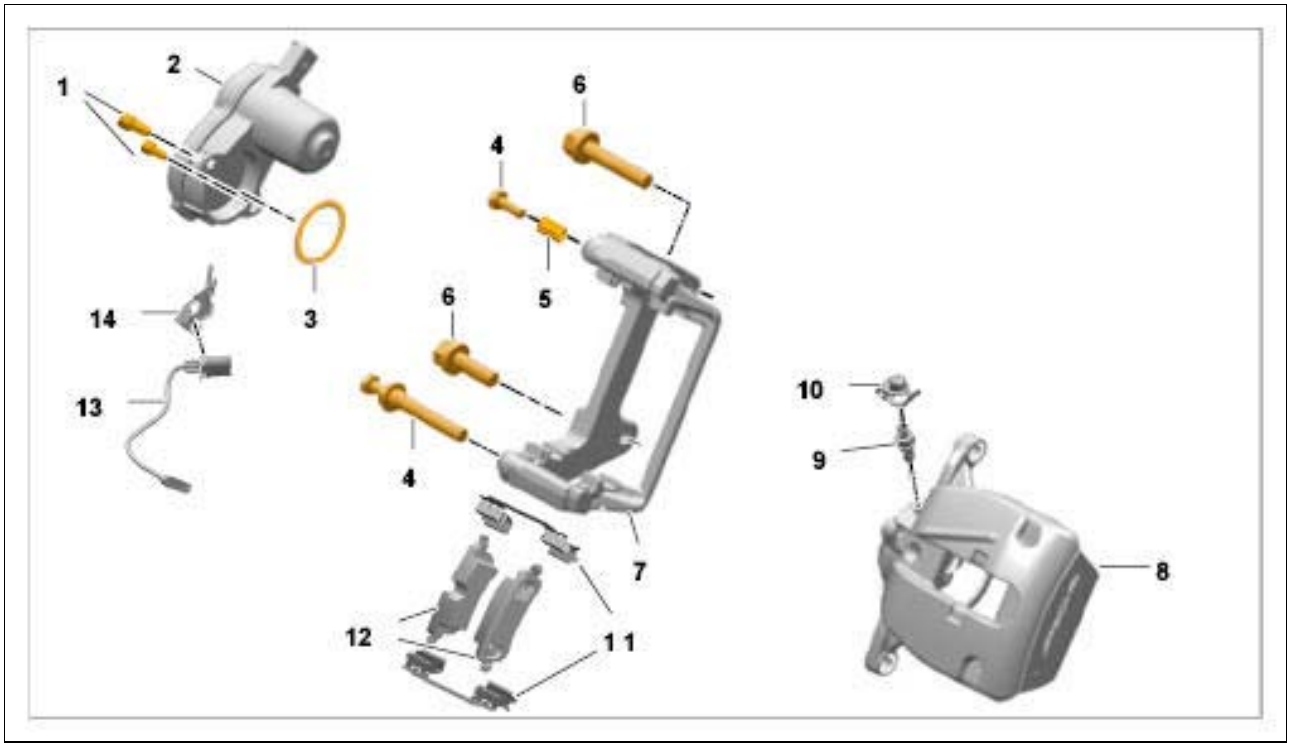

Courtesy of PORSCHE CARS NORTH AMERICA, INC.

1. Fastening screw for EPB actuator
2. EPB actuator
3. Sealing ring
4. Fastening screw securing brake calliper to calliper carrier
5. Contact for brake pad wear indicator
6. Brake calliper
7. Calliper carrier
8. Brake pads
9. Pad retaining bracket
10. Fastening screw securing brake calliper to wheel bearing housing

1. Disconnect plug connection **-1-** for the actuator.

Fig 2: Identifying EPB Plug Connection

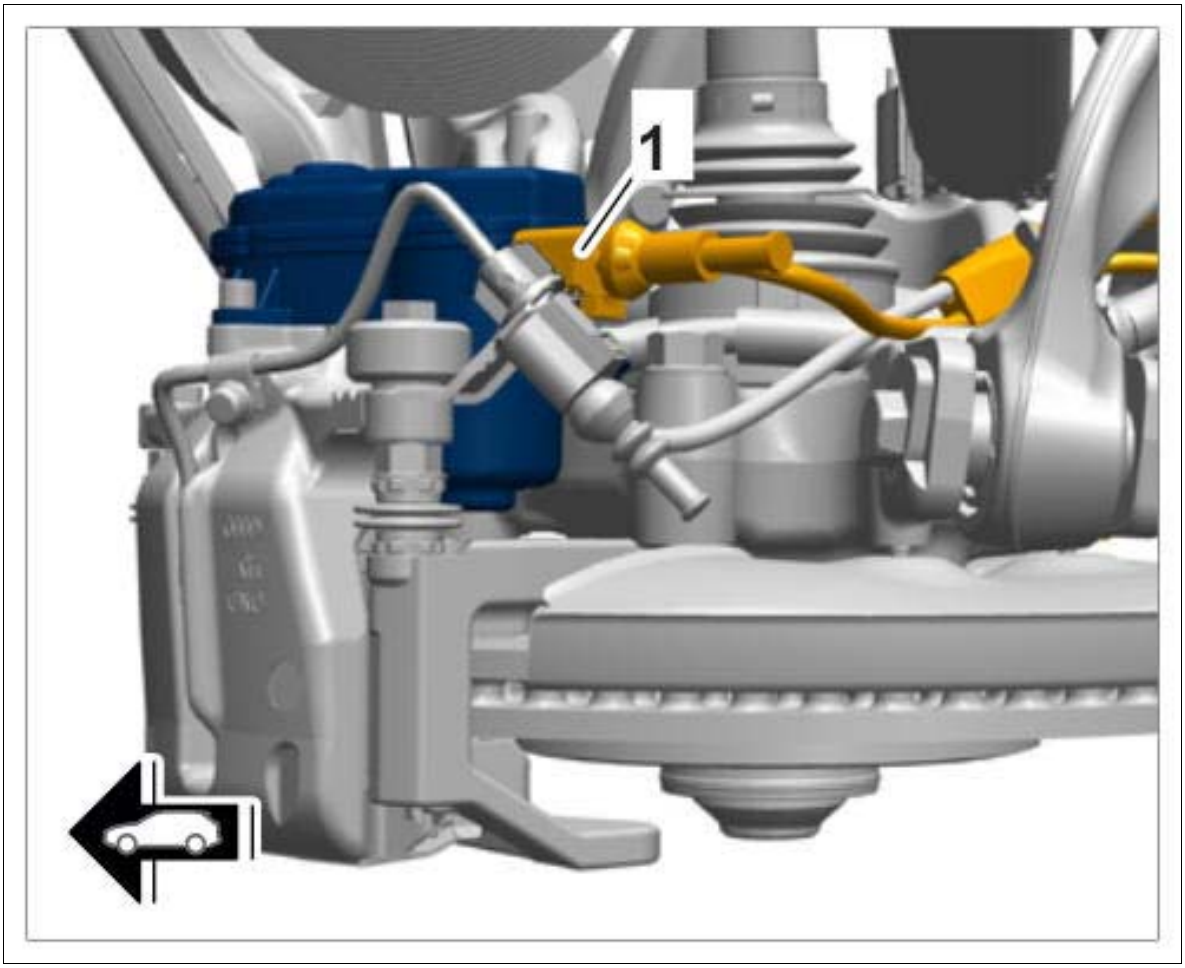

Courtesy of PORSCHE CARS NORTH AMERICA, INC.

2. Unscrew fastening screws **-1-** on the actuator.

Fig 3: Identifying Actuator Mounting Bolts

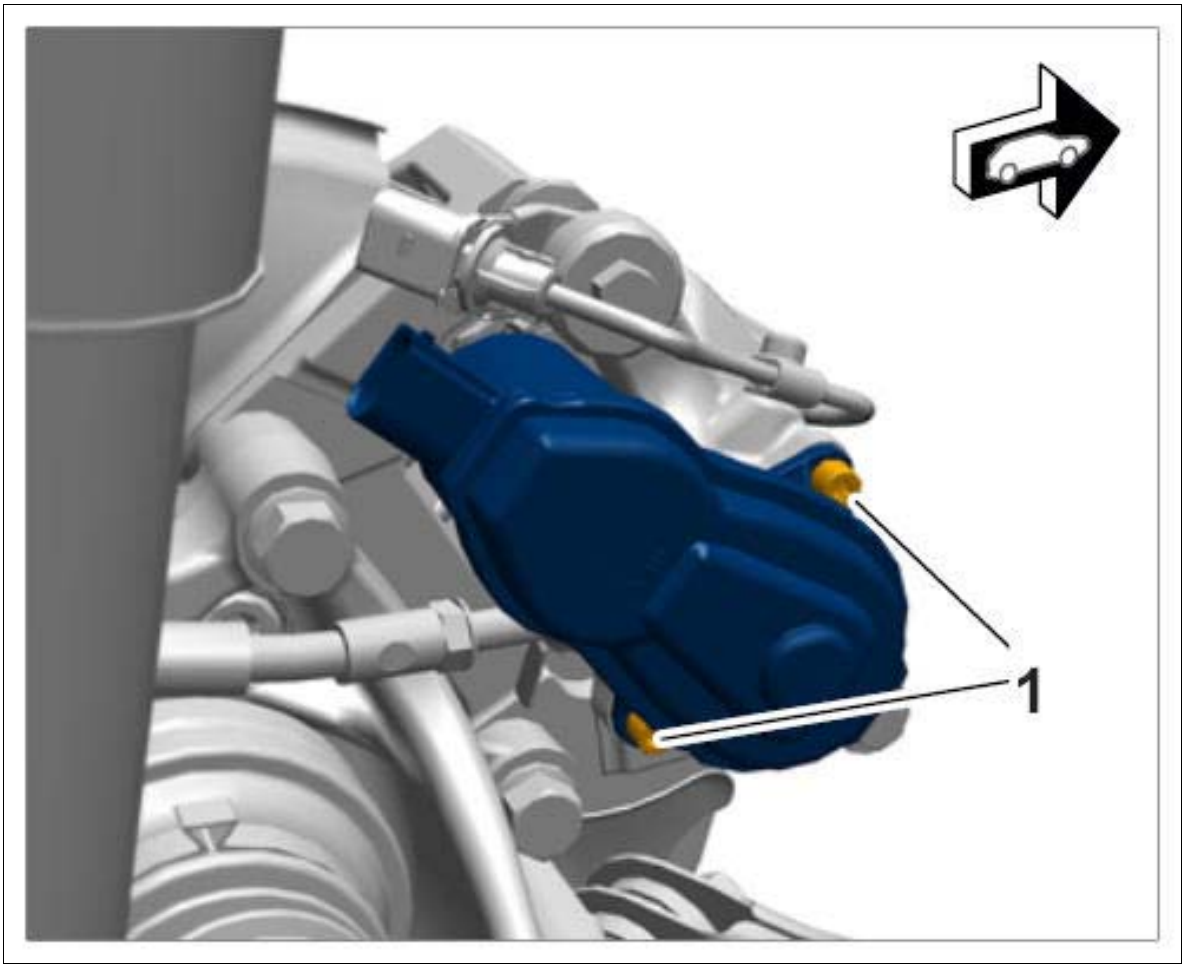

Courtesy of PORSCHE CARS NORTH AMERICA, INC.

3. Remove servo motor in **-direction of arrow-** .

Fig 4: Removing Actuator

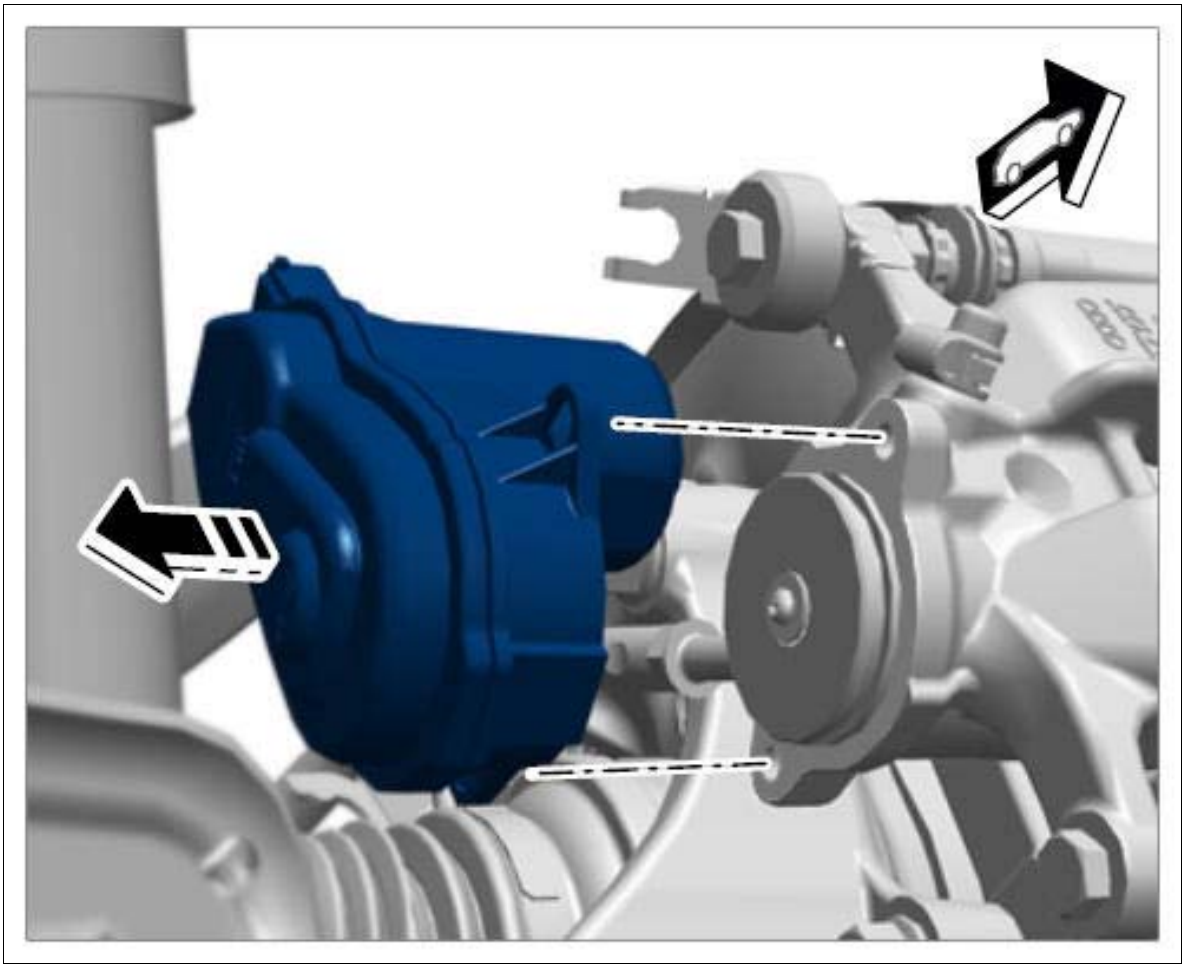

Courtesy of PORSCHE CARS NORTH AMERICA, INC.

WM 468519 REMOVING AND INSTALLING EPB ACTUATOR (ALL MODELS) > REMOVING AND INSTALLING EPB ACTUATOR > INSTALLING EPB ACTUATOR

Information

Check that the brake hose **-1-** and electric lines **-2-** are routed correctly (brake hose must be routed between the wheel bearing housing and electric lines).

Fig 1: Identifying Brake Hose And Electric Lines Position

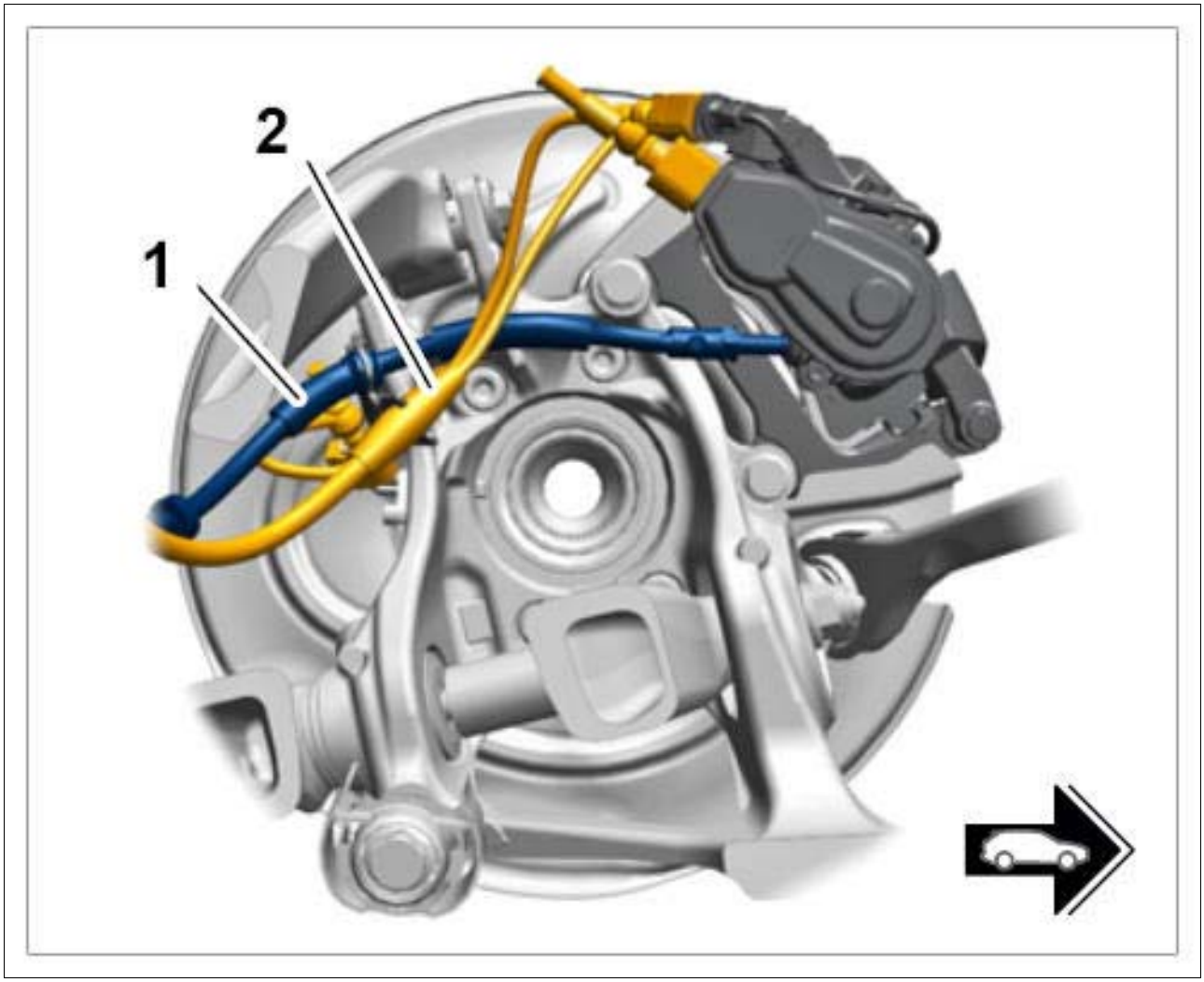

Courtesy of PORSCHE CARS NORTH AMERICA, INC.

Information

- Sealing ring must always be replaced.
- Clean ring groove and contact surfaces if they are dirty! Only use brake cleaner.
- Make sure that the ring groove on the sealing ring and the contact surface of the actuator are not damaged.

1. Installation is performed in reverse order. Turn adjusting screw on the brake calliper back slightly if necessary (to facilitate installation) → Turning back adjusting screw .

   Observe specified tightening torques:

   EPB actuator to brake calliper: **Tightening torque 11 Nm (8 ftlb.)**

Fig 2: Identifying EPB Actuator Adjusting Screw

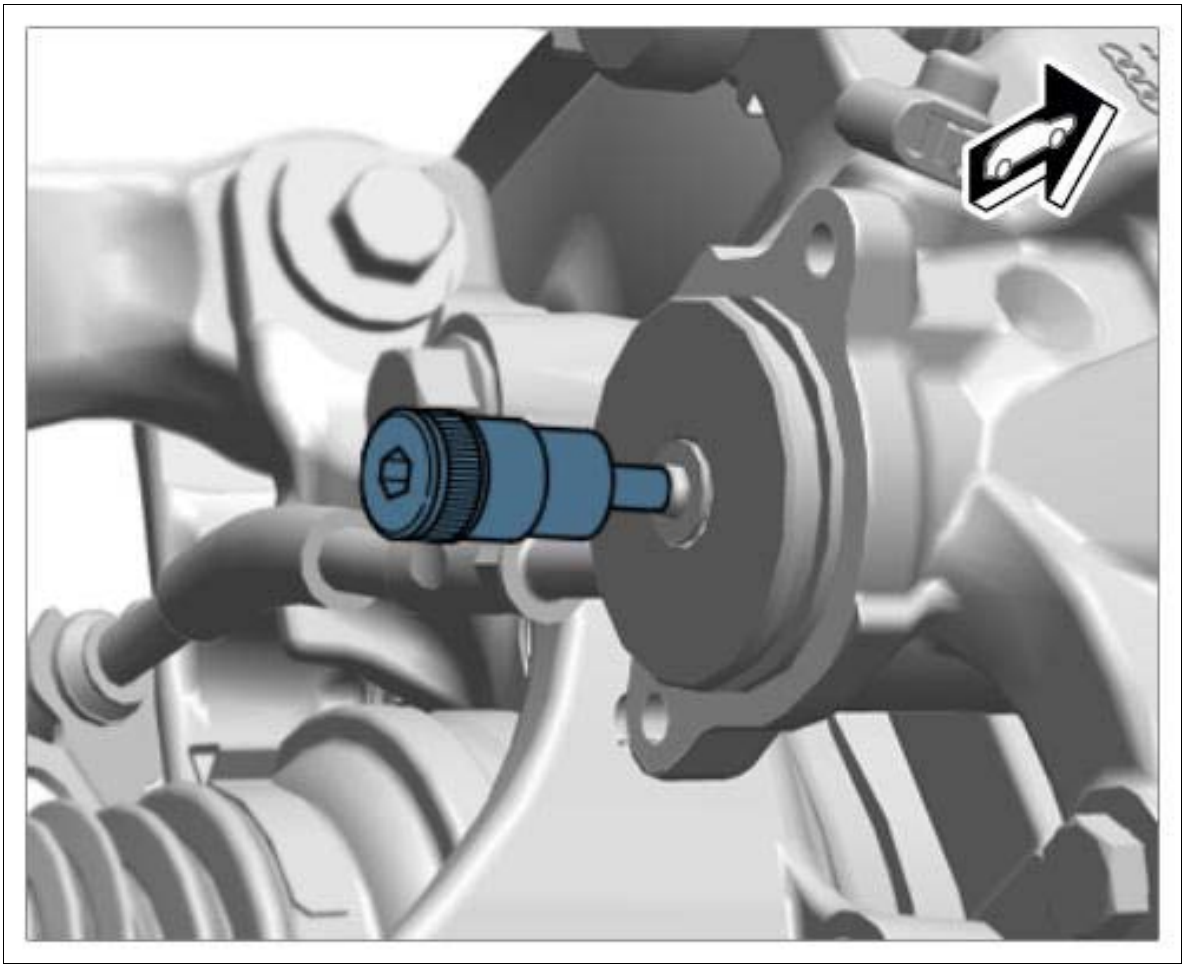

Courtesy of PORSCHE CARS NORTH AMERICA, INC.

WM 468519 REMOVING AND INSTALLING EPB ACTUATOR (ALL MODELS) > SUBSEQUENT WORK

1. Fit wheel. → Installing Wheel
2. Use **PIWIS Tester II 9818** to start up the electric parking brake (EPB).
    1. 2.1. Select >>Parking brake<< in the control unit overview.
    2. 2.2. Select >>Maintenance/repairs<< >>Start-up<<.

WM 471519 REMOVING AND INSTALLING BRAKE MASTER CYLINDER (ALL MODELS) > TECHNICAL VALUES

Location	Description	Type	Basic value	Tolerance 1	Tolerance 2
Brake line to brake master cylinder (left-hand drive)	Union nut	Tightening torque	14 Nm (10.5 ftlb.)		
Brake line to brake master cylinder (right-hand drive)	Union nut	Tightening torque	18 Nm (13 ftlb.)		
Brake master cylinder to brake booster	Hexagon nut/always use new nuts following removal	Tightening torque	49 Nm (36 ftlb.)		
Brake fluid reservoir to brake master cylinder		Tightening torque	5 Nm (3.5 ftlb.)		

WM 471519 REMOVING AND INSTALLING BRAKE MASTER CYLINDER (ALL MODELS) > PRELIMINARY WORK

1. Remove cowl panel cover → 508719 REMOVING AND INSTALLING COWL PANEL COVER .
2. Remove cross panel → 508119 REMOVING AND INSTALLING CROSS PANEL (DISASSEMBLING PLENUM PANEL) .

WM 471519 REMOVING AND INSTALLING BRAKE MASTER CYLINDER (ALL MODELS) > REMOVING AND INSTALLING BRAKE MASTER CYLINDER > REMOVING BRAKE MASTER CYLINDER

Information

- In the event of assembly work at the hydraulic connections, all electric plug connections in the area of the connection point must always be connected. This prevents the inside of the plug connections from being splashed with brake fluid or water.
- Clean any plug connections that have become dirty or damp during removal and fitting using a

lint-free cloth, for example.

- Brake fluid on electrical contacts (even thinned brake fluid) leads to corrosion and can cause faults in the system.
- Remove any escaping brake fluid immediately; rinse with water and dry thoroughly if necessary.

1. Place a suitable cloth underneath to catch any emerging brake fluid.
2. Drain brake fluid from the brake fluid reservoir using a suitable tool, e.g. a double-action hand pump.
3. Remove brake fluid reservoir **-1-** .

Fig 1: Identifying Brake Fluid Reservoir

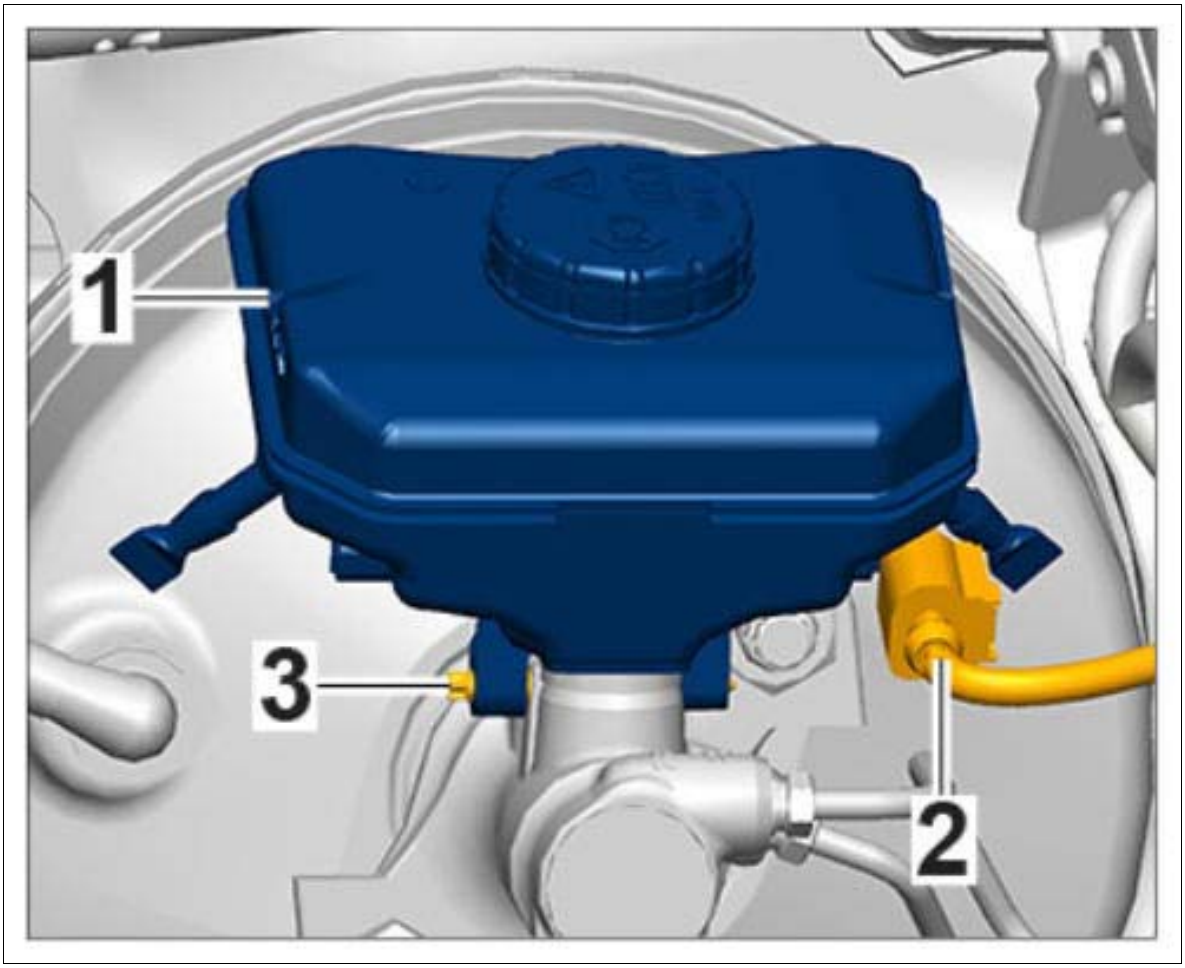

Courtesy of PORSCHE CARS NORTH AMERICA, INC.

1. 3.1. Release and disconnect connector **-2-** (protect against contact with brake fluid if necessary).
2. 3.2. Unscrew locking pin **-3-** .
3. 3.3. Remove brake fluid reservoir **-1-** .
4. 3.4. Wipe up any escaping brake fluid immediately and rinse away residues using plenty of water.

4. Screw off brake lines **-2-** on the brake master cylinder

    1. 4.1. Unscrew union nuts.

    2. 4.2. Pull brake lines out of the brake master cylinder.

    3. 4.3. Close off brake lines using suitable stoppers.

5. Screw off fastening nuts **-1-** .

Fig 2: Identifying Brake Master Cylinder

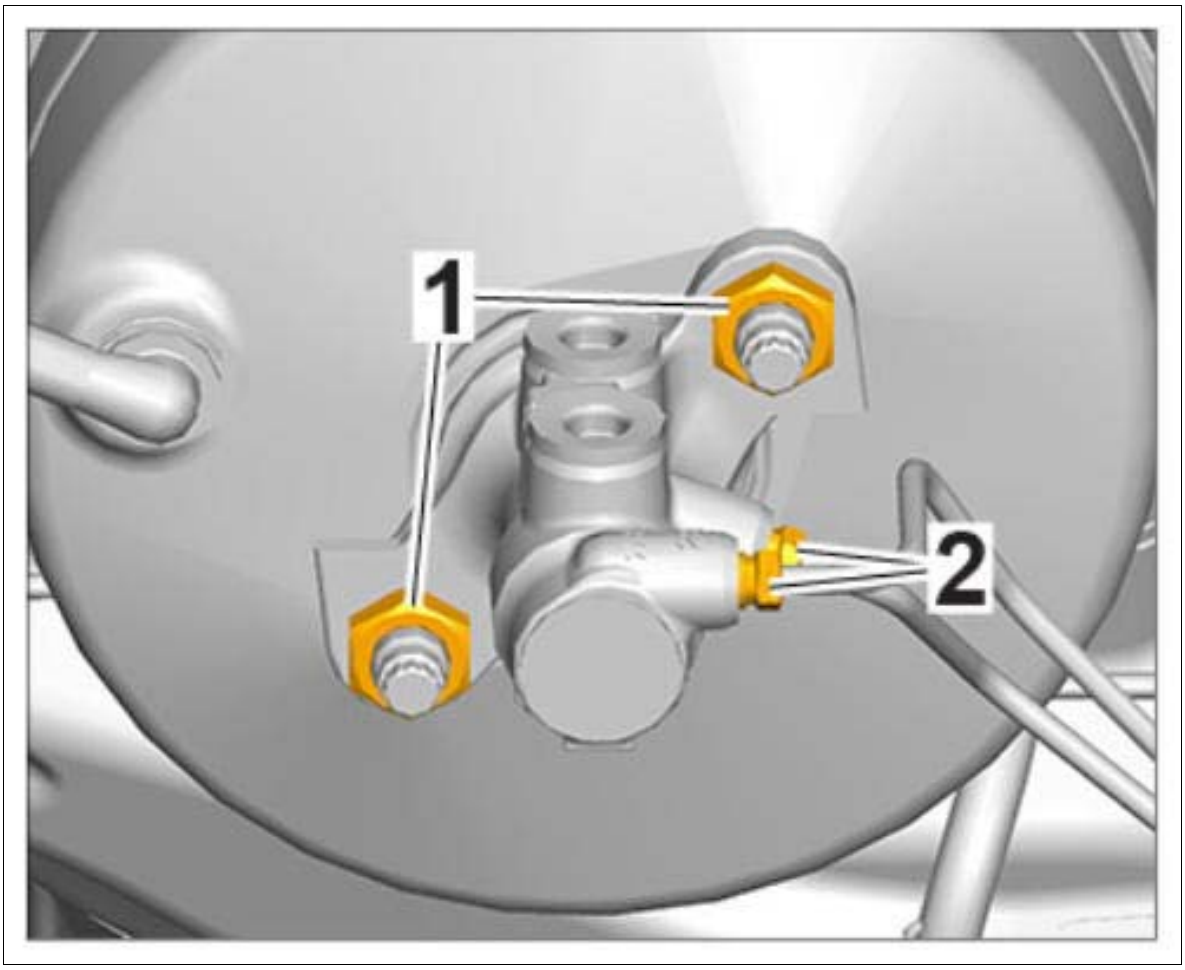

Courtesy of PORSCHE CARS NORTH AMERICA, INC.

6. Remove brake master cylinder.

WM 471519 REMOVING AND INSTALLING BRAKE MASTER CYLINDER (ALL MODELS) > REMOVING AND INSTALLING BRAKE MASTER CYLINDER > INSTALLING BRAKE MASTER CYLINDER

1. Installation is performed in reverse order.

    Observe specified tightening torques:

    Brake master cylinder to brake booster: **Tightening torque 49 Nm (36 ftlb.)**

Brake lines to brake master cylinder (left-hand drive vehicles): **Tightening torque 14 Nm (10.5 ftlb.)**

Brake lines to brake master cylinder (right-hand drive vehicles): **Tightening torque 18 Nm (13 ftlb.)**

Brake fluid reservoir to brake master cylinder: **Tightening torque 5 Nm (3.5 ftlb.)**

WM 471519 REMOVING AND INSTALLING BRAKE MASTER CYLINDER (ALL MODELS) > SUBSEQUENT WORK

1. Install cross panel → Installing cross panel .
2. Install cowl panel cover → 508719 REMOVING AND INSTALLING COWL PANEL COVER .
3. Bleed brake fluid .

WM 473919 REMOVING AND INSTALLING FRONT BRAKE CALLIPER (ALL MODELS) > TOOLS

Designation	Type	Number	Description	
assembly pins	VW tool	T10439	For holding the brake calliper	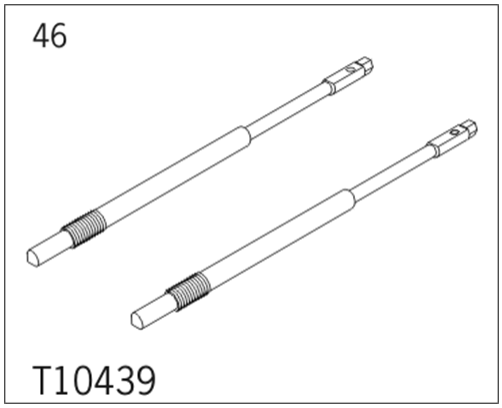

WM 473919 REMOVING AND INSTALLING FRONT BRAKE CALLIPER (ALL MODELS) > TECHNICAL VALUES

Location	Description	Type	Basic value	Tolerance 1	Tolerance 2
Brake calliper (18-inch - red/silver) to wheel carrier	M14 x 1.5 x 114 thread/always use new screws following removal	Initial tightening	30 Nm (22 ftlb.)		
Brake calliper (18-inch -	M14 x 1.5 x 114 thread/always	Final tightening	+90°		

red/silver) to wheel carrier	use new screws following removal				
Brake calliper (17-inch - black) to wheel carrier	M14 x 1.5 x 48 thread/always use new screws following removal	Tightening torque	196 Nm (145 ftlb.)		
Brake calliper (PCCB) to wheel carrier	M14 x 1.5 x 135 thread/always use new screws following removal	Initial tightening	30 Nm (22 ftlb.)		
Brake calliper (PCCB) to wheel carrier	M14 x 1.5 x 135 thread/always use new screws following removal	Final tightening	+90°		
Brake hose bracket to wheel carrier	M6 x 16 thread	Tightening torque	10 Nm (7.5 ftlb.)		
Brake hose to brake calliper		Tightening torque	20 Nm (15 ftlb.)		

WM 473919 REMOVING AND INSTALLING FRONT BRAKE CALLIPER (ALL MODELS) > PRELIMINARY WORK

1. Raise the vehicle → 4X00IN LIFTING THE VEHICLE .
2. Remove wheel. Use assembly aids (assembly pins) **-1-** . → 440519 REMOVING AND INSTALLING WHEEL .

Fig 1: Identifying Threaded Bolts For Fitting Wheel



Courtesy of PORSCHE CARS NORTH AMERICA, INC.

WM 473919 REMOVING AND INSTALLING FRONT BRAKE CALLIPER (ALL MODELS) > REMOVING AND INSTALLING FRONT BRAKE CALLIPER > REMOVING FRONT BRAKE CALLIPER (18-INCH - BRAKE CALLIPER COLOR: SILVER/RED)

Information

- To gain better access for removal of the brake calliper, turn the steering fully either to the right or left.

Fig 1: Identifying Front Brake Calliper



Courtesy of PORSCHE CARS NORTH AMERICA, INC.

1. Loosen holder **-1-** for brake line, wear indicator and speed sensor on the wheel bearing housing.

Fig 2: Identifying Holder On Wheel Bearing Housing

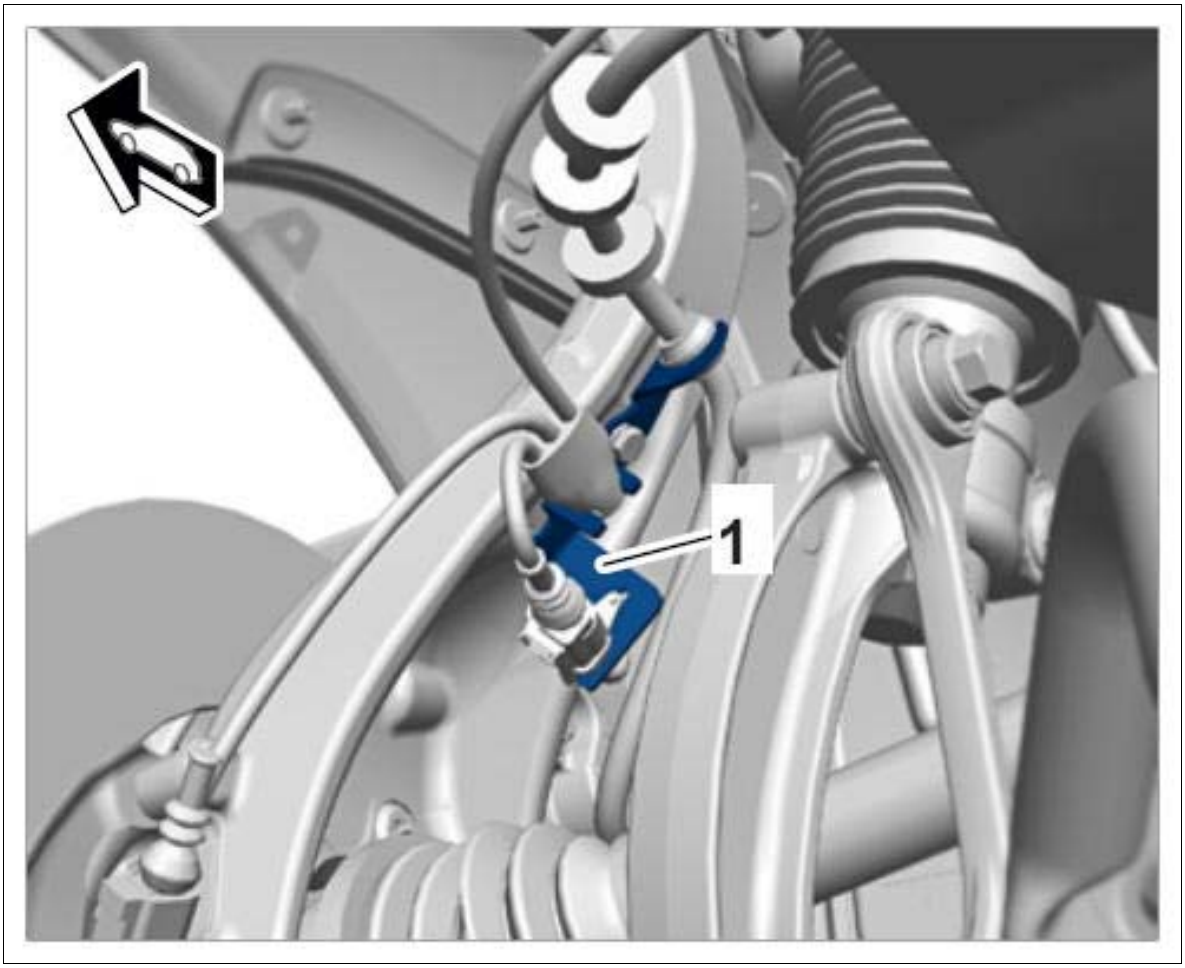

Courtesy of PORSCHE CARS NORTH AMERICA, INC.

2. Pull contact for brake pad wear indicator **-1-** out carefully and release holder for line **-2-** .

Fig 3: Identifying Wire Harness For Brake Pad Wear Indicator

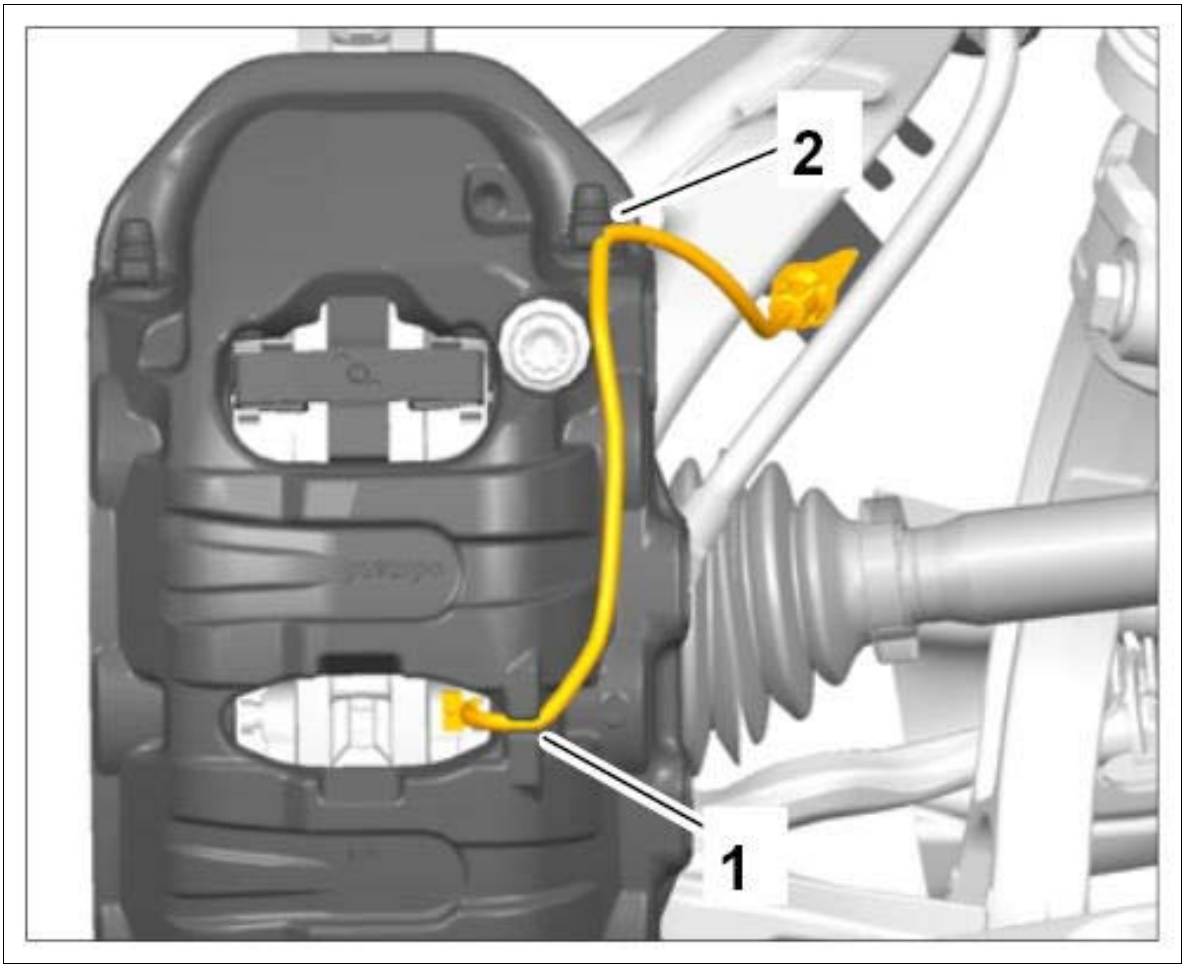

Courtesy of PORSCHE CARS NORTH AMERICA, INC.

> *NOTE: Removal of brake calliper*
>
> *1. Paint defects on brake calliper*

→ Proceed with care when setting back the brake pads.

→ Protect brake calliper from paint defects using a suitable cloth.

3. Set the disc brake pads back slightly and uniformly using water pump pliers.
4. Disconnect the brake line **-arrow-** at the brake calliper and collect brake fluid in a suitable container.

Fig 4: Locating Brake Line On Brake Calliper

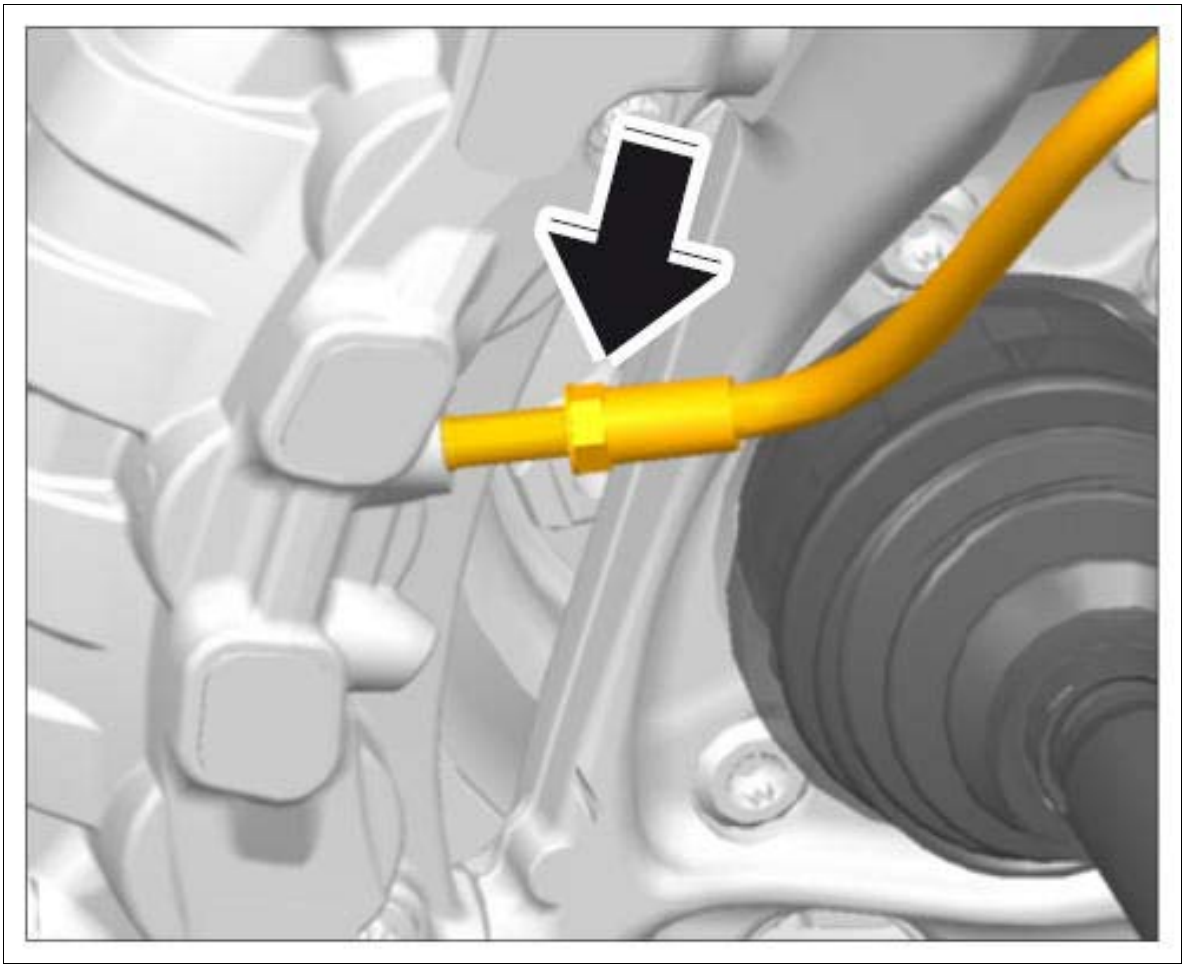

Courtesy of PORSCHE CARS NORTH AMERICA, INC.

5. Close off brake line using a suitable stopper.

   Information

   1. Never use an impact bolter to loosen and tighten the brake calliper on the wheel carrier.

6. Loosen fastening screws **-arrows-** and remove brake calliper from the wheel carrier.

Fig 5: Identifying Screws For Brake Calliper



Courtesy of PORSCHE CARS NORTH AMERICA, INC.

WM 473919 REMOVING AND INSTALLING FRONT BRAKE CALLIPER (ALL MODELS) > REMOVING AND INSTALLING FRONT BRAKE CALLIPER > REMOVING FRONT BRAKE CALLIPER (17-INCH - BRAKE CALLIPER COLOR: BLACK)

Information

- To gain better access for removal of the brake calliper, turn the steering fully either to the right or left.

Fig 1: Identifying Front Brake Calliper

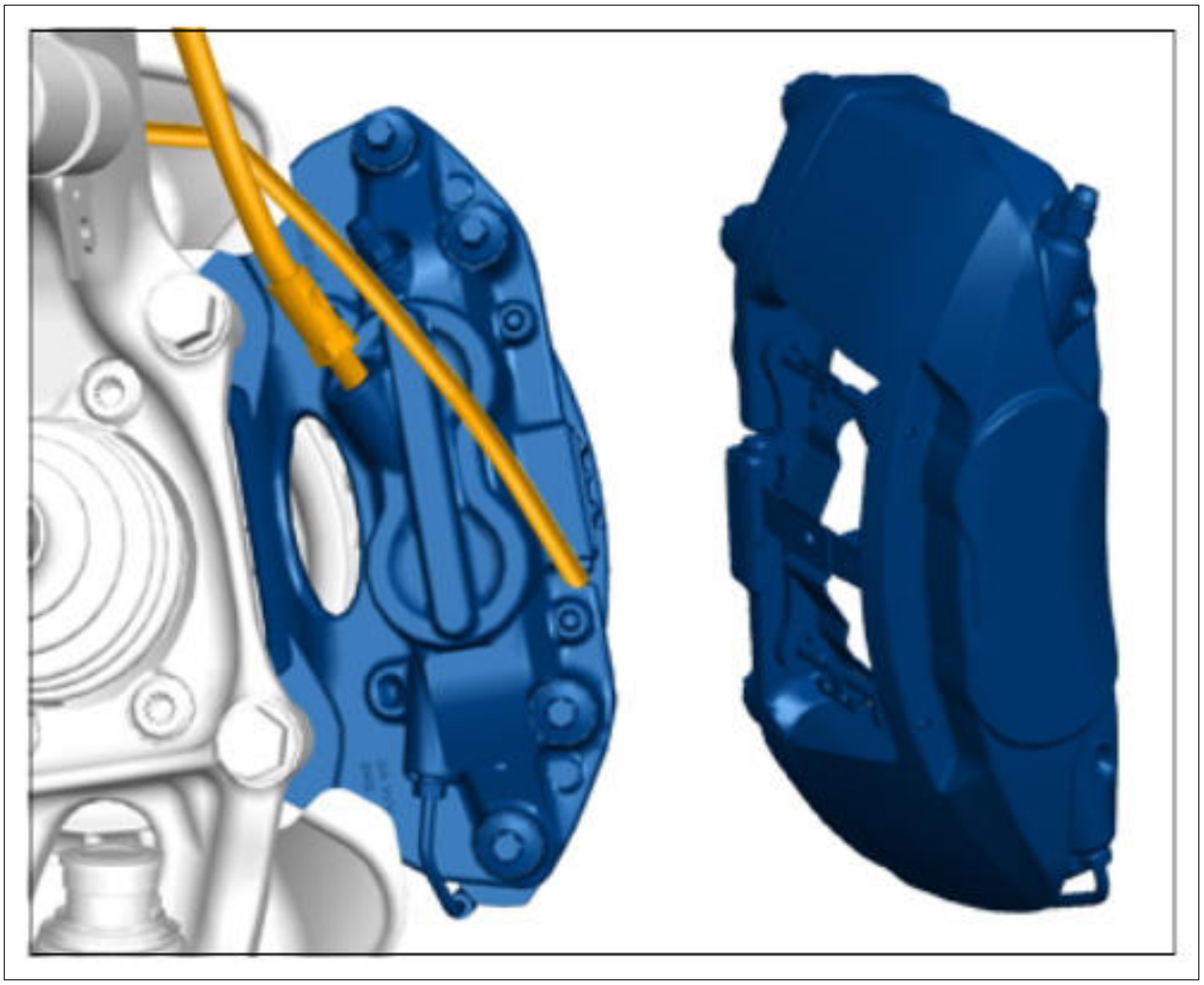

Courtesy of PORSCHE CARS NORTH AMERICA, INC.

1. Loosen holder **-1-** for brake line, wear indicator and speed sensor on the wheel bearing housing.

Fig 2: Identifying Holder On Wheel Bearing Housing

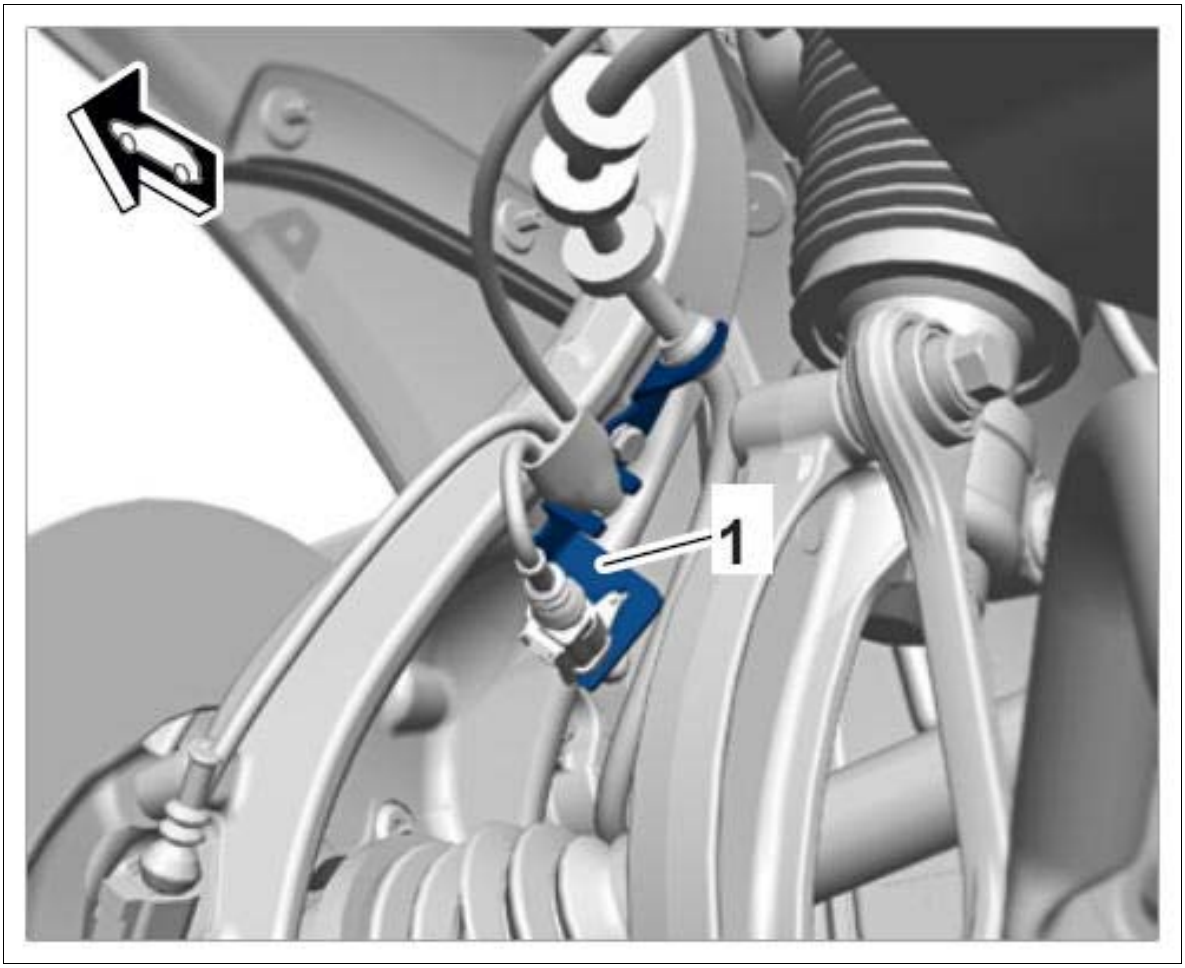

Courtesy of PORSCHE CARS NORTH AMERICA, INC.

Carefully pull contact for brake pad wear indicator out of the brake calliper and disconnect it at the holder.

NOTE: Removal of brake calliper

1. Paint defects on brake calliper

→ Proceed with care when setting back the brake pads.

→ Protect brake calliper from paint defects using a suitable cloth.

2. Set the disc brake pads back slightly and uniformly using water pump pliers.
3. Disconnect the brake line **-arrow-** at the brake calliper and collect brake fluid in a suitable container.

Fig 3: Locating Brake Line On Brake Calliper

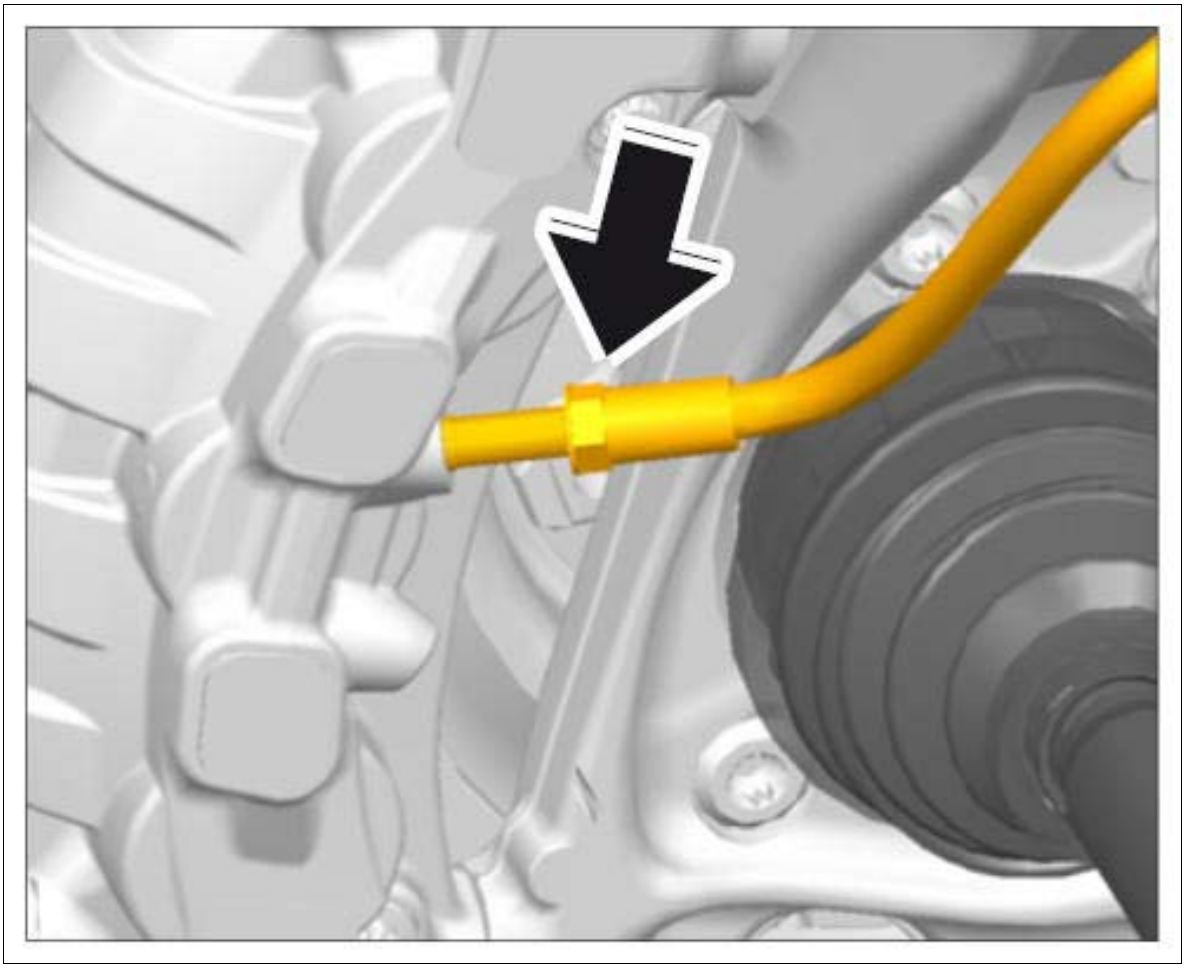

Courtesy of PORSCHE CARS NORTH AMERICA, INC.

4. Close off brake line using a suitable stopper.

   Information

   Never use an impact bolter to loosen and tighten the brake calliper on the wheel carrier.

5. Loosen fastening screws **-arrows-** and remove brake calliper from the wheel carrier.

Fig 4: Locating Brake Calliper Bolts

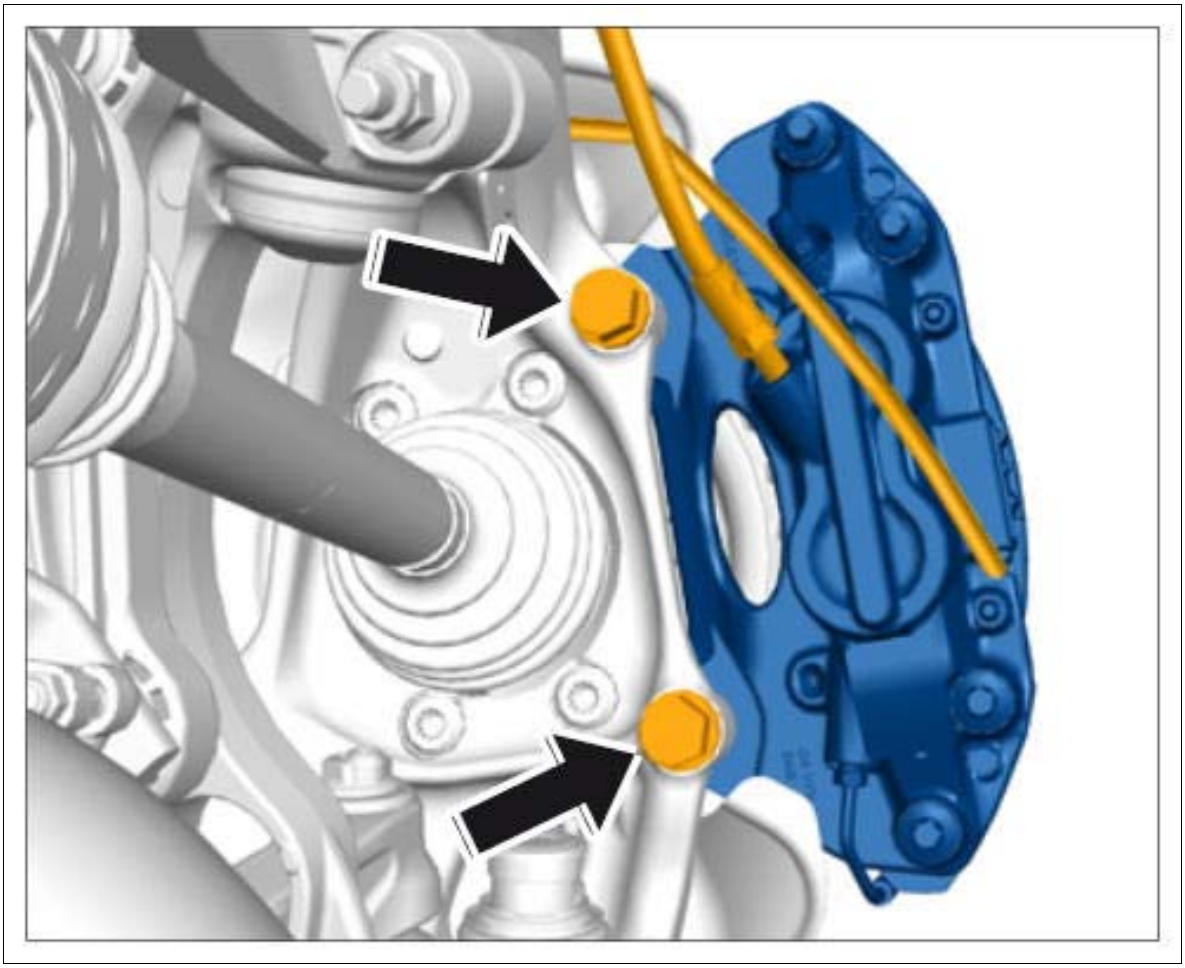

Courtesy of PORSCHE CARS NORTH AMERICA, INC.

WM 473919 REMOVING AND INSTALLING FRONT BRAKE CALLIPER (ALL MODELS) > REMOVING AND INSTALLING FRONT BRAKE CALLIPER > INSTALLING FRONT BRAKE CALLIPER

Do not bend the brake lines.

- Secure brake line holders at the wheel carrier.
- For easier access to the holders, turn in the wheel carrier as required.

WARNING: Old mounting parts fitted on the brake calliper

- *Reduced braking effect*
- *Risk of damage to the brake calliper*

→ Fit new pad retaining springs

Information

- Never use an impact bolter to loosen and tighten the brake calliper on the wheel carrier.
- Carry out a visual inspection on the thread for the brake calliper and blow it out carefully if necessary using compressed air. Use goggles!
- Replace screws for securing the brake calliper.

1. Check that all parts are in perfect condition (visual inspection) and replace them if necessary.
2. Installation is performed in reverse order. Pay particular attention to the following:

   Tightening torques:

   Brake calliper to wheel bearing housing (17-inch - black): **Tightening torque 196 Nm (145 ftlb.)**

   Brake calliper to wheel bearing housing (18-inch - red/silver): **Initial tightening 30 Nm (22 ftlb.) Final tightening +90°**

Brake calliper to wheel bearing housing (PCCB): **Initial tightening 30 Nm (22 ftlb.) Final tightening +90°**

Brake line to brake calliper: **Tightening torque 20 Nm (15 ftlb.)**

Holder to wheel bearing housing: **Tightening torque 10 Nm (7.5 ftlb.)**

To make it easier to install the brake calliper, assembly pins T10439 → Assembly pin for brake calliper can be used (not for 17-inch brake calliper).

Fig 1: Identifying Brake Calliper Pin



Courtesy of PORSCHE CARS NORTH AMERICA, INC.

- Carefully fit the brake calliper and screw in assembly pin only in the top thread by hand (this protects the thread!). → Assembly pin for brake calliper (top) fitted

Fig 2: Fitting Pin For Brake Calliper

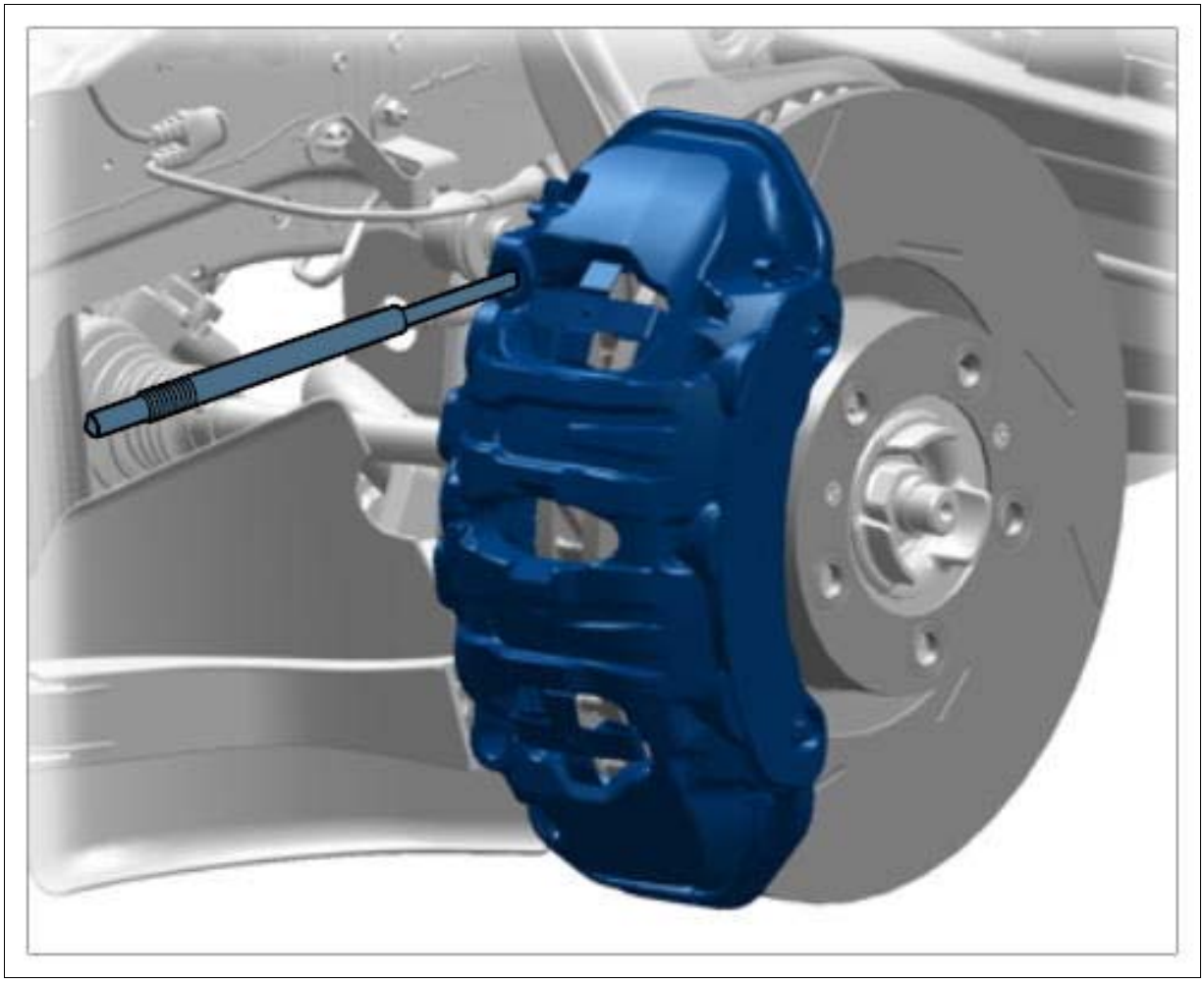

Courtesy of PORSCHE CARS NORTH AMERICA, INC.

- Screw in bottom brake calliper screws several turns by hand (this protects the thread!).
- Remove assembly pin and screw in top brake calliper screw several turns by hand (this protects the thread!).
- Screw in both brake calliper screws fully and tighten to the specified tightening torque.

WM 473919 REMOVING AND INSTALLING FRONT BRAKE CALLIPER (ALL MODELS) > SUBSEQUENT WORK

Information

New disc brake pads require a bedding-in time of approx. 200 km (125 miles)! Only then do they achieve their best friction coefficient and wear value! During this period, the brakes should only be subjected to full stress at high speed in emergencies!

1. Position disc brake pads by operating the brake several times.
2. Bleed the brake system .

3. Fit wheel. Use assembly aids (assembly pins) **-1-** .

→ Installing Wheel .

Fig 1: Identifying Threaded Bolts



Courtesy of PORSCHE CARS NORTH AMERICA, INC.

WM 473919 REMOVING AND INSTALLING FRONT BRAKE CALLIPER (PCCB) (ALL MODELS) > INFORMATION

The procedure for PCCB brake callipers is identical to the procedure for conventional brake callipers → 473919 REMOVING AND INSTALLING FRONT BRAKE CALLIPER .

WM 474119 REMOVING AND INSTALLING REAR BRAKE CALLIPER (ALL MODELS) > TOOLS

Designation	Type	Number	Description	

PIWIS Tester II	Special tool	9818		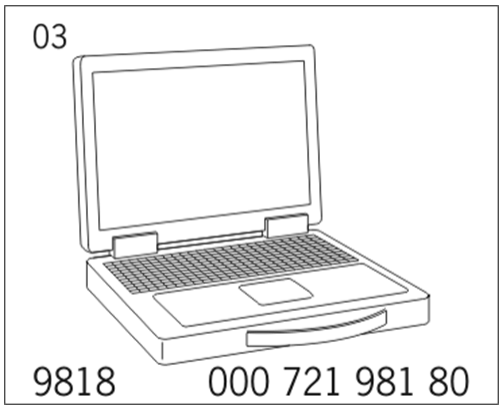

WM 474119 REMOVING AND INSTALLING REAR BRAKE CALLIPER (ALL MODELS) > TECHNICAL VALUES

Location	Description	Type	Basic value	Tolerance 1	Tolerance 2
Brake calliper to wheel bearing housing	M12/always use new screws or bolts following removal	Initial tightening	100 Nm (74 ftlb.)		
Brake calliper to wheel bearing housing	M12/always use new screws or bolts following removal	Final tightening	+90°		
Brake hose to brake calliper		Tightening torque	20 Nm (15 ftlb.)		

WM 474119 REMOVING AND INSTALLING REAR BRAKE CALLIPER (ALL MODELS) > PRELIMINARY WORK

1. Raise the vehicle. → 4X00IN LIFTING THE VEHICLE
2. Use **PIWIS Tester II 9818** to move the electric parking brake (EPB) into >>assembly position<<.
    1. 2.1. Select >>Parking brake<< in the control unit overview.
    2. 2.2. Select >>Maintenance/repairs<< >>Assembly position<<.
3. Remove wheel. → 440519 REMOVING AND INSTALLING WHEEL

WM 474119 REMOVING AND INSTALLING REAR BRAKE CALLIPER (ALL MODELS) > REMOVING AND INSTALLING REAR BRAKE CALLIPER > REMOVING REAR BRAKE

CALLIPER

Fig 1: Identifying Rear Brake Assembly

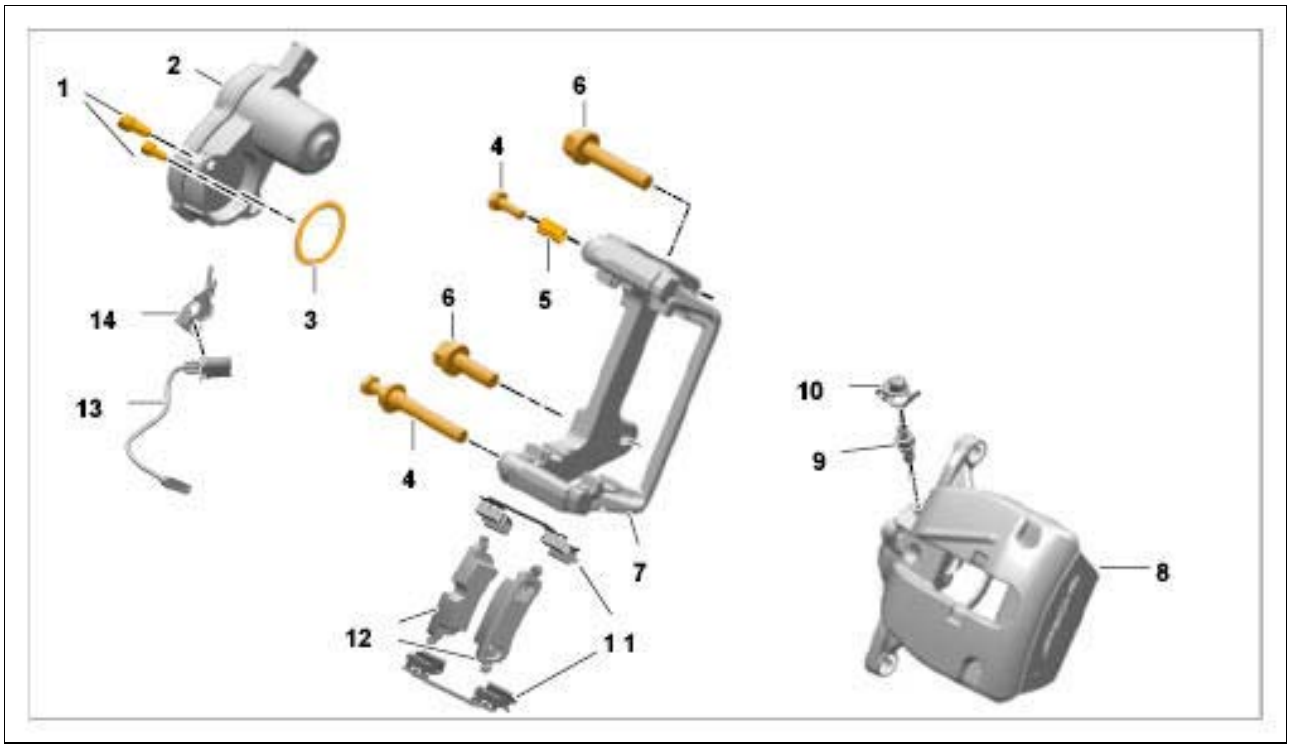

Courtesy of PORSCHE CARS NORTH AMERICA, INC.

1. Fastening screw for EPB actuator
2. EPB actuator
3. Sealing ring
4. Fastening screw securing brake calliper to calliper carrier
5. Boot for guide pin
6. Fastening screw securing brake calliper to wheel bearing housing
7. Calliper carrier
8. Brake calliper
9. Ventilation valve
10. Dust boot
11. Pad retaining bracket
12. Brake pad
13. Cable for brake pad wear indicator
14. Cable holder for brake pad wear indicator

1. Disconnect electric plug connection for brake pad wear indicator at the brake calliper.

2. Release and disconnect electric plug connection **-1-** on the speed sensor.

Fig 2: Identifying Rear Speed Sensor

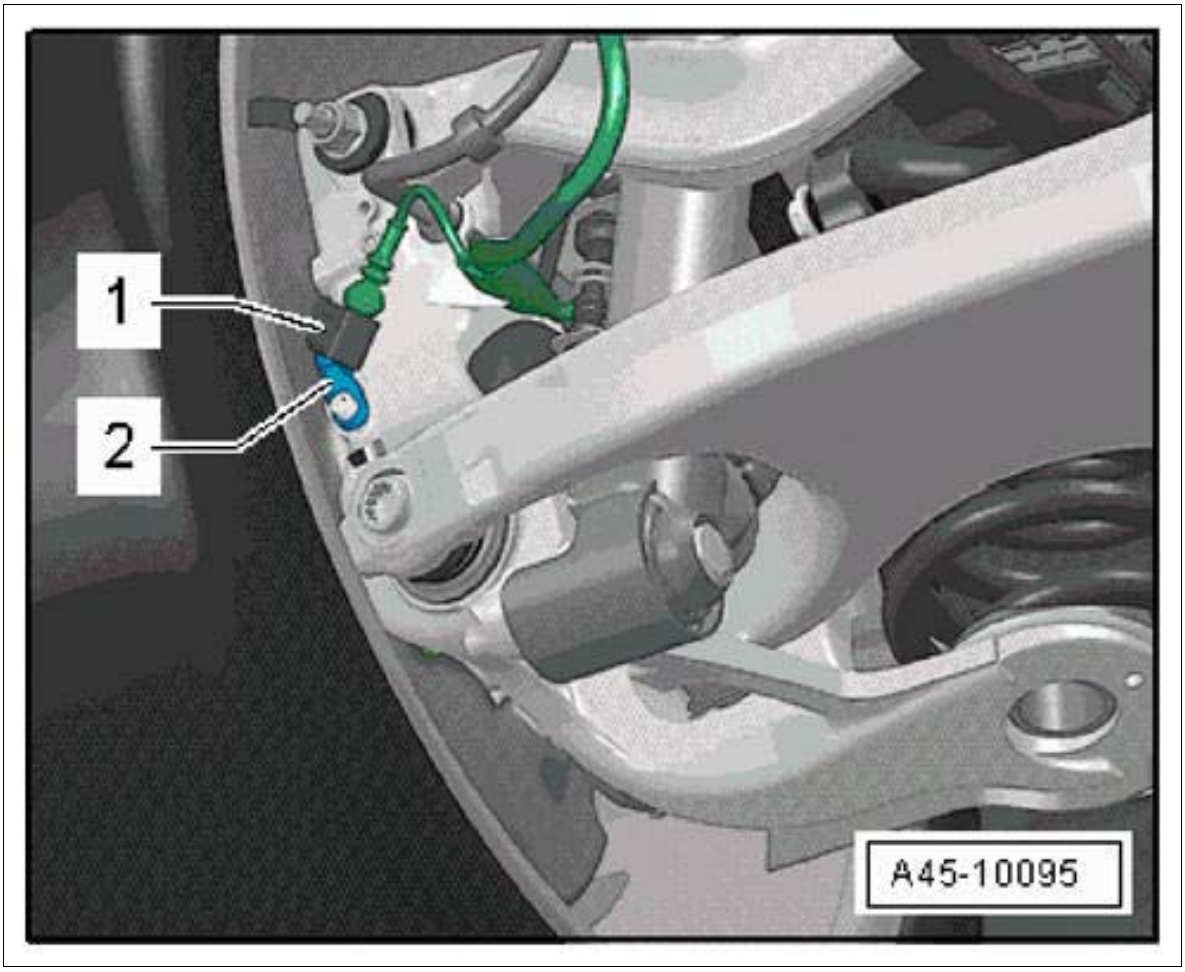

Courtesy of PORSCHE CARS NORTH AMERICA, INC.

3. Disconnect brake line **-2-** at the brake calliper and collect brake fluid in a suitable container.
4. Close off brake line using a suitable stopper.
5. Unscrew fastening screws **-3-** on the calliper carrier.

Fig 3: Identifying Brake Calliper Bolts

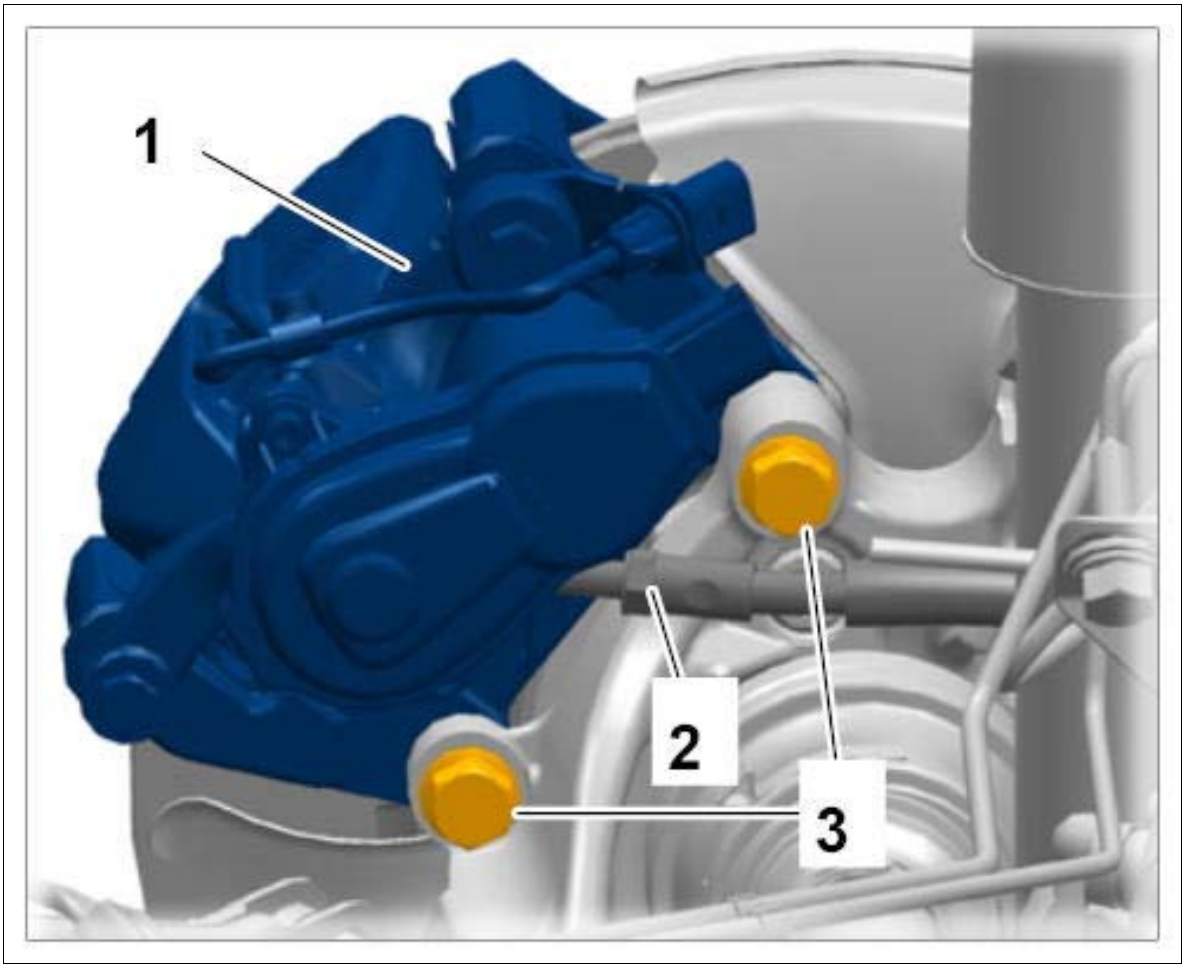

Courtesy of PORSCHE CARS NORTH AMERICA, INC.

WM 474119 REMOVING AND INSTALLING REAR BRAKE CALLIPER (ALL MODELS) > REMOVING AND INSTALLING REAR BRAKE CALLIPER > INSTALLING REAR BRAKE CALLIPER

WARNING: Old mounting parts fitted on the brake calliper

- *Reduced braking effect*
- *Risk of damage to the brake calliper*

→ Fit new pad retaining springs

Information

When replacing the brake pads, always pay attention to the following:

- The back of the pad backing plates must not be greased.

- Check brake discs for wear. For details of wear limits, see → 465302 CHECKING REAR BRAKE DISCS (WEAR ASSESSMENT) .
- Disc brakes must be clean and free of grease.
- The core of the warning contact wire must not be left exposed! Worn insulation is not important.
- Use a new repair kit (only replace the brake pads on the same axle).

1. Check that all parts are in perfect condition (visual inspection) and replace them if necessary.
2. Installation is performed in reverse order. Pay particular attention to the following:

   Information

   Make sure that the brake hose and electric line are clipped in and secured correctly in the combination holder at the wheel bearing housing so that the brake hose and electric line cannot come out of the holders.

   1. Clip brake hose dry (without using sliding compound) into the holder at the wheel bearing housing.
   2. Observe specified tightening torques:

   Calliper carrier to wheel bearing housing: **Initial tightening 100 Nm (74 ftlb.) Final tightening +90°**

   Brake line to brake calliper: **Tightening torque 20 Nm (15 ftlb.)**

WM 474119 REMOVING AND INSTALLING REAR BRAKE CALLIPER (ALL MODELS) > SUBSEQUENT WORK

1. Fit wheel. → Installing Wheel
2. Use PIWIS Tester II 9818 to start the electric parking brake (EPB).
   1. 2.1. Select >>Parking brake<< in the control unit overview.
   2. 2.2. Select >>Maintenance/repairs<< >>Start-up<<.

WM 474119 REMOVING AND INSTALLING REAR BRAKE CALLIPER (PCCB) (ALL MODELS) > INFORMATION

The procedure for PCCB brake callipers is identical to the procedure for conventional brake callipers → 474119 REMOVING AND INSTALLING REAR BRAKE CALLIPER .

WM 477019 REMOVING AND INSTALLING BRAKE BOOSTER (ALL MODELS) > TOOLS

Designation	Type	Number	Description	
PIWIS Tester II	Special tool	9818		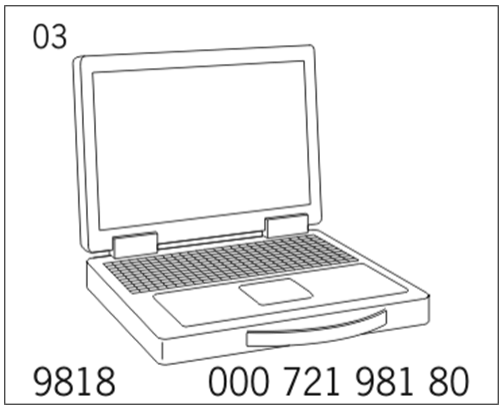
Release tool	VW tool	T40136		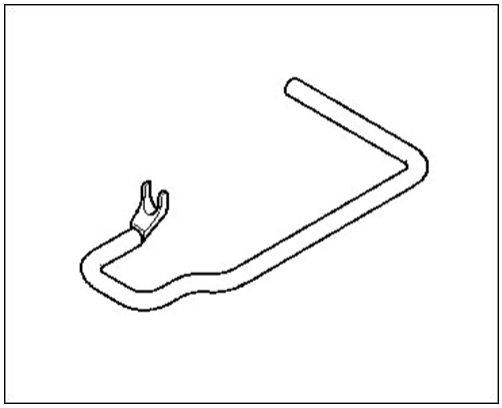

WM 477019 REMOVING AND INSTALLING BRAKE BOOSTER (ALL MODELS) > TECHNICAL VALUES

Location	Description	Type	Basic value	Tolerance 1	Tolerance 2
Brake booster to pedals	12 point socket	Tightening torque	25 Nm (19 ftlb.)		

WM 477019 REMOVING AND INSTALLING BRAKE BOOSTER (ALL MODELS) > PRELIMINARY WORK

1. Actuate the brake pedal as often as required until there is no more brake force boosting (brake booster is "empty", brake pedal becomes hard).
2. Remove brake light switch → 943619 REMOVING AND INSTALLING BRAKE LIGHT SWITCH .
3. Remove cowl panel cover → 508719 REMOVING AND INSTALLING COWL PANEL COVER .
4. Remove cross panel → 508119 REMOVING AND INSTALLING CROSS PANEL (DISASSEMBLING PLENUM PANEL) .

5. Remove brake master cylinder → 471519 REMOVING AND INSTALLING BRAKE MASTER CYLINDER .

WM 477019 REMOVING AND INSTALLING BRAKE BOOSTER (ALL MODELS) > REMOVING AND INSTALLING BRAKE BOOSTER > REMOVING BRAKE BOOSTER

1. Separate brake pedal from brake booster.
    1. Brake pedal
    2. Push rod
    3. Retaining lugs

Fig 1: Separating Brake Pedal From Booster

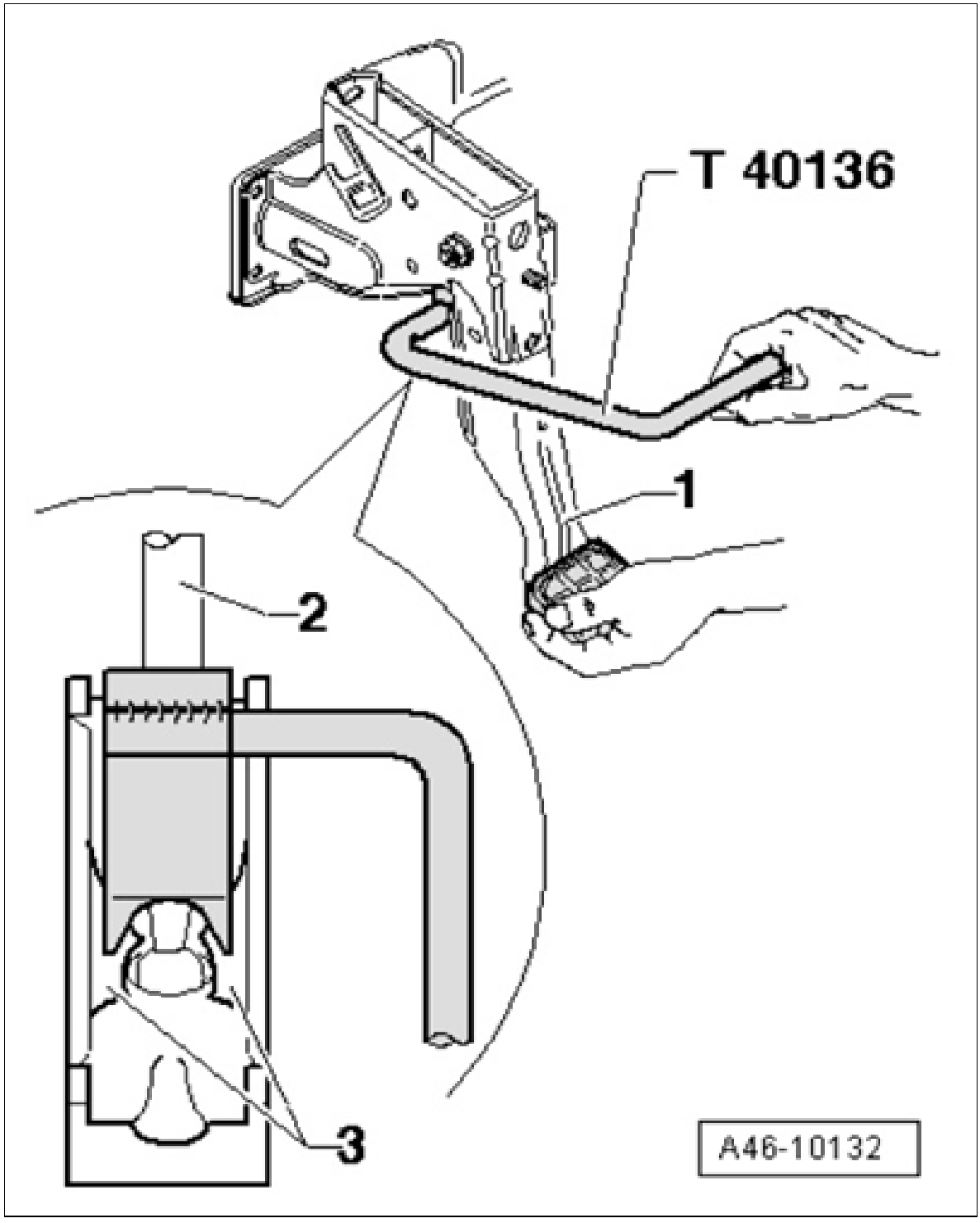

Courtesy of PORSCHE CARS NORTH AMERICA, INC.

1. 1.1. Press the brake pedal **-1-** towards the brake booster
2. 1.2. **Release tool T40136** must be fitted on the ball joint on the push rod **-2-** .
3. 1.3. To press the retaining lugs **-3-** on the mounting off the ball joint on the push rod **-2-** , pull release tool **T40136** towards the driver's seat and counter at the brake pedal **-1-** at the same time (the brake pedal must not move towards the driver's

seat).

4. 1.4. **Release tool T40136** and brake pedal must both be pulled towards the driver's seat.

2. Pull vacuum line **-2-** out of the brake booster.

3. Unscrew fastening screws **-1-** for the mounting saddle.

Information

1. When fitting the brake booster -1- , make sure not to damage the seal -3- and the boot -4- on the push rod -2- .

2. Check retaining lugs for the push rod through the opening in the plenum panel for signs of damage.

Fig 2: Identifying Brake Booster, Seal And Boot

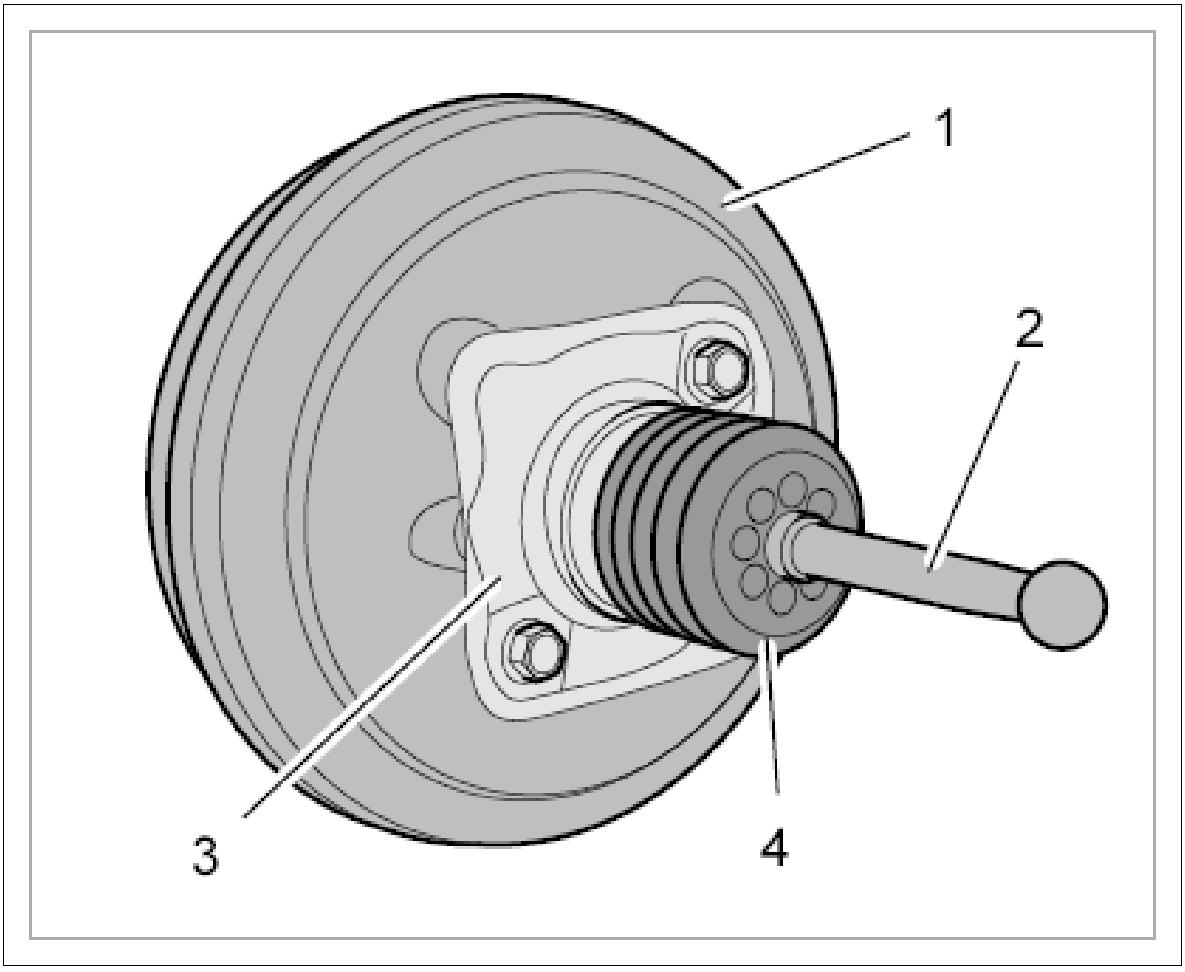

Courtesy of PORSCHE CARS NORTH AMERICA, INC.

4. Remove brake booster **-3-** .

Fig 3: Identifying Brake Booster

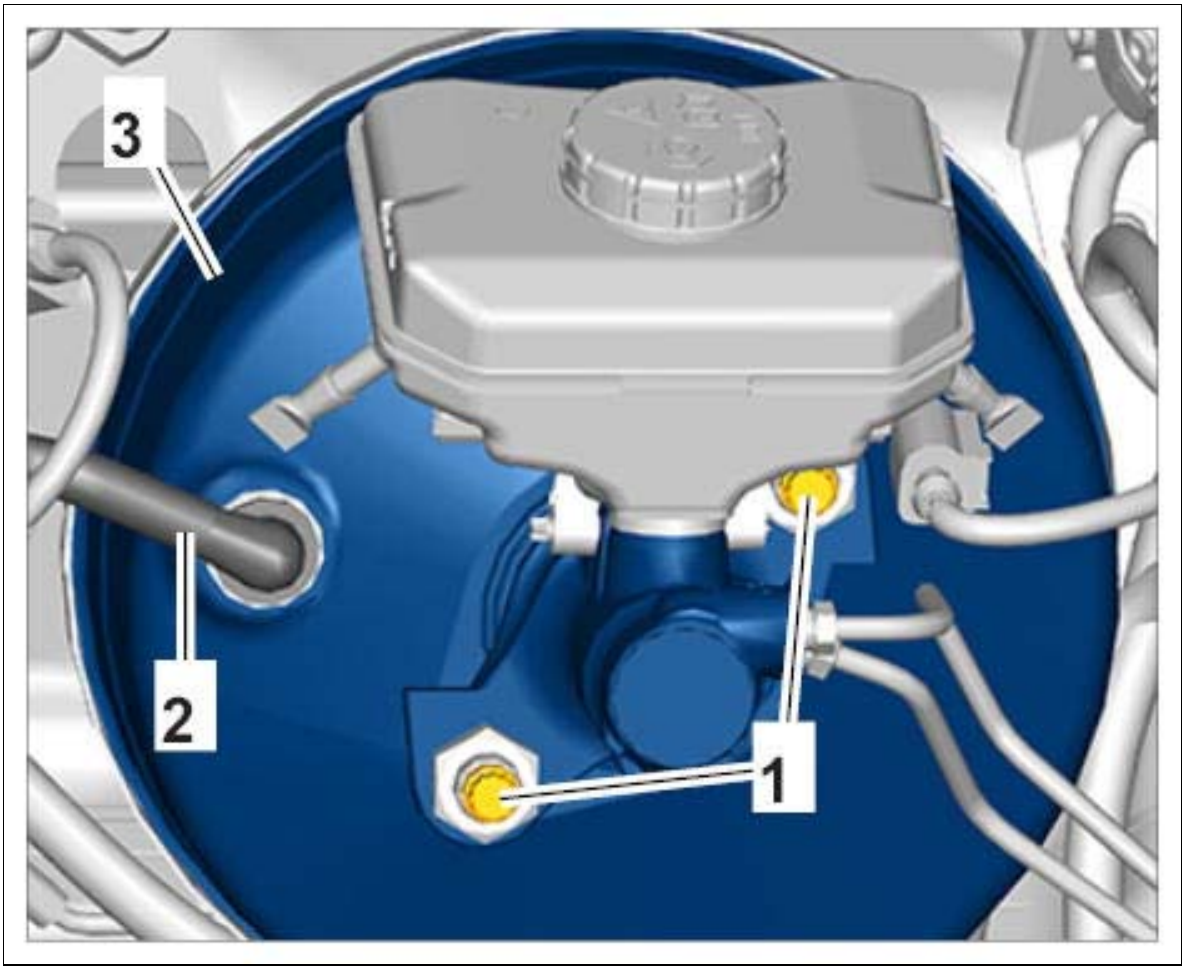

Courtesy of PORSCHE CARS NORTH AMERICA, INC.

WM 477019 REMOVING AND INSTALLING BRAKE BOOSTER (ALL MODELS) > REMOVING AND INSTALLING BRAKE BOOSTER > INSTALLING BRAKE BOOSTER

Information

- When fitting the brake booster -1- , make sure not to damage the seal -3- and the boot -4- on the push rod -2- .
- Check retaining lugs for the push rod through the opening in the plenum panel for signs of damage.

Fig 1: Identifying Brake Booster, Seal And Boot

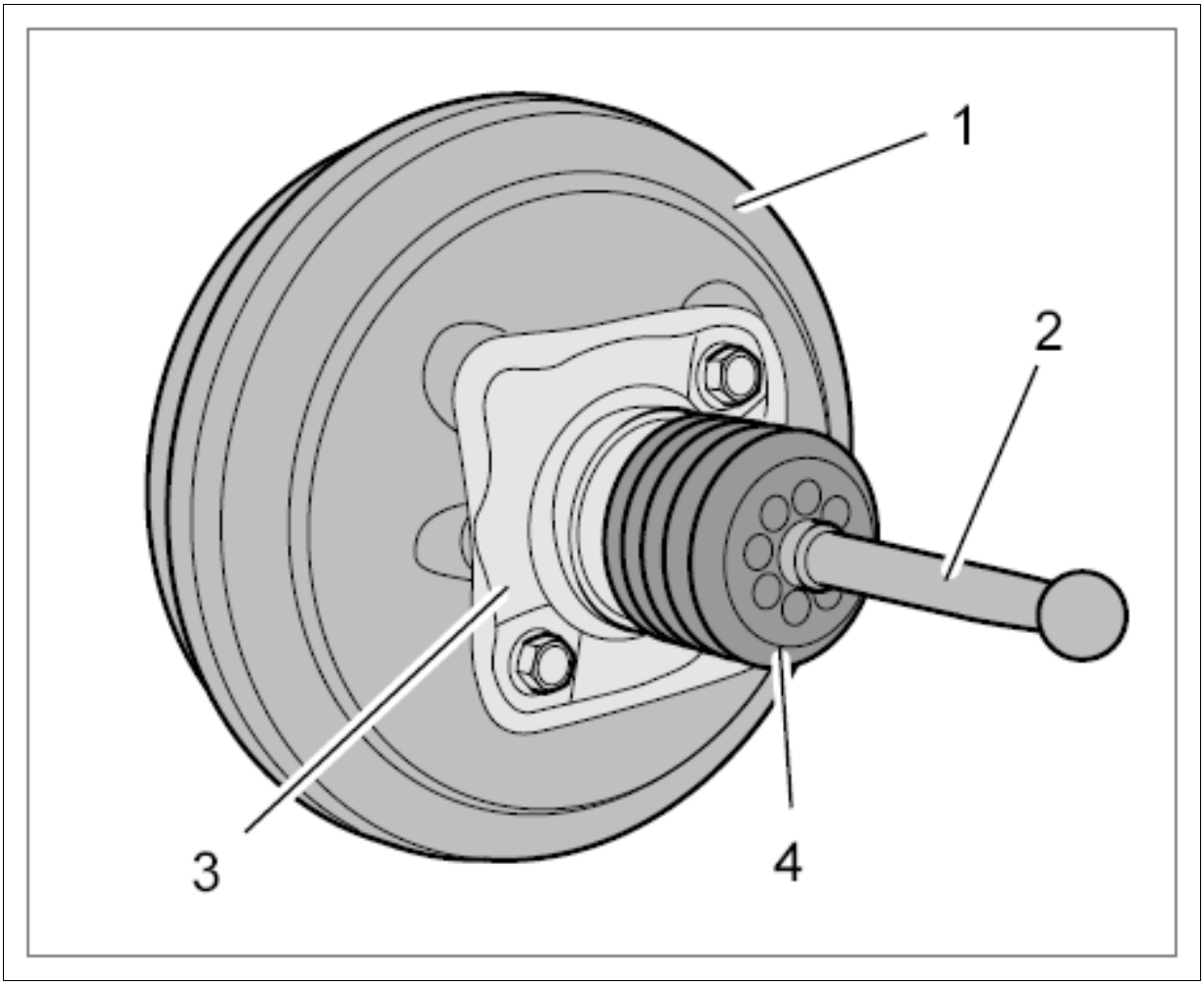

Courtesy of PORSCHE CARS NORTH AMERICA, INC.

1. Fit the brake booster into the vehicle. Check that the boot is seated correctly when doing so.
2. Tighten fastening screws **-1-** securing the brake booster **-3-** to the mounting saddle.
   Tightening torque 25 Nm (19 ftlb.)

Fig 2: Identifying Brake Booster

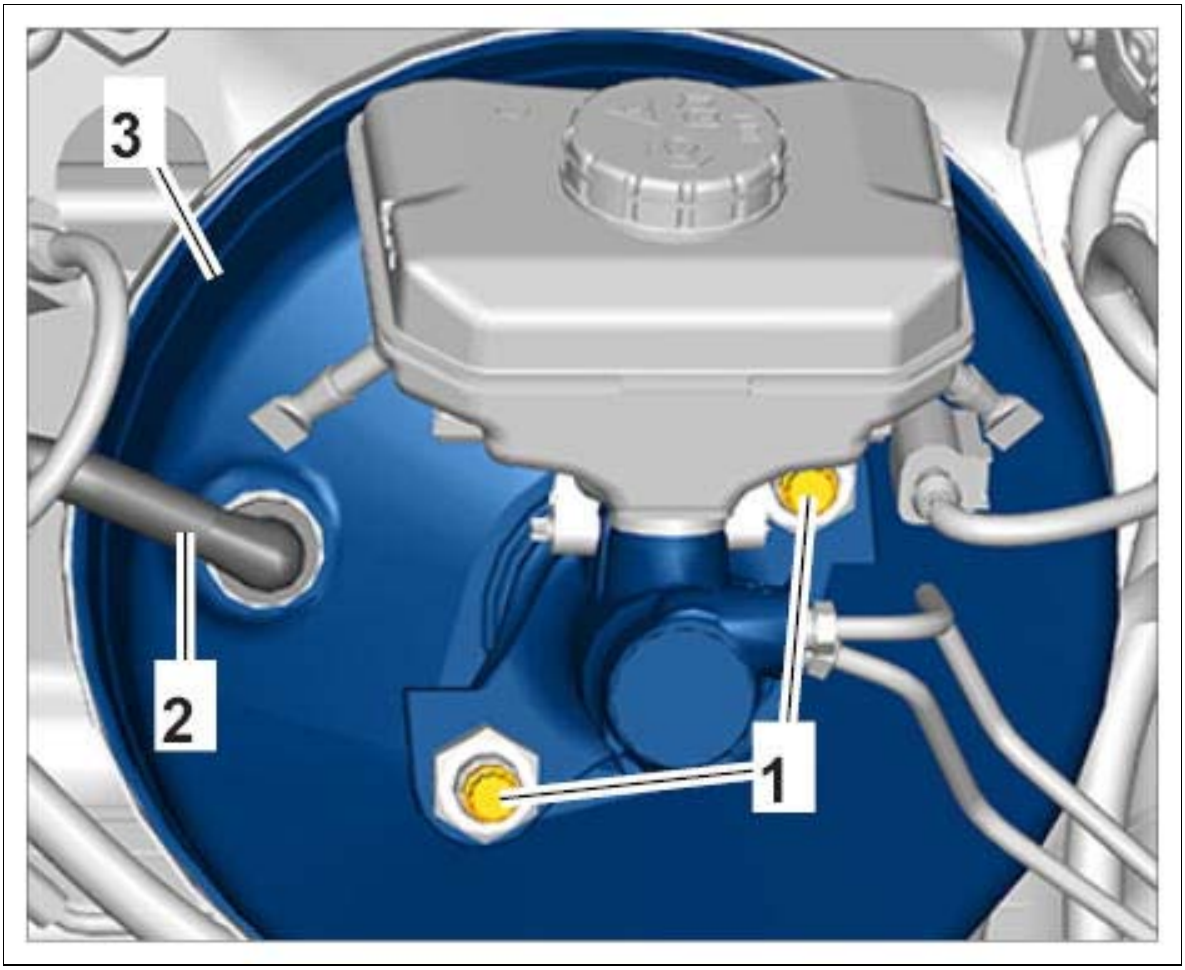

Courtesy of PORSCHE CARS NORTH AMERICA, INC.

Information

Damage when installing a new brake booster:

If the brake booster was replaced, the stopper at the vacuum line connection must be removed before connecting the brake pedal to the brake booster.

If this is not done, there is a risk of damage to the brake booster.

3. Connect brake pedal to the brake booster.

Fig 3: Positioning Brake Pedal On Push Rod

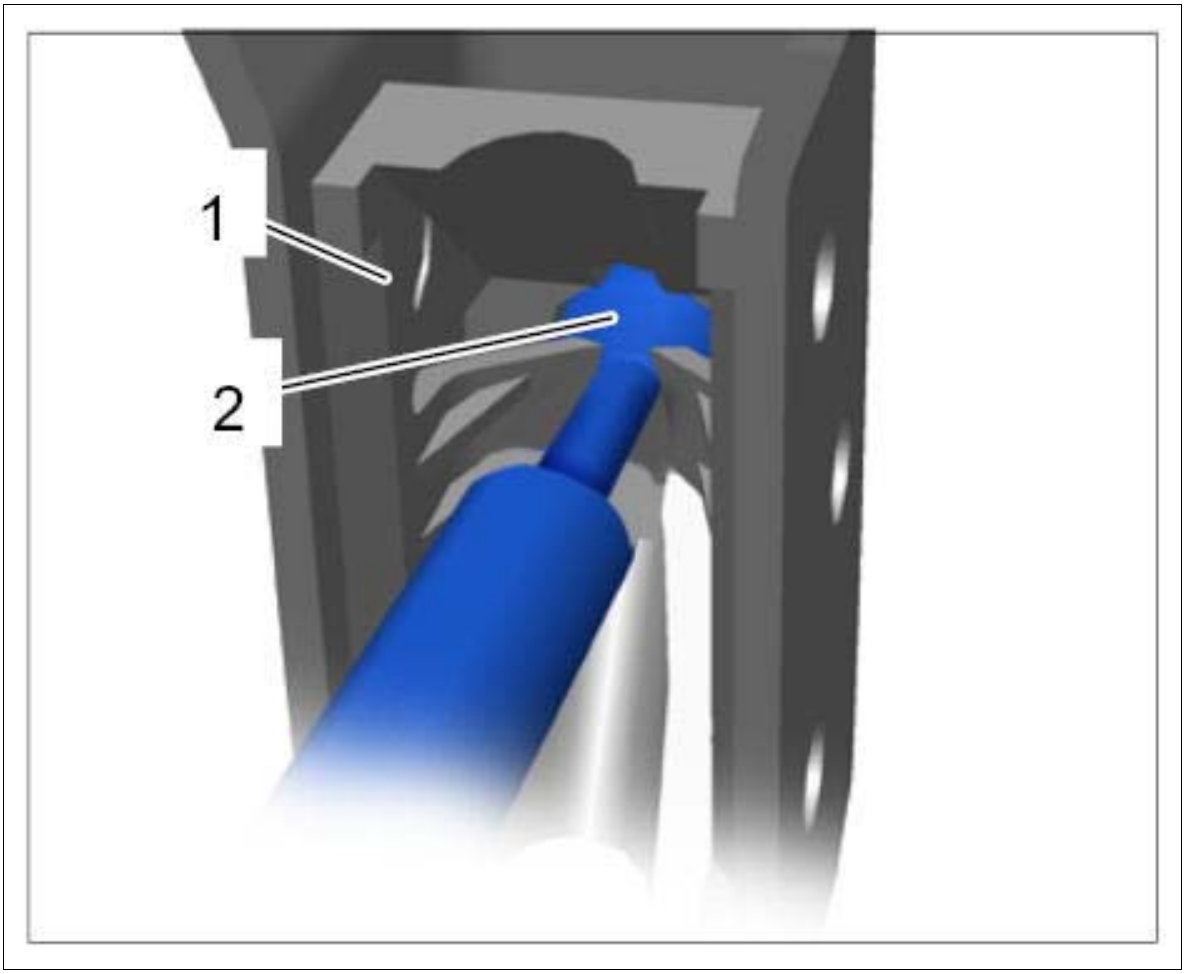

Courtesy of PORSCHE CARS NORTH AMERICA, INC.

1. 3.1. Position brake pedal on the push rod for the brake booster.
2. 3.2. Press the brake pedal fully until the push rod **-2-** engages with an audible click in the holder **-1-** on the brake pedal.
3. 3.3. Check that the push rod **-2-** is fully engaged in the holder **-1-** .

WM 477019 REMOVING AND INSTALLING BRAKE BOOSTER (ALL MODELS) > SUBSEQUENT WORK

1. Install brake master cylinder → Installing Brake Master Cylinder .
2. Install cross panel → Installing Cross Panel .
3. Install cowl panel cover → 508719 REMOVING AND INSTALLING COWL PANEL COVER .
4. Install brake light switch → 943619 REMOVING AND INSTALLING BRAKE LIGHT SWITCH .
5. **If the brake booster was replaced:** Check the brake booster in accordance with the instructions below.

WM 477019 REMOVING AND INSTALLING BRAKE BOOSTER (ALL MODELS) > SUBSEQUENT WORK > CHECKING BRAKE BOOSTER

1. Connect a battery charger with a current rating of at least 40 A to the jump-start terminals in the engine compartment.

2. Switch on ignition.

3. **PIWIS Tester II 9818** with the current software version installed must be connected to the vehicle communication module (VCI) via the **USB cable** . Then, connect the communication module to the vehicle and switch on the PIWIS Tester.

4. On the PIWIS Tester start screen, call up the ==> **'Diagnostics'** menu and select the vehicle type ==> **'Macan'** .

   The diagnostic application is then started and the control unit selection screen is populated.

1. Select the control unit ==> **'PSM'** in the control unit selection screen (**==> 'Overview'** menu) and press [>>] to confirm your selection → see Fig 1.

   Fig 1: Display - Control Unit Selection Screen

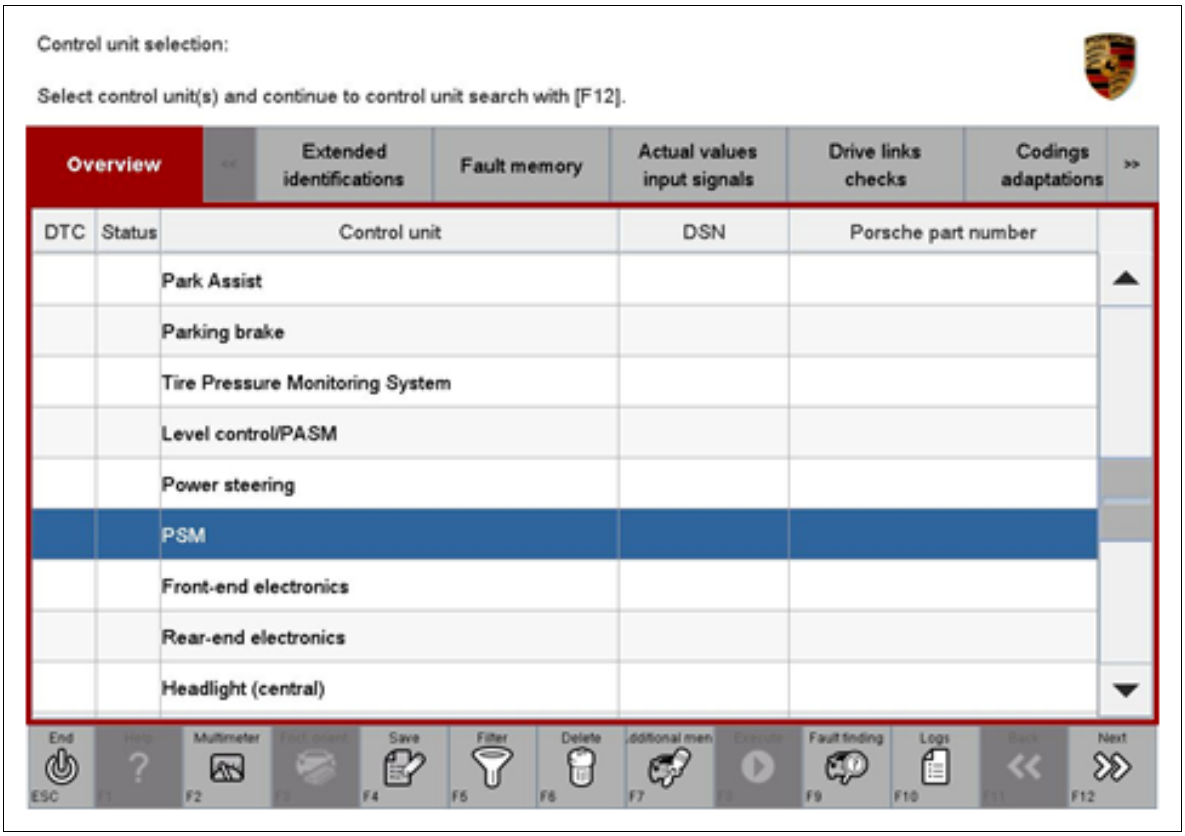

Courtesy of PORSCHE CARS NORTH AMERICA, INC.

2. Press [F11] to skip the question as to whether you want to create a vehicle analysis log (VAL).

3. Press [>>] to acknowledge the message that may appear informing you that campaigns for the vehicle are stored in the PIWIS information system.

4. Once the PSM control unit has been found and is displayed in the overview, select the ==> 'Actual values/input signals' menu → see Fig 2.

   Selecting Actual values/input signals

5. In the 'Actual values/input signals' menu, highlight the sensors to be checked **==> 'Brake pressure (hydraulic unit sensor)' and ==> 'Brake booster vacuum (vacuum sensor)'** and press [F12] to confirm.

6. Start the engine in selector-lever position "P" and leave it running for approx. 30 seconds at idle speed until the **'Vacuum'** is no longer increasing and remains constant.

   Information

   At **sea level, a vacuum of at least 900 mbar** must be reached at idle speed in the brake booster. The **higher the position** above sea level, the **lower** the ambient pressure, and thus the lower the **vacuum to be reached** in the brake booster.

   The vacuum in the brake booster drops by approx. 10 mbar for every 100 m increase in height.

   This means, for example, that a vehicle **at 1, 000 m** above sea level **still only reaches a vacuum of at least 800 mbar** in the brake booster.

7. Set the measured value for **'Brake pressure'** to approx. **130 bar** by pressing the brake pedal, keep the brake pressure at approx. 130 bar for 5 seconds and check the displayed measured values → see Fig 2.

   Fig 2: Display - Measured Values Screen

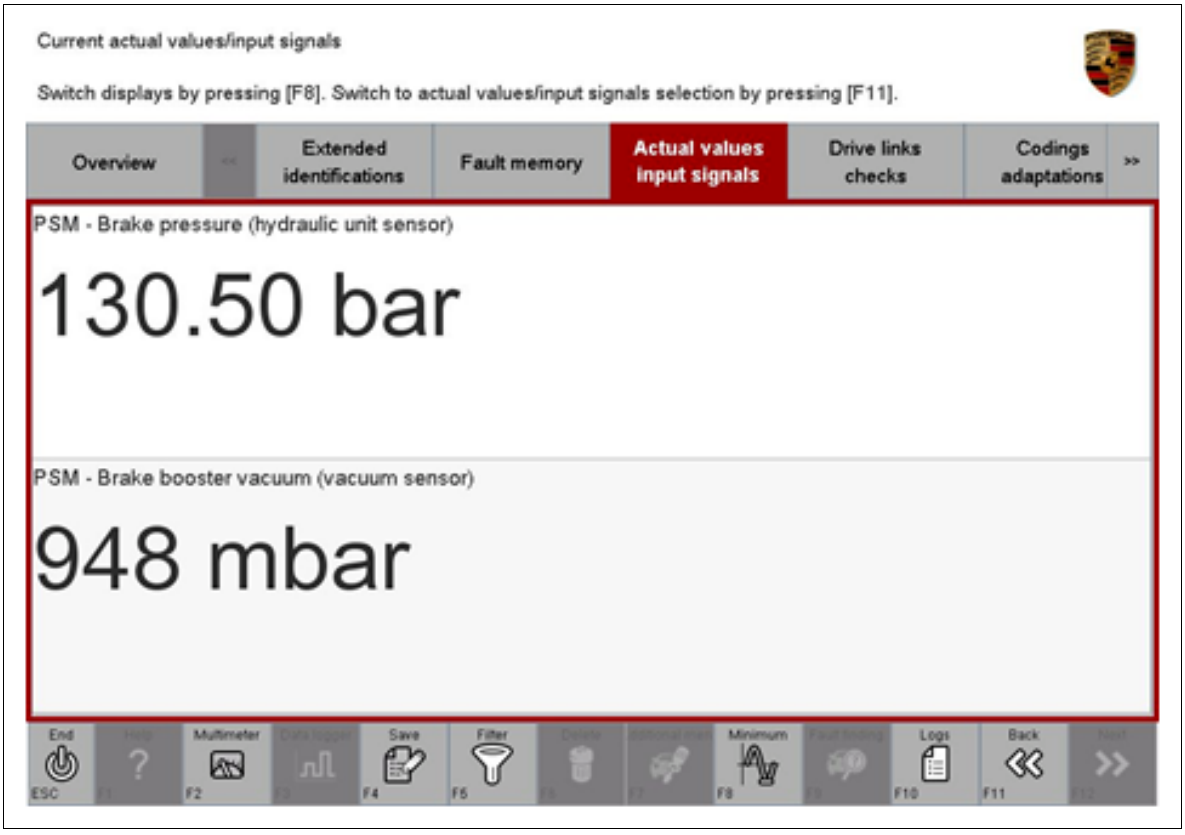

Courtesy of PORSCHE CARS NORTH AMERICA, INC.

1. If the vacuum **drops by less than approx. 100 mbar** from the starting value **after setting the brake pressure** and then **increases again** or remains constant, the **brake booster is OK** . Continue with **Step 8** .

2. If the vacuum **drops quickly by more than approx. 100 mbar from the starting value** when checking the **brake booster,** the brake booster must be **replaced** .

8. Stop the engine and switch off the ignition.

9. Disconnect the PIWIS Tester from the vehicle.

10. Switch off and disconnect the battery charger.

WM 477055 REPLACING BRAKE BOOSTER (ALL MODELS) > TOOLS

Designation	Type	Number	Description	
PIWIS Tester II	Special tool	9818		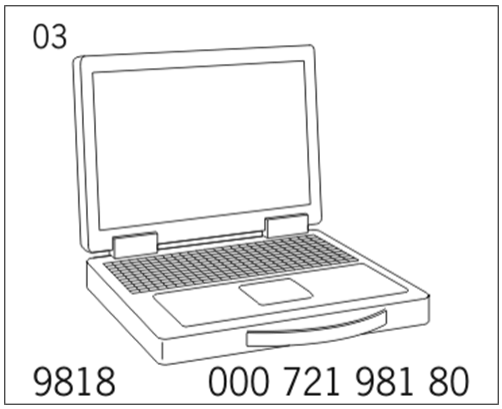
Release tool	VW tool	T40136		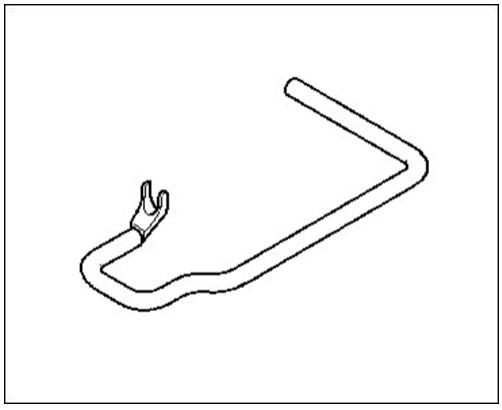

WM 477055 REPLACING BRAKE BOOSTER (ALL MODELS) > TECHNICAL VALUES

Location	Description	Type	Basic value	Tolerance 1	Tolerance 2
Brake line to brake master cylinder	Union nut	Tightening torque	14 Nm (10.5 ftlb.)		

(left-hand drive)					
Brake line to brake master cylinder (right-hand drive)	Union nut	Tightening torque	18 Nm (13 ftlb.)		
Brake booster to pedals	12 point socket	Tightening torque	25 Nm (19 ftlb.)		

WM 477055 REPLACING BRAKE BOOSTER (ALL MODELS) > PRELIMINARY WORK

1. Actuate the brake pedal as often as required until there is no more brake force boosting (brake booster is "empty", brake pedal becomes hard).
2. Remove brake light switch → 943619 REMOVING AND INSTALLING BRAKE LIGHT SWITCH .
3. Unclip cowl panel cover → 508719 REMOVING AND INSTALLING COWL PANEL COVER .
4. Remove cross panel → 508119 REMOVING AND INSTALLING CROSS PANEL (DISASSEMBLING PLENUM PANEL) .

WM 477055 REPLACING BRAKE BOOSTER (ALL MODELS) > REPLACING BRAKE BOOSTER

Information

- In the event of assembly work at the hydraulic connections, all electric plug connections in the area of the connection point must always be connected. This prevents the inside of the plug connections from being splashed with brake fluid or water.
- Clean any plug connections that have become dirty or damp during removal and fitting using a lint-free cloth, for example.
- Brake fluid on electrical contacts (even thinned brake fluid) leads to corrosion and can cause faults in the system.
- Remove any escaping brake fluid immediately; rinse with water and dry thoroughly if necessary.

Information

The following repair instructions describe the procedure for replacing the brake booster together with the brake master cylinder and brake fluid reservoir.

The brake master cylinder and brake fluid reservoir remain fitted on the brake booster.

1. Separate brake pedal from brake booster.

Fig 1: Separating Brake Pedal From Brake Booster

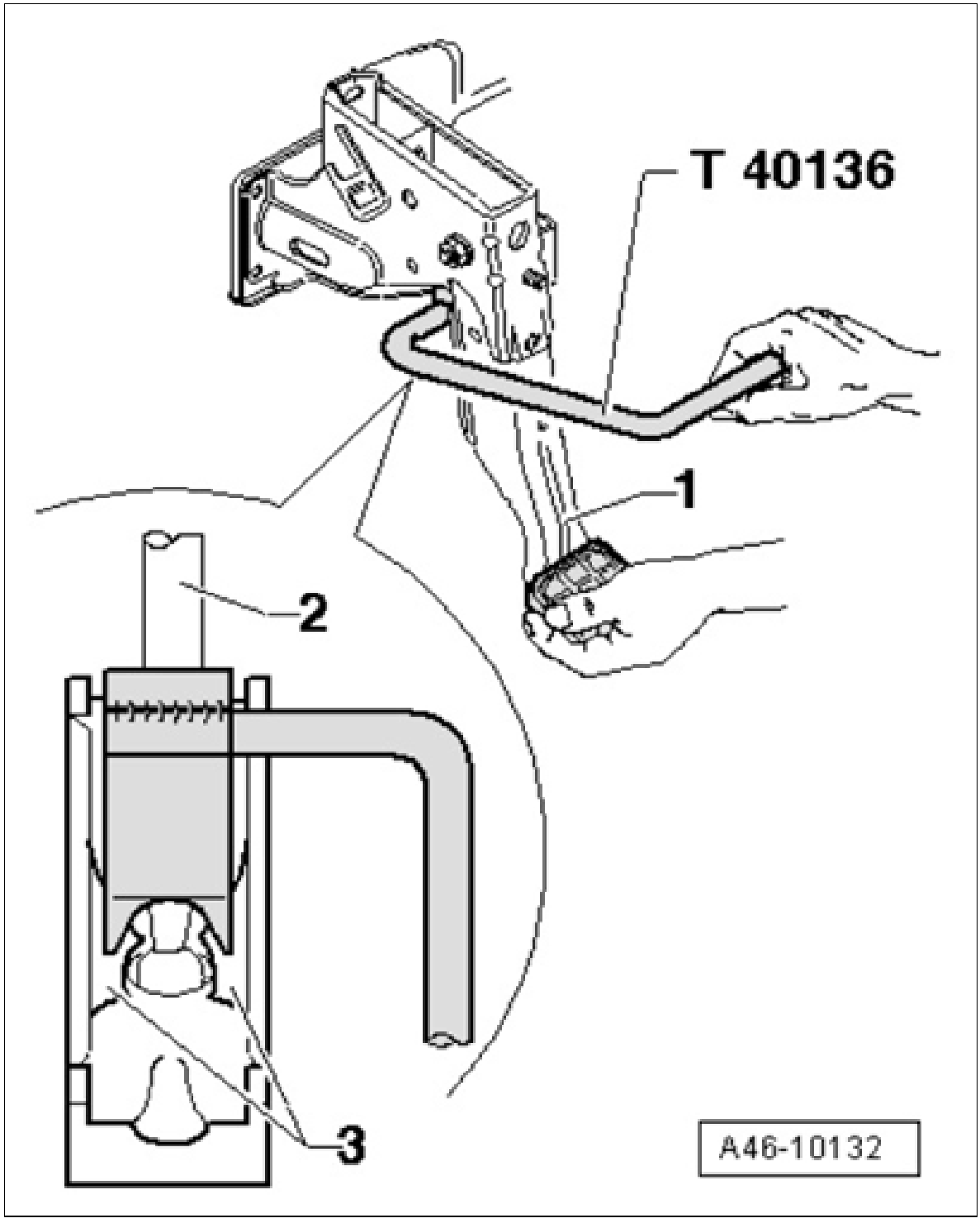

Courtesy of PORSCHE CARS NORTH AMERICA, INC.

1. 1.1. Press the brake pedal **-1-** towards the brake booster.
2. 1.2. **Release tool T40136** must be fitted on the ball joint on the push rod **-2-** .
3. 1.3. To press the retaining lugs **-3-** on the mounting off the ball joint on the push rod **-2-** , pull **release tool T40136** towards the driver's seat and counter at the brake pedal **-1-** at the same time (the brake pedal must not move towards the driver's

seat).

4. 1.4. Release tool T40136 and brake pedal must both be pulled towards the driver's seat.

2. Place a suitable cloth under the brake fluid reservoir to soak up emerging brake fluid.
3. Drain brake fluid from the brake fluid reservoir using a suitable tool, e.g. a double-action hand pump.
4. Release and disconnect connector **-2-** (protect against contact with brake fluid if necessary).

Fig 2: Identifying Connector On Brake Fluid Reservoir

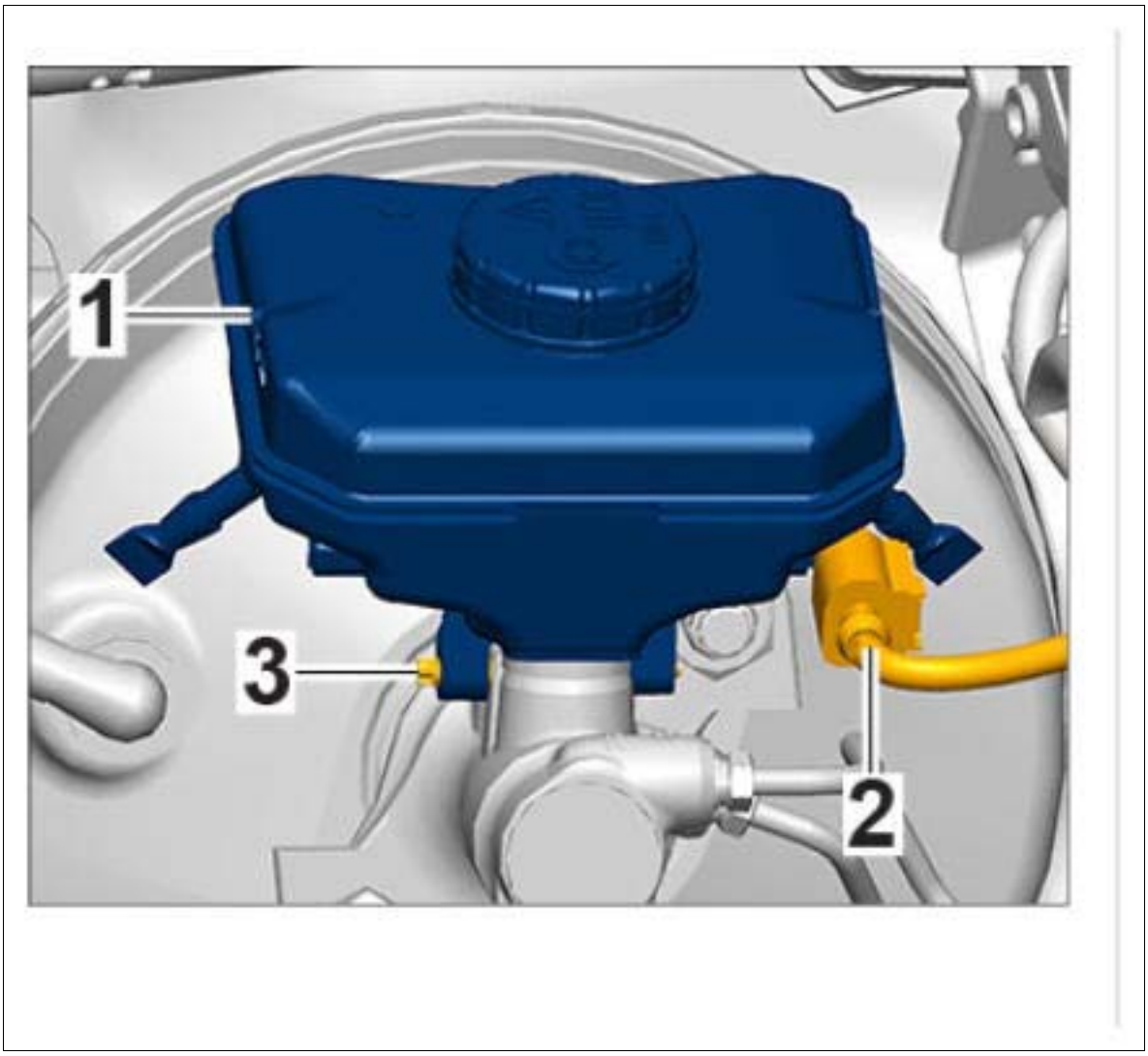

Courtesy of PORSCHE CARS NORTH AMERICA, INC.

5. Screw off brake lines **-2-** on the brake master cylinder

Fig 3: Identifying Brake Lines On Brake Master Cylinder

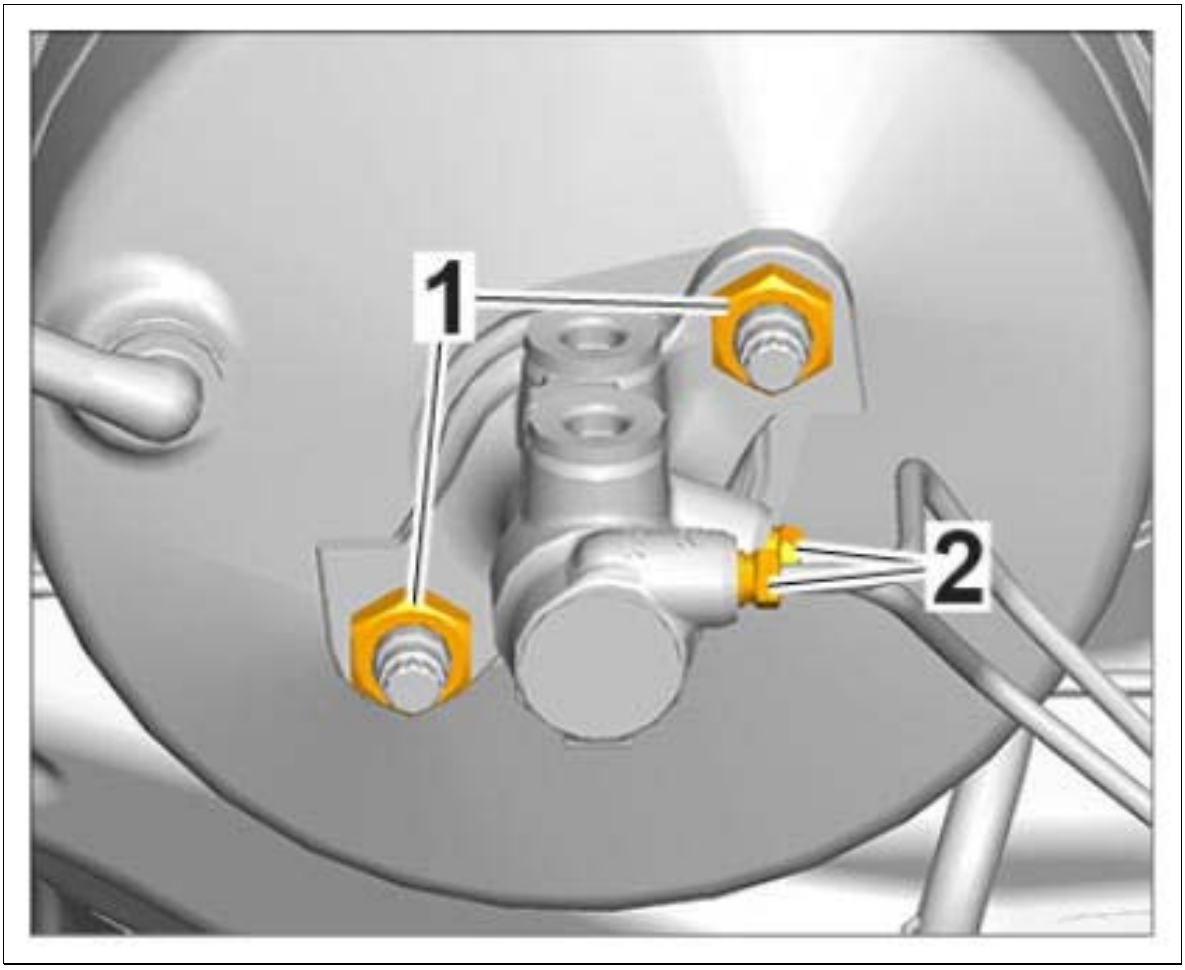

Courtesy of PORSCHE CARS NORTH AMERICA, INC.

1. 5.1. Unscrew union nuts.
2. 5.2. Pull brake lines out of the brake master cylinder.
3. 5.3. Close off brake lines and brake master cylinder using suitable stoppers.

6. Remove brake booster **-3-** .

Fig 4: Identifying Brake Booster Screws

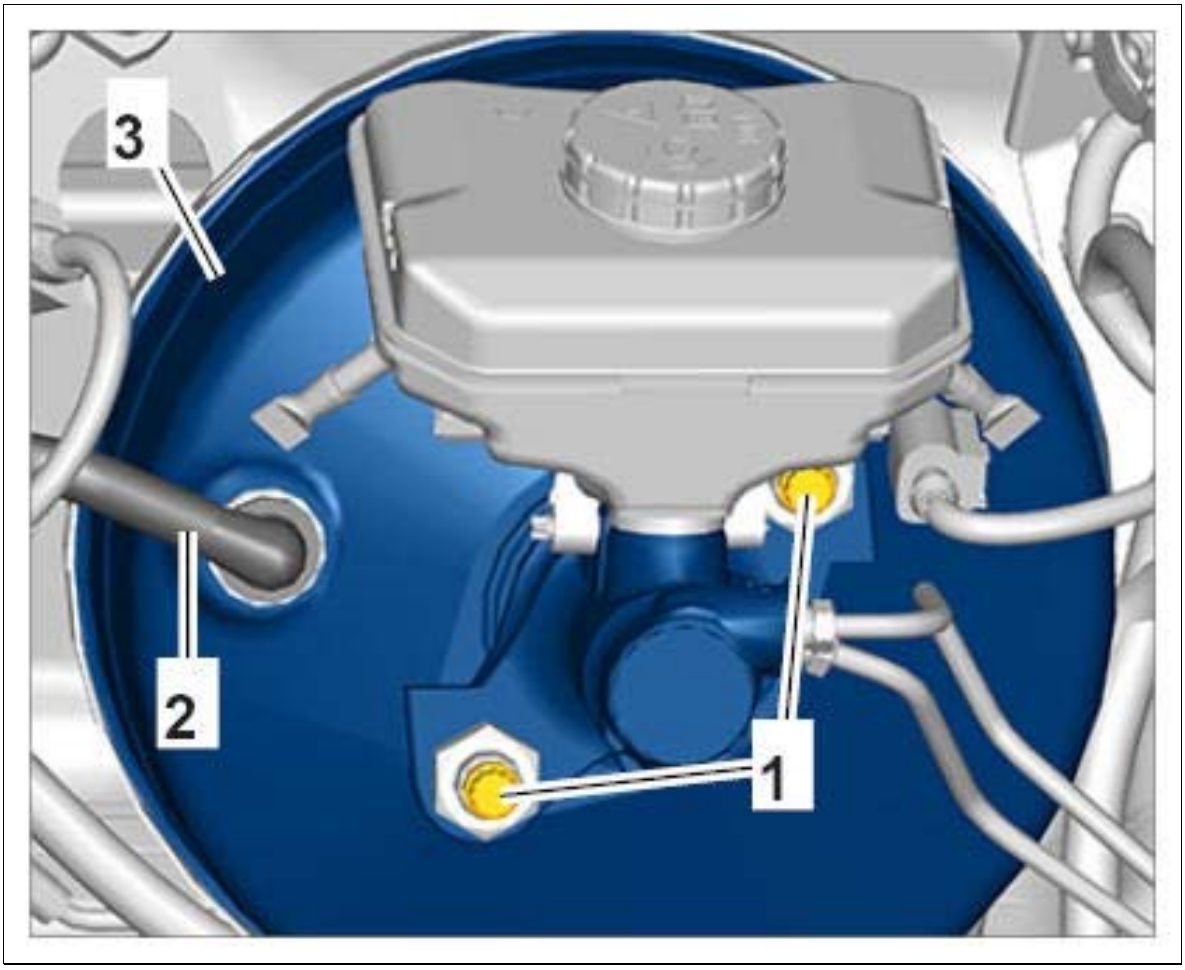

Courtesy of PORSCHE CARS NORTH AMERICA, INC.

1. 6.1. Pull vacuum line **-2-** out of the brake booster.
2. 6.2. Unscrew fastening screws **-1-** for the mounting saddle.
3. 6.3. Remove brake booster **-3-** with brake master cylinder and brake fluid reservoir.

WM 477055 REPLACING BRAKE BOOSTER (ALL MODELS) > REPLACING BRAKE BOOSTER > INSTALLING BRAKE BOOSTER

Information

- When fitting the brake booster -1- , make sure not to damage the seal -3- and the boot -4- on the push rod -2- .
- Check retaining lugs for the push rod through the opening in the plenum panel for signs of damage.

Fig 1: Identifying Brake Booster, Seal And Boot

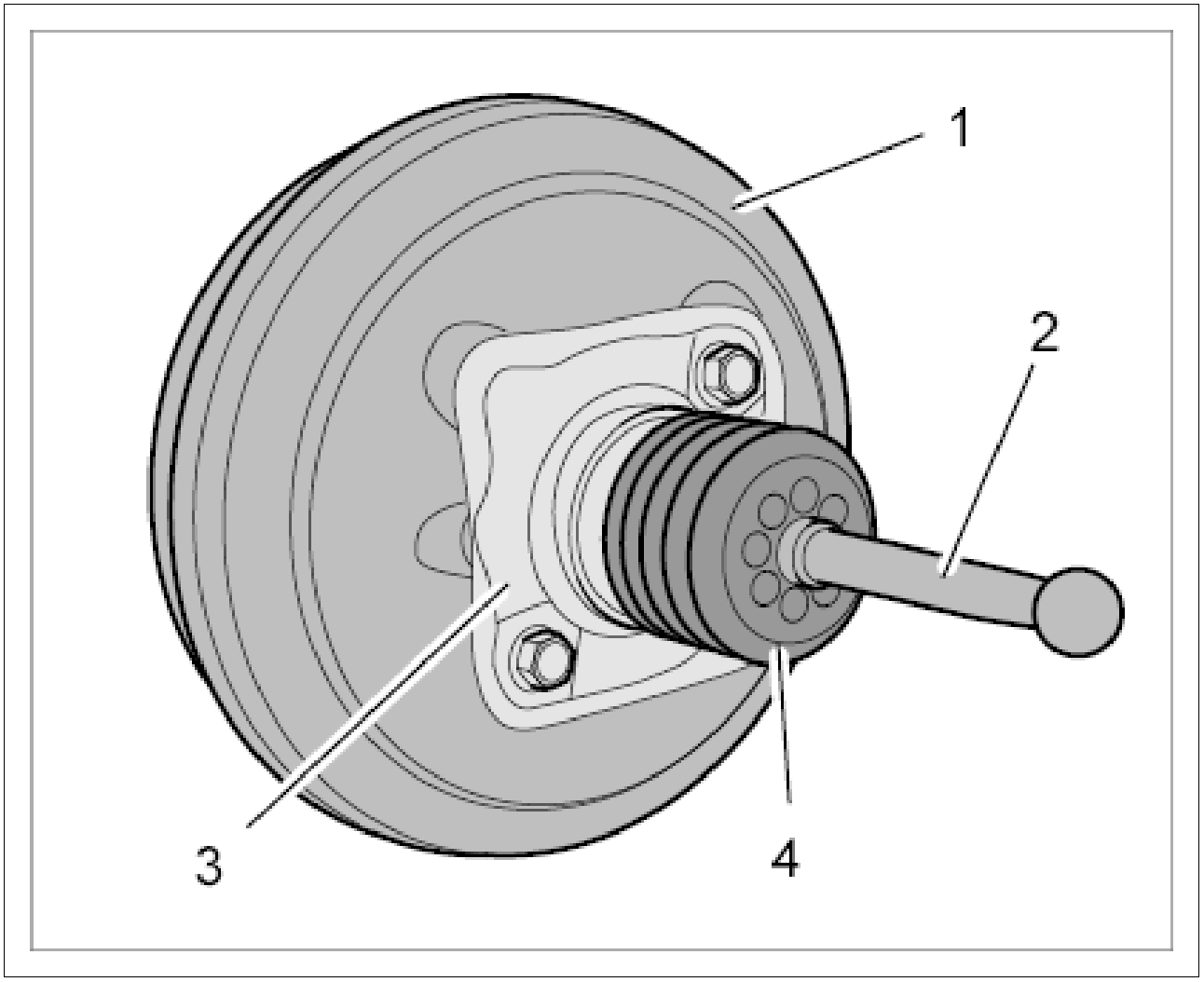

Courtesy of PORSCHE CARS NORTH AMERICA, INC.

1. Fit the brake booster into the vehicle. Check that the boot is seated correctly when doing so.
2. Tighten fastening screws **-1-** securing the brake booster **-3-** to the mounting saddle.
   Tightening torque 25 Nm (19 ftlb.)

Fig 2: Identifying Brake Booster Screws

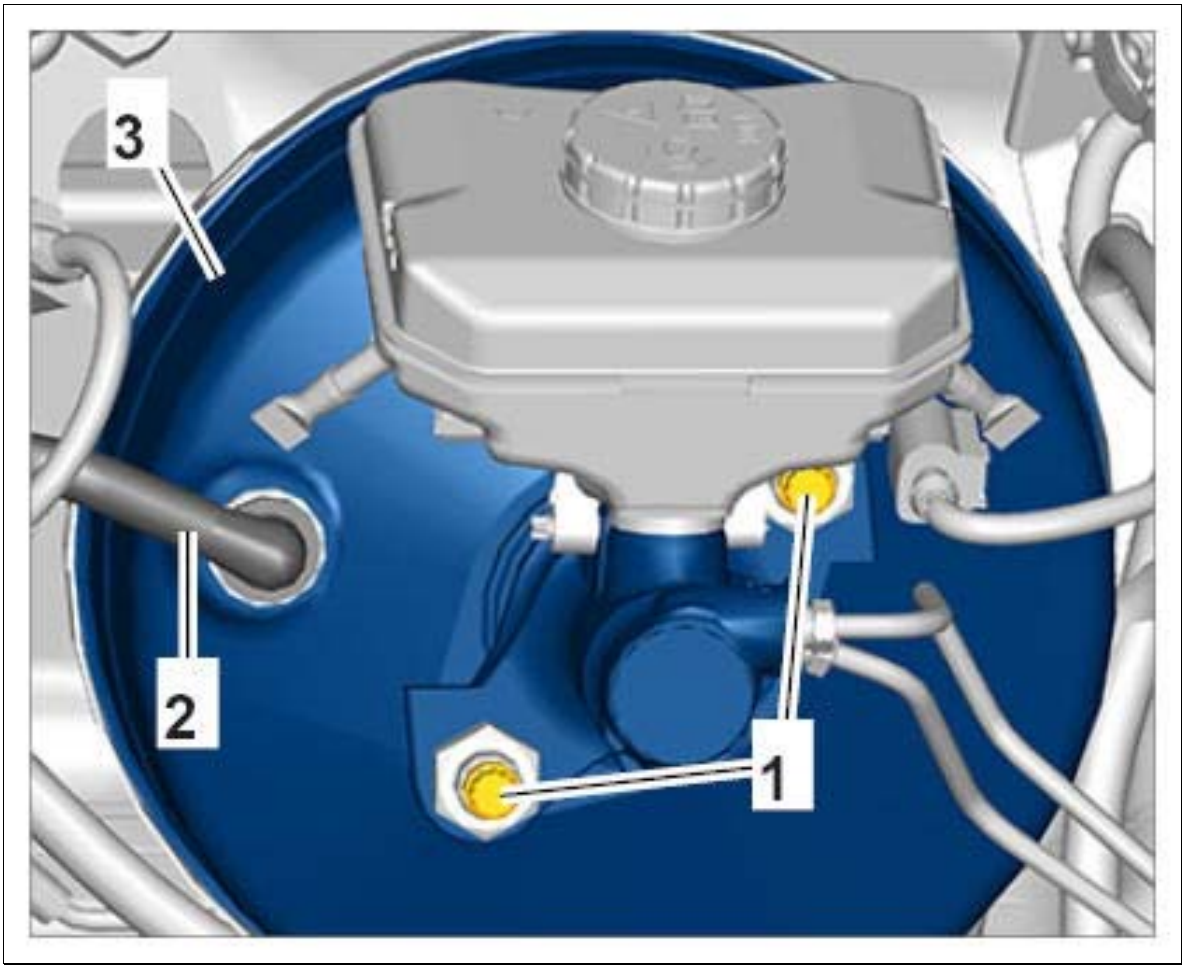

Courtesy of PORSCHE CARS NORTH AMERICA, INC.

3. Fit brake lines **-2-** on the brake master cylinder.

Fig 3: Identifying Brake Lines On Brake Master Cylinder

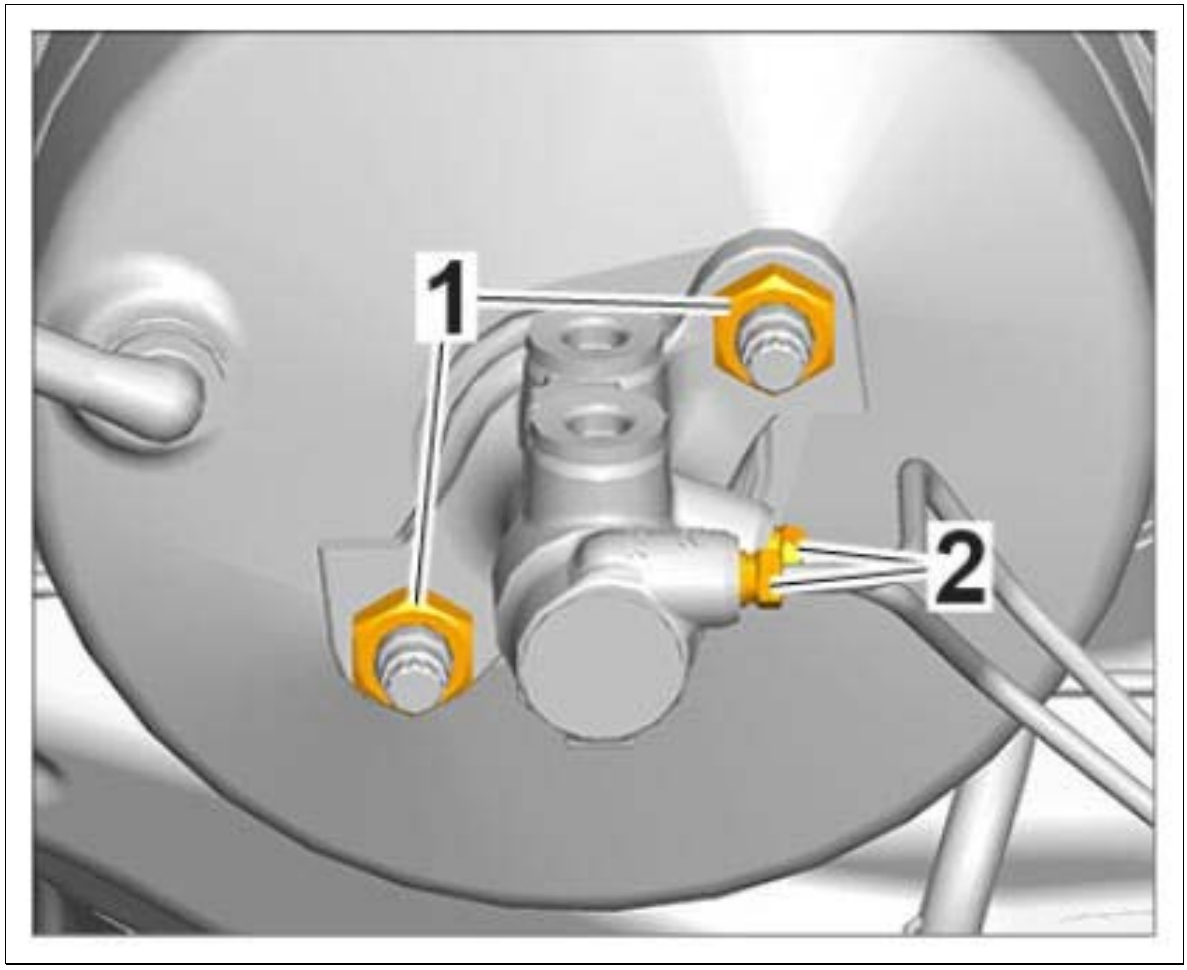

Courtesy of PORSCHE CARS NORTH AMERICA, INC.

1. 3.1. Remove stoppers from brake lines and brake master cylinder.
2. 3.2. Fit brake lines on the brake master cylinder.
3. 3.3. Tighten union nuts.

   Brake lines to brake master cylinder (left-hand drive vehicles): **Tightening torque 14 Nm (10.5 ftlb.)**

   Brake lines to brake master cylinder (right-hand drive vehicles): **Tightening torque 18 Nm (13 ftlb.)**

4. Plug in connector **-2-** on the brake fluid reservoir.

Fig 4: Identifying Connector On Brake Fluid Reservoir



Courtesy of PORSCHE CARS NORTH AMERICA, INC.

Information

Damage when installing a new brake booster:

Before connecting the brake pedal to the brake booster, the stopper at the vacuum line connection must be removed.

If this is not done, there is a risk of damage to the brake booster.

5. Connect brake pedal to the brake booster.

Fig 5: Positioning Brake Pedal On Push Rod

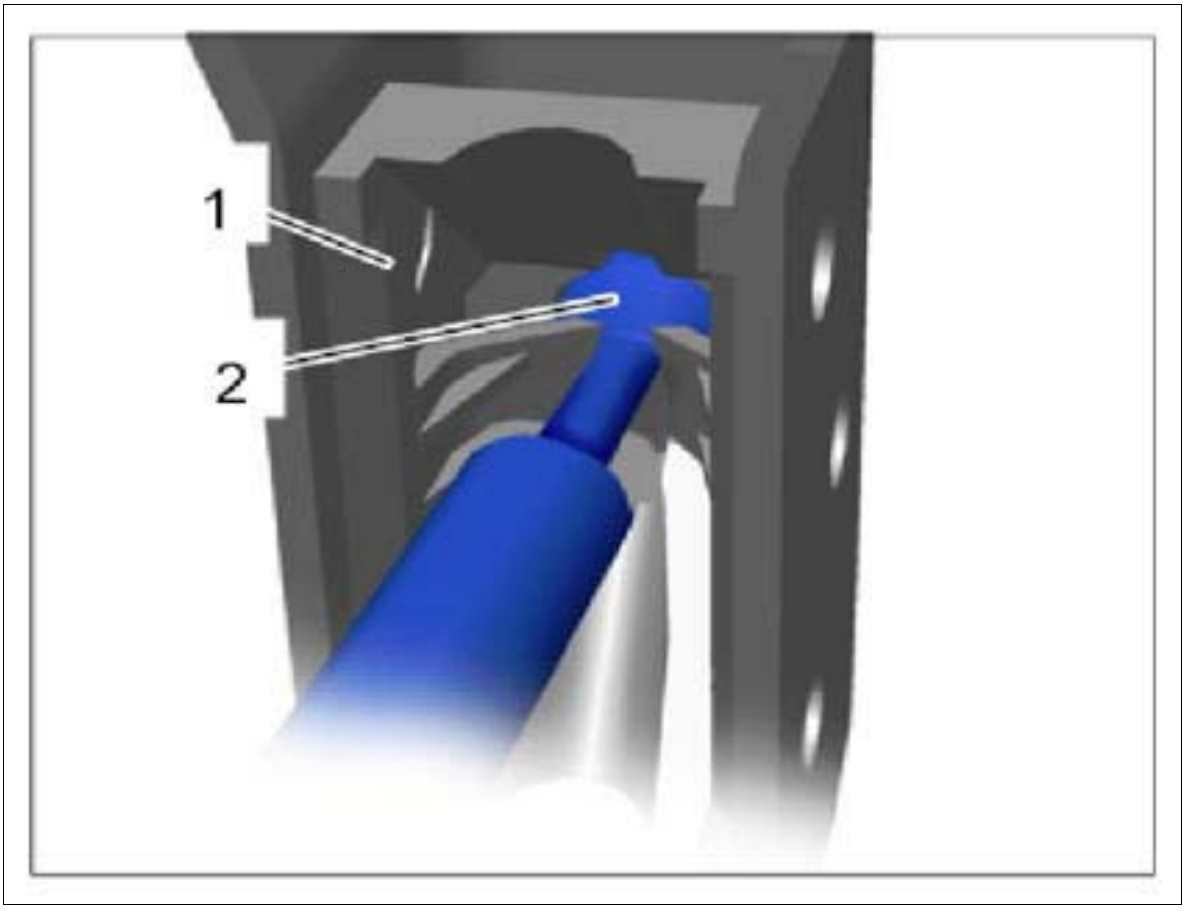

Courtesy of PORSCHE CARS NORTH AMERICA, INC.

1. 5.1. Position brake pedal on the push rod for the brake booster.
2. 5.2. Press the brake pedal fully until the push rod **-2-** engages with an audible click in the retaining lugs **-1-** on the brake pedal.
3. 5.3. Check that the push rod **-2-** is fully engaged in the retaining lugs **-1-** .

WM 477055 REPLACING BRAKE BOOSTER (ALL MODELS) > SUBSEQUENT WORK

1. Install cross panel → Installing Cross Panel .
2. Install cowl panel cover → 508719 REMOVING AND INSTALLING COWL PANEL COVER .
3. Bleed the brake system .
4. Install brake light switch → 943619 REMOVING AND INSTALLING BRAKE LIGHT SWITCH .
5. Check brake booster using **PIWIS Tester II 9818** in accordance with the instructions below.

WM 477055 REPLACING BRAKE BOOSTER (ALL MODELS) > SUBSEQUENT WORK >

CHECKING BRAKE BOOSTER

1. Connect a battery charger with a current rating of at least 40 A to the jump-start terminals in the engine compartment.
2. Switch on ignition.
3. **PIWIS Tester II 9818** with the current software version installed must be connected to the vehicle communication module (VCI) via the **USB cable** . Then, connect the communication module to the vehicle and switch on the PIWIS Tester.
4. On the PIWIS Tester start screen, call up the ==> 'Diagnostics' menu and select the vehicle type ==> **'Macan'** .

   The diagnostic application is then started and the control unit selection screen is populated.

1. Select the control unit → **'PSM'** in the control unit selection screen (**==> 'Overview'** menu) and press [>>] to confirm your selection → see Fig 1.

   Fig 1: Display - Control Unit Selection Screen

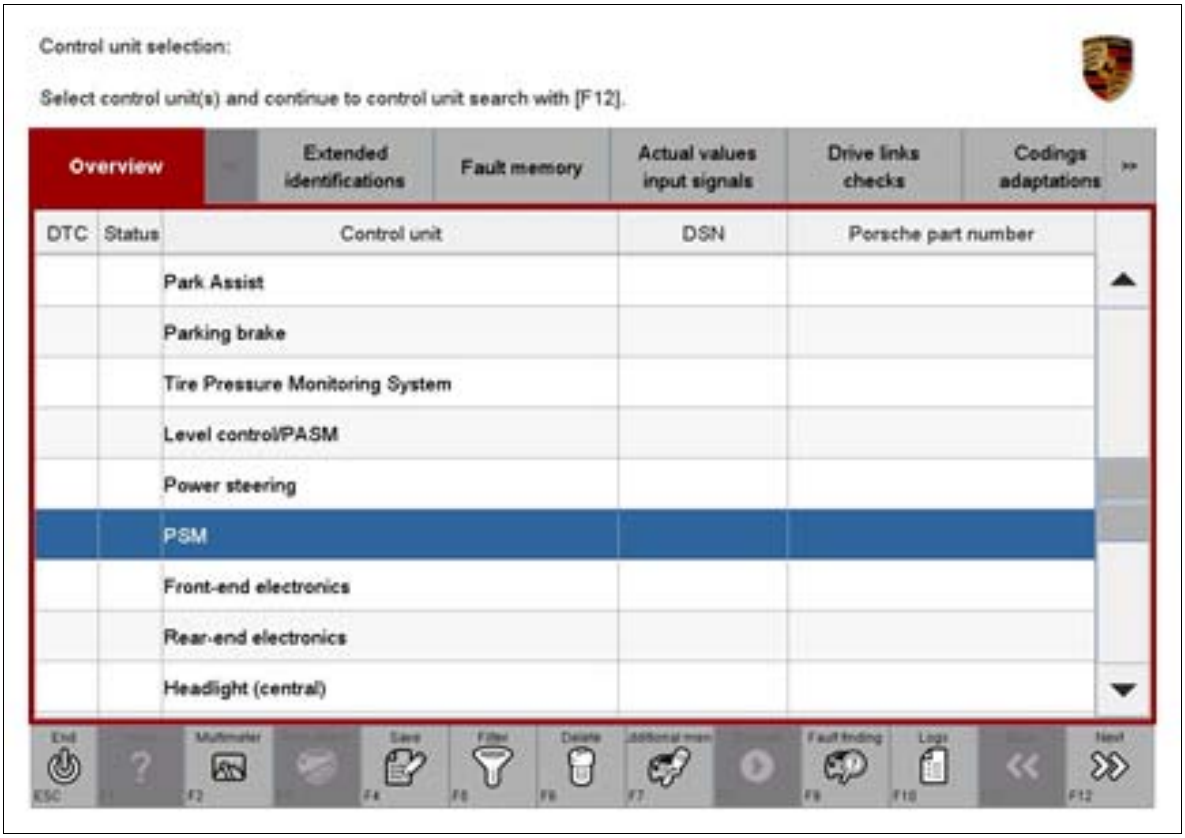

Courtesy of PORSCHE CARS NORTH AMERICA, INC.

2. Press [F11] to skip the question as to whether you want to create a vehicle analysis log (VAL).
3. Press [>>] to acknowledge the message that may appear informing you that campaigns for the vehicle are stored in the PIWIS information system.
4. Once the PSM control unit has been found and is displayed in the overview, select the **==> 'Actual values/input signals'** menu → see Fig 2.

Selecting Actual values/input signals

5. In the 'Actual values/input signals' menu, highlight the sensors to be checked ==> **'Brake pressure (hydraulic unit sensor)'** and ==> **'Brake booster vacuum (vacuum sensor)'** and press [F12] to confirm.

6. Start the engine in selector-lever position "P" and leave it running for approx. 30 seconds at idle speed until the **'Vacuum'** is no longer increasing and remains constant.

   Information

   At **sea level, a vacuum of at least 900 mbar** must be reached at idle speed in the brake booster. The **higher the position** above sea level, the lower the ambient pressure, and thus the lower the **vacuum to be reached** in the brake booster.

   The vacuum in the brake booster drops by approx. 10 mbar for every 100 m increase in height.

   This means, for example, that a vehicle at 1, 000 m above sea level **still only reaches a vacuum of at least 800 mbar** in the brake booster.

7. Set the measured value for **'Brake pressure'** to approx. **130 bar** by pressing the brake pedal, keep the brake pressure at approx. 130 bar for 5 seconds and check the displayed measured values → see Fig 2.

   Fig 2: Display - Measured Values Screen

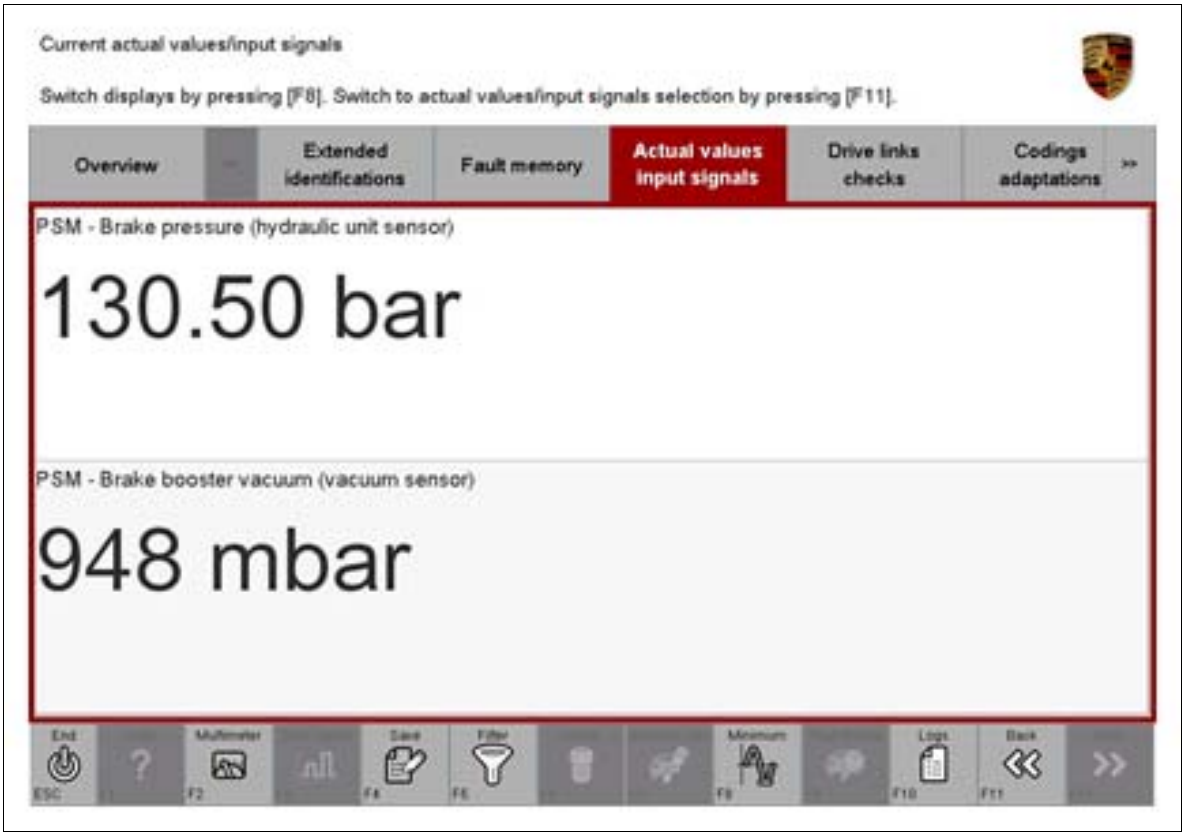

Courtesy of PORSCHE CARS NORTH AMERICA, INC.

1. If the vacuum **drops by less than approx. 100 mbar** from the starting value **after setting the brake pressure** and then **increases again** or remains constant, the **brake**

booster is OK. Continue with Step 8.

2. If the vacuum **drops quickly by more than approx. 100 mbar from the starting value** when checking the **brake booster,** the brake booster must be replaced.

8. Stop the engine and switch off the ignition.
9. Disconnect the PIWIS Tester from the vehicle.
10. Switch off and disconnect the battery charger.

WM 477601 CHECKING VACUUM PUMP (ALL MODELS) > TOOLS

Designation	Type	Number	Description	
tester	Special tool	9160/1		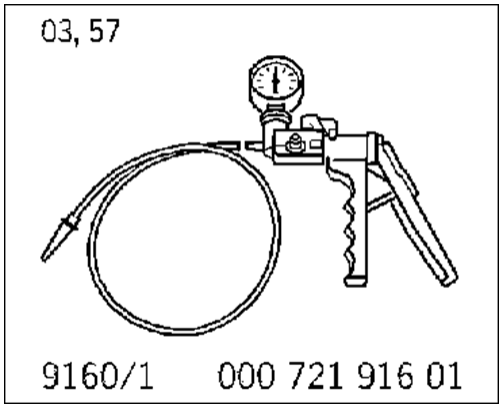

WM 477601 CHECKING VACUUM PUMP (ALL MODELS) > CHECKING VACUUM PUMP

Information

This check mainly involves examining the secondary load connection due to problems. The main connection (brake booster) is not checked. Defects in the main connection would be apparent immediately due to increasing pedal forces during braking (similar to a defective brake booster).

1. Connect vacuum gauge **tester 9160/1** to the secondary load connection.
2. Set vacuum tester to Vacuum position (lever set to Open).
3. Start engine and leave it running at idle speed with slightly changing revs.
4. The vacuum pump must create a vacuum of at least 600 mbar or 0.6 bar.
5. If the vacuum is not maintained, i.e. the pointer moves towards 0 bar, the vacuum pump is faulty. Replace vacuum pump. → 477619 REMOVING AND INSTALLING VACUUM PUMP
6. This defect can cause engine oil to get into the vacuum system. In this case, the lines and switching valves must be checked visually and replaced if necessary or cleaned with solvent naphtha.

WM 477619 REMOVING AND INSTALLING VACUUM PUMP (ALL MODELS) > TECHNICAL VALUES

Location	Description	Type	Basic value	Tolerance 1	Tolerance 2
Vacuum pump to engine		Tightening torque	9 Nm (6.5 ftlb.)		

WM 477619 REMOVING AND INSTALLING VACUUM PUMP (ALL MODELS) > REMOVING AND INSTALLING VACUUM PUMP > REMOVING VACUUM PUMP

Fig 1: Locating Vacuum Pump

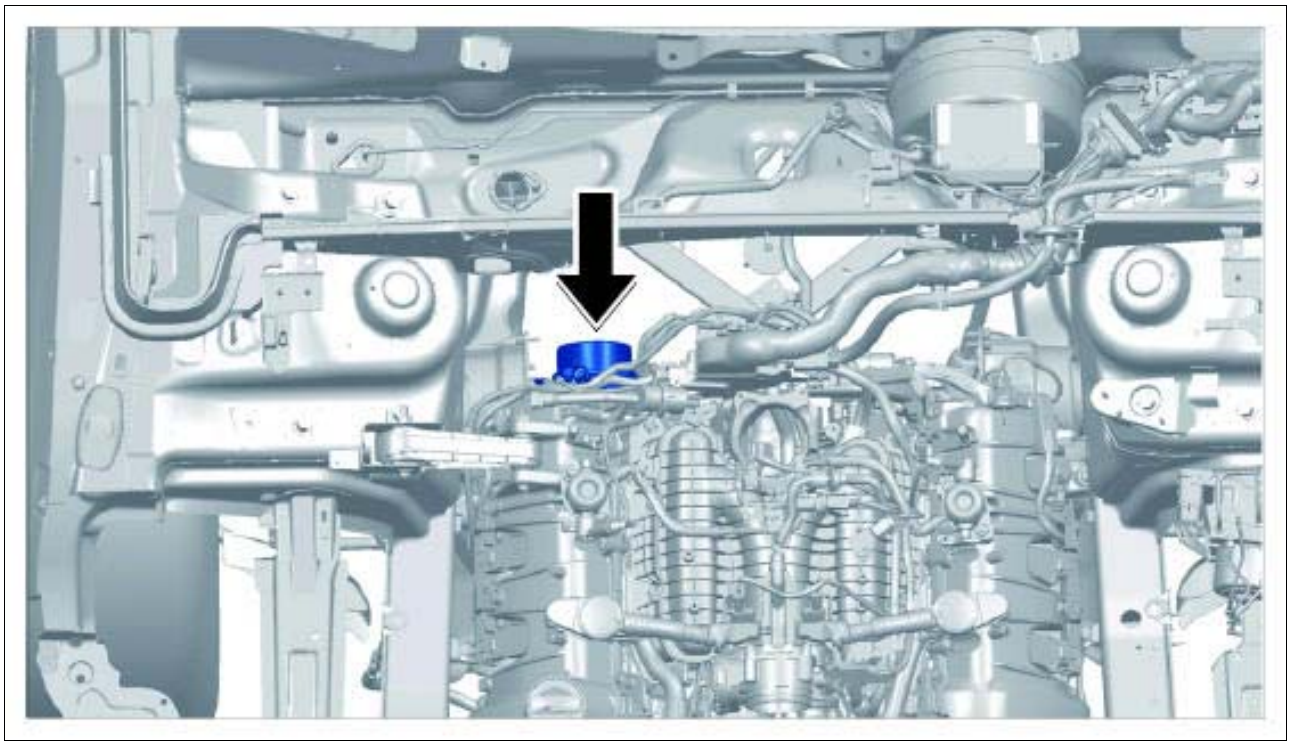

Courtesy of PORSCHE CARS NORTH AMERICA, INC.

1. Remove engine design cover.
2. Pull vacuum hose **-1-** off the vacuum pump connection piece.
3. Unscrew fastening screws **-2-** .
4. Remove vacuum pump **-3-** .

Fig 2: Identifying Vacuum Pump Screws

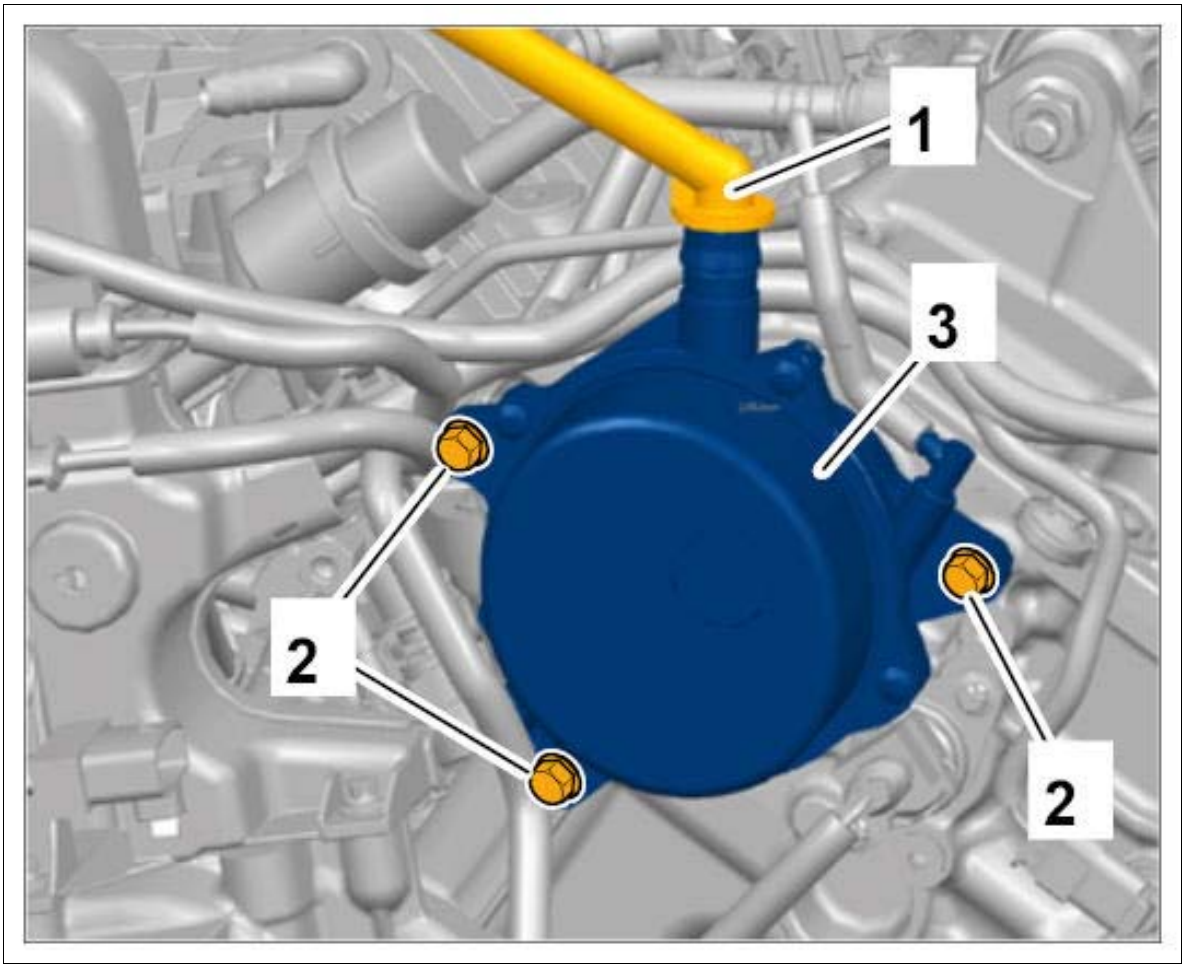

Courtesy of PORSCHE CARS NORTH AMERICA, INC.

WM 477619 REMOVING AND INSTALLING VACUUM PUMP (ALL MODELS) > REMOVING AND INSTALLING VACUUM PUMP > INSTALLING VACUUM PUMP

1. Replace sealing rings.
2. Installation is performed in reverse order.

   Vacuum pump to engine: **Tightening torque 9 Nm (6.5 ftlb.)**

WM 390119 REMOVING AND INSTALLING REAR FINAL DRIVE (MACAN, MACAN S, MACAN TURBO) > TOOLS

Designation	Type	Number	Description	
transmission jack	Workshop equipment	WE 1082		

WM 390119 REMOVING AND INSTALLING REAR FINAL DRIVE (MACAN, MACAN S, MACAN TURBO) > TECHNICAL VALUES

Location	Description	Type	Basic value	Tolerance 1	Tolerance 2
Rear fastening screw securing rear final drive to rear axle carrier	M12 x 80	Tightening torque	95 Nm (70 ftlb.)		
Bottom fastening screw securing rear final drive to rear axle carrier	M10 x 92/replace	Initial tightening	40 Nm (30 ftlb.)		
Bottom fastening screw securing rear final drive to rear axle carrier		Final tightening	+90°		

WM 390119 REMOVING AND INSTALLING REAR FINAL DRIVE (MACAN, MACAN S, MACAN TURBO) > PRELIMINARY WORK

1. Remove the drive shafts on both sides. → 422119 REMOVING AND INSTALLING REAR DRIVE SHAFT
2. Remove exhaust system. → 260119 REMOVING AND INSTALLING EXHAUST SYSTEM
3. Loosen cardan shaft on the rear final drive and make sure that it does not become kinked. → 393519 REMOVING AND INSTALLING REAR CARDAN SHAFT

WM 390119 REMOVING AND INSTALLING REAR FINAL DRIVE (MACAN, MACAN S,

MACAN TURBO) > REMOVING REAR FINAL DRIVE

WARNING: Danger of objects or loads falling down

- *Risk of squashing or crushing*

→ Secure components to prevent them from falling down.

1. Release and disconnect electric connector for servo motor for rear-differential lock **-1-** .

   Fig 1: Identifying Rear-Differential Lock Servo Motor Components

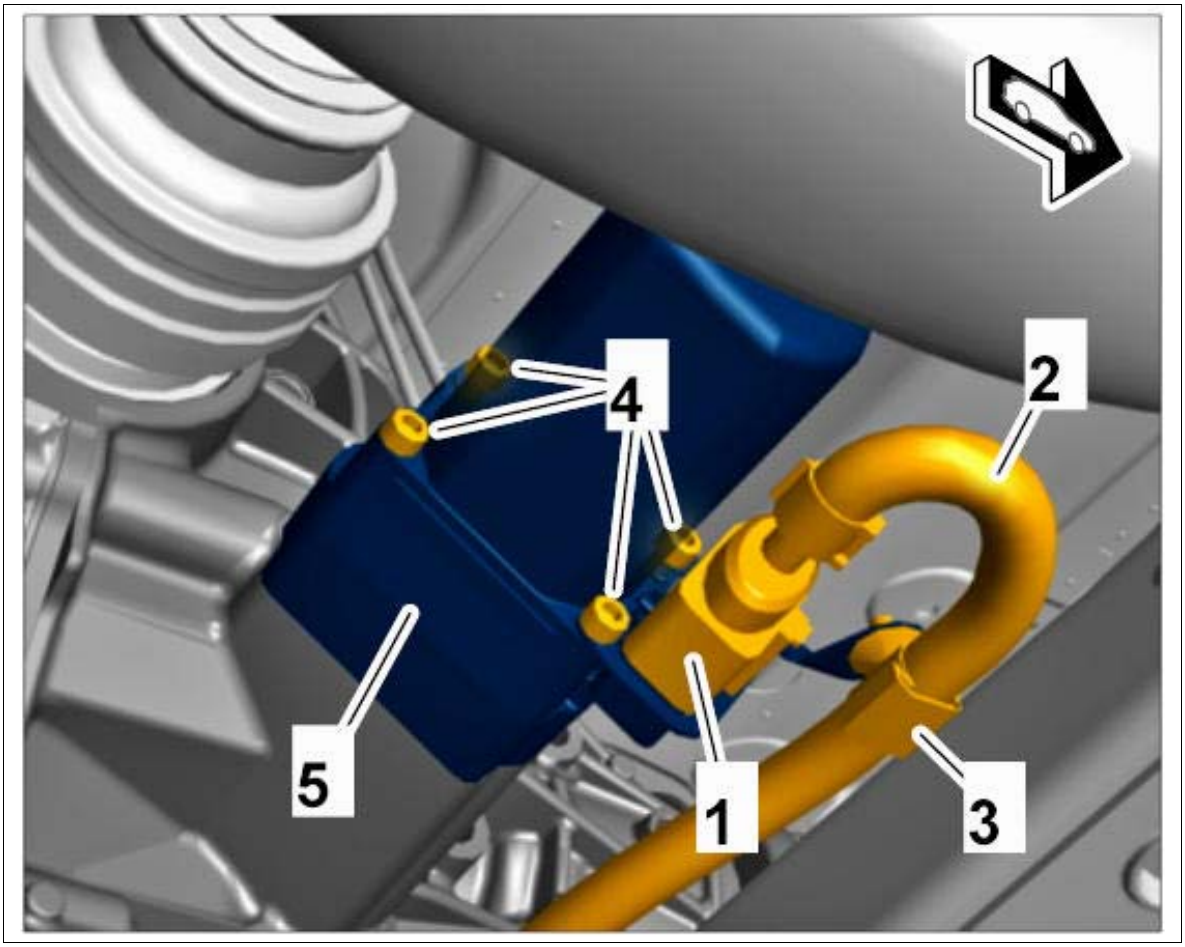

Courtesy of PORSCHE CARS NORTH AMERICA, INC.

2. Support rear final drive using **transmission jack WE 1082** , for example.
3. Remove rear final drive **-1-** .
   1. 3.1. Unscrew screws **-2-** on rear axle carrier.
   2. 3.2. Unscrew screw **-3-** on final drive bearing.
   3. 3.3. Remove rear final drive by tilting it downwards.

Fig 2: Identifying Rear Final Drive Screws

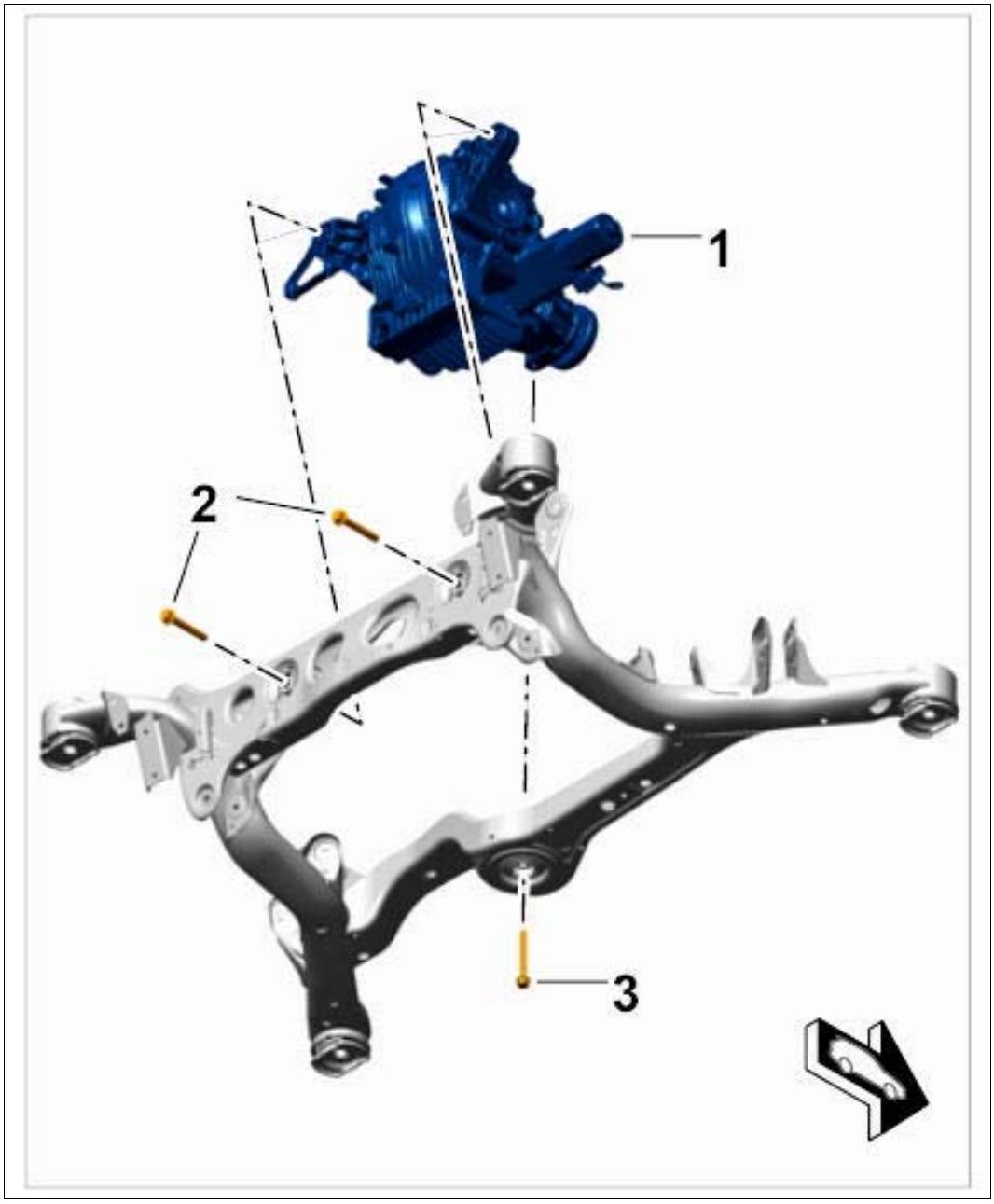

Courtesy of PORSCHE CARS NORTH AMERICA, INC.

WM 390119 REMOVING AND INSTALLING REAR FINAL DRIVE (MACAN, MACAN S, MACAN TURBO) > INSTALLING REAR FINAL DRIVE

Information

Information for replacing the final drive/servo motor.

- If the final drive as well as the servo motor (control unit) is replaced, there is no need to reload data (classification data).

- Classification data can be read out of the control unit using the PIWIS Tester.
- If only the servo motor is replaced, the classification data must be re-written into the control unit.
- Classification data can be found on the final-drive housing.

1. Installation is performed in reverse order.

    1. 1.1. Tightening torque for rear screws: **Tightening torque: 95 Nm (70 ftlb.)**
    2. 1.2. Tightening torque for lower front screw: **Initial tightening 40 Nm (30 ftlb.) Final tightening +90°**

       Use a new screw!

WM 390119 REMOVING AND INSTALLING REAR FINAL DRIVE (MACAN, MACAN S, MACAN TURBO) > SUBSEQUENT WORK

1. Secure cardan shaft to the rear final drive. → INSTALLING REAR CARDAN SHAFT
2. Install exhaust system. → INSTALLING EXHAUST SYSTEM
3. Install the drive shafts on both sides. → INSTALLING REAR DRIVE SHAFT

WM 391355 REPLACING TRANSFER GEAR CONTROL UNIT (MACAN, MACAN S, MACAN TURBO) > TOOLS

Designation	Type	Number	Description	
PIWIS Tester II	Special tool	9818		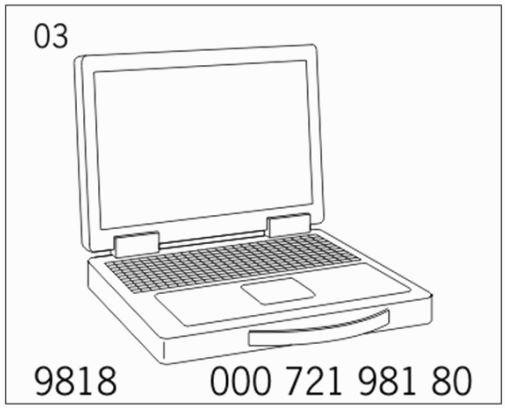

WM 391355 REPLACING TRANSFER GEAR CONTROL UNIT (MACAN, MACAN S, MACAN TURBO) > TECHNICAL VALUES

Location	Description	Type	Basic value	Tolerance 1	Tolerance 2
Current rating		Nominal value	40 A		

WM 391355 REPLACING TRANSFER GEAR CONTROL UNIT (MACAN, MACAN S, MACAN TURBO) > PRELIMINARY WORK

1. Switch off ignition and replace control unit.

WM 391355 REPLACING TRANSFER GEAR CONTROL UNIT (MACAN, MACAN S, MACAN TURBO) > CODING TRANSFER GEAR CONTROL UNIT

NOTE: Voltage drop

- *Risk of irreparable damage to control unit*
- *Risk of damage to control unit*
- *Fault entries in the control unit*
- *Coding in the control unit is aborted*
- *Malfunctions in control unit, even during programming*

→ Prior to disconnecting the control unit, switch off ignition and remove ignition key.

→ Ensure that the power supply is not interrupted during programming.

→ Connect a battery charger with a current rating of at least → **Nominal value: 40 A** to the vehicle battery.

Information

The **PIWIS Tester II 9818** instructions take precedence since the description may be different with later Tester releases.

The procedure described here has been structured in general terms. Different text or additional information may appear in **PIWIS Tester II 9818** .

1. PIWIS Tester must be connected to the vehicle before starting the Tester. Switch on ignition.
2. Select the vehicle type and start the diagnostic application.
3. Select the **All-wheel** control unit in the **overview** .
4. **Extended identification** must now be selected.
5. **Enter the vehicle identification number** and press [Enter] to confirm your entry.
6. **Select Programming** and press [F12] to continue.
7. **Automatic programming** must now be selected. Then press [F12] to continue.
8. Follow the instructions on the Tester and press [F12] to continue.

9. **Maintenance/repairs** must then be selected.
10. **Control unit replacement** must now be selected. Then press [F12] to continue.

    Information

    Only select the function if just the control unit will be replaced. If the control unit and transfer gear will be replaced, "Control unit and transmission replacement (together)" must be selected.
11. **Write data to new control unit/Start-up** must be selected. Then press [F12] to continue.
12. Enter the chassis number and press [F12] to continue.
13. Follow the instructions on the Tester and press [F12] to continue.
14. **Select Write data** and press [F8] to start. The data is now loaded.
15. The Tester displays the message **Data was written successfully to the control unit** . Press [F12] to continue.
16. Switch off ignition and press [F12]
17. Start the engine and press [F12] to continue.
18. Perform a function test on the transmission.
19. Read out the fault memory and erase it if necessary.

WM 392255 REPLACING SEALING RING FOR HALFSHAFT FLANGE (MACAN, MACAN S, MACAN TURBO) > TOOLS

Designation	Type	Number	Description	
Pressure piece	Special tool	9880		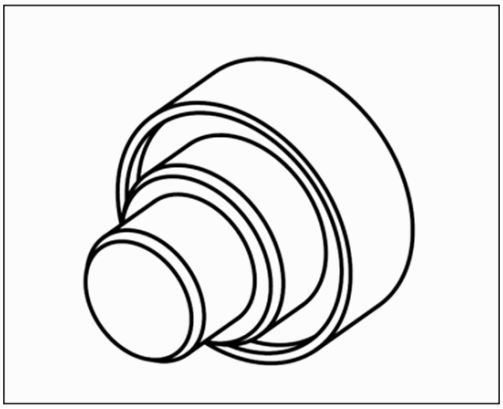

Pressure piece	Special tool	9880/1		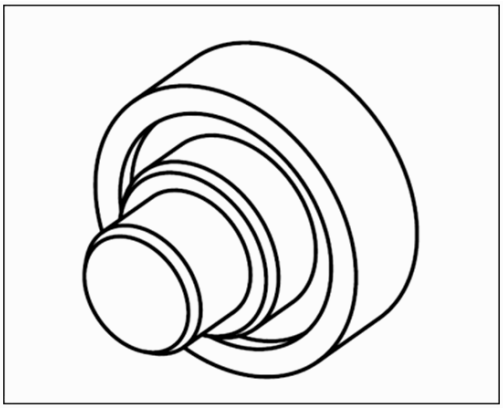
Impact puller	Commercially available tool	Nr.168-1		

WM 392255 REPLACING SEALING RING FOR HALFSHAFT FLANGE (MACAN, MACAN S, MACAN TURBO) > INFORMATION > COMPONENT OVERVIEW OF REAR AXLE

Fig 1: Overview Of Sealing Rings

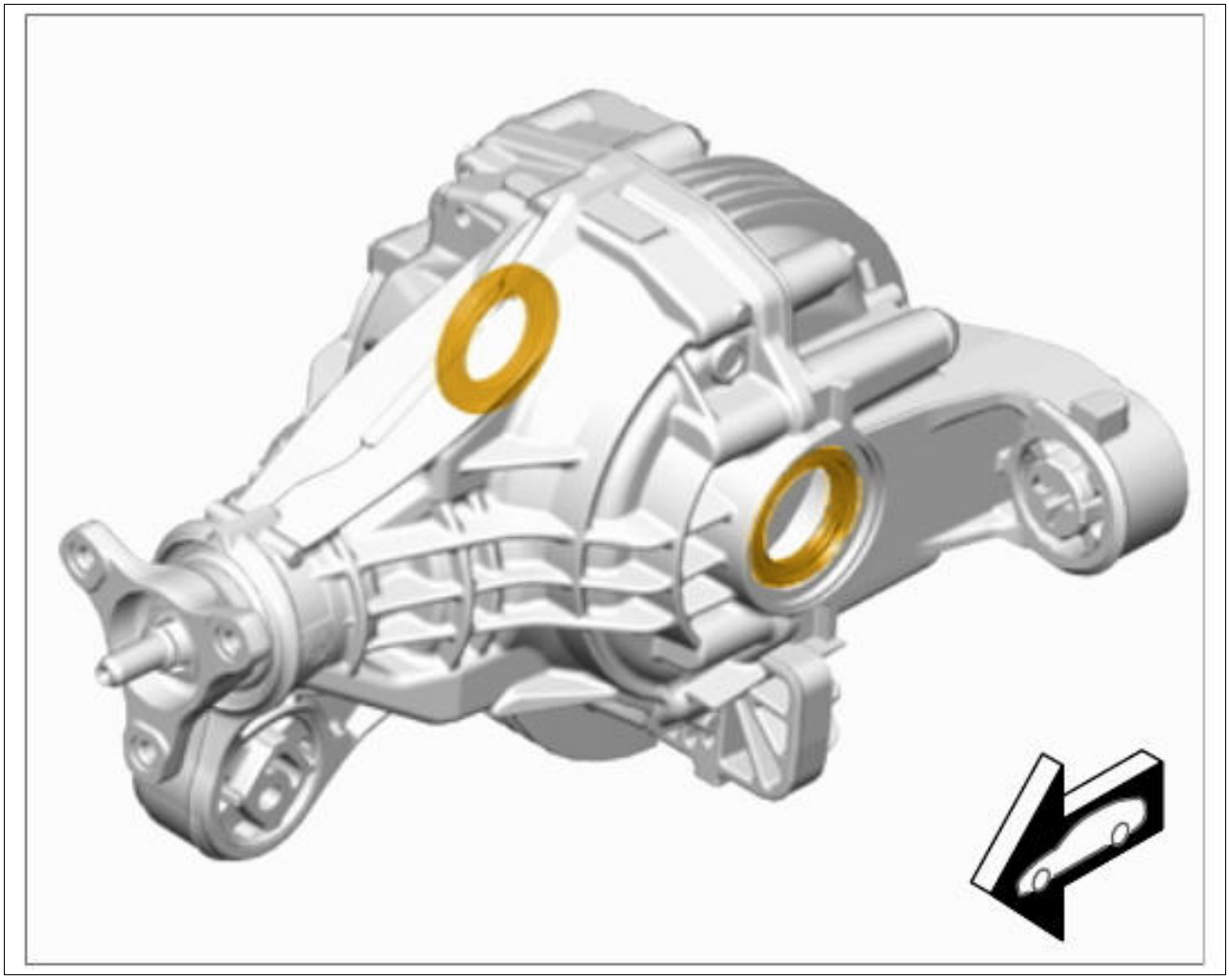

Courtesy of PORSCHE CARS NORTH AMERICA, INC.

WM 392255 REPLACING SEALING RING FOR HALFSHAFT FLANGE (MACAN, MACAN S, MACAN TURBO) > PRELIMINARY WORK

1. Remove rear drive shaft. → 422119 REMOVING AND INSTALLING REAR DRIVE SHAFT

WM 392255 REPLACING SEALING RING FOR HALFSHAFT FLANGE (MACAN, MACAN S, MACAN TURBO) > REPLACING SEALING RING FOR HALFSHAFT FLANGE

Information

- The pictures shown in this document may differ from the original.

1. Remove sealing ring using **impact puller Nr.168-1** or using a suitable screwdriver.

Fig 1: Removing Sealing Ring For Halfshaft Flange

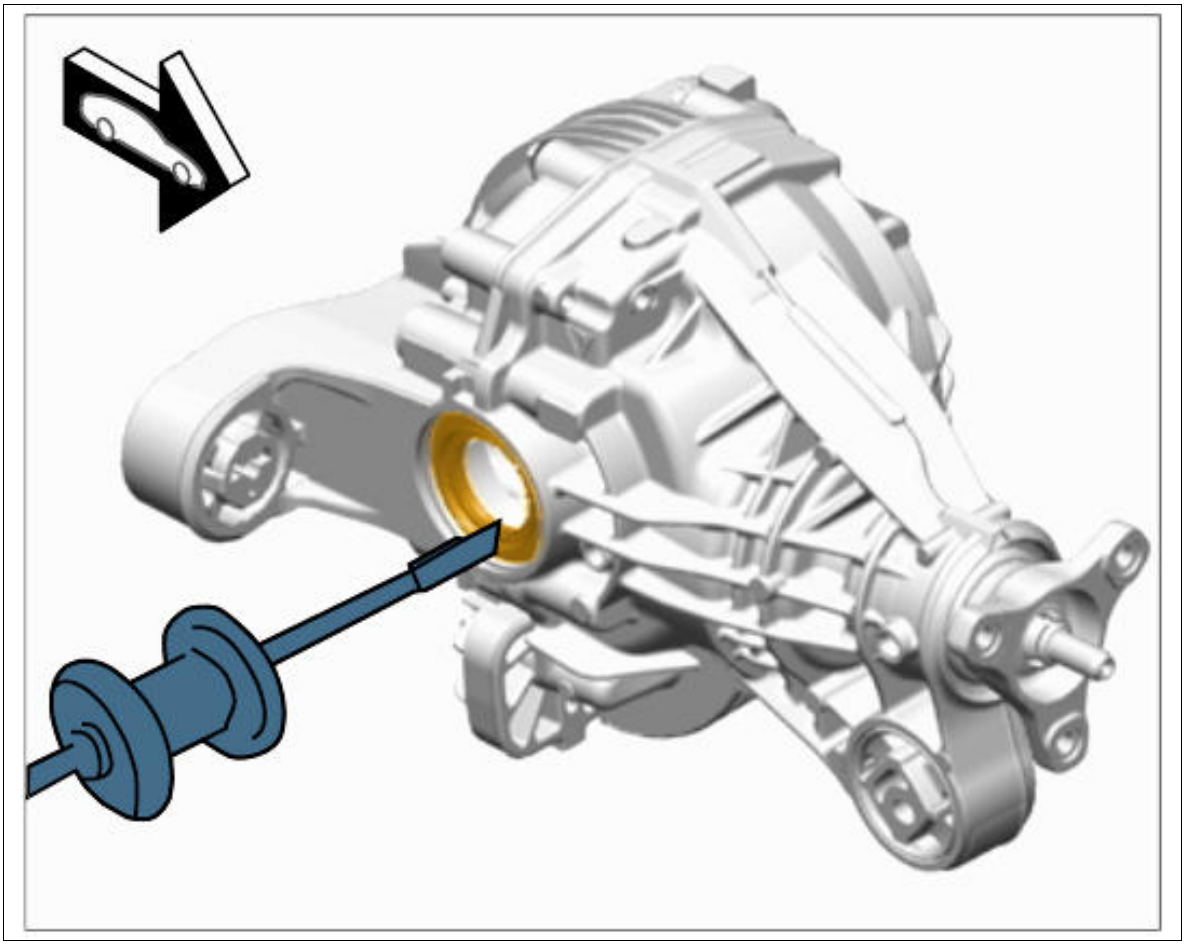

Courtesy of PORSCHE CARS NORTH AMERICA, INC.

2. Clean sealing surface of the sealing ring with a cloth.
3. **New** sealing ring must be oiled slightly at the outer edges.
4. **Tap in new** sealing ring using pressure piece until the special tool is touching the transmission housing.
    1. 4.1. **Pressure piece 9880** for rear axle differential **without** lock.
    2. 4.2. **Pressure piece 9880/1** for rear axle differential **with** lock.

Fig 2: Installing Sealing Ring

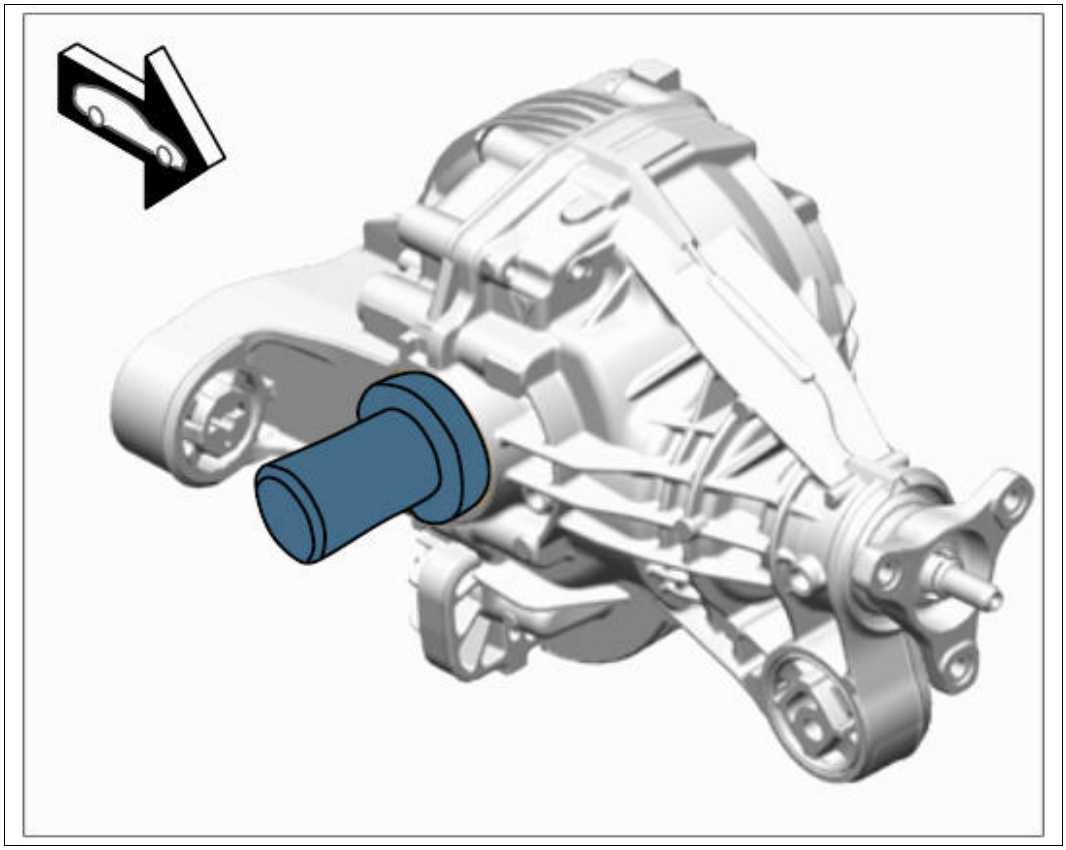

Courtesy of PORSCHE CARS NORTH AMERICA, INC.

WM 392255 REPLACING SEALING RING FOR HALFSHAFT FLANGE (MACAN, MACAN S, MACAN TURBO) > SUBSEQUENT WORK

1. Install rear drive shaft. → INSTALLING REAR DRIVE SHAFT
2. Check oil for rear final drive. → 399035 CHECKING AND TOPPING UP OIL FOR FINAL DRIVE

WM 392519 REMOVING AND INSTALLING HALFSHAFT FLANGE (MACAN, MACAN S, MACAN TURBO) > TOOLS

Designation	Type	Number	Description	

puller	VW tool	T10037		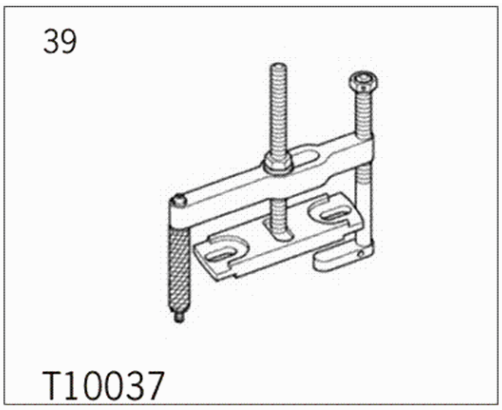
mandrel	VW tool	VW 295		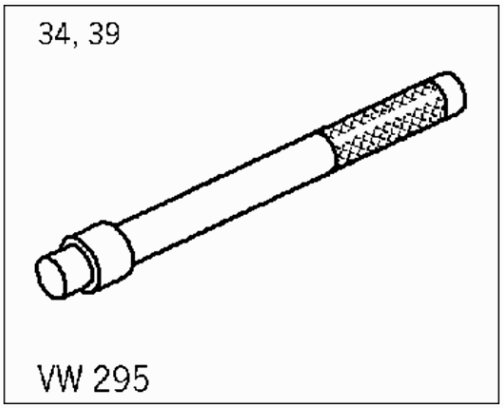

WM 392519 REMOVING AND INSTALLING HALFSHAFT FLANGE (MACAN, MACAN S, MACAN TURBO) > TECHNICAL VALUES

Location	Description	Type	Basic value	Tolerance 1	Tolerance 2
Fastening screw securing housing to intermediate housing on cover	M8 x 40 (28 ea.)/replace aluminum screw	Initial tightening	8 Nm (6 ftlb.)		
Fastening screw securing housing to intermediate housing on cover		Final tightening	+120°		
Fastening screw securing cover to intermediate housing	M8 x 55 (2 ea.)	Initial tightening	15 Nm (11 ftlb.)		
Fastening screw securing cover to intermediate housing		Final tightening	+90°		

Fastening screw securing differential flange to transmission housing	M8 x 38 (10 ea.)	Initial tightening	20 Nm (15 ftlb.)		
Fastening screw securing differential flange to transmission housing		Final tightening	+90°		
Fastening screw securing oil pan to transmission housing	M6 x 20 (15 ea.)	Tightening torque	10 Nm (7.5 ftlb.)		
Fastening screw securing clutch cover on transmission housing	M6 x 20 (5 ea.)	Tightening torque	10 Nm (7.5 ftlb.)		
Speed module to bearing bracket	M6 x 8.021 x 25	Tightening torque	10 Nm (7.5 ftlb.)		
Fastening screw securing pump to housing	M8 x 30 (5 ea.)	Tightening torque	25 Nm (19 ftlb.)		
Fastening screw securing hydraulic system to transmission housing	M6 x 45 (6 ea.)	Initial tightening	8 Nm (6 ftlb.)		
Fastening screw securing hydraulic system to transmission housing		Final tightening	+120°		
Fastening screw securing bearing bracket to intermediate housing	M8 x 40 (7 ea.)/replace aluminum screw	Initial tightening	8 Nm (6 ftlb.)		
Fastening screw securing bearing bracket to intermediate housing		Final tightening	+120°		
Fastening screw securing idler	M8 x 85 (2 ea.)	Tightening torque	25 Nm (19 ftlb.)		

gear support to bearing bracket					
Fastening screw securing sucking jet pump to pump module.	M5 x 20 (2 ea.)	Tightening torque	4.5 Nm (3 ftlb.)		
Fastening screw securing pressure filter to transmission housing	M6 x 20 (3 ea.)	Tightening torque	10 Nm (7.5 ftlb.)		
Screw on drive shaft	M14 x 1.5	Initial tightening	100 Nm (74 ftlb.)		
Screw on drive shaft		Final tightening	+120°	+30°	
Screw on intermediate shaft	M26 x 1.5 x 29/replace	Tightening torque	205 Nm (151.5 ftlb.)		
Screw on inner intermediate shaft	M26 x 1.5 x 29/replace	Tightening torque	205 Nm (151.5 ftlb.)		
Fastening screw for left flanged shaft	M8 x 25	Initial tightening	15 Nm (11 ftlb.)		
Fastening screw securing left flanged shaft		Final tightening	45°		
Drain plug on intermediate shaft housing/oil inspection plug on transmission housing.	M22 x 1.5 x 10.8 (2 ea.)/replace aluminum screw	Tightening torque	45 Nm (33 ftlb.)		
Drain plug on oil pan	M22 x 1.5 x 9.5	Tightening torque	45 Nm (33 ftlb.)		
Fastening screw securing cable guide to transmission housing	M6 x 20 (5 ea.)	Tightening torque	8 Nm (6 ftlb.)		
Sealing sleeve to transmission housing	M6 x 20	Tightening torque	10 Nm (7.5 ftlb.)		

Oil inspection plug on intermediate housing	M22 x 1.5 x 10.8/replace aluminum screw	Tightening torque	45 Nm (33 ftlb.)		
Fastening screw securing bending vibration balancer to cover	M8 (3 ea.)/replace	Initial tightening	20 Nm (15 ftlb.)		
Fastening screw securing bending vibration balancer to cover		Final tightening	+90°	+/-20°	

WM 392519 REMOVING AND INSTALLING HALFSHAFT FLANGE (MACAN, MACAN S, MACAN TURBO) > TECHNICAL VALUES > PORSCHE DOPPELKUPPLUNG (PDK) MECHANISM

Housing to intermediate housing on cover. → **Initial tightening: 8 Nm (6 ftlb.) → Final tightening: +120°**

Cover to intermediate housing. → **Initial tightening: 15 Nm (11 ftlb.) → Final tightening: +90°**

Differential flange to transmission housing. → **Initial tightening: 20 Nm (15 ftlb.) → Final tightening: +90°**

Oil pan to transmission housing. → **Tightening torque: 10 Nm (7.5 ftlb.)**

Clutch cover to transmission housing. → **Tightening torque: 10 Nm (7.5 ftlb.)**

Speed module to bearing bracket. → **Tightening torque: 10 Nm (7.5 ftlb.)**

Pump to housing. → **Tightening torque: 25 Nm (19 ftlb.)**

Hydraulic system to transmission housing. → **Initial tightening: 8 Nm (6 ftlb.) → Final tightening: +120°**

Bearing bracket to intermediate housing. → **Initial tightening: 8 Nm (6 ftlb.) → Final tightening: +120°**

Idler gear support to bearing bracket. → **Tightening torque: 25 Nm (19 ftlb.)**

Sucking jet pump to pump module. → **Tightening torque: 4.5 Nm (3 ftlb.)**

Pressure filter to transmission housing. → **Tightening torque: 10 Nm (7.5 ftlb.)**

Screw on drive shaft. → **Initial tightening: 100 Nm (74 ftlb.) → Final tightening: +120°+30°**

Screw on intermediate shaft. → **Tightening torque: 205 Nm (151.5 ftlb.)**

Screw on inner intermediate shaft. → **Tightening torque: 205 Nm (151.5 ftlb.)**

Left flanged shaft. → **Initial tightening: 15 Nm (11 ftlb.) → Final tightening: 45°**

Drain plug on intermediate shaft housing/oil inspection plug on transmission housing. → **Tightening torque: 45 Nm (33 ftlb.)**

Drain plug on oil pan. → **Tightening torque: 45 Nm (33 ftlb.)**

Cable guide to transmission housing. → **Tightening torque: 8 Nm (6 ftlb.)**

Sealing sleeve to transmission housing. → **Tightening torque: 10 Nm (7.5 ftlb.)**

Oil inspection plug on intermediate housing. → **Tightening torque: 45 Nm (33 ftlb.)**

Bending vibration balancer to cover. → **Initial tightening: 20 Nm (15 ftlb.) → Final tightening: +90°+/-20°**

WM 392519 REMOVING AND INSTALLING HALFSHAFT FLANGE (MACAN, MACAN S, MACAN TURBO) > PRELIMINARY WORK

1. Remove transmission. → REMOVING PORSCHE DOPPELKUPPLUNG (PDK)

WM 392519 REMOVING AND INSTALLING HALFSHAFT FLANGE (MACAN, MACAN S, MACAN TURBO) > REMOVING HALFSHAFT FLANGE > REMOVING LEFT HALFSHAFT FLANGE

Information

- Check the shaft sealing ring on the differential for damage.
- Replace the shaft sealing ring if damaged.

1. Tilt the transmission on the gear support backwards slightly so that the transmission oil does not leak out.
2. Unscrew the fastening screws **-arrows-** .

Fig 1: Locating Halfshaft Flange Screws

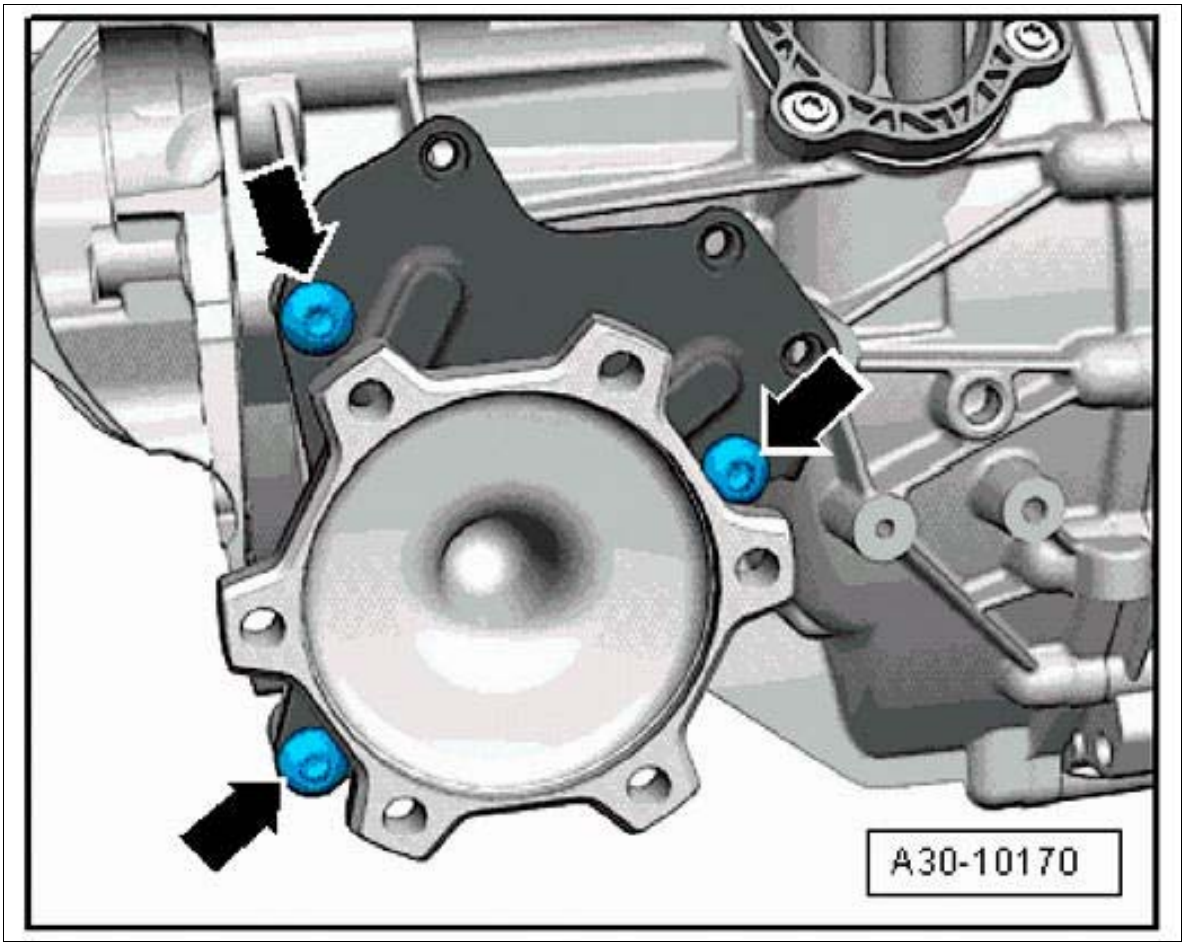

Courtesy of PORSCHE CARS NORTH AMERICA, INC.

3. Remove the halfshaft flange **-2-** slowly and carefully in **-direction of arrow A-** from the transmission.

Fig 2: Removing Halfshaft Flange

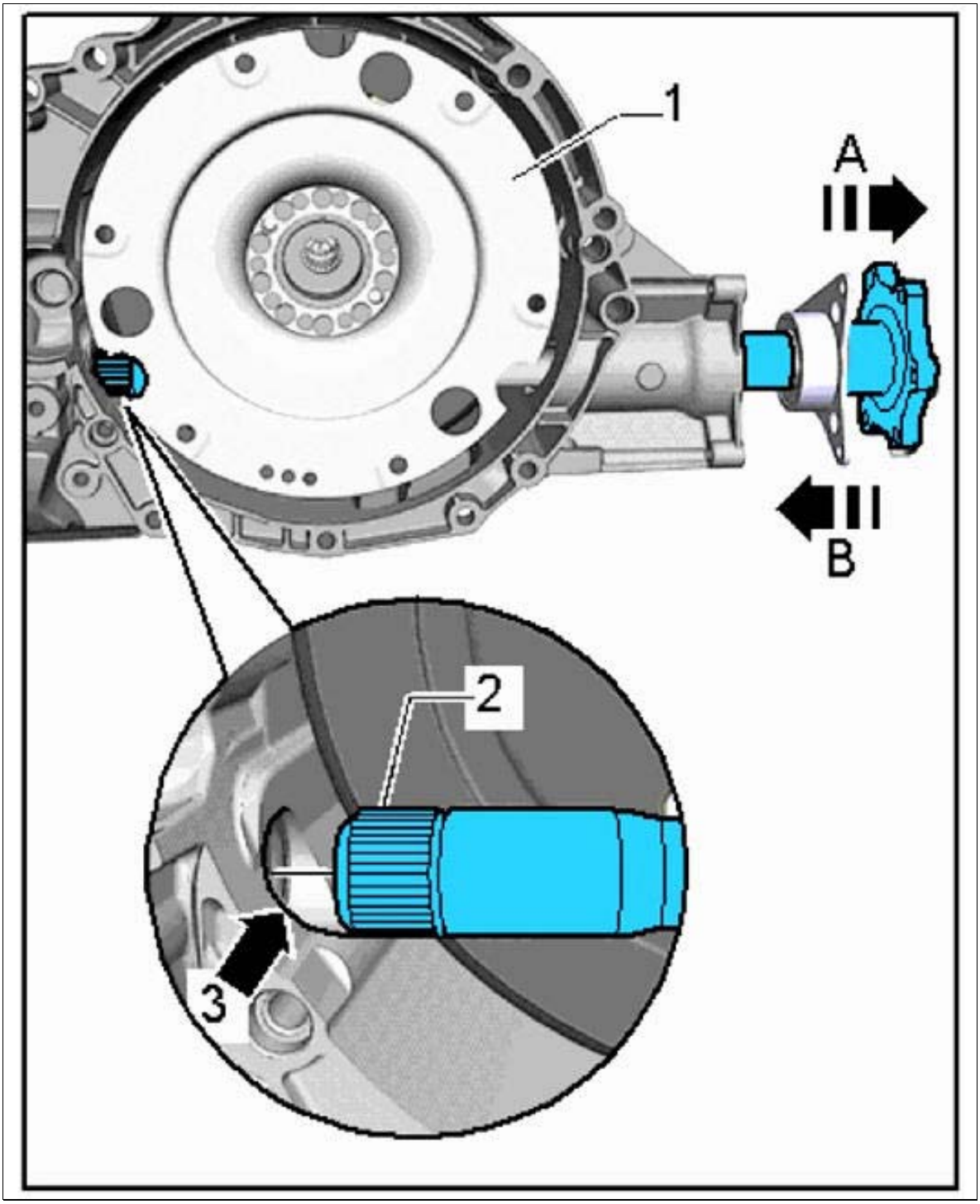

Courtesy of PORSCHE CARS NORTH AMERICA, INC.

4. Remove the flywheel. → 136019 REMOVING AND INSTALLING FLYWHEEL
5. Clean the halfshaft flange and place it on a clean surface.
6. Clean the connection area to the differential **-arrow A-** and the shaft sealing ring **-arrow B-** on the transmission housing.

Fig 3: Locating Shaft Sealing Ring

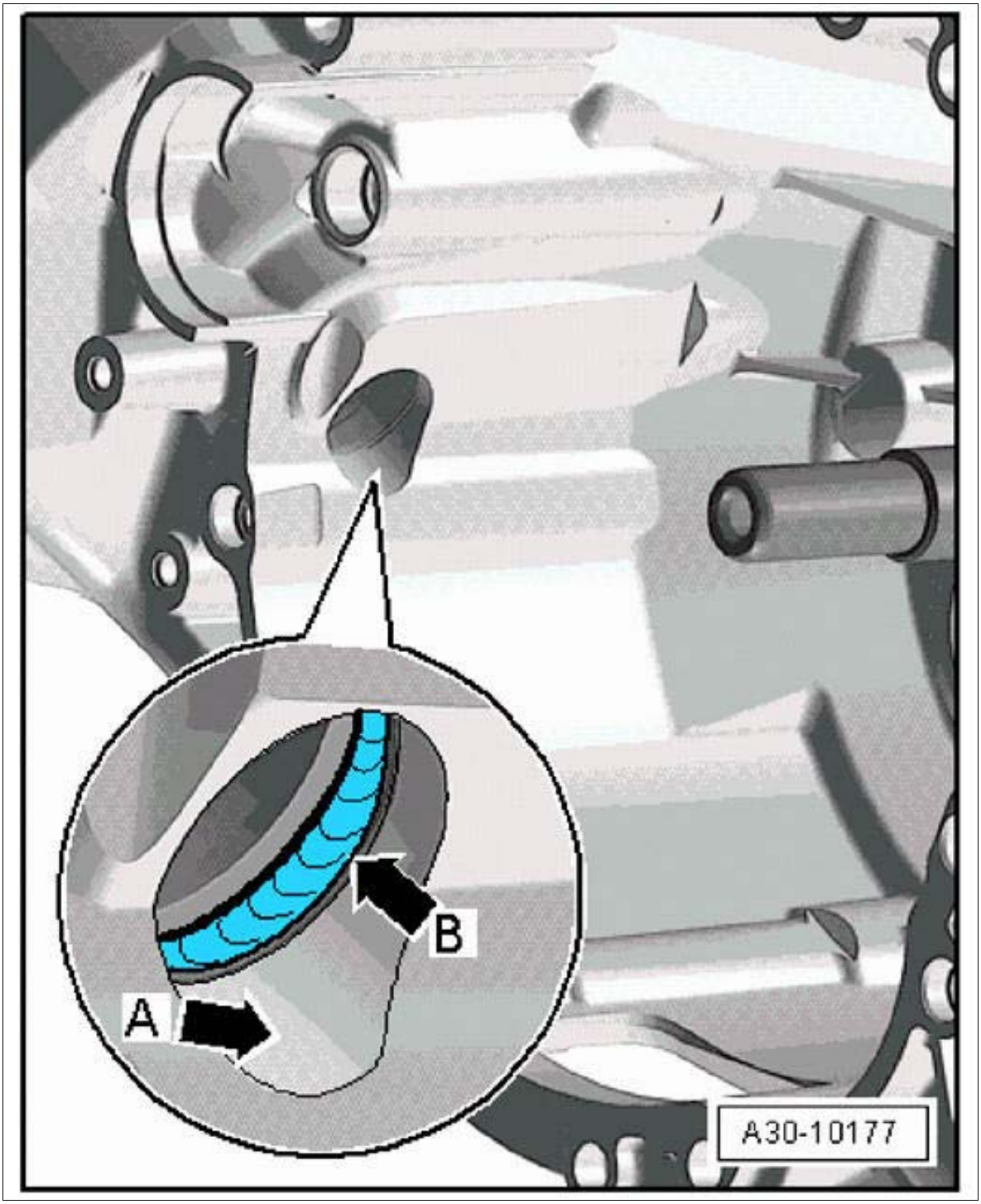

Courtesy of PORSCHE CARS NORTH AMERICA, INC.

WM 392519 REMOVING AND INSTALLING HALFSHAFT FLANGE (MACAN, MACAN S, MACAN TURBO) > REMOVING HALFSHAFT FLANGE > REMOVING RIGHT HALFSHAFT FLANGE

Information

- Replace the circlip for the right halfshaft flange.

  1. Place the collection container under the right halfshaft flange.
  2. Pull off the halfshaft flange.

     1. 2.1. Screw in the fastening screws **-2-** on the halfshaft flange **-3-** .
     2. 2.2. Pull off the halfshaft flange **-3-** using a **puller T10037** .

        Fig 1: Pulling Halfshaft Flange

        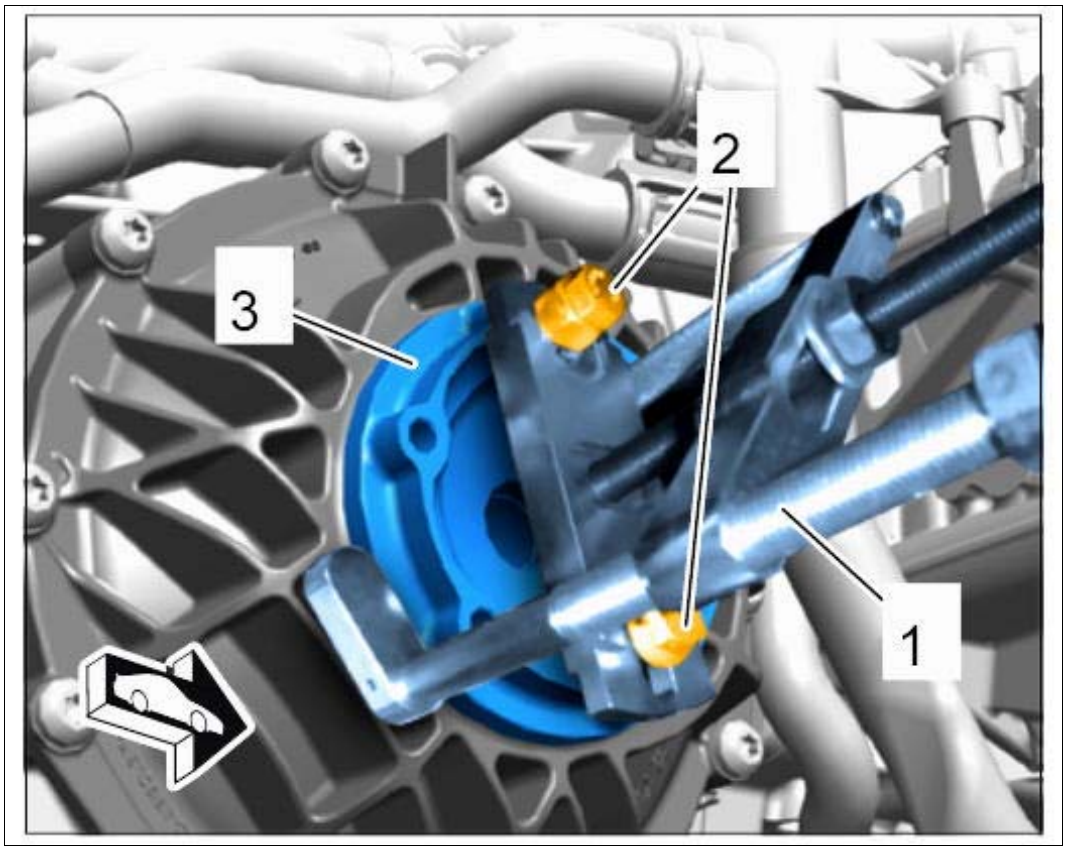

        Courtesy of PORSCHE CARS NORTH AMERICA, INC.

  3. Replace the circlip **-A-** .

     1. 3.1. Clamp the halfshaft flange in a vice using protective jaws.
     2. 3.2. Replace the circlip **-A-** .

Fig 2: Replacing Circlip

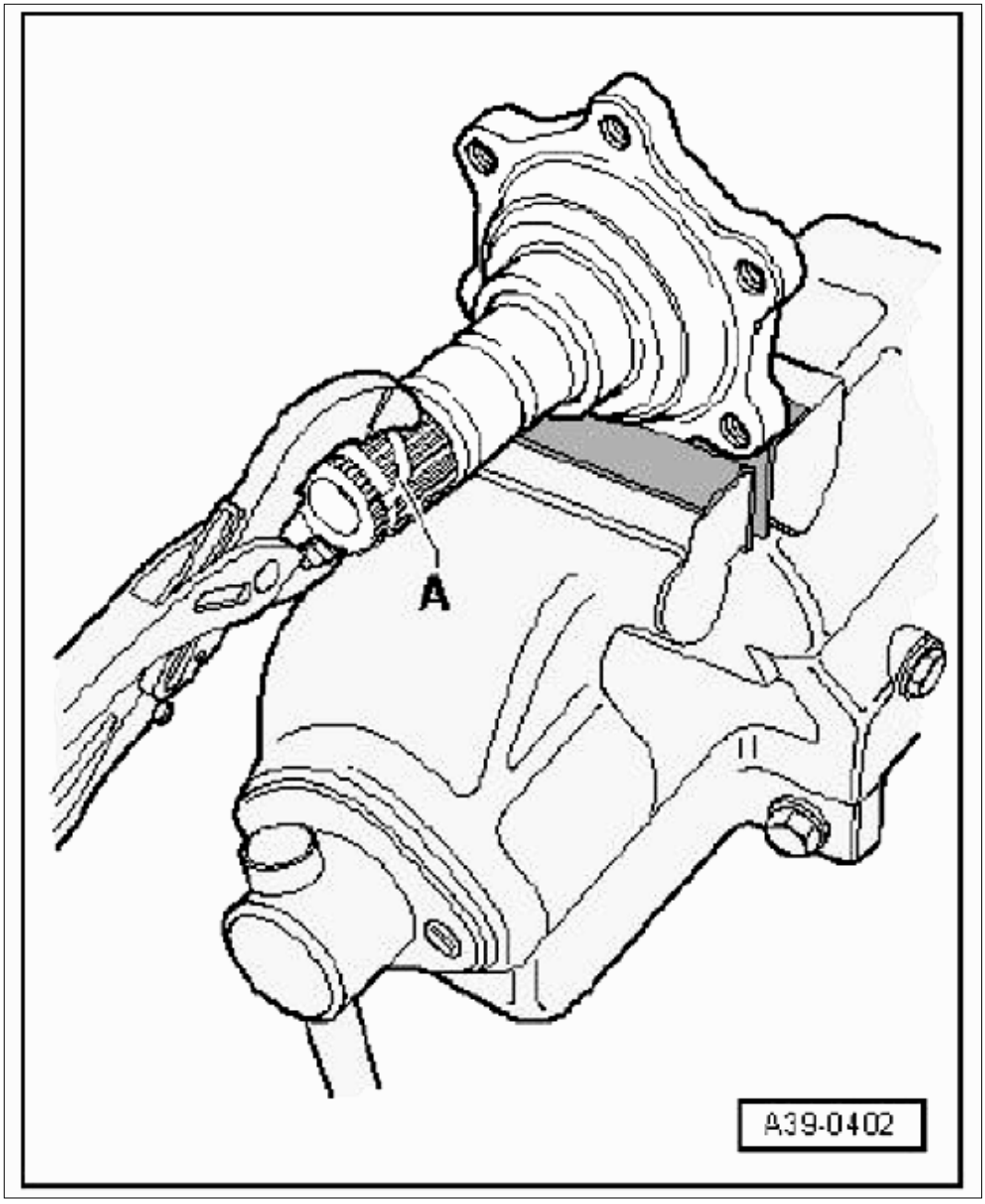

Courtesy of PORSCHE CARS NORTH AMERICA, INC.

WM 392519 REMOVING AND INSTALLING HALFSHAFT FLANGE (MACAN, MACAN S, MACAN TURBO) > INSTALLING HALFSHAFT FLANGE > INSTALLING LEFT HALFSHAFT FLANGE

Information

- Check the shaft sealing ring on the differential for damage.
- Replace the shaft sealing ring if damaged.

1. Check shaft sealing ring **-arrow B-** for damage.

Fig 1: Locating Shaft Sealing Ring

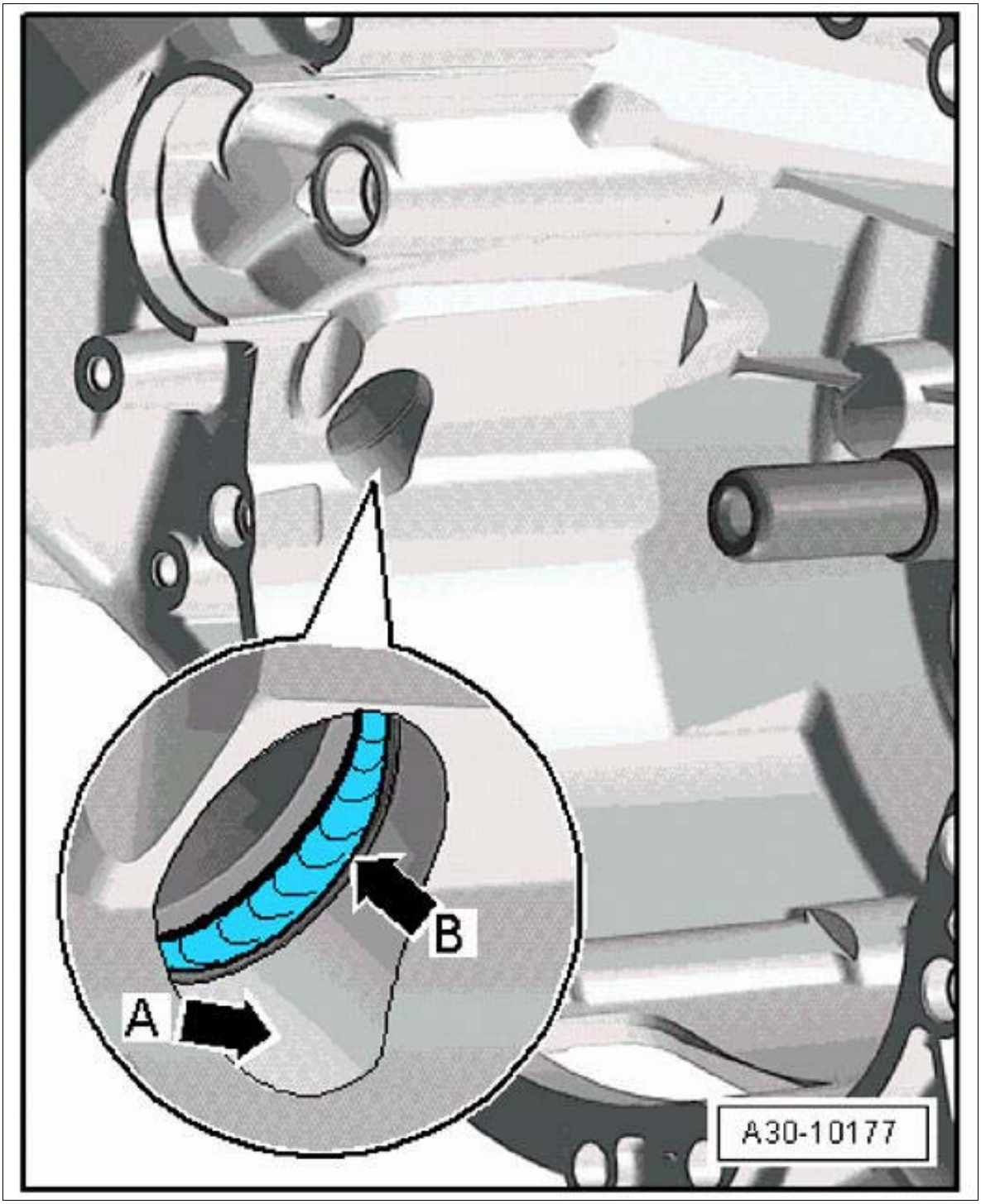

Courtesy of PORSCHE CARS NORTH AMERICA, INC.

2. Install flywheel. → INSTALLING FLYWHEEL

3. Install halfshaft flange **-2-** .

    1. 3.1. Turn the flywheel until the opening for entering the differential is visible.

    2. 3.2. Guide the halfshaft flange **-2-** centrally in **-direction of arrow B-** into the shaft

sealing ring on the differential.

3. 3.3. Carefully insert the halfshaft flange as far as it will go.

Fig 2: Removing Halfshaft Flange

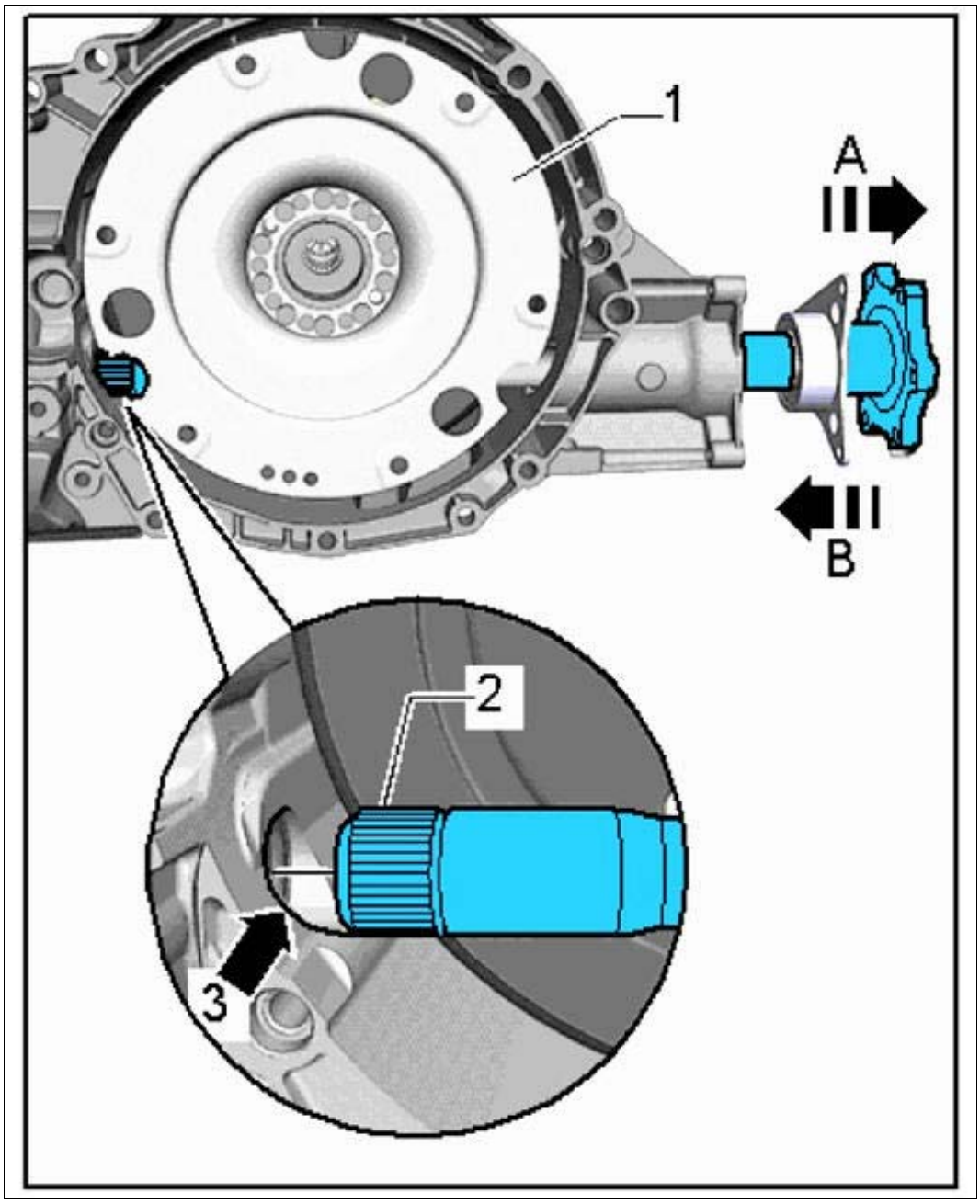

Courtesy of PORSCHE CARS NORTH AMERICA, INC.

4. Insert and tighten **new** fastening screws **-arrows -** .
    1. step **Initial tightening 15 Nm (11 ftlb.)**
    2. step **Final tightening 45°**

Fig 3: Locating Halfshaft Flange Screws

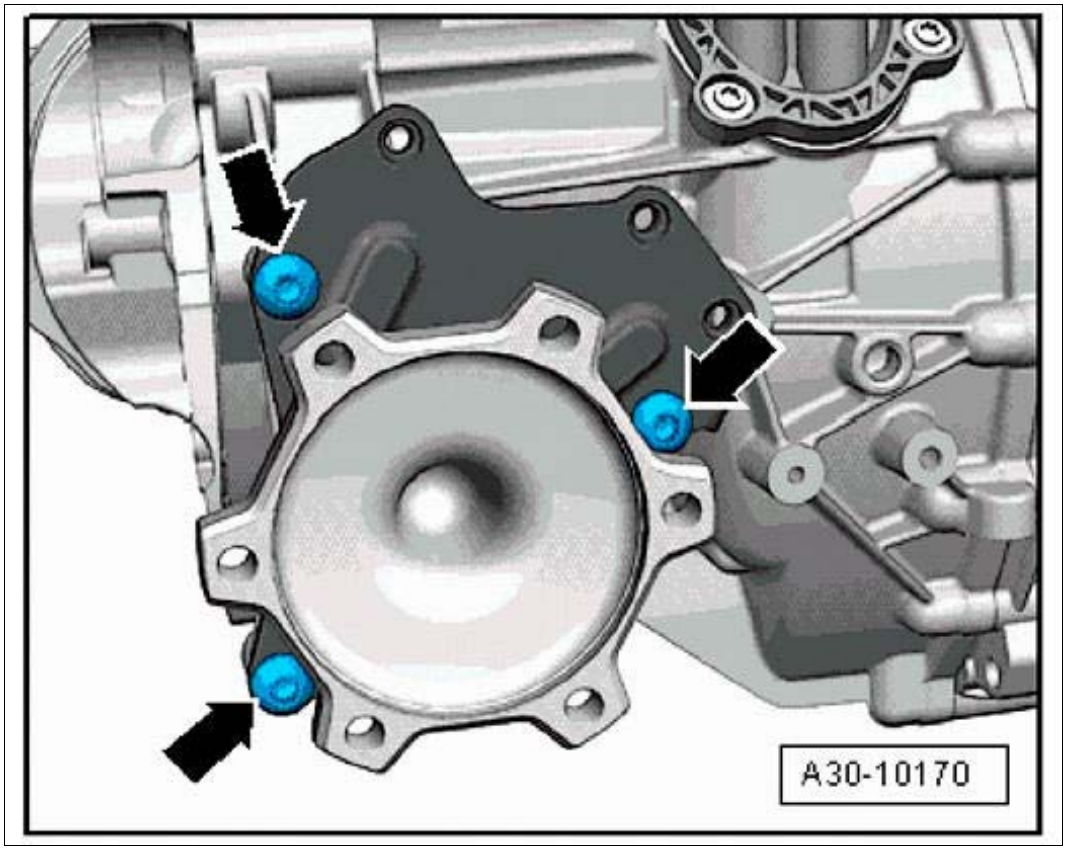

Courtesy of PORSCHE CARS NORTH AMERICA, INC.

WM 392519 REMOVING AND INSTALLING HALFSHAFT FLANGE (MACAN, MACAN S, MACAN TURBO) > INSTALLING HALFSHAFT FLANGE > INSTALLING RIGHT HALFSHAFT FLANGE

Information

- Replace the circlip for the right halfshaft flange.

1. Clean the area between the sealing and dust lip to halfway and apply sealing grease.
2. Tap in the halfshaft flange using a **mandrel VW 295** .

WM 392519 REMOVING AND INSTALLING HALFSHAFT FLANGE (MACAN, MACAN S, MACAN TURBO) > SUBSEQUENT WORK

1. Install transmission. → MOUNTING PORSCHE DOPPELKUPPLUNG (PDK)
2. Check the ATF and top up if necessary. → 370235 CHECKING AND TOPPING UP ATF

WM 393519 REMOVING AND INSTALLING REAR CARDAN SHAFT (MACAN, MACAN S, MACAN TURBO) > TOOLS

Designation	Type	Number	Description	
electronic torque wrench, 2 - 100 Nm/1.5 - 74 ftlb	Special tool	9768		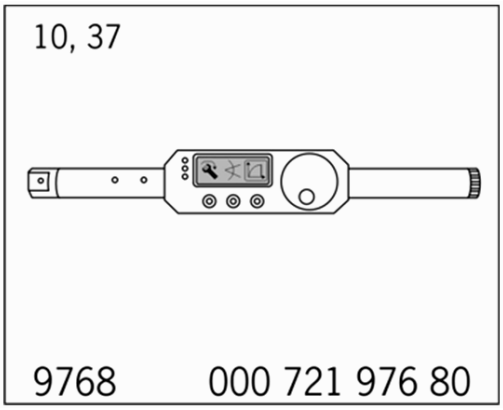

WM 393519 REMOVING AND INSTALLING REAR CARDAN SHAFT (MACAN, MACAN S, MACAN TURBO) > TECHNICAL VALUES

Location	Description	Type	Basic value	Tolerance 1	Tolerance 2
Fastening screws	Step 1: Cardan shaft to rear axle differential	Tightening torque	21 Nm (16 ftlb.)		
Fastening screws	Step 2: Cardan shaft to rear axle differential	Torque angle	+90°		
Fastening screws	Heat shield to holder	Tightening torque	55 Nm (41 ftlb.)		
Fastening nut	Heat shield to body	Tightening torque	2.1 Nm (1.5 ftlb.)		
Fastening screws	Heat shield to tank holder	Tightening torque	15 Nm (11 ftlb.)		
Fastening screws	Tunnel support	Tightening torque	55 Nm (41 ftlb.)		

WM 393519 REMOVING AND INSTALLING REAR CARDAN SHAFT (MACAN, MACAN S, MACAN TURBO) > PRELIMINARY WORK

1. Remove exhaust system. → 260119 REMOVING AND INSTALLING EXHAUST SYSTEM

WM 393519 REMOVING AND INSTALLING REAR CARDAN SHAFT (MACAN, MACAN S, MACAN TURBO) > REMOVING REAR CARDAN SHAFT

Information

- Mark the positions of all parts in relation to each other prior to removal. If the parts are not re-installed in the same position, this will result in too much imbalance, which could cause damage to the mount and humming noises.

Information

- Do not kink the cardan shaft; only store it facing upwards in elongated position with the center bearing holder.
- The cardan shaft is held by a single-lug clip, which must be removed before disassembly.
- To prevent damage to the cardan shaft, get a second mechanic to help.
- The cardan shaft must not be repaired.

1. Mark the installation position of the cardan shaft **-arrow-** on the transmission and on the rear axle differential.

   Fig 1: Locating Cardan Shaft Installation Position Mark

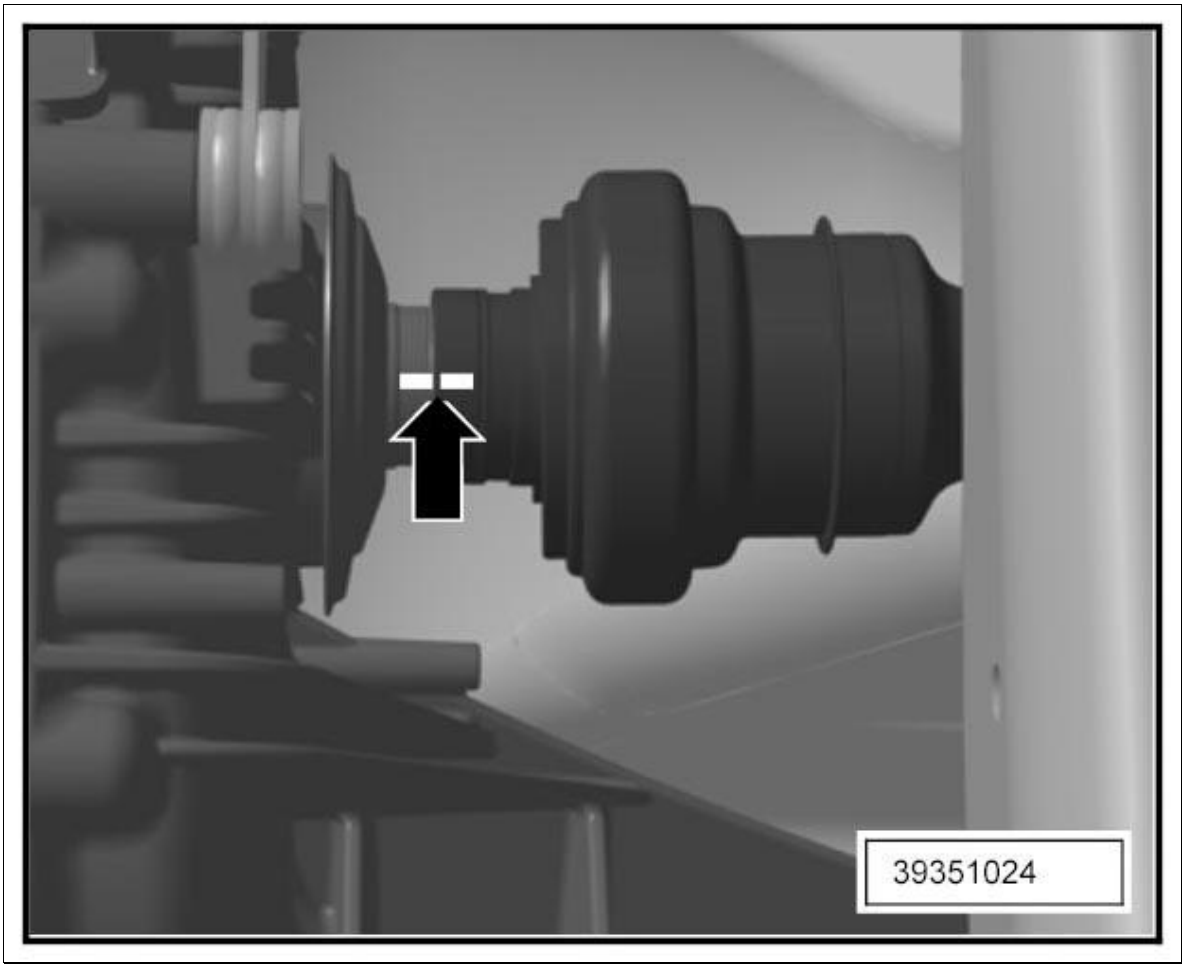

Courtesy of PORSCHE CARS NORTH AMERICA, INC.

2. Loosen single-lug clip **-1-** on the cardan shaft at the transmission side.

Fig 2: Identifying Cardan Shaft Single-Lug Clip

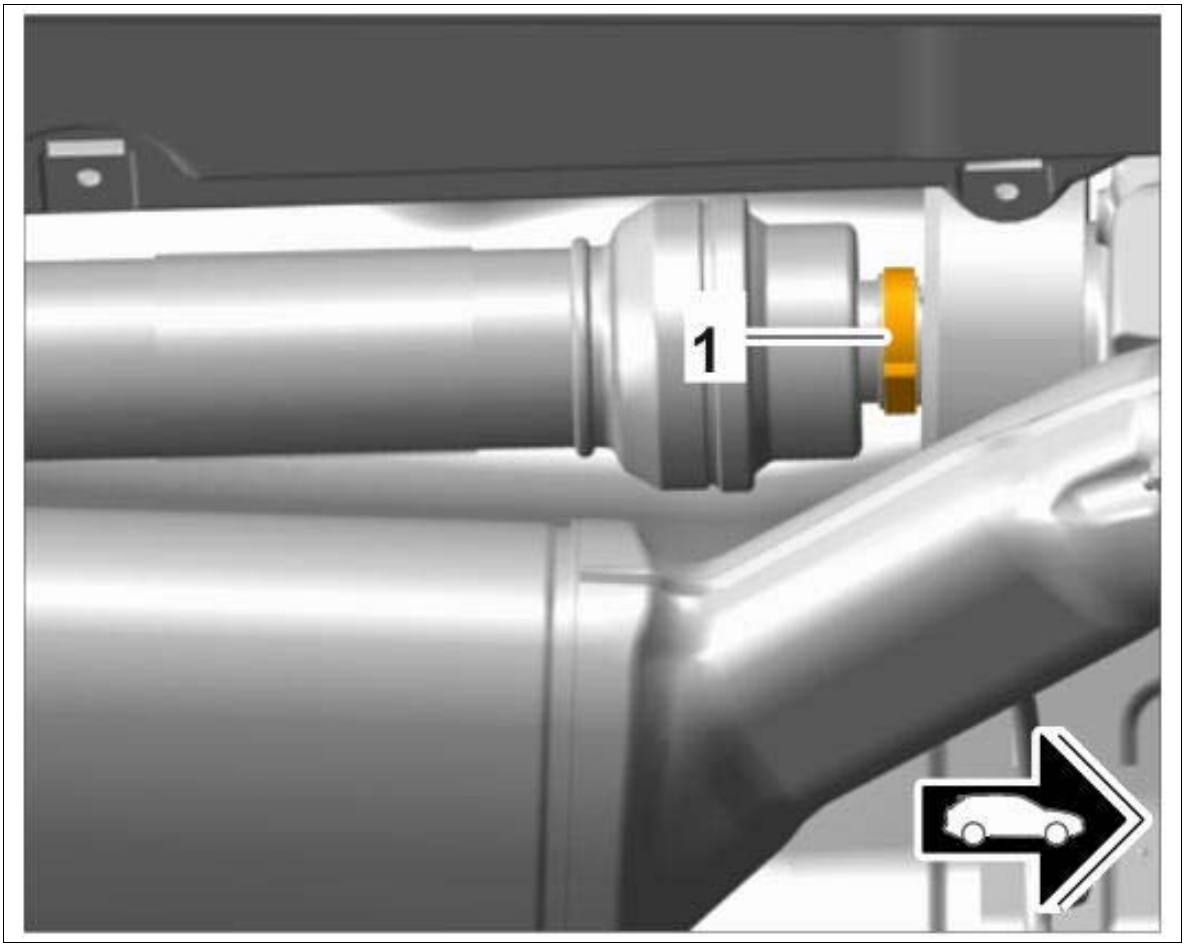

Courtesy of PORSCHE CARS NORTH AMERICA, INC.

Information

1. Replace fastening screws.
2. Clean and blow out threaded bores.
3. Clean flange surface on rear axle differential and cardan shaft to remove grease.

3. Unscrew fastening screws **-2-** on the cardan shaft **-1-** .

Fig 3: Identifying Cardan Shaft Fastening Screws

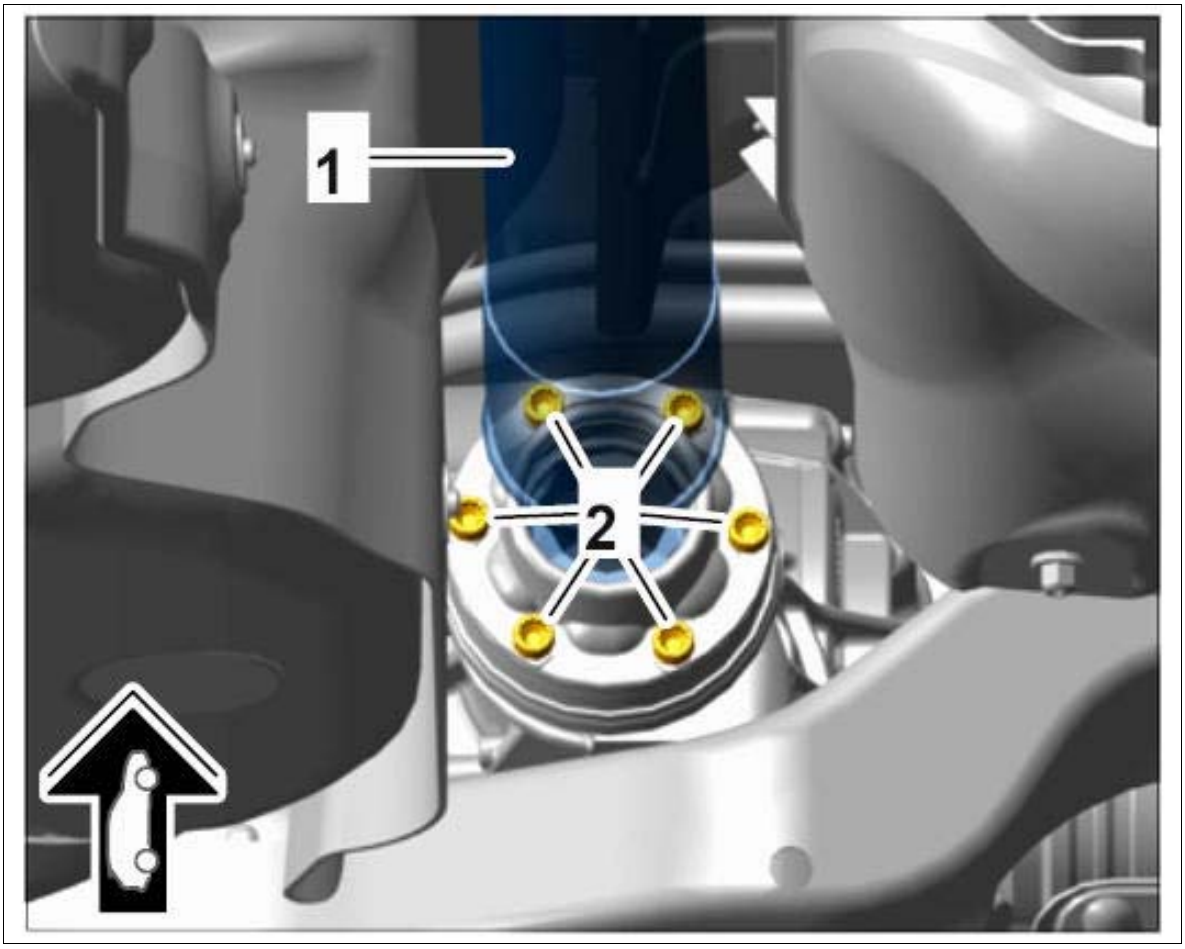

Courtesy of PORSCHE CARS NORTH AMERICA, INC.

4. Remove heat shield and rear tunnel cross member **-1-** .
    1. 4.1. Unscrew fastening screws **-2-** and **-3-** .
    2. 4.2. Unscrew fastening nut **-4-** .
    3. 4.3. Remove heat shield and cross member **-1-** .

Fig 4: Identifying Heat Shield And Rear Tunnel Cross Member Screws

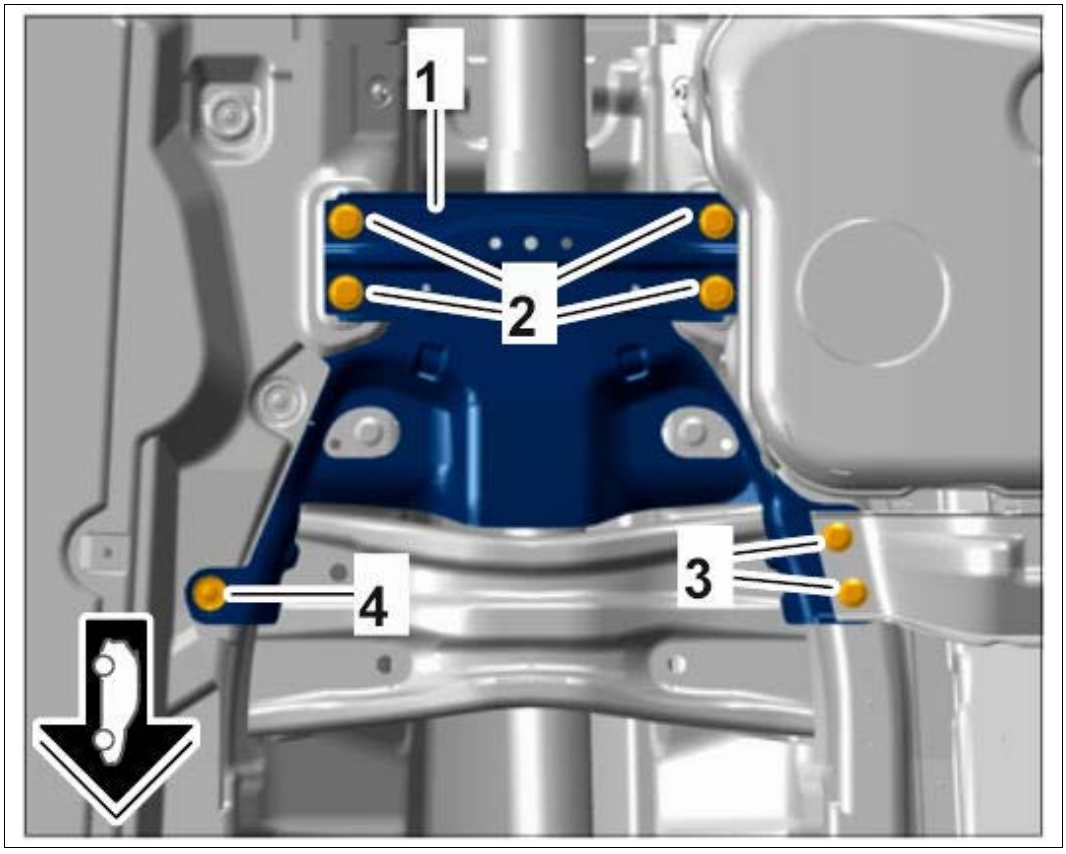

Courtesy of PORSCHE CARS NORTH AMERICA, INC.

5. Remove front tunnel support **-1-** .
    1. 5.1. Unscrew fastening screws **-2-** .
    2. 5.2. Remove support **-1-** .

Fig 5: Identifying Front Tunnel Support Screws

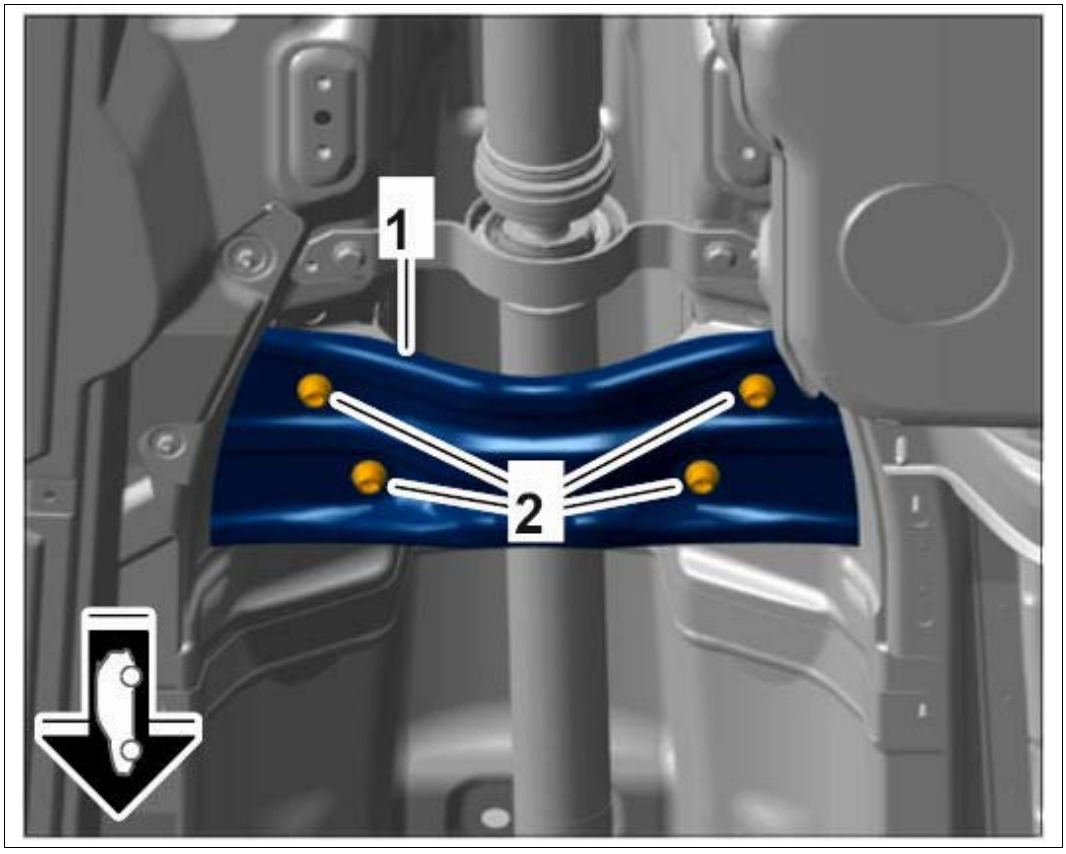

Courtesy of PORSCHE CARS NORTH AMERICA, INC.

6. Remove cardan shaft **-2-** .

The help of another person is required.

1. 6.1. Unscrew fastening screws **-3-** on the center bearing.
2. 6.2. Press cardan shaft **-2-** in **-direction of arrow 1-** .
3. 6.3. Pull cardan shaft flange **-1-** down and expose it.
4. 6.4. Remove cardan shaft **-2-** in **-direction of arrow 2-** .

Fig 6: Removing Cardan Shaft

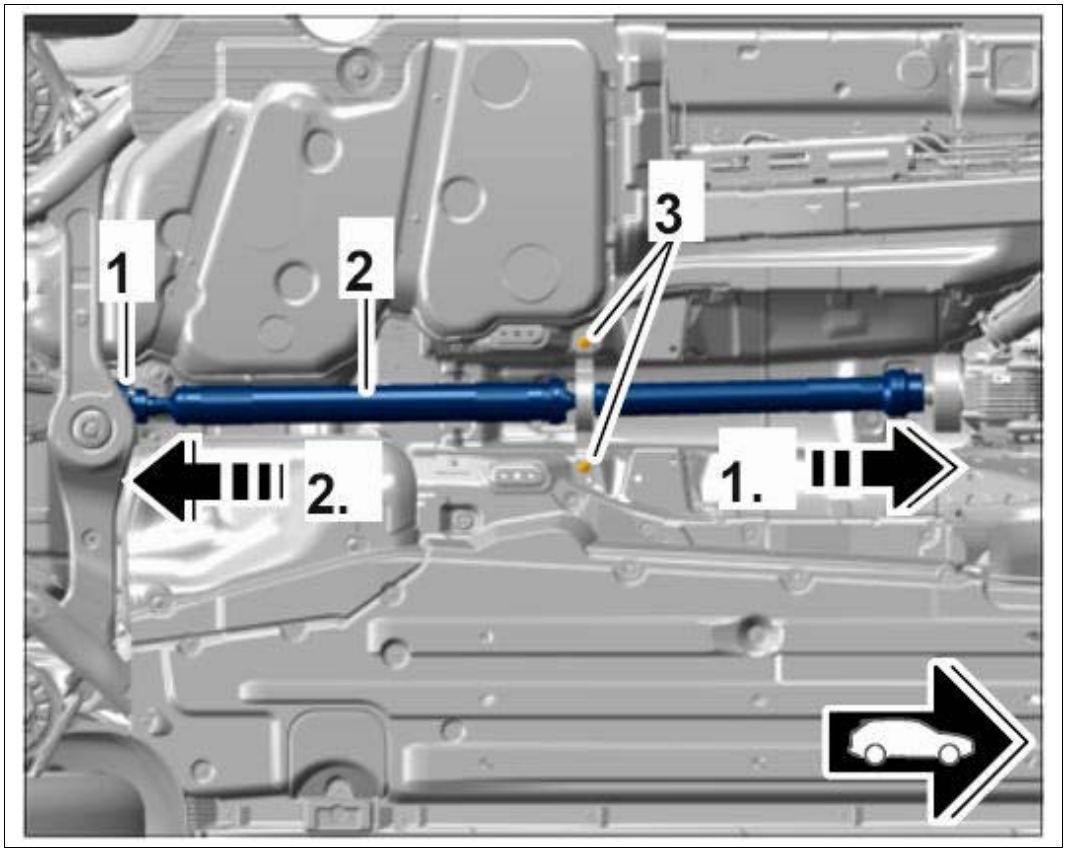

Courtesy of PORSCHE CARS NORTH AMERICA, INC.

WM 393519 REMOVING AND INSTALLING REAR CARDAN SHAFT (MACAN, MACAN S, MACAN TURBO) > INSTALLING REAR CARDAN SHAFT

1. Clean rear connecting flange of the cardan shaft to remove grease.
2. Observe previously marked installation position of the cardan shaft **-arrow-** on the transmission and on the rear axle differential.

Fig 1: Locating Cardan Shaft Installation Position

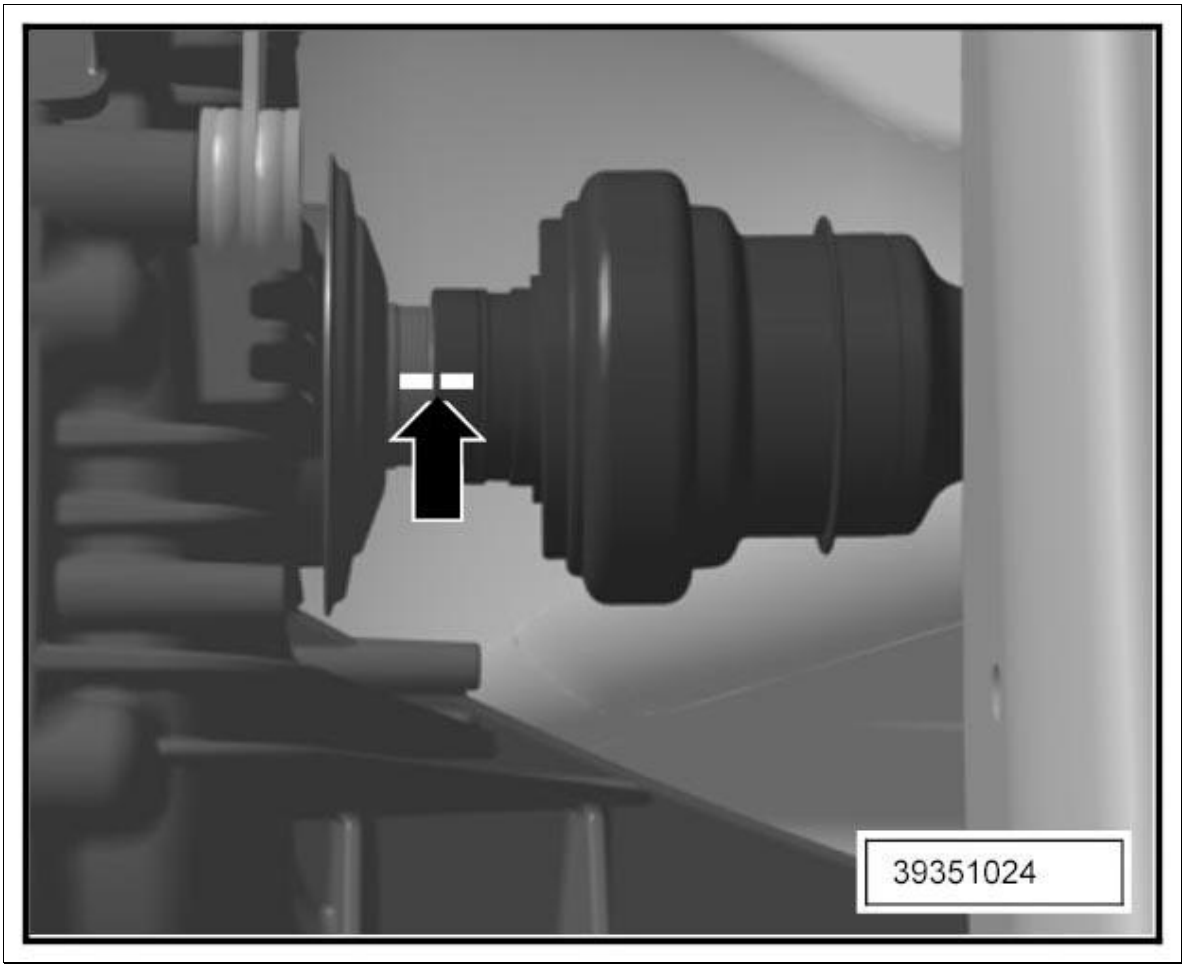

Courtesy of PORSCHE CARS NORTH AMERICA, INC.

Information

1. Replace fastening screws.
2. Clean and blow out threaded bores.
3. Clean flange surface on rear axle differential and cardan shaft to remove grease.

3. Install cardan shaft **-2-** .

The help of another person is required.

1. 3.1. **Fit new** single-lug clip on the cardan shaft.
2. 3.2. Push cardan shaft in **-direction of arrow 1-** onto the splines on the transmission.
3. 3.3. Press on cardan shaft in **-direction of arrow 1-** .
4. 3.4. Position cardan shaft flange **-1-** on the rear axle differential.
5. 3.5. Fit and tighten fastening screws on the center bearing **-3-** .

Fig 2: Installing Cardan Shaft

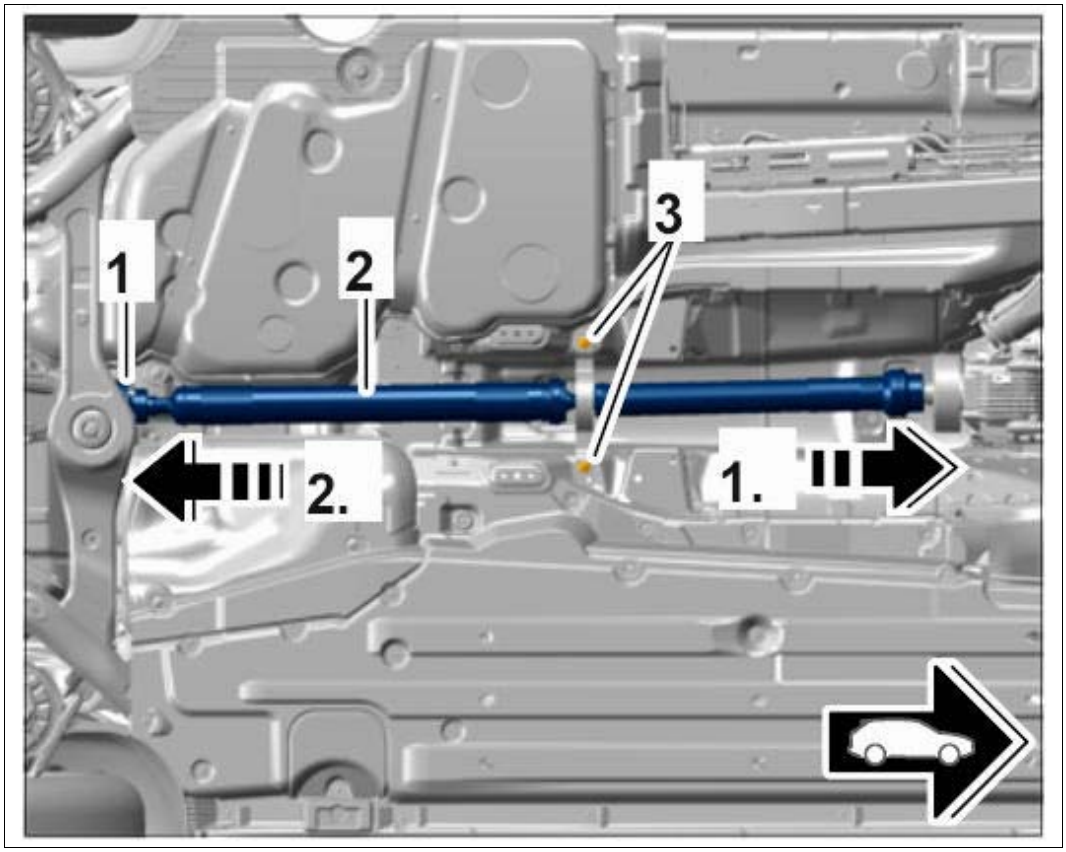

Courtesy of PORSCHE CARS NORTH AMERICA, INC.

4. Fasten single-lug clip **-1-** on the cardan shaft.

Fig 3: Identifying Cardan Shaft Single-Lug Clip

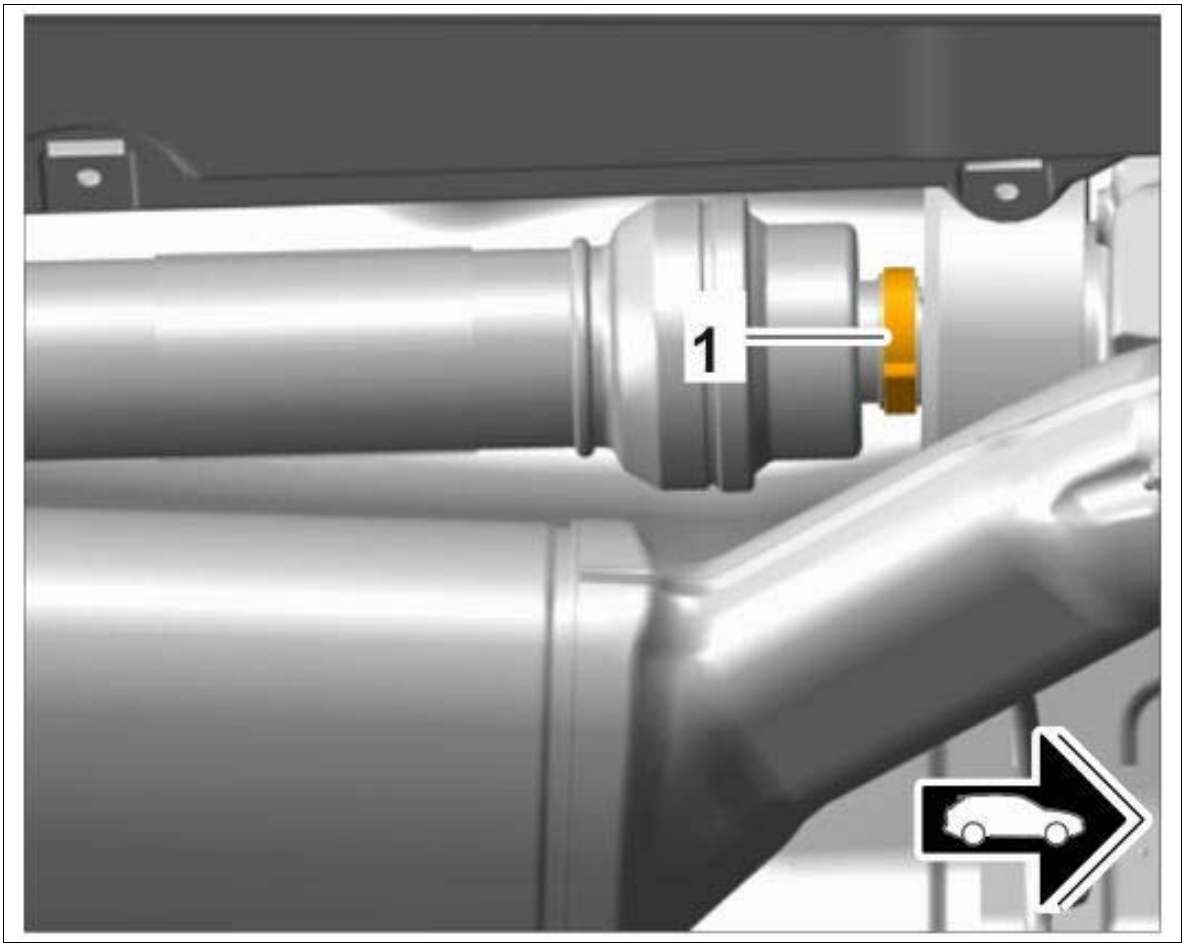

Courtesy of PORSCHE CARS NORTH AMERICA, INC.

Information

1. Replace fastening screws.
2. Clean and blow out threaded bores.
3. Clean flange surface on rear axle differential and cardan shaft to remove grease.

5. **Fit new** fastening screws **-2-** with a **new** seal and **new** plates at the rear of the rear axle differential and tighten using special tool **electronic torque wrench, 2 - 100 Nm/1.5 - 74 ftlb 9768.**

   Step 1

   Step 2 **Tightening torque: 21 Nm (16 ftlb.)**

   Final tightening **Torque angle +90°**

Fig 4: Identifying Cardan Shaft Fastening Screws

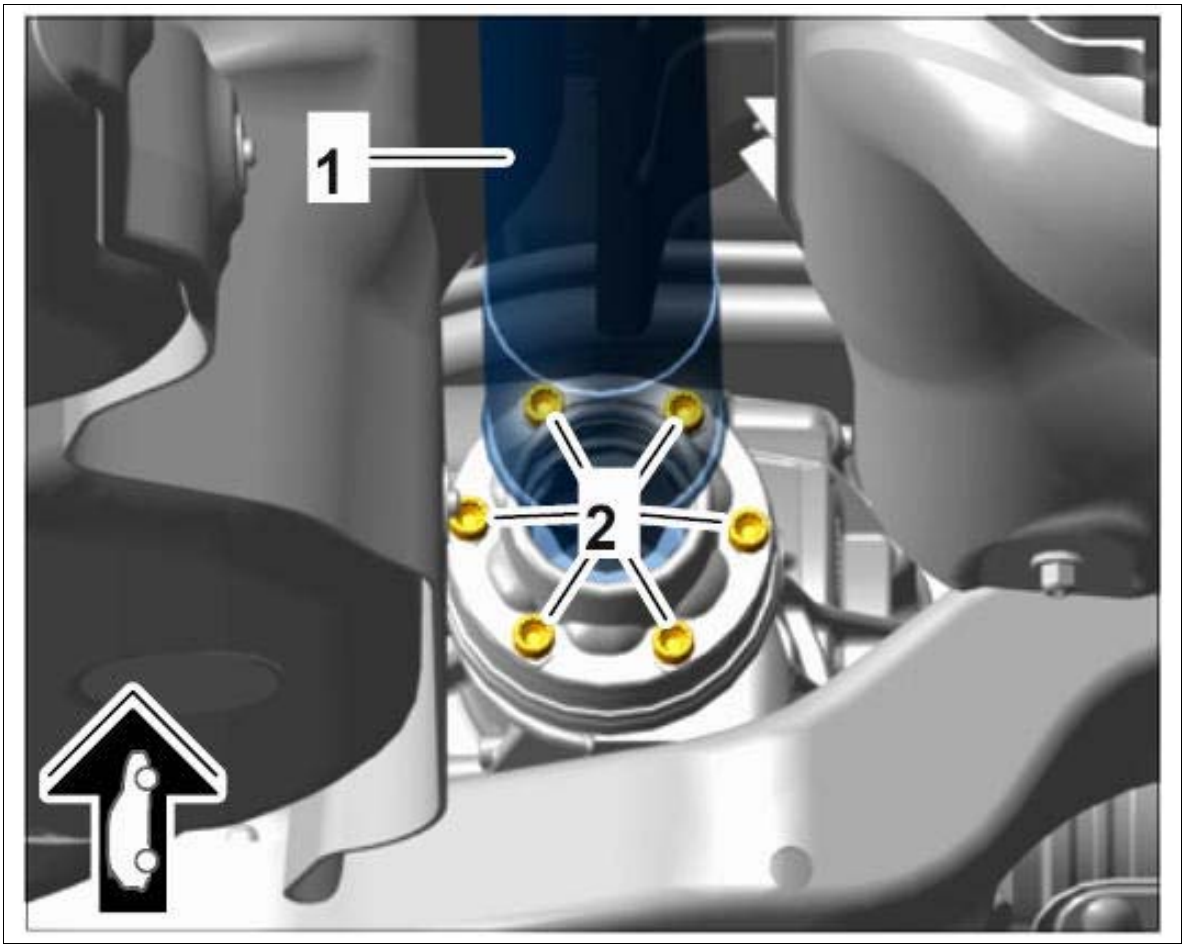

Courtesy of PORSCHE CARS NORTH AMERICA, INC.

6. Install front tunnel support **-1-** .
    1. 6.1. Position support **-1-** .
    2. 6.2. Fit and tighten fastening screws **-2-** . **Tightening torque: 55 Nm (41 ftlb.)**

Fig 5: Identifying Front Tunnel Support Screws

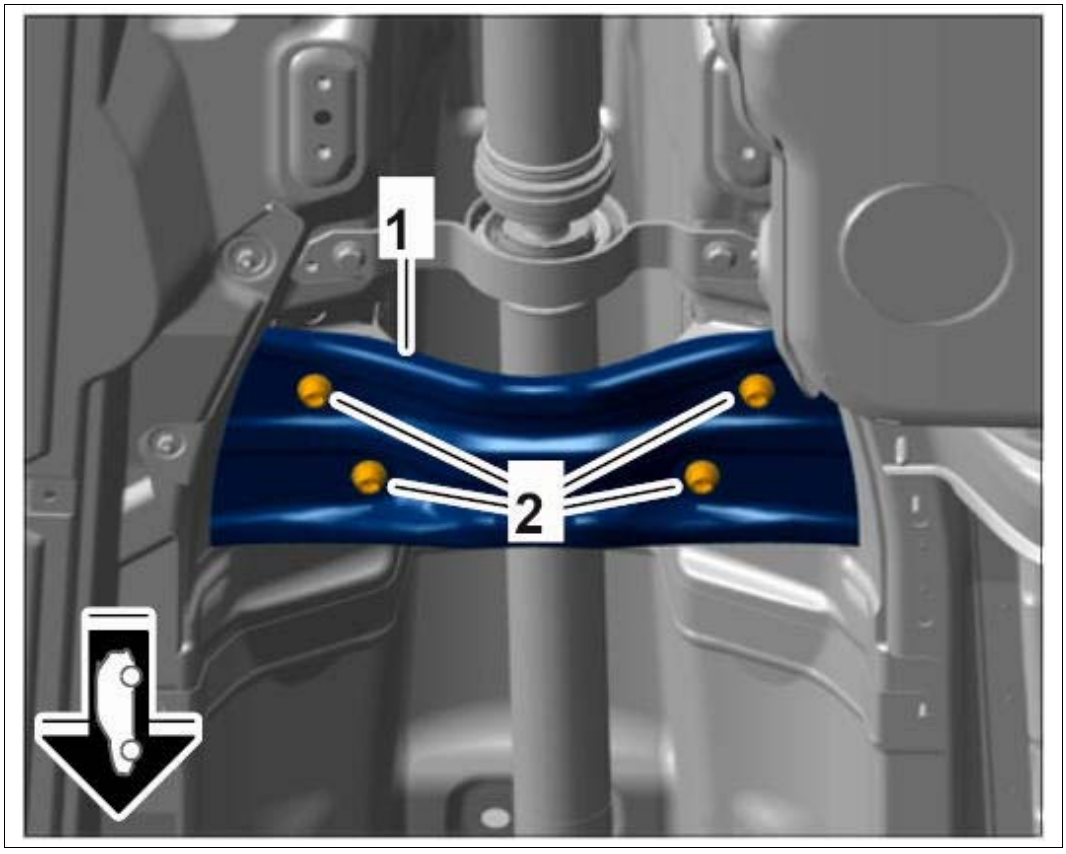

Courtesy of PORSCHE CARS NORTH AMERICA, INC.

7. Install heat shield and rear tunnel cross member **-1-** .
    1. 7.1. Position heat shield **-1-** .
    2. 7.2. Fit and tighten fastening screws **-2-** . **Tightening torque: 55 Nm (41 ftlb.)**
    3. 7.3. Fit and tighten fastening screws **-3-** . **Tightening torque: 15 Nm (11 ftlb.)**
    4. 7.4. Fit and tighten fastening nut **-4-** . **Tightening torque: 2.1 Nm (1.5 ftlb.)**

Fig 6: Identifying Heat Shield And Rear Tunnel Cross Member Screws

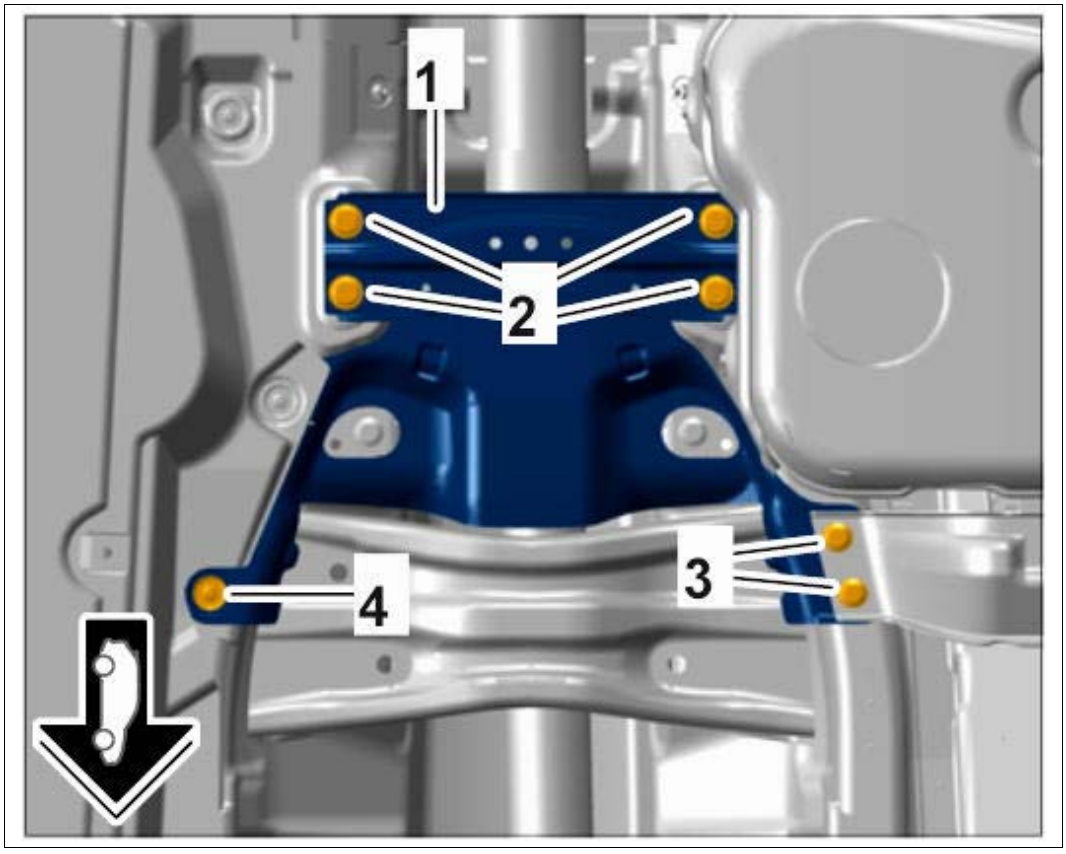

Courtesy of PORSCHE CARS NORTH AMERICA, INC.

WM 393519 REMOVING AND INSTALLING REAR CARDAN SHAFT (MACAN, MACAN S, MACAN TURBO) > SUBSEQUENT WORK

1. Install exhaust system. → INSTALLING EXHAUST SYSTEM

WM 395955 REPLACING SEALING RING FOR FRONT HALFSHAFT FLANGE (MACAN, MACAN S, MACAN TURBO) > TOOLS

Designation	Type	Number	Description	

engine/transmission repair stand WW MG 600/v	Workshop equipment	WE 1171		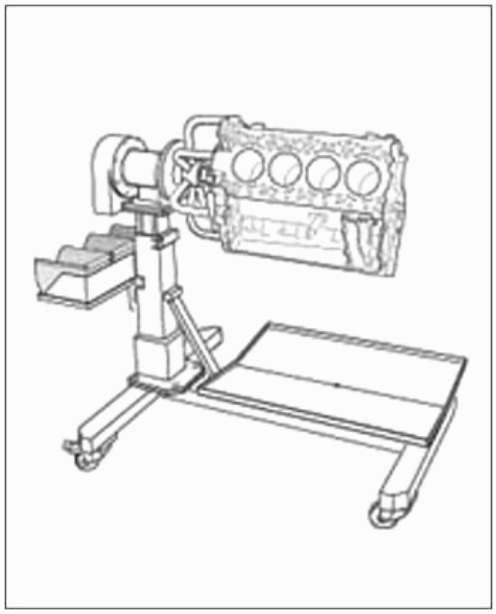
pressure piece	VW tool	T40163		
pressure piece	VW tool	T40164		

WM 395955 REPLACING SEALING RING FOR FRONT HALFSHAFT FLANGE (MACAN, MACAN S, MACAN TURBO) > PRELIMINARY WORK > PRELIMINARY WORK FOR FRONT LEFT SEALING RING

1. Secure transmission to **engine/transmission repair stand WW MG 600/v WE 1171.**
2. Remove right halfshaft flange. → 392519 REMOVING AND INSTALLING HALFSHAFT FLANGE

WM 395955 REPLACING SEALING RING FOR FRONT HALFSHAFT FLANGE (MACAN, MACAN S, MACAN TURBO) > PRELIMINARY WORK > PRELIMINARY WORK FOR FRONT RIGHT SEALING RING

1. Remove right halfshaft flange. → 392519 REMOVING AND INSTALLING HALFSHAFT FLANGE

WM 395955 REPLACING SEALING RING FOR FRONT HALFSHAFT FLANGE (MACAN, MACAN S, MACAN TURBO) > REPLACING SEALING RING FOR FRONT HALFSHAFT FLANGE > REPLACING SEALING RING FOR FRONT LEFT HALFSHAFT FLANGE

1. Remove cover for final drive.
    1. 1.1. Unscrew screws **-arrows-** .

2. 1.2. Carefully take off the cover.
3. 1.3. Collect emerging oil.

Fig 1: Locating Final Drive Cover Screws

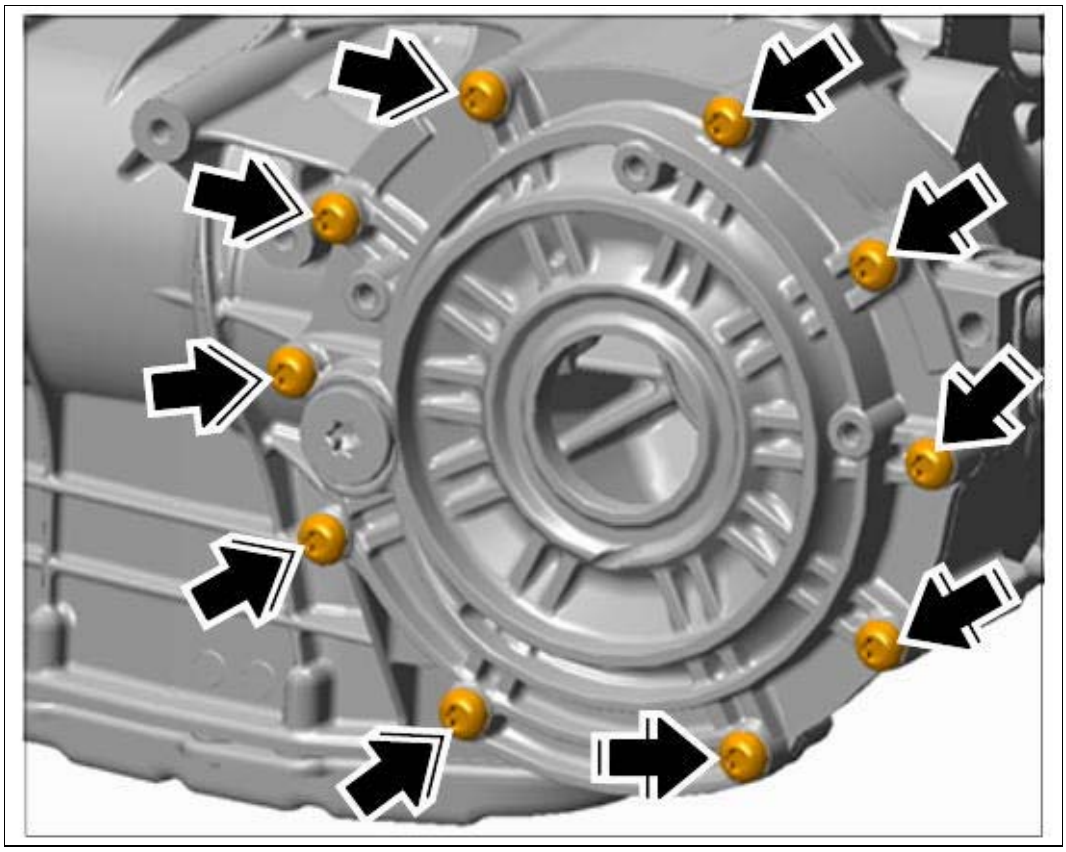

Courtesy of PORSCHE CARS NORTH AMERICA, INC.

2. Carefully remove differential and set it down on a soft surface.
3. Remove left halfshaft flange. → 392519 REMOVING AND INSTALLING HALFSHAFT FLANGE
4. Press out sealing ring on the back **-arrow-** .

Fig 2: Pressing Left Sealing Ring

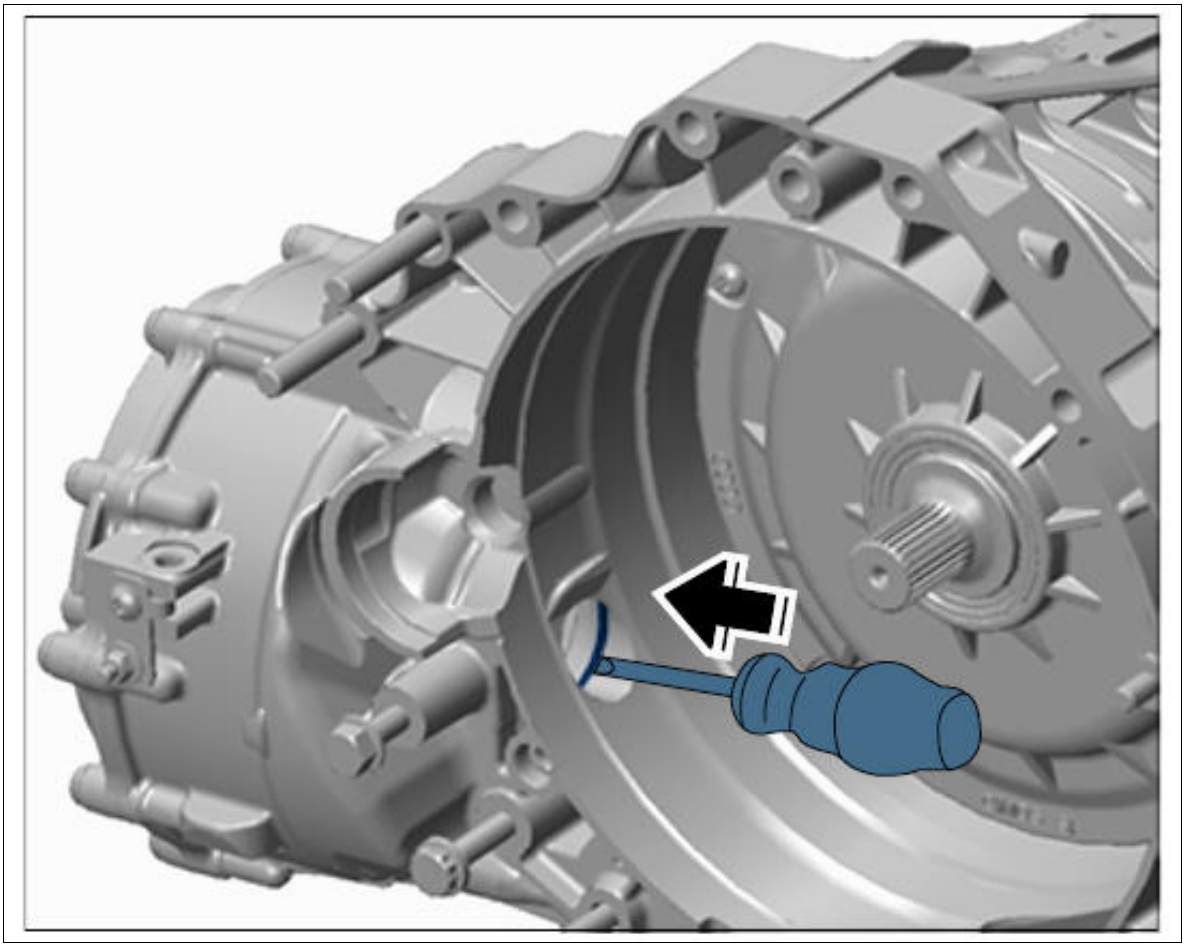

Courtesy of PORSCHE CARS NORTH AMERICA, INC.

5. Install new sealing ring.
    1. 5.1. Oil the external circumference of the new sealing ring with a light coating of oil and fit it on the **pressure piece T40164** .
    2. 5.2. The open side of the sealing ring is facing the pressure piece.
    3. 5.3. Tap sealing ring in as far as it will go using pressure piece. Do not tilt it.
    4. 5.4. Half-fill the space between the sealing and dust lips with sealing grease.

Fig 3: Installing Sealing Ring

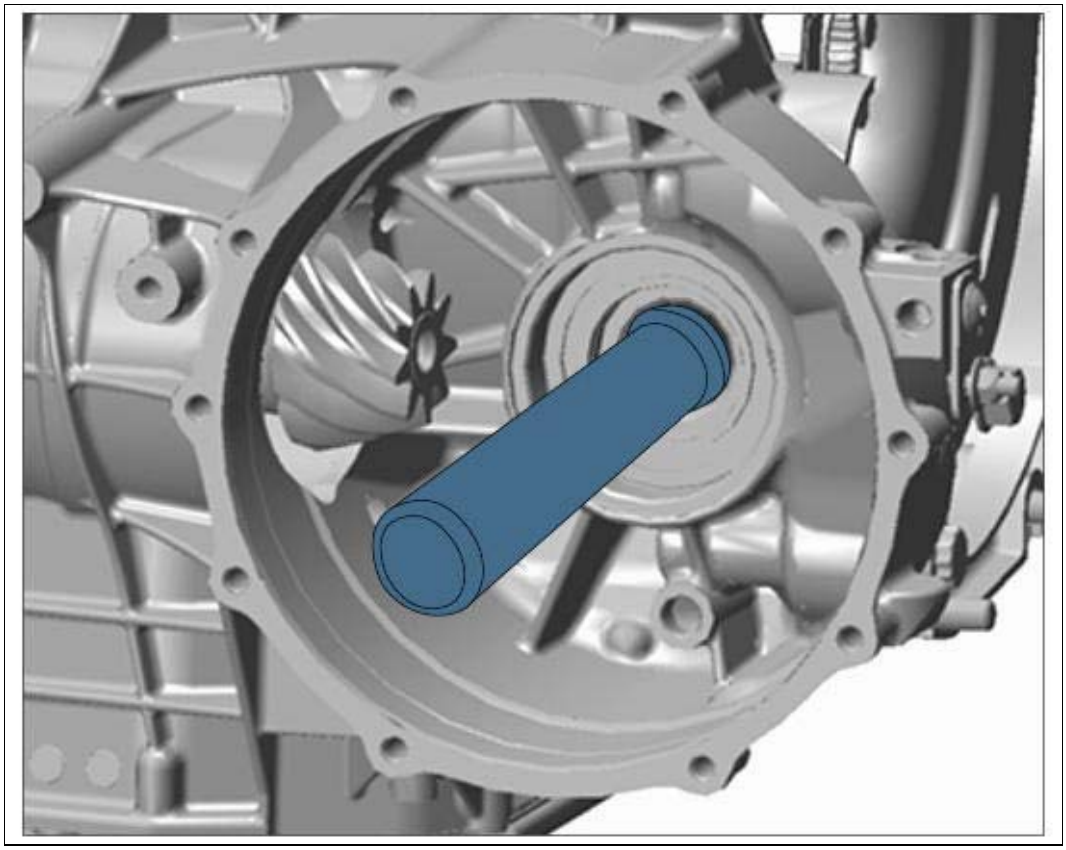

Courtesy of PORSCHE CARS NORTH AMERICA, INC.

6. Insert the differential.
7. Install cover for final drive.
    1. 7.1. Replace O-ring.
    2. 7.2. Tighten screws in the sequence **-1-10-** .

Fig 4: Final Drive Cover Screws Tightening Sequence

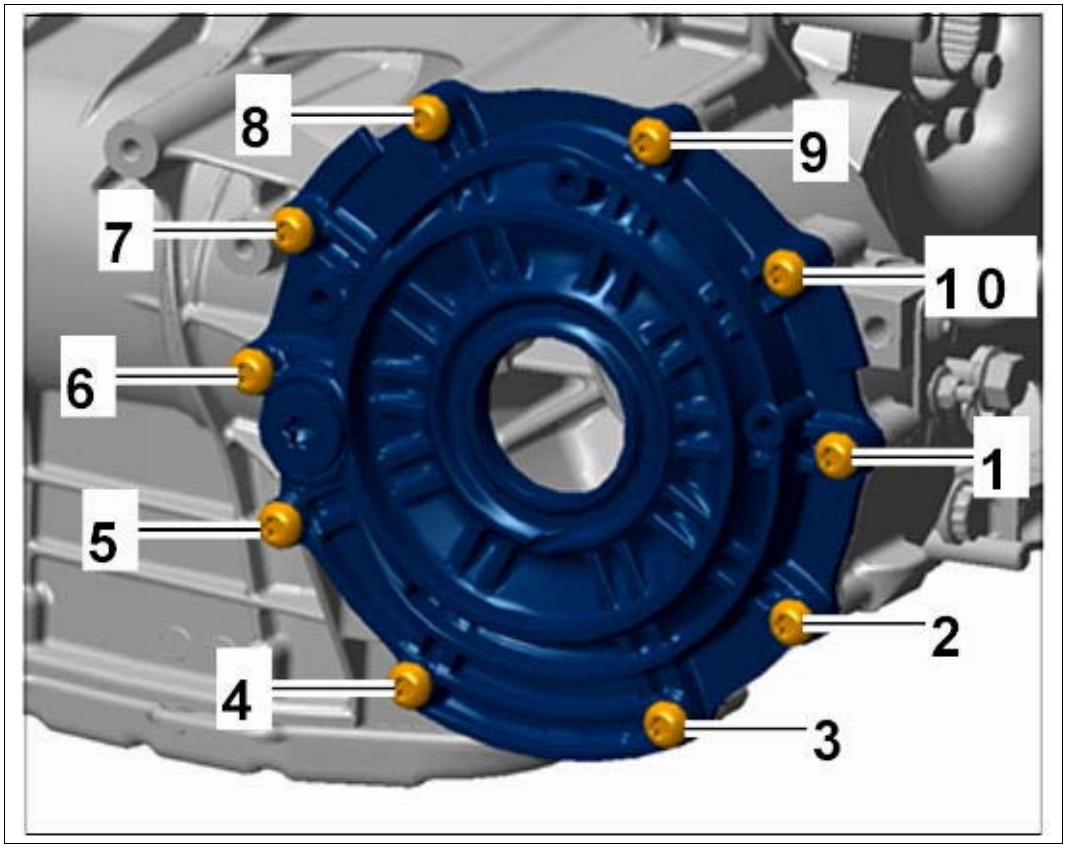

Courtesy of PORSCHE CARS NORTH AMERICA, INC.

WM 395955 REPLACING SEALING RING FOR FRONT HALFSHAFT FLANGE (MACAN, MACAN S, MACAN TURBO) > REPLACING SEALING RING FOR FRONT HALFSHAFT FLANGE > REPLACING SEALING RING FOR FRONT RIGHT HALFSHAFT FLANGE

1. Lever off sealing ring using a mounting lever **-arrow-** .

Fig 1: Replacing Right Sealing Ring

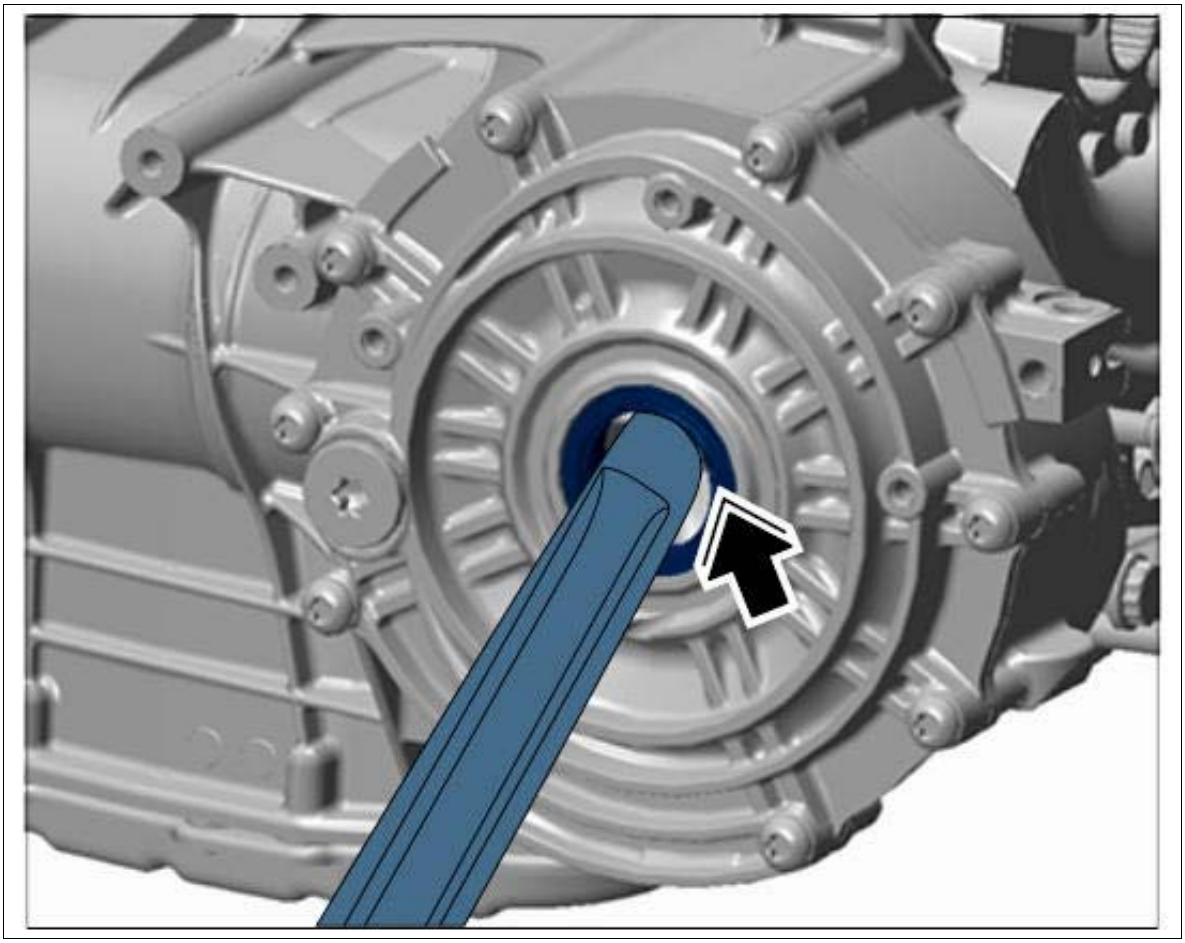

Courtesy of PORSCHE CARS NORTH AMERICA, INC.

2. Install new sealing ring.

    1. 2.1. Oil the external circumference of the new sealing ring with a light coating of oil and fit it on the **pressure piece T40163.**
    2. 2.2. Tap sealing ring in as far as it will go using pressure piece. Do not tilt it.
    3. 2.3. Half-fill the space between the sealing and dust lips with sealing grease.

Fig 2: Installing Sealing Ring

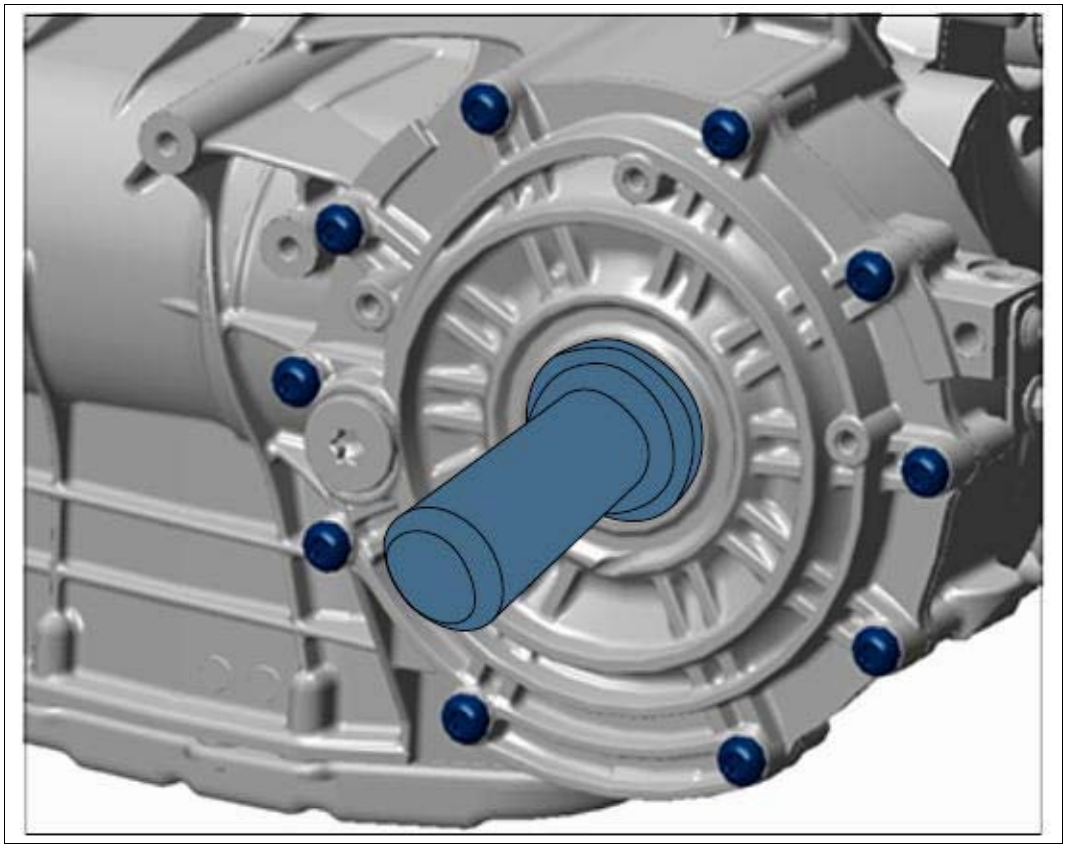

Courtesy of PORSCHE CARS NORTH AMERICA, INC.

WM 395955 REPLACING SEALING RING FOR FRONT HALFSHAFT FLANGE (MACAN, MACAN S, MACAN TURBO) > SUBSEQUENT WORK

1. Install halfshaft flange at the left and right. → INSTALLING HALFSHAFT FLANGE
2. Check transmission oil in front final drive. → 399035 CHECKING AND TOPPING UP OIL FOR ALL-WHEEL FINAL DRIVE

WM 396519 REMOVING AND INSTALLING TRANSFER GEAR (MACAN, MACAN S, MACAN TURBO) > TECHNICAL VALUES

Location	Description	Type	Basic value	Tolerance 1	Tolerance 2
Fastening screws securing transfer gear to Porsche Doppelkupplung (PDK)	M10 x 70/replace	Initial tightening	50 Nm (37 ftlb.)		

Fastening screws securing transfer gear to Porsche Doppelkupplung (PDK)		Final tightening	+90°		

WM 396519 REMOVING AND INSTALLING TRANSFER GEAR (MACAN, MACAN S, MACAN TURBO) > PRELIMINARY WORK

1. Remove exhaust system. → 260119 REMOVING AND INSTALLING EXHAUST SYSTEM
2. Remove rear cardan shaft. → 393519 REMOVING AND INSTALLING REAR CARDAN SHAFT

WM 396519 REMOVING AND INSTALLING TRANSFER GEAR (MACAN, MACAN S, MACAN TURBO) > REMOVING TRANSFER GEAR

Information

Remove transfer gear with vibration damper.

- The vibration damper cannot be removed from the transfer gear without damaging it.
- The vibration damper must always be replaced following removal.
- Read and follow installation instructions for vibration damper.

1. Release electric connector **-1-** (**-arrow-**) and disconnect it.

Fig 1: Locating Electric Plug Connection For Transfer Gear

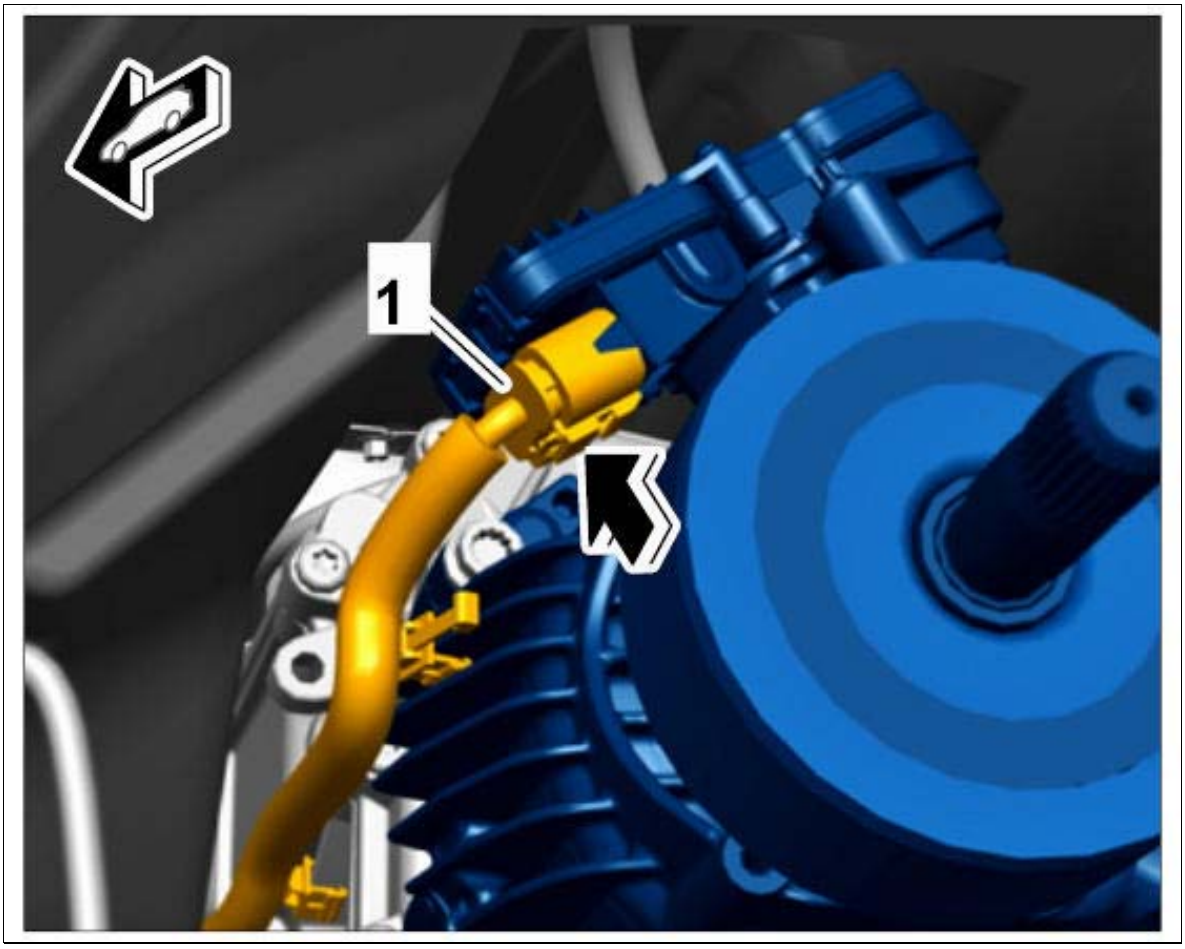

Courtesy of PORSCHE CARS NORTH AMERICA, INC.

2. Remove transfer gear.
    1. 2.1. Loosen screws in the sequence **-5-1-** .
    2. 2.2. Support transfer gear with a transmission jack.
    3. 2.3. Unscrew screws.
    4. 2.4. Pull off transfer gear and remove it in a downward direction.

Fig 2: Transfer Gear Screws Loosening Sequence

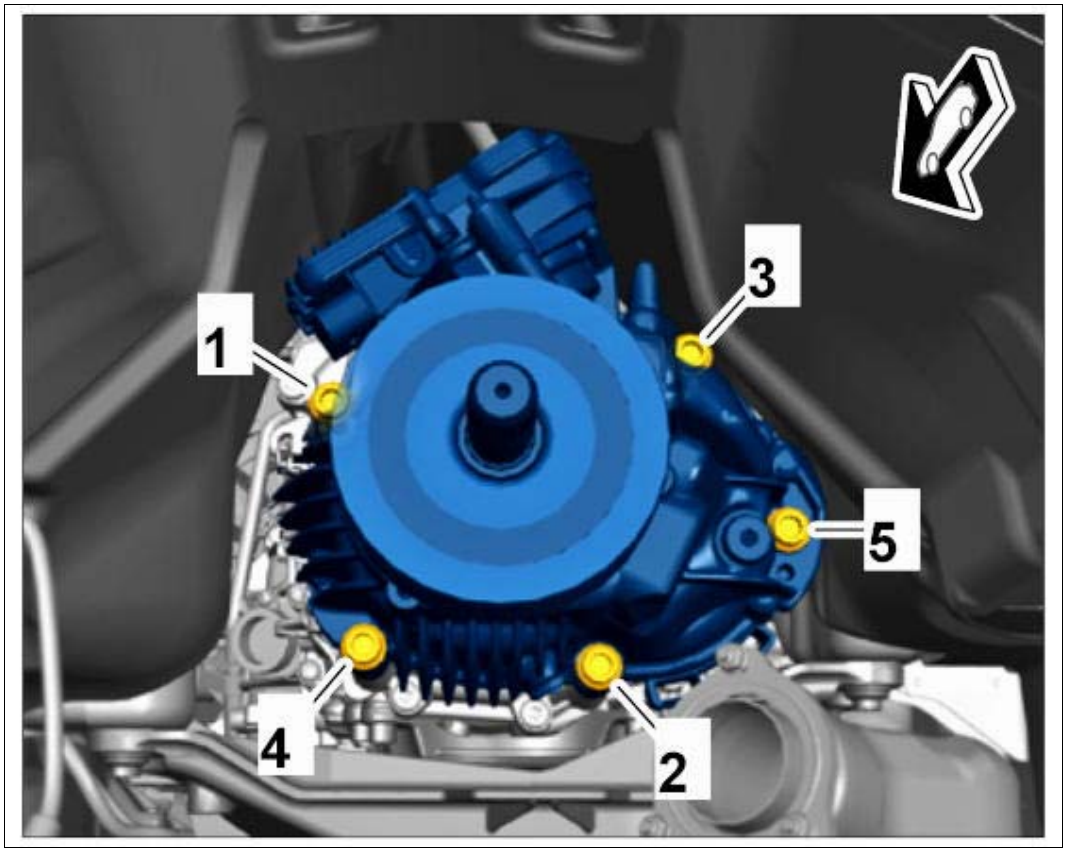

Courtesy of PORSCHE CARS NORTH AMERICA, INC.

WM 396519 REMOVING AND INSTALLING TRANSFER GEAR (MACAN, MACAN S, MACAN TURBO) > INSTALLING TRANSFER GEAR

1. Install transfer gear with vibration balancer.
    1. 1.1. Check splines on the transfer gear and apply grease all around it if necessary.
    2. 1.2. Replace screws.
    3. 1.3. Fit transfer gear and tighten screws hand-tight.
    4. 1.4. Tighten screws in the sequence **-1-5-** to **Initial tightening 50 Nm (37 ftlb.) Final tightening +90°** until secure.

Fig 1: Transfer Gear Screws Tightening Sequence

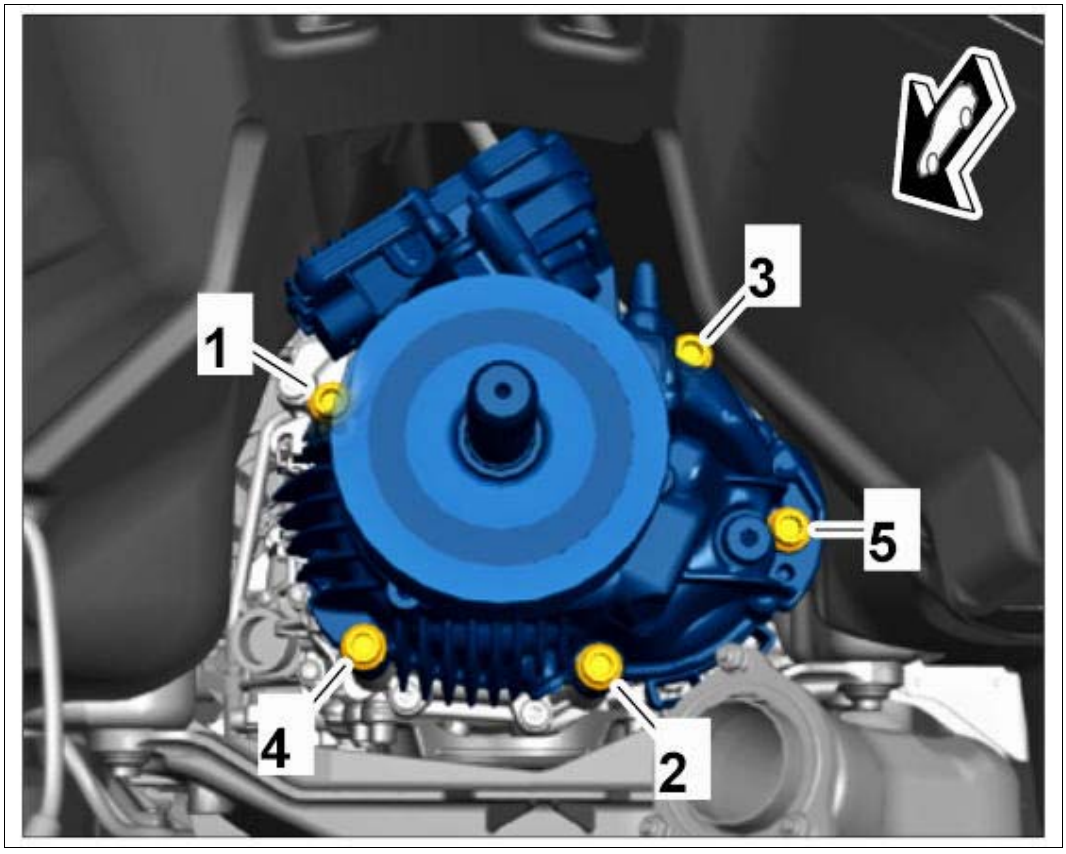

Courtesy of PORSCHE CARS NORTH AMERICA, INC.

2. Connect electric connector **-1-** to the control unit.

Fig 2: Locating Electric Plug Connection For Transfer Gear

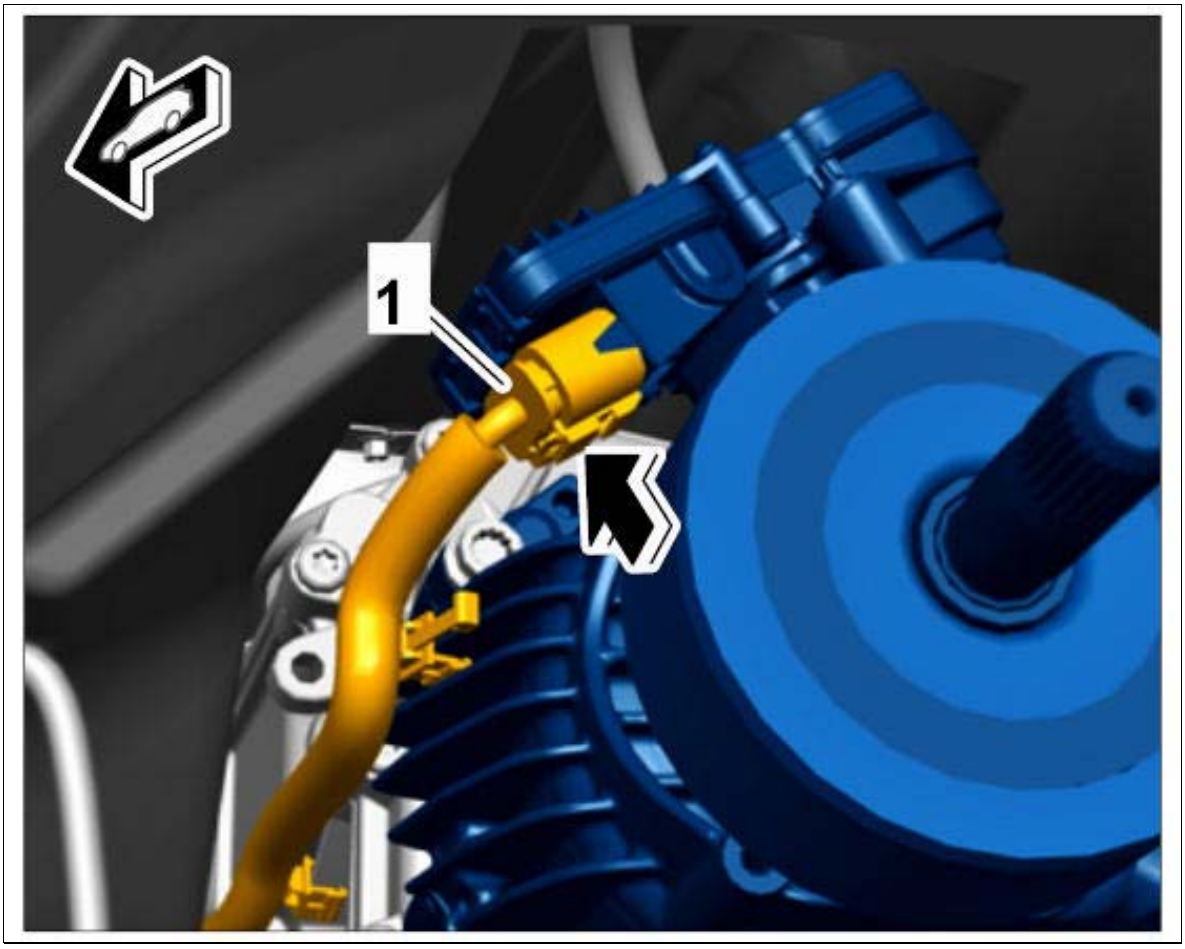

Courtesy of PORSCHE CARS NORTH AMERICA, INC.

3. If the transfer gear is replaced, new software must be installed.

WM 396519 REMOVING AND INSTALLING TRANSFER GEAR (MACAN, MACAN S, MACAN TURBO) > SUBSEQUENT WORK

1. Install rear cardan shaft. → INSTALLING REAR CARDAN SHAFT
2. Install exhaust system. → INSTALLING EXHAUST SYSTEM

WM 396955 REPLACING VIBRATION DAMPER FOR TRANSFER GEAR (MACAN S, MACAN TURBO) > TOOLS

Designation	Type	Number	Description	

hydraulic workshop press HPL45POA	Workshop equipment	WE 1322		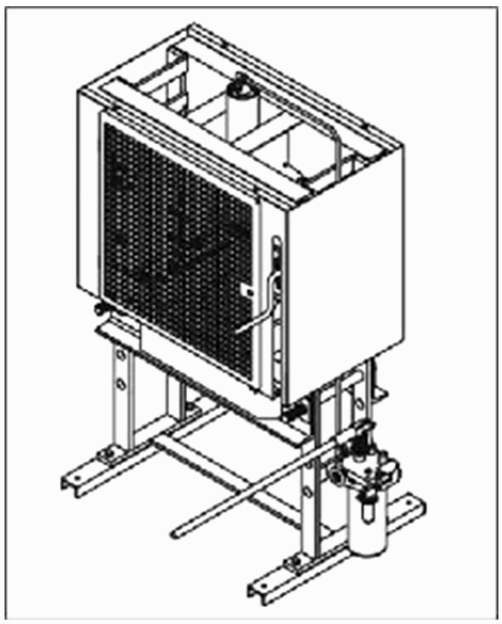
separating device	Workshop equipment	WE 1635		
drive-on sleeve	VW tool	30-100		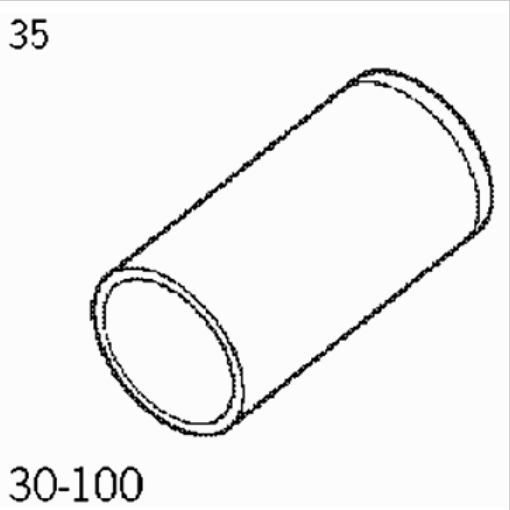
pressure piece	Special tool	9881/2		

WM 396955 REPLACING VIBRATION DAMPER FOR TRANSFER GEAR (MACAN S, MACAN TURBO) > TECHNICAL VALUES

Location	Description	Type	Basic value	Tolerance 1	Tolerance 2
Spacing of bores for puller on vibration damper		Length	60 mm		

WM 396955 REPLACING VIBRATION DAMPER FOR TRANSFER GEAR (MACAN S,

MACAN TURBO) > PRELIMINARY WORK

1. Remove transfer gear. → 396519 REMOVING AND INSTALLING TRANSFER GEAR

WM 396955 REPLACING VIBRATION DAMPER FOR TRANSFER GEAR (MACAN S, MACAN TURBO) > REPLACING VIBRATION DAMPER FOR TRANSFER GEAR > VIBRATION DAMPER FOR TRANSFER GEAR

Information

Remove transfer gear with vibration damper.

- The vibration damper cannot be removed from the transfer gear without damaging it.
- The vibration damper must always be replaced following removal.
- Read and follow installation instructions for vibration damper.

1. Remove vibration damper **-1-** from the transfer gear **-2-** using a puller **-4-** (recommended tool: Kukko 18-1).

   The procedure is described below using the puller Kukko 18-1.

   1. 1.1. Make M10 thread leaving gaps **-3-** of → **Length: 60 mm** on the top of the vibration damper.
   2. 1.2. Screw in pull stud **-arrows-** and remove vibration damper.

Fig 1: Removing Vibration Damper

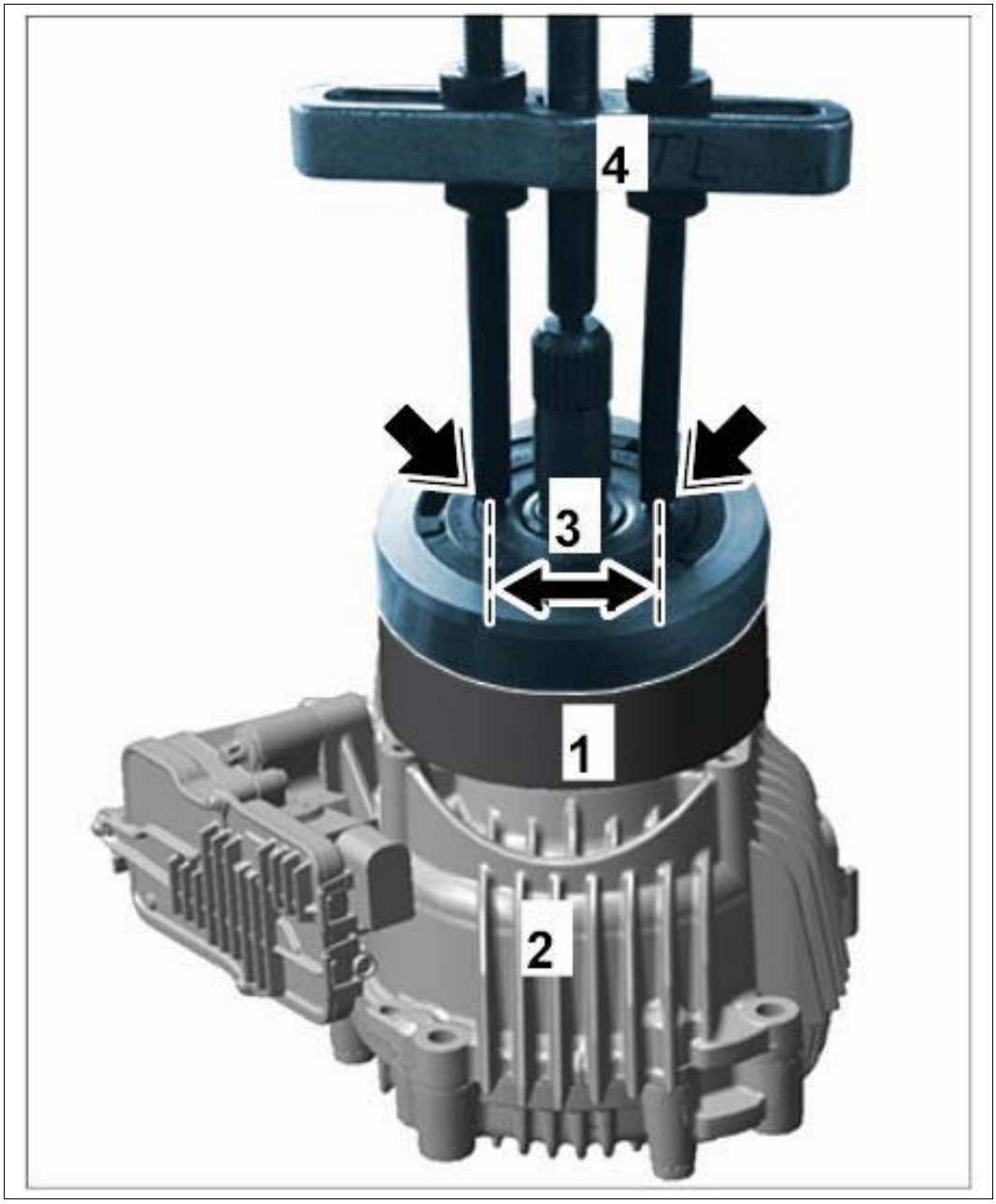

Courtesy of PORSCHE CARS NORTH AMERICA, INC.

2. Remove dowel sleeve **-1-** and protective cover.

    1. 2.1. Pull off dowel sleeve **-1-** using the puller **-2-** Kukko 18-1 and **separating device WE 1635 -3-** as shown.

Fig 2: Removing Vibration Damper Dowel Sleeve

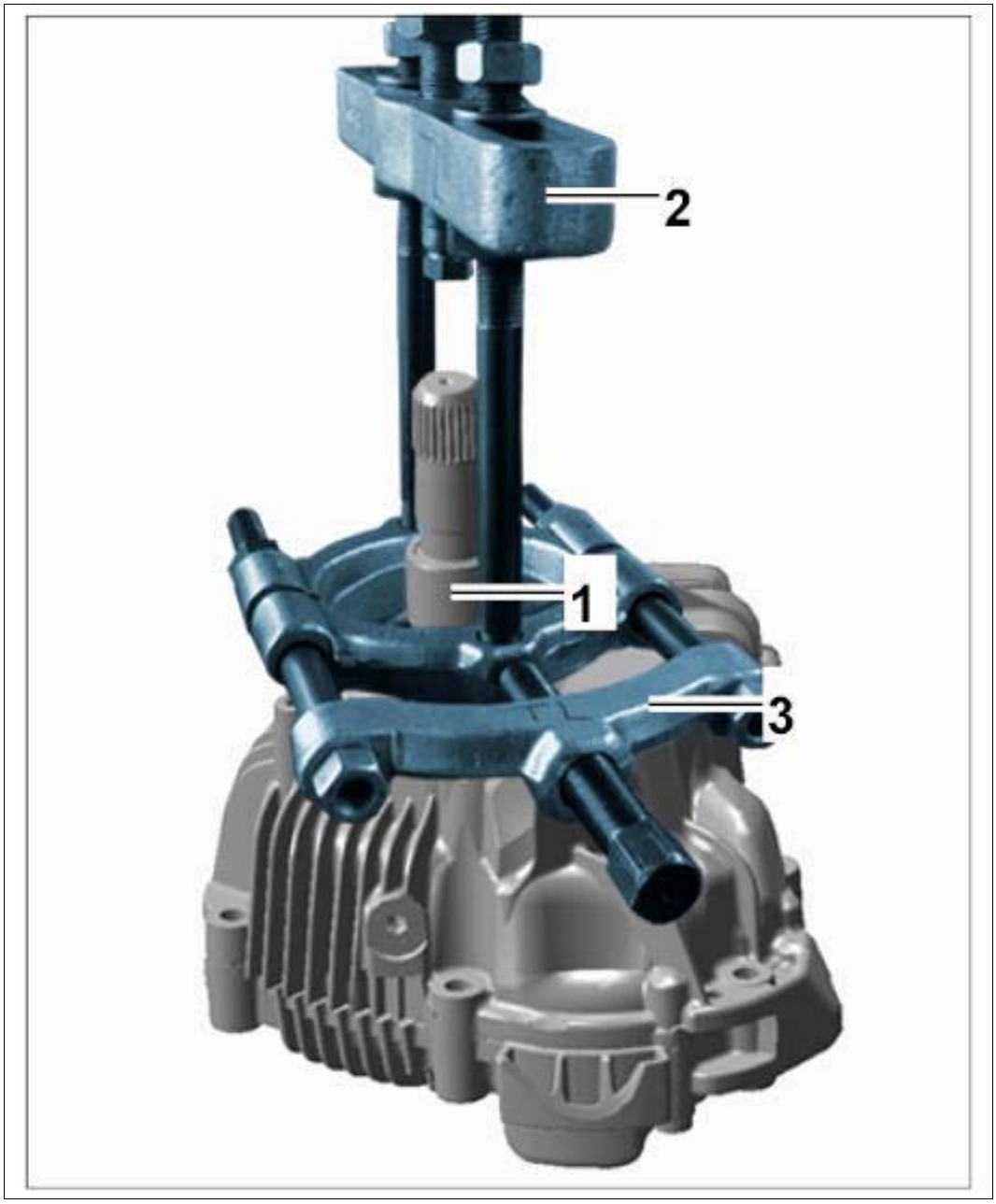

Courtesy of PORSCHE CARS NORTH AMERICA, INC.

3. Secure protective cover on the dowel sleeve.

4. Press dowel sleeve onto the transfer gear.

    1. 4.1. Press on dowel sleeve **-1-** and protective cover **-2-** using **drive-on sleeve 30-100 -3-** on the **hydraulic workshop press HPL45POA WE 1322** .

Fig 3: Pressing Dowel Sleeve

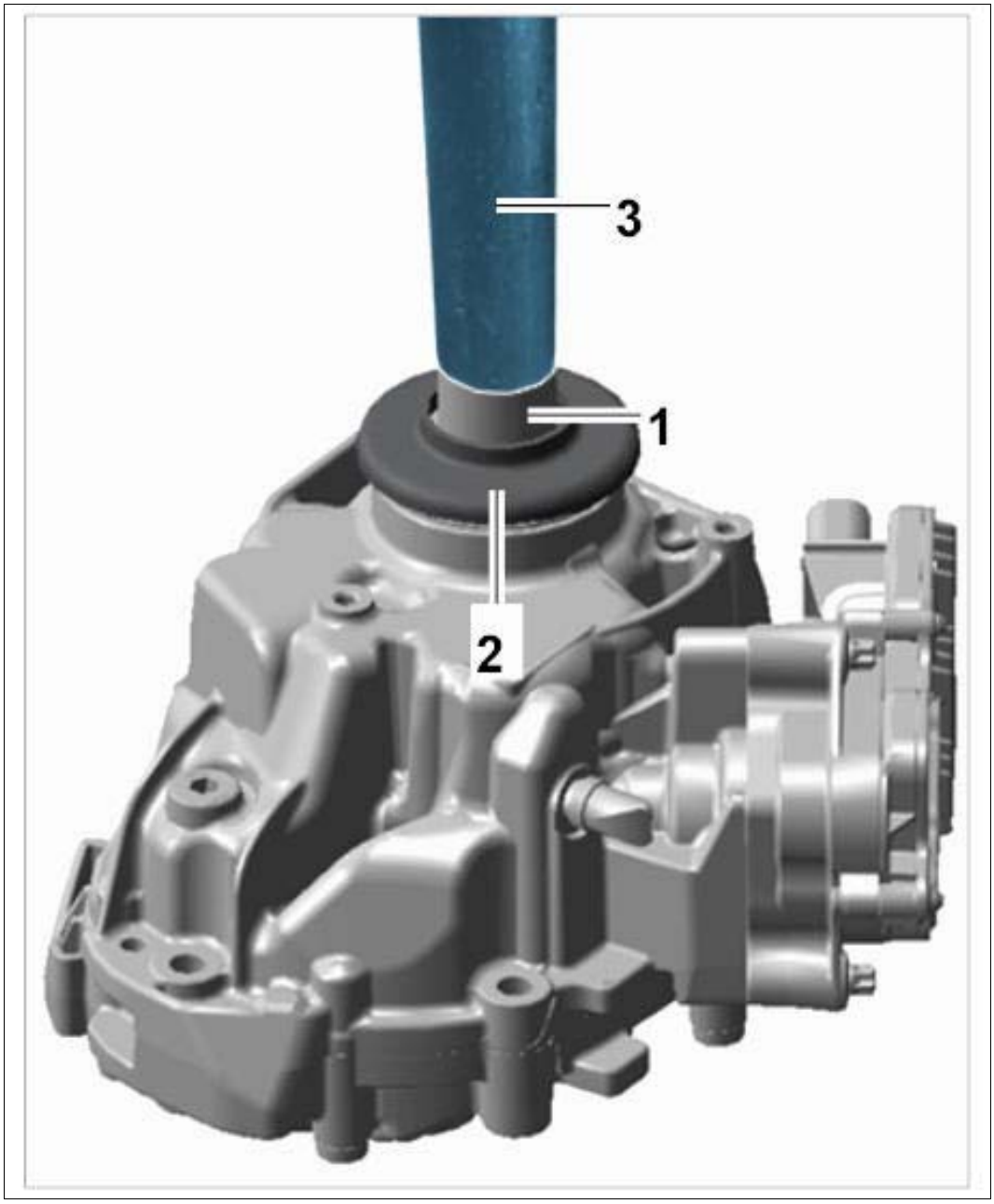

Courtesy of PORSCHE CARS NORTH AMERICA, INC.

5. Install vibration damper **-1-** .

    1. 5.1. Fit vibration damper **-1-** onto **pressure piece 9881/2 -3-** .
    2. 5.2. **Insert drive-in sleeve 30-100 -4-** into transfer gear **-2-** .

Fig 4: Pressing Vibration Damper

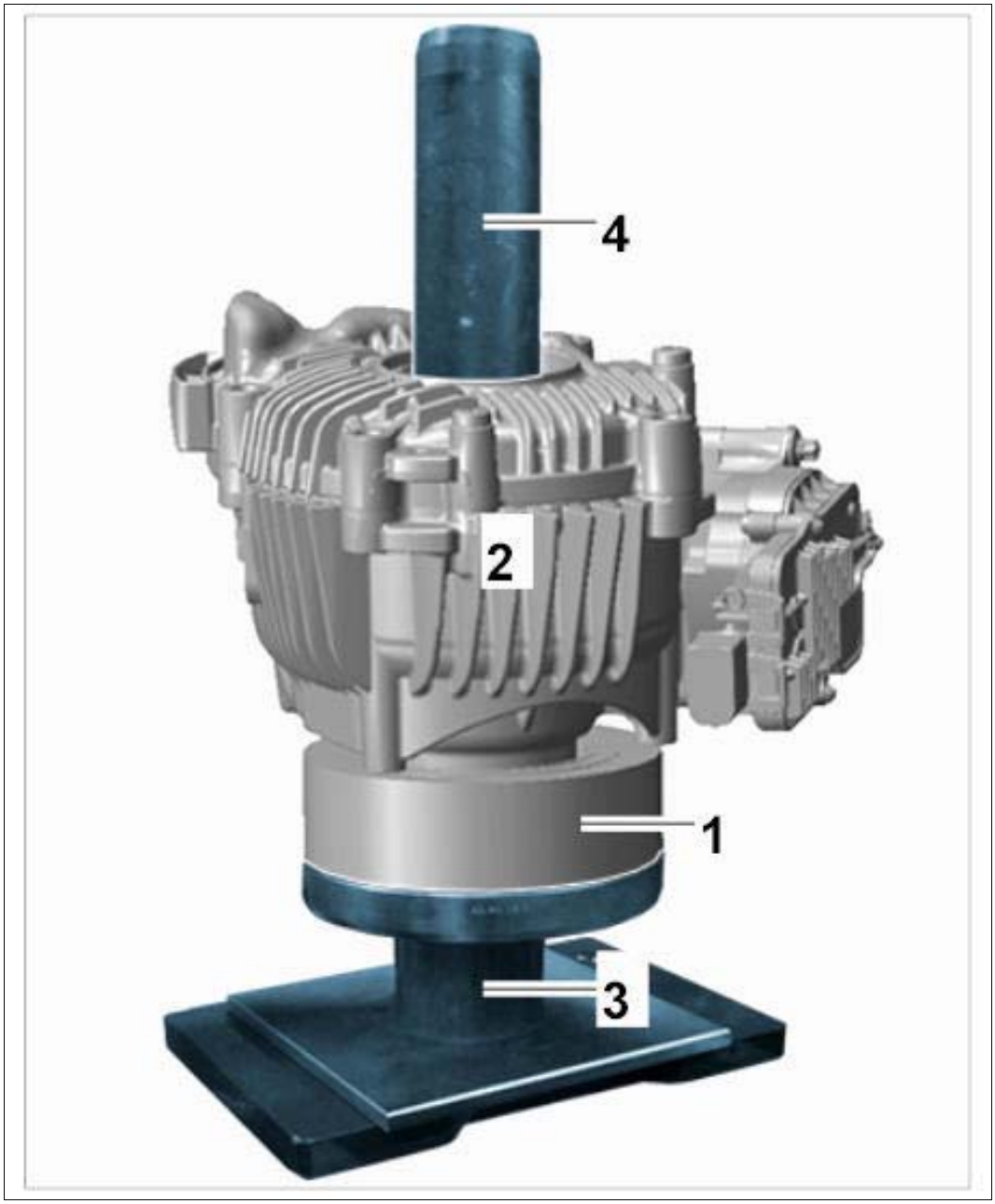

Courtesy of PORSCHE CARS NORTH AMERICA, INC.

3. 5.3. Press transfer gear **-2-** onto vibration damper **-1-** using the press.

WM 396955 REPLACING VIBRATION DAMPER FOR TRANSFER GEAR (MACAN S, MACAN TURBO) > SUBSEQUENT WORK

1. Install transfer gear. → INSTALLING TRANSFER GEAR

WM 397519 REMOVING AND INSTALLING CONTROL UNIT FOR

REAR-DIFFERENTIAL LOCK (MACAN, MACAN S, MACAN TURBO) > TOOLS

Designation	Type	Number	Description	
PIWIS Tester II	Special tool	9818		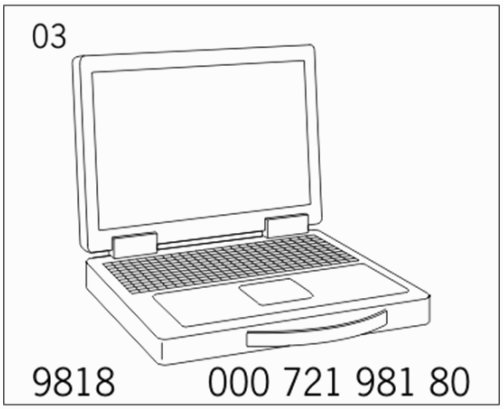

WM 397519 REMOVING AND INSTALLING CONTROL UNIT FOR REAR-DIFFERENTIAL LOCK (MACAN, MACAN S, MACAN TURBO) > PRELIMINARY WORK

1. Remove side trim panel for rear left luggage compartment. → 700319 REMOVING AND INSTALLING SIDE TRIM PANEL FOR REAR LUGGAGE COMPARTMENT .

WM 397519 REMOVING AND INSTALLING CONTROL UNIT FOR REAR-DIFFERENTIAL LOCK (MACAN, MACAN S, MACAN TURBO) > REMOVING CONTROL UNIT FOR REAR-DIFFERENTIAL LOCK

Information

Always comply with the regulations for handling ESD-sensitive components!

- Assembly work may only be carried out if the mechanic is wearing the working clothes and shoes approved by Porsche.
- The new part must only be removed from the ESD (electrostatic discharge) protective packaging just before installation and at the position at which the part is to be installed.
- Never touch the electric pins and plug contacts.

1. Remove control unit for rear-differential lock **-1-** .
    1. 1.1. Disengage locking mechanisms **-a-** and swivel control unit for rear-differential lock out of the holder **-b-** .
    2. 1.2. Pull control unit for rear-differential lock forward out of the clips **-2-** .

Fig 1: Removing Rear-Differential Lock Control Unit

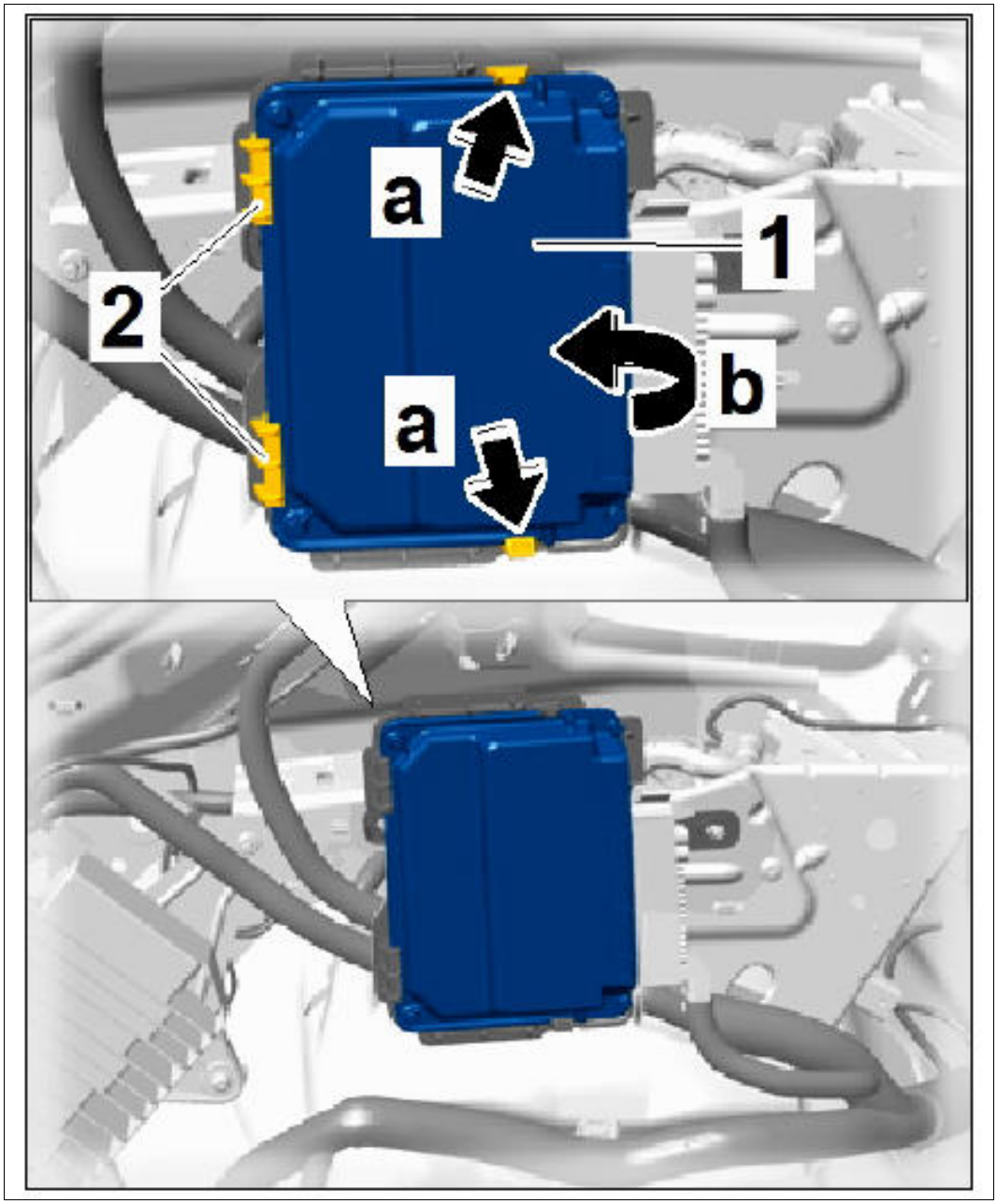

Courtesy of PORSCHE CARS NORTH AMERICA, INC.

2. Release electric plug connection **-1-** (**-a-**) and disconnect it from the rear-differential lock control unit **-2-** .

Fig 2: Disconnecting Electric Plug Connection

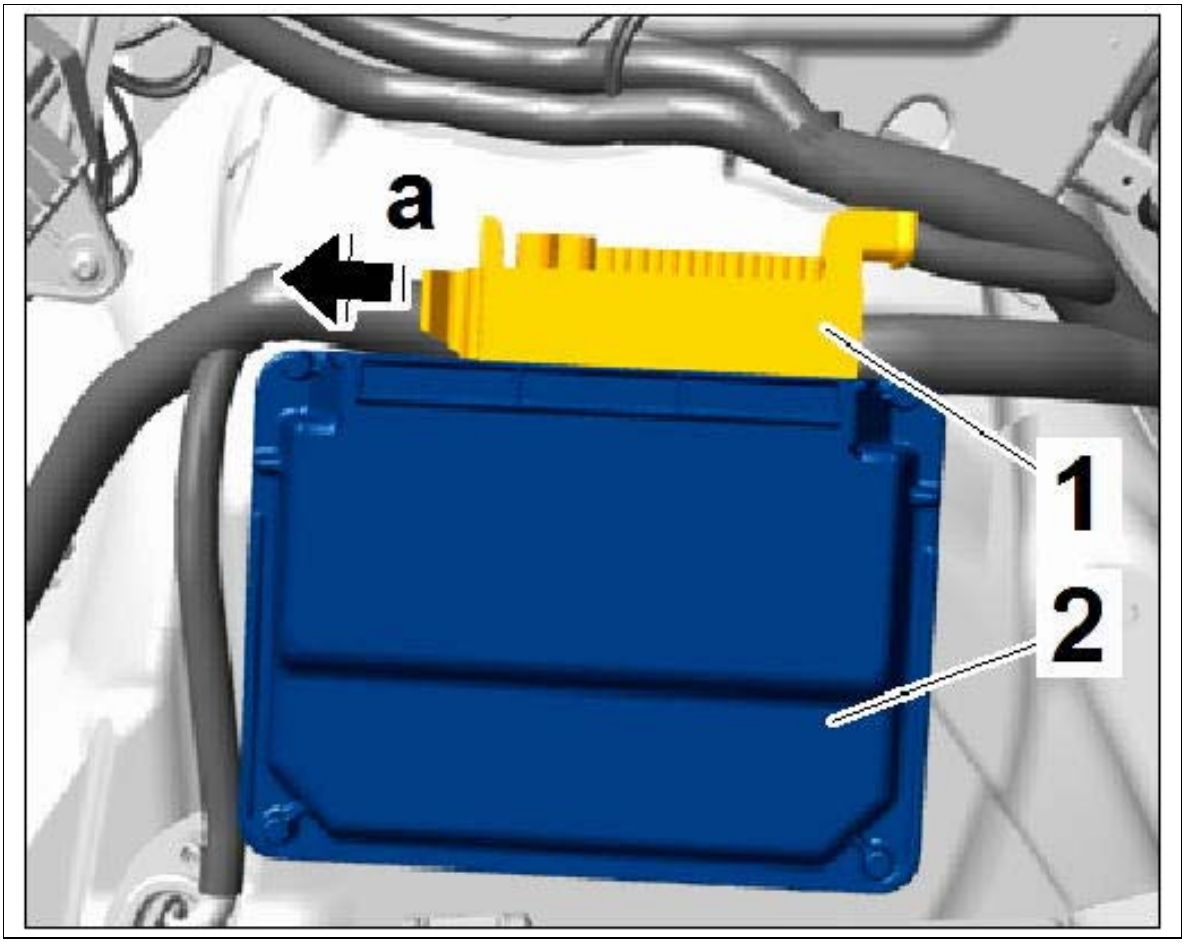

Courtesy of PORSCHE CARS NORTH AMERICA, INC.

WM 397519 REMOVING AND INSTALLING CONTROL UNIT FOR REAR-DIFFERENTIAL LOCK (MACAN, MACAN S, MACAN TURBO) > INSTALLING CONTROL UNIT FOR REAR-DIFFERENTIAL LOCK

Information

Always comply with the regulations for handling ESD-sensitive components!

- Assembly work may only be carried out if the mechanic is wearing the working clothes and shoes approved by Porsche.
- The new part must only be removed from the ESD (electrostatic discharge) protective packaging just before installation and at the position at which the part is to be installed.
- Never touch the electric pins and plug contacts.

1. Installation is performed in reverse order to removal.

WM 397519 REMOVING AND INSTALLING CONTROL UNIT FOR REAR-DIFFERENTIAL LOCK (MACAN, MACAN S, MACAN TURBO) > SUBSEQUENT WORK

1. Install side trim panel for rear left luggage compartment. → INSTALLING SIDE TRIM PANEL FOR REAR LUGGAGE COMPARTMENT
2. If the rear-differential lock control unit was replaced, teach the new rear-differential lock control unit to suit the vehicle using **PIWIS Tester II 9818** .

WM 397555 REPLACING CONTROL UNIT FOR REAR-DIFFERENTIAL LOCK (MACAN, MACAN S, MACAN TURBO) > TOOLS

Designation	Type	Number	Description	
PIWIS Tester II	Special tool	9818		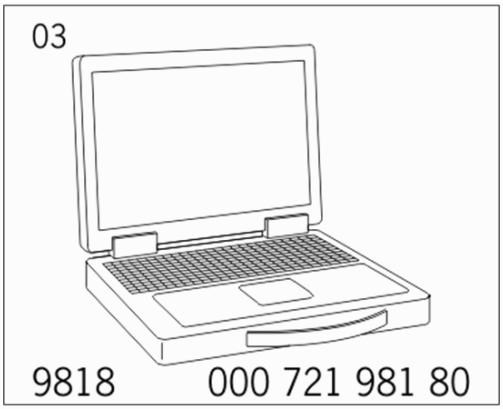

WM 397555 REPLACING CONTROL UNIT FOR REAR-DIFFERENTIAL LOCK (MACAN, MACAN S, MACAN TURBO) > REPLACING CONTROL UNIT FOR REAR-DIFFERENTIAL LOCK

Information

No values (data) are read or written when replacing the rear-differential lock control unit.

The rear-differential lock control unit is only removed and installed again.

The rear-differential lock control unit is not listed in **PIWIS Tester II 9818.**

→ 397519 REMOVING AND INSTALLING CONTROL UNIT FOR REAR-DIFFERENTIAL LOCK

WM 397719 REMOVING AND INSTALLING SERVO MOTOR FOR REAR-DIFFERENTIAL LOCK (MACAN, MACAN S, MACAN TURBO) > PRELIMINARY WORK

1. Drain oil for final drive. → 399055 CHANGING OIL for final drive

WM 397719 REMOVING AND INSTALLING SERVO MOTOR FOR REAR-DIFFERENTIAL LOCK (MACAN, MACAN S, MACAN TURBO) > REMOVING SERVO MOTOR FOR REAR-DIFFERENTIAL LOCK

1. Remove servo motor for rear-differential lock.
    1. 1.1. Release and disconnect electric connector **-1-** .
    2. 1.2. Loosen electric line **-2-** from the holder **-3-** .
    3. 1.3. Unscrew screws **-4-** and remove servo motor **-5-** .

    > *WARNING: Hot fluid*
    >
    > *1. Danger of scalding*

    → Let the fluid cool down.

    → Wear personal protective gear.

    4. 1.4. Collect emerging oil in a container.

    Fig 1: Identifying Rear-Differential Lock Servo Motor

    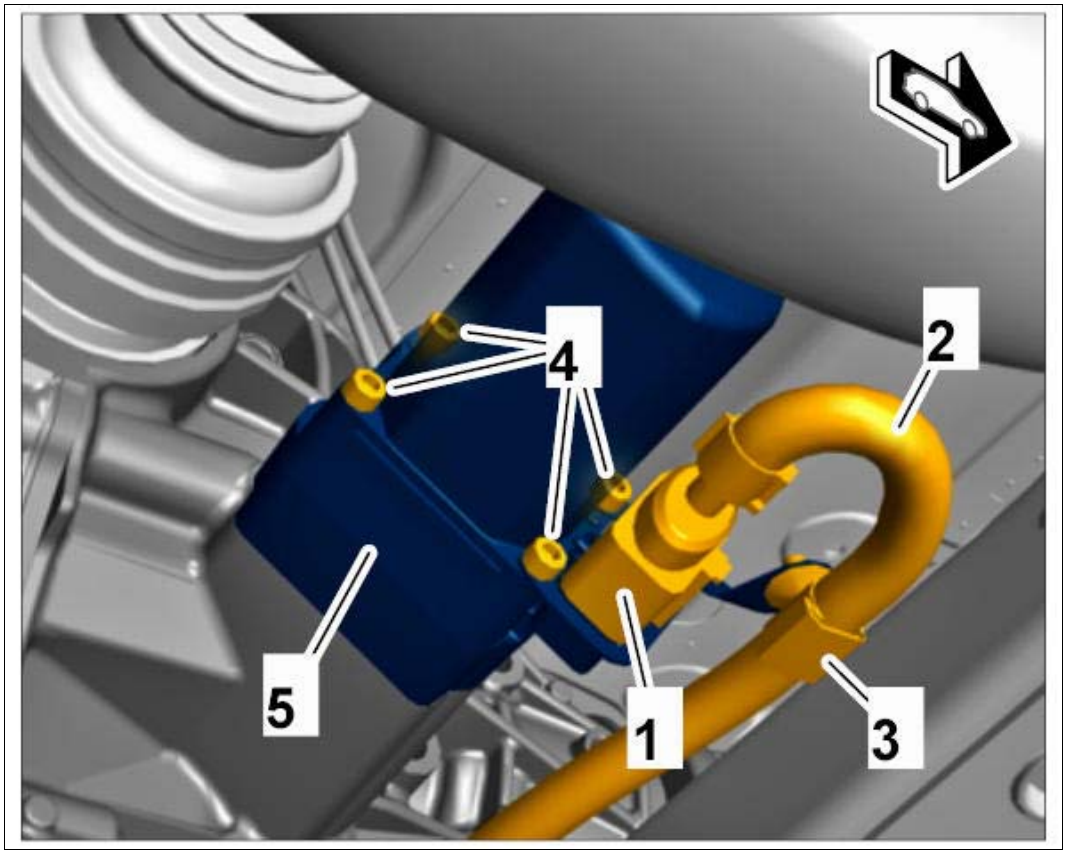

    Courtesy of PORSCHE CARS NORTH AMERICA, INC.

WM 397719 REMOVING AND INSTALLING SERVO MOTOR FOR REAR-DIFFERENTIAL LOCK (MACAN, MACAN S, MACAN TURBO) > INSTALLING SERVO MOTOR FOR REAR-DIFFERENTIAL LOCK

Information

Information for replacing the final drive/servo motor.

- If the final drive as well as the servo motor (control unit) is replaced, there is no need to reload data (classification data).
- Classification data can be read out of the control unit using the PIWIS Tester.
- If only the servo motor is replaced, the classification data must be re-written into the control unit.
- Classification data can be found on the final-drive housing.

1. Installation is performed in reverse order. Pay particular attention to the following:

   Information

   1. Replace O-rings.
   2. Grease O-rings with a light coating of Kluber Syntheso Glep (Part No.: 000.043.204.68).
      1. 1.1. Replace sealing ring on servo motor shaft **-arrow -** .
      2. 1.2. Tightening torque:

Fig 1: Locating Sealing Ring On Servo Motor Shaft

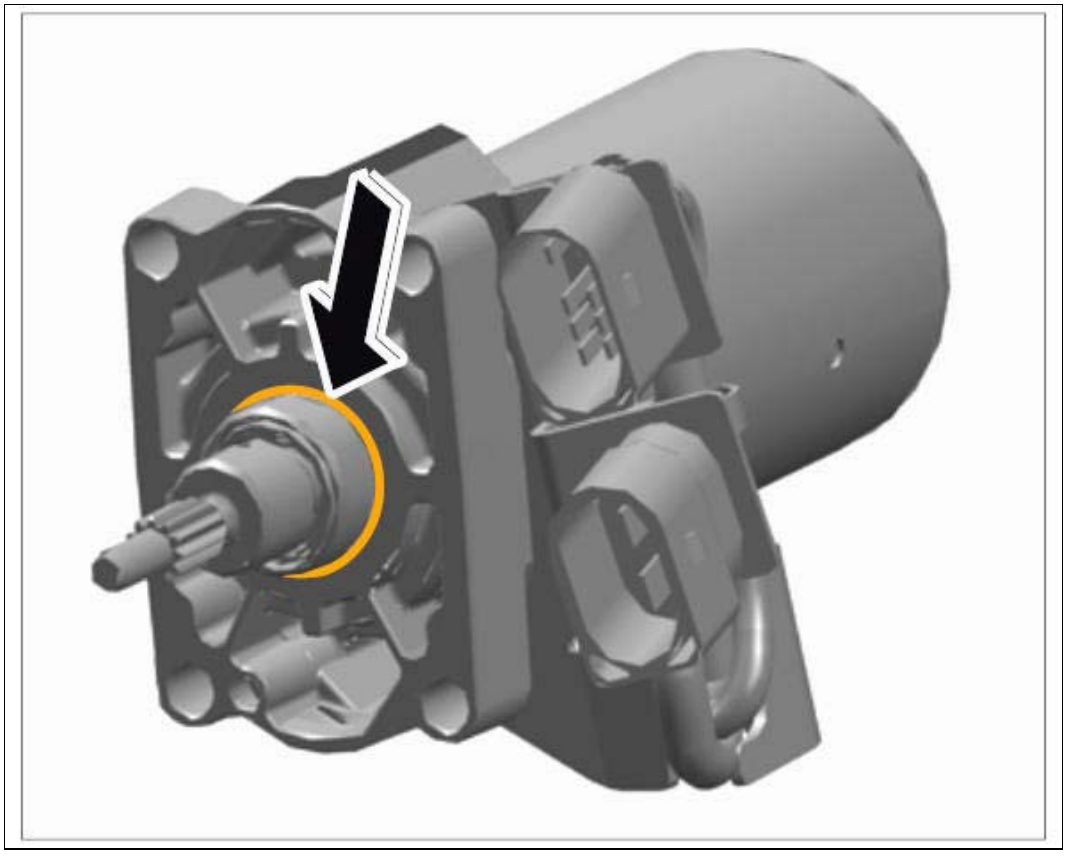

Courtesy of PORSCHE CARS NORTH AMERICA, INC.

WM 397719 REMOVING AND INSTALLING SERVO MOTOR FOR REAR-DIFFERENTIAL LOCK (MACAN, MACAN S, MACAN TURBO) > SUBSEQUENT WORK

1. Top up oil for final drive. → 399035 CHECKING AND TOPPING UP OIL FOR FINAL DRIVE

WM 399035 CHECKING AND TOPPING UP OIL FOR ALL-WHEEL FINAL DRIVE (INCLUDES CHANGING OIL) (MACAN, MACAN S, MACAN TURBO) > OVERVIEW OF SCREW PLUGS

Fig 1: Overview Of Screw Plugs

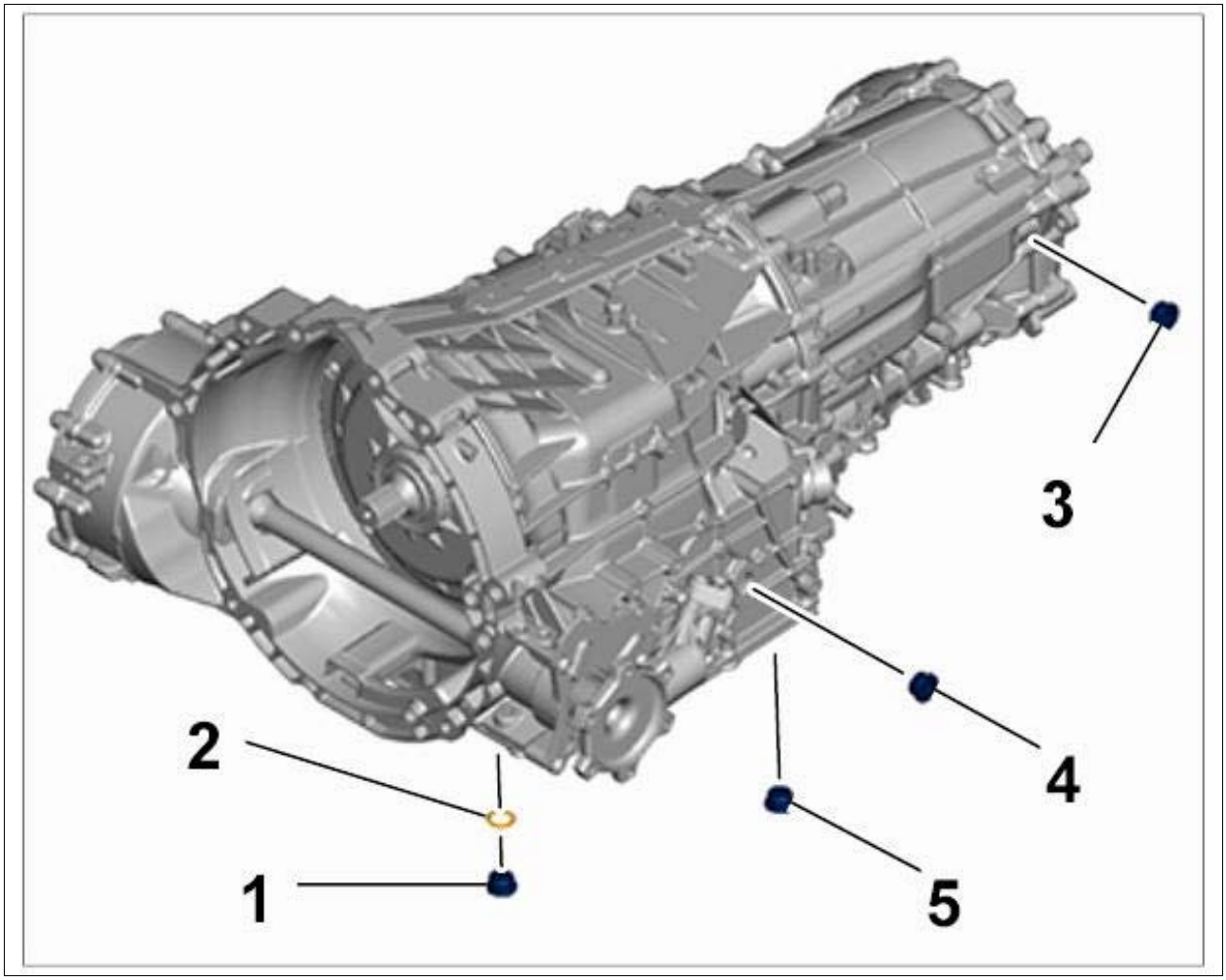

Courtesy of PORSCHE CARS NORTH AMERICA, INC.

1. ATF drain plug
2. Sealing ring/**replace**
3. Inspection and filler plug for all-wheel final drive → **Tightening torque: 45 Nm (33 ftlb.)**
4. ATF inspection and filler plug → **Tightening torque: 0 Nm (0 ftlb.)**
5. Transmission oil drain plug → **Tightening torque: 45 Nm (33 ftlb.)**

1. Oil drain plug on rear final drive → **Tightening torque: 35 Nm (26 ftlb.)+/-5 Nm (+/-3.5 ftlb.)**
2. Inspection and filler plug on rear final drive → **Tightening torque: 35 Nm (26 ftlb.)+/-5 Nm (+/-3.5 ftlb.)**

Fig 2: Identifying Final Drive

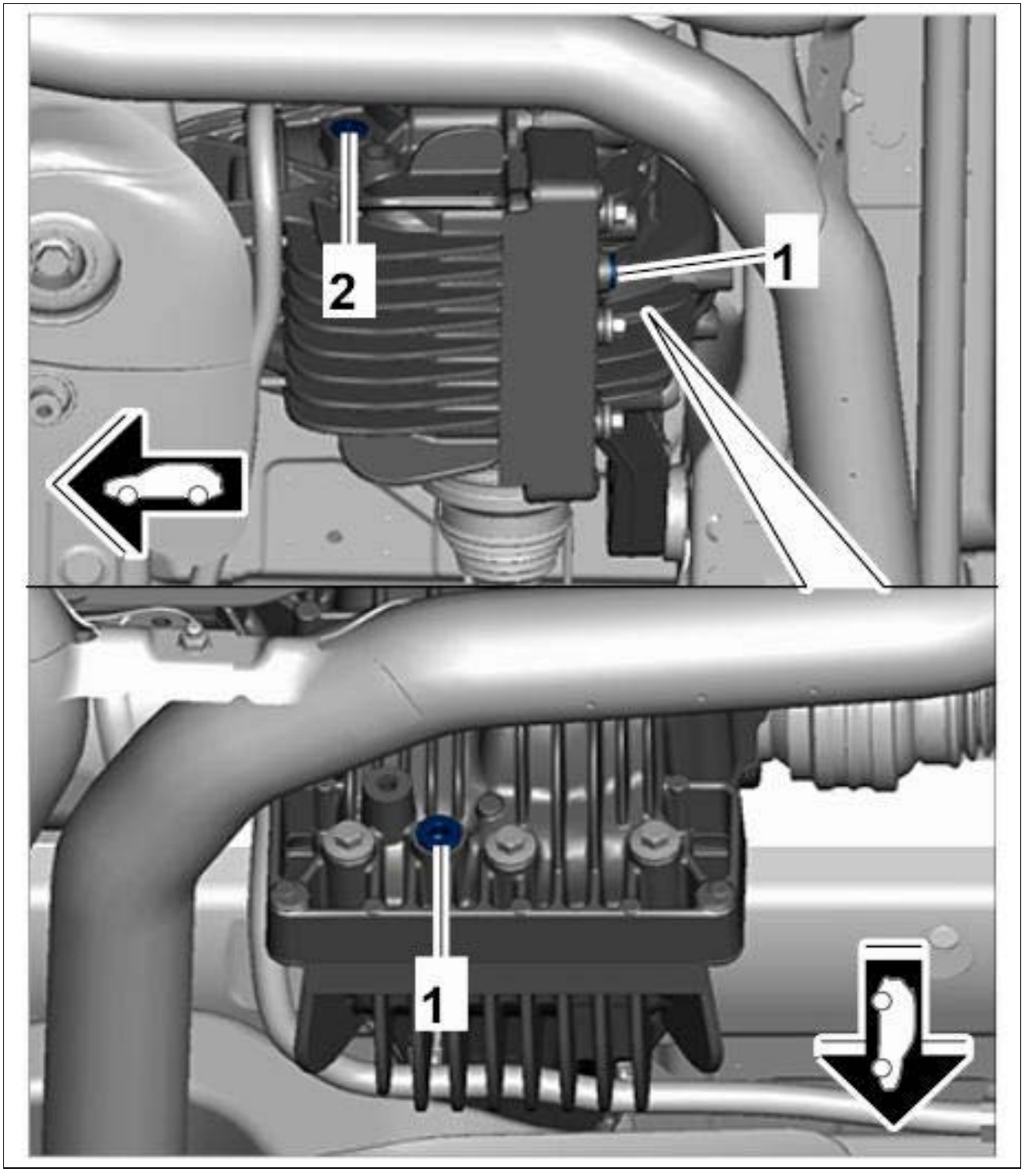

Courtesy of PORSCHE CARS NORTH AMERICA, INC.

WM 399035 CHECKING AND TOPPING UP OIL FOR ALL-WHEEL FINAL DRIVE (INCLUDES CHANGING OIL) (MACAN, MACAN S, MACAN TURBO) > TECHNICAL VALUES > FILLING CAPACITIES

Porsche Doppelkupplung (PDK)	
Specification: Castrol BOT342A	
ATF transmission oil (clutches, mechatronics) New filling including volume of 0.5 liters for filling the ATF lines	→ **Filling capacity: 7 Liter**
ATF transmission oil change quantity	→ **Filling capacity: 6.5 Liter**
Front-axle final drive	
Specification: Castrol BOT233FEQ with additive	
MTF transmission oil (gear wheels, front-axle final drive)	→ **Filling capacity: 4.1 Liter**
MTF transmission oil change quantity	→ **Filling capacity: 4.1 Liter**
Hang-on transmission	
Specification: Shell TF0870 Qatar	
Transmission oil for hang-on transmission	→ **Filling capacity: 0.58 Liter**
Rear axle differential without lock	
Specification: Castrol SAF-PD	
Transmission oil for rear axle differential	→ **Filling capacity: 1.2 Liter**
Rear axle differential with lock	
Specification: Castrol SAF Carbon mod.	
Transmission oil for rear axle differential	→ **Filling capacity: 1.45 Liter**

WM 399035 CHECKING AND TOPPING UP OIL FOR ALL-WHEEL FINAL DRIVE (INCLUDES CHANGING OIL) (MACAN, MACAN S, MACAN TURBO) > CHANGING OIL FOR ALL-WHEEL FINAL DRIVE > DRAINING OIL FOR ALL-WHEEL FINAL DRIVE

WARNING: Hot fluid

- *Danger of scalding*

→ Let the fluid cool down.

→ Wear personal protective gear.

Information

The transmission/final drive must be stopped for at least 15 minutes to allow for internal oil level adjustment.

1. Drain oil for all-wheel final drive.

1. 1.1. Unscrew drain plug.
2. 1.2. Collect emerging oil in a suitable container.
3. 1.3. Tighten drain plug.

WM 399035 CHECKING AND TOPPING UP OIL FOR ALL-WHEEL FINAL DRIVE (INCLUDES CHANGING OIL) (MACAN, MACAN S, MACAN TURBO) > CHANGING OIL FOR ALL-WHEEL FINAL DRIVE > FILLING OIL FOR ALL-WHEEL FINAL DRIVE

Information

- Secure vehicle to prevent it rolling away.
- To check transmission oil the vehicle must be horizontal.

Information

- To ensure that the various oil chambers in the transmission are filled uniformly, always observe the specified filling time.

1. Fill in oil for all-wheel final drive slowly and uniformly over a period of at least 5 minutes.
    1. 1.1. Unscrew screw plug.
    2. 1.2. Repeat the filling process step-by-step every 15 seconds using 50 ml of oil.
    3. 1.3. Oil for all-wheel final drive must come up to the lower edge of the inspection and filler bore.
    4. 1.4. Tighten screw plug.

WM 399035 CHECKING AND TOPPING UP OIL FOR ALL-WHEEL FINAL DRIVE (INCLUDES CHANGING OIL) (MACAN, MACAN S, MACAN TURBO) > CHECKING OIL FOR ALL-WHEEL FINAL DRIVE

WARNING: Hot fluid

- *Danger of scalding*

→ Let the fluid cool down.

→ Wear personal protective gear.

Information

- Secure vehicle to prevent it rolling away.
- To check transmission oil the vehicle must be horizontal.

Information

The transmission/final drive must be stopped for at least 15 minutes to allow for internal oil level adjustment.

1. Check oil for all-wheel final drive.
    1. 1.1. Unscrew screw plug.
    2. 1.2. Soak up emerging oil with a cloth.
    3. 1.3. Oil must come up to the lower edge of the inspection and filler bore.
    4. 1.4. If the oil level is below the inspection and filler bore, fill in oil for all-wheel final drive until it runs out of the inspection and filler bore.
    5. 1.5. Fill in oil for all-wheel final drive. → 399035 CHECKING AND TOPPING UP OIL FOR ALL-WHEEL FINAL DRIVE
    6. 1.6. Tighten screw plug.

WM 399035 CHECKING AND TOPPING UP OIL FOR FINAL DRIVE (MACAN, MACAN S, MACAN TURBO) > TECHNICAL VALUES

Location	Description	Type	Basic value	Tolerance 1	Tolerance 2
Inspection and filler plug on rear final drive		Tightening torque	35 Nm (26 ftlb.)	+/-5 Nm (+/- 3.5 ftlb.)	

WM 399035 CHECKING AND TOPPING UP OIL FOR FINAL DRIVE (MACAN, MACAN S, MACAN TURBO) > INFORMATION > FILLING CAPACITIES

Porsche Doppelkupplung (PDK)	
Specification: Castrol BOT342A	
ATF transmission oil (clutches, mechatronics) New filling including volume of 0.5 liters for filling the ATF lines	→ **Filling capacity: 7 Liter**
ATF transmission oil change quantity	→ **Filling capacity: 6.5 Liter**
Front-axle final drive	
Specification: Castrol BOT233FEQ with additive	
MTF transmission oil (gear wheels, front-axle final drive)	→ **Filling capacity: 4.1 Liter**
MTF transmission oil change quantity	→ **Filling capacity: 4.1 Liter**
Hang-on transmission	

Specification: Shell TF0870 Qatar	
Transmission oil for hang-on transmission	→ **Filling capacity: 0.58 Liter**
Rear axle differential without lock	
Specification: Castrol SAF-PD	
Transmission oil for rear axle differential	→ **Filling capacity: 1.2 Liter**
Rear axle differential with lock	
Specification: Castrol SAF Carbon mod.	
Transmission oil for rear axle differential	→ **Filling capacity: 1.45 Liter**

WM 399035 CHECKING AND TOPPING UP OIL FOR FINAL DRIVE (MACAN, MACAN S, MACAN TURBO) > CHECKING OIL FOR FINAL DRIVE

WARNING: Hot fluid

- *Danger of scalding*

→ Let the fluid cool down.

→ Wear personal protective gear.

Information

- Secure vehicle to prevent it rolling away.
- To check transmission oil the vehicle must be horizontal.

1. Check oil for final drive.
    1. 1.1. Unscrew inspection plug and filler plug **-2-** .
    2. 1.2. Oil for final drive must come up to the lower edge of the inspection and filler bore.
    3. 1.3. Top up oil for final drive. → 399055 CHANGING OIL FOR FINAL DRIVE
    4. 1.4. Tighten inspection plug and filler plug to the specified torque **-2-** . **Tightening torque: 35 Nm (26 ftlb.) +/- 5 Nm (+/-3.5 ftlb.)**

Fig 1: Identifying Final Drive And Filler Plug

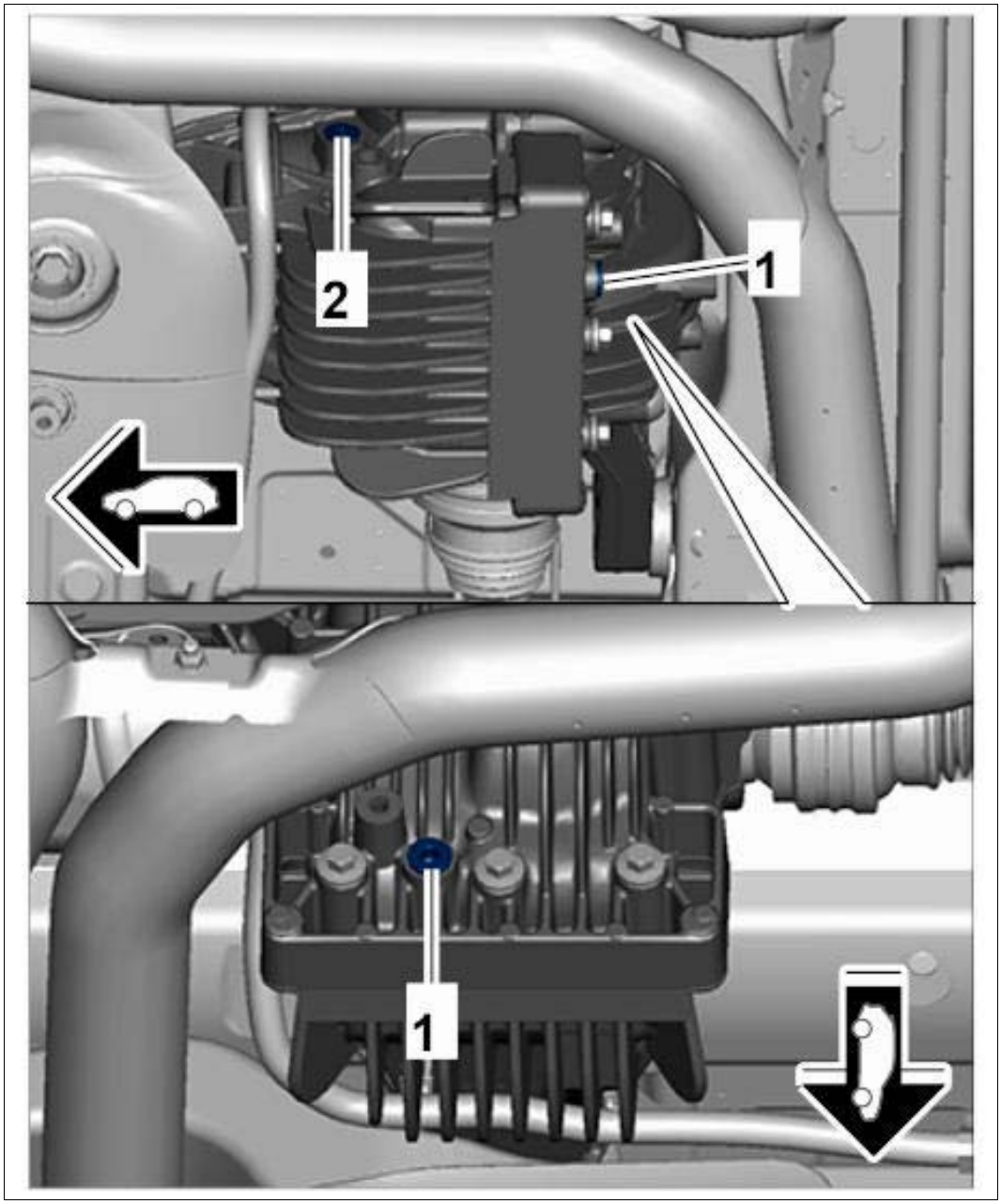

Courtesy of PORSCHE CARS NORTH AMERICA, INC.

WM 399055 CHANGING OIL FOR FINAL DRIVE (MACAN, MACAN S, MACAN TURBO) > INFORMATION > FILLING CAPACITIES

Porsche Doppelkupplung (PDK)	
Specification: Castrol BOT342A	
ATF transmission oil (clutches, mechatronics) New filling including volume of 0.5 liters for filling the ATF lines	→ **Filling capacity: 7 Liter**

ATF transmission oil change quantity	→ **Filling capacity: 6.5 Liter**
Front-axle final drive	
Specification: Castrol BOT233FEQ with additive	
MTF transmission oil (gear wheels, front-axle final drive)	→ **Filling capacity: 4.1 Liter**
MTF transmission oil change quantity	→ **Filling capacity: 4.1 Liter**
Hang-on transmission	
Specification: Shell TF0870 Qatar	
Transmission oil for hang-on transmission	→ **Filling capacity: 0.58 Liter**
Rear axle differential without lock	
Specification: Castrol SAF-PD	
Transmission oil for rear axle differential	→ **Filling capacity: 1.2 Liter**
Rear axle differential with lock	
Specification: Castrol SAF Carbon mod.	
Transmission oil for rear axle differential	→ **Filling capacity: 1.45 Liter**

WM 399055 CHANGING OIL FOR FINAL DRIVE (MACAN, MACAN S, MACAN TURBO) > CHANGING OIL FOR FINAL DRIVE > DRAINING OIL FOR FINAL DRIVE

WARNING: Hot fluid

- *Danger of scalding*

→ Let the fluid cool down.

→ Wear personal protective gear.

Information

- Secure vehicle to prevent it rolling away.
- To check transmission oil the vehicle must be horizontal.

Information

Use only oil approved by Porsche.

1. Drain oil for final drive.
    1. 1.1. Unscrew inspection plug and filler plug **-2-** .
    2. 1.2. Unscrew oil drain plug **-1-** and collect emerging oil in a suitable container.

3. 1.3. Replace oil drain plug **-1-** and tighten to the specified torque.

Fig 1: Identifying Final Drive And Filler Plug

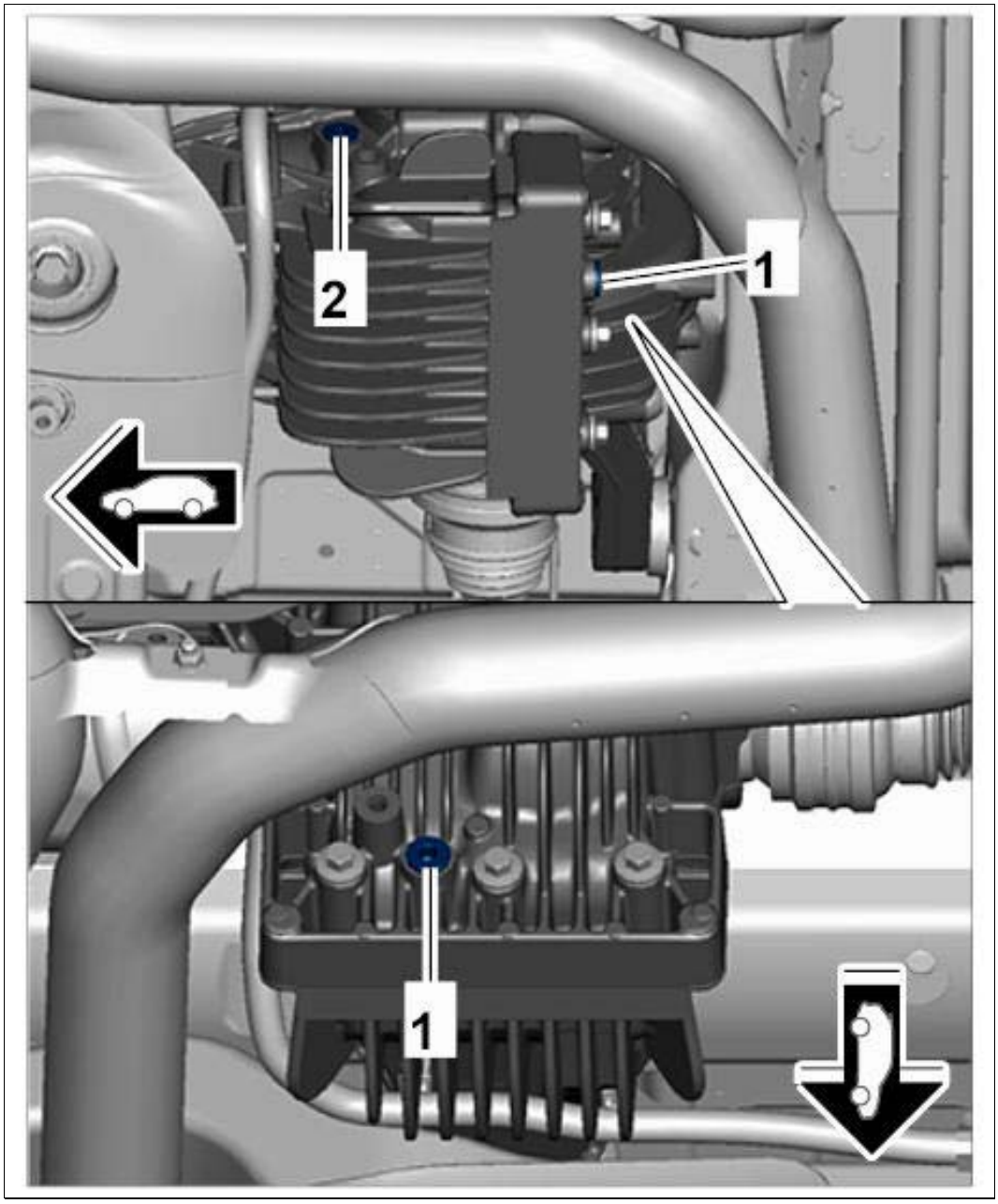

Courtesy of PORSCHE CARS NORTH AMERICA, INC.

WM 399055 CHANGING OIL FOR FINAL DRIVE (MACAN, MACAN S, MACAN TURBO) > CHANGING OIL FOR FINAL DRIVE > FILLING OIL FOR FINAL DRIVE

Information

- Secure vehicle to prevent it rolling away.
- To check transmission oil the vehicle must be horizontal.

Information

Use only oil approved by Porsche.

1. Top up oil for final drive.
    1. 1.1. Fill oil for final drive into the opening on the inspection and filler bore.
    2. 1.2. Oil for all-wheel final drive must come up to the lower edge of the inspection and filler bore.
    3. 1.3. Soak up emerging oil with a cloth and clean sealing surfaces.
    4. 1.4. Replace inspection plug and filler plug and tighten to the specified torque.

WM 399255 REPLACING SEALING RING FOR TRANSFER GEAR (MACAN, MACAN S, MACAN TURBO) > TOOLS

Designation	Type	Number	Description	
puller set	Workshop equipment	WE 1689		
pressure piece	Special tool	9881		
pressure piece	Special tool	9881/1		
hook	VW tool	VW 681		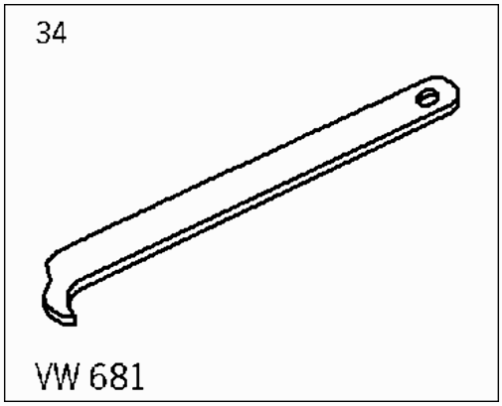

WM 399255 REPLACING SEALING RING FOR TRANSFER GEAR (MACAN, MACAN S, MACAN TURBO) > PRELIMINARY WORK

1. Remove vibration damper for transfer gear. → 396955 REPLACING VIBRATION DAMPER FOR TRANSFER GEAR

WM 399255 REPLACING SEALING RING FOR TRANSFER GEAR (MACAN, MACAN S, MACAN TURBO) > REPLACING SEALING RING FOR TRANSFER GEAR > REPLACING SEALING RING FOR FRONT TRANSFER GEAR

1. Remove sealing ring **-1-** using **hook VW 681.**

Fig 1: Removing Rear Sealing Ring

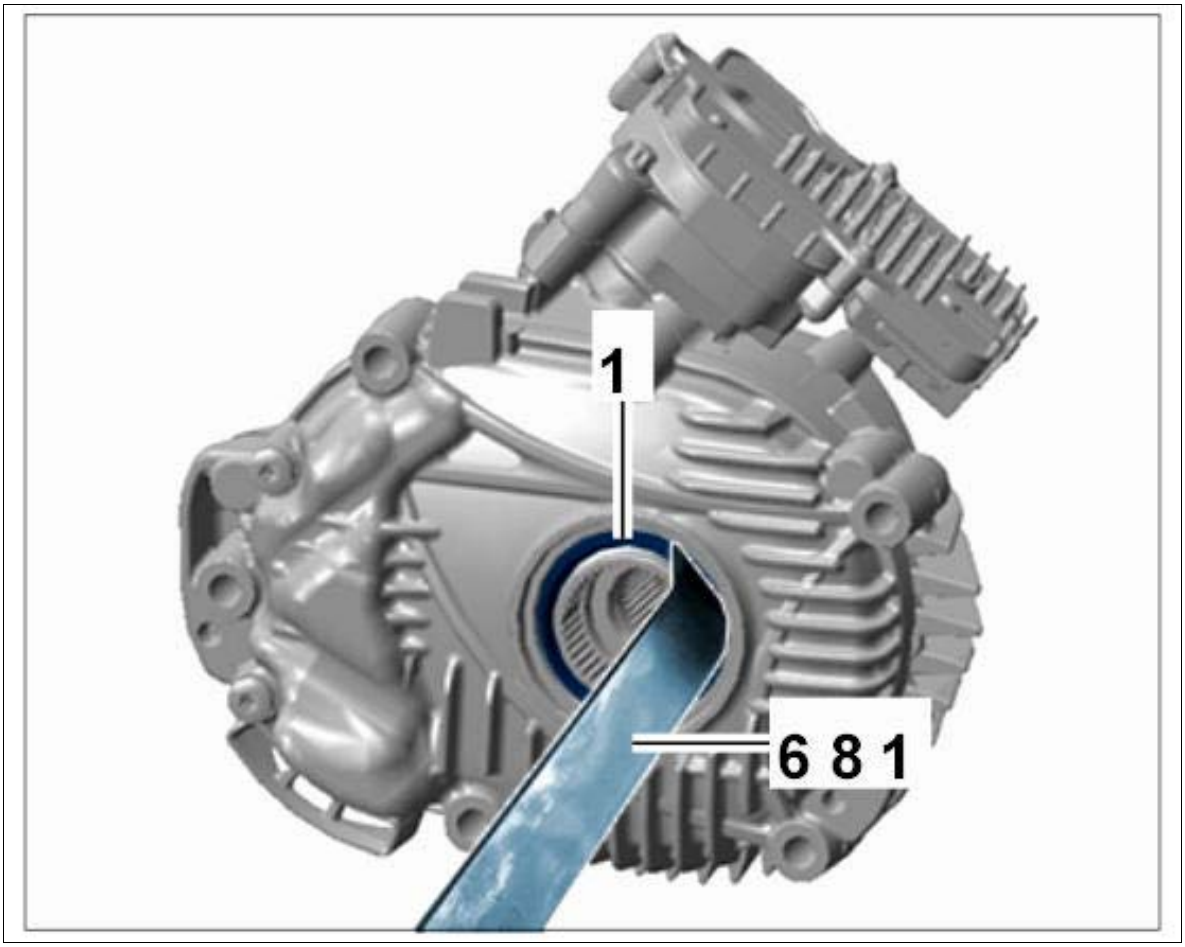

Courtesy of PORSCHE CARS NORTH AMERICA, INC.

2. Clean the sealing face.
3. Install new sealing ring using **pressure piece 9881/1** .
    1. 3.1. Tap in sealing ring evenly using a plastic hammer.

WM 399255 REPLACING SEALING RING FOR TRANSFER GEAR (MACAN, MACAN S, MACAN TURBO) > REPLACING SEALING RING FOR TRANSFER GEAR > REPLACING SEALING RING FOR REAR TRANSFER GEAR

1. Remove sealing ring **-1-** using **puller set WE 1689.**

Fig 1: Removing Rear Sealing Ring

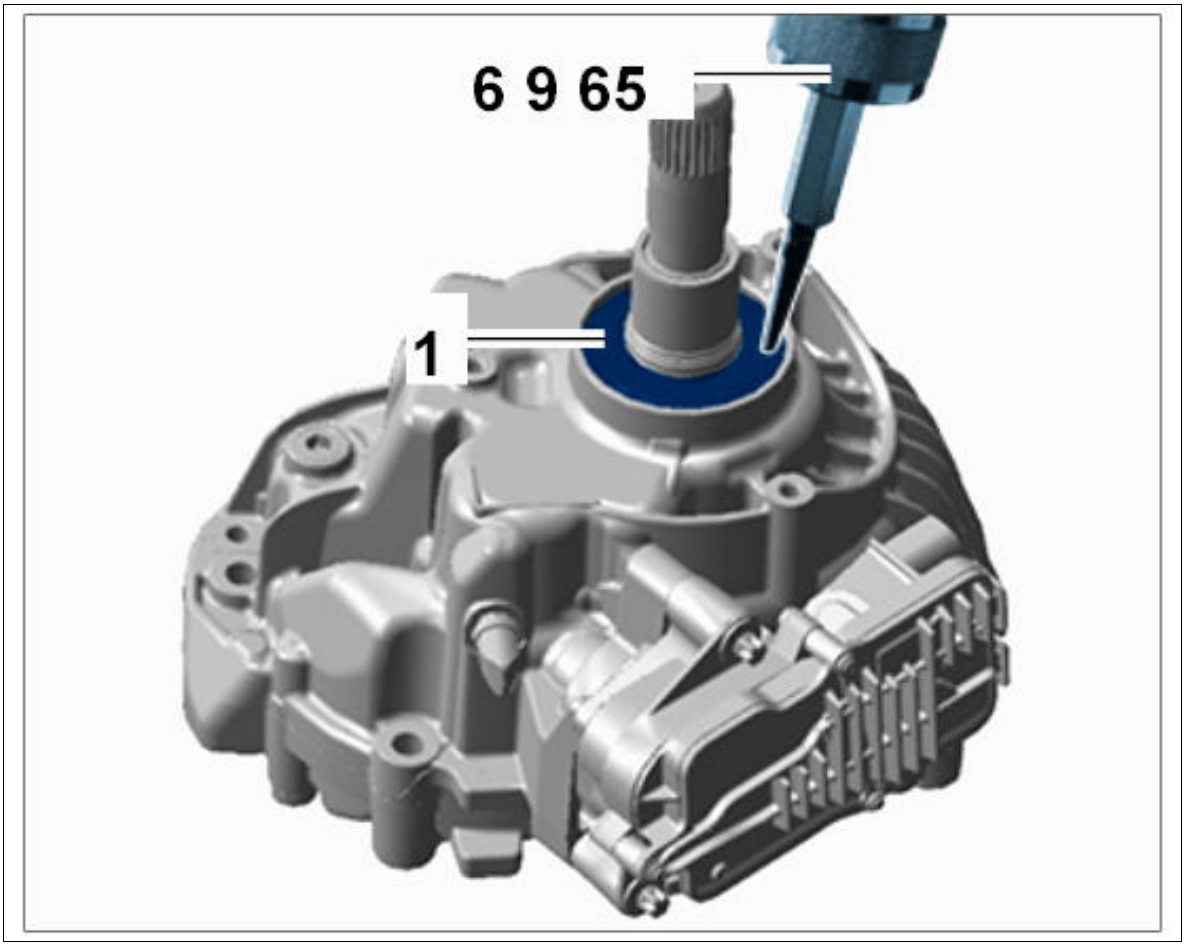

Courtesy of PORSCHE CARS NORTH AMERICA, INC.

2. Clean the sealing face.
3. Install new sealing ring using **pressure piece 9881.**
    1. 3.1. Tap in sealing ring evenly using a plastic hammer.

Fig 2: Installing Front Sealing Ring

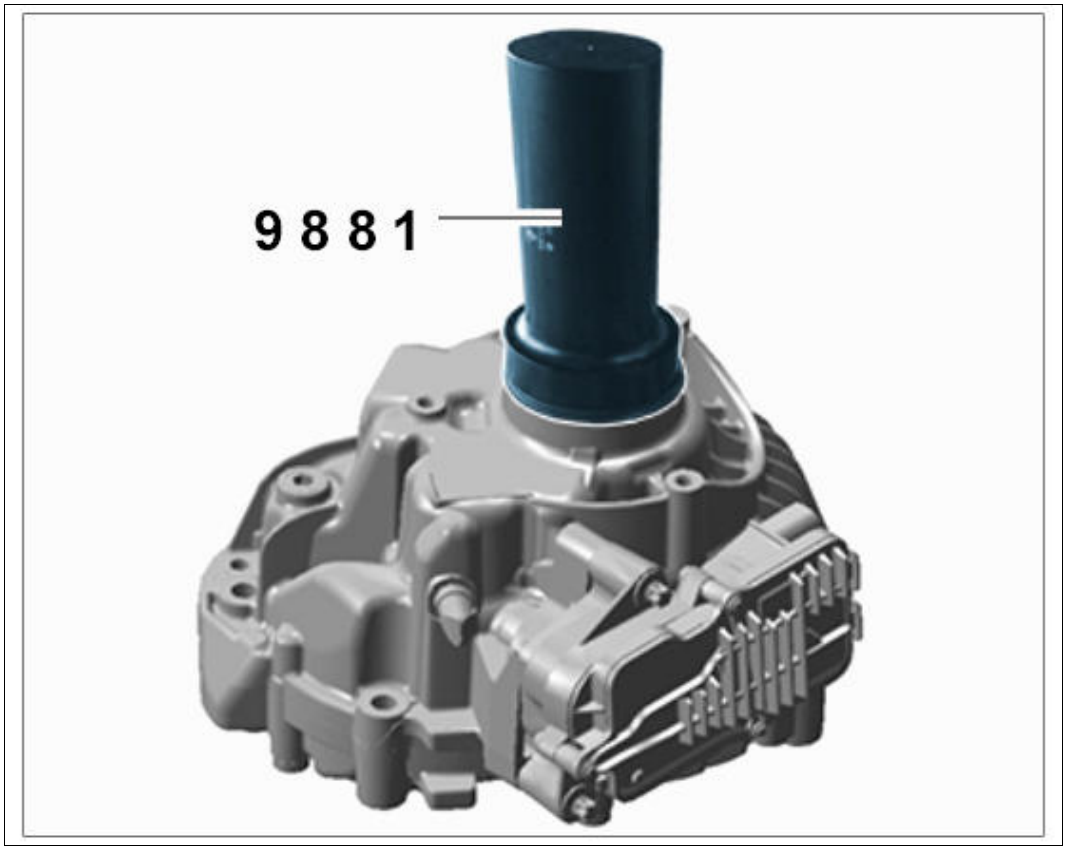

Courtesy of PORSCHE CARS NORTH AMERICA, INC.

WM 399255 REPLACING SEALING RING FOR TRANSFER GEAR (MACAN, MACAN S, MACAN TURBO) > SUBSEQUENT WORK

1. Install vibration damper for transfer gear. → REPLACING VIBRATION DAMPER FOR TRANSFER GEAR

Service Manual: 4X - CHASSIS - GENERAL -- (95B) - MACAN

WM 4X00IN BRAKE DISC MEASUREMENT SHEET (ALL MODELS) > INFORMATION > BRAKE DISC MEASUREMENT SHEET

Information

Notes on checking and measurement points can be found in:

- Technical data relating to the tests. → 4650TW TECHNICAL DATA/BRAKE WEAR LIMIT
- Description of Tests 1-3, front. → 465002 CHECKING FRONT BRAKE DISCS (WEAR ASSESSMENT)
- Description of Tests 1-3, rear. → 465302 CHECKING REAR BRAKE DISCS (WEAR ASSESSMENT)

A copy or print-out of the data card shown here can be used to document the measured result. The data cards cannot be ordered.

1. Make a copy or print-out of the data card shown here.

   Information

   1. Actual values that are identical in all versions are already entered!
   2. These values may change in the course of further development . Check them if necessary and add the new values as required. → 4650TW TECHNICAL DATA/BRAKE WEAR LIMIT

2. Before taking measurements (Test 1 to Test 3), enter the general data, vehicle type and the missing nominal values (new brake disc thickness/brake disc wear limit) in the data card.
3. Carry out measurements (actual status) and enter the values in the data card.
4. If brake discs are to be replaced, carry out Test 2 with the new discs again and enter the latest values in a new data card.

Brake disc measurement		
Customer:	Rep. Order No.:	
Street:	Porsche VIN:	
City:	Reg. number:	
Telephone:	Date of first registration:	
Vehicle type:	Odometer reading [km/miles]:	
Checker:	Date/Signature	
Nominal values		
Test 1 = Brake disc thickness		
- Brake disc thickness, new [mm]:	Front:	Rear:

- Wear limit [mm]:			Front:	Rear:
Test 2 = Lateral runout				
- Brake disc installed [mm]			max.:	
- Wheel hub			max.: 0, 02	
- Brake disc removed [mm]			max.: 0, 03	
Test 3 = Thickness tolerance of brake disc				
Thickness tolerance of brake disc [mm]			max.:	
Measured values (actual values) [mm]	front left	front right	rear left	rear right
Test 1 = Brake disc thickness (measured at 3 points, each offset by 120°)				
Measurement point A				
Measurement point B				
Measurement point C				
Test 2 = Lateral runout				
- Brake disc installed				
- Wheel hub				
- Brake disc removed (difference wheel hub/brake disc installed)				
Test 3 = Thickness tolerance of brake disc (1)				
Thickness tolerance (1)				

(1)	Test 3: Do not enter the eight measured values for each brake disc in the data sheet, just comment on the measured result for each brake disc (i.e. OK or not OK)

WM 4X00IN GENERAL INFORMATION ON TYRE PRESSURE MONITORING (TPM) (ALL MODELS) > TOOLS

Designation	Type	Number	Description	

PIWIS Tester II	Special tool	9818		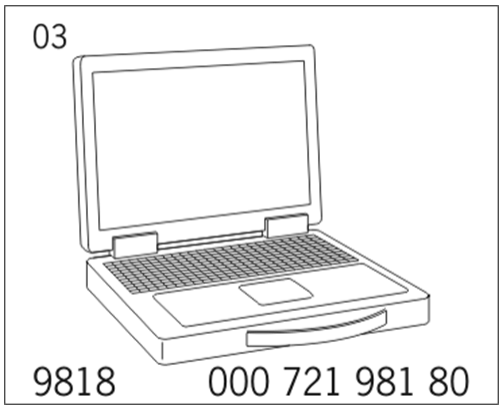

WM 4X00IN GENERAL INFORMATION ON TYRE PRESSURE MONITORING (TPM) (ALL MODELS) > GENERAL INFORMATION ON TYRE PRESSURE MONITORING (TPM) > DESIGN AND OPERATING PRINCIPLE > DESIGN

Fig 1: Identifying 3RD Generation TPM System Design

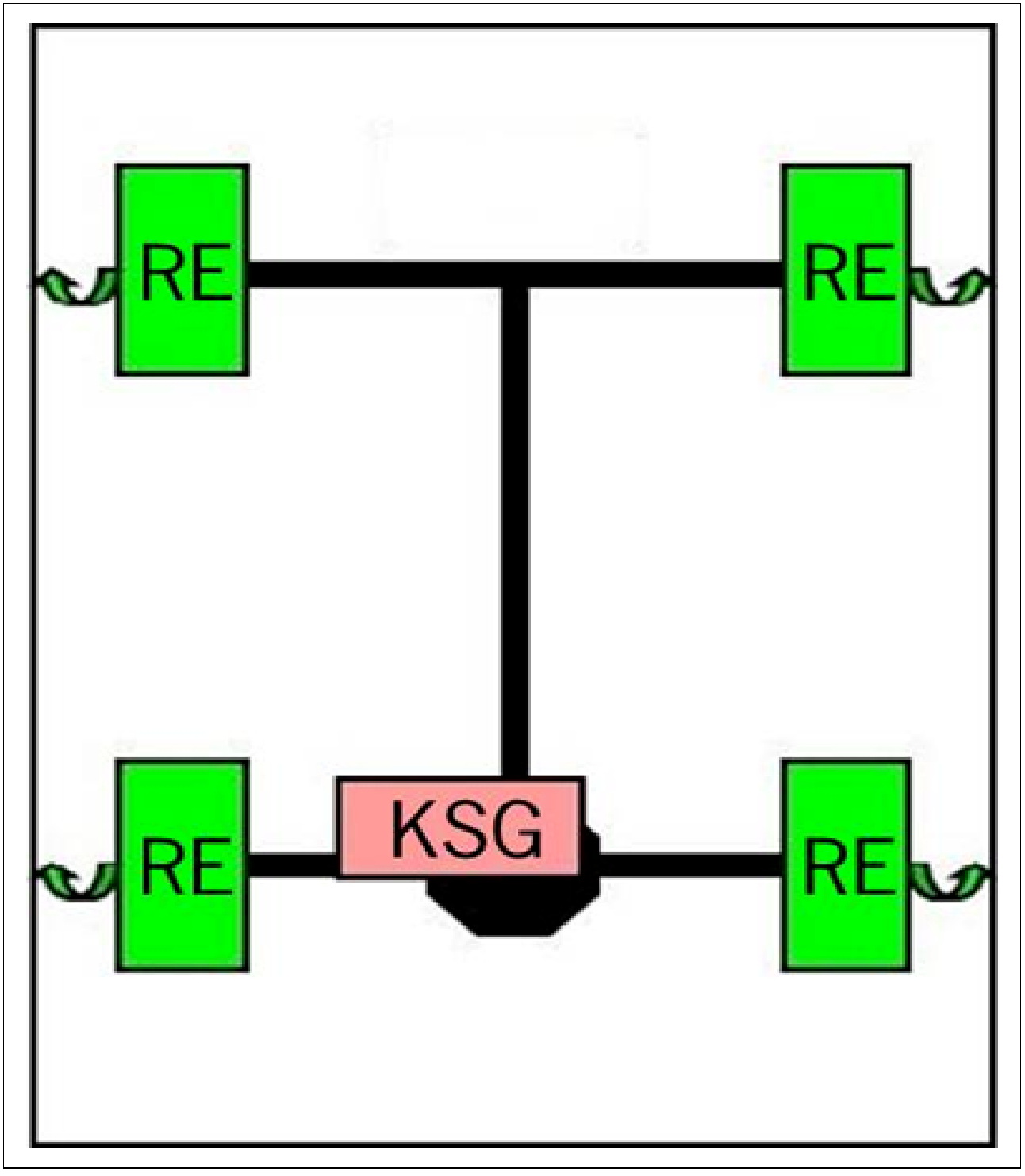

Courtesy of PORSCHE CARS NORTH AMERICA, INC.

The 3rd generation TPM system consists of:

- 4 wheel electronics units screwed onto the wheels
- 4 TPM valves and
- 1 TPM control unit (KSG) with integrated central antenna (installed on the rear axle)

WM 4X00IN GENERAL INFORMATION ON TYRE PRESSURE MONITORING (TPM) (ALL MODELS) > GENERAL INFORMATION ON TYRE PRESSURE MONITORING (TPM) > DESIGN AND OPERATING PRINCIPLE > OPERATING PRINCIPLE

The 3rd generation TPM system operates on the principle of unidirectional communication between the wheel electronics and control unit. This means that the wheel electronics can communicate with the control unit, but the control unit cannot communicate with the wheel electronics.

The wheel electronics units send the currently measured tire pressure, the direction of rotation, the temperature of the air in the tire and the remaining service life (of the battery) as well as a specific ID from the wheel that is currently turning at specified intervals.

The wheel position is learned automatically from the side and axle specifications. The direction of rotation of a wheel is detected by acceleration sensors in the wheel electronics (left/right detection). Axle sensing (front axle/rear axle detection) is performed based on differentiated sound levels between the front and rear axle, where the central antenna is fitted close to one axle (high level). The levels received from the other axle are correspondingly low.

WM 4X00IN GENERAL INFORMATION ON TYRE PRESSURE MONITORING (TPM) (ALL MODELS) > GENERAL INFORMATION ON TYRE PRESSURE MONITORING (TPM) > DESIGN AND OPERATING PRINCIPLE > TRANSMISSION MODES

The wheel electronics units communicate with the control unit in various modes. Depending on the current mode of a wheel electronics unit, it sends telegrams to the control unit at defined intervals.

- **Normal mode:** Normal mode is active while the vehicle is driving (after Burst mode has ended).
- **Sleep mode:** Sleep mode is activated as soon as the vehicle remains stationary for longer than 5 minutes. The wheel electronics then send no more telegrams. If the ignition is switched on while the wheel electronics units are in Sleep mode, no tire pressures are displayed (display in instrument cluster: "-.-"). Tire pressures are only displayed again when the vehicle is driving (see Burst mode).
- **Burst mode:** If the wheel electronics units are in Sleep mode and the vehicle is accelerated to over 25 km/h (15 mph) from stationary, the wheel electronics units switch to Burst mode. The wheel electronics units send their telegrams for 60 seconds at fast intervals.

WM 4X00IN GENERAL INFORMATION ON TYRE PRESSURE MONITORING (TPM) (ALL MODELS) > TEACHING TYRE PRESSURE MONITORING (TPM) > GENERAL INFORMATION

If a new set of wheels is used or wheel electronics units were replaced, the TPM system must be taught. When teaching the TPM system, the control unit stores the wheel IDs of the wheel electronics units and assigns a position to them.

New wheel electronics units can be taught by selecting a new set of wheels in the instrument cluster.

The system is then in learning mode and re-assigns the wheel IDs that are received.

But the system also detects a wheel change if the stored information does not correspond to the information received. The control unit then displays a message on the instrument cluster prompting you to select the newly fitted set of wheels.

The wheel electronics units can be taught while the vehicle is driving and while it is stationary. Teaching while driving is recommended.

WM 4X00IN GENERAL INFORMATION ON TYRE PRESSURE MONITORING (TPM) (ALL MODELS) > TEACHING TYRE PRESSURE MONITORING (TPM) > TEACHING WHILE DRIVING

A procedure in **PIWIS Tester II 9818** can be used to teach the wheel IDs while driving: >>Tyre Pressure Monitoring (TPM) system << >>Maintenance/repairs<< >>Teach wheel IDs<< >>Teach wheel IDs while driving<<.

The wheel IDs can also be taught without using the System Tester.

The following points must always be observed:

- Allow an idle time of at least 5 minutes before teaching the wheel IDs (wheel electronics units are then in Sleep mode).
- Briefly accelerate the vehicle to over 25 km/h (15 mph) in order to teach the wheel IDs (wheel electronics units are then in Burst mode).
- Then continue driving at any speed (even < 25 km/h or 15 mph) for max. 10 minutes.
- Teaching was successful if a pressure reading is displayed in the instrument cluster for all wheel positions.

WM 4X00IN GENERAL INFORMATION ON TYRE PRESSURE MONITORING (TPM) (ALL MODELS) > TEACHING TYRE PRESSURE MONITORING (TPM) > TEACHING WHILE STATIONARY

Information

If the TPM system is to be taught while the vehicle is stationary, it is advisable to take note of the wheel IDs and the position of all wheels and store the information together with the wheels. This can significantly reduce the teaching time for the next wheel change.

The wheel IDs and position can be read out using **PIWIS Tester II 9818** if this information is already stored in the control unit. >>Tyre Pressure Monitoring (TPM) system<< >>Actual values and input signals<<

WM 4X00IN GENERAL INFORMATION ON TYRE PRESSURE MONITORING (TPM) (ALL MODELS) > TEACHING TYRE PRESSURE MONITORING (TPM) > TEACHING

WHILE STATIONARY > IF WHEEL IDS ARE KNOWN

Allocation of wheel electronics units using the **PIWIS Tester II 9818:** >>Tyre Pressure Monitoring (TPM) system<< >>Maintenance/repairs<< >>Teach wheel IDs<< >>Teach wheel IDs while vehicle is stationary<< >>Wheel IDs known<<.

WM 4X00IN GENERAL INFORMATION ON TYRE PRESSURE MONITORING (TPM) (ALL MODELS) > TEACHING TYRE PRESSURE MONITORING (TPM) > TEACHING WHILE STATIONARY > IF WHEEL IDS ARE UNKNOWN

Allocation of wheel electronics units using the **PIWIS Tester II 9818:** >>Tyre Pressure Monitoring (TPM) system<< >>Maintenance/repairs<< >>Teach wheel IDs<< >>Teach wheel IDs while vehicle is stationary<< >>Wheel IDs unknown<<.

Always observe the following procedure (instructions on the System Tester always take precedence!):

- Allow an idle time of at least 5 minutes before teaching the wheel IDs (wheel electronics units are then in Sleep mode).
- As per instructions on the System Tester, pressure (at least 0.2 bar and approx. 5 seconds) at the wheels must be reduced.
- The wheel electronics registers the pressure difference (after 2 minutes at the latest) and switches to Burst mode.
- The control unit receives the telegrams from the activated wheel electronics unit and writes its wheel ID to the specified position.

WM 4X00IN INFORMATION ON PSM (ALL MODELS) > INFORMATION ON PSM

PSM is an active control system for stabilizing the vehicle at the limit of driving dynamics. Sensors continuously determine:

- Vehicle speed
- Direction of travel (steering angle)
- Lateral acceleration
- Longitudinal acceleration
- Rotation rate

Information

- The PSM (Porsche Stability Management) is automatically ready/switched on after each engine start.

WM 4X00IN INFORMATION ON PSM (ALL MODELS) > INFORMATION ON PSM >

INFORMATION ON PSM

The vehicles are equipped with a new PSM generation with enhanced functions, which considerably improve active safety.

- Enhanced braking readiness
- Brake assist function
- Enhanced Trailer Stability Management
- New ABS tuning for braking on loose surfaces

With enhanced braking readiness, the brake system builds up slight pressure when the accelerator is released quickly and places the brake pads lightly on the brake discs. If the driver now presses the brake, braking power can be achieved more quickly. This results in a shorter stopping distance. Enhanced braking readiness always remains active, irrespective of whether PSM is on or off.

On identifying full braking - when a defined pedal pressure is exceeded - brake assist supplies the required pressure for maximum deceleration via the PSM hydraulic unit. Brake assist can be deactivated by switching off PSM.

Enhanced Trailer Stability Management is a support function of PSM for driving with a trailer. The system detects swaying movements of the trailer and tries to minimize these through targeted braking. Trailer Stability Management can be switched off by switching off PSM. When the driver presses the brake pedal, Trailer Stability Management is activated even if PSM is switched off.

The ABS control strategy has been modified for braking on loose surfaces. A brake barrier, which helps to reduce braking distance on gravel or snow for example, is created in front of the tires by blocking the wheels short.

WM 4X00IN INFORMATION ON PSM (ALL MODELS) > INFORMATION ON PSM > SWITCHING OFF PSM

Press the PSM button. PSM switches off after a short delay.

When PSM is off, the PSM OFF warning light in the instrument panel and the indicator light in the switch light up.

- When braking, the vehicle is also stabilized when PSM is switched off!
- One-sided wheel spin is also prevented when PSM is switched off!

PSM should always be switched on for normal driving.

In the following exceptional cases, it can be advantageous to switch off the PSM temporarily:

- On a loose surface and in deep snow
- When rocking the vehicle free
- When using snow chains
- On extremely rough ground (if one or more wheels have little or no road grip - engine performance

is reduced)

WM 4X00IN INFORMATION ON PSM (ALL MODELS) > INFORMATION ON PSM > SWITCHING PSM BACK ON

Press the PSM button. PSM switches on after a short delay.

WM 4X00IN LIFTING THE VEHICLE (ALL MODELS) > TOOLS

Designation	Type	Number	Description	
PIWIS Tester II	Special tool	9818		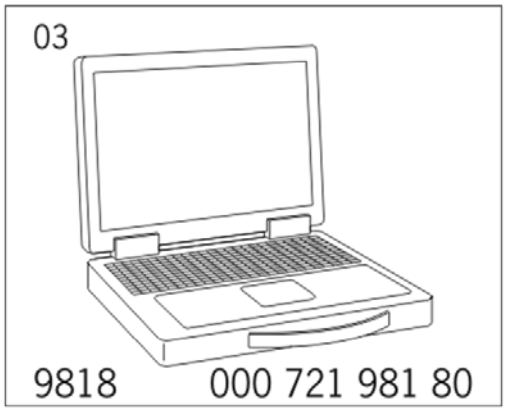

WM 4X00IN LIFTING THE VEHICLE (ALL MODELS) > TECHNICAL VALUES

Location	Description	Type	Basic value	Tolerance 1	Tolerance 2
Switching on the levelling system	Speed > 7 km/h (4 mph), the levelling system switches on automatically.	Speed greater than	+7 km/h (4 mph)		

WM 4X00IN LIFTING THE VEHICLE (ALL MODELS) > LIFTING THE VEHICLE > GENERAL INFORMATION

NOTE: Air springs can become kinked/fall out

- *Risk of damage to air springs*

→ Switch off the levelling system (press and hold the levelling system button for at least 10 seconds).

→ Check the bellows before lowering the vehicle.

Information

Always pay particular attention to the following before raising the vehicle:

- Deactivate the levelling system before raising the vehicle (press and hold the levelling system button for at least 10 seconds).
- If a transmission range is engaged while the vehicle is raised, the levelling system must first be deactivated using PIWIS Tester II 9818. To do this, select >>Levelling system/PASM<< >>Drive links/checks<< >>Activate/deactivate vehicle<< in the control unit overview. Select the value "Deactivate levelling system (permanently)" and press "Start" [F8] to execute the function. Re-activate the levelling system when the work is complete. To do this, select the value "Activate levelling system" in the same menu item and press "Start" [F8] to execute the function.

WM 4X00IN LIFTING THE VEHICLE (ALL MODELS) > LIFTING THE VEHICLE > LIFTING THE VEHICLE

1. Drive vehicle onto the lifting platform. Pay particular attention to the following:
    1. When driving onto a lifting platform, ensure that there is sufficient distance between the lifting platform and the vehicle.
    2. If work has to be done in the front footwell, the vehicle should be positioned in such a way that the doors can be opened far enough.
2. On vehicles with air suspension/levelling system: Switch off the levelling system.
    1. 2.1. Switch on ignition.
    2. 2.2. Press and hold the levelling system button until the message >>Levelling system switched off<< appears on the instrument cluster.

Fig 1: Identifying Levelling System Button



Courtesy of PORSCHE CARS NORTH AMERICA, INC.

WARNING: Vehicle can fall down

1. Risk of squashing or crushing

2. Risk of damage to the vehicle

→ Do not place any solid objects under the raised vehicle.

→ Ensure that the lifting platform is prevented from lowering.

→ Remove solid objects before lowering the vehicle.

→ Raise the vehicle only at the take-up points provided.

3. Raise the vehicle at the four jacking points **-1-** .

Fig 2: Identifying Vehicle Jacking Points

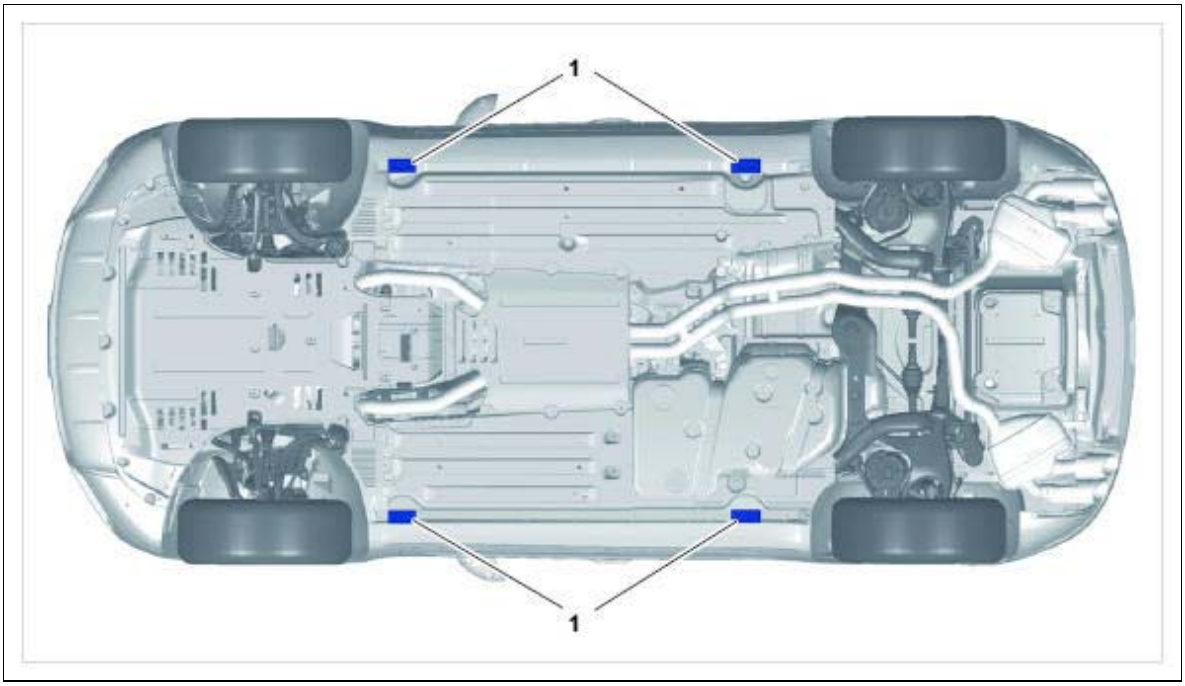

Courtesy of PORSCHE CARS NORTH AMERICA, INC.

WM 4X00IN LIFTING THE VEHICLE (ALL MODELS) > SUBSEQUENT WORK > SWITCHING ON THE LEVELLING SYSTEM

1. Lower the vehicle.
2. Switch on ignition.
3. Press and hold the levelling system button until the message >>Levelling system switched on<< appears on the instrument cluster.

   Alternatively, the levelling system will switch on automatically while driving **(→ Speed greater than: +7 km/h (4 mph))** .

Fig 1: Identifying Levelling System Button



Courtesy of PORSCHE CARS NORTH AMERICA, INC.

WM 4X00IN SAFETY INSTRUCTIONS AND INFORMATION FOR CARRYING OUT REPAIRS ON THE CHASSIS (ALL MODELS) > TOOLS

Designation	Type	Number	Description	
PIWIS Tester II	Special tool	9818		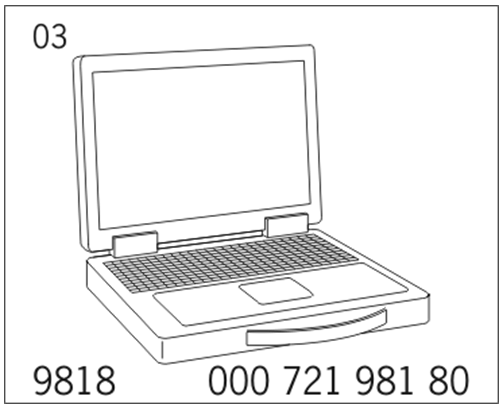

WM 4X00IN SAFETY INSTRUCTIONS AND INFORMATION FOR CARRYING OUT REPAIRS ON THE CHASSIS (ALL MODELS) > GENERAL WARNING NOTES > FITTING CHASSIS COMPONENTS

WARNING: Incorrect handling of safety bolts

- *Danger of injury*
- *Loss of torque*

→ Always use new fastening screws and nuts following removal.

→ Observe specified tightening torques.

→ Carry out a visual inspection of all re-used parts.

WM 4X00IN SAFETY INSTRUCTIONS AND INFORMATION FOR CARRYING OUT REPAIRS ON THE CHASSIS (ALL MODELS) > GENERAL WARNING NOTES > SPRING STRUTS/COIL SPRINGS

WARNING: Installation of incorrect or damaged coil springs

- *Different vehicle handling*
- *Coil springs can break*

→ Examine the components carefully before installation.

→ When installing new coil springs/spring struts, make sure they are assigned correctly.

→ Only use a suitable tool for removing and installing coil springs.

→ Do not weld or grind, or use a hammer close to the spring struts.

→ Do not apply color markings to the coil springs.

WM 4X00IN SAFETY INSTRUCTIONS AND INFORMATION FOR CARRYING OUT REPAIRS ON THE CHASSIS (ALL MODELS) > GENERAL WARNING NOTES > WHEELS AND TIRES

WARNING: High tire seating pressure

- *Risk of squashing or bruising*

→ Use a tire filling cage.

Information

- Newly mounted tires require a bedding-in period to remove the vulcanization layer.
- Customers must be informed that the full performance of new tires is achieved only after a distance of 100 to 200 km (60 to 120 miles) has been driven. Avoid extreme driving maneuvers (acceleration, braking) during this time.

WM 4X00IN SAFETY INSTRUCTIONS AND INFORMATION FOR CARRYING OUT REPAIRS ON THE CHASSIS (ALL MODELS) > GENERAL WARNING NOTES > WORKING ON VEHICLES WITH PSM

WARNING: Steering-angle sensor not calibrated or calibrated incorrectly

- *Unexpected vehicle handling*
- *Steering-angle sensor does not function*
- *Malfunction in steering-angle sensor*

→ After working on wheel suspension parts, when replacing the steering-angle sensor and after changing the wheel alignment values, calibrate the steering-angle sensor using **PIWIS Tester II 9818** .

→ Keep the front wheels in straight-ahead position on the measuring platform during calibration.

→ On vehicles with electromechanical steering, also re-teach the electric steering lock settings.

WM 4X00IN SAFETY INSTRUCTIONS AND INFORMATION FOR CARRYING OUT REPAIRS ON THE CHASSIS (ALL MODELS) > GENERAL WARNING NOTES > BRAKE SYSTEM

WARNING: Installation of brake pads with the wrong brake pad quality

- *Longer braking distance*
- *More wear on brake pads*

→ Only use the type-specific brake pads.

→ Replace the brake pads when the brake pad wear indicator light comes on, but no later than when

there is a residual pad thickness of 2 mm on each axle.

→ Replace the brake discs on each axle as soon as the brake pad wear limit is reached.

Information

- Observe brake fluid quality. Use only new DOT 4 brake fluid.
- The brake-fluid change interval using Super DOT4 brake fluid is two years.
- This brake fluid is available under the following part numbers: Container quantity: 1 liter = 000.043.203.66. 30 liters = 000.043.203.67.

WM 4X00IN SAFETY INSTRUCTIONS AND INFORMATION FOR CARRYING OUT REPAIRS ON THE CHASSIS (ALL MODELS) > GENERAL WARNING NOTES > HANDLING AIRBAG SYSTEMS

WARNING: Incorrect handling of airbag units

- *Triggering of airbag unit.*
- *System faults can occur.*

→ Switch off ignition and remove ignition key or remote control (hand-held transmitter).

→ A power supply (e.g. battery charger) must not be connected to the external power supply/jump-lead starting terminals.

→ Disconnect the battery and insulate the ground strap so that all contact with a ground carrier is avoided.

→ Wait 1 minute after disconnecting the battery.

→ Only pull off connector on the triggering unit after the waiting time has elapsed.

→ Make sure that no foreign objects are located in front of the airbag unit during installation.

→ Replace damaged parts during removal.

→ Always position airbag units so that the blow-out opening is facing upwards, e.g. crest on driver's airbag.

→ Do not position anything on the airbag units.

→ If removed for an extended period, the airbag units must be stored in a safe place.

→ Airbag units must not come into contact with grease, oil, detergents, liquids, or similar substances.

→ Do not expose airbag units to temperatures above 90°.

→ Do not remove the short-circuit spring on the plug-in contacts.

→ Ignition and preparations may only be carried out by skilled staff, supervised by a second responsible person.

→ Before disposal, the airbag unit must be rendered harmless by electrical ignition performed in accordance with all precautionary measures, thereby preventing it from being used incorrectly.

WM 4X00IN TIGHTENING TORQUES FOR BRAKE HYDRAULIC SYSTEM (MACAN S, MACAN TURBO) > TECHNICAL VALUES

Location	Description	Type	Basic value	Tolerance 1	Tolerance 2
Brake line to brake master cylinder (left-hand drive)	Union nut	Tightening torque	14 Nm (10.5 ftlb.)		
Brake line to brake master cylinder (right-hand drive)	Union nut	Tightening torque	18 Nm (13 ftlb.)		
Brake line to hydraulic unit (left-hand drive)	All lines on hydraulic unit	Tightening torque	14 Nm (10.5 ftlb.)		
Brake line to hydraulic unit (right-hand drive)	Line: Brake calliper - hydraulic unit	Tightening torque	14 Nm (10.5 ftlb.)		
Brake line to hydraulic unit (right-hand drive)	Line: Brake master cylinder - hydraulic unit	Tightening torque	18 Nm (13 ftlb.)		
Pedals to body	Hexagon nut	Tightening torque	9 Nm (6.5 ftlb.)		
Brake booster to pedals	12 point socket	Tightening torque	25 Nm (19 ftlb.)		
Brake master cylinder to brake booster	Hexagon nut/always use new nuts following removal	Tightening torque	49 Nm (36 ftlb.)		
Brake fluid reservoir to brake master cylinder		Tightening torque	5 Nm (3.5 ftlb.)		
Vacuum pump to engine		Tightening torque	9 Nm (6.5 ftlb.)		

Bleeder screw on front brake calliper	M10 x 1 thread	Tightening torque	14 Nm (10.5 ftlb.)		
Bleeder screw on rear brake calliper		Tightening torque	10 Nm (7.5 ftlb.)		

WM 4X00IN TIGHTENING TORQUES FOR BRAKE HYDRAULIC SYSTEM (MACAN S, MACAN TURBO) > TIGHTENING TORQUES FOR BRAKE HYDRAULIC SYSTEM

Location	Description	Type	Basic value	Tolerance 1	Tolerance 2
Brake line to brake master cylinder (left-hand drive)	Union nut	Tightening torque	14 Nm (10.5 ftlb.)		
Brake line to brake master cylinder (right-hand drive)	Union nut	Tightening torque	18 Nm (13 ftlb.)		
Brake line to hydraulic unit (left-hand drive)	All lines on hydraulic unit	Tightening torque	14 Nm (10.5 ftlb.)		
Brake line to hydraulic unit (right-hand drive)	Line: Brake calliper - hydraulic unit	Tightening torque	14 Nm (10.5 ftlb.)		
Brake line to hydraulic unit (right-hand drive)	Line: Brake master cylinder - hydraulic unit	Tightening torque	18 Nm (13 ftlb.)		
Pedals to body	Hexagon nut	Tightening torque	9 Nm (6.5 ftlb.)		
Brake booster to pedals	12 point socket	Tightening torque	25 Nm (19 ftlb.)		
Brake master cylinder to brake booster	Hexagon nut/always use new nuts following removal	Tightening torque	49 Nm (36 ftlb.)		
Brake fluid reservoir to brake master cylinder		Tightening torque	5 Nm (3.5 ftlb.)		

Vacuum pump to engine		Tightening torque	9 Nm (6.5 ftlb.)		
Bleeder screw on front brake calliper	M10 x 1 thread	Tightening torque	14 Nm (10.5 ftlb.)		
Bleeder screw on rear brake calliper		Tightening torque	10 Nm (7.5 ftlb.)		

WM 4X00IN TIGHTENING TORQUES FOR BRAKE MECHANISM (ALL MODELS) > TECHNICAL VALUES

Location	Description	Type	Basic value	Tolerance 1	Tolerance 2
Brake calliper (18-inch - red/silver) to wheel carrier	M14 x 1.5 x 114 thread/always use new screws following removal	Initial tightening	30 Nm (22 ftlb.)		
Brake calliper (18-inch - red/silver) to wheel carrier	M14 x 1.5 x 114 thread/always use new screws following removal	Final tightening	+90°		
Brake calliper (17-inch - black) to wheel carrier	M14 x 1.5 x 48 thread/always use new screws following removal	Tightening torque	196 Nm (145 ftlb.)		
Brake calliper (PCCB) to wheel carrier	M14 x 1.5 x 135 thread/always use new screws following removal	Initial tightening	30 Nm (22 ftlb.)		
Brake calliper (PCCB) to wheel carrier	M14 x 1.5 x 135 thread/always use new screws following removal	Final tightening	+90°		
Brake hose bracket to wheel carrier	M6 x 16 thread	Tightening torque	10 Nm (7.5 ftlb.)		
Brake hose to brake calliper		Tightening torque	20 Nm (15 ftlb.)		
Brake cover panel to wheel carrier	M6 x 14 thread	Tightening torque	10 Nm (7.5 ftlb.)		
Brake disc to wheel hub	M6 x 16 thread	Tightening torque	10 Nm (7.5 ftlb.)		

Brake hose to brake line in wheel housing		Tightening torque	14 Nm (10.5 ftlb.)		
Brake calliper to wheel bearing housing	M12/always use new screws or bolts following removal	Initial tightening	100 Nm (74 ftlb.)		
Brake calliper to wheel bearing housing	M12/always use new screws or bolts following removal	Final tightening	+90°		
Brake calliper to brake carrier	Always use new screws following removal	Tightening torque	35 Nm (26 ftlb.)		
Brake hose bracket to wheel bearing housing M6 x 16 thread		Tightening torque	9 Nm (6.5 ftlb.)		
Brake hose to brake calliper		Tightening torque	20 Nm (15 ftlb.)		
Brake cover panel to wheel bearing housing	M6 x 14 thread	Tightening torque	10 Nm (7.5 ftlb.)		
Brake disc to wheel hub	M6 x 16 thread	Tightening torque	10 Nm (7.5 ftlb.)		
EPB actuator to brake calliper	Always use new screws following removal	Tightening torque	11 Nm (8 ftlb.)		
Brake hose to brake line in wheel housing		Tightening torque	14 Nm (10.5 ftlb.)		

WM 4X00IN TIGHTENING TORQUES FOR BRAKE MECHANISM (ALL MODELS) > TIGHTENING TORQUES FOR BRAKE MECHANISM > FRONT AXLE

Location	Description	Type	Basic value	Tolerance 1	Tolerance 2
Brake calliper (18-inch - red/silver) to wheel carrier	M14 x 1.5 x 114 thread/always use new screws following removal	Initial tightening	30 Nm (22 ftlb.)		

Brake calliper (18-inch - red/silver) to wheel carrier	M14 x 1.5 x 114 thread/always use new screws following removal	Final tightening	+90°		
Brake calliper (17-inch - black) to wheel carrier	M14 x 1.5 x 48 thread/always use new screws following removal	Tightening torque	196 Nm (145 ftlb.)		
Brake calliper (PCCB) to wheel carrier	M14 x 1.5 x 135 thread/always use new screws following removal	Initial tightening	30 Nm (22 ftlb.)		
Brake calliper (PCCB) to wheel carrier	M14 x 1.5 x 135 thread/always use new screws following removal	Final tightening	+90°		
Brake hose bracket to wheel carrier	M6 x 16 thread	Tightening torque	10 Nm (7.5 ftlb.)		
Brake hose to brake calliper		Tightening torque	20 Nm (15 ftlb.)		
Brake cover panel to wheel carrier	M6 x 14 thread	Tightening torque	10 Nm (7.5 ftlb.)		
Brake disc to wheel hub	M6 x 16 thread	Tightening torque	10 Nm (7.5 ftlb.)		
Brake hose to brake line in wheel housing		Tightening torque	14 Nm (10.5 ftlb.)		

WM 4X00IN TIGHTENING TORQUES FOR BRAKE MECHANISM (ALL MODELS) > TIGHTENING TORQUES FOR BRAKE MECHANISM > REAR AXLE

Location	Description	Type	Basic value	Tolerance 1	Tolerance 2
Brake calliper to wheel bearing housing	M12/always use new screws or bolts following removal	Initial tightening	100 Nm (74 ftlb.)		
Brake calliper to wheel bearing housing	M12/always use new screws or bolts following removal	Final tightening	+90°		

Brake calliper to brake carrier	Always use new screws following removal	Tightening torque	35 Nm (26 ftlb.)		
Brake hose bracket to wheel bearing housing	M6 x 16 thread	Tightening torque	9 Nm (6.5 ftlb.)		
Brake hose to brake calliper		Tightening torque	20 Nm (15 ftlb.)		
Brake cover panel to wheel bearing housing	M6 x 14 thread	Tightening torque	10 Nm (7.5 ftlb.)		
Brake disc to wheel hub	M6 x 16 thread	Tightening torque	10 Nm (7.5 ftlb.)		
EPB actuator to brake calliper	Always use new screws following removal	Tightening torque	11 Nm (8 ftlb.)		
Brake hose to brake line in wheel housing		Tightening torque	14 Nm (10.5 ftlb.)		

WM 4X00IN TIGHTENING TORQUES FOR FRONT AXLE (ALL MODELS) > TECHNICAL VALUES

Location	Description	Type	Basic value	Tolerance 1	Tolerance 2
Fastening screws	Heat shield to front-axle carrier	Tightening torque	9 Nm (6.5 ftlb.)		
Fastening screw	Heat shield to front-axle carrier	Tightening torque	20 Nm (15 ftlb.)		
Fastening screws	Heat shield over engine mount	Tightening torque	20 Nm (15 ftlb.)		
Fastening screws	Heat shield to front-axle carrier	Tightening torque	9 Nm (6.5 ftlb.)		
Fastening screw	Heat shield to front-axle carrier	Tightening torque	20 Nm (15 ftlb.)		
Fastening screws	Heat shield over engine mount	Tightening torque	20 Nm (15 ftlb.)		
Fastening screws	Retainer plate to front-axle carrier	Tightening torque	30 Nm (22 ftlb.)		
Fastening screw	Step 1, engine mount	Initial tightening	90 Nm (67 ftlb.)		

Fastening screw	Step 2, engine mount	Final tightening	+90°		
Fastening screw	Step 1, front-axle carrier to body	Initial tightening	115 Nm (85 ftlb.)		
Fastening screw	Step 2, front-axle carrier to body	Final tightening	+90°		
Fastening screw	Step 1, front-axle carrier to body	Initial tightening	115 Nm (85 ftlb.)		
Fastening screw	Step 2, front-axle carrier to body	Final tightening	+90°		
Fastening screws	Engine mount to front-axle carrier	Tightening torque	55 Nm (41 ftlb.)		
Fastening screws	Step 1, cross-strut to front-axle carrier	Initial tightening	90 Nm (67 ftlb.)		
Fastening screws	Step 2, cross-strut to front-axle carrier	Final tightening	+135°		
Front fastening screw	Step 1, cross-strut to front-axle carrier	Initial tightening	90 Nm (67 ftlb.)		
Fastening screw	Step 2, Cross-strut to front-axle carrier	Final tightening	+90°		
Fastening screw	Step 1, fastening screw for connecting link	Initial tightening	40 Nm (30 ftlb.)		
Fastening screw	Step 2, fastening screw for connecting link	Final tightening	+90°		
Fastening screw	Step 1, fastening screw for connecting link	Initial tightening	40 Nm (30 ftlb.)		
Fastening screw	Step 2, fastening screw for connecting link	Final tightening	+90°		
Fastening nut		Tightening torque	25 Nm (19 ftlb.)		
Fastening screw	Protective plate	Tightening torque	20 Nm (15 ftlb.)		
Dome strut to body		Tightening torque	20 Nm (15 ftlb.)		
Additional reinforcement to body		Tightening torque	20 Nm (15 ftlb.)		

Dome strut to cross panel		Tightening torque	2 Nm (1.5 ftlb.)		
Additional reinforcement to dome strut		Tightening torque	20 Nm (15 ftlb.)		
Clamp for axle joint (connection for lower trailing arm)	BM10 x 65 thread/always use new screws or bolts following removal	Tightening torque	40 Nm (30 ftlb.)		
Lower trailing arm to wheel bearing housing	M14 thread/always use new nuts following removal	Tightening torque	140 Nm (104 ftlb.)		
Lower control arm to wheel bearing housing	M14 thread/always use new nuts following removal	Tightening torque	140 Nm (104 ftlb.)		
Upper trailing arm to wheel bearing housing	M10 thread	Tightening torque	45 Nm (33 ftlb.)		
Wheel bearing to wheel bearing housing	M12 x 1.5 x 45 thread/observe installation sequence!/always use new screws or bolts following removal	Initial tightening	80 Nm (59 ftlb.)		
Wheel bearing to wheel bearing housing	M12 x 1.5 x 45 thread/observe installation sequence!/always use new screws or bolts following removal	Final tightening	+90°		
Brake disc to wheel hub	M6 x 16 thread	Tightening torque	10 Nm (7.5 ftlb.)		
Brake cover plate to wheel bearing housing	M6 x 14 thread	Tightening torque	10 Nm (7.5 ftlb.)		
Speed sensor to wheel bearing housing	M6 x 16 thread	Tightening torque	8 Nm (6 ftlb.)		
Holder to wheel bearing housing	M6 x 16 thread	Tightening torque	10 Nm (7.5 ftlb.)		
Lower trailing arm to wheel bearing housing	M14 thread/always use new nuts following removal	Tightening torque	140 Nm (104 ftlb.)		

Lower trailing arm to front-axle carrier	M12 thread/always use new screws or bolts and nuts following removal	Initial tightening	70 Nm (52 ftlb.)		
Lower trailing arm to front-axle carrier	M12 thread/always use new screws or bolts and nuts following removal	Final tightening	+180°		
Level sensor to lower trailing arm	M6 thread	Tightening torque	9 Nm (6.5 ftlb.)		
Spring strut to lower trailing arm	M12 thread/always use new screws or bolts and nuts following removal	Initial tightening	90 Nm (67 ftlb.)		
Spring strut to lower trailing arm	M12 thread/always use new screws or bolts and nuts following removal	Final tightening	+90°		
Upper trailing arm to wheel bearing housing	M10 thread	Tightening torque	45 Nm (33 ftlb.)		
Upper trailing arm to mounting saddle	M10 thread/always use new screws or bolts and nuts following removal	Initial tightening	50 Nm (37 ftlb.)		
Upper trailing arm to mounting saddle	M10 thread/always use new screws or bolts and nuts following removal	Final tightening	+90°		
Lower control arm to front-axle carrier	M12 thread/always use new screws or bolts and nuts following removal	Initial tightening	70 Nm (52 ftlb.)		
Lower control arm to front-axle carrier	M12 thread/always use new screws or bolts and nuts following removal	Final tightening	+180°		
Lower control arm to wheel bearing housing	M14 thread/always use new nuts following removal	Tightening torque	140 Nm (104 ftlb.)		
Connecting link to anti-roll bar	AM10 thread/always use new screws and nuts following removal	Initial tightening	40 Nm (30 ftlb.)		

Connecting link to anti-roll bar	AM10 thread/always use new screws and nuts following removal	Final tightening	+90°		
Connecting link to spring strut	M10 x 45 thread/always use new screws or bolts following removal	Initial tightening	40 Nm (30 ftlb.)		
Connecting link to spring strut	M10 x 45 thread/always use new screws or bolts following removal	Final tightening	+90°		
Anti-roll bar clamp to front-axle carrier	M8 thread/always use new nut following removal	Tightening torque	30 Nm (22 ftlb.)		
Mounting saddle to piston rod (conventional)	M10 thread	Tightening torque	50 Nm (37 ftlb.)		
Spring-strut supporting mount to piston rod (PASM)	M12 thread	Tightening torque	50 Nm (37 ftlb.)		
Mounting saddle to spring strut (PASM only)	M8 thread	Tightening torque	30 Nm (22 ftlb.)		
Mounting saddle to body	M10 x 35 thread/observe tightening sequence/always use new screws or bolts following removal	Initial tightening	40 Nm (30 ftlb.)		
Mounting saddle to body	M10 x 35 thread/observe tightening sequence/always use new screws or bolts following removal	Final tightening	+90°		
Damper fork to damper	M12 thread/always use new screws or bolts and nuts following removal	Initial tightening	40 Nm (30 ftlb.)		
Damper fork to damper	M12 thread/always use new screws or	Final tightening	+180°		

	bolts and nuts following removal				
Spring strut to lower trailing arm	M12 thread/always use new screws or bolts and nuts following removal	Initial tightening	90 Nm (67 ftlb.)		
Spring strut to lower trailing arm	M12 thread/always use new screws or bolts and nuts following removal	Final tightening	+90°		
Connecting link to spring strut	M10 x 45 thread/always use new screws or bolts following removal	Initial tightening	40 Nm (30 ftlb.)		
Connecting link to spring strut	M10 x 45 thread/always use new screws or bolts following removal	Final tightening	+90°		
Air line to air-spring strut		Tightening torque	3 Nm (2 ftlb.)		
Pressure control valve to air-spring strut		Tightening torque	8 Nm (6 ftlb.)		
Drive shaft to wheel hub	Step 1 (wheels suspended in the air, press brakes while tightening)/M16 x 72 thread/always use new screws or bolts following removal	Tightening torque	200 Nm (148 ftlb.)		
Drive shaft to wheel hub	Step 2 (wheels on the ground)/M16 x 72 thread/always use new screws or bolts following removal	Torque angle	180°		
Drive shaft to transmission	M10 x 20 thread/always use new screws or bolts following removal	Initial tightening	30 Nm (22 ftlb.)		
Drive shaft to transmission	M10 x 20 thread/always use new screws or bolts following removal	Final tightening	+90°		

Heat shield to transmission	M8 x 22 thread	Tightening torque	23 Nm (17 ftlb.)		
Wheel to wheel hub		Tightening torque	160 Nm (118 ftlb.)		

WM 4X00IN TIGHTENING TORQUES FOR FRONT AXLE (ALL MODELS) > TIGHTENING TORQUES FOR FRONT AXLE > FRONT-AXLE CARRIER

Fig 1: Identifying Front-Axle Carrier Components

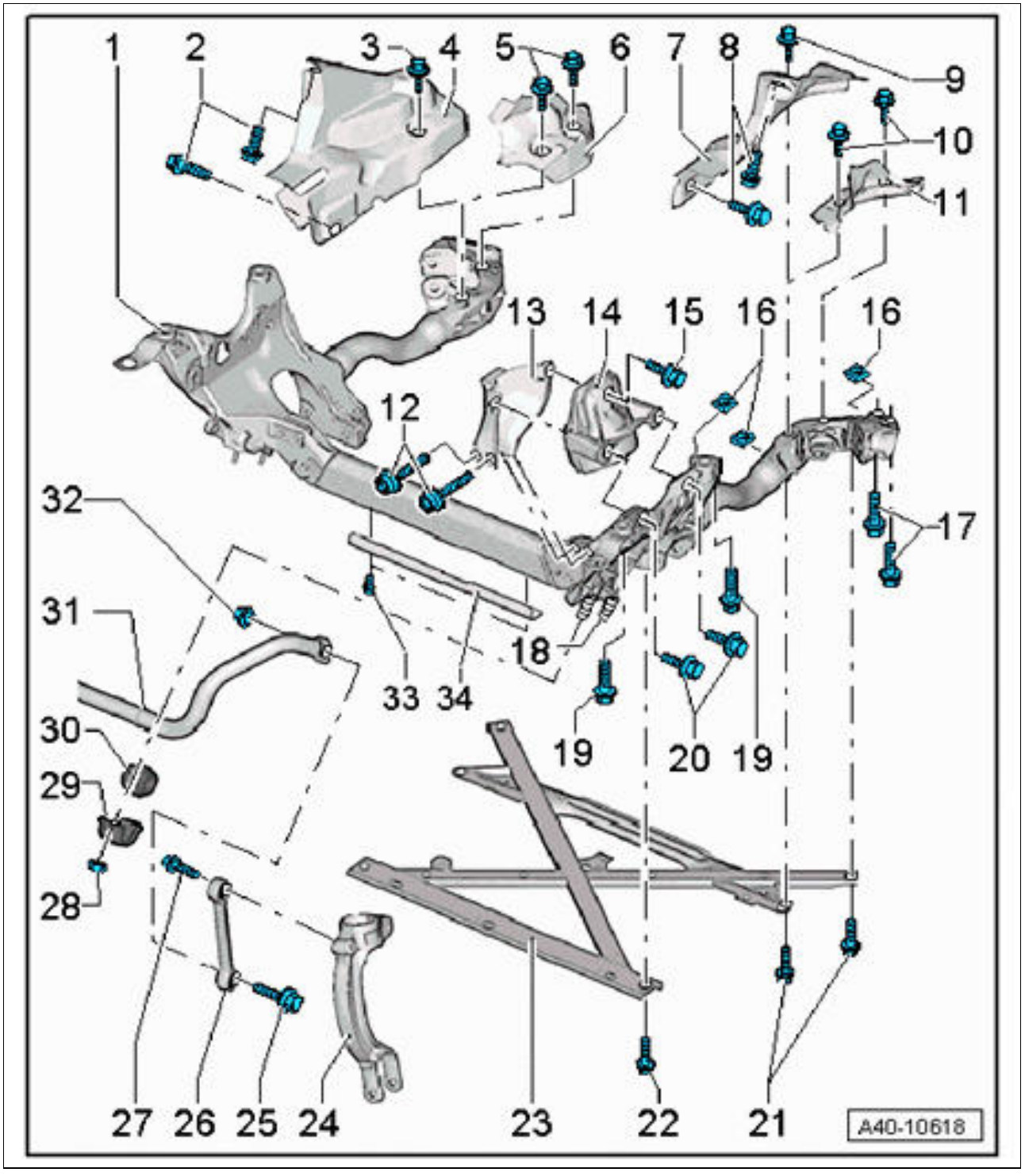

Courtesy of PORSCHE CARS NORTH AMERICA, INC.

1. Front-axle carrier
2. Fastening screws → **Tightening torque: 9 Nm (6.5 ftlb.)**
3. Fastening screw → **Tightening torque: 20 Nm (15 ftlb.)**
4. Right heat shield on front-axle carrier

5. Fastening screws → **Tightening torque: 20 Nm (15 ftlb.)**
6. Right heat shield over engine mount
7. Left heat shield on front-axle carrier
8. Fastening screws → **Tightening torque: 9 Nm (6.5 ftlb.)**
9. Fastening screw → **Tightening torque: 20 Nm (15 ftlb.)**
10. Fastening screws → **Tightening torque: 20 Nm (15 ftlb.)**
11. Left heat shield on engine mount
12. Fastening screws/replace → **Tightening torque: 30 Nm (22 ftlb.)**
13. Retainer plate for engine mount
14. Engine mount
15. Fastening screw/replace → **Initial tightening: 90 Nm (67 ftlb.)** → **Final tightening: +90°**
16. Square nut/**replace**
17. Fastening screws/replace → **Initial tightening: 115 Nm (85 ftlb.)** → **Final tightening: +90°**
18. Stud/replace if damaged
19. Fastening screw/replace → **Initial tightening: 115 Nm (85 ftlb.)** → **Final tightening: +90°**
20. Fastening screws → **Tightening torque: 55 Nm (41 ftlb.)**
21. Rear fastening screws to cross-strut/replace → **Initial tightening: 90 Nm (67 ftlb.)** → **Final tightening: +135°**
22. Front fastening screw to cross-strut/replace → **Initial tightening: 90 Nm (67 ftlb.)** → **Final tightening: +90°**
23. Cross-strut for front-axle carrier
24. Shock absorber fork
25. Fastening screw/replace → **Initial tightening: 40 Nm (30 ftlb.)** → **Final tightening: +90°**
    1. Must be tightened at empty weight position
26. Connecting link
27. 27 - Fastening screw/replace → **Initial tightening: 40 Nm (30 ftlb.)** → **Final tightening: +90°**
    1. Must be tightened at empty weight position
28. Fastening nut/replace → **Tightening torque: 25 Nm (19 ftlb.)**
29. Clip
30. Rubber mounting
    1. Opening in the rubber mounting must be facing the front-axle carrier during installation.

2. The anti-roll bar and rubber mounting be free of grease during assembly.

31. Anti-roll bar

32. Fastening nut

33. Fastening screw for protective plate → **Tightening torque: 20 Nm (15 ftlb.)**

34. Protective plate

WM 4X00IN TIGHTENING TORQUES FOR FRONT AXLE (ALL MODELS) > TIGHTENING TORQUES FOR FRONT AXLE > FRONT-AXLE CARRIER > TIGHTENING SEQUENCE FOR FRONT-AXLE CARRIER

Fig 1: Identifying Front-Axle Carrier Installation Position Mark

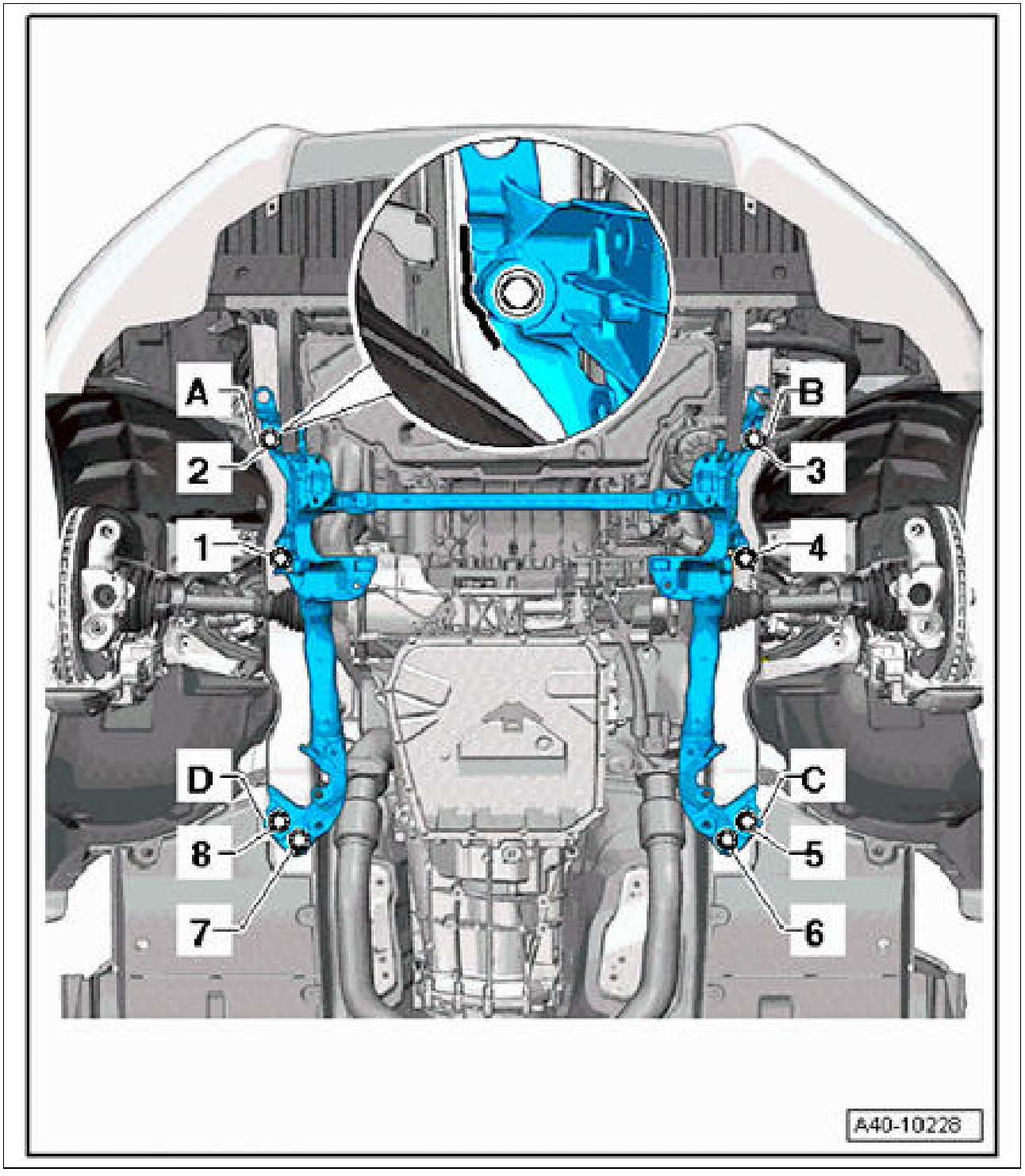

Courtesy of PORSCHE CARS NORTH AMERICA, INC.

A - D - Mark installation position before removal

1 to 8 - Fastening screws on front-axle carrier

WM 4X00IN TIGHTENING TORQUES FOR FRONT AXLE (ALL MODELS) >

TIGHTENING TORQUES FOR FRONT AXLE > FRONT-AXLE CARRIER > DOME STRUT

Fig 1: Identifying Dome Strut With Additional Reinforcement Mounting



Courtesy of PORSCHE CARS NORTH AMERICA, INC.

1. Dome strut
2. Fastening nut → **Tightening torque: 20 Nm (15 ftlb.)**
3. Fastening nut → **Tightening torque: 20 Nm (15 ftlb.)**
4. Additional reinforcement, left
5. Fastening nut → **Tightening torque: 2 Nm (1.5 ftlb.)**
6. Fastening screw → **Tightening torque: 20 Nm (15 ftlb.)**
7. Additional reinforcement, right

WM 4X00IN TIGHTENING TORQUES FOR FRONT AXLE (ALL MODELS) > TIGHTENING TORQUES FOR FRONT AXLE > FRONT-AXLE CARRIER > WHEEL BEARING HOUSING

Location	Description	Type	Basic value	Tolerance 1	Tolerance 2
Clamp for axle joint (connection	BM10 x 65 thread/always use	Tightening torque	40 Nm (30 ftlb.)		

for lower trailing arm)	new screws or bolts following removal				
Lower trailing arm to wheel bearing housing	M14 thread/always use new nuts following removal	Tightening torque	140 Nm (104 ftlb.)		
Lower control arm to wheel bearing housing	M14 thread/always use new nuts following removal	Tightening torque	140 Nm (104 ftlb.)		
Upper trailing arm to wheel bearing housing	M10 thread	Tightening torque	45 Nm (33 ftlb.)		
Wheel bearing to wheel bearing housing	M12 x 1.5 x 45 thread/observe installation sequence!/always use new screws or bolts following removal	Initial tightening	80 Nm (59 ftlb.)		
Wheel bearing to wheel bearing housing	M12 x 1.5 x 45 thread/observe installation sequence!/always use new screws or bolts following removal	Final tightening	+90°		
Brake disc to wheel hub	M6 x 16 thread	Tightening torque	10 Nm (7.5 ftlb.)		
Brake cover plate to wheel bearing housing	M6 x 14 thread	Tightening torque	10 Nm (7.5 ftlb.)		
Speed sensor to wheel bearing housing	M6 x 16 thread	Tightening torque	8 Nm (6 ftlb.)		
Holder to wheel bearing housing	M6 x 16 thread	Tightening torque	10 Nm (7.5 ftlb.)		

WM 4X00IN TIGHTENING TORQUES FOR FRONT AXLE (ALL MODELS) > TIGHTENING TORQUES FOR FRONT AXLE > FRONT-AXLE CARRIER > TRAILING ARM

Location	Description	Type	Basic value	Tolerance 1	Tolerance 2
Lower trailing arm to wheel	M14 thread/always	Tightening torque	140 Nm (104 ftlb.)		

bearing housing	use new nuts following removal				
Lower trailing arm to front-axle carrier	M12 thread/always use new screws or bolts and nuts following removal	Initial tightening	70 Nm (52 ftlb.)		
Lower trailing arm to front-axle carrier	M12 thread/always use new screws or bolts and nuts following removal	Final tightening	+180°		
Level sensor to lower trailing arm	M6 thread	Tightening torque	9 Nm (6.5 ftlb.)		
Spring strut to lower trailing arm	M12 thread/always use new screws or bolts and nuts following removal	Initial tightening	90 Nm (67 ftlb.)		
Spring strut to lower trailing arm	M12 thread/always use new screws or bolts and nuts following removal	Final tightening	+90°		
Upper trailing arm to wheel bearing housing	M10 thread	Tightening torque	45 Nm (33 ftlb.)		
Upper trailing arm to mounting saddle	M10 thread/always use new screws or bolts and nuts following removal	Initial tightening	50 Nm (37 ftlb.)		
Upper trailing arm to mounting saddle	M10 thread/always use new screws or bolts and nuts following removal	Final tightening	+90°		
Lower control arm to front-axle carrier	M12 thread/always use new screws or bolts and nuts following removal	Initial tightening	70 Nm (52 ftlb.)		
Lower control arm to front-axle	M12 thread/always use new screws	Final tightening	+180°		

carrier	or bolts and nuts following removal				
Lower control arm to wheel bearing housing	M14 thread/always use new nuts following removal	Tightening torque	140 Nm (104 ftlb.)		

WM 4X00IN TIGHTENING TORQUES FOR FRONT AXLE (ALL MODELS) > TIGHTENING TORQUES FOR FRONT AXLE > FRONT-AXLE CARRIER > ANTI-ROLL BAR AND CONNECTING LINK

Location	Description	Type	Basic value	Tolerance 1	Tolerance 2
Connecting link to anti-roll bar	AM10 thread/always use new screws and nuts following removal	Initial tightening	40 Nm (30 ftlb.)		
Connecting link to anti-roll bar	AM10 thread/always use new screws and nuts following removal	Final tightening	+90°		
Connecting link to spring strut	M10 x 45 thread/always use new screws or bolts following removal	Initial tightening	40 Nm (30 ftlb.)		
Connecting link to spring strut	M10 x 45 thread/always use new screws or bolts following removal	Final tightening	+90°		
Anti-roll bar clamp to front-axle carrier	M8 thread/always use new nut following removal	Tightening torque	30 Nm (22 ftlb.)		

WM 4X00IN TIGHTENING TORQUES FOR FRONT AXLE (ALL MODELS) > TIGHTENING TORQUES FOR FRONT AXLE > FRONT-AXLE CARRIER > SPRING STRUT

Location	Description	Type	Basic value	Tolerance 1	Tolerance 2
Mounting saddle	M10 thread	Tightening	50 Nm (37		

to piston rod (conventional)		torque	ftlb.)		
Spring-strut supporting mount to piston rod (PASM)	M12 thread	Tightening torque	50 Nm (37 ftlb.)		
Mounting saddle to spring strut (PASM only)	M8 thread	Tightening torque	30 Nm (22 ftlb.)		
Mounting saddle to body	M10 x 35 thread/observe tightening sequence/always use new screws or bolts following removal	Initial tightening	40 Nm (30 ftlb.)		
Mounting saddle to body	M10 x 35 thread/observe tightening sequence/always use new screws or bolts following removal	Final tightening	+90°		
Damper fork to damper	M12 thread/always use new screws or bolts and nuts following removal	Initial tightening	40 Nm (30 ftlb.)		
Damper fork to damper	M12 thread/always use new screws or bolts and nuts following removal	Final tightening	+180°		
Spring strut to lower trailing arm	M12 thread/always use new screws or bolts and nuts following removal	Initial tightening	90 Nm (67 ftlb.)		
Spring strut to lower trailing arm	M12 thread/always use new screws or bolts and nuts following removal	Final tightening	+90°		
Connecting link to spring strut	M10 x 45 thread/always use new screws or bolts following removal	Initial tightening	40 Nm (30 ftlb.)		
Connecting link to spring strut	M10 x 45 thread/always use	Final tightening	+90°		

	new screws or bolts following removal				
Air line to air-spring strut		Tightening torque	3 Nm (2 ftlb.)		
Pressure control valve to air-spring strut		Tightening torque	8 Nm (6 ftlb.)		

WM 4X00IN TIGHTENING TORQUES FOR FRONT AXLE (ALL MODELS) > TIGHTENING TORQUES FOR FRONT AXLE > FRONT-AXLE CARRIER > DRIVE SHAFT

Location	Description	Type	Basic value	Tolerance 1	Tolerance 2
Drive shaft to wheel hub	Step 1 (wheels suspended in the air, press brakes while tightening)/M16 x 72 thread/always use new screws or bolts following removal	Tightening torque	200 Nm (148 ftlb.)		
Drive shaft to wheel hub	Step 2 (wheels on the ground)/M16 x 72 thread/always use new screws or bolts following removal	Torque angle	180°		
Drive shaft to transmission	M10 x 20 thread/always use new screws or bolts following removal	Initial tightening	30 Nm (22 ftlb.)		
Drive shaft to transmission	M10 x 20 thread/always use new screws or bolts following removal	Final tightening	+90°		
Heat shield to transmission	M8 x 22 thread	Tightening torque	23 Nm (17 ftlb.)		

WM 4X00IN TIGHTENING TORQUES FOR FRONT AXLE (ALL MODELS) >

TIGHTENING TORQUES FOR FRONT AXLE > FRONT-AXLE CARRIER > WHEEL MOUNTING

Location	Description	Type	Basic value	Tolerance 1	Tolerance 2
Wheel to wheel hub		Tightening torque	160 Nm (118 ftlb.)		

WM 4X00IN TIGHTENING TORQUES FOR LEVELLING SYSTEM (ALL MODELS) > TECHNICAL VALUES

Location	Description	Type	Basic value	Tolerance 1	Tolerance 2
Compressor to holder	M6 thread	Tightening torque	8 Nm (6 ftlb.)		
Valve unit to holder	M6 thread	Tightening torque	4.5 Nm (3 ftlb.)		
Compressor/valve unit holder to underbody	M8 thread	Tightening torque	20 Nm (15 ftlb.)		
Pressure lines to valve block	Union nuts	Tightening torque	3.5 Nm (2.5 ftlb.)		
Pressure line to compressor	Union nut	Tightening torque	3.5 Nm (2.5 ftlb.)		
Pressure accumulator to body		Tightening torque	20 Nm (15 ftlb.)		
Pressure line to pressure accumulator	Union nut	Tightening torque	3.5 Nm (2.5 ftlb.)		
Rear level sensor to holder		Tightening torque	5 Nm (3.5 ftlb.)		
Front level sensor to front-axle carrier	M8 thread	Tightening torque	20 Nm (15 ftlb.)		

WM 4X00IN TIGHTENING TORQUES FOR LEVELLING SYSTEM (ALL MODELS) > TIGHTENING TORQUES FOR LEVELLING SYSTEM > COMPRESSOR/VALVE BLOCK/PRESSURE ACCUMULATOR

Location	Description	Type	Basic value	Tolerance 1	Tolerance 2
Compressor to	M6 thread	Tightening	8 Nm (6 ftlb.)		

holder		torque			
Valve unit to holder	M6 thread	Tightening torque	4.5 Nm (3 ftlb.)		
Compressor/valve unit holder to underbody	M8 thread	Tightening torque	20 Nm (15 ftlb.)		
Pressure lines to valve block	Union nuts	Tightening torque	3.5 Nm (2.5 ftlb.)		
Pressure line to compressor	Union nut	Tightening torque	3.5 Nm (2.5 ftlb.)		
Pressure accumulator to body		Tightening torque	20 Nm (15 ftlb.)		
Pressure line to pressure accumulator	Union nut	Tightening torque	3.5 Nm (2.5 ftlb.)		

WM 4X00IN TIGHTENING TORQUES FOR LEVELLING SYSTEM (ALL MODELS) > TIGHTENING TORQUES FOR LEVELLING SYSTEM > LEVEL SENSORS

Location	Description	Type	Basic value	Tolerance 1	Tolerance 2
Rear level sensor to holder		Tightening torque	5 Nm (3.5 ftlb.)		
Front level sensor to front-axle carrier	M8 thread	Tightening torque	20 Nm (15 ftlb.)		

WM 4X00IN TIGHTENING TORQUES FOR REAR AXLE (ALL MODELS) > TECHNICAL VALUES

Location	Description	Type	Basic value	Tolerance 1	Tolerance 2
Rear axle housing, front to body	M14 x 1.5 x 135 thread/always replace screws following removal	Initial tightening	115 Nm (85 ftlb.)		
Rear axle housing, front to body	M14 x 1.5 x 135 thread/always replace screws following removal	Final tightening	+90°		

Rear axle housing, rear to body	M12 x 1.5 x 145 thread/always replace screws following removal	Initial tightening	115 Nm (85 ftlb.)		
Rear axle housing, rear to body	M12 x 1.5 x 145 thread/always replace screws following removal	Final tightening	+90°		
Wheel bearing to wheel bearing housing	M12 x 1.5 x 45 thread/observe installation sequence!/always use new screws or bolts following removal	Initial tightening	80 Nm (59 ftlb.)		
Wheel bearing to wheel bearing housing	M12 x 1.5 x 45 thread/observe installation sequence!/always use new screws or bolts following removal	Final tightening	+90°		
Speed sensor to wheel bearing housing	M6 x 16 thread	Tightening torque	8 Nm (6 ftlb.)		
Brake calliper to wheel bearing housing	M12 thread/always use new screws or bolts following removal	Initial tightening	100 Nm (74 ftlb.)		
Brake calliper to wheel bearing housing	M12 thread/always use new screws or bolts following removal	Tightening torque	+90°		
Brake disc to wheel hub	M6 x 16 thread	Tightening torque	10 Nm (7.5 ftlb.)		
Brake cover plate to wheel bearing housing	M6 x 14 thread	Tightening torque	10 Nm (7.5 ftlb.)		
Spring strut to lower trailing arm	M12 thread/always use new screws or bolts and nuts following removal	Initial tightening	90 Nm (67 ftlb.)		
Spring strut to lower trailing arm	M12 thread/always use new screws or bolts and nuts following removal	Final tightening	+90°		

Holder to wheel bearing housing	M6 x 16 thread	Tightening torque	9 Nm (6.5 ftlb.)		
Drive shaft to wheel hub	Step 1 (wheels suspended in mid-air, operate brakes while tightening)/M16 x 72 thread/always use new screws or bolts following removal	Initial tightening	200 Nm (148 ftlb.)		
Drive shaft to wheel hub	Step 2 (wheels on the ground)/M16 x 72 thread/always use new screws or bolts following removal	Final tightening	180°		
Heat shield for drive shaft to rear axle	M8 x 22 thread	Tightening torque	23 Nm (17 ftlb.)		
Air line to air spring		Tightening torque	3 Nm (2 ftlb.)		
Lower trailing arm to rear axle housing	M12 thread/always use new screws or bolts and nuts following removal	Initial tightening	70 Nm (52 ftlb.)		
Lower trailing arm to rear axle housing	M12 thread/always use new screws or bolts and nuts following removal	Final tightening	+180°		
Lower trailing arm to wheel bearing housing	M14 thread/always use new screws or bolts and nuts following removal	Initial tightening	120 Nm (89 ftlb.)		
Lower trailing arm to wheel bearing housing	M14 thread/always use new screws or bolts and nuts following removal	Final tightening	+360°		
Level sensor to lower trailing arm	M6 x 16 thread	Tightening torque	9 Nm (6.5 ftlb.)		
Connecting link to lower trailing arm	M10 x 65 thread/always use new screws or bolts following removal	Initial tightening	40 Nm (30 ftlb.)		

Connecting link to lower trailing arm	M10 x 65 thread/always use new screws or bolts following removal	Final tightening	+90°		
Upper control arm to rear axle housing	M12 thread/always use new screws or bolts and nuts following removal	Initial tightening	70 Nm (52 ftlb.)		
Upper control arm to rear axle housing	M12 thread/always use new screws or bolts and nuts following removal	Final tightening	+180°		
Upper control arm to wheel bearing housing	M12 thread	Tightening torque	95 Nm (70 ftlb.)		
Tie rod to rear axle housing	M12 thread/always use new screws or bolts and nuts following removal	Tightening torque	95 Nm (70 ftlb.)		
Tie rod to wheel bearing housing	M12 x 1.5 x 80.8 thread/always use new screws or bolts following removal	Initial tightening	90 Nm (67 ftlb.)		
Tie rod to wheel bearing housing	M12 x 1.5 x 80.8 thread/always use new screws or bolts following removal	Final tightening	+90°		
Connecting link to anti-roll bar	M10 x 65 thread/always use new screws and nuts following removal	Initial tightening	40 Nm (30 ftlb.)		
Connecting link to anti-roll bar	M10 x 65 thread/always use new screws and nuts following removal	Final tightening	+90°		
Connecting link to lower trailing arm	M10 x 65 thread/always use new screws or bolts following removal	Initial tightening	40 Nm (30 ftlb.)		
Connecting link to lower trailing arm	M10 x 65 thread/always use new screws or bolts following removal	Final tightening	+90°		

Anti-roll bar clamp to rear axle carrier	M8 x 65 thread/always use new screws following removal	Initial tightening	20 Nm (15 ftlb.)		
Anti-roll bar clamp to rear axle carrier	M8 x 65 thread/always use new screws following removal	Final tightening	+180°		
Supporting mount to piston rod (conventional)	M10 thread	Tightening torque	35 Nm (26 ftlb.)		
Supporting mount to piston rod (PASM)	M12 thread	Tightening torque	35 Nm (26 ftlb.)		
Shock absorber to wheel bearing housing	M14 x 1.5 x 90 thread/always use new screw or bolt following removal	Initial tightening	150 Nm (111 ftlb.)		
Shock absorber to wheel bearing housing	M14 x 1.5 x 90 thread/always use new screw or bolt following removal	Final tightening	+180°		
Shock absorber to body	AM10 x 35 thread/always use new screws or bolts following removal	Initial tightening	50 Nm (37 ftlb.)		
Shock absorber to body	AM10 x 35 thread/always use new screws or bolts following removal	Final tightening	+90°		
Wheel to wheel hub		Tightening torque	160 Nm (118 ftlb.)		

WM 4X00IN TIGHTENING TORQUES FOR REAR AXLE (ALL MODELS) > TIGHTENING TORQUES FOR REAR AXLE > REAR AXLE HOUSING

Location	Description	Type	Basic value	Tolerance 1	Tolerance 2
Rear axle housing, front to body	M14 x 1.5 x 135 thread/always replace screws following removal	Initial tightening	115 Nm (85 ftlb.)		
Rear axle housing, front to	M14 x 1.5 x 135 thread/always	Final tightening	+90°		

body	replace screws following removal				
Rear axle housing, rear to body	M12 x 1.5 x 145 thread/always replace screws following removal	Initial tightening	115 Nm (85 ftlb.)		
Rear axle housing, rear to body	M12 x 1.5 x 145 thread/always replace screws following removal	Final tightening	+90°		

WM 4X00IN TIGHTENING TORQUES FOR REAR AXLE (ALL MODELS) > TIGHTENING TORQUES FOR REAR AXLE > WHEEL BEARING HOUSING

Location	Description	Type	Basic value	Tolerance 1	Tolerance 2
Wheel bearing to wheel bearing housing	M12 x 1.5 x 45 thread/observe installation sequence!/always use new screws or bolts following removal	Initial tightening	80 Nm (59 ftlb.)		
Wheel bearing to wheel bearing housing	M12 x 1.5 x 45 thread/observe installation sequence!/always use new screws or bolts following removal	Final tightening	+90°		
Speed sensor to wheel bearing housing	M6 x 16 thread	Tightening torque	8 Nm (6 ftlb.)		
Brake calliper to wheel bearing housing	M12 thread/always use new screws or bolts following removal	Initial tightening	100 Nm (74 ftlb.)		
Brake calliper to wheel bearing housing	M12 thread/always use new screws or bolts following removal	Tightening torque	+90°		
Brake disc to wheel hub	M6 x 16 thread	Tightening torque	10 Nm (7.5 ftlb.)		
Brake cover plate to wheel	M6 x 14 thread	Tightening torque	10 Nm (7.5 ftlb.)		

bearing housing					
Spring strut to lower trailing arm	M12 thread/always use new screws or bolts and nuts following removal	Initial tightening	90 Nm (67 ftlb.)		
Spring strut to lower trailing arm	M12 thread/always use new screws or bolts and nuts following removal	Final tightening	+90°		
Holder to wheel bearing housing	M6 x 16 thread	Tightening torque	9 Nm (6.5 ftlb.)		
Drive shaft to wheel hub	Step 1 (wheels suspended in mid-air, operate brakes while tightening)/M16 x 72 thread/always use new screws or bolts following removal	Initial tightening	200 Nm (148 ftlb.)		
Drive shaft to wheel hub	Step 2 (wheels on the ground)/M16 x 72 thread/always use new screws or bolts following removal	Final tightening	180°		
Heat shield for drive shaft to rear axle	M8 x 22 thread	Tightening torque	23 Nm (17 ftlb.)		
Air line to air spring		Tightening torque	3 Nm (2 ftlb.)		

WM 4X00IN TIGHTENING TORQUES FOR REAR AXLE (ALL MODELS) > TIGHTENING TORQUES FOR REAR AXLE > TRAILING ARM

Location	Description	Type	Basic value	Tolerance 1	Tolerance 2
Lower trailing arm to rear axle housing	M12 thread/always use new screws or bolts and nuts following removal	Initial tightening	70 Nm (52 ftlb.)		
Lower trailing arm to rear axle housing	M12 thread/always use new screws	Final tightening	+180°		

	or bolts and nuts following removal				
Lower trailing arm to wheel bearing housing	M14 thread/always use new screws or bolts and nuts following removal	Initial tightening	120 Nm (89 ftlb.)		
Lower trailing arm to wheel bearing housing	M14 thread/always use new screws or bolts and nuts following removal	Final tightening	+360°		
Level sensor to lower trailing arm	M6 x 16 thread	Tightening torque	9 Nm (6.5 ftlb.)		
Connecting link to lower trailing arm	M10 x 65 thread/always use new screws or bolts following removal	Initial tightening	40 Nm (30 ftlb.)		
Connecting link to lower trailing arm	M10 x 65 thread/always use new screws or bolts following removal	Final tightening	+90°		
Upper control arm to rear axle housing	M12 thread/always use new screws or bolts and nuts following removal	Initial tightening	70 Nm (52 ftlb.)		
Upper control arm to rear axle housing	M12 thread/always use new screws or bolts and nuts following removal	Final tightening	+180°		
Upper control arm to wheel bearing housing	M12 thread	Tightening torque	95 Nm (70 ftlb.)		
Tie rod to rear axle housing	M12 thread/always use new screws or bolts and nuts following removal	Tightening torque	95 Nm (70 ftlb.)		
Tie rod to wheel bearing housing	M12 x 1.5 x 80.8 thread/always use new screws	Initial tightening	90 Nm (67 ftlb.)		

	or bolts following removal				
Tie rod to wheel bearing housing	M12 x 1.5 x 80.8 thread/always use new screws or bolts following removal	Final tightening	+90°		

WM 4X00IN TIGHTENING TORQUES FOR REAR AXLE (ALL MODELS) > TIGHTENING TORQUES FOR REAR AXLE > ANTI-ROLL BAR AND CONNECTING LINK

Location	Description	Type	Basic value	Tolerance 1	Tolerance 2
Connecting link to anti-roll bar	M10 x 65 thread/always use new screws and nuts following removal	Initial tightening	40 Nm (30 ftlb.)		
Connecting link to anti-roll bar	M10 x 65 thread/always use new screws and nuts following removal	Final tightening	+90°		
Connecting link to lower trailing arm	M10 x 65 thread/always use new screws or bolts following removal	Initial tightening	40 Nm (30 ftlb.)		
Connecting link to lower trailing arm	M10 x 65 thread/always use new screws or bolts following removal	Final tightening	+90°		
Anti-roll bar clamp to rear axle carrier	M8 x 65 thread/always use new screws following removal	Initial tightening	20 Nm (15 ftlb.)		
Anti-roll bar clamp to rear axle carrier	M8 x 65 thread/always use new screws following removal	Final tightening	+180°		

WM 4X00IN TIGHTENING TORQUES FOR REAR AXLE (ALL MODELS) > TIGHTENING TORQUES FOR REAR AXLE > SHOCK ABSORBER

Location	Description	Type	Basic value	Tolerance 1	Tolerance 2
Supporting mount to piston rod (conventional)	M10 thread	Tightening torque	35 Nm (26 ftlb.)		
Supporting mount to piston rod (PASM)	M12 thread	Tightening torque	35 Nm (26 ftlb.)		
Shock absorber to wheel bearing housing	M14 x 1.5 x 90 thread/always use new screw or bolt following removal	Initial tightening	150 Nm (111 ftlb.)		
Shock absorber to wheel bearing housing	M14 x 1.5 x 90 thread/always use new screw or bolt following removal	Final tightening	+180°		
Shock absorber to body	AM10 x 35 thread/always use new screws or bolts following removal	Initial tightening	50 Nm (37 ftlb.)		
Shock absorber to body	AM10 x 35 thread/always use new screws or bolts following removal	Final tightening	+90°		

WM 4X00IN TIGHTENING TORQUES FOR REAR AXLE (ALL MODELS) > TIGHTENING TORQUES FOR REAR AXLE > WHEEL MOUNTING

Location	Description	Type	Basic value	Tolerance 1	Tolerance 2
Wheel to wheel hub		Tightening torque	160 Nm (118 ftlb.)		

WM 4X00IN TIGHTENING TORQUES FOR STEERING (ALL MODELS) > TECHNICAL VALUES

Location	Description	Type	Basic value	Tolerance 1	Tolerance 2
Steering gear to front-axle carrier	M12 x 1.5 x 153 thread/always use	Initial tightening	80 Nm (59 ftlb.)		

	new screws and nuts following removal				
Steering gear to front-axle carrier	M12 x 1.5 x 153 thread/always use new screws and nuts following removal	Final tightening	+180°		
Tie rod to rack-and-pinion (axial joint)		Tightening torque	100 Nm (74 ftlb.)		
Tie-rod ball to tie rod	Counter when loosening and tightening the lock nut on the outer joint	Tightening torque	90 Nm (67 ftlb.)		
Tie-rod ball to wheel carrier cone	M12 x 1.5 thread/always use new nut following removal	Tightening torque	100 Nm (74 ftlb.)		
Intermediate steering shaft to steering gear (universal joint)	M8 x 30 thread/always use new screw or bolt following removal	Tightening torque	30 Nm (22 ftlb.)		
Inner clamp on bellows on passenger's side (diameter: 85 mm)	Fit using clamp tensioner V.A.G 1682 A	Tightening torque	7 Nm (5 ftlb.)		
Inner clamp on bellows on driver's side (diameter: 59 mm)	Fit using clamp tensioner V.A.G 1682 A	Tightening torque	10 Nm (7.5 ftlb.)		
Steering column to retaining frame/module cross member	M8 x 30 thread	Tightening torque	20 Nm (15 ftlb.)		
Steering column to mounting saddle	M8 x 22 thread	Tightening torque	20 Nm (15 ftlb.)		
Steering wheel to steering column	Internal serration screw, M18 x 1.5 x 26. Always replace following removal! (microencapsulated thread)	Initial tightening	30 Nm (22 ftlb.)		

Steering wheel to steering column	Internal serration screw, M18 x 1.5 x 26. Always replace following removal! (microencapsulated thread)	Final tightening	+90°		
Steering column to intermediate steering shaft (universal joint)	M8 x 30 thread/always use new screw or bolt following removal	Tightening torque	30 Nm (22 ftlb.)		
Intermediate steering shaft to steering gear (universal joint)	M8 x 30 thread/always use new screw or bolt following removal	Tightening torque	30 Nm (22 ftlb.)		
Lower part of casing to steering column		Tightening torque	1.5 Nm (1 ftlb.)		
Handle to control lever		Tightening torque	3 Nm (2 ftlb.)		
Contact bridge to steering wheel skeleton		Tightening torque	6 Nm (4.5 ftlb.)		
Multi-functional switch and front trim to main cover		Tightening torque	0.45 Nm (0.25 ftlb.)		
Steering wheel skeleton to main cover		Tightening torque	2 Nm (1.5 ftlb.)		
Paddles to steering wheel skeleton		Tightening torque	2.5 Nm (2 ftlb.)		
Back cover to steering wheel skeleton		Tightening torque	2.7 Nm (2 ftlb.)		

WM 4X00IN TIGHTENING TORQUES FOR STEERING (ALL MODELS) > TIGHTENING TORQUES FOR STEERING > STEERING GEAR

Location	Description	Type	Basic value	Tolerance 1	Tolerance 2
Steering gear to front-axle carrier	M12 x 1.5 x 153 thread/always use new screws	Initial tightening	80 Nm (59 ftlb.)		

	and nuts following removal				
Steering gear to front-axle carrier	M12 x 1.5 x 153 thread/always use new screws and nuts following removal	Final tightening	+180°		
Tie rod to rack-and-pinion (axial joint)		Tightening torque	100 Nm (74 ftlb.)		
Tie-rod ball to tie rod	Counter when loosening and tightening the lock nut on the outer joint	Tightening torque	90 Nm (67 ftlb.)		
Tie-rod ball to wheel carrier cone	M12 x 1.5 thread/always use new nut following removal	Tightening torque	100 Nm (74 ftlb.)		
Intermediate steering shaft to steering gear (universal joint)	M8 x 30 thread/always use new screw or bolt following removal	Tightening torque	30 Nm (22 ftlb.)		
Inner clamp on bellows on passenger's side (diameter: 85 mm)	Fit using clamp tensioner V.A.G 1682 A	Tightening torque	7 Nm (5 ftlb.)		
Inner clamp on bellows on driver's side (diameter: 59 mm)	Fit using clamp tensioner V.A.G 1682 A	Tightening torque	10 Nm (7.5 ftlb.)		

WM 4X00IN TIGHTENING TORQUES FOR STEERING (ALL MODELS) > TIGHTENING TORQUES FOR STEERING > STEERING WHEEL/STEERING COLUMN

Location	Description	Type	Basic value	Tolerance 1	Tolerance 2
Steering column to retaining frame/module cross member	M8 x 30 thread	Tightening torque	20 Nm (15 ftlb.)		

Steering column to mounting saddle	M8 x 22 thread	Tightening torque	20 Nm (15 ftlb.)		
Steering wheel to steering column	Internal serration screw, M18 x 1.5 x 26. Always replace following removal! (microencapsulated thread)	Initial tightening	30 Nm (22 ftlb.)		
Steering wheel to steering column	Internal serration screw, M18 x 1.5 x 26. Always replace following removal! (microencapsulated thread)	Final tightening	+90°		
Steering column to intermediate steering shaft (universal joint)	M8 x 30 thread/always use new screw or bolt following removal	Tightening torque	30 Nm (22 ftlb.)		
Intermediate steering shaft to steering gear (universal joint)	M8 x 30 thread/always use new screw or bolt following removal	Tightening torque	30 Nm (22 ftlb.)		
Lower part of casing to steering column		Tightening torque	1.5 Nm (1 ftlb.)		
Handle to control lever		Tightening torque	3 Nm (2 ftlb.)		
Contact bridge to steering wheel skeleton		Tightening torque	6 Nm (4.5 ftlb.)		
Multi-functional switch and front trim to main cover		Tightening torque	0.45 Nm (0.25 ftlb.)		
Steering wheel skeleton to main cover		Tightening torque	2 Nm (1.5 ftlb.)		
Paddles to steering wheel skeleton		Tightening torque	2.5 Nm (2 ftlb.)		
Back cover to steering wheel skeleton		Tightening torque	2.7 Nm (2 ftlb.)		

WM 4X00IN WHEEL RIM PAINT COLORS (ALL MODELS) > WHEEL RIM PAINT COLORS - MACAN

18-inch Macan

Fig 1: Identifying Wheel Rim (Macan - 18 Inch)



Courtesy of PORSCHE CARS NORTH AMERICA, INC.

Color code/option	Designation	Note	Order No.
8Z8	Brilliant Silver		C7N

18-inch Macan S

Fig 2: Identifying Wheel Rim (Macan S - 18 Inch)



Courtesy of PORSCHE CARS NORTH AMERICA, INC.

Color code/option	Designation	Note	Order No.
8Z8	Brilliant Silver		C5F

19-inch Macan Turbo

Fig 3: Identifying Wheel Rim (Macan Turbo - 19 Inch)



Courtesy of PORSCHE CARS NORTH AMERICA, INC.

Color code/option	Designation	Note	Order No.
88Z	Brilliant Chrome		C6P

19-inch Macan Design II

Fig 4: Identifying Wheel Rim (Macan Design II - 19 Inch)



Courtesy of PORSCHE CARS NORTH AMERICA, INC.

Color code/option	Designation	Note	Order No.
88Z	Brilliant Chrome		C6X

20-inch Macan RS Spyder Design

Fig 5: Identifying Wheel Rim (Macan RS Spyder Design - 20 Inch)



Courtesy of PORSCHE CARS NORTH AMERICA, INC.

Color code/option	Designation	Note	Order No.
OC6	Dark Titanium	High-gloss turned finish	CY3

20-inch Macan Sport Design II

Fig 6: Identifying Wheel Rim (Macan Sport Design II - 20 Inch)



Courtesy of PORSCHE CARS NORTH AMERICA, INC.

Color code/option	Designation	Note	Order No.
88Z	Brilliant Chrome		CY4

21-inch Macan Turbo Design

Fig 7: Identifying Wheel Rim (Macan Turbo Design - 21 Inch)



Courtesy of PORSCHE CARS NORTH AMERICA, INC.

Color code/option	Designation	Note	Order No.
OC6	Dark Titanium	High-gloss turned and polished finish	C7T

WM 270419 REMOVING AND INSTALLING DC/DC CONVERTER (ALL MODELS) > PRELIMINARY WORK

1. Remove trim panel for luggage compartment (luggage compartment cover) at the right side. → Removing center trim panel for luggage compartment (luggage compartment cover)

WM 270419 REMOVING AND INSTALLING DC/DC CONVERTER (ALL MODELS) > REMOVING DC/DC CONVERTER

NOTE: Voltage peaks

- *Risk of damage to load or to the control unit*

→ Remove the ignition key and switch off load before disconnecting or removing load.

Fig 1: Identifying DC/DC Converter Position

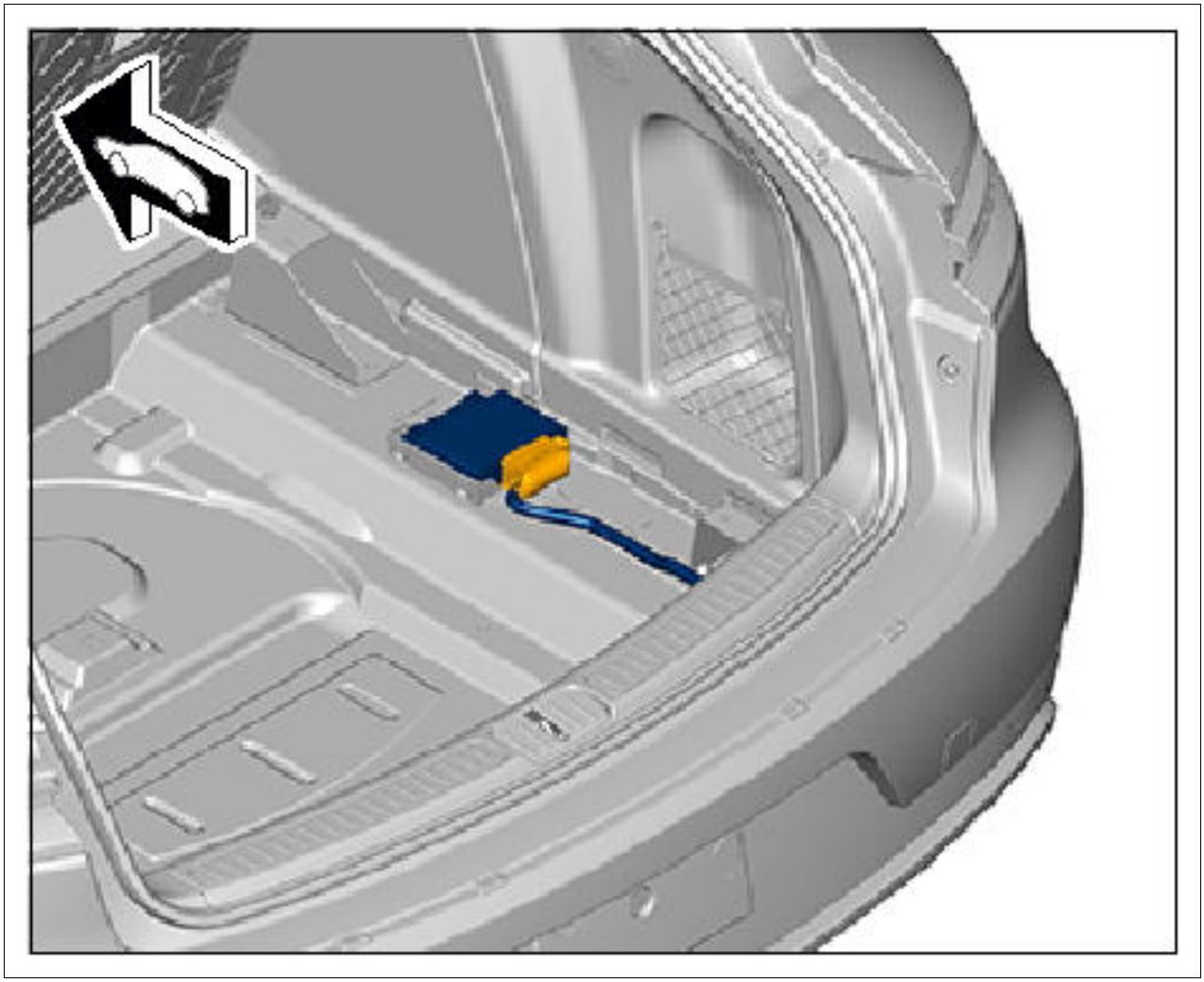

Courtesy of PORSCHE CARS NORTH AMERICA, INC.

1. Switch off ignition and pull remote control out of ignition lock.
2. Take DC/DC converter **-1-** out of the holder **-2-** .
    1. 2.1. Disengage retaining lugs **-a-** .
    2. 2.2. Lift DC/DC converter up slightly at the left.
    3. 2.3. Pull DC/DC converter at the right out of the holder **-b-** .

Fig 2: Removing DC/DC Converter

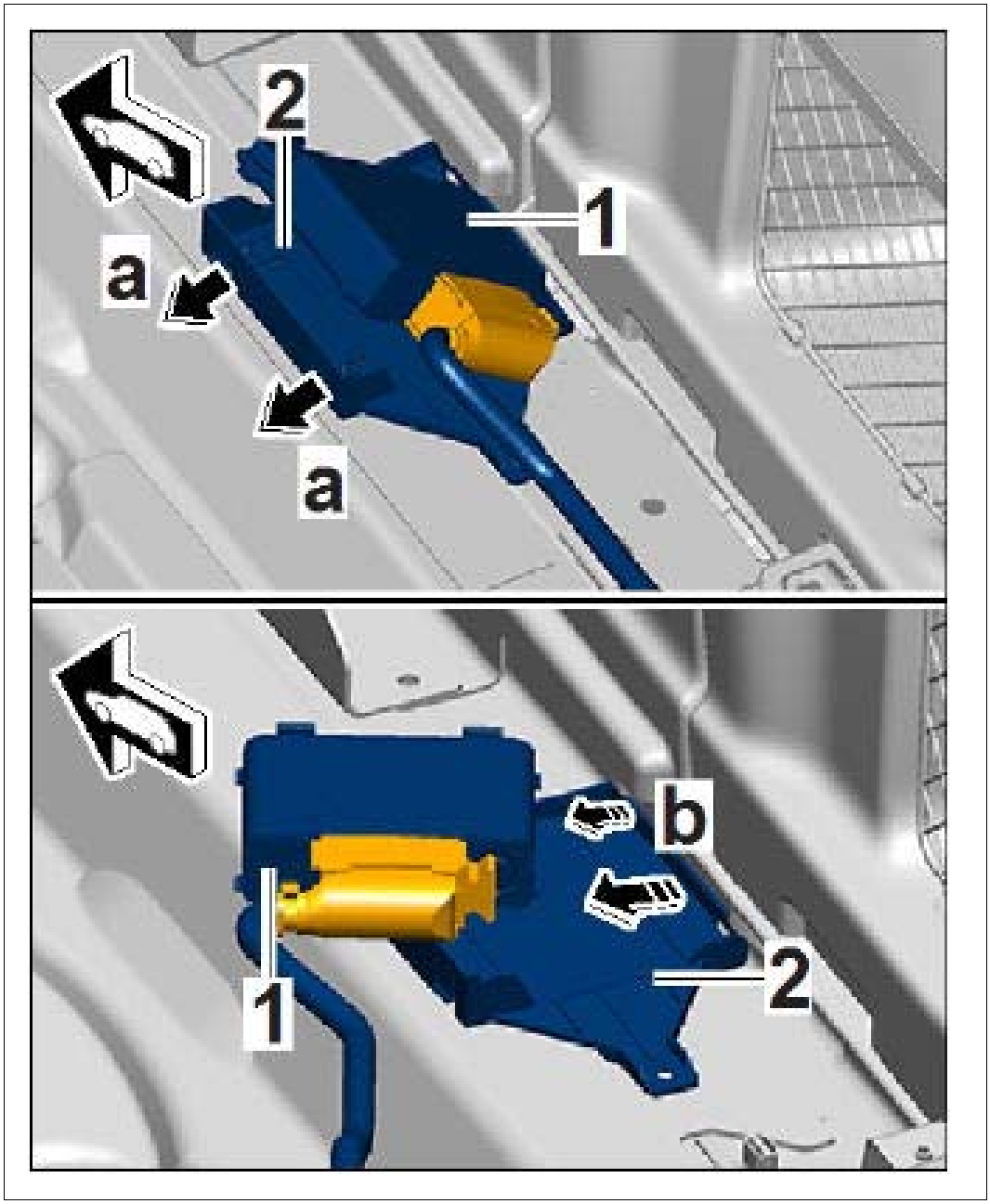

Courtesy of PORSCHE CARS NORTH AMERICA, INC.

Information

Always comply with the regulations for handling ESD-sensitive components!

1. Assembly work may only be carried out if the mechanic is wearing the working clothes and shoes approved by Porsche.
2. The new part must only be removed from the ESD (electrostatic discharge) protective packaging just before installation and at the position at which the part is to be installed.
3. Never touch the electric pins and plug contacts.

3. Pull slide **-2-** out of the electric plug connection **-1-** (**-a-**) and disconnect electric plug connection from the DC/DC converter **-A-** .

Fig 3: Disconnecting Electric Plug Connection (Shown On 991)

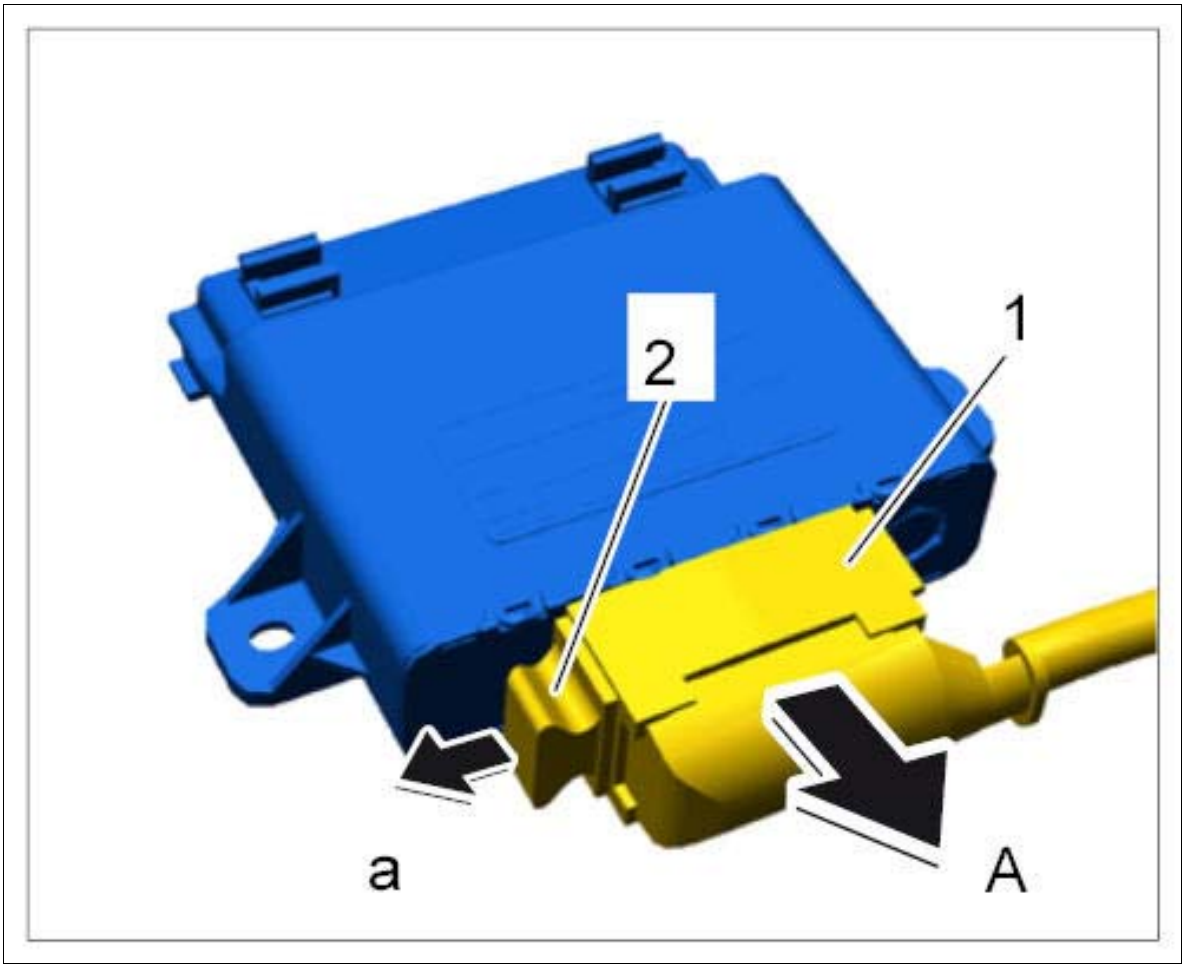

Courtesy of PORSCHE CARS NORTH AMERICA, INC.

WM 270419 REMOVING AND INSTALLING DC/DC CONVERTER (ALL MODELS) > INSTALLING DC/DC CONVERTER

Information

Always comply with the regulations for handling ESD-sensitive components!

- Assembly work may only be carried out if the mechanic is wearing the working clothes and shoes approved by Porsche.
- The new part must only be removed from the ESD (electrostatic discharge) protective packaging just before installation and at the position at which the part is to be installed.
- Never touch the electric pins and plug contacts.

1. Installation is performed in reverse order to removal.

WM 270419 REMOVING AND INSTALLING DC/DC CONVERTER (ALL MODELS) > SUBSEQUENT WORK

1. Install trim panel for luggage compartment (luggage compartment cover) at the right side. → Installing center trim panel for luggage compartment (luggage compartment cover)

WM 270619 REMOVING AND INSTALLING BATTERY (ALL MODELS) > TOOLS

Designation	Type	Number	Description	
PIWIS Tester II	Special tool	9818		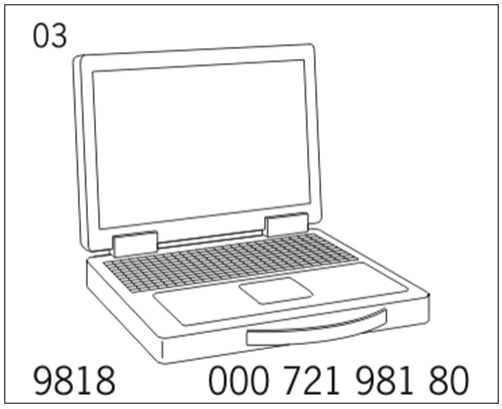

WM 270619 REMOVING AND INSTALLING BATTERY (ALL MODELS) > TECHNICAL VALUES

Location	Description	Type	Basic value	Tolerance 1	Tolerance 2
Terminal clamp to battery terminal	M6 nut	Tightening torque	5 Nm (3.5 ftlb.)		
Clamp support for battery to body	Hexagon-head bolt, M8 x 25	Tightening torque	23 Nm (17 ftlb.)		

WM 270619 REMOVING AND INSTALLING BATTERY (ALL MODELS) > PRELIMINARY WORK > VEHICLES WITH SOUND SYSTEM

1. Remove subwoofer. → Removing subwoofer

WM 270619 REMOVING AND INSTALLING BATTERY (ALL MODELS) > REMOVING BATTERY

WARNING: Static battery charge

- *Battery can explode*
- *Electrical discharges*

→ Do not rub the battery with a dry cloth.

NOTE: Using charging cables/jump leads directly on the vehicle battery.

- *Risk of damage to battery sensors.*

→ Always connect charging cables/jump leads to the external power supply for jump-lead starting.

Information

Switch off all loads and remove the ignition key.

- Do not disconnect the battery while the engine is running.
- Disconnect and reconnect battery with extreme caution.
- Do not rub the battery with a dry cloth.

1. Switch off ignition and pull remote control out of ignition lock.
2. Switch off electrical loads.
3. Remove luggage compartment floor.
4. Remove collapsible wheel, if necessary.
5. Lift carpet **-1-** .
6. Disengage cover **-2-** (**-arrows-**) and fold it forward.

Fig 1: Opening Battery Cover

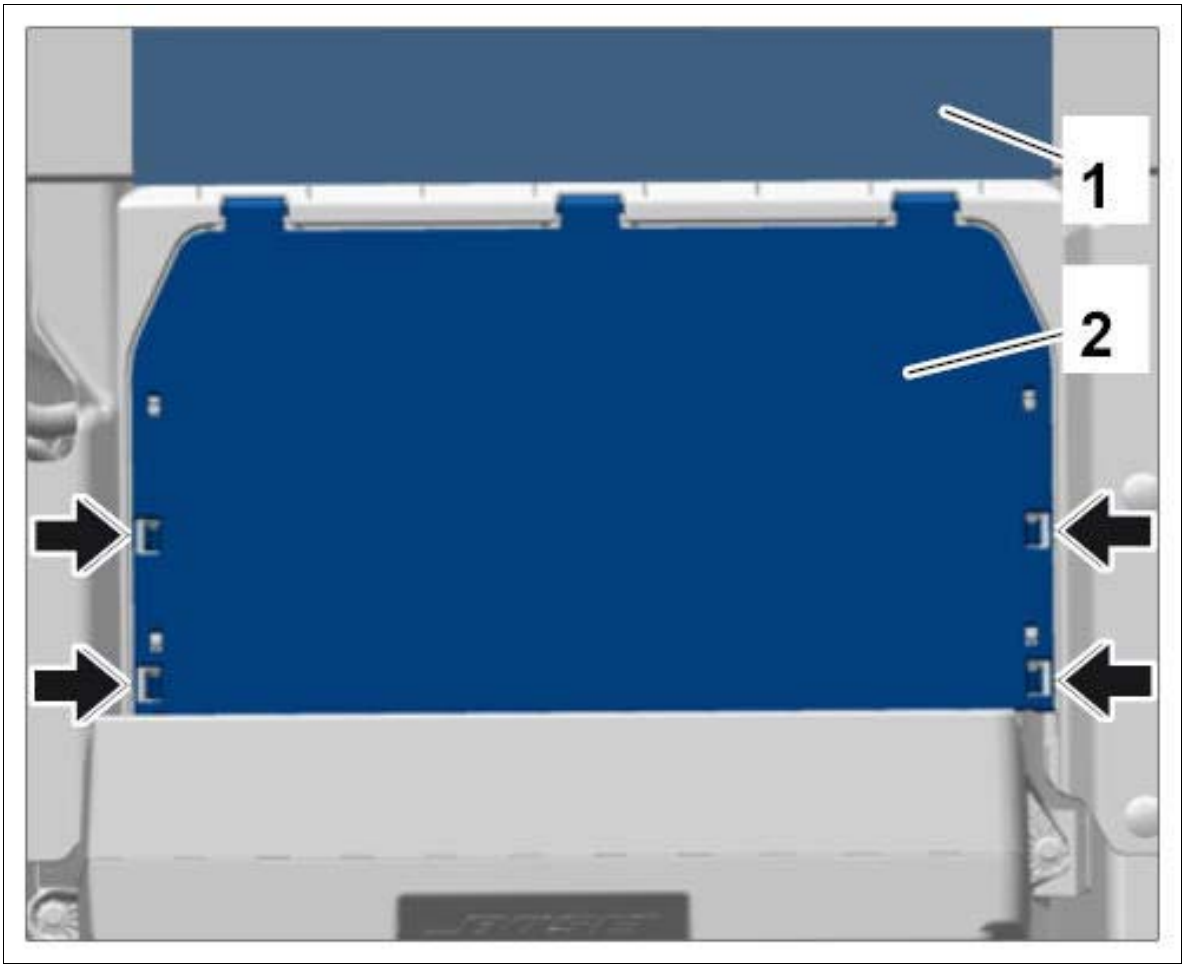

Courtesy of PORSCHE CARS NORTH AMERICA, INC.

7. **Danger of short circuit when loosening the terminal clamps!**

    1. 7.1. **First** open the cover on the negative terminal and disconnect **terminal clamp -1- for the ground strap from the battery terminal!**
    2. 7.2. Insulate terminal clamp or route ground strap to prevent any contact with the battery terminal!
    3. 7.3. Open cover on the positive terminal and disconnect terminal clamp **-2-** for the B+ line from the battery terminal.

Fig 2: Identifying Battery Terminal Clamps

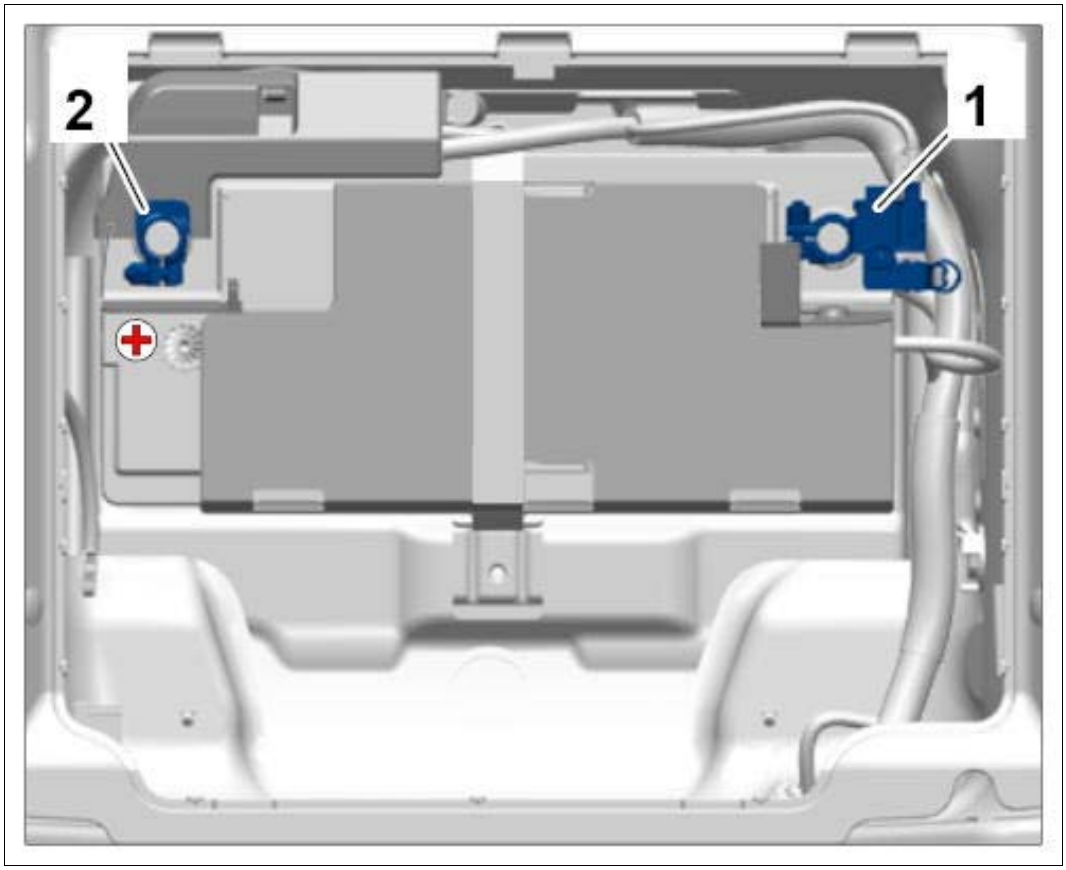

Courtesy of PORSCHE CARS NORTH AMERICA, INC.

8. Unscrew fastening screw **-1-** , remove clamp support **-2-** and move it forward with a rebound strap.

Fig 3: Identifying Battery Clamp Support Screw

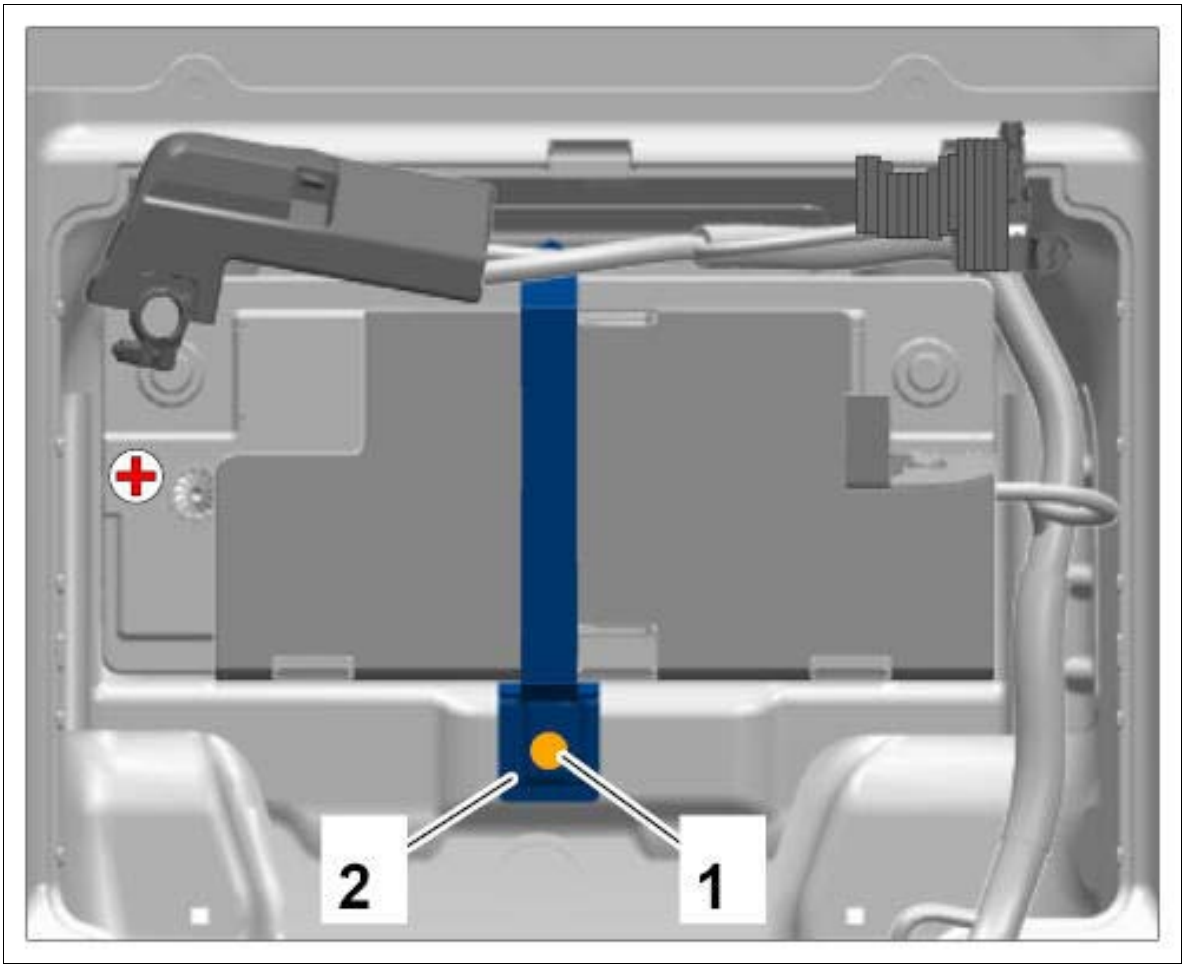

Courtesy of PORSCHE CARS NORTH AMERICA, INC.

9. Disengage cover **-1-** (**-arrows-**) and remove it.

Fig 4: Removing Battery Cover

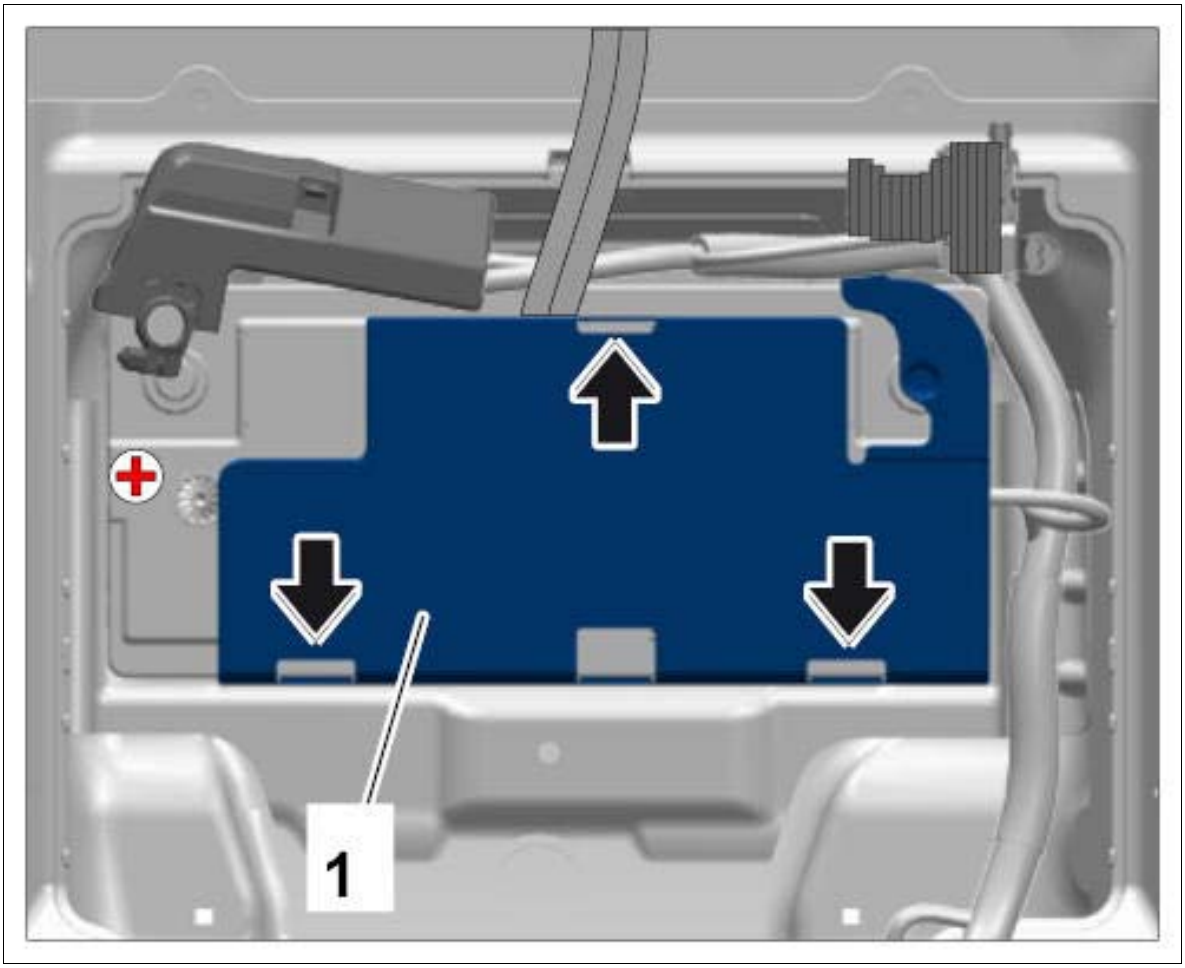

Courtesy of PORSCHE CARS NORTH AMERICA, INC.

10. Pull breather hose **-1-** off the battery **-2-** .
11. Bend up support clips **-3-** and lift the battery out. Get another person to help if necessary.

Fig 5: Identifying Battery And Breather Hose

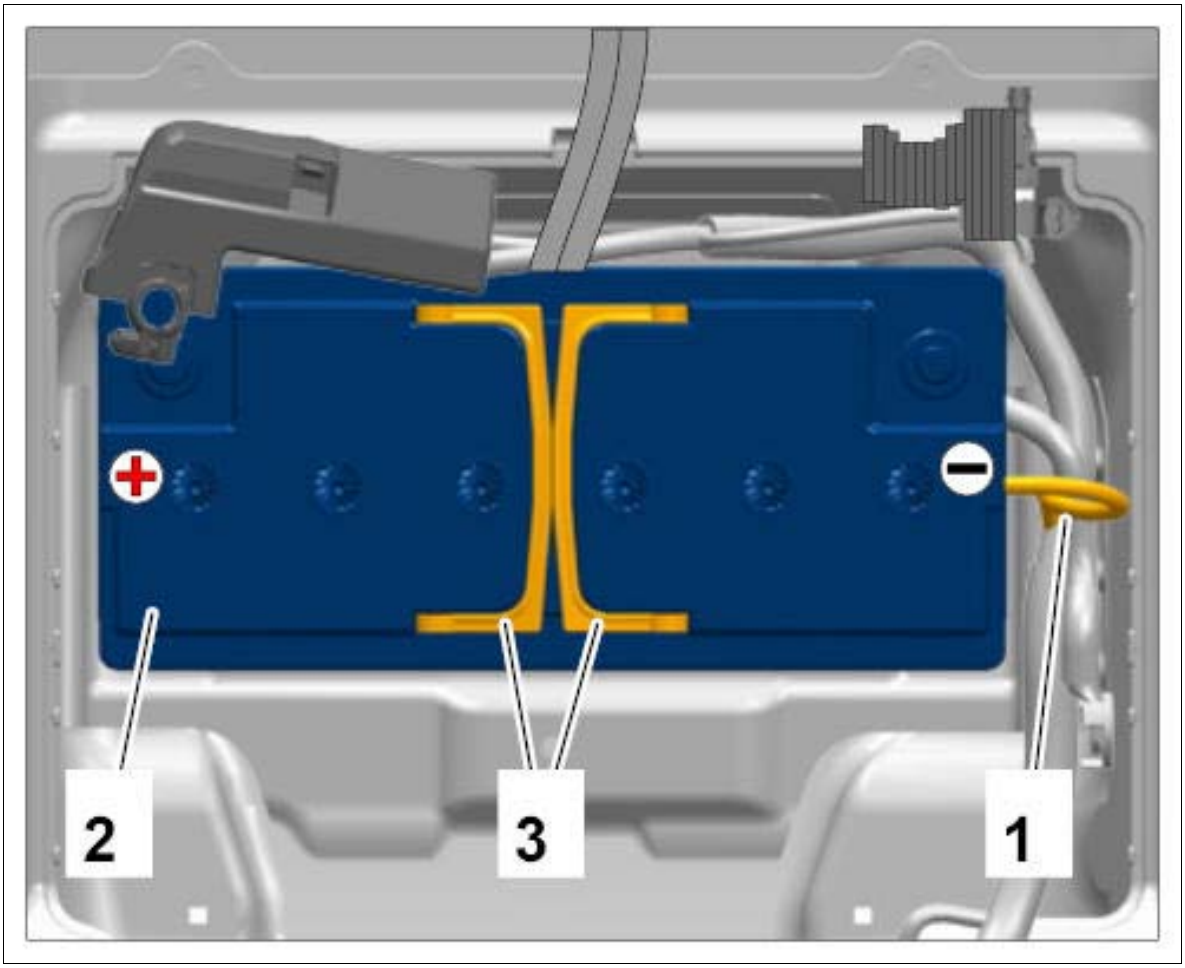

Courtesy of PORSCHE CARS NORTH AMERICA, INC.

WM 270619 REMOVING AND INSTALLING BATTERY (ALL MODELS) > INSTALLING BATTERY

WARNING: Static battery charge

- *Battery can explode*
- *Electrical discharges*

→ Do not rub the battery with a dry cloth.

Information

Switch off all loads and remove the ignition key.

- Do not disconnect the battery while the engine is running.

- Disconnect and reconnect battery with extreme caution.
- Do not rub the battery with a dry cloth.

1. Installation is performed in reverse order to removal.
2. Tighten fastening screw for clamp support securing battery to the body. **Tightening torque 23 Nm (17 ftlb.)**
3. Tighten fastening nuts on terminal clamps. **Tightening torque 5 Nm (3.5 ftlb.)**

WM 270619 REMOVING AND INSTALLING BATTERY (ALL MODELS) > SUBSEQUENT WORK > VEHICLES WITH SOUND SYSTEM

1. Install subwoofer. → Installing subwoofer
2. If the battery was replaced, write new battery data into the gateway control unit using **PIWIS Tester II 9818.** → WM 270619 REMOVING AND INSTALLING BATTERY
3. Follow work instructions after disconnecting the battery. → 2X00IN WORK INSTRUCTIONS AFTER DISCONNECTING THE BATTERY

WM 2706IN EXTERNAL POWER CONNECTION, JUMP-LEAD STARTING (ALL MODELS) > INFORMATION > EXTERNAL POWER CONNECTION, JUMP-LEAD STARTING

WARNING: Live jump leads

- *Risk of electric shock*
- *Risk of short circuit*

→ Route the jump leads so that they do not become entangled in moving parts in the engine compartment.

→ There must be no contact between the vehicles.

NOTE: Using charging cables/jump leads directly on the vehicle battery.

- *Risk of damage to battery sensors.*

→ Always connect charging cables/jump leads to the external power supply for jump-lead starting.

Information

- If the battery is flat, jump leads can be used together with the battery of another vehicle to start the

car or to supply external power to the vehicle.

Information

Both batteries must be 12 V batteries.

The capacity (AH) of the donor battery must not be significantly lower than that of the flat battery.

The flat battery must be properly connected to the vehicle electrical system.

1. Open protective cover on the positive terminal for jump-lead starting **-+-** (**-arrow-**).
2. Connect the positive cable to the positive terminal for jump-lead starting **-+-** , then to the positive terminal of the donor battery.
3. First, connect the negative cable to the negative terminal of the donor battery, then to the ground point for jump-lead starting **-** .

Fig 1: Connecting Battery To Vehicle Electrical System

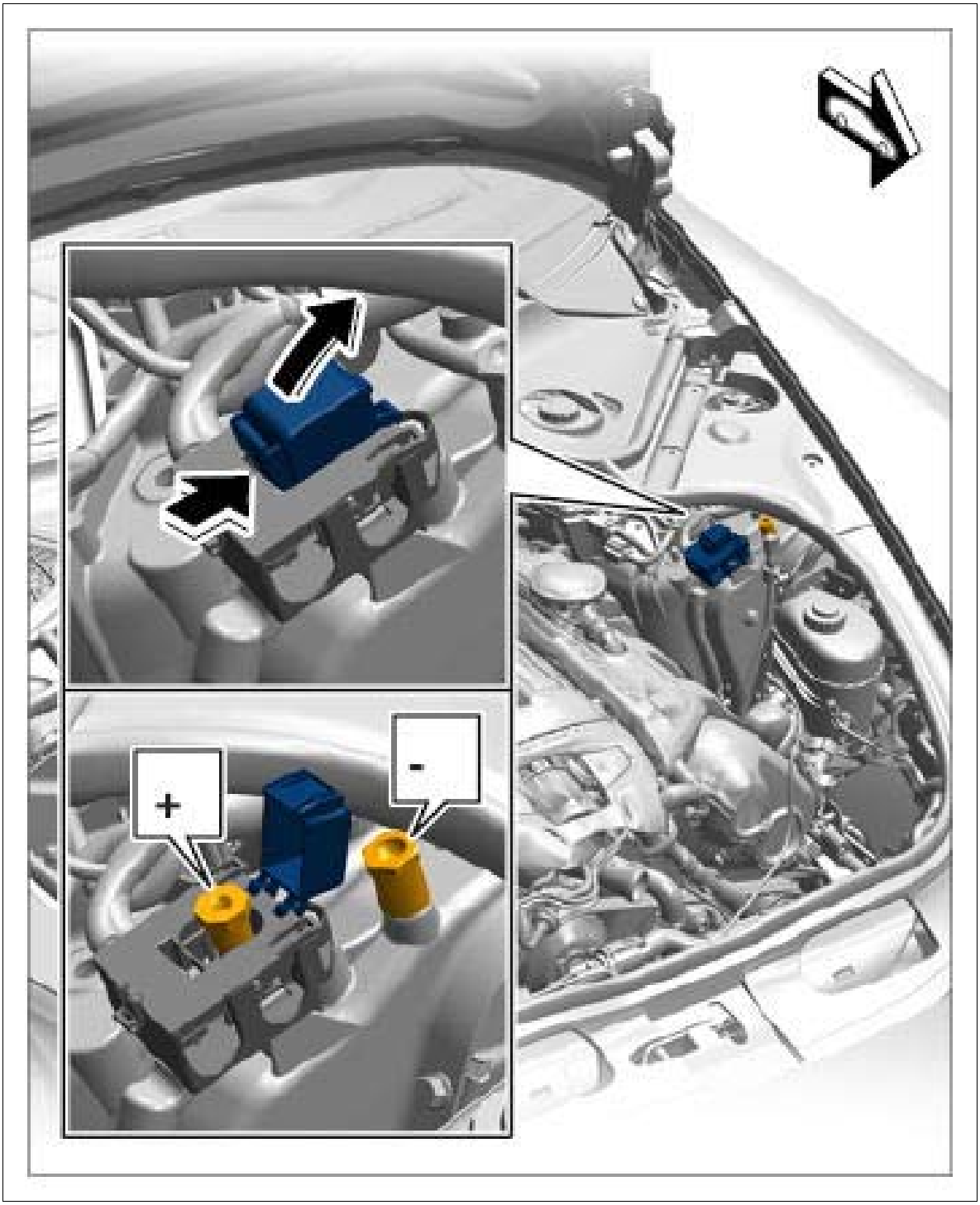

Courtesy of PORSCHE CARS NORTH AMERICA, INC.

4. Leave the engine of the vehicle supplying the power running at higher revs.
5. Start the engine. Do not spend longer than 15 seconds trying to start the vehicle with the jump leads, then wait for at least one minute before trying again.
6. Disconnect the two jump leads in reverse order when the engine is running.
7. Close protective cover.

WM 2706IN GENERAL INFORMATION ON AGM VEHICLE BATTERY (ALL MODELS) > TOOLS

Designation	Type	Number	Description	
PIWIS Tester II	Special tool	9818		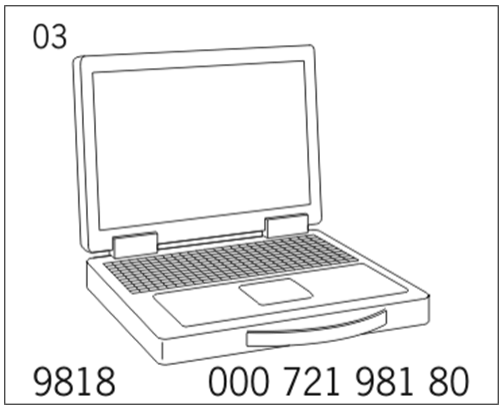

WM 2706IN GENERAL INFORMATION ON AGM VEHICLE BATTERY (ALL MODELS) > TECHNICAL VALUES

Location	Description	Type	Basic value	Tolerance 1	Tolerance 2
Battery terminal		Torque	5 Nm (3.5 ftlb.)		

WM 2706IN GENERAL INFORMATION ON AGM VEHICLE BATTERY (ALL MODELS) > INFORMATION

NOTE: A battery charger for providing an external power supply or for jump-lead starting is connected directly to the battery in the vehicle.

- *Risk of damage to the battery sensor.*
- *Battery sensor sends incorrect battery values to the vehicle electrical system.*

→ Always connect a battery charger for providing an external power supply or for jump-lead starting to the defined connections in the engine compartment. → 2X00IN BATTERY TRICKLE CHARGING

Information

The AGM (**A** bsorbent **G** lass **M** at) battery is a **maintenance-free, sealed** battery.

- This battery must not be opened. If the battery is opened, it must be replaced.

- There is a serial number -A- and a part number -B- on the top right-hand side of the battery.

  Fig 1: Identifying Battery Serial And Part Number

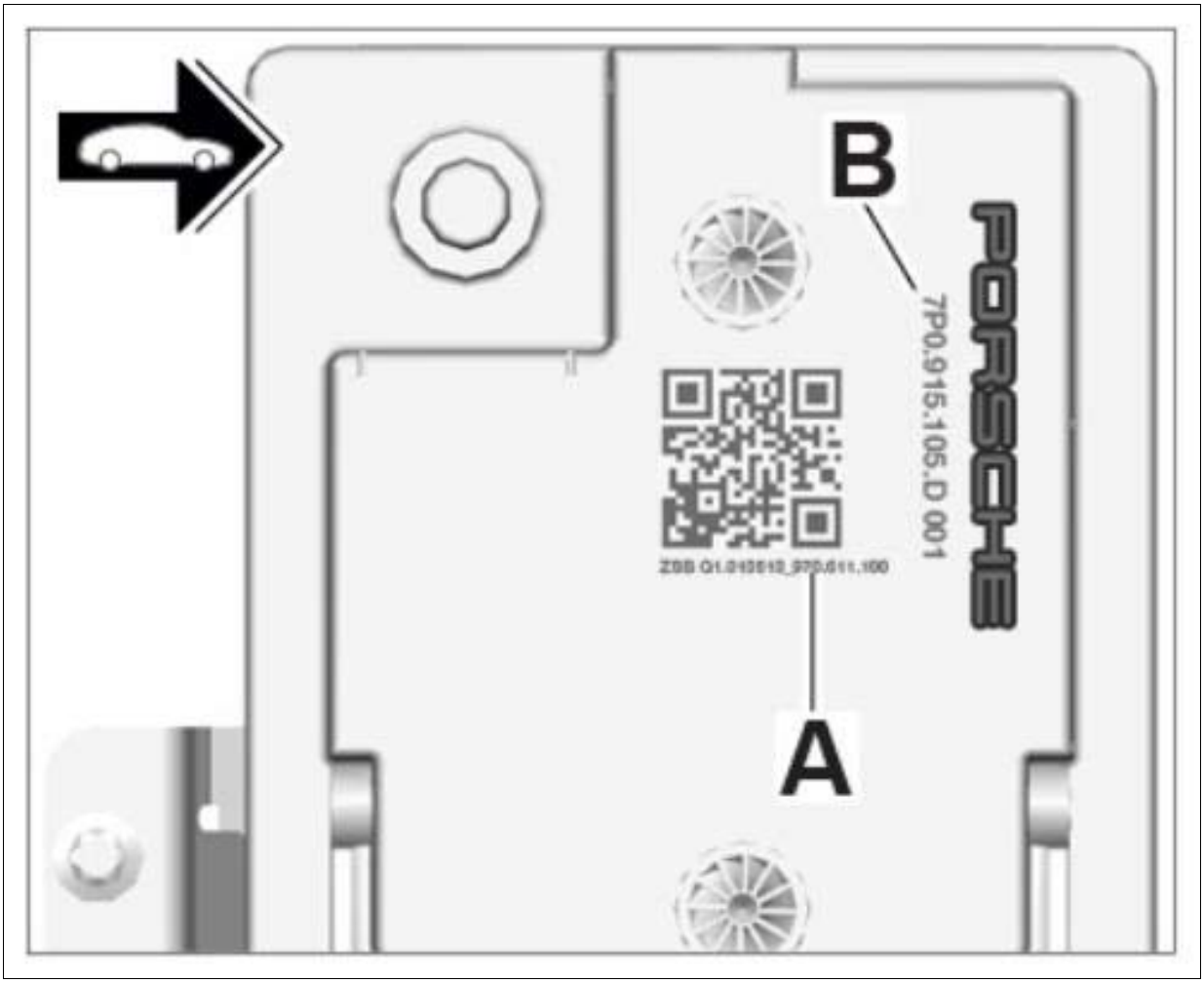

Courtesy of PORSCHE CARS NORTH AMERICA, INC.

- After replacing the battery, the serial number and part number as well as the battery size and manufacturer must be entered using the PIWIS Tester under: Gateway/Maintenance/repairs /Change battery.
- The battery size and battery manufacturer must also be entered when changing the battery.

Information

- To prevent contact corrosion, only approved bolts, nuts, washers, etc. should be used. These elements have a special surface coating and must be stored separately.

The battery is one of the most important electrical components in the vehicle. Fault-free functioning of the battery contributes greatly to customer satisfaction. To guarantee long and efficient operation, the battery must be checked and maintained according to the instructions provided here.

Besides starting the vehicle, the battery also acts as a buffer and supplier of electrical power for the entire vehicle electrical system.

An AGM (**A** bsorbent **G** lass **M** at) battery is used as standard. The AGM battery offers the following advantages, for example:

- Sealed, valve-controlled battery
- High-cycle battery
- High cold-start performance
- Cannot leak or tilt
- Totally maintenance-free
- Shake-resistant
- No acid leakage if the housing is damaged
- Flexible installation and safe to handle
- High load capacity and longer service life
- Ideal for Start/Stop function

WM 2706IN GENERAL INFORMATION ON AGM VEHICLE BATTERY (ALL MODELS) > INFORMATION > INSTRUCTIONS FOR HANDLING BATTERIES

Information

- Battery terminals do not need to be greased.
- The battery terminal clamps should only be attached by hand - without excessive force - to prevent damage to the battery.
- The tightening torque for the battery terminals is → Torque: 5 Nm (3.5 ftlb.).
- If the battery is reconnected, proceed according to → 2X0000 WORK INSTRUCTIONS AFTER DISCONNECTING THE BATTERY .

WM 2706IN GENERAL INFORMATION ON AGM VEHICLE BATTERY (ALL MODELS) > INFORMATION > WARNING NOTES AND SAFETY REGULATIONS FOR BATTERIES

1. **-1-** No fire, sparks, naked flames or smoking:
    1. Avoid sparking when using cables and electrical devices.
    2. Avoid short circuits.
    3. On batteries with central venting, there is an increased concentration of oxyhydrogen gas at the hose opening. The vent hose should not be bent or blocked by dirt.
2. **-2-** Wear eye protection.
3. **-3-** Keep children away from acids and batteries.
4. **-4-** Risk of acid burns:

1. Battery acid is highly caustic, so wear protective gloves.
2. Do not tip battery; acid can emerge from the vent opening.

Fig 1: Identifying Battery Symbols

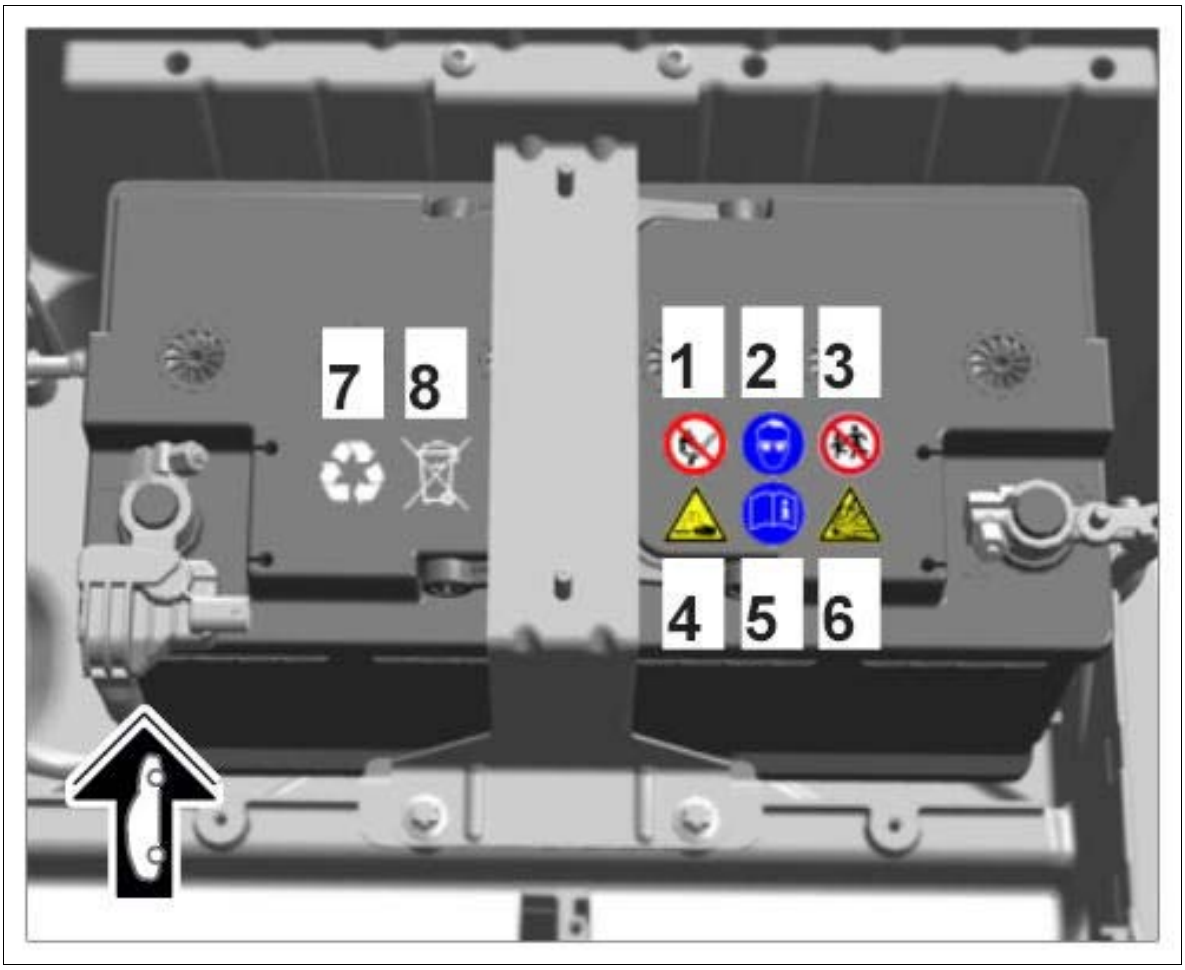

Courtesy of PORSCHE CARS NORTH AMERICA, INC.

Information

1. First aid: Rinse acid splashes in the eyes immediately with clean water for a few minutes. Consult a doctor immediately. Neutralize acid splashes on the skin or clothing immediately with soap suds and rinse again with plenty of water. If acid has been drunk unintentionally, consult a doctor immediately.

5. **-5-** Follow the instructions on the battery, in the Technical Information and in the Driver's Manual.
6. **-6-** Risk of explosion:
    1. A highly explosive detonating gas mixture is formed when charging batteries.
7. **-7-** Disposal:
    1. Hand in old batteries at a collection point.
8. **-8-** Never dispose of old batteries in domestic rubbish!

WM 2706IN GENERAL INFORMATION ON AGM VEHICLE BATTERY (ALL MODELS) > NOTES ON REMOVING AND INSTALLING THE BATTERY

NOTE: A battery charger for providing an external power supply or for jump-lead starting is connected directly to the battery in the vehicle.

- *Risk of damage to the battery sensor.*
- *Battery sensor sends incorrect battery values to the vehicle electrical system.*

→ Always connect a battery charger for providing an external power supply or for jump-lead starting to the defined connections in the engine compartment. → 2X00IN BATTERY TRICKLE CHARGING

Information

- The battery is located in the luggage compartment under the loadspace floor.
- In order to avoid triggering the siren in vehicles with an additional alarm siren, the battery must be disconnected while the ignition is on!
- All loads must be switched off beforehand! Remove ignition key!
- Never disconnect battery with engine running!
- Never start engine without a securely connected battery!
- To prevent damage to the battery, the battery terminal clamps should only be attached by hand - without excessive force.
- Check that the battery is seated correctly after installation. A loose battery presents other dangers, such as: - Reduced service life due to vibration damage. - Noises. - Damage to the battery housing from mounting parts. - Inadequate crash safety.

WM 2706IN GENERAL INFORMATION ON AGM VEHICLE BATTERY (ALL MODELS) > NOTES ON REMOVING AND INSTALLING THE BATTERY > OPERATING PRINCIPLE OF CENTRAL VENTING

Information

- State-of-the-art batteries have central venting -A- .
- In certain battery states, the gas produced during charging can emerge centrally through an opening on the upper cover side. Backfire protection is integrated at the same position and prevents the combustible gas in the battery from igniting.
- On batteries with a vent hose -A- , check that the vent hose is not disconnected or pinched. Only then can the battery be freely vented.

Fig 1: Identifying Battery Vent Hose

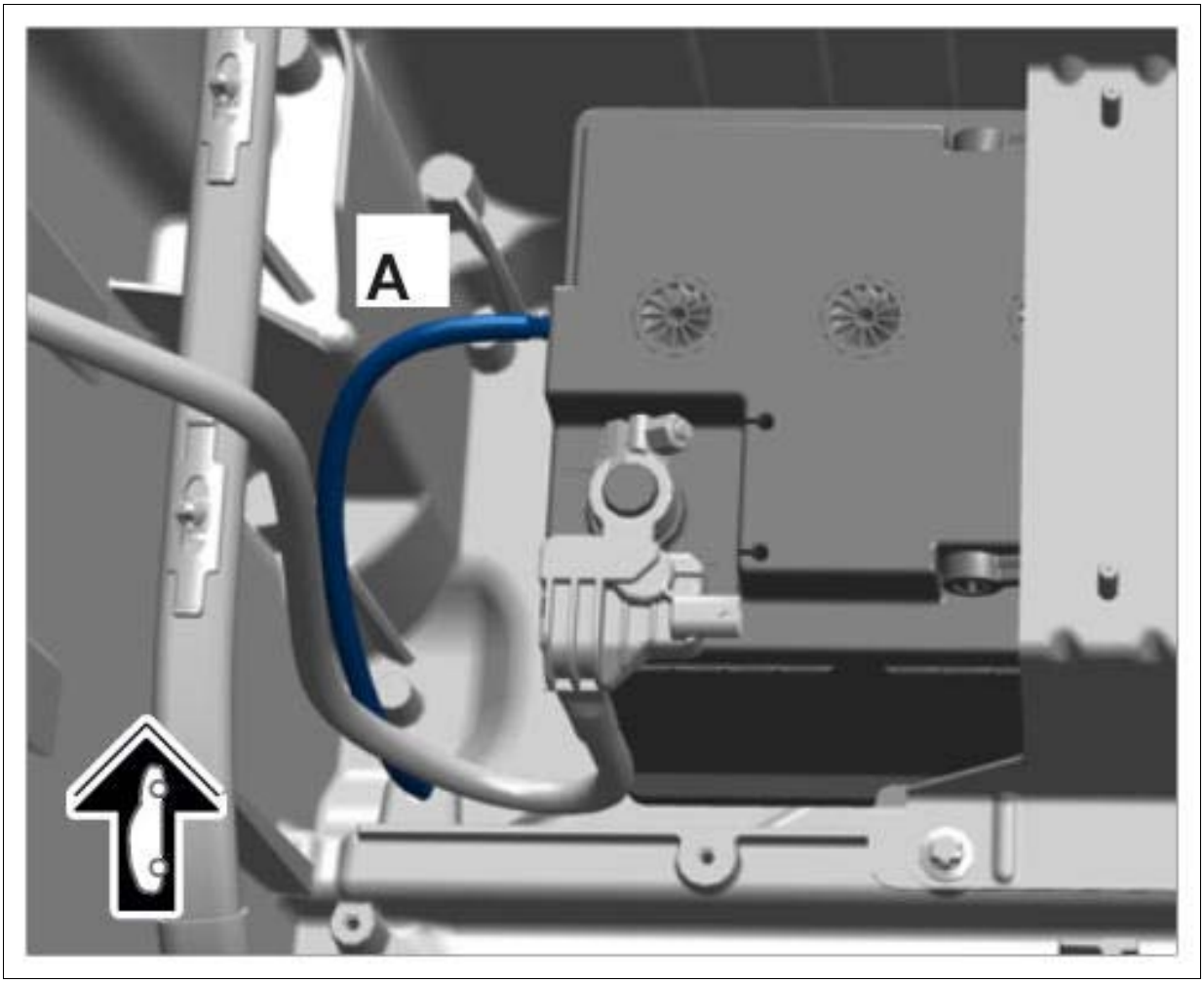

Courtesy of PORSCHE CARS NORTH AMERICA, INC.

WM 2706IN GENERAL INFORMATION ON AGM VEHICLE BATTERY (ALL MODELS) > VISUAL INSPECTION

A visual inspection of the battery must be performed before taking measurements, e.g. measuring the open-circuit voltage, or before carrying out the battery load test.

This test can be used to determine:

- Whether the battery housing is damaged. Leak-free operation and function of the battery cannot be guaranteed if the housing is damaged.
- Whether the battery terminals (battery line connections) are damaged. The line connections might not make contact if the battery terminals are damaged. This can cause the lines to catch fire and can result in malfunctions in the electrical system.

WM 2706IN GENERAL INFORMATION ON AGM VEHICLE BATTERY (ALL MODELS) >

CHECKING BATTERY VENT HOSE

Information

- Make sure that the vent hose -A- is not kinked or damaged. If in doubt, replace it.
- The vent hose -A- must be inserted in the battery and in the battery box.

Fig 1: Identifying Vent Hose (Panamera)

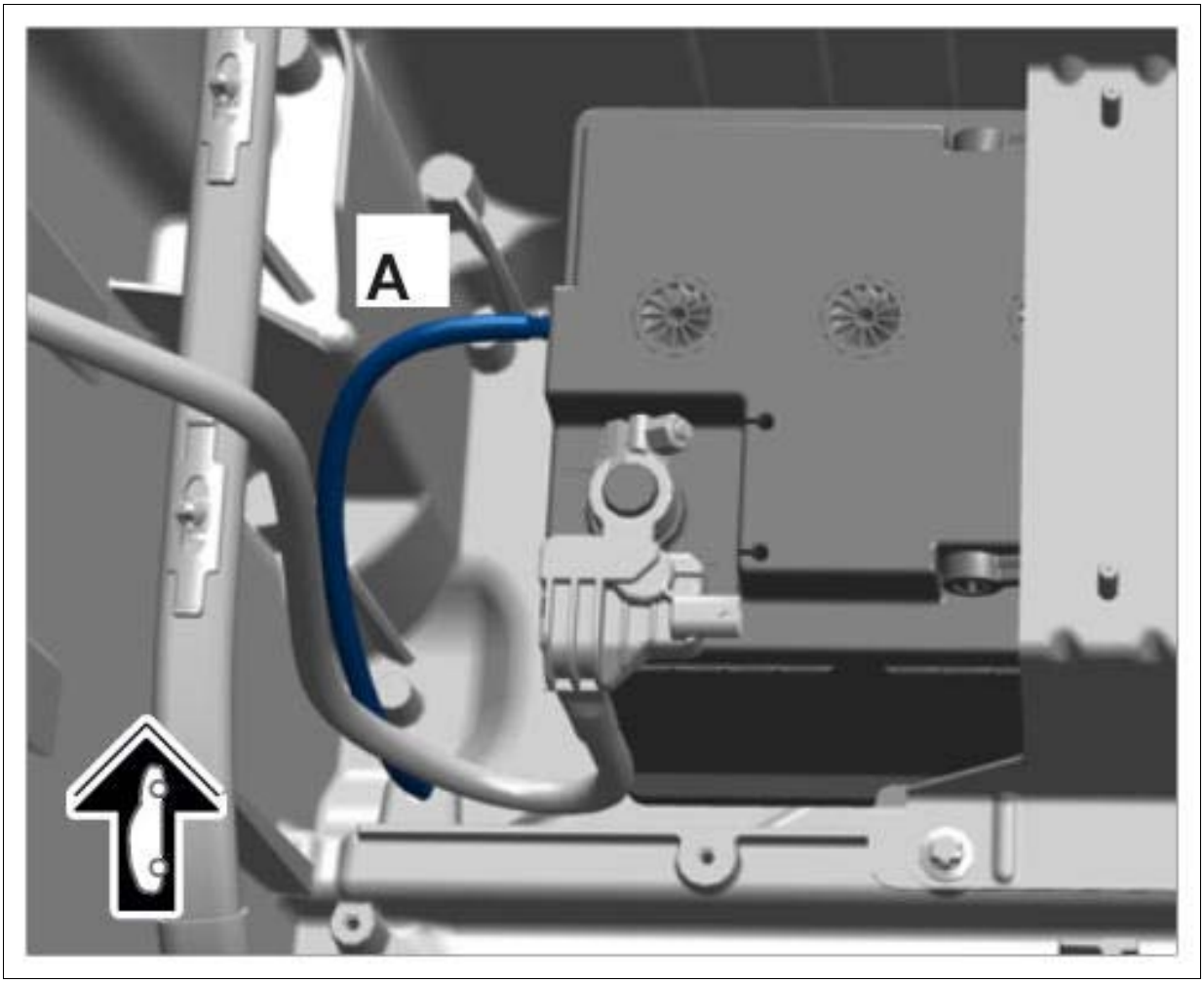

Courtesy of PORSCHE CARS NORTH AMERICA, INC.

WM 2706IN GENERAL INFORMATION ON AGM VEHICLE BATTERY (ALL MODELS) > OPEN-CIRCUIT VOLTAGE MEASUREMENT

Information

- Compared with the value from PIWIS Tester II 9818, the battery voltage can be measured using a hand-held multimeter.
- Proceed as follows:

Information

The open-circuit voltage measurement should be read out using **PIWIS Tester II 9818** in the **Gateway** control unit by selecting **Energy management, Quick closed-circuit current measurement** in the menu.

1. Switch off ignition and remove ignition key.
2. Disconnect ground strap on the battery.

   Information

   1. After charging and waiting for at least 2 hours, during which time the battery should neither be loaded nor charged:
3. Measure the battery voltage with a hand-held multimeter.
   1. The battery open-circuit voltage should not fall below 12.5 V.
   2. If the hand-held multimeter shows 12.5 V or more, the battery voltage is OK.
   3. If the hand-held multimeter shows a battery voltage below 12.5 V: Charge the battery.

Charging the battery

WARNING: Highly inflammable or explosive materials

- *Danger of fire or explosion*

→ Avoid contact with hot parts or sources of ignition.

→ Use suction to remove ignitable vapors.

→ Attach warning sign in a clearly visible position.

Information

- A battery charger is required.
- Read operating instructions for the charger.
- The battery must have a minimum temperature of 0 °C.
- If possible, do not rapid-charge batteries as this can damage them.
- If exhaustively discharged batteries are charged quickly, they will not take up a charge current or they will be identified too early as full due to the so-called "surface charge".

NOTE: A battery charger for providing an external power supply or for jump-lead starting is connected directly to the battery in the vehicle.

- *Risk of damage to the battery sensor.*
- *Battery sensor sends incorrect battery values to the vehicle electrical system.*

→ Always connect a battery charger for providing an external power supply or for jump-lead starting to the defined connections in the engine compartment. → 2X00IN BATTERY TRICKLE CHARGING

1. Switch off the battery charger.
2. Switch off ignition and remove ignition key.
3. Connect cables from the charger to the external power supply points.
4. Set the charge current on the battery charger according to the battery capacity.
5. Switch on the battery charger.

   Procedure for charging exhaustively discharged batteries:

   Batteries that have not been used for a long time discharge automatically.

   A battery is exhaustively discharged if the open-circuit voltage has dropped below 11.6 V, see OPEN-CIRCUIT VOLTAGE MEASUREMENT

   In exhaustively discharged batteries, the battery acid (sulfuric acid and water mixture) consists of virtually only water, as the sulfuric acid proportion is considerably reduced.

   Exhaustively discharged batteries sulphatise, i.e. the entire plate surfaces of the batteries harden.

   If exhaustively discharged batteries are immediately recharged after an exhaustive discharge, the sulphatisation recedes again.

   If these batteries are not recharged, the plates continue to harden and charge take-up ability is limited. This results in reduced battery performance.

   Exhaustively discharged batteries must be charged using a low charge current as follows:

   1. Set the charge current to maximum 10% of battery capacity, i.e. with a 95 AH battery, the charge current is max. 9.5 A.

6. Charge the battery.

WM 2706IN GENERAL INFORMATION ON AGM VEHICLE BATTERY (ALL MODELS) > BATTERY TRICKLE CHARGING

Information

- When working or carrying out tests on the vehicle or when the vehicle is in the workshop, a battery charger with a rated current of at least 40 A must be connected.
- As soon as the vehicle is unlocked, e.g. the vehicle is in the workshop or salesroom, it must be trickle charged with a battery charging device.

1. Switch off the battery charger.
2. Switch off ignition and remove remote control (hand-held transmitter).
3. Switch off all electrical loads (e.g. lights).

4. Open protective cover on the positive terminal for jump-lead starting.
5. First, connect the positive cable to the positive terminal for jump-lead starting, then to the positive terminal of the donor battery.
6. First, connect the negative cable to the negative terminal of the donor battery, then to the ground point for jump-lead starting.
7. Set the charge current on the battery charger according to the battery capacity.
8. Switch on the battery charger.

WM 2706IN GENERAL INFORMATION ON AGM VEHICLE BATTERY (ALL MODELS) > CONNECTING THE BATTERY FOR TRICKLE CHARGING

A charger with a current rating of at least 40 A must be connected to the external power supply points/jump-lead starting points.

Set the charger to maximum A (amps).

Switch off all unnecessary loads (e.g. lights).

When working on the vehicle for more than 15 minutes.

When running diagnostics using the Porsche System Tester.

When adjusting the headlights.

When working on or with the Infotainment system.

If the doors, bonnet and rear lid are open for a long period of time or if these components are actuated frequently.

WM 272219 REMOVING AND INSTALLING GENERATOR (MACAN) > PRELIMINARY WORK

1. Disconnect the battery. → Removing Battery
2. Remove engine cover.
3. Loosen drive belt. → Removing Drive Belt

WM 272219 REMOVING AND INSTALLING GENERATOR (MACAN) > REMOVING GENERATOR

1. Remove the generator.
    1. 1.1. Release and disconnect electric connector **-1-** .
    2. 1.2. Unscrew nut **-2-** and remove B+ line **-3-** .

3. 1.3. Unscrew screws **-4-** and remove the generator.

Fig 1: Identifying Generator Electric Connector Nut And Screw

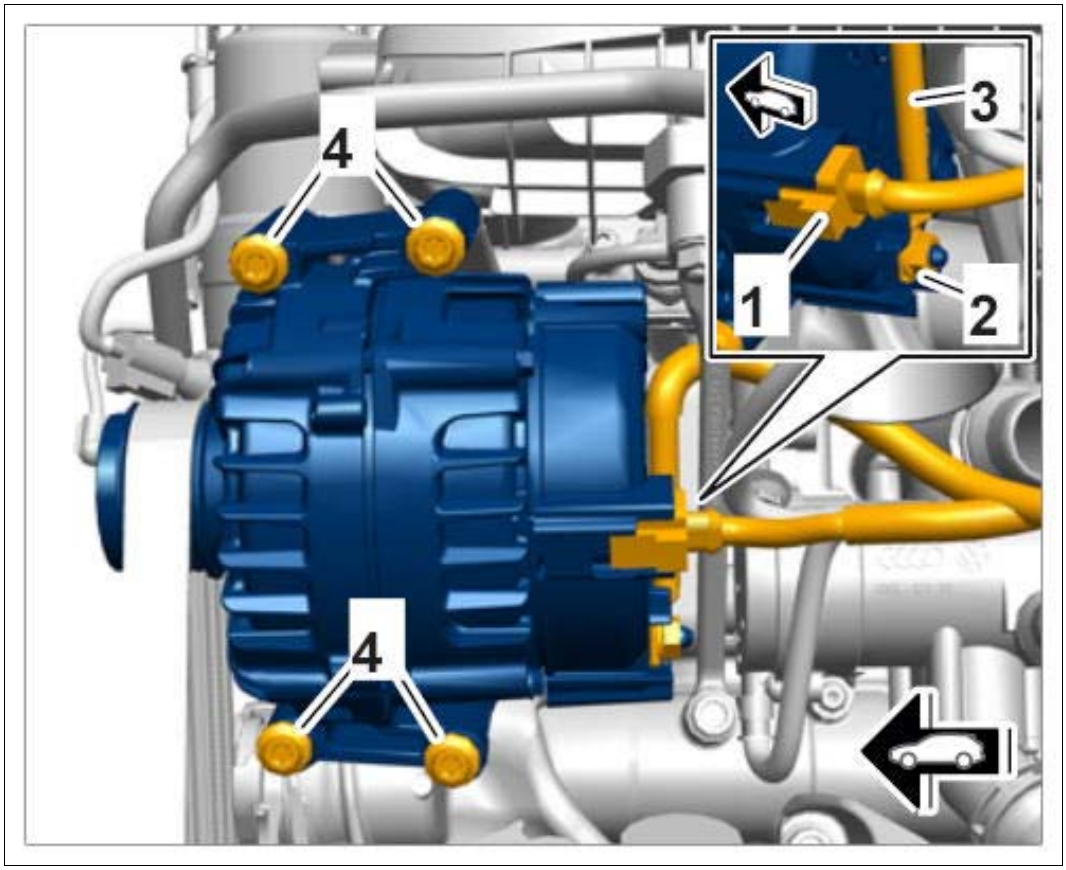

Courtesy of PORSCHE CARS NORTH AMERICA, INC.

WM 272219 REMOVING AND INSTALLING GENERATOR (MACAN) > INSTALLING GENERATOR

1. Installation is performed in reverse order. Pay particular attention to the following:
    1. 1.1. Tightening torque for nut on B+ line:
    2. 1.2. Tightening torque for screws on generator:

WM 272219 REMOVING AND INSTALLING GENERATOR (MACAN) > SUBSEQUENT WORK

1. Secure the drive belt. → Installing Drive Belt
2. Install engine cover.
3. Connect the battery. → Installing Battery

WM 276019 REMOVING AND INSTALLING STARTER (MACAN) > TECHNICAL VALUES

Location	Description	Type	Basic value	Tolerance 1	Tolerance 2
Fastening screw	Engine support	Tightening torque	40 Nm (30 ftlb.)		
Fastening screw for starter (transmission side)	Replace	Initial tightening	30 Nm (22 ftlb.)		
Fastening screw for starter (transmission side)	Replace	Final tightening	+105°	+/-30°	
Fastening nut on B+ line		Tightening torque	15 Nm (11 ftlb.)		
Fastening screw for starter (engine side)		Tightening torque	65 Nm (48 ftlb.)		

WM 276019 REMOVING AND INSTALLING STARTER (MACAN) > PRELIMINARY WORK

1. Disconnect battery ground terminal. → Removing Battery
2. Remove turbocharger. → Removing Turbocharger
3. Remove right engine mount. → Removing engine mount
4. Remove support for engine mount **-2-** at the right.
    1. 4.1. Unscrew screws **-arrows-** and remove support.

Fig 1: Locating Engine Mount Support Screws

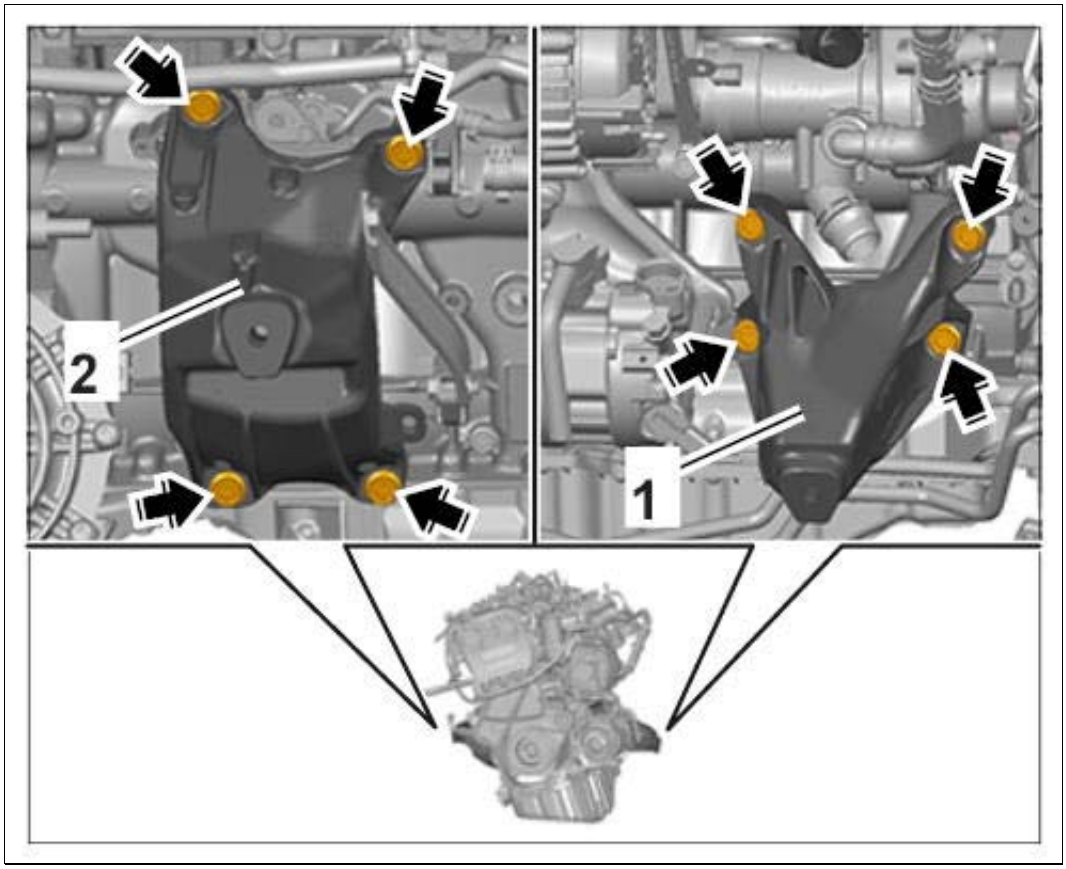

Courtesy of PORSCHE CARS NORTH AMERICA, INC.

WM 276019 REMOVING AND INSTALLING STARTER (MACAN) > REMOVING STARTER

1. Remove starter.

    1. 1.1. Release and disconnect electric connector **-1-** .
    2. 1.2. Unscrew nut **-2-** and remove B+ line **-3-** .
    3. 1.3. Unscrew screw -4 - at the top and remove spacer sleeve **-5-** .
    4. 1.4. Unscrew screw **-6-** at the bottom.
    5. 1.5. Remove the starter **-7-** .

Fig 1: Identifying Starter Electric Connector Nut And Screw

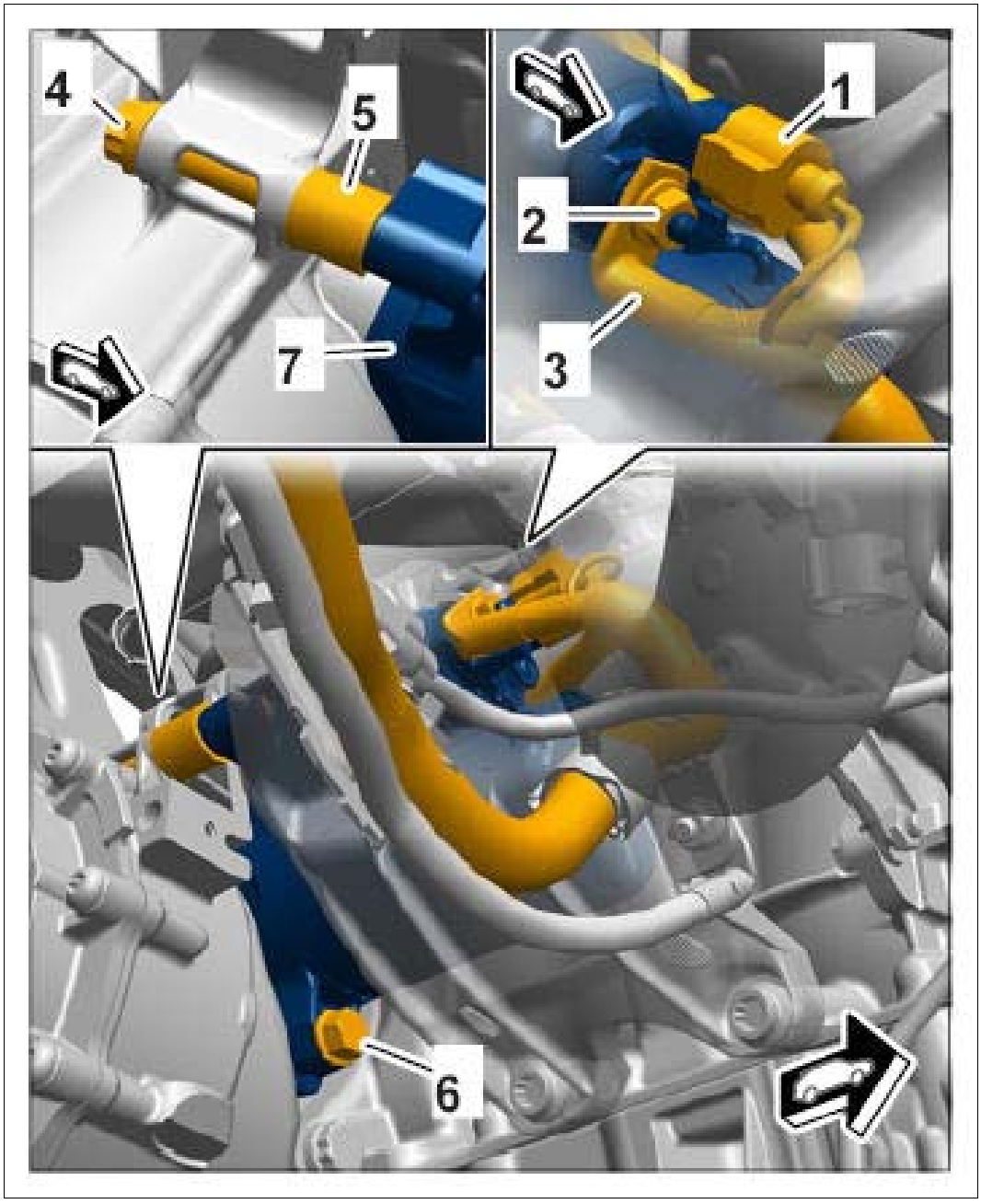

Courtesy of PORSCHE CARS NORTH AMERICA, INC.

WM 276019 REMOVING AND INSTALLING STARTER (MACAN) > INSTALLING STARTER

1. Installation is performed in reverse order. Pay particular attention to the following:
    1. 1.1. Position spacer sleeve.
    2. 1.2. Tightening torque for starter (top): **Initial tightening 30 Nm (22 ftlb.) Final tightening +105° +/-30°**

Replace screw.

3. 1.3. Tightening torque for starter (bottom): **Tightening torque 65 Nm (48 ftlb.)**
4. 1.4. Tightening torque for nut on B+ line: **Tightening torque 15 Nm (11 ftlb.)**

WM 276019 REMOVING AND INSTALLING STARTER (MACAN) > SUBSEQUENT WORK

1. Install support for engine mount.
    1. 1.1. Tightening torque for securing support to engine: **Tightening torque 40 Nm (30 ftlb.)**
2. Install engine mount. → Installing engine mount
3. Install turbocharger. → Installing Turbocharger
4. Connect battery ground terminal. → Removing Battery

WM 278515 ADJUSTING CONTROL UNIT FOR DISTANCE MEASURING SENSOR (ALL MODELS) > TOOLS

Designation	Type	Number	Description	
wheel alignment system ML 5000 Porsche	Service equipment	WE 1272		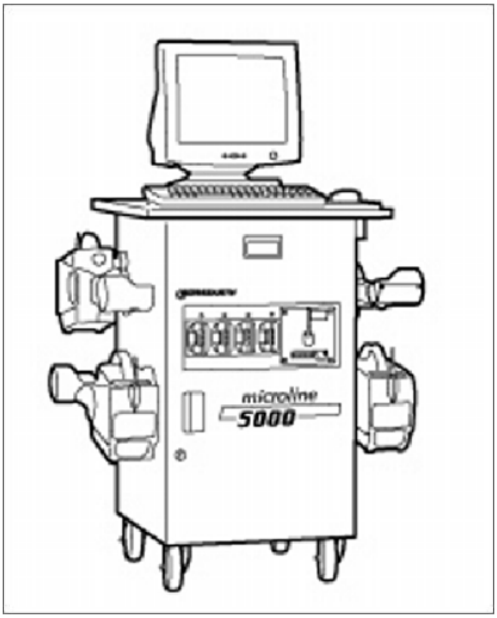

axle alignment system with DSP508XF sensors	Service equipment	WE 1328		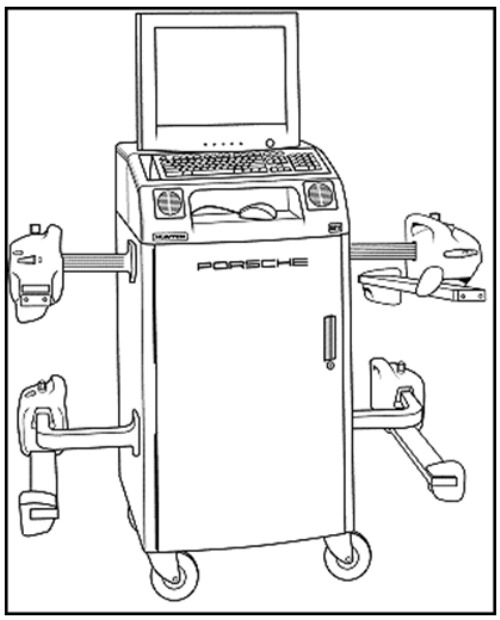
adjustment device with reflector VAS 6430/1	Service equipment	WE 1362		
T-socket wrench for ACC sensor VAS 6190/2	Service equipment	WE 1364		
PIWIS Tester II	Special tool	9818		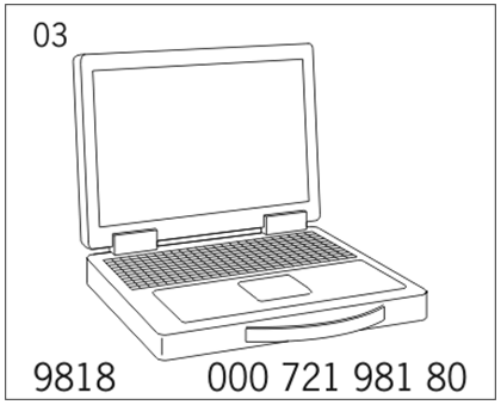

WM 278515 ADJUSTING CONTROL UNIT FOR DISTANCE MEASURING SENSOR (ALL MODELS) > PRELIMINARY WORK > WHEN DOES DISTANCE MEASURING SENSOR CONTROL UNIT NEED TO BE ADJUSTED?

The distance measuring sensor control unit must be re-adjusted in the following situations:

1. Suspension was aligned and adjusted.
2. Distance measuring sensor control unit or distance measuring sensor control unit holder was loosened or removed and installed.
3. Bumper was loosened or removed and installed.
4. The front end is damaged.
5. Fault memory entry: ACC sensor incorrectly adjusted (D00004).
    1. 5.1. The misalignment angle is outside of the range -1.5° to +1.5°.

WM 278515 ADJUSTING CONTROL UNIT FOR DISTANCE MEASURING SENSOR (ALL MODELS) > PRELIMINARY WORK > REQUIREMENTS FOR TESTING AND ADJUSTMENT

1. Tyre tread depth of the tires of one axle must not deviate by more than 2 mm.
2. Tyre inflation pressure in accordance with regulations ("Comfort" or "Normal" tire pressure).
3. As with complete suspension alignment, make sure that there is no sliding base or turnplate at the end stop during alignment.
    1. 3.1. Take the track width and wheel base into consideration.
4. Check that vehicle weight corresponds to empty weight. Weight of the vehicle ready for driving (completely full fuel tank, reducing agent tank and water reservoir for the windscreen washer/headlight cleaning system, spare wheel, tool kit, jack) without driver.
5. Spare wheel, tool kit and jack must be located at the positions specified by the vehicle manufacturer.
6. Vehicle aligned correctly, having been bounced multiple times.
7. Wheel suspension, steering and steering linkage show no signs of play or damage.
    1. 7.1. Check for play and damage and carry out repairs if necessary.
8. Set vehicles with air suspension to normal level.
    1. 8.1. Switch off ignition, close and lock all doors.
    2. 8.2. Wait 15 seconds until vehicle has settled in normal level.
    3. 8.3. Open door and leave it open during the measurement, switch on ignition.

WM 278515 ADJUSTING CONTROL UNIT FOR DISTANCE MEASURING SENSOR (ALL MODELS) > PRELIMINARY WORK > SETTING UP THE MEASURING SYSTEM

Information

Check that there is sufficient floor space between the vehicle and the adjustment device - the gap between the adjustment device and vehicle must be approx. 120 cm.

The vehicle can be reversed onto the axle alignment platform if there is not enough floor space in front of the measuring platform.

The vehicle must be positioned so that the front and rear axles are centered on turnplates/sliding plates.

Information

The procedure described here is for the **wheel alignment system ML 5000 Porsche WE 1272 and the axle alignment system with DSP508XF sensors WE 1328.**

Deviations can occur with other alignment systems.

1. Select **the relevant vehicle in the wheel alignment computer.**
2. Select quick function **Calibrate distance measuring sensor** .
3. Fit instrument holders onto the wheels on the rear axle.
4. Fit the rear sensors onto the rear axle using the spoiler adapter (Beissbarth only, this sets the sensors to a lower position).
5. Align the rear sensors on the rear axle using the spirit level and clamp the instrument holders using the wing screws.

   Information

   Once the vehicle and adjustment tool are aligned, the vehicle and adjustment tool must no longer be moved.

   1. The vehicle is standing on turnplates/sliding plates that are released on one side , allowing the vehicle to be moved slightly.
   2. If the vehicle is moved while taking measurements on the turnplates, the measurement process must be repeated.
   3. If the adjustment tool is moved following alignment, the measurement process must be repeated.
6. Attach the front sensors to the measuring mirror, align using the spirit level and clamp.

   1. 6.1. Centre the adjustment tool.
   2. 6.2. Set distance of adjustment tool and vehicle in accordance with the specifications provided by the measuring equipment manufacturer.
   3. 6.3. The distance between the left sensor and the vehicle **-Bl-** should be identical to the distance between the right sensor and the vehicle **-Br-** .

Fig 1: Identifying Right Sensor Dimension

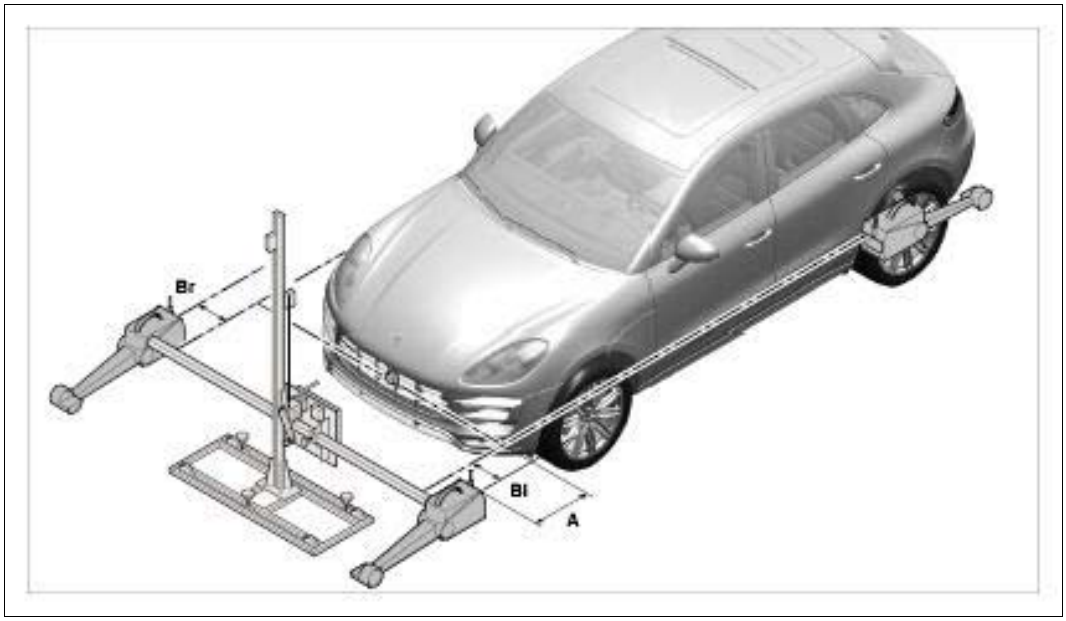

Courtesy of PORSCHE CARS NORTH AMERICA, INC.

7. Switch on (initialize) the sensors.

WM 278515 ADJUSTING CONTROL UNIT FOR DISTANCE MEASURING SENSOR (ALL MODELS) > PRELIMINARY WORK > PREPARATION FOR ADJUSTING DISTANCE MEASURING SENSOR

1. Connect a battery charger with a current rating of at least 40 A to the external power feed points.
2. Read out the fault memory using **PIWIS Tester II 9818** , create a vehicle analysis log if necessary → 0X03IN CREATING VEHICLE ANALYSIS LOG (VAL) and correct any faults.
3. Remove trim cover **-1-** from the distance measuring sensor control unit.
    1. 3.1. Push trim cover up **-a-** .
    2. 3.2. Pull trim cover forward and remove it **-b-** .

Fig 1: Removing Trim Cover

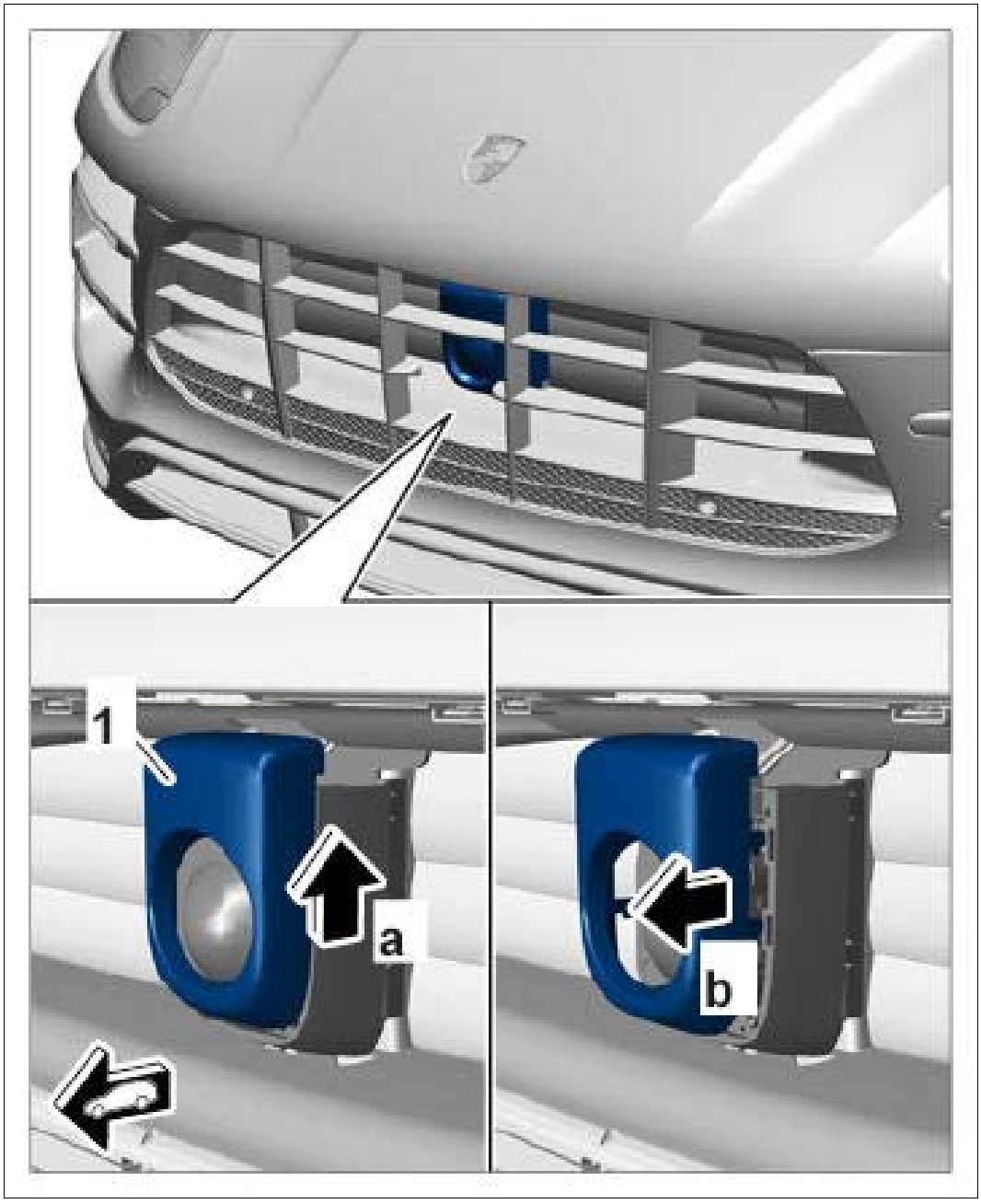

Courtesy of PORSCHE CARS NORTH AMERICA, INC.

4. Clean distance measuring sensor control unit and trim cover using commercially available cleaning agent.

5. Fit the front sensors onto the adjustment device, align using the spirit levels and clamp using the wing screws, and switch them on (initialize).

6. Set the distance between the **adjustment device with reflector VAS 6430/1 WE 1362** and the **vehicle** in accordance with the specifications provided by the measuring equipment manufacturer.

    1. 6.1. The distance between the left sensor and the vehicle **-Bl-** should be identical to the distance between the right spirit level and the vehicle **-Br-** .

Fig 2: Identifying Right Sensor Dimension

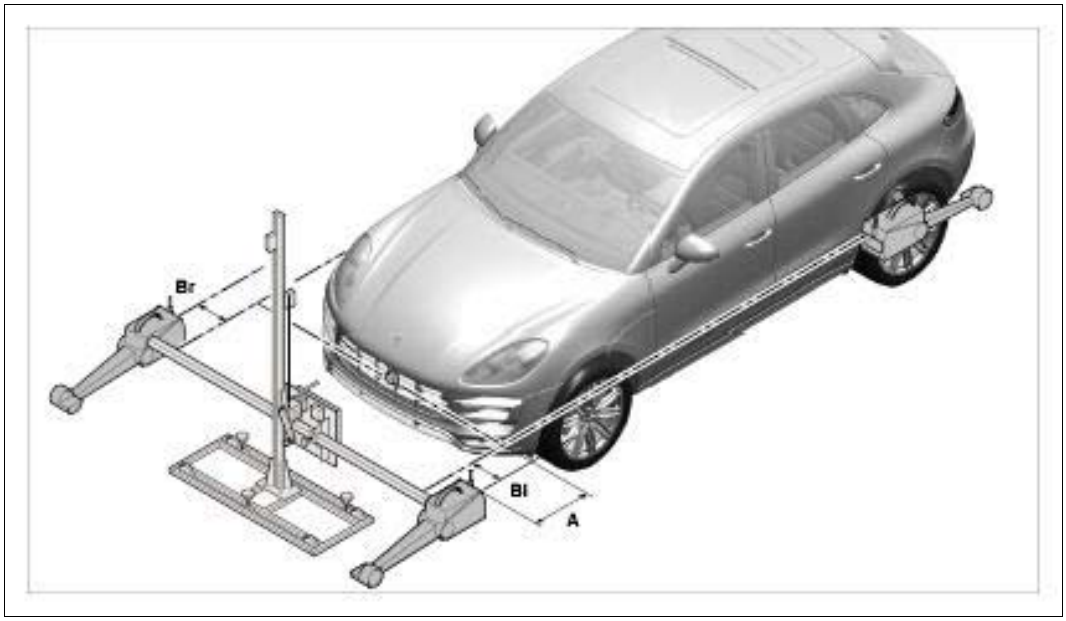

Courtesy of PORSCHE CARS NORTH AMERICA, INC.

7. On the adjustment device, move the mirror into the position **-2-** in alignment with the marking (**-A-** the number 2 on the rotary knob must point towards the vehicle).

Fig 3: Identifying Adjustment Device Position

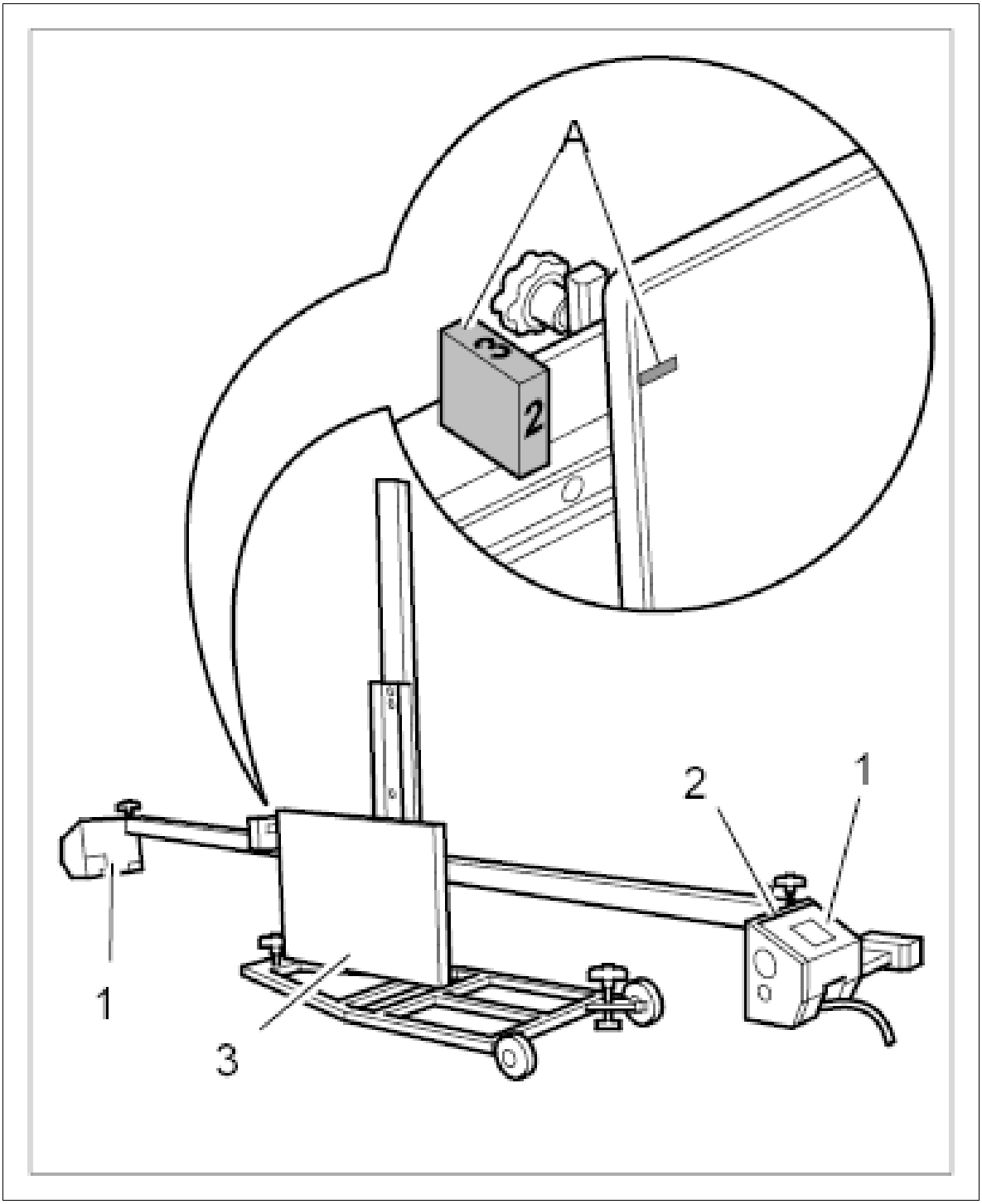

Courtesy of PORSCHE CARS NORTH AMERICA, INC.

Information

Once the vehicle and adjustment tool are aligned, the vehicle and adjustment tool must no longer be moved.

1. The vehicle is standing on turnplates/sliding plates that are released on one side, allowing the vehicle to be moved.

2. If the vehicle is moved while taking measurements on the turnplates, the measurement process must be repeated.

3. If the adjustment tool is moved following alignment, the measurement process must be repeated.

8. Release turnplates/sliding plates on **one side of the vehicle** .

9. Start the menu for adjusting the distance measuring sensor control unit, see **operating instructions for measuring platform** .

10. Before starting the adjustment process, use the laser beam at the mirror **-3-** on the adjustment device (for switching on the laser beam, see operating instructions for adjustment device) to check that the laser beam strikes the sensor lens. Info:

    1. 10.1. The adjustment device is positioned correctly if the laser beam still strikes the sensor lens even after the identical individual toe values have been set.

    2. 10.2. If the laser beam does not strike the sensor lens, the alignment of the adjustment device must be repeated.

Fig 4: Identifying Adjustment Device Position

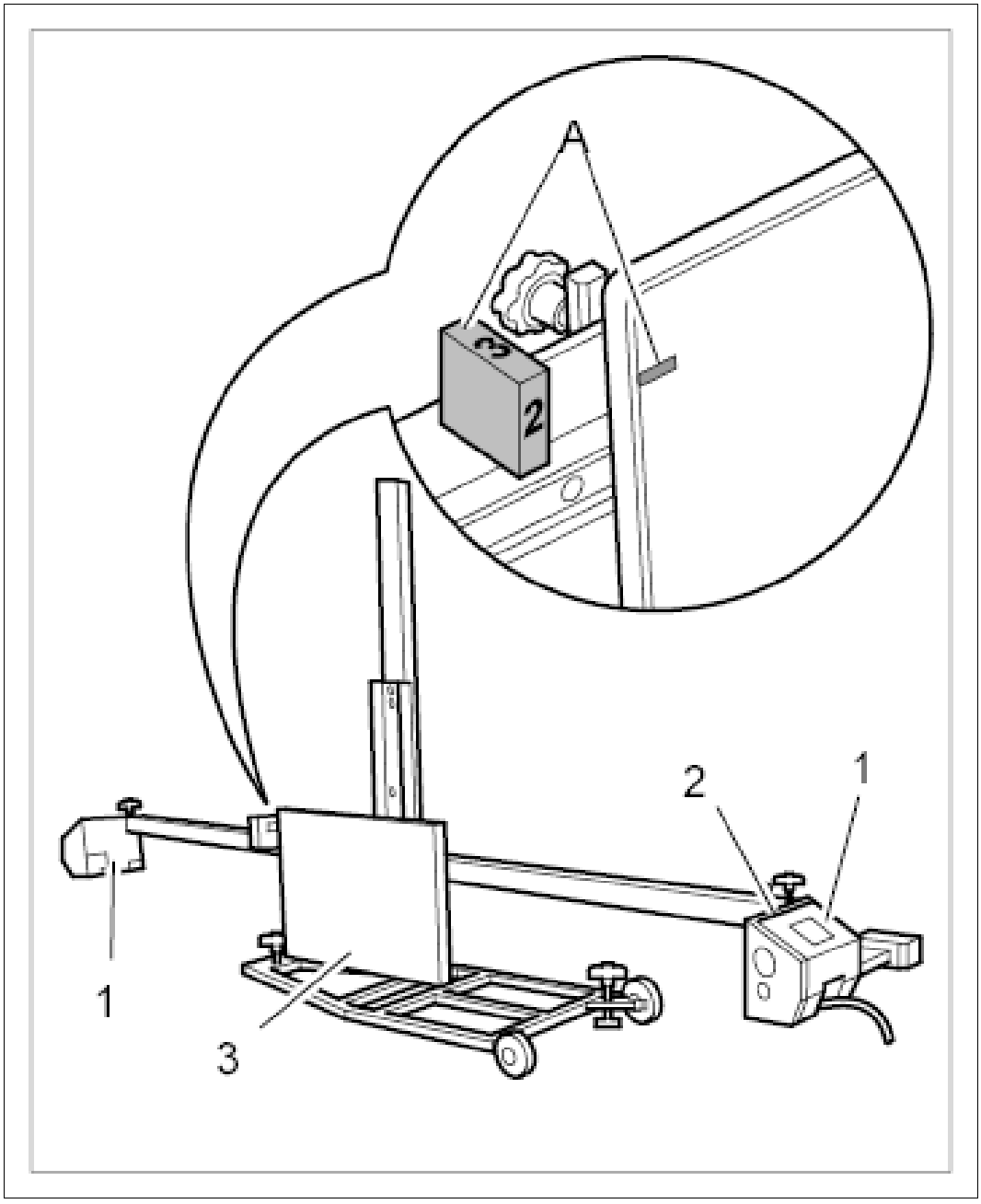

Courtesy of PORSCHE CARS NORTH AMERICA, INC.

11. Align adjustment device at the side:

    1. 11.1. The laser beam of the adjustment device must strike the center of the sensor lens.

Fig 5: Aligning Adjustment Device

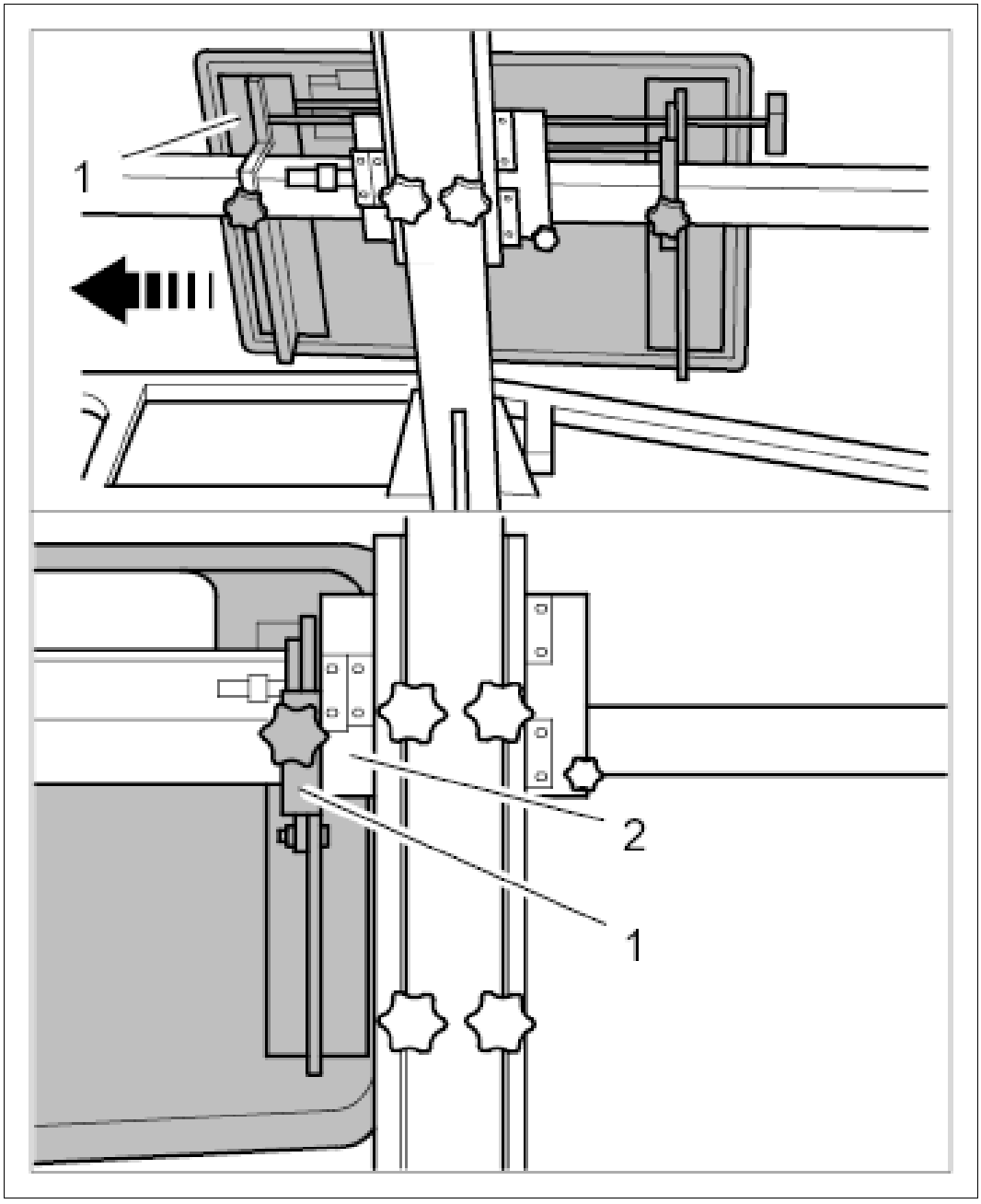

Courtesy of PORSCHE CARS NORTH AMERICA, INC.

12. Use the adjusting screws **-1, 2, 3, 4, 5-** on the adjustment device to level the mirror's spirit levels **-A, B-** horizontally.

13. Use the crank **-arrow-** on the adjustment device to adjust the mirror so that the laser beam strikes the center of the sensor lens on the vertical line.

Fig 6: Aligning Mirror's Spirit Levels

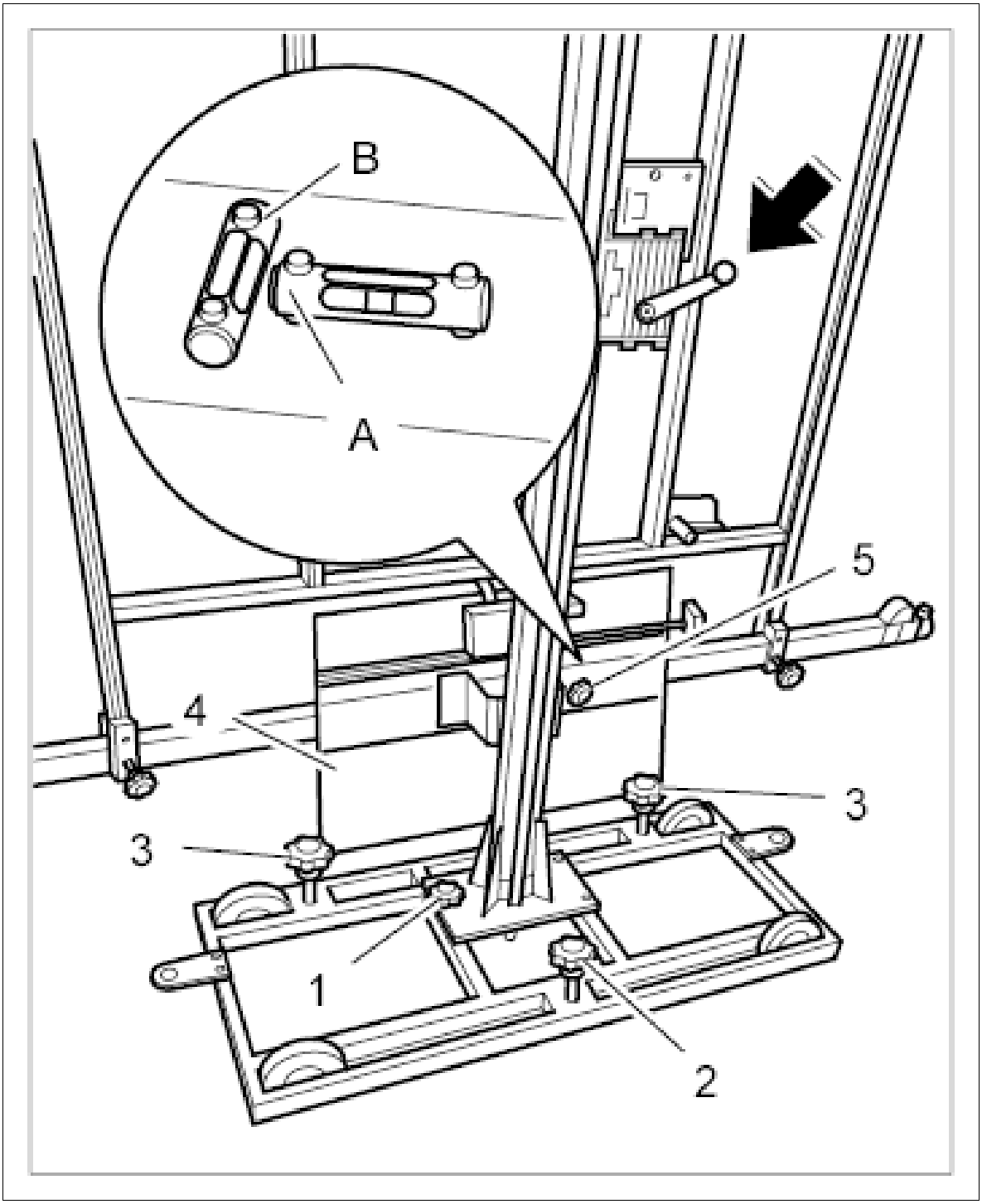

Courtesy of PORSCHE CARS NORTH AMERICA, INC.

14. Turn the adjustment bar on the adjustment device to the side using the adjustment screw **-5-** until the green indicator on the adjustment bar is displayed on the measuring platform screen.

Fig 7: Example Of Adjustment Bar Display

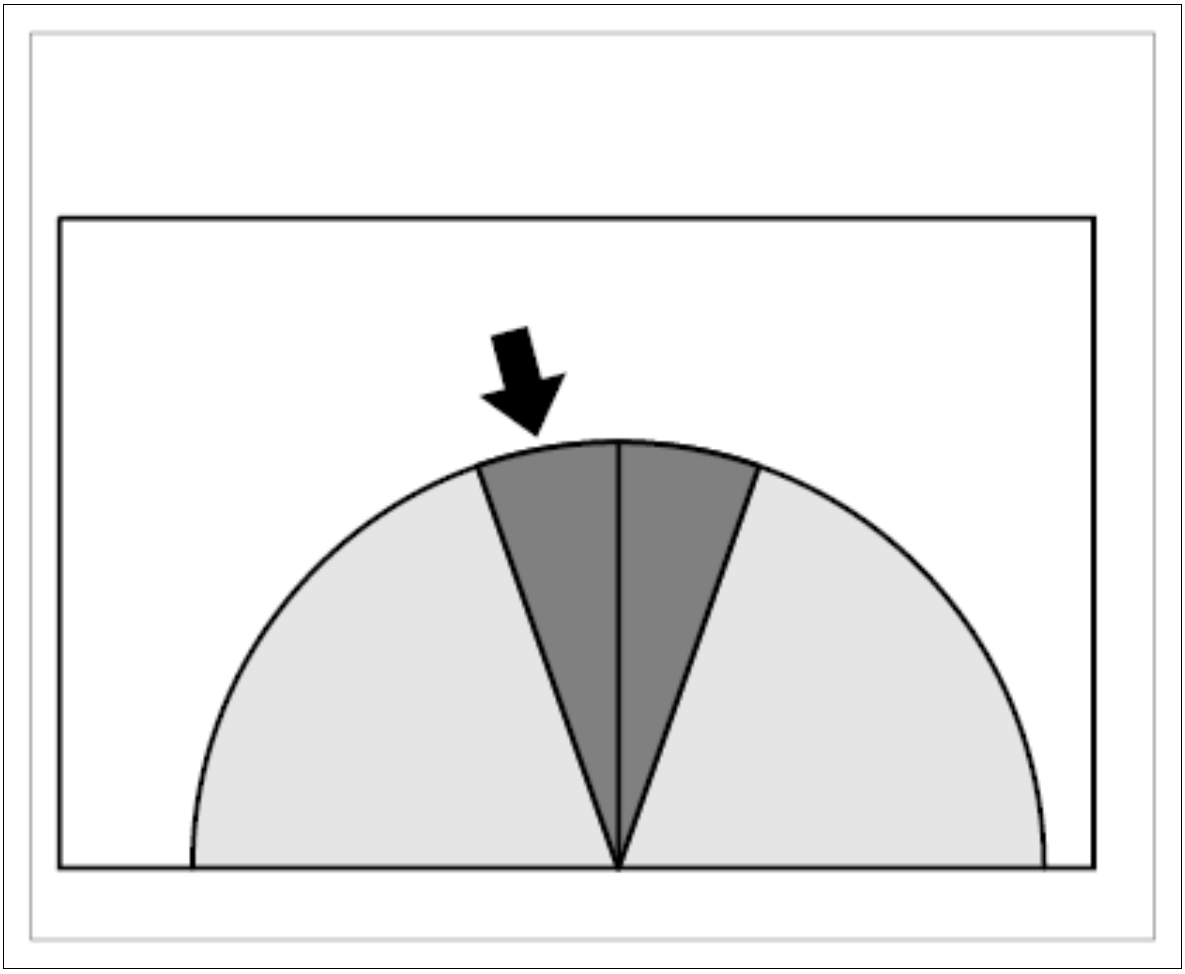

Courtesy of PORSCHE CARS NORTH AMERICA, INC.

Fig 8: Example Of Hunter Display

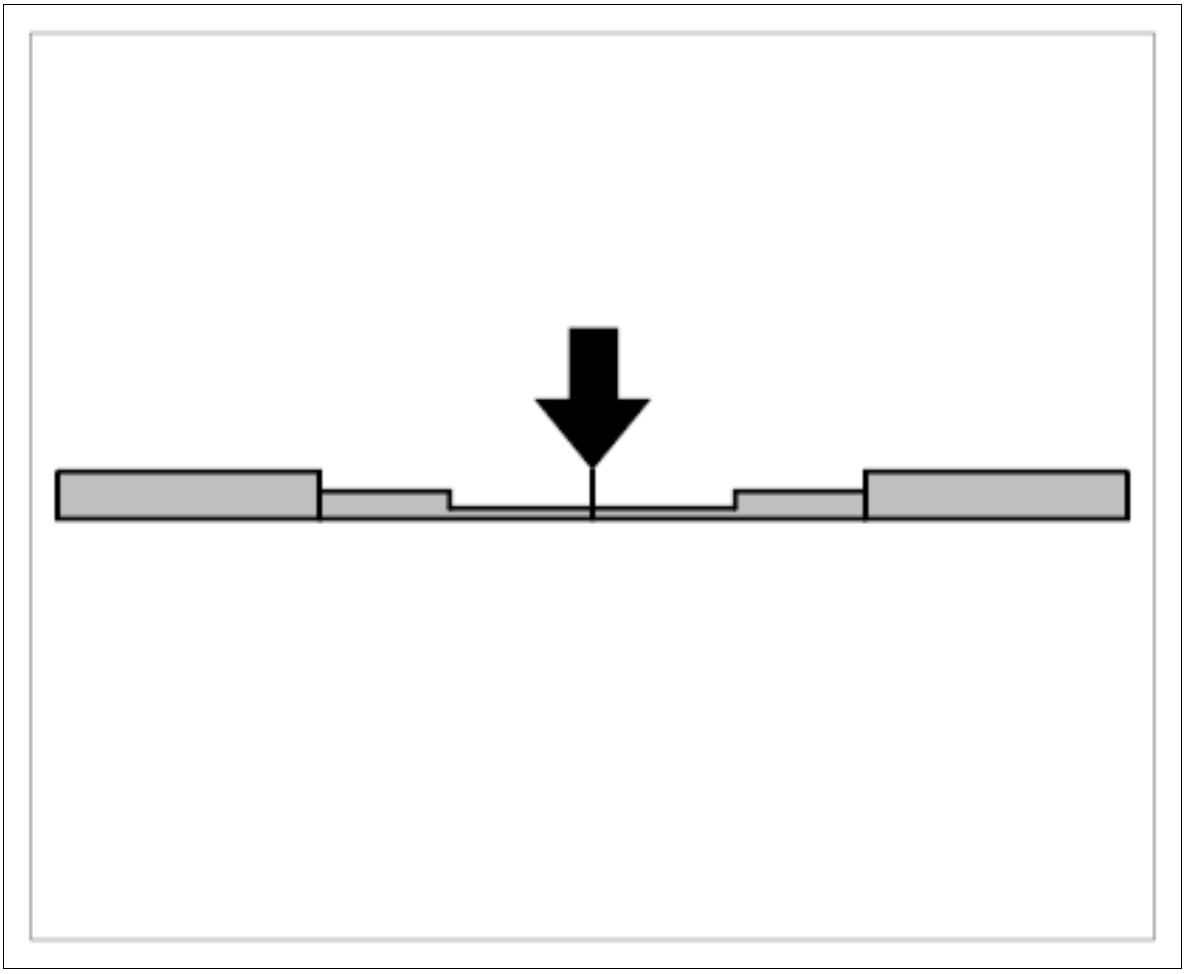

Courtesy of PORSCHE CARS NORTH AMERICA, INC.

WM 278515 ADJUSTING CONTROL UNIT FOR DISTANCE MEASURING SENSOR (ALL MODELS) > ADJUSTING CONTROL UNIT FOR DISTANCE MEASURING SENSOR

1. Connect **PIWIS Tester II 9818** to the vehicle and start it.
2. Switch on ignition.
3. Select the required vehicle and the **Adaptive cruise control** control unit. Press [F12] to continue.
4. Select the **Maintenance/repairs** sub-menu in the **Adaptive cruise control** menu. Press [F12] to continue.
5. Follow the instructions on **PIWIS Tester II 9818** and adjust the distance measuring sensor control unit **-1-** as required using adjustment tool **T-socket wrench for ACC sensor VAS 6190/2 WE 1364 -2-** by turning the relevant adjusting screw **-3-** according to specifications.

Fig 1: Identifying Sensor Control Unit Adjusting Screws

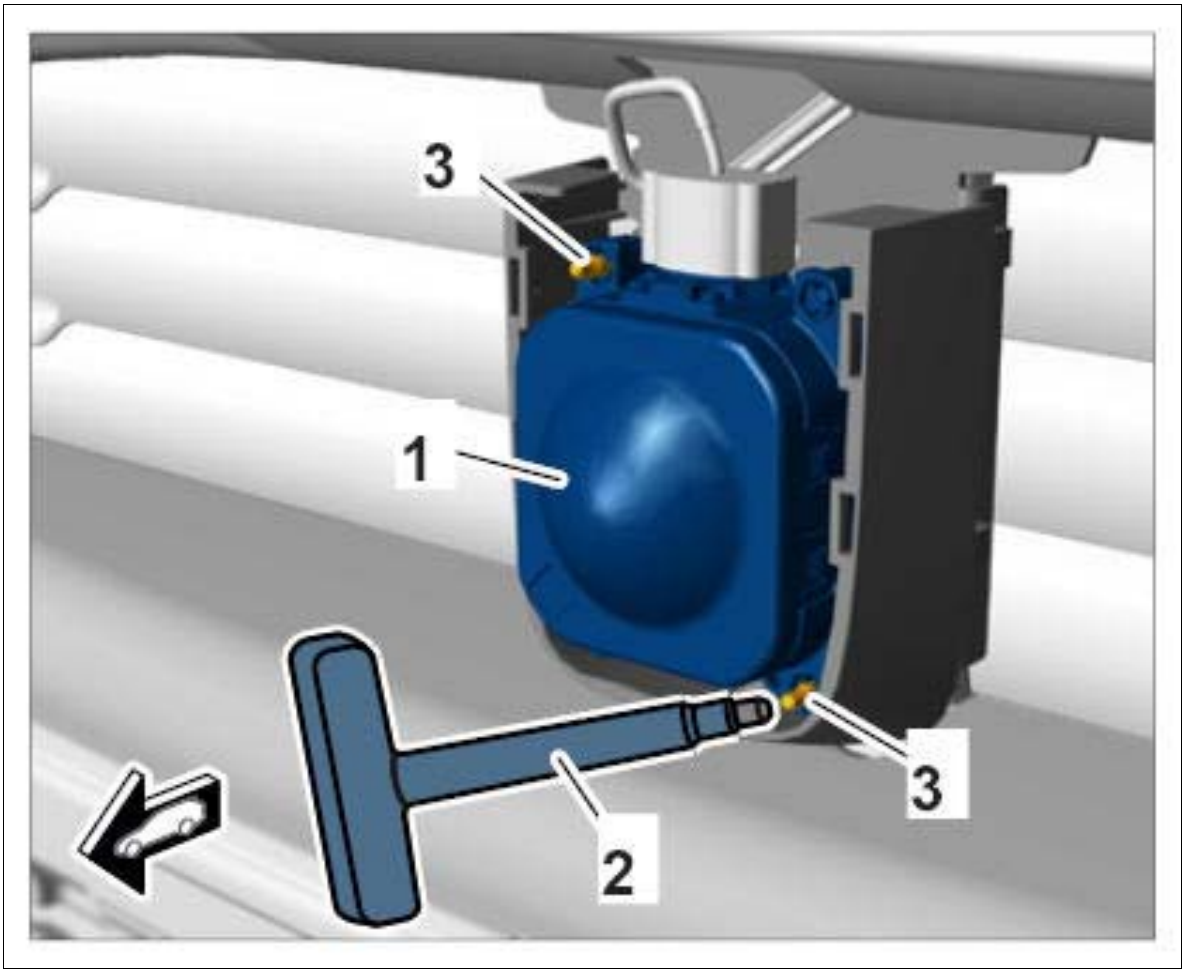

Courtesy of PORSCHE CARS NORTH AMERICA, INC.

6. Repeat the process until PIWIS Tester II 9818 displays the message Adjustment successful.

WM 278515 ADJUSTING CONTROL UNIT FOR DISTANCE MEASURING SENSOR (ALL MODELS) > SUBSEQUENT WORK

1. Switch off ignition and pull remote control out of ignition lock.
2. **PIWIS Tester II 9818** must now be disconnected from the vehicle.
3. Disconnect battery charger.
4. Remove sensors and instrument holders.

   Information

   Before and after fitting the trim cover for the distance measuring sensor control unit, check the following points:

   1. The holder for the distance measuring sensor control unit must not show any signs of deformation, which may have been caused, for example, by removing or installing the trim

cover for the distance measuring sensor control unit. If the holder for the distance measuring sensor control unit is deformed, carefully push it back into shape.

2. If the trim cover is damaged or cracked, replace the trim cover.

3. After fitting the trim cover, check that it is seated correctly and securely.

5. Install trim cover **-1-** on the distance measuring sensor control unit.

1. 5.1. Fit trim cover **-a-** .

2. 5.2. Push trim cover down **-b-** until it engages securely.

Fig 1: Installing Trim Cover On Distance Measuring Sensor Control Unit

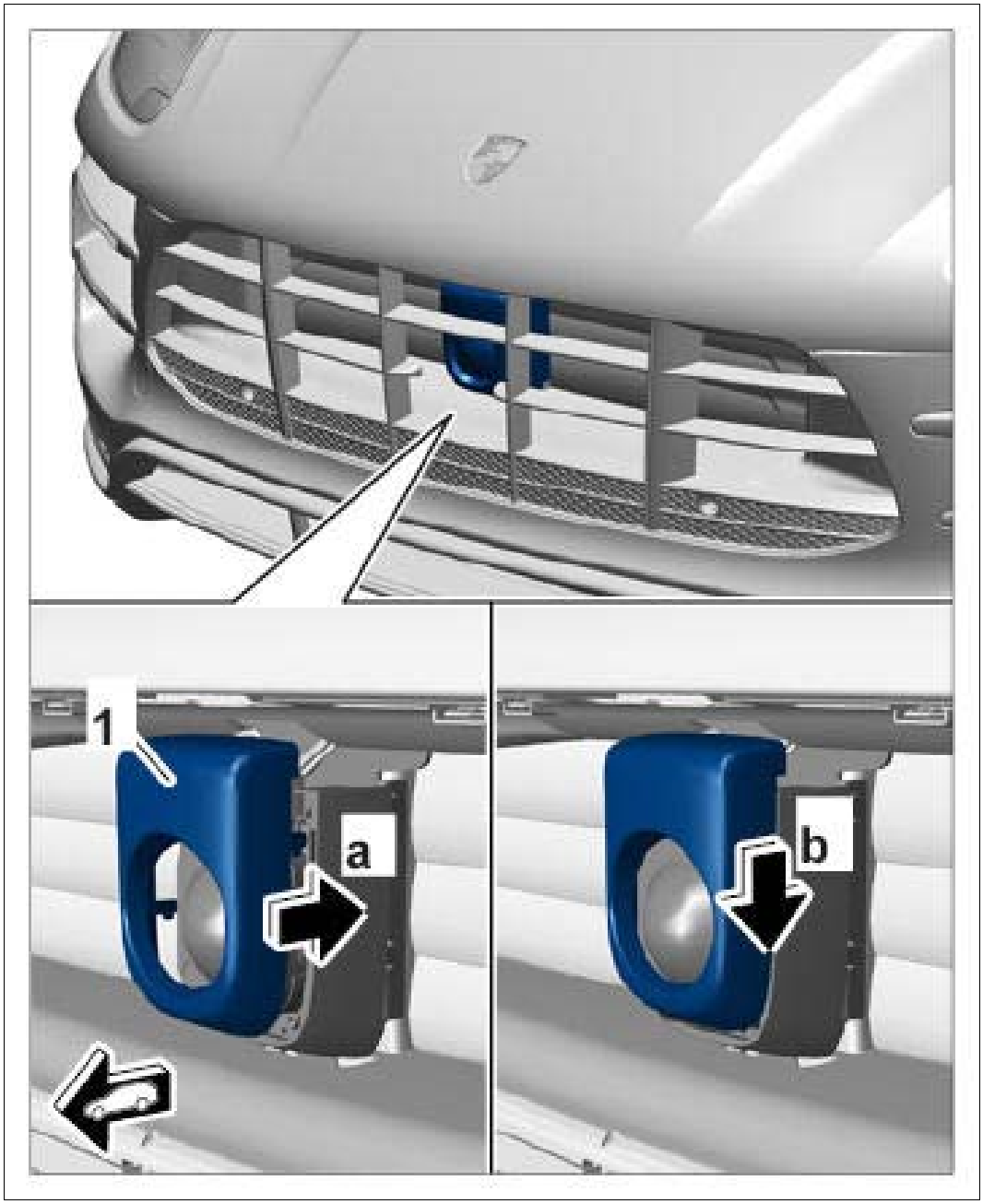

Courtesy of PORSCHE CARS NORTH AMERICA, INC.

6. Perform a test drive and check operation of distance measuring sensor control unit.

7. Read out the fault memory of the distance measuring sensor control unit.

WM 278519 REMOVING AND INSTALLING CONTROL UNIT FOR DISTANCE MEASURING SENSOR (ALL MODELS) > TECHNICAL VALUES

Location	Description	Type	Basic value	Tolerance 1	Tolerance 2
Holder for distance measuring sensor control unit to closing panel	Internal Torx screw, M6 x 12	Tightening torque	8 Nm (6 ftlb.)		
Holder for distance measuring sensor control unit, lower to plastic bracket	Internal Torx screw, Ø 5 x 16	Tightening torque	2.5 Nm (2 ftlb.)		

WM 278519 REMOVING AND INSTALLING CONTROL UNIT FOR DISTANCE MEASURING SENSOR (ALL MODELS) > PRELIMINARY WORK

1. Remove front apron. → Removing Front Apron

WM 278519 REMOVING AND INSTALLING CONTROL UNIT FOR DISTANCE MEASURING SENSOR (ALL MODELS) > REMOVING CONTROL UNIT FOR DISTANCE MEASURING SENSOR

NOTE: Voltage peaks

- *Risk of damage to load or to the control unit*

→ Remove the ignition key and switch off load before disconnecting or removing load.

1. Switch off ignition and pull remote control out of the ignition lock.
2. Disengage trim cover **-1-** at the left and right of the holder **-2-** for the distance measuring sensor control unit **-3-** and remove it.

Fig 1: Removing Distance Measuring Sensor Control Unit Cover

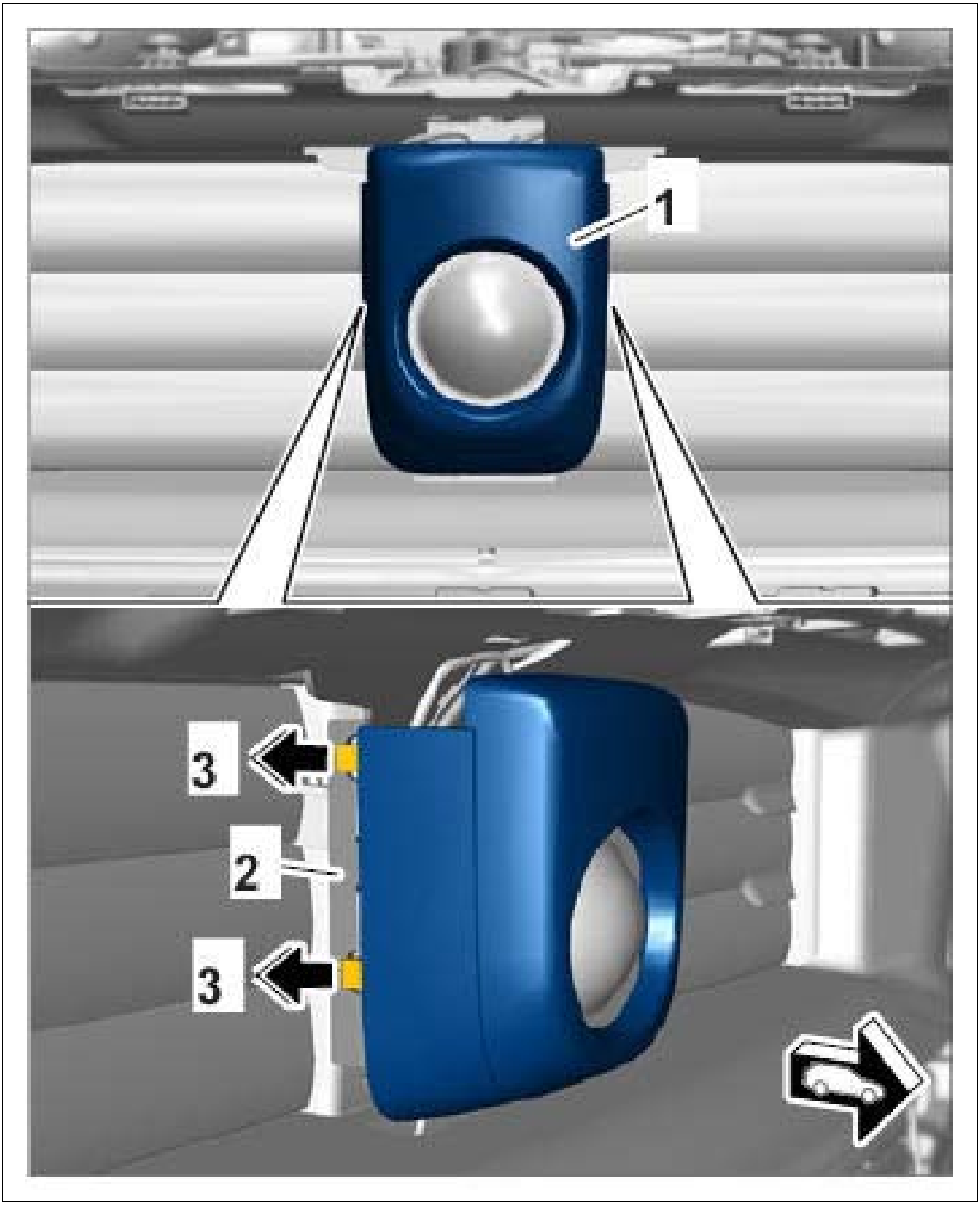

Courtesy of PORSCHE CARS NORTH AMERICA, INC.

Information

Always comply with the regulations for handling ESD-sensitive components!

1. Assembly work may only be carried out if the mechanic is wearing the working clothes and shoes approved by Porsche.

2. The new part must only be removed from the ESD (electrostatic discharge) protective

packaging just before installation and at the position at which the part is to be installed.

3. Never touch the electric pins and plug contacts.

3. Release electric plug connection **-1-** (**-2-**) and disconnect it from the distance measuring sensor control unit **-3-** .

4. Unclip bracket for electric line **-4-** at the holder for the distance measuring sensor control unit and set electric line aside.

Fig 2: Disconnecting Electric Plug Connection

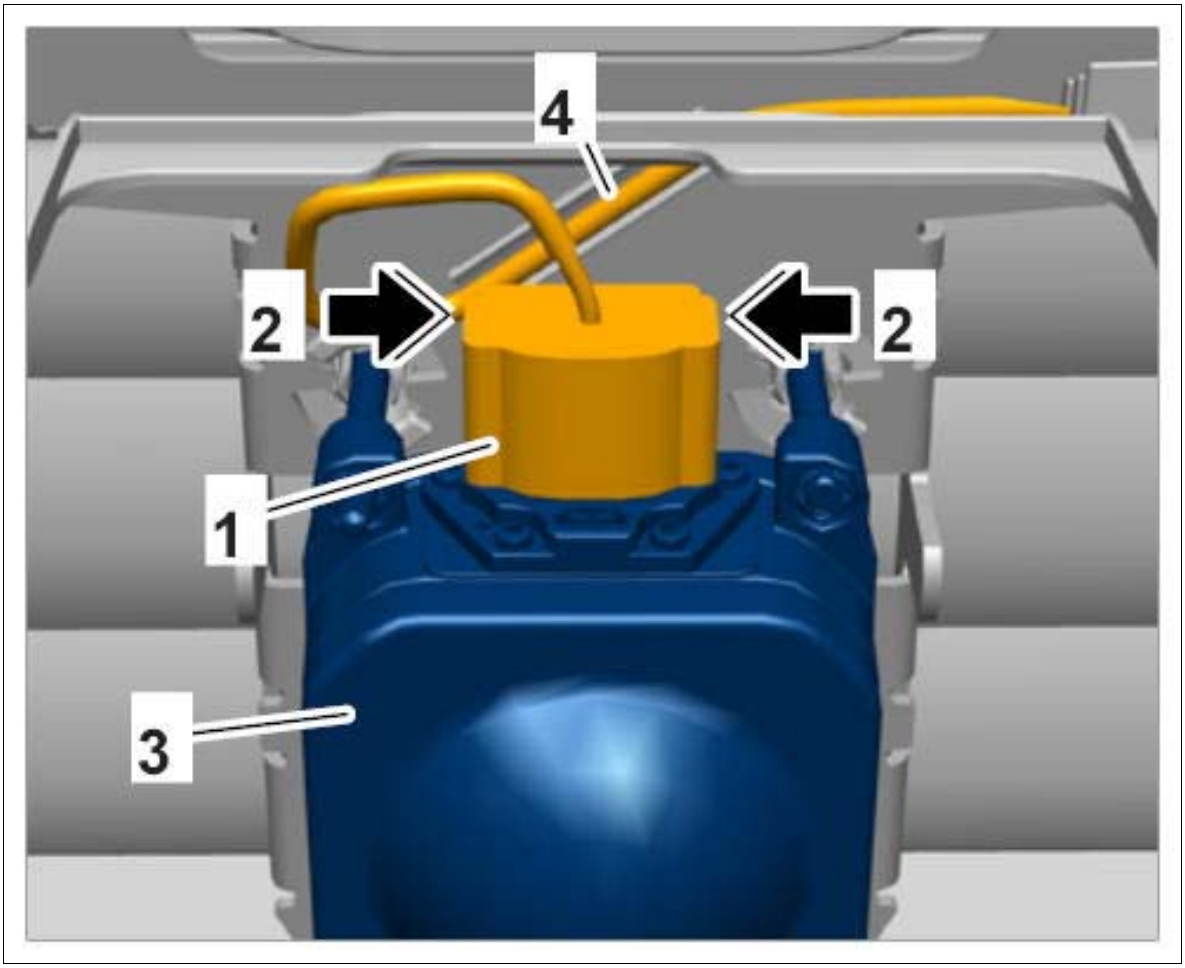

Courtesy of PORSCHE CARS NORTH AMERICA, INC.

5. Loosen air guide **-1-** close to the distance measuring sensor control unit **-2-** at the lock carrier.

6. Unscrew fastening screws **-3-** and remove distance measuring sensor control unit and holder.

Fig 3: Identifying Distance Measuring Sensor Control Unit

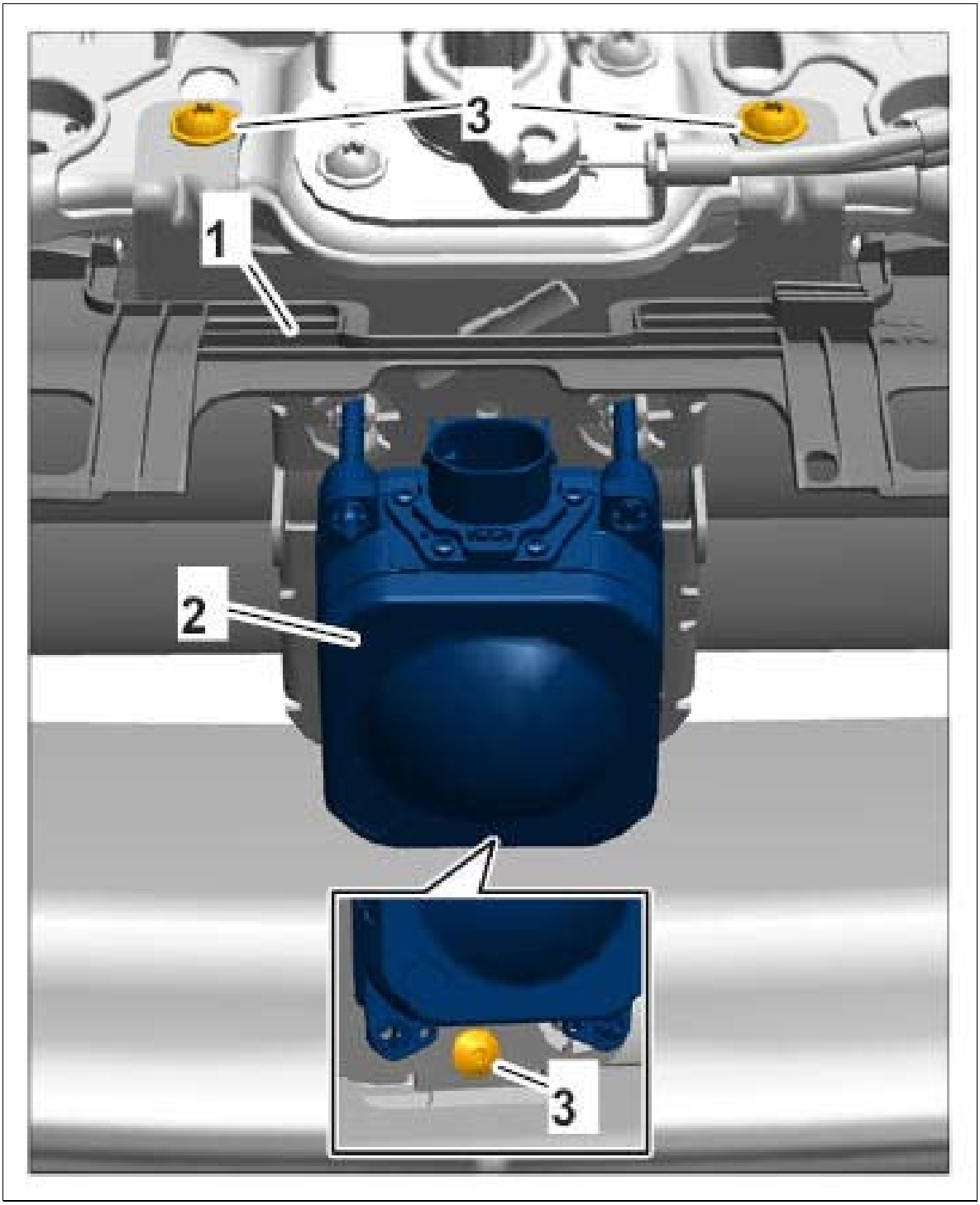

Courtesy of PORSCHE CARS NORTH AMERICA, INC.

WM 278519 REMOVING AND INSTALLING CONTROL UNIT FOR DISTANCE MEASURING SENSOR (ALL MODELS) > INSTALLING CONTROL UNIT FOR DISTANCE MEASURING SENSOR

Information

Before and after fitting the trim cover for the distance measuring sensor control unit, check the following points:

- The holder for the distance measuring sensor control unit must not show any signs of deformation, which may have been caused, for example, by removing or installing the trim cover for the distance measuring sensor control unit. If the holder for the distance measuring sensor control unit is deformed, carefully push it back into shape.
- If the trim cover is damaged or cracked, replace the trim cover.
- After fitting the trim cover, check that it is seated correctly and securely.

1. Installation is performed in reverse order to removal.
2. Tighten fastening screw at the bottom of the holder for the distance measuring sensor control unit. **Tightening torque 2.5 Nm (2 ftlb.)**
3. Tighten fastening screw at the top of the holder for the distance measuring sensor control unit. **Tightening torque 8 Nm (6 ftlb.)**

WM 278519 REMOVING AND INSTALLING CONTROL UNIT FOR DISTANCE MEASURING SENSOR (ALL MODELS) > SUBSEQUENT WORK

1. The distance measuring sensor control unit must be adjusted whenever it is removed and installed. → 278515 ADJUSTING CONTROL UNIT FOR DISTANCE MEASURING SENSOR

WM 2X00IN BATTERY TRICKLE CHARGING (ALL MODELS) > BATTERY TRICKLE CHARGING > INFORMATION

→ "Workshop Equipment and Special Tools Information" Battery chargers.

Information

- When working or carrying out tests on the vehicle or when the vehicle is in the workshop, a battery charger with a rated current of at least 40 A must be connected.
- As soon as the vehicle is unlocked, e.g. the vehicle is in the workshop or salesroom, it must be trickle charged with a battery charging device.

NOTE: Using charging cables/jump leads directly on the vehicle battery.

- *Risk of damage to battery sensors.*

→ Always connect charging cables/jump leads to the external power supply for jump-lead starting.

1. Open protective cover on the positive terminal for jump-lead starting.
2. First, connect the positive cable from the charger to the positive terminal.
3. Connect the negative cable from the charger to the ground point for jump-lead starting.
4. Read the operating instructions for the charger.
5. Switch off all electrical loads.
6. Switch on the charger.

WM 2X00IN BATTERY TRICKLE CHARGING (ALL MODELS) > BATTERY TRICKLE CHARGING > CONNECTING THE BATTERY FOR TRICKLE CHARGING

A suitable battery charger must be connected to the vehicle electrical system when performing the following tasks. All unnecessary electrical loads must be switched off.

When working on the vehicle for more than 15 minutes.

When running diagnostics using the Porsche System Tester.

When adjusting the headlights.

When working on or with the Infotainment system.

If the doors, bonnet and rear lid are open for a long period of time or if these components are actuated frequently.

WM 2X00IN TECHNICAL VALUES (MACAN) > TECHNICAL VALUES

Location	Description	Type	Basic value	Tolerance 1	Tolerance 2
Aluminum screw, M6	AL9	Initial tightening	4 Nm (3 ftlb.)		
Aluminum screw, M6	AL9	Final tightening	90°		
Aluminum screw, M8	AL9	Initial tightening	10 Nm (7.5 ftlb.)		
Aluminum screw, M8	AL9	Final tightening	90°		
Aluminum screw, M10	AL9	Initial tightening	20 Nm (15 ftlb.)		
Aluminum screw, M10	AL9	Final tightening	90°		
Fastening screw securing fuel tank to body		Tightening torque	20 Nm (15 ftlb.)		
Fastening screw securing tank filler neck to wheel housing	M8 x 25	Tightening torque	15 Nm (11 ftlb.)		
Stone guard to fuel tank	Nut, M8	Tightening torque	20 Nm (15 ftlb.)		
Fastening screw securing carbon canister to body	M8 x 30	Tightening torque	15 Nm (11 ftlb.)		
Stud to body		Tightening torque	15 Nm (11 ftlb.)		
Fastening nut securing suspension to body		Tightening torque	20 Nm (15 ftlb.)		
Fastening nuts securing air cleaner for carbon canister to wheel arch	Nut, M6	Tightening torque	5 Nm (3.5 ftlb.)		
Fastening screw securing cover for fuel line to body	M6 x 12	Tightening torque	8 Nm (6 ftlb.)		

Fastening nut securing exhaust manifold to turbocharger	Replace	Tightening torque	25 Nm (19 ftlb.)		
Fastening nut for electronic adjuster for turbocharger	If the nut was loosened, the electronic adjuster for the turbocharger must be replaced	Tightening torque	10 Nm (7.5 ftlb.)		
Fastening screw for electronic adjuster for turbocharger		Tightening torque	10 Nm (7.5 ftlb.)		
Fastening screw for coolant return line		Tightening torque	9 Nm (6.5 ftlb.)		
Fastening screw for recirculating air valve		Tightening torque	7 Nm (5 ftlb.)		
Fastening screw for connection piece		Tightening torque	9 Nm (6.5 ftlb.)		
Fastening screw for oil return line for turbocharger		Tightening torque	9 Nm (6.5 ftlb.)		
Fastening screw for oil return line for turbocharger		Tightening torque	25 Nm (19 ftlb.)		
Fastening screw securing hose to turbocharger		Tightening torque	9 Nm (6.5 ftlb.)		
Oxygen sensor	Coat thread with high-temperature paste.	Tightening torque	55 Nm (41 ftlb.)		
Fastening screw for heat shield		Tightening torque	9 Nm (6.5 ftlb.)		
Fastening screw securing oil supply line to turbocharger		Tightening torque	9 Nm (6.5 ftlb.)		
Fastening screw securing oil supply line to engine		Tightening torque	9 Nm (6.5 ftlb.)		

Fastening screw for heat shield	Coat with high-temperature paste	Tightening torque	30 Nm (22 ftlb.)		
Fastening screw securing coolant line to engine		Tightening torque	9 Nm (6.5 ftlb.)		
Fastening screw securing coolant line to turbocharger		Tightening torque	9 Nm (6.5 ftlb.)		
Fastening screw for support		Tightening torque	30 Nm (22 ftlb.)		
Screw-type clamp securing molded hose to charge-air cooler		Tightening torque	5.5 Nm (4 ftlb.)		
Screw-type clamp securing molded hose to turbocharger		Tightening torque	5.5 Nm (4 ftlb.)		
Screw-type clamp securing molded hose to intake-air distributor		Tightening torque	5.5 Nm (4 ftlb.)		
Screw-type clamp securing molded hose to pressure pipe		Tightening torque	5.5 Nm (4 ftlb.)		
Fastening screw for boost pressure sensor		Tightening torque	5 Nm (3.5 ftlb.)		
Fastening nut for pressure pipe		Tightening torque	9 Nm (6.5 ftlb.)		
Screw-type clamp securing molded hose for silencer to pressure pipe		Tightening torque	3 Nm (2 ftlb.)		
Screw-type clamp securing molded hose to pressure pipe		Tightening torque	5.5 Nm (4 ftlb.)		
Screw-type clamp securing molded hose to charge-air cooler		Tightening torque	5.5 Nm (4 ftlb.)		

Fastening screw for charge-air cooler		Tightening torque	7 Nm (5 ftlb.)		
Screw-type clamp securing molded hose to silencer		Tightening torque	3 Nm (2 ftlb.)		
Oxygen sensor upstream of catalytic converter	Grease thread with high-temperature paste.	Tightening torque	55 Nm (41 ftlb.)		
Oxygen sensor downstream of catalytic converter	Grease thread with high-temperature paste.	Tightening torque	55 Nm (41 ftlb.)		
Coolant temperature sensor		Tightening torque	9 Nm (6.5 ftlb.)		
Speed sender	Replace screw/oil sealing ring	Initial tightening	4 Nm (3 ftlb.)		
Speed sender	Replace screw/oil sealing ring	Final tightening	+45°		
Knock sensor		Tightening torque	20 Nm (15 ftlb.)		
Hall sender		Tightening torque	9 Nm (6.5 ftlb.)		
Fuel pressure sensor for low pressure		Tightening torque	15 Nm (11 ftlb.)		
Fuel pressure sensor		Tightening torque	27 Nm (20 ftlb.)		
Fastening screws securing air cleaner housing cover to air cleaner housing		Tightening torque	3.5 Nm (2.5 ftlb.)		
Fastening bolt for intake manifold		Torque angle	90°		
Screw-type clamp securing molded hose to turbocharger		Tightening torque	5.5 Nm (4 ftlb.)		
Fastening screw securing air cleaner housing to body		Tightening torque	3.5 Nm (2.5 ftlb.)		

Fastening screw for intake-air distributor		Tightening torque	9 Nm (6.5 ftlb.)		
Fastening screws for high-pressure pump	Replace	Tightening torque	20 Nm (15 ftlb.)		
Fastening nut for fuel supply line	Coat ball with clean engine oil	Tightening torque	20 Nm (15 ftlb.)		
Adapter for fuel supply line	Coat thread with clean engine oil	Tightening torque	40 Nm (30 ftlb.)		
Fuel pressure sensor	Coat thread with clean engine oil	Tightening torque	27 Nm (20 ftlb.)		
Fastening screws for throttle housing		Tightening torque	7 Nm (5 ftlb.)		
Fastening screw securing intake manifold support		Tightening torque	20 Nm (15 ftlb.)		
Fastening nut for intake manifold support		Tightening torque	10 Nm (7.5 ftlb.)		
Rubber mounting		Tightening torque	5 Nm (3.5 ftlb.)		
Fastening screw securing coolant pipe to intake manifold		Tightening torque	6 Nm (4.5 ftlb.)		
Fuel collection pipe		Tightening torque	9 Nm (6.5 ftlb.)		
Fastening screws for high-pressure pump	Replace	Tightening torque	20 Nm (15 ftlb.)		
Adapter for fuel supply line/high-pressure pump	Replace/coat thread with clean engine oil	Tightening torque	40 Nm (30 ftlb.)		
Union nut for fuel supply line	Coat ball with clean engine oil	Tightening torque	20 Nm (15 ftlb.)		
Union nut for fuel supply line	Coat ball with clean engine oil	Tightening torque	20 Nm (15 ftlb.)		
Adapter for fuel supply line/fuel distributor	Replace/coat thread with clean engine oil	Tightening torque	40 Nm (30 ftlb.)		

Fastening screws for fuel distributor		Tightening torque	9 Nm (6.5 ftlb.)		
Temperature sensor		Tightening torque	5 Nm (3.5 ftlb.)		
Fastening screw for throttle housing		Tightening torque	7 Nm (5 ftlb.)		
Fastening screw for intake-air distributor		Tightening torque	9 Nm (6.5 ftlb.)		
Fuel pressure sensor	Coat thread and cone with clean engine oil	Tightening torque	27 Nm (20 ftlb.)		
Fastening screw for fuel distributor for intake manifold injection		Tightening torque	9 Nm (6.5 ftlb.)		
Fuel line adapter	Replace	Tightening torque	40 Nm (30 ftlb.)		
Union nut for fuel line	Coat ball on fuel supply line with engine oil	Tightening torque	20 Nm (15 ftlb.)		
Fuel line connection		Tightening torque	20 Nm (15 ftlb.)		
Fastening screw for fuel line		Tightening torque	5 Nm (3.5 ftlb.)		
Fastening screw for temperature sensor		Tightening torque	5 Nm (3.5 ftlb.)		
Fastening nut for intake-air distributor		Tightening torque	9 Nm (6.5 ftlb.)		
Fastening screws for intake-air distributor		Tightening torque	9 Nm (6.5 ftlb.)		
Fuel pressure sensor for low pressure		Tightening torque	15 Nm (11 ftlb.)		
Adapter	Screw to fuel pressure sensor	Tightening torque	15 Nm (11 ftlb.)		
Fastening screw for high-pressure pump	Replace	Tightening torque	20 Nm (15 ftlb.)		

Fuel line connection		Tightening torque	20 Nm (15 ftlb.)		
Fuel line adapter	Replace	Tightening torque	40 Nm (30 ftlb.)		
Union nut on fuel line		Tightening torque	20 Nm (15 ftlb.)		
Fastening screw for high-pressure pump	Replace	Tightening torque	20 Nm (15 ftlb.)		
Clamping sleeve, D65		Tightening torque	33 Nm (24 ftlb.)		
Fastening nuts securing front silencer to catalytic converter	Replace	Tightening torque	23 Nm (17 ftlb.)		
Fastening screw securing rubber stop to bracket		Tightening torque	23 Nm (17 ftlb.)		
Fastening screw securing bracket to transmission		Tightening torque	23 Nm (17 ftlb.)		
Fastening screw securing compression spring to tab		Tightening torque	23 Nm (17 ftlb.)		
Oxygen sensor downstream of catalytic converter	Grease thread with high-temperature paste.	Tightening torque	55 Nm (41 ftlb.)		
Fastening nuts securing catalytic converter to turbocharger Replace		Tightening torque	23 Nm (17 ftlb.)		
Fastening nuts for exhaust-system mount		Tightening torque	20 Nm (15 ftlb.)		
Fastening screws for rear silencer bracket		Tightening torque	20 Nm (15 ftlb.)		
Screws on tailpipe cover with A-pipe		Tightening torque	8 Nm (6 ftlb.)		
Fastening screw for starter (transmission	Replace	Initial tightening	30 Nm (22 ftlb.)		

side)					
Fastening screw for starter (transmission side)	Replace	Final tightening	+105°	+/-30°	
Fastening nut on B+ line		Tightening torque	15 Nm (11 ftlb.)		
Fastening screw for starter (engine side)		Tightening torque	65 Nm (48 ftlb.)		
Fastening screw securing generator to engine		Tightening torque	23 Nm (17 ftlb.)		
Fastening nut securing B+ line to generator		Tightening torque	16 Nm (12 ftlb.)		
Fastening screw for ignition coil		Tightening torque	10 Nm (7.5 ftlb.)		
Spark plug - NEW	Initial tightening/do not use lubricant	Tightening torque	25 Nm (19 ftlb.)		
Spark plug	Re-use/do not use lubricant	Tightening torque	30 Nm (22 ftlb.)		
Fastening screw for knock sensor	Replace	Tightening torque	20 Nm (15 ftlb.)		
Fastening screw for pulse sender		Tightening torque	10 Nm (7.5 ftlb.)		
Fastening screw for hall sender		Tightening torque	9 Nm (6.5 ftlb.)		
Fastening nut securing ground line to ignition coil		Tightening torque	10 Nm (7.5 ftlb.)		

WM 2X00IN TECHNICAL VALUES (MACAN) > OVERVIEW

Information

- The tightening steps in the tightening sequences relate to tightening screws uniformly, i.e. all affected screws must first be tightened uniformly to the first torque value, then all screws are tightened one stage further, and so on.
- Replace all O-rings following removal!

The torques in the table below generally apply to screws that are not specifically listed =>

The bolt quality is indicated on the screw head at the top as a decimal number, e.g. "8.8" or "12.9".

Bolt quality 8.8		Bolt quality 10.9		Bolt quality 12.9	
Thread	[Nm (ftlb.)]	Thread	[Nm (ftlb.)]	Thread	[Nm (ftlb.)]
M4	3 (2)	M4	4 (3)	M4	5 (3.5)
M5	6 (4.5)	M5	8 (6)	M5	10 (7.5)
M6	10 (7.5)	M6	13 (9.5)	M6	16 (12)
M8	23 (17)	M8	33 (24)	M8	39 (29)
M10	45 (33)	M10	65 (48)	M10	80 (59)
M10 x 1.25	50 (37)	M10 x 1.25	70 (52)	M10 x 1.25	85 (63)
M12	80 (59)	M12	115 (85)	M12	135 (100)
M12 x 1.25	90 (67)	M12 x 1.25	125 (93)	M12 x 1.25	150 (111)
M12 x 1.5	85 (63)	M12 x 1.5	120 (89)	M12 x 1.5	145 (107)
M14	130 (96)	M14	180 (133)	M14	220 (163)
M16	200 (148)	M16	280 (207)	M16	335 (248)

Aluminum screws

Thread	Strength	Tightening procedure
M6	AL9	→ **Initial tightening: 4 Nm (3 ftlb.)** and → **Final tightening: 90°** or yield-point wrench.
M8	AL9	→ **Initial tightening: 10 Nm (7.5 ftlb.)** and → **Final tightening: 90°** or yield-point wrench.
M10	AL9	→ **Initial tightening: 20 Nm (15 ftlb.)** and → **Final tightening: 90°** or yield-point wrench.

WM 2X00IN TECHNICAL VALUES (MACAN) > GROUP 20 > FUEL SYSTEM

Fuel tank to body. → **Tightening torque: 20 Nm (15 ftlb.)**

Tank filler neck to wheel housing. → **Tightening torque: 15 Nm (11 ftlb.)**

Stone guard to fuel tank. → **Tightening torque: 20 Nm (15 ftlb.)**

Carbon canister to body. → **Tightening torque: 15 Nm (11 ftlb.)**

Stud to body. → **Tightening torque: 15 Nm (11 ftlb.)**

Suspension to body (studs). → **Tightening torque: 20 Nm (15 ftlb.)**

Air cleaner for carbon canister to wheel arch. → **Tightening torque: 5 Nm (3.5 ftlb.)**

Cover for fuel line to body. → **Tightening torque: 8 Nm (6 ftlb.)**

WM 2X00IN TECHNICAL VALUES (MACAN) > GROUP 21 > TURBOCHARGER

Fig 1: Identifying Turbocharger Components

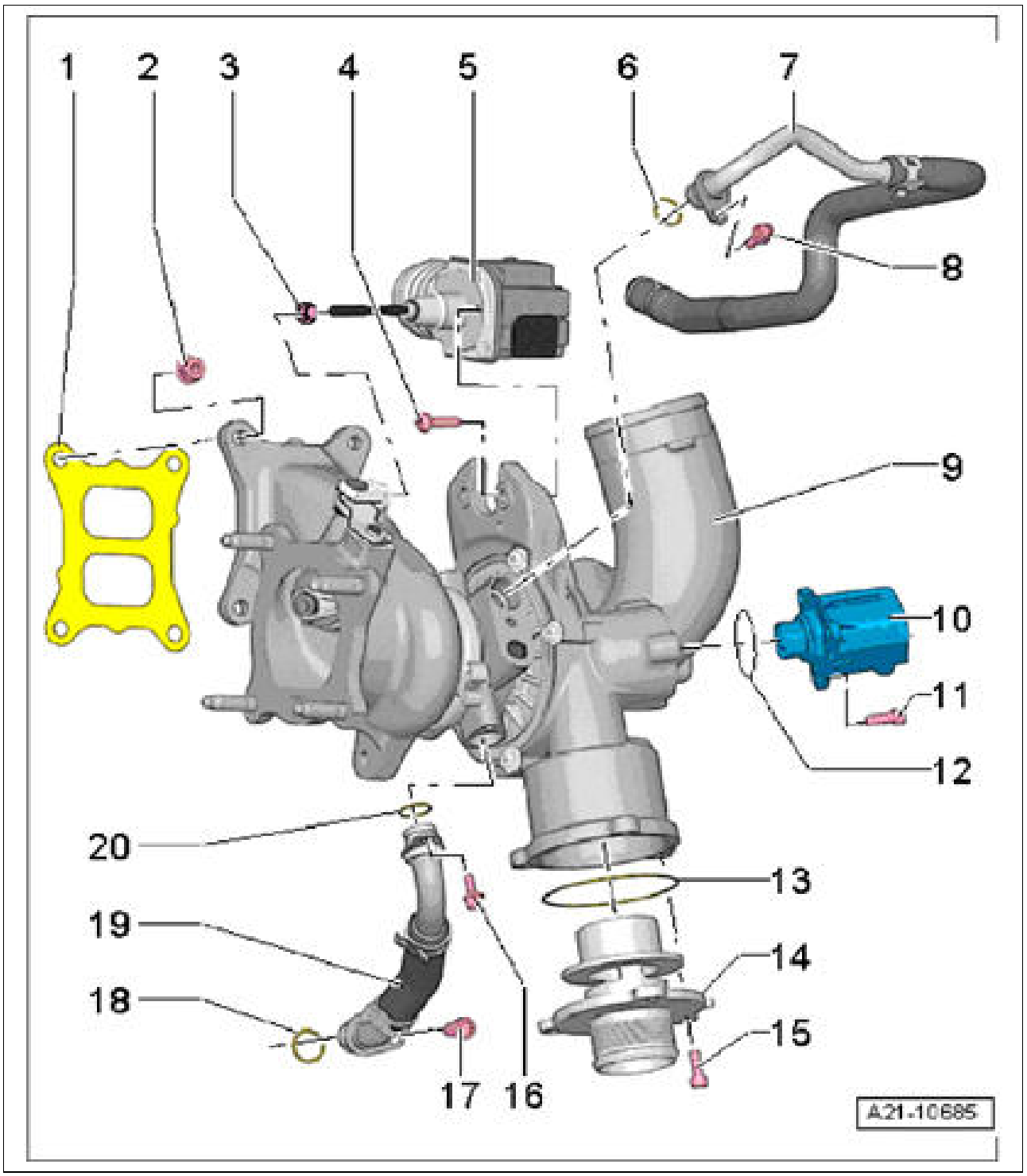

Courtesy of PORSCHE CARS NORTH AMERICA, INC.

1. Seal/**replace**

2. Nut/**replace → Tightening torque: 25 Nm (19 ftlb.)**
3. Nut/**If the nut was loosened, the electronic adjuster for the turbocharger must be replaced → Tightening torque: 10 Nm (7.5 ftlb.)**
4. Screw → **Tightening torque: 10 Nm (7.5 ftlb.)**
5. Electronic adjuster for turbocharger
6. O-ring/**replace and coat with coolant**
7. Coolant return line
8. Screw → **Tightening torque: 9 Nm (6.5 ftlb.)**
9. Turbocharger
10. Recirculating air valve/**check installation position**
11. Screw → **Tightening torque: 7 Nm (5 ftlb.)**
12. O-ring/**replace**
13. O-ring/**replace**
14. Connection piece
15. Screw → **Tightening torque: 9 Nm (6.5 ftlb.)**
16. Screw → **Tightening torque: 9 Nm (6.5 ftlb.)**
17. Screw → **Tightening torque: 25 Nm (19 ftlb.)**
18. O-ring/**replace and coat with engine oil**
19. Oil return line for turbocharger
20. O-ring/**replace and coat with engine oil**

Installation position of recirculating air valve for turbocharger

Fig 2: Locating Recirculating Air Valve For Turbocharger Position

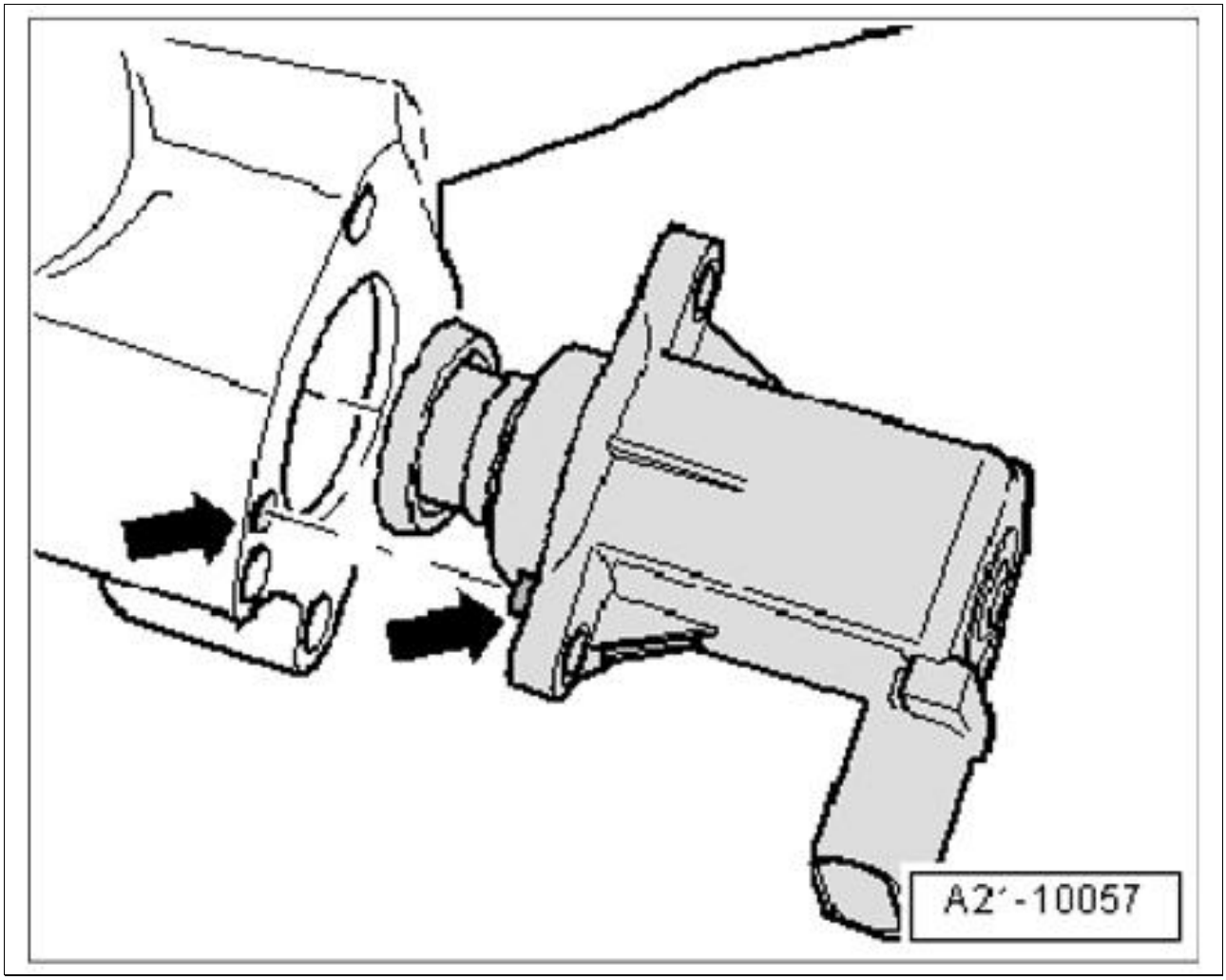

Courtesy of PORSCHE CARS NORTH AMERICA, INC.

Fig 3: Identifying Turbocharger Components

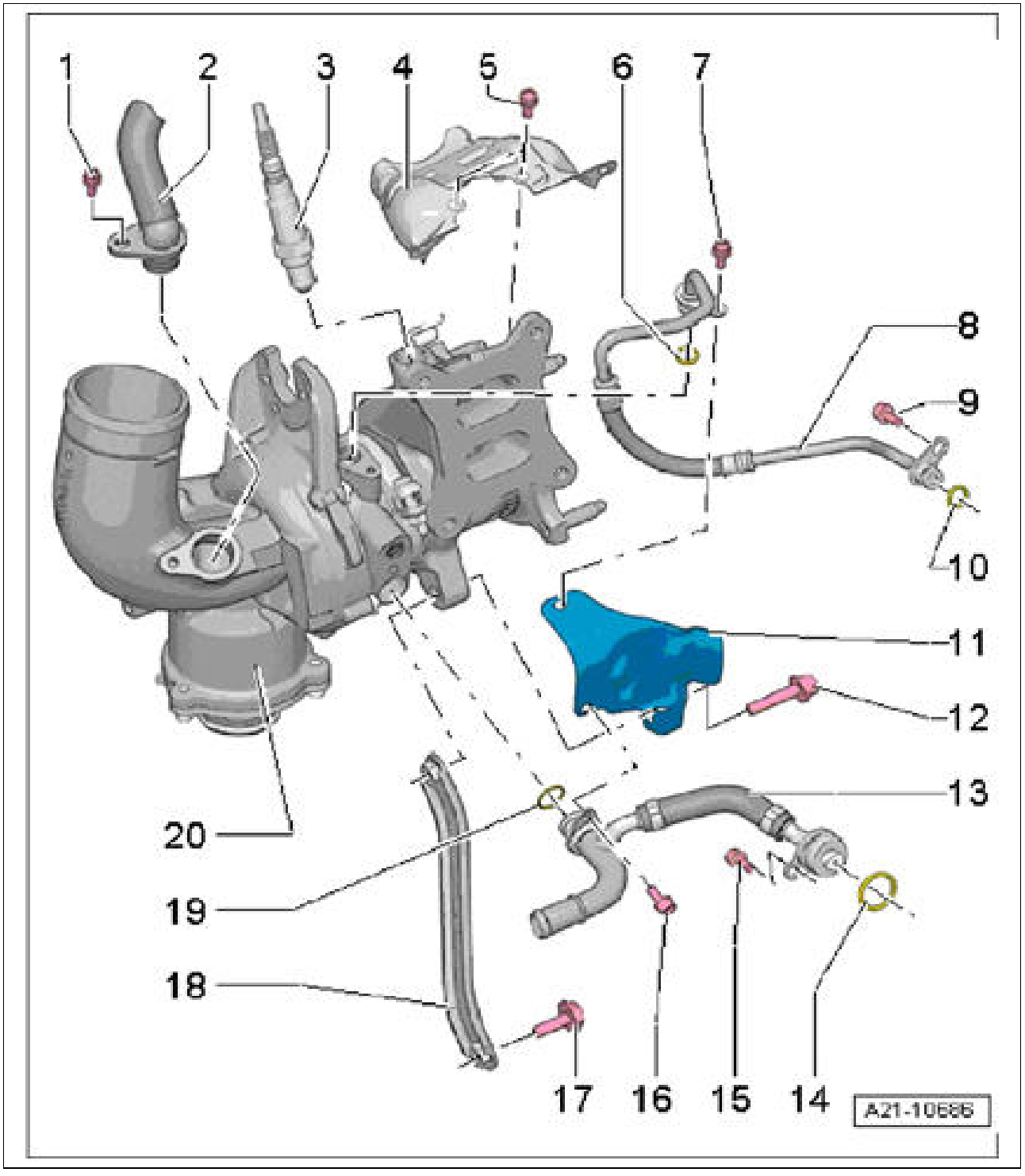

Courtesy of PORSCHE CARS NORTH AMERICA, INC.

1. Screw → **Tightening torque: 9 Nm (6.5 ftlb.)**
2. Hose to turbocharger
3. Oxygen sensor → **Tightening torque: 55 Nm (41 ftlb.) High-temperature paste must not get into the slits on the oxygen sensor body.**
4. Heat shield

5. Screw → **Tightening torque: 9 Nm (6.5 ftlb.)**
6. O-ring/**replace and coat with engine oil**
7. Screw → **Tightening torque: 9 Nm (6.5 ftlb.)**
8. Oil supply line
9. Screw → **Tightening torque: 9 Nm (6.5 ftlb.)**
10. O-ring/**replace and coat with engine oil**
11. Heat shield
12. Screw → **Tightening torque: 30 Nm (22 ftlb.)**
13. Coolant line
14. O-ring/**replace and coat with coolant**
15. Screw → **Tightening torque: 9 Nm (6.5 ftlb.)**
16. Screw → **Tightening torque: 9 Nm (6.5 ftlb.)**
17. Screw → **Tightening torque: 30 Nm (22 ftlb.)**
18. Support
19. O-ring/**replace and coat with coolant**
20. Turbocharger

WM 2X00IN TECHNICAL VALUES (MACAN) > GROUP 21 > CHARGE AIR SYSTEM

Fig 1: Identifying Charge Air System Components

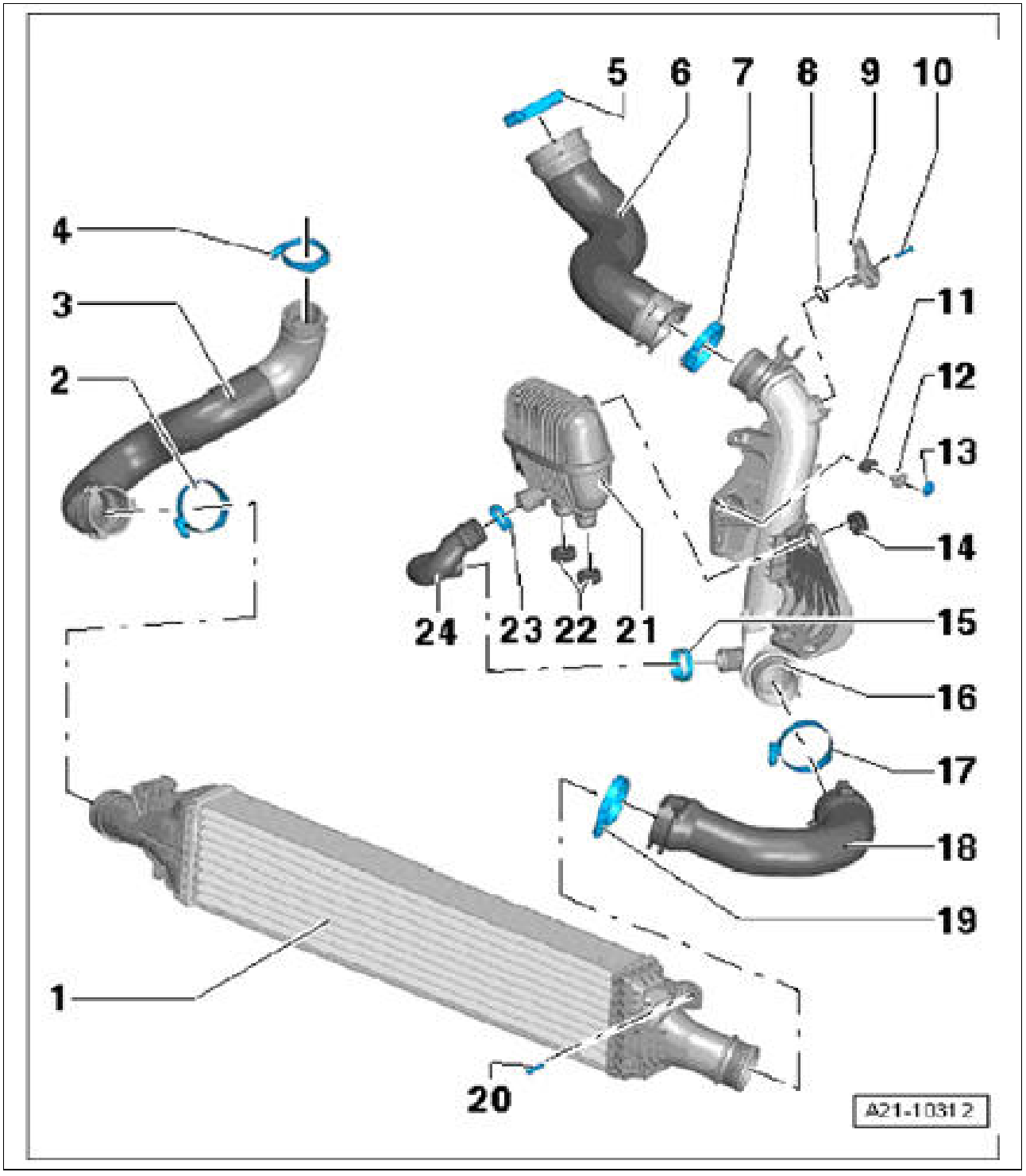

Courtesy of PORSCHE CARS NORTH AMERICA, INC.

1. Charge-air cooler
2. Screw-type clamp → **Tightening torque: 5.5 Nm (4 ftlb.)**
3. Molded hose
4. Screw-type clamp → **Tightening torque: 5.5 Nm (4 ftlb.)**

5. Screw-type clamp → **Tightening torque: 5.5 Nm (4 ftlb.)**
6. Molded hose
7. Screw-type clamp → **Tightening torque: 5.5 Nm (4 ftlb.)**
8. O-ring/**replace**
9. Boost pressure sensor (pressure and temperature)
10. Screw → **Tightening torque: 5 Nm (3.5 ftlb.)**
11. Rubber sleeve
12. Bush
13. Nut → **Tightening torque: 9 Nm (6.5 ftlb.)**
14. Rubber sleeve
15. Screw-type clamp → **Tightening torque: 3 Nm (2 ftlb.)**
16. Pressure pipe
17. Screw-type clamp → **Tightening torque: 5.5 Nm (4 ftlb.)**
18. Molded hose
19. Screw-type clamp → **Tightening torque: 5.5 Nm (4 ftlb.)**
20. Screw → **Tightening torque: 7 Nm (5 ftlb.)**
21. Silencer
22. Rubber sleeve
23. Screw-type clamp → **Tightening torque: 3 Nm (2 ftlb.)**
24. Molded hose

WM 2X00IN TECHNICAL VALUES (MACAN) > GROUP 24 > INSTALLATION POSITIONS OF INJECTION SYSTEM

Fig 1: Identifying Injection System Installation Positions

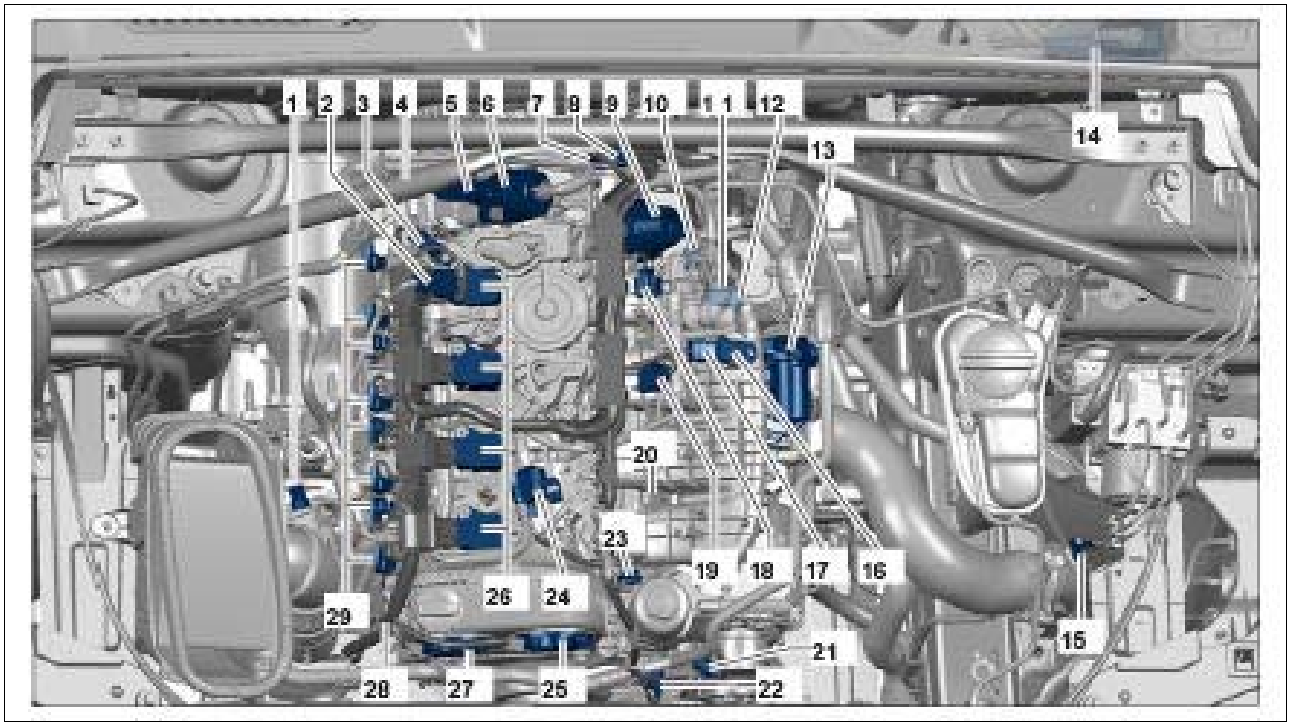

Courtesy of PORSCHE CARS NORTH AMERICA, INC.

1. Oxygen sensor upstream of catalytic converter → **Tightening torque: 55 Nm (41 ftlb.)** **High-temperature paste must not get into the slits on the oxygen sensor body.**
2. Electric plug connection for oxygen sensor
3. Hall sender
4. Oxygen sensor downstream of catalytic converter → **Tightening torque: 55 Nm (41 ftlb.)** **High-temperature paste must not get into the slits on the oxygen sensor body.**
5. Control valve for fuel pressure
6. High-pressure pump
7. Coolant temperature sensor → **Tightening torque: 9 Nm (6.5 ftlb.)**
8. Electric plug connection for fuel injectors for intake manifold injection
9. Vacuum unit for intake manifold flaps
10. Valve for intake manifold flap
11. Speed sensor/**replace screw; oil sealing ring → Initial tightening: 4 Nm (3 ftlb.) → Final tightening: +45°**
12. Electric plug connections for
    1. Knock sensor
    2. Valve for intake manifold flap

3. Fuel pressure sensor
4. Electronic adjuster for intake manifold flap
5. Hall sender
6. Fuel injectors for direct fuel injection (DFI)

13. Throttle valve control unit
14. Engine control unit
15. Boost pressure sensor
16. Intake air temperature sensor
17. Knock sensor → **Tightening torque: 20 Nm (15 ftlb.)**
18. Hall sender → **Tightening torque: 9 Nm (6.5 ftlb.)**
19. Fuel pressure sensor for low pressure → **Tightening torque: 15 Nm (11 ftlb.)**
20. Fuel pressure sensor → **Tightening torque: 27 Nm (20 ftlb.)**
21. Oil pressure control valve
22. Oil pressure switch
23. Electronic adjuster for intake manifold flap
24. Solenoid valve for carbon canister
25. Camshaft control valve
26. Ignition coils
27. Valve for outlet camshaft control
28. Recirculating air valve for turbocharger
29. Camshaft actuator

WM 2X00IN TECHNICAL VALUES (MACAN) > GROUP 24 > AIR CLEANER

Fig 1: Identifying Air Cleaner Components

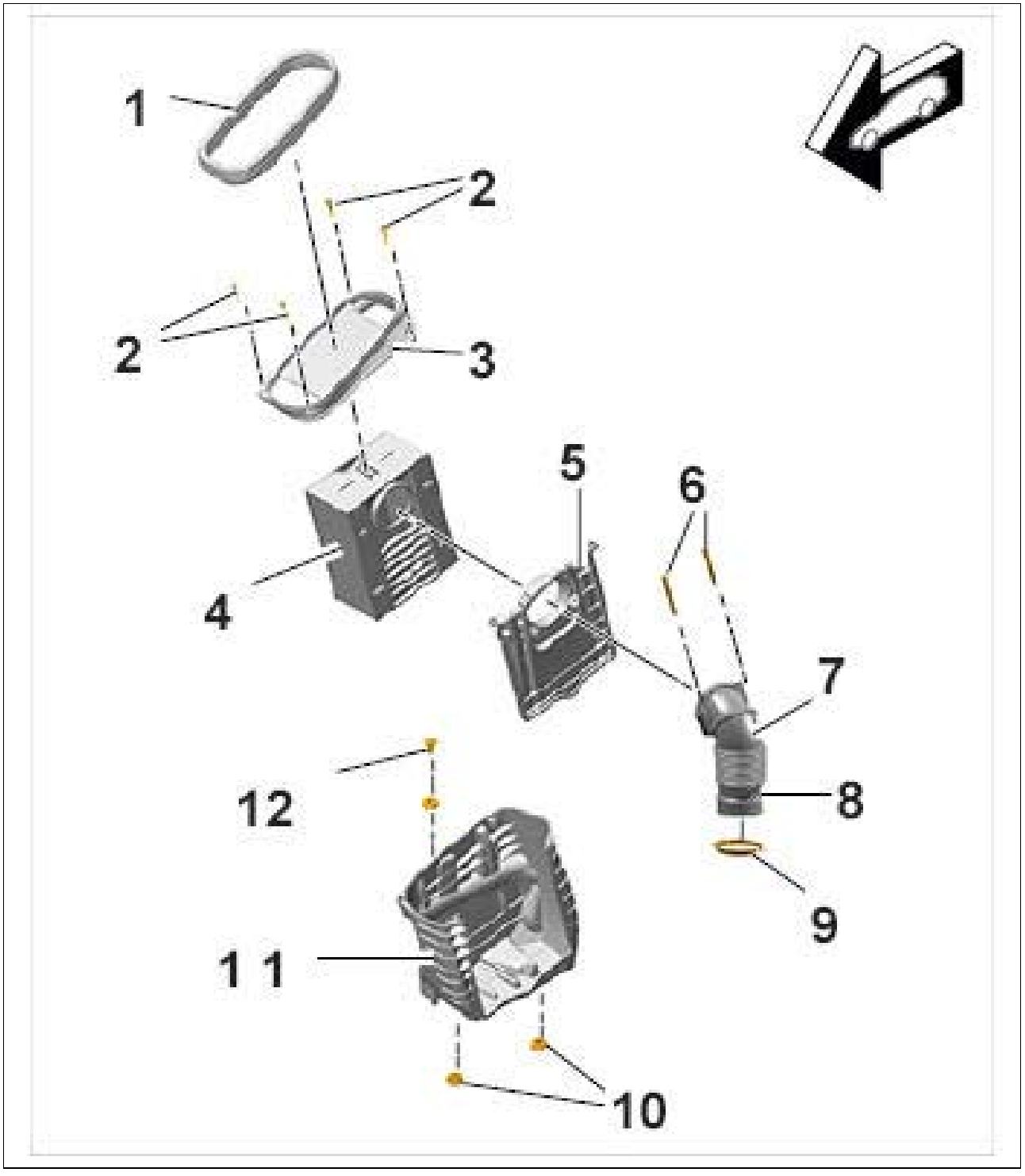

Courtesy of PORSCHE CARS NORTH AMERICA, INC.

1. Rubber seal
2. Screws → **Tightening torque: 3.5 Nm (2.5 ftlb.)**
3. Air cleaner housing cover
4. Air-cleaner element

5. Air-cleaner element cover
6. Fastening bolt → **Torque angle: 90°**
7. Intake pipe
8. Vacuum hose connection
9. Screw-type clamp → **Tightening torque: 5.5 Nm (4 ftlb.)**
10. Rubber sleeves
11. Air cleaner housing
12. Screw → **Tightening torque: 3.5 Nm (2.5 ftlb.)**

WM 2X00IN TECHNICAL VALUES (MACAN) > GROUP 24 > INTAKE-AIR DISTRIBUTOR

Fig 1: Identifying Intake-Air Distributor Components

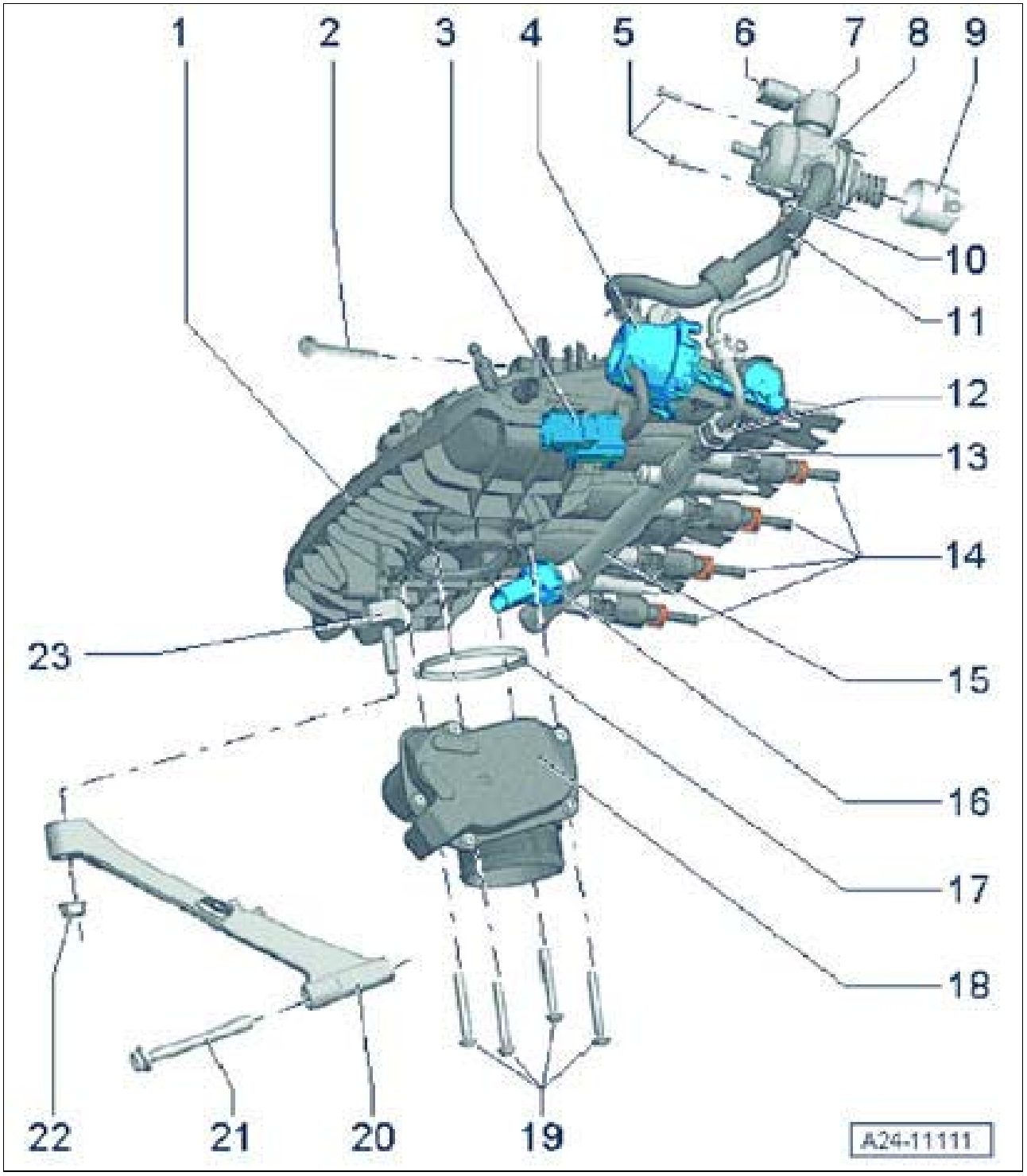

Courtesy of PORSCHE CARS NORTH AMERICA, INC.

1. Intake-air distributor
2. Screw → **Tightening torque: 9 Nm (6.5 ftlb.)**
3. Intake manifold flap valve
4. Vacuum unit for intake manifold flaps

5. Screws/**replace → Tightening torque: 20 Nm (15 ftlb.)**
6. Electric plug connection
7. Pressure regulator for fuel pressure
8. High-pressure pump
    1. With pressure regulator for fuel pressure
    2. Make sure that no dirt gets into the fuel system during installation
    3. Protect the high-pressure pump from impact of any kind
    4. The fuel system must be depressurized for installation
    5. Do not strain fuel lines during installation
9. Roller tappet
    1. Can remain in the vacuum pump following removal of the high-pressure pump, removable
10. Fuel supply lines for fuel injectors for direct fuel injection (DFI)
    1. Do not install fuel supply line too tightly/ensure absolute cleanliness
11. Fuel supply lines for fuel injectors for intake manifold injection
    1. Do not install fuel supply line too tightly/ensure absolute cleanliness
12. Union nut → **Tightening torque: 20 Nm (15 ftlb.)**
13. Adapter/**replace → Tightening torque: 40 Nm (30 ftlb.)**
14. Fuel injectors/**replace O-ring and Teflon ring; check installation position**
15. Fuel distributor
16. Fuel pressure sensor/**coat thread with clean engine oil → Tightening torque: 27 Nm (20 ftlb.)**
17. Sealing ring/**replace**
18. Throttle housing
    1. This must be adapted to suit the engine control unit again following removal and installation or replacement
19. Screws → **Tightening torque: 7 Nm (5 ftlb.)**
20. Intake manifold support
21. Screw → **Tightening torque: 20 Nm (15 ftlb.)**
22. Nut → **Tightening torque: 10 Nm (7.5 ftlb.)**
23. Rubber mounting → **Tightening torque: 5 Nm (3.5 ftlb.)**
    1. Screw → **Tightening torque: 6 Nm (4.5 ftlb.)**

WM 2X00IN TECHNICAL VALUES (MACAN) > GROUP 24 > FUEL DISTRIBUTOR FOR DIRECT FUEL INJECTION (DFI)

Fig 1: Identifying Direct Fuel Injection Fuel Distributor Components (DFI)

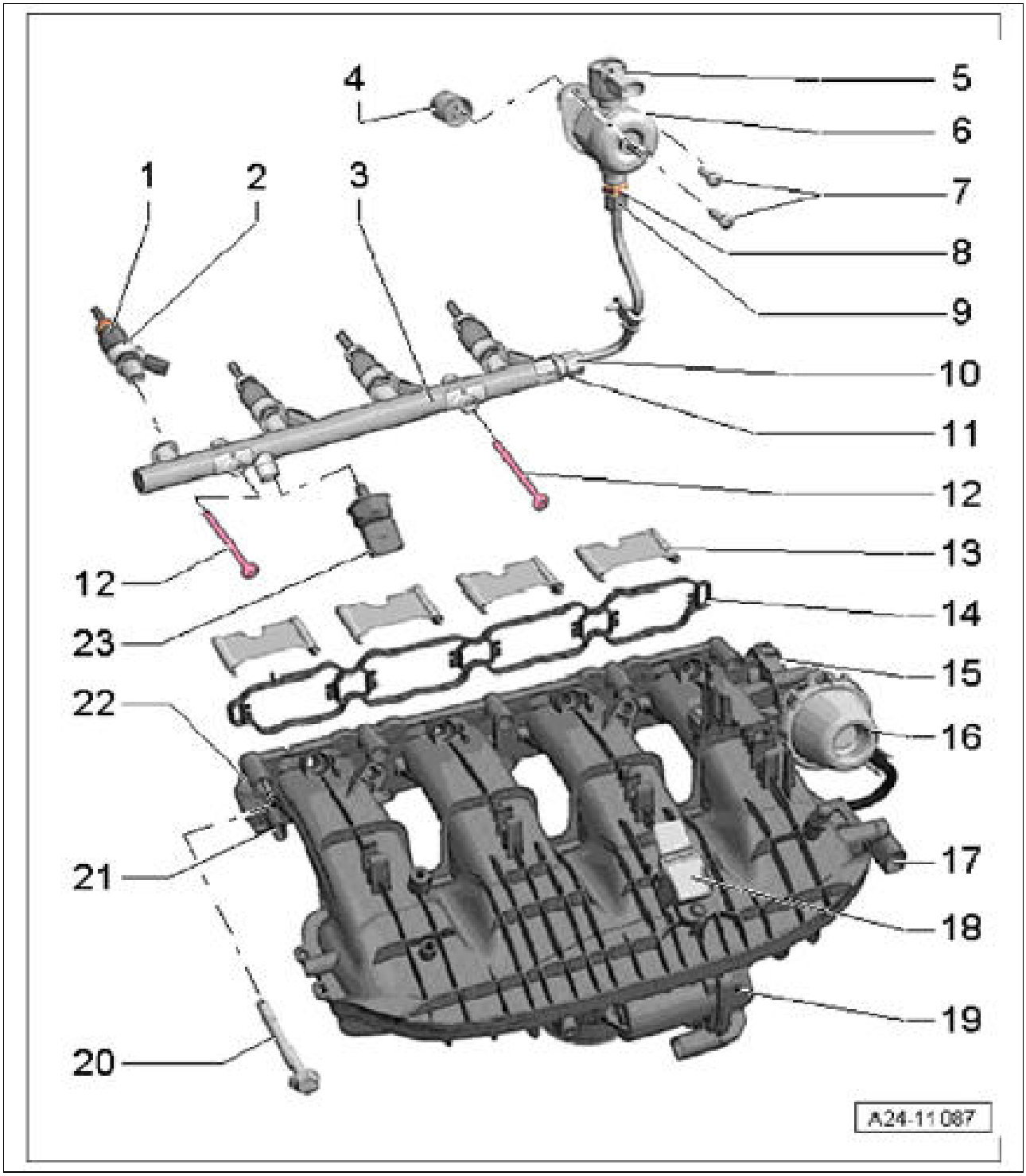

Courtesy of PORSCHE CARS NORTH AMERICA, INC.

1. Fuel injector/**replace O-rings; replace combustion chamber sealing ring**

    1. Check that it is installed at the correct position
2. Support ring/**replace**
3. Fuel collection pipe → **Tightening torque: 9 Nm (6.5 ftlb.)**
4. Roller tappet
5. Pressure regulator for fuel pressure
6. High-pressure pump
    1. With pressure regulator for fuel pressure
    2. Make sure that no dirt gets into the fuel system during installation
    3. Protect the high-pressure pump from impact of any kind
    4. The fuel system must be depressurized for installation
    5. Do not strain fuel lines during installation
7. Screws/**replace** → **Tightening torque: 20 Nm (15 ftlb.)**
8. Adapter for fuel supply line/**replace** → **Tightening torque: 40 Nm (30 ftlb.)**
9. Union nut → **Tightening torque: 20 Nm (15 ftlb.)**
10. Union nut → **Tightening torque: 20 Nm (15 ftlb.)**
11. Adapter/replace → **Tightening torque: 40 Nm (30 ftlb.)**
12. Screws → **Tightening torque: 9 Nm (6.5 ftlb.)**
13. Channel separator plates
14. Seal/**replace if damaged**
15. Adjustment of intake manifold flaps
16. Vacuum unit for intake manifold flaps
17. Intake manifold flap valve
18. Temperature sensor → **Tightening torque: 5 Nm (3.5 ftlb.)**
19. Throttle housing → **Tightening torque: 7 Nm (5 ftlb.)**
    1. This must be adapted to suit the engine control unit again following removal and installation or replacement
20. Screw → **Tightening torque: 9 Nm (6.5 ftlb.)**
21. Intake manifold pressure sensor
    1. This must be adapted to suit the engine control unit again following removal and installation or replacement
22. Intake-air distributor

23. Fuel pressure sensor/**coat thread and cone with clean engine oil → Tightening torque: 27 Nm (20 ftlb.)**

WM 2X00IN TECHNICAL VALUES (MACAN) > GROUP 24 > FUEL DISTRIBUTOR FOR INTAKE MANIFOLD INJECTION

Fig 1: Identifying Intake Manifold Injection Fuel Distributor Components

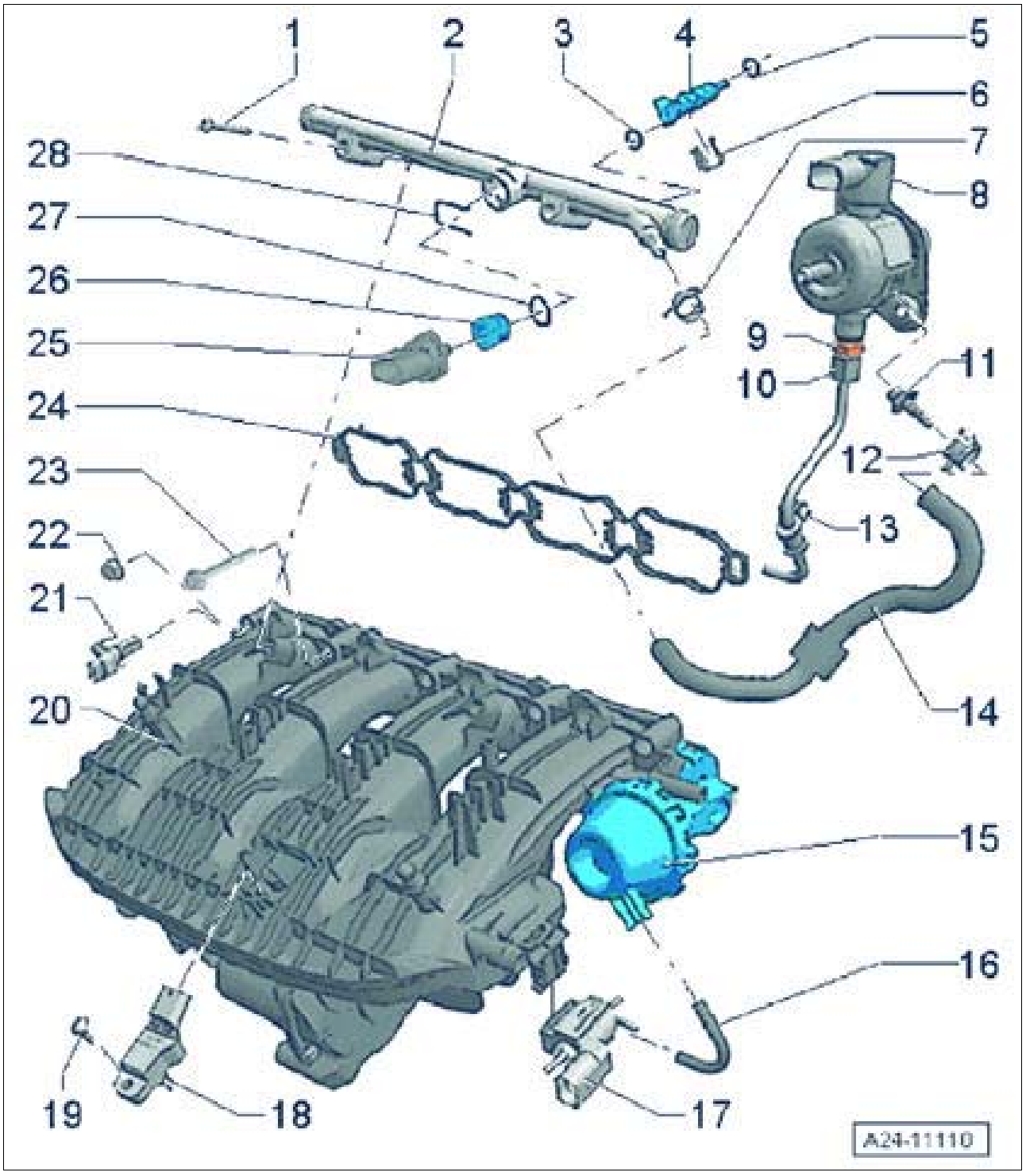

Courtesy of PORSCHE CARS NORTH AMERICA, INC.

1. Screw → **Tightening torque: 9 Nm (6.5 ftlb.)**
2. Fuel distributor
3. O-ring/**replace**
4. Fuel injector/**check installation position**
5. O-ring/**replace**
6. Retaining clip
7. Spring band clamp
8. High-pressure pump
    1. With control valve for fuel pressure
    2. Make sure that no dirt gets into the fuel system during installation
    3. Protect the high-pressure pump from impact of any kind
    4. The fuel system must be depressurized for installation
    5. Do not strain fuel lines during installation
9. Adapter/**replace** → **Tightening torque: 40 Nm (30 ftlb.)**
10. Nut → **Tightening torque: 20 Nm (15 ftlb.)**
    1. Do not strain fuel lines during installation
11. Fuel line connection → **Tightening torque: 20 Nm (15 ftlb.)**
12. Clamp/**replace**
13. Screw → **Tightening torque: 5 Nm (3.5 ftlb.)**
14. Fuel supply line
    1. Do not strain fuel lines during installation
15. Vacuum unit for intake manifold flaps
16. Vacuum hose
17. Intake manifold flap valve
18. Temperature sensor
19. Screw → **Tightening torque: 5 Nm (3.5 ftlb.)**
20. Intake-air distributor
21. Electronic adjuster for intake manifold flap
22. Nut → **Tightening torque: 9 Nm (6.5 ftlb.)**
23. Screws → **Tightening torque: 9 Nm (6.5 ftlb.)**

24. Seal/**replace if damaged**
25. Fuel pressure sensor for low pressure → **Tightening torque: 15 Nm (11 ftlb.)**
26. Adapter → **Tightening torque: 15 Nm (11 ftlb.)**
27. O-ring/**replace**
28. Clip

WM 2X00IN TECHNICAL VALUES (MACAN) > GROUP 24 > HIGH-PRESSURE PUMP

Fig 1: Identifying High-Pressure Pump Components

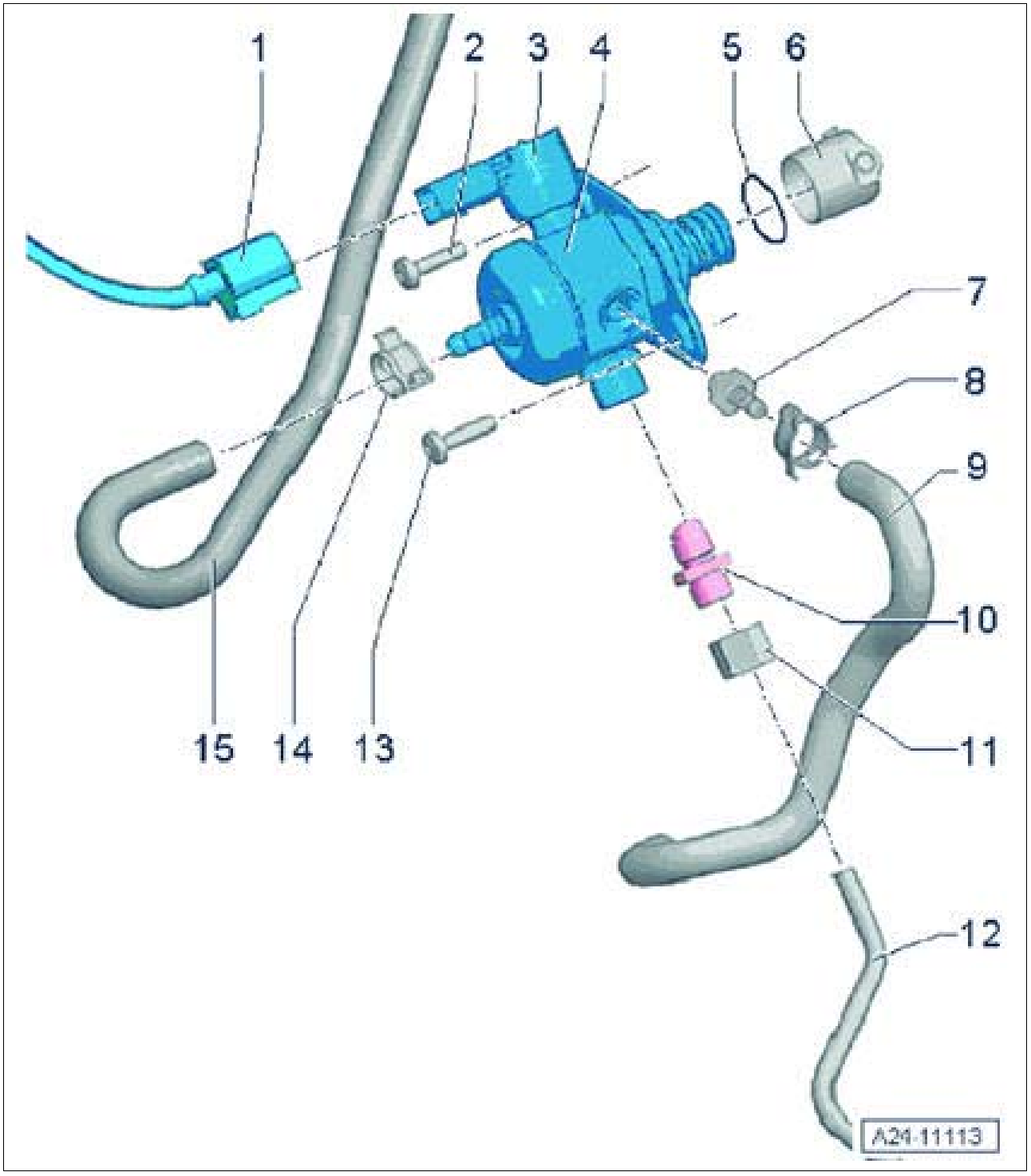

Courtesy of PORSCHE CARS NORTH AMERICA, INC.

1. Electric plug connection for fuel pressure control valve
2. Screw/**replace** → **Tightening torque: 20 Nm (15 ftlb.)**
3. Pressure regulator
4. High-pressure pump

    1. Make sure that no dirt gets into the fuel system during installation
    2. Protect the high-pressure pump from impact of any kind
    3. The fuel system must be depressurized for installation
    4. Do not strain fuel lines during installation
5. O-ring/**replace if damaged**
6. Roller tappet
7. Fuel line connection → **Tightening torque: 20 Nm (15 ftlb.)**
8. Clamp/**replace**
9. Fuel line
    1. Do not strain fuel lines during installation
10. Fuel line adapter/**replace** → **Tightening torque: 40 Nm (30 ftlb.)**
11. Nut → **Tightening torque: 20 Nm (15 ftlb.)**
12. Fuel line/**coat ball with engine oil**
    1. Do not strain fuel lines during installation
13. Screw/replace → **Tightening torque: 20 Nm (15 ftlb.)**
14. Spring band clamp
15. Fuel line

WM 2X00IN TECHNICAL VALUES (MACAN) > GROUP 24 > FUEL INJECTOR FOR DIRECT FUEL INJECTION (DFI)

Fig 1: Identifying Direct Fuel Injection Fuel Injectors Components (DFI)

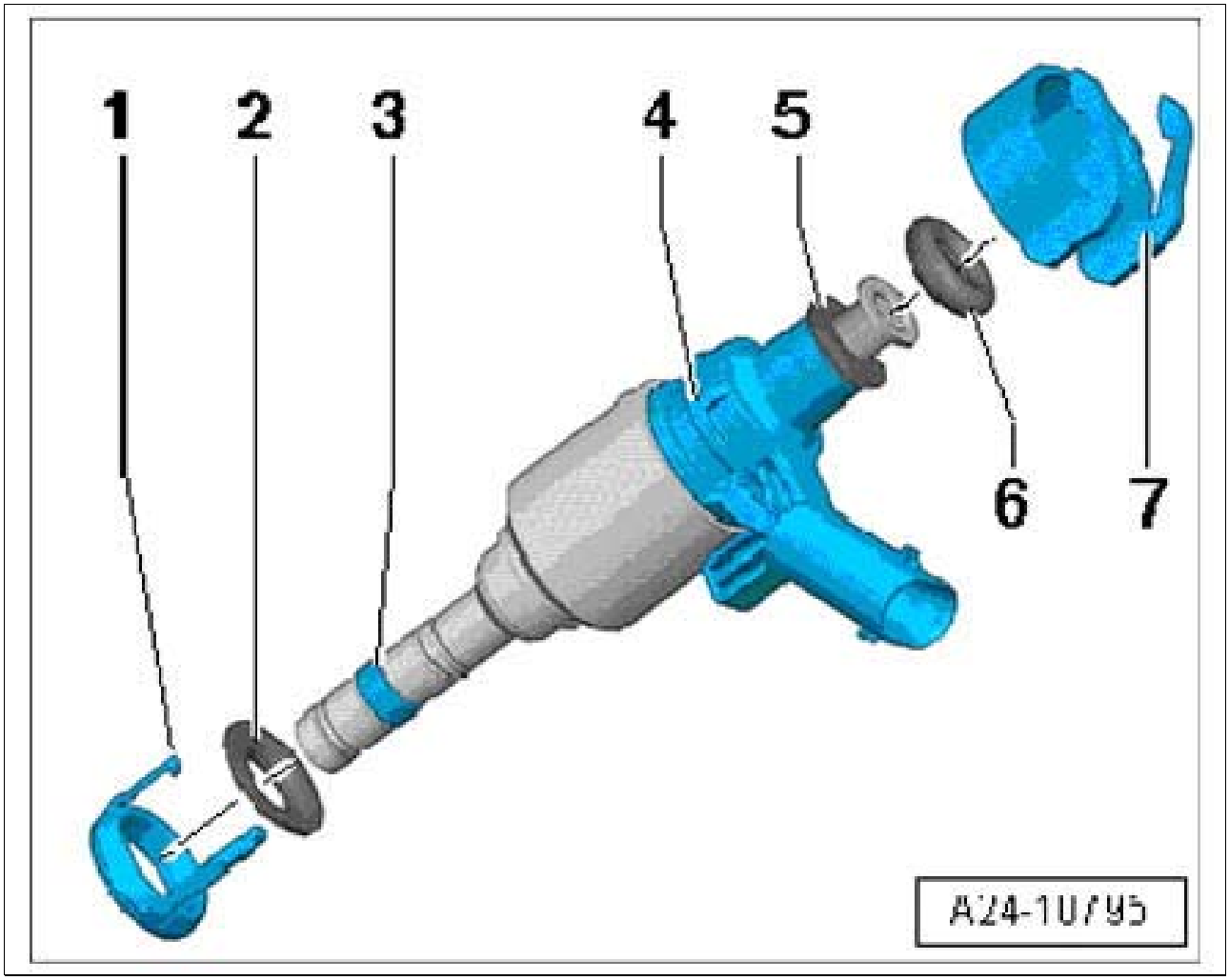

Courtesy of PORSCHE CARS NORTH AMERICA, INC.

1. Intermediate ring/**replace**
2. Mounting/**replace**
3. Combustion chamber sealing ring/**replace; do not grease**
4. Fuel injector
5. Spacer ring/**replace**
6. O-ring/**replace**
7. Support ring/**replace**

WM 2X00IN TECHNICAL VALUES (MACAN) > GROUP 24 > FUEL INJECTOR FOR INTAKE MANIFOLD INJECTION

Fig 1: Identifying Intake Manifold Injection Fuel Injector Fuel Injector

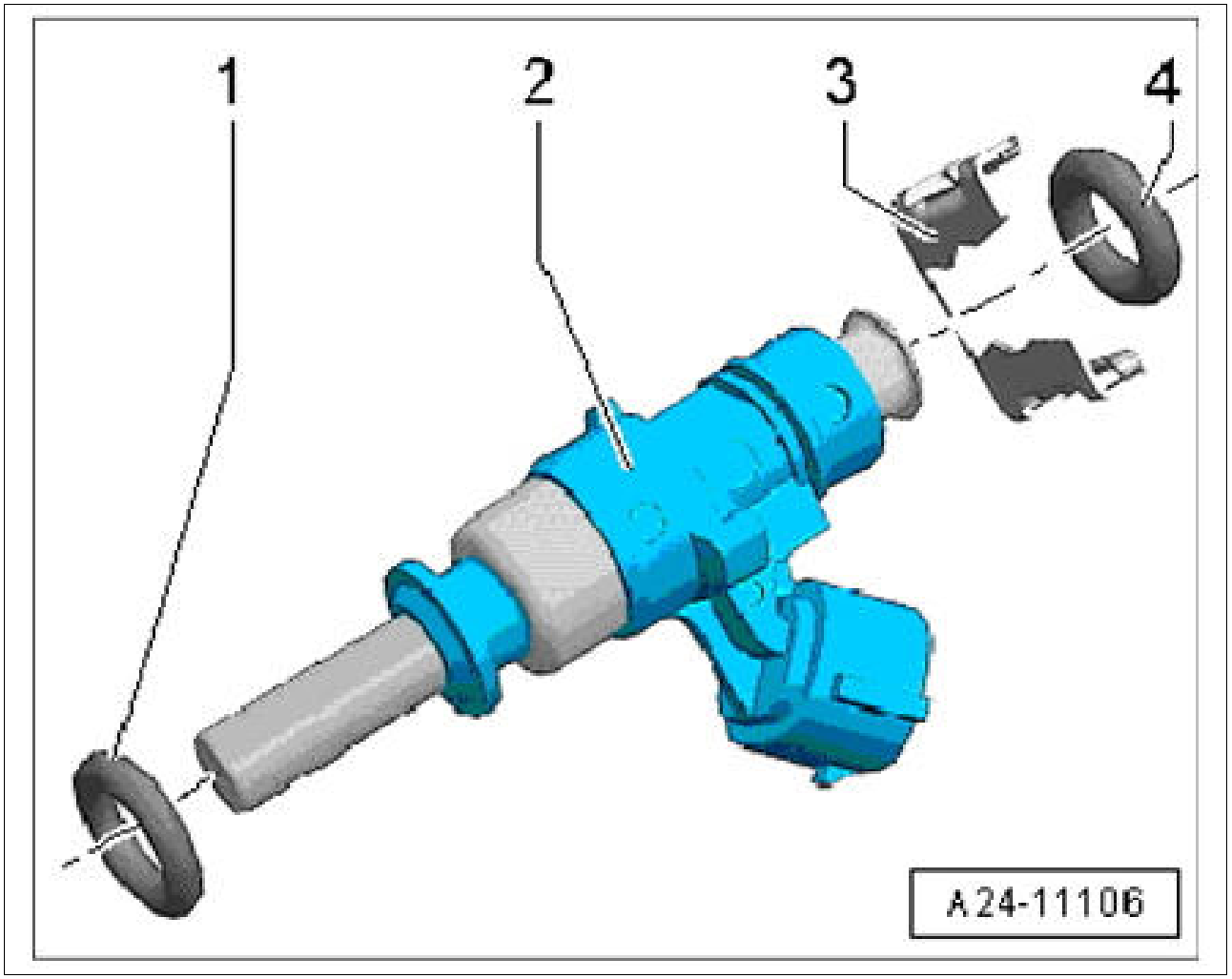

Courtesy of PORSCHE CARS NORTH AMERICA, INC.

1. O-ring/**replace; coat with clean engine oil**
2. Fuel injector
3. Retaining clip
4. O-ring/**replace; coat with clean engine oil**

WM 2X00IN TECHNICAL VALUES (MACAN) > GROUP 26 > EXHAUST SYSTEM

Fig 1: Identifying Exhaust System Components

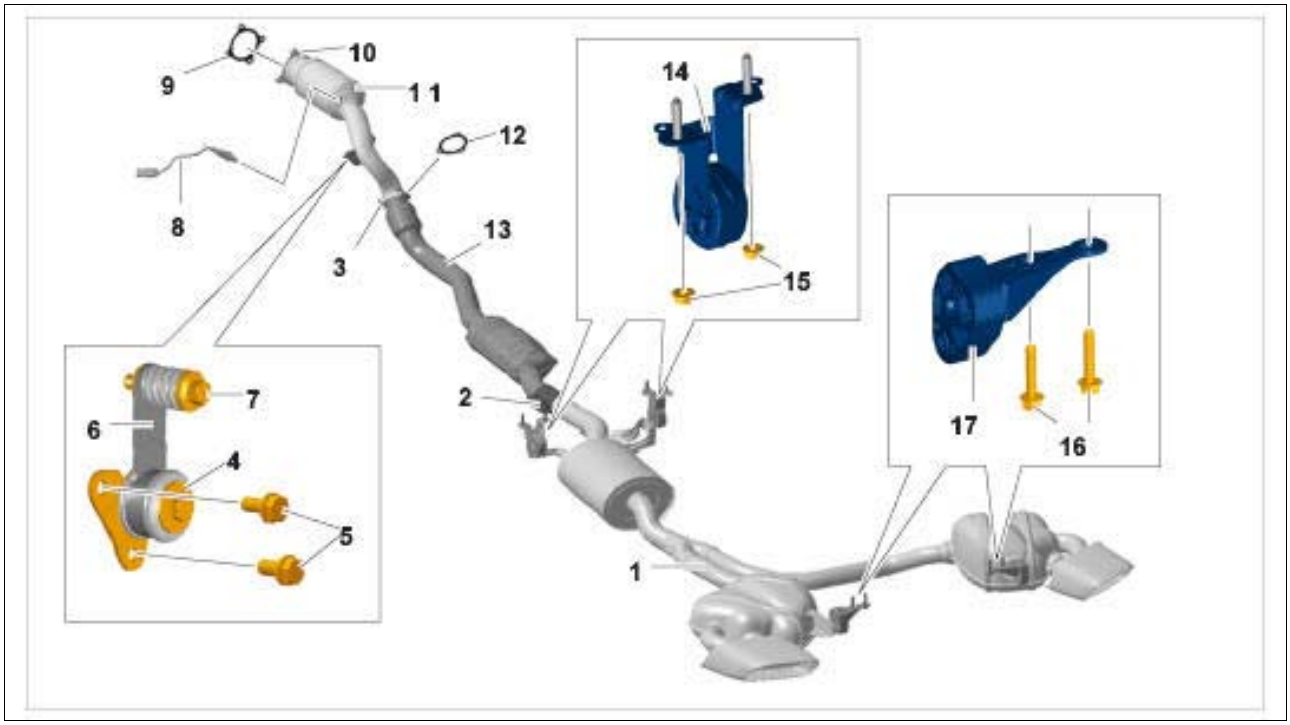

Courtesy of PORSCHE CARS NORTH AMERICA, INC.

1. Front and rear silencers
2. Clamping sleeve → **Tightening torque: 33 Nm (24 ftlb.)**
3. Nuts/**replace** → **Tightening torque: 23 Nm (17 ftlb.)**
4. Screw → **Tightening torque: 23 Nm (17 ftlb.)**
5. Screws → **Tightening torque: 23 Nm (17 ftlb.)**
6. Spring/tab assembly, FLP
7. Screw → **Tightening torque: 23 Nm (17 ftlb.)**
8. Oxygen sensor downstream of catalytic converter → **Tightening torque: 55 Nm (41 ftlb.)** **High-temperature paste must not get into the slits on the oxygen sensor body.**
9. Seal/**replace**
10. Nuts/**replace** → **Tightening torque: 23 Nm (17 ftlb.)**
11. Catalytic converter
12. Seal/**replace**
13. Front silencer
14. Exhaust-system mount
15. Nuts → **Tightening torque: 20 Nm (15 ftlb.)**

16. Screws → **Tightening torque: 20 Nm (15 ftlb.)**

17. Rear silencer bracket

- - Screws on tailpipe cover with A-pipe → **Tightening torque: 8 Nm (6 ftlb.)**

WM 2X00IN TECHNICAL VALUES (MACAN) > GROUP 27 > STARTER

Fig 1: Identifying Starter Components

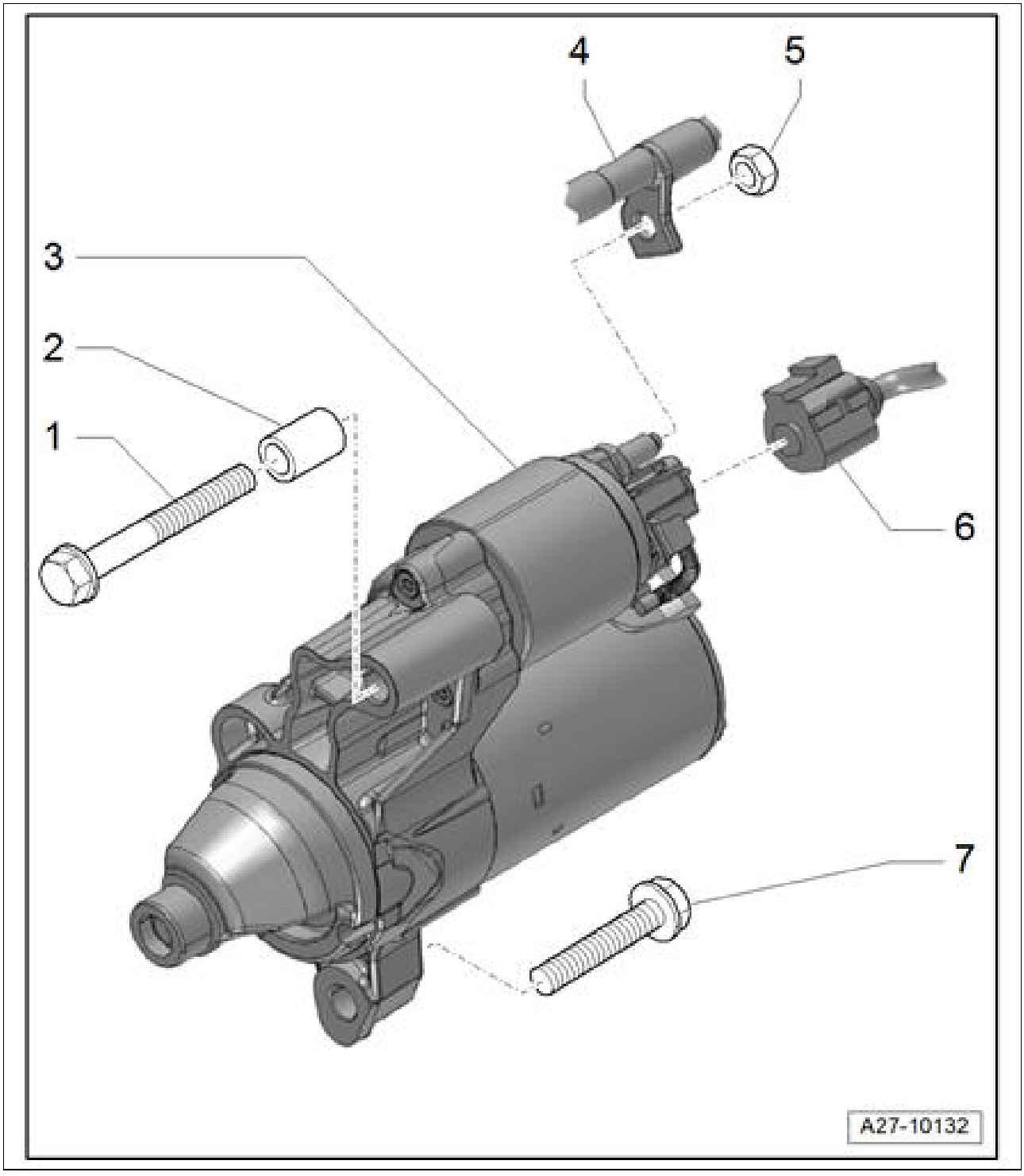

Courtesy of PORSCHE CARS NORTH AMERICA, INC.

1. Screw/**replace → Initial tightening: 30 Nm (22 ftlb.) → Final tightening: +105°+/-30°**
2. Spacer sleeve
3. Starter
4. B+ line

5. Nut → **Tightening torque: 15 Nm (11 ftlb.)**
6. Electric plug connection
7. Screw → **Tightening torque: 65 Nm (48 ftlb.)**

WM 2X00IN TECHNICAL VALUES (MACAN) > GROUP 27 > GENERATOR

Fig 1: Identifying Generator Components

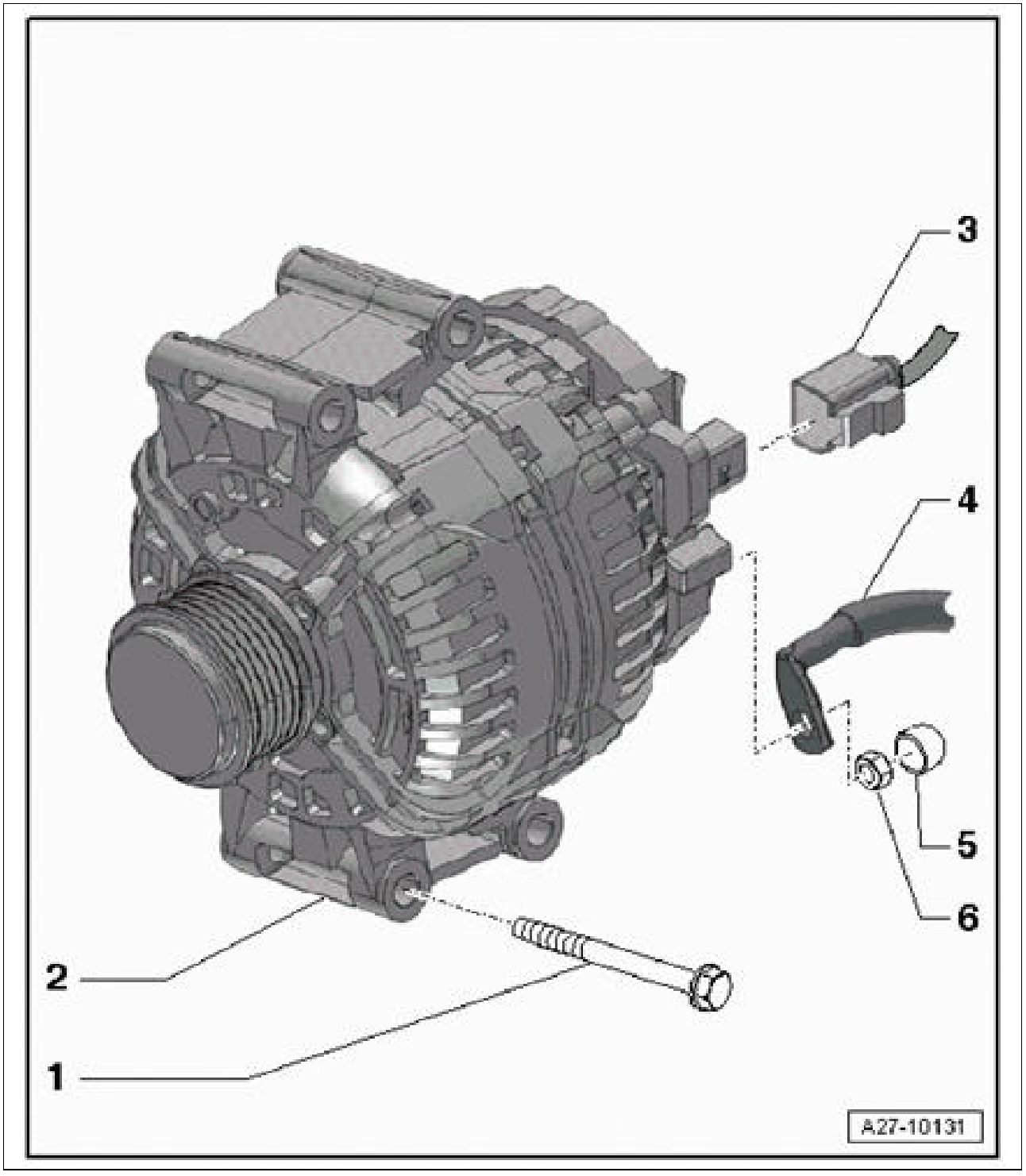

Courtesy of PORSCHE CARS NORTH AMERICA, INC.

1. Screw → **Tightening torque: 23 Nm (17 ftlb.)**
2. Generator
3. Electric plug connection
4. B+ line

5. Cap

6. Nut → **Tightening torque: 16 Nm (12 ftlb.)**

WM 2X00IN TECHNICAL VALUES (MACAN) > GROUP 28 > IGNITION SYSTEM

Fig 1: Identifying Ignition System Components

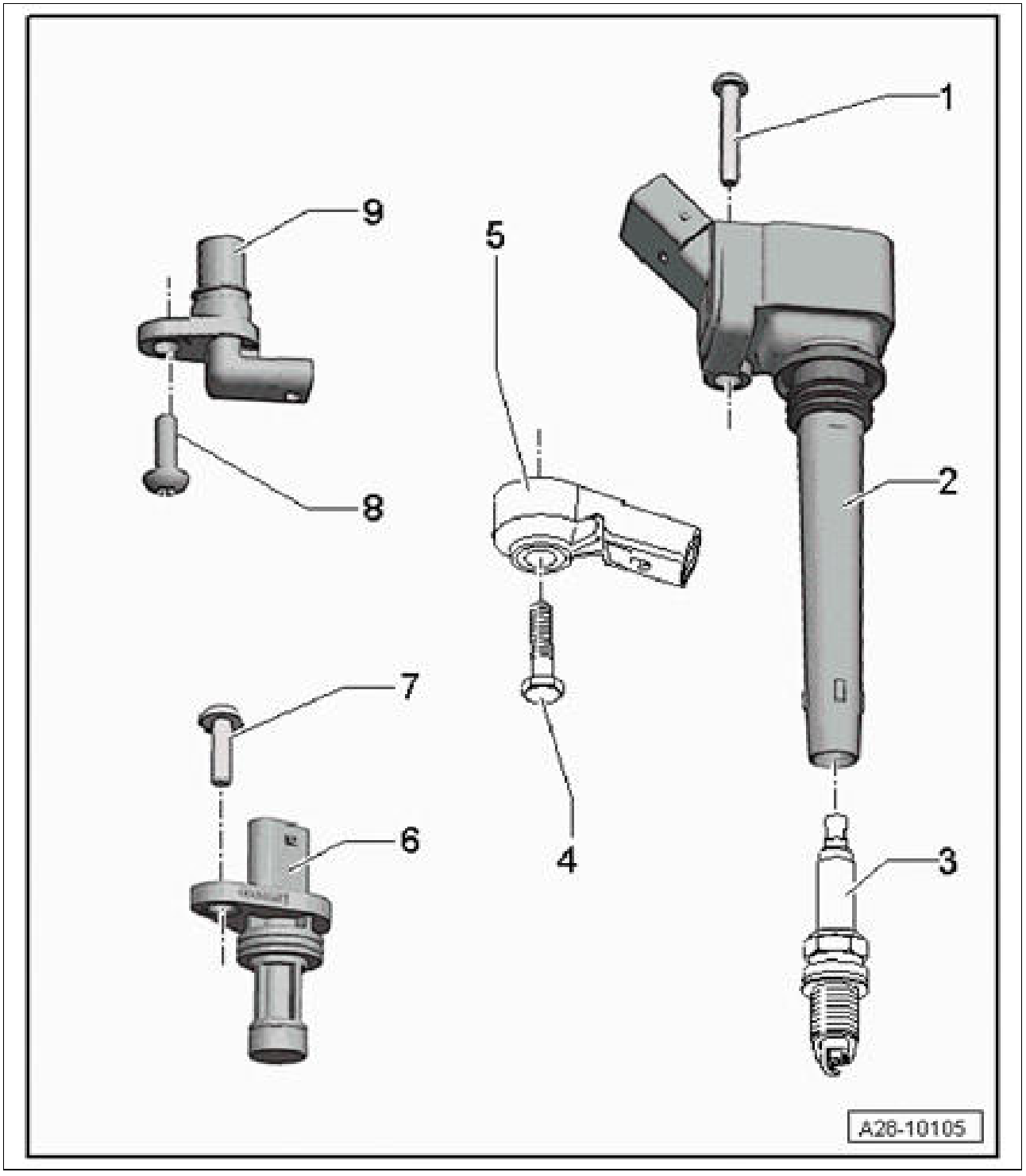

Courtesy of PORSCHE CARS NORTH AMERICA, INC.

1. Screw → **Tightening torque: 10 Nm (7.5 ftlb.)**
2. Ignition coil
3. Spark plug → **Tightening torque: 25 Nm (19 ftlb.)** → **Tightening torque: 30 Nm (22 ftlb.)**
4. Screw/**replace** → **Tightening torque: 20 Nm (15 ftlb.)**
5. Knock sensor
6. Pulse sender/**check O-ring for damage**
7. Screw → **Tightening torque: 10 Nm (7.5 ftlb.)**
8. Screw → **Tightening torque: 9 Nm (6.5 ftlb.)**
9. Hall sender/**replace O-ring**

not shown - Nut securing ground line to ignition coil → **Tightening torque: 10 Nm (7.5 ftlb.)**

WM 2X00IN WORK INSTRUCTIONS AFTER DISCONNECTING THE BATTERY (ALL MODELS) > TECHNICAL VALUES

Location	Description	Type	Basic value	Tolerance 1	Tolerance 2
Terminal clamp to battery terminal	M6 nut	Tightening torque	5 Nm (3.5 ftlb.)		

WM 2X00IN WORK INSTRUCTIONS AFTER DISCONNECTING THE BATTERY (ALL MODELS) > INFORMATION > DISCONNECTING THE BATTERY

WARNING: Static battery charge

- *Battery can explode*
- *Electrical discharges*

→ Do not rub the battery with a dry cloth.

Information

Switch off all loads and remove the ignition key.

- Do not disconnect the battery while the engine is running.
- Disconnect and reconnect battery with extreme caution.
- Do not rub the battery with a dry cloth.

Information

The battery is located in the luggage compartment under the storage floor.

1. Switch off ignition and pull remote control out of ignition lock.
2. Switch off electrical loads.
3. Remove luggage compartment floor.
4. Remove collapsible wheel, if necessary.
5. Lift carpet **-1-** .
6. Disengage cover **-2-** (**-arrows-**) and fold it forward.

   Fig 1: Locating Battery Cover

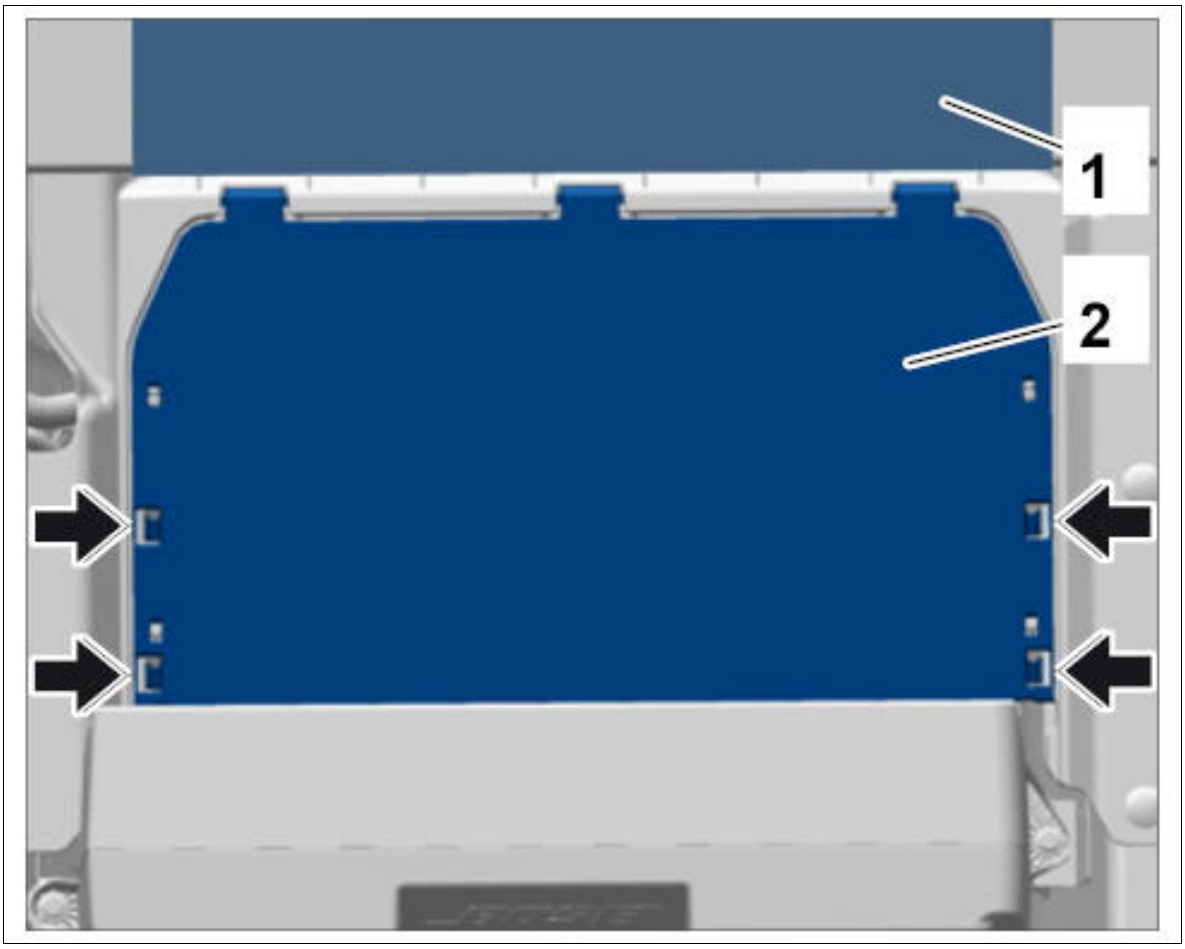

Courtesy of PORSCHE CARS NORTH AMERICA, INC.

7. **Risk of short circuit! Disconnect the ground line at the battery!**
   1. 7.1. Open cover **-1-** on the negative terminal.
   2. 7.2. Loosen terminal clamp **-2-** for the ground line from the negative terminal.
   3. 7.3. Insulate terminal clamp or route ground line to prevent any contact with the negative terminal!

Fig 2: Identifying Battery Terminal Clamp And Cover

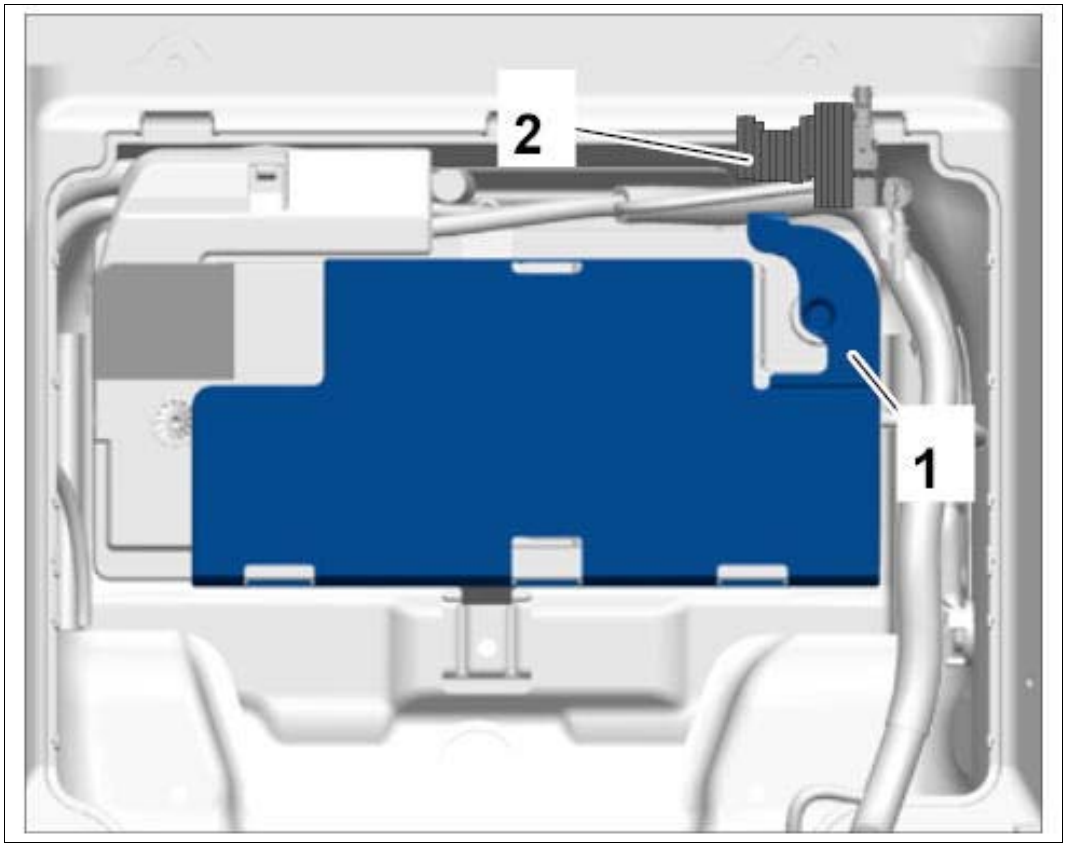

Courtesy of PORSCHE CARS NORTH AMERICA, INC.

WM 2X00IN WORK INSTRUCTIONS AFTER DISCONNECTING THE BATTERY (ALL MODELS) > INFORMATION > CONNECTING THE BATTERY

WARNING: Static battery charge

- *Battery can explode*
- *Electrical discharges*

→ Do not rub the battery with a dry cloth.

Information

Switch off all loads and remove the ignition key.

- Do not disconnect the battery while the engine is running.
- Disconnect and reconnect battery with extreme caution.
- Do not rub the battery with a dry cloth.

1. The battery is connected in reverse order to the steps described for disconnecting.
2. Tighten fastening nut on the terminal clamp for the ground line. **Tightening torque 5 Nm (3.5 ftlb.)**

WM 2X00IN WORK INSTRUCTIONS AFTER DISCONNECTING THE BATTERY (ALL MODELS) > INFORMATION > EFFECT OF DISCONNECTION OR TOTAL DISCHARGE OF BATTERY ON ELECTRICAL SYSTEMS IN THE VEHICLE AND THE PRECAUTIONS TO BE TAKEN

Information

Control unit memories

Values and faults stored in the control units can be deleted if the battery is disconnected or completely discharged.

- If possible, all fault memories should be checked and, if necessary, printed out before the battery is disconnected.

Information

Supply voltage fault entry

The entry "supply voltage" may be stored in various control units if the battery has been completely discharged.

- Delete the "supply voltage" entry from the control units in question.

Information

Ready status

In some countries (presently the U.S.A. and Canada), after disconnecting the battery, it is necessary to reach the Ready status by a test drive and/or by using the Porsche System Tester DME control module menu). If in doubt about this, contact the relevant importer.

Information

2470 DME control module

With all DME systems, the engine must run for several minutes before the engine control module can relearn the idle speed and mixture adaptation values!

After disconnection of the power supply, the idle speed might change or fluctuate briefly until the throttle valve adjusting unit has been readapted.

The mixture adaptation is also lost.

After the battery is connected:

With the DME, it is necessary to carry out a learning and adaptation routine as described below:

- Switch ignition on for 30 seconds without starting the engine.

- Do not actuate accelerator pedal.

This completes the adaptation of the throttle valve adjusting unit.

Information

Tyre pressure monitoring system

When the battery is disconnected and connected, the tire pressure is first displayed as "- - - ".

- Once the battery has been disconnected and work is complete, the vehicle must be driven for a short distance.

The actual pressures will then be displayed again.

Information

4560 Steering angle sensor

The steering angle sensor must be re-initialized when the battery is disconnected and connected.

- Turn wheels to straight-ahead position.
- Switch ignition off and then on again twice.
- Start engine.
- From the straight-ahead position, turn steering wheel approx. 20° to the right, past the straight-ahead position.
- Drive the vehicle straight ahead for at least one second at a speed above 4 km/h (2.5 mph).

The steering angle sensor segment is recognized again in this process.

Once the sensor has been successfully initialized, the fault code that is stored in the fault memory is documented using the fault deletion counter.

The fault memory erases itself automatically.

The PSM indicator light in the instrument cluster goes out.

Information

6014 Motor for sunroof

The limit positions of the sunroof are deleted from the control unit when the battery is disconnected and connected.

- Switch on ignition.
- Press the sunroof button for several seconds in direction of travel.
- After approx. 10 seconds, the sunroof performs an automatic standardization process an↓d resets all positions.
- Keep the button pressed during the standardization process.

Afterwards, the sunroof is standardized correctly.

Information

6452 Power windows

The limit positions of the power windows are deleted from the control unit when the battery is disconnected and connected.

Perform the following procedure for all power windows:

- Pull rocker switch and fully close window once.
- Pull rocker switch once more.

The upper end position of the window is stored.

- Press rocker switch and fully open window once.
- Press rocker switch once more.

The lower end position of the window is stored.

Information

4815 Electrical steering column adjustment (ELVS)

The electrical steering column adjustment end positions (ELVS) are deleted when the battery is disconnected and connected.

The following buttons must be pressed in sequence in order to re-initialize electrical steering column adjustment.

- Press the extend button three times (extend towards the driver).
- Press the retract button once.
- Press the extend button once (towards the driver).
- Press the up button once.
- Press the down button once.

Once the buttons have been pressed correctly, the steering column automatically moves all axles and stops at the center position (only works when the vehicle is stationary).

1. Erase error messages from the control units.
2. Perform the required initialization steps, depending on vehicle equipment.

WM 2X00IN WORK INSTRUCTIONS AFTER DISCONNECTING THE BATTERY (ALL MODELS) > INFORMATION > TEST DRIVE AFTER DISCONNECTING AND CONNECTING THE BATTERY

Information

Depending on the vehicle equipment fitted, all these work steps are carried out during the test drive.

Read out the fault memories of all control units after the test drive.

- If there is a fault present, check to see if the fault was caused by an undervoltage.
- If faults were caused by an undervoltage (or CAN timeout error), erase the fault memory, perform another test drive and read out the fault memory.
- If faults were not caused by an undervoltage, correct the faults in accordance with GFF (Guided Fault Finding).

    1. Perform a test drive.

Service Manual: 90 - INSTRUMENTS -- (95B) - MACAN

WM 900319 REMOVING AND INSTALLING DASHBOARD INSET (MACAN, MACAN S, MACAN TURBO) > REMOVING DASHBOARD INSET

1. Move steering column to its lowest, rearmost position.
2. Unclip bottom of dashboard inset **-1-** at the left, right and in the middle from the dashboard using a plastic wedge **-2-** .

Fig 1: Locating Dashboard Inset Clips (Bottom)

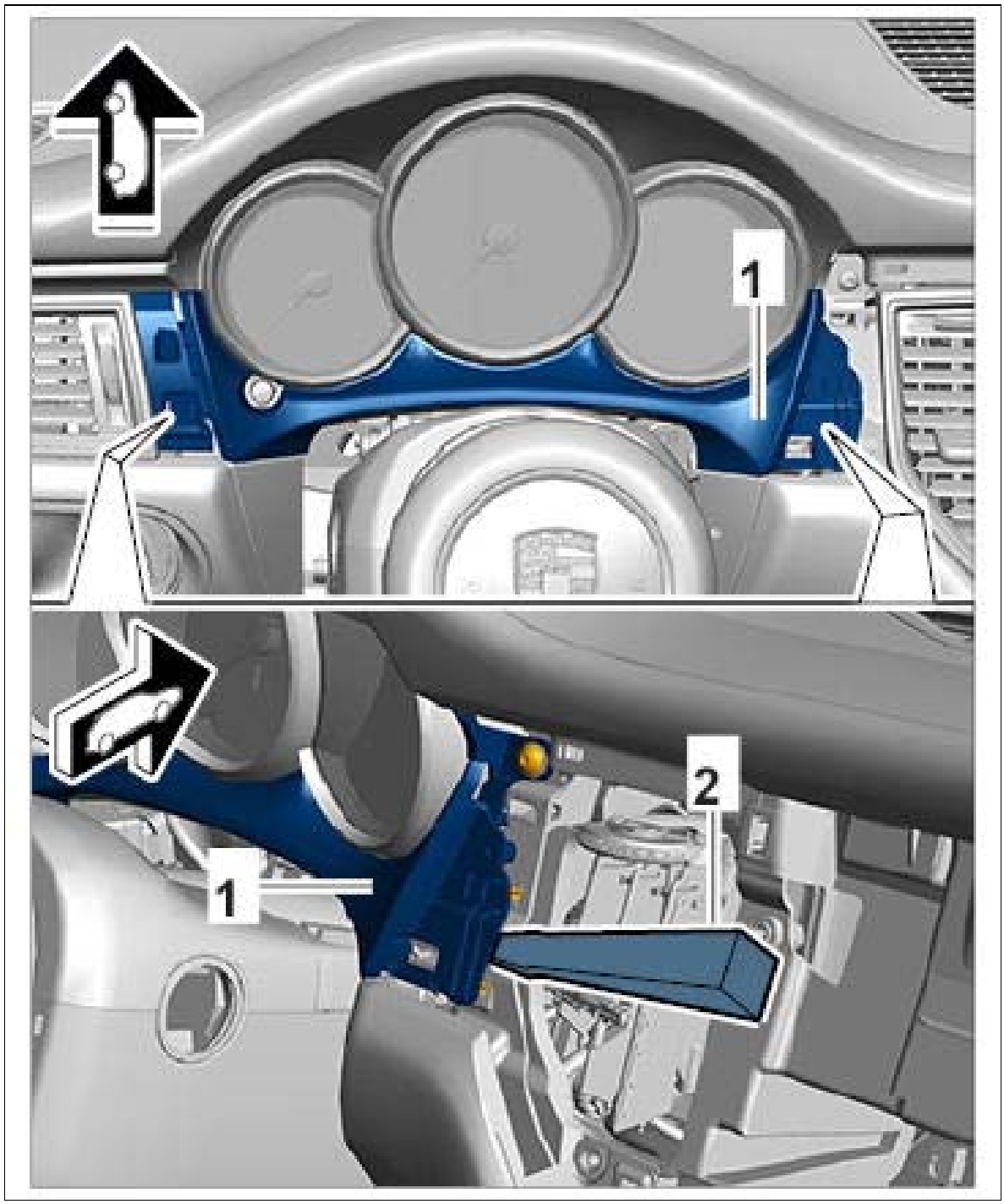

Courtesy of PORSCHE CARS NORTH AMERICA, INC.

3. Unscrew fastening screws **-1-** and remove plastic damping plates **-2-** from between the dashboard inset **-3-** and dashboard.

Fig 2: Identifying Dashboard Inset Fastening Screws (Top)

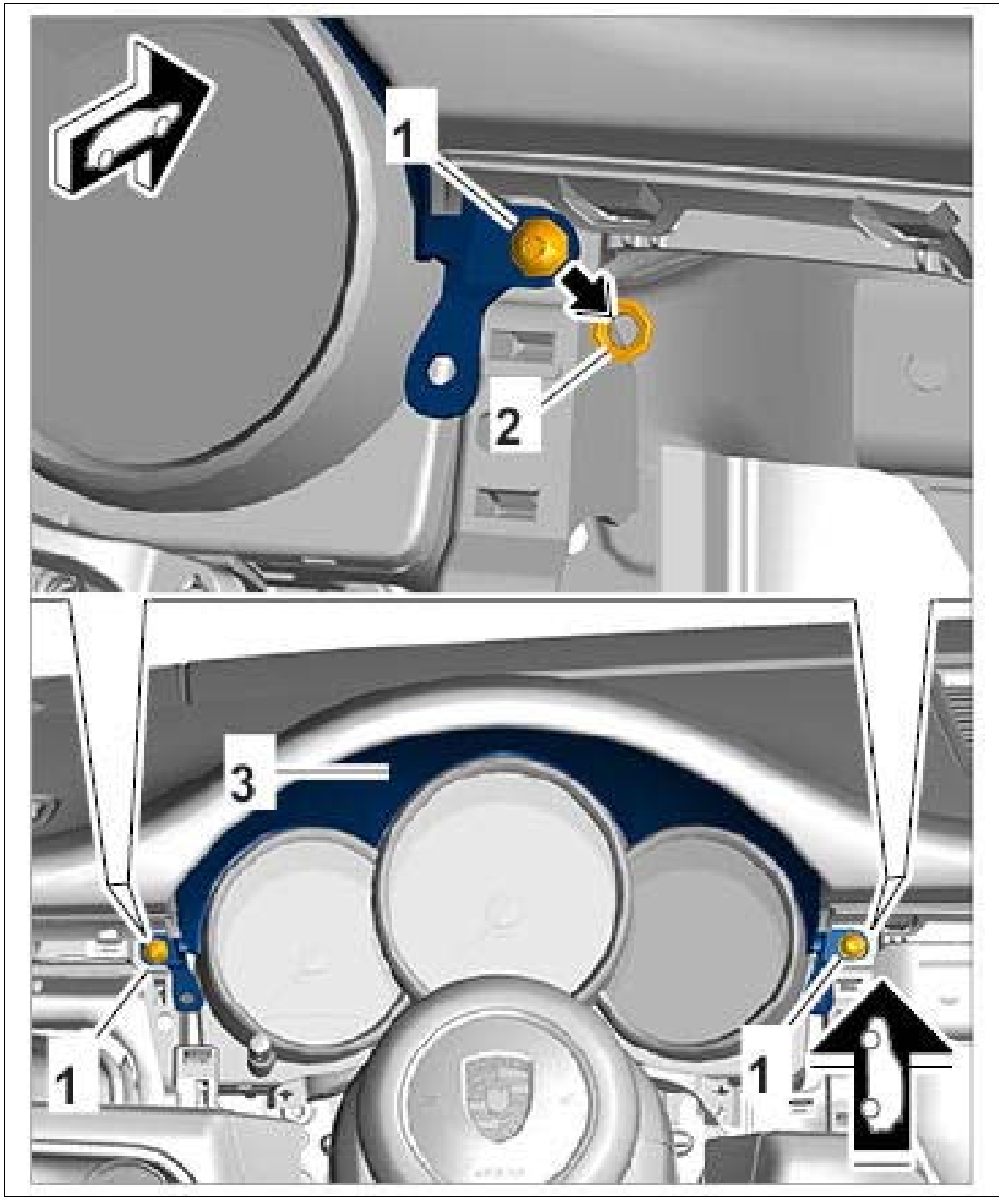

Courtesy of PORSCHE CARS NORTH AMERICA, INC.

4. Loosen dashboard inset at top and detach it from the dashboard.

    1. 4.1. Carefully push a plastic squeegee **-1-** in between the top of the dashboard inset **-2-** and dashboard and loosen top of dashboard inset in area **-a-** .

Fig 3: Loosening Dashboard Inset (Top) Using Plastic Squeegee

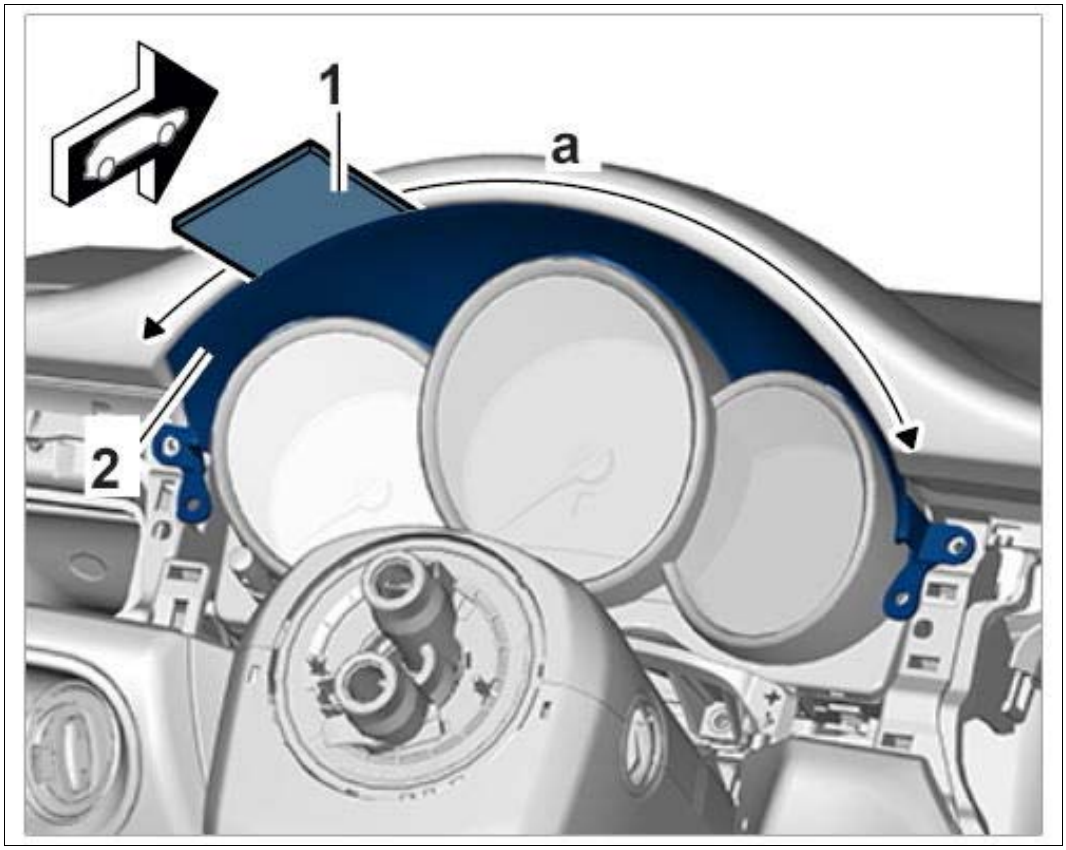

Courtesy of PORSCHE CARS NORTH AMERICA, INC.

5. Remove dashboard inset at the top **-1-** .

    1. 5.1. Position a plastic squeegee **-2-** and plastic wedge **-3-** close to the fastening pins **-a-** between the top of the dashboard inset and the dashboard.

    2. 5.2. Disengage fastening pins **-a-** at the left and right by pulling them horizontally to the rear.

    3. 5.3. Remove dashboard inset at the top.

Fig 4: Removing Dashboard Inset (Top)

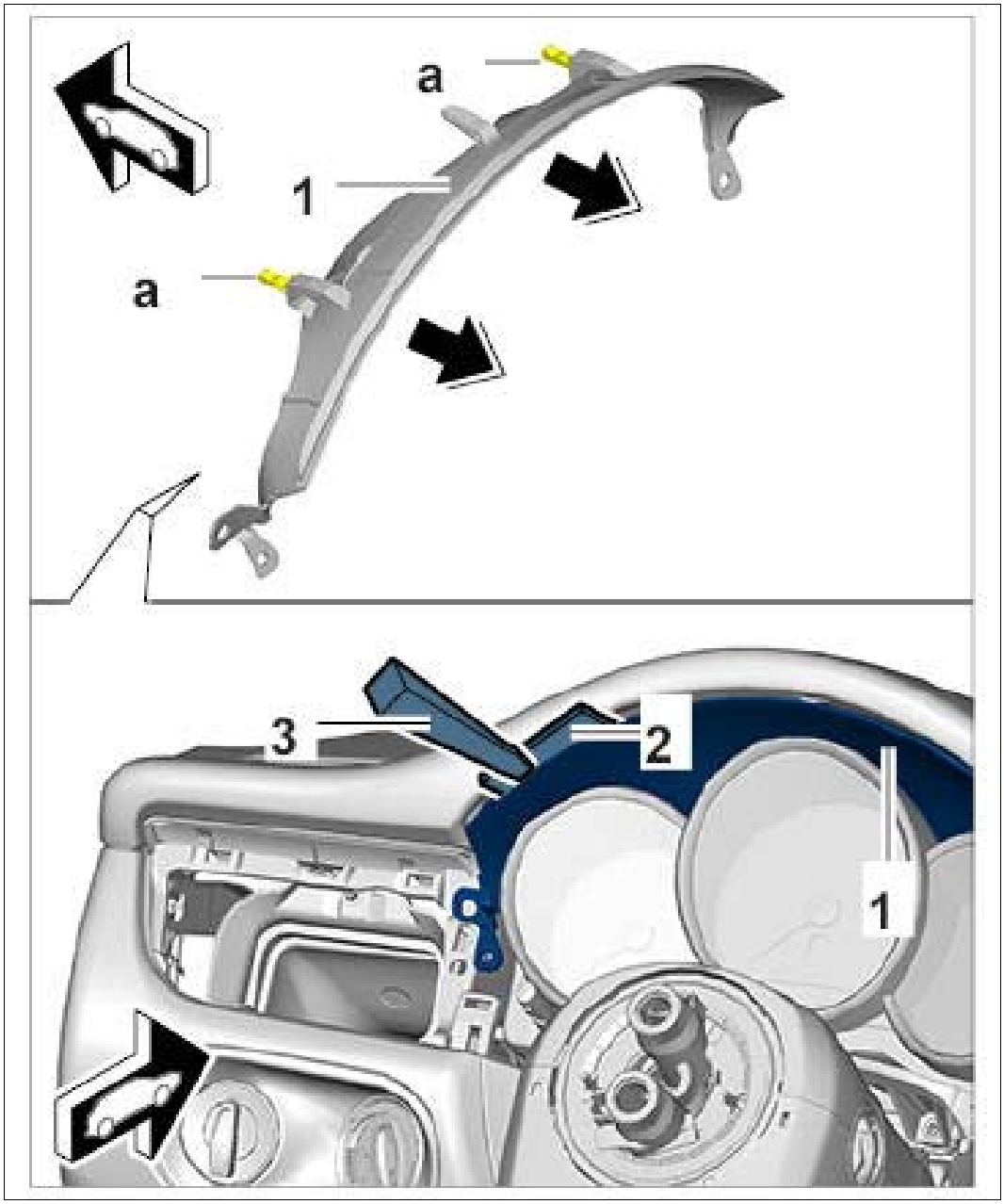

Courtesy of PORSCHE CARS NORTH AMERICA, INC.

WM 900319 REMOVING AND INSTALLING DASHBOARD INSET (MACAN, MACAN S, MACAN TURBO) > INSTALLING DASHBOARD INSET

1. Installation is performed in reverse order to removal.

WM 902219 REMOVING AND INSTALLING STOPWATCH (MACAN, MACAN S, MACAN TURBO) > TECHNICAL VALUES

Location	Description	Type	Basic value	Tolerance 1	Tolerance 2
Stopwatch or compass to cover for center loudspeaker	Internal Torx screw, M5 x 20	Tightening torque	3 Nm (2 ftlb.)		

WM 902219 REMOVING AND INSTALLING STOPWATCH (MACAN, MACAN S, MACAN TURBO) > PRELIMINARY WORK

1. Remove cover for center loudspeaker. → 70901900 REMOVING AND INSTALLING COVER FOR CENTER LOUDSPEAKER .

WM 902219 REMOVING AND INSTALLING STOPWATCH (MACAN, MACAN S, MACAN TURBO) > REMOVING STOPWATCH

1. Unscrew fastening screws **-1-** from the stopwatch **-2-** .
2. Remove stopwatch from cover for center loudspeaker **-3-** .

Fig 1: Removing Stopwatch

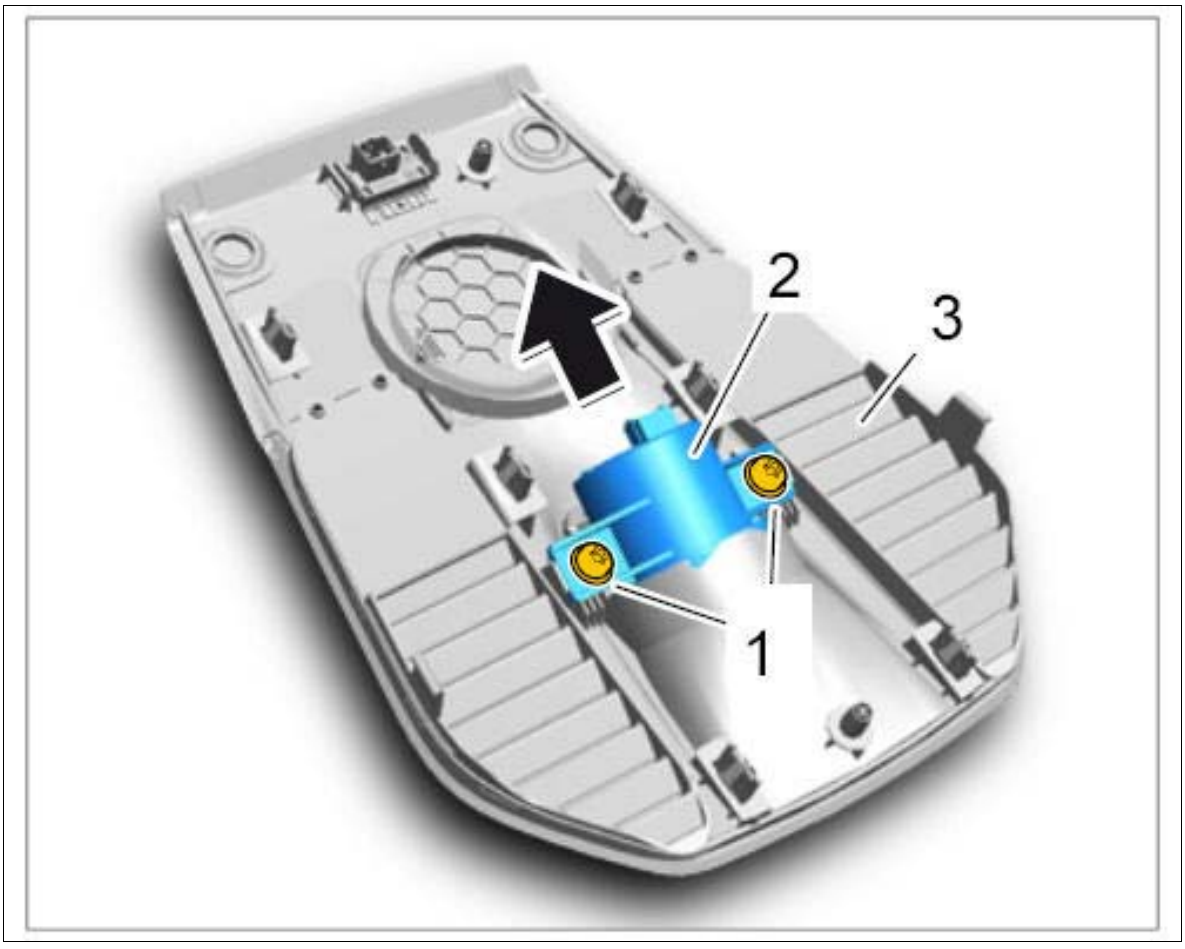

Courtesy of PORSCHE CARS NORTH AMERICA, INC.

WM 902219 REMOVING AND INSTALLING STOPWATCH (MACAN, MACAN S, MACAN TURBO) > INSTALLING STOPWATCH

1. Installation is performed in reverse order to removal.
2. Tighten fastening screws for stopwatch at the cover for the center loudspeaker. **Tightening torque: 3 Nm (2 ftlb.)**

WM 902219 REMOVING AND INSTALLING STOPWATCH (MACAN, MACAN S, MACAN TURBO) > SUBSEQUENT WORK

1. Install cover for center loudspeaker. → INSTALLING COVER FOR CENTER LOUDSPEAKER

WM 902519 REMOVING AND INSTALLING INSTRUMENT CLUSTER (MACAN, MACAN S, MACAN TURBO) > TOOLS

Designation	Type	Number	Description	
PIWIS Tester II	Special tool	9818		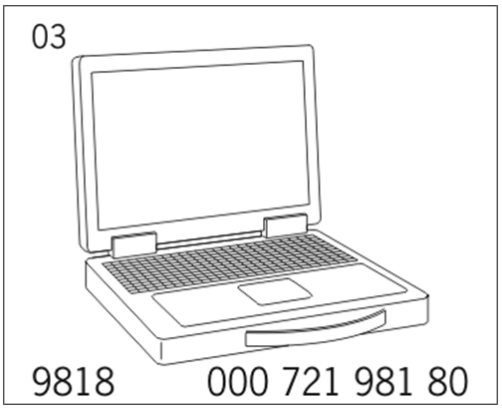

WM 902519 REMOVING AND INSTALLING INSTRUMENT CLUSTER (MACAN, MACAN S, MACAN TURBO) > TECHNICAL VALUES

Location	Description	Type	Basic value	Tolerance 1	Tolerance 2
Instrument cluster to dashboard	Internal Torx screw, M5 x 16	Tightening torque	3.2 Nm (2 ftlb.)		

WM 902519 REMOVING AND INSTALLING INSTRUMENT CLUSTER (MACAN, MACAN S, MACAN TURBO) > PRELIMINARY WORK

1. Remove dashboard inset. → 900319 REMOVING AND INSTALLING DASHBOARD INSET .

WM 902519 REMOVING AND INSTALLING INSTRUMENT CLUSTER (MACAN, MACAN S, MACAN TURBO) > REMOVING INSTRUMENT CLUSTER

NOTE: Voltage peaks

- *Risk of damage to load or to the control unit*

→ Remove the ignition key and switch off load before disconnecting or removing load.

Information

Always comply with the regulations for handling ESD-sensitive components!

- Assembly work may only be carried out if the mechanic is wearing the working clothes and shoes approved by Porsche.
- The new part must only be removed from the ESD (electrostatic discharge) protective packaging just before installation and at the position at which the part is to be installed.
- Never touch the electric pins and plug contacts.

1. Move steering column to its lowest, rearmost position.
2. Remove upper part of steering column casing **-1-** .
    1. 2.1. Lift up upper part of steering column casing at the center using a plastic wedge **-4-** and use a plastic squeegee **-2-** at the left and right to unclip it from the lower part of the steering column casing **-3-** .
    2. 2.2. Disengage upper part of steering column casing from lower part of steering column casing and remove with the trim panel under the instrument cluster **-5-** .

Fig 1: Removing Upper Part Of Steering Column Casing

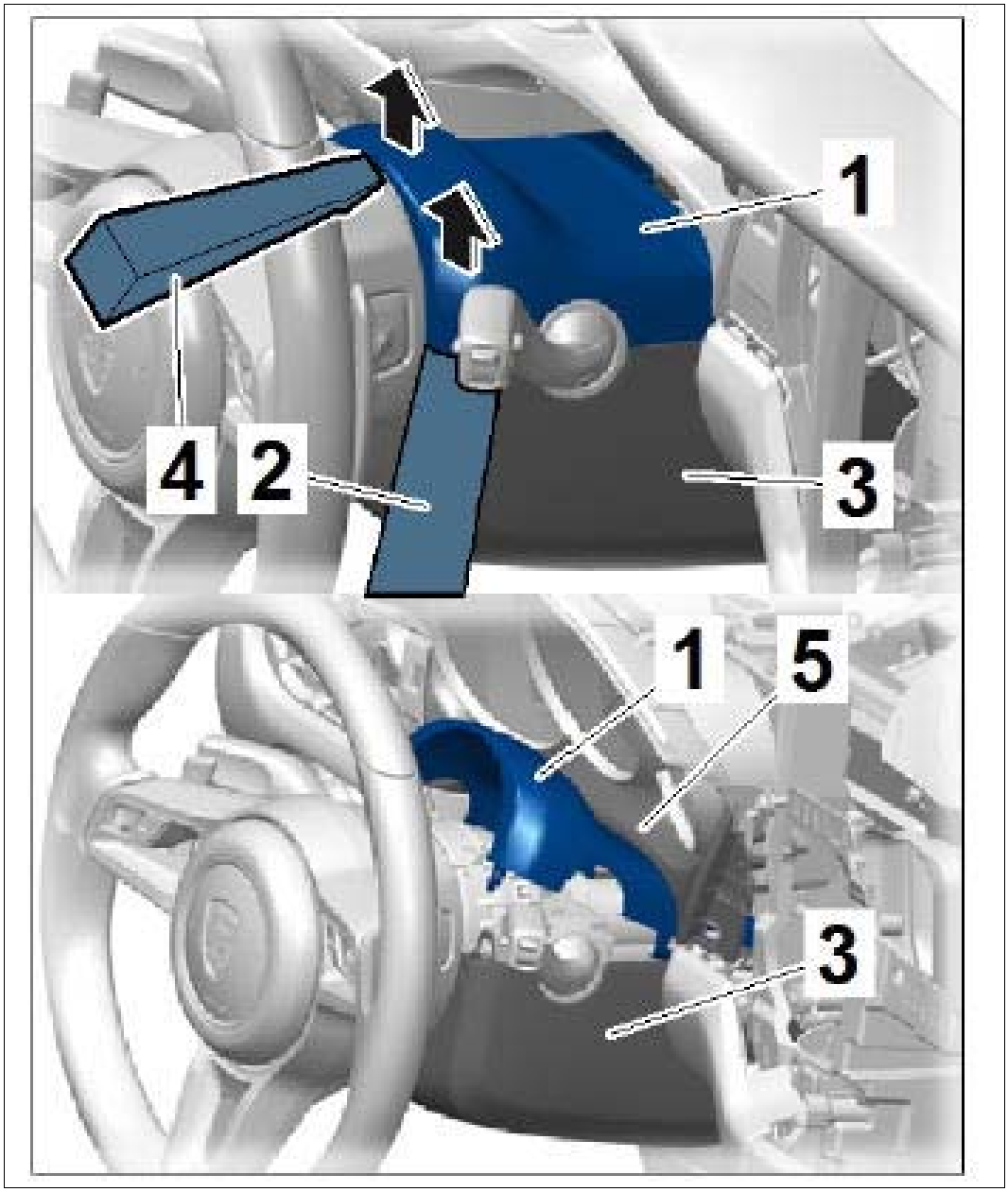

Courtesy of PORSCHE CARS NORTH AMERICA, INC.

3. Cover steering column with a clean, soft cloth.

4. Unscrew fastening screws **-1-** from the instrument cluster **-2-** .

Fig 2: Locating Instrument Cluster Fastening Screws

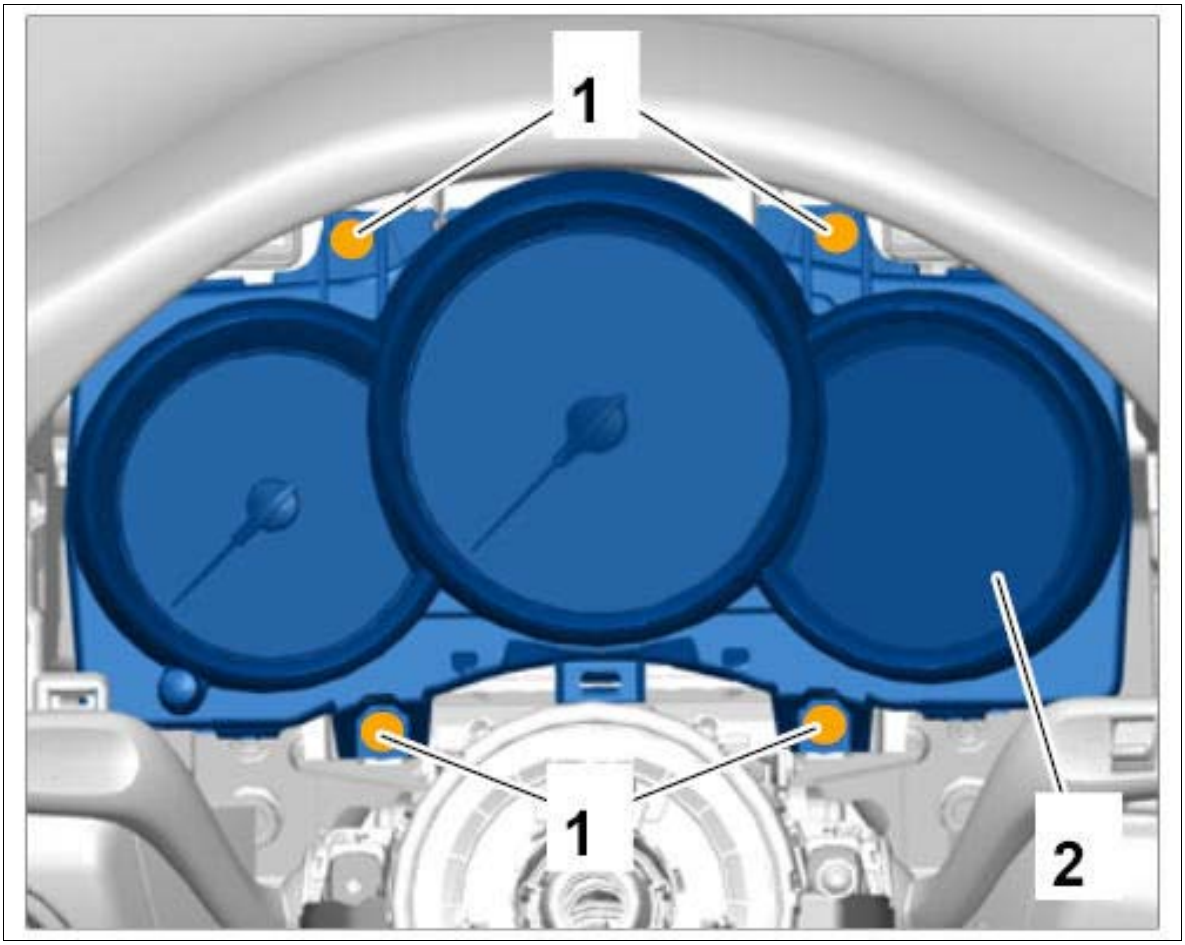

Courtesy of PORSCHE CARS NORTH AMERICA, INC.

5. Carefully pull instrument cluster at the right out of the dashboard.
6. Release electric plug connection **-1-** (**-a-**) and pull it off the instrument cluster **-2-** .

Fig 3: Disconnecting Electric Plug Connection

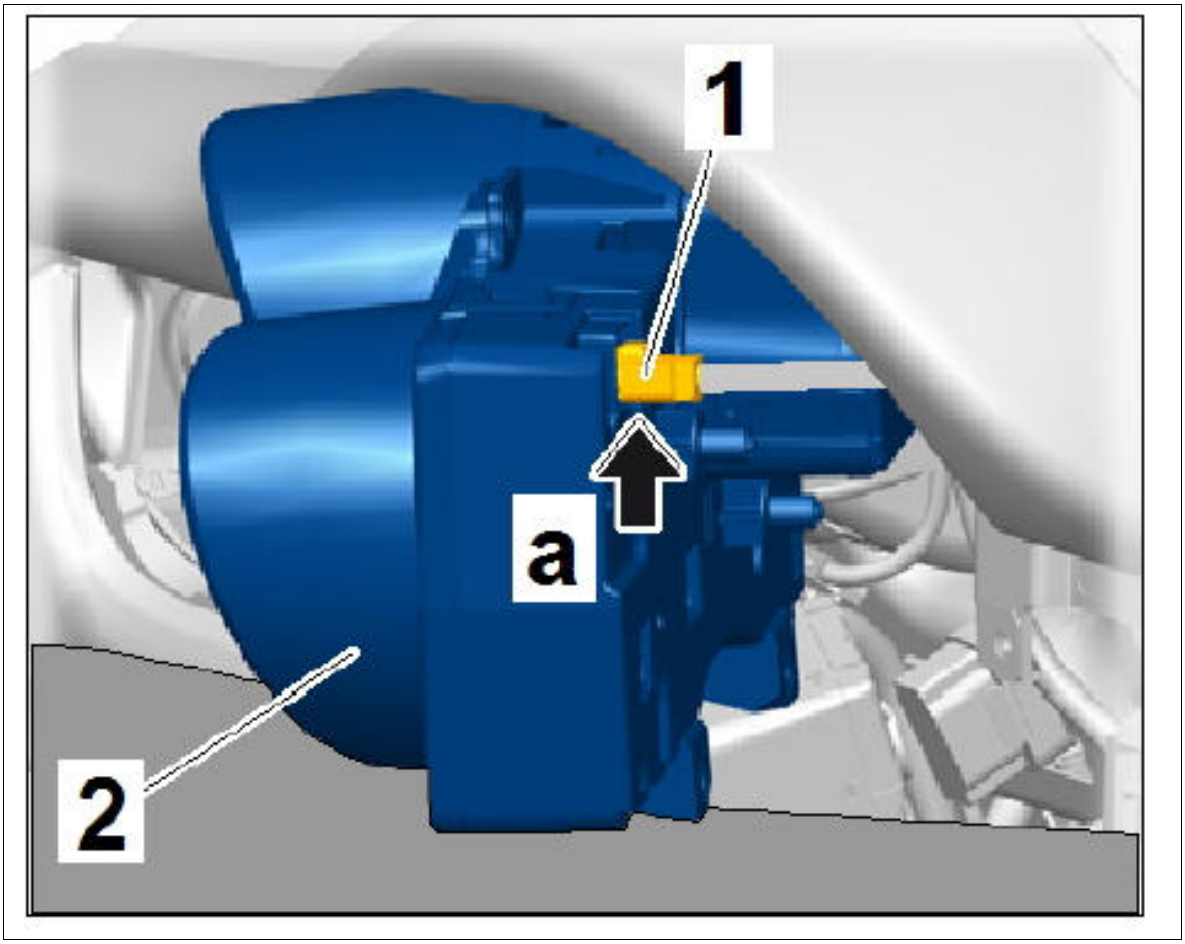

Courtesy of PORSCHE CARS NORTH AMERICA, INC.

7. Carefully pull instrument cluster at the left out of the dashboard.
8. Release clip **-1-** (**-a-**), swivel it down and disconnect electric plug connection **-2-** from the instrument cluster **-3-** .

Fig 4: Disconnecting Electric Plug Connection

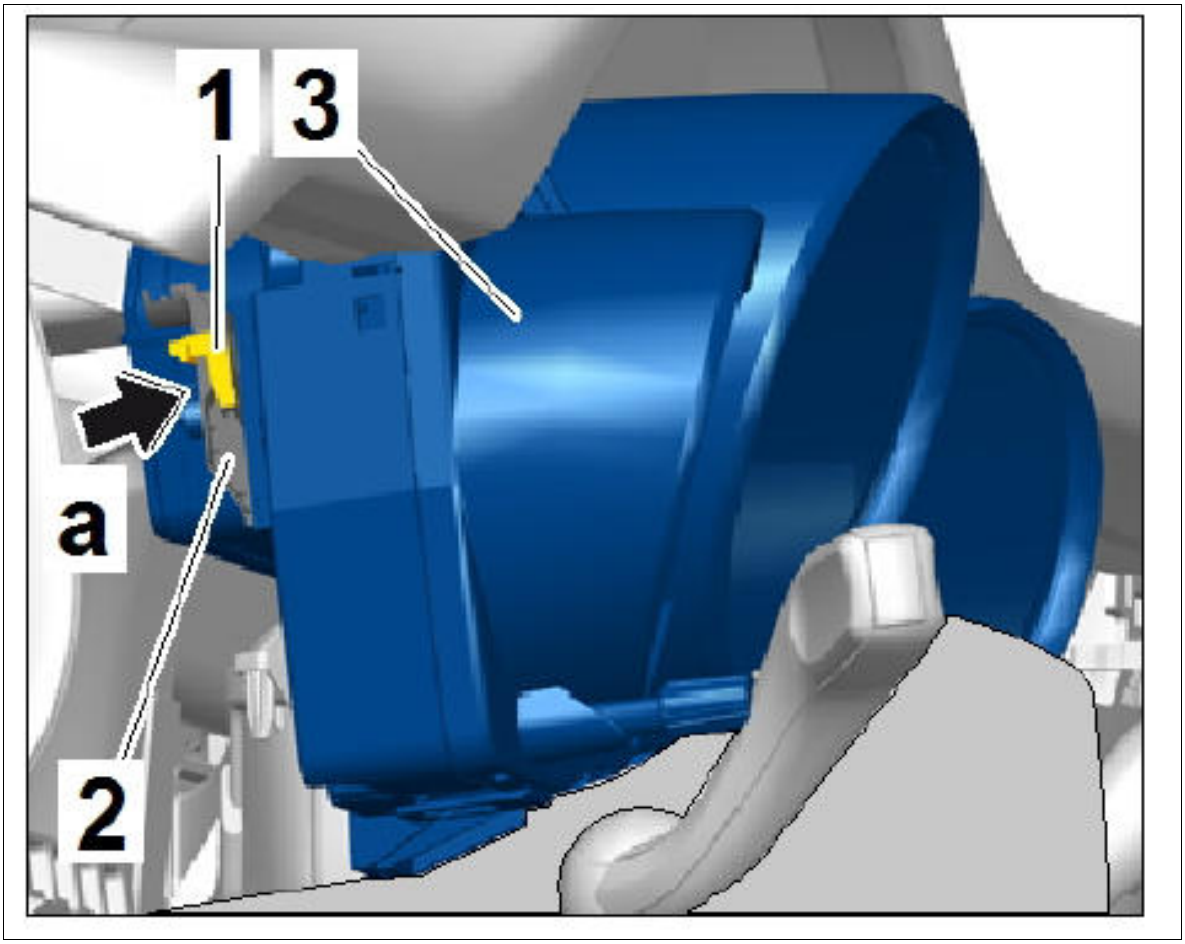

Courtesy of PORSCHE CARS NORTH AMERICA, INC.

9. Remove instrument cluster by pulling it to the left.

WM 902519 REMOVING AND INSTALLING INSTRUMENT CLUSTER (MACAN, MACAN S, MACAN TURBO) > INSTALLING INSTRUMENT CLUSTER

Information

Always comply with the regulations for handling ESD-sensitive components!

- Assembly work may only be carried out if the mechanic is wearing the working clothes and shoes approved by Porsche.
- The new part must only be removed from the ESD (electrostatic discharge) protective packaging just before installation and at the position at which the part is to be installed.
- Never touch the electric pins and plug contacts.

1. Installation is performed in reverse order to removal.
2. Tighten fastening screws securing instrument cluster to dashboard. **Tightening torque: 3.2 Nm (2 ftlb.)**

WM 902519 REMOVING AND INSTALLING INSTRUMENT CLUSTER (MACAN, MACAN S, MACAN TURBO) > SUBSEQUENT WORK

1. Install dashboard inset. → INSTALLING DASHBOARD INSET .
2. If the instrument cluster was replaced, teach the new instrument cluster to suit the vehicle using **PIWIS Tester II 9818** . → 902555 REPLACING INSTRUMENT CLUSTER

WM 902555 REPLACING INSTRUMENT CLUSTER (MACAN, MACAN S, MACAN TURBO) > TOOLS

Designation	Type	Number	Description	
PIWIS Tester II	Special tool	9818		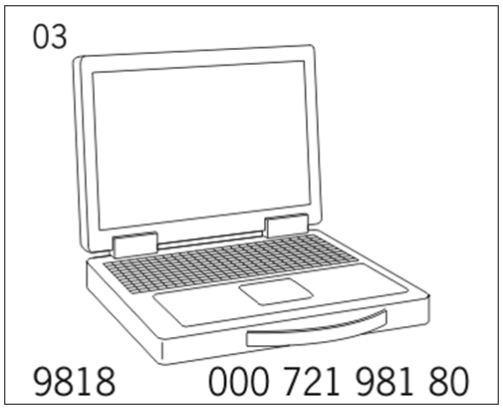

WM 902555 REPLACING INSTRUMENT CLUSTER (MACAN, MACAN S, MACAN TURBO) > TECHNICAL VALUES

Location	Description	Type	Basic value	Tolerance 1	Tolerance 2
Current rating		Nominal value	40 A		

WM 902555 REPLACING INSTRUMENT CLUSTER (MACAN, MACAN S, MACAN TURBO) > REPLACING INSTRUMENT CLUSTER

NOTE: Voltage drop

- *Risk of irreparable damage to control unit*
- *Risk of damage to control unit*
- *Fault entries in the control unit*

- *Coding in the control unit is aborted*
- *Malfunctions in control unit, even during programming*

→ Prior to disconnecting the control unit, switch off ignition and remove ignition key.

→ Ensure that the power supply is not interrupted during programming.

→ Connect a battery charger with a current rating of at least → **Nominal value: 40 A** to the vehicle battery.

Information

The **PIWIS Tester II 9818** instructions take precedence since the description may be different with later Tester releases.

The procedure described here has been structured in general terms. Different text or additional information may appear in **PIWIS Tester II 9818** .

1. Connect the PIWIS Tester to the vehicle and start the Tester. Switch on ignition.
2. Select the vehicle type and start the diagnostic application.
3. Select the required control unit **Instrument cluster** in the **overview** .
4. **Maintenance/repairs** must then be selected.
5. Select the **Set total mileage** function and press [F12].
6. Read the warning on the Tester and press [F12].
7. **Read off and take note of the total mileage.**
8. Switch off ignition and replace control unit. → 902519 REMOVING AND INSTALLING INSTRUMENT CLUSTER .
9. Switch on ignition.
10. Select the vehicle type and start the diagnostic application.
11. Select the required control unit **Instrument cluster** in the **overview** .
12. **Extended identification** must now be selected.
13. Select the **Vehicle identification number** field.
14. **Enter the vehicle identification number** and press "Enter" to confirm your entry.
15. **Maintenance/repairs** must then be selected.
16. Select the **Set total mileage** function and press [F12].
17. Read the warning on the Tester and press [F12].
18. **Select Total mileage** and enter the value that was read out in Step 7. Then press "Enter" to confirm your entry and press [F8] to write data.

19. **Coding/adaptations** must then be selected.
20. **Select Automatic coding** and press [F12].
21. Wait until coding has been completed, then press [F12] to continue.
22. **Maintenance/repairs** must then be selected.
23. **Select Fuel tank calibration** and press [F12] to continue.
24. Read the information displayed on the Tester, then start by pressing [F8].
25. **Read out the fault memory** and erase it if necessary.
26. Return to the **control unit overview** .
27. Check the function of the instrument cluster and fuel level gauge during the test drive.

WM 903519 REMOVING AND INSTALLING GATEWAY CONTROL UNIT (MACAN, MACAN S, MACAN TURBO) > TOOLS

Designation	Type	Number	Description	
PIWIS Tester II	Special tool	9818		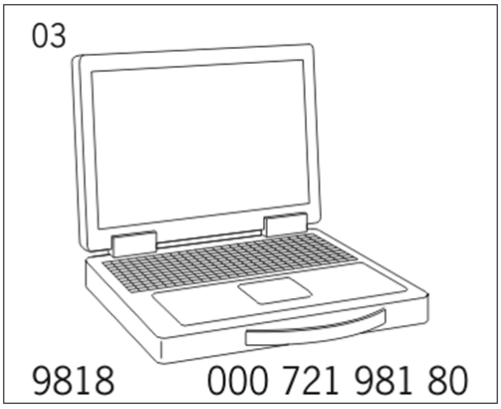

WM 903519 REMOVING AND INSTALLING GATEWAY CONTROL UNIT (MACAN, MACAN S, MACAN TURBO) > TECHNICAL VALUES

Location	Description	Type	Basic value	Tolerance 1	Tolerance 2
Gateway control unit to body	Internal Torx screw, M5 x 16	Tightening torque	9 Nm (6.5 ftlb.)		

WM 903519 REMOVING AND INSTALLING GATEWAY CONTROL UNIT (MACAN, MACAN S, MACAN TURBO) > PRELIMINARY WORK

1. Remove rear seat. → 724819 REMOVING AND INSTALLING REAR SEAT .

WM 903519 REMOVING AND INSTALLING GATEWAY CONTROL UNIT (MACAN, MACAN S, MACAN TURBO) > REMOVING GATEWAY CONTROL UNIT

NOTE: Voltage peaks

- *Risk of damage to load or to the control unit*

→ Remove the ignition key and switch off load before disconnecting or removing load.

Information

Always comply with the regulations for handling ESD-sensitive components!

- Assembly work may only be carried out if the mechanic is wearing the working clothes and shoes approved by Porsche.
- The new part must only be removed from the ESD (electrostatic discharge) protective packaging just before installation and at the position at which the part is to be installed.
- Never touch the electric pins and plug contacts.

1. Switch off ignition and pull remote control out of ignition lock.
2. Unscrew fastening screw **-1-** .
3. Pull gateway control unit **-2-** out of the clip **-3-** .

Fig 1: Removing Gateway Control Unit

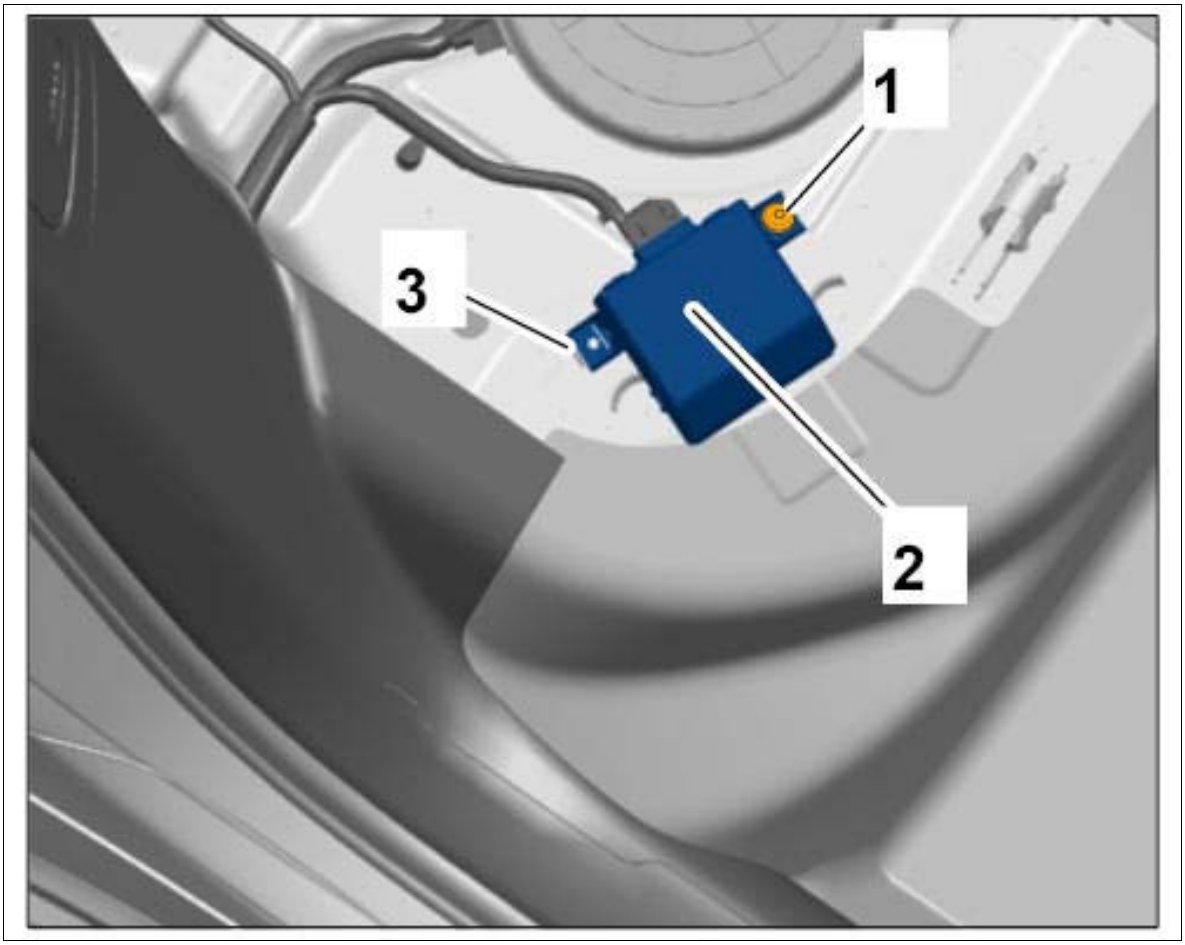

Courtesy of PORSCHE CARS NORTH AMERICA, INC.

4. Release electric plug connection **-1-** (**-a-**) and pull it off the gateway control unit **-2-** .

Fig 2: Disconnecting Electric Plug Connection

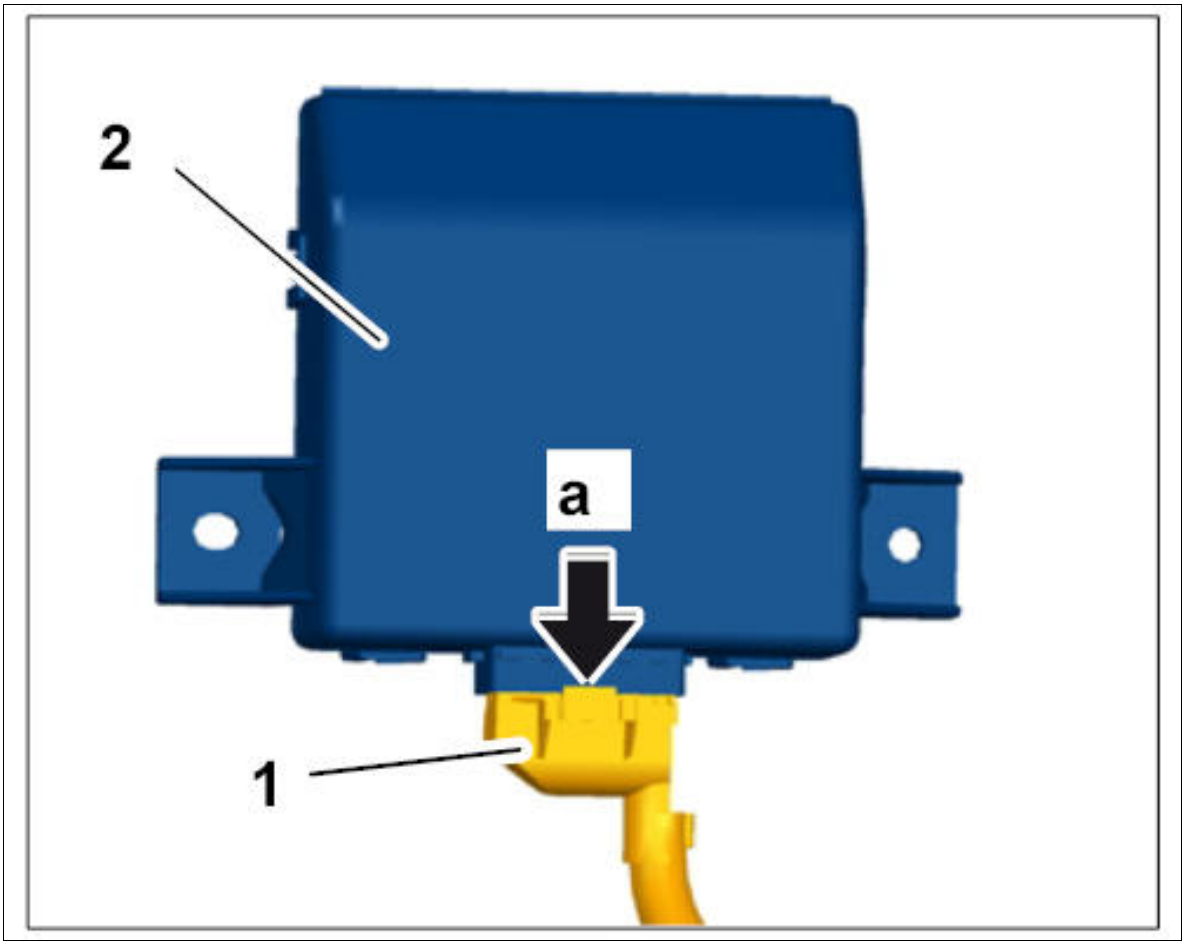

Courtesy of PORSCHE CARS NORTH AMERICA, INC.

WM 903519 REMOVING AND INSTALLING GATEWAY CONTROL UNIT (MACAN, MACAN S, MACAN TURBO) > INSTALLING GATEWAY CONTROL UNIT

Information

Always comply with the regulations for handling ESD-sensitive components!

- Assembly work may only be carried out if the mechanic is wearing the working clothes and shoes approved by Porsche.
- The new part must only be removed from the ESD (electrostatic discharge) protective packaging just before installation and at the position at which the part is to be installed.
- Never touch the electric pins and plug contacts.

1. Installation is performed in reverse order to removal.
2. Tighten fastening screw securing gateway control unit to the body. **Tightening torque: 9 Nm (6.5 ftlb.)**

WM 903519 REMOVING AND INSTALLING GATEWAY CONTROL UNIT (MACAN, MACAN S, MACAN TURBO) > SUBSEQUENT WORK

1. Install rear seat. → INSTALLING REAR SEAT .
2. If the gateway control unit was replaced, teach the new gateway control unit to suit the vehicle using **PIWIS Tester II 9818** . → 903555 REPLACING GATEWAY CONTROL UNIT .

WM 903555 REPLACING GATEWAY CONTROL UNIT (MACAN, MACAN S, MACAN TURBO) > TOOLS

Designation	Type	Number	Description	
PIWIS Tester II	Special tool	9818		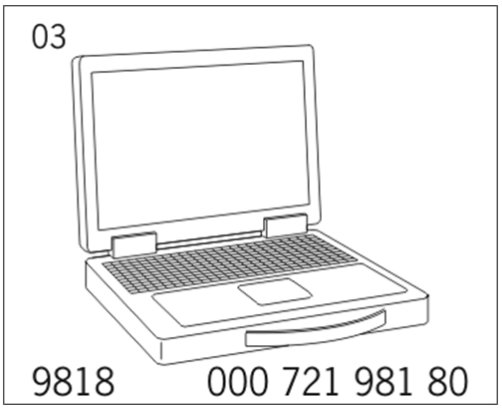

WM 903555 REPLACING GATEWAY CONTROL UNIT (MACAN, MACAN S, MACAN TURBO) > TECHNICAL VALUES

Location	Description	Type	Basic value	Tolerance 1	Tolerance 2
Current rating		Nominal value	40 A		

WM 903555 REPLACING GATEWAY CONTROL UNIT (MACAN, MACAN S, MACAN TURBO) > REPLACING GATEWAY CONTROL UNIT > CODING THE GATEWAY CONTROL UNIT

NOTE: Voltage drop

- *Risk of irreparable damage to control unit*
- *Risk of damage to control unit*
- *Fault entries in the control unit*

- *Coding in the control unit is aborted*
- *Malfunctions in control unit, even during programming*

→ Prior to disconnecting the control unit, switch off ignition and remove ignition key.

→ Ensure that the power supply is not interrupted during programming.

→ Connect a battery charger with a current rating of at least → **Nominal value: 40 A** to the vehicle battery.

Information

The **PIWIS Tester II 9818** instructions take precedence since the description may be different with later Tester releases.

The procedure described here has been structured in general terms. Different text or additional information may appear in **PIWIS Tester II 9818** .

1. Switch off ignition and replace control unit. → 903519 REMOVING AND INSTALLING GATEWAY CONTROL UNIT .
2. Connect the PIWIS Tester to the vehicle and start the Tester. Switch on ignition.
3. Select the vehicle type and start the diagnostic application.
4. Select the required control unit **Gateway** in the **overview** and press [F12] to continue.
5. **Extended identification** must now be selected.
6. **Enter the vehicle identification number** and press [Enter].
7. **Maintenance/repairs** must then be selected.
8. **Control unit replacement** must now be selected. Then press [F12] to continue.
9. **Select Write data** , press [F12] and then press [F8] to start. Data is installed.
10. As soon as the Tester confirms that **data has been written** , switch the ignition off and on again.
11. Go back to the **overview** by pressing [F7].
12. **Select Maintenance of vehicle data** and press [F12] to continue.
13. **Enter data in the required fields** and press [F12] to continue.
14. **Maintenance/repairs** must then be selected.
15. **Required & Actual configuration** must now be selected. Then press [F12] to continue.
16. Check the list of components that are actually installed and accept it by pressing [F8].
17. **Codings/adaptations** must now be selected. Then press [F12] to continue.
18. **Automatic coding** must now be selected. Then press [F12] to continue.

19. The Tester displays the message **Coding has been completed successfully** . Press [F12] to continue.

20. Read out the fault memory and erase it if necessary.

WM 905019 REMOVING AND INSTALLING HORN (MACAN, MACAN S, MACAN TURBO) > TECHNICAL VALUES

Location	Description	Type	Basic value	Tolerance 1	Tolerance 2
Holder for horn to front bumper	Internal serration screw, M8 x 20	Tightening torque	20 Nm (15 ftlb.)		

WM 905019 REMOVING AND INSTALLING HORN (MACAN, MACAN S, MACAN TURBO) > PRELIMINARY WORK

1. Remove front wheel housing liner. → 505619 REMOVING AND INSTALLING FRONT WHEEL HOUSING LINER .

WM 905019 REMOVING AND INSTALLING HORN (MACAN, MACAN S, MACAN TURBO) > REMOVING HORN

Information

- Some of the repair illustrations show only one side of the vehicle.
- Naturally, some steps also have to be performed on the opposite side of the vehicle as well.

1. Remove horn **-1-** .
    1. 1.1. Release electric plug connection **-2-** and pull it off the horn.
    2. 1.2. Unscrew fastening screw **-3-** and remove horn.

Fig 1: Removing Horn

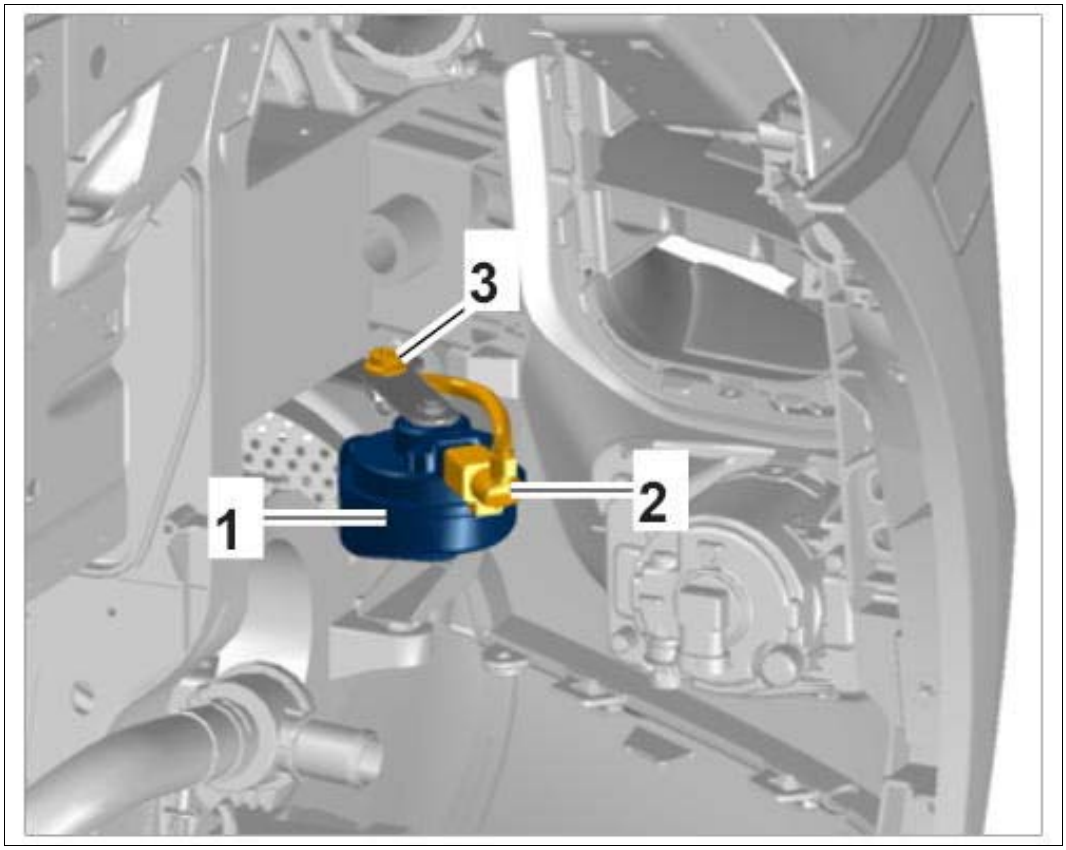

Courtesy of PORSCHE CARS NORTH AMERICA, INC.

WM 905019 REMOVING AND INSTALLING HORN (MACAN, MACAN S, MACAN TURBO) > INSTALLING HORN

1. Install horn **-1-** .
    1. 1.1. Position the horn so that the cut-out in the holder goes around the bolt on the bumper **-arrow-** .
    2. 1.2. Tighten fastening screw **-2-** . **Tightening torque: 20 Nm (15 ftlb.)**
    3. 1.3. Connect electric plug connection **-3-** until the electric plug connection engages securely.

Fig 1: Installing Horn

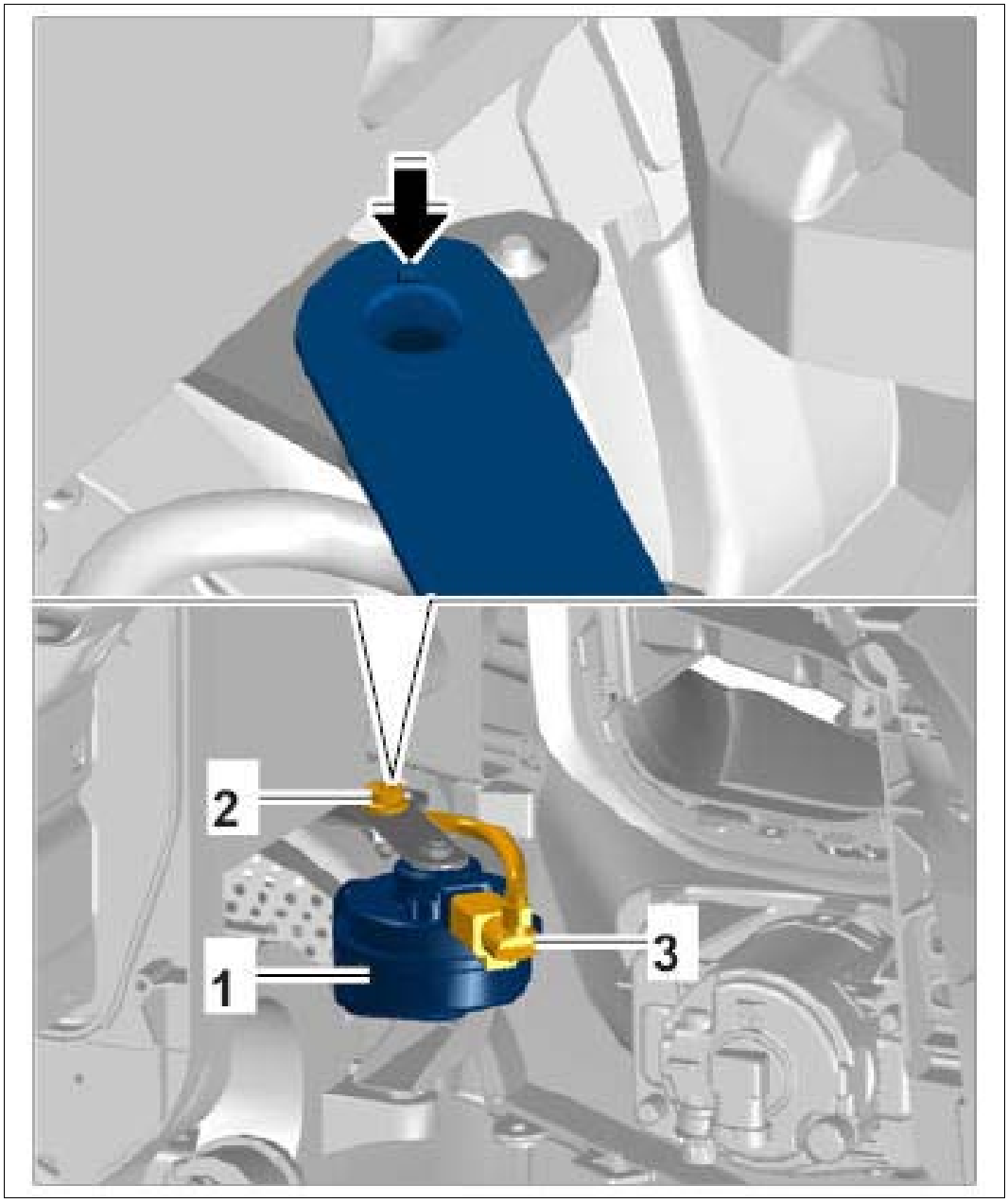

Courtesy of PORSCHE CARS NORTH AMERICA, INC.

WM 905019 REMOVING AND INSTALLING HORN (MACAN, MACAN S, MACAN TURBO) > SUBSEQUENT WORK

1. Install front wheel housing liner. → INSTALLING FRONT WHEEL HOUSING LINER

WM 906419 REMOVING AND INSTALLING CONTROL UNIT FOR AUXILIARY ALARM SYSTEM (MACAN, MACAN S, MACAN TURBO) > TOOLS

Designation	Type	Number	Description	
socket-wrench insert	Special tool	9259		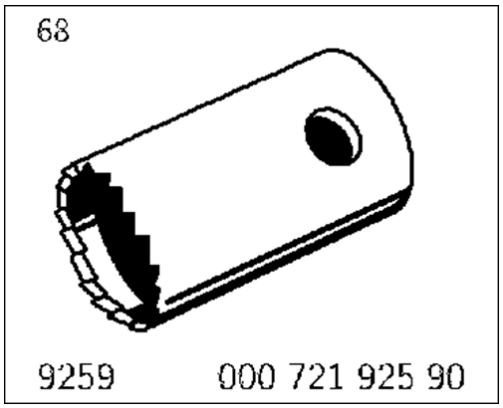

WM 906419 REMOVING AND INSTALLING CONTROL UNIT FOR AUXILIARY ALARM SYSTEM (MACAN, MACAN S, MACAN TURBO) > PRELIMINARY WORK

Remove rear seat. → 724819 REMOVING AND INSTALLING REAR SEAT .

WM 906419 REMOVING AND INSTALLING CONTROL UNIT FOR AUXILIARY ALARM SYSTEM (MACAN, MACAN S, MACAN TURBO) > REMOVING CONTROL UNIT FOR AUXILIARY ALARM SYSTEM

Fig 1: Identifying Auxiliary Alarm System Control Unit Installation Position

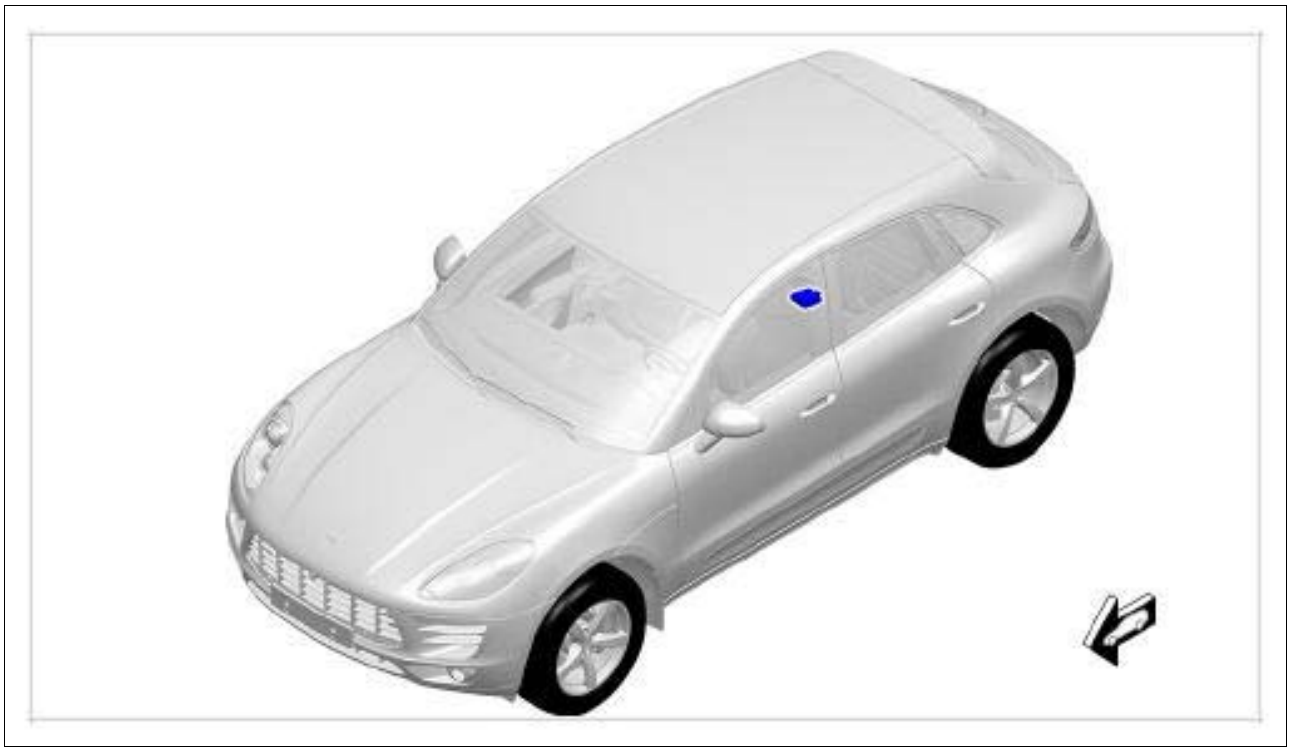

Courtesy of PORSCHE CARS NORTH AMERICA, INC.

1. Loosen shear-off nuts **-1-** using **socket-wrench insert 9259** and remove holder for control unit for auxiliary alarm system.

   Fig 2: Removing Auxiliary Alarm System Control Unit



Courtesy of PORSCHE CARS NORTH AMERICA, INC.

2. Remove control unit for auxiliary alarm system from its holder.

3. Release electric plug connection **-a-** , fold the securing clip over **-A-** and disconnect plug connection **-B-** .

Fig 3: Disconnecting Electric Plug Connection

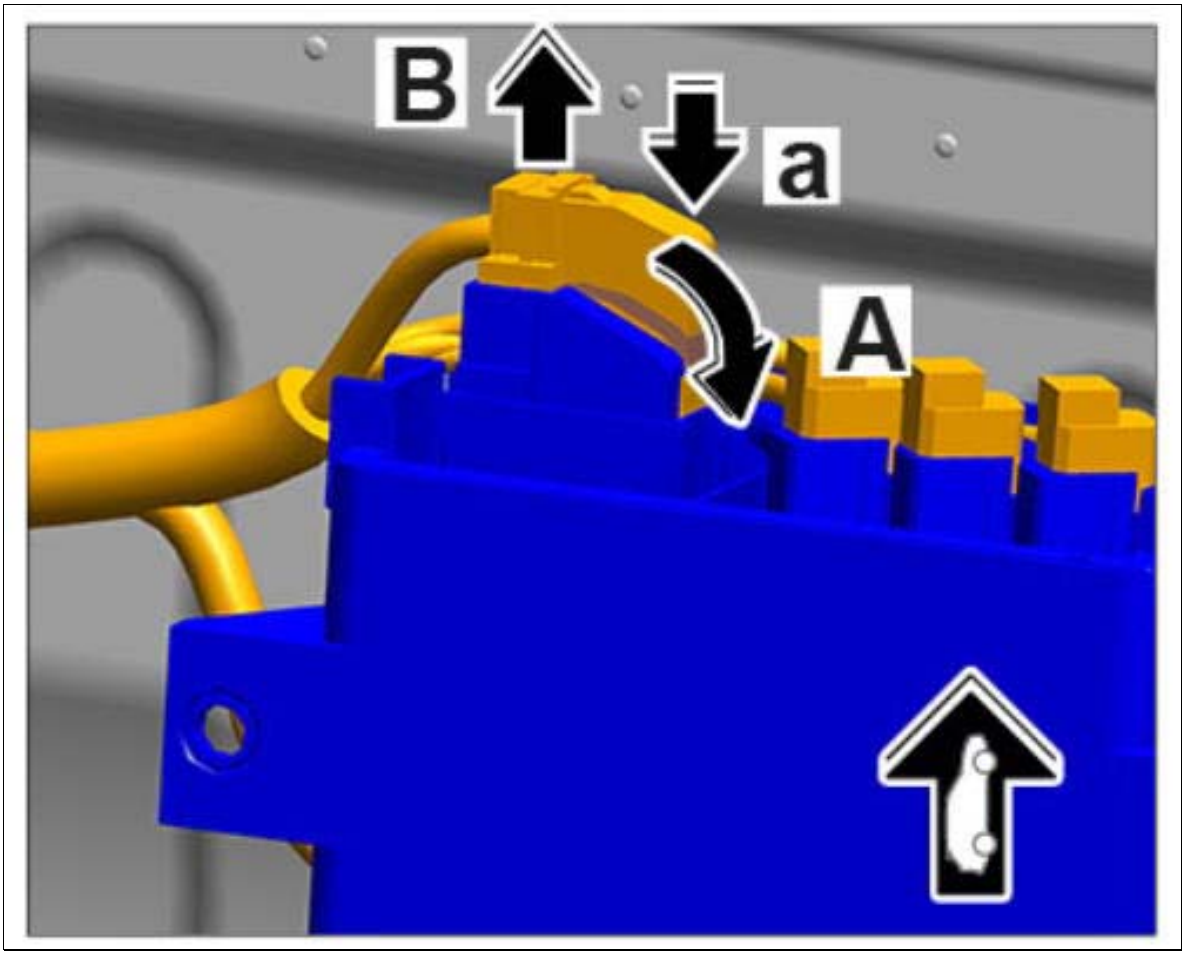

Courtesy of PORSCHE CARS NORTH AMERICA, INC.

4. Release antenna plug connections **-a, A-** and disconnect them **-B-** .

Fig 4: Disconnecting Antenna Plug Connections

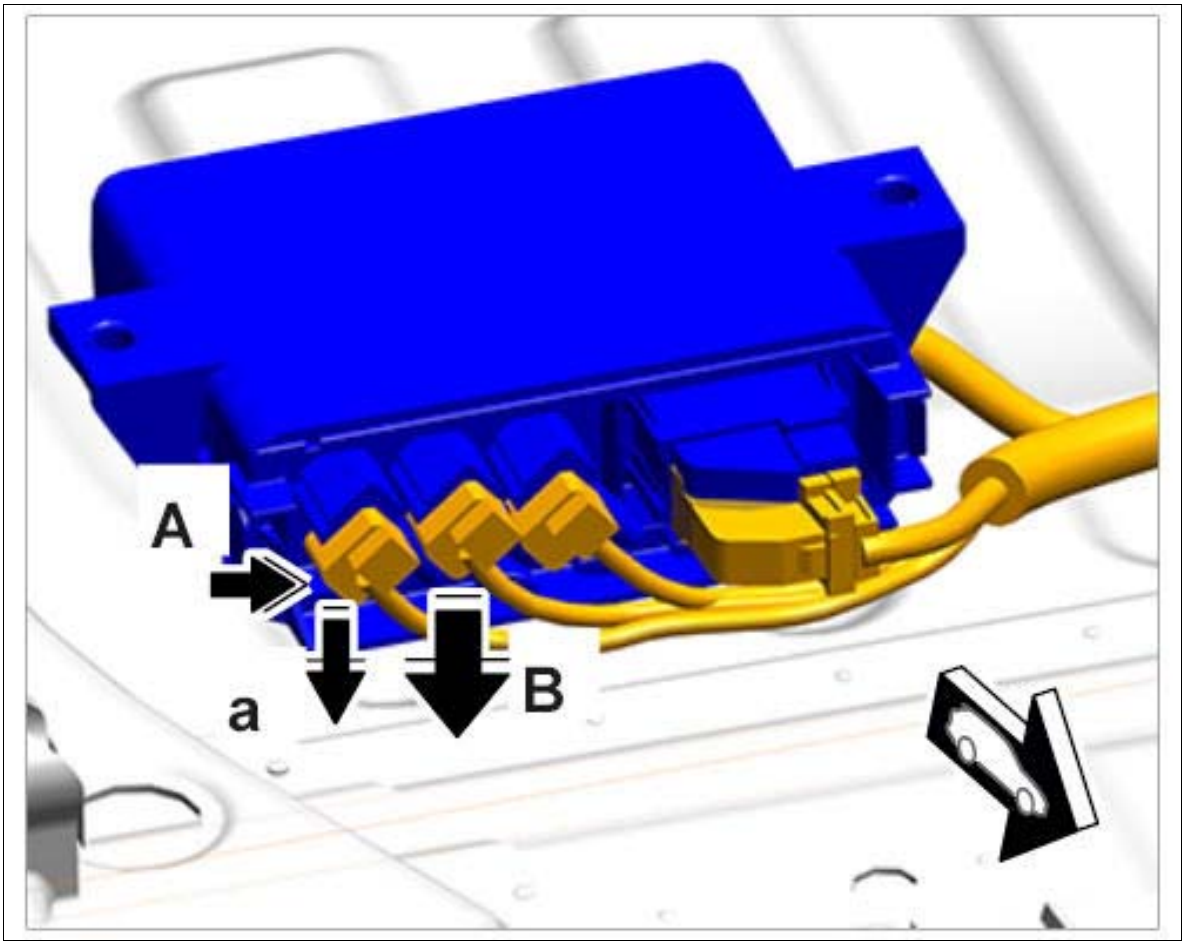

Courtesy of PORSCHE CARS NORTH AMERICA, INC.

5. Remove control unit for auxiliary alarm system from the vehicle.

WM 906419 REMOVING AND INSTALLING CONTROL UNIT FOR AUXILIARY ALARM SYSTEM (MACAN, MACAN S, MACAN TURBO) > INSTALLING CONTROL UNIT FOR AUXILIARY ALARM SYSTEM

1. Plug in antenna plug connections for GSM **-1-** , GPS **-2-** and driver card **-3-** (**-A-**) and lock securely **-B-** .

Fig 1: Installing Antenna Plug Connections

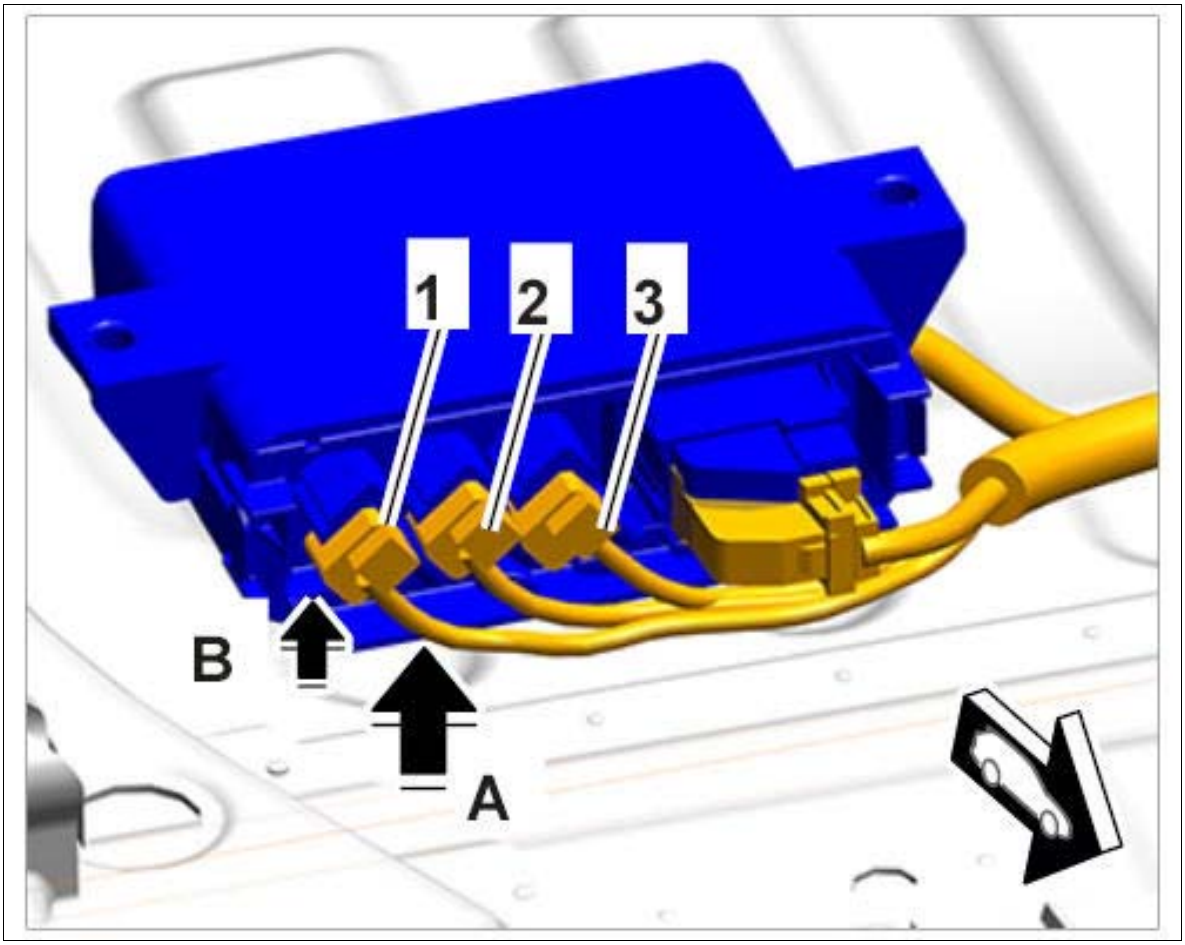

Courtesy of PORSCHE CARS NORTH AMERICA, INC.

2. Plug in electric plug connection **-A-** and fold locking clip over **-B-** .

Fig 2: Connecting Electric Plug Connection

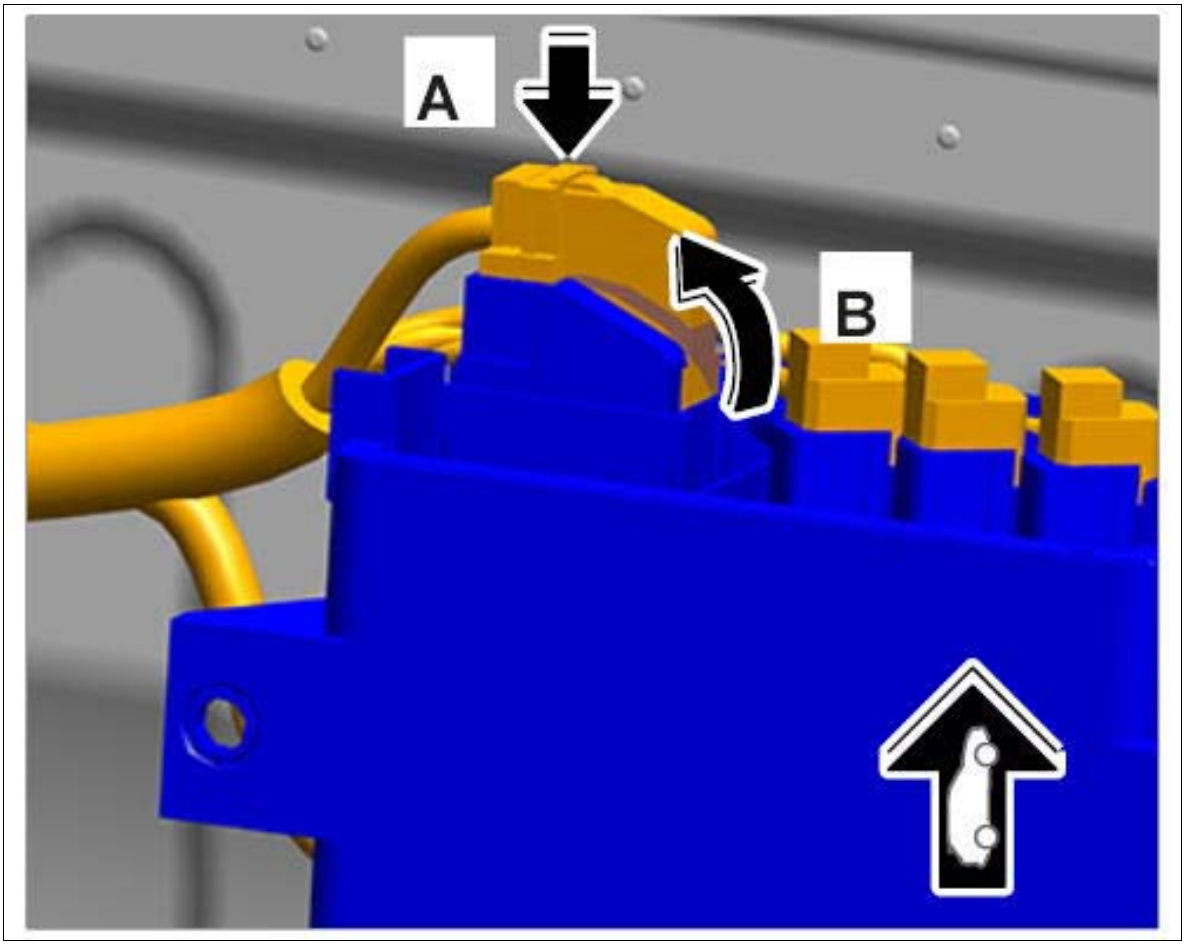

Courtesy of PORSCHE CARS NORTH AMERICA, INC.

3. Push control unit for auxiliary alarm system into holder and position it on the screw bolts.
4. Tighten shear-off nuts **-1-** until they break off.

Fig 3: Installing Auxiliary Alarm System Control Unit



Courtesy of PORSCHE CARS NORTH AMERICA, INC.

WM 906419 REMOVING AND INSTALLING CONTROL UNIT FOR AUXILIARY ALARM SYSTEM (MACAN, MACAN S, MACAN TURBO) > SUBSEQUENT WORK

1. Install rear seat. → INSTALLING REAR SEAT .

WM 906425 ACTIVATING PCC/PVTS (MACAN, MACAN S, MACAN TURBO) > TOOLS

Designation	Type	Number	Description	

PIWIS Tester II	Special tool	9818		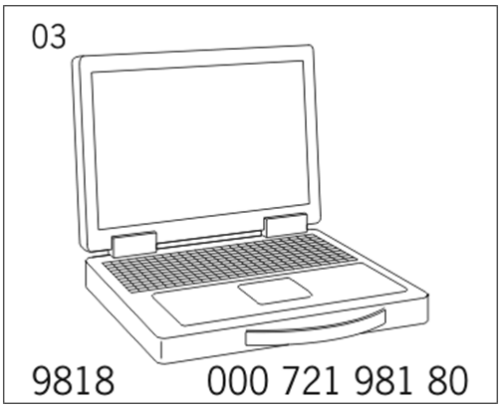

WM 906425 ACTIVATING PCC/PVTS (MACAN, MACAN S, MACAN TURBO) > TECHNICAL VALUES

Location	Description	Type	Basic value	Tolerance 1	Tolerance 2
Current rating		Nominal value	40 A		

WM 906425 ACTIVATING PCC/PVTS (MACAN, MACAN S, MACAN TURBO) > ACTIVATING PCC/PVTS

NOTE: Voltage drop

- *Risk of irreparable damage to control unit*
- *Risk of damage to control unit*
- *Fault entries in the control unit*
- *Coding in the control unit is aborted*
- *Malfunctions in control unit, even during programming*

→ Prior to disconnecting the control unit, switch off ignition and remove ignition key.

→ Ensure that the power supply is not interrupted during programming.

→ Connect a battery charger with a current rating of at least → **Nominal value: 40 A** to the vehicle battery.

Information

The **PIWIS Tester II 9818** instructions take precedence since the description may be different with later Tester releases.

The procedure described here has been structured in general terms; different text or additions may

appear in **PIWIS Tester II 9818** .

Information

PCC/PVTS should be activated just before vehicle hand over as the customer has access to the vehicle and the term of the PCC/PVTS contract begins following activation.

1. Get installation code from the customer.

   Information

   If the installation code is not available, PCC/PVTS activation must be carried out during vehicle hand over.

2. Connect the PIWIS Tester to the vehicle and start the Tester. Switch on ignition.
3. Select the vehicle type and start the diagnostic application.
4. Check the chassis number and press [F12] to start.
5. Select **Vehicle functions** in the menu by pressing [F7].
6. Start the Tester sequence **Activate PCC/PVTS** by pressing [F12].
7. Follow the steps/instructions shown on the PIWIS Tester.
8. Log PCC/PVTS activation.
9. Switch off ignition.
10. **Read out the fault memory** and erase it if necessary.
11. Perform a function test if necessary.

Service Manual: 97 - CABLES -- (95B) - MACAN

WM 970819 REMOVING AND INSTALLING WIRE HARNESS FOR DASHBOARD (ALL MODELS) > PRELIMINARY WORK

1. Remove dashboard. → 701819 REMOVING AND INSTALLING DASHBOARD .
2. Remove headliner. → 708419 REMOVING AND INSTALLING HEADLINER .
3. Remove center console. → 681719 REMOVING AND INSTALLING CENTER CONSOLE .

WM 970819 REMOVING AND INSTALLING WIRE HARNESS FOR DASHBOARD (ALL MODELS) > REMOVING WIRE HARNESS FOR DASHBOARD

NOTE: Incorrect handling of wire harness

- *Risk of damage to lines*

→ The wire harness contains all airbag lines, antenna lines and optical waveguides.

→ The wire harness must not be separated and is always replaced as a complete wire harness when carrying out extensive repairs.

→ If individual lines are damaged, shut off these lines and install new lines. Route the new lines along the wire harness and secure them to the wire harness.

NOTE: Incorrect handling of optical waveguides

- *Risk of damage to optical waveguide*

→ Observe the requirements for working with and installing optical waveguides.

Fig 1: Locating Dashboard Wire Harness Position

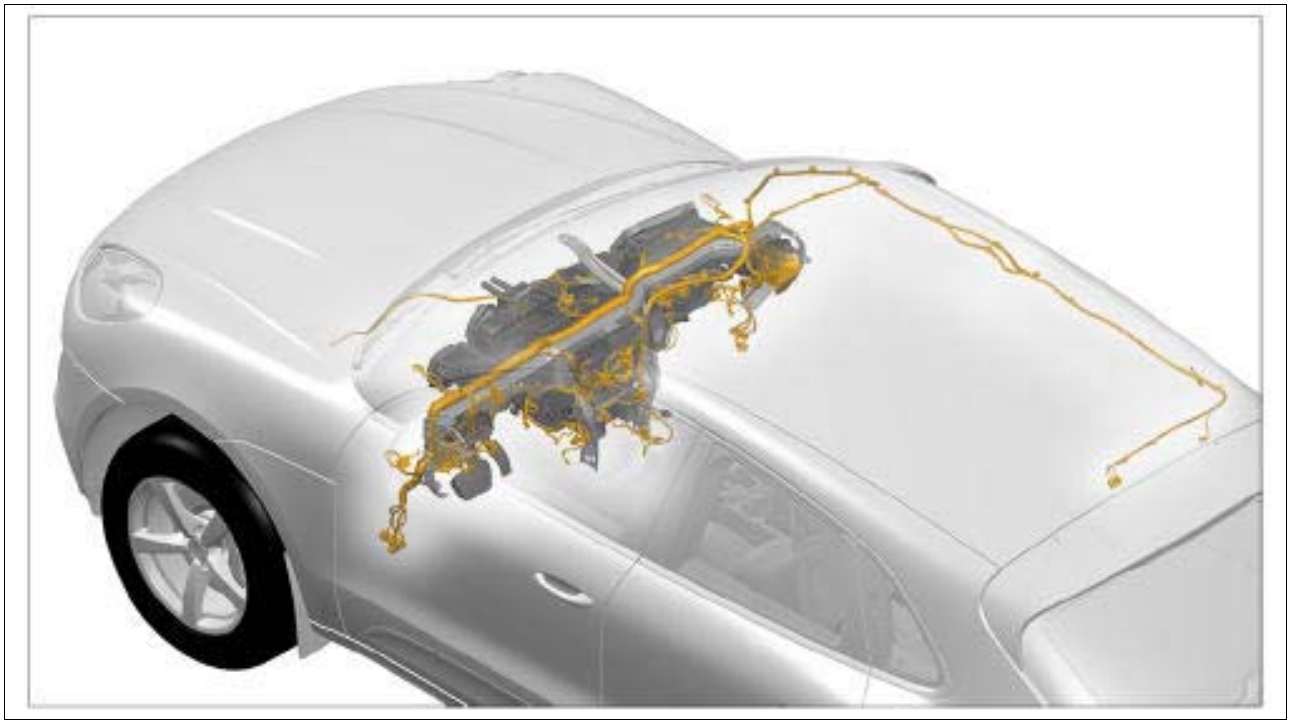

Courtesy of PORSCHE CARS NORTH AMERICA, INC.

1. Loosen and expose wire harness in the lower right footwell.
2. Release electric plug connections **-a-** and disconnect them **-A-** .

Fig 2: Disconnecting Electric Plug Connections

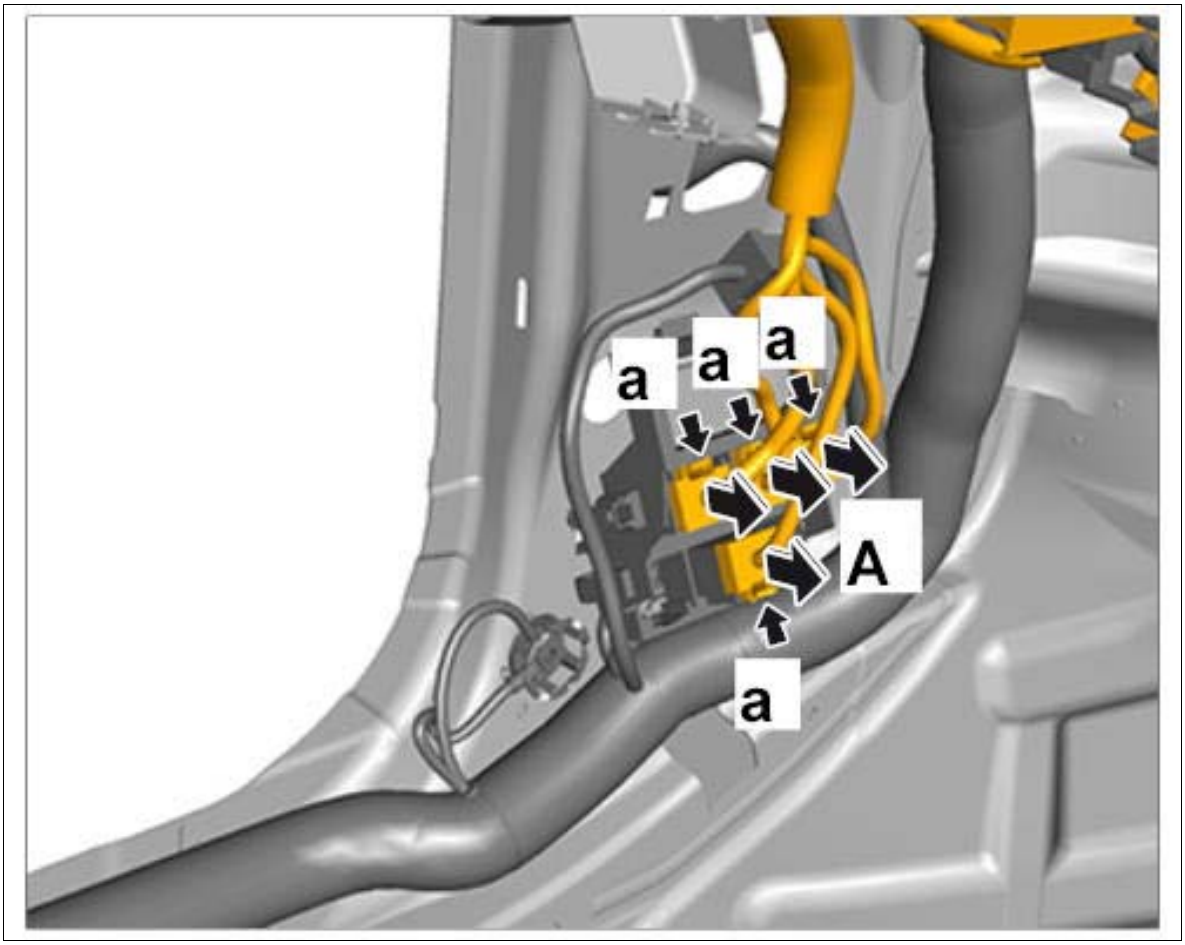

Courtesy of PORSCHE CARS NORTH AMERICA, INC.

3. Unclip section of line at the dashboard bracket at the left and guide it out.

Fig 3: Loosening Section Of Line

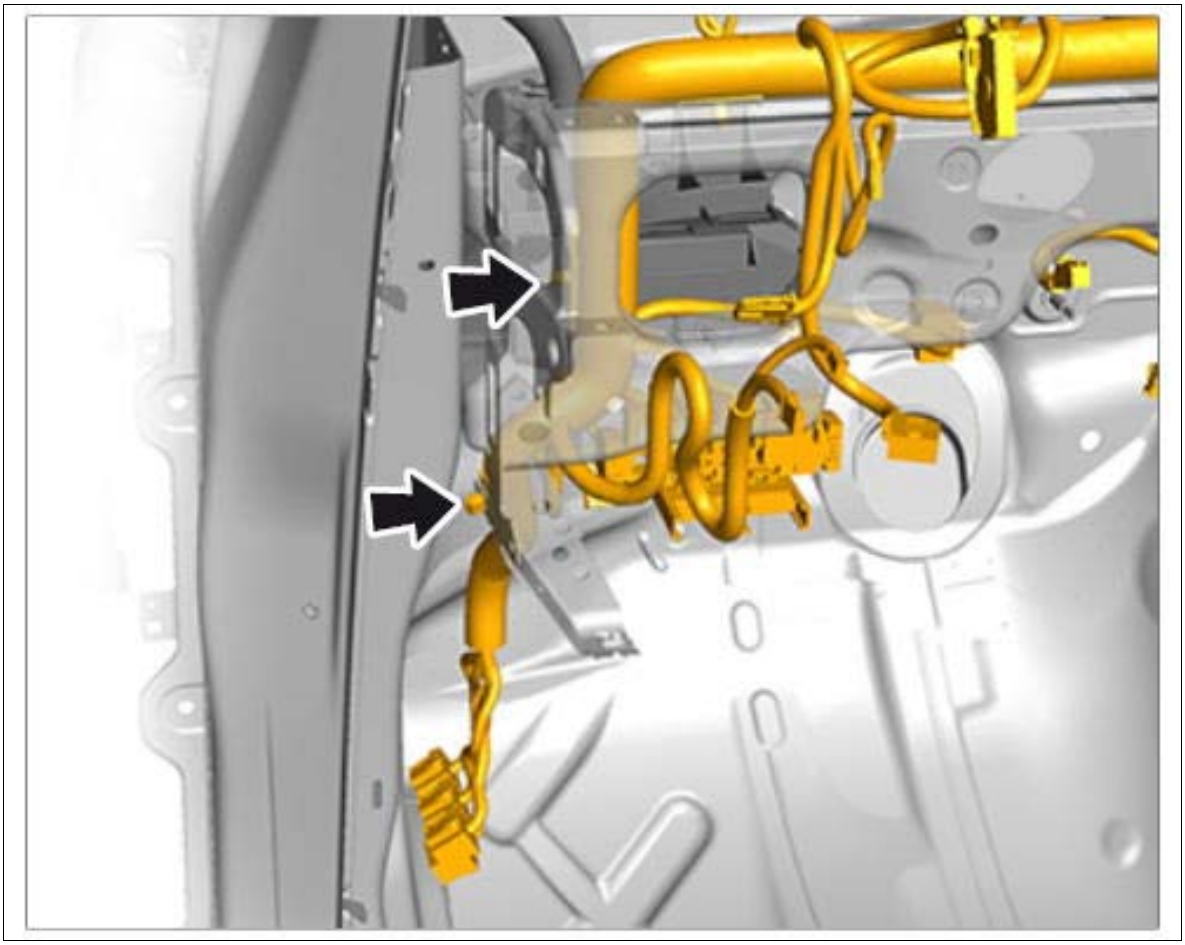

Courtesy of PORSCHE CARS NORTH AMERICA, INC.

4. Release electric plug connection for temperature sensor at the air vent **-a-** and disconnect it **-A-** .

Fig 4: Disconnecting Temperature Sensor

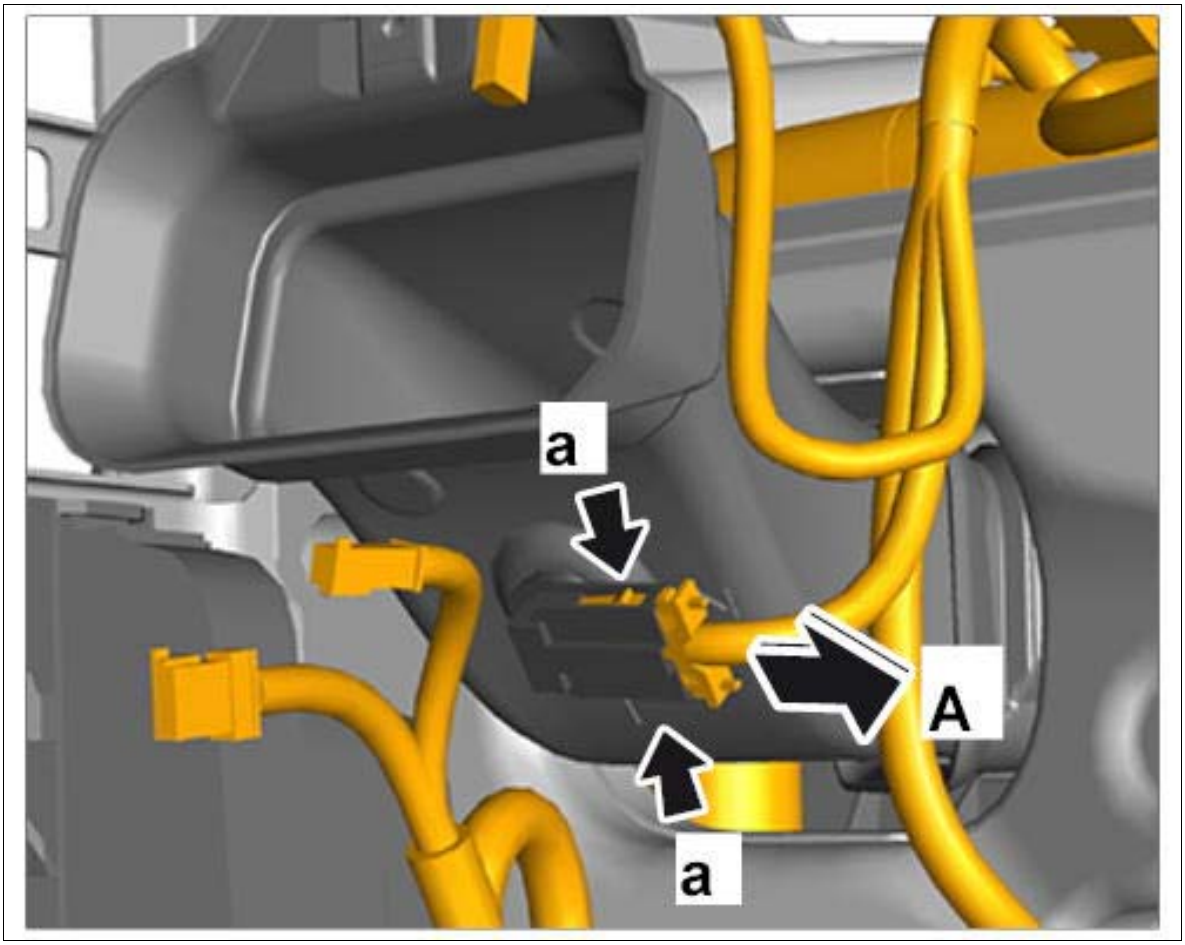

Courtesy of PORSCHE CARS NORTH AMERICA, INC.

5. Loosen section of line on top center dashboard bracket and center console and guide it out.

Fig 5: Locating Dashboard Section Line



Courtesy of PORSCHE CARS NORTH AMERICA, INC.

6. Release electric plug connection in the left footwell **-a-** and disconnect it **-A-** .

Fig 6: Disconnecting Electric Plug Connection

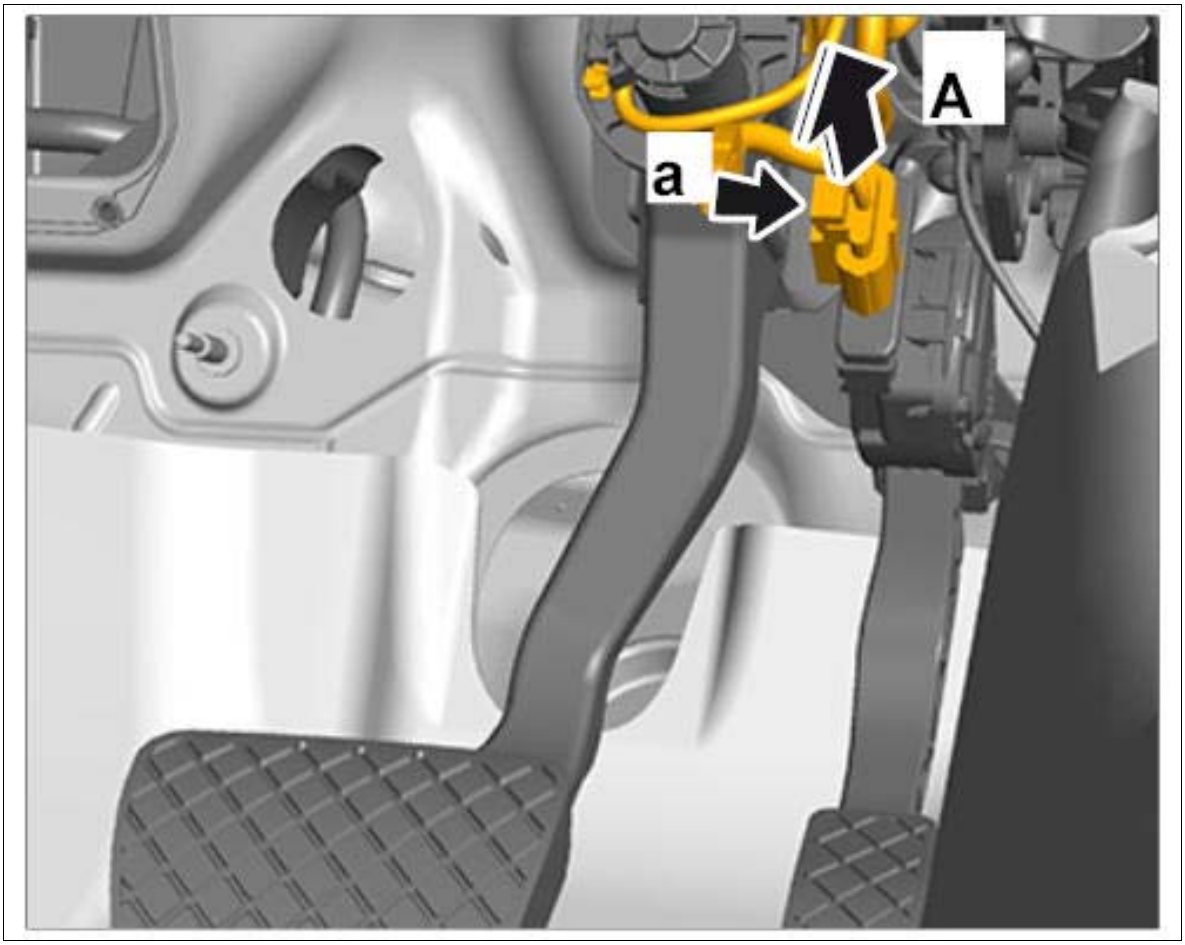

Courtesy of PORSCHE CARS NORTH AMERICA, INC.

7. Bend carpet in left footwell aside and disconnect and remove ground lines **-1, 2-** from the body.

Fig 7: Loosening Ground Connections

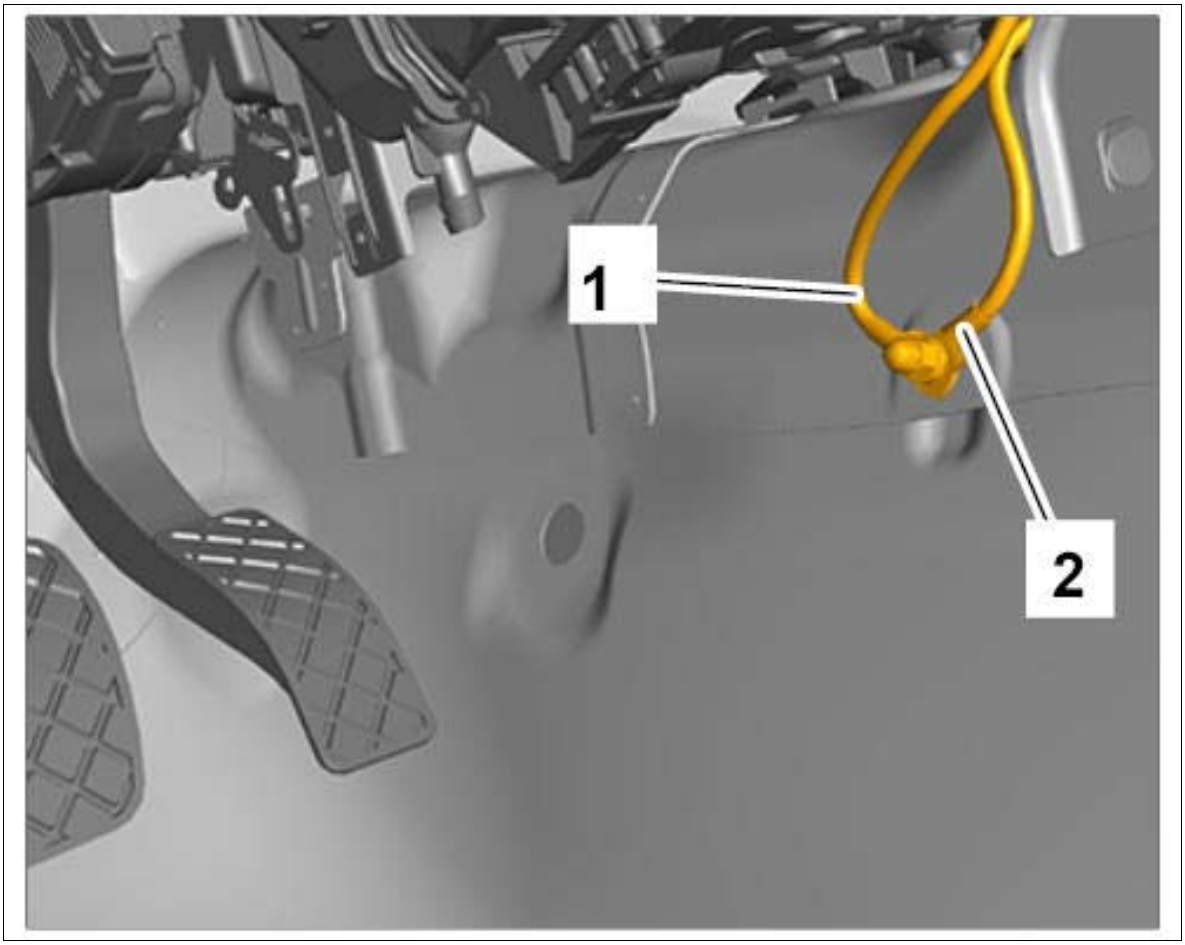

Courtesy of PORSCHE CARS NORTH AMERICA, INC.

8. Disconnect battery line **-1-** .
    1. 8.1. Disconnect battery line in the engine compartment and guide it out.
    2. 8.2. Unclip battery line on the dashboard bracket **-2-** .
    3. 8.3. Pull battery line in through the seal on the bulkhead.

Fig 8: Disconnecting Battery Line

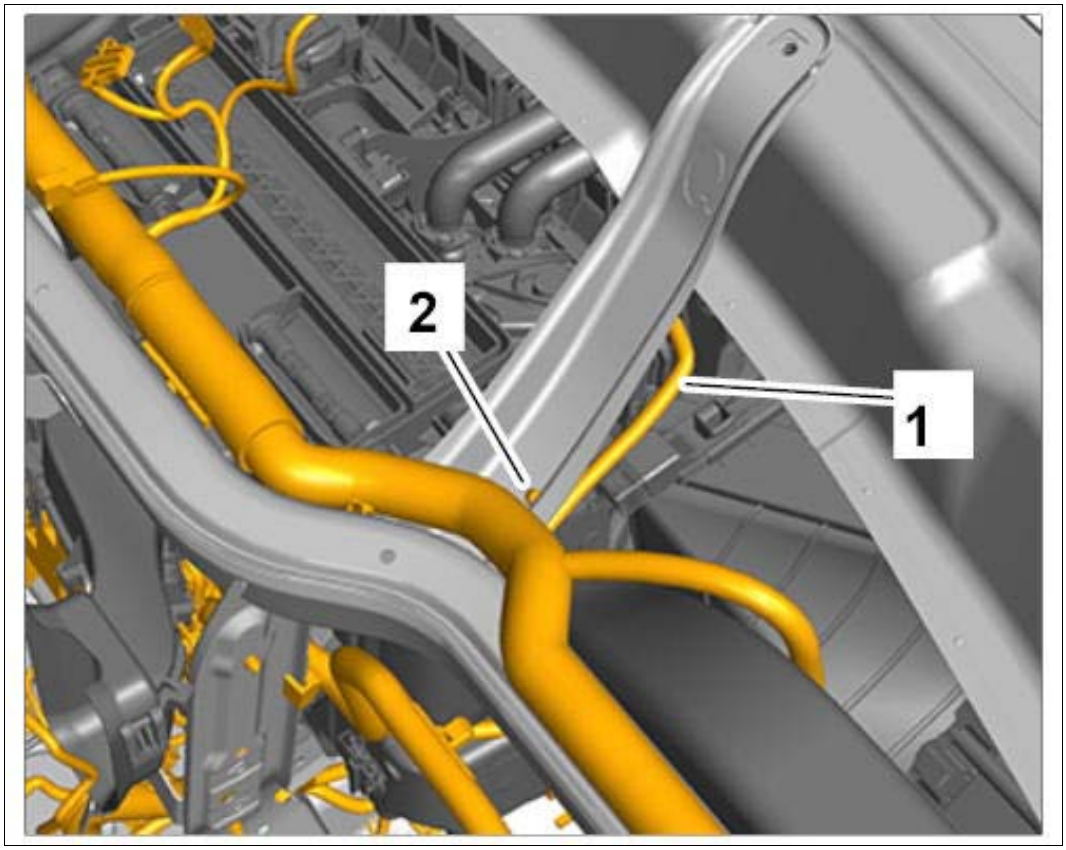

Courtesy of PORSCHE CARS NORTH AMERICA, INC.

9. Unclip section of line **-1-** on dashboard bracket at the right and on passenger's airbag holder and expose it.

Fig 9: Disconnecting Section Of Line On Dashboard (Right)

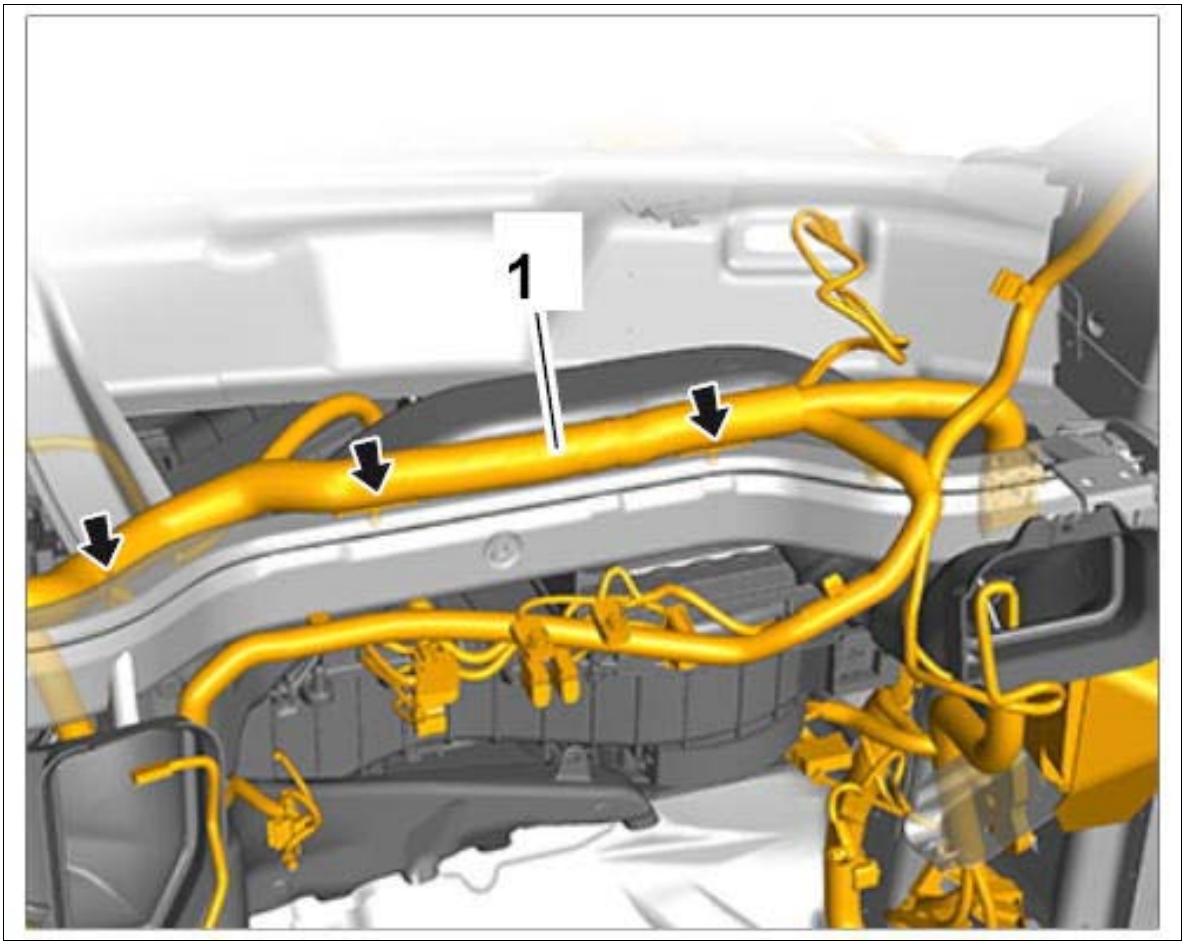

Courtesy of PORSCHE CARS NORTH AMERICA, INC.

10. Unclip section of line at the right A-pillar **-2-** and roof console **-1-** .

Fig 10: Locating Roof Console Section Line

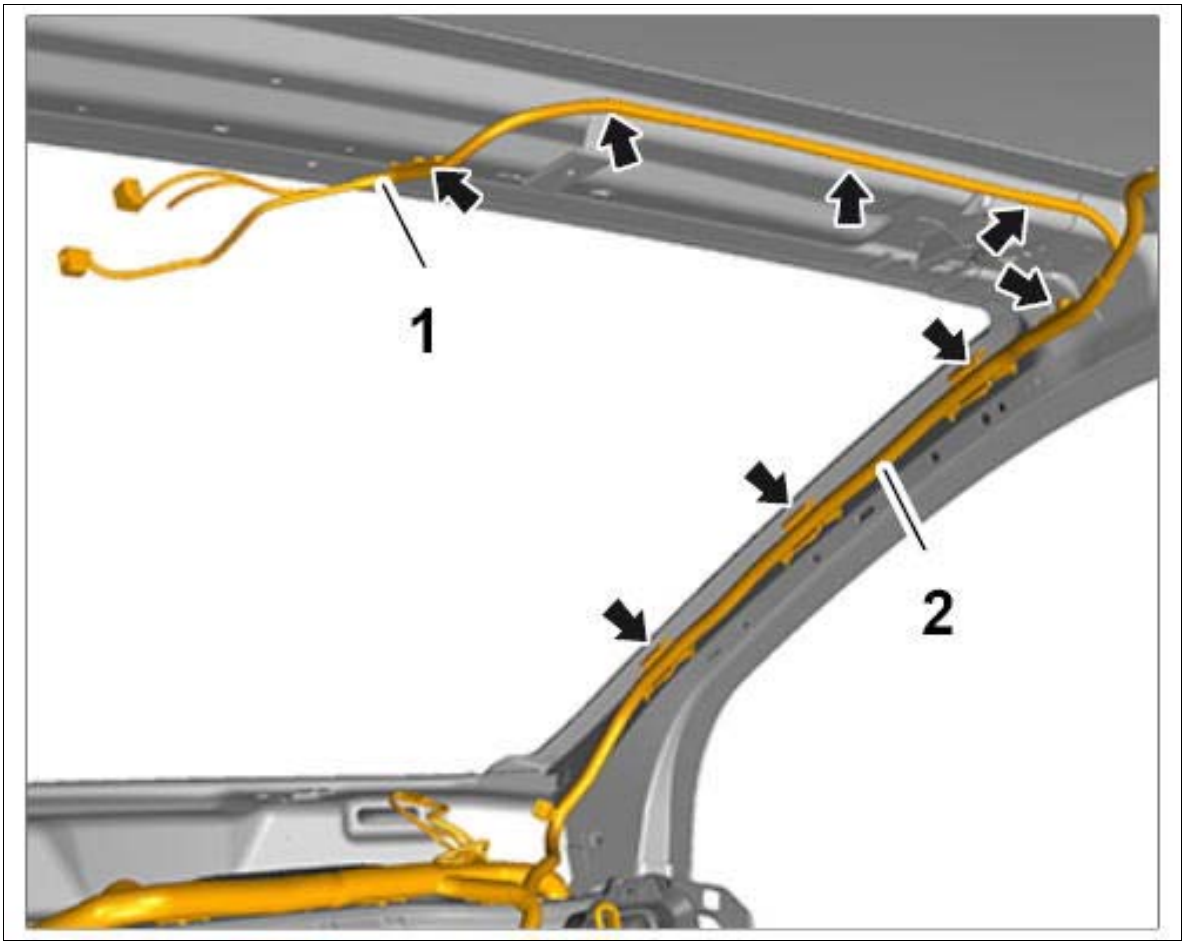

Courtesy of PORSCHE CARS NORTH AMERICA, INC.

11. Unclip section of line **-1-** on the roof pillar at the right.

Fig 11: Locating Section Of Line On Right Roof Pillar

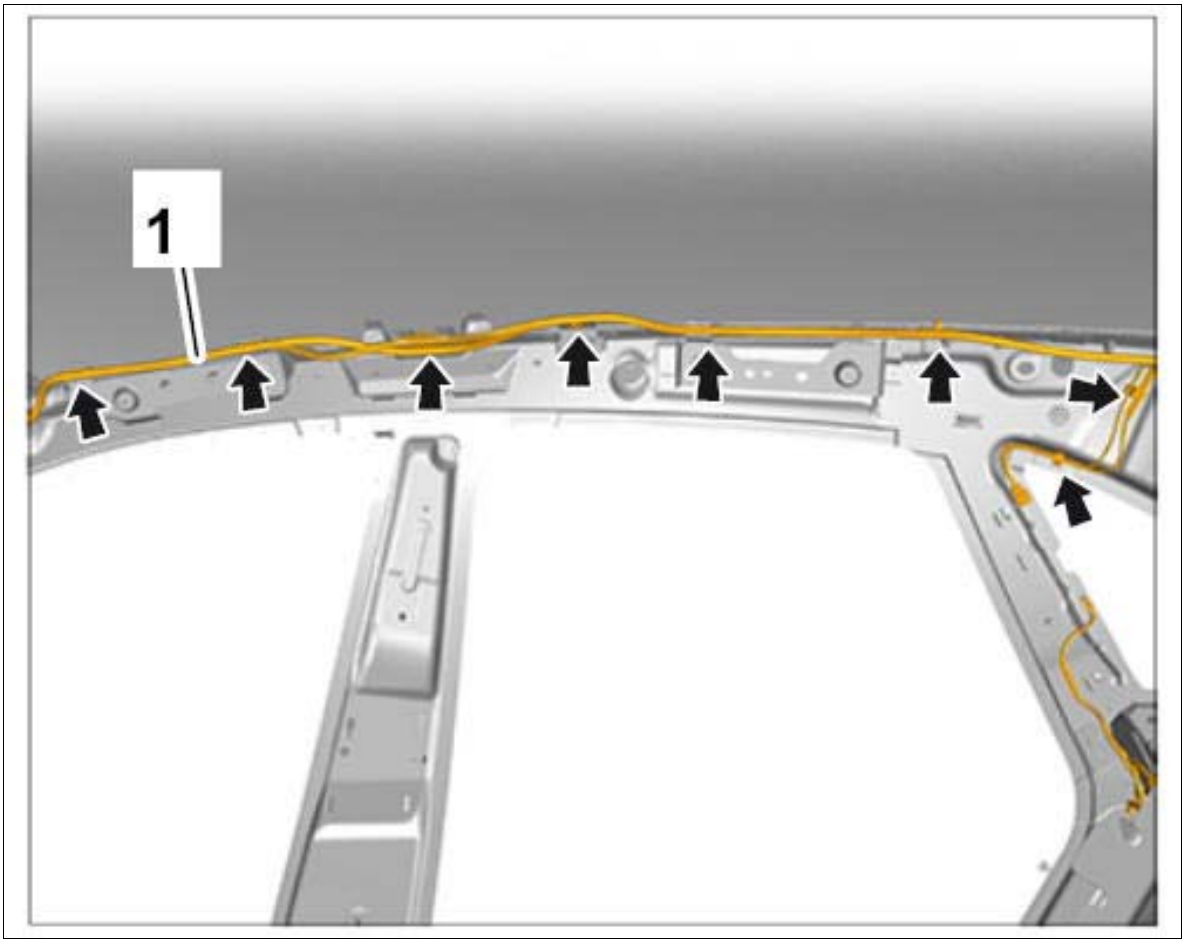

Courtesy of PORSCHE CARS NORTH AMERICA, INC.

12. Unclip antenna lines at the side window at the right **-1-** and disconnect them **-2-** .

Fig 12: Disconnecting Antenna Lines

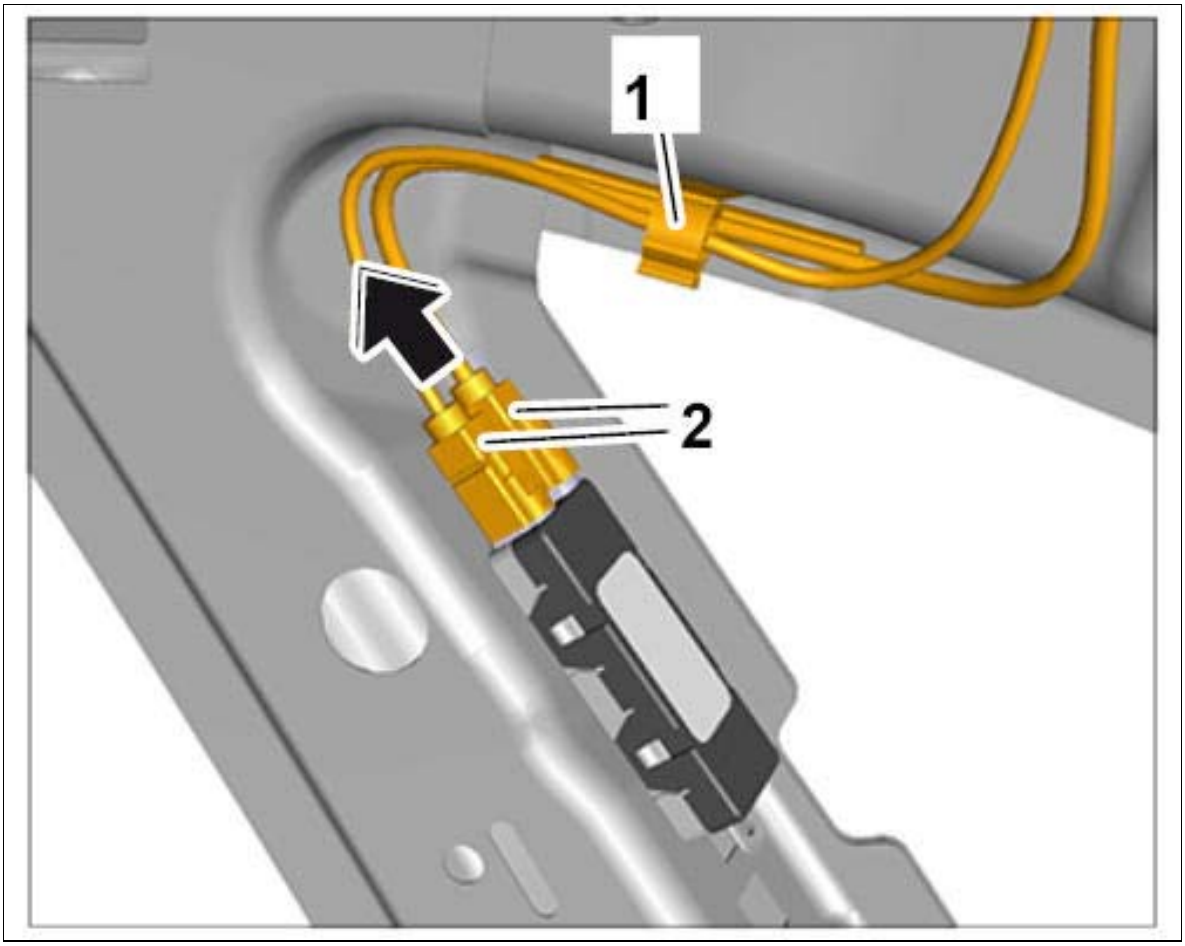

Courtesy of PORSCHE CARS NORTH AMERICA, INC.

13. Unclip and disconnect antenna line at the rear right of the roof **-2-** .
14. Unclip section of line **-1-** at the rear right of the roof.

Fig 13: Identifying Rear Right Roof Section Line

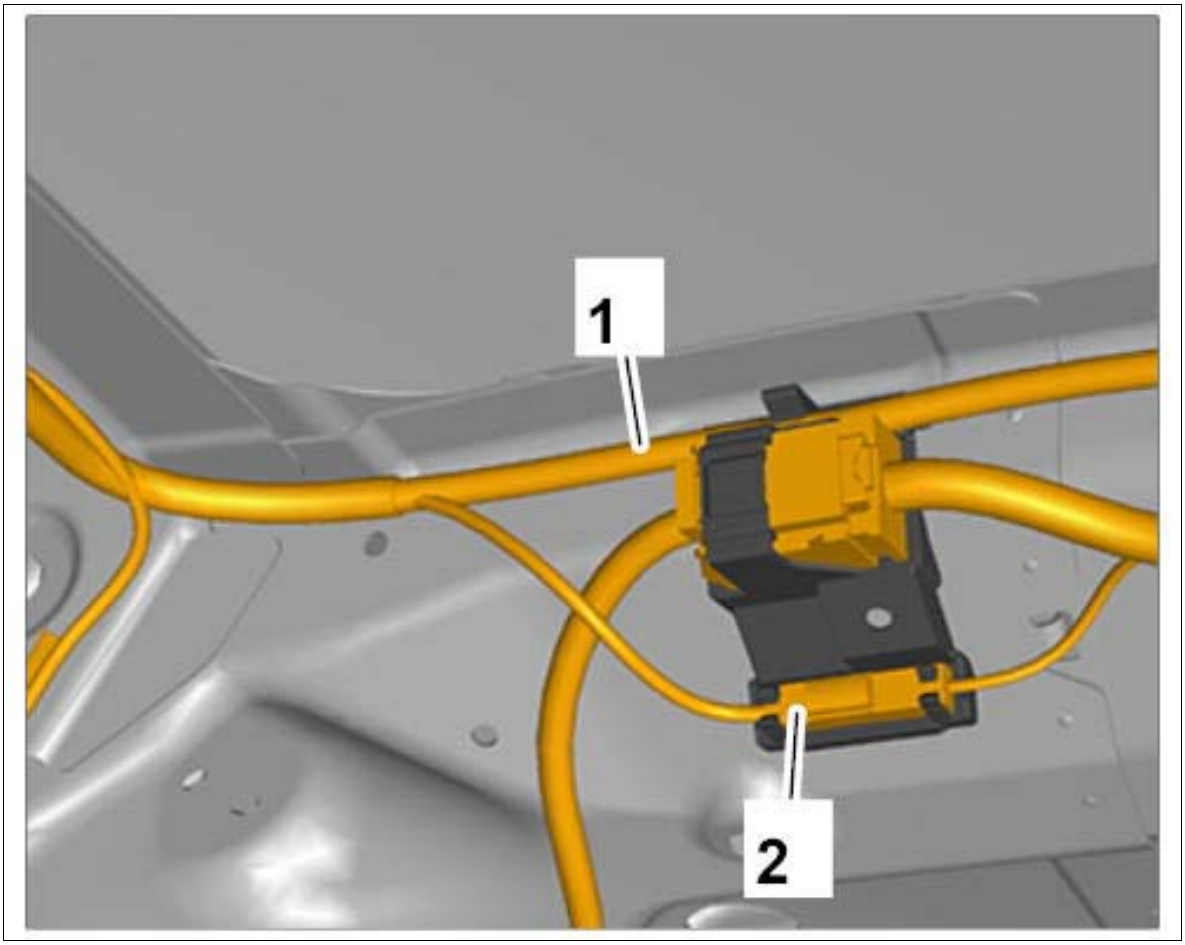

Courtesy of PORSCHE CARS NORTH AMERICA, INC.

15. Unclip section of line at the center rear of the roof **-1-** .
16. Unclip and disconnect antenna lines **-2-** .

Fig 14: Identifying Center Rear Roof Section Line

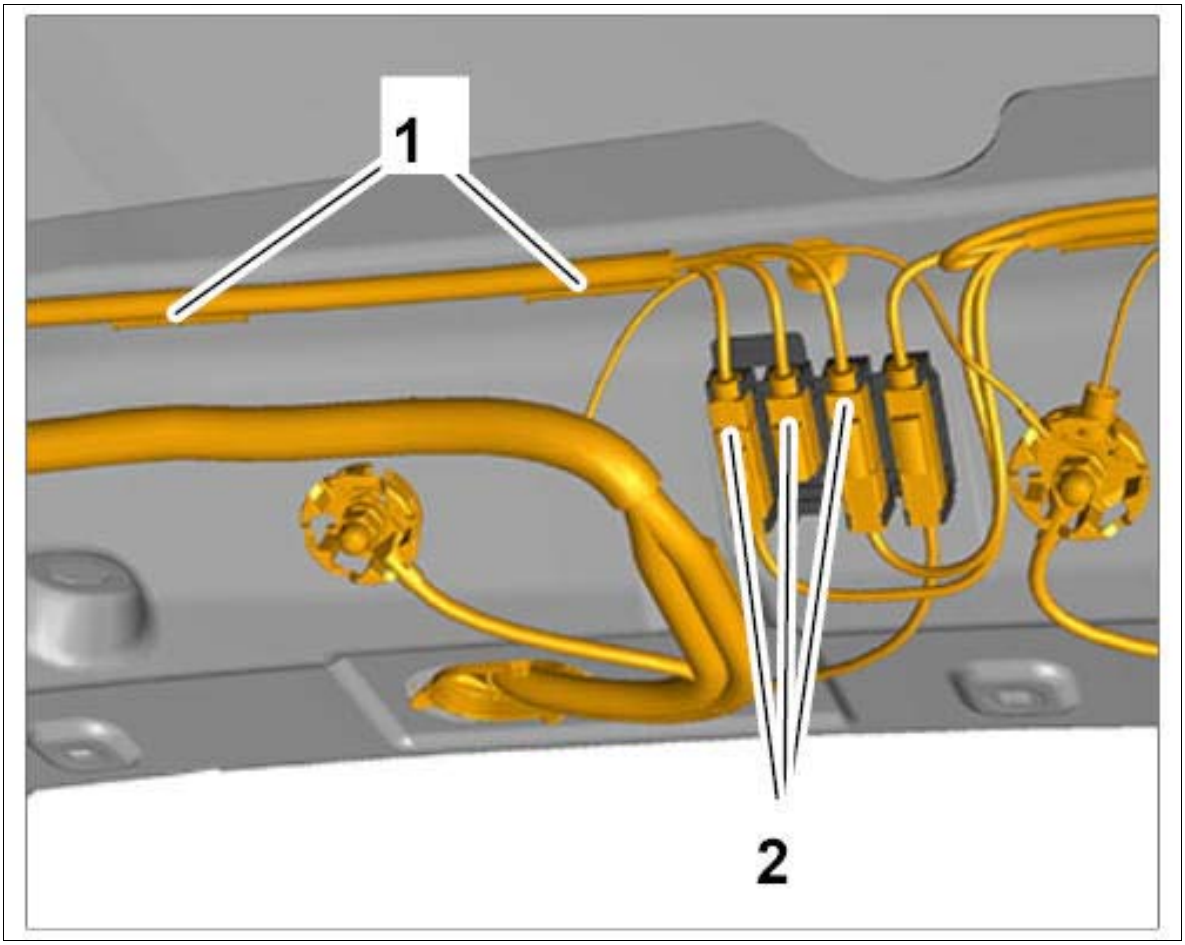

Courtesy of PORSCHE CARS NORTH AMERICA, INC.

WM 970819 REMOVING AND INSTALLING WIRE HARNESS FOR DASHBOARD (ALL MODELS) > INSTALLING WIRE HARNESS FOR DASHBOARD

NOTE: Incorrect handling of wire harness

- *Risk of damage to lines*

→ The wire harness contains all airbag lines, antenna lines and optical waveguides.

→ The wire harness must not be separated and is always replaced as a complete wire harness when carrying out extensive repairs.

→ If individual lines are damaged, shut off these lines and install new lines. Route the new lines along the wire harness and secure them to the wire harness.

NOTE: Incorrect handling of optical waveguides

- *Risk of damage to optical waveguide*

→ Observe the requirements for working with and installing optical waveguides.

1. Installation is performed in reverse order to removal.

WM 970819 REMOVING AND INSTALLING WIRE HARNESS FOR DASHBOARD (ALL MODELS) > SUBSEQUENT WORK

1. Install center console → INSTALLING CENTER CONSOLE .
2. Install headliner → INSTALLING HEADLINER .
3. Install dashboard → INSTALLING DASHBOARD .

WM 970909 LOOSENING AND SECURING MAIN WIRE HARNESS IN ENGINE COMPARTMENT (ALL MODELS) > TECHNICAL VALUES

Location	Description	Type	Basic value	Tolerance 1	Tolerance 2
Ground line to ground pin in body	Nut, M6	Tightening torque			9 Nm (6.5 ftlb.)

WM 970909 LOOSENING AND SECURING MAIN WIRE HARNESS IN ENGINE COMPARTMENT (ALL MODELS) > INFORMATION

Fig 1: Overview Of Main Wire Harness Installation Position

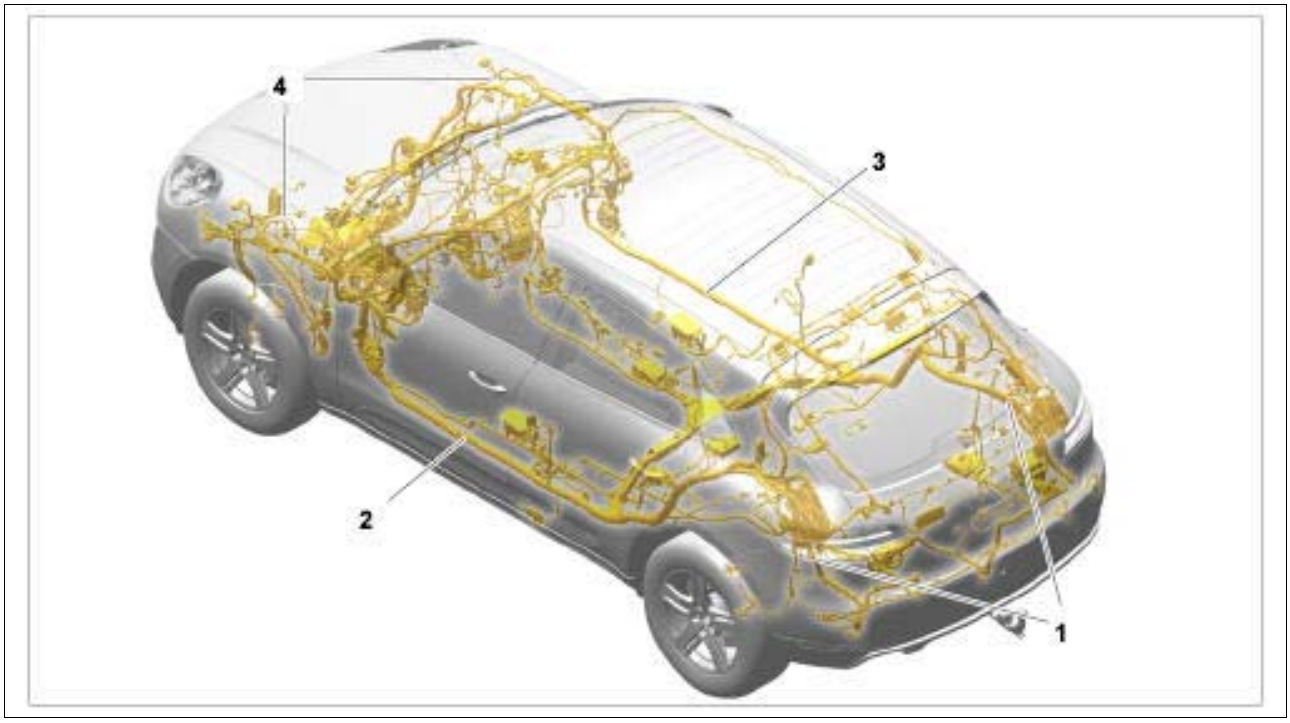

Courtesy of PORSCHE CARS NORTH AMERICA, INC.

- 4 - Main wire harness in engine compartment

WM 970909 LOOSENING AND SECURING MAIN WIRE HARNESS IN ENGINE COMPARTMENT (ALL MODELS) > PRELIMINARY WORK FOR LOOSENING AND SECURING MAIN WIRE HARNESS IN ENGINE COMPARTMENT AT THE RIGHT

1. Disconnect ground line on the battery. → 2X00IN WORK INSTRUCTIONS AFTER DISCONNECTING THE BATTERY .
2. Remove glove compartment. → 681519 REMOVING AND INSTALLING GLOVE COMPARTMENT .
3. Remove front side-section trim panel at the right. → 702419 REMOVING AND INSTALLING FRONT SIDE-SECTION TRIM PANEL .
4. Remove cover behind the right headlight. → 700219 REMOVING AND INSTALLING FRONT TRIM PANEL .
5. Remove right front wheel. → 440519 REMOVING AND INSTALLING WHEEL .
6. Remove front wheel housing liner at the right. → 505619 REMOVING AND INSTALLING FRONT WHEEL HOUSING LINER .

   Vehicles with auxiliary heating

7. Remove complete heater. → 822019 REMOVING AND INSTALLING COMPLETE HEATER .

WM 970909 LOOSENING AND SECURING MAIN WIRE HARNESS IN ENGINE COMPARTMENT (ALL MODELS) > PRELIMINARY WORK FOR LOOSENING AND SECURING MAIN WIRE HARNESS IN ENGINE COMPARTMENT AT THE LEFT

1. Disconnect ground line on the battery. → 2X00IN WORK INSTRUCTIONS AFTER DISCONNECTING THE BATTERY .
2. Remove control unit for front-end electronics. → 944919 REMOVING AND INSTALLING CONTROL UNIT FOR FRONT-END ELECTRONICS .
3. Loosen fuse box in the cowl panel. → LOOSENING FUSE BOX IN THE COWL PANEL .
4. Remove left headlight. → 941519 REMOVING AND INSTALLING HEADLIGHTS .
5. Remove front left wheel. → 440519 REMOVING AND INSTALLING WHEEL .
6. Remove front wheel housing liner at the left. → 505619 REMOVING AND INSTALLING FRONT WHEEL HOUSING LINER .
7. Remove windscreen-washer reservoir. → 926019 REMOVING AND INSTALLING WINDSCREEN-WASHER RESERVOIR .
8. Remove windscreen washer system hose from the front lid → REMOVING SPRAY NOZZLE FOR WINDSCREEN WASHER SYSTEM .

   Macan Turbo

9. Remove left air cleaner housing. → 242519 REMOVING AND INSTALLING AIR CLEANER HOUSING .

WM 970909 LOOSENING AND SECURING MAIN WIRE HARNESS IN ENGINE COMPARTMENT (ALL MODELS) > LOOSENING MAIN WIRE HARNESS IN ENGINE COMPARTMENT AT THE RIGHT

NOTE: Incorrect handling of main wire harness

- *Risk of damage to lines*

→ The main wire harness contains all airbag lines, antenna lines and optical waveguides.

→ The main wire harness must not be separated and is always replaced as a complete wire harness when carrying out extensive repairs.

→ If individual lines are damaged, shut off these lines and install new lines. Lay the new lines along the main wire harness and secure them to the main wire harness.

Information

Always comply with the regulations for handling ESD-sensitive components!

- Assembly work may only be carried out if the mechanic is wearing the working clothes and shoes approved by Porsche.
- The new part must only be removed from the ESD (electrostatic discharge) protective packaging just before installation and at the position at which the part is to be installed.
- Never touch the electric pins and plug contacts.

1. Release electric plug connections **-1-** , disconnect them and push them to the right out of the holders.

   Fig 1: Disconnecting Electric Plug Connections On Front Apron

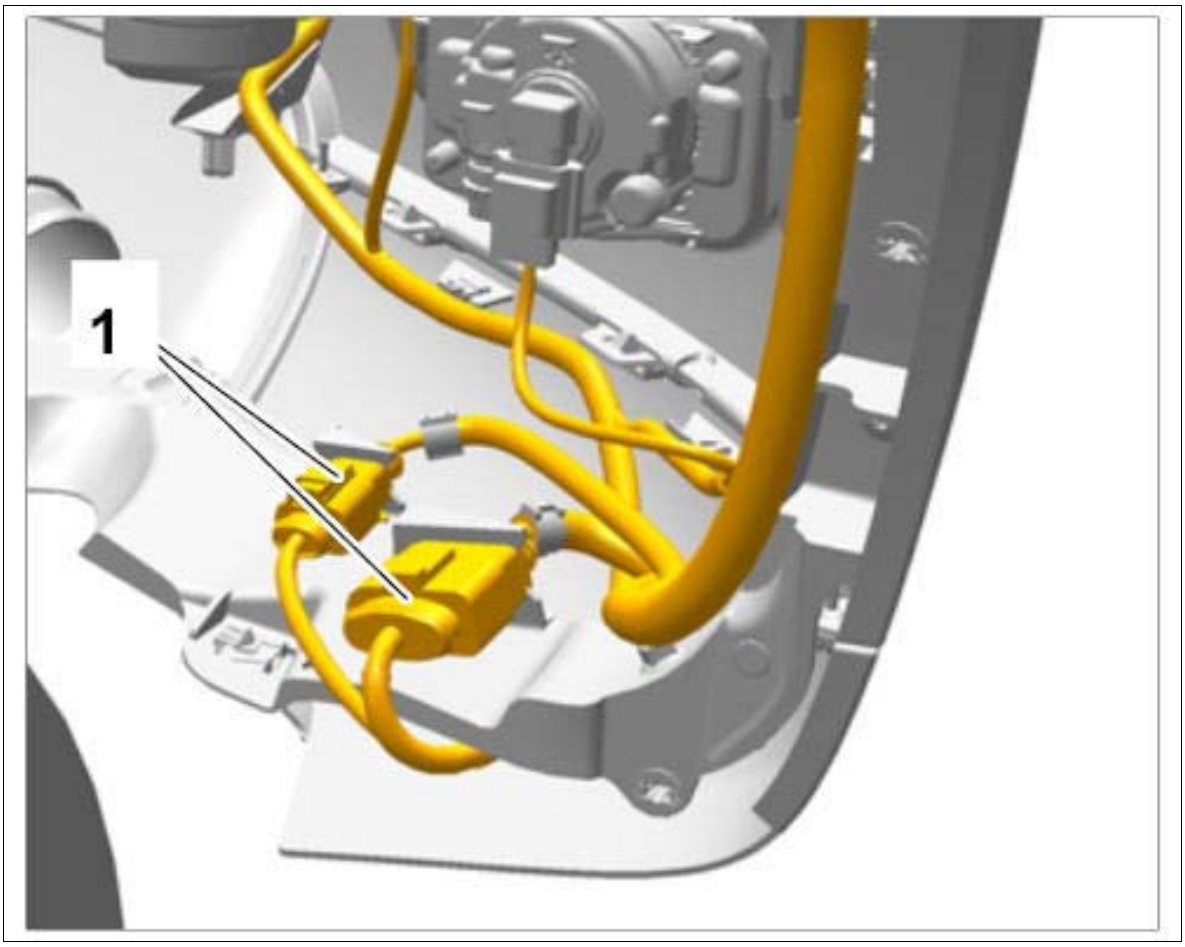

Courtesy of PORSCHE CARS NORTH AMERICA, INC.

2. Release and disconnect electric plug connection on front right airbag sensor. → 695119 REMOVING AND INSTALLING AIRBAG SENSOR
3. Unscrew fastening nut **-1-** and remove ground lines from the ground point in the front right wheel housing.

Fig 2: Loosening Ground Lines In Front Right Wheel Housing

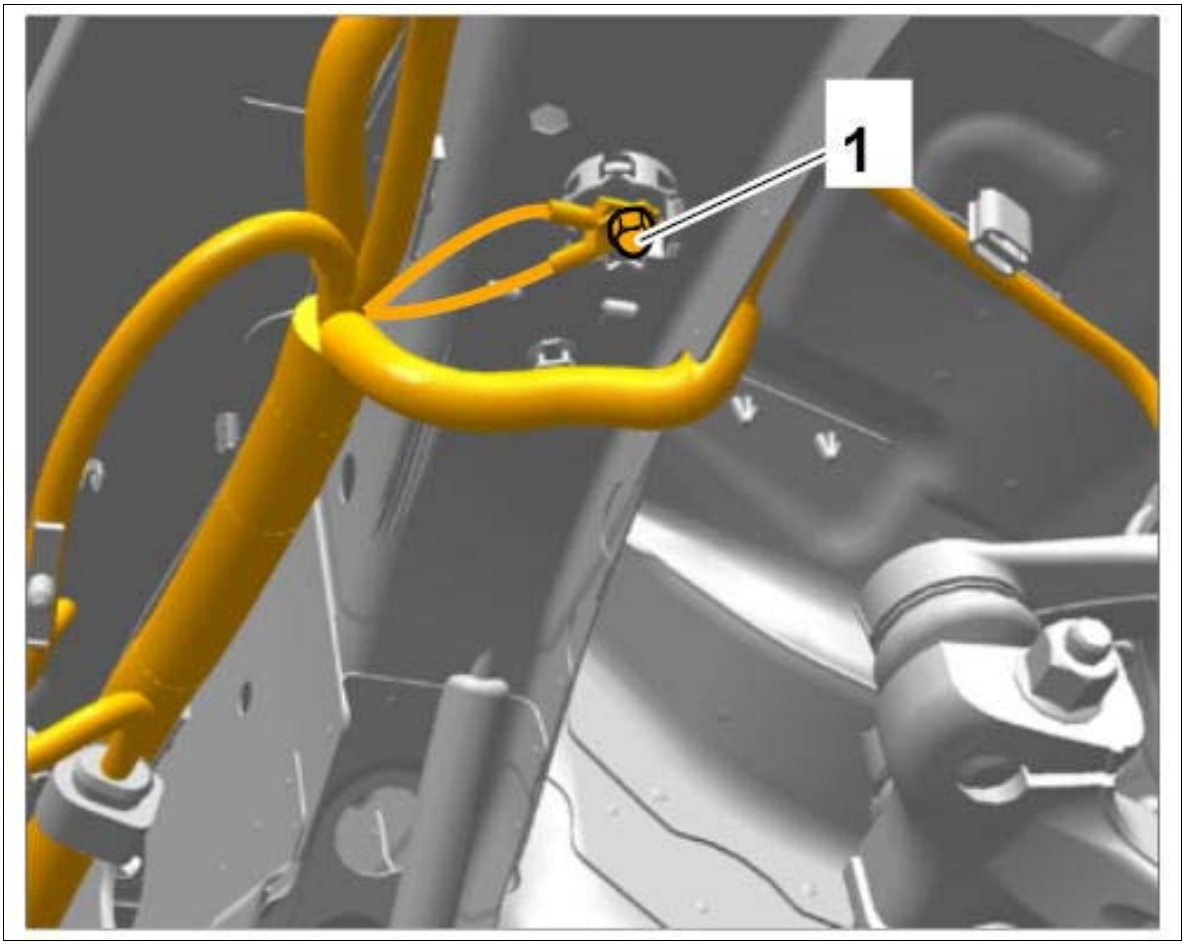

Courtesy of PORSCHE CARS NORTH AMERICA, INC.

Vehicles with air suspension

4. Release and disconnect electric plug connection on the front right spring strut. → 433019 REMOVING AND INSTALLING FRONT AIR-SPRING STRUT

All vehicles

5. Release and disconnect electric plug connection on the front right brake pad wear contact. → 463656 REPLACING FRONT DISC BRAKE PADS

6. Release and disconnect electric plug connection on the front right speed sensor. → 451155 REPLACING FRONT SPEED SENSOR

7. Release and disconnect electric plug connection **-1-** on the front right level sensor, if fitted. → 431855 REPLACING FRONT LEVEL SENSOR

Fig 3: Identifying Level Sensor Connector

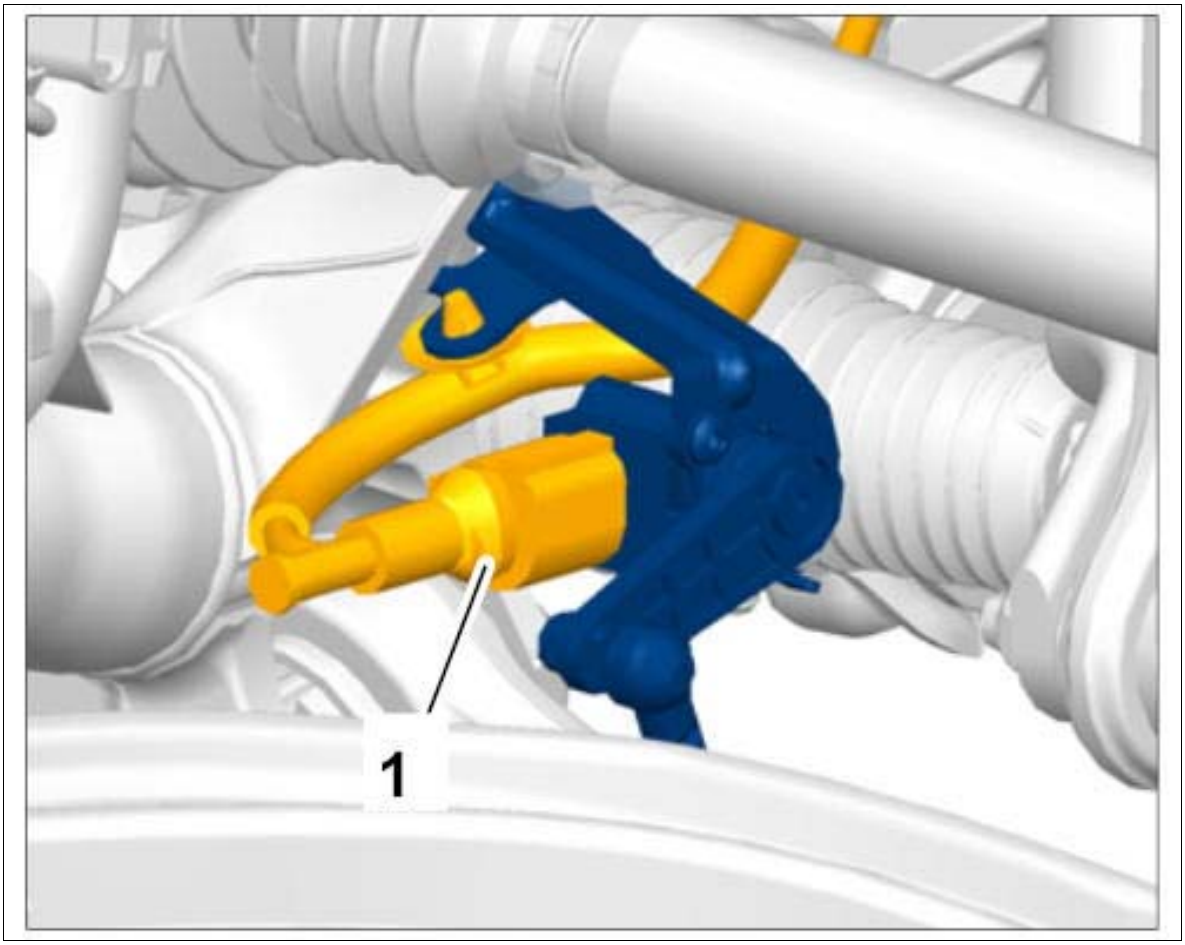

Courtesy of PORSCHE CARS NORTH AMERICA, INC.

8. Release and disconnect electric plug connection **-1-** on the right headlight.

Vehicles with PASM

9. Release and disconnect electric plug connection **-2-** on sensor for body.

Fig 4: Disconnecting Electric Plug Connection On Right Headlight

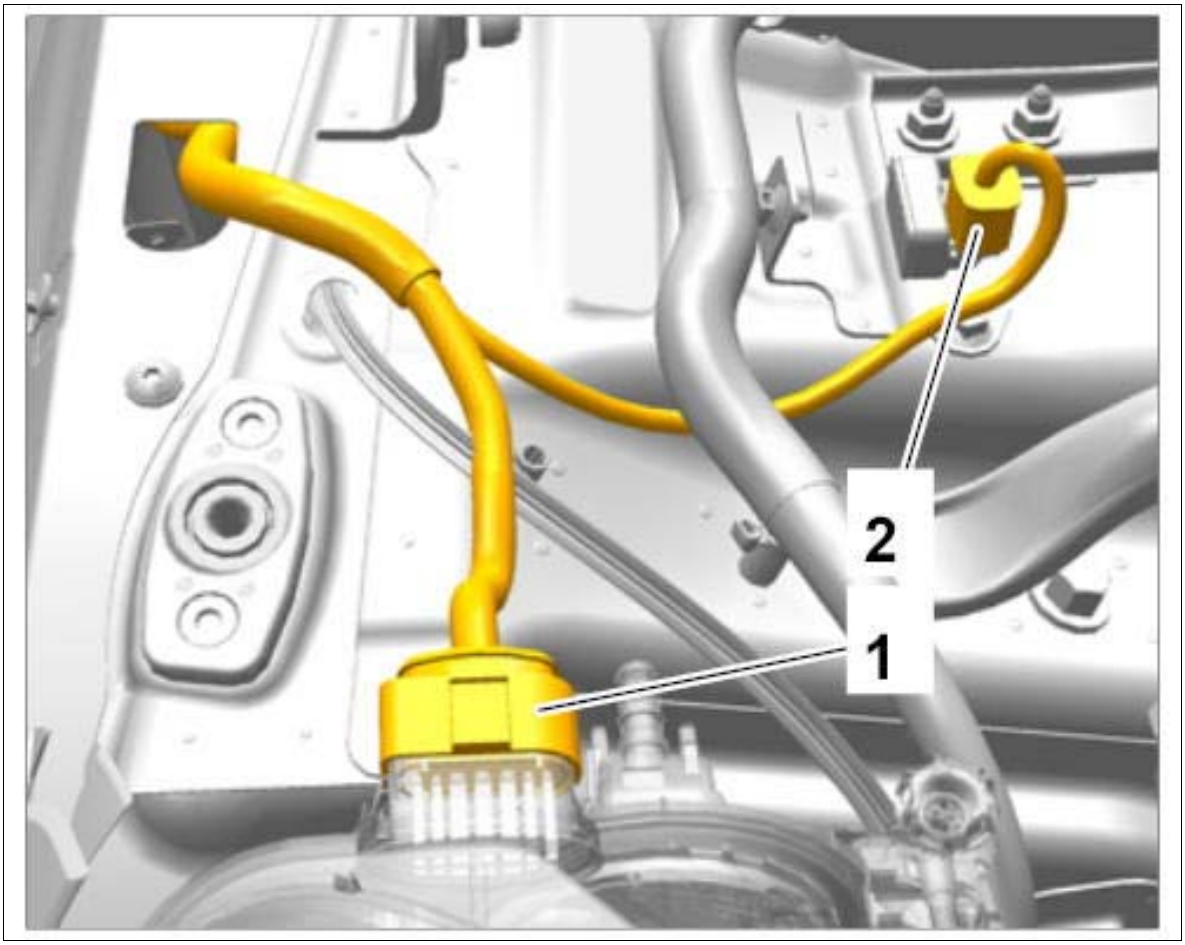

Courtesy of PORSCHE CARS NORTH AMERICA, INC.

10. Remove grommet **-1-** on the right from the body.
    1. 10.1. Unhook locking mechanisms for the inner ring **-2-** (**-arrows-**).
    2. 10.2. Pull inner ring out of the outer ring **-3-** .
    3. 10.3. Pull grommet **-1-** on the right out of the body into the passenger compartment.

Fig 5: Removing Grommet From Body

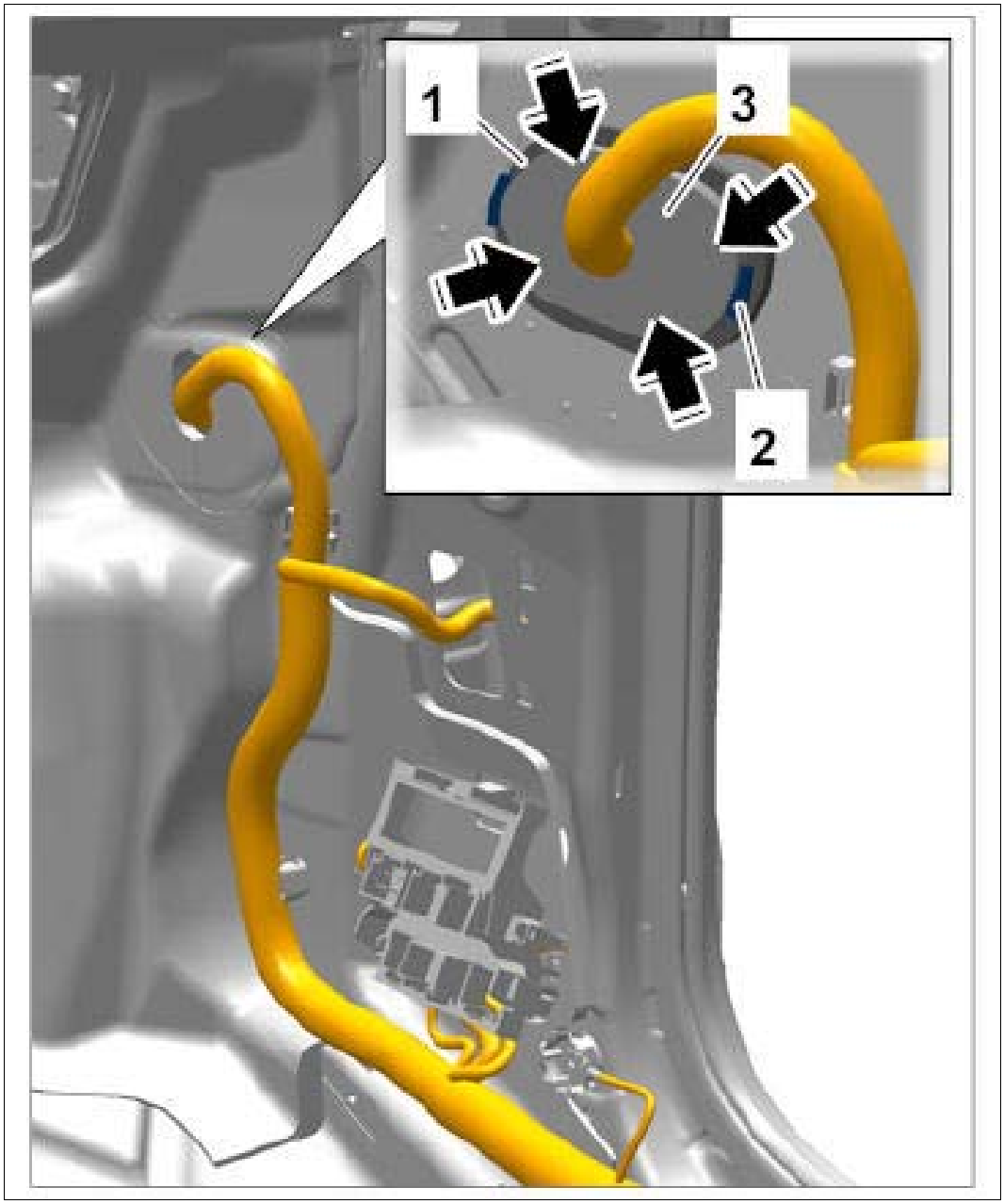

Courtesy of PORSCHE CARS NORTH AMERICA, INC.

11. Unclip main wire harness in engine compartment at the right from all holders.
12. Carefully guide main wire harness in engine compartment at the right into the passenger compartment.

WM 970909 LOOSENING AND SECURING MAIN WIRE HARNESS IN ENGINE COMPARTMENT (ALL MODELS) > LOOSENING MAIN WIRE HARNESS IN ENGINE COMPARTMENT AT THE LEFT

NOTE: Incorrect handling of main wire harness

- *Risk of damage to lines*

→ The main wire harness contains all airbag lines, antenna lines and optical waveguides.

→ The main wire harness must not be separated and is always replaced as a complete wire harness when carrying out extensive repairs.

→ If individual lines are damaged, shut off these lines and install new lines. Lay the new lines along the main wire harness and secure them to the main wire harness.

Information

Always comply with the regulations for handling ESD-sensitive components!

- Assembly work may only be carried out if the mechanic is wearing the working clothes and shoes approved by Porsche.
- The new part must only be removed from the ESD (electrostatic discharge) protective packaging just before installation and at the position at which the part is to be installed.
- Never touch the electric pins and plug contacts.

1. Release and disconnect electric plug connection on front left airbag sensor. → 695119 REMOVING AND INSTALLING AIRBAG SENSOR
2. Disconnect electric plug connections under the left headlight.
    1. 2.1. Release electric plug connections **-1-** , disconnect them and unclip them from the headlight mounting.
    2. 2.2. Unclip antenna lines **-2-** from the headlight mounting and release and disconnect them.

Fig 1: Disconnecting Electric Plug Connections Under Headlight

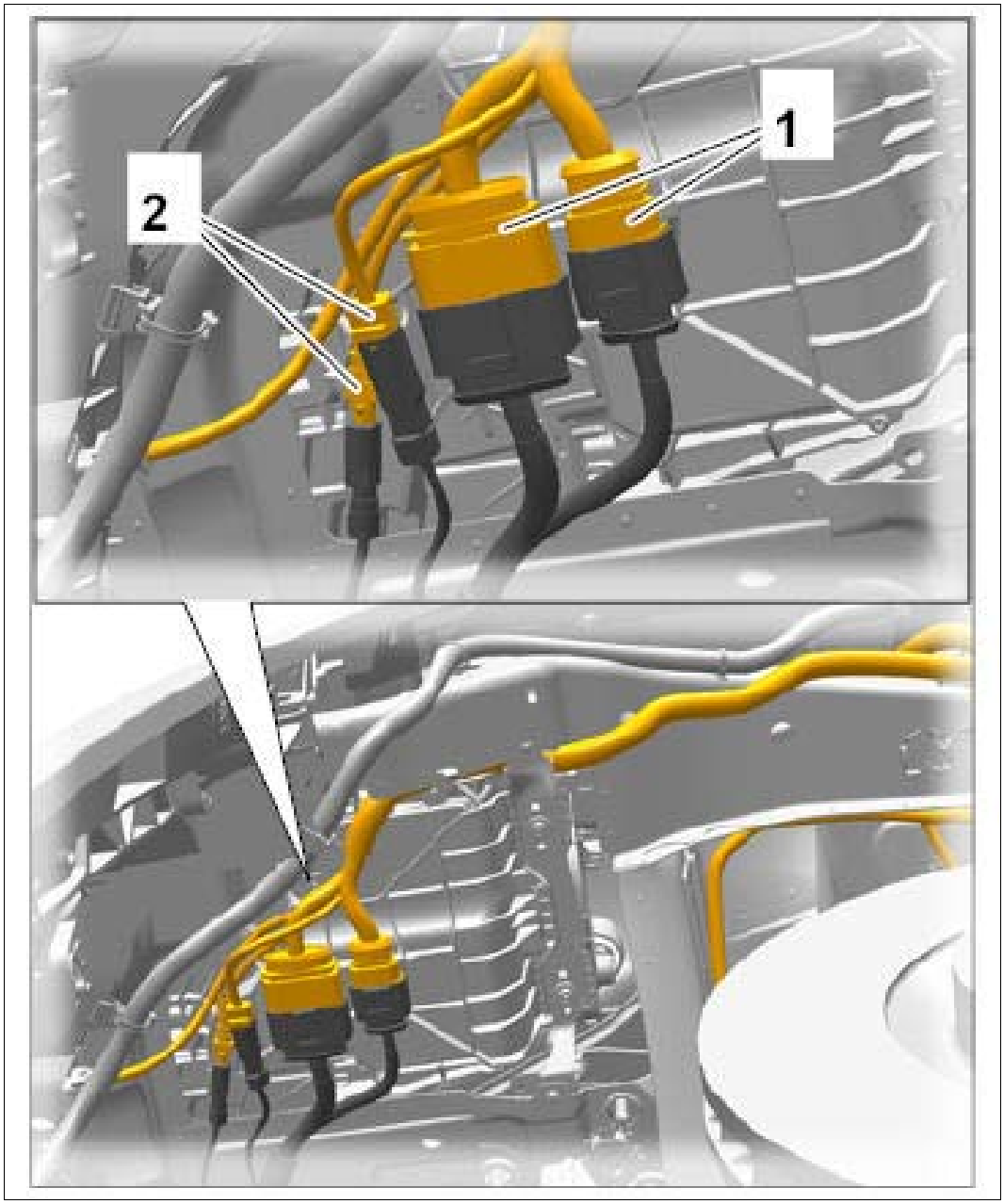

Courtesy of PORSCHE CARS NORTH AMERICA, INC.

3. Unscrew fastening nut **-1-** and remove ground lines from the ground point in the front left wheel housing.

Fig 2: Loosening Ground Lines In Front Left Wheel Housing

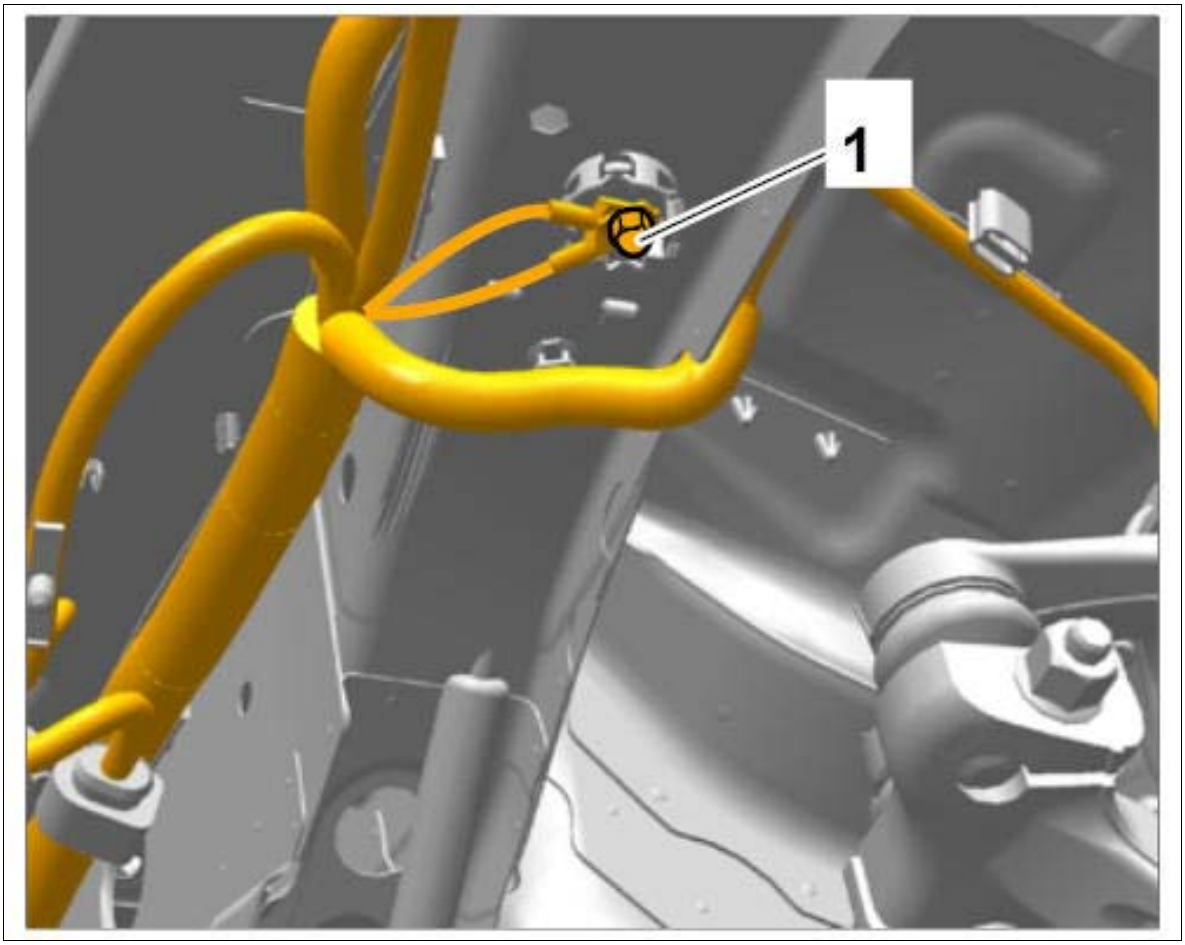

Courtesy of PORSCHE CARS NORTH AMERICA, INC.

Vehicles with air suspension

4. Release and disconnect electric plug connection on the front left air-spring strut. → 433019 REMOVING AND INSTALLING FRONT AIR-SPRING STRUT

All vehicles

5. Release and disconnect electric plug connection on the front left brake pad wear contact. → 463656 REPLACING FRONT DISC BRAKE PADS

6. Release and disconnect electric plug connection on the front left speed sensor. → 451155 REPLACING FRONT SPEED SENSOR

7. Release and disconnect electric plug connection **-1-** on the front left level sensor, if fitted. → 431855 REPLACING FRONT LEVEL SENSOR

Fig 3: Identifying Level Sensor Connector

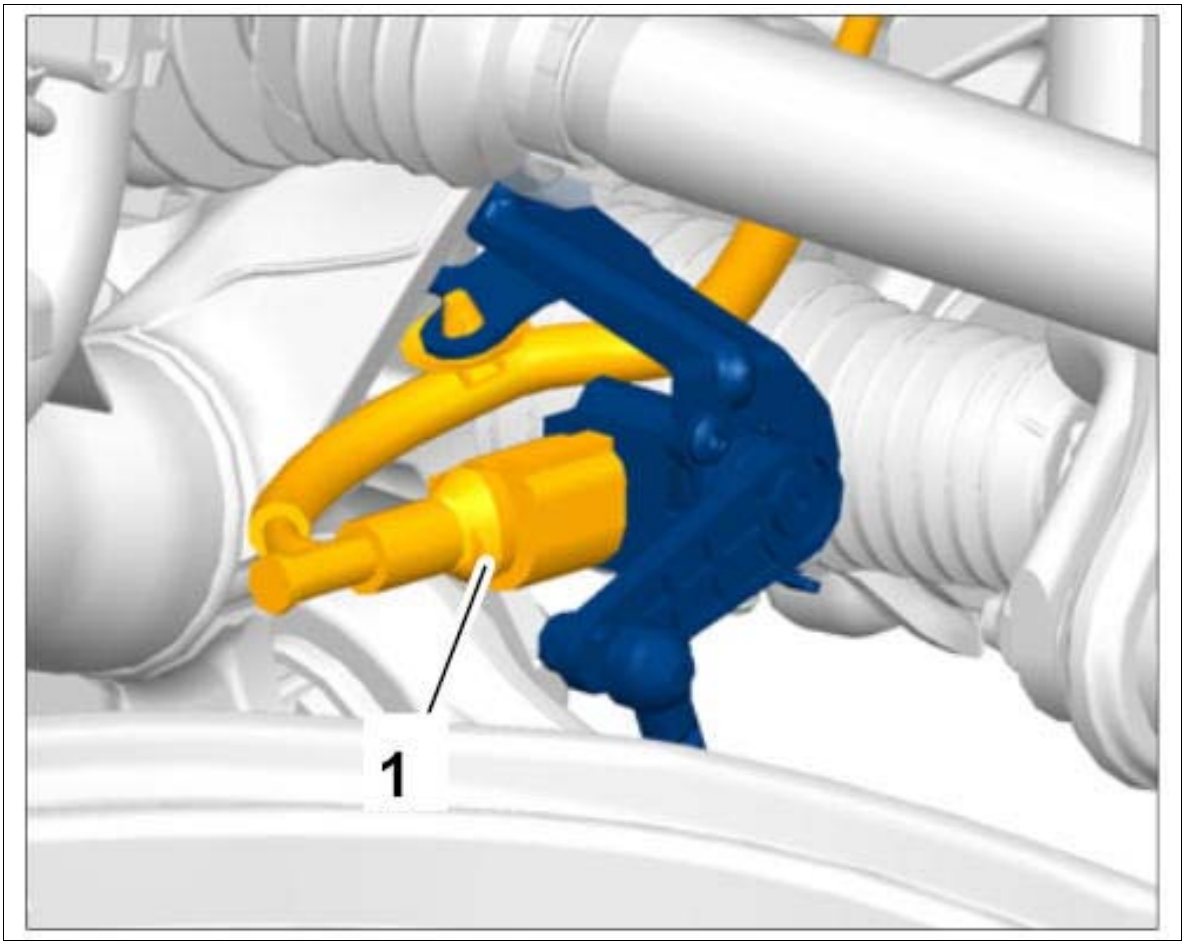

Courtesy of PORSCHE CARS NORTH AMERICA, INC.

8. Release and disconnect electric plug connection **-1-** on the engine coolant level sensor.

Vehicles with PASM

9. Release and disconnect electric plug connection **-2-** on sensor for body.

Fig 4: Disconnecting Electric Plug Connections On Engine Coolant Level Sensor And Body Sensor

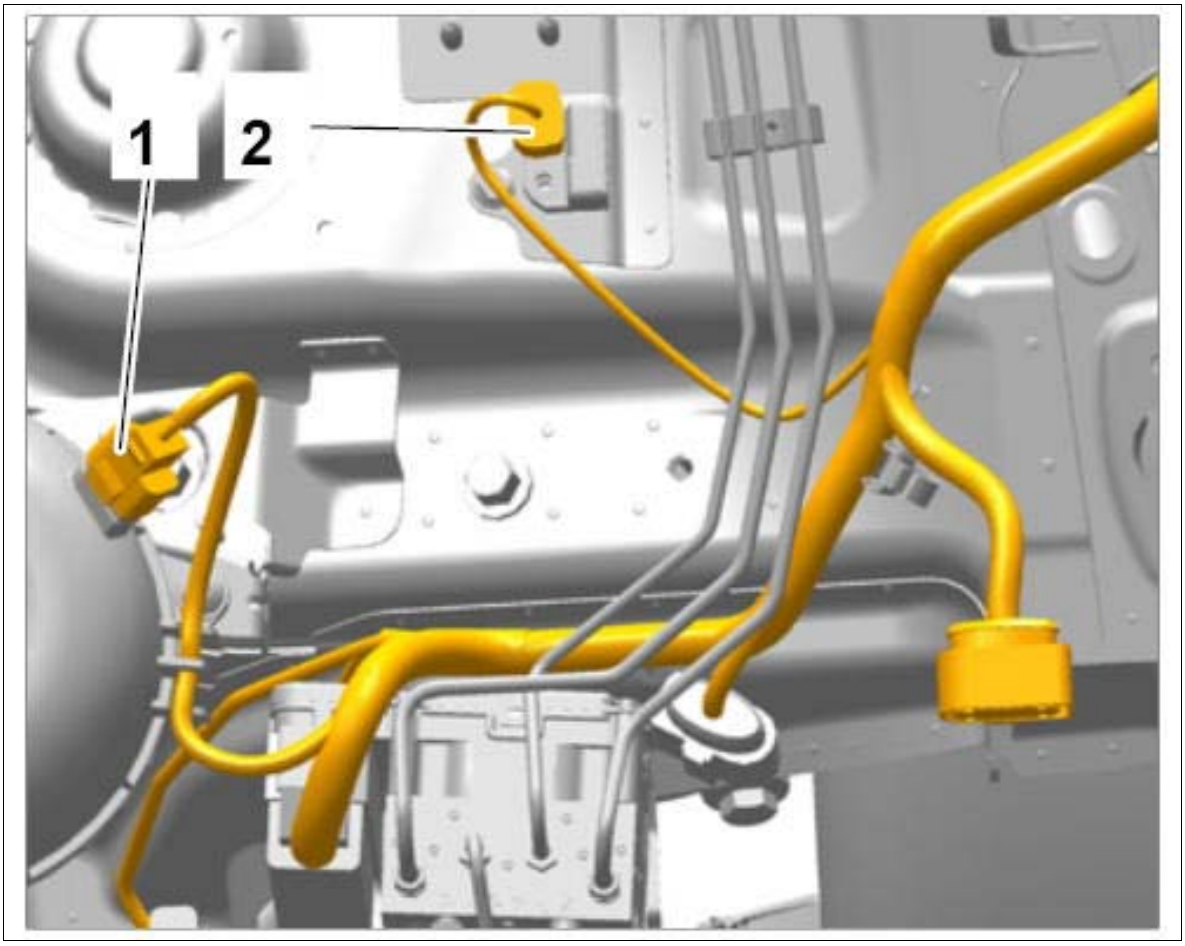

Courtesy of PORSCHE CARS NORTH AMERICA, INC.

All vehicles

10. Release and disconnect electric plug connection **-1-** on hydraulic unit. → 453019 REMOVING AND INSTALLING HYDRAULIC UNIT

11. Unscrew fastening nut **-2-** and remove ground lines from the ground point on the front left longitudinal member.

Fig 5: Disconnecting Hydraulic Unit Electric Plug Connection

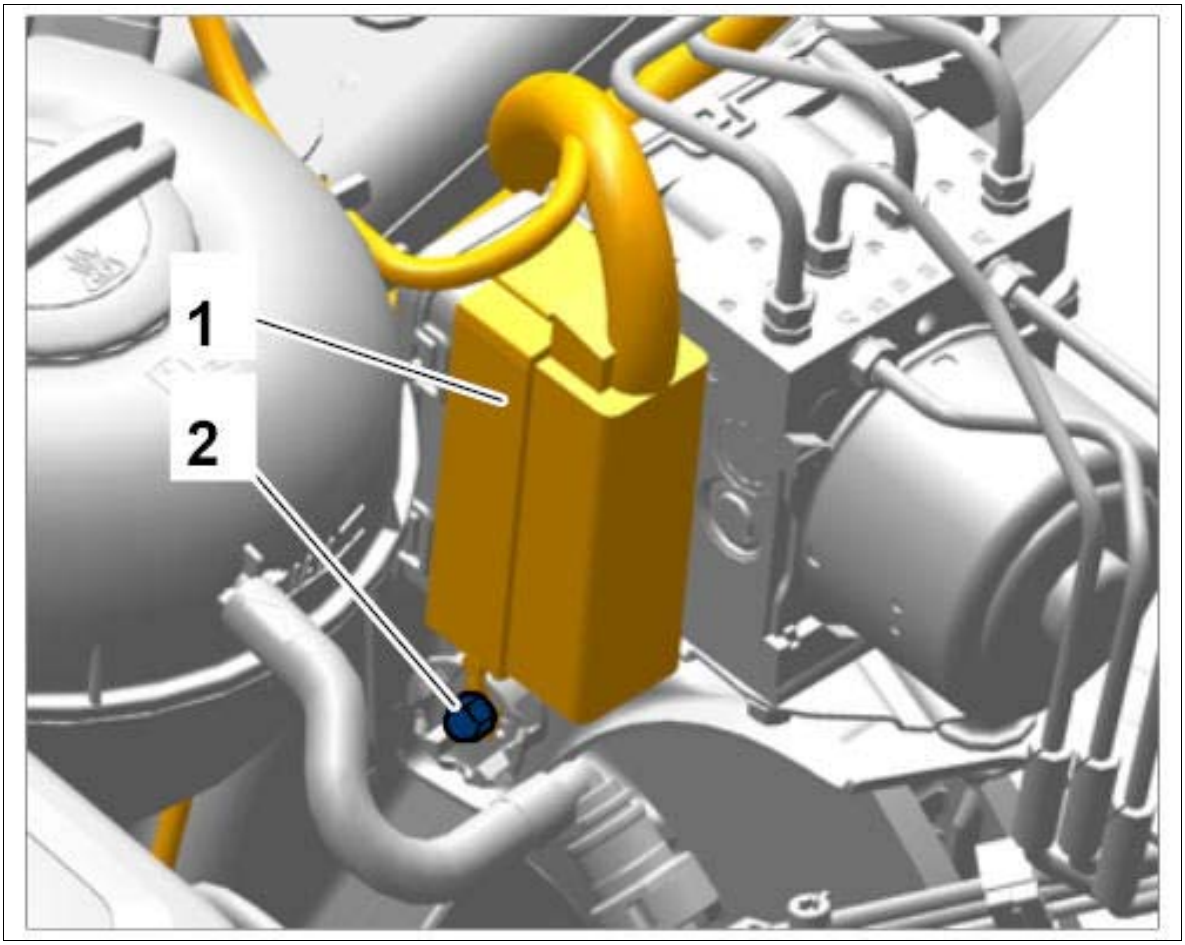

Courtesy of PORSCHE CARS NORTH AMERICA, INC.

12. Release and disconnect electric plug connection **-1-** on the wiper motor.
13. Release and disconnect electric plug connection **-2-** on the brake fluid level sensor.
14. Unscrew fastening nut **-3-** and remove ground lines from the ground point on the left cowl panel.

Fig 6: Disconnecting Electric Plug Connections

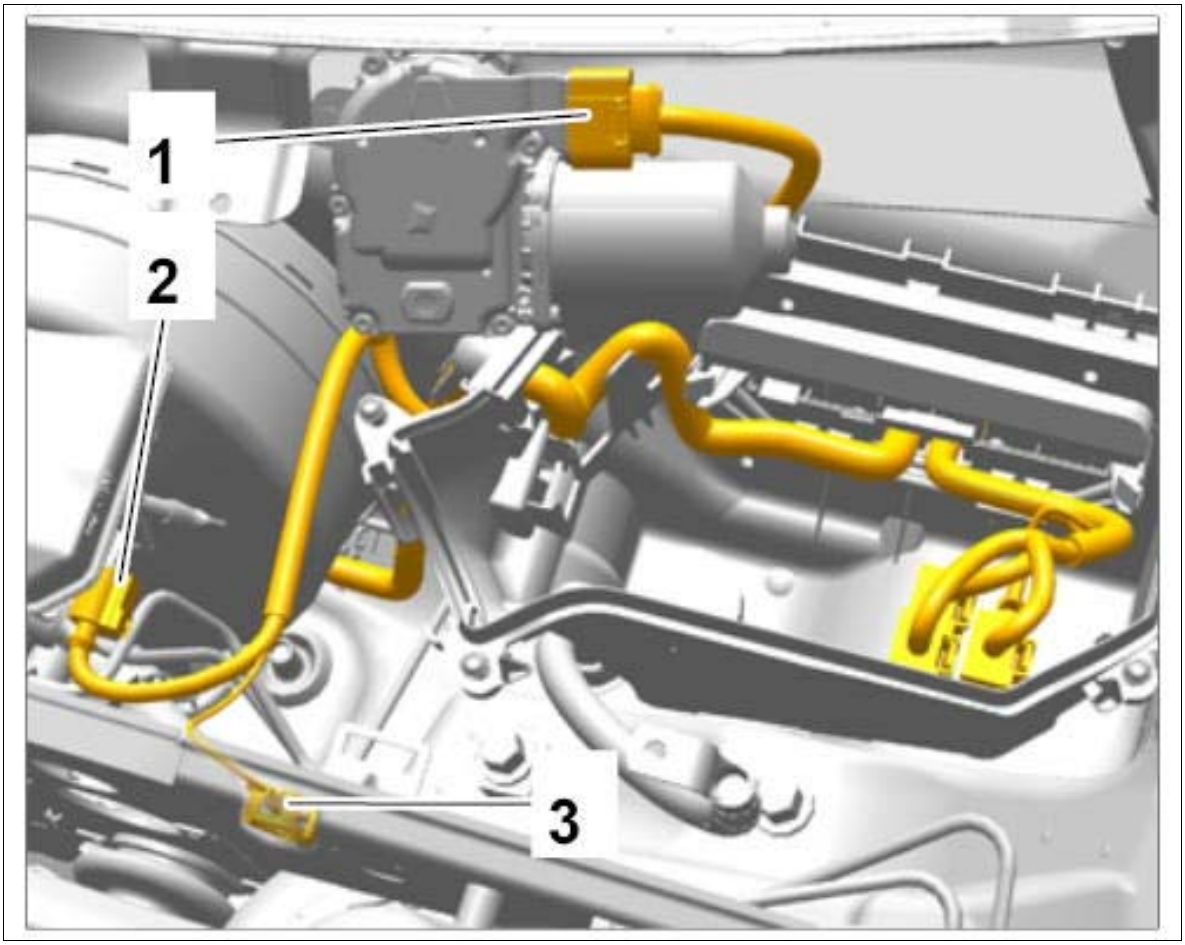

Courtesy of PORSCHE CARS NORTH AMERICA, INC.

15. Loosen holder **-1-** for electric lines from the housing for the fuse box on the cowl panel **-arrows-** .

Fig 7: Loosening Electric Lines Holder

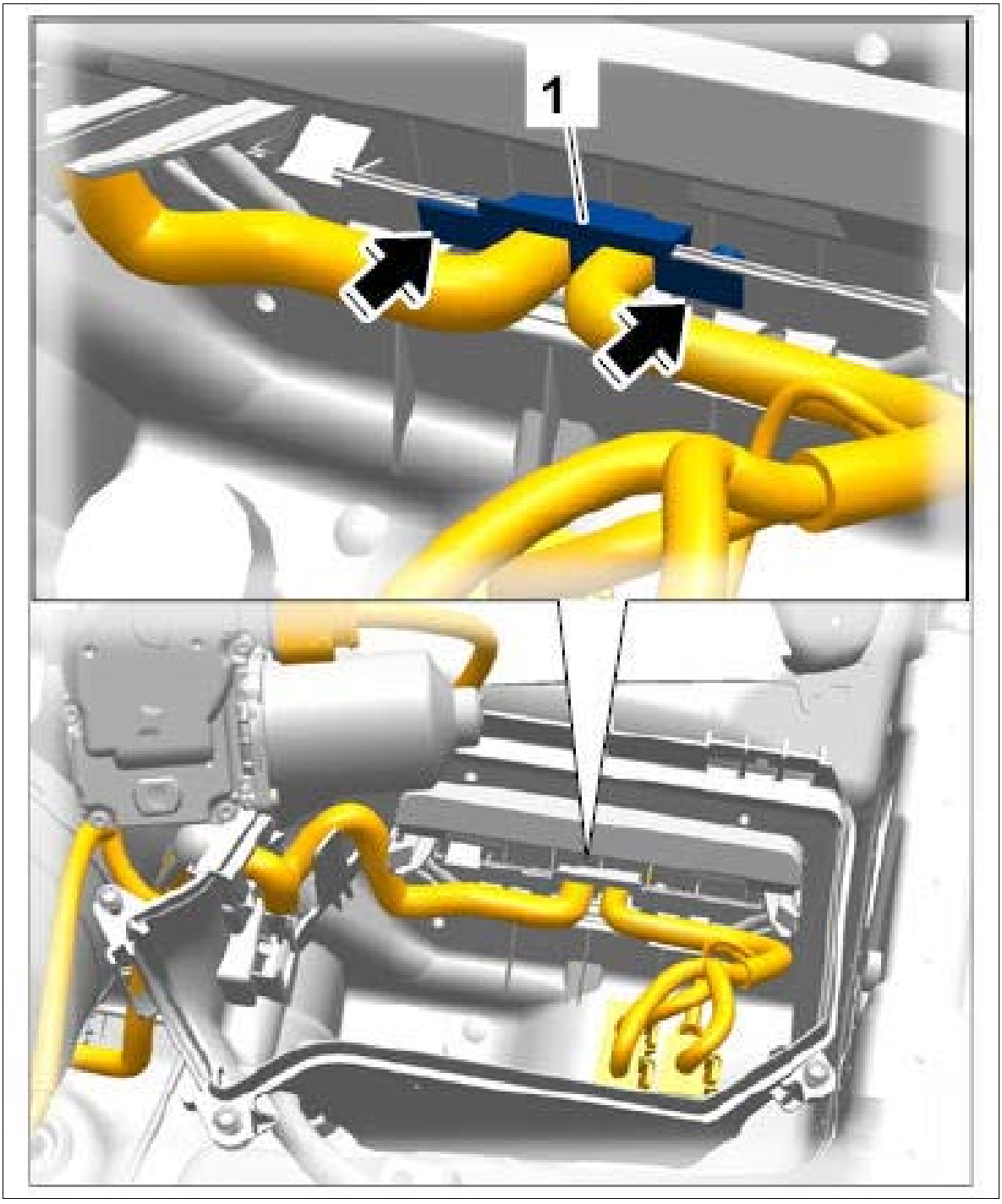

Courtesy of PORSCHE CARS NORTH AMERICA, INC.

16. Loosen grommet **-1-** on the left out of the body.
    1. 16.1. Unhook locking mechanisms for the inner ring **-2-** (**-arrows-**).
    2. 16.2. Pull inner ring out of the outer ring **-3-** .
    3. 16.3. Pull grommet **-1-** on the left out of the body into the passenger compartment.

Fig 8: Loosening Grommet From Body (Right Grommet)

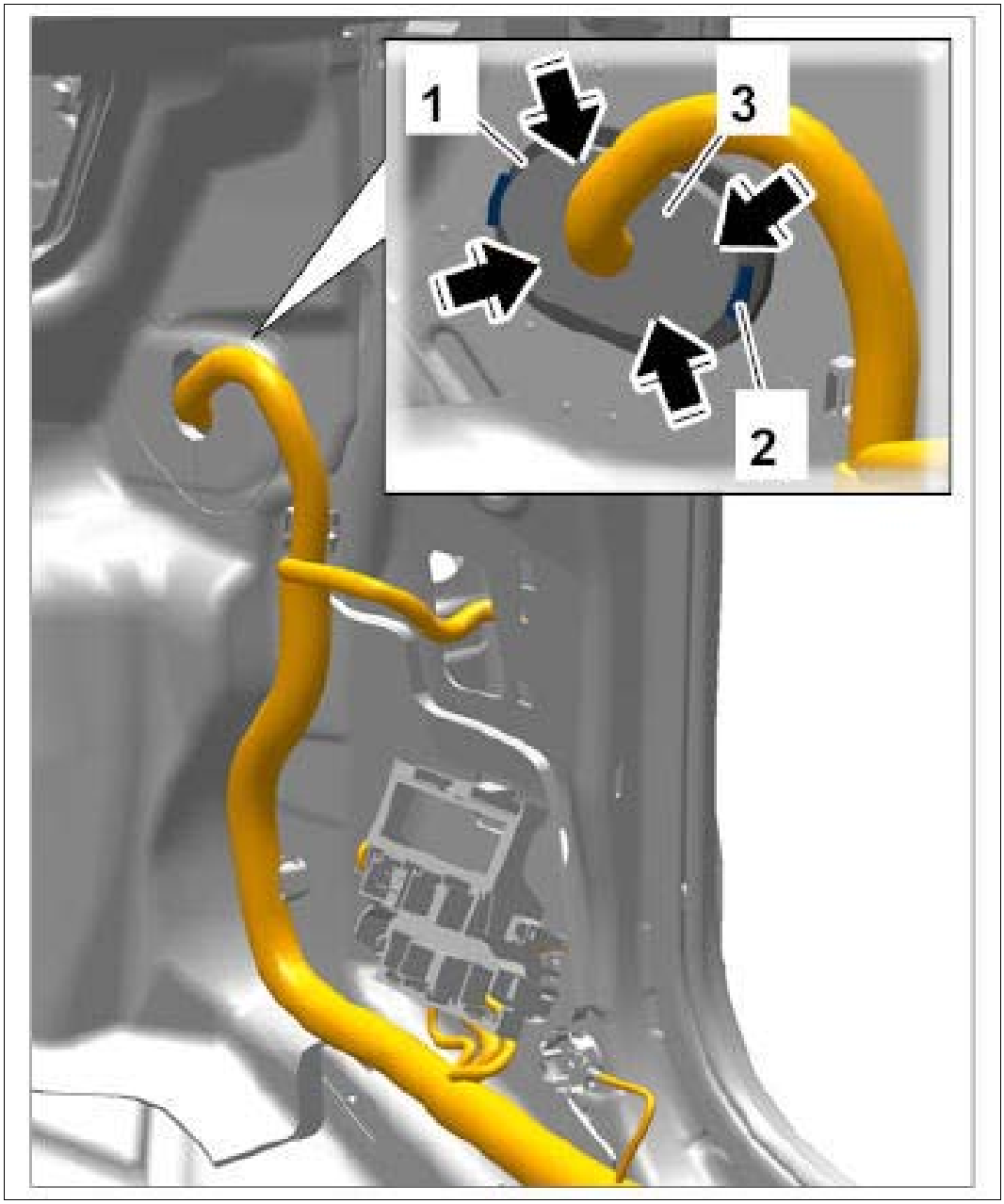

Courtesy of PORSCHE CARS NORTH AMERICA, INC.

17. Unclip main wire harness in engine compartment at the left from all holders.
18. Carefully guide main wire harness in engine compartment at the left into the passenger compartment.

WM 970909 LOOSENING AND SECURING MAIN WIRE HARNESS IN ENGINE COMPARTMENT (ALL MODELS) > SECURING MAIN WIRE HARNESS IN ENGINE COMPARTMENT AT THE RIGHT

NOTE: Incorrect handling of main wire harness

- *Risk of damage to lines*

→ The main wire harness contains all airbag lines, antenna lines and optical waveguides.

→ The main wire harness must not be separated and is always replaced as a complete wire harness when carrying out extensive repairs.

→ If individual lines are damaged, shut off these lines and install new lines. Lay the new lines along the main wire harness and secure them to the main wire harness.

Information

Always comply with the regulations for handling ESD-sensitive components!

- Assembly work may only be carried out if the mechanic is wearing the working clothes and shoes approved by Porsche.
- The new part must only be removed from the ESD (electrostatic discharge) protective packaging just before installation and at the position at which the part is to be installed.
- Never touch the electric pins and plug contacts.

1. The main wire harness is secured in reverse order to the steps required for loosening it.
    1. 1.1. Make sure that the individual sub-parts of the wire harness in the engine compartment at the right are not twisted or entangled.
    2. 1.2. Check that the wire harness is routed correctly and without tension so that no chafing occurs.
    3. 1.3. Clip all electric lines for the main wire harness in the engine compartment at the right in securely at the designated positions.
    4. 1.4. Connect all electric plug connections until they engage securely.
    5. 1.5. Lock all electric plug connections by hand using the manual slide lock.
2. Tighten fastening nut securing ground line to the body. **Tightening torque 9 Nm (6.5 ftlb.)**

WM 970909 LOOSENING AND SECURING MAIN WIRE HARNESS IN ENGINE COMPARTMENT (ALL MODELS) > SECURING MAIN WIRE HARNESS IN ENGINE COMPARTMENT AT THE LEFT

NOTE: Incorrect handling of main wire harness

- *Risk of damage to lines*

→ The main wire harness contains all airbag lines, antenna lines and optical waveguides.

→ The main wire harness must not be separated and is always replaced as a complete wire harness when carrying out extensive repairs.

→ If individual lines are damaged, shut off these lines and install new lines. Lay the new lines along the main wire harness and secure them to the main wire harness.

Information

Always comply with the regulations for handling ESD-sensitive components!

- Assembly work may only be carried out if the mechanic is wearing the working clothes and shoes approved by Porsche.
- The new part must only be removed from the ESD (electrostatic discharge) protective packaging just before installation and at the position at which the part is to be installed.
- Never touch the electric pins and plug contacts.

1. The main wire harness is secured in reverse order to the steps required for loosening it.
    1. 1.1. Make sure that the individual sub-parts of the wire harness in the engine compartment at the left are not twisted or entangled.
    2. 1.2. Check that the wire harness is routed correctly and without tension so that no chafing occurs.
    3. 1.3. Clip all electric lines for the main wire harness in the engine compartment at the left in securely at the designated positions.
    4. 1.4. Connect all electric plug connections until they engage securely.
    5. 1.5. Lock all electric plug connections by hand using the manual slide lock.
2. Tighten fastening nuts securing ground lines to the body. **Tightening torque 9 Nm (6.5 ftlb.)**

WM 970909 LOOSENING AND SECURING MAIN WIRE HARNESS IN ENGINE COMPARTMENT (ALL MODELS) > SUBSEQUENT WORK FOR LOOSENING AND SECURING MAIN WIRE HARNESS IN ENGINE COMPARTMENT AT THE RIGHT

Vehicles with auxiliary heating

1. Install complete heater. → INSTALLING HEATER .

    All vehicles

2. Install front wheel housing liner at the right → INSTALLING FRONT WHEEL HOUSING LINER
3. Fit right front wheel → INSTALLING WHEEL .
4. Install cover behind the right headlight → INSTALLING FRONT TRIM PANEL .
5. Install front side-section trim panel at the right → INSTALLING FRONT SIDE-SECTION TRIM PANEL .

6. Install glove compartment → INSTALLING GLOVE COMPARTMENT .
7. Connect ground line to the battery → 2X00IN WORK INSTRUCTIONS AFTER DISCONNECTING THE BATTERY .

WM 970909 LOOSENING AND SECURING MAIN WIRE HARNESS IN ENGINE COMPARTMENT (ALL MODELS) > SUBSEQUENT WORK FOR LOOSENING AND SECURING MAIN WIRE HARNESS IN ENGINE COMPARTMENT AT THE LEFT

Macan Turbo

1. Install left air cleaner housing. → INSTALLING AIR CLEANER HOUSING .

   All vehicles

2. Install windscreen washer system hose in front lid → INSTALLING SPRAY NOZZLE FOR WINDSCREEN WASHER SYSTEM .
3. Install windscreen-washer reservoir → INSTALLING WINDSCREEN-WASHER RESERVOIR .
4. Install front wheel housing liner at the left → INSTALLING FRONT WHEEL HOUSING LINER .
5. Install front left wheel → INSTALLING WHEEL .
6. Install left headlight → INSTALLING HEADLIGHTS .
7. Secure fuse box in the cowl panel → SECURING FUSE BOX IN THE COWL PANEL .
8. Install control unit for front-end electronics → INSTALLING CONTROL UNIT FOR FRONT-END ELECTRONICS .
9. Connect ground line to the battery → 2X00IN WORK INSTRUCTIONS AFTER DISCONNECTING THE BATTERY .

WM 970909 LOOSENING AND SECURING MAIN WIRE HARNESS IN LUGGAGE COMPARTMENT (ALL MODELS) > TECHNICAL VALUES

Location	Description	Type	Basic value	Tolerance 1	Tolerance 2
Ground line to ground pin in body	Nut, M6	Tightening torque	9 Nm (6.5 ftlb.)		

WM 970909 LOOSENING AND SECURING MAIN WIRE HARNESS IN LUGGAGE COMPARTMENT (ALL MODELS) > PRELIMINARY WORK FOR LOOSENING AND SECURING MAIN WIRE HARNESS IN LUGGAGE COMPARTMENT AT THE RIGHT

1. Remove the battery. → 270619 REMOVING AND INSTALLING BATTERY .

2. Remove headliner. → 708419 REMOVING AND INSTALLING HEADLINER .
3. Remove side trim panel for rear luggage compartment at the right. → 700319 REMOVING AND INSTALLING SIDE TRIM PANEL FOR REAR LUGGAGE COMPARTMENT .
4. Remove rear-end electronics control unit and holder for rear-end electronics control unit. → 578919 REMOVING AND INSTALLING CONTROL UNIT FOR REAR-END ELECTRONICS .
5. Remove trim panel for luggage compartment (luggage compartment cover) at the right side. → 700619 REMOVING AND INSTALLING TRIM PANEL FOR LUGGAGE COMPARTMENT (LUGGAGE COMPARTMENT COVER) AT THE SIDES .
6. Remove cover for rear lock support. → 703919 REMOVING AND INSTALLING COVER FOR REAR LOCK SUPPORT .
7. Remove power distributor. → 978919 REMOVING AND INSTALLING POWER DISTRIBUTOR .
8. Remove right tail light. → 943119 REMOVING AND INSTALLING TAIL LIGHT .
9. Remove filler flap. → 553755 REPLACING FILLER FLAP
10. Remove rear right wheel. → 440519 REMOVING AND INSTALLING WHEEL .
11. Remove rear wheel housing liner at the right. → 536919 REMOVING AND INSTALLING REAR WHEEL HOUSING LINER .

    Vehicles with PASM

12. Remove PASM control unit. → 431619 REMOVING AND INSTALLING PASM CONTROL UNIT .

WM 970909 LOOSENING AND SECURING MAIN WIRE HARNESS IN LUGGAGE COMPARTMENT (ALL MODELS) > PRELIMINARY WORK FOR LOOSENING AND SECURING MAIN WIRE HARNESS IN LUGGAGE COMPARTMENT AT THE LEFT

Preliminary Work for loosening and securing main wire harness in luggage compartment at the left

1. Disconnect ground line on the battery. → 2X00IN WORK INSTRUCTIONS AFTER DISCONNECTING THE BATTERY
2. Remove headliner → 708419 REMOVING AND INSTALLING HEADLINER .
3. Remove side trim panel for rear left luggage compartment → 700319 REMOVING AND INSTALLING SIDE TRIM PANEL FOR REAR LUGGAGE COMPARTMENT .
4. Remove trim panel for luggage compartment (luggage compartment cover) at the left side → 700619 REMOVING AND INSTALLING TRIM PANEL FOR LUGGAGE COMPARTMENT (LUGGAGE COMPARTMENT COVER) AT THE SIDES .
5. Remove cover for rear lock support → 703919 REMOVING AND INSTALLING COVER FOR REAR LOCK SUPPORT .
6. Remove left tail light → 943119 REMOVING AND INSTALLING TAIL LIGHT .
7. Remove rear apron → WM 635519 REMOVING AND INSTALLING REAR APRON (ALL

MODELS) .

8. Remove left rear wheel → 440519 REMOVING AND INSTALLING WHEEL .
9. Remove rear wheel housing liner at the left → 536919 REMOVING AND INSTALLING REAR WHEEL HOUSING LINER .

Vehicles with rear-differential lock

10. Remove rear-differential lock control unit and rear-differential lock control unit holder → 397519 REMOVING AND INSTALLING CONTROL UNIT FOR REAR-DIFFERENTIAL LOCK .

Vehicles with loudspeaker booster or TV tuner

11. Remove loudspeaker booster with holder. → 914419 REMOVING AND INSTALLING LOUDSPEAKER BOOSTER .
12. Remove TV tuner and holder. → 911719 REMOVING AND INSTALLING TV TUNER .

WM 970909 LOOSENING AND SECURING MAIN WIRE HARNESS IN LUGGAGE COMPARTMENT (ALL MODELS) > INFORMATION

Fig 1: Identifying Luggage Compartment Main Wire Harness Installation Position



Courtesy of PORSCHE CARS NORTH AMERICA, INC.

1. Installation position of main wire harness in luggage compartment at the right
2. Installation position of main wire harness in luggage compartment at the left

WM 970909 LOOSENING AND SECURING MAIN WIRE HARNESS IN LUGGAGE COMPARTMENT (ALL MODELS) > LOOSENING MAIN WIRE HARNESS IN LUGGAGE COMPARTMENT AT THE RIGHT

NOTE: Incorrect handling of main wire harness

- *Risk of damage to lines*

→ The main wire harness contains all airbag lines, antenna lines and optical waveguides.

→ The main wire harness must not be separated and is always replaced as a complete wire harness when carrying out extensive repairs.

→ If individual lines are damaged, shut off these lines and install new lines. Lay the new lines along the main wire harness and secure them to the main wire harness.

Information

Always comply with the regulations for handling ESD-sensitive components!

- Assembly work may only be carried out if the mechanic is wearing the working clothes and shoes approved by Porsche.
- The new part must only be removed from the ESD (electrostatic discharge) protective packaging just before installation and at the position at which the part is to be installed.
- Never touch the electric pins and plug contacts.

1. Release and disconnect electric plug connection **-1-** on DC/DC converter. → 270419 REMOVING AND INSTALLING DC/DC CONVERTER
2. Pull vent hose **-2-** out of grommet.

Fig 1: Disconnecting Vent Hose And Electric Plug Connection On DC/DC Converter

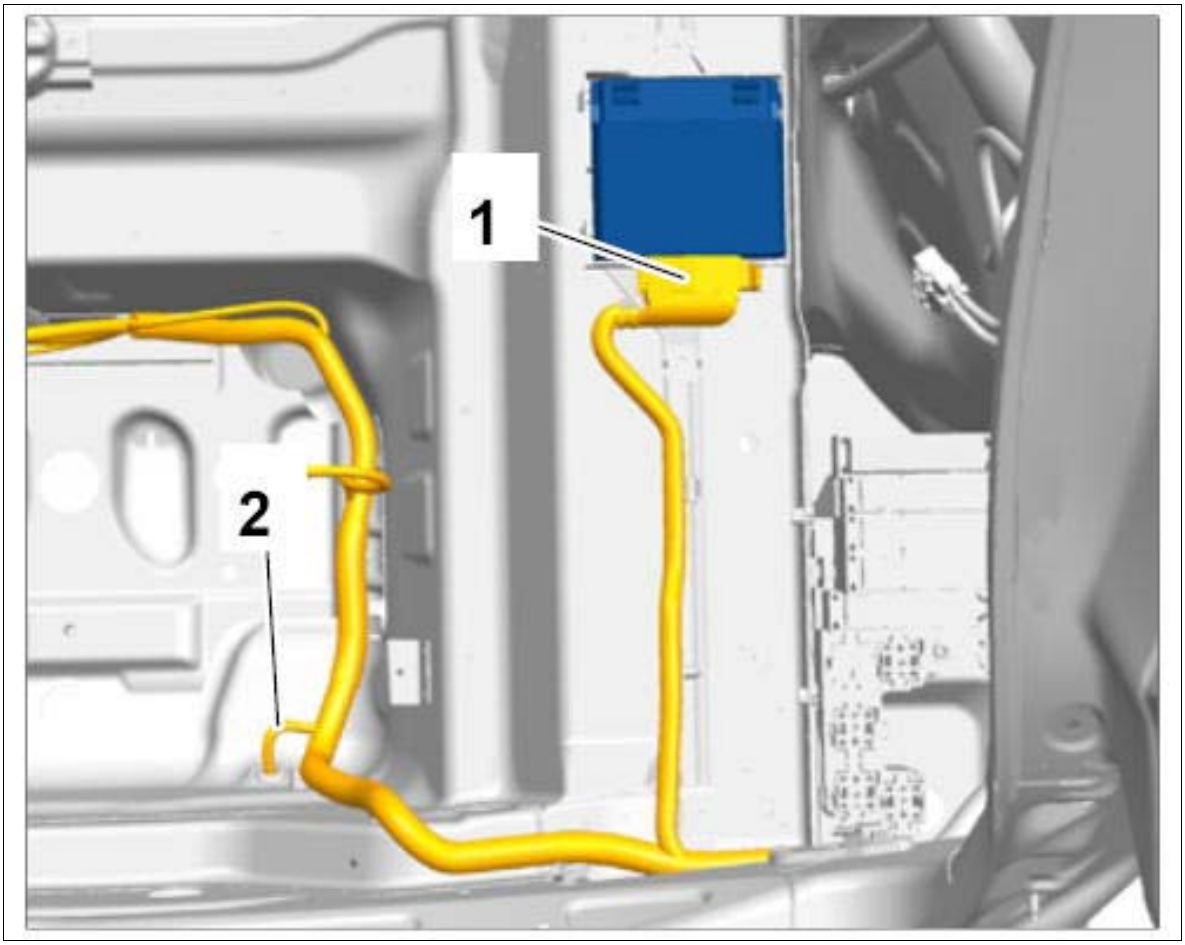

Courtesy of PORSCHE CARS NORTH AMERICA, INC.

3. Loosening fuse box **-1-** in luggage compartment at the right. → LOOSENING FUSE BOX IN THE LUGGAGE COMPARTMENT .

4. Screw off fastening nut **-2-** and remove ground line from ground point.

Fig 2: Disconnecting Relay Carrier And Ground Line

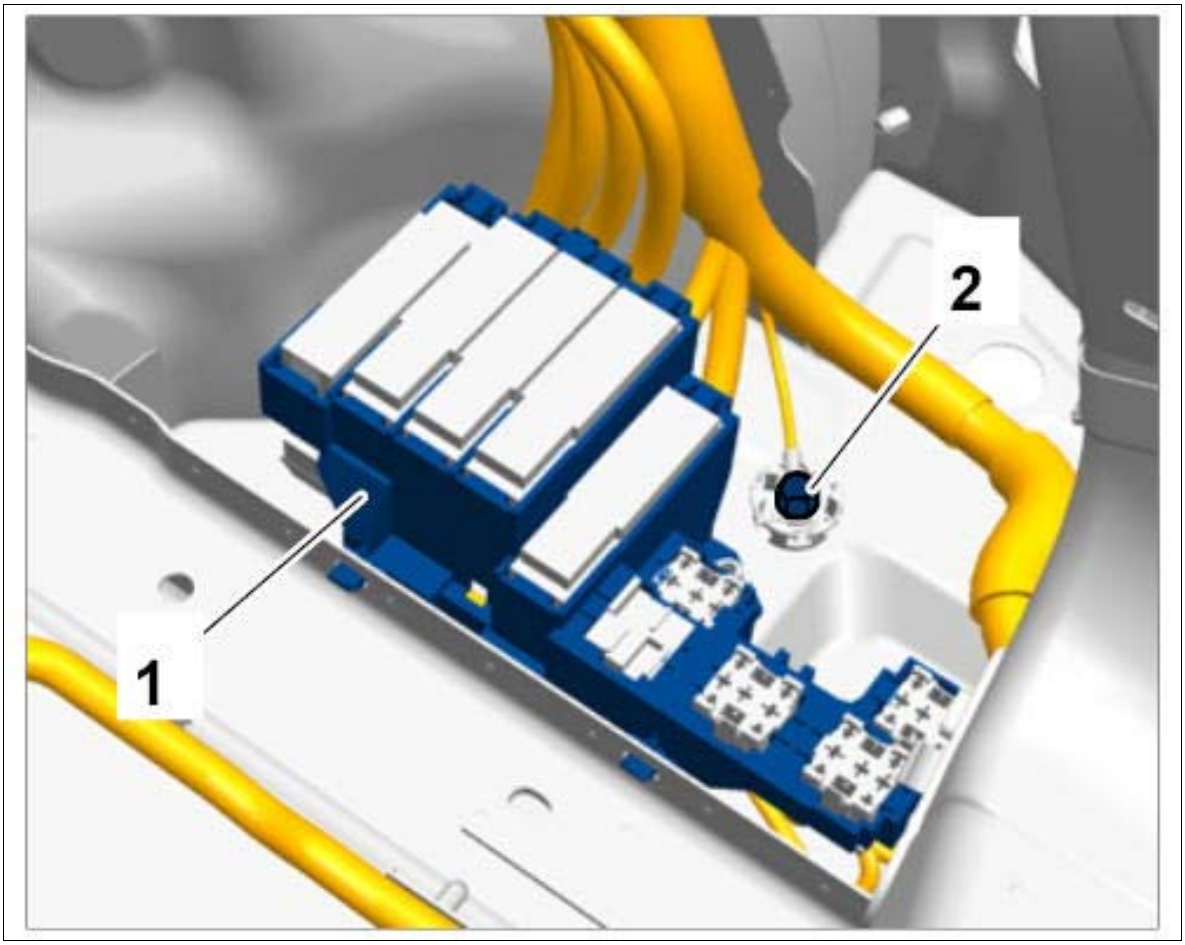

Courtesy of PORSCHE CARS NORTH AMERICA, INC.

5. Release and disconnect electric plug connections on the trailer hitch control unit. → 669619 REMOVING AND INSTALLING TRAILER HITCH CONTROL UNIT

6. Release and disconnect electric plug connection on the electric parking brake control unit. → 466219 REMOVING AND INSTALLING CONTROL UNIT FOR ELECTRIC PARKING BRAKE

7. Release and disconnect electric plug connections on the ParkAssist control unit. → 917419 REMOVING AND INSTALLING CONTROL UNIT FOR PARKASSIST

8. Release electric plug connections **-1-** , disconnect them and unclip them from the holder **-2-** .

9. Unclip antenna connector **-3-** from its holder and release and disconnect it.

Fig 3: Disconnecting Electric Plug Connections

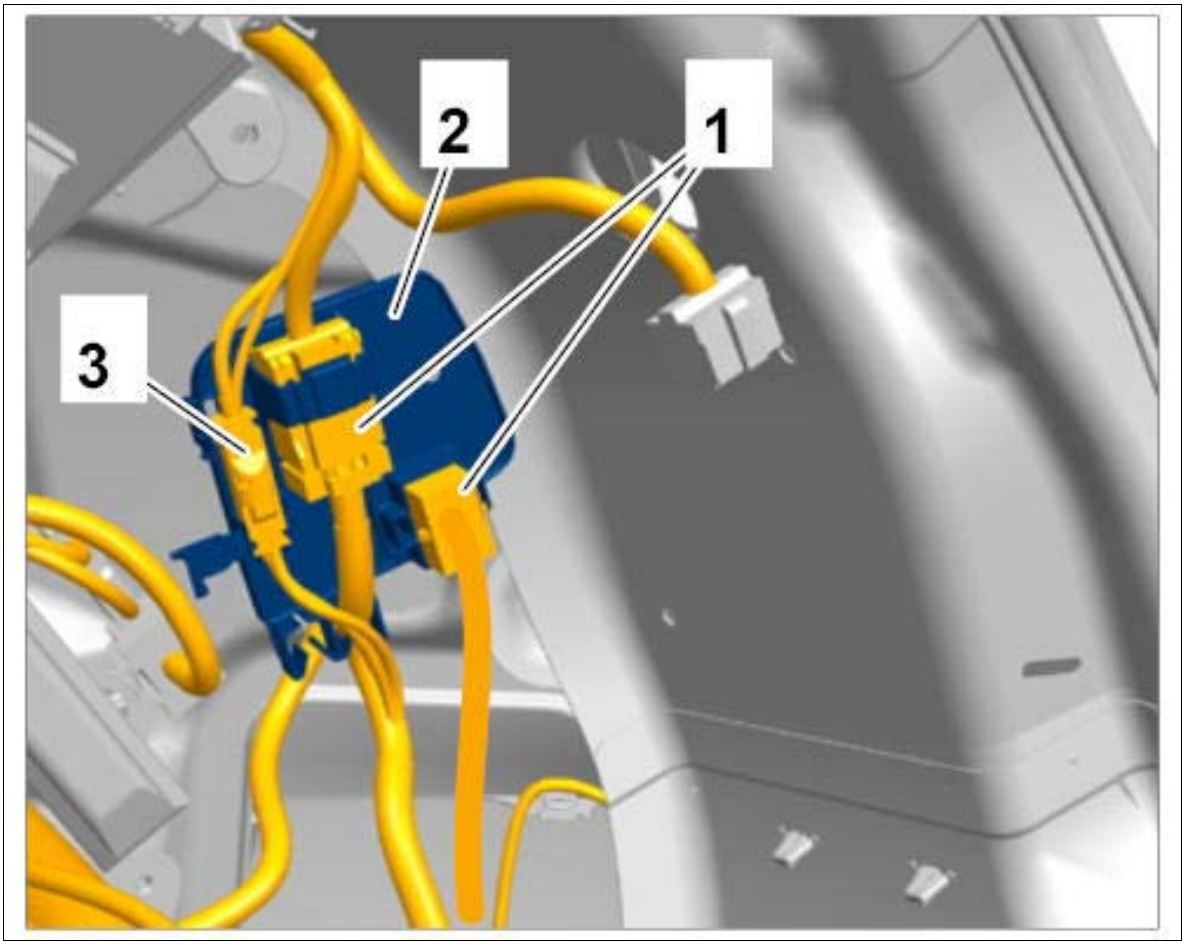

Courtesy of PORSCHE CARS NORTH AMERICA, INC.

10. Release and disconnect electric plug connection on the rear right seat-belt pretensioner. → 691219 REMOVING AND INSTALLING REAR THREE-POINT BELT
11. Release and disconnect electric plug connection on the right head airbag unit. → 696619 REMOVING AND INSTALLING HEAD AIRBAG UNIT
12. Release and disconnect antenna line **-1-** on the radio receiver for auxiliary heating **-2-** .
13. Release and disconnect electric plug connection **-1-** on the radio receiver for auxiliary heating.

Fig 4: Disconnecting Antenna Line And Electric Plug Connection On Auxiliary Heating Radio Receiver

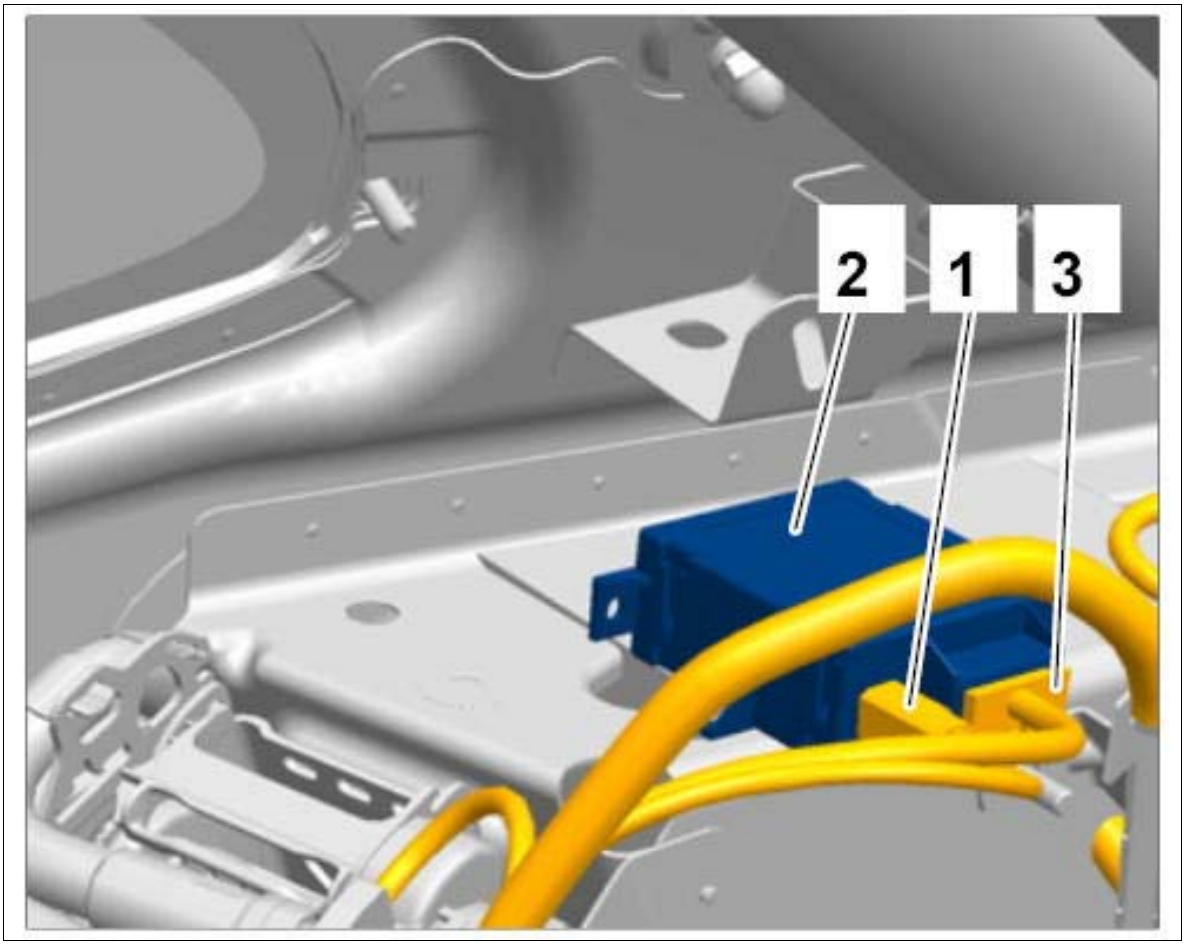

Courtesy of PORSCHE CARS NORTH AMERICA, INC.

14. Release and disconnect antenna line **-1-** on the right antenna amplifier **-2-** .

Fig 5: Disconnecting Antenna Line On Antenna Amplifier

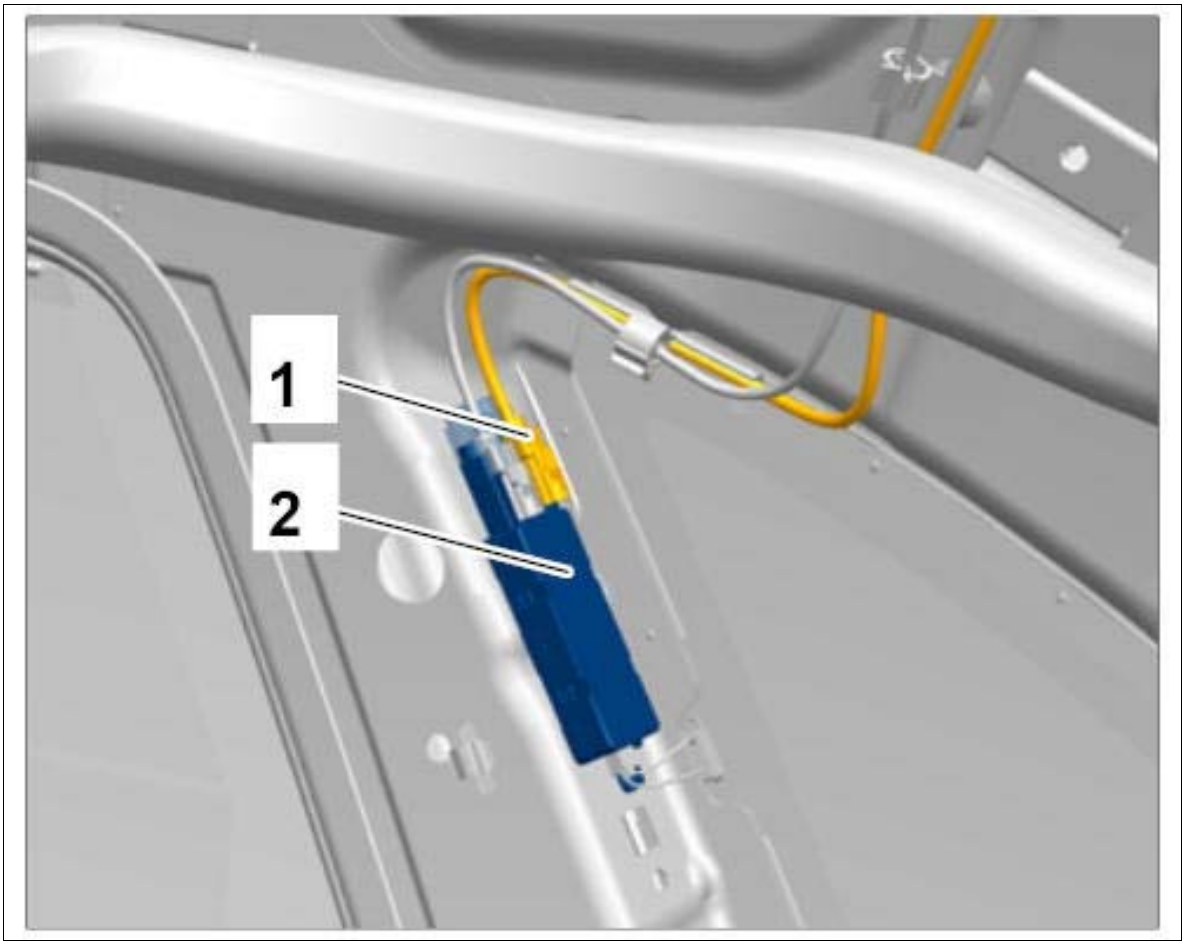

Courtesy of PORSCHE CARS NORTH AMERICA, INC.

15. Release and disconnect electric plug connection **-1-** on the rear right roof pillar and loosen it from holder **-2-** .

Fig 6: Disconnecting Electric Plug Connection On Rear Right Roof Pillar

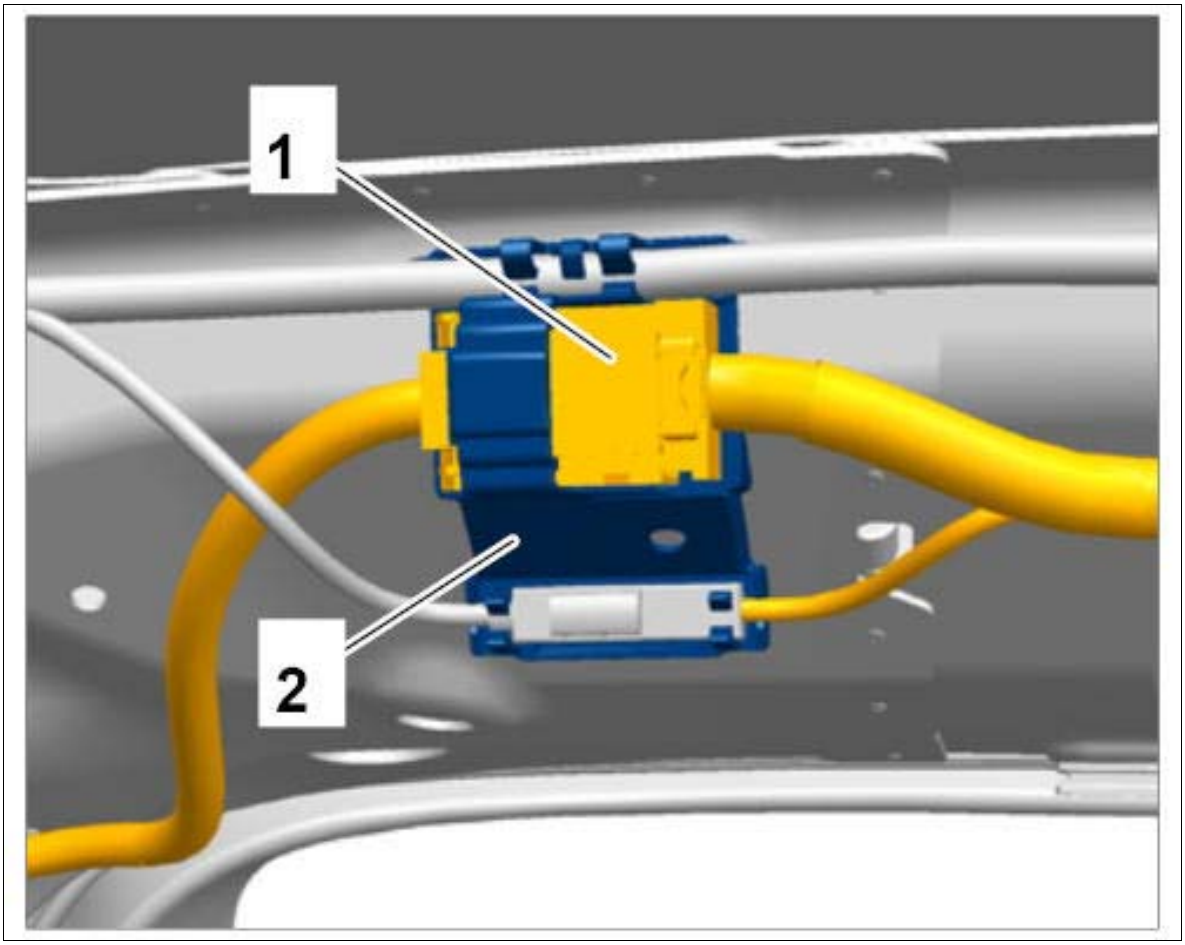

Courtesy of PORSCHE CARS NORTH AMERICA, INC.

Vehicles with air suspension

16. Release and disconnect electric plug connection **-1-** on the rear right spring strut.

All vehicles

17. Press grommet **-2-** into the passenger compartment.

Fig 7: Disconnecting Rear Right Shock Absorber Electric Plug Connection

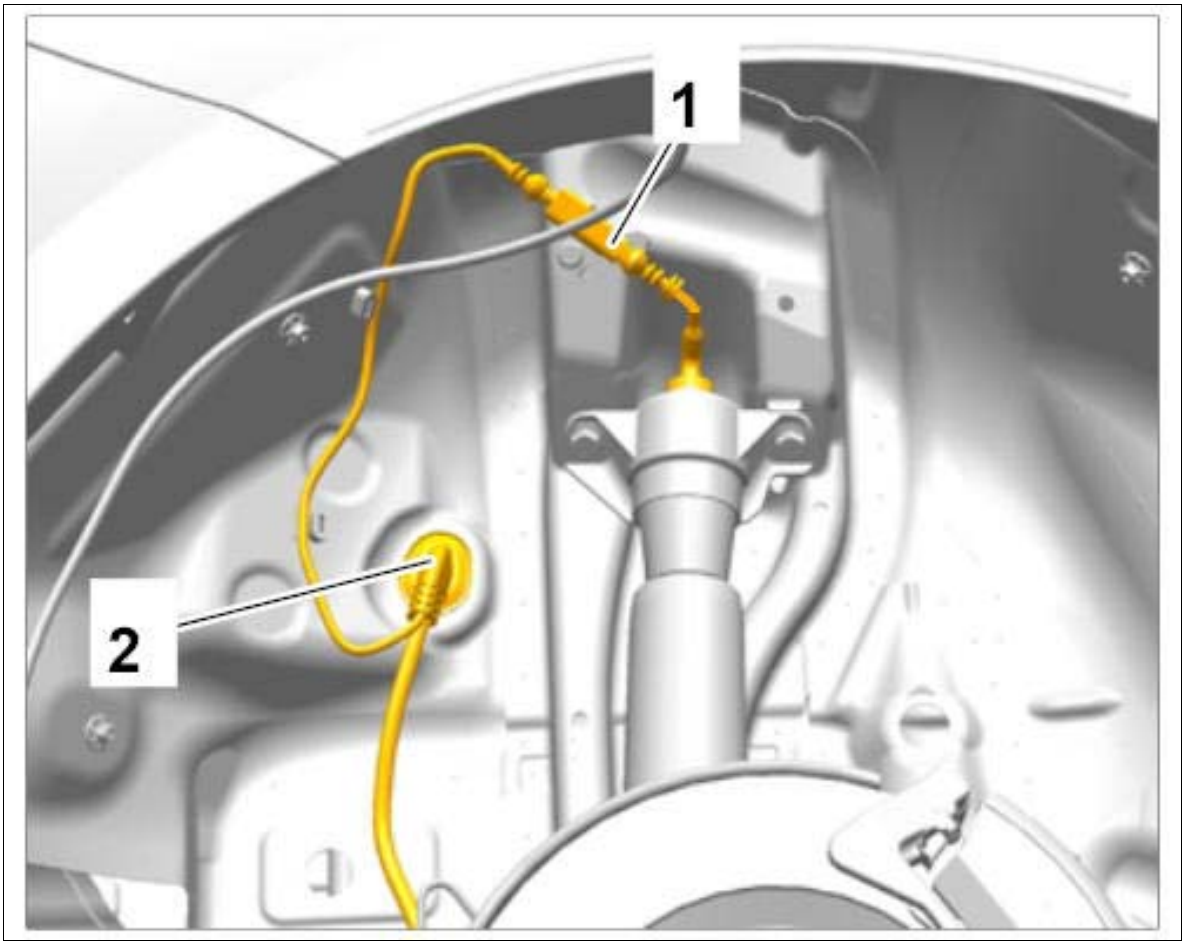

Courtesy of PORSCHE CARS NORTH AMERICA, INC.

18. Release and disconnect electric plug connection **-1-** on the parking brake actuator.
19. Release and disconnect electric plug connection **-2-** on the brake pad wear contact.

Fig 8: Disconnecting Electric Plug Connections On Brake Pad Wear Contact And Parking Brake Actuator

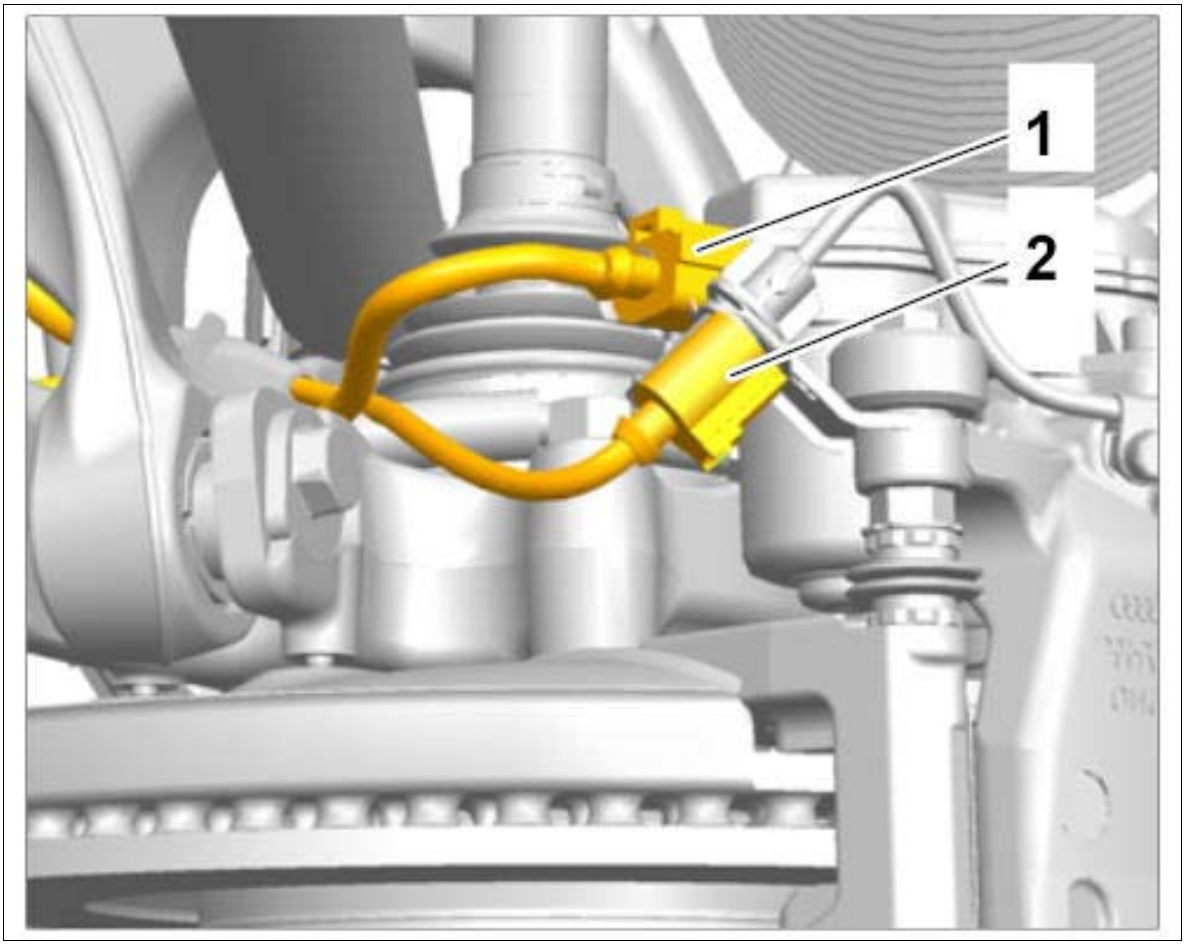

Courtesy of PORSCHE CARS NORTH AMERICA, INC.

20. Release and disconnect electric plug connection on the rear right speed sensor. → 451555 REPLACING REAR SPEED SENSOR
21. Release and disconnect electric plug connection on the rear right level sensor, if fitted. → 431955 REPLACING REAR LEVEL SENSOR
22. Unclip main wire harness - sub-part for rear right wheel housing - from all holders and carefully guide it into the luggage compartment.
23. Unclip main wire harness in luggage compartment at the right from all holders.

WM 970909 LOOSENING AND SECURING MAIN WIRE HARNESS IN LUGGAGE COMPARTMENT (ALL MODELS) > LOOSENING MAIN WIRE HARNESS IN LUGGAGE COMPARTMENT AT THE LEFT

NOTE: Incorrect handling of main wire harness

- *Risk of damage to lines*

→ The main wire harness contains all airbag lines, antenna lines and optical waveguides.

→ The main wire harness must not be separated and is always replaced as a complete wire harness when carrying out extensive repairs.

→ If individual lines are damaged, shut off these lines and install new lines. Lay the new lines along the main wire harness and secure them to the main wire harness.

NOTE: Incorrect handling of optical waveguides

- *Risk of damage to optical waveguide*

→ Observe the requirements for working with and installing optical waveguides.

Information

Always comply with the regulations for handling ESD-sensitive components!

- Assembly work may only be carried out if the mechanic is wearing the working clothes and shoes approved by Porsche.
- The new part must only be removed from the ESD (electrostatic discharge) protective packaging just before installation and at the position at which the part is to be installed.
- Never touch the electric pins and plug contacts.

1. Take tire sealing compound and compressor out of the storage tray.
2. Screw off fastening nuts **-1-** and remove storage tray **-2-** .

Fig 1: Removing Storage Tray

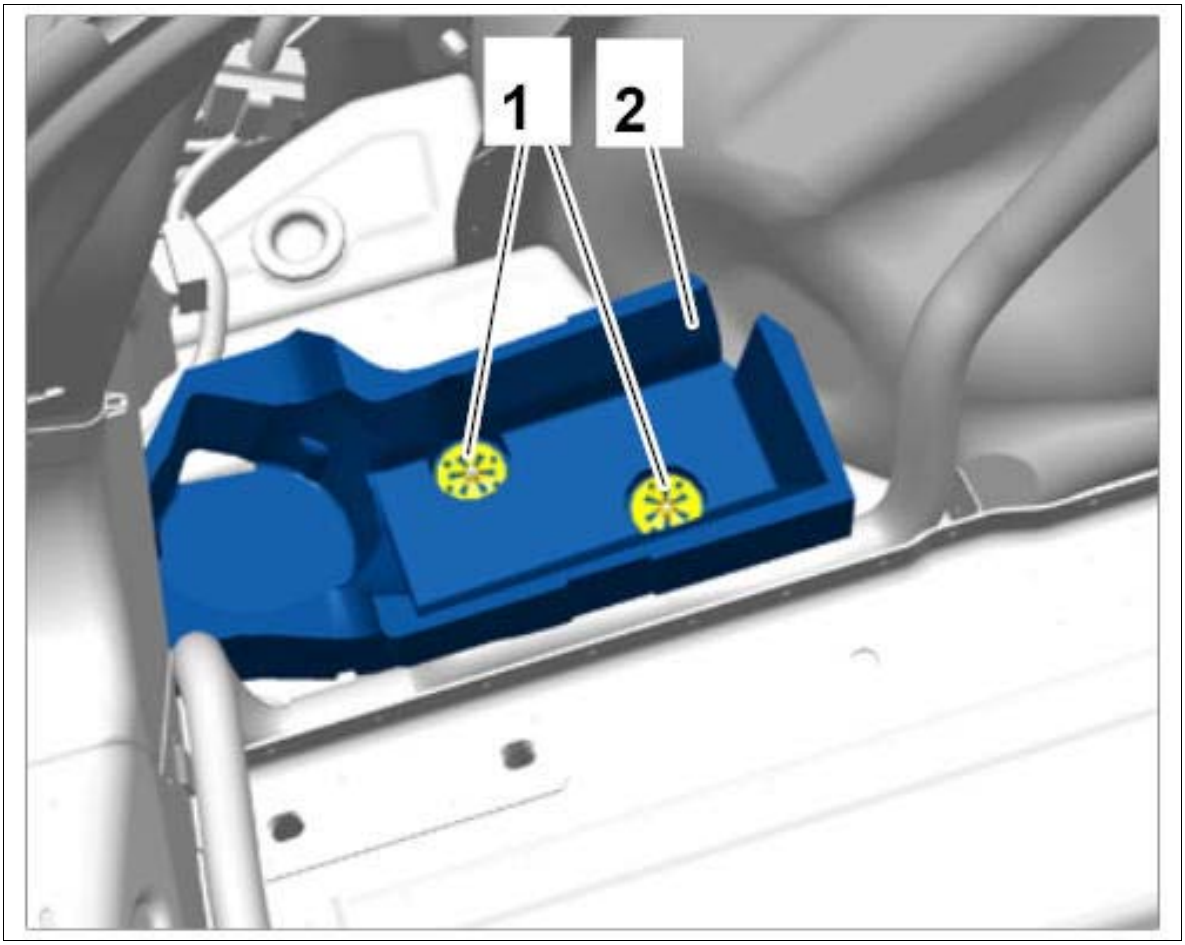

Courtesy of PORSCHE CARS NORTH AMERICA, INC.

3. Release and disconnect electric plug connection on KESSY antenna at the rear. → 966719 REMOVING AND INSTALLING KESSY ANTENNA

Vehicles with sports exhaust system

4. Release and disconnect electric plug connections on servo motors for exhaust flap control at the left and right. → 263355 REPLACING REAR SILENCER

5. Press grommet for electric line for the servo motor for exhaust flap control at the left into the passenger compartment.

All vehicles

6. Release and disconnect electric plug connections **-1-** on control unit for Lane Change Assist. → 917019 REMOVING AND INSTALLING CONTROL UNIT FOR LANE CHANGE ASSIST

7. Unclip, release and pull off antenna line **-2-** .

8. Press grommet **-3-** into the passenger compartment.

Fig 2: Disconnecting Antenna Line

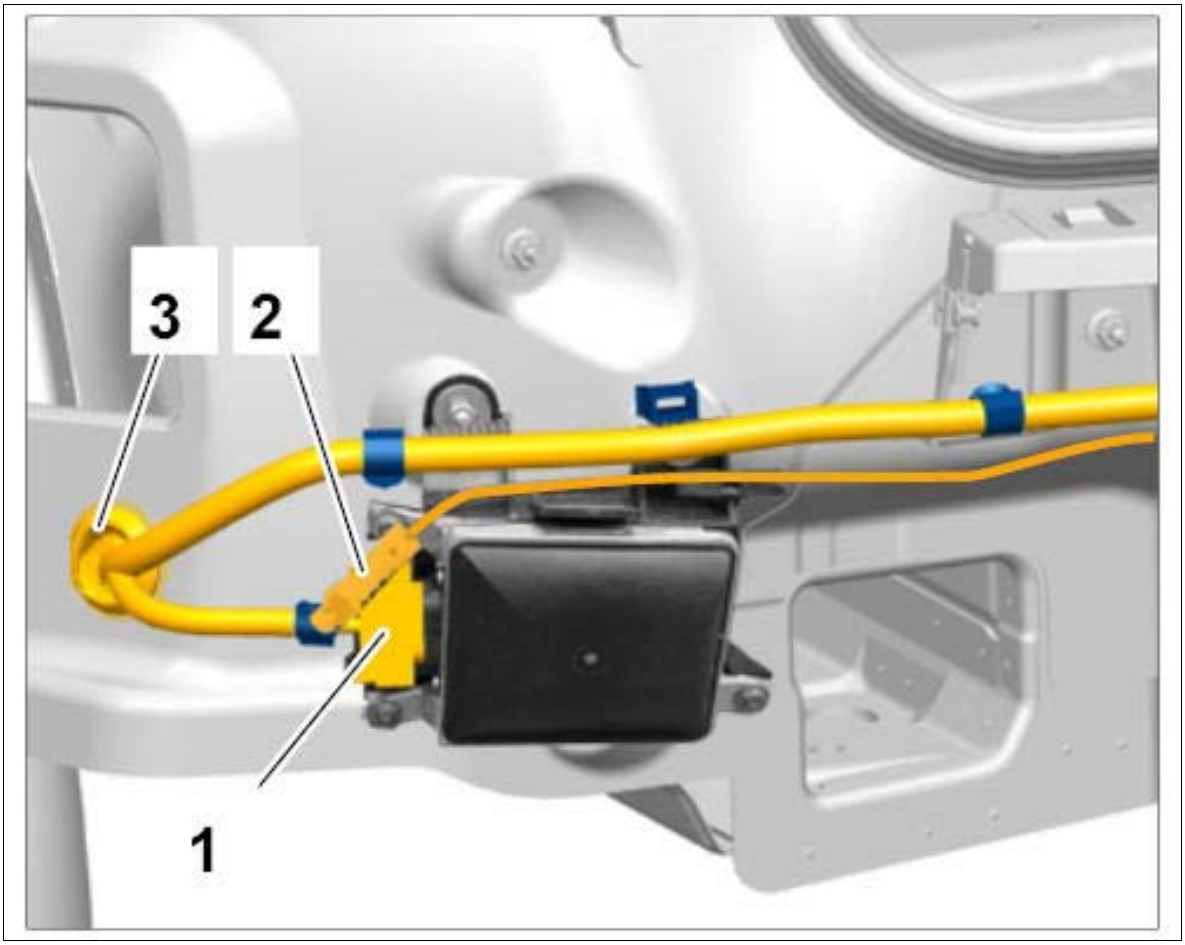

Courtesy of PORSCHE CARS NORTH AMERICA, INC.

9. Unclip main wire harness - rear-end connection - from all holders and carefully guide it into the luggage compartment.

Vehicles with air suspension

10. Release and disconnect electric plug connection **-1-** on the rear left spring strut.

All vehicles

11. Press grommet **-2-** into the luggage compartment.

Fig 3: Disconnecting Electric Plug Connection On Rear Left Spring Strut (Right Side Of Vehicle)

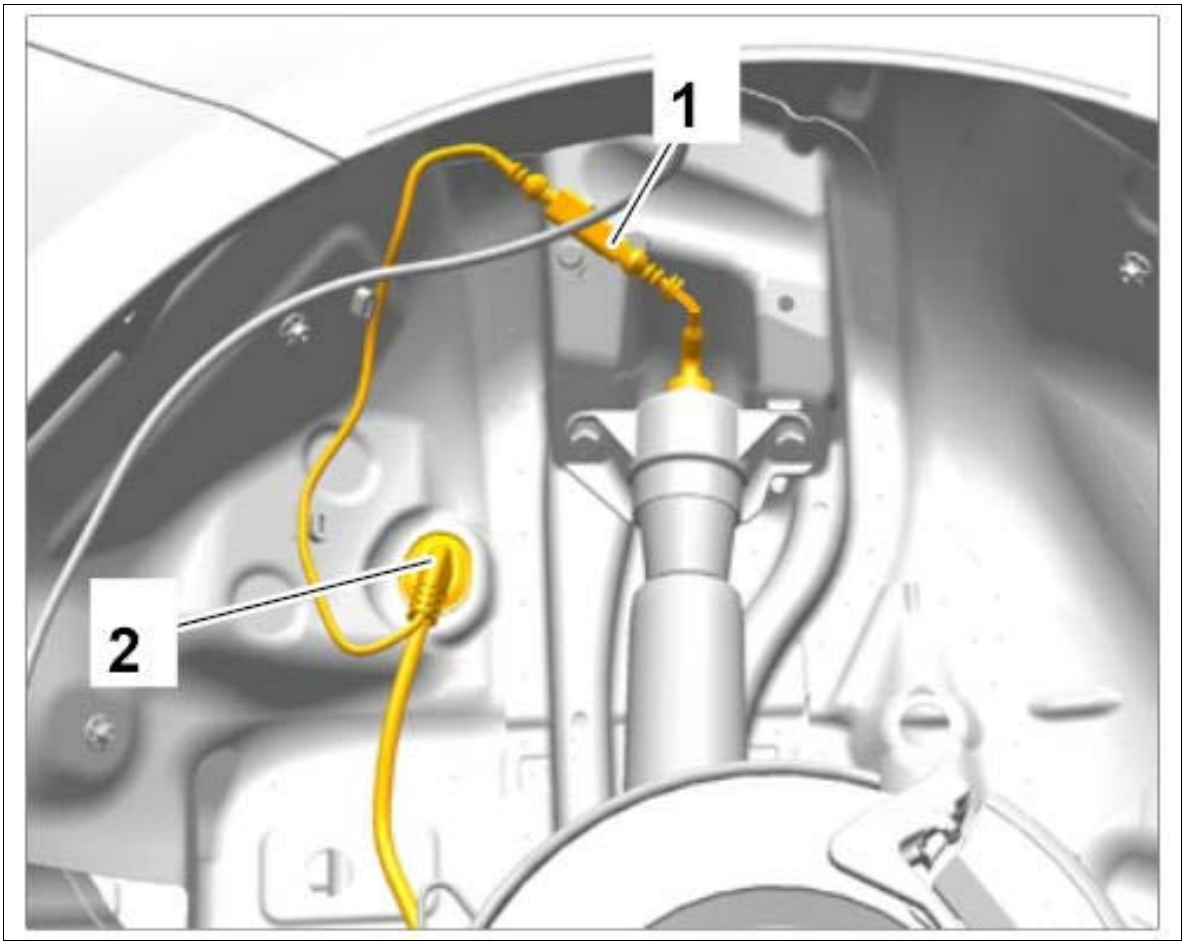

Courtesy of PORSCHE CARS NORTH AMERICA, INC.

12. Release and disconnect electric plug connection **-1-** on the parking brake actuator.
13. Release and disconnect electric plug connection **-2-** on the brake pad wear contact.

Fig 4: Disconnecting Electric Plug Connection On Parking Brake Actuator (Right Side Of Vehicle)

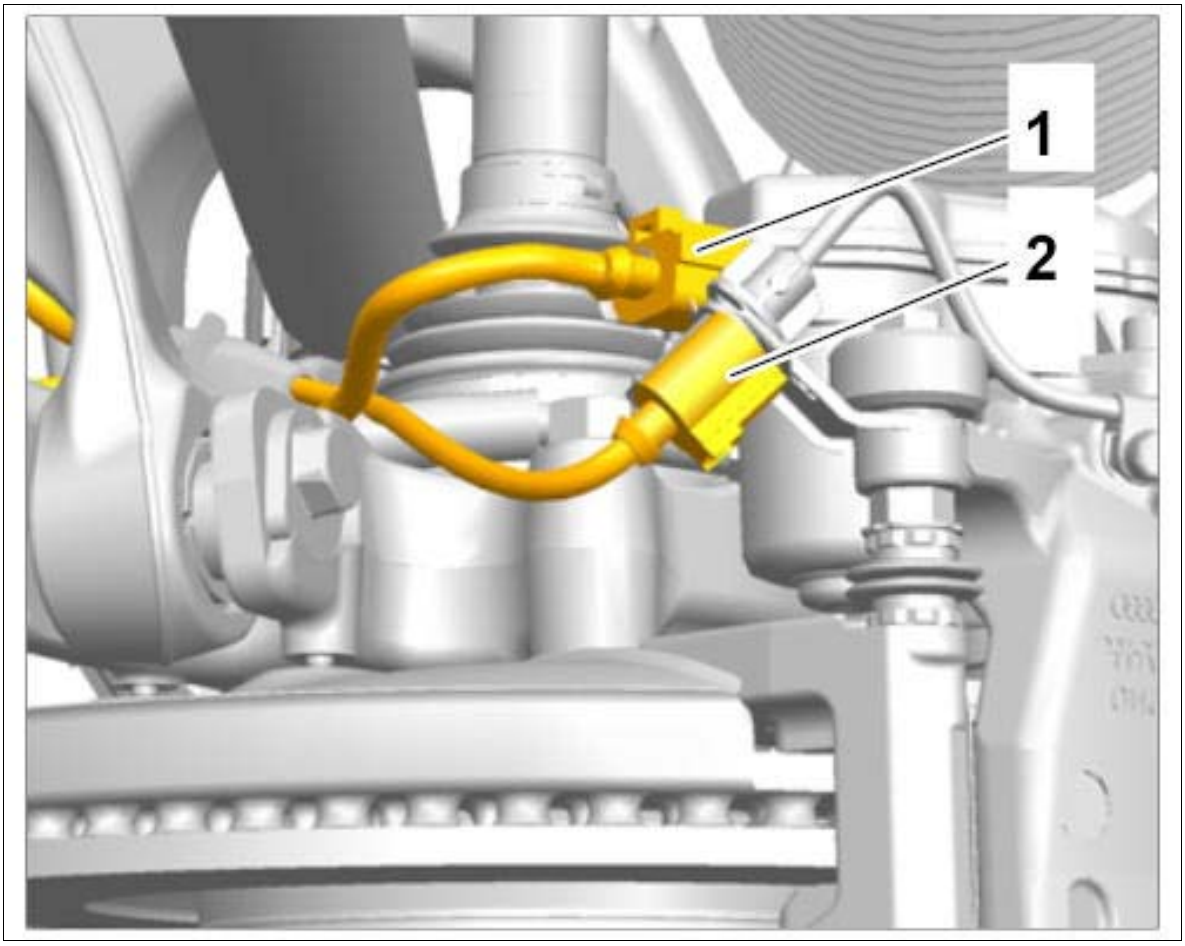

Courtesy of PORSCHE CARS NORTH AMERICA, INC.

14. Release and disconnect electric plug connection on the rear left speed sensor. → 451555 REPLACING REAR SPEED SENSOR

15. Release and disconnect electric plug connection on the rear left level sensor, if fitted. → 431955 REPLACING REAR LEVEL SENSOR

16. Release and disconnect electric plug connection on control unit for tire pressure monitoring system. → 443419 REMOVING AND INSTALLING TPM CONTROL UNIT

17. Unclip main wire harness - connection for rear left wheel housing - from all holders and carefully guide it into the luggage compartment.

Vehicles with rear-differential lock

18. Release and disconnect electric plug connection **-1-** on servo motor for rear-differential lock.

19. Unclip electric line **-3-** for servo motor for rear-differential lock from all holders.

20. Press grommet **-2-** into the luggage compartment and carefully guide main wire harness - sub-part for rear-differential lock - into the luggage compartment.

Fig 5: Disconnecting Electric Plug Connection On Servo Motor For Rear-Differential Lock

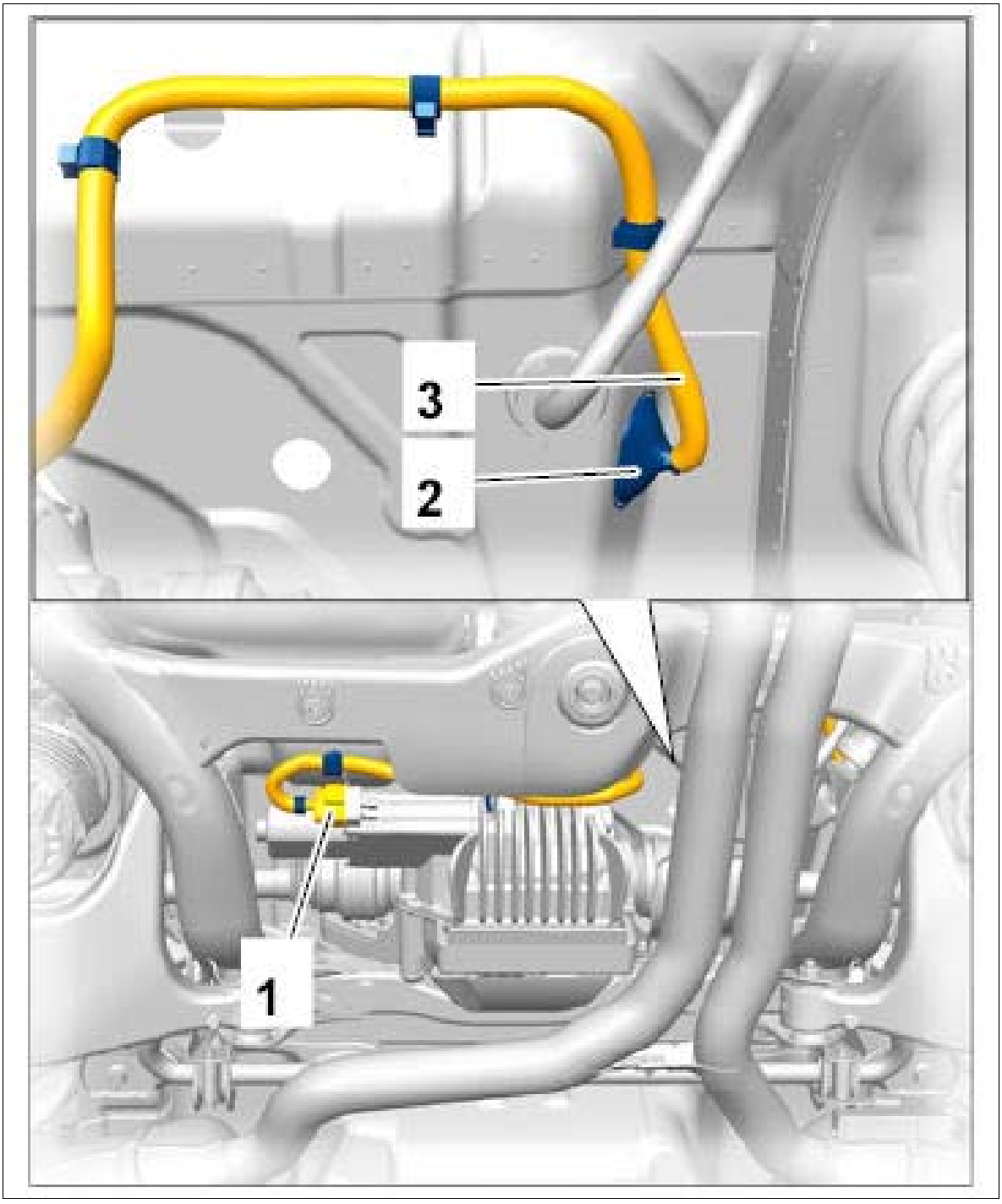

Courtesy of PORSCHE CARS NORTH AMERICA, INC.

21. Remove positive cable **-1-** on power distributor. → 978919 REMOVING AND INSTALLING POWER DISTRIBUTOR

Fig 6: Disconnecting Positive Cable On Power Distributor

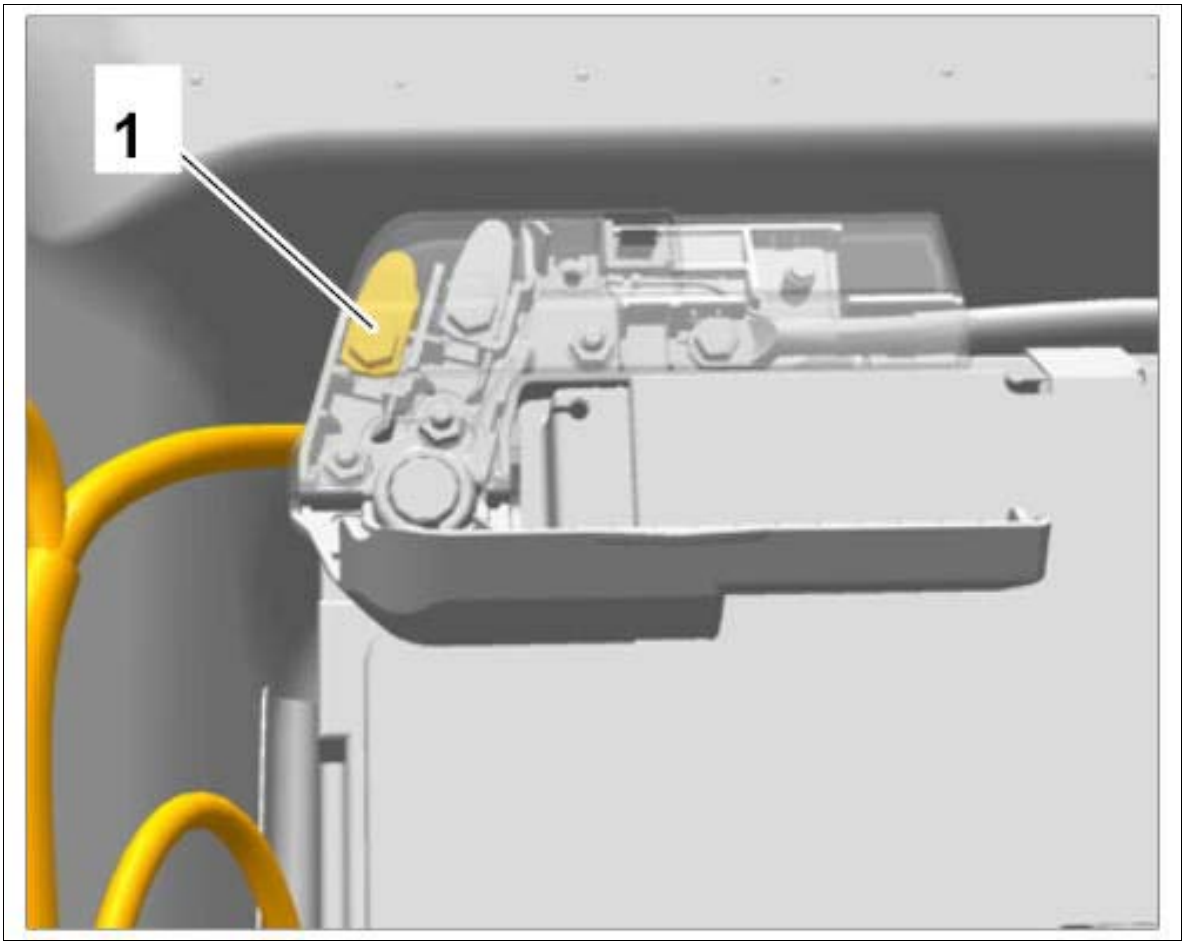

Courtesy of PORSCHE CARS NORTH AMERICA, INC.

22. Unclip main wire harness - sub-part for rear-differential lock - on luggage compartment floor at the center from all holders.

23. Screw off fastening nuts **-1-** and remove ground lines from ground points.

Fig 7: Disconnecting Ground Lines From Ground Points

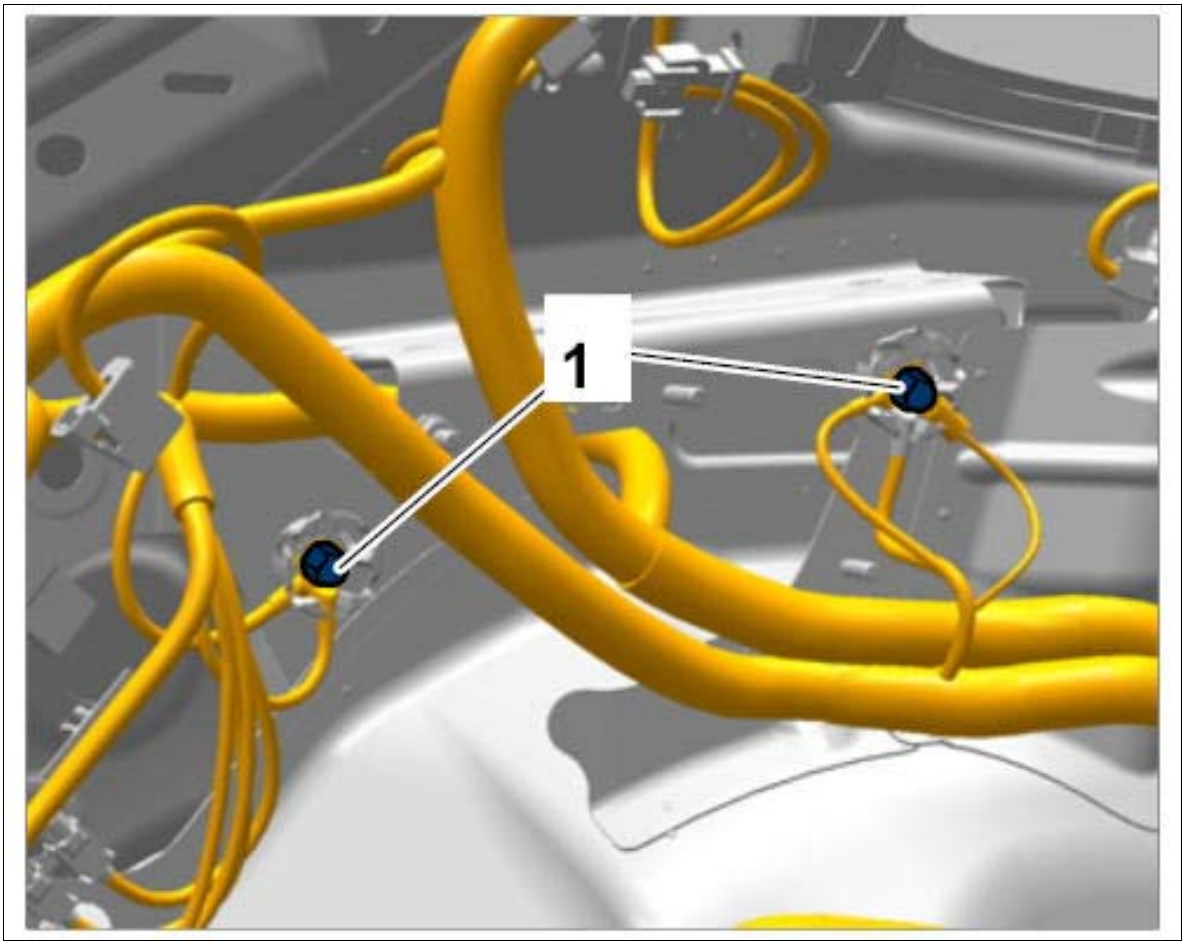

Courtesy of PORSCHE CARS NORTH AMERICA, INC.

24. Release and disconnect electric plug connection on the rear left seat-belt pretensioner. → 691219 REMOVING AND INSTALLING REAR THREE-POINT BELT

25. Release and disconnect electric plug connection on the left head airbag unit. → 696619 REMOVING AND INSTALLING HEAD AIRBAG UNIT

26. Release and pull off antenna lines **-1-** on the left antenna amplifier **-2-** .

Fig 8: Disconnecting Antenna Line On Left Antenna Amplifier

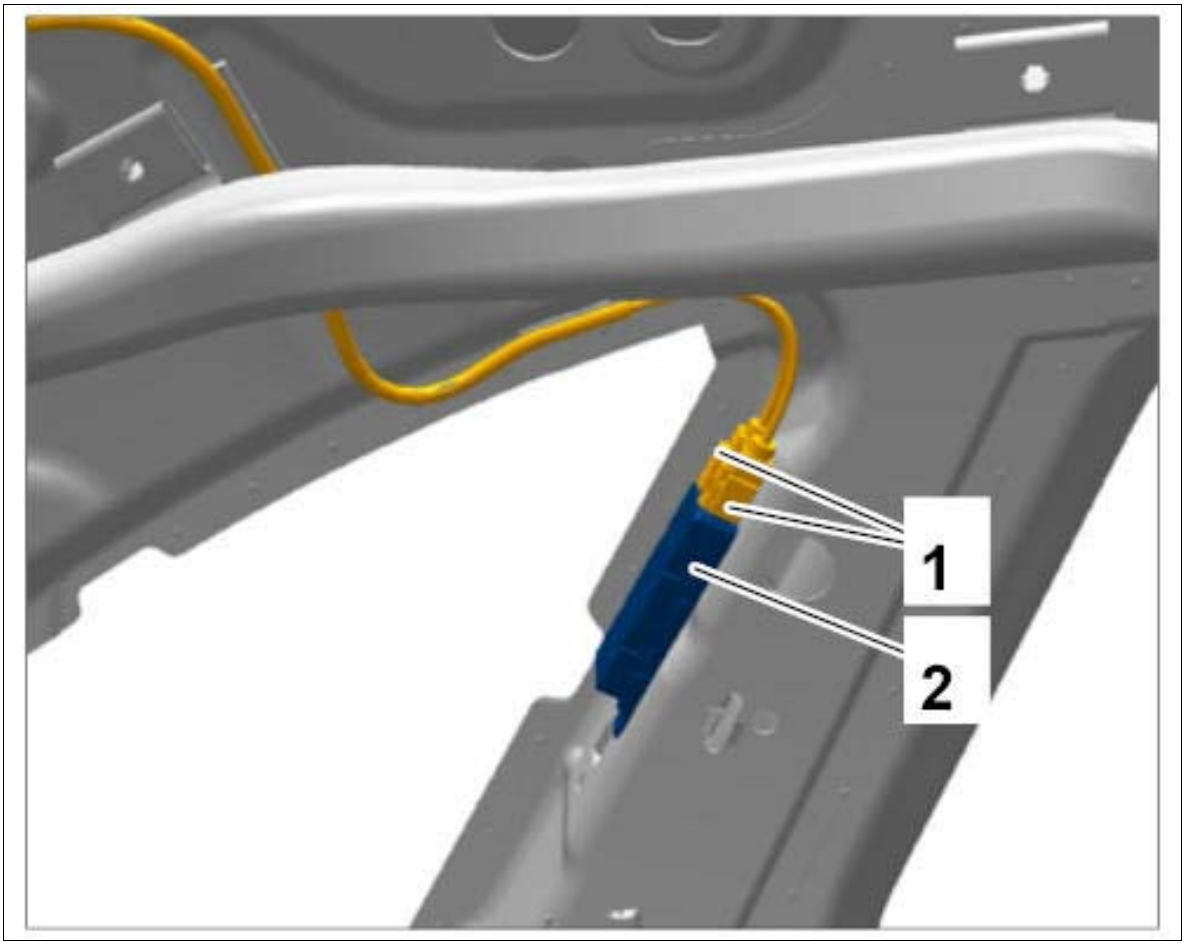

Courtesy of PORSCHE CARS NORTH AMERICA, INC.

27. Unclip, release and disconnect antenna lines **-1-** on the rear roof pillar at the center.
28. Screw off fastening nut **-2-** and remove ground line **-3-** from ground points.

Fig 9: Disconnecting Antenna Lines And Ground Line On Rear Roof Pillar (Center)

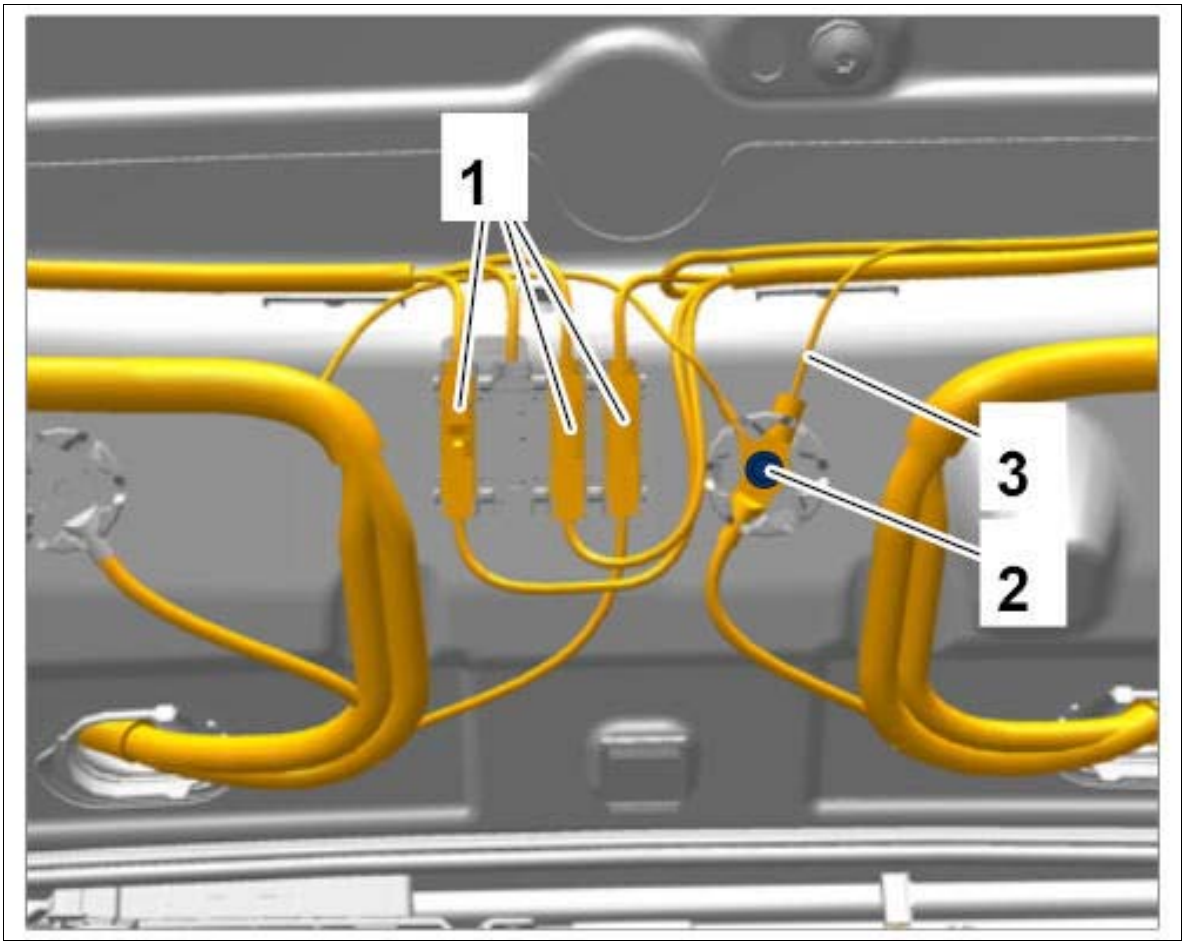

Courtesy of PORSCHE CARS NORTH AMERICA, INC.

29. Unclip, release and disconnect antenna line **-1-** on the rear left roof pillar.
30. Unclip, release and disconnect spray water hose **-2-** .
31. Release and disconnect electric plug connection **-3-** and unclip it from the holder.

Fig 10: Disconnecting Antenna Line On Rear Left Roof Pillar

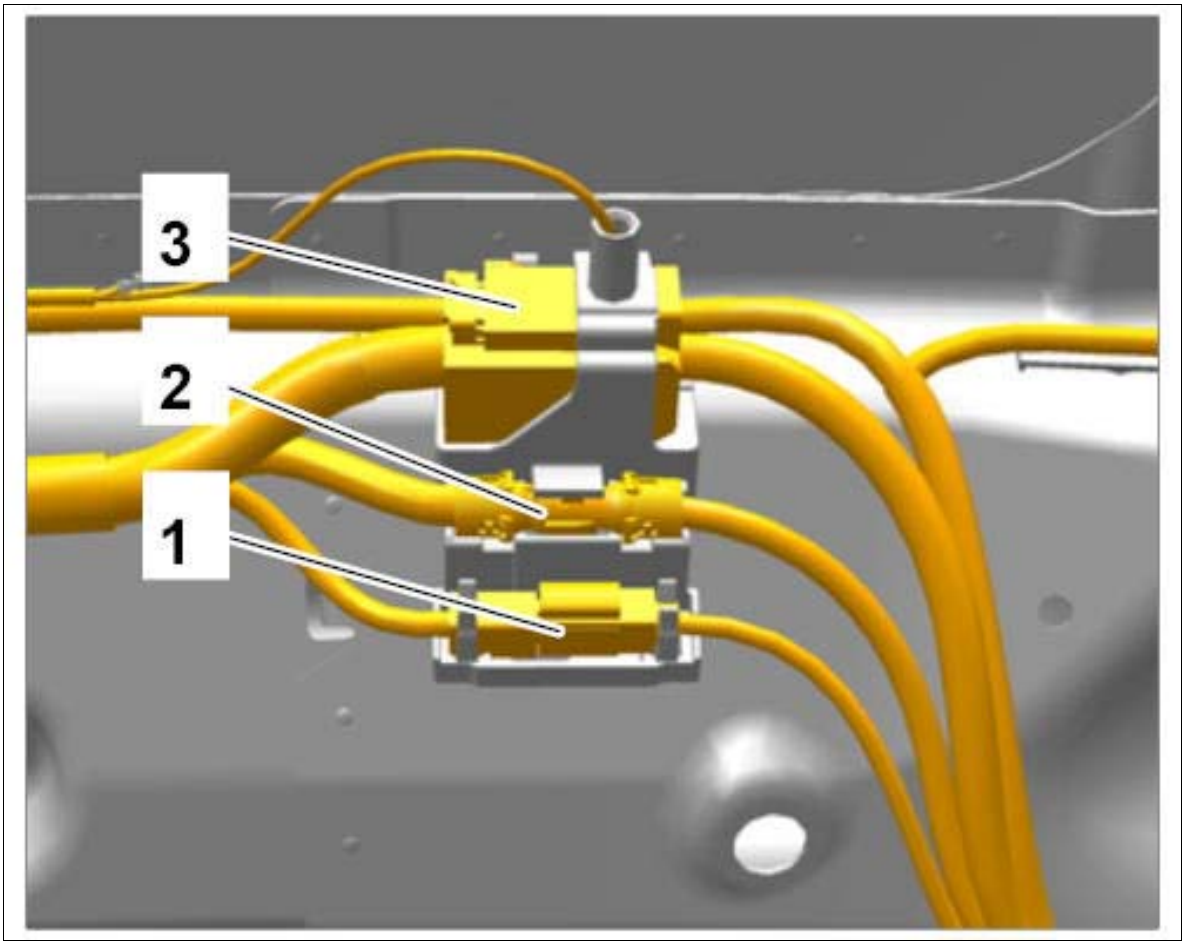

Courtesy of PORSCHE CARS NORTH AMERICA, INC.

32. Unclip main wire harness in luggage compartment at the left from all holders.

WM 970909 LOOSENING AND SECURING MAIN WIRE HARNESS IN LUGGAGE COMPARTMENT (ALL MODELS) > SECURING MAIN WIRE HARNESS IN LUGGAGE COMPARTMENT AT THE RIGHT

NOTE: Incorrect handling of main wire harness

- *Risk of damage to lines*

→ The main wire harness contains all airbag lines, antenna lines and optical waveguides.

→ The main wire harness must not be separated and is always replaced as a complete wire harness when carrying out extensive repairs.

→ If individual lines are damaged, shut off these lines and install new lines. Lay the new lines along the main wire harness and secure them to the main wire harness.

NOTE: Incorrect handling of optical waveguides

- *Risk of damage to optical waveguide*

→ Observe the requirements for working with and installing optical waveguides.

Information

Always comply with the regulations for handling ESD-sensitive components!

- Assembly work may only be carried out if the mechanic is wearing the working clothes and shoes approved by Porsche.
- The new part must only be removed from the ESD (electrostatic discharge) protective packaging just before installation and at the position at which the part is to be installed .
- Never touch the electric pins and plug contacts.

1. The main wire harness is secured in reverse order to the steps required for loosening it.
    1. 1.1. Make sure that the individual sub-parts of the wire harness in the luggage compartment at the right are not twisted or entangled.
    2. 1.2. Check that the wire harness is routed correctly and without tension so that no chafing occurs.
    3. 1.3. Clip all electric lines for the main wire harness in the luggage compartment at the right in securely at the designated positions.
    4. 1.4. Connect all electric plug connections until they engage securely.
    5. 1.5. Lock all electric plug connections by hand using the manual slide lock.
2. Tighten fastening nut securing ground line to the body. **Tightening torque 9 Nm (6.5 ftlb.)**

WM 970909 LOOSENING AND SECURING MAIN WIRE HARNESS IN LUGGAGE COMPARTMENT (ALL MODELS) > SECURING MAIN WIRE HARNESS IN LUGGAGE COMPARTMENT AT THE LEFT

NOTE: Incorrect handling of main wire harness

- *Risk of damage to lines*

→ The main wire harness contains all airbag lines, antenna lines and optical waveguides.

→ The main wire harness must not be separated and is always replaced as a complete wire harness when carrying out extensive repairs.

→ If individual lines are damaged, shut off these lines and install new lines. Lay the new lines along the

main wire harness and secure them to the main wire harness.

NOTE: Incorrect handling of optical waveguides

- *Risk of damage to optical waveguide*

→ Observe the requirements for working with and installing optical waveguides.

Information

Always comply with the regulations for handling ESD-sensitive components!

- Assembly work may only be carried out if the mechanic is wearing the working clothes and shoes approved by Porsche.
- The new part must only be removed from the ESD (electrostatic discharge) protective packaging just before installation and at the position at which the part is to be installed.
- Never touch the electric pins and plug contacts.

1. The main wire harness is secured in reverse order to the steps required for loosening it.
    1. 1.1. Make sure that the individual sub-parts of the wire harness in the luggage compartment at the left are not twisted or entangled.
    2. 1.2. Check that the wire harness is routed correctly and without tension so that no chafing occurs.
    3. 1.3. Clip all electric lines for the main wire harness in the luggage compartment at the left in securely at the designated positions.
    4. 1.4. Connect all electric plug connections until they engage securely.
    5. 1.5. Lock all electric plug connections by hand using the manual slide lock.
2. Tighten fastening nuts securing ground lines to the body. **Tightening torque 9 Nm (6.5 ftlb.)**

WM 970909 LOOSENING AND SECURING MAIN WIRE HARNESS IN LUGGAGE COMPARTMENT (ALL MODELS) > SUBSEQUENT WORK FOR LOOSENING AND SECURING MAIN WIRE HARNESS IN LUGGAGE COMPARTMENT AT THE RIGHT

Vehicles with PASM

1. Install PASM control unit. → INSTALLING PASM CONTROL UNIT .

    All vehicles

2. Install rear wheel housing liner at the right → INSTALLING FRONT WHEEL HOUSING LINER .
3. Install rear right wheel → INSTALLING WHEEL .
4. Install filler flap → 553755 REPLACING FILLER FLAP .

5. Install right tail light → INSTALLING TAIL LIGHT .
6. Install power distributor → INSTALLING POWER DISTRIBUTOR .
7. Install cover for rear lock support → INSTALLING COVER FOR REAR LOCK SUPPORT .
8. Install trim panel for luggage compartment (luggage compartment cover) at the right side → INSTALLING CENTER TRIM PANEL FOR LUGGAGE COMPARTMENT (LUGGAGE COMPARTMENT COVER) .
9. Install rear-end electronics control unit and holder for rear-end electronics control unit → INSTALLING CONTROL UNIT FOR REAR-END ELECTRONICS .
10. Install side trim panel for rear luggage compartment at the right → INSTALLING SIDE TRIM PANEL FOR REAR LUGGAGE COMPARTMENT .
11. Install headliner → INSTALLING HEADLINER .
12. Install the battery. → INSTALLING BATTERY .

WM 970909 LOOSENING AND SECURING MAIN WIRE HARNESS IN LUGGAGE COMPARTMENT (ALL MODELS) > SUBSEQUENT WORK FOR LOOSENING AND SECURING MAIN WIRE HARNESS IN LUGGAGE COMPARTMENT AT THE LEFT

Vehicles with loudspeaker booster or TV tuner

1. Install loudspeaker booster with holder → INSTALLING LOUDSPEAKER BOOSTER .
2. Install TV tuner with holder → INSTALLING TV TUNER .

Vehicles with rear-differential lock

3. Install rear-differential lock control unit holder and rear-differential lock control unit → INSTALLING CONTROL UNIT FOR REAR-DIFFERENTIAL LOCK .

All vehicles

4. Install rear left wheel housing liner → INSTALLING FRONT WHEEL HOUSING LINER .
5. Install left rear wheel → INSTALLING WHEEL .
6. Install rear apron → INSTALLING REAR APRON .
7. Install left tail light → INSTALLING TAIL LIGHT .
8. Install cover for rear lock support → INSTALLING COVER FOR REAR LOCK SUPPORT .
9. Install trim panel for luggage compartment (luggage compartment cover) at the left side → INSTALLING CENTRE TRIM PANEL FOR LUGGAGE COMPARTMENT (LUGGAGE COMPARTMENT COVER) .
10. Install side trim panel for rear left luggage compartment → INSTALLING SIDE TRIM PANEL FOR REAR LUGGAGE COMPARTMENT .
11. Install headliner → INSTALLING HEADLINER .

12. Connect ground line to the battery → 2X00IN WORK INSTRUCTIONS AFTER DISCONNECTING THE BATTERY .

WM 970909 LOOSENING AND SECURING MAIN WIRE HARNESS IN PASSENGER COMPARTMENT AT THE LEFT (ALL MODELS) > TECHNICAL VALUES

Location	Description	Type	Basic value	Tolerance 1	Tolerance 2
Ground line to ground pin in body	Nut, M6	Tightening torque	9 Nm (6.5 ftlb.)		

WM 970909 LOOSENING AND SECURING MAIN WIRE HARNESS IN PASSENGER COMPARTMENT AT THE LEFT (ALL MODELS) > PRELIMINARY WORK

1. Disconnect ground line on the battery. → 2X00IN WORK INSTRUCTIONS AFTER DISCONNECTING THE BATTERY .
2. Remove headliner. → 708419 REMOVING AND INSTALLING HEADLINER .
3. Remove dashboard. → 701819 REMOVING AND INSTALLING DASHBOARD .
4. Remove carpet. → 704119 REMOVING AND INSTALLING CARPET .
5. Remove insulating mat under the rear seat.
6. Remove rear inner door sill trim at the left. → 680519 REMOVING AND INSTALLING REAR INNER DOOR SILL TRIM .
7. Release and disconnect electric plug connection on (central) headlight control unit. → 941619 REMOVING AND INSTALLING (CENTRAL) HEADLIGHT CONTROL UNIT .
8. Remove control unit for front-end electronics. → 944919 REMOVING AND INSTALLING CONTROL UNIT FOR FRONT-END ELECTRONICS .
9. Remove front lid release.
10. Loosen fuse box in dashboard at the left. → LOOSENING FUSE BOX IN THE DASHBOARD .

    Vehicles with KESSY

11. Disconnect electric plug connection for KESSY antenna at the left door entry guard and expose electric line. → 966719 REMOVING AND INSTALLING KESSY ANTENNA .

    Vehicles with air suspension

12. Disconnect sub-part for air suspension on the underbody.

    1. 12.1. Disconnect electric plug connections on the compressor for the levelling system. → 431519 REMOVING AND INSTALLING COMPRESSOR FOR LEVELLING SYSTEM .

2. 12.2. Disconnect electric plug connection on the valve unit (levelling system). → 432355 REPLACING VALVE UNIT (LEVELLING SYSTEM) .

3. 12.3. Unclip and expose electric line.

Vehicles with DeNOx catalytic converter

13. Disconnect sub-part for DeNOx catalytic converter at the underbody.

    1. 13.1. Disconnect electric plug connection on control unit for reducing agent.

    2. 13.2. Disconnect electric plug connection for temperature sensor for exhaust gas downstream of DeNOx catalytic converter.

    3. 13.3. Disconnect electric plug connection on NOx sensor with control unit.

    4. 13.4. Unclip and expose electric line.

Vehicles with mobile communication antenna

14. Release and disconnect electric plug connection on mobile communication antenna.

Vehicles with front camera

15. Release and disconnect electric plug connection on front camera. → 963819 REMOVING AND INSTALLING FRONT CAMERA .

Vehicles with GPS antenna

16. Release and disconnect electric plug connection on GPS antenna. → 911319 REMOVING AND INSTALLING GPS ANTENNA .

WM 970909 LOOSENING AND SECURING MAIN WIRE HARNESS IN PASSENGER COMPARTMENT AT THE LEFT (ALL MODELS) > INFORMATION

Fig 1: Identifying Passenger Compartment Main Wire Harness Installation Position (Left)

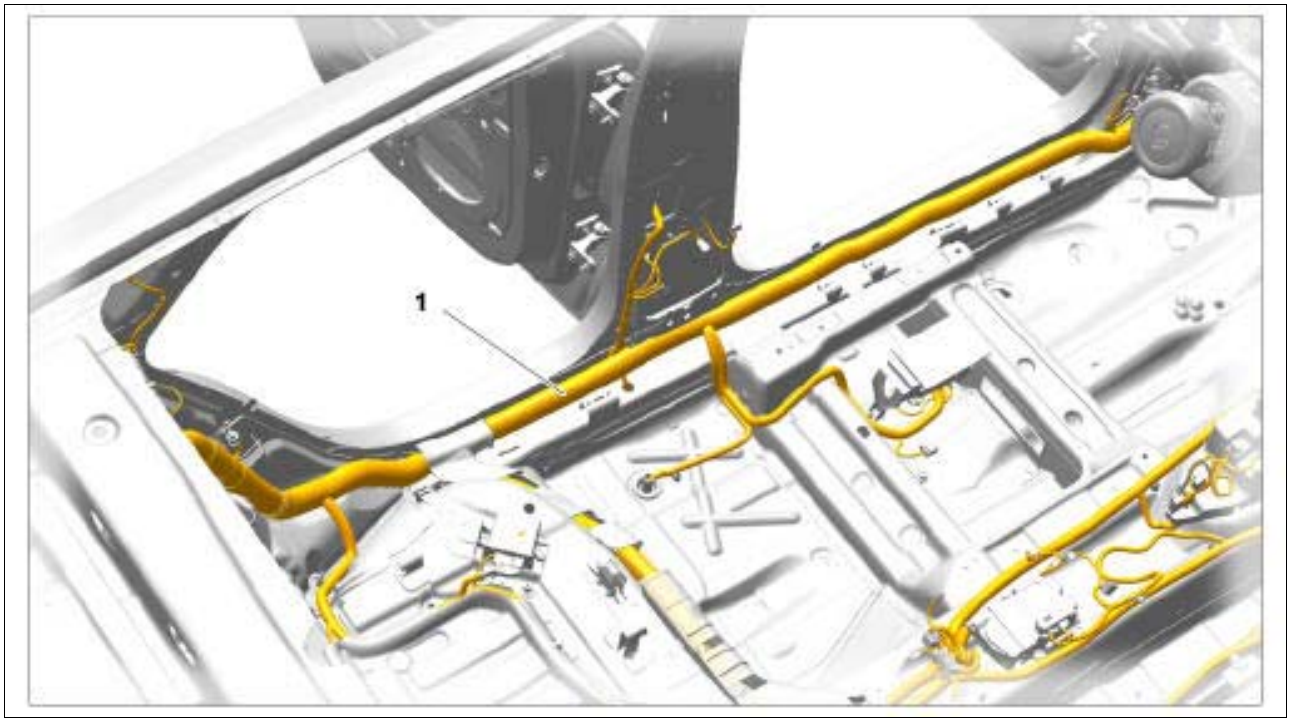

Courtesy of PORSCHE CARS NORTH AMERICA, INC.

1. Main wire harness in passenger compartment at the left

WM 970909 LOOSENING AND SECURING MAIN WIRE HARNESS IN PASSENGER COMPARTMENT AT THE LEFT (ALL MODELS) > LOOSENING MAIN WIRE HARNESS IN PASSENGER COMPARTMENT AT THE LEFT

NOTE: Incorrect handling of main wire harness

- *Risk of damage to lines*

→ The main wire harness contains all airbag lines, antenna lines and optical waveguides.

→ The main wire harness must not be separated and is always replaced as a complete wire harness when carrying out extensive repairs.

→ If individual lines are damaged, shut off these lines and install new lines. Lay the new lines along the main wire harness and secure them to the main wire harness.

NOTE: Incorrect handling of optical waveguides

- *Risk of damage to optical waveguide*

→ Observe the requirements for working with and installing optical waveguides.

Information

Always comply with the regulations for handling ESD-sensitive components!

- Assembly work may only be carried out if the mechanic is wearing the working clothes and shoes approved by Porsche.
- The new part must only be removed from the ESD (electrostatic discharge) protective packaging just before installation and at the position at which the part is to be installed.
- Never touch the electric pins and plug contacts.

1. Release and disconnect electric plug connection on airbag sensor on inner wheel arch at the rear left. → 695119 REMOVING AND INSTALLING AIRBAG SENSOR
2. Release and disconnect electric plug connection on seat-belt pretensioner on driver's side. → 691119 REMOVING AND INSTALLING FRONT THREE-POINT BELT
3. Disconnect electric plug connection for wire harness for rear left door in the B-pillar.
    1. 3.1. Lever off locking mechanism for electric plug connection **-1-** using a plastic wedge in an upward direction **-a-** and pull off electric plug connection.
    2. 3.2. Release electric plug connection **-2-** (**-b-**) and press it into the B-pillar.

    Fig 1: Disconnecting Rear Left Door Wire Harness Electric Plug Connection (Rear Right Door)

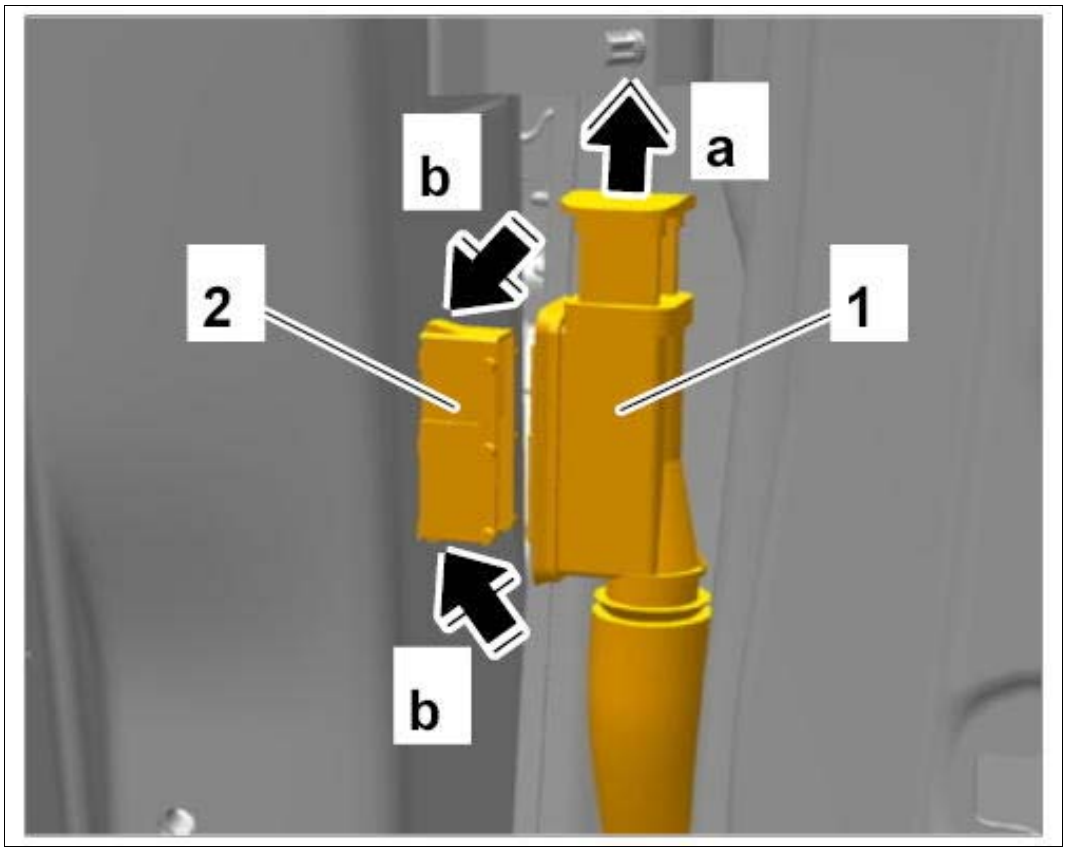

Courtesy of PORSCHE CARS NORTH AMERICA, INC.

4. Disconnect electric plug connection for wire harness for front left door at the bottom of the A-pillar.

    1. 4.1. Lever off locking mechanism for electric plug connection **-1-** using a plastic wedge in an upward direction **-a-** and pull off electric plug connection.

    2. 4.2. Release electric plug connection **-2-** (**-b-**) and press it into the A-pillar.

    Fig 2: Disconnecting Front Left Door Wire Harness Electric Plug Connection (Rear Right Door)

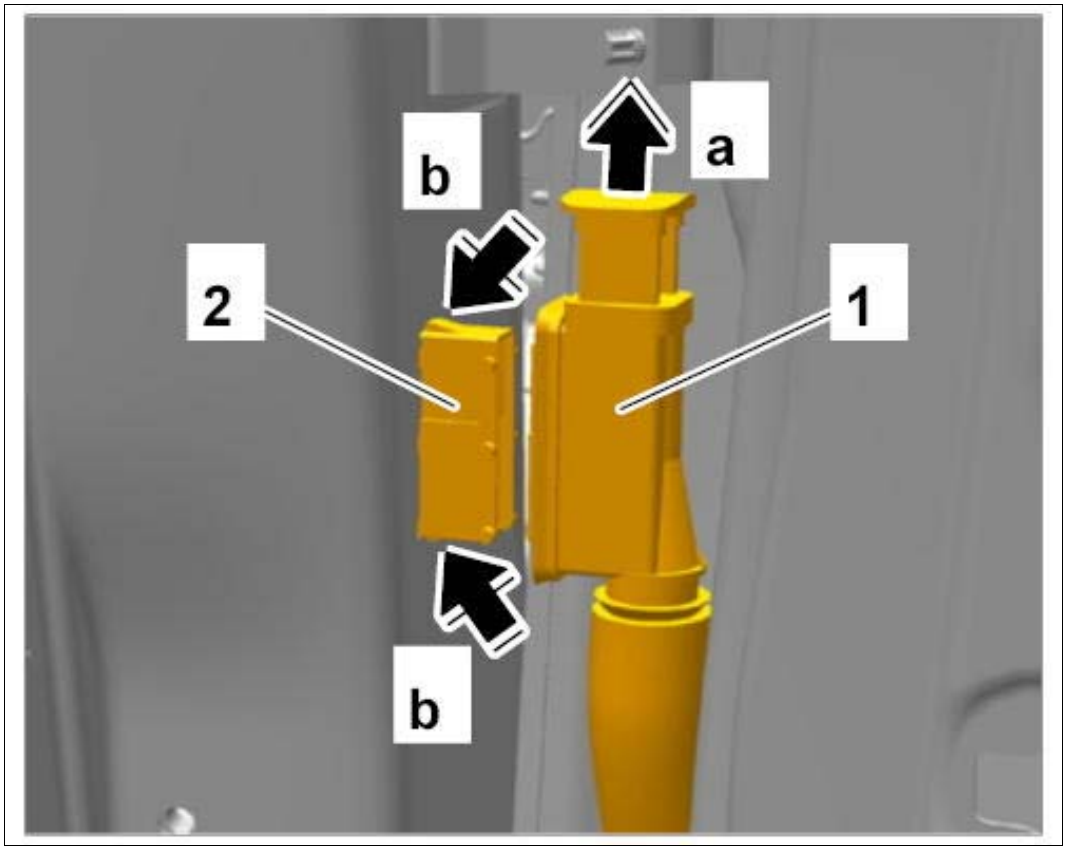

Courtesy of PORSCHE CARS NORTH AMERICA, INC.

5. Release and disconnect electric plug connections **-1-** for the dashboard wire harness at the left.

6. Screw off fastening nut **-2-** and remove ground lines from the ground point.

Fig 3: Disconnecting Electric Plug Connections For Dashboard Wire Harness And Ground Lines (Left)

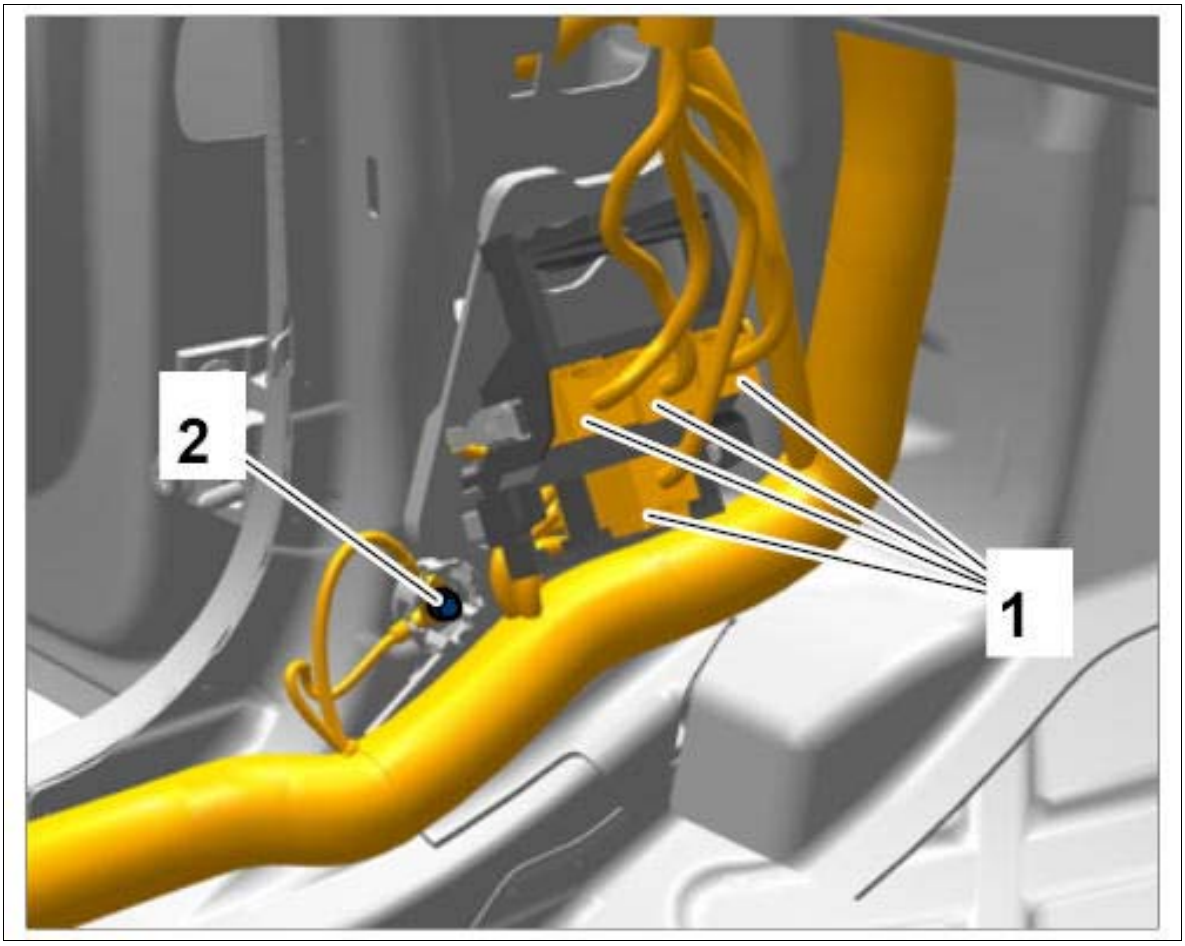

Courtesy of PORSCHE CARS NORTH AMERICA, INC.

7. Release and disconnect electric plug connection for combination sensor. → 456155 REPLACING COMBINATION SENSOR

8. Loosen connector bracket **-1-** under the driver's seat.

    1. 8.1. Screw off fastening nut **-2-** and remove connector bracket to the rear.

    2. 8.2. Screw off fastening nut **-3-** and remove ground line from ground point.

Fig 4: Loosening Connector Bracket And Ground Line Under Driver Seat (Passenger Seat)

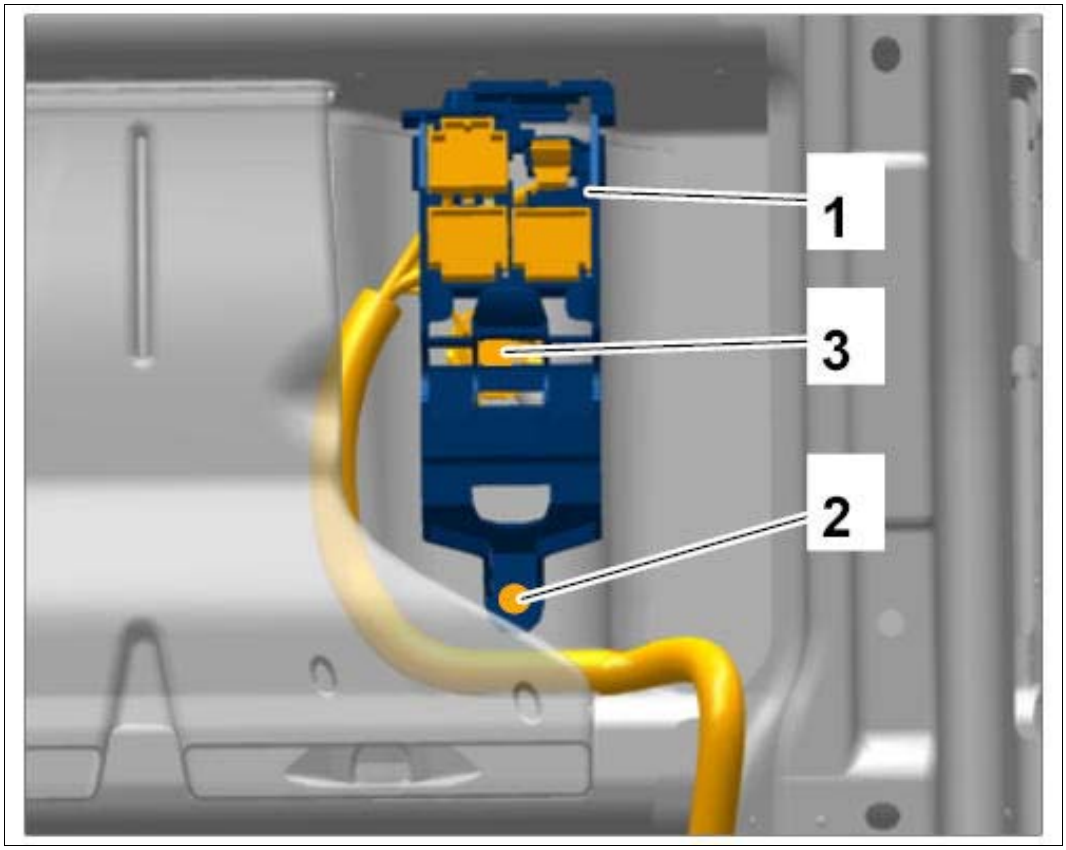

Courtesy of PORSCHE CARS NORTH AMERICA, INC.

9. Unclip main wire harness in passenger compartment at the left and all sub-parts from holders.
10. Press grommets on the sub-parts into the passenger compartment and guide all sub-parts carefully into the passenger compartment.

WM 970909 LOOSENING AND SECURING MAIN WIRE HARNESS IN PASSENGER COMPARTMENT AT THE LEFT (ALL MODELS) > SECURING MAIN WIRE HARNESS IN PASSENGER COMPARTMENT AT THE LEFT

NOTE: Incorrect handling of main wire harness

- *Risk of damage to lines*

→ The main wire harness contains all airbag lines, antenna lines and optical waveguides.

→ The main wire harness must not be separated and is always replaced as a complete wire harness when carrying out extensive repairs.

→ If individual lines are damaged, shut off these lines and install new lines. Lay the new lines along the

main wire harness and secure them to the main wire harness.

NOTE: Incorrect handling of optical waveguides

- *Risk of damage to optical waveguide*

→ Observe the requirements for working with and installing optical waveguides.

Information

Always comply with the regulations for handling ESD-sensitive components!

- Assembly work may only be carried out if the mechanic is wearing the working clothes and shoes approved by Porsche.
- The new part must only be removed from the ESD (electrostatic discharge) protective packaging just before installation and at the position at which the part is to be installed.
- Never touch the electric pins and plug contacts.

1. The main wire harness is secured in reverse order to the steps required for loosening it.
    1. 1.1. Make sure that the individual sub-parts of the wire harness in the passenger compartment at the left are not twisted or entangled.
    2. 1.2. Check that the wire harness is routed correctly and without tension so that no chafing occurs.
    3. 1.3. Clip all electric lines for the main wire harness in the passenger compartment at the left in securely at the designated positions.
    4. 1.4. Connect all electric plug connections until they engage securely.
    5. 1.5. Lock all electric plug connections by hand using the manual slide lock.
2. Tighten fastening nut securing ground line to the body. **Tightening torque 9 Nm (6.5 ftlb.)**

WM 970909 LOOSENING AND SECURING MAIN WIRE HARNESS IN PASSENGER COMPARTMENT AT THE LEFT (ALL MODELS) > SUBSEQUENT WORK

Vehicles with GPS antenna

1. Connect and lock electric plug connection on GPS antenna. → INSTALLING GPS ANTENNA .

    Vehicles with front camera

2. Connect and lock electric plug connection on front camera. → INSTALLING FRONT CAMERA .

    Vehicles with mobile communication antenna

3. Connect and lock electric plug connection on mobile communication antenna.

    Vehicles with DeNOx catalytic converter

4. Secure sub-part for DeNOx catalytic converter at the underbody.
    1. 4.1. Route electric line and clip it in.
    2. 4.2. Connect and lock electric plug connection on control unit for reducing agent.
    3. 4.3. Connect and lock electric plug connection for temperature sensor for exhaust gas downstream of DeNOx catalytic converter.
    4. 4.4. Connect and lock electric plug connection on NOx sensor with control unit.

Vehicles with air suspension

5. Secure sub-part for air suspension on the underbody.
    1. 5.1. Route electric line and clip it in.
    2. 5.2. Connect and lock electric plug connections on compressor for the levelling system. → 431519 REMOVING AND INSTALLING COMPRESSOR FOR LEVELLING SYSTEM - section on "Installing"
    3. 5.3. Connect and lock electric plug connection on valve unit (levelling system). → 432355 REPLACING VALVE UNIT (LEVELLING SYSTEM)

Vehicles with KESSY

6. Route electric line for KESSY antenna at the door entry guard on the left and connect and lock electric plug connection. → INSTALLING KESSY ANTENNA .

All vehicles

7. Secure the fuse box in the dashboard at the left → SECURING FUSE BOX IN THE DASHBOARD .
8. Install front lid release.
9. Install control unit for front-end electronics → INSTALLING CONTROL UNIT FOR FRONT-END ELECTRONICS .
10. Connect and lock electric plug connection on (central) headlight control unit → INSTALLING (CENTRAL) HEADLIGHT CONTROL UNIT .
11. Install rear inner door sill trim at the left → INSTALLING REAR INNER DOOR SILL TRIM .
12. Fit insulating mat under the rear seat.
13. Fit carpet → INSTALLING CARPET .
14. Install dashboard → INSTALLING DASHBOARD .
15. Install headliner → INSTALLING HEADLINER .
16. Connect ground line to the battery → 2X00IN WORK INSTRUCTIONS AFTER DISCONNECTING THE BATTERY .

WM 970909 LOOSENING AND SECURING MAIN WIRE HARNESS IN PASSENGER

COMPARTMENT AT THE RIGHT (ALL MODELS) > TECHNICAL VALUES

Location	Description	Type	Basic value	Tolerance 1	Tolerance 2
Ground line to ground pin in body	Nut, M6	Tightening torque	9 Nm (6.5 ftlb.)		

WM 970909 LOOSENING AND SECURING MAIN WIRE HARNESS IN PASSENGER COMPARTMENT AT THE RIGHT (ALL MODELS) > PRELIMINARY WORK

1. Remove carpet. → 704119 REMOVING AND INSTALLING CARPET .
2. Remove insulating mat under the rear seat.
3. Release and disconnect electric plug connection on gateway control unit. → 903519 REMOVING AND INSTALLING GATEWAY CONTROL UNIT .
4. Release and disconnect electric plug connection on fuel pump control unit. → 207019 REMOVING AND INSTALLING CONTROL UNIT FOR FUEL PUMP .
5. Remove glove compartment. → 681519 REMOVING AND INSTALLING GLOVE COMPARTMENT .
6. Remove front side-section trim panel at the right. → 702419 REMOVING AND INSTALLING FRONT SIDE-SECTION TRIM PANEL .
7. Remove rear inner door sill trim at the right. → 680519 REMOVING AND INSTALLING REAR INNER DOOR SILL TRIM .
8. Remove PCM display and operator control unit. → 911019 REMOVING AND INSTALLING PCM DISPLAY AND OPERATOR CONTROL UNIT .
9. Disconnect electric plug connection on airbag triggering unit. → 695319 REMOVING AND INSTALLING TRIGGERING UNIT FOR AIRBAG .

   Vehicles with KESSY

10. Disconnect electric plug connection for KESSY antenna at the right door entry guard and expose electric line. → 966719 REMOVING AND INSTALLING KESSY ANTENNA .

    Vehicles with auxiliary heating

11. Disconnect electric plug connection on fuel pump for auxiliary heating and expose electric line.

    → 824519 REMOVING AND INSTALLING FUEL PUMP FOR AUXILIARY HEATING .

WM 970909 LOOSENING AND SECURING MAIN WIRE HARNESS IN PASSENGER COMPARTMENT AT THE RIGHT (ALL MODELS) > LOOSENING MAIN WIRE HARNESS IN PASSENGER COMPARTMENT AT THE RIGHT

NOTE: Incorrect handling of main wire harness

- *Risk of damage to lines*

→ The main wire harness contains all airbag lines, antenna lines and optical waveguides.

→ The main wire harness must not be separated and is always replaced as a complete wire harness when carrying out extensive repairs.

→ If individual lines are damaged, shut off these lines and install new lines. Lay the new lines along the main wire harness and secure them to the main wire harness.

NOTE: Incorrect handling of optical waveguides

- *Risk of damage to optical waveguide*

→ Observe the requirements for working with and installing optical waveguides.

Fig 1: Locating Passenger Compartment Main Wire Harness Position (Right)



Courtesy of PORSCHE CARS NORTH AMERICA, INC.

1. Main wire harness in passenger compartment at the right

1. Screw off fastening nut **-1-** and remove ground lines **-2-** from ground point.

Fig 2: Disconnecting Ground Lines

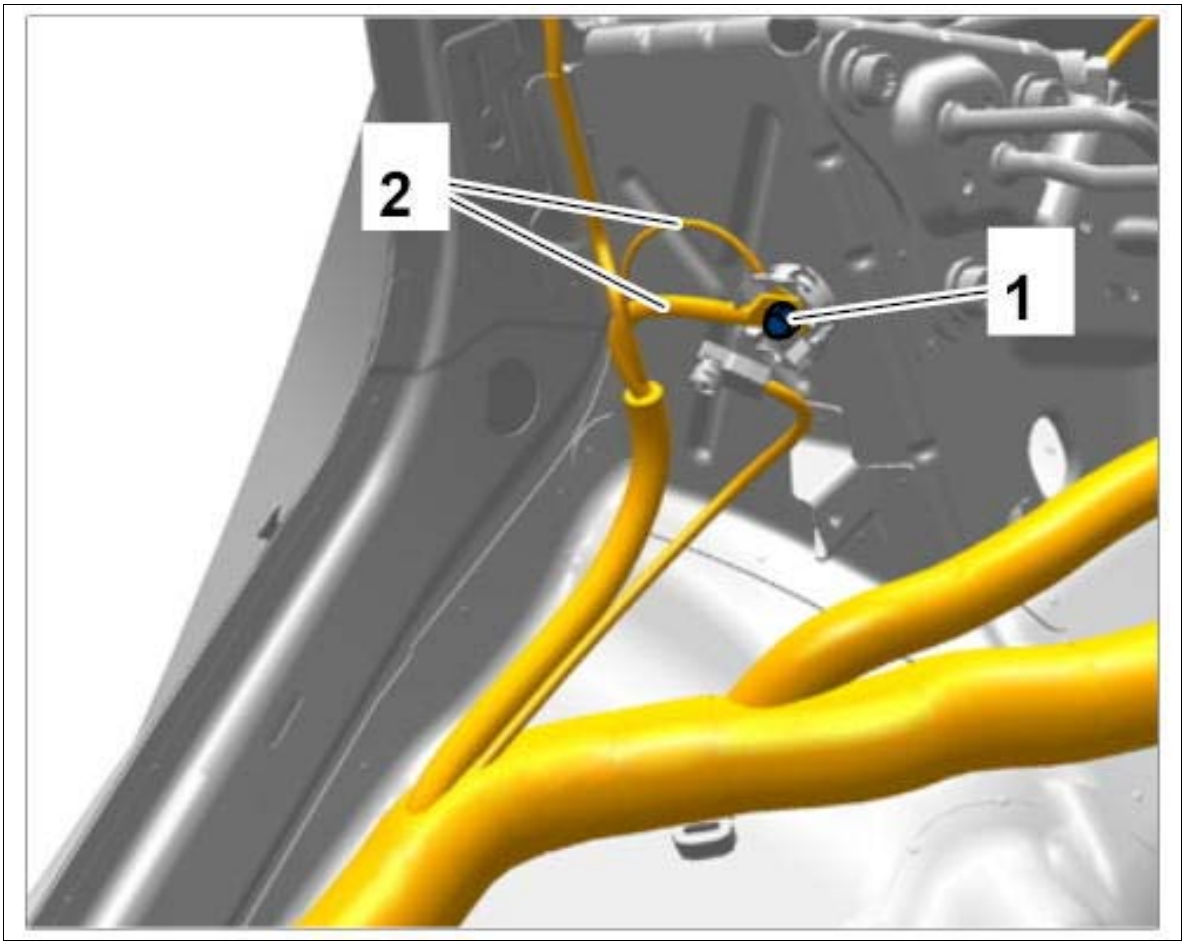

Courtesy of PORSCHE CARS NORTH AMERICA, INC.

2. Release and disconnect electric plug connection on airbag sensor on inner wheel arch at the rear right. → 695119 REMOVING AND INSTALLING AIRBAG SENSOR

3. Release and disconnect electric plug connection on seat-belt pretensioner on passenger's side. → 691119 REMOVING AND INSTALLING FRONT THREE-POINT BELT

4. Disconnect electric plug connection on wire harness for door at the rear right in the B-pillar.

    1. 4.1. Lever off locking mechanism for electric plug connection **-1-** using a plastic wedge in an upward direction **-a-** and pull off electric plug connection.

    2. 4.2. Release electric plug connection **-2-** (**-b-**) and press it into the B-pillar.

Fig 3: Disconnecting Electric Plug Connection On Rear Right Door Wire Harness

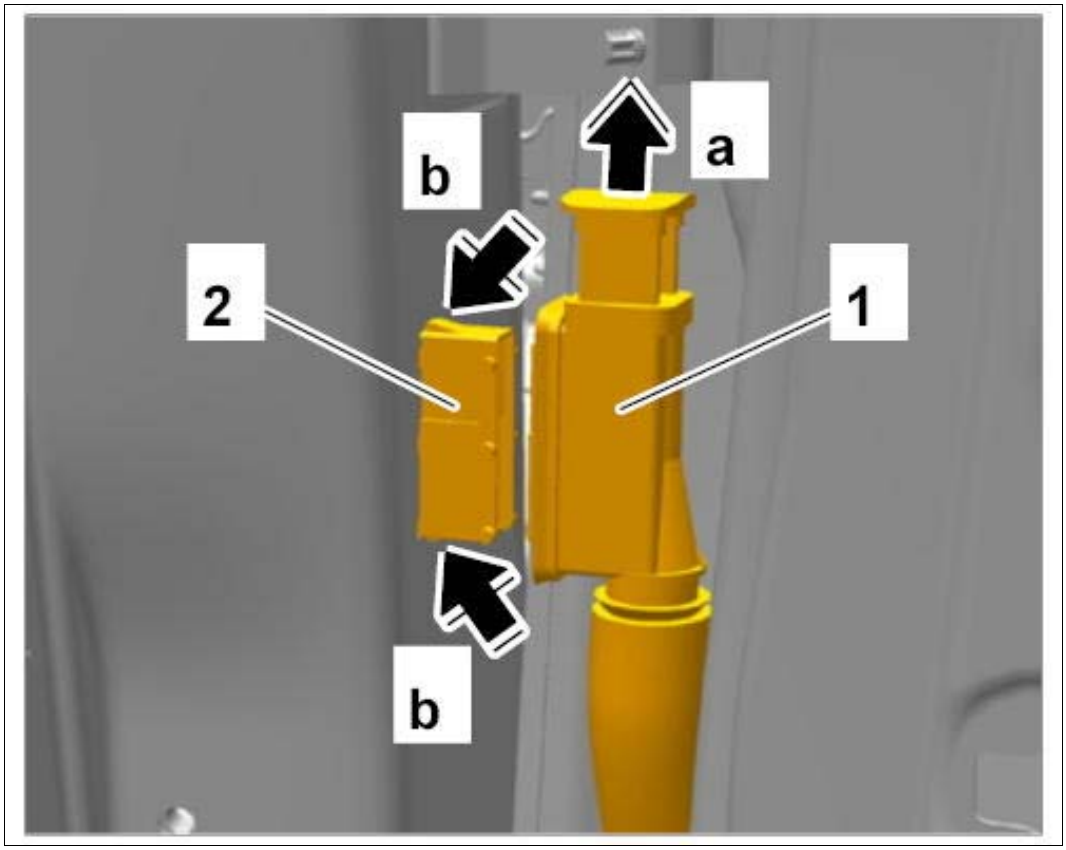

Courtesy of PORSCHE CARS NORTH AMERICA, INC.

5. Remove sound absorber **-1-** on wire harness for front right door.

Fig 4: Removing Sound Absorber On Front Right Door Wire Harness

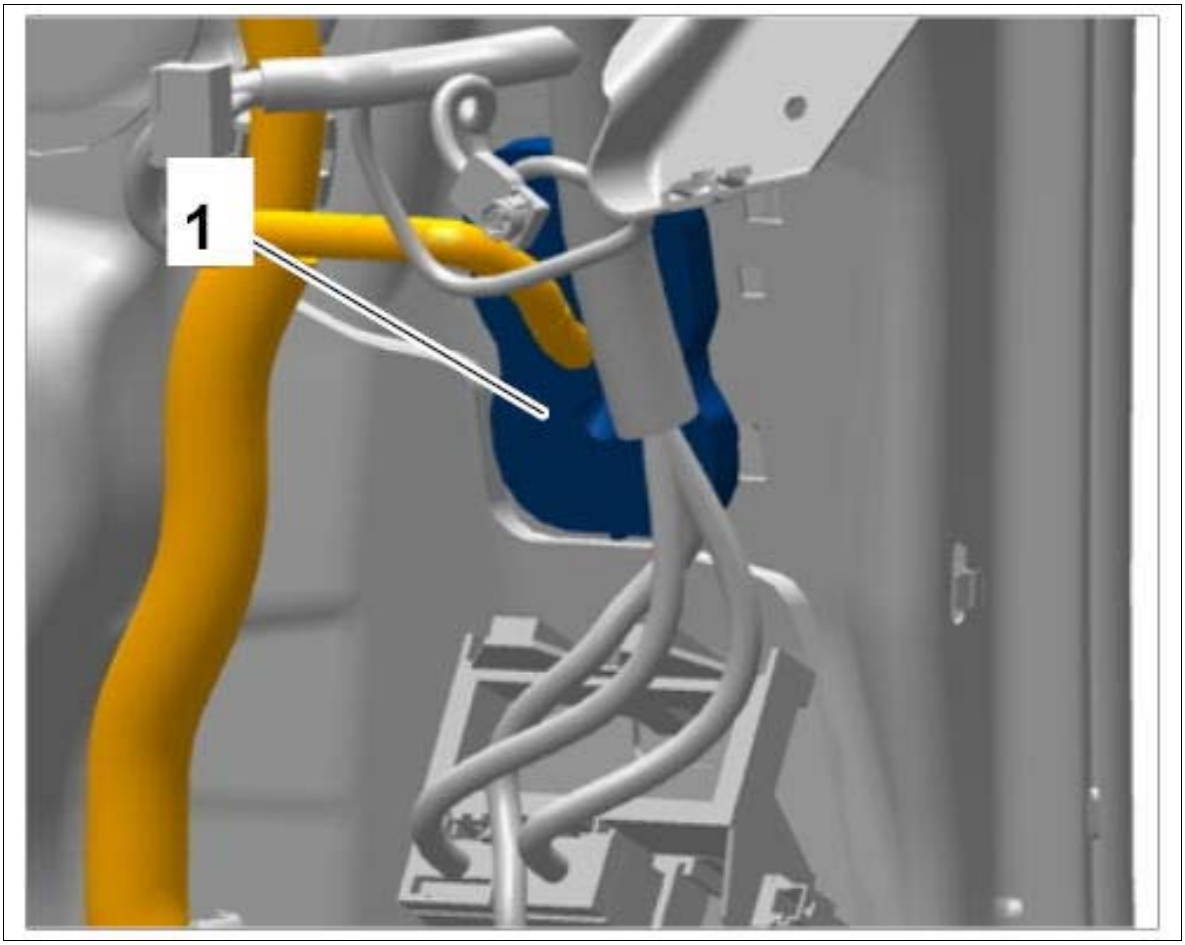

Courtesy of PORSCHE CARS NORTH AMERICA, INC.

6. Disconnect electric plug connection on wire harness for front right door at the bottom of the A-pillar.

    1. 6.1. Lever off locking mechanism for electric plug connection **-1-** using a plastic wedge in an upward direction **-a-** and pull off electric plug connection.

    2. 6.2. Release electric plug connection **-2-** (**-b-**) and press it into the A-pillar.

Fig 5: Disconnecting Electric Plug Connection On Front Right Door Wire Harness

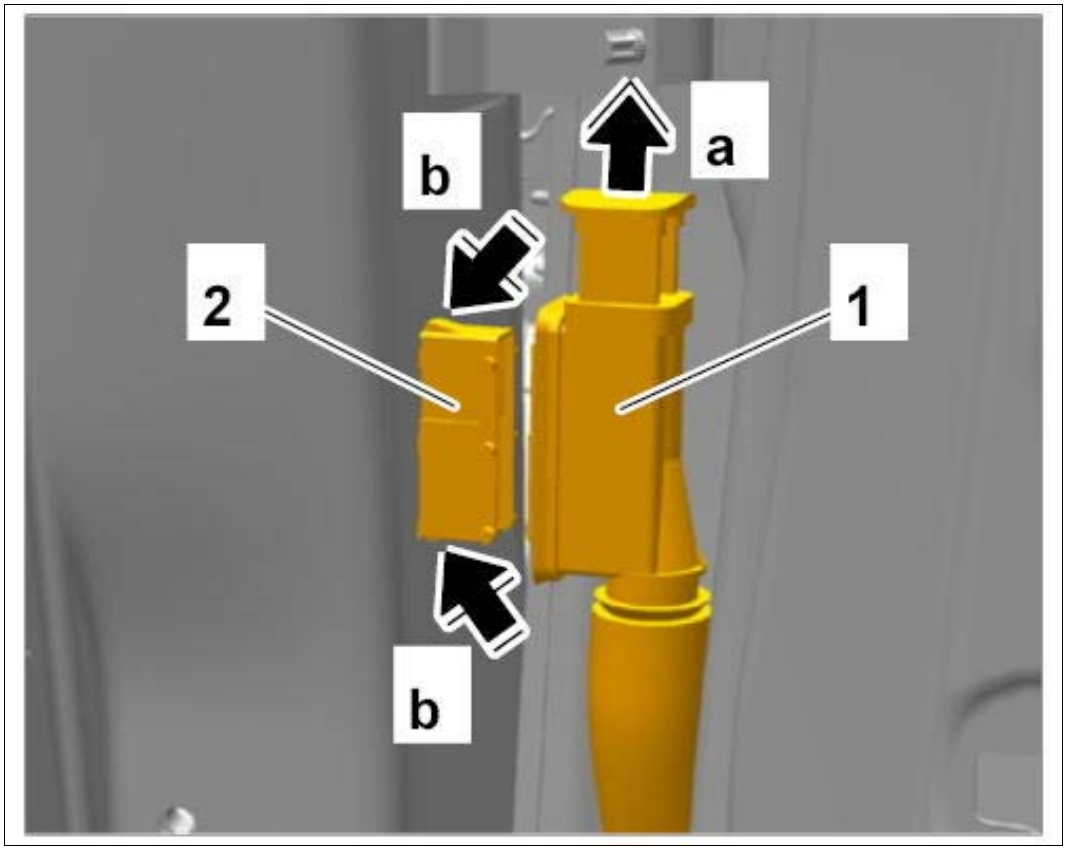

Courtesy of PORSCHE CARS NORTH AMERICA, INC.

7. Release and disconnect electric plug connections **-1-** for the dashboard wire harness at the right.
8. Screw off fastening nut **-2-** and remove ground lines from the ground point.

Fig 6: Disconnecting Electric Plug Connections On Dashboard Wire Harness And Ground Lines (Right)

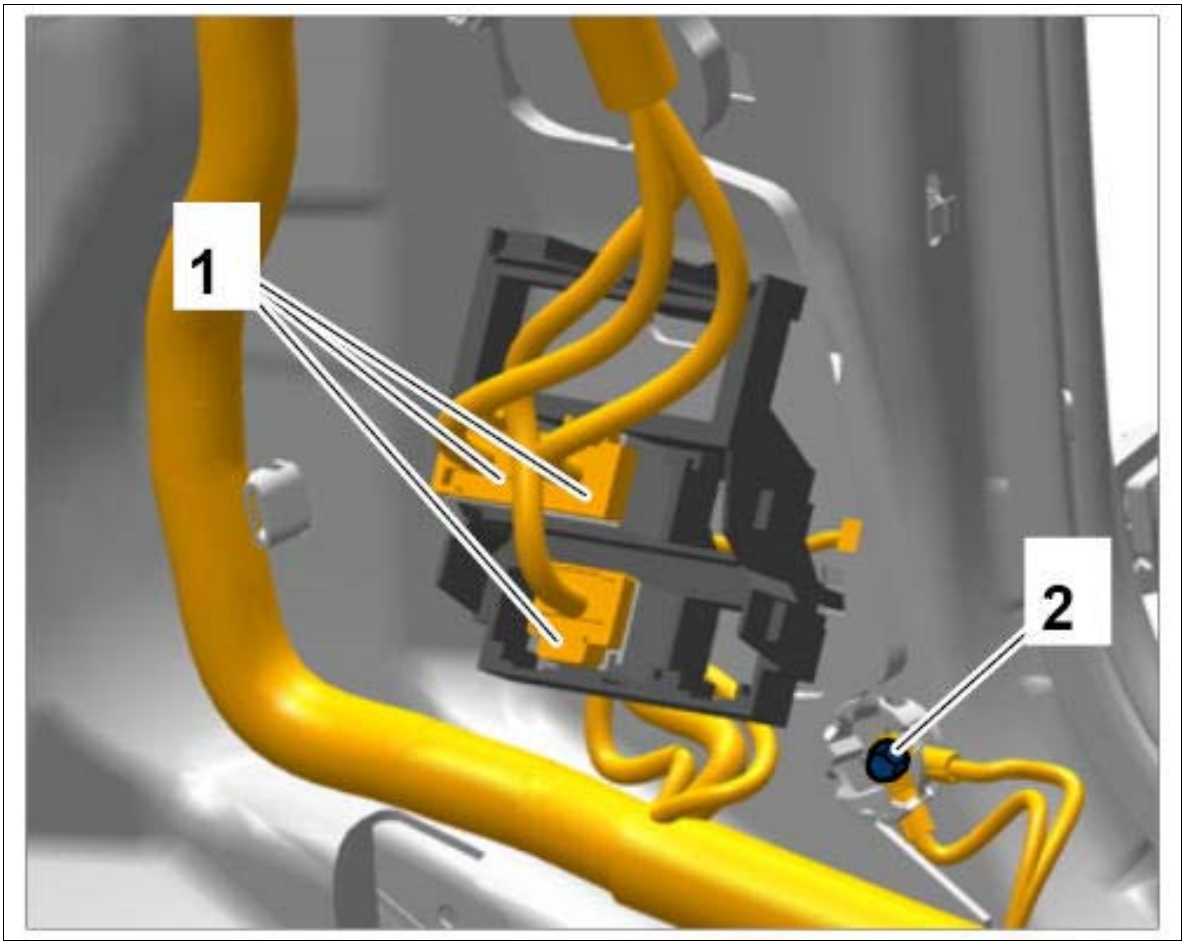

Courtesy of PORSCHE CARS NORTH AMERICA, INC.

9. Loosen connector bracket **-1-** under the passenger's seat.
    1. 9.1. Screw off fastening nut **-2-** and remove connector bracket to the rear.
    2. 9.2. Screw off fastening nut **-3-** and remove ground line from ground point.

Fig 7: Loosening Connector Bracket And Ground Line Under Passenger Seat

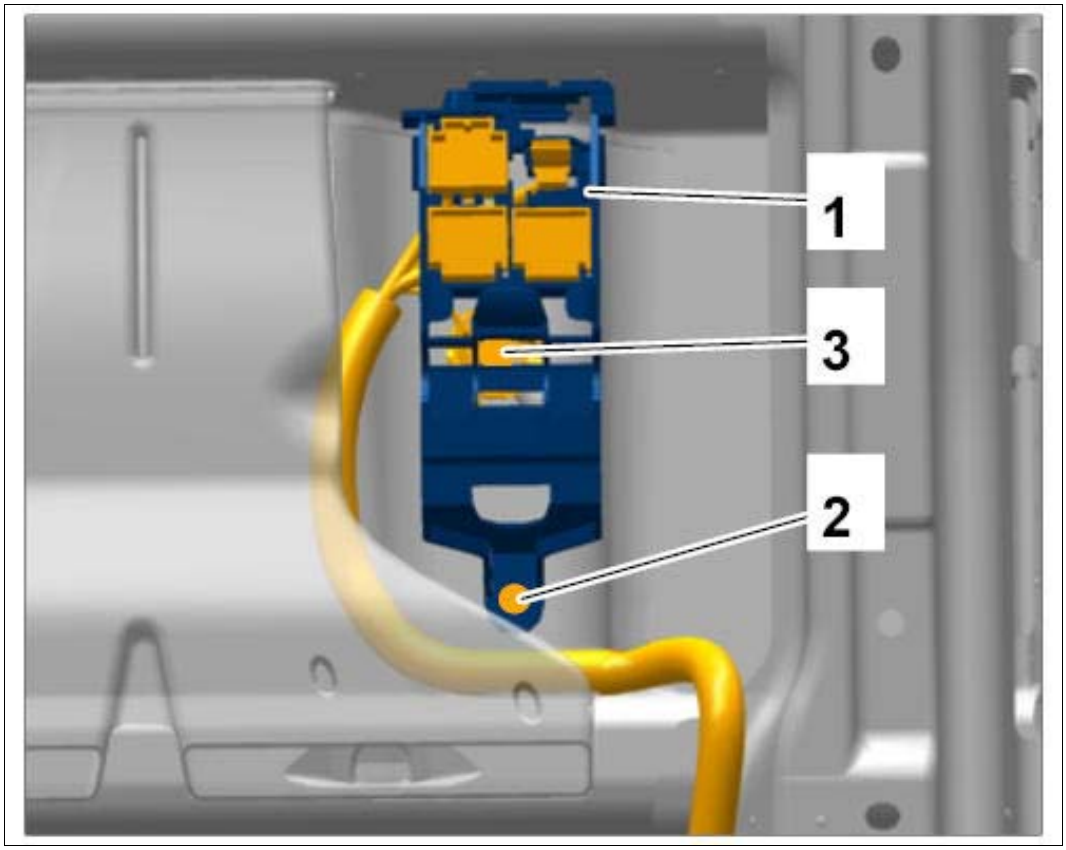

Courtesy of PORSCHE CARS NORTH AMERICA, INC.

10. Screw off fastening nuts **-1-** and remove ground lines at ground points.

Fig 8: Disconnecting Center Tunnel Ground Lines

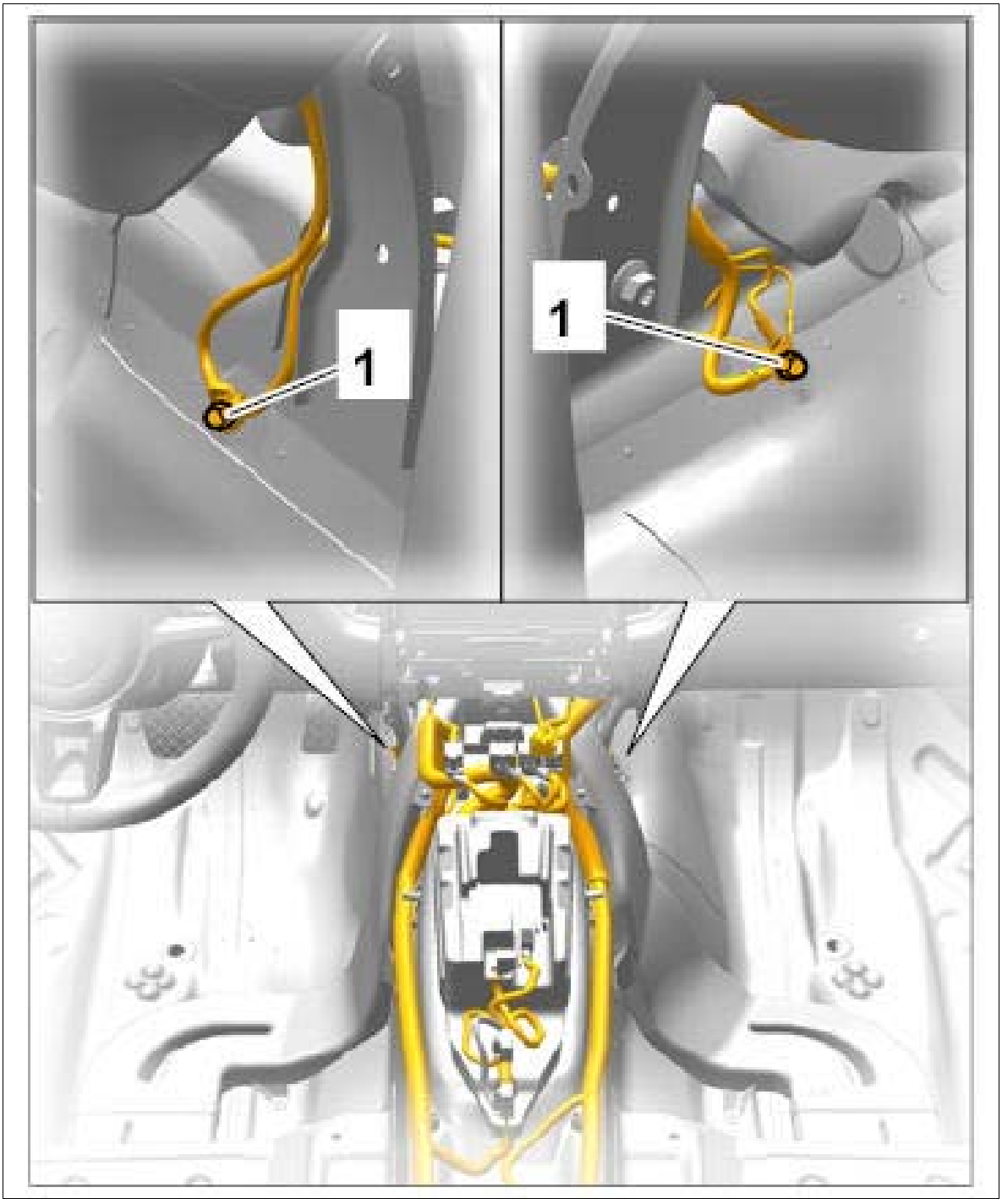

Courtesy of PORSCHE CARS NORTH AMERICA, INC.

11. Unclip main wire harness in passenger compartment at the right and all sub-parts from holders.
12. Press grommets on the sub-parts into the passenger compartment and guide all sub-parts carefully into the passenger compartment.

WM 970909 LOOSENING AND SECURING MAIN WIRE HARNESS IN PASSENGER

COMPARTMENT AT THE RIGHT (ALL MODELS) > SECURING MAIN WIRE HARNESS IN PASSENGER COMPARTMENT AT THE RIGHT

NOTE: Incorrect handling of main wire harness

- *Risk of damage to lines*

→ The main wire harness contains all airbag lines, antenna lines and optical waveguides.

→ The main wire harness must not be separated and is always replaced as a complete wire harness when carrying out extensive repairs.

→ If individual lines are damaged, shut off these lines and install new lines. Lay the new lines along the main wire harness and secure them to the main wire harness.

NOTE: Incorrect handling of optical waveguides

- *Risk of damage to optical waveguide*

→ Observe the requirements for working with and installing optical waveguides.

1. The main wire harness is secured in reverse order to the steps required for loosening it.
    1. 1.1. Make sure that the individual sub-parts of the wire harness in the passenger compartment at the right are not twisted or entangled.
    2. 1.2. Check that the wire harness is routed correctly and without tension so that no chafing occurs.
    3. 1.3. Clip all electric lines for the main wire harness in the passenger compartment at the right in securely at the designated positions.
    4. 1.4. Connect all electric plug connections until they engage securely.
    5. 1.5. Lock all electric plug connections by hand using the manual slide lock.
2. Tighten fastening nuts securing ground lines to the body. **Tightening torque 9 Nm (6.5 ftlb.)**

WM 970909 LOOSENING AND SECURING MAIN WIRE HARNESS IN PASSENGER COMPARTMENT AT THE RIGHT (ALL MODELS) > SUBSEQUENT WORK

Vehicles with auxiliary heating

1. Route electric line for fuel pump for auxiliary heating, clip it in and connect and lock electric plug connection. → INSTALLING FUEL PUMP FOR AUXILIARY HEATING .

    Vehicles with KESSY

2. Route electric line for KESSY antenna at the door entry guard on the right, clip it in and connect and lock electric plug connection. → INSTALLING KESSY ANTENNA .

   All vehicles

3. Connect electric plug connection to airbag triggering unit and lock it → INSTALLING AIRBAG TRIGGERING UNIT .
4. Install PCM display and operator control unit → INSTALLING PCM DISPLAY AND OPERATOR CONTROL UNIT .
5. Install rear inner door sill trim at the right → INSTALLING REAR INNER DOOR SILL TRIM .
6. Install front side-section trim panel at the right → INSTALLING FRONT SIDE-SECTION TRIM PANEL .
7. Install glove compartment → INSTALLING GLOVE COMPARTMENT .
8. Connect electric plug connection to control unit for fuel pump and lock it → INSTALLING CONTROL UNIT FOR FUEL PUMP .
9. Connect electric plug connection to the gateway control unit and lock it → INSTALLING GATEWAY CONTROL UNIT .
10. Fit insulating mat under the rear seat.
11. Fit carpet → INSTALLING CARPET .

WM 970919 REMOVING AND INSTALLING MAIN WIRE HARNESS (ALL MODELS) > INFORMATION

Fig 1: Overview Of Main Wire Harness Position

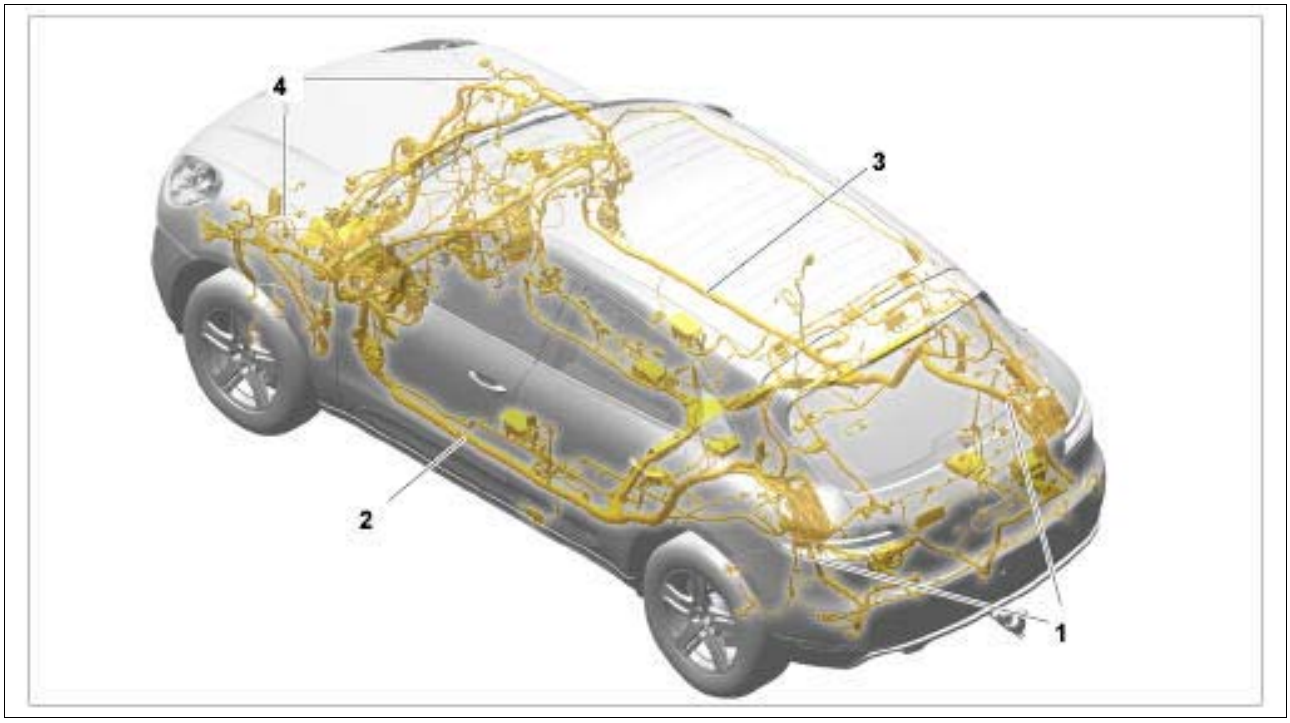

Courtesy of PORSCHE CARS NORTH AMERICA, INC.

1. Main wire harness in luggage compartment
2. Main wire harness in passenger compartment at the left
3. Main wire harness in passenger compartment at the right
4. Main wire harness in engine compartment

WM 970919 REMOVING AND INSTALLING MAIN WIRE HARNESS (ALL MODELS) > PRELIMINARY WORK

1. Disconnect main wire harness in luggage compartment. → 970909 LOOSENING AND SECURING MAIN WIRE HARNESS IN LUGGAGE COMPARTMENT - section on "Loosening"
2. Disconnect main wire harness in passenger compartment at the left. → 970909 LOOSENING AND SECURING MAIN WIRE HARNESS IN PASSENGER COMPARTMENT AT THE LEFT - section on "Loosening"
3. Disconnect main wire harness in passenger compartment at the right. → 970909 LOOSENING AND SECURING MAIN WIRE HARNESS IN PASSENGER COMPARTMENT AT THE RIGHT - section on "Loosening"
4. Disconnect main wire harness in engine compartment. → 970909 LOOSENING AND SECURING MAIN WIRE HARNESS IN ENGINE COMPARTMENT - section on "Loosening"

WM 970919 REMOVING AND INSTALLING MAIN WIRE HARNESS (ALL MODELS) > REMOVING MAIN WIRE HARNESS

NOTE: Incorrect handling of main wire harness

- *Risk of damage to lines*

→ The main wire harness contains all airbag lines, antenna lines and optical waveguides.

→ The main wire harness must not be separated and is always replaced as a complete wire harness when carrying out extensive repairs.

→ If individual lines are damaged, shut off these lines and install new lines. Lay the new lines along the main wire harness and secure them to the main wire harness.

NOTE: Incorrect handling of optical waveguides

- *Risk of damage to optical waveguide*

→ Observe the requirements for working with and installing optical waveguides.

1. Mask door sill and door panel for left rear door.
2. Get another person to help you to remove the main wire harness with all its sub-parts up to the door sill for the left rear door from the vehicle.

WM 970919 REMOVING AND INSTALLING MAIN WIRE HARNESS (ALL MODELS) > INSTALLING MAIN WIRE HARNESS

NOTE: Incorrect handling of main wire harness

- *Risk of damage to lines*

→ The main wire harness contains all airbag lines, antenna lines and optical waveguides.

→ The main wire harness must not be separated and is always replaced as a complete wire harness when carrying out extensive repairs.

→ If individual lines are damaged, shut off these lines and install new lines. Lay the new lines along the main wire harness and secure them to the main wire harness.

NOTE: Incorrect handling of optical waveguides

- *Risk of damage to optical waveguide*

→ Observe the requirements for working with and installing optical waveguides.

1. Installation is performed in reverse order to removal.

WM 970919 REMOVING AND INSTALLING MAIN WIRE HARNESS (ALL MODELS) > SUBSEQUENT WORK

1. Secure main wire harness in engine compartment → SECURING MAIN WIRE HARNESS IN ENGINE COMPARTMENT AT THE RIGHT and SECURING MAIN WIRE HARNESS IN ENGINE COMPARTMENT AT THE LEFT .
2. Secure main wire harness in passenger compartment at the left → SECURING MAIN WIRE HARNESS IN PASSENGER COMPARTMENT AT THE LEFT .
3. Secure main wire harness in passenger compartment at the right → SECURING MAIN WIRE HARNESS IN PASSENGER COMPARTMENT AT THE RIGHT .
4. Secure main wire harness in luggage compartment → SECURING MAIN WIRE HARNESS IN LUGGAGE COMPARTMENT AT THE RIGHT and SECURING MAIN WIRE HARNESS IN LUGGAGE COMPARTMENT AT THE LEFT .

WM 971519 REMOVING AND INSTALLING FRONT WIRE HARNESS (ALL MODELS) > PRELIMINARY WORK

1. Remove front apron. → WM 631519 REMOVING AND INSTALLING FRONT APRON (ALL MODELS) .

WM 971519 REMOVING AND INSTALLING FRONT WIRE HARNESS (ALL MODELS) > REMOVING FRONT WIRE HARNESS

1. Front wire harness

Fig 1: Identifying Front Wire Harness (Shown On Turbo Vehicle)

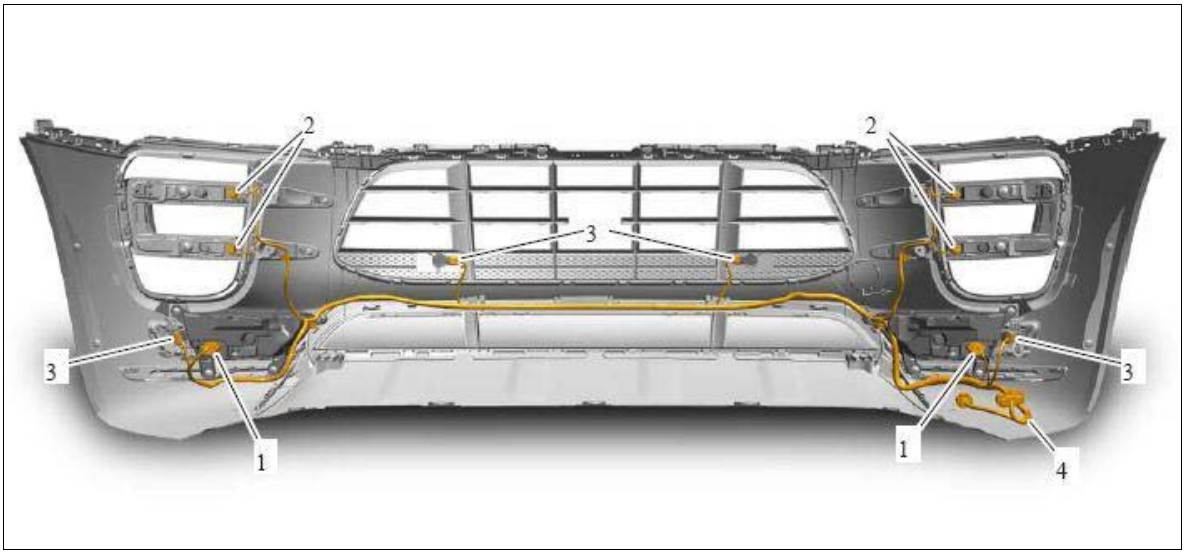

Courtesy of PORSCHE CARS NORTH AMERICA, INC.

1. Fog lights
2. Auxiliary headlights
3. ParkAssist sensor
4. Front wire harness

1. Release and disconnect electric plug connections **-1-** on left and right fog lights.
2. Release and disconnect electric plug connections **-2-** on left and right auxiliary headlights
3. Release and disconnect electric plug connections **-3-** on all ParkAssist sensors.

Information

1. Some of the repair illustrations show only one side of the vehicle.
2. Naturally, some steps also have to be performed on the opposite side of the vehicle as well.

4. Loosen all holders **-5-** for the front wiring harness **-4-** from the front apron and remove the front wiring harness.

Fig 2: Identifying Front Wire Harness Left Side (Shown On Turbo Vehicle)

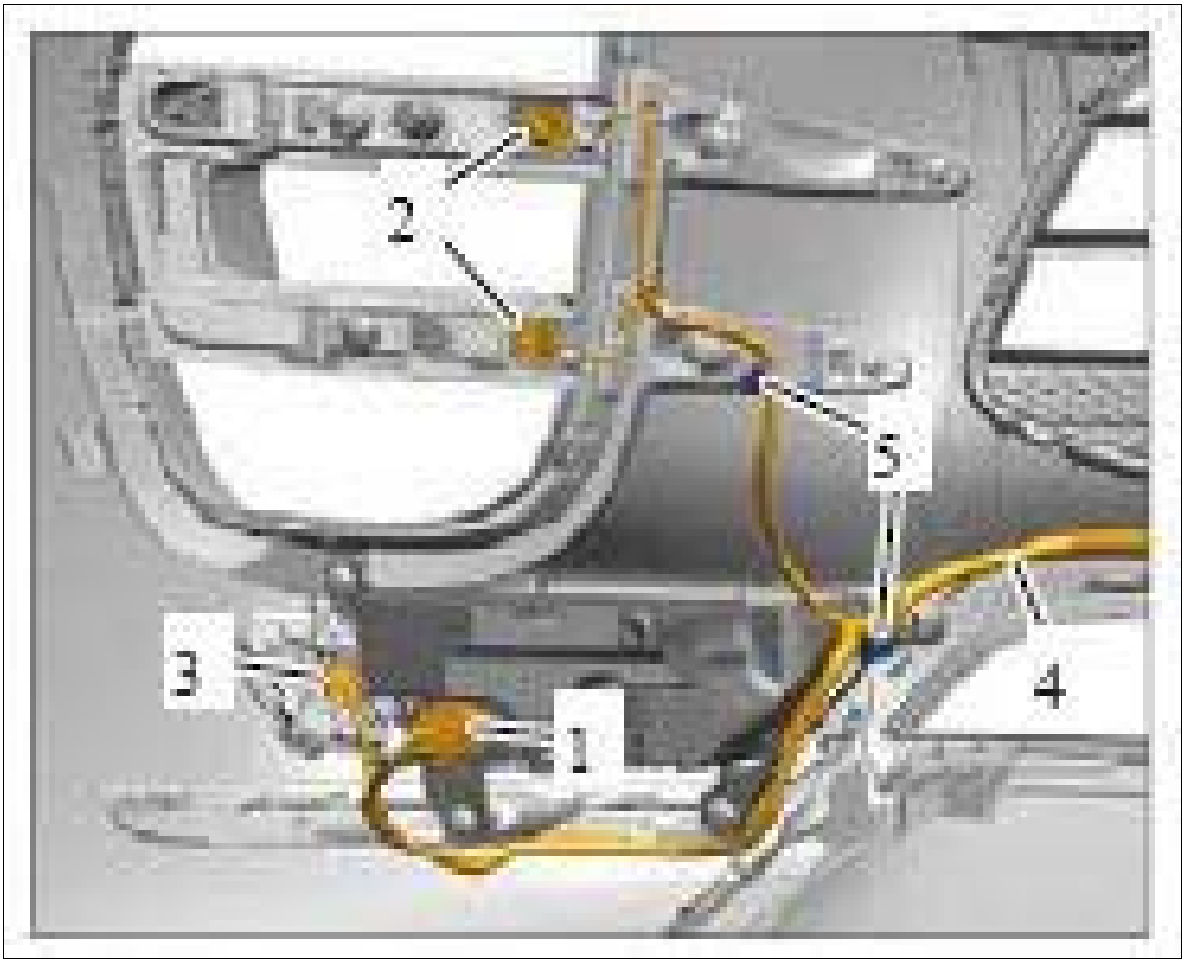

Courtesy of PORSCHE CARS NORTH AMERICA, INC.

WM 971519 REMOVING AND INSTALLING FRONT WIRE HARNESS (ALL MODELS) > INSTALLING FRONT WIRE HARNESS

1. Installation is performed in reverse order to removal.

WM 971519 REMOVING AND INSTALLING FRONT WIRE HARNESS (ALL MODELS) > SUBSEQUENT WORK

1. Install front apron. → INSTALLING FRONT APRON .

WM 971619 REMOVING AND INSTALLING WIRE HARNESS FOR FRONT-END (ALL MODELS) > PRELIMINARY WORK

1. Remove front bumper. → 631019 REMOVING AND INSTALLING FRONT BUMPER .

WM 971619 REMOVING AND INSTALLING WIRE HARNESS FOR FRONT-END (ALL MODELS) > REMOVING WIRE HARNESS FOR FRONT-END

Information

- Some of the repair illustrations show only one side of the vehicle.
- Naturally, some steps also have to be performed on the opposite side of the vehicle as well.

Fig 1: Identifying Front-End Wire Harness

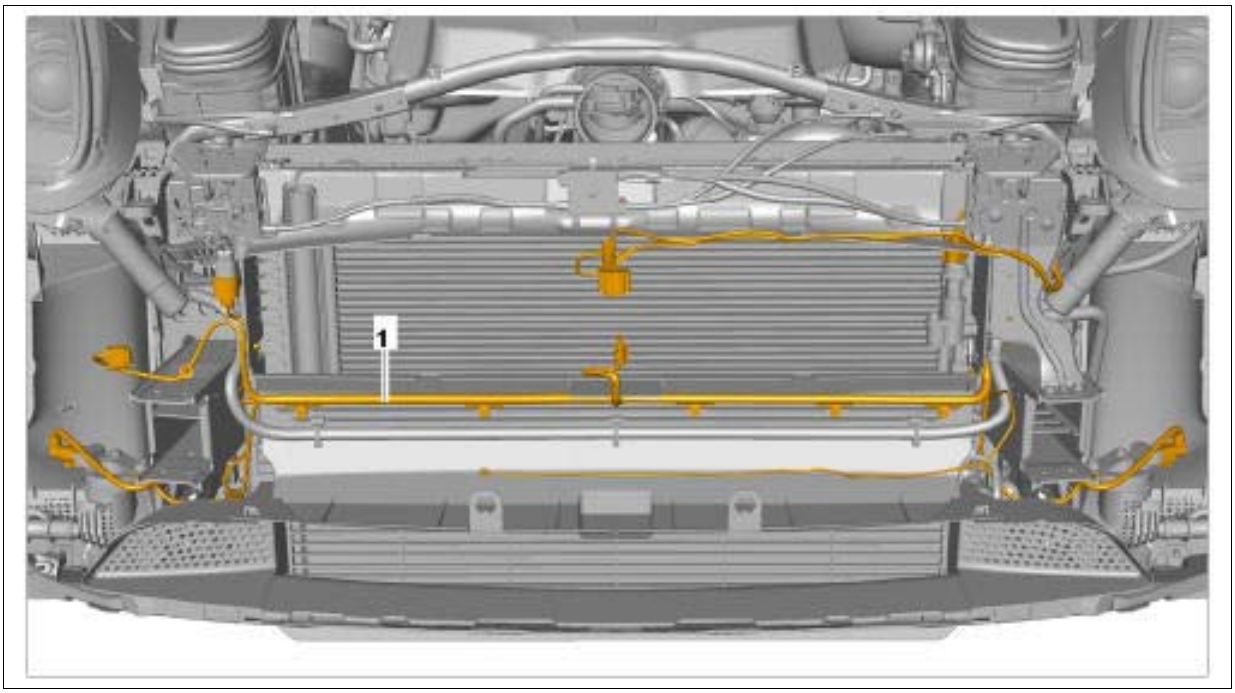

Courtesy of PORSCHE CARS NORTH AMERICA, INC.

1. Wire harness for front-end

1. Switch off ignition and pull remote control out of ignition lock.
2. Release electric plug connection **-1-** at the microswitch for the front lid lock at the left and right and disconnect it. → 558519 REMOVING AND INSTALLING MICROSWITCH FOR FRONT LID LOCK .
3. Release electric plug connection **-2-** at the garage door opener control unit and disconnect it. → 967919 REMOVING AND INSTALLING GARAGE DOOR OPENER CONTROL UNIT .
4. Release electric plug connection **-3-** at the horn at the left and right and disconnect it. → 905019 REMOVING AND INSTALLING HORN .
5. Release electric plug connection **-4-** at the outside-temperature sensor and disconnect it. → 916819 REMOVING AND INSTALLING OUTSIDE-TEMPERATURE SENSOR .

Fig 2: Disconnecting Electric Plug Connections

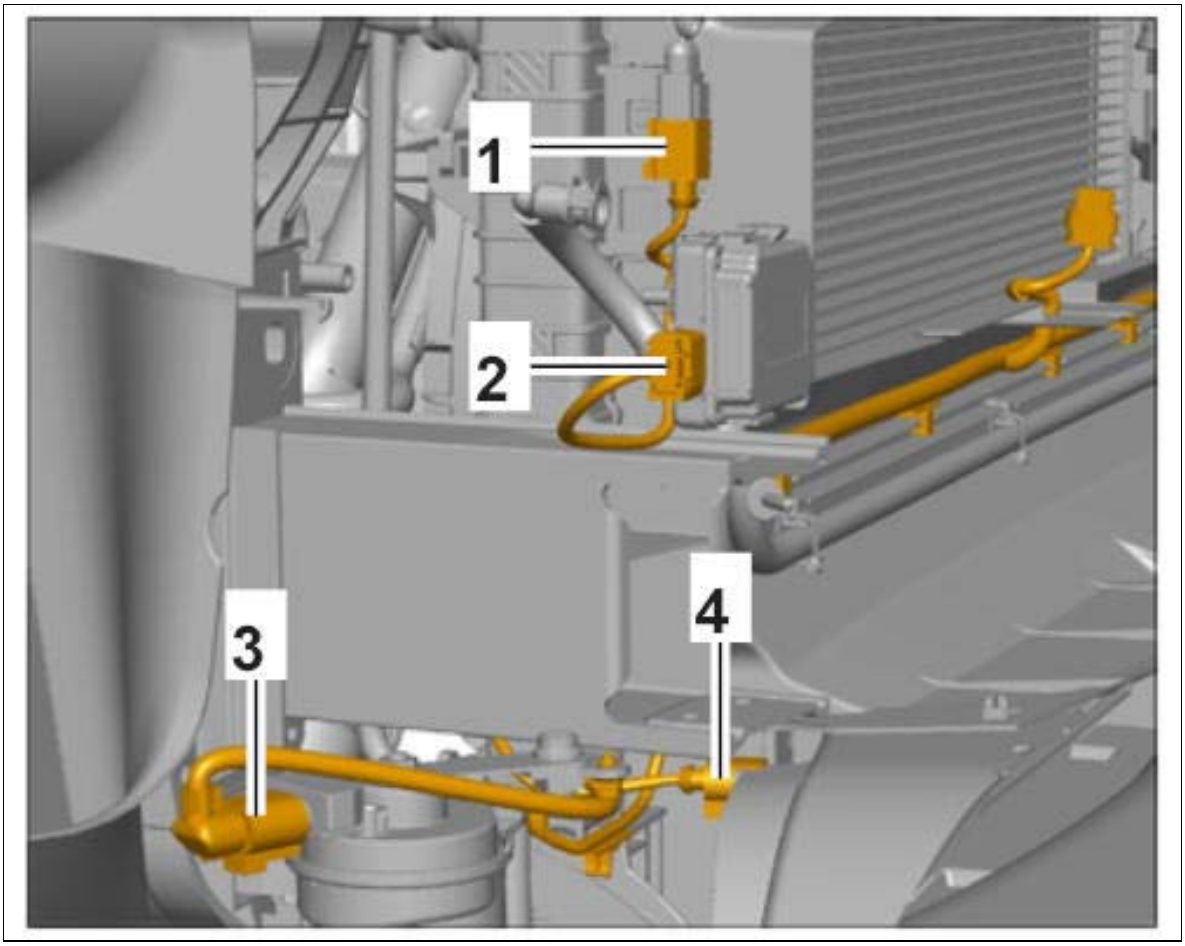

Courtesy of PORSCHE CARS NORTH AMERICA, INC.

6. Release electric plug connection **-1-** at the air-conditioning pressure switch and disconnect it. → 878319 REMOVING AND INSTALLING PRESSURE SWITCH .

Fig 3: Disconnecting Electric Plug Connection

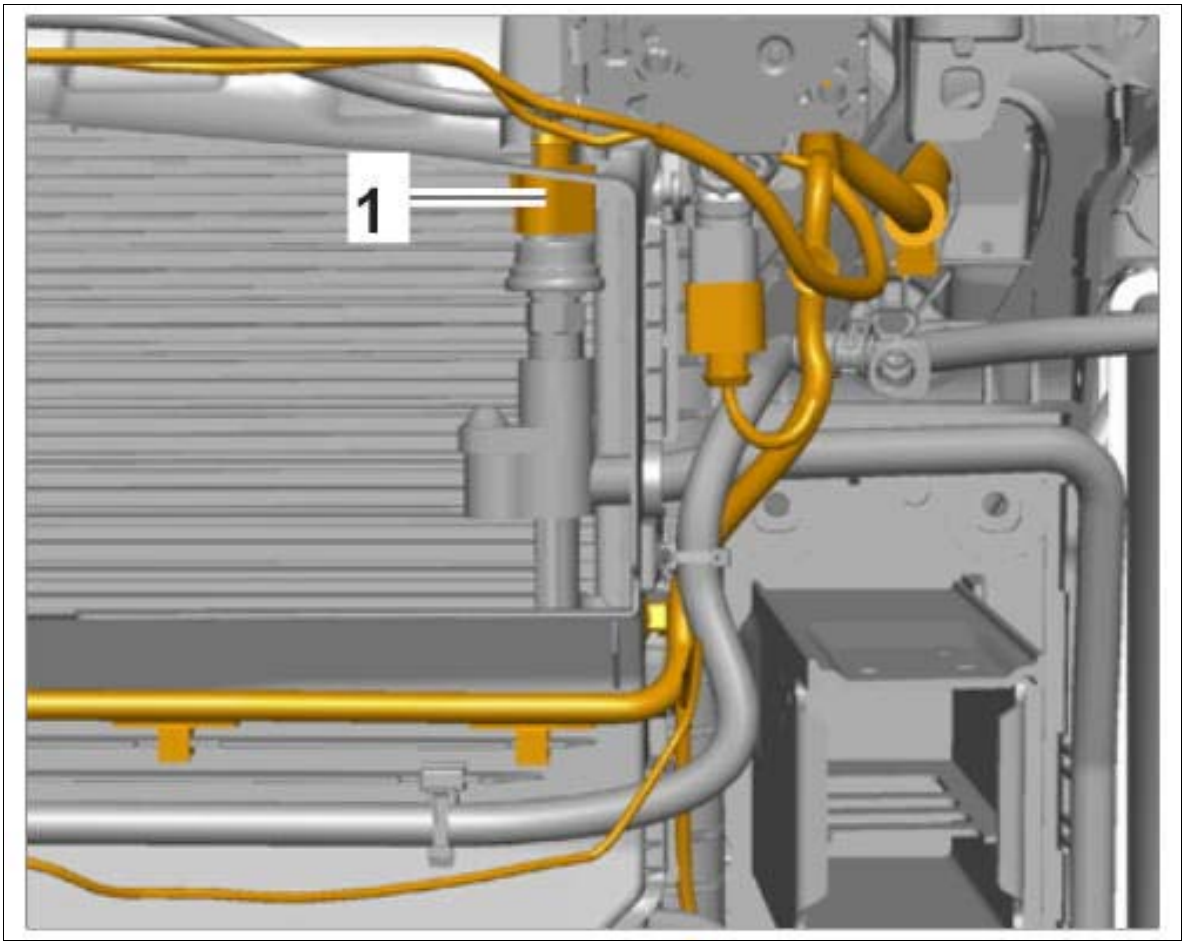

Courtesy of PORSCHE CARS NORTH AMERICA, INC.

7. Release electric plug connections **-1-** under the left headlight and disconnect them.
8. Unclip plug connection **-2-** for antenna line from the holder and release and disconnect it.

Fig 4: Disconnecting Electric Plug Connections

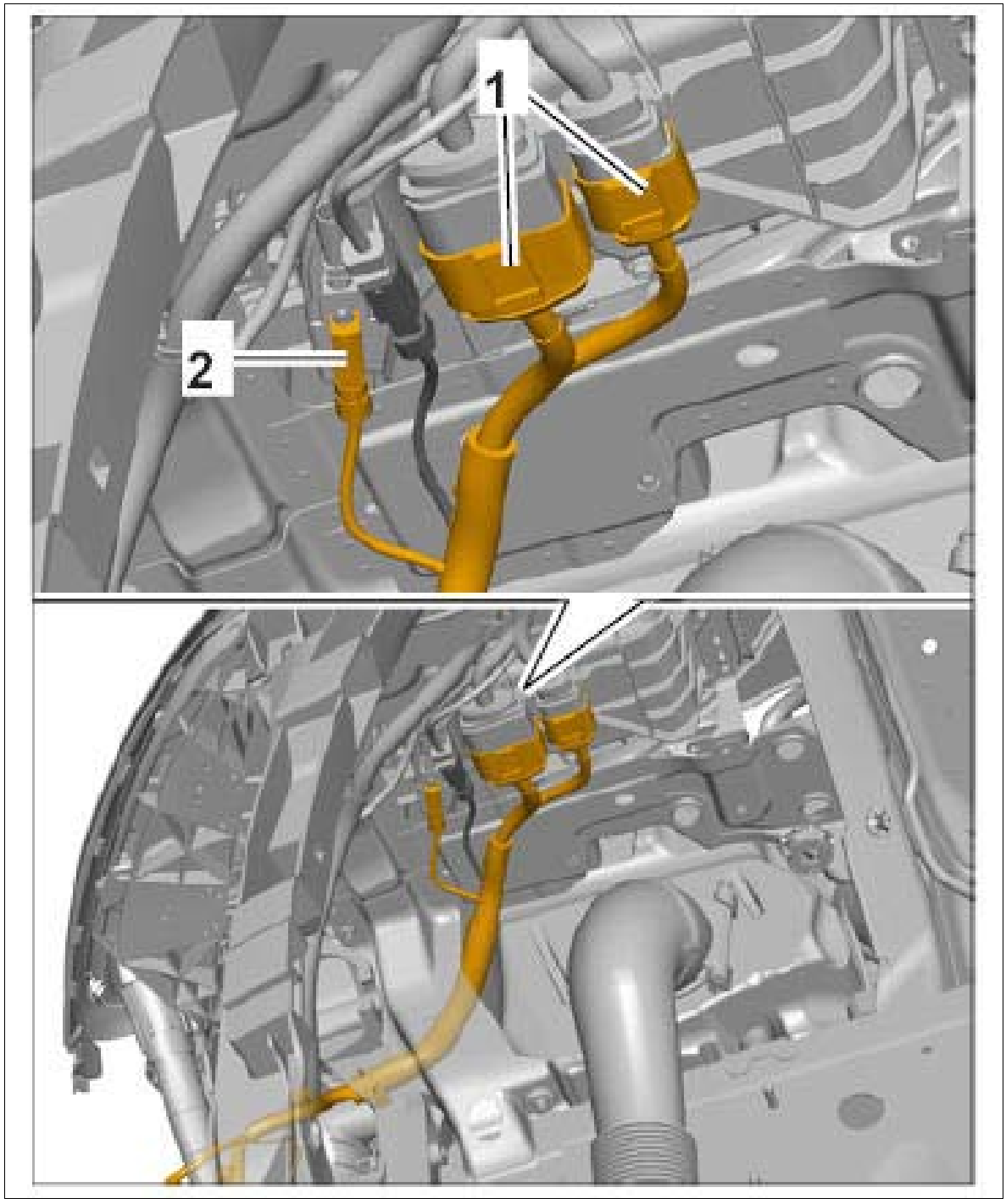

Courtesy of PORSCHE CARS NORTH AMERICA, INC.

9. Unclip all holders **-1-** for the front-end wire harness **-2-** and remove front-end wire harness.

Fig 5: Removing Front-End Wire Harness

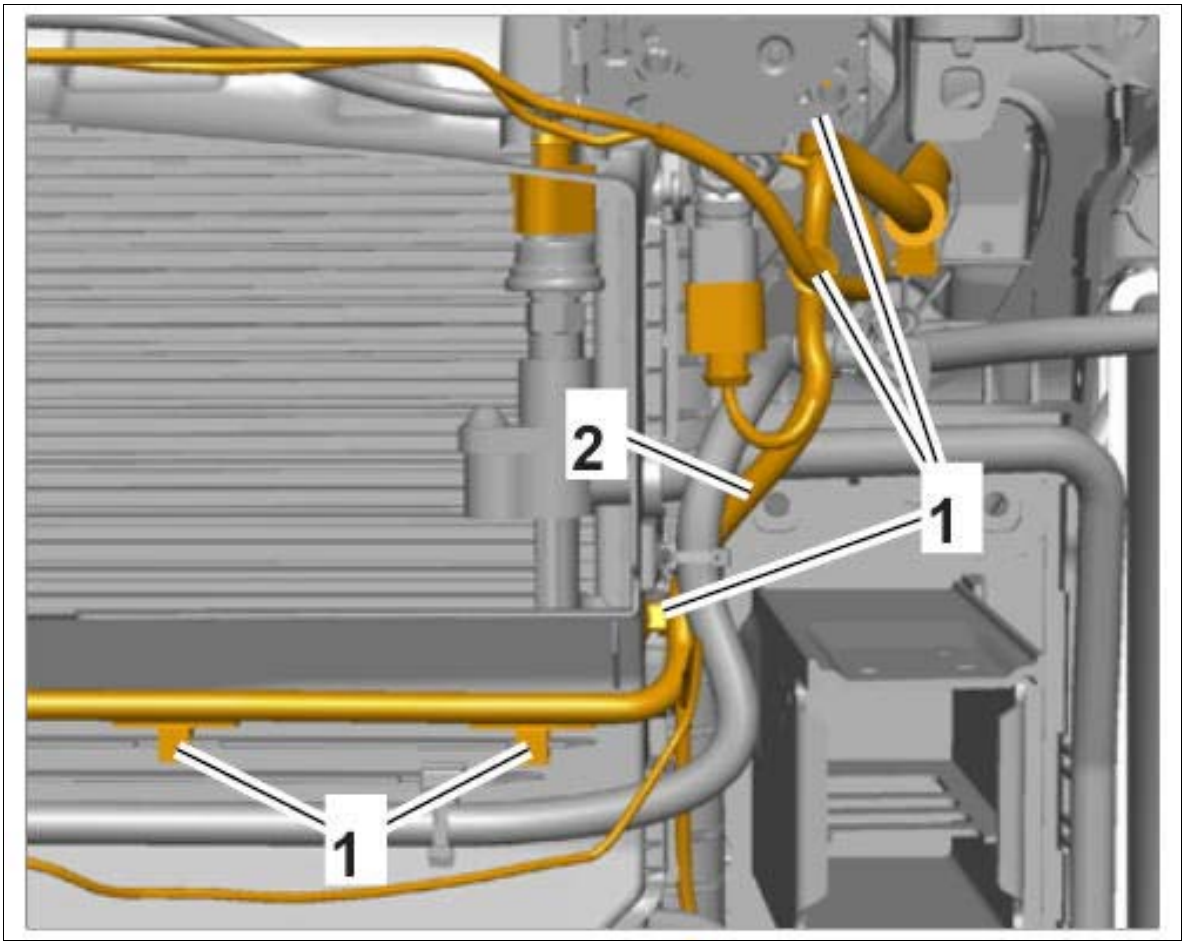

Courtesy of PORSCHE CARS NORTH AMERICA, INC.

WM 971619 REMOVING AND INSTALLING WIRE HARNESS FOR FRONT-END (ALL MODELS) > INSTALLING WIRE HARNESS FOR FRONT-END

1. Installation is performed in reverse order to removal.

WM 971619 REMOVING AND INSTALLING WIRE HARNESS FOR FRONT-END (ALL MODELS) > SUBSEQUENT WORK

1. Install front bumper. → INSTALLING FRONT BUMPER .

WM 972419 REMOVING AND INSTALLING WIRE HARNESS FOR REMOVABLE TRAILER HITCH (ALL MODELS) > INFORMATION

The wire harness for the removable trailer hitch is integrated into the trailer hitch and cannot be replaced separately.

WM 972719 REMOVING AND INSTALLING WIRE HARNESS FOR TAILGATE AT THE LEFT (ALL MODELS) > TECHNICAL VALUES

Location	Description	Type	Basic value	Tolerance 1	Tolerance 2
Ground line to ground pin in body	Nut, M6	Tightening torque	9 Nm (6.5 ftlb.)		

WM 972719 REMOVING AND INSTALLING WIRE HARNESS FOR TAILGATE AT THE LEFT (ALL MODELS) > PRELIMINARY WORK

1. Remove trim panel for rear lid → REMOVING TRIM PANEL FOR REAR LID .
2. Remove tailgate trim panel → REMOVING TAILGATE TRIM PANEL
3. Remove headliner → REMOVING HEADLINER .
4. Remove rear spoiler → REMOVING REAR SPOILER .

WM 972719 REMOVING AND INSTALLING WIRE HARNESS FOR TAILGATE AT THE LEFT (ALL MODELS) > INFORMATION > INSTALLATION POSITION

Fig 1: Identifying Tailgate Wire Harness Installation Position (Left)

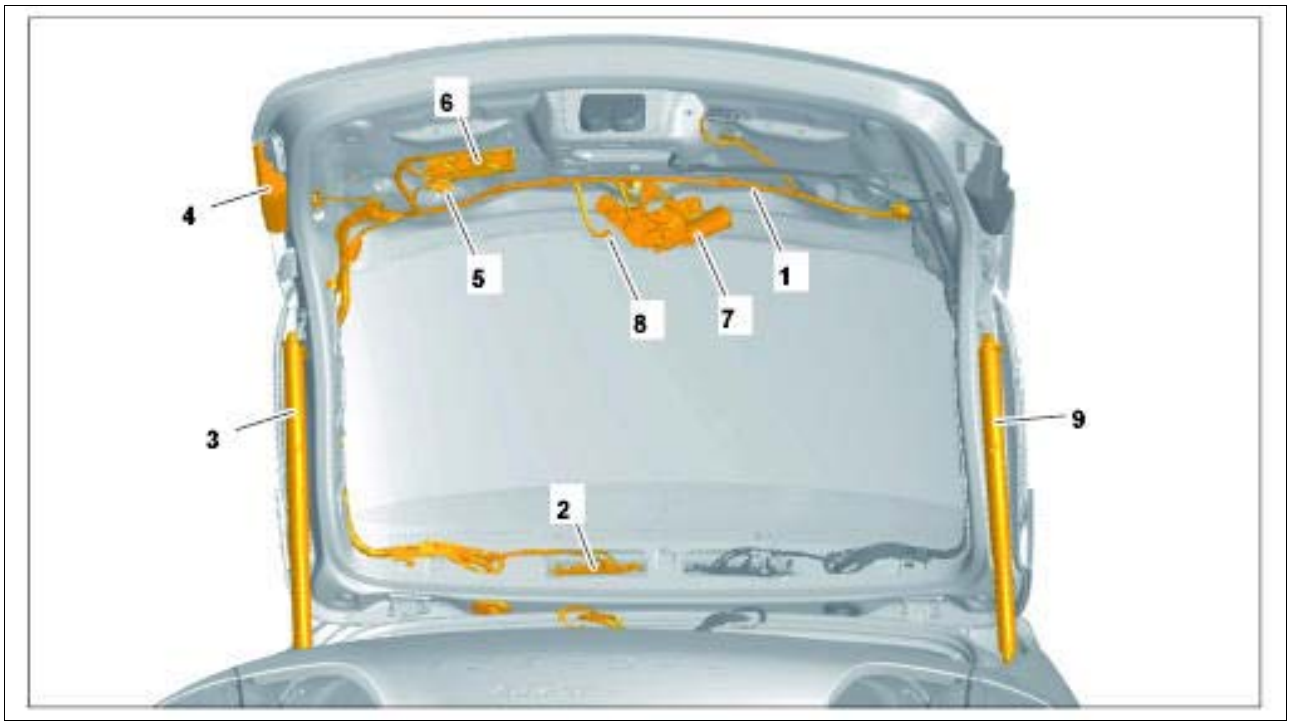

Courtesy of PORSCHE CARS NORTH AMERICA, INC.

1. Wire harness for tailgate, left
2. Antenna amplifier
3. Actuating cylinder for rear lid, left
4. Tail light in rear lid, left
5. Parking aid buzzer
6. Rear lid control unit
7. Wiper motor for rear window washer
8. Rear lid release
9. Actuating cylinder for rear lid, right

WM 972719 REMOVING AND INSTALLING WIRE HARNESS FOR TAILGATE AT THE LEFT (ALL MODELS) > REMOVING WIRE HARNESS FOR TAILGATE AT THE LEFT

1. Release and pull off connection **-1-** for antenna line at the antenna amplifier **-2-** . → 918419 REMOVING AND INSTALLING ANTENNA AMPLIFIER .

   Fig 1: Disconnecting Antenna Line

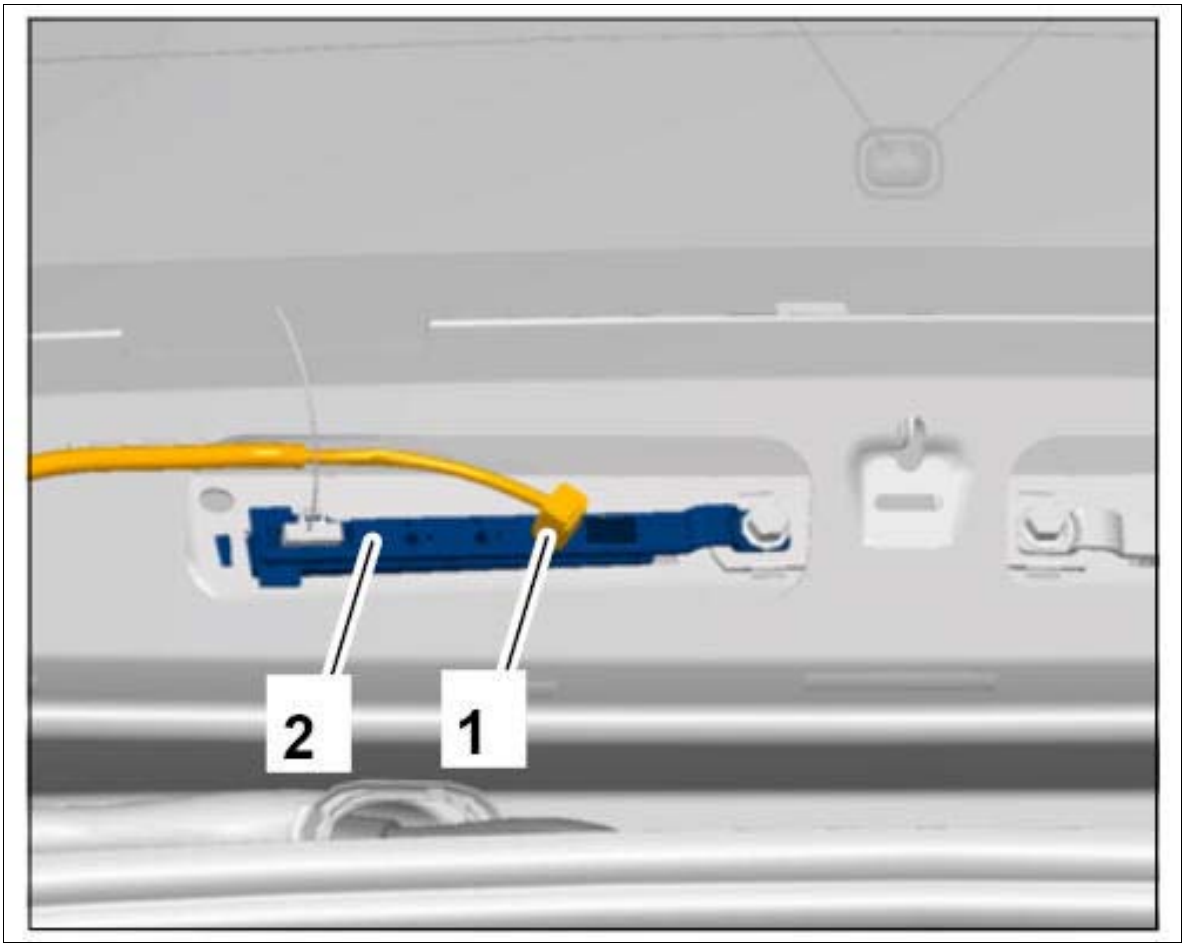

Courtesy of PORSCHE CARS NORTH AMERICA, INC.

2. Disconnect electric plug connection **-1-** at the rear window heating connection.

3. Release and disconnect electric plug connection **-2-** for actuating cylinder for rear lid at the left. → 557319 REMOVING AND INSTALLING ACTUATING CYLINDER FOR REAR LID .

Fig 2: Disconnecting Electric Plug Connections

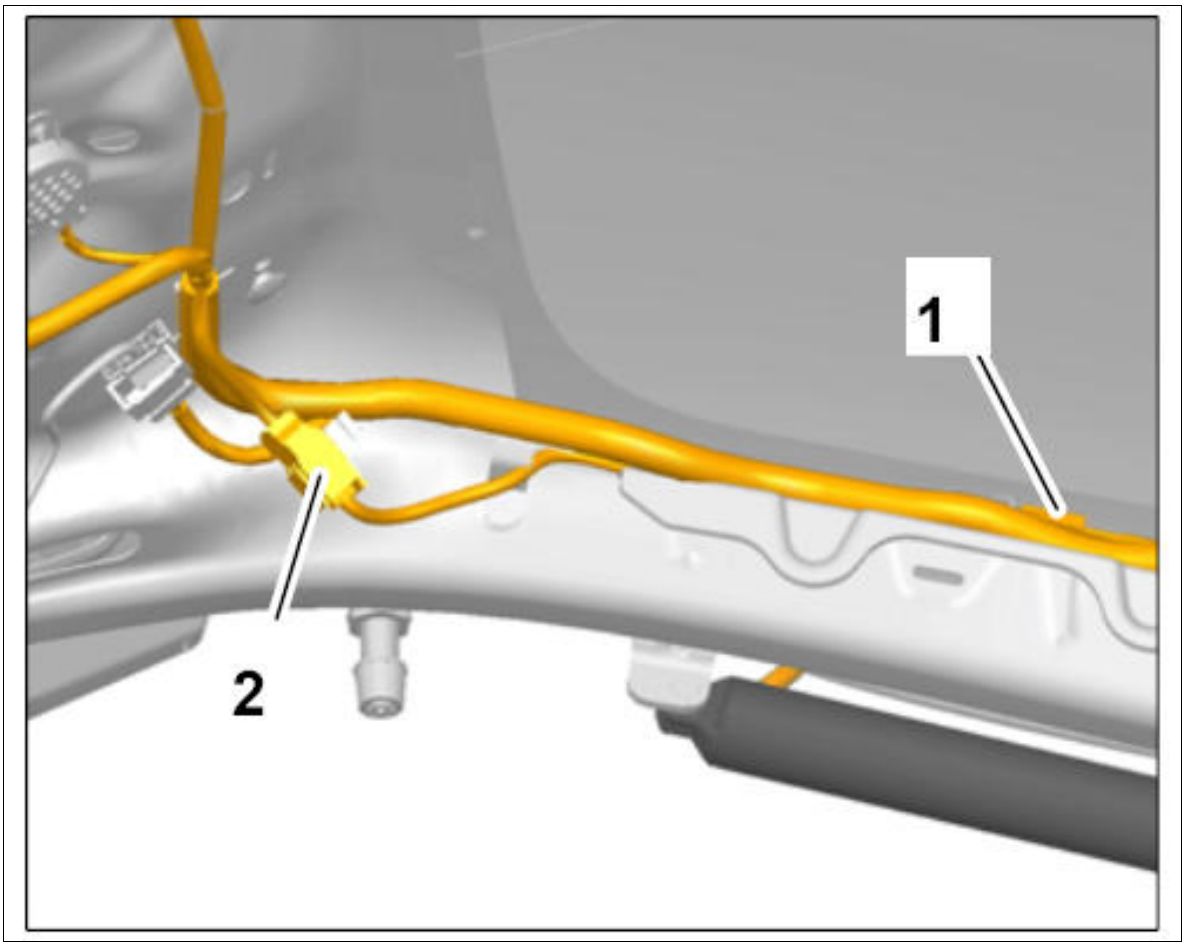

Courtesy of PORSCHE CARS NORTH AMERICA, INC.

4. Release and disconnect electric plug connection **-1-** for tail light in rear lid at the left. → 943119 REMOVING AND INSTALLING TAIL LIGHT IN REAR LID .

5. Disconnect electric plug connection **-2-** at the parking aid buzzer **-3-** .

6. Release and disconnect electric plug connections **-4-** at the rear lid control unit **-5-** . → 556819 REMOVING AND INSTALLING CONTROL UNIT FOR REAR LID .

Fig 3: Disconnecting Electric Plug Connections

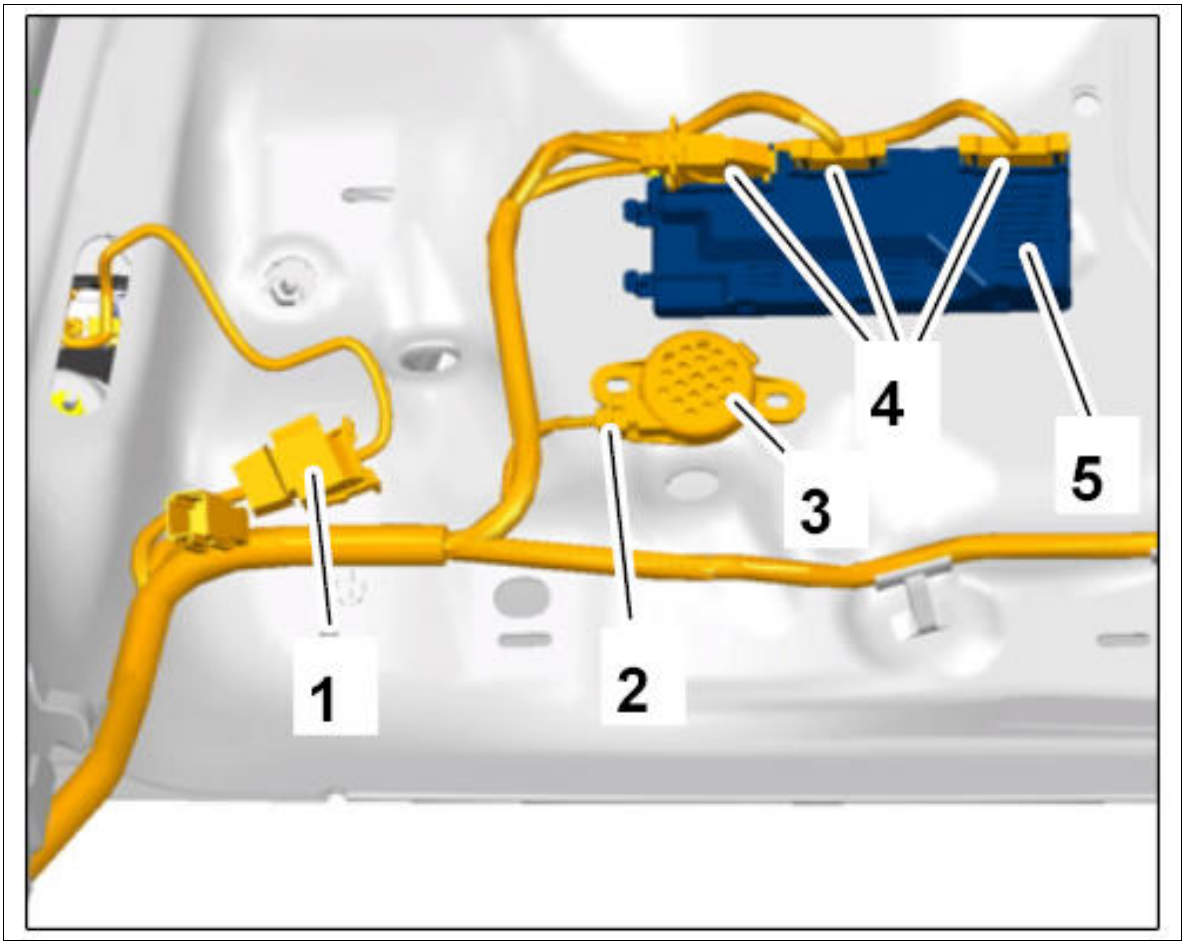

Courtesy of PORSCHE CARS NORTH AMERICA, INC.

7. Release and disconnect electric plug connection **-1-** at wiper motor for rear window washer **-2-** . → 923419 REMOVING AND INSTALLING WIPER MOTOR FOR REAR WINDOW WASHER .

8. Release and disconnect electric plug connection **-3-** for rear lid release. → 555719 REMOVING AND INSTALLING REAR LID RELEASE .

Fig 4: Disconnecting Electric Plug Connections

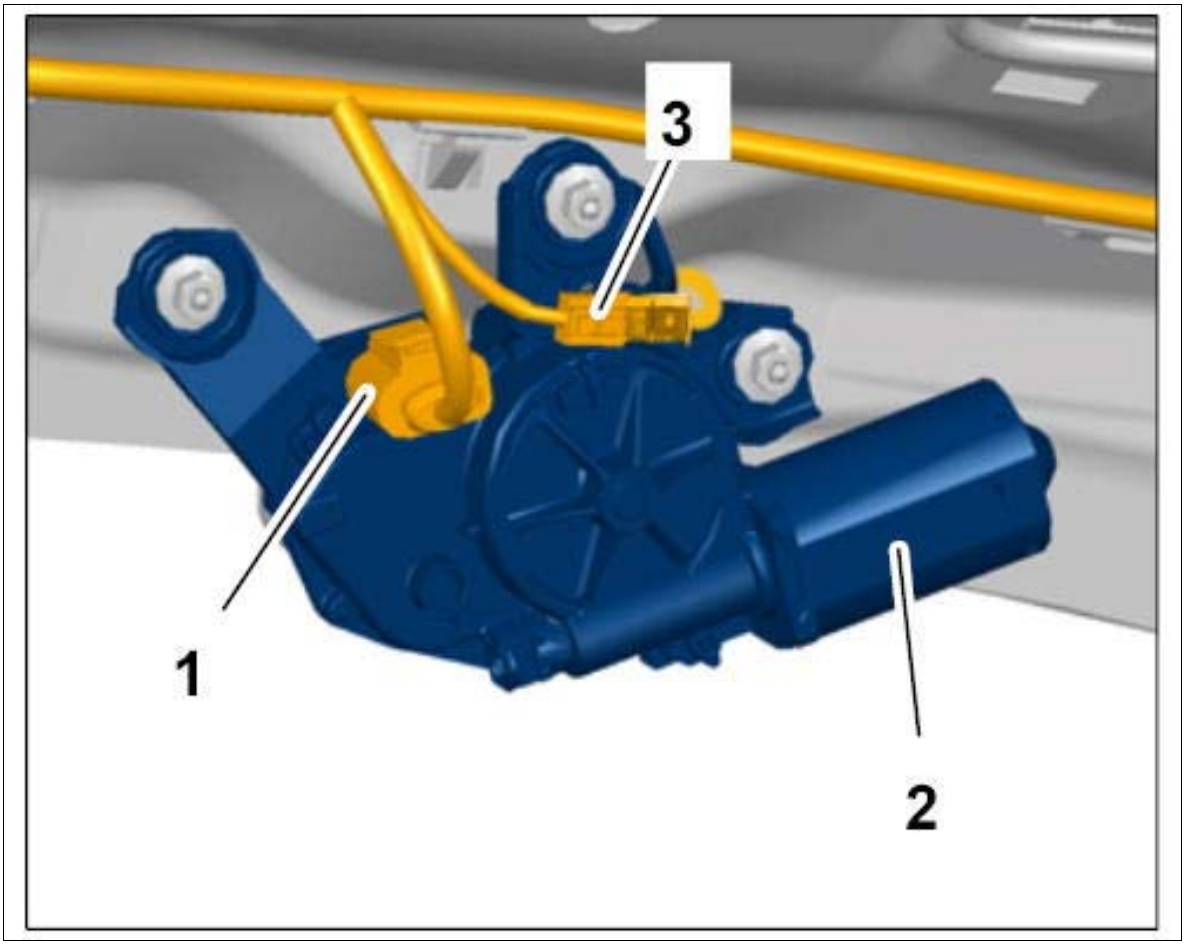

Courtesy of PORSCHE CARS NORTH AMERICA, INC.

9. Release and disconnect electric plug connection **-1-** for actuating cylinder for rear lid at the right. → 557319 REMOVING AND INSTALLING ACTUATING CYLINDER FOR REAR LID .

Fig 5: Disconnecting Electric Plug Connection

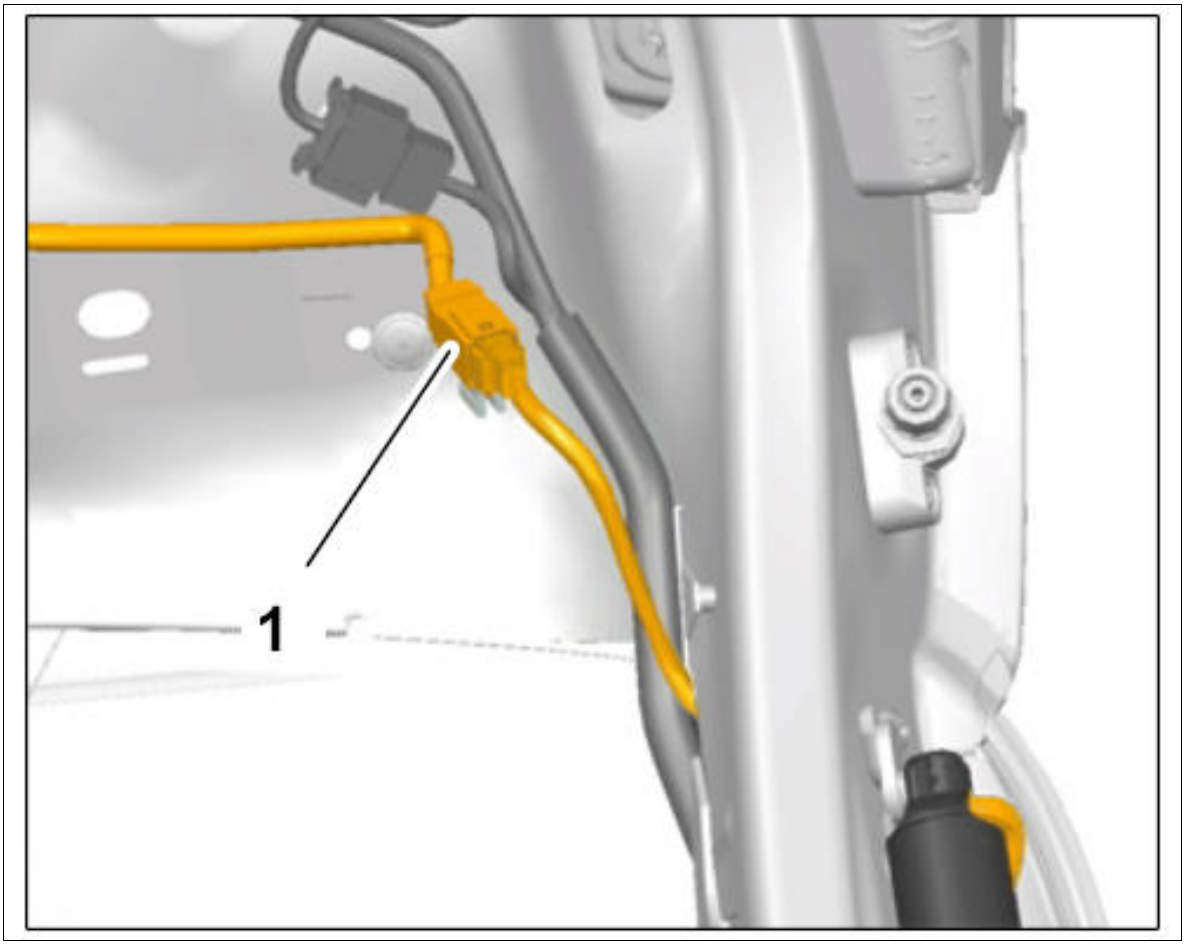

Courtesy of PORSCHE CARS NORTH AMERICA, INC.

10. Screw off fastening nut **-1-** and remove ground strap **-2-** .

Fig 6: Disconnecting Ground Strap

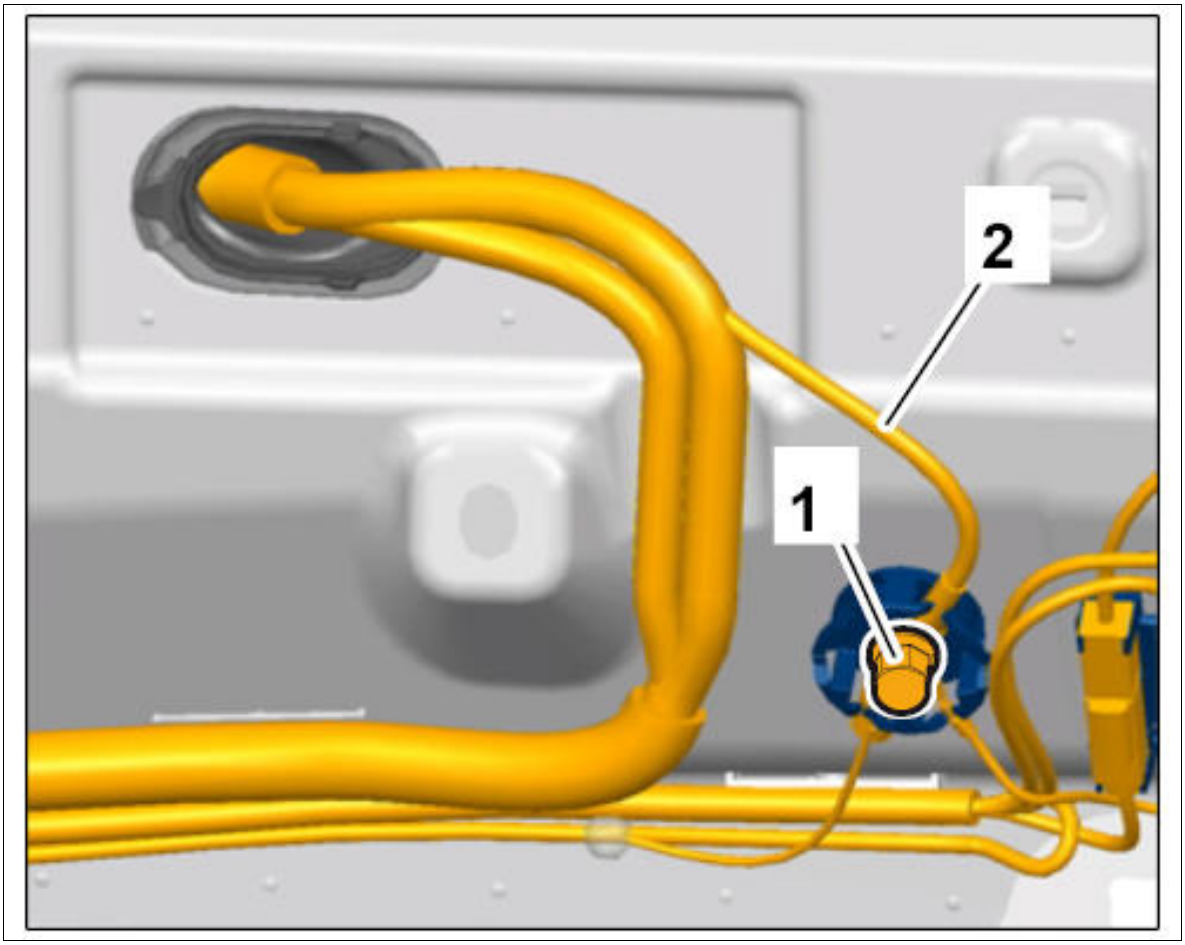

Courtesy of PORSCHE CARS NORTH AMERICA, INC.

11. Disengage antenna line **-1-** from its holder **-2-** , then release **-a-** and disconnect it.
12. Disengage hose for rear window washer **-3-** from its holder, then release **-b-** and disconnect it.

Fig 7: Disconnecting Rear Window Washer Antenna Line And Hose

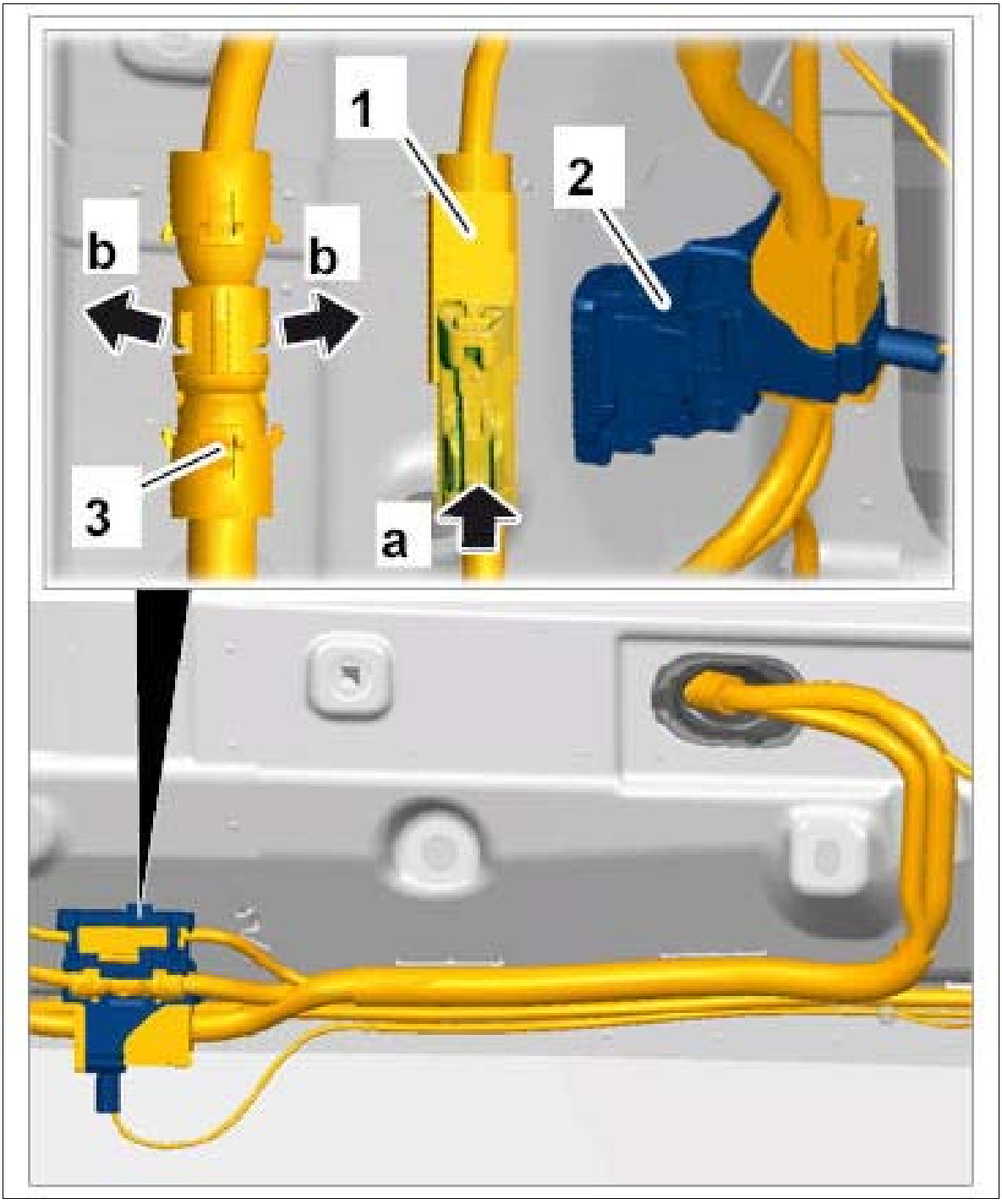

Courtesy of PORSCHE CARS NORTH AMERICA, INC.

13. Release and disconnect electric plug connection **-1-** (**-a-**).

Fig 8: Disconnecting Electric Plug Connection

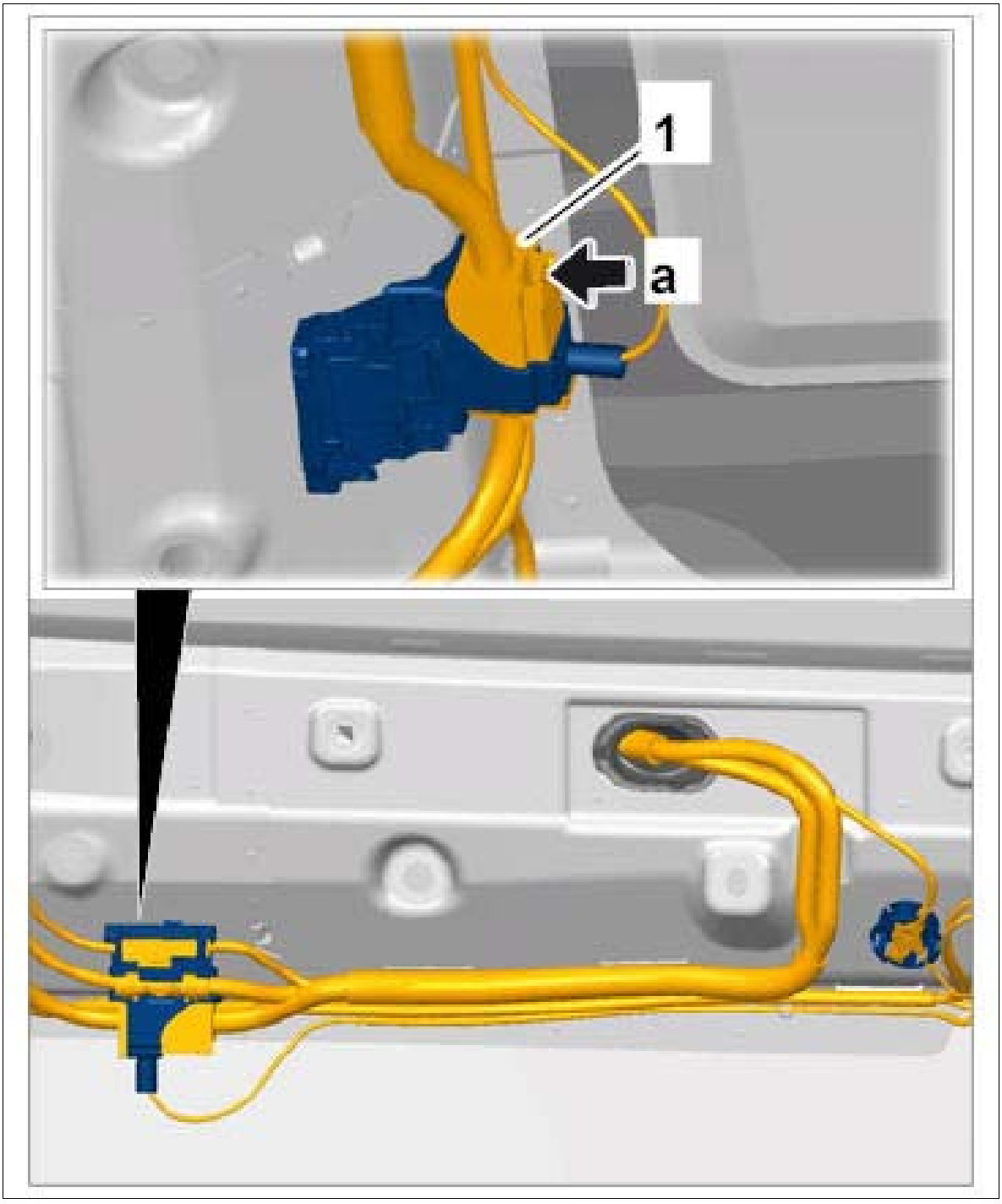

Courtesy of PORSCHE CARS NORTH AMERICA, INC.

14. Open holder **-1-** and remove it from the tailgate.
15. Unclip all retaining clips **-2-** on the tailgate wire harness at the left using a plastic wedge.

Fig 9: Identifying Holder And Retaining Clips

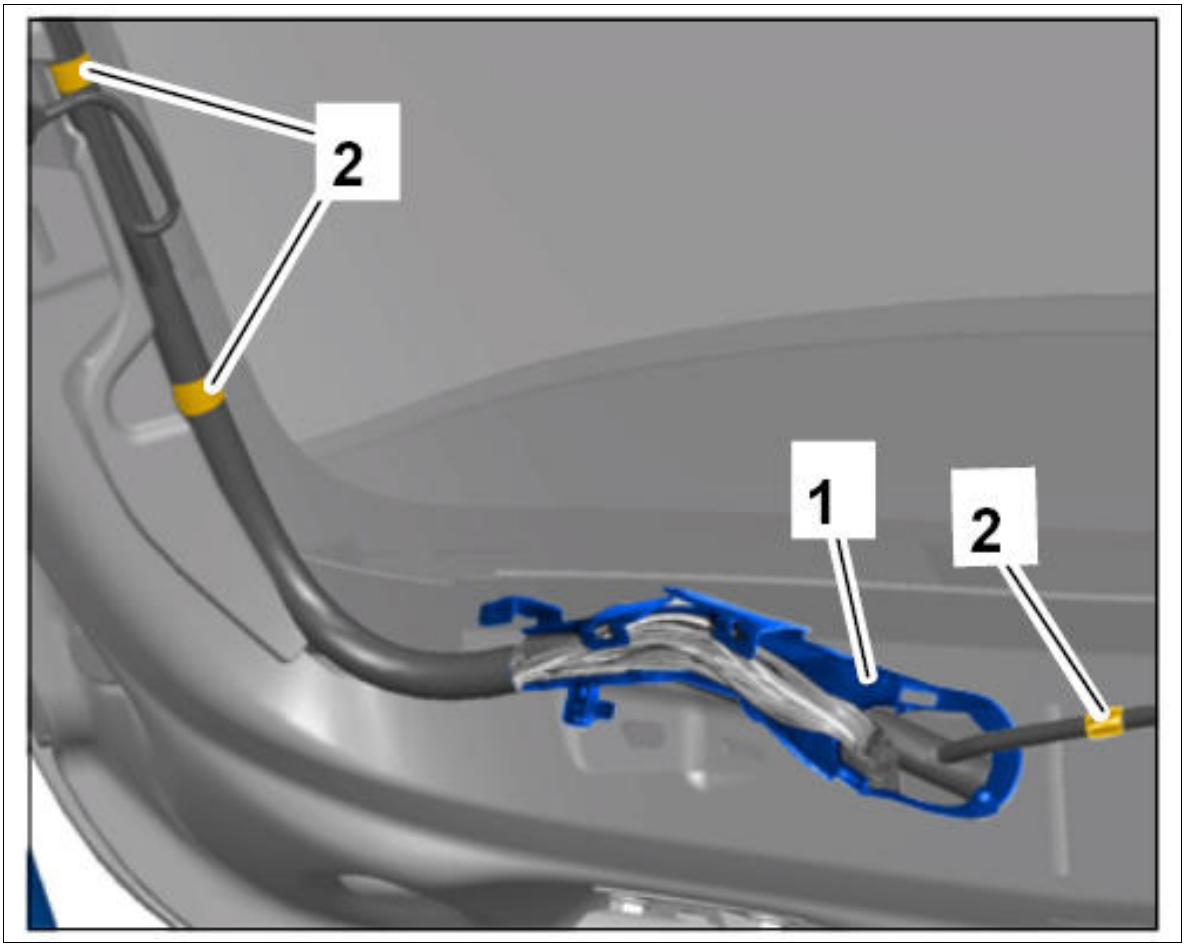

Courtesy of PORSCHE CARS NORTH AMERICA, INC.

16. Press grommet **-1-** into the tailgate.
17. Unclip cable bushing **-2-** from the tailgate and roof pillar.
18. Carefully guide wire harness for tailgate at the left **-3-** out through the openings in the tailgate and roof pillar and remove it.

Fig 10: Removing Tailgate Wire Harness (Left)

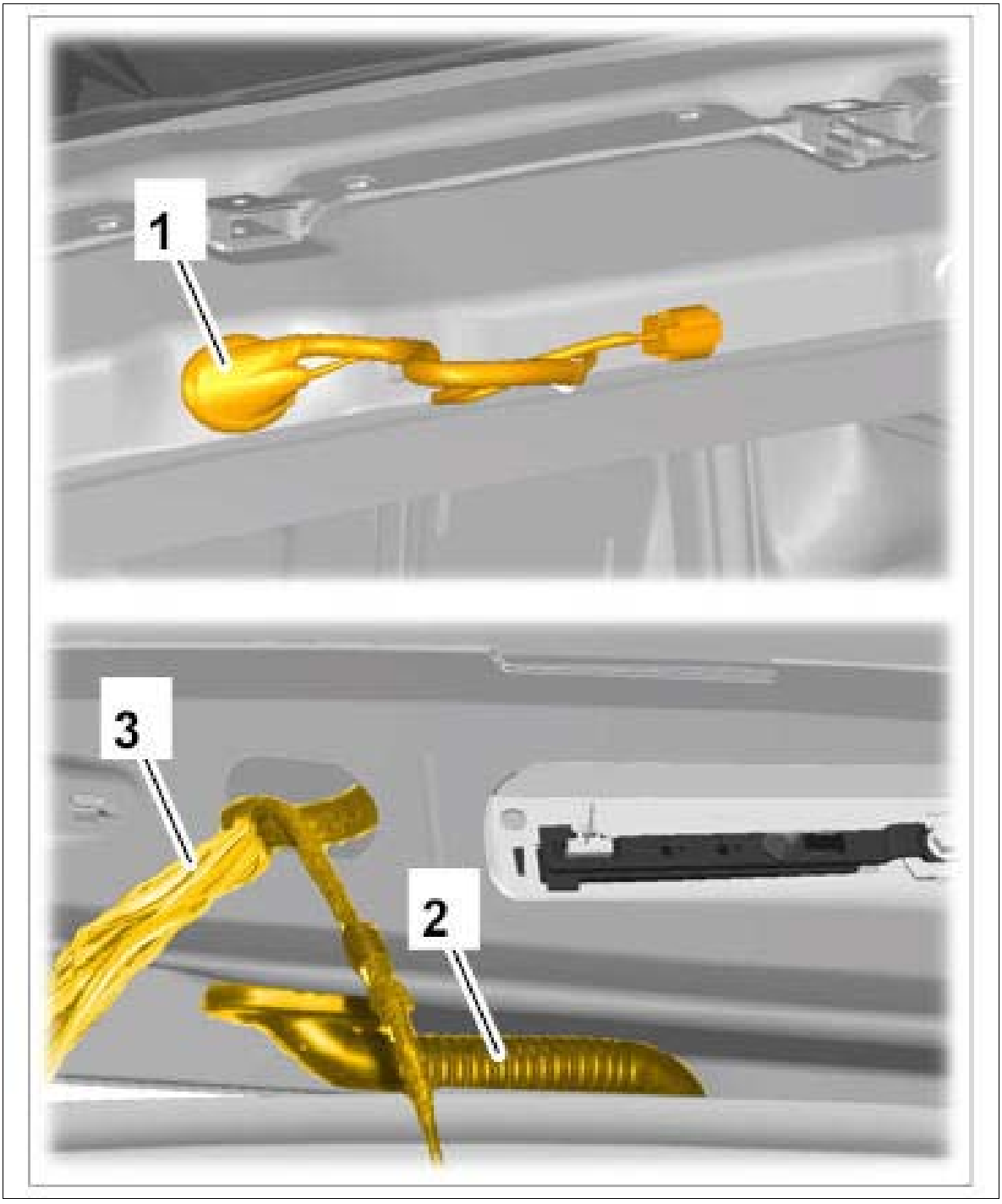

Courtesy of PORSCHE CARS NORTH AMERICA, INC.

WM 972719 REMOVING AND INSTALLING WIRE HARNESS FOR TAILGATE AT THE LEFT (ALL MODELS) > INSTALLING WIRE HARNESS FOR TAILGATE AT THE LEFT

1. Installation is performed in reverse order to removal.

    1. 1.1. Do not twist or entangle the individual strands of the wire harness for tailgate at

the left.

2. 1.2. Check that the wire harness is routed correctly and without tension so that no chafing occurs.
3. 1.3. Connect all electric plug connections until they engage securely.
4. 1.4. Lock all electric plug connections by hand using the manual slide lock.
5. 1.5. Tighten fastening nut for the ground strap at the roof pillar. **Tightening torque 9 Nm (6.5 ftlb.)**

WM 972719 REMOVING AND INSTALLING WIRE HARNESS FOR TAILGATE AT THE LEFT (ALL MODELS) > SUBSEQUENT WORK

1. Install rear spoiler → INSTALLING REAR SPOILER .
2. Install headliner → INSTALLING HEADLINER .
3. Install tailgate trim panel → INSTALLING TAILGATE TRIM PANEL .
4. Install trim panel for rear lid → INSTALLING TRIM PANEL FOR REAR LID .

WM 972719 REMOVING AND INSTALLING WIRE HARNESS FOR TAILGATE AT THE RIGHT (ALL MODELS) > TECHNICAL VALUES

Location	Description	Type	Basic value	Tolerance 1	Tolerance 2
Ground line to ground pin in body	Nut, M6	Tightening torque	9 Nm (6.5 ftlb.)		
Ground line to tailgate	Screw, M6	Tightening torque	9 Nm (6.5 ftlb.)		

WM 972719 REMOVING AND INSTALLING WIRE HARNESS FOR TAILGATE AT THE RIGHT (ALL MODELS) > PRELIMINARY WORK

1. Remove trim panel for rear lid. → 708719 TRIM PANEL FOR REAR LID .
2. Remove tailgate trim panel. → 709219 REMOVING AND INSTALLING TAILGATE TRIM PANEL .
3. Remove headliner. → 708419 REMOVING AND INSTALLING HEADLINER .

WM 972719 REMOVING AND INSTALLING WIRE HARNESS FOR TAILGATE AT THE

RIGHT (ALL MODELS) > INFORMATION > INSTALLATION POSITION

Fig 1: Identifying Tailgate Wire Harness Installation Position (Right)

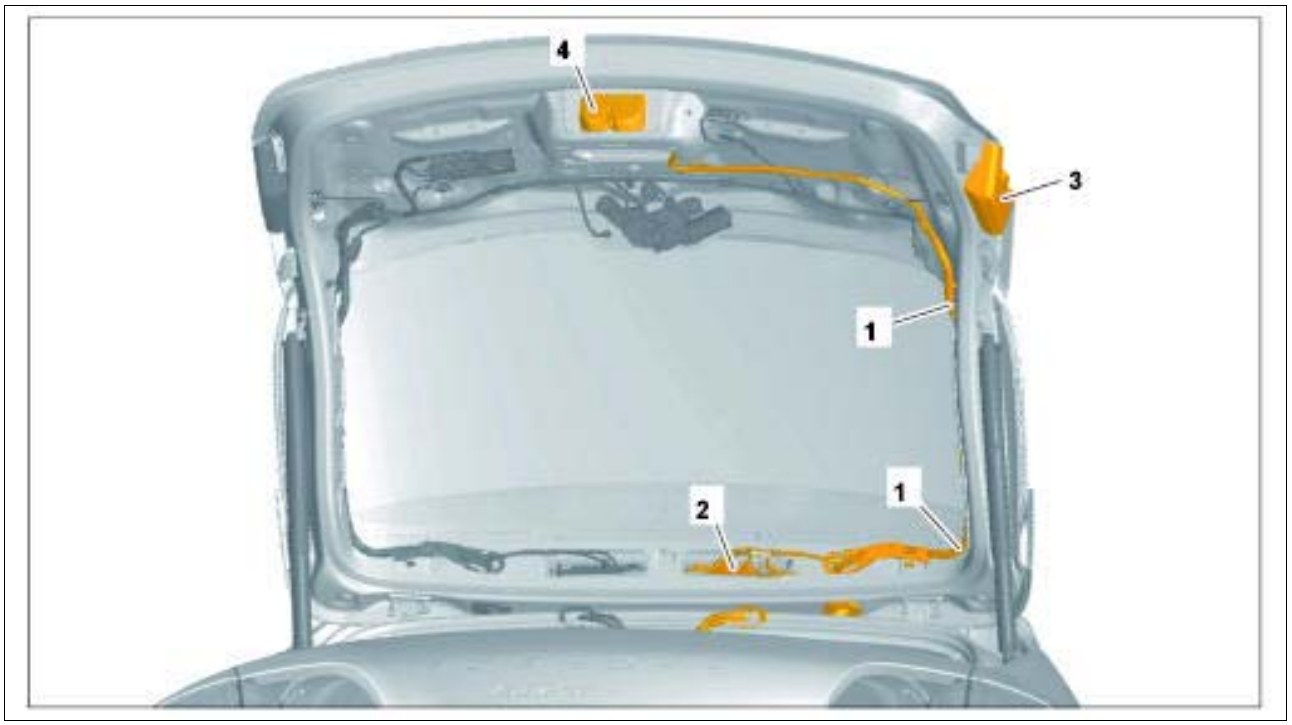

Courtesy of PORSCHE CARS NORTH AMERICA, INC.

1. Wire harness for tailgate, right
2. Antenna control unit
3. Tail light in rear lid, right
4. Upper part of lid lock, rear

WM 972719 REMOVING AND INSTALLING WIRE HARNESS FOR TAILGATE AT THE RIGHT (ALL MODELS) > REMOVING WIRE HARNESS FOR TAILGATE AT THE RIGHT

1. Release and pull off antenna line connections **-1-** on the antenna control unit **-2-** . → 918619 REMOVING AND INSTALLING ANTENNA CONTROL UNIT .
2. Release and disconnect electric plug connections **-3-** on the antenna control unit. → 918619 REMOVING AND INSTALLING ANTENNA CONTROL UNIT .
3. Screw off fastening nut **-4-** and remove ground strap **-5-** .

Fig 1: Disconnecting Antenna Lines And Electric Plug Connections

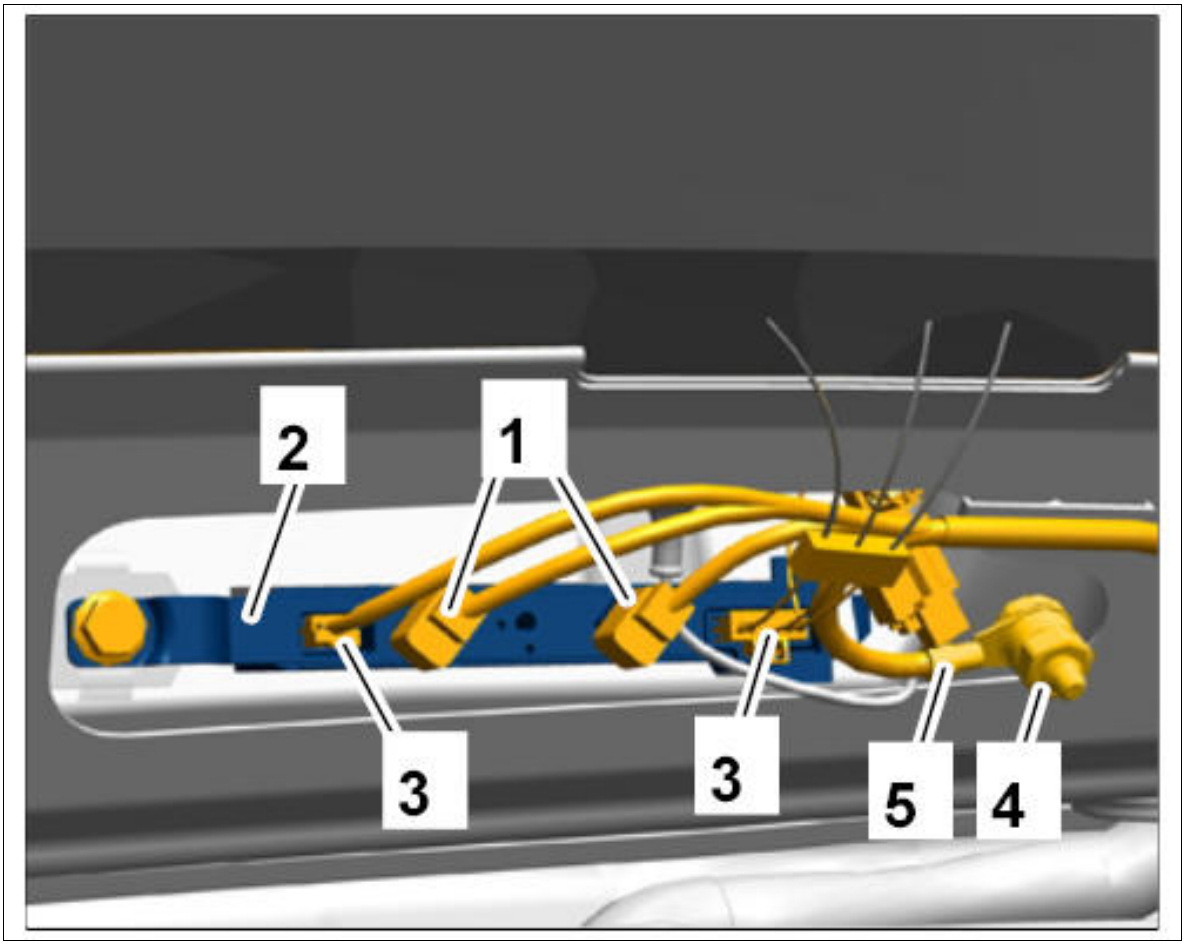

Courtesy of PORSCHE CARS NORTH AMERICA, INC.

4. Unscrew fastening screw **-1-** on the ground strap.
5. Disconnect electric plug connection **-2-** at the rear window heating connection.
6. Release and disconnect electric plug connection **-3-** for tail light in rear lid at the right. → 943119 REMOVING AND INSTALLING TAIL LIGHT IN REAR LID .

Fig 2: Disconnecting Electric Plug Connections

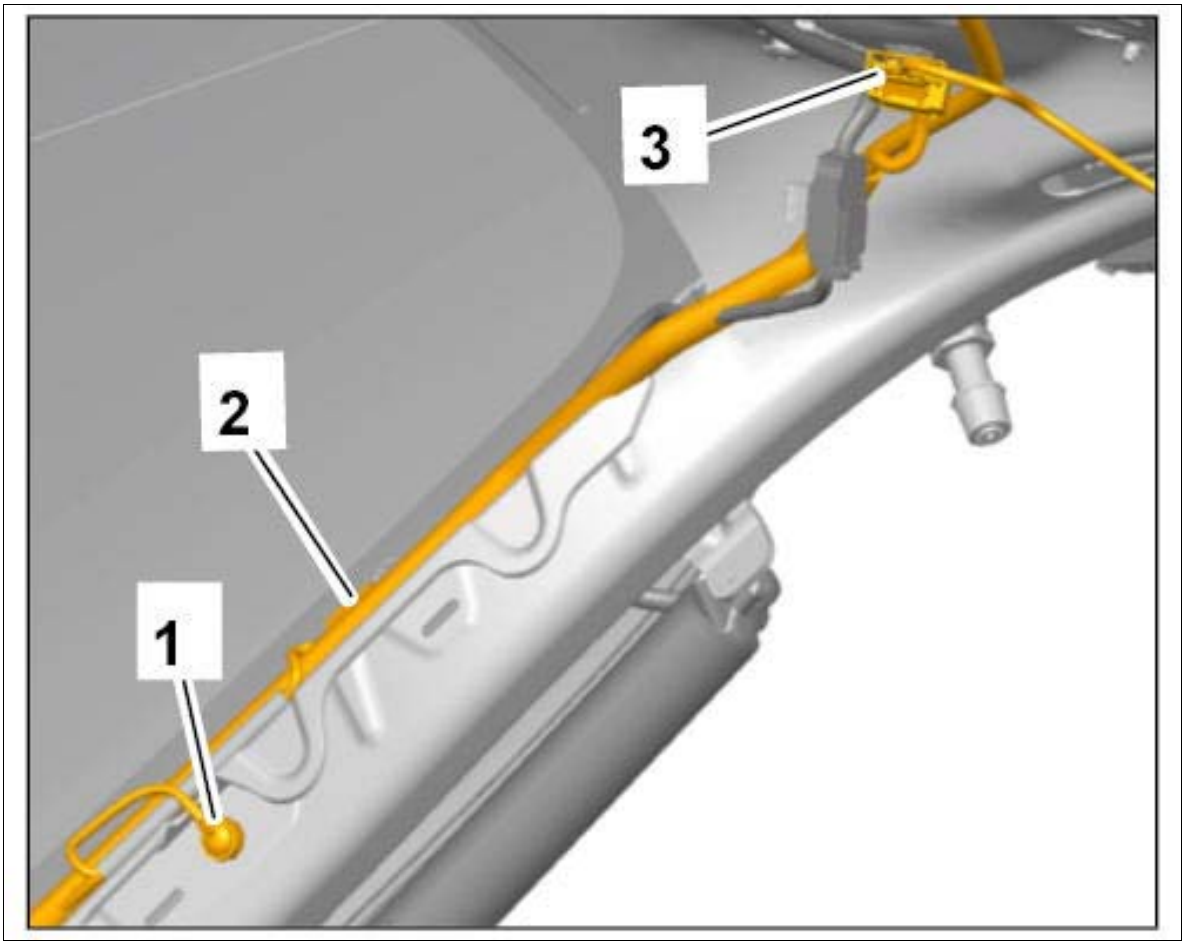

Courtesy of PORSCHE CARS NORTH AMERICA, INC.

7. Release and disconnect electric plug connections **-1-** on upper part of rear lid lock **-2-** . → 558719 REMOVING AND INSTALLING UPPER PART OF REAR LID LOCK .

Fig 3: Disconnecting Electric Plug Connections

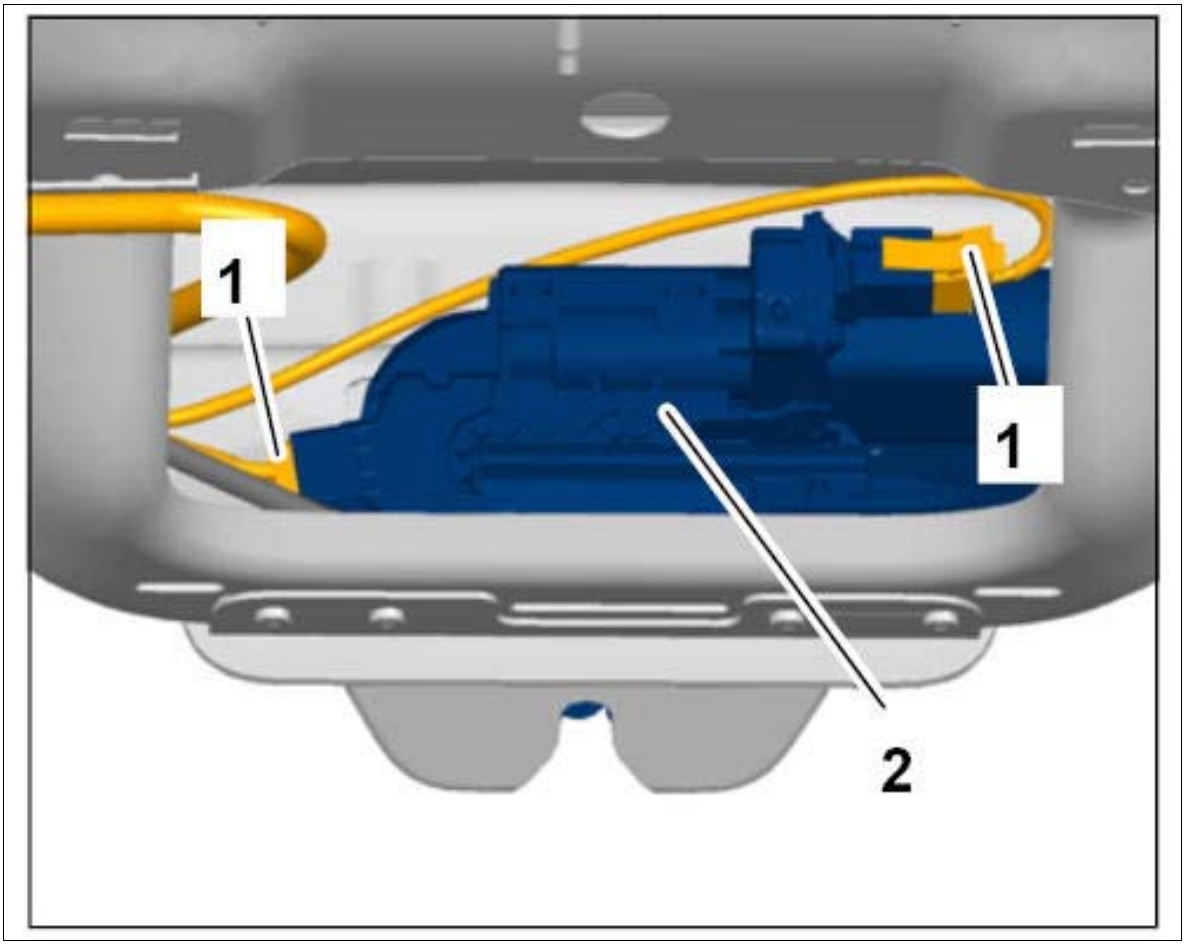

Courtesy of PORSCHE CARS NORTH AMERICA, INC.

8. Unscrew fastening nuts **-1-** and remove ground straps **-2-** .
9. Disengage plug connection for antenna line **-3-** from the holder, then release **-a-** and disconnect it.

Fig 4: Disconnecting Antenna Line And Ground Straps

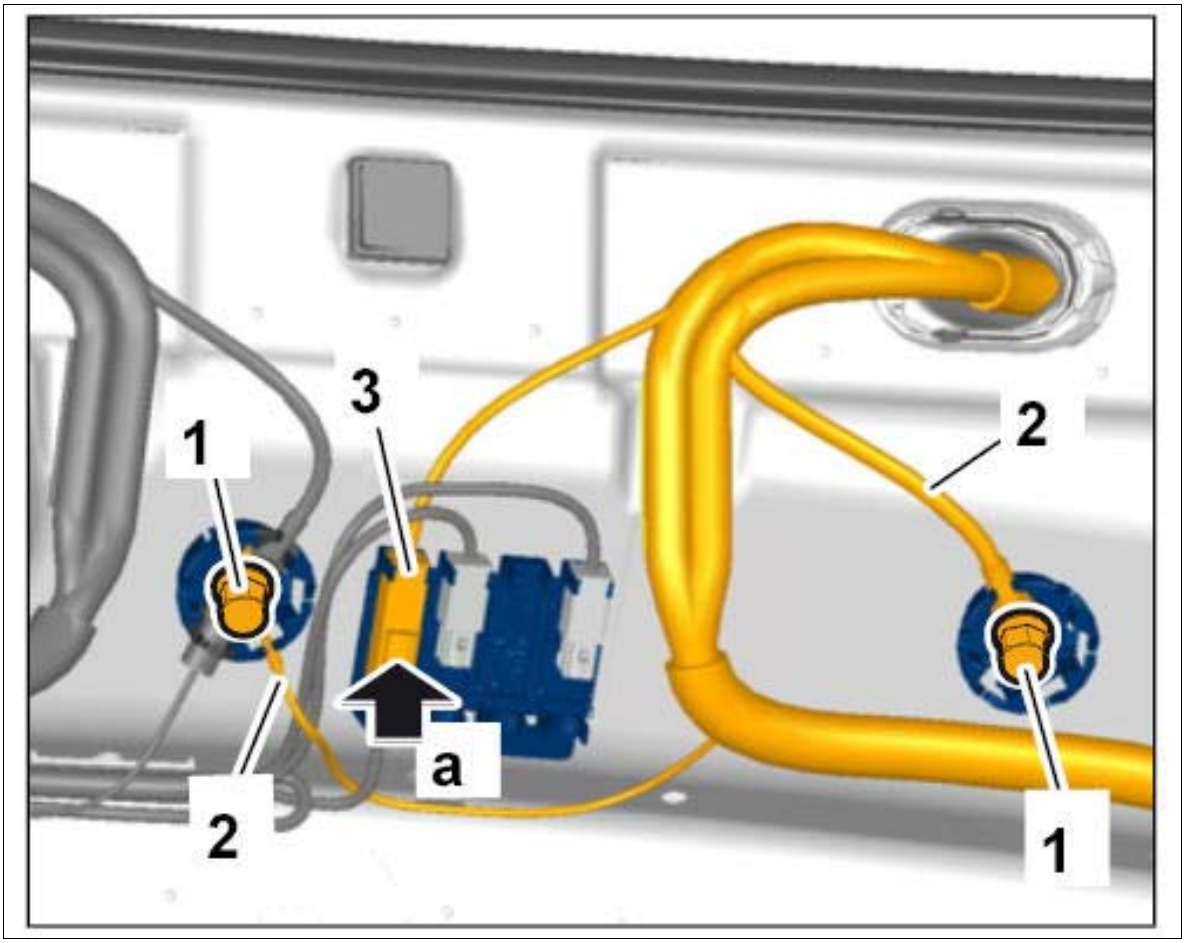

Courtesy of PORSCHE CARS NORTH AMERICA, INC.

10. Disengage plug connection for antenna line **-1-** from the holder, then release **-a-** and disconnect it.
11. Release and disconnect electric plug connection **-2-** (**-b-**).

Fig 5: Disconnecting Antenna Line And Electric Plug Connection

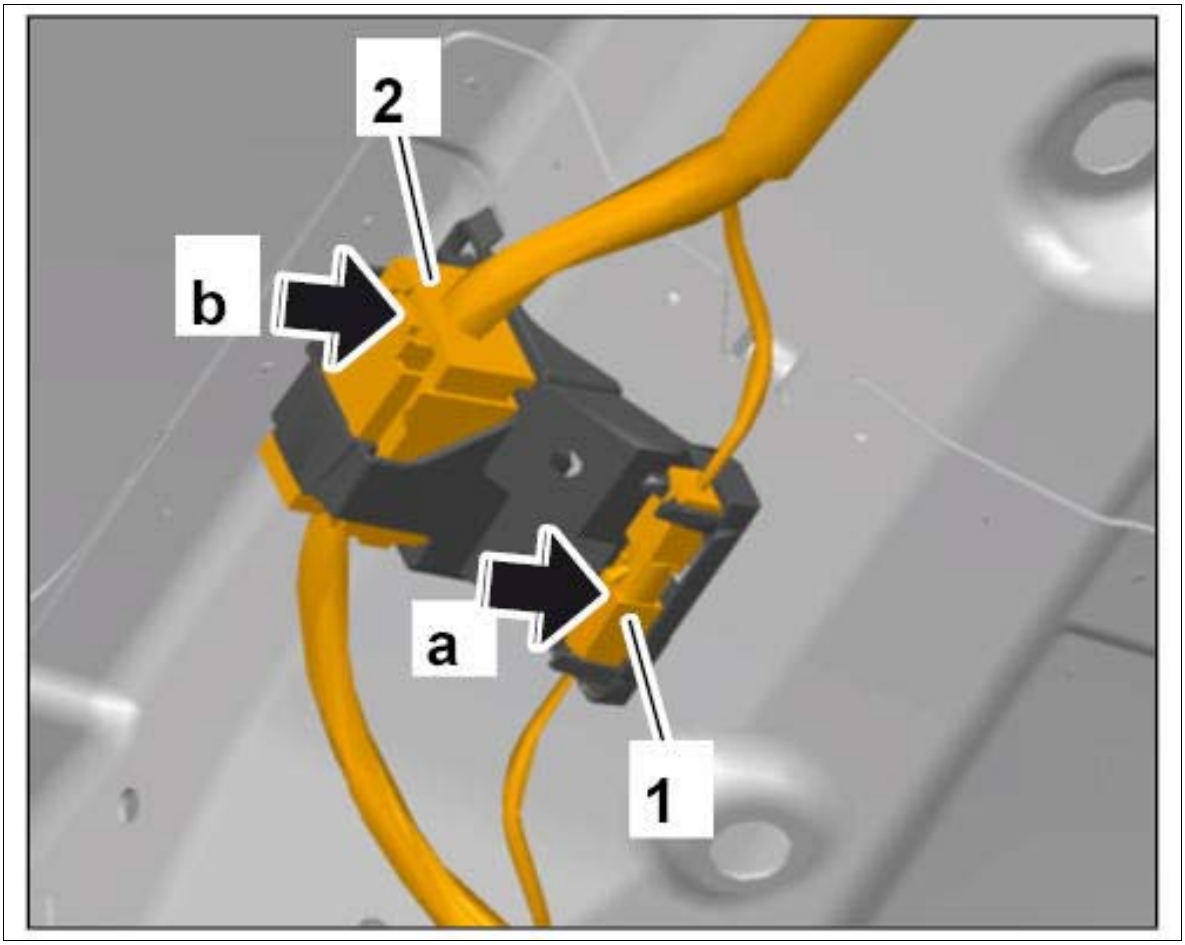

Courtesy of PORSCHE CARS NORTH AMERICA, INC.

12. Open holder **-1-** and remove it from the tailgate.
13. Unclip all retaining clips **-2-** on the tailgate wire harness at the right using a plastic wedge.

Fig 6: Identifying Holder And Retaining Clips

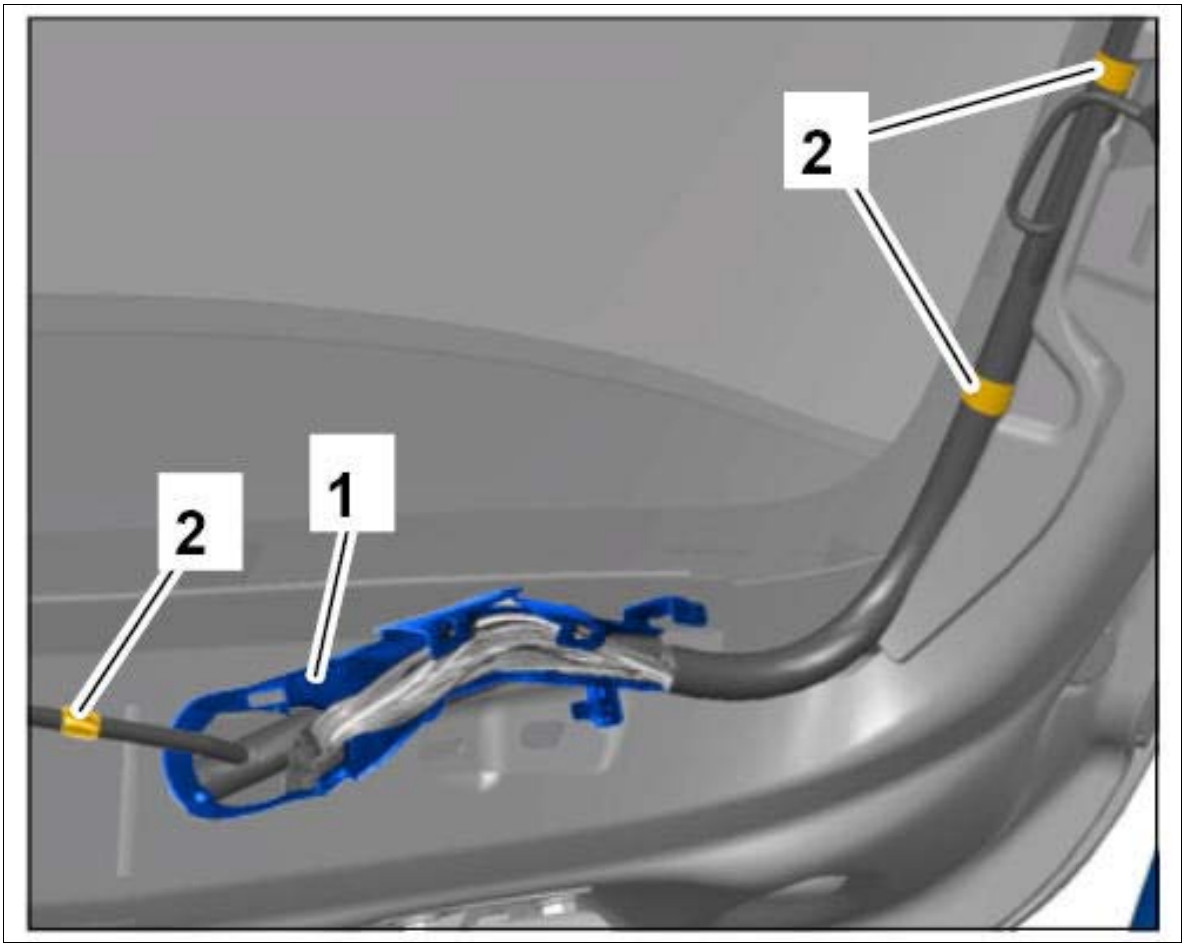

Courtesy of PORSCHE CARS NORTH AMERICA, INC.

14. Unclip cable bushing **-1-** from the tailgate and roof pillar.
15. Carefully guide wire harness for tailgate at the right **-2-** out through the openings in the tailgate and roof pillar and remove it.

Fig 7: Removing Tailgate Wire Harness (Right)

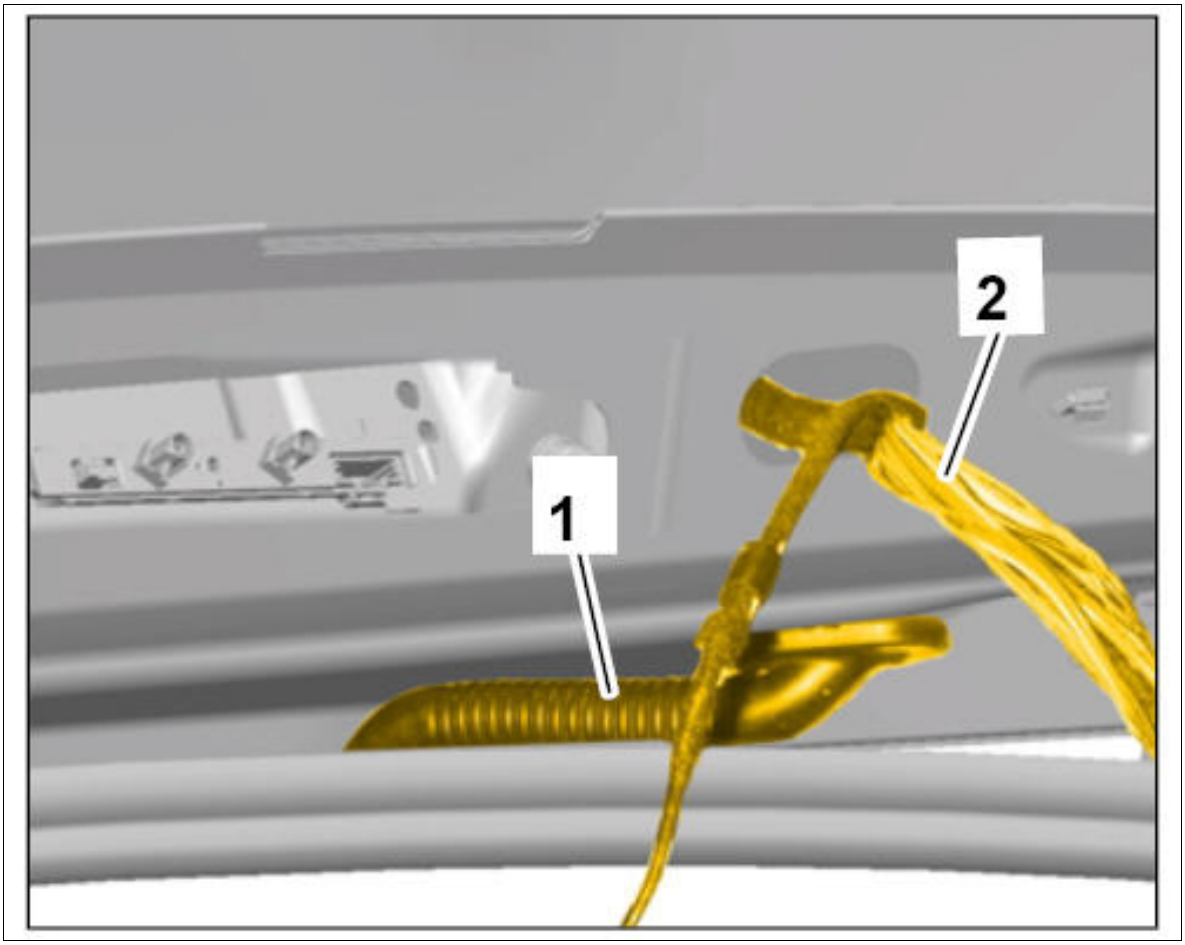

Courtesy of PORSCHE CARS NORTH AMERICA, INC.

WM 972719 REMOVING AND INSTALLING WIRE HARNESS FOR TAILGATE AT THE RIGHT (ALL MODELS) > INSTALLING WIRE HARNESS FOR TAILGATE AT THE RIGHT

1. Installation is performed in reverse order to removal.
    1. 1.1. Do not twist or entangle the individual strands of the wire harness for tailgate at the right.
    2. 1.2. Check that the wire harness is routed correctly and without tension so that no chafing occurs.
    3. 1.3. Connect all electric plug connections until they engage securely.
    4. 1.4. Lock all electric plug connections by hand using the manual slide lock.
    5. 1.5. Tighten fastening nut for the ground strap at the roof pillar. **Tightening torque 9 Nm (6.5 ftlb.)**
    6. 1.6. Tighten fastening nut for the ground strap at the tailgate. **Tightening torque 9**

Nm (6.5 ftlb.)

7. 1.7. Tighten fastening screw for the ground strap at the tailgate. **Tightening torque 9 Nm (6.5 ftlb.)**

WM 972719 REMOVING AND INSTALLING WIRE HARNESS FOR TAILGATE AT THE RIGHT (ALL MODELS) > SUBSEQUENT WORK

1. Install headliner → INSTALLING HEADLINER .
2. Install tailgate trim panel → INSTALLING TAILGATE TRIM PANEL .
3. Install trim panel for rear lid → INSTALLING TRIM PANEL FOR REAR LID .

WM 973219 REMOVING AND INSTALLING WIRE HARNESS FOR DOOR IN FRONT DOOR PANEL (ALL MODELS) > PRELIMINARY WORK

1. Remove front door panel. → 705919 REMOVING AND INSTALLING FRONT DOOR PANEL .
2. Remove switch for front power windows. → 645819 REMOVING AND INSTALLING SWITCH FOR FRONT POWER WINDOWS .

WM 973219 REMOVING AND INSTALLING WIRE HARNESS FOR DOOR IN FRONT DOOR PANEL (ALL MODELS) > REMOVING WIRE HARNESS FOR DOOR IN FRONT DOOR PANEL

Information

- The number of plug connections and holders on the wire harness can vary depending on vehicle equipment.
- The illustrations show only one side of the vehicle and one equipment variant. Other sides of the vehicle and other equipment variants may differ.

1. Disengage wire harness **-1-** from the holders **-2-** on the front door panel.

Fig 1: Disconnecting Wire Harness From Door Panel

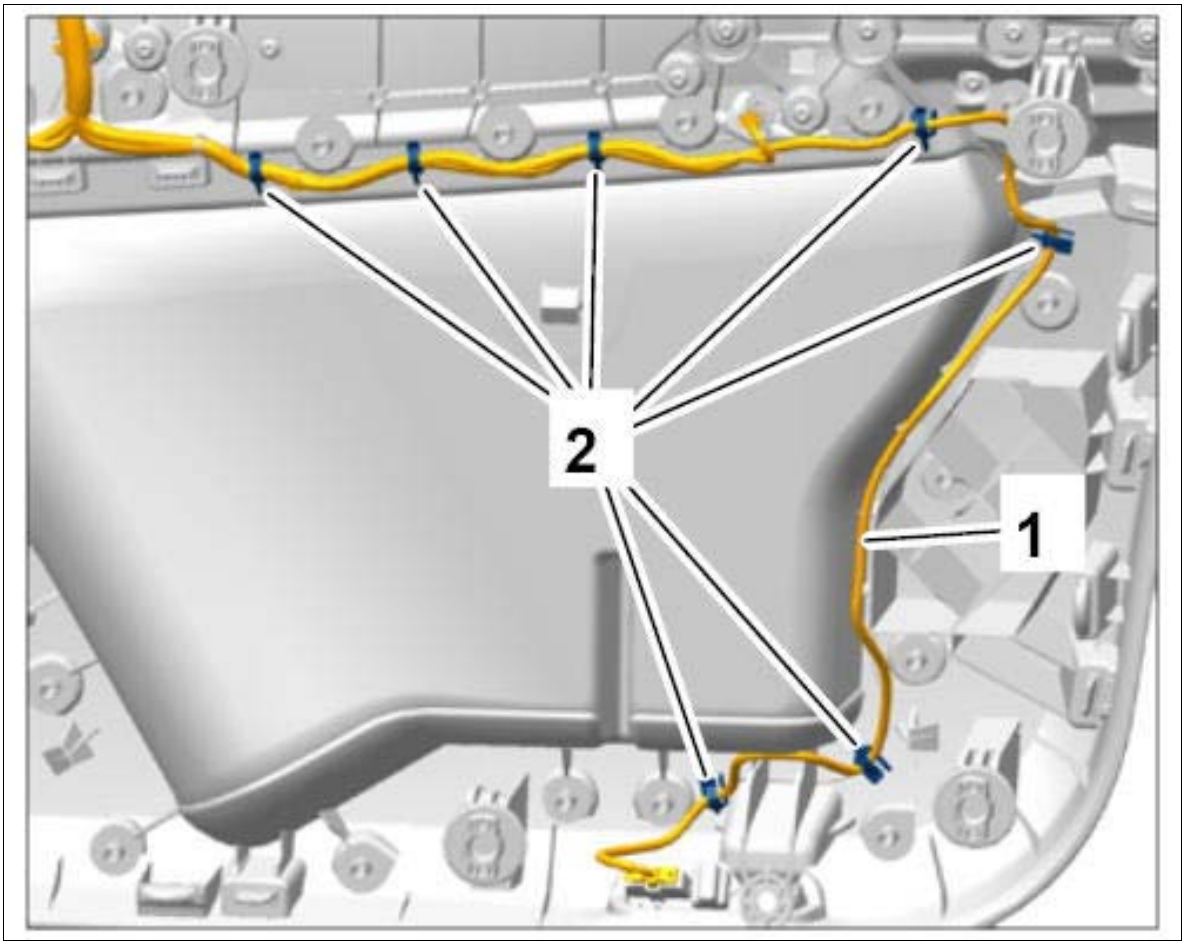

Courtesy of PORSCHE CARS NORTH AMERICA, INC.

2. Release electric plug connection **-1-** for mid-range loudspeaker **-2-** (**-a-**) and disconnect it.
3. Unclip the wire harness holders **-3-** from the front door panel.

Fig 2: Disconnecting Mid-Range Loudspeaker Electric Plug Connection

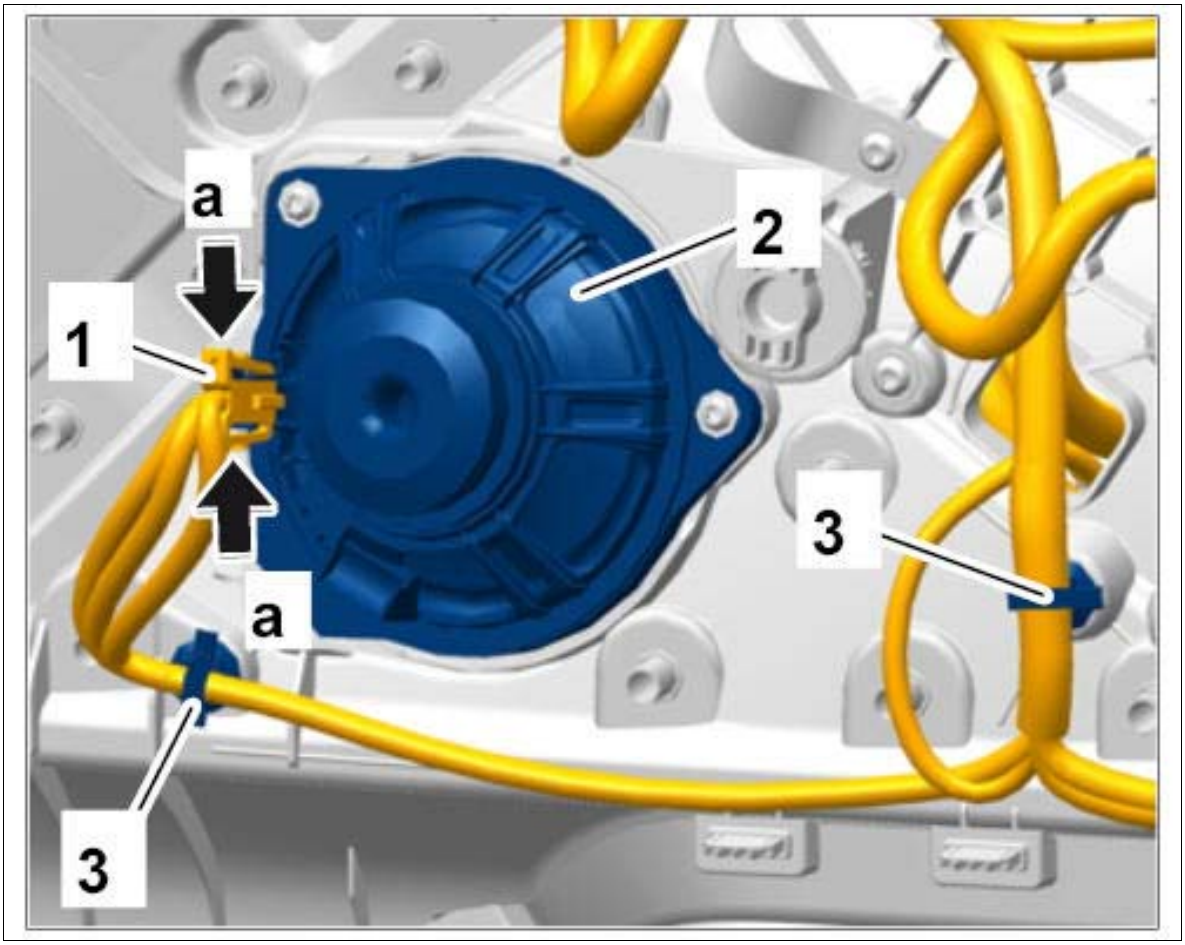

Courtesy of PORSCHE CARS NORTH AMERICA, INC.

4. Disconnect electric plug connection **-1-** for memory seat adjustment switch.
5. Disconnect electric plug connection **-2-** from the door handle liner light.
6. Disconnect electric plug connection **-3-** from light for ambient lighting.
7. Unclip the wire harness holder **-4-** from the front door panel.

Fig 3: Disconnecting Electric Plug Connections

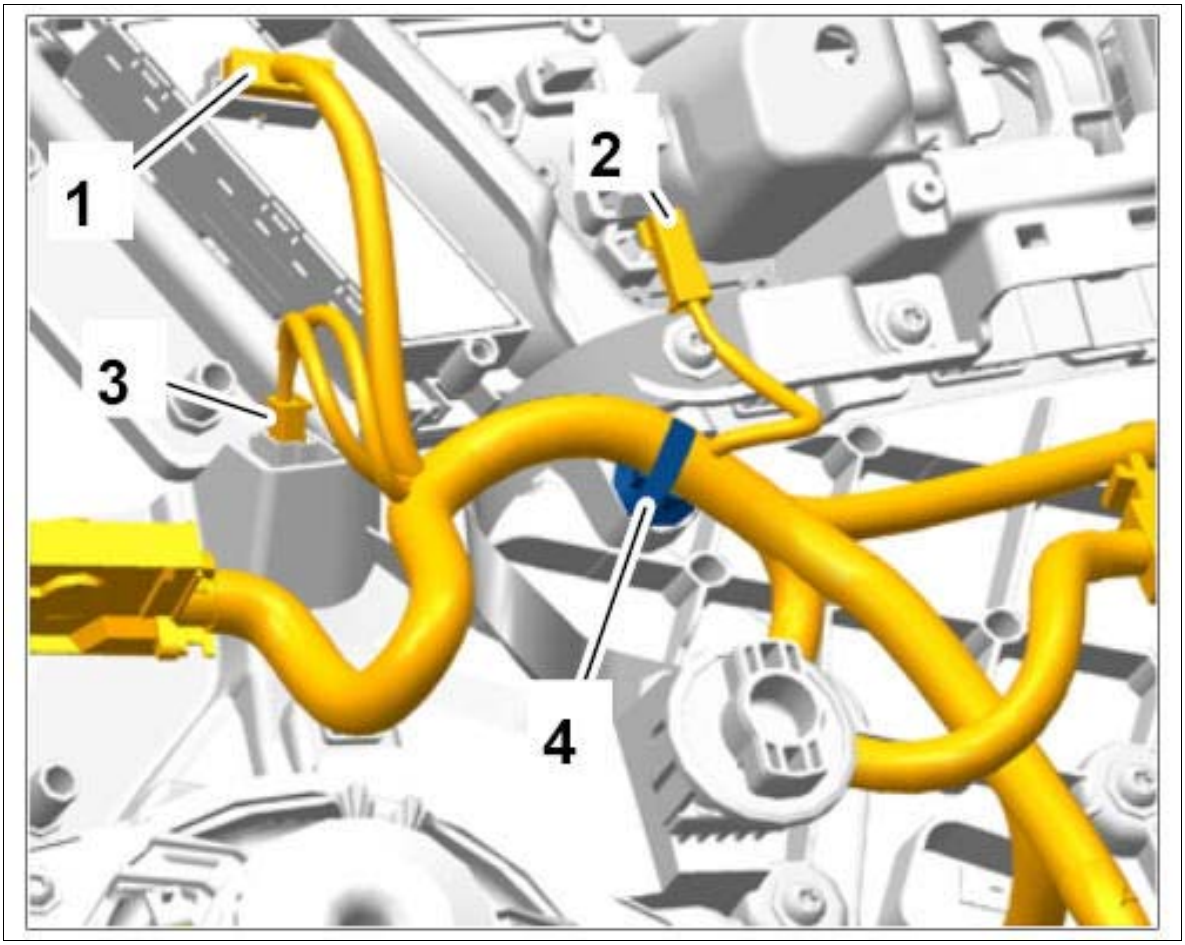

Courtesy of PORSCHE CARS NORTH AMERICA, INC.

8. Release electric plug connection **-1-** at the central locking button and disconnect it.
9. Disconnect electric plug connection **-2-** from light-emitting diode for alarm system.
10. Disconnect electric plug connection **-3-** from light for ambient lighting.
11. Disengage wire harness **-4-** from the holders **-5-** on the front door panel.

Fig 4: Disconnecting Electric Plug Connections

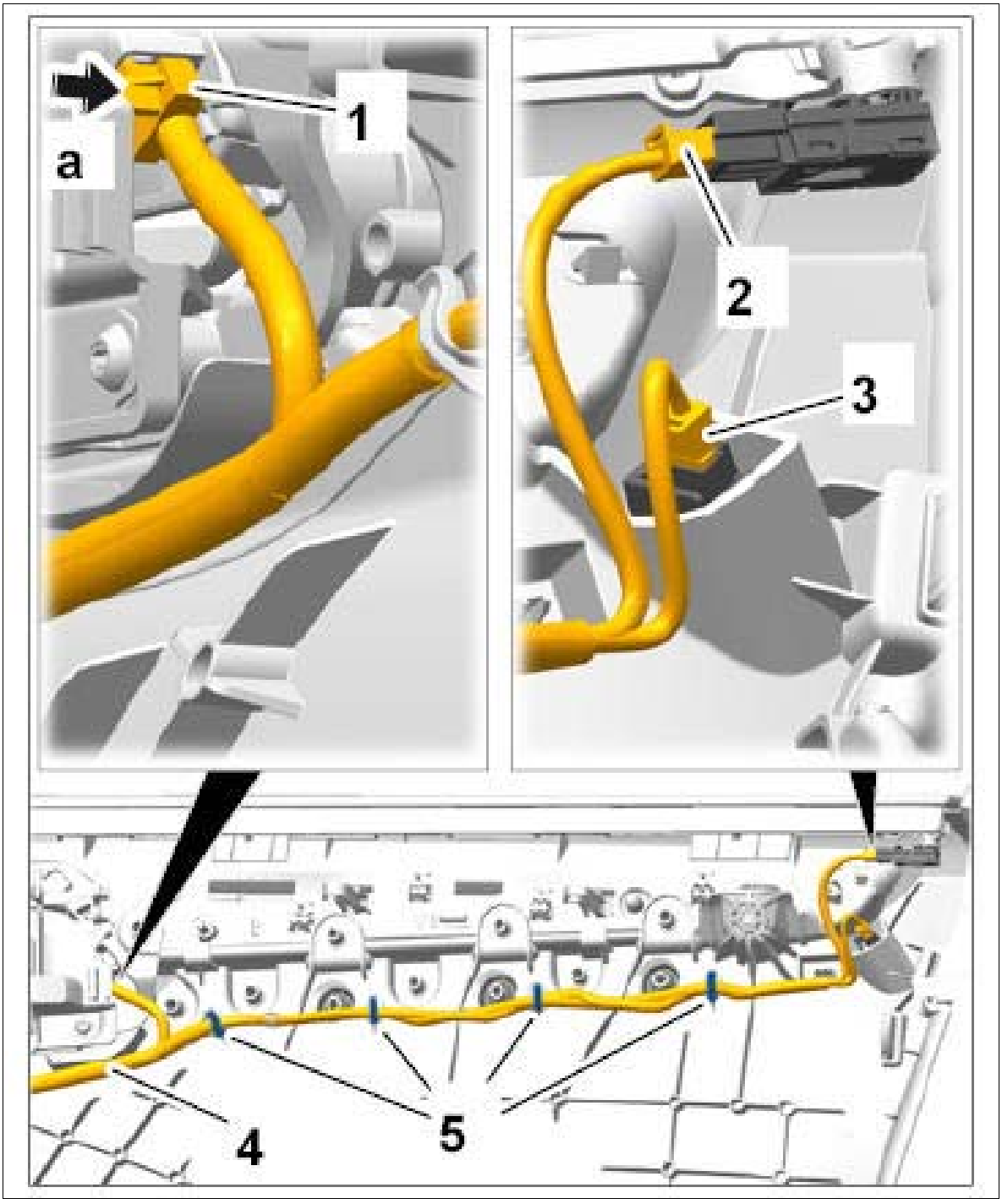

Courtesy of PORSCHE CARS NORTH AMERICA, INC.

WM 973219 REMOVING AND INSTALLING WIRE HARNESS FOR DOOR IN FRONT DOOR PANEL (ALL MODELS) > INSTALLING WIRE HARNESS FOR DOOR IN FRONT DOOR PANEL

1. Installation is performed in reverse order to removal.

1. 1.1. Make sure that the individual sections of the door wire harness in the front door panel are not twisted or entangled.
2. 1.2. Check that the wire harness is routed correctly and without tension so that no chafing occurs.
3. 1.3. Connect all electric plug connections until they engage securely.
4. 1.4. Clip in all sections of the door wire harness in the front door panel securely at the relevant positions.

WM 973219 REMOVING AND INSTALLING WIRE HARNESS FOR DOOR IN FRONT DOOR PANEL (ALL MODELS) > SUBSEQUENT WORK

1. Install switch for front power windows → INSTALLING SWITCH FOR FRONT POWER WINDOWS .
2. Install front door panel → INSTALLING FRONT DOOR PANEL .

WM 973219 REMOVING AND INSTALLING WIRE HARNESS FOR DOOR IN FRONT DOOR SUB-FRAME (ALL MODELS) > PRELIMINARY WORK

1. Disconnect the battery ground strap. → 2X00IN WORK INSTRUCTIONS AFTER DISCONNECTING THE BATTERY .
2. Remove front door panel → 705919 REMOVING AND INSTALLING FRONT DOOR PANEL .
3. Remove woofer in the front door → 914119 REMOVING AND INSTALLING FRONT LOUDSPEAKERS .

   Vehicles with KESSY
4. Remove supporting bow for door handle → 571119 REMOVING AND INSTALLING FRONT DOOR HANDLE .

WM 973219 REMOVING AND INSTALLING WIRE HARNESS FOR DOOR IN FRONT DOOR SUB-FRAME (ALL MODELS) > REMOVING WIRE HARNESS FOR DOOR IN FRONT DOOR SUB-FRAME

NOTE: Voltage peaks

- *Risk of damage to load or to the control unit*

→ Remove the ignition key and switch off load before disconnecting or removing load.

Information

Always comply with the regulations for handling ESD-sensitive components!

- Assembly work may only be carried out if the mechanic is wearing the working clothes and shoes approved by Porsche.
- The new part must only be removed from the ESD (electrostatic discharge) protective packaging just before installation and at the position at which the part is to be installed.
- Never touch the electric pins and plug contacts.

Information

- The number of plug connections and holders on the wire harness can vary depending on vehicle equipment.
- The illustrations show only one side of the vehicle and one equipment variant. Other sides of the vehicle and other equipment variants may differ.

1. Release electric plug connection **-1-** (**-a-**) and pull it down off the front door control unit **-2-** .
2. Release electric plug connection **-1-** (**-b-**) and disconnect it.

Fig 1: Disconnecting Electric Plug Connection

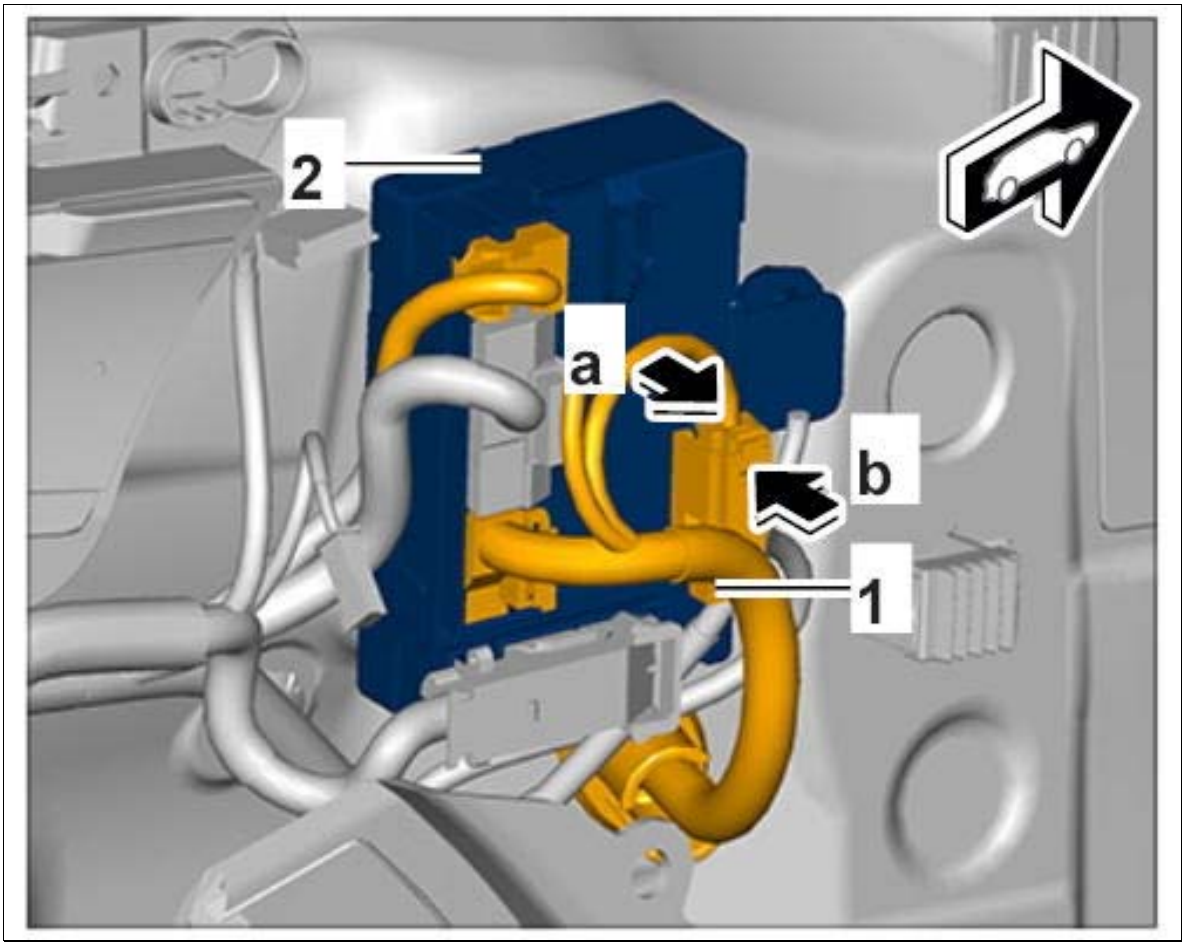

Courtesy of PORSCHE CARS NORTH AMERICA, INC.

3. Release electric plug connection **-1-** (**-a-**) and disconnect it from the front door control unit **-2-** .

4. Pull locking mechanism **-b-** , press release button **-arrow-** and pull off electric plug connection **-3-** .

Fig 2: Disconnecting Electric Plug Connections

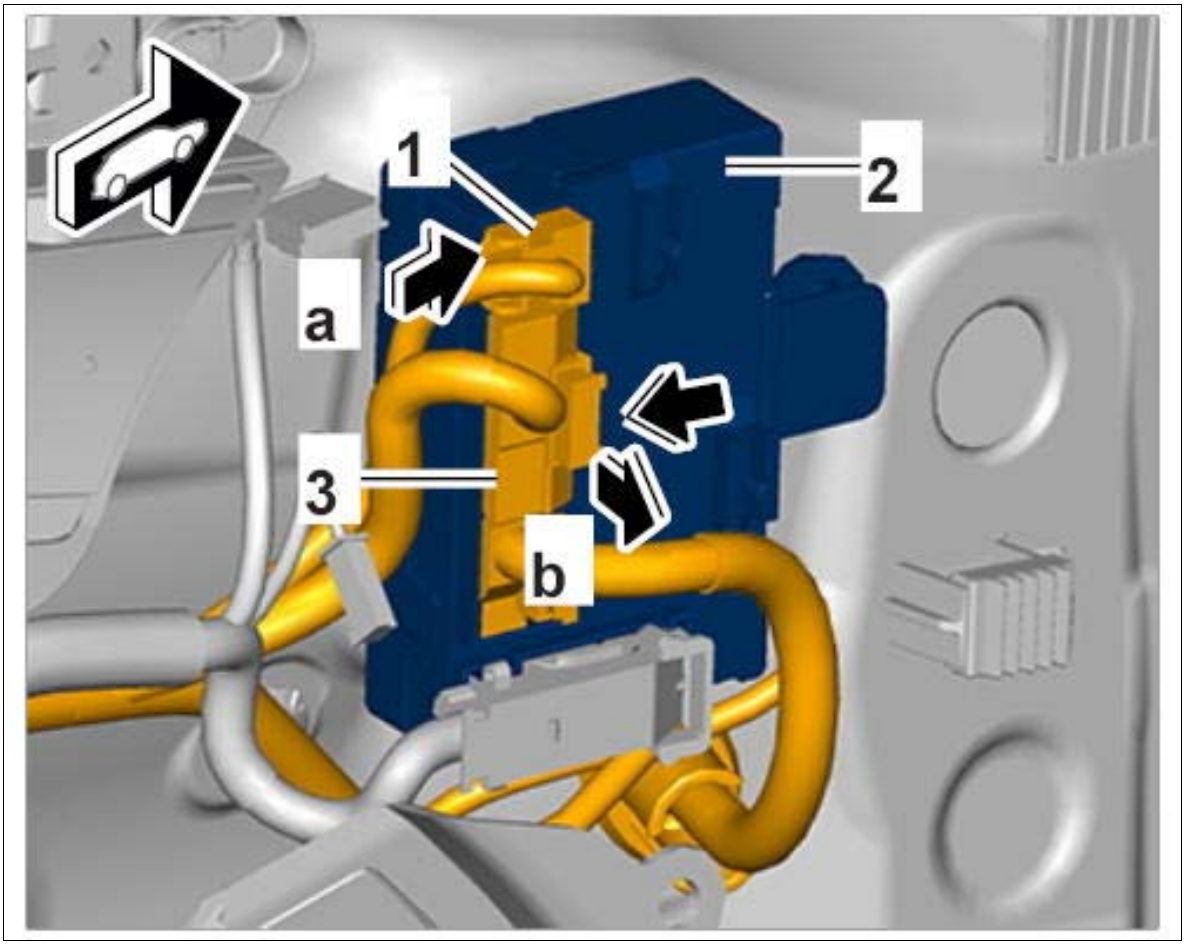

Courtesy of PORSCHE CARS NORTH AMERICA, INC.

5. Release the catch **-a-** and slide electric connector **-1-** down off retaining clip.

> ⚠ *CAUTION: Incorrect triggering of airbag modules.*
>
> 1. *Danger of injury and material damage if airbag sensors are not handled correctly!*

→ Remove ignition key. Disconnect battery. Route or isolate ground strap so that all contact with a ground carrier (e.g. body, seat frame) is avoided.

→ Always wait one minute after disconnecting the battery before disconnecting the connector from the sensor.

→ The airbag sensor must not be removed with the plug plugged in!

→ The airbag sensors cannot be interchanged.

6. Pull out locking mechanism **-b-** , press on the locking mechanism **-c-** and pull electric plug connection **-2-** off the pressure sensor **-3-** .

Fig 3: Disconnecting Electric Plug Connection On Pressure Sensor

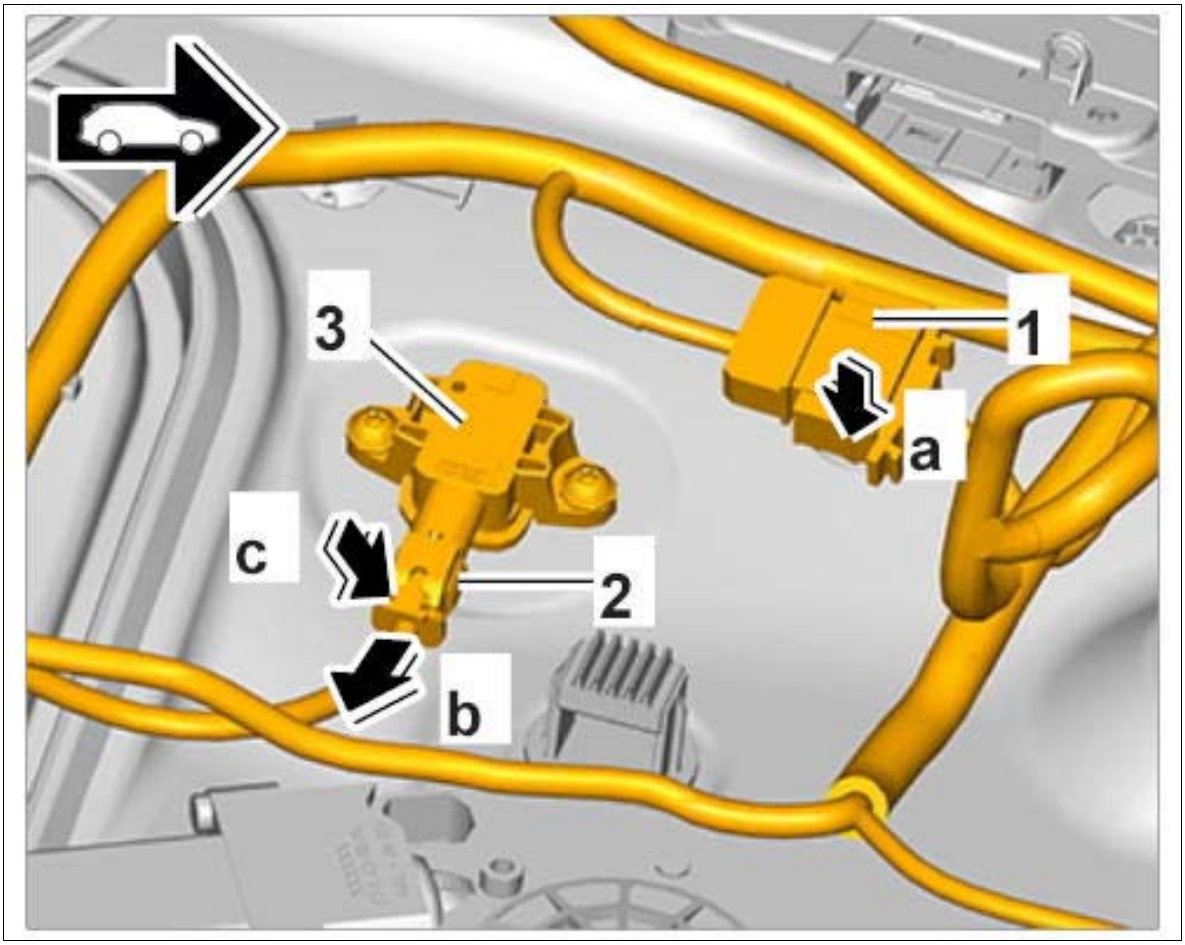

Courtesy of PORSCHE CARS NORTH AMERICA, INC.

7. Pull out locking mechanism **-a-** , press release button **-b-** and pull electric plug connection **-1-** off the window regulator motor **-2-** .

Fig 4: Disconnecting Electric Plug Connection On Window Regulator Motor

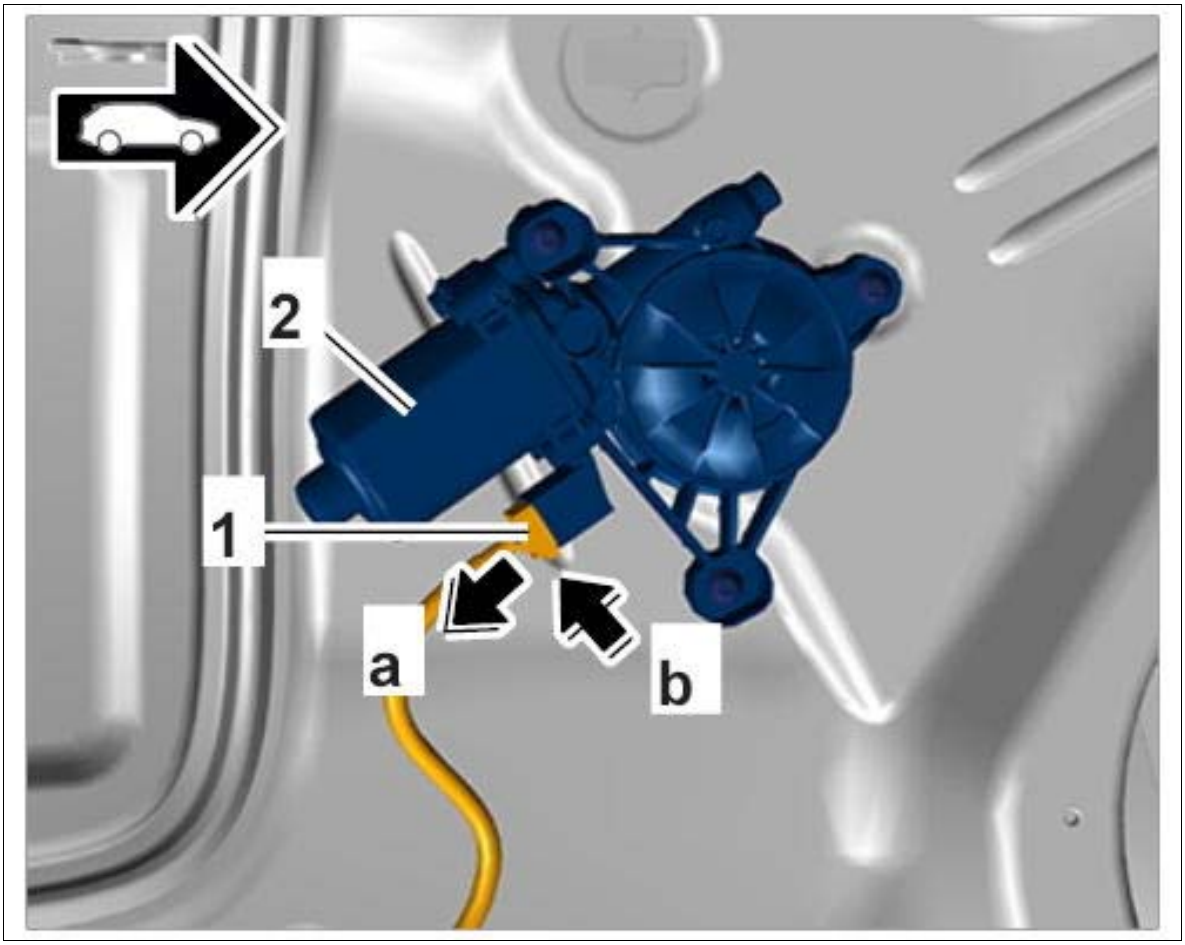

Courtesy of PORSCHE CARS NORTH AMERICA, INC.

8. Unclip wire harness **-1-** from retaining clips on the cover **-2-** .
9. Detach cover **-2-** from the front door.
10. Loosen grommet **-3-** from the front door.

Fig 5: Identifying Front Door, Wire Harness, Cover And Grommet

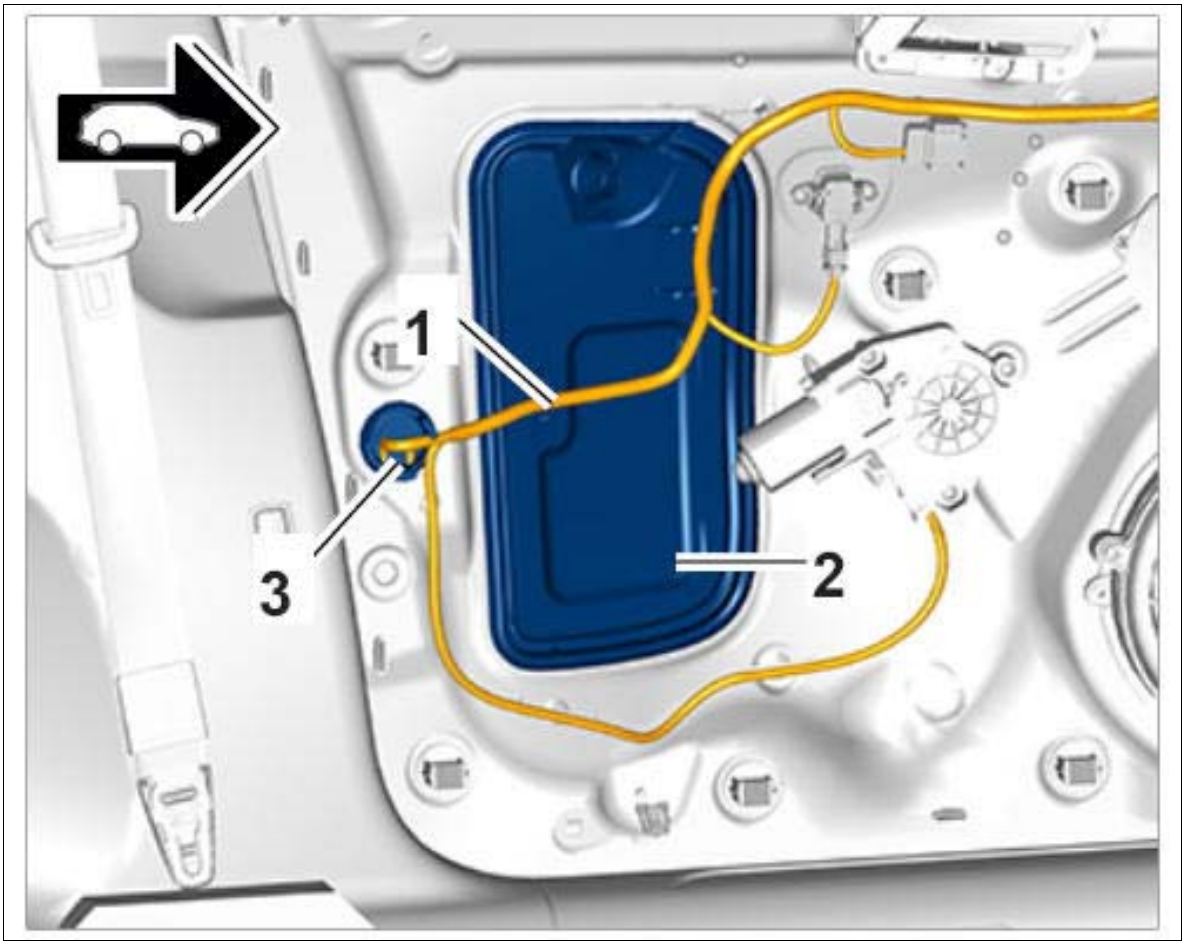

Courtesy of PORSCHE CARS NORTH AMERICA, INC.

11. Release electric plug connection **-1-** (**-a-**) and disconnect it from the door lock **-2-** .
12. Release electric plug connection **-3-** (**-b-**) and disconnect it from the door lock.

Fig 6: Disconnecting Door Lock Electric Plug Connections

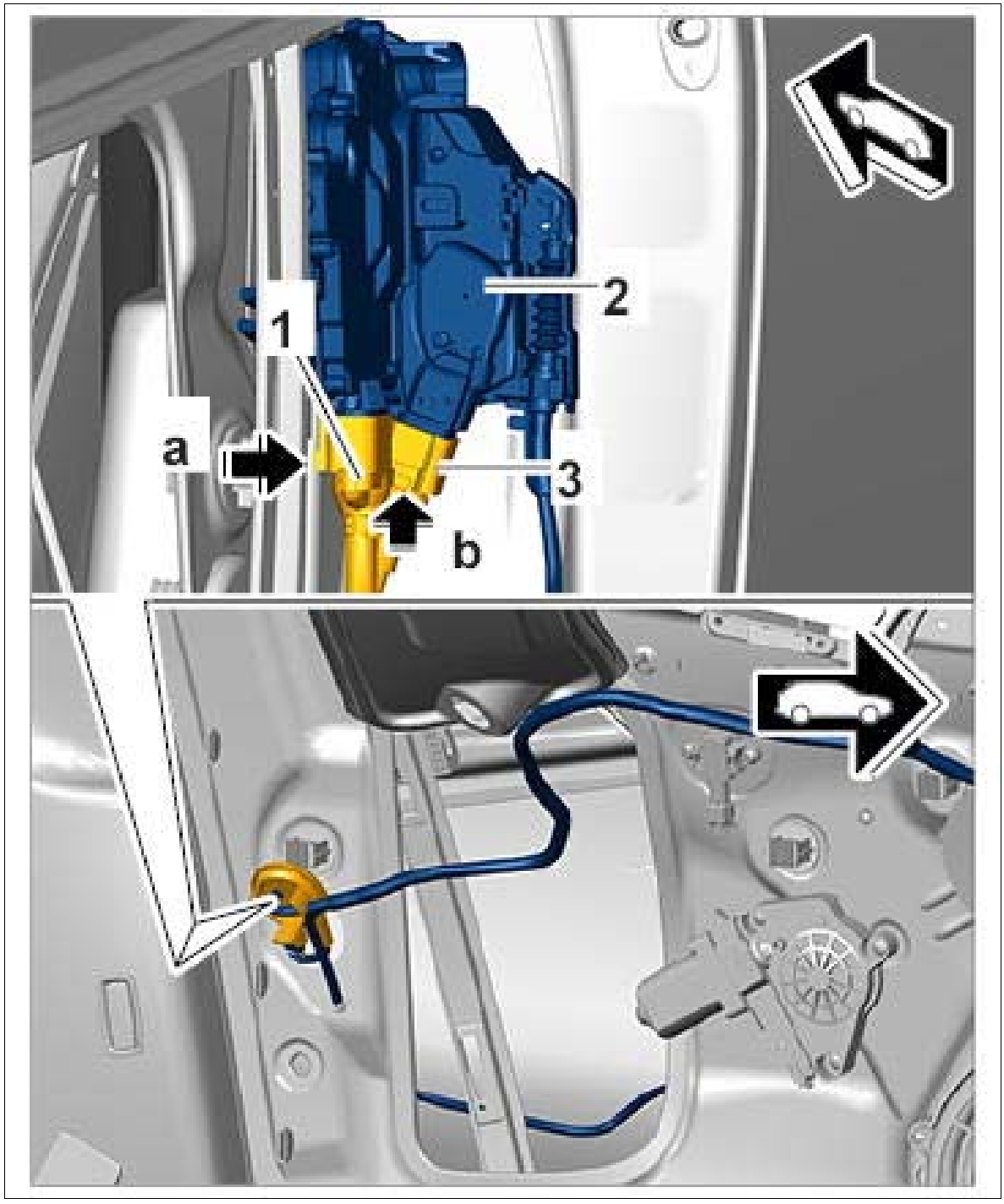

Courtesy of PORSCHE CARS NORTH AMERICA, INC.

13. Loosen grommet **-1-** from the front door.
14. Unclip the wire harness holders **-2-** from the front door.

Fig 7: Detaching Grommet And Wire Harness From Front Door

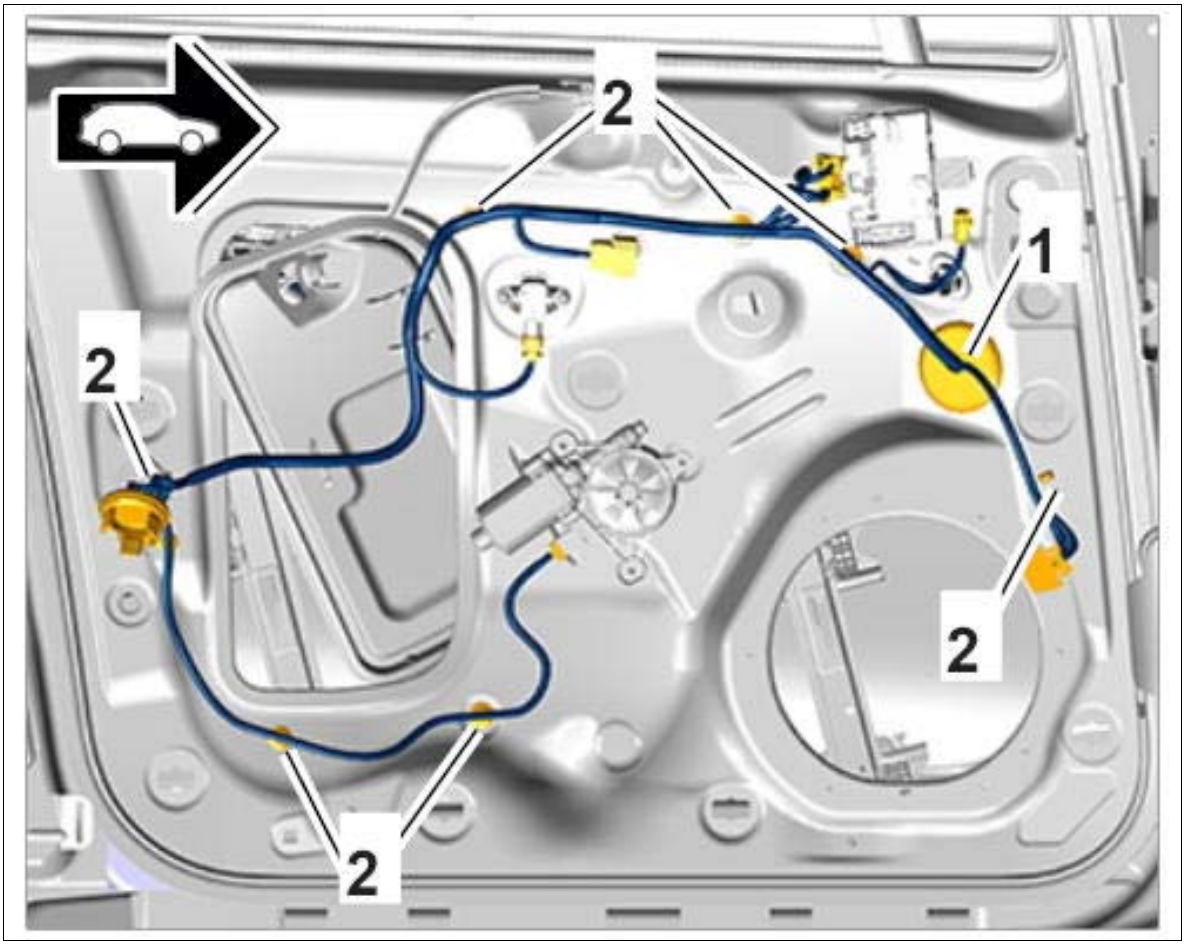

Courtesy of PORSCHE CARS NORTH AMERICA, INC.

15. Release locking mechanism on electric plug connection for wire harness for door in front door sub-frame **-1-** at the A-pillar in an upward direction using a plastic wedge **-a-** and remove it.

Fig 8: Disconnecting Electric Plug Connection On Front Door Wire Harness

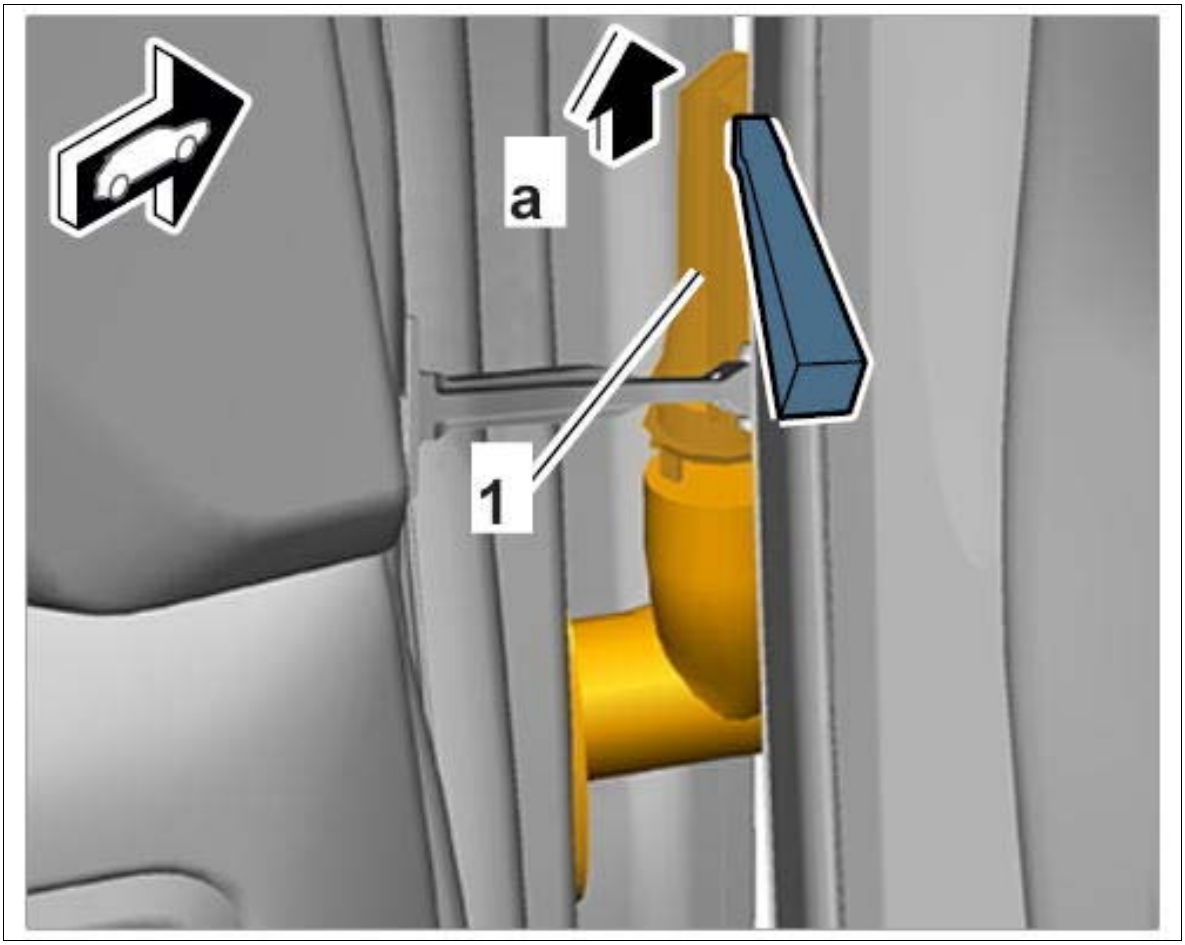

Courtesy of PORSCHE CARS NORTH AMERICA, INC.

16. Disengage grommet **-1-** at the bottom from the front door **-a-** .
17. Pull wire harness **-2-** up out of the front door and remove it.

Fig 9: Detaching Grommet From Front Door

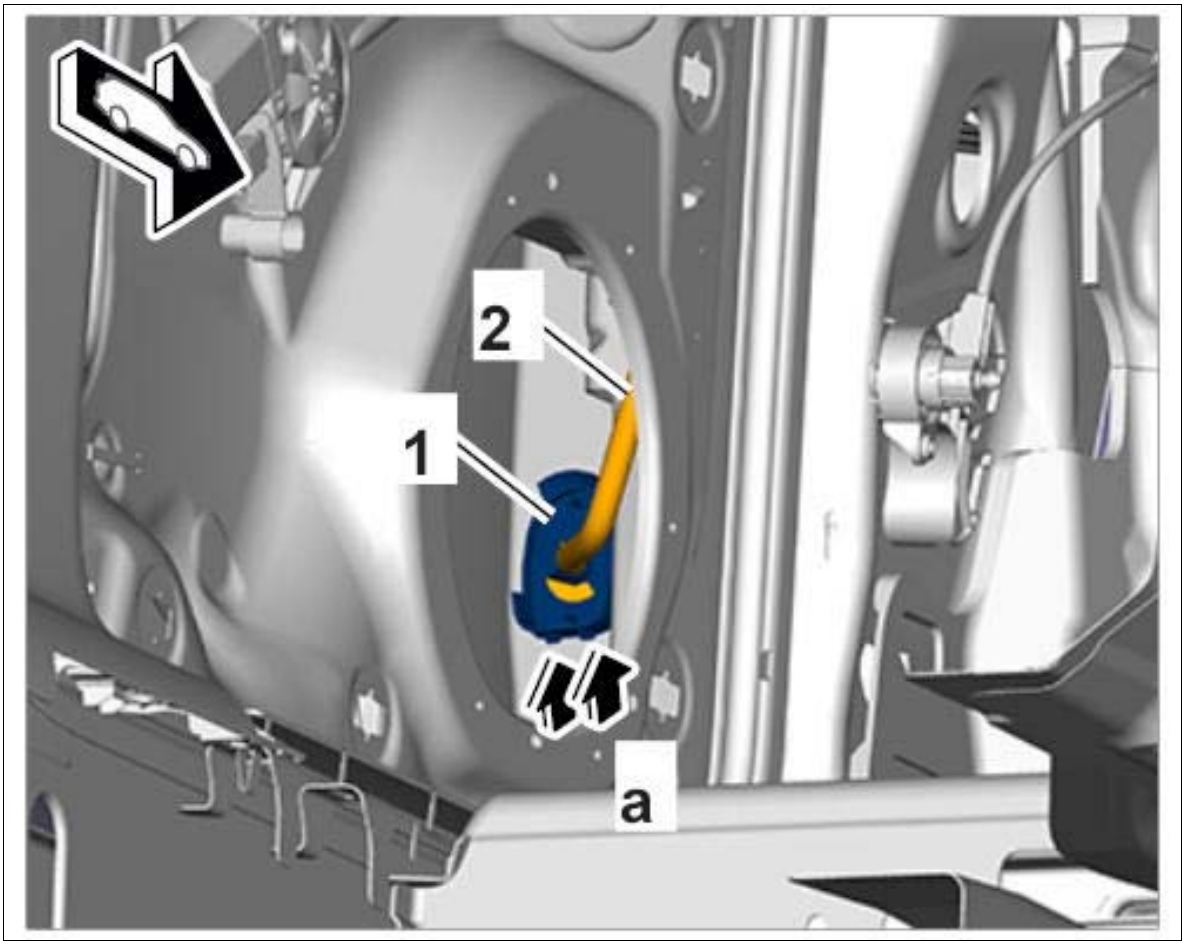

Courtesy of PORSCHE CARS NORTH AMERICA, INC.

WM 973219 REMOVING AND INSTALLING WIRE HARNESS FOR DOOR IN FRONT DOOR SUB-FRAME (ALL MODELS) > INSTALLING WIRE HARNESS FOR DOOR IN FRONT DOOR SUB-FRAME

Information

Always comply with the regulations for handling ESD-sensitive components!

- Assembly work may only be carried out if the mechanic is wearing the working clothes and shoes approved by Porsche.
- The new part must only be removed from the ESD (electrostatic discharge) protective packaging just before installation and at the position at which the part is to be installed.
- Never touch the electric pins and plug contacts .

1. Installation is performed in reverse order to removal.

    1. 1.1. Make sure that the individual sections of the wire harness in the front door sub-frame are not twisted or entangled.

2. 1.2. Check that the wire harness is routed correctly and without tension so that no chafing occurs.

3. 1.3. Connect all electric plug connections until they engage securely.

4. 1.4. Lock all electric plug connections by hand using the manual slide lock.

5. 1.5. Clip in all sections of the door wire harness in the front door sub-frame securely at the relevant positions.

2. Make sure that the grommets **-1, 2, 3-** and the cover **-4-** are seated correctly in the front door.

    1. 2.1. Align grommet **-2-** in such a way that the center bar **-a-** of the grommet is pointing towards the recess **-b-** in the door panel.

    2. 2.2. Align grommet **-3-** in such a way that the grommet exit points in the door are pointing straight down.

Fig 1: Checking Grommets And Cover

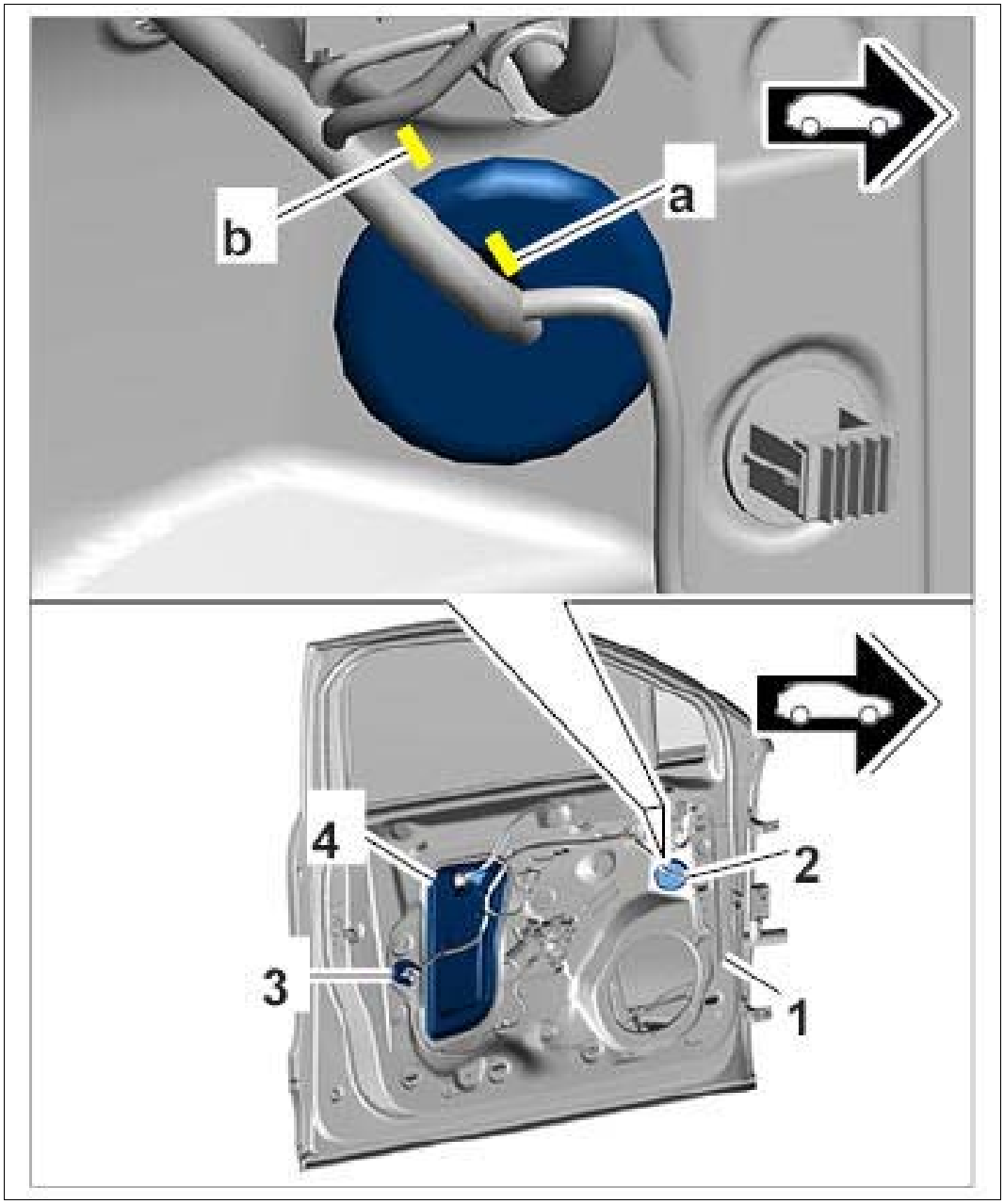

Courtesy of PORSCHE CARS NORTH AMERICA, INC.

WM 973219 REMOVING AND INSTALLING WIRE HARNESS FOR DOOR IN FRONT DOOR SUB-FRAME (ALL MODELS) > SUBSEQUENT WORK

Vehicles with KESSY

1. Install supporting bow for door handle → INSTALLING DOOR HANDLE .

All vehicles

2. Install woofer in the front door → INSTALLING FRONT LOUDSPEAKERS .

3. Install front door panel → INSTALLING FRONT DOOR PANEL .
4. Connect the battery ground strap → 2X00IN WORK INSTRUCTIONS AFTER DISCONNECTING THE BATTERY .

WM 973219 REMOVING AND INSTALLING WIRE HARNESS FOR DOOR IN REAR DOOR PANEL (ALL MODELS) > PRELIMINARY WORK

1. Remove rear door panel. → 707319 REMOVING AND INSTALLING REAR DOOR PANEL .
2. Remove switch for rear power windows. → 645819 REMOVING AND INSTALLING SWITCH FOR REAR POWER WINDOWS .

WM 973219 REMOVING AND INSTALLING WIRE HARNESS FOR DOOR IN REAR DOOR PANEL (ALL MODELS) > REMOVING WIRE HARNESS FOR DOOR IN REAR DOOR PANEL

Information

- The number of plug connections and holders on the wire harness can vary depending on vehicle equipment.
- The illustrations show only one side of the vehicle and one equipment variant. Other sides of the vehicle and other equipment variants may differ.

1. Disengage wire harness **-1-** from the holders **-2-** on the rear door panel.
2. Unclip the wire harness holders **-3-** from the rear door panel.

Fig 1: Disconnecting Door Wire Harness In Rear Door Panel

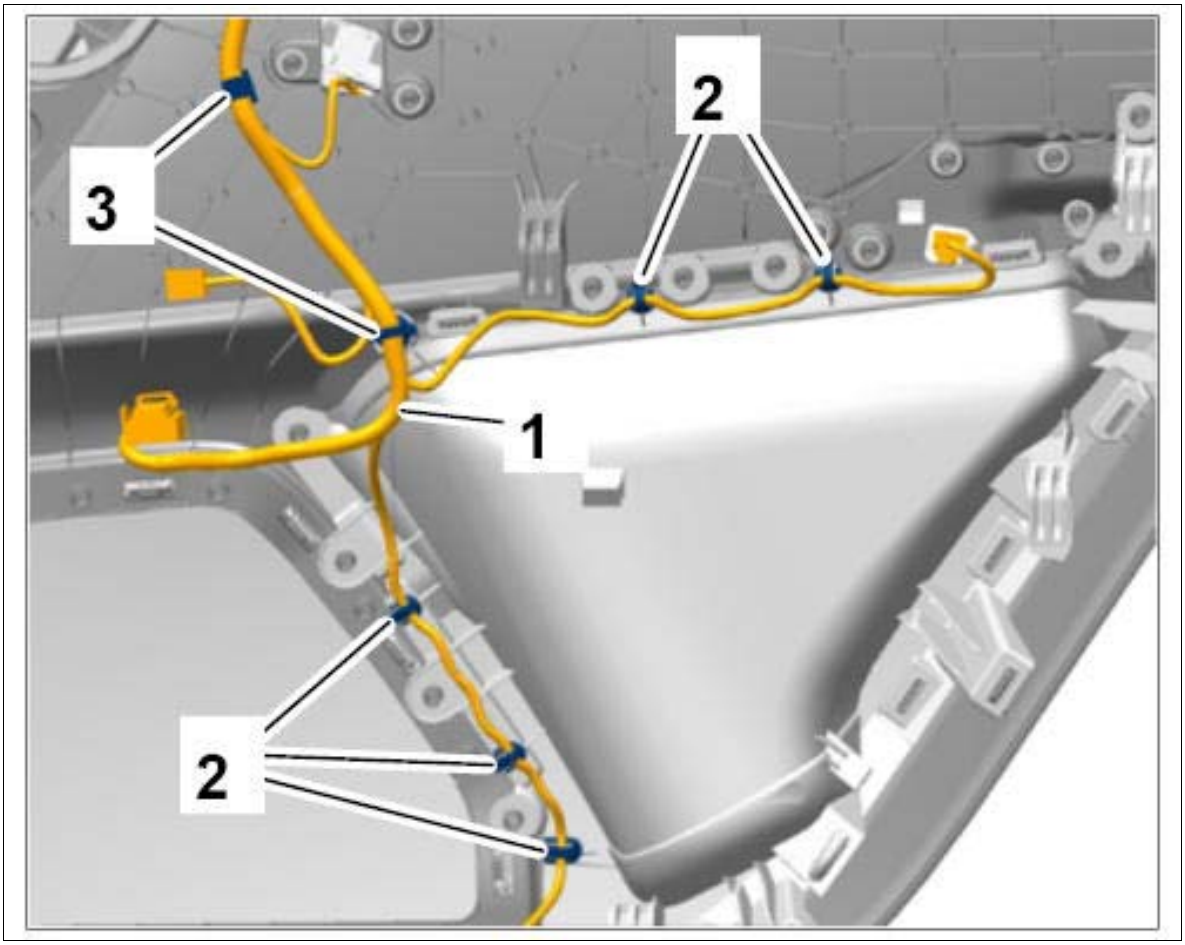

Courtesy of PORSCHE CARS NORTH AMERICA, INC.

3. Disconnect electric plug connection **-1-** at the mid-range loudspeaker.
4. Disconnect electric plug connection **-2-** at the tweeter.
5. Disconnect electric plug connection **-3-** from light for ambient lighting.
6. Disconnect electric plug connection **-4-** from the door handle liner light.
7. Unclip the holder **-5-** for the wire harness **-6-** from the rear door panel.

Fig 2: Disconnecting Electric Plug Connections

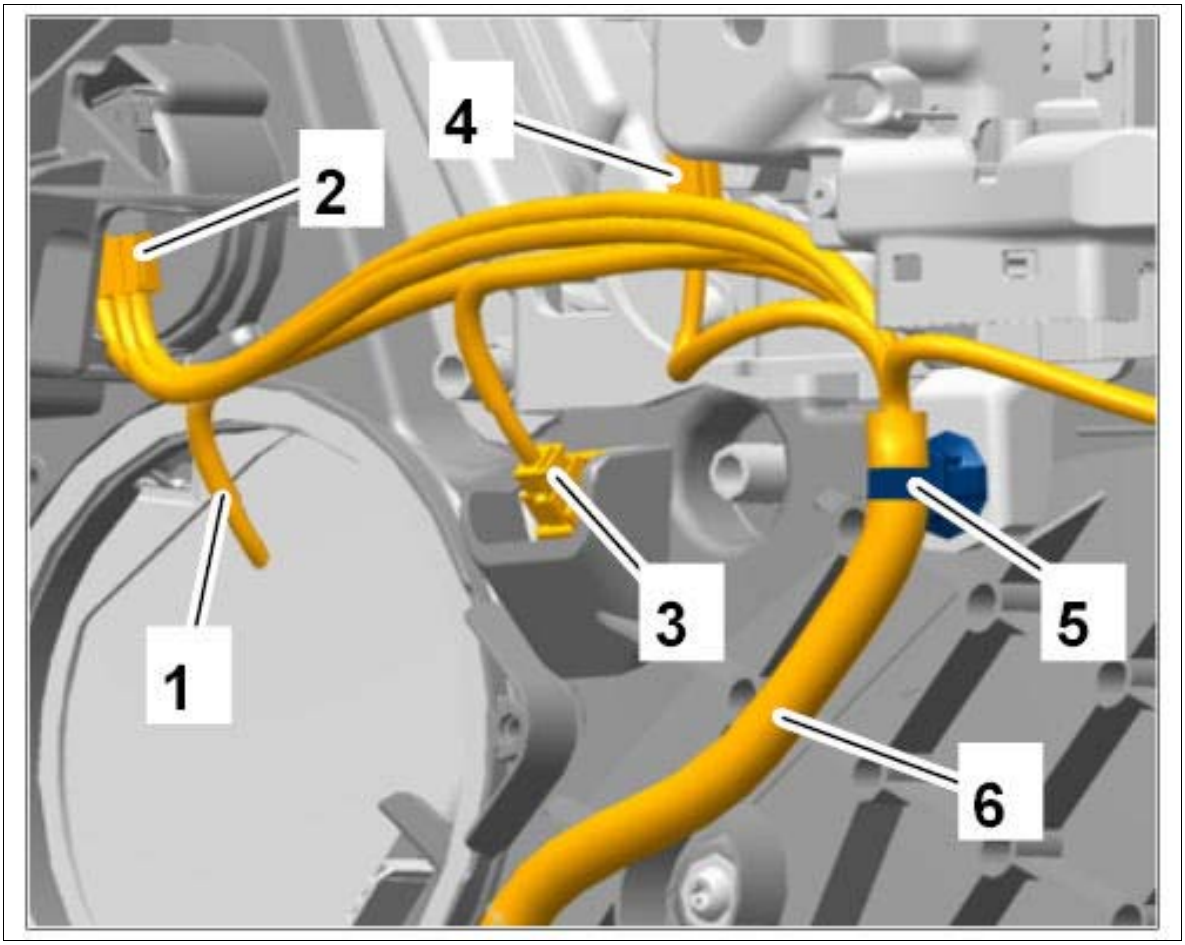

Courtesy of PORSCHE CARS NORTH AMERICA, INC.

8. Disconnect electric plug connection **-1-** from light for ambient lighting.
9. Disengage wire harness **-2-** from the holders **-3-** on the rear door panel.
10. Unclip the holder **-4-** for the wire harness from the rear door panel.

Fig 3: Disconnecting Electric Plug Connection

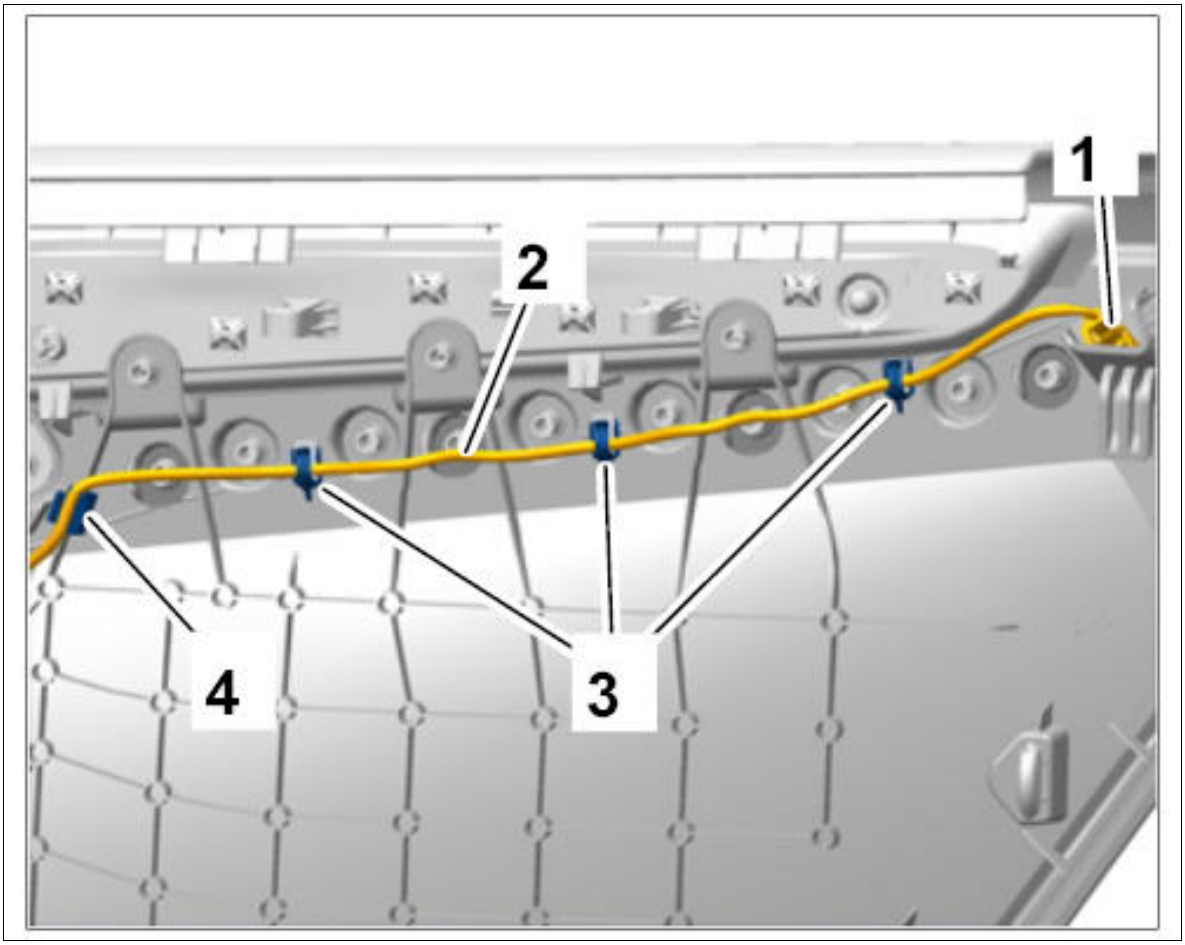

Courtesy of PORSCHE CARS NORTH AMERICA, INC.

WM 973219 REMOVING AND INSTALLING WIRE HARNESS FOR DOOR IN REAR DOOR PANEL (ALL MODELS) > INSTALLING WIRE HARNESS FOR DOOR IN REAR DOOR PANEL

1. Installation is performed in reverse order to removal.

WM 973219 REMOVING AND INSTALLING WIRE HARNESS FOR DOOR IN REAR DOOR PANEL (ALL MODELS) > SUBSEQUENT WORK

1. Install switch for rear power windows. → INSTALLING SWITCH FOR REAR POWER WINDOWS .
2. Install rear door panel. → INSTALLING REAR DOOR PANEL .

WM 973219 REMOVING AND INSTALLING WIRE HARNESS FOR DOOR IN REAR

DOOR SUB-FRAME (ALL MODELS) > PRELIMINARY WORK

1. Remove rear door panel → 707319 REMOVING AND INSTALLING REAR DOOR PANEL .
2. Remove woofer in the rear door → 914219 REMOVING AND INSTALLING REAR LOUDSPEAKERS .

   Vehicles with KESSY

3. Remove support bow for rear door handle → 581119 REMOVING AND INSTALLING REAR DOOR HANDLE .

WM 973219 REMOVING AND INSTALLING WIRE HARNESS FOR DOOR IN REAR DOOR SUB-FRAME (ALL MODELS) > REMOVING WIRE HARNESS FOR DOOR IN REAR DOOR SUB-FRAME

NOTE: Voltage peaks

- *Risk of damage to load or to the control unit*

→ Remove the ignition key and switch off load before disconnecting or removing load.

Information

Always comply with the regulations for handling ESD-sensitive components!

- Assembly work may only be carried out if the mechanic is wearing the working clothes and shoes approved by Porsche.
- The new part must only be removed from the ESD (electrostatic discharge) protective packaging just before installation and at the position at which the part is to be installed.
- Never touch the electric pins and plug contacts.

Information

- The number of plug connections and holders on the wire harness can vary depending on vehicle equipment.
- The illustrations show only one side of the vehicle and one equipment variant. Other sides of the vehicle and other equipment variants may differ.

1. Release electric plug connection **-1-** (**-a-**), disconnect it from the front door control unit **-2-** and move it aside **-b-** .

Fig 1: Disconnecting Electric Plug Connection

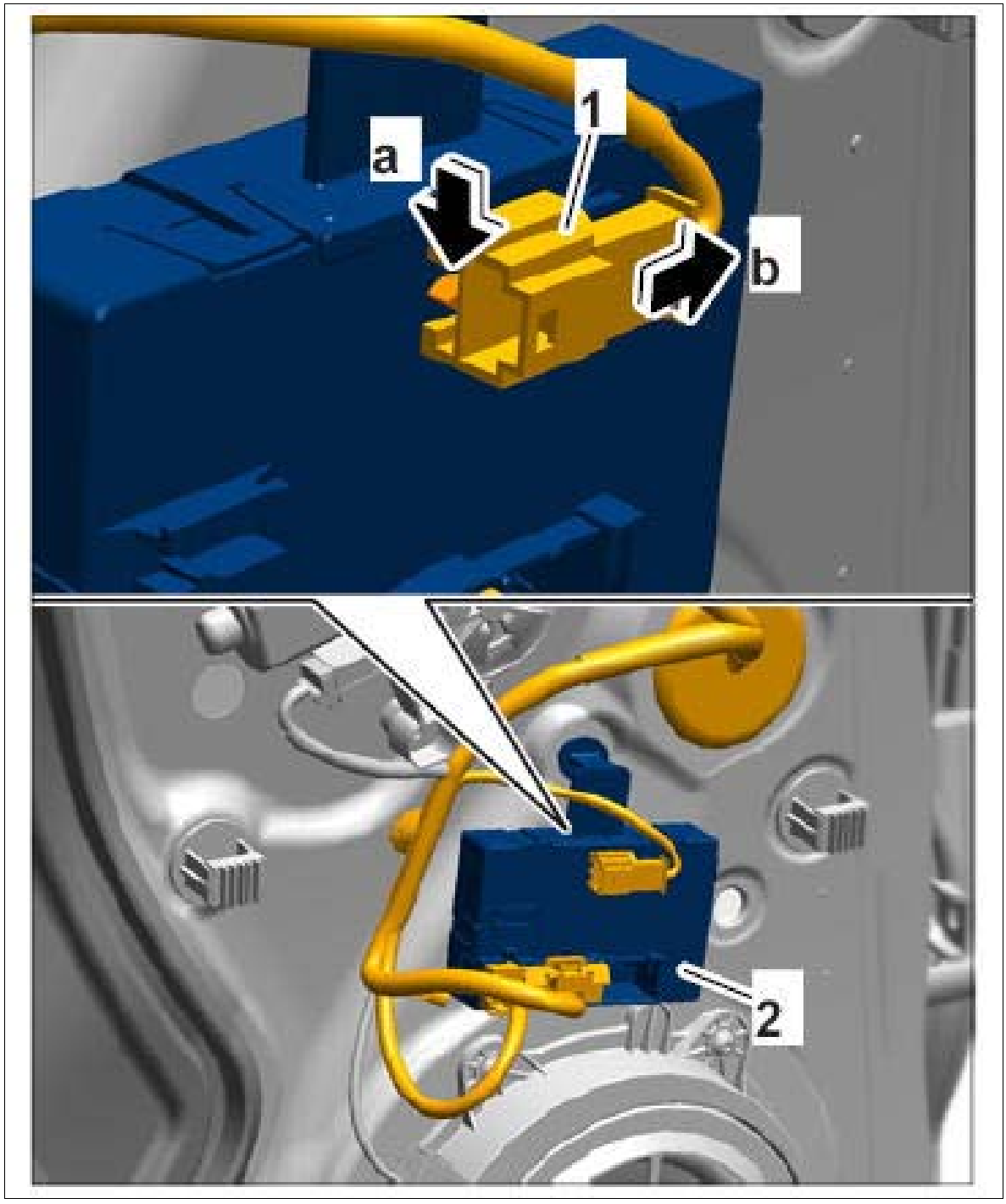

Courtesy of PORSCHE CARS NORTH AMERICA, INC.

2. Release electric plug connection **-1-** (**-a-**) and disconnect it from the rear door control unit **-2-** .

3. Pull locking mechanism **-b-** , press release button **-c-** and pull off electric plug connection **-3-** .

Fig 2: Disconnecting Electric Plug Connections

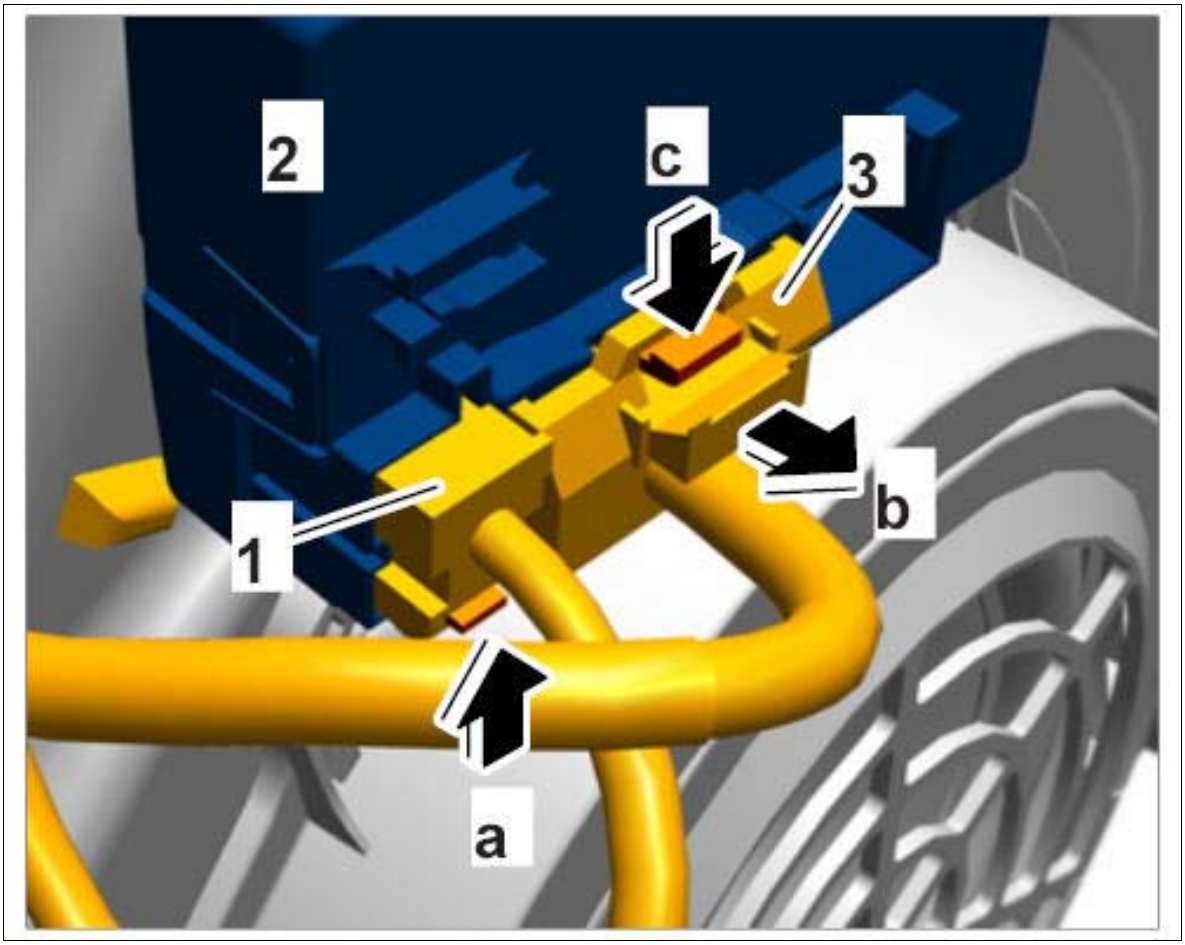

Courtesy of PORSCHE CARS NORTH AMERICA, INC.

4. Pull out locking mechanism **-a-** , press release button **-b-** and pull electric plug connection **-1-** off the rear window regulator motor **-2-** .

Fig 3: Disconnecting Electric Plug Connection On Rear Window Regulator Motor

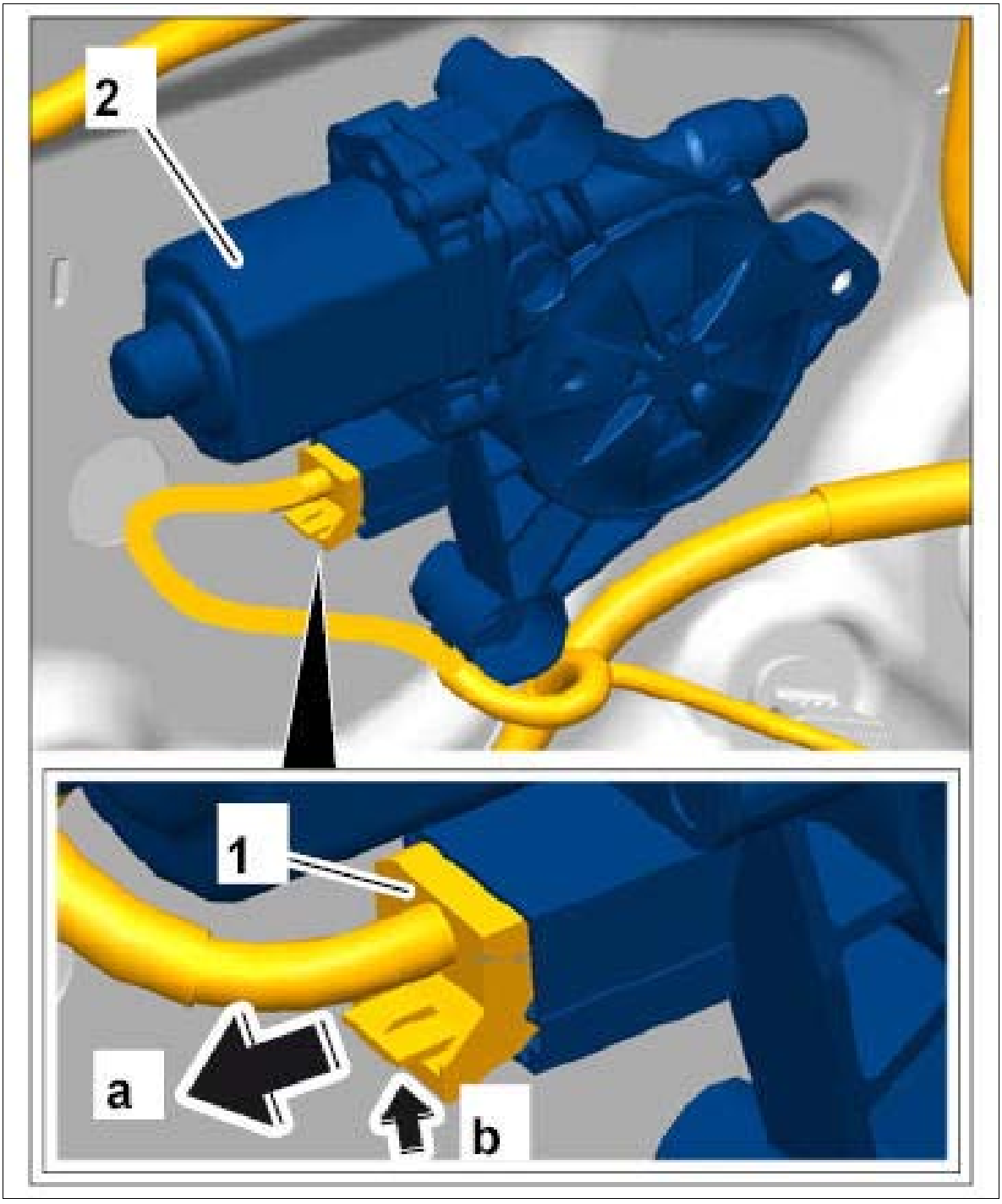

Courtesy of PORSCHE CARS NORTH AMERICA, INC.

5. Remove grommet **-1-** from the rear door.
6. Remove cover **-2-** from the rear door.

Fig 4: Detaching Cover And Grommet From Rear Door

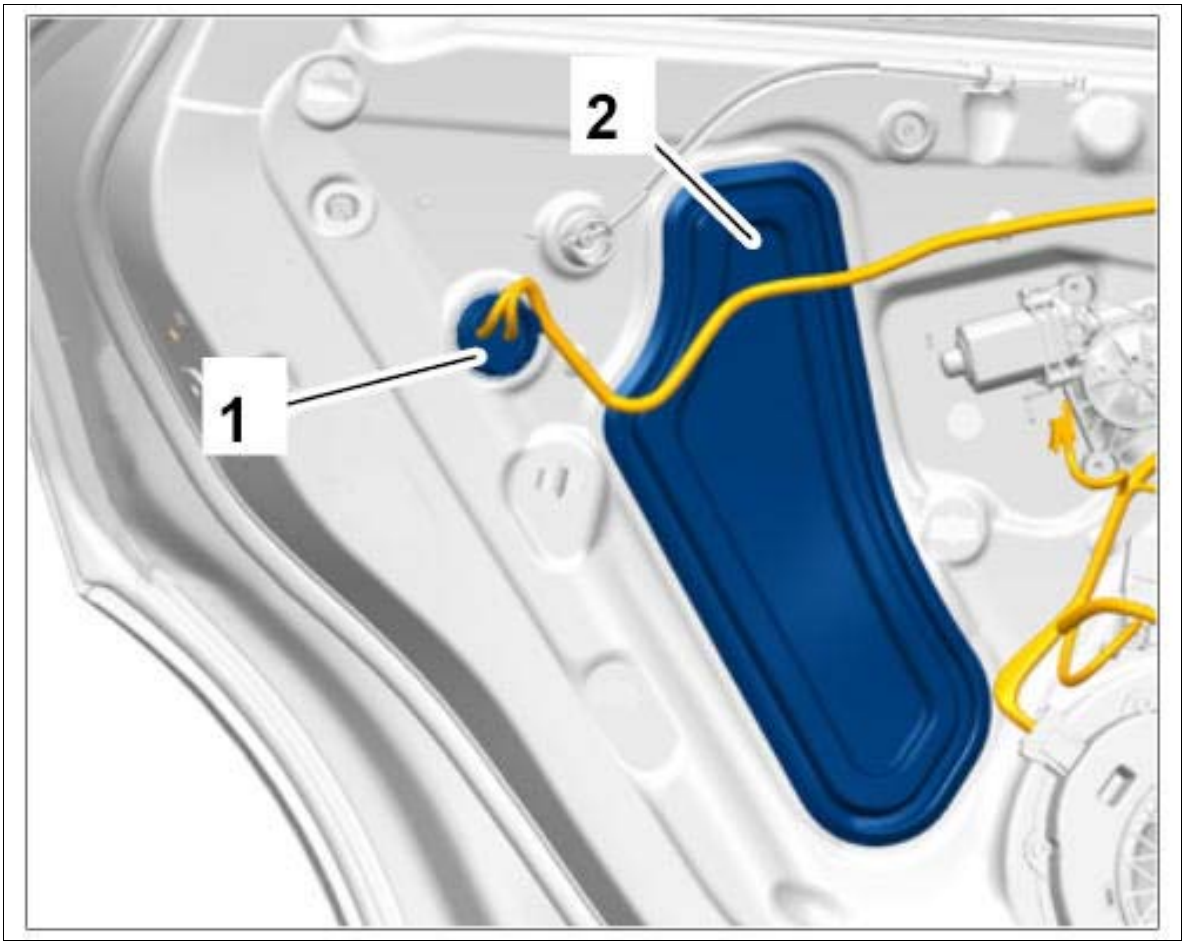

Courtesy of PORSCHE CARS NORTH AMERICA, INC.

7. Pull locking mechanism **-a-** , press it **-b-** and pull electric plug connection **-1-** off the rear door lock **-2-** .

Fig 5: Disconnecting Rear Door Lock Electric Plug Connection

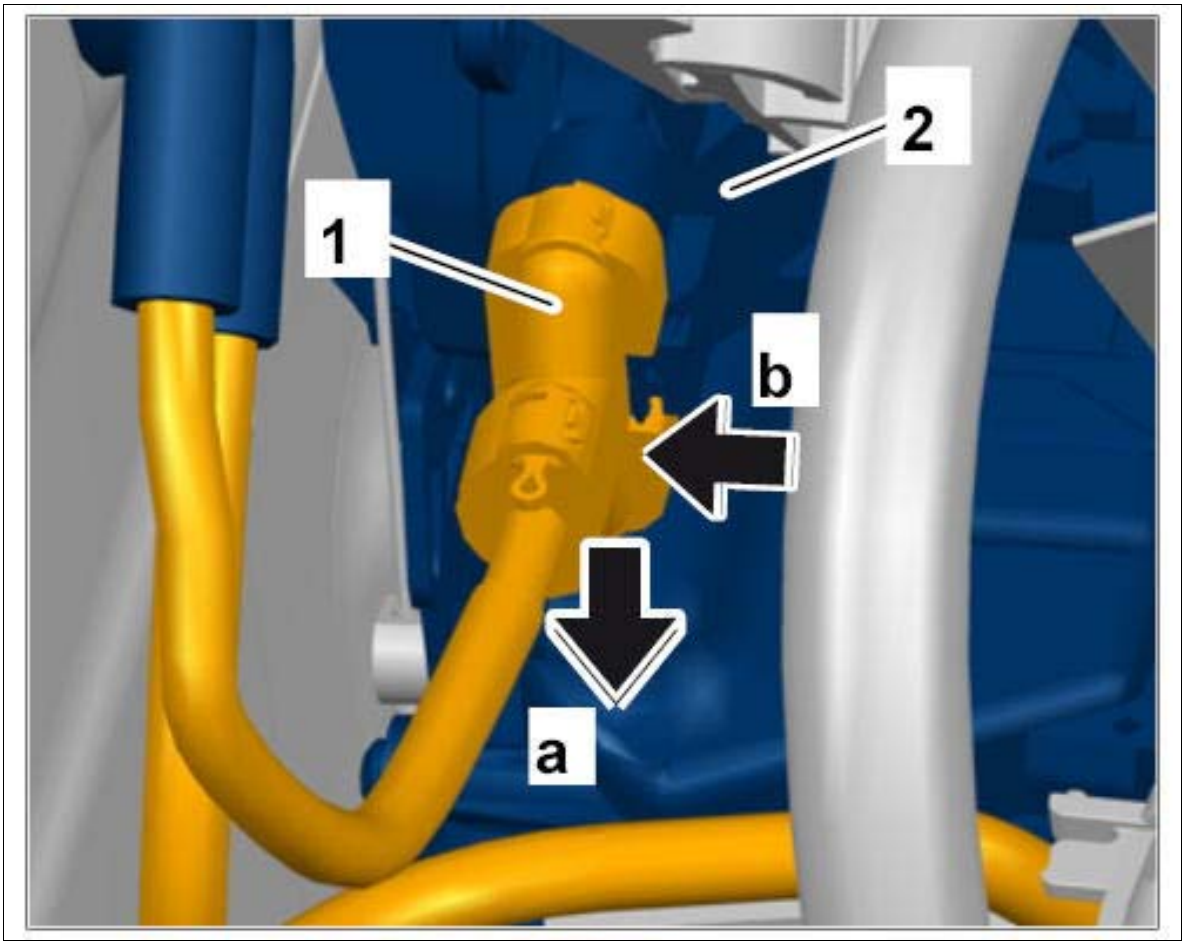

Courtesy of PORSCHE CARS NORTH AMERICA, INC.

8. Remove grommet **-1-** from the rear door.
9. Unclip the wire harness holders **-2-** from the rear door.

Fig 6: Detaching Grommet And Wire Harness From Front Door

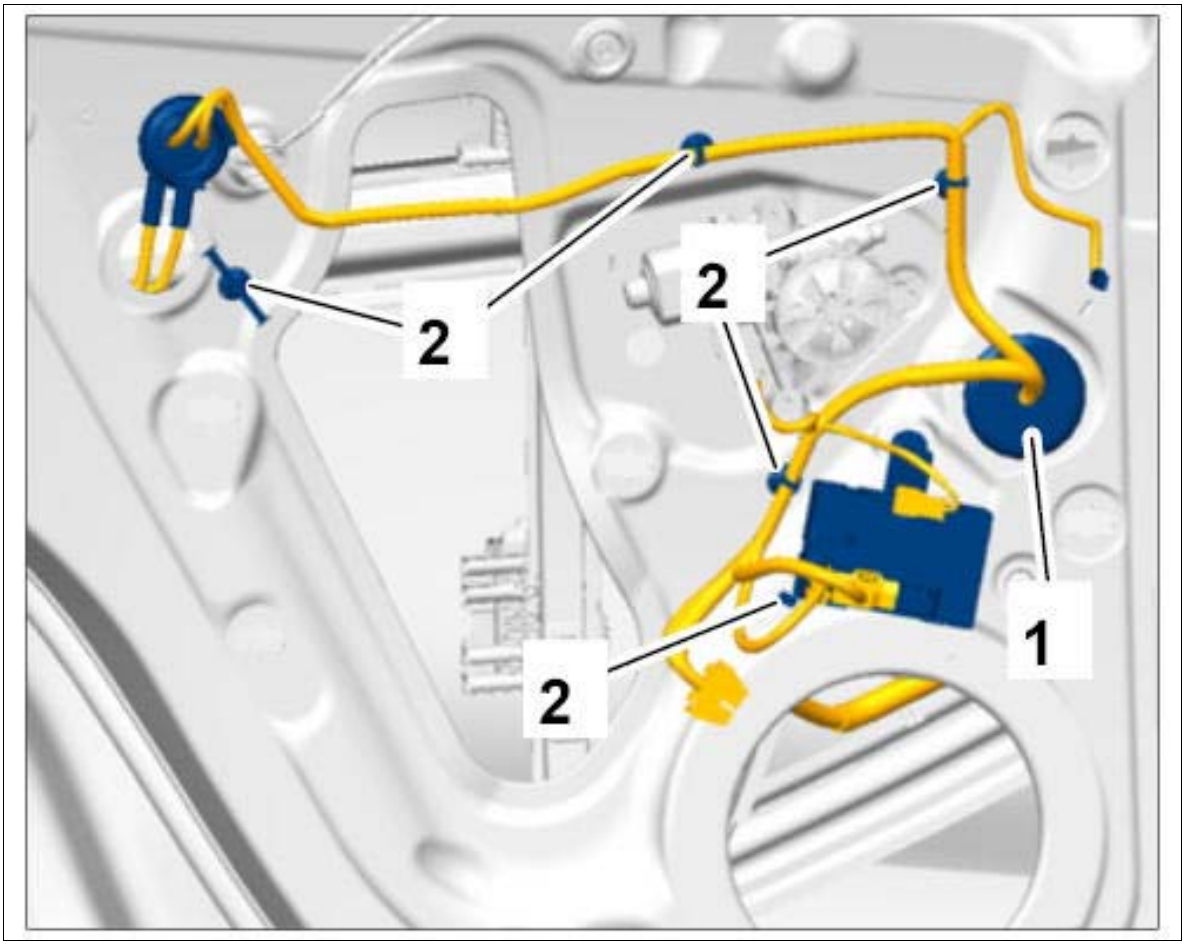

Courtesy of PORSCHE CARS NORTH AMERICA, INC.

10. Disengage rear door control unit **-1-** (**-a-**) and guide out wire harness for door in rear door sub-frame **-2-** .

Fig 7: Loosening Rear Door Control Unit

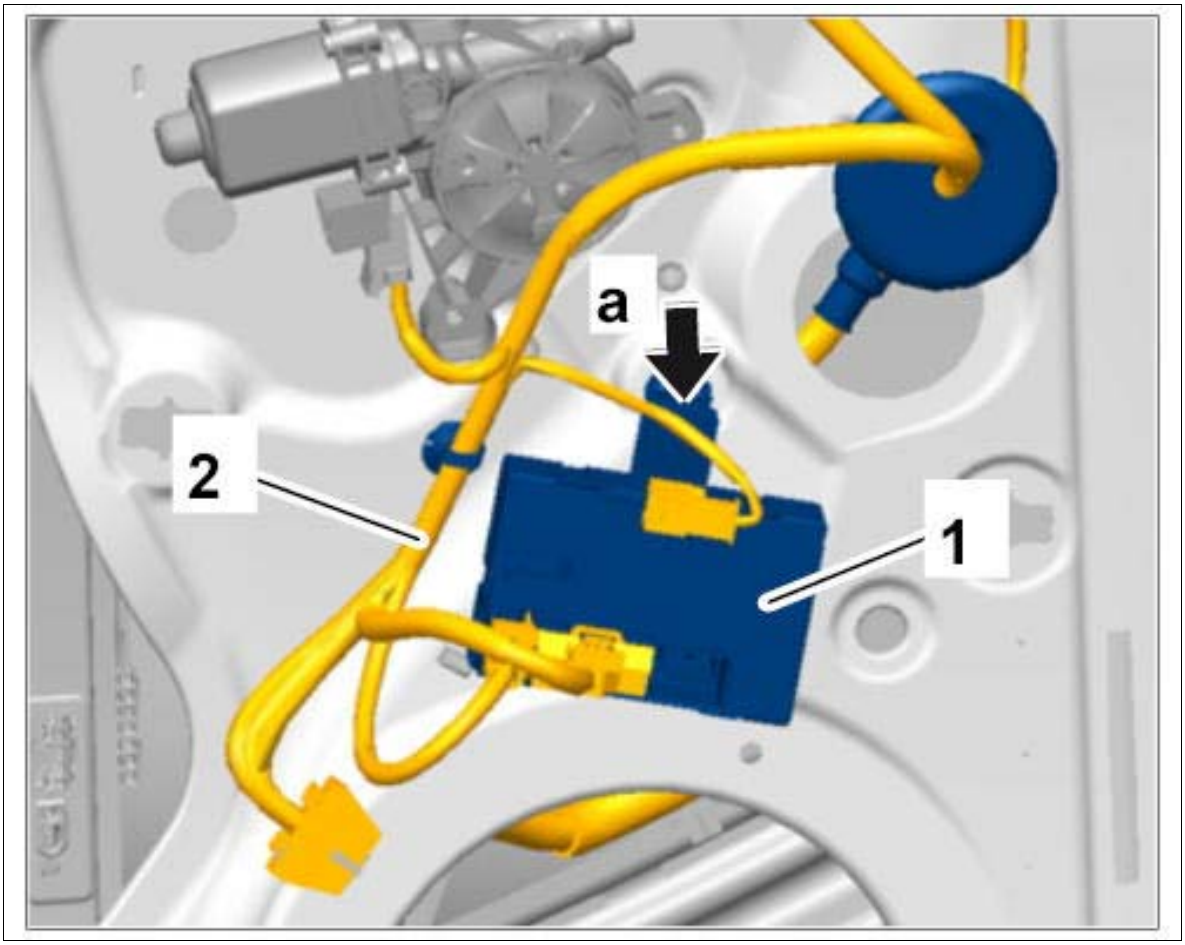

Courtesy of PORSCHE CARS NORTH AMERICA, INC.

11. Release locking mechanism on electric plug connection for wire harness for door in rear door sub-frame **-1-** at the B-pillar in an upward direction using a plastic wedge **-a-** and remove it.

Fig 8: Disconnecting Electric Plug Connection On Rear Door Wire Harness

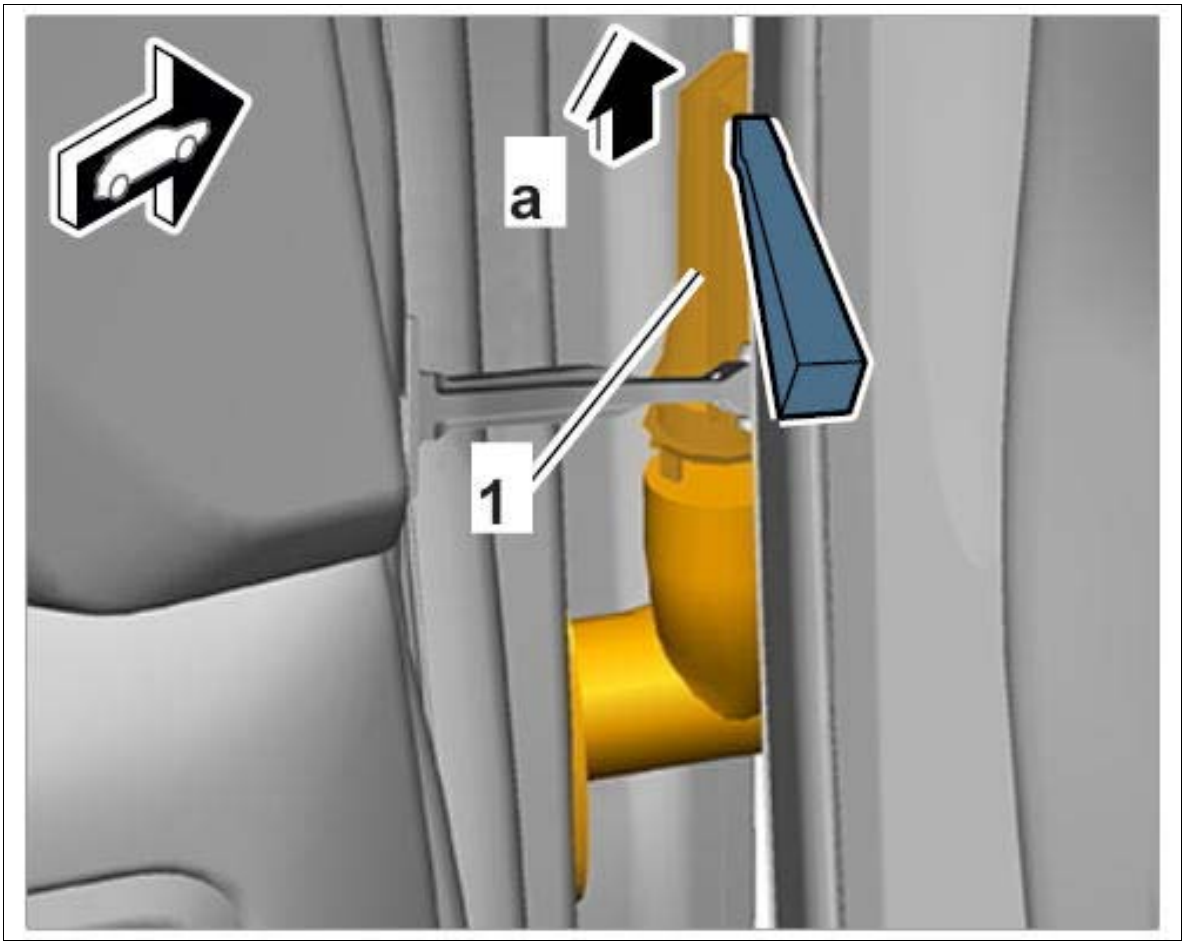

Courtesy of PORSCHE CARS NORTH AMERICA, INC.

12. Disengage grommet **-1-** at the bottom from rear door **-a-** .
13. Disengage the wire harness holder **-2-** from the rear door.
14. Lift wire harness up out of the rear door.

Fig 9: Loosening Bottom Grommet From Rear Door

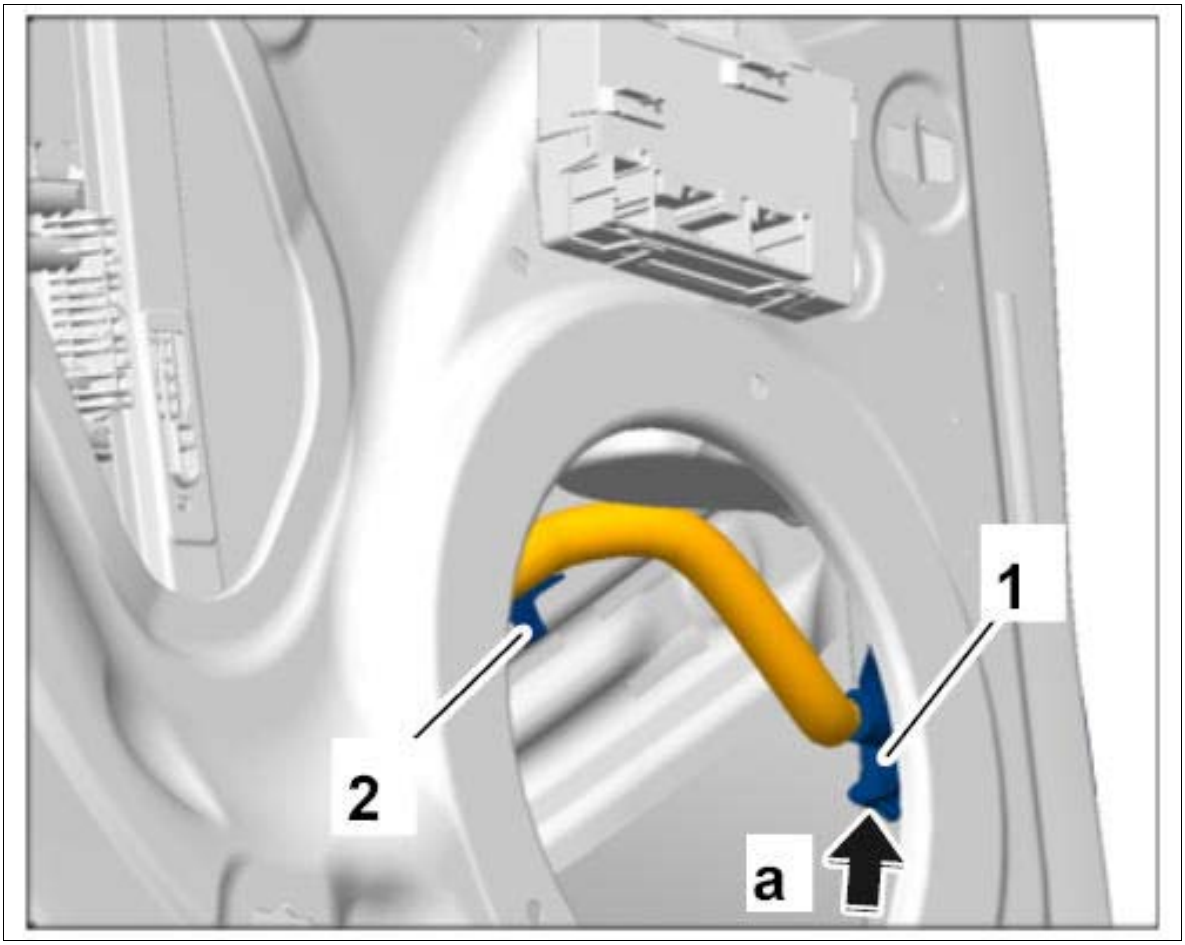

Courtesy of PORSCHE CARS NORTH AMERICA, INC.

WM 973219 REMOVING AND INSTALLING WIRE HARNESS FOR DOOR IN REAR DOOR SUB-FRAME (ALL MODELS) > INSTALLING WIRE HARNESS FOR DOOR IN REAR DOOR SUB-FRAME

Information

Always comply with the regulations for handling ESD-sensitive components!

- Assembly work may only be carried out if the mechanic is wearing the working clothes and shoes approved by Porsche.
- The new part must only be removed from the ESD (electrostatic discharge) protective packaging just before installation and at the position at which the part is to be installed.
- Never touch the electric pins and plug contacts.

1. Installation is performed in reverse order to removal.

    1. 1.1. Make sure that the individual sections of the wire harness in the rear door sub-frame are not twisted or entangled.

2. 1.2. Check that the wire harness is routed correctly and without tension so that no chafing occurs.

3. 1.3. Connect all electric plug connections until they engage securely.

4. 1.4. Lock all electric plug connections by hand using the manual slide lock.

5. 1.5. Clip in all sections of the door wire harness in the rear door sub-frame securely at the relevant positions.

2. Make sure that the grommets **-1, 2, 3-** and the cover **-4-** are seated correctly in the rear door.

    1. 2.1. Align grommet **-2-** in such a way that the center bar **-a-** of the grommet is pointing towards the recess **-b-** in the door panel.

    2. 2.2. Align grommet **-3-** in such a way that the grommet exit points in the door are pointing straight down.

Fig 1: Checking Grommets And Cover

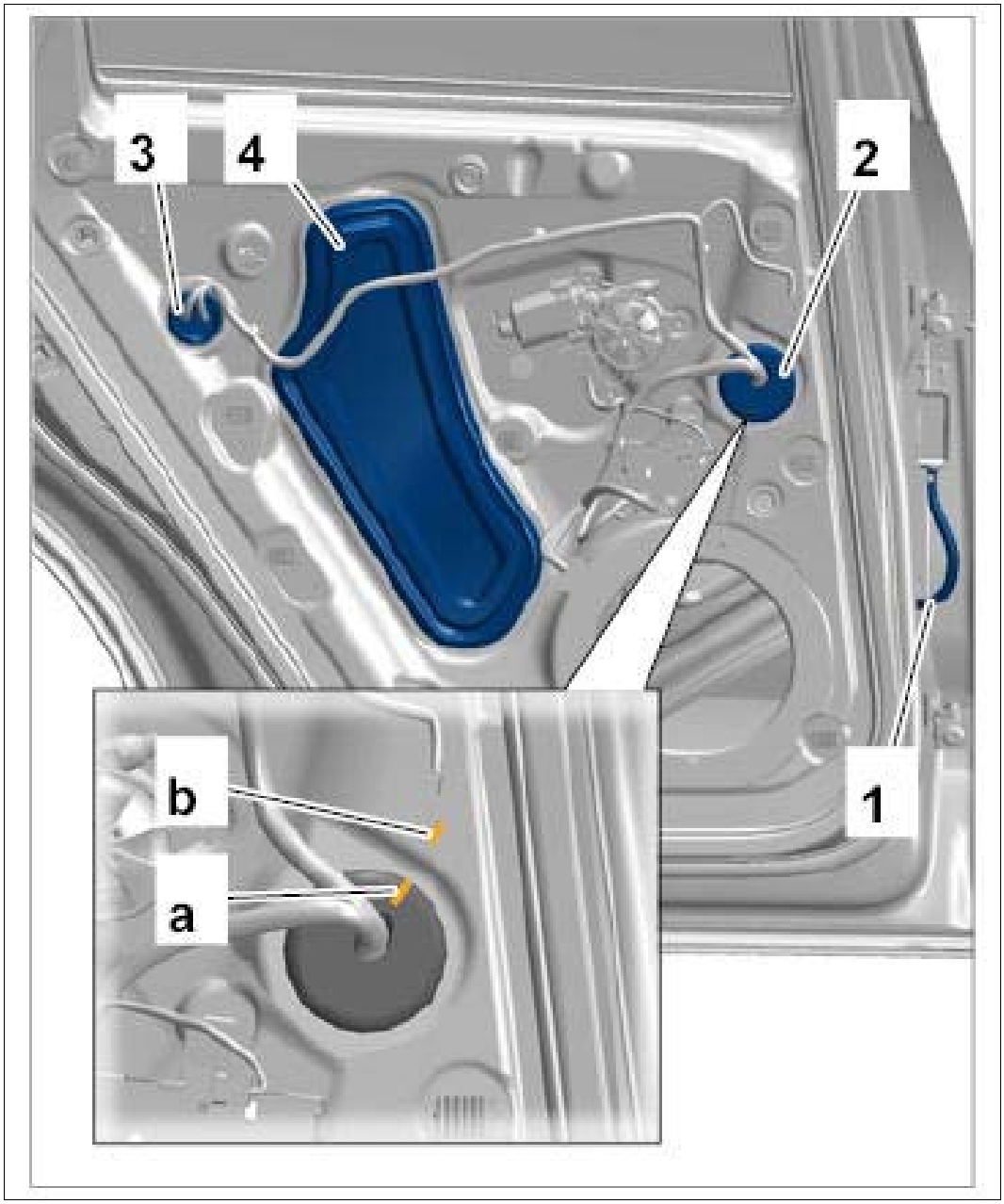

Courtesy of PORSCHE CARS NORTH AMERICA, INC.

WM 973219 REMOVING AND INSTALLING WIRE HARNESS FOR DOOR IN REAR DOOR SUB-FRAME (ALL MODELS) > SUBSEQUENT WORK

Vehicles with KESSY

1. Install support bow for rear door handle. → INSTALLING REAR DOOR HANDLE .

All vehicles

2. Install woofer in the rear door. → INSTALLING REAR LOUDSPEAKERS .

3. Install rear door panel. → INSTALLING REAR DOOR PANEL .

WM 974319 REMOVING AND INSTALLING WIRE HARNESS FOR REAR-VIEW MIRROR (ALL MODELS) > INFORMATION

The steps for removing and installing the wire harness for the rear-view mirror are described under "Removing and installing mirror base". → 669319 REMOVING AND INSTALLING MIRROR BASE

WM 974519 REMOVING AND INSTALLING BATTERY-STARTER WIRE HARNESS (FROM EXTERNAL POWER CONNECTION TO STARTER) (ALL MODELS) > TOOLS

Designation	Type	Number	Description	
bonnet stay	Special tool	9873		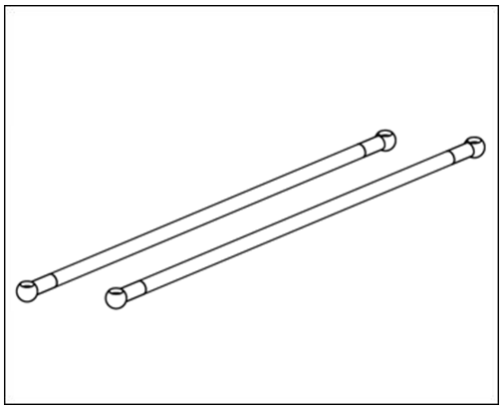

WM 974519 REMOVING AND INSTALLING BATTERY-STARTER WIRE HARNESS (FROM EXTERNAL POWER CONNECTION TO STARTER) (ALL MODELS) > TECHNICAL VALUES

Location	Description	Type	Basic value	Tolerance 1	Tolerance 2
Connection terminal for B+ positive cables to jump-start point	Connection terminal, M8	Tightening torque	20 Nm (15 ftlb.)		
Positive cable to jump-start point	Nut, M6	Tightening torque	7.5 Nm (5.5 ftlb.)		
Positive cable to B+ line	Nut, M6	Tightening torque	7.5 Nm (5.5 ftlb.)		
Ground line to longitudinal member	Cap nut, M8	Tightening torque	20 Nm (15 ftlb.)		

B+ positive cable to potential distributor on longitudinal member	Nut, M8	Tightening torque	20 Nm (15 ftlb.)		

WM 974519 REMOVING AND INSTALLING BATTERY-STARTER WIRE HARNESS (FROM EXTERNAL POWER CONNECTION TO STARTER) (ALL MODELS) > PRELIMINARY WORK

1. Disconnect ground lead on the battery. → 2X00IN WORK INSTRUCTIONS AFTER DISCONNECTING THE BATTERY
2. Move front lid to service position using **bonnet stay 9873.** → 553119 REMOVING AND INSTALLING FRONT PNEUMATIC SPRING .
3. Remove cowl panel cover. → 508719 REMOVING AND INSTALLING COWL PANEL COVER .
4. Remove cover behind the right headlight. → 700219 REMOVING AND INSTALLING FRONT TRIM PANEL .
5. Remove right front wheel. → 440519 REMOVING AND INSTALLING WHEEL .
6. Remove front wheel housing liner at the right. → 505619 REMOVING AND INSTALLING FRONT WHEEL HOUSING LINER .

   Macan S Diesel
7. Remove cover for front underbody. → 519219 REMOVING AND INSTALLING COVER FOR FRONT UNDERBODY .

WM 974519 REMOVING AND INSTALLING BATTERY-STARTER WIRE HARNESS (FROM EXTERNAL POWER CONNECTION TO STARTER) (ALL MODELS) > REMOVING BATTERY-STARTER WIRE HARNESS (FROM EXTERNAL POWER CONNECTION TO STARTER)

Fig 1: Locating Battery Wiring Harness Position (External Power Connection To Fan)

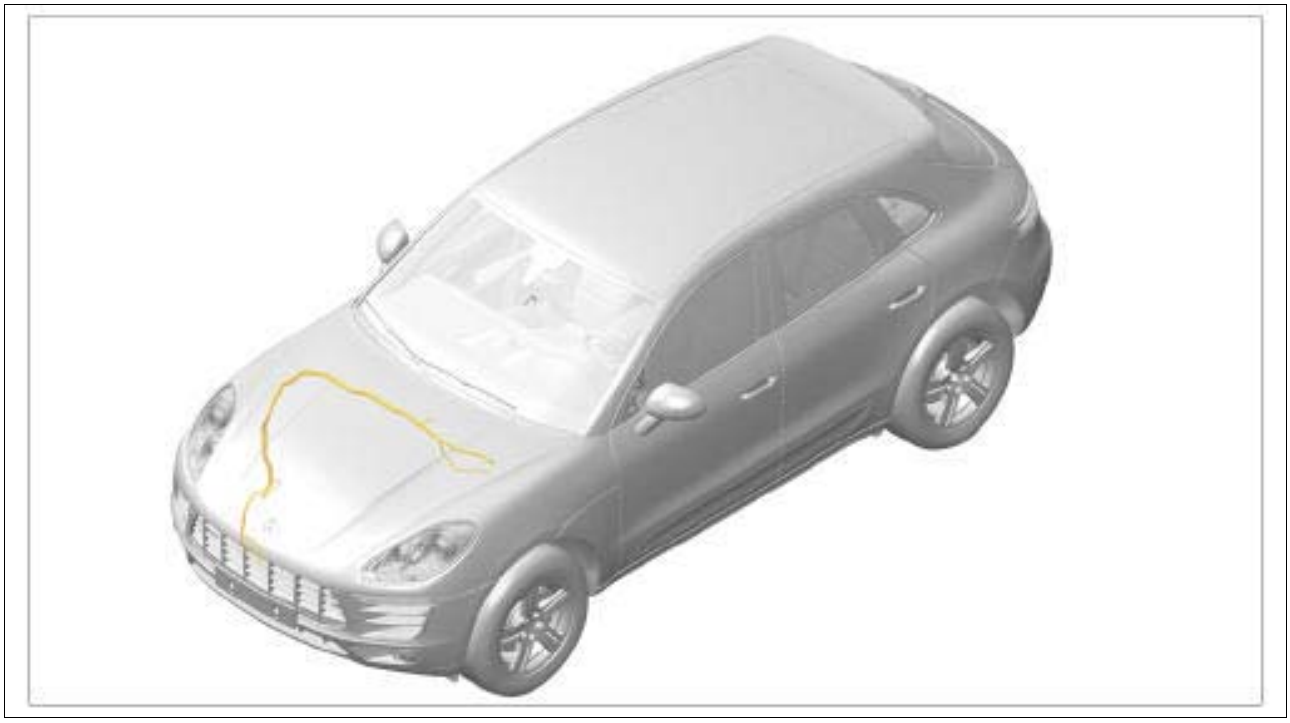

Courtesy of PORSCHE CARS NORTH AMERICA, INC.

1. Disconnect positive cables at the jump-start point.
    1. 1.1. Remove cover **-1-** at the jump-start point.
    2. 1.2. Screw off fastening nut **-2-** and remove positive cable **-3-** from positive cable (B+) **-5-** .
    3. 1.3. Unscrew connection terminal **-4-** at the jump-start point and remove positive cable (B+) at the jump-start point.
    4. 1.4. Unscrew fastening nut **-6-** for positive cable **-7-** at the jump-start point.

Fig 2: Disconnecting Jump-Start Point Positive Cables

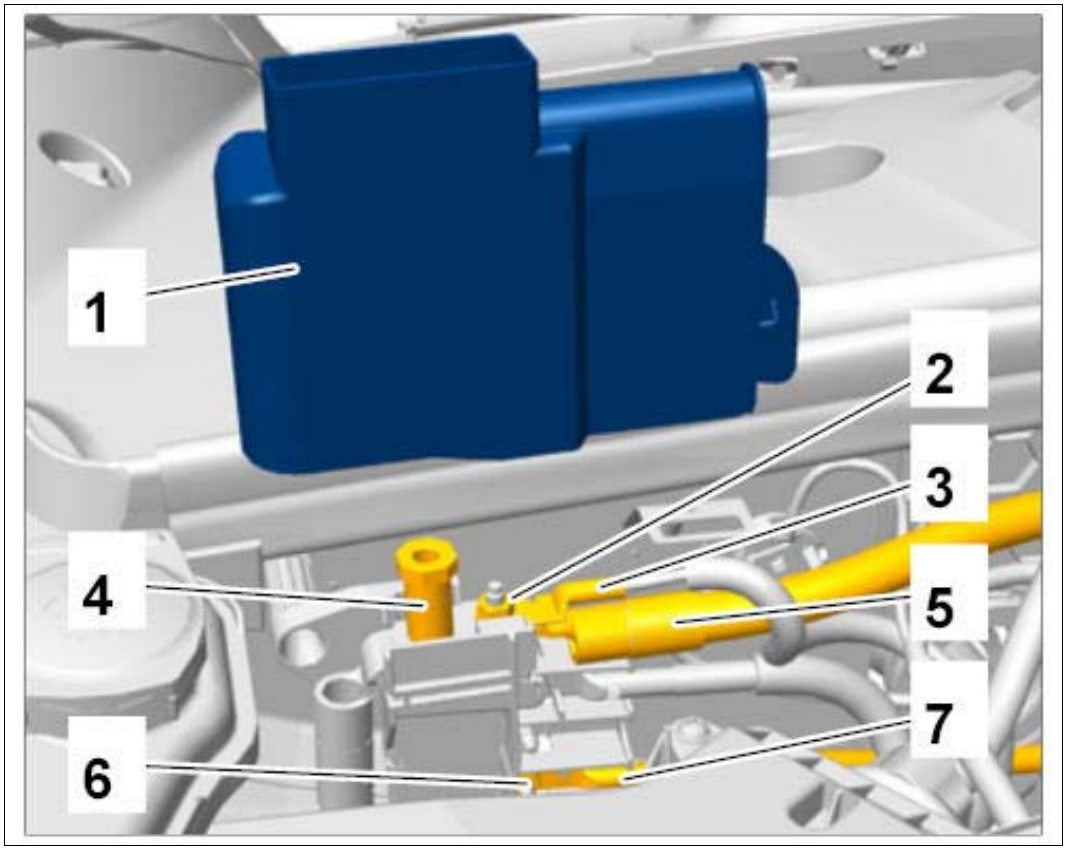

Courtesy of PORSCHE CARS NORTH AMERICA, INC.

2. Disconnect electric plug connection **-1-** .

    1. 2.1. Disengage electric plug connection **-a-** and push it down towards the rear and off the retaining clip.

    2. 2.2. Pull red locking mechanism **-b-** .

    3. 2.3. Pull secondary lock **-c-** and disconnect electric plug connection.

Fig 3: Disconnecting Electric Plug Connection

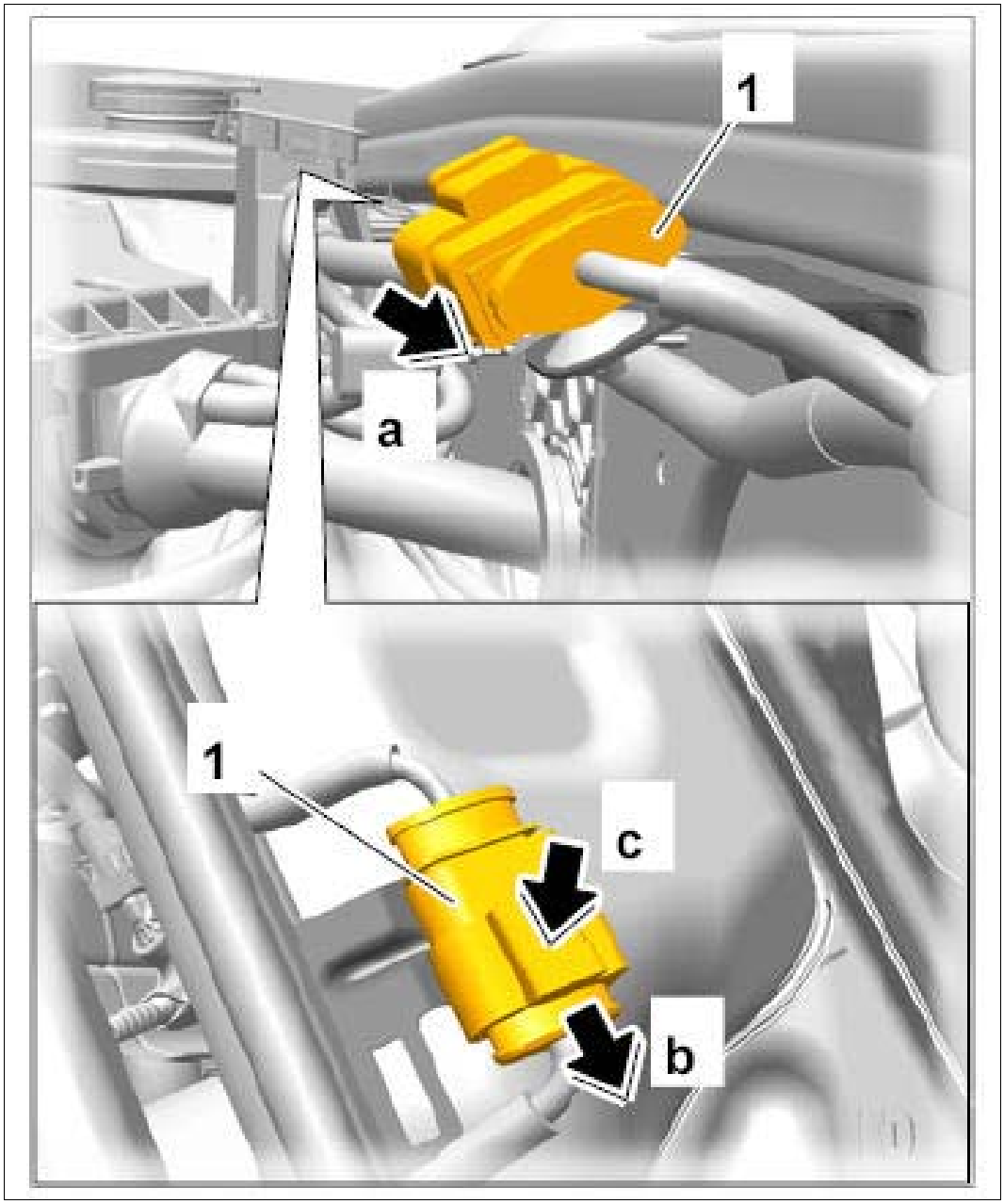

Courtesy of PORSCHE CARS NORTH AMERICA, INC.

3. Disconnect battery-starter wire harness **-1-** on the cowl panel.
    1. 3.1. Unclip the holder **-2-** at the battery-starter wire harness holder **-a-** .
    2. 3.2. Unclip the holders **-3-** for the battery-starter wire harness on the cowl panel.

Fig 4: Disconnecting Battery-Starter Wire Harness On Cowl Panel

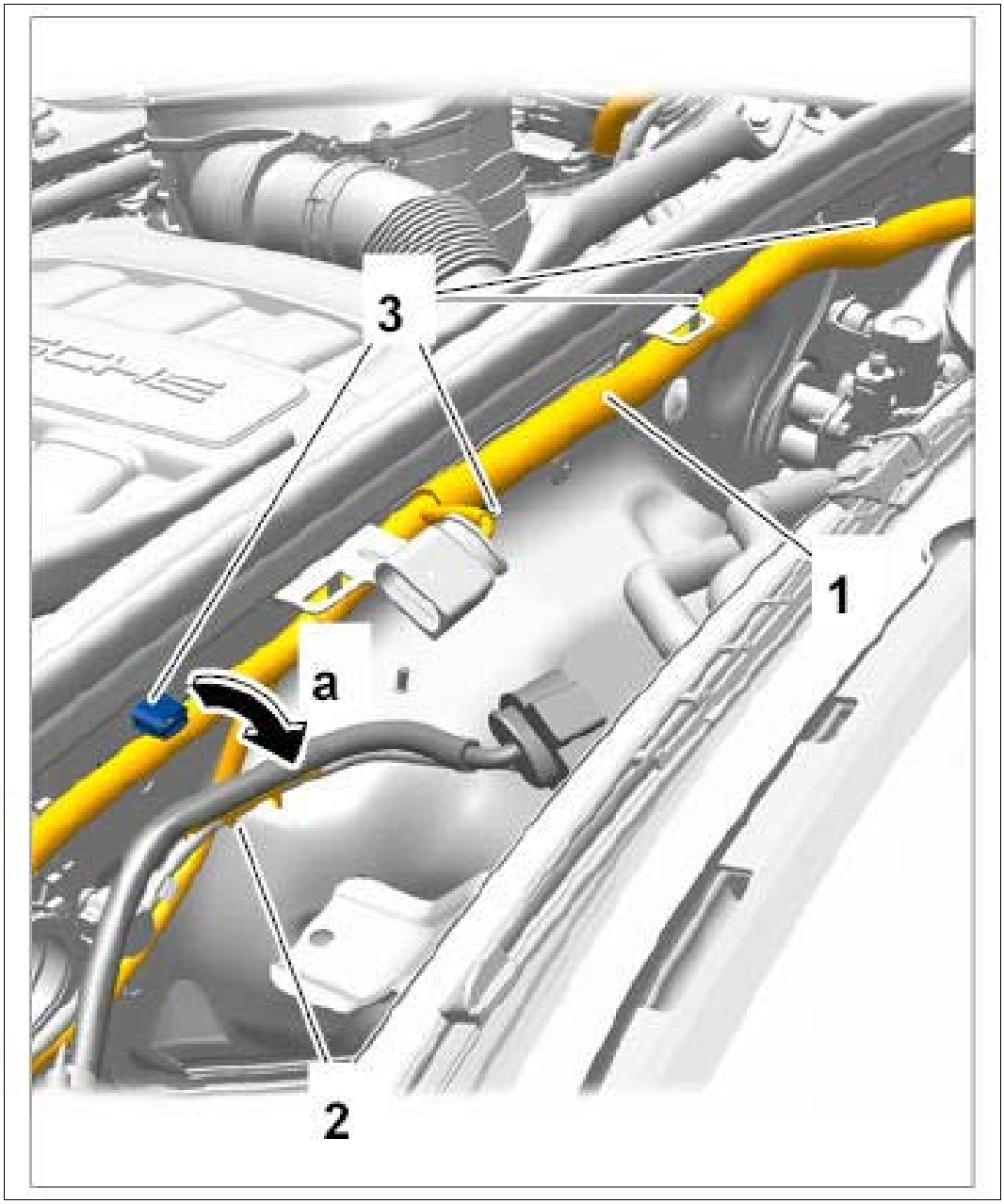

Courtesy of PORSCHE CARS NORTH AMERICA, INC.

4. Loosen wire harness sleeve **-1-** on the cowl panel.
    1. 4.1. Carefully move seal **-2-** to the side.
    2. 4.2. Unclip the holders **-3-** for the wire harness sleeve in the wheel housing at the top right.

Fig 5: Loosening Wire Harness Sleeve On Cowl Panel

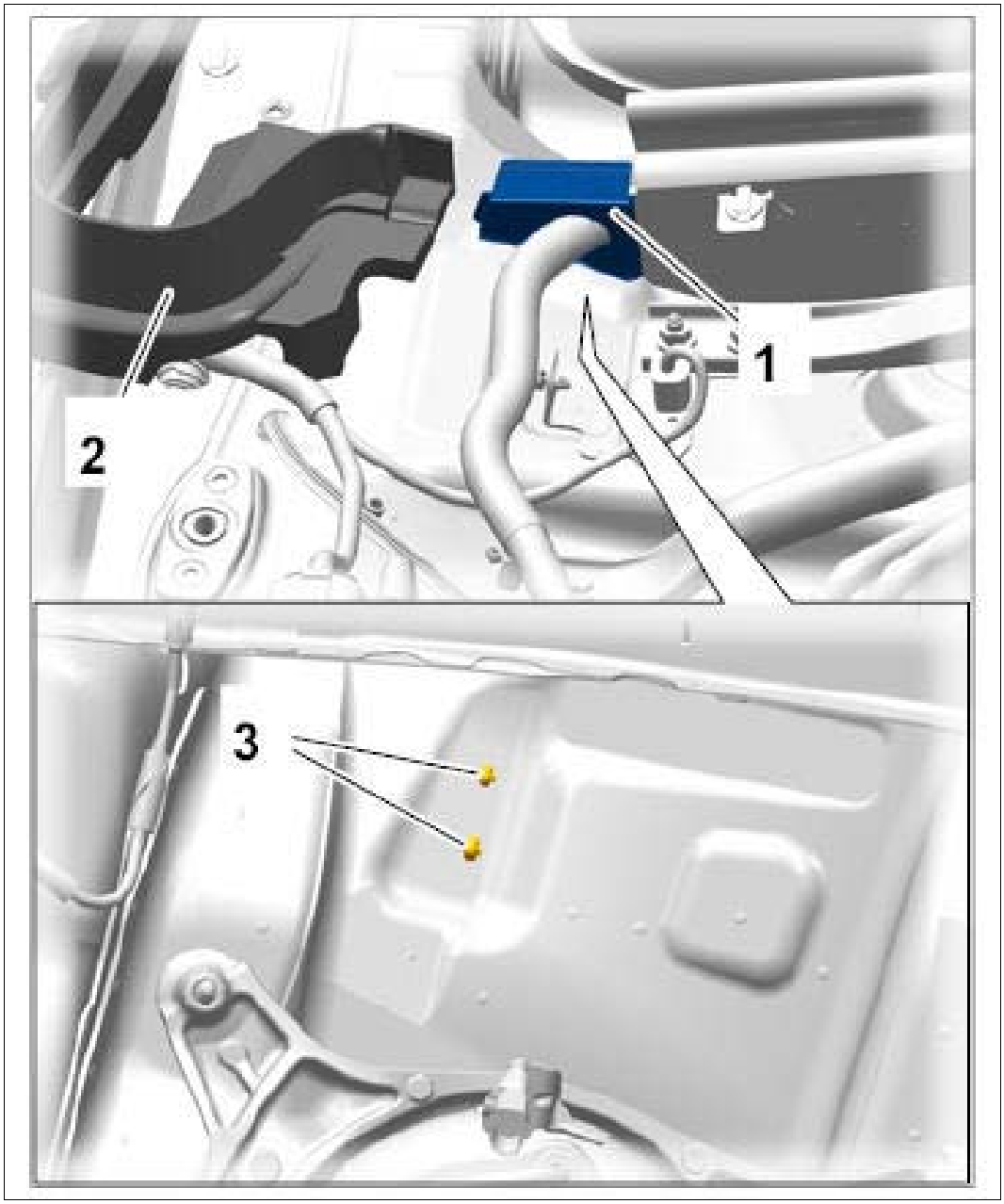

Courtesy of PORSCHE CARS NORTH AMERICA, INC.

5. Unclip the holders **-1-** for the battery-starter wire harness **-2-** on the body.

Fig 6: Disconnecting Battery-Starter Wire Harness

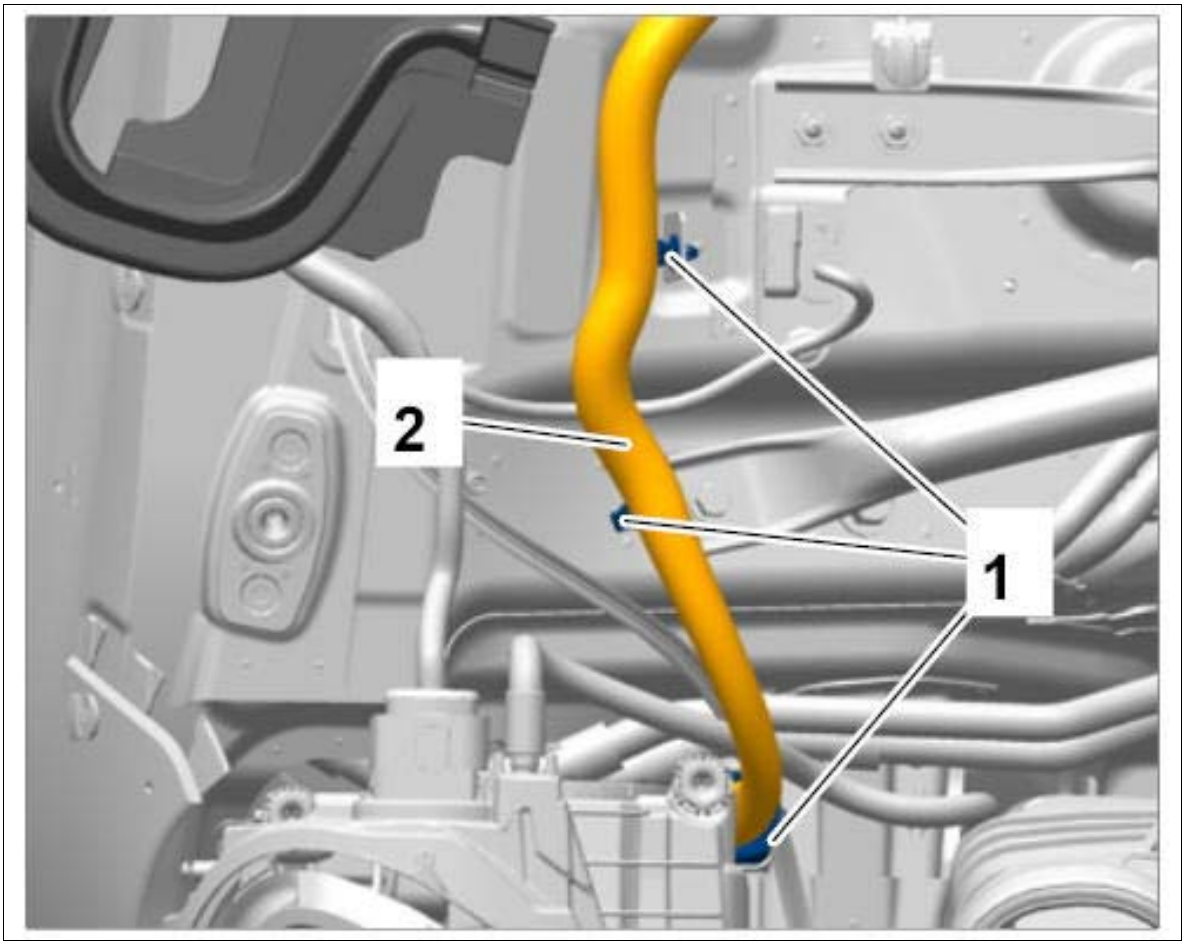

Courtesy of PORSCHE CARS NORTH AMERICA, INC.

Information

One or two electric plug connections for the fans must be disconnected, depending on the engine type.

6. Disconnect electric plug connection **-1-** .
    1. 6.1. Pull red locking mechanism **-a-** .
    2. 6.2. Press secondary lock **-b-** and disconnect electric plug connection.

Fig 7: Disconnecting Fan Electric Plug Connection

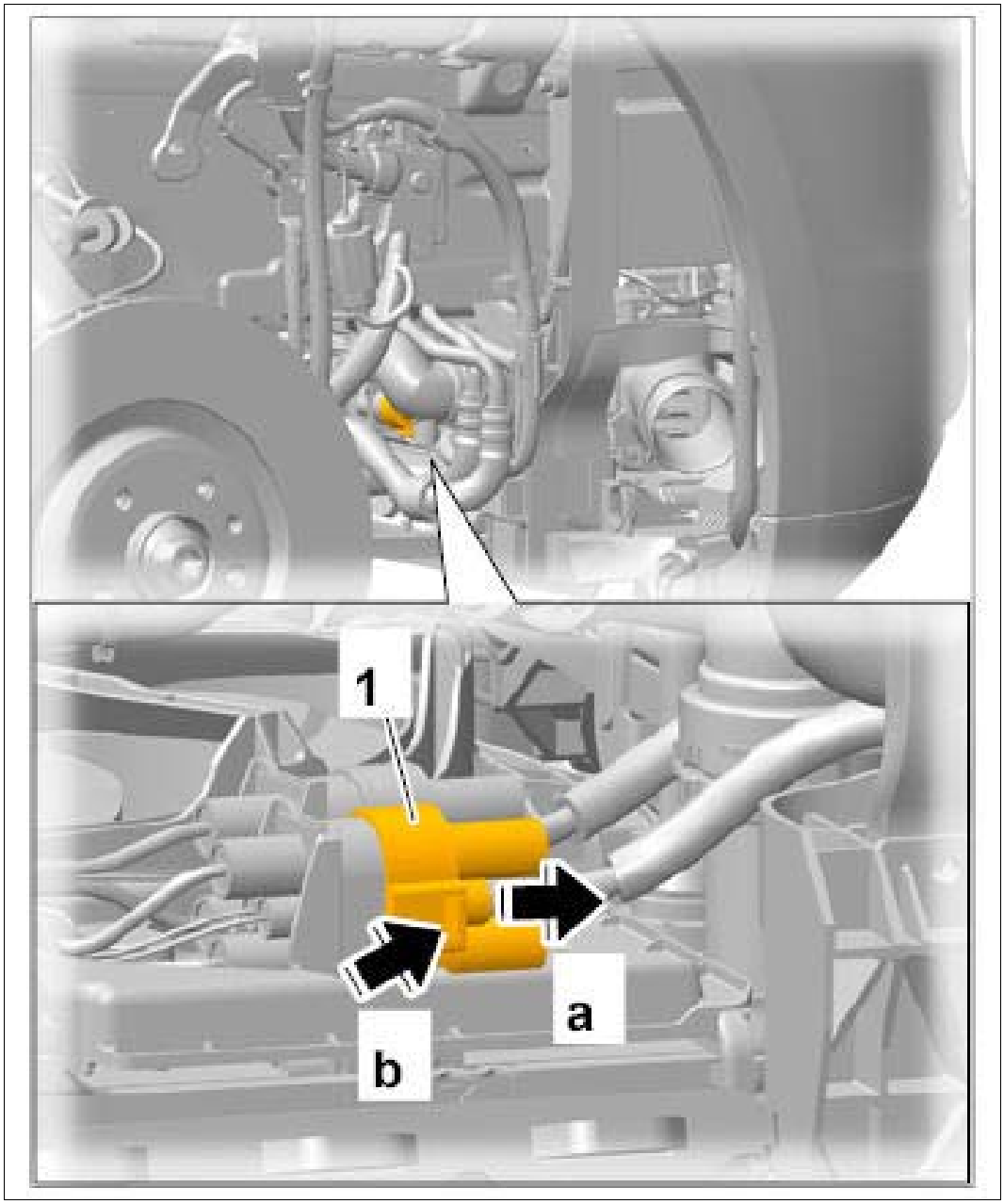

Courtesy of PORSCHE CARS NORTH AMERICA, INC.

7. Release electric plug connection **-1-** (**-a-**) and disconnect it.

8. Screw off fastening nut **-2-** and remove ground line **-3-** .

Fig 8: Disconnecting Electric Plug Connection And Ground Line

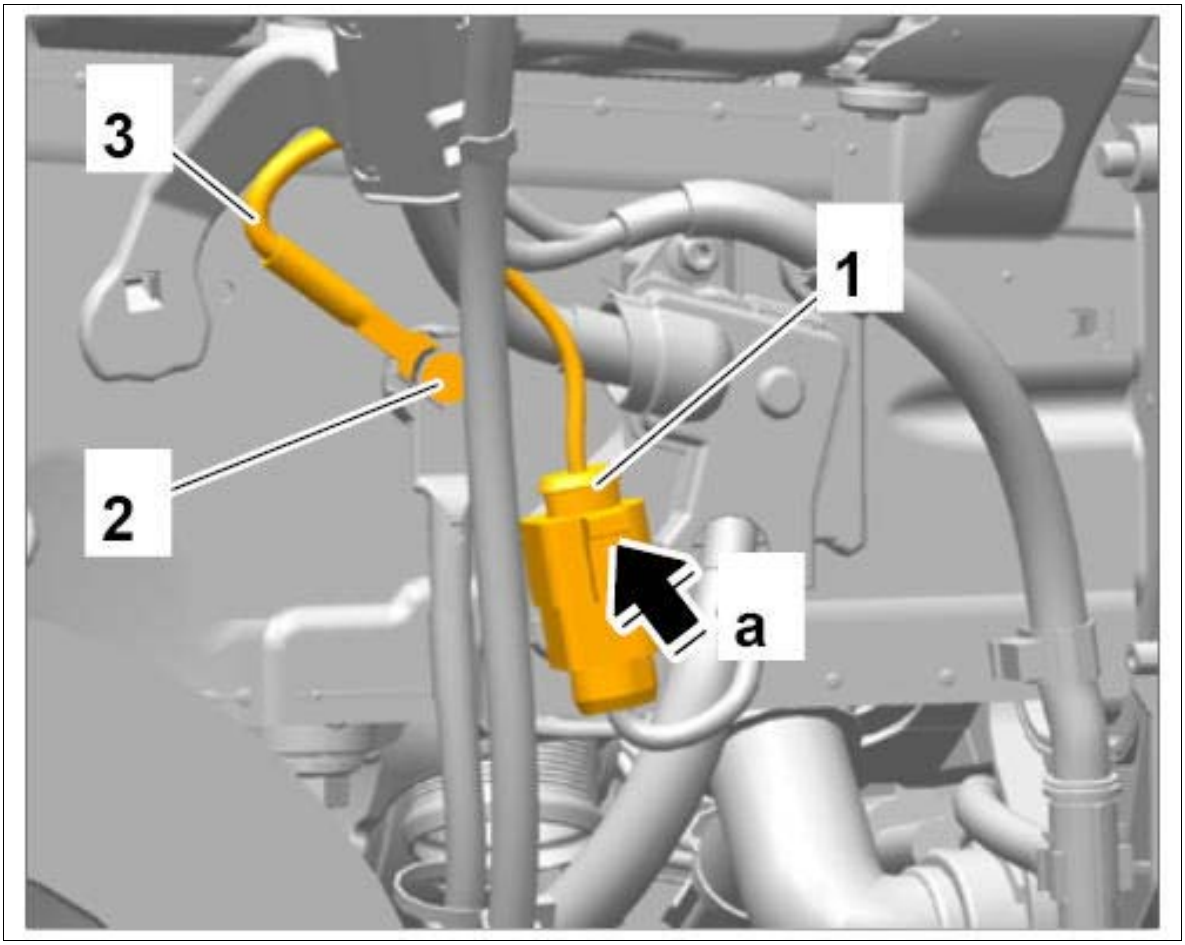

Courtesy of PORSCHE CARS NORTH AMERICA, INC.

9. Disconnect battery-starter wire harness **-1-** at the potential distributor.
    1. 9.1. Release cover **-2-** on the potential distributor and fold it down.
    2. 9.2. Screw off fastening nut **-3-** and remove B+ positive cable from the potential distributor.
    3. 9.3. Open the holders **-4-** and remove battery-starter wire harness.

Fig 9: Disconnecting Potential Distributor Battery-Starter Wire Harness

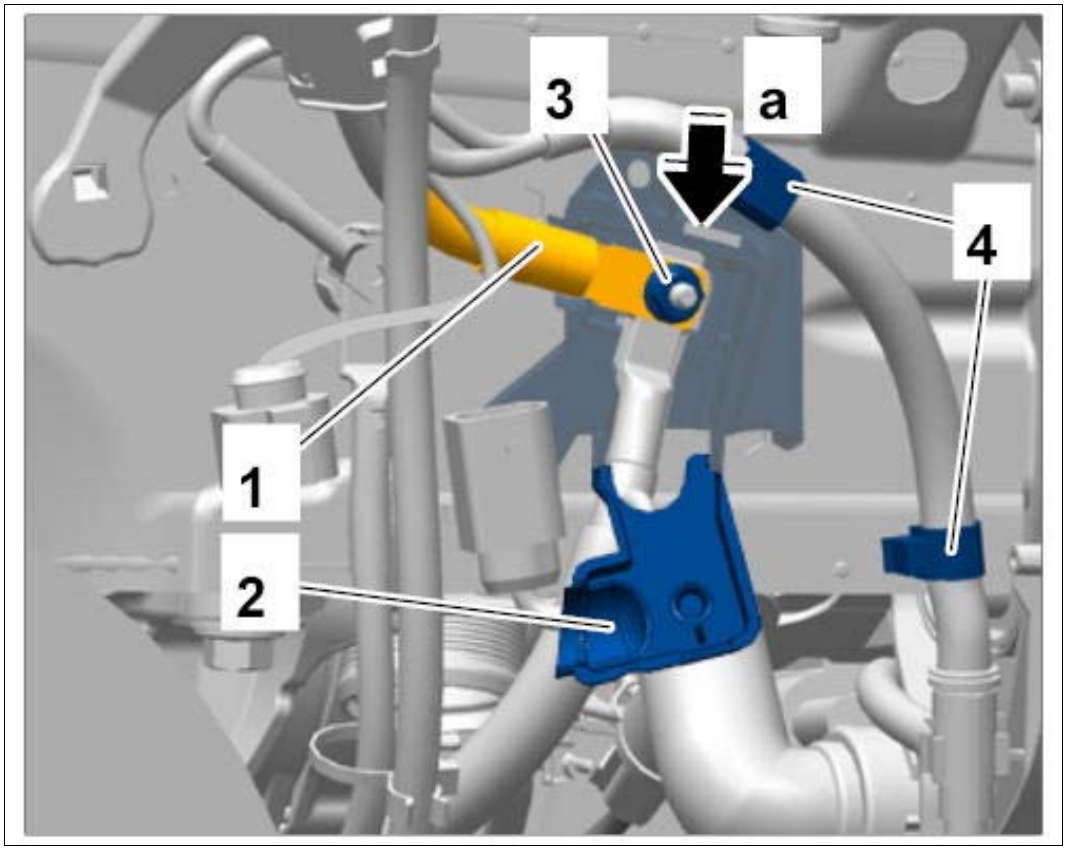

Courtesy of PORSCHE CARS NORTH AMERICA, INC.

10. Unclip breather hose **-1-** from the holders **-2-** for the wiring duct **-3-** .
11. Release wiring duct **-a-** and pull it up out of the longitudinal member.
12. Remove battery-starter wire harness **-4-** in a downward direction.

Fig 10: Disconnecting Battery-Starter Wire Harness

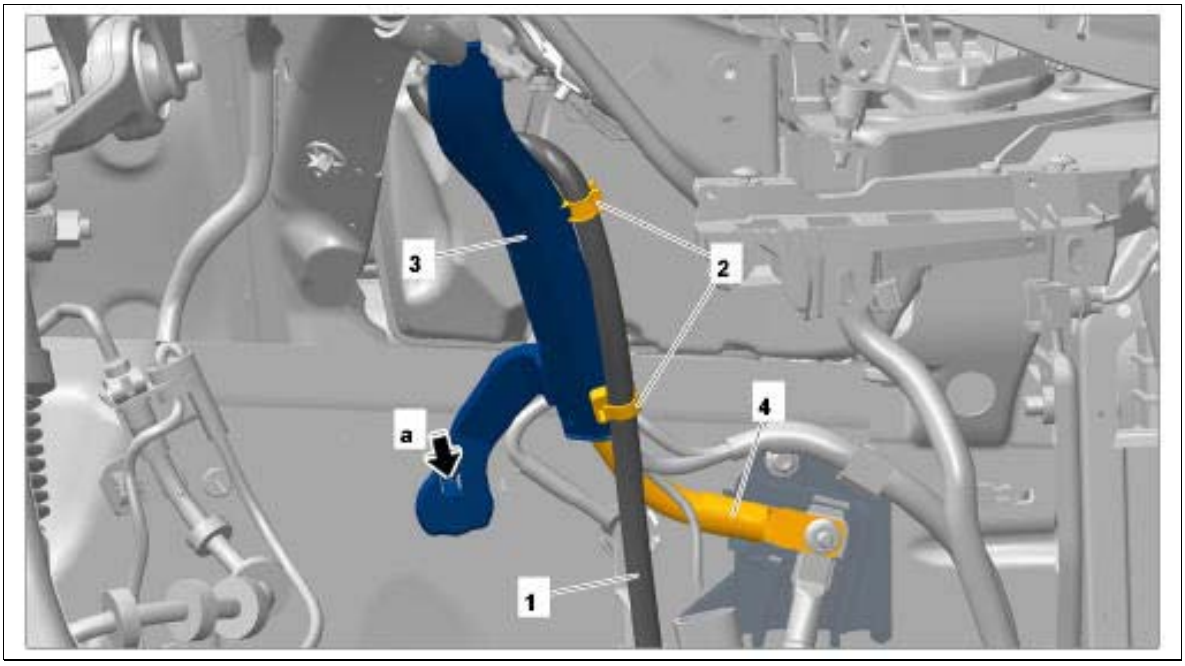

Courtesy of PORSCHE CARS NORTH AMERICA, INC.

WM 974519 REMOVING AND INSTALLING BATTERY-STARTER WIRE HARNESS (FROM EXTERNAL POWER CONNECTION TO STARTER) (ALL MODELS) > INSTALLING BATTERY-STARTER WIRE HARNESS (FROM EXTERNAL POWER CONNECTION TO STARTER)

1. Installation is performed in reverse order to removal.
2. Tighten fastening nut securing B+ positive cable to the potential distributor on the longitudinal member. **Tightening torque 20 Nm (15 ftlb.)**
3. Tighten fastening nut securing ground line to the longitudinal member. **Tightening torque 20 Nm (15 ftlb.)**
4. Tighten fastening nut securing positive cable at the jump-start point. **Tightening torque 7.5 Nm (5.5 ftlb.)**
5. Tighten connection terminal securing B+ positive cables to the jump-start point. **Tightening torque 20 Nm (15 ftlb.)**
6. Tighten fastening nut securing positive cable to B+ positive cable. **Tightening torque 7.5 Nm (5.5 ftlb.)**

WM 974519 REMOVING AND INSTALLING BATTERY-STARTER WIRE HARNESS (FROM EXTERNAL POWER CONNECTION TO STARTER) (ALL MODELS) > SUBSEQUENT WORK

Macan S Diesel

1. Install cover for front underbody. → INSTALLING COVER FOR FRONT UNDERBODY .

   All vehicles

2. Install front wheel housing liner at the left → INSTALLING FRONT WHEEL HOUSING LINER .
3. Fit right front wheel → INSTALLING WHEEL .
4. Install cover behind the right headlight → INSTALLING FRONT TRIM PANEL .
5. Install cowl panel cover → INSTALLING COWL PANEL COVER .
6. **Bonnet stay 9873** must be removed before moving front lid into normal position. → 553119 REMOVING AND INSTALLING FRONT PNEUMATIC SPRING .
7. Connect ground line to the battery → 2X00IN WORK INSTRUCTIONS AFTER DISCONNECTING THE BATTERY .

WM 974519 REMOVING AND INSTALLING WIRE HARNESS FOR BATTERY WIRING (SECTION FOR BATTERY EXTERNAL POWER CONNECTION) (ALL MODELS) > TECHNICAL VALUES

Location	Description	Type	Basic value	Tolerance 1	Tolerance 2
Connection terminal for B+ positive cables to jump-start point	Connection terminal, M8	Tightening torque	20 Nm (15 ftlb.)		

WM 974519 REMOVING AND INSTALLING WIRE HARNESS FOR BATTERY WIRING (SECTION FOR BATTERY EXTERNAL POWER CONNECTION) (ALL MODELS) > PRELIMINARY WORK

1. Disconnect the battery. → 270619 REMOVING AND INSTALLING BATTERY .
2. Loosen carpet in luggage compartment and remove cover over battery. → 700619 REMOVING AND INSTALLING CENTER TRIM PANEL FOR LUGGAGE COMPARTMENT (LUGGAGE COMPARTMENT COVER) .
3. Remove cowl panel cover. → 508719 REMOVING AND INSTALLING COWL PANEL COVER .
4. Remove front left wheel housing liner. → 505619 REMOVING AND INSTALLING FRONT WHEEL HOUSING LINER .
5. Remove front left wheel. → 440519 REMOVING AND INSTALLING WHEEL .
6. Remove cover for center underbody at the left. → 519319 REMOVING AND INSTALLING

COVER FOR CENTER UNDERBODY .

WM 974519 REMOVING AND INSTALLING WIRE HARNESS FOR BATTERY WIRING (SECTION FOR BATTERY EXTERNAL POWER CONNECTION) (ALL MODELS) > REMOVING WIRE HARNESS FOR BATTERY WIRING

Fig 1: Locating Battery Wiring Harness Position

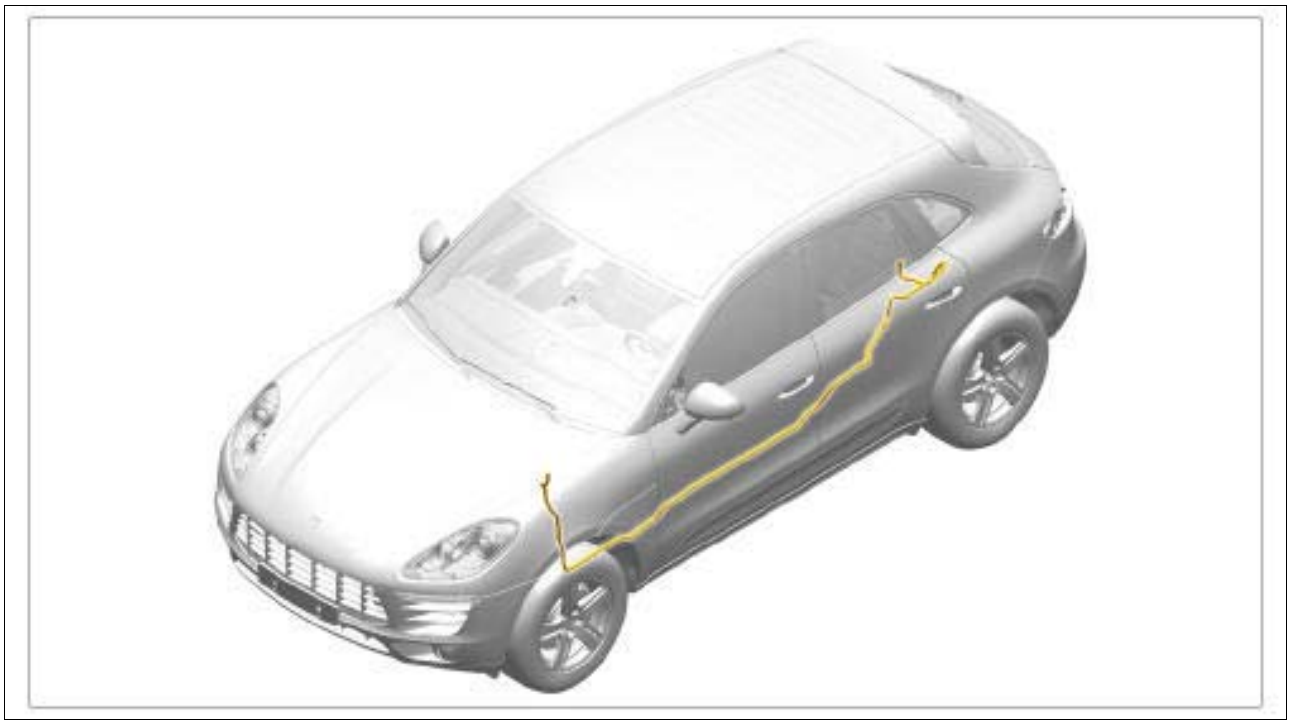

Courtesy of PORSCHE CARS NORTH AMERICA, INC.

1. Disconnect positive cable (B+) at the power distributor. → 978919 REMOVING AND INSTALLING POWER DISTRIBUTOR .
2. Unclip holders **-1-** for the positive cable (B+) **-2-** in the luggage compartment.

Fig 2: Disconnecting Positive Cable (B+) In Luggage Compartment

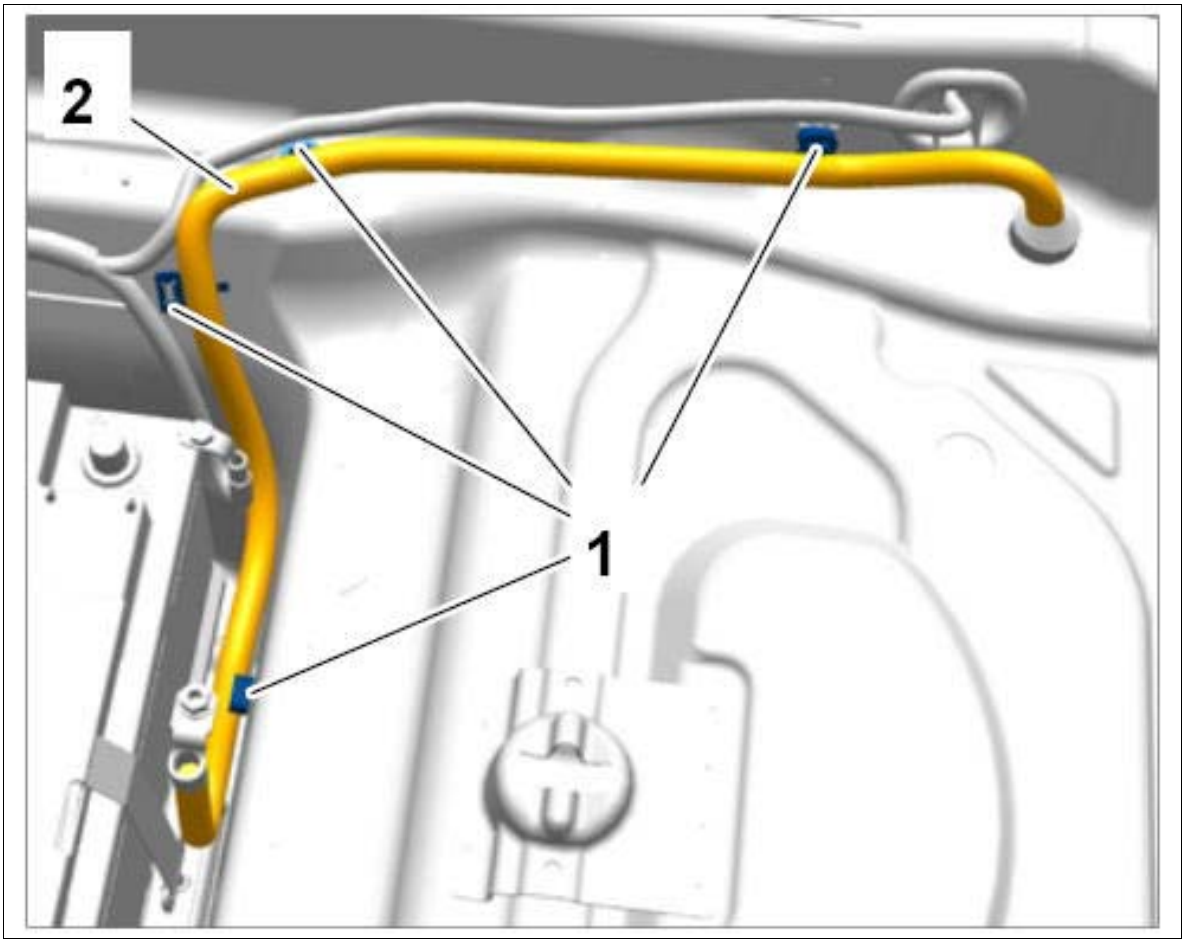

Courtesy of PORSCHE CARS NORTH AMERICA, INC.

3. Disconnect positive cables (B+) **-1-** at the jump-start point.
    1. 3.1. Remove cover **-2-** at the jump-start point.
    2. 3.2. Screw off connection terminal **-3-** at the jump-start point.
    3. 3.3. Remove positive cables (B+) at the jump-start point.

Fig 3: Disconnecting Jump-Start Point Positive Cable (B+)

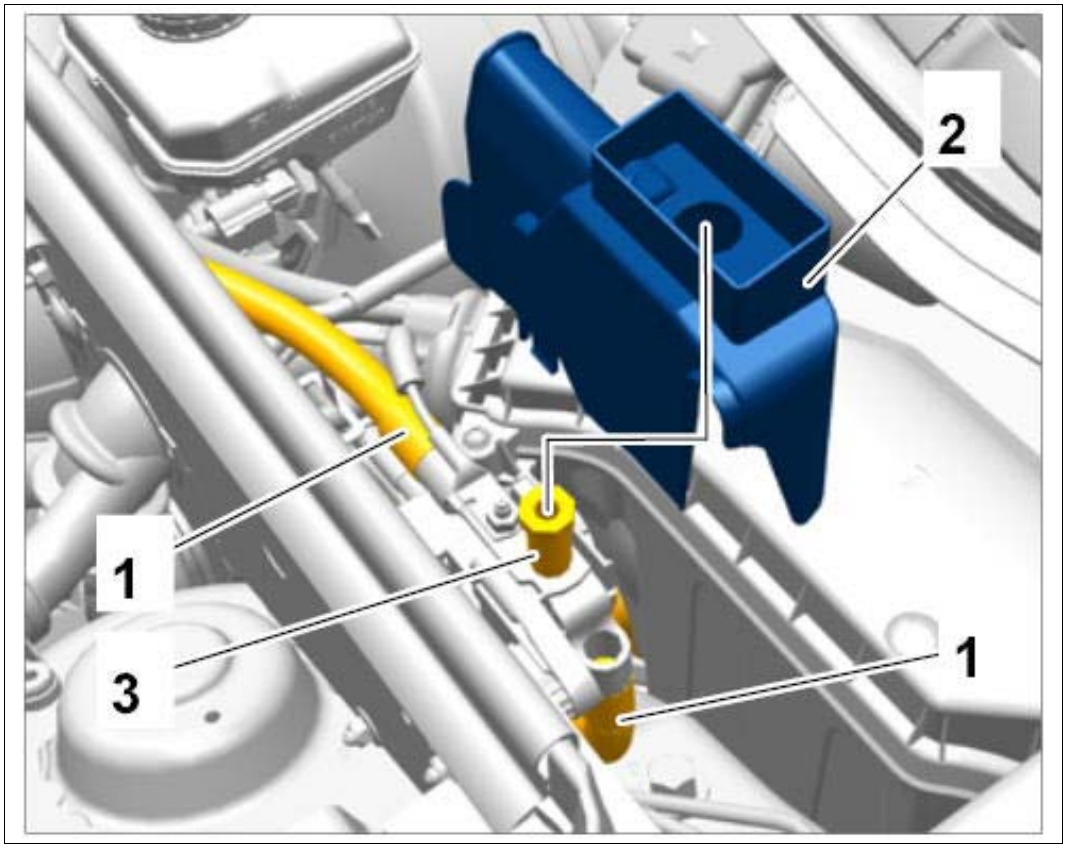

Courtesy of PORSCHE CARS NORTH AMERICA, INC.

Vehicles with air suspension

4. Unclip air lines **-1-** close to the compressor **-2-** and valve unit **-3-** at the left underbody from the holders.

Fig 4: Disconnecting Air Lines

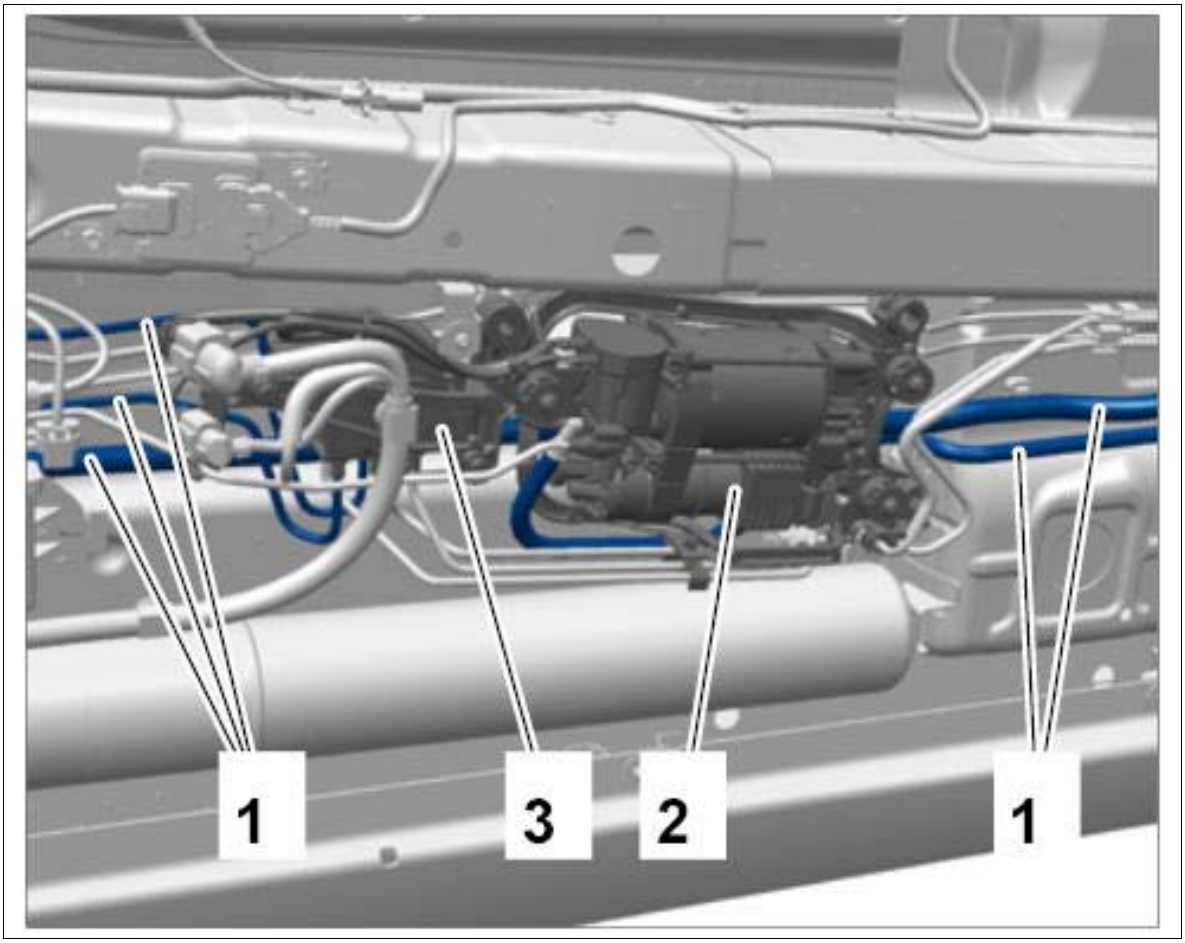

Courtesy of PORSCHE CARS NORTH AMERICA, INC.

5. Support the compressor **-1-** and valve unit **-2-** with connected lines using the transmission jack and lower them by approx. 100 mm. → 431519 REMOVING AND INSTALLING COMPRESSOR FOR LEVELLING SYSTEM .

Fig 5: Supporting Compressor And Valve Unit Using Transmission Jack And Lower

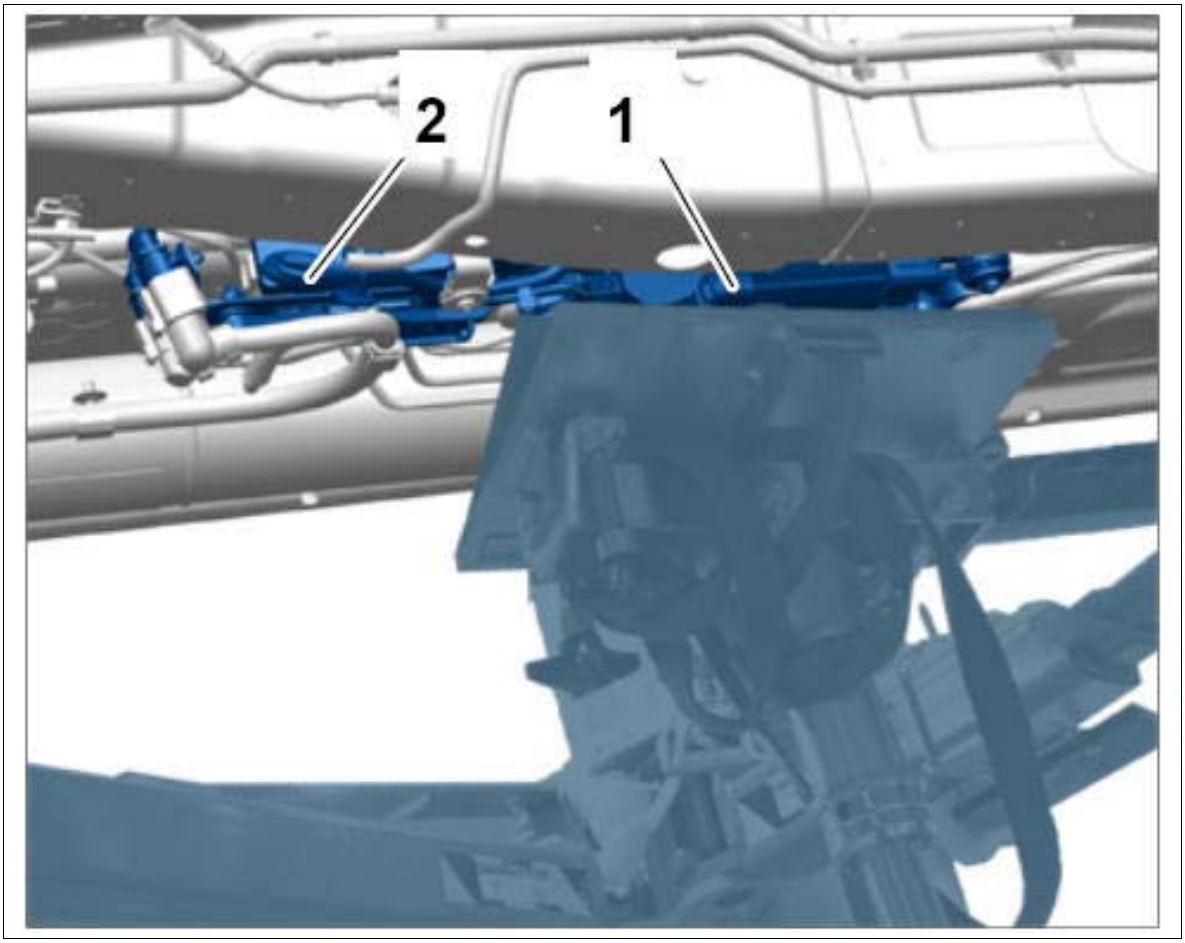

Courtesy of PORSCHE CARS NORTH AMERICA, INC.

All vehicles

6. Loosen grommet **-1-** from the body.
    1. 6.1. Unhook locking mechanisms **-2-** for the inner ring **-arrows-** .
    2. 6.2. Pull inner ring down out of the guides for the outer ring **-3-** .
    3. 6.3. Pull grommet **-1-** down out of the body.

Fig 6: Removing Grommet From Body



Courtesy of PORSCHE CARS NORTH AMERICA, INC.

7. Unclip holders **-1-** for the positive cable (B+) **-2-** at the rear left of the underbody.

8. Pull positive cable (B+) down out of the luggage compartment.

Fig 7: Pulling Positive Cable (B+) Out Of Luggage Compartment

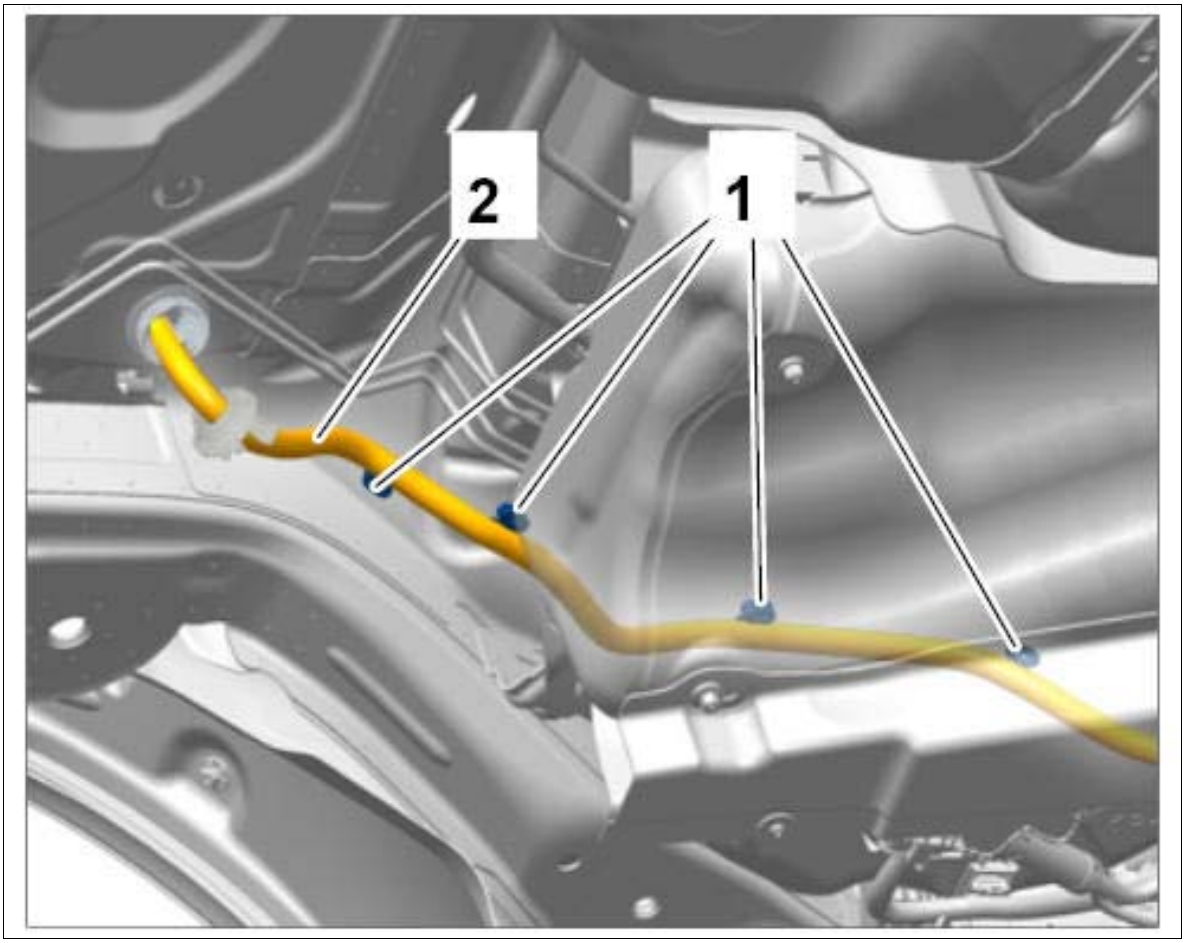

Courtesy of PORSCHE CARS NORTH AMERICA, INC.

9. Unclip holders **-1-** for the positive cable (B+) **-2-** at the center left of the underbody.

Fig 8: Disconnecting Positive Cable (B+) At Center Left Of Underbody

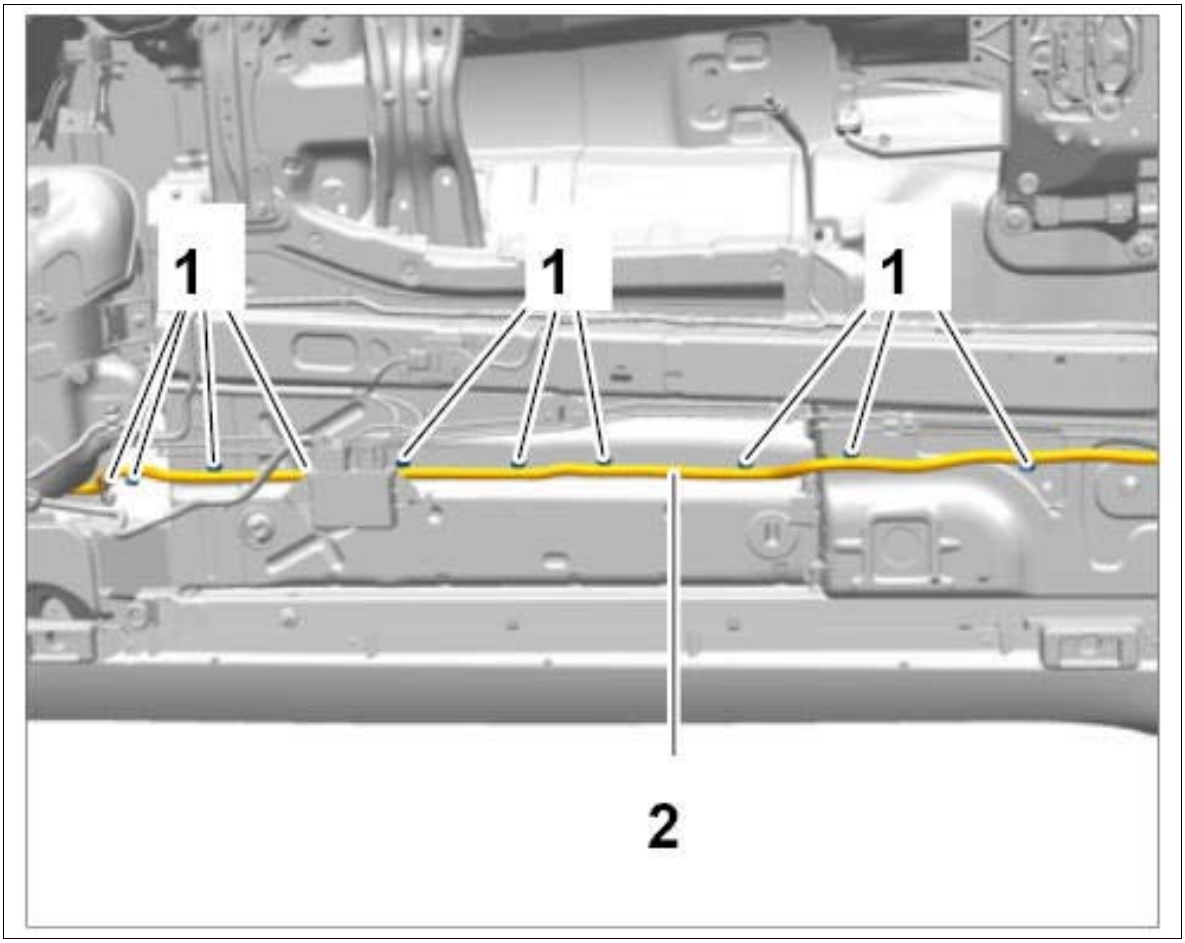

Courtesy of PORSCHE CARS NORTH AMERICA, INC.

10. Disconnect positive cable (B+) **-1-** in the front left wheel housing and remove it.
    1. 10.1. Unclip guide **-2-** .
    2. 10.2. Unclip holders **-3-** for the positive cable (B+).
    3. 10.3. Pull grommet **-4-** down out of the body.

Fig 9: Disconnecting Positive Cable (B+) In Front Left Wheel Housing

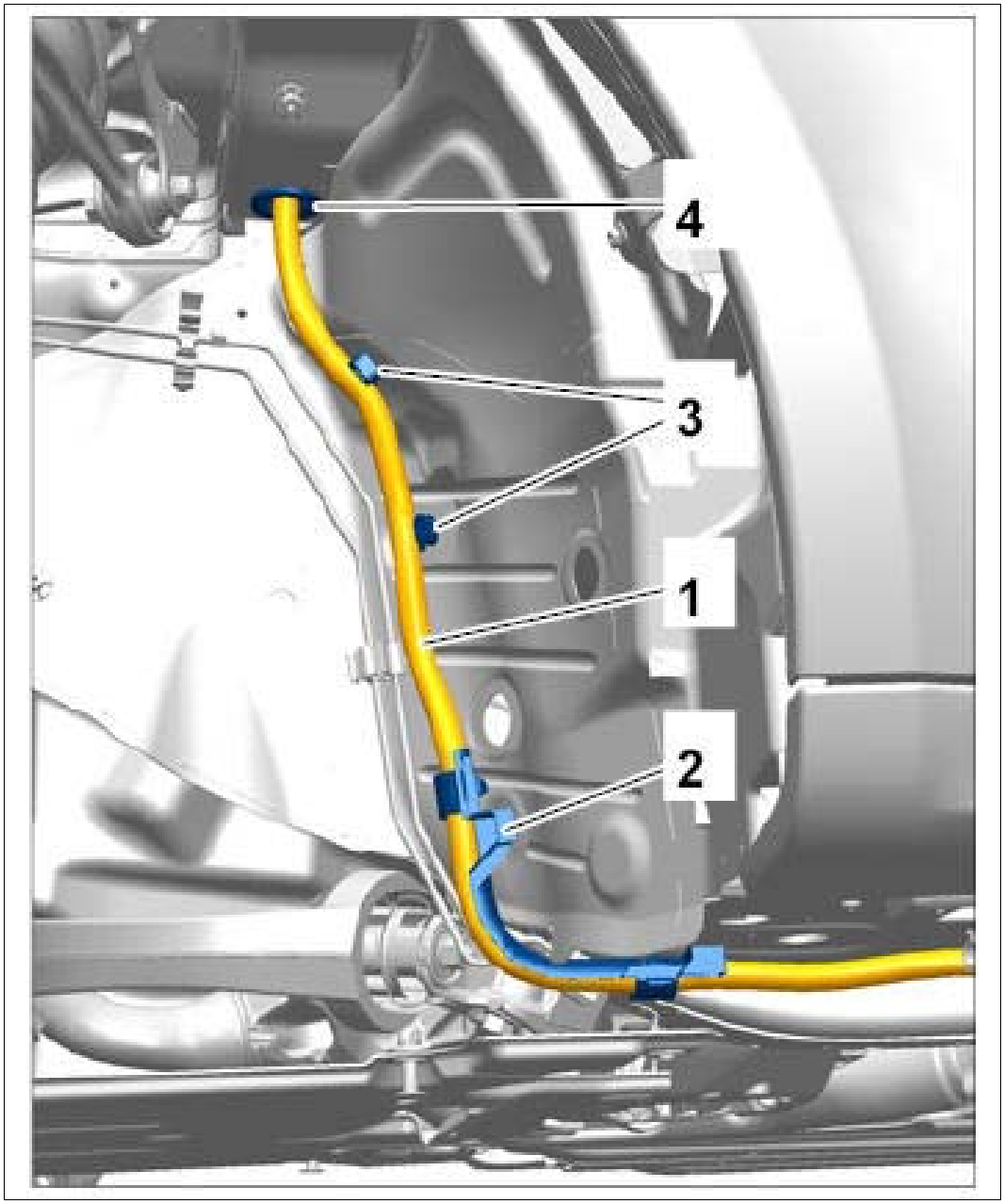

Courtesy of PORSCHE CARS NORTH AMERICA, INC.

WM 974519 REMOVING AND INSTALLING WIRE HARNESS FOR BATTERY WIRING (SECTION FOR BATTERY EXTERNAL POWER CONNECTION) (ALL MODELS) > INSTALLING WIRE HARNESS FOR BATTERY WIRING

Information

Check that the positive cable (B+) is routed correctly and without tension so that no chafing occurs!

1. Installation is performed in reverse order to removal.

2. Tighten connection terminal at the jump-start point. **Tightening torque 20 Nm (15 ftlb.)**

WM 974519 REMOVING AND INSTALLING WIRE HARNESS FOR BATTERY WIRING (SECTION FOR BATTERY EXTERNAL POWER CONNECTION) (ALL MODELS) > SUBSEQUENT WORK

1. Connect the battery → INSTALLING BATTERY .
2. Install cover over the battery and fit carpet in luggage compartment → INSTALLING CENTER TRIM PANEL FOR LUGGAGE COMPARTMENT (LUGGAGE COMPARTMENT COVER) .
3. Install cover for left center underbody → INSTALLING COVER FOR CENTER UNDERBODY .
4. Install front left wheel housing liner → INSTALLING FRONT WHEEL HOUSING LINER .
5. Install front left wheel. → INSTALLING WHEEL .
6. Install cowl panel cover → INSTALLING COWL PANEL COVER .

WM 974619 REMOVING AND INSTALLING CUTOFF RELAY (ALL MODELS) > TECHNICAL VALUES

Location	Description	Type	Basic value	Tolerance 1	Tolerance 2
Cutoff relay to power distributor	Nut, M8	Tightening torque	8 Nm (6 ftlb.)		

WM 974619 REMOVING AND INSTALLING CUTOFF RELAY (ALL MODELS) > PRELIMINARY WORK

1. Disconnect ground lead on the battery → 2X00IN WORK INSTRUCTIONS AFTER DISCONNECTING THE BATTERY .
2. Remove power distributor → 978919 REMOVING AND INSTALLING POWER DISTRIBUTOR .

WM 974619 REMOVING AND INSTALLING CUTOFF RELAY (ALL MODELS) > REMOVING CUTOFF RELAY

WARNING: Incorrect handling of airbag units

- *Triggering of airbag unit.*
- *System faults can occur.*

→ Switch off ignition and remove ignition key or remote control (hand-held transmitter).

→ A power supply (e.g. battery charger) must not be connected to the external power supply/jump-lead starting terminals.

→ Disconnect the battery and insulate the ground strap so that all contact with a ground carrier is avoided.

→ Wait 1 minute after disconnecting the battery.

→ Only pull off connector on the triggering unit after the waiting time has elapsed.

→ Make sure that no foreign objects are located in front of the airbag unit during installation.

→ Replace damaged parts during removal.

→ Always position airbag units so that the blow-out opening is facing upwards, e.g. crest on driver's airbag.

→ Do not position anything on the airbag units.

→ If removed for an extended period, the airbag units must be stored in a safe place.

→ Airbag units must not come into contact with grease, oil, detergents, liquids, or similar substances.

→ Do not expose airbag units to temperatures above 90°.

→ Do not remove the short-circuit spring on the plug-in contacts.

→ Ignition and preparations may only be carried out by skilled staff, supervised by a second responsible person.

→ Before disposal, the airbag unit must be rendered harmless by electrical ignition performed in accordance with all precautionary measures, thereby preventing it from being used incorrectly.

1. Screw off fastening nuts **-1-** .
2. Removing cutoff relay **-2-** from the power distributor.

Fig 1: Removing Cutoff Relay

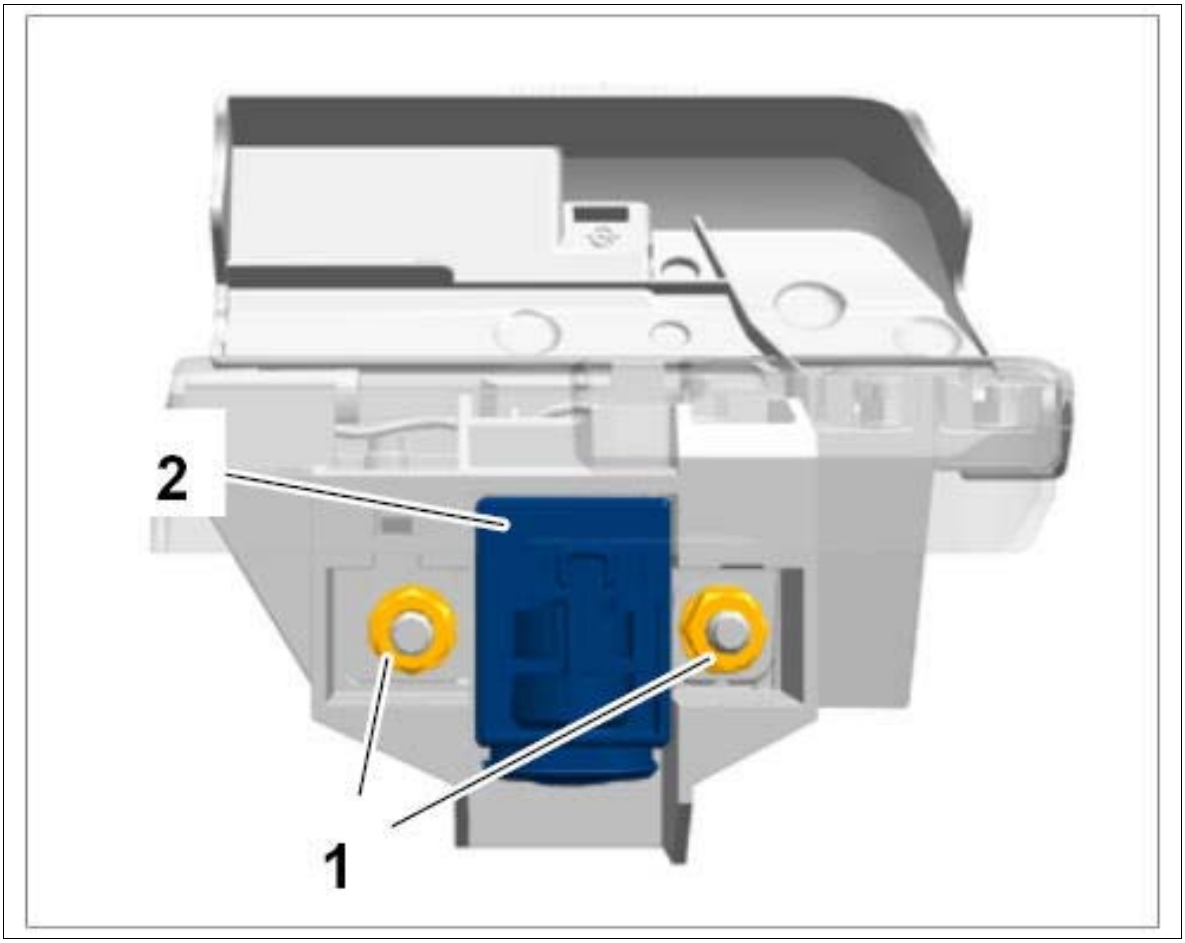

Courtesy of PORSCHE CARS NORTH AMERICA, INC.

WM 974619 REMOVING AND INSTALLING CUTOFF RELAY (ALL MODELS) > INSTALLING CUTOFF RELAY

WARNING: Incorrect handling of airbag units

- *Triggering of airbag unit.*
- *System faults can occur.*

→ Switch off ignition and remove ignition key or remote control (hand-held transmitter).

→ A power supply (e.g. battery charger) must not be connected to the external power supply/jump-lead starting terminals.

→ Disconnect the battery and insulate the ground strap so that all contact with a ground carrier is avoided.

→ Wait 1 minute after disconnecting the battery.

→ Only pull off connector on the triggering unit after the waiting time has elapsed.

→ Make sure that no foreign objects are located in front of the airbag unit during installation.

→ Replace damaged parts during removal.

→ Always position airbag units so that the blow-out opening is facing upwards, e.g. crest on driver's airbag.

→ Do not position anything on the airbag units.

→ If removed for an extended period, the airbag units must be stored in a safe place.

→ Airbag units must not come into contact with grease, oil, detergents, liquids, or similar substances.

→ Do not expose airbag units to temperatures above 90°.

→ Do not remove the short-circuit spring on the plug-in contacts.

→ Ignition and preparations may only be carried out by skilled staff, supervised by a second responsible person.

→ Before disposal, the airbag unit must be rendered harmless by electrical ignition performed in accordance with all precautionary measures, thereby preventing it from being used incorrectly.

1. Installation is performed in reverse order to removal.
2. Tighten fastening nuts used to secure cutoff relay on power distributor. **Tightening torque 8 Nm (6 ftlb.)**

WM 974619 REMOVING AND INSTALLING CUTOFF RELAY (ALL MODELS) > SUBSEQUENT WORK

1. Install power distributor → INSTALLING POWER DISTRIBUTOR .
2. Connect ground lead to the battery. → 2X00IN WORK INSTRUCTIONS AFTER DISCONNECTING THE BATTERY

WM 975219 REMOVING AND INSTALLING WIRE HARNESS FOR ENGINE (MACAN S, MACAN TURBO) > TECHNICAL VALUES

Location	Description	Type	Basic value	Tolerance 1	Tolerance 2
Fastening screw securing vent line to cylinder head		Tightening torque	10 Nm (7.5 ftlb.)		
Fastening nut securing B+ line to starter		Tightening torque	18 Nm (13 ftlb.)		

Fastening nut securing terminal 50 line to starter		Tightening torque	10 Nm (7.5 ftlb.)		

WM 975219 REMOVING AND INSTALLING WIRE HARNESS FOR ENGINE (MACAN S, MACAN TURBO) > PRELIMINARY WORK

1. Remove engine. → 100119 REMOVING AND INSTALLING ENGINE .
2. Loosen the generator and disconnect electric plug connections at generator. → 272219 REMOVING AND INSTALLING GENERATOR .
3. Disconnect oxygen sensors upstream of the catalytic converter at the left and right and unclip all holders for the lines. → 246919 REMOVING AND INSTALLING OXYGEN SENSOR UPSTREAM OF CATALYTIC CONVERTER .
4. Disconnect oxygen sensors downstream of the catalytic converter at the left and right and unclip all holders for the lines. → 247319 REMOVING AND INSTALLING OXYGEN SENSOR DOWNSTREAM OF CATALYTIC CONVERTER .
5. Remove vacuum reservoir with secondary air pump. → 245419 REMOVING AND INSTALLING VACUUM RESERVOIR .

WM 975219 REMOVING AND INSTALLING WIRE HARNESS FOR ENGINE (MACAN S, MACAN TURBO) > REMOVING WIRE HARNESS FOR ENGINE

Information

- Some of the repair illustrations show only one side of the vehicle.
- Naturally, some steps also have to be performed on the opposite side of the vehicle as well.

Fig 1: Locating Engine Wire Harness Position

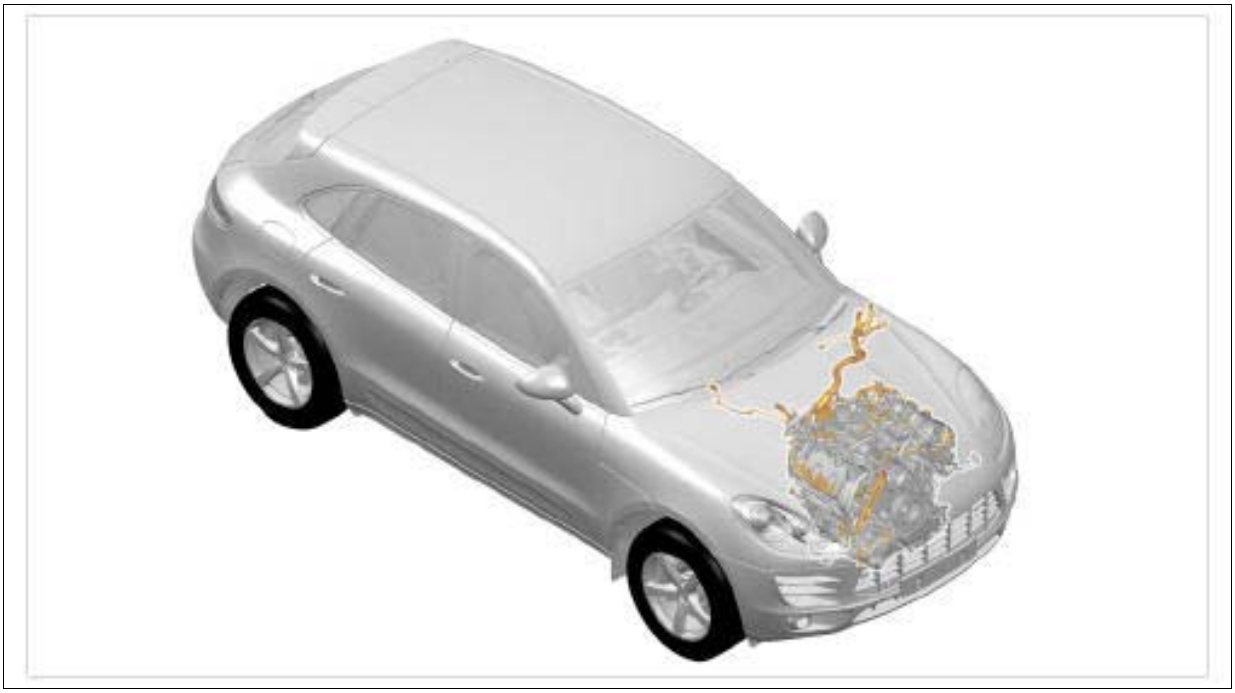

Courtesy of PORSCHE CARS NORTH AMERICA, INC.

Fig 2: Overview Of Engine Wire Harness Connectors

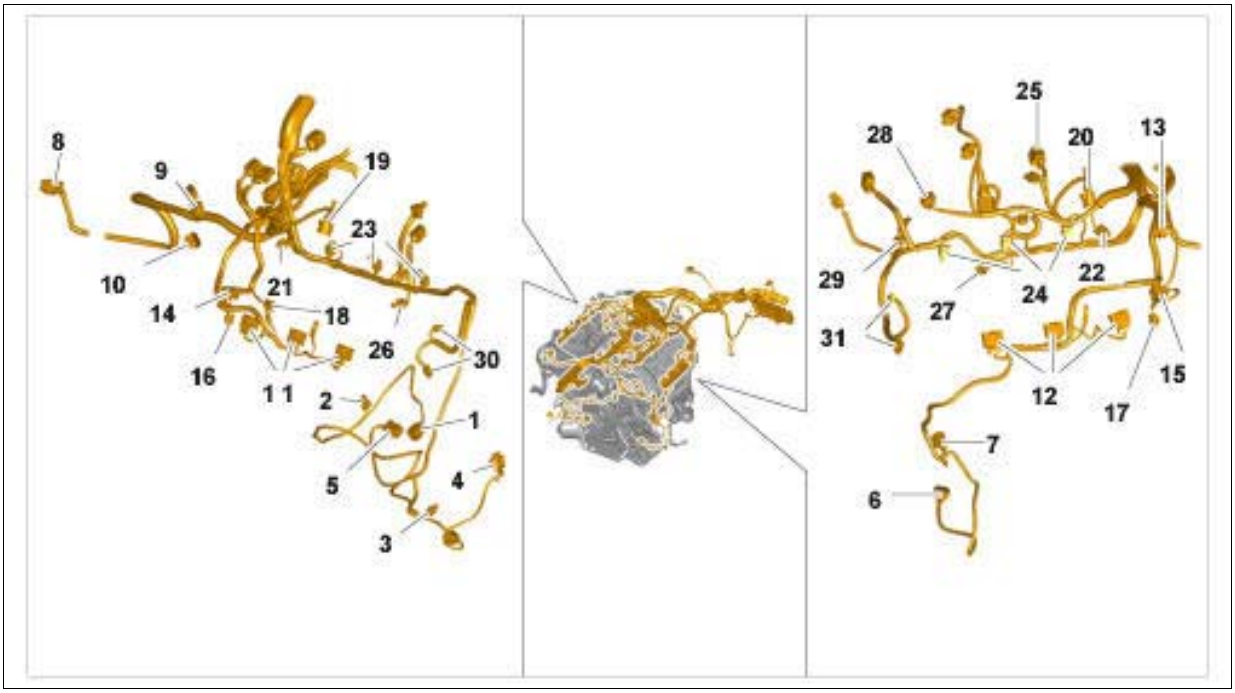

Courtesy of PORSCHE CARS NORTH AMERICA, INC.

1. Steering control unit
2. Crankshaft pulse sender
3. Oil level sensor

4. Oil pressure sender with temperature sensor
5. Generator
6. Oil level sensor
7. Air-conditioning compressor
8. Transfer gear control unit
9. PDK temperature sensor
10. PDK hydraulic unit
11. Ignition coils for cylinders 1-3
12. Ignition coils for cylinders 4-6
13. Engine-compartment temperature sensor
14. Hydraulic valves for variable valve lift switchover, cylinders 1-3
15. Hydraulic valves for variable valve lift switchover, cylinders 4-6
16. Hall sender for outlet camshaft, cylinders 1-3
17. Hall sender for outlet camshaft, cylinders 4-6
18. Coolant temperature sensor
19. High-pressure pump, cylinders 1-3
20. High-pressure pumps, cylinders 4-6
21. Hall sender for intake camshaft, cylinders 1-3
22. Hall sender for intake camshaft, cylinders 4-6
23. Fuel injectors for cylinders 1-3
24. Fuel injectors for cylinders 4-6
25. Fuel pressure sensor (low-pressure)
26. Knock sensors, cylinders 1-3
27. Knock sensors, cylinders 4-6
28. Vacuum sensor for diagnosis
29. Expansion element
30. Actuator, cylinders 1-3
31. Actuator, cylinders 4-6

Disconnect engine wire harness sub-part at the bottom right:

1. Pull out locking mechanism on electric plug connection **-1-** on the steering control unit **-a-** ,

press release **-b-** and disconnect electric plug connection.

2. Unclip wire harness holder **-2-** at the engine oil pan.

Fig 3: Disconnecting Electric Plug Connection On Steering Control Unit

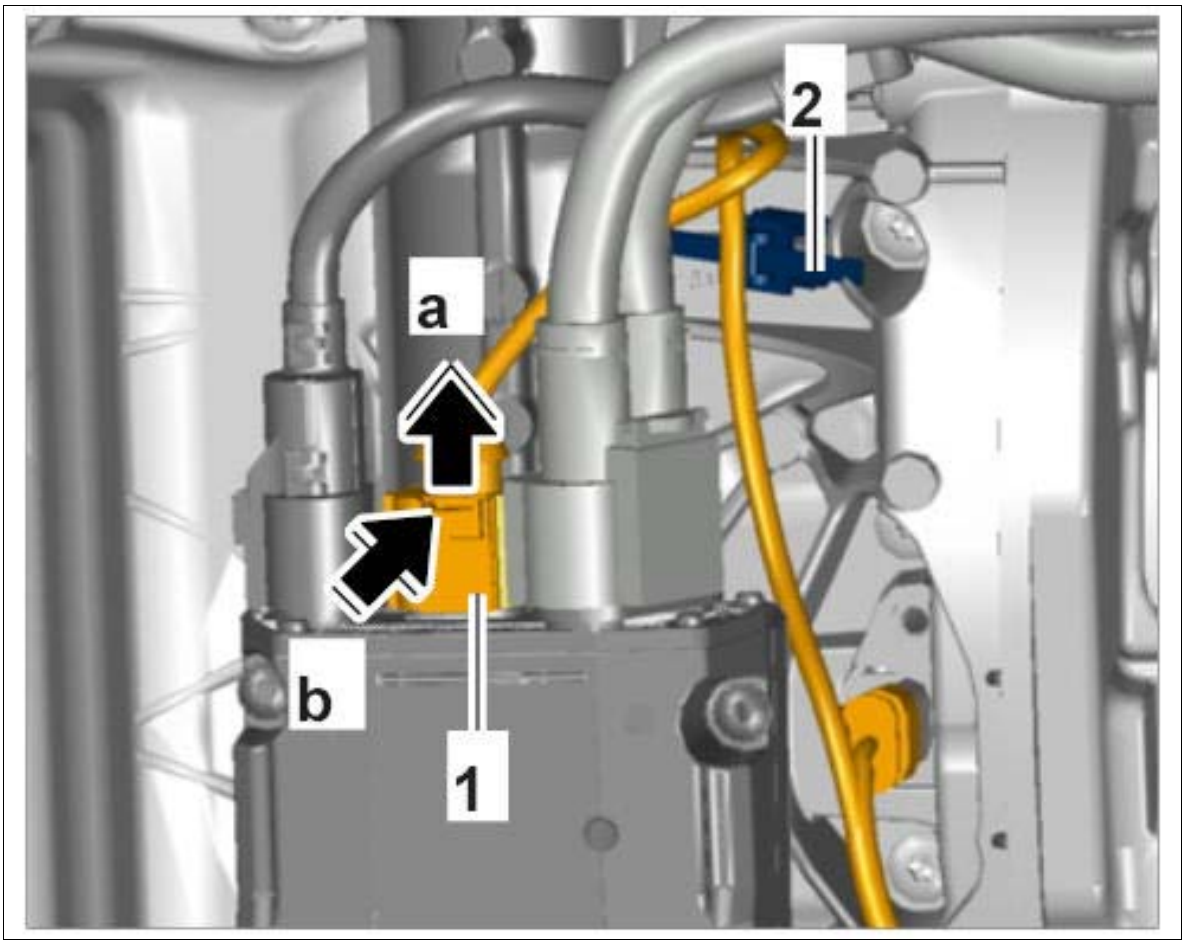

Courtesy of PORSCHE CARS NORTH AMERICA, INC.

3. Pull out locking mechanism on electric plug connection **-1-** on the crankshaft pulse sender **-a-**, press locking mechanism **-b-** and disconnect electric plug connection.

4. Unclip wire harness holders **-2-** at the engine oil pan and oil line.

Fig 4: Disconnecting Electric Plug Connection On Crankshaft Pulse Sender

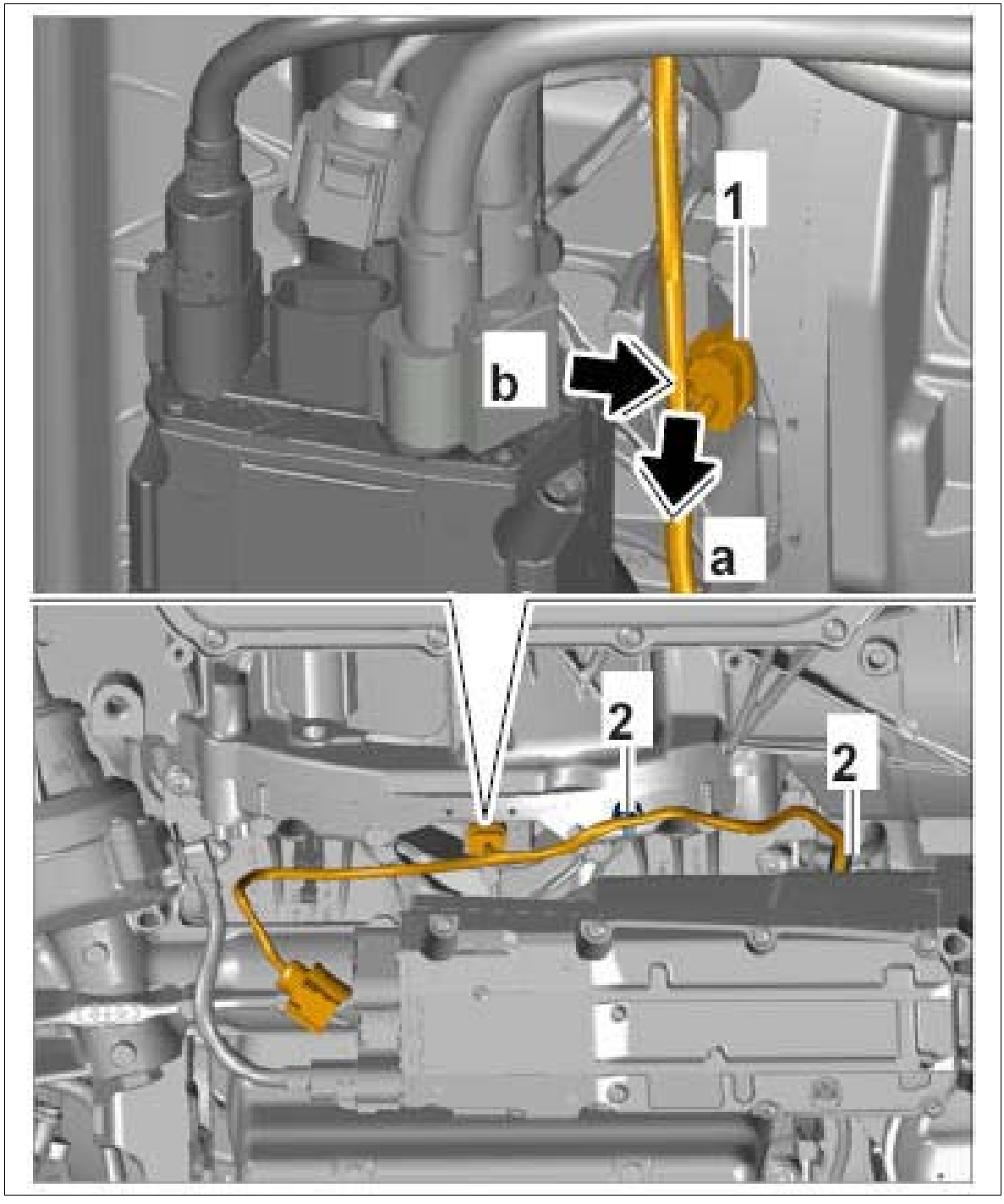

Courtesy of PORSCHE CARS NORTH AMERICA, INC.

5. Release electric plug connection **-1-** on the oil level sensor **-a-** and disconnect it.
6. Unclip wire harness holders **-2-** at the coolant line.
7. Unclip wire harness holders **-3-** at the oil pan.

Fig 5: Disconnecting Electric Plug Connection On Oil Level Sensor

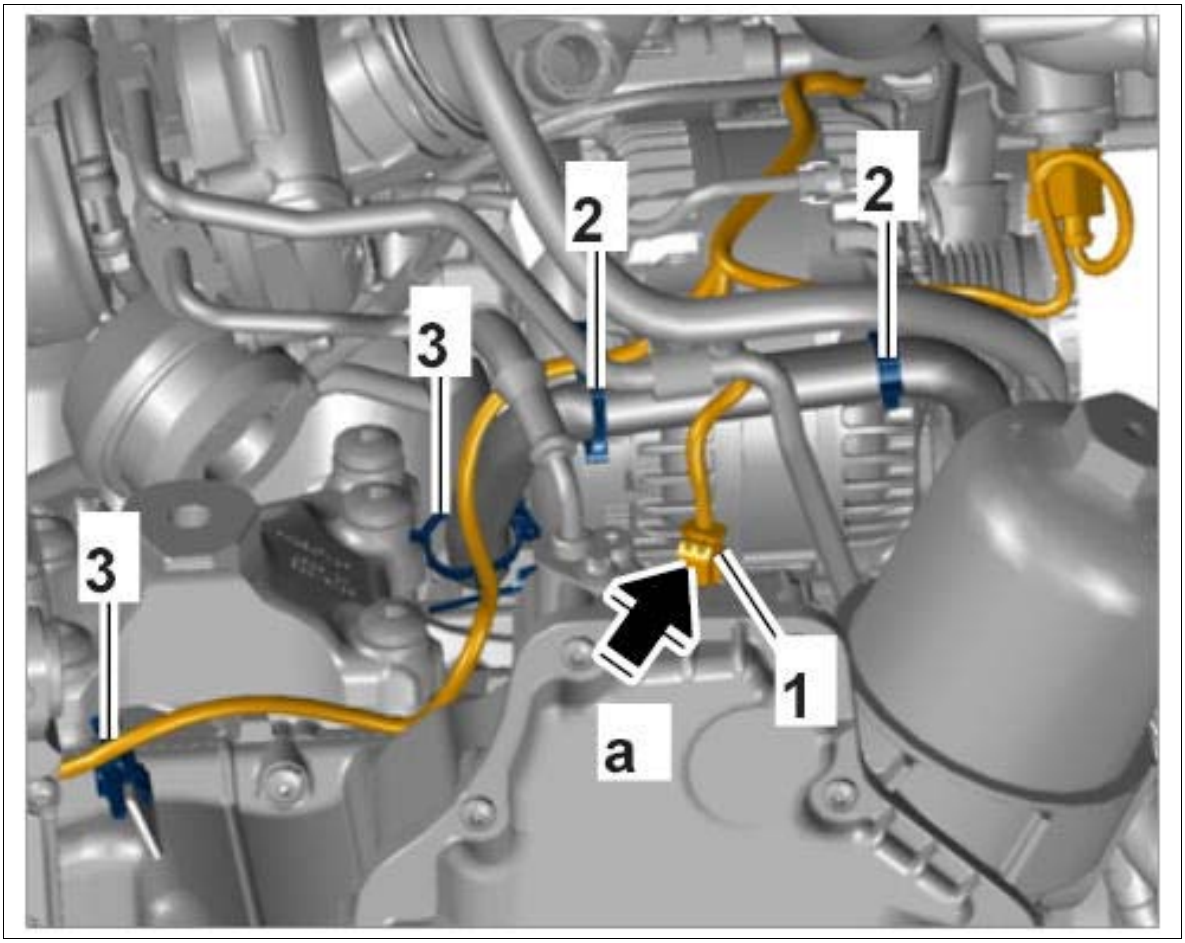

Courtesy of PORSCHE CARS NORTH AMERICA, INC.

8. Release electric plug connection **-1-** on the oil pressure sender with temperature sensor and disconnect it.
9. Unclip wire harness holder **-2-** at the coolant line.

Fig 6: Disconnecting Electric Plug Connection On Oil Pressure Sender With Temperature Sensor

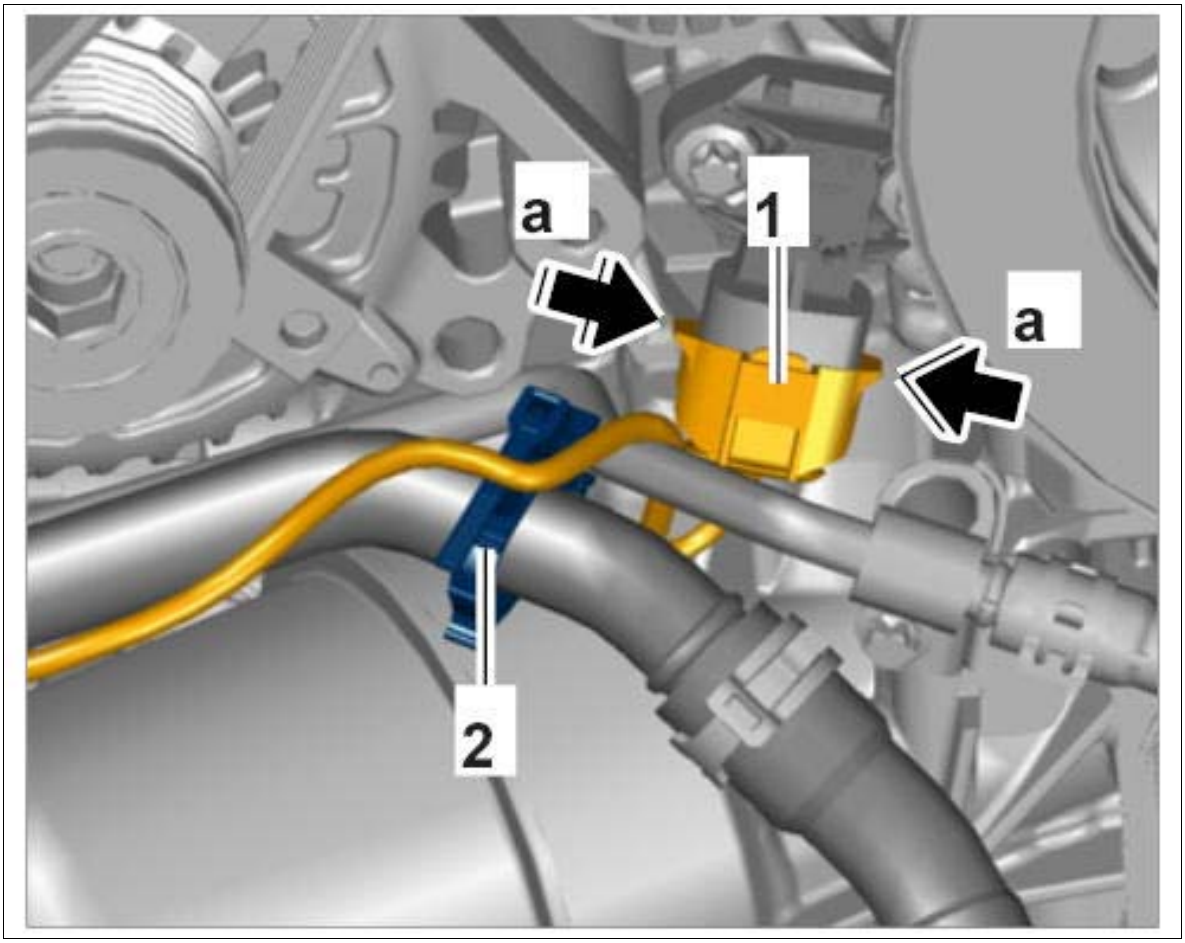

Courtesy of PORSCHE CARS NORTH AMERICA, INC.

10. Unscrew fastening screws **-1-** for the coolant line **-2-** .

Fig 7: Disconnecting Coolant Line

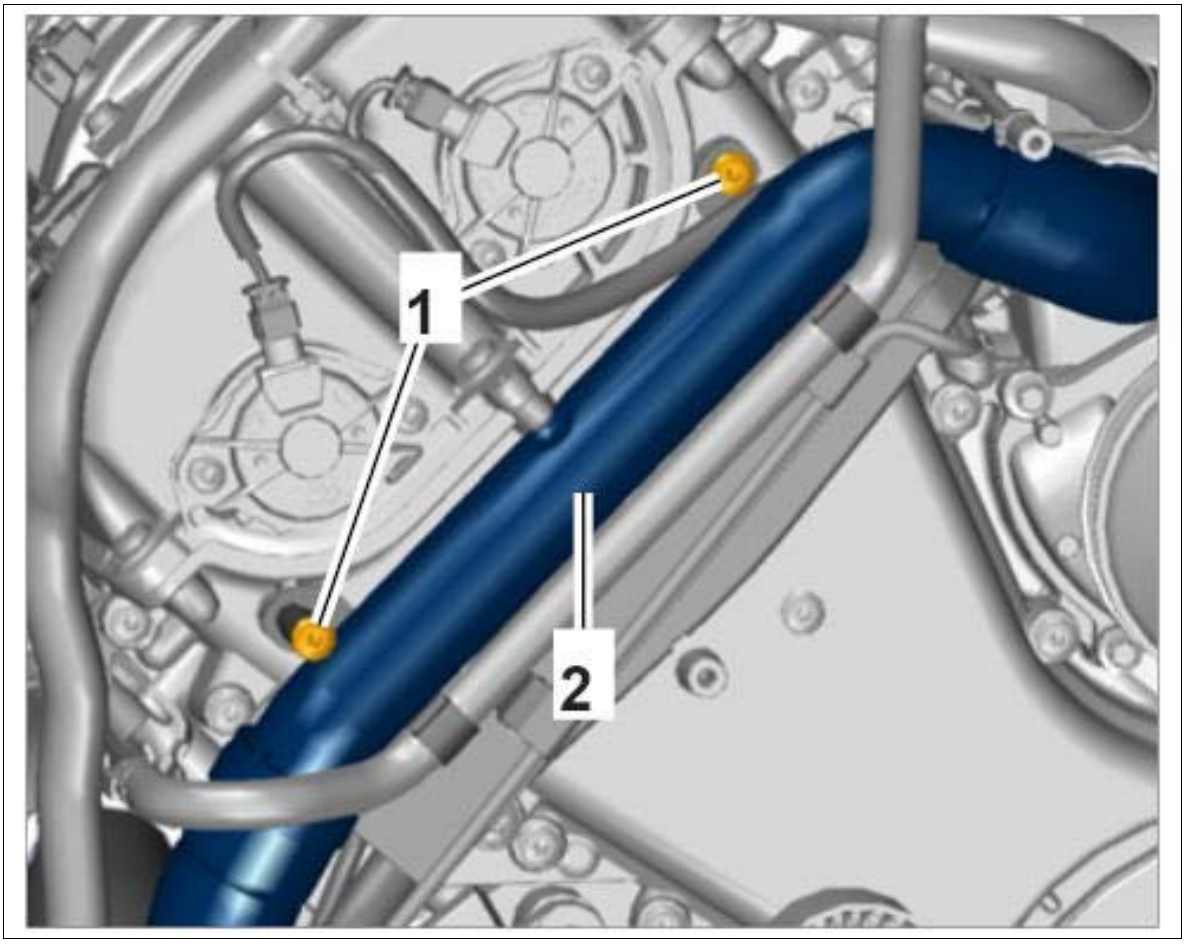

Courtesy of PORSCHE CARS NORTH AMERICA, INC.

11. Loosen wiring duct **-3-** .
    1. 11.1. Unclip line **-1-** from the cable duct.
    2. 11.2. Unscrew fastening screw **-2-** .

Fig 8: Loosening Wiring Duct

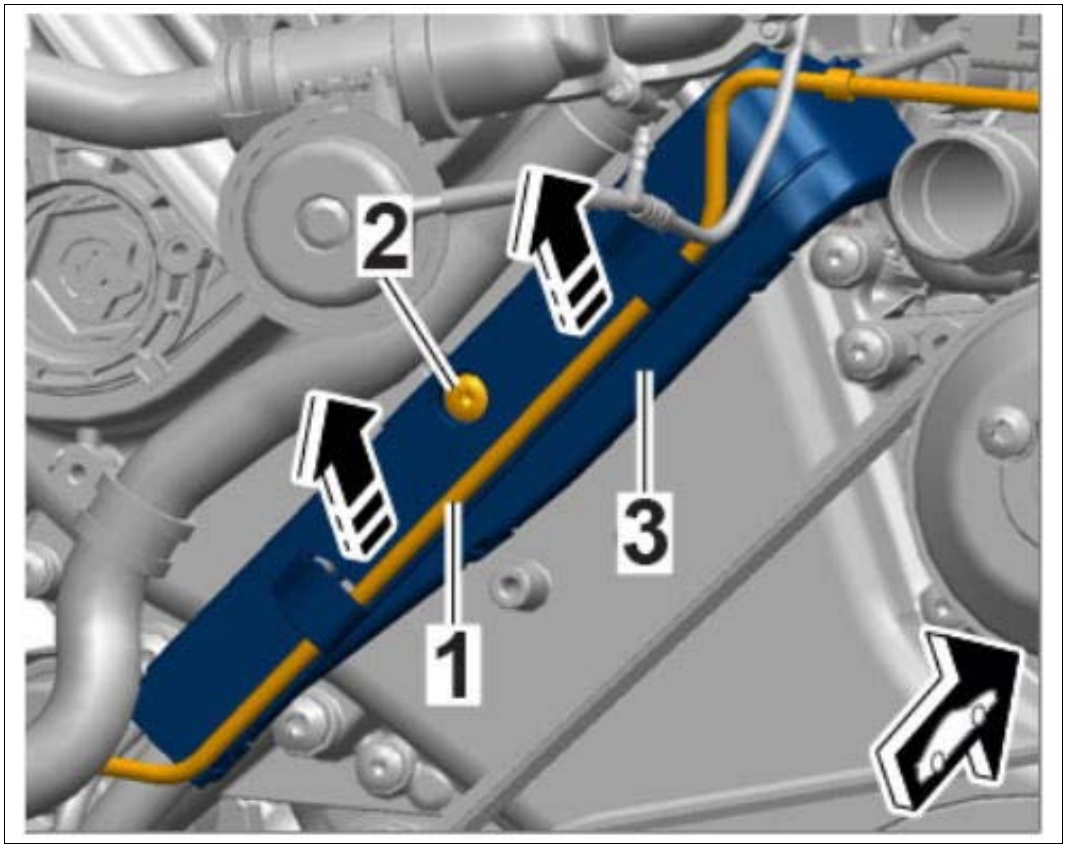

Courtesy of PORSCHE CARS NORTH AMERICA, INC.

Disconnect engine wire harness sub-part at the bottom left:

12. Release electric plug connection **-1-** on the oil level sensor **-arrow-** and disconnect it.
13. Unclip wire harness holders **-2-** at the oil pan and coolant line.

Fig 9: Disconnecting Electric Plug Connection On Oil Level Sensor

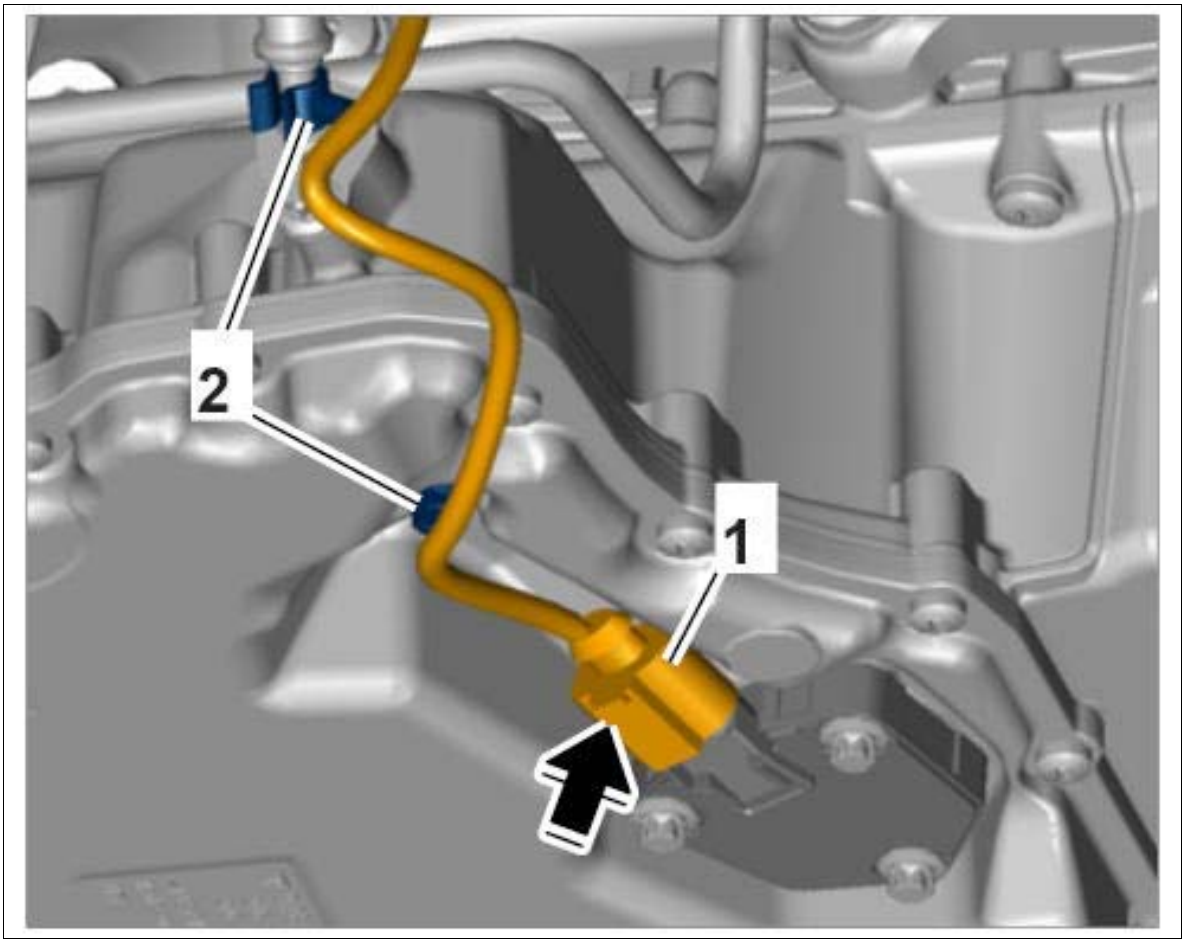

Courtesy of PORSCHE CARS NORTH AMERICA, INC.

14. Release electric plug connection **-1-** on the air-conditioning compressor **-a-** and disconnect it.
15. Unclip wire harness holder **-2-** at the refrigerant line.

Fig 10: Disconnecting Electric Plug Connection On Air-Conditioning Compressor

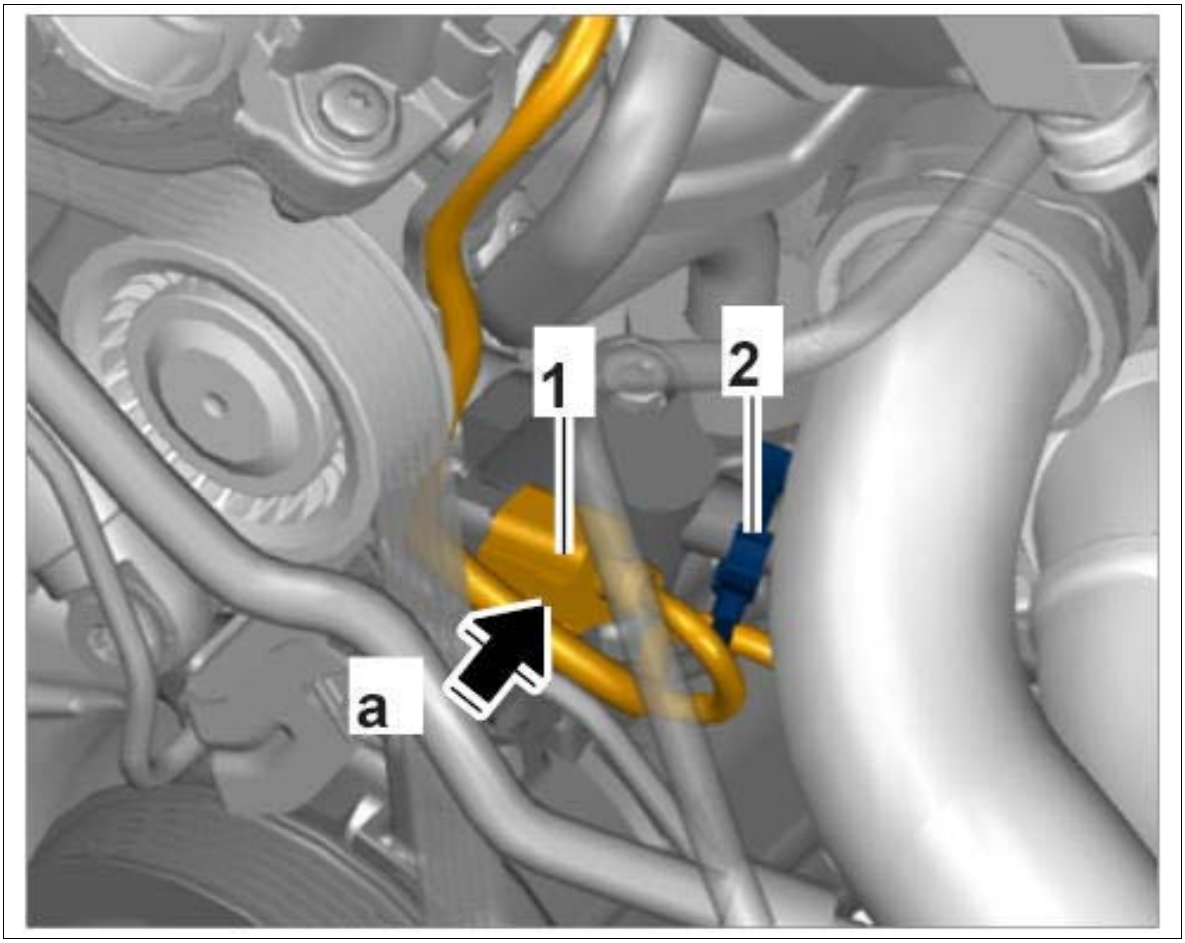

Courtesy of PORSCHE CARS NORTH AMERICA, INC.

16. Pull off wire harness holders **-1-** at the cylinder head cover and press them off the retaining strip at the side.

Fig 11: Removing Wire Harness Holders

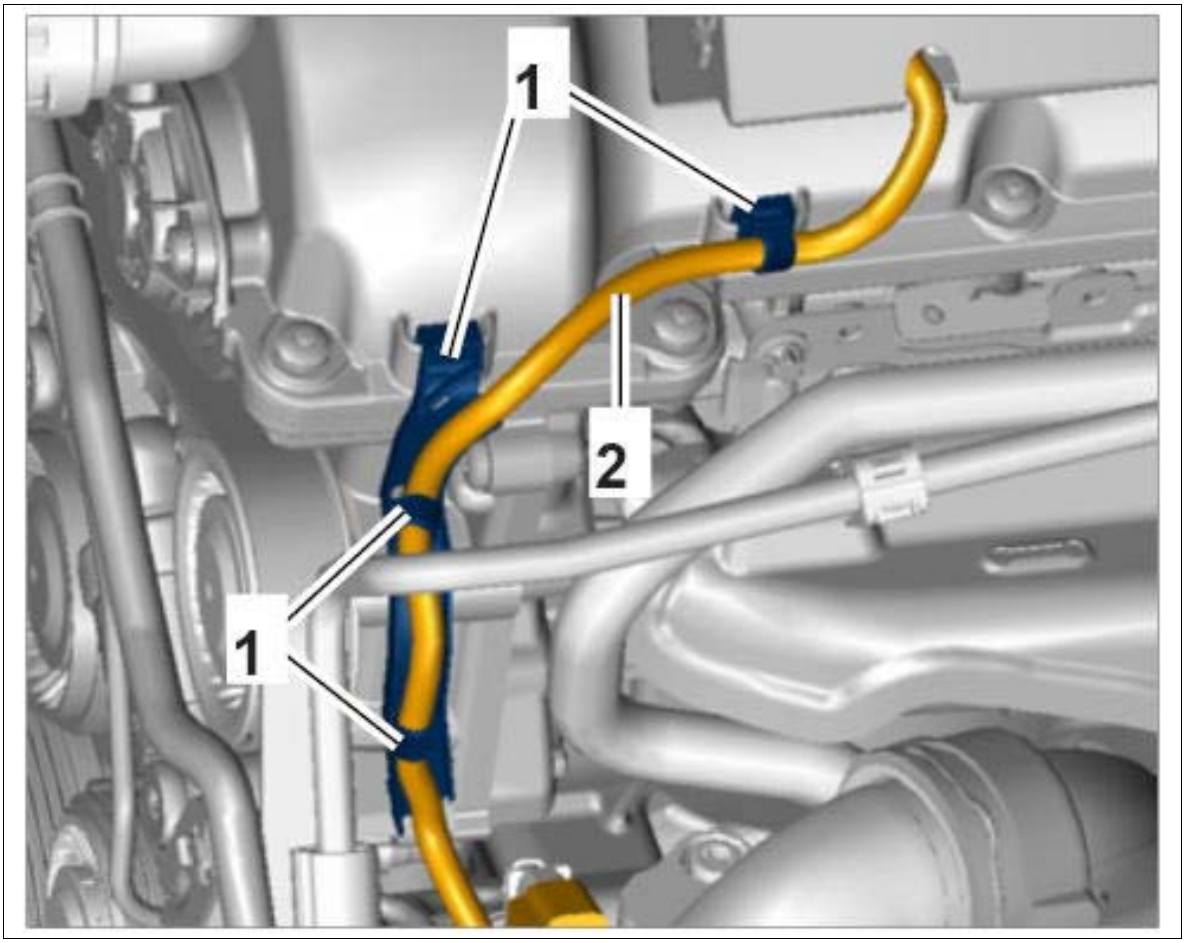

Courtesy of PORSCHE CARS NORTH AMERICA, INC.

Disconnect engine wire harness sub-part for transmission:

17. Release electric plug connection **-1-** on the transfer gear control unit **-a-** and disconnect it.
18. Pull off wire harness holders **-2-** at the transfer gear and Porsche Doppelkupplung (PDK).

Fig 12: Disconnecting Electric Plug Connection On Transfer Gear Control Unit

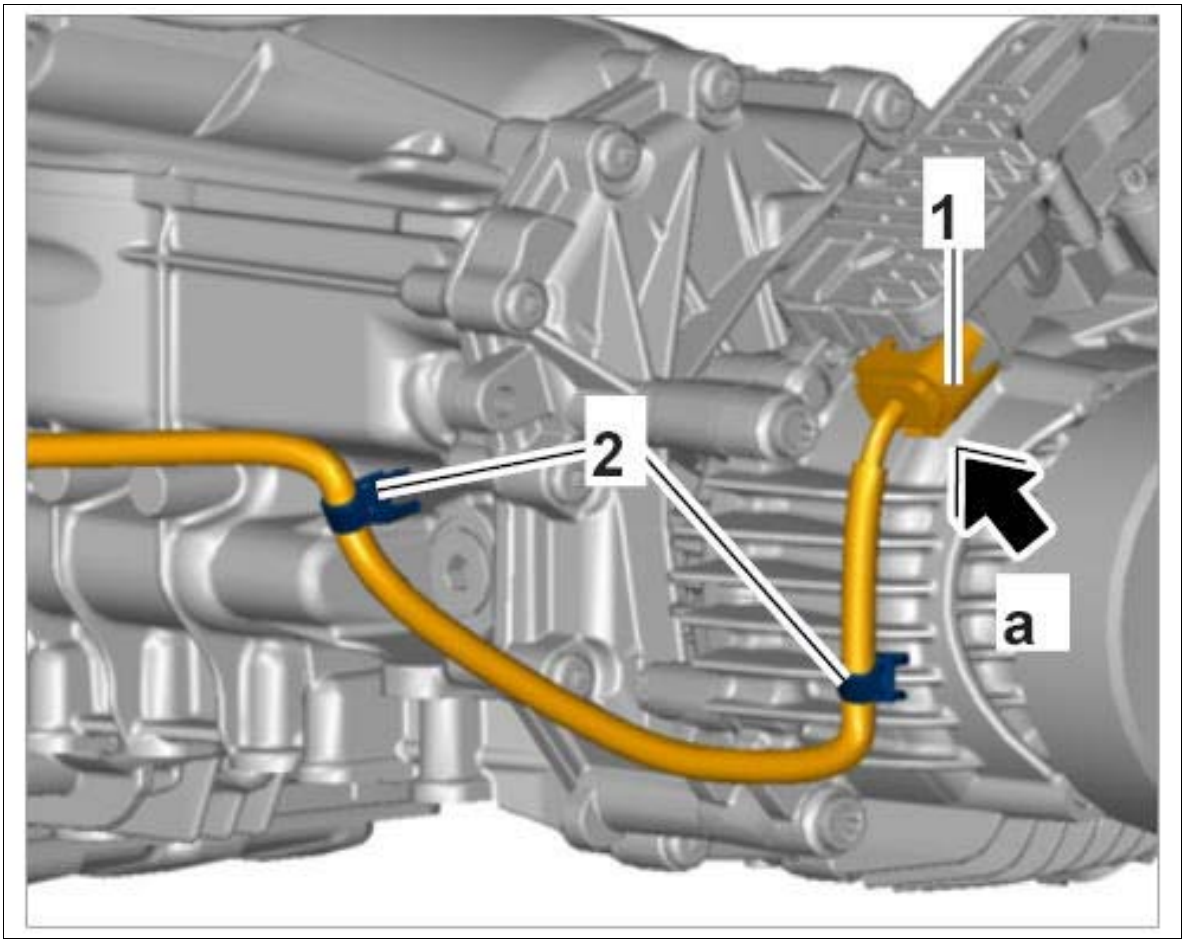

Courtesy of PORSCHE CARS NORTH AMERICA, INC.

19. Pull out locking mechanism on electric plug connection **-1-** on the PDK temperature sensor **-a-**, press locking mechanism **-b-** and disconnect electric plug connection.
20. Turn electric plug connection **-2-** for the PDK hydraulic unit approx. 90° anti-clockwise and disconnect it.
21. Pull off wire harness holders **-3-** at the Porsche Doppelkupplung (PDK).

Fig 13: Disconnecting Electric Plug Connections On Porsche Doppelkupplung (PDK)

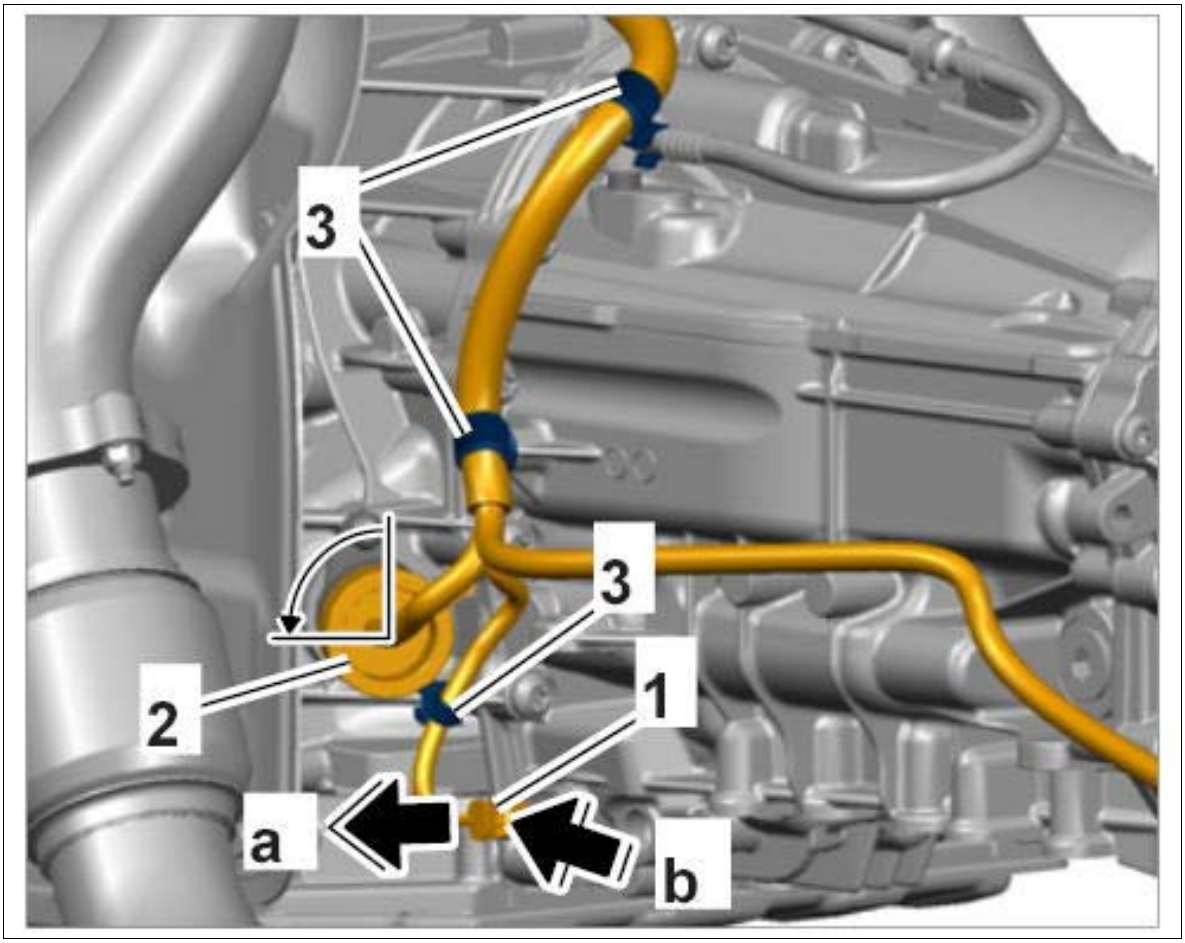

Courtesy of PORSCHE CARS NORTH AMERICA, INC.

22. Loosen lines for ATF cooling and guide the engine wire harness sub-part for transmission under the lines for ATF cooling. → 386219 REMOVING AND INSTALLING LINE FOR ATF COOLING .

Loosen engine wire harness sub-part at the top:

23. Disconnect electric plug connections **-1-** on the ignition coils on cylinders 1-3 and cylinders 4-6. → 282020 REMOVING AND INSTALLING IGNITION COILS .

    1. 23.1. Unscrew fastening screws **-2-** from the wiring ducts.

    2. 23.2. Release and disconnect electric plug connections **-a-** .

24. Unscrew fastening screw **-3-** for the wiring duct on the left valve cover.

Fig 14: Disconnecting Electric Plug Connections On Ignition Coils

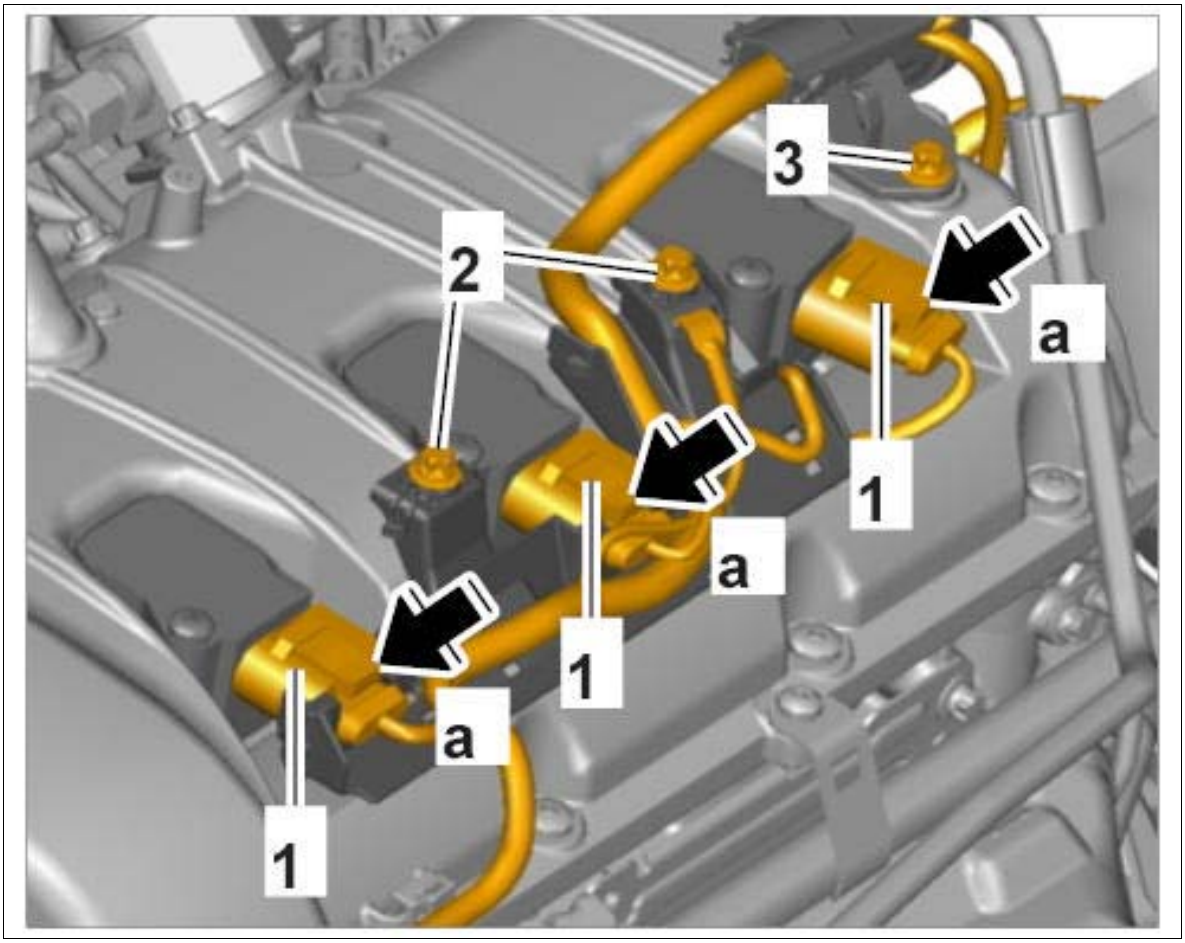

Courtesy of PORSCHE CARS NORTH AMERICA, INC.

25. Release electric plug connection **-1-** on the engine-compartment temperature sensor **-a-** and disconnect it.

Fig 15: Disconnecting Electric Plug Connection On Engine-Compartment Temperature Sensor

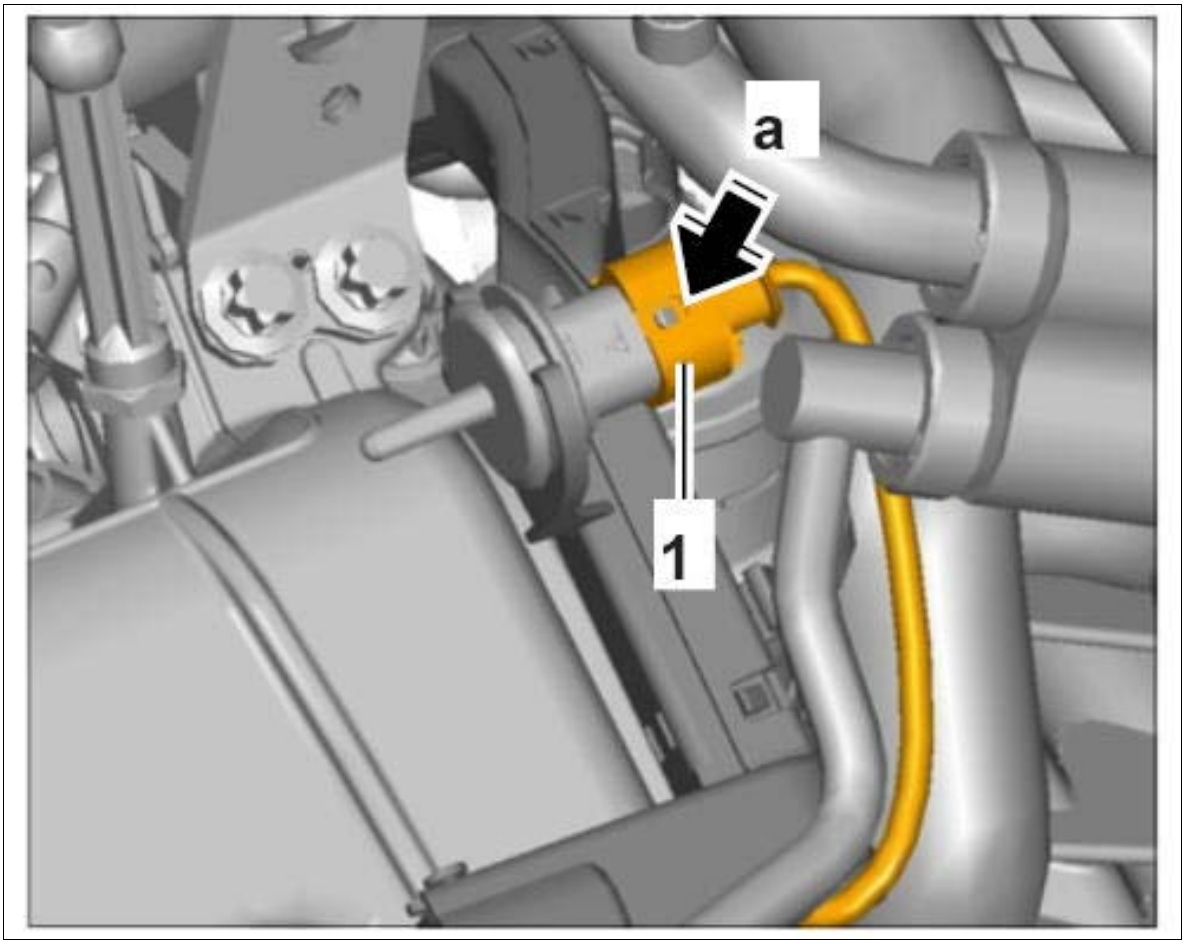

Courtesy of PORSCHE CARS NORTH AMERICA, INC.

26. Unscrew fastening screws **-1-** and remove heat shields **-2-** on the left and right cylinder head.
27. Release electric plug connections **-3-** on hydraulic valve for variable valve lift switchover for cylinders 1-3 and cylinders 4-6 **-a-** and disconnect them.
28. Release electric plug connections **-4-** on hall senders for the outlet camshaft for cylinders 1-3 and cylinders 4-6 **-b-** and disconnect them.

Fig 16: Locating Hall Senders Electric Plug Connections

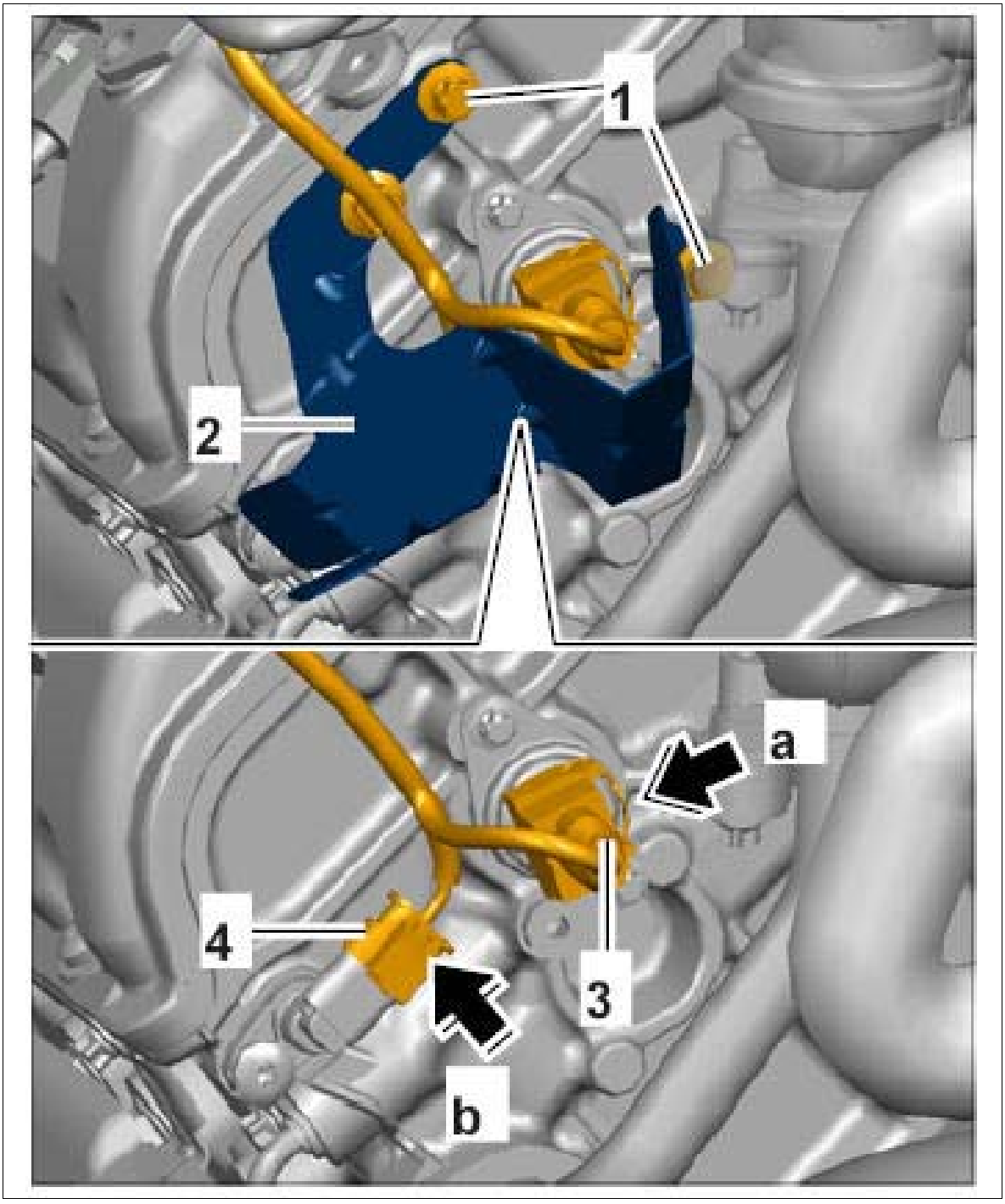

Courtesy of PORSCHE CARS NORTH AMERICA, INC.

29. Release electric plug connection **-1-** on the coolant temperature sensor **-a-** and disconnect it.
30. Unclip wire harness holder **-2-** at the crankcase.

Fig 17: Disconnecting Electric Plug Connection On Coolant Temperature Sensor

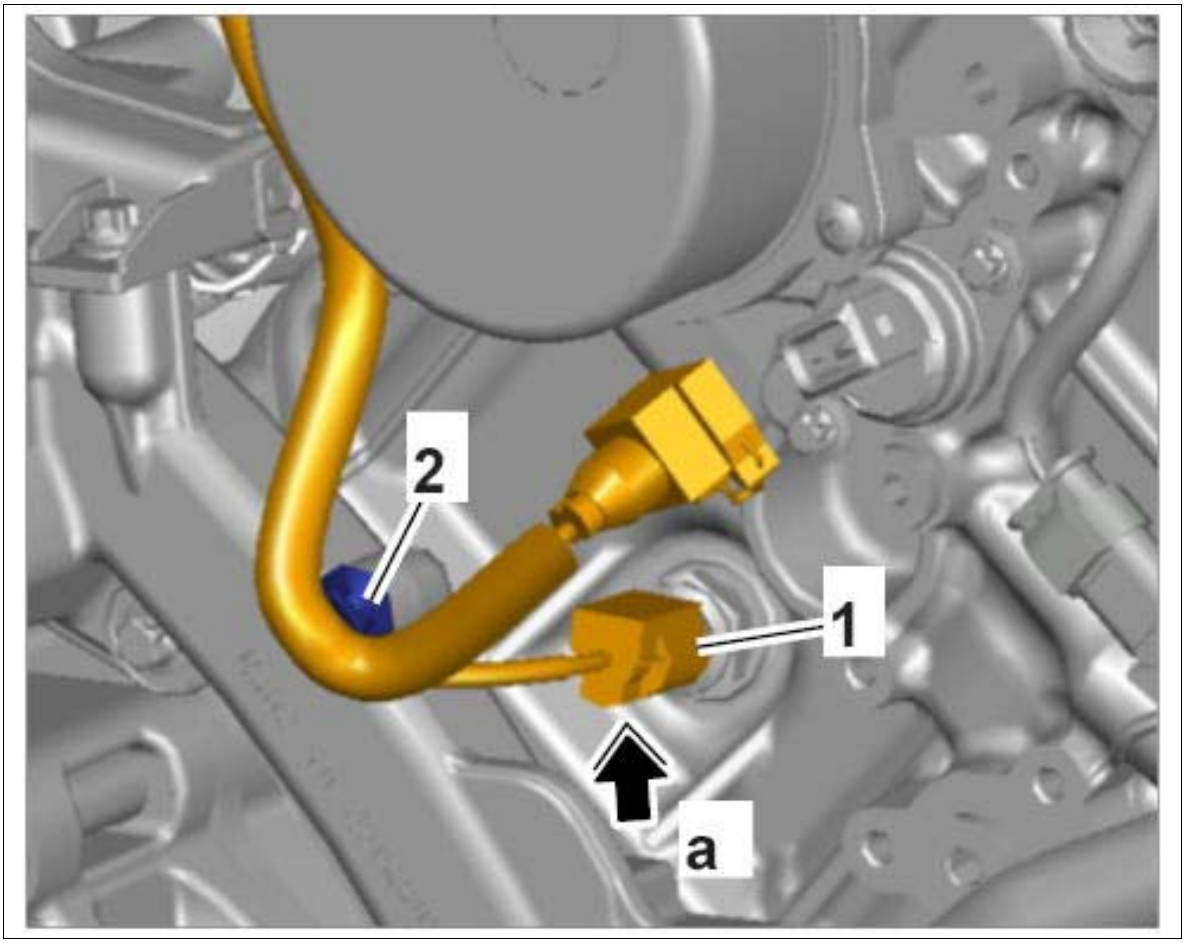

Courtesy of PORSCHE CARS NORTH AMERICA, INC.

31. Release electric plug connections **-1-** on high-pressure pumps for cylinders 1-3 and cylinders 4-6 **-a-** and disconnect them.

32. Release electric plug connections **-2-** on hall senders for the intake camshaft for cylinders 1-3 and cylinders 4-6 **-b-** and disconnect them.

33. Unclip wire harness holders **-3-** at the fuel lines.

Fig 18: Disconnecting Electric Plug Connections On High-Pressure Pumps And Intake Camshafts Hall Senders

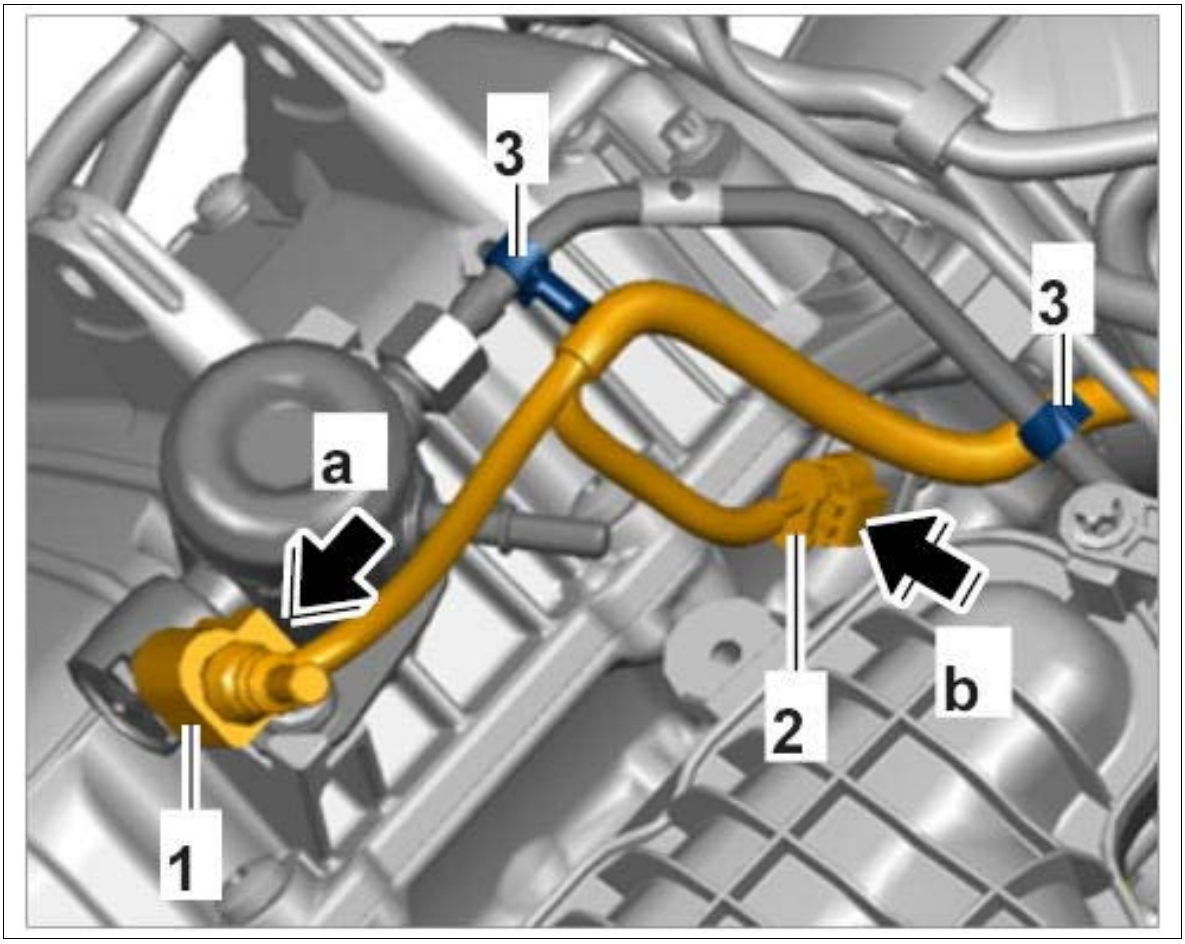

Courtesy of PORSCHE CARS NORTH AMERICA, INC.

34. Release locking mechanisms for electric plug connections **-1, 2, 3-** on the fuel injectors for cylinders 1-3 and cylinders 4-6 **-a-** , press locking mechanisms and pull them off **-b-** .

Fig 19: Removing Fuel Injectors Electric Plug Connections

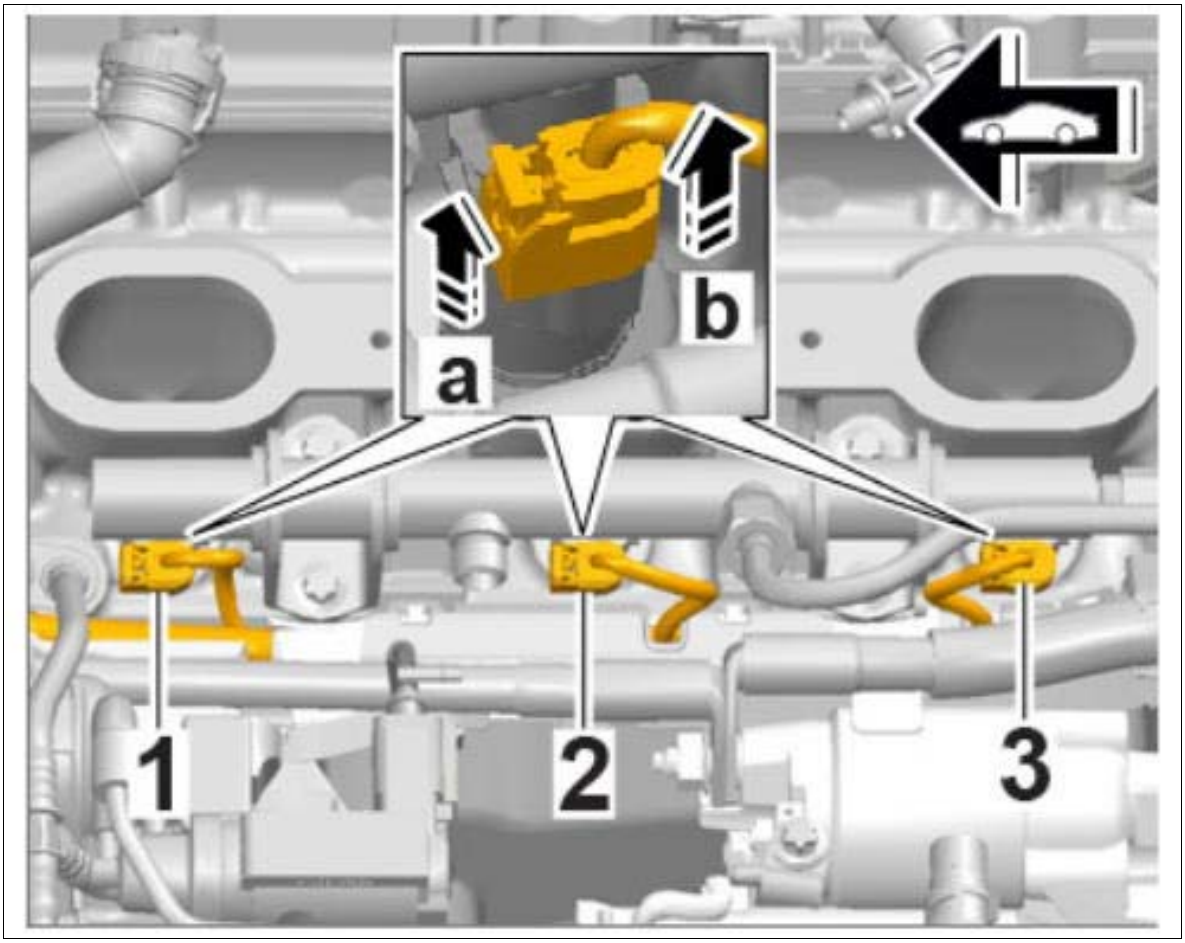

Courtesy of PORSCHE CARS NORTH AMERICA, INC.

35. Release electric plug connection **-1-** on fuel pressure sensor (low-pressure) **-a-** and disconnect it.
36. Cut tie-wrap **-2-** .
37. Release electric plug connection **-3-** (**-b-**) and disconnect it.

Fig 20: Disconnecting Electric Plug Connection On Fuel Pressure Sensor (Low-Pressure)

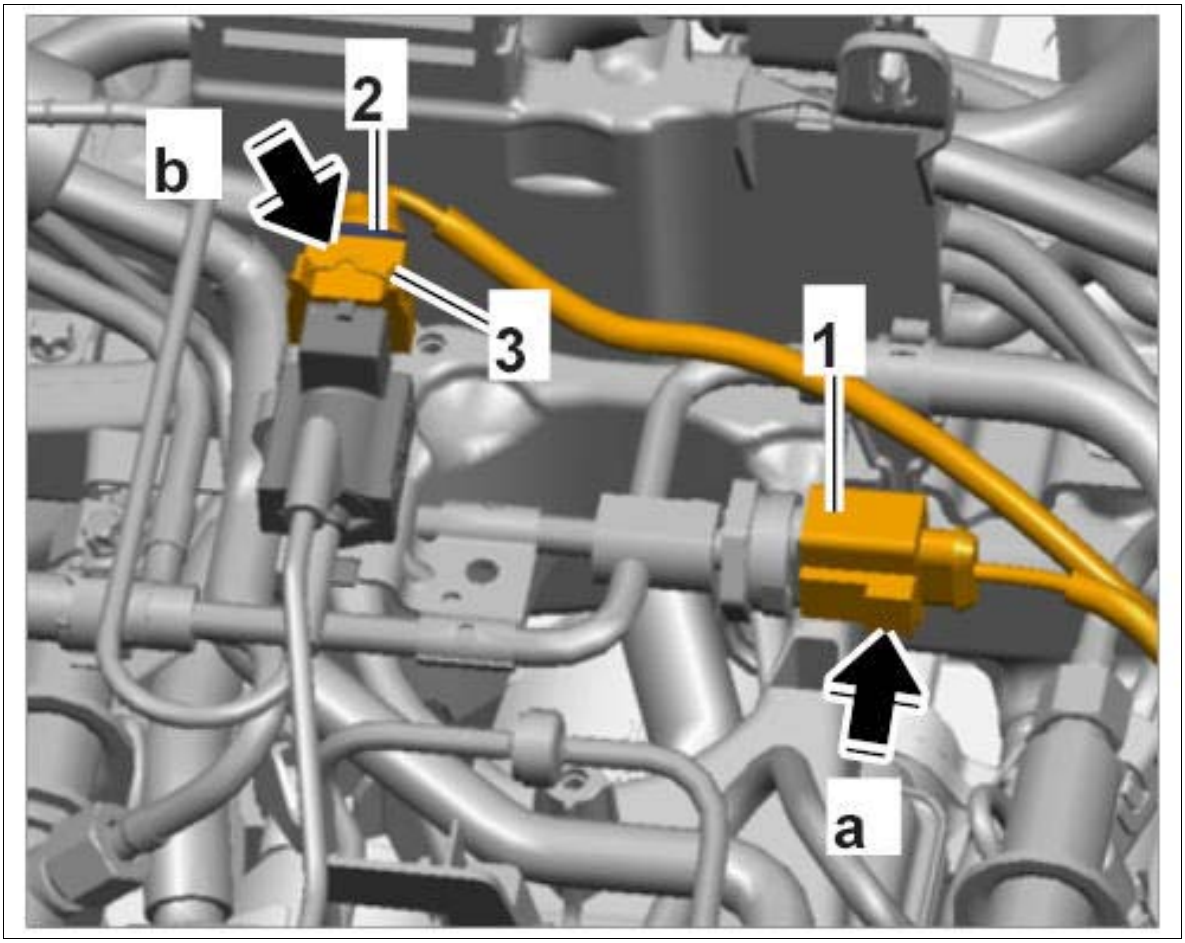

Courtesy of PORSCHE CARS NORTH AMERICA, INC.

38. Unscrew fastening nut **-1-** on electric line for terminal 50 **-2-** and remove electric line for terminal 50 at the starter.

39. Unscrew fastening nut **-3-** on electric B+ line **-4-** and remove electric B+ line at the starter.

Fig 21: Disconnecting Starter Electric Lines

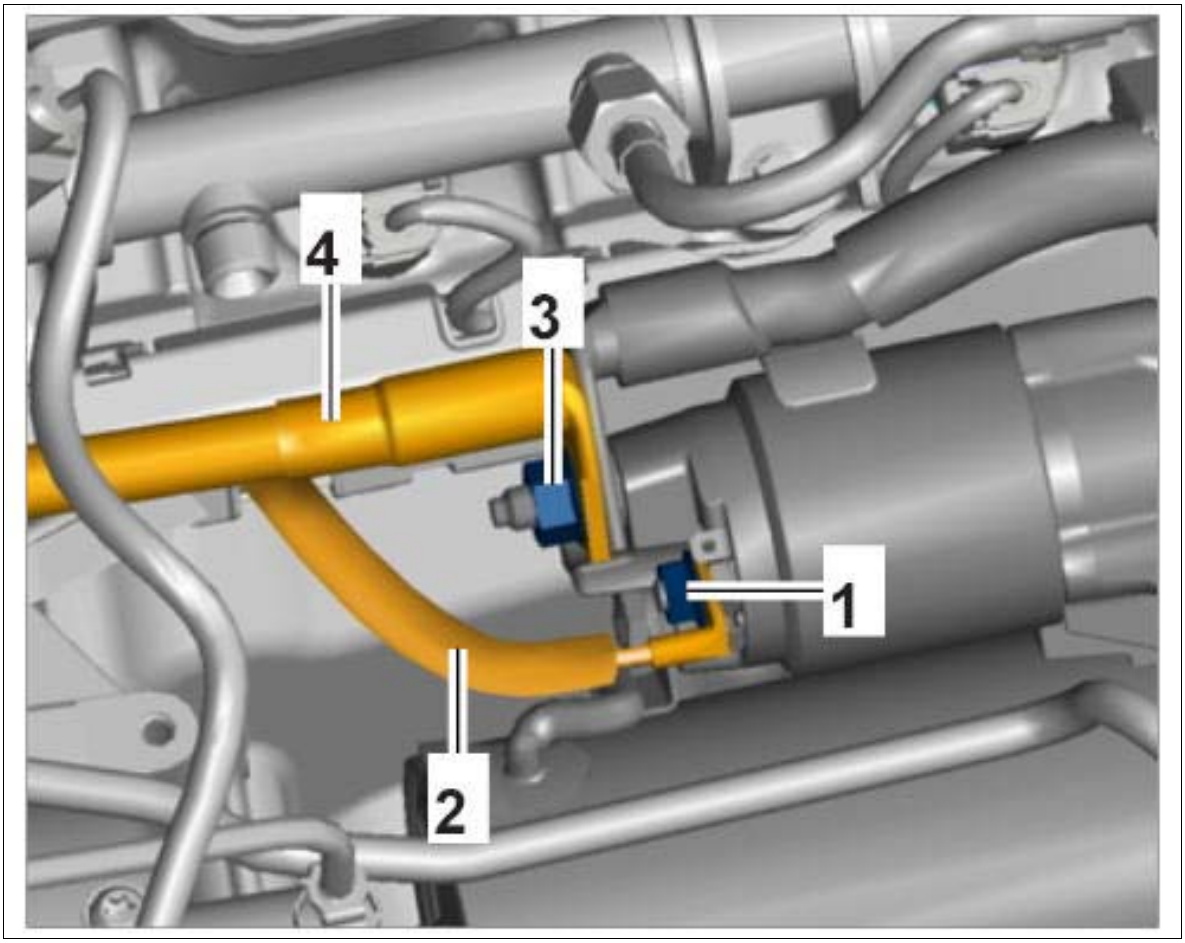

Courtesy of PORSCHE CARS NORTH AMERICA, INC.

40. Release electric plug connections **-1-** on knock sensors for cylinders 1-3 and cylinders 4-6 **-a-** and disconnect them.

Fig 22: Disconnecting Electric Plug Connection On Knock Sensors

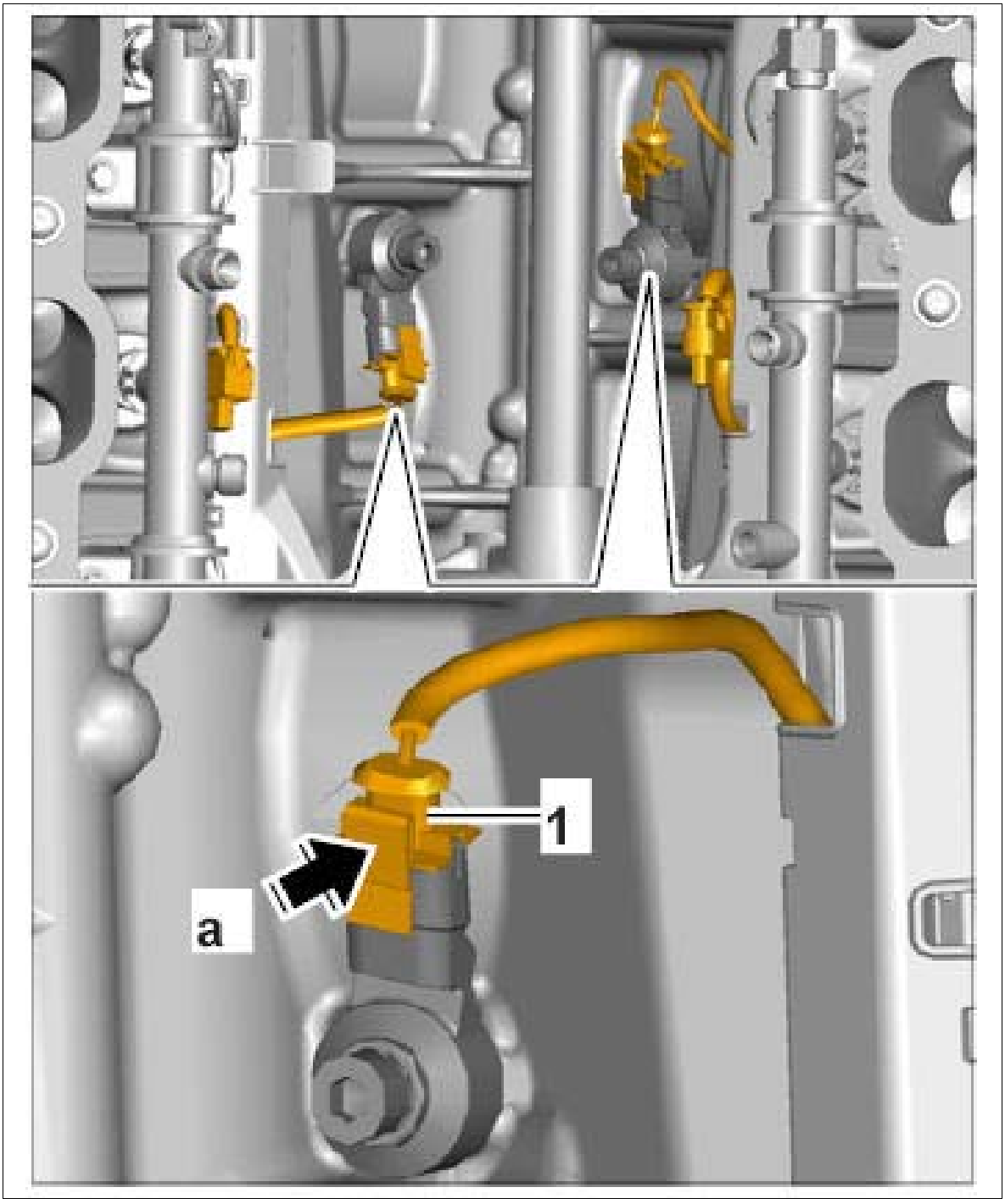

Courtesy of PORSCHE CARS NORTH AMERICA, INC.

41. Release electric plug connection on vacuum sensor for diagnosis **-2-** (**-a-**) and disconnect it **-b-** .

Fig 23: Disconnecting Electric Plug Connection On Diagnosis Vacuum Sensor

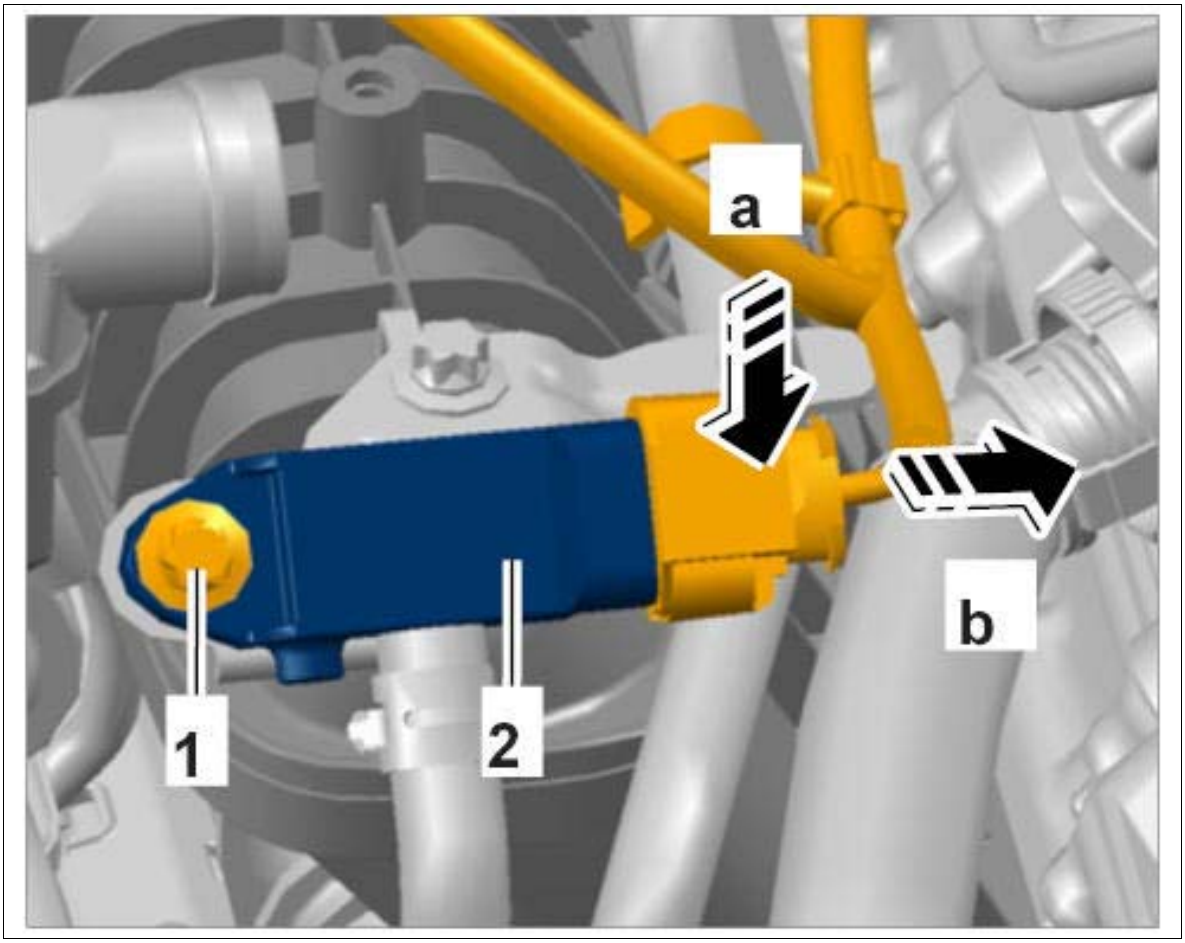

Courtesy of PORSCHE CARS NORTH AMERICA, INC.

42. Release electric plug connection **-1-** on expansion element **-a-** and disconnect it **-b-** .

Fig 24: Disconnecting Electric Plug Connection On Expansion Element

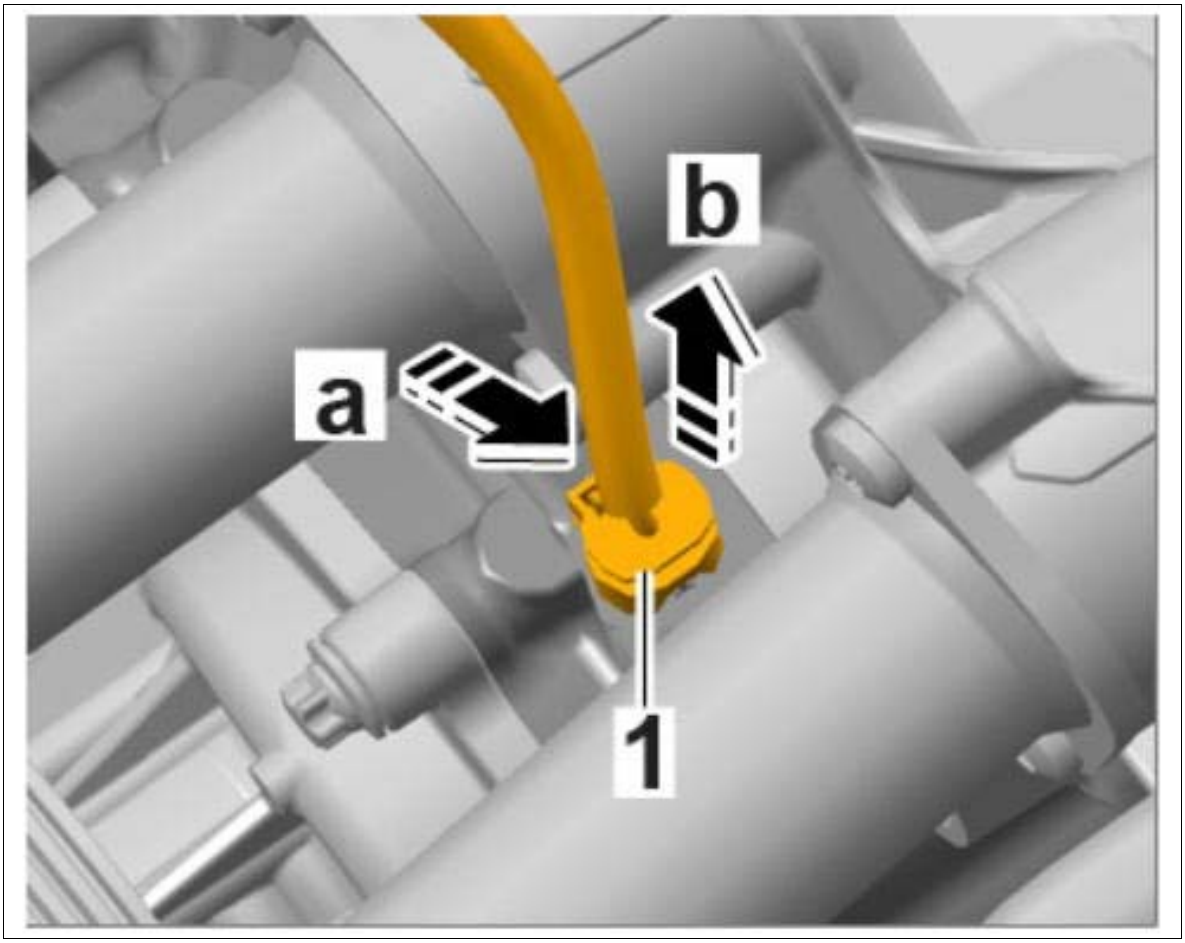

Courtesy of PORSCHE CARS NORTH AMERICA, INC.

Information

Do not confuse the plug connection at the actuators for camshaft control. Given the similar design of the plug connections on the intake and outlet camshafts, these must be marked for re-installation during removal.

43. Mark electric plug connections **-1-** on actuators for cylinders 1-3 and on actuators for cylinders 4-6 so that they do not get mixed up.

44. Release locking mechanisms for electric plug connections **-1-** on actuators for cylinders 1-3 and cylinders 4-6 **-a-** , press locking mechanisms **-b-** and pull them off.

45. Unclip wire harness holders **-2-** at the cylinder head and vacuum line.

46. Loosen fastening screw **-3-** on holder for the left cylinder head.

Fig 25: Disconnecting Electric Plug Connections On Valve Lift Adjustment Solenoid Hydraulic Valves

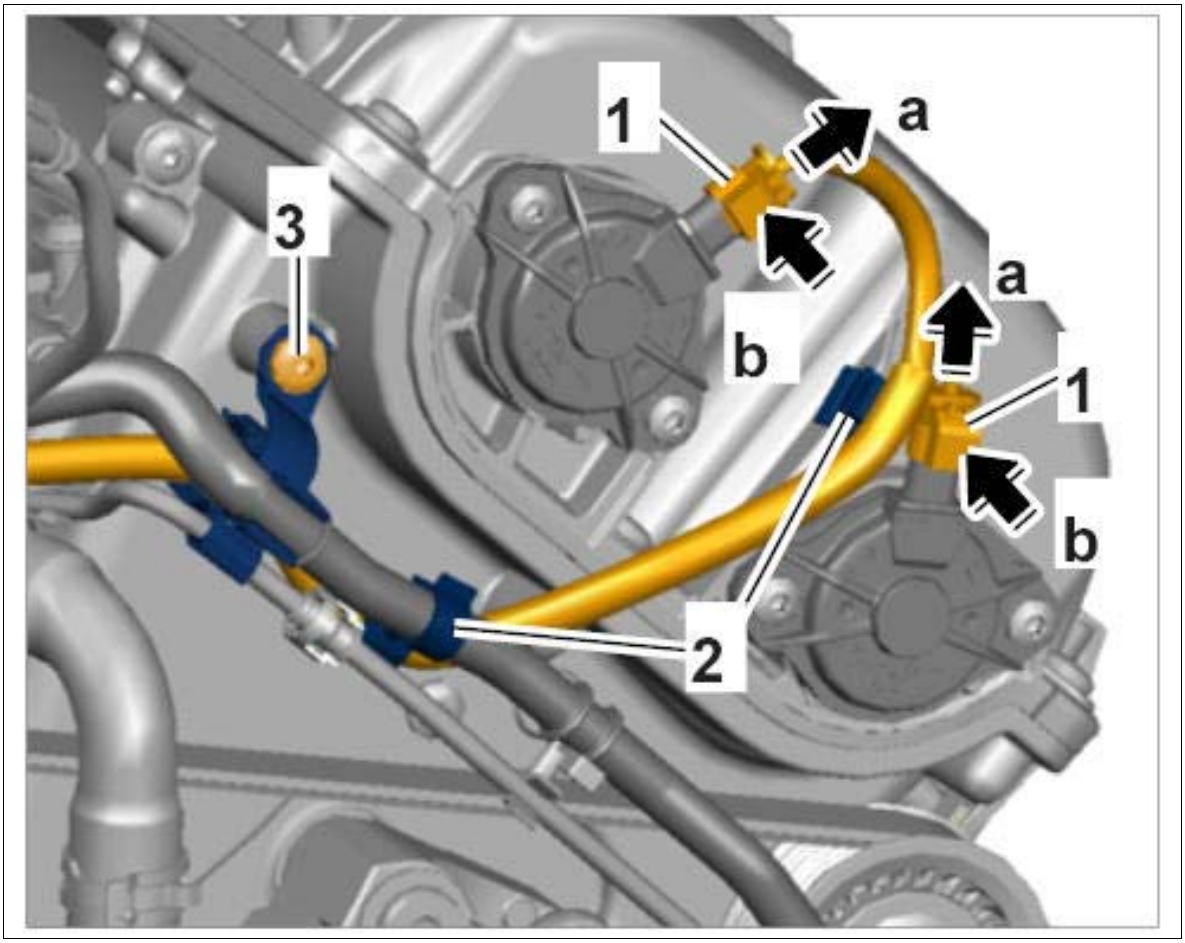

Courtesy of PORSCHE CARS NORTH AMERICA, INC.

47. Unscrew fastening screw **-2-** and disconnect coolant vent line **-1-** .

Fig 26: Identifying Coolant Vent Line

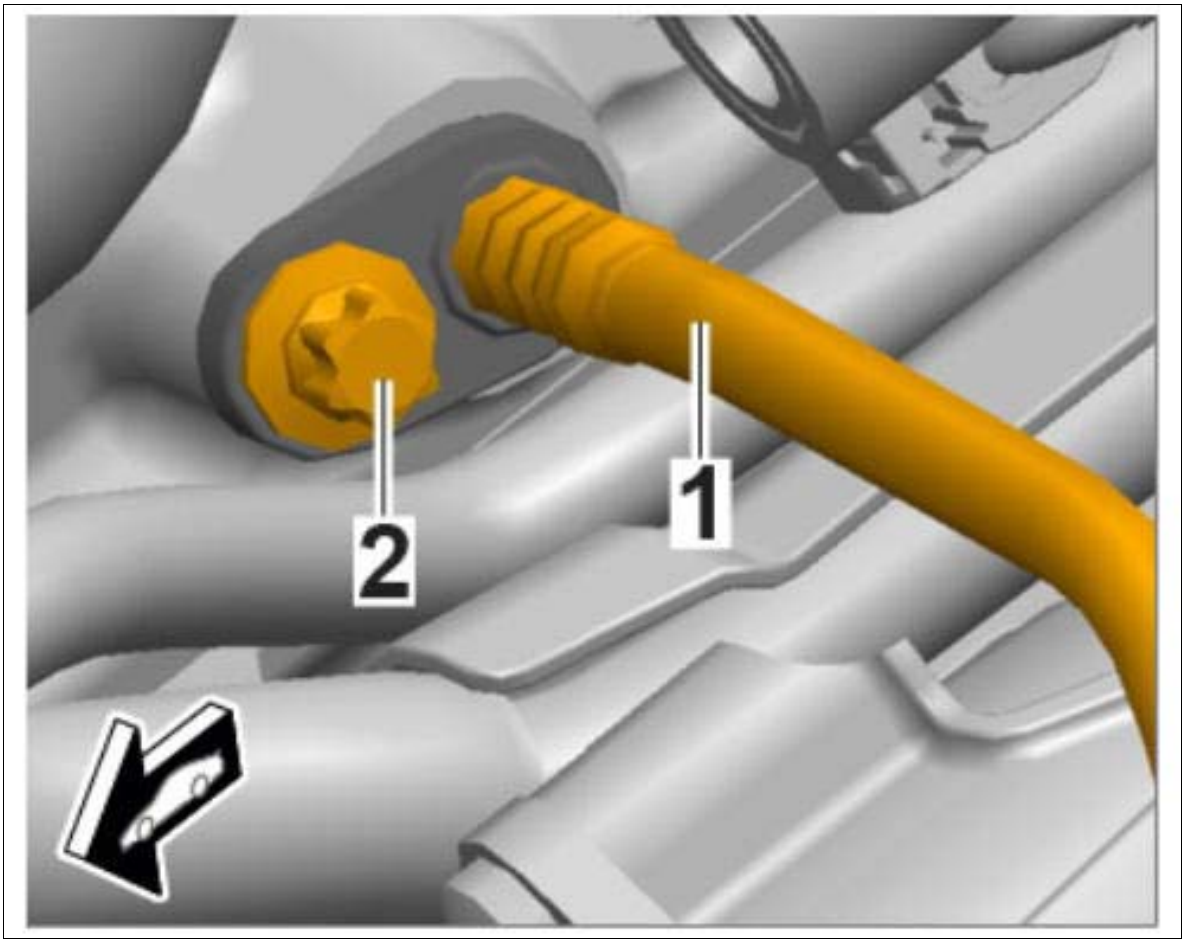

Courtesy of PORSCHE CARS NORTH AMERICA, INC.

48. Unscrew fastening screws **-1, 2-** from wiring ducts and remove them.

Fig 27: Identifying Cable Duct Mounting

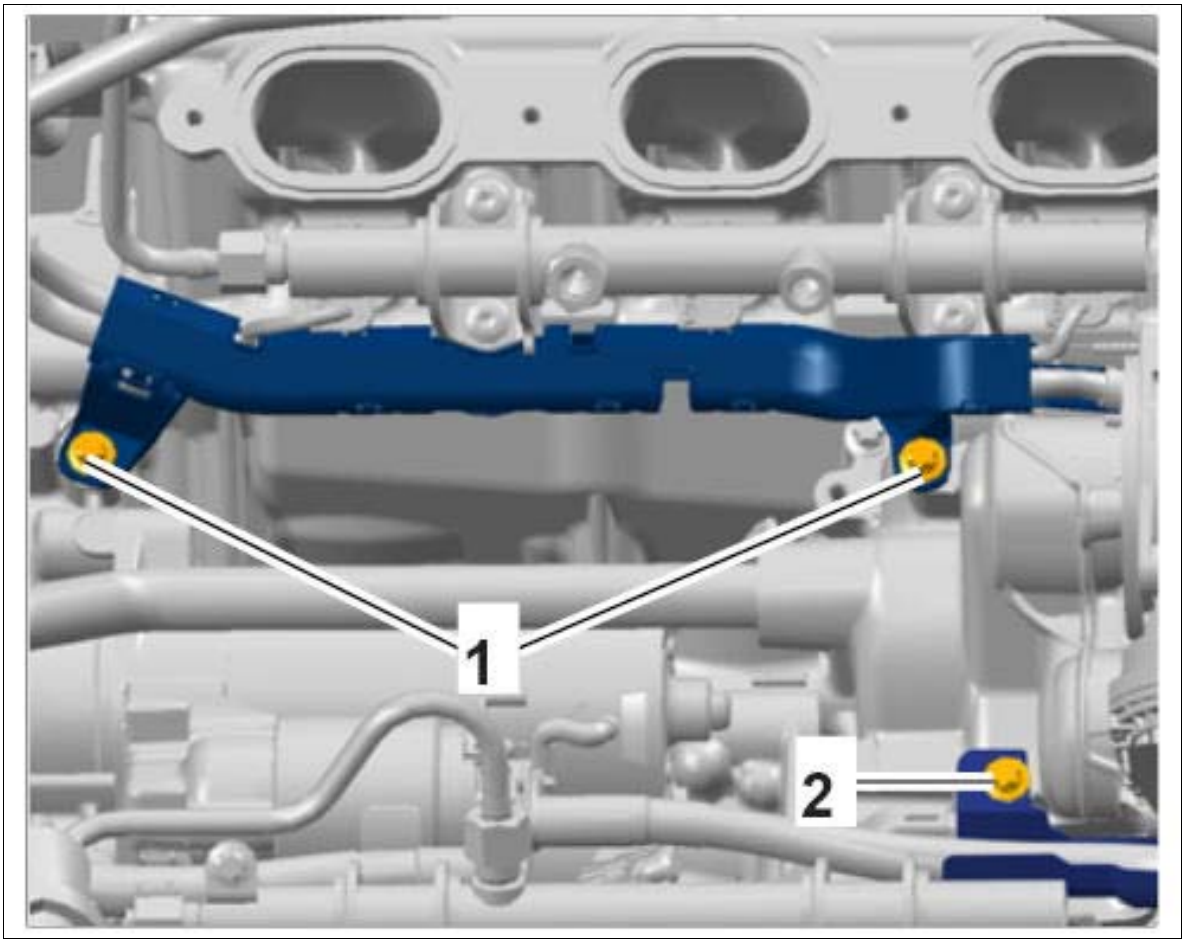

Courtesy of PORSCHE CARS NORTH AMERICA, INC.

49. Disengage line bracket **-1-** on the engine wire harness **-2-** and pull it off in an upward direction.

50. Open line bracket and remove electric connector **-3-** .

Fig 28: Removing Electric Connectors From Line Bracket

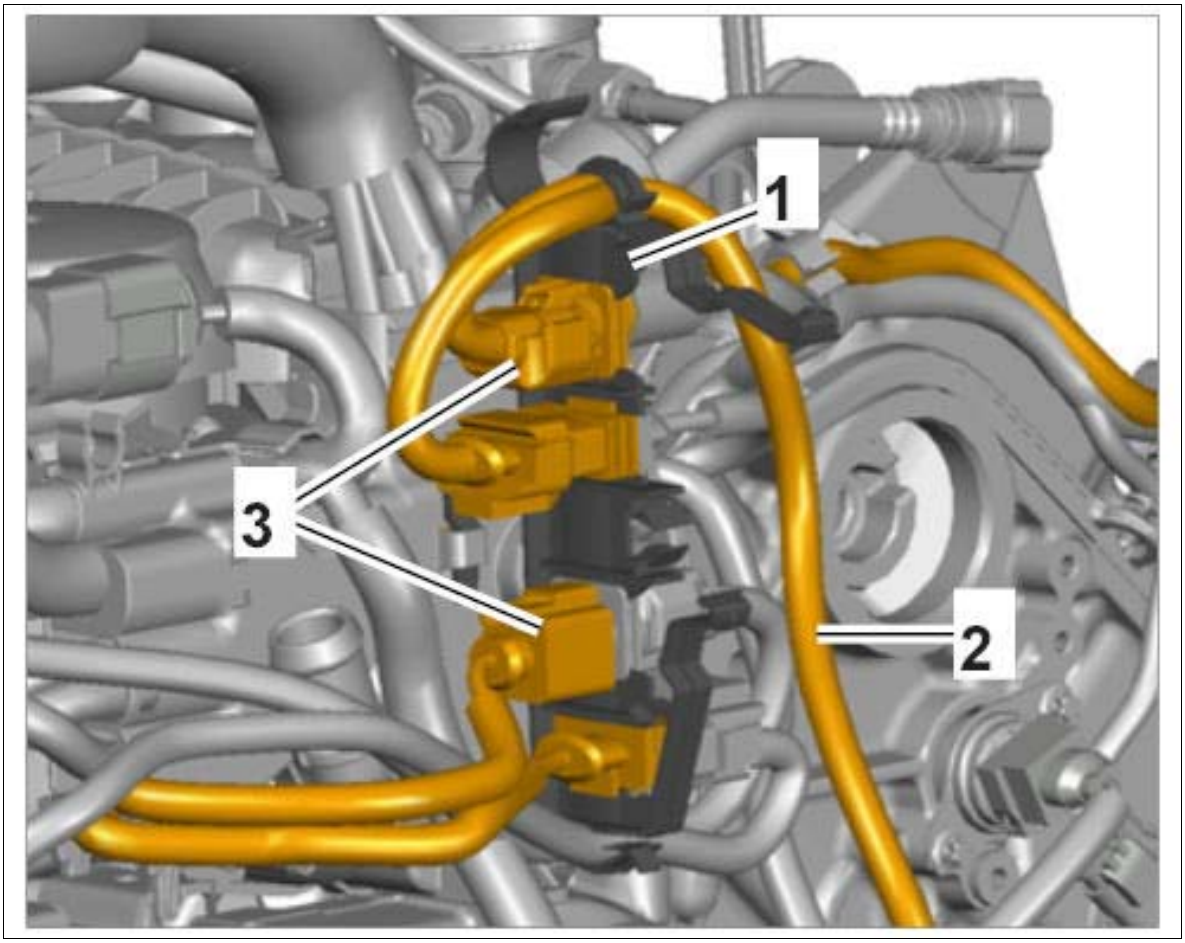

Courtesy of PORSCHE CARS NORTH AMERICA, INC.

51. Unscrew fastening screws **-1, 2, 3-** on the wiring ducts.
52. Carefully remove engine wire harness from the engine.
    1. 52.1. Remove terminal 30 line from the connection at the starter.

Fig 29: Loosening Wiring Ducts

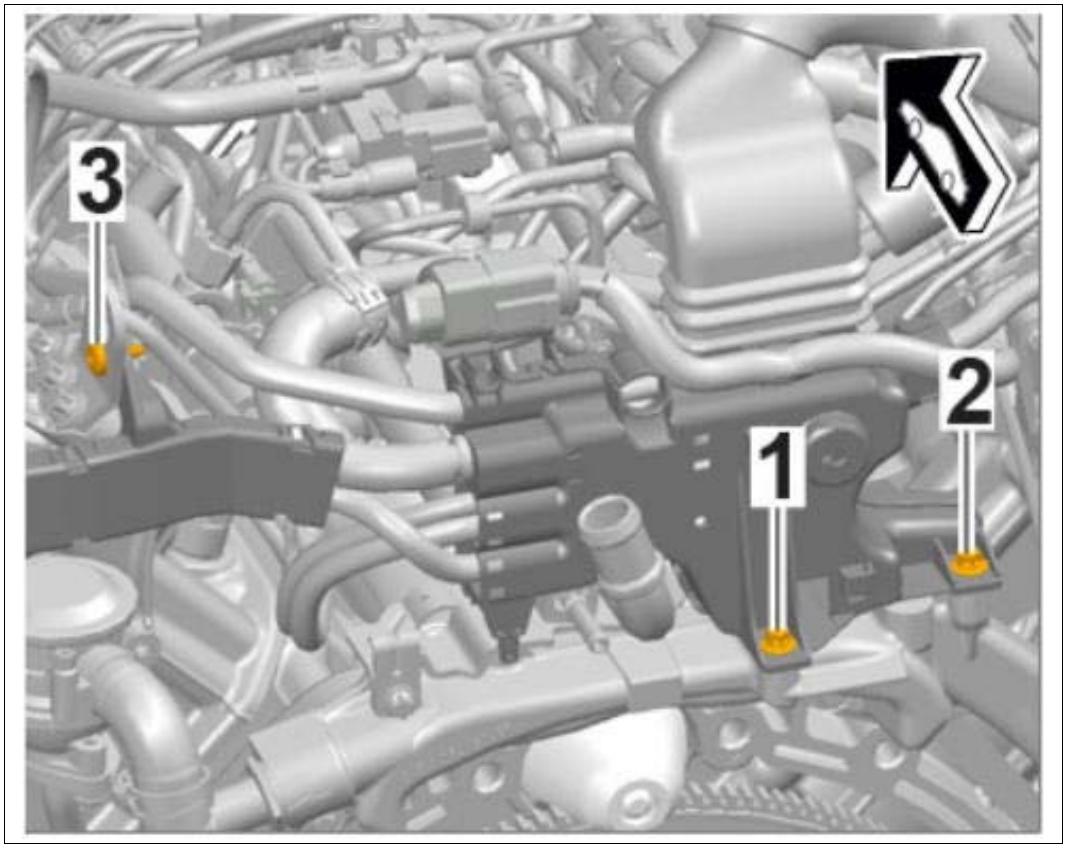

Courtesy of PORSCHE CARS NORTH AMERICA, INC.

WM 975219 REMOVING AND INSTALLING WIRE HARNESS FOR ENGINE (MACAN S, MACAN TURBO) > INSTALLING WIRE HARNESS FOR ENGINE

1. Installation is performed in reverse order to removal.
    1. 1.1. Make sure that the individual sub-parts of the engine wire harness are not twisted or entangled.
    2. 1.2. Check that the wire harness is routed correctly and without tension so that no chafing occurs.
    3. 1.3. Connect all electric plug connections until they engage securely.
    4. 1.4. Lock all electric plug connections by hand using the manual slide lock.
    5. 1.5. Clip in all sections of the engine wire harness securely at the relevant positions.
2. Tighten fastening screws for the wiring ducts at the left and right on the cylinder head.
3. Tighten fastening screws for the wiring ducts at the left and right on the valve cover.
4. Tighten fastening screws for the wiring ducts on the thermostat housing.
5. Tighten fastening screws for the wiring ducts on the crankcase.

6. Tighten fastening screw for the vent line on the cylinder head. **Tightening torque 10 Nm (7.5 ftlb.)**
7. Tighten fastening screw securing holder to left cylinder head.
8. Tighten fastening nut used to secure the electric B+ line to the starter. **Tightening torque 18 Nm (13 ftlb.)**
9. Tighten fastening nut used to secure the electric line for terminal 50 to the starter. **Tightening torque 10 Nm (7.5 ftlb.)**
10. Tighten fastening screw securing wiring duct to the timing chain housing cover.
11. Tighten fastening screws securing coolant line to the timing chain housing cover.

WM 975219 REMOVING AND INSTALLING WIRE HARNESS FOR ENGINE (MACAN S, MACAN TURBO) > SUBSEQUENT WORK

1. Install vacuum reservoir with secondary-air pump → INSTALLING VACUUM RESERVOIR .
2. Connect oxygen sensors downstream of the catalytic converter at the left and right and clip in all holders for the lines → INSTALLING OXYGEN SENSOR DOWNSTREAM OF CATALYTIC CONVERTER .
3. Connect oxygen sensors upstream of the catalytic converter at the left and right and clip in all holders for the lines → INSTALLING OXYGEN SENSOR UPSTREAM OF CATALYTIC CONVERTER .
4. Install the generator → INSTALLING GENERATOR .
5. Install engine → INSTALLING ENGINE .

WM 975619 REMOVING AND INSTALLING WIRING FOR BACKREST (ALL MODELS) > INFORMATION

- Fastening parts may be different from the parts described.
- The number of plug connections can vary, depending on equipment.

WM 975619 REMOVING AND INSTALLING WIRING FOR BACKREST (ALL MODELS) > PRELIMINARY WORK

1. Remove front seat → 720119 REMOVING AND INSTALLING FRONT SEAT
2. Remove padding for front backrest. → 741719 REMOVING AND INSTALLING PADDING FOR FRONT BACKREST .

WM 975619 REMOVING AND INSTALLING WIRING FOR BACKREST (ALL MODELS) > REMOVING WIRING FOR BACKREST

NOTE: Voltage peaks

- *Risk of damage to load or to the control unit*

→ Switch off ignition and remove remote control before disconnecting or removing load.

Information

Always comply with the regulations for handling ESD-sensitive components!

- Assembly work may only be carried out if the mechanic is wearing the working clothes and shoes approved by Porsche.
- The new part must only be removed from the ESD (electrostatic discharge) protective packaging just before installation and at the position at which the part is to be installed.
- Never touch the electric pins and plug contacts.

Fig 1: Locating Backrest Wire Harness Position

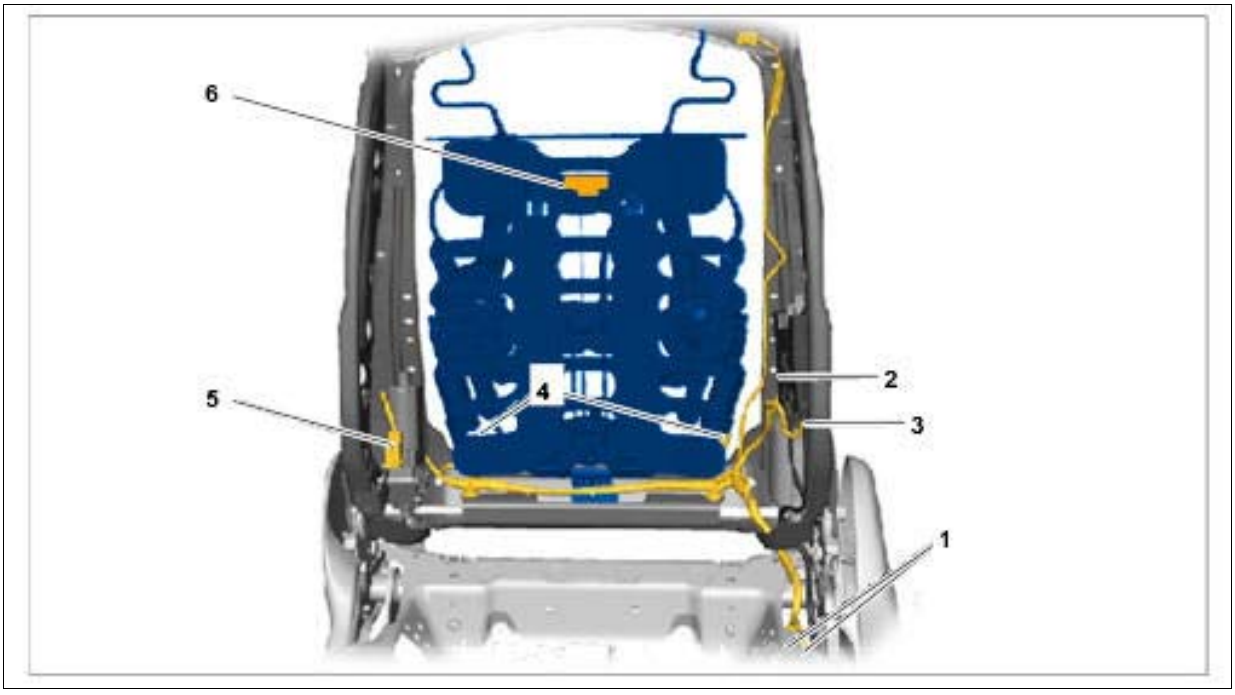

Courtesy of PORSCHE CARS NORTH AMERICA, INC.

1. Two connectors for backrest wire harness
2. Connector for motor for air cushion
3. Connector for control valve for air cushion
4. Two connectors for lumbar support

5. Connector for motor for backrest adjustment

6. Connector for motor for seat ventilation

1. Unclip, release and disconnect two electric plug connections **-1-** for the backrest wire harness. → 721919 REMOVING AND INSTALLING FRONT BACKREST FRAME .

2. Release and disconnect electric plug connection **-2-** for the air cushion motor. → 723919 REMOVING AND INSTALLING MOTOR FOR AIR CUSHION .

3. Unscrew two fastening screws for the backrest air cushion. → 721719 REMOVING AND INSTALLING AIR CUSHION FOR BACKREST .

4. Release and disconnect electric plug connection **-3-** for control valve for air cushion. → 723819 REMOVING AND INSTALLING CONTROL VALVE FOR AIR CUSHION .

5. Release and disconnect two electric plug connections **-4-** for lumbar support. → 723419 REMOVING AND INSTALLING LUMBAR SUPPORT .

6. Release and disconnect electric plug connection **-5-** for motor for backrest adjustment. → 728919 REMOVING AND INSTALLING MOTOR FOR BACKREST ADJUSTMENT .

7. Release and disconnect electric plug connection **-6-** for motor for seat ventilation.

8. Unclip clips **-1-** on the backrest frame.

9. Cut open tie-wraps **-2-** on the backrest frame.

Fig 2: Identifying Clips On Backrest Frame

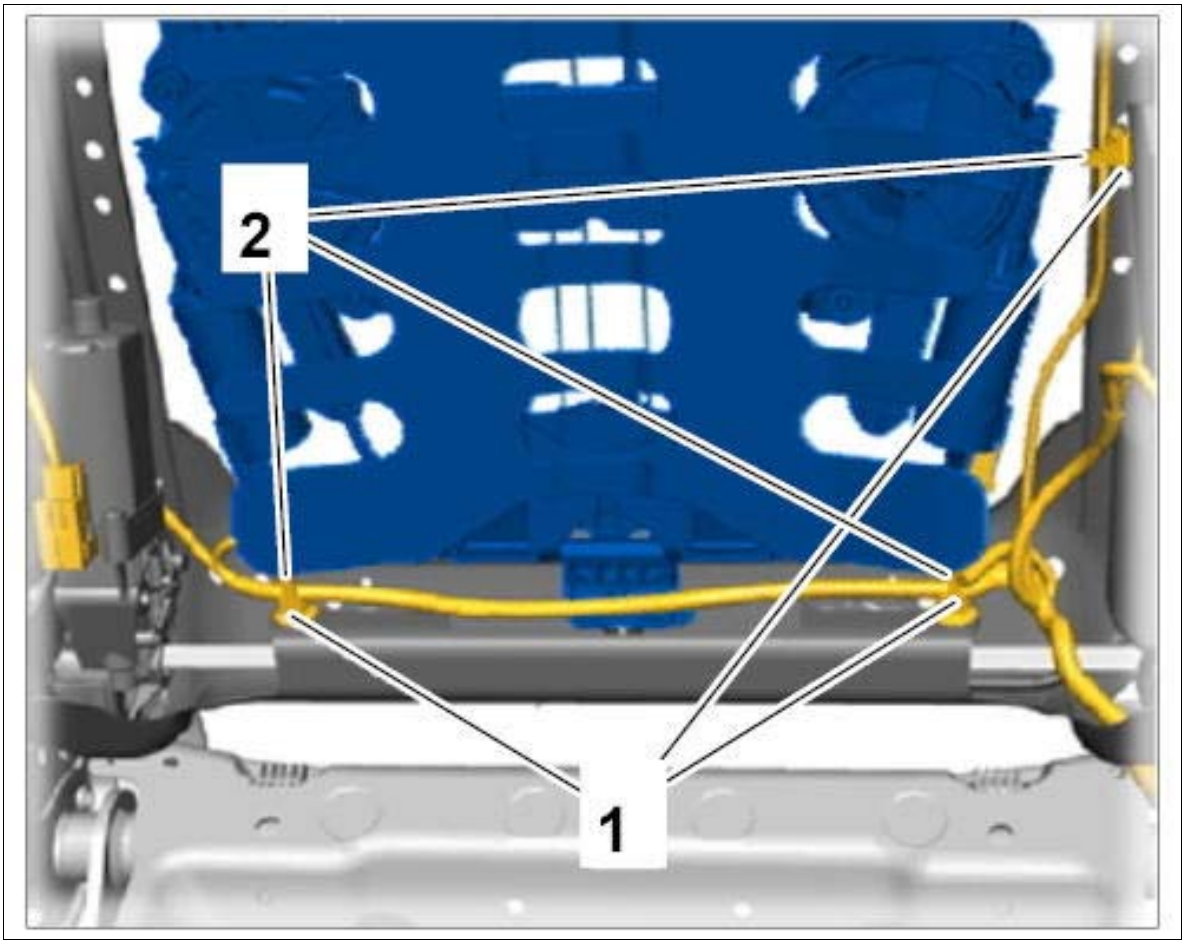

Courtesy of PORSCHE CARS NORTH AMERICA, INC.

10. Remove wiring for backrest.

WM 975619 REMOVING AND INSTALLING WIRING FOR BACKREST (ALL MODELS) > INSTALLING WIRING FOR BACKREST

Fig 1: Locating Backrest Wire Harness Position

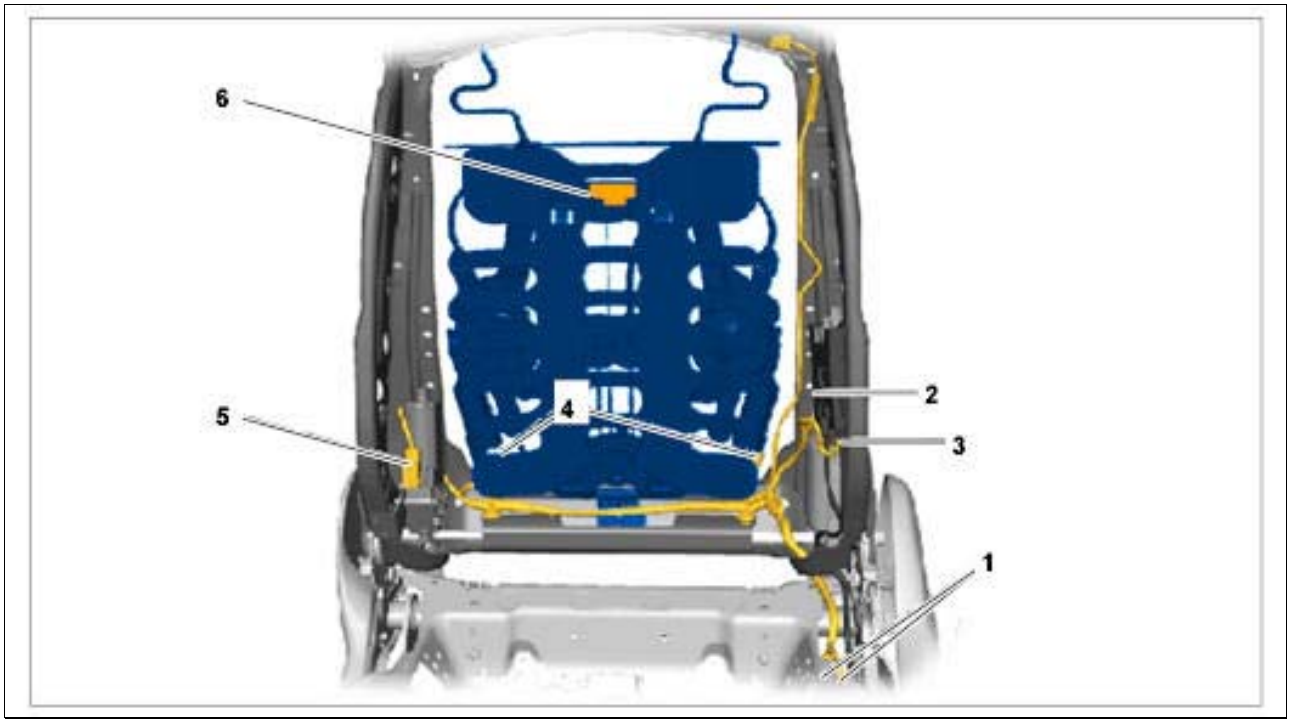

Courtesy of PORSCHE CARS NORTH AMERICA, INC.

1. Two connectors for backrest wire harness
2. Connector for motor for air cushion
3. Connector for control valve for air cushion
4. Two connectors for lumbar support
5. Connector for motor for backrest adjustment
6. Connector for motor for seat ventilation

1. First fit the wire harness loosely in the backrest, ensuring that it is positioned correctly.
2. Clip in clips **-1-** on the backrest frame.
3. Fit tie-wraps **-2-** .

Fig 2: Identifying Clips On Backrest Frame

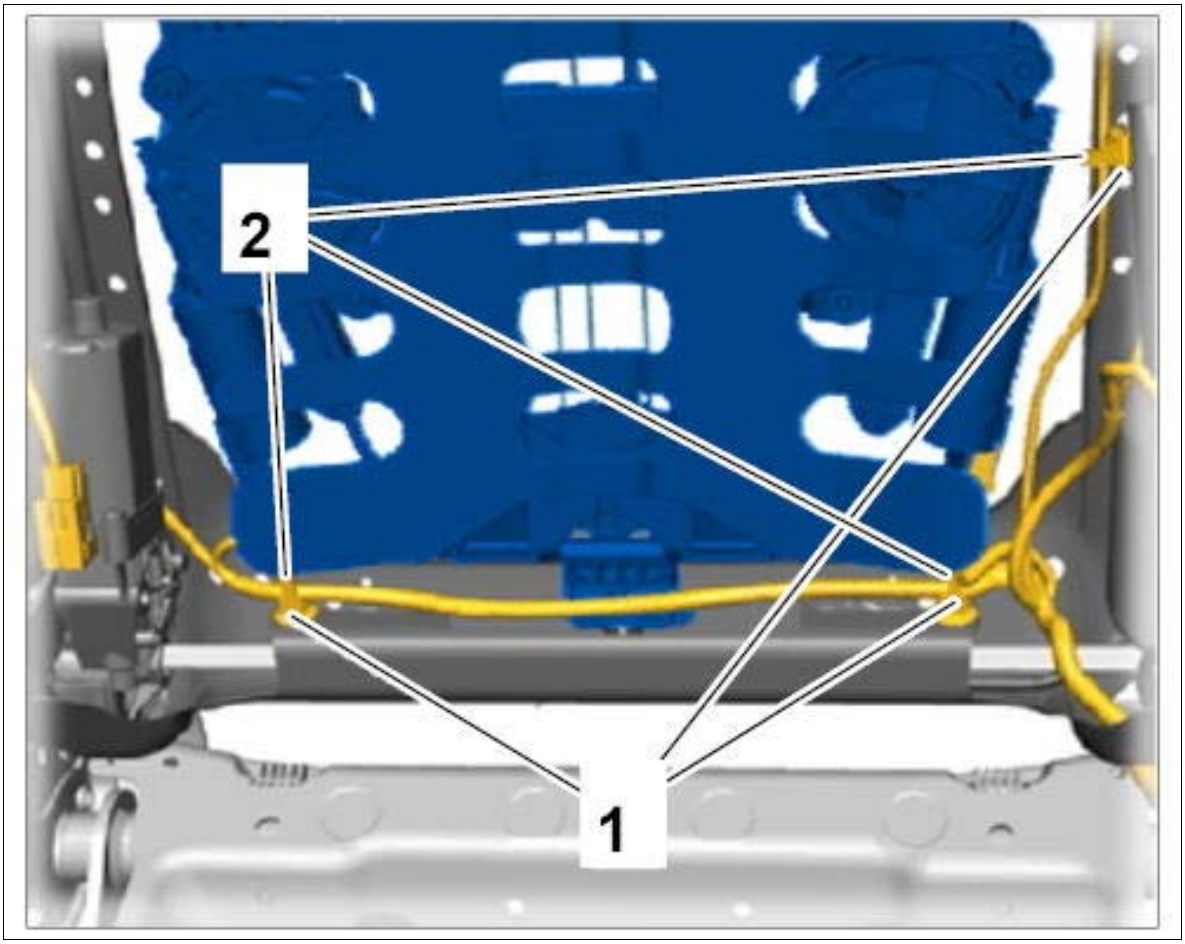

Courtesy of PORSCHE CARS NORTH AMERICA, INC.

4. Plug in electric plug connections **-1-** to **-6-** until the connectors engage securely.
5. Screw in two fastening screws for the backrest air cushion → INSTALLING AIR CUSHION FOR BACKREST .

WM 975619 REMOVING AND INSTALLING WIRING FOR BACKREST (ALL MODELS) > SUBSEQUENT WORK

1. Install padding for front backrest → INSTALLING PADDING FOR FRONT BACKREST .
2. Install front seat → INSTALLING FRONT SEAT .

WM 975719 REMOVING AND INSTALLING WIRE HARNESS FOR POWER SEATS (ALL MODELS) > INFORMATION

- Fastening elements may be different from the parts described.
- The number of plug connections can vary, depending on equipment.

WM 975719 REMOVING AND INSTALLING WIRE HARNESS FOR POWER SEATS (ALL MODELS) > PRELIMINARY WORK

1. Remove front seat → 720119 REMOVING AND INSTALLING FRONT SEAT .
2. Remove outer trim panel on front seat → 721619 REMOVING AND INSTALLING TRIM PANEL FOR FRONT SEAT .

WM 975719 REMOVING AND INSTALLING WIRE HARNESS FOR POWER SEATS (ALL MODELS) > REMOVING WIRE HARNESS FOR POWER SEATS

NOTE: Voltage peaks

- *Risk of damage to load or to the control unit*

→ Switch off ignition and remove remote control before disconnecting or removing load.

Information

Always comply with the regulations for handling ESD-sensitive components!

- Assembly work may only be carried out if the mechanic is wearing the working clothes and shoes approved by Porsche.
- The new part must only be removed from the ESD (electrostatic discharge) protective packaging just before installation and at the position at which the part is to be installed.
- Never touch the electric pins and plug contacts.

Fig 1: Locating Power Seats Wire Harness Position

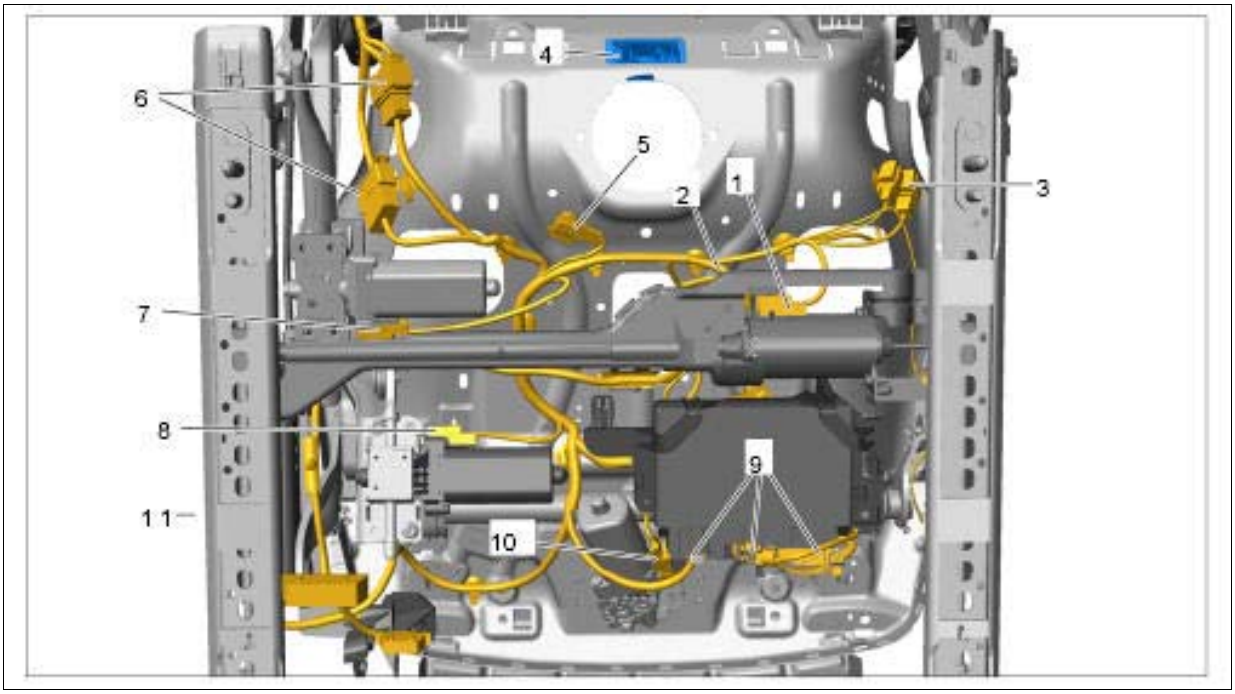

Courtesy of PORSCHE CARS NORTH AMERICA, INC.

1. Electric plug connection for seat adjustment motor (two connectors)
2. Electric plug connection for heated seats
3. Electric plug connection for seat-belt buckle
4. Electric plug connection for footwell lighting
5. Electric plug connection for backrest heating
6. Electric plug connection for wire harness for backrest (two connectors)
7. Electric plug connection for motor for rear vertical adjustment
8. Electric plug connection for motor for front vertical adjustment
9. Electric plug connection for control unit for memory seat adjustment (three connectors)
10. Electric plug connection for motor for seat fore-and-aft adjustment
11. Electric plug connection for motor for seat adjustment

Fig 2: Identifying Memory Seat Adjustment Electric Plug Connection Under Control Unit

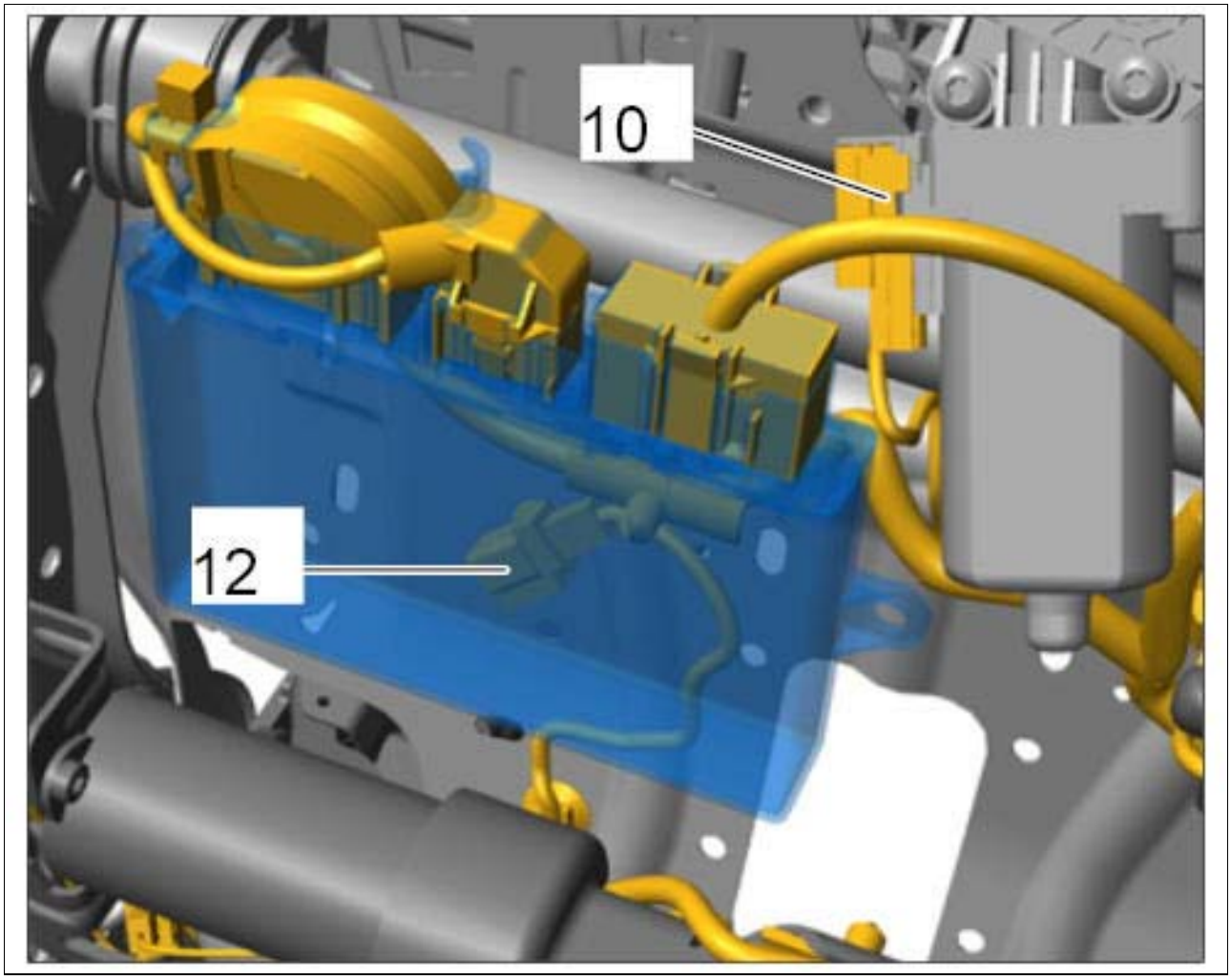

Courtesy of PORSCHE CARS NORTH AMERICA, INC.

10 - Electric plug connection for motor for seat fore-and-aft adjustment

12 - Electric plug connection for seat occupancy detection

Disconnecting electric plug connections:

1. Release and disconnect electric plug connection **-1-** for seat adjustment motor. → 728719 REMOVING AND INSTALLING SEAT ADJUSTMENT MOTOR .
2. Release and disconnect electric plug connection **-2-** for seat heating. → 741019 REMOVING AND INSTALLING PADDING FOR FRONT SEAT .
3. Unclip bracket for electric plug connection for seat heating **-2-** from the seat frame.
4. Release and disconnect electric plug connection **-3-** for seat-belt buckle. → 692419 REMOVING AND INSTALLING FRONT BELT LOCK .
5. Unclip bracket for electric plug connection for seat-belt buckle **-3-** from the seat frame.
6. Unclip footwell light **-1-** from the seat frame using a screwdriver **-A-** .

Fig 3: Removing Footwell Light

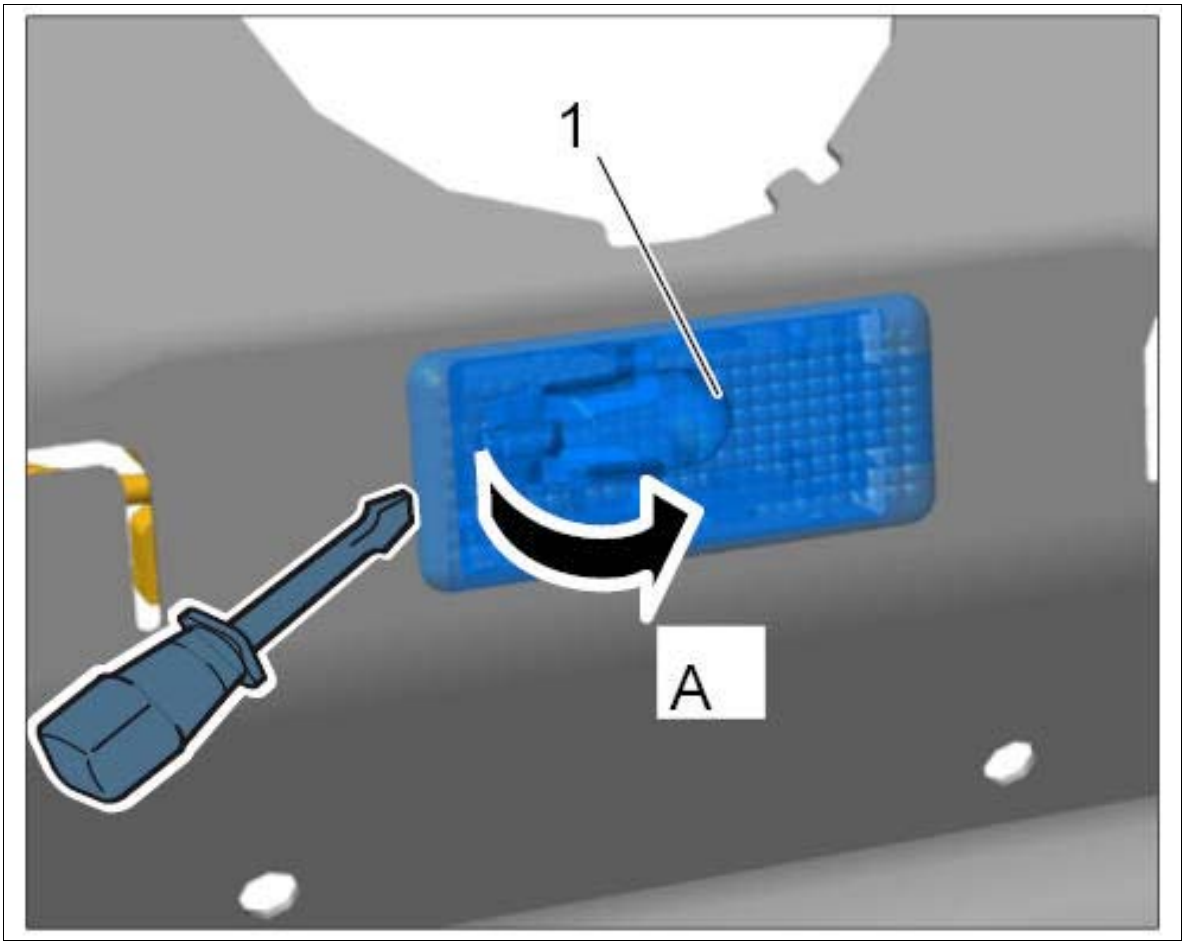

Courtesy of PORSCHE CARS NORTH AMERICA, INC.

7. Release and disconnect electric plug connection **-4-** for footwell lighting.
8. Release and disconnect electric plug connection **-5-** for backrest heating. → 741719 REMOVING AND INSTALLING PADDING FOR FRONT BACKREST .
9. Unclip bracket for electric plug connection for backrest heating **-5-** from the seat frame.
10. Release and disconnect electric plug connections **-6-** for backrest wire harness (2 connectors). → 721919 REMOVING AND INSTALLING FRONT BACKREST FRAME .
11. Unclip two brackets for electric plug connections for the backrest wire harness **-6-** from the seat frame.
12. Release and disconnect electric plug connection **-7-** for motor for rear vertical adjustment. → 729219 REMOVING AND INSTALLING MOTOR FOR REAR VERTICAL ADJUSTMENT .
13. Release and disconnect electric plug connection **-8-** for motor for front vertical adjustment. → 728819 REMOVING AND INSTALLING MOTOR FOR FRONT VERTICAL ADJUSTMENT (SEAT ANGLE) .
14. Release and disconnect electric plug connections **-9-** for control unit for memory seat adjustment (three connectors). → 729319 REMOVING AND INSTALLING CONTROL UNIT FOR MEMORY SEAT ADJUSTMENT .

15. Unscrew fastening screw on bracket for control unit for memory seat adjustment and seat-surface extension and remove bracket from the catches on the seat frame. → 740819 REMOVING AND INSTALLING FRONT SEAT-SURFACE EXTENSION .

16. Release and disconnect electric plug connection **-10-** for motor for seat fore-and-aft adjustment. → 740819 REMOVING AND INSTALLING FRONT SEAT-SURFACE EXTENSION .

17. Release and disconnect electric plug connection **-12-** for seat occupancy detection.

18. Unclip bracket for electric plug connection for seat occupancy detection **-12-** from the seat frame.

    Loosening fastening points:

19. Unclip electric line from the bracket in areas **-1-** to **-5-** .

    Fig 4: Loosening Fastening Points On Seat Frame

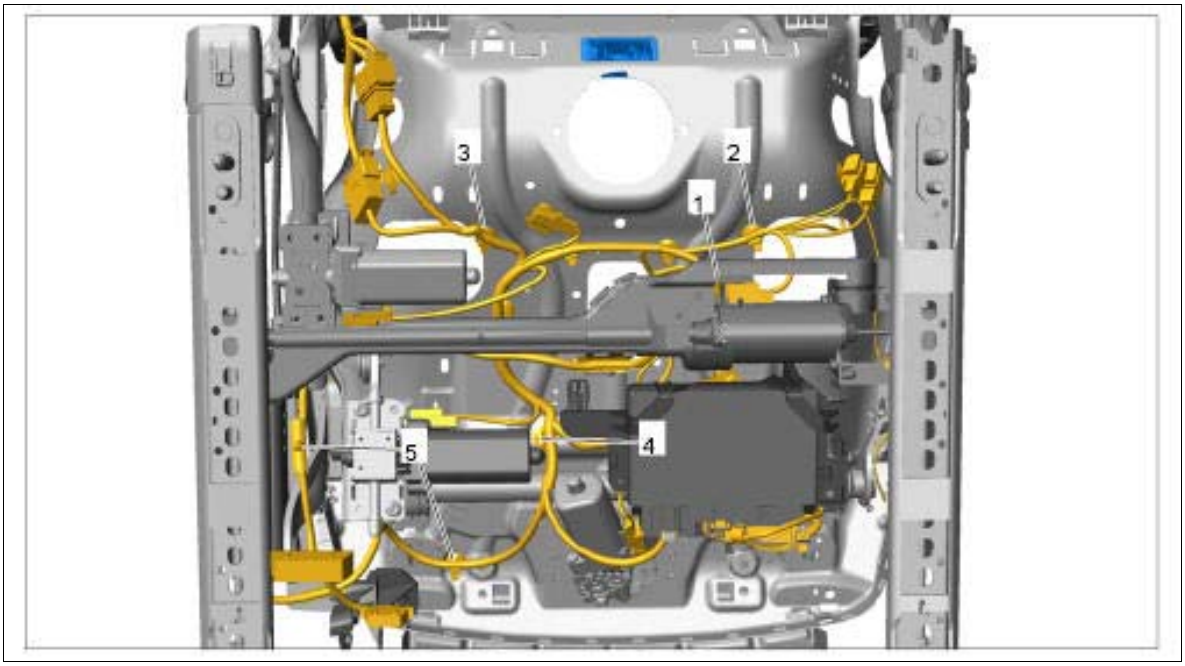

Courtesy of PORSCHE CARS NORTH AMERICA, INC.

20. Unclip electric line from the brackets **-6-** and **-7-** on the control unit.

Fig 5: Loosening Fastening Points Under Control Unit

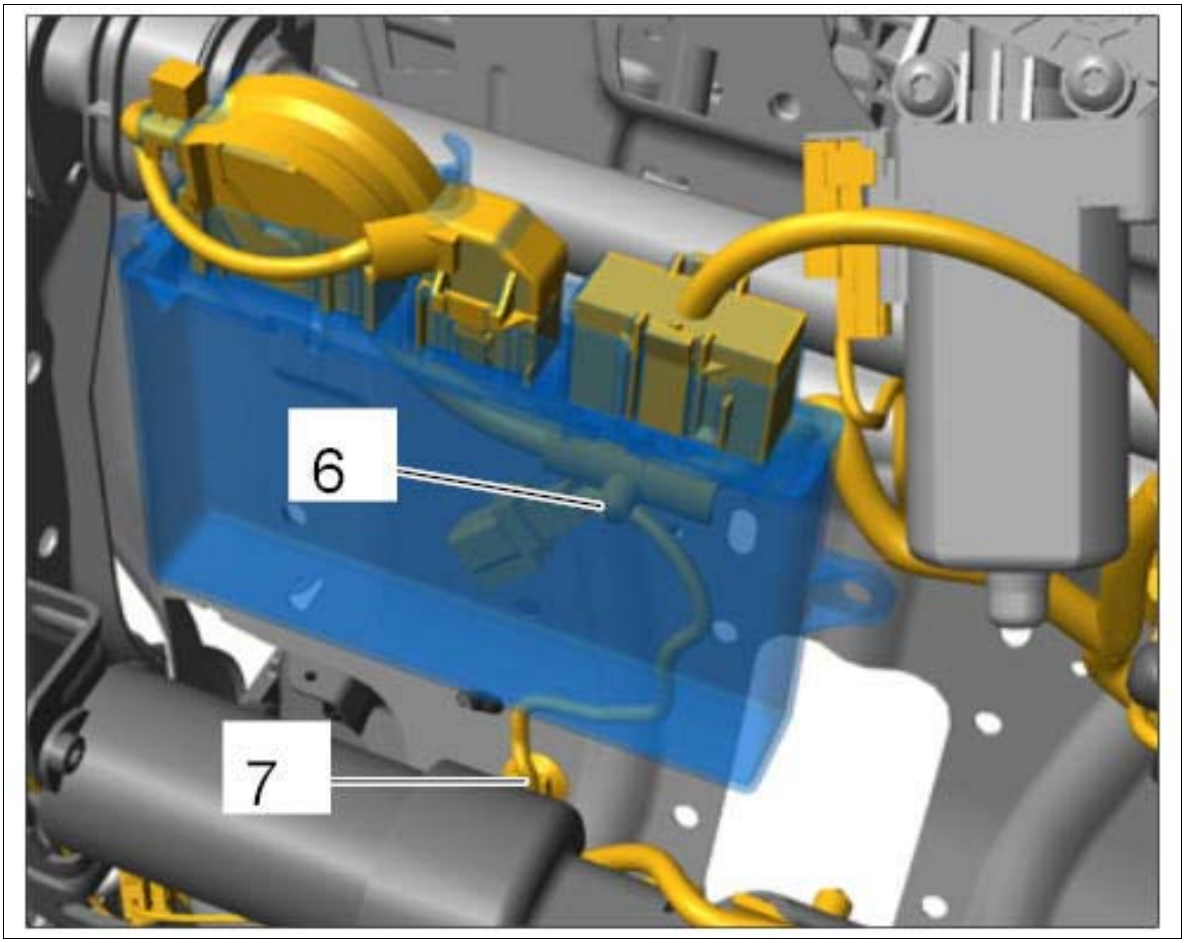

Courtesy of PORSCHE CARS NORTH AMERICA, INC.

21. Remove wiring harness.

WM 975719 REMOVING AND INSTALLING WIRE HARNESS FOR POWER SEATS (ALL MODELS) > INSTALLING WIRE HARNESS FOR POWER SEATS

Fig 1: Locating Power Seats Wire Harness Position

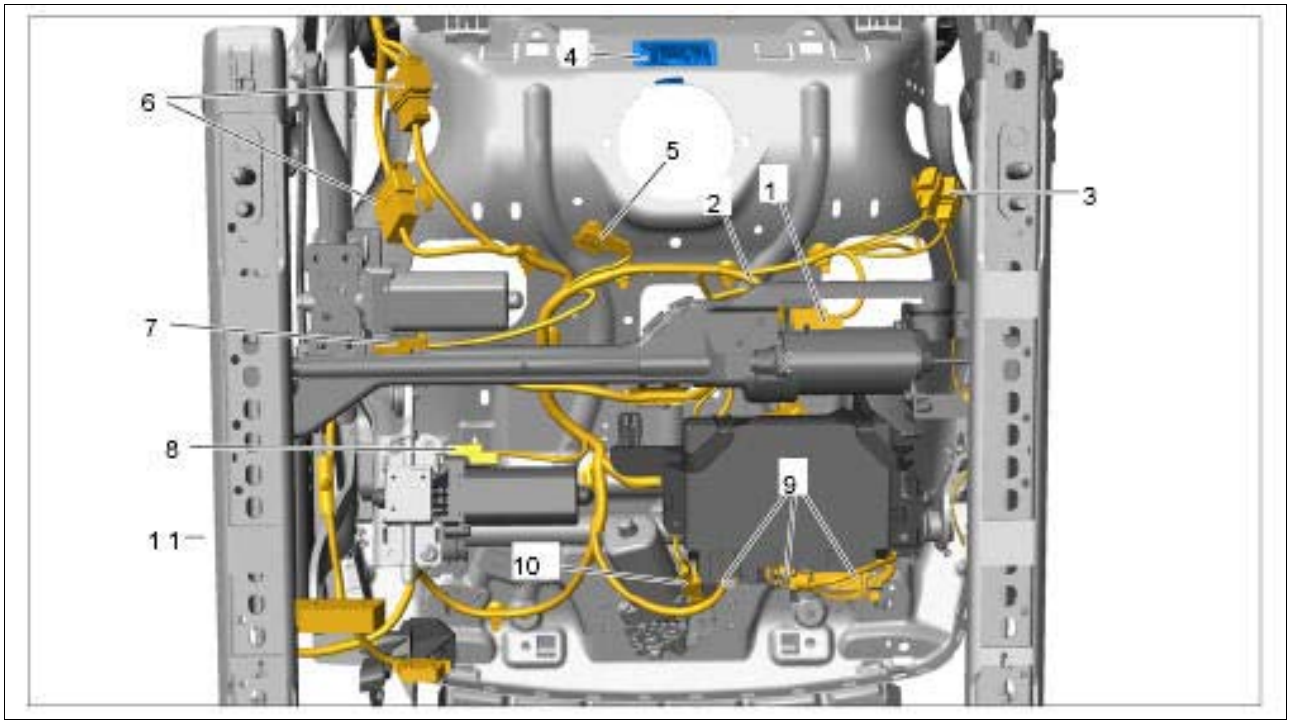

Courtesy of PORSCHE CARS NORTH AMERICA, INC.

1. Electric plug connection for seat adjustment motor (two connectors)
2. Electric plug connection for heated seats
3. Electric plug connection for seat-belt buckle
4. Electric plug connection for footwell lighting
5. Electric plug connection for backrest heating
6. Electric plug connection for wire harness for backrest (two connectors)
7. Electric plug connection for motor for rear vertical adjustment
8. Electric plug connection for motor for front vertical adjustment
9. Electric plug connection for control unit for memory seat adjustment (three connectors)
10. Electric plug connection for motor for seat fore-and-aft adjustment
11. Electric plug connection for motor for seat adjustment

Fig 2: Identifying Connector Under Control Unit For Memory Seat Adjustment

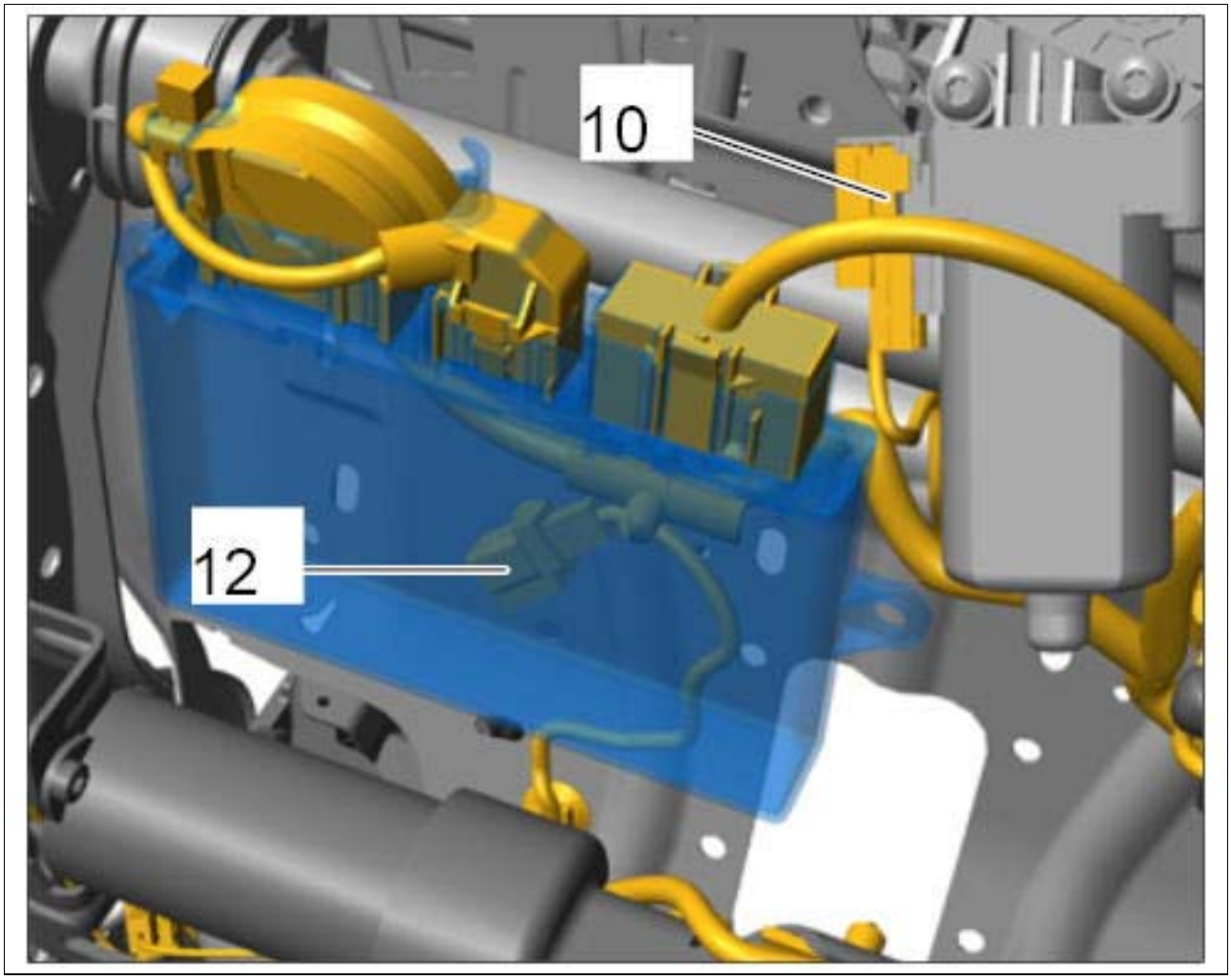

Courtesy of PORSCHE CARS NORTH AMERICA, INC.

10 - Electric plug connection for motor for seat fore-and-aft adjustment

12 - Electric plug connection for seat occupancy detection

1. First lay the wire harness loosely in the seat, ensuring that it is positioned correctly.
2. Press in fixing clips for the wire harness in areas **-1 - 5-** and **-6 + 7-** .

Fig 3: Fitting Fastening Points On Seat Frame

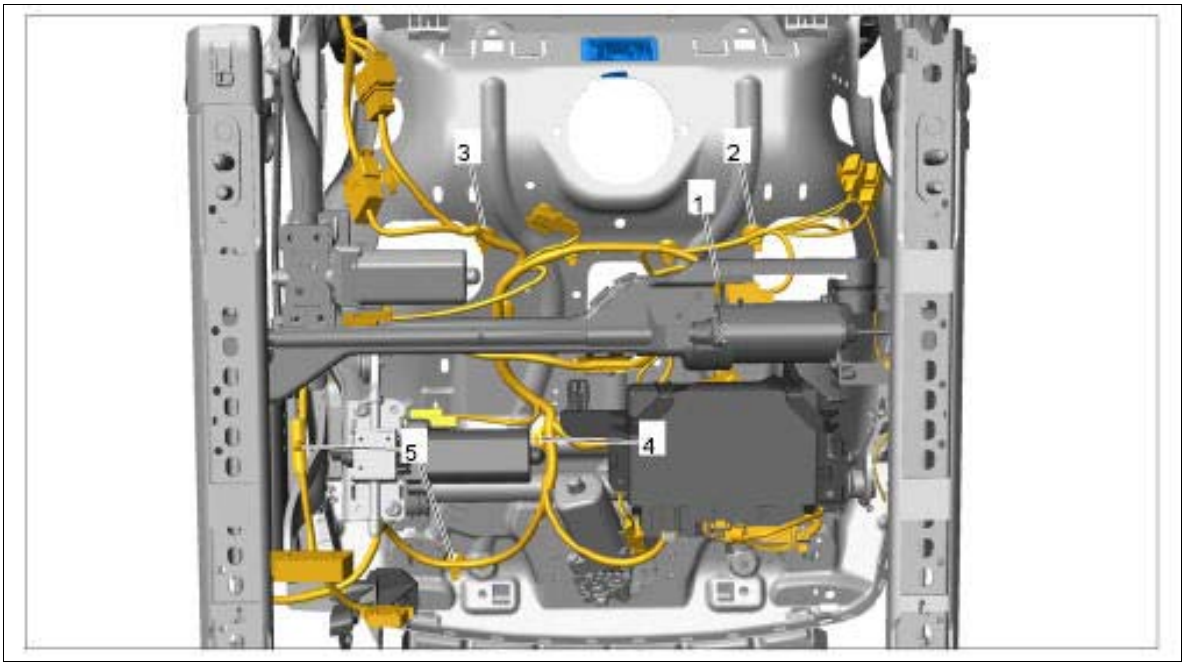

Courtesy of PORSCHE CARS NORTH AMERICA, INC.

Fig 4: Fitting Fastening Points Under Control Unit

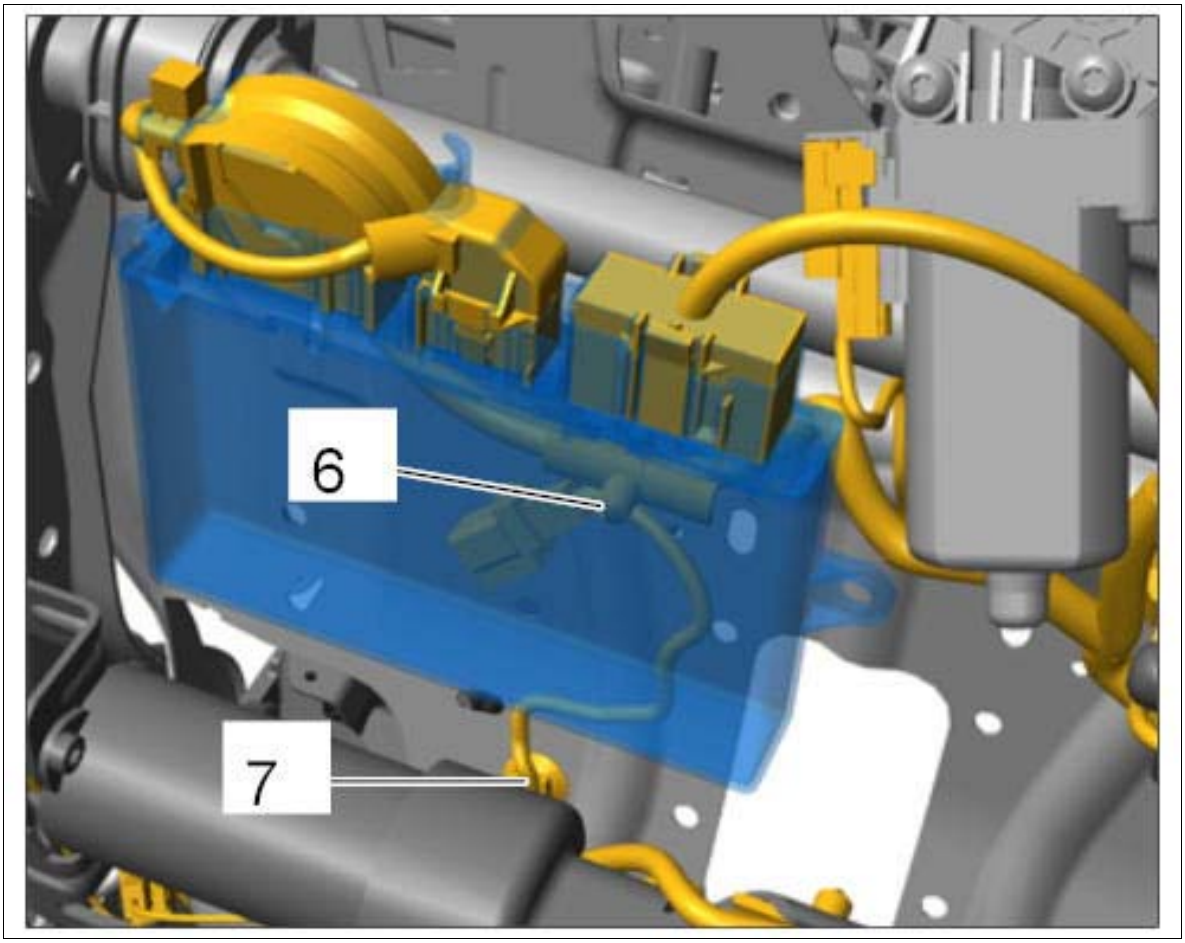

Courtesy of PORSCHE CARS NORTH AMERICA, INC.

3. Press in fixing clips for electric plug connections **-2, 3, 5, 6-** and **-12-** .
4. Plug in electric plug connections **-1 - 11-** and **-12-** until the connector engages securely.
5. Fit footwell light in seat frame.
6. Fit the bracket into the cut-outs on the seat frame and screw in fastening screw on bracket for control unit for memory seat adjustment and seat-surface extension → INSTALLING FRONT SEAT-SURFACE EXTENSION .

WM 975719 REMOVING AND INSTALLING WIRE HARNESS FOR POWER SEATS (ALL MODELS) > SUBSEQUENT WORK

1. Install outer trim panel for front seat → INSTALLING TRIM PANEL FOR SEAT .
2. Install front seat → INSTALLING FRONT SEAT .

WM 975919 REMOVING AND INSTALLING WIRE HARNESS FOR PARKASSIST (ALL MODELS) > PRELIMINARY WORK

1. Remove rear apron → WM 635519 REMOVING AND INSTALLING REAR APRON (ALL MODELS) .

WM 975919 REMOVING AND INSTALLING WIRE HARNESS FOR PARKASSIST (ALL MODELS) > REMOVING WIRE HARNESS FOR PARKASSIST

Information

- Some of the repair illustrations show only one side of the vehicle.
- Naturally, some steps also have to be performed on the opposite side of the vehicle as well.

Fig 1: View Of ParkAssist Wire Harness

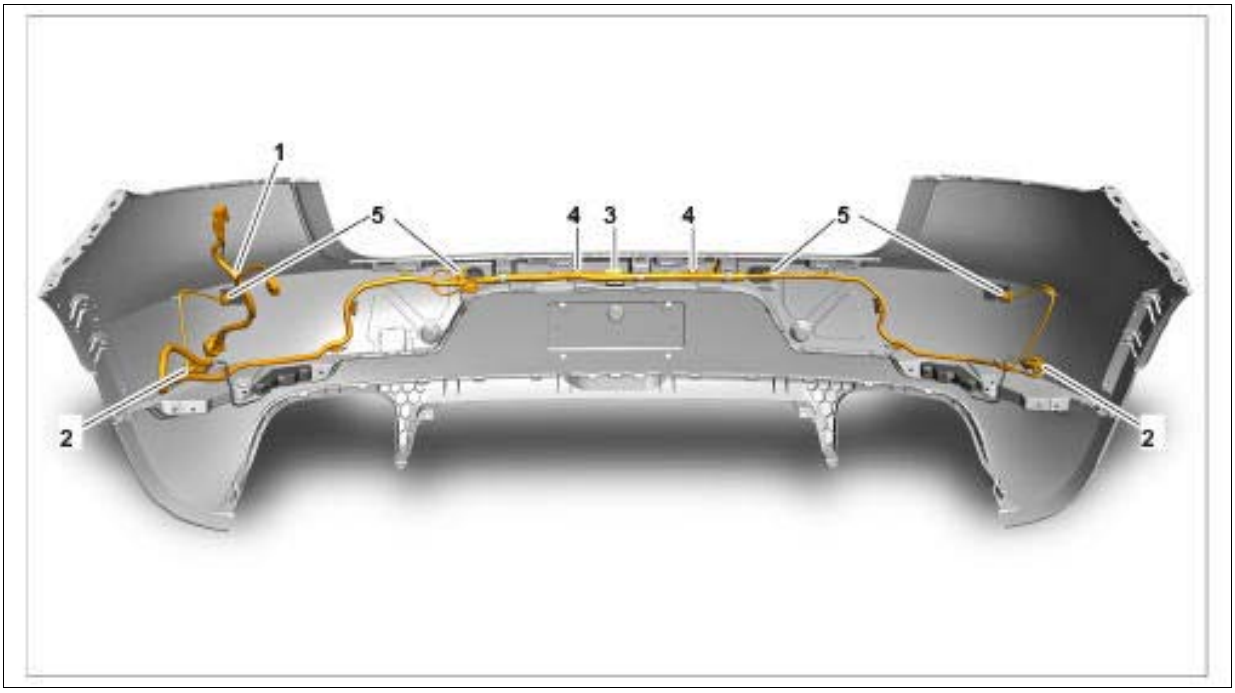

Courtesy of PORSCHE CARS NORTH AMERICA, INC.

1. Wire harness for ParkAssist
2. Reversing light
3. Reversing camera
4. Number plate light
5. ParkAssist sensor

1. Disconnect electric plug connections **-1-** at the reversing lights **-2-** .
    1. 1.1. Cut tie-wrap **-3-** .
    2. 1.2. Release and disconnect electric plug connection.

Fig 2: Disconnecting Reversing Lights Electric Plug Connections

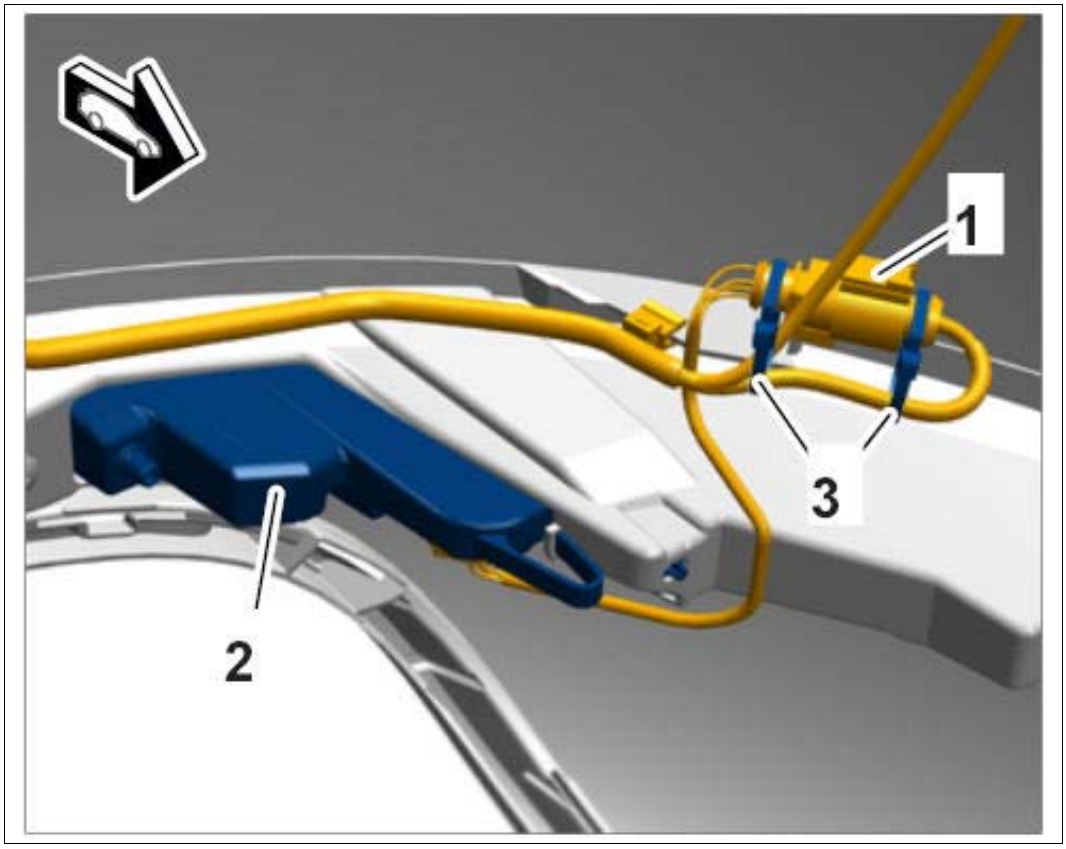

Courtesy of PORSCHE CARS NORTH AMERICA, INC.

Vehicles with reversing camera

2. Disconnect electric plug connections **-1-** for the reversing camera.
    1. 2.1. Remove wire harness for ParkAssist **-2-** from holder **-3-** .
    2. 2.2. Cut tie-wrap **-4-** .
    3. 2.3. Release and disconnect electric plug connections.

Fig 3: Disconnecting Reversing Camera Electric Plug Connections

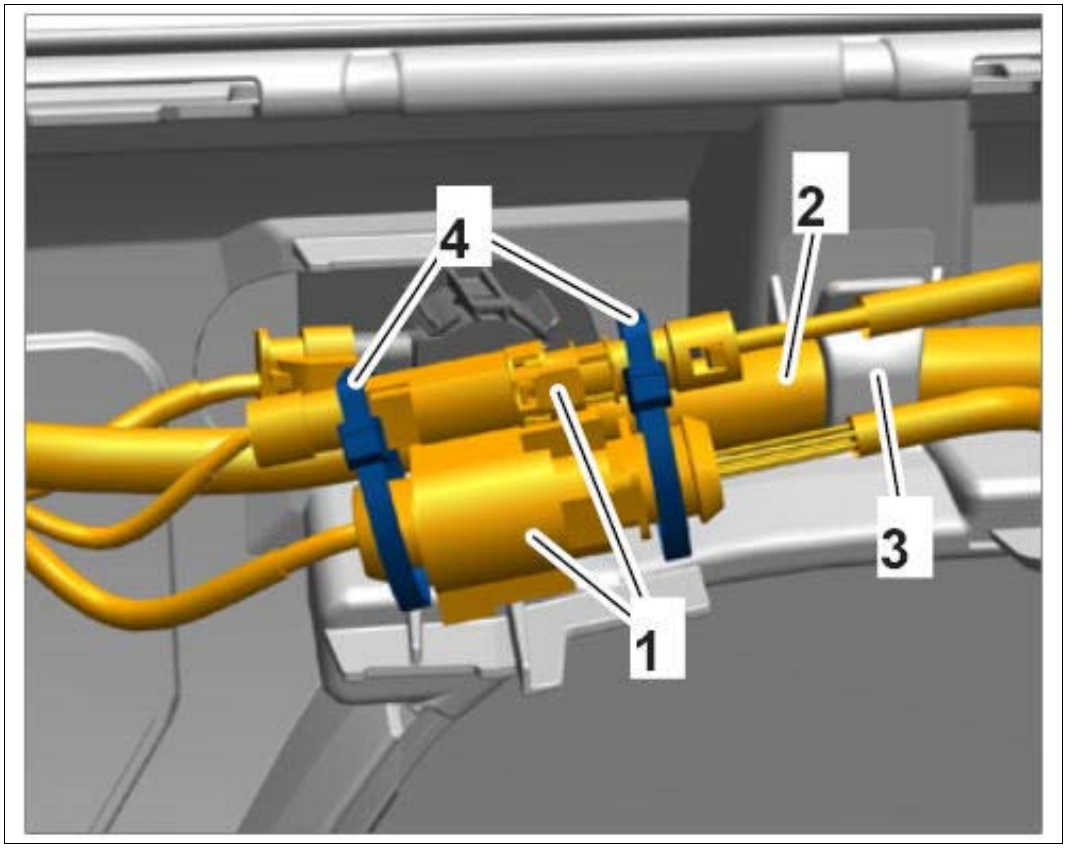

Courtesy of PORSCHE CARS NORTH AMERICA, INC.

All vehicles

3. Remove wire harness for ParkAssist **-1-** from holders **-2-** .
4. Release electric plug connections **-3-** at the number plate lights and pull them off.

Fig 4: Disconnecting Number Plate Lights Electric Plug Connections

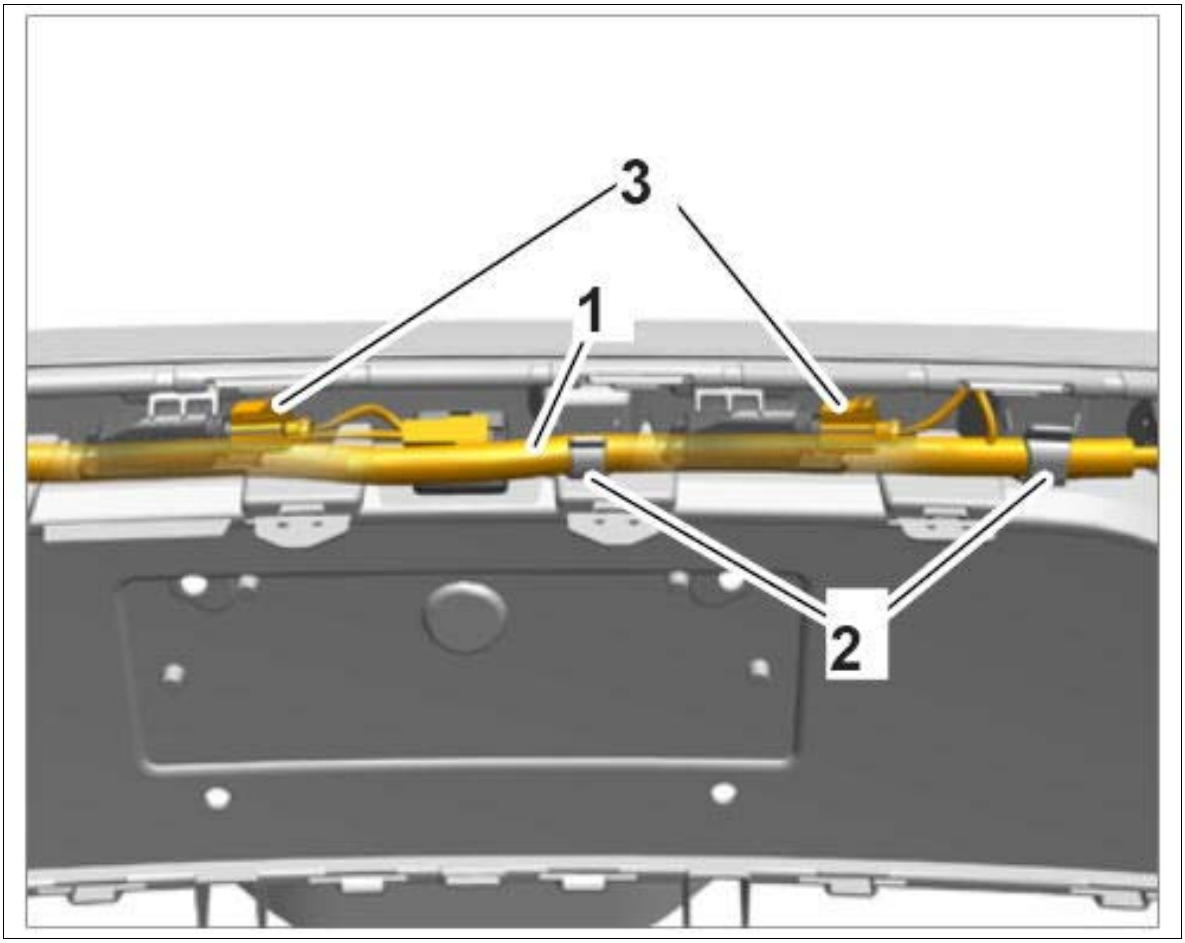

Courtesy of PORSCHE CARS NORTH AMERICA, INC.

5. Disconnect electric plug connections at the ParkAssist sensors **-1-** .
    1. 5.1. Disengage locking mechanism for electric plug connection **-2-** .
    2. 5.2. Press locking mechanism **-3-** and disconnect electric plug connection from the ParkAssist sensor.

Fig 5: Disconnecting ParkAssist Sensors Electric Plug Connections

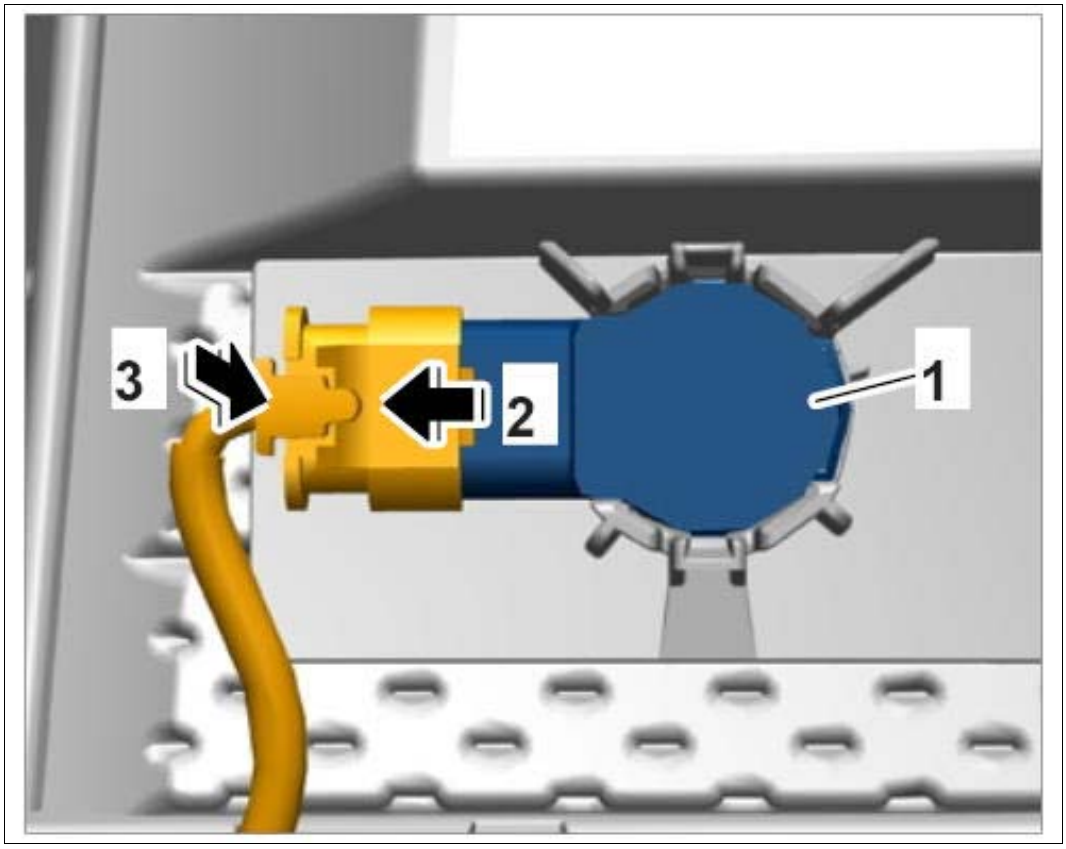

Courtesy of PORSCHE CARS NORTH AMERICA, INC.

6. Pull all holders **-1-** for the ParkAssist wire harness **-2-** off the rear apron and remove wire harness for ParkAssist.

Fig 6: Loosening ParkAssist Wire Harness Holders

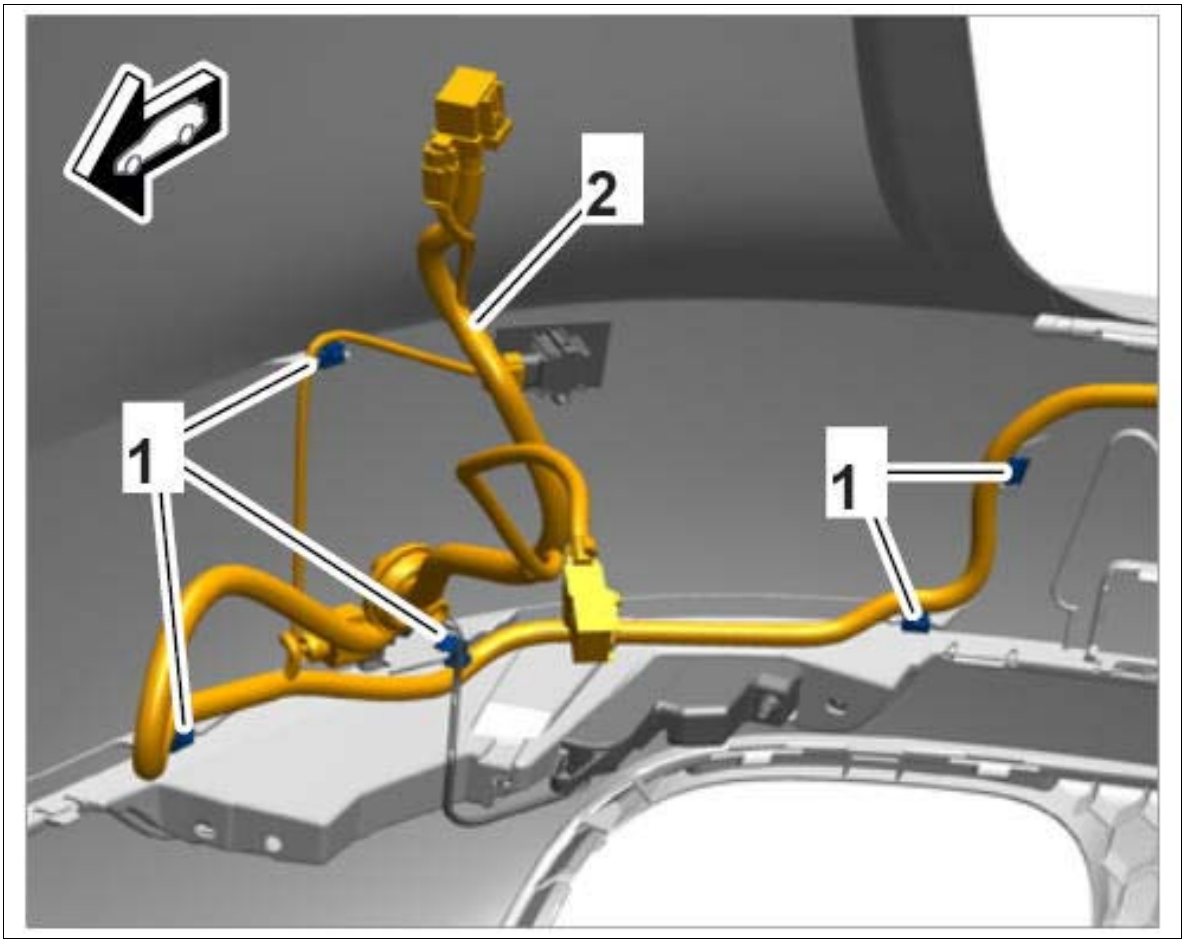

Courtesy of PORSCHE CARS NORTH AMERICA, INC.

WM 975919 REMOVING AND INSTALLING WIRE HARNESS FOR PARKASSIST (ALL MODELS) > INSTALLING WIRE HARNESS FOR PARKASSIST

1. Installation is performed in reverse order to removal.

WM 975919 REMOVING AND INSTALLING WIRE HARNESS FOR PARKASSIST (ALL MODELS) > SUBSEQUENT WORK

1. Install rear apron → INSTALLING REAR APRON .

WM 977019 REMOVING AND INSTALLING WIRE HARNESS FOR NUMBER PLATE LIGHTS (ALL MODELS) > PRELIMINARY WORK

1. Remove rear apron → WM 635519 REMOVING AND INSTALLING REAR APRON (ALL MODELS) .

WM 977019 REMOVING AND INSTALLING WIRE HARNESS FOR NUMBER PLATE LIGHTS (ALL MODELS) > REMOVING WIRE HARNESS FOR NUMBER PLATE LIGHTS

Information

- Some of the repair illustrations show only one side of the vehicle.
- Naturally, some steps also have to be performed on the opposite side of the vehicle as well.

Fig 1: View Of Number Plate Lights Wire Harness

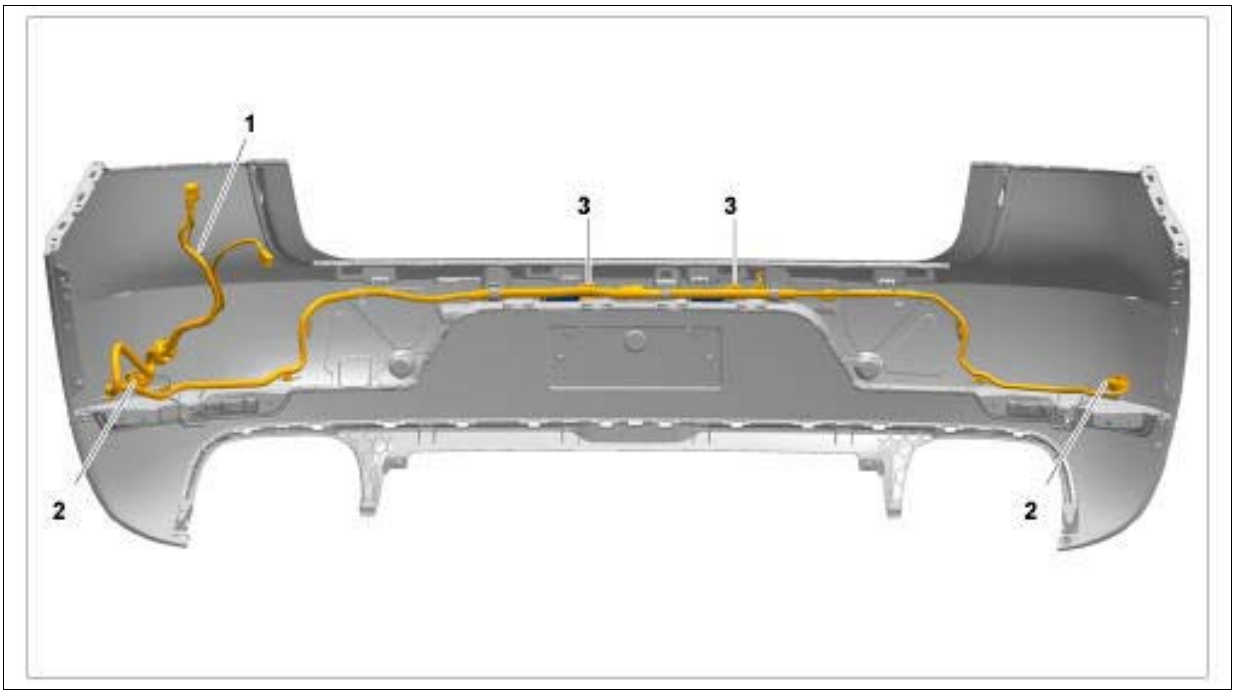

Courtesy of PORSCHE CARS NORTH AMERICA, INC.

1. Wire harness for number plate lights
2. Electric plug connection for reversing light
3. Electric plug connection for number plate light

1. Disconnect electric plug connections **-1-** at the reversing lights **-2-** .
    1. 1.1. Cut tie-wrap **-3-** .
    2. 1.2. Release and disconnect electric plug connection.

Fig 2: Disconnecting Reversing Lights Electric Plug Connections

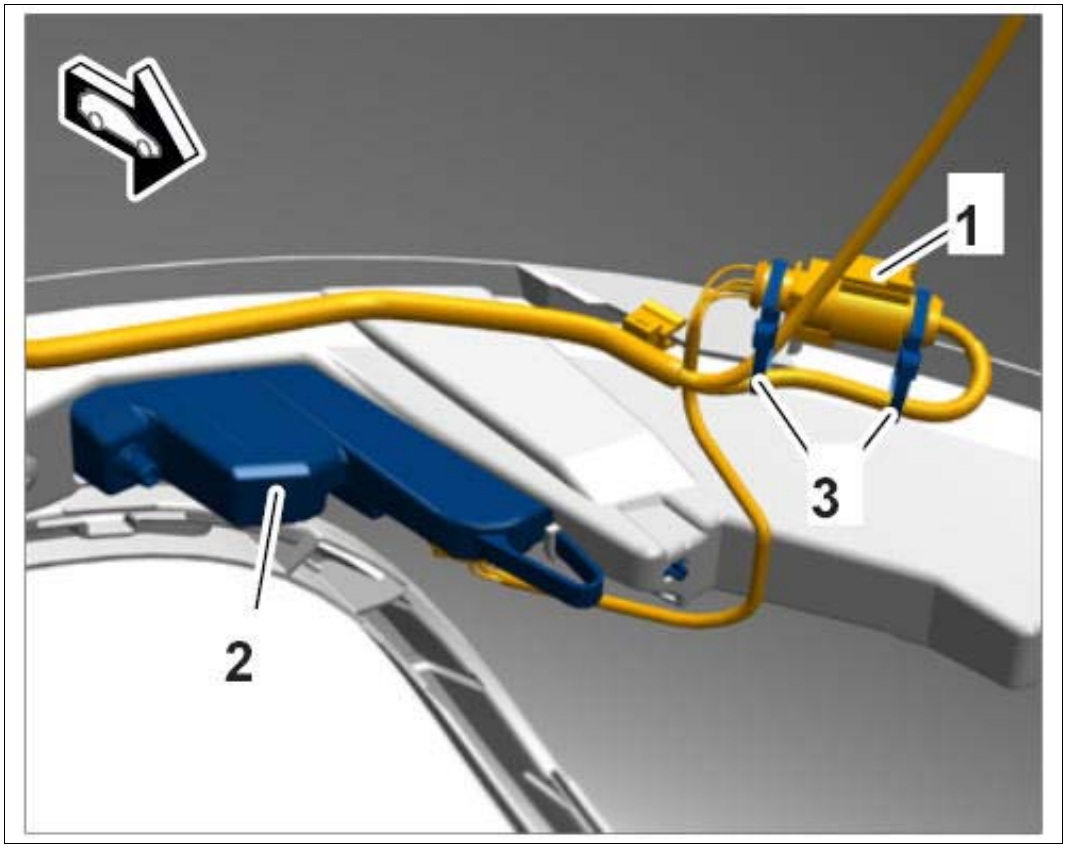

Courtesy of PORSCHE CARS NORTH AMERICA, INC.

2. Remove wire harness for number plate lights **-1-** from holders **-2-** .

3. Release electric plug connections at the number plate lights **-3-** and disconnect them.

Fig 3: Disconnecting Number Plate Lights Electric Plug Connections

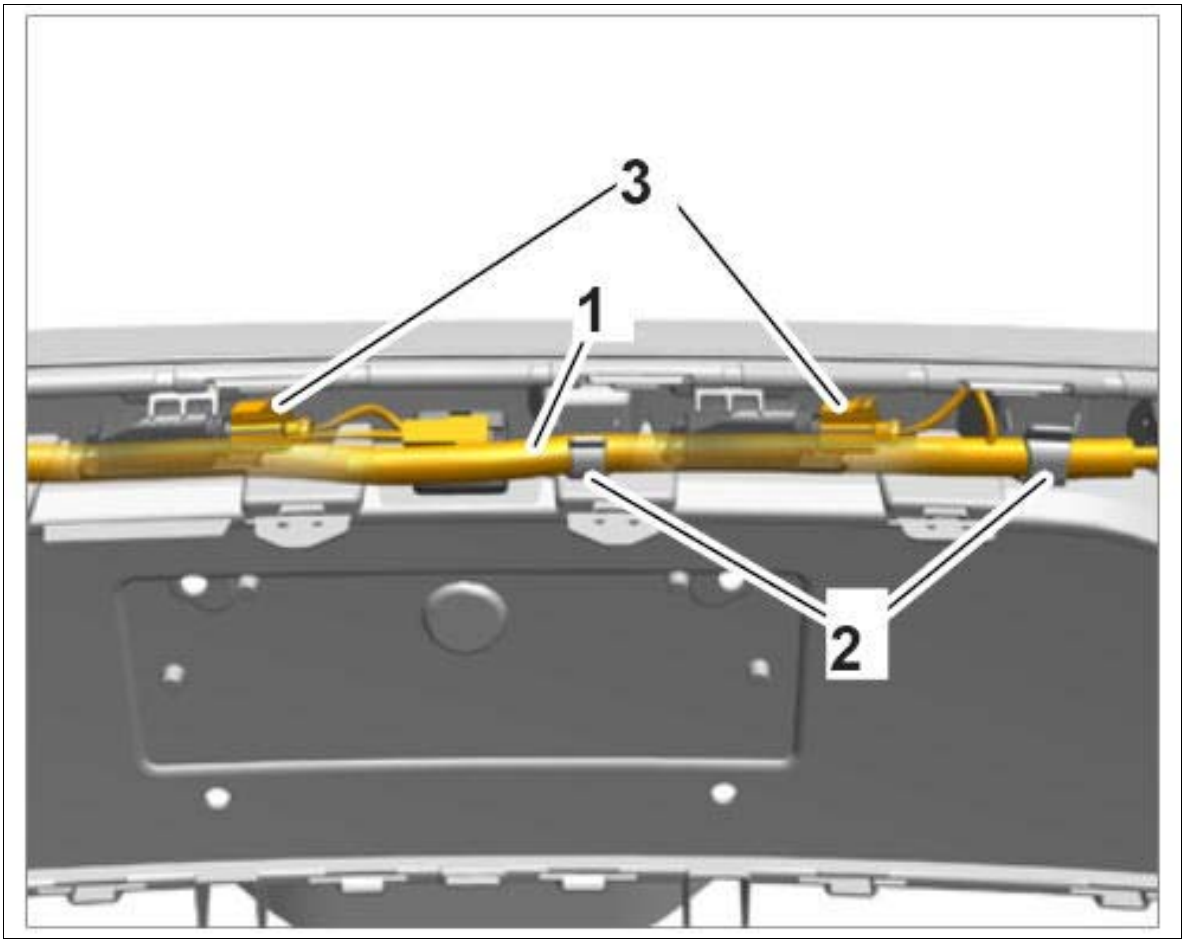

Courtesy of PORSCHE CARS NORTH AMERICA, INC.

4. Pull all holders **-1-** for the wire harness for number plate lights **-2-** off the rear apron and remove wire harness for number plate lights.

Fig 4: Loosening Number Plate Lights Wire Harness Holders

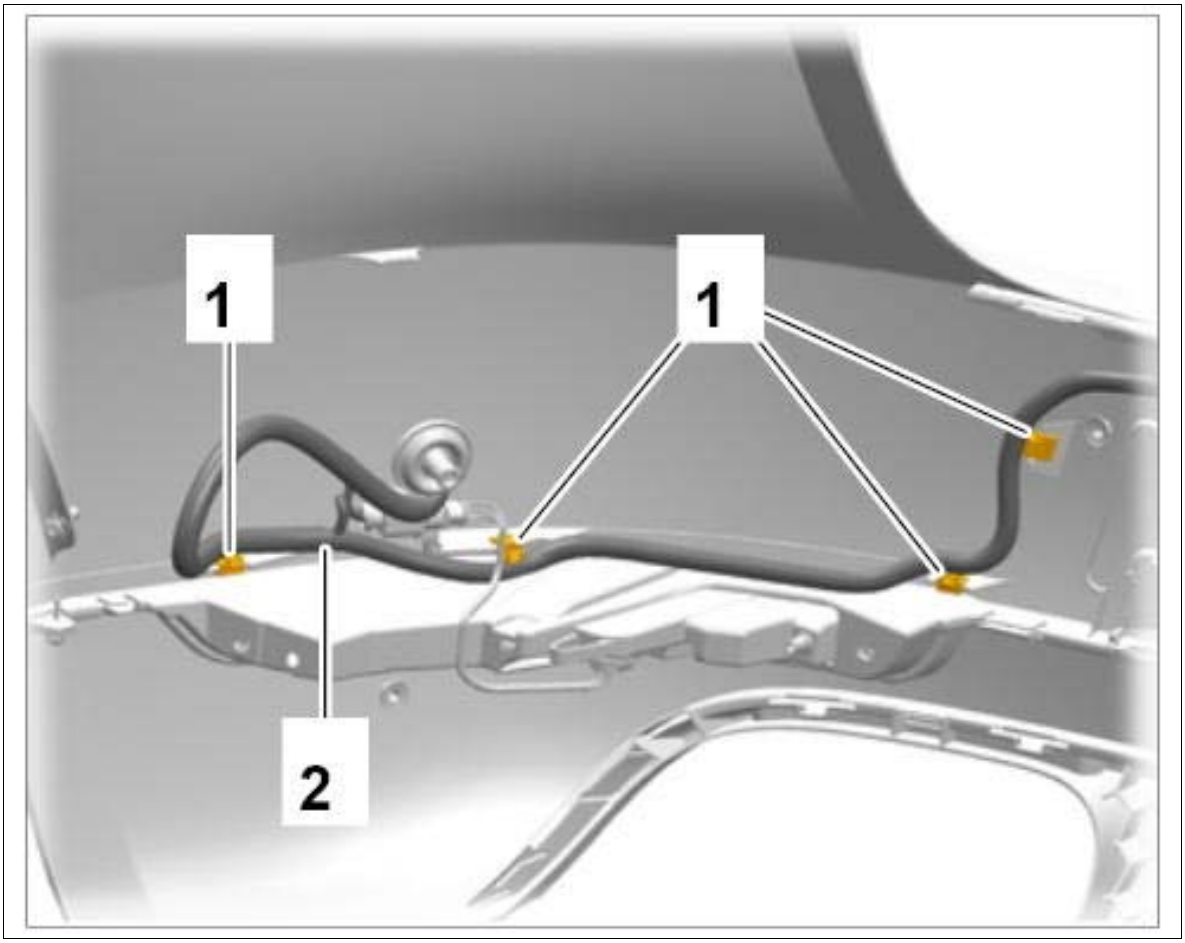

Courtesy of PORSCHE CARS NORTH AMERICA, INC.

WM 977019 REMOVING AND INSTALLING WIRE HARNESS FOR NUMBER PLATE LIGHTS (ALL MODELS) > INSTALLING WIRE HARNESS FOR NUMBER PLATE LIGHTS

1. Installation is performed in reverse order to removal.

WM 977019 REMOVING AND INSTALLING WIRE HARNESS FOR NUMBER PLATE LIGHTS (ALL MODELS) > SUBSEQUENT WORK

1. Install rear apron → INSTALLING REAR APRON .

WM 977223 INSTALLING OPTICAL WAVEGUIDE (PCM TO TV TUNER) (ALL MODELS) > TOOLS

Designation	Type	Number	Description	
press-out and unlocking tools for tab and round plug connectors of all sizes	Commercially available tool	Nr.155		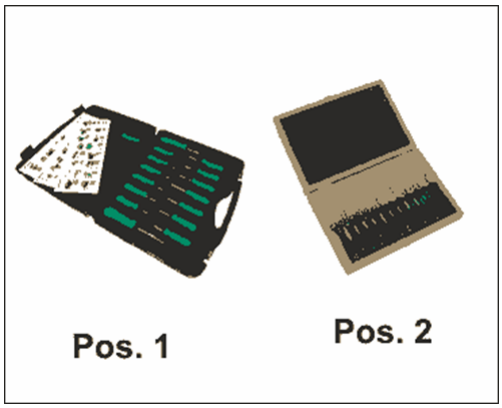

WM 977223 INSTALLING OPTICAL WAVEGUIDE (PCM TO TV TUNER) (ALL MODELS) > INFORMATION > MOST CONTROL UNITS A - C

A - PCM display and operator control unit

C - TV tuner

Fig 1: Identifying MOST Control Units (Shown On Panamera)

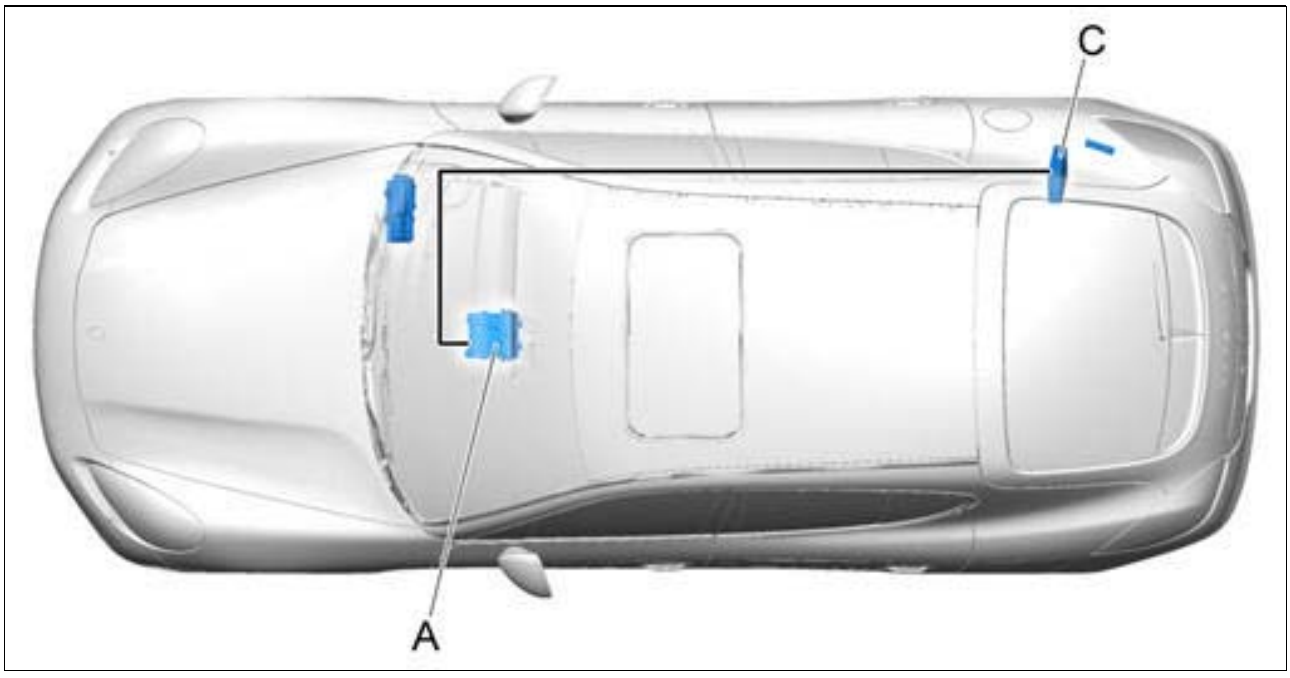

Courtesy of PORSCHE CARS NORTH AMERICA, INC.

WM 977223 INSTALLING OPTICAL WAVEGUIDE (PCM TO TV TUNER) (ALL MODELS) > PRELIMINARY WORK

1. Remove PCM display and operator control unit. → 911019 REMOVING AND INSTALLING PCM DISPLAY AND OPERATOR CONTROL UNIT .
2. Remove side trim panel for rear luggage compartment at the left. → 700319 REMOVING AND INSTALLING SIDE TRIM PANEL FOR REAR LUGGAGE COMPARTMENT .
3. Remove TV tuner with TV tuner holder. → 911719 REMOVING AND INSTALLING TV TUNER .
4. Remove rear inner door sill trim at the left. → 680519 REMOVING AND INSTALLING REAR INNER DOOR SILL TRIM .
5. Remove carpet. → 704119 REMOVING AND INSTALLING CARPET .

WM 977223 INSTALLING OPTICAL WAVEGUIDE (PCM TO TV TUNER) (ALL MODELS) > DISCONNECTING OPTICAL WAVEGUIDE (PCM TO TV TUNER)

Information

Observe the general information on optical waveguides. → General information on optical waveguides - MOST bus

Information

Before routing a new optical waveguide:

- Visually check the locks, connector housing and contacts for damage.
- Replace damaged parts if necessary.

1. Release electric plug connection **-1-** for optical waveguide at the compact connector **-2-** for the PCM display and operator control unit **-B-** and disconnect it.

Fig 1: Disconnecting Electric Plug Connection From PCM Compact Connector

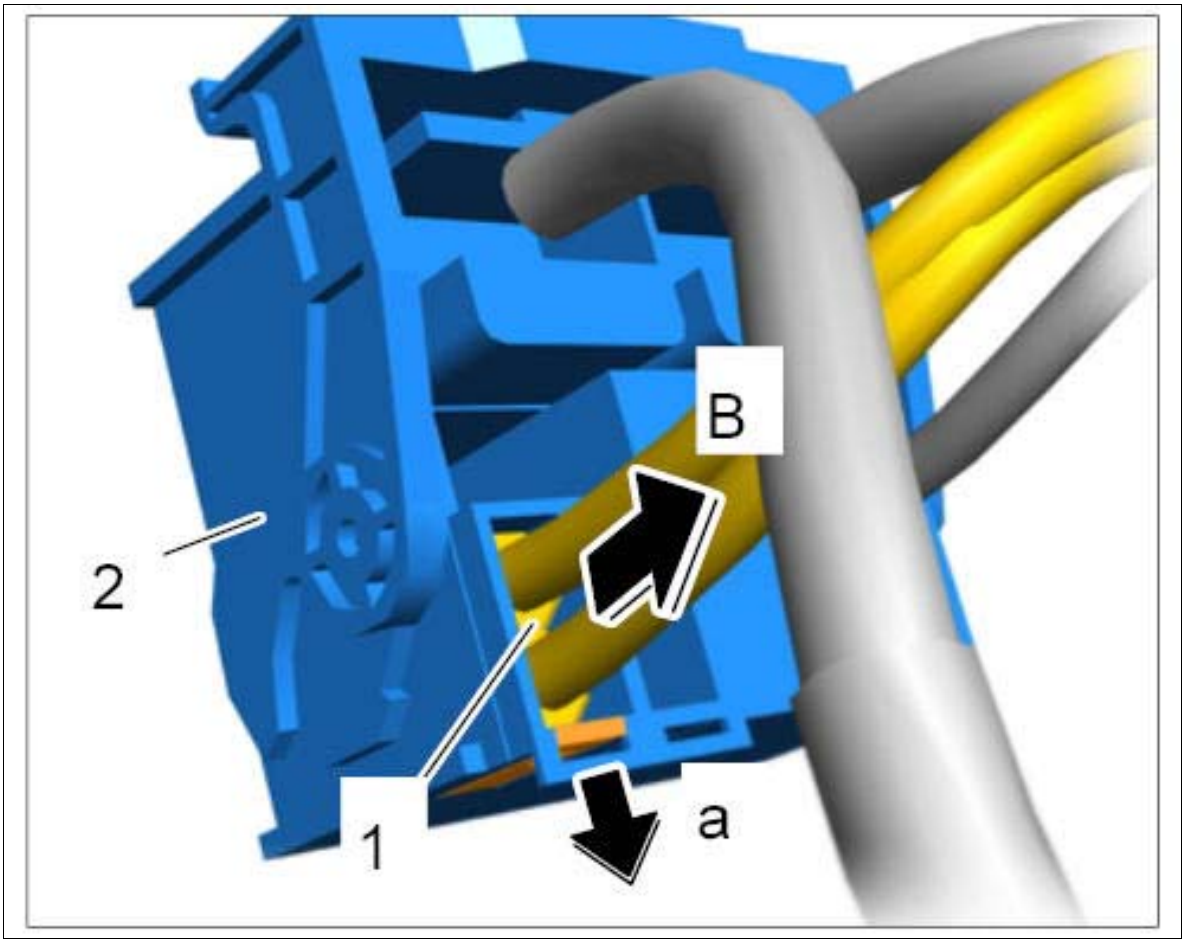

Courtesy of PORSCHE CARS NORTH AMERICA, INC.

2. Release electric plug connection **-1-** for optical waveguide at the compact connector **-2-** for the TV tuner and disconnect it **-B-** .

Fig 2: Disconnecting Electric Plug Connection From TV Tuner Compact Connector

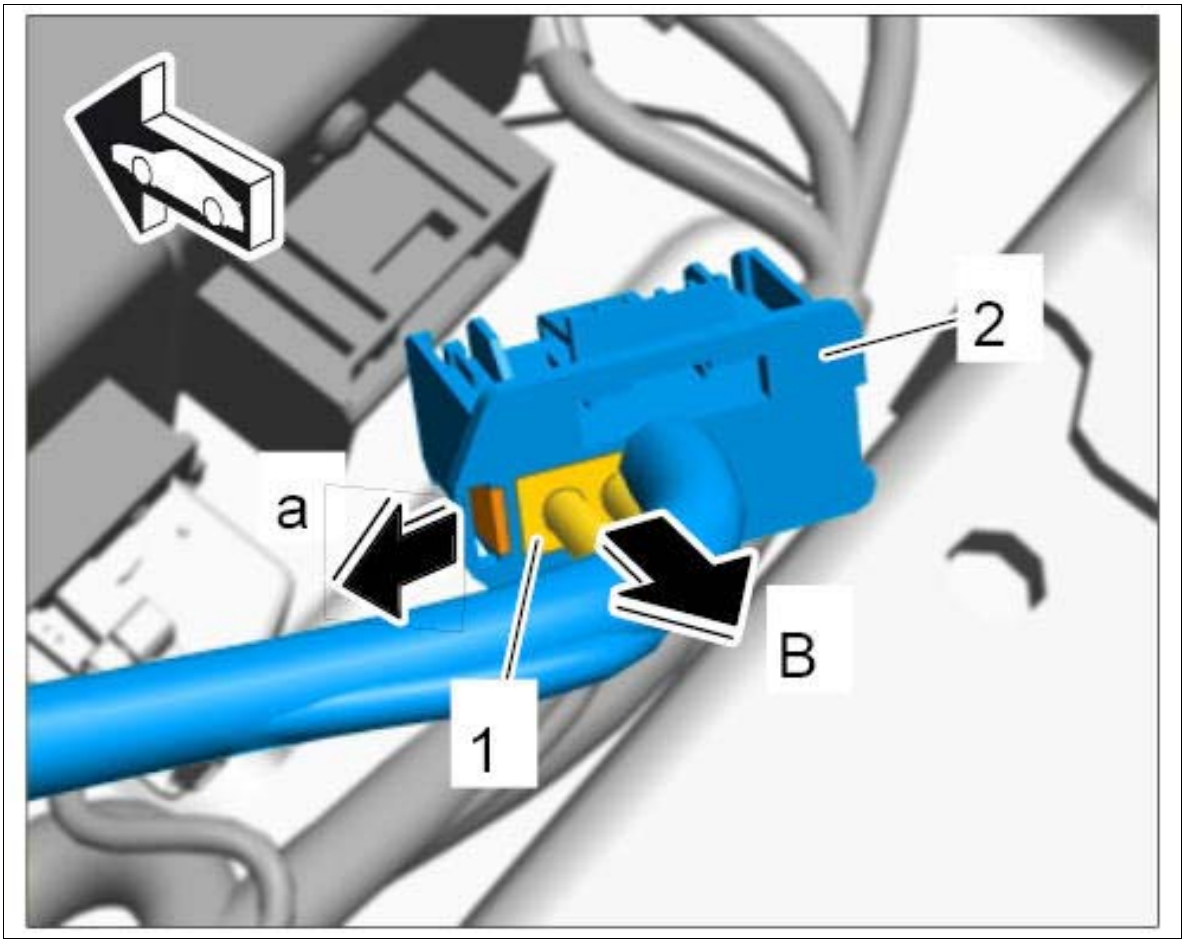

Courtesy of PORSCHE CARS NORTH AMERICA, INC.

WM 977223 INSTALLING OPTICAL WAVEGUIDE (PCM TO TV TUNER) (ALL MODELS) > REMOVING OPTICAL CONTACTS ON CONNECTOR SIDE

1. Open the secondary locking mechanism using **press-out and unlocking tools for tab and round plug connectors of all sizes Nr.155.** Insert the tool into the opening provided and lift the locking mechanism. The locking mechanism engages in the upper position.

Fig 1: Removing Secondary Locking Mechanism Of Optical Contacts (Connector Side)

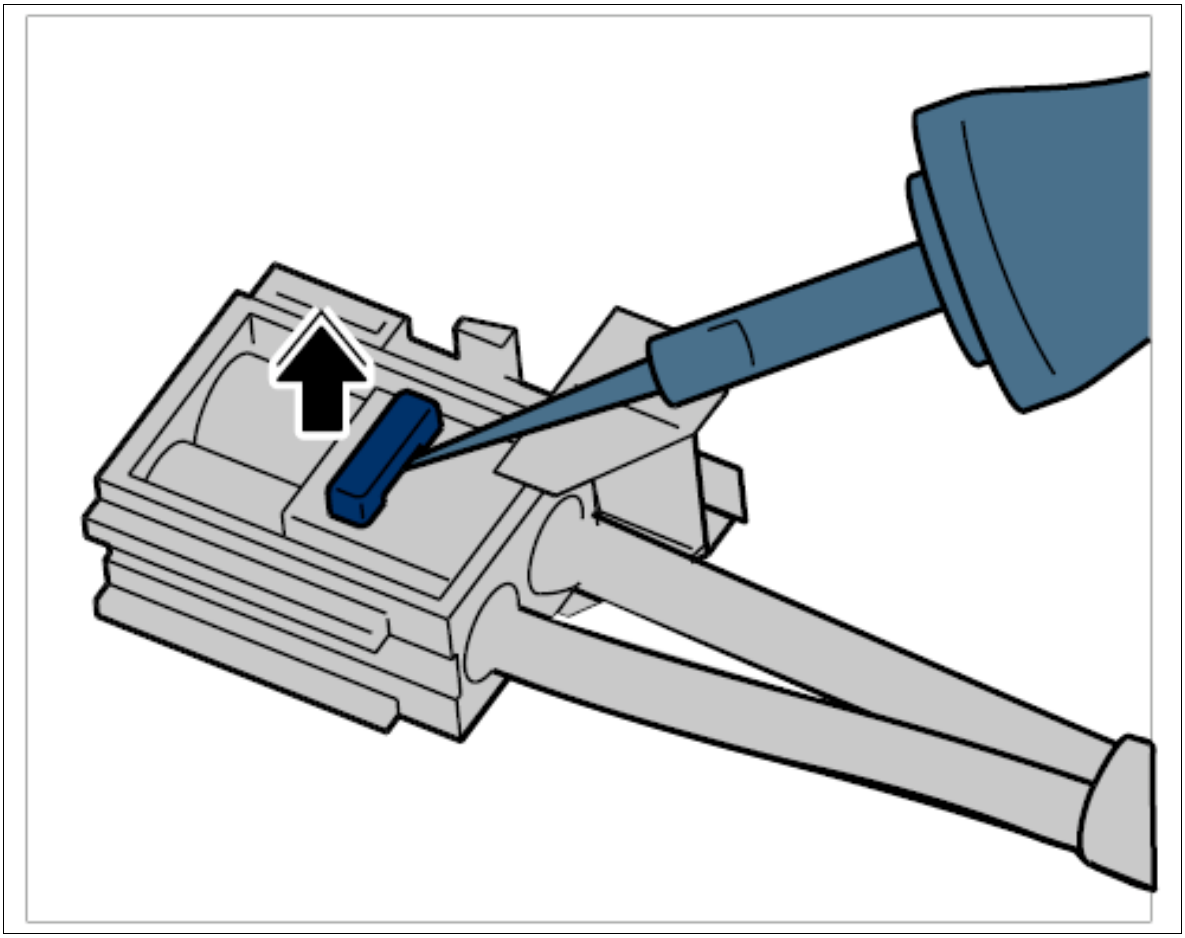

Courtesy of PORSCHE CARS NORTH AMERICA, INC.

2. **Press-out and unlocking tools for tab and round plug connectors of all sizes Nr.155** must be positioned on the primary locking mechanism. Then lift the locking mechanism.

    A. Optical contact, grey

    B. Optical contact, black

Fig 2: Removing Primary Locking Mechanism Of Optical Contacts (Connector Side)

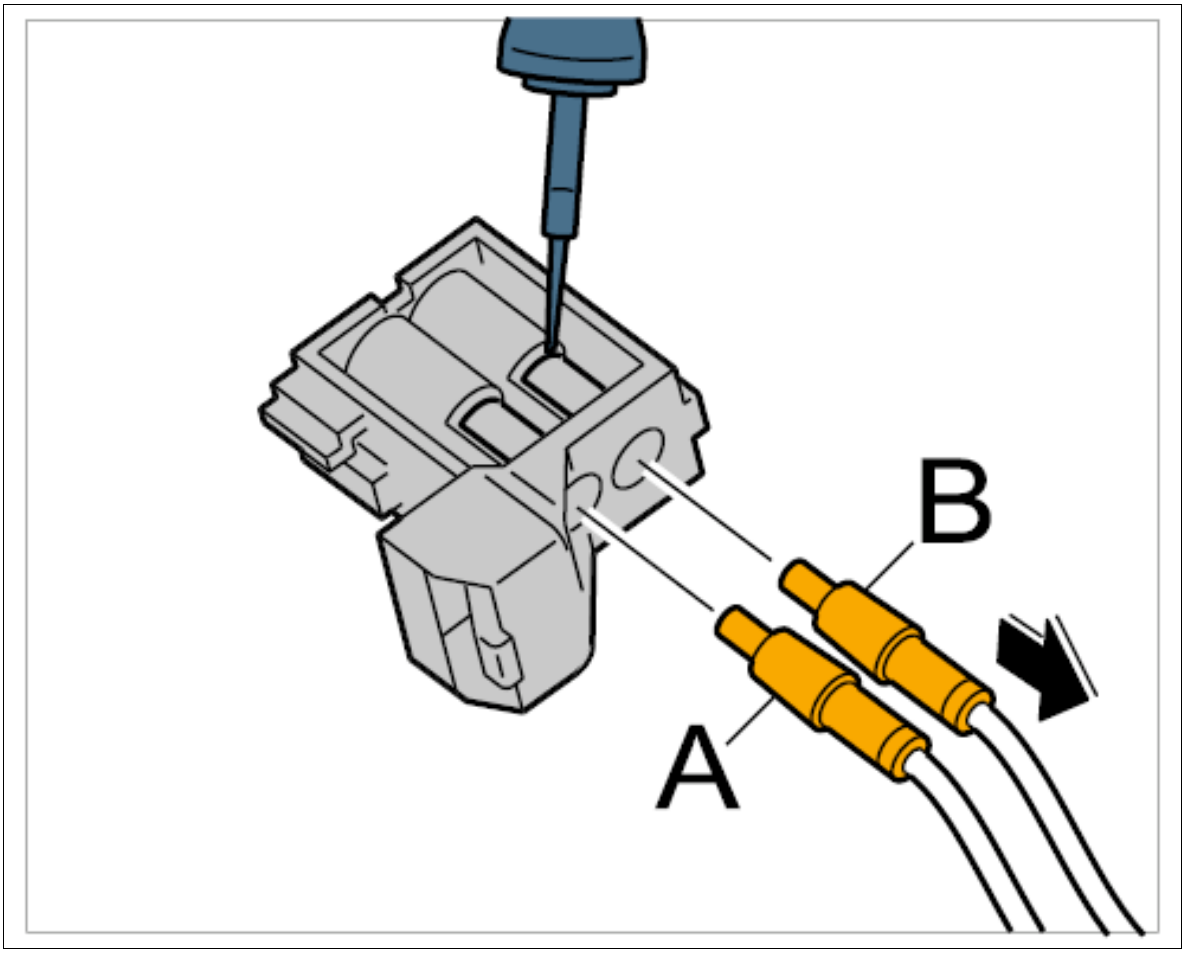

Courtesy of PORSCHE CARS NORTH AMERICA, INC.

3. Carefully pull on the optical waveguides **-A and B-** in **-direction of arrow-** . If it is not possible to pull out the optical waveguide, check again that the secondary locking mechanism is completely released and that the primary locking mechanism is raised sufficiently.

Perform visual inspection of locking mechanisms, connector housings and contacts for possible damage, and exchange the damaged parts, if necessary.

WM 977223 INSTALLING OPTICAL WAVEGUIDE (PCM TO TV TUNER) (ALL MODELS) > INSTALLING OPTICAL CONTACTS ON CONNECTOR SIDE

Remove the dust boot right before plugging.

Check the proper condition of the contacts.

1. Push optical contacts **-A and B-** into the connectors until they engage securely.

    A. Optical contact, grey

    B. Optical contact, black

Fig 1: Installing Primary Locking Mechanism Of Optical Contacts (Connector Side)

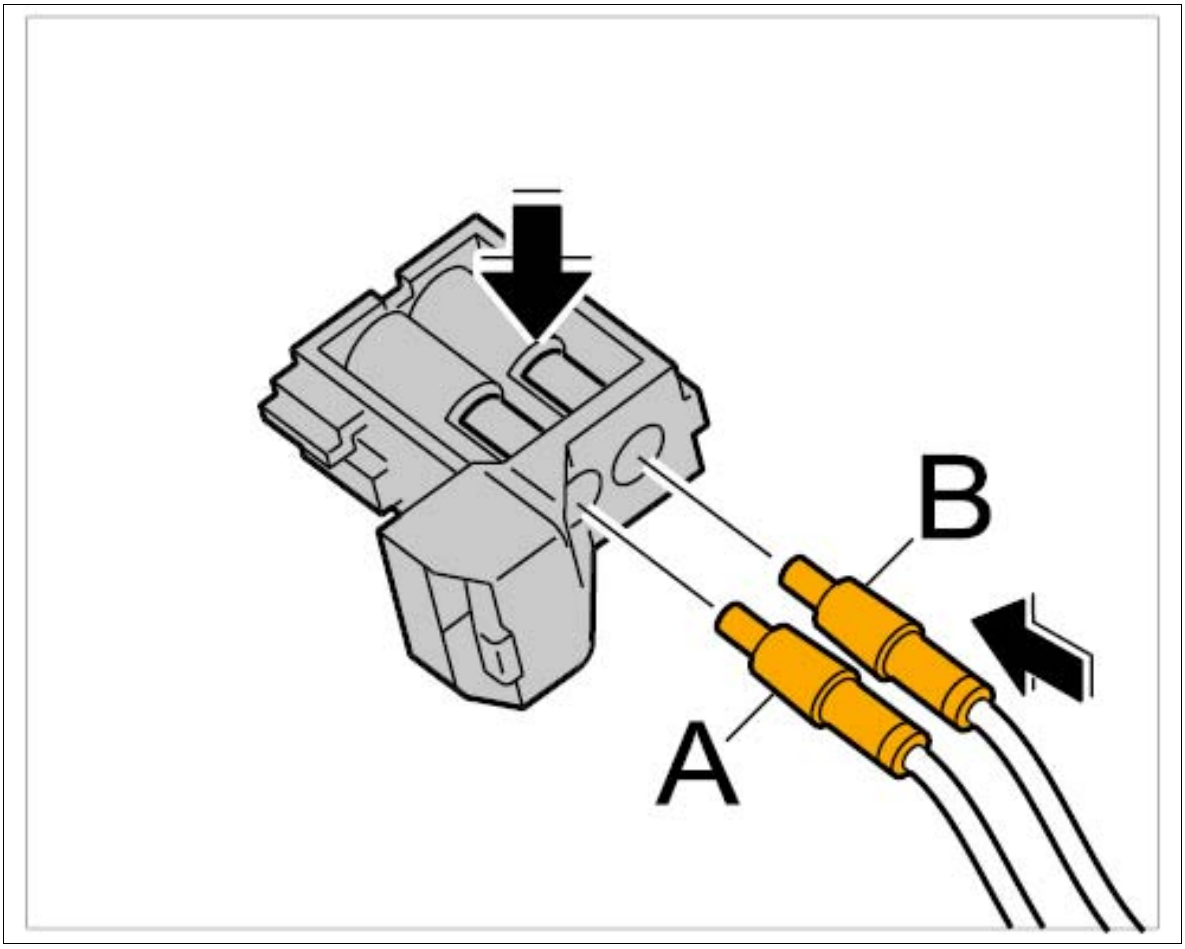

Courtesy of PORSCHE CARS NORTH AMERICA, INC.

2. Close the secondary locking mechanism and check that the optical contacts are seated securely.

Fig 2: Installing Secondary Locking Mechanism Of Optical Contacts (Connector Side)

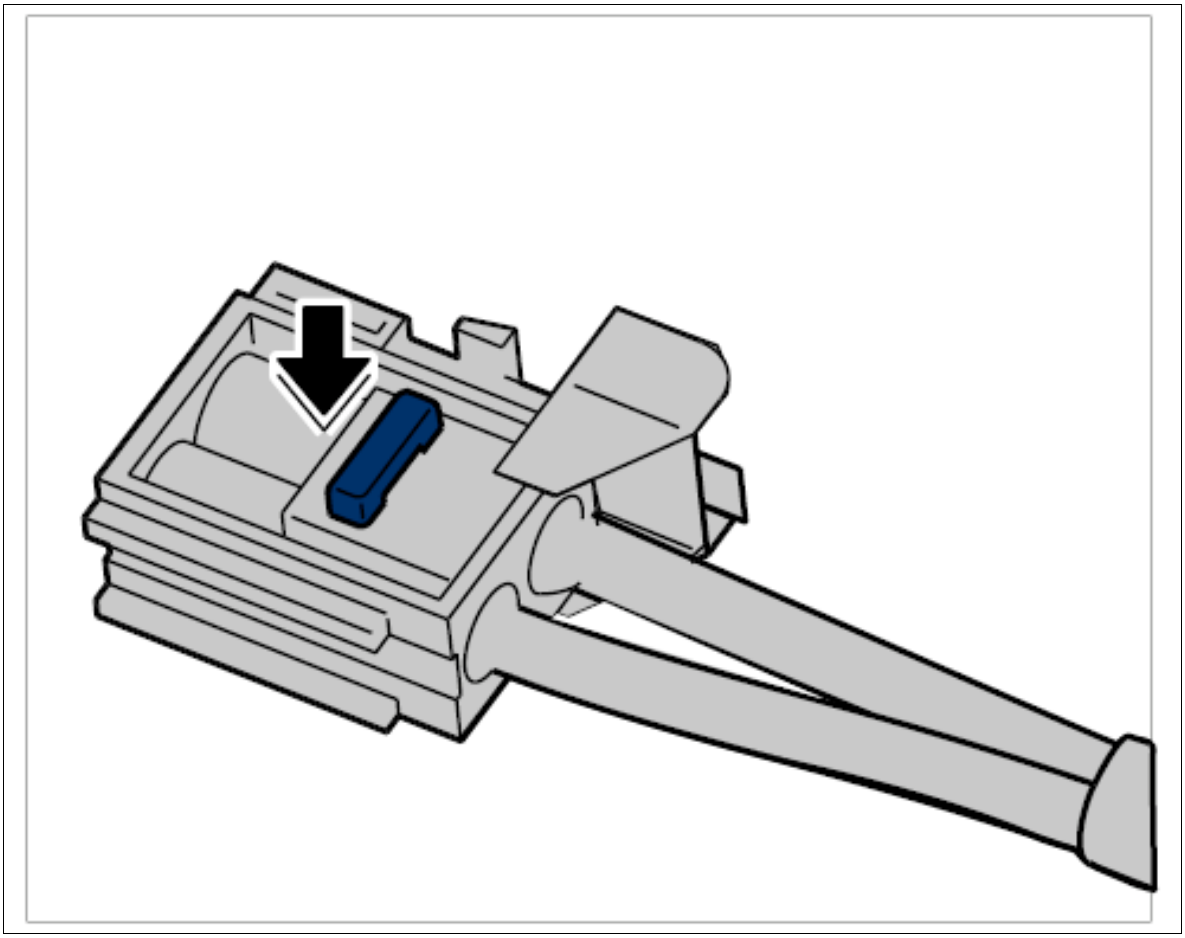

Courtesy of PORSCHE CARS NORTH AMERICA, INC.

Installing optical waveguide (PCM to TV tuner)

Information

- The new lines will be secured to the fastening points for the old lines.
- The old wire harness remains installed in the vehicle.
- The old wire harness will only be disconnected/unplugged directly at the connected components.

Information

- When installing the wire harness, make sure the insulation of the line is not damaged.

Information

The range of spare parts available for optical waveguides depends on the vehicle equipment. Depending on the vehicle equipment, there is a specific set containing the individual optical waveguides.

Select the required optical waveguide and remove it from the set.

Information

Before routing a new optical waveguide:

- Visually check the locks, connector housing and contacts for damage.
- Replace damaged parts if necessary.

1. Cut off optical contacts of the damaged optical waveguide, isolate it and tie it to the main wire harness.
2. Route new optical waveguide along the main wire harness, guide it through the existing cable ducts and tie it to the main wire harness using tie-wraps.
3. Plug electric plug connection **-1-** for the optical waveguide into the compact connector **-2-** for the TV tuner **-A-** until the electric plug connection engages securely.

   Fig 3: Plugging Electric Plug Connection Into TV Tuner Compact Connector

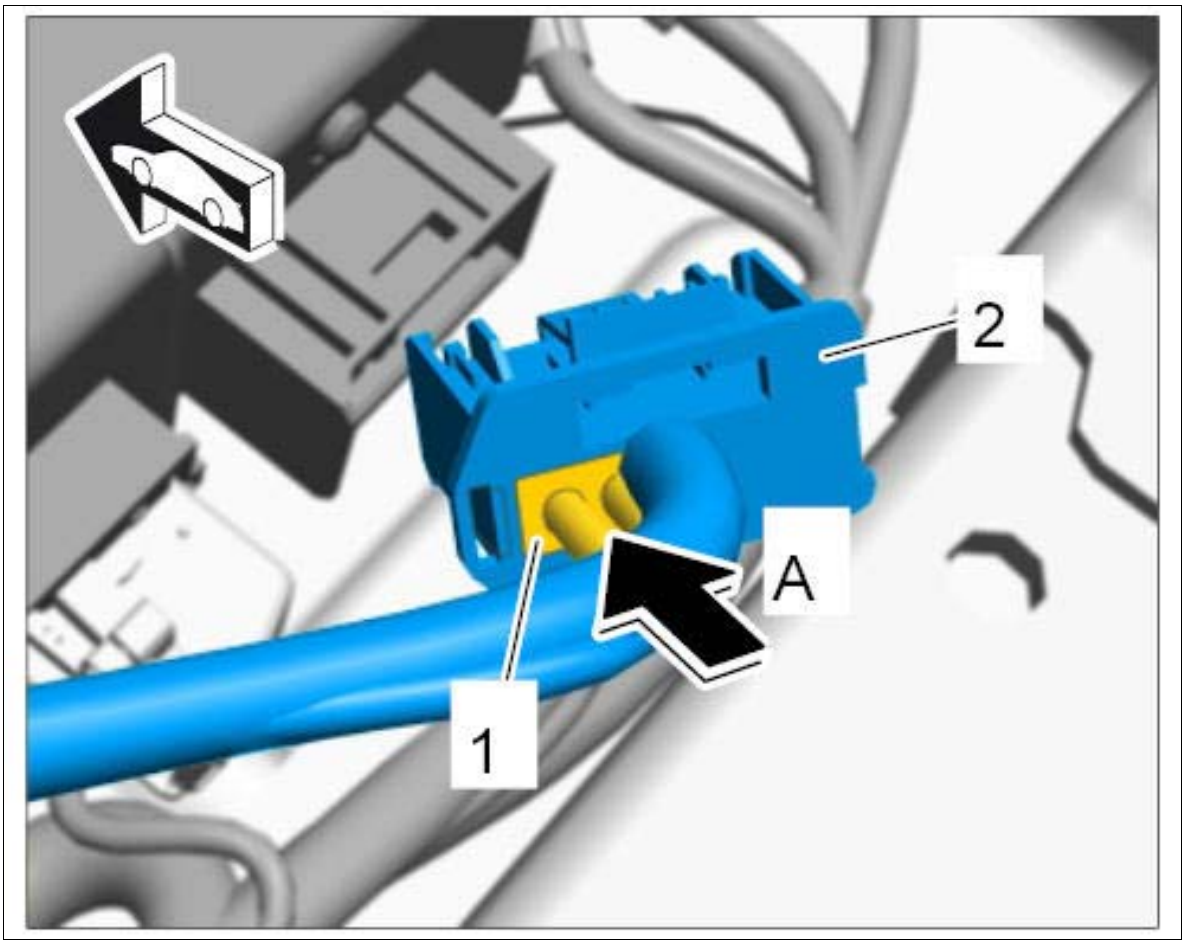

Courtesy of PORSCHE CARS NORTH AMERICA, INC.

4. Plug electric plug connection **-1-** for the optical waveguide into the compact connector **-2-** for the PCM display and operator control unit **-A-** until the electric plug connection engages securely.

Fig 4: Plugging Electric Plug Connection Into PCM Compact Connector

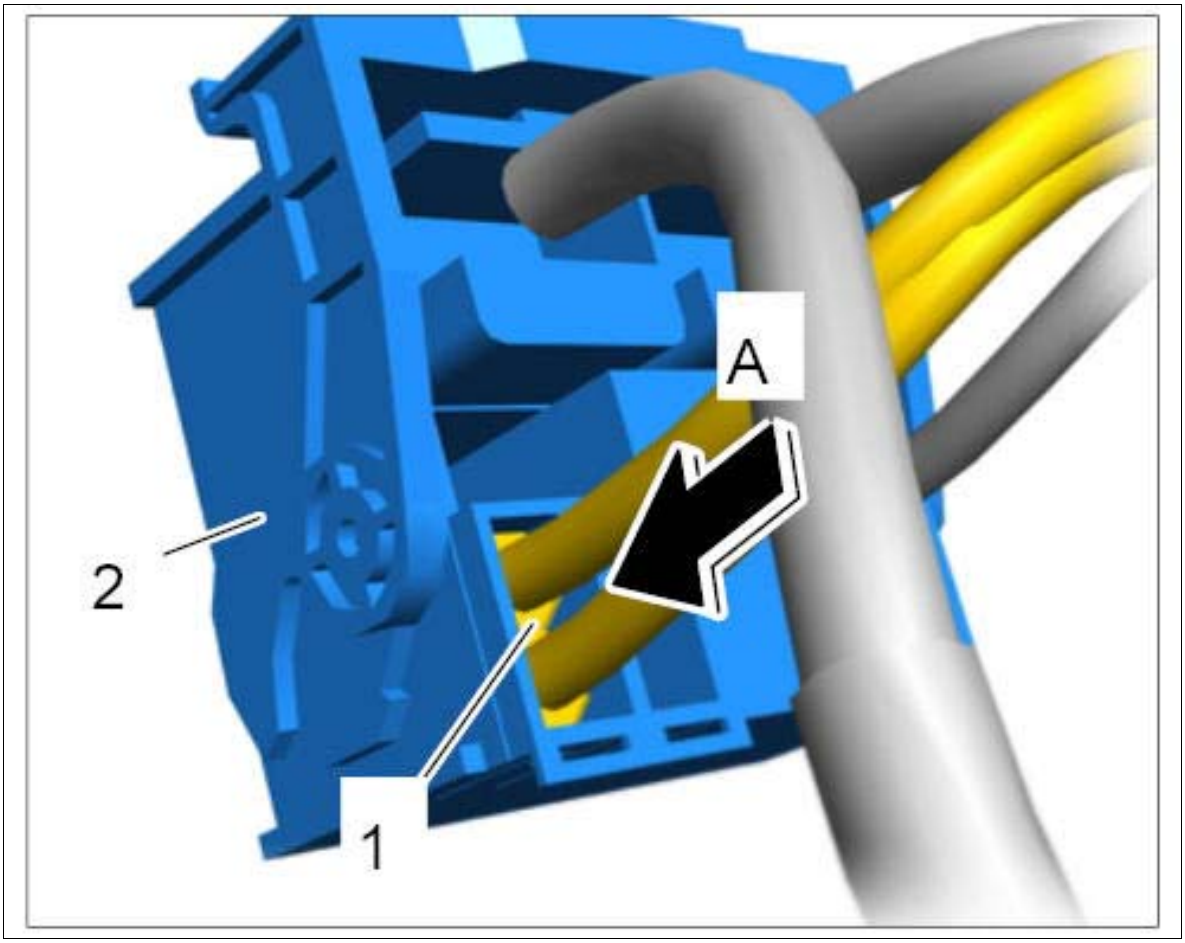

Courtesy of PORSCHE CARS NORTH AMERICA, INC.

WM 977223 INSTALLING OPTICAL WAVEGUIDE (PCM TO TV TUNER) (ALL MODELS) > SUBSEQUENT WORK

1. Fit carpet → INSTALLING CARPET .
2. Install rear inner door sill trim at the left → INSTALLING REAR INNER DOOR SILL TRIM .
3. Install side trim panel for rear luggage compartment at the left → INSTALLING SIDE TRIM PANEL FOR REAR LUGGAGE COMPARTMENT .
4. Install TV tuner with TV tuner holder → INSTALLING TV TUNER .
5. Install PCM display and operator control unit → INSTALLING PCM DISPLAY AND OPERATOR CONTROL UNIT .

WM 977223 INSTALLING OPTICAL WAVEGUIDE (PCM TO LOUDSPEAKER BOOSTER AND TV TUNER) (ALL MODELS) > TOOLS

Designation	Type	Number	Description	
press-out and unlocking tools for tab and round plug connectors of all sizes	Commercially available tool	Nr.155		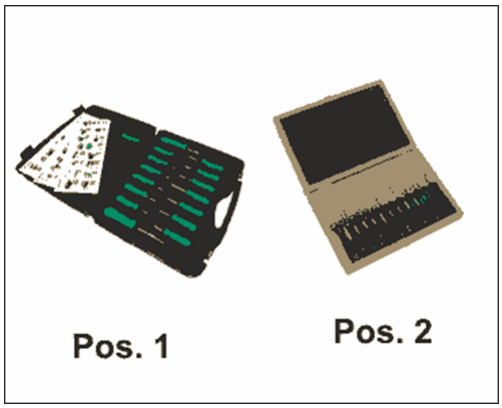

WM 977223 INSTALLING OPTICAL WAVEGUIDE (PCM TO LOUDSPEAKER BOOSTER AND TV TUNER) (ALL MODELS) > INFORMATION > MOST CONTROL UNITS A - B - C

A. PCM display and operator control unit

B. Loudspeaker booster

C. TV tuner

Fig 1: Identifying MOST Control Units (Shown On Panamera)

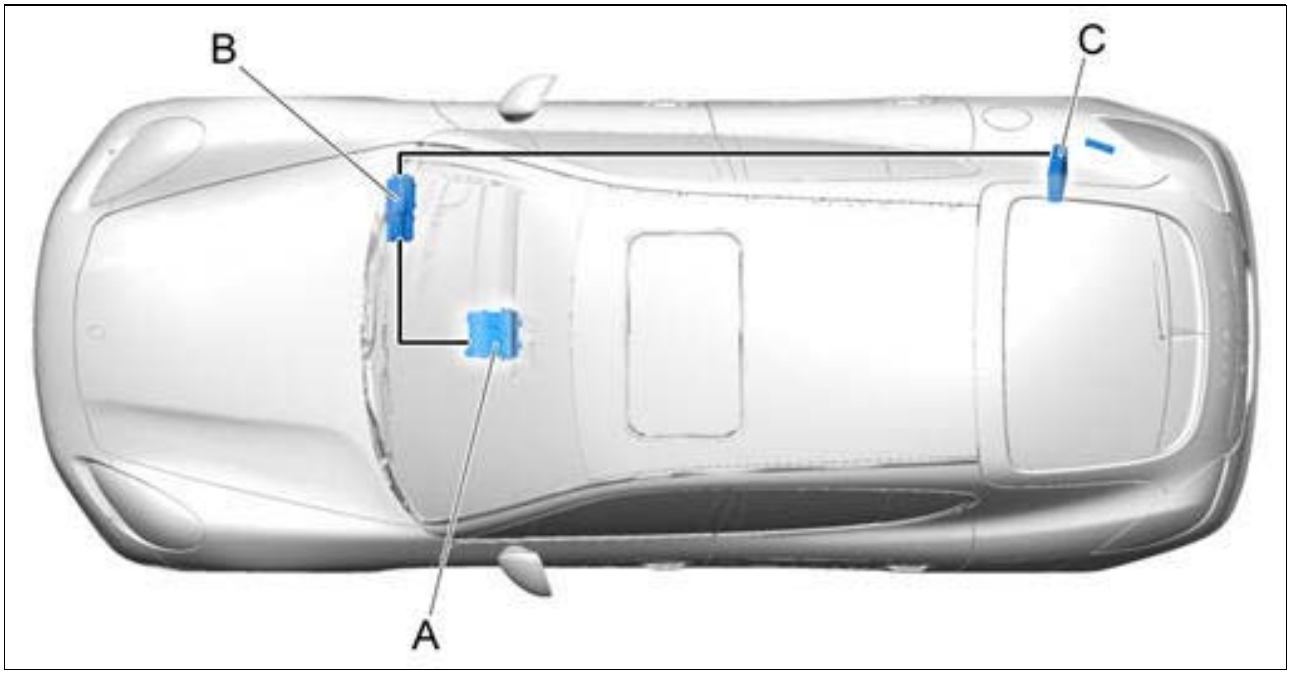

Courtesy of PORSCHE CARS NORTH AMERICA, INC.

WM 977223 INSTALLING OPTICAL WAVEGUIDE (PCM TO LOUDSPEAKER BOOSTER

AND TV TUNER) (ALL MODELS) > PRELIMINARY WORK

1. Remove PCM display and operator control unit. → 911019 REMOVING AND INSTALLING PCM DISPLAY AND OPERATOR CONTROL UNIT .
2. Remove side trim panel for rear luggage compartment at the left. → 700319 REMOVING AND INSTALLING SIDE TRIM PANEL FOR REAR LUGGAGE COMPARTMENT .
3. Remove TV tuner with TV tuner holder. → 911719 REMOVING AND INSTALLING TV TUNER .
4. Remove rear inner door sill trim at the left. → 680519 REMOVING AND INSTALLING REAR INNER DOOR SILL TRIM .
5. Remove carpet. → 704119 REMOVING AND INSTALLING CARPET .

WM 977223 INSTALLING OPTICAL WAVEGUIDE (PCM TO LOUDSPEAKER BOOSTER AND TV TUNER) (ALL MODELS) > INSTALLING OPTICAL WAVEGUIDE (PCM TO LOUDSPEAKER BOOSTER AND TV TUNER) > DISCONNECTING OPTICAL WAVEGUIDE (PCM TO LOUDSPEAKER BOOSTER AND TV TUNER)

Information

Observe the general information on optical waveguides. → General information on optical waveguides - MOST bus

Information

Before routing a new optical waveguide:

- Visually check the locks, connector housing and contacts for damage.
- Replace damaged parts if necessary.

1. Release electric plug connection **-1-** for optical waveguide at the compact connector **-2-** for the PCM display and operator control unit **-B-** and disconnect it.

Fig 1: Disconnecting Electric Plug Connection From PCM Compact Connector

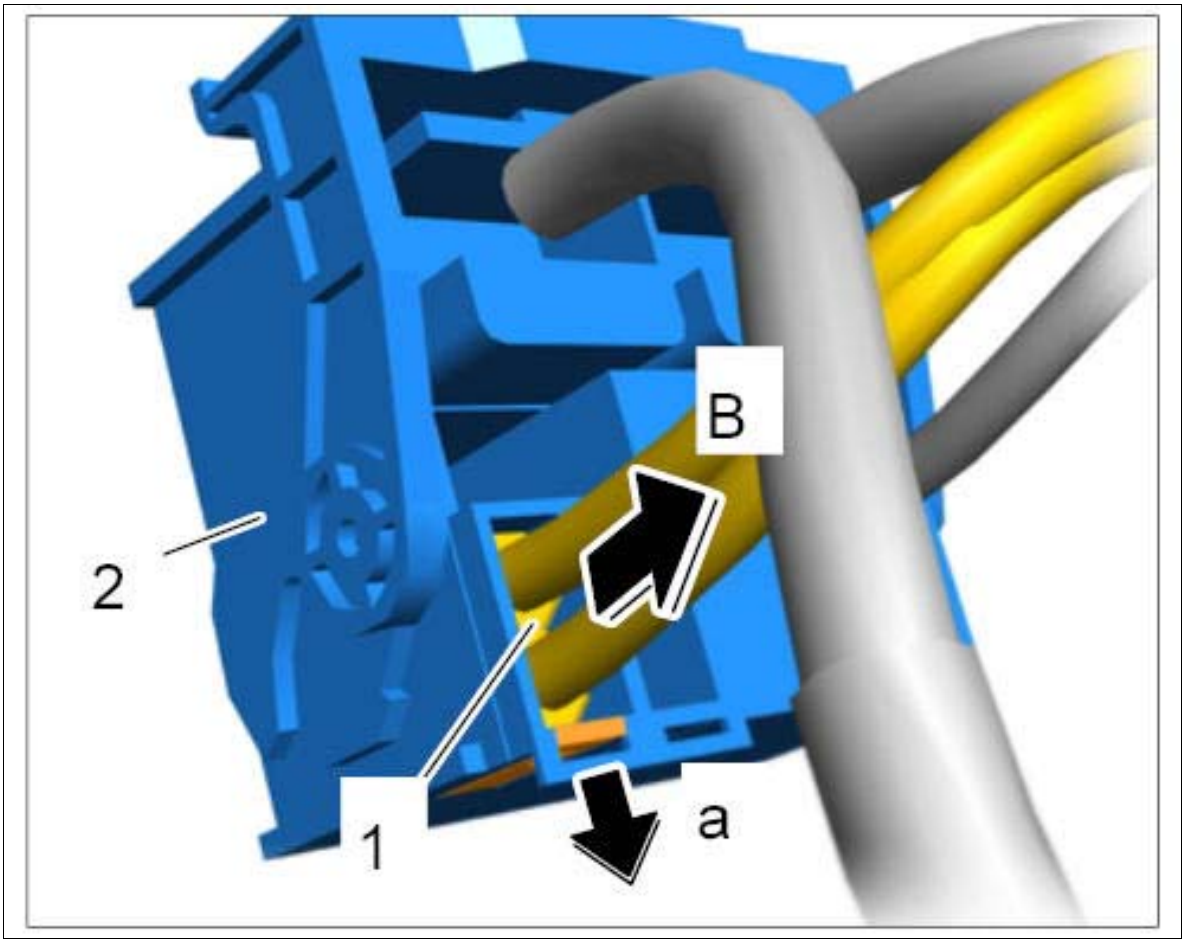

Courtesy of PORSCHE CARS NORTH AMERICA, INC.

2. Release electric plug connection **-1-** for optical waveguide at the compact connector **-2-** for the TV tuner and disconnect it **-B-** .

Fig 2: Disconnecting Electric Plug Connection From TV Tuner Compact Connector

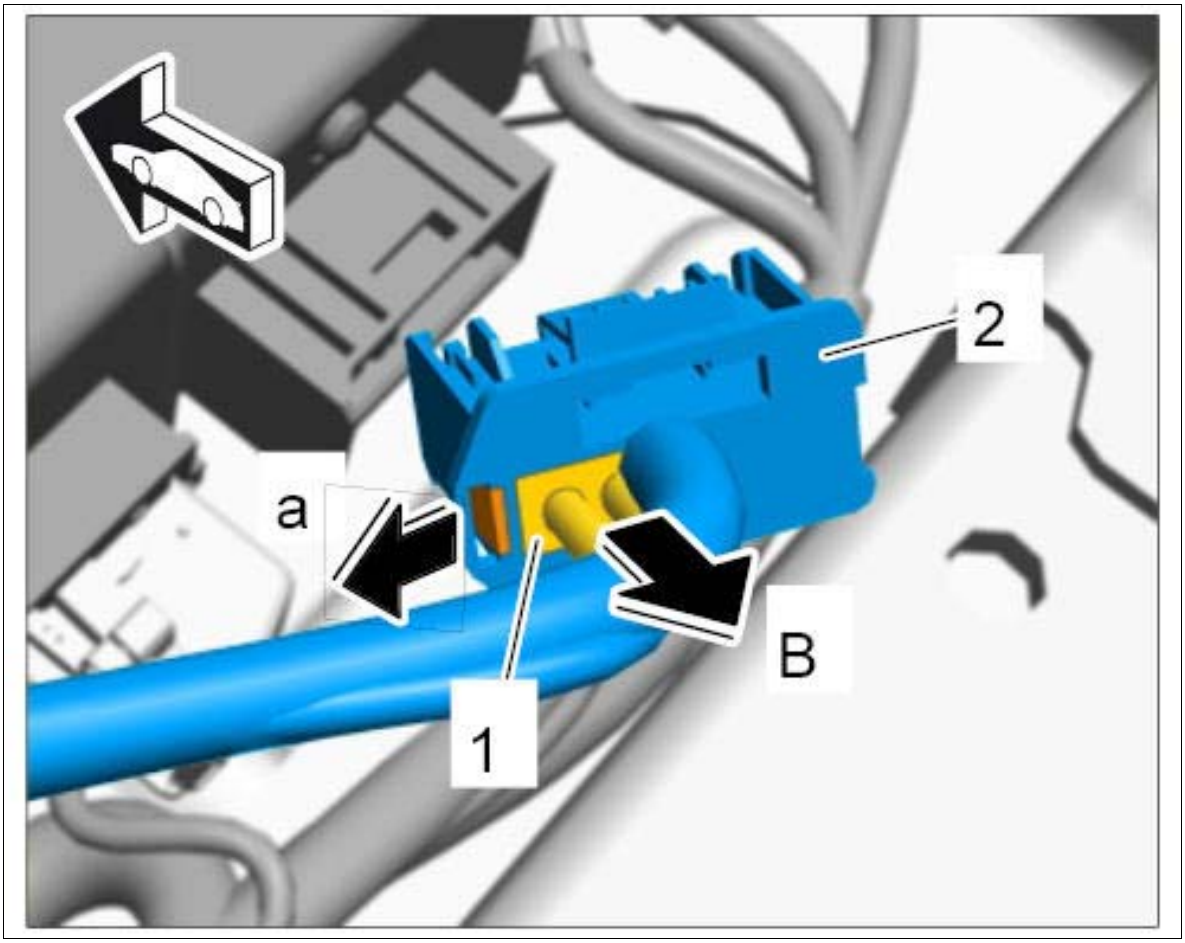

Courtesy of PORSCHE CARS NORTH AMERICA, INC.

WM 977223 INSTALLING OPTICAL WAVEGUIDE (PCM TO LOUDSPEAKER BOOSTER AND TV TUNER) (ALL MODELS) > INSTALLING OPTICAL WAVEGUIDE (PCM TO LOUDSPEAKER BOOSTER AND TV TUNER) > REMOVING OPTICAL CONTACTS ON CONNECTOR SIDE

1. Open the secondary locking mechanism using **press-out and unlocking tools for tab and round plug connectors of all sizes Nr.155.** Insert the tool into the opening provided and lift the locking mechanism. The locking mechanism engages in the upper position.

Fig 1: Removing Secondary Locking Mechanism Of Optical Contacts (Connector Side)

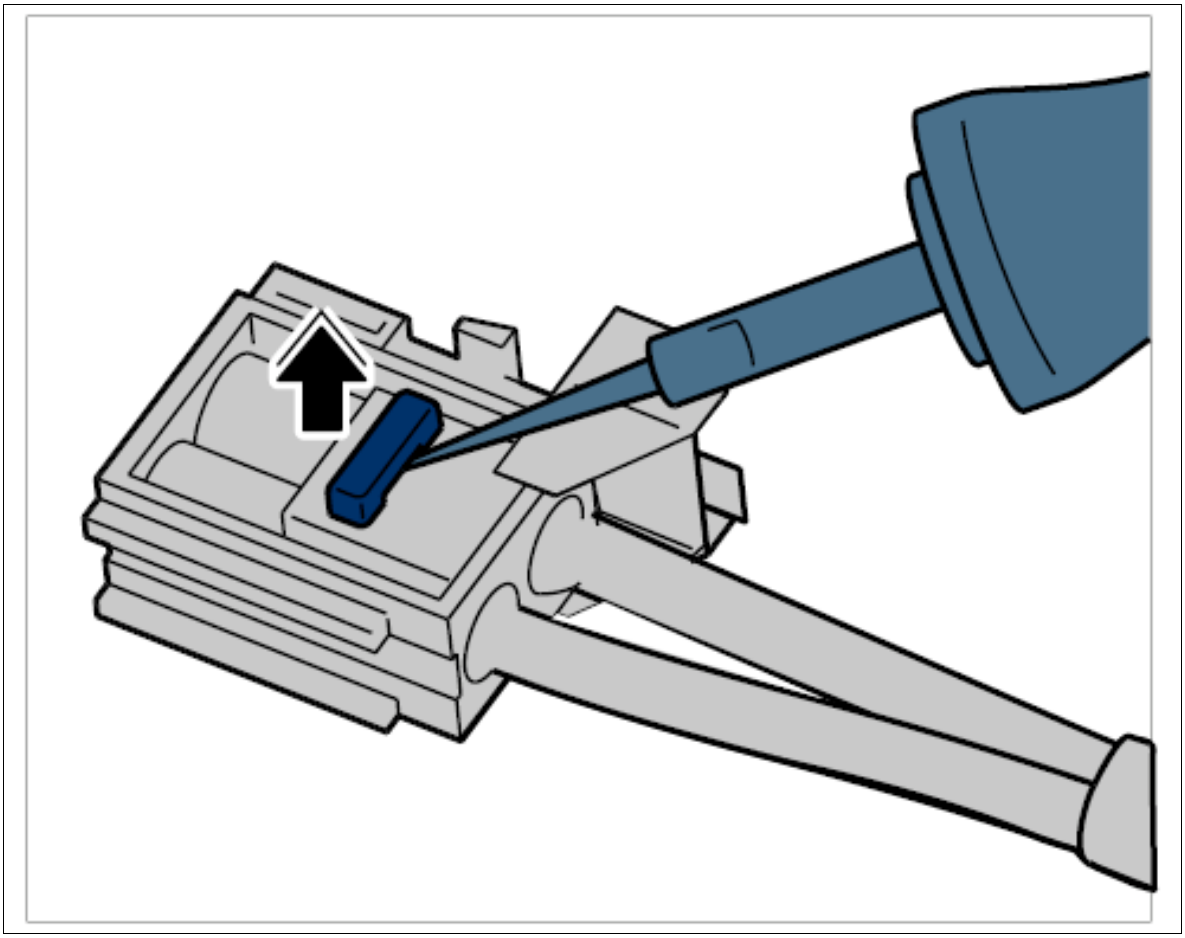

Courtesy of PORSCHE CARS NORTH AMERICA, INC.

2. **Press-out and unlocking tools for tab and round plug connectors of all sizes Nr.155** must be positioned on the primary locking mechanism. Then lift the locking mechanism.

    A. Optical contact, grey

    B. Optical contact, black

Fig 2: Removing Primary Locking Mechanism Of Optical Contacts (Connector Side)

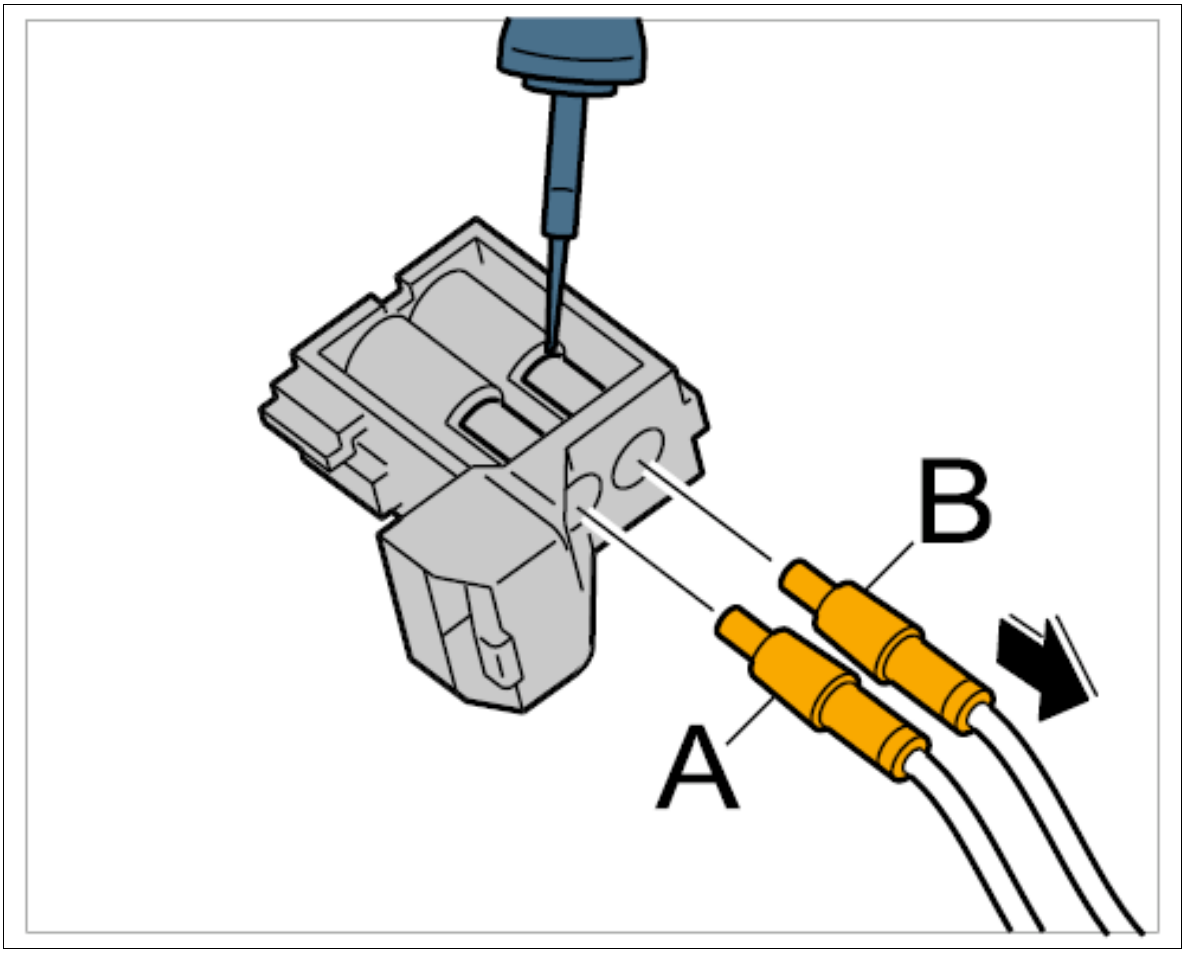

Courtesy of PORSCHE CARS NORTH AMERICA, INC.

3. Carefully pull on the optical waveguides **-A and B-** in **-direction of arrow-** . If it is not possible to pull out the optical waveguide, check again that the secondary locking mechanism is completely released and that the primary locking mechanism is raised sufficiently.

Perform visual inspection of locking mechanisms, connector housings and contacts for possible damage, and exchange the damaged parts, if necessary.

WM 977223 INSTALLING OPTICAL WAVEGUIDE (PCM TO LOUDSPEAKER BOOSTER AND TV TUNER) (ALL MODELS) > INSTALLING OPTICAL WAVEGUIDE (PCM TO LOUDSPEAKER BOOSTER AND TV TUNER) > INSTALLING OPTICAL CONTACTS ON CONNECTOR SIDE

Remove the dust boot right before plugging.

Check the proper condition of the contacts.

1. Push optical contacts **-A and B-** into the connectors until they engage securely.

    A. Optical contact, grey

B. Optical contact, black

Fig 1: Installing Primary Locking Mechanism Of Optical Contacts (Connector Side)

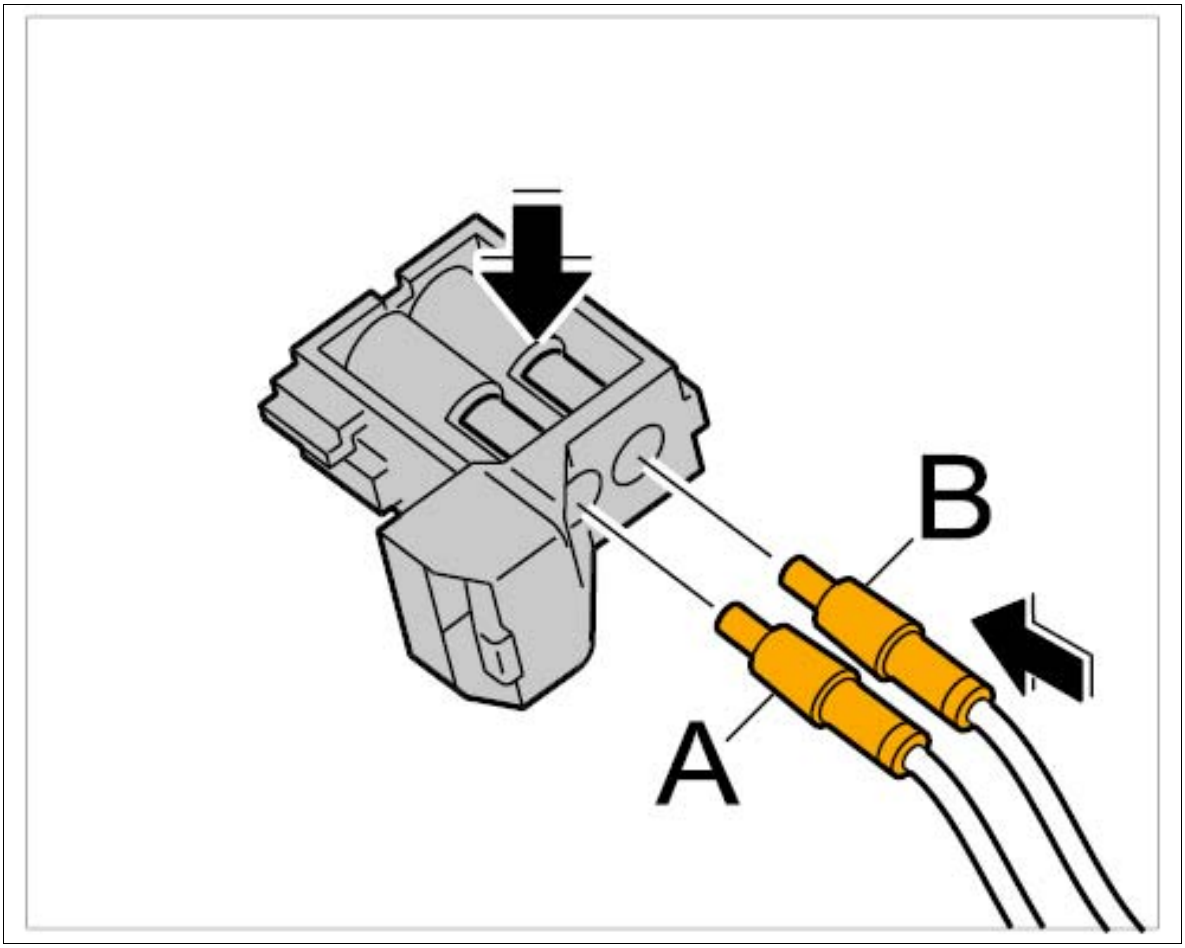

Courtesy of PORSCHE CARS NORTH AMERICA, INC.

2. Close the secondary locking mechanism and check that the optical contacts are seated securely.

Fig 2: Installing Secondary Locking Mechanism Of Optical Contacts (Connector Side)

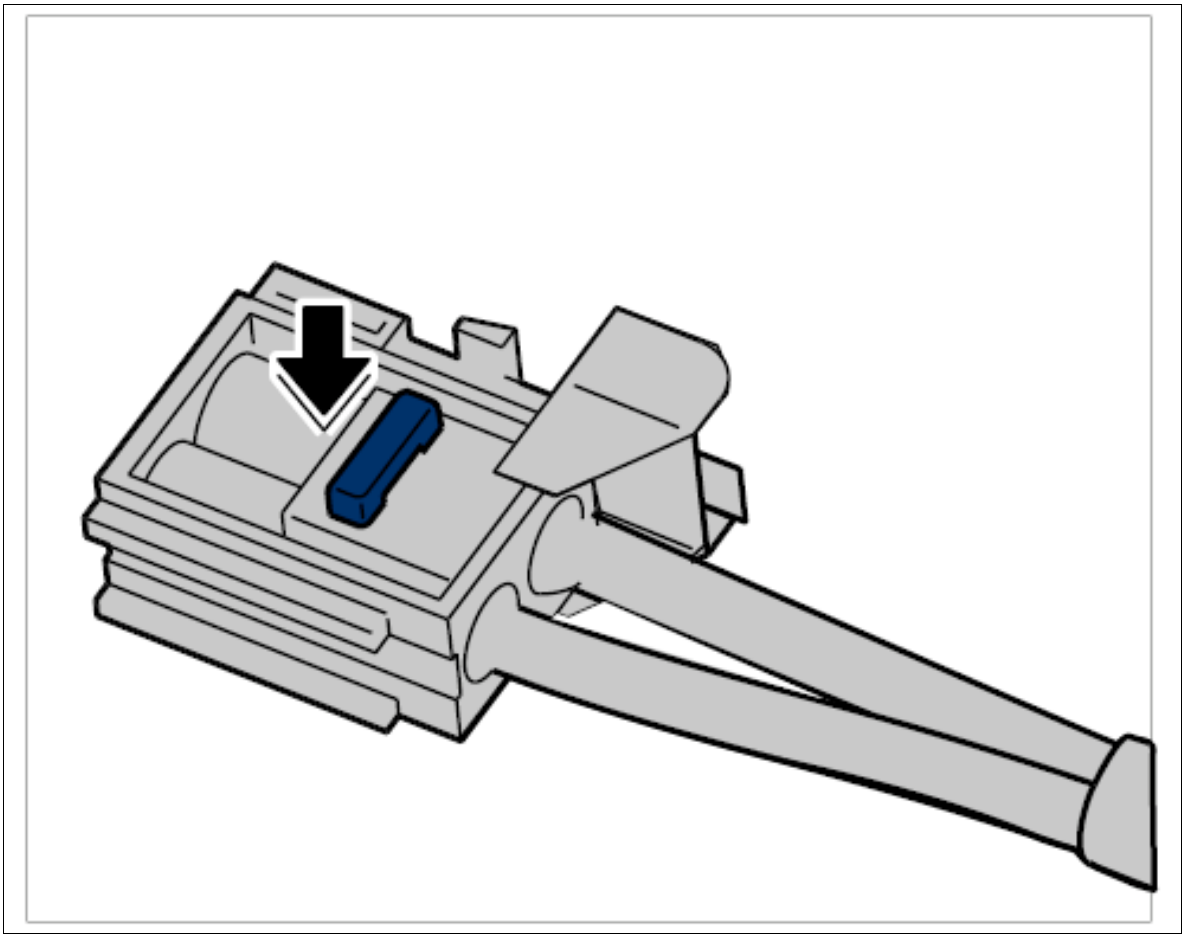

Courtesy of PORSCHE CARS NORTH AMERICA, INC.

WM 977223 INSTALLING OPTICAL WAVEGUIDE (PCM TO LOUDSPEAKER BOOSTER AND TV TUNER) (ALL MODELS) > INSTALLING OPTICAL WAVEGUIDE (PCM TO LOUDSPEAKER BOOSTER AND TV TUNER) > INSTALLING OPTICAL WAVEGUIDE (PCM TO LOUDSPEAKER BOOSTER AND TV TUNER)

Information

- The new lines will be secured to the fastening points for the old lines.
- The old wire harness remains installed in the vehicle.
- The old wire harness will only be disconnected/unplugged directly at the connected components.

Information

- When installing the wire harness, make sure the insulation of the line is not damaged.

Information

The range of spare parts available for optical waveguides depends on the vehicle equipment. Depending

on the vehicle equipment, there is a specific set containing the individual optical waveguides.

Select the required optical waveguide and remove it from the set.

Information

Before routing a new optical waveguide:

- Visually check the locks, connector housing and contacts for damage.
- Replace damaged parts if necessary.

1. Cut off optical contacts of the damaged optical waveguide, isolate it and tie it to the main wire harness.
2. Route new optical waveguide along the main wire harness, guide it through the existing cable ducts and tie it to the main wire harness using tie-wraps.
3. Plug electric plug connection **-1-** for the optical waveguide into the compact connector **-2-** for the TV tuner **-A-** until the electric plug connection engages securely.

   Fig 1: Plugging Electric Plug Connection Into TV Tuner Compact Connector

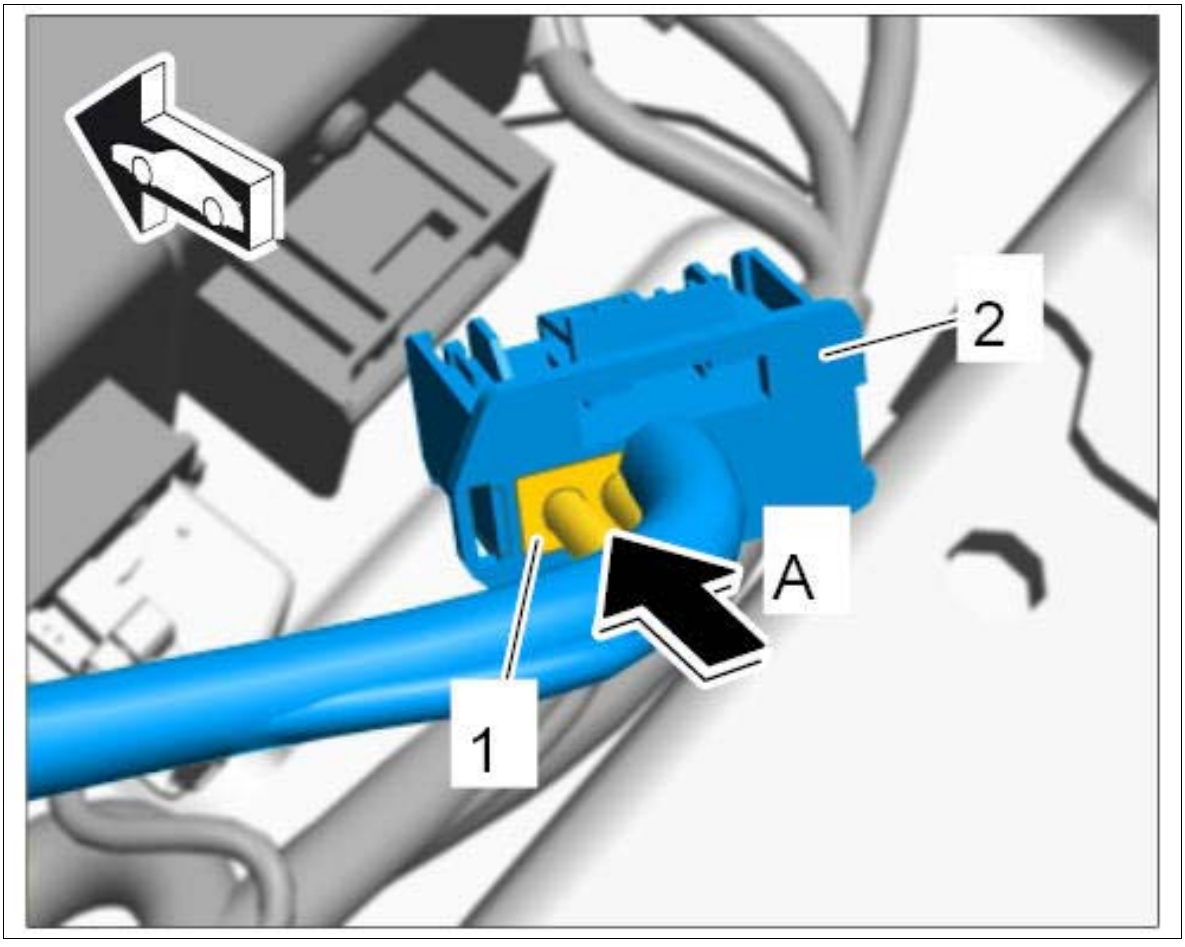

Courtesy of PORSCHE CARS NORTH AMERICA, INC.

4. Plug electric plug connection **-1-** for the optical waveguide into the compact connector **-2-** for the PCM display and operator control unit **-A-** until the electric plug connection engages securely.

Fig 2: Plugging Electric Plug Connection Into PCM Compact Connector

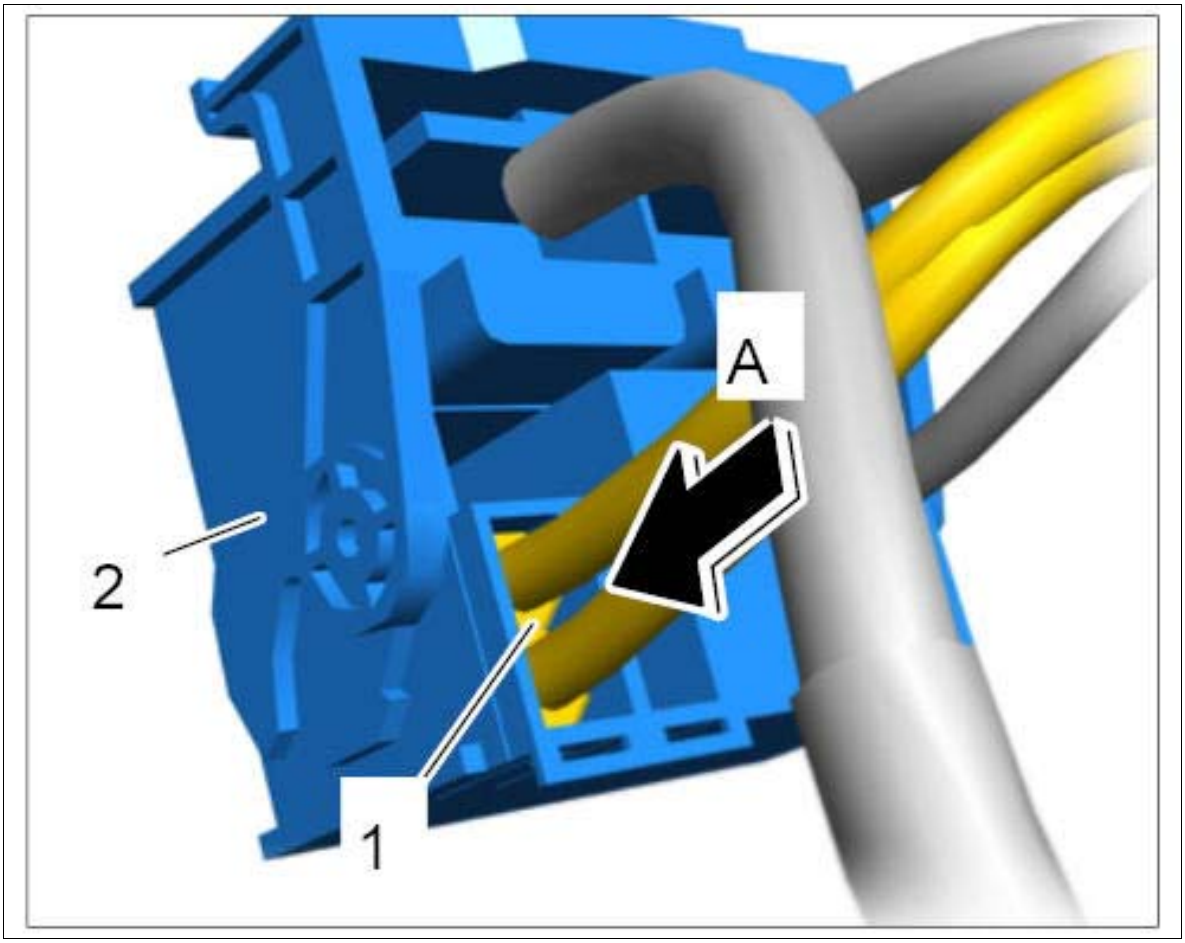

Courtesy of PORSCHE CARS NORTH AMERICA, INC.

WM 977223 INSTALLING OPTICAL WAVEGUIDE (PCM TO LOUDSPEAKER BOOSTER AND TV TUNER) (ALL MODELS) > SUBSEQUENT WORK

1. Fit carpet → INSTALLING CARPET .
2. Install rear inner door sill trim at the left → INSTALLING REAR INNER DOOR SILL TRIM .
3. Install side trim panel for rear luggage compartment at the left → INSTALLING SIDE TRIM PANEL FOR REAR LUGGAGE COMPARTMENT .
4. Install TV tuner with TV tuner holder → INSTALLING TV TUNER .
5. Install PCM display and operator control unit → INSTALLING PCM DISPLAY AND OPERATOR CONTROL UNIT .

WM 977223 INSTALLING OPTICAL WAVE GUIDE (PCM TO LOUDSPEAKER BOOSTER) (ALL MODELS) > TOOLS

Designation	Type	Number	Description	
press-out and unlocking tools for tab and round plug connectors of all sizes	Commercially available tool	Nr.155		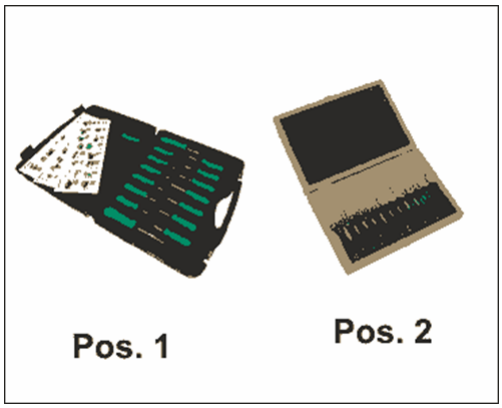

WM 977223 INSTALLING OPTICAL WAVE GUIDE (PCM TO LOUDSPEAKER BOOSTER) (ALL MODELS) > INFORMATION > MOST CONTROL UNITS A - B

A. PCM display and operator control unit

B. Loudspeaker booster

Fig 1: Identifying MOST Control Units (Shown On Panamera)

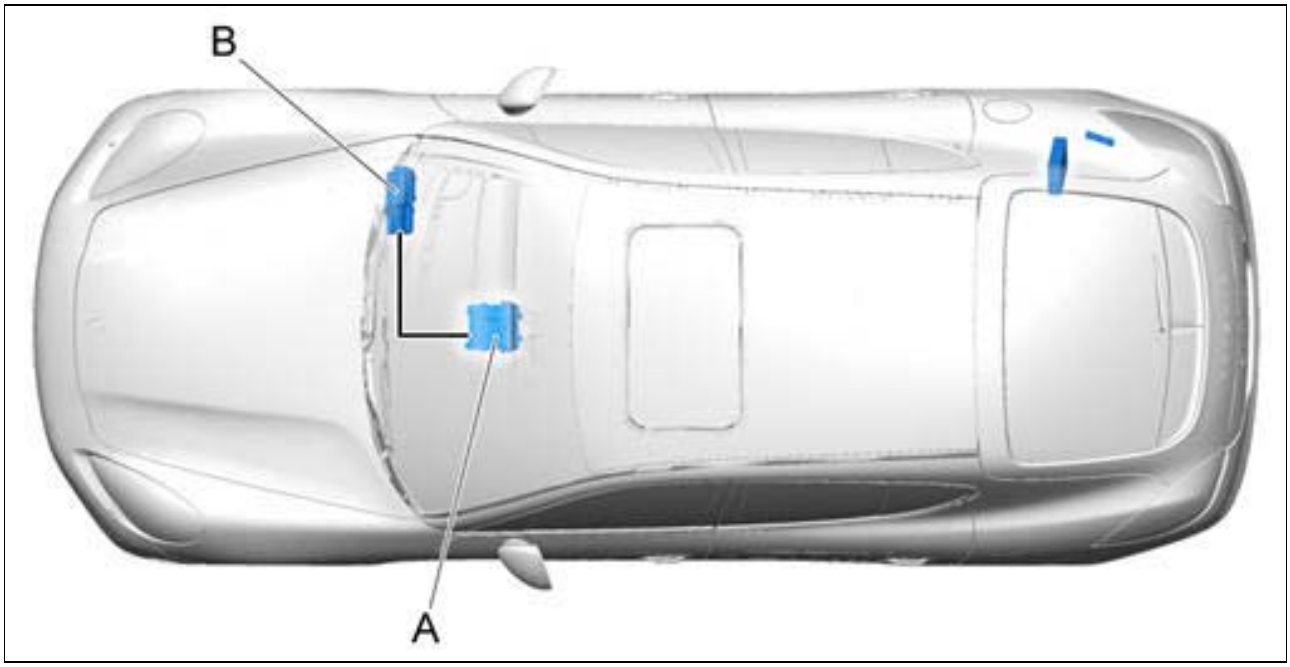

Courtesy of PORSCHE CARS NORTH AMERICA, INC.

WM 977223 INSTALLING OPTICAL WAVE GUIDE (PCM TO LOUDSPEAKER BOOSTER) (ALL MODELS) > PRELIMINARY WORK

1. Remove PCM display and operator control unit. → 911019 REMOVING AND INSTALLING PCM DISPLAY AND OPERATOR CONTROL UNIT .
2. Remove side trim panel for rear luggage compartment at the left. → 700319 REMOVING AND INSTALLING SIDE TRIM PANEL FOR REAR LUGGAGE COMPARTMENT .
3. Remove loudspeaker booster with holder for loudspeaker booster. → 914419 REMOVING AND INSTALLING LOUDSPEAKER BOOSTER .
4. Remove rear inner door sill trim at the left. → 680519 REMOVING AND INSTALLING REAR INNER DOOR SILL TRIM .
5. Remove carpet. → 704119 REMOVING AND INSTALLING CARPET .

WM 977223 INSTALLING OPTICAL WAVE GUIDE (PCM TO LOUDSPEAKER BOOSTER) (ALL MODELS) > INSTALLING OPTICAL WAVEGUIDE (PCM TO LOUDSPEAKER BOOSTER) > DISCONNECTING OPTICAL WAVEGUIDE (PCM TO LOUDSPEAKER BOOSTER)

Information

Observe the general information on optical waveguides. → General information on optical waveguides - MOST bus

Information

Before routing a new optical waveguide:

- Visually check the locks, connector housing and contacts for damage.
- Replace damaged parts if necessary.

1. Release electric plug connection **-1-** for optical waveguide at the compact connector **-2-** for the PCM display and operator control unit **-B-** and disconnect it.

Fig 1: Disconnecting Electric Plug Connection From PCM Compact Connector

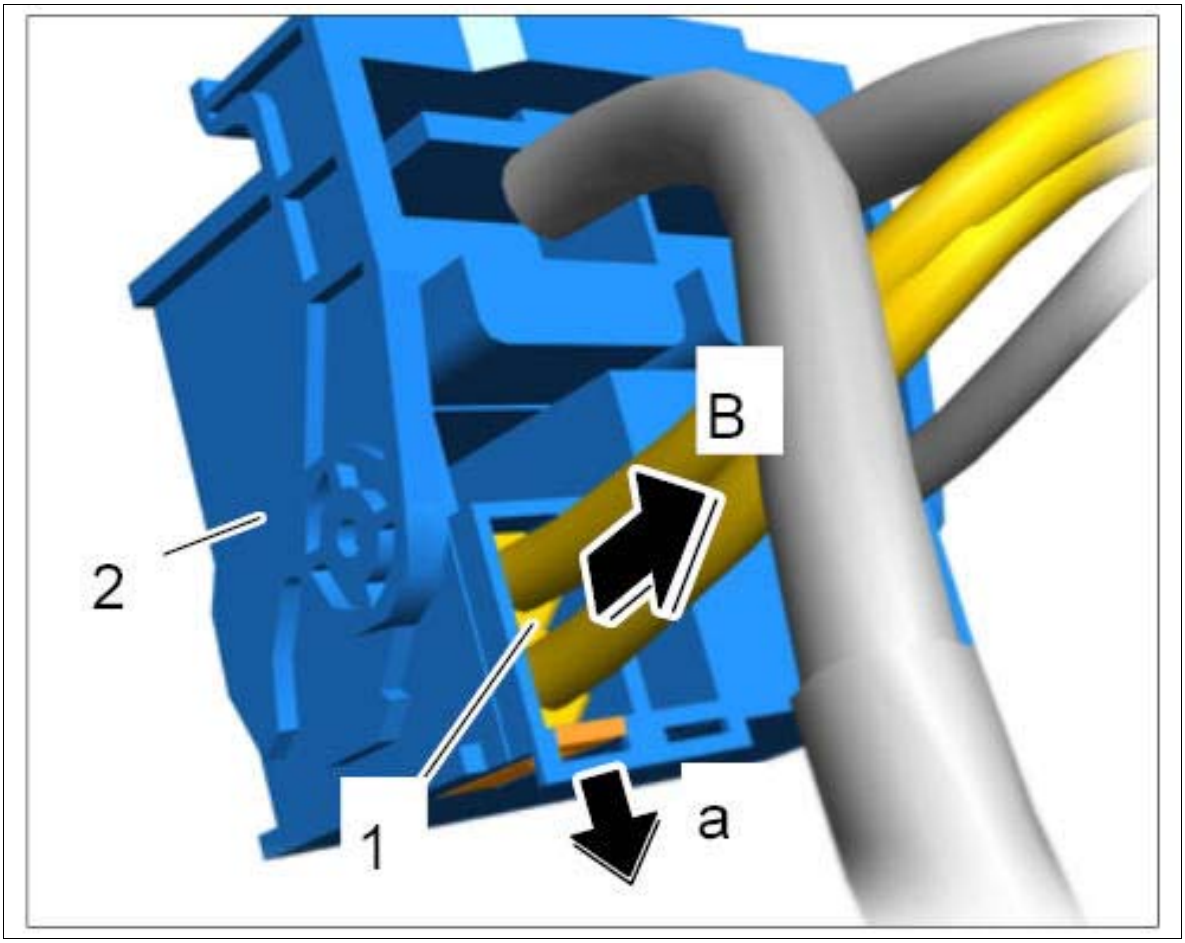

Courtesy of PORSCHE CARS NORTH AMERICA, INC.

WM 977223 INSTALLING OPTICAL WAVE GUIDE (PCM TO LOUDSPEAKER BOOSTER) (ALL MODELS) > INSTALLING OPTICAL WAVEGUIDE (PCM TO LOUDSPEAKER BOOSTER) > REMOVING OPTICAL CONTACTS ON CONNECTOR SIDE

1. Open the secondary locking mechanism using **press-out and unlocking tools for tab and round plug connectors of all sizes Nr.155.** Insert the tool into the opening provided and lift the locking mechanism. The locking mechanism engages in the upper position.

Fig 1: Removing Secondary Locking Mechanism Of Optical Contacts (Connector Side)

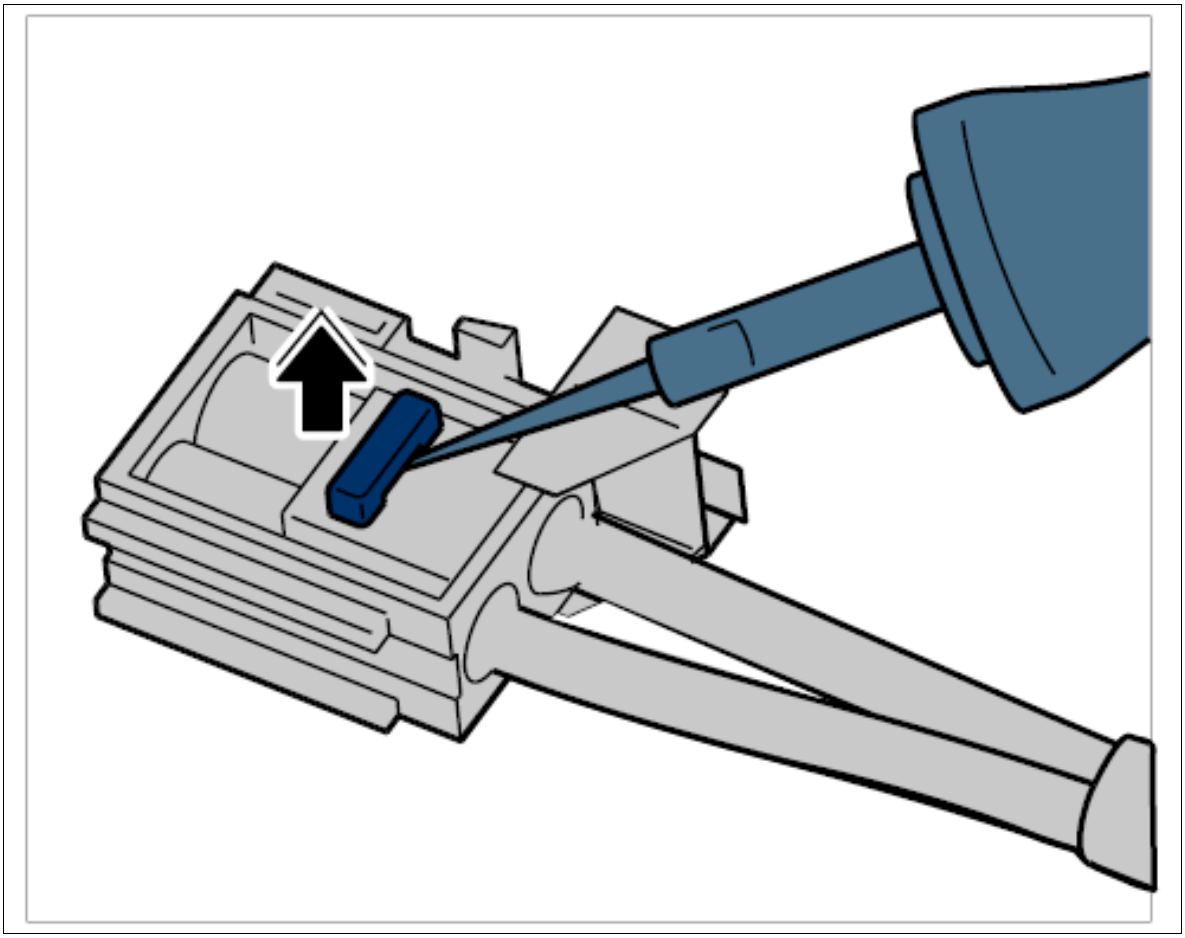

Courtesy of PORSCHE CARS NORTH AMERICA, INC.

2. **Press-out and unlocking tools for tab and round plug connectors of all sizes Nr.155** must be positioned on the primary locking mechanism. Then lift the locking mechanism.

    A. Optical contact, grey

    B. Optical contact, black

Fig 2: Removing Primary Locking Mechanism Of Optical Contacts (Connector Side)

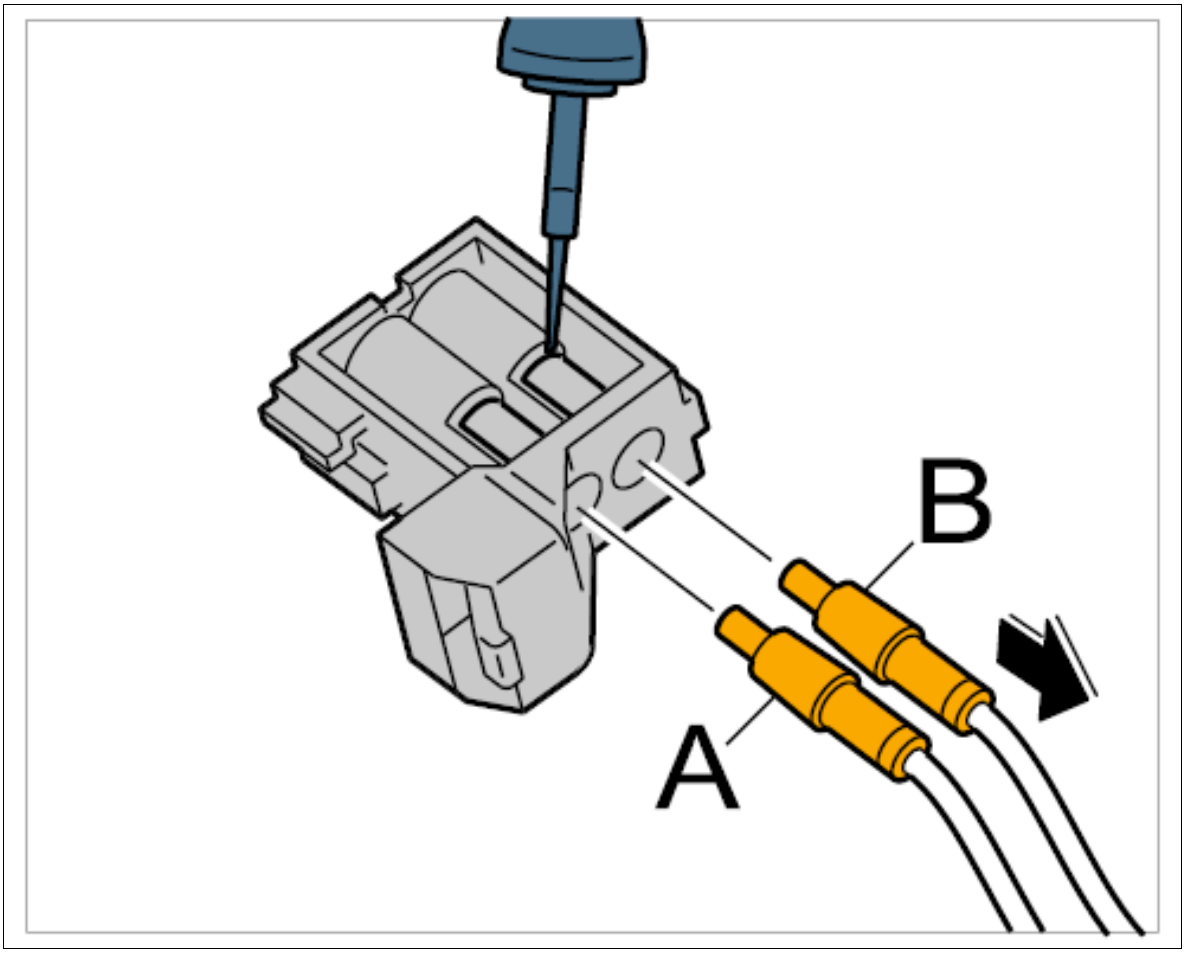

Courtesy of PORSCHE CARS NORTH AMERICA, INC.

3. Carefully pull on the optical waveguides **-A and B-** in **-direction of arrow-** . If it is not possible to pull out the optical waveguide, check again that the secondary locking mechanism is completely released and that the primary locking mechanism is raised sufficiently.

Perform visual inspection of locking mechanisms, connector housings and contacts for possible damage, and exchange the damaged parts, if necessary.

WM 977223 INSTALLING OPTICAL WAVE GUIDE (PCM TO LOUDSPEAKER BOOSTER) (ALL MODELS) > INSTALLING OPTICAL WAVEGUIDE (PCM TO LOUDSPEAKER BOOSTER) > INSTALLING OPTICAL CONTACTS ON CONNECTOR SIDE

Remove the dust boot right before plugging.

Check the proper condition of the contacts.

1. Push optical contacts **-A and B-** into the connectors until they engage securely.

    A. Optical contact, grey

B. Optical contact, black

Fig 1: Installing Primary Locking Mechanism Of Optical Contacts (Connector Side)

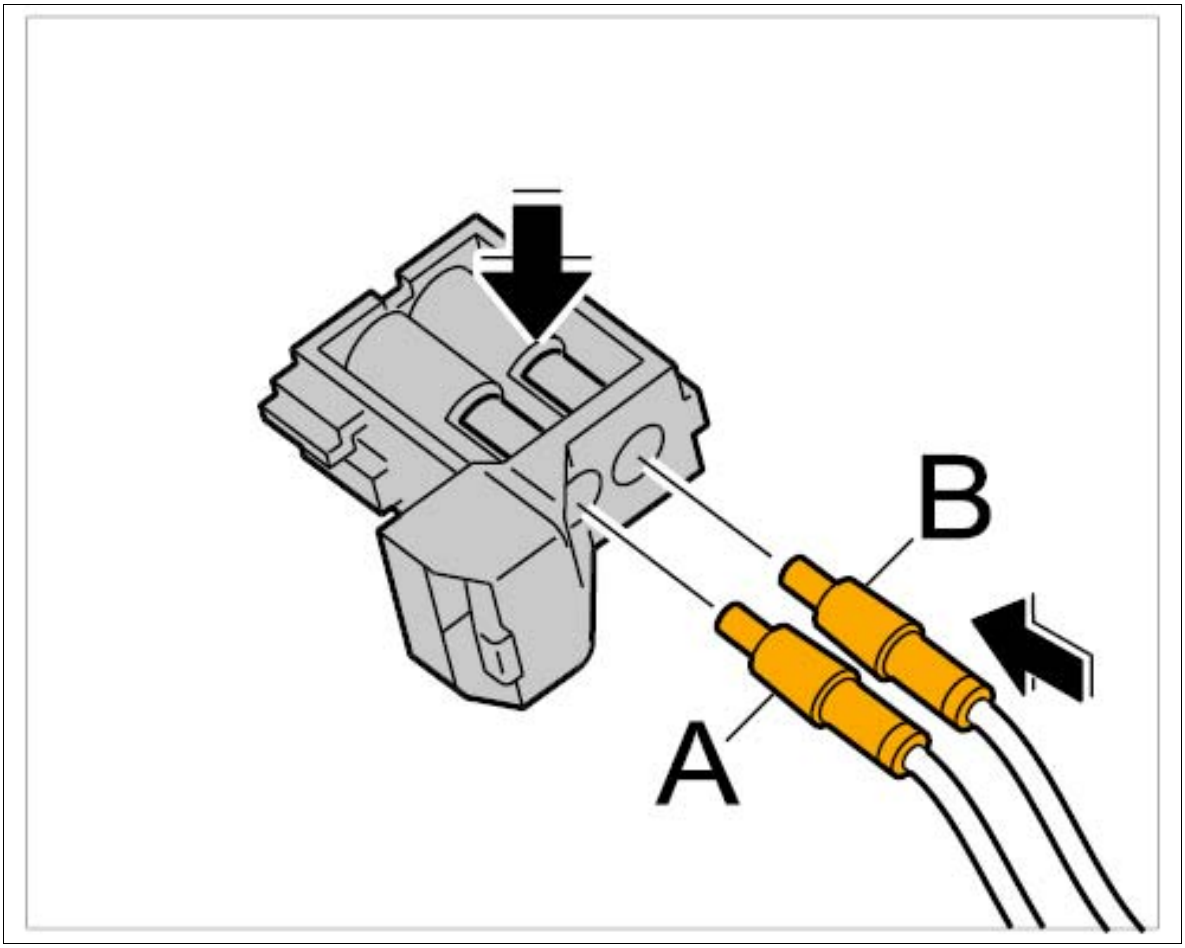

Courtesy of PORSCHE CARS NORTH AMERICA, INC.

2. Close the secondary locking mechanism and check that the optical contacts are seated securely.

Fig 2: Installing Secondary Locking Mechanism Of Optical Contacts (Connector Side)

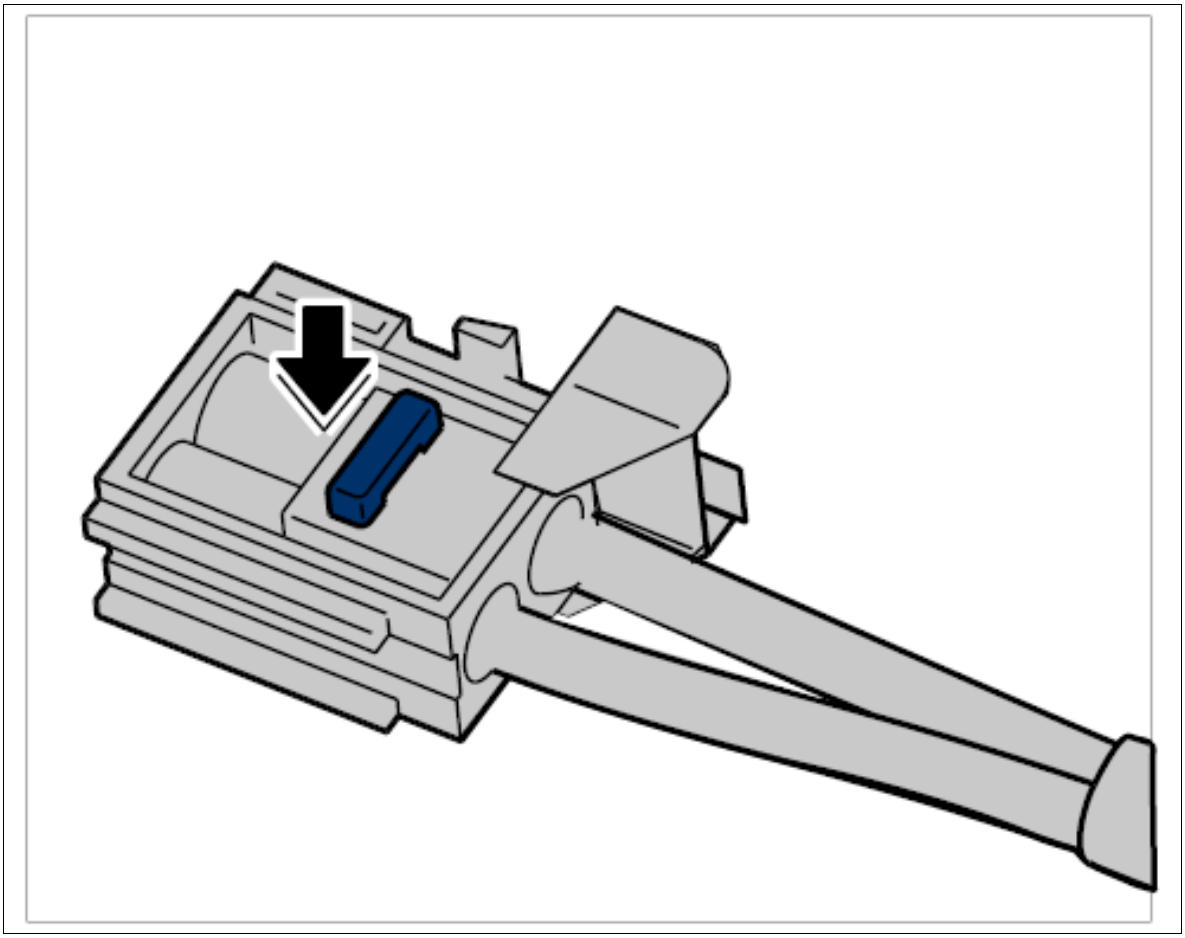

Courtesy of PORSCHE CARS NORTH AMERICA, INC.

WM 977223 INSTALLING OPTICAL WAVE GUIDE (PCM TO LOUDSPEAKER BOOSTER) (ALL MODELS) > INSTALLING OPTICAL WAVEGUIDE (PCM TO LOUDSPEAKER BOOSTER) > INSTALLING OPTICAL WAVEGUIDE (PCM TO LOUDSPEAKER BOOSTER)

Information

- The new lines will be secured to the fastening points for the old lines.
- The old wire harness remains installed in the vehicle.
- The old wire harness will only be disconnected/unplugged directly at the connected components.

Information

- When installing the wire harness, make sure the insulation of the line is not damaged.

Information

The range of spare parts available for optical waveguides depends on the vehicle equipment. Depending

on the vehicle equipment, there is a specific set containing the individual optical waveguides.

Select the required optical waveguide and remove it from the set.

Information

Before routing a new optical waveguide:

- Visually check the locks, connector housing and contacts for damage.
- Replace damaged parts if necessary.

1. Cut off optical contacts of the damaged optical waveguide, isolate it and tie it to the main wire harness.
2. Route new optical waveguide along the main wire harness, guide it through the existing cable ducts and tie it to the main wire harness using tie-wraps.
3. Plug electric plug connection **-1-** for the optical waveguide into the compact connector **-2-** for the PCM display and operator control unit **-A-** until the electric plug connection engages securely.

   Fig 1: Plugging Electric Plug Connection Into PCM Compact Connector

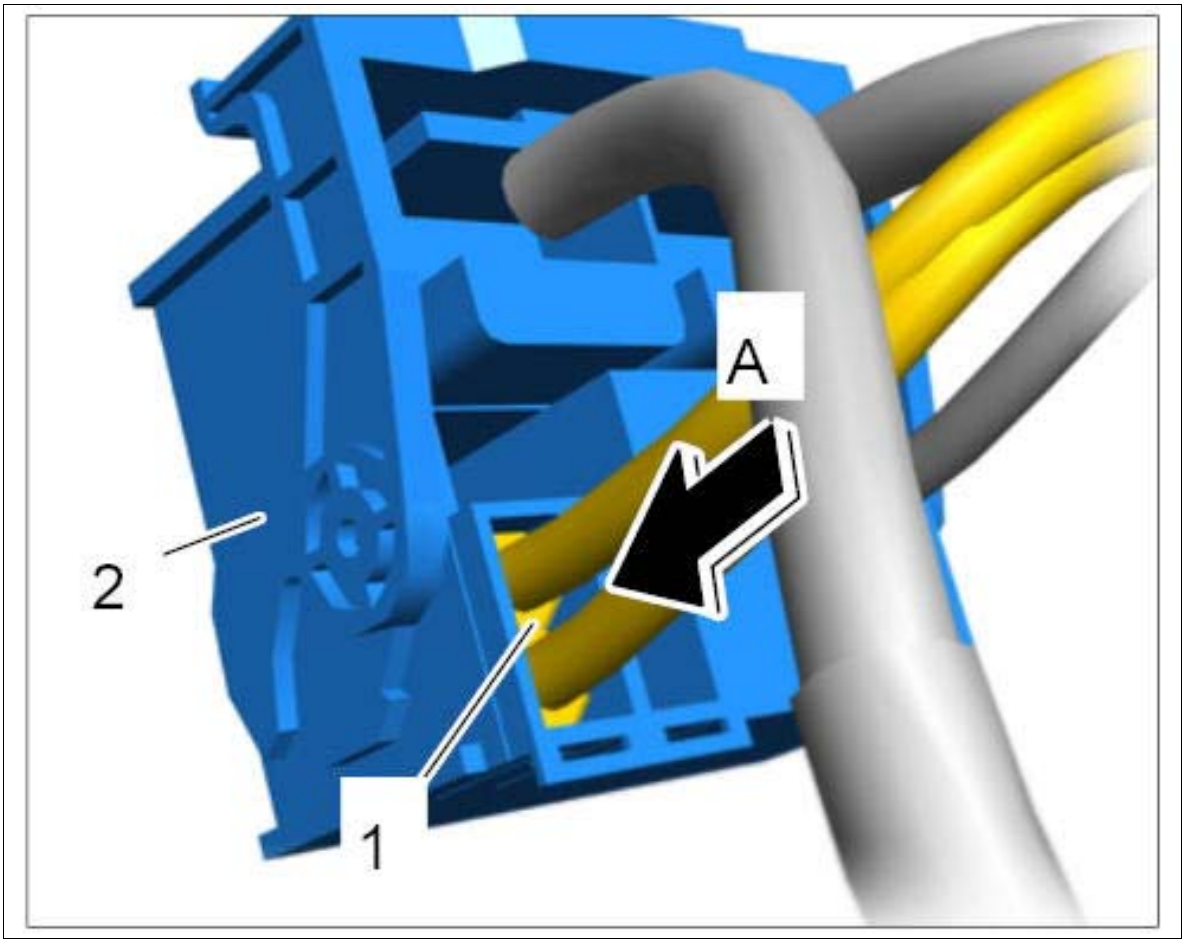

Courtesy of PORSCHE CARS NORTH AMERICA, INC.

WM 977223 INSTALLING OPTICAL WAVE GUIDE (PCM TO LOUDSPEAKER BOOSTER) (ALL MODELS) > SUBSEQUENT WORK

1. Fit carpet → INSTALLING CARPET .
2. Install rear inner door sill trim at the left → INSTALLING REAR INNER DOOR SILL TRIM .
3. Install side trim panel for rear luggage compartment at the left → INSTALLING SIDE TRIM PANEL FOR REAR LUGGAGE COMPARTMENT .
4. Install loudspeaker booster with holder for loudspeaker booster → INSTALLING LOUDSPEAKER BOOSTER .
5. Install PCM display and operator control unit → INSTALLING PCM DISPLAY AND OPERATOR CONTROL UNIT .

WM 978409 LOOSENING AND SECURING FUSE BOX (ALL MODELS) > TECHNICAL VALUES

Location	Description	Type	Basic value	Tolerance 1	Tolerance 2
Fuse box in luggage compartment to body	Combined nut, M6	Tightening torque	3 Nm (2 ftlb.)		
Positive cable to fuse box in cowl panel	Nut, M6	Tightening torque	9 Nm (6.5 ftlb.)		

WM 978409 LOOSENING AND SECURING FUSE BOX (ALL MODELS) > PRELIMINARY WORK FOR LOOSENING AND SECURING FUSE BOX IN THE COWL PANEL

1. Disconnect ground line on the battery. → 2X00IN WORK INSTRUCTIONS AFTER DISCONNECTING THE BATTERY
2. Remove DME control unit → 247019 REMOVING AND INSTALLING DME CONTROL UNIT .

WM 978409 LOOSENING AND SECURING FUSE BOX (ALL MODELS) > PRELIMINARY WORK FOR LOOSENING AND SECURING FUSE BOX IN THE DASHBOARD

1. Disconnect ground line on the battery. → 2X00IN WORK INSTRUCTIONS AFTER DISCONNECTING THE BATTERY .
2. Remove dashboard cover. → 701619 REMOVING AND INSTALLING DASHBOARD COVER .
3. Remove trim panel under dashboard at the left. → 70191901 REMOVING AND INSTALLING

TRIM PANEL UNDER DASHBOARD AT THE LEFT .

WM 978409 LOOSENING AND SECURING FUSE BOX (ALL MODELS) > PRELIMINARY WORK FOR LOOSENING AND SECURING FUSE BOX IN THE LUGGAGE COMPARTMENT

1. Disconnect ground line on the battery. → 2X00IN WORK INSTRUCTIONS AFTER DISCONNECTING THE BATTERY .
2. Remove inner part of side trim panel for rear luggage compartment at the right. → 700319 REMOVING AND INSTALLING SIDE TRIM PANEL FOR REAR LUGGAGE COMPARTMENT .

WM 978409 LOOSENING AND SECURING FUSE BOX (ALL MODELS) > INFORMATION

Fig 1: Identifying Fuse Box Installation Position

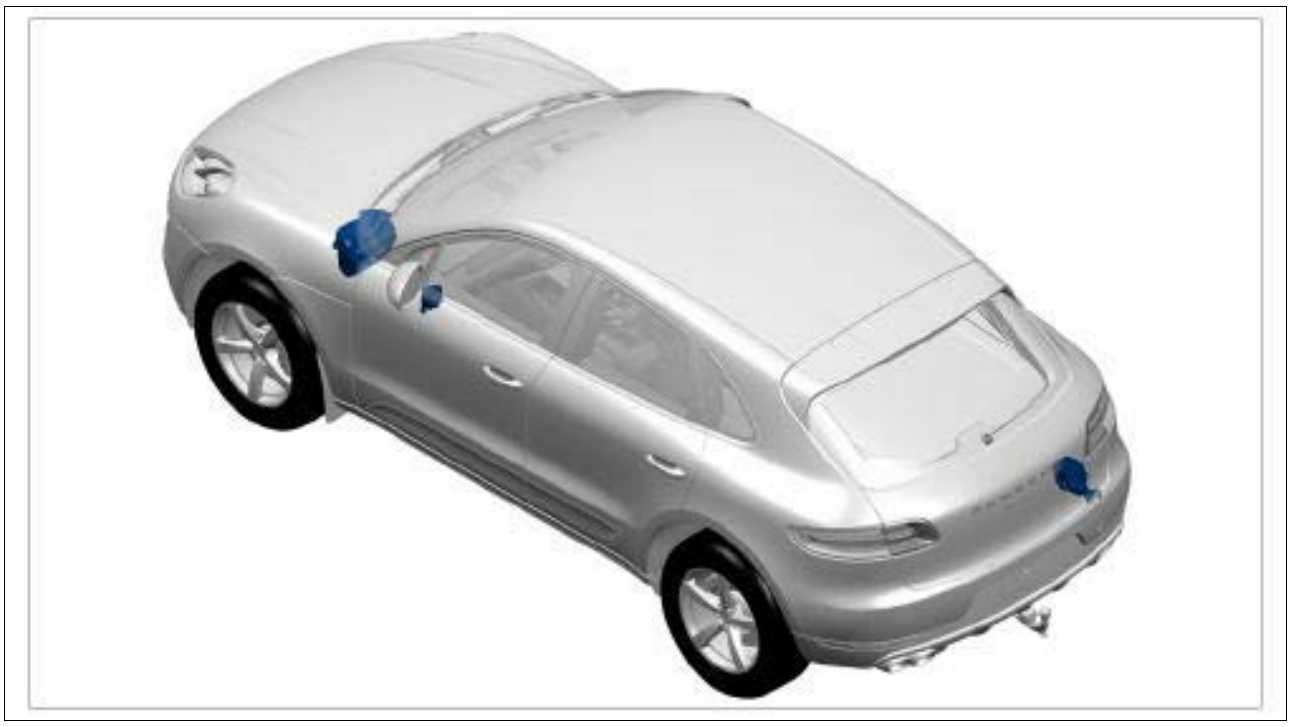

Courtesy of PORSCHE CARS NORTH AMERICA, INC.

1. Fuse box in cowl panel
2. Fuse box in dashboard
3. Fuse box in luggage compartment

WM 978409 LOOSENING AND SECURING FUSE BOX (ALL MODELS) > LOOSENING

FUSE BOX IN THE COWL PANEL

NOTE: Voltage peaks

- *Risk of damage to load or to the control unit*

→ Remove the ignition key and switch off load before disconnecting or removing load.

1. Release and disconnect electric plug connections **-1-** .
2. Screw off fastening nut **-2-** and remove positive cable from the fuse box **-3-** .

Fig 1: Disconnecting Electric Plug Connections And Positive Cable

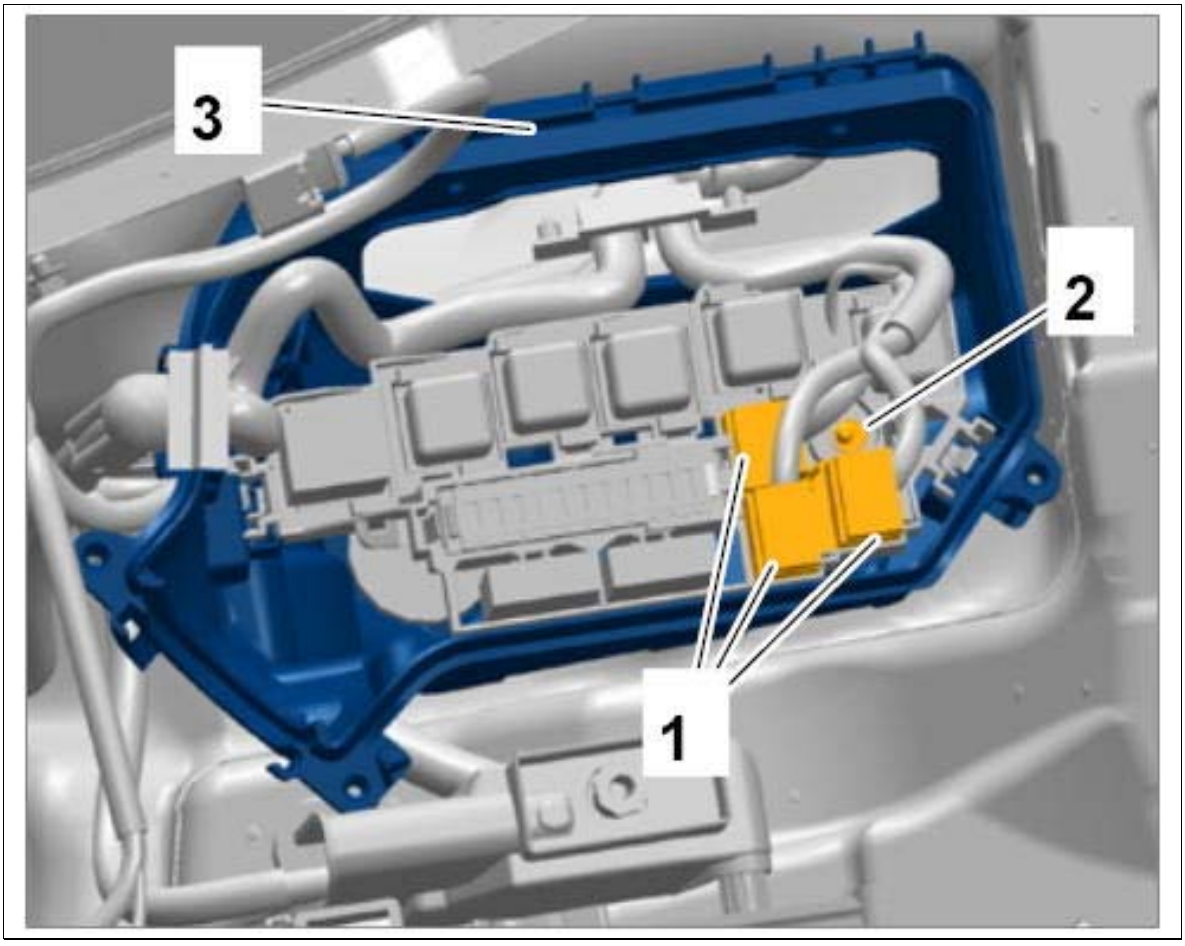

Courtesy of PORSCHE CARS NORTH AMERICA, INC.

3. Release fuse box **-1-** at the left and right **-a-** and remove it.

Fig 2: Loosening Fuse Box In Cowl Panel

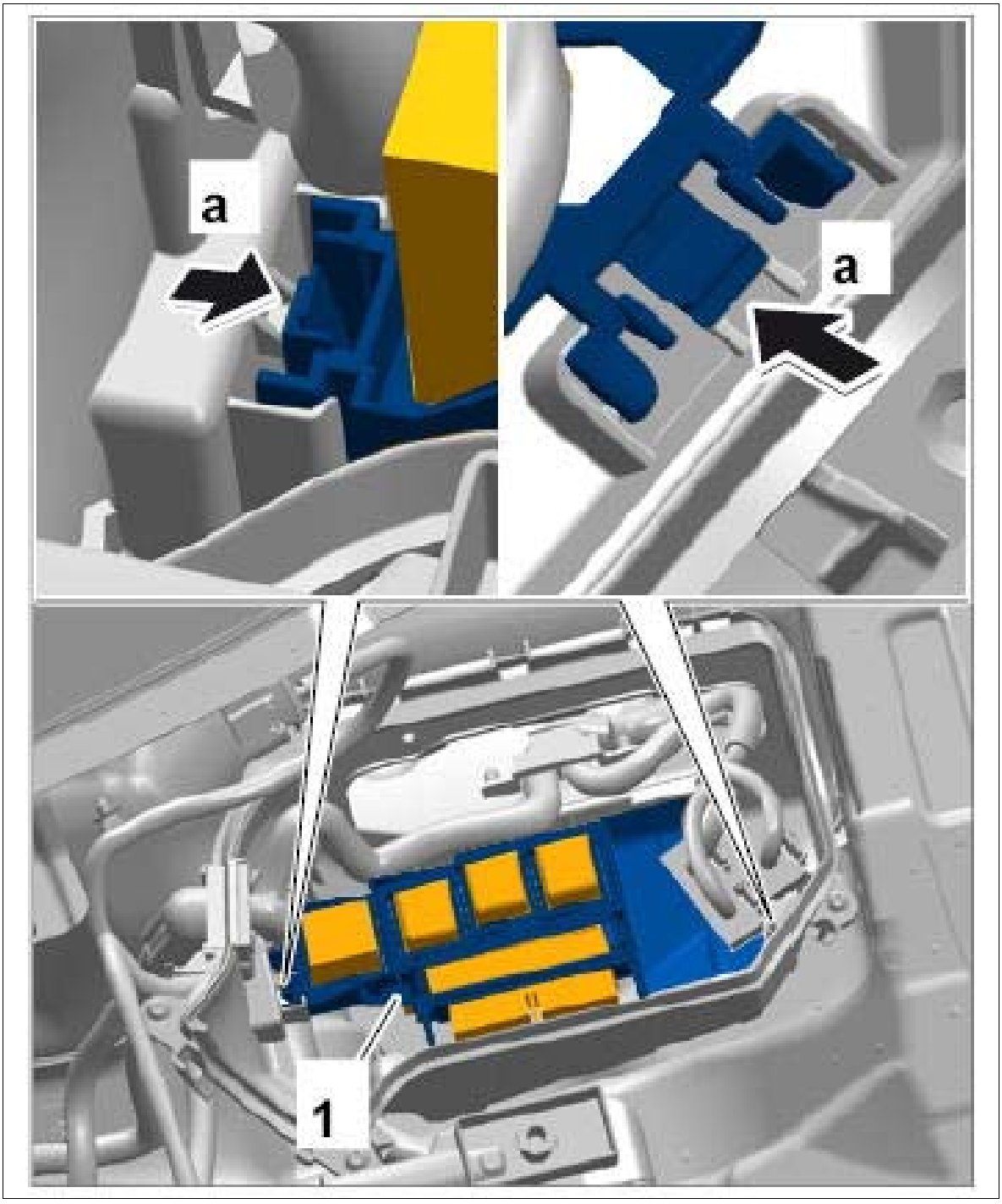

Courtesy of PORSCHE CARS NORTH AMERICA, INC.

WM 978409 LOOSENING AND SECURING FUSE BOX (ALL MODELS) > LOOSENING FUSE BOX IN THE DASHBOARD

NOTE: Voltage peaks

- *Risk of damage to load or to the control unit*

→ Remove the ignition key and switch off load before disconnecting or removing load.

1. Disengage fuse box **-1-** using a screwdriver **-a-** and pull it down and out of the dashboard **-b-** .

   Fig 1: Loosening Fuse Box In Dashboard

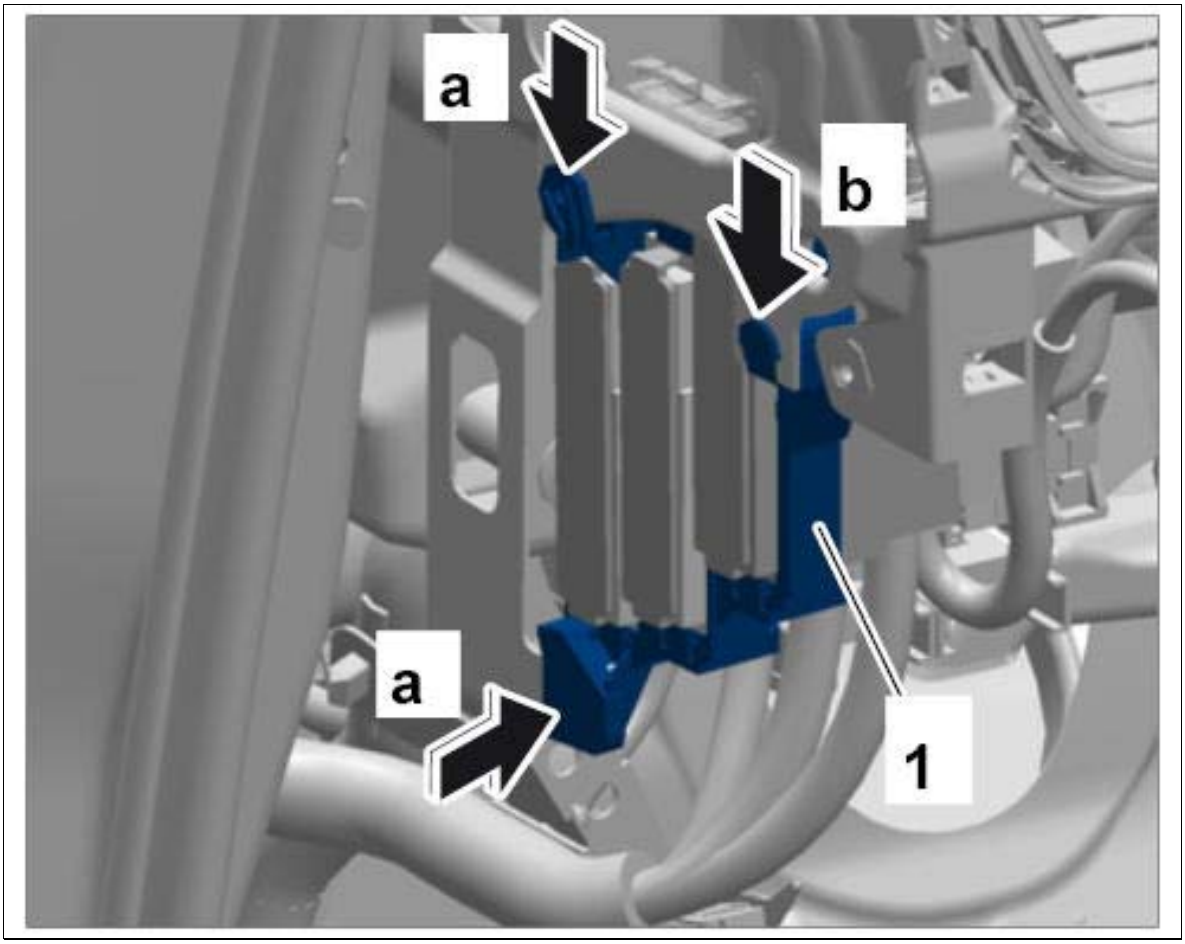

Courtesy of PORSCHE CARS NORTH AMERICA, INC.

WM 978409 LOOSENING AND SECURING FUSE BOX (ALL MODELS) > LOOSENING FUSE BOX IN THE LUGGAGE COMPARTMENT

NOTE: Voltage peaks

- *Risk of damage to load or to the control unit*

→ Remove the ignition key and switch off load before disconnecting or removing load.

1. Screw off fastening nut **-1-** .

2. Pull the fuse box **-2-** to the right and out of the openings on the longitudinal member **-a-** .

Fig 1: Loosening Fuse Box In Luggage Compartment

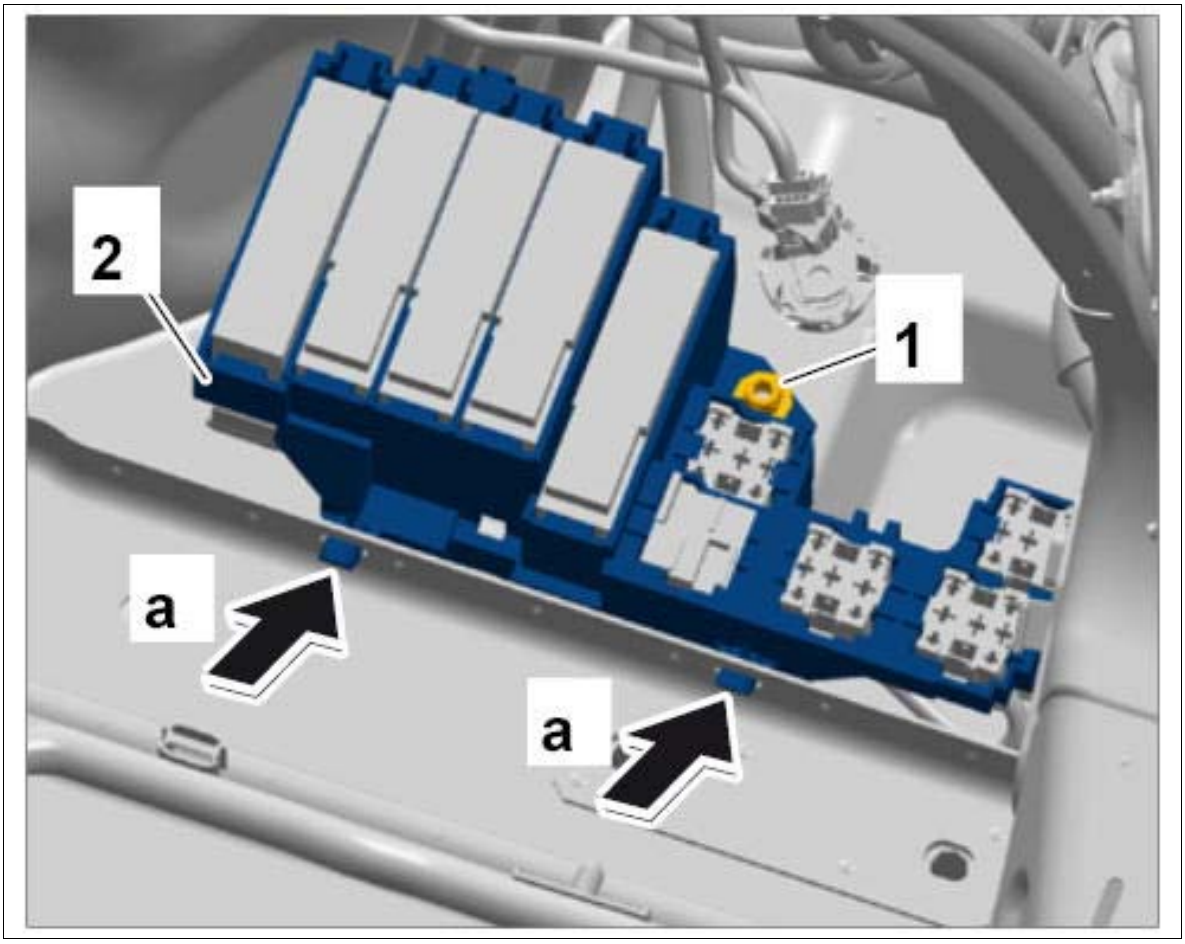

Courtesy of PORSCHE CARS NORTH AMERICA, INC.

WM 978409 LOOSENING AND SECURING FUSE BOX (ALL MODELS) > SECURING FUSE BOX IN THE COWL PANEL

1. The fuse box is secured in reverse order to the steps required for loosening it.
2. Tighten fastening nut on positive cable at the fuse box. **Tightening torque 9 Nm (6.5 ftlb.)**

WM 978409 LOOSENING AND SECURING FUSE BOX (ALL MODELS) > SECURING FUSE BOX IN THE DASHBOARD

1. The fuse box is secured in reverse order to the steps required for loosening it.

WM 978409 LOOSENING AND SECURING FUSE BOX (ALL MODELS) > SECURING FUSE BOX IN THE LUGGAGE COMPARTMENT

1. The fuse box is secured in reverse order to the steps required for loosening it.
2. Replace and tighten fastening nut securing fuse box to the body. **Tightening torque 3 Nm (2 ftlb.)**

WM 978409 LOOSENING AND SECURING FUSE BOX (ALL MODELS) > SUBSEQUENT WORK FOR LOOSENING AND SECURING FUSE BOX IN THE COWL PANEL

1. Install DME control unit → INSTALLING DME CONTROL UNIT .
2. Connect ground line to the battery → 2X00IN WORK INSTRUCTIONS AFTER DISCONNECTING THE BATTERY .

WM 978409 LOOSENING AND SECURING FUSE BOX (ALL MODELS) > SUBSEQUENT WORK FOR LOOSENING AND SECURING FUSE BOX IN THE DASHBOARD

1. Install trim panel under dashboard at the left → INSTALLING TRIM PANEL UNDER DASHBOARD AT THE LEFT .
2. Install dashboard cover → INSTALLING DASHBOARD TRIM PANEL .
3. Connect ground line to the battery → 2X00IN WORK INSTRUCTIONS AFTER DISCONNECTING THE BATTERY .

WM 978409 LOOSENING AND SECURING FUSE BOX (ALL MODELS) > SUBSEQUENT WORK FOR LOOSENING AND SECURING FUSE BOX IN THE LUGGAGE COMPARTMENT

1. Install inner part of side trim panel for rear luggage compartment at the right → INSTALLING SIDE TRIM PANEL FOR REAR LUGGAGE COMPARTMENT .
2. Connect ground line to the battery → 2X00IN WORK INSTRUCTIONS AFTER DISCONNECTING THE BATTERY .

WM 978919 REMOVING AND INSTALLING POWER DISTRIBUTOR (ALL MODELS) > TECHNICAL VALUES

Location	Description	Type	Basic value	Tolerance 1	Tolerance 2
Positive cable to power distributor	Nut, M8	Tightening torque	16 Nm (12 ftlb.)		

Positive cable to power distributor	Nut, M6	Tightening torque	7.5 Nm (5.5 ftlb.)		
Positive cable to power distributor	Screw, M6	Tightening torque	7.5 Nm (5.5 ftlb.)		

WM 978919 REMOVING AND INSTALLING POWER DISTRIBUTOR (ALL MODELS) > PRELIMINARY WORK

1. Disconnect ground lead on the battery. → 2X00IN WORK INSTRUCTIONS AFTER DISCONNECTING THE BATTERY

WM 978919 REMOVING AND INSTALLING POWER DISTRIBUTOR (ALL MODELS) > REMOVING POWER DISTRIBUTOR

WARNING: Incorrect handling of airbag units

- *Triggering of airbag unit.*
- *System faults can occur.*

→ Switch off ignition and remove ignition key or remote control (hand-held transmitter).

→ A power supply (e.g. battery charger) must not be connected to the external power supply/jump-lead starting terminals.

→ Disconnect the battery and insulate the ground strap so that all contact with a ground carrier is avoided.

→ Wait 1 minute after disconnecting the battery.

→ Only pull off connector on the triggering unit after the waiting time has elapsed.

→ Make sure that no foreign objects are located in front of the airbag unit during installation.

→ Replace damaged parts during removal.

→ Always position airbag units so that the blow-out opening is facing upwards, e.g. crest on driver's airbag.

→ Do not position anything on the airbag units.

→ If removed for an extended period, the airbag units must be stored in a safe place.

→ Airbag units must not come into contact with grease, oil, detergents, liquids, or similar substances.

→ Do not expose airbag units to temperatures above 90°.

→ Do not remove the short-circuit spring on the plug-in contacts.

→ Ignition and preparations may only be carried out by skilled staff, supervised by a second responsible person.

→ Before disposal, the airbag unit must be rendered harmless by electrical ignition performed in accordance with all precautionary measures, thereby preventing it from being used incorrectly.

1. Open cover **-1-** on the positive terminal.
2. Loosen terminal clamp **-2-** for the power distributor from the battery terminal.

Fig 1: Loosening Terminal Clamp On Positive Terminal

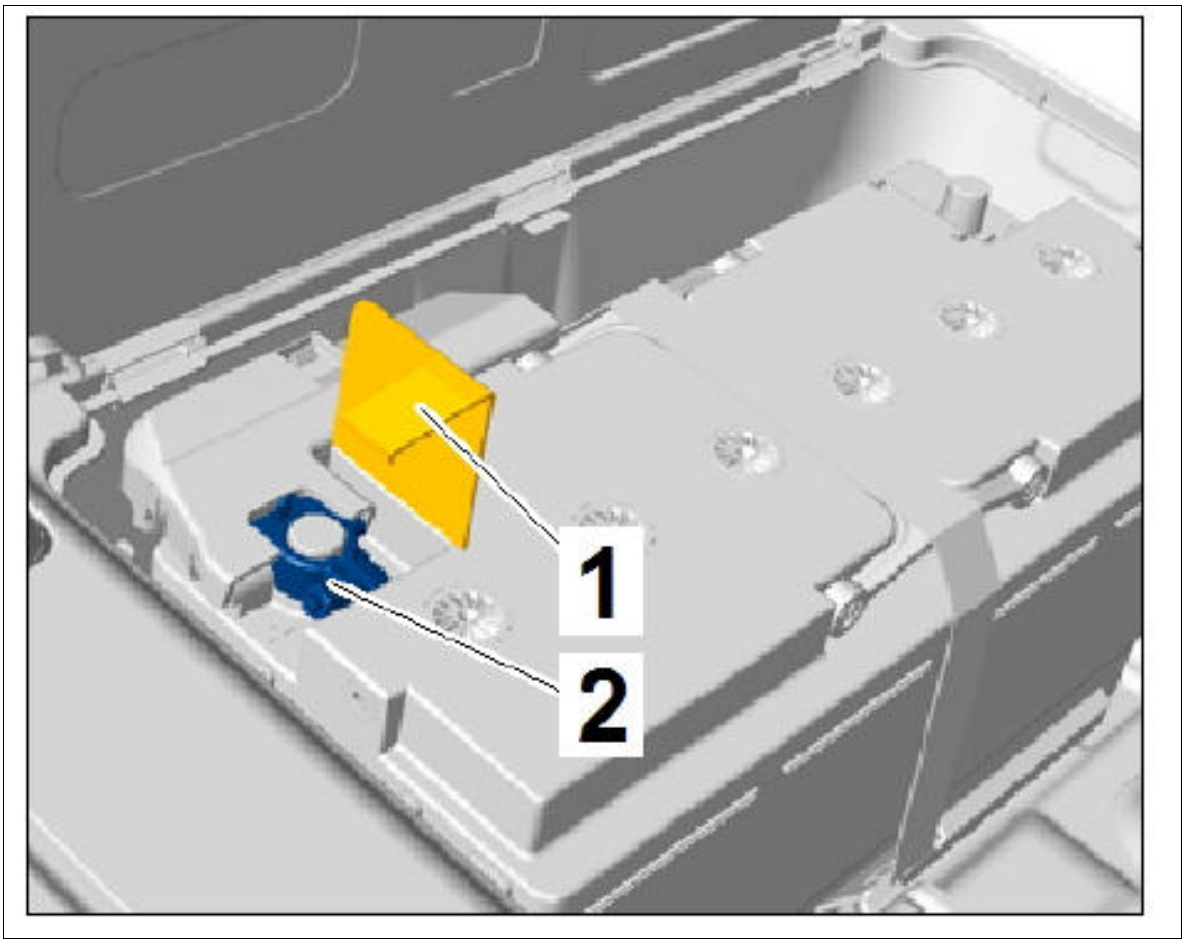

Courtesy of PORSCHE CARS NORTH AMERICA, INC.

3. Release cover **-1-** (**-a-**) and fold it up towards the rear.

Fig 2: Opening Cover

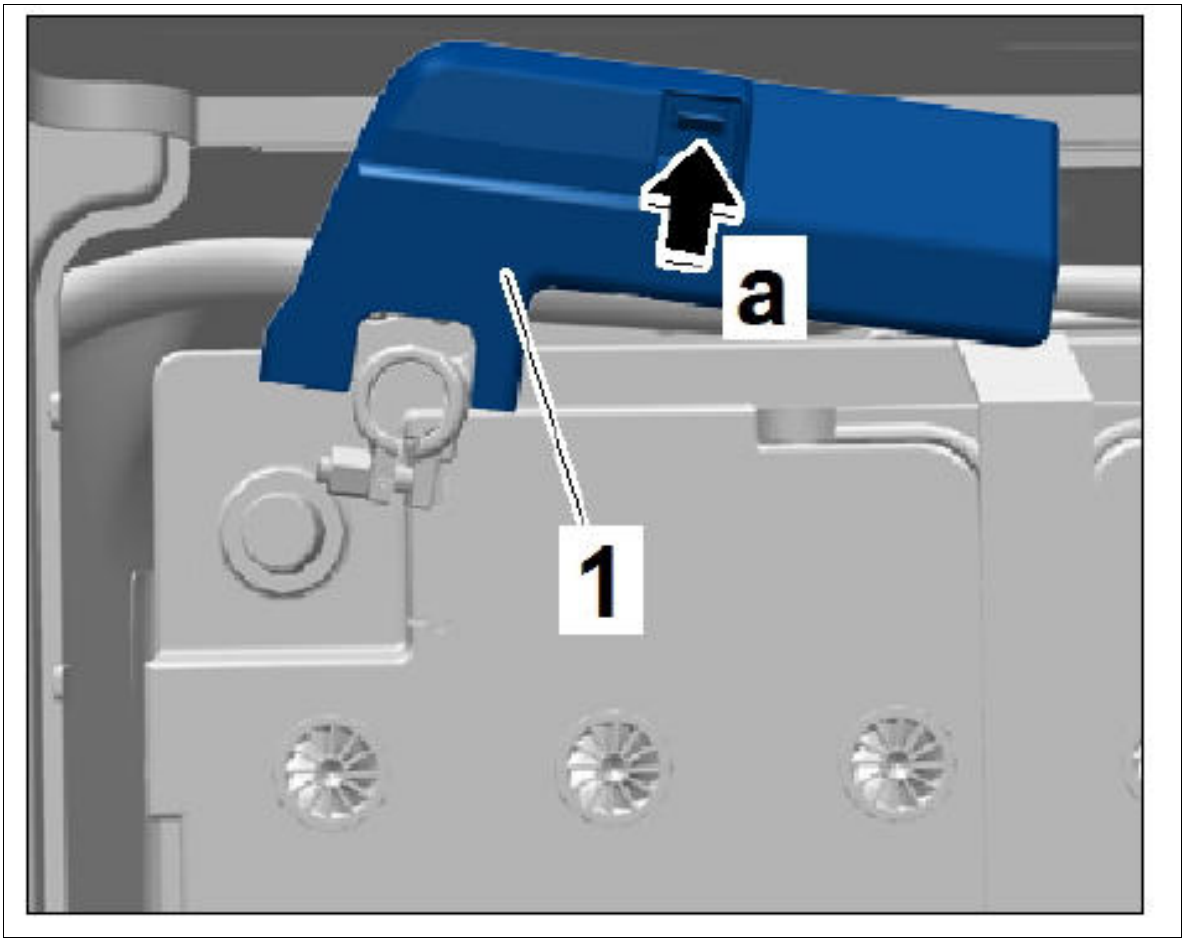

Courtesy of PORSCHE CARS NORTH AMERICA, INC.

4. Unscrew fastening screw **-1-** and remove electric line.
5. Unscrew fastening nuts **-2-** and remove ground lines.

Fig 3: Disconnecting Electric Lines

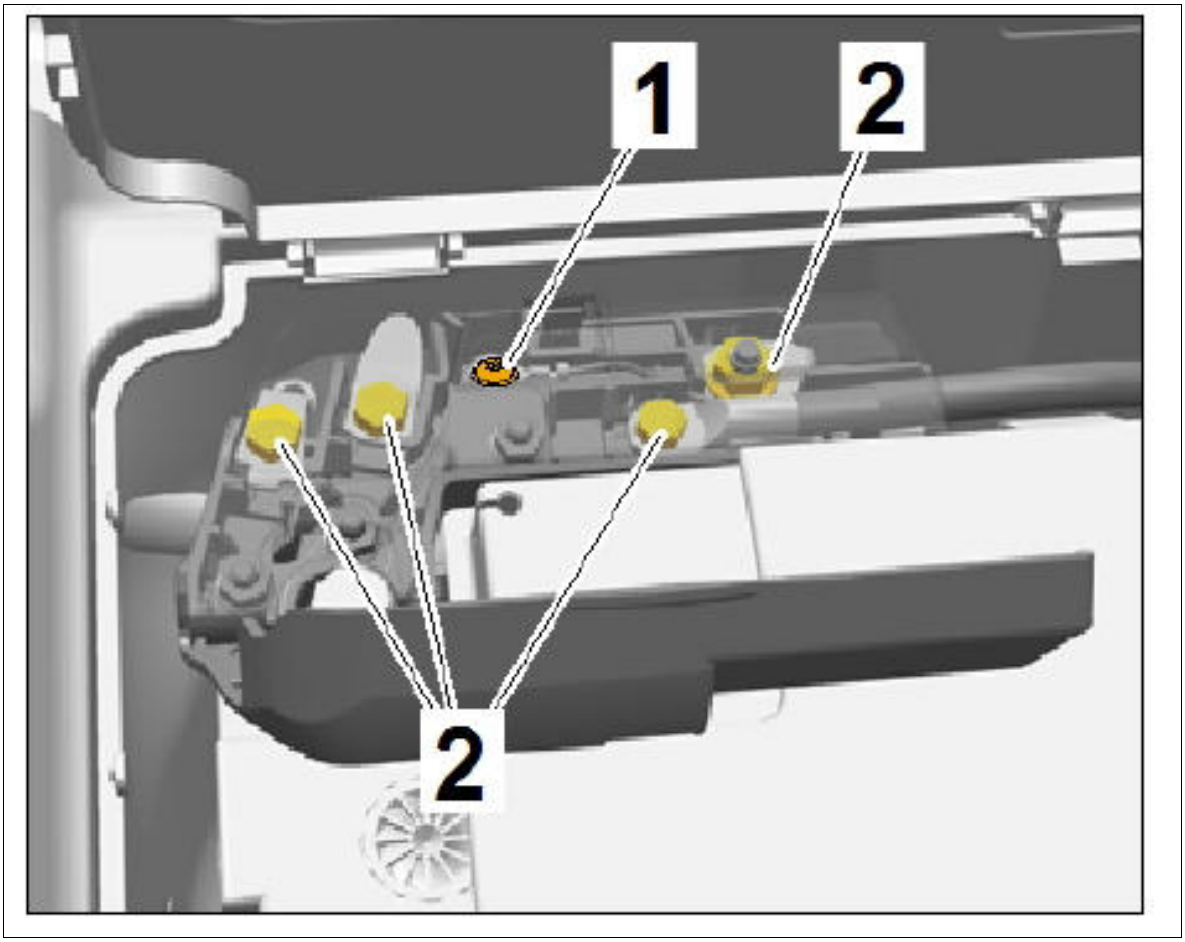

Courtesy of PORSCHE CARS NORTH AMERICA, INC.

6. Lift the power distributor and release and disconnect electric plug connection **-1-** on the cutoff relay **-2-** (**-a-**).

Fig 4: Disconnecting Electric Plug Connection On Cutoff Relay

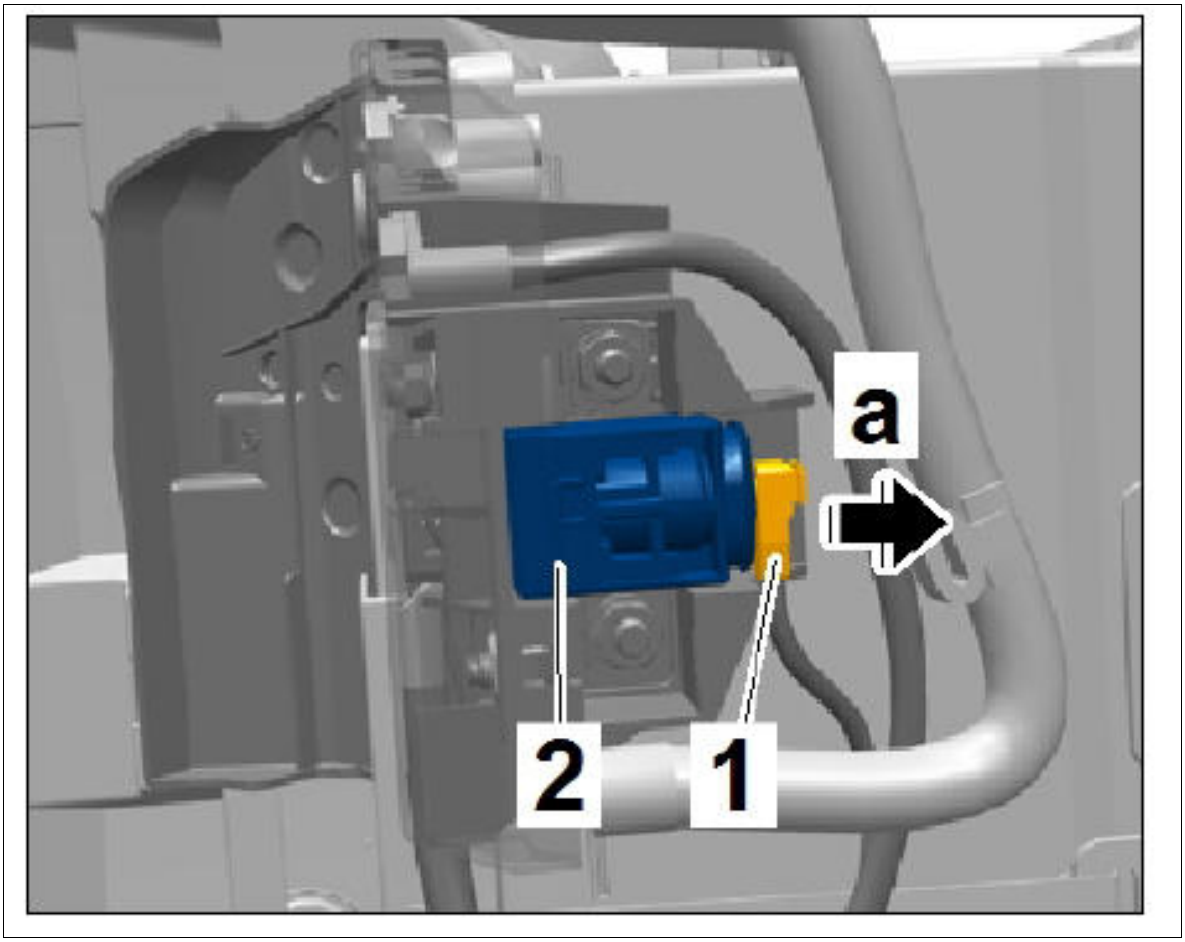

Courtesy of PORSCHE CARS NORTH AMERICA, INC.

WM 978919 REMOVING AND INSTALLING POWER DISTRIBUTOR (ALL MODELS) > INSTALLING POWER DISTRIBUTOR

WARNING: Incorrect handling of airbag units

- *Triggering of airbag unit.*
- *System faults can occur.*

→ Switch off ignition and remove ignition key or remote control (hand-held transmitter).

→ A power supply (e.g. battery charger) must not be connected to the external power supply/jump-lead starting terminals.

→ Disconnect the battery and insulate the ground strap so that all contact with a ground carrier is avoided.

→ Wait 1 minute after disconnecting the battery.

→ Only pull off connector on the triggering unit after the waiting time has elapsed.

→ Make sure that no foreign objects are located in front of the airbag unit during installation.

→ Replace damaged parts during removal.

→ Always position airbag units so that the blow-out opening is facing upwards, e.g. crest on driver's airbag.

→ Do not position anything on the airbag units.

→ If removed for an extended period, the airbag units must be stored in a safe place.

→ Airbag units must not come into contact with grease, oil, detergents, liquids, or similar substances.

→ Do not expose airbag units to temperatures above 90°.

→ Do not remove the short-circuit spring on the plug-in contacts.

→ Ignition and preparations may only be carried out by skilled staff, supervised by a second responsible person.

→ Before disposal, the airbag unit must be rendered harmless by electrical ignition performed in accordance with all precautionary measures, thereby preventing it from being used incorrectly.

1. Installation is performed in reverse order to removal.
2. Tighten M6 fastening nuts used to secure electric lines to the power distributor. **Tightening torque 7.5 Nm (5.5 ftlb.)**
3. Tighten M8 fastening nut used to secure electric line to the power distributor. **Tightening torque 16 Nm (12 ftlb.)**
4. Tighten fastening screw used to secure electric line to the power distributor. **Tightening torque 7.5 Nm (5.5 ftlb.)**

WM 978919 REMOVING AND INSTALLING POWER DISTRIBUTOR (ALL MODELS) > SUBSEQUENT WORK

Connect ground lead to the battery. → 2X00IN WORK INSTRUCTIONS AFTER DISCONNECTING THE BATTERY

WM 979255 REPLACING FUSE ELEMENT IN POWER DISTRIBUTOR (ALL MODELS) > TECHNICAL VALUES

Location	Description	Type	Basic value	Tolerance 1	Tolerance 2
Positive cable to power distributor	Nut, M6	Tightening torque	7.5 Nm (5.5 ftlb.)		

Fuse element to power distributor	Nut, M6	Tightening torque	7.5 Nm (5.5 ftlb.)		
Terminal clamp to battery terminal	M6 nut	Tightening torque	5 Nm (3.5 ftlb.)		

WM 979255 REPLACING FUSE ELEMENT IN POWER DISTRIBUTOR (ALL MODELS) > PRELIMINARY WORK

1. Disconnect ground lead on the battery. → 2X00IN WORK INSTRUCTIONS AFTER DISCONNECTING THE BATTERY .

WM 979255 REPLACING FUSE ELEMENT IN POWER DISTRIBUTOR (ALL MODELS) > REPLACING FUSE ELEMENT IN POWER DISTRIBUTOR

NOTE: Voltage peaks

- *Risk of damage to loads or to the control unit*

→ Disconnect the battery before removing the component or control unit.

Fig 1: Locating Fuse Element Position

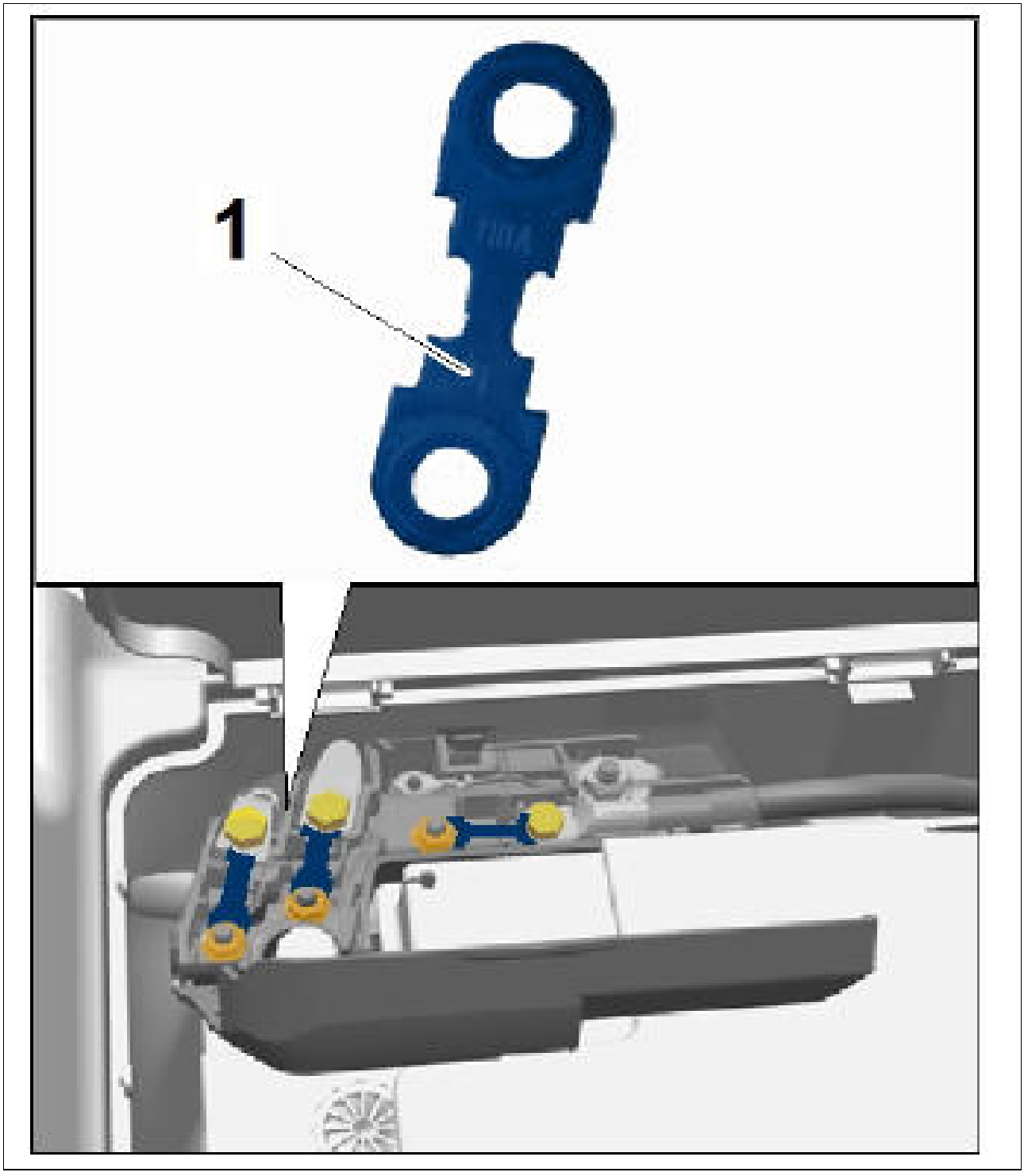

Courtesy of PORSCHE CARS NORTH AMERICA, INC.

1. Fuse element

1. Unhook cover **-1-** over terminal clamp on the power distributor and fold it over **-a-** .

2. Release cover **-2-** (**-b-**) and fold it up towards the rear **-c-** .

Fig 2: Opening Covers On Power Distributor

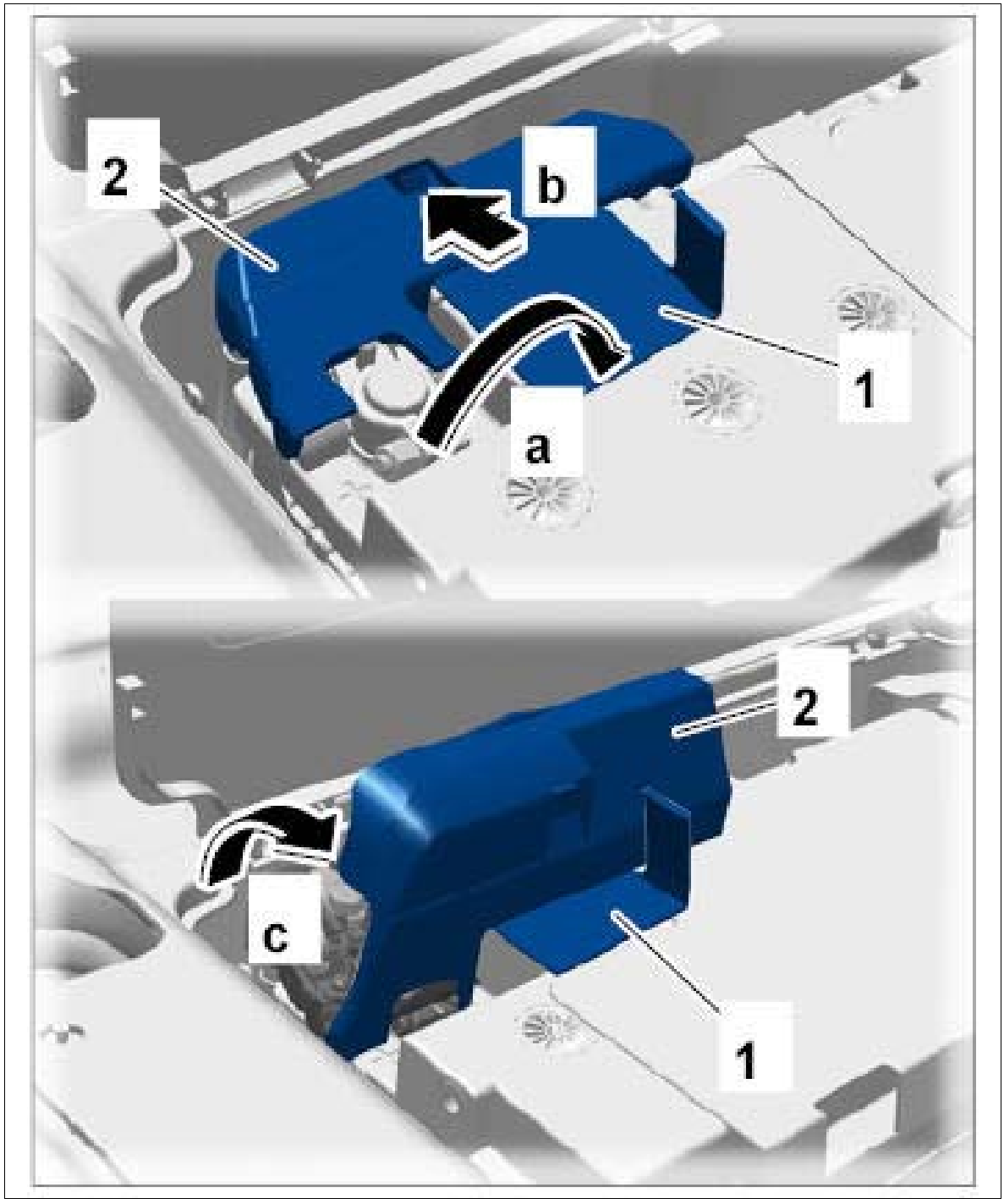

Courtesy of PORSCHE CARS NORTH AMERICA, INC.

3. Remove defective fuse element.
    1. 3.1. Screw off nut **-1-** with line on the fuse element.
    2. 3.2. Screw off nut **-2-** on the fuse element.
    3. 3.3. Remove the rest of the fuse element from the power distributor.

Fig 3: Removing Fuse Element

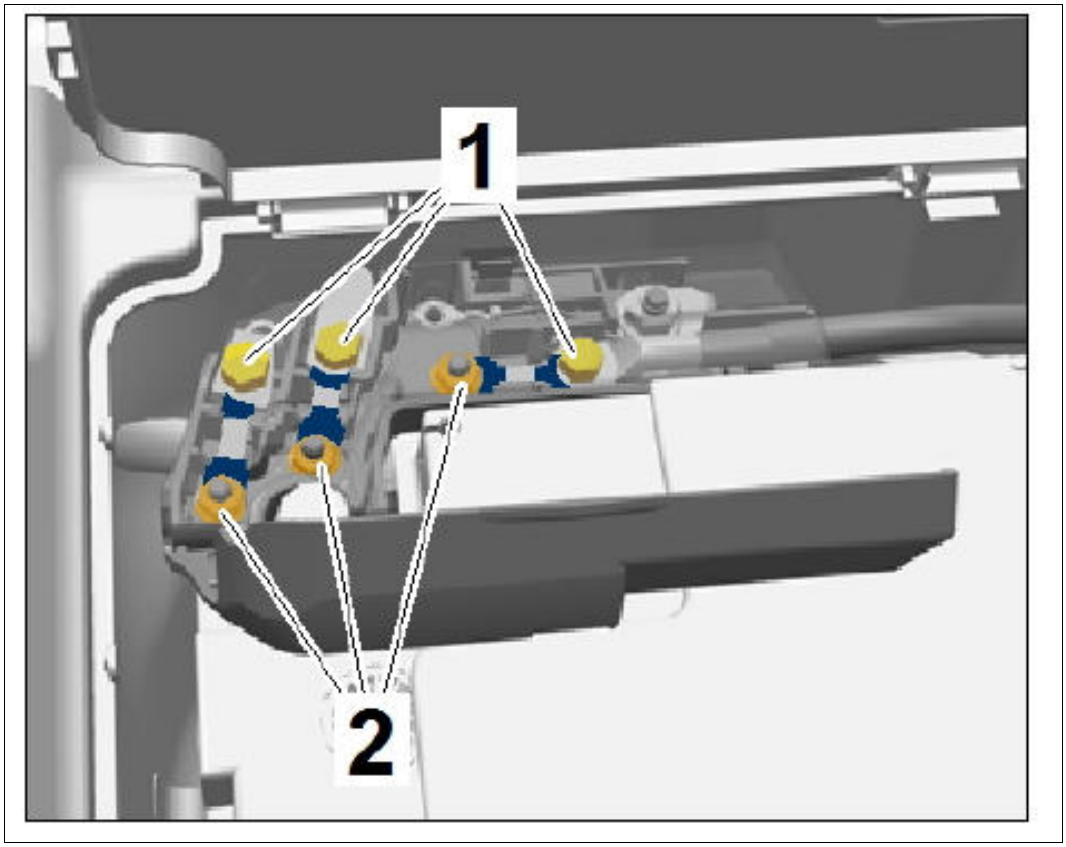

Courtesy of PORSCHE CARS NORTH AMERICA, INC.

4. Insert a new fuse element with a suitable nominal current rating.
5. Tighten nut **-1-** for the line on the fuse element. **Tightening torque 7.5 Nm (5.5 ftlb.)**
6. Tighten nut **-2-** on the fuse element. **Tightening torque 7.5 Nm (5.5 ftlb.)**

Fig 4: Installing Fuse Element

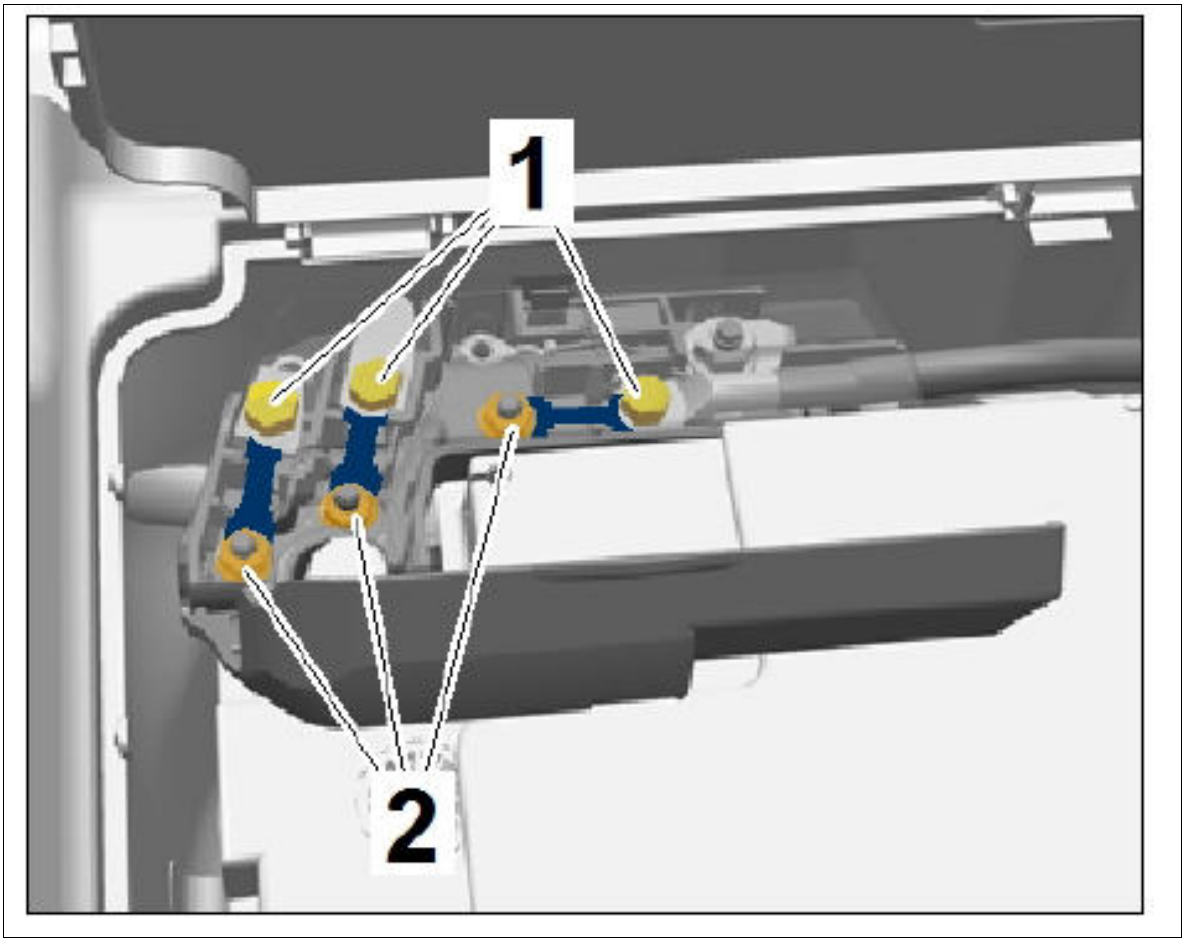

Courtesy of PORSCHE CARS NORTH AMERICA, INC.

7. Push cover **-1-** forward and close it until it engages securely **-a-** .

Fig 5: Closing Cover

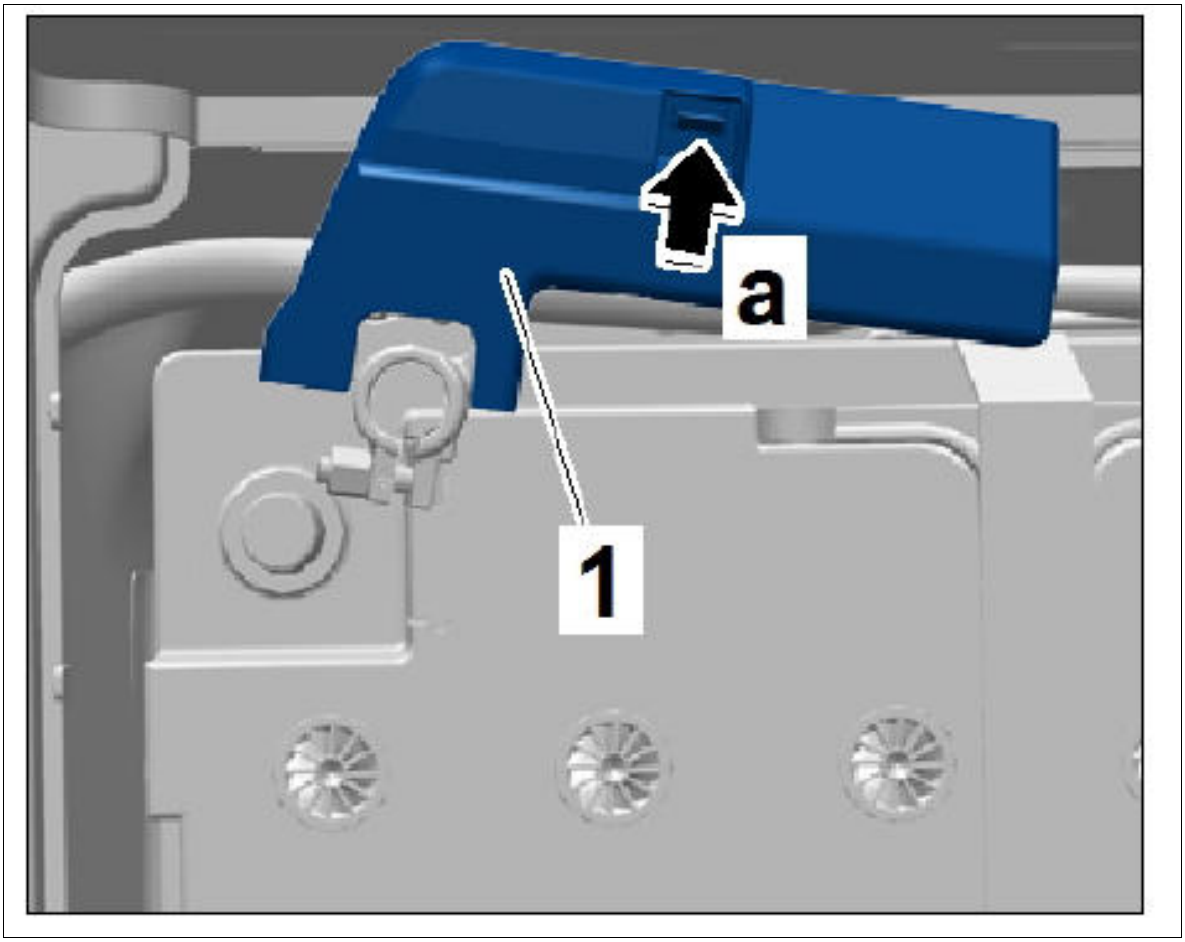

Courtesy of PORSCHE CARS NORTH AMERICA, INC.

8. Tighten terminal clamp **-2-** for the power distributor on the battery terminal. **Tightening torque 5 Nm (3.5 ftlb.)**

9. Close the cover **-1-** on the positive terminal until it engages securely.

Fig 6: Identifying Positive Terminal And Cover

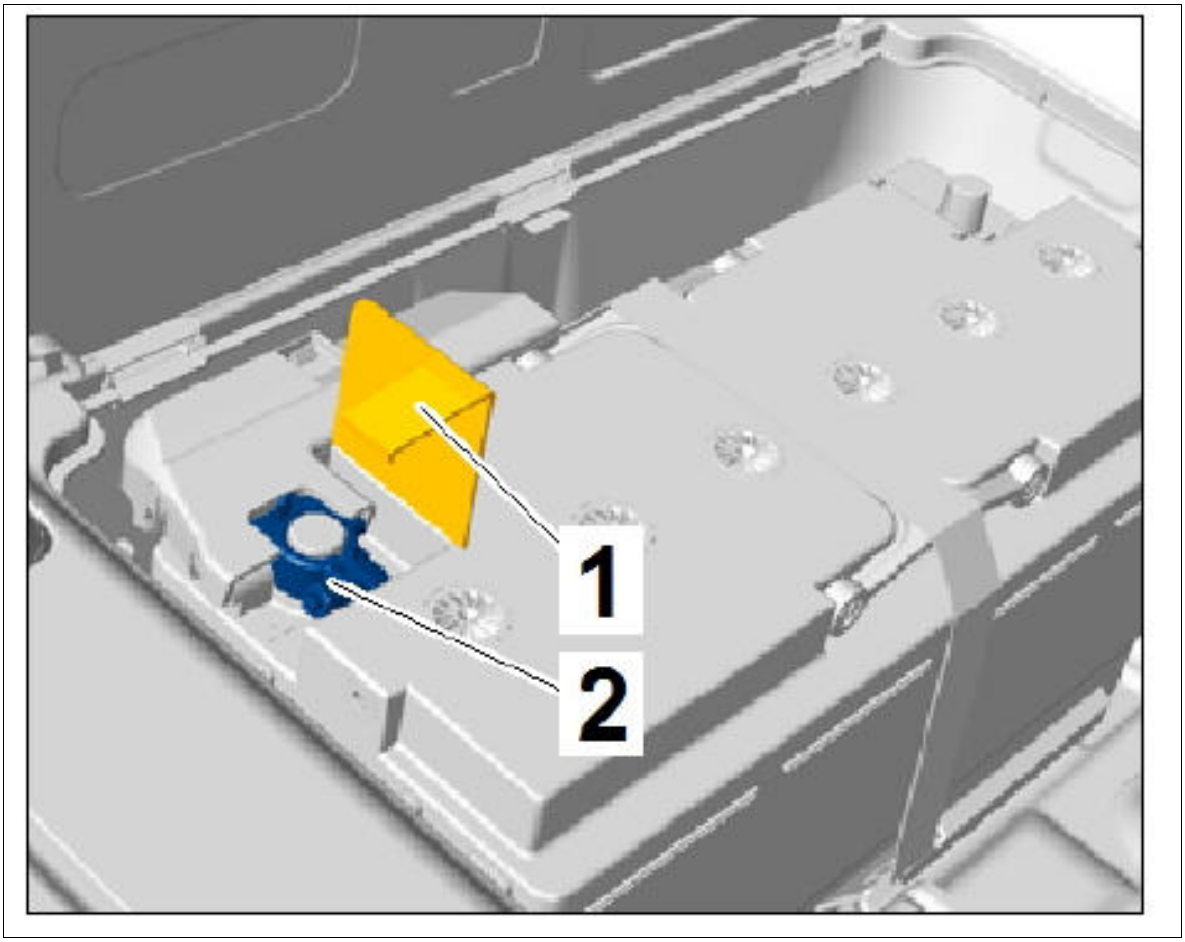

Courtesy of PORSCHE CARS NORTH AMERICA, INC.

WM 979255 REPLACING FUSE ELEMENT IN POWER DISTRIBUTOR (ALL MODELS) > SUBSEQUENT WORK

1. Connect ground lead to the battery → 2X00IN WORK INSTRUCTIONS AFTER DISCONNECTING THE BATTERY .

WM 9X00IN BASIC INSTRUCTIONS AND PROCEDURE FOR CONTROL UNIT PROGRAMMING USING THE PIWIS TESTER (ALL MODELS) > TOOLS

Designation	Type	Number	Description	
battery charger HFL 65	Service equipment	WE 1353		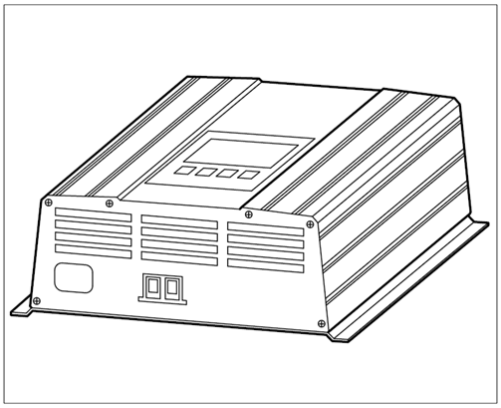
PIWIS Tester II	Special tool	9818		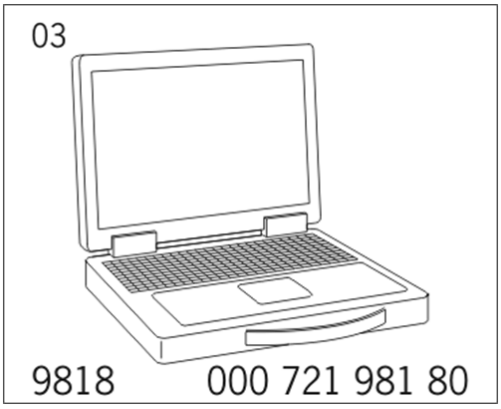

WM 9X00IN BASIC INSTRUCTIONS AND PROCEDURE FOR CONTROL UNIT PROGRAMMING USING THE PIWIS TESTER (ALL MODELS) > BASIC INFORMATION AND INSTRUCTIONS FOR CONTROL UNIT PROGRAMMING > BASIC INFORMATION ON CONTROL UNIT PROGRAMMING

Information

There are basically two different ways of carrying out control unit programming:

- Using the "Programming" menu for the relevant control unit (e.g. for the DME and PDK control units).

or

- Using the "Campaign" function in the Additional menu on the PIWIS Tester by entering a specific programming code.

The type of control unit programming to be used is described in the relevant Service Information or in the relevant Technical Information.

WM 9X00IN BASIC INSTRUCTIONS AND PROCEDURE FOR CONTROL UNIT PROGRAMMING USING THE PIWIS TESTER (ALL MODELS) > BASIC INFORMATION AND INSTRUCTIONS FOR CONTROL UNIT PROGRAMMING > BASIC INSTRUCTIONS FOR CONTROL UNIT PROGRAMMING

NOTE: Fault entry in the fault memory and control unit programming aborted due to undervoltage.

- *Increased current draw during diagnosis or control unit programming can cause a drop in voltage, which can result in one or more fault entries and the abnormal termination of the programming process.*

→ Before commencing work, connect a suitable battery charger with a current rating of at least 40 A to the jump-start terminals in the engine compartment.

NOTE: Control unit programming will be aborted if the WLAN connection is unstable.

- *An unstable WLAN connection can interrupt communication between PIWIS Tester II and the vehicle communication module (VCI). As a result, control unit programming may be aborted.*

→ During control unit programming, always connect PIWIS Tester II to the vehicle communication module (VCI) via the USB cable.

NOTE: Control unit programming will be aborted if the vehicle key is not recognized

- *If the vehicle key is not recognized in vehicles with Porsche Entry & Drive, programming cannot be started or will be interrupted.*

→ Switch on the ignition using the original vehicle key. To do this, replace the control panel in the ignition lock with the original vehicle key if necessary.

WM 9X00IN BASIC INSTRUCTIONS AND PROCEDURE FOR CONTROL UNIT PROGRAMMING USING THE PIWIS TESTER (ALL MODELS) > GENERAL PRELIMINARY WORK

1. Connect a battery charger with a current rating of **at least 40 A** (e.g. **battery charger HFL 65 WE 1353)** to the jump-start terminals in the engine compartment and switch it on.

2. Switch on the ignition using the **original driver's key.**

   On vehicles with "Porsche Entry & Drive", do this by replacing the control panel in the ignition lock with the original driver's key if necessary.

3. **PIWIS Tester II 9818** must be connected to the vehicle communication module (VCI) via the **USB cable.** Then, connect the communication module to the vehicle and switch on the PIWIS Tester.

WM 9X00IN BASIC INSTRUCTIONS AND PROCEDURE FOR CONTROL UNIT PROGRAMMING USING THE PIWIS TESTER (ALL MODELS) > BASIC PROCEDURE FOR CONTROL UNIT PROGRAMMING USING THE PIWIS TESTER > INFORMATION ON THE PROCEDURE FOR CONTROL UNIT PROGRAMMING

Information

There are basically two different ways of carrying out control unit programming using the PIWIS Tester:

- Using the "Programming" menu for the relevant control unit (e.g. for the DME and PDK control units) → Control unit programming using the "Programming" menu.

or

- Using the "Campaign" function in the Additional menu on the PIWIS Tester by entering a specific programming code → Control unit programming using the "Campaign" function in the Additional menu on the PIWIS Tester.

The type of control unit programming to be used is described in the relevant Service Information or in the relevant Technical Information.

WM 9X00IN BASIC INSTRUCTIONS AND PROCEDURE FOR CONTROL UNIT PROGRAMMING USING THE PIWIS TESTER (ALL MODELS) > BASIC PROCEDURE FOR CONTROL UNIT PROGRAMMING USING THE PIWIS TESTER > CONTROL UNIT PROGRAMMING USING THE "PROGRAMMING" MENU

1. On the PIWIS Tester start screen, call up the **==> 'Diagnostics'** menu and select the relevant vehicle type.

   The diagnostic application is then started and the control unit selection screen is populated.

2. Select the control unit to be programmed in the control unit selection screen (**==> "Overview"** menu) and press [>>] to confirm your selection → see Fig 1.

Fig 1: Screen Display - Control Unit Selection

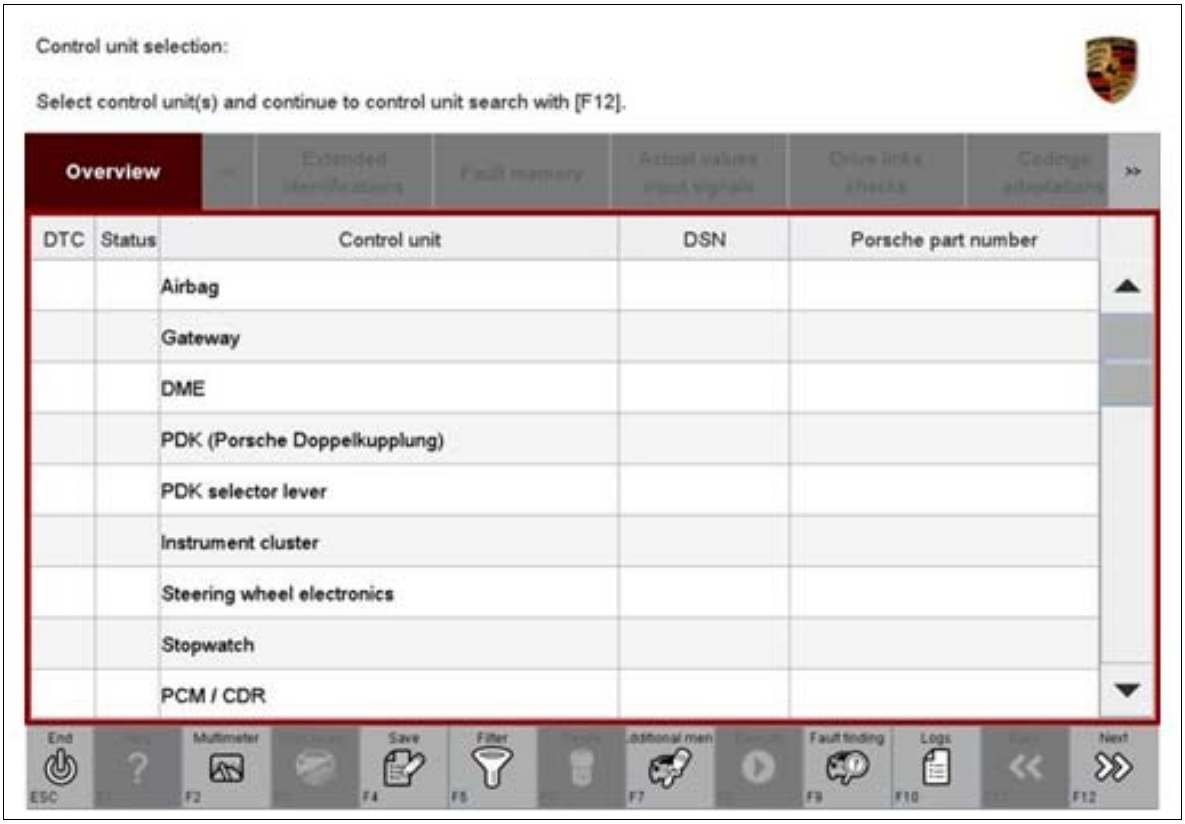

Courtesy of PORSCHE CARS NORTH AMERICA, INC.

3. When the question "Create Vehicle Analysis Log (VAL)?" appears, either press [F12] to create a VAL or press [F11] if you do not want to create a VAL.
4. Press [>>] to acknowledge the message that may appear informing you that campaigns for the vehicle are stored in the PIWIS information system.
5. Once the control unit to be programmed has been found, select the **==> 'Programming'** menu.
6. Select the **==> 'Automatic programming'** function and press [>>] to confirm your selection and start the guided programming sequence → see Fig 2.

Fig 2: Screen Display - Automatic Programming

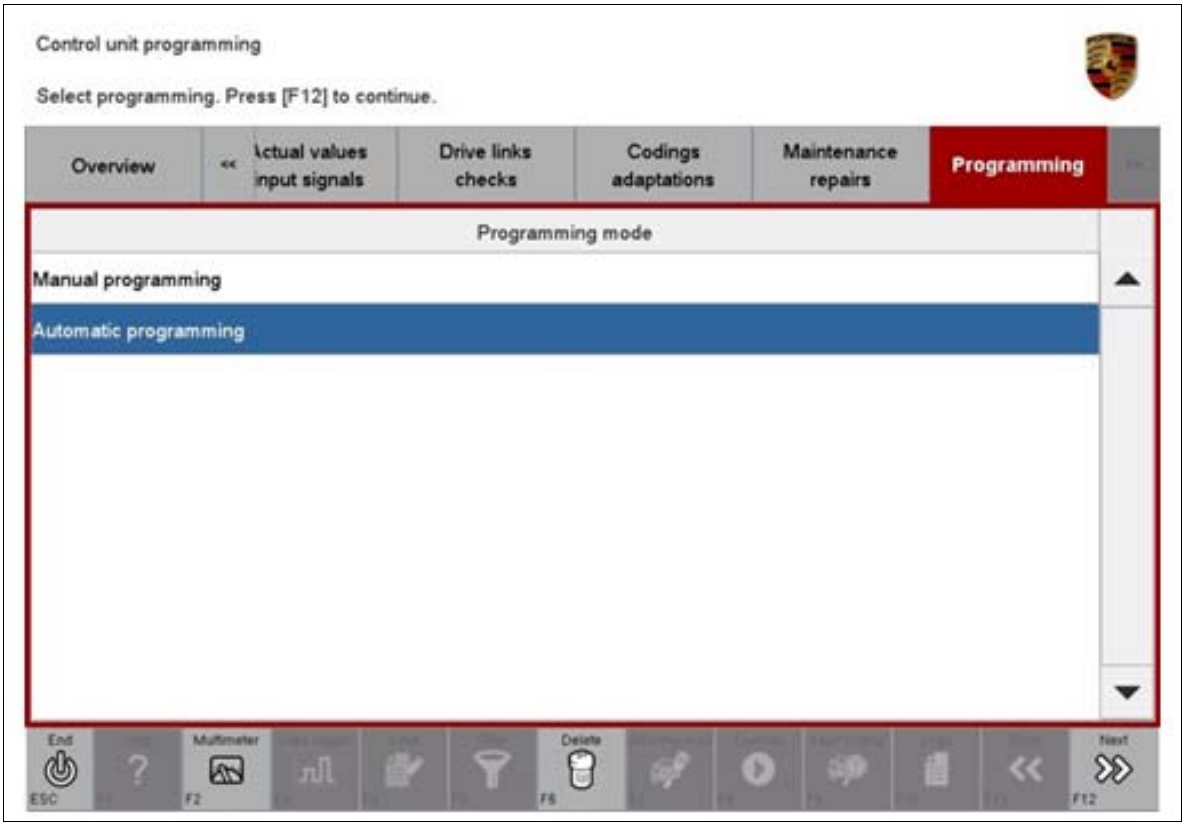

Courtesy of PORSCHE CARS NORTH AMERICA, INC.

7. Read and follow the **information and instructions on the PIWIS Tester** during the guided programming sequence. Then press [>>] to continue.

   During the programming sequence, the control unit is re-programmed and then re-coded automatically if necessary.

   Do not interrupt programming and coding.

   Once control unit programming - and coding if necessary - is complete, you will be prompted to switch the ignition off and then back on again after a specified waiting time.

   Information

   Once programming is completed successfully, the work described under **==> "General subsequent work"** must always be carried out.

   If other specific subsequent work is required, this is described in the relevant Service Information or in the relevant Technical Information.

   Information

   1. If an error message is displayed during programming (e.g. "Campaign does not exist", "No suitable programming rules found" or "Vehicle data could not be read", etc.), please read and follow the appropriate instructions provided under → Troubleshooting.

   2. If programming is interrupted (e.g. due to a voltage drop or if communication is aborted, etc.) or if programming could not be carried out successfully (error message

"Programming unsuccessful"), programming must be repeated .

3. If coding is not carried out successfully during the guided programming sequence, the control unit must be re-coded again separately once the guided programming sequence is complete. To do this, select the relevant control unit in the control unit selection screen ("Overview" menu) and press [>>] to confirm your selection. Once the control unit has been found, select the "Codings/adaptations" menu and re-code the control unit using the 'Automatic coding' function.

WM 9X00IN BASIC INSTRUCTIONS AND PROCEDURE FOR CONTROL UNIT PROGRAMMING USING THE PIWIS TESTER (ALL MODELS) > BASIC PROCEDURE FOR CONTROL UNIT PROGRAMMING USING THE PIWIS TESTER > CONTROL UNIT PROGRAMMING USING THE "CAMPAIGN" FUNCTION IN THE ADDITIONAL MENU ON THE PIWIS TESTER

1. On the PIWIS Tester start screen, call up the **==> 'Diagnostics'** menu and select the relevant vehicle type.

   The diagnostic application is then started and the control unit selection screen is populated.

2. In the control unit selection screen ("Overview" menu), press [F7] to call up the **==> 'Additional menu'** (→ see Fig 1).

   Fig 1: Screen Display - Control Unit Selection

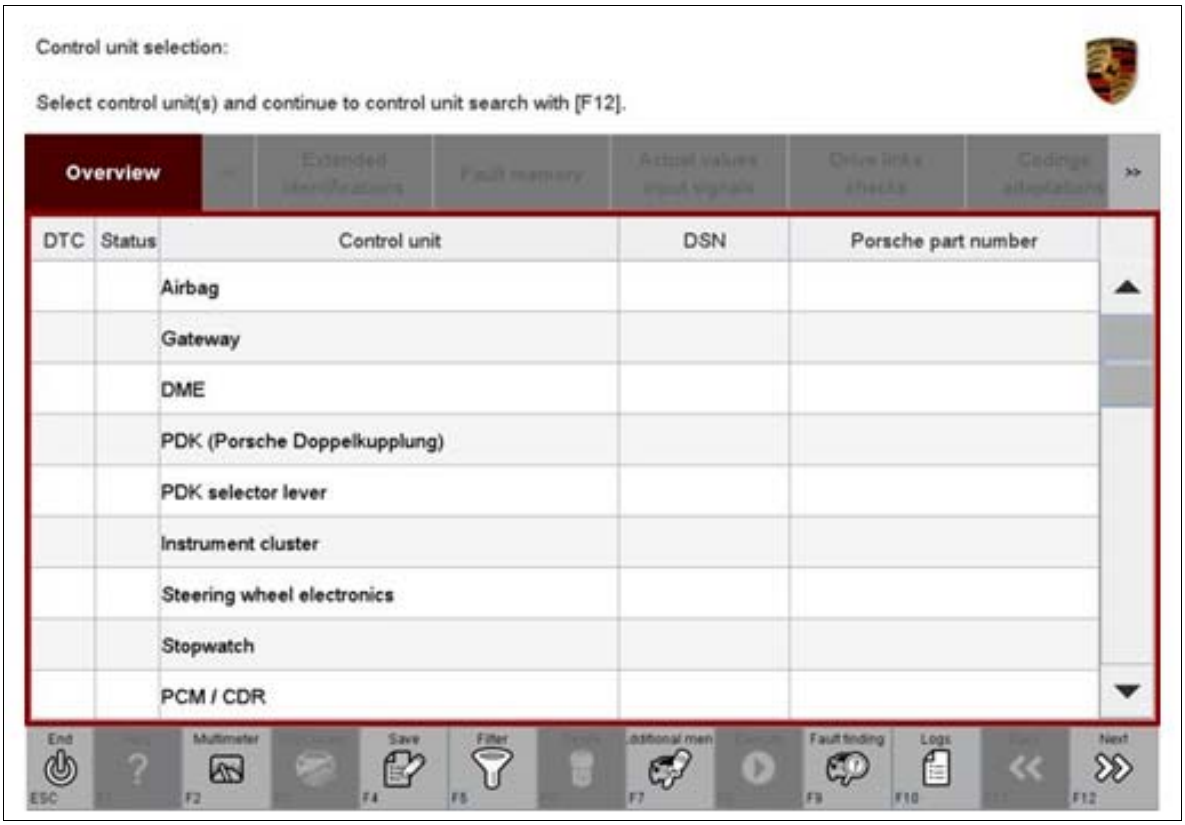

Courtesy of PORSCHE CARS NORTH AMERICA, INC.

3. When the question "Create Vehicle Analysis Log (VAL)?" appears, either press [>>] to create a

VAL or press [F11] if you do not want to create a VAL.

4. Press [>>] to acknowledge the message that may appear informing you that campaigns for the vehicle are stored in the PIWIS information system.

5. Select the **==> 'Campaign'** function and press [>>] to confirm your selection → see Fig 2.

   You are then prompted to enter a programming code.

   Fig 2: Screen Display - Additional Menu - Campaign

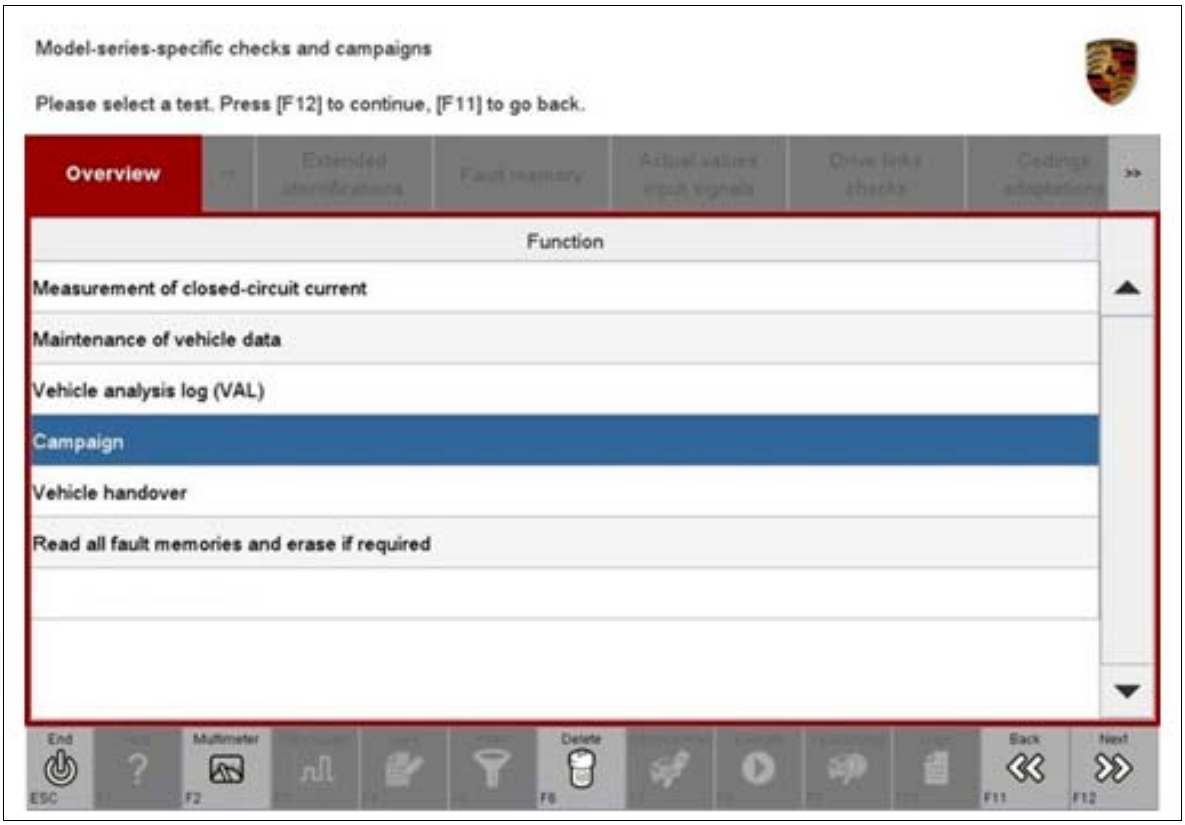

Courtesy of PORSCHE CARS NORTH AMERICA, INC.

6. To enter the programming code, click in the relevant text box so that the cursor starts to flash → see Fig 3.

Fig 3: Screen Display - Programming Code Input Field

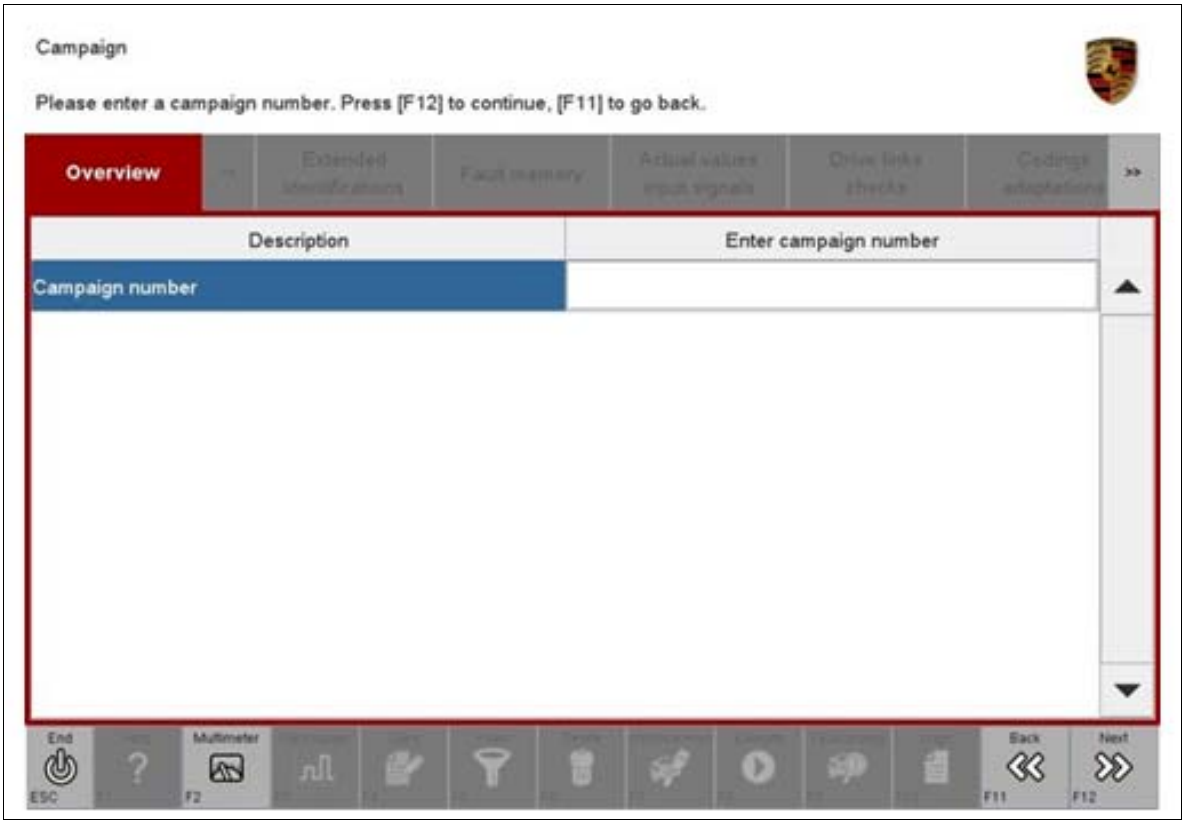

Courtesy of PORSCHE CARS NORTH AMERICA, INC.

7. Enter the **programming code** specified in the relevant description (Technical Information, Service Information) and press Enter to confirm your entry.

   The text box turns blue.

8. Press [>>] to start the guided programming sequence.

   Read and follow the **information and instructions on the PIWIS Tester** during the guided programming sequence. Then press [>>] to continue.

   During the programming sequence, the control unit is re-programmed and then re-coded automatically if necessary.

   Do not interrupt programming and coding.

   Once control unit programming - and coding if necessary - is complete, you will be prompted to switch the ignition off and then back on again after a specified waiting time.

   Information

   Once programming is completed successfully, the work described under **==> "General subsequent work"** must always be carried out.

   If other specific subsequent work is required, this is described in the relevant Service Information or in the relevant Technical Information.

   Information

1. If an error message is displayed during programming (e.g. "Campaign does not exist", "No suitable programming rules found" or "Vehicle data could not be read", etc.), please read and follow the appropriate instructions provided under → Troubleshooting.

2. If programming is interrupted (e.g. due to a voltage drop or if communication is aborted, etc.) or if programming could not be carried out successfully (error message "Programming unsuccessful"), programming must be repeated by entering the programming code again (Additional menu > Campaign >> Enter campaign number). It is not possible to program the control units manually.

3. If coding is not carried out successfully during the guided programming sequence, the control unit must be re-coded again separately once the guided programming sequence is complete. To do this, select the relevant control unit in the control unit selection screen ("Overview" menu) and press [>>] to confirm your selection. Once the control unit has been found, select the "Codings/adaptations" menu and re-code the control unit using the 'Automatic coding' function.

WM 9X00IN BASIC INSTRUCTIONS AND PROCEDURE FOR CONTROL UNIT PROGRAMMING USING THE PIWIS TESTER (ALL MODELS) > GENERAL SUBSEQUENT WORK

1. Read out and erase all fault memories.

    1. 1.1. In the control unit selection screen (**==> 'Overview'** menu), press [F7] to call up the **==> 'Additional menu'** (→ see Fig 1).

        Fig 1: Screen Display - Control Unit Selection

        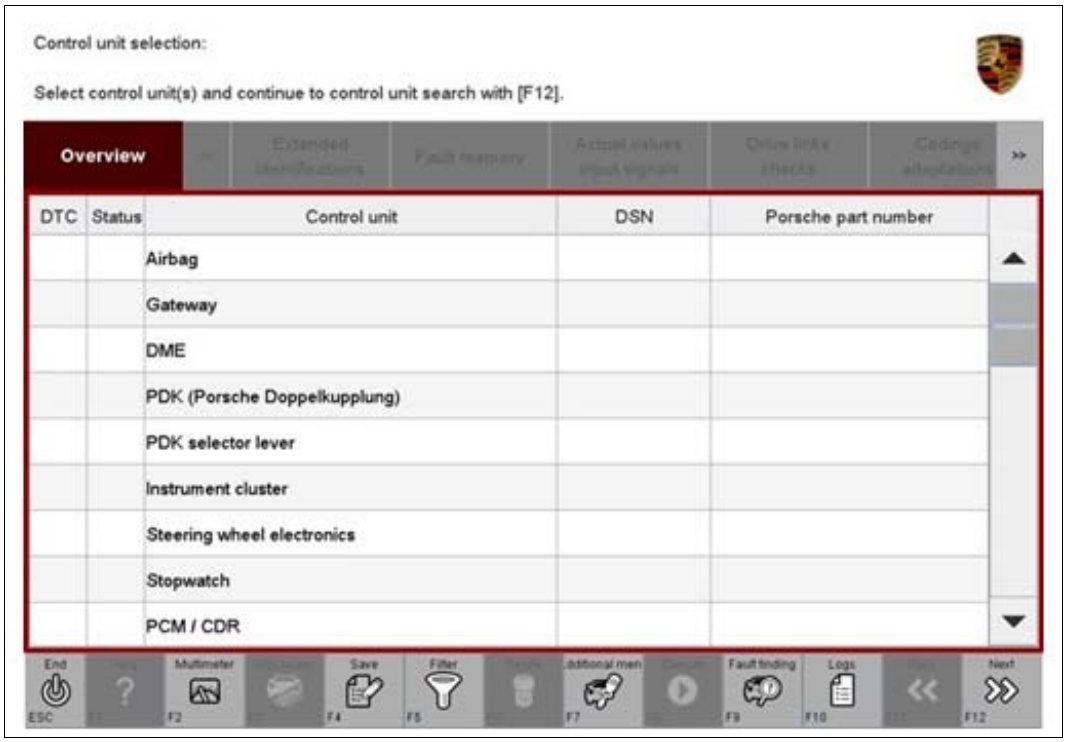

        Courtesy of PORSCHE CARS NORTH AMERICA, INC.

    2. 1.2. Select the function **==> 'Read all fault memories and erase if required' and**

press [>>] to confirm → see Fig 2.

The fault memories of the control units are read out.

Fig 2: Screen Display - Erasing Fault Memories

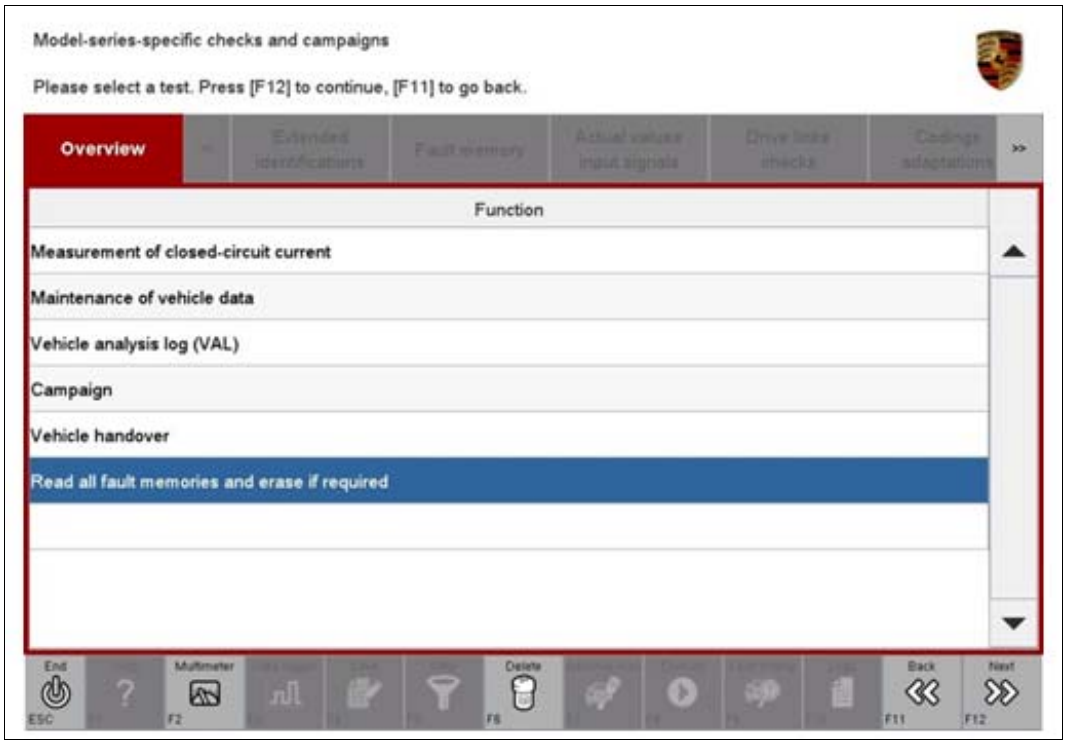

Courtesy of PORSCHE CARS NORTH AMERICA, INC.

3. 1.3. Once you have read out the fault memories, delete the fault memory entries by pressing [F8].
4. 1.4. Press [>>] ("Yes") in response to the question as to whether you really want to delete all fault memory entries.

   The faults stored in the fault memories of the various control units are deleted.

   Information

   If there are still fault memory entries in individual control units, start the engine briefly and then switch it off again. Wait for approx. 10 seconds before switching the ignition on again and re-establish the connection between the PIWIS Tester and the vehicle. Then read out and erase the fault memories of the affected control units again separately.

   If the control units are found to have other faults, which cannot be erased and are **not caused by control unit programming,** these faults must be found and corrected.

1. Switch off ignition.
2. Disconnect the PIWIS Tester from the vehicle.
3. Switch off and disconnect the battery charger.

4. On vehicles with Porsche Entry & Drive, replace the original driver's key in the ignition lock with the control panel again.

WM 9X00IN BASIC INSTRUCTIONS AND PROCEDURE FOR CONTROL UNIT PROGRAMMING USING THE PIWIS TESTER (ALL MODELS) > FAULT FINDING

Information

This information describes possible **causes and remedial action for error messages** that can occur both during control unit programming using the **'Campaign'** function and during control unit programming using the **'Automatic programming'** function.

Error message after starting programming	Possible causes	Remedial action
Specified campaign does not exist	• PIWIS Tester software is not up-to-date	• Update PIWIS Tester software to the software version specified in the Technical Information (or a higher software version). Then enter the programming code again and start programming.
	• Wrong vehicle type selected	• Close the diagnostic application. Select the correct vehicle type and restart the diagnostic application. Then enter the programming code again and start programming.
	• Incorrect programming code entered or programming code not entered correctly	• Enter the programming code specified in the Technical Information correctly.
No suitable programming rules found. Cause: **Part number of the control unit** is not in the programming rules.	• Campaign must not be carried out on the vehicle or campaign was already carried out.	• Check vehicle assignment to the campaign in **PIWIS > Vehicle information** .
	• Replacement control unit with up-to-date software version was installed	• Check Porsche part number of the relevant control unit in the ==> "Extended

		identification" menu.
	• Software version of the installed control unit is already up-to-date	Information about the current Porsche part numbers and software versions of the affected control unit can be found in the relevant Service Information or in the relevant Technical Information.
	• Software version of the control unit is a version that is not intended for carrying out the campaign.	
No suitable programming rules found. Cause: **Current vehicle equipment** is not shown in the programming rules. Please check vehicle order and change it if necessary.	• Campaign must not be carried out on the vehicle.	• Check vehicle assignment to the campaign in **PIWIS > 'Vehicle Information'** menu.
	• Vehicle order is wrong.	• Check vehicle order and correct it if necessary (PIWIS Tester > Additional menu [>>] Maintenance of vehicle data). Then enter the programming code again and start programming.
Vehicle data could not be read	• Ignition not switched on	• Switch on ignition and close and restart the diagnostic application. Then enter the programming code again and start programming.

WM 9X00IN BULB TABLE AND INSTALLATION INSTRUCTIONS (ALL MODELS) > INFORMATION > BULB TABLE

Use	Shape, wattage
Dipped beam with halogen headlights	H7, 55 W
High beam with halogen headlights	H15, 55 W
Dipped beam for Bi-Xenon headlight	Philips, D1S, 35 W
Dipped beam for Bi-Xenon headlight with cornering light	Philips, D1S, 35 W
Static cornering light with Bi-Xenon headlight with cornering light	H7, 55 W
Marker light	LED, cannot be replaced individually

Daytime driving lights	LED, cannot be replaced individually
Light in rear-view mirror	LED
Fog lights	H11
Tail light, rear fog light	LED, cannot be replaced individually
Brake light/tail light	LED, cannot be replaced individually
Additional brake light	LED, cannot be replaced individually
Reversing light	LED, cannot be replaced individually
Number plate light	C, 5 W
Direction indicator light, front	LED, cannot be replaced individually
Direction indicator light, rear	LED, cannot be replaced individually
Direction indicator in mirror	LED
Side marker light (USA)	LED
Glove compartment light	W, 5 W
Footwell light	LED
Door warning light	LED
Luggage compartment lamp	W, 5 W
Interior light	LED
Reading light	Depending on equipment: • W, 5 W • LED
Orientation light	LED, cannot be replaced individually
Ignition lock light	LED, cannot be replaced
Door storage bin light	LED
Door opener light	LED

WM 9X00IN BULB TABLE AND INSTALLATION INSTRUCTIONS (ALL MODELS) > INFORMATION > INSTALLATION INSTRUCTIONS

WARNING: Live components

- *Risk of electric shock*

→ Remove electric charge from component.

→ Make sure it does not switch on again.

→ Check that there is no electric charge

→ Cover adjacent live parts.

> *NOTE: Incorrect handling of bulbs*
>
> - *Risk of damage to bulbs and the bulb housing*

→ Switch off ignition and remove ignition key.

→ Switch off the relevant loads when changing bulbs.

→ Only use bulbs listed in the bulb table.

→ Only install clean bulbs that are free of grease.

→ Always use a cloth or soft paper when working with bulbs.

→ Observe the safety instructions when changing a bulb in a Bi-Xenon headlight.

→ In certain states, it is compulsory to carry spare light bulbs.

WM 9X00IN ORDERING AND REPAIRING ELECTRIC PLUG CONNECTIONS (ALL MODELS) > TOOLS

Designation	Type	Number	Description	
PIWIS Tester II	Special tool	9818		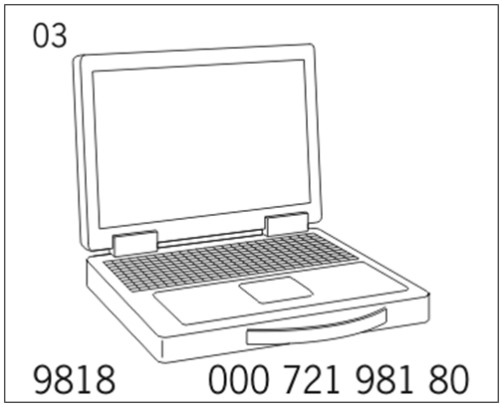

WM 9X00IN ORDERING AND REPAIRING ELECTRIC PLUG CONNECTIONS (ALL MODELS) > INFORMATION > GENERAL INFORMATION ON ORDERING CONNECTOR HOUSINGS AND REPAIR LINES

Information

- Spare parts for repairing electric plug connections can be purchased in the TKR Automotive GmbH online shop. Link: **www.tkr-connector.com**
- The spare parts available there include: Connector housings, individual lines with crimped-on contact, crimp connectors, cable seals and dummy plugs.
- Initially, only the electric plug connections installed in the Macan are available in the online shop.
- Only spare parts for repairing electric plug connections are available in the online shop. The tools that are available there must be purchased using the usual procurement process for tools.
- Only one account for ordering connectors should be set up for the online shop for every Porsche Centre, but the account can be used many times internally in the Porsche Centre.

Fig 1: Screen Display - Online Shop



Courtesy of PORSCHE CARS NORTH AMERICA, INC.

WM 9X00IN ORDERING AND REPAIRING ELECTRIC PLUG CONNECTIONS (ALL MODELS) > INFORMATION > IDENTIFICATION OF REQUIRED ELECTRIC PLUG CONNECTION

Information

- The correct individual line is identified based on the relevant connector housing.
- The correct individual lines and the correct tool for loosening the primary and secondary locks on the connector are displayed for every connector housing.
- The following options are available for identifying the connector housing in the online shop
  - Perform a search in the search field using the part number shown on the connector .

IMPORTANT: Enter the part number without spaces or punctuation

- Perform a search based on the number and arrangement of the pins and comparison with colored photos
- Perform a search based on the position of the connector in the vehicle and comparison with colored photos
- Identify the part number using wiring diagrams → "Wiring Diagrams" in PIWIS Tester II 9818 and perform a search in the search field based on the part number that is read out.

- The correct crimp connectors are identified based on the color coding of the line diameters in the online shop. The color coding corresponds to the color of the crimp connector.

WM 9X00IN ORDERING AND REPAIRING ELECTRIC PLUG CONNECTIONS (ALL MODELS) > INFORMATION > REPAIRING ELECTRIC PLUG CONNECTION

NOTE: Risk of damage to connector contacts or locking lugs

- *Corrosion on connector contacts*
- *Contact problems*

→ Only use the recommended press-out tool

1. Release secondary lock on electric plug connection using the specified press-out tool.
2. Release primary lock on electric plug connection using the specified press-out tool.
3. Cut off faulty line **-1-** using **stripping pliers VAS 1978/3 -2-** .

Fig 1: Cutting Line Using Stripping Pliers

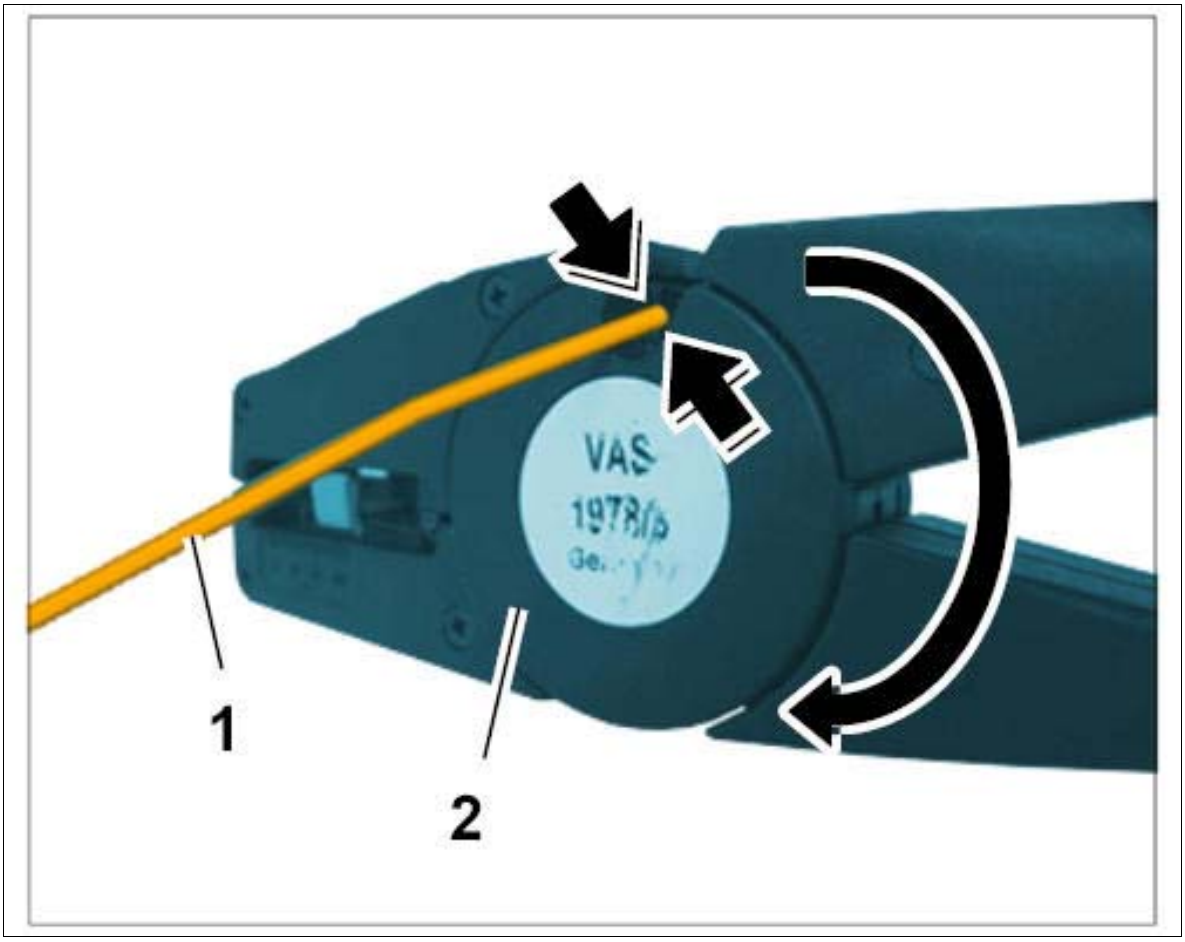

Courtesy of PORSCHE CARS NORTH AMERICA, INC.

4. Cut repair line with crimped-on contacts on both sides to the required length.
5. Insert contact on the repair line into the connector housing until the contact engages securely.
6. Guide a suitable line seal **-2-** onto the repair line **-1-** if necessary.
    1. 6.1. The wide end of the line seal is guided on first.
    2. 6.2. The diameter of the line seal must be smaller than the diameter of the line to ensure that the line seal fits securely.
    3. 6.3. A suitable tool can be used as an aid for guiding on the line seal.
    4. 6.4. Guide the line seal on as far as required until the line seal is fitted fully and securely in the sealing chamber.

Fig 2: Installing Seals

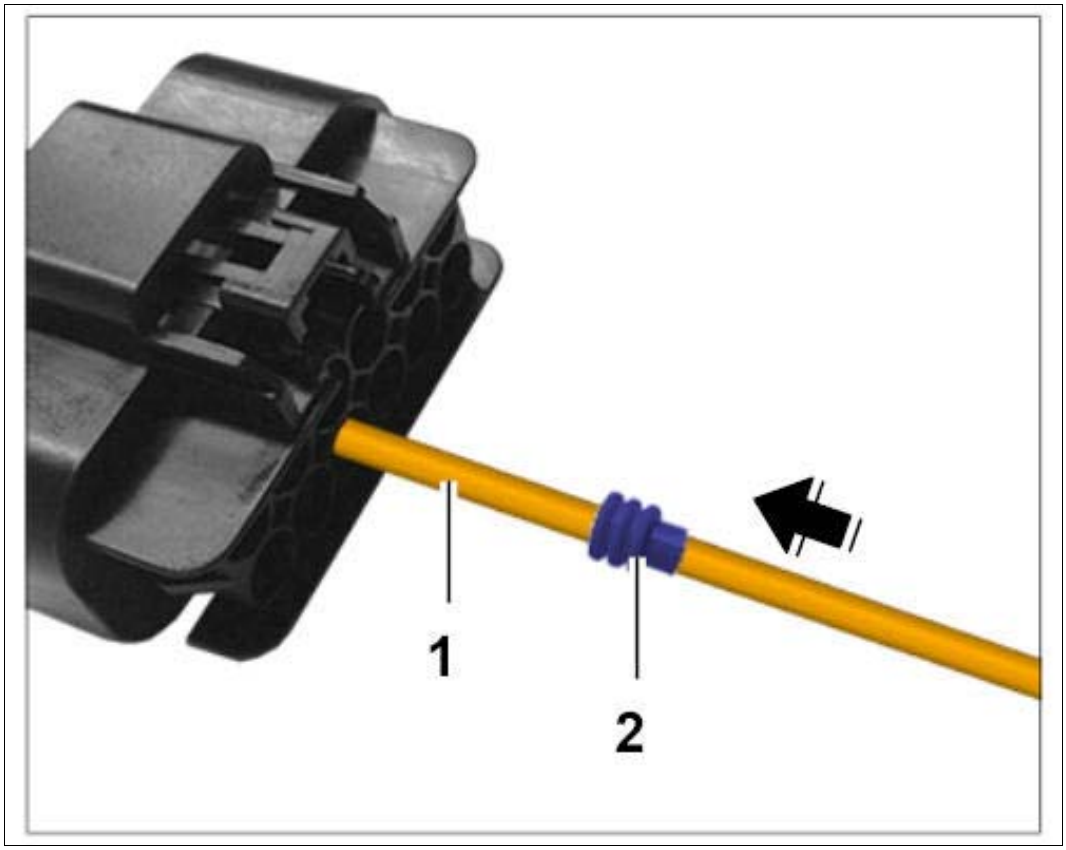

Courtesy of PORSCHE CARS NORTH AMERICA, INC.

7. Strip the repair line **-1-** and the line that was cut using **stripping pliers VAS 1978/3 -2-** .

Fig 3: Cutting Repair Line Using Stripping Pliers

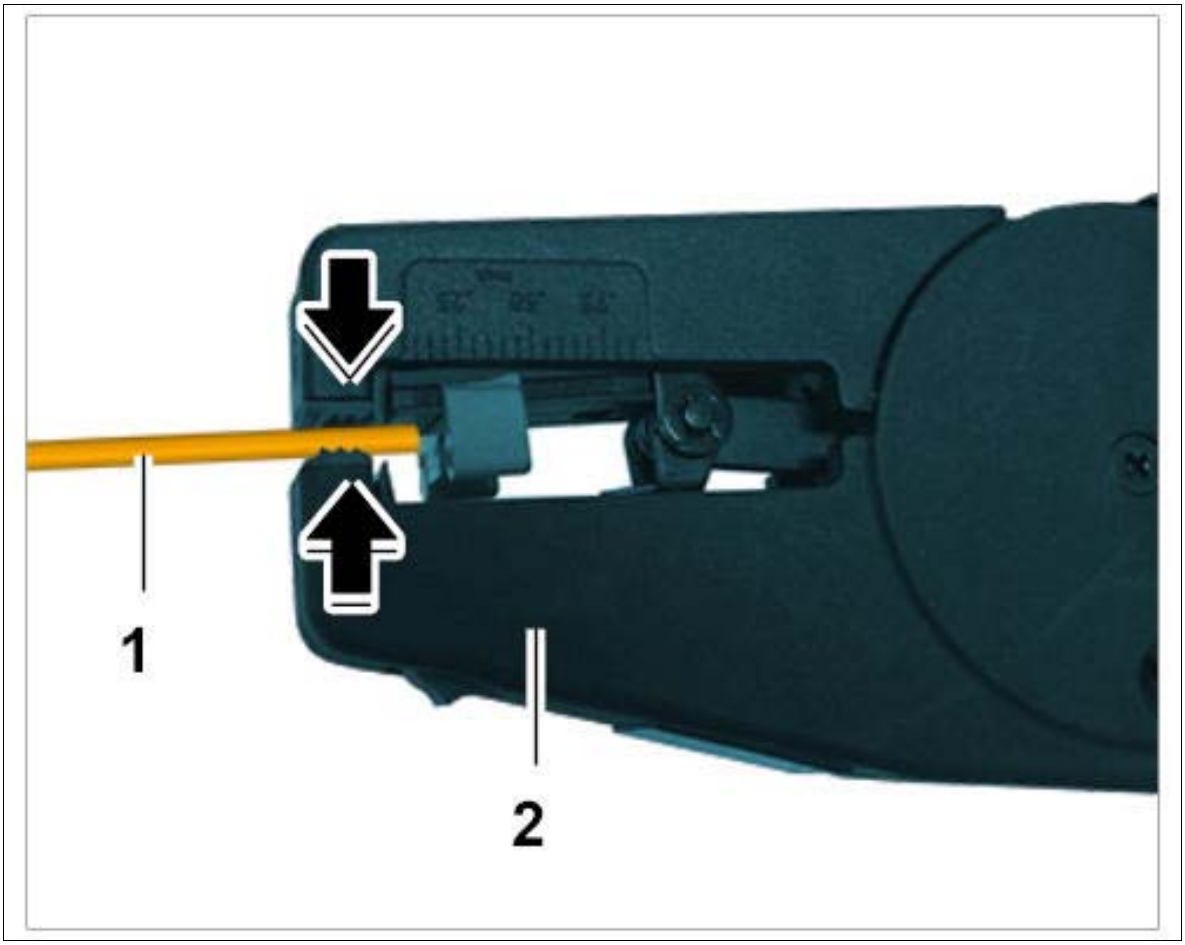

Courtesy of PORSCHE CARS NORTH AMERICA, INC.

8. Insert stripped part of the repair line **-1-** and stripped part of the line to be repaired **-3-** into a suitable crimp connector **-2-** .

Fig 4: Inserting Repair Lines Into Crimp Connectors

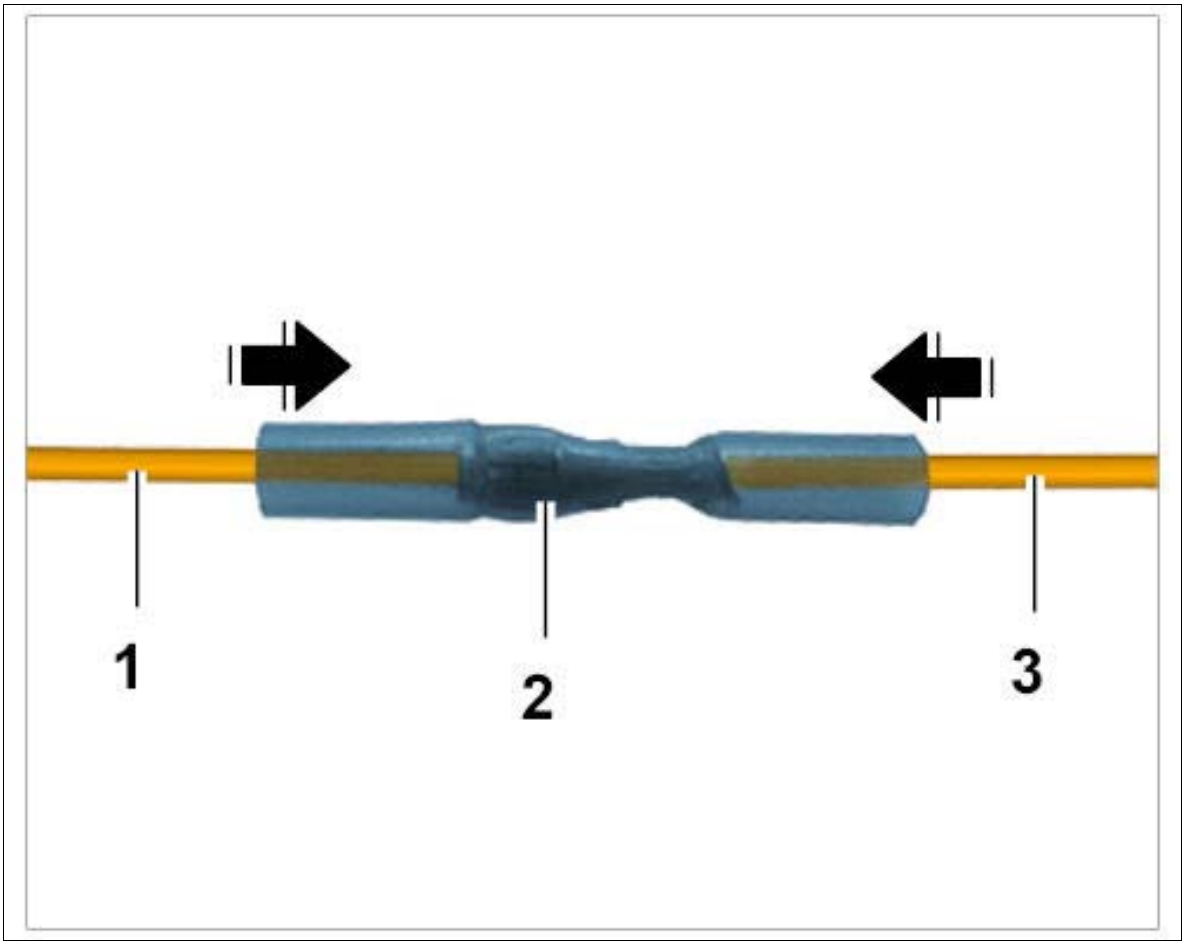

Courtesy of PORSCHE CARS NORTH AMERICA, INC.

9. Crimp on both repair lines using **crimping pliers VAS 1978/1-1** .

    1. 9.1. Fit crimping pliers insert **-1-** according to the color marking **-3-** on the crimp connector **-2-** into the **crimping pliers VAS 1978/1-1** .

    2. 9.2. Crimp on the crimp connector **-2-** using **crimping pliers VAS 1978/1-1** .

Fig 5: Installing Repair Line

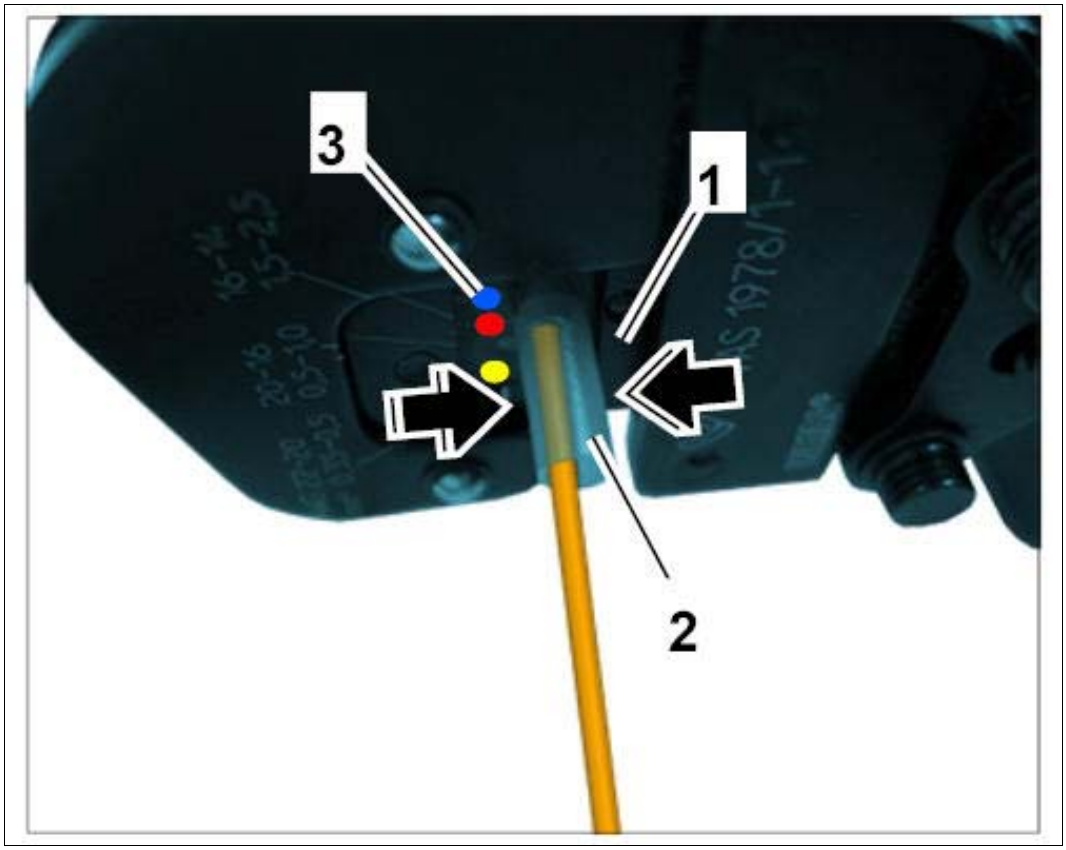

Courtesy of PORSCHE CARS NORTH AMERICA, INC.

10. Seal shrink-fit hose on the crimp connection **-1- using hot-air blowerVAS 1978/14A -2-** .

Fig 6: Installing Seal Shrink-Fit Hose On Crimp Connection

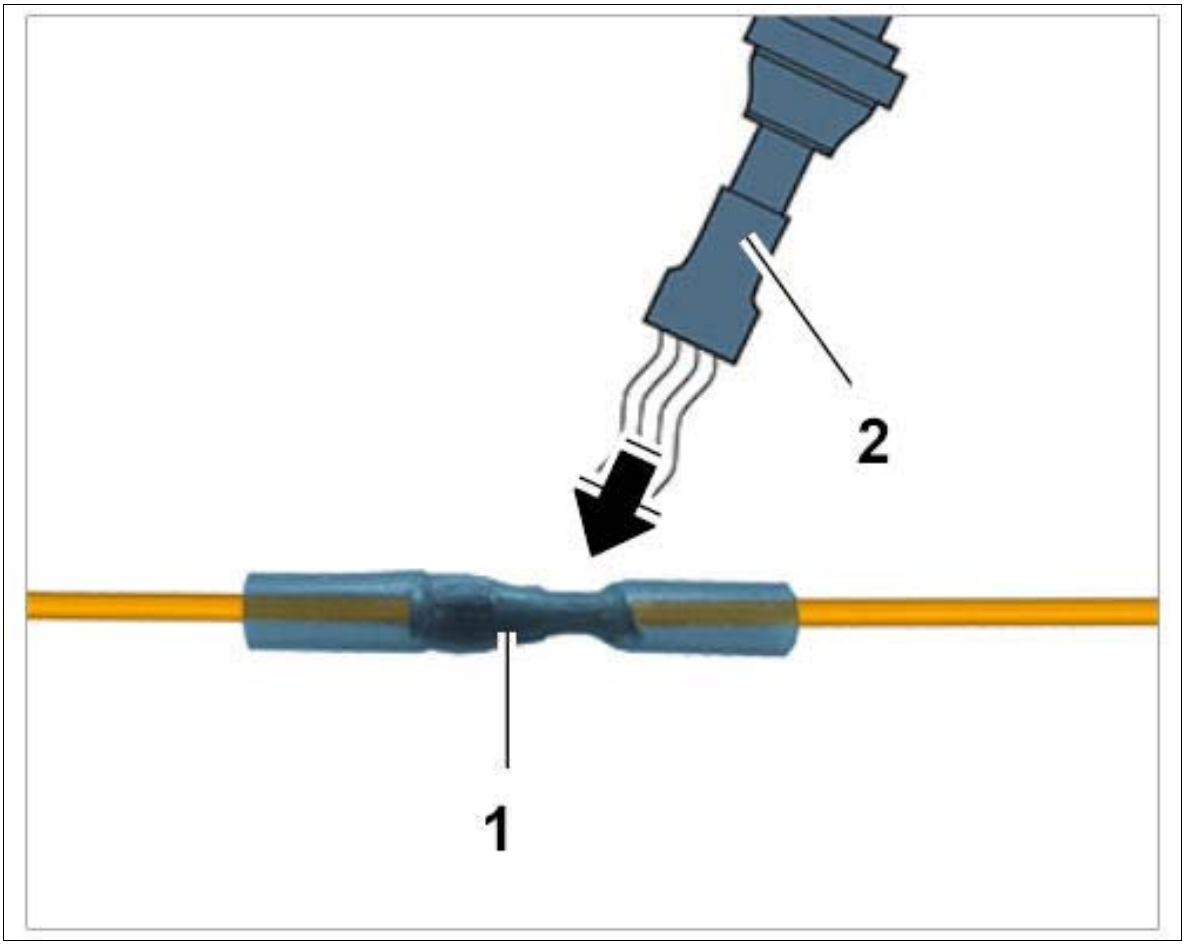

Courtesy of PORSCHE CARS NORTH AMERICA, INC.

WM 9X00IN TECHNICAL VALUES (ALL MODELS) > TECHNICAL VALUES

Location	Description	Type	Basic value	Tolerance 1	Tolerance 2
Gateway control unit to body	Internal Torx screw, M5 x 16	Tightening torque	9 Nm (6.5 ftlb.)		
Holder for horn to front bumper	Internal serration screw, M8 x 20	Tightening torque	20 Nm (15 ftlb.)		
Stopwatch or compass to cover for center loudspeaker	Internal Torx screw, M5 x 20	Tightening torque	3 Nm (2 ftlb.)		
Instrument cluster to dashboard	Internal Torx screw, M5 x 16	Tightening torque	3.2 Nm (2 ftlb.)		
Steering wheel electronics control unit to	Internal Torx screw, Ø 2.5 x 12	Tightening torque	0.5 Nm (0.5 ftlb.)		

steering-column switch					
Lane Change Assist control unit to holder	Internal Torx screw, M5 x 14	Tightening torque	3 Nm (2 ftlb.)		
Rear woofer to rear door	Internal Torx screw, M5 x 20	Tightening torque	4 Nm (3 ftlb.)		
Subwoofer to body	Hexagon-head bolt, M6 x 16	Tightening torque	9 Nm (6.5 ftlb.)		
Antenna amplifier to tailgate	Hexagon-head bolt, M6 x 20	Tightening torque	9 Nm (6.5 ftlb.)		
Antenna control unit to tailgate	Hexagon-head bolt, M6 x 20	Tightening torque	9 Nm (6.5 ftlb.)		
SDARS antenna to vehicle roof	Hexagon nut	Tightening torque	7 Nm (5 ftlb.)	+1 Nm (+0.5 ftlb.)	
Loudspeaker booster to holder	Internal Torx screw, M6 x 12	Tightening torque	6 Nm (4.5 ftlb.)		
TV tuner to holder	Internal Torx screw, M6 x 12	Tightening torque	6 Nm (4.5 ftlb.)		
Holder for loudspeaker booster and TV tuner to body	Nut, M6	Tightening torque	9 Nm (6.5 ftlb.)		
PCM display and operator control unit to the instrument panel	Internal Torx screw, M5 x 16	Tightening torque	4 Nm (3 ftlb.)		
Telephone bracket to center console	Internal Torx screw, Ø 3 x 7	Tightening torque	0.5 Nm (0.5 ftlb.)		
ParkAssist control unit to body	Nut, M6	Tightening torque	3 Nm (2 ftlb.)		
Filler neck for windscreen washer system to body	Internal Torx screw, M6 x 14	Tightening torque	7 Nm (5 ftlb.)		
Windscreen-washer reservoir to body	Internal Torx screw, M6 x 16	Tightening torque	7 Nm (5 ftlb.)		
Wiper linkage to body	Internal Torx screw, M6 x 28	Tightening torque	8 Nm (6 ftlb.)		
Wiper arm to wiper linkage	Hexagon nut, M10	Tightening torque	32 Nm (24 ftlb.)		

Wiper motor to wiper linkage	Internal Torx screw, M6 x 16	Tightening torque	12 Nm (9 ftlb.)	+/-1 Nm (+/- 0.5 ftlb.)	
Distance from left wiper arm to cowl panel cover	Dimension a	Nominal value	30 mm		
Distance from right wiper arm to cowl panel cover	Dimension b	Nominal value	34 mm		
Distance from upper edge of windscreen to spray point of inner spray jet	Dimension a	Length	200 mm		
Distance from side edge of windscreen to spray point of inner spray jet	Dimension b	Length	535 mm		
Distance from upper edge of windscreen to spray point of center spray jet	Dimension c	Length	325 mm		
Distance from side edge of windscreen to spray point of center spray jet	Dimension d	Length	335 mm		
Distance from upper edge of windscreen to spray point of outer spray jet	Dimension e	Length	480 mm		
Distance from side edge of windscreen to spray point of outer spray jet	Dimension f	Length	165 mm		
Wiper arm for rear window washer to wiper axle	Hexagon nut, M8	Tightening torque	19 Nm (14 ftlb.)		
Wiper motor for rear window washer to rear lid	Hexagon nut, M6	Tightening torque	8 Nm (6 ftlb.)		

Distance from center wiper lip to lower edge of windscreen	Dimension a	Nominal value	25 mm		
Tilt angle of light/dark limit of dipped beam headlight		Adjustment value	-1 %		
Tilt angle of light/dark limit of fog light		Adjustment value	-2 %		
Distance between collection box and main headlight	Dimension a	Length	300 mm	+400 mm	
Distance between collection box and fog light	Dimension a	Length	300 mm	+400 mm	
Tail light to body	Internal Torx screw, M6 x 25	Tightening torque	7.2 Nm (5 ftlb.)		
Rear retaining strip to body	Collar nut, M6	Tightening torque	7.2 Nm (5 ftlb.)		
Rear retaining strip to front retaining strip	Internal Torx screw, Ø 5 x 16	Tightening torque	2 Nm (1.5 ftlb.)		
Tail light to rear lid	Collar nut, M6	Tightening torque	7.2 Nm (5 ftlb.)		
Auxiliary headlight to front apron	Internal Torx screw, Ø 5 x 16	Tightening torque	6 Nm (4.5 ftlb.)		
Reversing light to rear apron	Internal Torx screw, Ø 5 x 16	Tightening torque	2.3 Nm (1.5 ftlb.)		
Fog light to front apron	Internal Torx screw, Ø 5 x 16	Tightening torque	2 Nm (1.5 ftlb.)	+/-0.5 Nm (+/-0.5 ftlb.)	
Light bulb control unit to headlight	Internal Torx screw, Ø 4 x 12	Tightening torque	1.5 Nm (1 ftlb.)		
Light bulb igniter to headlight	Internal Torx screw, Ø 4 x 12	Tightening torque	1.5 Nm (1 ftlb.)		
Headlight to headlight mounting	Hexagon-head bolt, M6 x 20	Tightening torque	8 Nm (6 ftlb.)		
Headlight mounting to body	Hexagon socket head bolt, M6 x 30	Tightening torque	9 Nm (6.5 ftlb.)		

Seal to headlight	Internal Torx screw, Ø 4 x 12	Tightening torque	2 Nm (1.5 ftlb.)		
Alarm siren holder to cowl panel	Collar nut, M6	Tightening torque	7 Nm (5 ftlb.)		
Clamp securing steering-column switch to steering column	Hexagon socket head bolt, M6 x 15	Tightening torque	4 Nm (3 ftlb.)		
Holder securing garage door opener control unit to lock support	Internal Torx screw, M6 x 22	Tightening torque	6 Nm (4.5 ftlb.)		
Switch console to center console	Internal Torx screw, M5 x 20	Tightening torque	4 Nm (3 ftlb.)		
Ground line to ground pin in body	Nut, M6	Tightening torque	9 Nm (6.5 ftlb.)		
Ground line to tailgate	Screw, M6	Tightening torque	9 Nm (6.5 ftlb.)		
Positive cable to power distributor	Nut, M8	Tightening torque	16 Nm (12 ftlb.)		
Positive cable to power distributor	Nut, M6	Tightening torque	7.5 Nm (5.5 ftlb.)		
Positive cable to power distributor	Screw, M6	Tightening torque	7.5 Nm (5.5 ftlb.)		
Cutoff relay to power distributor	Nut, M8	Tightening torque	8 Nm (6 ftlb.)		
Fuse element to power distributor	Nut, M6	Tightening torque	7.5 Nm (5.5 ftlb.)		
Connection terminal for B+ positive cables to jump-start point	Connection terminal, M8	Tightening torque	20 Nm (15 ftlb.)		
Positive cable to jump-start point	Nut, M6	Tightening torque	7.5 Nm (5.5 ftlb.)		
Positive cable to B+ line	Nut, M6	Tightening torque	7.5 Nm (5.5 ftlb.)		
Ground line to longitudinal member	Cap nut, M8	Tightening torque	20 Nm (15 ftlb.)		
B+ positive cable to potential	Nut, M8	Tightening torque	20 Nm (15 ftlb.)		

distributor on longitudinal member					
Fuse box in luggage compartment to body	Combined nut, M6	Tightening torque	3 Nm (2 ftlb.)		
Positive cable to fuse box in cowl panel	Nut, M6	Tightening torque	9 Nm (6.5 ftlb.)		
Connector console under driver's or passenger's seat to body	Combined nut, M6	Tightening torque	3 Nm (2 ftlb.)		

WM 9X00IN TECHNICAL VALUES (ALL MODELS) > TECHNICAL VALUES - 90 - INSTRUMENTS

Location	Description	Type	Basic value	Tolerance 1	Tolerance 2
Gateway control unit to body	Internal Torx screw, M5 x 16	Tightening torque	9 Nm (6.5 ftlb.)		
Holder for horn to front bumper	Internal serration screw, M8 x 20	Tightening torque	20 Nm (15 ftlb.)		
Stopwatch or compass to cover for center loudspeaker	Internal Torx screw, M5 x 20	Tightening torque	3 Nm (2 ftlb.)		
Instrument cluster to dashboard	Internal Torx screw, M5 x 16	Tightening torque	3.2 Nm (2 ftlb.)		

WM 9X00IN TECHNICAL VALUES (ALL MODELS) > TECHNICAL VALUES -91- RADIO, ON-BOARD COMPUTER, PARKASSIST

Location	Description	Type	Basic value	Tolerance 1	Tolerance 2
Steering wheel electronics control unit to steering-column switch	Internal Torx screw, Ø 2.5 x 12	Tightening torque	0.5 Nm (0.5 ftlb.)		
Lane Change Assist control unit	Internal Torx screw, M5 x 14	Tightening torque	3 Nm (2 ftlb.)		

to holder					
Rear woofer to rear door	Internal Torx screw, M5 x 20	Tightening torque	4 Nm (3 ftlb.)		
Subwoofer to body	Hexagon-head bolt, M6 x 16	Tightening torque	9 Nm (6.5 ftlb.)		
Antenna amplifier to tailgate	Hexagon-head bolt, M6 x 20	Tightening torque	9 Nm (6.5 ftlb.)		
Antenna control unit to tailgate	Hexagon-head bolt, M6 x 20	Tightening torque	9 Nm (6.5 ftlb.)		
SDARS antenna to vehicle roof	Hexagon nut	Tightening torque	7 Nm (5 ftlb.)	+1 Nm (+0.5 ftlb.)	
Loudspeaker booster to holder	Internal Torx screw, M6 x 12	Tightening torque	6 Nm (4.5 ftlb.)		
TV tuner to holder	Internal Torx screw, M6 x 12	Tightening torque	6 Nm (4.5 ftlb.)		
Holder for loudspeaker booster and TV tuner to body	Nut, M6	Tightening torque	9 Nm (6.5 ftlb.)		
PCM display and operator control unit to the instrument panel	Internal Torx screw, M5 x 16	Tightening torque	4 Nm (3 ftlb.)		
Telephone bracket to center console	Internal Torx screw, Ø 3 x 7	Tightening torque	0.5 Nm (0.5 ftlb.)		
ParkAssist control unit to body	Nut, M6	Tightening torque	3 Nm (2 ftlb.)		

WM 9X00IN TECHNICAL VALUES (ALL MODELS) > TECHNICAL VALUES -92- WINDSCREEN WIPER AND WASHER SYSTEM

Location	Description	Type	Basic value	Tolerance 1	Tolerance 2
Filler neck for windscreen washer system to body	Internal Torx screw, M6 x 14	Tightening torque	7 Nm (5 ftlb.)		
Windscreen-washer reservoir to body	Internal Torx screw, M6 x 16	Tightening torque	7 Nm (5 ftlb.)		
Wiper linkage to body	Internal Torx screw, M6 x 28	Tightening torque	8 Nm (6 ftlb.)		

Wiper arm to wiper linkage	Hexagon nut, M10	Tightening torque	32 Nm (24 ftlb.)		
Wiper motor to wiper linkage	Internal Torx screw, M6 x 16	Tightening torque	12 Nm (9 ftlb.)	+/-1 Nm (+/- 0.5 ftlb.)	
Distance from left wiper arm to cowl panel cover	Dimension a	Nominal value	30 mm		
Distance from right wiper arm to cowl panel cover	Dimension b	Nominal value	34 mm		
Distance from upper edge of windscreen to spray point of inner spray jet	Dimension a	Length	200 mm		
Distance from side edge of windscreen to spray point of inner spray jet	Dimension b	Length	535 mm		
Distance from upper edge of windscreen to spray point of center spray jet	Dimension c	Length	325 mm		
Distance from side edge of windscreen to spray point of center spray jet	Dimension d	Length	335 mm		
Distance from upper edge of windscreen to spray point of outer spray jet	Dimension e	Length	480 mm		
Distance from side edge of windscreen to spray point of outer spray jet	Dimension f	Length	165 mm		
Wiper arm for rear window washer to wiper axle	Hexagon nut, M8	Tightening torque	19 Nm (14 ftlb.)		
Wiper motor for rear window	Hexagon nut, M6	Tightening torque	8 Nm (6 ftlb.)		

washer to rear lid					
Distance from center wiper lip to lower edge of windscreen	Dimension a	Nominal value	25 mm		

WM 9X00IN TECHNICAL VALUES (ALL MODELS) > TECHNICAL VALUES -94- LIGHTS, LAMPS, SWITCHES - EXTERIOR

Location	Description	Type	Basic value	Tolerance 1	Tolerance 2
Tilt angle of light/dark limit of dipped beam headlight		Adjustment value	-1 %		
Tilt angle of light/dark limit of fog light		Adjustment value	-2 %		
Distance between collection box and main headlight	Dimension a	Length	300 mm	+400 mm	
Distance between collection box and fog light	Dimension a	Length	300 mm	+400 mm	
Tail light to body	Internal Torx screw, M6 x 25	Tightening torque	7.2 Nm (5 ftlb.)		
Rear retaining strip to body	Collar nut, M6	Tightening torque	7.2 Nm (5 ftlb.)		
Rear retaining strip to front retaining strip	Internal Torx screw, Ø 5 x 16	Tightening torque	2 Nm (1.5 ftlb.)		
Tail light to rear lid	Collar nut, M6	Tightening torque	7.2 Nm (5 ftlb.)		
Auxiliary headlight to front apron	Internal Torx screw, Ø 5 x 16	Tightening torque	6 Nm (4.5 ftlb.)		
Reversing light to rear apron	Internal Torx screw, Ø 5 x 16	Tightening torque	2.3 Nm (1.5 ftlb.)		
Fog light to front apron	Internal Torx screw, Ø 5 x 16	Tightening torque	2 Nm (1.5 ftlb.)	+/-0.5 Nm (+/-0.5 ftlb.)	

Light bulb control unit to headlight	Internal Torx screw, Ø 4 x 12	Tightening torque	1.5 Nm (1 ftlb.)		
Light bulb igniter to headlight	Internal Torx screw, Ø 4 x 12	Tightening torque	1.5 Nm (1 ftlb.)		
Headlight to headlight mounting	Hexagon-head bolt, M6 x 20	Tightening torque	8 Nm (6 ftlb.)		
Headlight mounting to body	Hexagon socket head bolt, M6 x 30	Tightening torque	9 Nm (6.5 ftlb.)		
Seal to headlight	Internal Torx screw, Ø 4 x 12	Tightening torque	2 Nm (1.5 ftlb.)		

WM 9X00IN TECHNICAL VALUES (ALL MODELS) > TECHNICAL VALUES - 96 - LIGHTS, LAMPS, SWITCHES - INTERIOR, ANTI-THEFT PROTECTION

Location	Description	Type	Basic value	Tolerance 1	Tolerance 2
Alarm siren holder to cowl panel	Collar nut, M6	Tightening torque	7 Nm (5 ftlb.)		
Clamp securing steering-column switch to steering column	Hexagon socket head bolt, M6 x 15	Tightening torque	4 Nm (3 ftlb.)		

4

Location	Description	Type	Basic value	Tolerance 1	Tolerance 2
Holder securing garage door opener control unit to lock support	Internal Torx screw, M6 x 22	Tightening torque	6 Nm (4.5 ftlb.)		
Switch console to center console	Internal Torx screw, M5 x 20	Tightening torque	4 Nm (3 ftlb.)		

WM 9X00IN TECHNICAL VALUES (ALL MODELS) > TECHNICAL VALUES - 97 - LINES

Location	Description	Type	Basic value	Tolerance 1	Tolerance 2
Ground line to ground pin in body	Nut, M6	Tightening torque	9 Nm (6.5 ftlb.)		
Ground line to tailgate	Screw, M6	Tightening torque	9 Nm (6.5 ftlb.)		
Positive cable to power distributor	Nut, M8	Tightening torque	16 Nm (12 ftlb.)		
Positive cable to power distributor	Nut, M6	Tightening torque	7.5 Nm (5.5 ftlb.)		
Positive cable to power distributor	Screw, M6	Tightening torque	7.5 Nm (5.5 ftlb.)		
Cutoff relay to power distributor	Nut, M8	Tightening torque	8 Nm (6 ftlb.)		
Fuse element to power distributor	Nut, M6	Tightening torque	7.5 Nm (5.5 ftlb.)		
Connection terminal for B+ positive cables to jump-start point	Connection terminal, M8	Tightening torque	20 Nm (15 ftlb.)		
Positive cable to jump-start point	Nut, M6	Tightening torque	7.5 Nm (5.5 ftlb.)		
Positive cable to B+ line	Nut, M6	Tightening torque	7.5 Nm (5.5 ftlb.)		
Ground line to longitudinal member	Cap nut, M8	Tightening torque	20 Nm (15 ftlb.)		
B+ positive cable to potential distributor on longitudinal member	Nut, M8	Tightening torque	20 Nm (15 ftlb.)		
Fuse box in luggage compartment to body	Combined nut, M6	Tightening torque	3 Nm (2 ftlb.)		
Positive cable to fuse box in cowl panel	Nut, M6	Tightening torque	9 Nm (6.5 ftlb.)		
Connector console under driver's or passenger's seat to body	Combined nut, M6	Tightening torque	3 Nm (2 ftlb.)		

WM 100119 REMOVING AND INSTALLING ENGINE (MACAN) > TOOLS

Designation	Type	Number	Description	
support bracket	VW tool	10-222 A		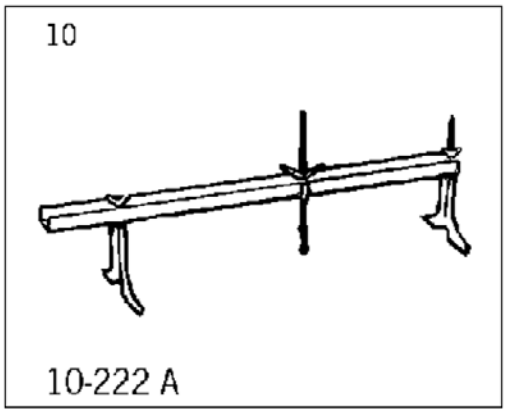
workshop crane	Workshop equipment	WE 1188		
Lifting tackle	VW tool	2024 A		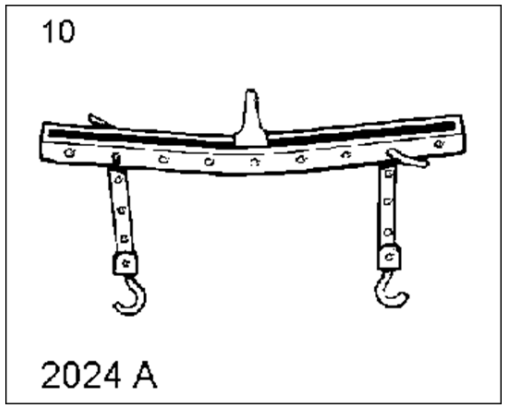

gearbox support	VW tool	3147		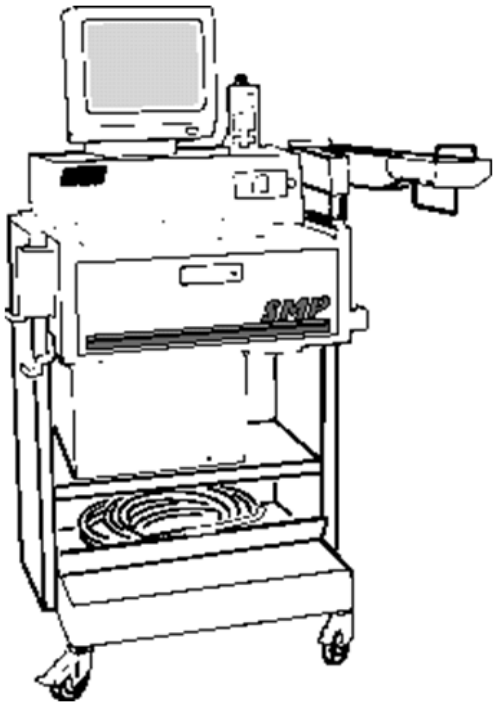

WM 100119 REMOVING AND INSTALLING ENGINE (MACAN) > PRELIMINARY WORK

1. Remove ignition key.
2. Disconnect the battery. → 270619 REMOVING AND INSTALLING BATTERY
3. Remove engine cover.
4. Loosen drive belt. → 137819 REMOVING AND INSTALLING DRIVE BELT
5. Remove cowl panel cover. → 508719 REMOVING AND INSTALLING COWL PANEL COVER
6. Remove filler neck from windscreen-washer reservoir. → 926019 REMOVING AND INSTALLING WINDSCREEN-WASHER RESERVOIR
7. Remove front strut. → 408619 REMOVING AND INSTALLING FRONT STRUT
8. Remove front wheels. → 440519 REMOVING AND INSTALLING WHEEL
9. Remove front wheel housing liner. → 505619 REMOVING AND INSTALLING FRONT WHEEL HOUSING LINER
10. Remove cover for front underbody. → 519219 REMOVING AND INSTALLING COVER FOR FRONT UNDERBODY
11. Drain coolant. → 193817 DRAINING AND FILLING COOLANT
12. Remove cross panel. → 508119 REMOVING AND INSTALLING CROSS PANEL (DISASSEMBLING PLENUM PANEL)
13. Remove catalytic converter. → 267319 REMOVING AND INSTALLING CATALYTIC CONVERTER

WM 100119 REMOVING AND INSTALLING ENGINE (MACAN) > REMOVING ENGINE

WARNING: Danger of objects or loads falling down

- *Risk of squashing or crushing*

→ Secure components to prevent them from falling down.

WARNING: Hot fluid

- *Danger of scalding*

→ Let the fluid cool down.

→ Wear personal protective gear.

WARNING: Highly inflammable or explosive materials

- *Danger of fire or explosion*

→ Avoid contact with hot parts or sources of ignition.

→ Use suction to remove ignitable vapors.

→ Attach warning sign in a clearly visible position.

CAUTION: Hot components

- *Risk of burns*

→ Let hot components cool down.

→ Wear personal protective gear.

NOTE: Aggressive fluids

- *Risk of damage to components and surfaces*

→ Do not spill fluids.

→ In the event of contact, wash the component or surface with water.

→ Replace components that are already damaged.

Information

- Close off open connections and lines using suitable stoppers or caps.

Information

Place a cloth underneath to catch escaping fuel.

Information

- The pictures shown in this document may differ from the original.

1. Loosen screw-type clamps and pull off pressure hose.

   Fig 1: Locating Charge-Air Cooler/Throttle Valve Pressure Hose

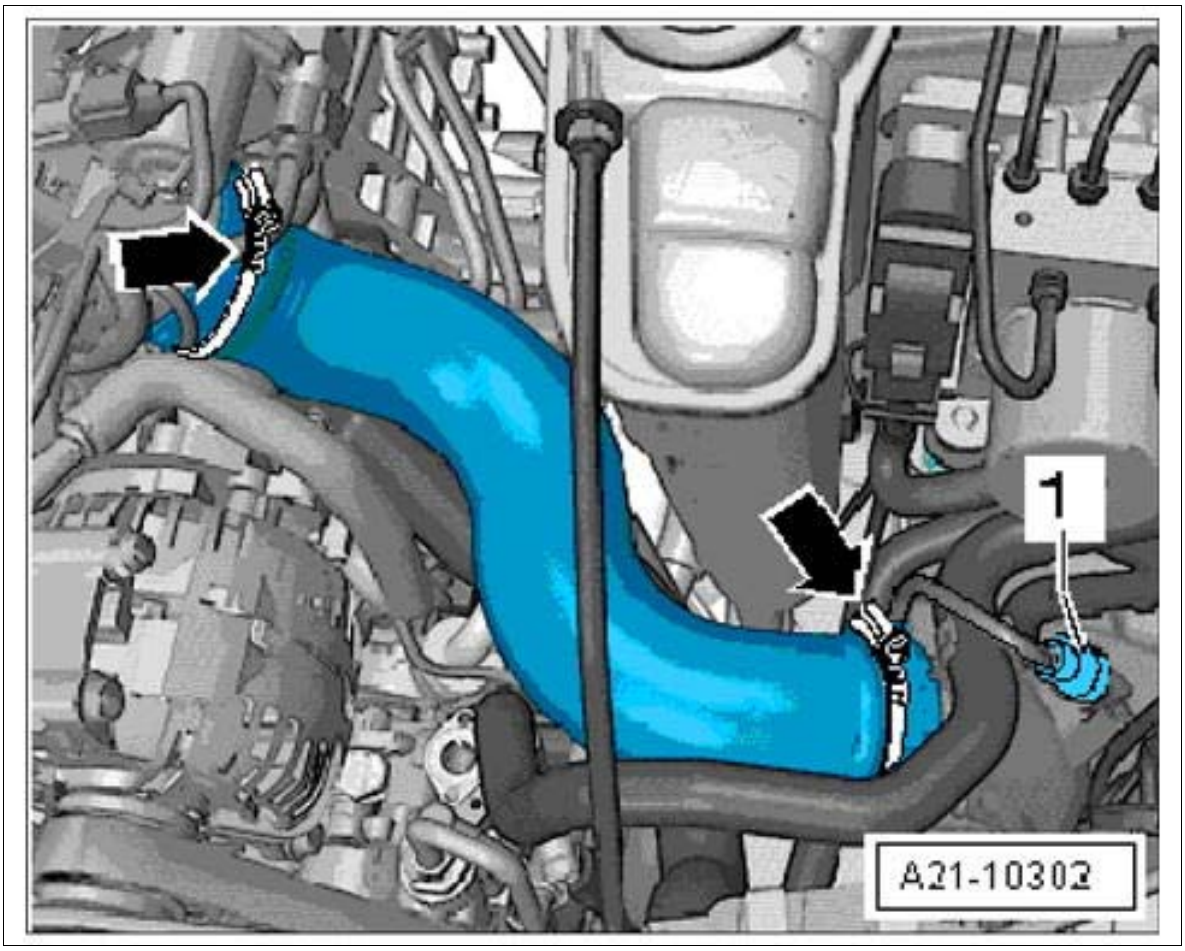

Courtesy of PORSCHE CARS NORTH AMERICA, INC.

2. Release and disconnect electric connector **-1-** for the boost pressure sensor.

Fig 2: Identifying Boost Pressure Sensor Electric Connector

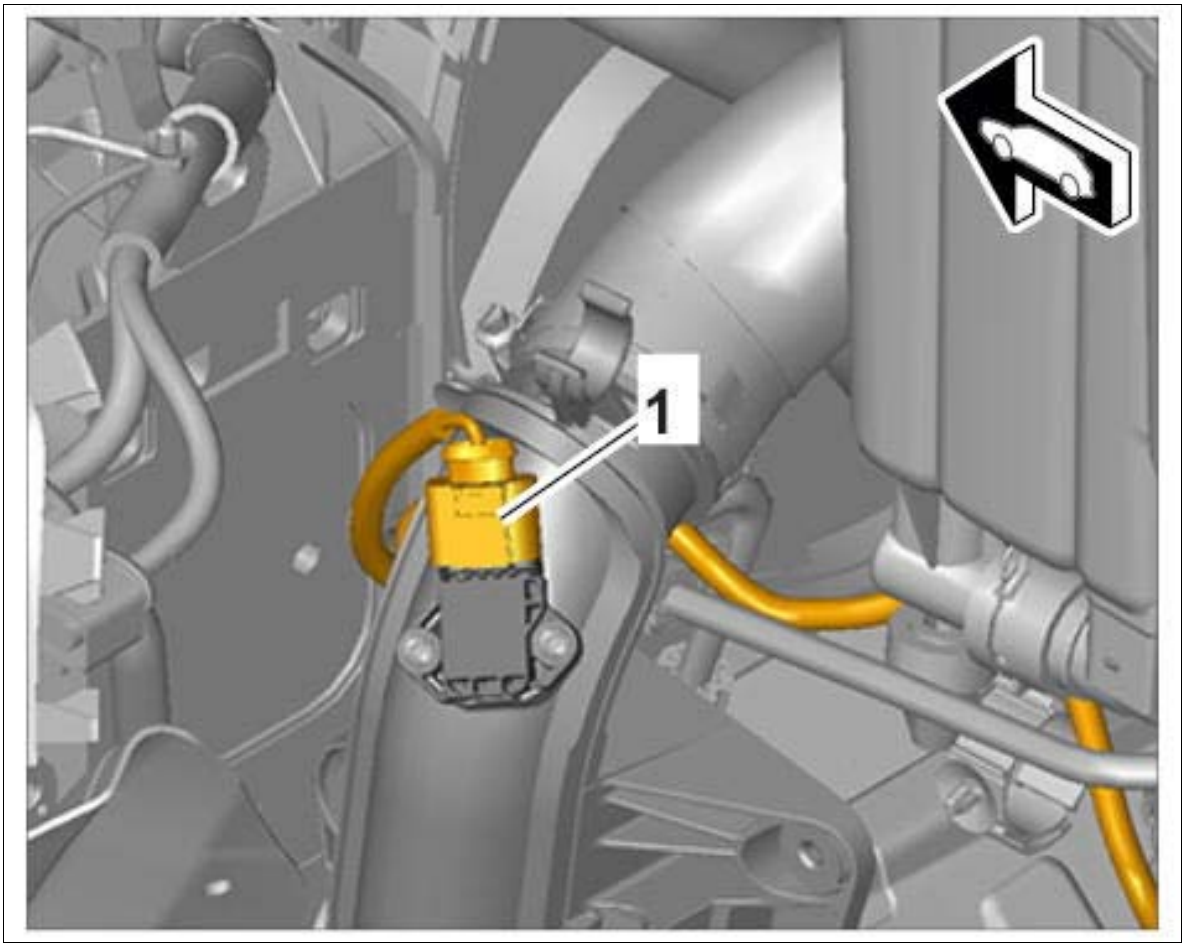

Courtesy of PORSCHE CARS NORTH AMERICA, INC.

3. Loosen fastening screws **-2-** and remove air cleaner housing cover **-1-** .

Fig 3: Identifying Air Cleaner Housing Cover

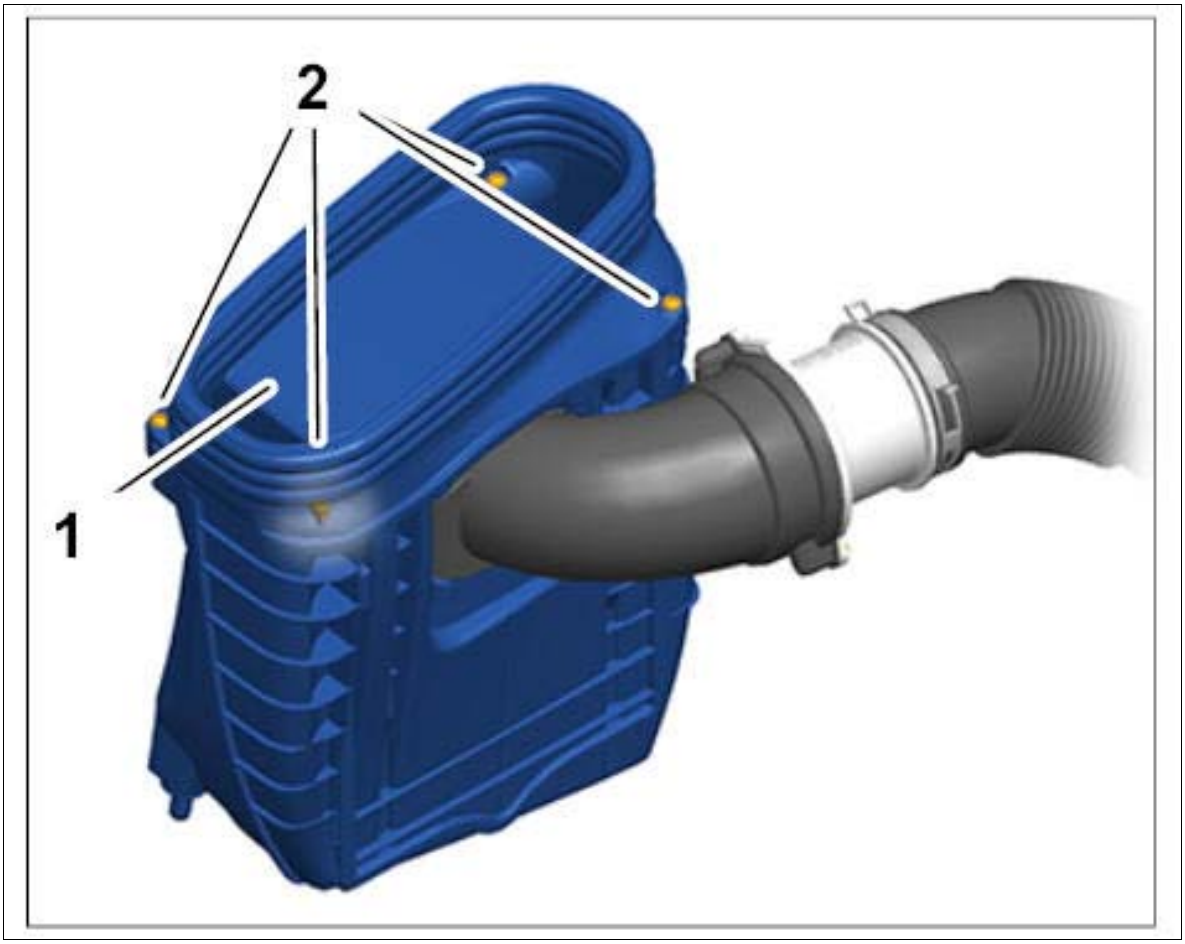

Courtesy of PORSCHE CARS NORTH AMERICA, INC.

4. Remove fastening bolts.
    1. 4.1. Press fastening bolts **-1-** down slightly and turn 90° in **-direction of arrow-** .
    2. 4.2. Pull out loosened fastening bolt **-2-** .

Fig 4: Identifying Engine Fastening Bolts

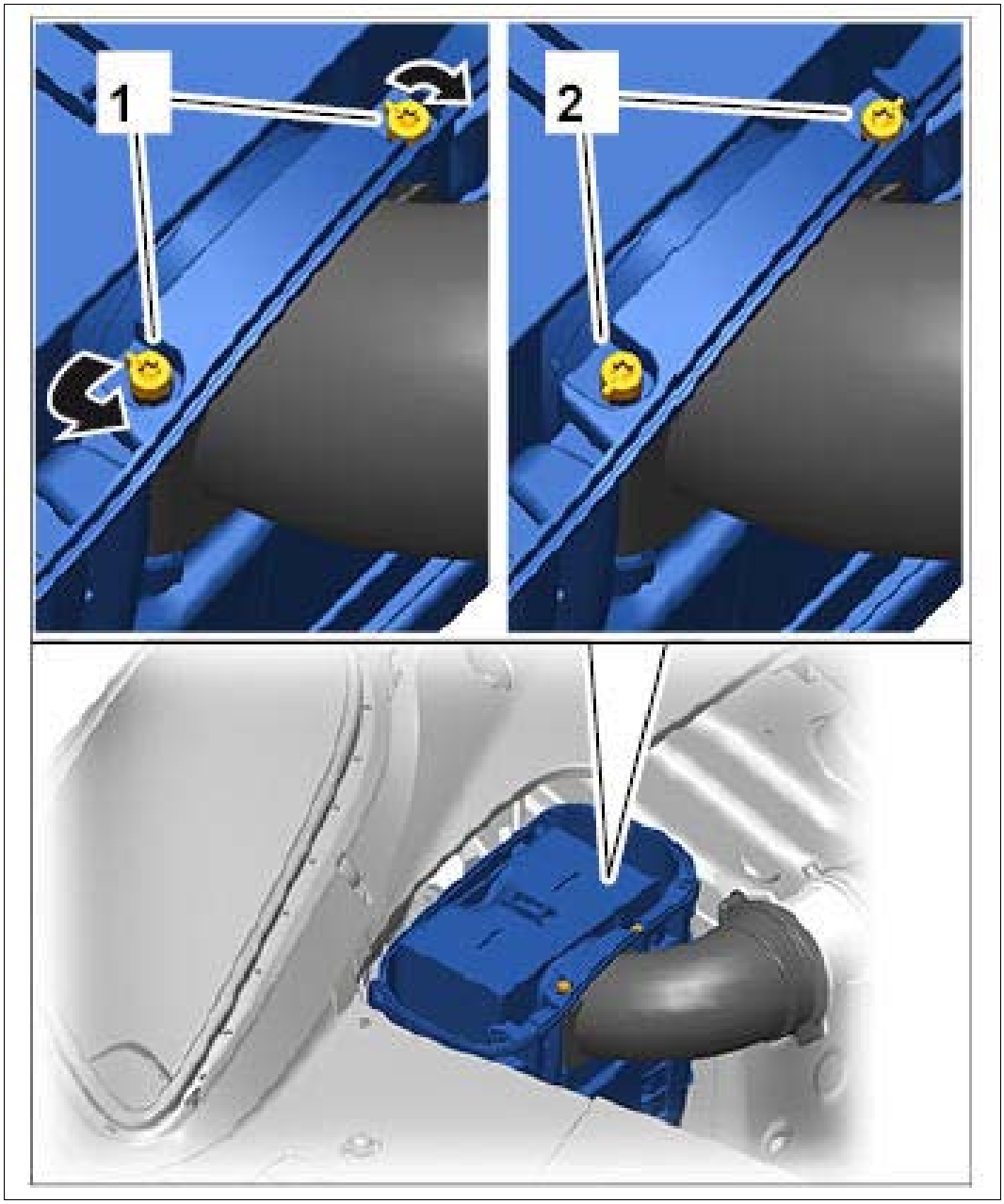

Courtesy of PORSCHE CARS NORTH AMERICA, INC.

5. Loosen air guide **-1-** from the air cleaner housing **-2-** in **-direction of arrow-** .

Fig 5: Loosening Air Guide

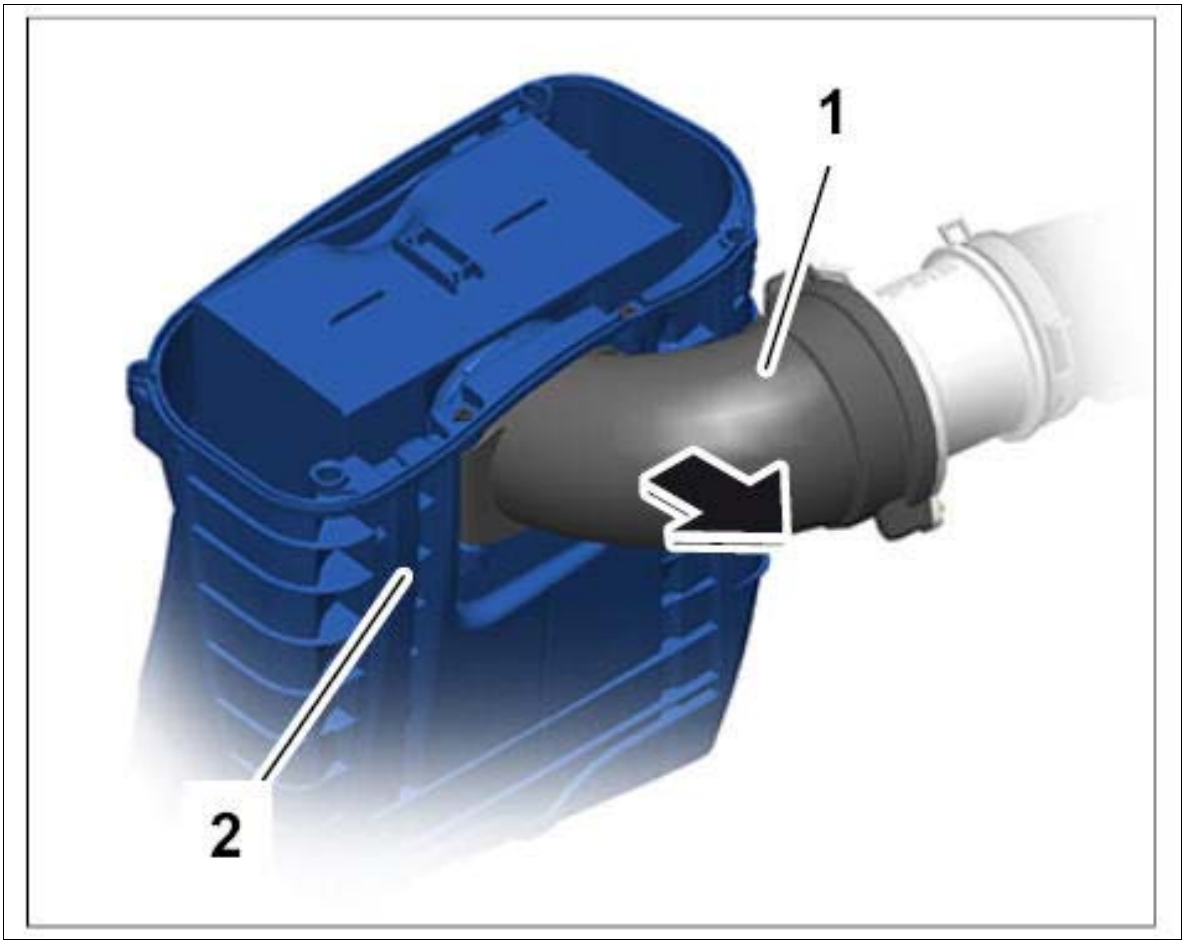

Courtesy of PORSCHE CARS NORTH AMERICA, INC.

6. Remove air box for air cleaner **-1-** (air cleaner/turbocharger).
    1. 6.1. Disconnect vacuum line **-2-** and loosen screw-type clamp **-3-** .
    2. 6.2. Lift air box for air cleaner up and remove it.

Fig 6: Identifying Air-Cleaner And Vacuum Line

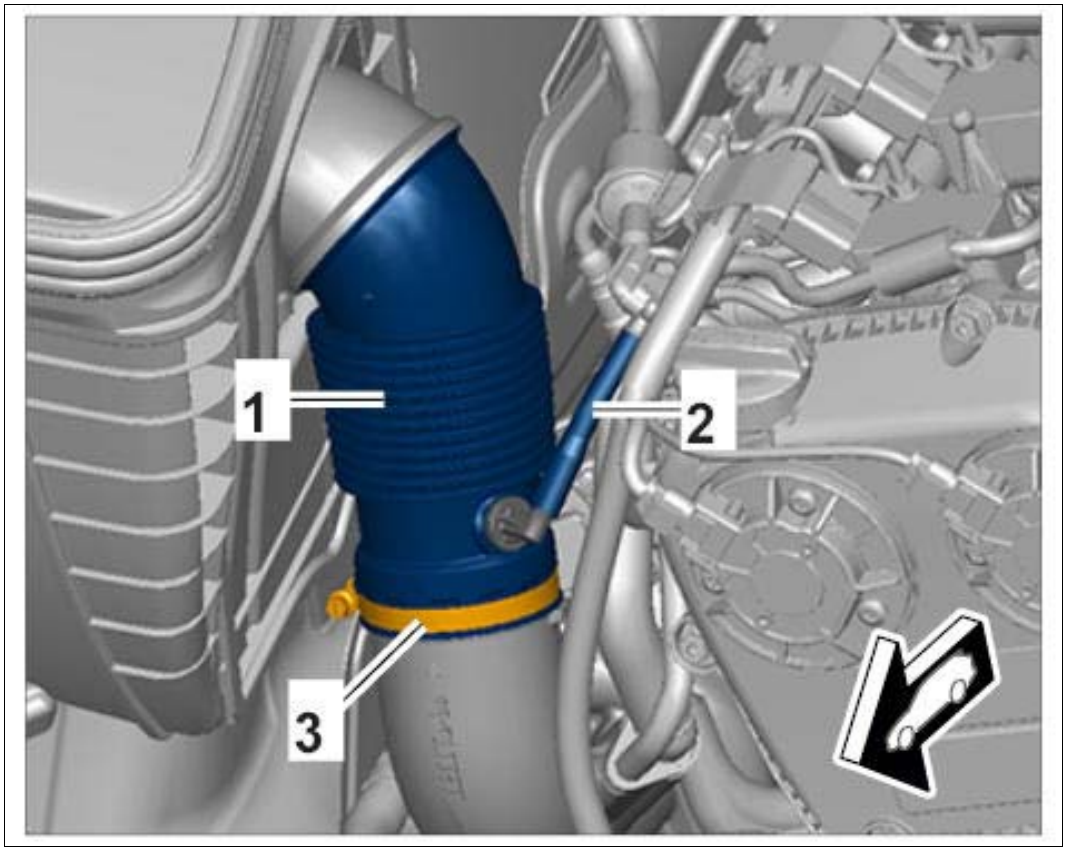

Courtesy of PORSCHE CARS NORTH AMERICA, INC.

7. Disconnect fuel lines at the front.
    1. 7.1. Press unlocking ring **-1-** and disconnect fuel supply line.
    2. 7.2. Loosen clamp **-2-** and pull hose off the carbon canister.

Fig 7: Identifying Fuel Lines Clamp

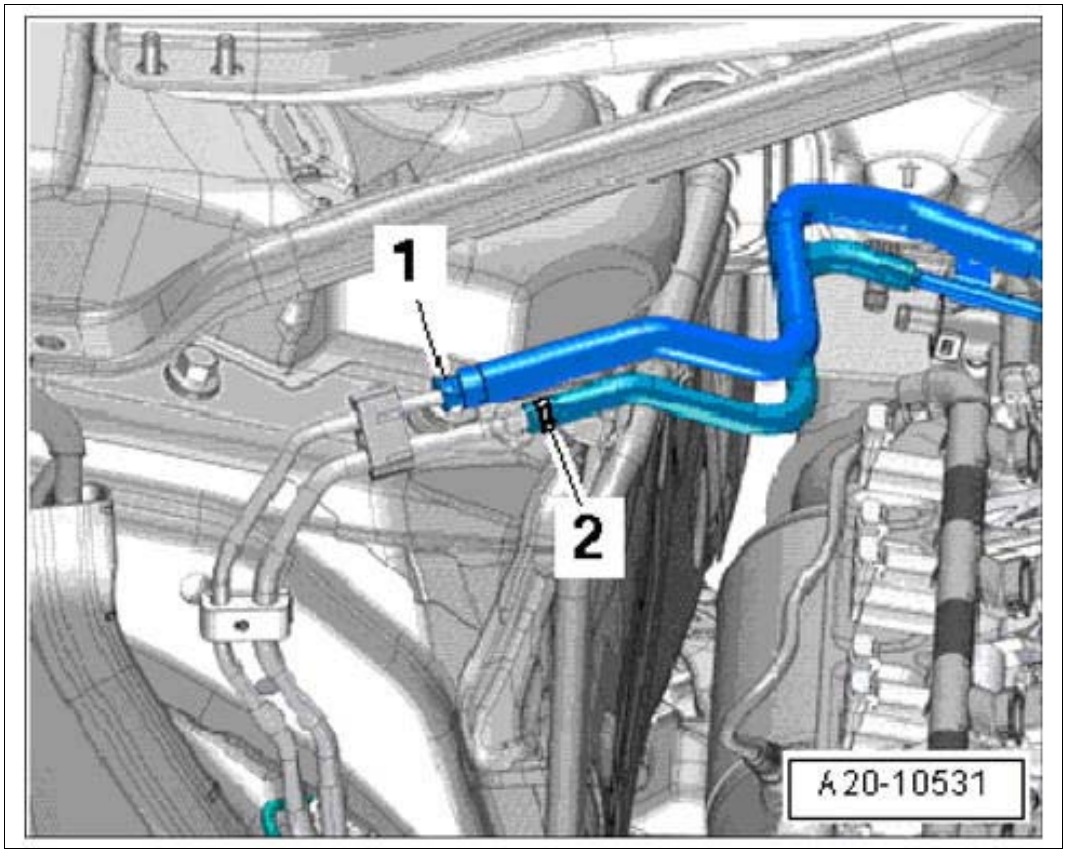

Courtesy of PORSCHE CARS NORTH AMERICA, INC.

8. Disconnect coolant line at the radiator.

    1. 8.1. Lift up retaining clip **-1-** and pull off coolant line **-2-** .

Fig 8: Identifying Radiator Coolant Line

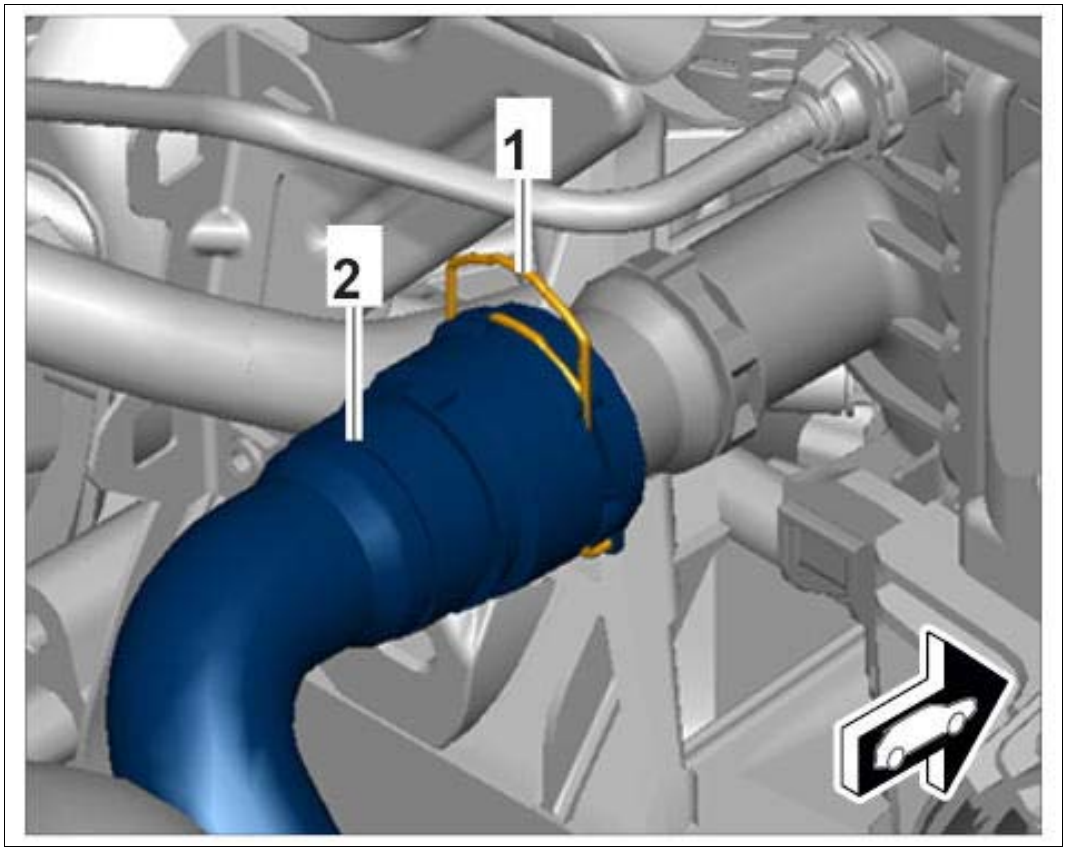

Courtesy of PORSCHE CARS NORTH AMERICA, INC.

9. Disconnect lines on the coolant reservoir **-1-** .
    1. 9.1. Lift up retaining clip **-arrow-** and pull off vent line **-2-** .
    2. 9.2. Lift up retaining clip **-arrow-** and pull off coolant line **-3-** .

Fig 9: Locating Coolant Reservoir Lines

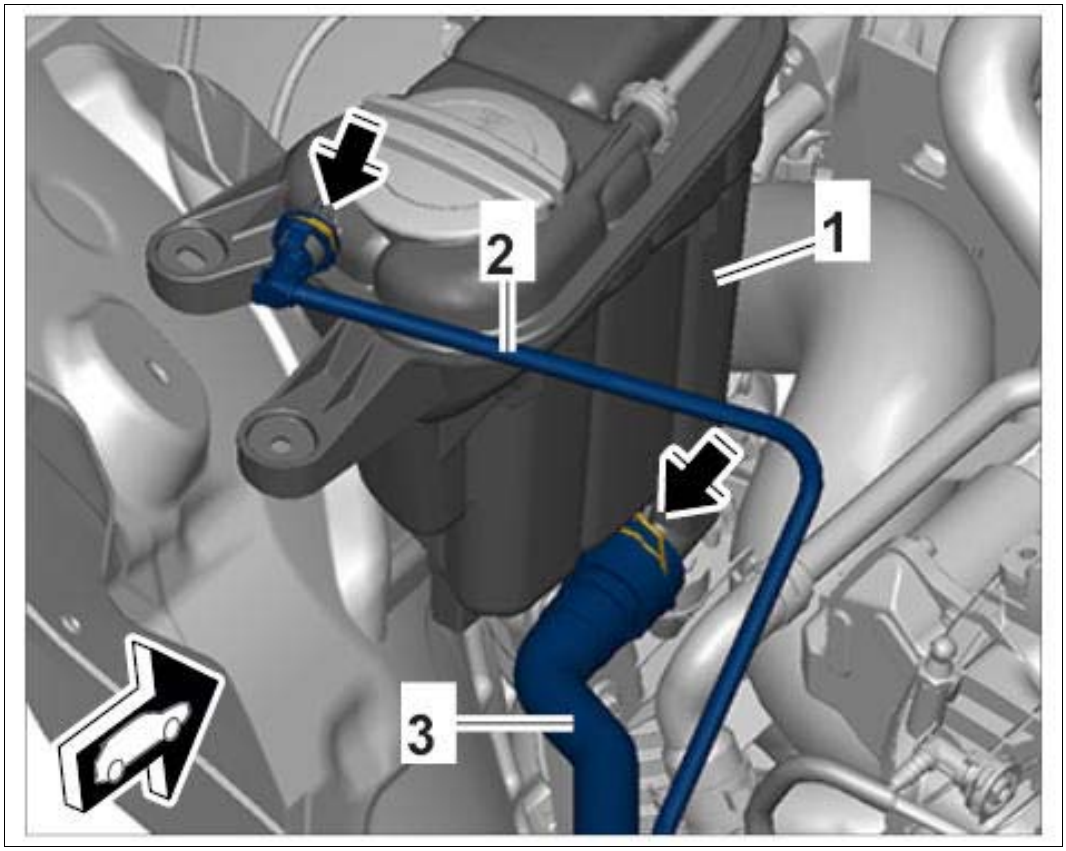

Courtesy of PORSCHE CARS NORTH AMERICA, INC.

10. Loosen air-conditioning compressor and secure it to the side member.

    1. 10.1. Release and disconnect electric connector **-1-** on the air-conditioning compressor **-2-** .
    2. 10.2. Unscrew screws **-3-** .
    3. 10.3. Secure air-conditioning compressor using tie-wraps on the longitudinal member for example.

Fig 10: Identifying Air-Conditioning Compressor

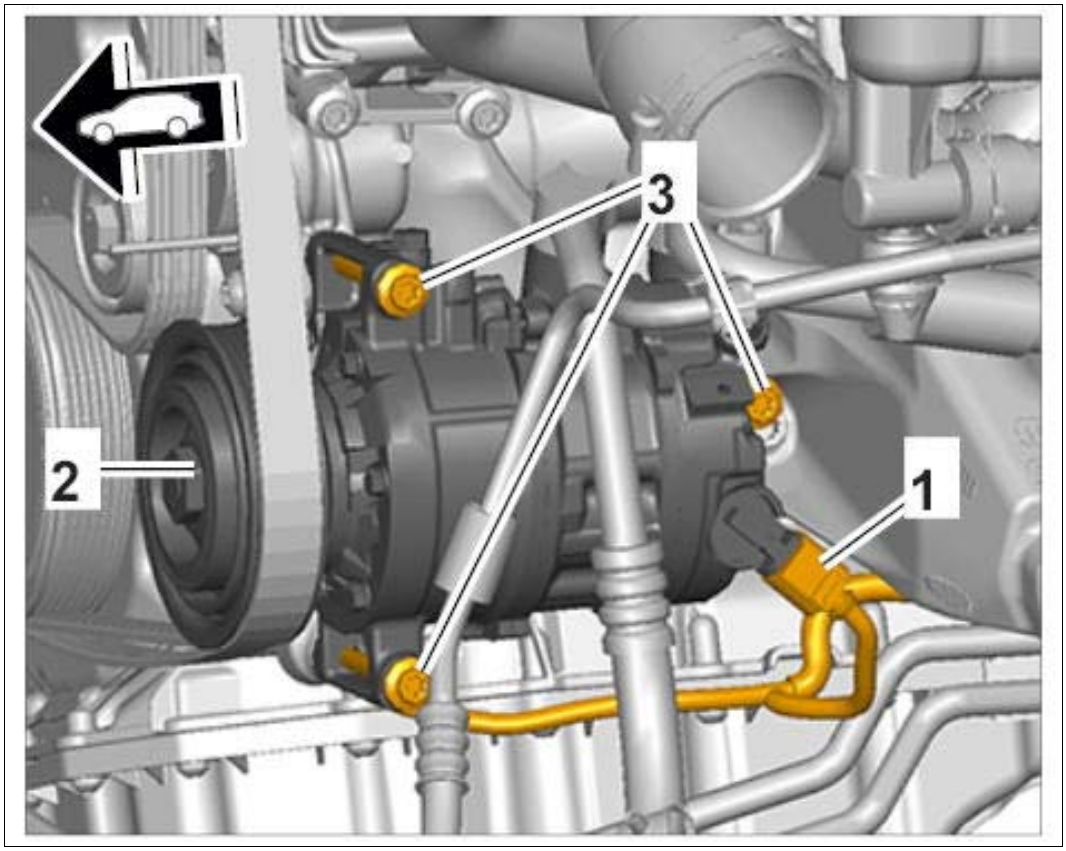

Courtesy of PORSCHE CARS NORTH AMERICA, INC.

11. Unscrew fastening screws **-1, 2 and 4-** and remove cover **-3-** on the fuse box.

Fig 11: Removing E-Box Cover

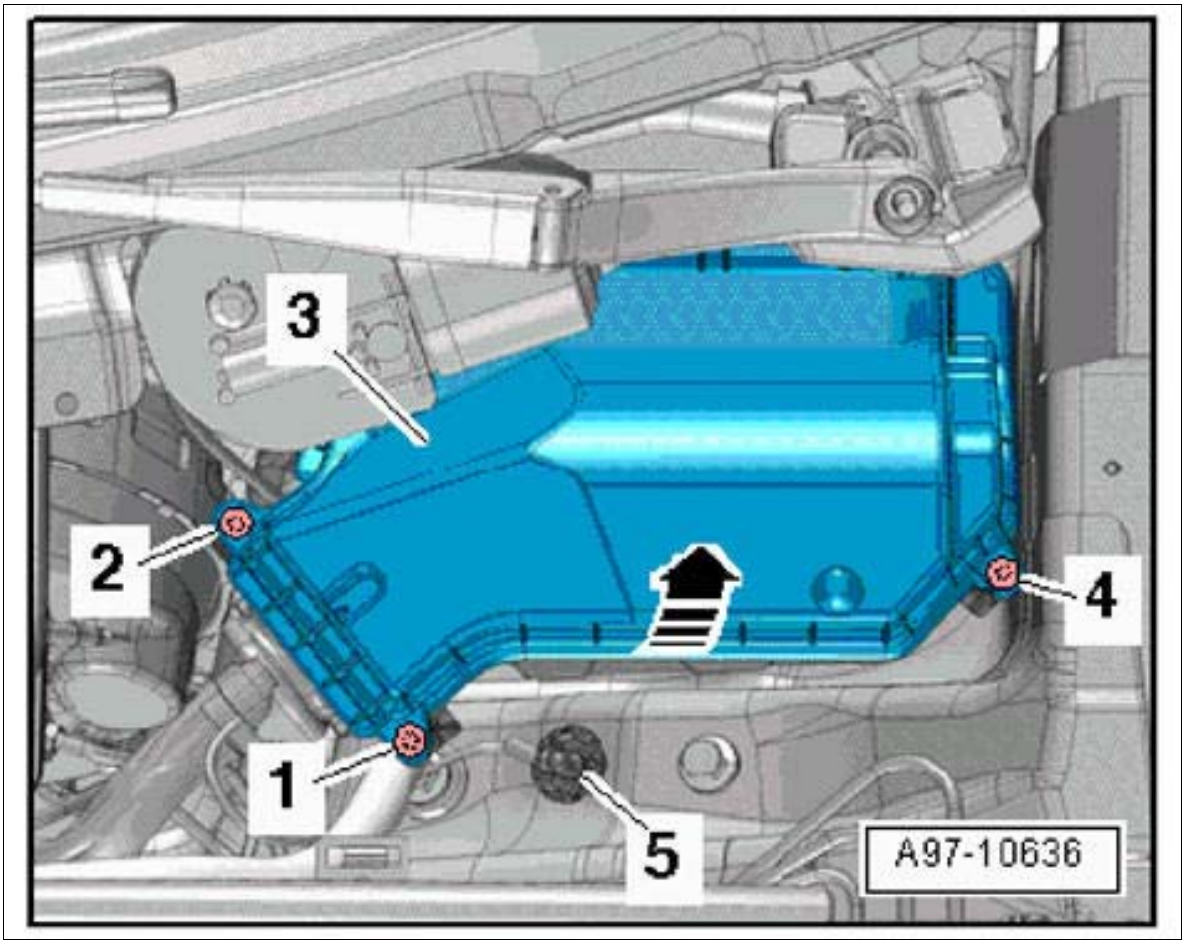

Courtesy of PORSCHE CARS NORTH AMERICA, INC.

12. Unscrew fastening nut **-1-** , disconnect ground line **-2-** and set it aside.

Fig 12: Identifying Engine Ground Line

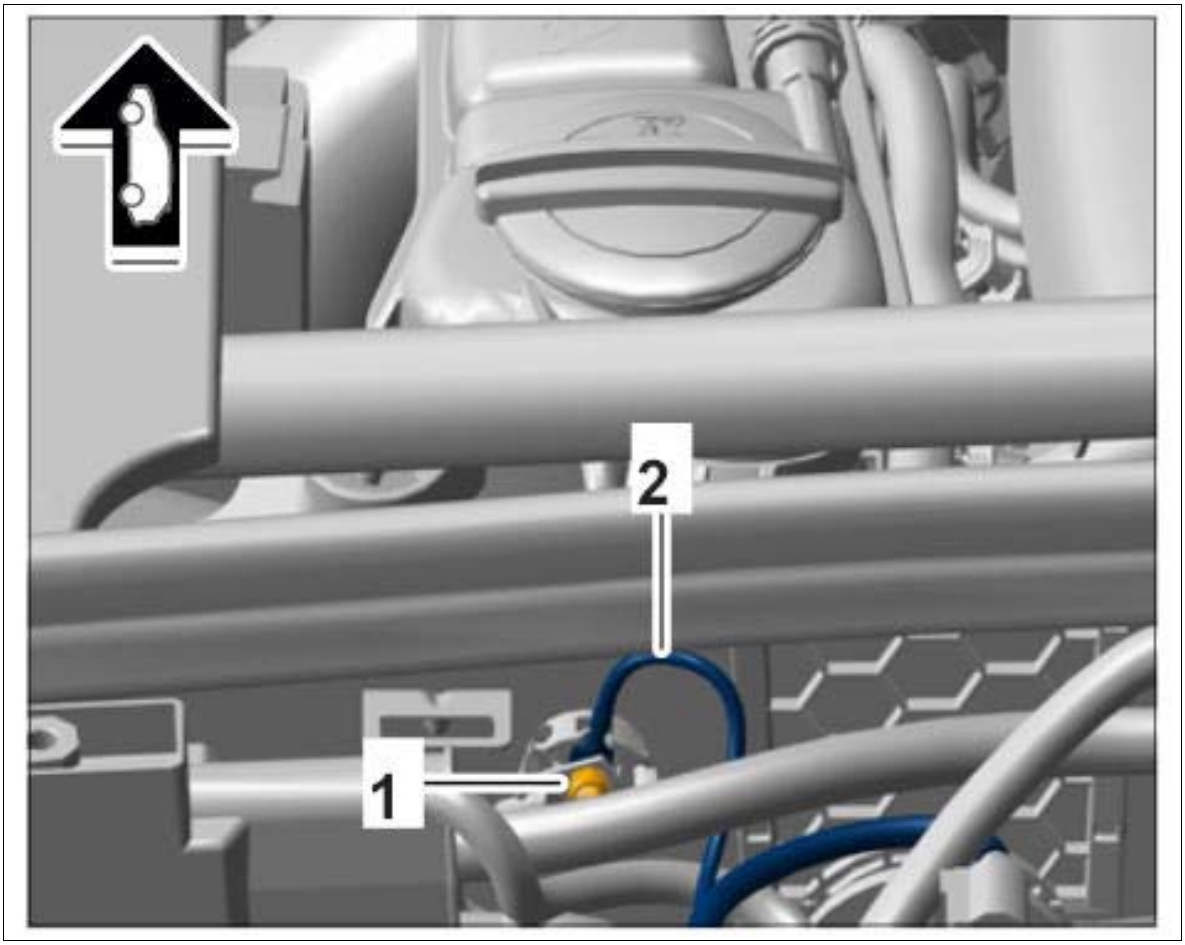

Courtesy of PORSCHE CARS NORTH AMERICA, INC.

13. Remove cover for B+ line **-1-** .

Fig 13: Identifying Engine Cover B+ Line

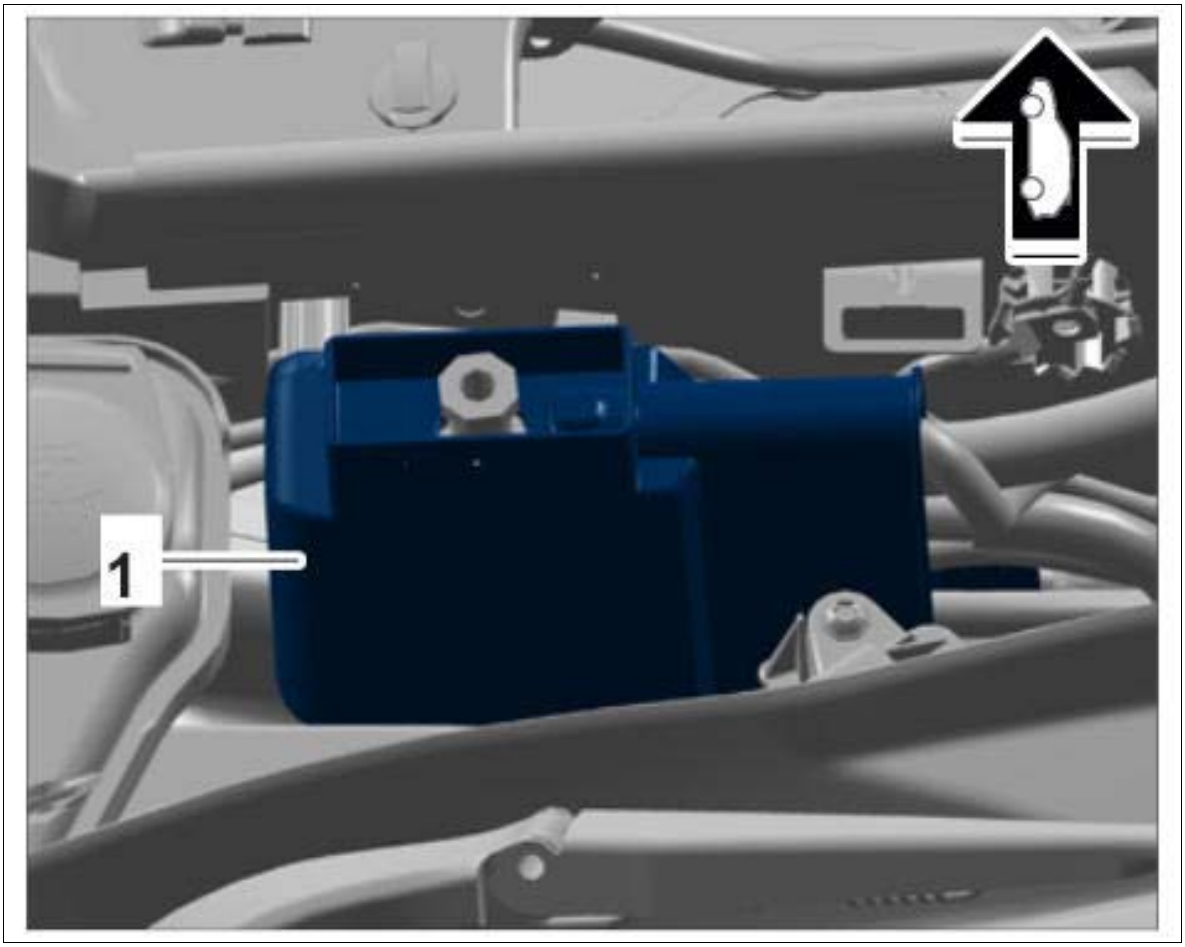

Courtesy of PORSCHE CARS NORTH AMERICA, INC.

14. Unscrew fastening nut **-1-** and move line **-4-** aside.

Fig 14: Identifying Engine B+ Line And Nut

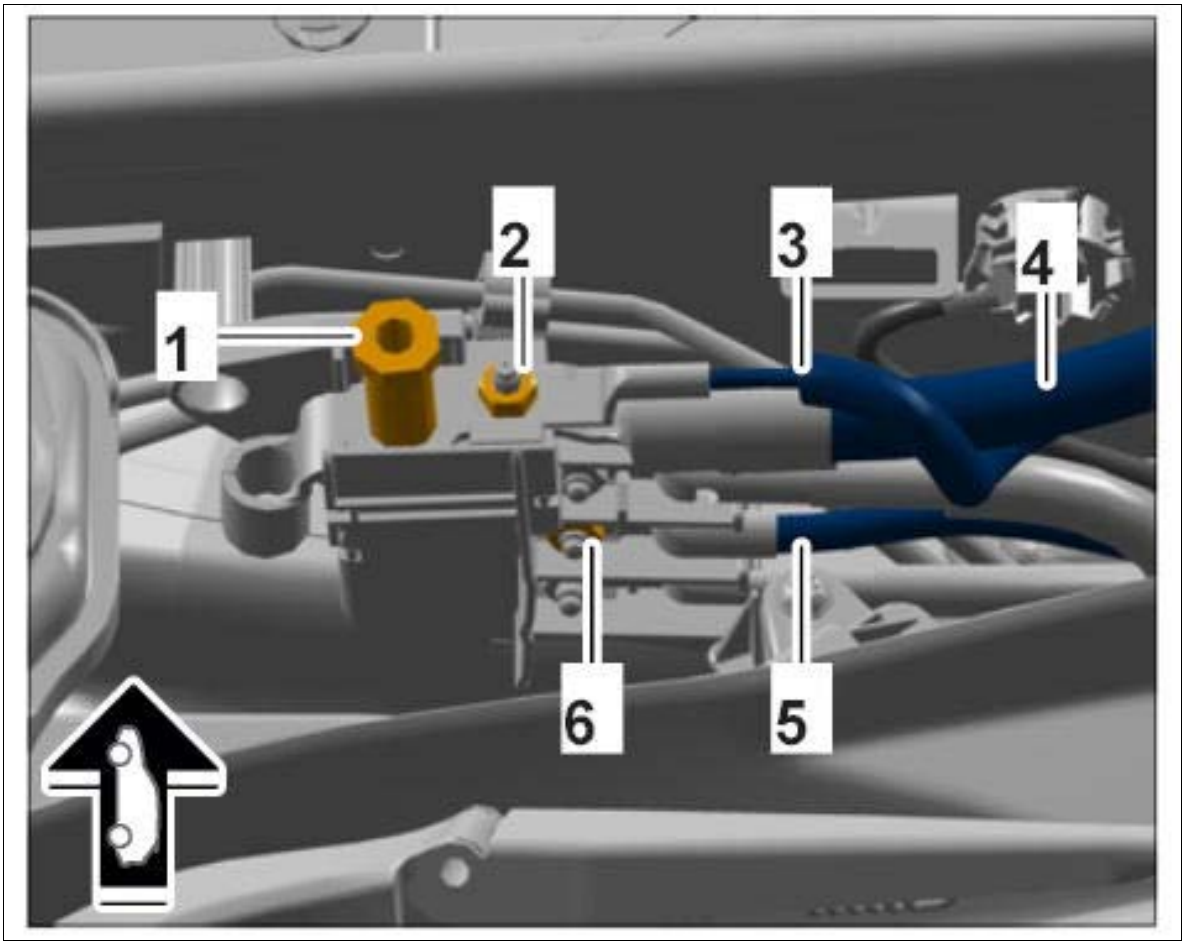

Courtesy of PORSCHE CARS NORTH AMERICA, INC.

15. Release electric plug connections **-A-** in direction of arrow and remove DME control unit in **-direction of arrow B-** .

Fig 15: Removing DME Control Unit

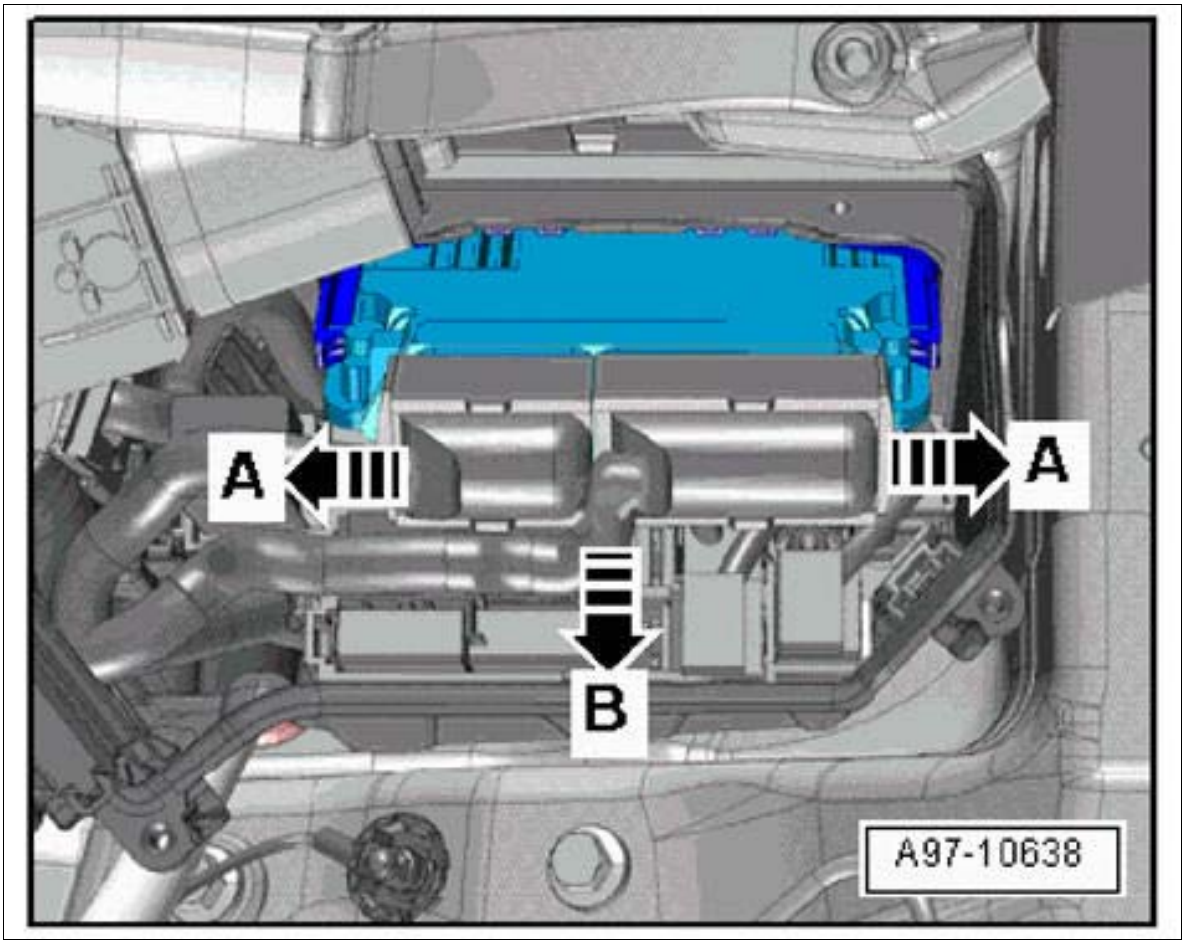

Courtesy of PORSCHE CARS NORTH AMERICA, INC.

16. Loosen the fuse box.
    1. 16.1. Disconnect electric plug connections **-2-** and **-4-** .
    2. 16.2. Unscrew fastening nut **-3-** .
    3. 16.3. Press locking lug **-arrow-** and remove the fuse box by pulling it upwards.

Fig 16: Removing Relay And Fuse Box

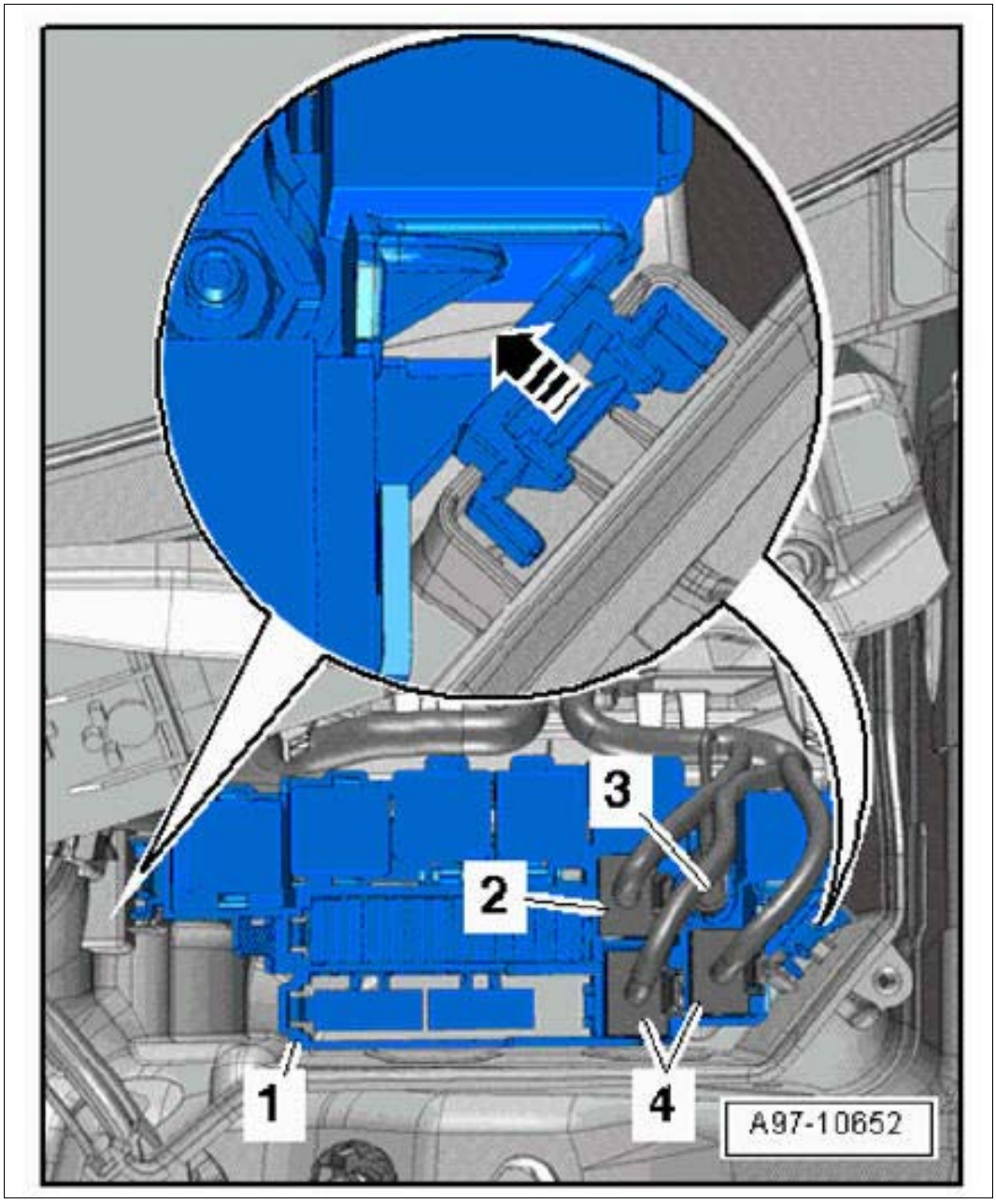

Courtesy of PORSCHE CARS NORTH AMERICA, INC.

17. Remove cable bushing **-1-** .

    1. 17.1. Pull off rubber seal on the firewall.
    2. 17.2. Carefully unclip clips **-arrow A-** .
    3. 17.3. Remove cable bushing **-1-** in **-direction of arrow B-** .

Fig 17: Removing Cable Bushing

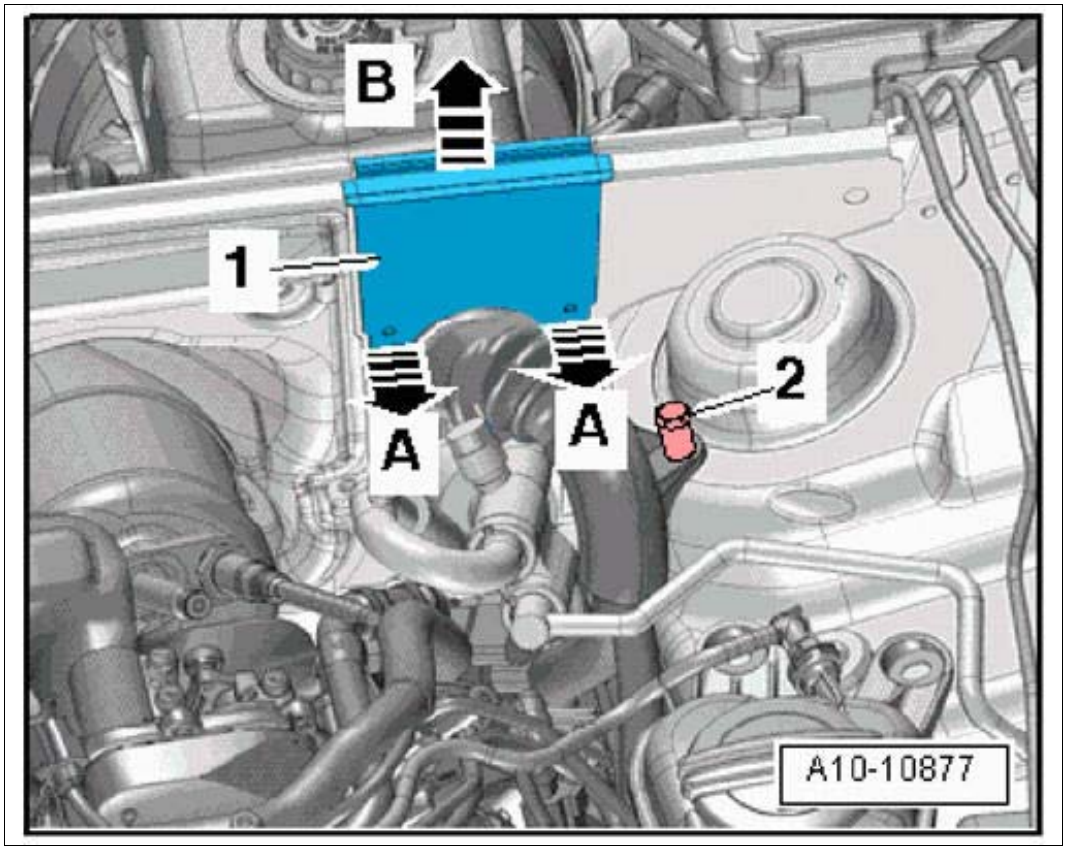

Courtesy of PORSCHE CARS NORTH AMERICA, INC.

18. Unscrew fastening nut **-2-** and loosen engine wire harness **-1-** from the guide.

Fig 18: Identifying Engine Wire Harness

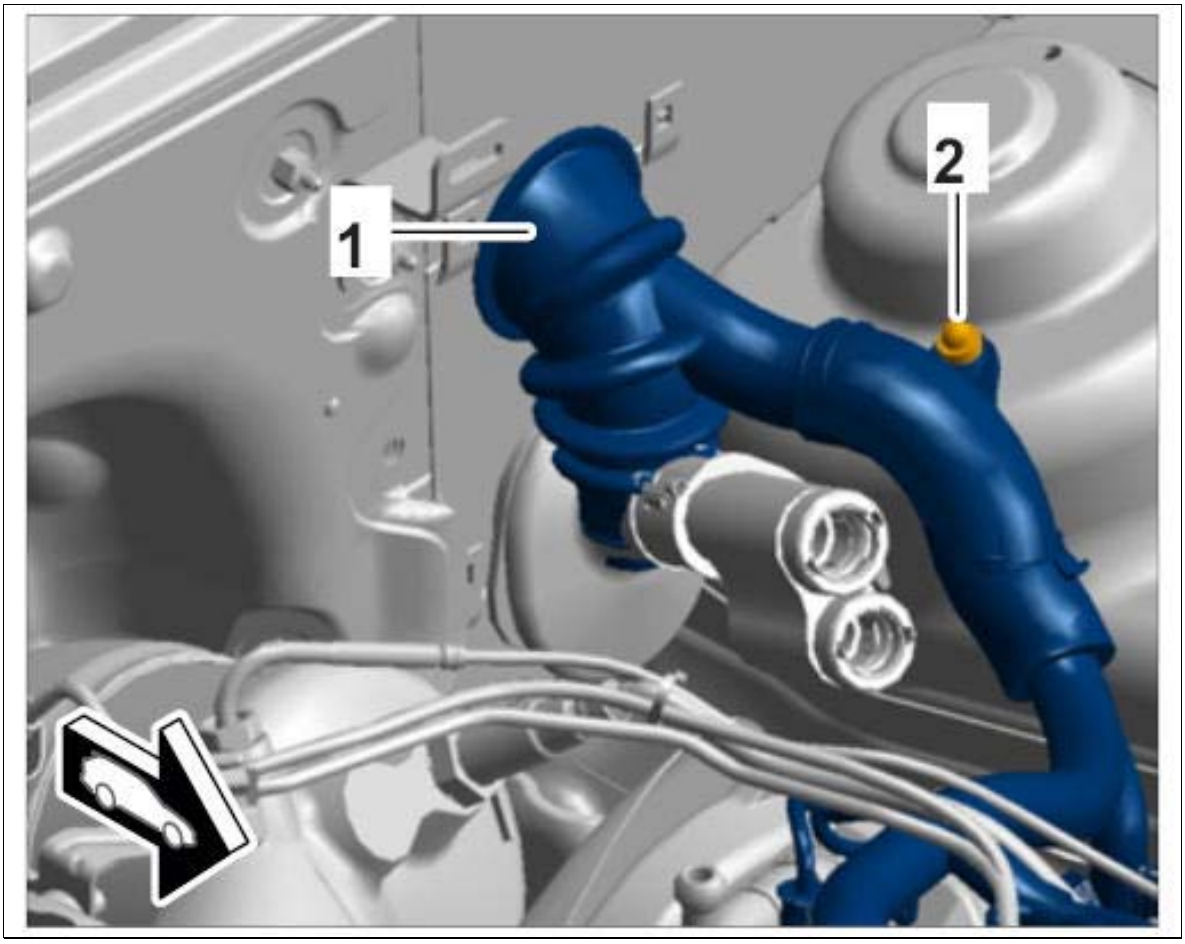

Courtesy of PORSCHE CARS NORTH AMERICA, INC.

19. Expose engine wire harness **-6-** .
    1. 19.1. Disconnect electric plug connection **-1-** .
    2. 19.2. Unclip electric line **-4-** from the cross panel **-2-** (**-3-**) and set it aside.
    3. 19.3. Guide engine wire harness **-6-** with relay and fuse box under the B+ line **-5-** and place it on the engine.

Fig 19: Identifying Engine Wire Harness And Plug Connection

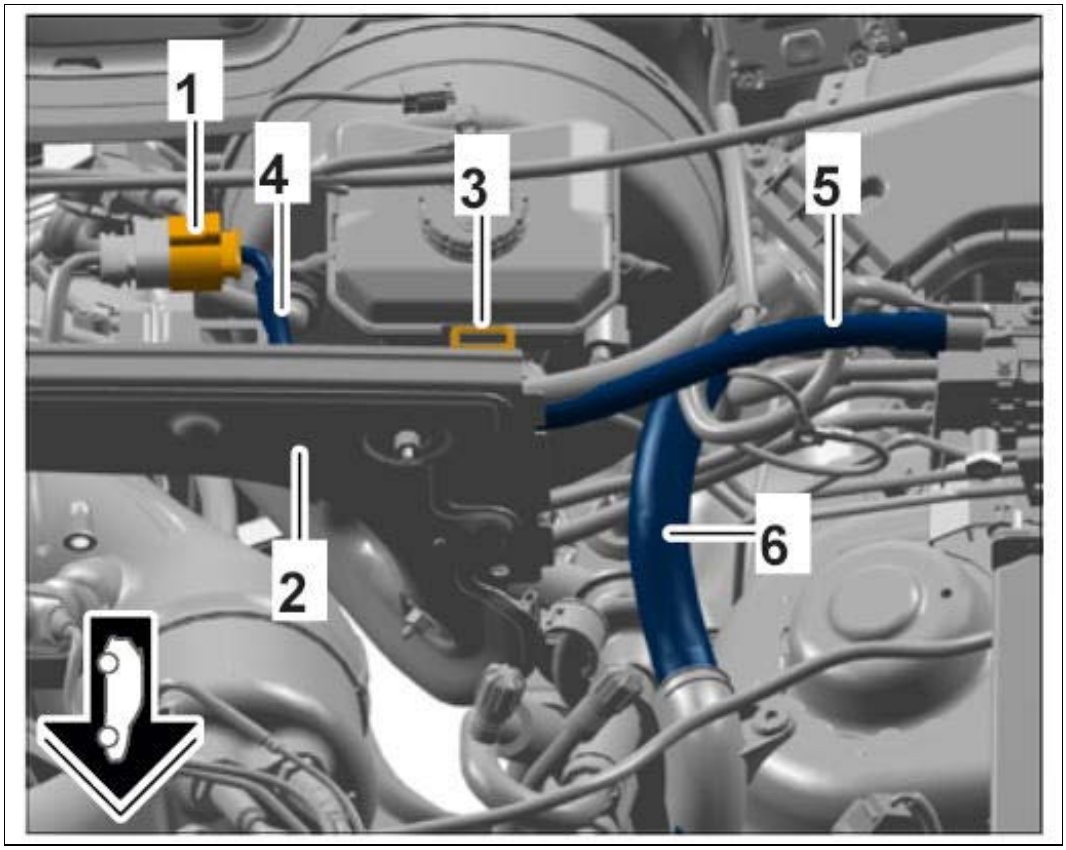

Courtesy of PORSCHE CARS NORTH AMERICA, INC.

20. Loosen flange screws securing engine to transmission.

    1. 20.1. Unscrew screws **-2... 5-** .

Fig 20: Engine To Transmission Flange Screws Loosening Sequence

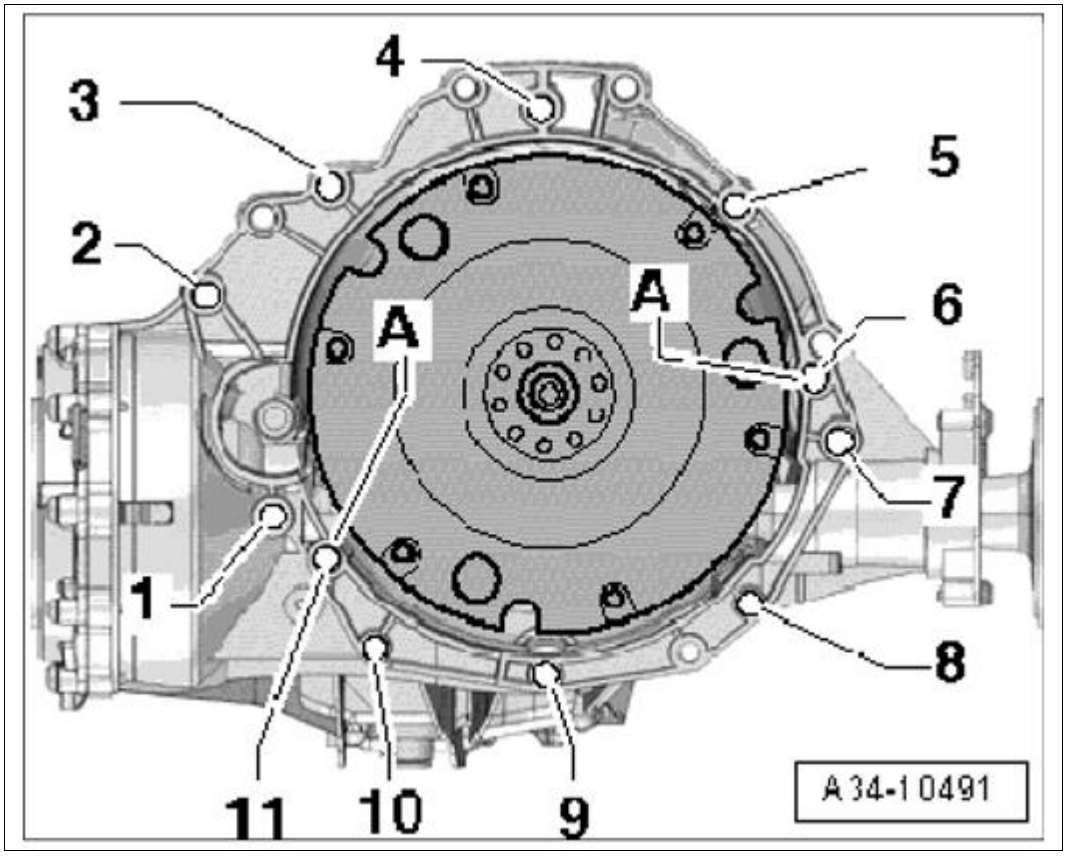

Courtesy of PORSCHE CARS NORTH AMERICA, INC.

21. Open locking lug **-1-** with a screwdriver, open housing cover **-2-** on the right longitudinal member and remove it.

Fig 21: Identifying Housing Cover

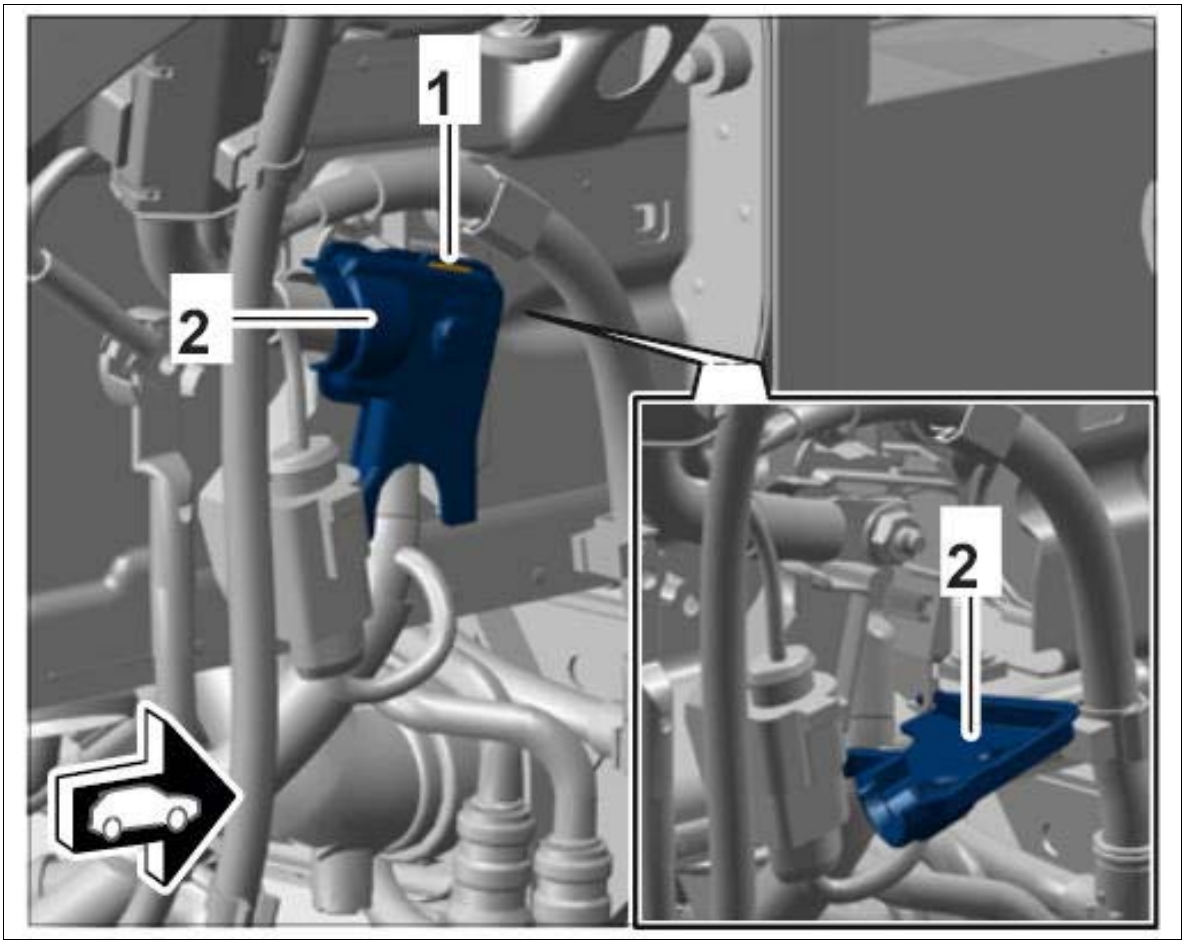

Courtesy of PORSCHE CARS NORTH AMERICA, INC.

22. Disconnect electric lines on the right longitudinal member.
    1. 22.1. Unclip headlight vent line **-8-** at the clip **-7-** and set it aside.
    2. 22.2. Unscrew fastening nut **-2-** and move ground lines **-1 and 6-** aside.
    3. 22.3. Disconnect electric plug connection **-5-** and pull it out of the clip.
    4. 22.4. Unscrew fastening nut **-4-** , remove ground line **-3-** and set it aside.

Fig 22: Identifying Longitudinal Member Electric Lines Nut

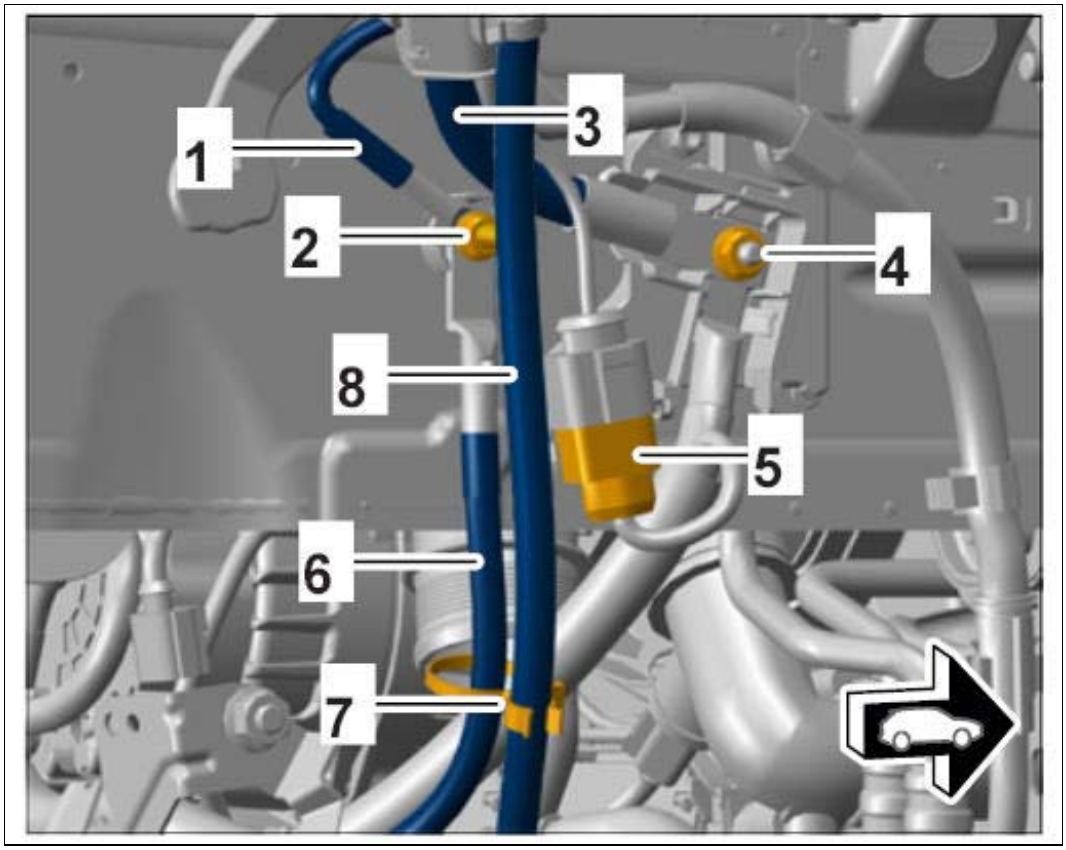

Courtesy of PORSCHE CARS NORTH AMERICA, INC.

23. Press in locking lugs **-1-** , pull out ground line **-2-** in **-direction of arrow -** and set it aside.

Fig 23: Pulling Ground Line

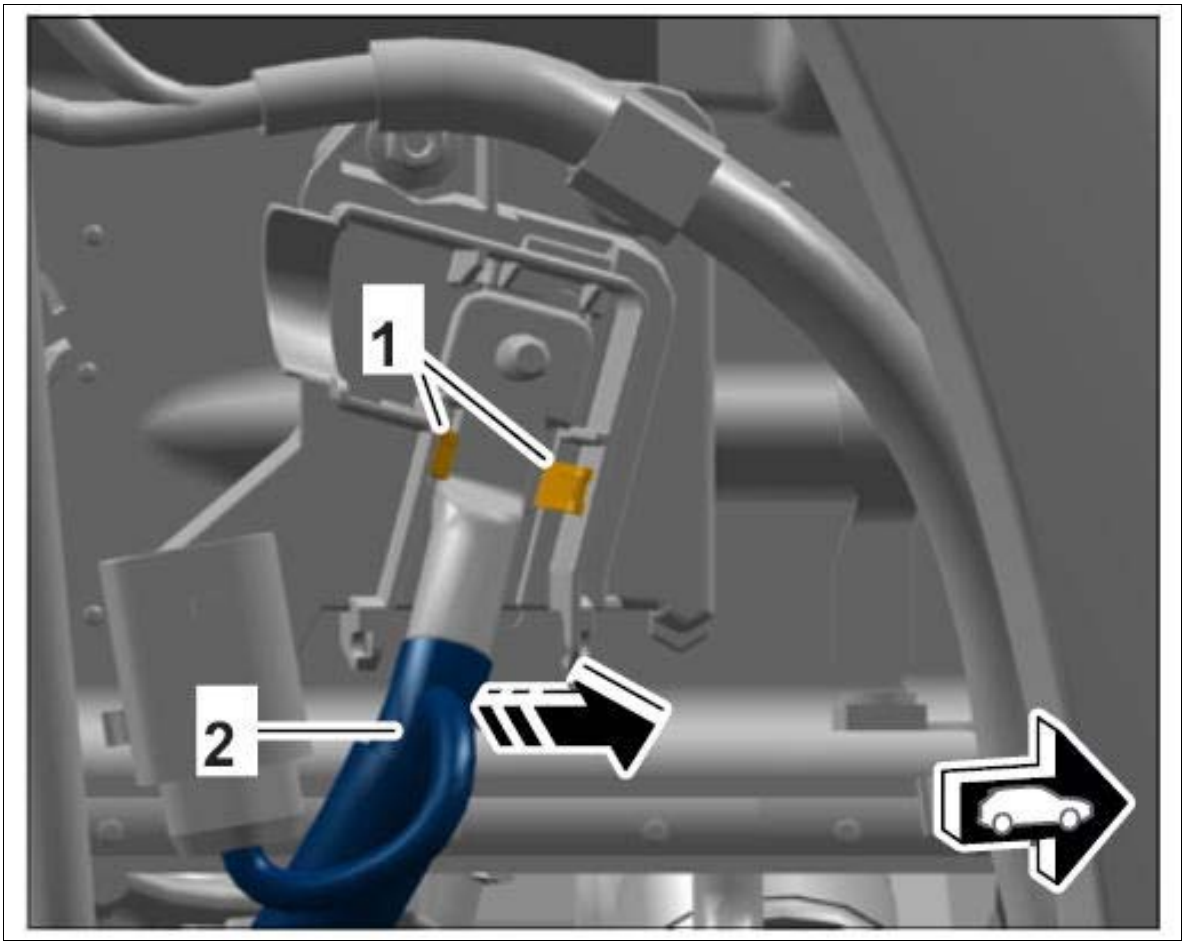

Courtesy of PORSCHE CARS NORTH AMERICA, INC.

24. Loosen screw-type clamp **-arrow-** and pull intake pipe off the turbocharger.

Fig 24: Locating Turbocharger Intake Pipe

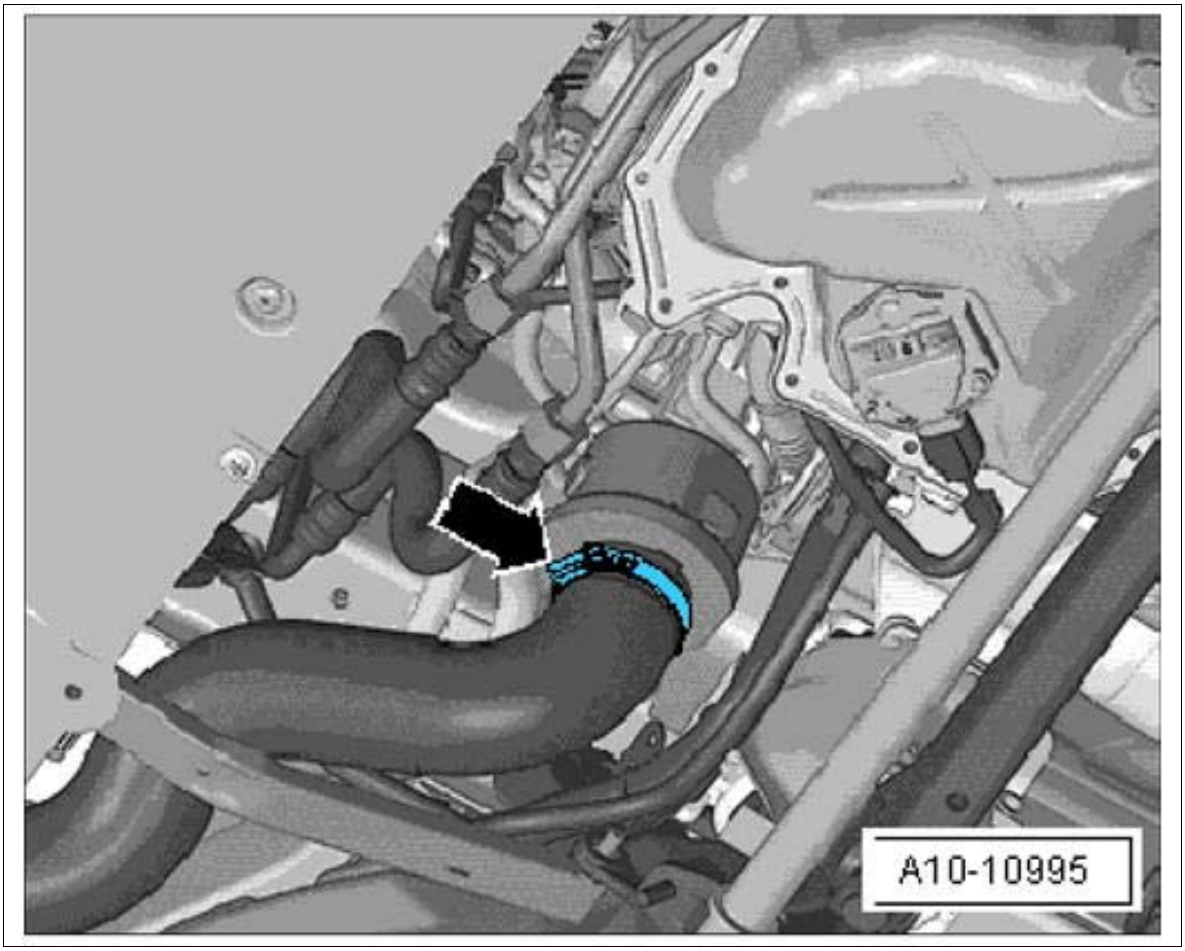

Courtesy of PORSCHE CARS NORTH AMERICA, INC.

25. Disconnect electric plug connection **-1-** on the coolant temperature sensor, unclip line and set it aside.

Fig 25: Identifying Coolant Temperature Sensor

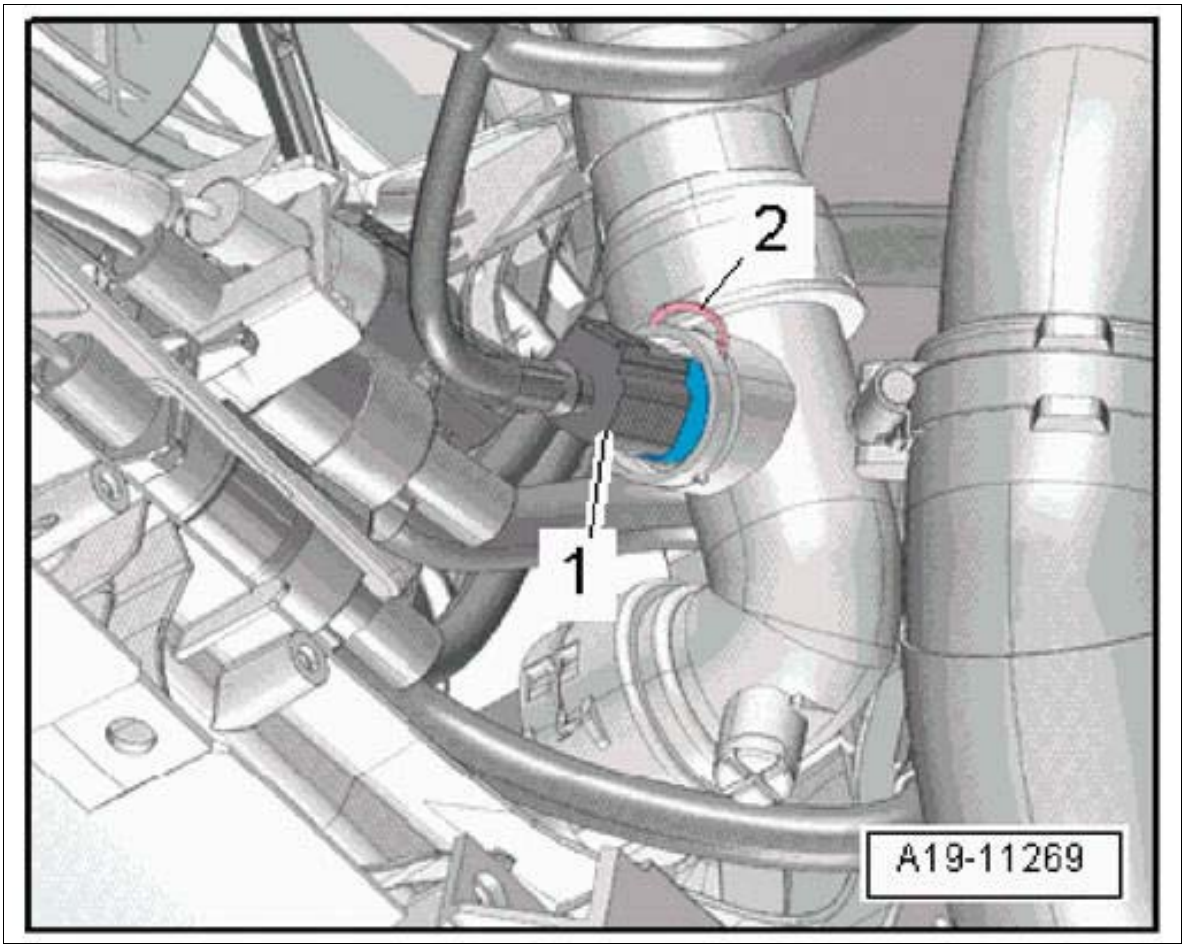

Courtesy of PORSCHE CARS NORTH AMERICA, INC.

26. Disconnect electric lines.

    1. 26.1. Disconnect electric connectors for the engine mount and expose line. → 975219 REMOVING AND INSTALLING WIRE HARNESS FOR ENGINE

27. Disconnect coolant line at the bottom of the radiator.

    1. 27.1. Lift up retaining clip **-2-** and pull off the coolant hose.

Fig 26: Identifying Radiator Coolant Line

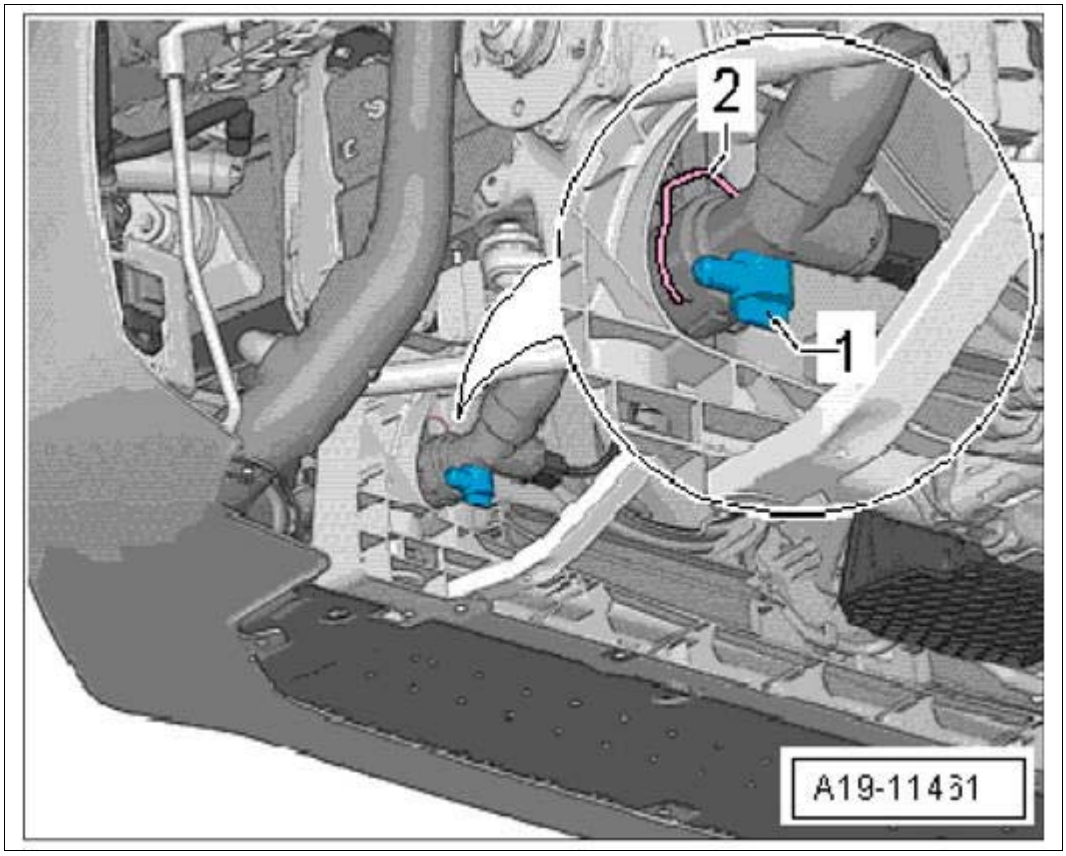

Courtesy of PORSCHE CARS NORTH AMERICA, INC.

28. Disconnect ATF lines **-1 and 2-** on the engine.

    1. 28.1. Unscrew screws **-arrows-** .

Fig 27: Locating Front ATF Lines

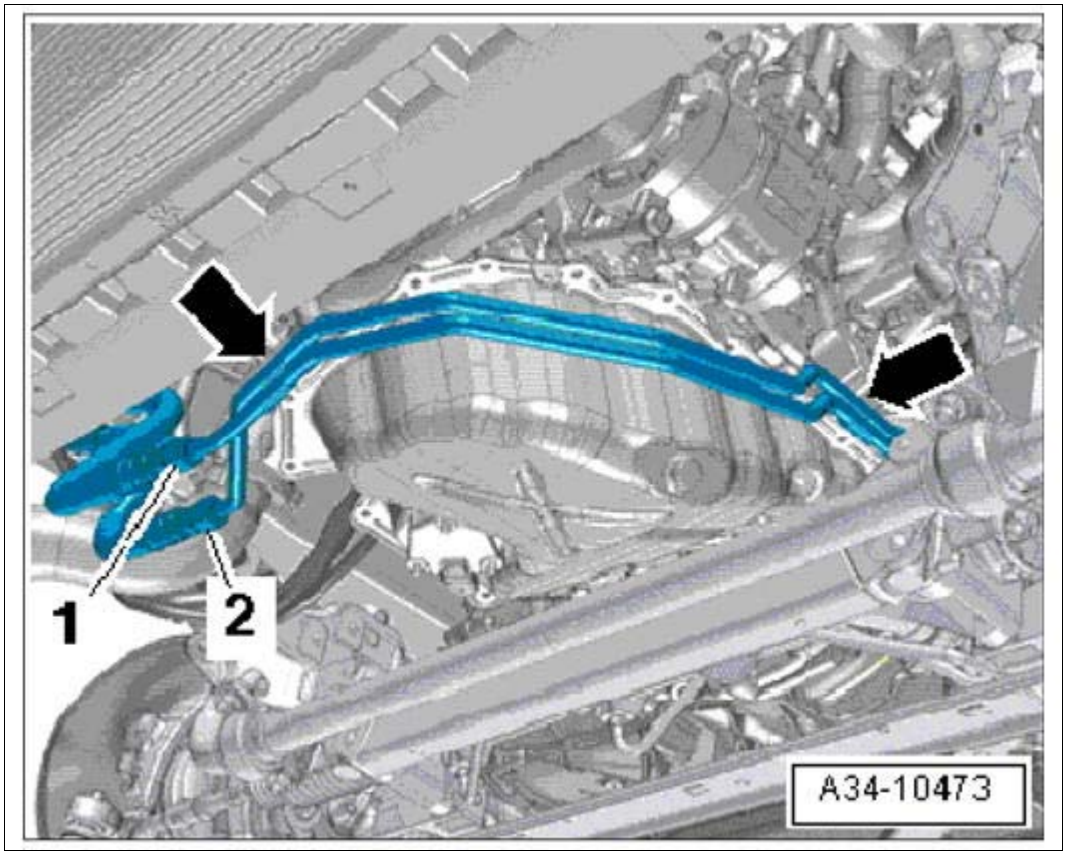

Courtesy of PORSCHE CARS NORTH AMERICA, INC.

29. Unscrew screws **-1-** on the left and right engine mount.

Fig 28: Identifying Engine Mount

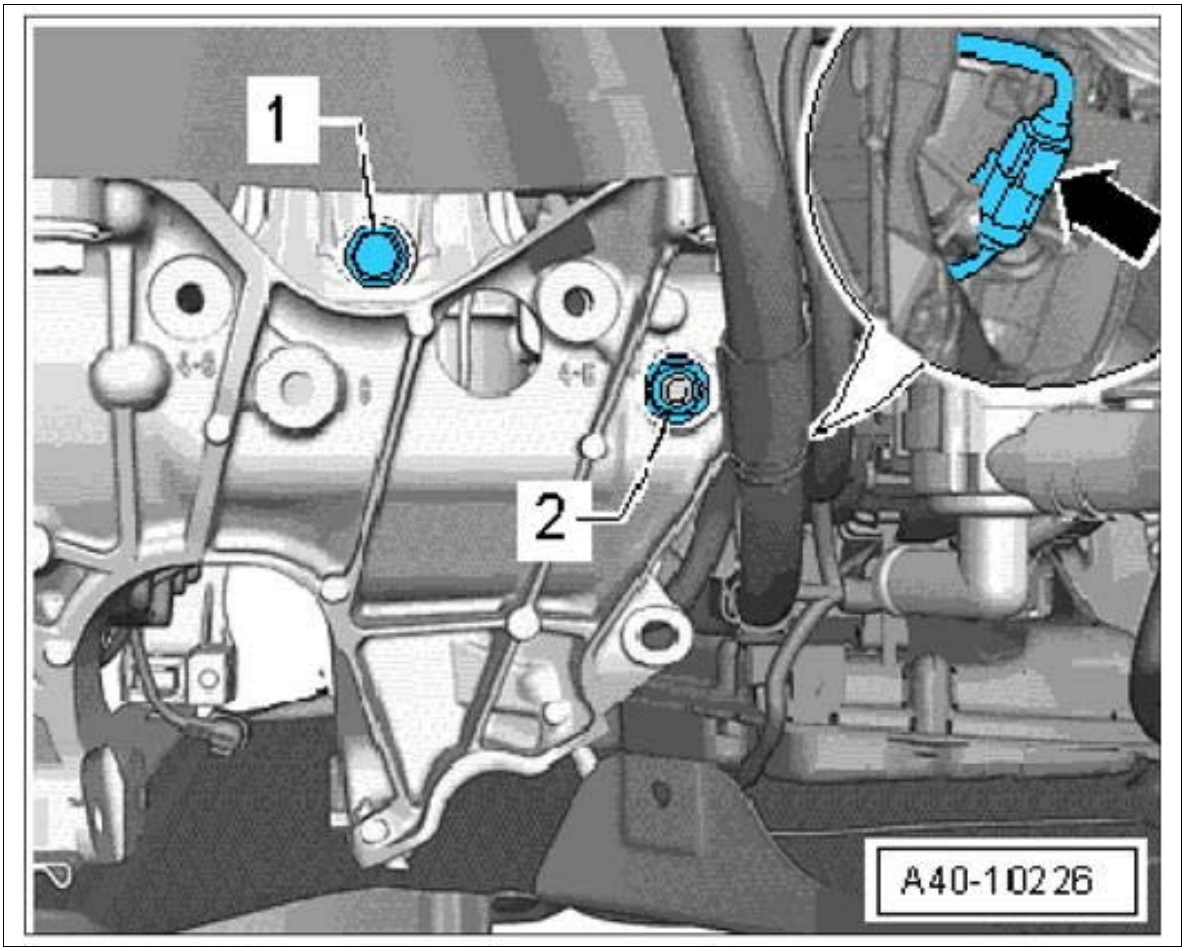

Courtesy of PORSCHE CARS NORTH AMERICA, INC.

30. Disconnect wiring harness at the transmission.
    1. 30.1. Release and disconnect electric connectors **-1 and 2-** .
    2. 30.2. Loosen holder **-arrows-** for wiring harness and expose it.

Fig 29: Locating Engine Transmission Wire Harness

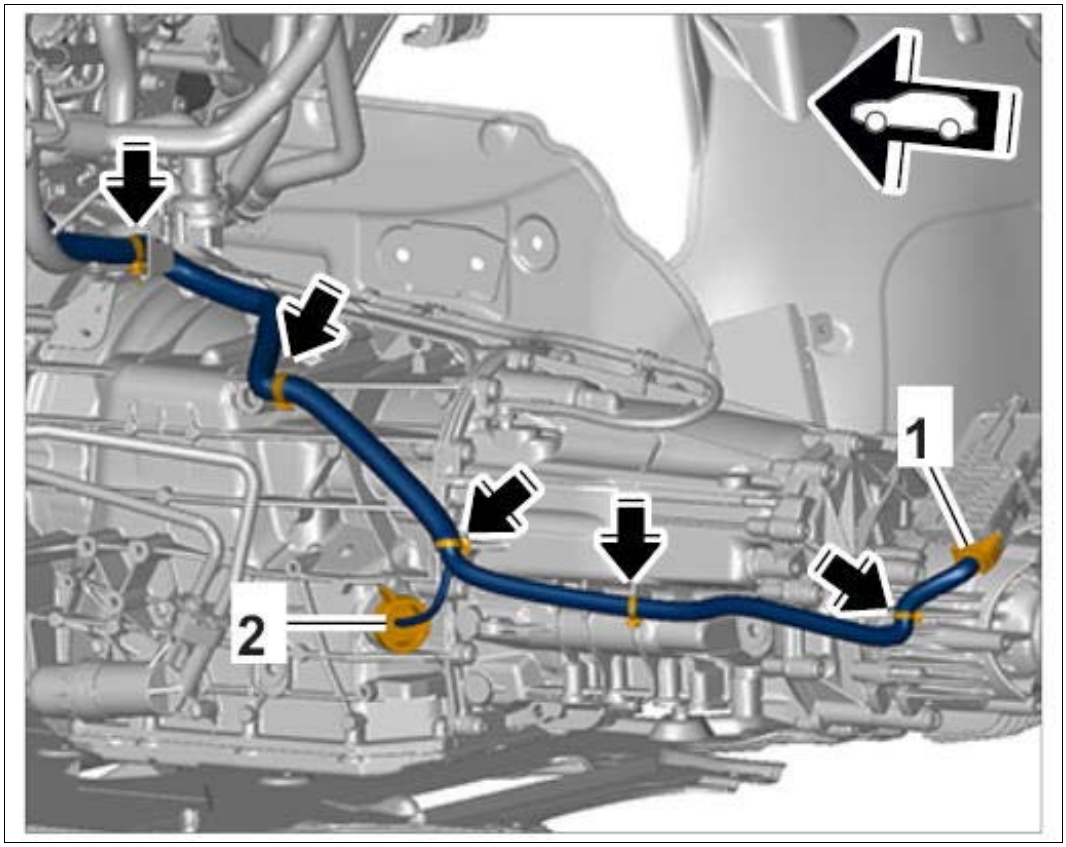

Courtesy of PORSCHE CARS NORTH AMERICA, INC.

31. Disconnect electric plug connections **-1 and 2-** and expose wiring harness in **-direction of arrow -** .

Fig 30: Disconnecting Steering Electric Plug Connection

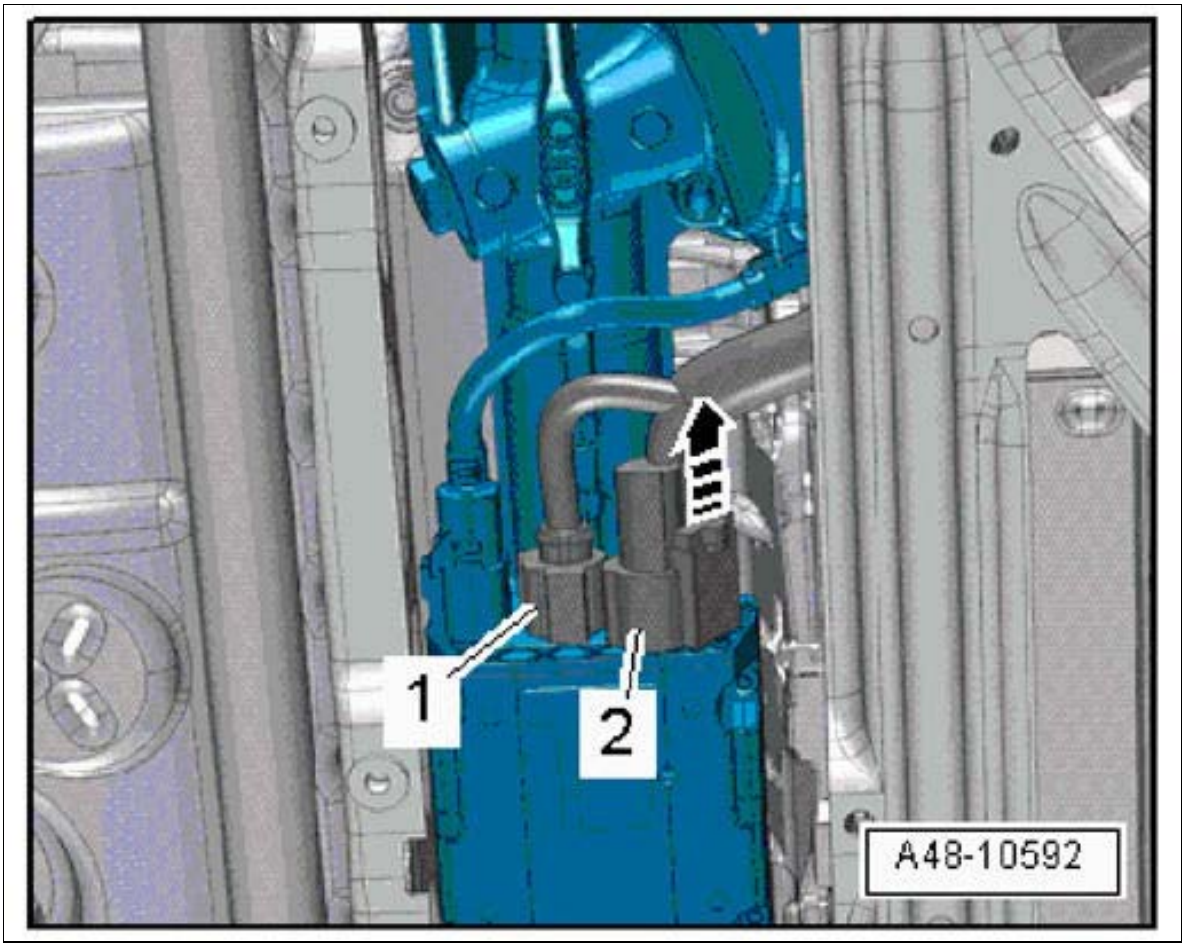

Courtesy of PORSCHE CARS NORTH AMERICA, INC.

32. Pull off cover **-1-** on the underside of the transmission.

Fig 31: Pulling Drive Plate Cover

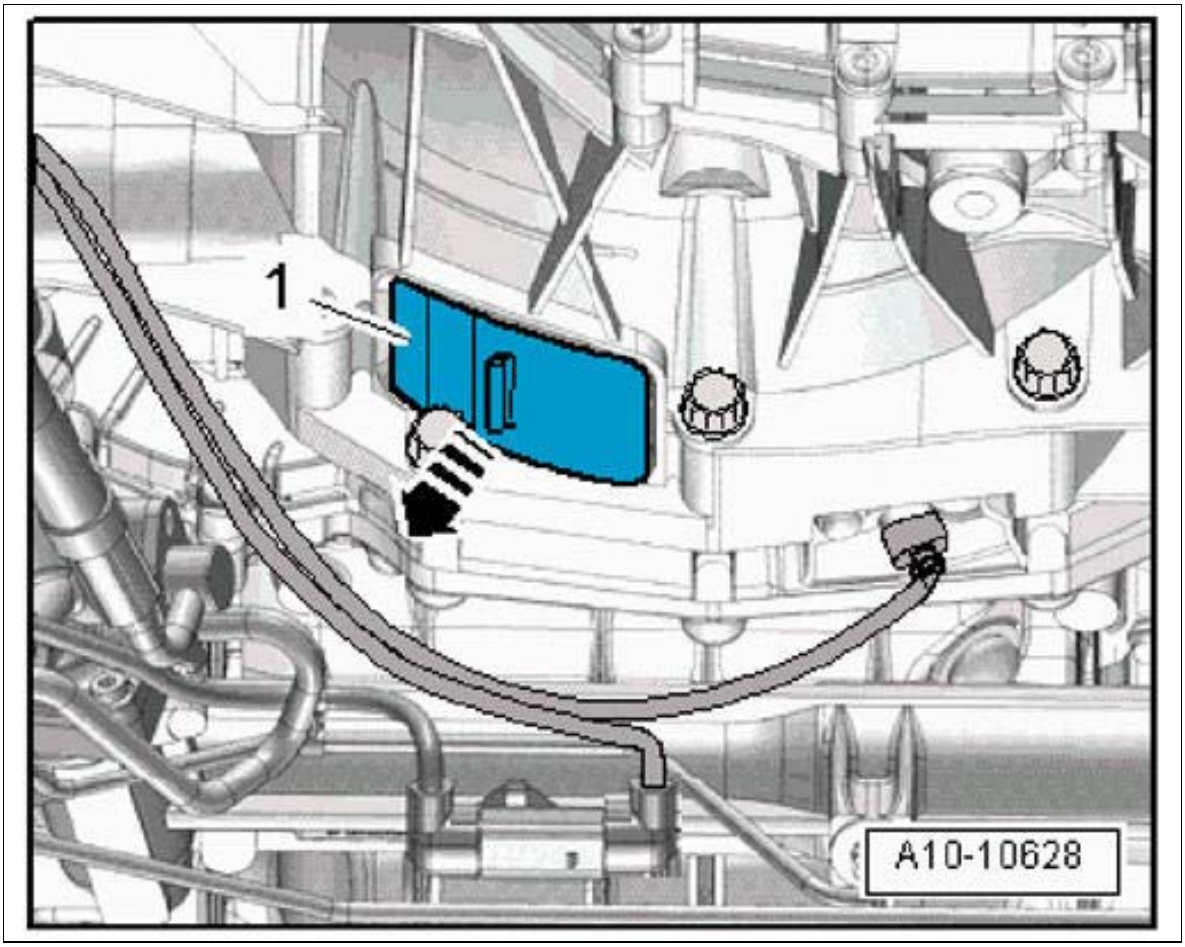

Courtesy of PORSCHE CARS NORTH AMERICA, INC.

33. Loosen flywheel from the transmission.
    1. 33.1. Unscrew screws **-arrow-** at the transmission opening.
    2. 33.2. Turn the crankshaft a further 120° in direction of rotation of the engine.
    3. 33.3. Counter at the crankshaft pulley.

Fig 32: Locating Flywheel Screw

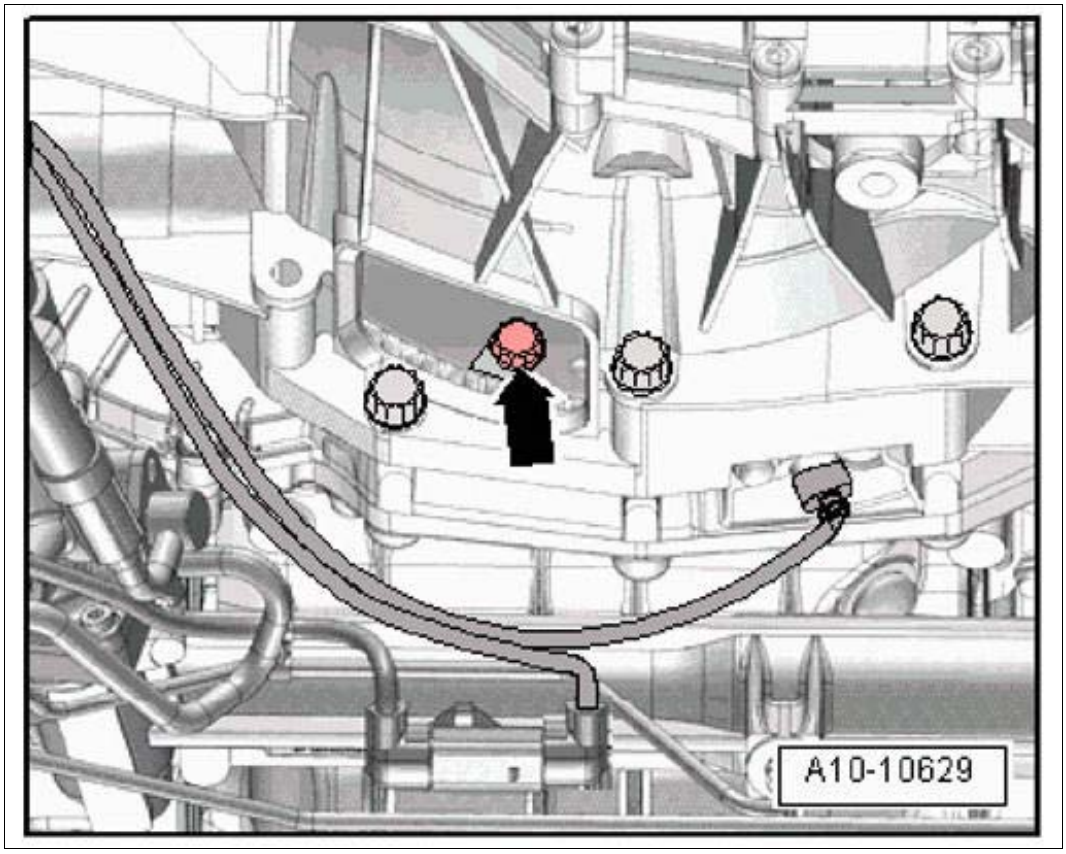

Courtesy of PORSCHE CARS NORTH AMERICA, INC.

34. Loosen fastening screws **-1 and 3-** on gear support **-2-** .

    1. 34.1. Before loosening the fastening screws, mark the installation position of the gear support with a felt-tip pen.

    2. 34.2. Loosen fastening screws **-1 and 3-** .

       Do not unscrew fastening screws fully!

Fig 33: Identifying Gear Support Screws

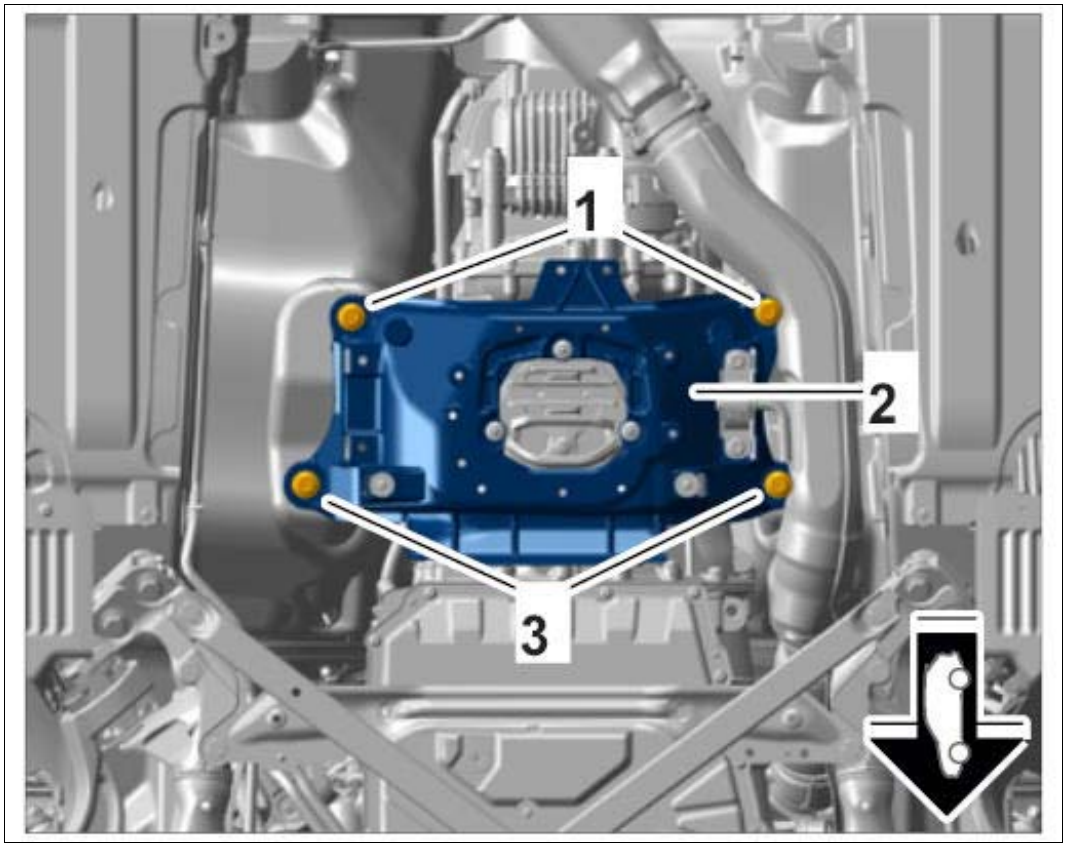

Courtesy of PORSCHE CARS NORTH AMERICA, INC.

35. Loosen flange screws securing engine to transmission.

    1. 35.1. Unscrew screw **-1-** for the starter from the engine side.
    2. 35.2. Unscrew screws **-6... 11-** .
    3. 35.3. Pull the starter off the transmission and leave it in installation position.

Fig 34: Engine Transmission Flange Screws Loosening Sequence

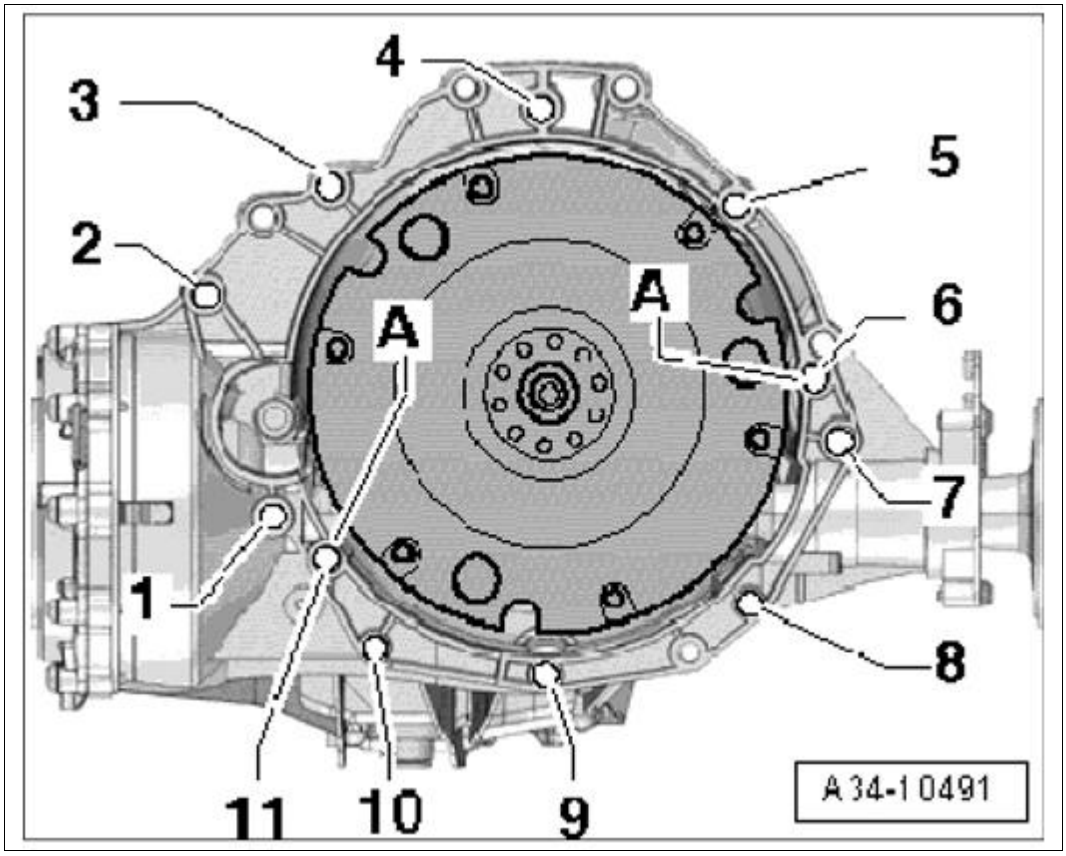

Courtesy of PORSCHE CARS NORTH AMERICA, INC.

36. Tighten tension strap on the transmission mount and tunnel transverse strut as shown.

Fig 35: Identifying Transmission Mount And Tunnel Transverse Strut Tension Strap

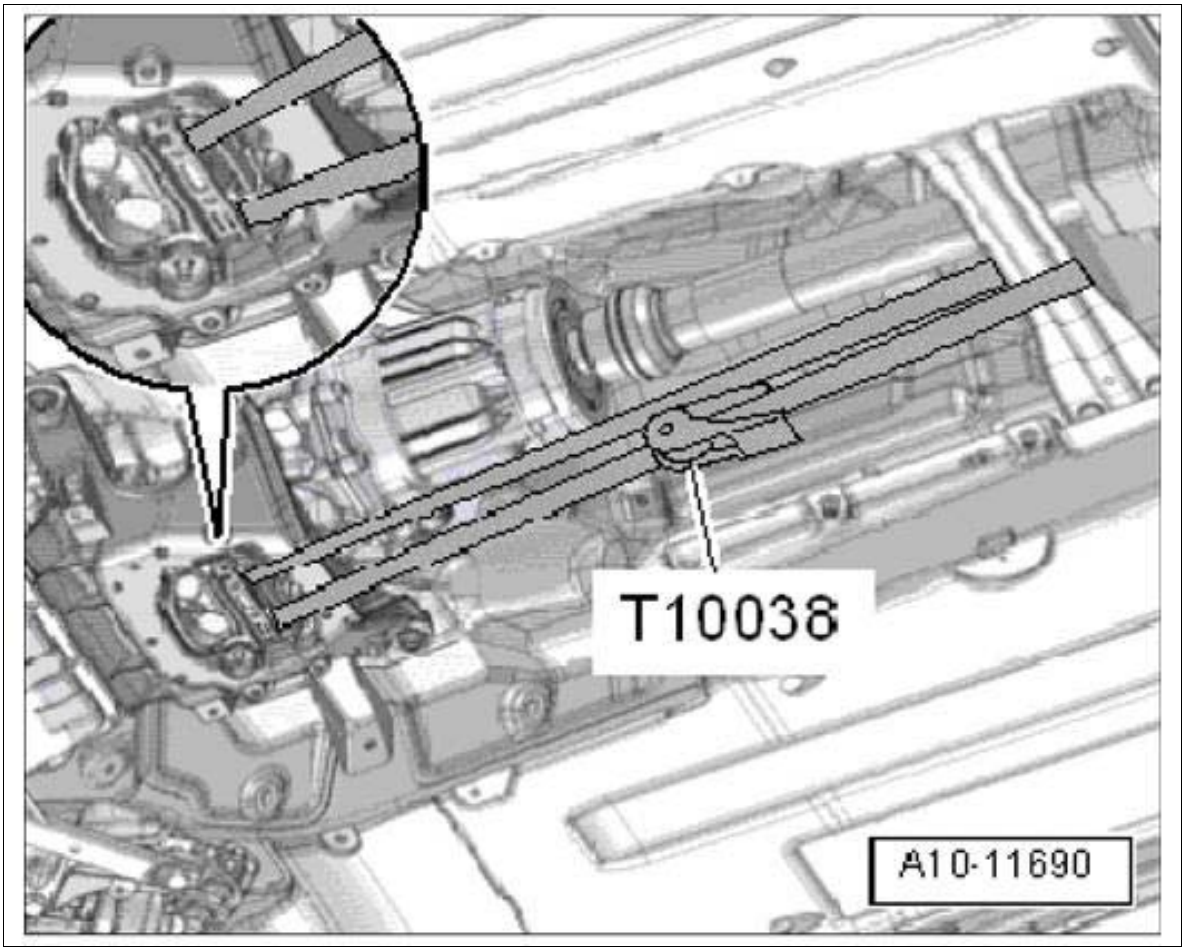

Courtesy of PORSCHE CARS NORTH AMERICA, INC.

37. Support transmission on the body using **support bracket 10-222 A** .
    1. 37.1. Secure 10-222 A to the adapters 10-222 A/8 using wing screws.
    2. 37.2. Fit 10-222 A using adapters 10-222 A/8 to the spring strut domes at the left and right.
    3. 37.3. Join transmission and spindle using **gearbox support 3147** .

Fig 36: Supporting Transmission Using Support Bracket

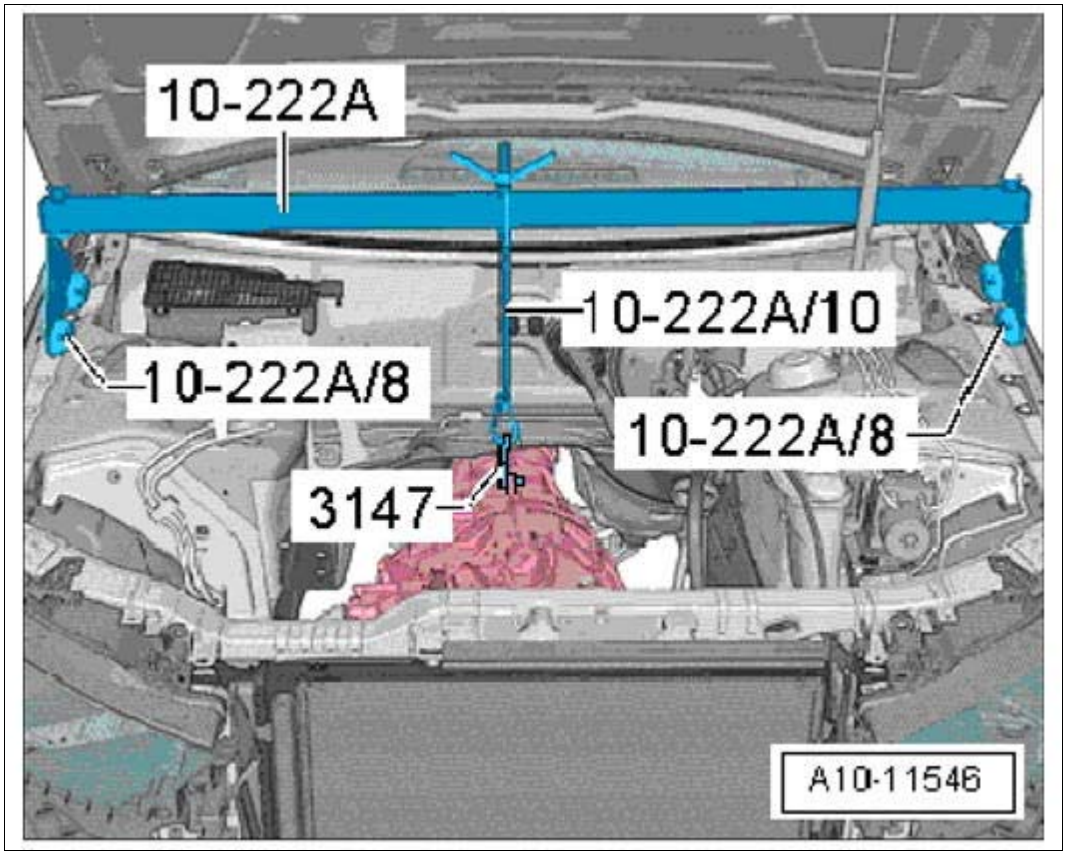

Courtesy of PORSCHE CARS NORTH AMERICA, INC.

38. **Lifting tackle 2024 A** must be engaged on the engine and on the **workshop crane WE 1188** as shown.

Fig 37: Lifting Tackle

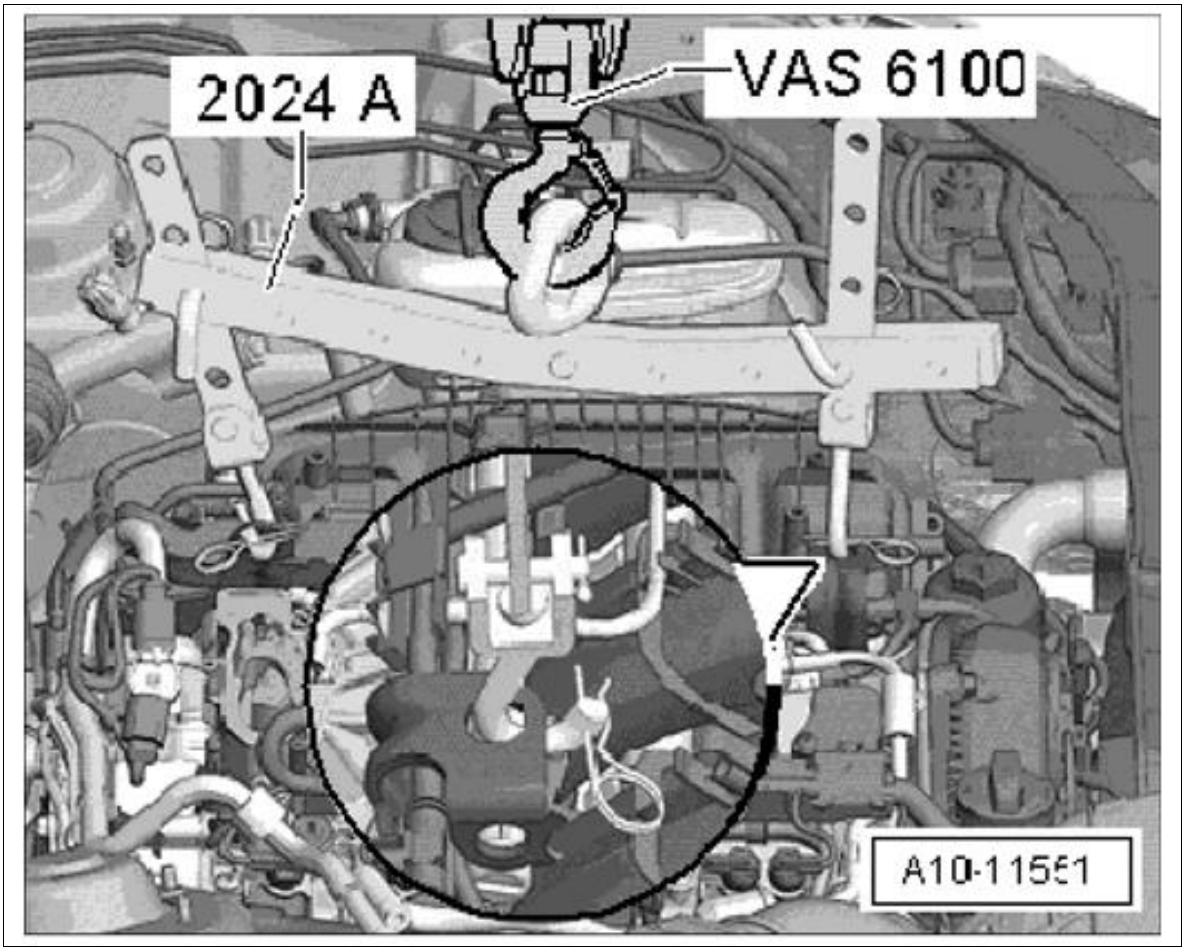

Courtesy of PORSCHE CARS NORTH AMERICA, INC.

39. Raise the engine until the engine mounts are free.
40. Turn the spindle of the **support bracket 10-222 A** further.
41. Pre-tension the tension strap.
42. Remove engine from transmission and lift it up out of the engine compartment.
    1. 42.1. Checking clearance of the engine in the engine compartment.
    2. 42.2. Check that all hose and line connections between the engine, transmission, unit carrier and body are disconnected.
    3. 42.3. Guide ATF lines past the oil pan.
43. Close off open lines with stoppers from outside.

WM 100119 REMOVING AND INSTALLING ENGINE (MACAN) > INSTALLING ENGINE

WARNING: Danger of objects or loads falling down

- *Risk of squashing or crushing*

→ Secure components to prevent them from falling down.

Information

Tightening torques, tightening sequence and assembly overviews for the engine and transmission:

- Group 1: → 1X00IN TECHNICAL VALUES
- Group 2: → 2X00IN TECHNICAL VALUES
- Group 3: → 3X00IN TECHNICAL VALUES

Information

- Check O-rings on the plug-in couplings and replace them if necessary.
- Clean plug connection and coolant hoses before assembly.
- Coat O-rings and coolant hoses with Kluber Plus Gel (Part No. 000.043.205.93).
- Remove stoppers before fitting the coolant lines and hoses.

Information

- Replace O-rings.
- Grease O-rings with a light coating of Kluber Syntheso Glep (Part No.: 000.043.204.68).

1. Check that the intermediate plate on the joint flange is engaged and pushed onto the dowel sleeves.
2. Check that dowel sleeves **-A-** for centering the engine and transmission are fitted in the cylinder block.

    1. 2.1. Insert missing dowel sleeves.

Fig 1: Engine Transmission Flange Screws Tightening Sequence

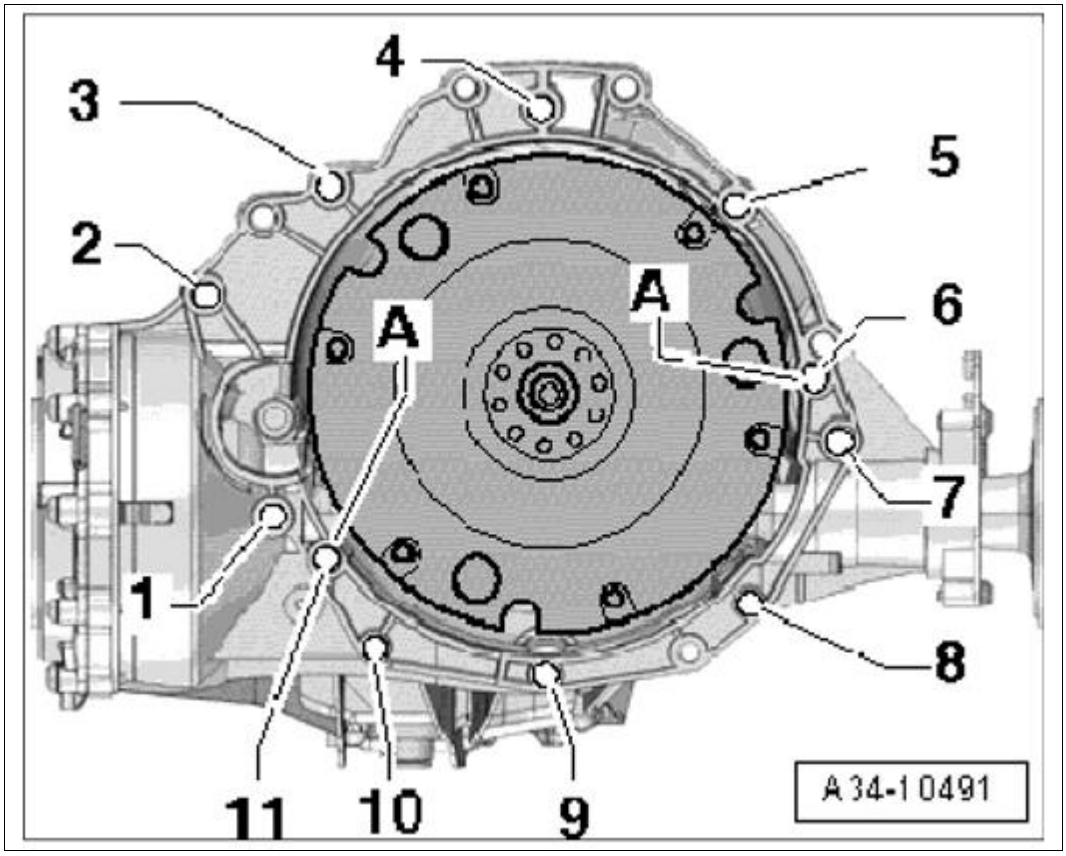

Courtesy of PORSCHE CARS NORTH AMERICA, INC.

3. Place starter in installation position.
    1. 3.1. Fit bottom screw before fitting the engine at the starter!
4. Guide engine into the engine compartment using workshop crane WE 1188.
    1. 4.1. Guide oil pan past the ATF lines.
5. Mount engine on transmission.
    1. 5.1. Loosen tension strap.
    2. 5.2. Tighten screws **-3... 5-** .

Fig 2: Engine Transmission Flange Screws Tightening Sequence

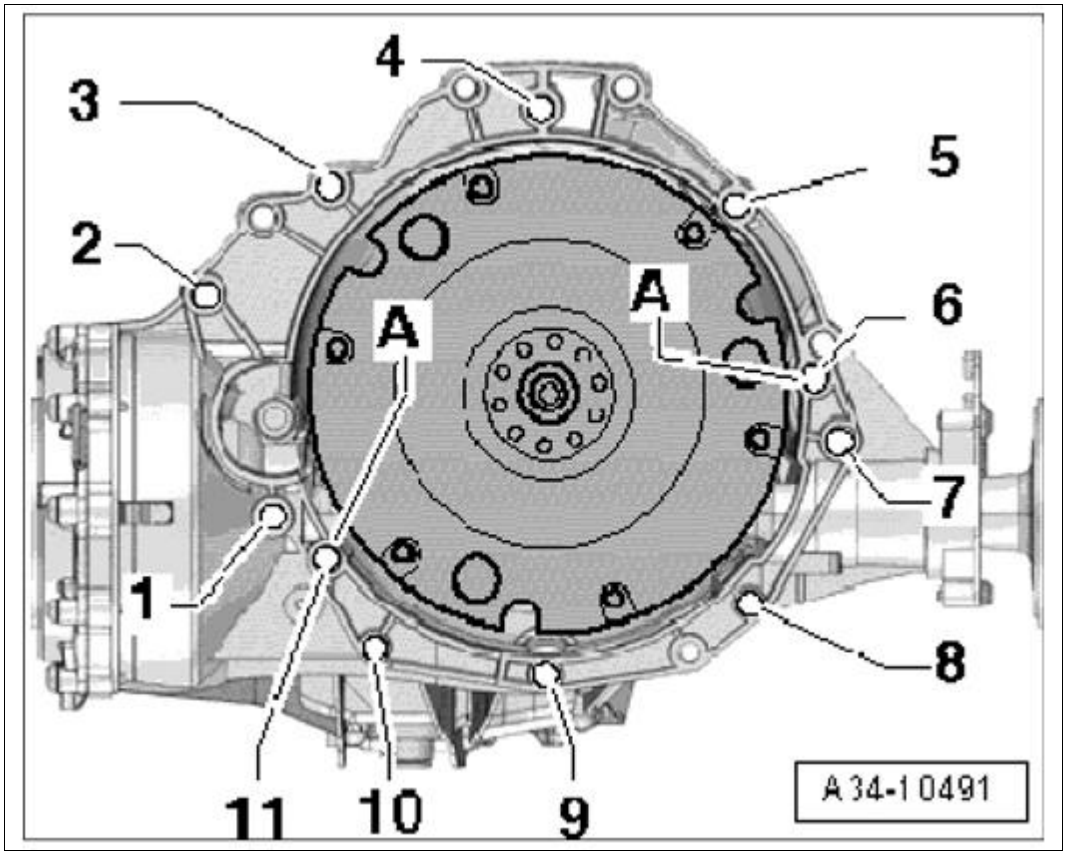

Courtesy of PORSCHE CARS NORTH AMERICA, INC.

6. Place engine and transmission in installation position.
    1. 6.1. Relieve spindle of the **support bracket 10-222 A** .
    2. 6.2. Lower the workshop crane and lower the engine and transmission onto the engine mounts.
    3. 6.3. Remove workshop crane and support bracket.
7. Secure the engine to the engine mounts.
    1. 7.1. Replace screw.
8. Tighten screws **-6... 11-** .

Fig 3: Engine Transmission Flange Screws Tightening Sequence

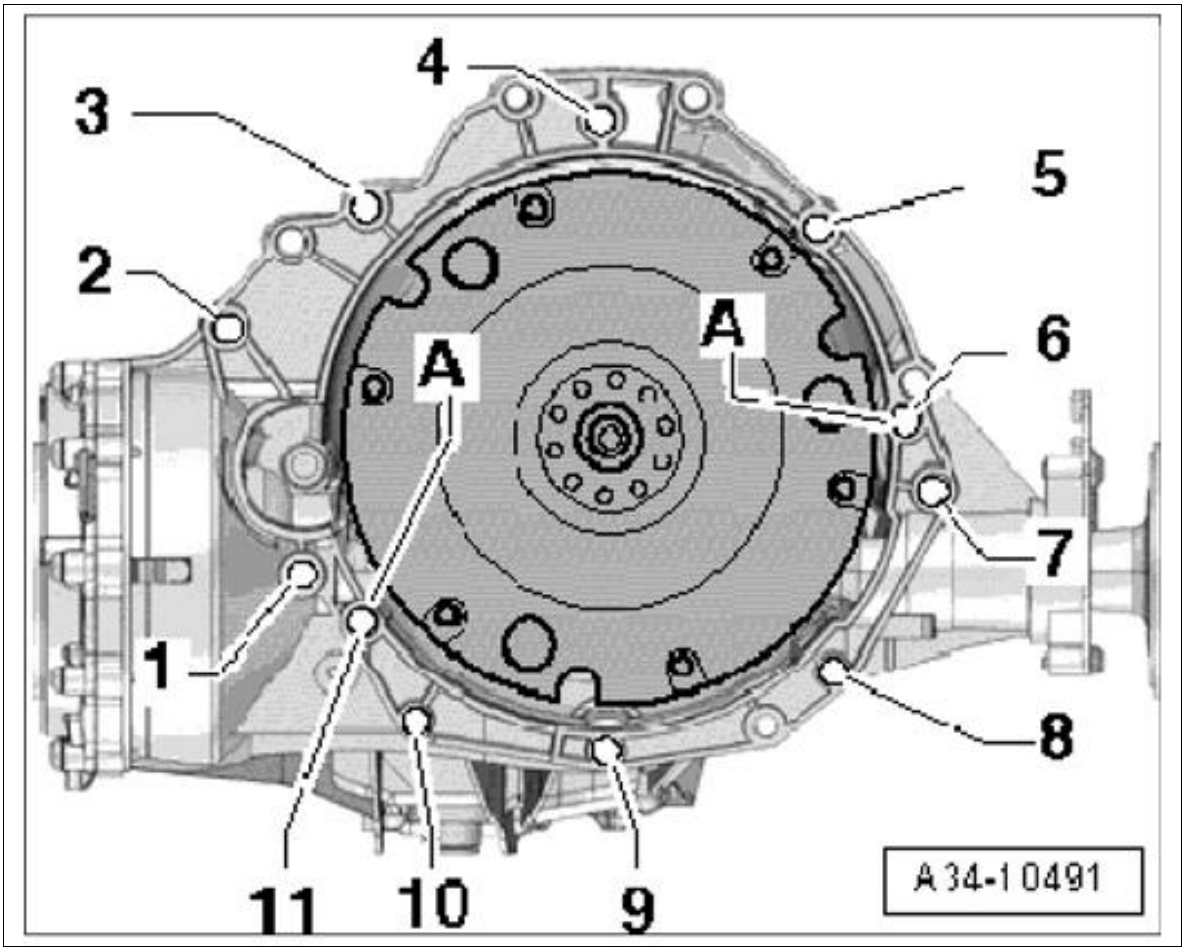

Courtesy of PORSCHE CARS NORTH AMERICA, INC.

9. Secure the flywheel on the transmission.
    1. 9.1. Screw in screw **-arrow-** hand-tight.
    2. 9.2. Turn the crankshaft a further 120° in direction of rotation of the engine.
    3. 9.3. Screw in second screw hand-tight.
    4. 9.4. Turn the crankshaft a further 120° in direction of rotation of the engine.
    5. 9.5. Tighten third screw to the specified tightening torque.
    6. 9.6. Tighten the remaining screws to the specified tightening torque.

Fig 4: Locating Flywheel Screws

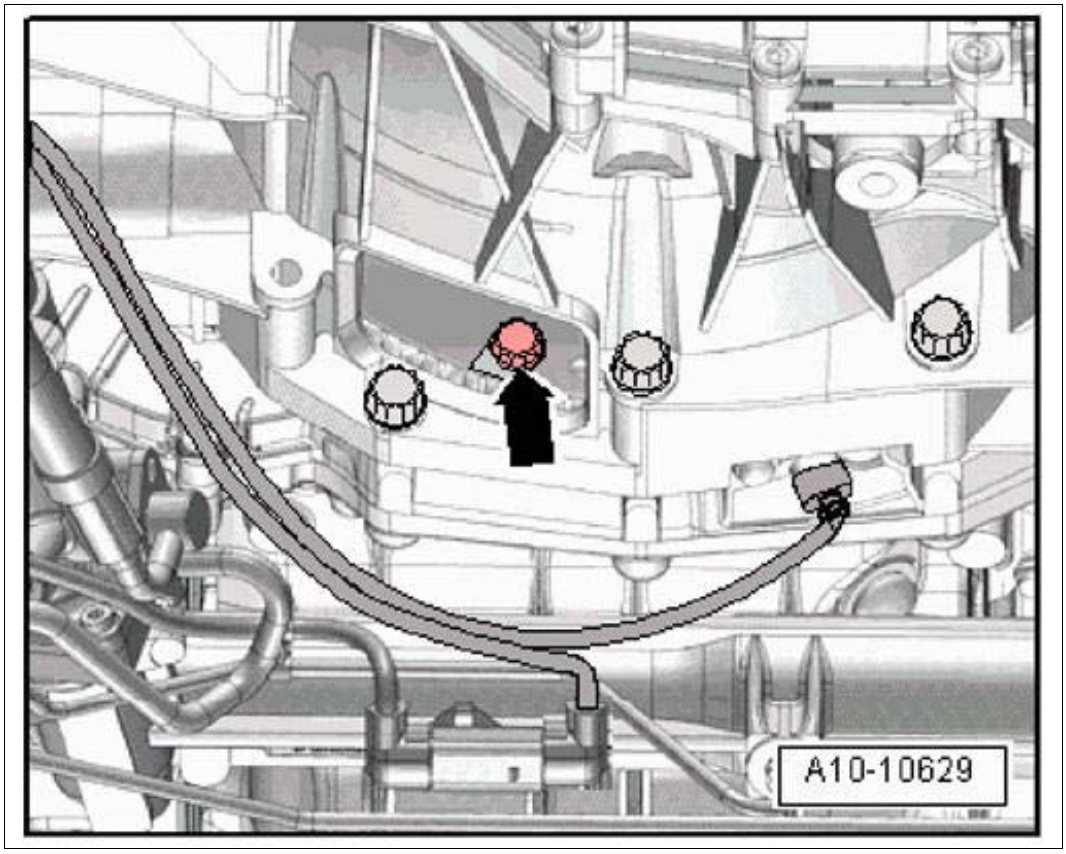

Courtesy of PORSCHE CARS NORTH AMERICA, INC.

10. Further installation is performed in reverse order. Pay particular attention to the following:
    1. 10.1. Replace seals and O-rings.
    2. 10.2. Replace tie-wraps that were removed.
    3. 10.3. Always use new aluminum screws.
    4. 10.4. Coat O-rings with a suitable agent.
11. When installing a reconditioned engine, check the engine-oil level before starting the engine. → 170101 CHECKING ENGINE-OIL LEVEL

WM 100119 REMOVING AND INSTALLING ENGINE (MACAN) > SUBSEQUENT WORK

1. Install catalytic converter. → INSTALLING CATALYTIC CONVERTER
2. Install cross panel. → INSTALLING CROSS PANEL
3. Install front strut. → INSTALLING FRONT STRUT
4. Install cowl panel cover. → INSTALLING COWL PANEL COVER
5. Install filler neck on windscreen-washer reservoir. → INSTALLING WINDSCREEN-WASHER

RESERVOIR

6. Install front wheel housing liner. → INSTALLING FRONT WHEEL HOUSING LINER
7. Install front wheels. → INSTALLING WHEEL
8. Install cover for front underbody. → INSTALLING COVER FOR FRONT UNDERBODY
9. Secure the drive belt. → INSTALLING DRIVE BELT
10. Connect the battery. → INSTALLING BATTERY
11. Fill in coolant. → INSTALLING BATTERY
12. Install engine cover.
13. Perform a test drive.

WM 100127 REMOVING AND MOUNTING ENGINE (MACAN S, MACAN TURBO) > TOOLS

Designation	Type	Number	Description	
workshop crane	Workshop equipment	WE 1188		

WM 100127 REMOVING AND MOUNTING ENGINE (MACAN S, MACAN TURBO) > PRELIMINARY WORK

1. Remove transmission. → 373427 REMOVING AND MOUNTING PORSCHE DOPPELKUPPLUNG (PDK)

WM 100127 REMOVING AND MOUNTING ENGINE (MACAN S, MACAN TURBO) > REMOVING ENGINE

⚠ *CAUTION: Heavy components*

- *Risk of squashing*

→ Wear personal protective gear.

→ Get someone to help if necessary.

1. Unscrew fastening screws **-1, 2 and 3-** at the engine mount.

Fig 1: Identifying Engine Mount Fastening Screws

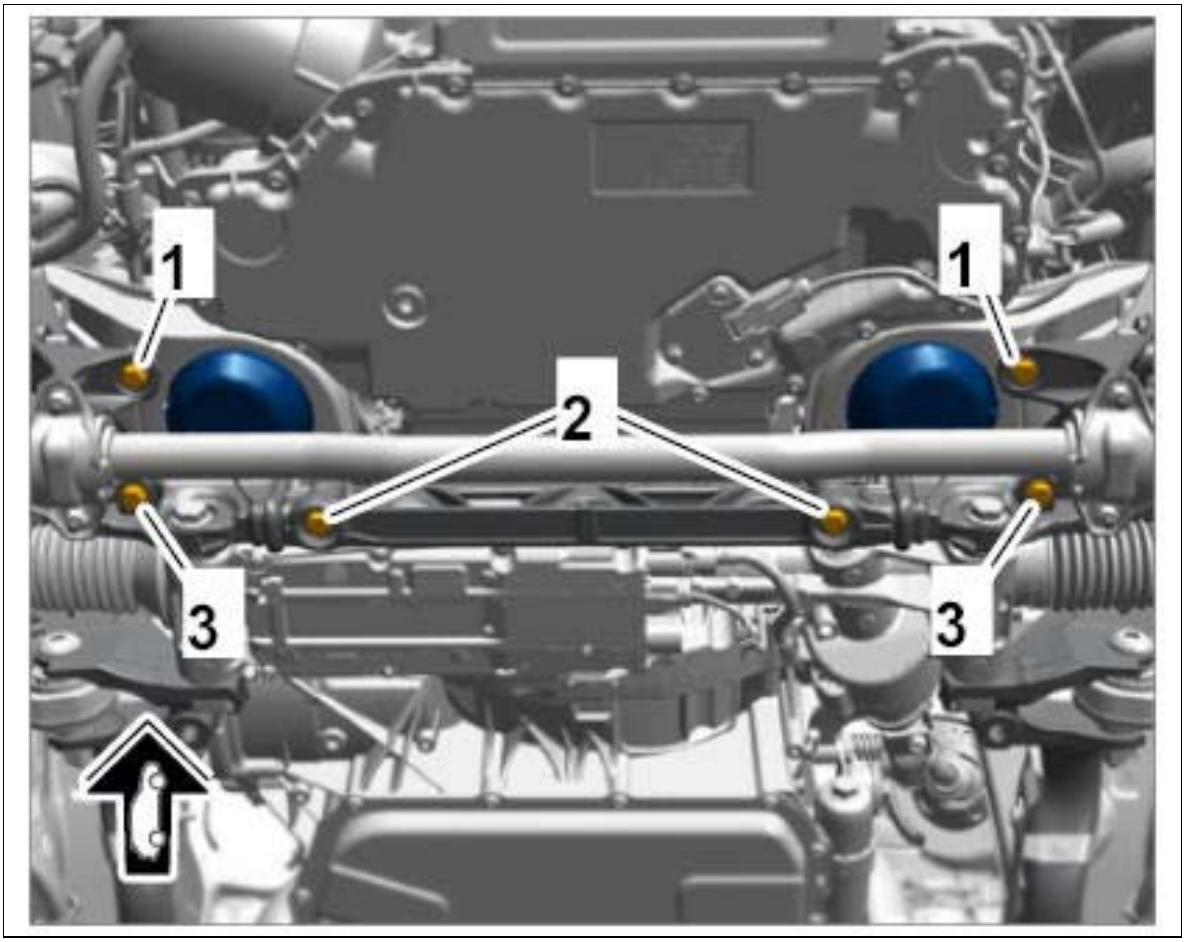

Courtesy of PORSCHE CARS NORTH AMERICA, INC.

2. Remove engine using **workshop crane WE 1188** . Check clearance.

WM 100127 REMOVING AND MOUNTING ENGINE (MACAN S, MACAN TURBO) > MOUNTING ENGINE

⚠ *CAUTION: Heavy components*

- *Risk of squashing*

→ Wear personal protective gear.

→ Get someone to help if necessary.

1. Position engine using **workshop crane WE 1188** .
2. Fit fastening screws **-1, 2 and 3-** on the engine mount.
    1. 2.1. Tighten fastening screws **-3-** .

2. 2.2. Tighten fastening screws **-2-** .
3. 2.3. Tighten fastening screws **-1-** .

Fig 1: Identifying Engine Mount Fastening Screws

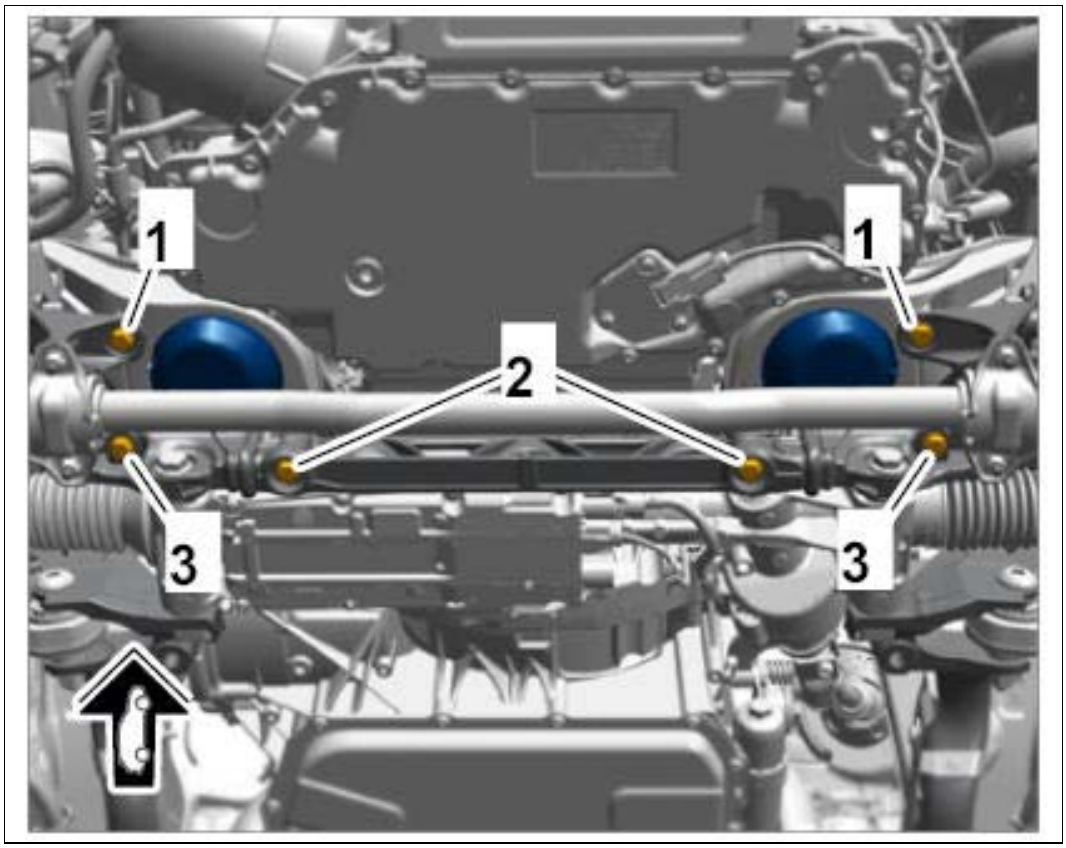

Courtesy of PORSCHE CARS NORTH AMERICA, INC.

WM 100127 REMOVING AND MOUNTING ENGINE (MACAN S, MACAN TURBO) > SUBSEQUENT WORK

1. Mount transmission. → MOUNTING PORSCHE DOPPELKUPPLUNG (PDK)

WM 1001IN ENGINE NUMBER MARKING (MACAN, MACAN S, MACAN TURBO) > INFORMATION > ENGINE NUMBER - MACAN

Fig 1: Locating Engine Number - Macan

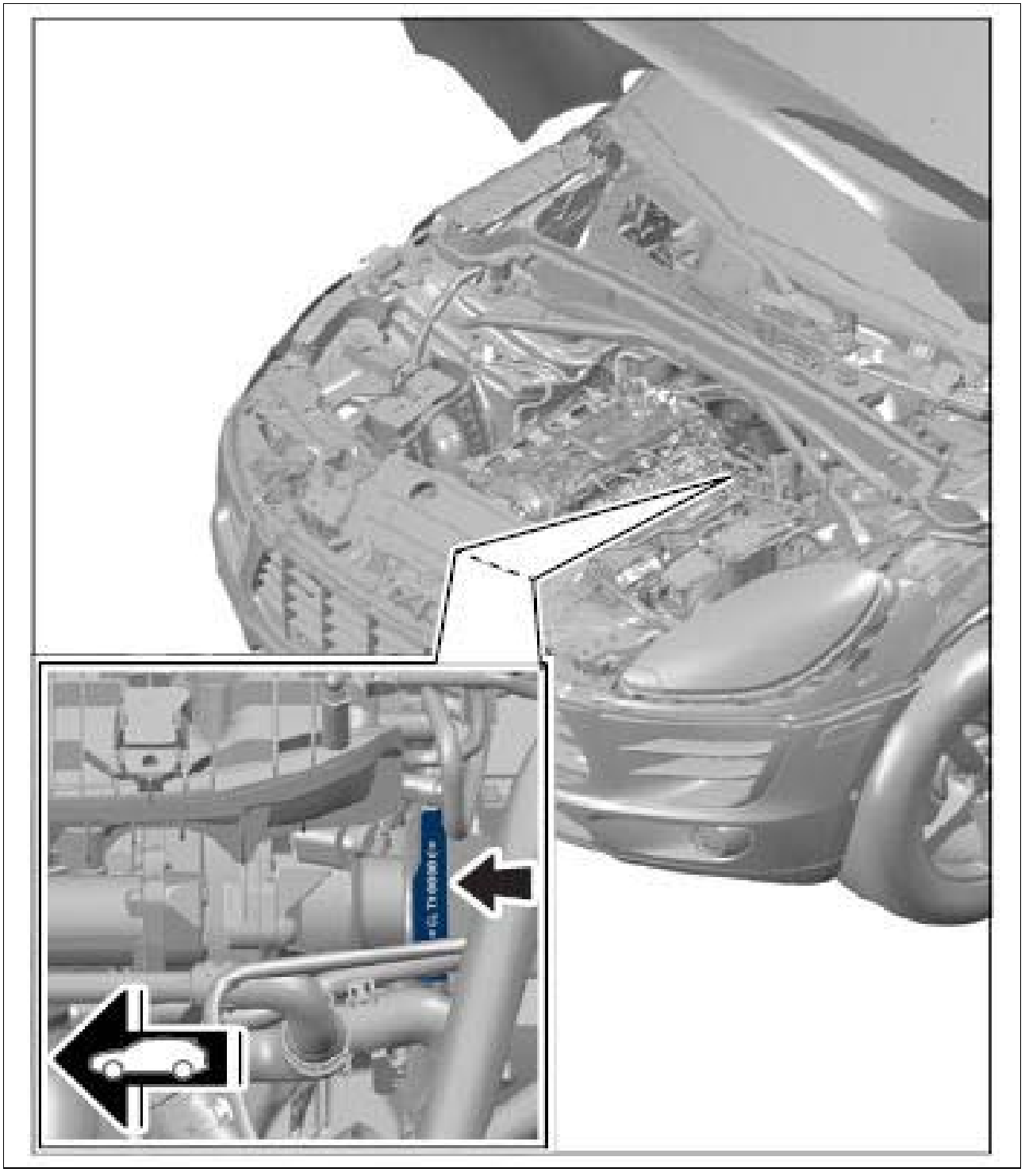

Courtesy of PORSCHE CARS NORTH AMERICA, INC.

The engine number can be found on the left-hand side at the engine connection point on the transmission.

Fig 2: Locating Engine Code - Macan

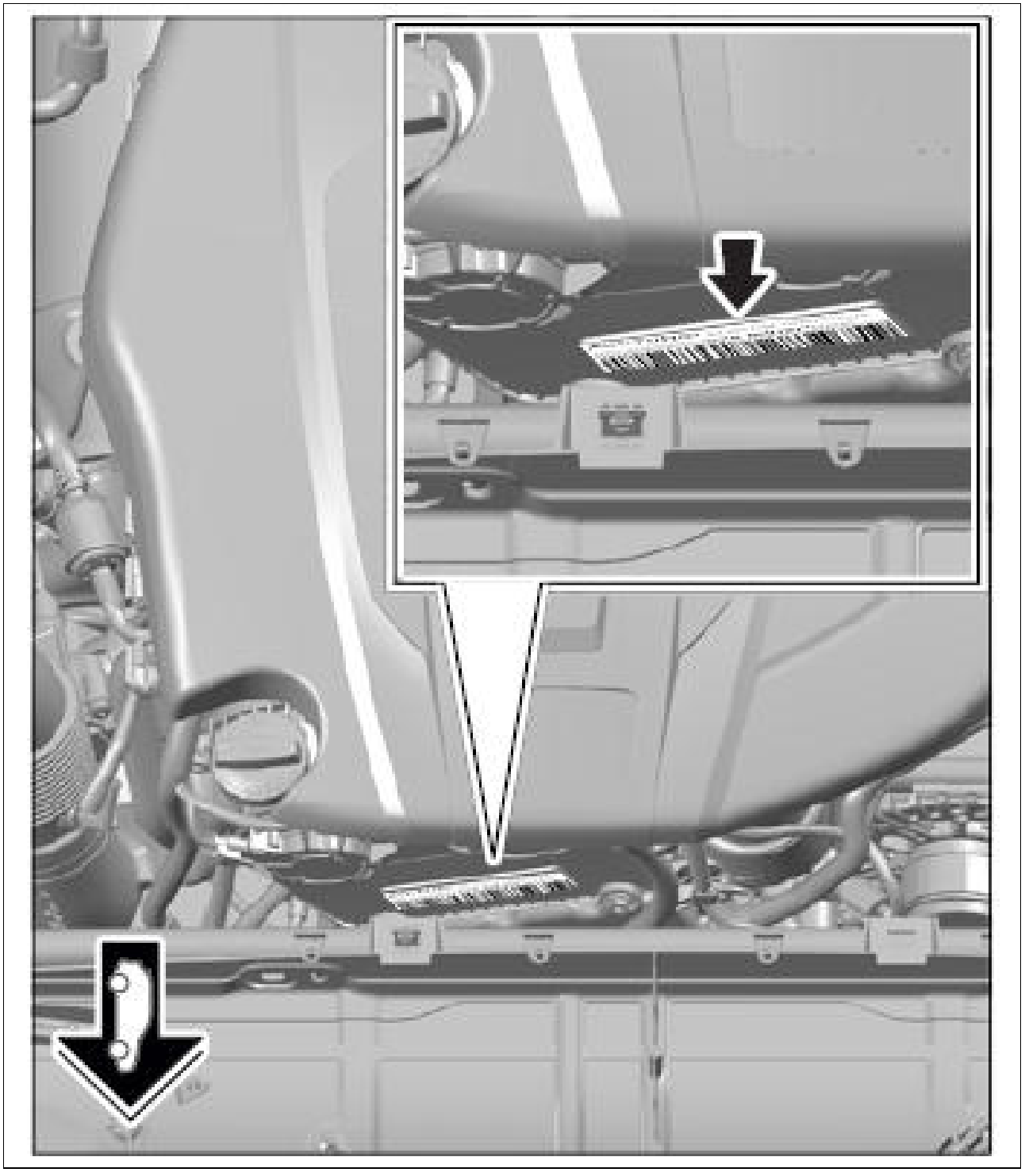

Courtesy of PORSCHE CARS NORTH AMERICA, INC.

In addition, a sticker showing "Engine code" and "Serial number" is affixed to the intake-air distributor.

WM 1001IN ENGINE NUMBER MARKING (MACAN, MACAN S, MACAN TURBO) > INFORMATION > ENGINE NUMBER - MACAN S/TURBO

Fig 1: Locating Engine Number - Macan S/Turbo

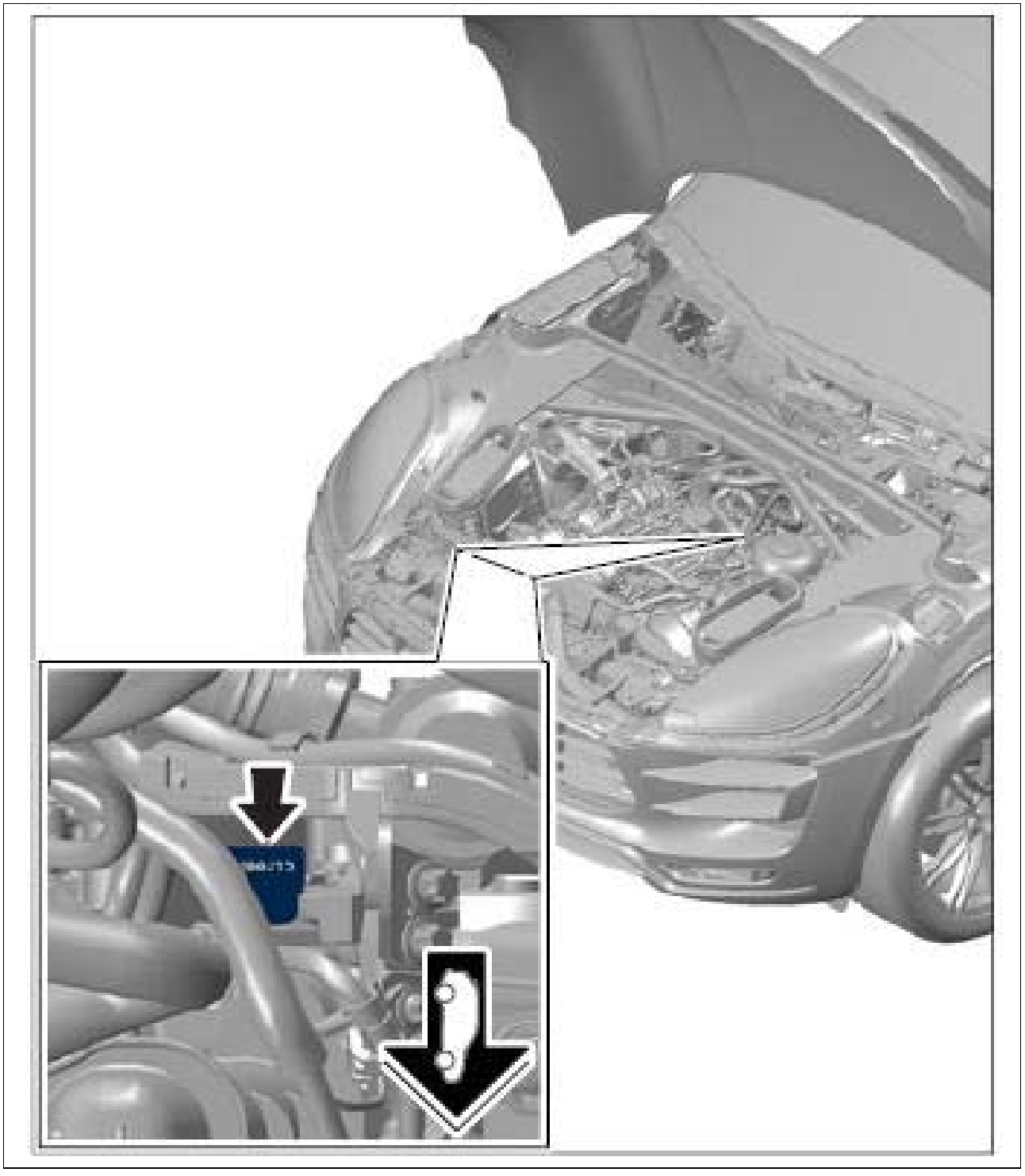

Courtesy of PORSCHE CARS NORTH AMERICA, INC.

The engine number can be found behind cylinder bank 4-6 underneath the secondary-air shut-off valve.

WM 1001IN ENGINE NUMBER MARKING (MACAN, MACAN S, MACAN TURBO) > INFORMATION > ENGINE NUMBER - MACAN S DIESEL

Fig 1: Locating Engine Number

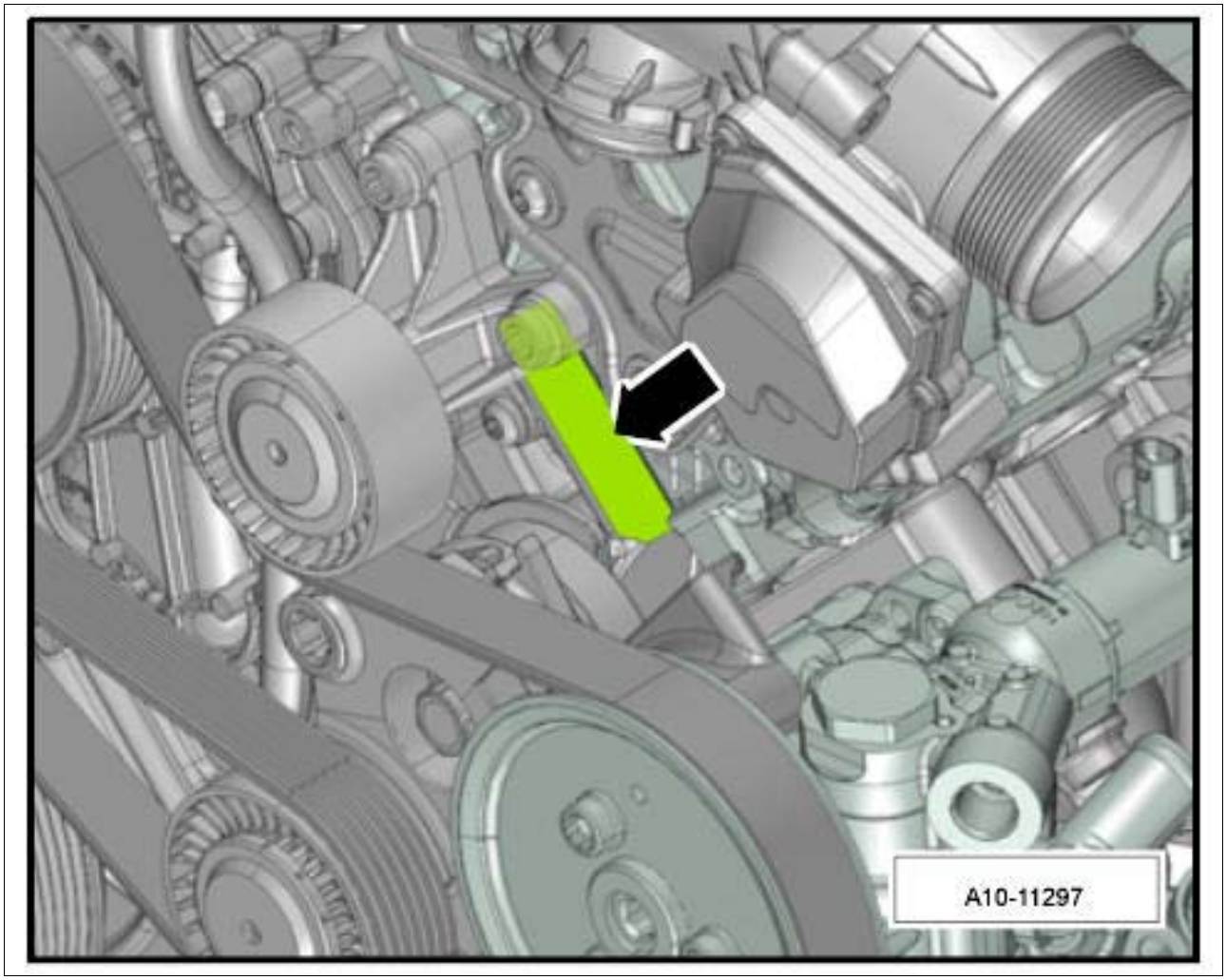

Courtesy of PORSCHE CARS NORTH AMERICA, INC.

The engine number ("Engine code" and "Serial number") can be found at the front left, underneath the toothed belt for the high-pressure pump **-arrow-** . In addition, a sticker showing "Engine code" and "Serial number" is affixed to the intake pipe.

WM 1001IN LIFTING THE ENGINE (WORKSHOP CRANE) (MACAN S, MACAN TURBO) > TOOLS

Designation	Type	Number	Description	

lifting tackle	VW tool	3033		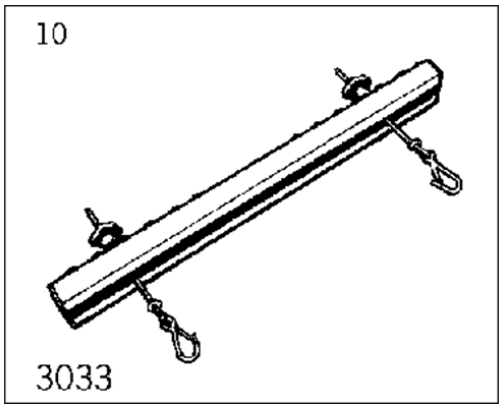

WM 1001IN LIFTING THE ENGINE (WORKSHOP CRANE) (MACAN S, MACAN TURBO) > SECURING ENGINE TO ENGINE CRANE

⚠ *CAUTION: Heavy components*

- *Risk of squashing*

→ Wear personal protective gear.

→ Get someone to help if necessary.

WARNING: Danger of objects or loads falling down

- *Risk of squashing or crushing*

→ Secure components to prevent them from falling down.

Information

- The pictures shown in this document may differ from the original.

Information

- When removing the new engine from the transport frame, it may be necessary to raise the transport frame at the side (flat jack or similar). → Workshop crane and transport frame
- When removing the new engine from the transport frame, it may be necessary to safeguard the engine against lateral movement using a second worker and against scratching by covering it with a blanket.

Fig 1: Identifying Workshop Crane And Transport Frame

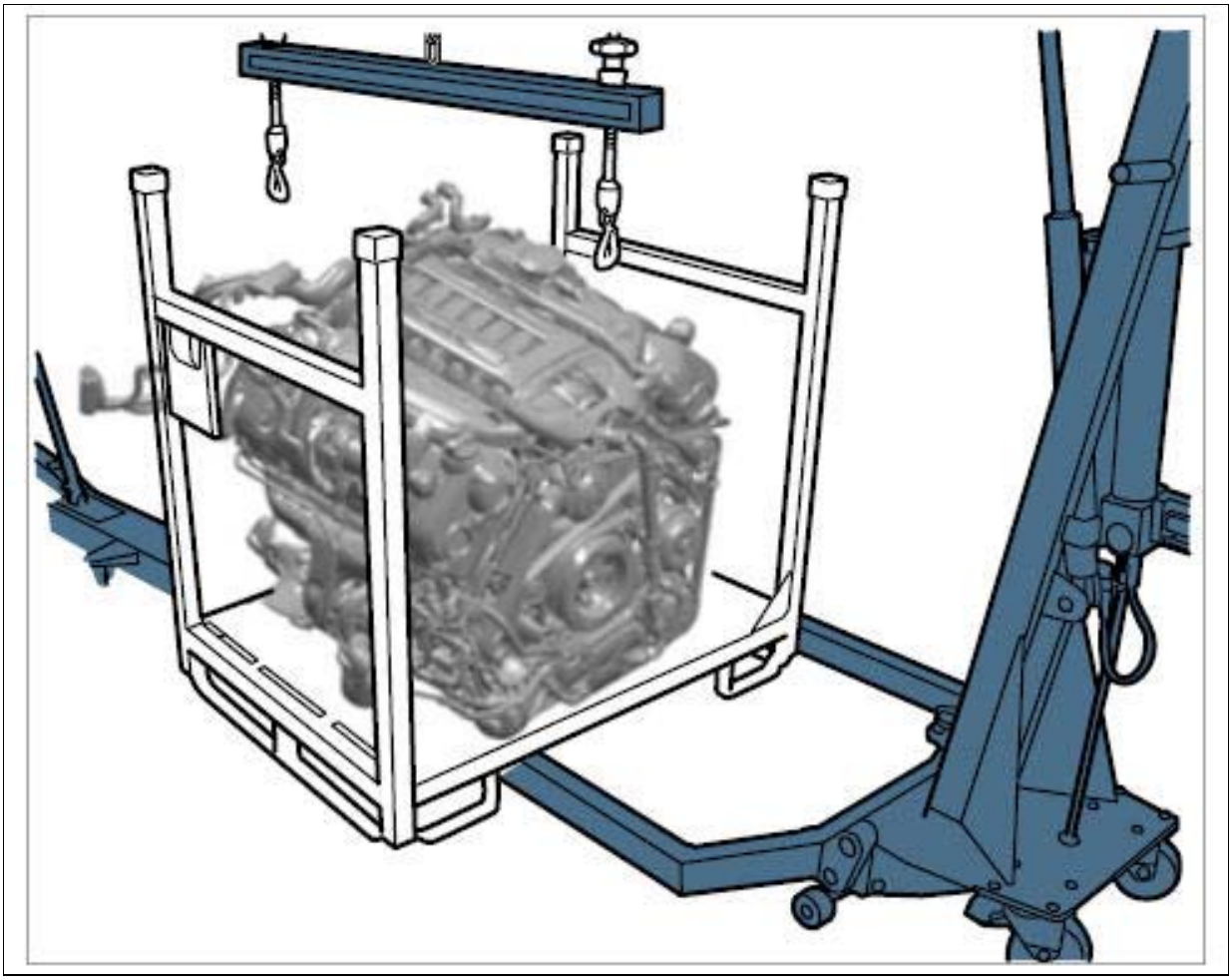

Courtesy of PORSCHE CARS NORTH AMERICA, INC.

1. Remove design cover on engine if necessary.
2. Engage one hook of the **lifting tackle 3033** in the rear transport eyebolt on the engine. Engage the other hook of the lifting tackle at the front of the engine. Raise the workshop crane slightly and tension the spindles slightly. The lifting tackle must be adjusted evenly. → Workshop crane and engine (V8 shown)

Fig 2: Identifying Workshop Crane And Engine (V8 Shown)

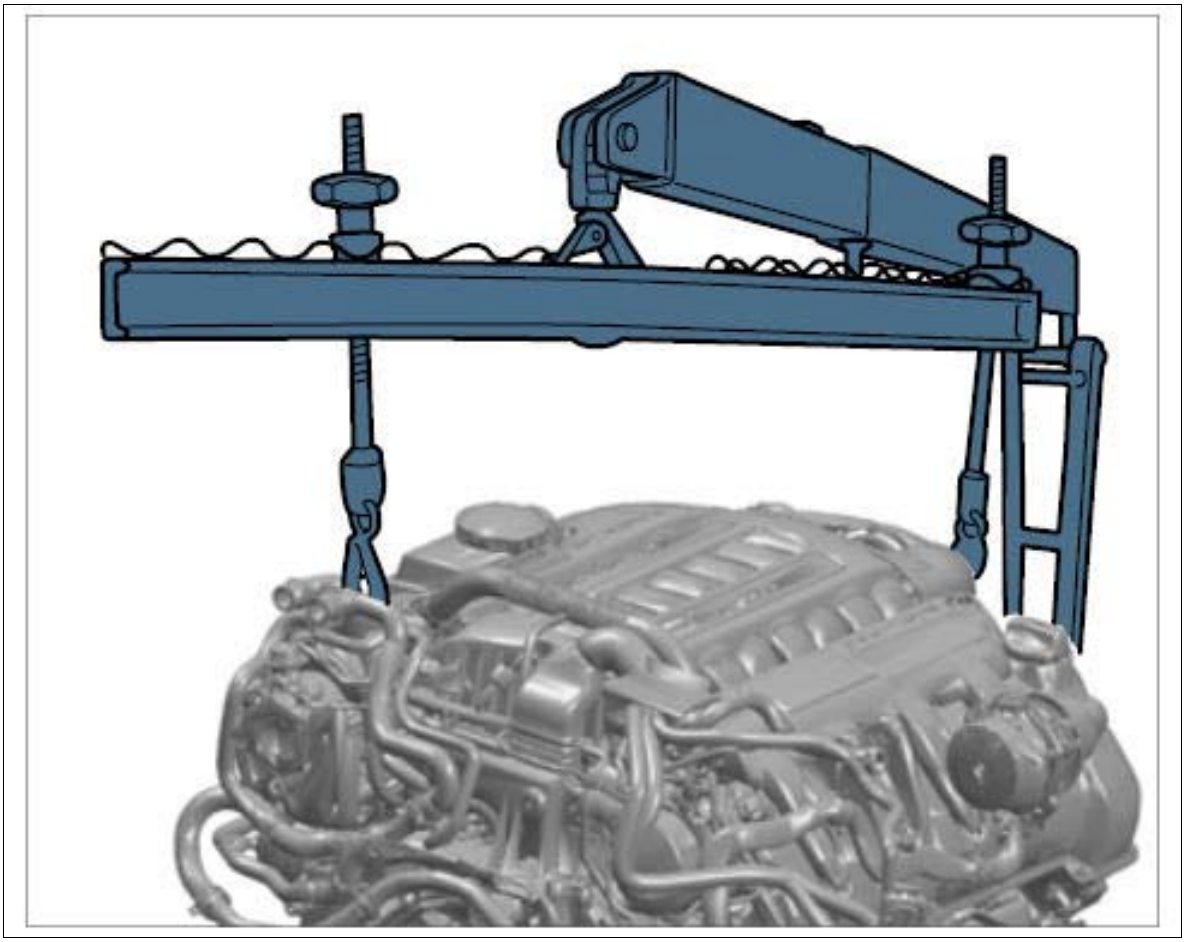

Courtesy of PORSCHE CARS NORTH AMERICA, INC.

3. Carefully lift the engine and balance it or separate the engine from the transmission, depending on what you want to do.

WM 1001IN SECURING ENGINE ON ASSEMBLY SUPPORT (MOUNTING BRACKET) (MACAN S, MACAN TURBO) > TOOLS

Designation	Type	Number	Description	
mounting parts	Special tool	9590		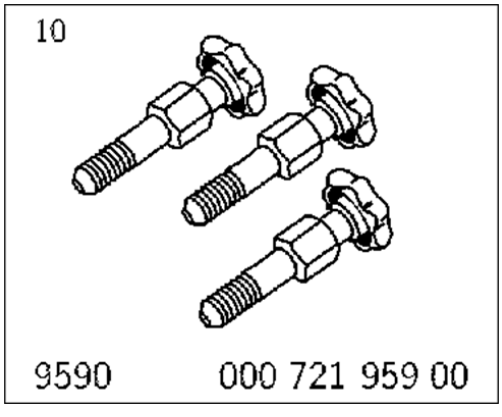

engine support	Special tool	9676/1		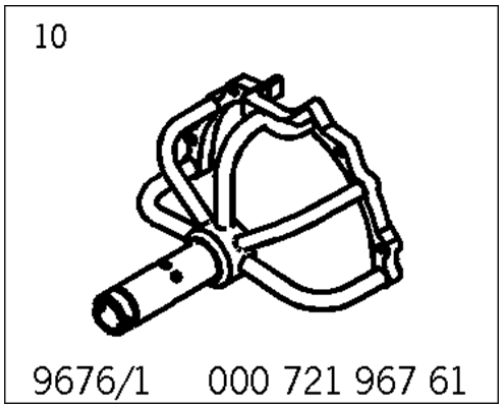

WM 1001IN SECURING ENGINE ON ASSEMBLY SUPPORT (MOUNTING BRACKET) (MACAN S, MACAN TURBO) > PRELIMINARY WORK

1. Lift the engine with a workshop crane. → 1001IN LIFTING THE ENGINE (WORKSHOP CRANE)

WM 1001IN SECURING ENGINE ON ASSEMBLY SUPPORT (MOUNTING BRACKET) (MACAN S, MACAN TURBO) > SECURING ENGINE ON ASSEMBLY SUPPORT

⚠ *CAUTION: Heavy components*

- *Risk of squashing*

→ Wear personal protective gear.

→ Get someone to help if necessary.

WARNING: Danger of objects or loads falling down

- *Risk of squashing or crushing*

→ Secure components to prevent them from falling down.

Information

- The engine needs to be suspended on an assembly support for certain repair work.

1. Secure engine support to the engine - **engine support 9676/1** . To do this, use the four screws **mounting parts 9590** and tighten them. → Engine support Bend the heat protection panel on the front-axle final drive on the turbo engine aside slightly if necessary (collision).

Fig 1: Supporting Engine Assembly

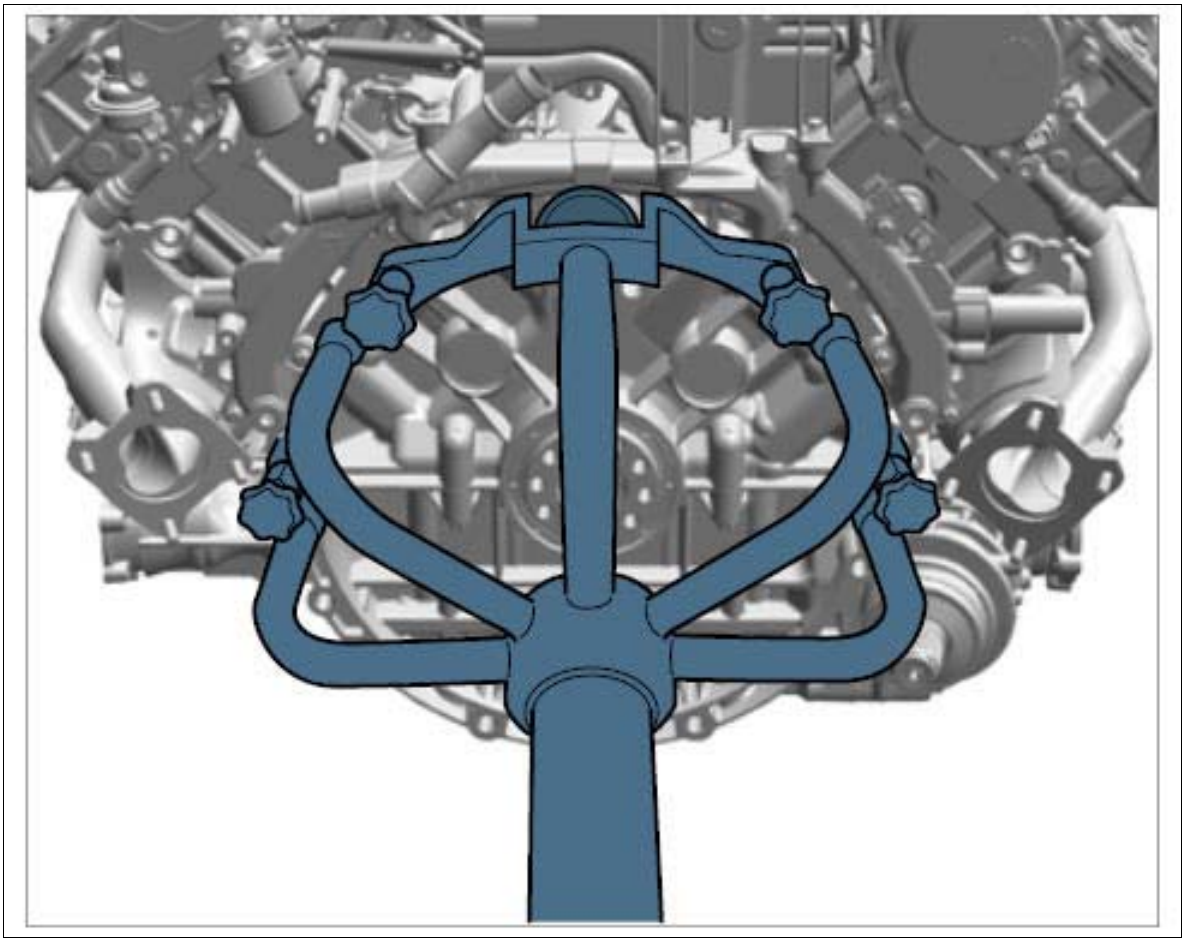

Courtesy of PORSCHE CARS NORTH AMERICA, INC.

2. Move engine in front of the engine support (assembly support) using the workshop crane and guide it in with the help of a second worker. Lift the engine so that it can be eased in horizontally. → Engine crane and engine on assembly support

Fig 2: Moving Engine Crane On Assembly Support

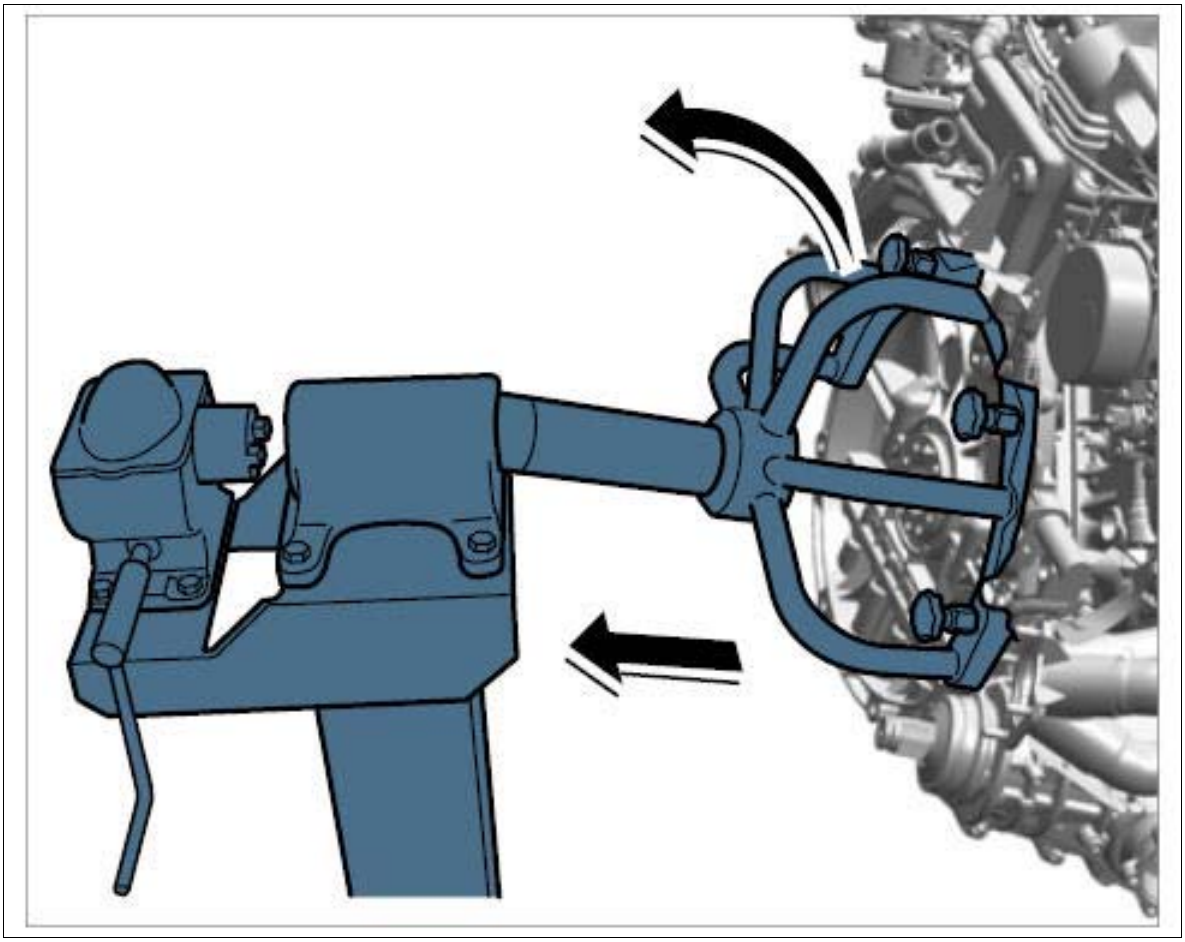

Courtesy of PORSCHE CARS NORTH AMERICA, INC.

3. Secure engine on assembly support. → Engine secured on assembly support

Fig 3: Securing Engine On Assembly Support

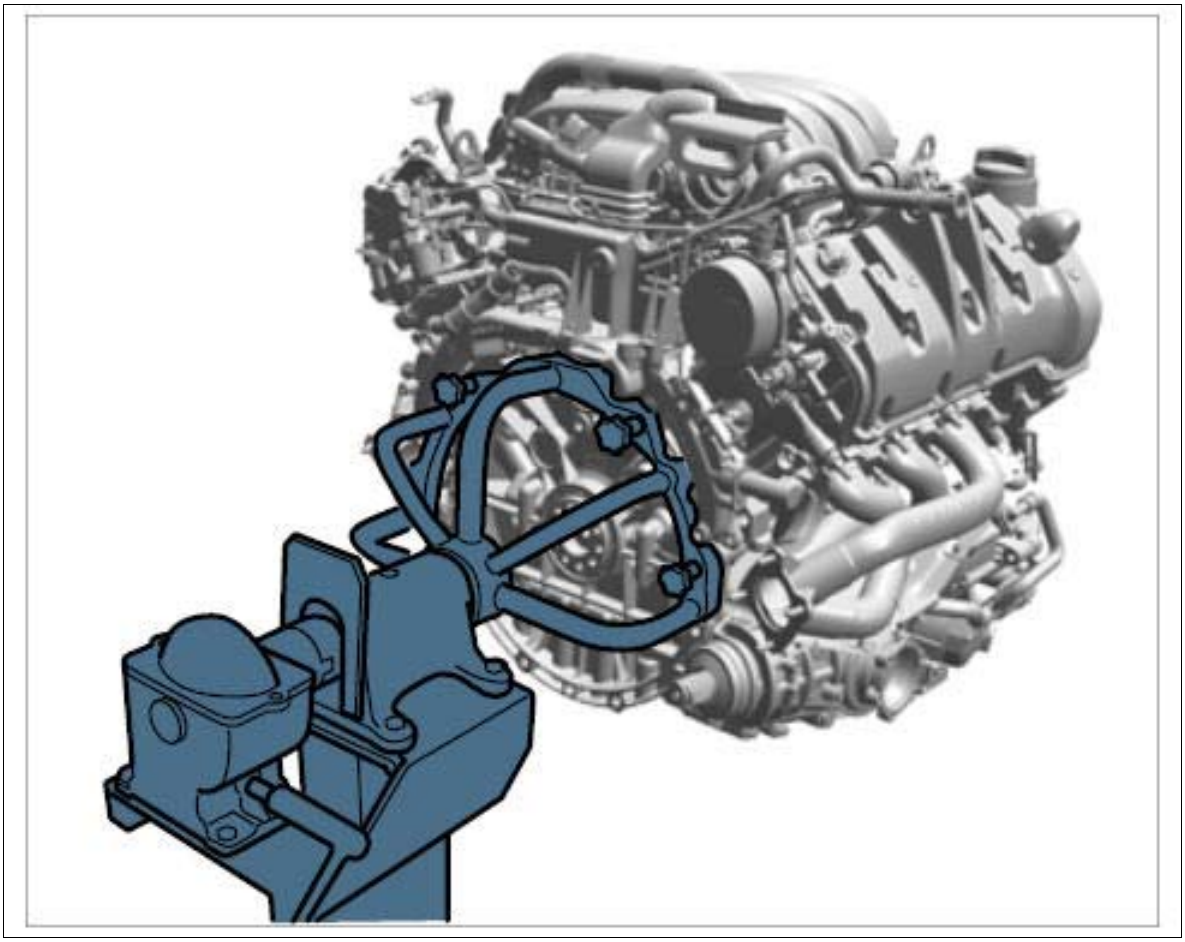

Courtesy of PORSCHE CARS NORTH AMERICA, INC.

WM 1001IN SECURING ENGINE ON ASSEMBLY SUPPORT (MACAN) > TOOLS

Designation	Type	Number	Description	

Engine/transmission repair stand WW-MG 600/v	Workshop equipment	WE 1171		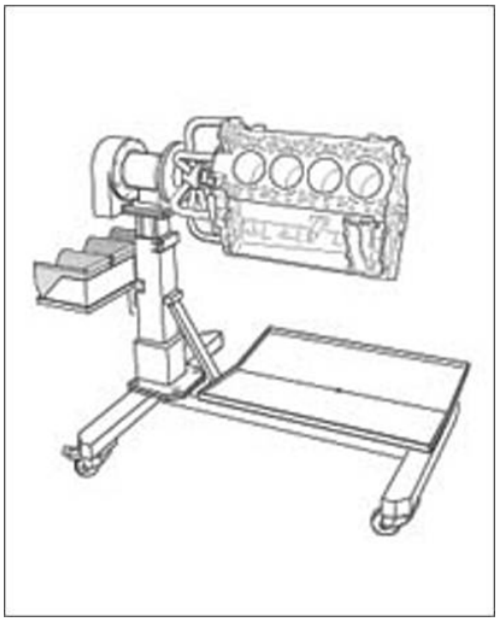
Workshop crane	Workshop equipment	WE 1188		
Mobile assembly station	Workshop equipment	WE 1323		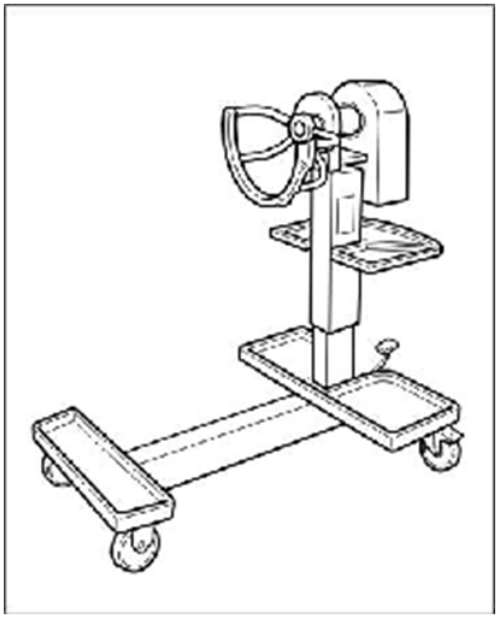
Lifting tackle	VW tool	2024 A		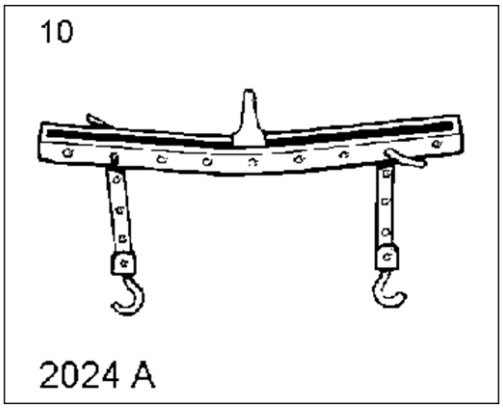

Mounting set	Special tool	9771/1		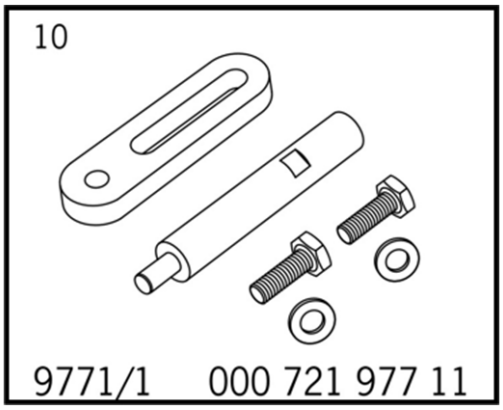
Engine support	Special tool	9771/2		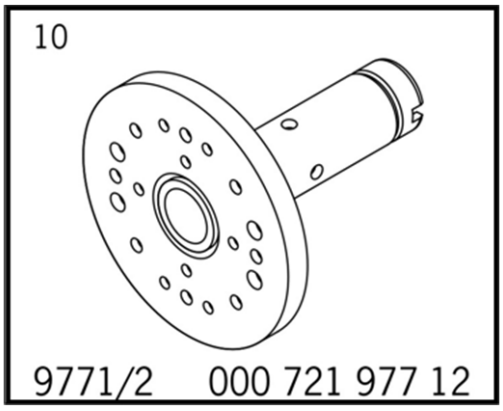

WM 1001IN SECURING ENGINE ON ASSEMBLY SUPPORT (MACAN) > PRELIMINARY WORK

1. Remove drive plate. → 136319 REMOVING AND INSTALLING DRIVE PLATE
2. Remove intermediate plate **-1-** .
    1. 2.1. Guide intermediate plate over the dowel sleeves **-2-** .
    2. 2.2. Lift tab **-4-** on the joint flange **-3-** .
    3. 2.3. Remove intermediate plate **-1-** .

Fig 1: Identifying Intermediate Plate Flange And Tab

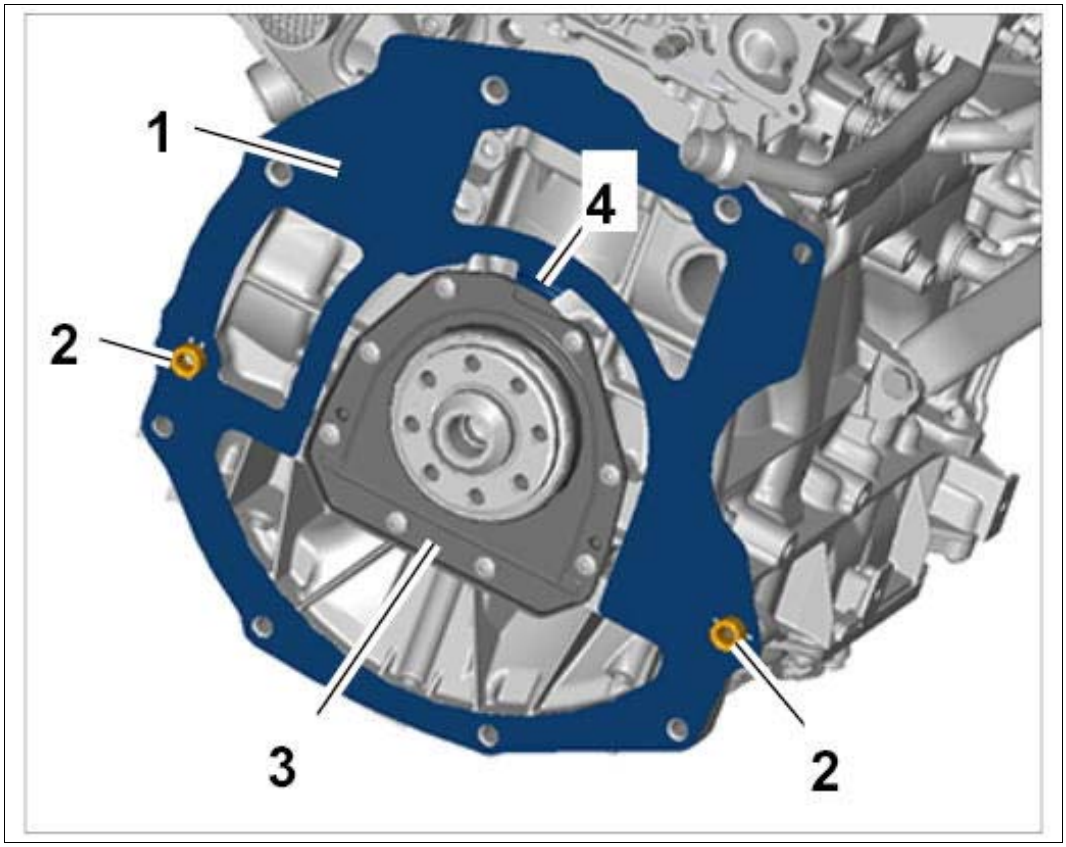

Courtesy of PORSCHE CARS NORTH AMERICA, INC.

3. Remove dowel sleeve **-1-** on the right-hand side.

    1. 3.1. Carefully tap out the dowel sleeve.

Fig 2: Removing Engine Dowel Sleeve

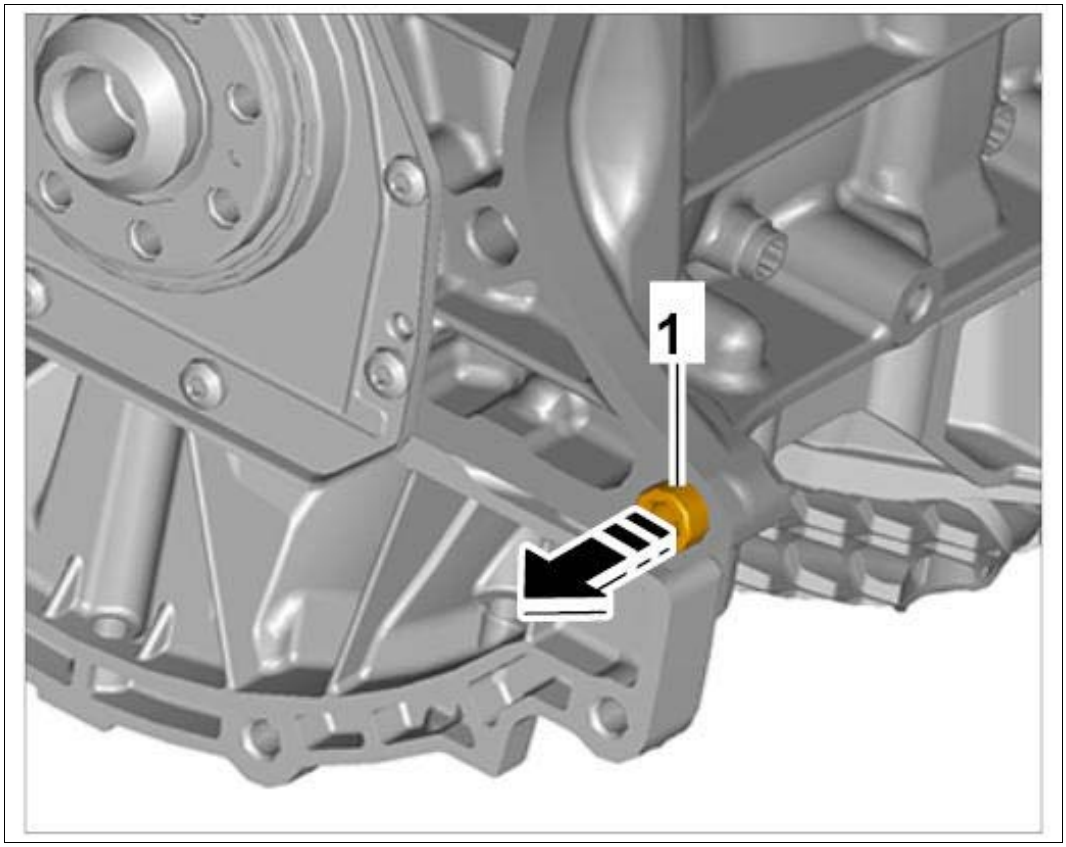

Courtesy of PORSCHE CARS NORTH AMERICA, INC.

WM 1001IN SECURING ENGINE ON ASSEMBLY SUPPORT (MACAN) > TOOLS AND MATERIALS > TOOLS

Lifting tackle 2024 A

Workshop crane WE 1188

Mounting set 9771/1

Engine support 9771/2

Engine/transmission repair stand WW-MG 600/v WE 1171 or Mobile assembly station WE 1323

WM 1001IN SECURING ENGINE ON ASSEMBLY SUPPORT (MACAN) > SECURING ENGINE ON ASSEMBLY SUPPORT

CAUTION: Heavy components

- *Risk of squashing*

→ Wear personal protective gear.

→ Get someone to help if necessary.

WARNING: Danger of objects or loads falling down

- *Risk of squashing or crushing*

→ Secure components to prevent them from falling down.

Information

- The engine needs to be suspended on an assembly support for certain repair work.

1. Lifting tackle 2024 A must be engaged at the engine and at the workshop crane WE 1188.

1. 1.1. Arrange perforated rails and support hooks as shown.

Fig 1: Lifting Tackle

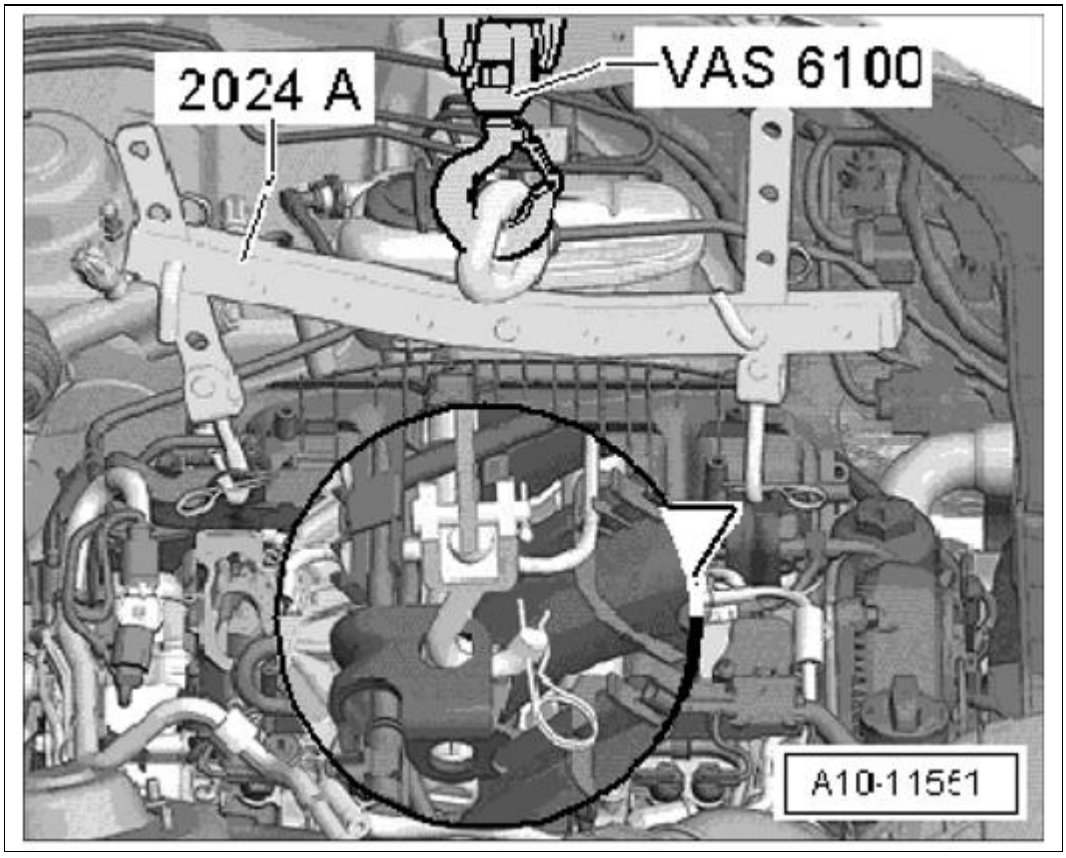

Courtesy of PORSCHE CARS NORTH AMERICA, INC.

2. Secure engine at the transmission side using **mounting set 9771/1** on the **engine support 9771/2** .

   Secure engine with engine support on the **engine/transmission repair stand WW-MG 600/v WE 1171** .

   1. 2.1.

      Template created: 26.02.2014

      Fig 2: Supporting Engine

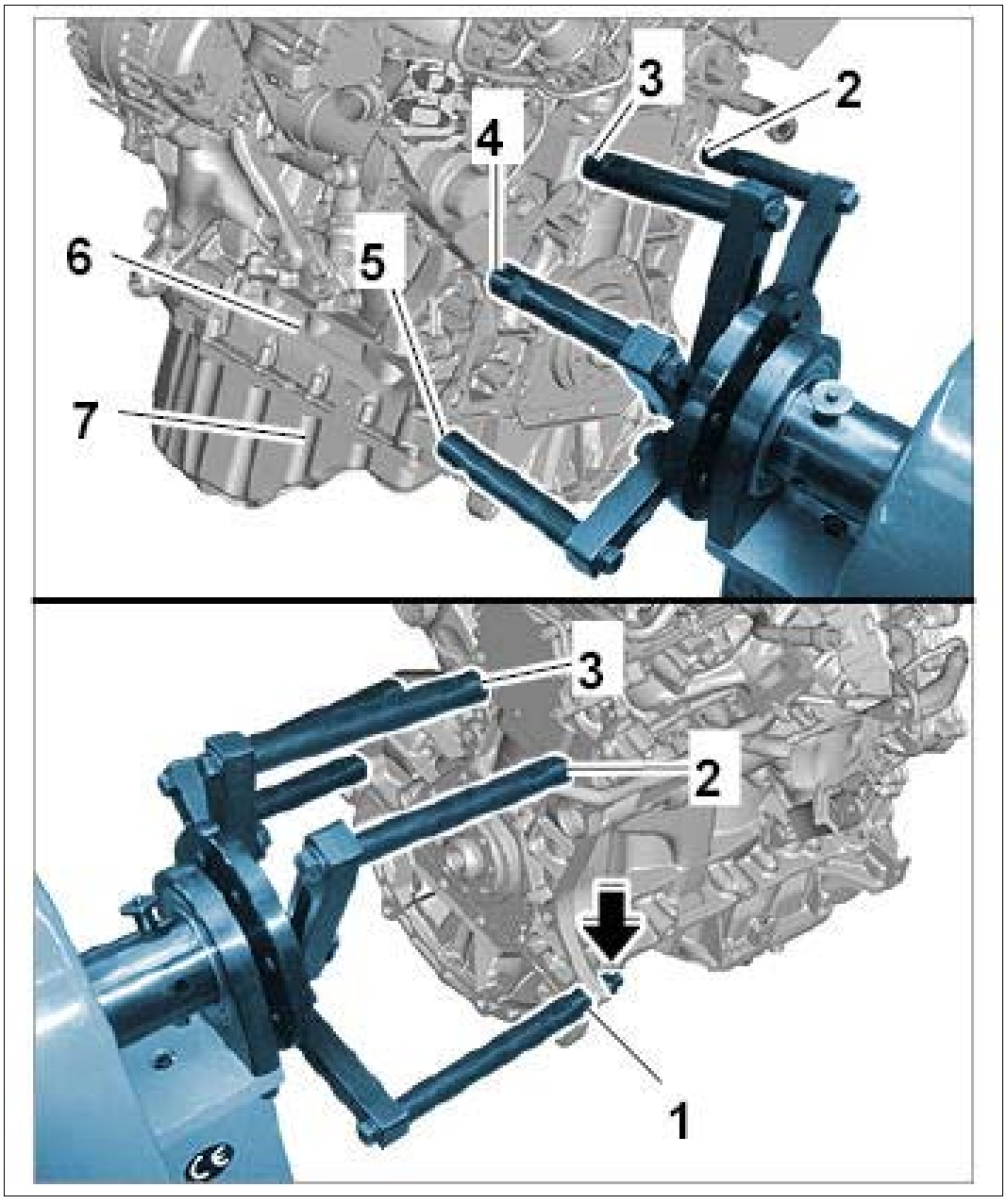

Courtesy of PORSCHE CARS NORTH AMERICA, INC.

WM 1001IN SUPPORTING ENGINE ON THE BODY (ENGINE SAFETY DEVICE)

(MACAN, MACAN S, MACAN TURBO) > TOOLS

Designation	Type	Number	Description	
engine safety device	VW tool	10-222 A		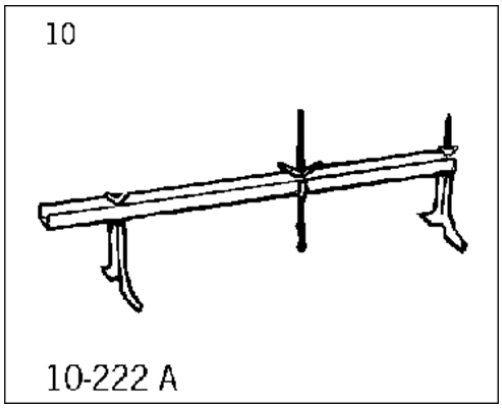
transmission jack V.A.G 1383 A	Workshop equipment	WE 1082		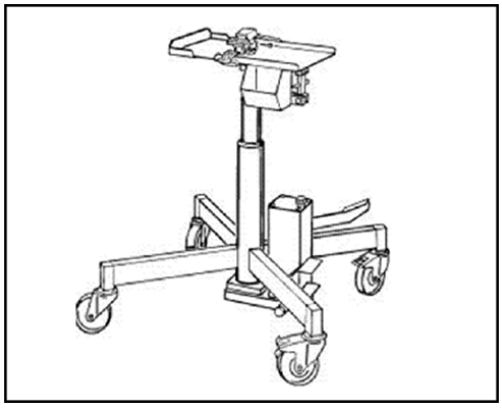
transmission and unit jack Junior Jack 2.0	Workshop equipment	WE 1223		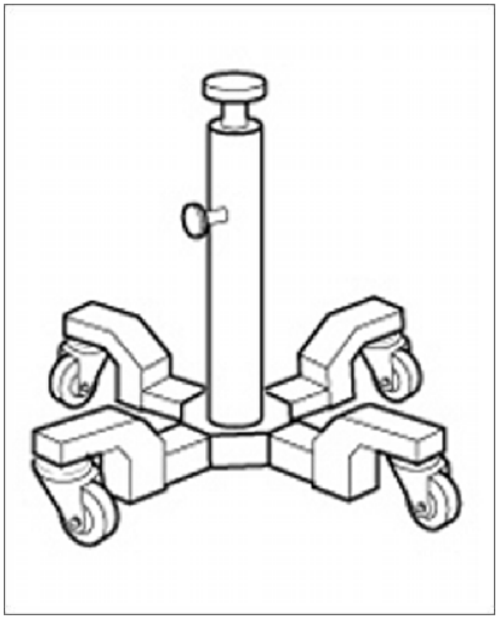

GA passenger-vehicle transmission plate	Workshop equipment	WE 1224		
Lifting tackle	VW tool	3033		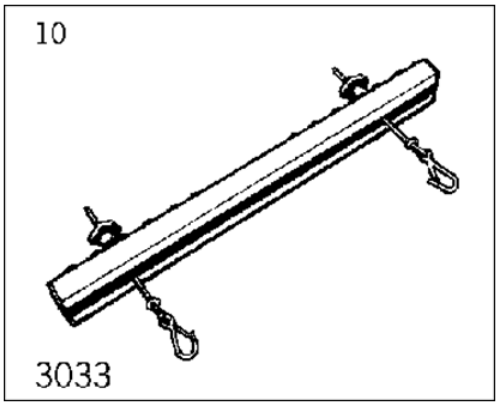
pipes	VW tool	T40091/1		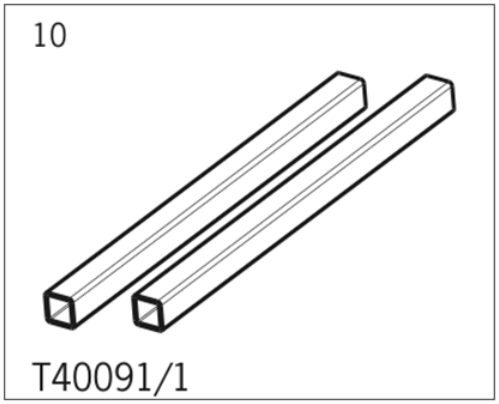

joiners	VW tool	T40091/3		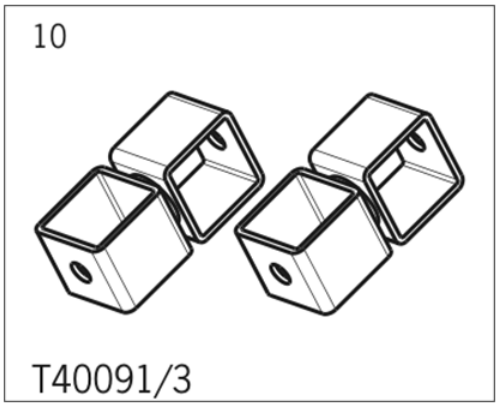
supports	VW tool	T40091/50-51		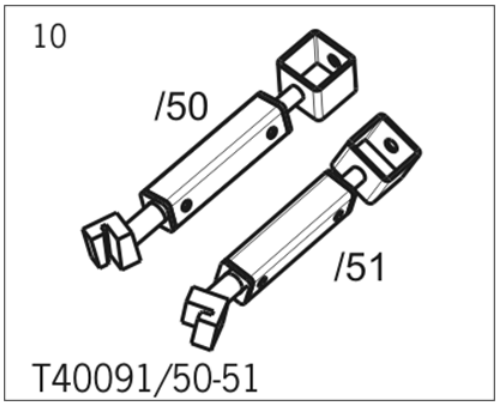
engine safety device supplement	VW tool	T40091/54		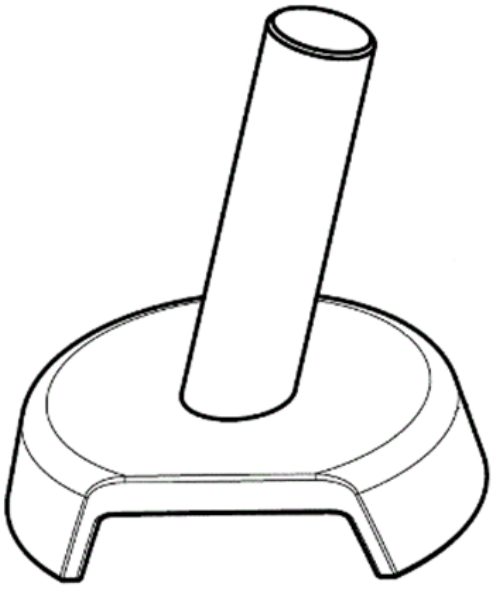

engine safety device supplement	VW tool	T40091/55		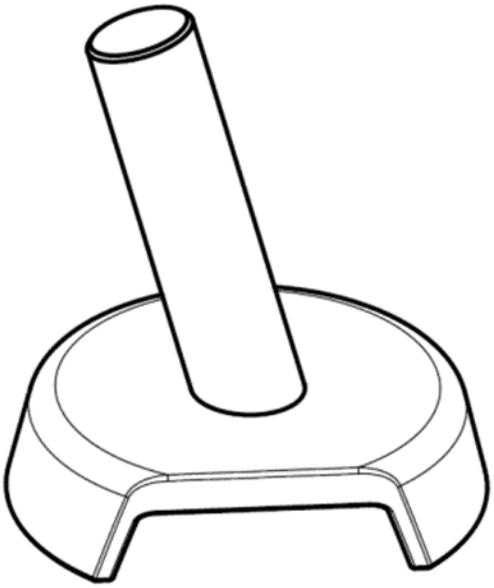
supports	VW tool	T40093/3P		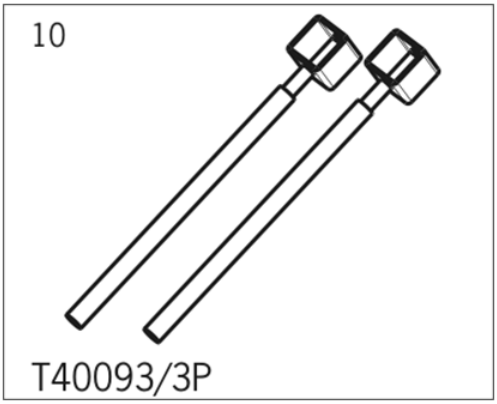
base	VW tool	T40093/50		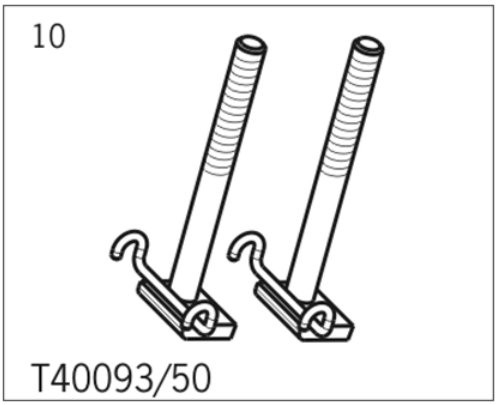

adjustable foot	VW tool	T40093/51		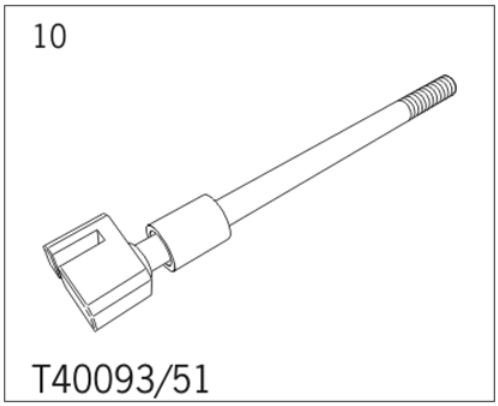

WM 1001IN SUPPORTING ENGINE ON THE BODY (ENGINE SAFETY DEVICE) (MACAN, MACAN S, MACAN TURBO) > TOOLS AND MATERIALS > ENGINE SAFETY DEVICE

Fig 1: Identifying Longitudinal Members And Spring Strut Domes

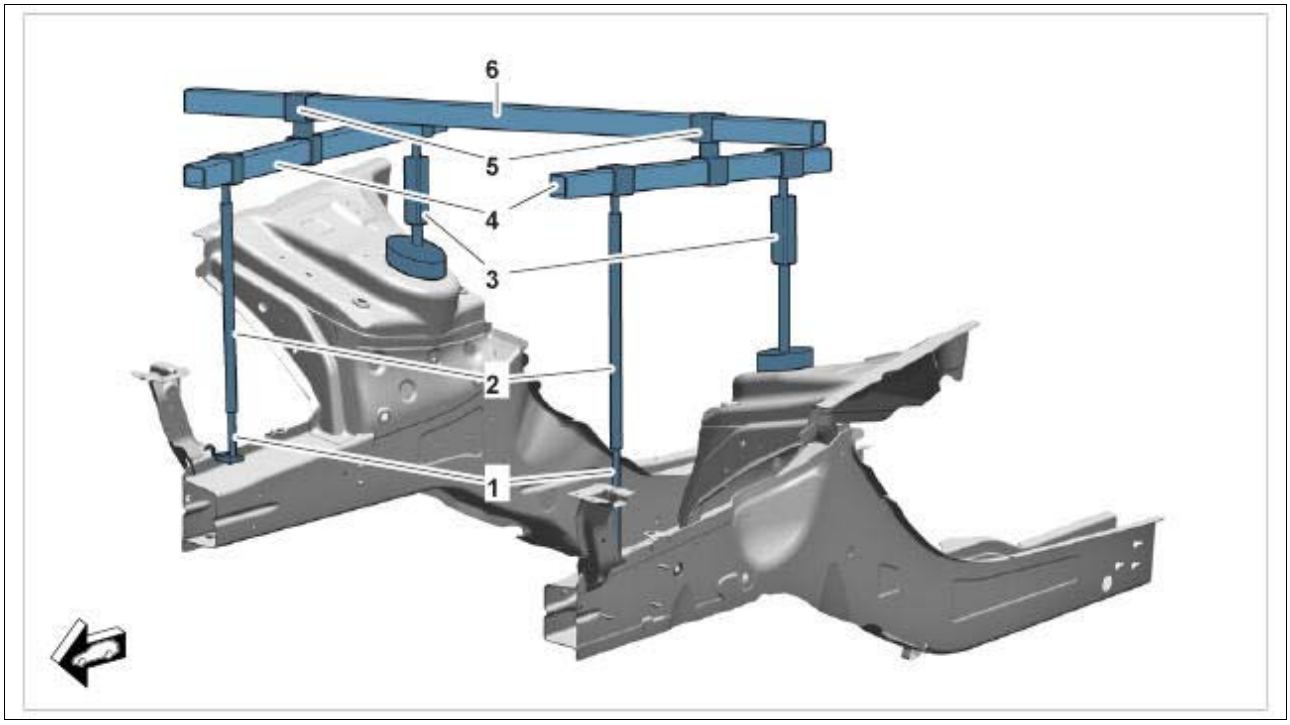

Courtesy of PORSCHE CARS NORTH AMERICA, INC.

1 - For left longitudinal member, one **adjustable foot T40093/51**

1 - For right longitudinal member, one **base T40093/50**

2 - Two **supports T40093/3P**

3 - Two **supports T40091/50-51, engine safety device supplement T40091/54, engine safety device supplement T40091/55**

4 - Two **pipes T40091/1**

5 - Two **joiners T40091/3**

6 - One **engine safety device 10-222 A**

Fig 2: Identifying Engine Safety Device

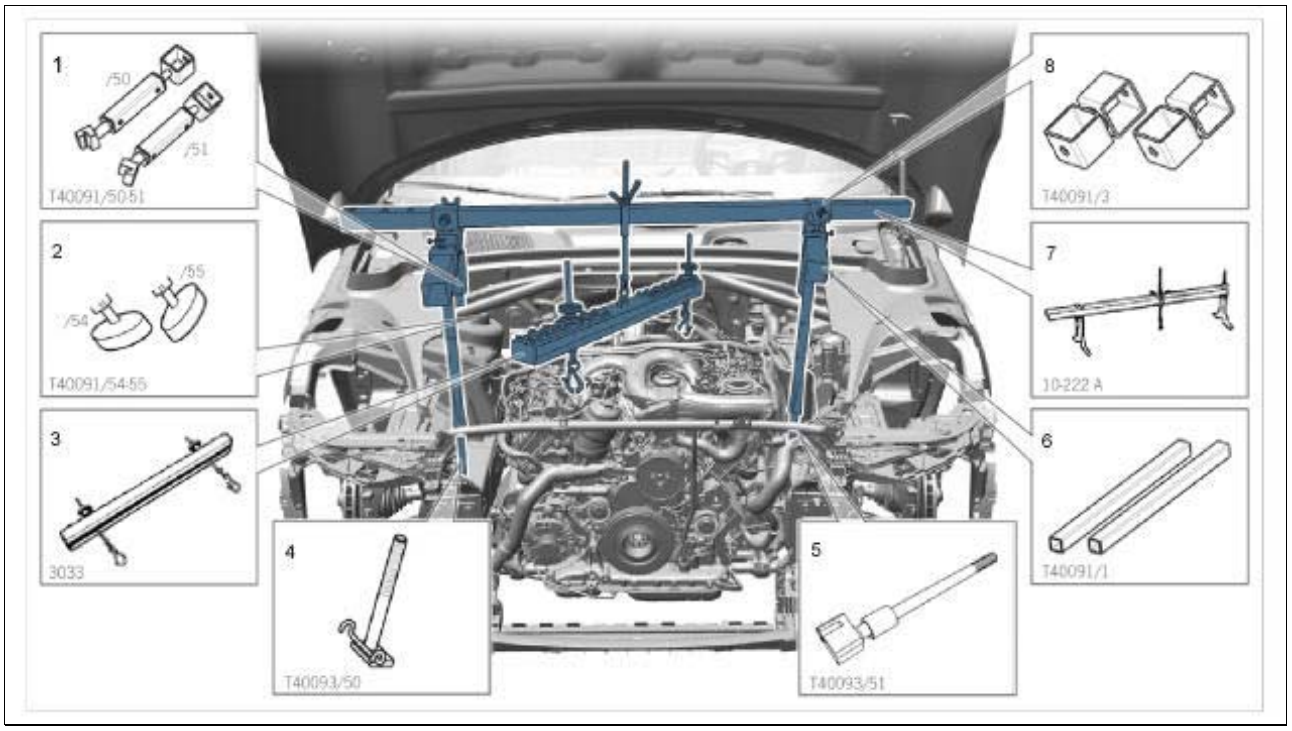

Courtesy of PORSCHE CARS NORTH AMERICA, INC.

1. **Support T40091/50-51**
2. **Engine safety device supplement T40091/54 Engine safety device supplement T40091/55**
3. **Lifting tackle 3033**
4. **Base T40093/50**
5. **Adjustable foot T40093/51**
6. **Pipe T40091/1**
7. **Support bracket 10-222 A**
8. **Joiner T40091/3**

WM 1001IN SUPPORTING ENGINE ON THE BODY (ENGINE SAFETY DEVICE) (MACAN, MACAN S, MACAN TURBO) > SUPPORTING ENGINE ON THE BODY (ENGINE SAFETY DEVICE)

WARNING: Danger of objects or loads falling down

- *Risk of squashing or crushing*

→ Secure components to prevent them from falling down.

Information

A unit lift, such as **transmission jack V.A.G 1383 A WE 1082** or **transmission and unit jack Junior Jack 2.0 WE 1223** with **GA passenger-vehicle transmission plate WE 1224** , can also be used to support the raised vehicle while you are working.

Information

The engine must be supported on the body in order to remove the front axle, oil guide housing, oil pump or similar components.

1. Remove refrigerant line **-2-** from the guide.
    1. 1.1. Open the clip **-1-** .
    2. 1.2. Lift refrigerant line **-2-** out of the guide and set it aside.
    3. 1.3. Move refrigerant line **-3-** aside.

    Fig 1: Identifying Refrigerant Line And Clip

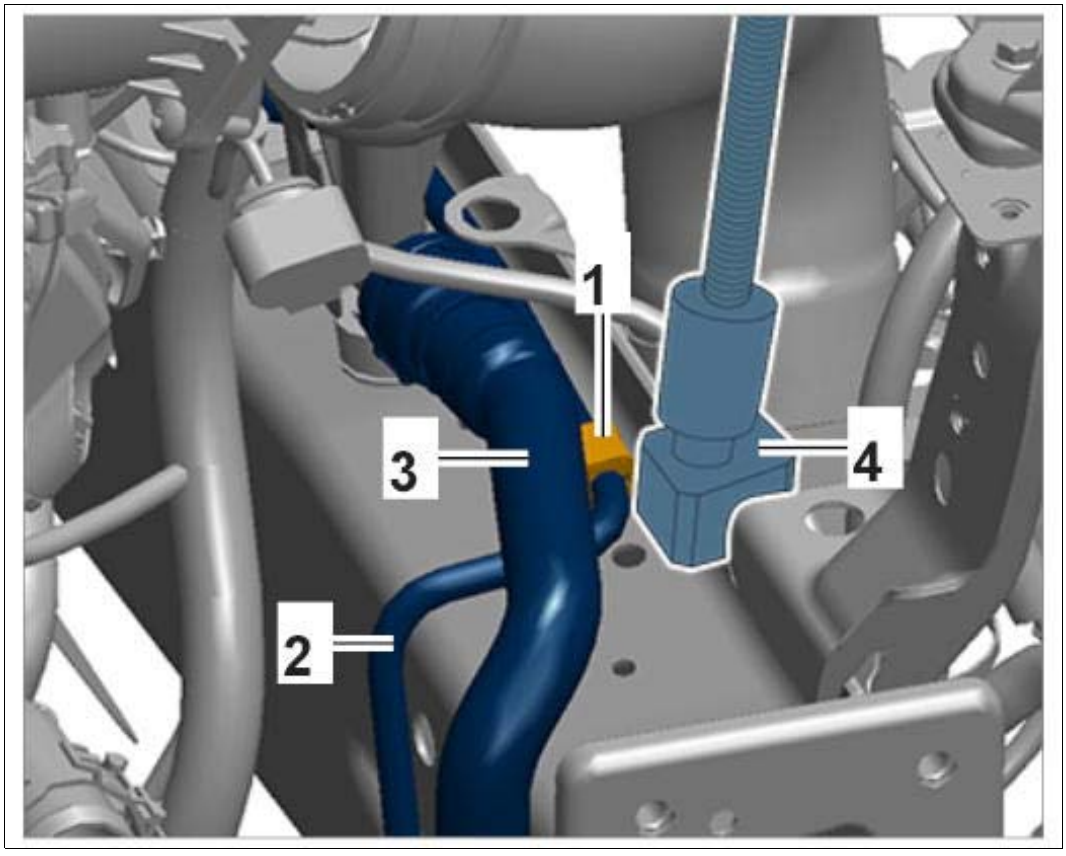

Courtesy of PORSCHE CARS NORTH AMERICA, INC.

2. Screw in supports **-1-, support T40091/50-51** on the **engine safety device supplement T40091/54** and **engine safety device supplement T40091/55** .

3. Place supports **-1-, support T40091/50-51** with the **engine safety device supplement T40091/54** and **engine safety device supplement T40091/55** onto the free spring strut domes.

4. Undo air hose from the throttle housing and set it aside.

5. Press coolant hose aside.

6. Position on the **left** longitudinal member, **adjustable foot T40093/51, -1-** .

   Fig 2: Identifying Left Longitudinal Member

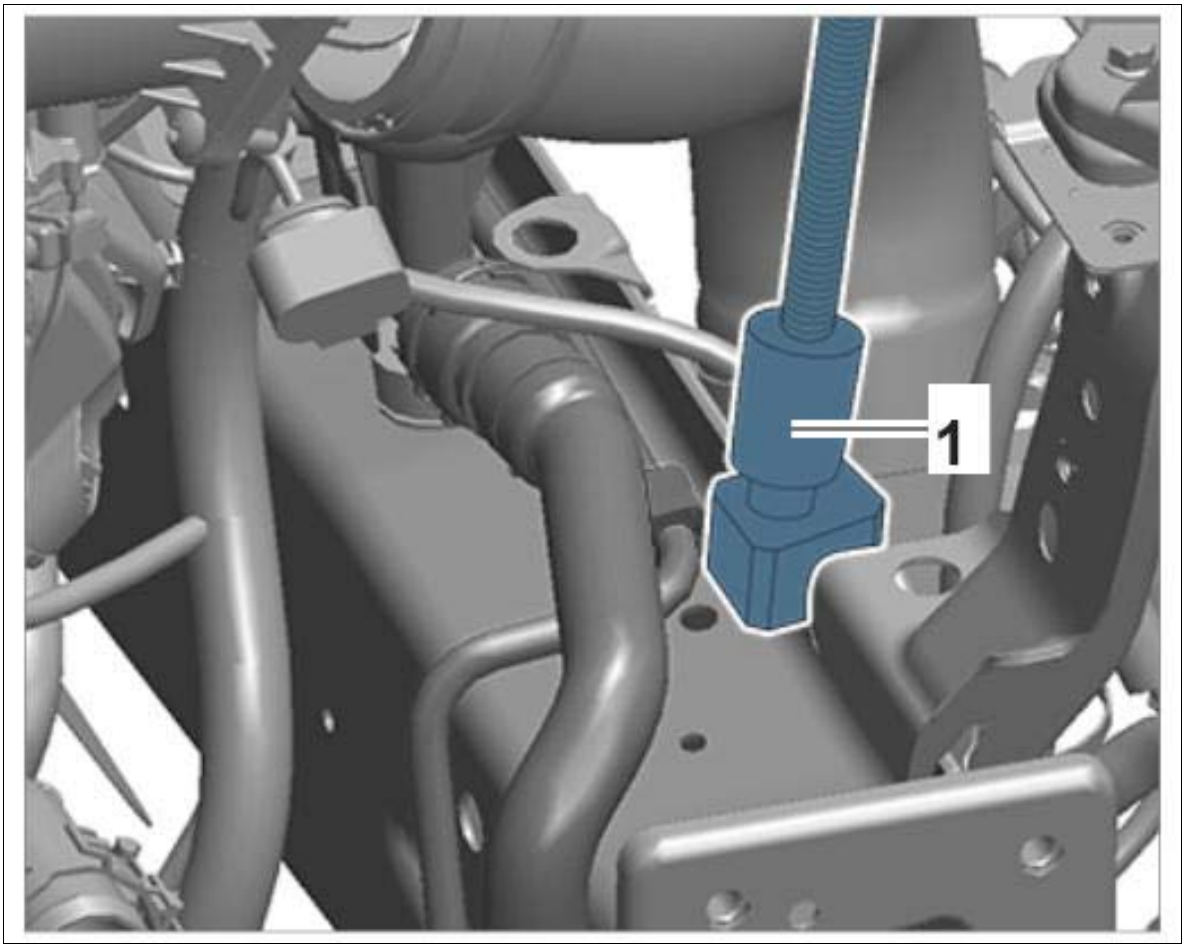

Courtesy of PORSCHE CARS NORTH AMERICA, INC.

7. Position on the **right** longitudinal member, **base T40093/50, -1-** .

8. **Support T40093/3P** Screw in, **-2-** , onto **adjustable foot T40093/51, -5-** , and **base T40093/50 -1-** , and correct to a height.

Fig 3: Identifying Right Longitudinal Member And Screws

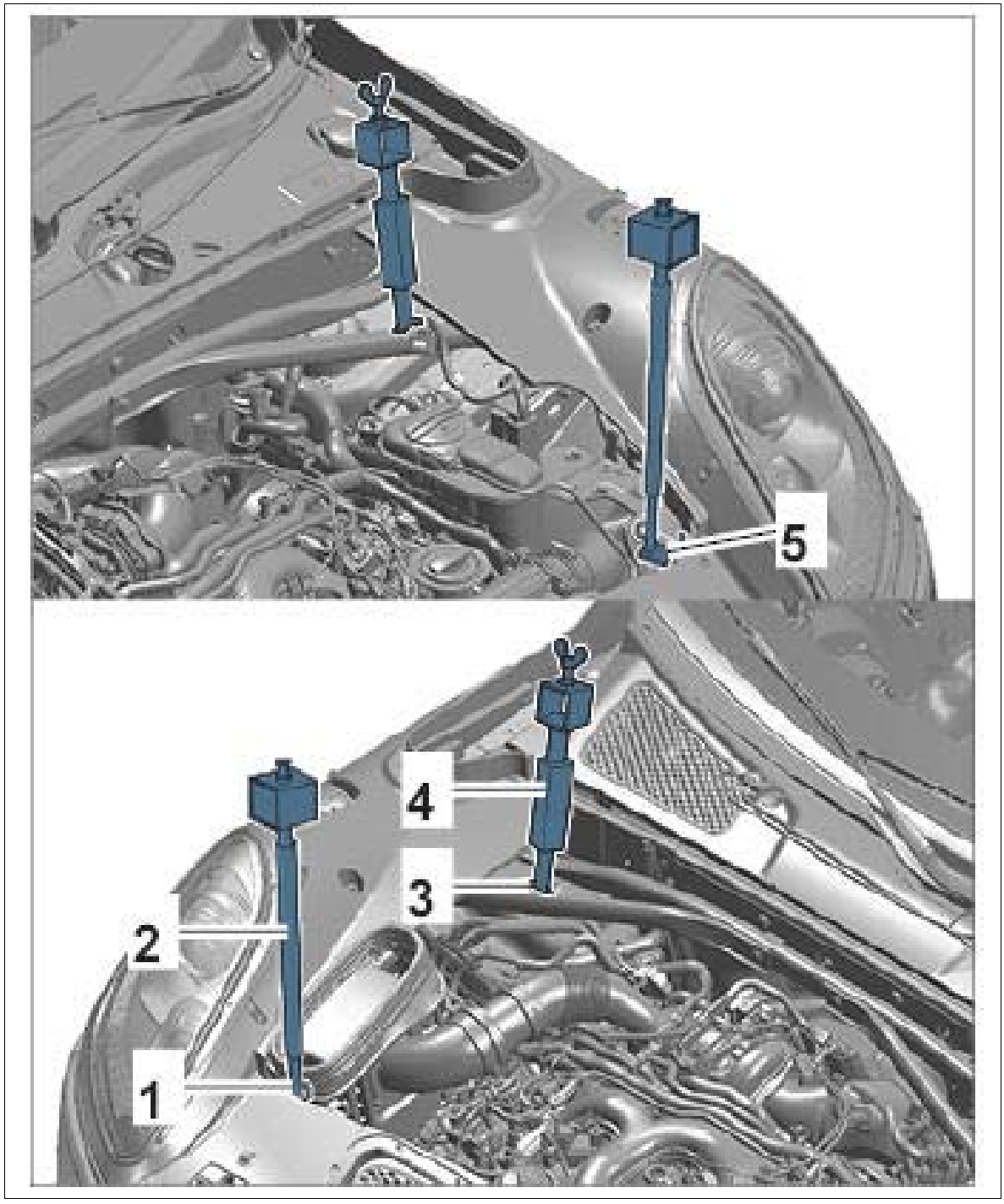

Courtesy of PORSCHE CARS NORTH AMERICA, INC.

9. **Pipe T40091/1** Push through, **-1-** , at both ends through the **support T40093/3P** until the middle.
10. At both ends of the two **pipes pipe T40091/1, -1-** , attach the **joiners T40091/3, -3-** .
11. **Pipe T40091/1** Push through, **-1-** , further and up to the **support T40091/50-51, -4-** .

Fig 4: Attaching Joiners T40091/3

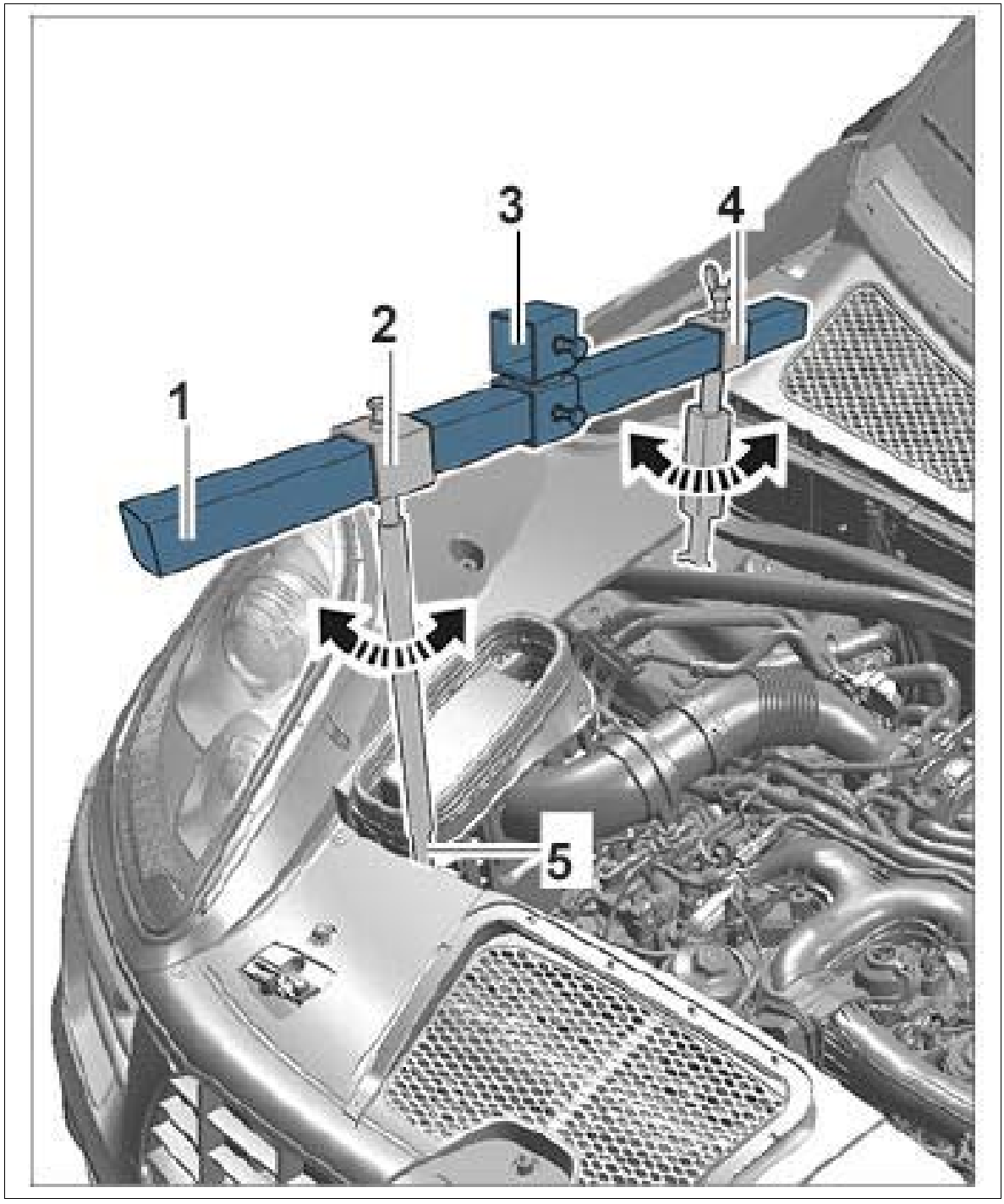

Courtesy of PORSCHE CARS NORTH AMERICA, INC.

12. **Safety device 10-222 A** Push, **-1-** , crossways through the **joiner T40091/3** .

Fig 5: Identifying Safety Device

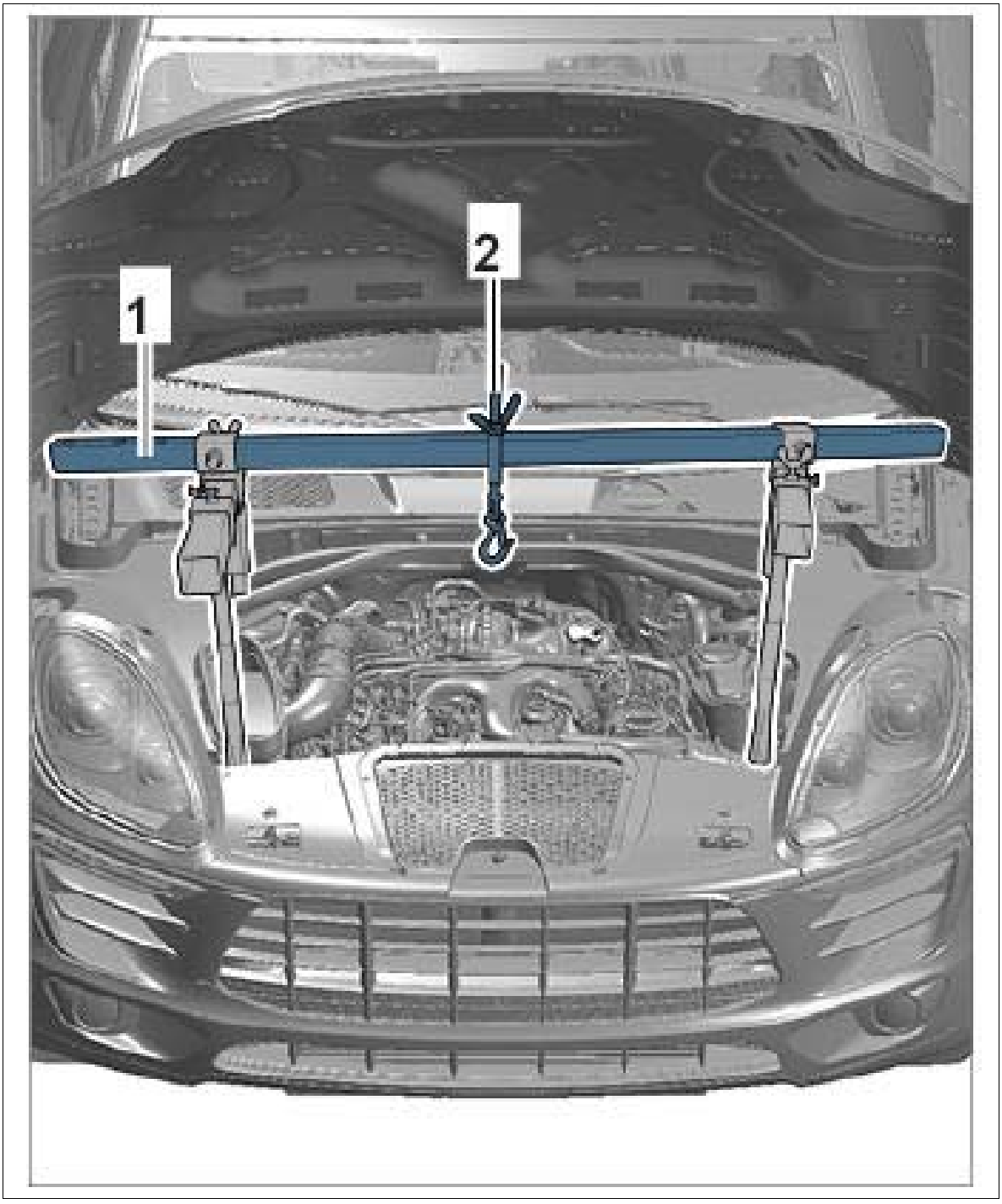

Courtesy of PORSCHE CARS NORTH AMERICA, INC.

13. **Lifting tackle 3033** Fasten, **-3-** , to the spindle of the **safety device 10-222 A, -1-** .
14. Fasten engine at the fastening points **-2-** and **-4-** pretension slightly.

Fig 6: Lifting Tackle

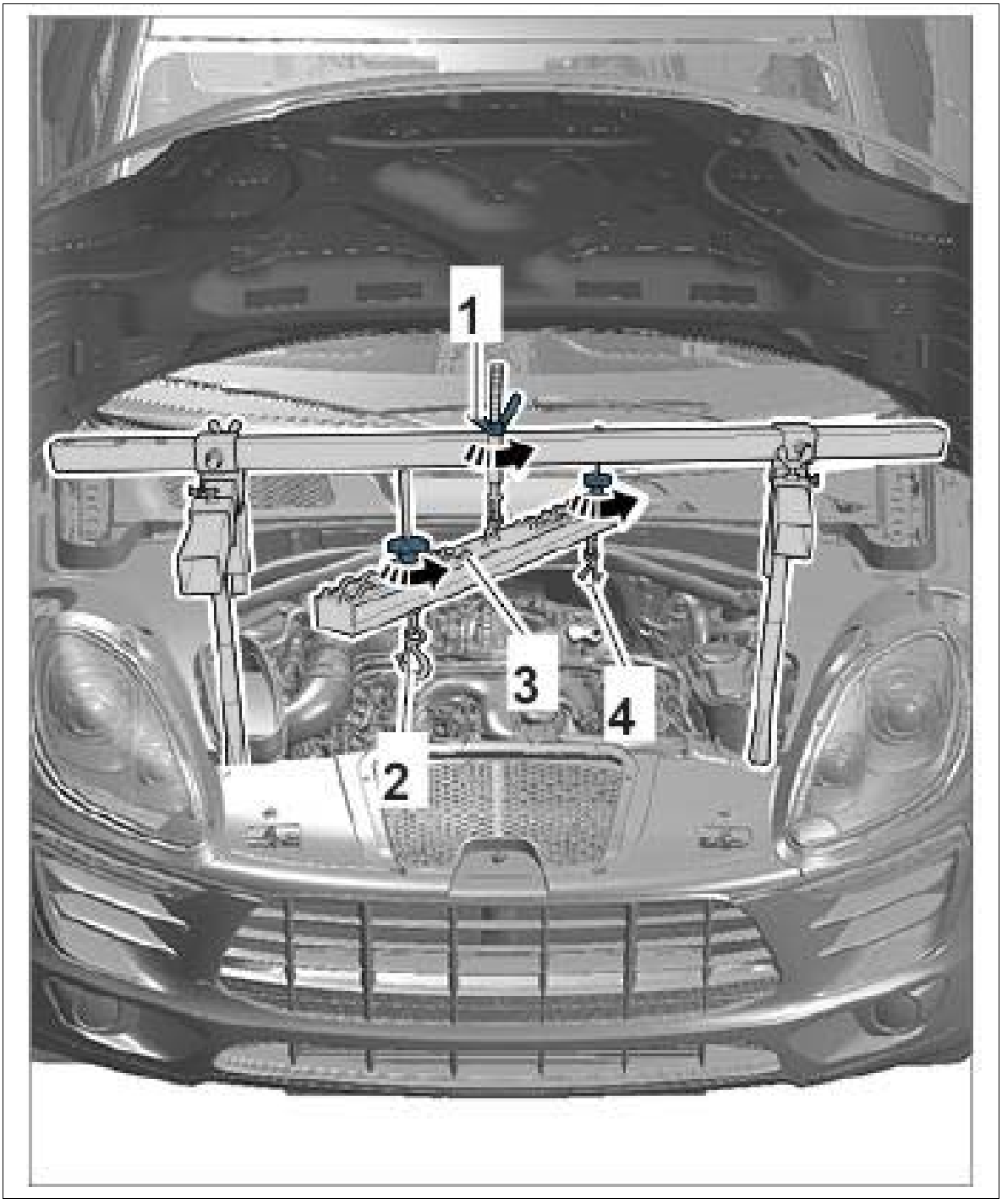

Courtesy of PORSCHE CARS NORTH AMERICA, INC.

WM 1001IN SUPPORTING ENGINE ON THE BODY (ENGINE SAFETY DEVICE) (MACAN, MACAN S, MACAN TURBO) > SUBSEQUENT WORK

1. Secure the air-conditioning line on the left longitudinal member.
2. Install the front strut. → INSTALLING FRONT STRUT

3. Install the air cleaner housing. → INSTALLING AIR CLEANER HOUSING
4. Install the engine cover.

WM 100433 COMPLETING RECONDITIONED ENGINE (MACAN) > TECHNICAL VALUES

Location	Description	Type	Basic value	Tolerance 1	Tolerance 2
Fastening screw	Engine support	Tightening torque	40 Nm (30 ftlb.)		

WM 100433 COMPLETING RECONDITIONED ENGINE (MACAN) > PRELIMINARY WORK

1. Secure engine to assembly support.
2. Remove turbocharger from the oil engine. → 213019 REMOVING AND INSTALLING TURBOCHARGER

WM 100433 COMPLETING RECONDITIONED ENGINE (MACAN) > COMPLETING RECONDITIONED ENGINE

Information

Tightening torques, tightening sequence and assembly overviews for the engine and transmission:

- Group 1: → 1X00IN TECHNICAL VALUES
- Group 2: → 2X00IN TECHNICAL VALUES
- Group 3: → 3X00IN TECHNICAL VALUES

Information

- Replace O-rings.
- Grease O-rings with a light coating of Kluber Syntheso Glep (Part No.: 000.043.204.68).

1. Convert engine mount supports.
    1. 1.1. Unscrew screws **-arrows-** and remove supports **-1-** and **-2-** .
    2. 1.2. Tightening torque: **Tightening torque: 40 Nm (30 ftlb.)**

Fig 1: Locating Engine Mount

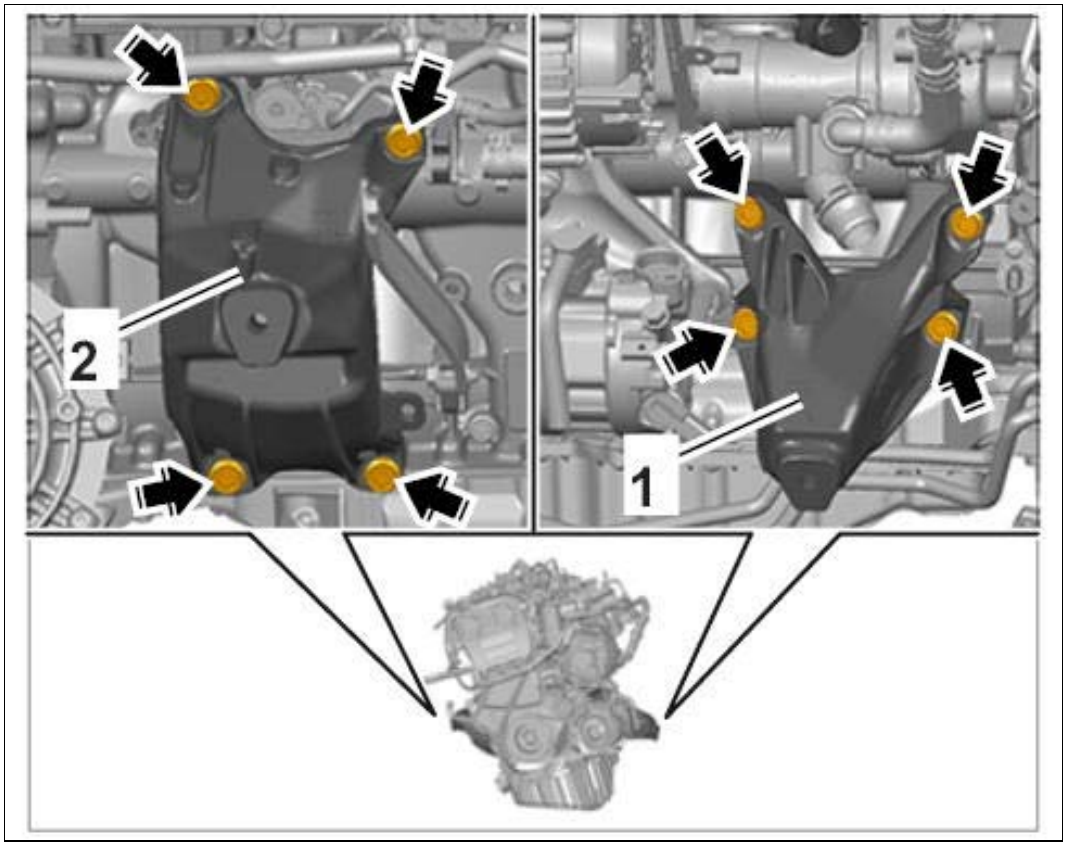

Courtesy of PORSCHE CARS NORTH AMERICA, INC.

2. Convert engine wire harness. → 975219 REMOVING AND INSTALLING WIRE HARNESS FOR ENGINE
3. Convert the generator. → 272219 REMOVING AND INSTALLING GENERATOR
4. Remove turbocharger on new engine. → 213019 REMOVING AND INSTALLING TURBOCHARGER
5. Remove and convert the starter. → 276019 REMOVING AND INSTALLING STARTER
    1. 5.1. Disconnect electric lines.
6. Install turbocharger from the new engine again. → INSTALLING TURBOCHARGER

    Information

    1. Check O-rings on the plug-in couplings and replace them if necessary.
    2. Clean plug connection and coolant hoses before assembly.
    3. Coat O-rings and coolant hoses with Kluber Plus Gel (Part No. 000.043.205.93).
    4. Remove stoppers before fitting the coolant lines and hoses.
7. Convert coolant hose heater.
    1. 7.1. Loosen retaining clip **-arrow-** and pull off coolant line **-1-** .

Fig 2: Locating Heater Coolant Line

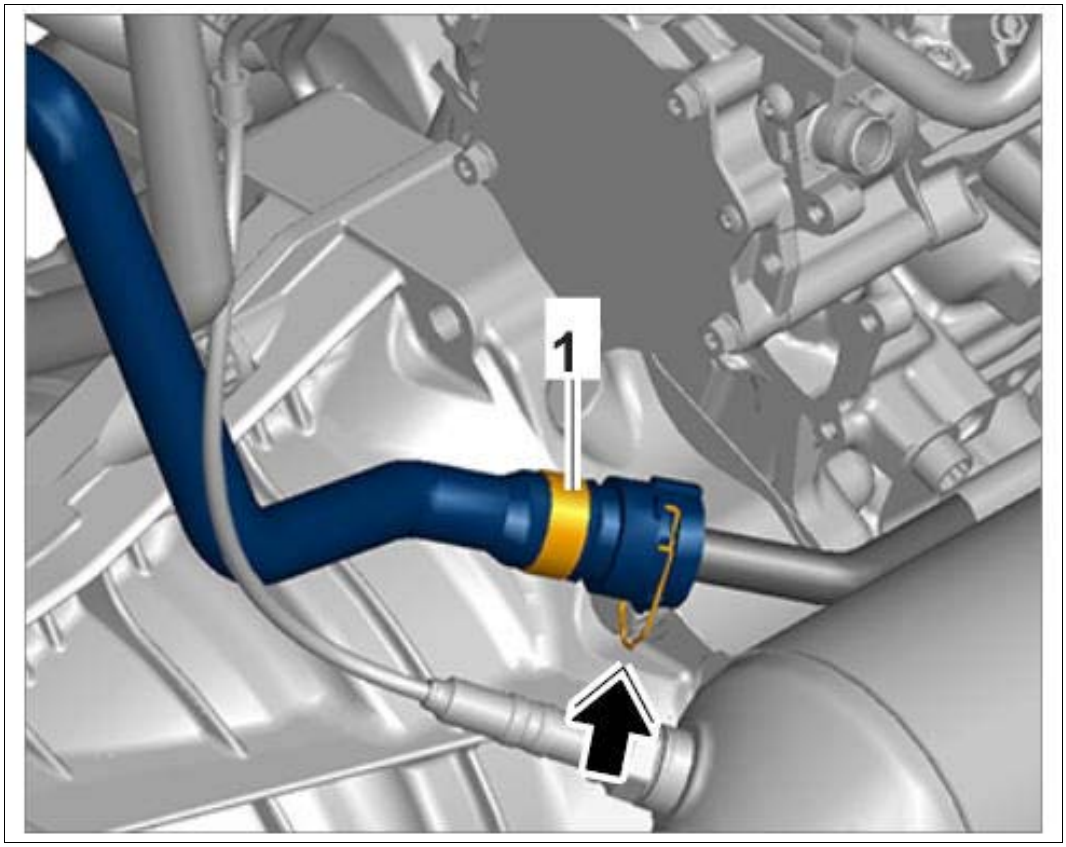

Courtesy of PORSCHE CARS NORTH AMERICA, INC.

Information

1. Check O-rings on the plug-in couplings and replace them if necessary.
2. Clean plug connection and coolant hoses before assembly.
3. Coat O-rings and coolant hoses with Kluber Plus Gel (Part No. 000.043.205.93).
4. Remove stoppers before fitting the coolant lines and hoses.

8. Disconnect and convert coolant lines on the coolant pump.
    1. 8.1. Lift up retaining clips **-arrows-** and pull off coolant lines.
    2. 8.2. Loosen clamp **-1-** and pull off coolant line.

Fig 3: Locating Coolant Pump Lines

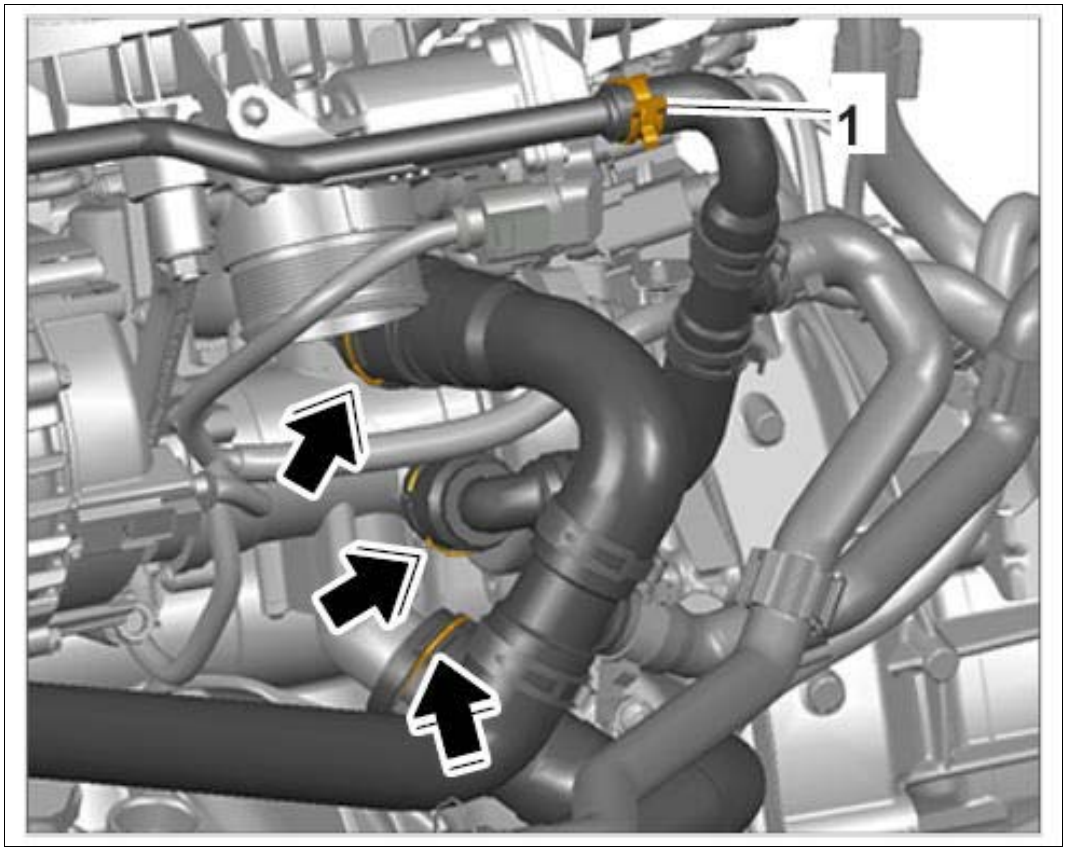

Courtesy of PORSCHE CARS NORTH AMERICA, INC.

WM 100433 COMPLETING RECONDITIONED ENGINE (MACAN) > SUBSEQUENT WORK

1. Install engine. → INSTALLING ENGINE
2. Add engine oil and check oil level. → FILLING ENGINE OIL

WM 101031 CONVERTING CRANKCASE (DOWEL SLEEVES) (MACAN S, MACAN TURBO) > CONVERTING DOWEL SLEEVES

Information

As of a certain engine number, longer dowel sleeves are installed in the crankcase and cannot be fitted on the old transmission.

The long dowel sleeves must be replaced with short dowel sleeves when installing new engines on the old transmission.

Model/type	Engine number

Macan S 3.0	CTM023880
Macan Turbo 3.6	CTL010398

1. Convert dowel sleeves **-arrows-** on the crankcase

    1. 1.1. Pull long **16.5-mm** dowel sleeves out of the crankcase by turning them back and forth using a vice-grip wrench or water pump pliers.

    2. 1.2. Carefully tap short **15-mm** dowel sleeves into the crankcase using a plastic hammer.

    Fig 1: Locating Crankcase Dowel Sleeves

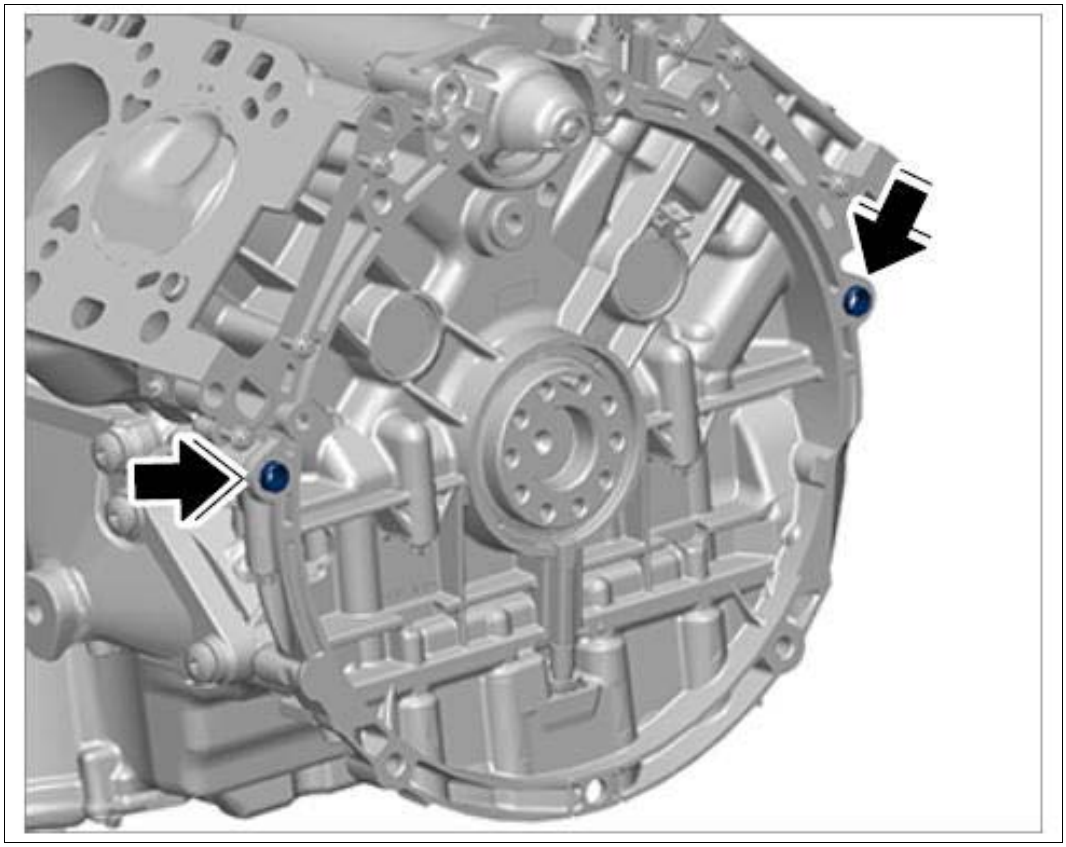

Courtesy of PORSCHE CARS NORTH AMERICA, INC.

WM 101320 REMOVING AND INSTALLING OIL SPRAY JETS (MACAN S, MACAN TURBO) > TECHNICAL VALUES

Location	Description	Type	Basic value	Tolerance 1	Tolerance 2
Splash valves to upper part of crankcase	M6	Tightening torque	13 Nm (9.5 ftlb.)		

WM 101320 REMOVING AND INSTALLING OIL SPRAY JETS (MACAN S, MACAN TURBO) > PRELIMINARY WORK

1. Remove crankshaft.

WM 101320 REMOVING AND INSTALLING OIL SPRAY JETS (MACAN S, MACAN TURBO) > REMOVING OIL SPRAY JETS > OIL SPRAY JETS

Information

- The type of oil spray jets used depends on the engine number. Always check the engine number when ordering new oil spray jets.
- Adapted software must be installed on the control unit if necessary due to modified oil pressures.

1. Unscrew screws **-7-** and remove oil spray jets **-6-** .

Fig 1: Identifying Crankcase Upper Part

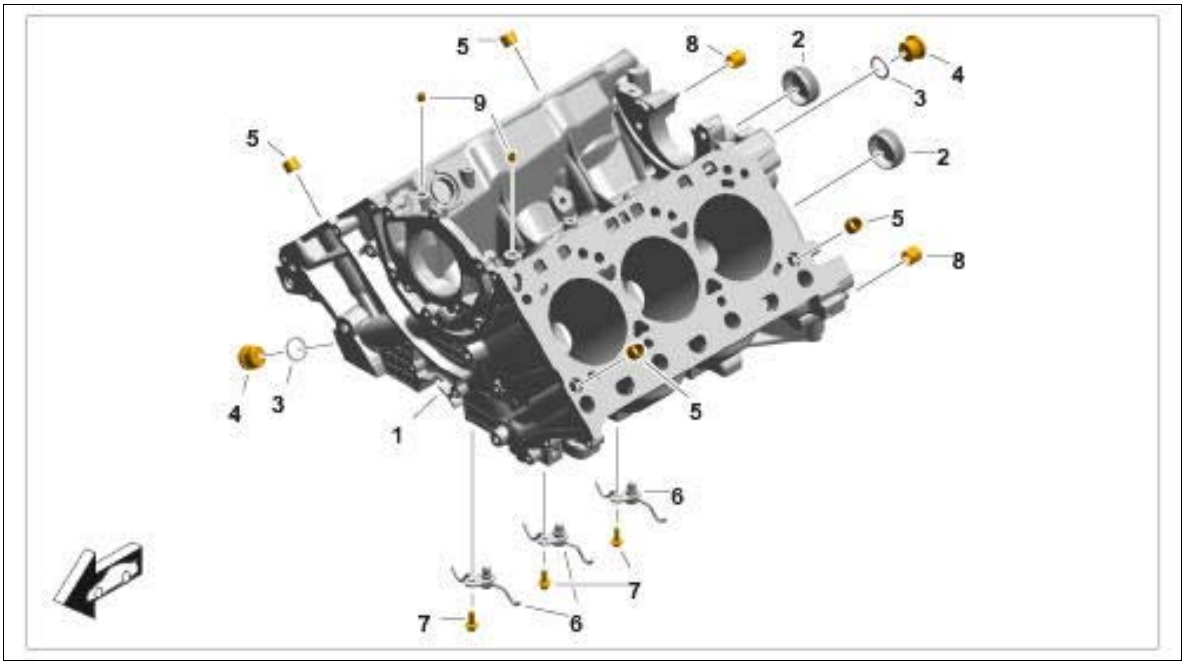

Courtesy of PORSCHE CARS NORTH AMERICA, INC.

WM 101320 REMOVING AND INSTALLING OIL SPRAY JETS (MACAN S, MACAN TURBO) > INSTALLING OIL SPRAY JETS

Information

- The type of oil spray jets used depends on the engine number. Always check the engine number when ordering new oil spray jets.
- Adapted software must be installed on the control unit if necessary due to modified oil pressures.

1. Insert oil spray jets into the upper part of the crankcase with new sealing rings and screw them on.

   To do this, grease sealing ring with Kluber Syntheso GLEP 1 and fit it. Check that oil spray jets are pointing in the correct direction of spray toward the inside of the piston crown. The oil spray jet must be aimed at the piston crown. → Spray direction → Spray direction at the side **Tightening torque: 13 Nm (9.5 ftlb.)**

   Fig 1: Inserting Oil Spray Jets



Courtesy of PORSCHE CARS NORTH AMERICA, INC.

Fig 2: Identifying Oil Spray Jet Direction



Courtesy of PORSCHE CARS NORTH AMERICA, INC.

WM 101320 REMOVING AND INSTALLING OIL SPRAY JETS (MACAN S, MACAN TURBO) > SUBSEQUENT WORK

1. Install crankshaft.
2. Assemble engine.
3. After completing the required work, load a new DME data version if necessary (oil jet opening pressure). This may also apply after replacing the engine.

WM 101802 PRESSURE LOSS TEST (MACAN) > TOOLS

Designation	Type	Number	Description	

Pressure loss tester Bosch EFAW 210 A	Workshop equipment	WE 1066		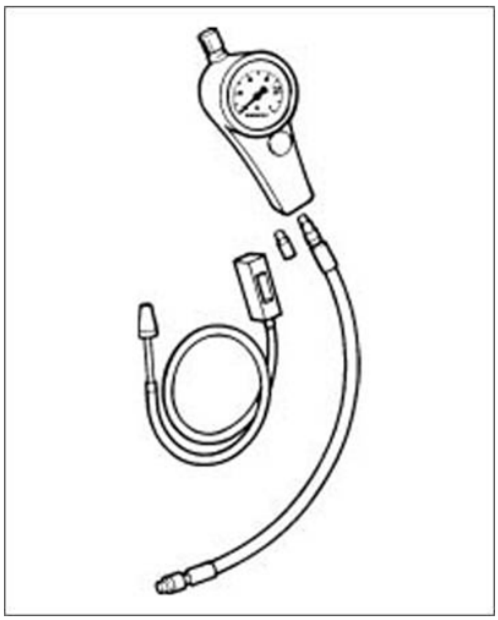

WM 101802 PRESSURE LOSS TEST (MACAN) > PRELIMINARY WORK

1. Unscrew and remove all spark plugs. → 287020 REMOVING AND INSTALLING SPARK PLUGS
2. Position cylinder to be tested to ignition TDC and remove tool (dead center finder).
    1. 2.1. The dead center finder or "cylinder pipe" consists of a glass tube (inspection glass) with a piston **-1-** , hose and a rubber cone **-2-**

Fig 1: Identifying Dead Center Finder (Cylinder Pipe)

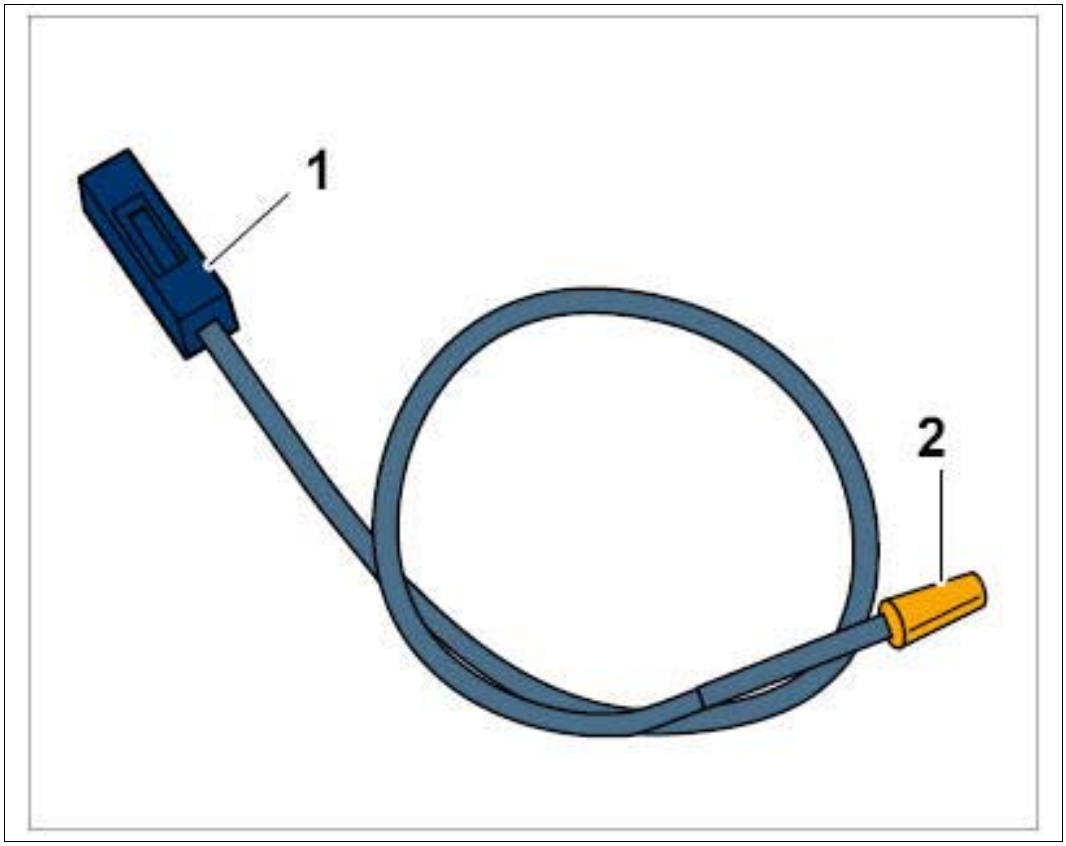

Courtesy of PORSCHE CARS NORTH AMERICA, INC.

2. 2.2. The rubber taper is pressed onto the spark plug hole. The inspection glass is either held by a helper → Tool setup - dead center finder (similar to illustration) or is secured vertically in a clearly visible position with a magnet.

Fig 2: Installing Tool (Dead Center Finder)

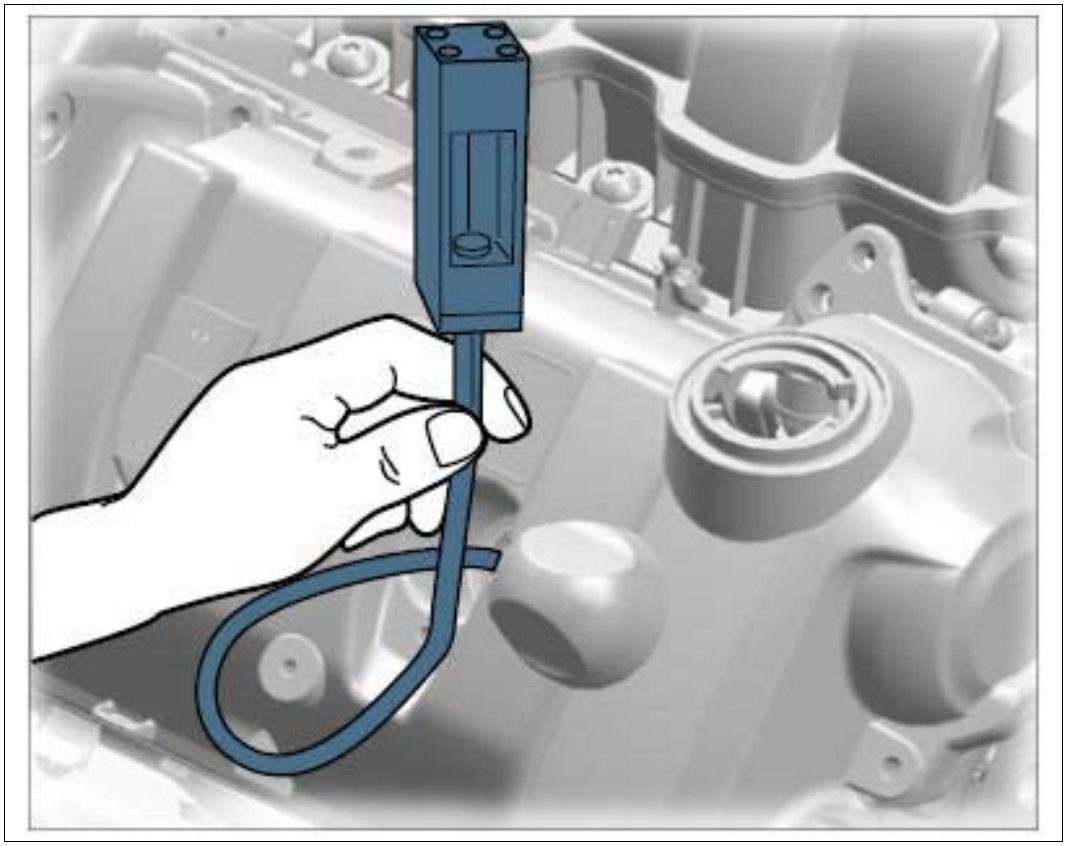

Courtesy of PORSCHE CARS NORTH AMERICA, INC.

3. 2.3. If the engine is now turned in direction of rotation on the crankshaft, the piston in the inspection glass is pressed up in the compression cycle → Plunger up in order to go back down immediately upon reaching the TDC. The piston in the inspection glass stays down in overlapping TDC → Plunger down .

Fig 3: Identifying Plunger (Up Position)

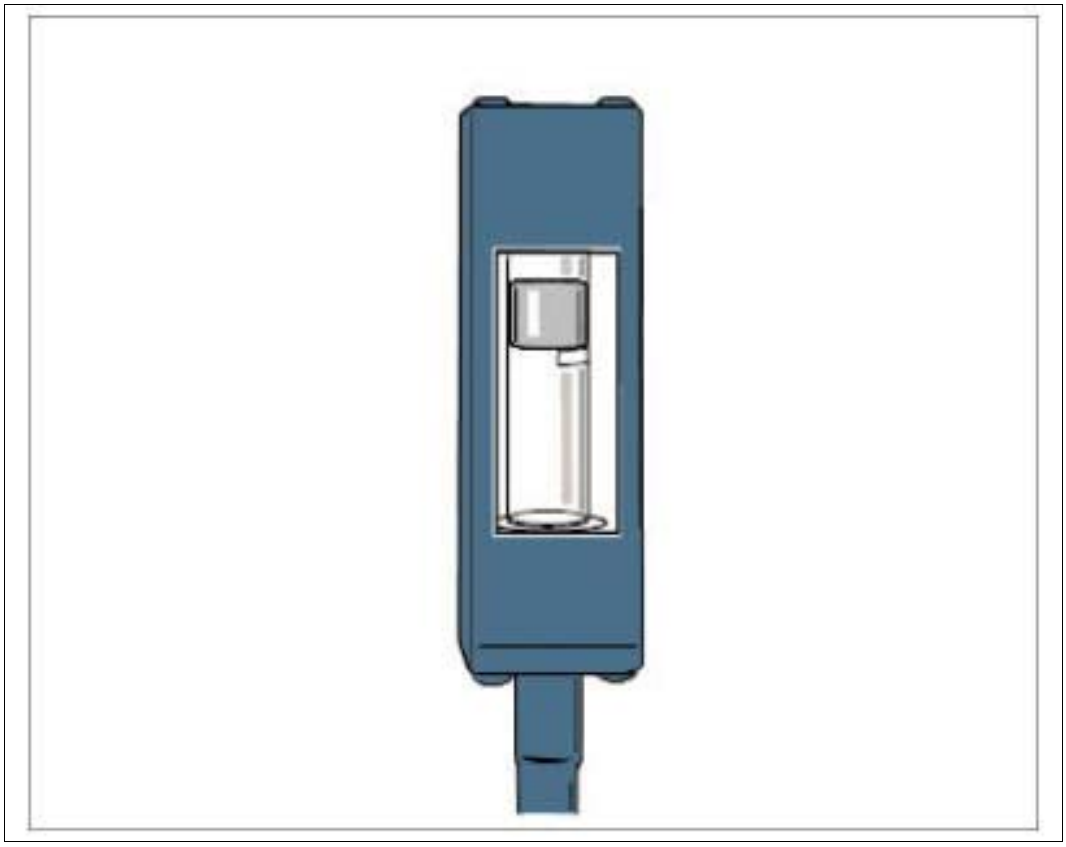

Courtesy of PORSCHE CARS NORTH AMERICA, INC.

Fig 4: Identifying Plunger (Down Position)

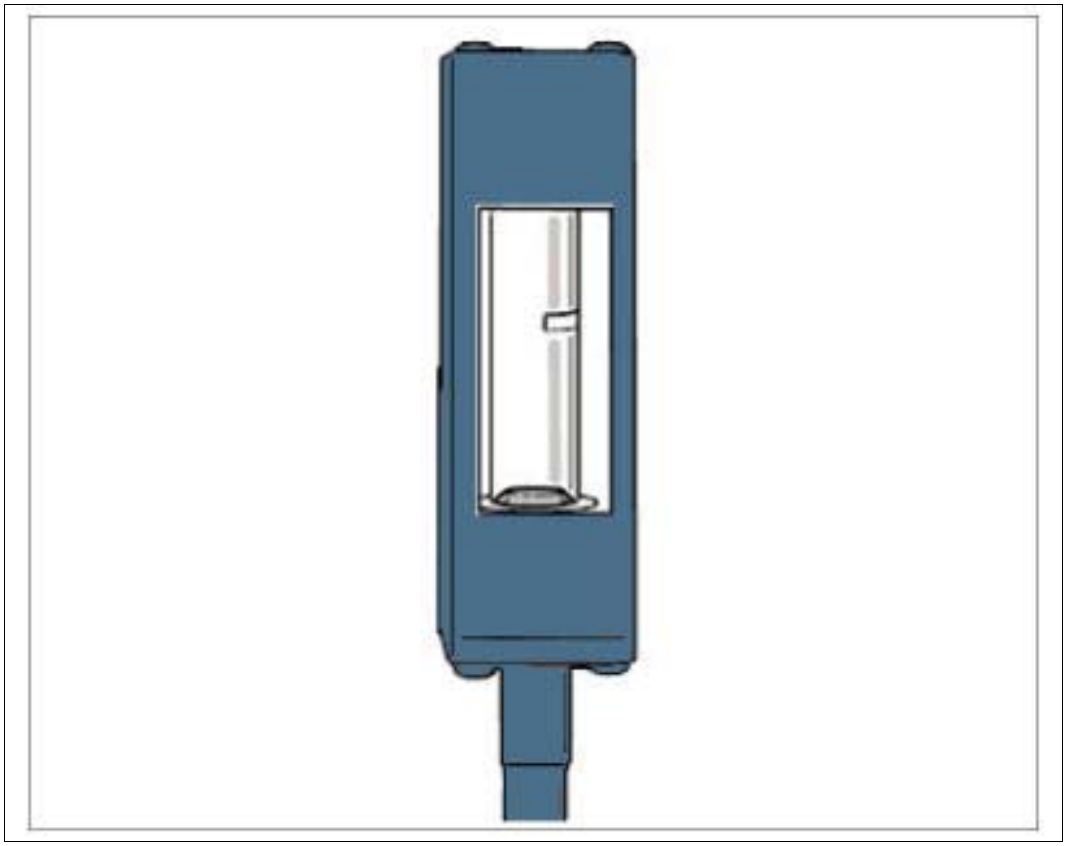

Courtesy of PORSCHE CARS NORTH AMERICA, INC.

WM 101802 PRESSURE LOSS TEST (MACAN) > TEST EVALUATION

- The test does not show any meaningful result on a new engine (i.e. one that hasn't been run in).
- A difference in pressure loss between the individual cylinders of approx. 5% is not significant.
- If the test shows an excessive loss of pressure (> 30%), a few drops of oil can be sprayed into the combustion chamber. Repeat the test. If the loss in pressure is now significantly less, the seal between the piston and cylinder is damaged.
- The air that is escaping causes hissing noises, which provide information about the component that is causing the damage.

If the limit values are exceeded, the engine must be started and the test repeated.

Potentially faulty component	Location of noise
Pistons, piston rings, cylinder line	Oil filler neck, positive crankcase ventilation
Cylinder head gasket, cylinder head	Coolant expansion tank
Exhaust valve	Exhaust system
Inlet valve	Intake system

WM 101802 PRESSURE LOSS TEST (MACAN) > TESTING PRESSURE LOSS ON THE ENGINE

WARNING: Rotating components

- *Danger of limbs being trapped or severed*

→ Do not reach into the danger area.

Information

- The check for loss of pressure can be used to assess the mechanical condition of a combustion engine.
- A pressure loss test is more meaningful than the compression pressure check.
- The percentage leakage quantity can be used to establish whether the leaks in the combustion chamber in question are so large that the combustion chamber must be repaired.
- The worn components (e.g. piston rings) can be identified by the compressed air that is escaping.

Information

The piston must be exactly at the upper return point when checking pressure loss. Do not touch any components of the belt drive and do not put any tools on the crankshaft pulley while performing the check.

Information

Read the work steps and tips in the operating instructions for the Bosch tester before performing the pressure loss test. The described Bosch tester is used as an example for all suitable pressure loss testers. Details of calibration and use can be found in the relevant operating instructions.

1. Get the tester ready. **Pressure loss tester Bosch EFAW 210 A WE 1066**
2. Screw the test hose into the spark plug thread of cylinder 1 by hand (compression TDC) and tighten hand-tight.

Fig 1: Adjusting Test Hose

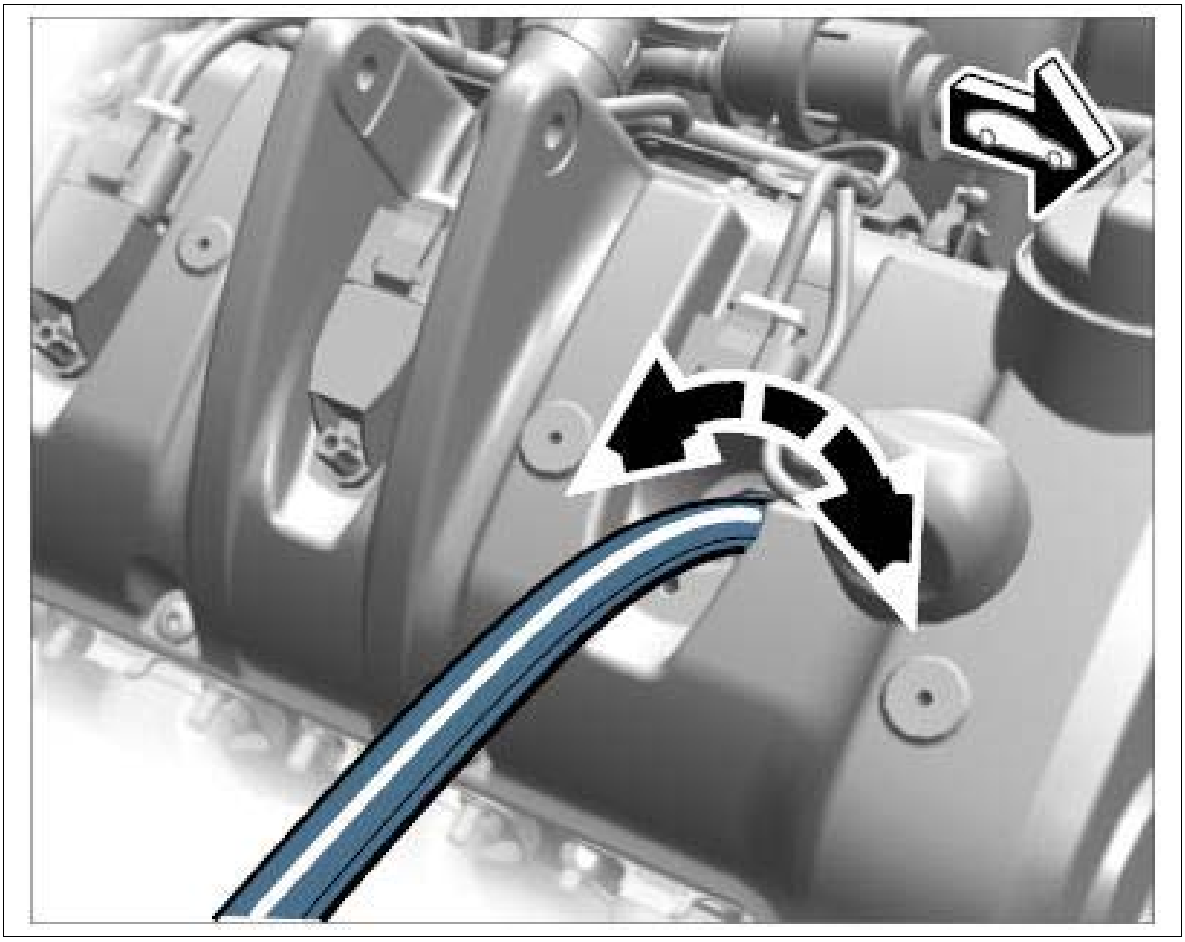

Courtesy of PORSCHE CARS NORTH AMERICA, INC.

3. Connect the pressure loss tester to the compressed air system.
4. Adjust the scale. To do this, insert the test nozzle at the front into the device.

Fig 2: Adjusting Scale

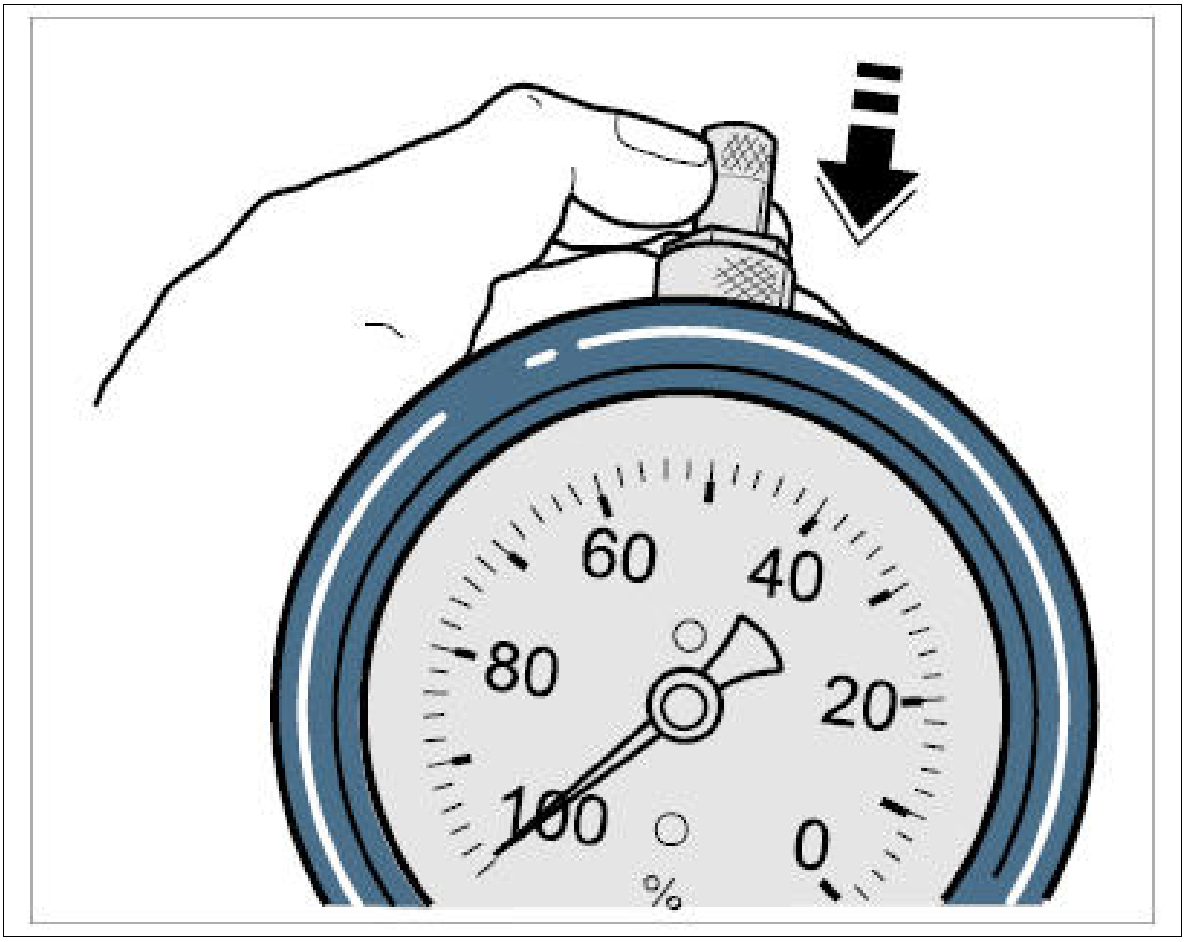

Courtesy of PORSCHE CARS NORTH AMERICA, INC.

5. Turn the adjusting wheel until the scale pointer is at the "cal." marking or "23%". The pressure is then equal in the two test chambers of the tool.

Fig 3: Adjusting Wheel

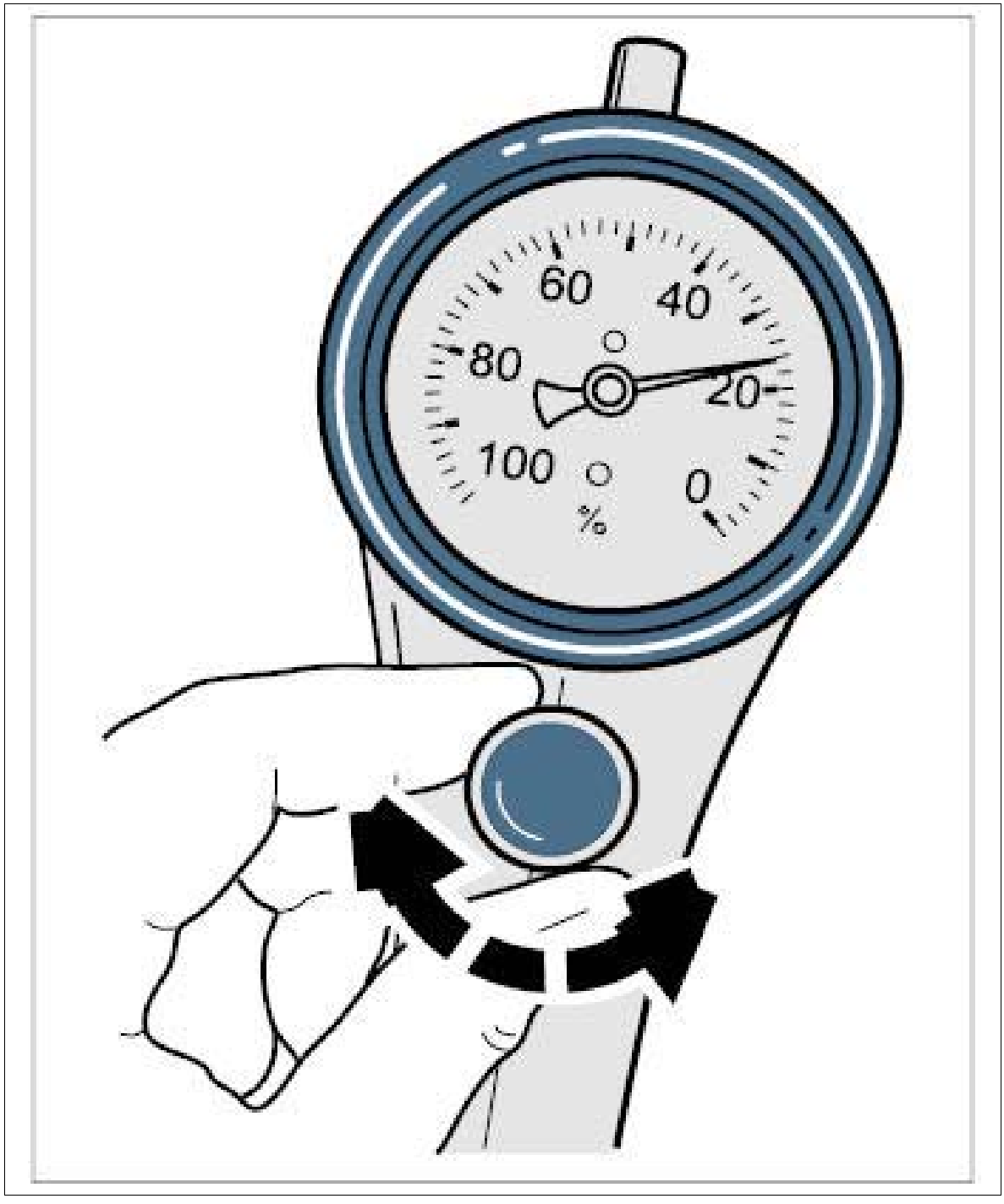

Courtesy of PORSCHE CARS NORTH AMERICA, INC.

6. Remove test nozzle and check that the pointer falls back. Then connect the test hose. The value that is displayed should not be greater than 25%. If the loss in pressure is greater, it is safe to assume that the engine needs an overhaul.

Fig 4: Checking Pressure Loss

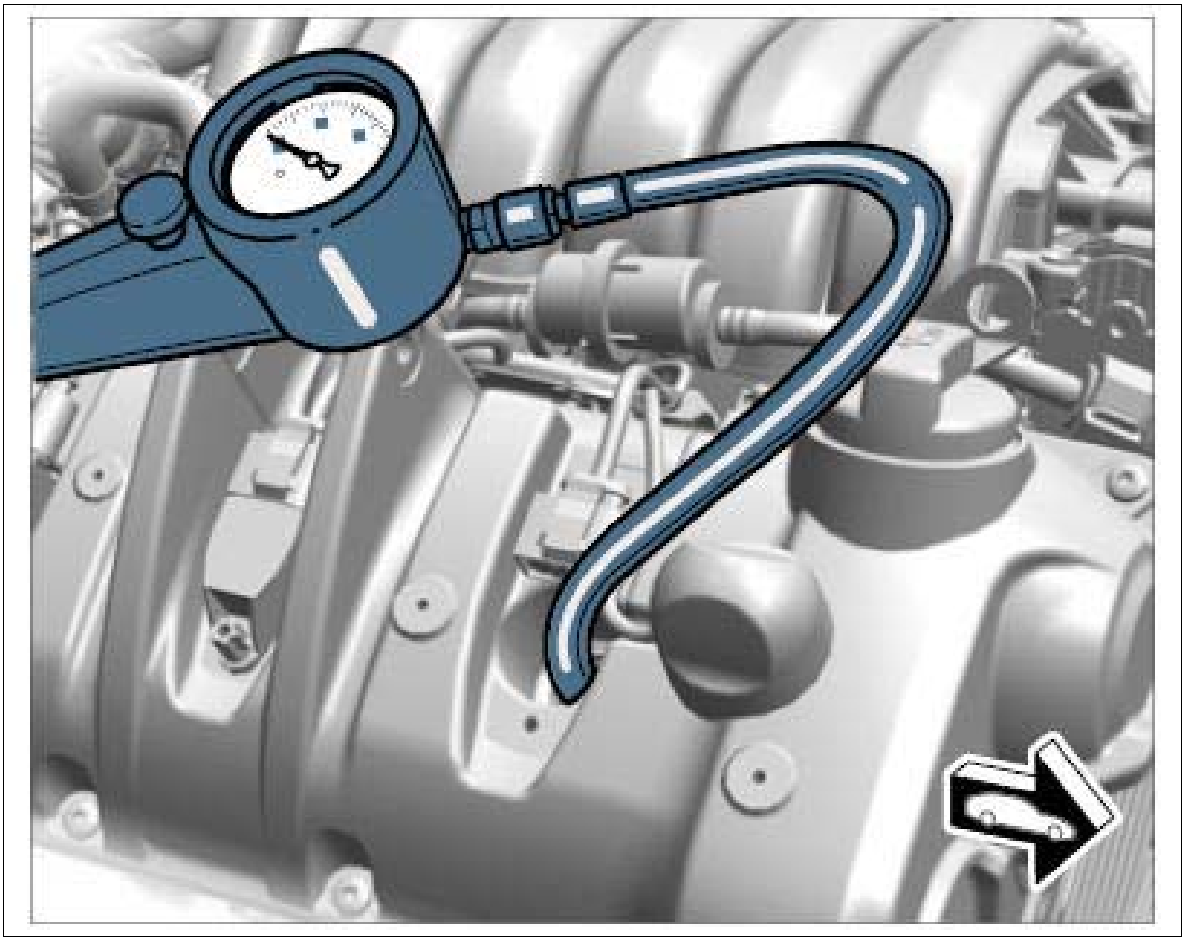

Courtesy of PORSCHE CARS NORTH AMERICA, INC.

7. Interrupt the compressed air supply and unscrew the test hose.
8. Check the next cylinder by turning the crankshaft through another 180° and check the next cylinder in the firing order following the instructions provided.

Firing order: 1 - 3 - 4- 2

WM 101802 PRESSURE LOSS TEST (MACAN) > SUBSEQUENT WORK

1. Remove the test hose once the test is complete.
2. Fit all spark plugs. → 287020 REMOVING AND INSTALLING SPARK PLUGS

WM 103519 REMOVING AND INSTALLING ENGINE MOUNT (MACAN) > PRELIMINARY WORK

1. Remove front wheel. → 440519 REMOVING AND INSTALLING WHEEL
2. Remove front wheel housing liner. → 505619 REMOVING AND INSTALLING FRONT WHEEL

HOUSING LINER

3. Remove underbody panelling. → 519219 REMOVING AND INSTALLING COVER FOR FRONT UNDERBODY

4. Support the engine on the body. → 1001IN SUPPORTING ENGINE ON THE BODY (ENGINE SAFETY DEVICE)

WM 103519 REMOVING AND INSTALLING ENGINE MOUNT (MACAN) > REMOVING ENGINE MOUNT

WARNING: Danger of objects or loads falling down

- *Risk of squashing or crushing*

→ Secure components to prevent them from falling down.

Information

- This work can only be performed when the engine has been suspended on the body.

Information

- The engine mounts must be replaced only in pairs.
- If an engine mount is defective, the heat shield must also be replaced.

Information

The procedure for removing and installing is described for one side as an example. The procedure for the other side is practically identical.

1. Pre-tension the engine with the support bracket.
2. Expose electric wire harness.
    1. 2.1. Disconnect electric plug connection **-arrow-** and move it aside.

Fig 1: Locating Electric Plug Connection

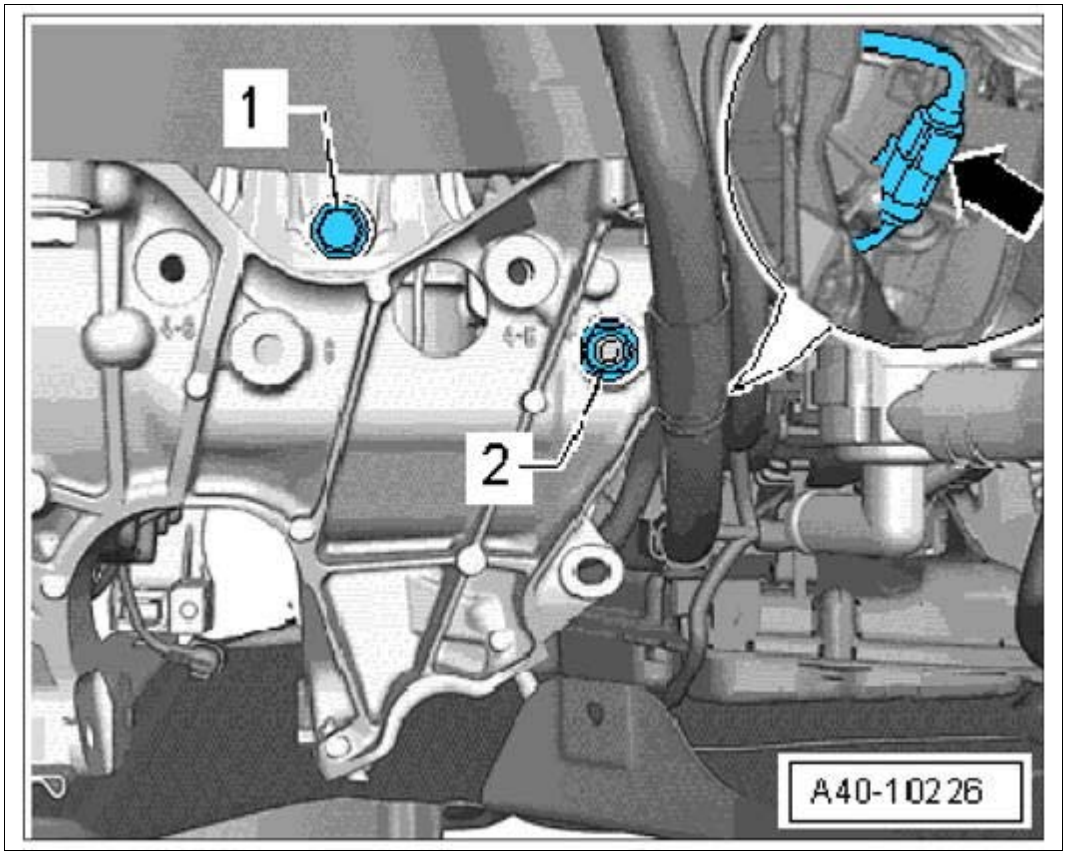

Courtesy of PORSCHE CARS NORTH AMERICA, INC.

3. Expose engine mount.

    1. 3.1. Unscrew fastening screws **-4-** .
    2. 3.2. Unscrew fastening screws **-1-** .
    3. 3.3. Move retainer plate **-3-** aside.
    4. 3.4. Unscrew fastening screw **-2-** .

Fig 2: Identifying Engine Mount Screws

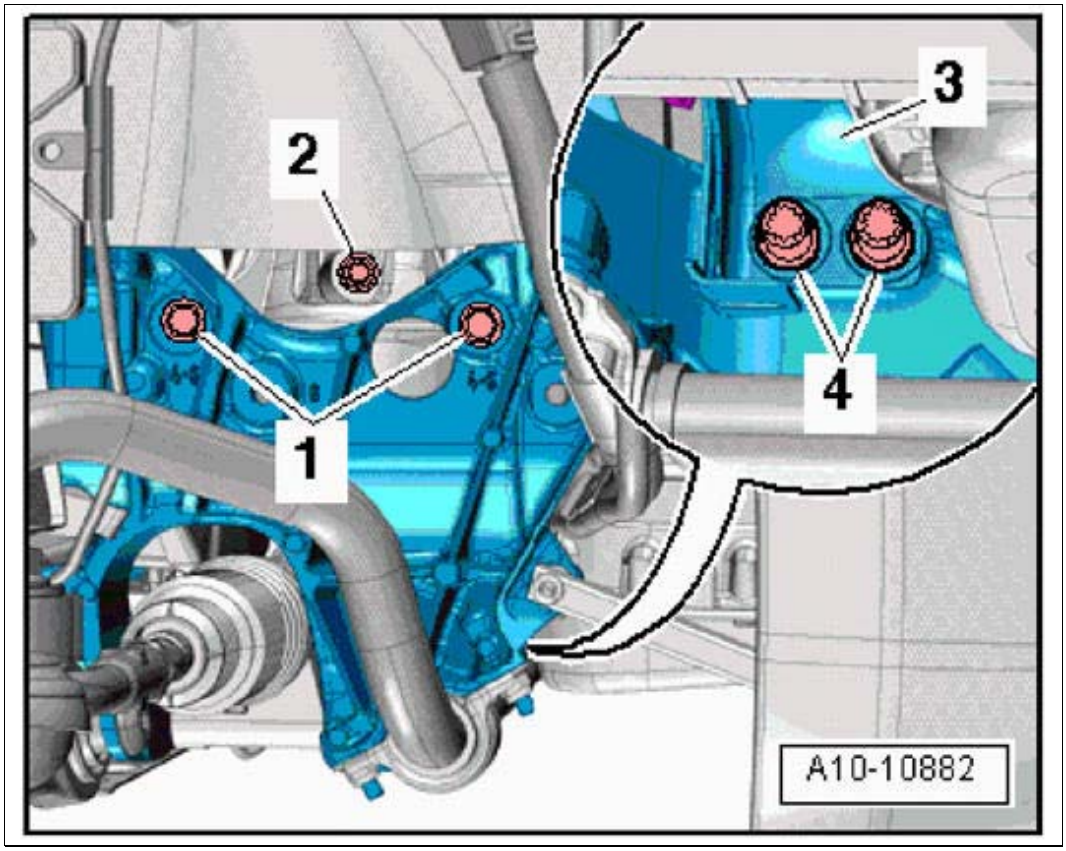

Courtesy of PORSCHE CARS NORTH AMERICA, INC.

4. Raise the engine at the spindle **-1-** by about 20 mm.

Fig 3: Identifying Spindle Dimension

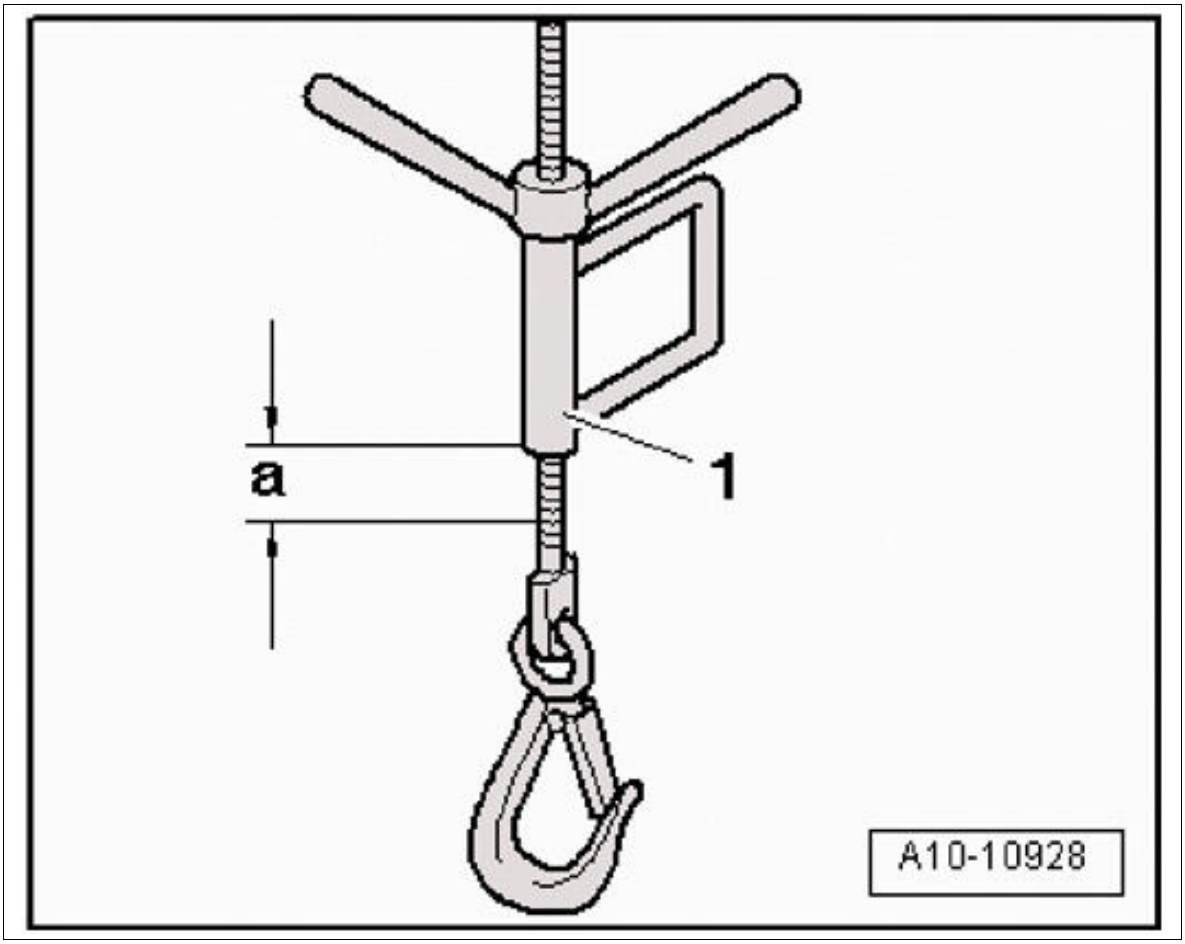

Courtesy of PORSCHE CARS NORTH AMERICA, INC.

5. Remove engine mount with retainer plate.

WM 103519 REMOVING AND INSTALLING ENGINE MOUNT (MACAN) > INSTALLING ENGINE MOUNT

WARNING: Danger of objects or loads falling down

- *Risk of squashing or crushing*

→ Secure components to prevent them from falling down.

Information

- This work can only be performed when the engine has been suspended on the body.

Information

- The engine mounts must be replaced only in pairs.

- If an engine mount is defective, the heat shield must also be replaced.

Information

The procedure for removing and installing is described for one side as an example. The procedure for the other side is practically identical.

1. Position engine mount with holder.
2. Lower the engine on the spindle by approx. 20 mm again.

   Fig 1: Identifying Spindle Dimension

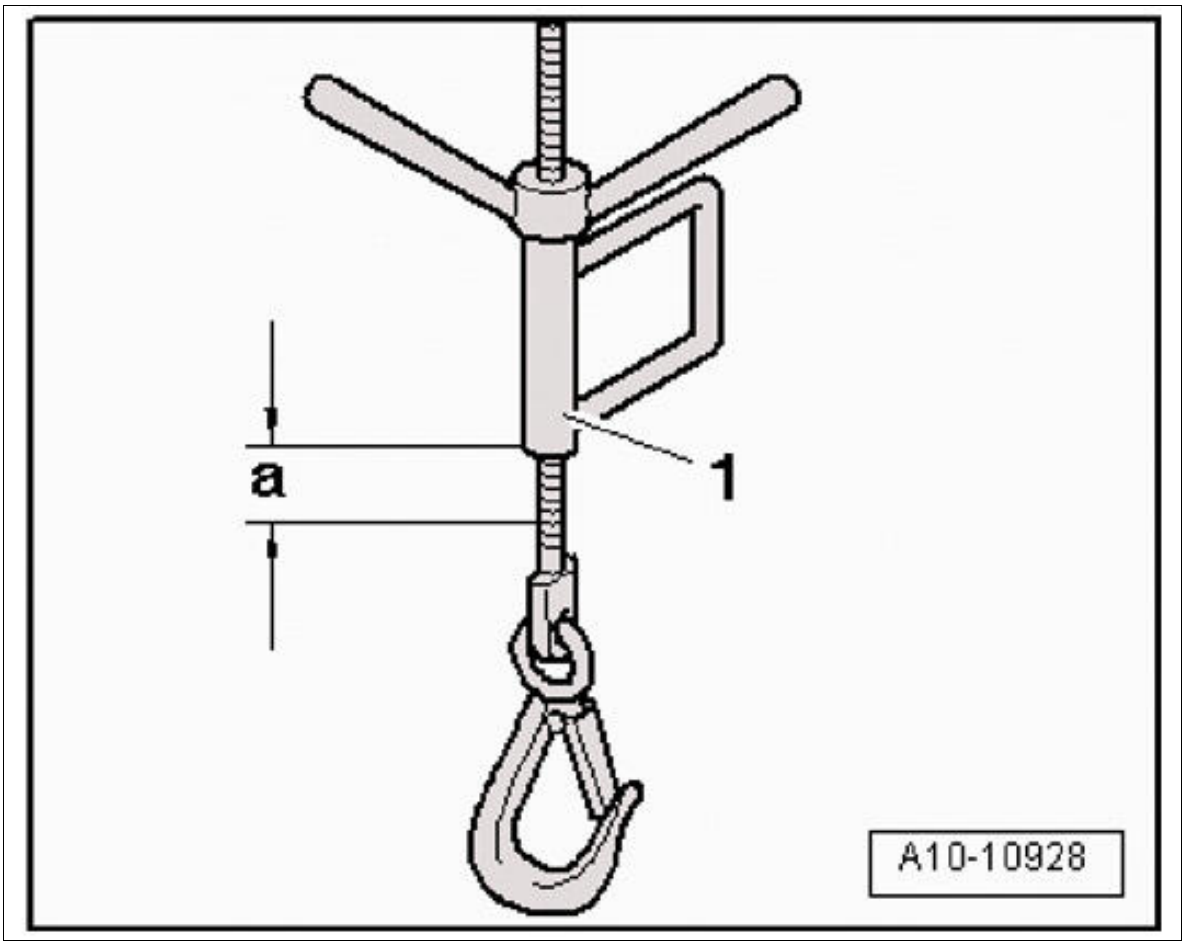

Courtesy of PORSCHE CARS NORTH AMERICA, INC.

3. Secure engine mount.
   1. 3.1. Fit fastening screw **-2-** by hand and screw in as far as it will go.
   2. 3.2. Fit fastening screws **-1-** by hand and screw in as far as they will go.
   3. 3.3. Fit fastening screws **-4-** by hand and screw in as far as they will go.
   4. 3.4. Tighten fastening screw **-2-** .

      Step 1

      Step 2

5. 3.5. Tighten fastening screws **-1-** .
6. 3.6. Tighten fastening screws **-4-** .

Fig 2: Identifying Engine Mount And Screws

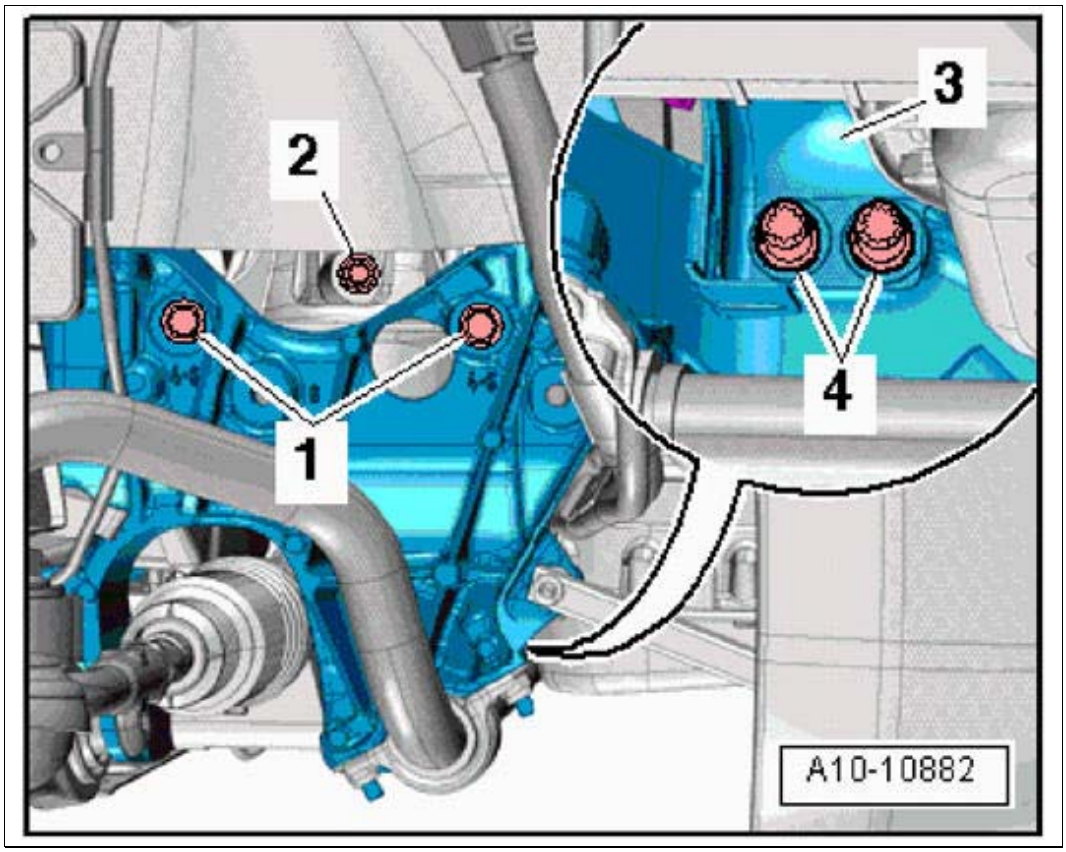

Courtesy of PORSCHE CARS NORTH AMERICA, INC.

4. Secure electric wire harness.
    1. 4.1. Connect electric plug connection **-arrow-** and engage it in the holder.

Fig 3: Locating Electric Plug Connection

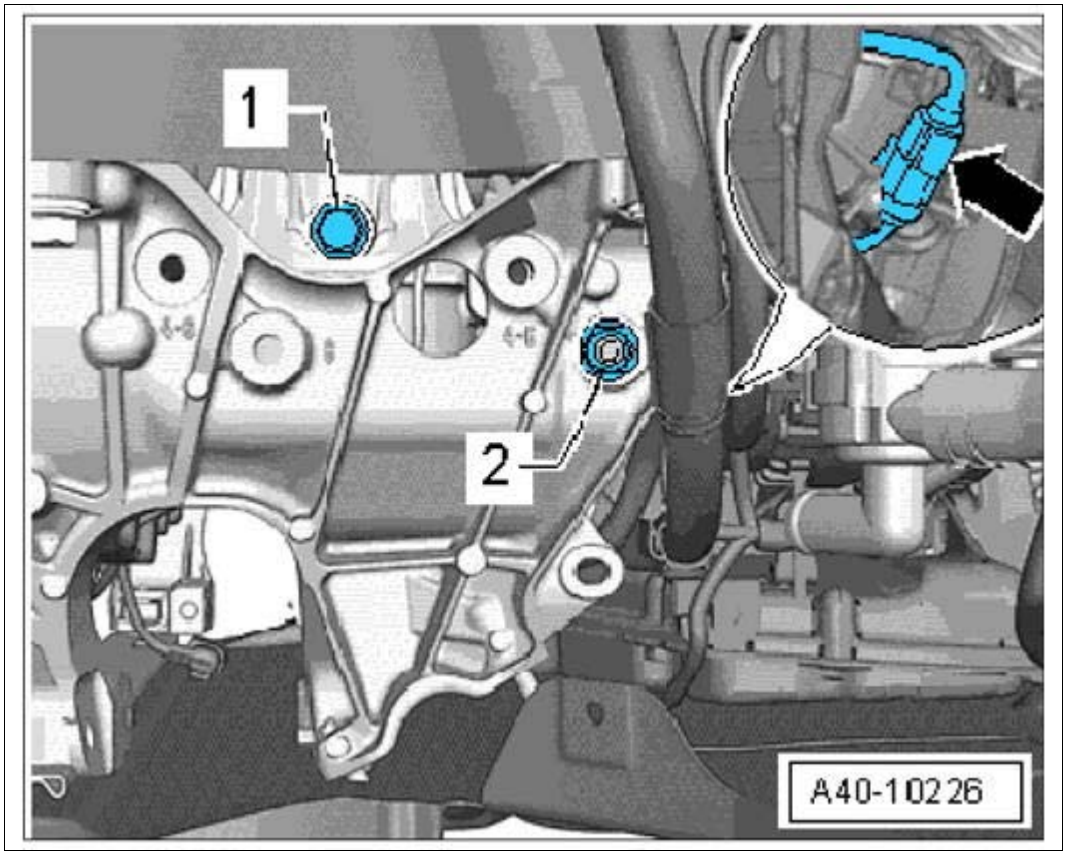

Courtesy of PORSCHE CARS NORTH AMERICA, INC.

WM 103519 REMOVING AND INSTALLING ENGINE MOUNT (MACAN) > SUBSEQUENT WORK

1. Remove engine safety device.
2. Install underbody panelling. → INSTALLING COVER FOR FRONT UNDERBODY
3. Install front wheel housing liner. → INSTALLING FRONT WHEEL HOUSING LINER
4. Fit front wheel. → INSTALLING WHEEL

WM 105519 REMOVING AND INSTALLING OIL SEPARATOR (MACAN) > TECHNICAL VALUES

Location	Description	Type	Basic value	Tolerance 1	Tolerance 2
Fastening screw securing hose to oil separator		Tightening torque	4 Nm (3 ftlb.)		

Fastening screw for oil separator		Tightening torque	9 Nm (6.5 ftlb.)		

WM 105519 REMOVING AND INSTALLING OIL SEPARATOR (MACAN) > PRELIMINARY WORK

1. Remove ignition coils for cylinders 3 and 4. → 282020 REMOVING AND INSTALLING IGNITION COILS
2. Loosen hose clamp **-1-** and disconnect hose from solenoid valve for carbon canister.
3. Unscrew screw **-2-** and disconnect positive crankcase ventilation hose **-3-** from the oil separator.

Fig 1: Locating Oil Separator Hose Clamp

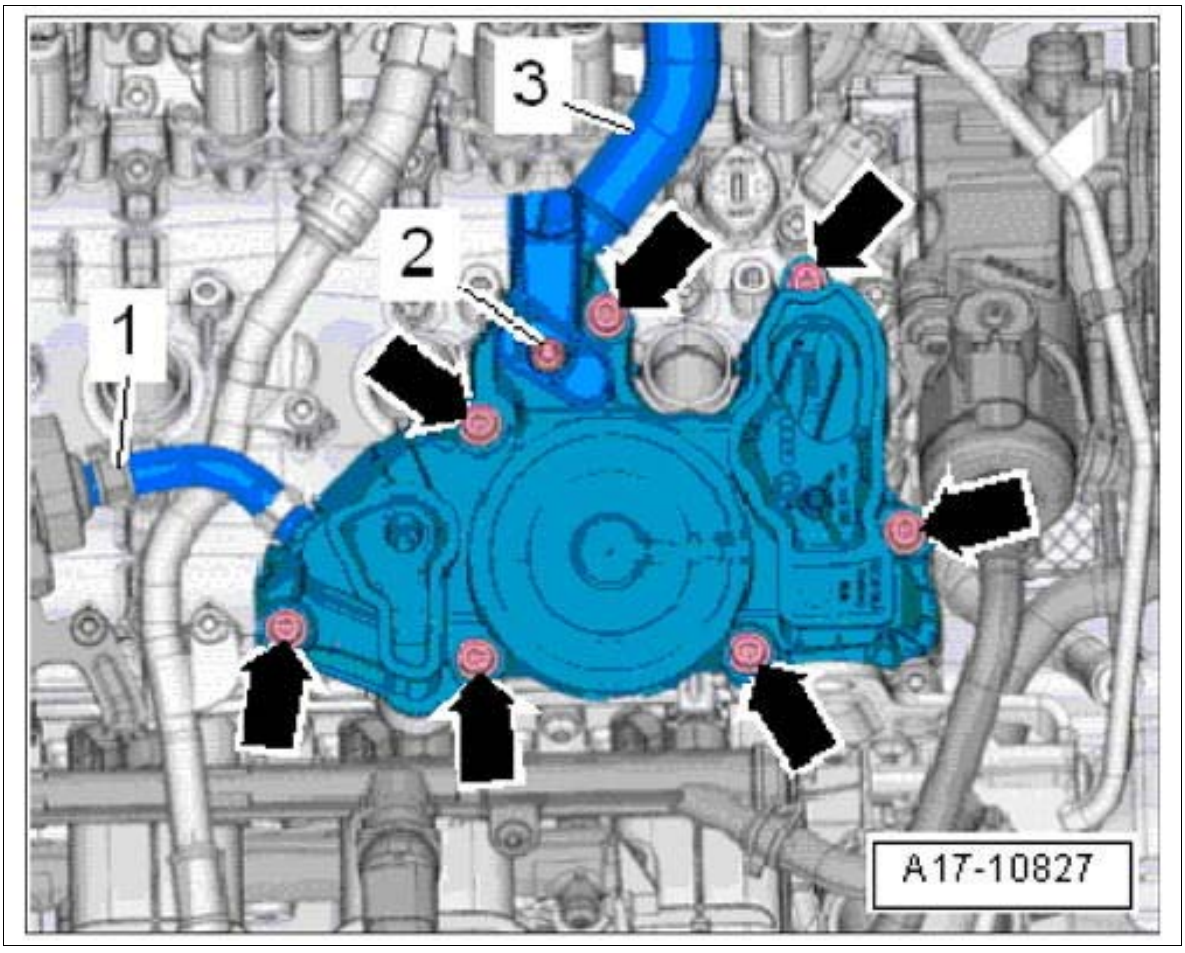

Courtesy of PORSCHE CARS NORTH AMERICA, INC.

WM 105519 REMOVING AND INSTALLING OIL SEPARATOR (MACAN) > REMOVING > REMOVING OIL SEPARATOR

Unscrew screws **-arrows-** and remove oil separator.

Fig 1: Locating Oil Separator Fastening Screws

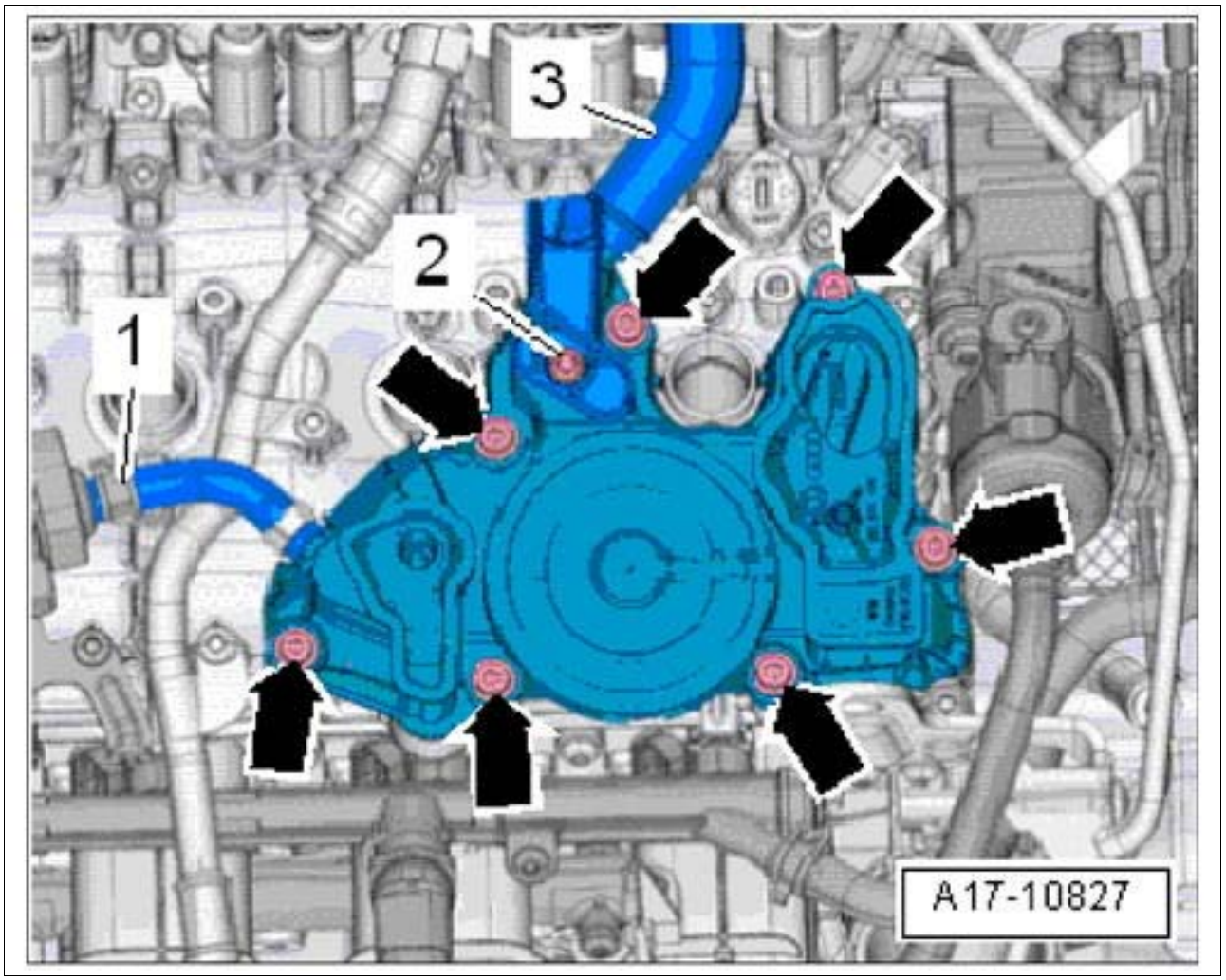

Courtesy of PORSCHE CARS NORTH AMERICA, INC.

WM 105519 REMOVING AND INSTALLING OIL SEPARATOR (MACAN) > INSTALLING > INSTALLING OIL SEPARATOR

1. Fit oil separator. **Replace seal** .
2. Secure oil separator.
    1. 2.1. Screw in screws by hand and tighten one after the other. **Tightening torque: 9 Nm (6.5 ftlb.)**

Fig 1: Oil Separator Screws Tightening Sequence

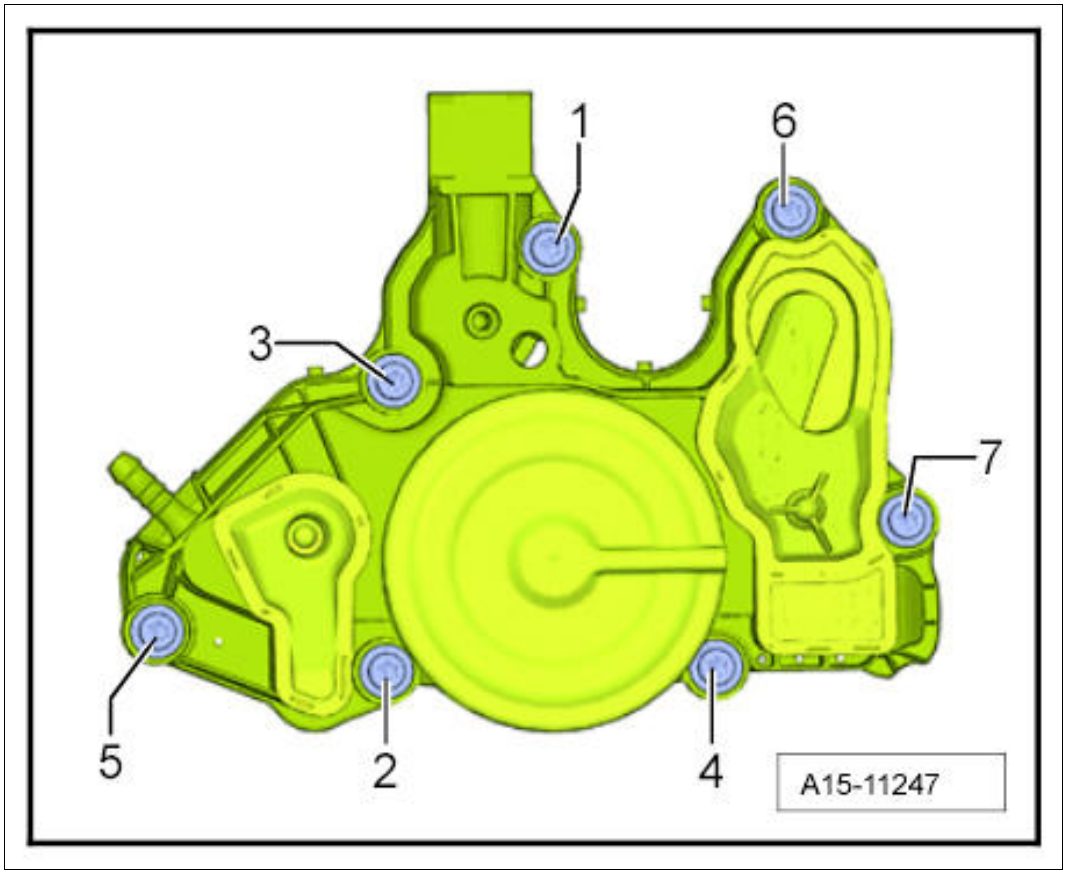

Courtesy of PORSCHE CARS NORTH AMERICA, INC.

WM 105519 REMOVING AND INSTALLING OIL SEPARATOR (MACAN) > SUBSEQUENT WORK

1. Fit positive crankcase ventilation hose on the oil separator and screw in fastening screw. **Tightening torque: 4 Nm (3 ftlb.) Replace seals**
2. Fit hose from solenoid valve for carbon canister and tighten hose clamp.
3. Install ignition coils for cylinders 3 and 4. → INSTALLING IGNITION COILS

WM 131020 REMOVING AND INSTALLING PISTONS (MACAN) > TOOLS

Designation	Type	Number	Description	
piston-ring restraining strap	Commercially available tool	Nr.57		
piston ring pliers	Commercially available tool	Nr.58		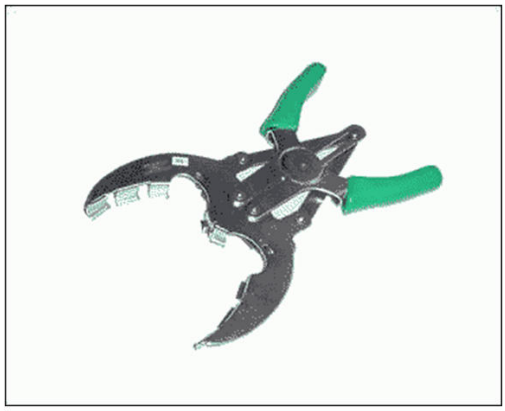
drift	VW tool	VW 222 A		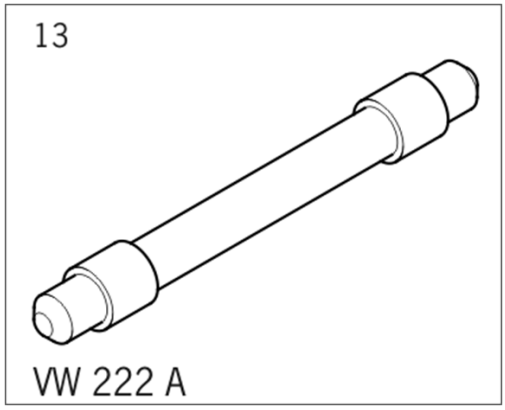

WM 131020 REMOVING AND INSTALLING PISTONS (MACAN) > PRELIMINARY WORK

1. Remove engine. → Removing engine

2. Secure engine to assembly support. → 1001IN SECURING ENGINE TO ASSEMBLY SUPPORT (MOUNTING BRACKET)
3. Remove cylinder head. → Removing cylinder head
4. Remove oil pan. → Removing lower part of oil pan

WM 131020 REMOVING AND INSTALLING PISTONS (MACAN) > REMOVING PISTONS

1. Mark installation position of the piston and its allocation to the relevant cylinder.

   Installation position: Arrow on piston crown is pointing to the pulley.
2. Mark installation position of the connecting rod and its allocation to the relevant cylinder.
3. Remove connecting-rod bearing cap and pull piston with connecting rod up and out.
4. Remove circlips from the piston pin eye.

   Information

   1. If the piston pin is stiff, heat the piston to arround 60 °C (140°F).
5. Drive out piston pin using **drift VW 222 A.**

WM 131020 REMOVING AND INSTALLING PISTONS (MACAN) > INSTALLING PISTONS

1. Fit piston pin using **drift VW 222 A.**
2. **Fit new** circlips in the piston pin eye.
3. Install piston rings offset by 120° using **piston ring pliers Nr.58.**
4. Insert bearing shells into the connecting rod and connecting-rod bearing cap. **Do not mix up worn bearing shells.**

   Dimension **-a-** must be the same at the left and right.

Fig 1: Identifying Bearing Shell Position

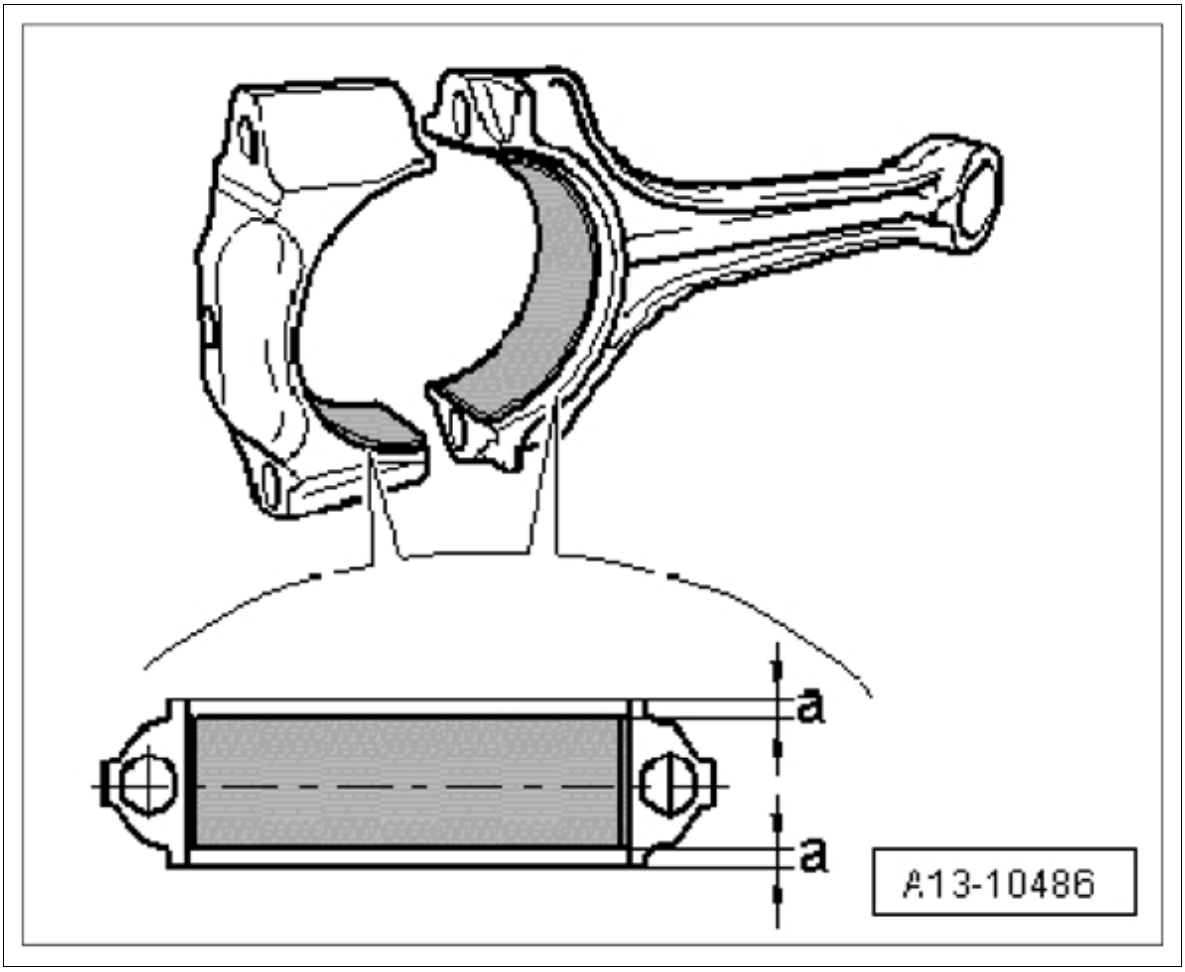

Courtesy of PORSCHE CARS NORTH AMERICA, INC.

5. Oil the running surfaces of the bearing shells.
6. Install piston using **piston-ring restraining strap Nr.57.**

   Check installation position: Arrow on piston crown is pointing to the pulley.
7. Install connecting-rod bearing cap with **new** fastening screws.

   Check installation position.

   Step 1:

   Step 2:

WM 131020 REMOVING AND INSTALLING PISTONS (MACAN) > SUBSEQUENT WORK

1. Install oil pan. → Installing
2. Install cylinder head. → Installing cylinder head

3. Install engine. → Installing engine

WM 135919 REMOVING AND INSTALLING CRANKSHAFT-FLYWHEEL SEALING RING (MACAN) > TOOLS

Designation	Type	Number	Description	
Assembly sleeve	VW tool	T20097		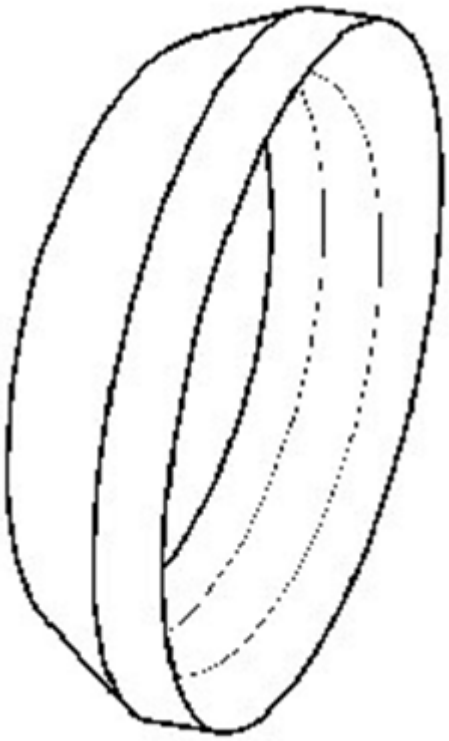

WM 135919 REMOVING AND INSTALLING CRANKSHAFT-FLYWHEEL SEALING RING (MACAN) > PRELIMINARY WORK

1. Remove transmission. → WM 373455 REPLACING PORSCHE DOPPELKUPPLUNG (PDK)
2. Remove flywheel. → Removing Flywheel

WM 135919 REMOVING AND INSTALLING CRANKSHAFT-FLYWHEEL SEALING RING (MACAN) > REMOVING CRANKSHAFT-FLYWHEEL SEALING RING

1. Disengage intermediate plate on the sealing ring and on the dowel sleeves **-arrows-** .

Fig 1: Locating Crankshaft/Flywheel Sealing Ring Intermediate Plate

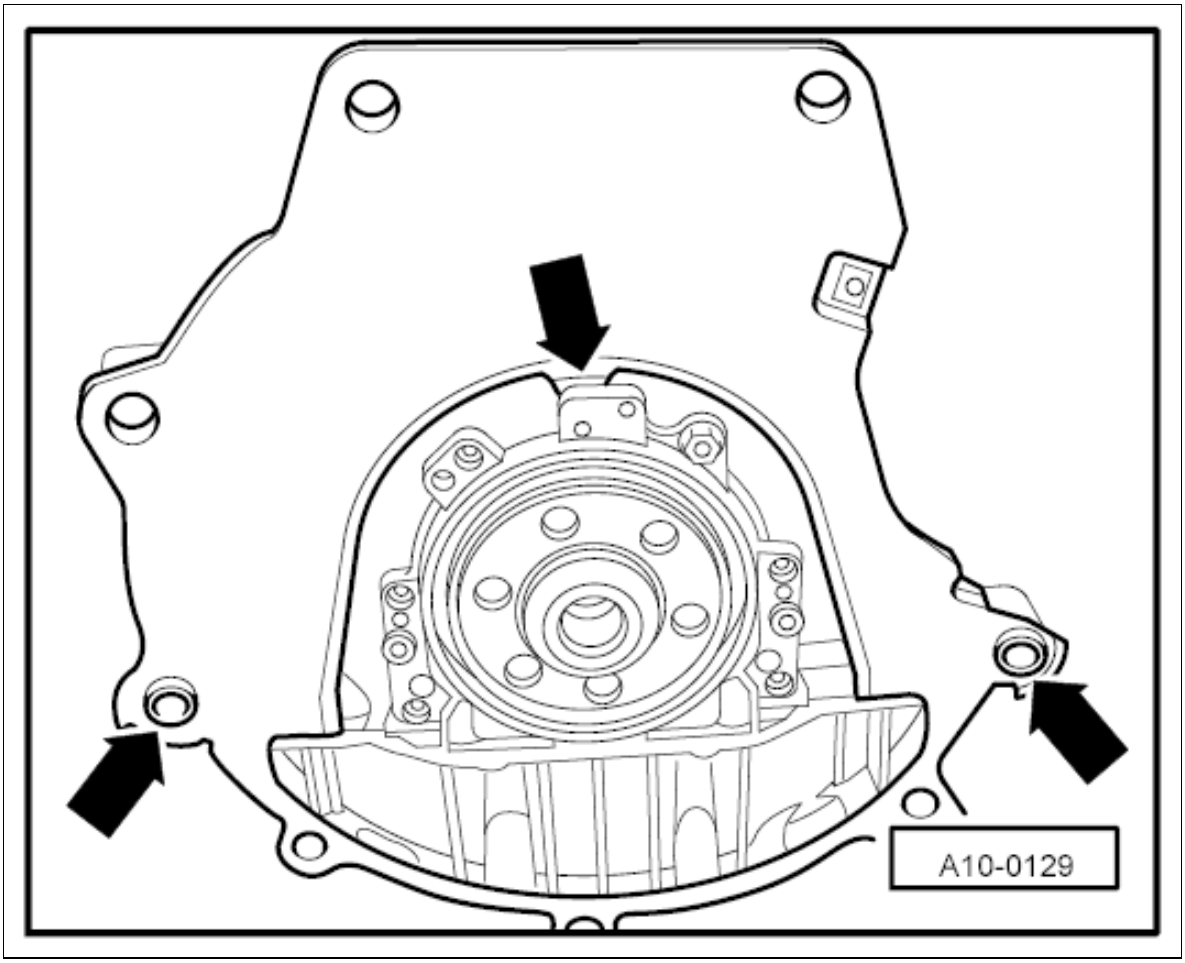

Courtesy of PORSCHE CARS NORTH AMERICA, INC.

2. Unscrew fastening screws **-1...6-** .

Fig 2: Crankshaft/Flywheel Sealing Ring Screws Loosening Sequence

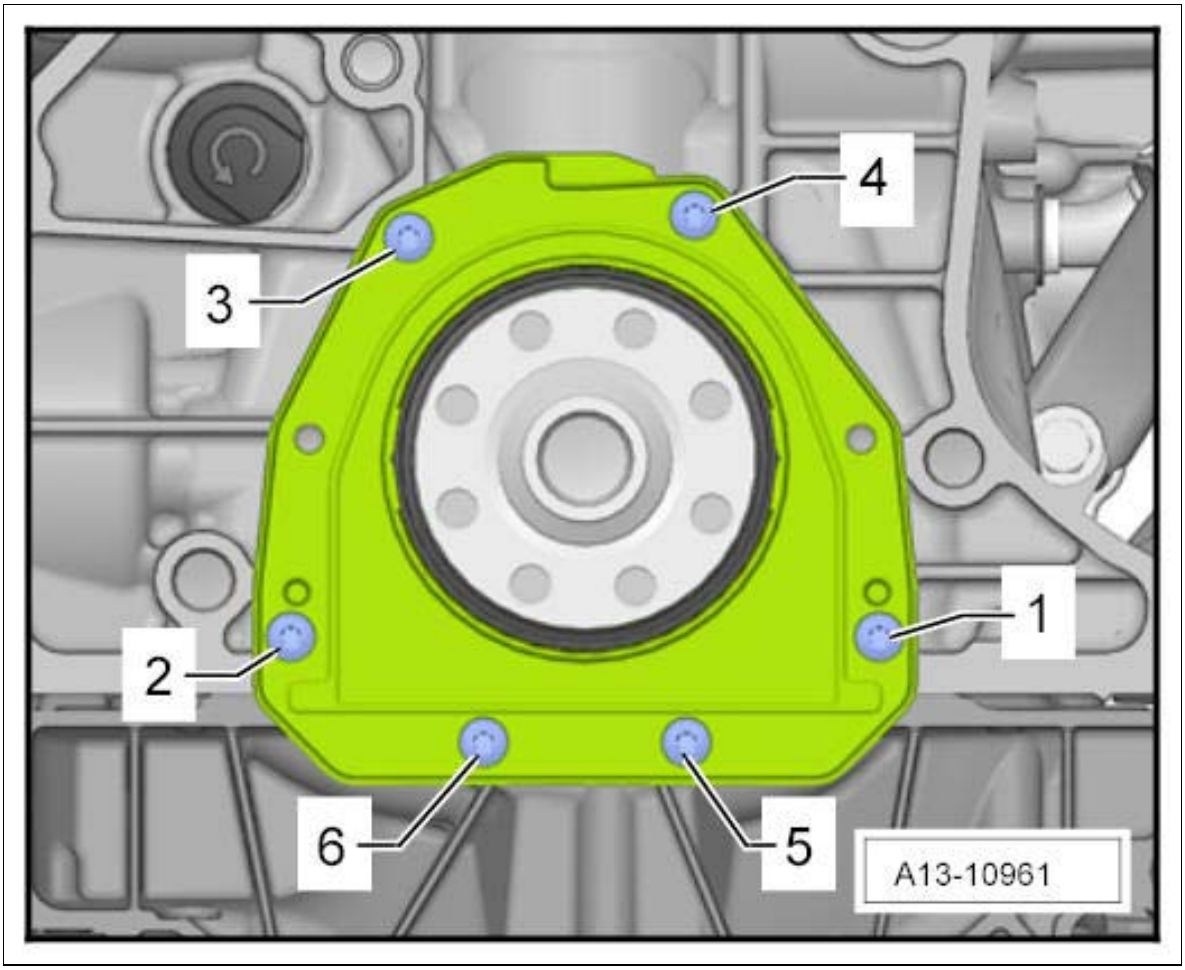

Courtesy of PORSCHE CARS NORTH AMERICA, INC.

3. Remove sealing ring.

WM 135919 REMOVING AND INSTALLING CRANKSHAFT-FLYWHEEL SEALING RING (MACAN) > INSTALLING CRANKSHAFT-FLYWHEEL SEALING RING

Information

After fitting the sealing ring, leave the silicone sealant to dry for 30 minutes.

Engine oil must not be filled in until the sealing compound has been allowed to dry for the specified time.

1. Remove sealant residue on the cylinder block using a scraper.
2. Clean sealing faces to remove any oil and grease.
3. Cut off the nozzle on the tube at the front marking. (The nozzle diameter is approx. 2 mm).

   Information

   The sealing ring must be fitted within 5 minutes of applying the silicone sealant.

4. Apply silicone sealant to the clean sealing face. → Applying sealant

   Sealant bead thickness: 2...3 mm.

   Fig 1: Locating Sealant Applying Area

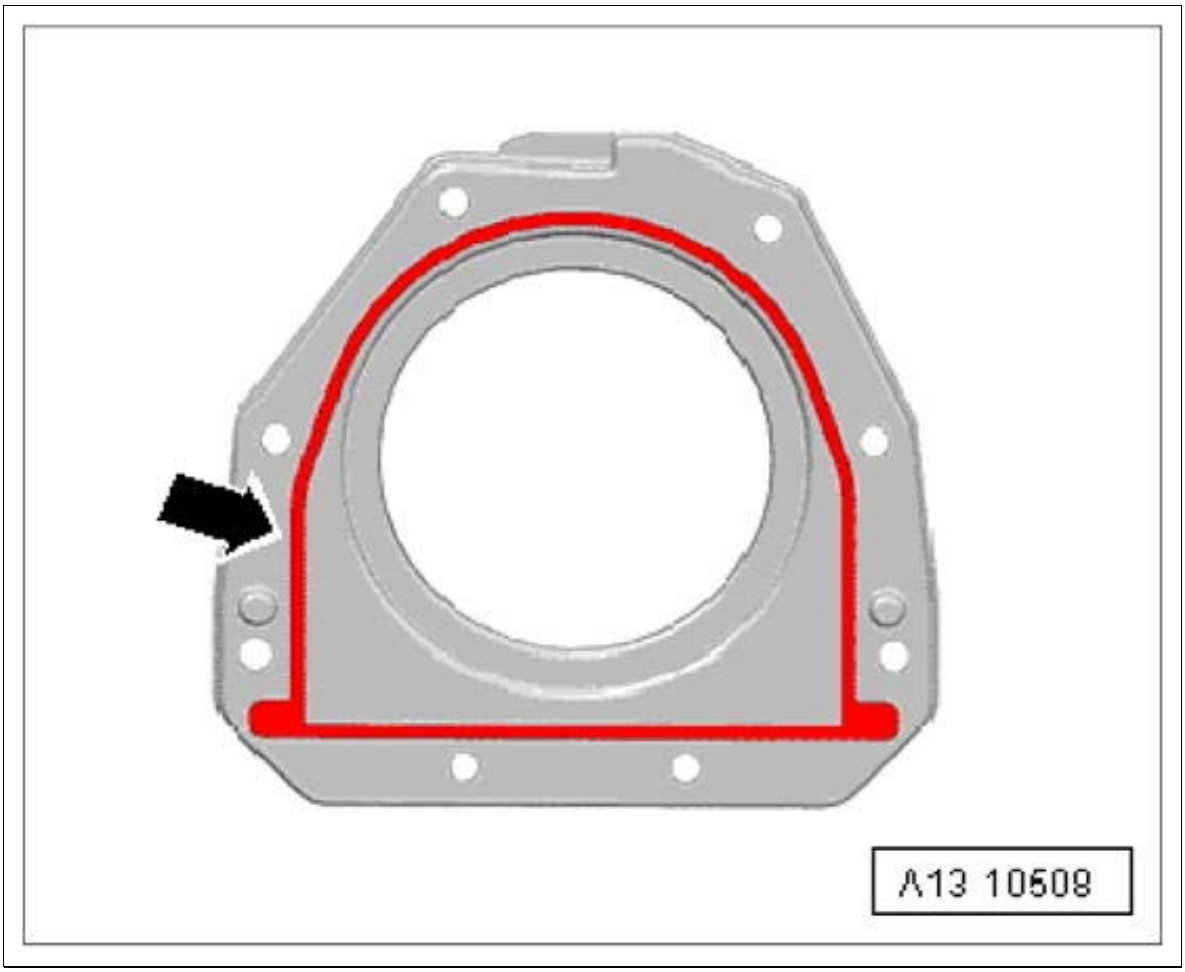

Courtesy of PORSCHE CARS NORTH AMERICA, INC.

5. **Assembly sleeve T20097** must now be fitted on the crankshaft journal. → Assembly sleeve on crankshaft journal

Fig 2: Installing Assembly Sleeve On Crankshaft Journal

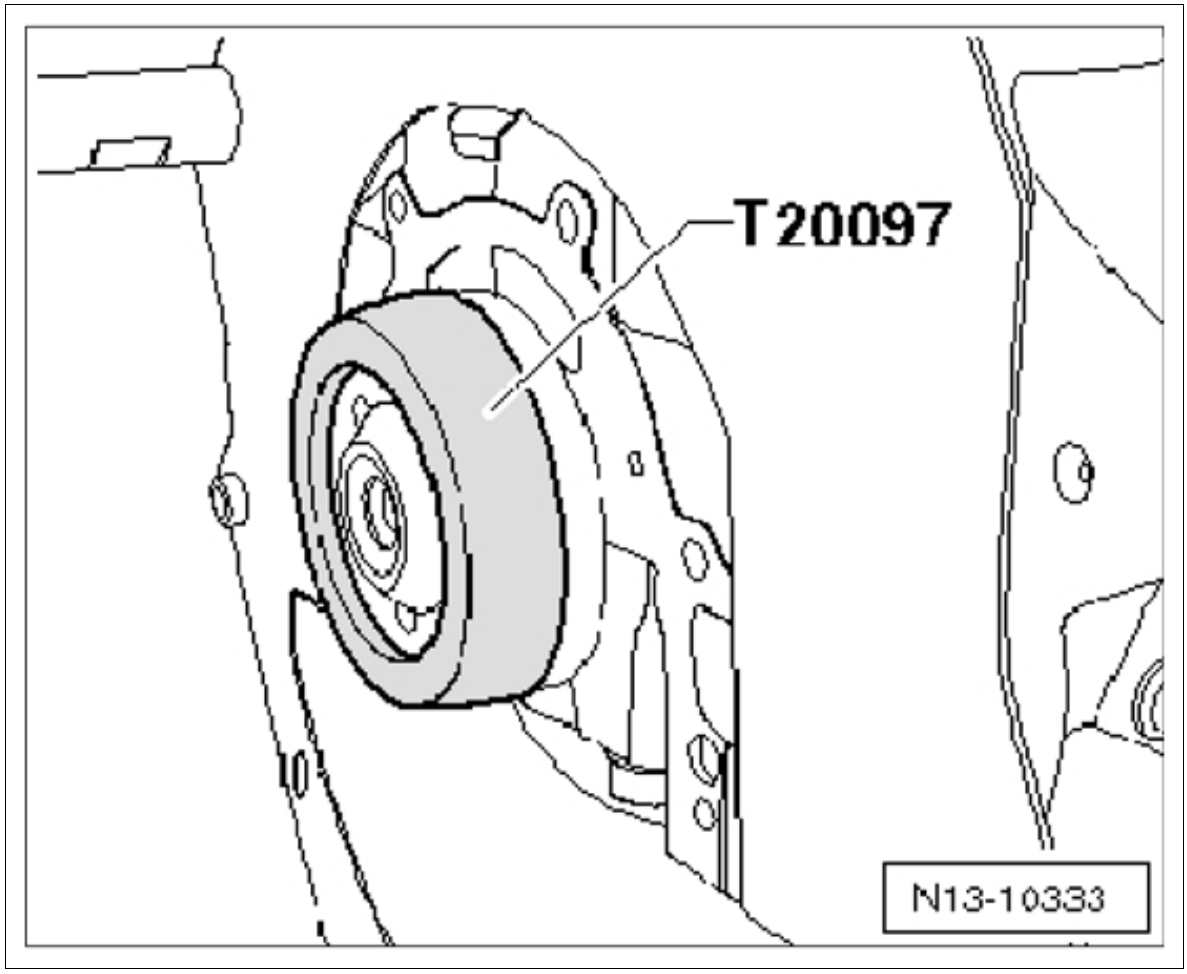

Courtesy of PORSCHE CARS NORTH AMERICA, INC.

6. Slide the sealing ring onto the crankshaft journal using **assembly sleeve T20097** and fit and tighten **new** fastening screws.

   Observe tightening sequence **-1...6-** .

   Step 1: Screw in as far as it will go by hand.

   Step 2:

Fig 3: Crankshaft/Flywheel Sealing Ring Screw Tightening Sequence

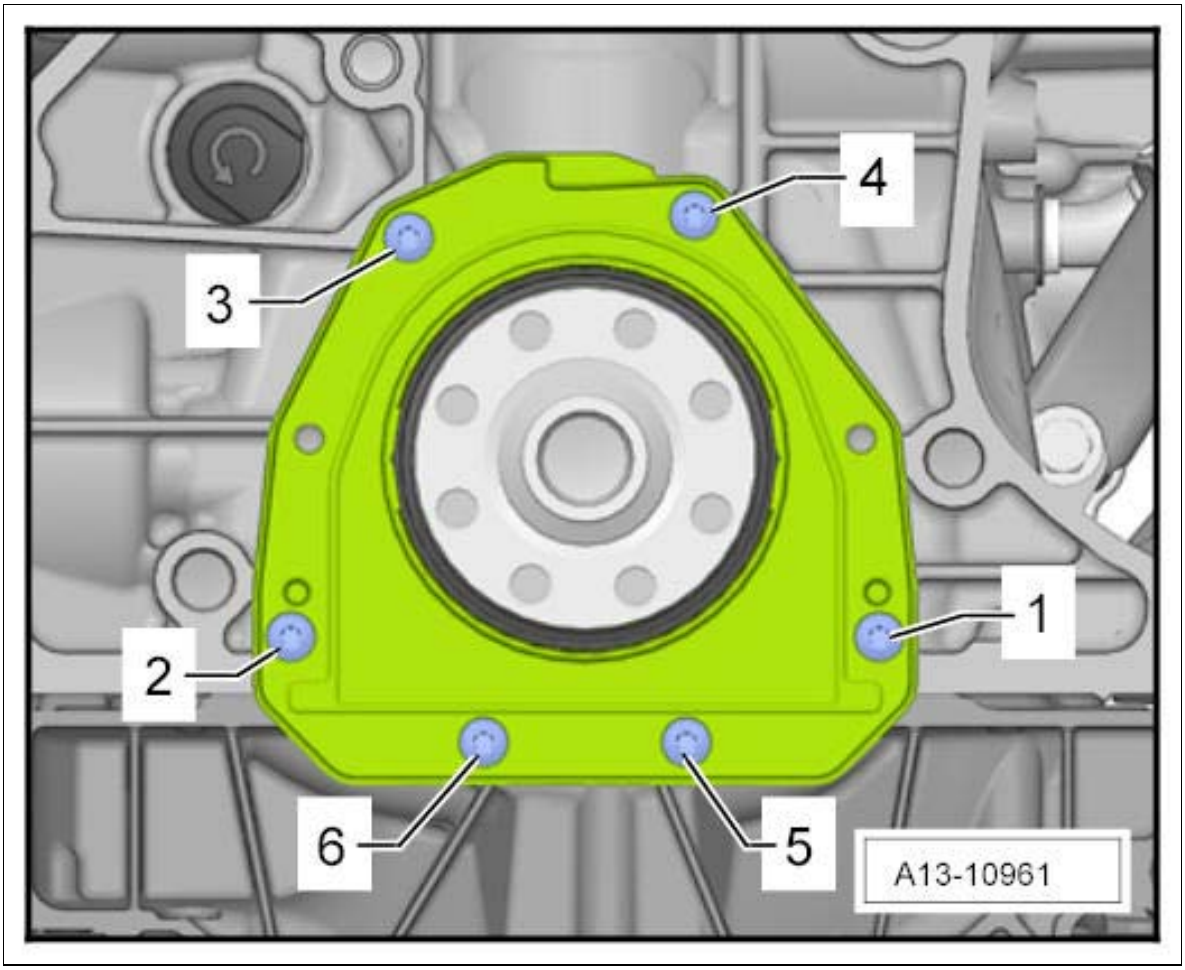

Courtesy of PORSCHE CARS NORTH AMERICA, INC.

7. **Assembly sleeve T20097** must now be removed.
8. Engage intermediate plate on the sealing ring and dowel sleeves **-arrows-** .

Fig 4: Locating Crankshaft/Flywheel Sealing Ring Intermediate Plate

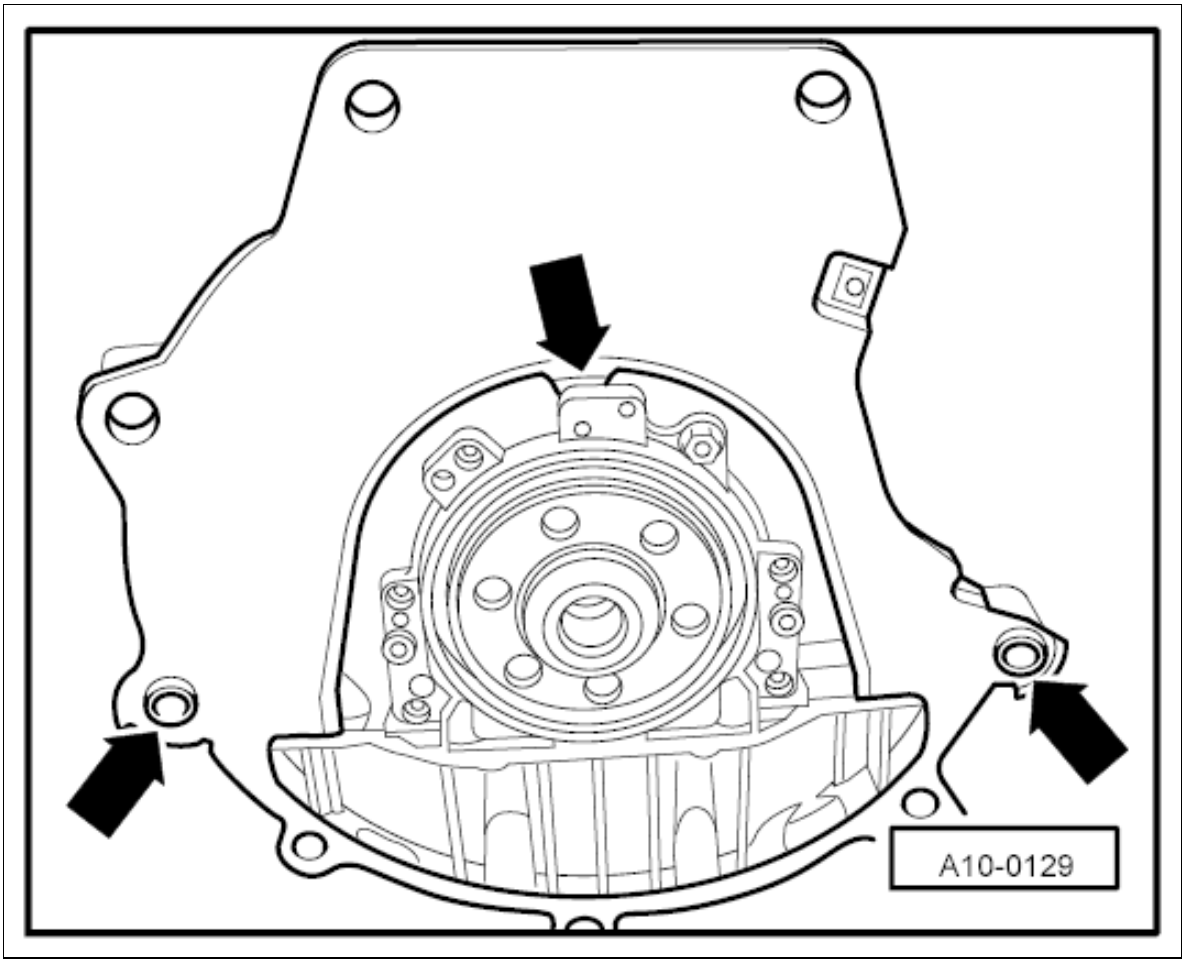

Courtesy of PORSCHE CARS NORTH AMERICA, INC.

WM 135919 REMOVING AND INSTALLING CRANKSHAFT-FLYWHEEL SEALING RING (MACAN) > SUBSEQUENT WORK

1. Install flywheel. → Installing Flywheel
2. Install transmission. → WM 373455 REPLACING PORSCHE DOPPELKUPPLUNG (PDK)
3. Check engine-oil level. → 170101 CHECKING ENGINE-OIL LEVEL

WM 136019 REMOVING AND INSTALLING FLYWHEEL (MACAN) > TOOLS

Designation	Type	Number	Description	

Extractor	VW tool	T40176		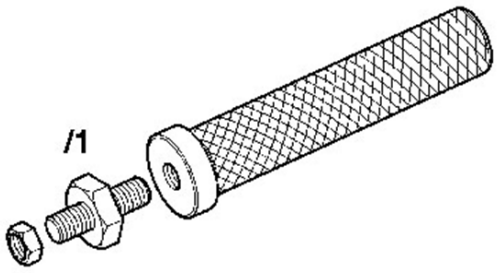

WM 136019 REMOVING AND INSTALLING FLYWHEEL (MACAN) > PRELIMINARY WORK

1. Remove transmission. → WM 373455 REPLACING PORSCHE DOPPELKUPPLUNG (PDK)
2. Remove left halfshaft flange. → REMOVING HALFSHAFT FLANGE

WM 136019 REMOVING AND INSTALLING FLYWHEEL (MACAN) > REMOVING FLYWHEEL

Information

- The flywheel must not be tilted during removal and installation.

1. Secure the extractor **Extractor T40176** on the flywheel **-A-** with a nut **-B-** .

Fig 1: Locating Extractor

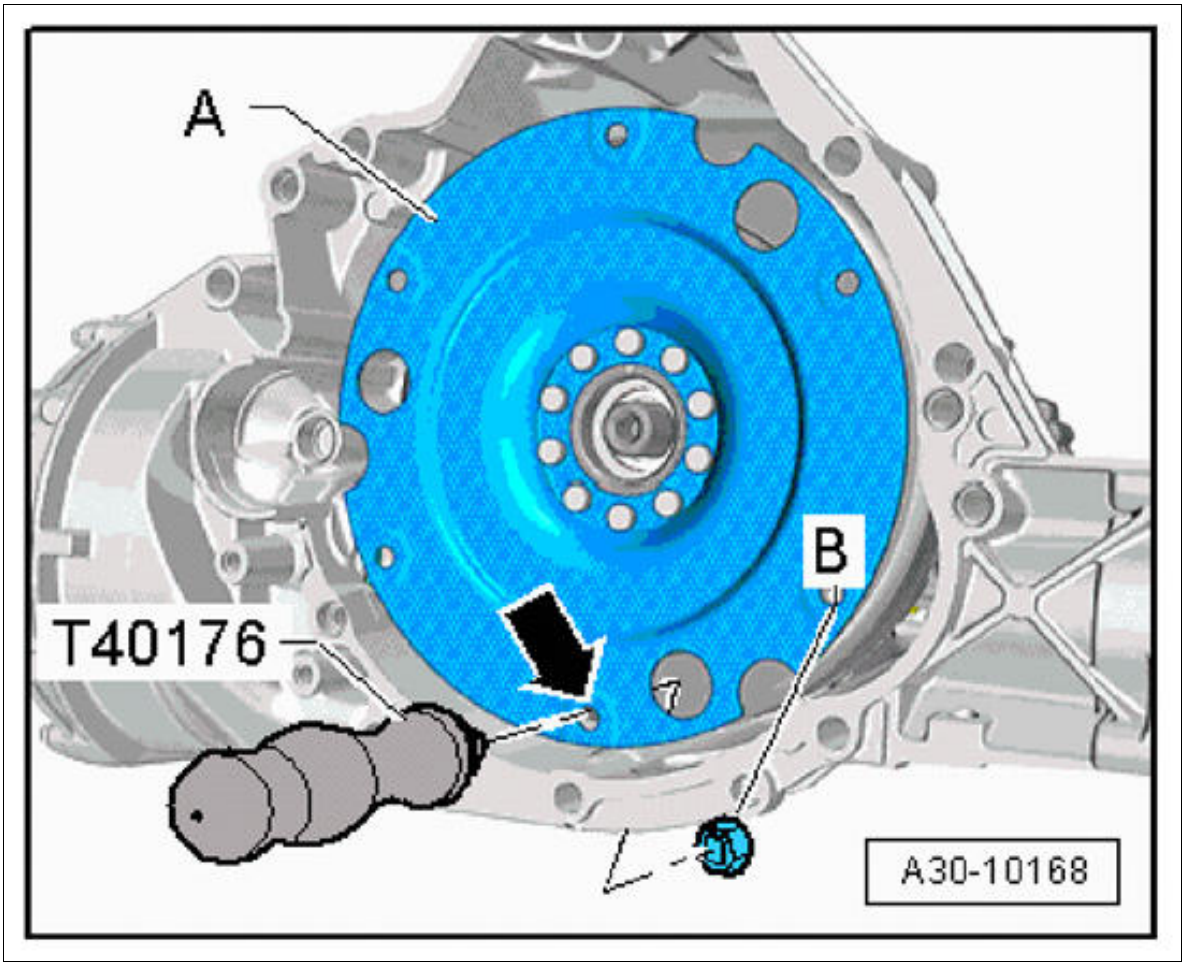

Courtesy of PORSCHE CARS NORTH AMERICA, INC.

2. Remove flywheel.
    1. 2.1. Turn extractor **Extractor T40176** upwards.
    2. 2.2. Pull flywheel off the input shaft without tilting it.

Fig 2: Pulling Flywheel

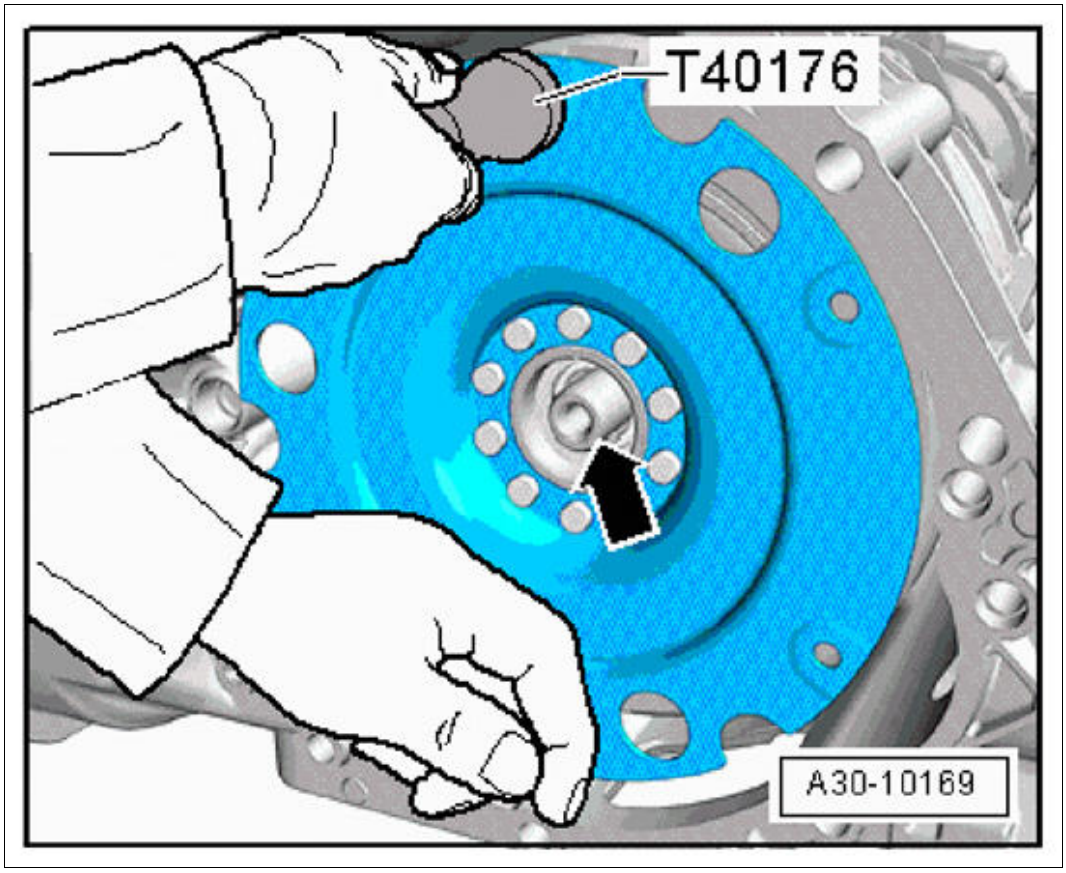

Courtesy of PORSCHE CARS NORTH AMERICA, INC.

WM 136019 REMOVING AND INSTALLING FLYWHEEL (MACAN) > INSTALLING FLYWHEEL

Information

- The flywheel must not be tilted during removal and installation.

1. Install flywheel.

    1. 1.1. Hold extractor **Extractor T40176** at the top and counter at the bottom of the flywheel with your hand.

    2. 1.2. Push flywheel onto the input shaft without tilting it.

Fig 1: Pushing Flywheel

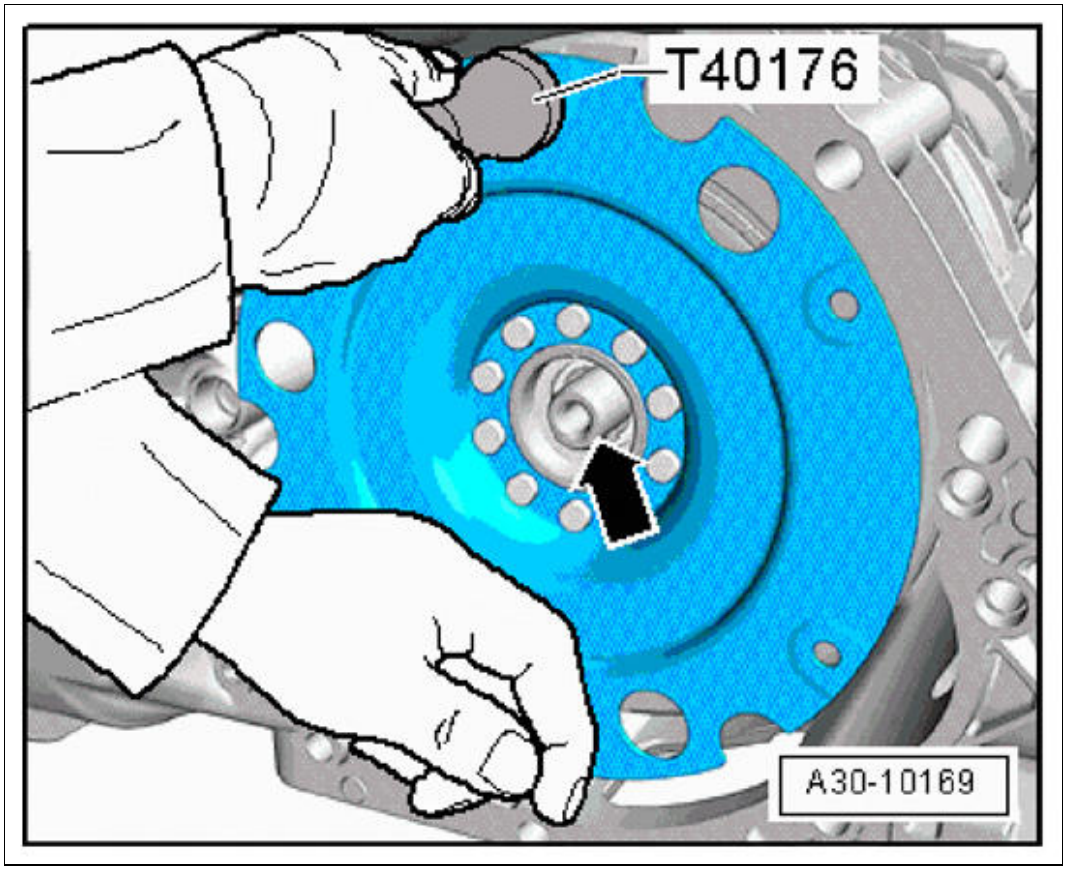

Courtesy of PORSCHE CARS NORTH AMERICA, INC.

2. Remove extractor **Extractor T40176** from the flywheel.

Fig 2: Locating Extractor

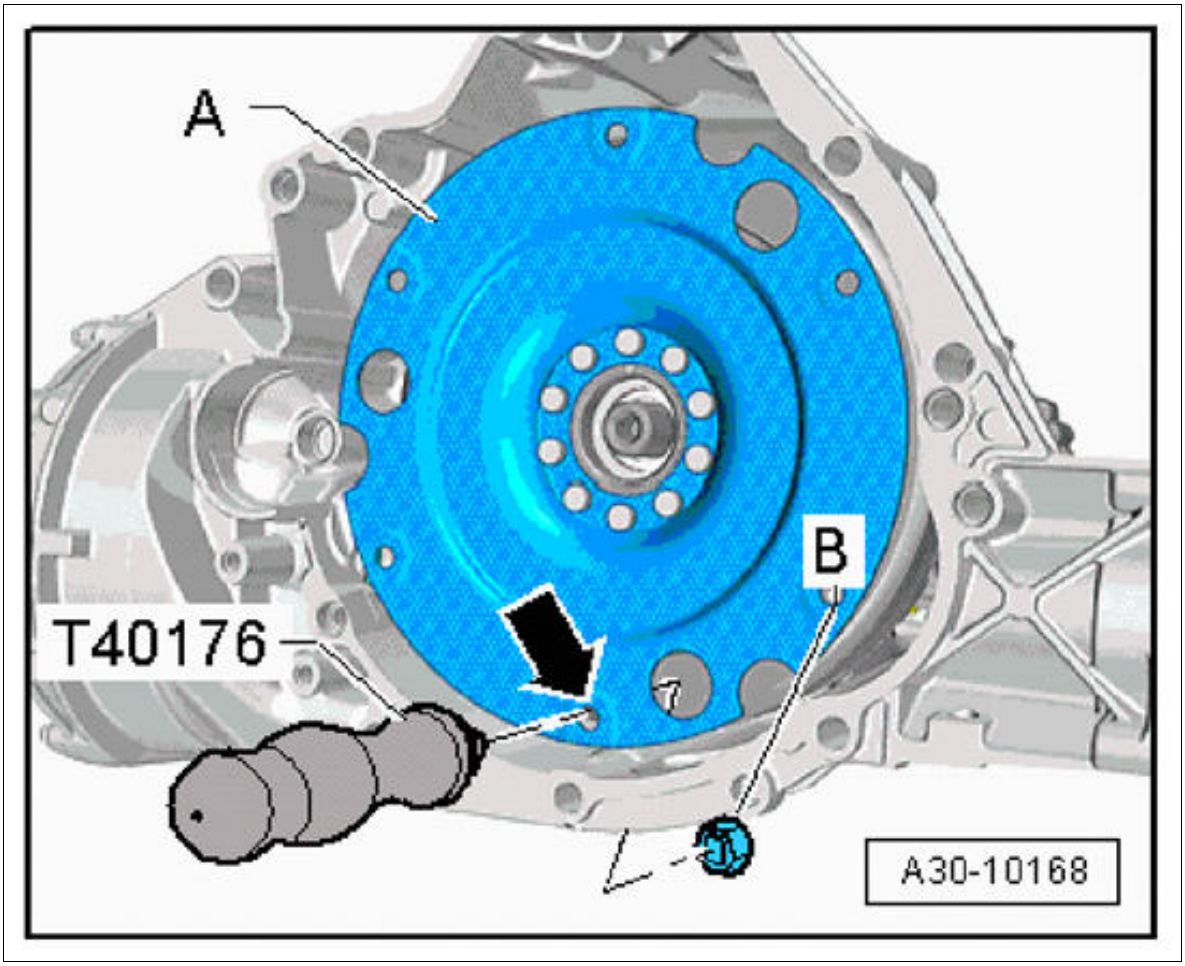

Courtesy of PORSCHE CARS NORTH AMERICA, INC.

WM 136019 REMOVING AND INSTALLING FLYWHEEL (MACAN) > SUBSEQUENT WORK

1. Install left halfshaft flange. → INSTALLING HALFSHAFT FLANGE
2. Install transmission. → WM 373455 REPLACING PORSCHE DOPPELKUPPLUNG (PDK)

WM 136319 REMOVING AND INSTALLING DRIVE PLATE (MACAN) > TOOLS

Designation	Type	Number	Description	

counter-hold tool	VW tool	10-201		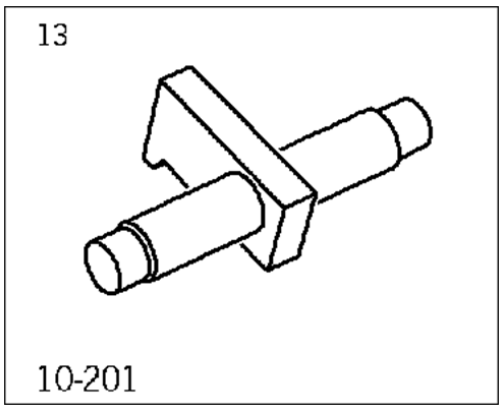

WM 136319 REMOVING AND INSTALLING DRIVE PLATE (MACAN) > PRELIMINARY WORK

1. Remove transmission. → WM 373455 REPLACING PORSCHE DOPPELKUPPLUNG (PDK)

WM 136319 REMOVING AND INSTALLING DRIVE PLATE (MACAN) > REMOVING DRIVE PLATE

1. Use **counter-hold tool 10-201** to loosen the screws. → Counter-hold tool on drive plate

Fig 1: Removing Drive Plate

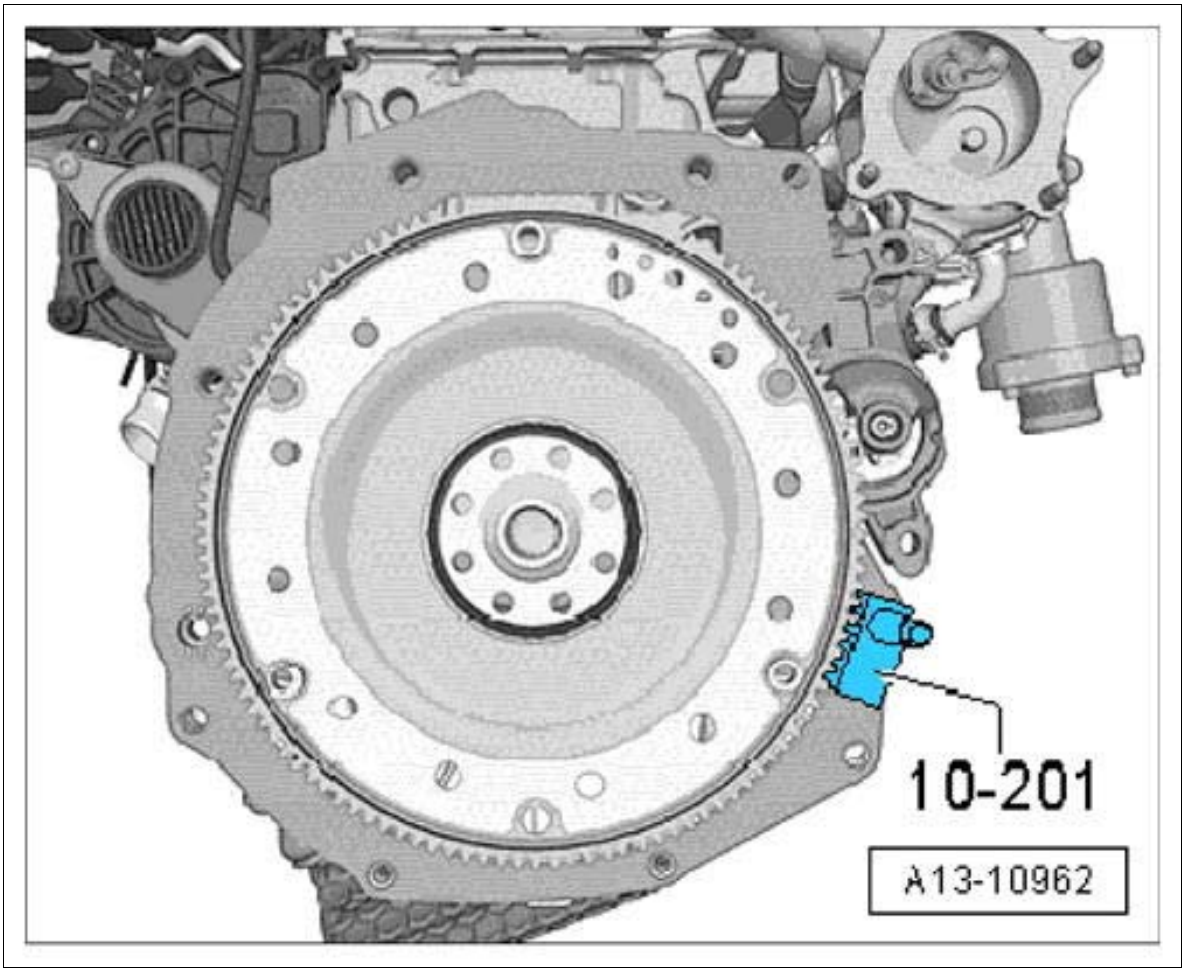

Courtesy of PORSCHE CARS NORTH AMERICA, INC.

Information

Risk of damage to outer surface of bearing flange on the drive plate.

1. Use a multiple-tooth socket wrench with a shaft length of at least 40 mm to loosen and tighten the screws.

2. Loosen fastening screws.

3. Remove drive plate at the sensor wheel.

WM 136319 REMOVING AND INSTALLING DRIVE PLATE (MACAN) > INSTALLING DRIVE PLATE

1. Use **counter-hold tool 10-201** to tighten the screws. → Counter-hold tool on drive plate

Fig 1: Installing Drive Plate

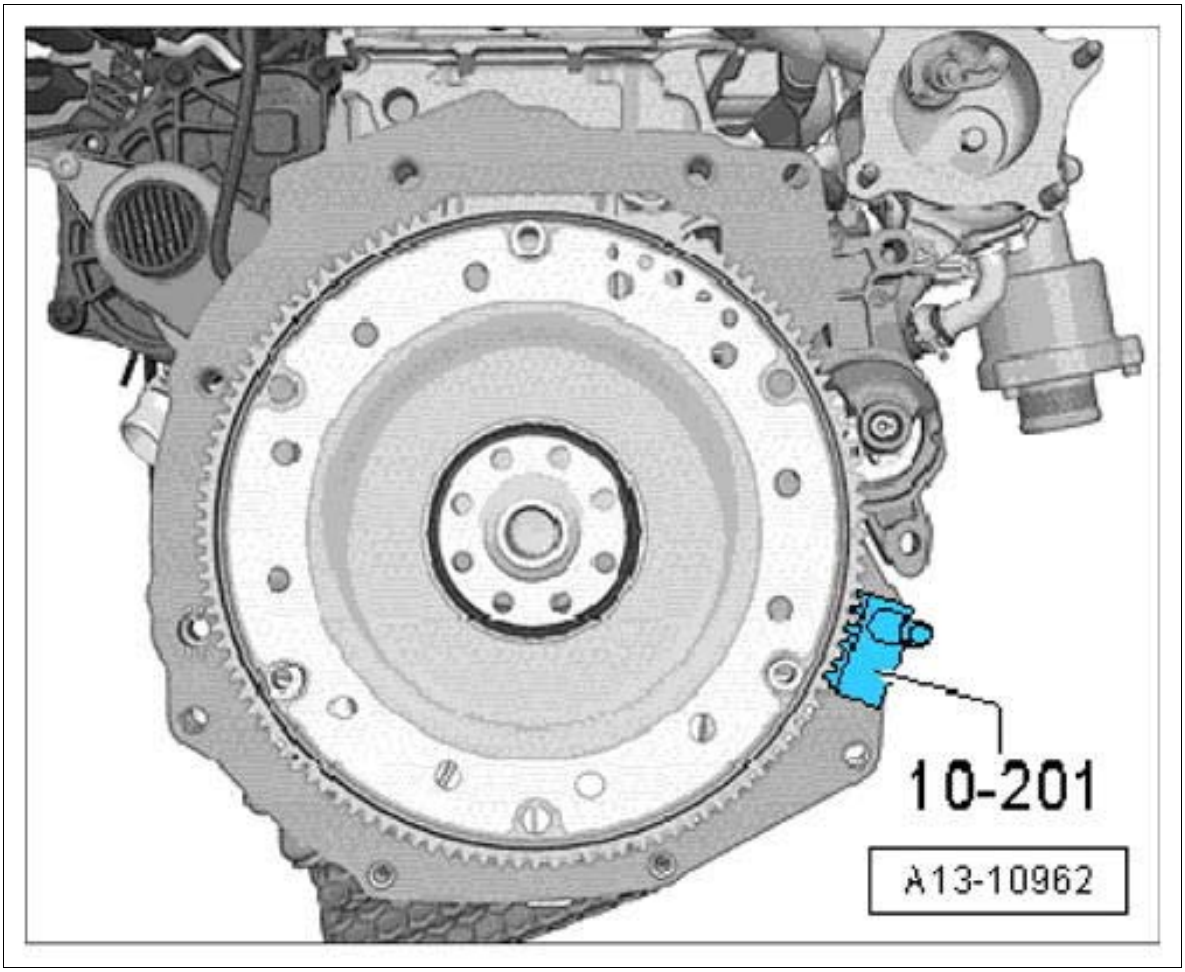

Courtesy of PORSCHE CARS NORTH AMERICA, INC.

Information

Risk of damage to outer surface of bearing flange on the drive plate.

1. Use a multiple-tooth socket wrench with a shaft length of at least 40 mm to loosen and tighten the screws.

2. **Fit and tighten new** fastening screws.

   Step 1:

   Step 2:

WM 136319 REMOVING AND INSTALLING DRIVE PLATE (MACAN) > SUBSEQUENT WORK

1. Install transmission. → WM 373455 REPLACING PORSCHE DOPPELKUPPLUNG (PDK)

WM 137319 REMOVING AND INSTALLING BELT TENSIONER (MACAN) > INFORMATION

1. Vibration damper
2. Belt tensioner
3. Generator
4. Air-conditioning compressor

Fig 1: Drive Belt Routing Diagram

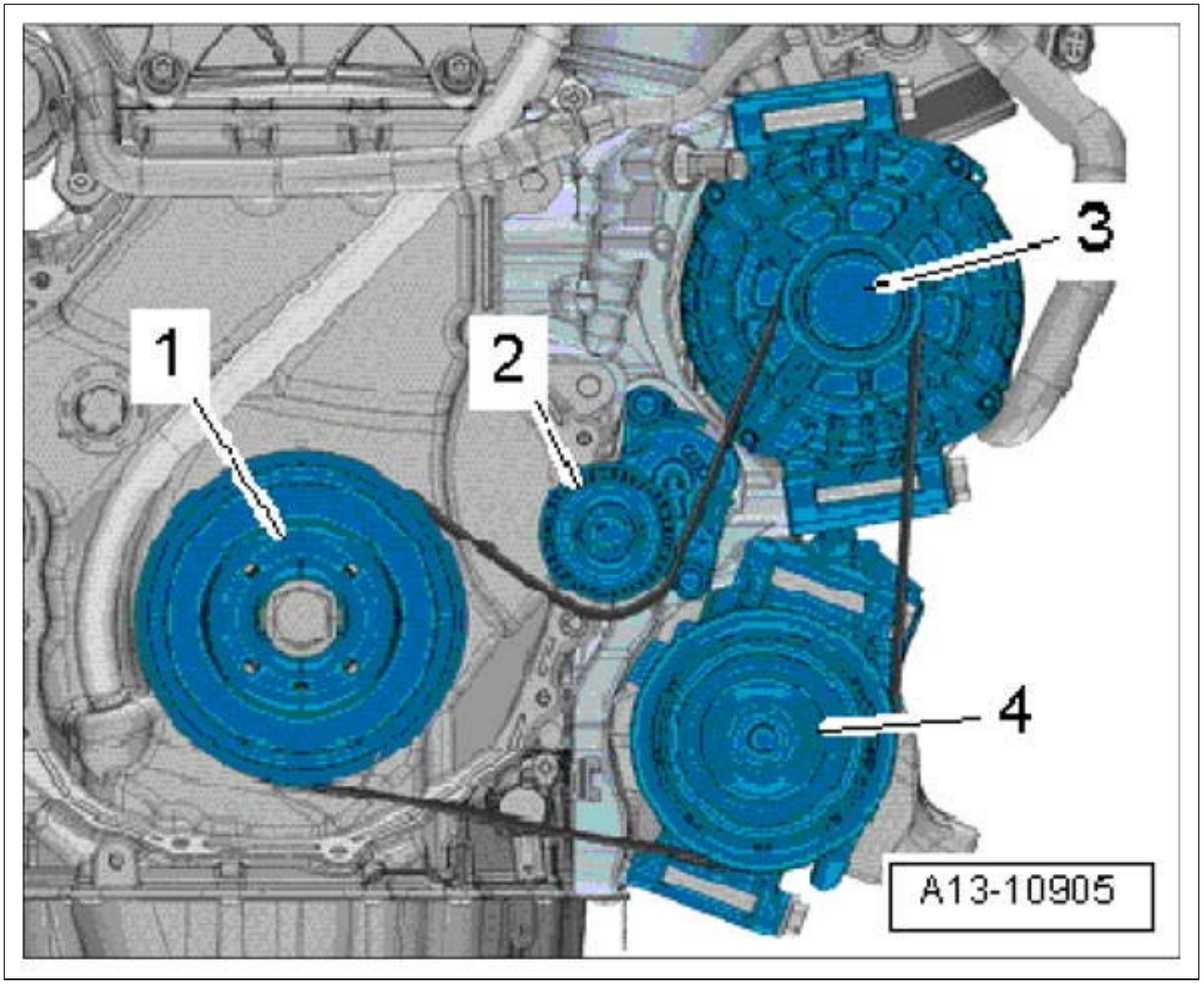

Courtesy of PORSCHE CARS NORTH AMERICA, INC.

WM 137319 REMOVING AND INSTALLING BELT TENSIONER (MACAN) > PRELIMINARY WORK

1. Remove drive belt. → Removing Drive Belt

WM 137319 REMOVING AND INSTALLING BELT TENSIONER (MACAN) > REMOVING BELT TENSIONER

1. Unscrew fastening screws **-arrows-** and remove belt tensioner **-1-** .

Fig 1: Locating Belt Tensioner Screws

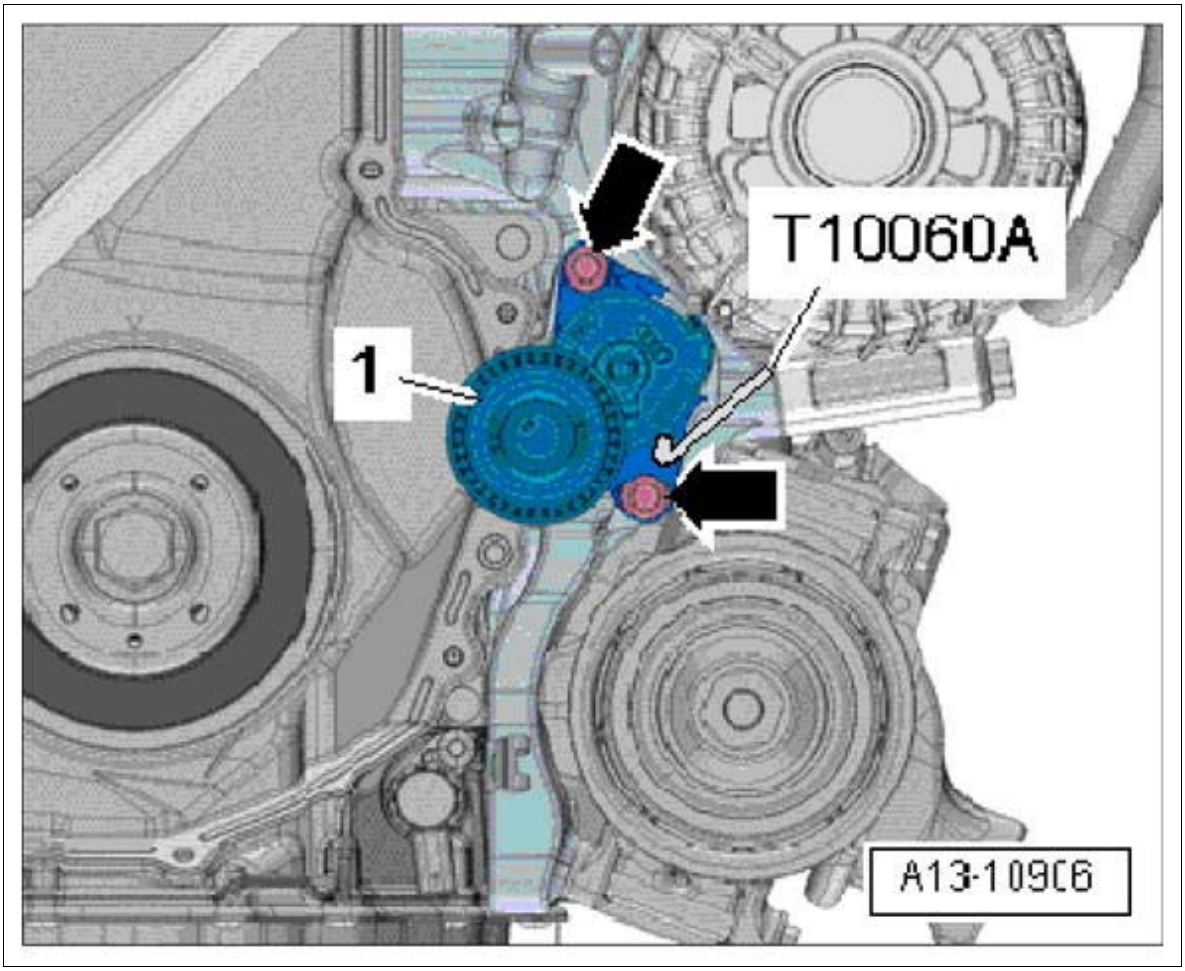

Courtesy of PORSCHE CARS NORTH AMERICA, INC.

WM 137319 REMOVING AND INSTALLING BELT TENSIONER (MACAN) > INSTALLING BELT TENSIONER

1. Install belt tensioner.
    1. 1.1. Position belt tensioner **-1-** on holder for auxiliary units.
    2. 1.2. **Fit and tighten new** fastening screws **-arrows-** .

       Step 1:

       Step 2:

Fig 1: Locating Belt Tensioner Screws

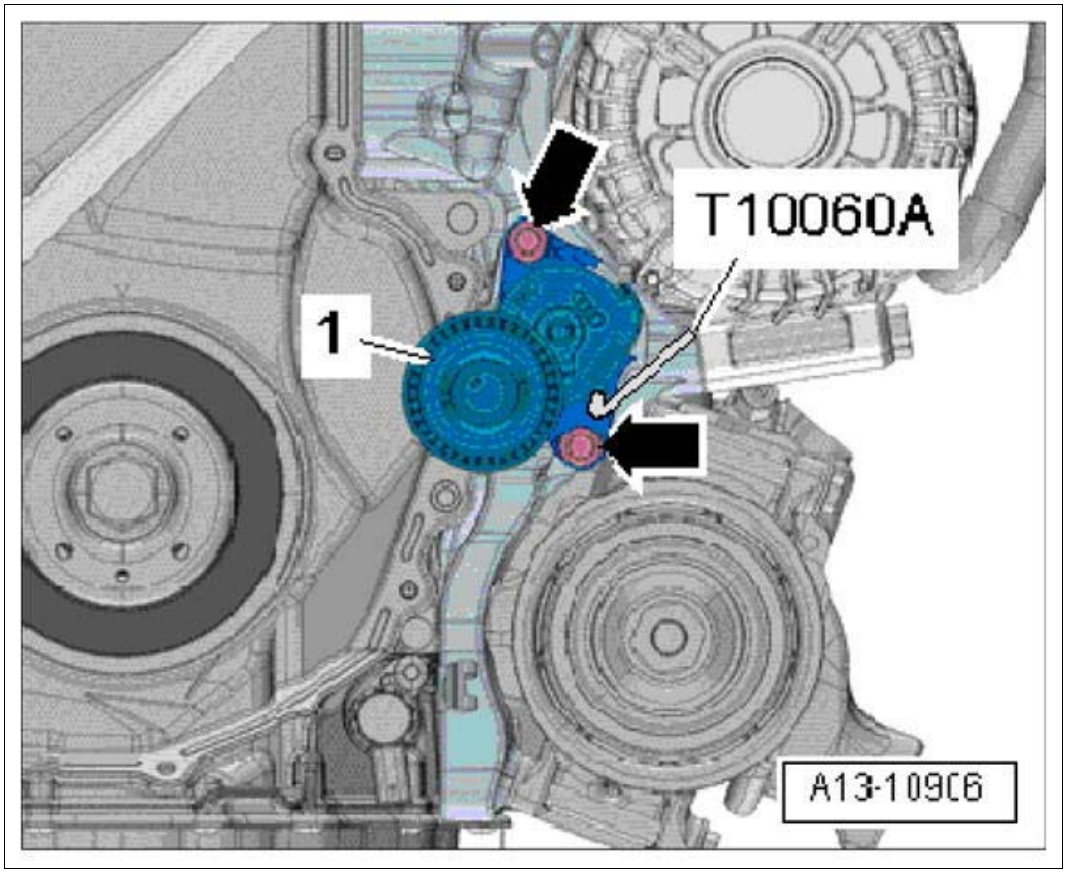

Courtesy of PORSCHE CARS NORTH AMERICA, INC.

WM 137319 REMOVING AND INSTALLING BELT TENSIONER (MACAN) > SUBSEQUENT WORK

1. Install drive belt. → Installing Drive Belt

WM 137419 REMOVING AND INSTALLING SEALING RING FOR CRANKSHAFT PULLEY (MACAN) > TOOLS

Designation	Type	Number	Description	

pressure piece	VW tool	T10354		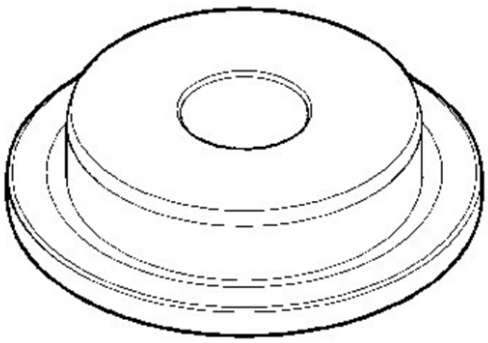
Pressure piece	VW tool	T10368		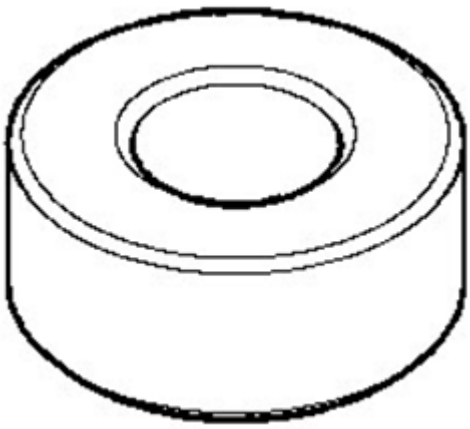
puller hook	VW tool	T40274		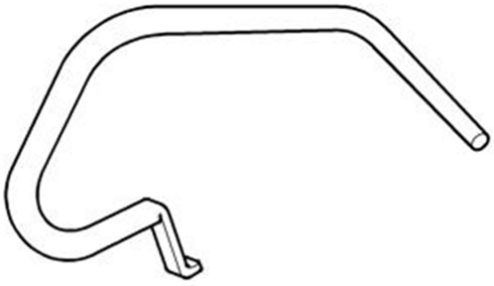

WM 137419 REMOVING AND INSTALLING SEALING RING FOR CRANKSHAFT PULLEY (MACAN) > PRELIMINARY WORK

1. Remove pulley. → Removing Pulley

WM 137419 REMOVING AND INSTALLING SEALING RING FOR CRANKSHAFT PULLEY (MACAN) > REMOVING SEALING RING FOR CRANKSHAFT PULLEY

1. **Pressure piece T10368** must be screwed on. → Pressure piece -T10368-

Fig 1: Identifying Pressure Piece - T10368

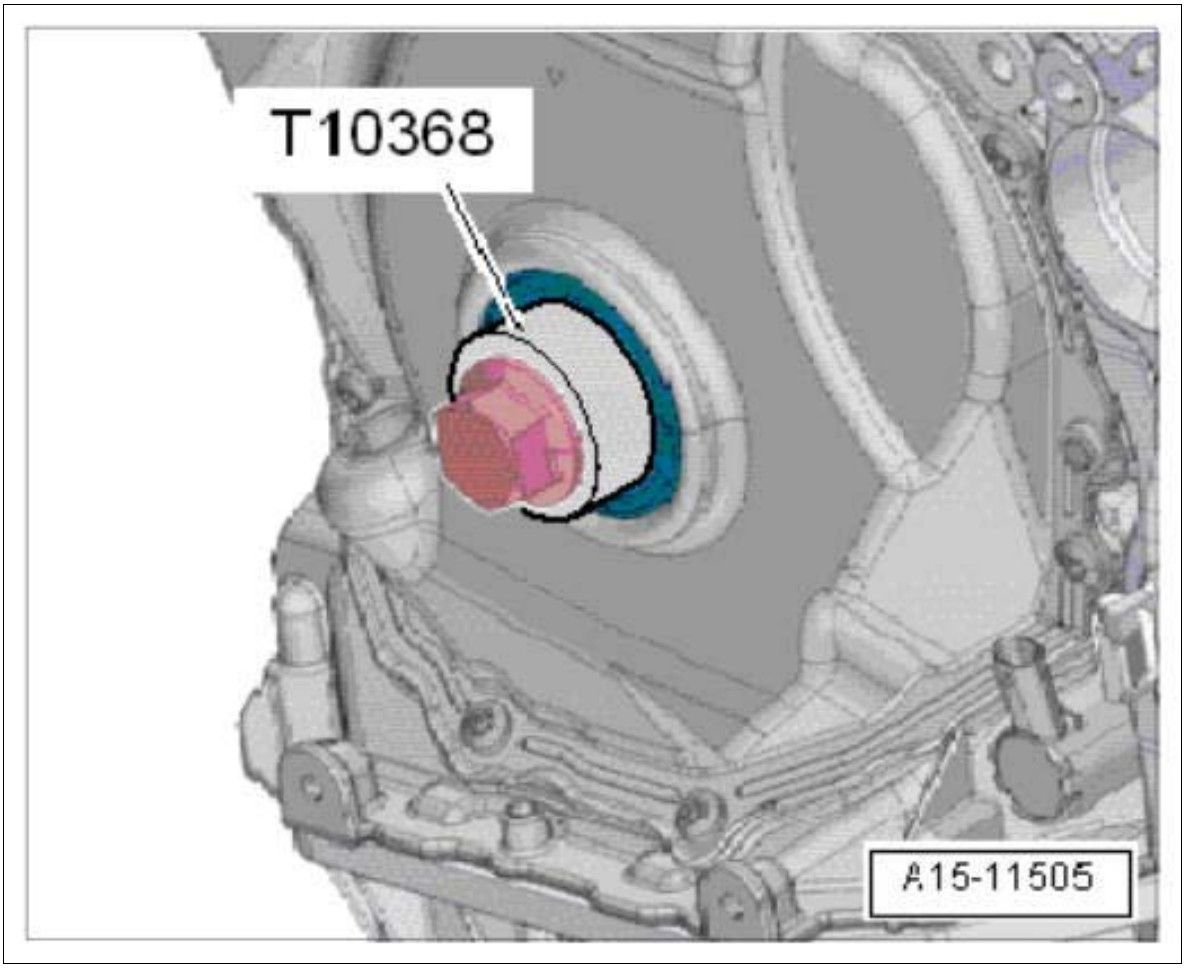

Courtesy of PORSCHE CARS NORTH AMERICA, INC.

2. Pull off sealing ring using **puller hook T40274.** → Pulling off sealing ring

Fig 2: Pulling Sealing Ring

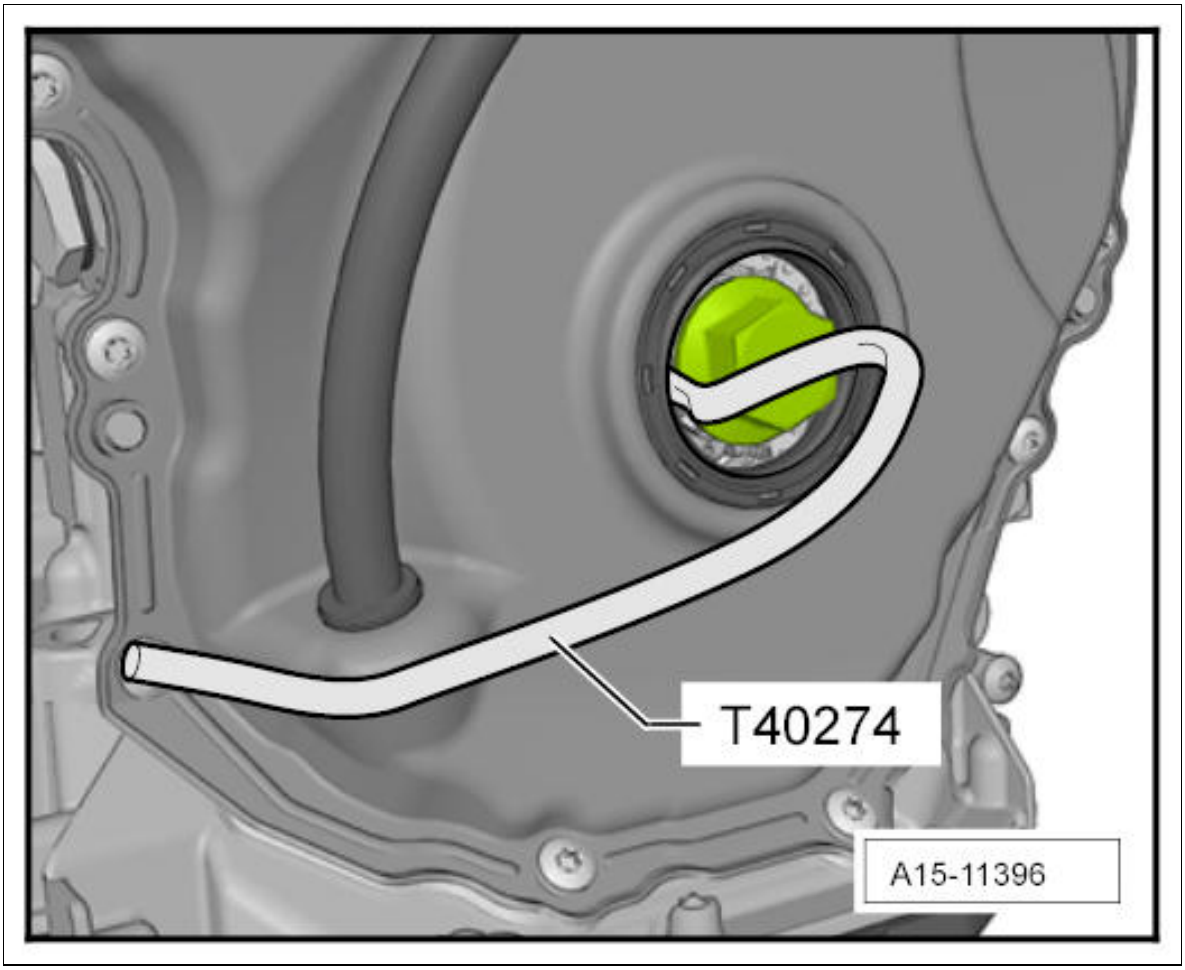

Courtesy of PORSCHE CARS NORTH AMERICA, INC.

Information

1. If the joint flange on the pulley or the surface on the crankshaft stub is slightly rusted, polish the rust off with a special polishing pad.
2. If there is bad corrosion or deep grooves, replace these components.

3. Clean running and sealing surfaces.

WM 137419 REMOVING AND INSTALLING SEALING RING FOR CRANKSHAFT PULLEY (MACAN) > INSTALLING SEALING RING FOR CRANKSHAFT PULLEY

1. **Pressure piece T10368** must be screwed off. → Pressure piece -T10368-

Fig 1: Identifying Pressure Piece - T10368

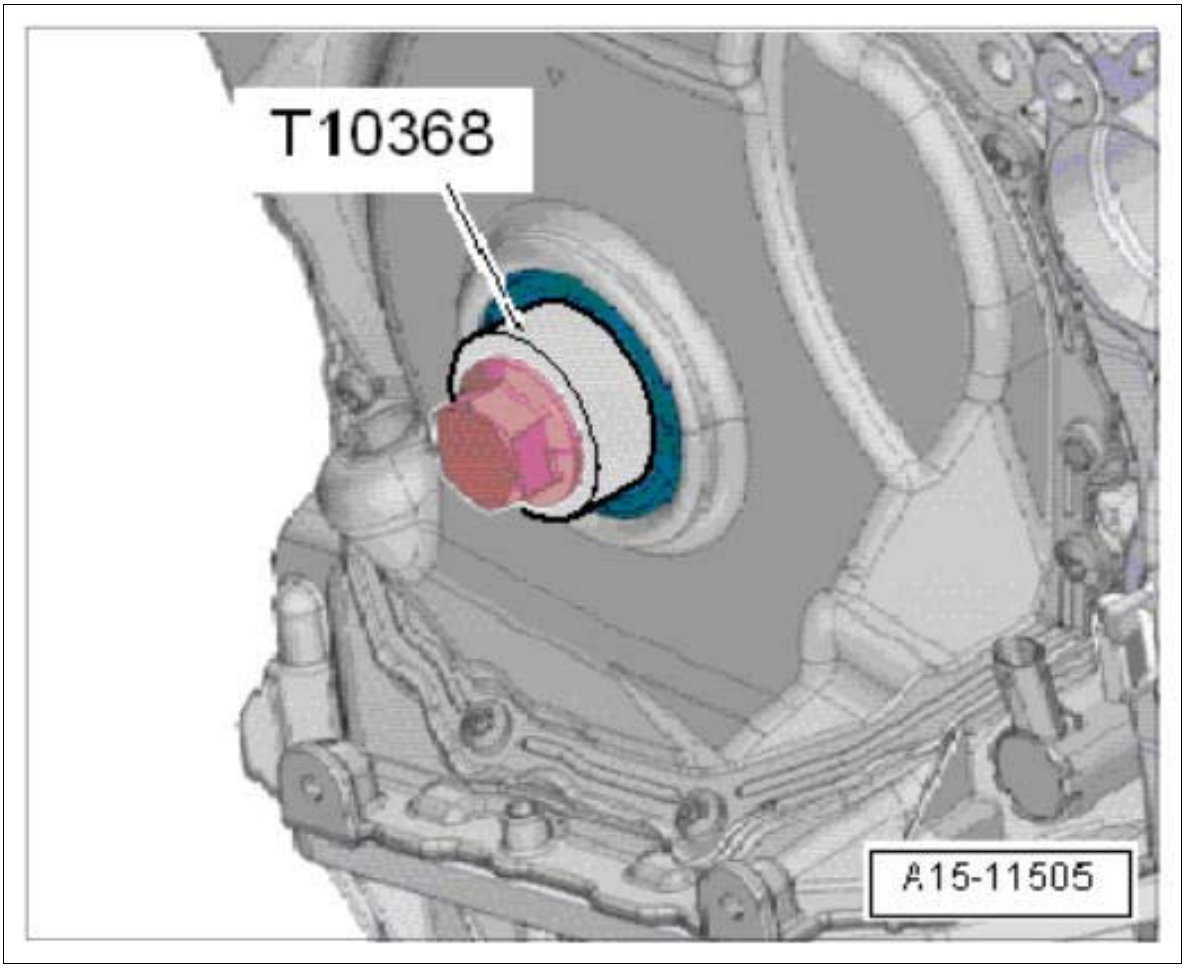

Courtesy of PORSCHE CARS NORTH AMERICA, INC.

2. Pull in new sealing ring using **pressure piece T10354** and fastening screw for pulley as far as it will go. → Pressure piece -T10354-

Fig 2: Identifying Pressure Piece - T10354

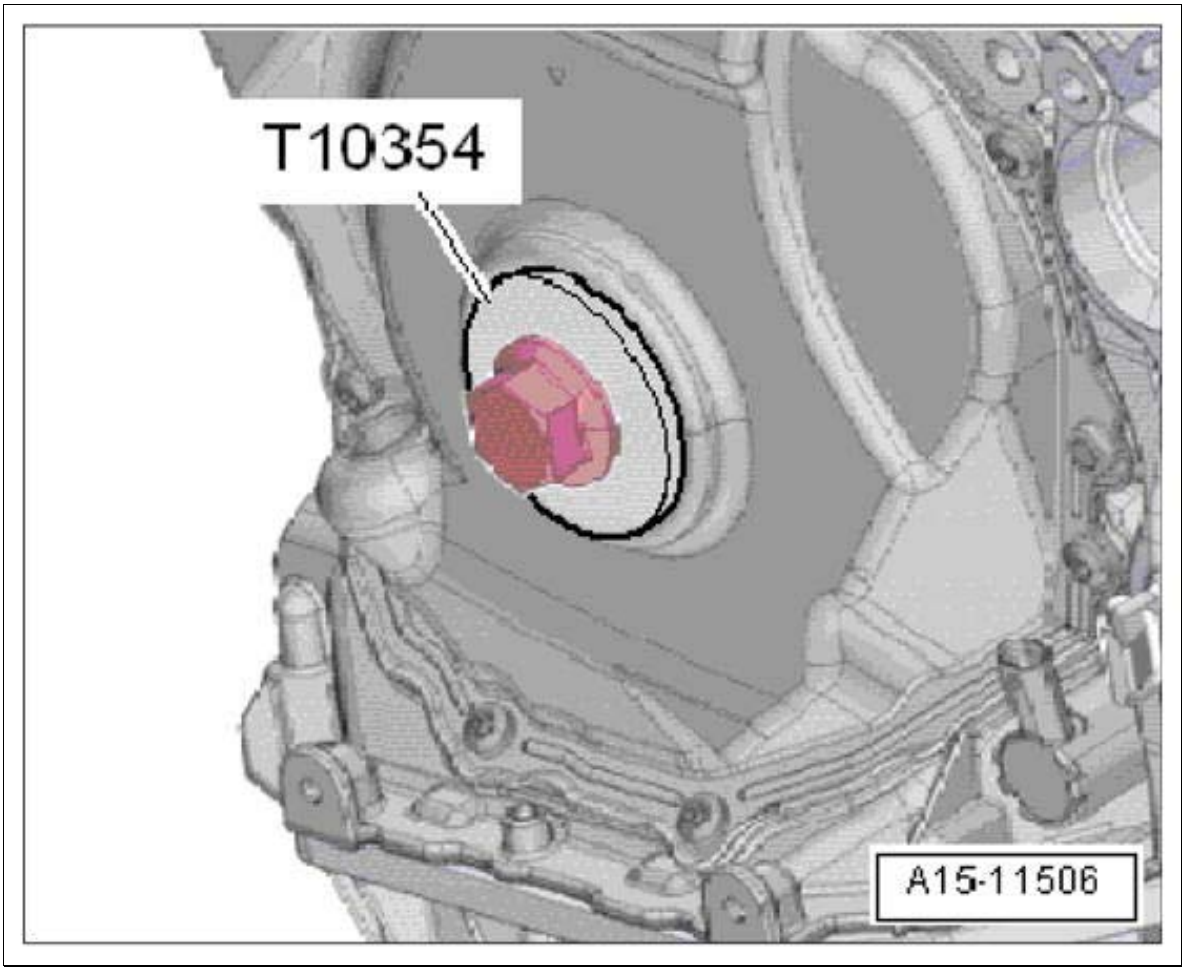

Courtesy of PORSCHE CARS NORTH AMERICA, INC.

3. **Pressure piece T10354** must now be removed.

WM 137419 REMOVING AND INSTALLING SEALING RING FOR CRANKSHAFT PULLEY (MACAN) > SUBSEQUENT WORK

1. Install pulley. → Installing Pulley

WM 137619 REMOVING AND INSTALLING PULLEY (MACAN) > TOOLS

Designation	Type	Number	Description	

counter-hold tool	VW tool	T10355		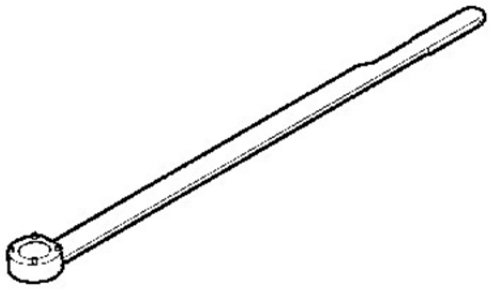

WM 137619 REMOVING AND INSTALLING PULLEY (MACAN) > PRELIMINARY WORK

1. Remove engine cover (design cover).
2. Remove cover for front underbody. → Removing cover for front underbody
3. Remove drive belt. → Removing Drive Belt

WM 137619 REMOVING AND INSTALLING PULLEY (MACAN) > REMOVING PULLEY

NOTE: Incorrect handling of tools

- *Risk of damage to the body*

→ Only use tools approved by Porsche.

→ Always ensure that the tool is seated correctly.

→ Protect the body and interior of the vehicle from damage with protective covers.

→ Cover delicate components with cardboard or sheetmetal panels.

Information

- Risk of irreparable damage to engine

When the pulley is removed, do not turn the crankshaft out of "TDC" position as this will adjust the timing.

1. Disconnect electric plug connection **-1-** and detach line.

Fig 1: Disconnect Fan Control Unit Electric Plug Connection

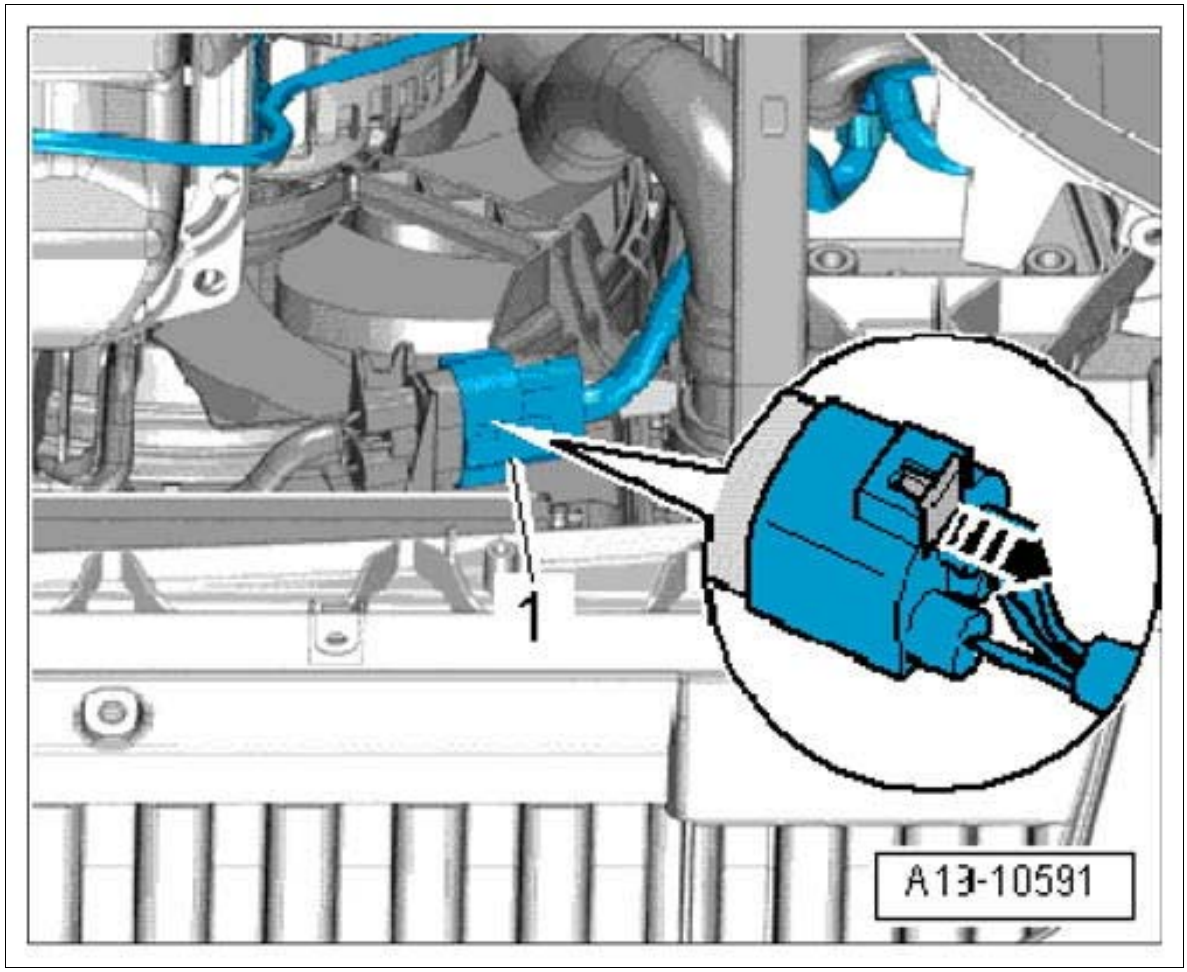

Courtesy of PORSCHE CARS NORTH AMERICA, INC.

2. Disconnect electric plug connections **-2 and 3-** and unscrew fastening screw **-arrow-** .

Fig 2: Locating Fan Control Unit Screw

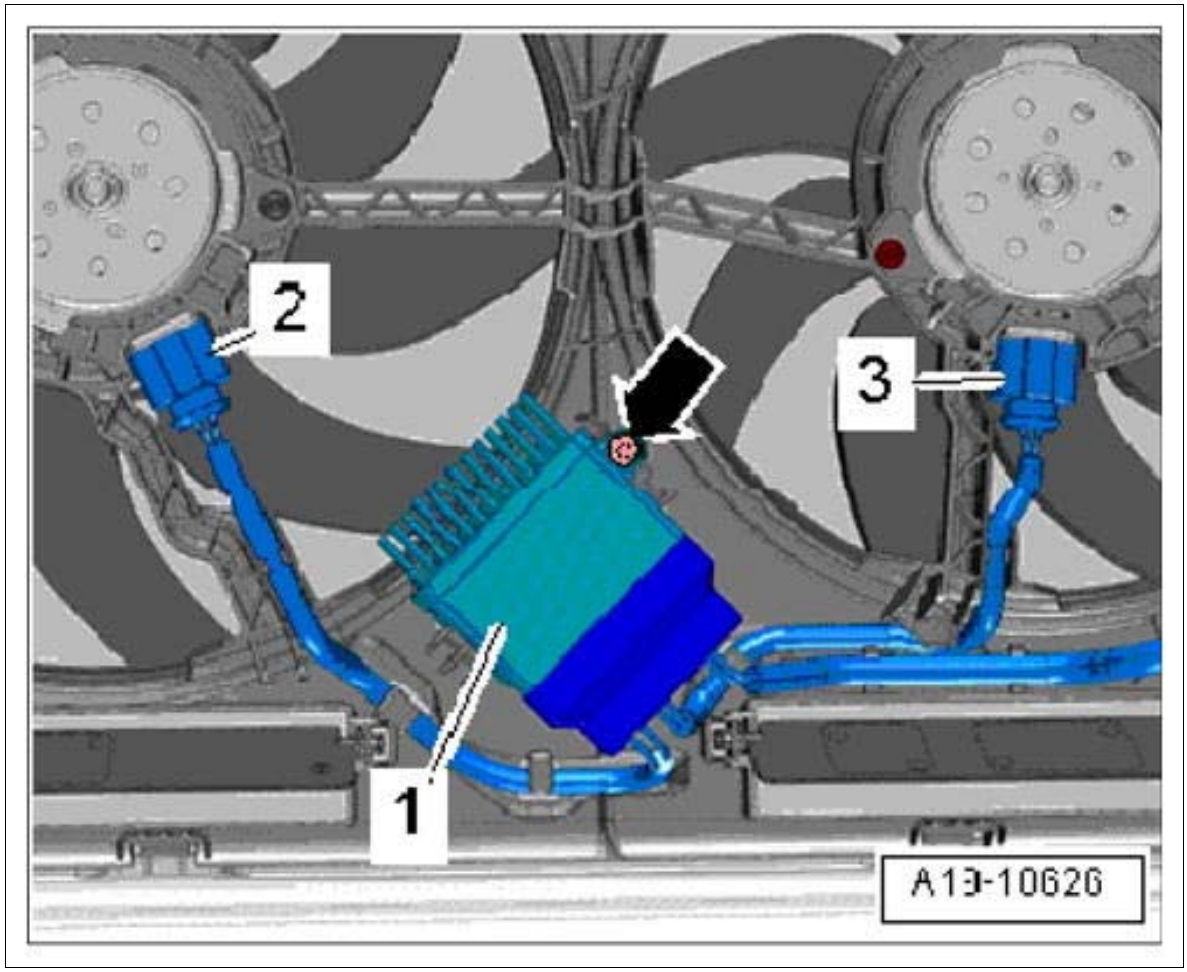

Courtesy of PORSCHE CARS NORTH AMERICA, INC.

3. Remove control unit for fan.
4. Use **counter-hold tool T10355** to turn the pulley to **TDC** position.

   The notch on the pulley and the marking on the chain housing cover must be opposite each other. → TDC marking on pulley

Fig 3: Turning Pulley To TDC Marking

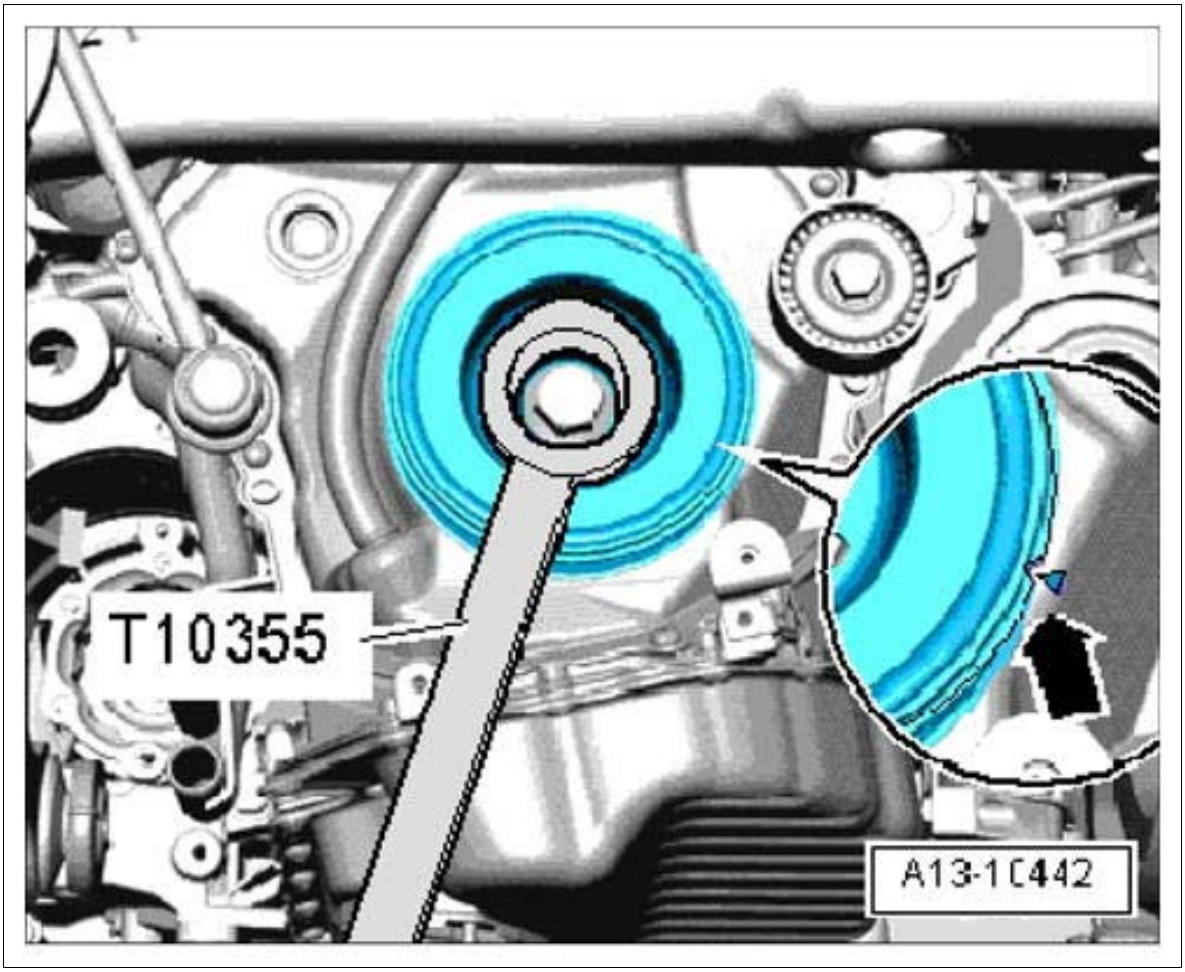

Courtesy of PORSCHE CARS NORTH AMERICA, INC.

5. Unscrew fastening screw for the pulley.

   Counter the pulley using counter-hold tool T10355.

WM 137619 REMOVING AND INSTALLING PULLEY (MACAN) > INSTALLING PULLEY

1. Coat sealing lip on the shaft sealing ring with engine oil.
2. Install pulley.
    1. 2.1. Position pulley.

       Check tooth contour -arrow -.
    2. 2.2. **Fit a new** fastening screw.

       The fastening screw is supplied with a new O-ring **-1-** .

       Coat O-ring with engine oil before fitting it.

Fig 1: Installing Pulley

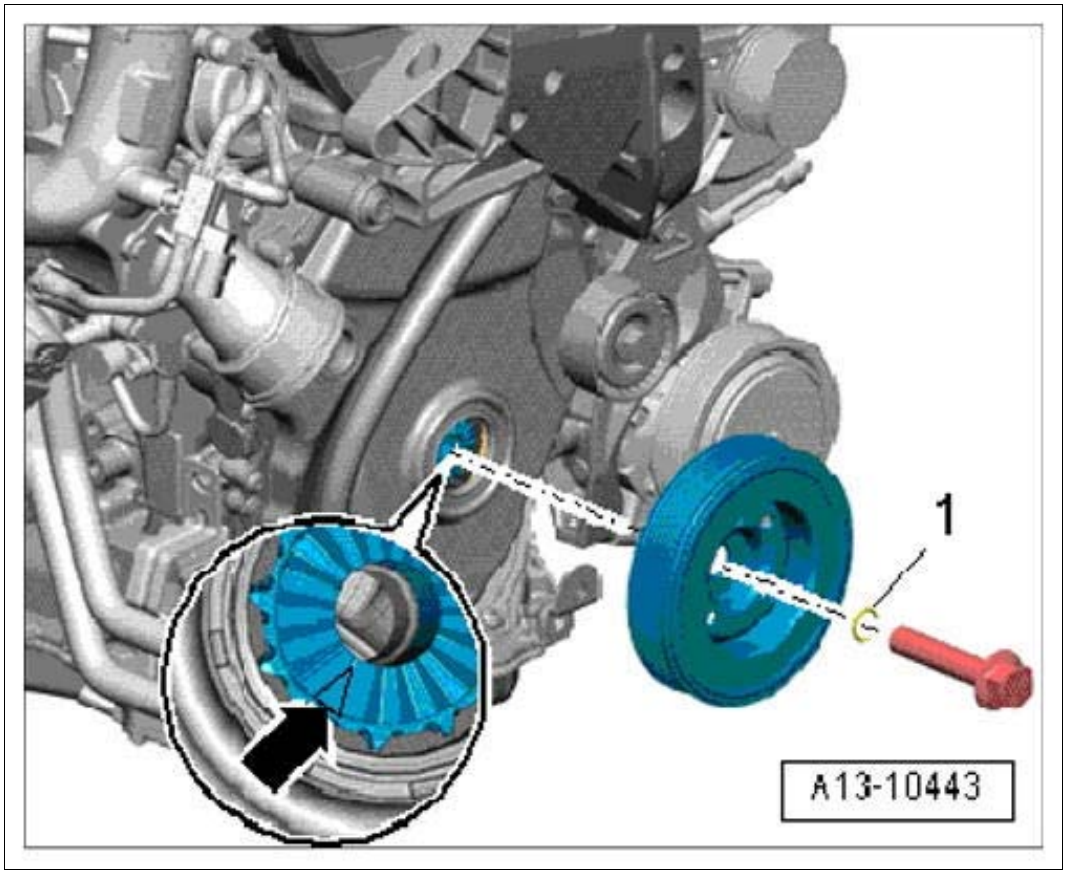

Courtesy of PORSCHE CARS NORTH AMERICA, INC.

3. Counter the pulley with **counter-hold tool T10355** and tighten fastening screw.

   Step 1:

   Step 2:

4. Install control unit for fan.

   1. 4.1. Position control unit **-1-** and fit and tighten fastening screw **-arrow-** .
   2. 4.2. Connect electric plug connections **-2 and 3-** .

Fig 2: Locating Fan Control Unit Screw

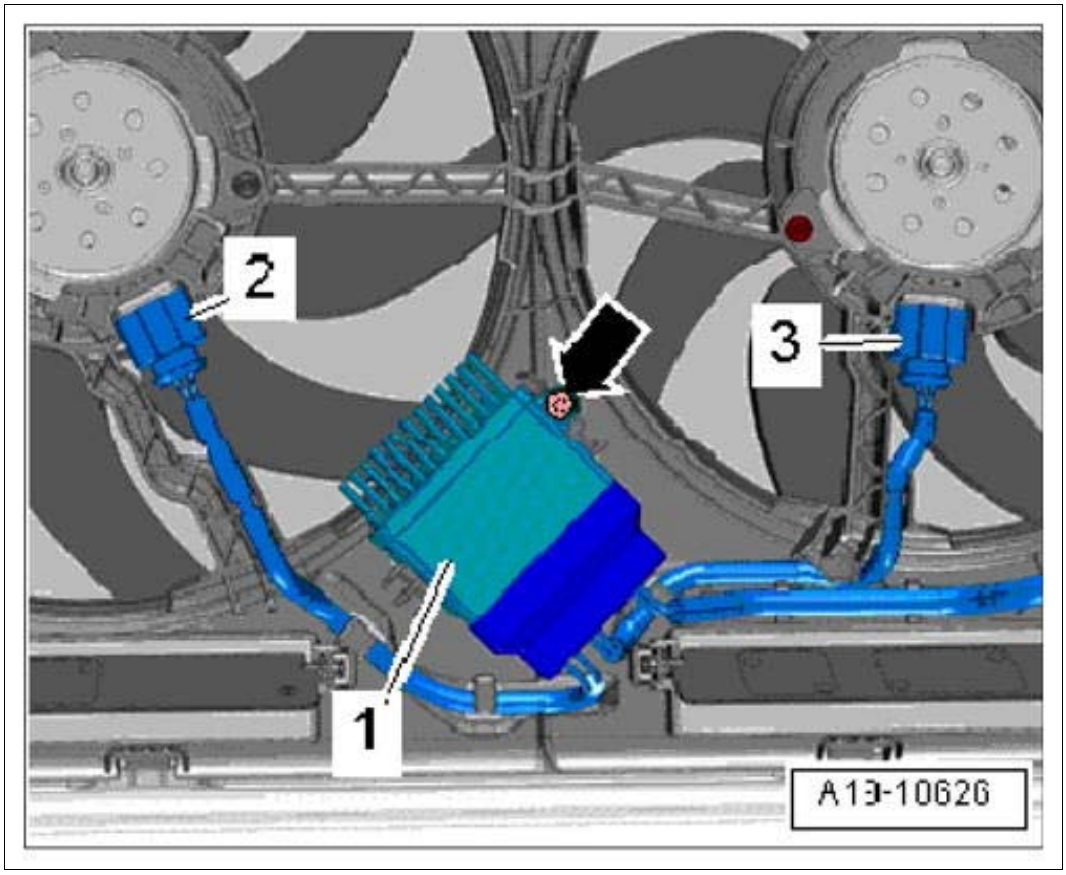

Courtesy of PORSCHE CARS NORTH AMERICA, INC.

5. Connect electric plug connection **-1-** and engage it in the holder.

Fig 3: Connecting Fan Control Unit Electric Plug Connection

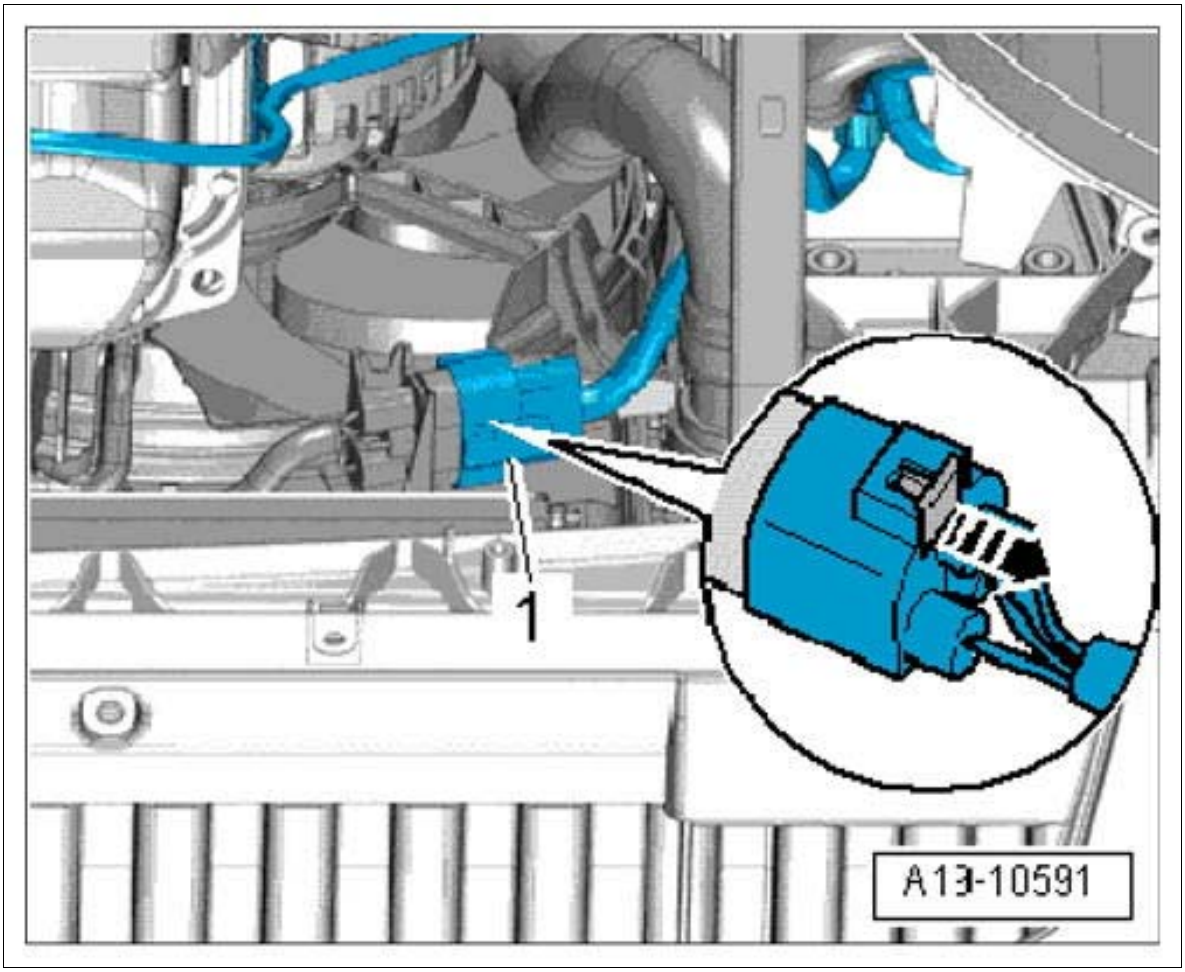

Courtesy of PORSCHE CARS NORTH AMERICA, INC.

WM 137619 REMOVING AND INSTALLING PULLEY (MACAN) > SUBSEQUENT WORK

1. Install drive belt. → Installing Drive Belt
2. Install engine cover (design cover).

WM 137801 CHECKING DRIVE BELT (MACAN) > CHECKING DRIVE BELT

NOTE: Drive belt removed incorrectly

- *Risk of damage to drive belt*

→ Only remove the drive belt when it is cold.

→ Replace damaged drive belt.

NOTE: Drive belt breaks and becomes jammed

- *Risk of damage to components (trim panels, electric cables, etc.)*
- *Sealing ring on crankshaft vibration balancer can start to leak*
- *Vibration balancer can overheat and lose its strength*

→ Following belt breakage, check adjacent components and the interior of the engine compartment for damage, and repair or replace damaged parts if necessary.

→ Find out why the belt broke. Check deflection rollers or crankshaft vibration balancer for prior damage.

→ If the drive belt is jammed, replace vibration balancer.

WARNING: Rotating components

- *Danger of limbs being trapped or severed*

→ Disconnect power supply to the drive motor of components or to the battery.

Information

- If spark plugs must be changed in the course of maintenance operations, the drive belt should be checked when the spark plugs are removed. The engine can then be cranked easier.

Information

- The following table indicates damage which necessitates replacement.

Fig 1: Identifying Drive Belts Damage Area

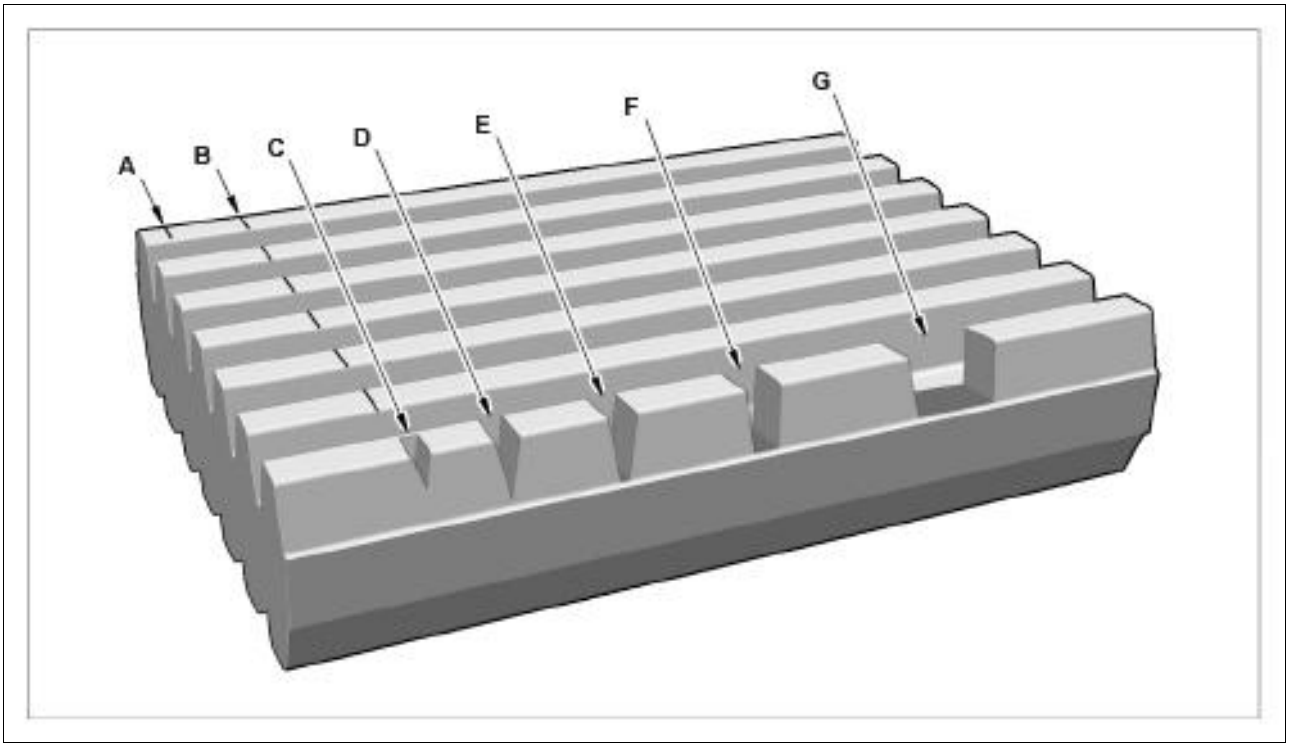

Courtesy of PORSCHE CARS NORTH AMERICA, INC.

Item	Type of damage	Explanation
-A-	Slight crack in a rib.	Drive belt is OK.
-B-	Hairline crack that runs across the entire belt width, or the butt seam is damaged.	Replace drive belt.
-C-	Crack running down to half of rib height.	Drive belt must be replaced if there is more than one crack running down to half of rib height.
-D-	Crack running to base of rib	Replace drive belt.
-E-	Crack running to traction cord, or edges so worn that the traction cord becomes visible.	Replace drive belt.
-F-	Rib detachment	Replace drive belt.
-G-	Rib fracture	Replace drive belt.

1. Using chalk, mark the drive belt in the area around the tensioning roller.
2. Turn engine at the vibration damper in rolling direction using a socket wrench until the chalk mark is at the same place again. While turning at the crankshaft, check the drive belt for signs of damage.

WM 137819 REMOVING AND INSTALLING DRIVE BELT (MACAN) > TOOLS

Designation	Type	Number	Description	
locking pin	VW tool	T10060 A		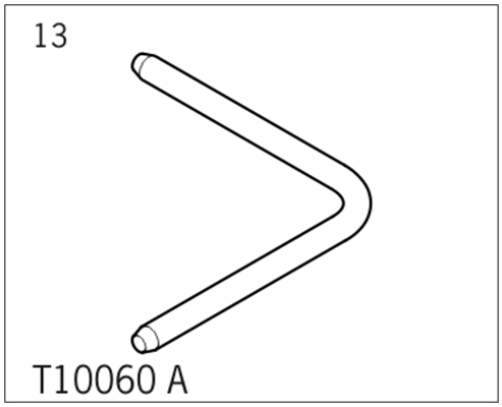

WM 137819 REMOVING AND INSTALLING DRIVE BELT (MACAN) > INFORMATION

1. Vibration damper
2. Belt tensioner
3. Generator
4. Air-conditioning compressor

Fig 1: Drive Belt Routing Diagram

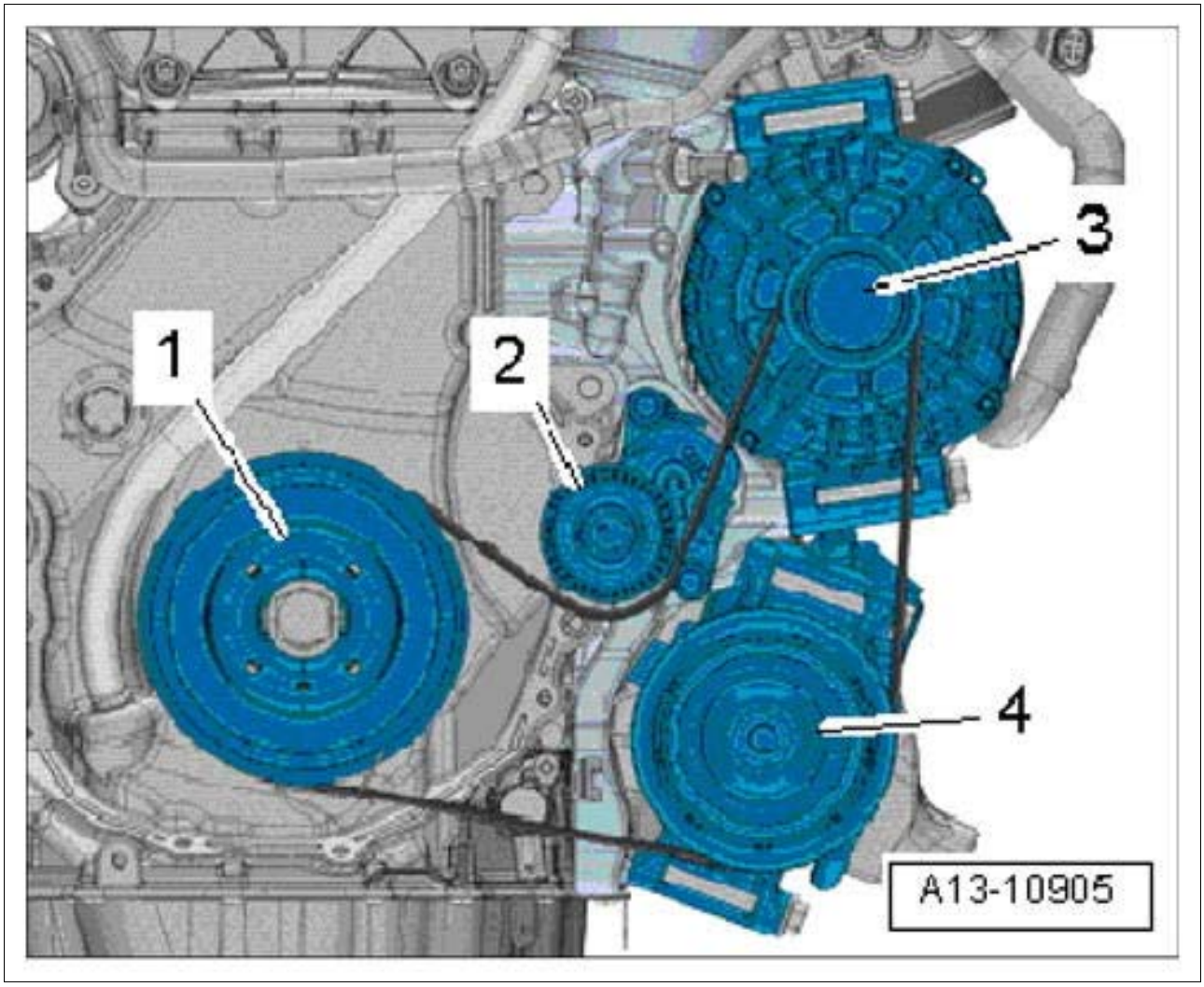

Courtesy of PORSCHE CARS NORTH AMERICA, INC.

WM 137819 REMOVING AND INSTALLING DRIVE BELT (MACAN) > PRELIMINARY WORK

1. Remove engine cover (design cover).

WM 137819 REMOVING AND INSTALLING DRIVE BELT (MACAN) > REMOVING DRIVE BELT

NOTE: Drive belt removed incorrectly

- *Risk of damage to drive belt*

→ Only remove the drive belt when it is cold.

→ Replace damaged drive belt.

NOTE: Drive belt breaks and becomes jammed

- *Risk of damage to components (trim panels, electric cables, etc.)*
- *Sealing ring on crankshaft vibration balancer can start to leak*
- *Vibration balancer can overheat and lose its strength*

→ Following belt breakage, check adjacent components and the interior of the engine compartment for damage, and repair or replace damaged parts if necessary.

→ Find out why the belt broke. Check deflection rollers or crankshaft vibration balancer for prior damage.

→ If the drive belt is jammed, replace vibration balancer.

WARNING: Rotating components

- *Danger of limbs being trapped or severed*

→ Disconnect power supply to the drive motor of components or to the battery.

Information

- Danger of irreparable damage if a previously used drive belt is set to move in the opposite rolling direction.

Before removing the drive belt, mark the rolling direction for re-installation with chalk or a felt-tipped pen.

1. Mark the rolling direction of the drive belt with chalk.
2. Remove drive belt.
    1. 2.1. Turn the belt tensioner in **-direction of arrow-** to relieve tension on the drive belt.
    2. 2.2. Lock the tensioning device using **locking pin T10060 A.**
    3. 2.3. Remove drive belt.

Fig 1: Removing Drive Belt

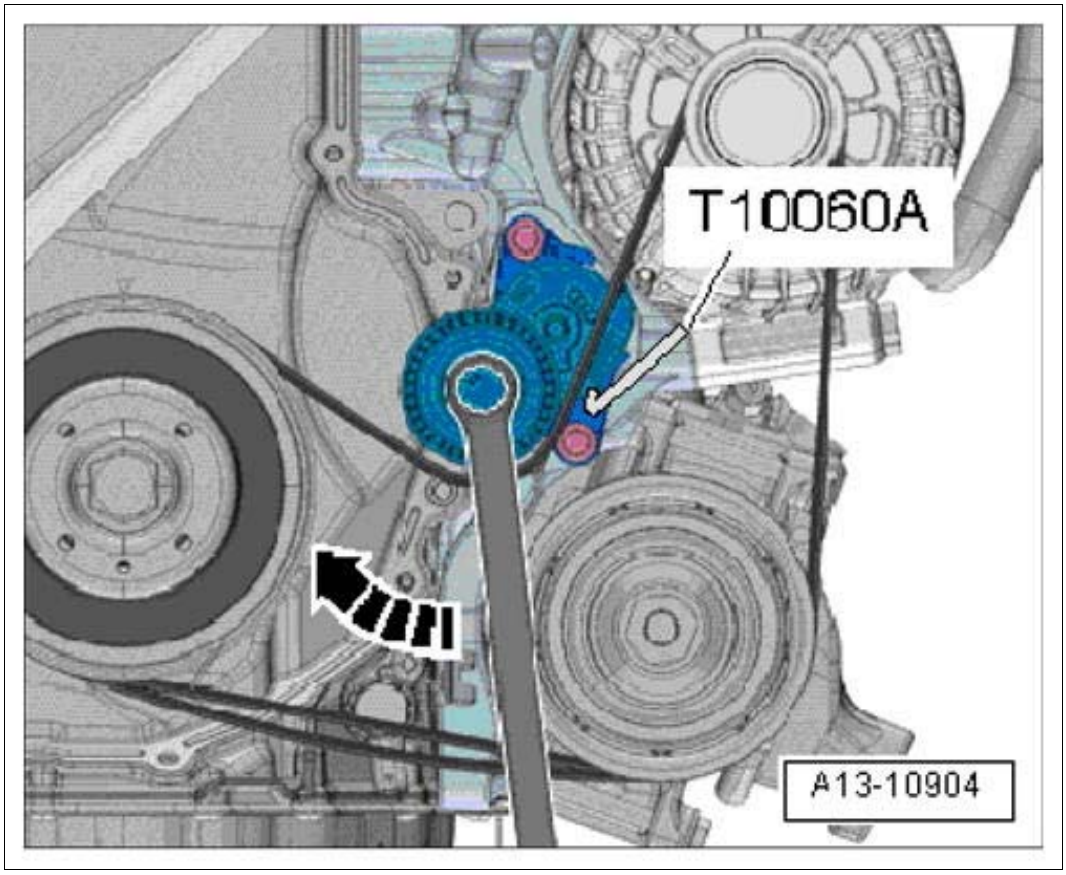

Courtesy of PORSCHE CARS NORTH AMERICA, INC.

WM 137819 REMOVING AND INSTALLING DRIVE BELT (MACAN) > INSTALLING DRIVE BELT

NOTE: Drive belt removed incorrectly

- *Risk of damage to drive belt*

→ Only remove the drive belt when it is cold.

→ Replace damaged drive belt.

NOTE: Drive belt breaks and becomes jammed

- *Risk of damage to components (trim panels, electric cables, etc.)*
- *Sealing ring on crankshaft vibration balancer can start to leak*
- *Vibration balancer can overheat and lose its strength*

→ Following belt breakage, check adjacent components and the interior of the engine compartment for damage, and repair or replace damaged parts if necessary.

→ Find out why the belt broke. Check deflection rollers or crankshaft vibration balancer for prior damage.

→ If the drive belt is jammed, replace vibration balancer.

WARNING: Rotating components

- *Danger of limbs being trapped or severed*

→ Disconnect power supply to the drive motor of components or to the battery.

1. Fit the drive belt. → Routing diagram

   Information

   1. Danger of irreparable damage if a previously used drive belt is set to move in the opposite rolling direction.

   Before removing the drive belt, mark the rolling direction for re-installation with chalk or a felt-tipped pen.

   If re-using a drive belt, check the rolling direction marking.

      1. Vibration damper
      2. Belt tensioner
      3. Generator
      4. Air-conditioning compressor

Fig 1: Drive Belt Routing Diagram

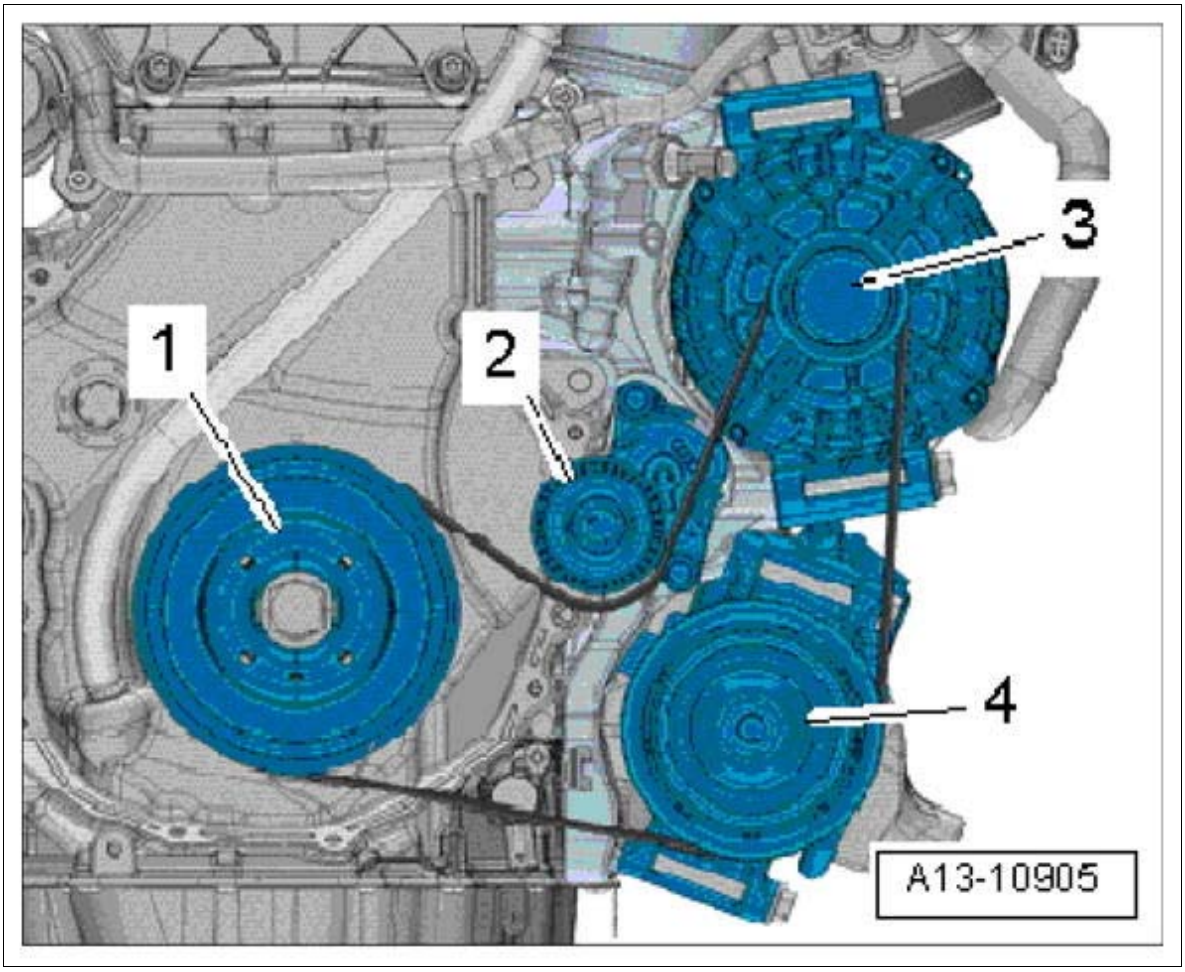

Courtesy of PORSCHE CARS NORTH AMERICA, INC.

2. Tension the drive belt.

    1. 2.1. Turn the belt tensioner in **-direction of arrow-** and pull out **locking pin T10060 A.**

    2. 2.2. Relieve the belt tensioner.

    3. 2.3. Check that the drive belt is fitted correctly.

Fig 2: Installing Drive Belt

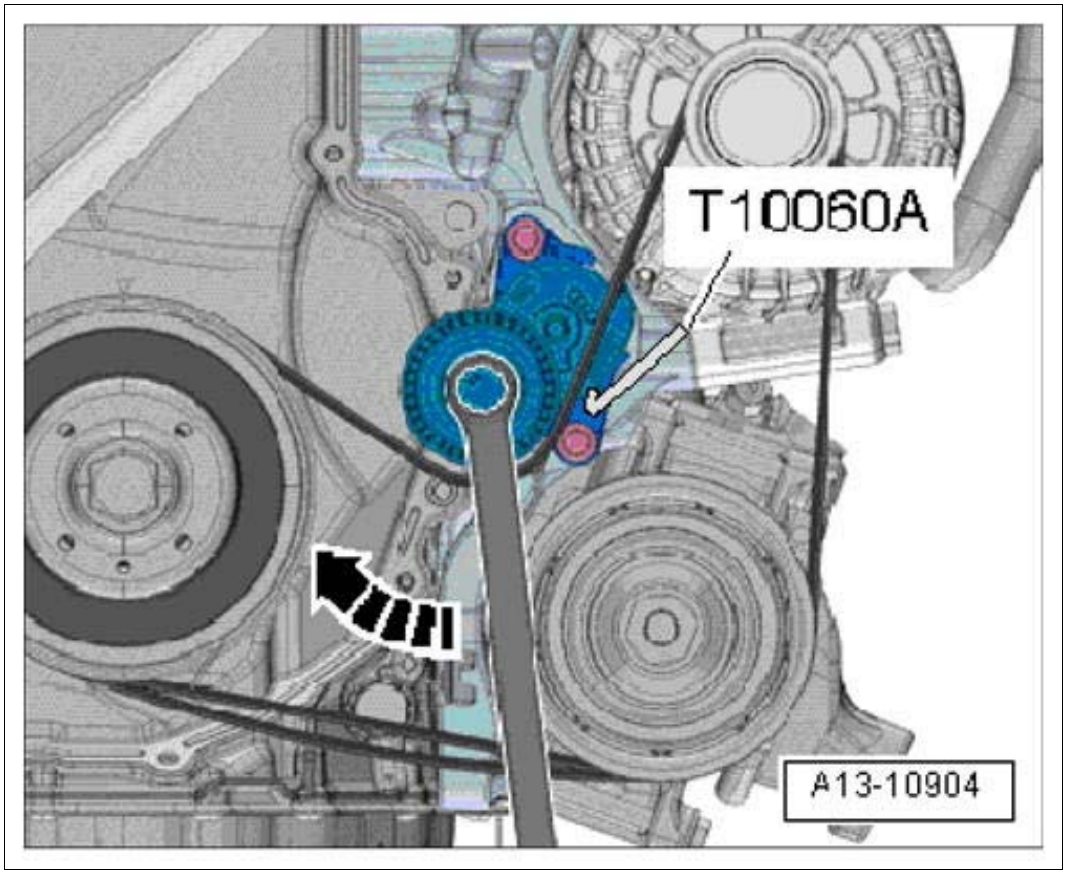

Courtesy of PORSCHE CARS NORTH AMERICA, INC.

3. Start the engine and check that the drive belt runs correctly.

WM 137819 REMOVING AND INSTALLING DRIVE BELT (MACAN) > SUBSEQUENT WORK

1. Install engine cover (design cover).

WM 150505 CHECKING AND ADJUSTING CAMSHAFTS (MACAN, MACAN S, MACAN TURBO) > TOOLS

Designation	Type	Number	Description	
Dial gauge	Commercially available tool	**Nr.136 Pos.1**		
Dial gauge adapter	VW tool	**T10170 A**		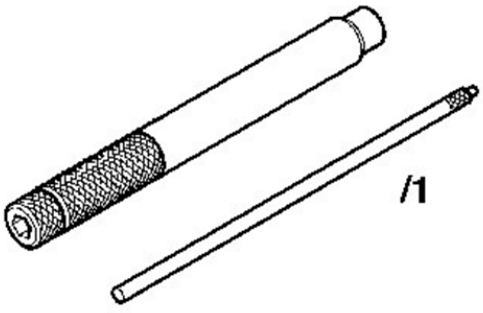

counter-hold tool	VW tool	**T10355**		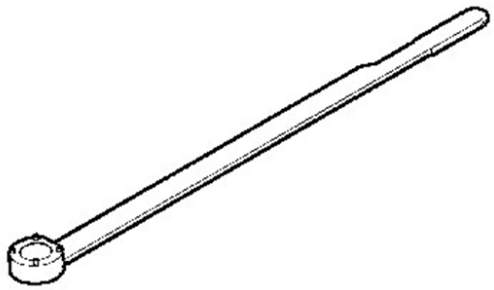
Lever	VW tool	**T40243**		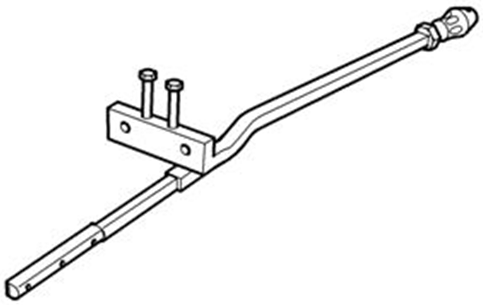
adapter	VW tool	**T40266**		
staking tool	VW tool	**T40267**		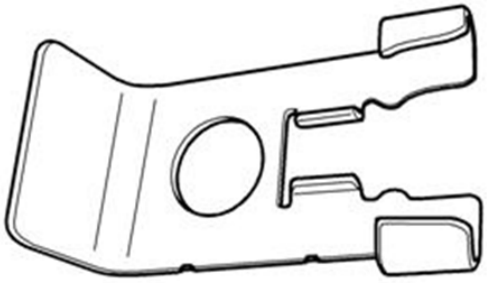

Camshaft clamp	VW tool	**T40271**		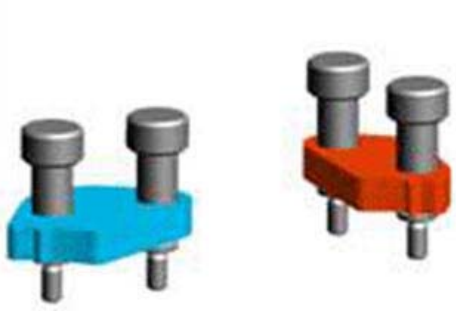

WM 150505 CHECKING AND ADJUSTING CAMSHAFTS (MACAN, MACAN S, MACAN TURBO) > CHECKING CAMSHAFTS

NOTE: Timing not set correctly

- *Risk of engine damage*
- *Rough running engine*
- *Loss of engine power*

→ Do not use force when fitting the staking tool.

→ Make sure that the gap is equal on both sides.

→ When inserting the staking tools, do not use force to turn the camshafts against any resistance.

→ The engine must be exactly at top dead center.

→ The opposite cylinder must be at ignition TDC.

1. Remove engine cover (design cover).
2. Remove front underbody cover. → 519219 REMOVING AND INSTALLING COVER FOR FRONT UNDERBODY
3. Remove upper timing-case cover. → 153319 REMOVING AND INSTALLING TIMING-CASE COVER
4. Use **counter-hold tool T10355** to turn the crankshaft in direction of rotation of the engine until the markings **-arrows-** are at the top.

   Markings on timing chain

Fig 1: Identifying TDC Position Of Cylinder 1

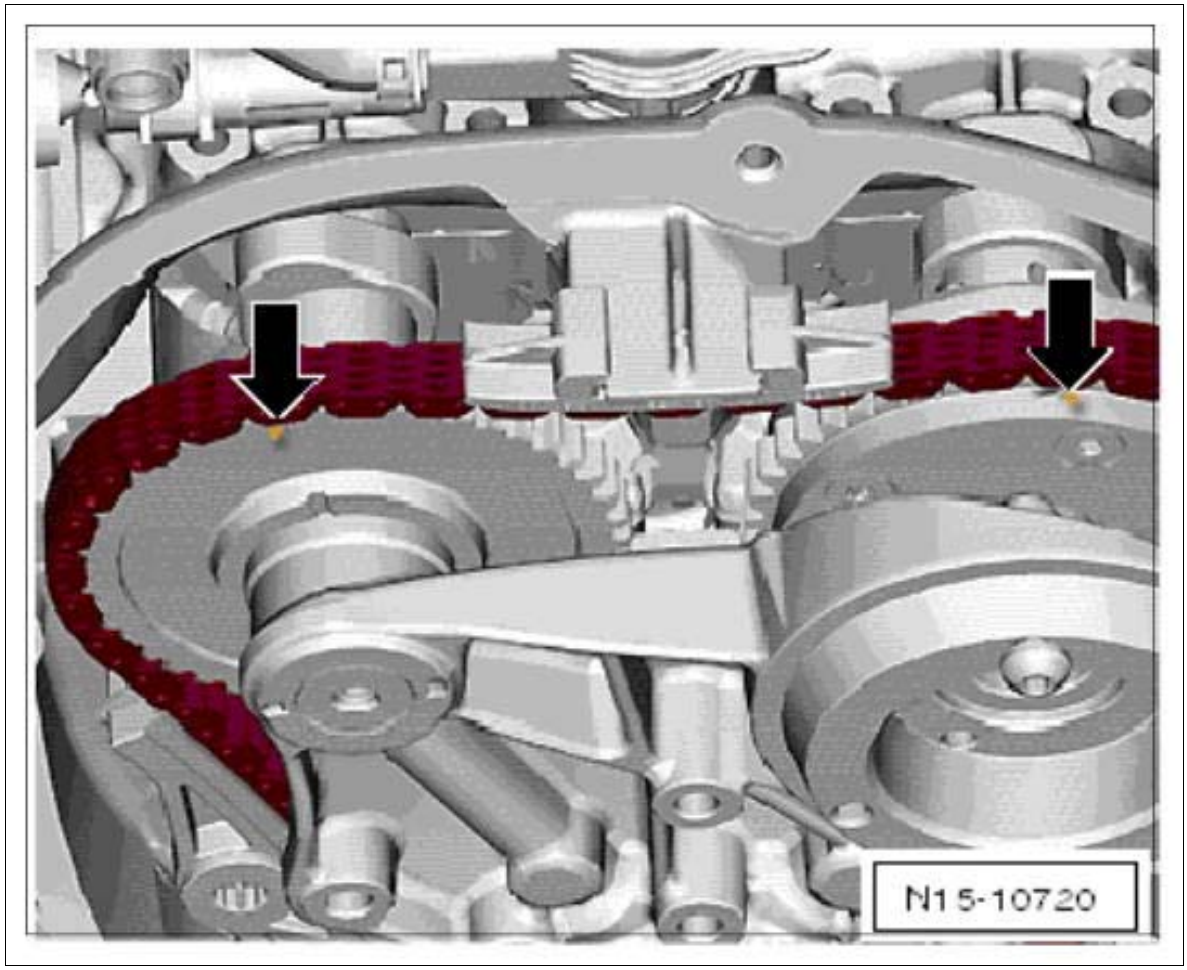

Courtesy of PORSCHE CARS NORTH AMERICA, INC.

5. Remove spark plug for cylinder 1. → 287020 REMOVING AND INSTALLING SPARK PLUGS
6. Set TDC position of cylinder 1.
    1. 6.1. **Dial gauge adapter T10170 A** must be screwed as far as it will go into the spark plug thread.
    2. 6.2. **Dial gauge Nr.136 Pos.1** with **dial gauge adapter T10170 A** must be inserted as far as it will go and secured with a clamping nut **-arrow-** .

        Information

        If the crankshaft was turned beyond the TDC position, turn the pulley another two turns in **direction of rotation of the engine.**

        Do not turn engine against the direction of rotation of the engine.

        Information

        Use a ratchet with socket-wrench insert a/f 24 or **counter-hold tool T10355** to turn the pulley.
    3. 6.3. Turn the crankshaft slowly in direction of rotation of the engine until maximum

pointer deflection (reversing point of the pointer) is reached.

4. 6.4. Once maximum pointer deflection is reached, the piston is at top dead center.

Fig 2: Identifying TDC Position Of Cylinder 1

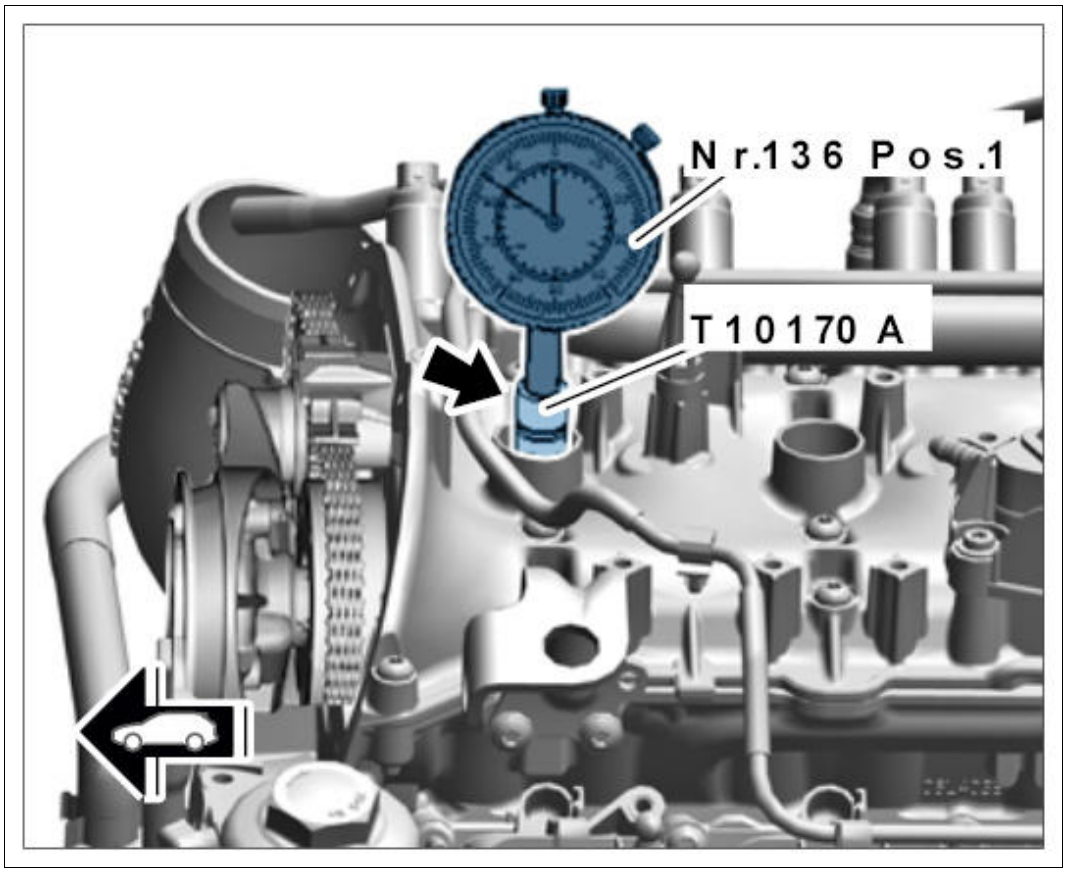

Courtesy of PORSCHE CARS NORTH AMERICA, INC.

7. Check markings.

    1. 7.1. The notch on the pulley and the marking on the lower timing-case cover must be aligned. **-arrow-**
    2. 7.2. The markings **-1-** on the camshaft sprockets must be facing upwards.

Fig 3: Identifying Top Dead Center Markings

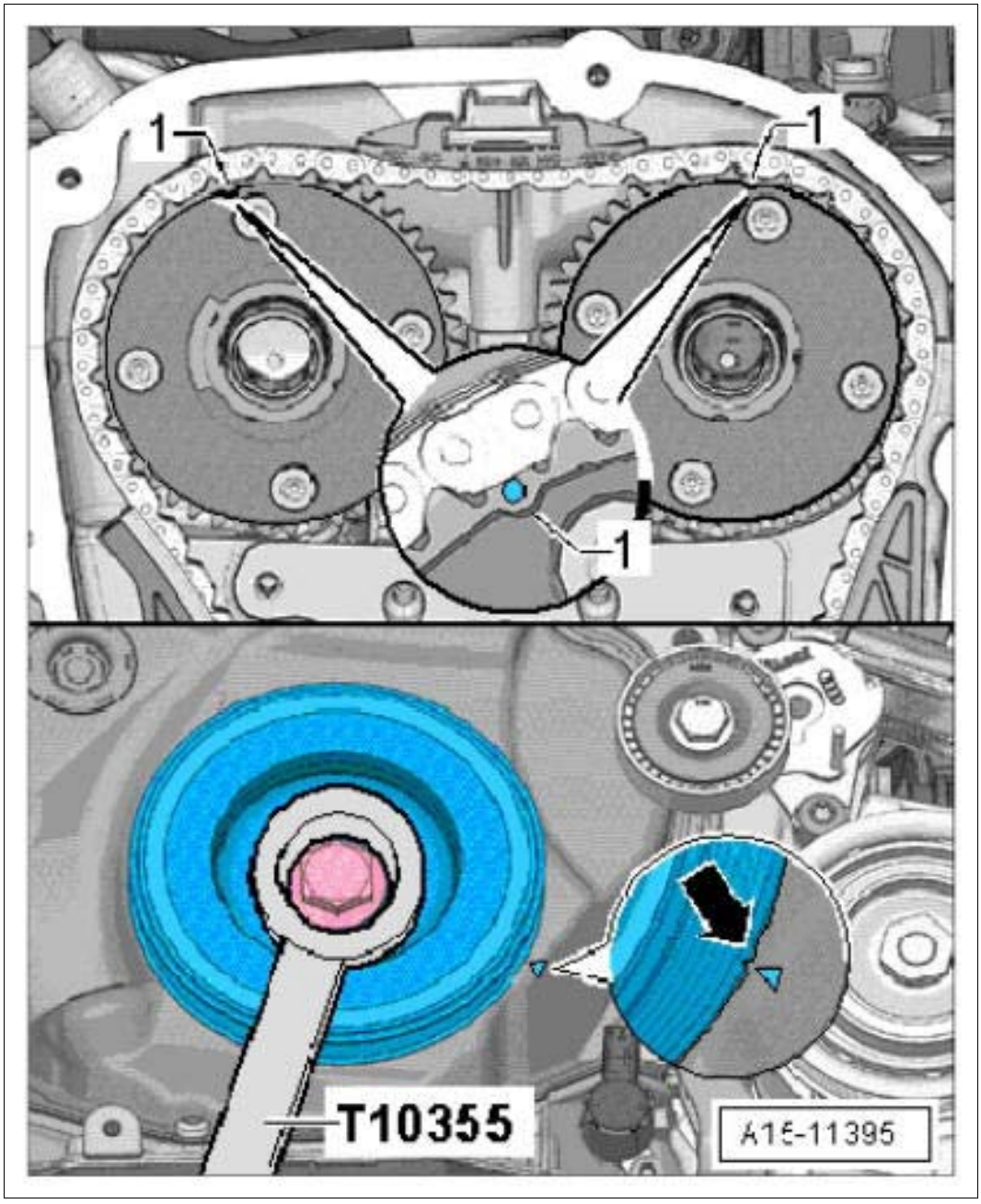

Courtesy of PORSCHE CARS NORTH AMERICA, INC.

8. Measure the distance from the edge **-1-** to the marking **-2-** on the outlet camshaft sprocket.

   Information

   An offset from one tooth indicates a deviation from the setpoint value of approx. 6 mm.

   If an offset is detected, the timing chain must be re-fitted.

   Nominal value: 74... 77 mm.

Fig 4: Measuring Outlet Camshaft Distance

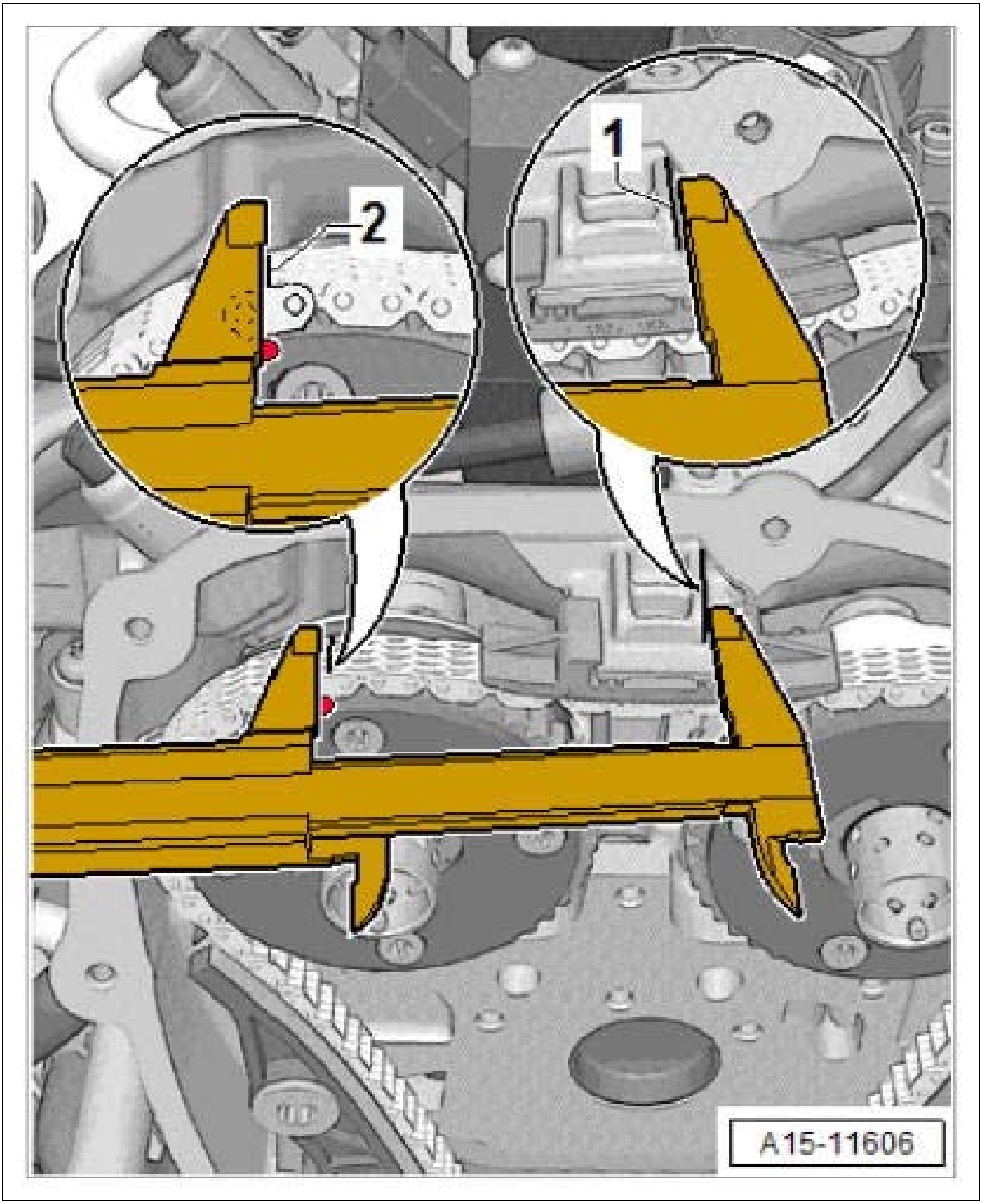

Courtesy of PORSCHE CARS NORTH AMERICA, INC.

9. Once the nominal value is reached, measure the distance between the marking on the outlet camshaft sprocket **-3-** and the marking on the intake camshaft sprocket **-4-** .

Information

An offset from one tooth indicates a deviation from the setpoint value of approx. 6 mm.

If an offset is detected, the timing chain must be re-fitted.

Nominal value: 124... 127 mm.

Fig 5: Measuring Sprockets Markings Distance

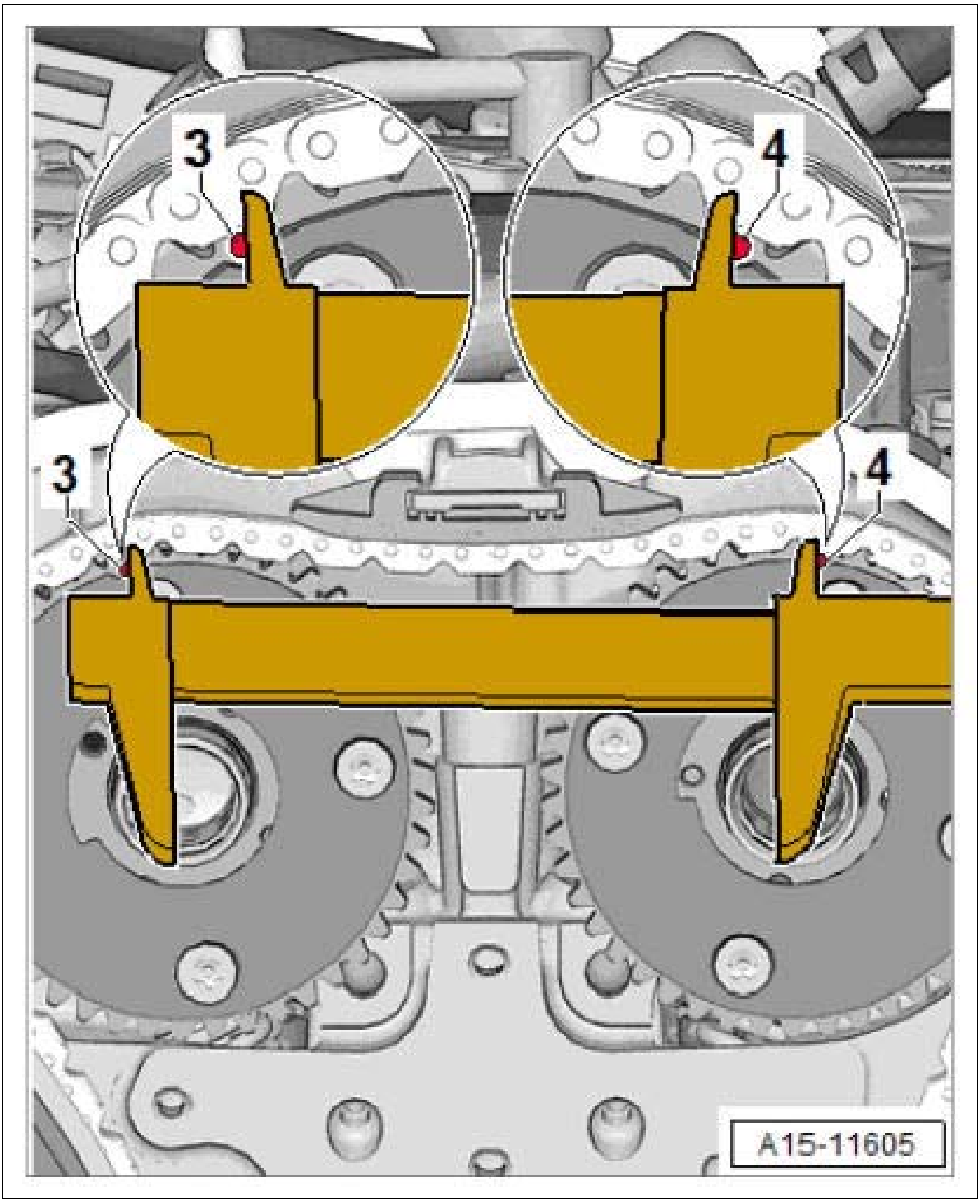

Courtesy of PORSCHE CARS NORTH AMERICA, INC.

WM 150505 CHECKING AND ADJUSTING CAMSHAFTS (MACAN, MACAN S, MACAN TURBO) > ADJUSTING CAMSHAFTS

NOTE: Timing not set correctly

- *Risk of engine damage*
- *Rough running engine*
- *Loss of engine power*

→ Do not use force when fitting the staking tool.

→ Make sure that the gap is equal on both sides.

→ When inserting the staking tools, do not use force to turn the camshafts against any resistance.

→ The engine must be exactly at top dead center.

→ The opposite cylinder must be at ignition TDC.

1. Remove engine cover (design cover).
2. Remove front underbody cover. → 519219 REMOVING AND INSTALLING COVER FOR FRONT UNDERBODY
3. Remove upper timing-case cover. → 153319 REMOVING AND INSTALLING TIMING-CASE COVER
4. Remove camshaft actuators. → 158419 REMOVING AND INSTALLING ACTUATOR FOR CAMSHAFT
5. Unscrew fastening screws **-arrows-** and remove bearing saddle.

Fig 1: Identifying Bearing Saddle

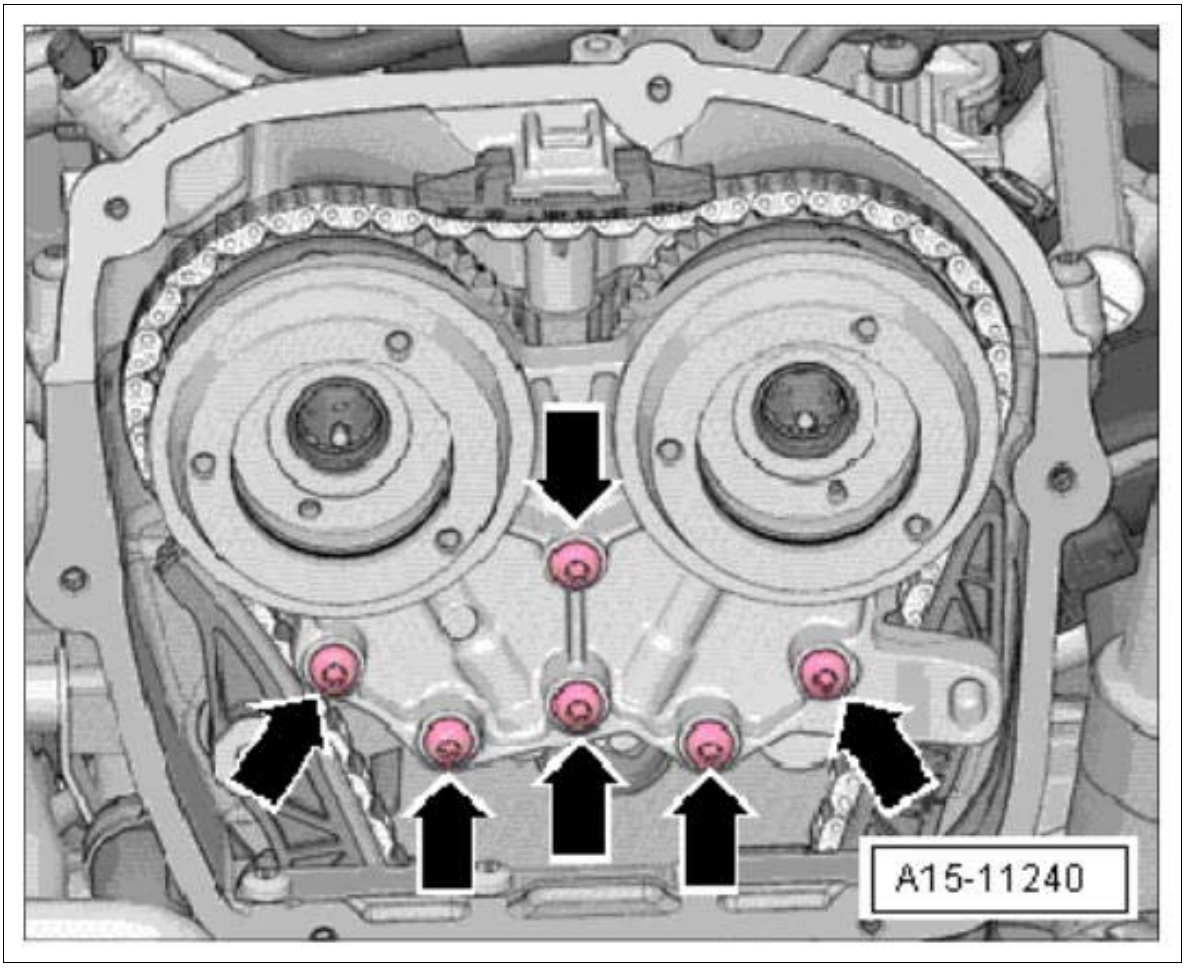

Courtesy of PORSCHE CARS NORTH AMERICA, INC.

6. Remove stopper **-arrow-** .

Fig 2: Identifying Chain Tensioner

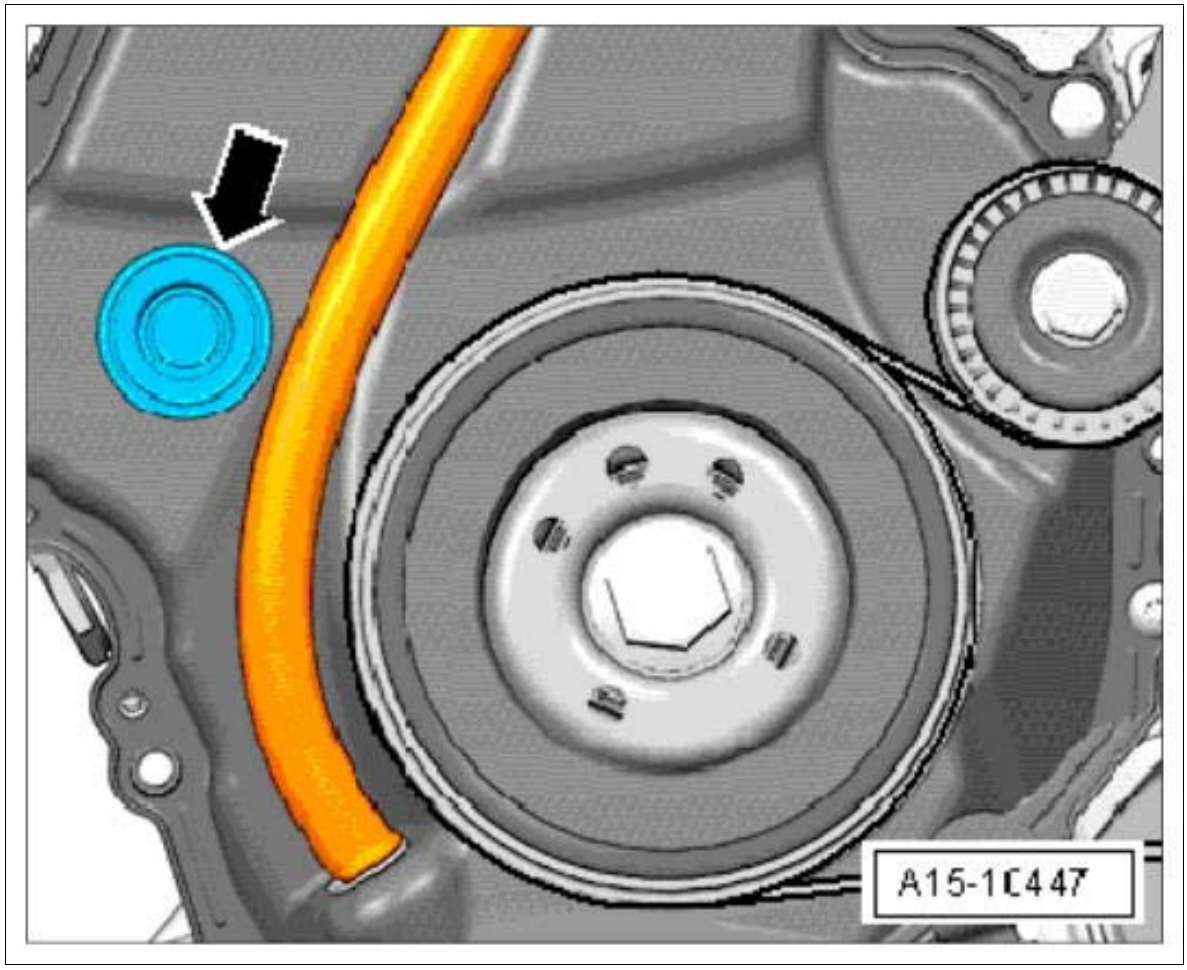

Courtesy of PORSCHE CARS NORTH AMERICA, INC.

7. Unscrew fastening screws **-arrows-** .

Fig 3: Identifying Chain Tensioner Screws

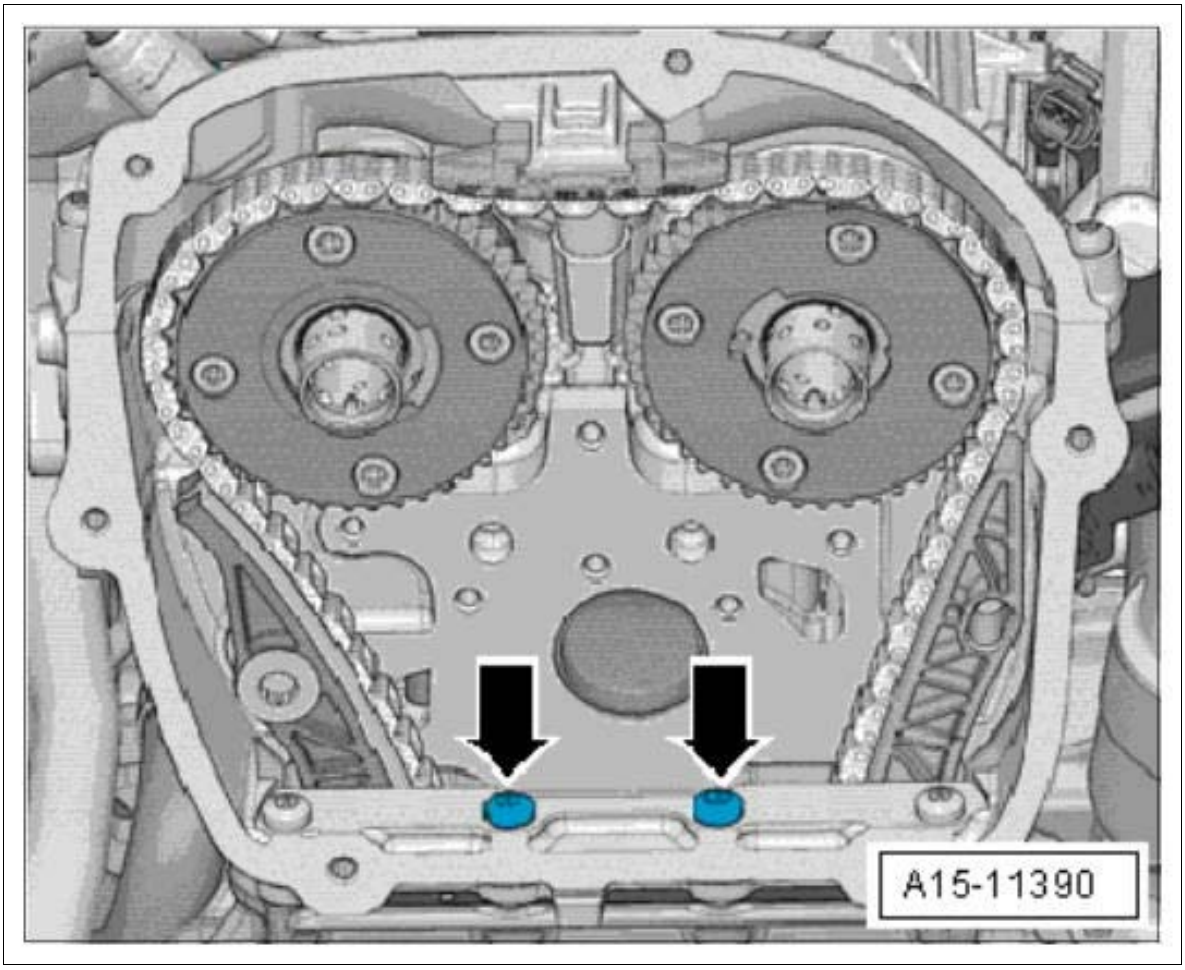

Courtesy of PORSCHE CARS NORTH AMERICA, INC.

8. Tighten chain tensioner.
    1. 8.1. **Lever T40243** must now be screwed in. **-arrows-**
    2. 8.2. Press and hold the circlip **-1-** on the chain tensioner.
    3. 8.3. **Lever T40243** must now be pressed slowly in **-direction of arrow-** and held securely.

Fig 4: Tightening Chain Tensioner

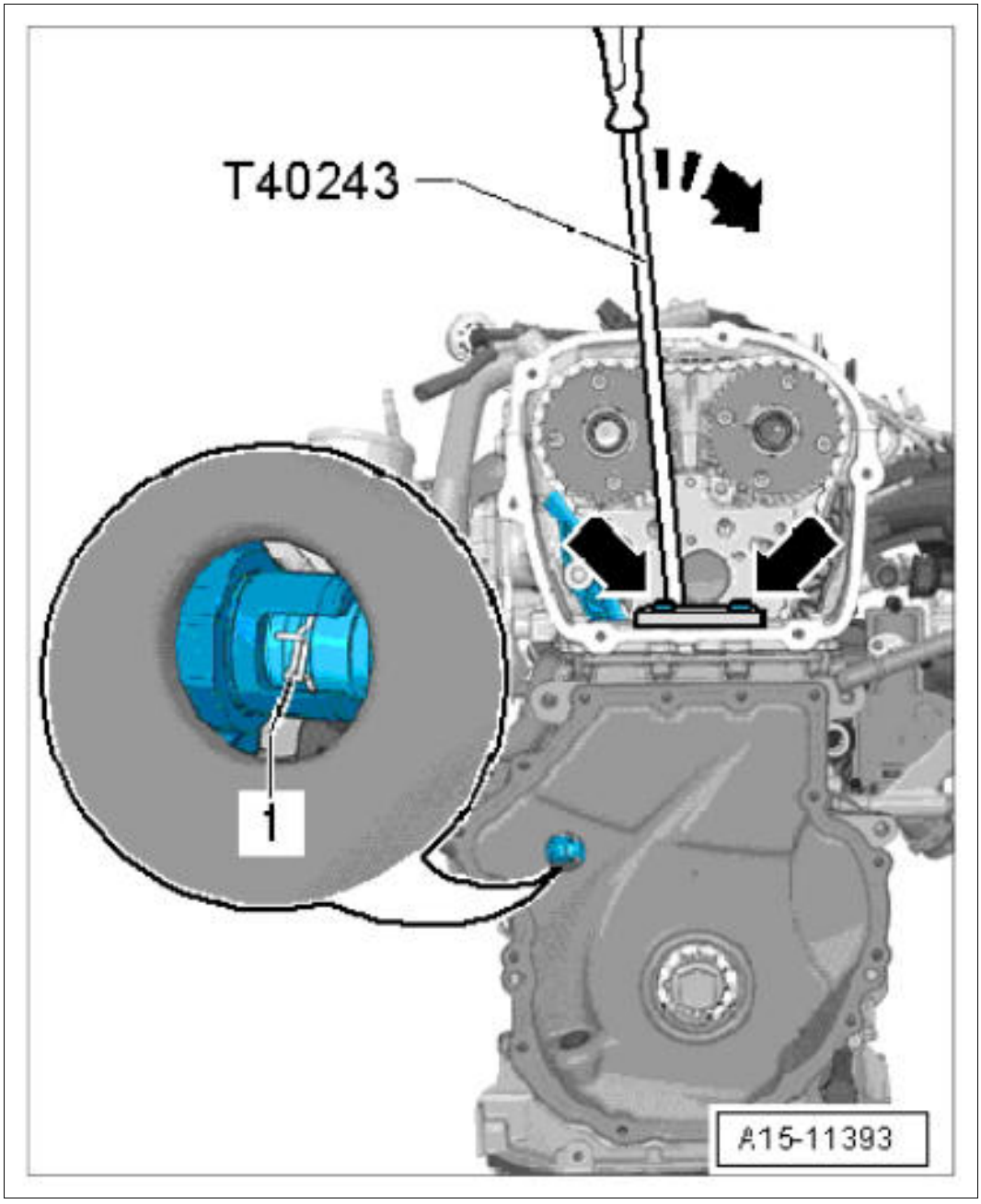

Courtesy of PORSCHE CARS NORTH AMERICA, INC.

9. Secure the chain tensioner with staking tool T40267.

Fig 5: Securing Chain Tensioner

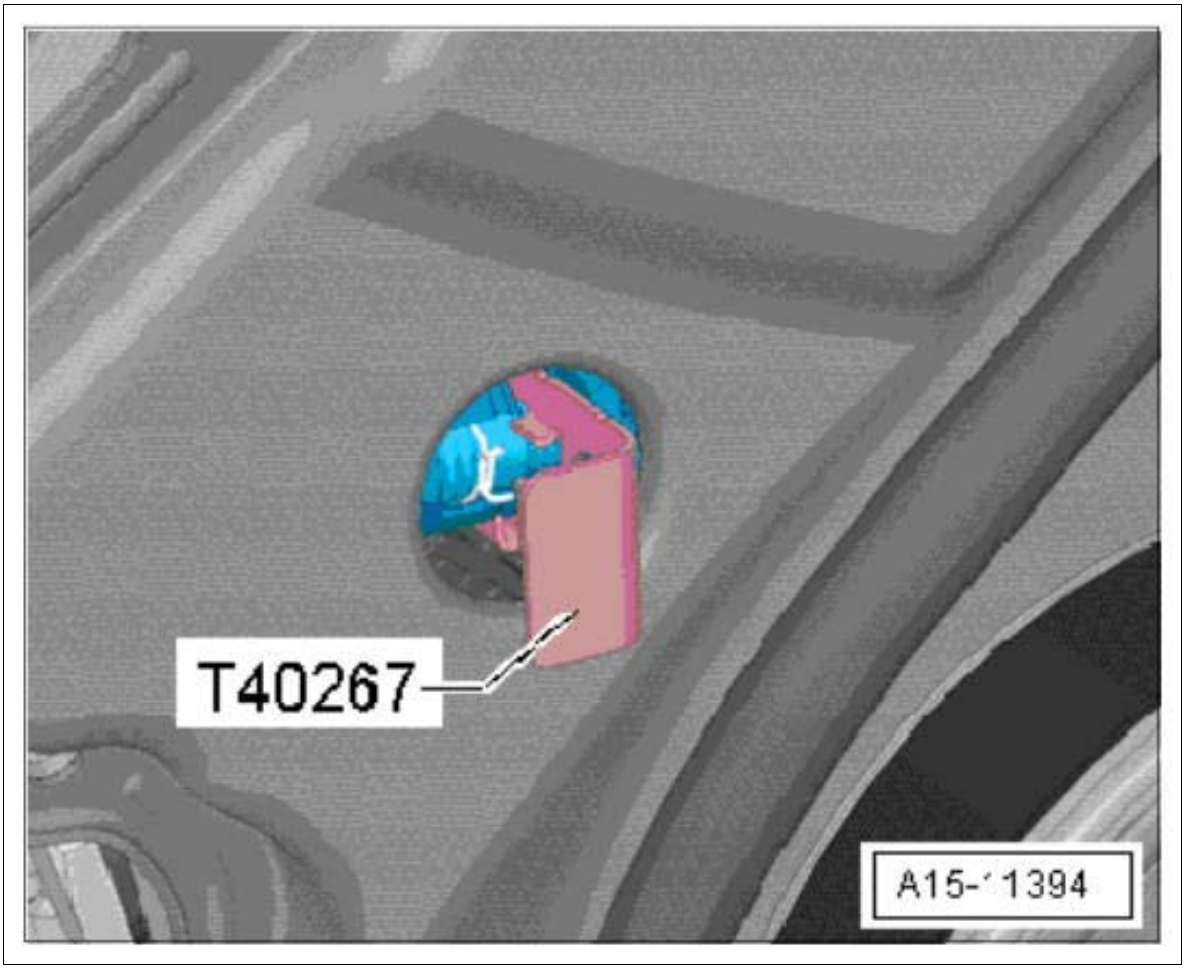

Courtesy of PORSCHE CARS NORTH AMERICA, INC.

10. **Lever T40243** must now be removed.
11. **Camshaft clamp T40271** /2 must be screwed onto the cylinder head and then pushed into the toothing on the sprocket in **-direction of arrow 2-** .

    Use **adapter T40266** to turn the intake camshaft in **-direction of arrow 1-** if necessary.

Fig 6: Securing Intake Camshaft

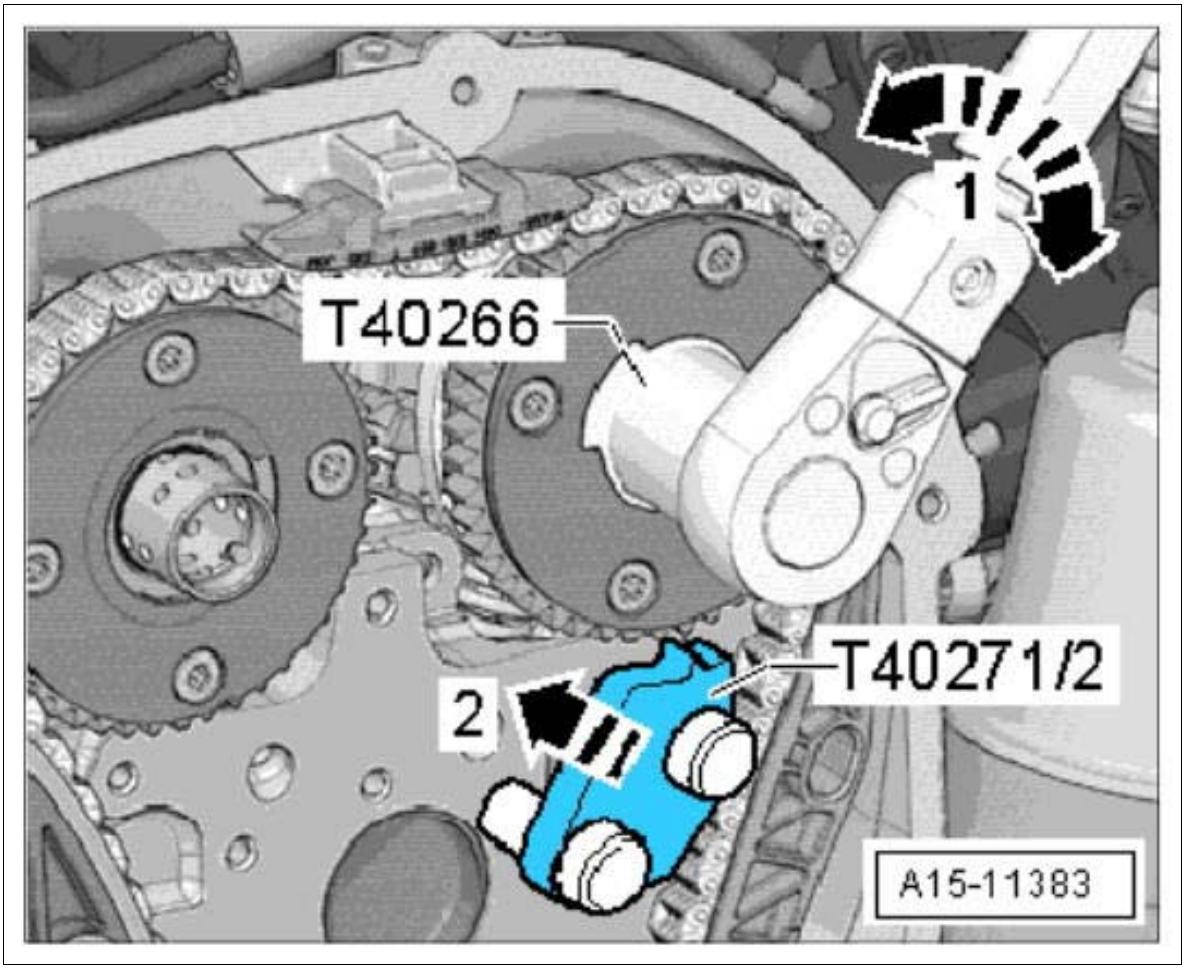

Courtesy of PORSCHE CARS NORTH AMERICA, INC.

12. Unscrew guide pin **-1-** and guide tensioning rail **-2-** down.

Fig 7: Loosening Tensioning Rail

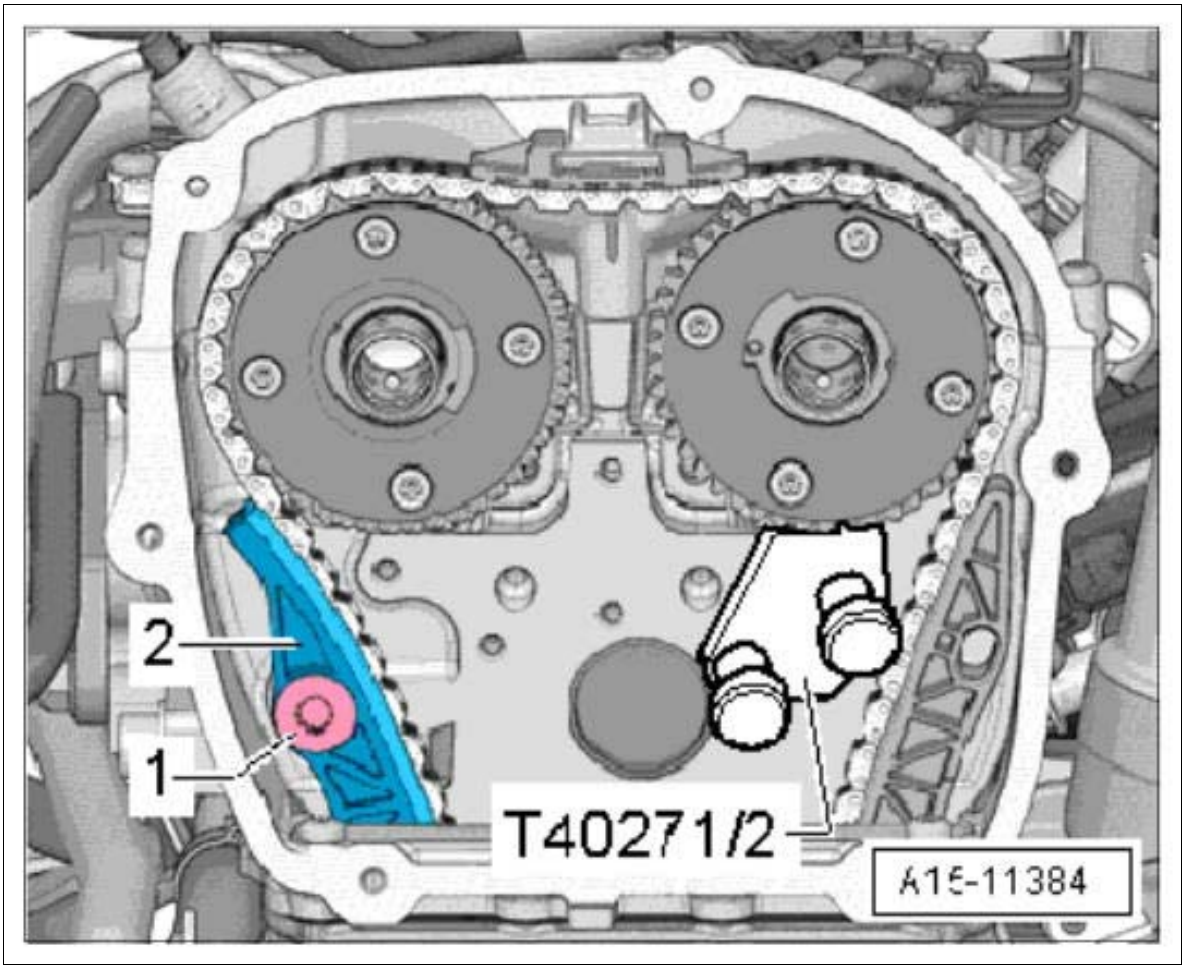

Courtesy of PORSCHE CARS NORTH AMERICA, INC.

13. Secure the outlet camshaft.

    1. 13.1. **The camshaft clamp T40271** /1 must be screwed onto the cylinder head. → Securing outlet camshaft

    2. 13.2. Use **adapter T40266** to turn the outlet camshaft in **-direction of arrow 1-** and push **camshaft clamp T40271** /1 onto the toothing in **-direction of arrow 2-** .

Fig 8: Securing Outlet Camshaft

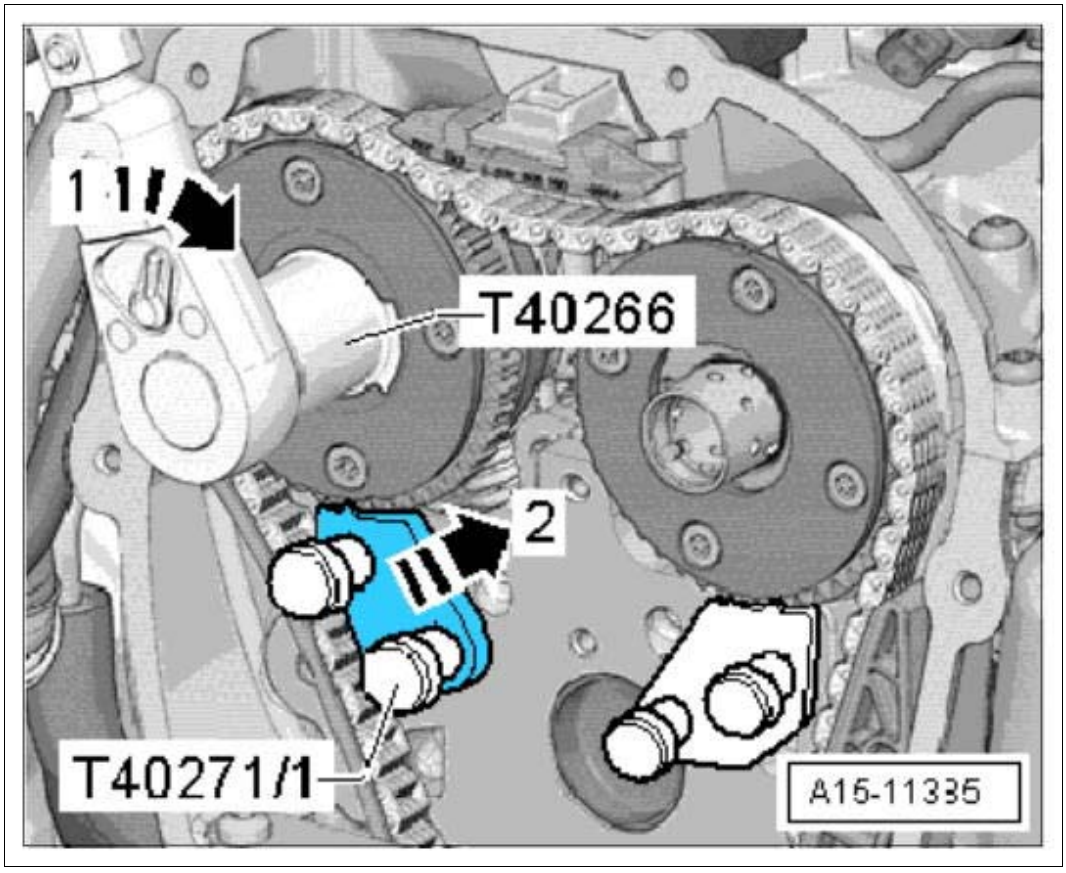

Courtesy of PORSCHE CARS NORTH AMERICA, INC.

14. Release the catch and press upper guide rail **-arrow-** forward and off.

Fig 9: Pressing Upper Guide Rail

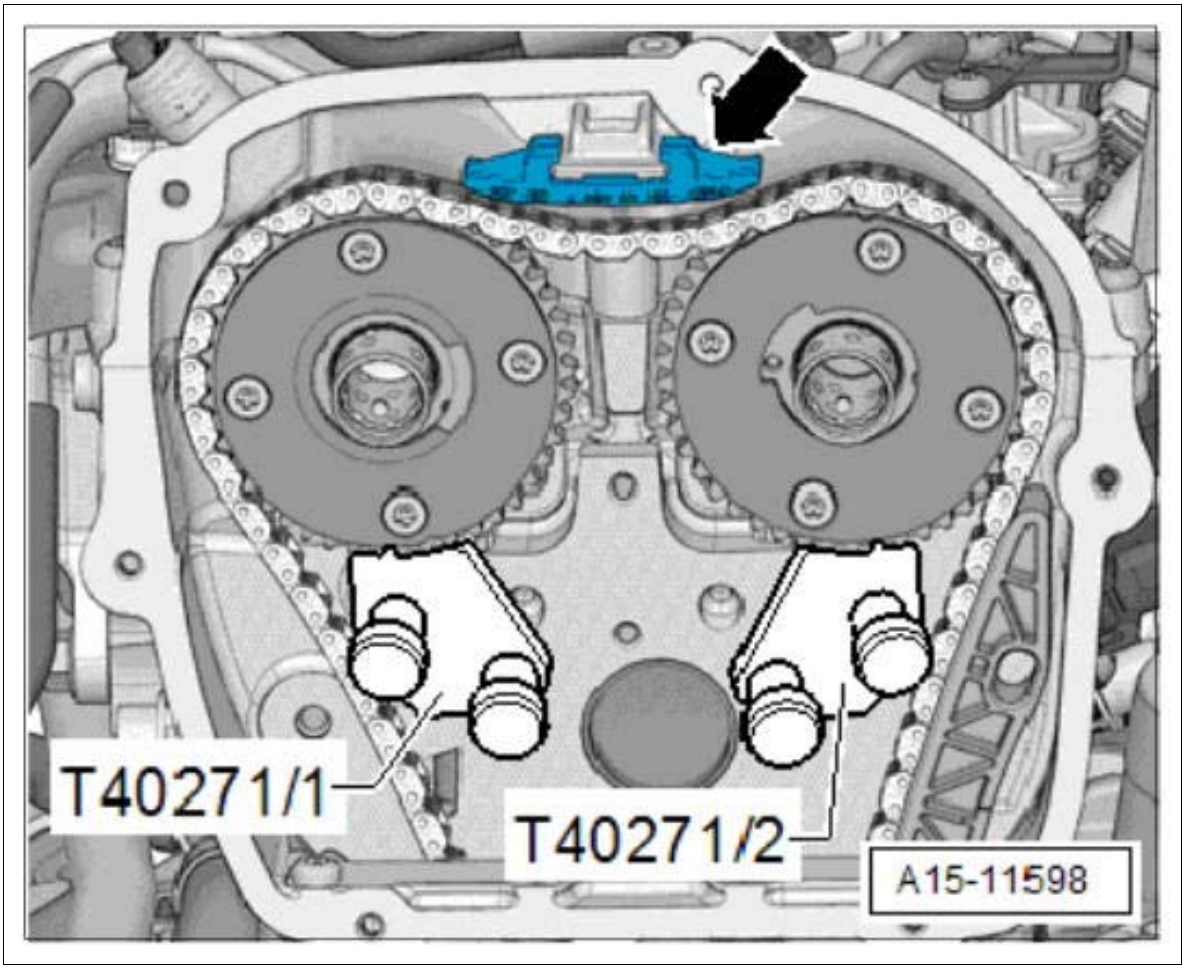

Courtesy of PORSCHE CARS NORTH AMERICA, INC.

15. Re-position timing chain.

    1. 15.1. The colored chain links must match the markings on the sprockets. **-1-**

Fig 10: Identifying Markings On Timing Chain

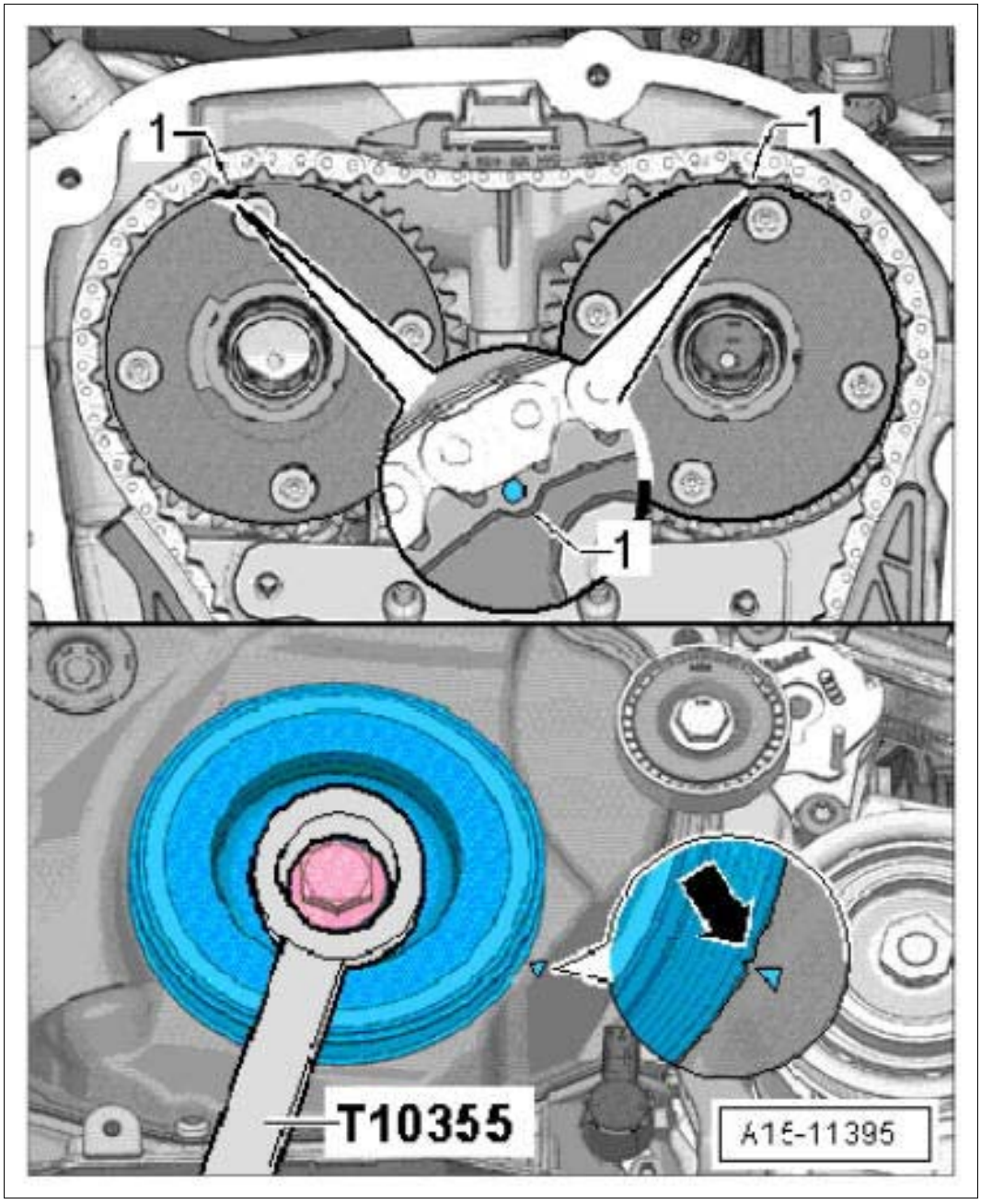

Courtesy of PORSCHE CARS NORTH AMERICA, INC.

16. Install upper guide rail **-arrow-** .

Fig 11: Installing Upper Guide Rail

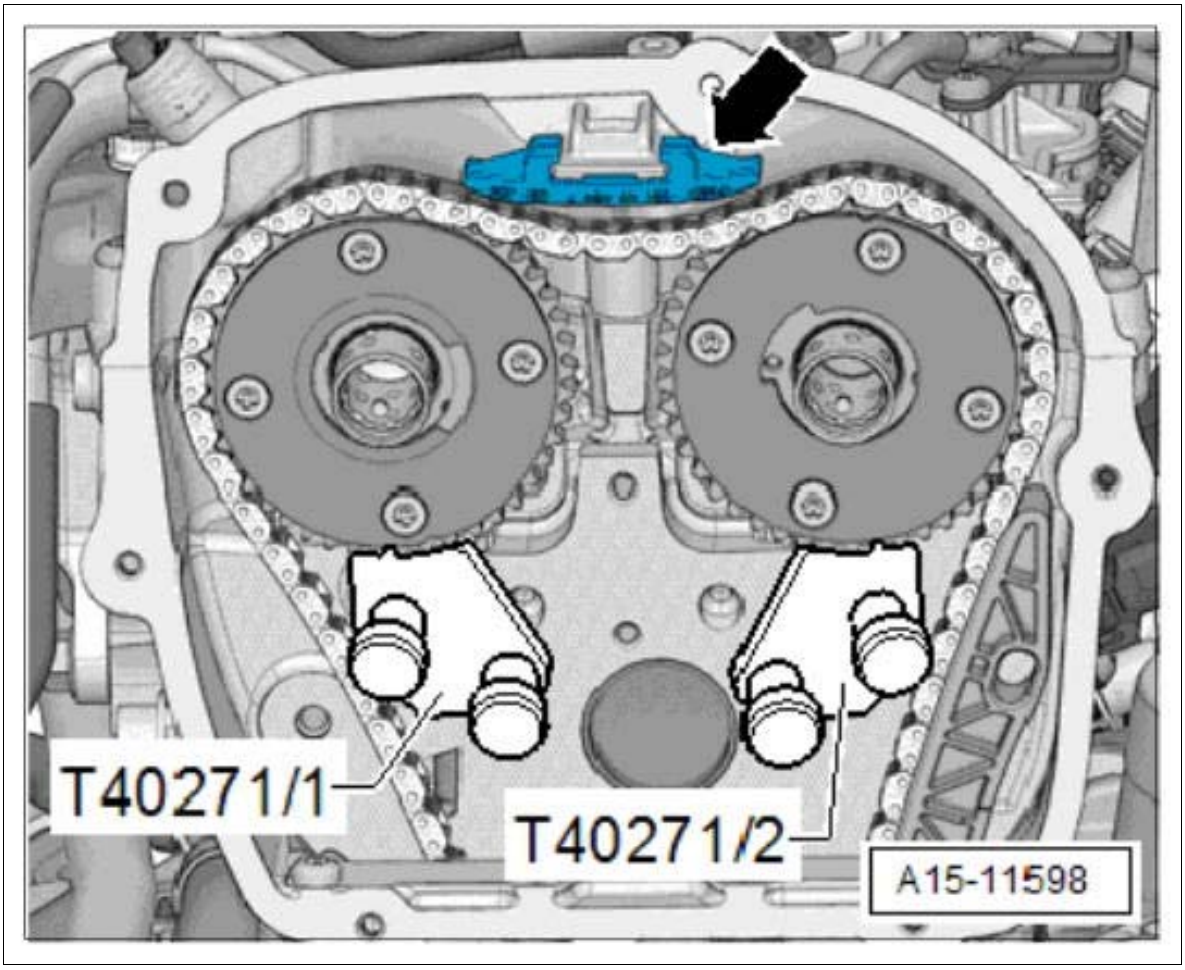

Courtesy of PORSCHE CARS NORTH AMERICA, INC.

17. **Camshaft clamp T40271** /1 can now be removed.

    1. 17.1. Use **adapter T40266** to turn the outlet camshaft in **-direction of arrow 1-** .
    2. 17.2. **Camshaft clamp T40271** /1 must be pushed out of the toothing on the sprocket in **-direction of arrow 2-** .
    3. 17.3. Relieve the camshaft and remove **camshaft clamp T40271** /1.

Fig 12: Removing Camshaft Clamp

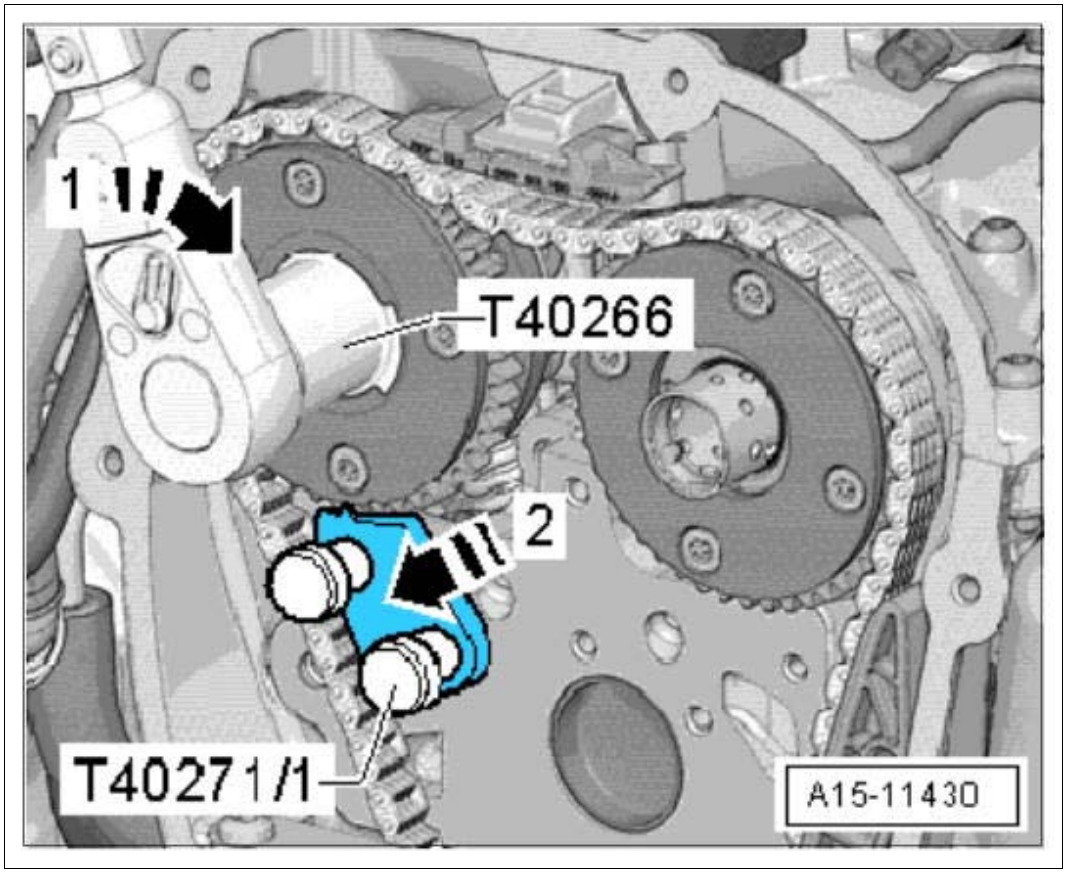

Courtesy of PORSCHE CARS NORTH AMERICA, INC.

18. Guide tensioning rail **-2-** up and fit and tighten the guide pin **-1-** .

Fig 13: Securing Tensioning Rail

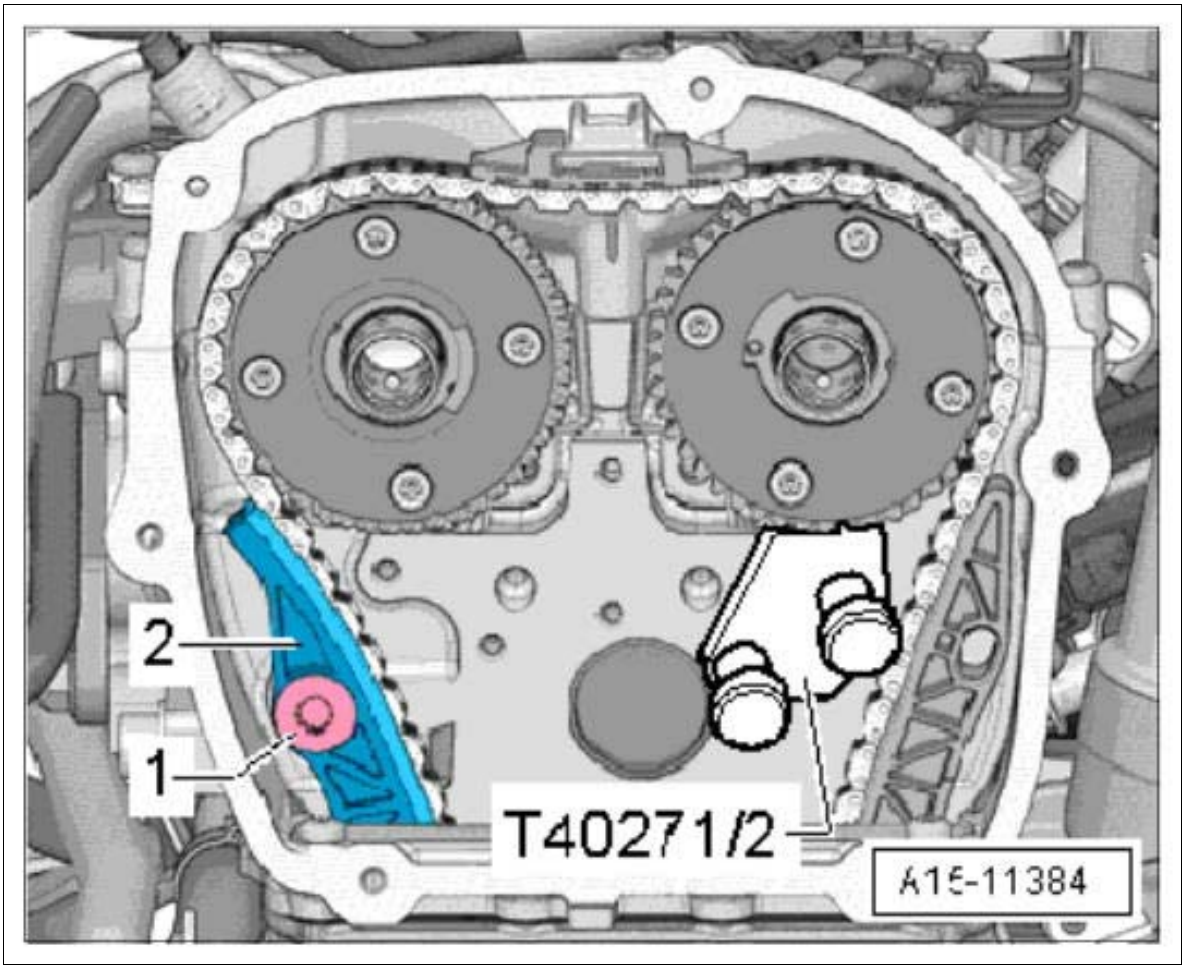

Courtesy of PORSCHE CARS NORTH AMERICA, INC.

19. **Camshaft clamp T40271** /2 can now be removed.

    1. 19.1. Use **adapter T40266** to turn the intake camshaft in **-direction of arrow 1-** .
    2. 19.2. **Camshaft clamp T40271** /2 must be pushed out of the toothing on the sprocket in **-direction of arrow 2-** .
    3. 19.3. Relieve the camshaft and remove **the camshaft clamp T40271** /2.

Fig 14: Removing Intake Camshaft Fixing Device

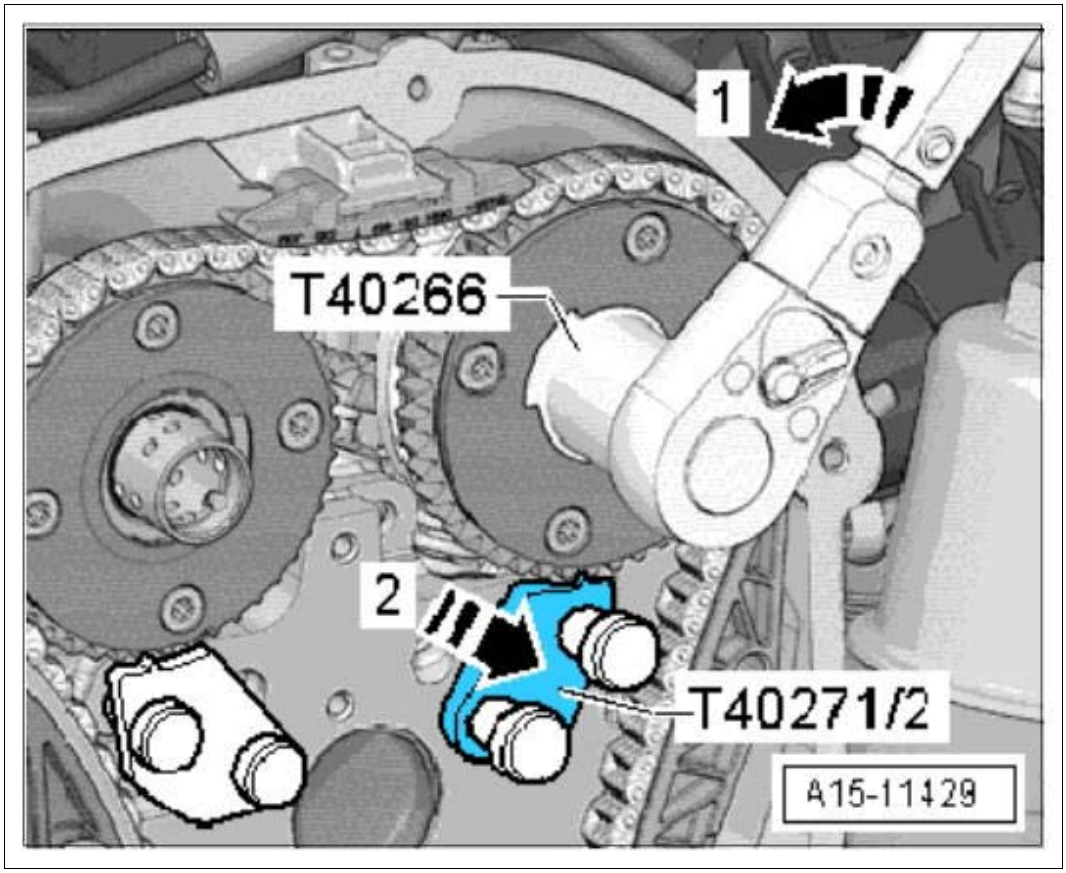

Courtesy of PORSCHE CARS NORTH AMERICA, INC.

20. **Staking tool T40267** must be pulled out.

Fig 15: Securing Chain Tensioner

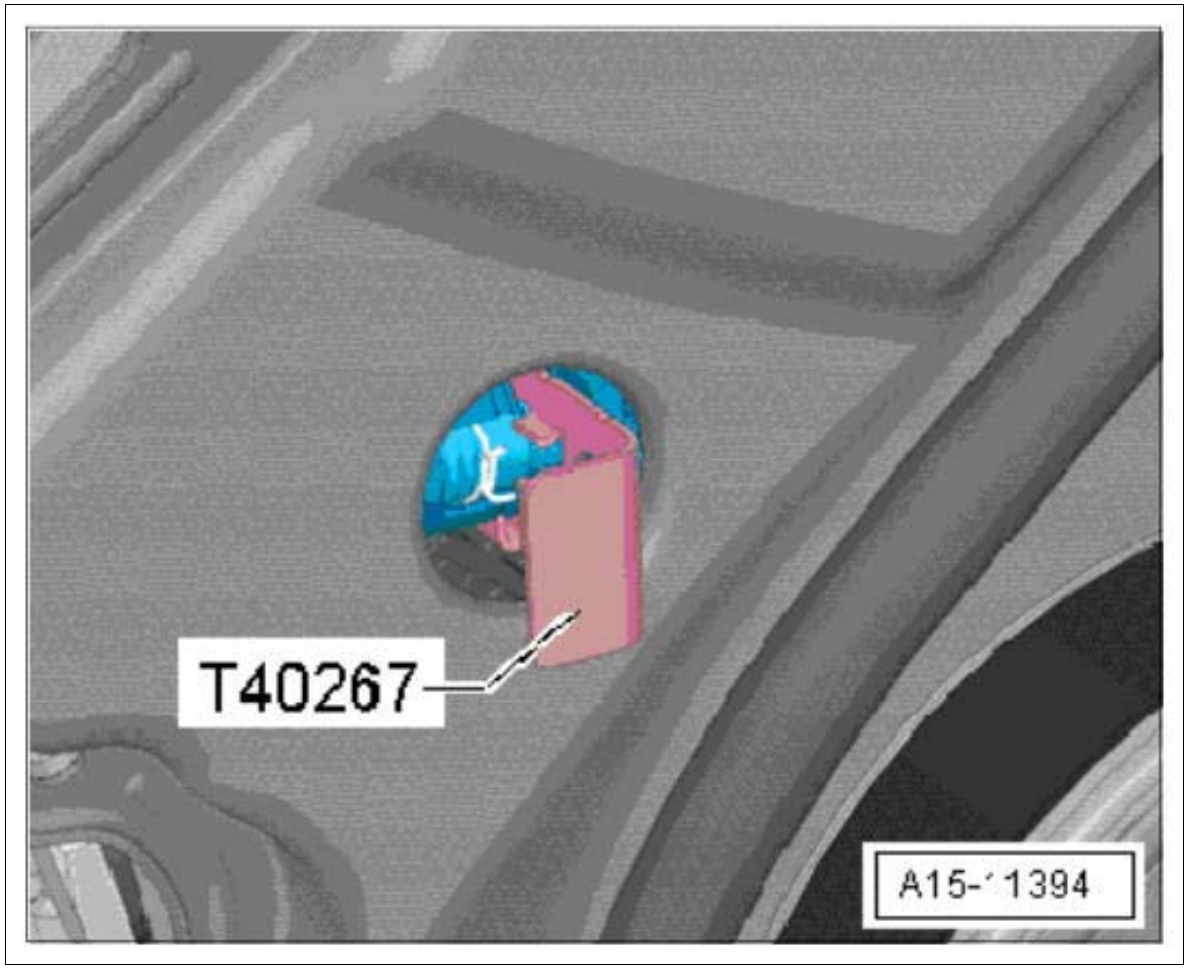

Courtesy of PORSCHE CARS NORTH AMERICA, INC.

21. Insert stopper **-arrow-** .

Fig 16: Identifying Chain Tensioner

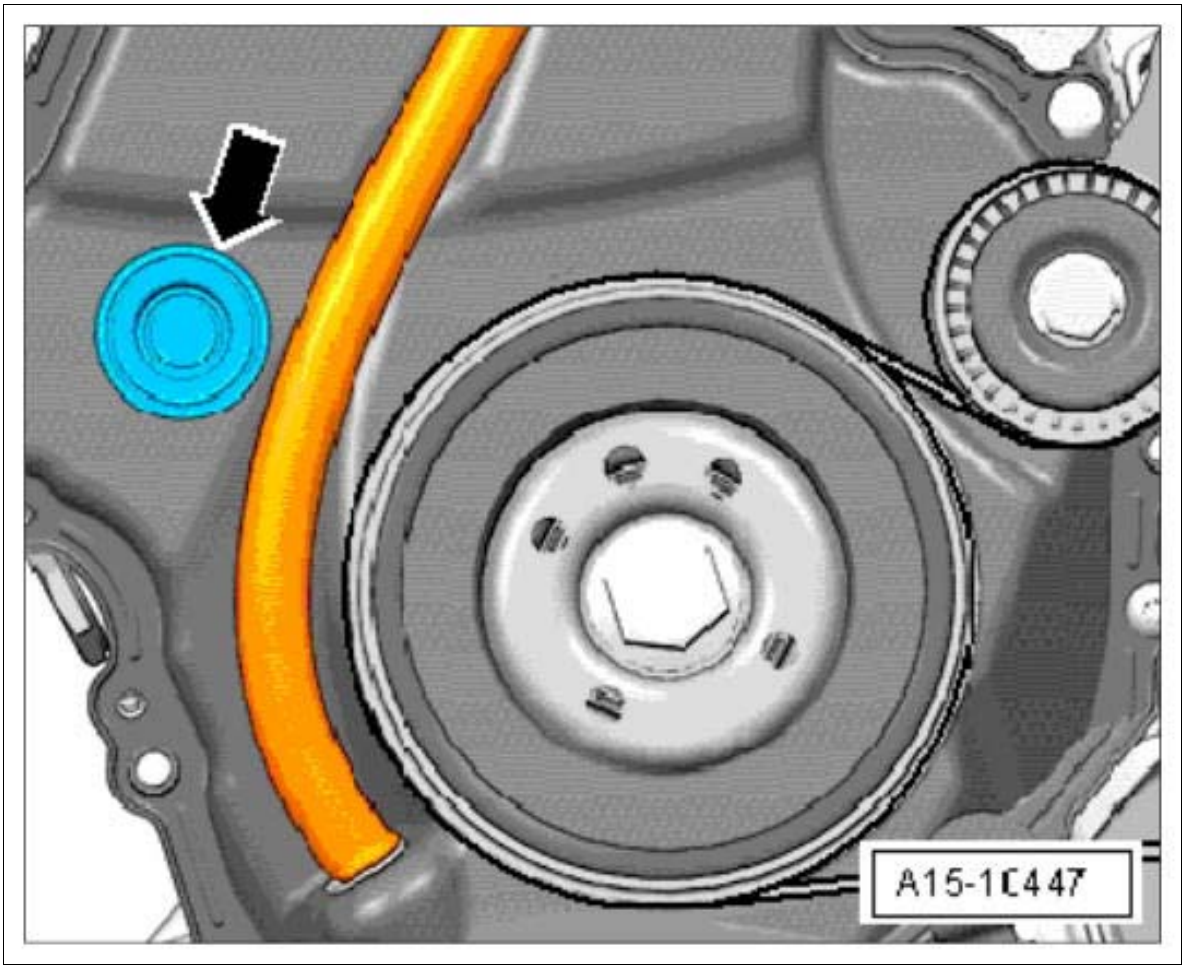

Courtesy of PORSCHE CARS NORTH AMERICA, INC.

22. **Fit and tighten new** fastening screws.

Fig 17: Identifying Chain Tensioner Screws

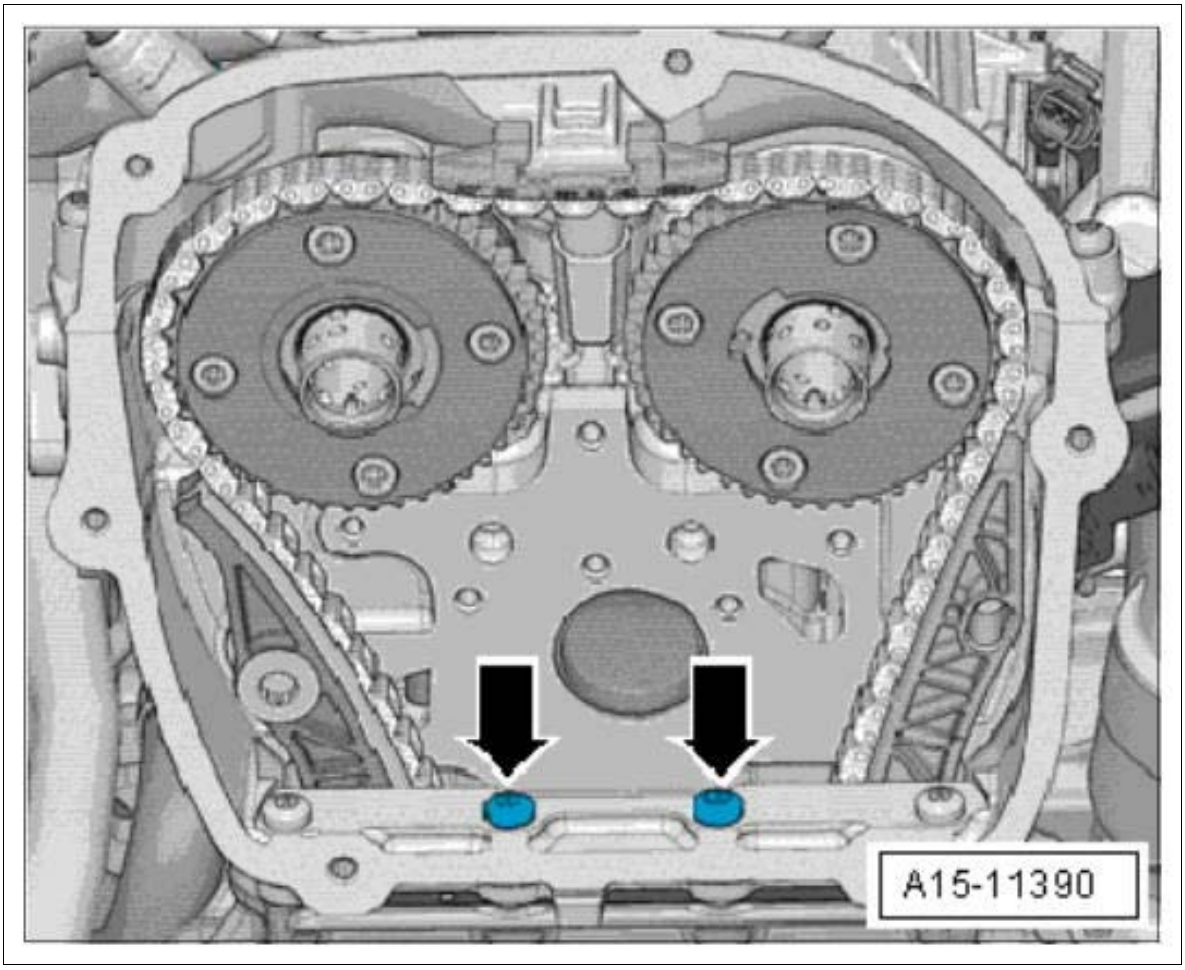

Courtesy of PORSCHE CARS NORTH AMERICA, INC.

23. Fit and tighten bearing saddle with new fastening screws **-arrows-** .

Fig 18: Locating Bearing Saddle Screws

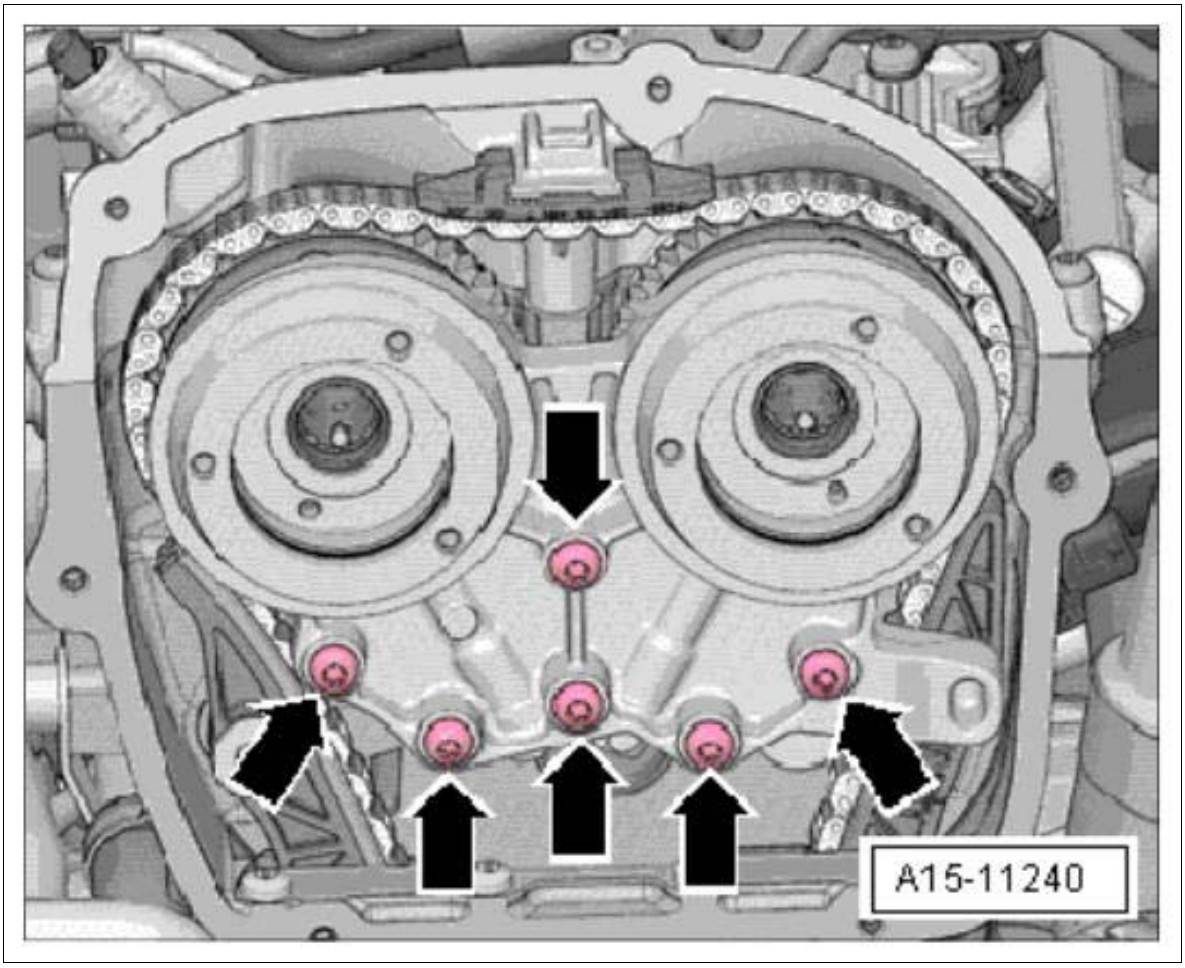

Courtesy of PORSCHE CARS NORTH AMERICA, INC.

24. Install camshaft actuators. → INSTALLING ACTUATOR FOR CAMSHAFT
25. Install upper timing-case cover. → INSTALLING CHAIN HOUSING COVER
26. Install front underbody cover. → INSTALLING COVER FOR FRONT UNDERBODY
27. Install engine cover (design cover).

WM 150516 SETTING TIMING FOR CAMSHAFTS (MACAN S, MACAN TURBO) > TOOLS

Designation	Type	Number	Description	

Locating pins	Special tool	9595/1		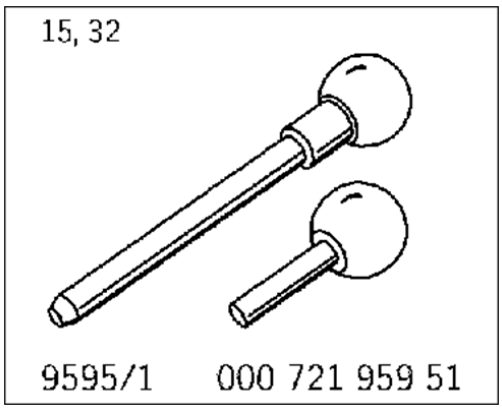
Auxiliary chain tensioner	Special tool	9683/1		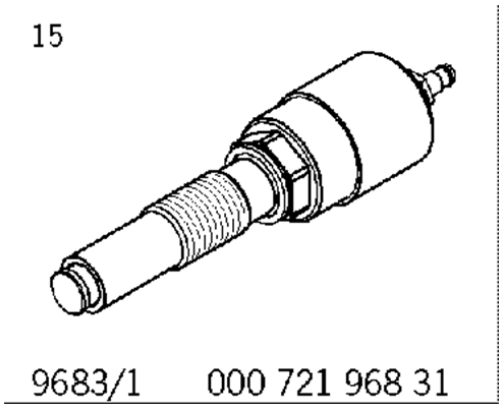
Staking tool for valve timing	Special tool	9861		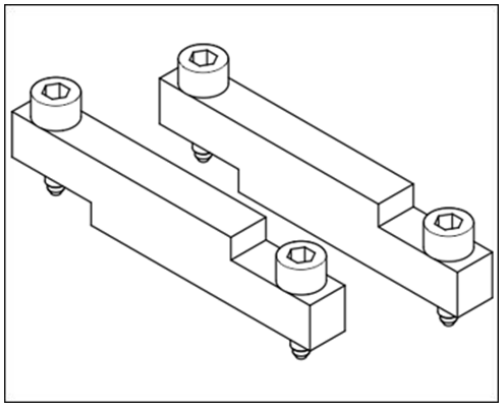

WM 150516 SETTING TIMING FOR CAMSHAFTS (MACAN S, MACAN TURBO) > TECHNICAL VALUES

Location	Description	Type	Basic value	Tolerance 1	Tolerance 2
Central screw securing camshaft controller to camshaft		Initial tightening	30 Nm (22 ftlb.)		

Central screw securing camshaft controller to camshaft		Final tightening	+40°		

WM 150516 SETTING TIMING FOR CAMSHAFTS (MACAN S, MACAN TURBO) > PRELIMINARY WORK

1. Remove cylinder head cover. → 158219 REMOVING AND INSTALLING CYLINDER HEAD COVER
2. The spark plugs can be removed so that it will be easier to turn the crankshaft. → 287020 REMOVING AND INSTALLING SPARK PLUGS

WM 150516 SETTING TIMING FOR CAMSHAFTS (MACAN S, MACAN TURBO) > SETTING TIMING FOR CAMSHAFTS

NOTE: Incorrect handling of crankshafts

- *Risk of damage to the timing system*

→ Never turn the crankshaft against the rolling direction or when the chain tensioner is removed.

→ Proceed carefully with your work.

→ Only turn the engine at the crankshaft.

→ After working on the camshaft, re-set the valve timing.

→ Observe general warning notes and working regulations.

NOTE: Timing not set correctly

- *Risk of engine damage*
- *Rough running engine*
- *Loss of engine power*

→ Do not use force when fitting the staking tool.

→ Make sure that the gap is equal on both sides.

→ When inserting the staking tools, do not use force to turn the camshafts against any resistance.

→ The engine must be exactly at top dead center.

→ The opposite cylinder must be at ignition TDC.

Information

- The adjustment of the oil pump with balance shaft with respect to the crankshaft must be correct.
- Correct adjustment of the balance shaft with respect to the crankshaft is a prerequisite for the valve timing of the camshafts.
- If the engine has vibrations in the crank drive, also check that the balance shaft is set correctly. For details of how to adjust the balance shaft , → 172019 REMOVING AND INSTALLING OIL PUMP .

1. Turn the crankshaft at the vibration balancer so that the vibration balancer's staking bore **-2-** is located approx. 45° degrees in front of the lower staking point on the timing-case cover **-1-** .

   Fig 1: Identifying Staking Bore Angle

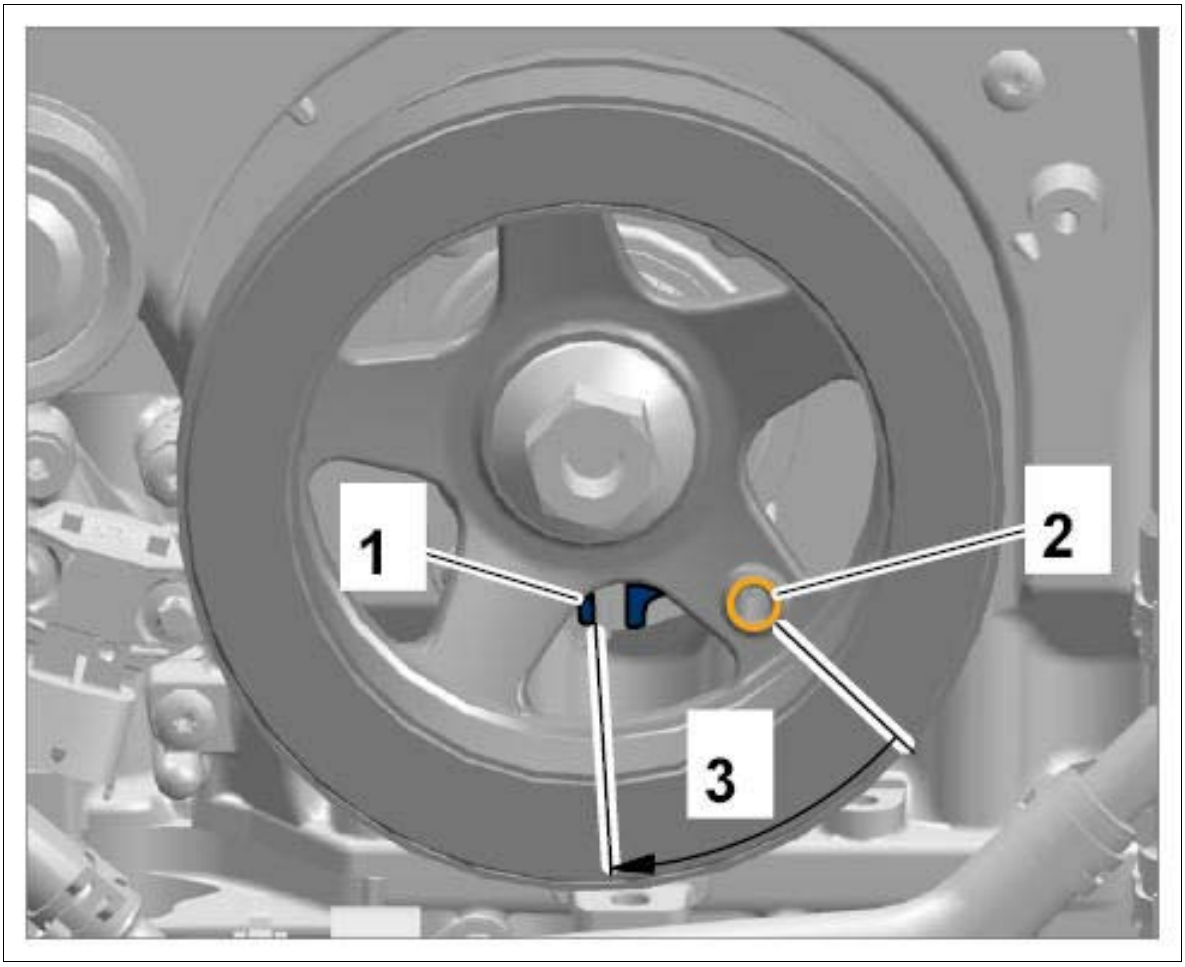

Courtesy of PORSCHE CARS NORTH AMERICA, INC.

2. Loosen central screws on the four camshaft controllers.
3. Remove chain tensioner. → 153619 REMOVING AND INSTALLING CHAIN TENSIONER
4. **Auxiliary chain tensioner 9683/1** must be screwed in hand-tight. Connect 1 bar of compressed air and slowly increase to 5.0 up to 5.5 bar (prevents the assembly chain

tensioner from "crashing" against the timing chain).

5. Turn the camshafts at the hexagon until the flat surfaces are pointing upwards.

   Fig 2: Turning Hexagon Camshaft

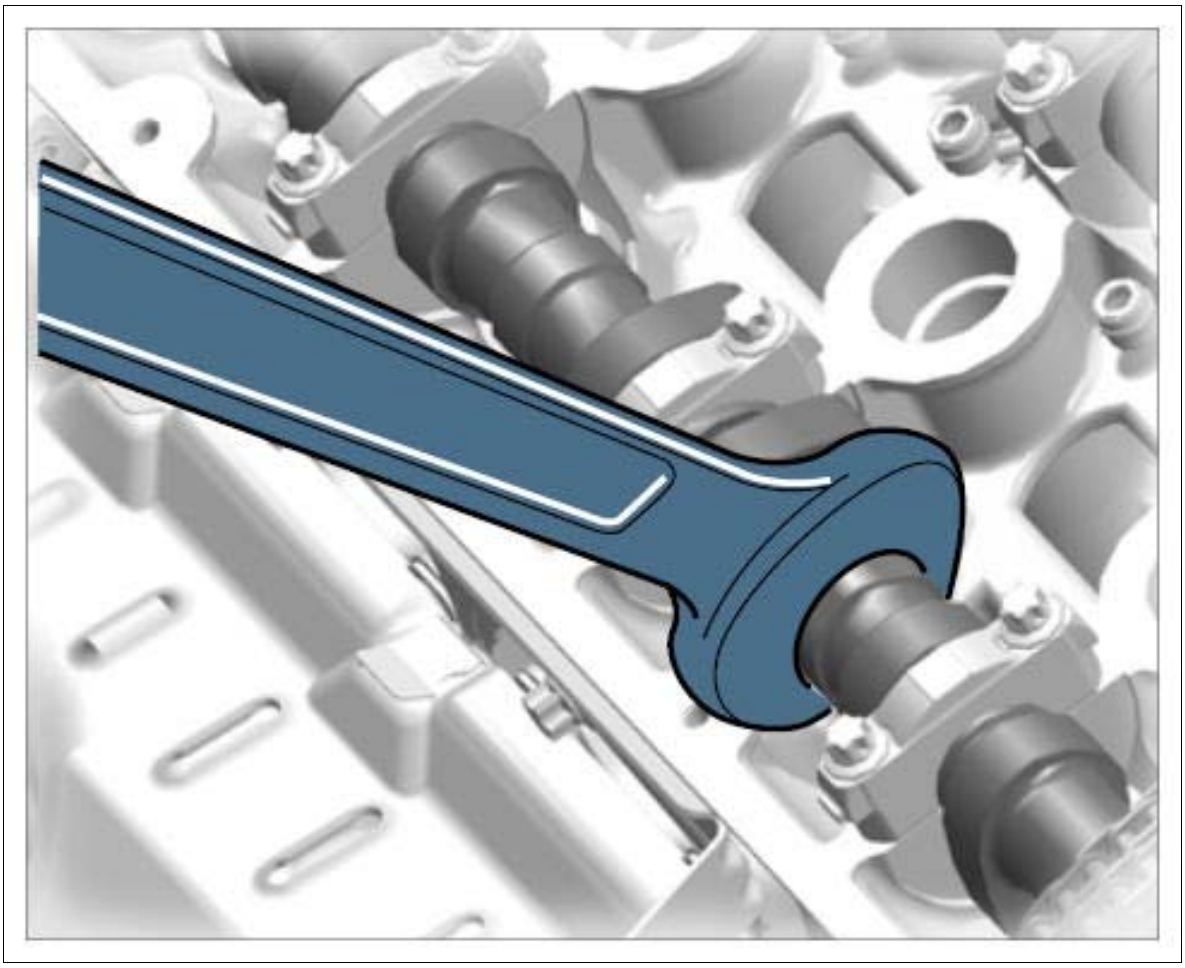

Courtesy of PORSCHE CARS NORTH AMERICA, INC.

6. **Staking tool for valve timing 9861** must be fitted on the camshafts.

    1. 6.1. Tighten screws to **20 Nm (15 ftlb.)** so that the camshafts are moved over the flat surfaces **-arrows-** into the exact position.

Fig 3: Locating Camshaft Flat Surface

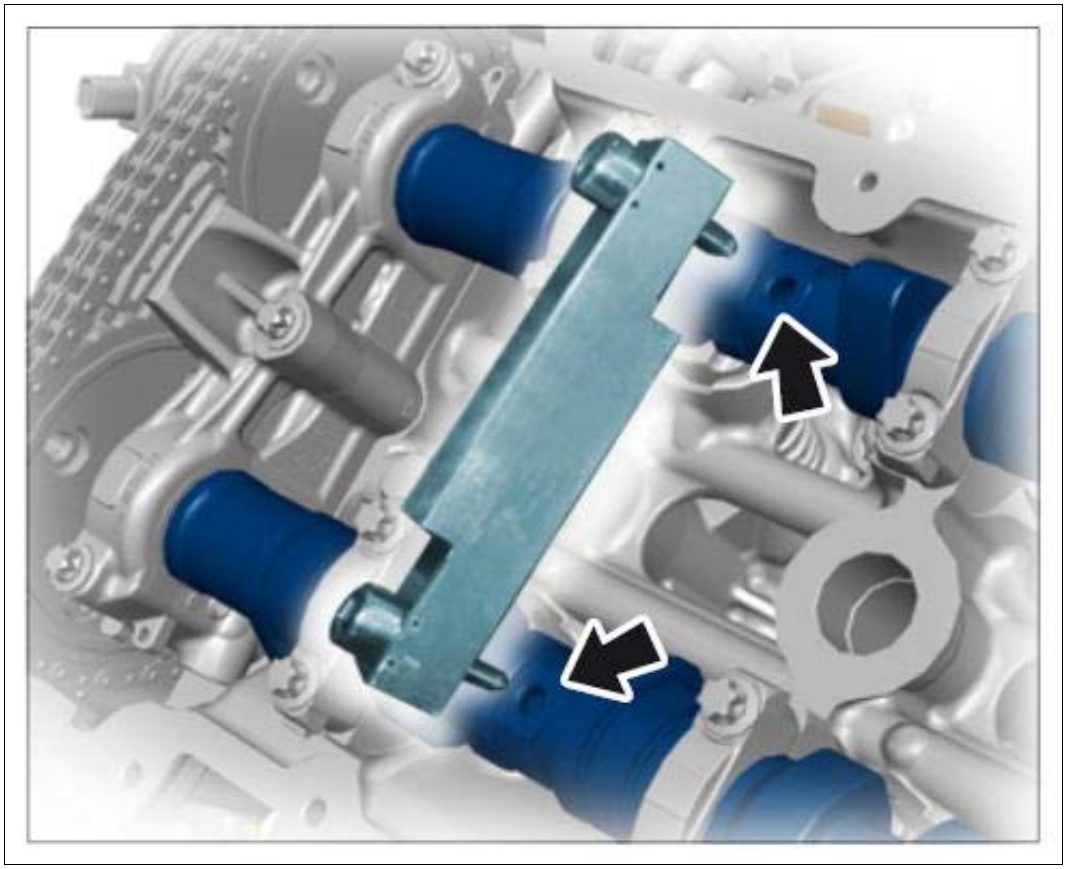

Courtesy of PORSCHE CARS NORTH AMERICA, INC.

7. Secure the crankshaft.

    1. 7.1. **Locating pins 9595/1** must be inserted into the staking bore on the vibration balancer **-2-** .
    2. 7.2. Turn the crankshaft at the vibration balancer (approx. 45°) **-3-** so that the staking pin in the vibration balancer slips into the lower staking point on the timing-case cover **-1-** .
    3. 7.3. At the same time, exert gentle pressure on the staking pin while turning.

Fig 4: Identifying Vibration Balancer Bore

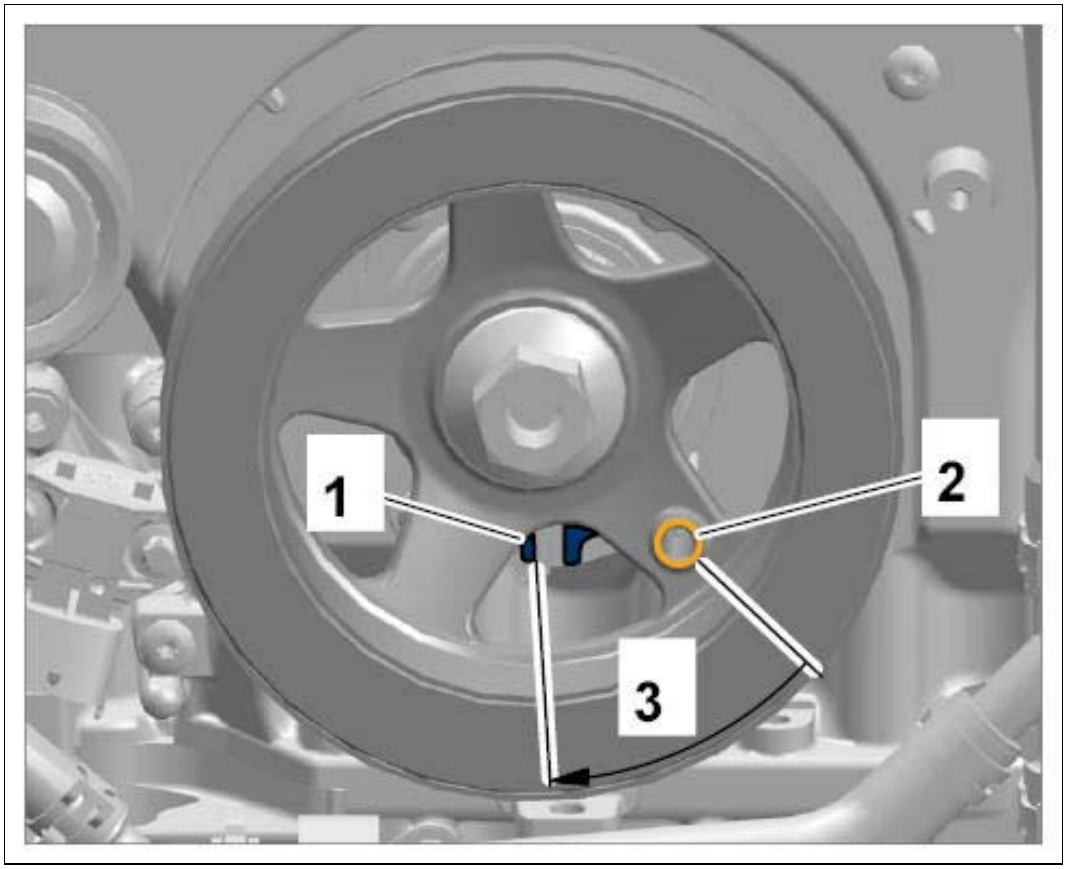

Courtesy of PORSCHE CARS NORTH AMERICA, INC.

8. **If you accidentally turn the vibration balancer too far, do not try to turn it back again!**
    1. 8.1. The staking tools must be removed and the camshafts must be turned in such a way that there is only the slightest pressure on the valve springs.
    2. 8.2. Turn the crankshaft once and start the setting procedure again.
9. Camshafts and crankshaft are fixed correctly.
    1. 9.1. Screwed-in assembly chain tensioner with approx. 5.0 to 5.5 bar pressure.
    2. 9.2. Two fixed staking tools on the camshafts.
    3. 9.3. Staking pin secures crankshaft in TDC of cylinder 1.
10. Tighten central screws on the four camshafts as instructed. To do this, counter at the hexagon on the camshaft controllers and observe the specified sequence!
    1. 10.1. Tightening torque: **Initial tightening 30 Nm (22 ftlb.) Final tightening +40°**
    2. 10.2. Tightening sequence:

Tightening sequence for central screw for camshaft controller (item 2)		
Result:	Cylinder bank:	Camshaft:

1	Bank 1, cylinders 1-3	Outlet
2	Bank 1, cylinders 1-3	Intake
3	Bank 2, cylinders 4-6	Intake
4	Bank 2, cylinders 4-6	Outlet

11. Remove tools.
12. Install chain tensioner.
13. Check by turning the engine twice.

WM 150516 SETTING TIMING FOR CAMSHAFTS (MACAN S, MACAN TURBO) > SUBSEQUENT WORK

1. Install spark plugs. → INSTALLING SPARK PLUGS
2. Install cylinder head cover. → INSTALL THE CYLINDER HEAD COVER

WM 150520 REMOVING AND INSTALLING CAMSHAFTS (MACAN) > PRELIMINARY WORK

1. Remove cylinder head cover. → 158219 REMOVING AND INSTALLING CYLINDER HEAD COVER

WM 150520 REMOVING AND INSTALLING CAMSHAFTS (MACAN) > REMOVING CAMSHAFTS

1. Camshafts are removed when removing the cylinder head cover.

WM 150520 REMOVING AND INSTALLING CAMSHAFTS (MACAN) > INSTALLING CAMSHAFTS

1. Camshafts are installed during installation of the cylinder head cover.

WM 150520 REMOVING AND INSTALLING CAMSHAFTS (MACAN) > SUBSEQUENT WORK

1. Install cylinder head cover. → INSTALL THE CYLINDER HEAD COVER

WM 153319 REMOVING AND INSTALLING CHAIN HOUSING COVER (MACAN, MACAN S, MACAN TURBO) > TOOLS

Designation	Type	Number	Description	
pressure piece	VW tool	**T10368**		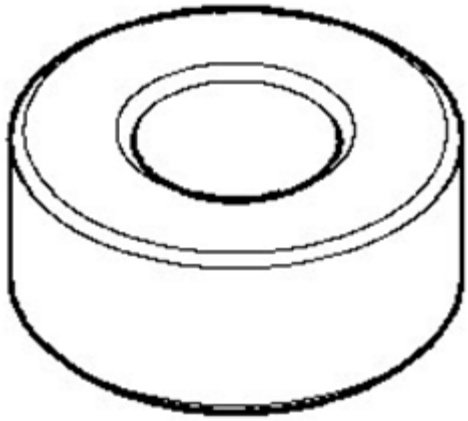

WM 153319 REMOVING AND INSTALLING CHAIN HOUSING COVER (MACAN, MACAN S, MACAN TURBO) > TECHNICAL VALUES

Location	Description	Type	Basic value	Tolerance 1	Tolerance 2
Fastening screw securing solenoid hydraulic valve for camshaft control	Replace	Initial tightening	4 Nm (3 ftlb.)		
Fastening screw securing solenoid hydraulic valve for camshaft control		Final tightening	+45°		
Fastening screw for chain housing cover, upper		Tightening torque	9 Nm (6.5 ftlb.)		
Fastening screw for chain housing cover, lower		Initial tightening	8 Nm (6 ftlb.)		
Fastening screw for chain		Final tightening	+45°		

housing cover, lower					
Fastening screw securing guide for oil dipstick		Tightening torque	9 Nm (6.5 ftlb.)		

WM 153319 REMOVING AND INSTALLING CHAIN HOUSING COVER (MACAN, MACAN S, MACAN TURBO) > PRELIMINARY WORK > PRELIMINARY WORK FOR UPPER CHAIN HOUSING COVER

1. Remove engine cover (design cover).

WM 153319 REMOVING AND INSTALLING CHAIN HOUSING COVER (MACAN, MACAN S, MACAN TURBO) > PRELIMINARY WORK > PRELIMINARY WORK FOR LOWER CHAIN HOUSING COVER

1. Drain engine oil. → 170117 DRAINING AND FILLING ENGINE OIL
2. Remove belt tensioner. → 137319 REMOVING AND INSTALLING BELT TENSIONER
3. Remove pulley. → 137619 REMOVING AND INSTALLING PULLEY

WM 153319 REMOVING AND INSTALLING CHAIN HOUSING COVER (MACAN, MACAN S, MACAN TURBO) > REMOVING CHAIN HOUSING COVER > REMOVING UPPER CHAIN HOUSING COVER

NOTE: Dirt and contamination

- *Risk of damage to units or components*

→ Protect components from dirt and contamination.

→ Clean or replace dirty components.

1. Remove actuators for camshaft.
    1. 1.1. Disconnect electric plug connections **-1 and 3-** .
    2. 1.2. Unscrew fastening screws **-arrows-** and remove actuators for the camshaft **-2 and 4-** .

Fig 1: Identifying Camshaft Actuators

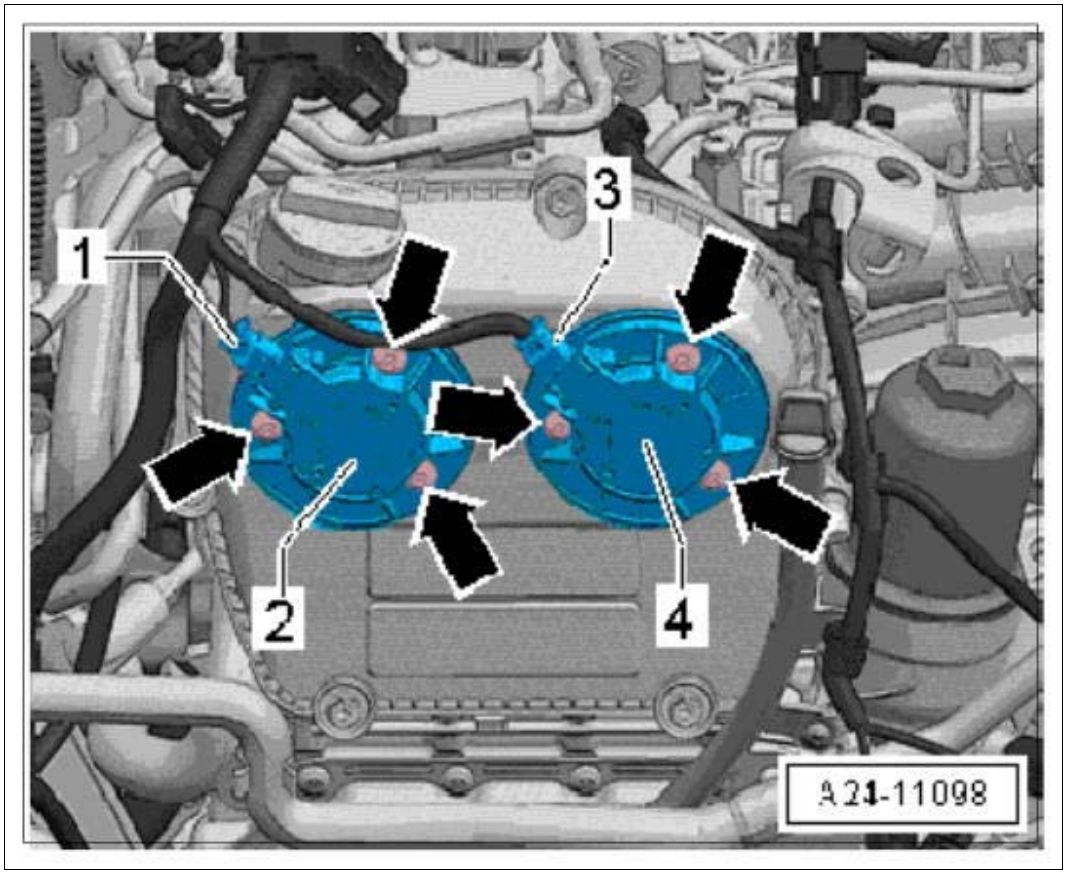

Courtesy of PORSCHE CARS NORTH AMERICA, INC.

2. Remove coolant hose and guide tube.

    1. 2.1. Unscrew fastening screw **-1-** .
    2. 2.2. Remove guide tube for oil dipstick **-4-** .

Fig 2: Identifying Coolant Hose And Guide Tube For Oil Dipstick

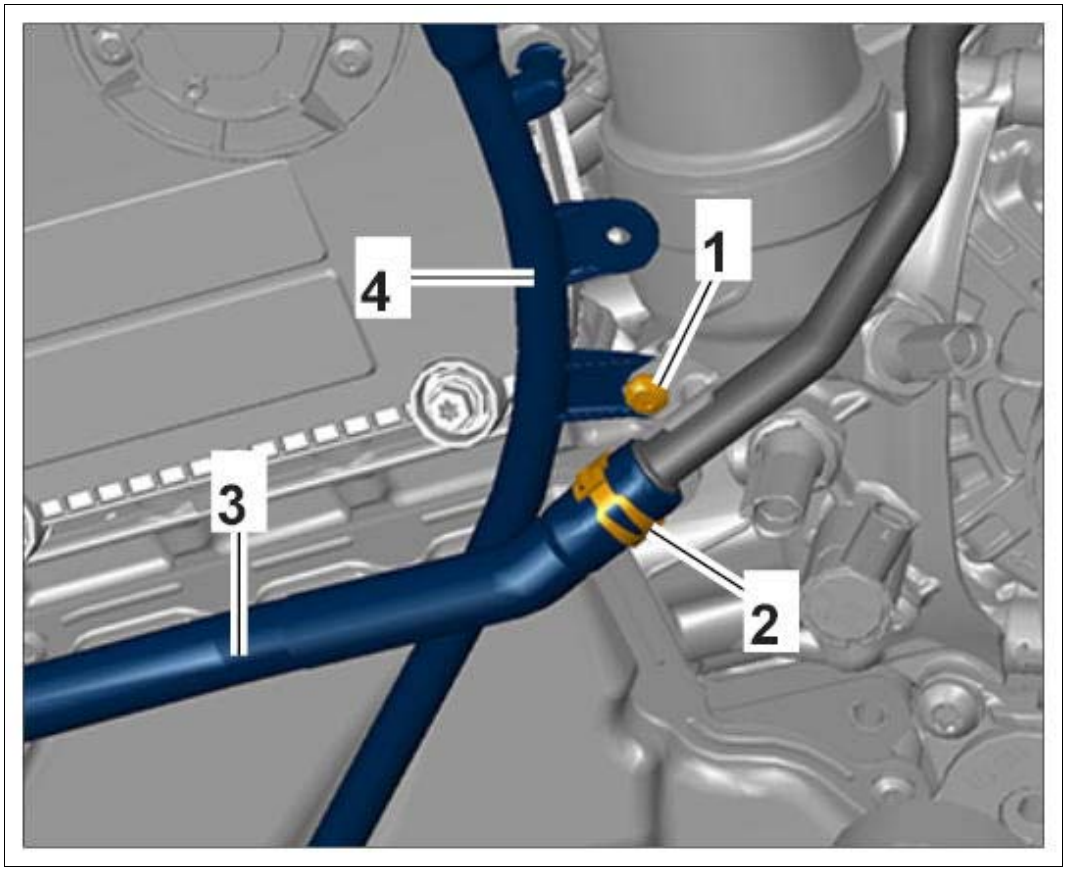

Courtesy of PORSCHE CARS NORTH AMERICA, INC.

3. Unscrew fastening screws **-1...6-** and remove upper chain housing cover.

Fig 3: Identifying Upper Chain Housing Cover Fastening Screws

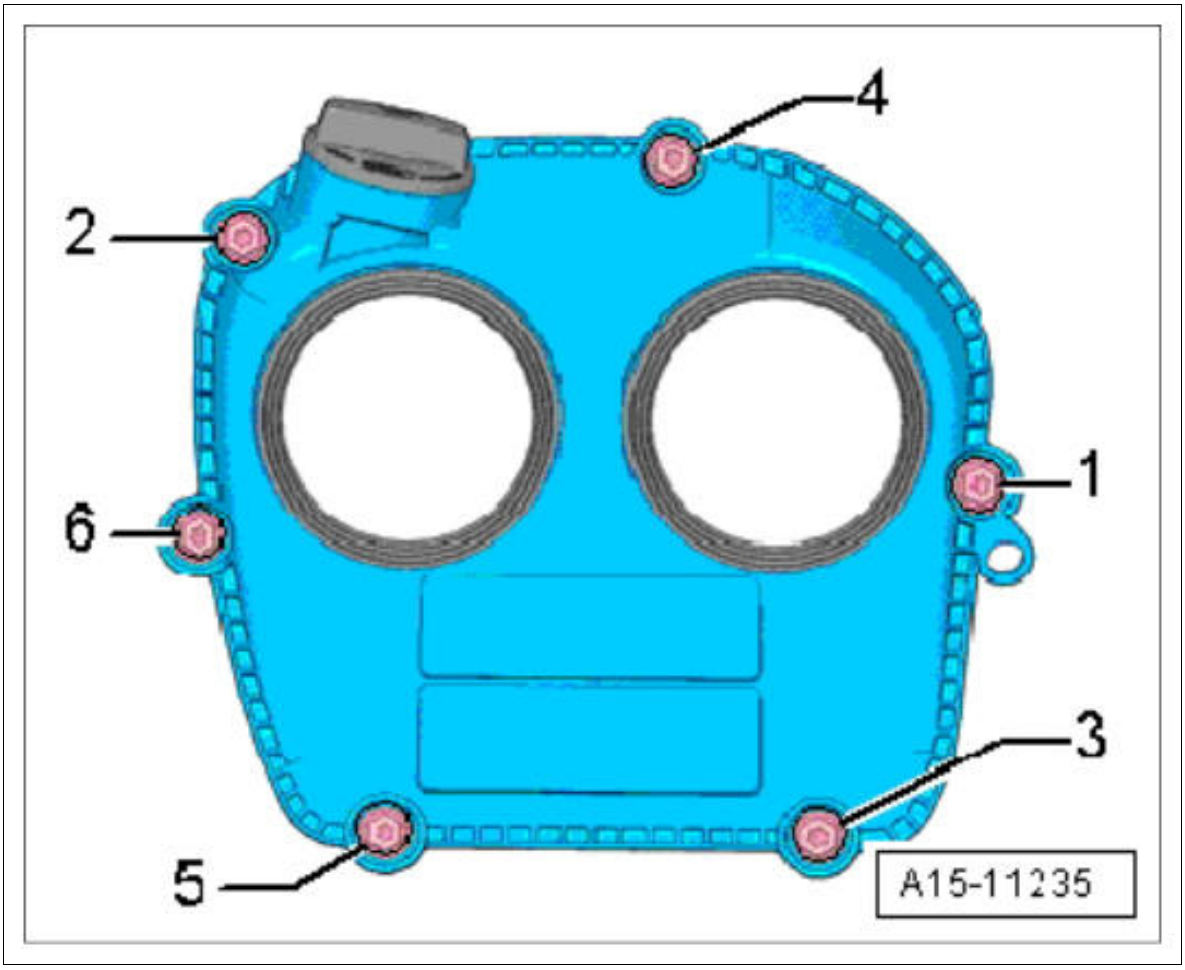

Courtesy of PORSCHE CARS NORTH AMERICA, INC.

WM 153319 REMOVING AND INSTALLING CHAIN HOUSING COVER (MACAN, MACAN S, MACAN TURBO) > REMOVING CHAIN HOUSING COVER > REMOVING LOWER CHAIN HOUSING COVER

NOTE: Dirt and contamination

- *Risk of damage to units or components*

→ Protect components from dirt and contamination.

→ Clean or replace dirty components.

1. Screw in fastening screw for pulley again using **pressure piece T10368.** → Pressure piece -T10368-

Fig 1: Identifying Pressure Piece - T10368

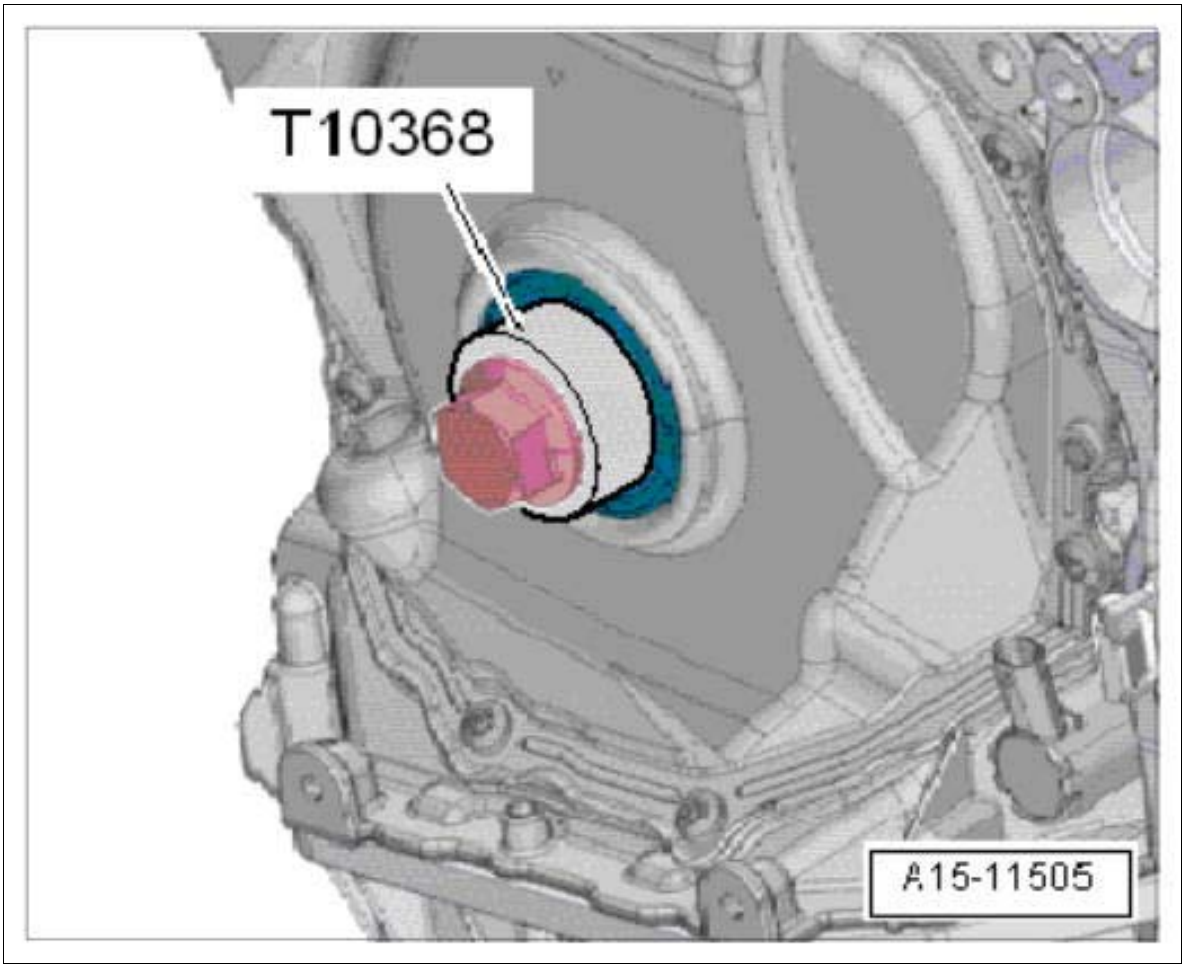

Courtesy of PORSCHE CARS NORTH AMERICA, INC.

2. Remove coolant hose and guide tube.
    1. 2.1. Unscrew fastening screw **-1-** .
    2. 2.2. Remove guide tube for oil dipstick **-4-** .

Fig 2: Identifying Coolant Hose And Guide Tube For Oil Dipstick

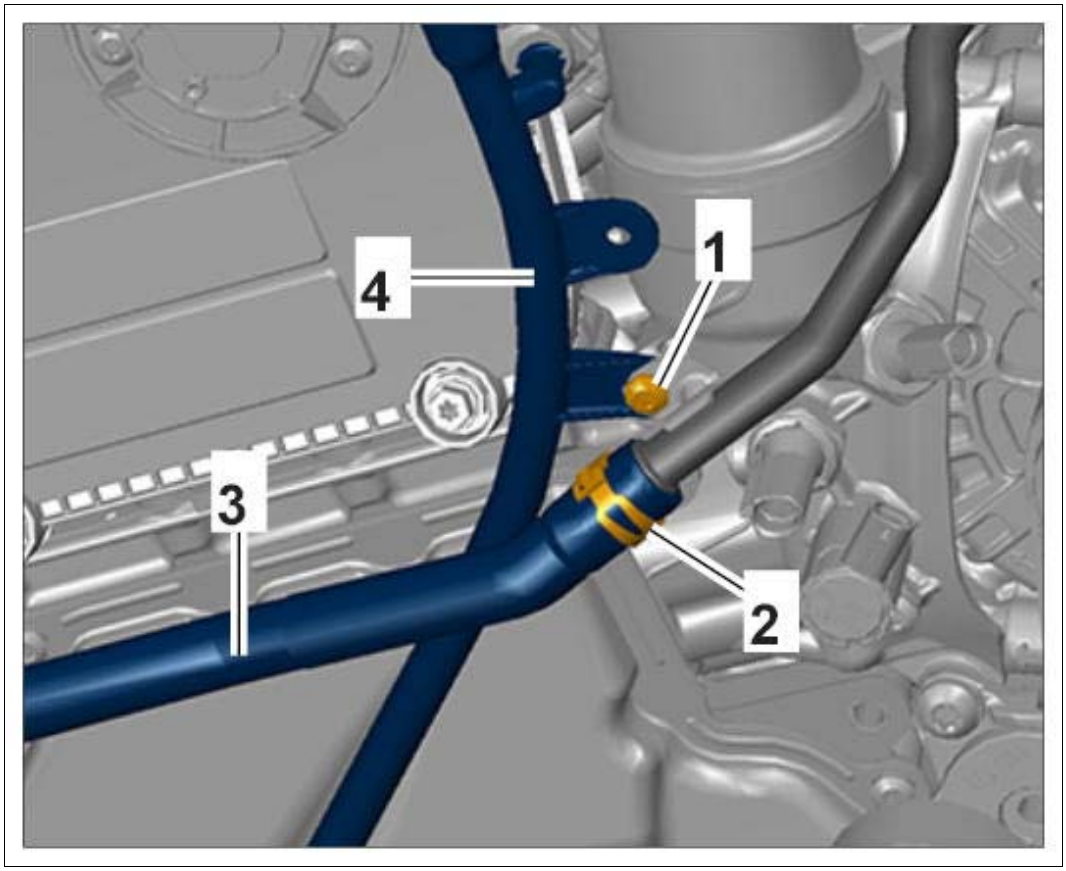

Courtesy of PORSCHE CARS NORTH AMERICA, INC.

3. Unscrew fastening screws **-1...15-** and remove chain housing cover.

Fig 3: Identifying Lower Chain Housing Cover

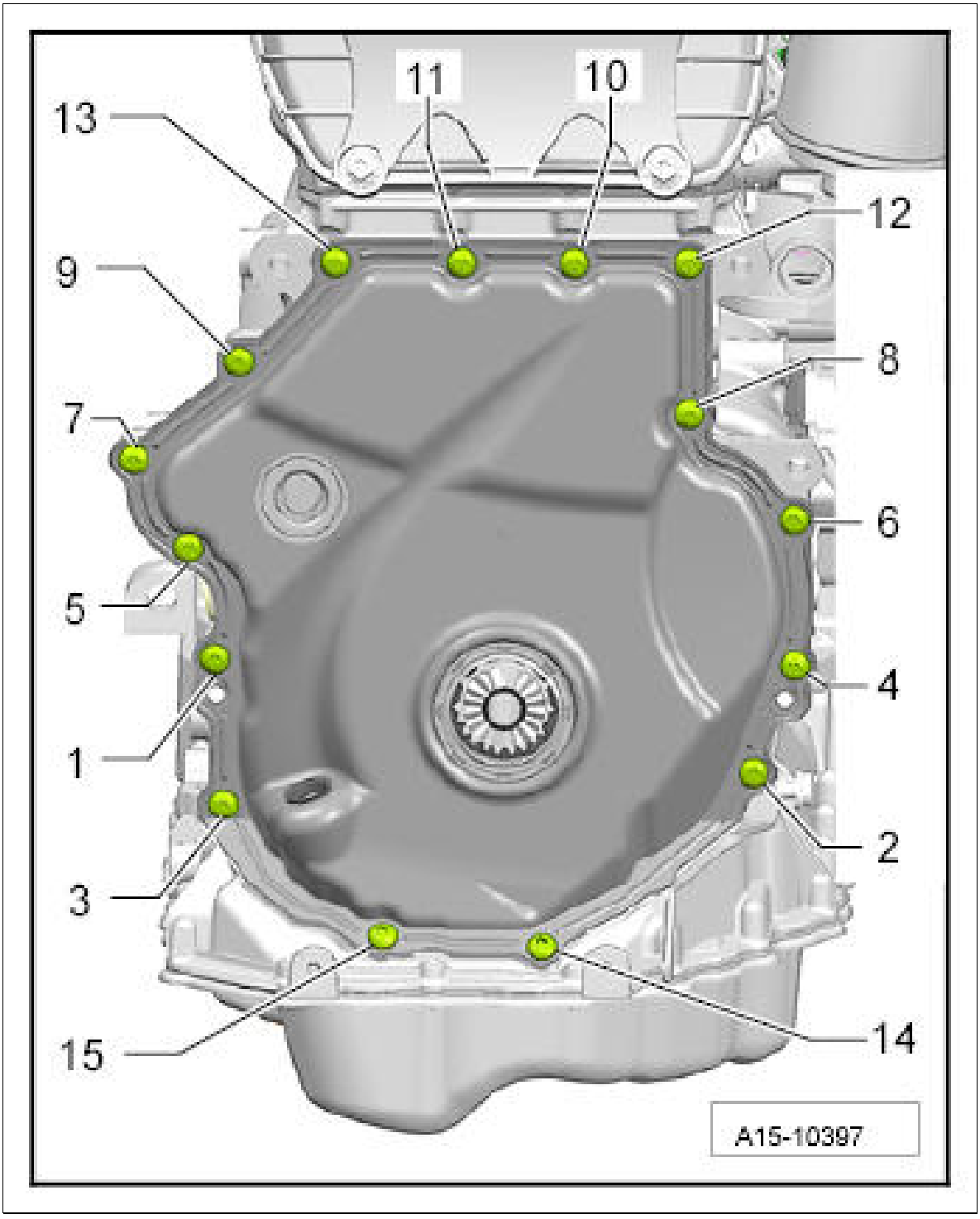

Courtesy of PORSCHE CARS NORTH AMERICA, INC.

WM 153319 REMOVING AND INSTALLING CHAIN HOUSING COVER (MACAN, MACAN S, MACAN TURBO) > INSTALLING CHAIN HOUSING COVER > INSTALLING UPPER CHAIN HOUSING COVER

1. Remove sealant residue on the bearing saddle.
2. Clean sealing faces to remove any oil and grease.
3. Cut off the nozzle on the tube at the front marking. (The nozzle diameter is approx. 1.5 mm).

   Information

   The chain housing cover must be installed within 5 minutes of applying the sealant.
4. Apply beads of sealant to the clean sealing rings **-arrows-** .

   Sealant bead thickness: 2 mm.

   Fig 1: Identifying Sealant Area

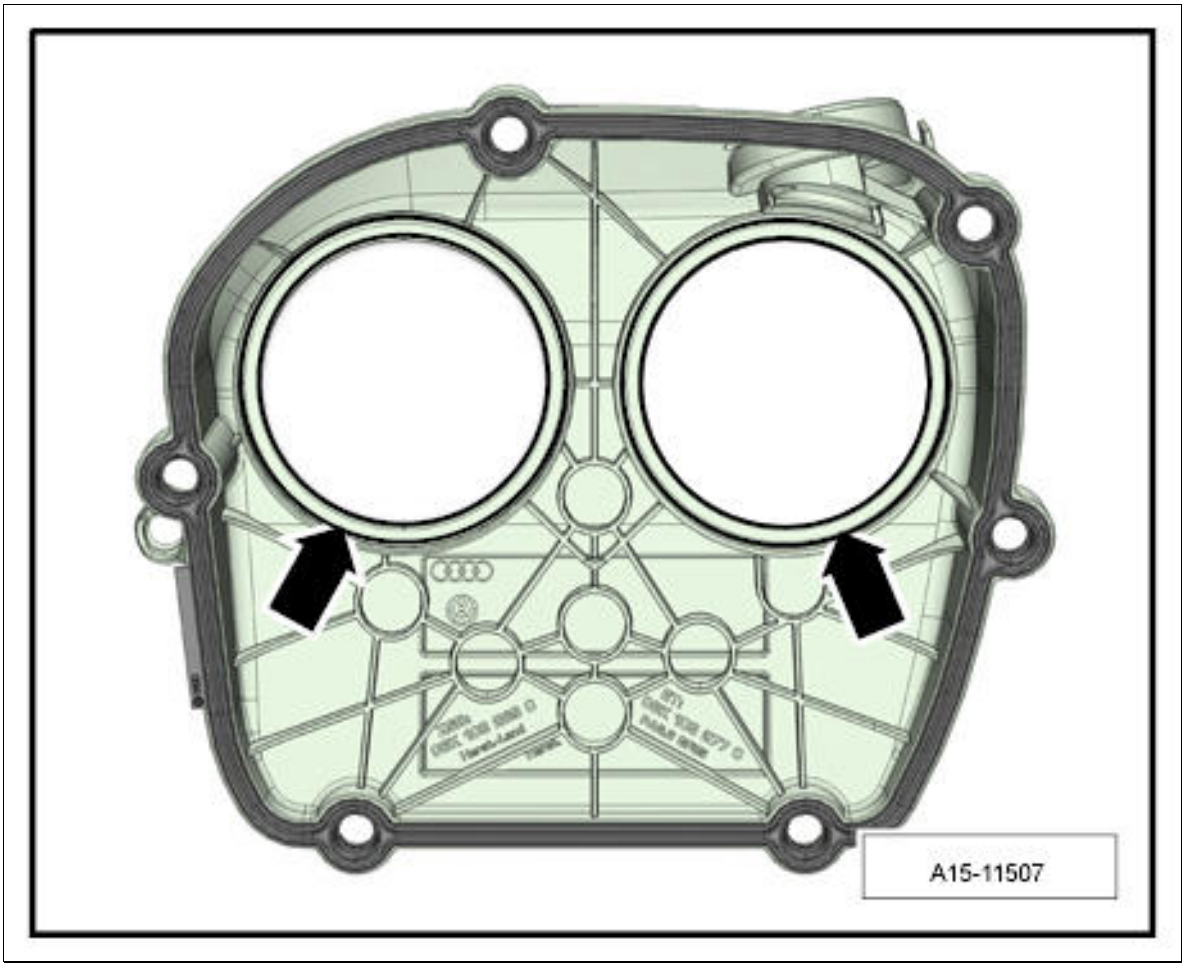

Courtesy of PORSCHE CARS NORTH AMERICA, INC.

5. Install chain housing cover.
   1. 5.1. Fit chain housing cover with **new** O-rings.
   2. 5.2. Fit and tighten fastening screws **-1...6-** . **Tightening torque 9 Nm (6.5 ftlb.)**

      Observe tightening sequence **-1...6-** .

Fig 2: Identifying Upper Chain Housing Cover Fastening Screws

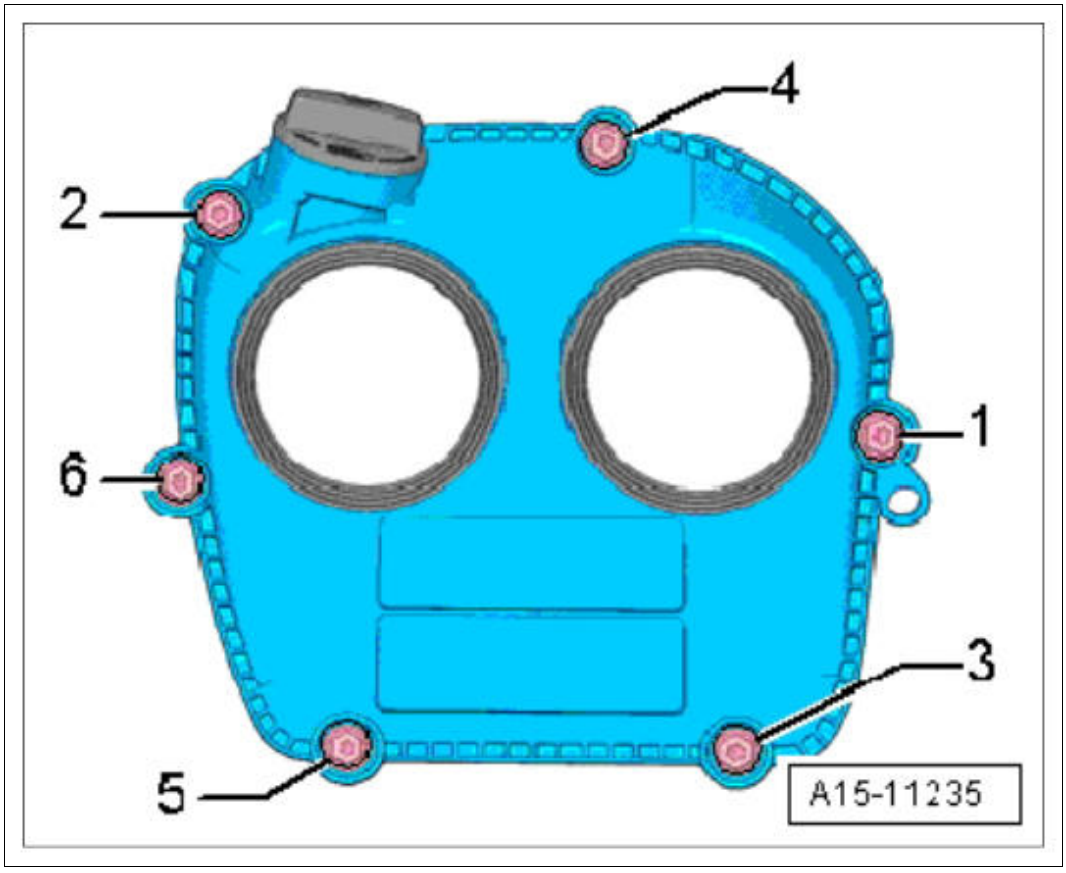

Courtesy of PORSCHE CARS NORTH AMERICA, INC.

6. Secure the coolant line.

    1. 6.1. Install guide tube for oil dipstick **-4-** with a **new** seal.
    2. 6.2. Fit and tighten fastening screw **-1-** . **Tightening torque 9 Nm (6.5 ftlb.)**

Fig 3: Identifying Coolant Hose And Guide Tube For Oil Dipstick

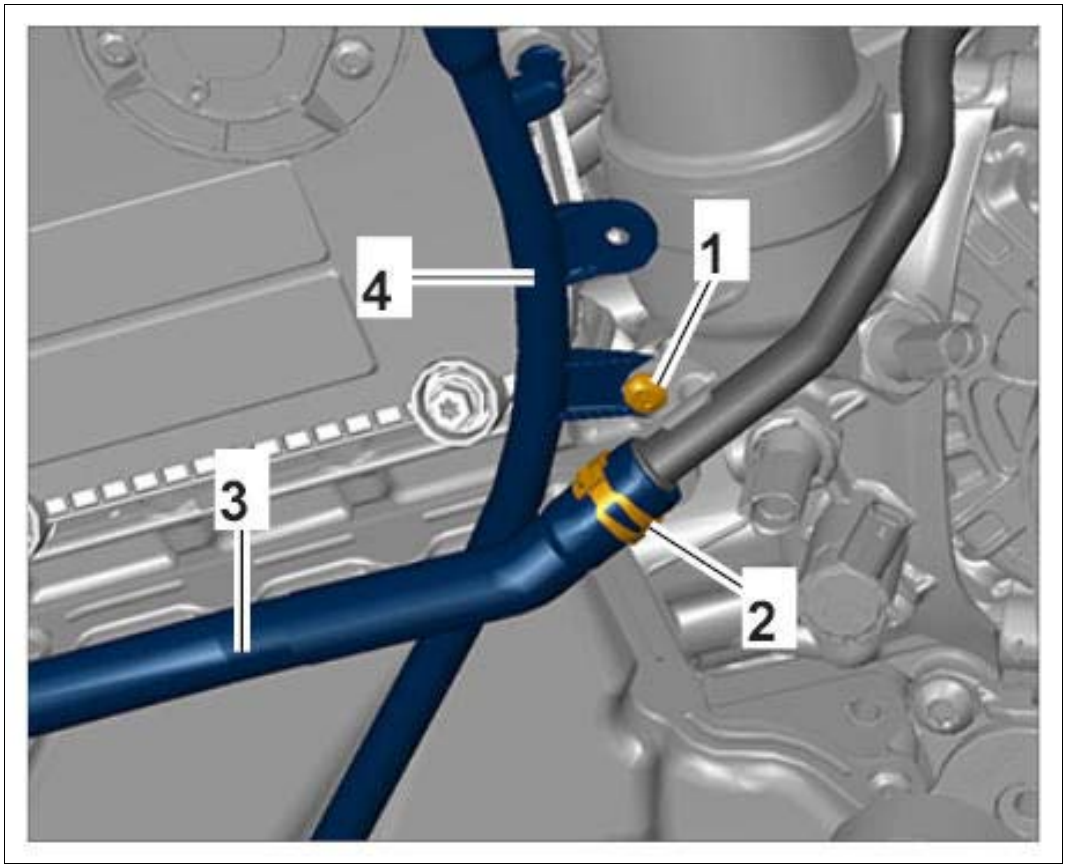

Courtesy of PORSCHE CARS NORTH AMERICA, INC.

7. Install actuators for camshaft.

    1. 7.1. Position actuators for camshaft **-2 and 4-** .
    2. 7.2. **Fit and tighten new** fastening screws **-arrows-** .

       Step 1: **Initial tightening 4 Nm (3 ftlb.)**

       Step 2: **Final tightening +45°**
    3. 7.3. Connect electric plug connections **-1 and 3-** .

Fig 4: Identifying Electric Plug Connections For Camshaft Actuators

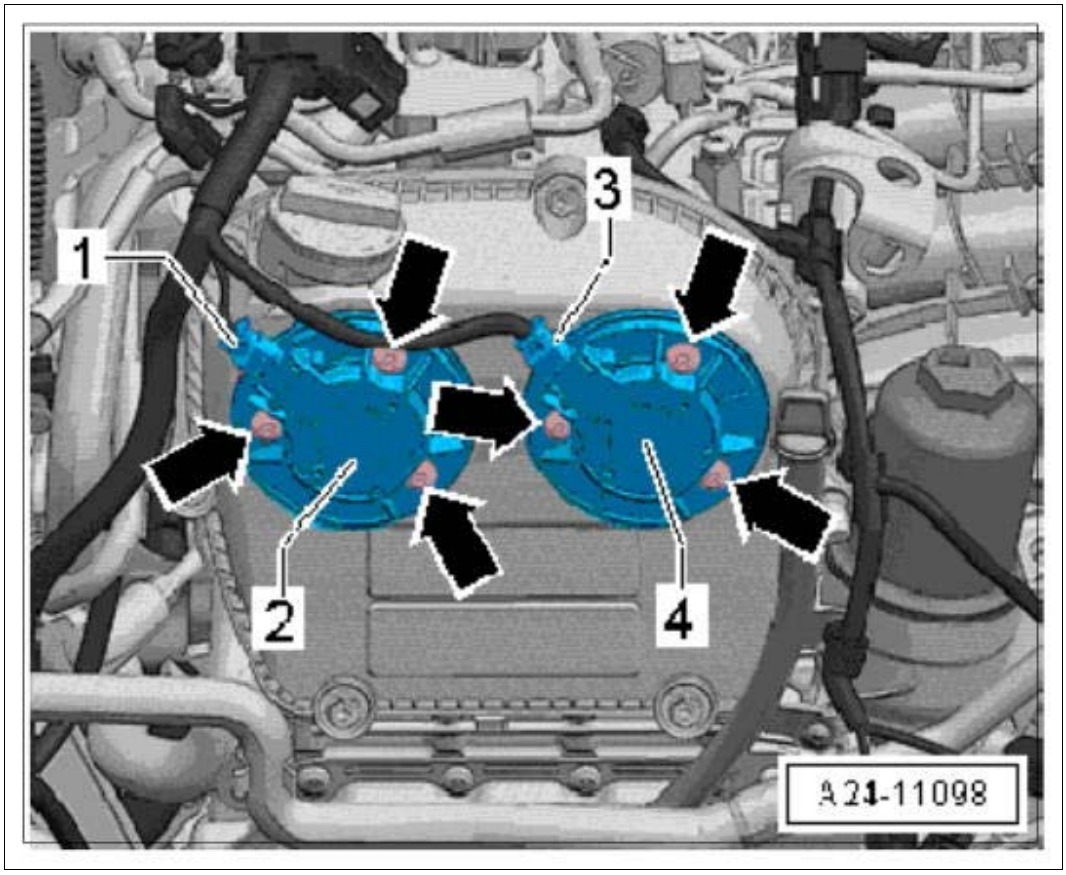

Courtesy of PORSCHE CARS NORTH AMERICA, INC.

WM 153319 REMOVING AND INSTALLING CHAIN HOUSING COVER (MACAN, MACAN S, MACAN TURBO) > INSTALLING CHAIN HOUSING COVER > INSTALLING LOWER CHAIN HOUSING COVER

Information

The lower chain housing cover must be replaced.

1. Remove sealant residue on the cylinder block using a flat scraper.
2. Clean sealing faces to remove any oil and grease.
3. Check that dowel pins for centering **-arrows-** are available.

Fig 1: Identifying Centering Chain Housing Cover Dowel Pins

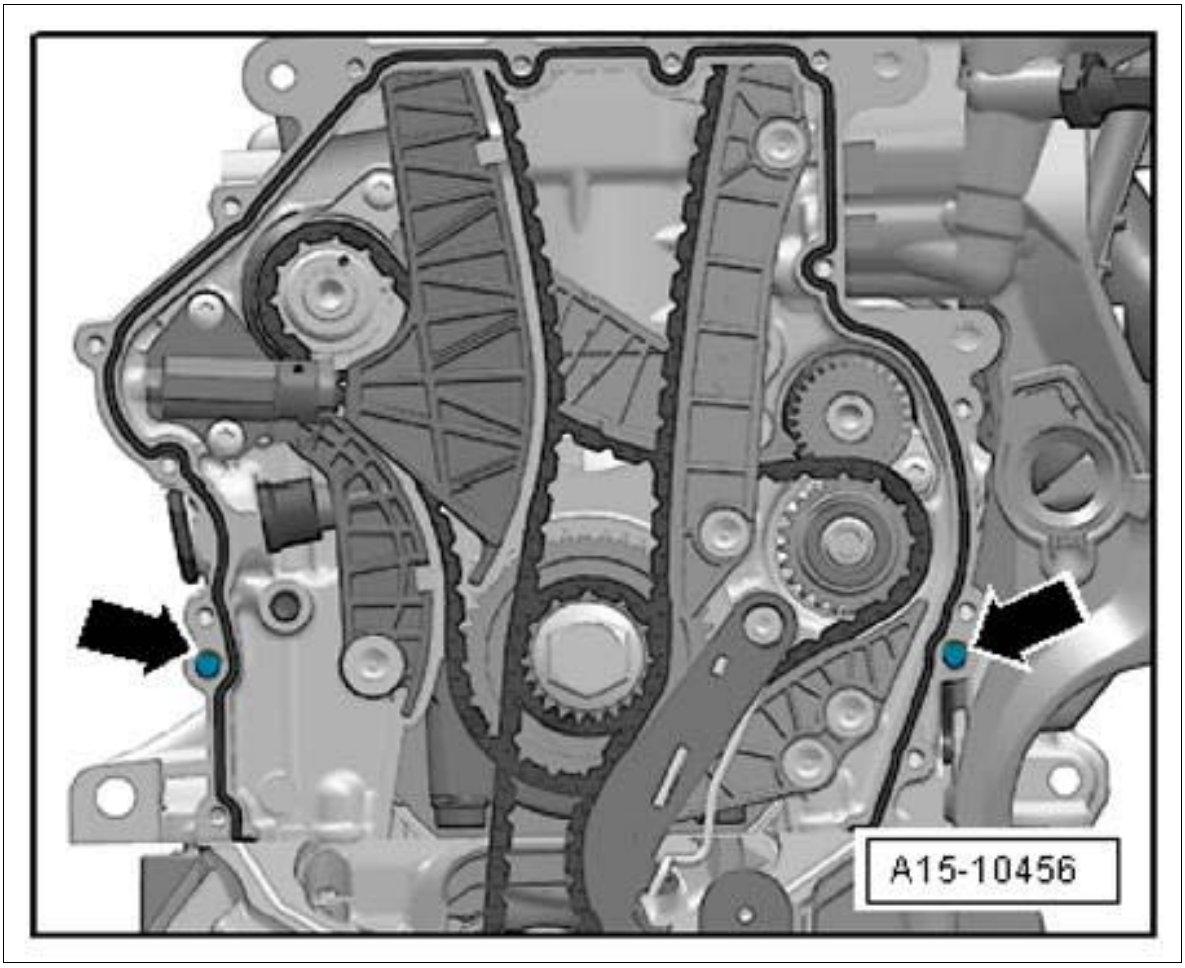

Courtesy of PORSCHE CARS NORTH AMERICA, INC.

4. Cut off the nozzle on the sealant tube at the front marking. (The nozzle diameter is approx. 3 mm).

   Information

   The chain housing cover must be installed within 5 minutes of applying the sealant.

5. Apply sealant to the sealing face **-arrow 1-** and edges **-arrows 2-** of the new cover.

   Sealant bead thickness: 2...3 mm.

Fig 2: Identifying Sealant Applying Area

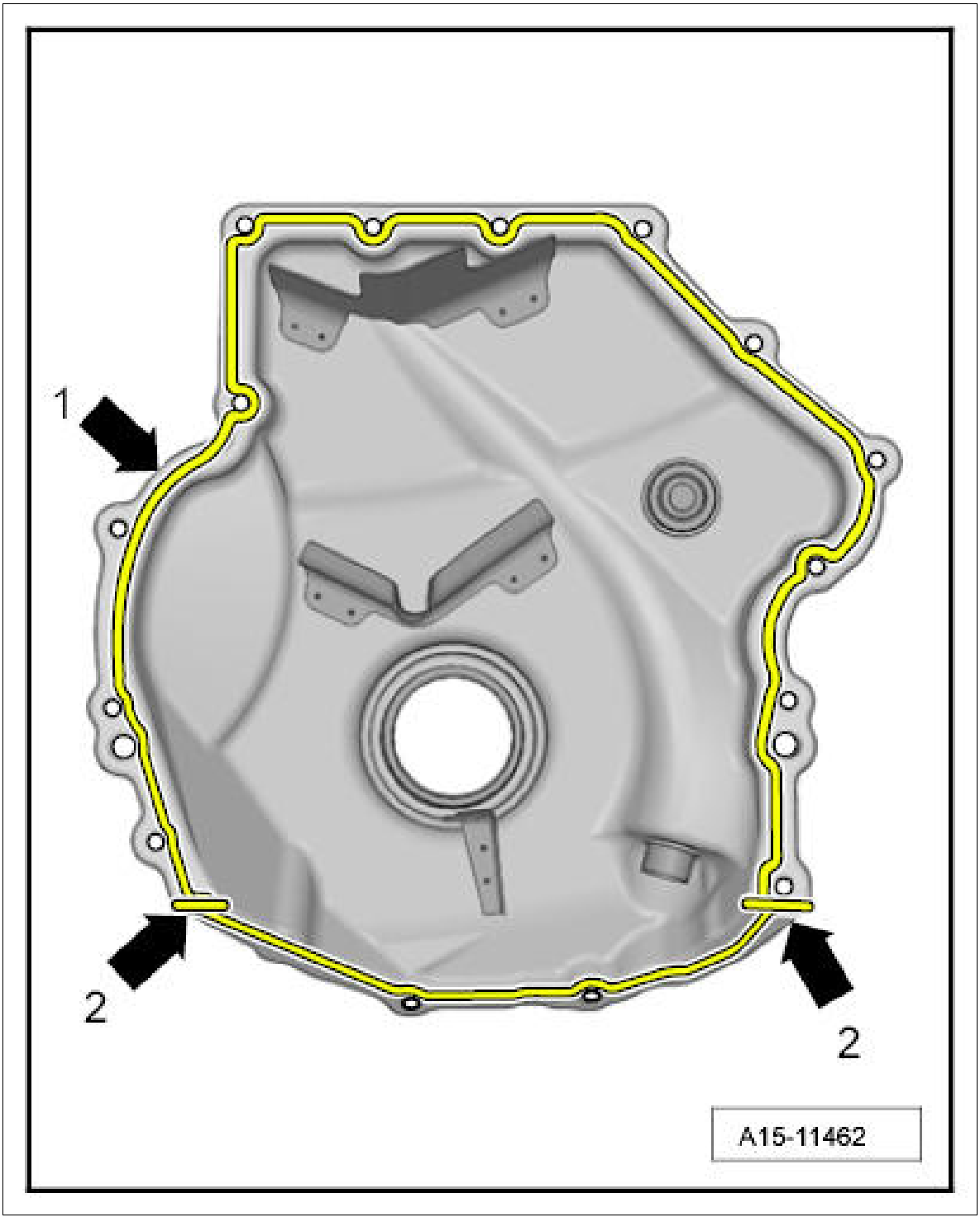

Courtesy of PORSCHE CARS NORTH AMERICA, INC.

6. **Install new** chain housing cover.
    1. 6.1. Position chain housing cover and fit **new** fastening screws **-1...15-** .
    2. 6.2. Tighten fastening screws in the sequence **-1...15-** .

        Step 1: **Initial tightening 8 Nm (6 ftlb.)**

Step 2: **Final tightening +45°**

Fig 3: Identifying Lower Chain Housing Cover

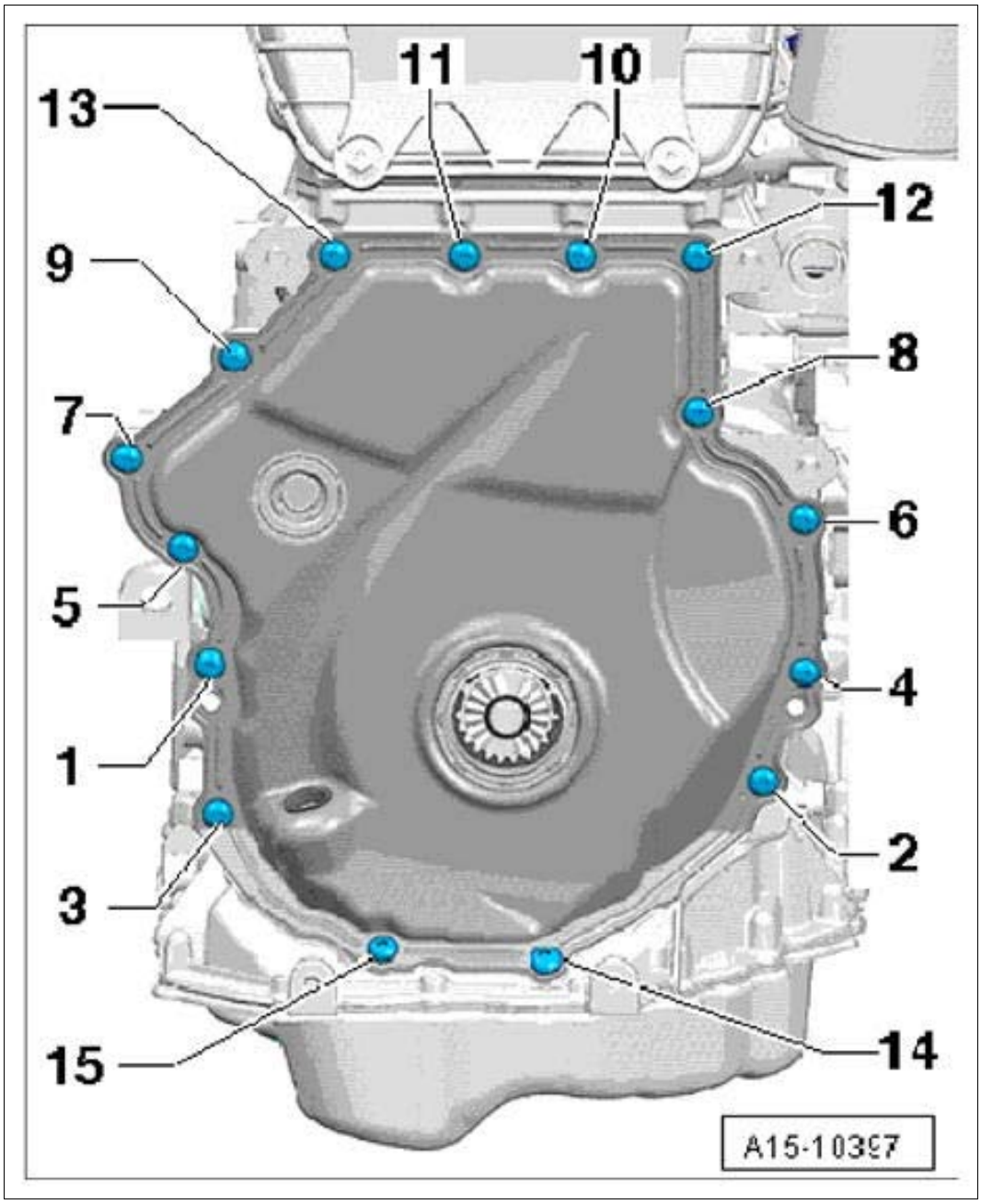

Courtesy of PORSCHE CARS NORTH AMERICA, INC.

7. Secure the coolant line.

    1. 7.1. Install guide tube for oil dipstick **-4-** with a new seal.
    2. 7.2. Fit and tighten fastening screw **-1-** . **Tightening torque 9 Nm (6.5 ftlb.)**

Fig 4: Identifying Coolant Hose And Guide Tube For Oil Dipstick

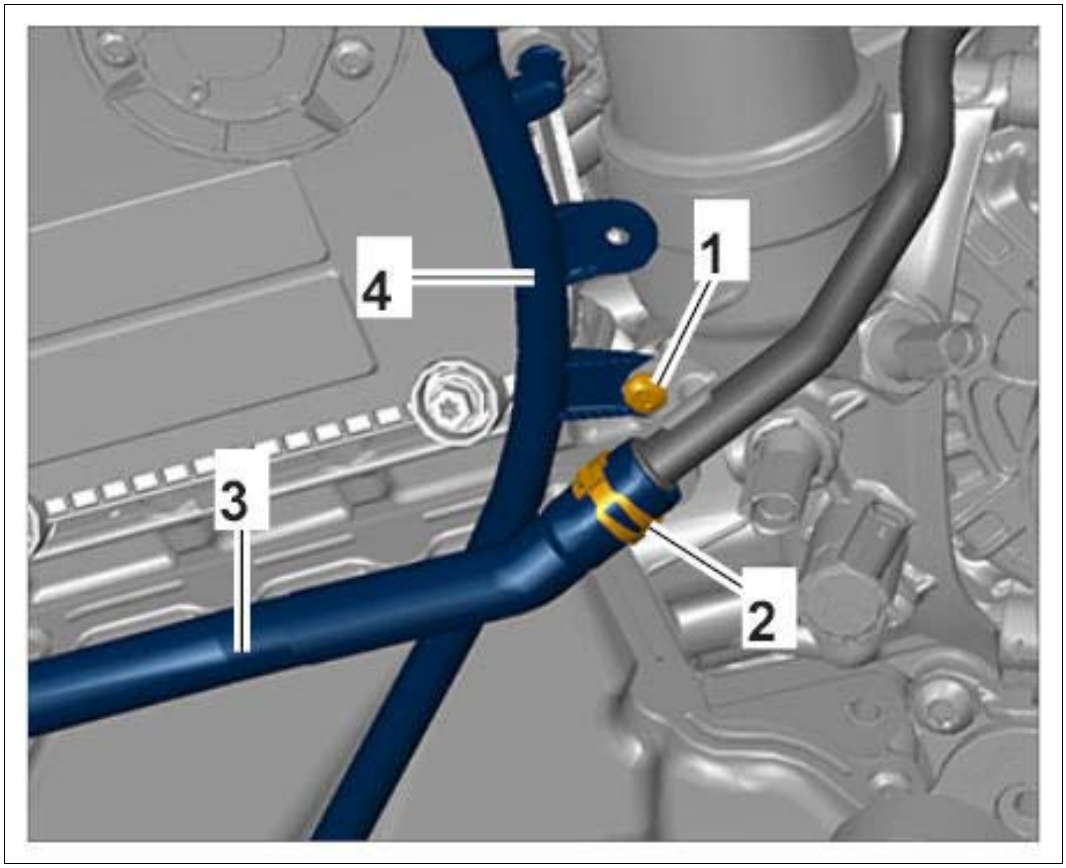

Courtesy of PORSCHE CARS NORTH AMERICA, INC.

8. Unscrew fastening screw for pulley and remove **pressure piece T10368.** → Pressure piece -T10368-

Fig 5: Identifying Pressure Piece - T10368

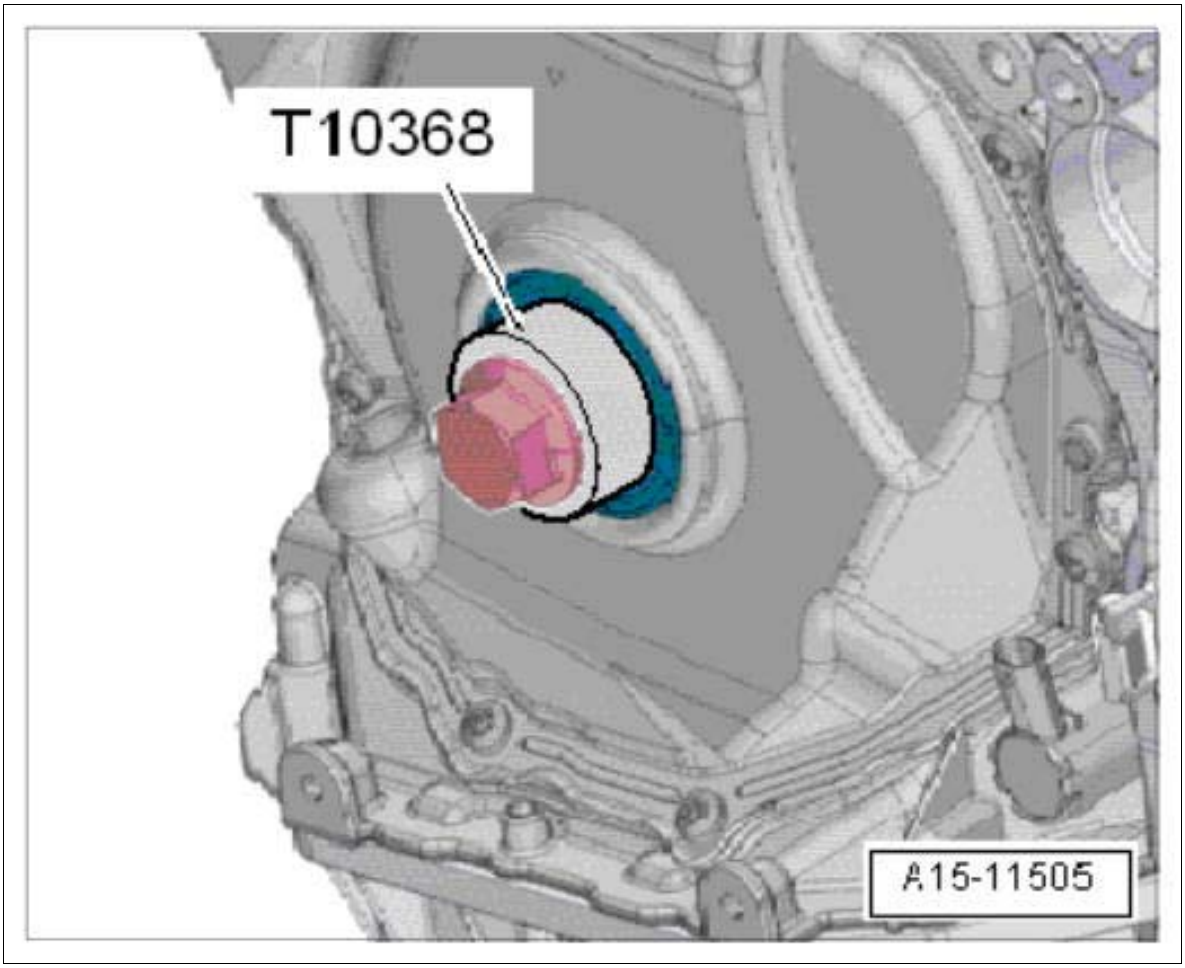

Courtesy of PORSCHE CARS NORTH AMERICA, INC.

WM 153319 REMOVING AND INSTALLING CHAIN HOUSING COVER (MACAN, MACAN S, MACAN TURBO) > SUBSEQUENT WORK > SUBSEQUENT WORK FOR UPPER CHAIN HOUSING COVER

1. Install engine cover (design cover).

WM 153319 REMOVING AND INSTALLING CHAIN HOUSING COVER (MACAN, MACAN S, MACAN TURBO) > SUBSEQUENT WORK > SUBSEQUENT WORK FOR LOWER CHAIN HOUSING COVER

1. Install pulley. → INSTALLING PULLEY
2. Install belt tensioner. → INSTALLING BELT TENSIONER
3. Fill in engine oil. → FILLING ENGINE OIL

WM 153519 REMOVING AND INSTALLING TIMING CHAIN (MACAN) > TOOLS

Designation	Type	Number	Description	
PIWIS Tester II	Special tool	9818		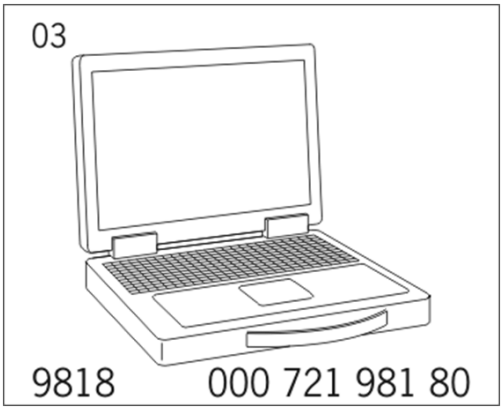
assembly tool	VW tool	T10352		
counter-hold tool	VW tool	T10355		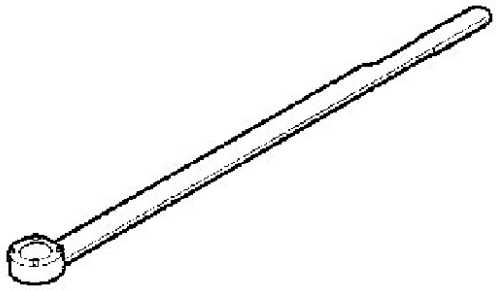
Pressure piece	VW tool	T10368		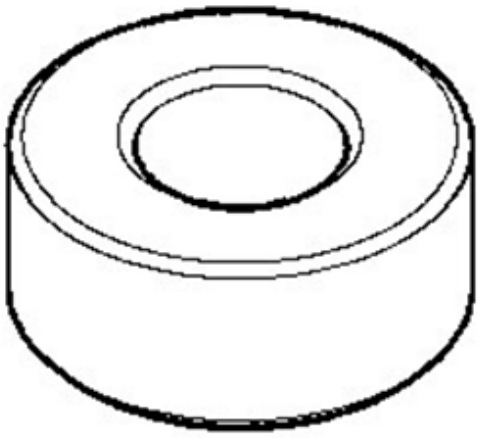

locking pin	VW tool	T40011		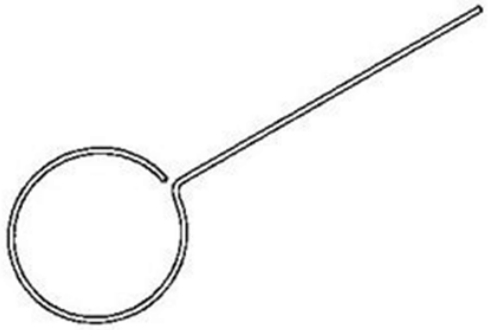
Lever	VW tool	T40243		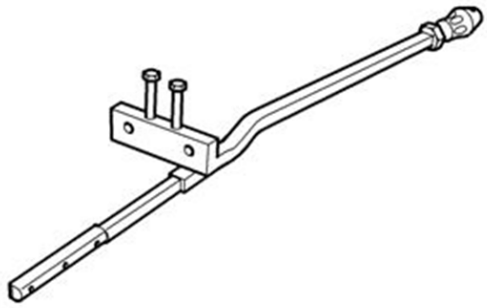
adapter	VW tool	T40266		
locking tool	VW tool	T40267		

Camshaft clamp	VW tool	T40271		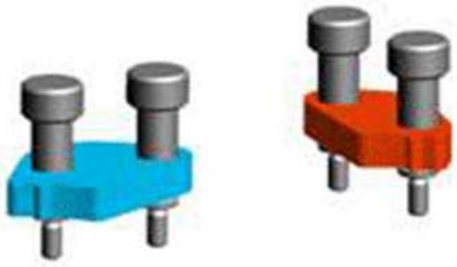

WM 153519 REMOVING AND INSTALLING TIMING CHAIN (MACAN) > PRELIMINARY WORK

1. Remove upper chain housing cover. → 153319 REMOVING AND INSTALLING CHAIN HOUSING COVER

WM 153519 REMOVING AND INSTALLING TIMING CHAIN (MACAN) > REMOVING TIMING CHAIN

Information

Control valves are left-threaded.

1. Use **assembly tool T10352** /2 to remove control valves at the left and right in **-direction of arrow-** .

Fig 1: Removing Control Valves

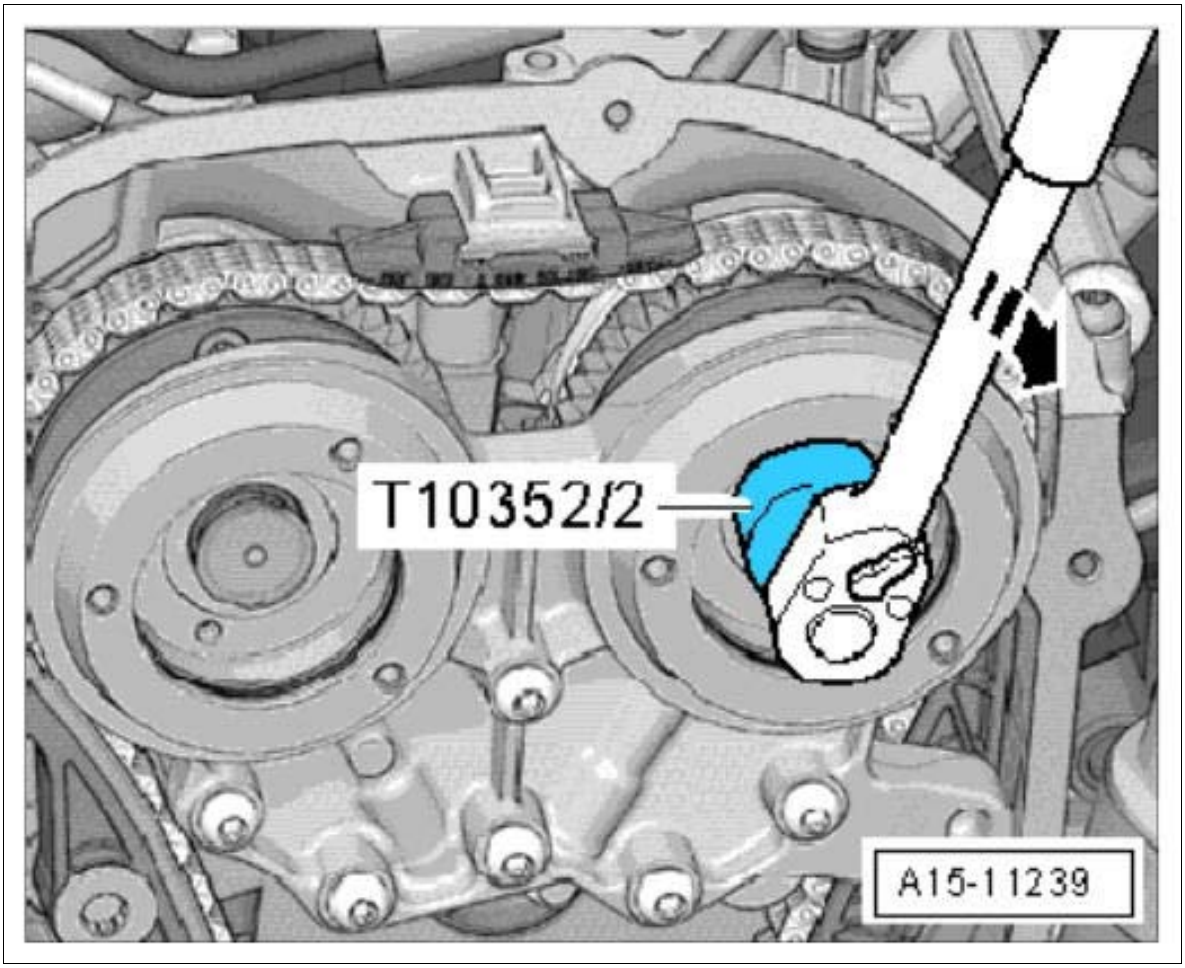

Courtesy of PORSCHE CARS NORTH AMERICA, INC.

2. Unscrew fastening screws **-arrows-** and remove bearing saddle.

Fig 2: Locating Bearing Saddle Screws

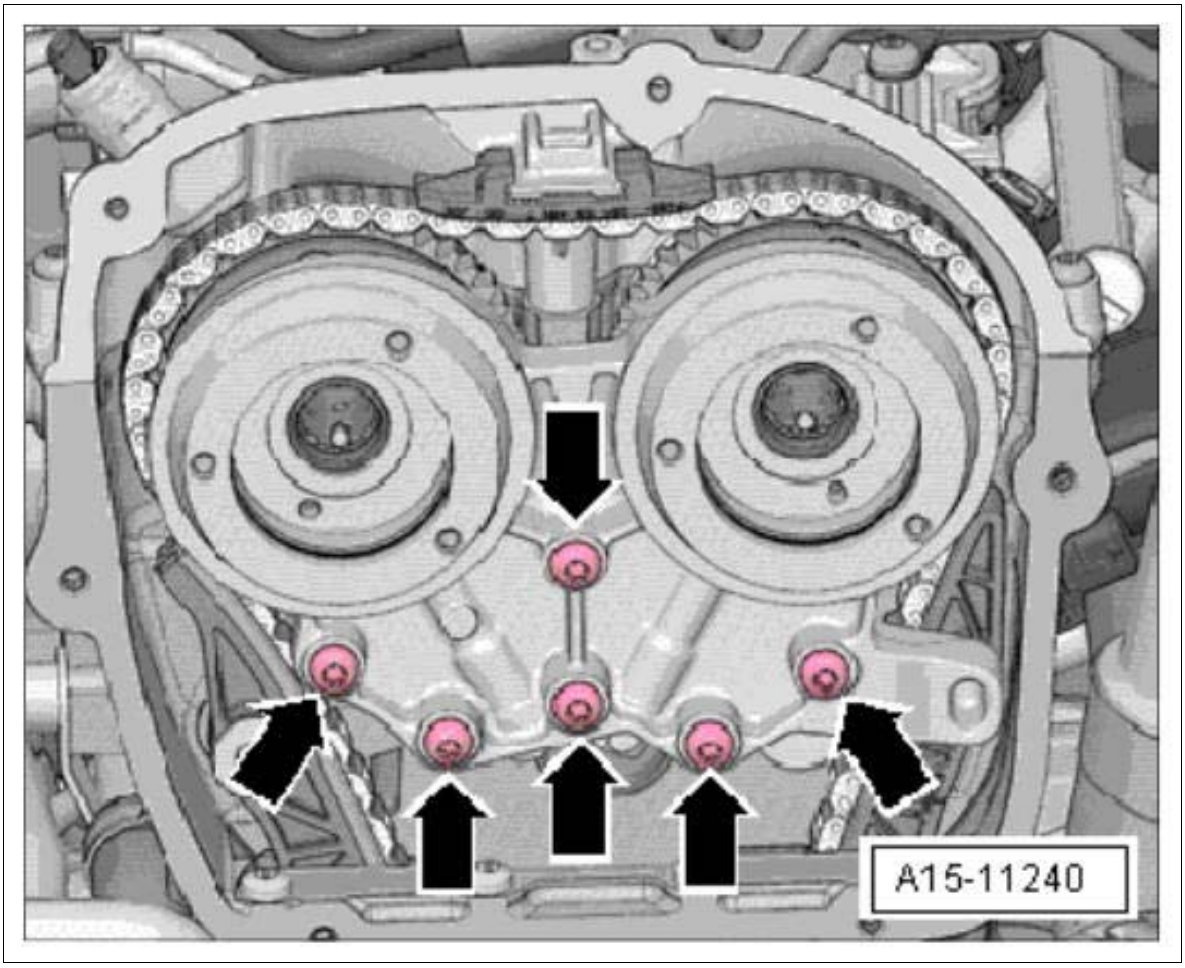

Courtesy of PORSCHE CARS NORTH AMERICA, INC.

3. Turn pulley to "top dead center" position using **counter-hold tool T10355** .
    1. 3.1. Markings **-1-** on the camshaft are pointing upwards.
    2. 3.2. The notch on the pulley and the marking on the chain housing cover are aligned **-arrow-** .

Fig 3: Locating Top Dead Center Markings

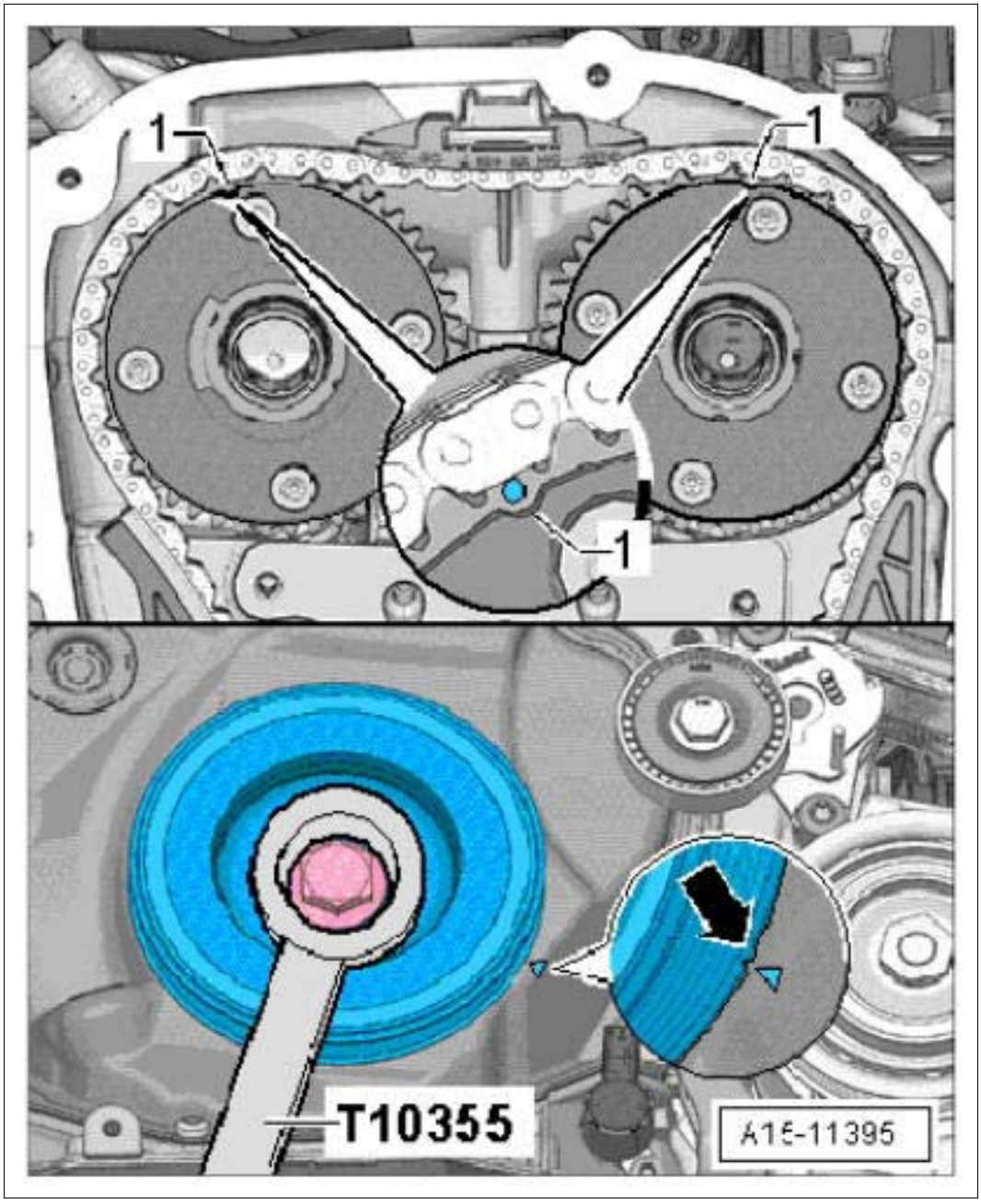

Courtesy of PORSCHE CARS NORTH AMERICA, INC.

4. Remove lower chain housing cover. → 153319 REMOVING AND INSTALLING LOWER CHAIN HOUSING COVER

5. Remove chain tensioner for the oil pump.

    1. 5.1. Press clamp in **-direction of arrow-** and lock it using **locking pin T40011** .

    2. 5.2. Unscrew guide pin **-1-** and remove chain tensioner.

Fig 4: Removing Oil Pump Chain Tensioner

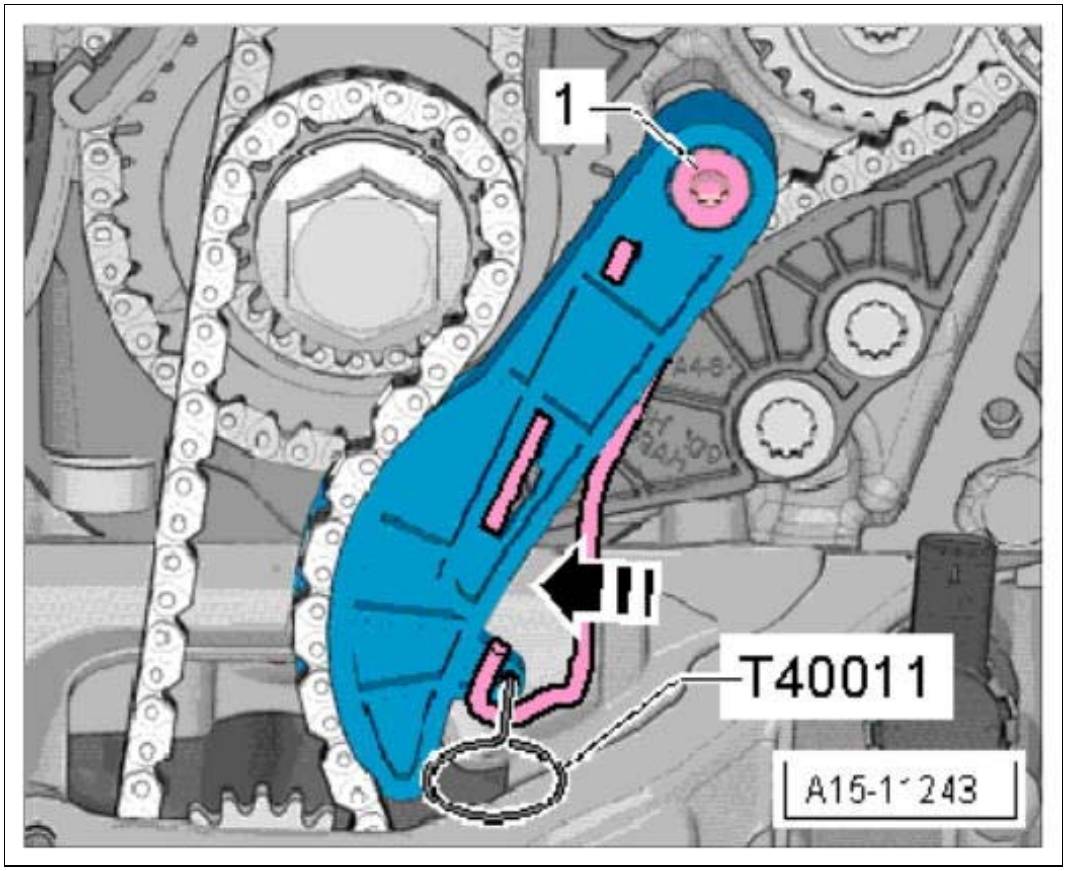

Courtesy of PORSCHE CARS NORTH AMERICA, INC.

6. Unscrew fastening screws **-arrows-** .

Fig 5: Locating Timing Chain Fastening Screws

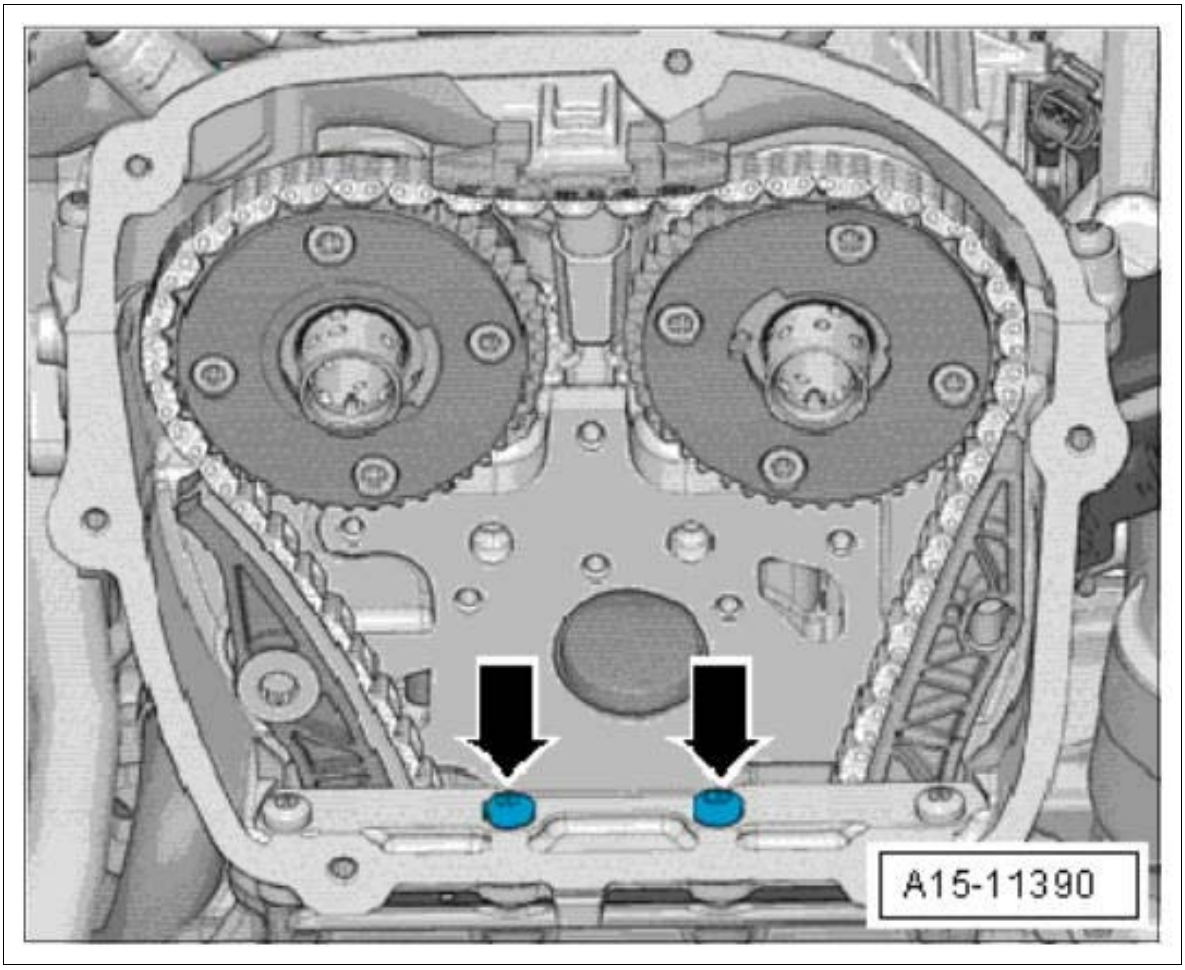

Courtesy of PORSCHE CARS NORTH AMERICA, INC.

7. Tighten chain tensioner.
    1. 7.1. **Lever T40243** must now be screwed in **-arrows-** .
    2. 7.2. Press and hold circlip **-1-** .
    3. 7.3. **Lever T40243** must now be pressed slowly in **-direction of arrow-** and held securely.

Fig 6: Tightening Chain Tensioner

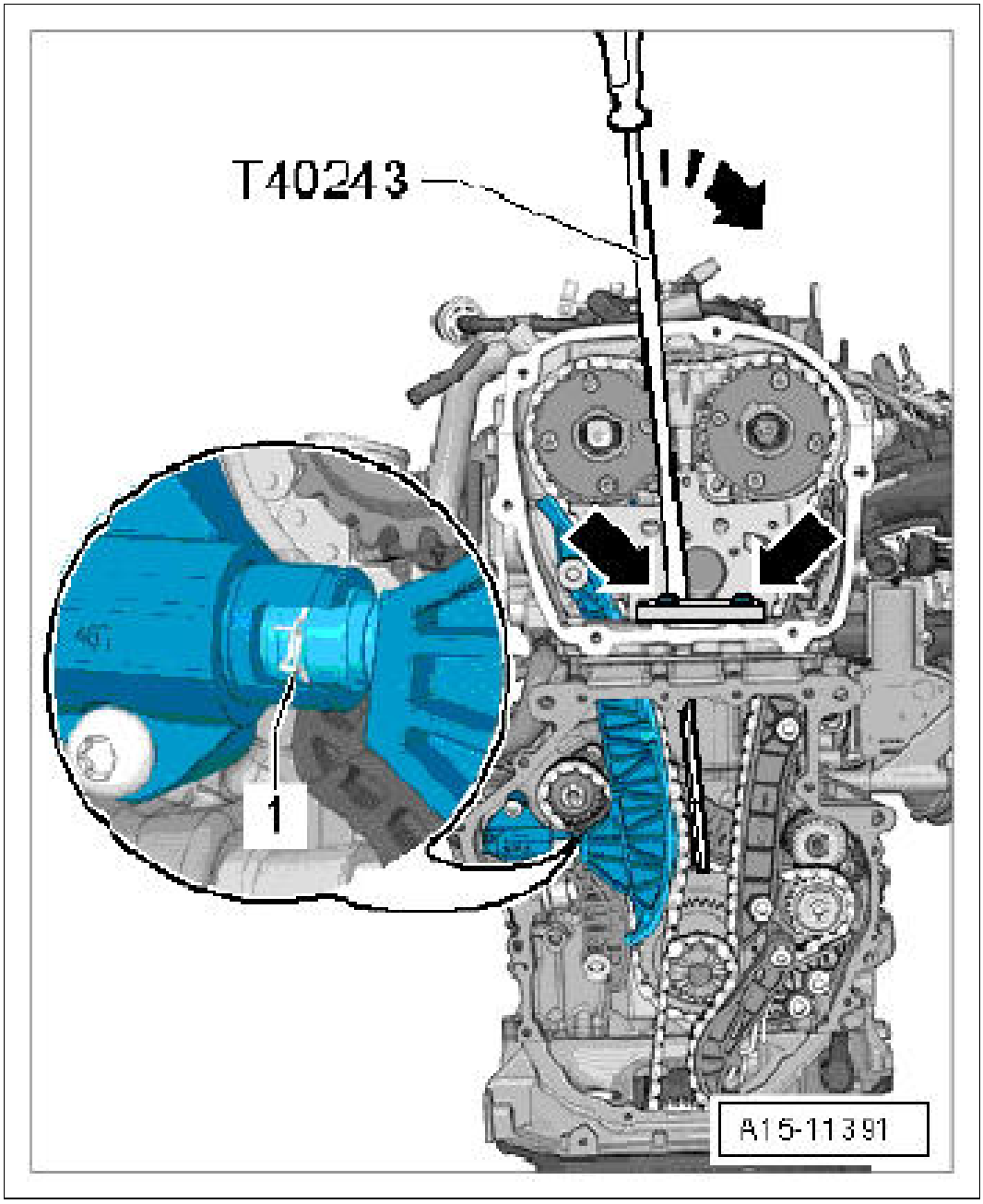

Courtesy of PORSCHE CARS NORTH AMERICA, INC.

8. Lock the chain tensioner using **locking tool T40267** (→ Locking chain tensioner) and remove **lever T40243** .

Fig 7: Locking Chain Tensioner

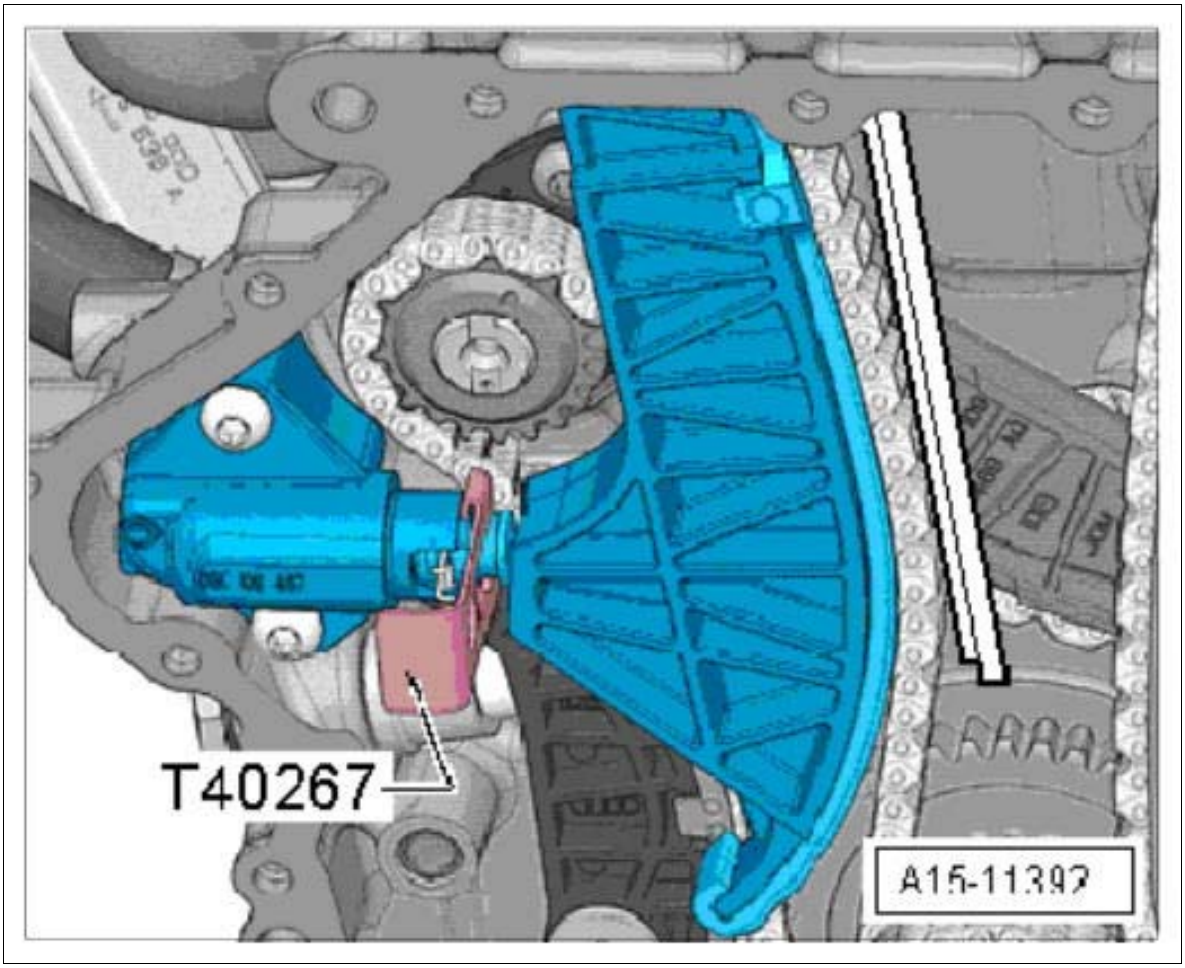

Courtesy of PORSCHE CARS NORTH AMERICA, INC.

9. **Camshaft clamp T40271** /2 must be screwed onto the cylinder head and then pushed into the splines on the sprocket in **-direction of arrow 2-** .

   Use **adapter T40266** to turn the intake camshaft in **-direction of arrow 1-** if necessary.

Fig 8: Securing Intake Camshaft

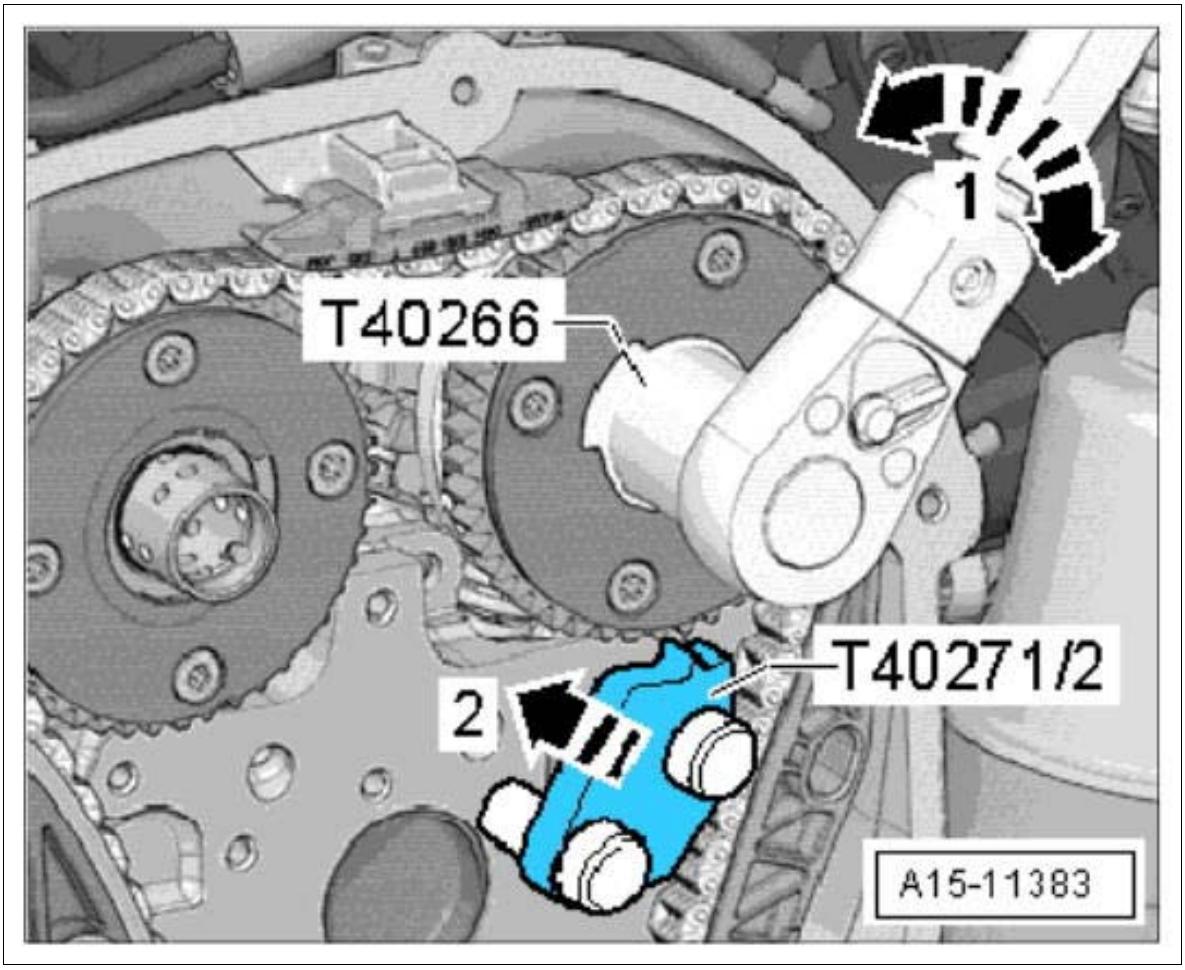

Courtesy of PORSCHE CARS NORTH AMERICA, INC.

10. Unscrew guide pin **-2-** and remove tensioning rail.

Fig 9: Identifying Tensioning And Guide Rails

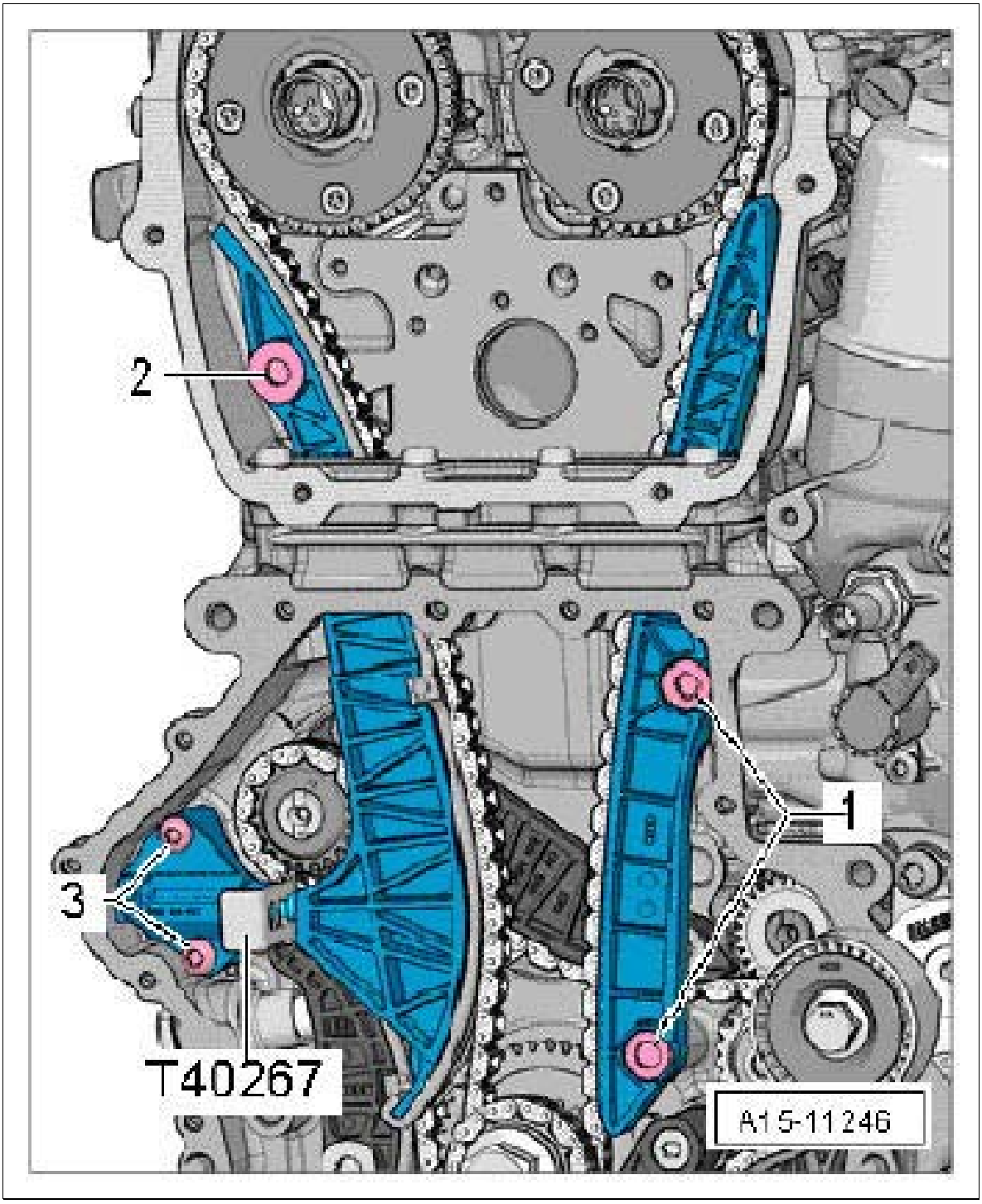

Courtesy of PORSCHE CARS NORTH AMERICA, INC.

11. Secure the outlet camshaft.

    1. 11.1. **Camshaft clamp T40271** /1 must be screwed onto the cylinder head. → Securing outlet camshaft

    2. 11.2. Use **adapter T40266** to turn the outlet camshaft in **-direction of arrow 1-** and push **camshaft clamp T40271** /1 onto the splines in **-direction of arrow 2-** .

Fig 10: Securing Outlet Camshaft

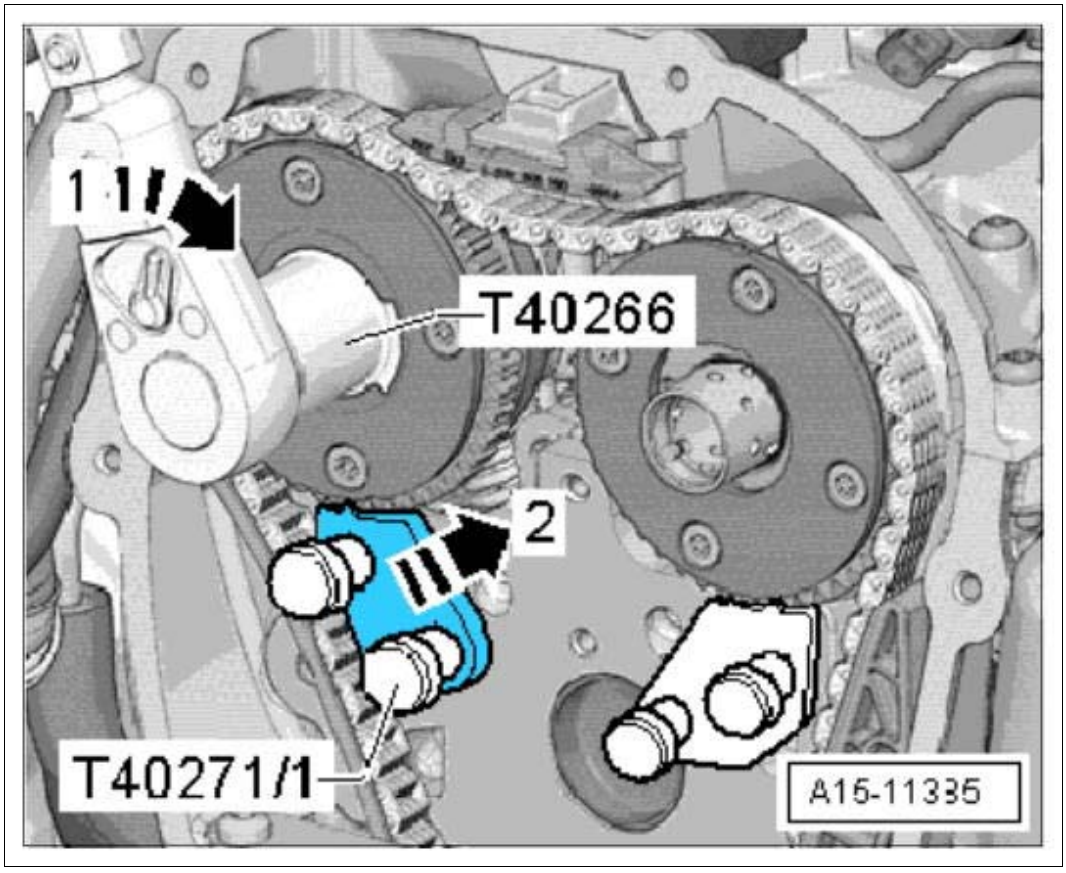

Courtesy of PORSCHE CARS NORTH AMERICA, INC.

12. Release the catch and press guide rail **-arrows-** forward and off.

Fig 11: Locating Upper Guide Rail

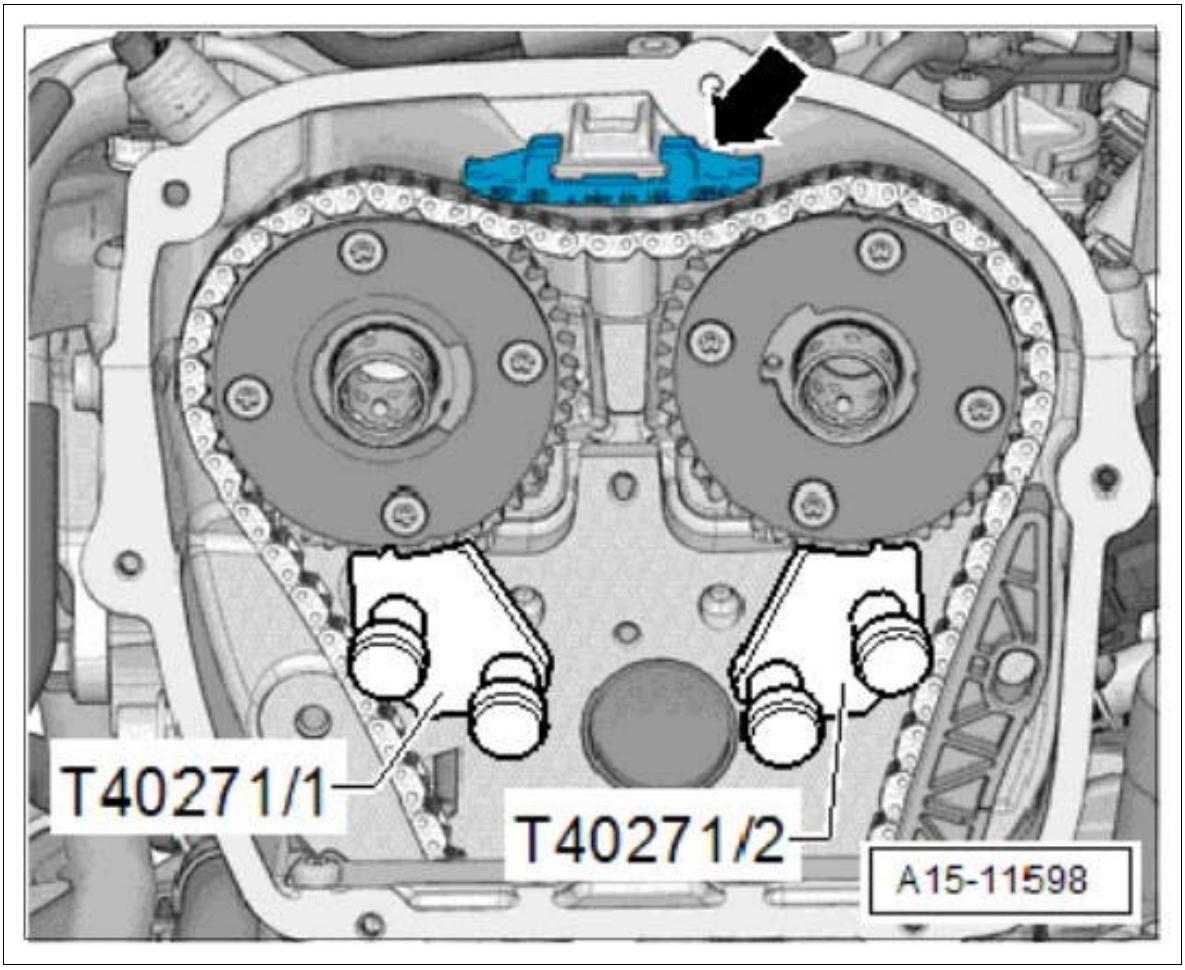

Courtesy of PORSCHE CARS NORTH AMERICA, INC.

13. Unscrew guide pin **-1-** and remove guide rail.

Fig 12: Identifying Tensioning And Guide Rails

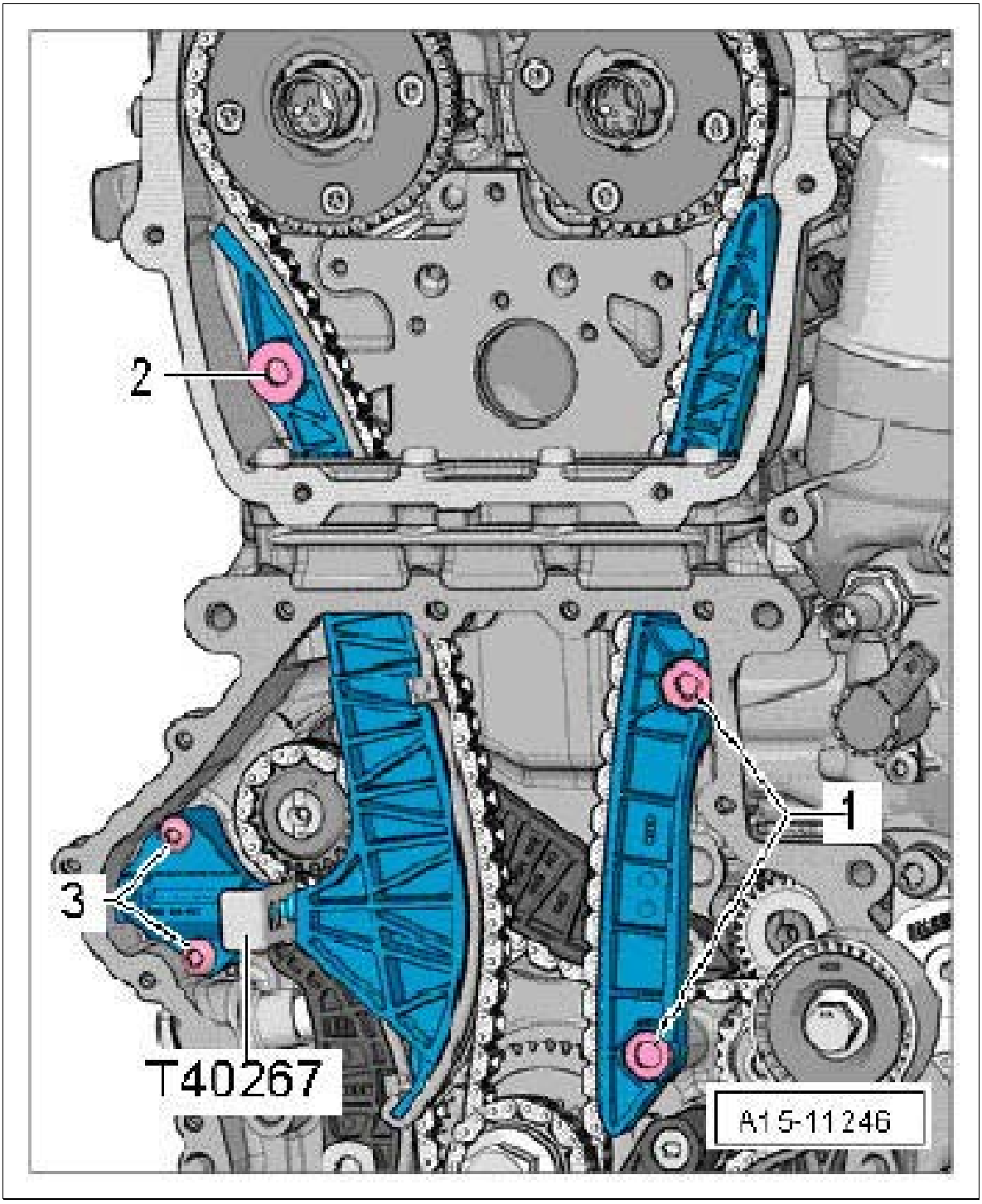

Courtesy of PORSCHE CARS NORTH AMERICA, INC.

14. Remove timing chain from the camshaft timing gears and hang it onto the pins on the camshafts **-arrows-** .

Fig 13: Locating Camshaft Timing Chain Pins

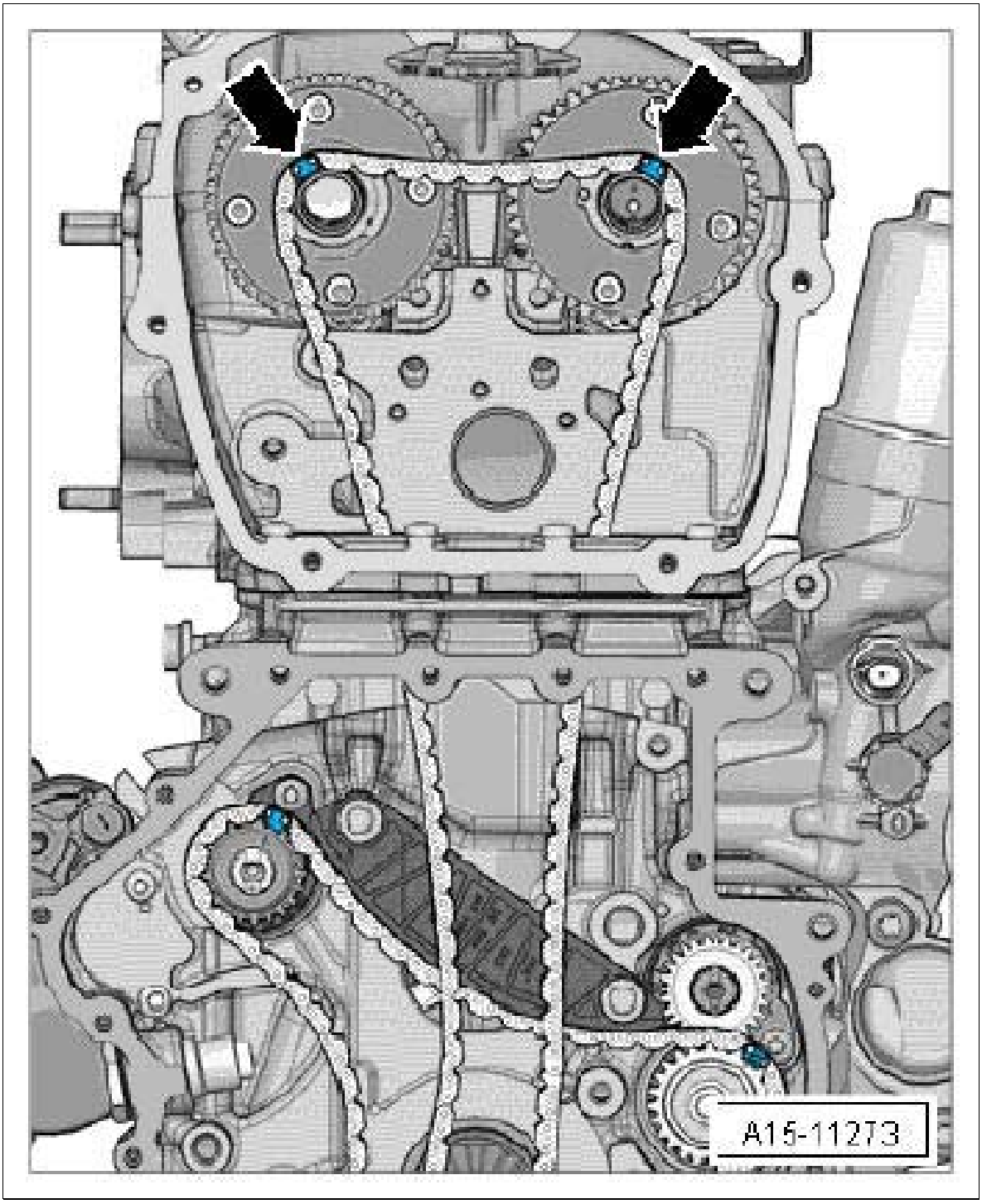

Courtesy of PORSCHE CARS NORTH AMERICA, INC.

15. Remove guide rail and tensioning rail.
    1. 15.1. Remove chain tensioner **-1-** .
    2. 15.2. Unscrew guide pin **-2-** and remove tensioning rail.
    3. 15.3. Unscrew guide pin **-4-** and remove guide rail.

Fig 14: Identifying Chain Tensioner And Guide Pin

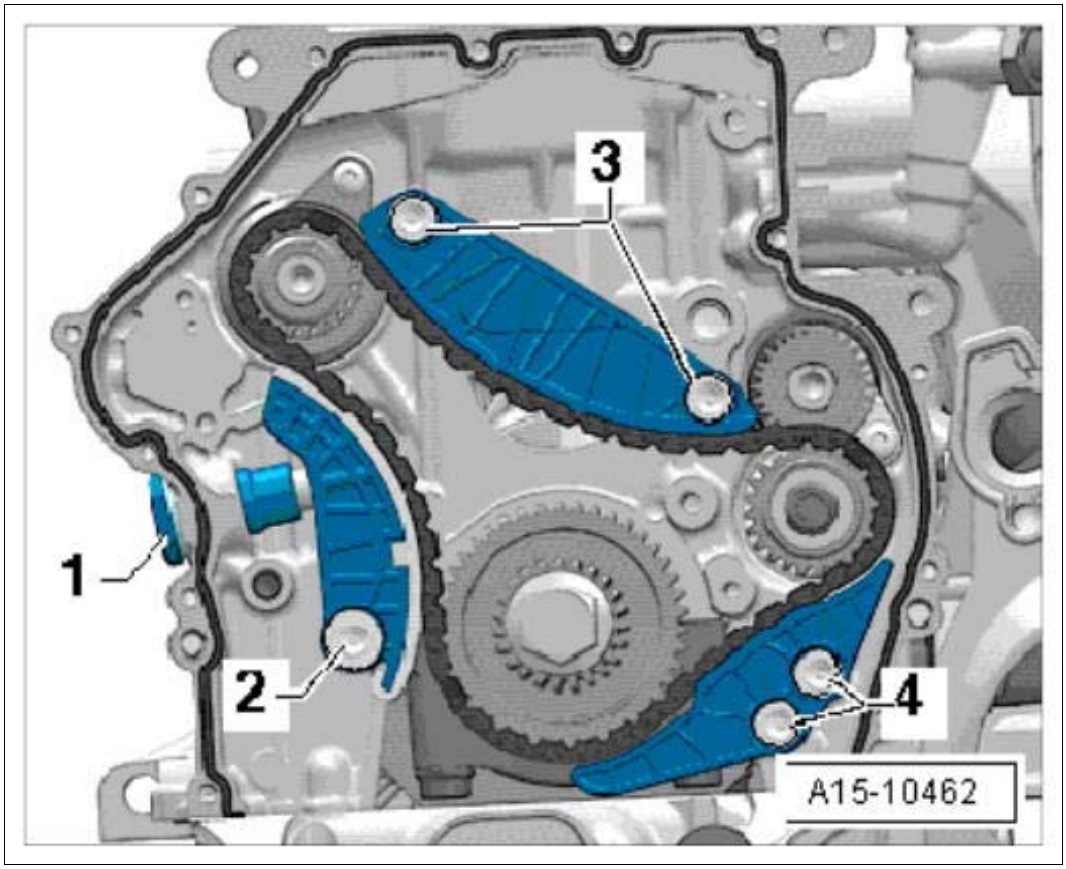

Courtesy of PORSCHE CARS NORTH AMERICA, INC.

16. Remove timing chain.
    1. 16.1. Unscrew fastening screw **-arrow-** for the pulley.
    2. 16.2. Remove timing chain for oil pump drive and remove three-stage sprocket.
    3. 16.3. Remove timing chain.

Fig 15: Removing Timing Chain

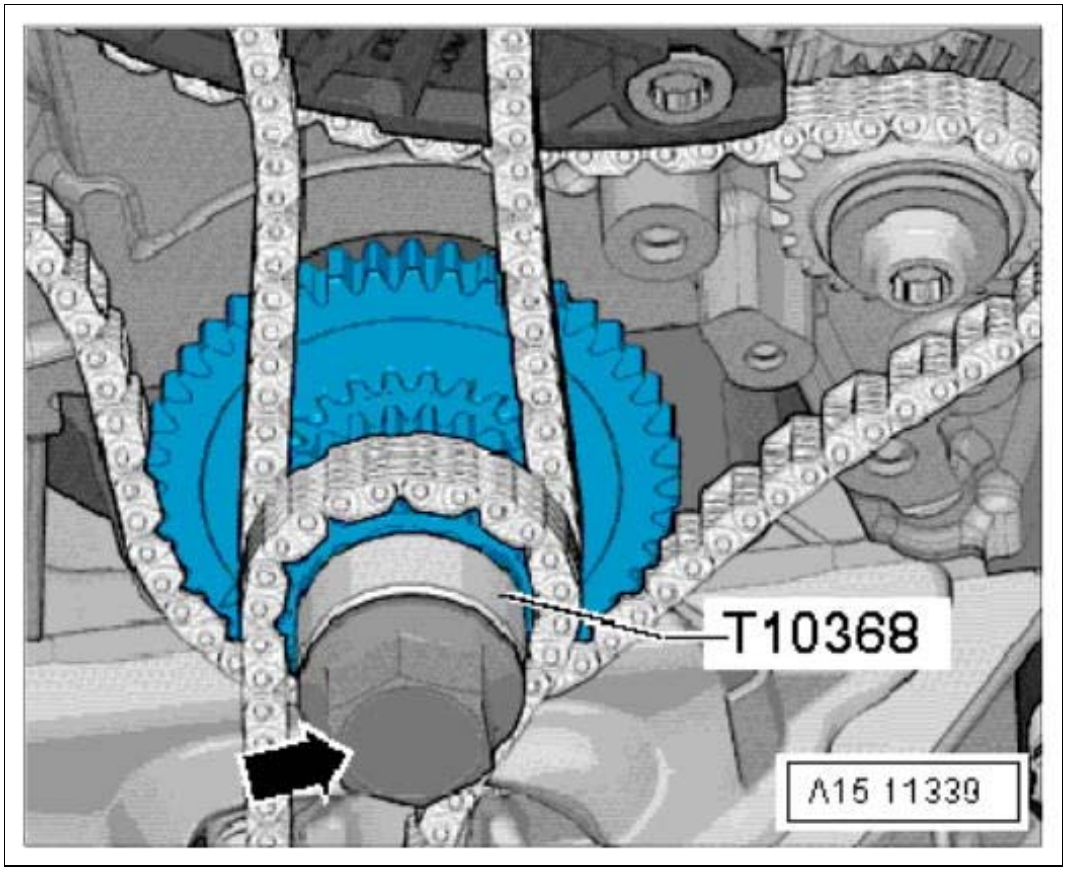

Courtesy of PORSCHE CARS NORTH AMERICA, INC.

WM 153519 REMOVING AND INSTALLING TIMING CHAIN (MACAN) > INSTALLING TIMING CHAIN

1. Mark TDC position on the cylinder block.
    1. 1.1. The markings **-arrows-** for TDC position of the crankshaft must be aligned.
    2. 1.2. Apply marking on the cylinder block **-1-** using a water-resistant marker.

Fig 1: Locating Top Dead Center Marking Position

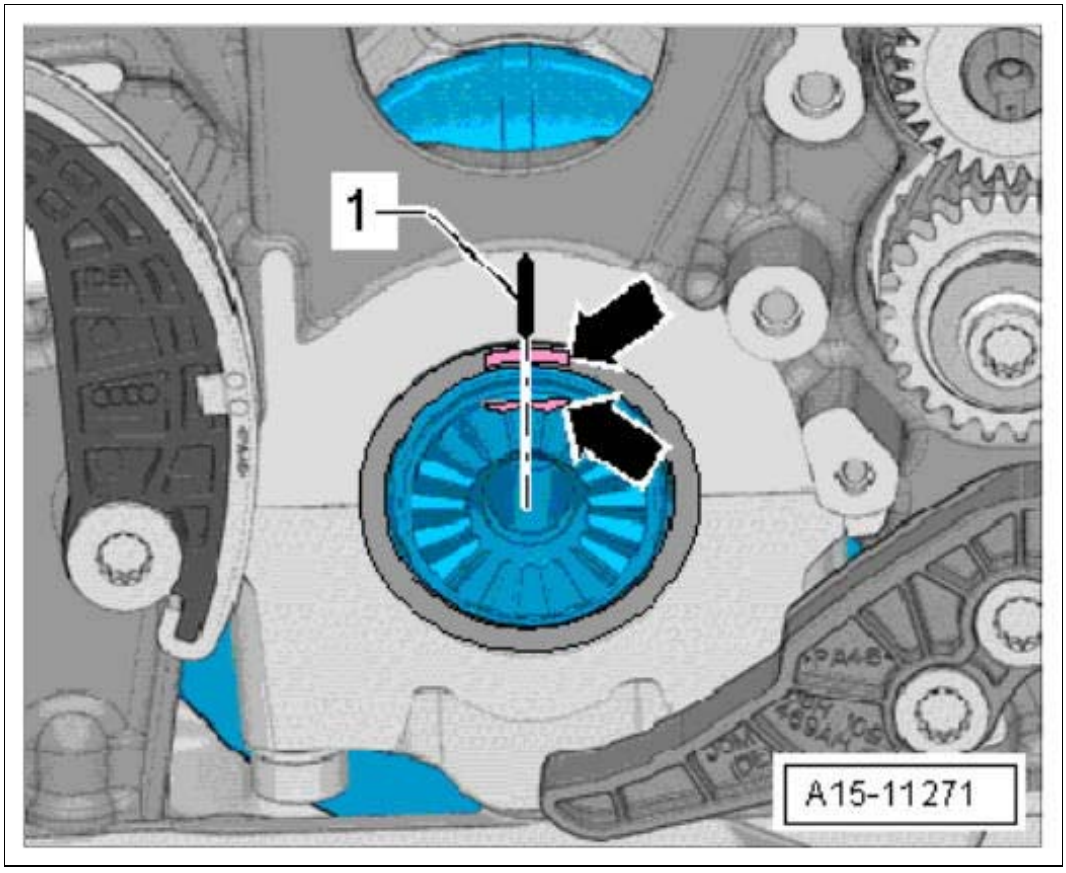

Courtesy of PORSCHE CARS NORTH AMERICA, INC.

2. Copy marking **-2-** to the tooth of the sprocket **-1-** using a water-resistant marker.

Fig 2: Identifying Sprocket Marking

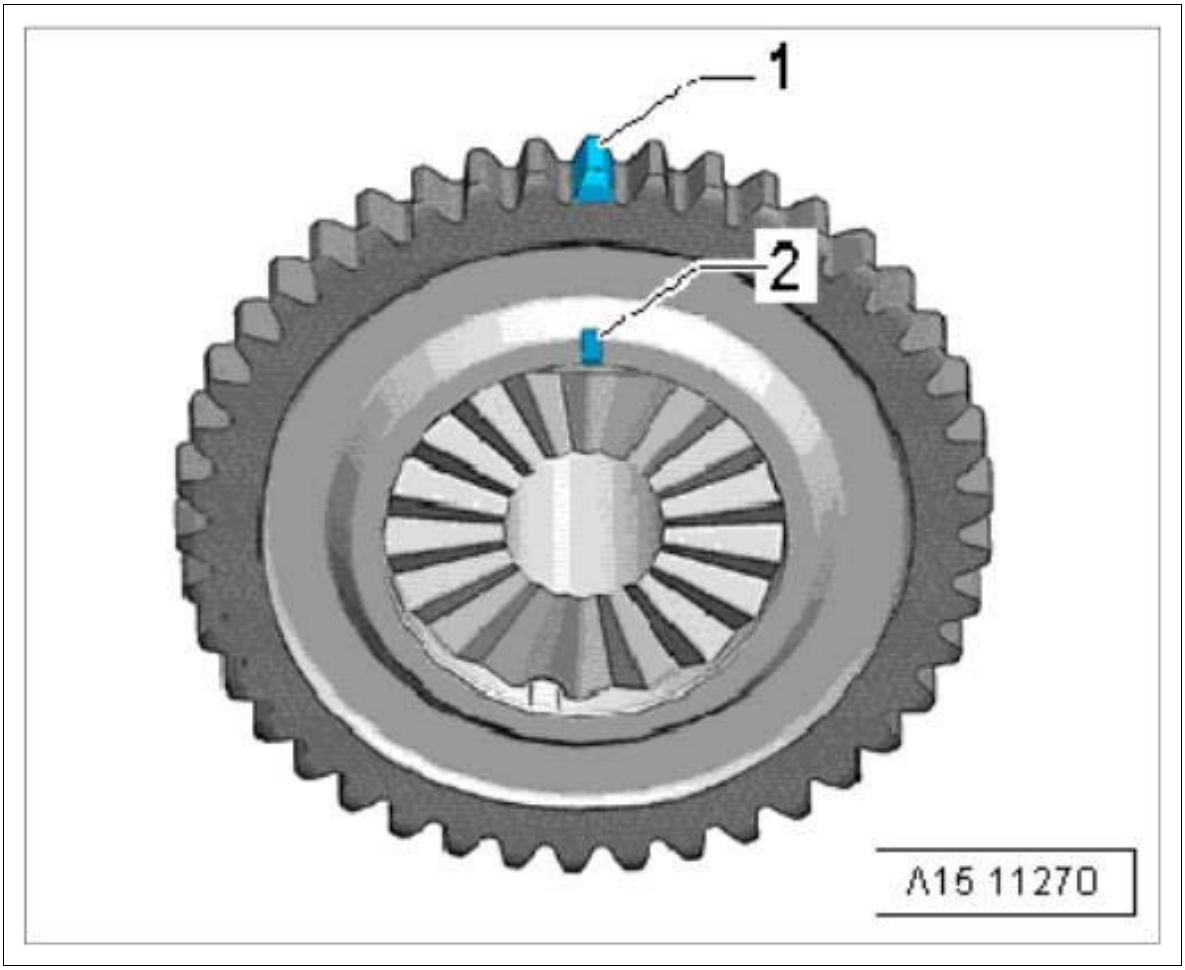

Courtesy of PORSCHE CARS NORTH AMERICA, INC.

3. Turn intermediate gear wheel and balance shaft to the marking **-arrow-** .

   Do not loosen fastening screw -1- .

Fig 3: Locating Intermediate Gear Wheel And Balance Shaft Marking

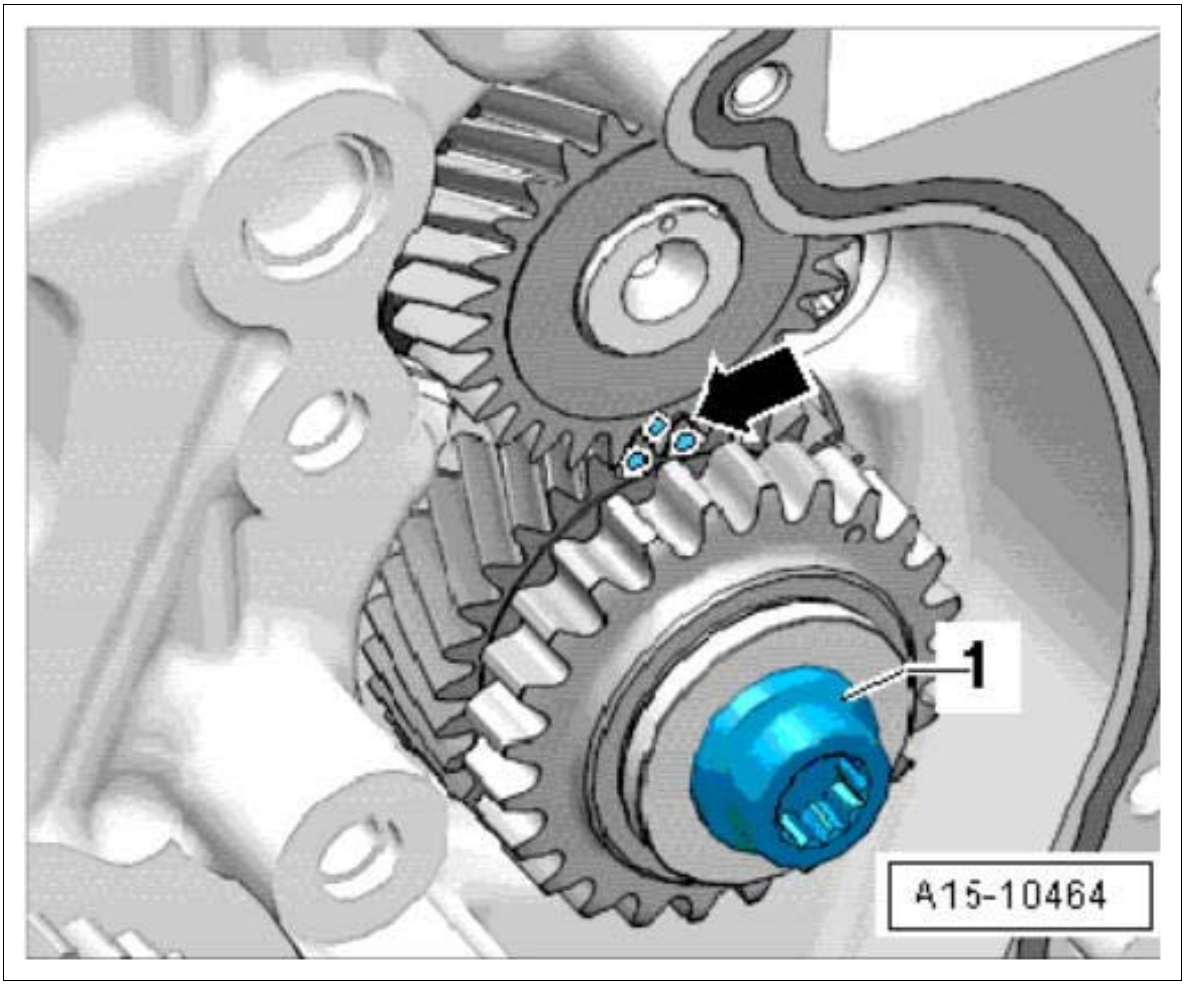

Courtesy of PORSCHE CARS NORTH AMERICA, INC.

4. Fit timing chain for balance shafts.

   Position colored chain links **-arrows-** at the markings on the sprockets.

Fig 4: Locating Balance Shaft Timing Chain

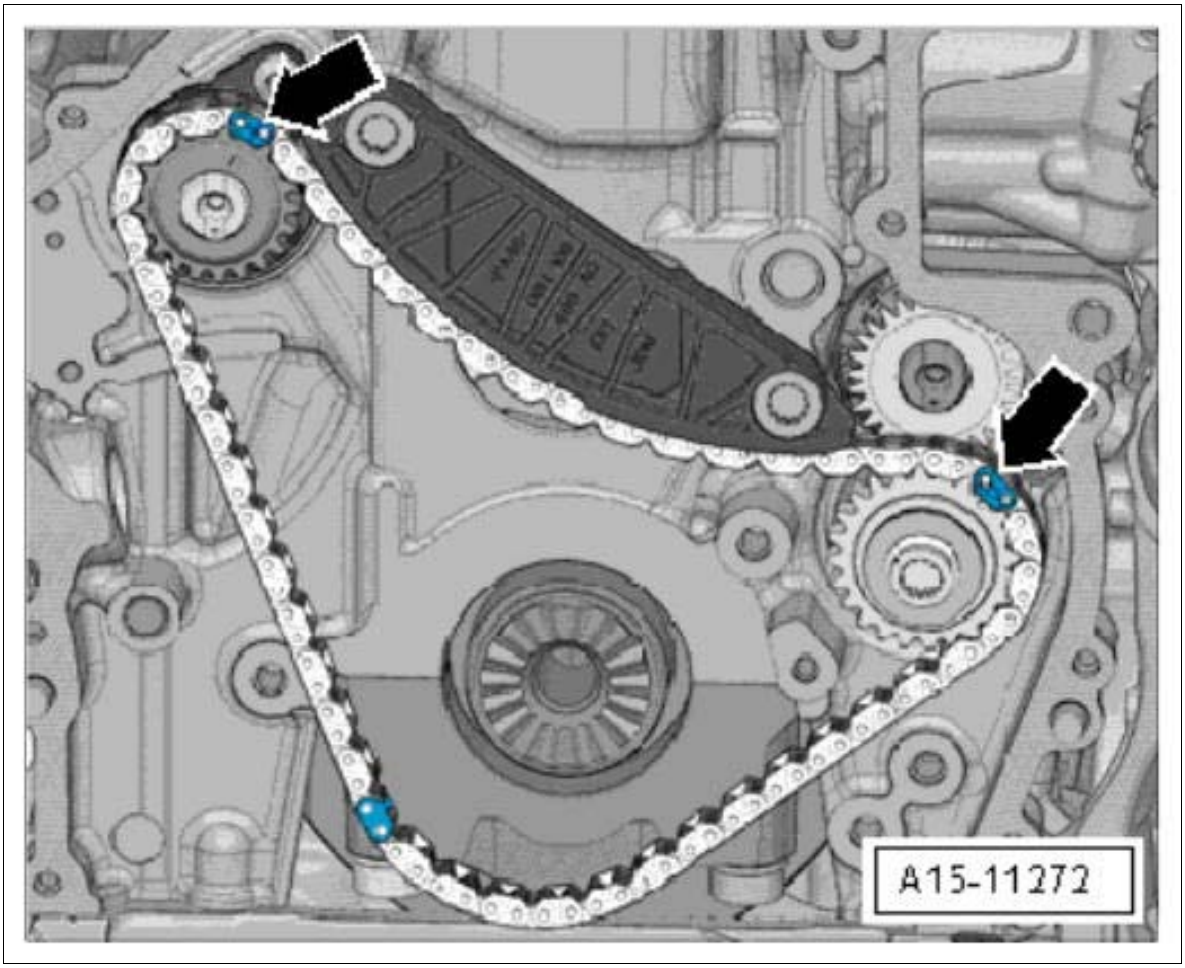

Courtesy of PORSCHE CARS NORTH AMERICA, INC.

5. Engage timing chain with markings **-arrows-** on the pins of the camshafts.

Fig 5: Locating Camshafts Timing Chain

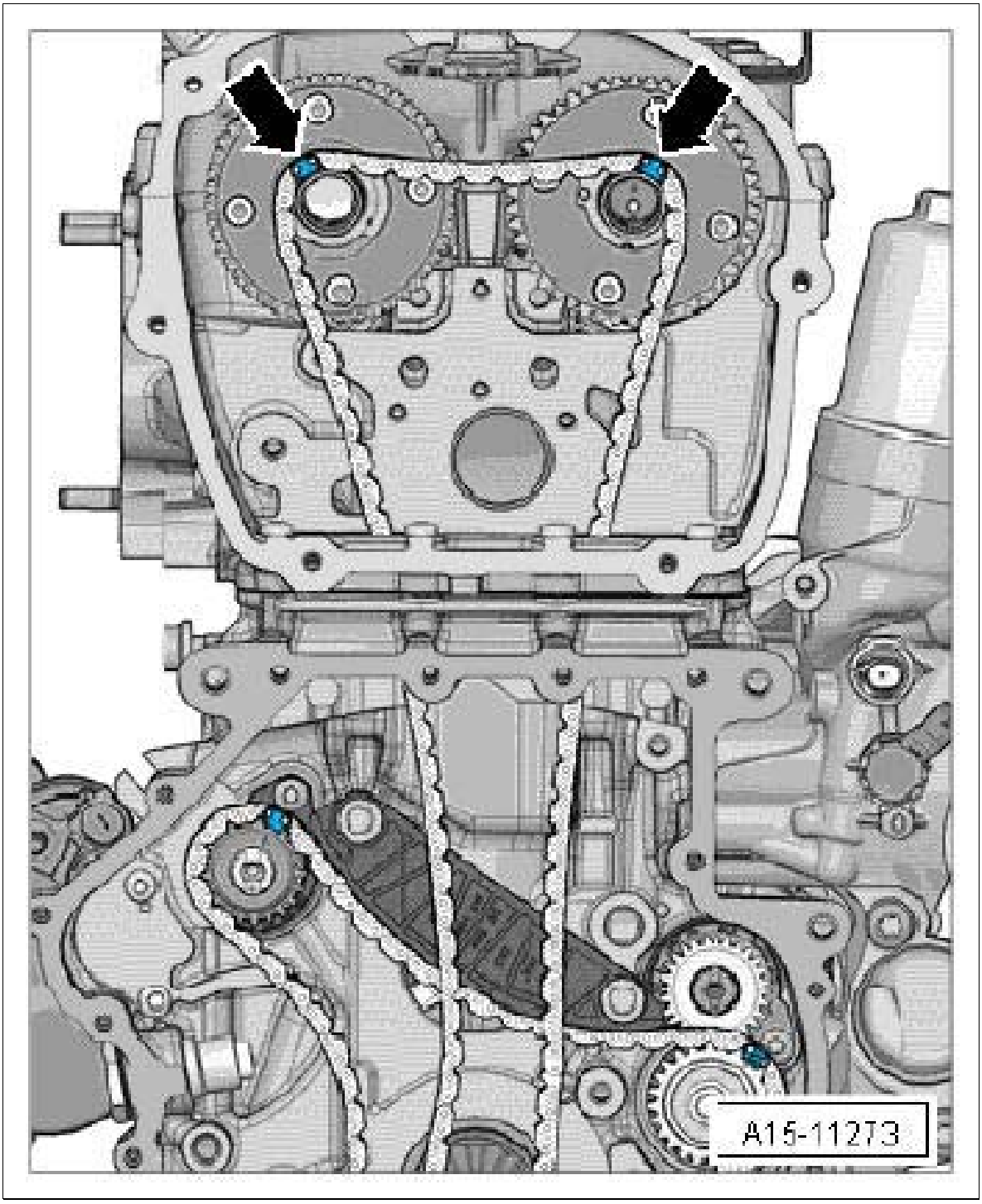

Courtesy of PORSCHE CARS NORTH AMERICA, INC.

6. Install three-stage sprocket.
    1. 6.1. Fit timing chain for oil pump drive on the three-stage sprocket.
    2. 6.2. Swivel the sprocket towards the engine in **-direction of arrow -** and secure on the crankshaft.

       The markings -arrows- must be opposite each other.

Fig 6: Installing Sprocket

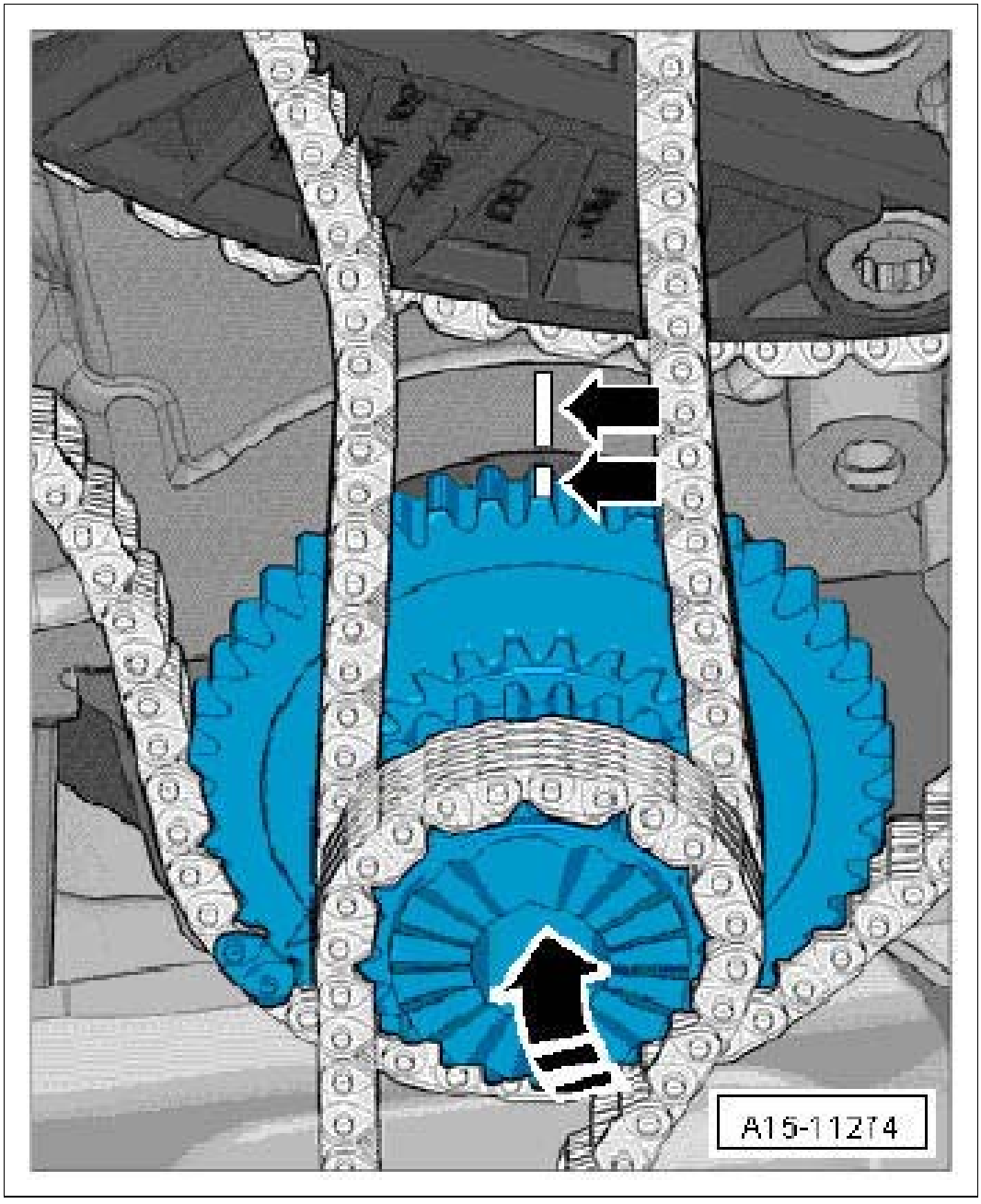

Courtesy of PORSCHE CARS NORTH AMERICA, INC.

7. **Pressure piece T10368** must now be screwed in with the fastening screw **-arrow-** .

Fig 7: Locating Timing Chain Pressure Piece

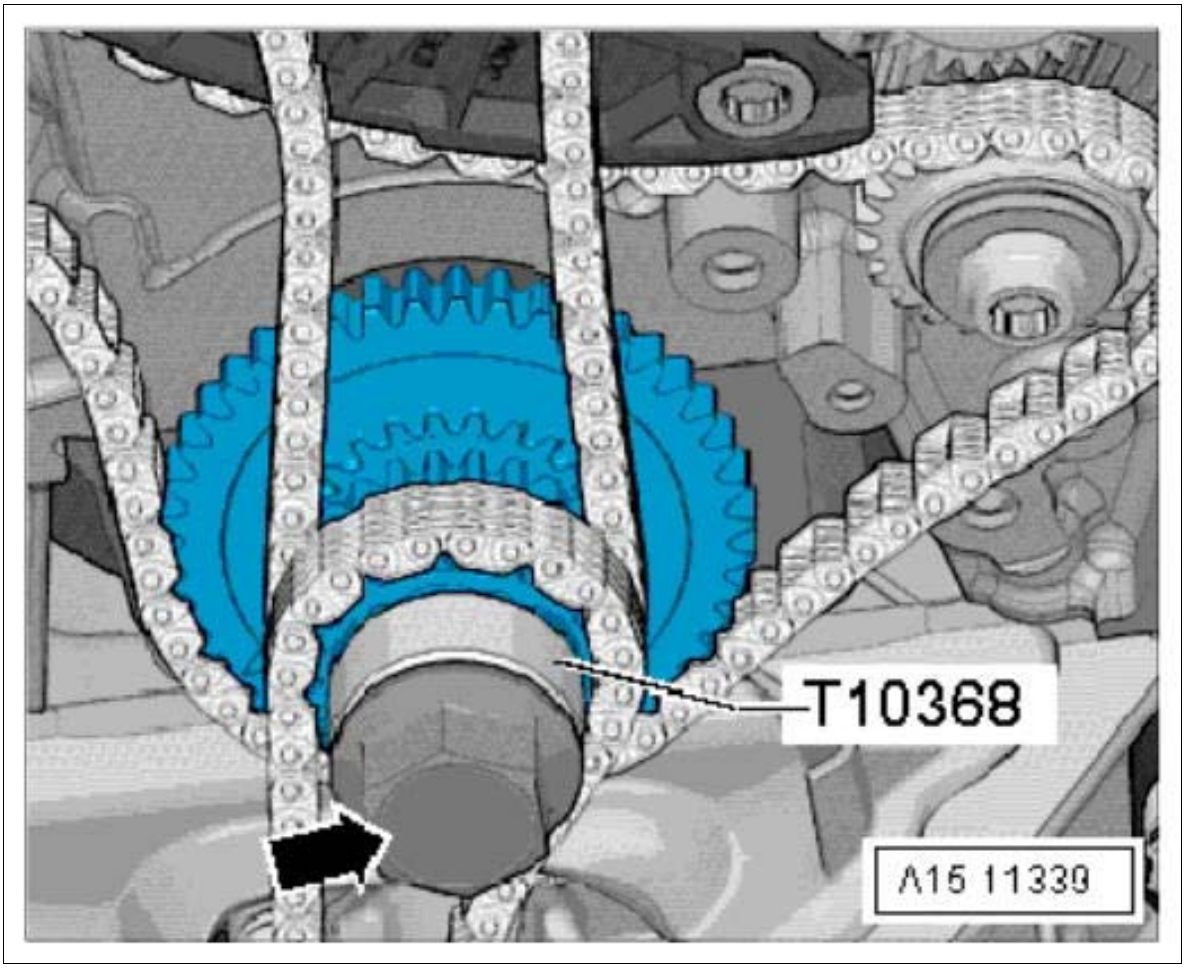

Courtesy of PORSCHE CARS NORTH AMERICA, INC.

8. Install tensioning rail for timing chain on balance shaft.

    1. 8.1. Position colored chain link in the timing chain **-arrow-** at the marking on the sprocket.

    2. 8.2. Install tensioning rail for the timing chain.

    3. 8.3. Fit and tighten guide pins **-1-** .

Fig 8: Locating Timing Chain Tensioning Rail On Balance Shaft

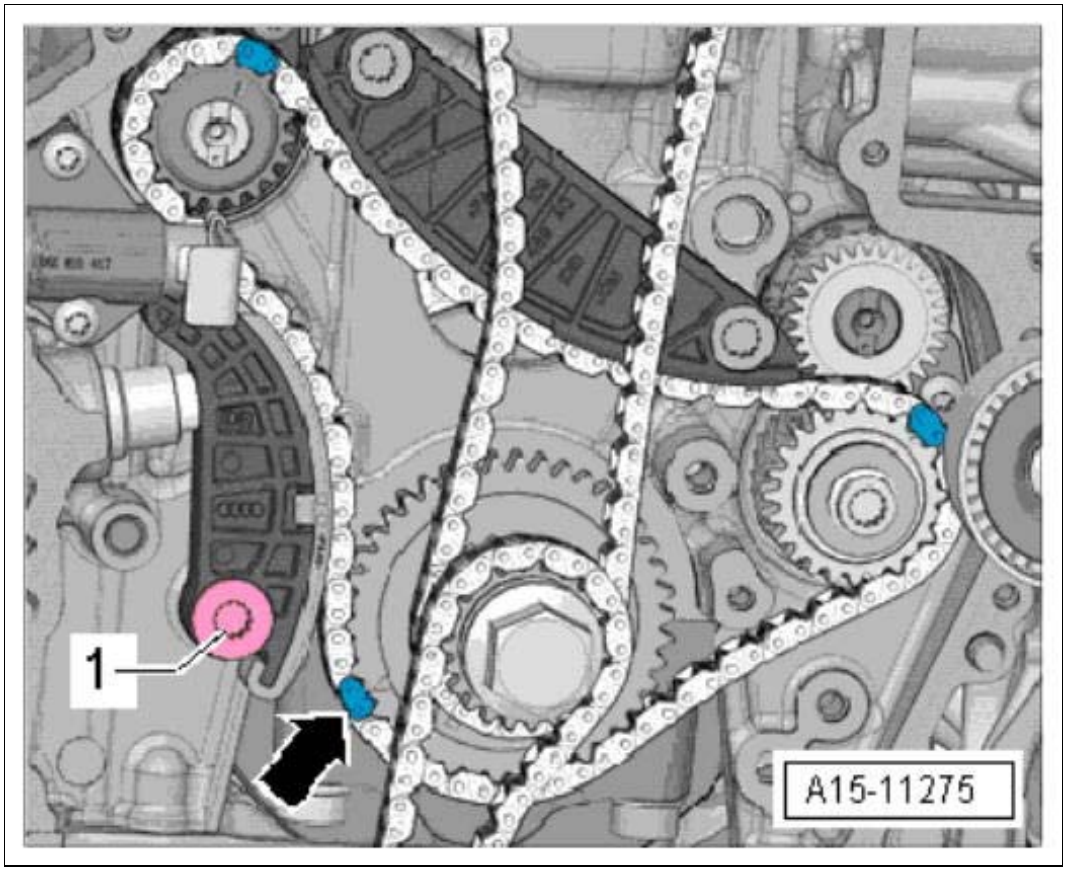

Courtesy of PORSCHE CARS NORTH AMERICA, INC.

9. Position guide rail and fit and tighten guide pins **-arrows-** .

Fig 9: Locating Timing Chain Guide Rail On Balance Shaft

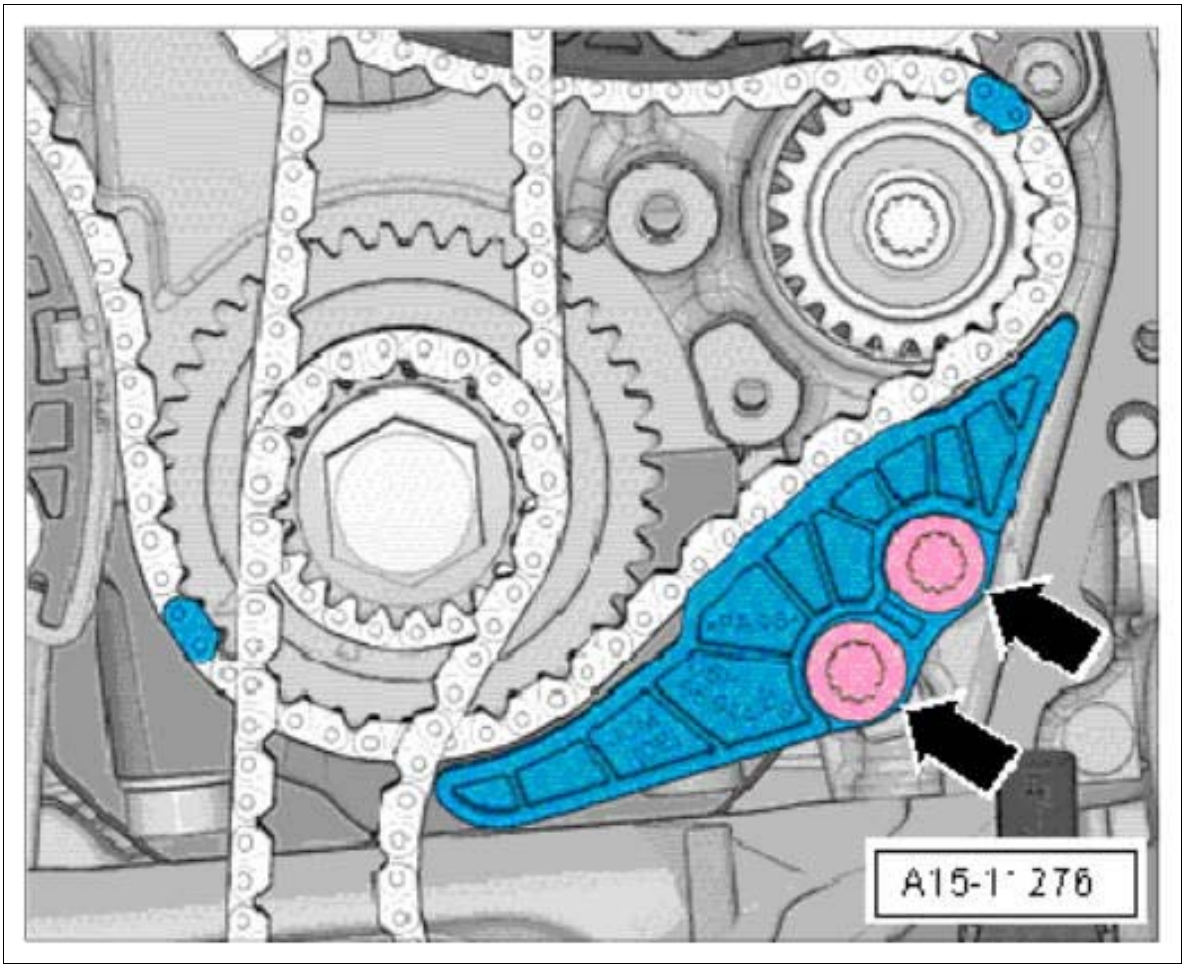

Courtesy of PORSCHE CARS NORTH AMERICA, INC.

10. Install chain tensioner **-1-** using screw locking agent.

Fig 10: Identifying Timing Chain Tensioner

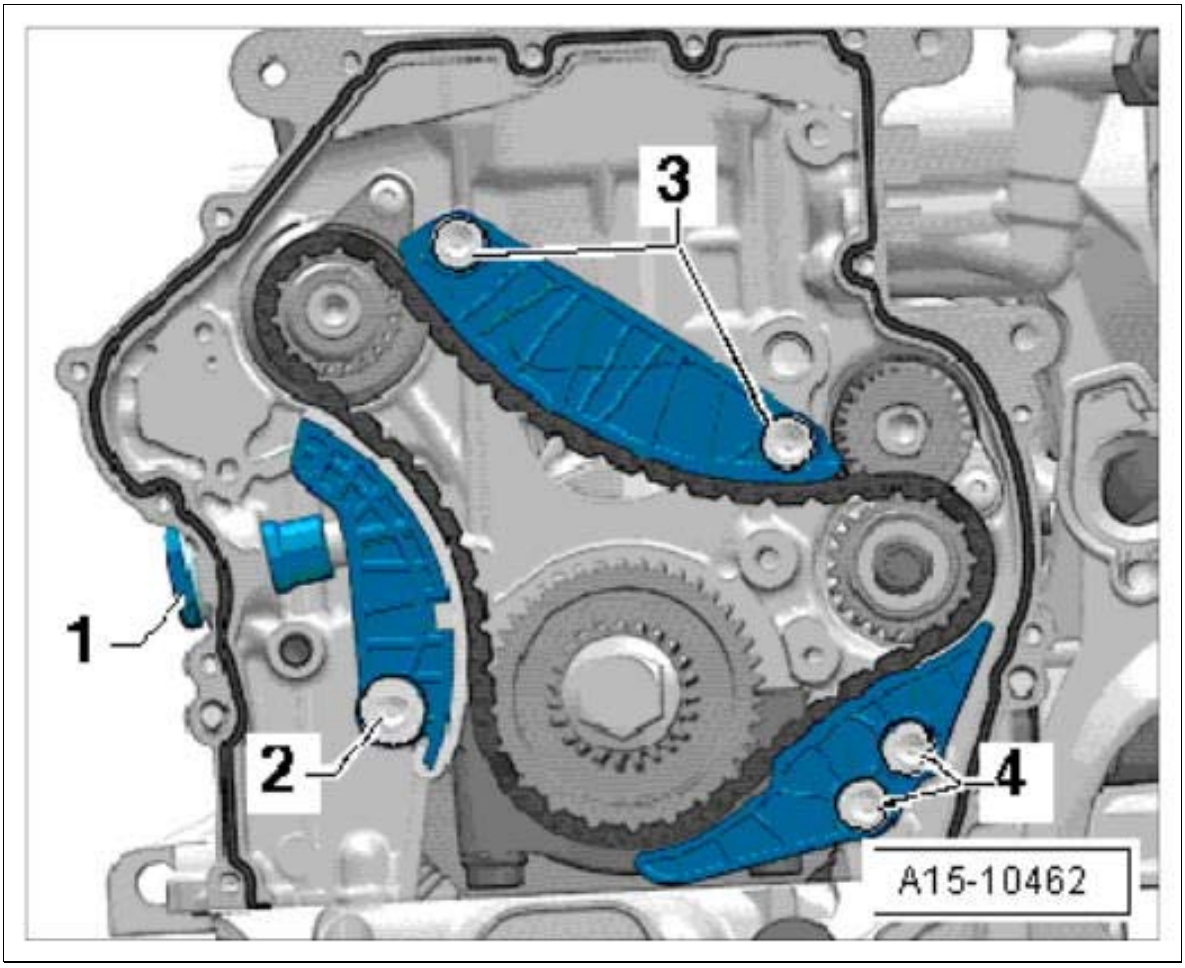

Courtesy of PORSCHE CARS NORTH AMERICA, INC.

11. Check installation position of the timing chain.

    The markings on the sprockets and the colored chain links must match. → Installation position of timing chain on balance shaft

Fig 11: Identifying Position Of Balance Shaft Timing Chain

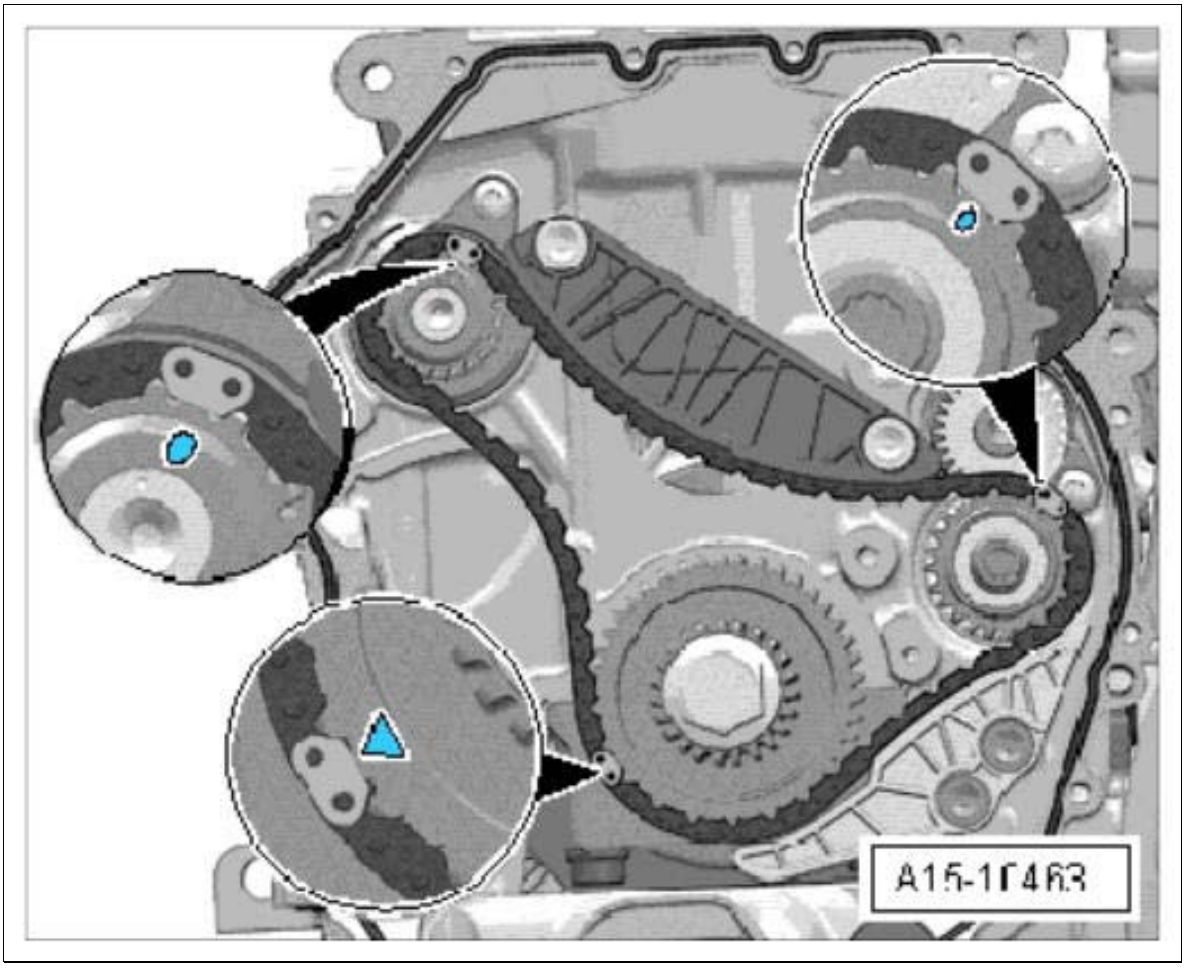

Courtesy of PORSCHE CARS NORTH AMERICA, INC.

12. Install timing chain. The colored chain links must be positioned at the markings on the sprockets. → Installing timing chain

    1. 12.1. Position timing chain on the intake camshaft.
    2. 12.2. Position timing chain on the outlet camshaft.
    3. 12.3. Position timing chain on the crankshaft and hold it securely.

Fig 12: Installing Timing Chain

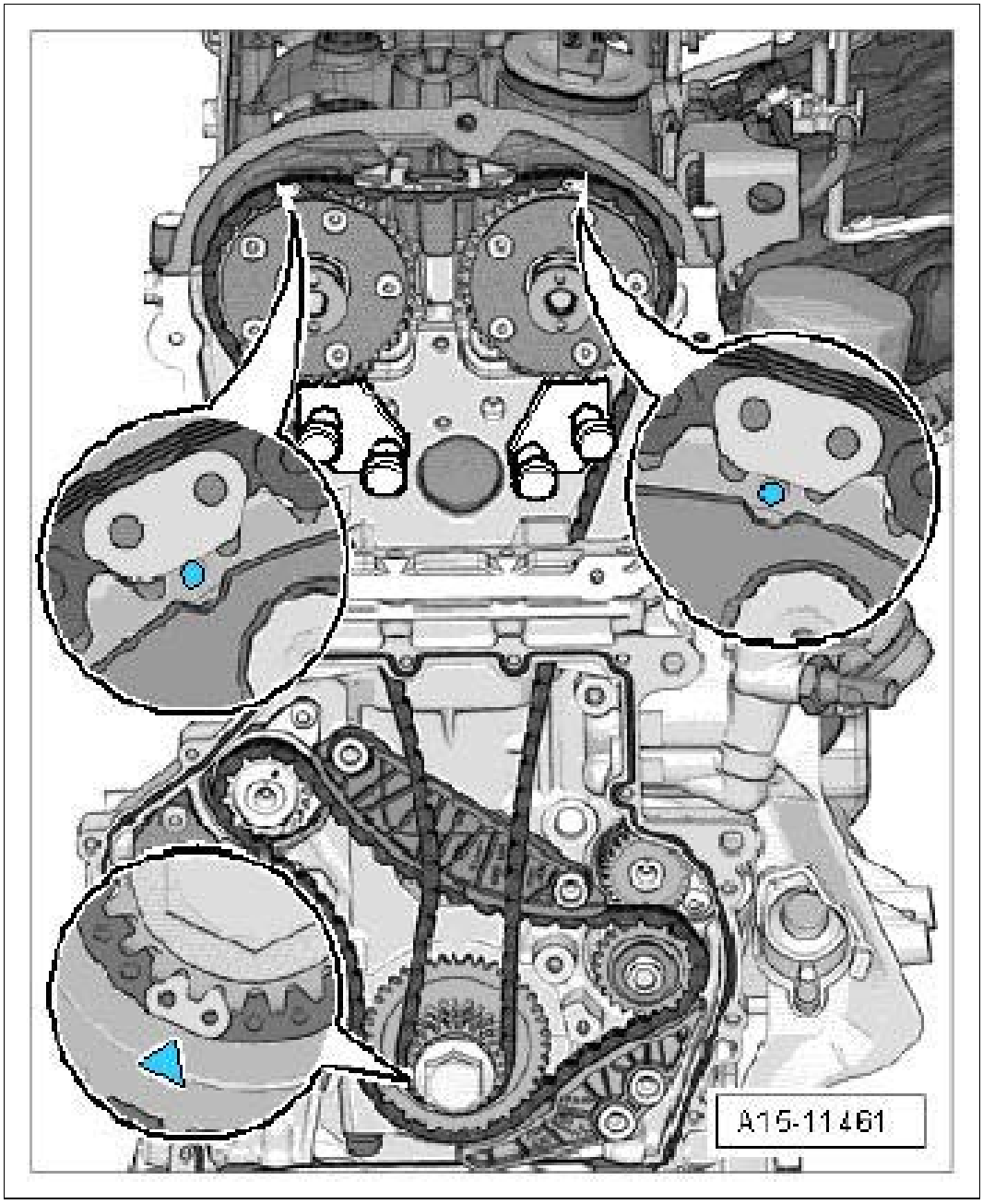

Courtesy of PORSCHE CARS NORTH AMERICA, INC.

13. Install guide rail and fit and tighten guide pins **-1-** .

Fig 13: Identifying Tensioning And Guide Rails

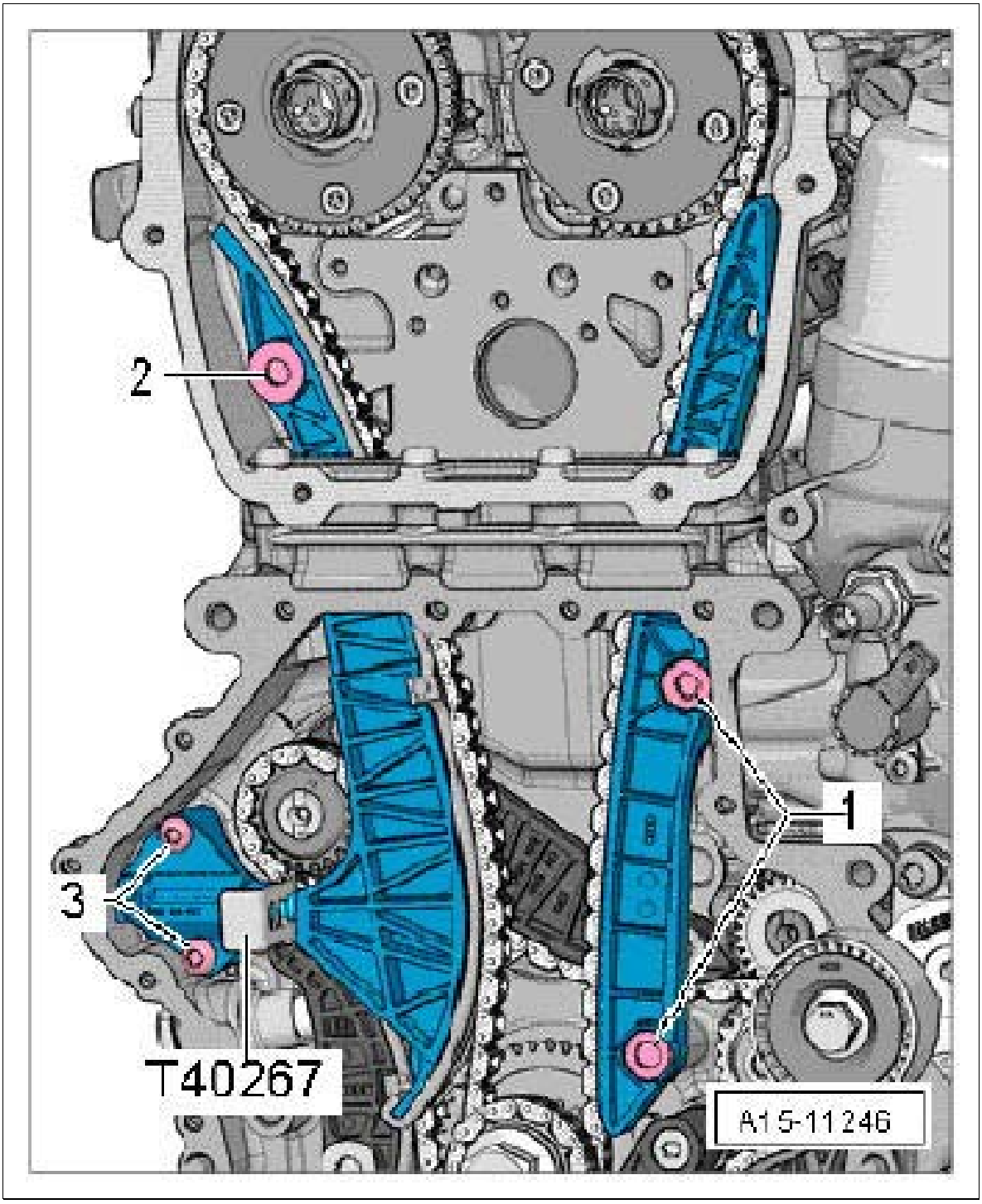

Courtesy of PORSCHE CARS NORTH AMERICA, INC.

14. Install upper guide rail **-arrow-** .

Fig 14: Locating Upper Guide Rail

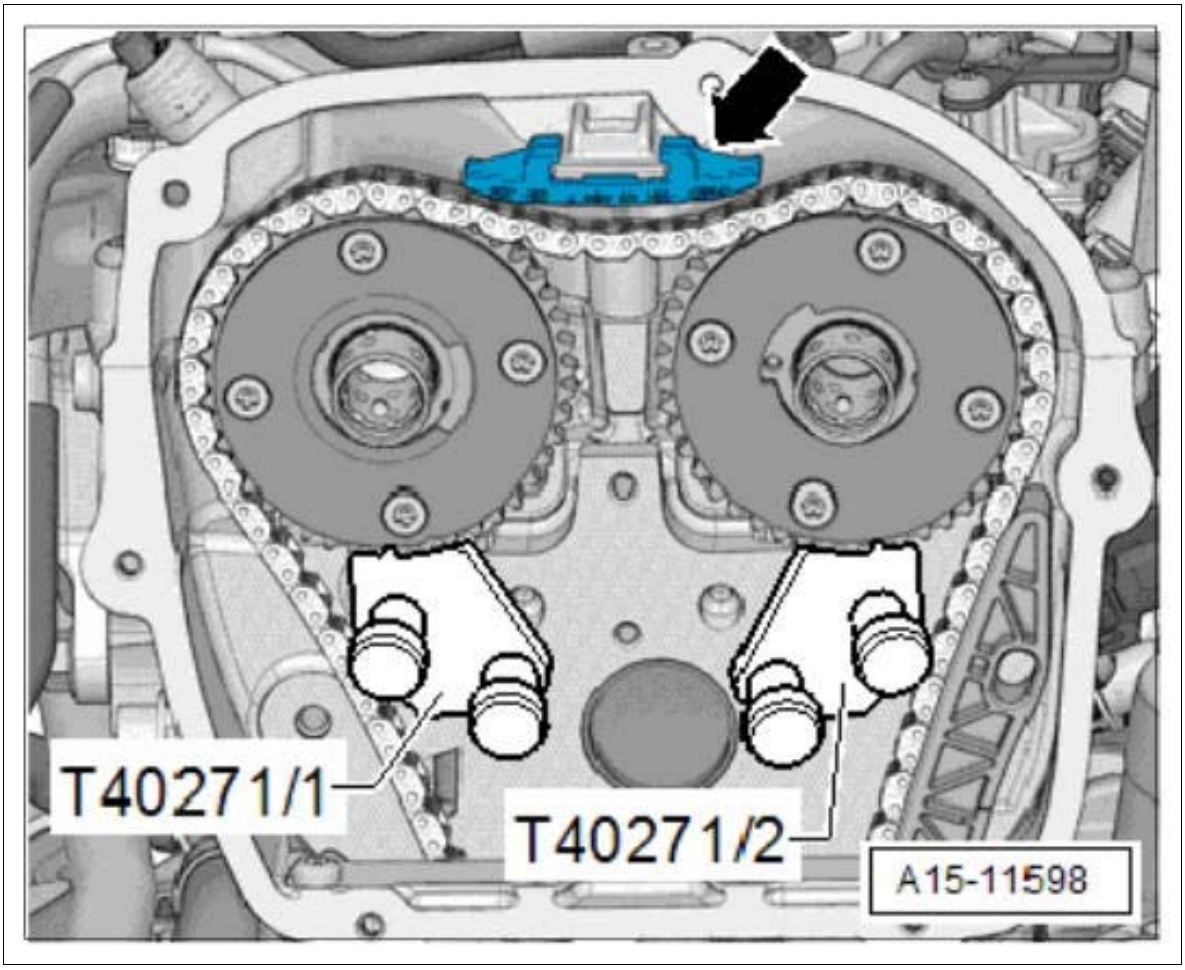

Courtesy of PORSCHE CARS NORTH AMERICA, INC.

15. **Camshaft clamp T40271** /1 can now be removed.
    1. 15.1. Use **adapter T40266** to turn the outlet camshaft in **-direction of arrow 1-** .
    2. 15.2. **Camshaft clamp T40271** /1 must be pushed out of the splines on the sprocket in **-direction of arrow 2-** .
    3. 15.3. Relieve the camshaft and remove **camshaft clamp T40271** /1.

Fig 15: Removing Outlet Camshaft Clamp

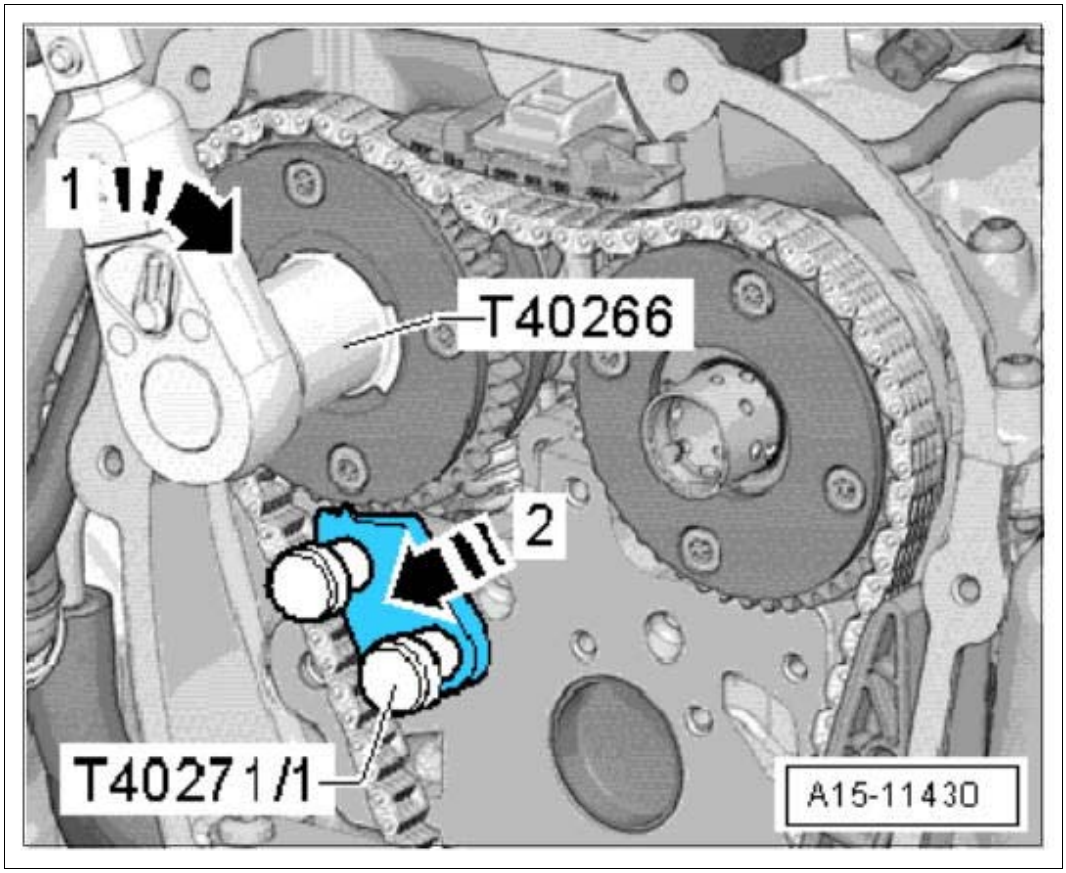

Courtesy of PORSCHE CARS NORTH AMERICA, INC.

16. Install tensioning rail and fit and tighten guide pins **-2-** .

Fig 16: Identifying Tensioning And Guide Rails

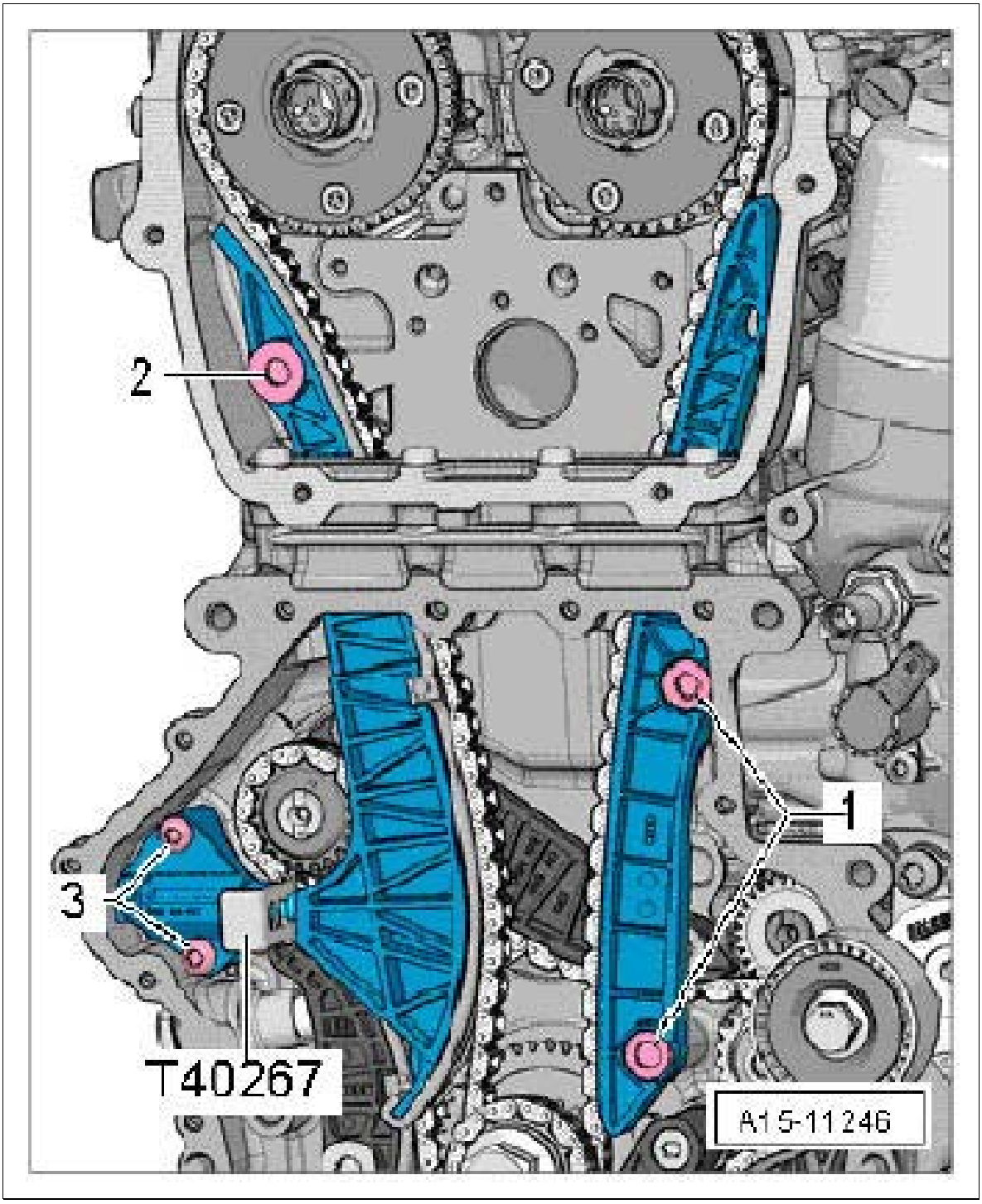

Courtesy of PORSCHE CARS NORTH AMERICA, INC.

17. **Camshaft clamp T40271** /2 can now be removed.

    1. 17.1. Use **adapter T40266** to turn the intake camshaft in **-direction of arrow 1-** .
    2. 17.2. **Camshaft clamp T40271** /2 must be pushed out of the splines on the sprocket in **-direction of arrow 2-** .
    3. 17.3. Relieve the camshaft and remove **camshaft clamp T40271** /2.

Fig 17: Removing Intake Camshaft Clamp

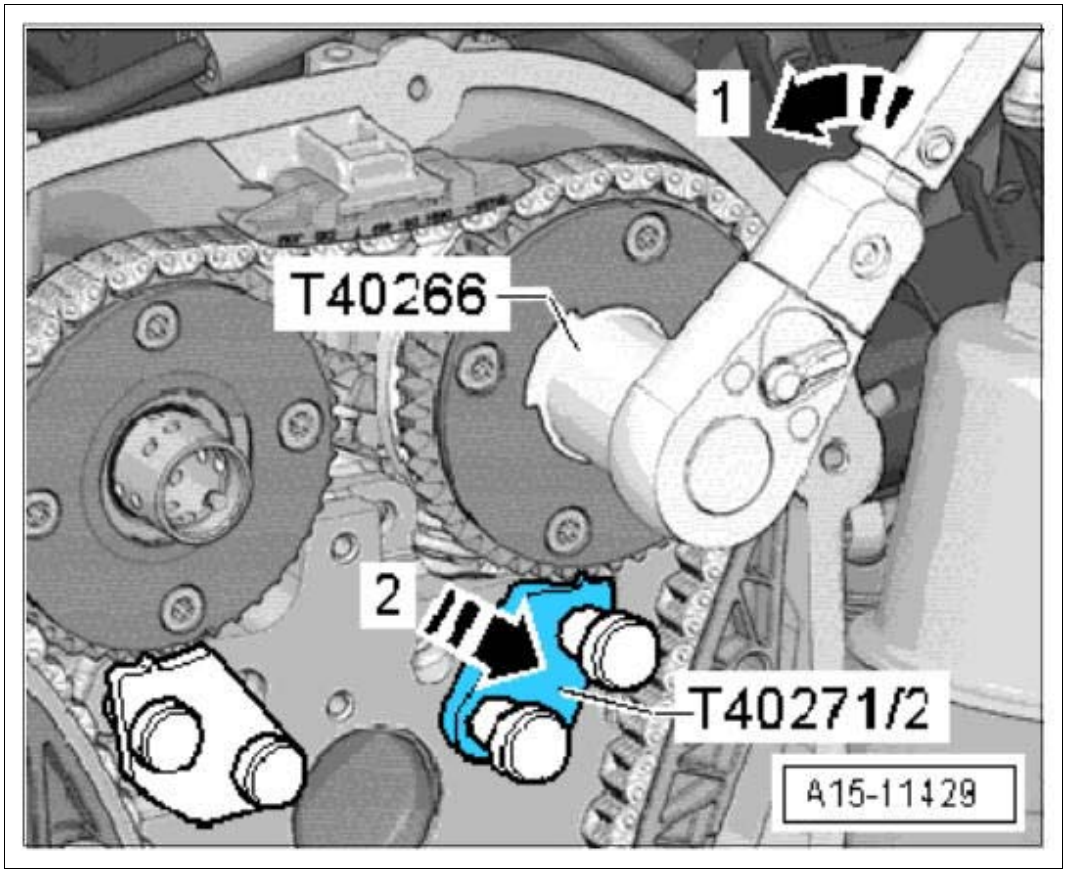

Courtesy of PORSCHE CARS NORTH AMERICA, INC.

18. Check the position of the colored chain links with respect to the markings. → Installing timing chain

Fig 18: Installing Timing Chain

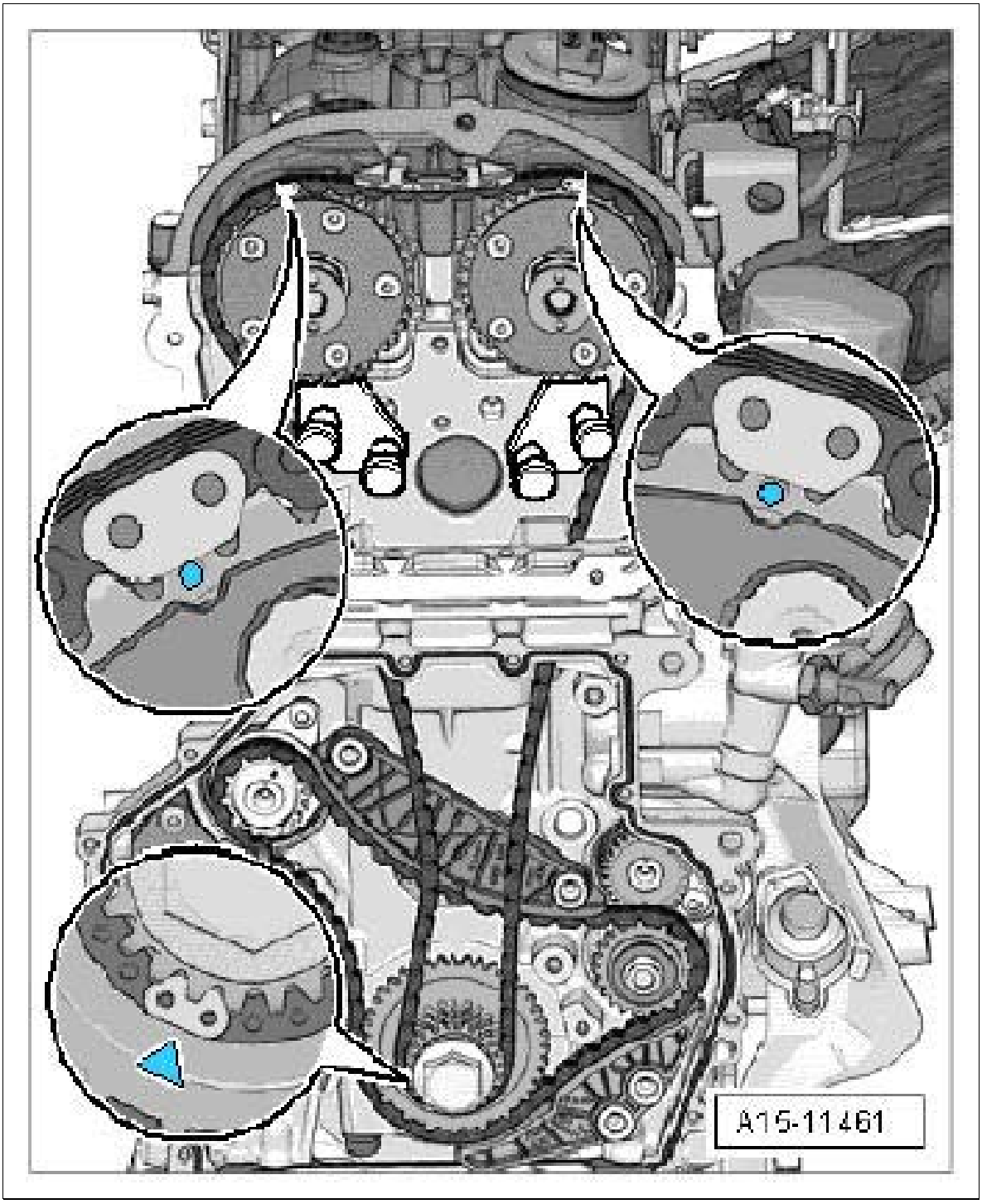

Courtesy of PORSCHE CARS NORTH AMERICA, INC.

19. Install drive chain for oil pump.
    1. 19.1. Fit drive chains and install chain tensioner.
    2. 19.2. Fit and tighten guide pins **-1-** .
    3. 19.3. **Locking pin T40011** must now be removed.

Fig 19: Installing Oil Pump Chain Tensioner

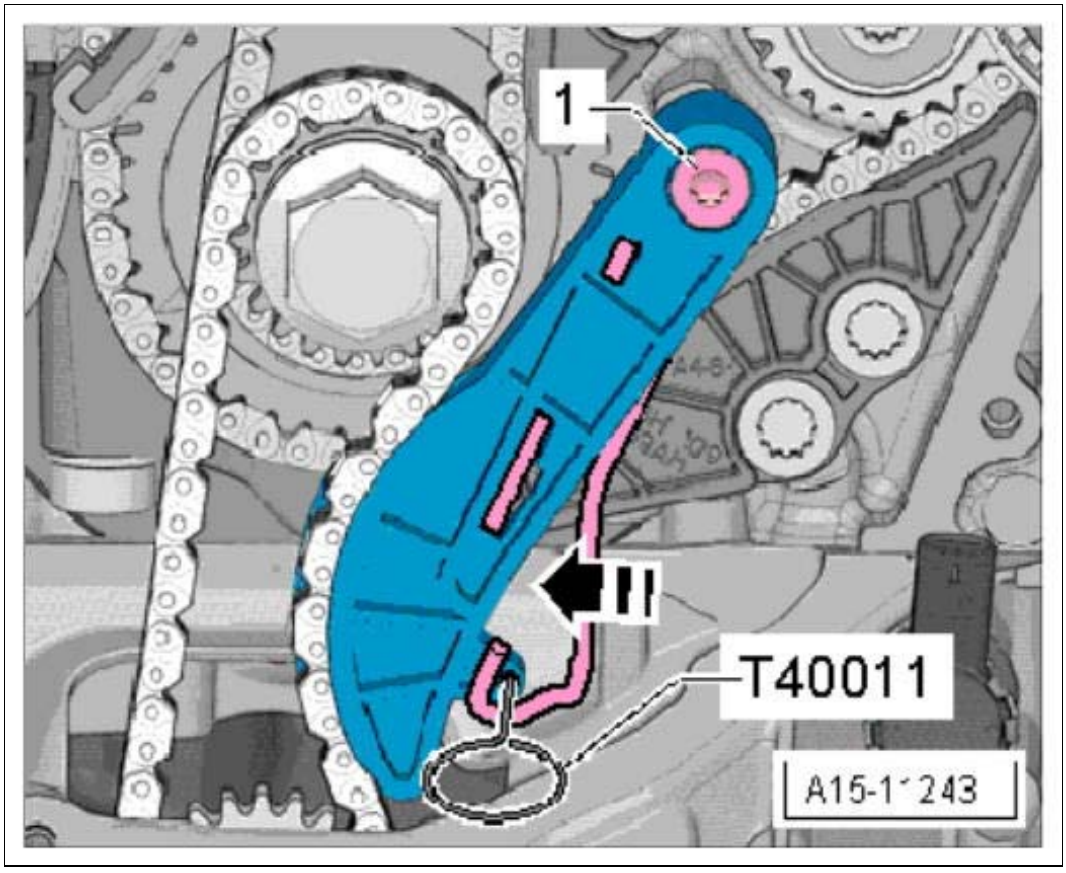

Courtesy of PORSCHE CARS NORTH AMERICA, INC.

20. **Fit and tighten new fastening screws -arrows-** .

Fig 20: Locating Timing Chain Screws

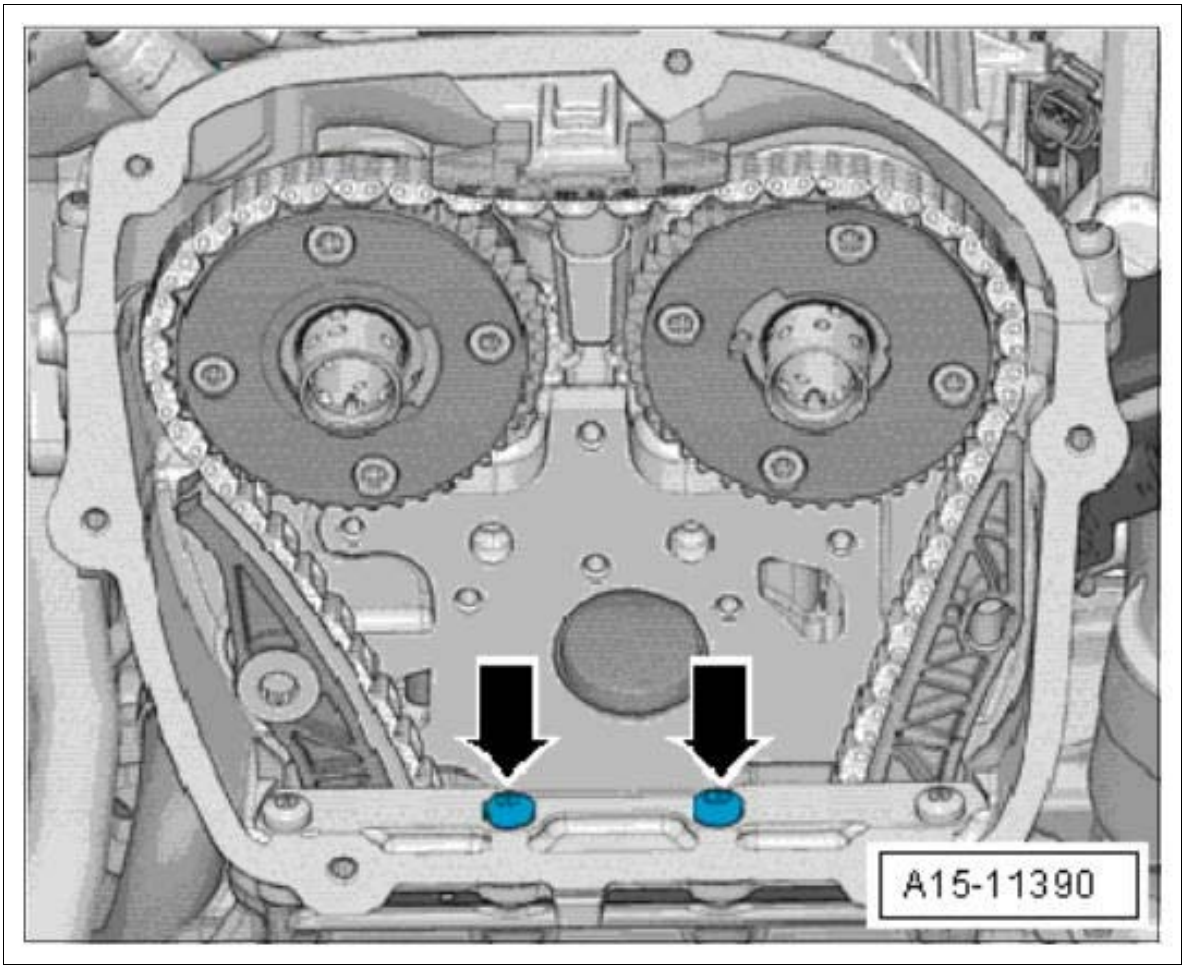

Courtesy of PORSCHE CARS NORTH AMERICA, INC.

21. Install bearing saddle.
    1. 21.1. Fit bearing saddle and screw in new fastening screws **-arrows-** hand-tight.
    2. 21.2. **Locking tool T40267** must be removed from the chain tensioner.
    3. 21.3. **Tighten new** fastening screws **-arrows-** .

Fig 21: Locating Bearing Saddle Screws

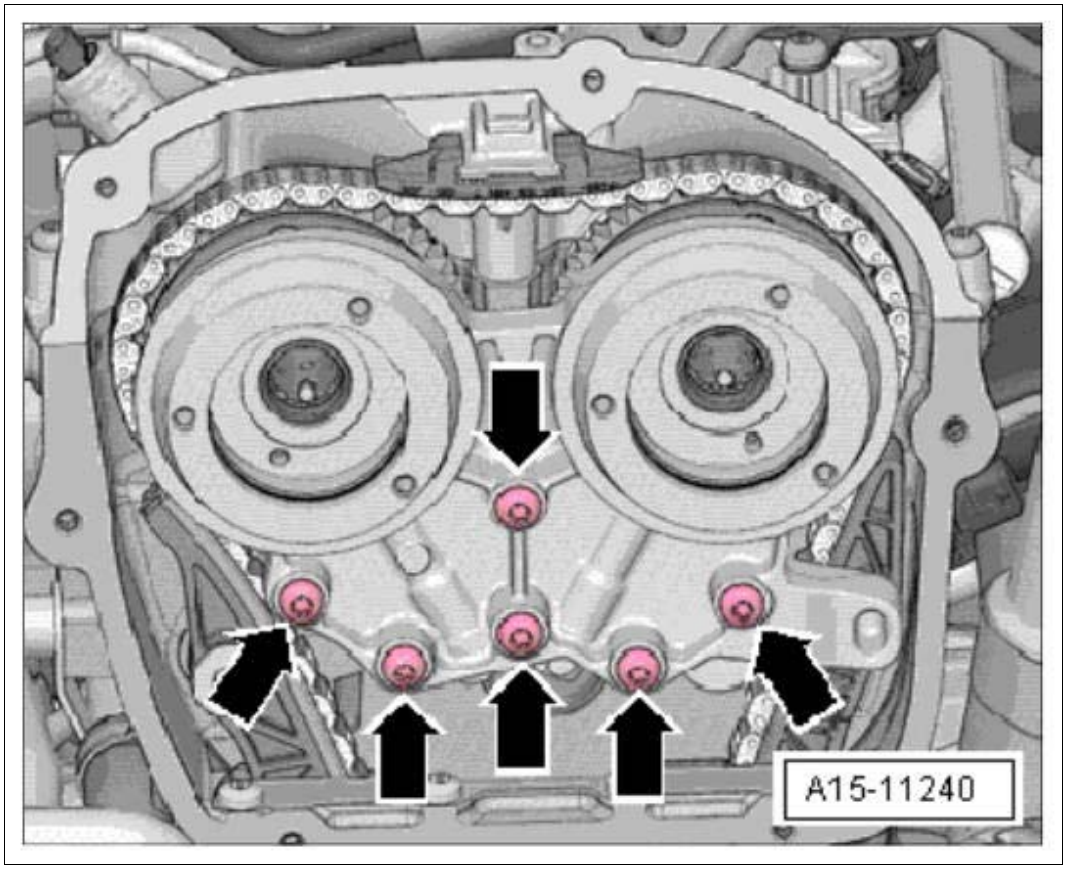

Courtesy of PORSCHE CARS NORTH AMERICA, INC.

Information

Control valves are left-threaded.

22. Install control valves using **assembly tool T10352** /2.

Fig 22: Removing Control Valves

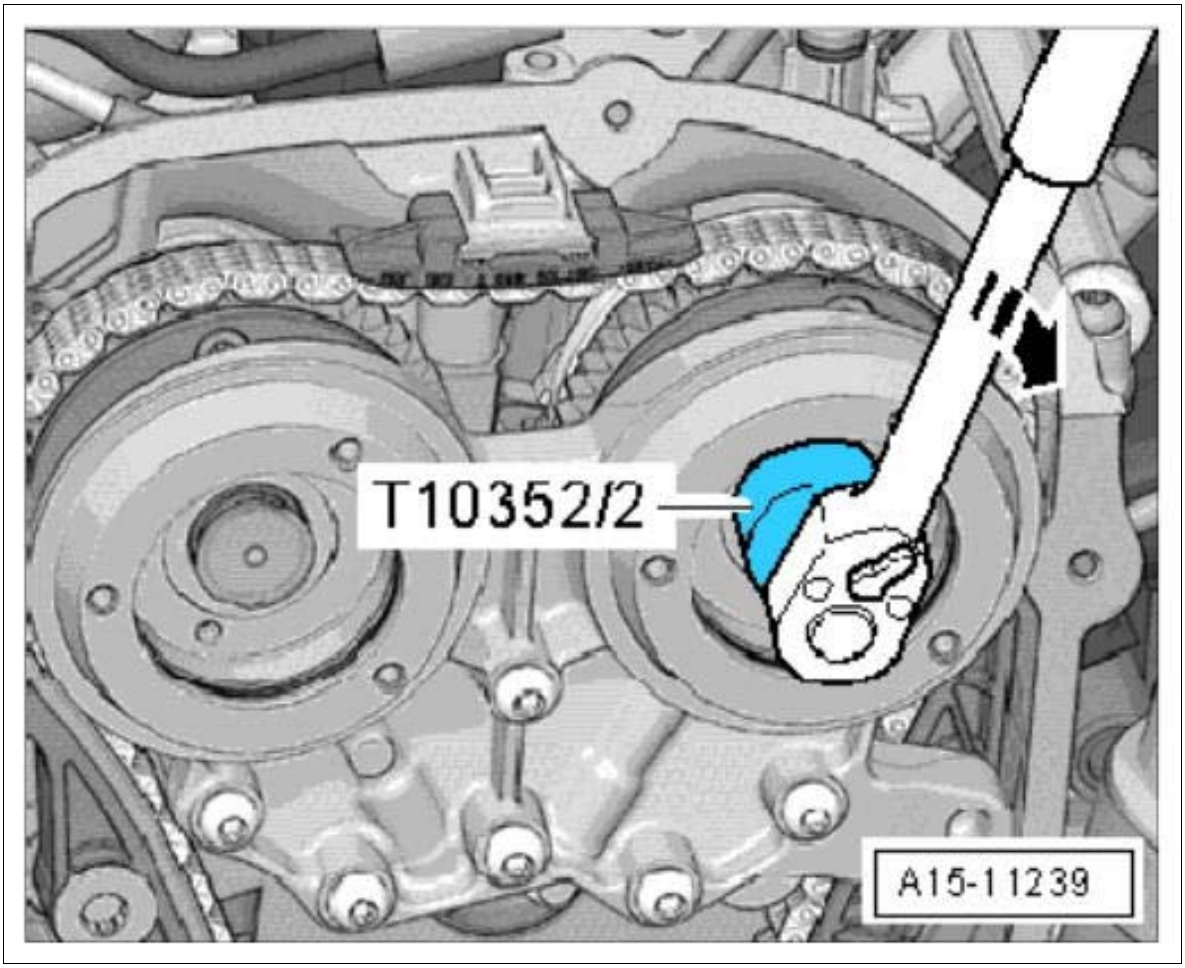

Courtesy of PORSCHE CARS NORTH AMERICA, INC.

WM 153519 REMOVING AND INSTALLING TIMING CHAIN (MACAN) > SUBSEQUENT WORK

1. Set the camshafts. → 150516 ADJUSTING CAMSHAFTS
2. Install chain housing cover. → INSTALLING CHAIN HOUSING COVER
3. After working on the chain drive, the chain elongation must be adapted using PIWIS Tester II 9818.

WM 153619 REMOVING AND INSTALLING CHAIN TENSIONER (MACAN) > TOOLS

Designation	Type	Number	Description	

assembly tool	VW tool	T10352		
locking pin	VW tool	T40011		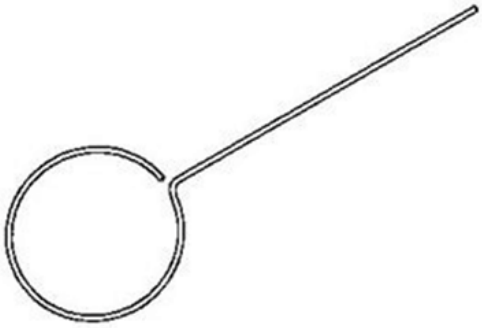
Lever	VW tool	T40243		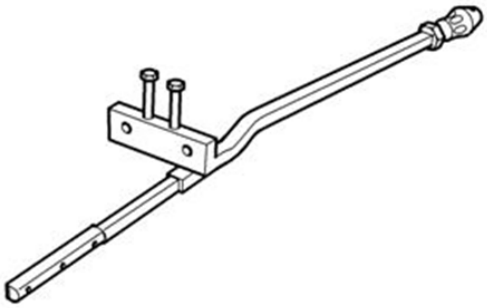
locking tool	VW tool	T40267		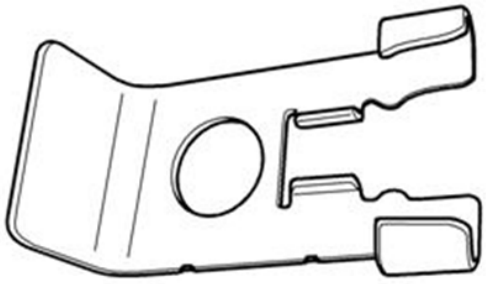

WM 153619 REMOVING AND INSTALLING CHAIN TENSIONER (MACAN) > TECHNICAL VALUES

Location	Description	Type	Basic value	Tolerance 1	Tolerance 2
Fastening screw for chain tensioner		Tightening torque	9 Nm (6.5 ftlb.)		

WM 153619 REMOVING AND INSTALLING CHAIN TENSIONER (MACAN) > PRELIMINARY WORK > PRELIMINARY WORK FOR CHAIN TENSIONER FOR TIMING CHAIN

1. Remove timing-case cover. → 153319 REMOVING AND INSTALLING TIMING-CASE COVER

WM 153619 REMOVING AND INSTALLING CHAIN TENSIONER (MACAN) > PRELIMINARY WORK > PRELIMINARY WORK FOR CHAIN TENSIONER ON BALANCE SHAFTS

1. Remove front underbody panelling. → 519219 REMOVING AND INSTALLING COVER FOR FRONT UNDERBODY

WM 153619 REMOVING AND INSTALLING CHAIN TENSIONER (MACAN) > PRELIMINARY WORK > PRELIMINARY WORK FOR CHAIN TENSIONER FOR OIL PUMP

1. Remove lower timing-case cover. → 153319 REMOVING AND INSTALLING TIMING-CASE COVER

WM 153619 REMOVING AND INSTALLING CHAIN TENSIONER (MACAN) > REMOVING CHAIN TENSIONER > REMOVING CHAIN TENSIONER FOR TIMING CHAIN

Information

Control valves are left-threaded.

1. Remove control valves at the left and right using assembly tool T10352/2 in **-direction of arrow-** .

Fig 1: Removing Control Valves

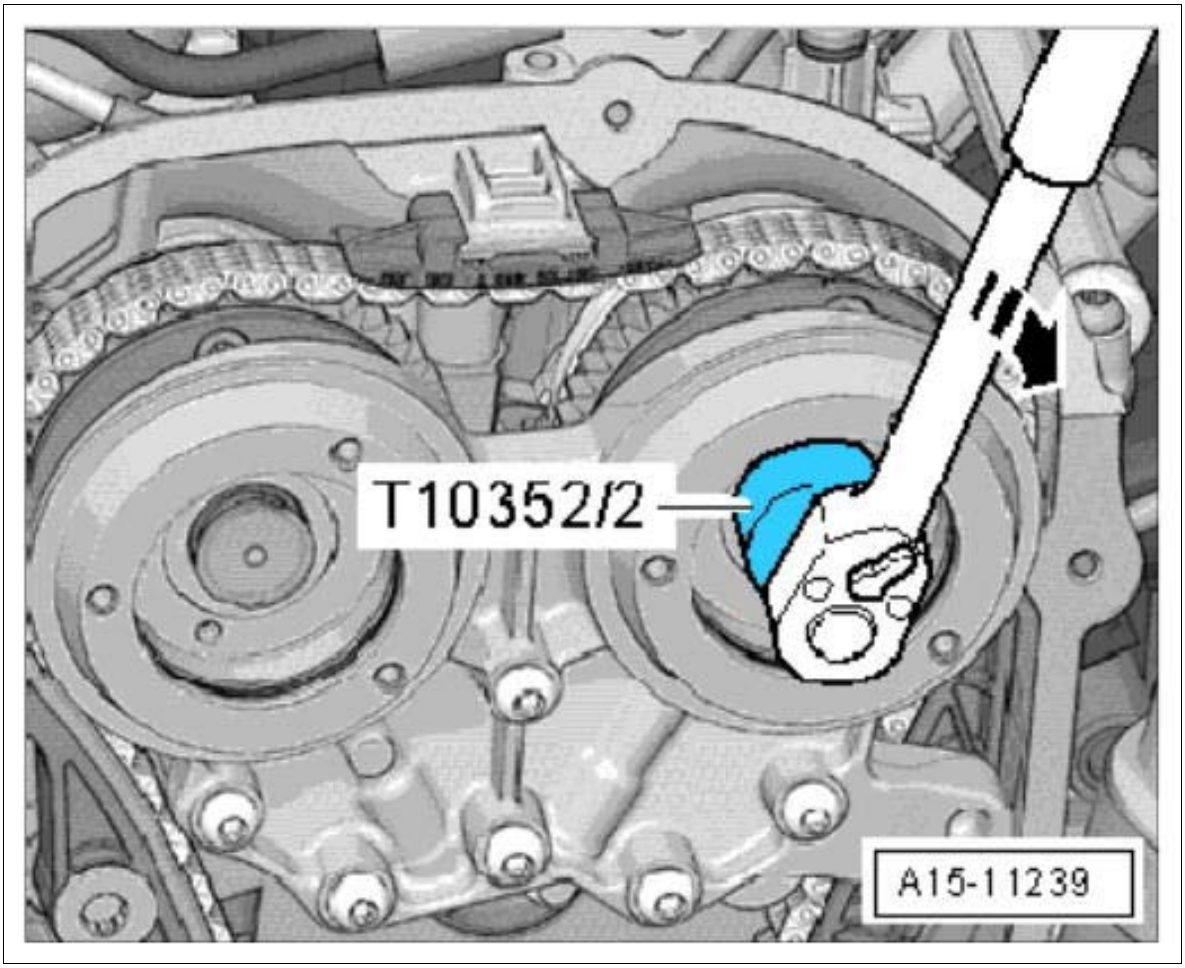

Courtesy of PORSCHE CARS NORTH AMERICA, INC.

2. Unscrew fastening screws **-arrows-** and remove bearing saddle.

Fig 2: Locating Bearing Saddle Screws

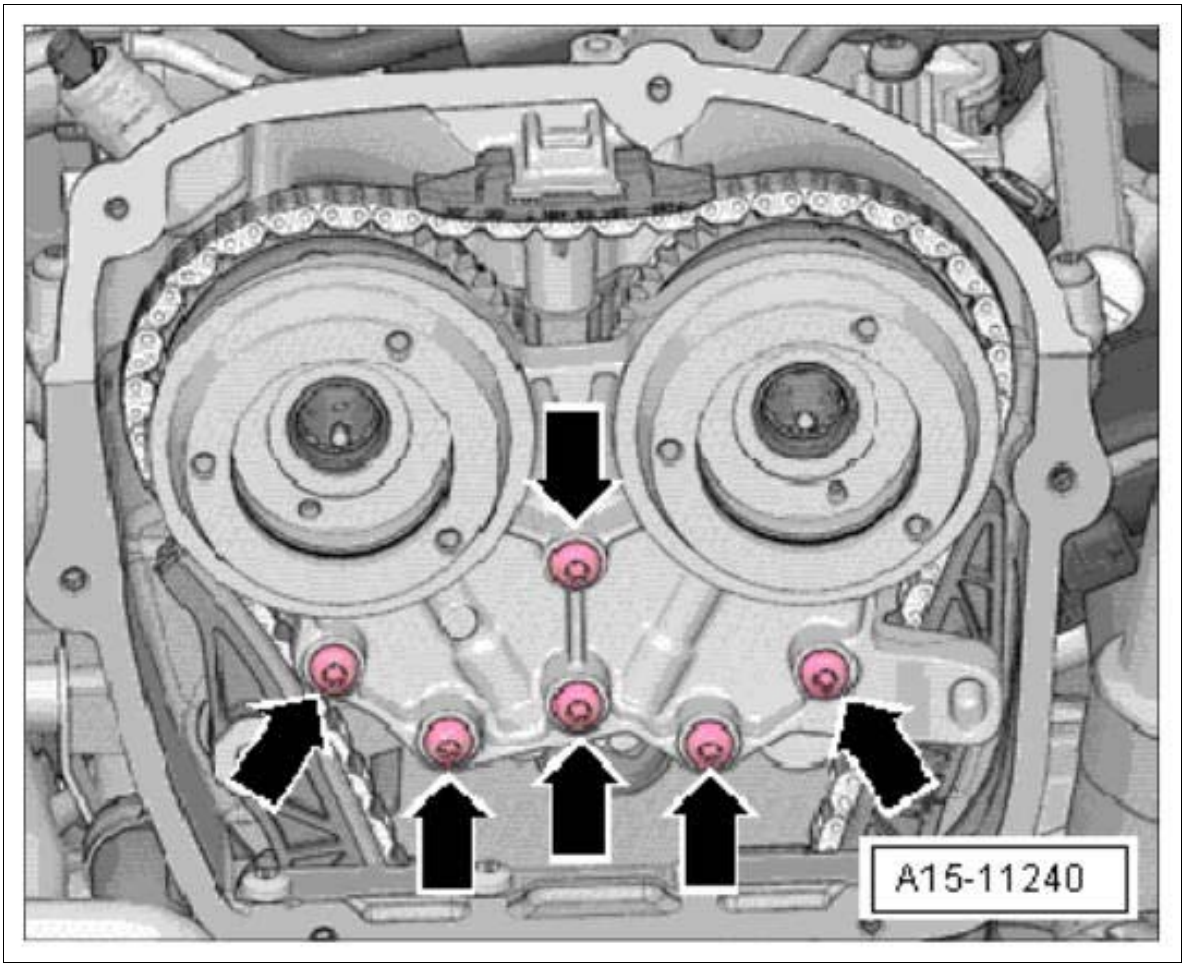

Courtesy of PORSCHE CARS NORTH AMERICA, INC.

3. Unscrew fastening screws **-arrows-** .

Fig 3: Locating Chain Tensioner Screws

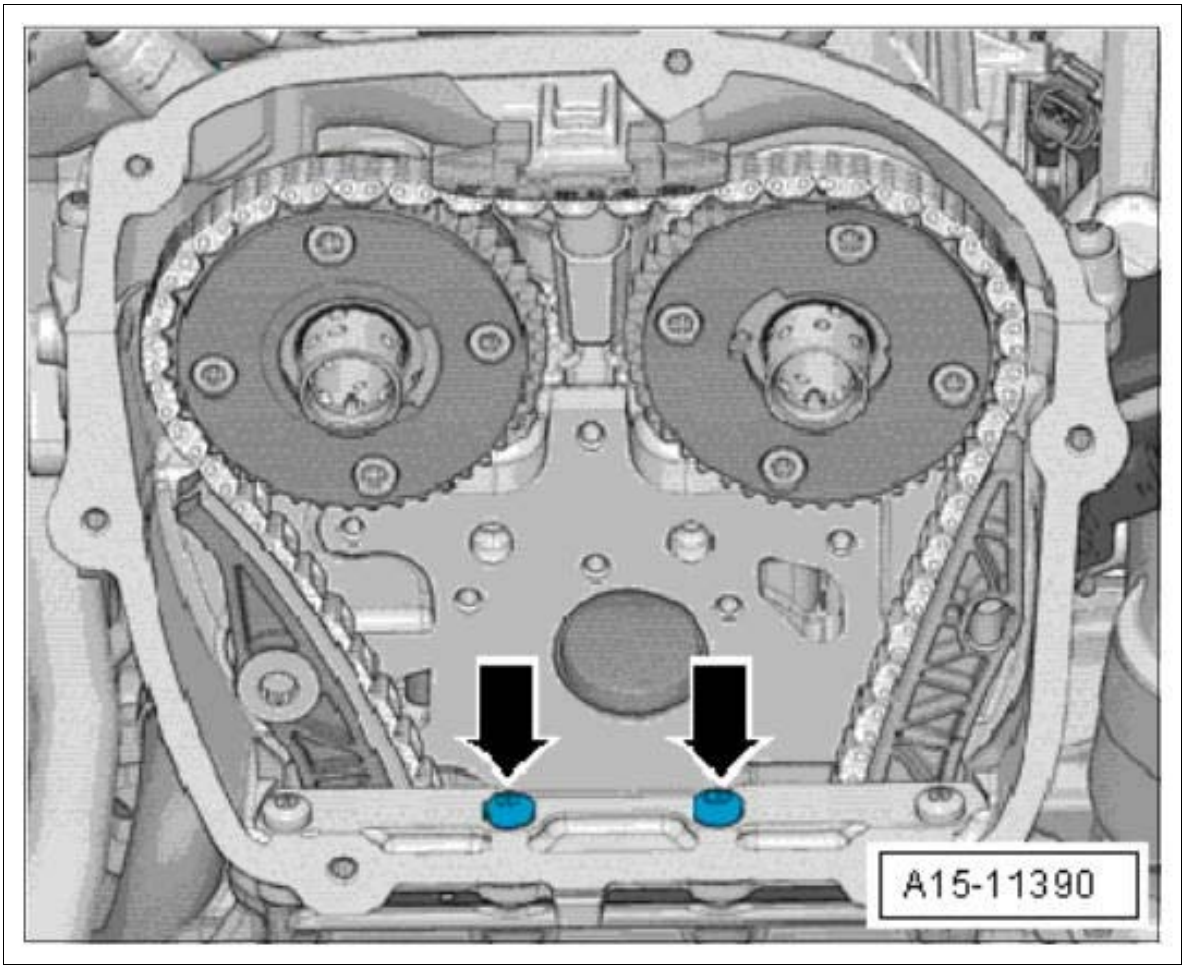

Courtesy of PORSCHE CARS NORTH AMERICA, INC.

4. Tighten chain tensioner.
    1. 4.1. **Lever T40243** must now be screwed in.
    2. 4.2. Press and hold circlip **-1-** .
    3. 4.3. **Lever T40243** must now be pressed slowly in **-direction of arrow-** and held securely.

Fig 4: Tightening Chain Tensioner

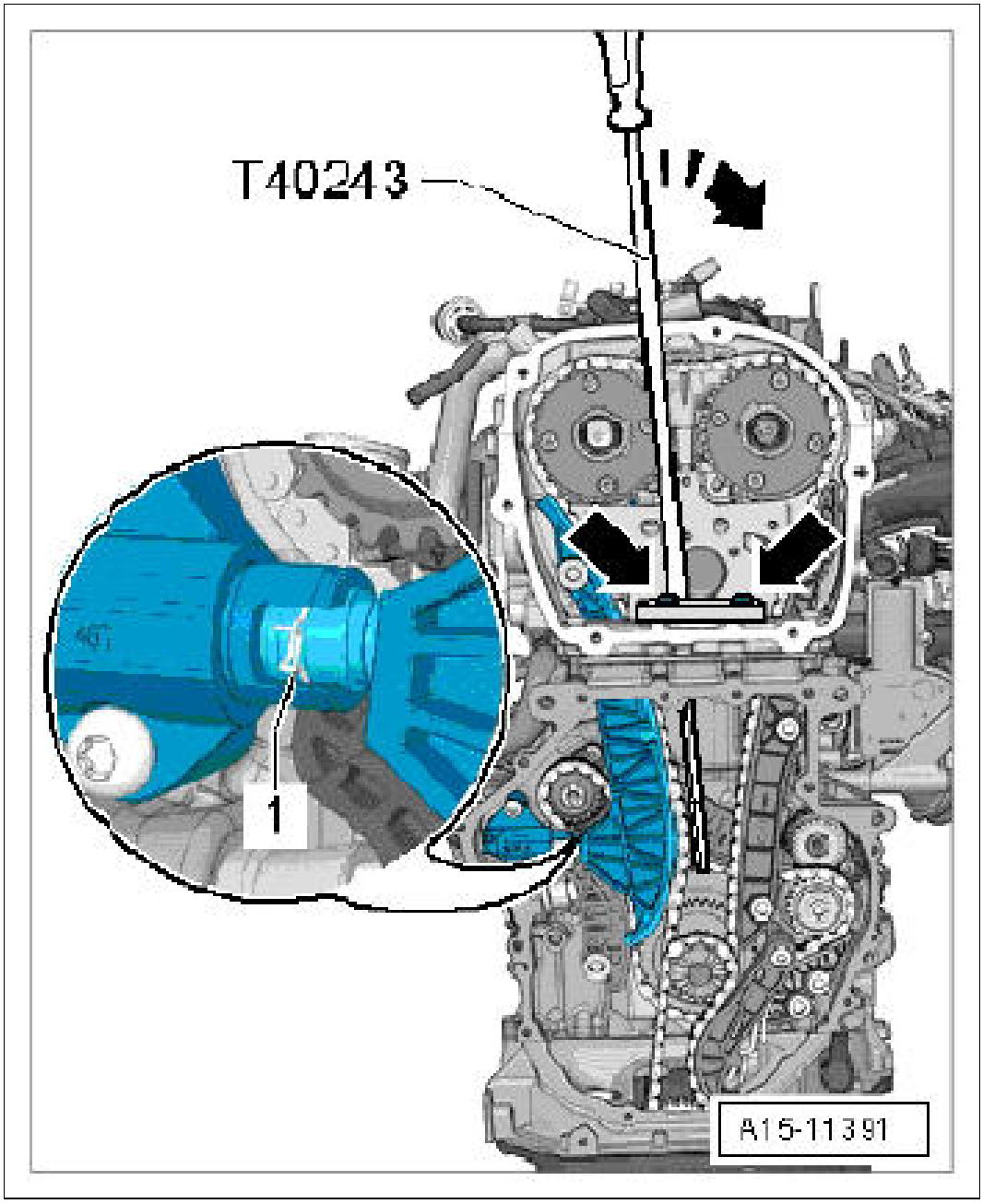

Courtesy of PORSCHE CARS NORTH AMERICA, INC.

5. Lock the chain tensioner using **locking tool T40267** (→ Locking chain tensioner) **and remove lever T40243** .

Fig 5: Locking Chain Tensioner

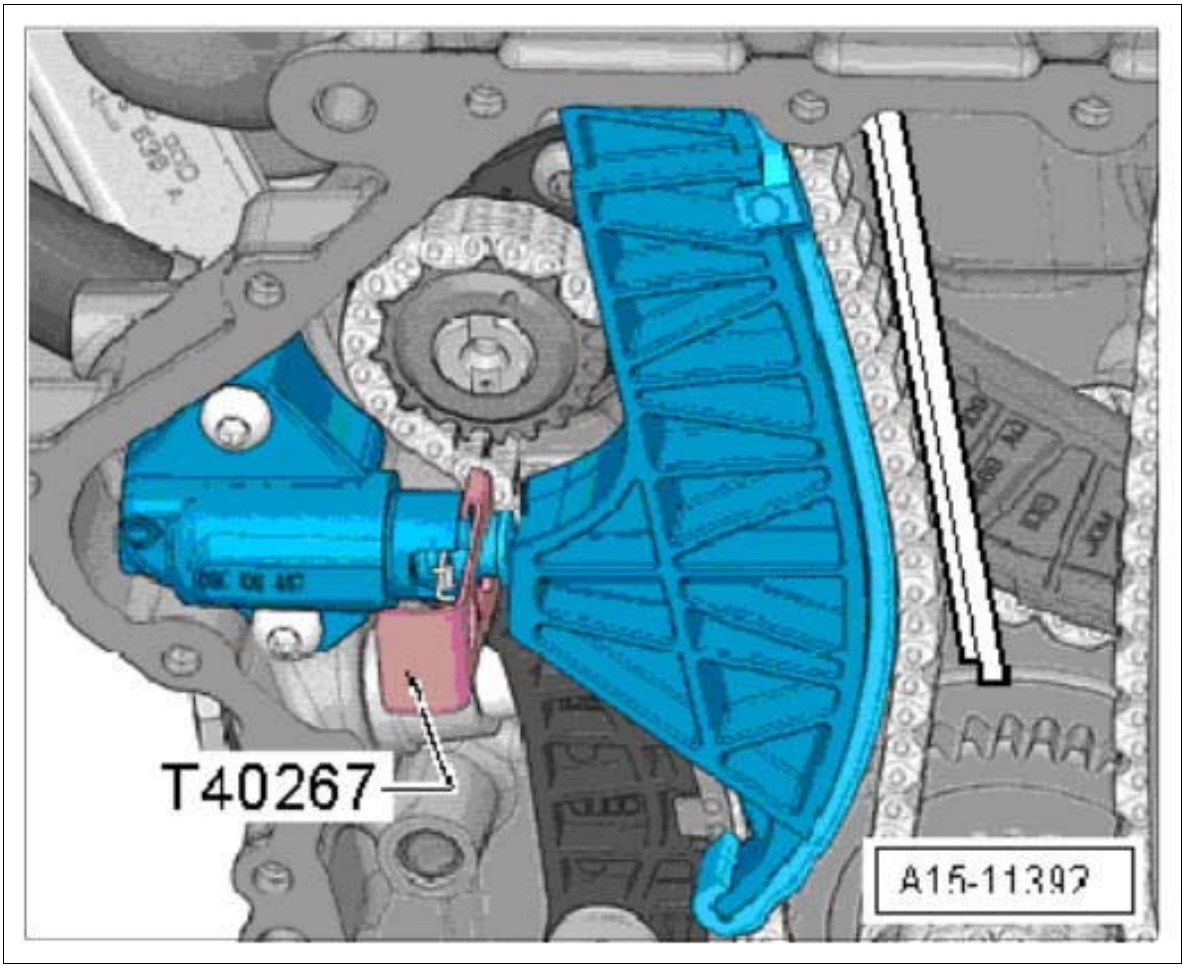

Courtesy of PORSCHE CARS NORTH AMERICA, INC.

6. Unscrew fastening screws **-3-** and remove chain tensioner.

Fig 6: Identifying Chain Tensioner Fastening Screws

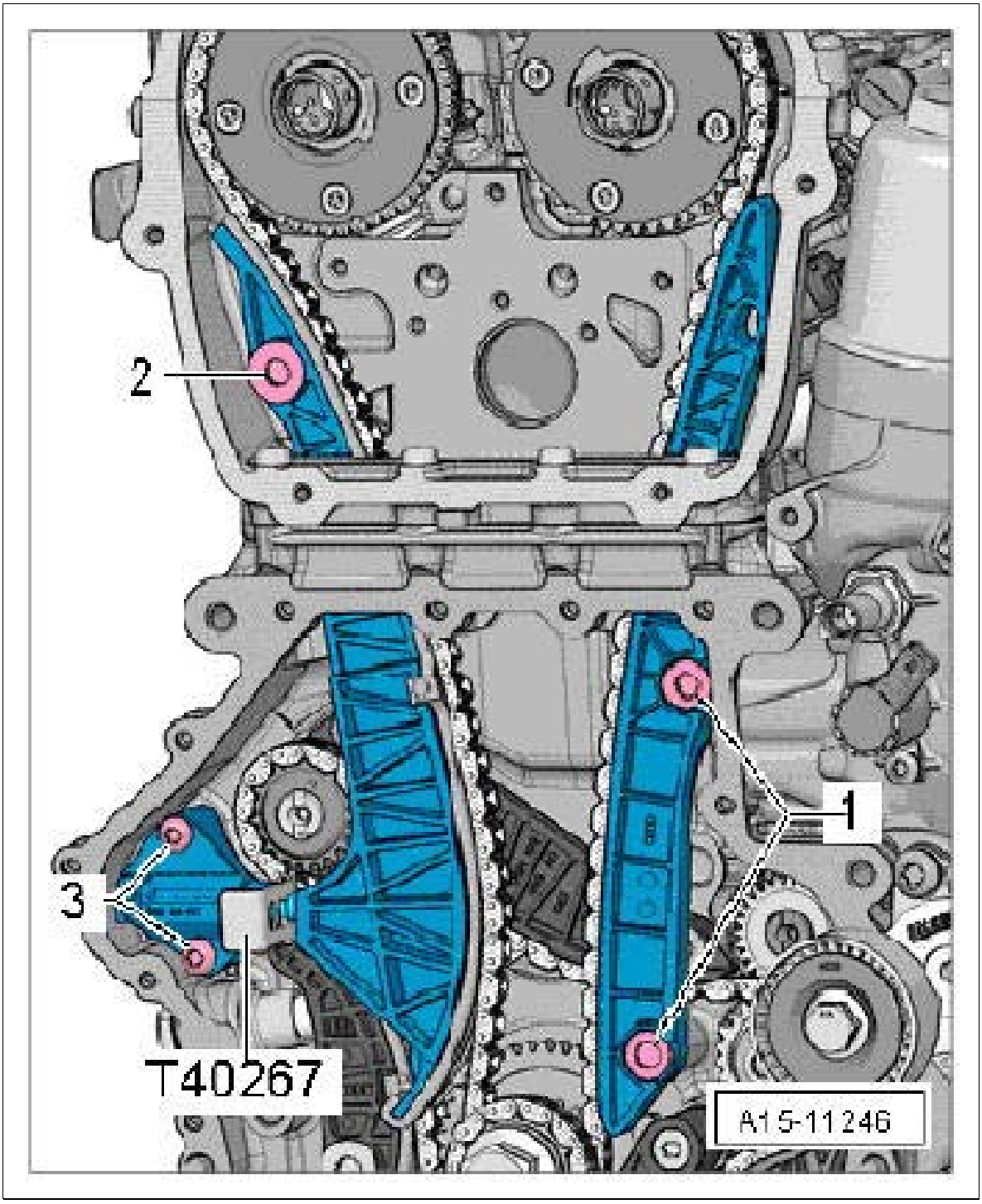

Courtesy of PORSCHE CARS NORTH AMERICA, INC.

WM 153619 REMOVING AND INSTALLING CHAIN TENSIONER (MACAN) > REMOVING CHAIN TENSIONER > REMOVING CHAIN TENSIONER ON BALANCE SHAFTS

1. Remove chain tensioner **-1-** .

Fig 1: Identifying Chain Tensioner On Balance Shafts

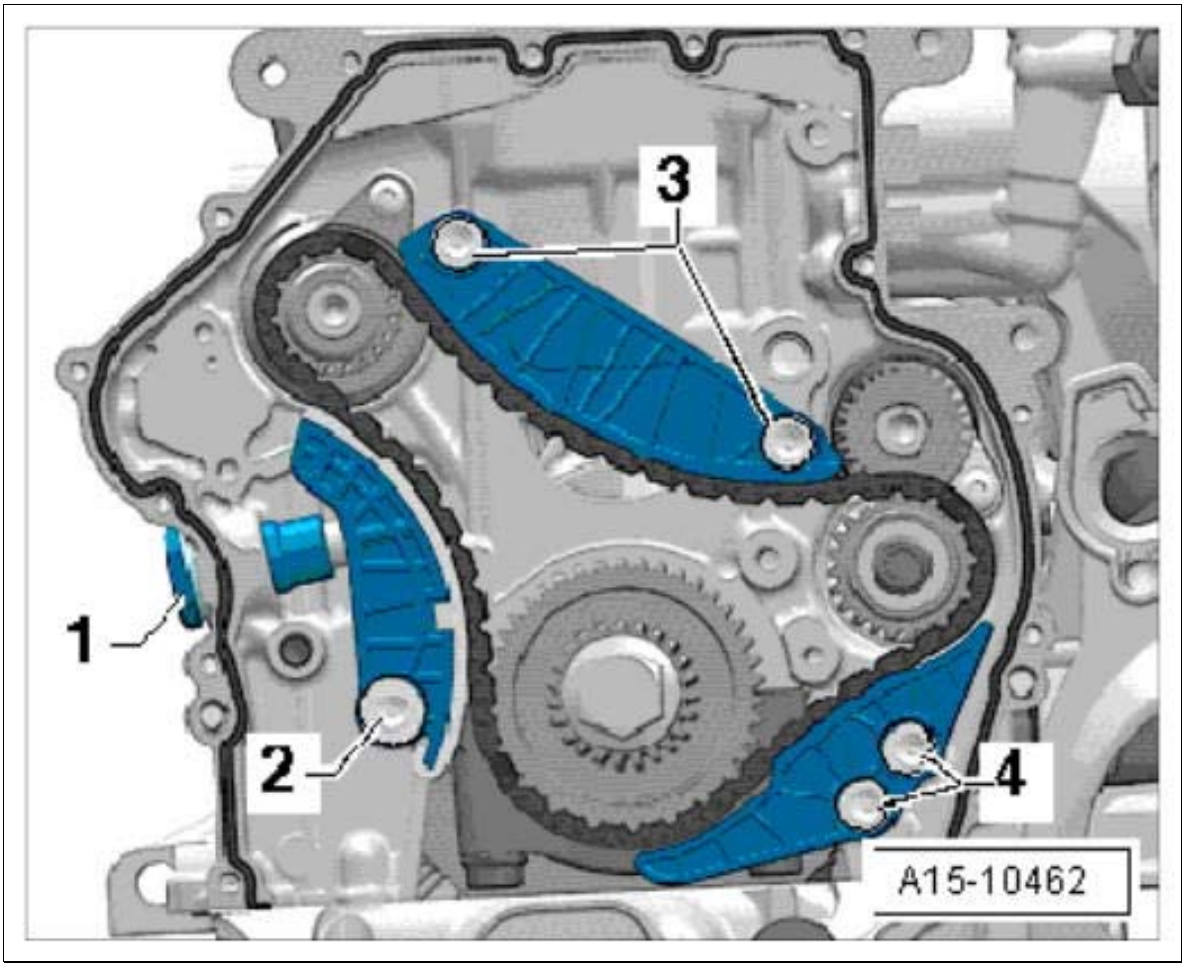

Courtesy of PORSCHE CARS NORTH AMERICA, INC.

WM 153619 REMOVING AND INSTALLING CHAIN TENSIONER (MACAN) > REMOVING CHAIN TENSIONER > REMOVING CHAIN TENSIONER FOR OIL PUMP

1. Remove chain tensioner for oil pump.
    1. 1.1. Press clamp in **-direction of arrow-** and lock it using locking pin T40011.
    2. 1.2. Unscrew guide pin **-1-** and remove chain tensioner.

Fig 1: Removing Oil Pump Chain Tensioner

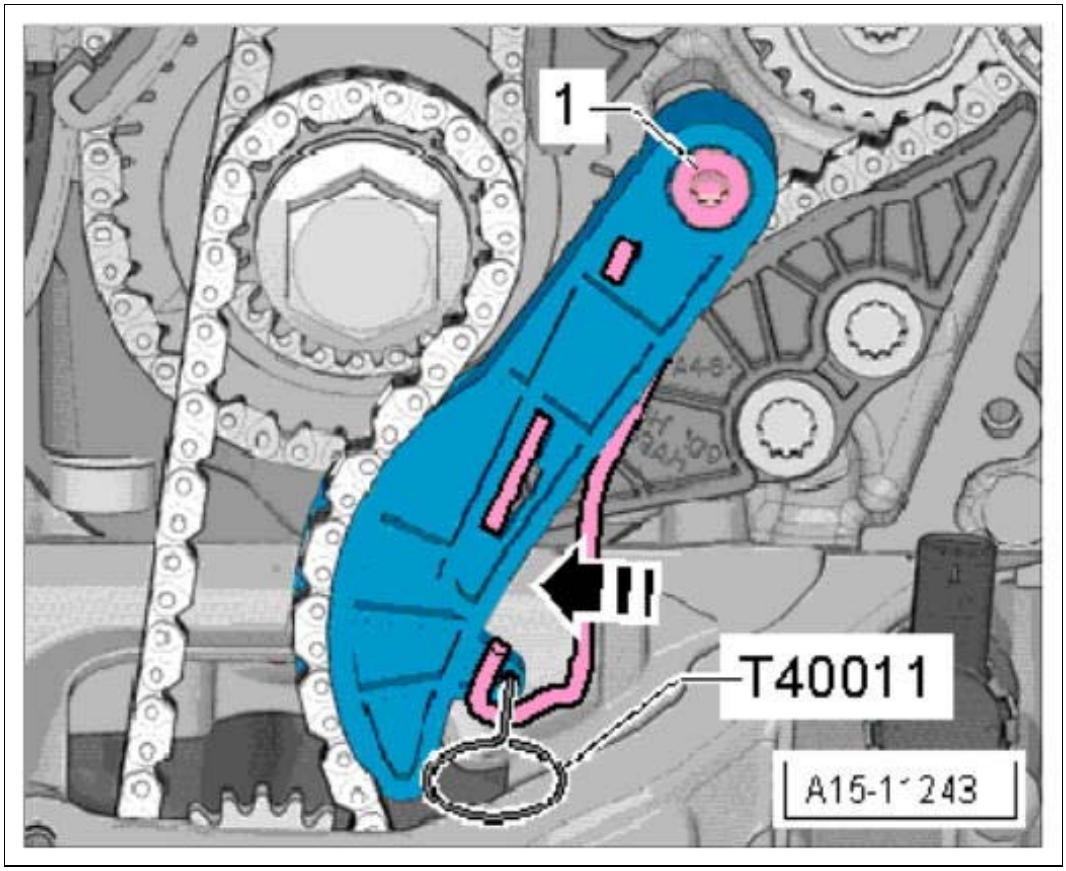

Courtesy of PORSCHE CARS NORTH AMERICA, INC.

WM 153619 REMOVING AND INSTALLING CHAIN TENSIONER (MACAN) > INSTALLING CHAIN TENSIONER > INSTALLING CHAIN TENSIONER FOR TIMING CHAIN

1. Pre-tension the chain tensioner using **locking tool T40267** .
2. Install chain tensioner and fit and tighten fastening screws **-3-** .

Fig 1: Identifying Chain Tensioner Fastening Screws

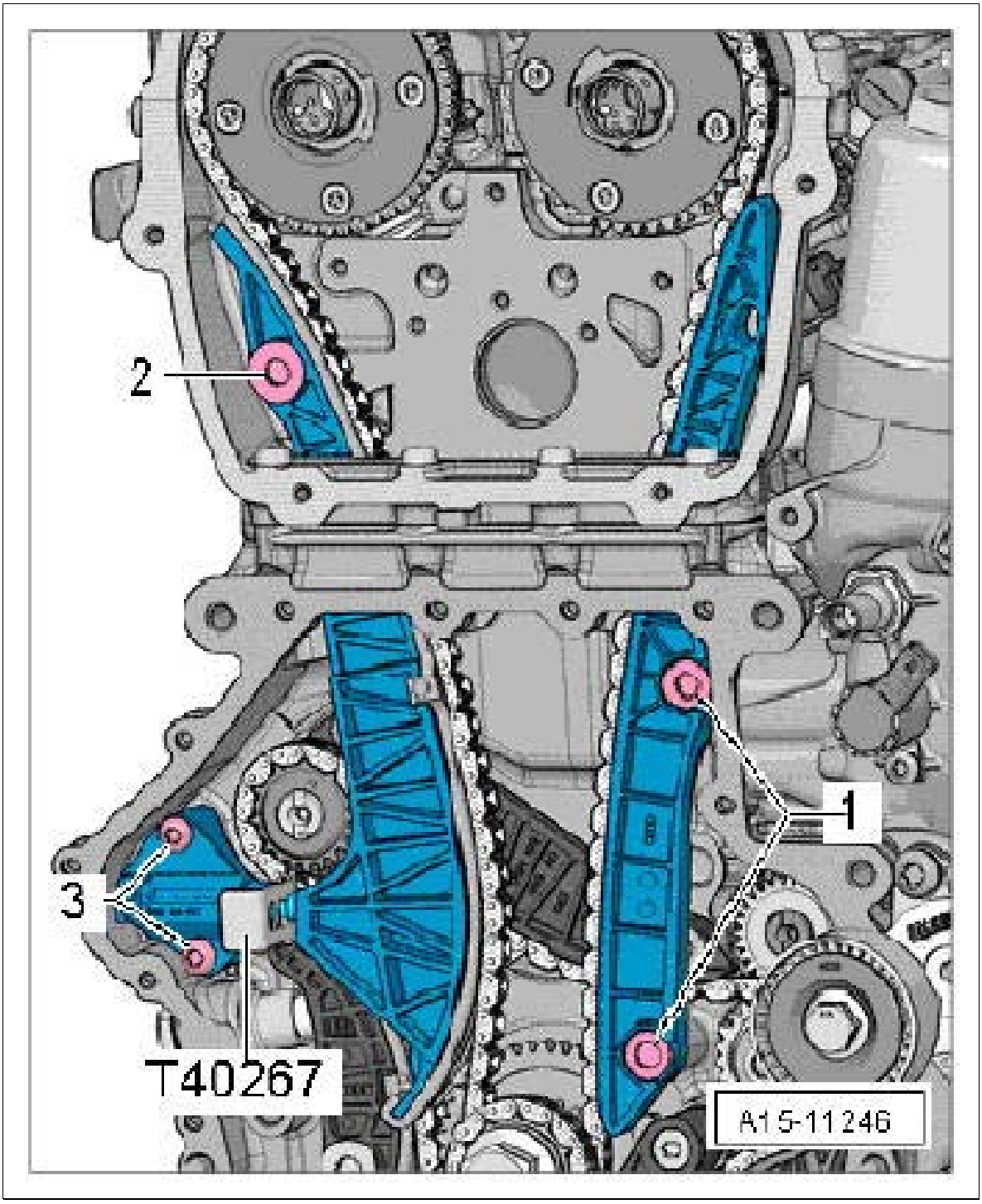

Courtesy of PORSCHE CARS NORTH AMERICA, INC.

3. **Locking tool T40267** must be pulled off the chain tensioner.

Fig 2: Locking Chain Tensioner

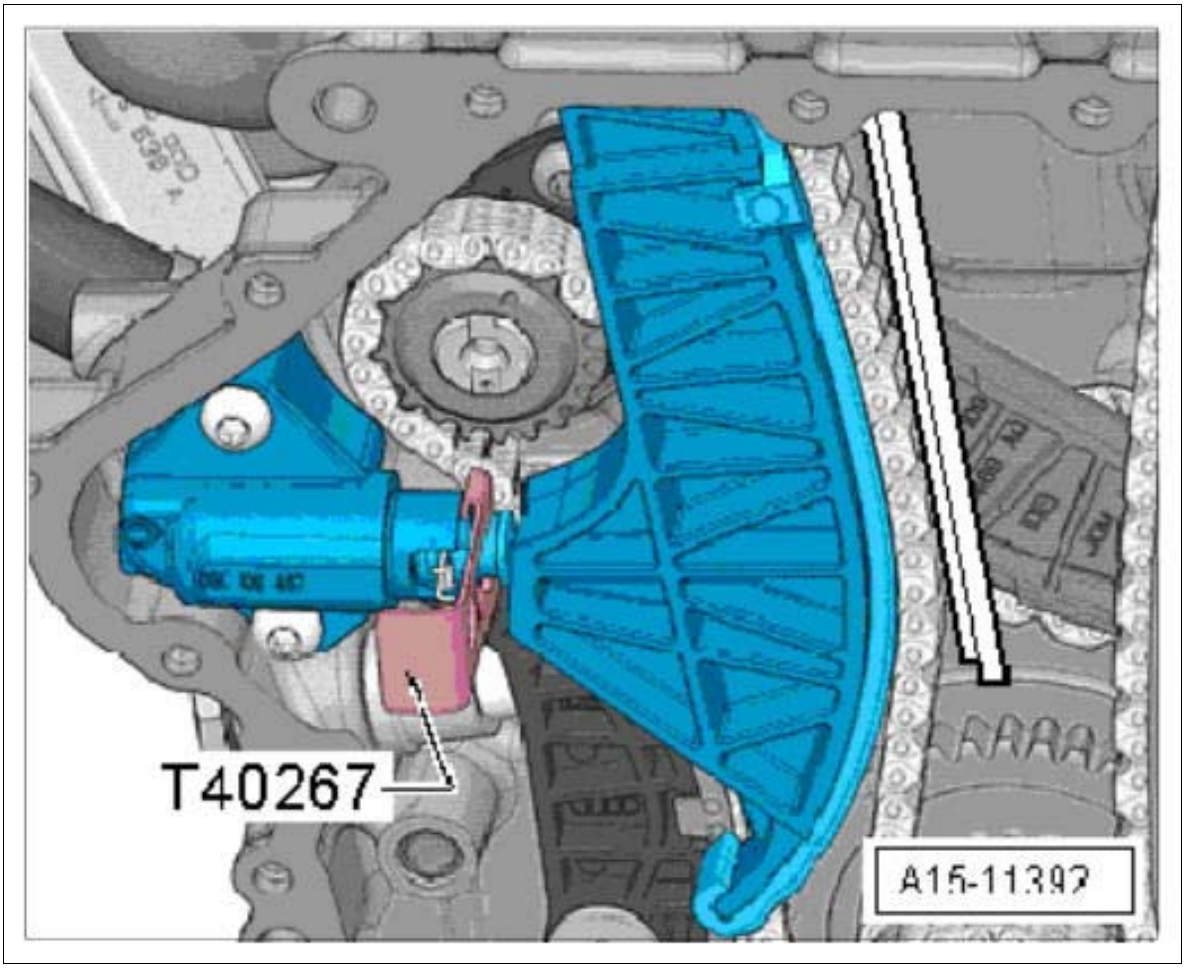

Courtesy of PORSCHE CARS NORTH AMERICA, INC.

4. **Fit and tighten new** fastening screws **-arrows-** .

Fig 3: Locating Chain Tensioner Screws

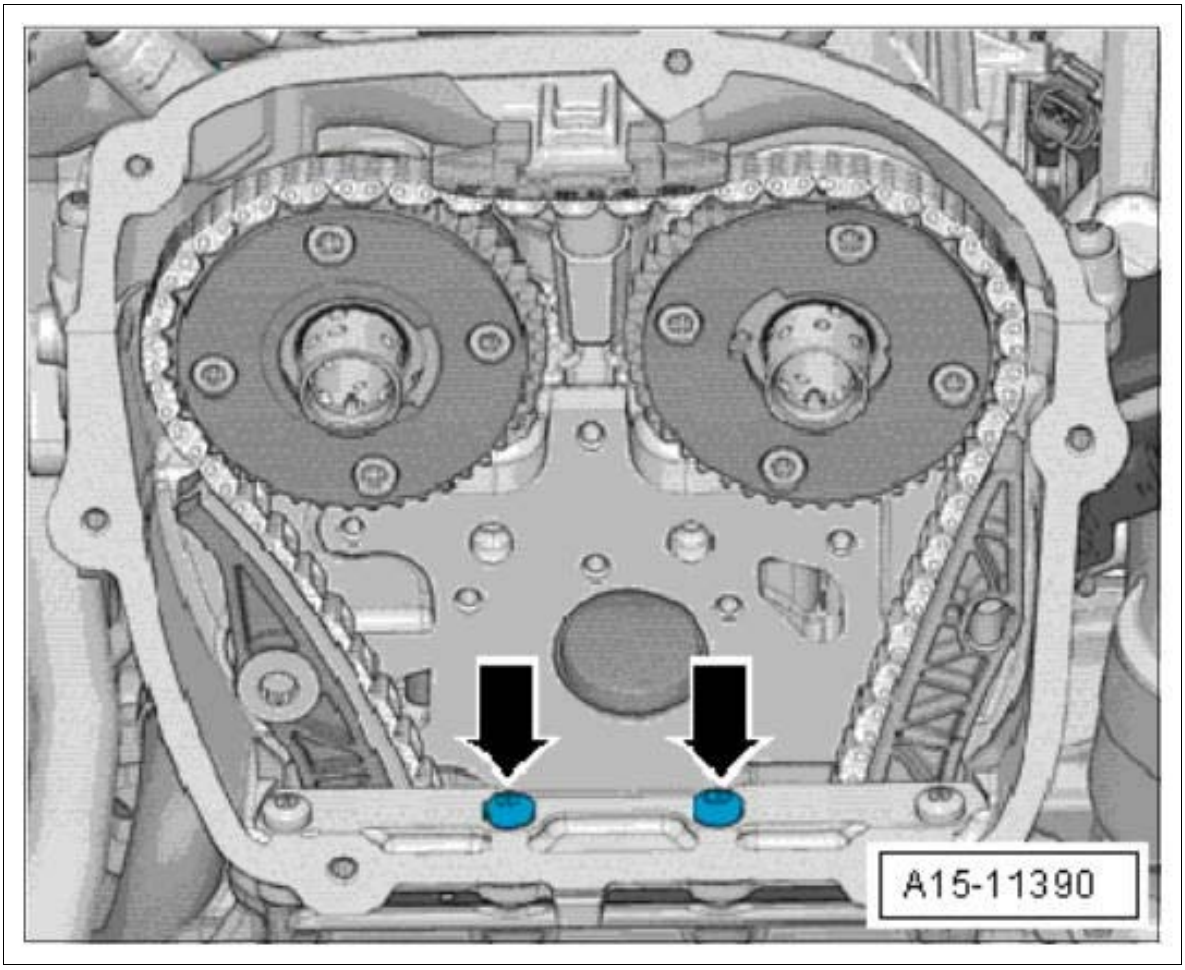

Courtesy of PORSCHE CARS NORTH AMERICA, INC.

5. Install bearing saddle.
    1. 5.1. Fit bearing saddle and screw in new fastening screws **-arrows-** hand-tight.
    2. 5.2. **Tighten new** fastening screws **-arrows-** .

Fig 4: Identifying Bearing Saddle Screws

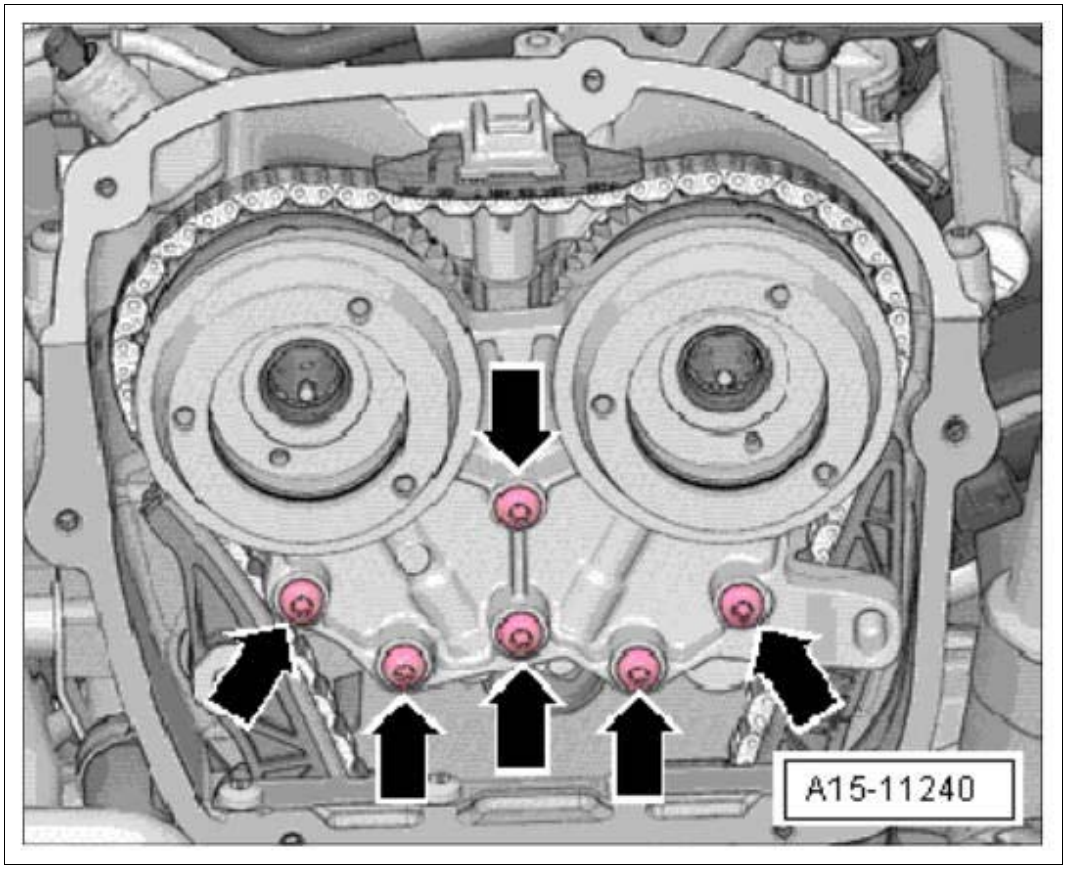

Courtesy of PORSCHE CARS NORTH AMERICA, INC.

Information

Control valves are left-threaded.

6. Install control valves using **assembly tool T10352** /2. → Installing control valves

Fig 5: Installing Control Valves

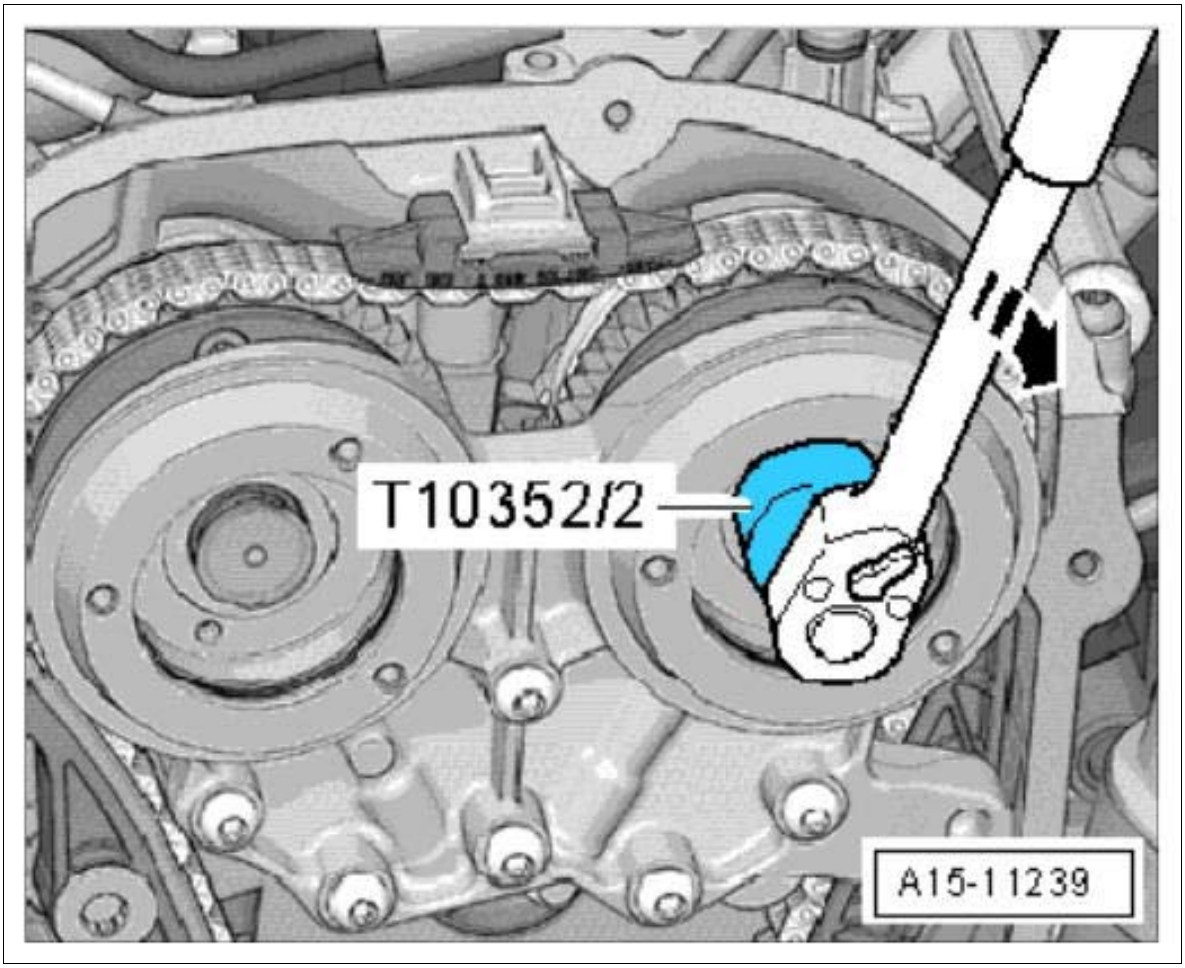

Courtesy of PORSCHE CARS NORTH AMERICA, INC.

WM 153619 REMOVING AND INSTALLING CHAIN TENSIONER (MACAN) > INSTALLING CHAIN TENSIONER > INSTALLING CHAIN TENSIONER ON BALANCE SHAFTS

1. Screw in chain tensioner **-1-** using screw locking agent and tighten it.

Fig 1: Identifying Balance Shafts Chain Tensioner

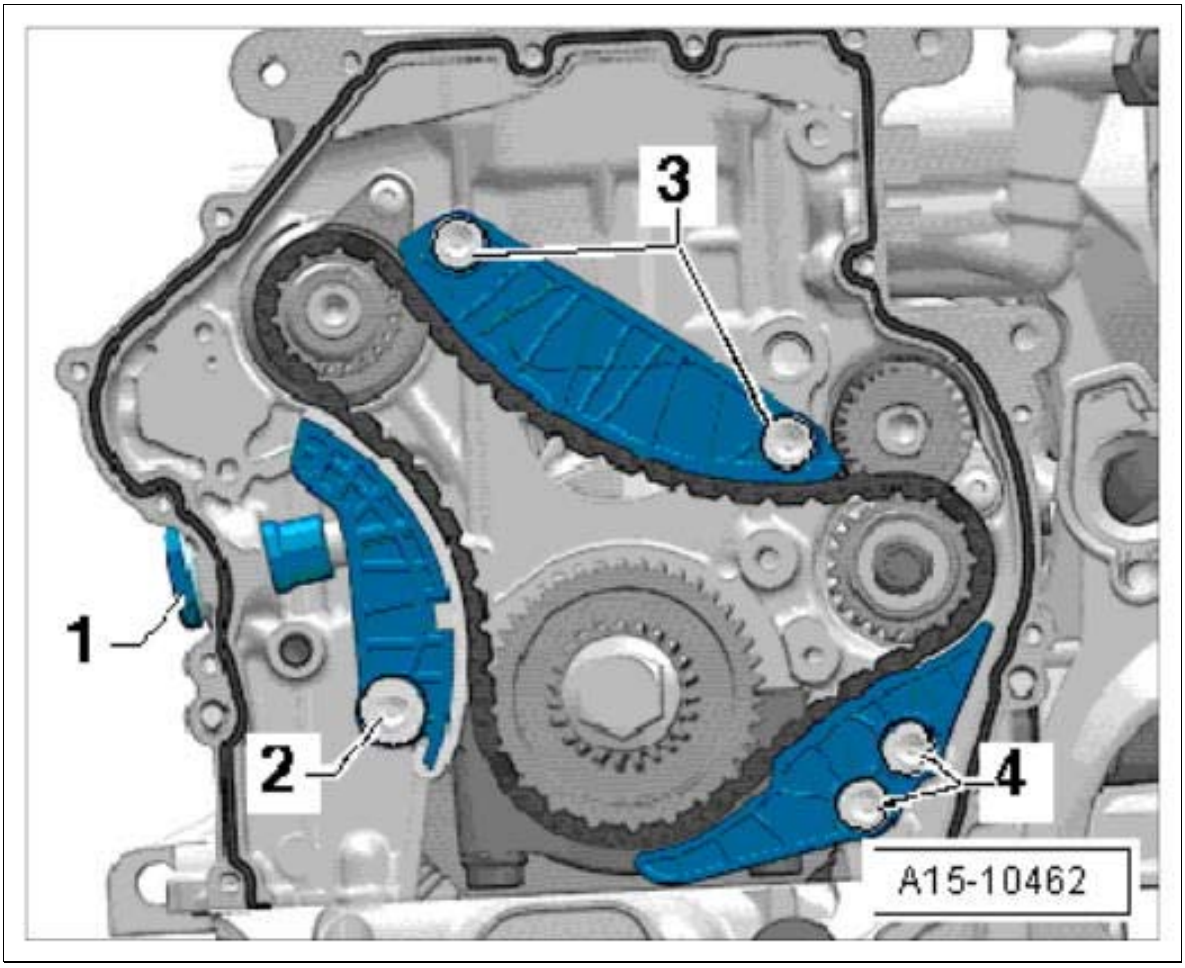

Courtesy of PORSCHE CARS NORTH AMERICA, INC.

WM 153619 REMOVING AND INSTALLING CHAIN TENSIONER (MACAN) > INSTALLING CHAIN TENSIONER > INSTALLING CHAIN TENSIONER FOR OIL PUMP

1. Install chain tensioner for oil pump.
    1. 1.1. Fit and tighten guide pin **-1-** . **Tightening torque 9 Nm (6.5 ftlb.)**
    2. 1.2. **Locking pin T40011** must now be removed.

Fig 1: Installing Oil Pump Chain Tensioner

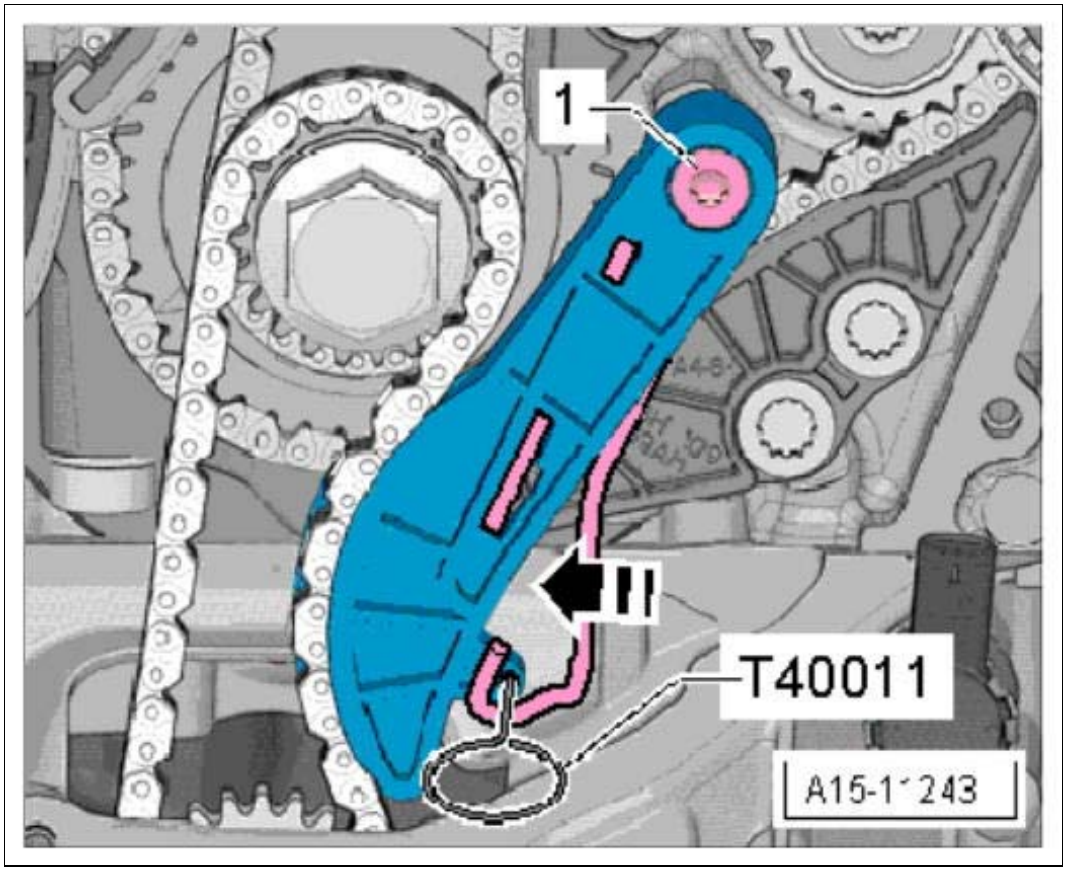

Courtesy of PORSCHE CARS NORTH AMERICA, INC.

WM 153619 REMOVING AND INSTALLING CHAIN TENSIONER (MACAN) > SUBSEQUENT WORK > SUBSEQUENT WORK FOR CHAIN TENSIONER FOR TIMING CHAIN

1. Install timing-case cover. → INSTALLING CHAIN HOUSING COVER

WM 153619 REMOVING AND INSTALLING CHAIN TENSIONER (MACAN) > SUBSEQUENT WORK > SUBSEQUENT WORK FOR CHAIN TENSIONER ON BALANCE SHAFTS

1. Install front underbody panelling. → INSTALLING COVER FOR FRONT UNDERBODY

WM 153619 REMOVING AND INSTALLING CHAIN TENSIONER (MACAN) > SUBSEQUENT WORK > SUBSEQUENT WORK FOR CHAIN TENSIONER FOR OIL PUMP

1. Install lower timing-case cover. → INSTALLING LOWER CHAIN HOUSING COVER

WM 153719 REMOVING AND INSTALLING SOLENOID/HYDRAULIC VALVE FOR CAMSHAFT CONTROLLER (MACAN) > TECHNICAL VALUES

Location	Description	Type	Basic value	Tolerance 1	Tolerance 2
Fastening screw securing solenoid hydraulic valve for camshaft control	Replace	Initial tightening	4 Nm (3 ftlb.)		
Fastening screw securing solenoid hydraulic valve for camshaft control		Final tightening	+45°		

WM 153719 REMOVING AND INSTALLING SOLENOID/HYDRAULIC VALVE FOR CAMSHAFT CONTROLLER (MACAN) > PRELIMINARY WORK

1. Remove engine cover (design cover).

WM 153719 REMOVING AND INSTALLING SOLENOID/HYDRAULIC VALVE FOR CAMSHAFT CONTROLLER (MACAN) > REMOVING SOLENOID/HYDRAULIC VALVE FOR CAMSHAFT CONTROLLER

1. Remove solenoid/hydraulic valves for camshaft controllers.
    1. 1.1. Disconnect electric plug connections **-1 and 3-** .
    2. 1.2. Unscrew fastening screws **-arrows-** .
    3. 1.3. Remove solenoid/hydraulic valves for camshaft controllers **-2 and 4-** .

Fig 1: Locating Camshaft Controller Solenoid/Hydraulic Valve Screws

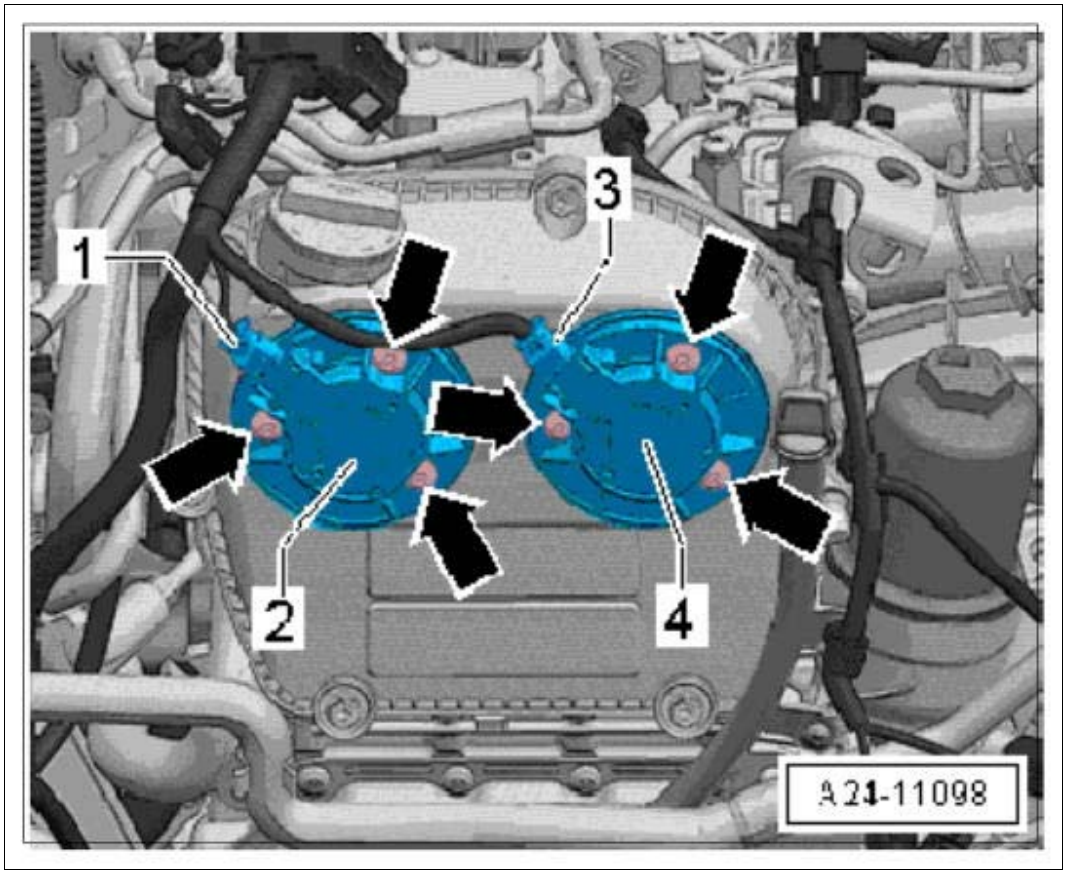

Courtesy of PORSCHE CARS NORTH AMERICA, INC.

WM 153719 REMOVING AND INSTALLING SOLENOID/HYDRAULIC VALVE FOR CAMSHAFT CONTROLLER (MACAN) > INSTALLING SOLENOID/HYDRAULIC VALVE FOR CAMSHAFT CONTROLLER

1. Install solenoid/hydraulic valves for camshaft controllers.
    1. 1.1. Fit solenoid/hydraulic valves for camshaft controller **-2 and 4-** with new O-rings.

       Coat sealing rings with engine oil.
    2. 1.2. Fit and tighten new fastening screws **-arrows-** .

       Step 1: **Initial tightening 4 Nm (3 ftlb.)**

       Step 2: **Final tightening +45°**
    3. 1.3. Connect electric plug connections **-1 and 3-** .

Fig 1: Locating Camshaft Controller Solenoid/Hydraulic Valve Screws

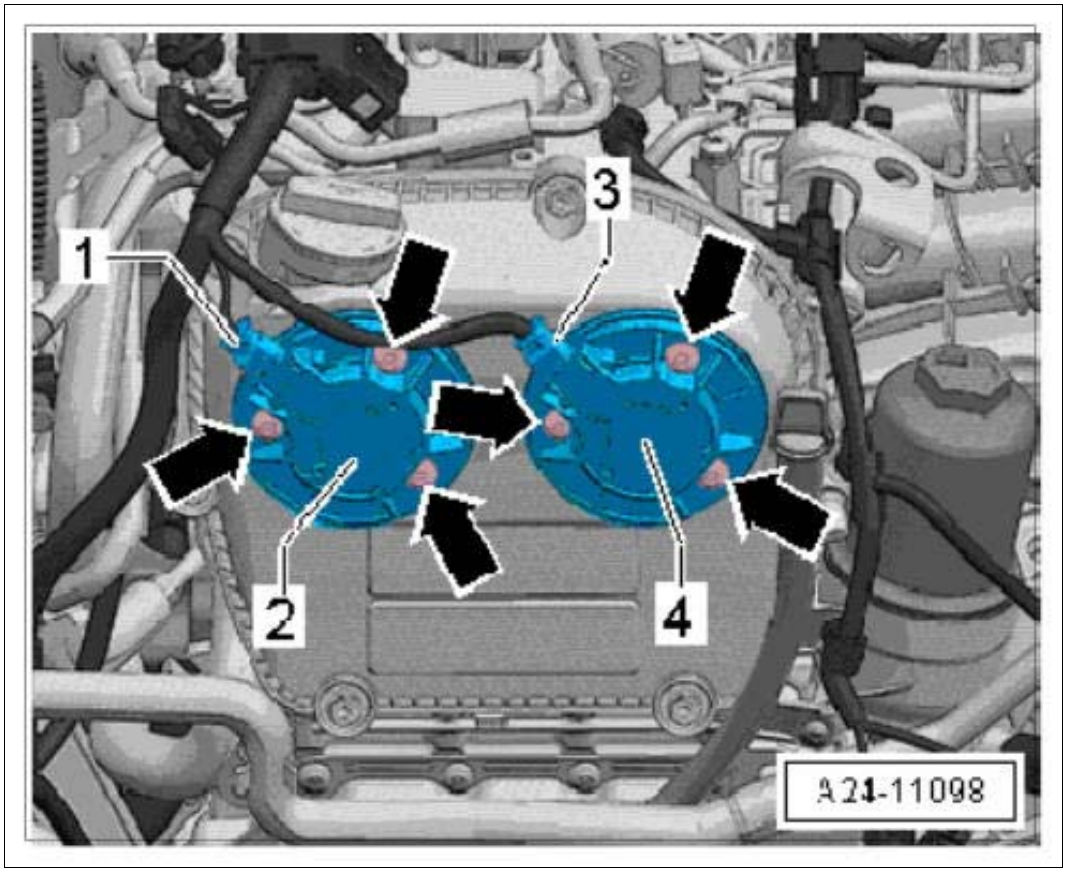

Courtesy of PORSCHE CARS NORTH AMERICA, INC.

WM 153719 REMOVING AND INSTALLING SOLENOID/HYDRAULIC VALVE (ACTUATORS) FOR CAMSHAFT CONTROLLER (MACAN S, MACAN TURBO) > TOOLS

Designation	Type	Number	Description	
Insert part for torque wrench	Special tool	9792		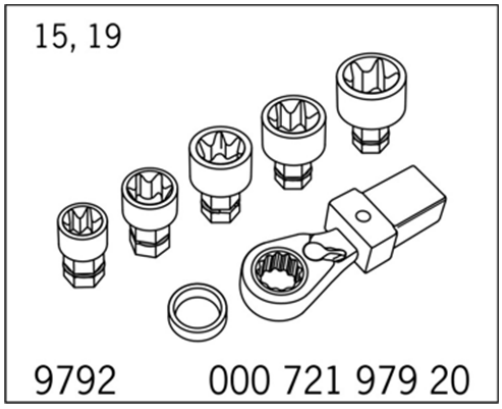

WM 153719 REMOVING AND INSTALLING SOLENOID/HYDRAULIC VALVE (ACTUATORS) FOR CAMSHAFT CONTROLLER (MACAN S, MACAN TURBO) > TECHNICAL VALUES

Location	Description	Type	Basic value	Tolerance 1	Tolerance 2
Actuator to cylinder head cover		Tightening torque	10 Nm (7.5 ftlb.)		

WM 153719 REMOVING AND INSTALLING SOLENOID/HYDRAULIC VALVE (ACTUATORS) FOR CAMSHAFT CONTROLLER (MACAN S, MACAN TURBO) > PRELIMINARY WORK

1. Remove engine cover.

   Only for outlet side:

2. Remove air cleaner housing. → 242519 REMOVING AND INSTALLING AIR CLEANER HOUSING
3. Disconnect positive crankcase ventilation line at the valve cover.

WM 153719 REMOVING AND INSTALLING SOLENOID/HYDRAULIC VALVE (ACTUATORS) FOR CAMSHAFT CONTROLLER (MACAN S, MACAN TURBO) > REMOVING SOLENOID/HYDRAULIC VALVE (ACTUATORS) FOR CAMSHAFT CONTROLLER > REMOVING SOLENOID/HYDRAULIC VALVE FOR CAMSHAFT CONTROLLER

1. Disconnect electric connector.
2. Unscrew fastening screws **-5-** .

   Tool recommendation: **Insert part for torque wrench 9792**

3. Pull hydraulic valve **-6-** forward and remove it.

   Information

   Replace sealing rings, seals and O-rings.

   1. 3.1. Remove seal **-4-** .

4. Place hydraulic valve **-6-** on a clean surface.

Fig 1: Removing Camshaft Controller Hydraulic Valve

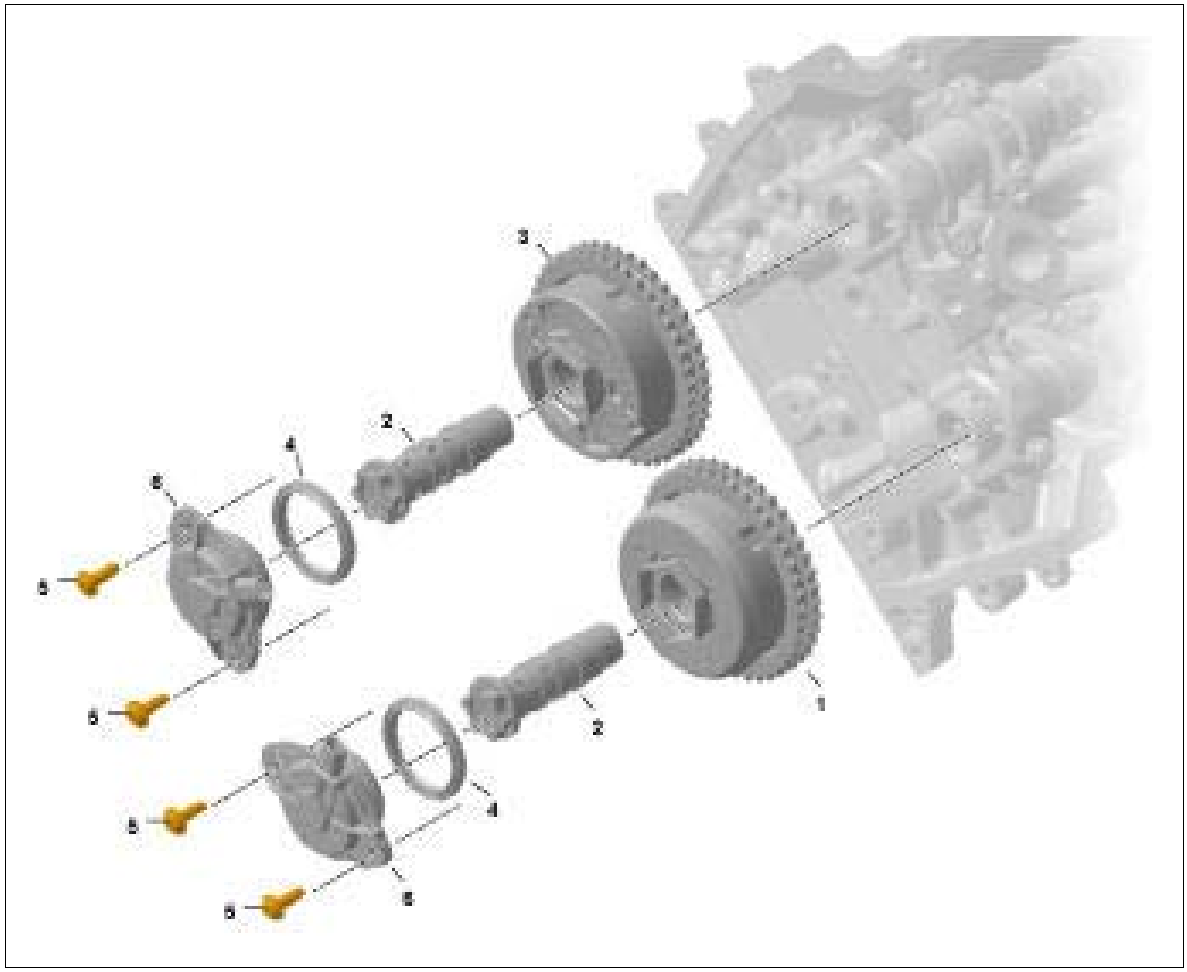

Courtesy of PORSCHE CARS NORTH AMERICA, INC.

WM 153719 REMOVING AND INSTALLING SOLENOID/HYDRAULIC VALVE (ACTUATORS) FOR CAMSHAFT CONTROLLER (MACAN S, MACAN TURBO) > INSTALLING SOLENOID/HYDRAULIC VALVE (ACTUATORS) FOR CAMSHAFT CONTROLLER

Information

Replace sealing rings, seals and O-rings.

1. Position hydraulic valve **-6-** .
2. Tighten fastening screws **-5-** . **Tightening torque 10 Nm (7.5 ftlb.)**

Fig 1: Installing Camshaft Controller Hydraulic Valve

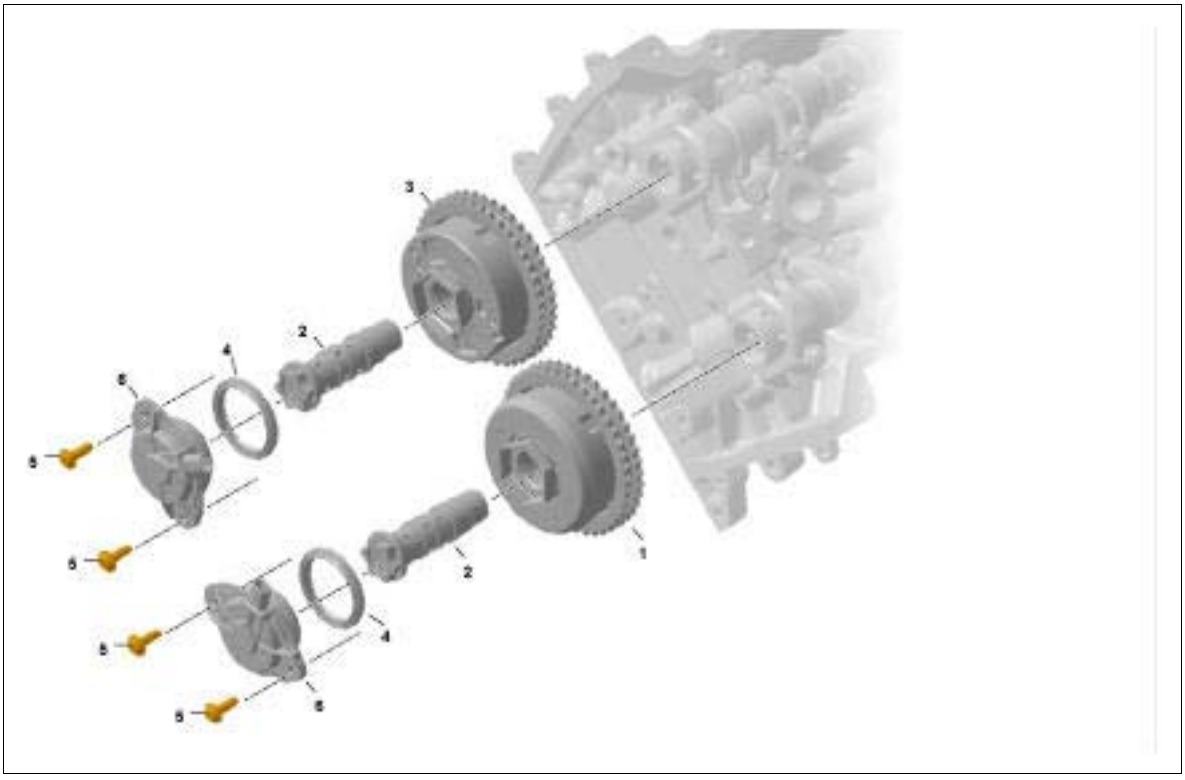

Courtesy of PORSCHE CARS NORTH AMERICA, INC.

WM 153719 REMOVING AND INSTALLING SOLENOID/HYDRAULIC VALVE (ACTUATORS) FOR CAMSHAFT CONTROLLER (MACAN S, MACAN TURBO) > SUBSEQUENT WORK

1. Secure positive crankcase ventilation line to the valve cover.
2. Install air cleaner housing. → 242519 REMOVING AND INSTALLING AIR CLEANER HOUSING
3. Install engine cover.

WM 154719 REMOVING AND INSTALLING TENSIONING RAILS (MACAN) > TOOLS

Designation	Type	Number	Description	

counter-hold tool	VW tool	T10355		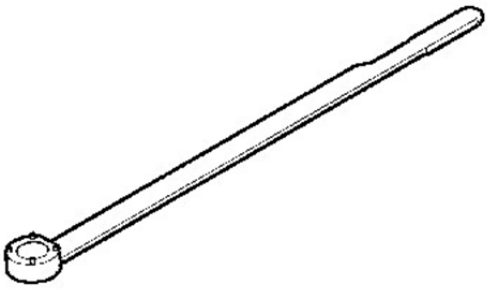
Lever	VW tool	T40243		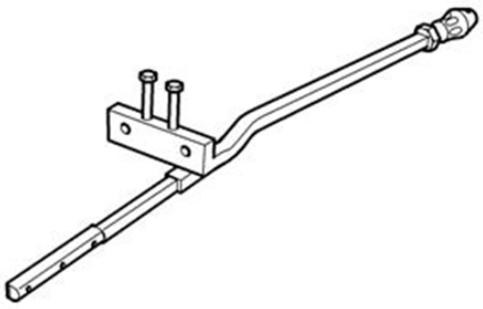
adapter	VW tool	T40266		
locking tool	VW tool	T40267		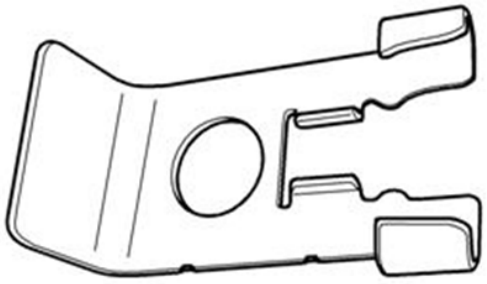

Camshaft clamp	VW tool	T40271		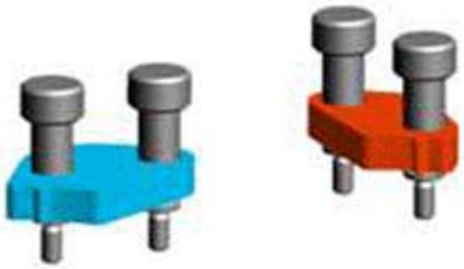

WM 154719 REMOVING AND INSTALLING TENSIONING RAILS (MACAN) > PRELIMINARY WORK > PRELIMINARY WORK FOR TENSIONING RAIL FOR TIMING CHAIN

1. Remove upper timing-case cover. → 153319 REMOVING AND INSTALLING TIMING-CASE COVER
2. Remove actuators for camshaft. → 158419 REMOVING AND INSTALLING ACTUATOR FOR CAMSHAFT
3. Unscrew fastening screws **-arrows-** and remove bearing saddle.

Fig 1: Locating Bearing Saddle Screws

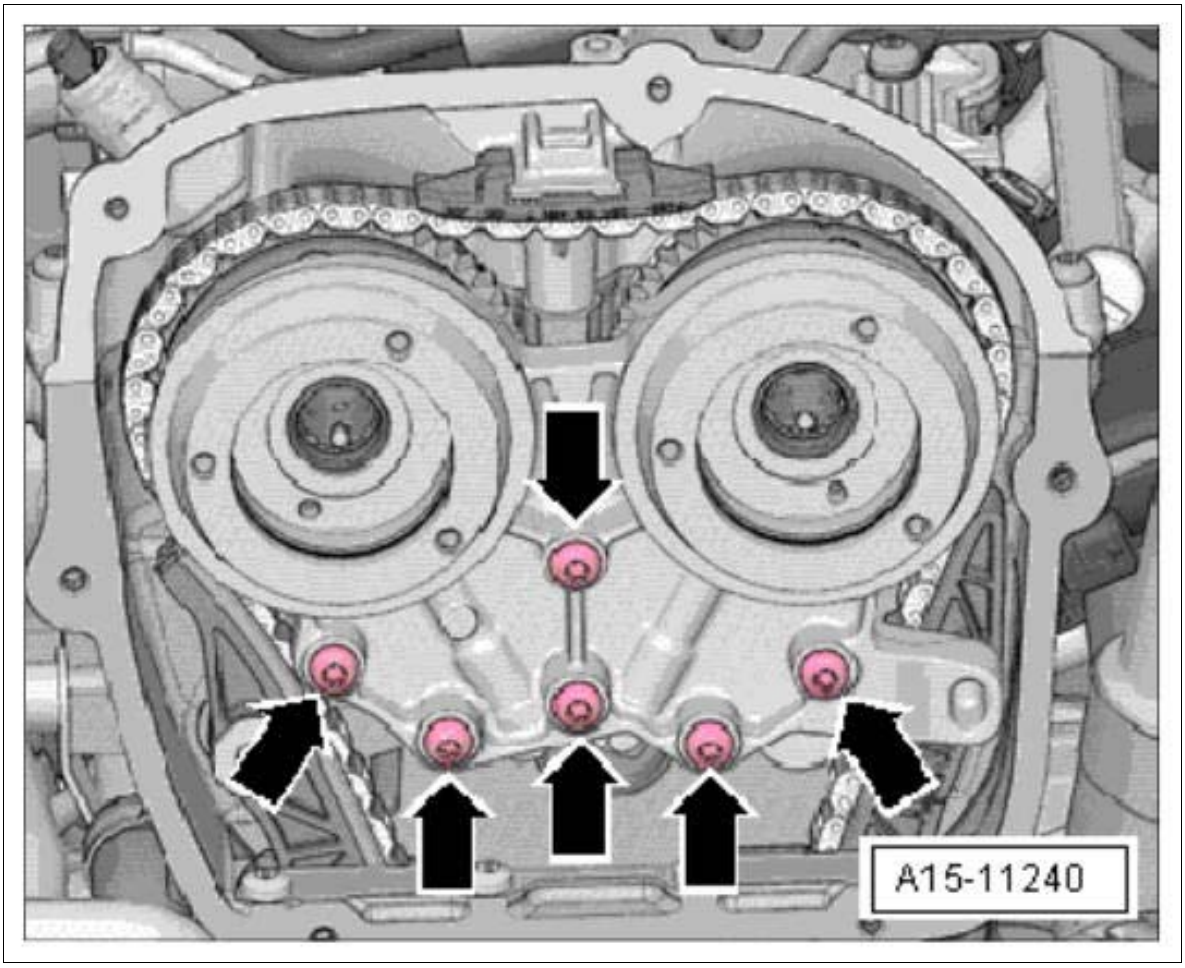

Courtesy of PORSCHE CARS NORTH AMERICA, INC.

4. Turn pulley to "top dead center" position using counter-hold tool T10355.
    1. 4.1. Markings **-1-** on the camshaft are pointing upwards.
    2. 4.2. The notch on the pulley and the marking on the timing-case cover are aligned. **-arrow-**

Fig 2: Locating Top Dead Center Markings

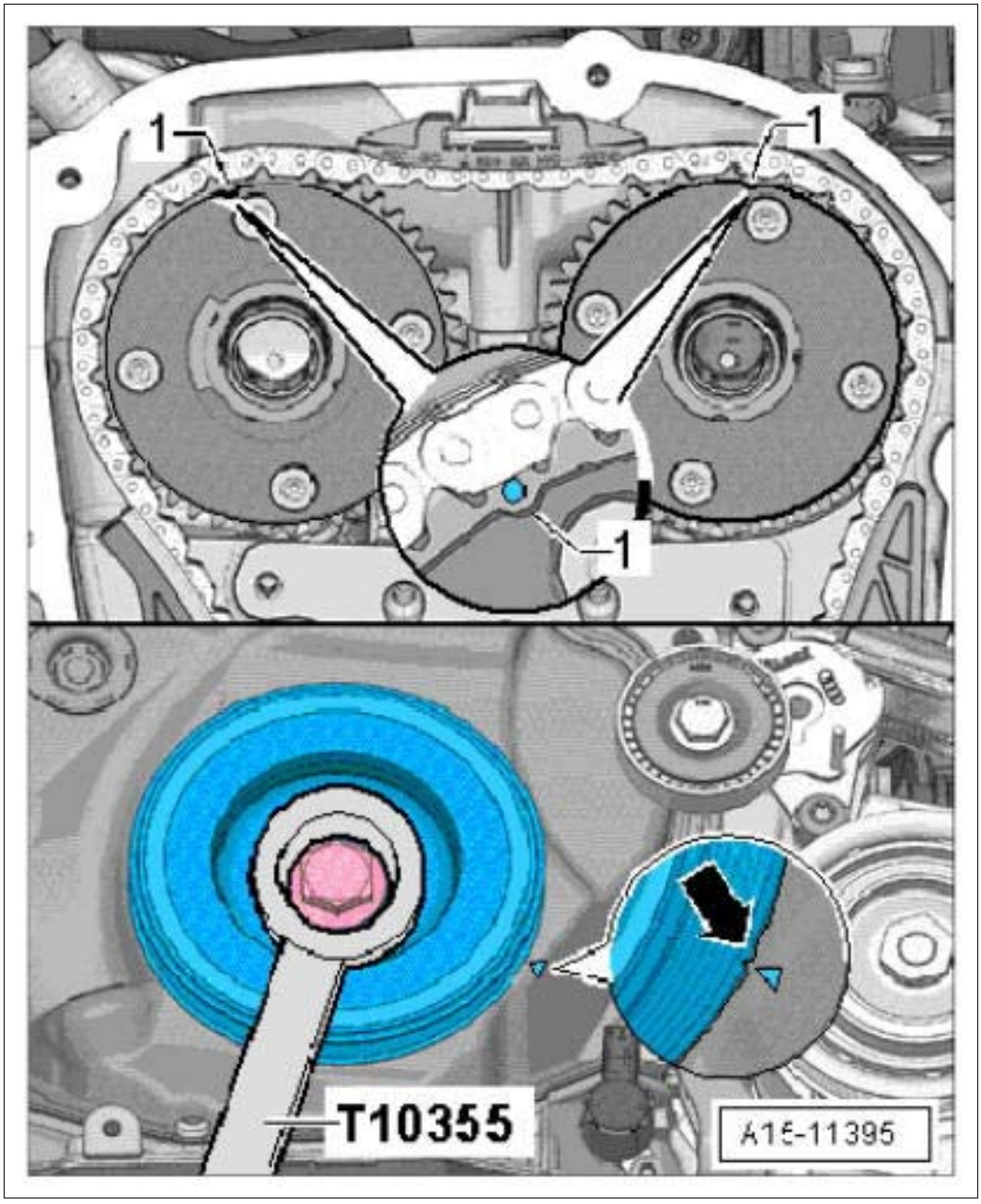

Courtesy of PORSCHE CARS NORTH AMERICA, INC.

5. Remove lower timing-case cover. → 153319 REMOVING AND INSTALLING TIMING-CASE COVER

6. Unscrew fastening screws **-arrows-** .

Fig 3: Locating Tensioning Rails Fastening Screws

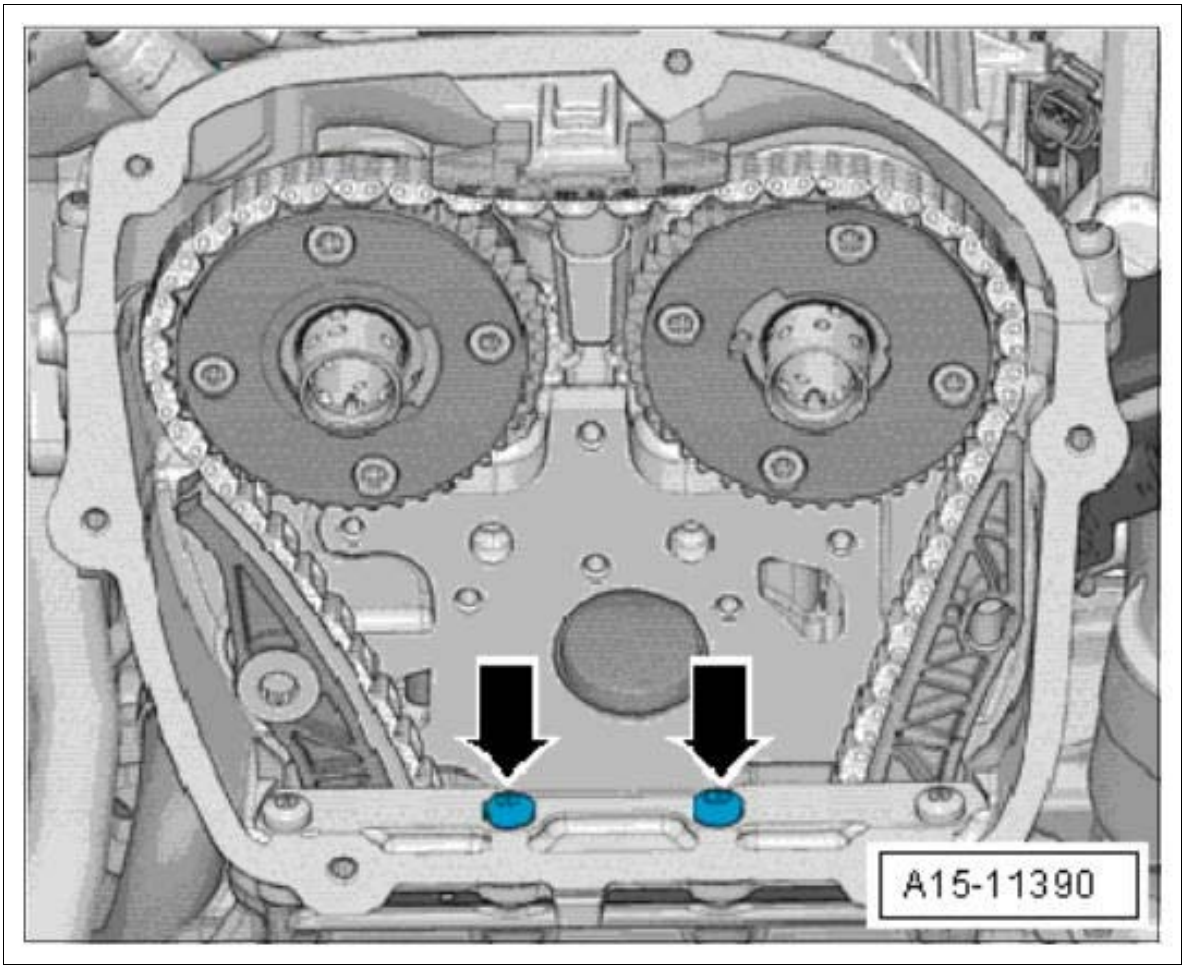

Courtesy of PORSCHE CARS NORTH AMERICA, INC.

7. Tighten chain tensioner.
    1. 7.1. **Lever T40243** must now be screwed in **-arrows-** .
    2. 7.2. Press circlip **-1-** together and hold it securely.
    3. 7.3. **Lever T40243** must now be pressed slowly in **-direction of arrow-** and held securely.

Fig 4: Tightening Chain Tensioner

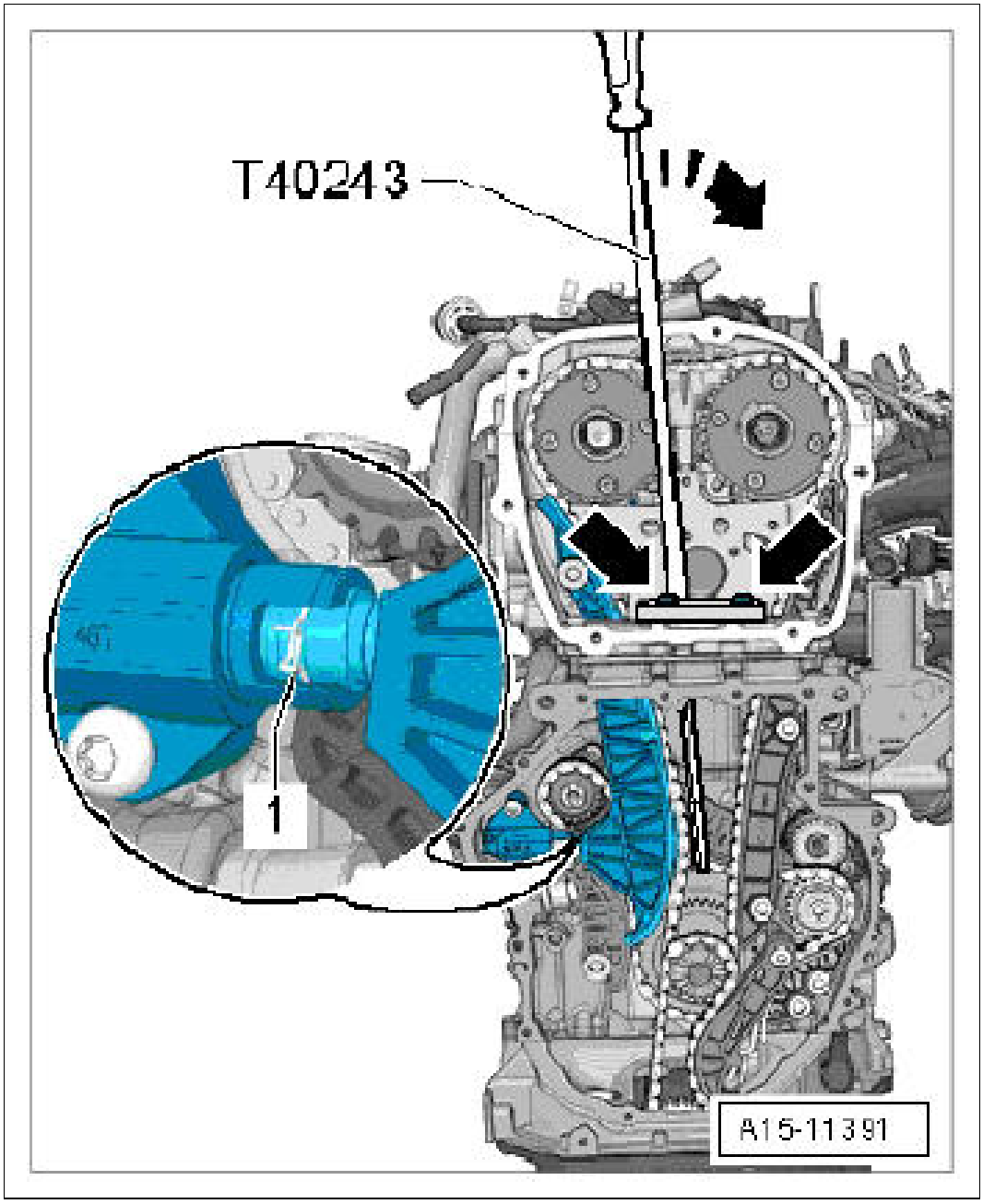

Courtesy of PORSCHE CARS NORTH AMERICA, INC.

8. Lock the chain tensioner using **locking tool T40267** (→ Locking chain tensioner) and remove lever **T40243** .

Fig 5: Locking Chain Tensioner

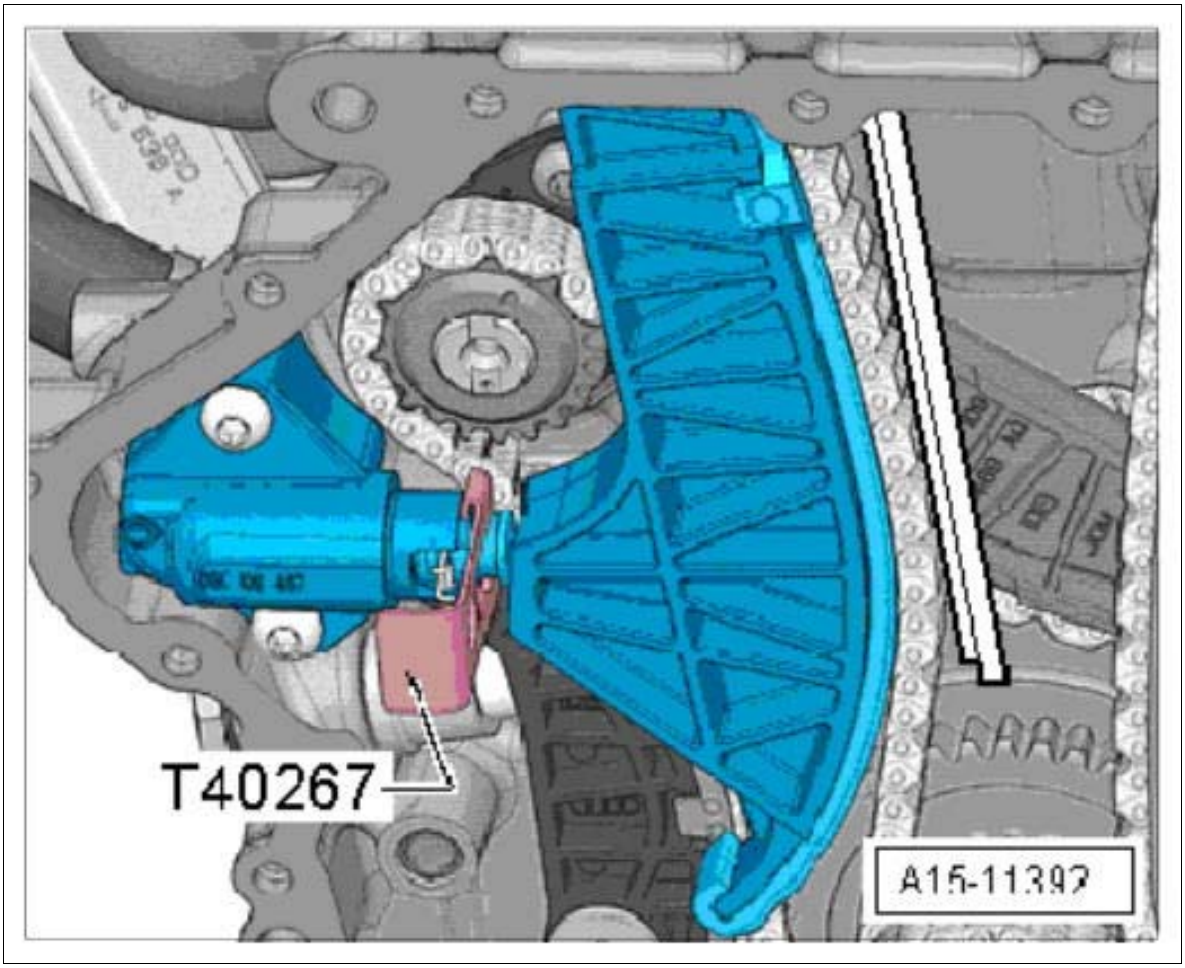

Courtesy of PORSCHE CARS NORTH AMERICA, INC.

9. **Camshaft clamp T40271** /2 must be screwed onto the cylinder head and then pushed into the toothing on the sprocket in **-direction of arrow 2-** .

   Use **adapter T40266** to turn the intake camshaft in **-direction of arrow 1-** if necessary.

Fig 6: Securing Intake Camshaft

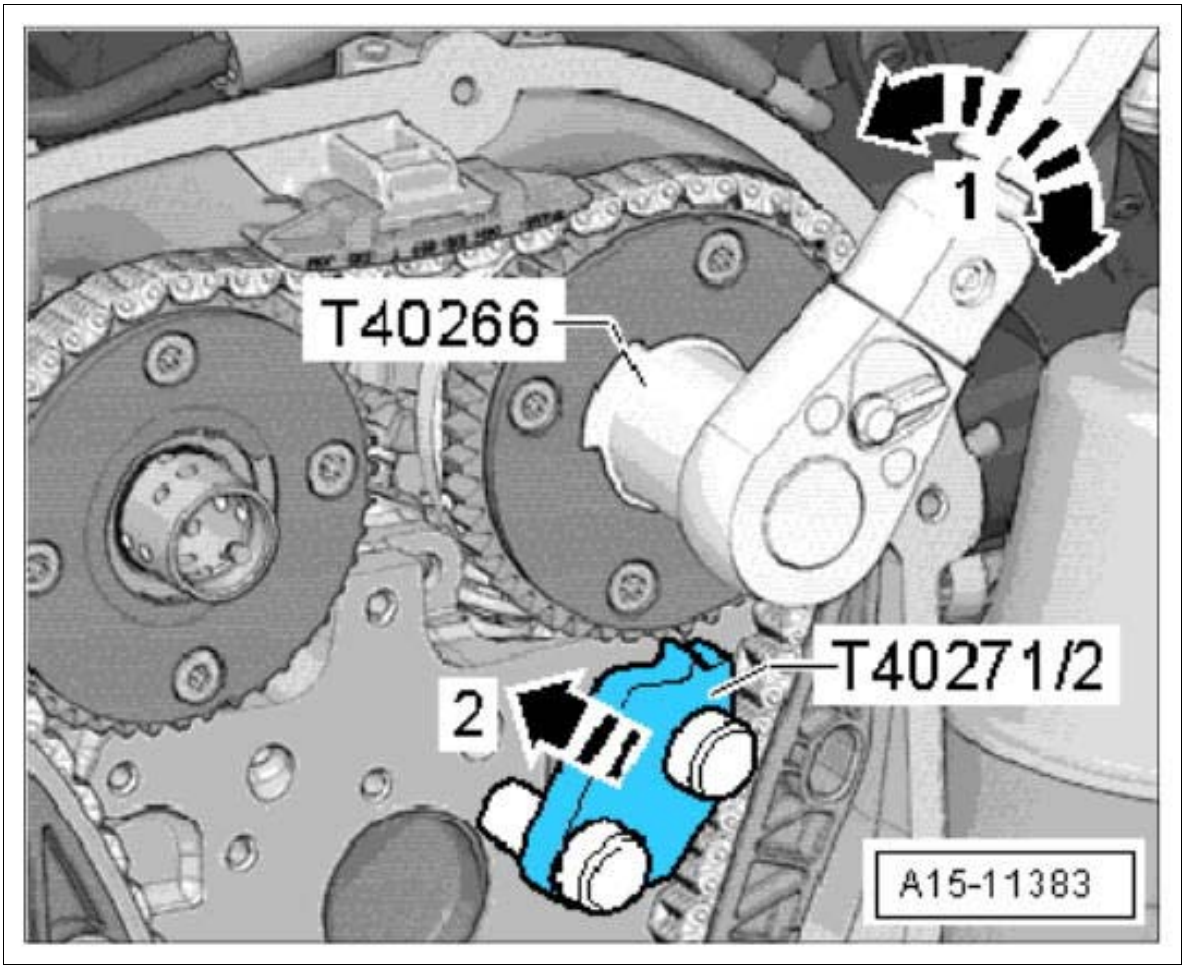

Courtesy of PORSCHE CARS NORTH AMERICA, INC.

WM 154719 REMOVING AND INSTALLING TENSIONING RAILS (MACAN) > PRELIMINARY WORK > PRELIMINARY WORK FOR TENSIONING RAIL ON BALANCE SHAFTS

1. Remove lower timing-case cover. → 153319 REMOVING AND INSTALLING TIMING-CASE COVER
2. Remove chain tensioner on balance shafts. → 153619 REMOVING AND INSTALLING CHAIN TENSIONER

WM 154719 REMOVING AND INSTALLING TENSIONING RAILS (MACAN) > REMOVING TENSIONING RAILS > REMOVING TENSIONING RAIL FOR TIMING CHAIN

1. Unscrew guide pin **-2-** and remove tensioning rail.

Fig 1: Identifying Tensioning And Guide Rails

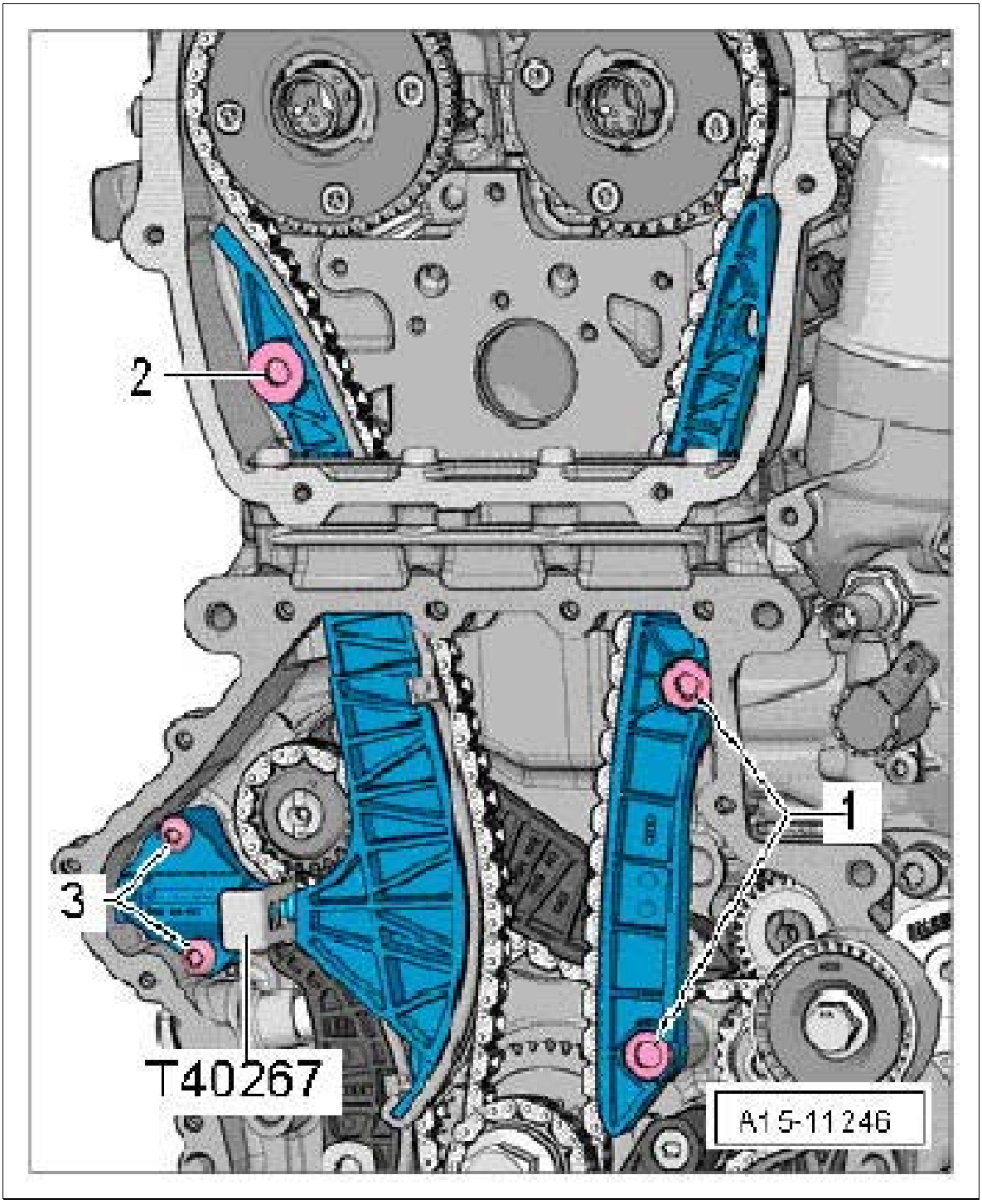

Courtesy of PORSCHE CARS NORTH AMERICA, INC.

WM 154719 REMOVING AND INSTALLING TENSIONING RAILS (MACAN) > REMOVING TENSIONING RAILS > REMOVING TENSIONING RAIL ON BALANCE SHAFTS

1. Unscrew guide pin **-2-** and remove tensioning rail.

Fig 1: Identifying Timing Chain And Balance Shafts

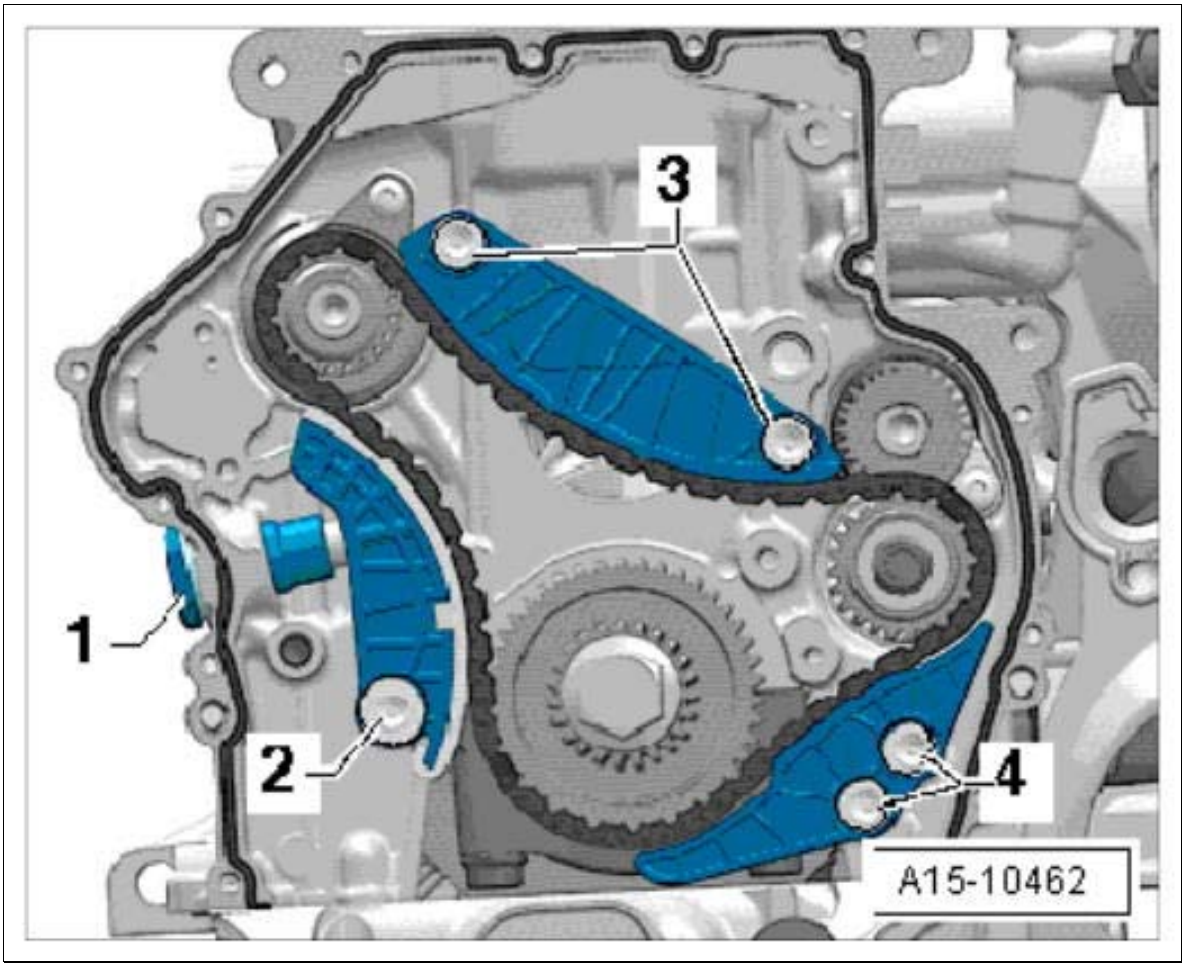

Courtesy of PORSCHE CARS NORTH AMERICA, INC.

WM 154719 REMOVING AND INSTALLING TENSIONING RAILS (MACAN) > INSTALLING TENSIONING RAILS > INSTALLING TENSIONING RAIL FOR TIMING CHAIN

1. Position tensioning rail and fit and tighten guide pin **-2-** .

Fig 1: Identifying Tensioning And Guide Rails

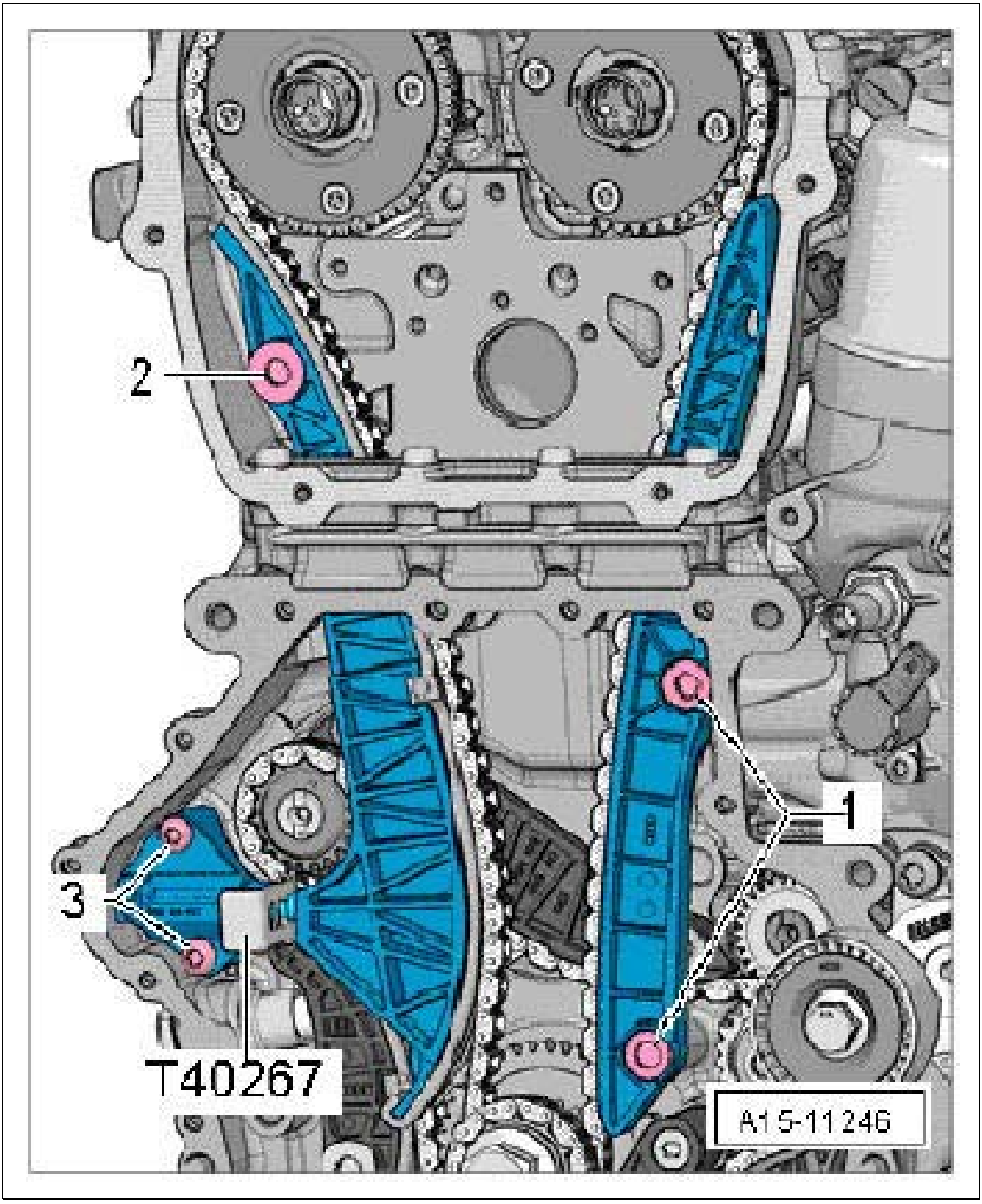

Courtesy of PORSCHE CARS NORTH AMERICA, INC.

WM 154719 REMOVING AND INSTALLING TENSIONING RAILS (MACAN) > INSTALLING TENSIONING RAILS > INSTALLING TENSIONING RAIL ON BALANCE SHAFTS

1. Check installation position of timing chain on balance shafts.

The markings on the sprockets and the colored chain links must match. → Installation position of timing chain on balance shaft

Fig 1: Identifying Position Of Balance Shaft Timing Chain

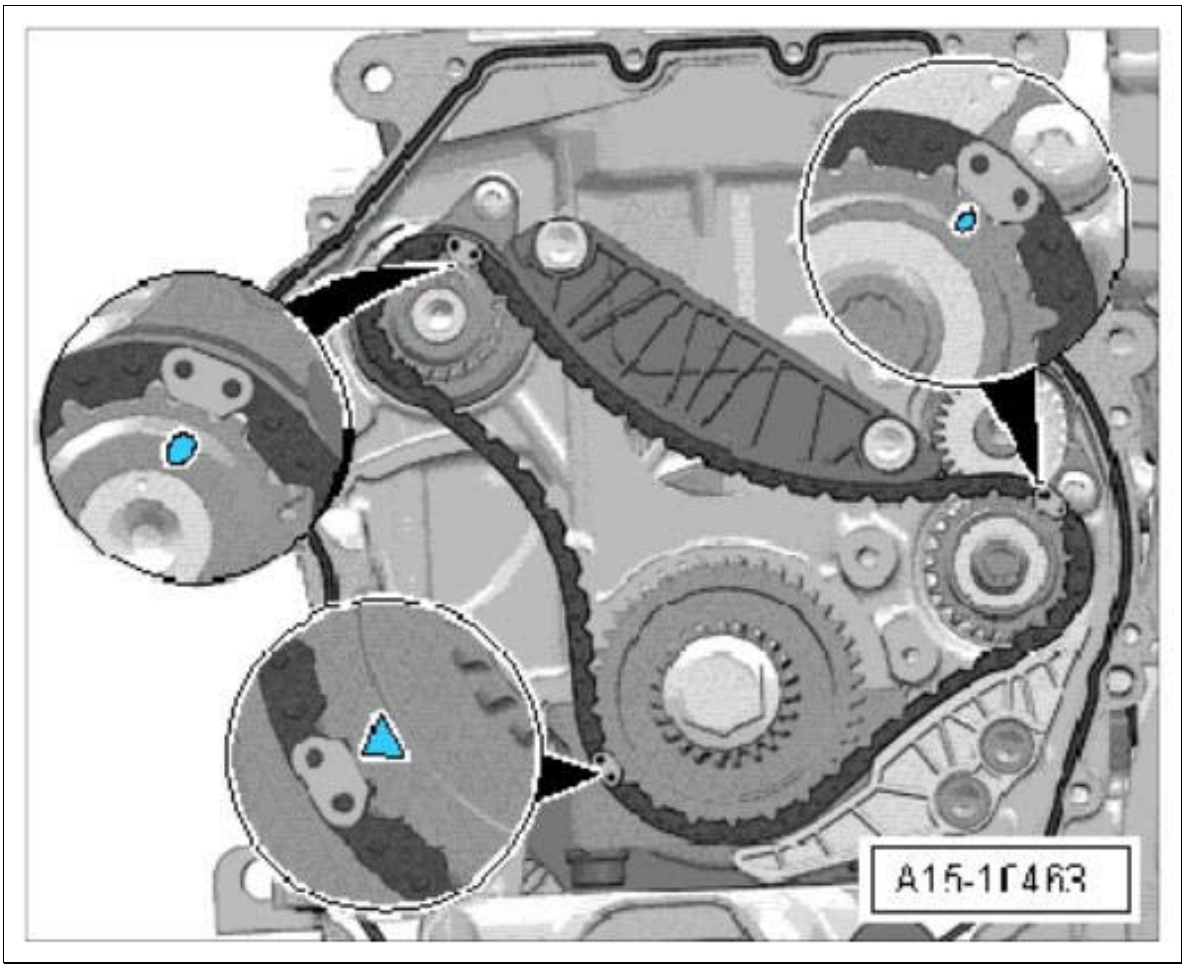

Courtesy of PORSCHE CARS NORTH AMERICA, INC.

2. Position tensioning rail on balance shafts and fit and tighten guide pin **-2-** .

Fig 2: Identifying Timing Chain And Balance Shafts

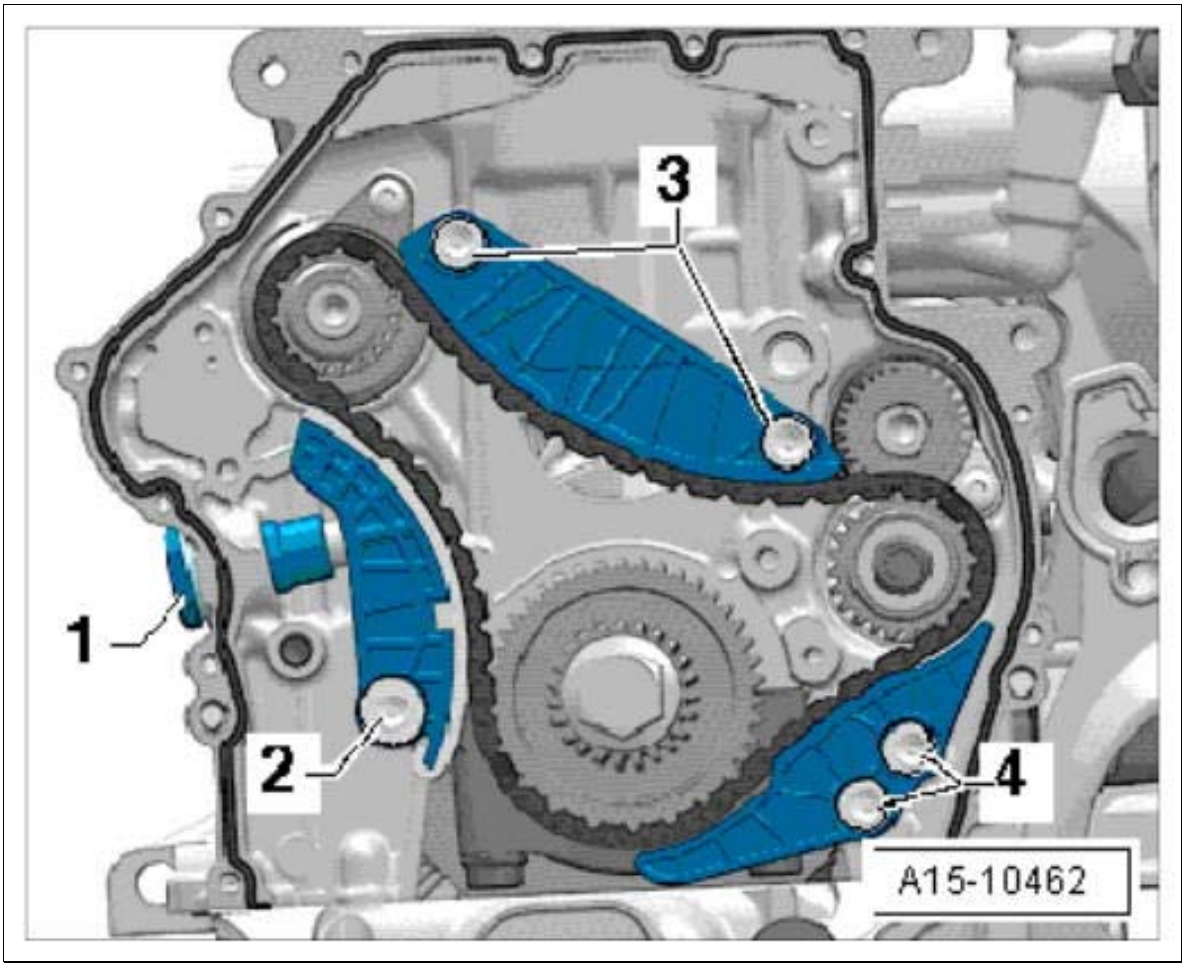

Courtesy of PORSCHE CARS NORTH AMERICA, INC.

WM 154719 REMOVING AND INSTALLING TENSIONING RAILS (MACAN) > SUBSEQUENT WORK > SUBSEQUENT WORK FOR TENSIONING RAIL FOR TIMING CHAIN

1. Check installation position of timing chain on balance shafts.

   The markings on the sprockets and the colored chain links must match. → Installation position of timing chain on balance shaft

Fig 1: Identifying Position Of Balance Shaft Timing Chain

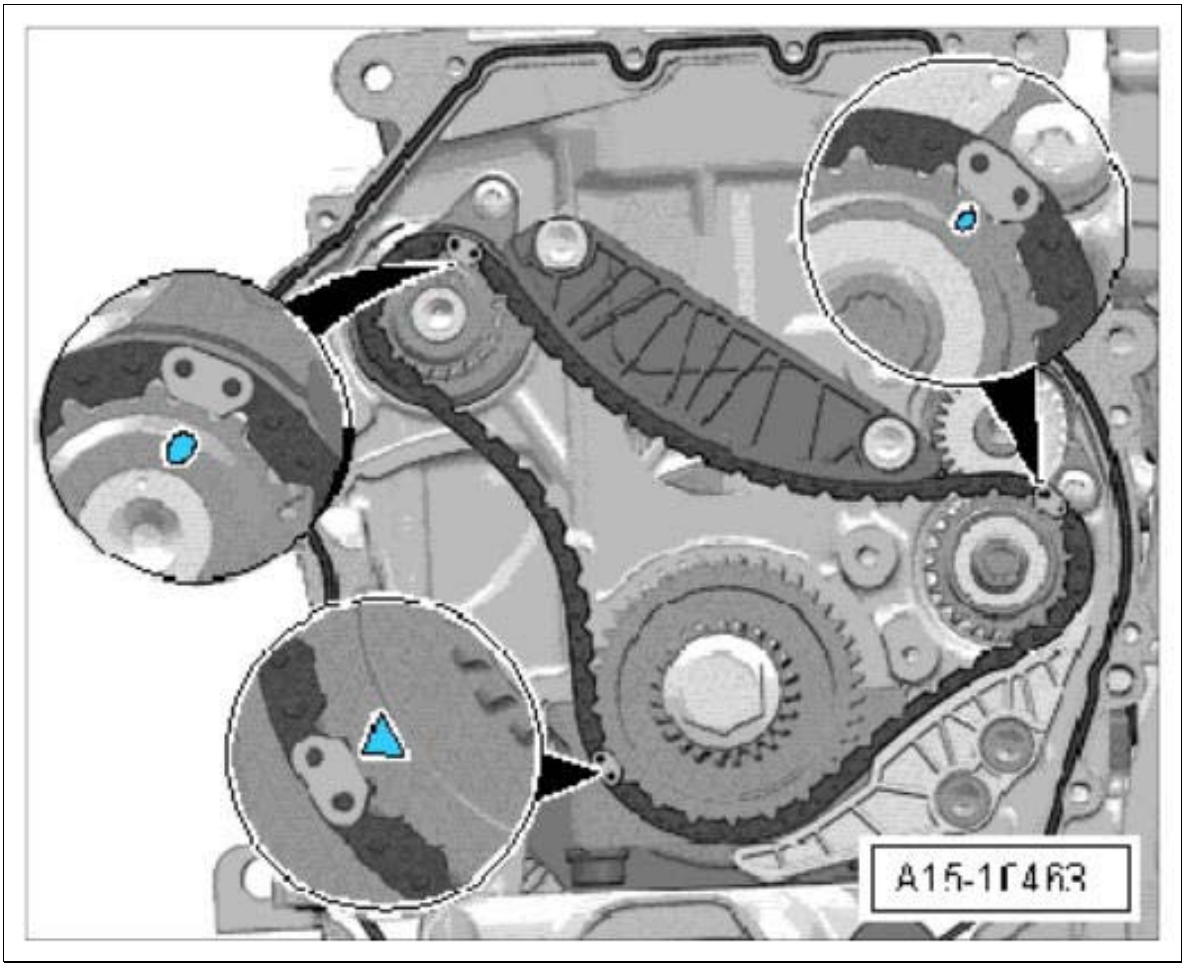

Courtesy of PORSCHE CARS NORTH AMERICA, INC.

2. Check installation position of the timing chain.

   Check the position of the colored chain links with respect to the markings. → Installation position of timing chain

Fig 2: Identifying Timing Chain Position

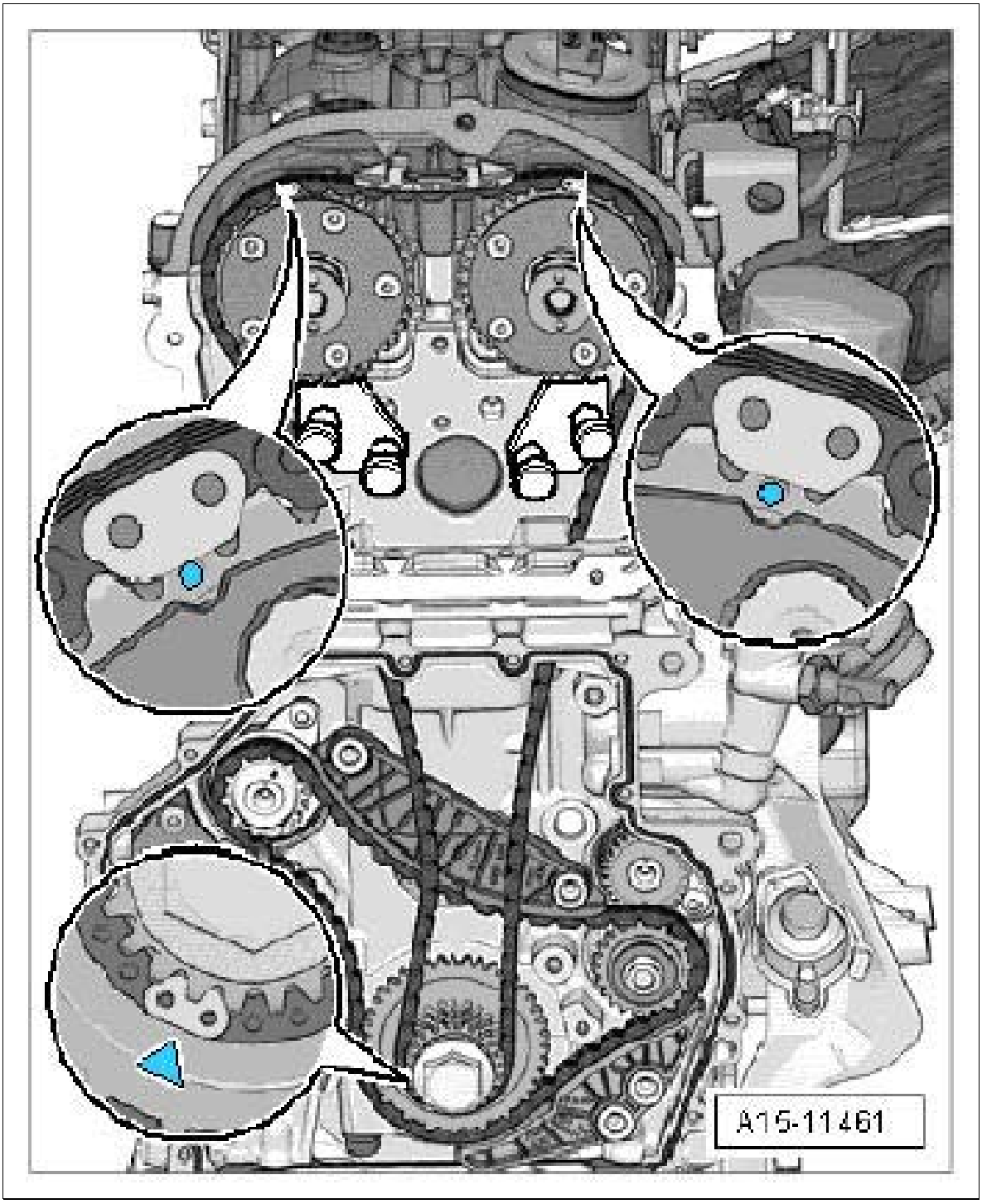

Courtesy of PORSCHE CARS NORTH AMERICA, INC.

3. Locking tool T40267 must be pulled off the chain tensioner. → Locking chain tensioner

Fig 3: Locking Chain Tensioner

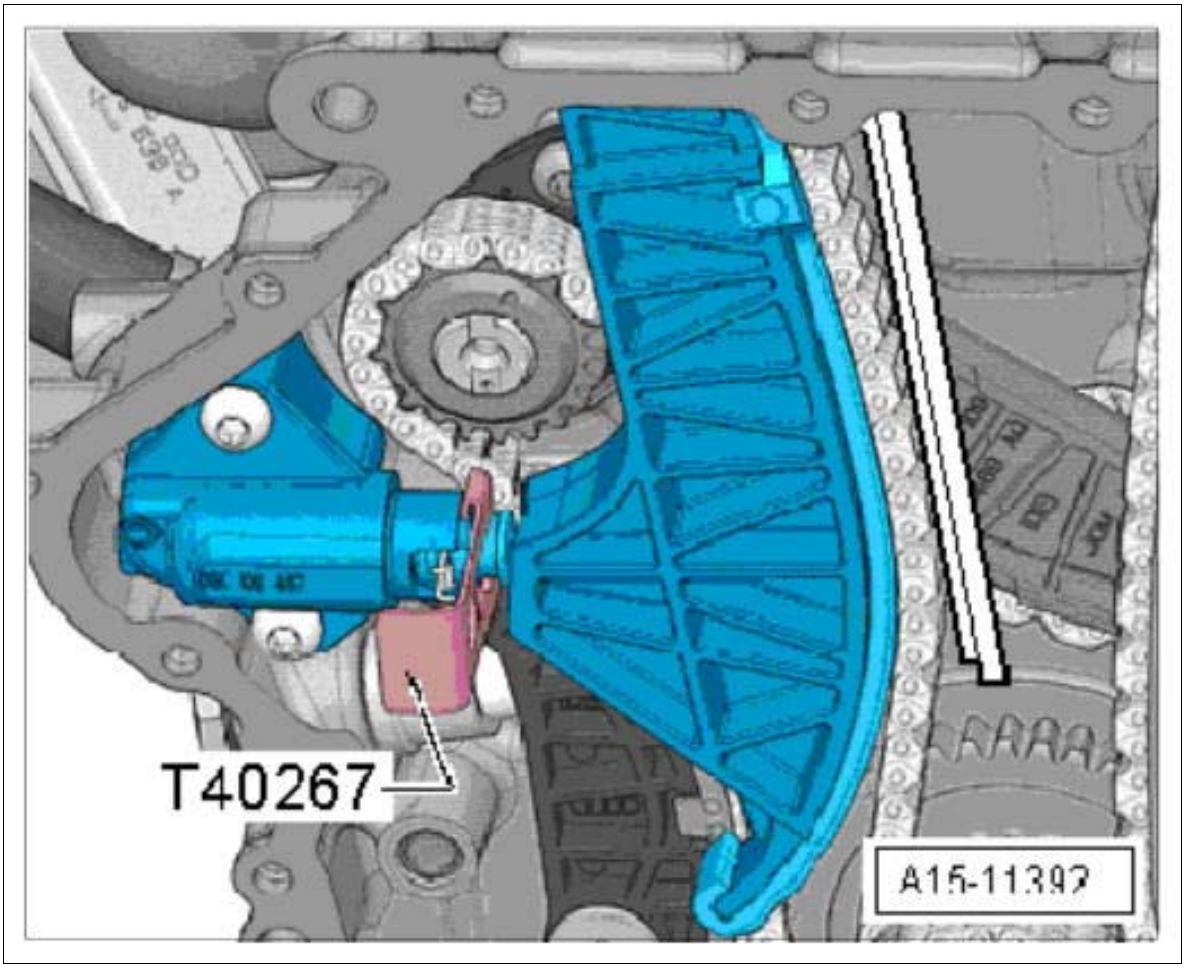

Courtesy of PORSCHE CARS NORTH AMERICA, INC.

4. **Camshaft clamp T40271** /2 can now be removed.

    1. 4.1. Use **adapter T40266** to turn the intake camshaft in **-direction of arrow 1-** .
    2. 4.2. **Camshaft clamp T40271** /2 must be pushed out of the toothing on the sprocket in **-direction of arrow 2-** .
    3. 4.3. Relieve the camshaft and remove **camshaft clamp T40271** /2.

Fig 4: Removing Intake Camshaft Clamp

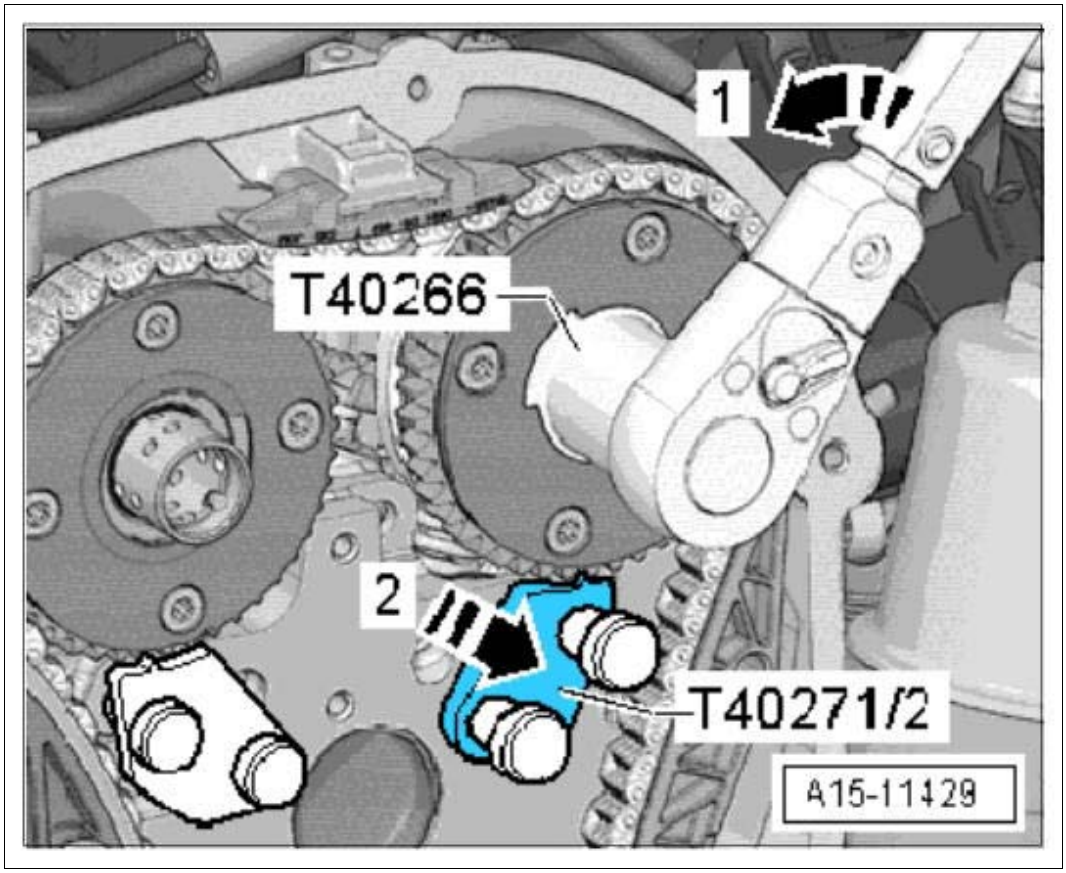

Courtesy of PORSCHE CARS NORTH AMERICA, INC.

5. Fit and tighten fastening screws **-arrows-** .

Fig 5: Locating Tensioning Rails Fastening Screws

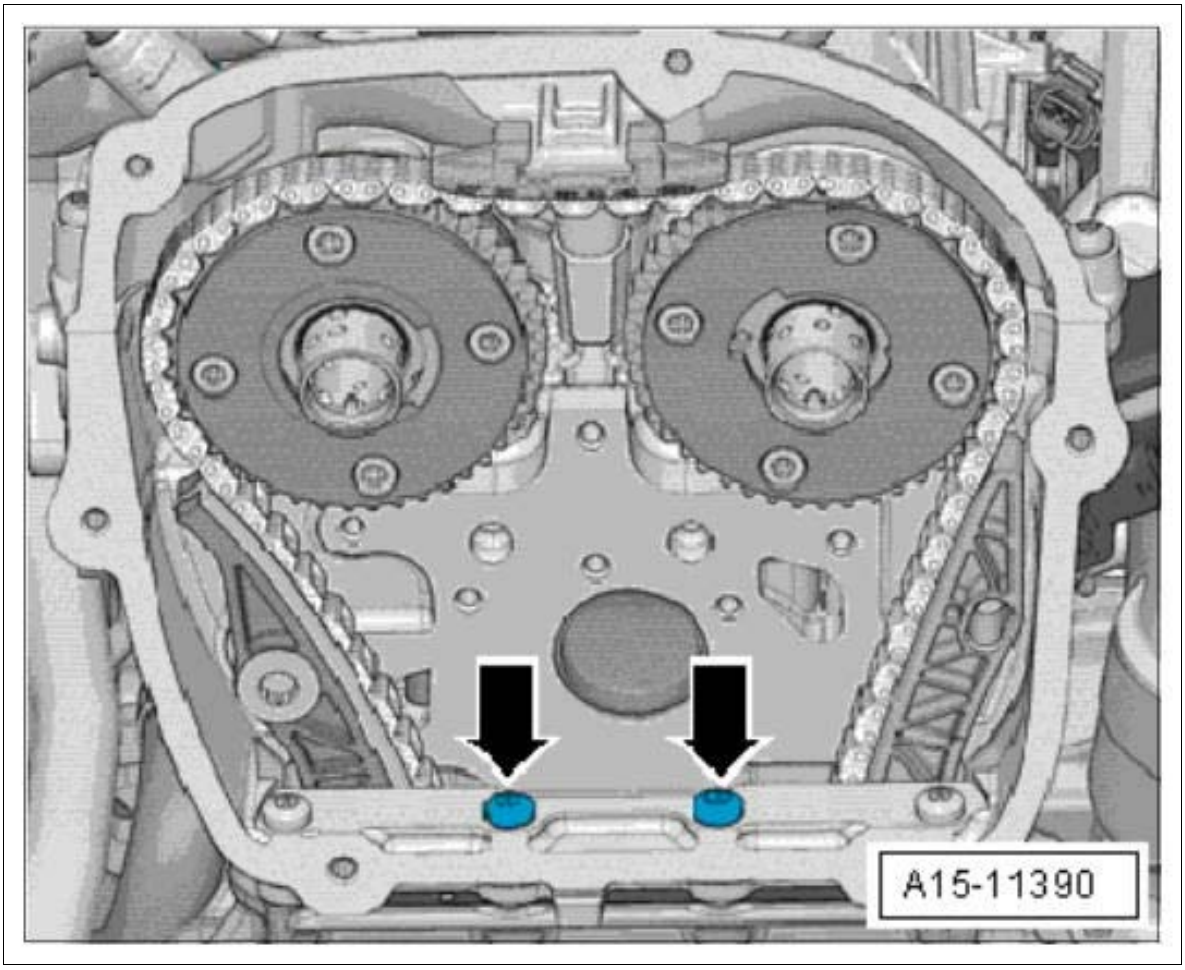

Courtesy of PORSCHE CARS NORTH AMERICA, INC.

6. Fit and tighten bearing saddle with new fastening screws **-arrows-** .

Fig 6: Locating Bearing Saddle Screws

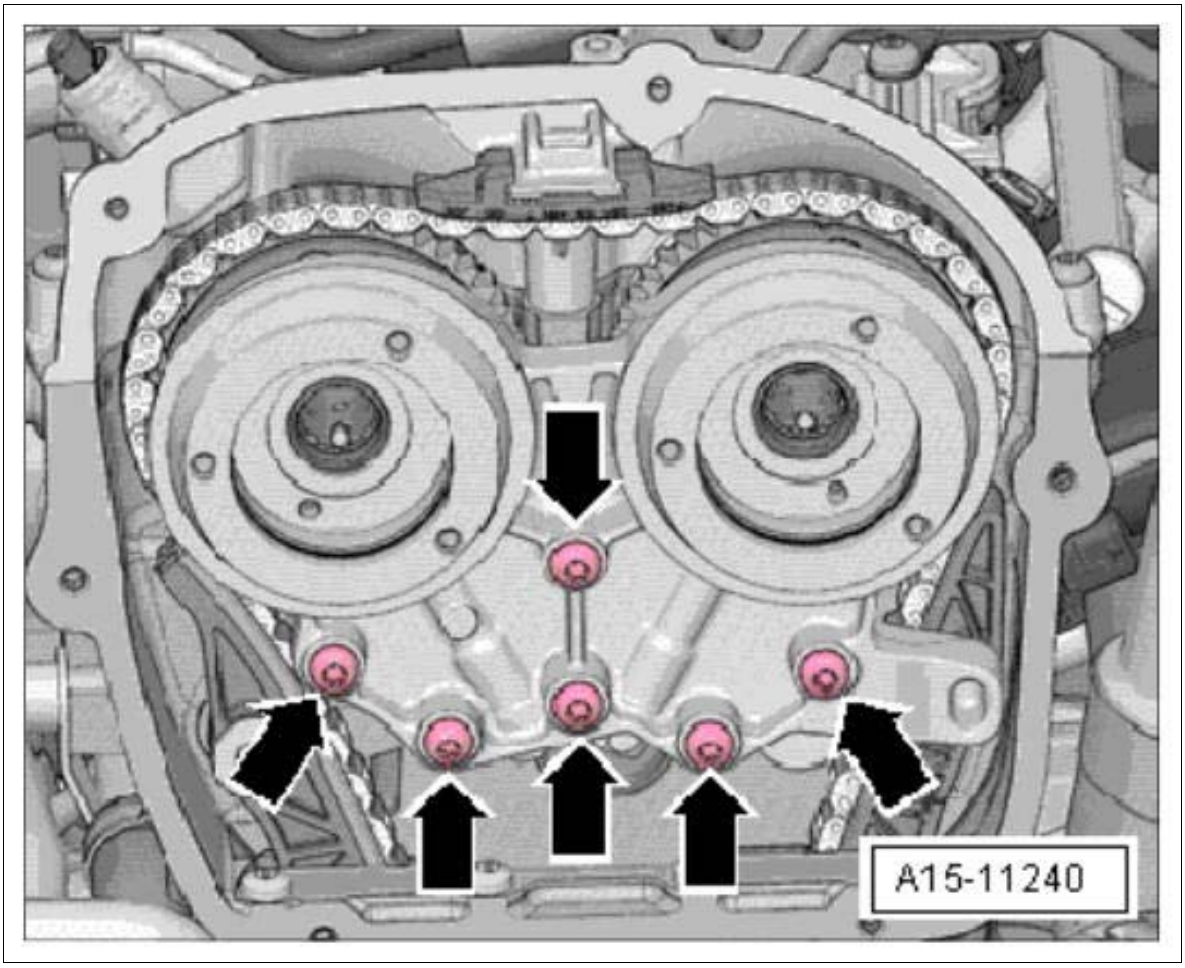

Courtesy of PORSCHE CARS NORTH AMERICA, INC.

7. Install actuators for camshaft. → INSTALLING ACTUATOR FOR CAMSHAFT
8. Install timing-case cover. → INSTALLING CHAIN HOUSING COVER

WM 154719 REMOVING AND INSTALLING TENSIONING RAILS (MACAN) > SUBSEQUENT WORK > SUBSEQUENT WORK FOR TENSIONING RAIL ON BALANCE SHAFTS

1. Install chain tensioner on balance shafts. → INSTALLING CHAIN TENSIONER ON BALANCE SHAFTS
2. Install lower timing-case cover. → INSTALLING LOWER CHAIN HOUSING COVER

WM 154819 REMOVING AND INSTALLING GUIDE RAILS (MACAN) > TOOLS

Designation	Type	Number	Description	

adapter	VW tool	T40266		
Camshaft clamp	VW tool	T40271		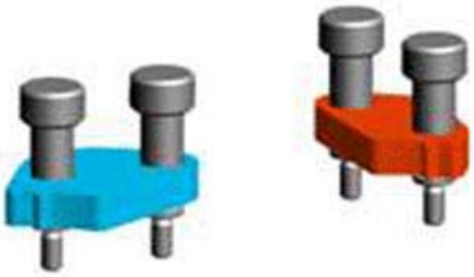

WM 154819 REMOVING AND INSTALLING GUIDE RAILS (MACAN) > PRELIMINARY WORK > PRELIMINARY WORK FOR GUIDE RAILS FOR TIMING CHAIN

1. Remove tensioning rail for timing chain. → REMOVING TENSIONING RAILS 154719 REMOVING AND INSTALLING TENSIONING RAILS
2. 2.
3. Remove chain tensioner for oil pump. → REMOVING CHAIN TENSIONER ON BALANCE SHAFTS 153619 REMOVING AND INSTALLING CHAIN TENSIONER
4. Secure the outlet camshaft.
    1. 4.1. **Camshaft clamp T40271** /1 must be screwed onto the cylinder head. → Securing outlet camshaft
    2. 4.2. Use adapter T40266 to turn the outlet camshaft in **-direction of arrow 1-** and push **camshaft clamp** T40271/1 onto the toothing in **-direction of arrow 2-** .

Fig 1: Securing Outlet Camshaft

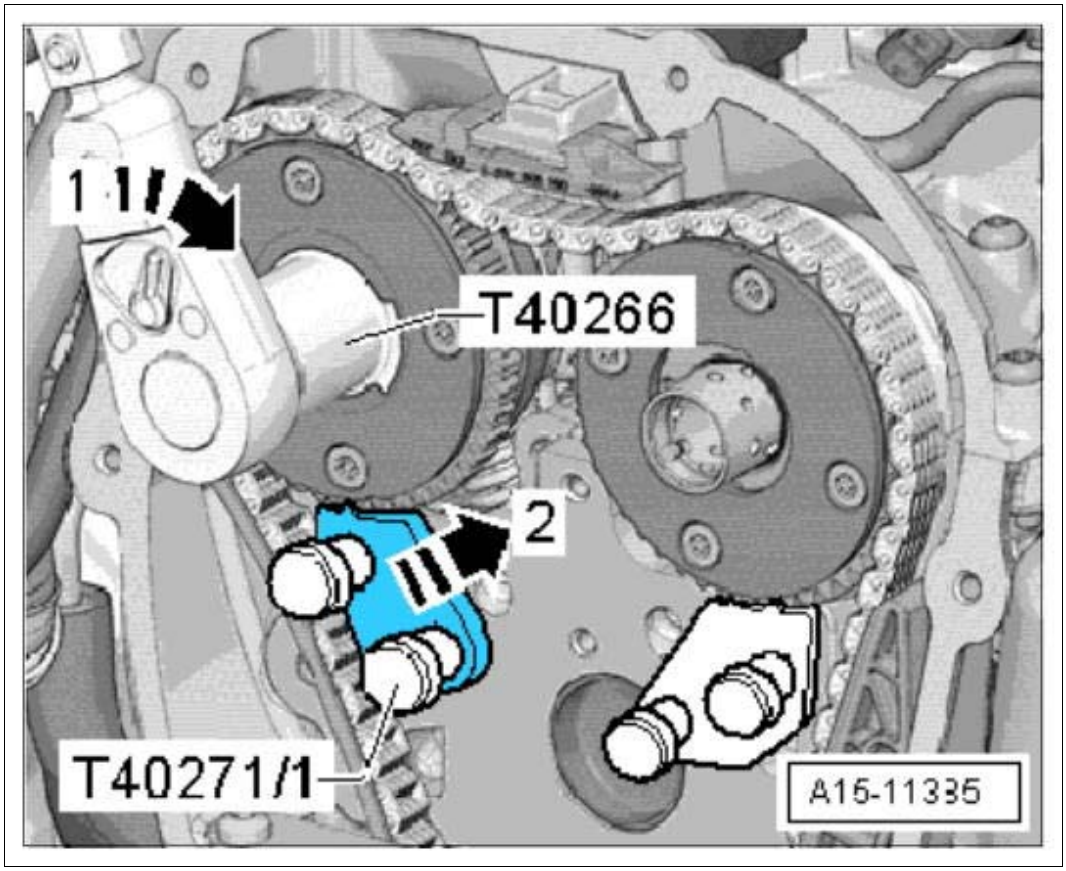

Courtesy of PORSCHE CARS NORTH AMERICA, INC.

WM 154819 REMOVING AND INSTALLING GUIDE RAILS (MACAN) > PRELIMINARY WORK > PRELIMINARY WORK FOR GUIDE RAILS ON BALANCE SHAFTS

1. Remove guide rails for timing chain. → 154819 REMOVING AND INSTALLING GUIDE RAILS

WM 154819 REMOVING AND INSTALLING GUIDE RAILS (MACAN) > REMOVING GUIDE RAILS > REMOVING GUIDE RAILS FOR TIMING CHAIN

1. Unscrew guide pin **-1-** and remove guide rail.

Fig 1: Identifying Guide Rail

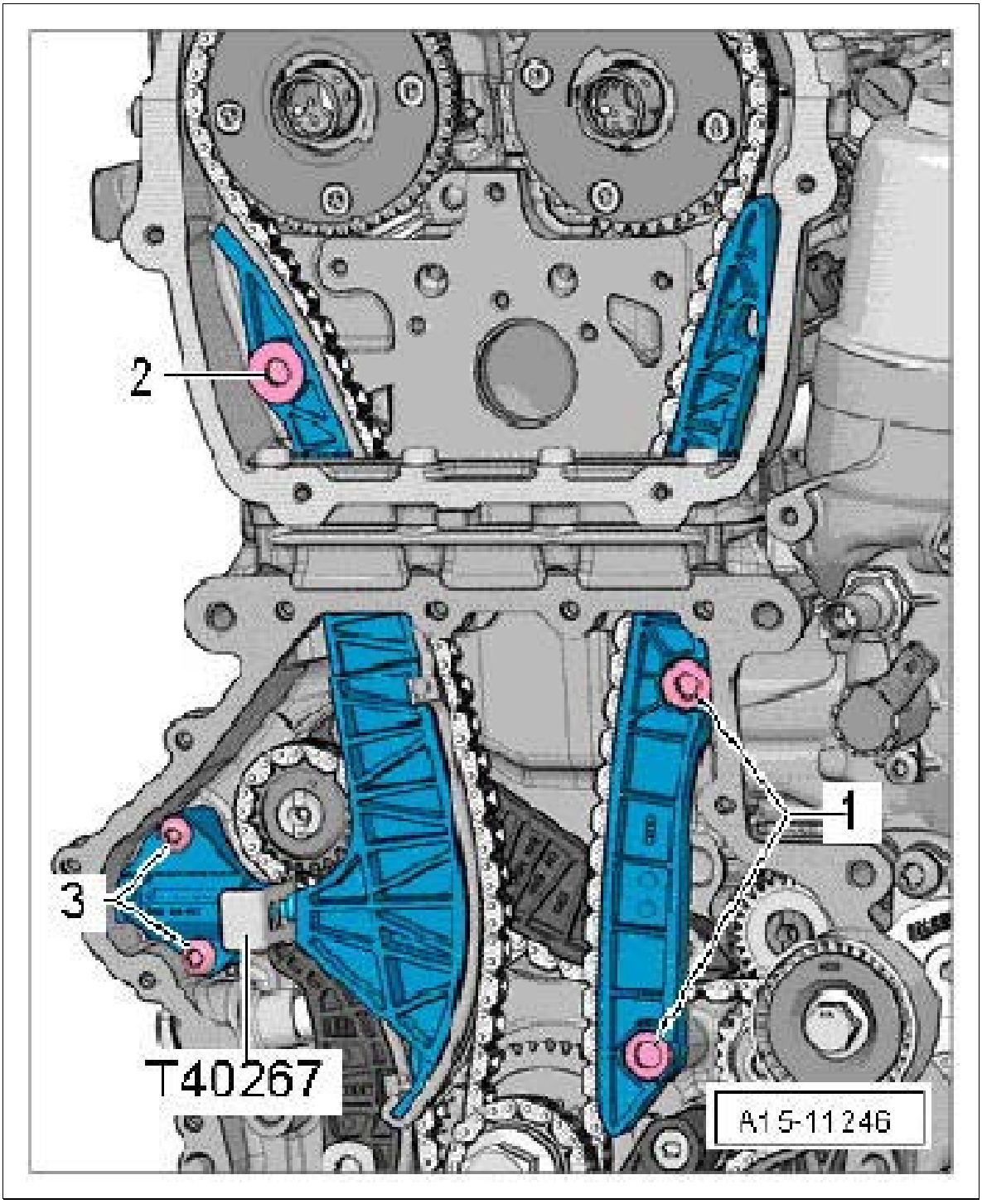

Courtesy of PORSCHE CARS NORTH AMERICA, INC.

2. Release the catch and press upper guide rail **-arrow-** forward and off.

Fig 2: Pressing Upper Guide Rail

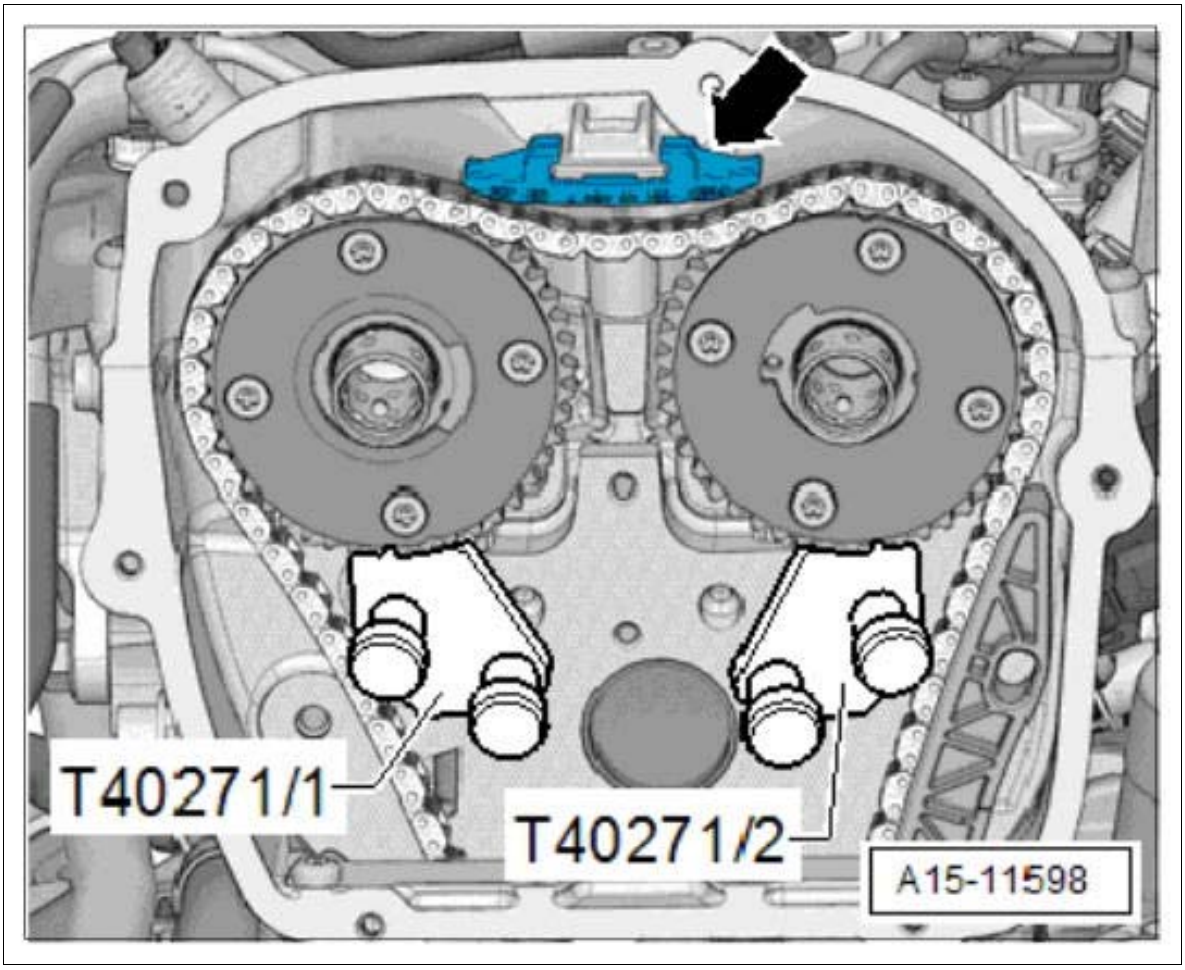

Courtesy of PORSCHE CARS NORTH AMERICA, INC.

WM 154819 REMOVING AND INSTALLING GUIDE RAILS (MACAN) > REMOVING GUIDE RAILS > REMOVING GUIDE RAILS ON BALANCE SHAFTS

1. Remove guide rails.
    1. 1.1. Relieve tension on chain tensioner for balance shafts **-1-** .
    2. 1.2. Unscrew guide pins **-3 and 4-** and remove guide rails.

Fig 1: Identifying Timing Chain On Balance Shafts

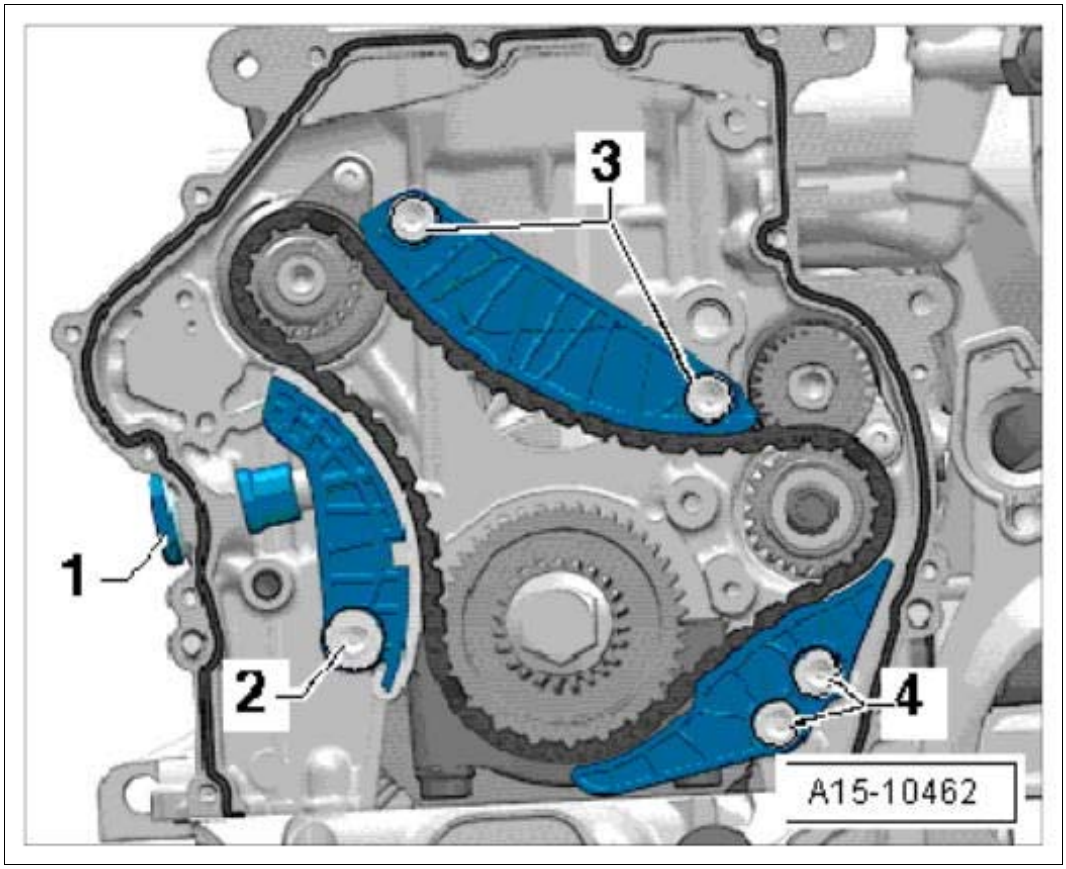

Courtesy of PORSCHE CARS NORTH AMERICA, INC.

WM 154819 REMOVING AND INSTALLING GUIDE RAILS (MACAN) > INSTALLING GUIDE RAILS > INSTALLING GUIDE RAILS FOR TIMING CHAIN

1. Press upper guide rail **-arrow-** into the catch.

Fig 1: Pressing Upper Guide Rail

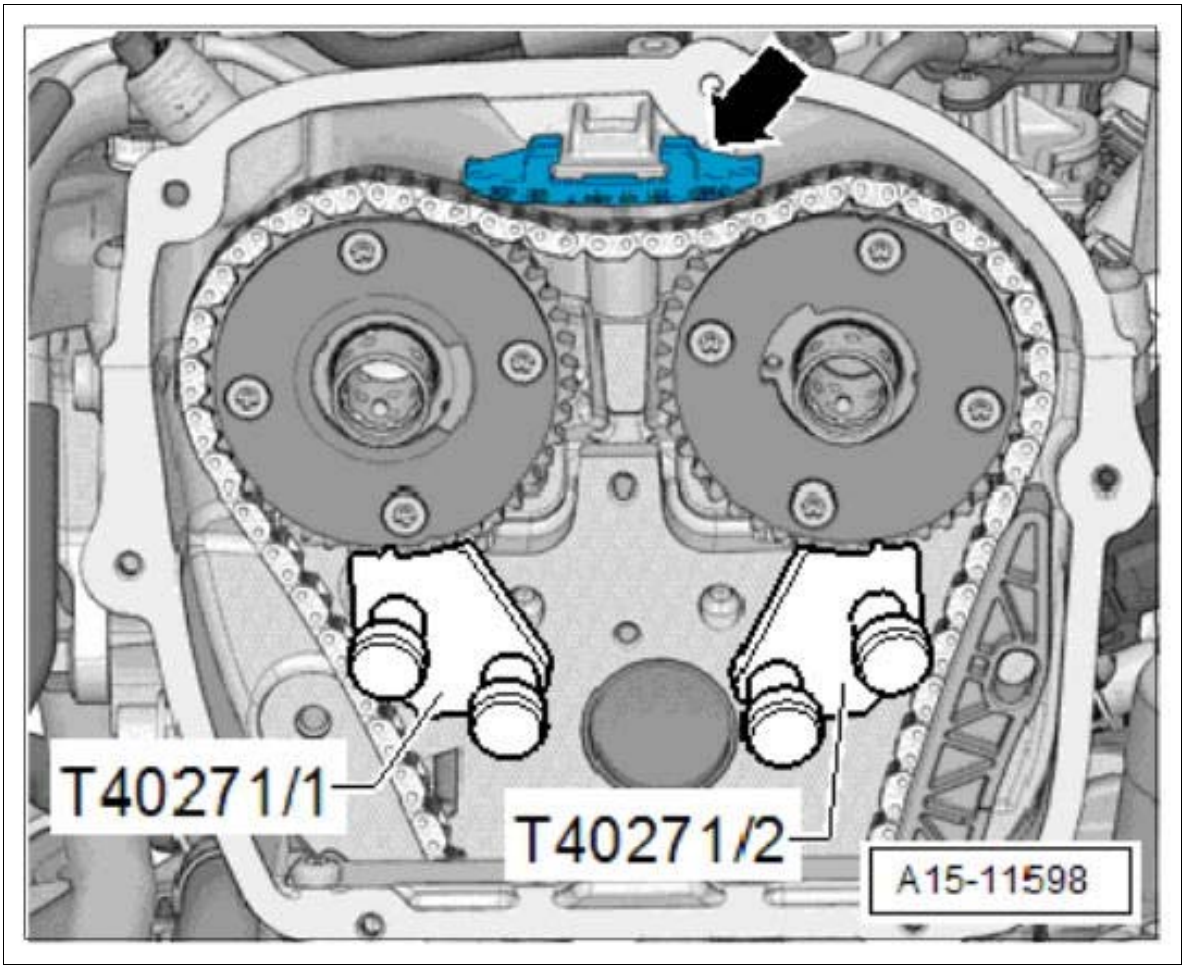

Courtesy of PORSCHE CARS NORTH AMERICA, INC.

2. Fit and tighten guide rail with guide pin **-1-** .

Fig 2: Identifying Guide Rail

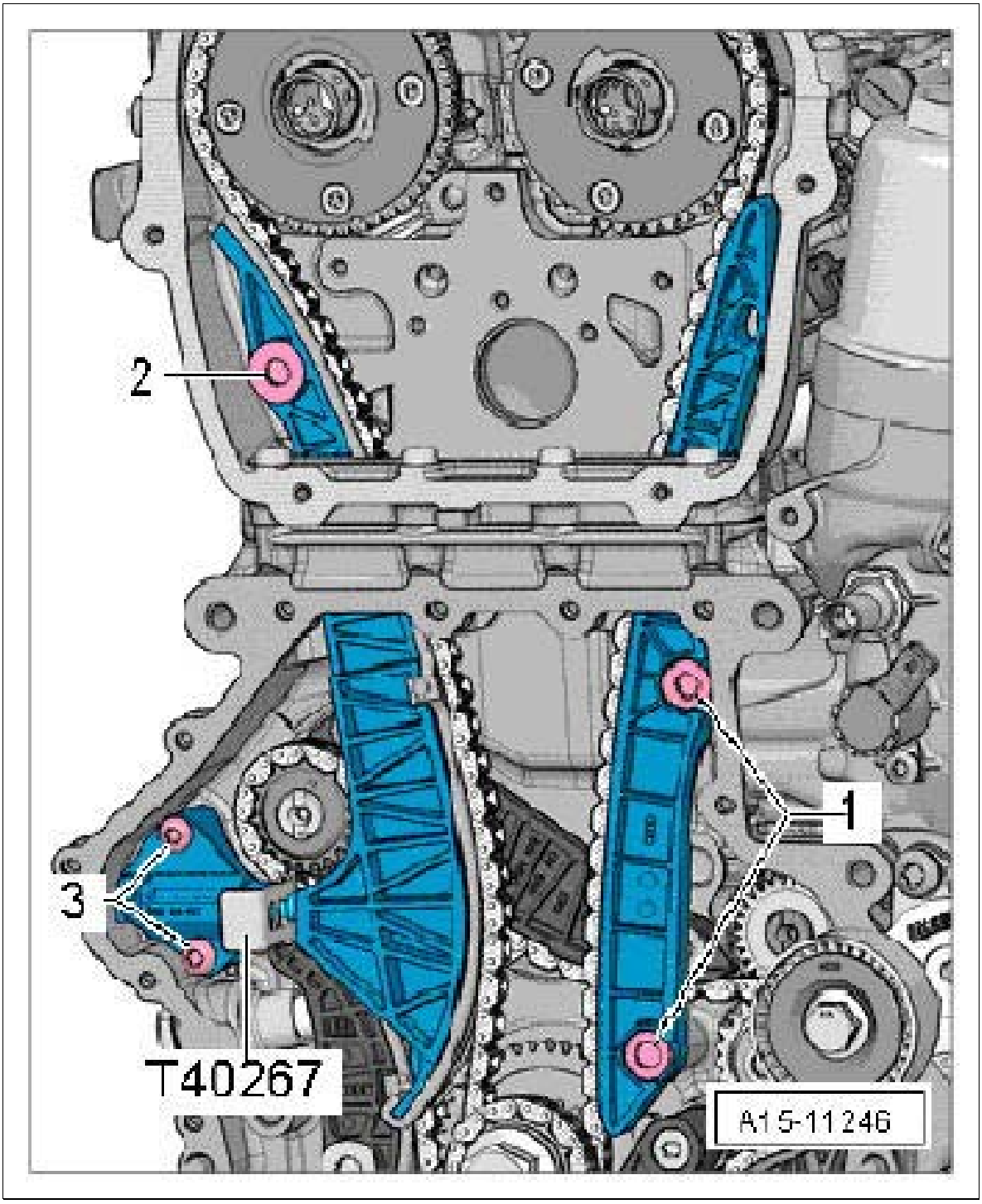

Courtesy of PORSCHE CARS NORTH AMERICA, INC.

WM 154819 REMOVING AND INSTALLING GUIDE RAILS (MACAN) > INSTALLING GUIDE RAILS > INSTALLING GUIDE RAILS ON BALANCE SHAFTS

1. Install guide rails.

1. 1.1. Fit and tighten guide rails with guide pins **-3 and 4-** .
2. 1.2. Tighten chain tensioner **-1-** .

Fig 1: Identifying Balance Shafts Timing Chain

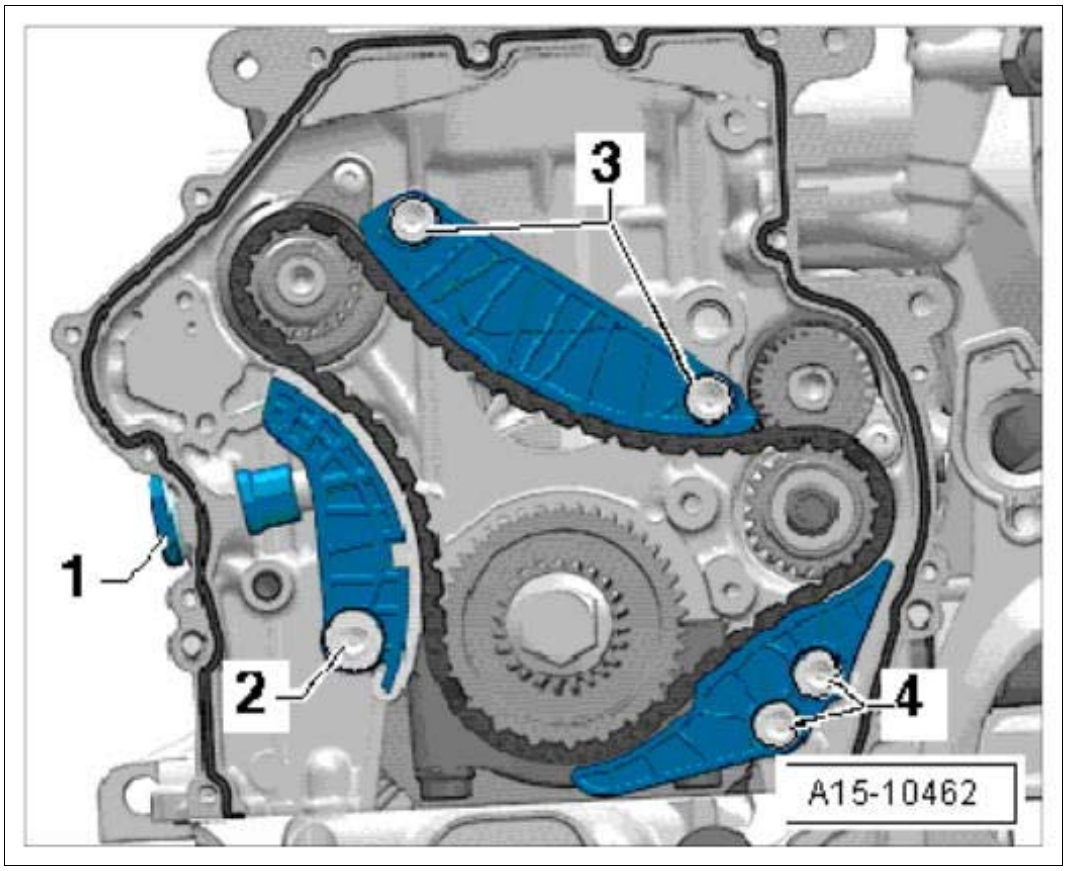

Courtesy of PORSCHE CARS NORTH AMERICA, INC.

WM 154819 REMOVING AND INSTALLING GUIDE RAILS (MACAN) > SUBSEQUENT WORK > SUBSEQUENT WORK FOR GUIDE RAIL FOR TIMING CHAIN

1. **Camshaft clamp T40271** /1 can now be removed.
    1. 1.1. Use **adapter T40266** to turn the outlet camshaft in **-direction of arrow 1-** .
    2. 1.2. **Camshaft clamp T40271** /1 must be pushed out of the toothing on the sprocket in **-direction of arrow 2-** .
    3. 1.3. Relieve the camshaft and remove **camshaft clamp T40271** /1.

Fig 1: Removing Outlet Camshaft Clamp

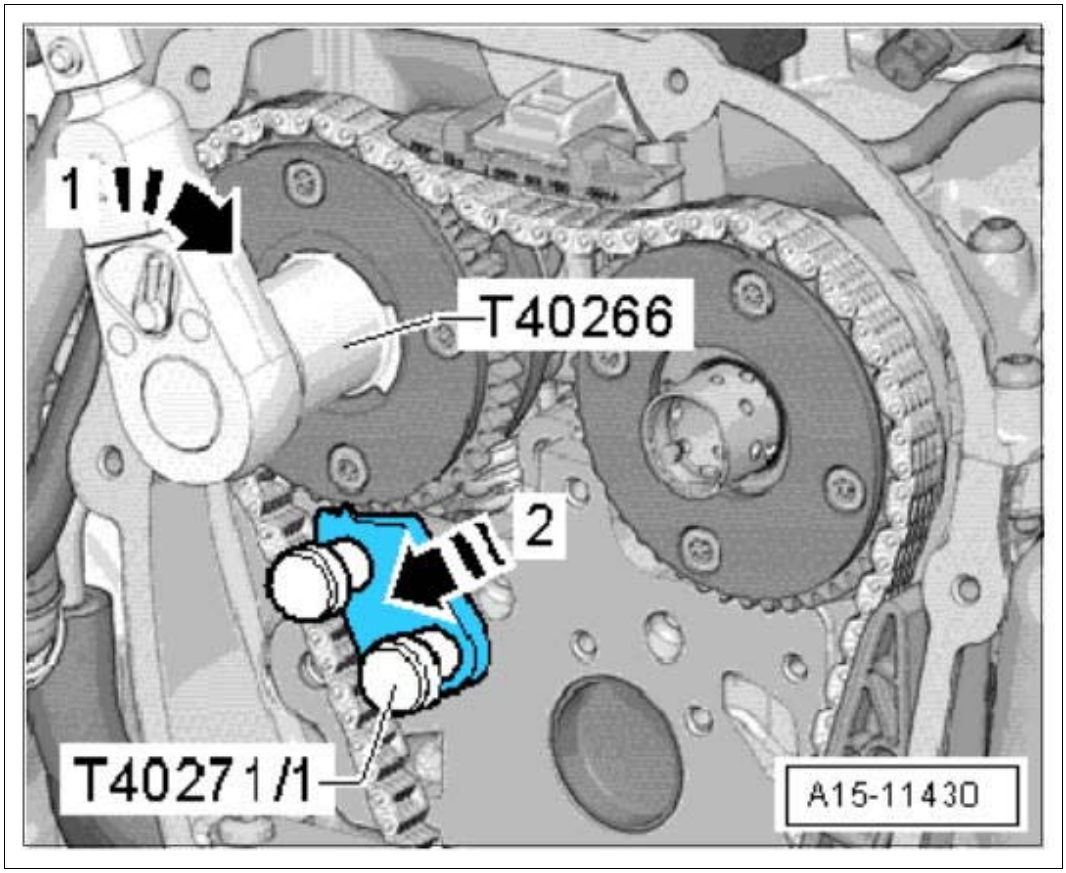

Courtesy of PORSCHE CARS NORTH AMERICA, INC.

2. Install chain tensioner for oil pump. → INSTALLING CHAIN TENSIONER FOR OIL PUMP
3. Install tensioning rail for timing chain. → INSTALLING TENSIONING RAILS

WM 154819 REMOVING AND INSTALLING GUIDE RAILS (MACAN) > SUBSEQUENT WORK > SUBSEQUENT WORK FOR GUIDE RAILS ON BALANCE SHAFTS

1. Install guide rails for timing chain. → INSTALLING GUIDE RAILS FOR TIMING CHAIN

WM 155519 REMOVING AND INSTALLING HYDRAULIC VALVE FOR VALVE LIFT SWITCHOVER (VARIABLE VALVE LIFT ADJUSTMENT) (MACAN) > TECHNICAL VALUES

Location	Description	Type	Basic value	Tolerance 1	Tolerance 2
Fastening screw for solenoid hydraulic valve for valve lift		Tightening torque	5 Nm (3.5 ftlb.)		

adjustment					

WM 155519 REMOVING AND INSTALLING HYDRAULIC VALVE FOR VALVE LIFT SWITCHOVER (VARIABLE VALVE LIFT ADJUSTMENT) (MACAN) > PRELIMINARY WORK

1. Remove engine cover (design cover).

WM 155519 REMOVING AND INSTALLING HYDRAULIC VALVE FOR VALVE LIFT SWITCHOVER (VARIABLE VALVE LIFT ADJUSTMENT) (MACAN) > REMOVING HYDRAULIC VALVE FOR VALVE LIFT SWITCHOVER (VARIABLE VALVE LIFT ADJUSTMENT)

1. Disconnect fuel line **-2-** and vacuum line **-3-** from the holder **-4-** .

   Fig 1: Disconnecting Fuel Lines

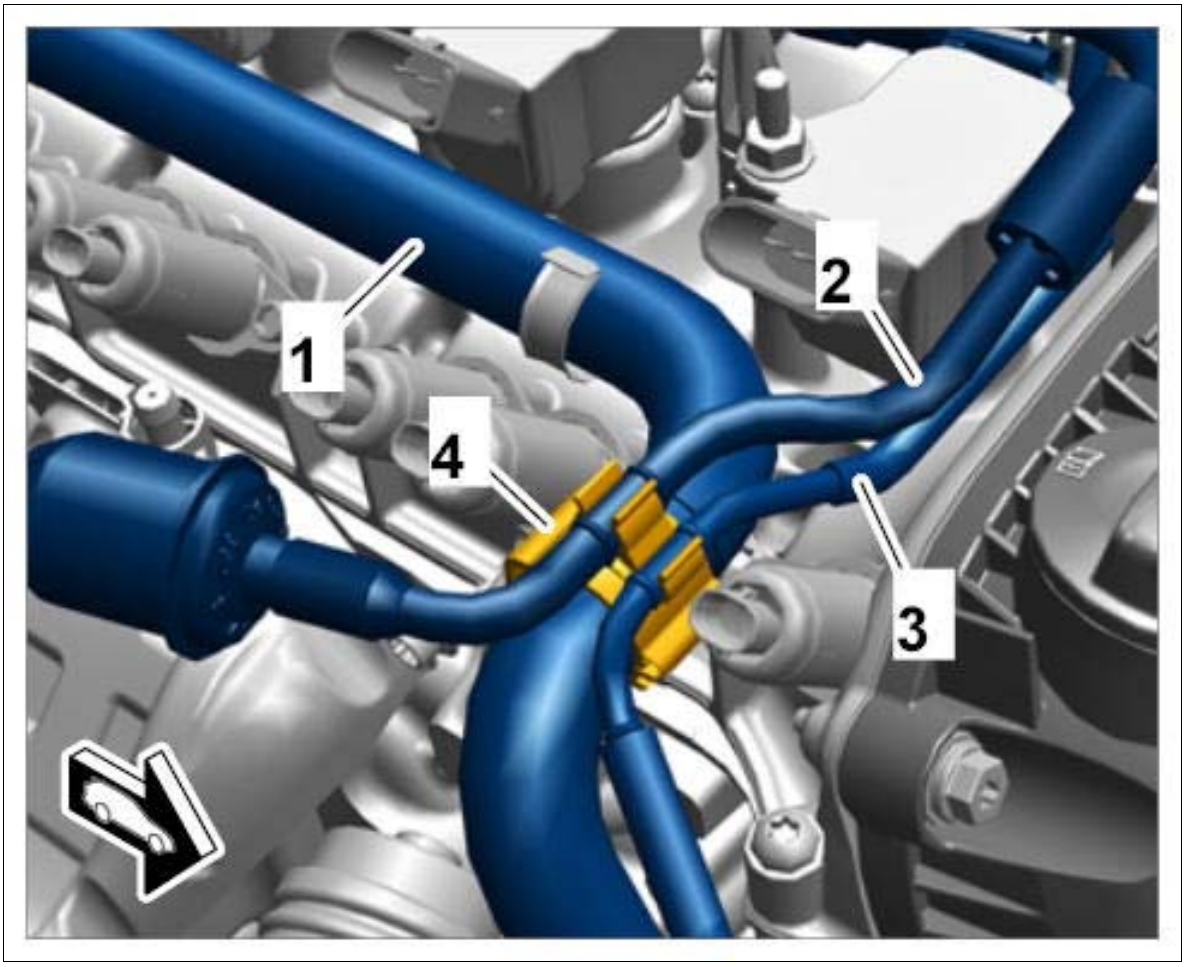

Courtesy of PORSCHE CARS NORTH AMERICA, INC.

2. Disconnect electric plug connections **-arrows-** .

Fig 2: Locating Electric Plug Connections Screws

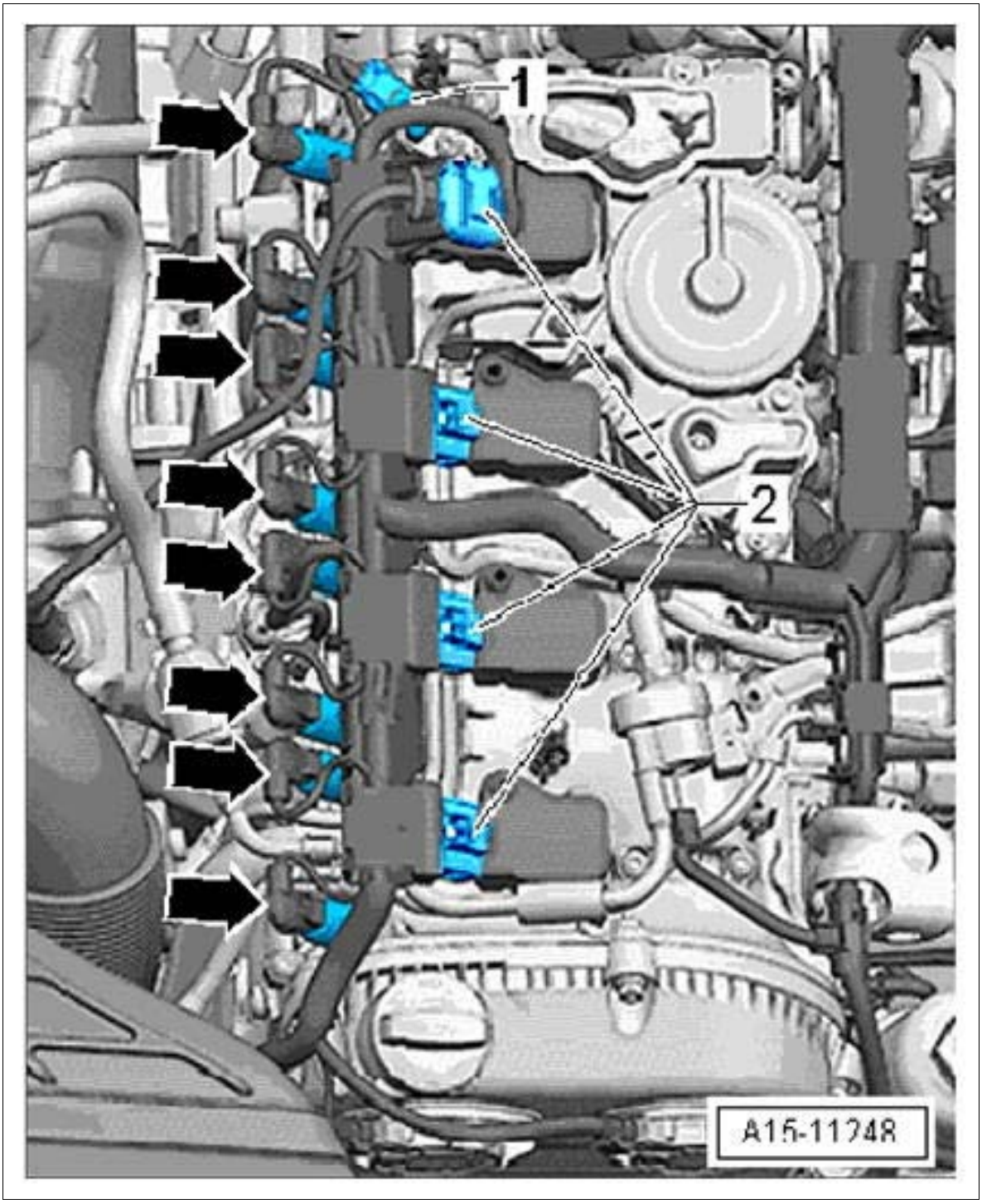

Courtesy of PORSCHE CARS NORTH AMERICA, INC.

3. Unscrew fastening screws **-arrows-** and remove hydraulic valves.

Fig 3: Locating Hydraulic Valves

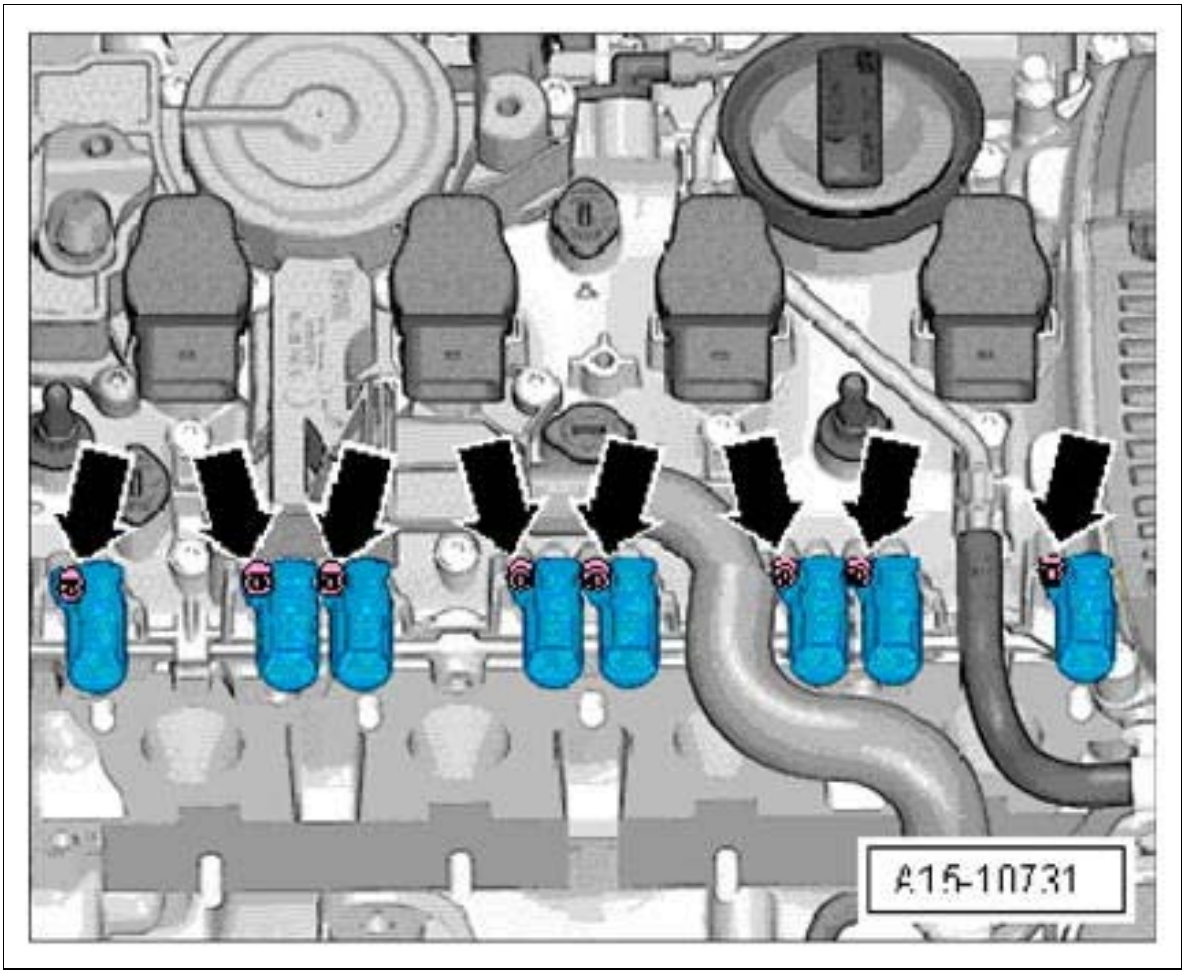

Courtesy of PORSCHE CARS NORTH AMERICA, INC.

WM 155519 REMOVING AND INSTALLING HYDRAULIC VALVE FOR VALVE LIFT SWITCHOVER (VARIABLE VALVE LIFT ADJUSTMENT) (MACAN) > INSTALLING HYDRAULIC VALVE FOR VALVE LIFT SWITCHOVER (VARIABLE VALVE LIFT ADJUSTMENT)

1. Install hydraulic valves.
2. Fit and tighten fastening screws **-arrows-** . **Tightening torque 5 Nm (3.5 ftlb.)**

Fig 1: Locating Hydraulic Valves

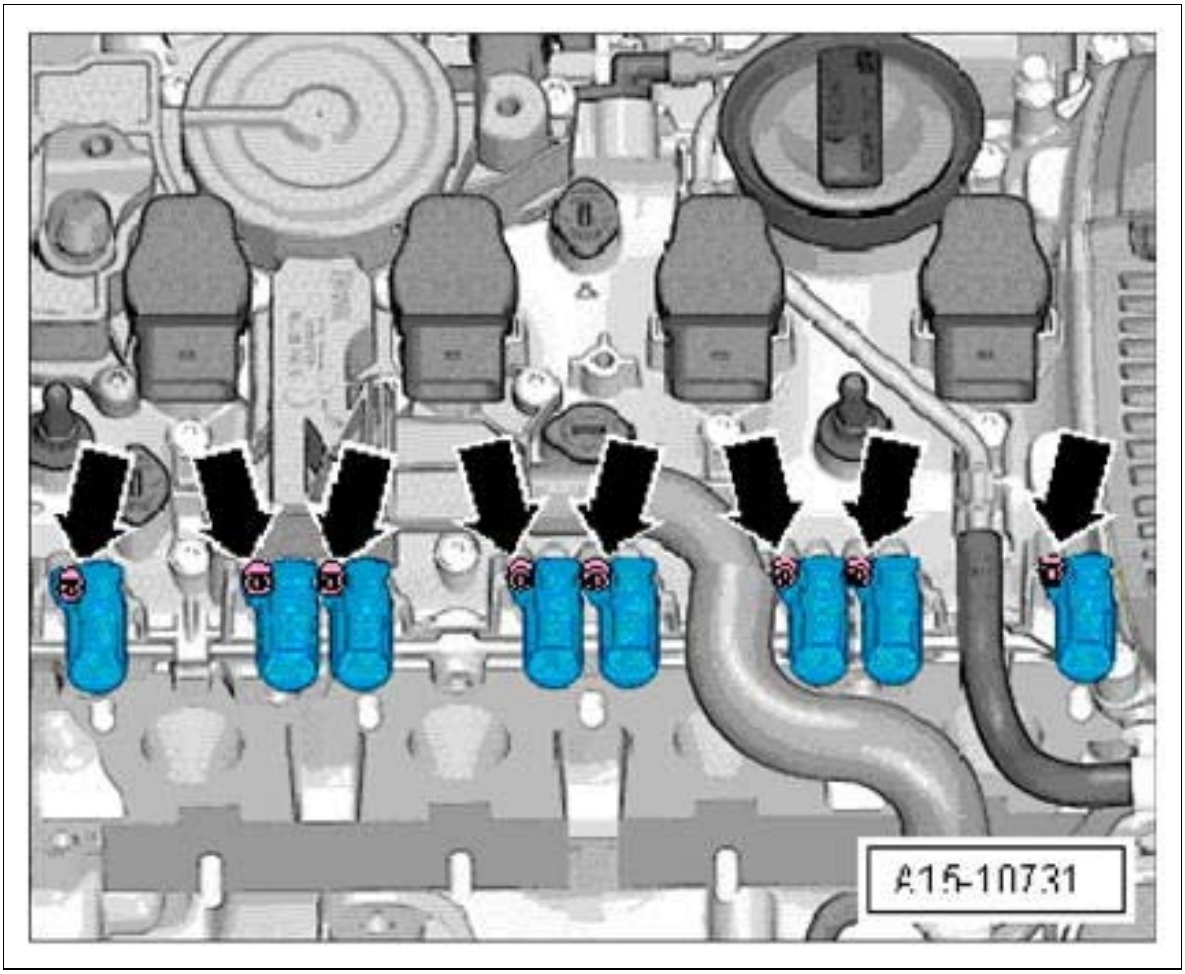

Courtesy of PORSCHE CARS NORTH AMERICA, INC.

3. Connect electric plug connections **-arrows-** .

Fig 2: Locating Electric Plug Connections Screws

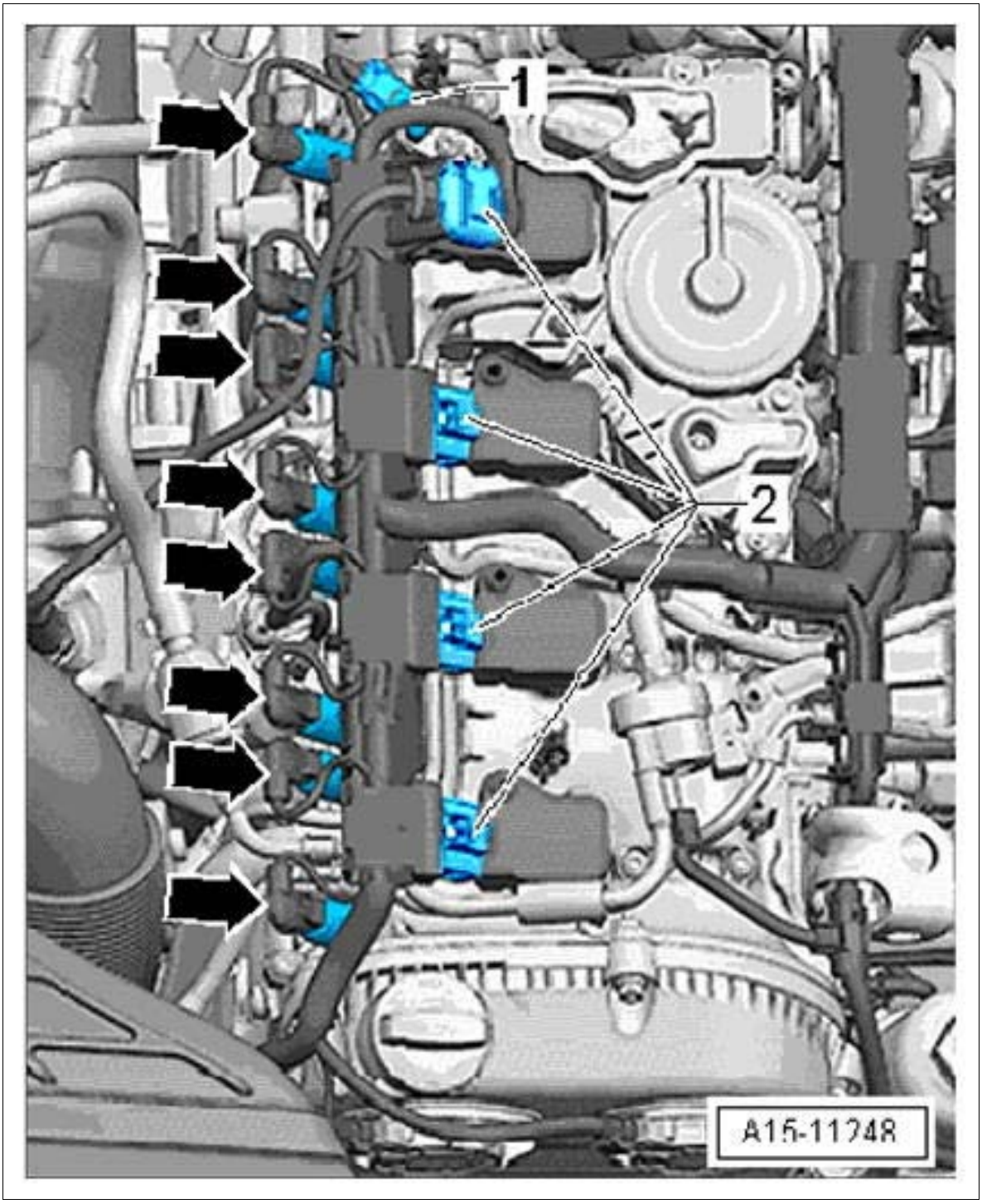

Courtesy of PORSCHE CARS NORTH AMERICA, INC.

4. Secure fuel line **-2-** and vacuum line **-3-** to the holder **-4-** .

Fig 3: Identifying Fuel And Vacuum Lines

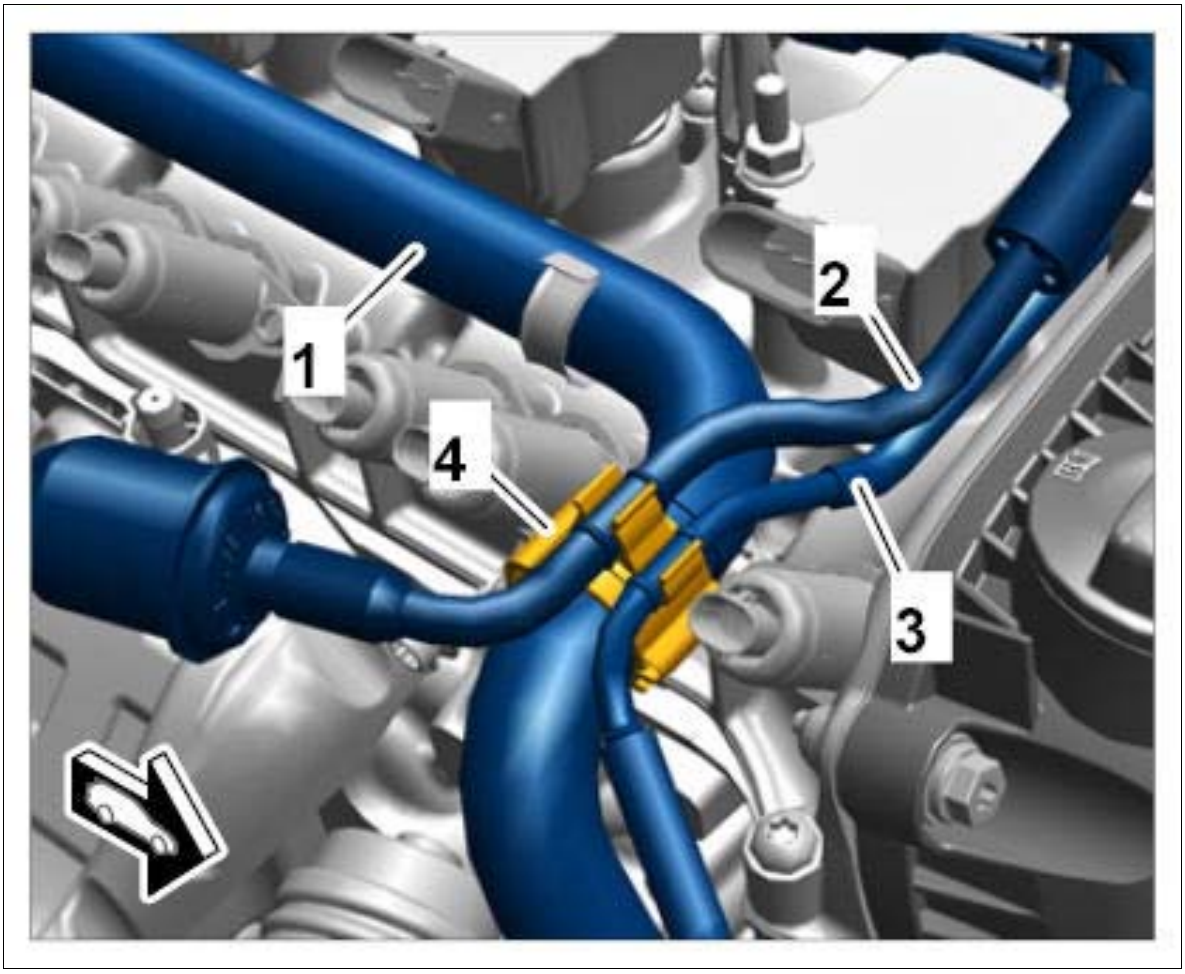

Courtesy of PORSCHE CARS NORTH AMERICA, INC.

WM 155519 REMOVING AND INSTALLING HYDRAULIC VALVE FOR VALVE LIFT SWITCHOVER (VARIABLE VALVE LIFT ADJUSTMENT) (MACAN) > SUBSEQUENT WORK

1. Install engine cover (design cover).

WM 155519 REMOVING AND INSTALLING HYDRAULIC VALVE FOR VALVE LIFT SWITCHOVER (MACAN S, MACAN TURBO) > TECHNICAL VALUES

Location	Description	Type	Basic value	Tolerance 1	Tolerance 2
Fastening screw for hydraulic valve for valve lift control		Tightening torque	6 Nm (4.5 ftlb.)		

WM 155519 REMOVING AND INSTALLING HYDRAULIC VALVE FOR VALVE LIFT SWITCHOVER (MACAN S, MACAN TURBO) > PRELIMINARY WORK

Information

Guided Fault Finding using the PIWIS Tester as well as the DME short test "Valve lift" must be performed before replacing the hydraulic valve. This is essential in order to avoid replacing the hydraulic valve unnecessarily.

The hydraulic valves are on the rear side of the cylinder heads facing the plenum panel.

1. Remove cross panel. → 508119 REMOVING AND INSTALLING CROSS PANEL (DISASSEMBLING PLENUM PANEL) .
2. **Cylinder bank 1 to 3:**

   Remove vacuum pump → 477619 REMOVING AND INSTALLING VACUUM PUMP .
3. **Cylinder bank 4 to 6:**

   Disconnect coolant pipe.

   1. 3.1. Loosen coolant pipe holder.

WM 155519 REMOVING AND INSTALLING HYDRAULIC VALVE FOR VALVE LIFT SWITCHOVER (MACAN S, MACAN TURBO) > REMOVAL > REMOVING HYDRAULIC VALVE FOR VALVE LIFT SWITCHOVER

1. Disconnect electric plug connection on the hydraulic valve **-3-** .
2. Loosen fastening screws **-4-** .
3. Pull hydraulic valve **-3-** out of the cylinder head.

   1. 3.1. Make sure that the sealing ring is also removed.

Fig 1: Identifying Valve Drive Components (Cylinders 1-3)

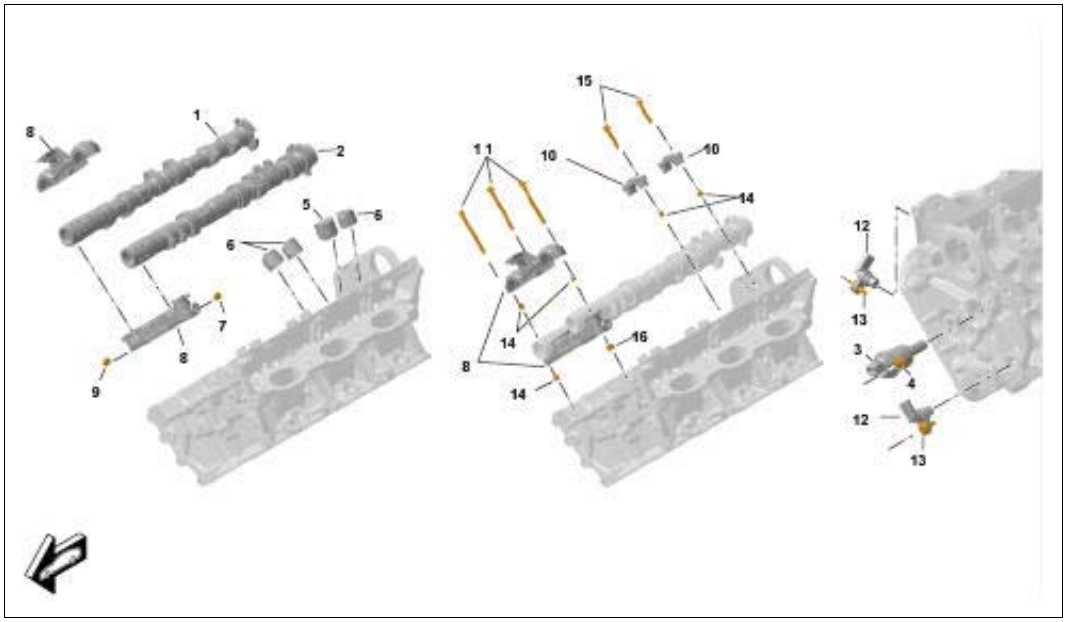

Courtesy of PORSCHE CARS NORTH AMERICA, INC.

WM 155519 REMOVING AND INSTALLING HYDRAULIC VALVE FOR VALVE LIFT SWITCHOVER (MACAN S, MACAN TURBO) > INSTALLATION > INSTALLING HYDRAULIC VALVE FOR VALVE LIFT SWITCHOVER

1. Install hydraulic valve **-3-** with new sealing ring in correct position.

   Sealing ring must not slip out of place.

2. Fit and tighten fastening screws **-4-** . **Tightening torque 6 Nm (4.5 ftlb.)**

Fig 1: Identifying Valve Drive Components (Cylinders 1-3)

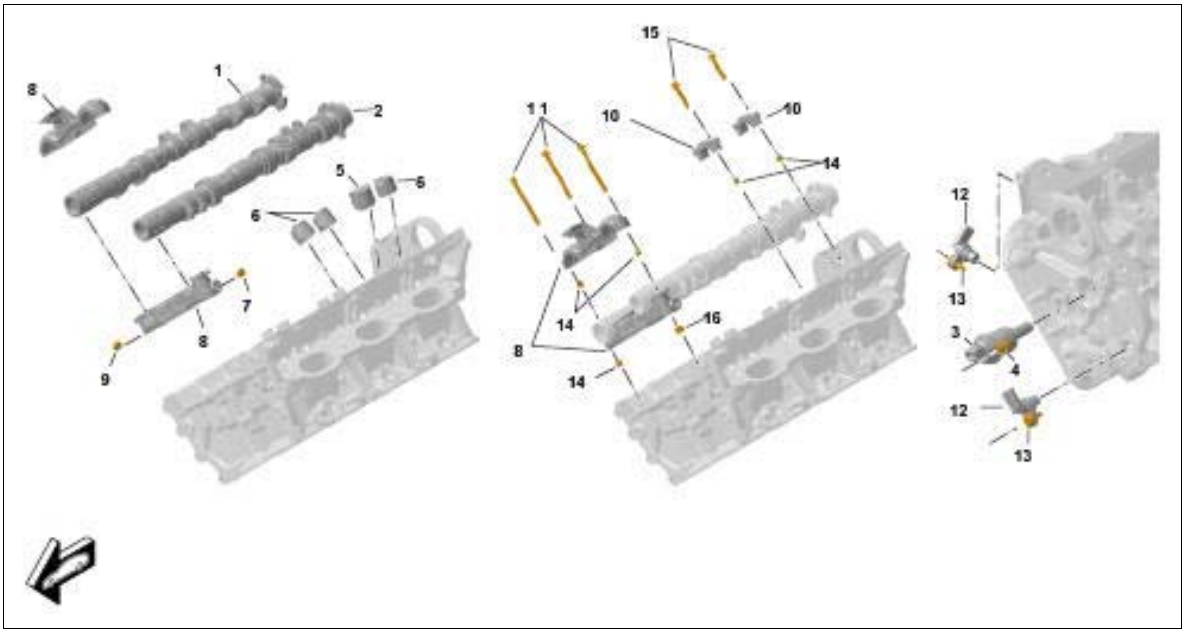

Courtesy of PORSCHE CARS NORTH AMERICA, INC.

WM 155519 REMOVING AND INSTALLING HYDRAULIC VALVE FOR VALVE LIFT SWITCHOVER (MACAN S, MACAN TURBO) > SUBSEQUENT WORK

1. **Cylinder bank 1 to 3:**

   Install vacuum pump → INSTALLING VACUUM PUMP .

2. **Cylinder bank 4 to 6:**

   Secure coolant pipe.

   1. 2.1. Secure coolant pipe holder.

3. Remove cross panel. → 508119 REMOVING AND INSTALLING CROSS PANEL (DISASSEMBLING PLENUM PANEL)

WM 156355 REPLACING VALVE-STEM SEALS (MACAN) > PRELIMINARY WORK

Information

The new valve stem seals have a plastic sleeve **-3-** .

Information

- Mark allocation of rocker arms and hydraulic compensating elements for re-installation.
- Rocker arms must be set aside in such a way that they cannot be mixed up.

- Remove rocker arms together with the hydraulic compensating elements and set them down on a clean surface.

    1. Remove spark plugs. → 287020 REMOVING AND INSTALLING SPARK PLUGS
    2. Remove camshafts. → 150520 REMOVING AND INSTALLING CAMSHAFTS
    3. Take hydraulic tappets and rocker arms out of the cylinder head.

WM 156355 REPLACING VALVE-STEM SEALS (MACAN) > REMOVING VALVE-STEM SEALS

Information

Set pistons of the respective cylinder to **bottom dead center** .

1. Screw guide plate **-VAS 5161/19B-** with the knurled screws **-VAS 5161/12-** on the cylinder head as shown.

   Fig 1: Identifying Guide Plate 1

   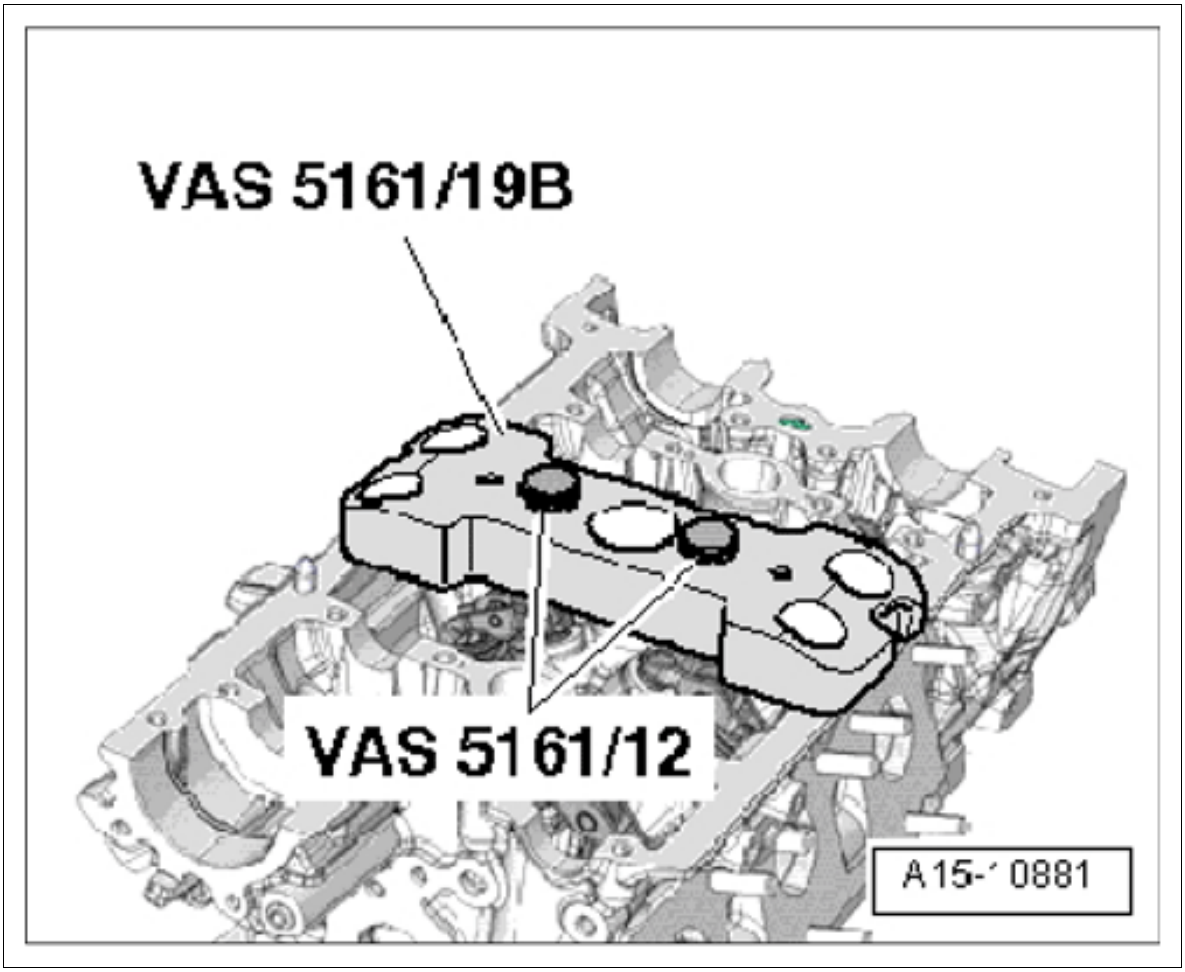

   Courtesy of PORSCHE CARS NORTH AMERICA, INC.

2. Screw adapter **-T40012-** into the spark plug thread.

3. Connect compressed air of at least 6 bar overpressure.
4. Loosen any tight valve collets using the impact mandrel **-VAS 5161/3-** and a plastic hammer.

Fig 2: Identifying Adapter

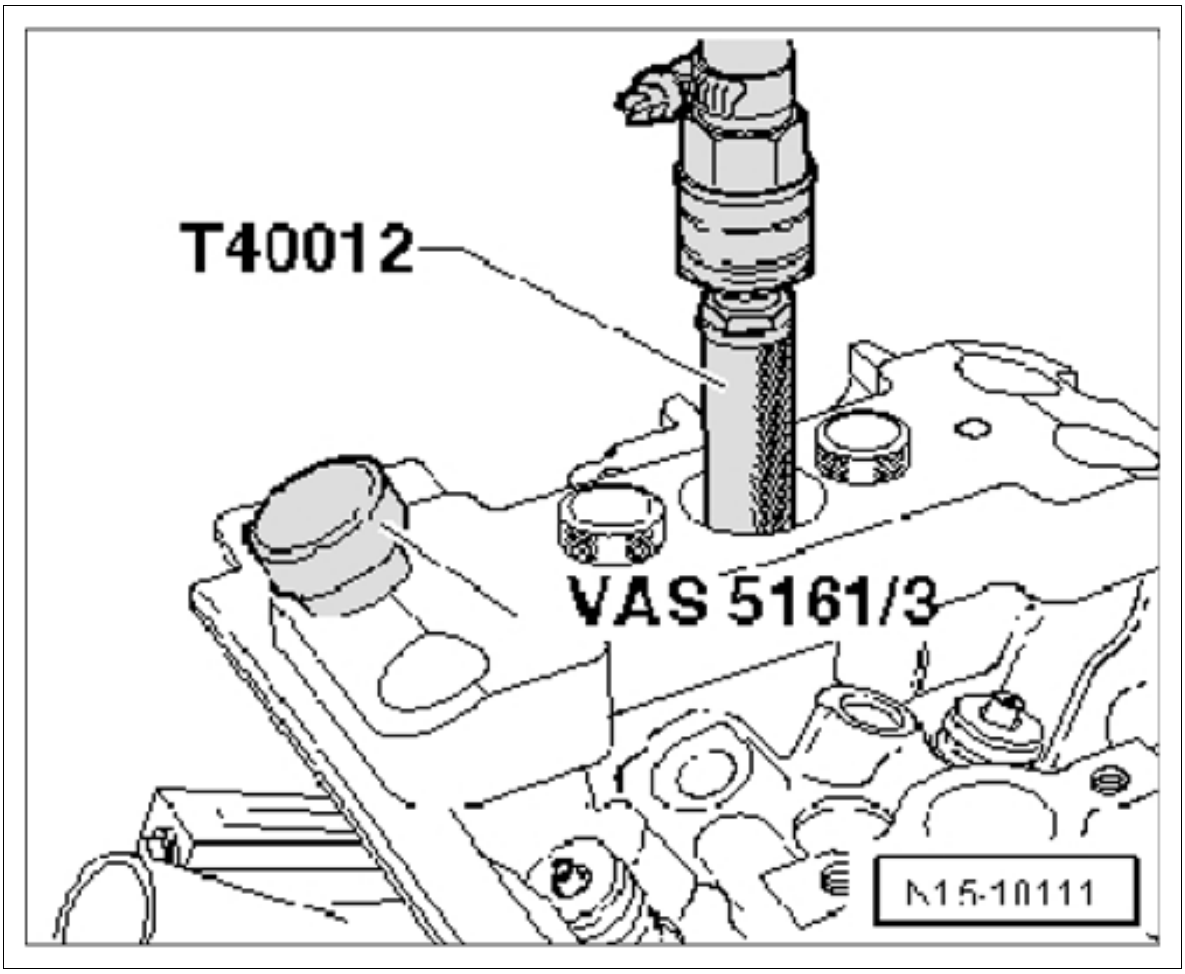

Courtesy of PORSCHE CARS NORTH AMERICA, INC.

For intake side

5. Screw retainer **-VAS 5161/6-** with attachment fork **-VAS 5161/5-** into the center thread of the guide plate **-VAS 5161/19B-** .
6. Fit assembly cartridge **-VAS 5161/8-** into the guide plate **-VAS 5161/19B-** .
7. Engage pressure fork **-VAS 5161/2-** on the retainer **-VAS 5161/6-** .

Fig 3: Identifying Retainers

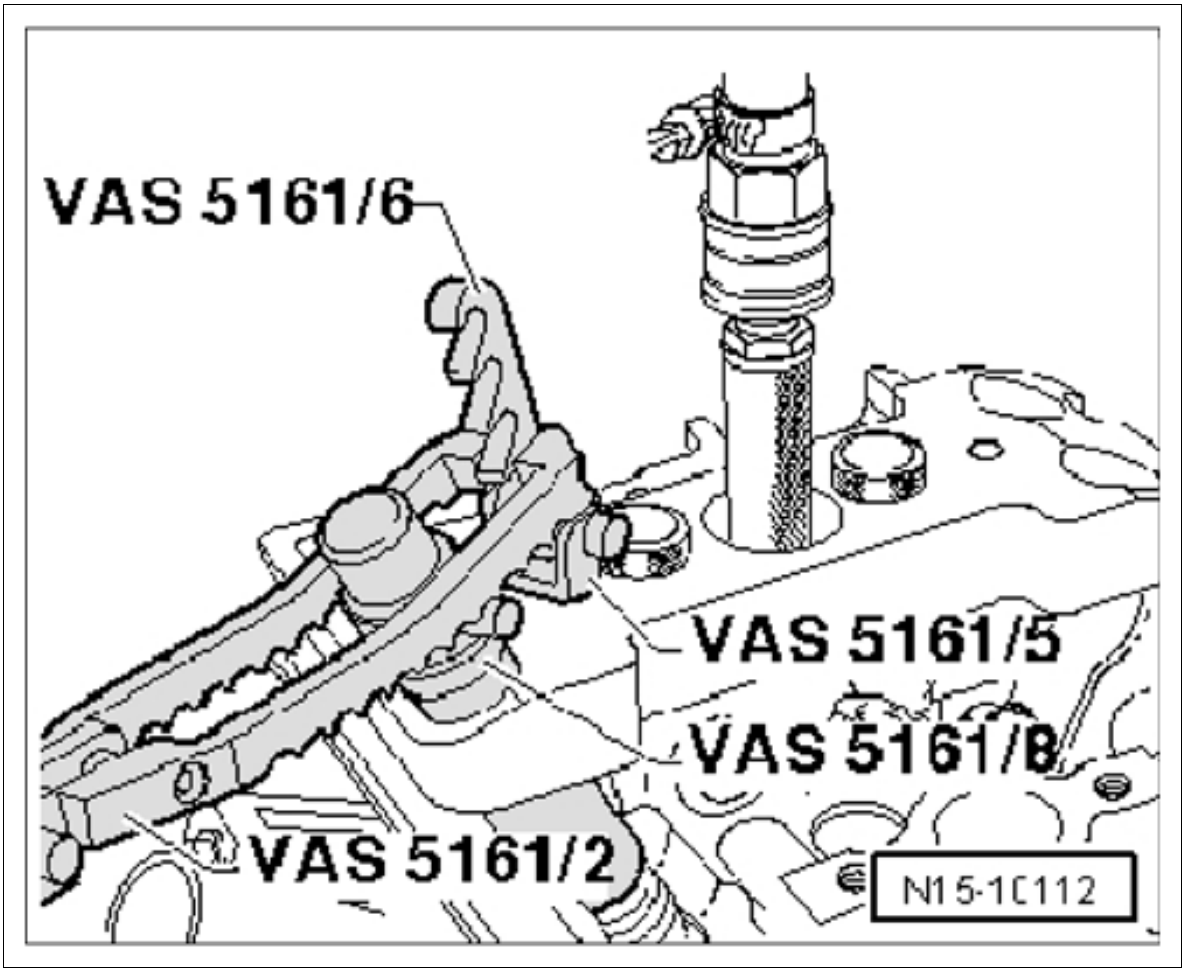

Courtesy of PORSCHE CARS NORTH AMERICA, INC.

For outlet side

8. Screw retainer **-VAS 5161/6-** with attachment fork **-VAS 5161/5-** into the outer thread of the guide plate **-VAS 5161/19B-** .
9. Press assembly cartridge **-VAS 5161/8-** down and turn the knurled screw for the assembly cartridge **-VAS 5161/8-** to the right at the same time until the tips engage in the valve collets.
10. Move knurled screw back and forth slightly to press the valve collets apart and engage them in the assembly cartridge.
11. Release pressure fork **-VAS 5161/2-** .
12. Remove assembly cartridge **-VAS 5161/8-** .

Fig 4: Identifying Assembly Cartridge

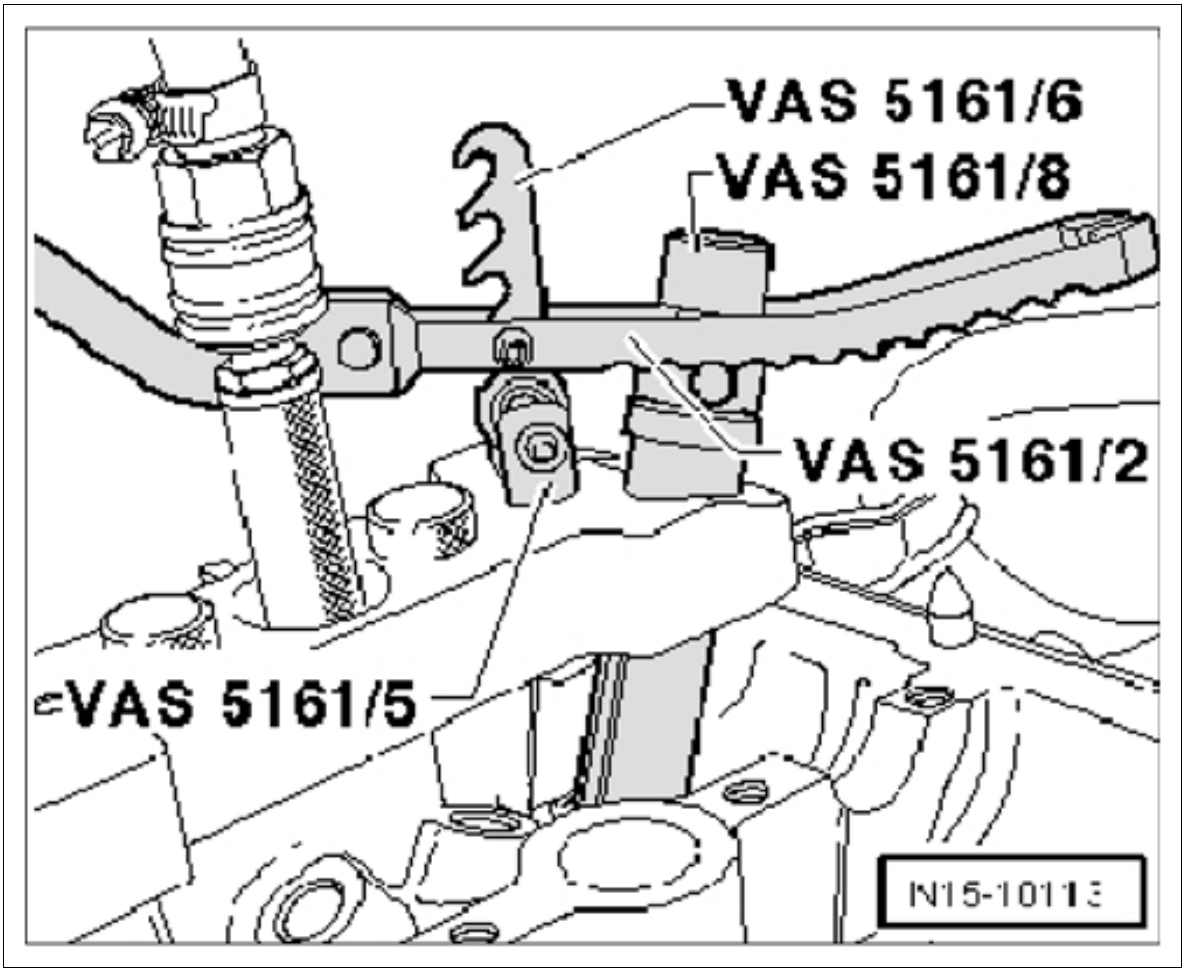

Courtesy of PORSCHE CARS NORTH AMERICA, INC.

13. Pull off valve stem seals using valve-stem seal puller **-3364-** .

Fig 5: Identifying Puller

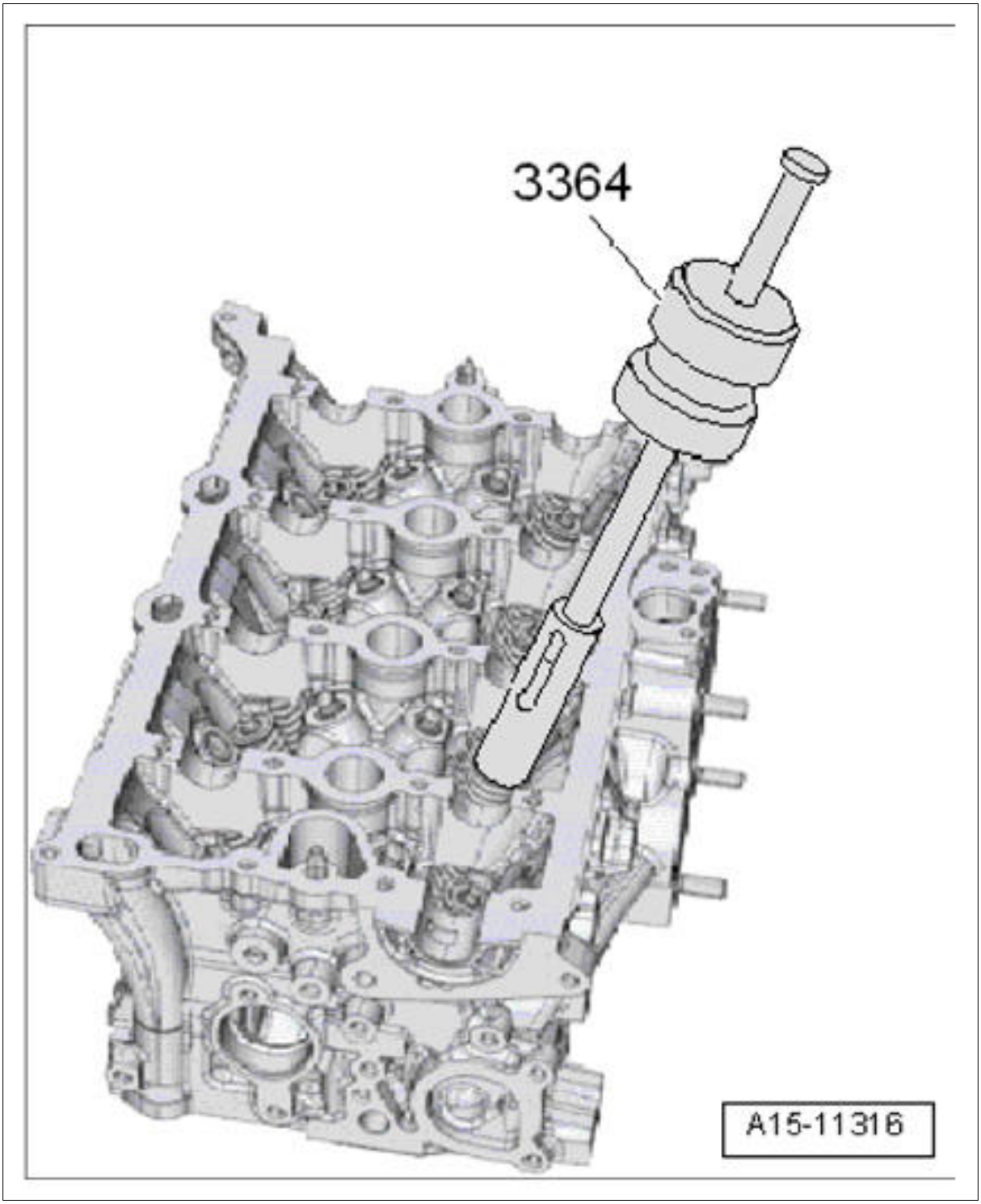

Courtesy of PORSCHE CARS NORTH AMERICA, INC.

14. If you cannot use the valve-stem seal puller **-3364-** due to lack of space, tap out the roll pin **-arrow-** using a mandrel and remove the puller attachment.

Fig 6: Identifying Puller

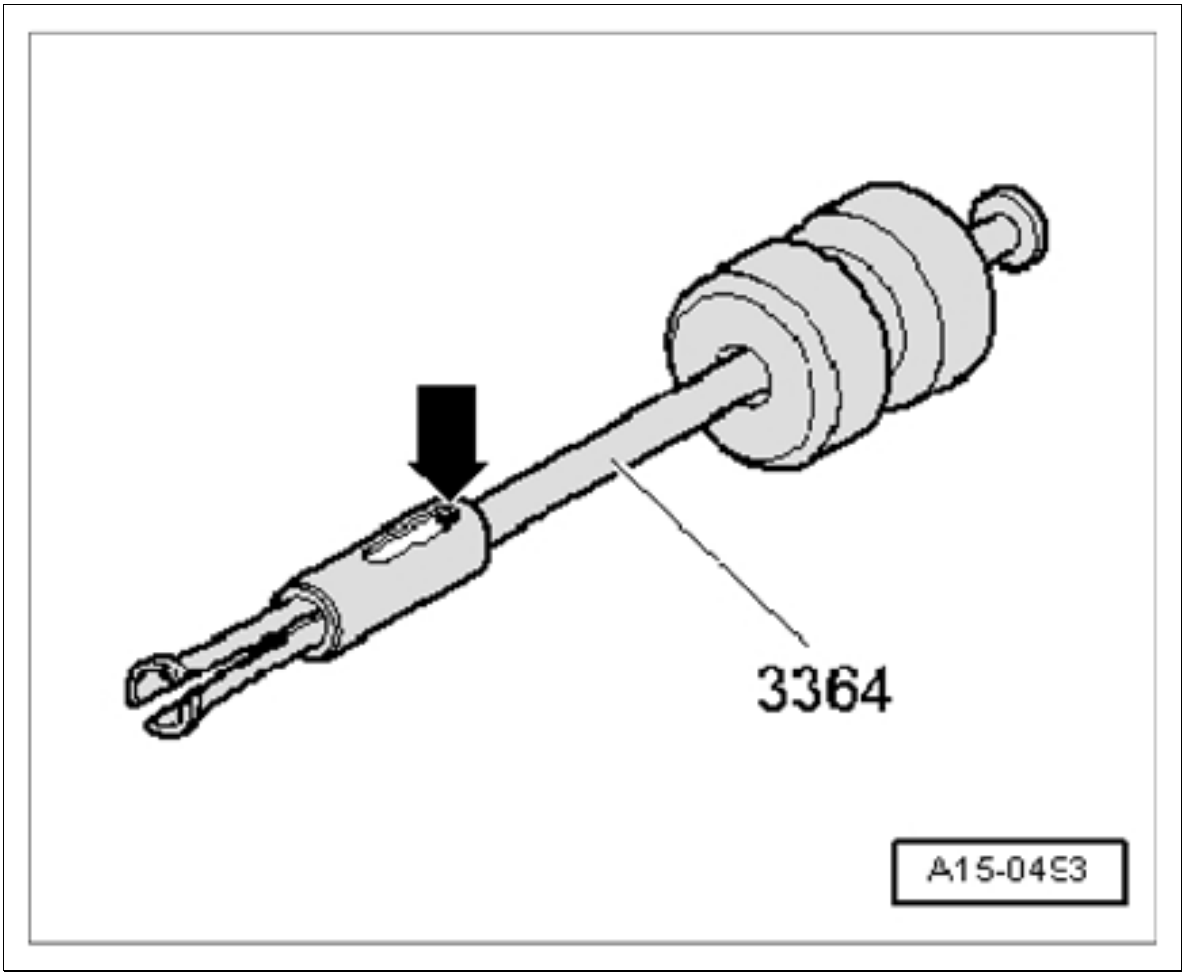

Courtesy of PORSCHE CARS NORTH AMERICA, INC.

15. Fit lower part of valve-stem seal puller **-3364-** on the valve stem seal.
16. Fit mandrel **-1-** into the bore in the lower part of puller.
17. Fit assembly lever on the puller and pull out the valve stem seal. **-arrow-**

Fig 7: Pulling Valve Stem Seal

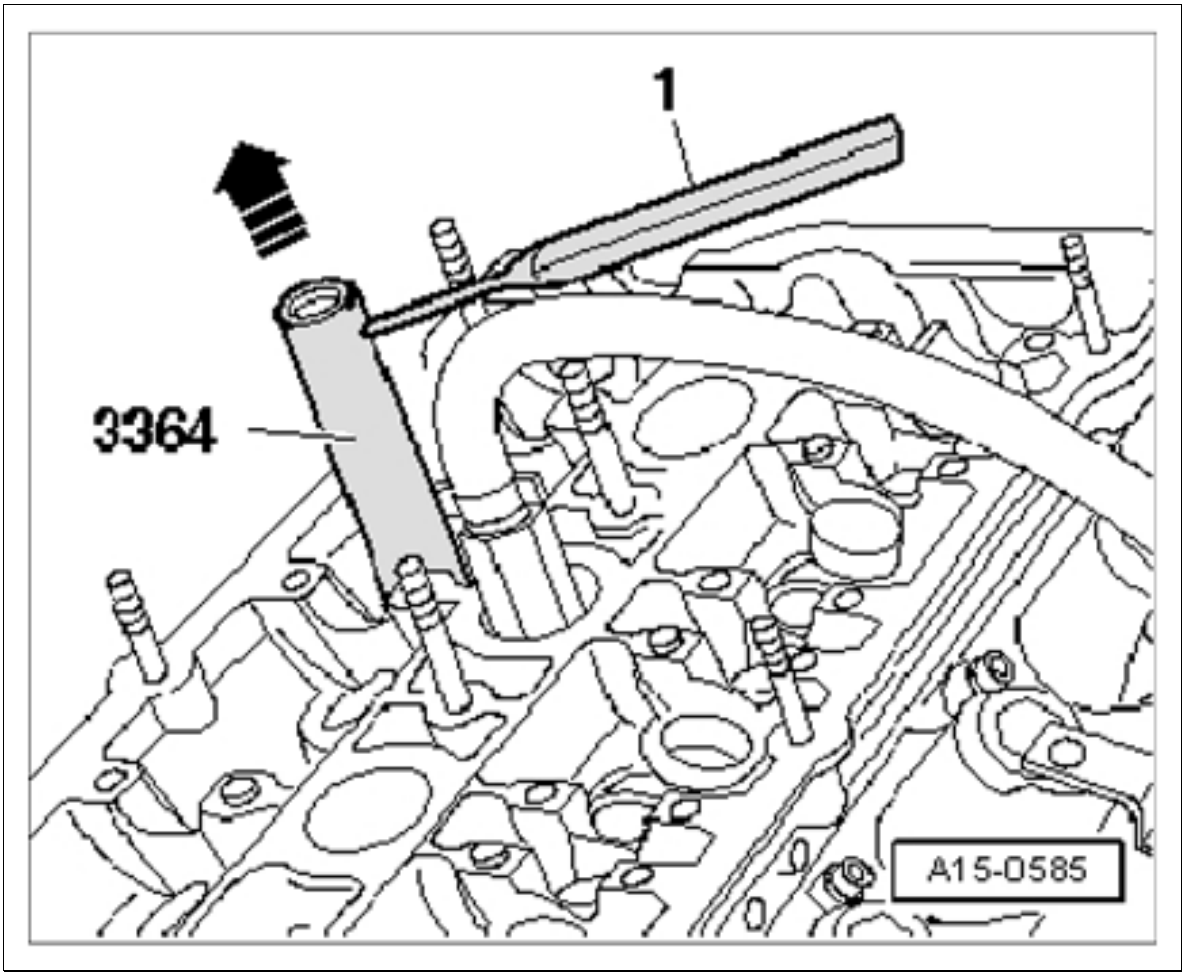

Courtesy of PORSCHE CARS NORTH AMERICA, INC.

WM 156355 REPLACING VALVE-STEM SEALS (MACAN) > INSTALLING VALVE STEM SEALS

Information

Risk of damage when installing valve stem seals.

Place plastic sleeve **-A-** , included with the new valve stem seals **-B-** , onto the valve stem.

- Lightly oil sealing lip of valve stem seal.
- Slide the valve stem seal -B- onto the plastic sleeve -A- .

Fig 1: Identifying Plastic Sleeve And Stem Seal

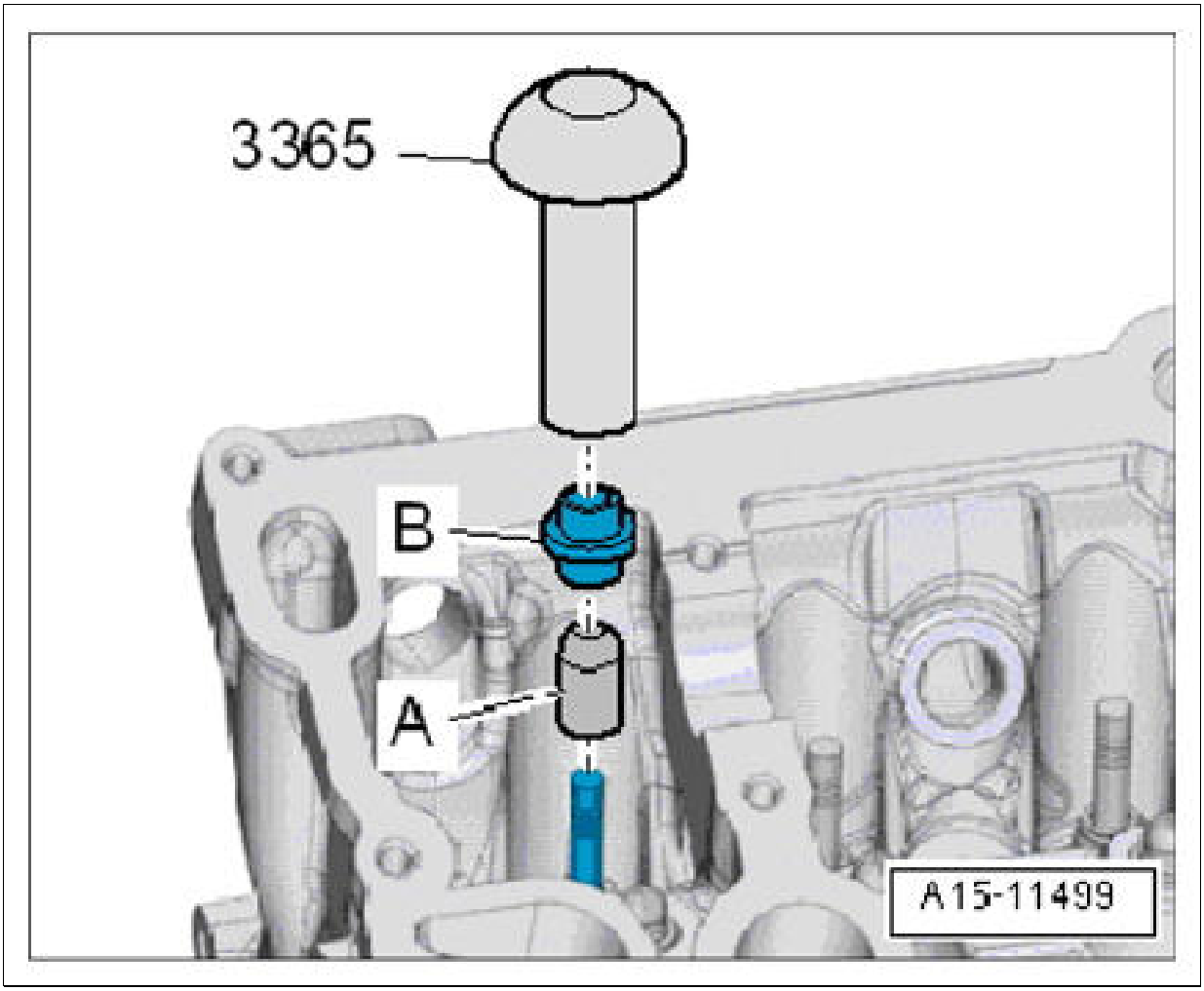

Courtesy of PORSCHE CARS NORTH AMERICA, INC.

1. Carefully press valve stem seal onto the valve guide using valve-stem seal fitting tool **-3365-** .
2. Remove plastic sleeve.
3. Insert valve spring and valve-spring plate.
4. Set up removal and installation device **-VAS 5161-** .

   Intake side

Fig 2: Identifying Retainer

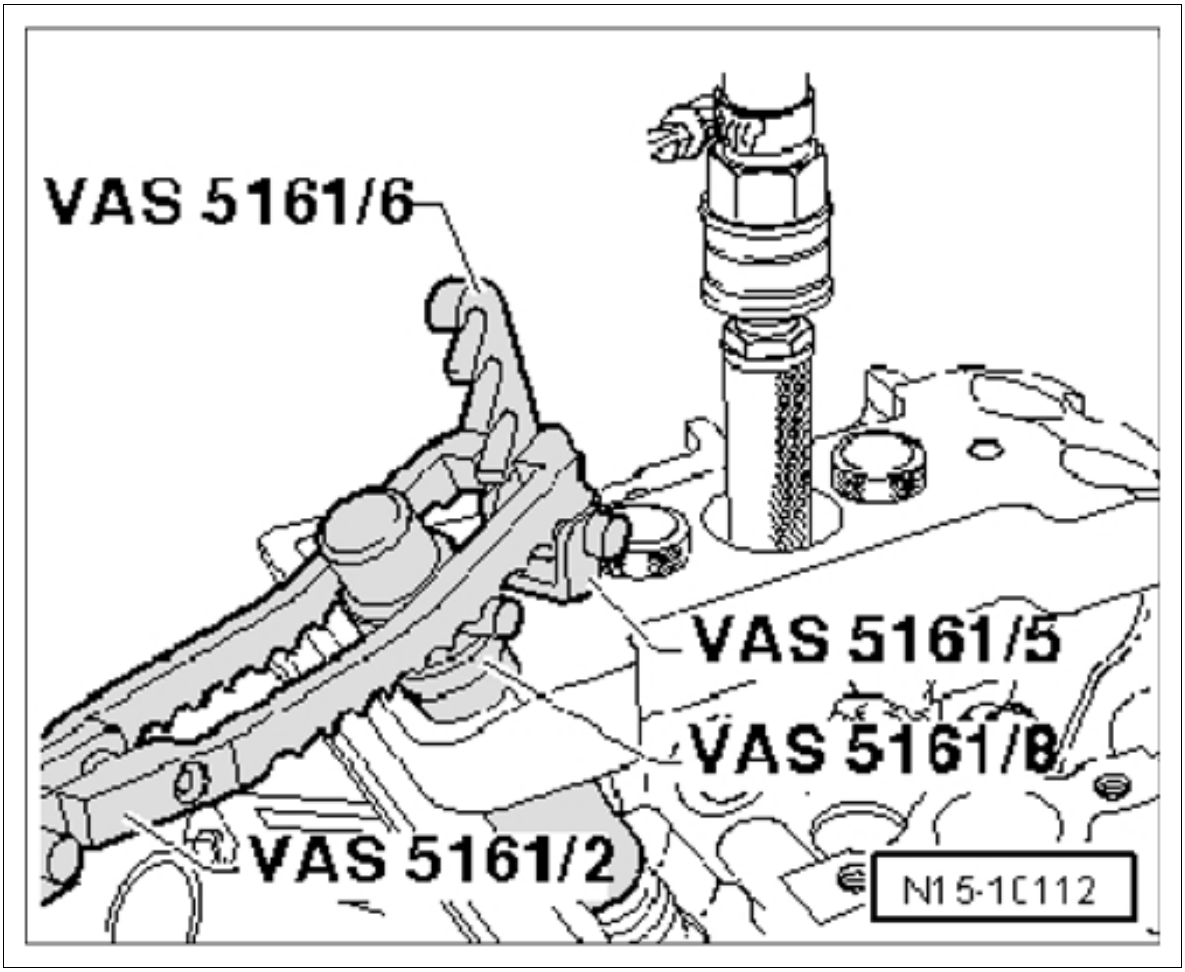

Courtesy of PORSCHE CARS NORTH AMERICA, INC.

Outlet side

Fig 3: Identifying Assembly Cartridge

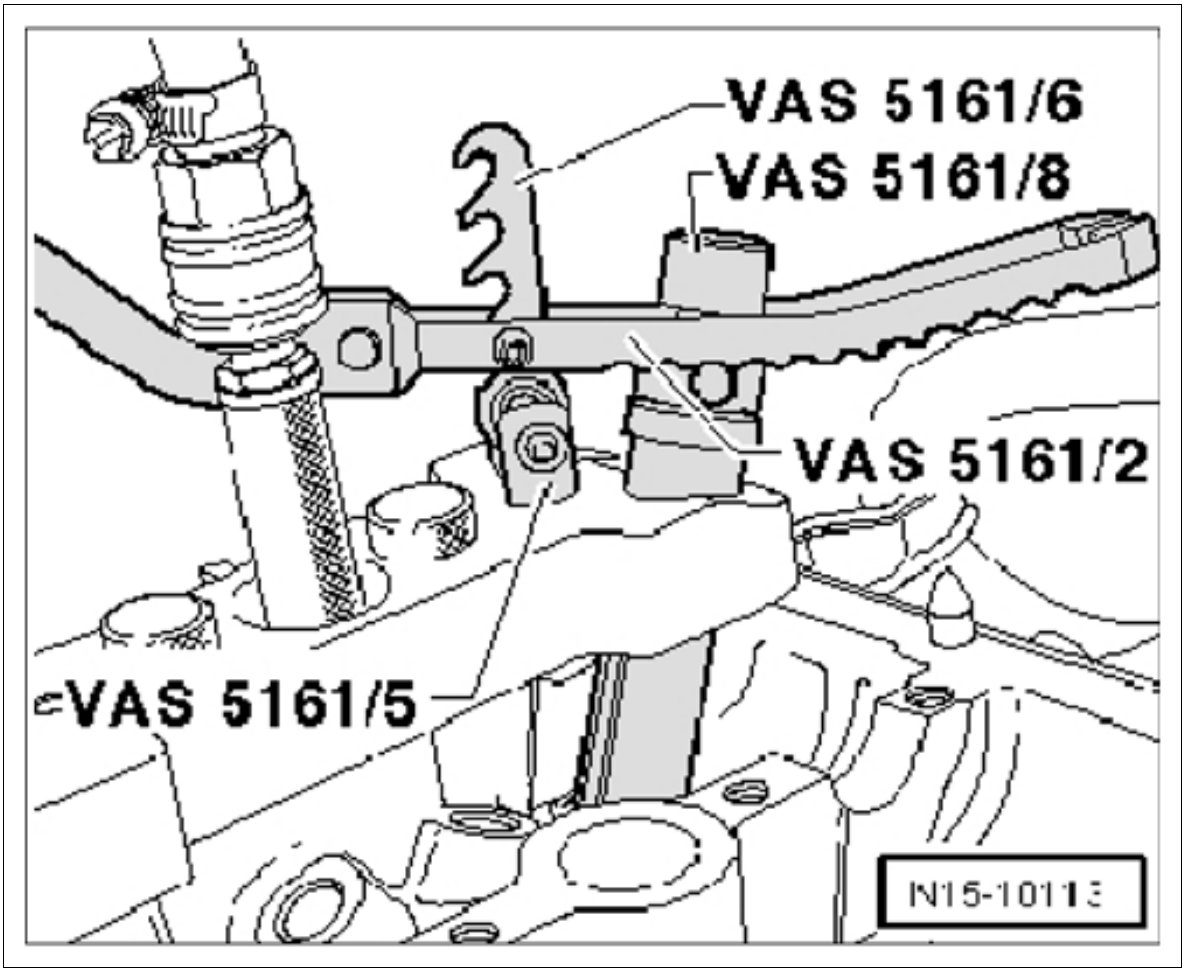

Courtesy of PORSCHE CARS NORTH AMERICA, INC.

5. If the valve collets were removed from the assembly cartridge **-VAS 5161/8-** , they must first be inserted into the insertion device **-VAS 5161/18-** .
6. Press assembly cartridge **-VAS 5161/8-** onto the insertion device **-VAS 5161/18-** from above and pick up the valve collets.

Fig 4: Identifying Insertion Device

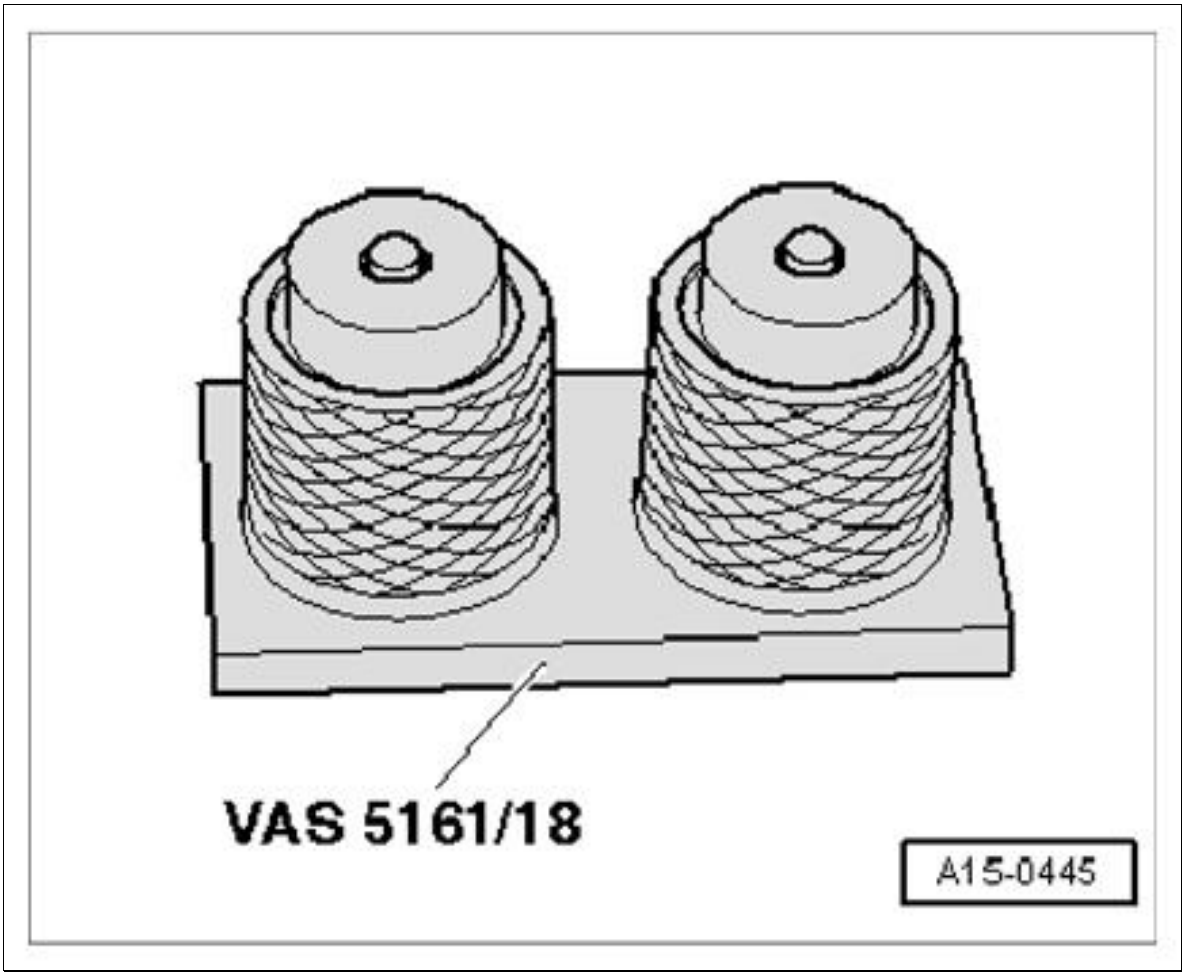

Courtesy of PORSCHE CARS NORTH AMERICA, INC.

Fig 5: Identifying Assembly Cartridge

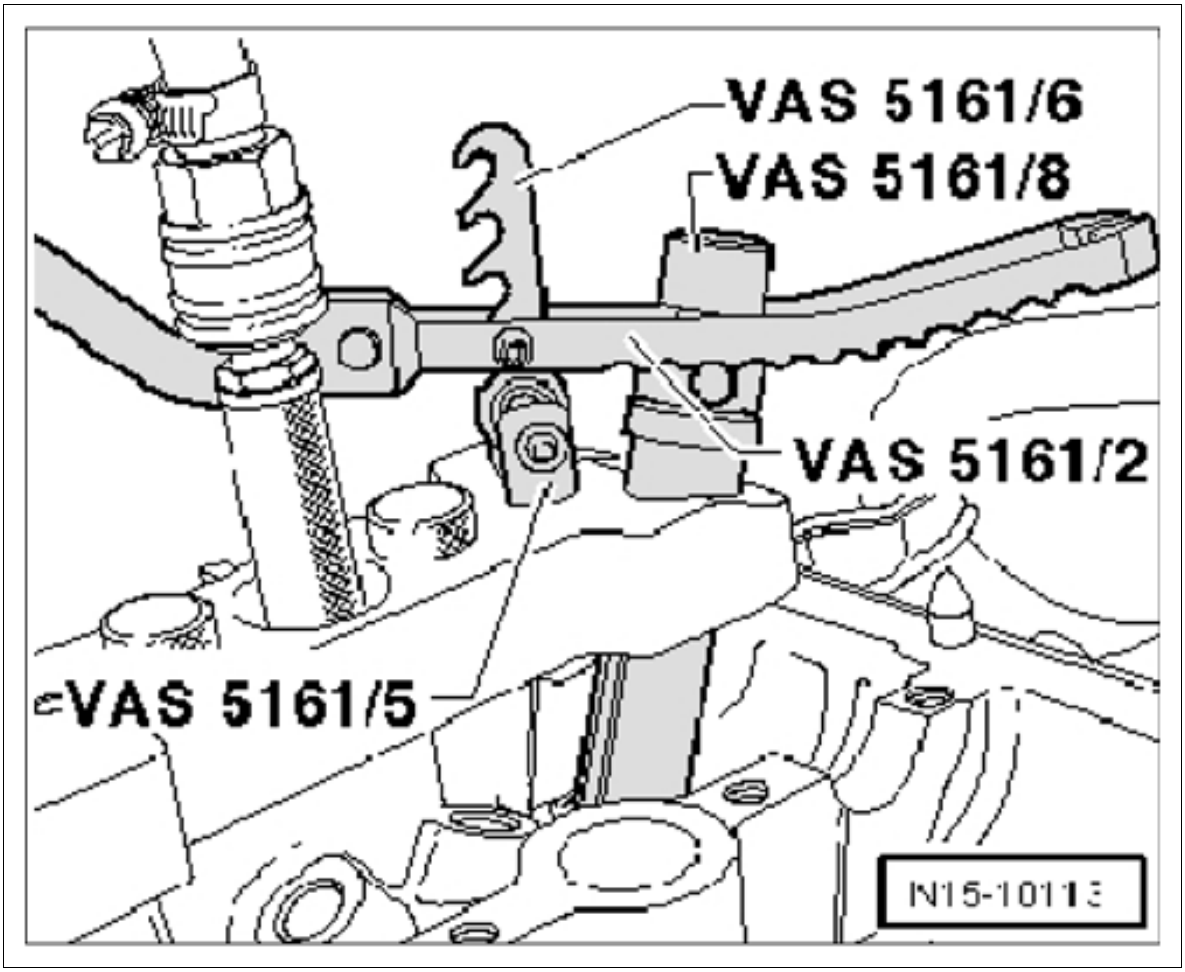

Courtesy of PORSCHE CARS NORTH AMERICA, INC.

7. Press assembly cartridge **-VAS 5161/8-** down using the pressure fork **-VAS 5161/2-** and turn knurled screw on the assembly cartridge back and forth and pull upwards at the same time.
8. Reduce pressure on the pressure fork **-VAS 5161/2-** while pulling on the knurled screw.
9. Remove removal and installation device **-VAS 5161-** .

WM 156355 REPLACING VALVE-STEM SEALS (MACAN) > SUBSEQUENT WORK

1. Fit hydraulic tappets and rocker arms on the cylinder head.
2. Install camshafts. → INSTALLING CAMSHAFTS
3. Install spark plugs. → INSTALLING SPARK PLUGS

WM 155920 REMOVING AND INSTALLING VALVE LIFTERS (MACAN S, MACAN TURBO) > TECHNICAL VALUES

Location	Description	Type	Basic value	Tolerance 1	Tolerance 2
Fastening screw for hydraulic valve for valve lift control		Tightening torque	6 Nm (4.5 ftlb.)		
Fastening screw for camshaft mounting saddle		Tightening torque	13 Nm (9.5 ftlb.)		
Fastening screw securing hall sender to cylinder head	M6 x 16 AL9/replace	Initial tightening	4 Nm (3 ftlb.)		
Fastening screw securing hall sender to cylinder head		Final tightening	+60°		
Fastening screw for camshaft housing		Tightening torque	13 Nm (9.5 ftlb.)		

WM 155920 REMOVING AND INSTALLING VALVE LIFTERS (MACAN S, MACAN TURBO) > INFORMATION > VALVE DRIVE > VALVE DRIVE, CYLINDERS 1-3

Fig 1: Identifying Valve Drive Components (Cylinders 1-3)

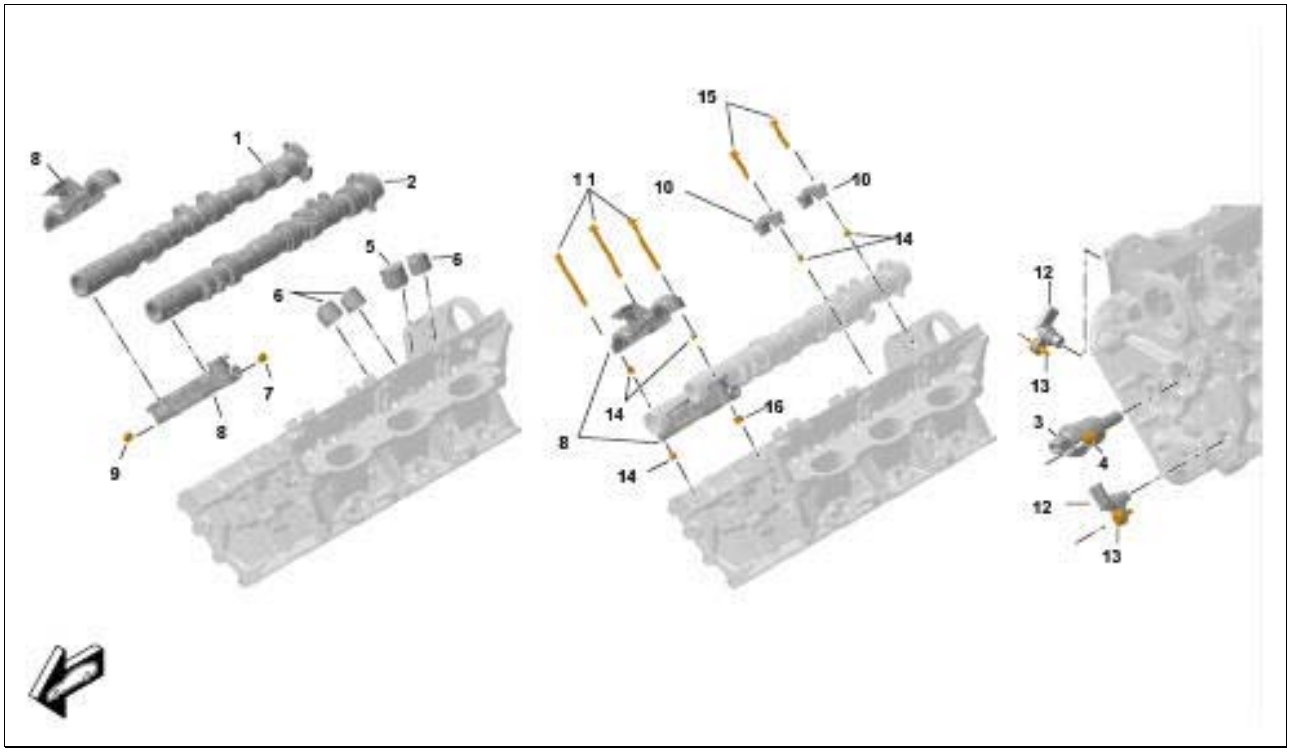

Courtesy of PORSCHE CARS NORTH AMERICA, INC.

1. Outlet camshaft, cylinders 1-3/grease bearing surfaces (Shell Darina APC Grease 2)
2. Intake camshaft, cylinders 1-3/grease bearing surfaces (Shell Darina APC Grease 2)
3. Hydraulic valve for variable valve lift control
4. Screw, BM5 x 12 → **Tightening torque: 6 Nm (4.5 ftlb.)**
5. Switching tappet/coat with engine oil
6. Bucket tappet/coat with engine oil
7. Stopper 11.2
8. Mounting saddle/grease bearing surfaces (Shell Darina APC Grease 2)
9. Stopper 6.7
10. Housing/grease bearing surfaces (Shell Darina APC Grease 2)
11. Screw, BM6 x 70 → **Tightening torque: 13 Nm (9.5 ftlb.)**
12. Hall sender
13. Aluminum screw, M6 x 16/replace → **Initial tightening: 4 Nm (3 ftlb.) → Final tightening: +60°**
14. Dowel sleeve
15. Screw, M6 x 35 x 25 → **Tightening torque: 13 Nm (9.5 ftlb.)**

16. Dowel sleeve

WM 155920 REMOVING AND INSTALLING VALVE LIFTERS (MACAN S, MACAN TURBO) > PRELIMINARY WORK

1. Remove camshafts. → 150520 REMOVING AND INSTALLING CAMSHAFTS

WM 155920 REMOVING AND INSTALLING VALVE LIFTERS (MACAN S, MACAN TURBO) > REMOVING VALVE LIFTERS (HYDRAULIC TAPPETS)

Information

The procedure for removing and installing is described for one side as an example. The procedure for the other side is practically identical.

Information

- The pictures shown in this document may differ from the original.

Information

- If the hydraulic tappets are to be re-used, they must be marked according to installation position using a water-resistant felt-tip pen and set aside in such a way that they cannot be mixed up!
- If the hydraulic tappets are to be re-used, they must be installed at the same position!

1. Pull the hydraulic tappets out of the cylinder head one after the other → Hydraulic tappet and set them aside in such a way that they cannot be mixed up → Putting components down without mixing them up (cylinder bank 5-8 shown here as an example) .

Fig 1: Identifying Hydraulic Tappet

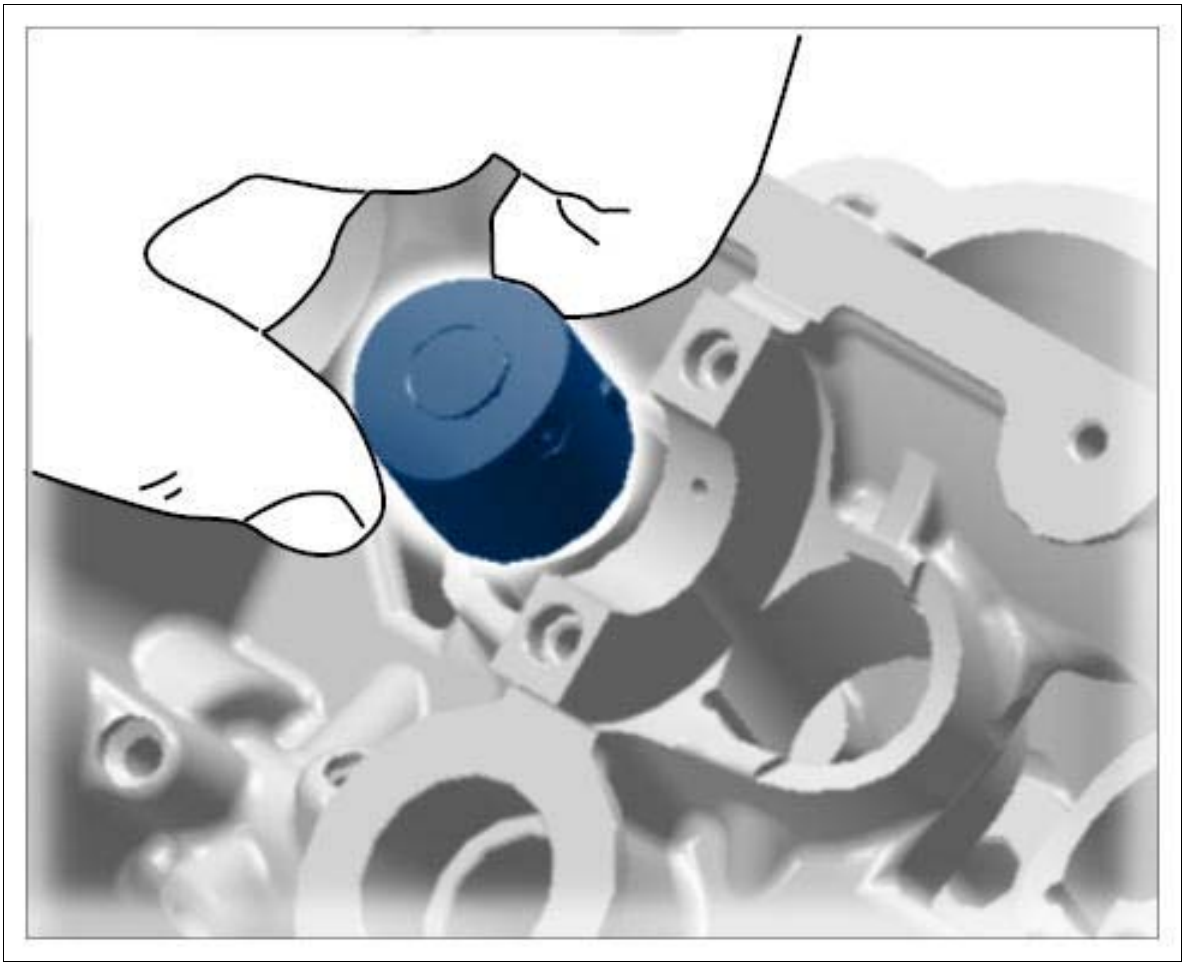

Courtesy of PORSCHE CARS NORTH AMERICA, INC.

1. **E** - Intake side
2. **A** - Exhaust side
3. **5 to 8** - Cylinders

Fig 2: Identifying Intake And Exhaust Side Components

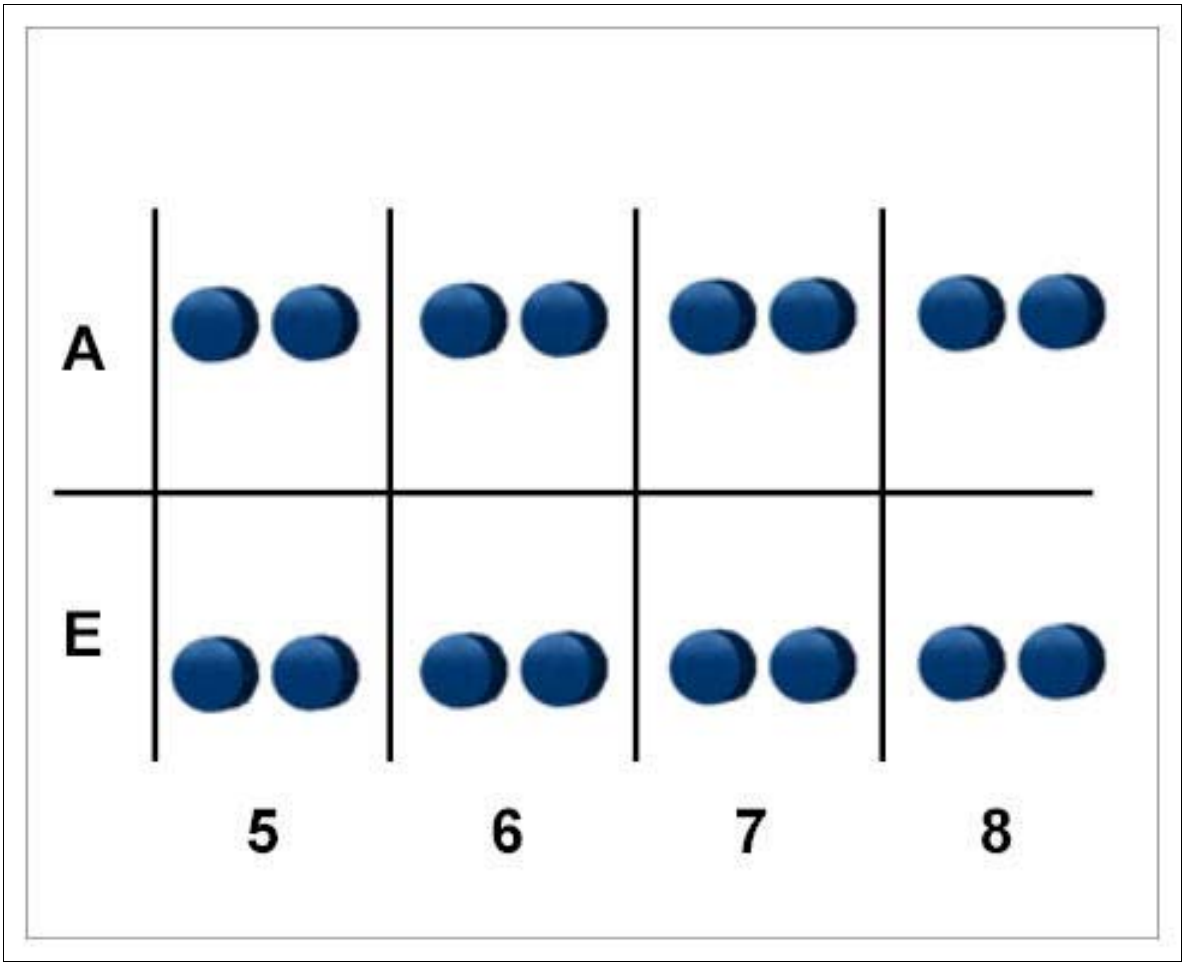

Courtesy of PORSCHE CARS NORTH AMERICA, INC.

WM 155920 REMOVING AND INSTALLING VALVE LIFTERS (MACAN S, MACAN TURBO) > INSTALLING VALVE LIFTERS (HYDRAULIC TAPPETS)

1. Oil the hydraulic tappets with engine oil and insert them into the cylinder head. → Hydraulic tappet

Fig 1: Installing Valve Lifters (Hydraulic Tappets)

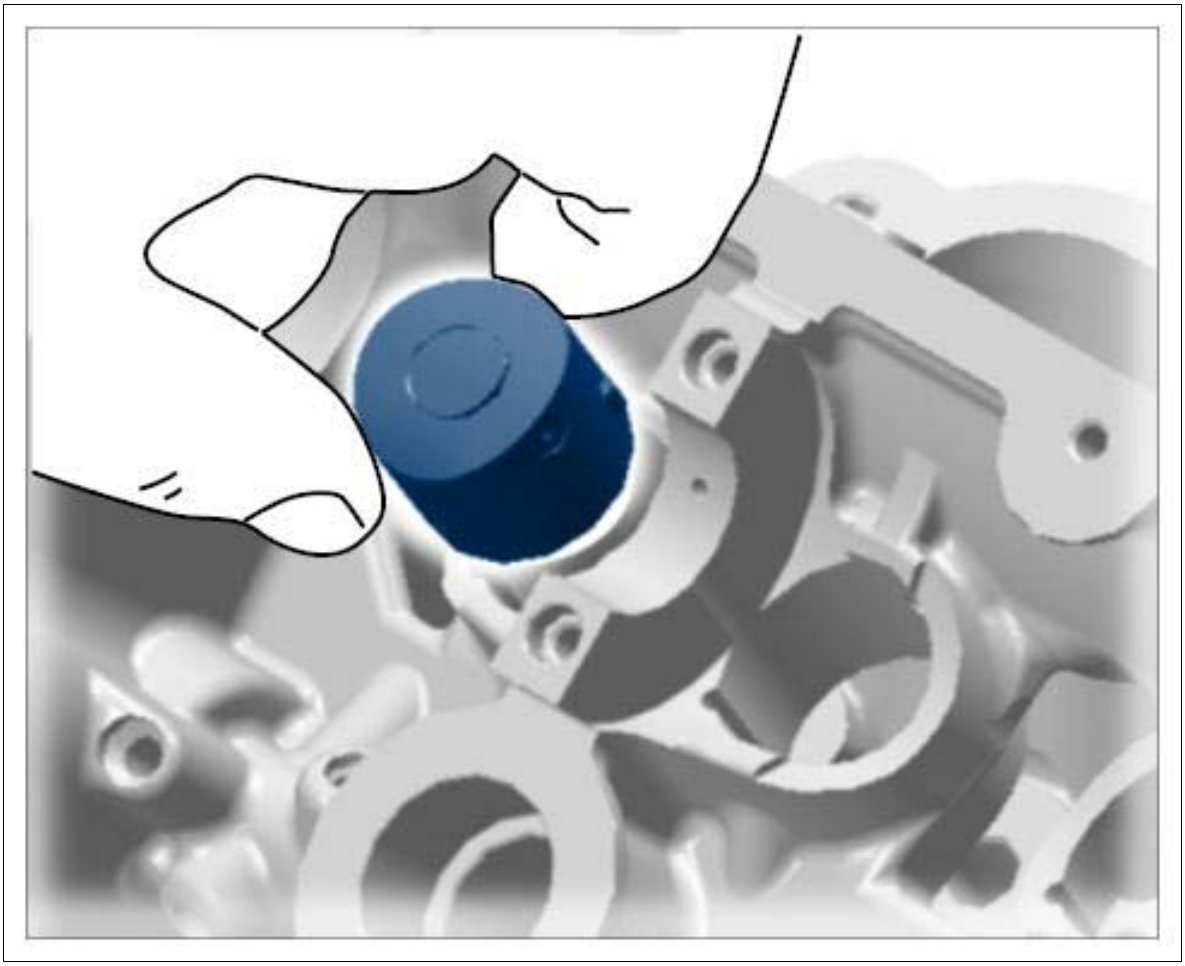

Courtesy of PORSCHE CARS NORTH AMERICA, INC.

WM 155920 REMOVING AND INSTALLING VALVE LIFTERS (MACAN S, MACAN TURBO) > SUBSEQUENT WORK

1. Install camshafts. → INSTALLING CAMSHAFTS

WM 156120 REMOVING AND INSTALLING VALVES (MACAN S, MACAN TURBO) > TOOLS

Designation	Type	Number	Description	

Puller	VW tool	3364		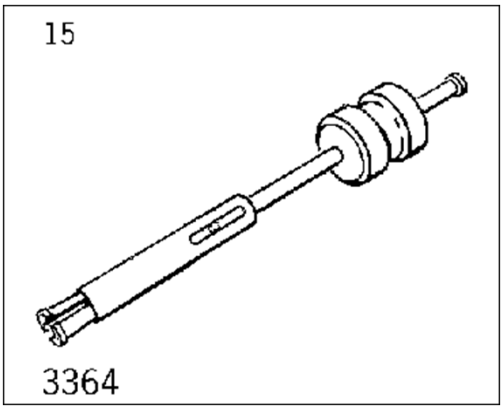
Assembly driver	Special tool	9606/1		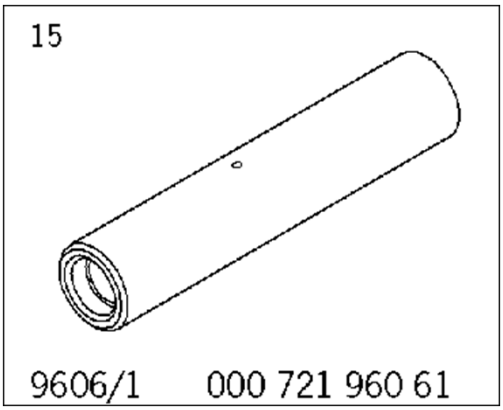
Valve key fitting and removal tool	Commercially available tool	Nr.54 Pos.1		
guide bush, 31 mm	Commercially available tool	Nr.54 Pos.1A		

guide bush, 28 mm	Commercially available tool	Nr.54 Pos.1B		

WM 156120 REMOVING AND INSTALLING VALVES (MACAN S, MACAN TURBO) > PRELIMINARY WORK

1. Remove cylinder head. → 157019 REMOVING AND INSTALLING CYLINDER HEAD
2. Remove camshafts. → 150520 REMOVING AND INSTALLING CAMSHAFTS
3. Take hydraulic tappets out of the cylinder head and lay them on a clean surface, arranged according to cylinders and valves. Do not interchange components. For details, see → 155920 REMOVING AND INSTALLING VALVE LIFTERS (HYDRAULIC TAPPETS)

WM 156120 REMOVING AND INSTALLING VALVES (MACAN S, MACAN TURBO) > TOOLS AND MATERIALS > SPECIAL TOOL

Fig 1: Identifying Special Tools For Valves

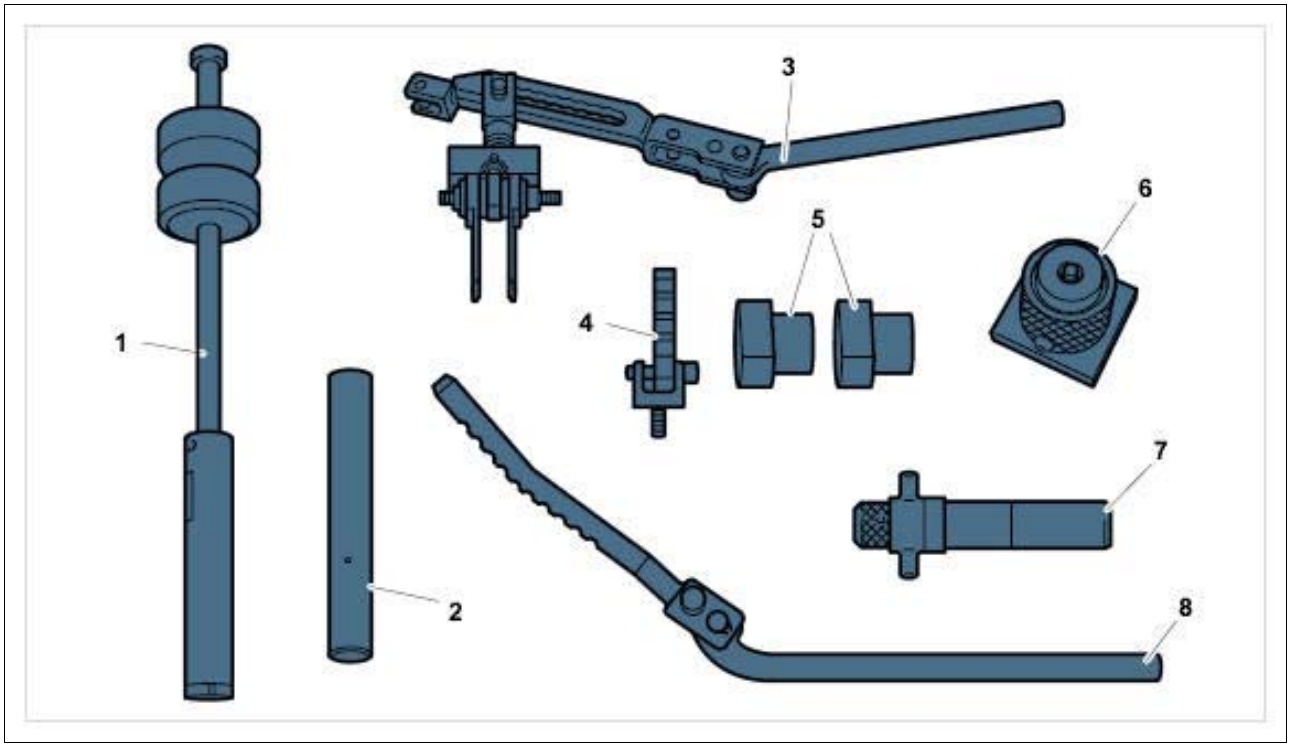

Courtesy of PORSCHE CARS NORTH AMERICA, INC.

1. **Puller 3364** => only for removing valve-stem seals.
2. **Assembly driver 9606/1** => only for fitting valve-stem seals.
3. Universal assembly bar with universal assembly driver **Valve key fitting and removal tool Nr.54 Pos.1**
4. Hooking piece (fitting hook) with holder (several possible)
5. Plastic guide for intake and outlet valve **guide bush, 31 mm Nr.54 Pos.1A and guide bush, 28 mm Nr.54 Pos.1B**
6. Assembly fixture for valve keys
7. Assembly cartridge for valve keys
8. Assembly bar (hook) with adjustable lever

WM 156120 REMOVING AND INSTALLING VALVES (MACAN S, MACAN TURBO) > REMOVING VALVES

Information

- Secure the cylinder head on a level surface, which allows easy access to the valves from underneath.
- No valves should be hidden by the surface under the cylinder head.

- The cylinder head fastening must not tip over when tools are used.

1. The spark plugs must be removed and the valve lock screwed in before the valves are removed → Screwing in tool . The valve lock prevents the valves from being opened while being pressed down. Alternatively, a rubber plate placed underneath helps if the cylinder head surface is smooth **-2-** .

   Fig 1: Installing Valve Lock Tool

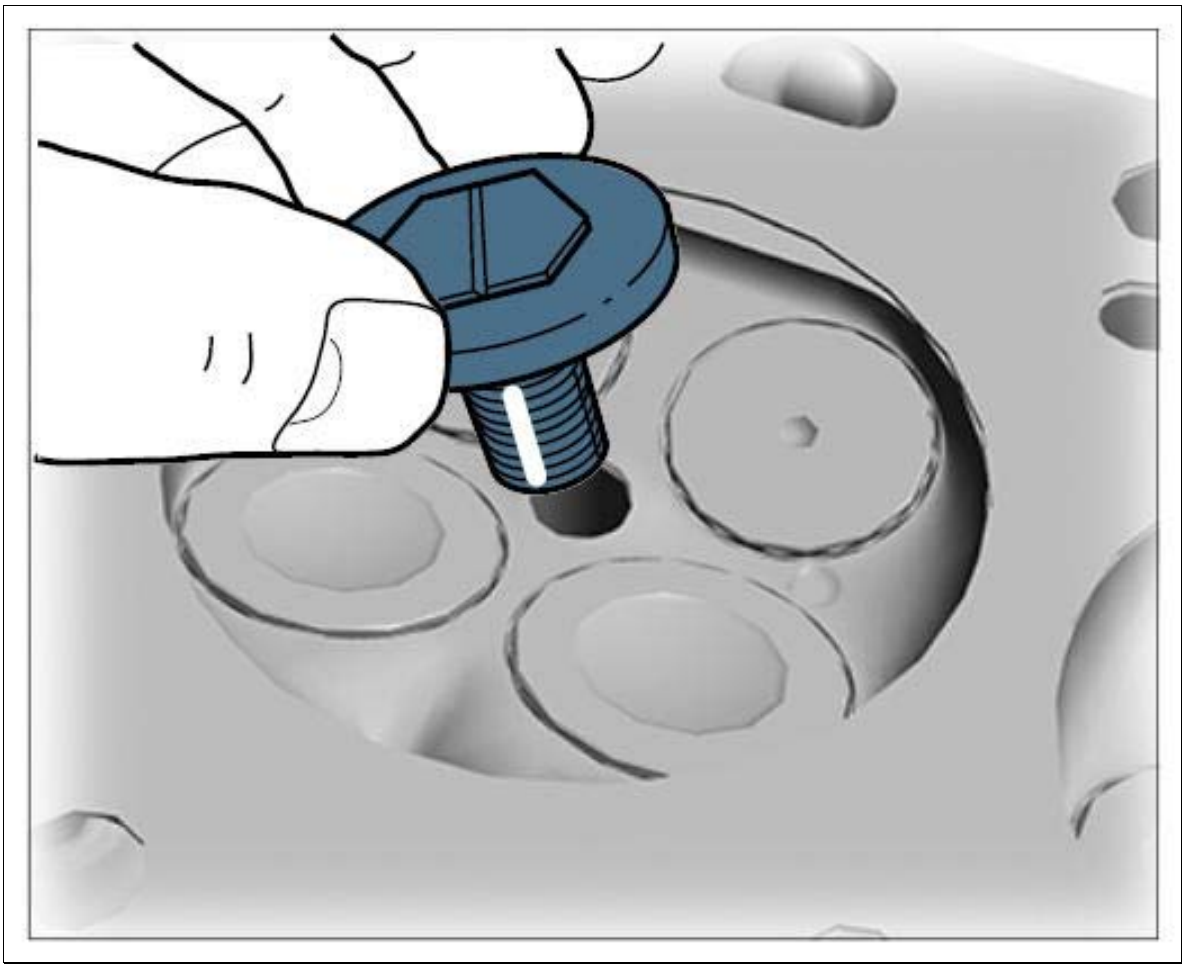

Courtesy of PORSCHE CARS NORTH AMERICA, INC.

Fig 2: Identifying Valves, Valve Lock And Rubber Plate

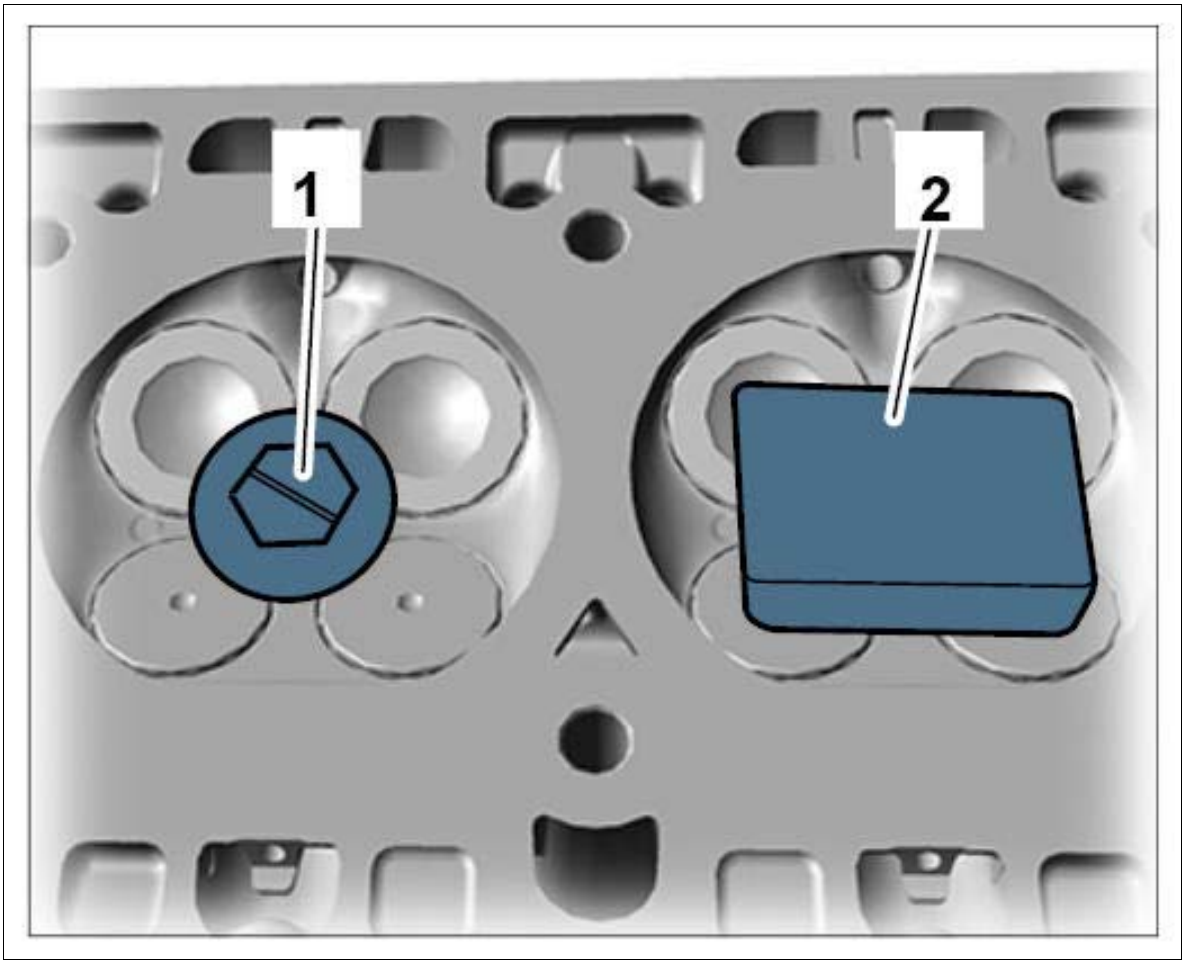

Courtesy of PORSCHE CARS NORTH AMERICA, INC.

2. Fit the tool on the cylinder head and adjust it.

    1. 2.1. Screw holder **-1-** with the appropriate thread into its matching thread on the cylinder head. The hook piece **-2-** is pre-fitted in the holder.

Fig 3: Fitting Tool On Cylinder Head

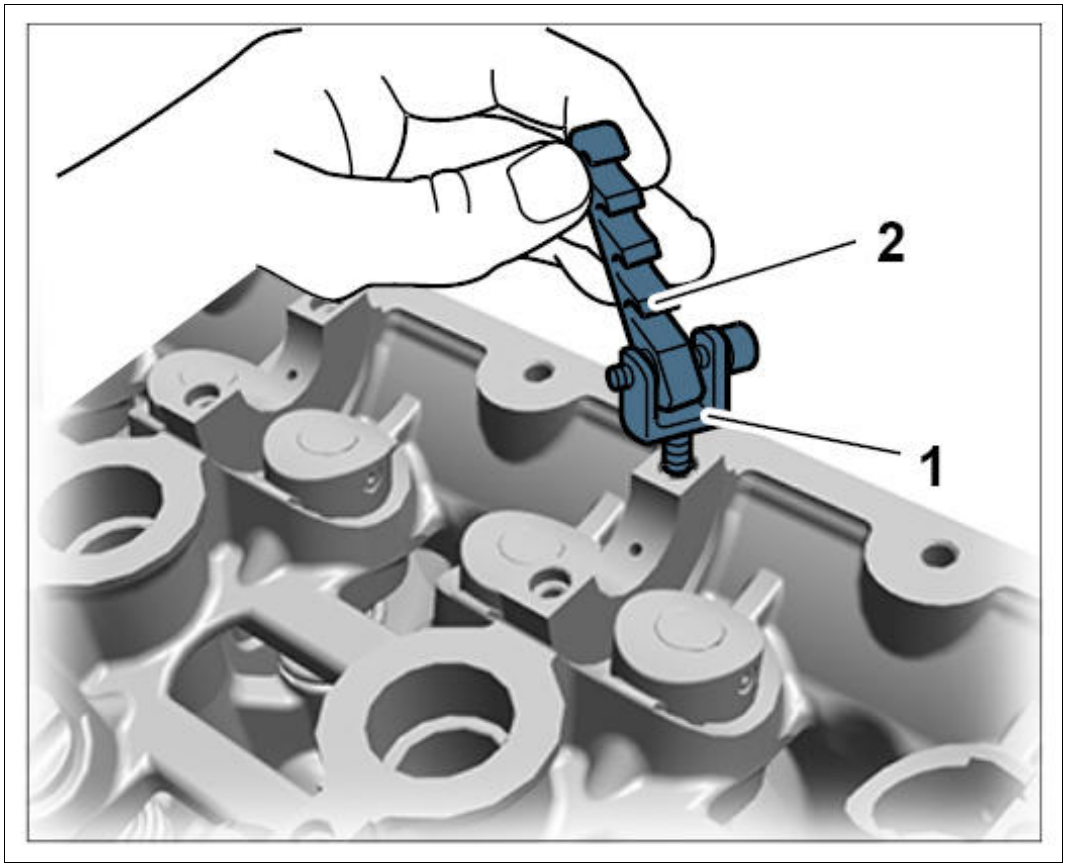

Courtesy of PORSCHE CARS NORTH AMERICA, INC.

2. 2.2. Insert a suitable plastic guide **-1-** instead of the tappet.

Fig 4: Inserting Plastic Guide

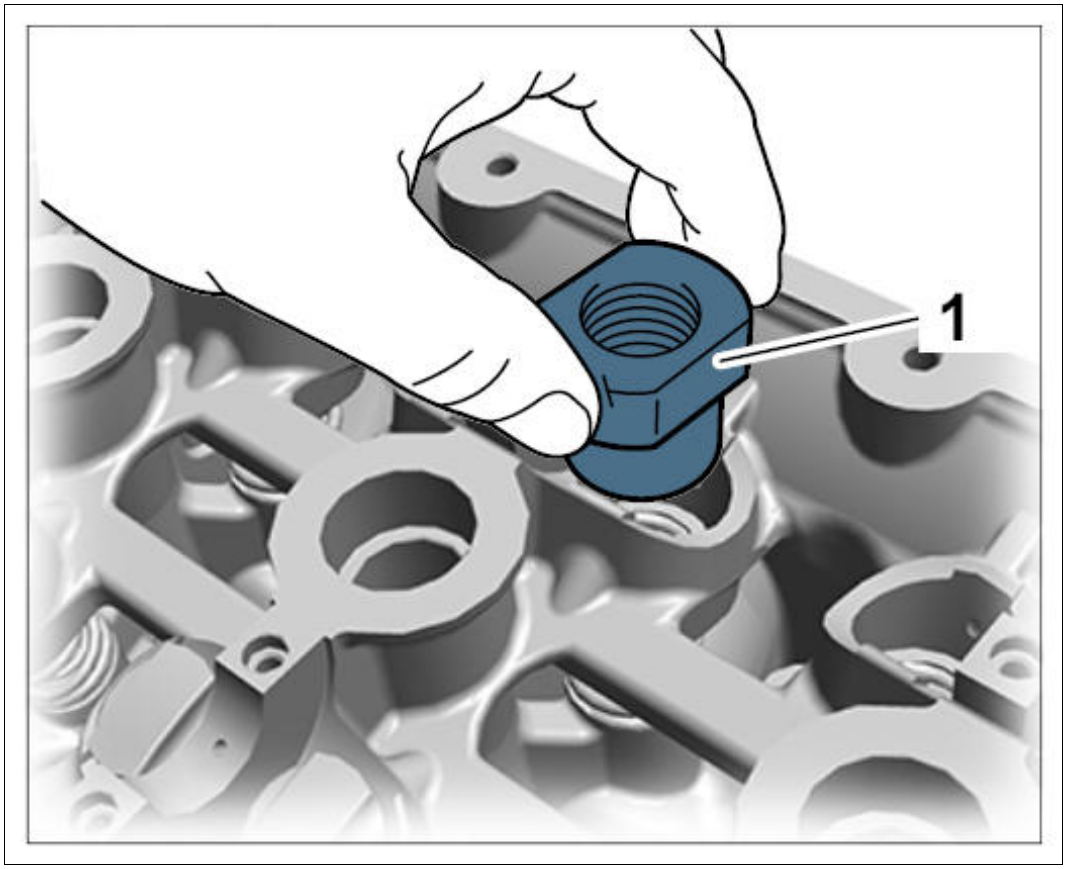

Courtesy of PORSCHE CARS NORTH AMERICA, INC.

3. 2.3. Insert assembly cartridge **-1-** for the valve keys into the plastic guide.

Fig 5: Inserting Cartridge Assembly

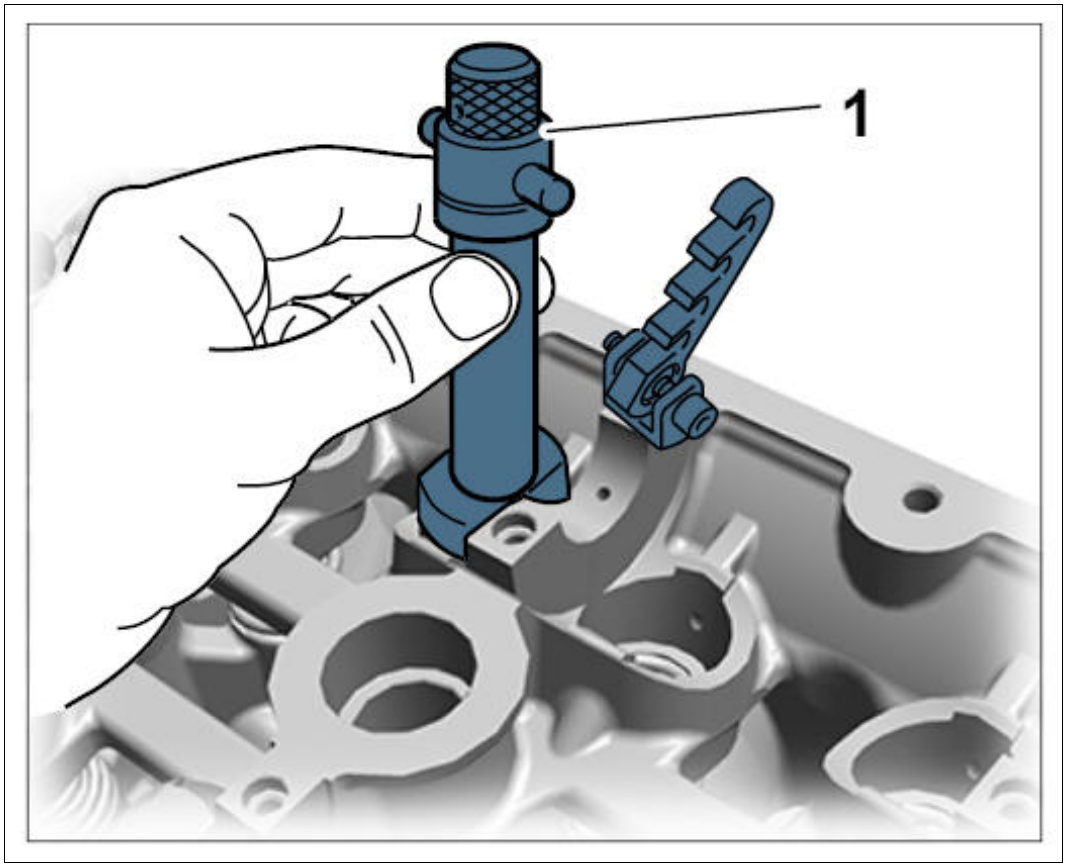

Courtesy of PORSCHE CARS NORTH AMERICA, INC.

4. 2.4. Hook the lever (assembly bar) **-1-** into the hook and place correctly onto the assembly cartridge. Make sure that the tool and equipment can be used without tilting.

Fig 6: Installing Assembly Bar

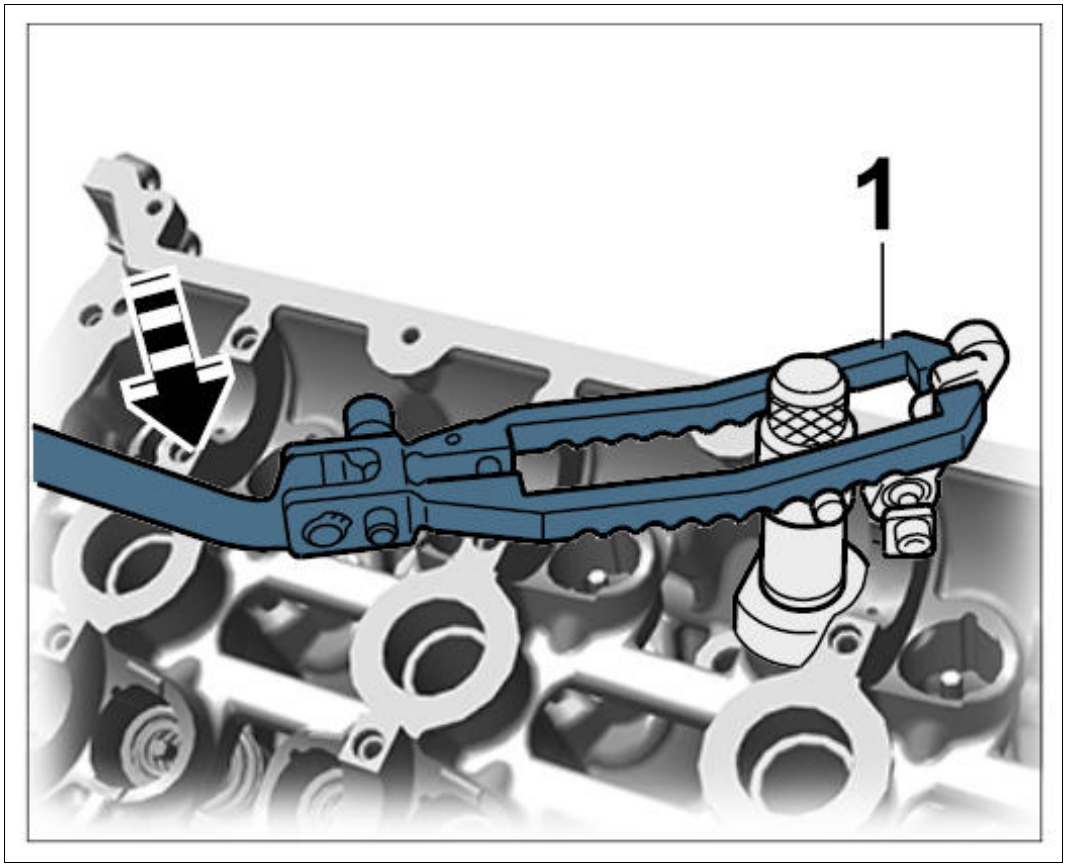

Courtesy of PORSCHE CARS NORTH AMERICA, INC.

3. Remove valve keys.

    1. 3.1. Press assembly cartridge with the lever (assembly bar) against the force of the valve spring and keep it pressed → Tool fitted correctly . The knurled screw of the assembly cartridge pushes forward **-1-** .

Fig 7: Pressing Assembly Cartridge

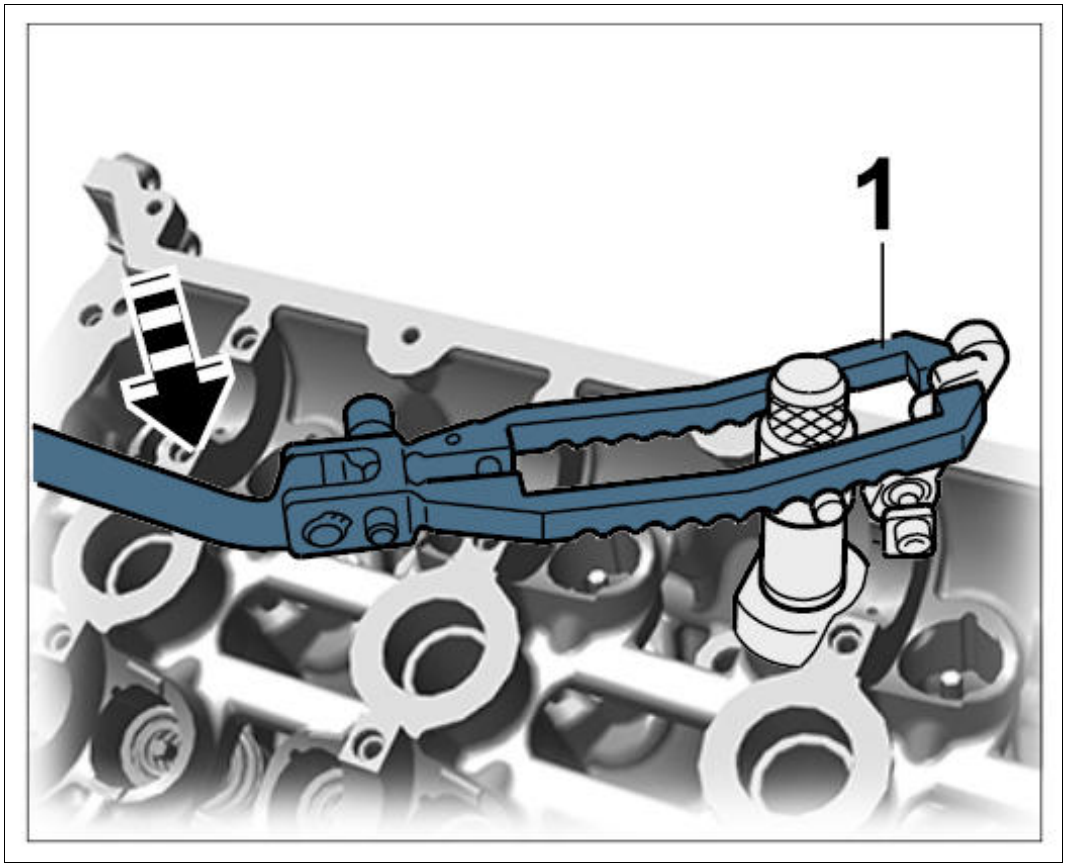

Courtesy of PORSCHE CARS NORTH AMERICA, INC.

Fig 8: Pressing Down Lever And Knurled Screw

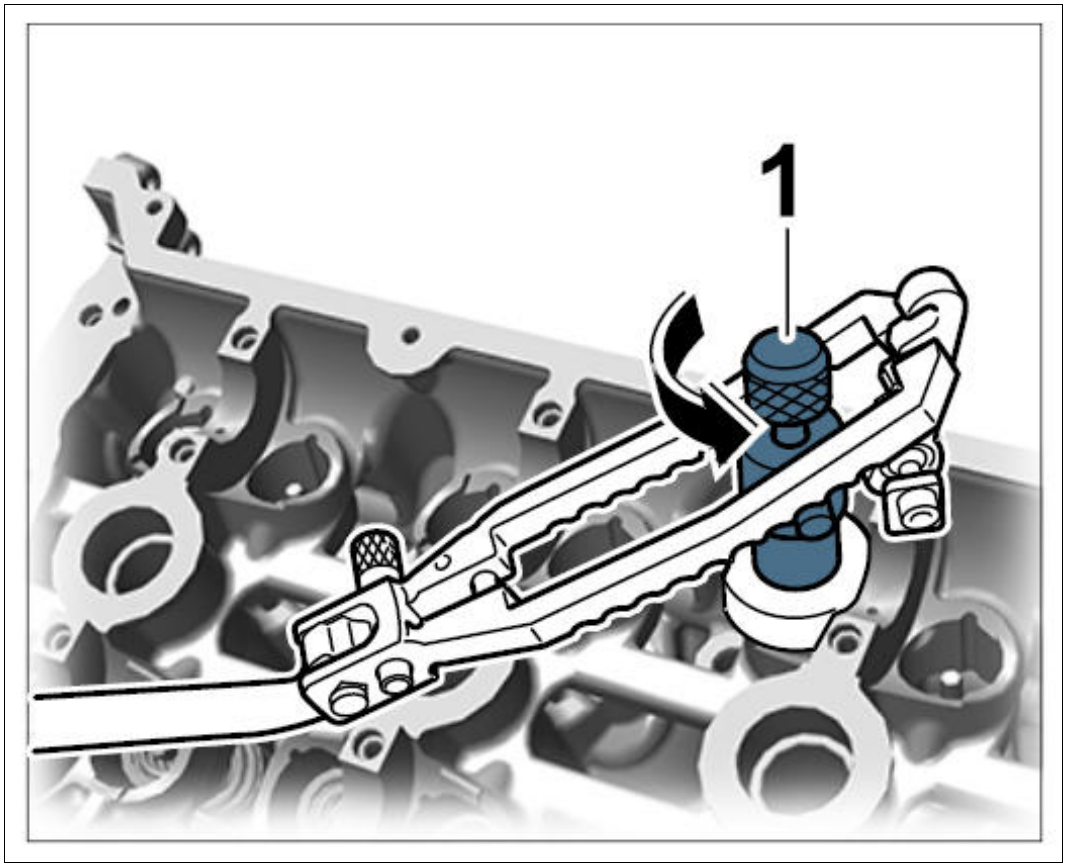

Courtesy of PORSCHE CARS NORTH AMERICA, INC.

Information

The mechanic must practise for use of the assembly cartridge to be effective. Some repetitions must be made to ensure that the valve keys are correctly held in place.

2. 3.2. Turn the knurled screw back and forth **-1-** until the valve keys snap into place in the assembly cartridge **-2-** and are held there. The knurled screw retracts.

Fig 9: Turning Knurled Screw

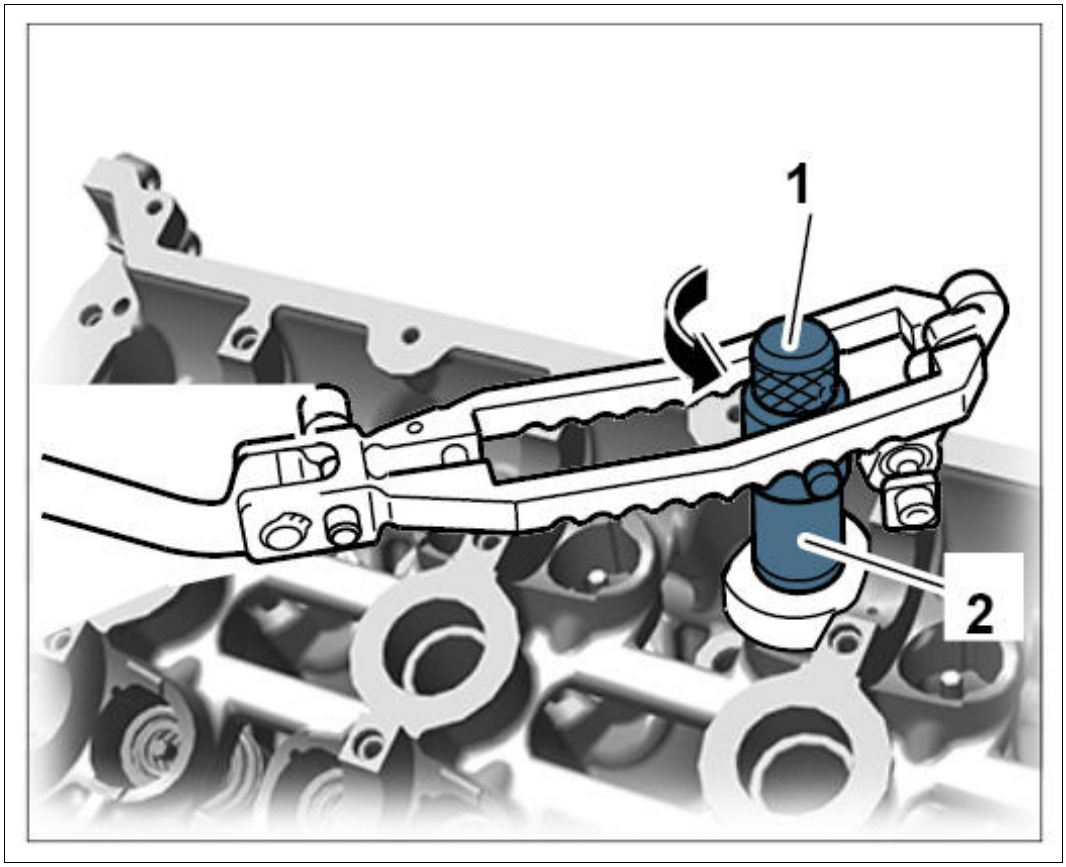

Courtesy of PORSCHE CARS NORTH AMERICA, INC.

3. 3.3. Remove assembly cartridge and check correct position of both valve keys **-1-** .

Fig 10: Placing Valve Keys In Assembly Cartridge

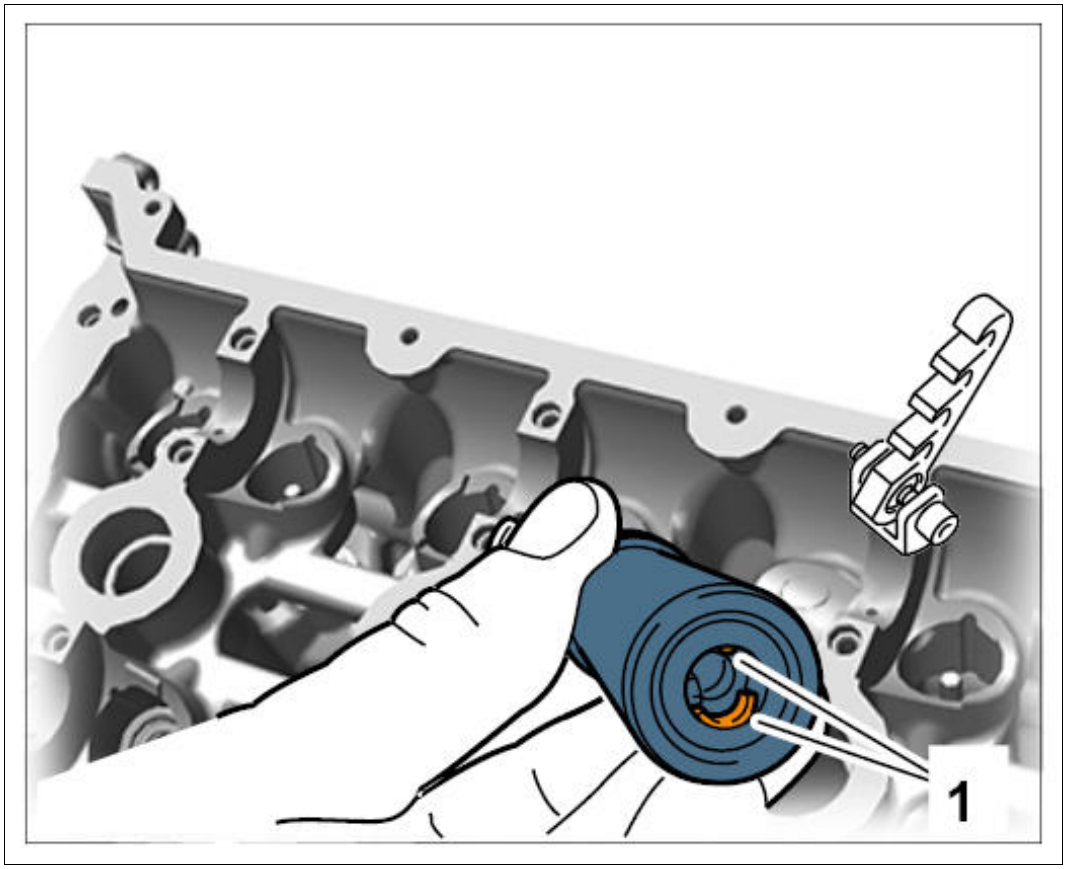

Courtesy of PORSCHE CARS NORTH AMERICA, INC.

4. 3.4. Pull out the knurled screw from the assembly cartridge **-1-** and tap out the valve keys **-2-** .

Fig 11: Removing Valve Keys

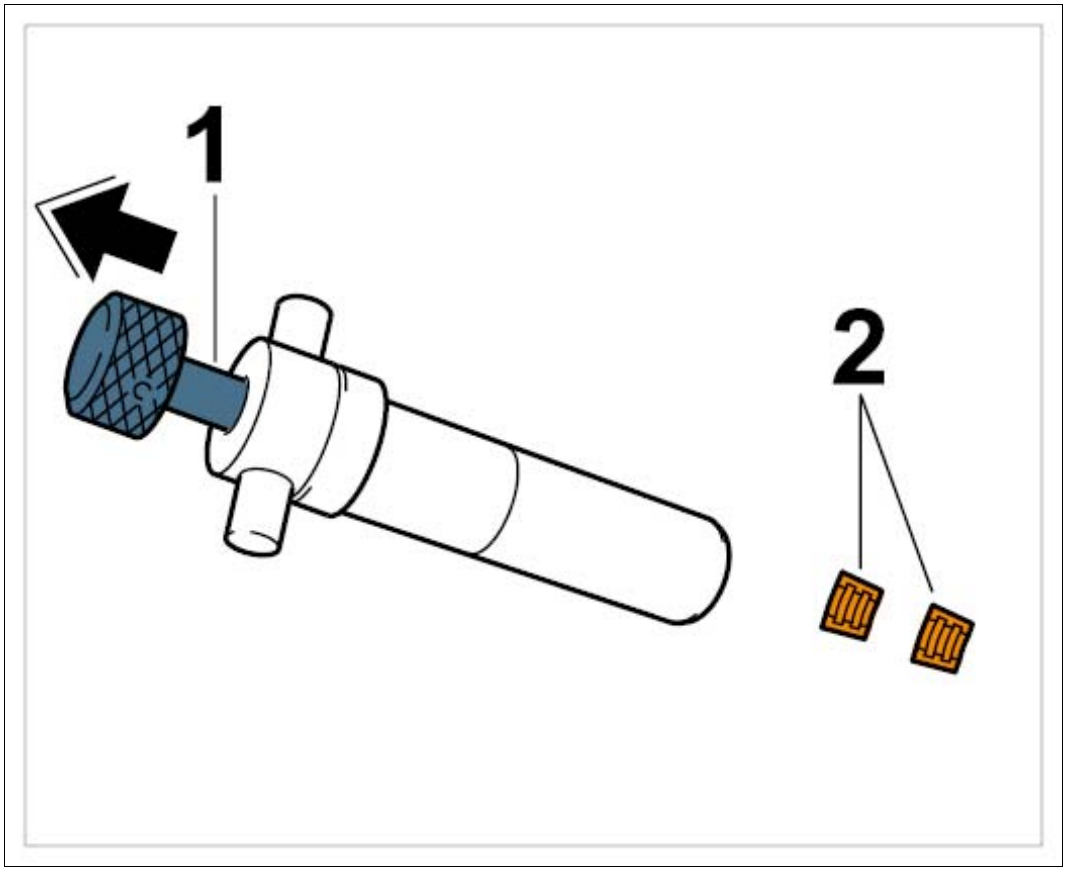

Courtesy of PORSCHE CARS NORTH AMERICA, INC.

4. Remove valve springs, concave washer and valve keys from the cylinder head.
5. Remove valve locks and push the valves to the side of the combustion chamber.

WM 156120 REMOVING AND INSTALLING VALVES (MACAN S, MACAN TURBO) > INSTALLING VALVES

NOTE: Valve grinding paste not removed

- *Risk of damage to sealing face on intake valve*

→ Remove all valve grinding paste fully after grinding.

Information

- The valves cannot be touched up afterwards.
- The valves can be grinded using commercially available valve grinding paste.

1. Apply a small amount of valve grinding paste to the valve seat.

2. Oil the valve stem of a new valve and insert it into the valve guide from the combustion chamber. Push the valve in until it is seated securely in the valve seat of the cylinder head.

3. Grind the valve with a commercially available valve grinder (with rubber suction head) using rotating movements. To do this, hold the valve grinder between the palms of both hands and press against the valve seat with rotating movements → Grinding valve seat .

Fig 1: Turning Valve Seat

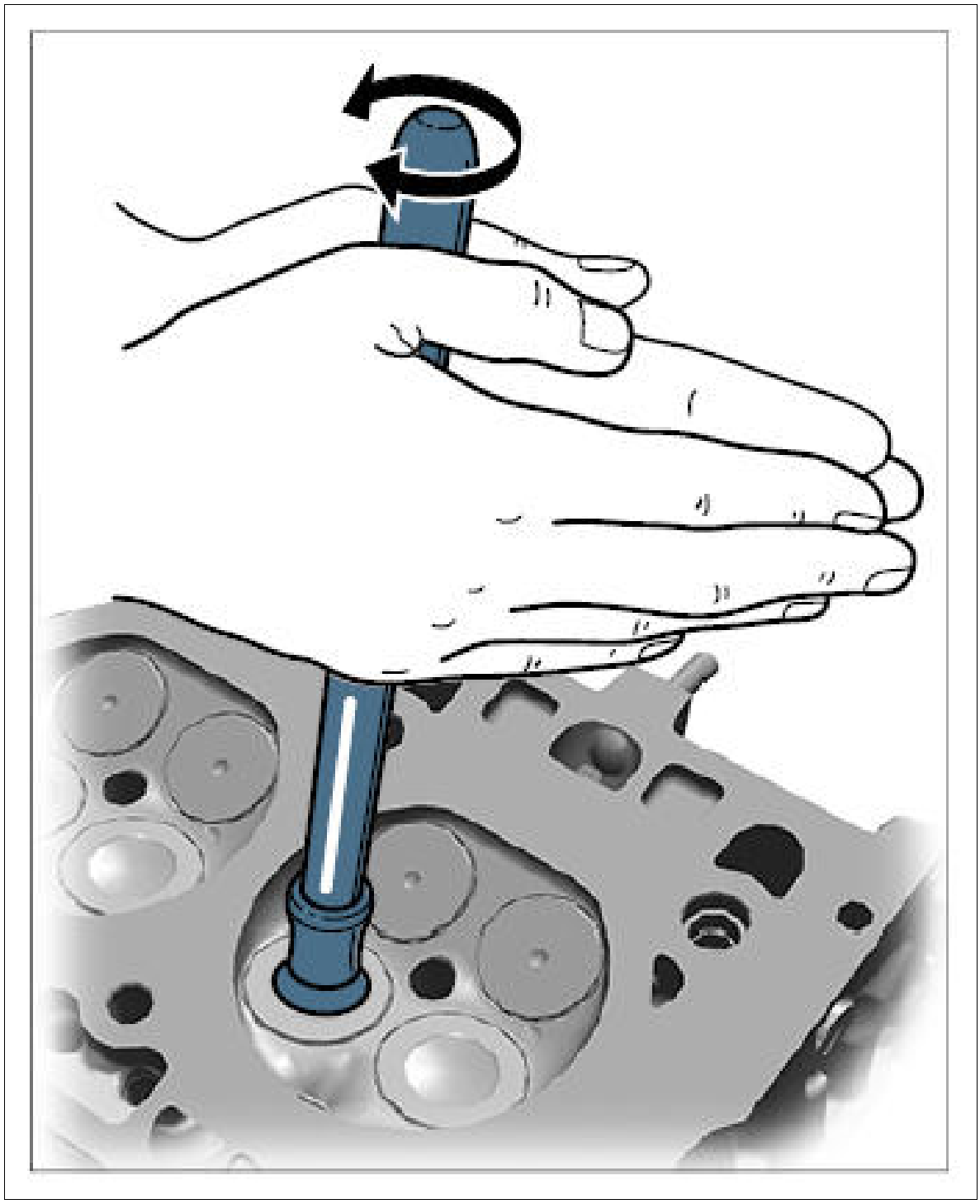

Courtesy of PORSCHE CARS NORTH AMERICA, INC.

4. Carry out the grinding operation for each valve that is replaced. Check for leaks using some fuel and installed spark plugs. The fuel must not escape through the valve seat. Carefully

remove valve grinding paste.

5. Fit valve lock. → Locking valves

Fig 2: Identifying Valves

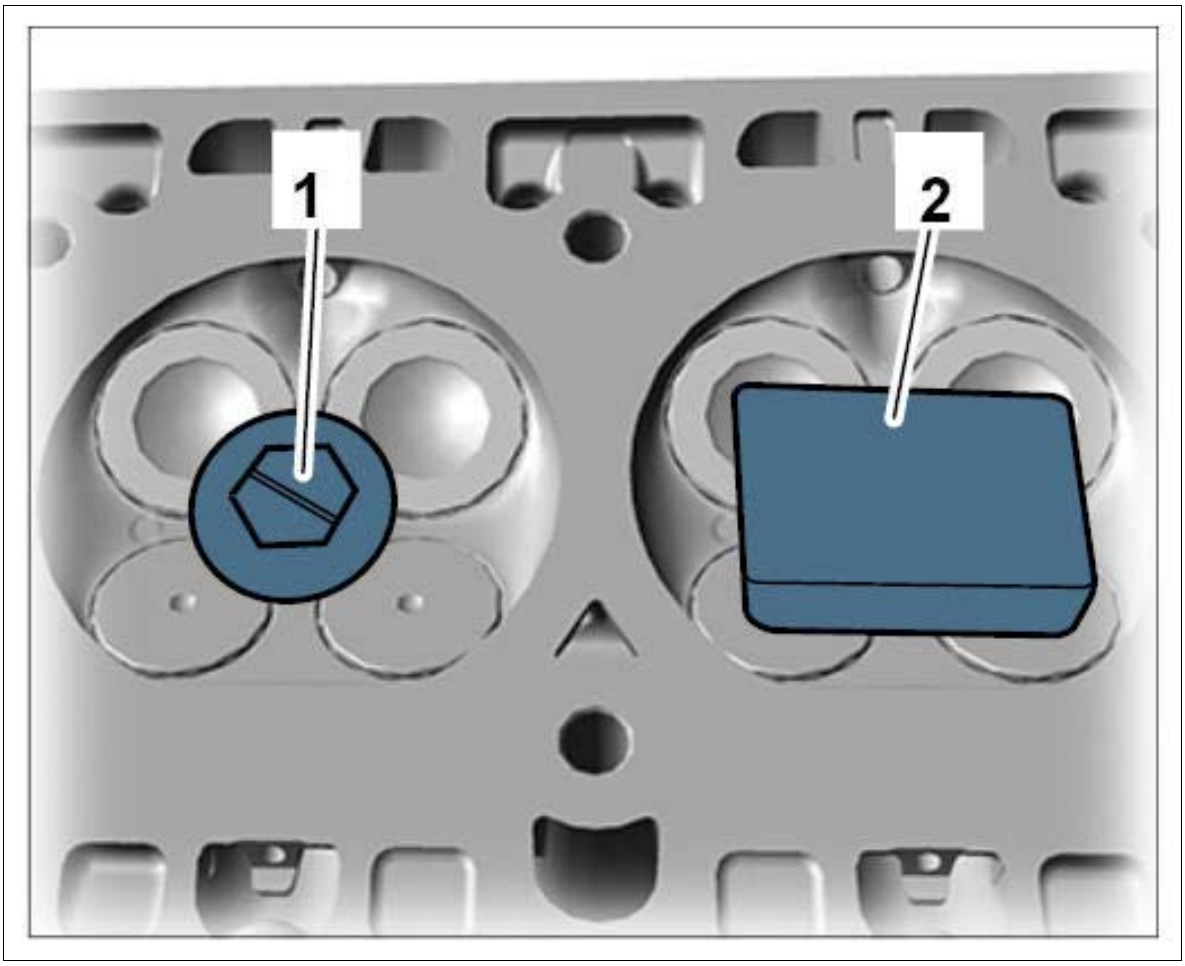

Courtesy of PORSCHE CARS NORTH AMERICA, INC.

6. Replace valve stem seals. For details, → 156355 REPLACING VALVE-STEM SEALS

7. Fit valve springs, concave washers and valve keys. To do this, place valve springs (there are two in the outlet valve in the turbo engine) on the bottom concave washer. Place top concave washer in position.

Information

The mechanic must practise for use of the assembly cartridge to be effective. Some repetitions must be made to ensure that the valve keys are correctly held in place.

8. Insert valve keys into the assembly cartridge.

    1. 8.1. Press the spring washer of the assembly fixture downwards **-1-** and insert the valve keys **-2-** with the narrow end pointing downwards.

Fig 3: Installing Valve Keys In Assembly Fixture

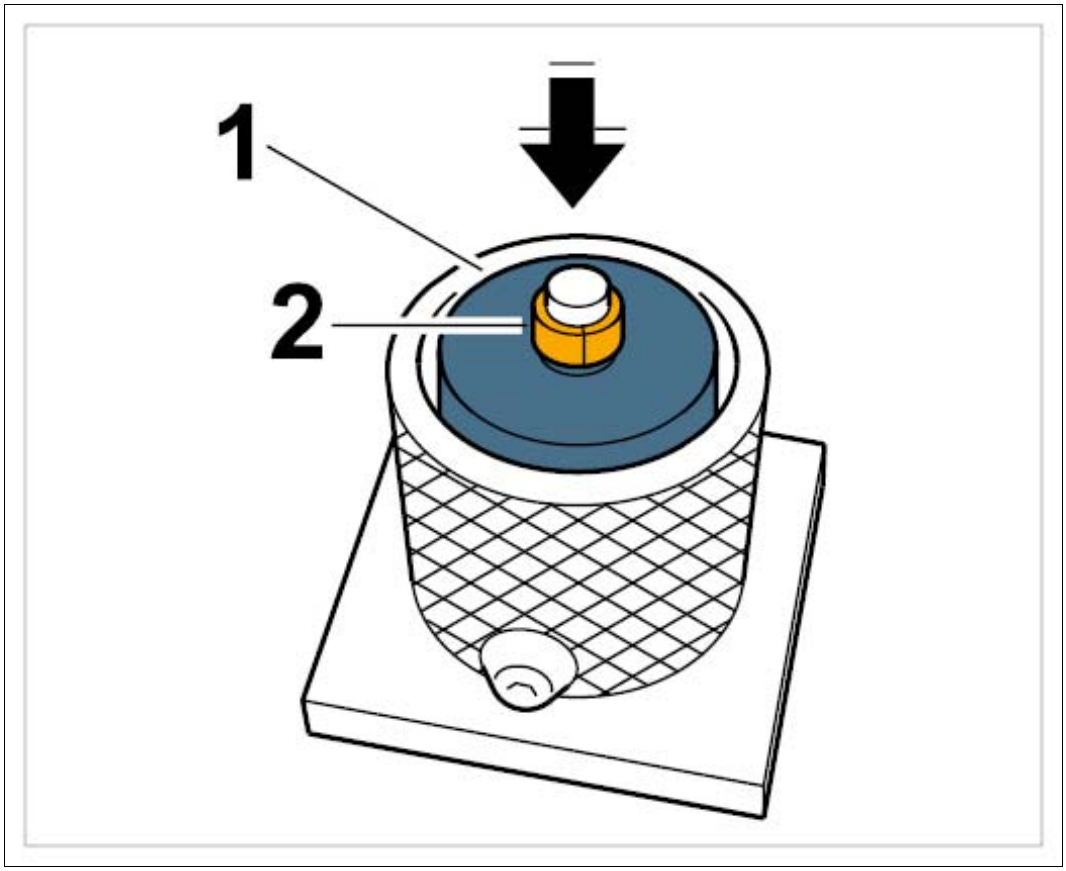

Courtesy of PORSCHE CARS NORTH AMERICA, INC.

2. 8.2. Ensure that the valve keys fit symmetrically and are inserted as far as they will go in the tool. The spring washer automatically locks the valve keys in place.
3. 8.3. Place the assembly cartridge **-2-** onto the center of the assembly fixture. Observe installation position of the valve keys **-1-** .

Fig 4: Identifying Assembly Cartridge

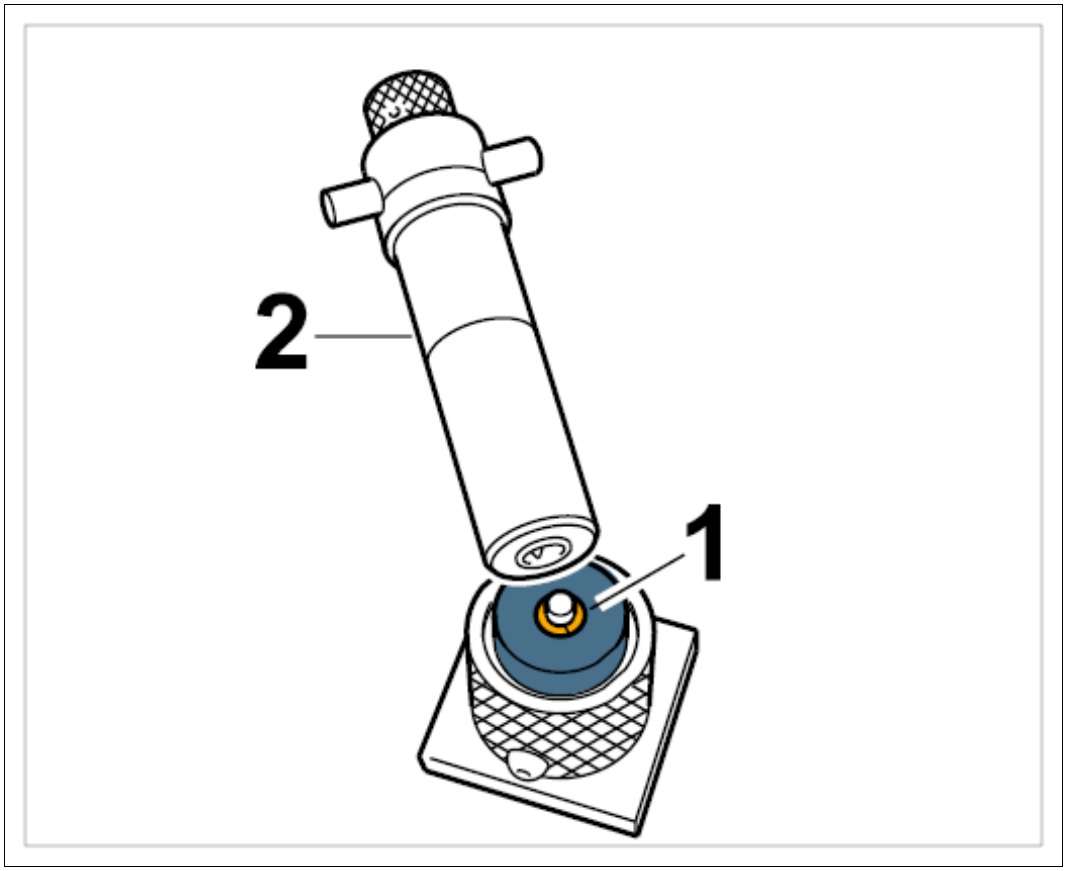

Courtesy of PORSCHE CARS NORTH AMERICA, INC.

4. 8.4. Press the assembly cartridge against the spring force onto the assembly fixture. The knurled screw moves forward. When doing so, turn the knurled screw back and forth until the valve keys snap into place. Repeat as required. → Assembly cartridge with valve keysFig 5

Fig 5: Pressing Assembly Cartridge

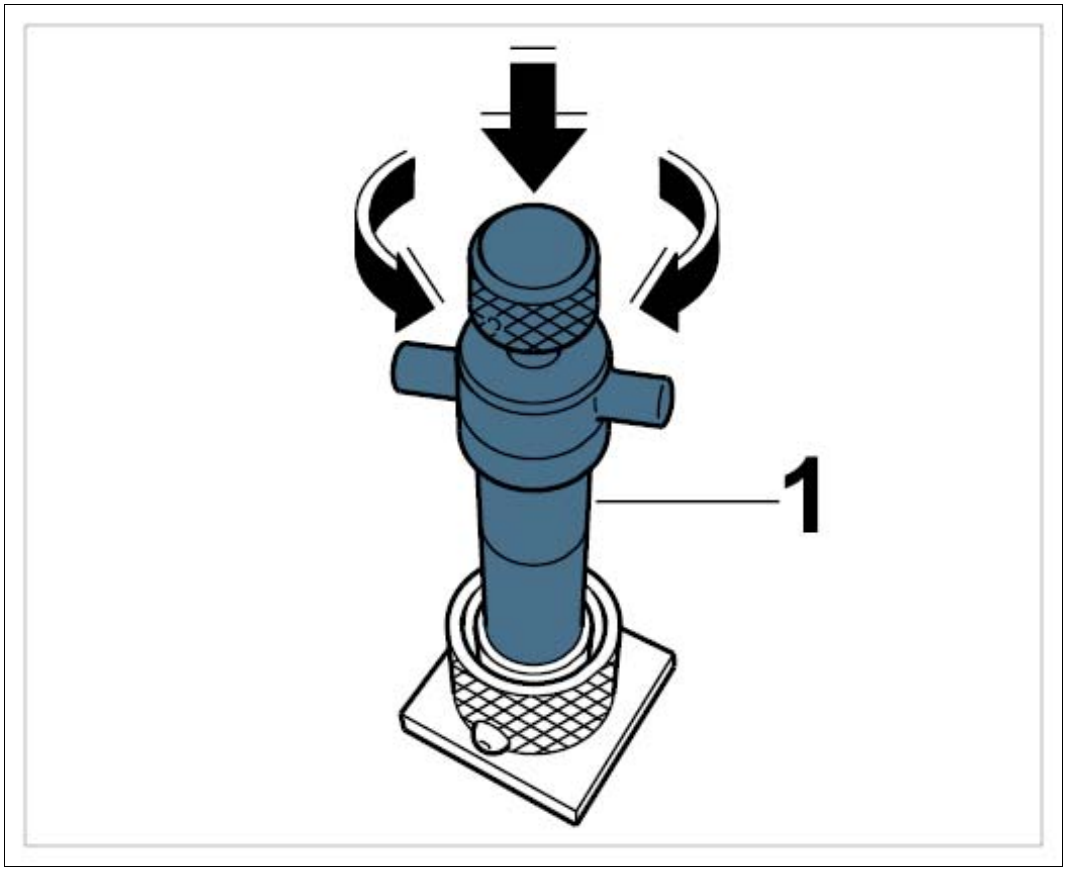

Courtesy of PORSCHE CARS NORTH AMERICA, INC.

5. 8.5. Make sure the valve keys are held symmetrically in place in the assembly cartridge **-1-** .

Fig 6: Identifying Valve Keys Inserted Tool

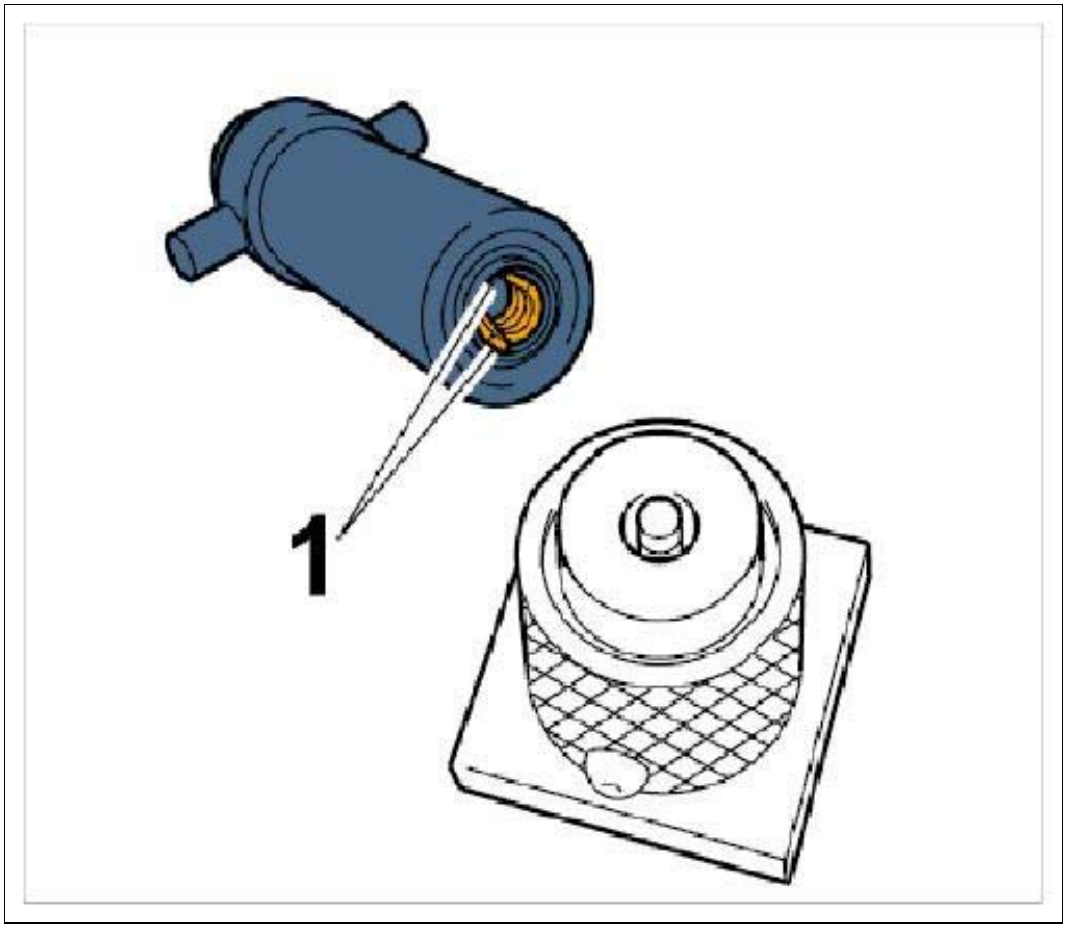

Courtesy of PORSCHE CARS NORTH AMERICA, INC.

9. Place the valve key assembly cartridge onto the cylinder head (same as removal of valve) and position it on the top concave washer.

10. Press assembly cartridge with the lever (assembly bar) against the force of the valve spring and keep it pressed. The knurled screw moves forward. When doing so, turn the knurled screw back and forth until the valve keys snap into place → Installing valve keysFig 7. Repeat as required.

Fig 7: Installing Valve Keys

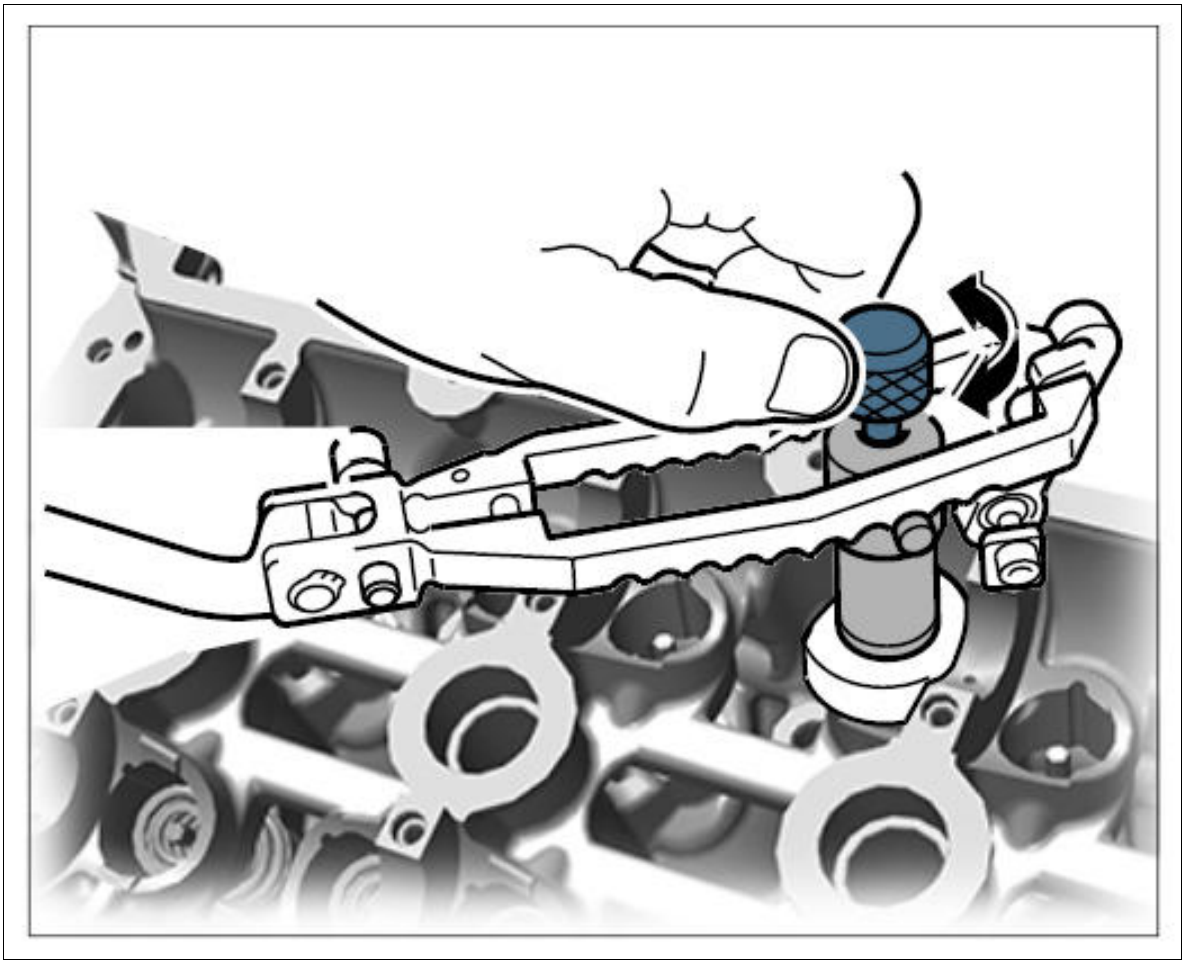

Courtesy of PORSCHE CARS NORTH AMERICA, INC.

11. When installing the valve keys, check that they are positioned correctly.

WM 156120 REMOVING AND INSTALLING VALVES (MACAN S, MACAN TURBO) > SUBSEQUENT WORK

1. Install cylinder head. → INSTALLING CYLINDER HEAD
2. Fit hydraulic tappets. Do not interchange components. → 155920 REMOVING AND INSTALLING VALVE LIFTERS (HYDRAULIC TAPPETS)
3. Install camshafts. → INSTALLING CAMSHAFTS

WM 157019 REMOVING AND INSTALLING CYLINDER HEAD (MACAN) > TOOLS

Designation	Type	Number	Description	

spark plug wrench	VW tool	3122 B		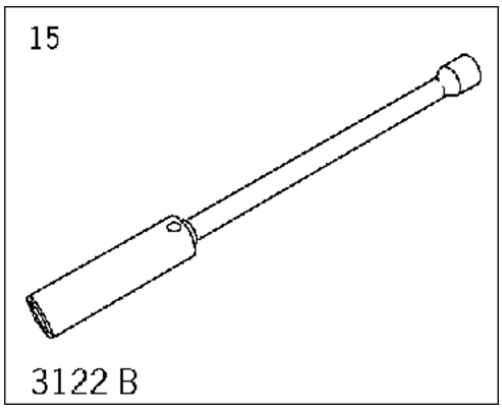
socket-wrench insert, Polydrive	VW tool	T10070		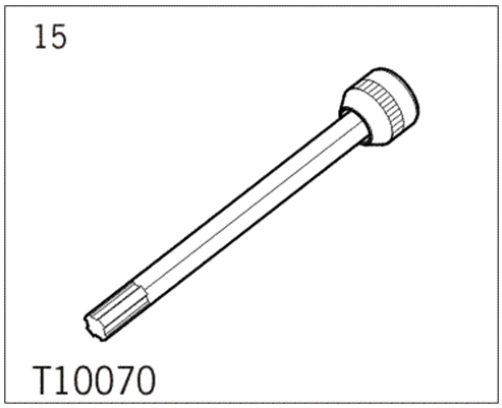
counter-hold tool	VW tool	T10355		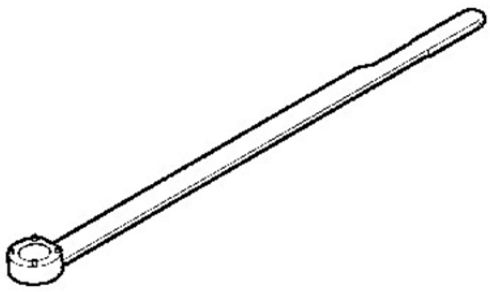

WM 157019 REMOVING AND INSTALLING CYLINDER HEAD (MACAN) > PRELIMINARY WORK

1. Drain coolant. → 193817 DRAINING AND FILLING COOLANT
2. Remove catalytic converter. → 267319 REMOVING AND INSTALLING CATALYTIC CONVERTER
3. Remove camshafts. → 150520 REMOVING AND INSTALLING CAMSHAFTS

WM 157019 REMOVING AND INSTALLING CYLINDER HEAD (MACAN) > REMOVING CYLINDER HEAD

1. Disconnect coolant hose at the rear of the cylinder head at the spring band clamp **-1-** .

Fig 1: Identifying Cylinder Head Spring Band Clamp

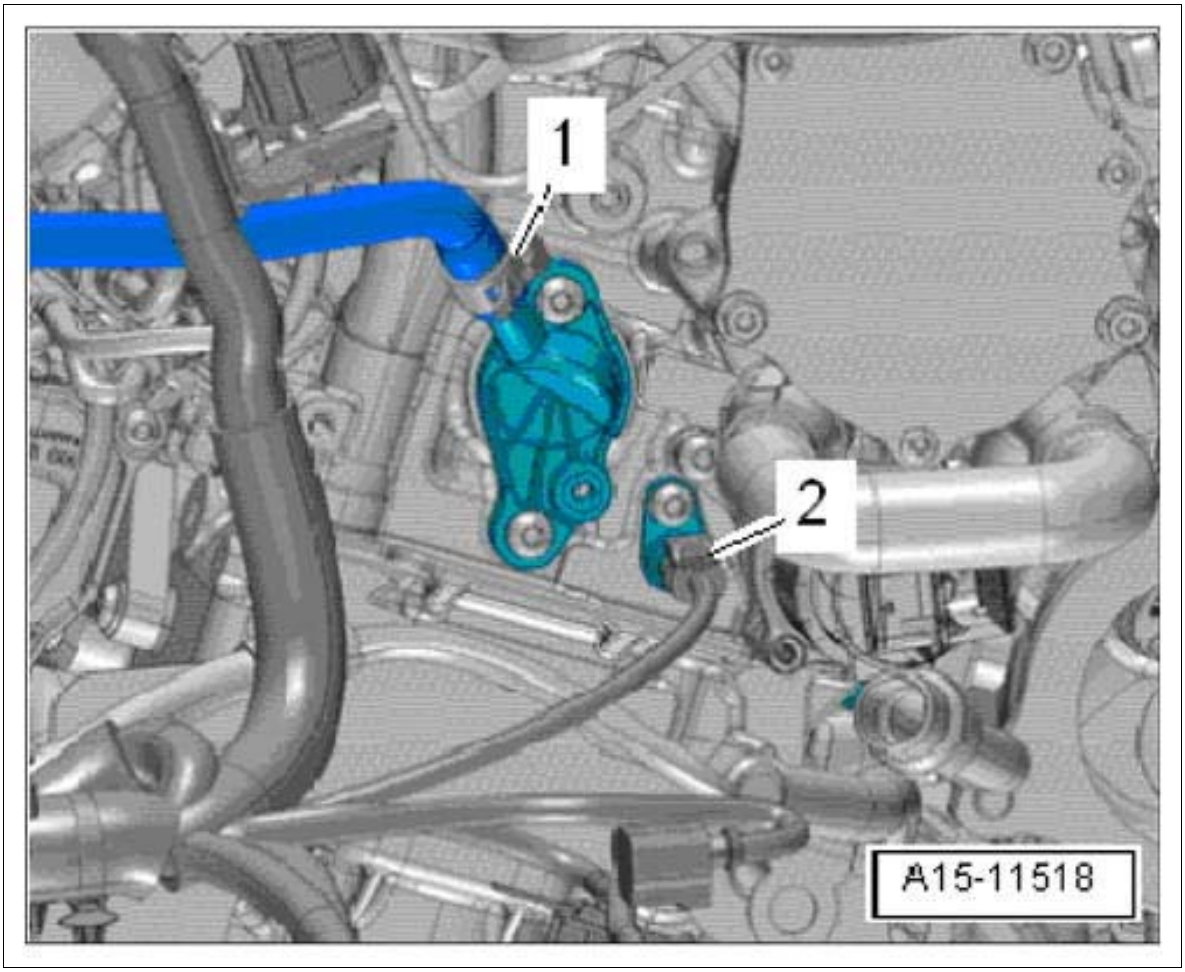

Courtesy of PORSCHE CARS NORTH AMERICA, INC.

2. Disconnect electric plug connection **-2-** for temperature sensor.

Fig 2: Identifying Cylinder Head Electric Plug Connection

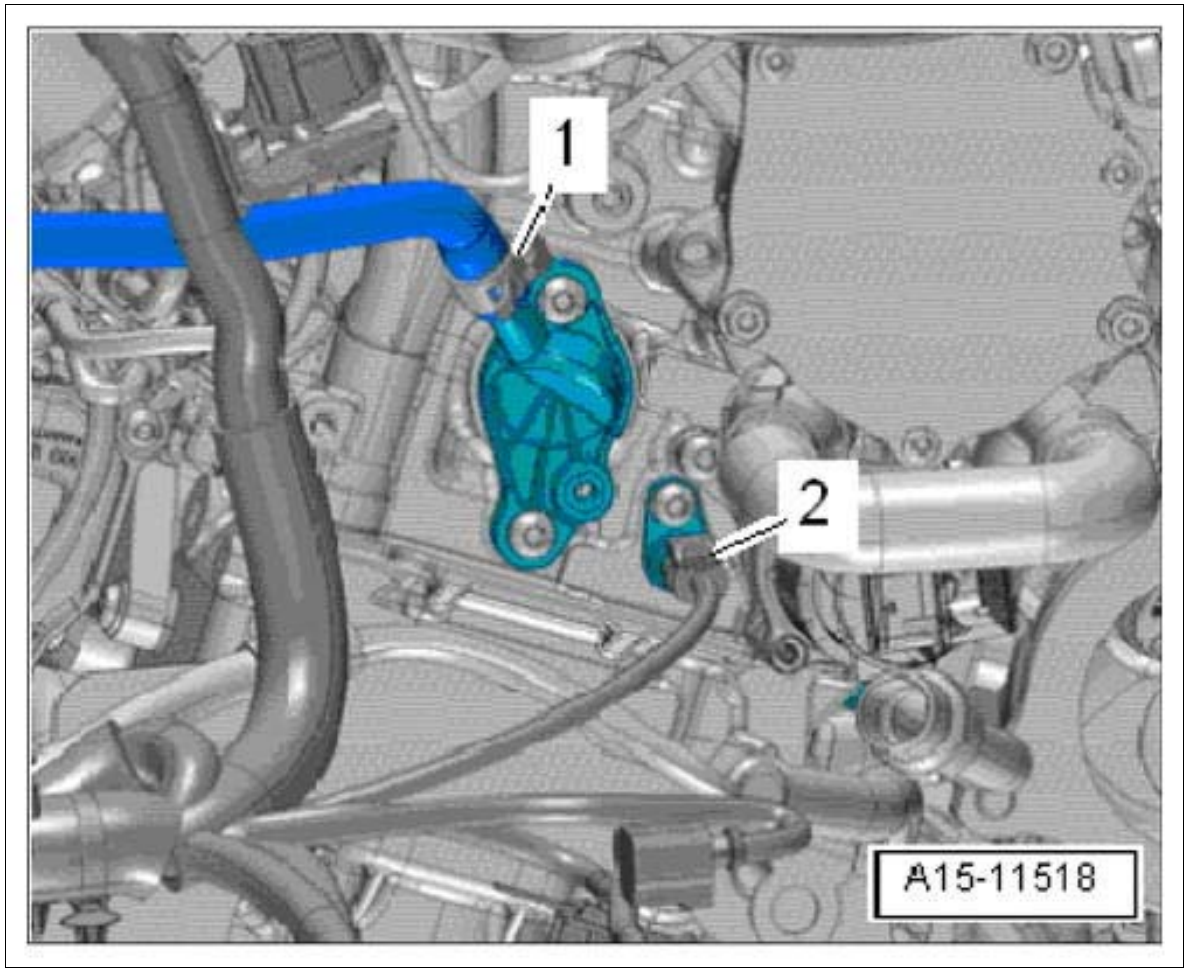

Courtesy of PORSCHE CARS NORTH AMERICA, INC.

3. Loosen fastening screw **-2-** on the turbocharger support by two turns.

Fig 3: Identifying Turbocharger Support Screws

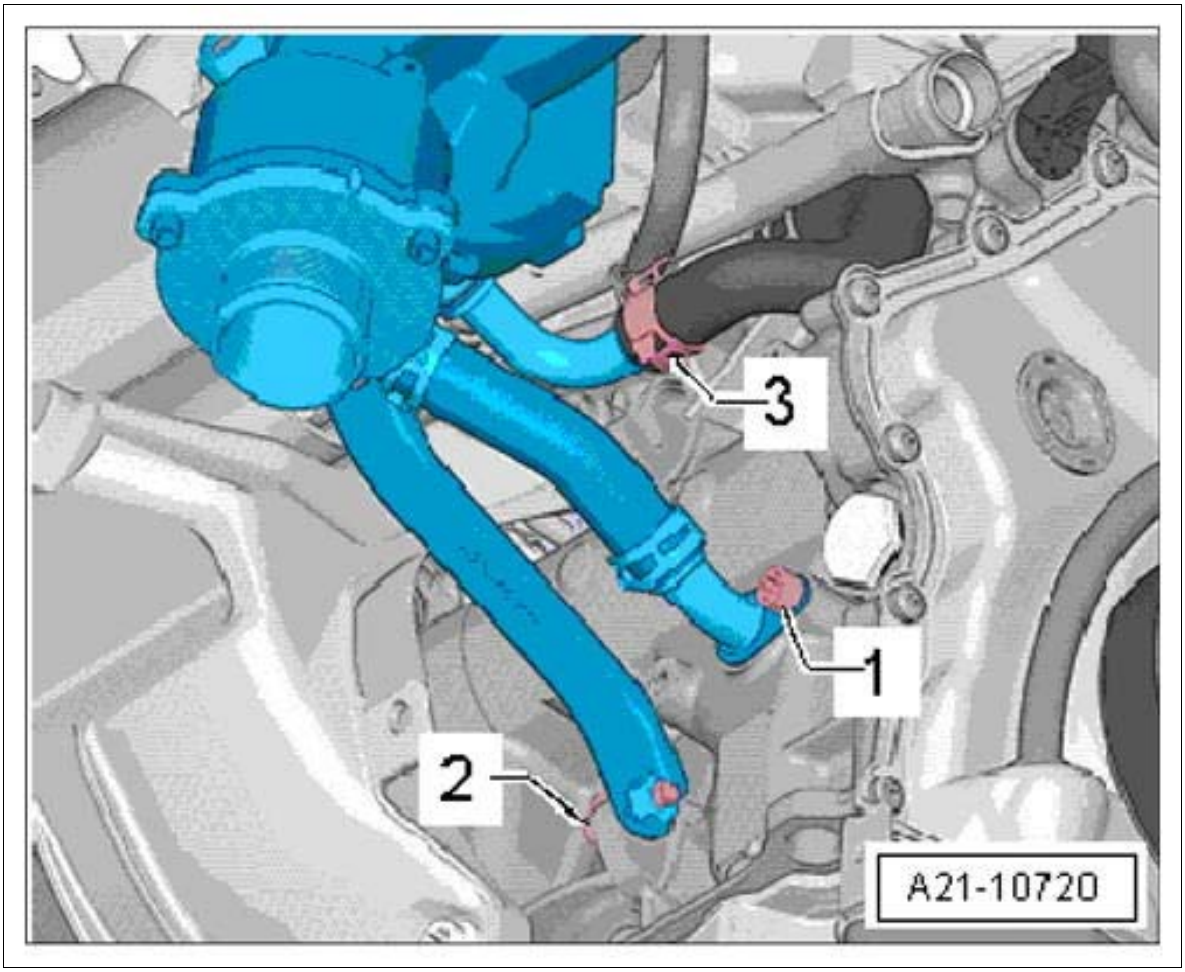

Courtesy of PORSCHE CARS NORTH AMERICA, INC.

4. Unscrew fastening screws **-arrows-** and remove heat shield.

Fig 4: Locating Turbocharger Heat Shield Screws

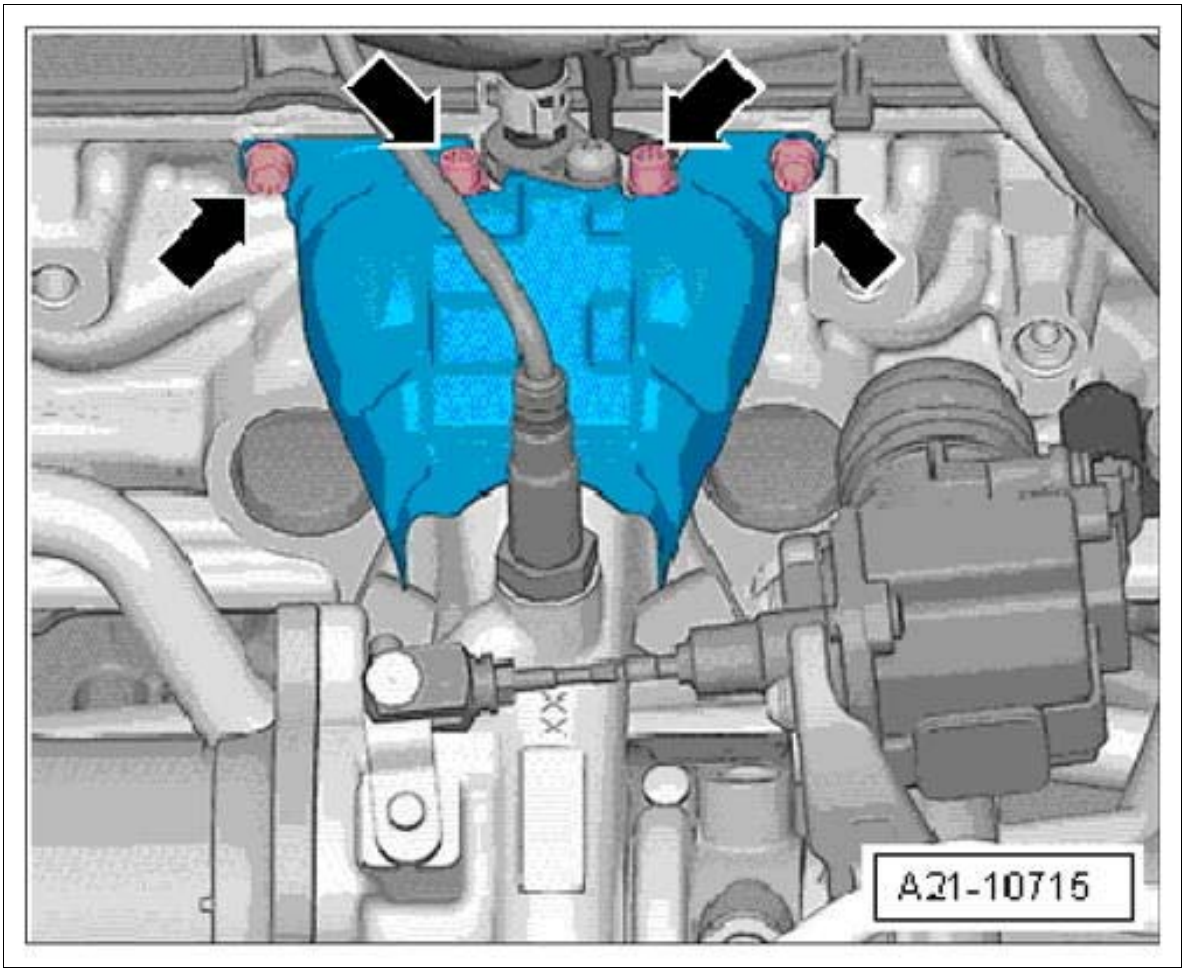

Courtesy of PORSCHE CARS NORTH AMERICA, INC.

5. Unscrew fastening nuts **-arrows-** .

Fig 5: Locating Turbocharger Nut

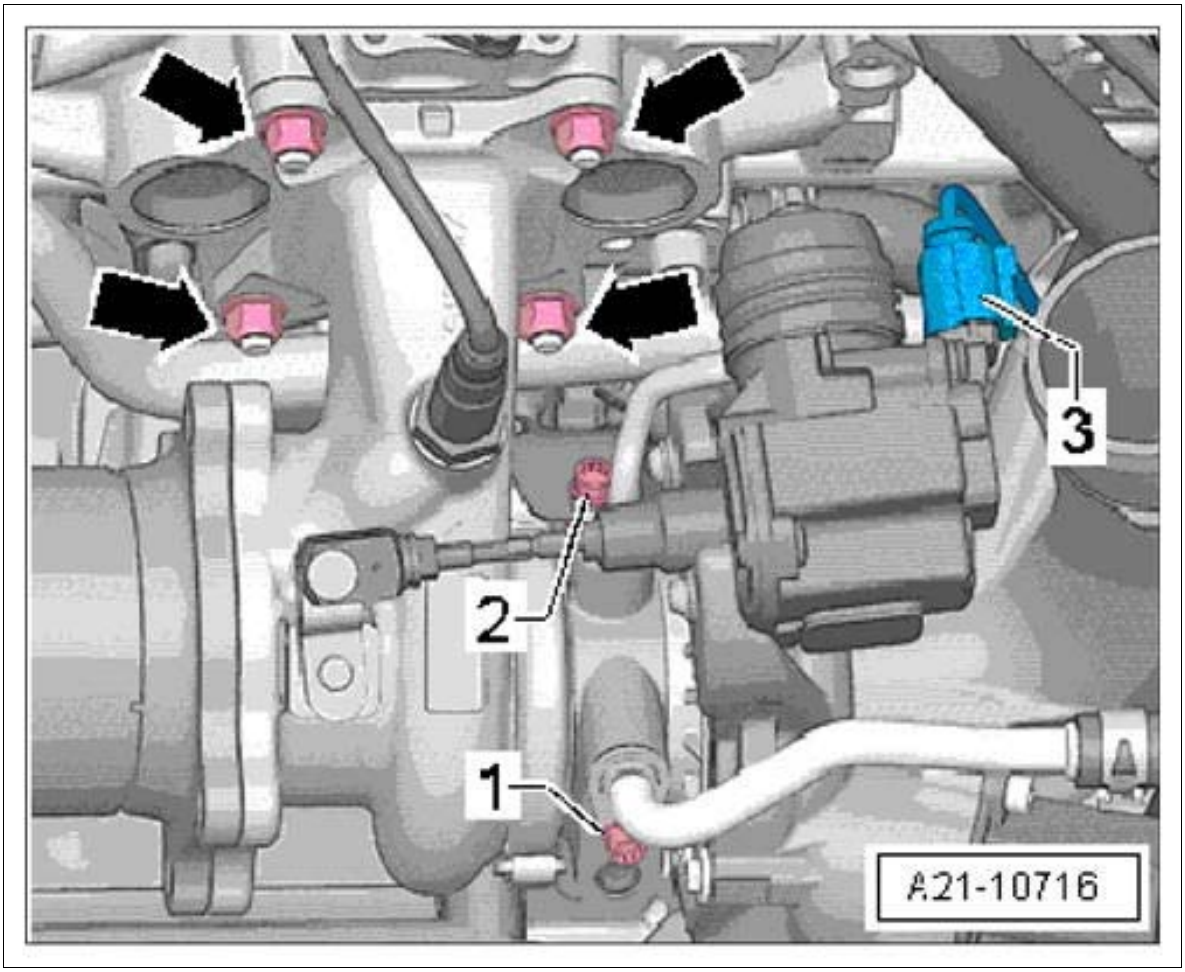

Courtesy of PORSCHE CARS NORTH AMERICA, INC.

6. Pull turbocharger off the studs in **-direction of arrow-** .

Fig 6: Loosening Turbocharger

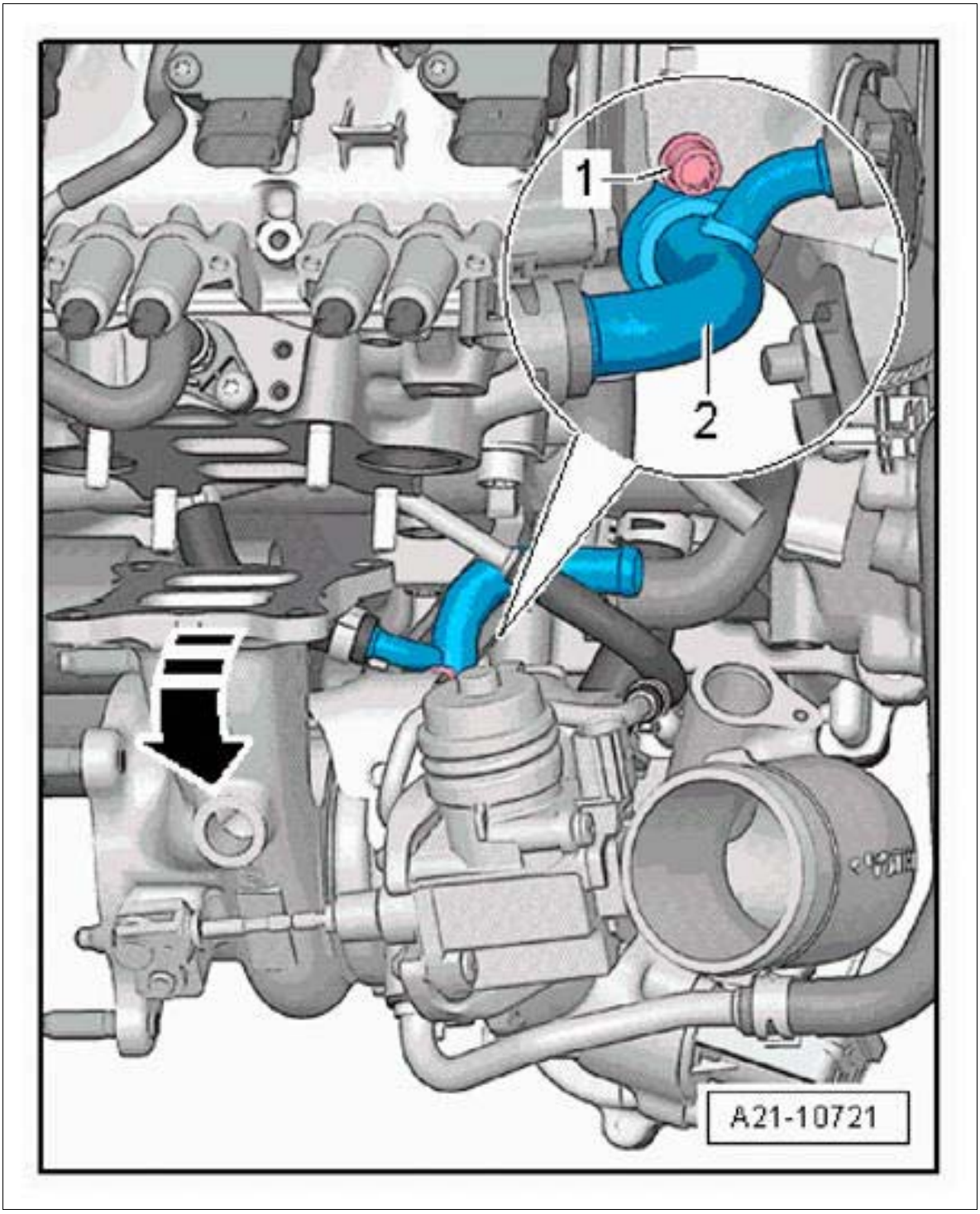

Courtesy of PORSCHE CARS NORTH AMERICA, INC.

7. Loosen screw-type clamps **-arrows-** and remove molded hose.

Fig 7: Removing Intake Manifold Molded Hose

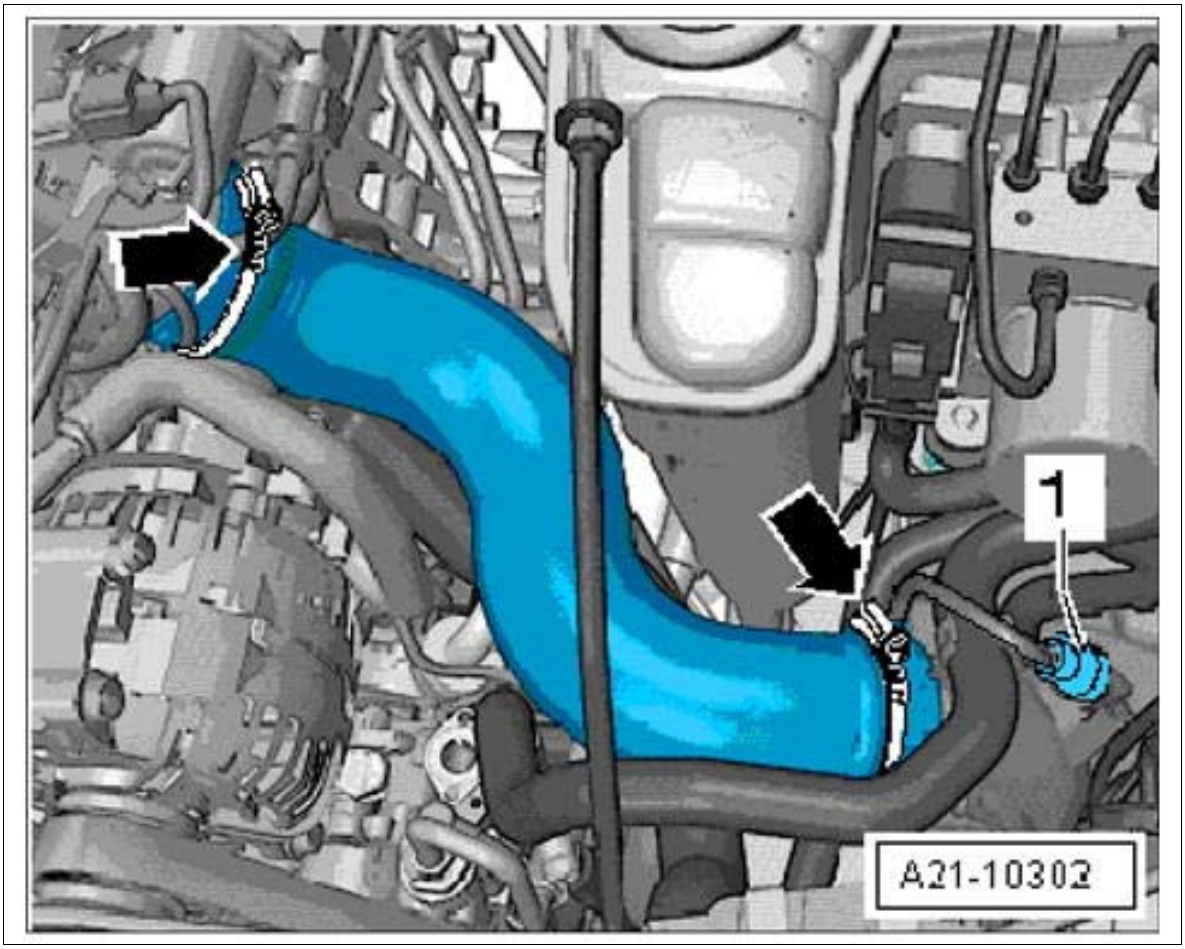

Courtesy of PORSCHE CARS NORTH AMERICA, INC.

8. Disconnect electric plug connections **-2...6-** and expose lines.

Fig 8: Locating Electric Plug Connections

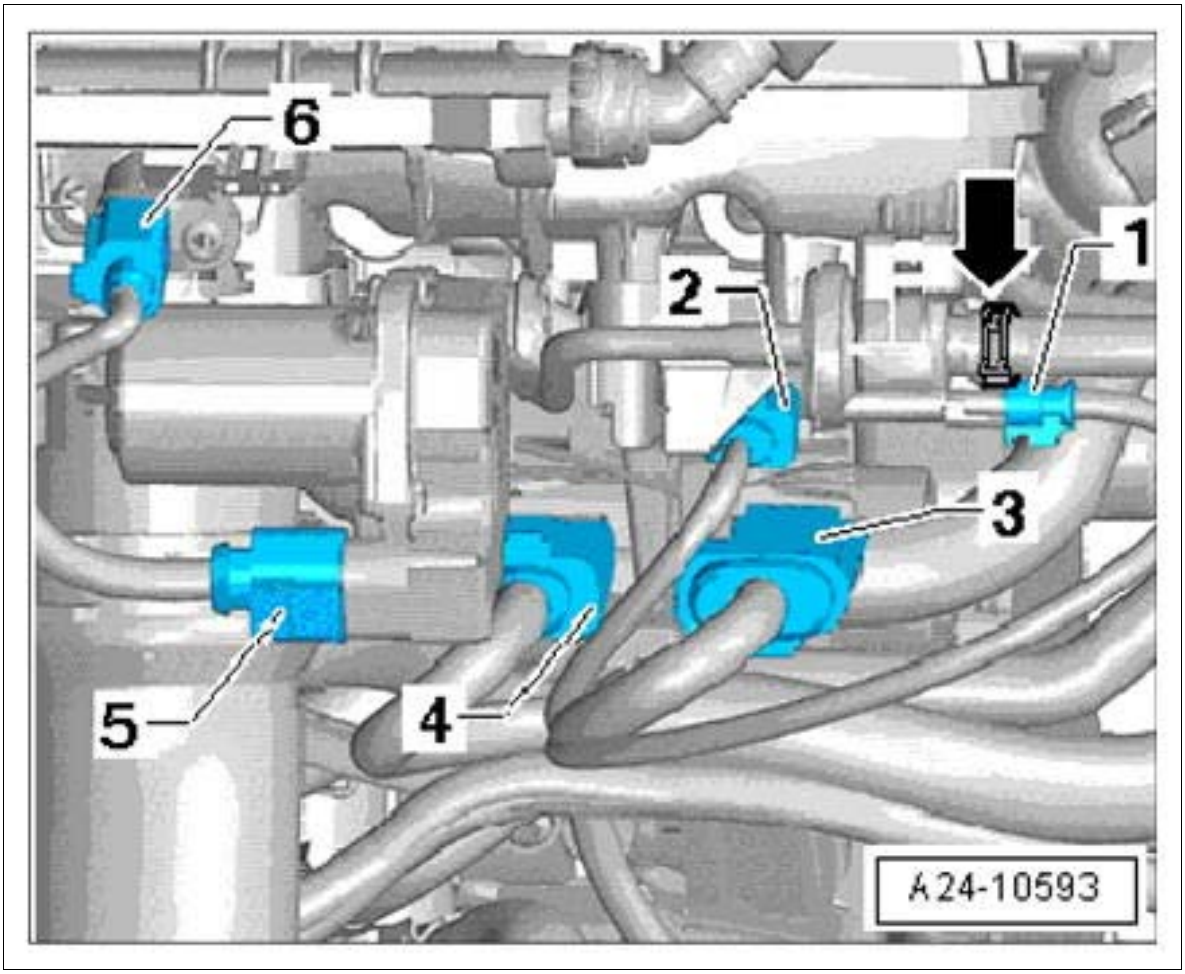

Courtesy of PORSCHE CARS NORTH AMERICA, INC.

9. Disconnect electric plug connection **-1-** on the oil pressure switch.

Fig 9: Locating Oil Pressure Switch

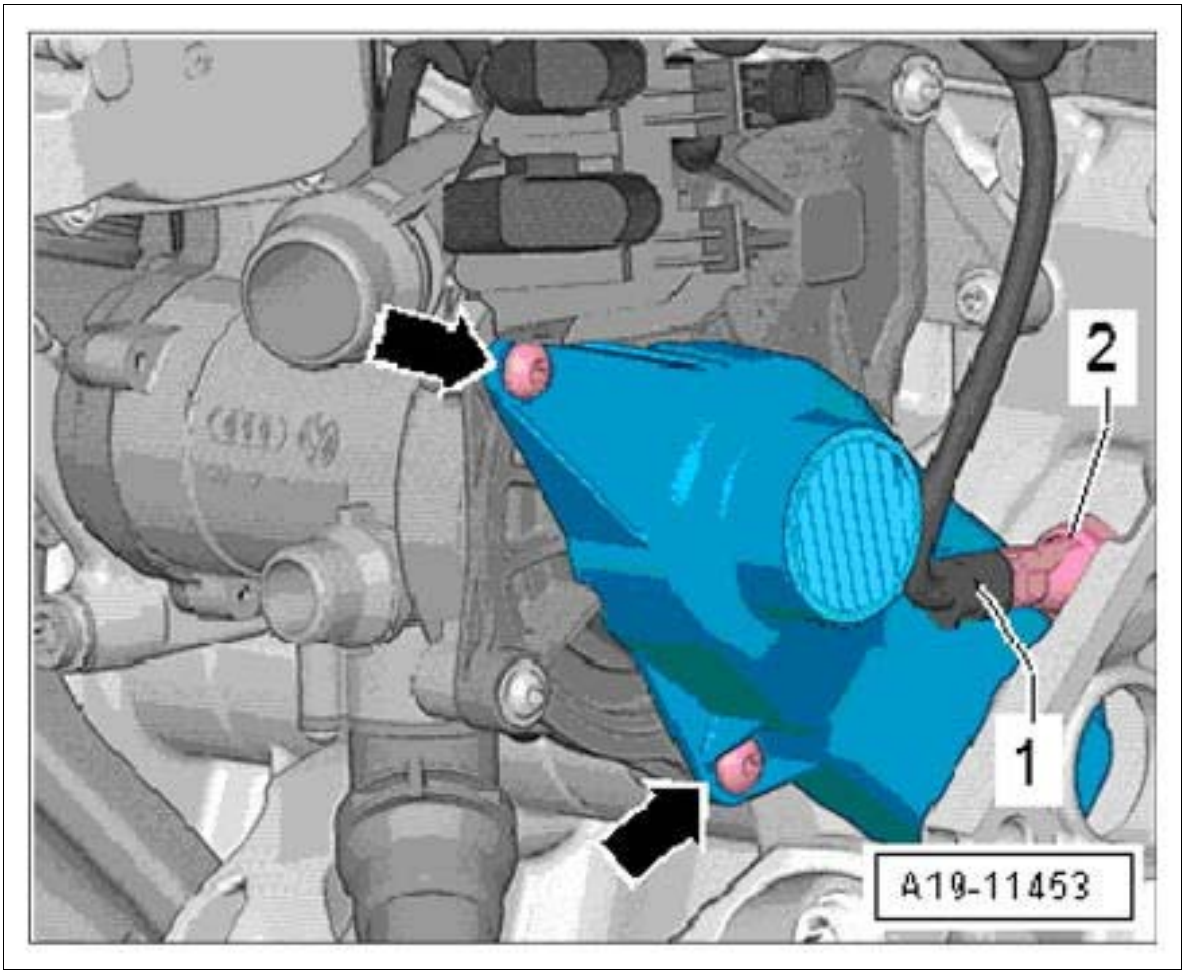

Courtesy of PORSCHE CARS NORTH AMERICA, INC.

10. Unscrew fastening screw **-1-** and remove holder for coolant line.

Fig 10: Identifying Coolant Line Holder Screws

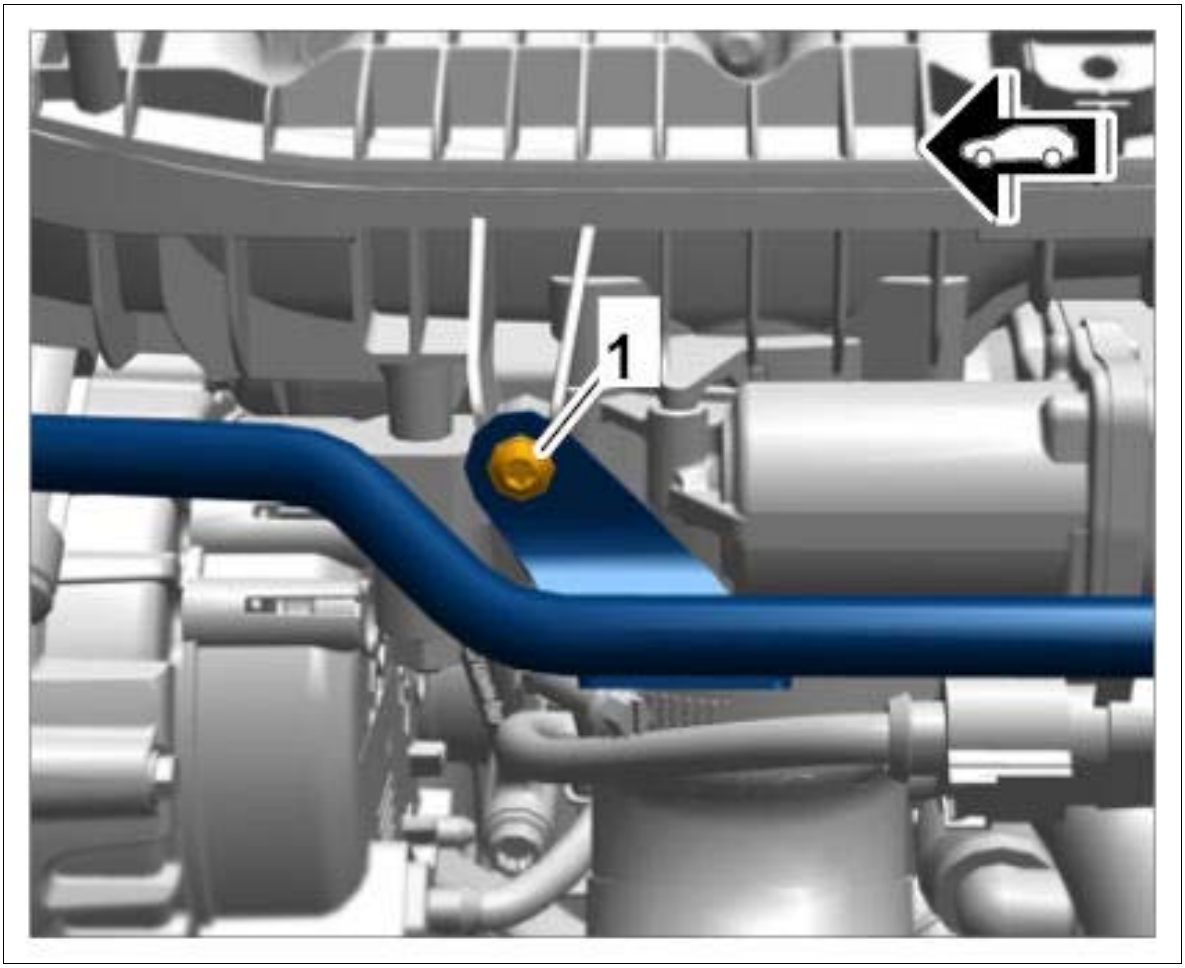

Courtesy of PORSCHE CARS NORTH AMERICA, INC.

11. Unscrew fastening screw **-2-** , screw off fastening nut **-1-** and remove support for intake manifold.

Fig 11: Identifying Intake Manifold Support

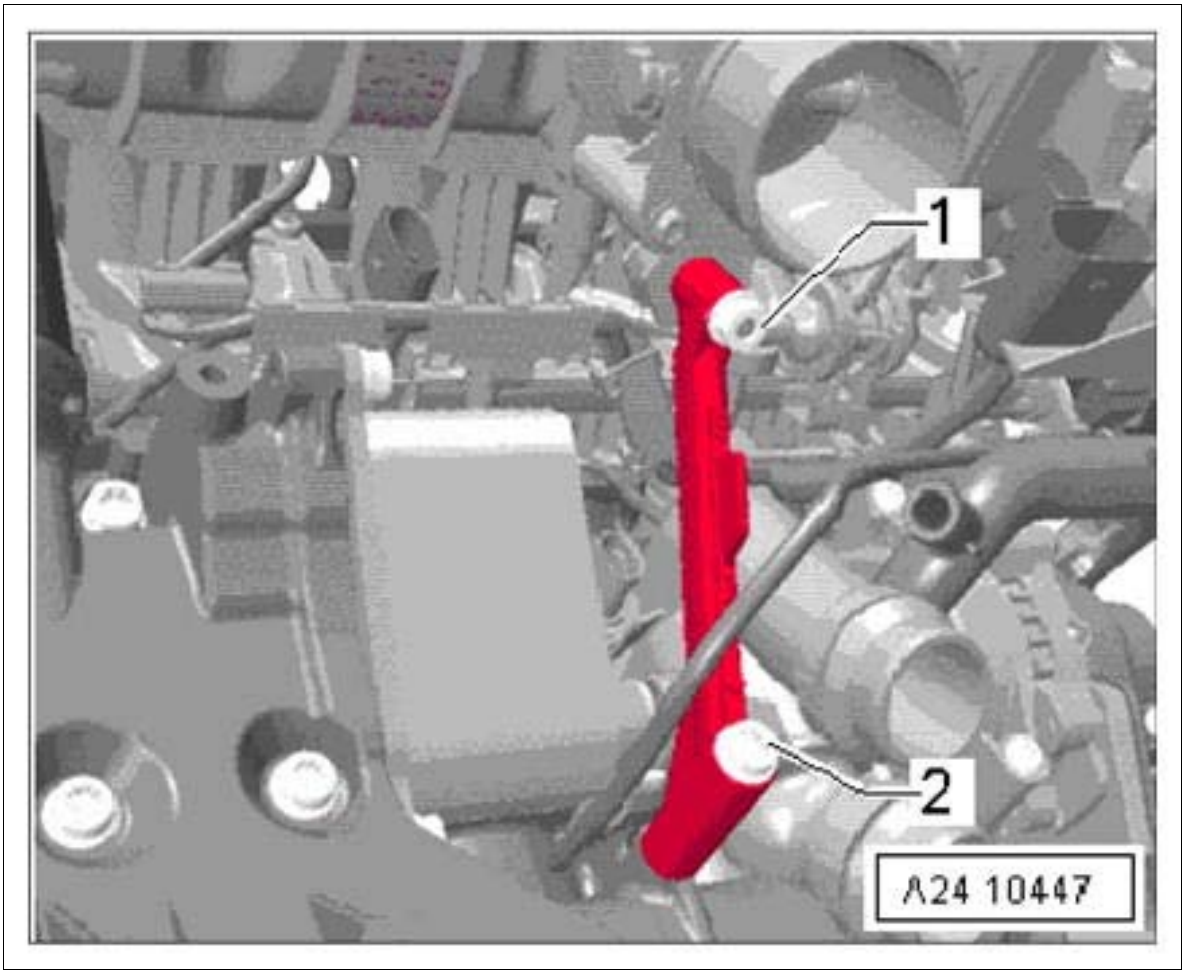

Courtesy of PORSCHE CARS NORTH AMERICA, INC.

12. Disconnect electric plug connection **-1, 3 and 5-** .

Fig 12: Identifying Oil Pressure Switch Electric Plug Connections

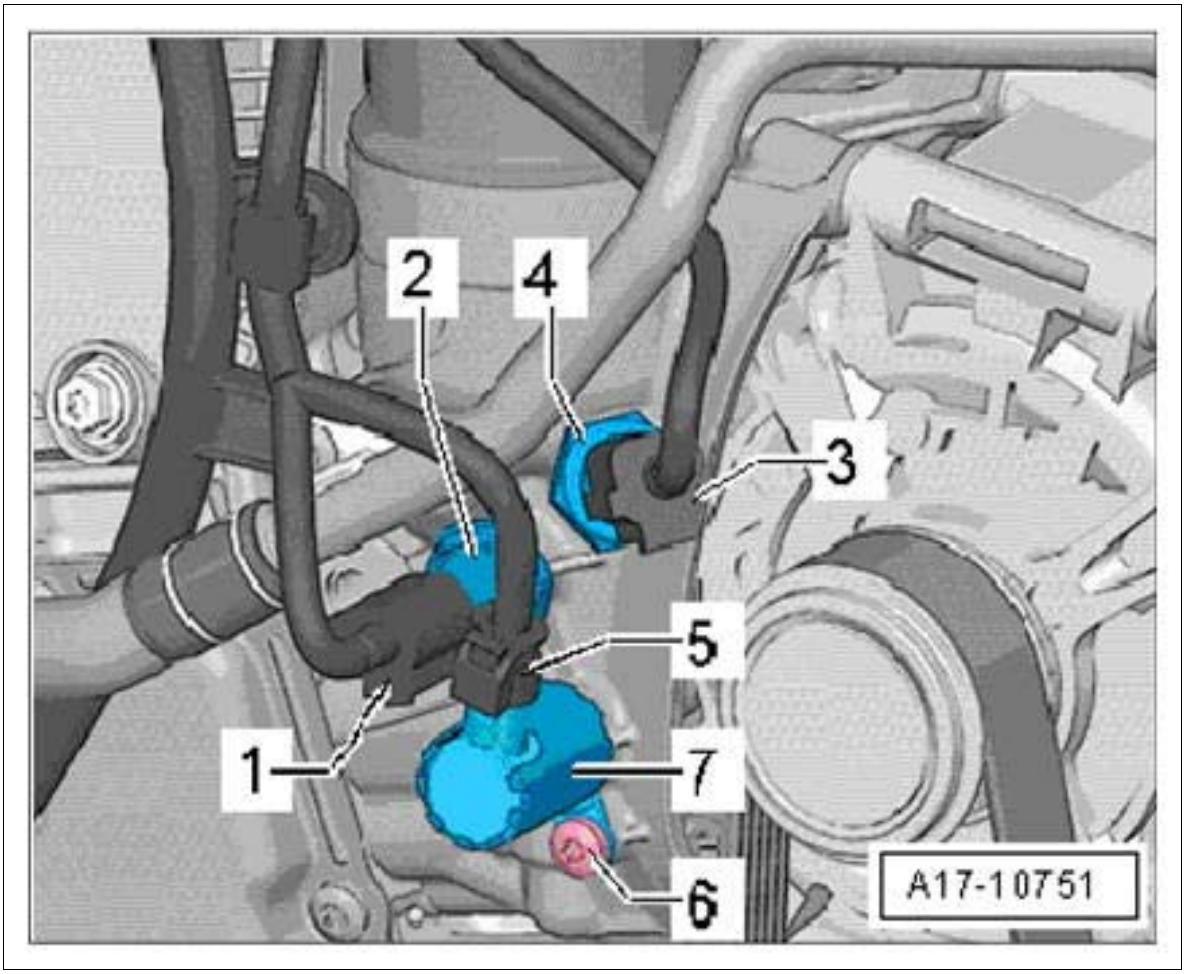

Courtesy of PORSCHE CARS NORTH AMERICA, INC.

13. Remove spark plugs using **spark plug wrench 3122 B** .

    Information

    1. Be careful of the tensioning and guide rails when lifting off the cylinder head.
    2. Check that all lines and cables are disconnected.

14. Remove cylinder head.

    1. 14.1. Unscrew fastening screws **-arrows-** .
    2. 14.2. Unscrew fastening screws **-1...10-** for cylinder head using **socket-wrench insert, Polydrive T10070.**

       Observe the sequence -1...10-.
    3. 14.3. Remove cylinder head and place it on a soft surface.

Fig 13: Cylinder Head Screws Loosening Sequence

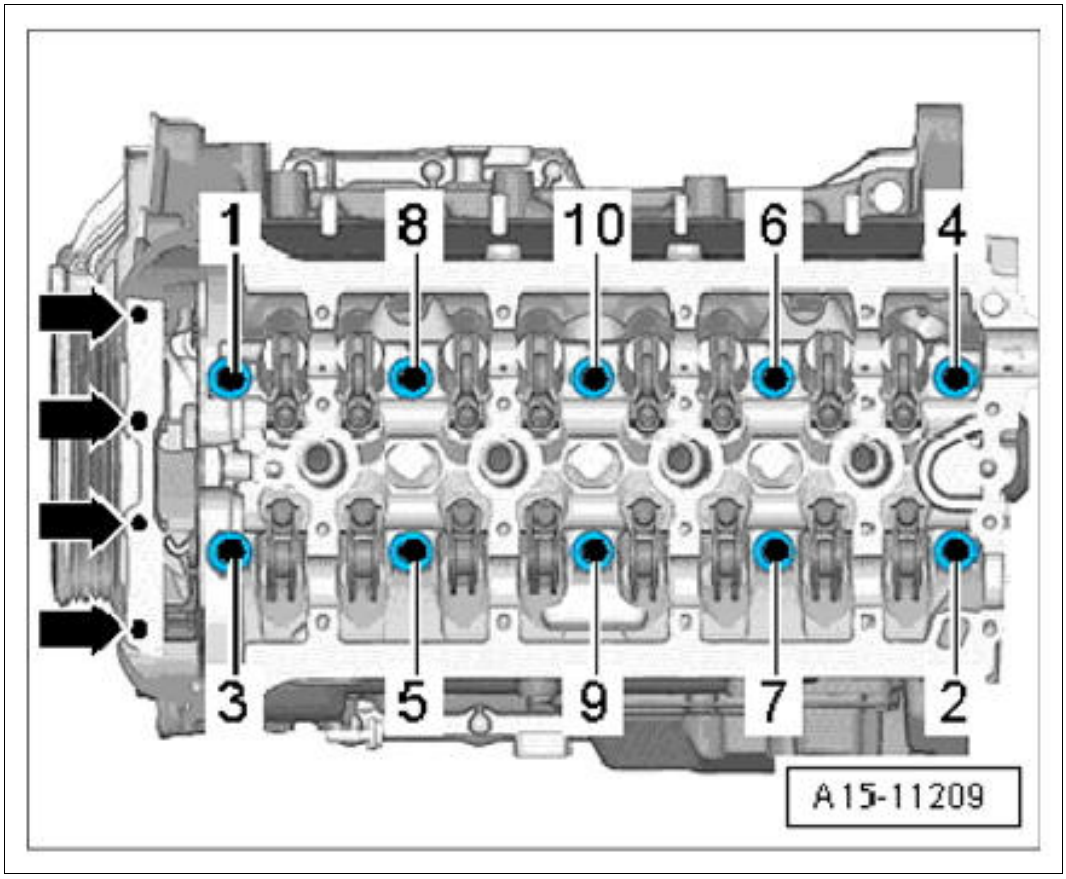

Courtesy of PORSCHE CARS NORTH AMERICA, INC.

15. Check the cylinder head for distortion at several places using a straight-edge. → Measuring distortion on cylinder head

    1. Maximum permitted distortion: 0.05 mm

Fig 14: Measuring Cylinder Head Distortion

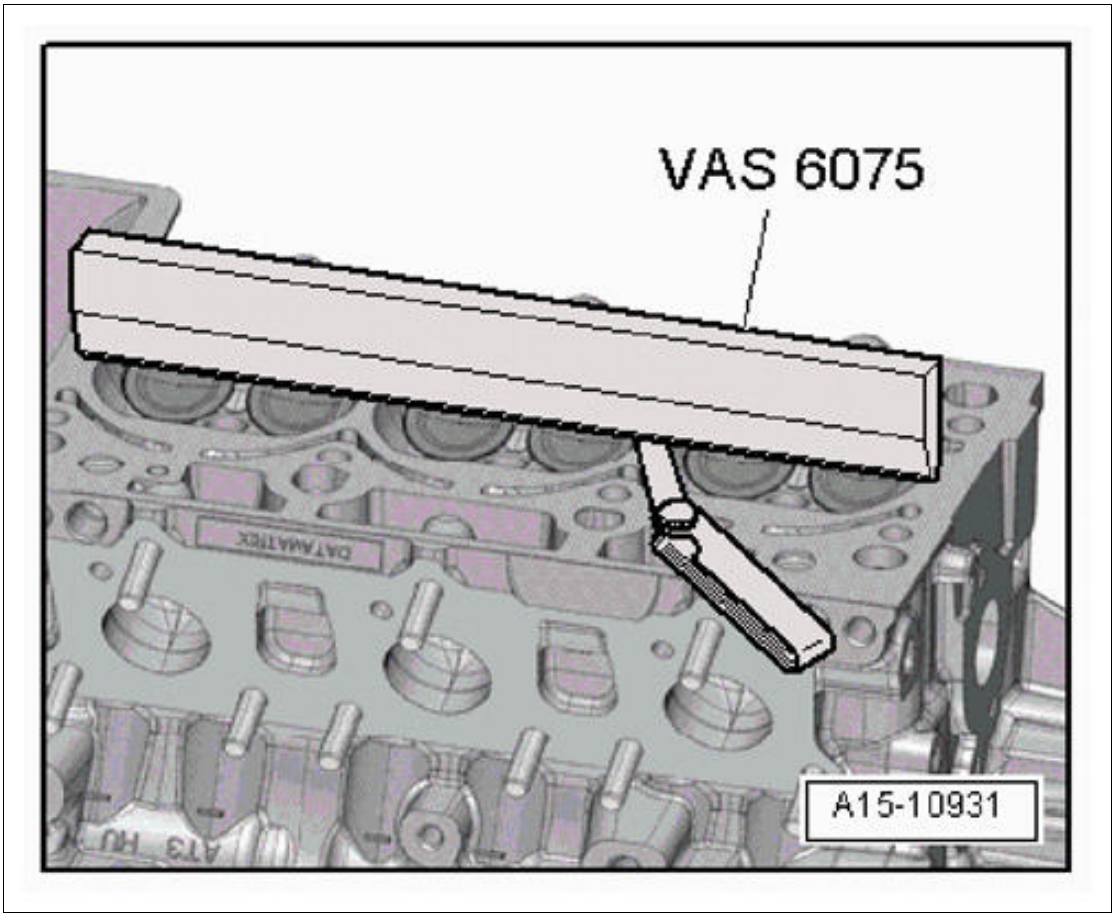

Courtesy of PORSCHE CARS NORTH AMERICA, INC.

WM 157019 REMOVING AND INSTALLING CYLINDER HEAD (MACAN) > INSTALLING CYLINDER HEAD

NOTE: Risk of damage if components are not cleaned and handled correctly when fitting the cylinder head.

- *Risk of damage to sealing faces.*
- *Risk of damage to the crankcase.*
- *Risk of leaks at the cylinder-head gasket.*
- *Risk of damage to open valves.*
- *Risk of damage to valves and piston crowns after working on the valve drive.*

→ Carefully remove any residual sealant from the cylinder head and crankcase. Make sure there are no long scores or scratches.

→ Carefully remove lubricating gel and sanding residues.

→ There must be no oil or coolant in the blind holes for the cylinder-head fastening screws in the crankcase.

→ To prevent damage to the silicone layer and seam area of the cylinder-head gasket, do not remove the new cylinder head-gasket from its packaging until just before installation and handle with extreme care.

→ If you are using a replacement head, do not remove the plastic socket used to protect the open valves until just before you install the cylinder head.

→ To prevent valve problems when starting the engine, carefully turn the engine with your hand for at least two turns.

Information

- If you are installing a replacement cylinder head, the contact surfaces between the hydraulic compensating elements, rocker arms and running surfaces of cams must be oiled before installing the cylinder head cover.
- If you are replacing the cylinder head or cylinder-head gasket, change the coolant and engine oil.
- Replace screws that are tightened to an additional torque angle.
- Replace self-locking nuts as well as sealing rings, seals and O-rings.
- Note the different sealants for sealing surfaces and cylinder head screws .
- Secure all hose connections with standard hose clamps .

1. Fit cylinder head.

    1. 1.1. **Fit new** cylinder-head gasket. **Check installation position of cylinder-head gasket** .
    2. 1.2. Check centering pins **-arrows-** in the cylinder block.
    3. 1.3. Fit cylinder head.

Fig 1: Locating Cylinder Block Centering Pins

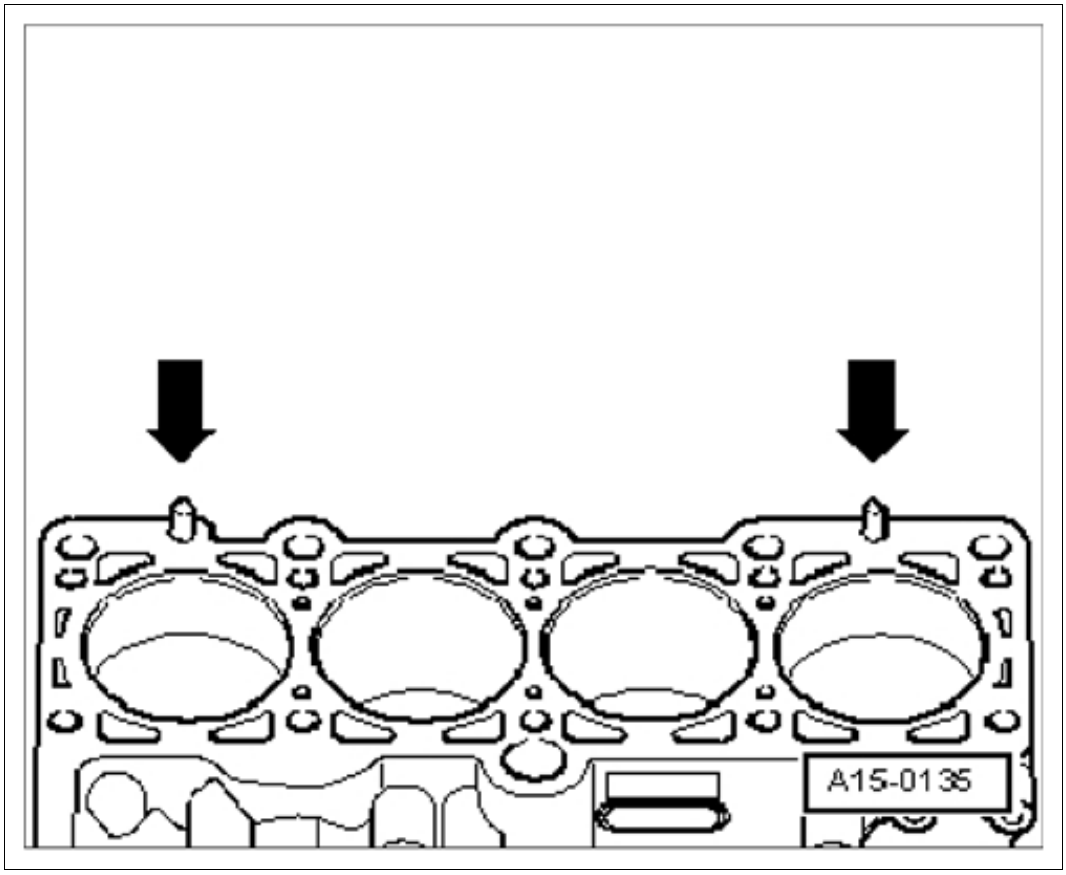

Courtesy of PORSCHE CARS NORTH AMERICA, INC.

2. **Fit new** cylinder head screws and tighten hand-tight.
3. Tighten cylinder head screws using **socket-wrench insert, Polydrive T10070** in the sequence **-1...10-** .
    1. **Tighten new** cylinder head screws **-arrows-** .

Fig 2: Cylinder Head Screws Tightening Sequence

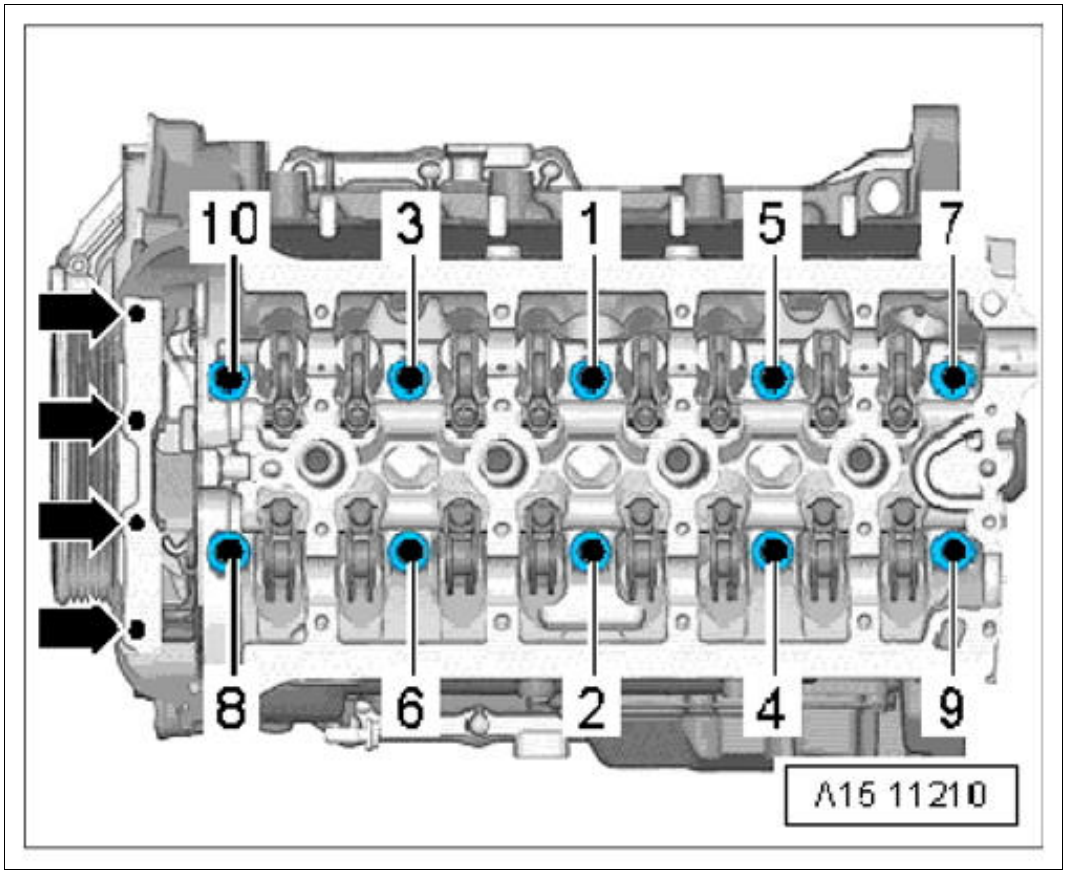

Courtesy of PORSCHE CARS NORTH AMERICA, INC.

4. Use **counter-hold tool T10355** to turn the pulley to **TDC** position.

   The notch **-arrow-** on the pulley and the marking on the chain housing cover must be opposite each other.

Fig 3: Identifying TDC Marking On Pulley

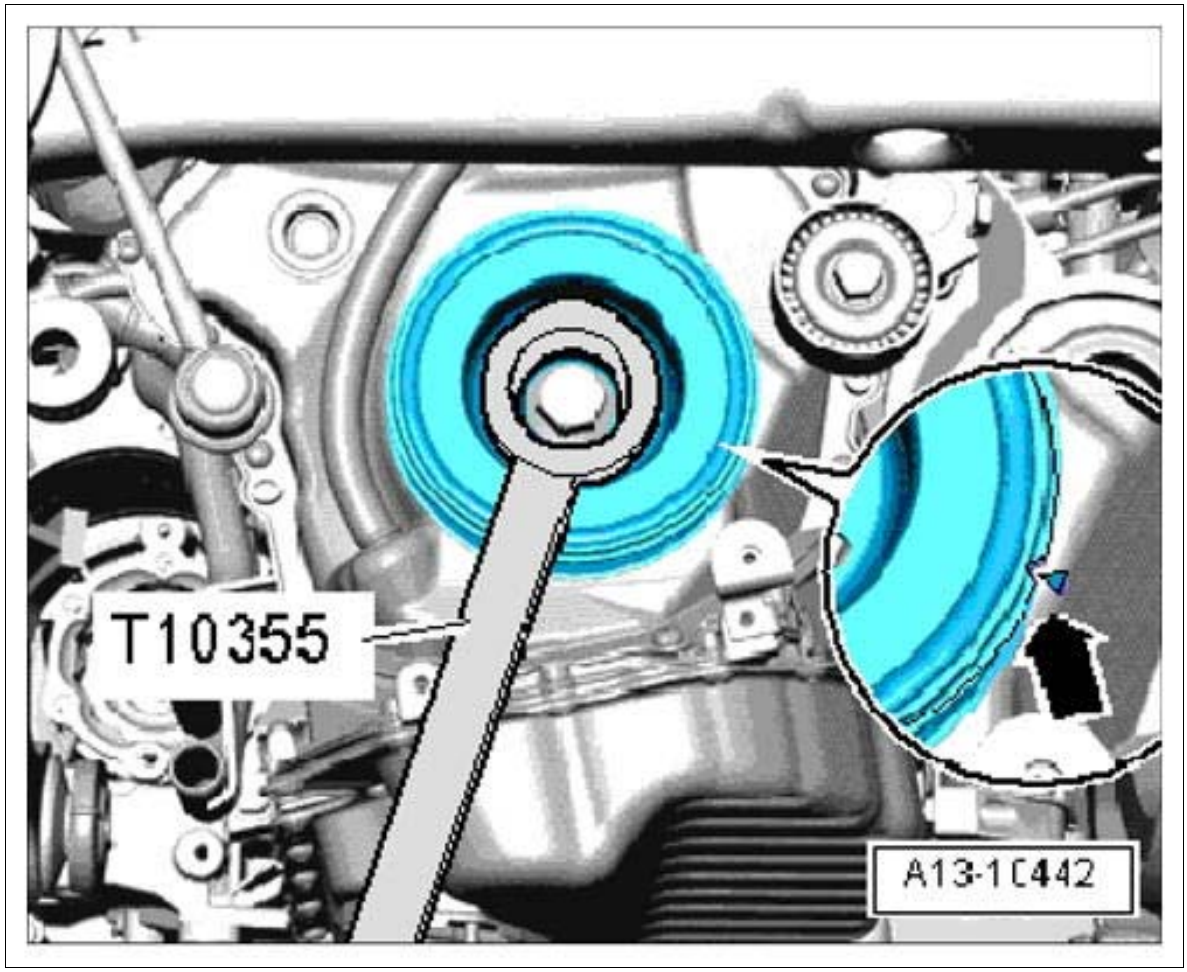

Courtesy of PORSCHE CARS NORTH AMERICA, INC.

5. Connect electric plug connections **-1, 3 and 5-** .

Fig 4: Identifying Oil Pressure Switch Electric Plug Connections

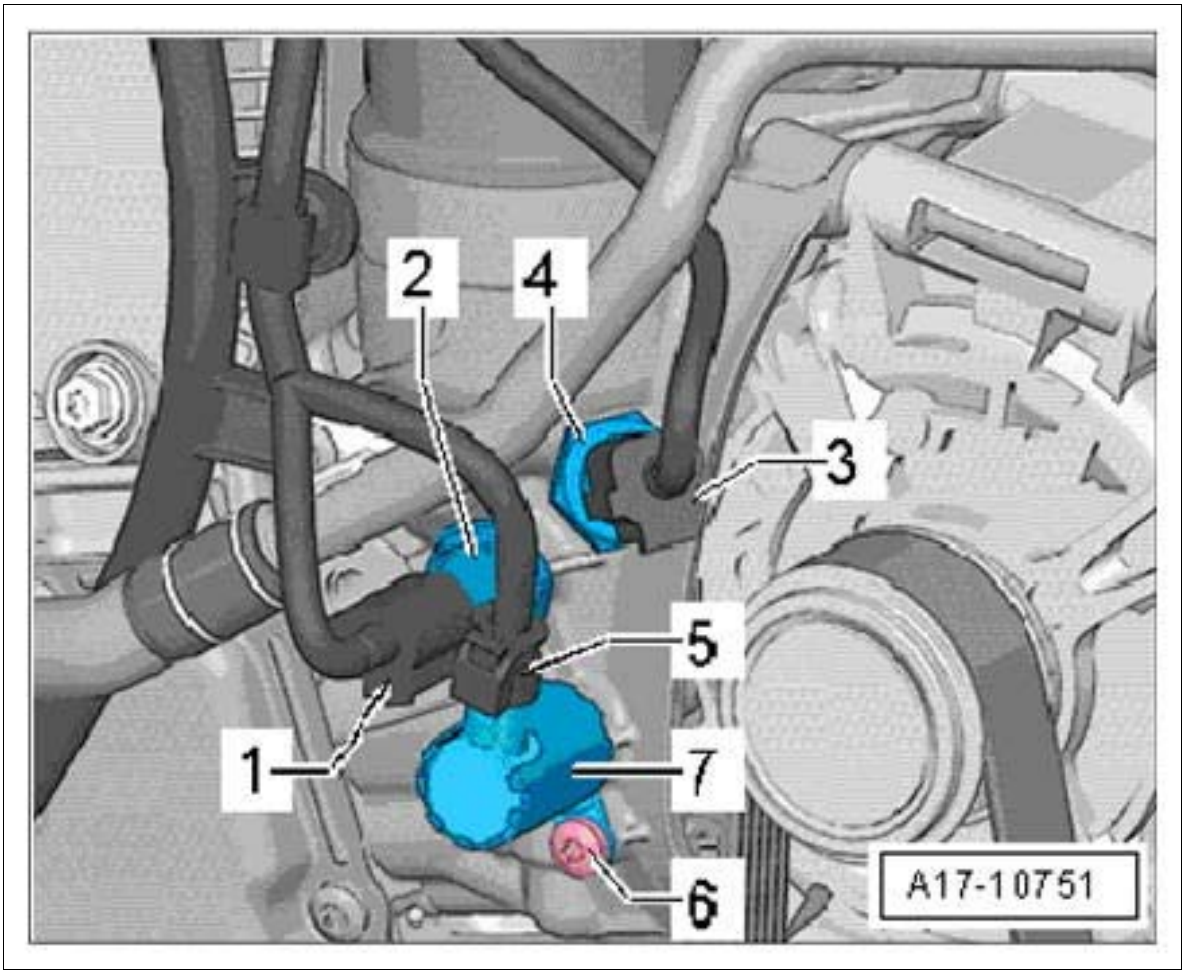

Courtesy of PORSCHE CARS NORTH AMERICA, INC.

6. Install support for intake manifold.
    1. 6.1. Position support and fit fastening nut **-1-** .
    2. 6.2. Fit and tighten fastening screw **-2-** .
    3. 6.3. Tighten fastening nut **-1-** .

Fig 5: Identifying Intake Manifold Support

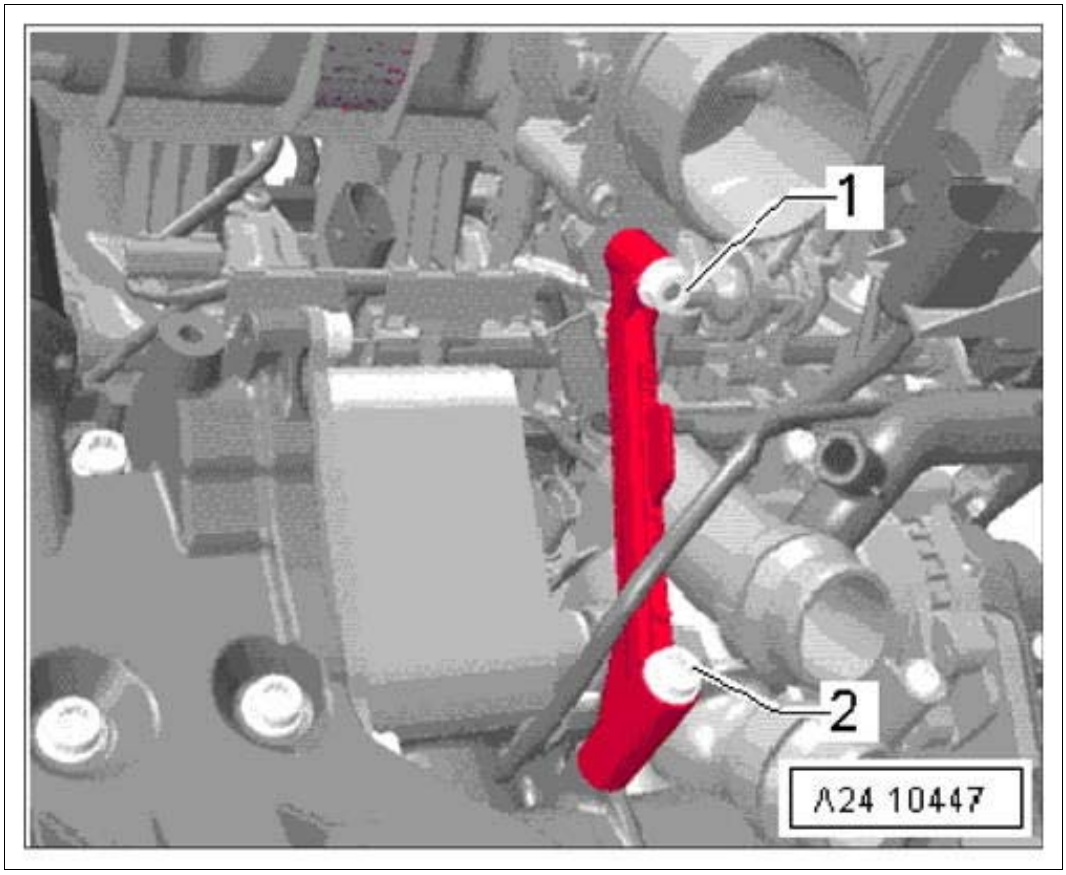

Courtesy of PORSCHE CARS NORTH AMERICA, INC.

7. Fit holder for coolant line and screw in and tighten fastening screw **-1-** .

Fig 6: Identifying Coolant Line Holder On Intake Manifold

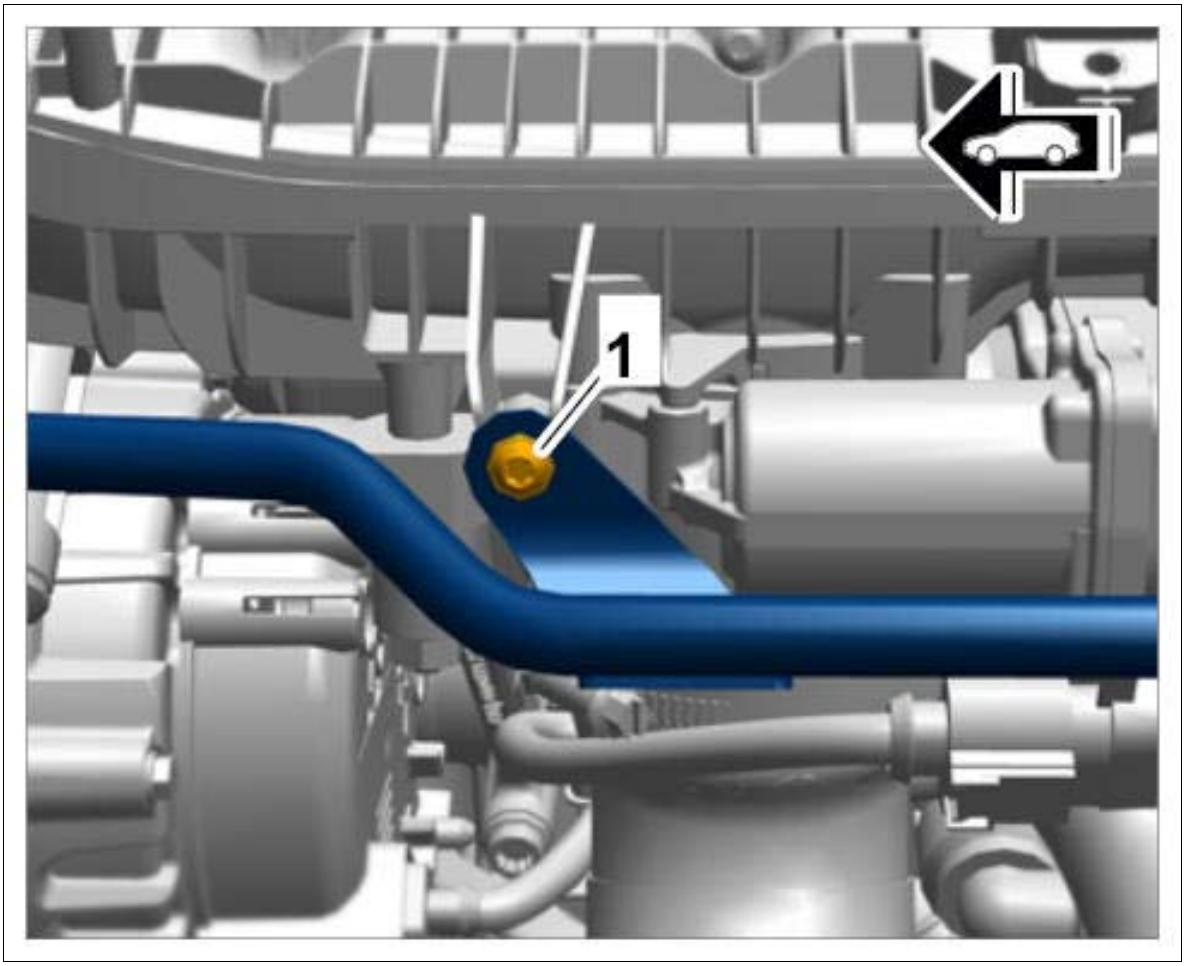

Courtesy of PORSCHE CARS NORTH AMERICA, INC.

8. Connect electric plug connection **-1-** for the oil pressure switch.

Fig 7: Locating Oil Pressure Switch

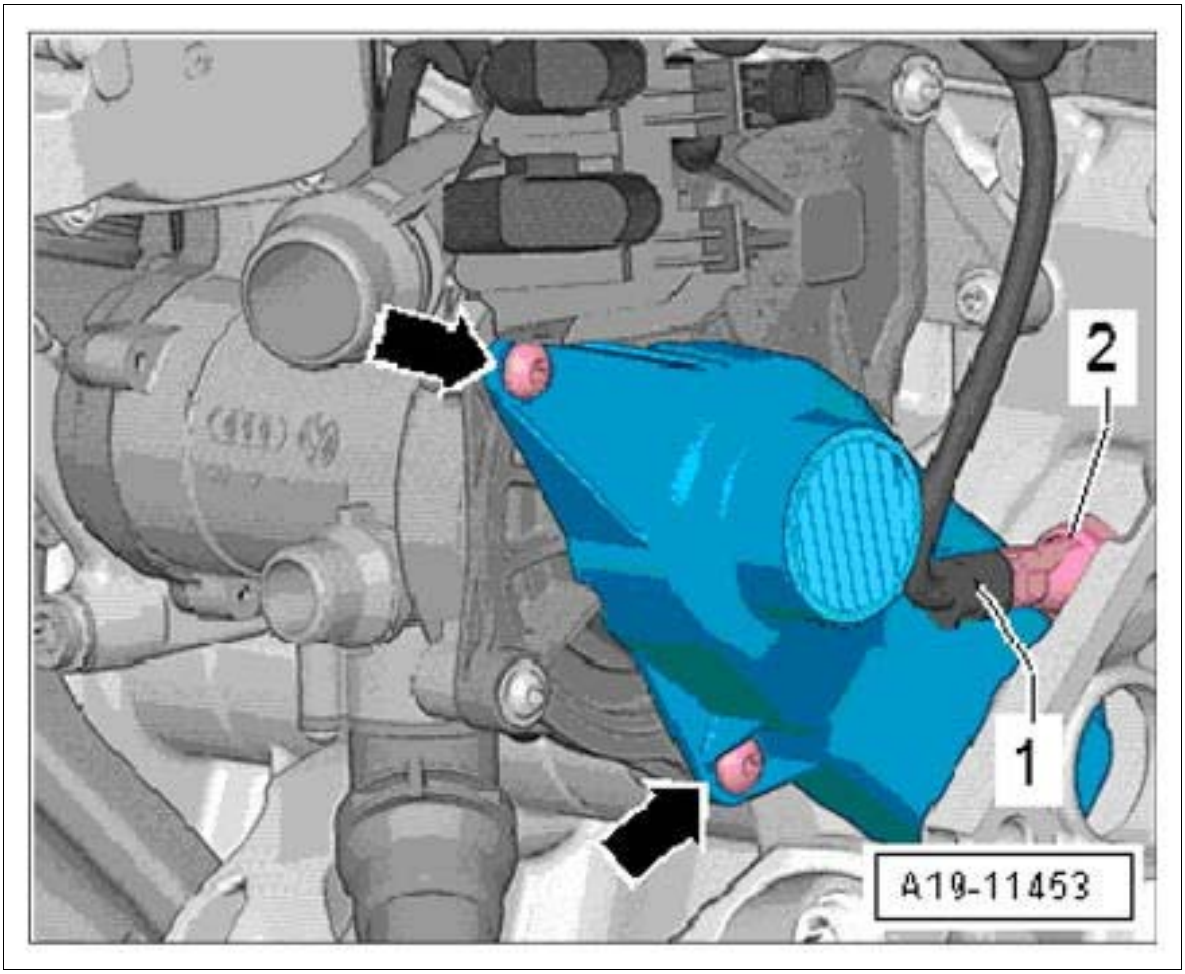

Courtesy of PORSCHE CARS NORTH AMERICA, INC.

9. Plug in electric plug connections **-2...6-** and route lines.

Fig 8: Locating Electric Plug Connections

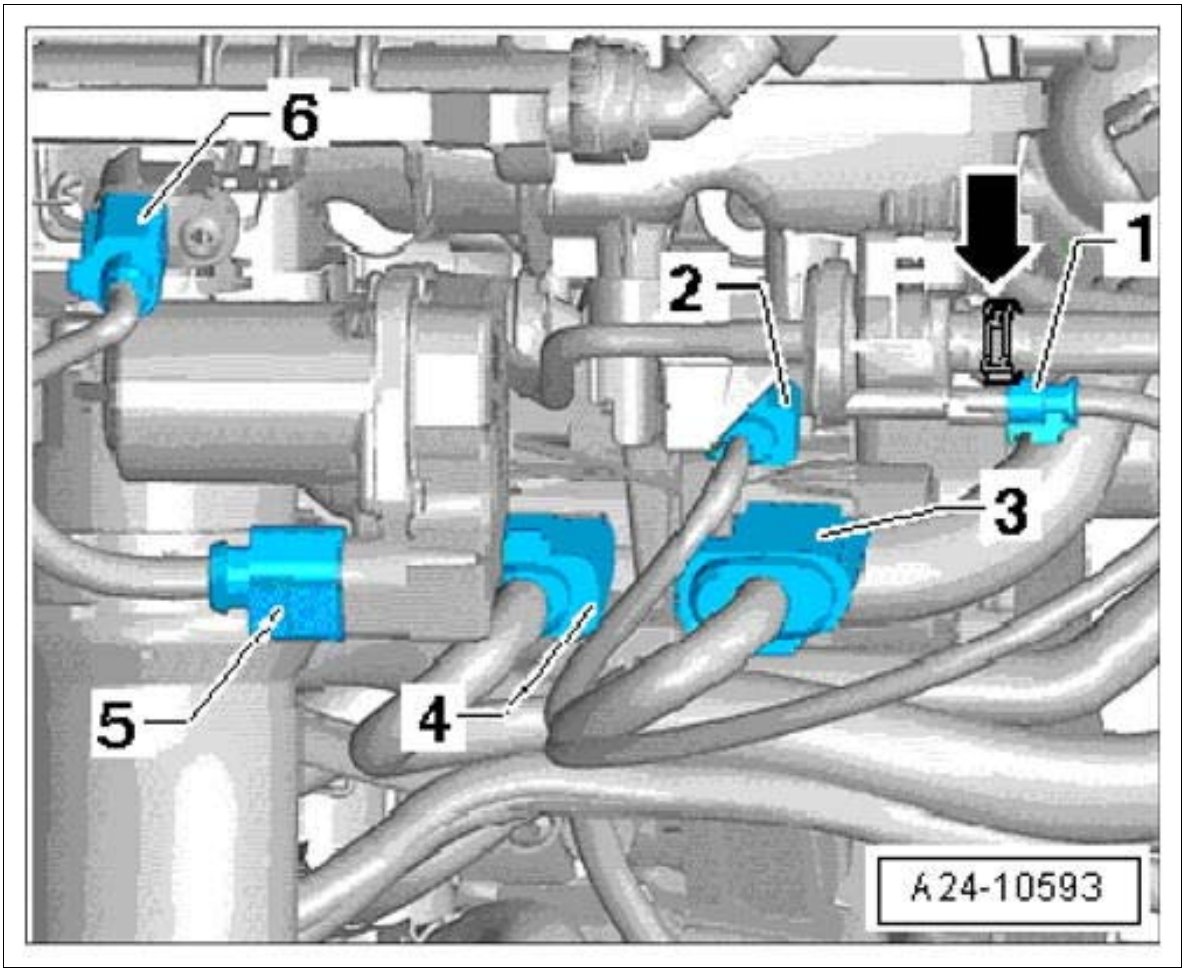

Courtesy of PORSCHE CARS NORTH AMERICA, INC.

10. Install molded hose and tighten hose clamps **-arrows-** .

Fig 9: Locating Intake Manifold Molded Hose

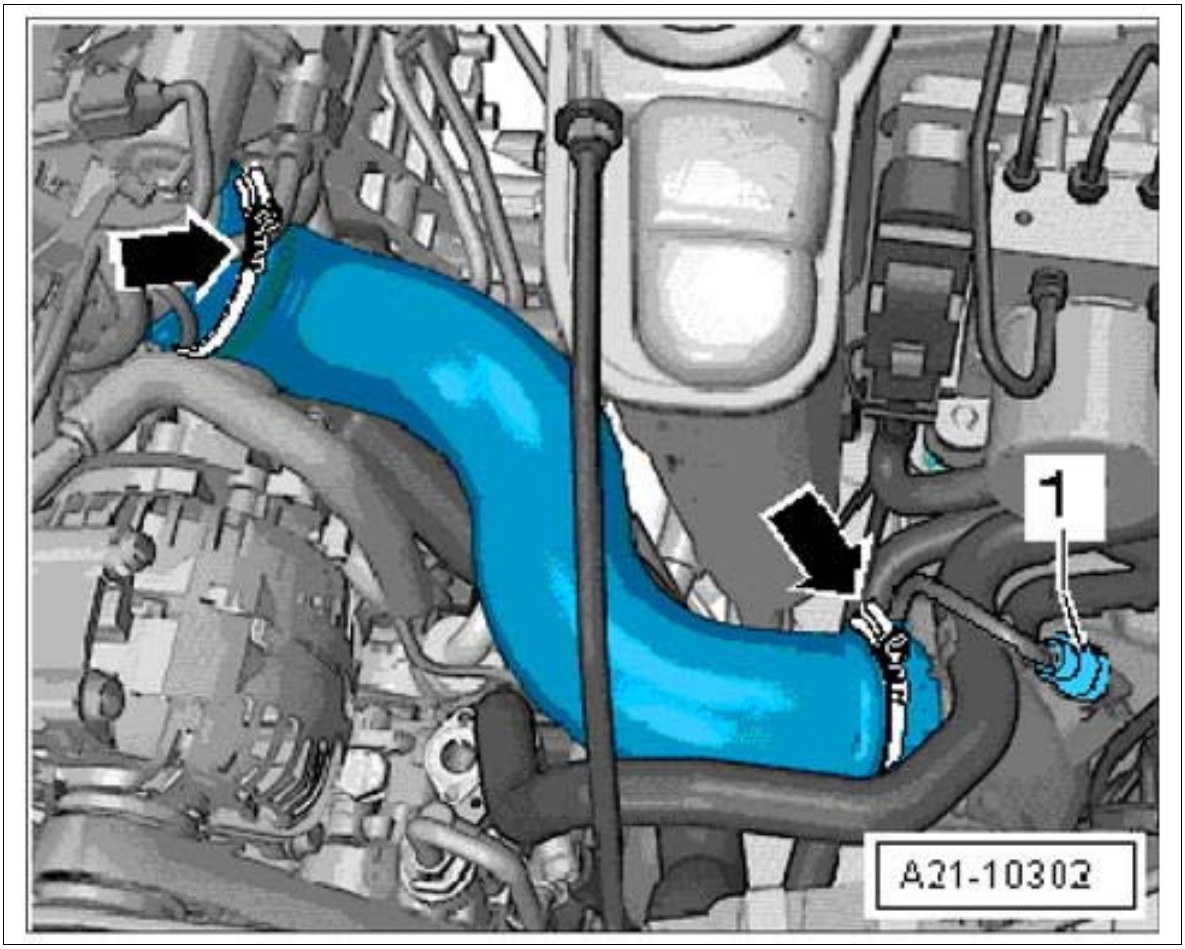

Courtesy of PORSCHE CARS NORTH AMERICA, INC.

11. Fit turbocharger on studs in the opposite direction to **-direction of arrow-** with a new seal.

Fig 10: Loosening Turbocharger

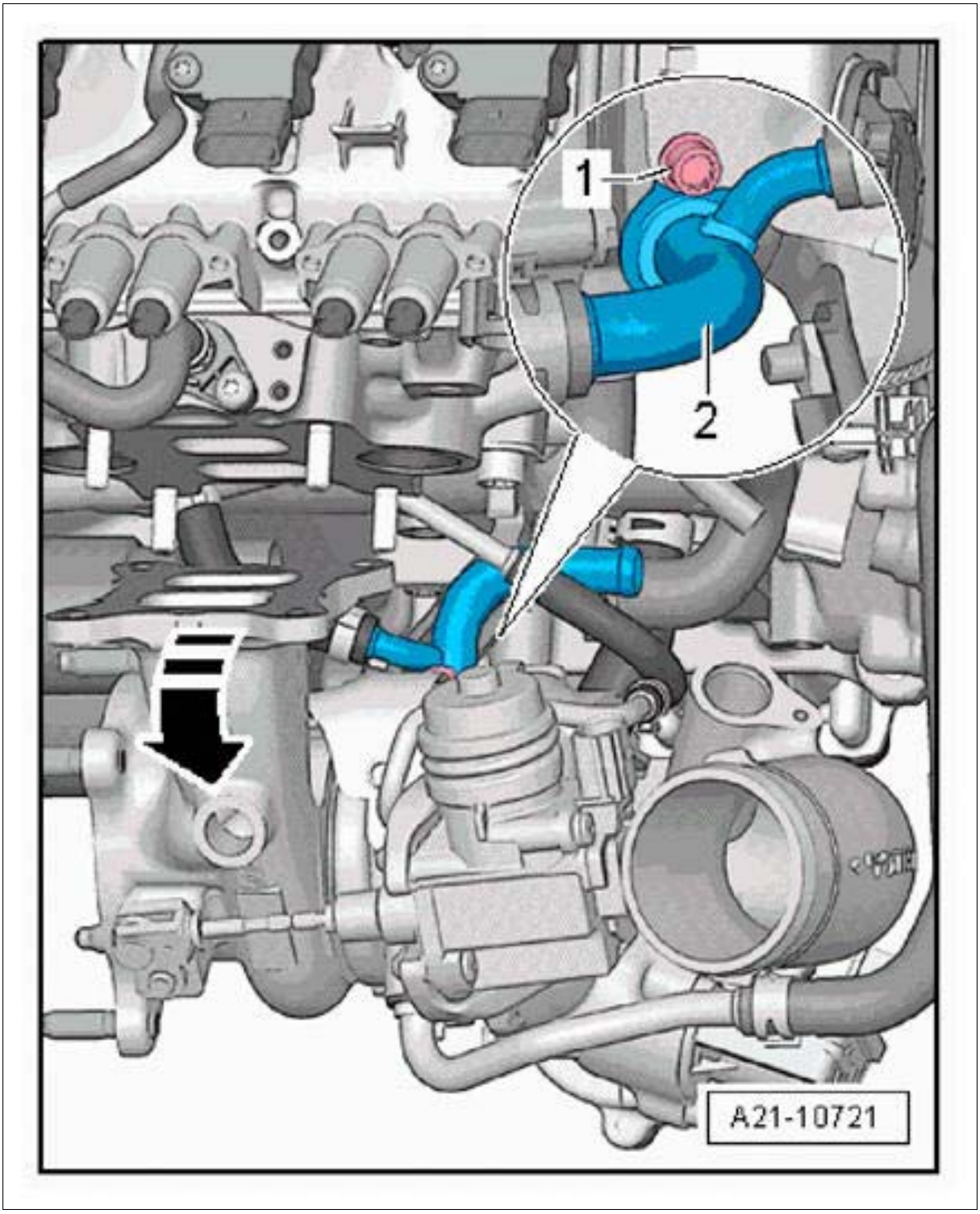

Courtesy of PORSCHE CARS NORTH AMERICA, INC.

12. **Fit and tighten new** fastening nuts **-arrows-** .

Fig 11: Locating Turbocharger Nuts

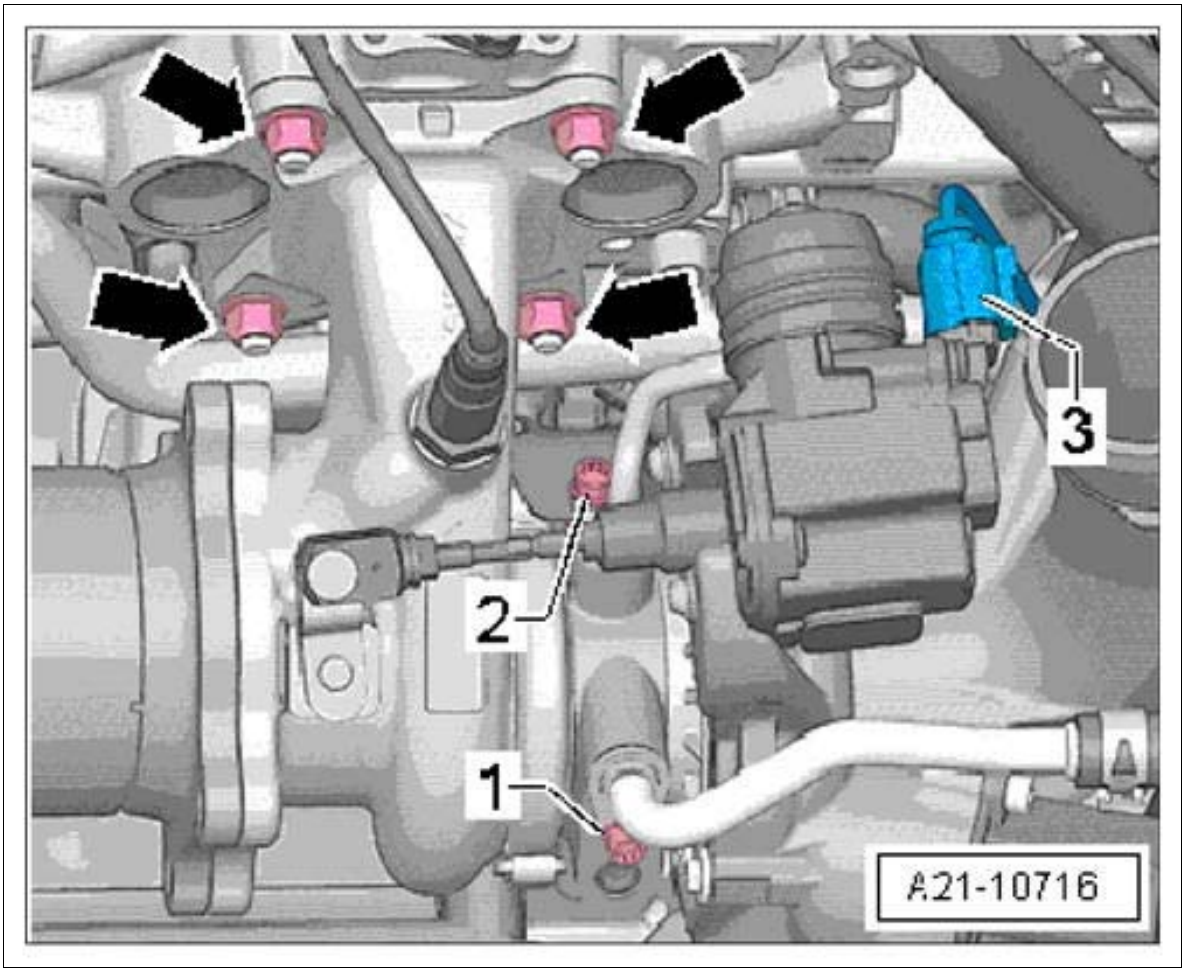

Courtesy of PORSCHE CARS NORTH AMERICA, INC.

13. Position heat shield and fit and tighten fastening screws **-arrows-** .

Fig 12: Locating Turbocharger Heat Shield Screws

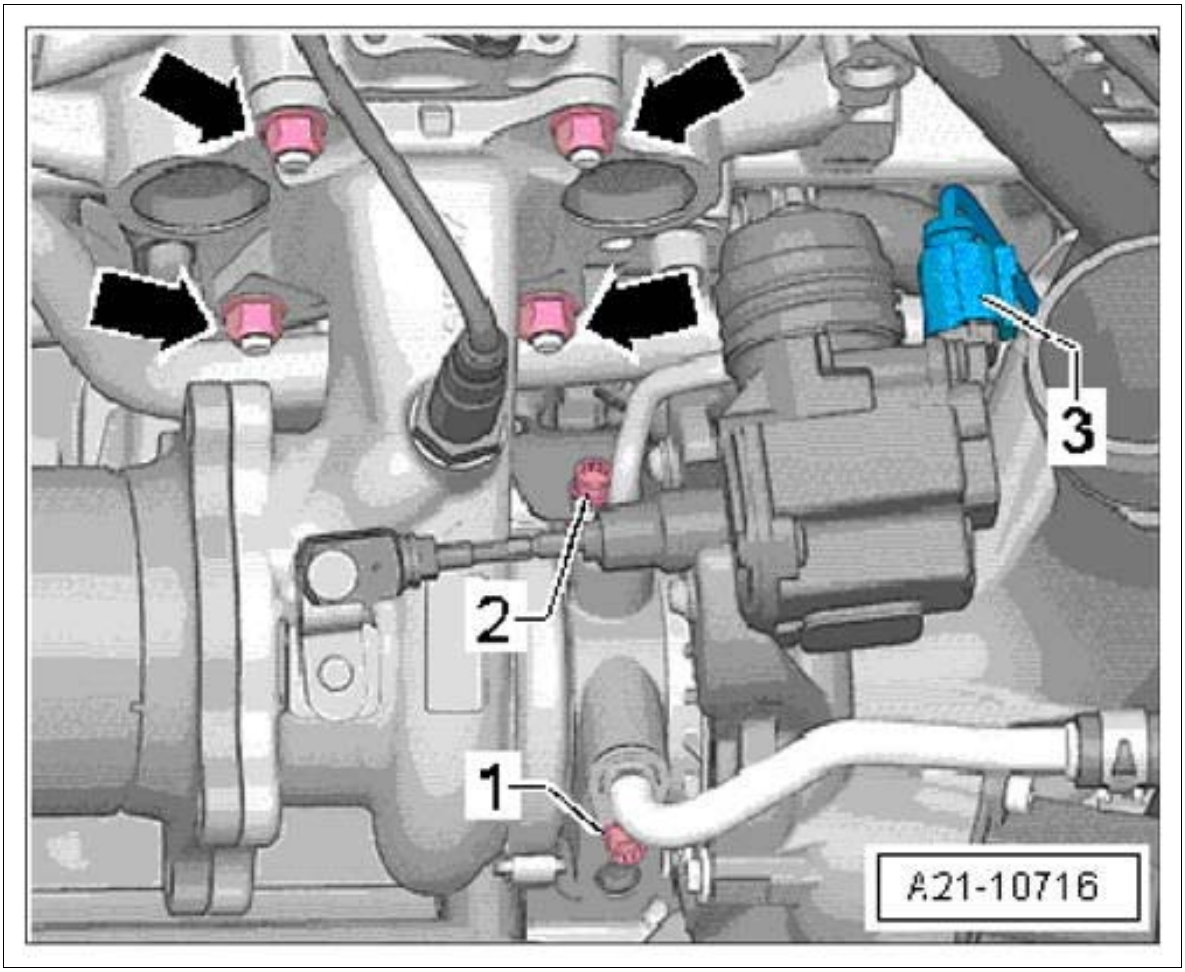

Courtesy of PORSCHE CARS NORTH AMERICA, INC.

14. Tighten fastening screw **-2-** turbocharger support.

Fig 13: Identifying Turbocharger Support Fastening Screw

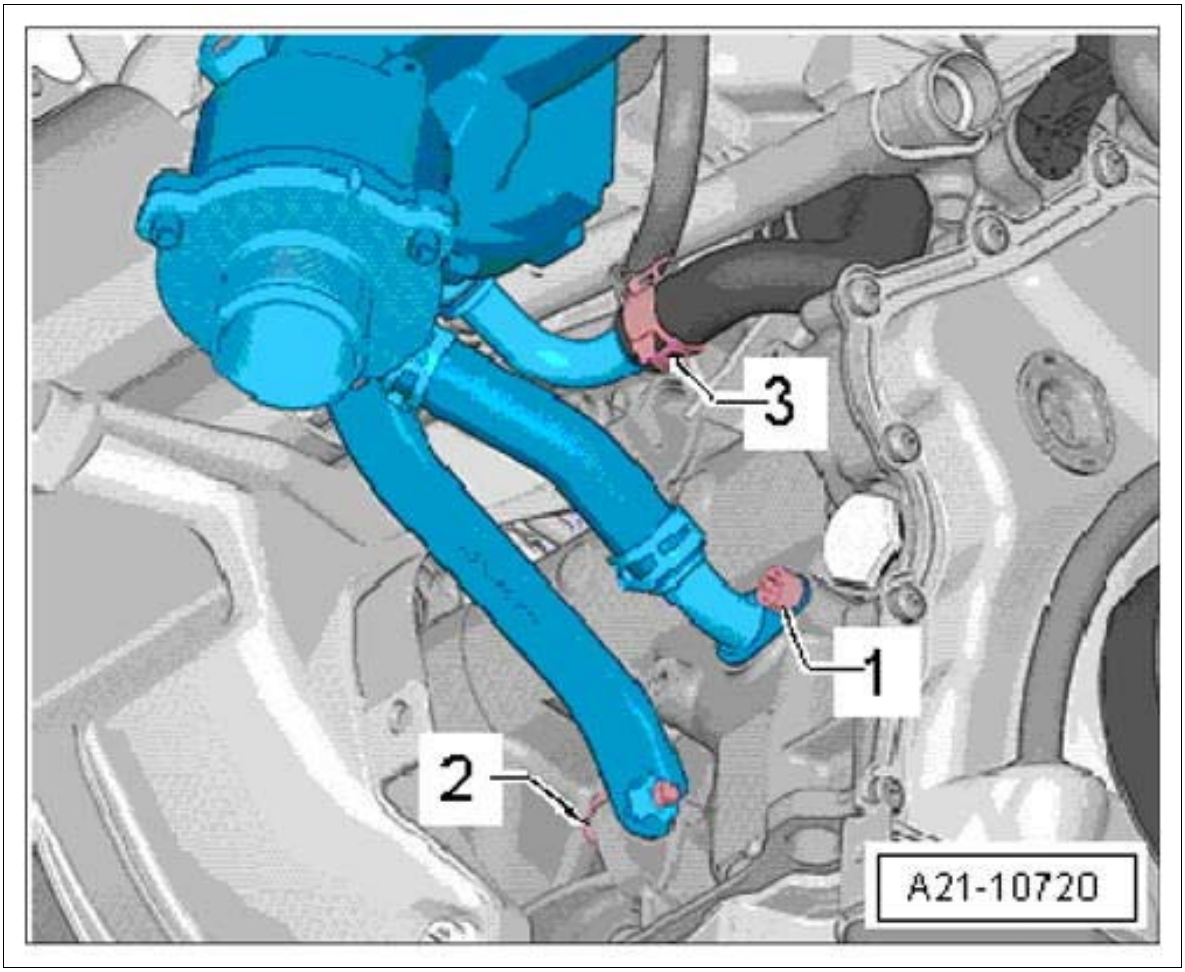

Courtesy of PORSCHE CARS NORTH AMERICA, INC.

15. Plug in electric plug connection **-2-** for temperature sensor.

Fig 14: Identifying Cylinder Head Electric Plug Connection

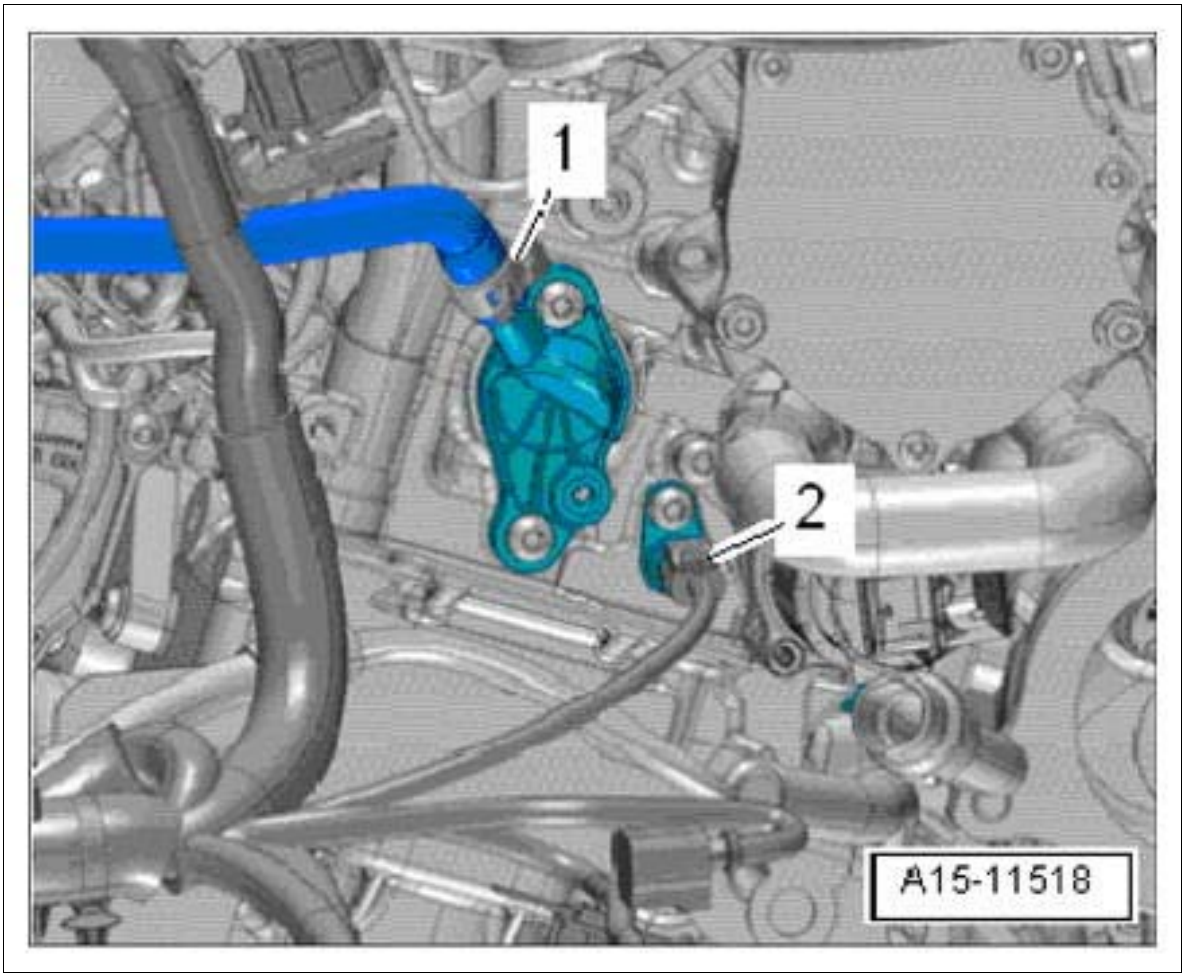

Courtesy of PORSCHE CARS NORTH AMERICA, INC.

16. Secure coolant hose to spring band clamp **-1-** .

Fig 15: Identifying Cylinder Head Spring Band Clamp

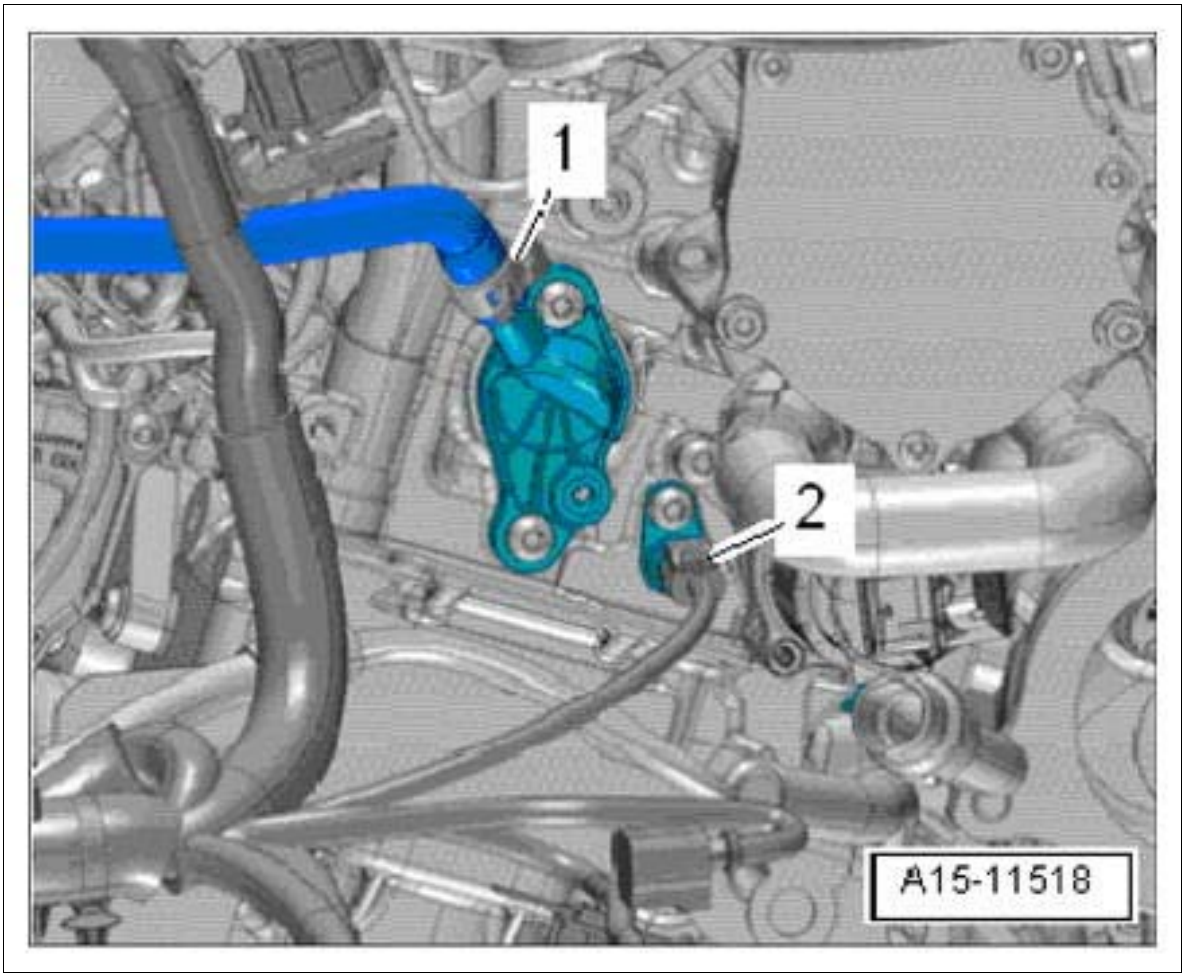

Courtesy of PORSCHE CARS NORTH AMERICA, INC.

WM 157019 REMOVING AND INSTALLING CYLINDER HEAD (MACAN) > SUBSEQUENT WORK

1. Install camshafts. → INSTALLING CAMSHAFTS
2. Install catalytic converter. → INSTALLING CATALYTIC CONVERTER
3. Change coolant. → 193817 DRAINING AND FILLING COOLANT
4. Change engine oil. → 170117 DRAINING AND FILLING ENGINE OIL

WM 158219 REMOVING AND INSTALLING CYLINDER HEAD COVER (MACAN) > TOOLS

Designation	Type	Number	Description	

the counter-hold tool	VW tool	T10355		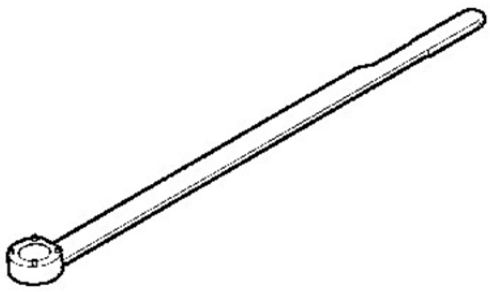
Lever	VW tool	T40243		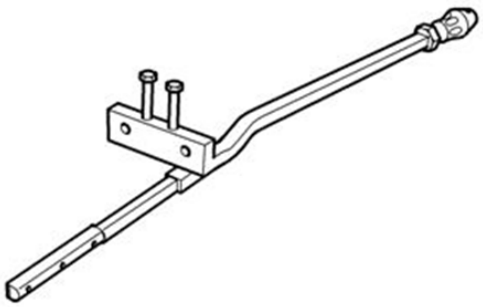
adapter	VW tool	T40266		
staking tool	VW tool	T40267		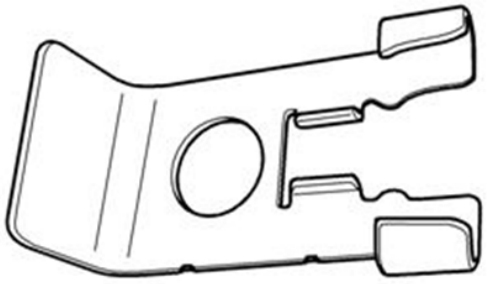

The camshaft clamp	VW tool	T40271		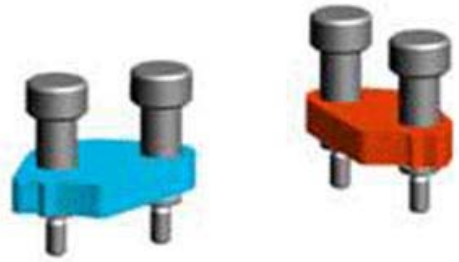

WM 158219 REMOVING AND INSTALLING CYLINDER HEAD COVER (MACAN) > TECHNICAL VALUES

Location	Description	Type	Basic value	Tolerance 1	Tolerance 2
Fastening screw on cylinder head cover	Observe specified sequence	Initial tightening	8 Nm (6 ftlb.)		
Fastening screw on cylinder head cover	Observe specified sequence	Final tightening	+90°		
Fastening screw for oil separator	Observe specified sequence	Tightening torque	9 Nm (6.5 ftlb.)		

WM 158219 REMOVING AND INSTALLING CYLINDER HEAD COVER (MACAN) > PRELIMINARY WORK

1. Remove the engine cover (design cover).
2. Remove the cover for the front underbody. → 519219 REMOVING AND INSTALLING THE COVER FOR THE FRONT UNDERBODY
3. Remove the air cleaner housing. → 242519 REMOVING AND INSTALLING THE AIR CLEANER HOUSING
4. Remove the upper timing-case cover. → 153319 REMOVING AND INSTALLING THE TIMING-CASE COVER
5. Remove the actuators for the camshaft. → 158419 REMOVING AND INSTALLING THE ACTUATOR FOR THE CAMSHAFT

6. Remove the hydraulic valves for the valve lift switchover. → 155519 HYDRAULIC VALVE FOR THE VALVE LIFT SWITCHOVER

7. Remove the ignition coils. → 282020 REMOVING AND INSTALLING THE IGNITION COILS

WM 158219 REMOVING AND INSTALLING CYLINDER HEAD COVER (MACAN) > REMOVE THE CYLINDER HEAD COVER

NOTE: Dirt and contamination

- *Risk of damage to units or components*

→ Protect components from dirt and contamination.

→ Clean or replace dirty components.

Information

- Close off open connections and lines using suitable stoppers or caps.

1. Disconnect the electric plug connection **-arrow-** to the oil level sensor.

Fig 1: Locating Oil Level Sensor Plug Connection

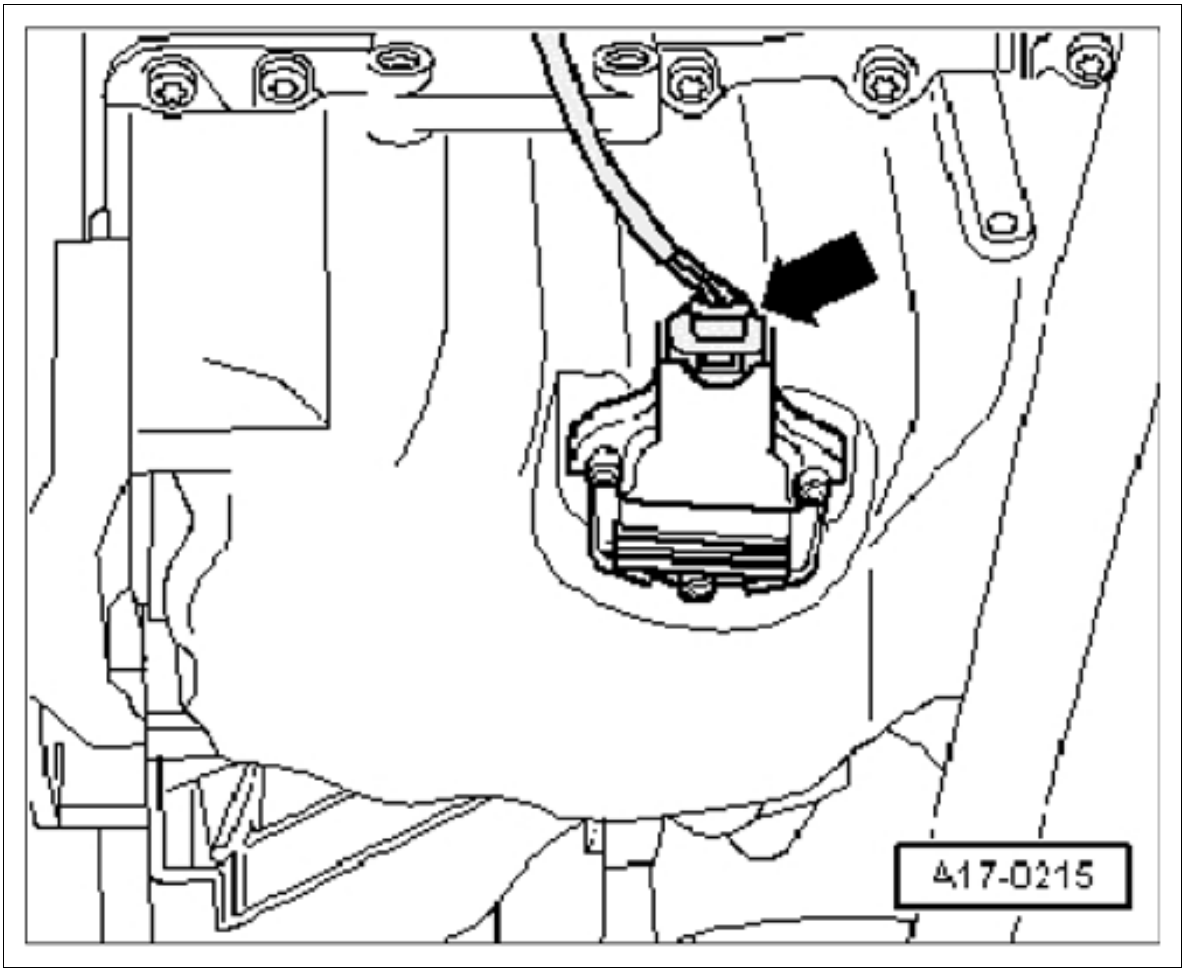

Courtesy of PORSCHE CARS NORTH AMERICA, INC.

2. Disconnect the electric plug connections **-1 and 2-** .

Fig 2: Identifying Turbocharger Electric Lines

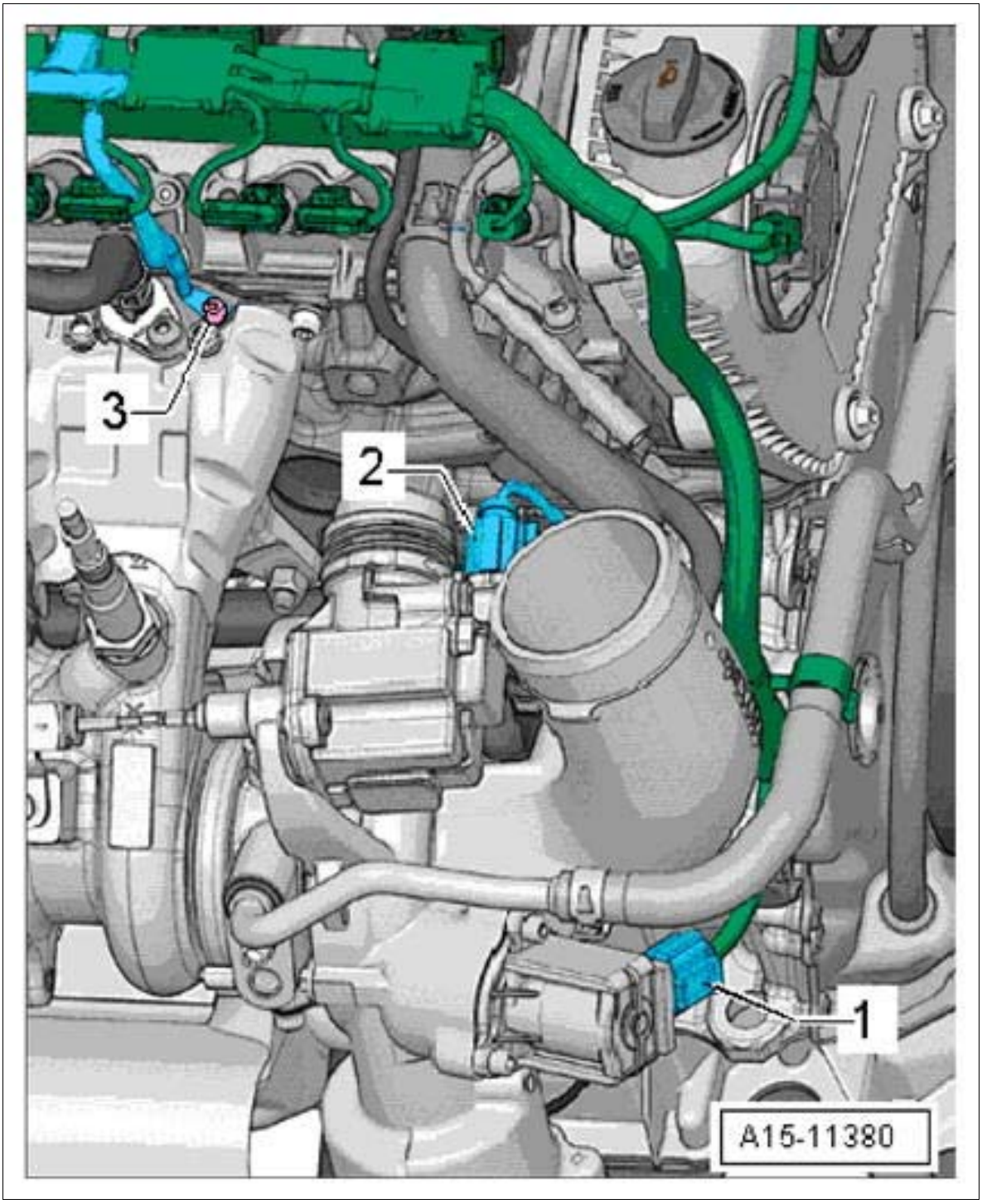

Courtesy of PORSCHE CARS NORTH AMERICA, INC.

3. Take the electric plug connection **-1-** out of the holder and disconnect it.

Fig 3: Identifying Oxygen Sensor Electric Plug Connection

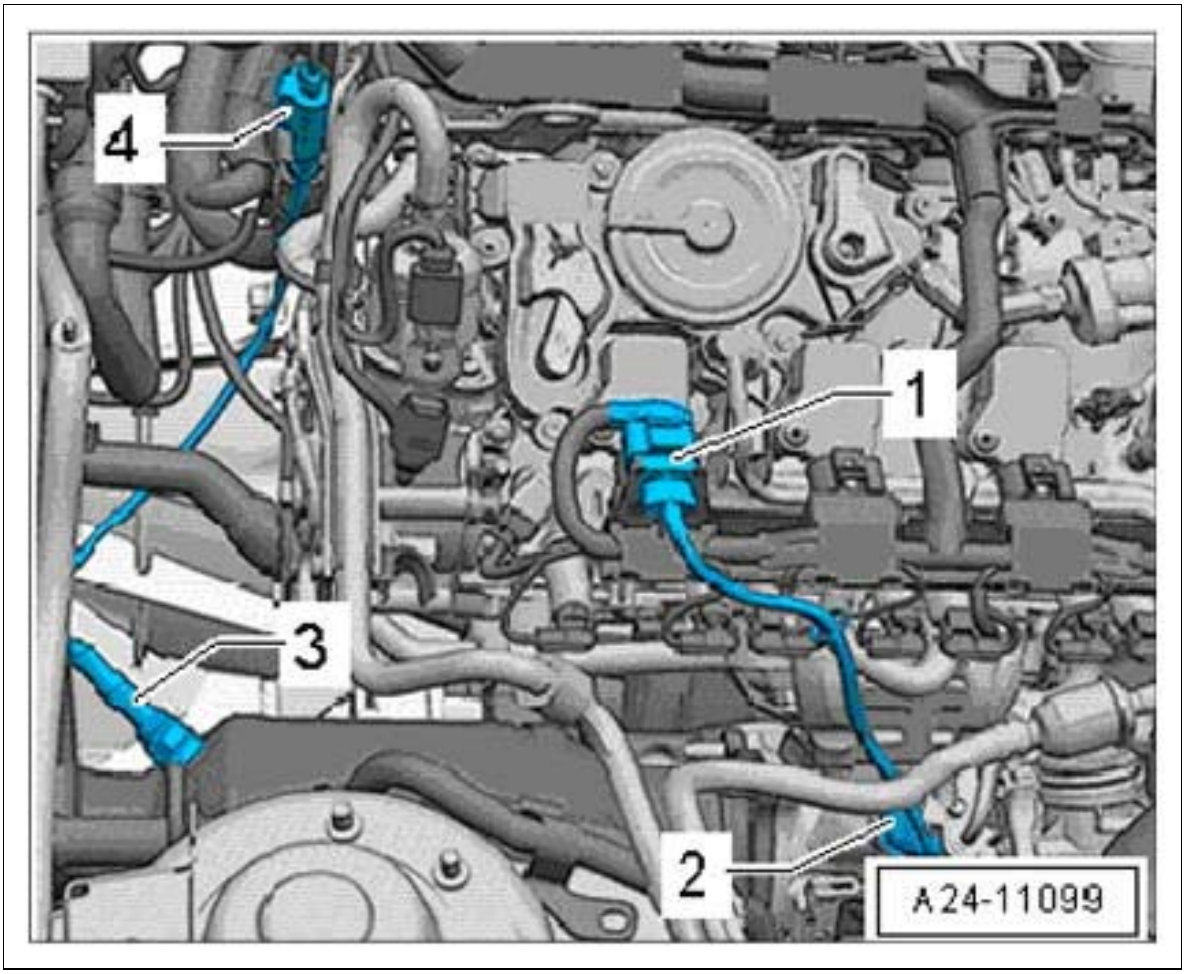

Courtesy of PORSCHE CARS NORTH AMERICA, INC.

4. Disconnect the electric plug connection **-1-** of the hall sender.

Fig 4: Locating Hall Sender Electric Plug Connections

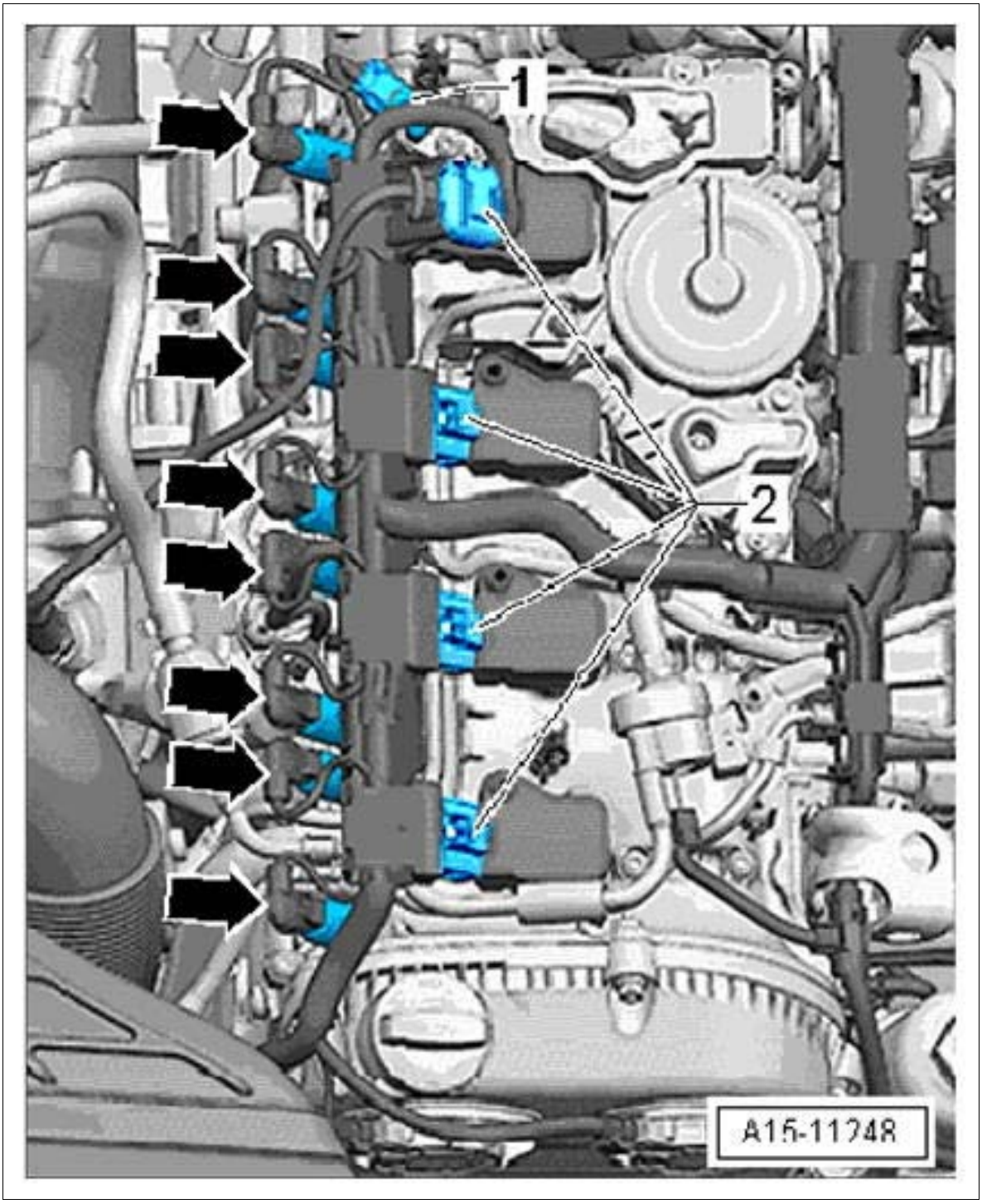

Courtesy of PORSCHE CARS NORTH AMERICA, INC.

5. Disconnect the electric plug connections **-1, 3 and 5-** .

Fig 5: Identifying Electric Plug Connections

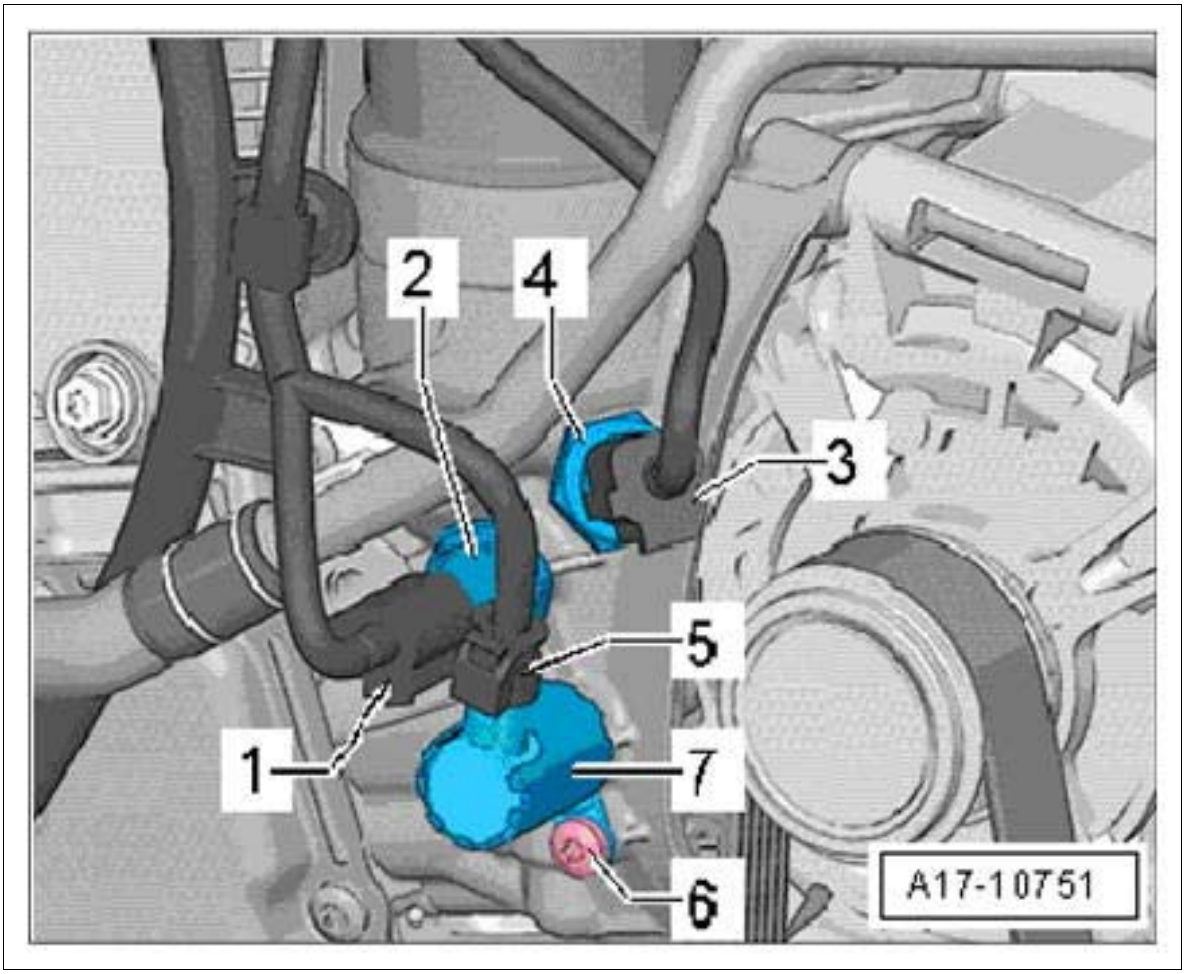

Courtesy of PORSCHE CARS NORTH AMERICA, INC.

6. Disconnect the electric plug connections **-1...5-** and expose the lines.

Fig 6: Identifying Intake-Air Distributor Electric Plug Connections

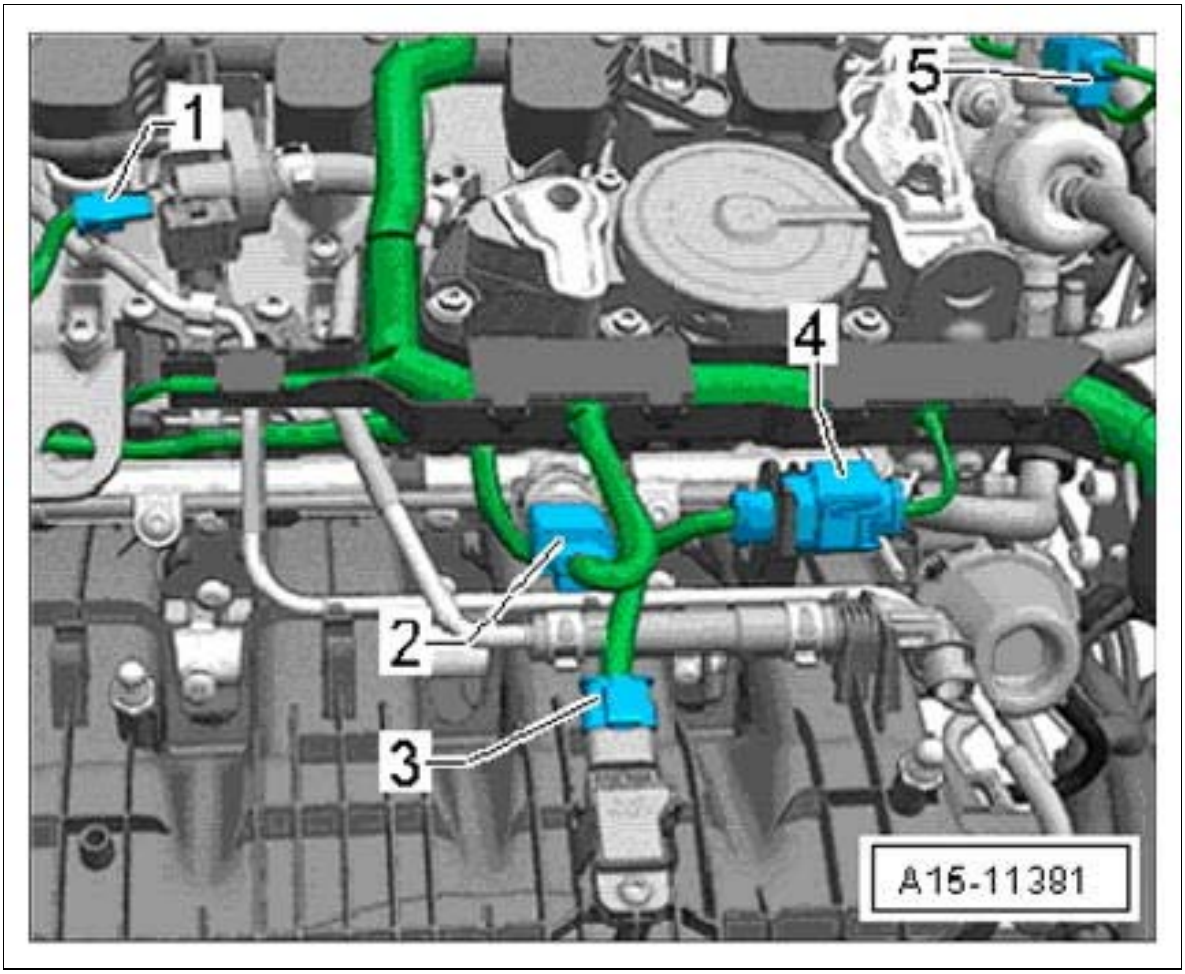

Courtesy of PORSCHE CARS NORTH AMERICA, INC.

7. Loosen the spring band clamp **-2-** and pull the hose off the carbon canister.

Fig 7: Identifying Front Fuel Lines

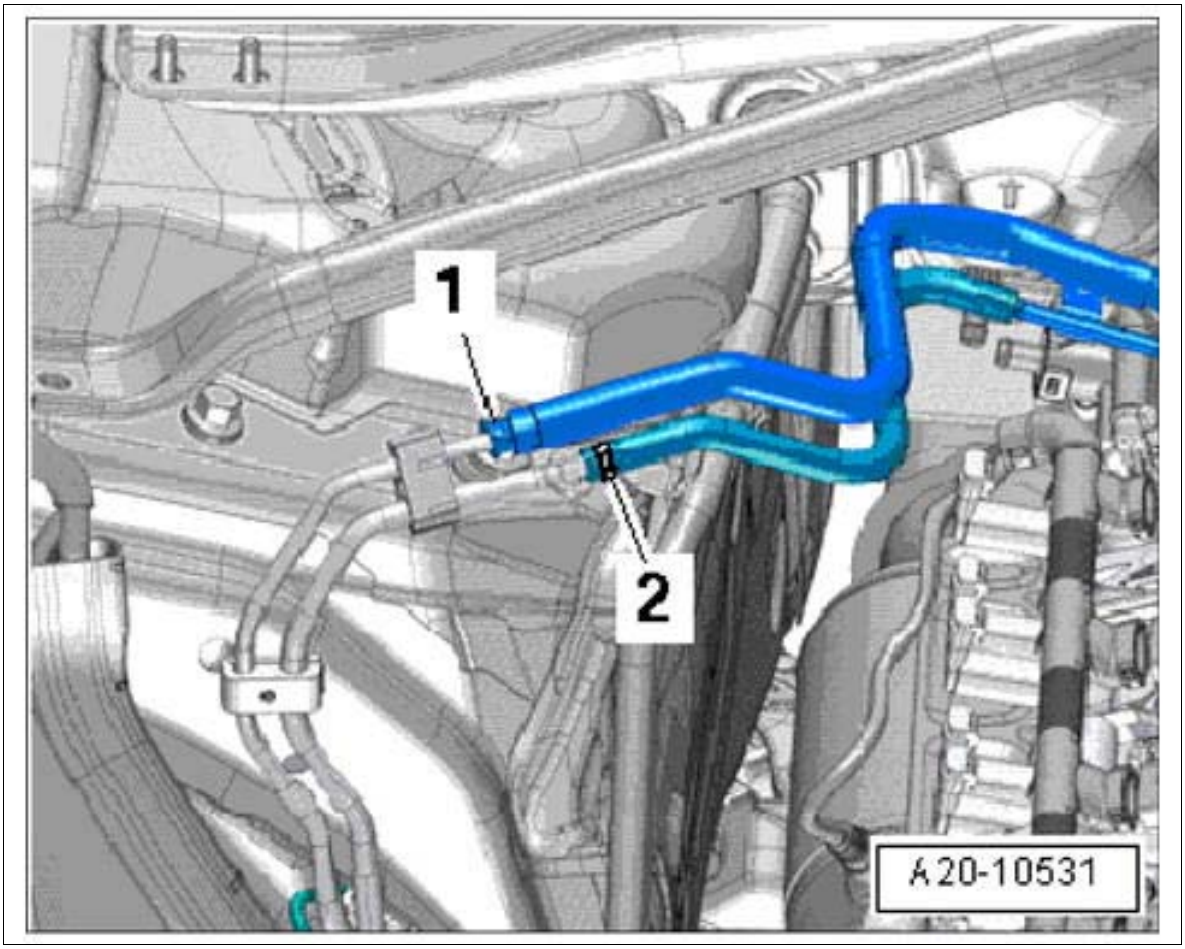

Courtesy of PORSCHE CARS NORTH AMERICA, INC.

8. Remove the positive crankcase ventilation.
    1. 8.1. Loosen the single-lug clip **-1-** and pull the hose off the carbon canister.
    2. 8.2. Unscrew the fastening screws **-arrows-** and remove the positive crankcase ventilation.
    3. 8.3. Expose the vacuum lines.

Fig 8: Locating Positive Crankcase Ventilation Screws

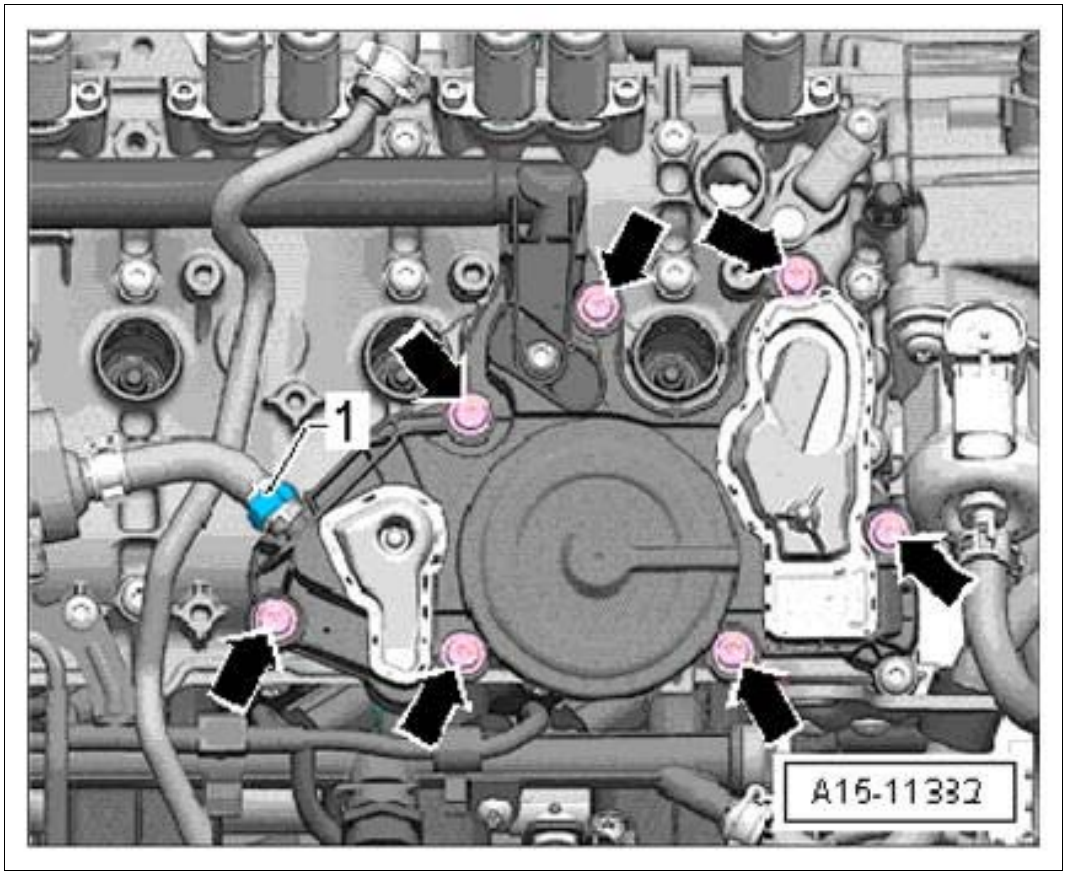

Courtesy of PORSCHE CARS NORTH AMERICA, INC.

9. Unscrew the fastening screws **-arrows-** and remove the bearing saddle.

Fig 9: Locating Bearing Saddle Screws

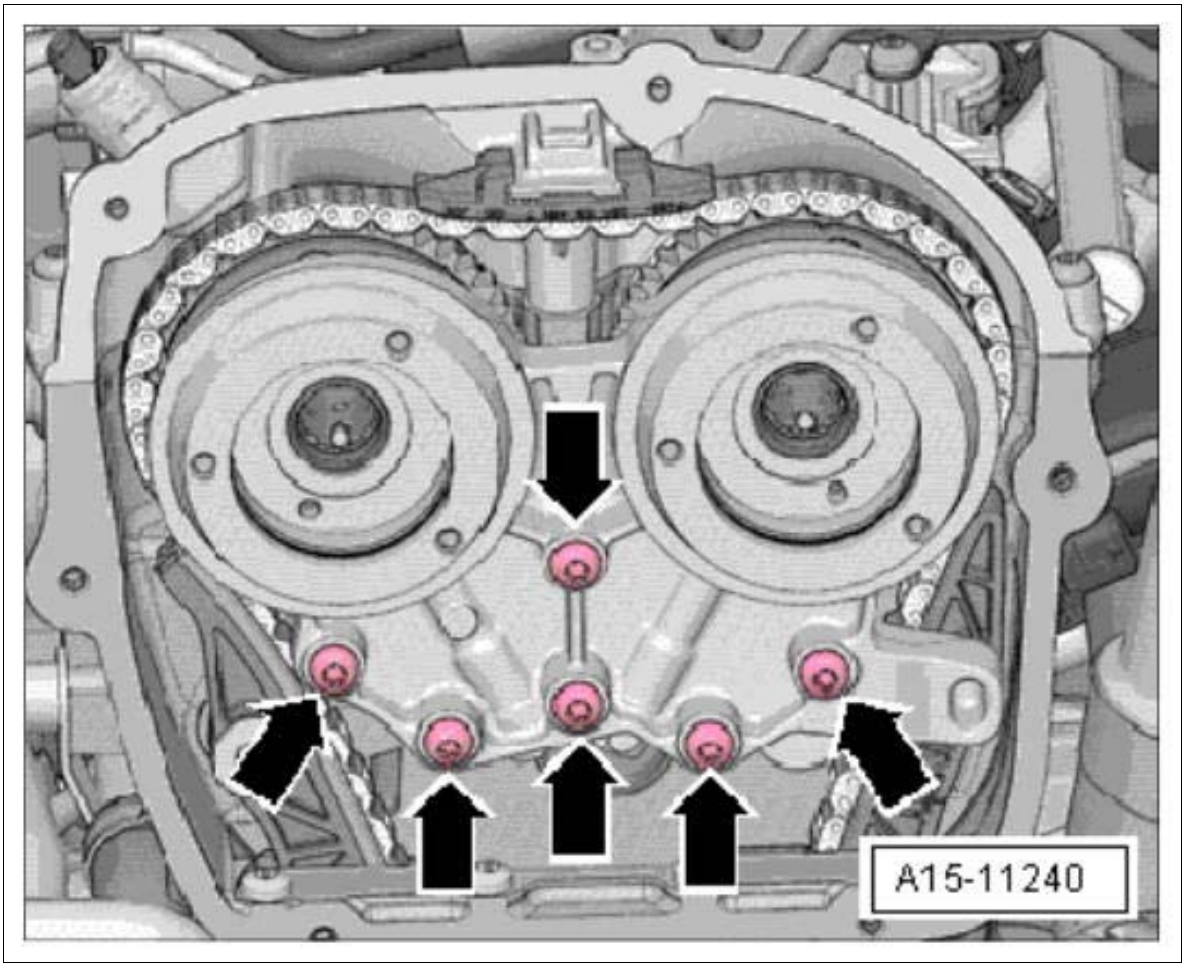

Courtesy of PORSCHE CARS NORTH AMERICA, INC.

10. Turn the pulley using **the counter-hold tool T10355** to the "top dead center" position.
    1. 10.1. Markings **-1-** on the camshaft are pointing upwards.
    2. 10.2. The notch on the pulley and the marking on the timing-case cover are aligned **-arrow-** .

Fig 10: Locating Top Dead Center Markings

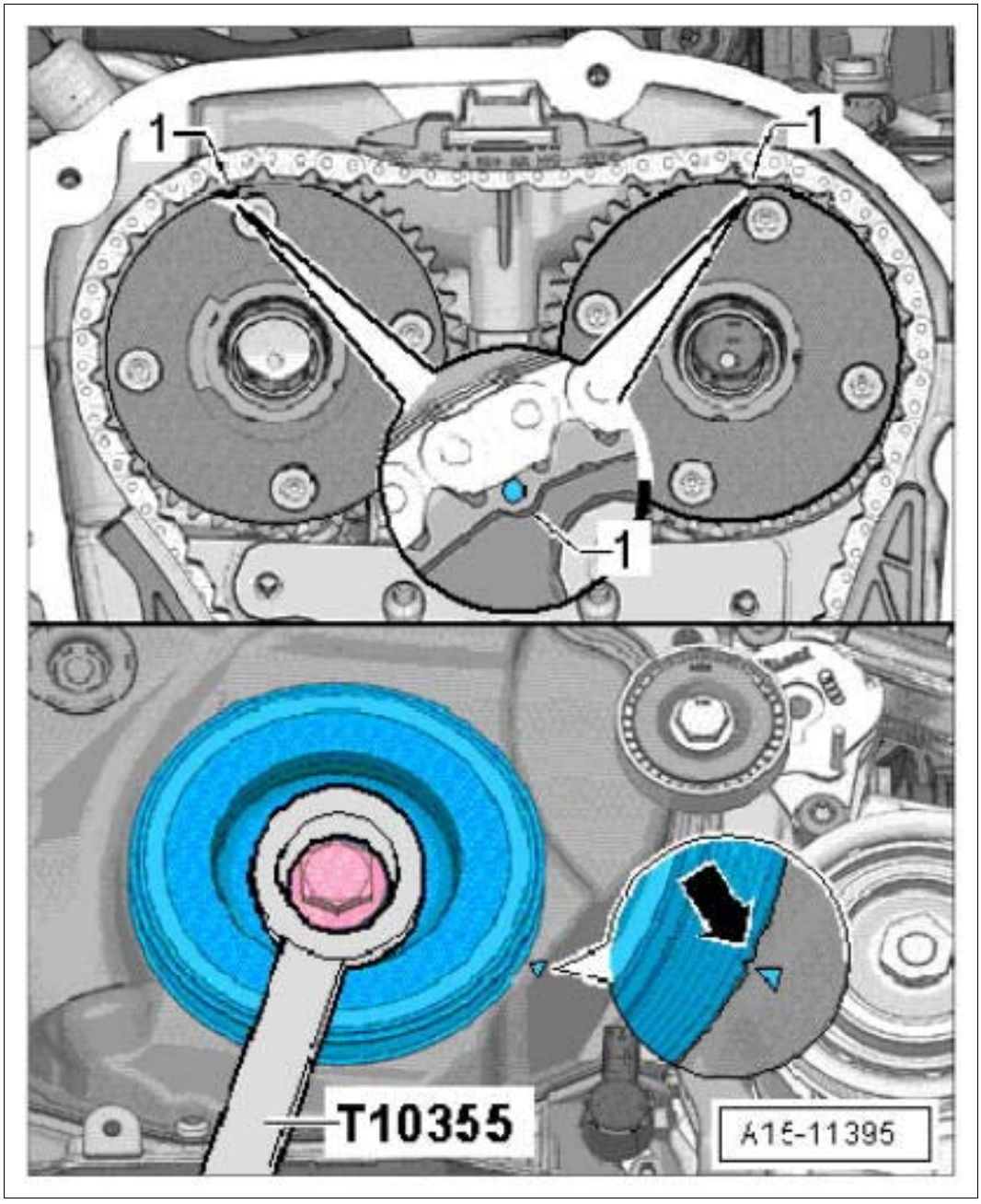

Courtesy of PORSCHE CARS NORTH AMERICA, INC.

11. Copy the markings.

    1. 11.1. Identify the timing chain and cylinder head **-arrows-** with the markings on the sprockets **-1-** by using a water-resistant marker.

    2. 11.2. Mark timing chain on guide rail by using a water-resistant marker. **-2-**

Fig 11: Locating TDC Markings

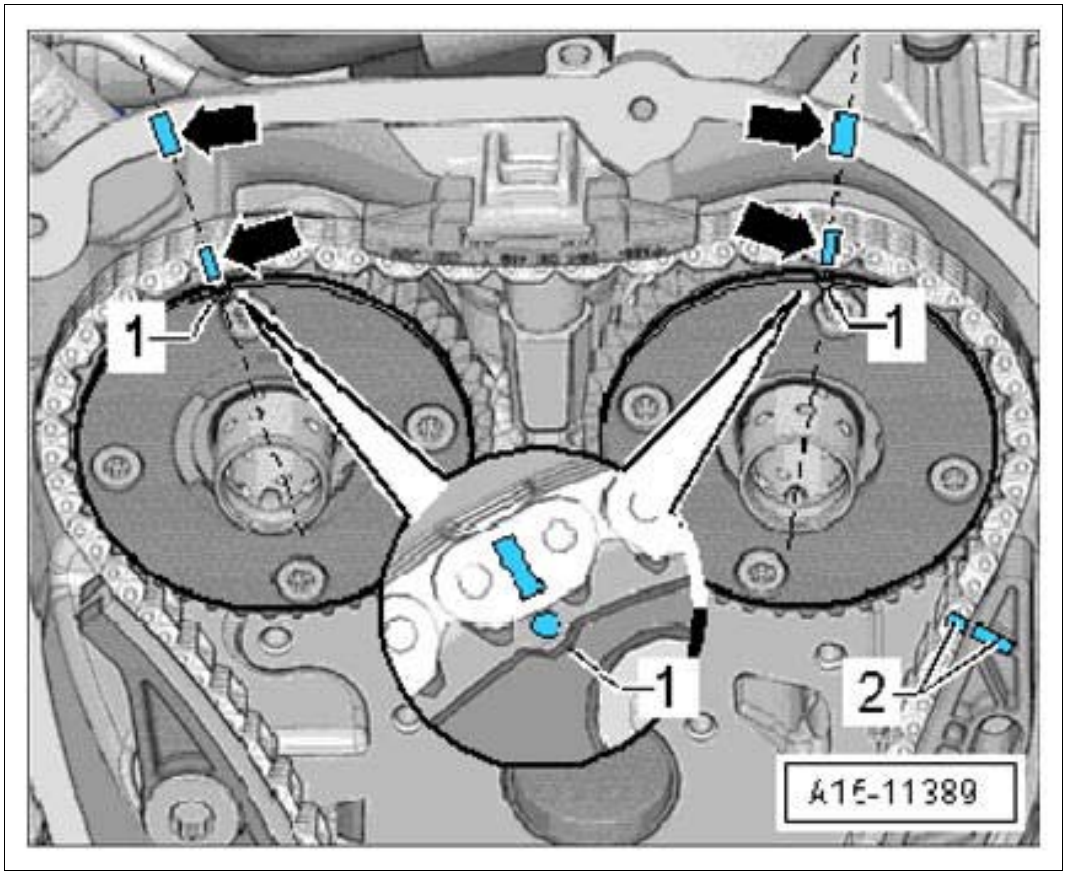

Courtesy of PORSCHE CARS NORTH AMERICA, INC.

12. Remove the stopper **-arrow-** .

Fig 12: Locating Chain Tensioner Stopper

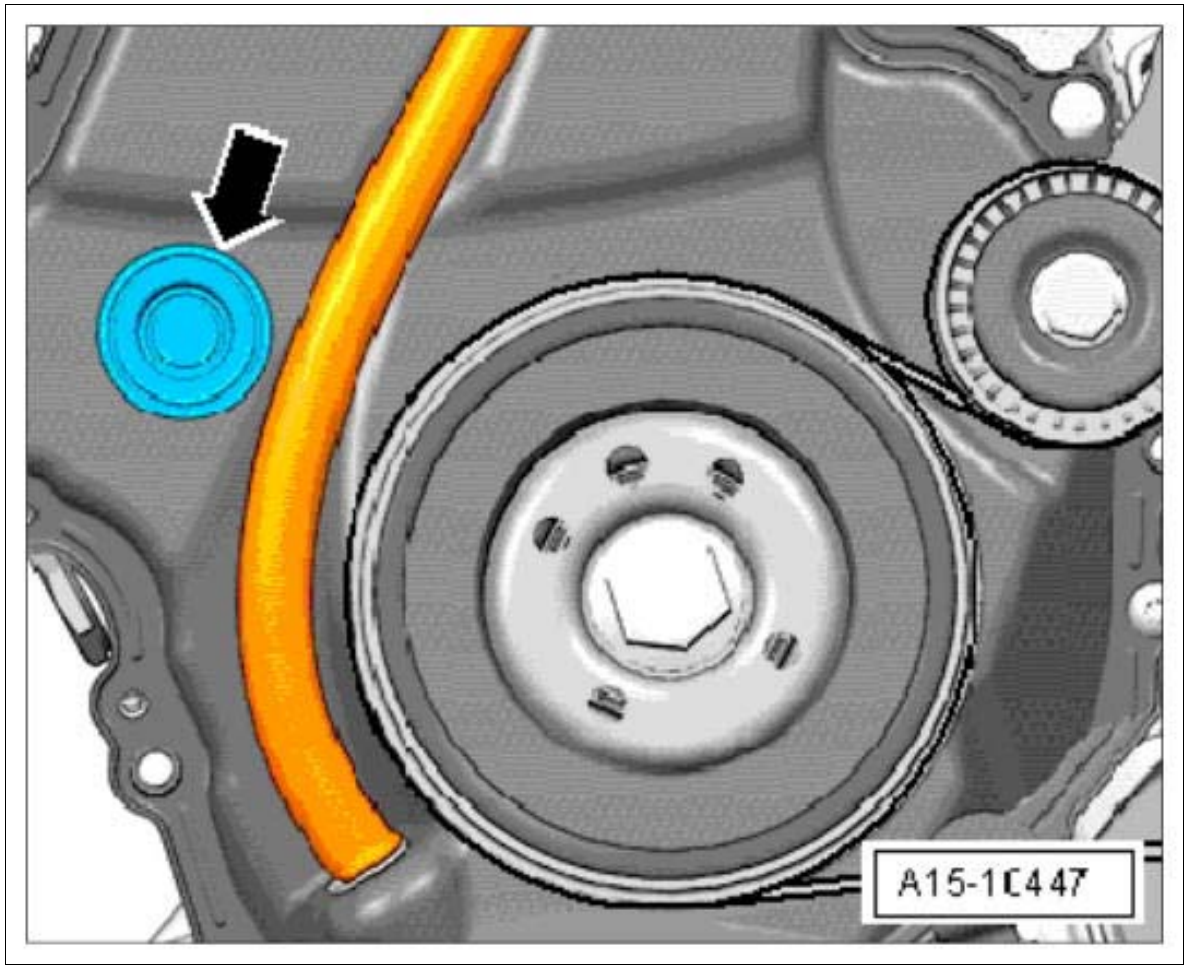

Courtesy of PORSCHE CARS NORTH AMERICA, INC.

13. Unscrew the fastening screws **-arrows-** .

Fig 13: Locating Timing Chain Screws

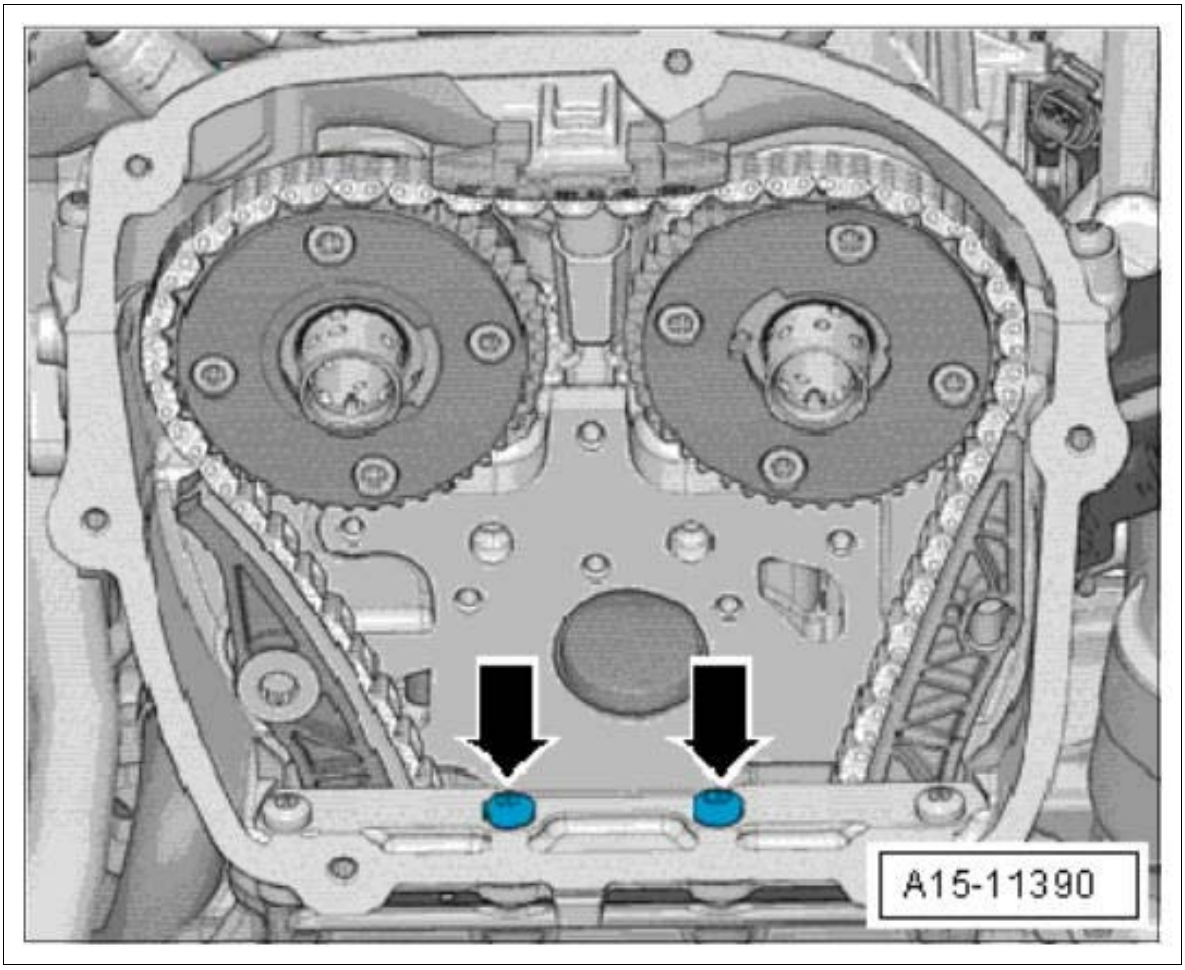

Courtesy of PORSCHE CARS NORTH AMERICA, INC.

14. Tighten the chain tensioner.
    1. 14.1. **Lever T40243** must now be screwed in. **-arrows-**
    2. 14.2. Press and hold the circlip **-1-** on the chain tensioner.
    3. 14.3. **Lever T40243** must now be pressed slowly in **-direction of arrow-** and held securely.

Fig 14: Tightening Chain Tensioner

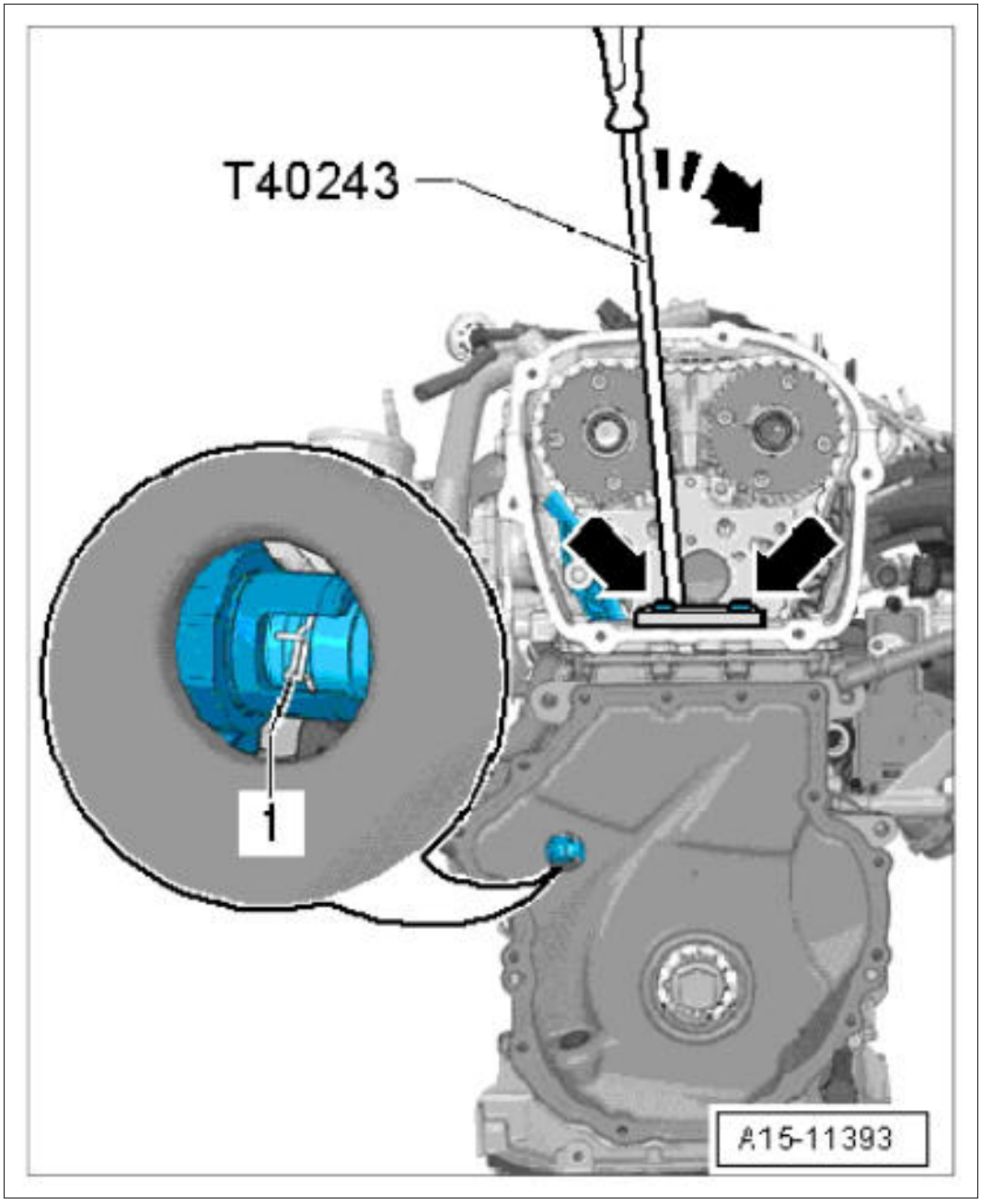

Courtesy of PORSCHE CARS NORTH AMERICA, INC.

15. Secure the chain tensioner with the staking tool T40267.

Fig 15: Securing Chain Tensioner

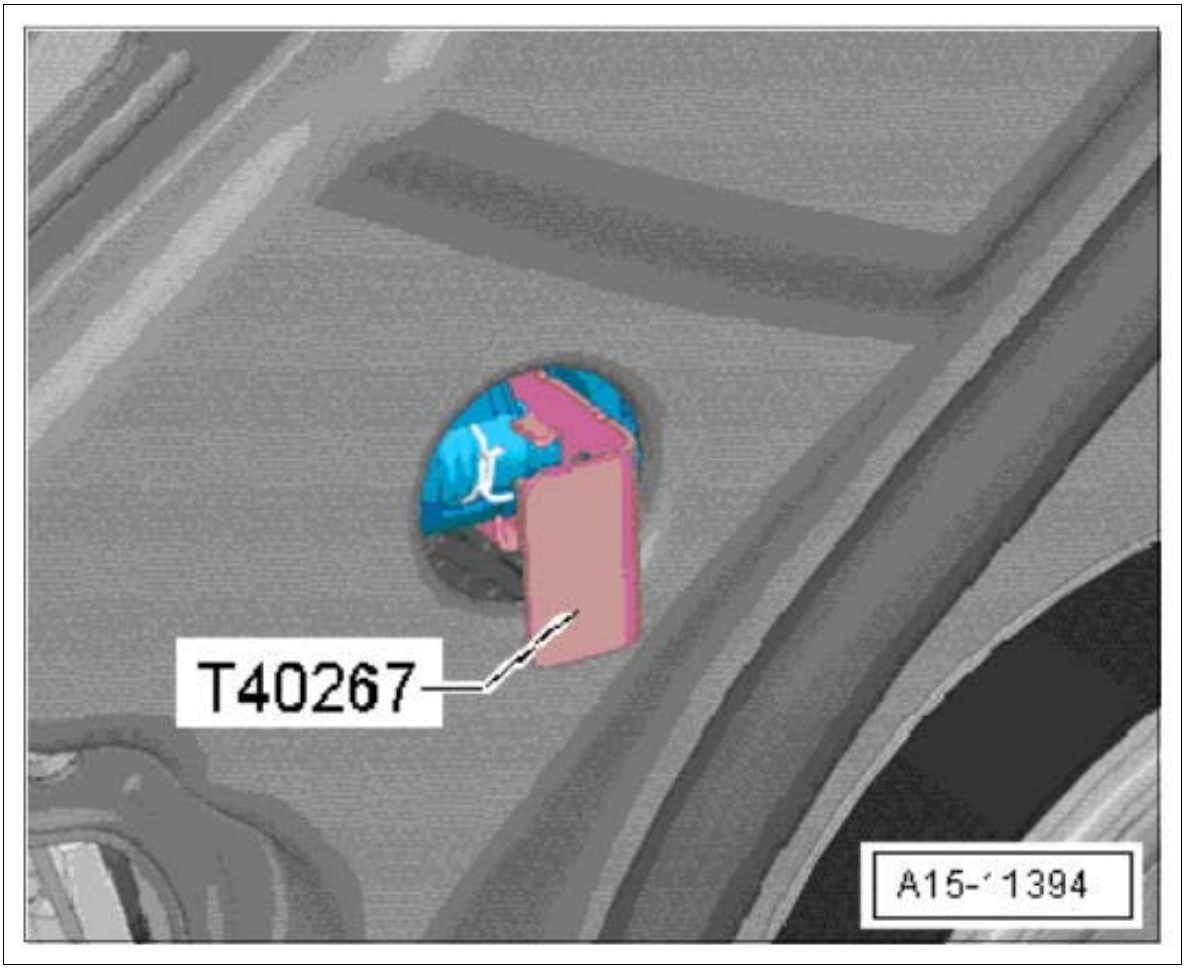

Courtesy of PORSCHE CARS NORTH AMERICA, INC.

16. **Remove the lever T40243** .

17. **The camshaft clamp T40271** /2 must be screwed onto the cylinder head and then pushed into the toothing on the sprocket in **-direction of arrow 2-** .

    Use **adapter T40266** to turn the intake camshaft in **-direction of arrow 1-** if necessary.

Fig 16: Securing Intake Camshaft

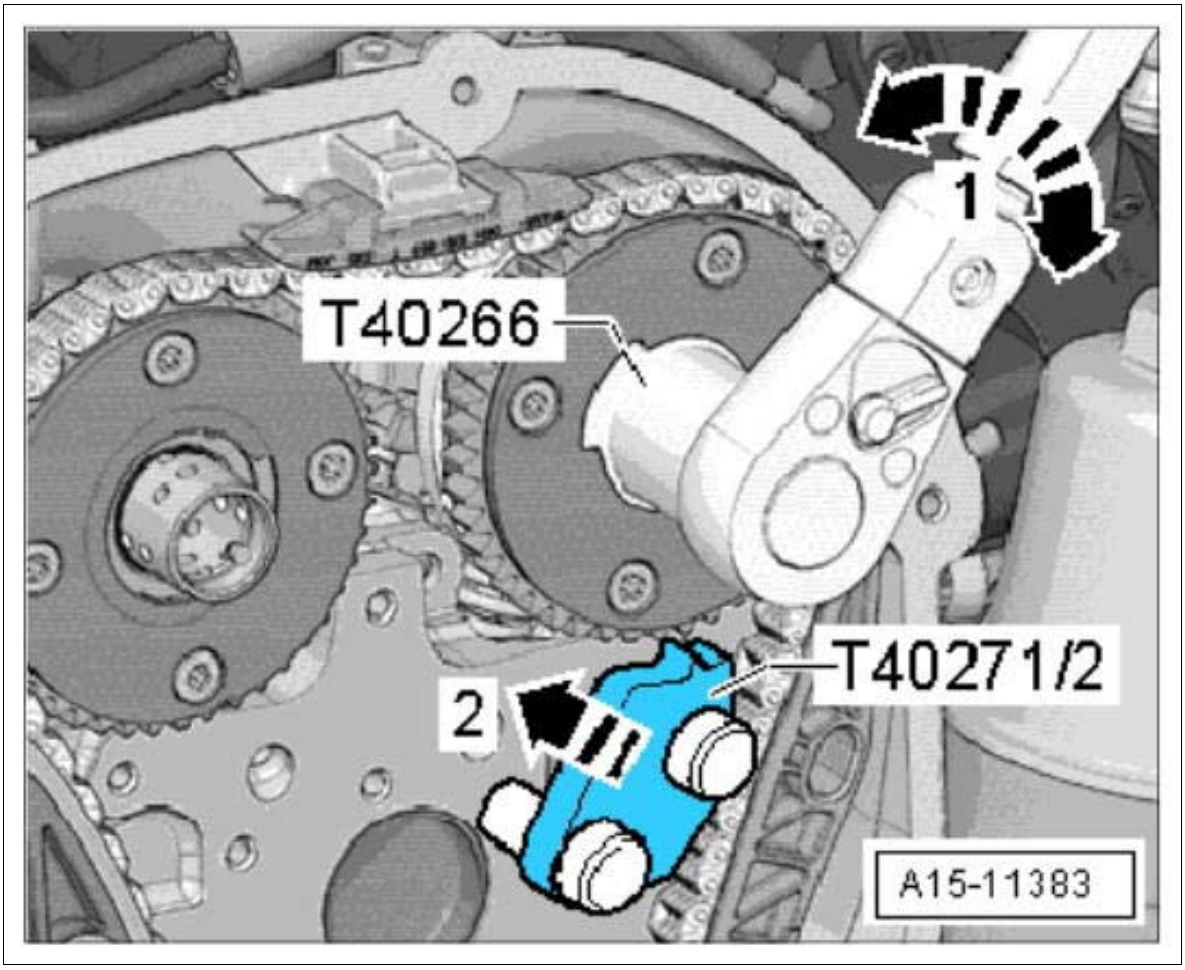

Courtesy of PORSCHE CARS NORTH AMERICA, INC.

18. Unscrew the guide pin **-1-** and guide the tensioning rail **-2-** down.

Fig 17: Loosening Tensioning Rail

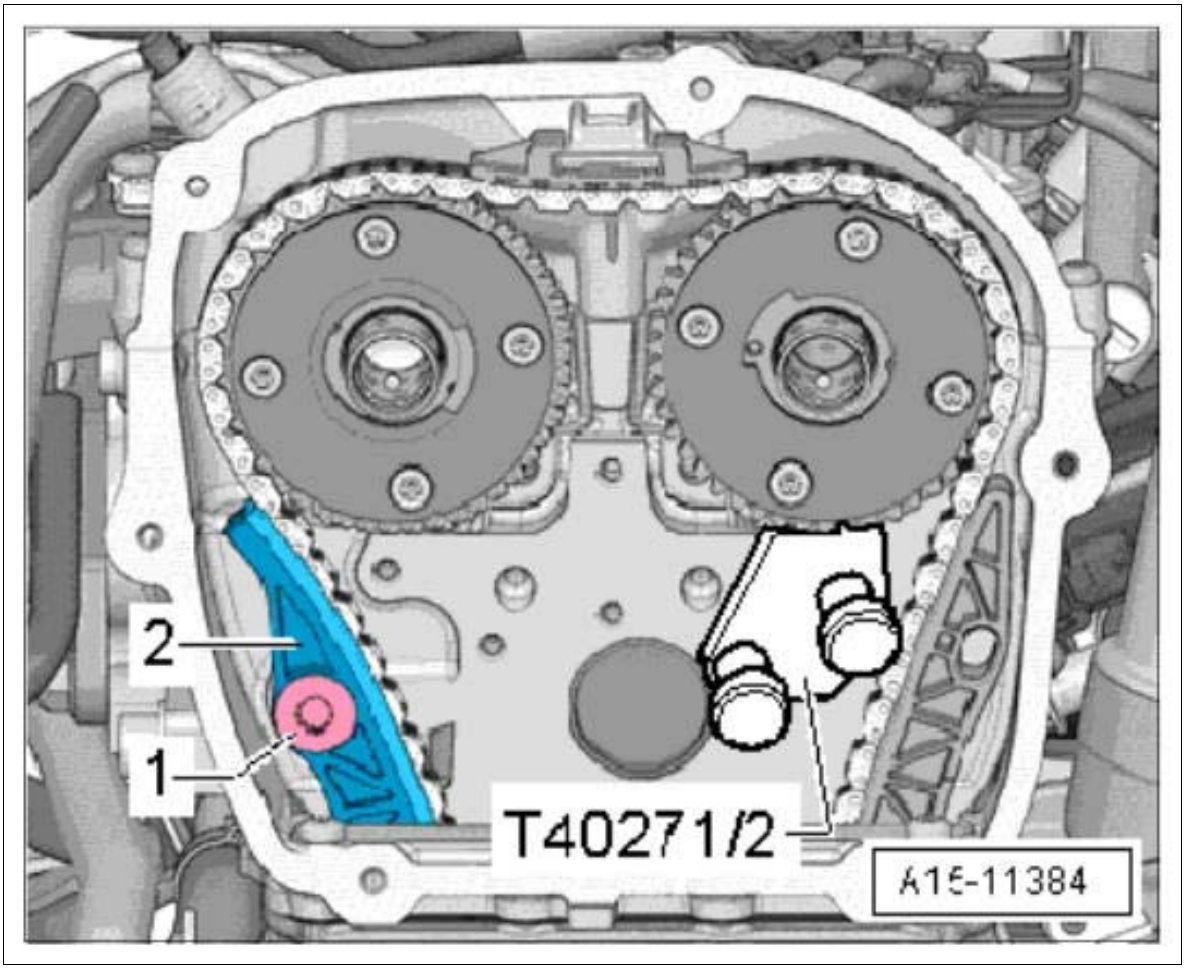

Courtesy of PORSCHE CARS NORTH AMERICA, INC.

19. Secure the outlet camshaft.

    1. 19.1. The **camshaft clamp T40271** /1 must be screwed onto the cylinder head. → Secure the outlet camshaft

    2. 19.2. Use adapter T40266 to turn the outlet camshaft in **-direction of arrow 1-** and push **camshaft clamp T40271** /1 onto the toothing in **-direction of arrow 2-** .

Fig 18: Securing Outlet Camshaft

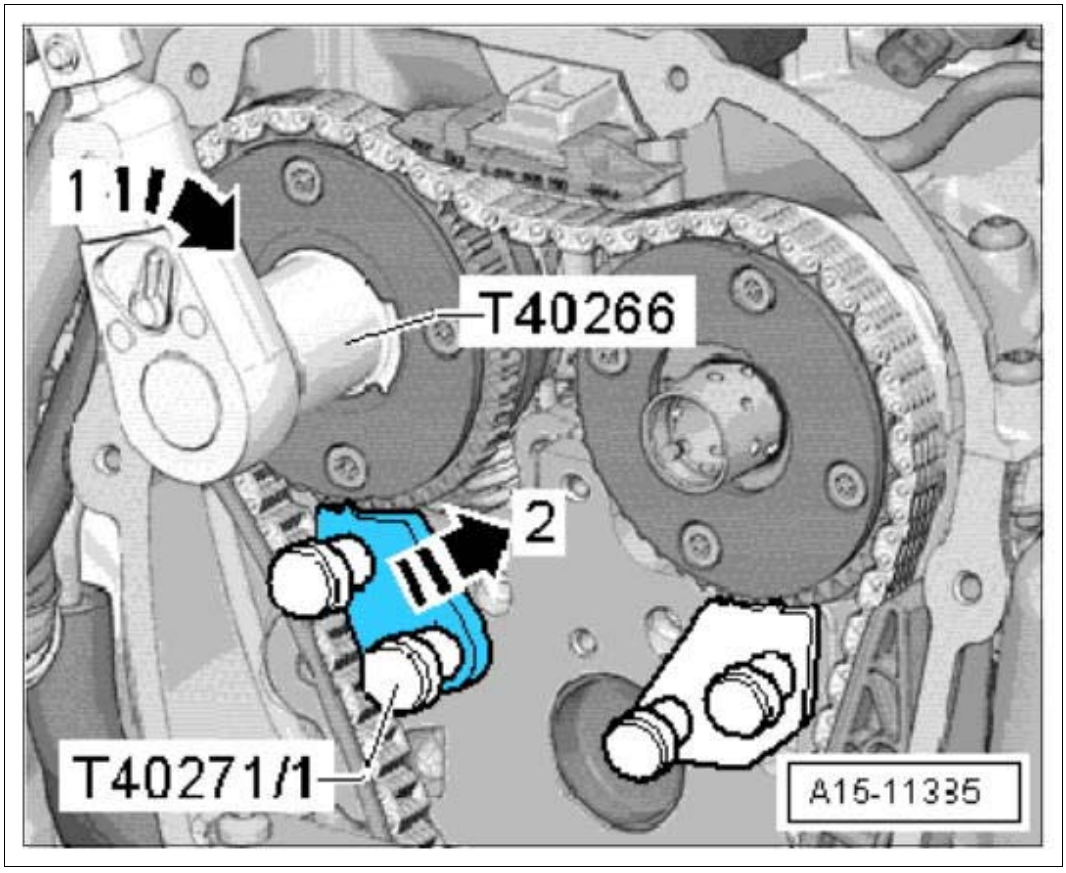

Courtesy of PORSCHE CARS NORTH AMERICA, INC.

20. Transfer the markings onto the camshaft clamps

    1. 20.1. Mark the sprockets to **camshaft clamps T40271** /1 and 2. **-arrow-**
    2. 20.2. Release the catch on the upper guide rail **-1-** and remove the upper guide rail.
    3. 20.3. Remove the timing chain from the sprockets.

Fig 19: Locating Camshaft Clamps Markings

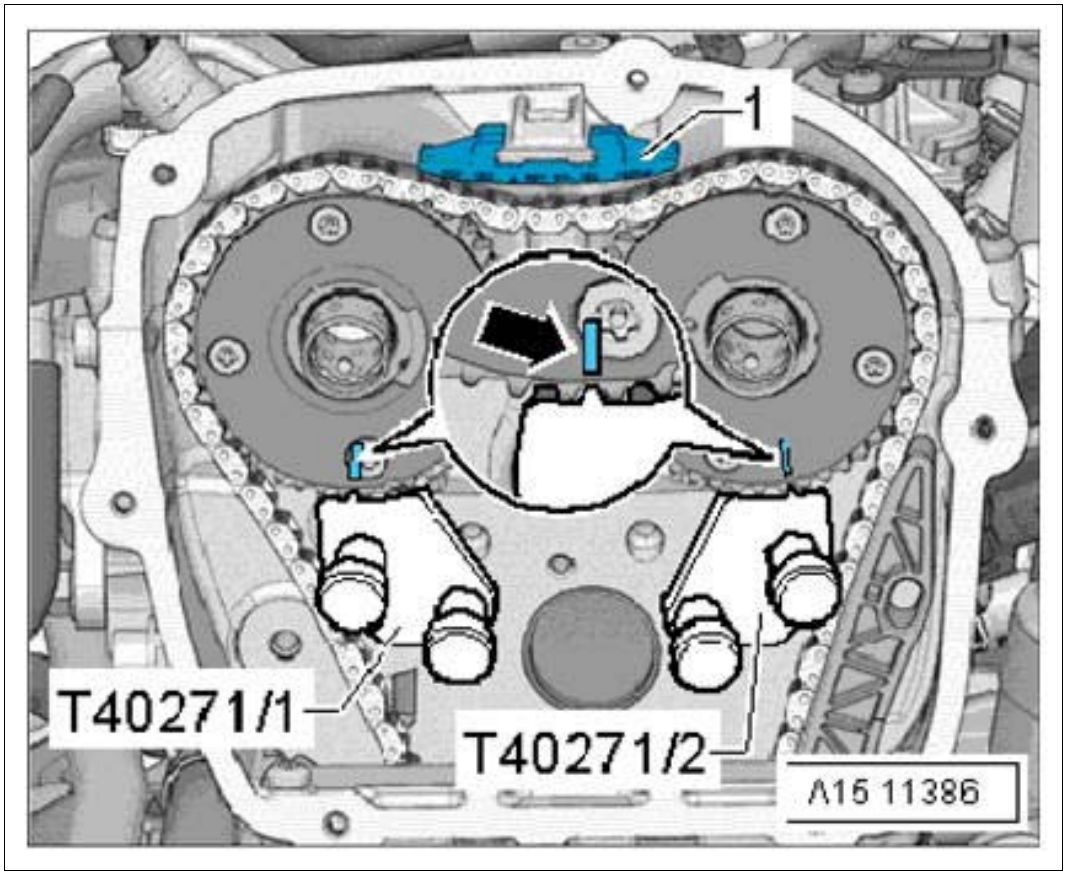

Courtesy of PORSCHE CARS NORTH AMERICA, INC.

21. Turn the pulley, **against the direction of rotation of the engine** , out of TDC position.

22. Turn camshaft in **-direction of arrow 1-** with adapter T40266, push **camshaft clamps T40271** /2 in **-direction of arrow 2-** and fit camshaft into normal position.

Fig 20: Securing Intake Camshaft

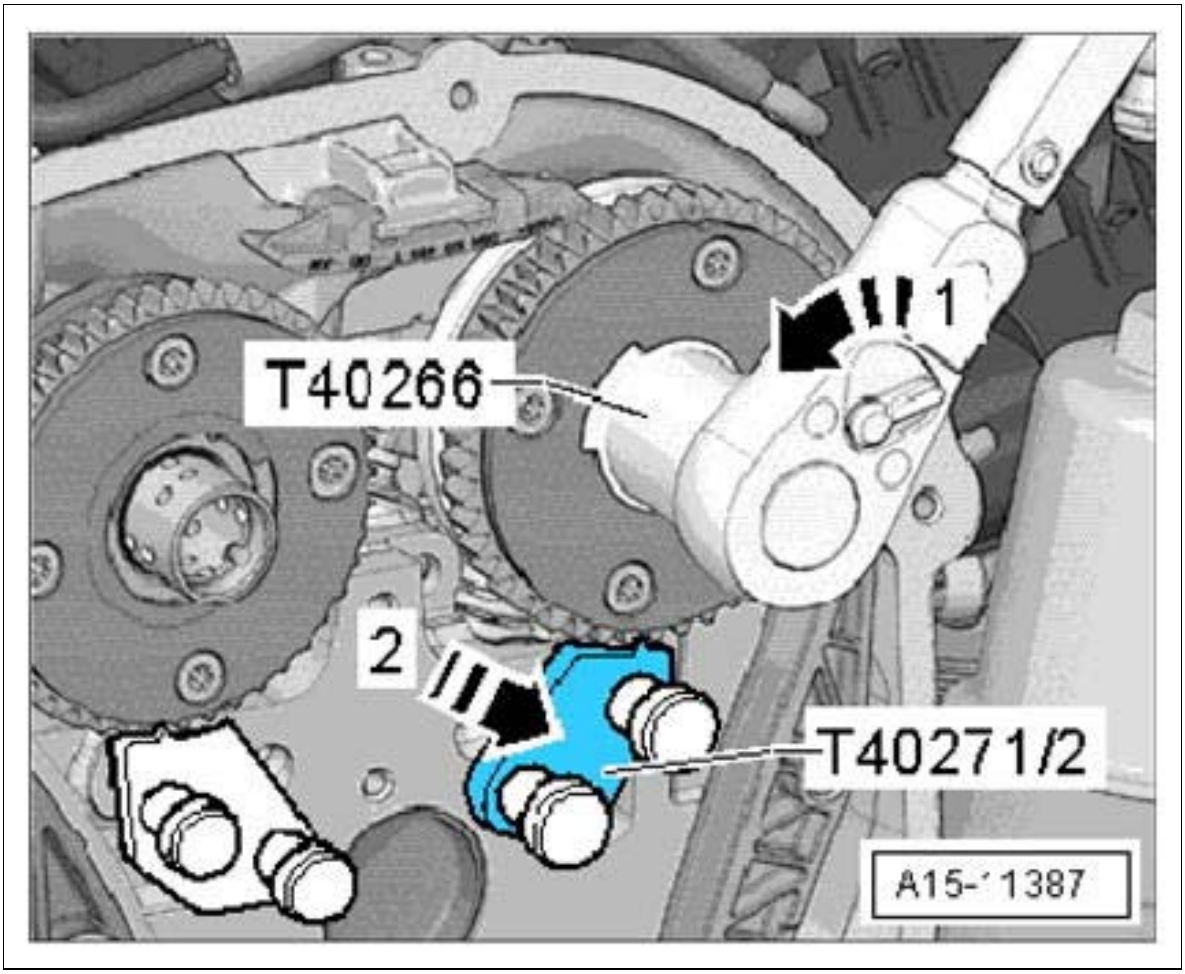

Courtesy of PORSCHE CARS NORTH AMERICA, INC.

23. Turncamshaft in **-direction of arrow 1-** with **adapter T40266** , push **camshaft clamps T40271** /1 in **-direction of arrow 2-** and fit camshaft into normal position.

Fig 21: Securing Outlet Camshaft

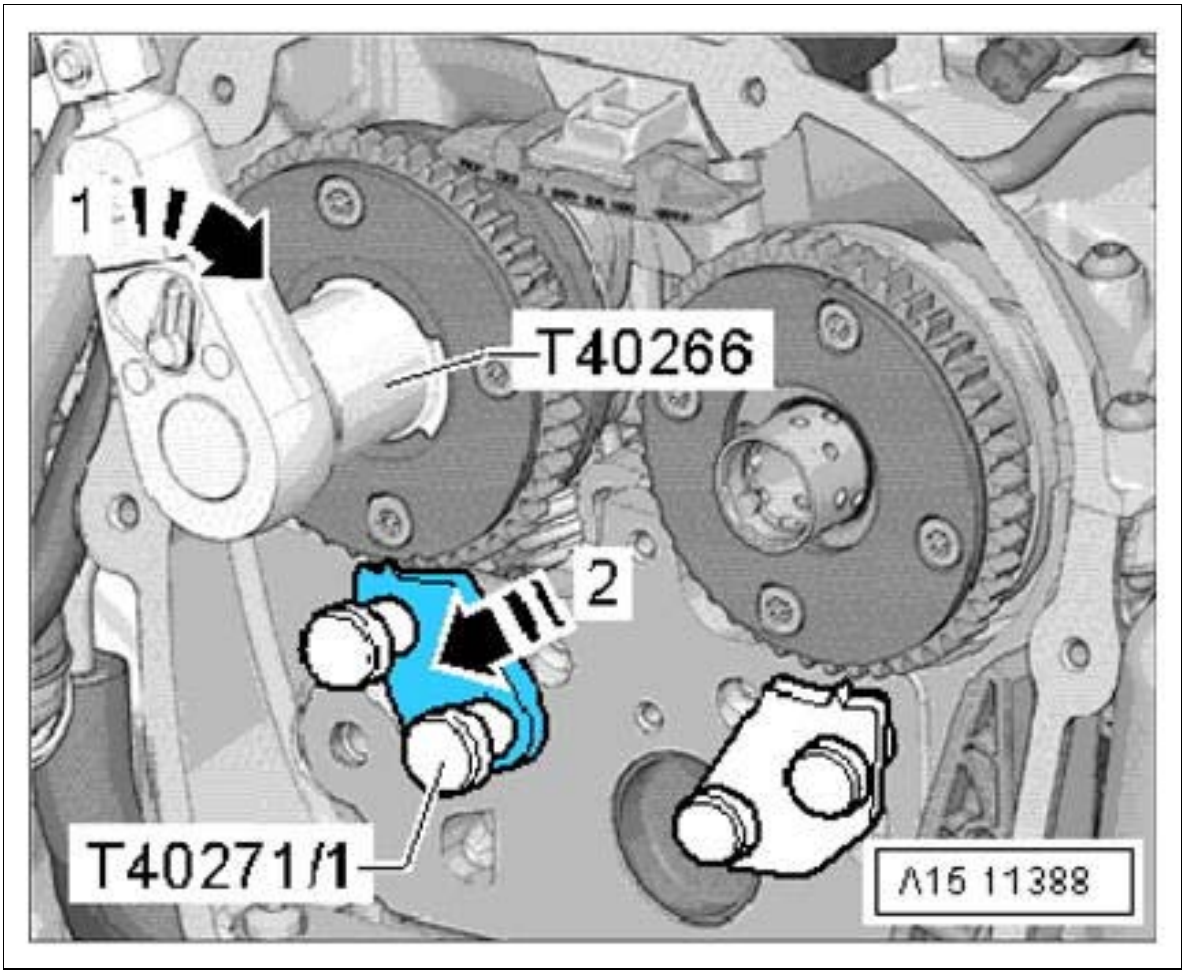

Courtesy of PORSCHE CARS NORTH AMERICA, INC.

24. Remove the high-pressure pump. → 246319 REMOVING AND INSTALLING THE HIGH-PRESSURE PUMP
25. Remove the vacuum pump. → 477619 REMOVING AND INSTALLING THE VACUUM PUMP
26. Unscrew the fastening screws on the cylinder head cover in the sequence **-1...6-** .

Fig 22: Cylinder Head Cover Screws Loosening Sequence

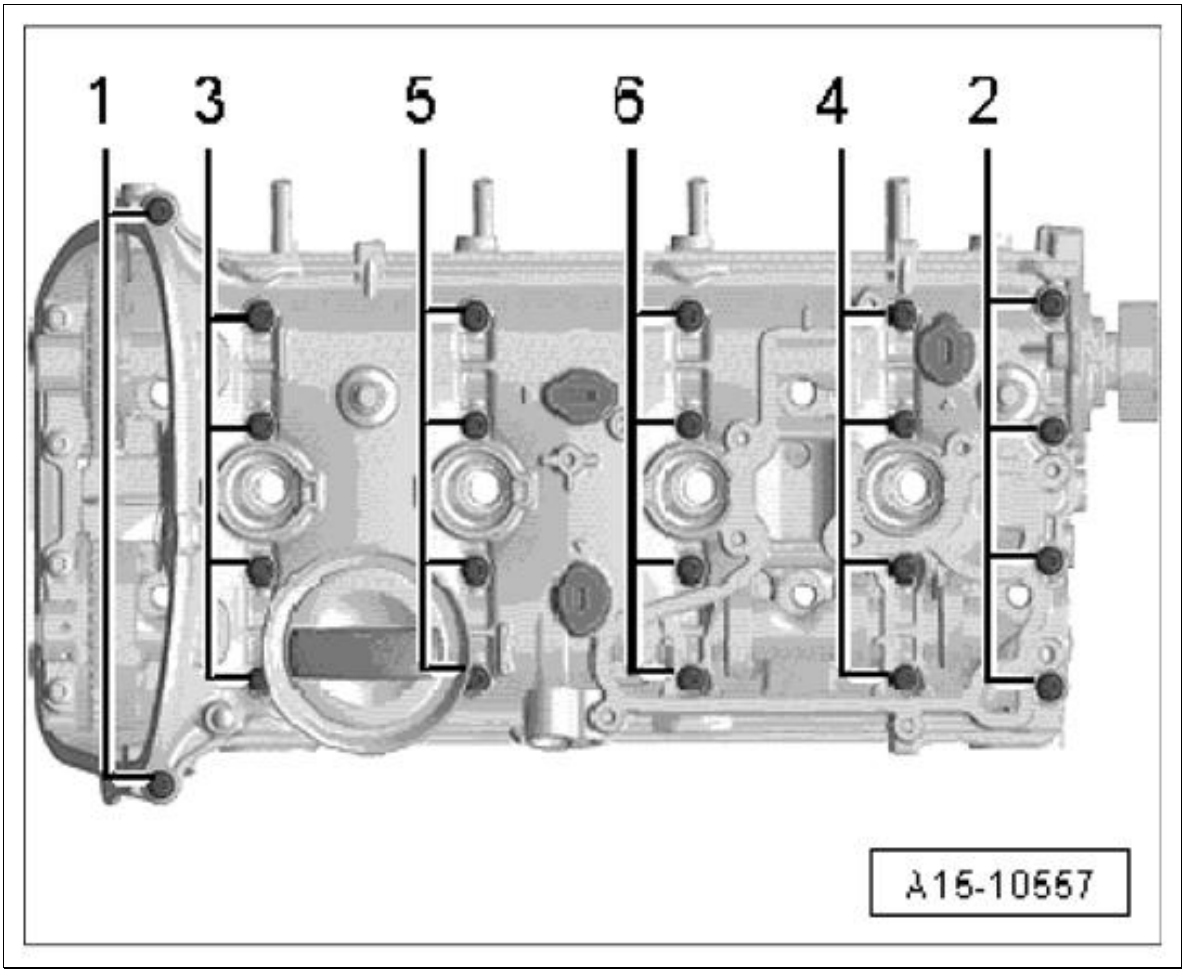

Courtesy of PORSCHE CARS NORTH AMERICA, INC.

27. Guide the cylinder head cover under permanent ventilation.
28. Remove the camshafts.

WM 158219 REMOVING AND INSTALLING CYLINDER HEAD COVER (MACAN) > INSTALL THE CYLINDER HEAD COVER

WARNING: Preloaded or pressurized components

- *Risk of eye injuries*
- *Risk of bruising*

→ Wear personal protective gear.

→ Secure components to prevent them from falling off suddenly.

NOTE: Dirt and contamination

- *Risk of damage to units or components*

→ Protect components from dirt and contamination.

→ Clean or replace dirty components.

Information

- Sealing faces must be free of oil and grease.
- The rocker arms must rest properly on the valve stem ends.
- The crankshaft must not be at the TDC position.

If the crankshaft has been turned, the piston of the 1st cylinder must be set to the top dead center and the crankshaft must be turned back again slightly.

1. Remove any sealant residue on the cylinder block using a flat scraper.
2. Remove any sealant residue from the groove on the cylinder head cover and from the sealing faces.
3. Oil the running surfaces of the camshafts.
4. When replacing the camshafts, transfer the markings **-arrow-** onto the new camshafts.

Fig 1: Locating Camshaft Clamps Markings

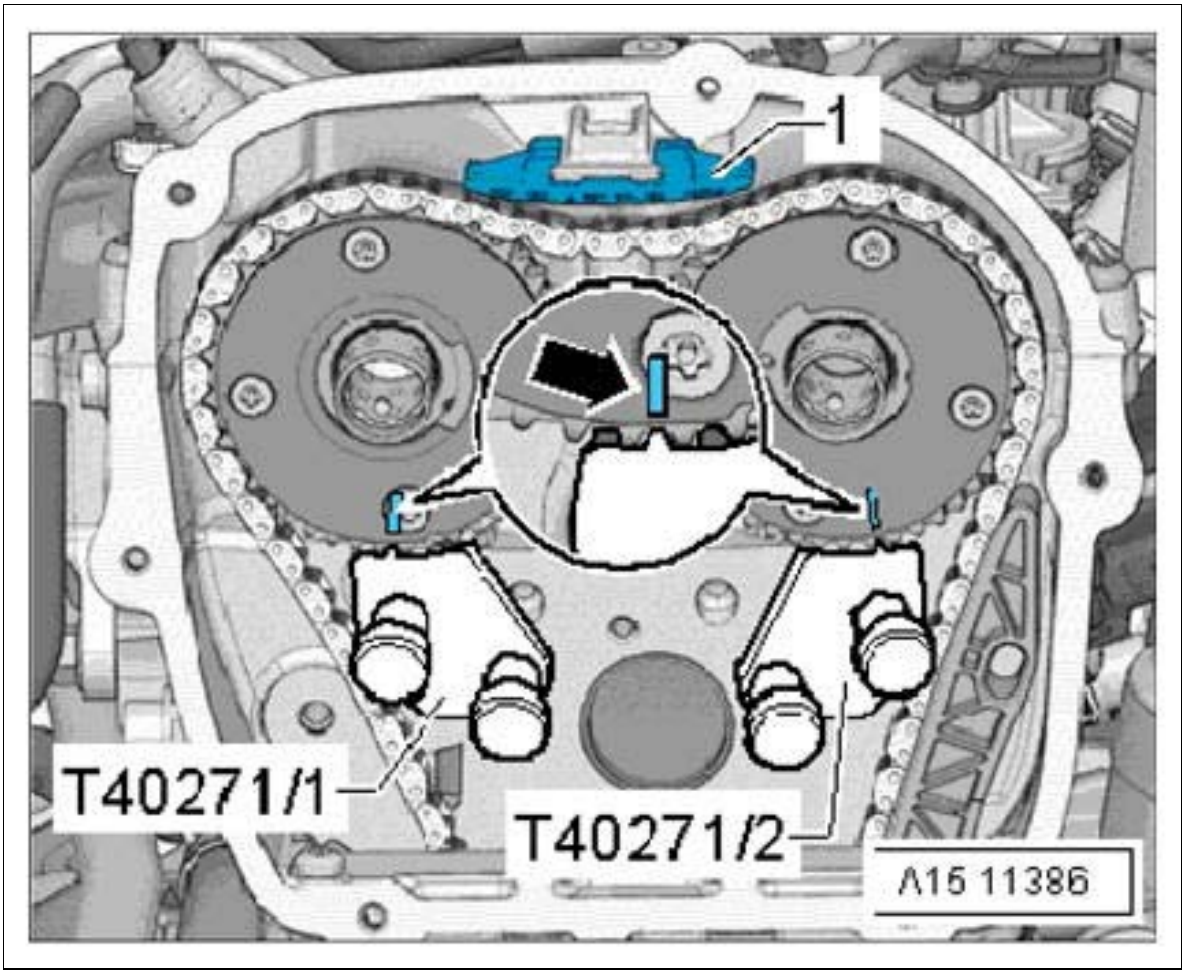

Courtesy of PORSCHE CARS NORTH AMERICA, INC.

5. Insert the intake camshaft **-1-** into the cylinder head.

Fig 2: Identifying Intake Camshaft

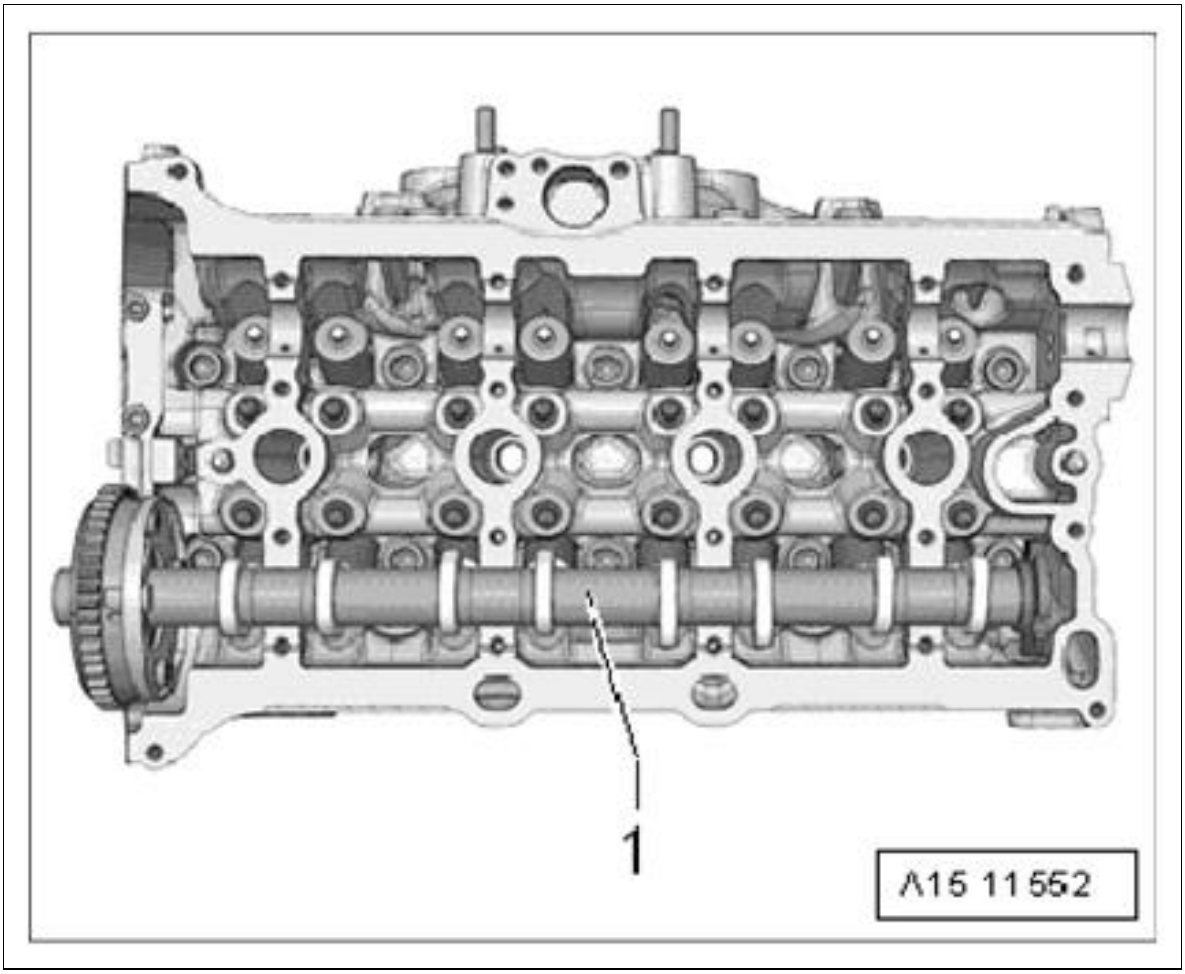

Courtesy of PORSCHE CARS NORTH AMERICA, INC.

6. Cut the nozzle off the sealant tube at the front marking (nozzle ø is approx. 2 mm).

Fig 3: Cutting Sealant Tube Nozzle

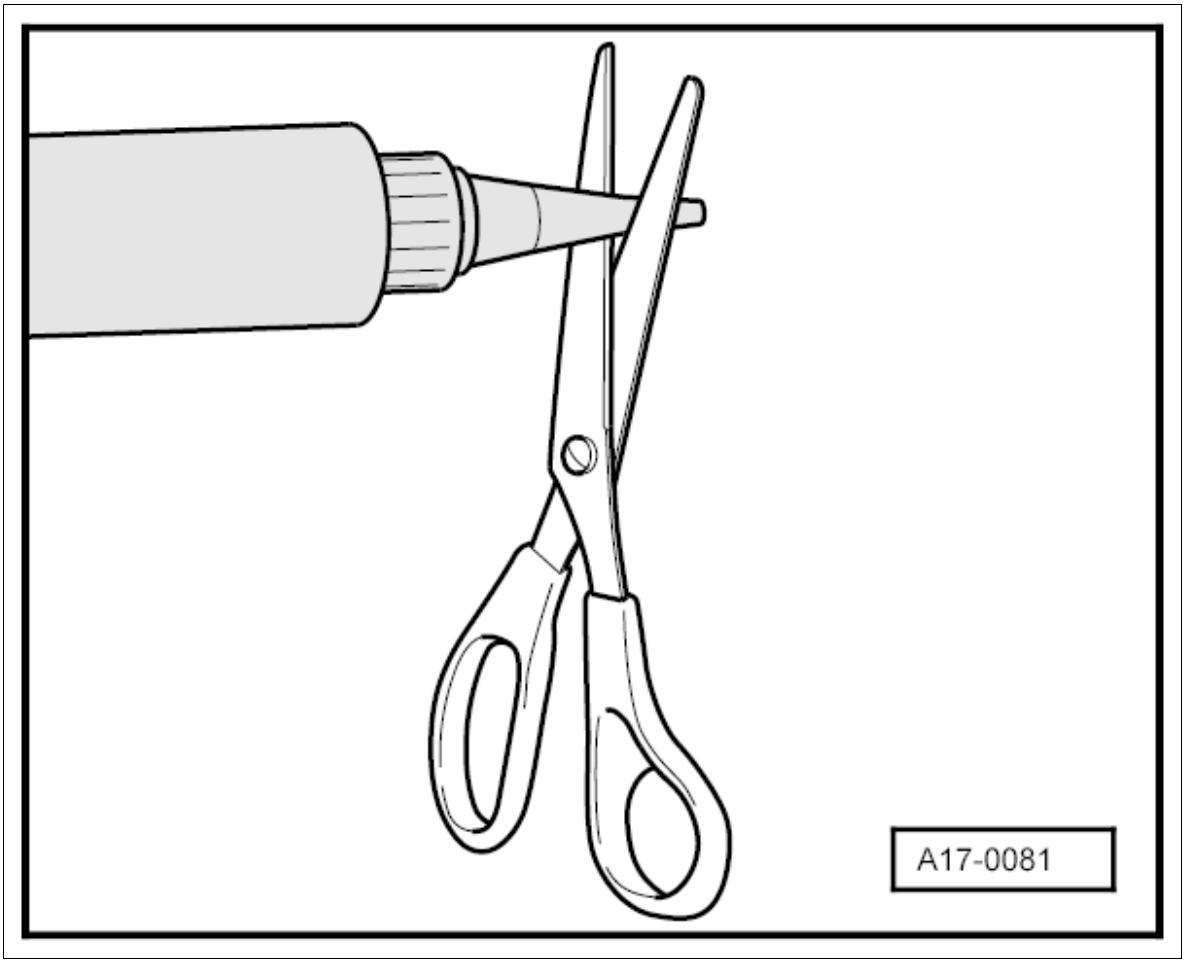

Courtesy of PORSCHE CARS NORTH AMERICA, INC.

Information

1. The cylinder head cover must be installed within 5 minutes of applying the sealant.
2. The bead of sealant must not be thicker than the prescribed thickness.
3. Observe the use-by date of the sealant.

7. Apply silicone sealant to clean sealing faces **-arrows-** .

   Sealant bead thickness: 2... 3 mm.

Fig 4: Locating Sealant Bead

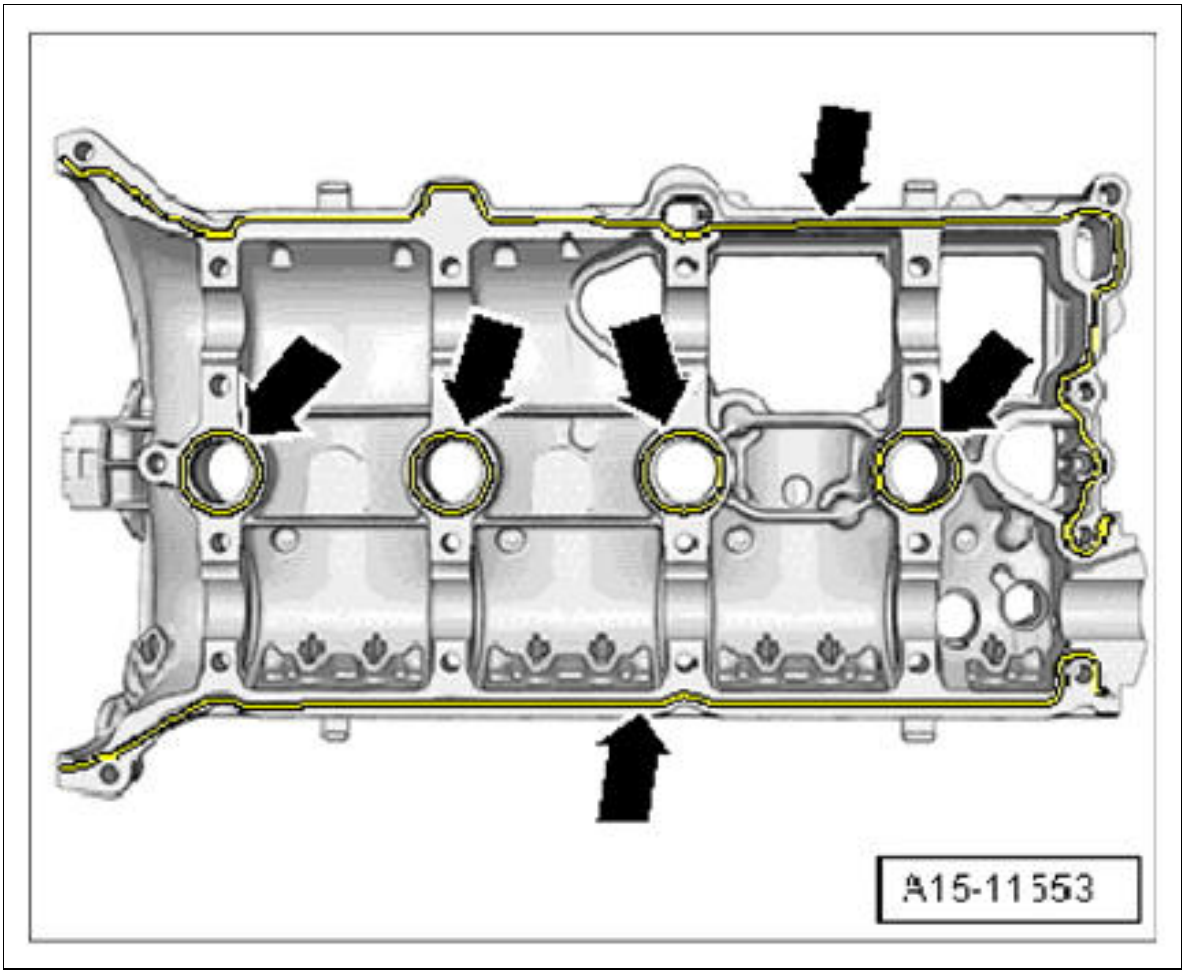

Courtesy of PORSCHE CARS NORTH AMERICA, INC.

8. Insert the outlet camshaft **-1-** into the cylinder head cover.

Fig 5: Identifying Outlet Camshaft

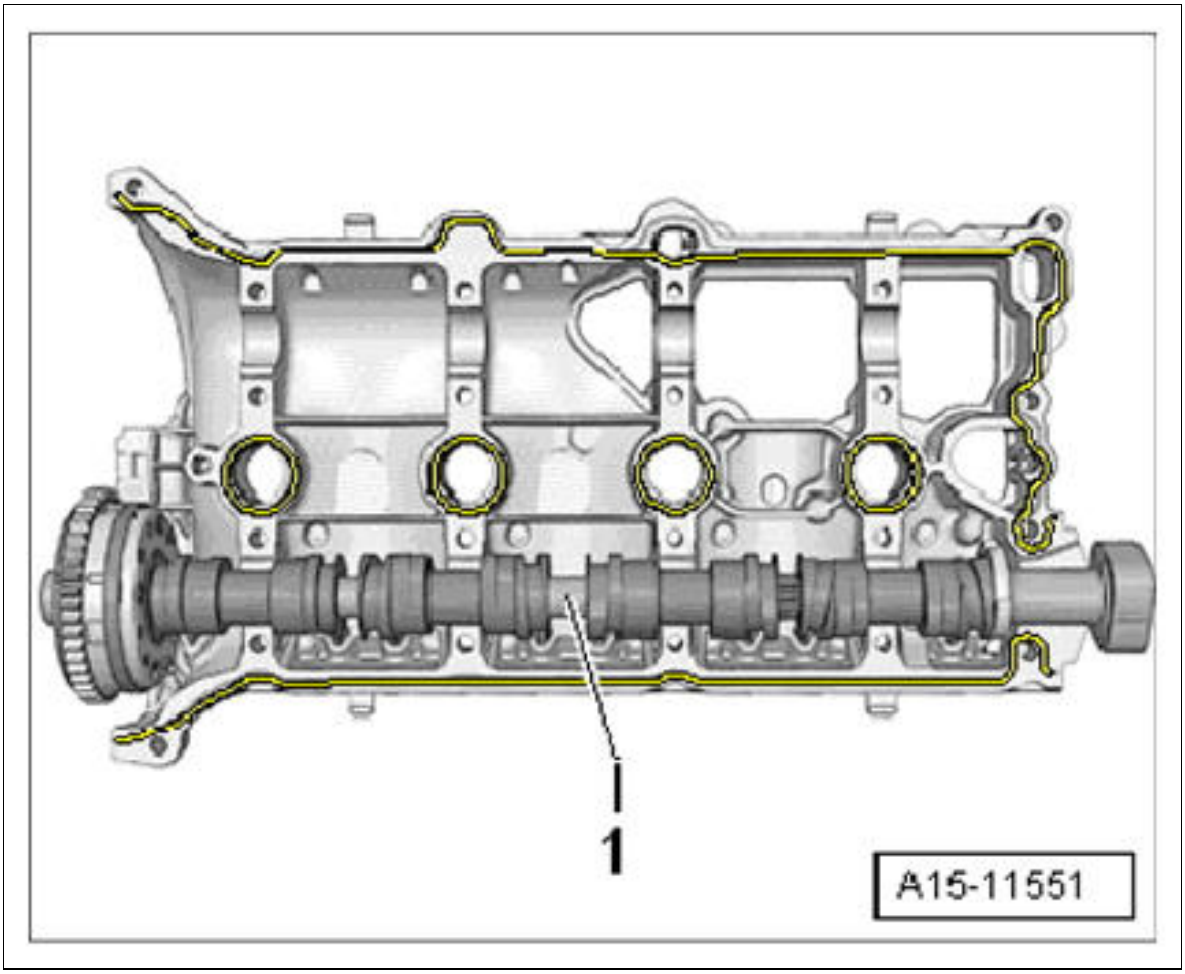

Courtesy of PORSCHE CARS NORTH AMERICA, INC.

9. Place the cylinder head cover and camshaft onto the cylinder head.
10. **Tighten the new** fastening screws in several steps in the sequence **-1...6-** .
    1. step: Screw in the fastening screws hand-tight.
    2. step: **Initial tightening 8 Nm (6 ftlb.)**
    3. step: **Final tightening +90°**

Fig 6: Cylinder Head Cover Screws Tightening Sequence

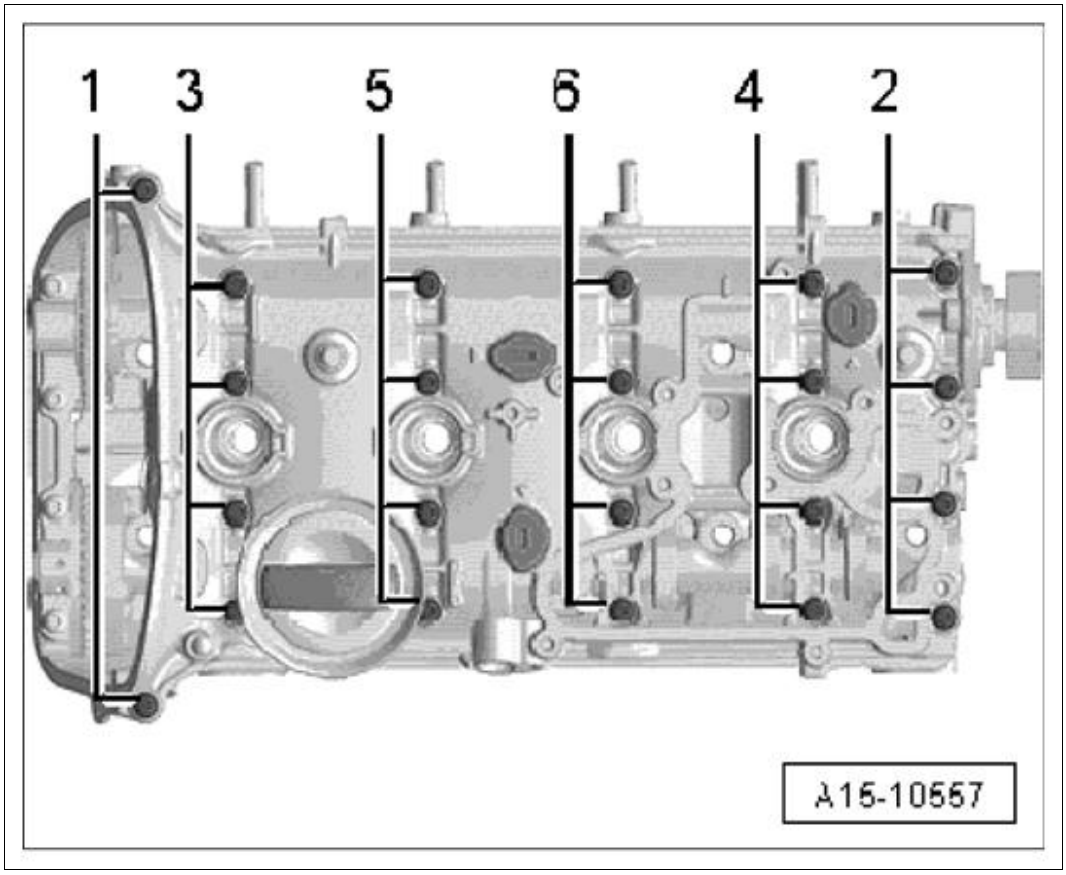

Courtesy of PORSCHE CARS NORTH AMERICA, INC.

11. Align the intake camshaft.
    1. 11.1. Turn the intake camshaft in **-direction of arrow 1-** until the marking **-3-** aligns with the **camshaft clamps T40271/2** .
    2. 11.2. **Push the camshaft clamp T40271** /2 in **-direction of arrow 2-** onto the splines of the sprocket.

Fig 7: Aligning Intake Camshaft

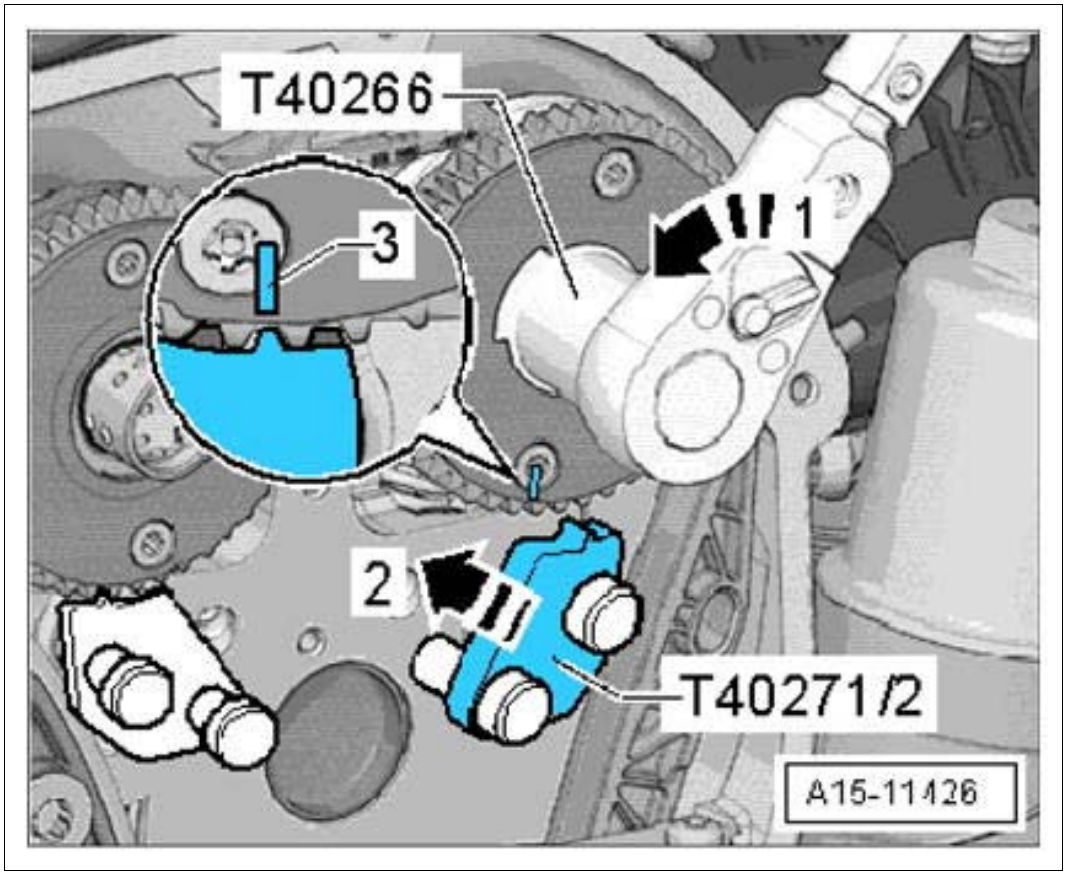

Courtesy of PORSCHE CARS NORTH AMERICA, INC.

12. Align the outlet camshaft.

    1. 12.1. Turn the outlet camshaft in the direction of the arrow **-direction of arrow 1-** until the marking **-3-** aligns with the **camshaft clamps T40271** /1.

    2. 12.2. **Push the camshaft clamp T40271** /1 in **-direction of arrow 2-** onto the splines of the sprocket.

Fig 8: Aligning Outlet Camshaft

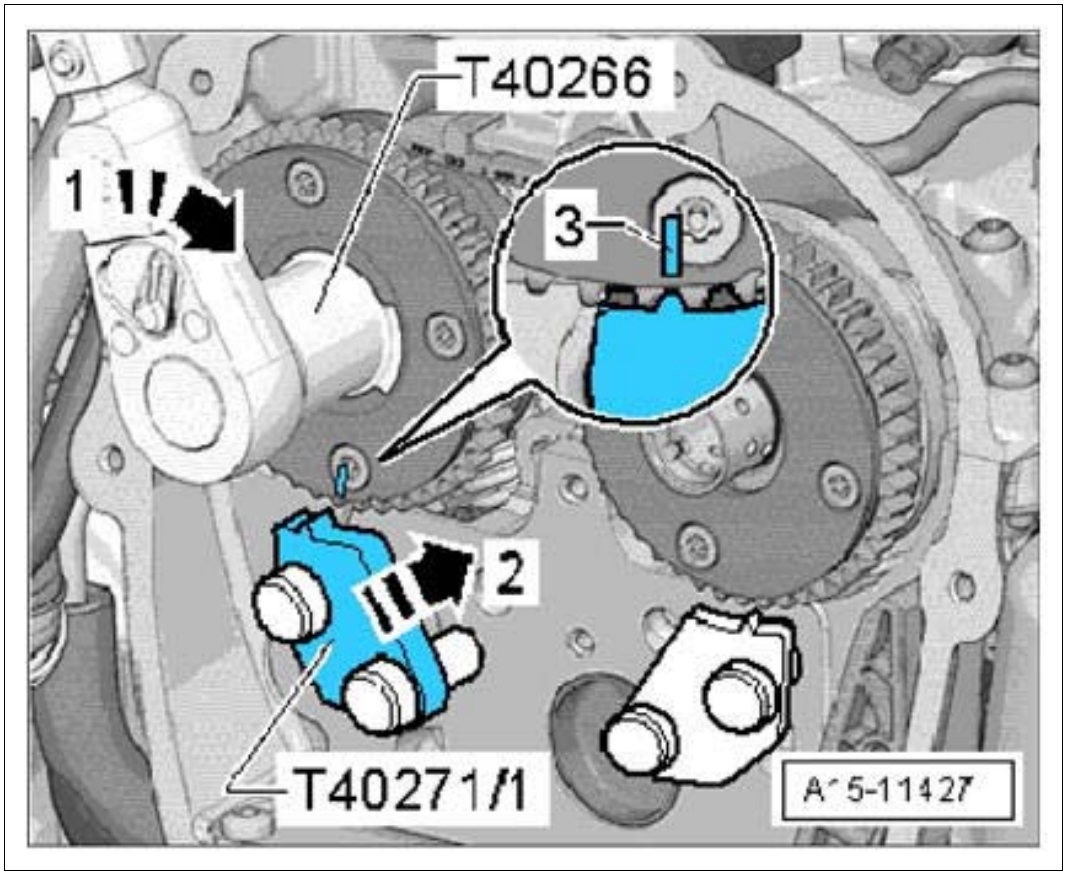

Courtesy of PORSCHE CARS NORTH AMERICA, INC.

13. Turn the pulley using **counter-hold tool T10355** to set to the TDC position.

    1. 13.1. The notch on the pulley and the marking on the timing-case cover **-arrow-** must be aligned.

Fig 9: Locating TDC Marking On Pulley

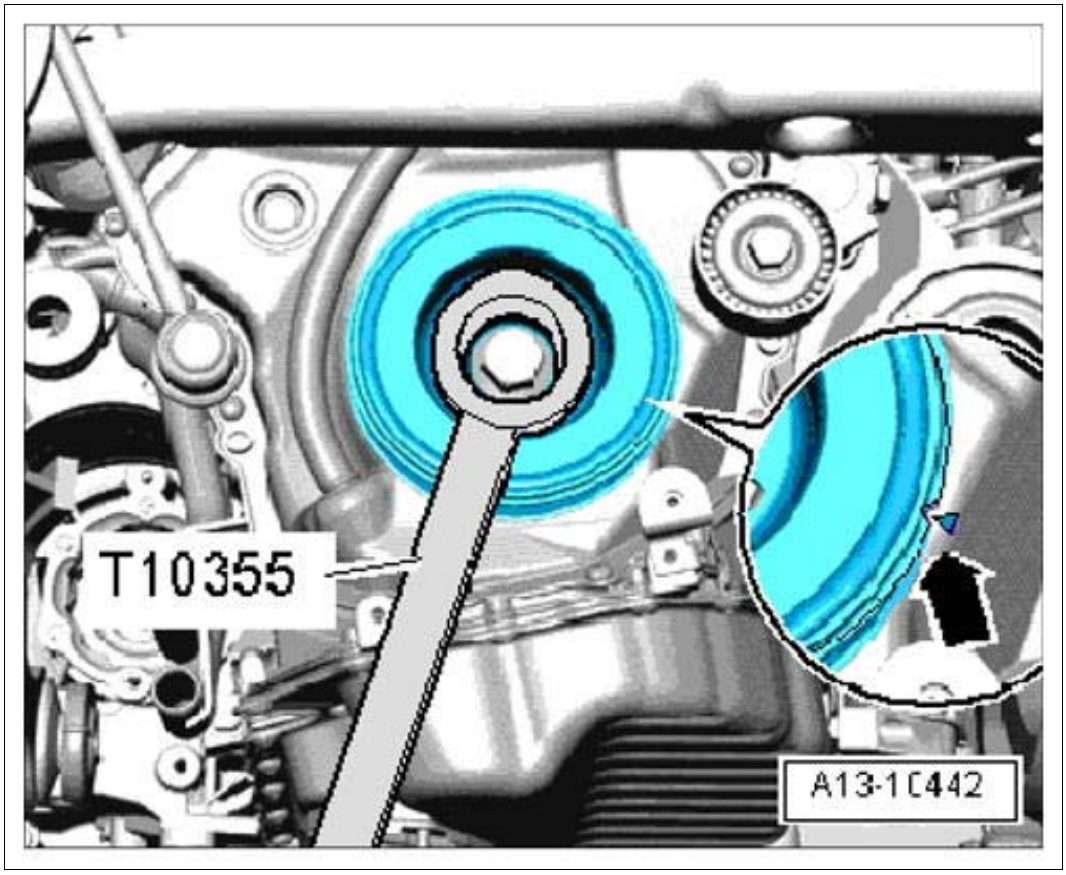

Courtesy of PORSCHE CARS NORTH AMERICA, INC.

14. Install the timing chain.

    1. 14.1. Position the markings on the chain links **-arrows-** at the markings on the sprockets **-1-** .
    2. 14.2. Install the upper guide rail **-2-** .

Fig 10: Locating Sprockets Marking

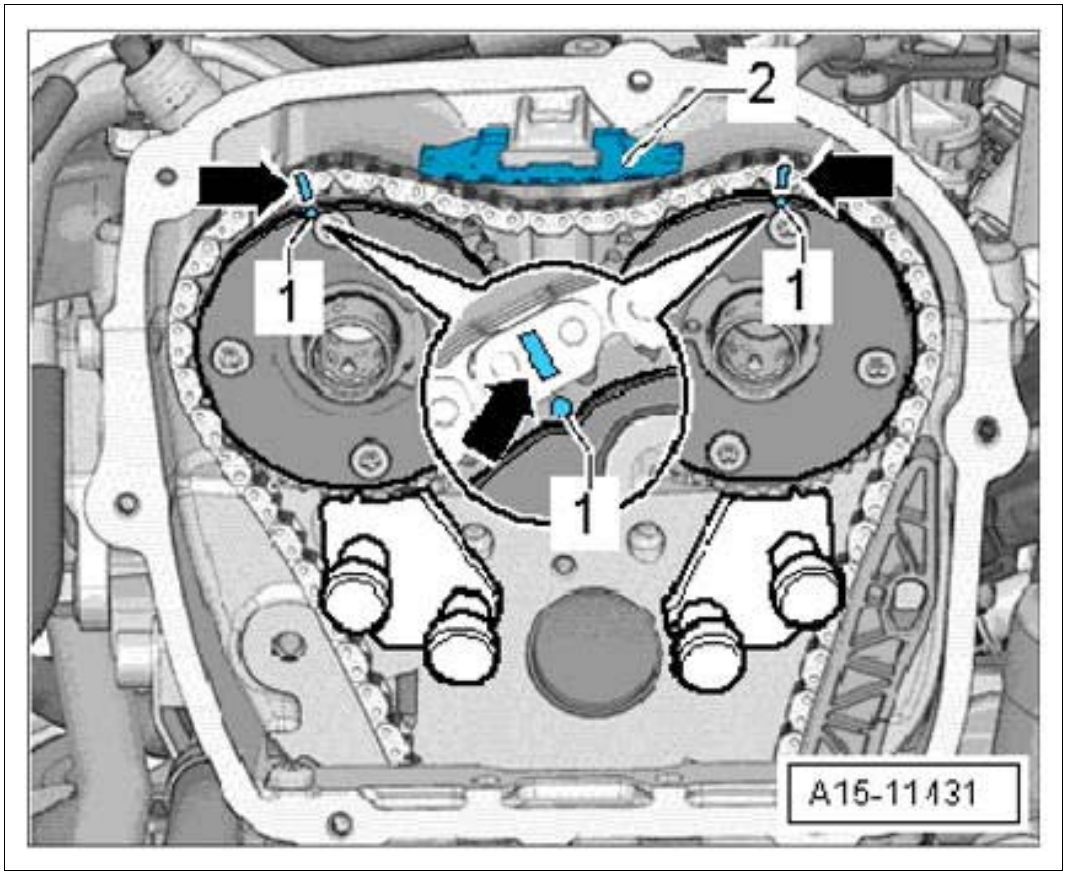

Courtesy of PORSCHE CARS NORTH AMERICA, INC.

15. **Camshaft clamp T40271** /1 can now be removed.

    1. 15.1. **Use adapter T40266** to turn the outlet camshaft in **-direction of arrow 1-** .
    2. 15.2. **Camshaft clamp T40271** /1 must be pushed out of the toothing on the sprocket in **-direction of arrow 2-** .
    3. 15.3. Relieve the camshaft and remove **camshaft clamp T40271** /1.

Fig 11: Removing Outlet Camshaft Fixing Device

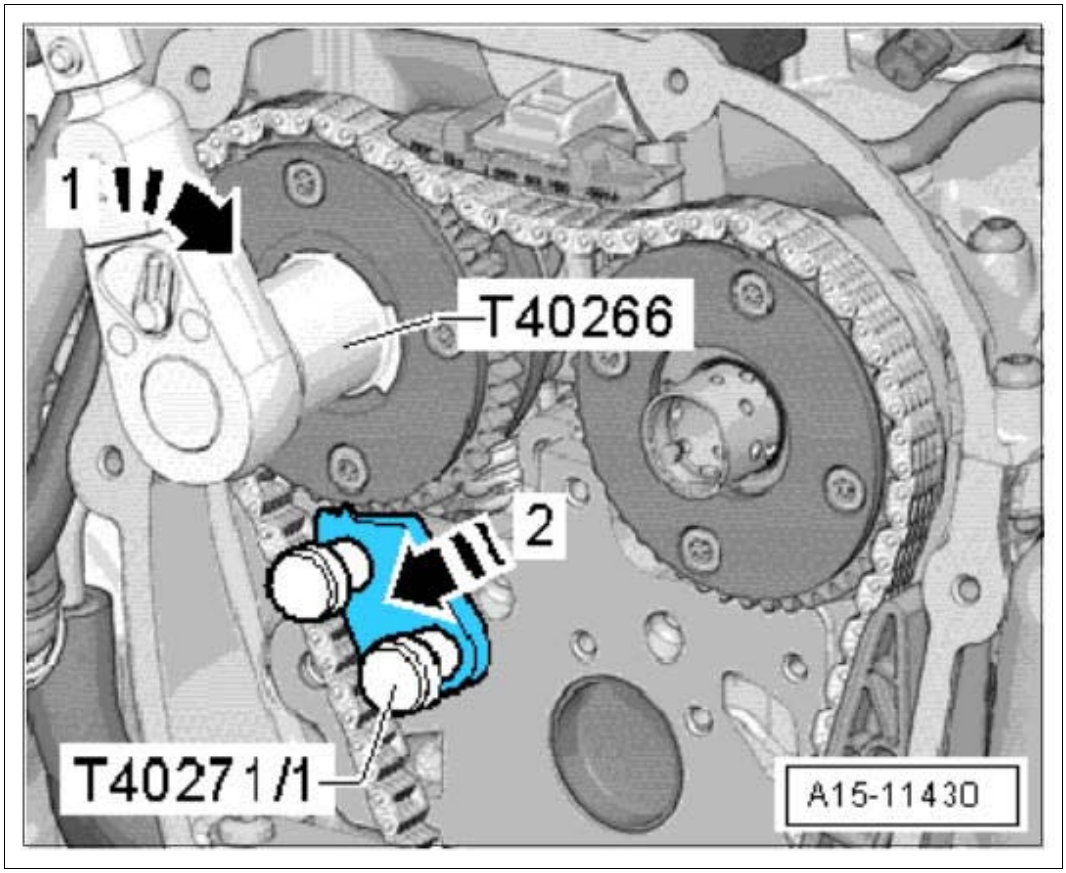

Courtesy of PORSCHE CARS NORTH AMERICA, INC.

16. Guide the tensioning rail **-2-** up, fit and tighten the guide pin **-1-** .

Fig 12: Securing Tensioning Rail

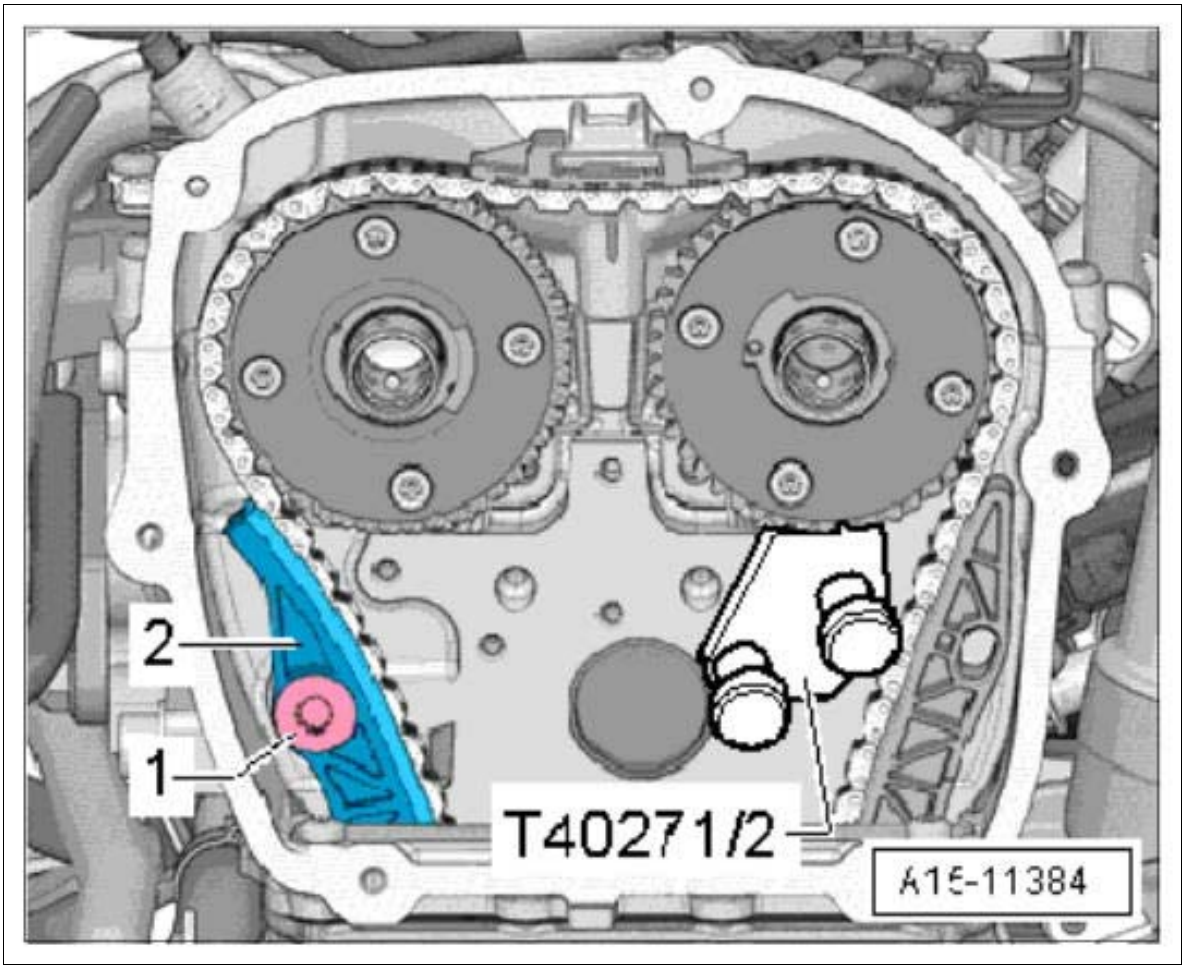

Courtesy of PORSCHE CARS NORTH AMERICA, INC.

17. **The camshaft clamp T40271** /2 can now be removed.

    1. 17.1. **Use adapter T40266** to turn the intake camshaft in **-direction of arrow 1-** .
    2. 17.2. **The camshaft clamp T40271** /2 must be pushed out of the toothing on the sprocket in **-direction of arrow 2-** .
    3. 17.3. Relieve the camshaft and remove the **camshaft clamp T40271** /2.

Fig 13: Removing Intake Camshaft Clamp

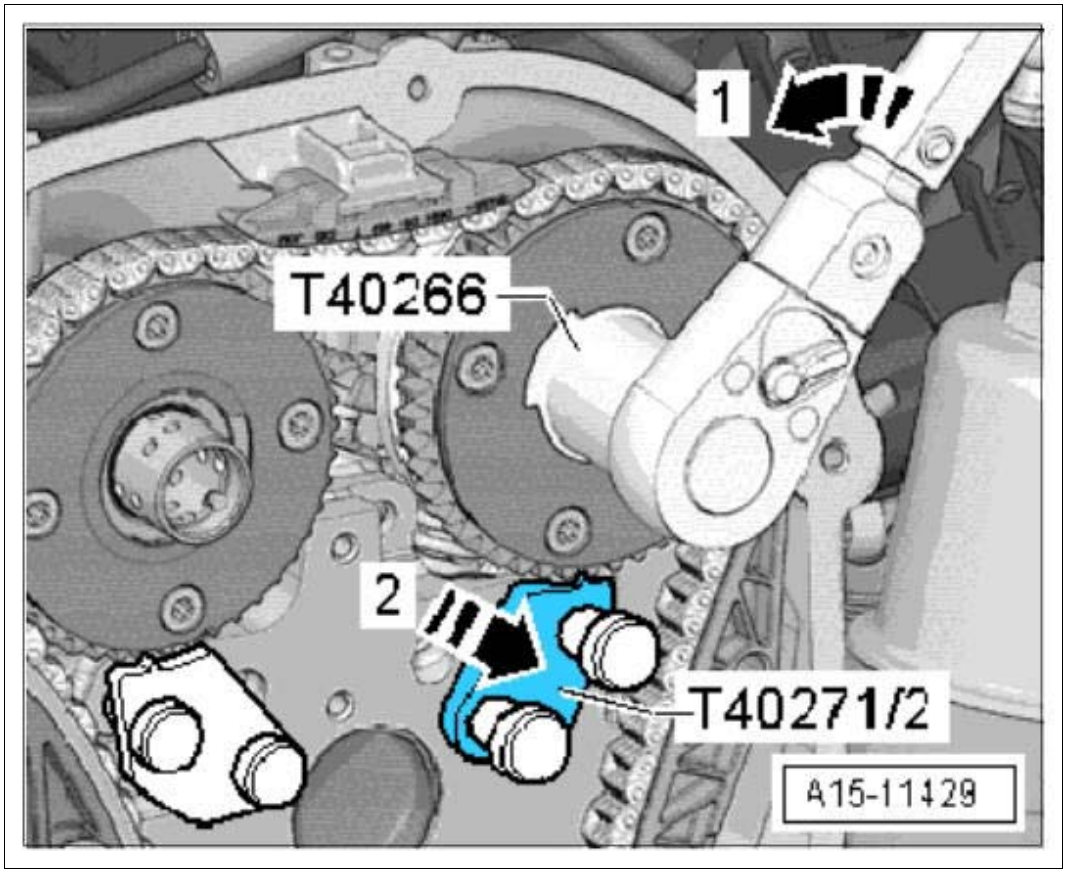

Courtesy of PORSCHE CARS NORTH AMERICA, INC.

18. Check the timing.

    1. 18.1. The timing chain and cylinder head **-arrows-** must align with the markings on the sprockets **-1-** .
    2. 18.2. The markings on the timing chain and guide rail **-2-** must be aligned.
    3. 18.3. The notch on the pulley must be aligned with the marking on the timing-case cover **-3-** .
    4. 18.4. If the markings applied are no longer visible, the timing must be checked. → 150516 ADJUST THE CAMSHAFTS

Fig 14: Locating Sprockets Marking

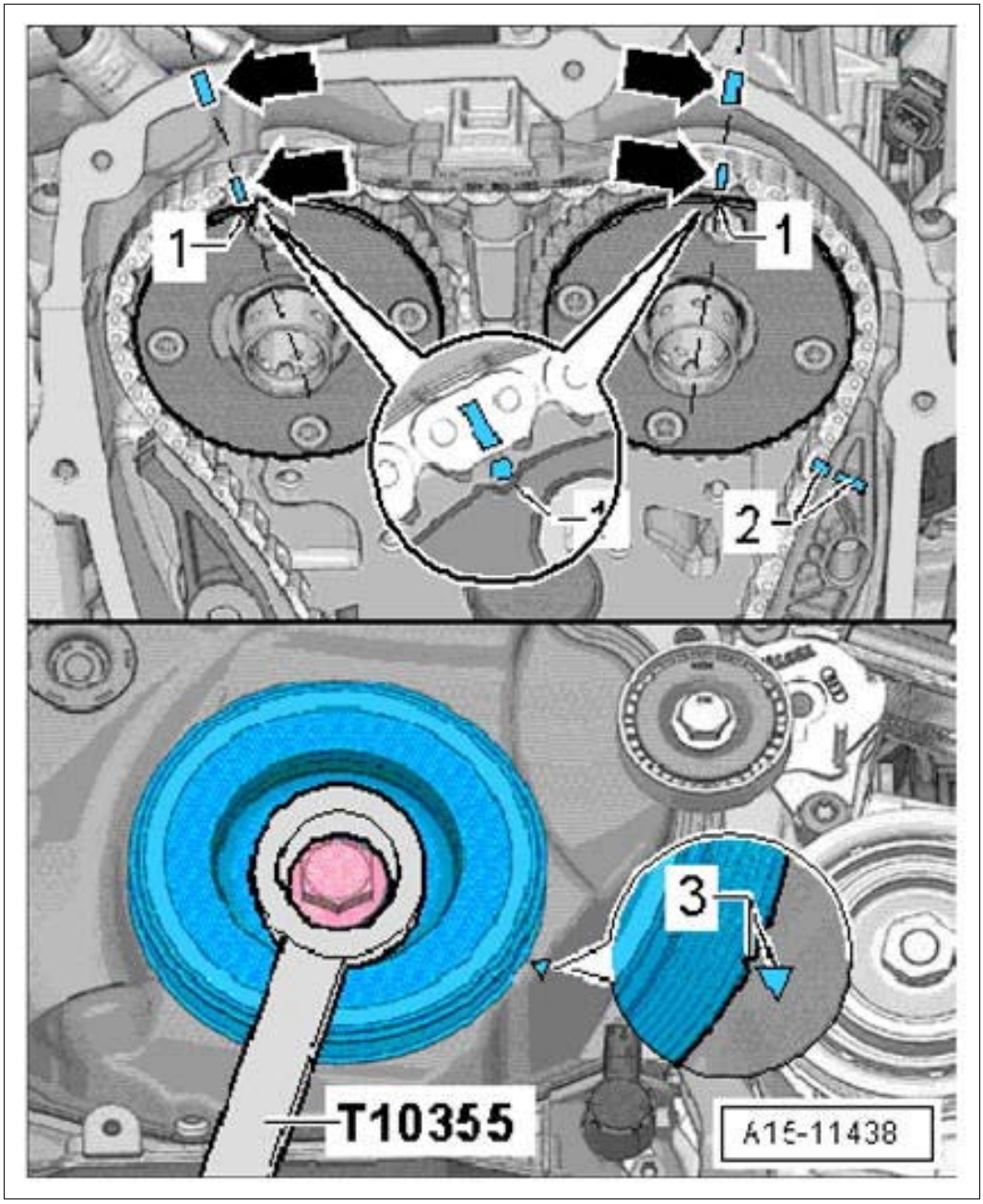

Courtesy of PORSCHE CARS NORTH AMERICA, INC.

19. **Pull out the staking tool T40267** .

Fig 15: Securing Chain Tensioner

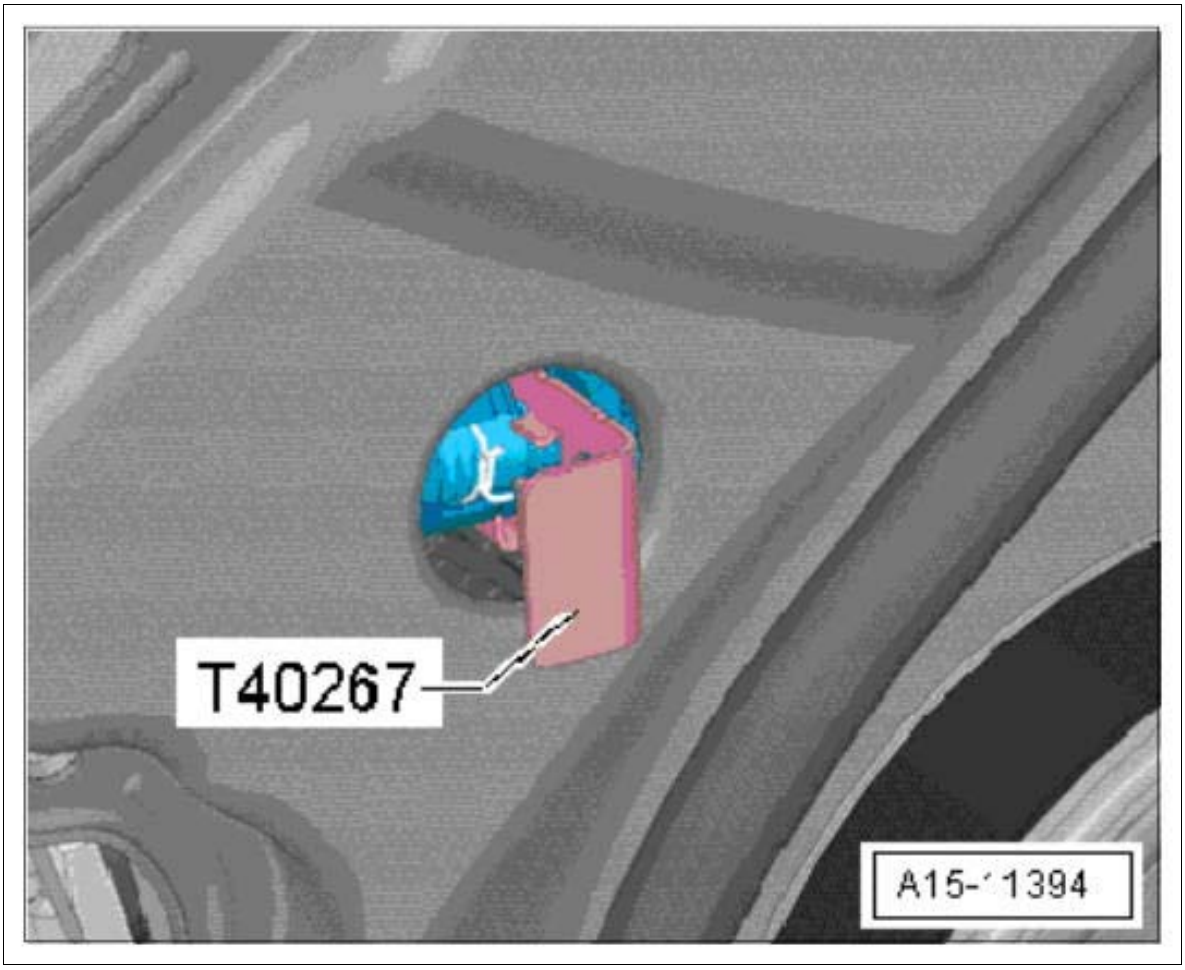

Courtesy of PORSCHE CARS NORTH AMERICA, INC.

20. Insert **-arrow-** the plug.

Fig 16: Locating Chain Tensioner Plug

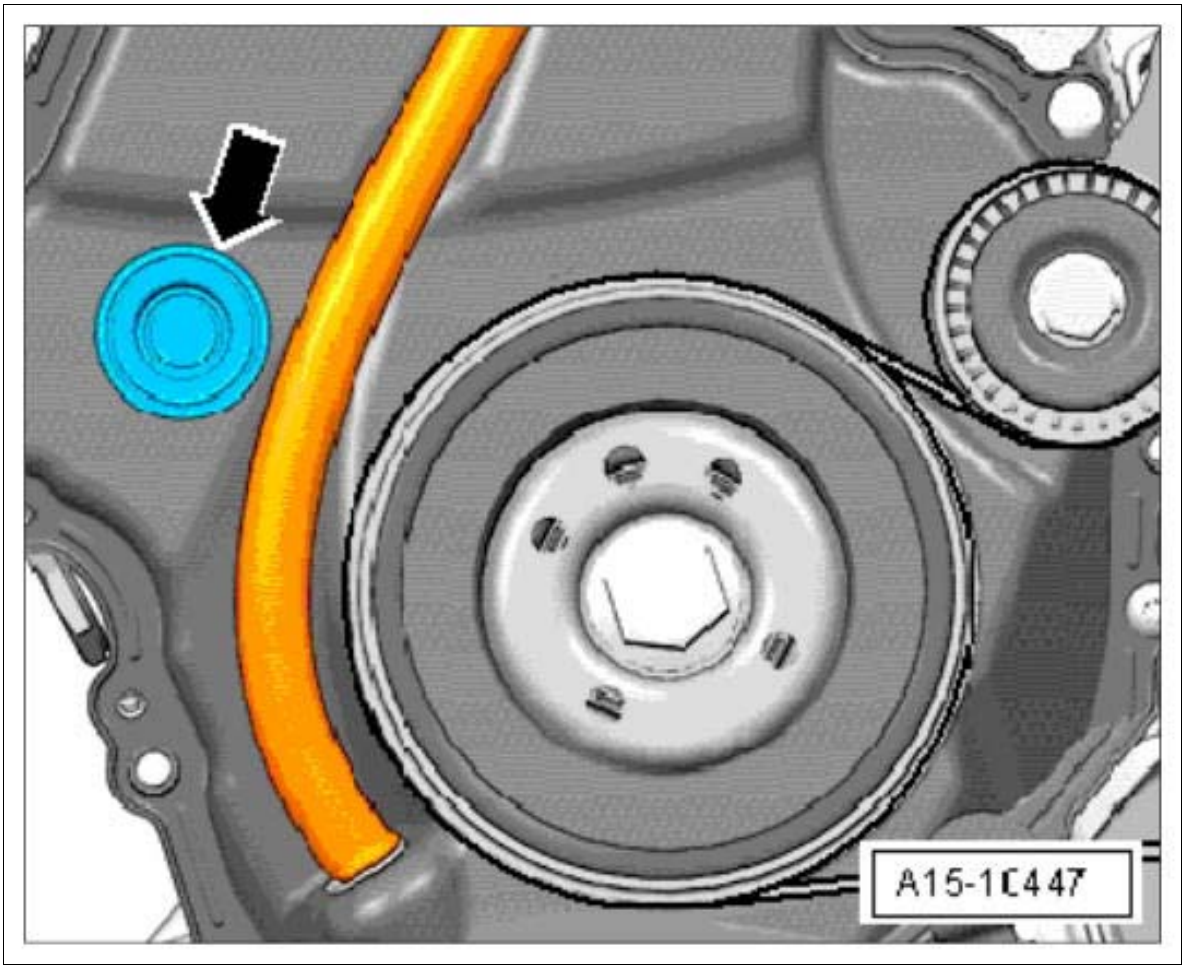

Courtesy of PORSCHE CARS NORTH AMERICA, INC.

21. **Fit and tighten the new fastening screws.**

    1. step:

    2. step:

Fig 17: Locating Chain Tensioner Screws

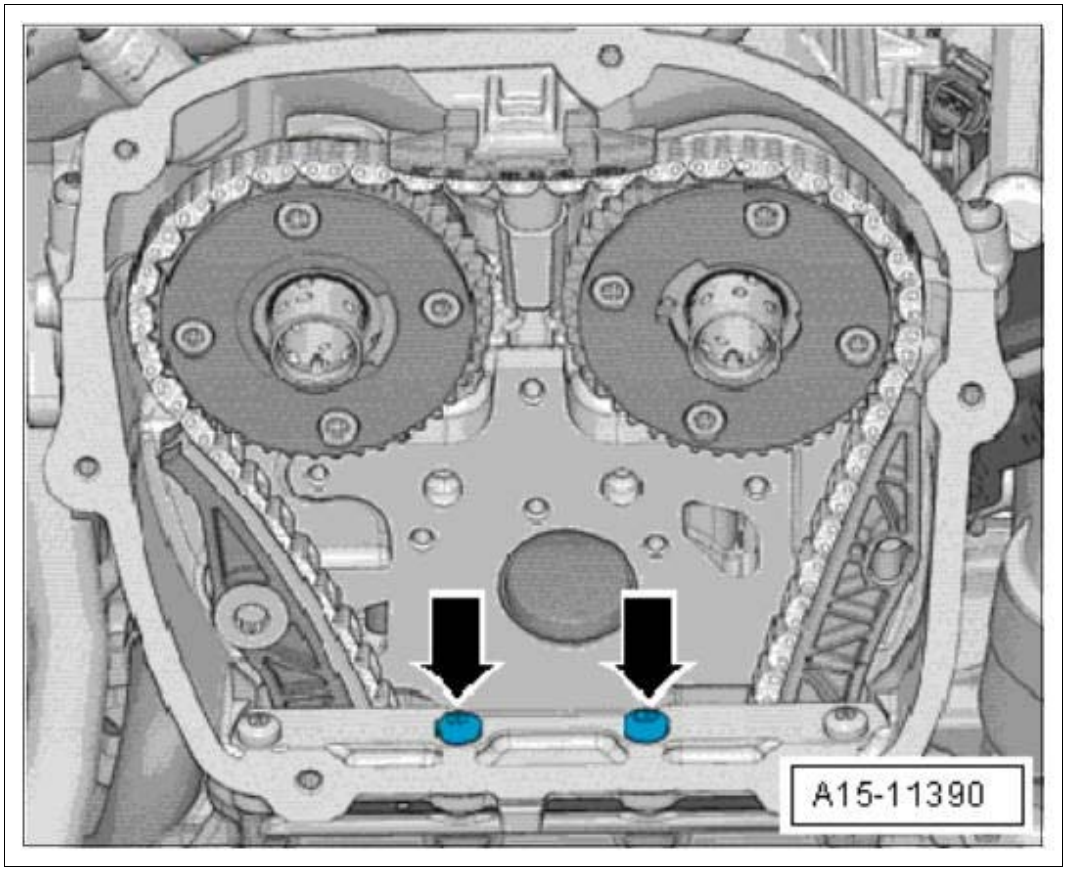

Courtesy of PORSCHE CARS NORTH AMERICA, INC.

22. Fit and tighten the bearing saddle with the new fastening screws **-arrows-** .

    1. step:

    2. step:

Fig 18: Locating Bearing Saddle Screws

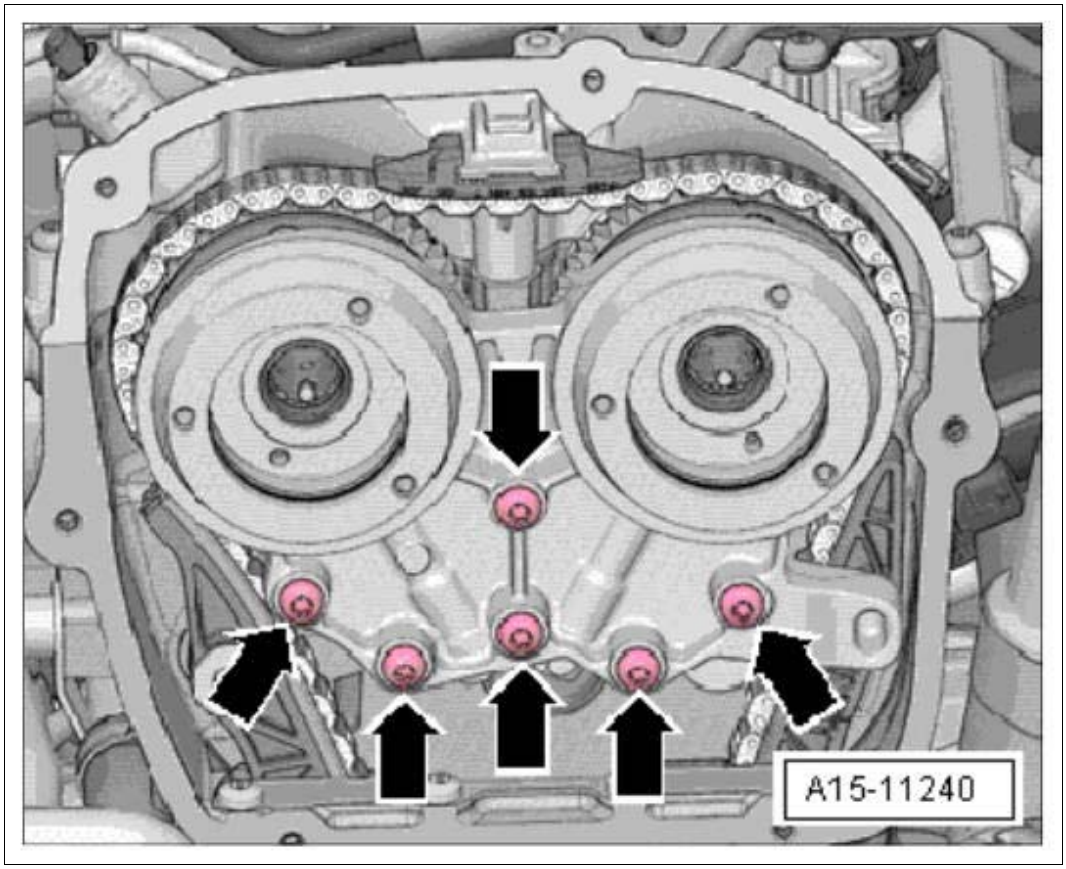

Courtesy of PORSCHE CARS NORTH AMERICA, INC.

23. Install the oil separator.

    1. 23.1. Fit the oil separator with the fastening screws **-arrows-** .
    2. 23.2. Secure the hose for the carbon canister with a **new** single-lug clip **-1-** .

Fig 19: Locating Oil Separator Screws

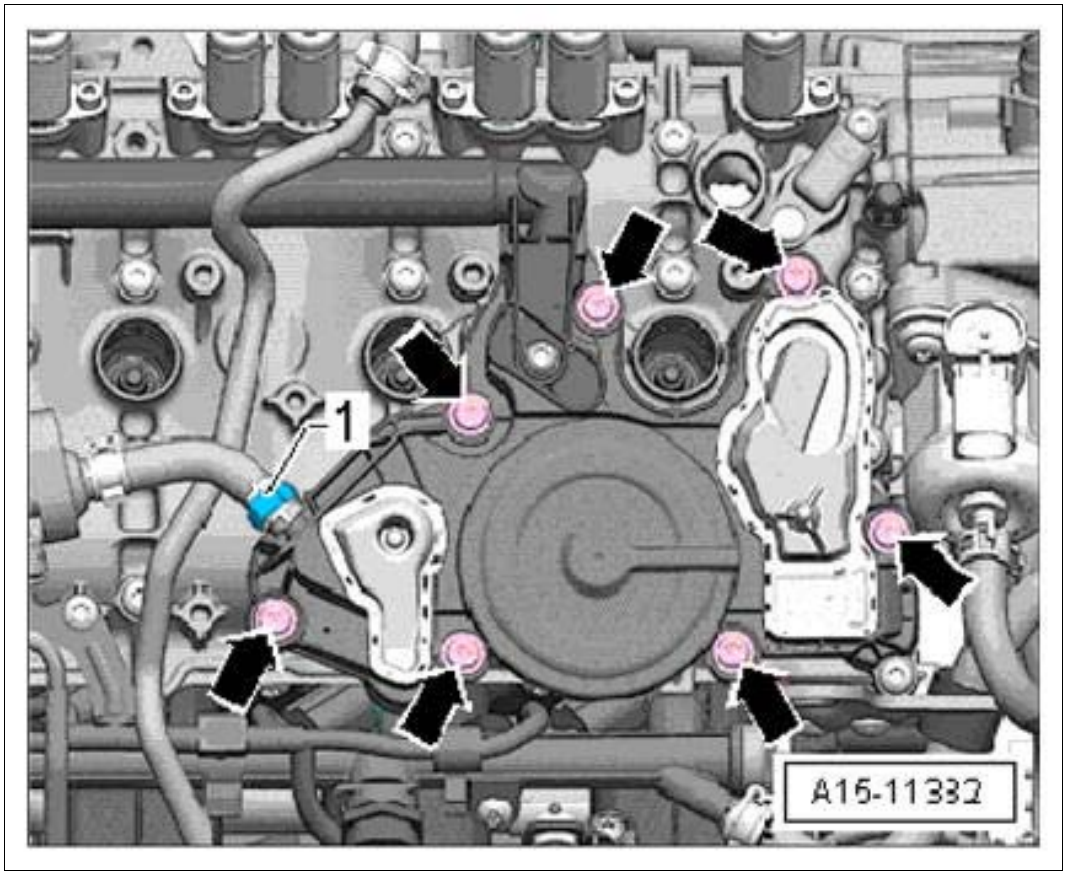

Courtesy of PORSCHE CARS NORTH AMERICA, INC.

24. Tighten the fastening screws **-1...7-** . **Tightening torque 9 Nm (6.5 ftlb.)**

    Observe the tightening sequence -1...7-.

Fig 20: Oil Separator Screws Tightening Sequence

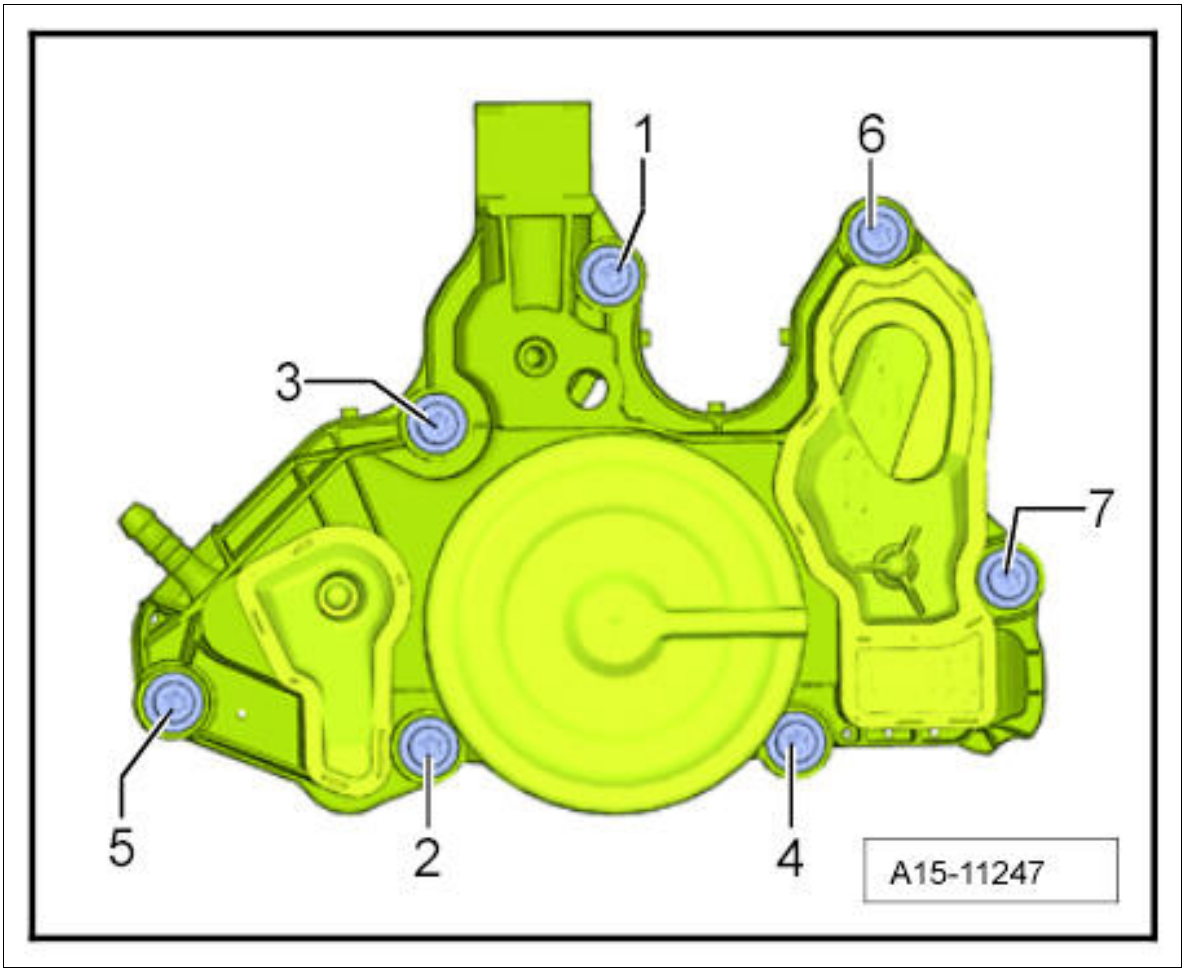

Courtesy of PORSCHE CARS NORTH AMERICA, INC.

25. Secure the hose for the carbon canister with a spring band clamp **-2-** .

Fig 21: Identifying Fuel Lines

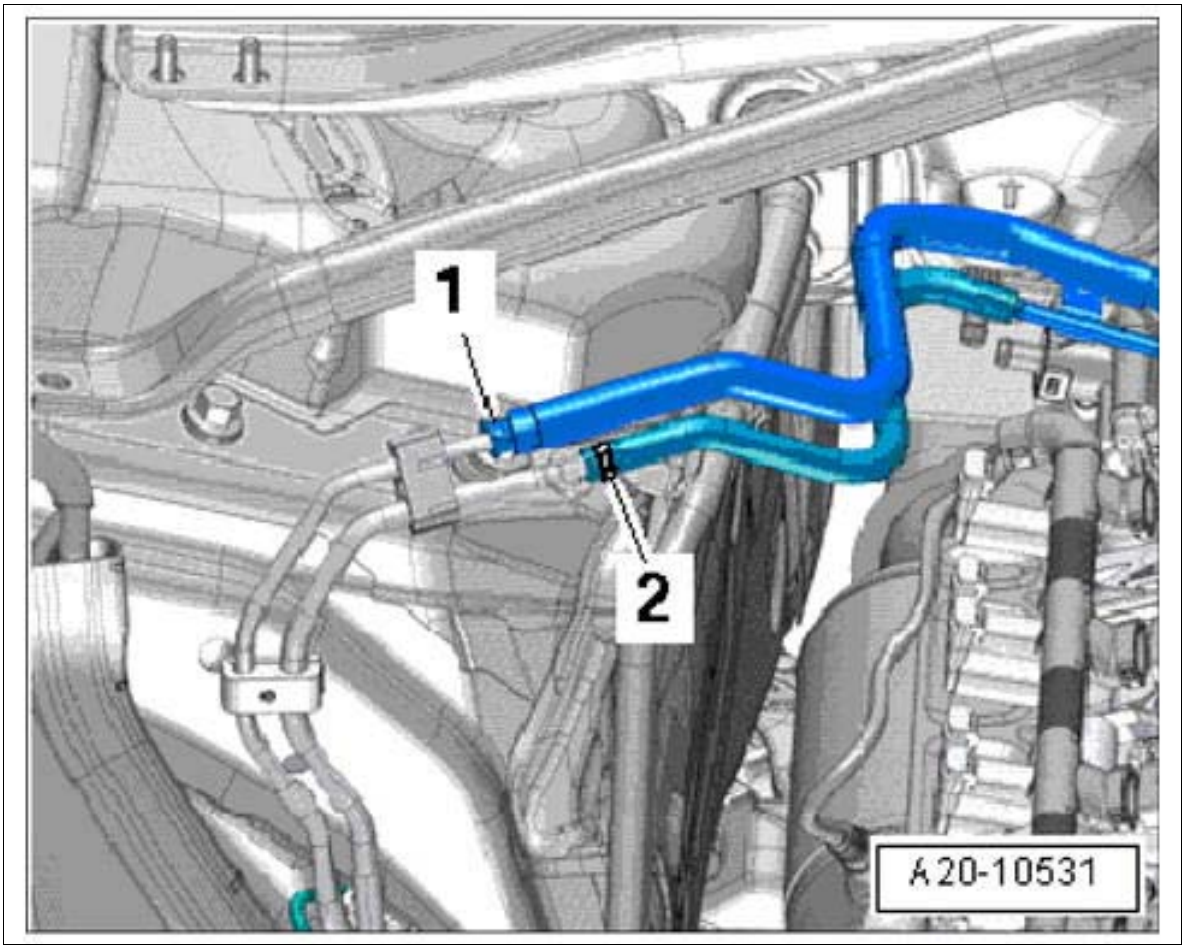

Courtesy of PORSCHE CARS NORTH AMERICA, INC.

26. Plug in the electric plug connections **-1...5-** and route the lines.

Fig 22: Identifying Electric Plug Connections On Intake-Air Distributor

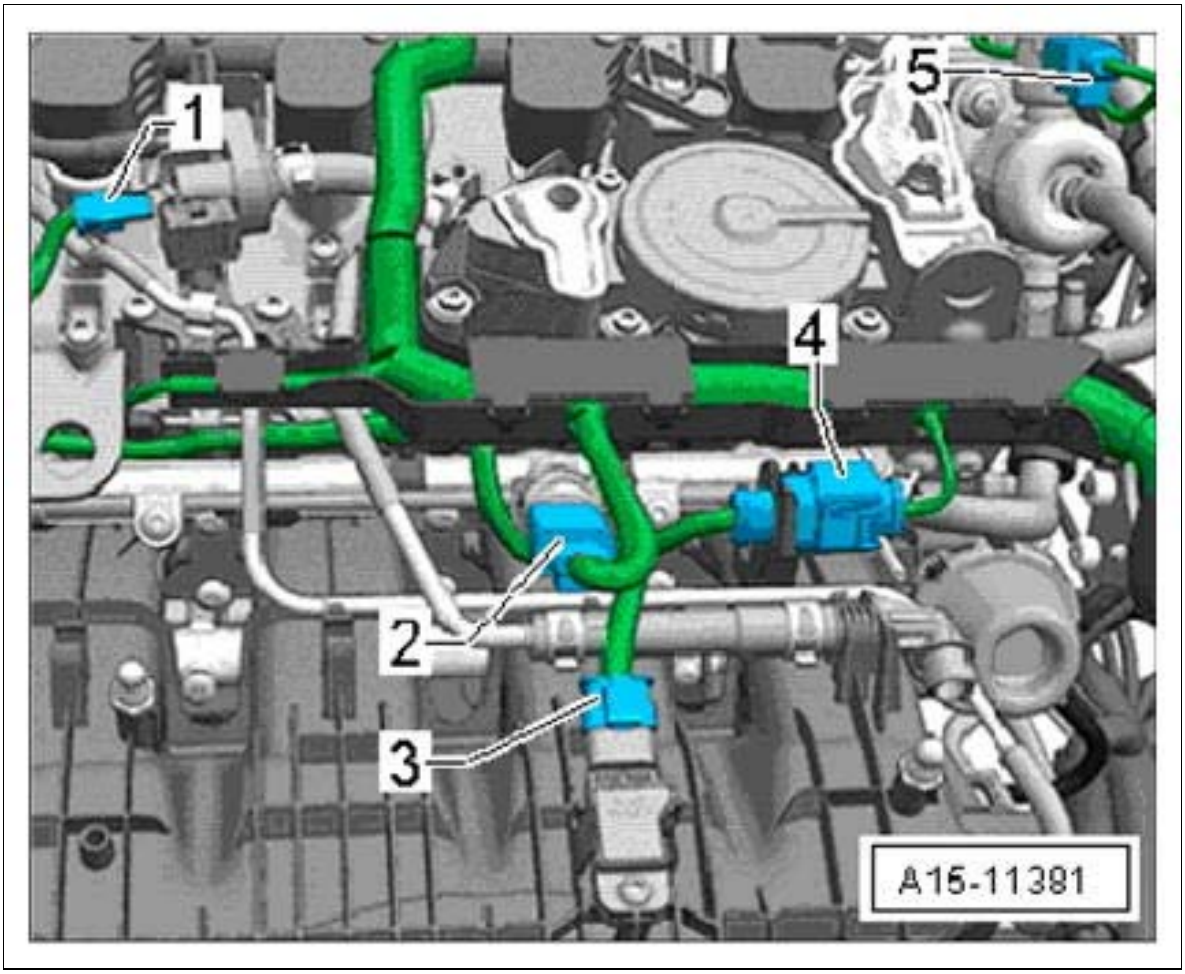

Courtesy of PORSCHE CARS NORTH AMERICA, INC.

27. Connect the electric plug connections **-1, 3 and 5-** .

Fig 23: Identifying Electric Plug Connections

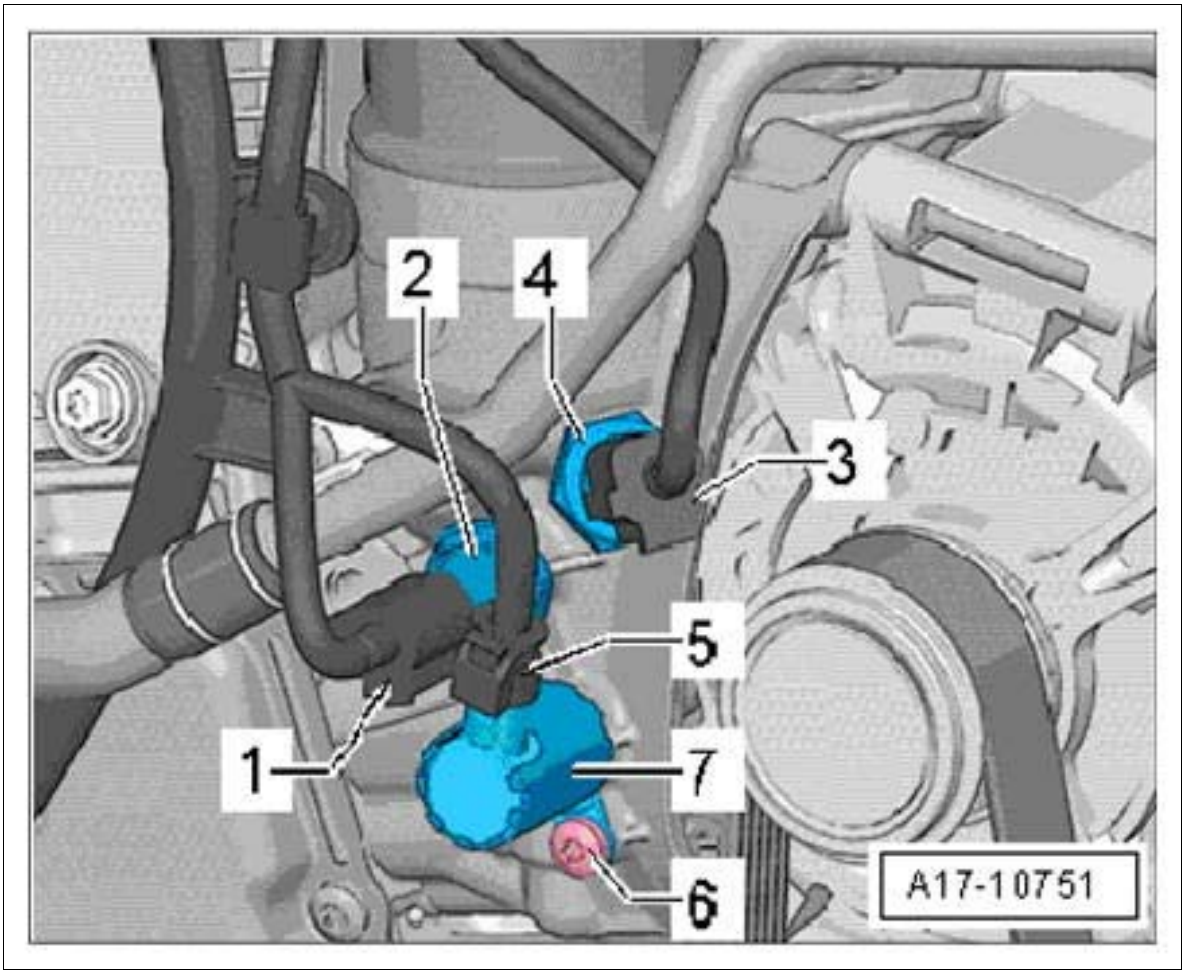

Courtesy of PORSCHE CARS NORTH AMERICA, INC.

28. Plug in the electric plug connection **-1-** on the hall sender.

Fig 24: Locating Electric Plug Connections

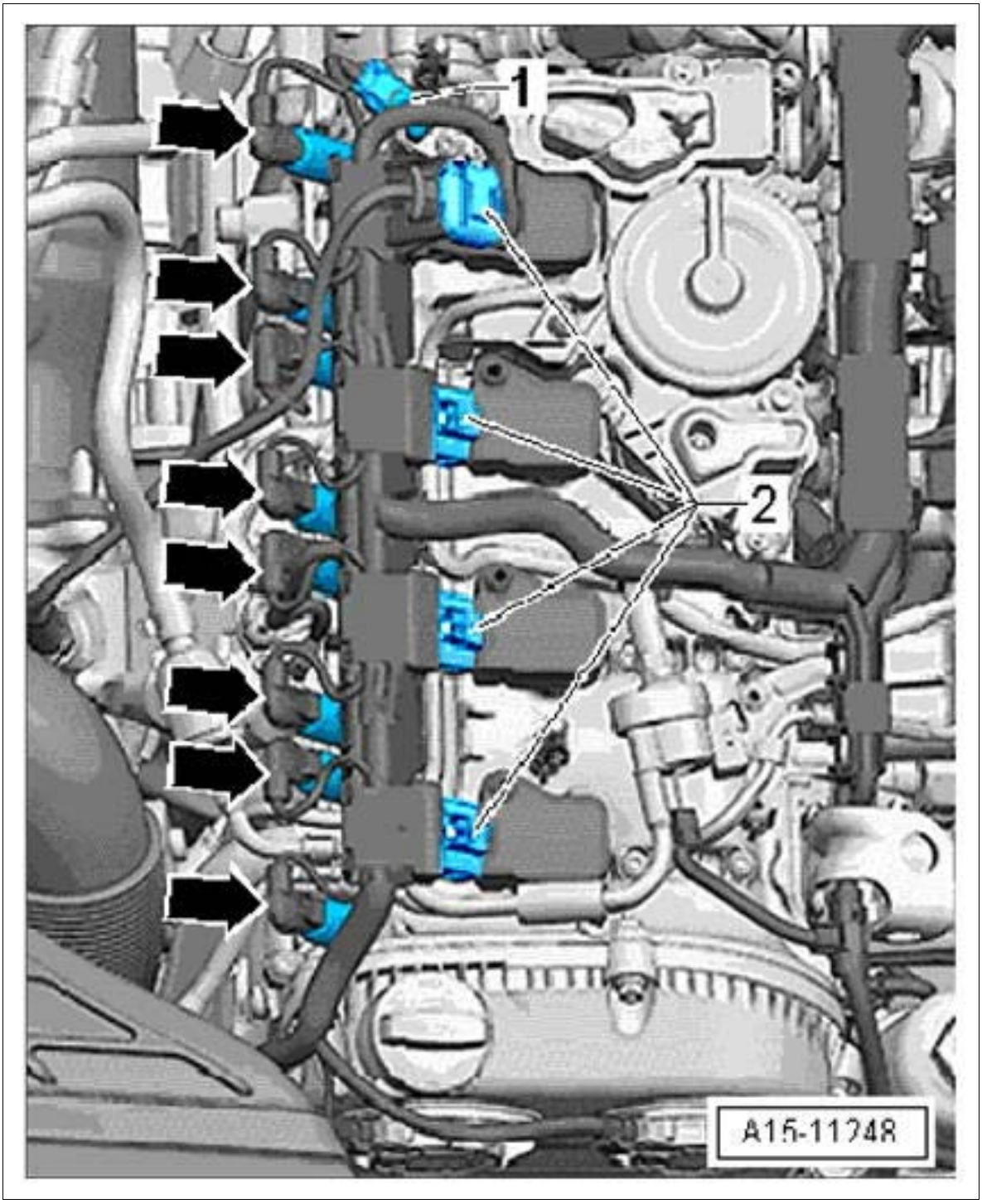

Courtesy of PORSCHE CARS NORTH AMERICA, INC.

29. Connect the electric plug connection **-1-** for the oxygen sensor and secure in the holder.

Fig 25: Identifying Electric Plug Connection For Oxygen Sensor

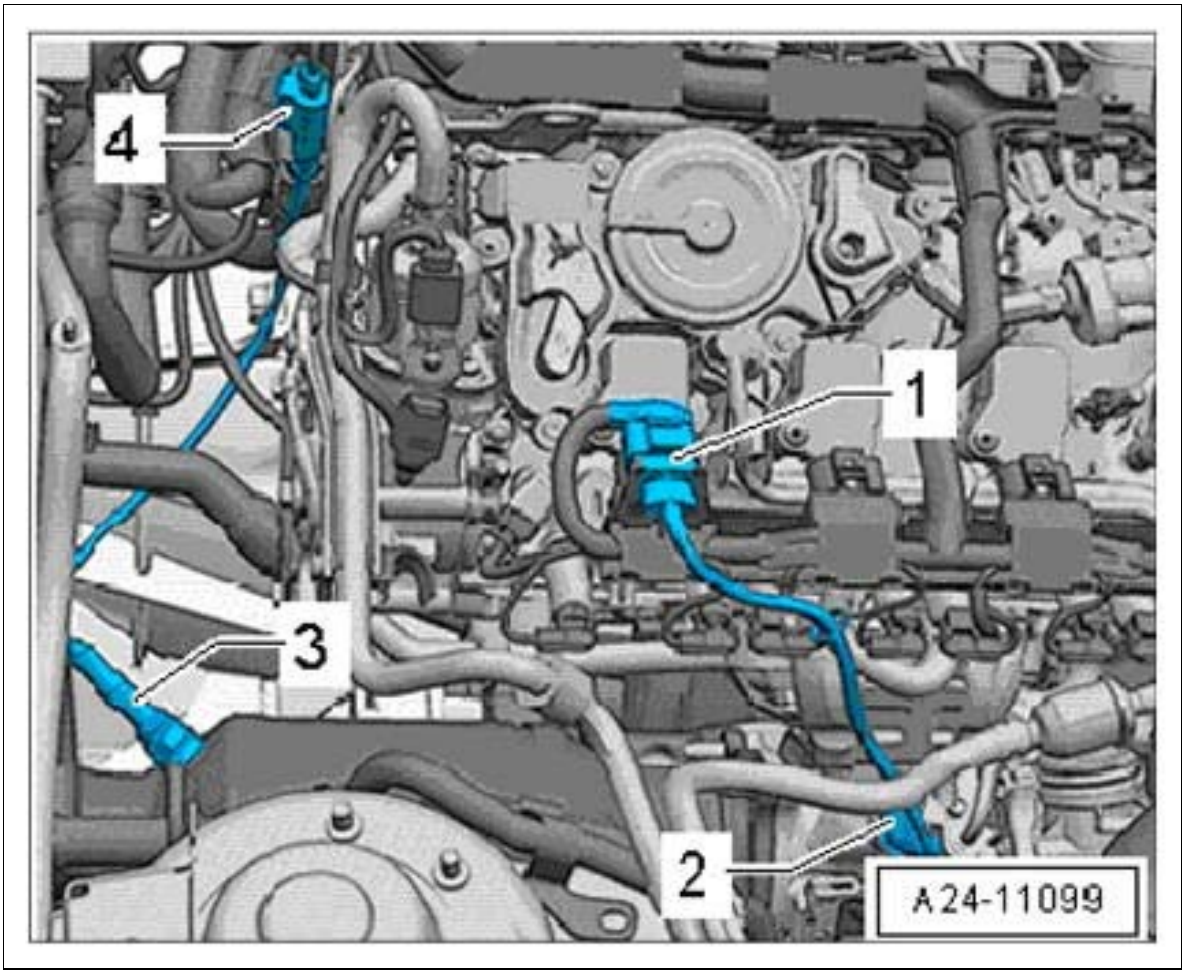

Courtesy of PORSCHE CARS NORTH AMERICA, INC.

30. Connect the electric plug connections **-1 and 2-** .

Fig 26: Identifying Electric Lines For Turbocharger

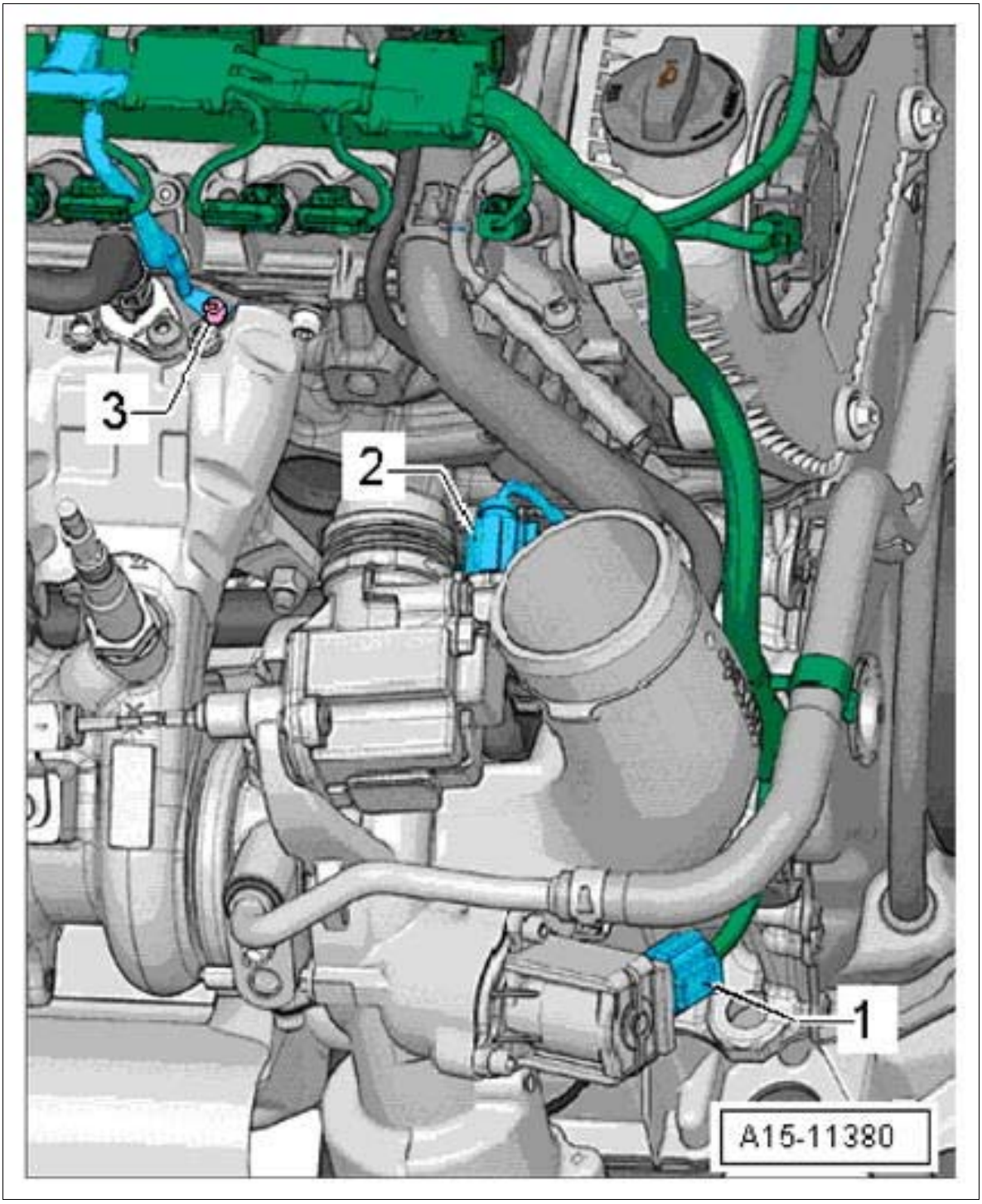

Courtesy of PORSCHE CARS NORTH AMERICA, INC.

31. Connect the electric plug connection to the oil level sensor **-arrow-** .

Fig 27: Locating Plug Connection For Oil Level Sensor

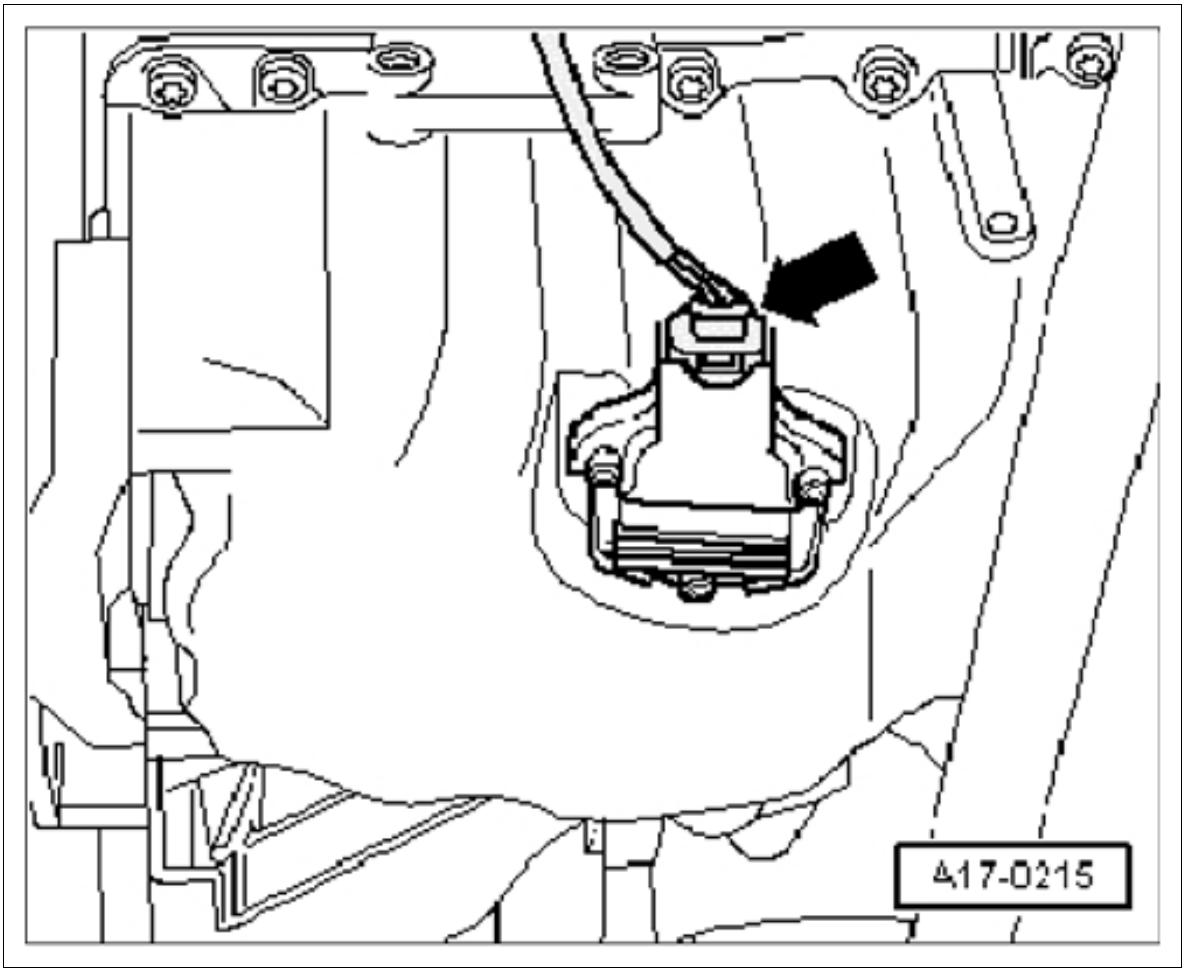

Courtesy of PORSCHE CARS NORTH AMERICA, INC.

WM 158219 REMOVING AND INSTALLING CYLINDER HEAD COVER (MACAN) > SUBSEQUENT WORK

1. Install the ignition coils. → INSTALLING IGNITION COILS
2. Install the hydraulic valves for the valve lift switchover. → INSTALLING HYDRAULIC VALVE FOR VALVE LIFT SWITCHOVER (VARIABLE VALVE LIFT ADJUSTMENT)
3. Install the actuators for the camshafts. → INSTALLING ACTUATOR FOR CAMSHAFT
4. Fit the upper timing-case cover. → INSTALLING CHAIN HOUSING COVER
5. Install the air cleaner housing. → INSTALLING AIR CLEANER HOUSING
6. Install the cover for the front underbody. → INSTALLING COVER FOR FRONT UNDERBODY
7. Install the engine cover (design cover).

WM 158419 REMOVING AND INSTALLING ACTUATOR FOR CAMSHAFT (MACAN) > TOOLS

Designation	Type	Number	Description	
assembly tool	VW tool	T10352		

WM 158419 REMOVING AND INSTALLING ACTUATOR FOR CAMSHAFT (MACAN) > PRELIMINARY WORK

1. Remove solenoid/hydraulic valve for camshaft controller. → 153719 REMOVING AND INSTALLING SOLENOID/HYDRAULIC VALVE FOR CAMSHAFT CONTROLLER

WM 158419 REMOVING AND INSTALLING ACTUATOR FOR CAMSHAFT (MACAN) > REMOVING ACTUATOR FOR CAMSHAFT

Information

Actuators for the camshaft are left-threaded.

1. Remove actuator for the camshaft using **assembly tool T10352** /2 in **-direction of arrow-** .

Fig 1: Removing/Installing Actuator For Camshaft

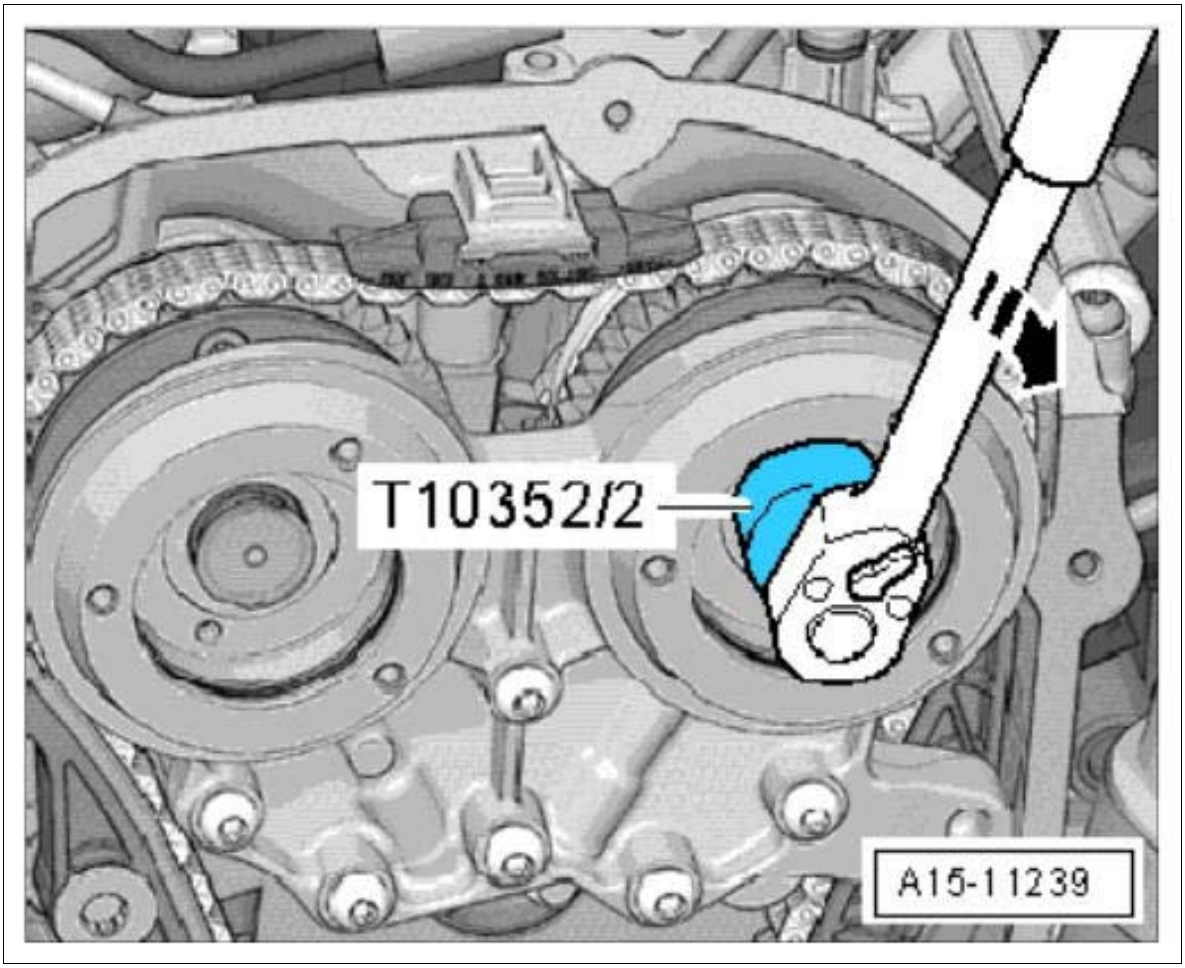

Courtesy of PORSCHE CARS NORTH AMERICA, INC.

WM 158419 REMOVING AND INSTALLING ACTUATOR FOR CAMSHAFT (MACAN) > INSTALLING ACTUATOR FOR CAMSHAFT

Information

Actuators for the camshaft are left-threaded.

1. Install actuator for camshaft using **assembly tool T10352** /2.

Fig 1: Removing/Installing Actuator For Camshaft

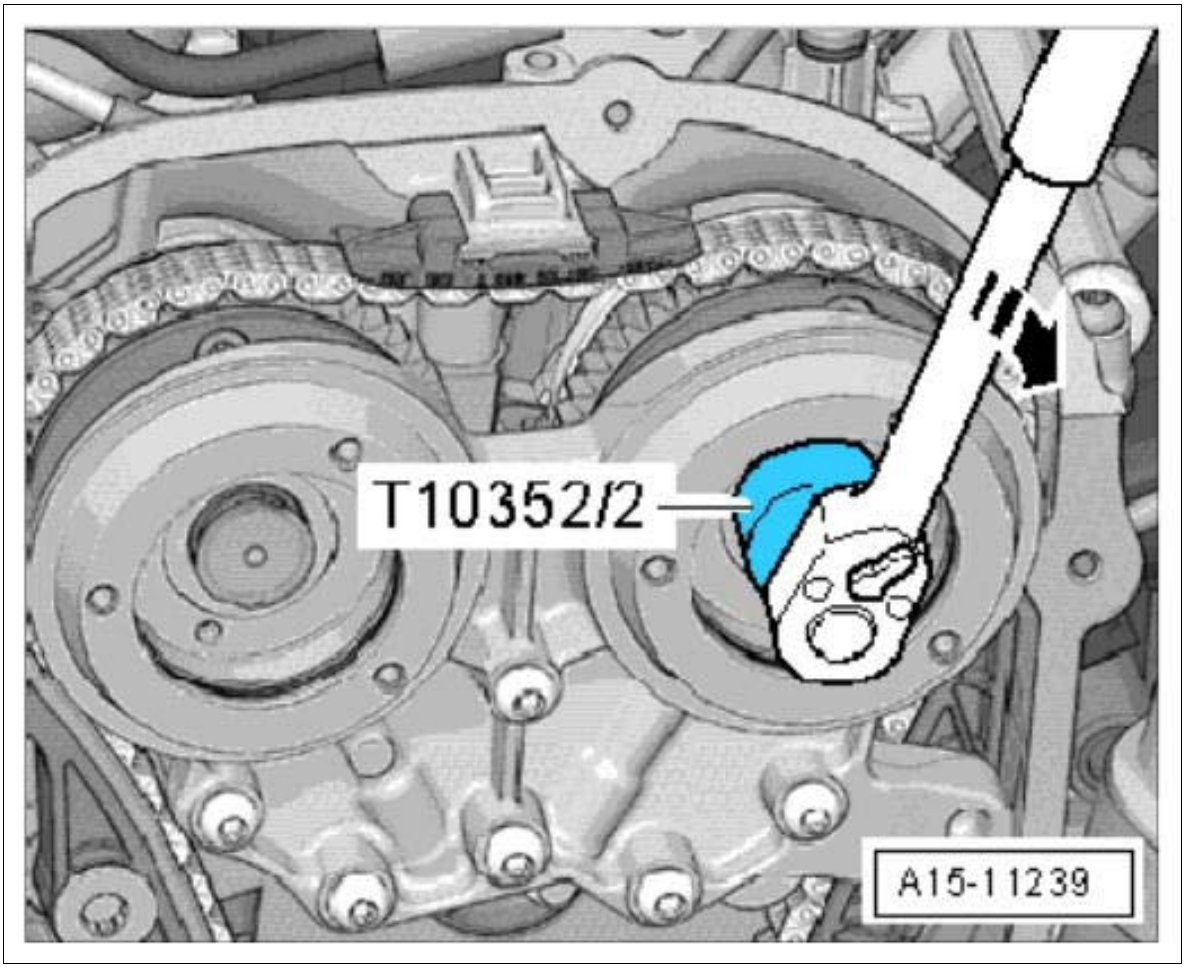

Courtesy of PORSCHE CARS NORTH AMERICA, INC.

WM 158419 REMOVING AND INSTALLING ACTUATOR FOR CAMSHAFT (MACAN) > SUBSEQUENT WORK

1. Install solenoid/hydraulic valve for camshaft controller. → INSTALLING SOLENOID/HYDRAULIC VALVE FOR CAMSHAFT CONTROLLER

WM 170101 CHECKING ENGINE-OIL LEVEL (MACAN) > TOOLS

Designation	Type	Number	Description	
PIWIS Tester 2	Special tool	9818		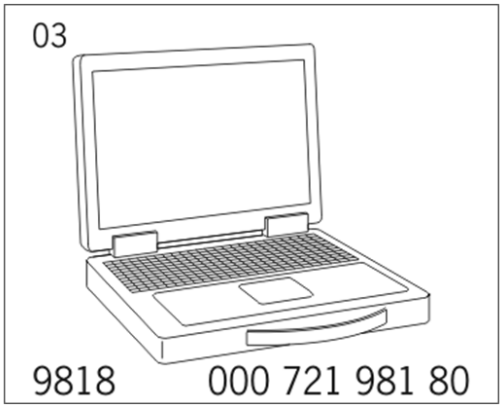

WM 170101 CHECKING ENGINE-OIL LEVEL (MACAN) > TECHNICAL VALUES

Location	Description	Type	Basic value	Tolerance 1	Tolerance 2
First fill of engine oil		Filling capacity	5.4 Liter		
Engine oil change quantity with filter (MAX)		Filling capacity	4.7 Liter		
Engine oil change quantity with filter (MIN)		Filling capacity	3.7 Liter		

WM 170101 CHECKING ENGINE-OIL LEVEL (MACAN) > INFORMATION > ENGINE OIL

Specification	Macan (2.0)
Engine oil specification - Europe	A40 (Porsche approval list) SAE 0W-40
Engine oil specification - USA/RoW	A40 (Porsche approval list) SAE 0W-40
Filling capacities:	
First fill	**→ Filling capacity: 5.4 Liter**
Change quantity with filter (MAX)	**→ Filling capacity: 4.7 Liter**
Change quantity with filter (MIN)	**→ Filling capacity: 3.7 Liter**

WM 170101 CHECKING ENGINE-OIL LEVEL (MACAN) > CHECKING ENGINE OIL

- The vehicle must be horizontal.
- The engine must be at operating temperature.
- Always check that there is enough engine oil in the engine.

> *NOTE: Incorrect oil level*
>
> - *Risk of damage to engine or catalytic converter*

→ Check the oil level regularly.

→ The oil level must not fall below the Minimum marking or rise above the Maximum marking.

→ Only use engine oil approved by Porsche.

Information

- The engine-oil level can be checked on the instrument cluster display or using PIWIS Tester 2 9818 .

  1. For details of checking the oil level using the instrument cluster, see Driver's Manual.
  2. To check the engine-oil level using **PIWIS Tester II 9818** , select [DME], [Maintenance/repairs], [Oil filling]. Follow the instructions for oil fill measurement on the Tester. If the engine oil has not yet reached measuring temperature, it can be heated to operating temperature by leaving the vehicle running while stationary or test-driving the vehicle. Check the engine-oil level after the test drive using the Tester. The Tester shows the oil level as a percentage and recommends a top-up quantity in liters.

WM 170117 DRAINING AND FILLING ENGINE OIL (MACAN) > PRELIMINARY WORK

1. Remove underbody panelling → 519219 REMOVING AND INSTALLING COVER FOR FRONT UNDERBODY

WM 170117 DRAINING AND FILLING ENGINE OIL (MACAN) > PRELIMINARY WORK > DRAINING ENGINE OIL

Information

When changing engine oil, drain the oil when it is hot because hot oil is more fluid than cold oil and all dirt particles and suspended matter can be cleaned out. Position the collecting container as close as possible to the drain outlet of the oil pan.

WARNING: Hot fluid

- *Danger of scalding*

→ Let the fluid cool down.

→ Wear personal protective gear.

1. Drain oil.
    1. 1.1. Position collection container under the stopper.
    2. 1.2. Unscrew stopper and drain oil.
2. Insert stopper with a new O-ring and turn it as far as it will go. Coat new O-ring with engine oil.
    1. 2.1. Stopper engages at the lock.

WM 170117 DRAINING AND FILLING ENGINE OIL (MACAN) > FILLING ENGINE OIL > ENGINE OIL

Filling capacities:	
First fill	**→ Filling capacity: 5.4 Liter**
Change quantity with filter (MAX)	**→ Filling capacity: 4.7 Liter**
Change quantity with filter (MIN)	**→ Filling capacity: 3.7 Liter**

WM 170117 DRAINING AND FILLING ENGINE OIL (MACAN) > FILLING ENGINE OIL > FILLING ENGINE OIL

NOTE: Incorrect oil level

- *Risk of damage to engine or catalytic converter*

→ Check the oil level regularly.

→ The oil level must not fall below the Minimum marking or rise above the Maximum marking.

→ Only use engine oil approved by Porsche.

1. Fill in engine oil.

WM 170117 DRAINING AND FILLING ENGINE OIL (MACAN) > SUBSEQUENT WORK

1. Install underbody panelling. → INSTALLING COVER FOR FRONT UNDERBODY

WM 170301 CHECKING OIL PRESSURE (ENGINE OIL) (MACAN) > TOOLS

Designation	Type	Number	Description	
oil pressure tester	Workshop equipment	WE 1068		

WM 170301 CHECKING OIL PRESSURE (ENGINE OIL) (MACAN) > PRELIMINARY WORK

1. Remove engine cover.

WM 170301 CHECKING OIL PRESSURE (ENGINE OIL) (MACAN) > CHECKING > CHECKING OIL PRESSURE

Test prerequisites:

- Park the vehicle on a level surface
- Oil level OK.
- Oil temperature 80 °C (radiator fan must have come on once)

1. Disconnect plug connection **-3-** on oil pressure switch for reduced oil pressure.

> *WARNING: Hot fluid*
>
> *1. Danger of scalding*

→ Let the fluid cool down.

→ Wear personal protective gear.

2. Unscrew and remove oil pressure switch for reduced oil pressure **-4-** .

Fig 1: Locating Oil Pressure Switch

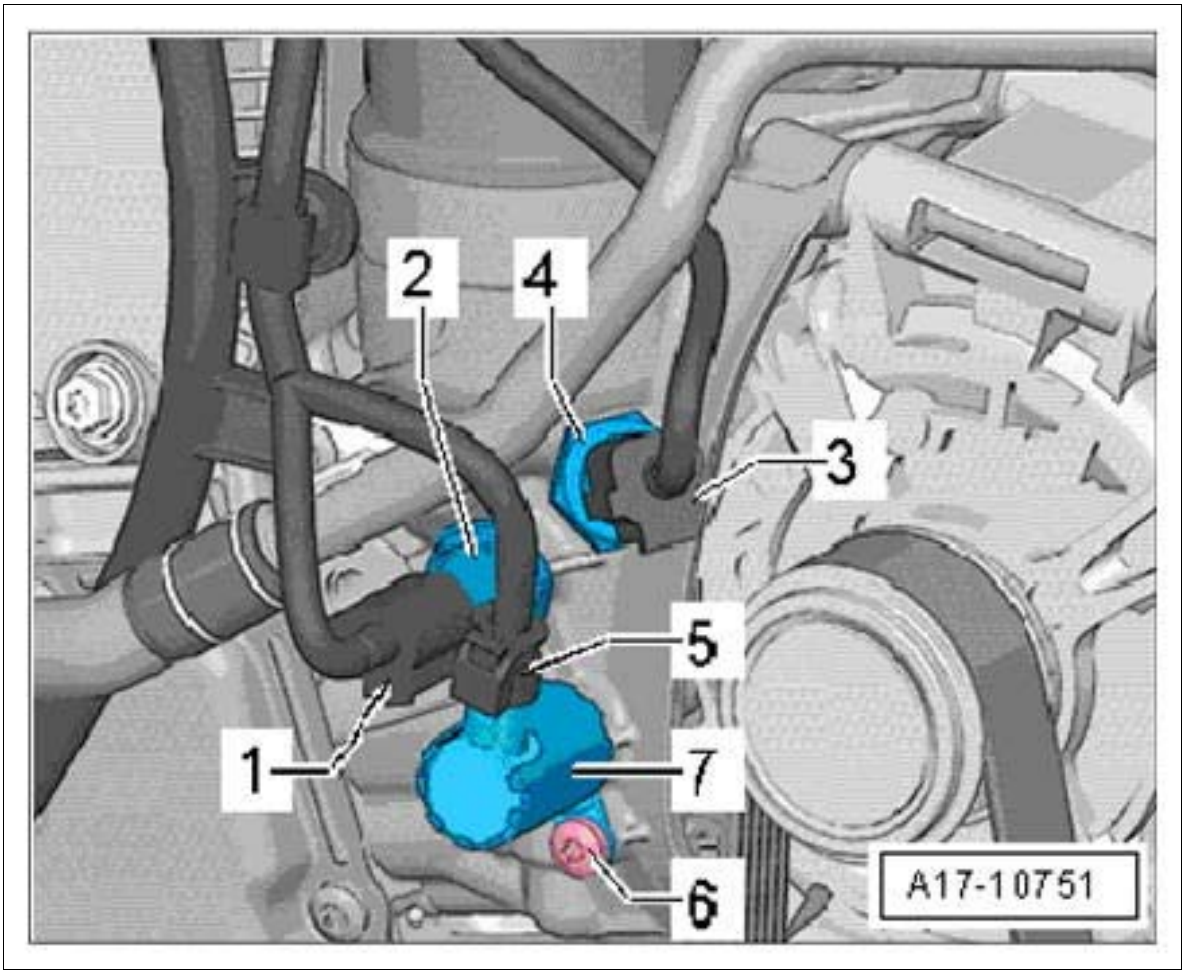

Courtesy of PORSCHE CARS NORTH AMERICA, INC.

3. Screw in oil pressure tester **oil pressure tester WE 1068** instead of the oil pressure switch **-4-** .
    1. 3.1. Screw oil pressure switch for reduced oil pressure into the oil pressure tester.
    2. 3.2. Connect plug connection for oil pressure switch again.
4. Start the engine and read off the oil pressure.
    1. Oil pressure at idle speed: 1.2 to 2.1 bar
    2. Oil pressure at 2, 000 RPM: 1.6 to 2.1 bar **(3.0 to 4.0 bar possible during the intake phase).**
    3. Oil pressure at 3, 700 RPM: 3.0 to 4.0 bar

WM 170301 CHECKING OIL PRESSURE (ENGINE OIL) (MACAN) > SUBSEQUENT WORK

1. Remove oil pressure tester.

2. Install oil pressure switch for reduced oil pressure.
3. Install engine cover.

WM 170301 CHECKING OIL PRESSURE (MACAN S, MACAN TURBO) > TOOLS

Designation	Type	Number	Description	
Oil pressure tester V.A.G 1342	Workshop equipment	WE 1068		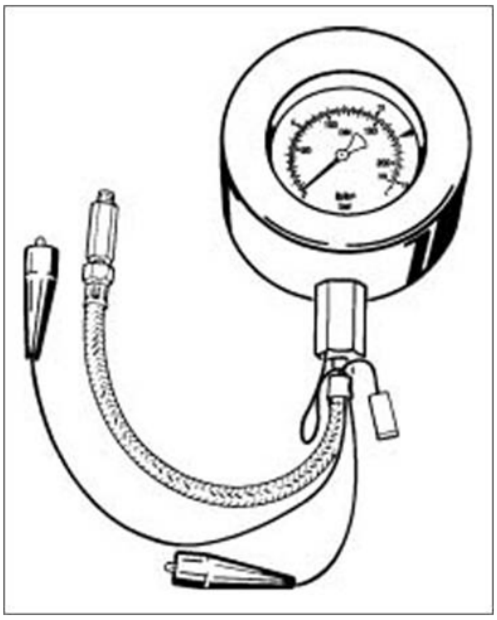

WM 170301 CHECKING OIL PRESSURE (MACAN S, MACAN TURBO) > TECHNICAL VALUES

Location	Description	Type	Basic value	Tolerance 1	Tolerance 2
Oil pressure measurement temperature	Minimum	Engine temperature	90°C		

WM 170301 CHECKING OIL PRESSURE (MACAN S, MACAN TURBO) > PRELIMINARY WORK

Information

If vehicles have fault entries relating to oil pressure, oil pump activation, oil pressure monitoring, etc. in the DME control unit (and a warning light comes "on" on the instrument cluster), proceed as follows:

- Check the oil level.
- Delete related faults.

- Do not replace components, such as the oil pump, oil pressure sensor or oil pressure control valve if you suspect that they are faulty.

If the vehicle has not been driven for a long time (months), the control mechanism in the oil pump can become stiff ("stick").

Very short trips and a lot of loading/maneuvering can cause the oil to become very diluted => Oil pressure very low. For example, 20 cold starts in quick succession can reduce the viscosity of the engine oil by 30%.

- Change the engine oil. Test-drive the vehicle.
- If error messages/warnings are displayed again, proceed in accordance with the instructions under Guided Fault Finding in the PIWIS Tester.

Information

- The oil pressure can be displayed and checked for any engine speeds using the PIWIS Tester.
- The pressure readings can be shown graphically in the data logger.
- If an oil-pressure gauge needs to be connected for further tests, proceed according to the instructions starting from "Preliminary Work".
- For details of measured values, see below.

1. Remove cover for front underbody. → 519219 REMOVING AND INSTALLING COVER FOR FRONT UNDERBODY

WM 170301 CHECKING OIL PRESSURE (MACAN S, MACAN TURBO) > TOOLS AND MATERIALS > TOOLS

Fig 1: Identifying Oil Pressure Tester

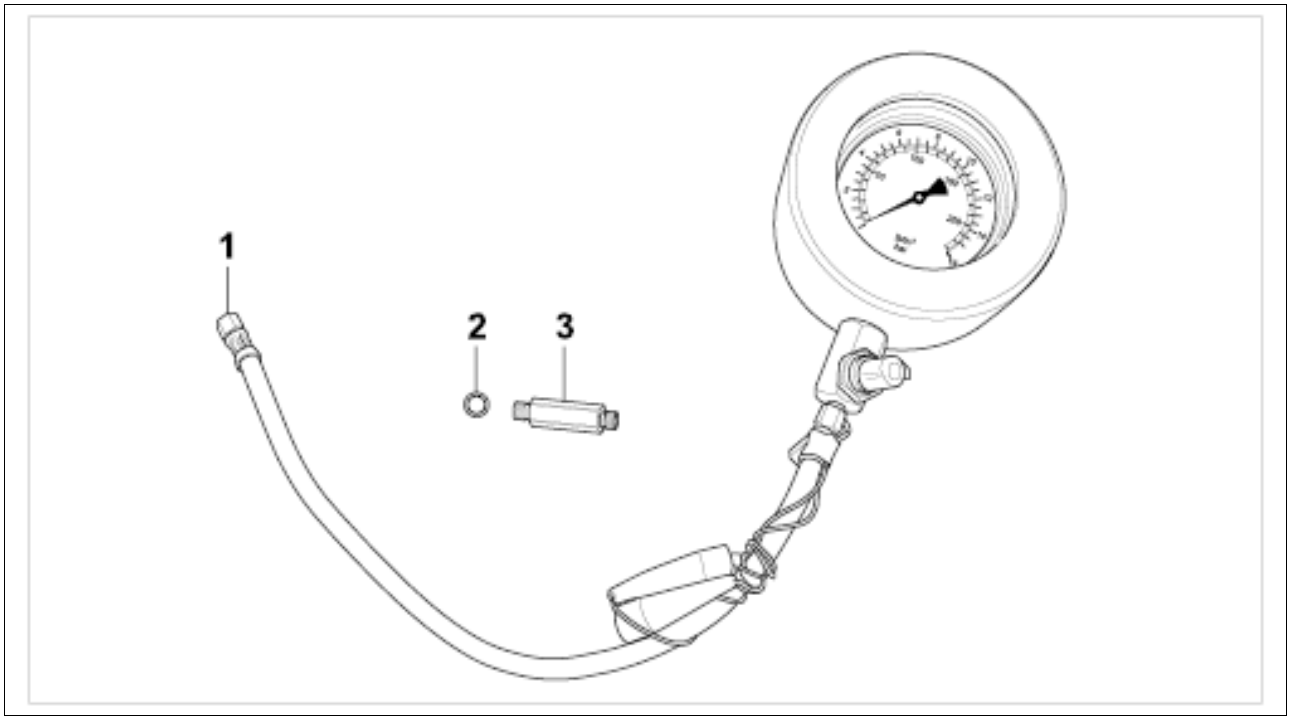

Courtesy of PORSCHE CARS NORTH AMERICA, INC.

1. **Oil pressure tester V.A.G 1342 WE 1068**
2. Sealing ring
3. Adapter

WM 170301 CHECKING OIL PRESSURE (MACAN S, MACAN TURBO) > CHECKING OIL PRESSURE

WARNING: Toxic substances

- *Danger of poisoning or suffocation*
- *Danger of burns to the eyes and skin*

→ Ventilate the work area well.

→ Never ingest or inhale.

→ Read specific information on the Hazard Sheet.

→ Do not smoke, eat or drink in the work area.

WARNING: Hot fluid

- *Danger of scalding*

→ Let the fluid cool down.

→ Wear personal protective gear.

WARNING: Highly inflammable or explosive materials

- *Danger of fire or explosion*

→ Avoid contact with hot parts or sources of ignition.

→ Use suction to remove ignitable vapors.

→ Attach warning sign in a clearly visible position.

Information

The oil pressure may be too low for a number of reasons:

- Oil is diluted (e.g. fuel gets into the oil due to too many cold starts without warming up the engine afterwards).
- Oil pump is faulty.
- Too much bearing clearance (e.g. crankshaft bearing).
- Oil level is too low.
- Oil pressure regulating valve is faulty.
- Oil pressure sensor is faulty.
- Incorrect oil has been used. Use only oil that has been approved by Porsche for the measurement.

Information

The oil pressure may be too high for a number of reasons:

- Oil has thickened or is very cold after a cold start and high engine speeds.
- Oil pump is faulty.
- Mechanical oil pump pressure relief valve is faulty (oil pump needs to be replaced).
- Oil pressure regulating valve is faulty.
- Cable plug of oil pressure regulating valve has fallen off or open circuit between it and the control unit (oil pressure may be up to 11 bar, engine loses approximately 10 kW of engine power)
- Oil pressure sensor is faulty.
- Incorrect oil has been used. Use only oil that has been approved by Porsche for the

measurement.

1. Unscrew screw plug at the measuring point **-5-** . When doing so, make sure that the sealing ring **-6-** does not fall off.

    1. 1.1. Soak up emerging engine oil with a cloth.

    Fig 1: Identifying Oil Pressure Sensor And Oil Pressure Measuring Point

    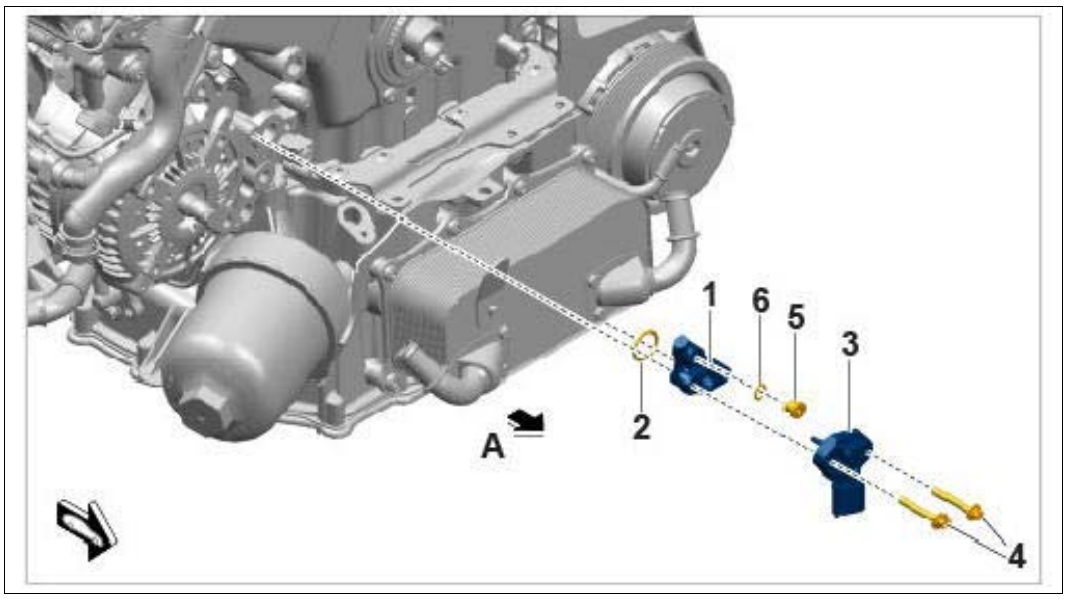

    Courtesy of PORSCHE CARS NORTH AMERICA, INC.

2. Screw adapter for oil-pressure gauge **-1-** with sealing ring **-2-** into the measuring point. Carefully tighten to max. 10 Nm (7.5 ftlb.).

Fig 2: Placing Adapter In Measuring Point

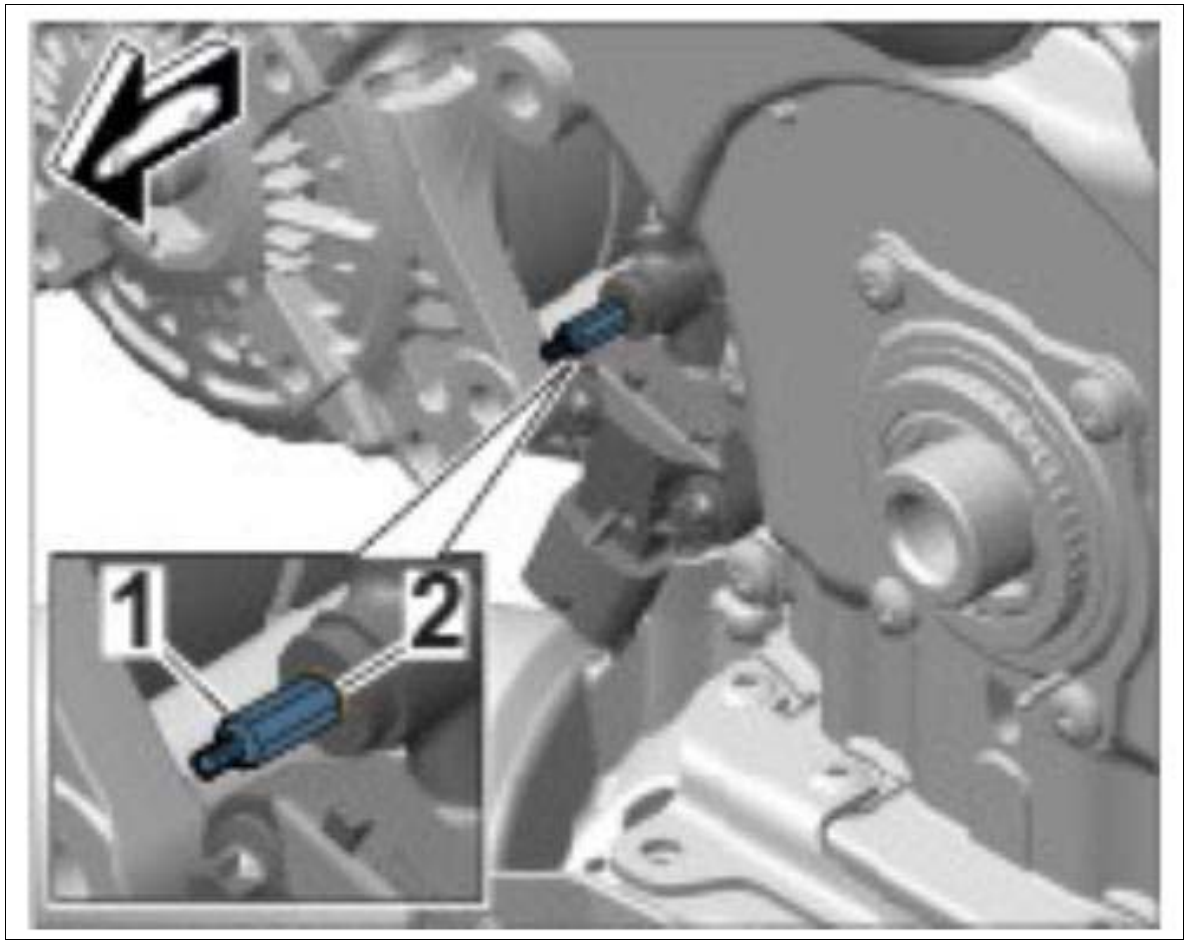

Courtesy of PORSCHE CARS NORTH AMERICA, INC.

Fig 3: Identifying Adapter Setup

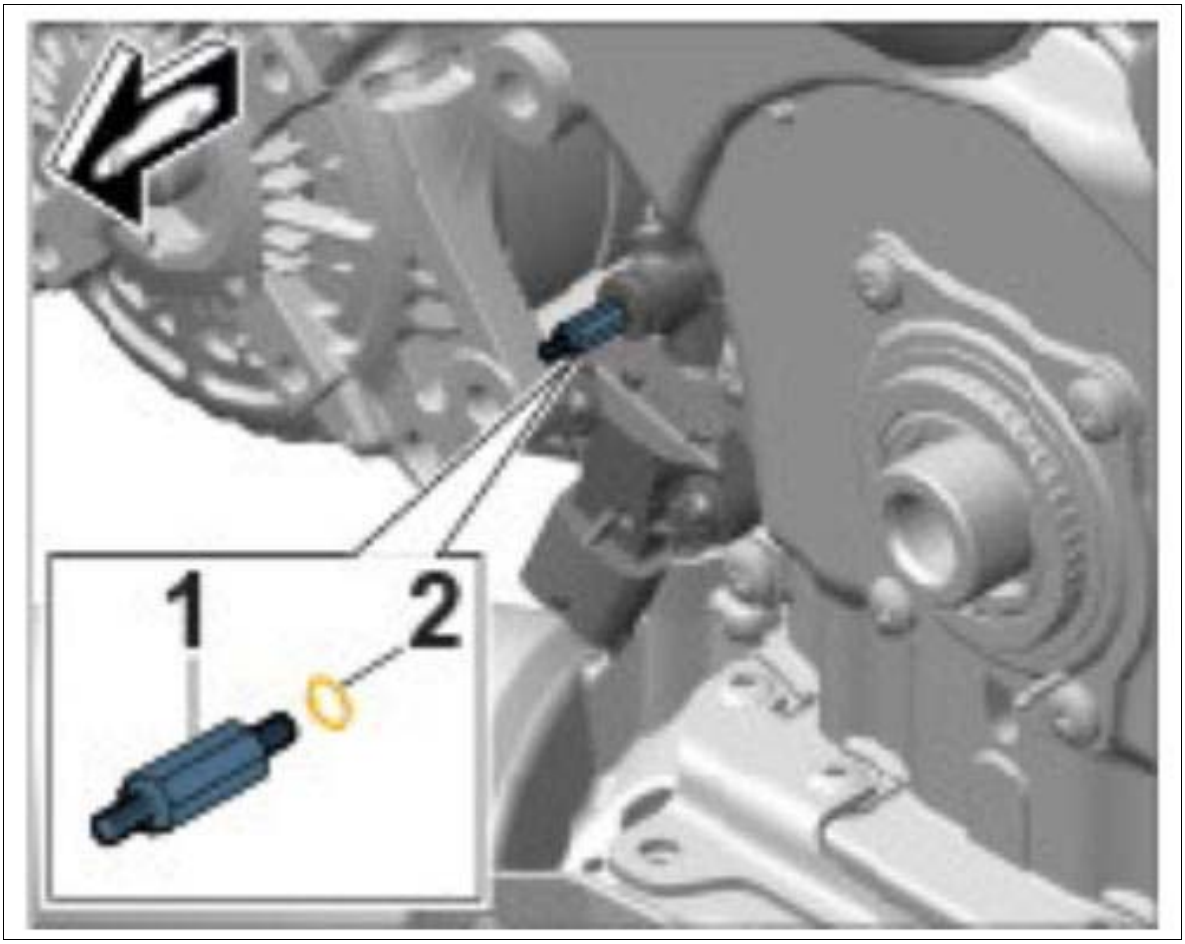

Courtesy of PORSCHE CARS NORTH AMERICA, INC.

3. Screw oil-pressure gauge **-3-** onto the adapter **-2-** . Counter screw torque using an open-ended wrench **-1-** .

Fig 4: Installing Oil-Pressure Gauge On Adapter



Courtesy of PORSCHE CARS NORTH AMERICA, INC.

4. Secure oil-pressure gauge.
    1. 4.1. Secure oil-pressure gauge to the oil filter or coolant line using tie-wraps/wire.
    2. 4.2. Make sure that the oil-pressure gauge and hose are not touching any rotating components.
5. Complete the engine for taking measurements.
6. Check that there are no rotating components touching the measuring hose and that the pressure gauge is easy to read when positioned.
7. Connect the PIWIS Tester and battery charger.
    1. Use the PIWIS Tester to display the actual values for oil pressure, engine temperature and engine speed in DME. The oil pressure displayed in the PIWIS Tester is always higher than that on the pressure gauge by the value of the ambient pressure (depending on the altitude, e.g. 1, 000 hPa).
    2. The pressure display on the oil-pressure gauge must be the same as the value on the PIWIS Tester once adjusted by the ambient pressure value.
    3. The pressure display on the oil-pressure gauge is much slower than that on the PIWIS Tester. The measured value on the PIWIS Tester fluctuates rapidly. The trend between

the two measuring instruments is significant.

4. The measured oil pressure remains virtually constant over different rev ranges. The measurement using the oil-pressure gauge merely confirms that the oil pressure sensor's display is correct.

5. The pressure readings can be shown graphically in the data logger.

8. Start the engine and leave it running until it reaches the measurement temperature. → **Engine temperature: 90°C**

   Measured values (examples)

   1. For a cold start (e.g. 24 °C), pressure immediately jumps to 8 bar briefly (oil-pressure gauge).

   2. Following a cold start, oil pressure drops briefly to 3 bar (oil-pressure gauge) - 4, 000 hPa (PIWIS Tester).

   3. During warm-up phase at idle speed, pressure drops from 3 bar to 1.8 bar (oil-pressure gauge) - 4, 000 hPa drops to 2, 800 hPa (PIWIS Tester).

   4. At engine temperature of 90 °C at idle speed, pressure is 1.5 to 1.6 bar (oil-pressure gauge) - 2, 600 hPa (PIWIS Tester).

   5. At engine temperature of 90 °C at 1, 000 RPM, pressure is 2.8 bar (oil-pressure gauge) - 3, 800 hPa (PIWIS Tester).

   6. At engine temperature of 90 °C at between 2, 000 RPM and 4, 000 RPM, the oil pressure is almost constant at 3.0 bar (oil-pressure gauge) - 4, 000 hPa (PIWIS Tester). The value can fluctuate by 0.1 bar (100 hPa).

WM 170301 CHECKING OIL PRESSURE (MACAN S, MACAN TURBO) > SUBSEQUENT WORK

1. Remove oil-pressure gauge and adapter again.

2. Refit screw plug with a new sealing ring.

3. Install cover for front underbody. → INSTALLING COVER FOR FRONT UNDERBODY

WM 170419 REMOVING AND INSTALLING OIL-PRESSURE SENDER (MACAN S, MACAN TURBO) > PRELIMINARY WORK

Information

If vehicles have fault entries relating to oil pressure, oil pump activation, oil pressure monitoring, etc. in the DME control unit (and a warning light comes "on" on the instrument cluster), proceed as follows:

- Check the oil level.
- Delete related faults.

- Do not replace components, such as the oil pump, oil pressure sensor or oil pressure control valve if you suspect that they are faulty.

If the vehicle has not been driven for a long time (months), the control mechanism in the oil pump can become stiff ("stick").

Very short trips and a lot of loading/maneuvering can cause the oil to become very diluted => Oil pressure very low. For example, 20 cold starts in quick succession can reduce the viscosity of the engine oil by 30%.

- Change the engine oil. Test-drive the vehicle.
- If error messages/warnings are displayed again, proceed in accordance with the instructions under Guided Fault Finding in the PIWIS Tester.

1. Remove cover for front underbody.

   → 519219 REMOVING AND INSTALLING COVER FOR FRONT UNDERBODY

2. Remove lower pedestrian protection. → 697019 REMOVING AND INSTALLING PEDESTRIAN PROTECTION

WM 170419 REMOVING AND INSTALLING OIL-PRESSURE SENDER (MACAN S, MACAN TURBO) > REMOVING OIL-PRESSURE SENDER

WARNING: Hot fluid

- *Danger of scalding*

→ Let the fluid cool down.

→ Wear personal protective gear.

WARNING: Highly inflammable or explosive materials

- *Danger of fire or explosion*

→ Avoid contact with hot parts or sources of ignition.

→ Use suction to remove ignitable vapors.

→ Attach warning sign in a clearly visible position.

Information

- Oil pressure may be too low for a number of reasons:
- Oil is diluted.

- Oil pump is faulty.
- Bearing clearance is too large (e.g. crankshaft bearing)
- Oil level is too low.
- Oil pressure regulating valve is faulty.
- Incorrect oil has been used. Only use oil that has been approved by Porsche for the measurement.

Information

- When the oil-pressure sender is unscrewed, approx. 0.3 liters of engine oil will escape.

Collect emerging oil and dispose of it in accordance with the applicable national laws.

1. Release and disconnect electric connector on the oil-pressure sender.
2. Unscrew screws **-6-** and remove oil-pressure sender **-5-** .
    1. 2.1. Remove adapter **-3-** .
    2. 2.2. Soak up emerging oil with a cloth.

Fig 1: Identifying Oil Pressure Sensor Components

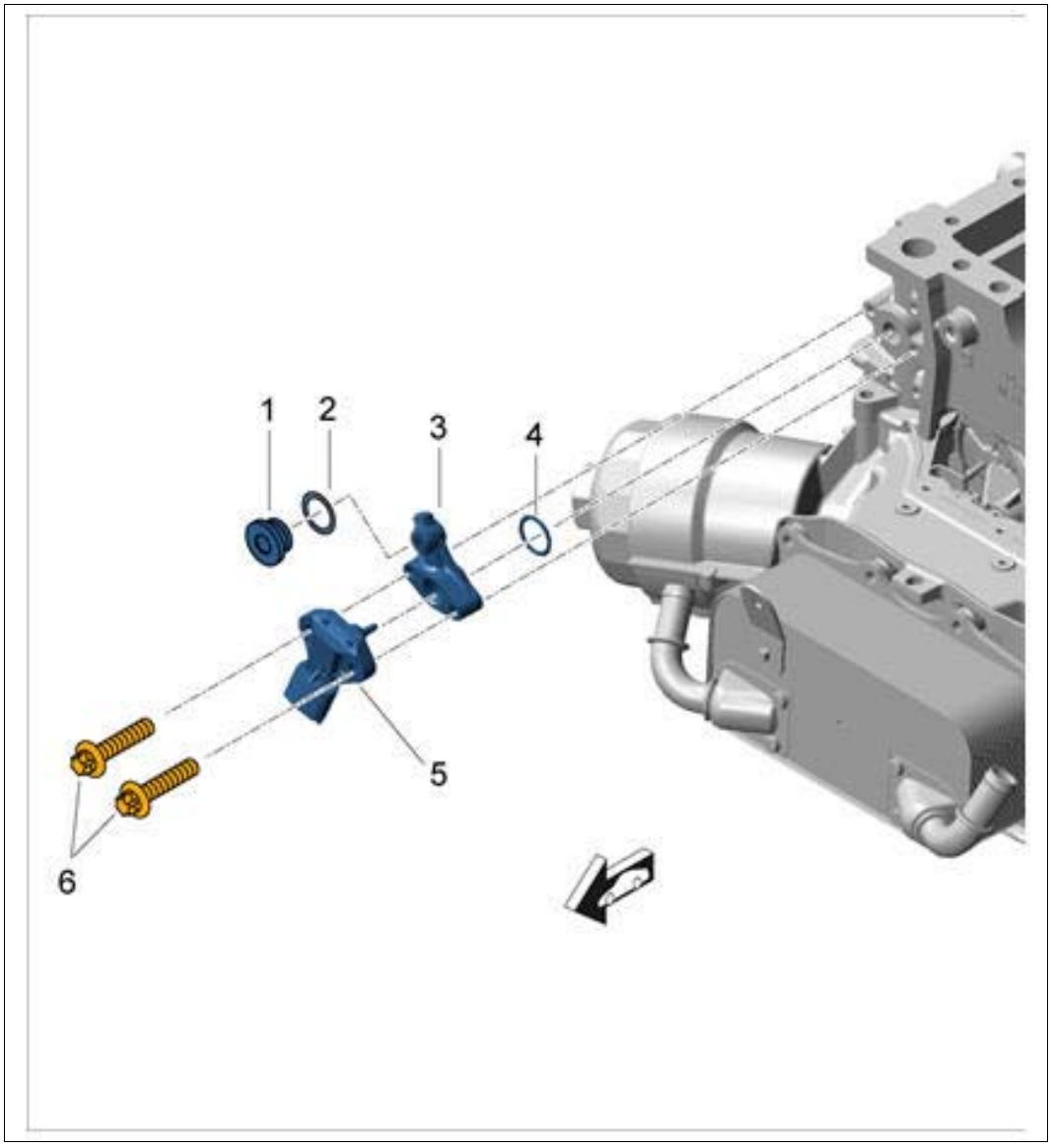

Courtesy of PORSCHE CARS NORTH AMERICA, INC.

WM 170419 REMOVING AND INSTALLING OIL-PRESSURE SENDER (MACAN S, MACAN TURBO) > INSTALLING OIL-PRESSURE SENDER

1. Install oil-pressure sender.
    1. 1.1. Clean the sealing faces.
    2. 1.2. Replace sealing ring **-4-** .
    3. 1.3. Position oil-pressure sender **-5-** with adapter **-3-** and tighten screws **-6-** to.
    4. 1.4. Connect electric connector.

Fig 1: Identifying Oil Pressure Sensor Components

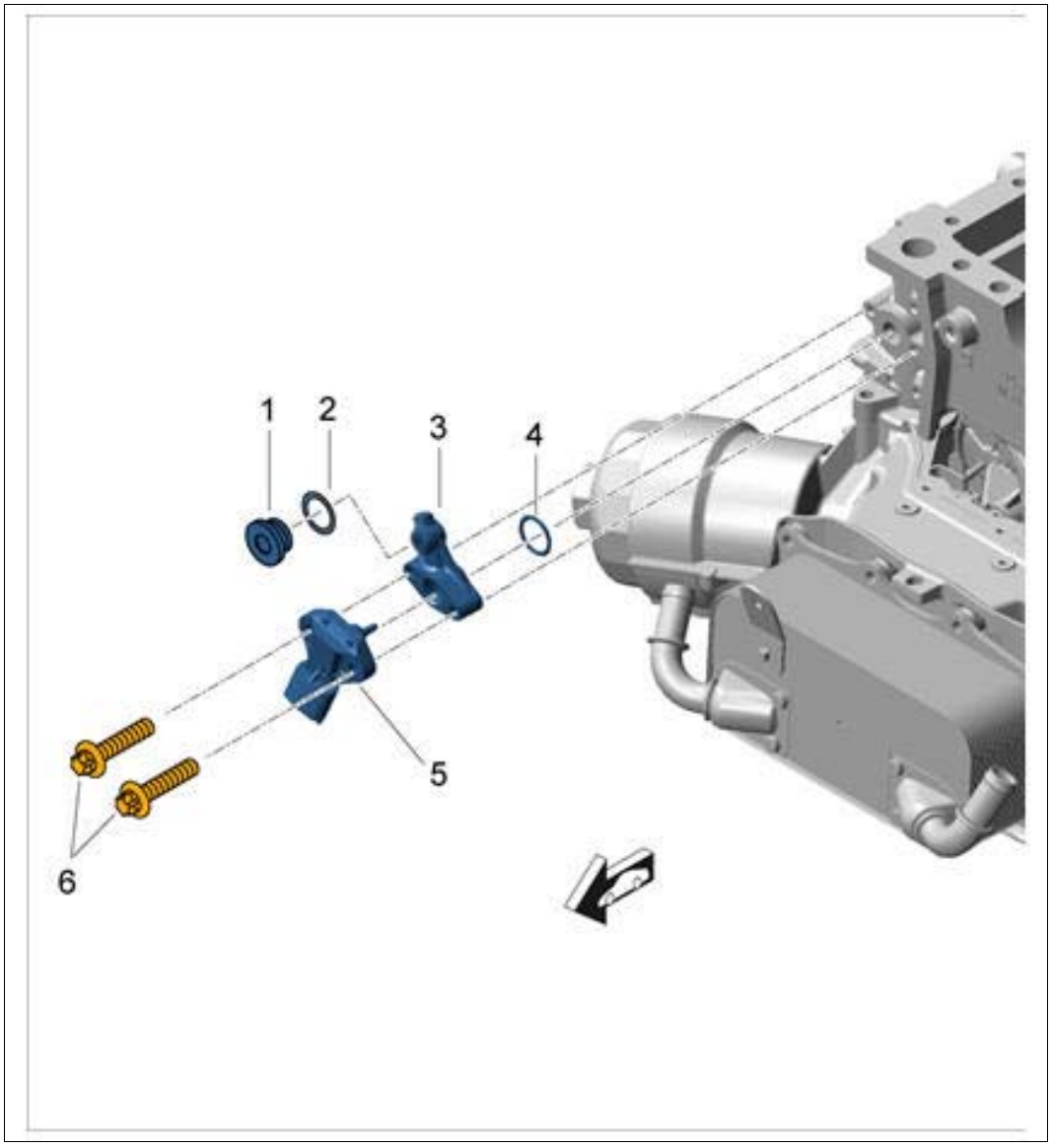

Courtesy of PORSCHE CARS NORTH AMERICA, INC.

WM 170419 REMOVING AND INSTALLING OIL-PRESSURE SENDER (MACAN S, MACAN TURBO) > SUBSEQUENT WORK

1. Install cover for front underbody.

   → INSTALLING COVER FOR FRONT UNDERBODY

2. Install lower pedestrian protection. → INSTALLING PEDESTRIAN PROTECTION
3. Check the oil level and top up if necessary. → 170101 CHECKING ENGINE-OIL LEVEL

WM 170519 REMOVING AND INSTALLING OIL COOLER BRACKET (MACAN) >

TECHNICAL VALUES

Location	Description	Type	Basic value	Tolerance 1	Tolerance 2
Oil pressure switch		Tightening torque	20 Nm (15 ftlb.)		

WM 170519 REMOVING AND INSTALLING OIL COOLER BRACKET (MACAN) > PRELIMINARY WORK

1. Disconnect electric plug connection **-1-** on the oil pressure switch.

Fig 1: Identifying Oil Pressure Switch Plug Connection

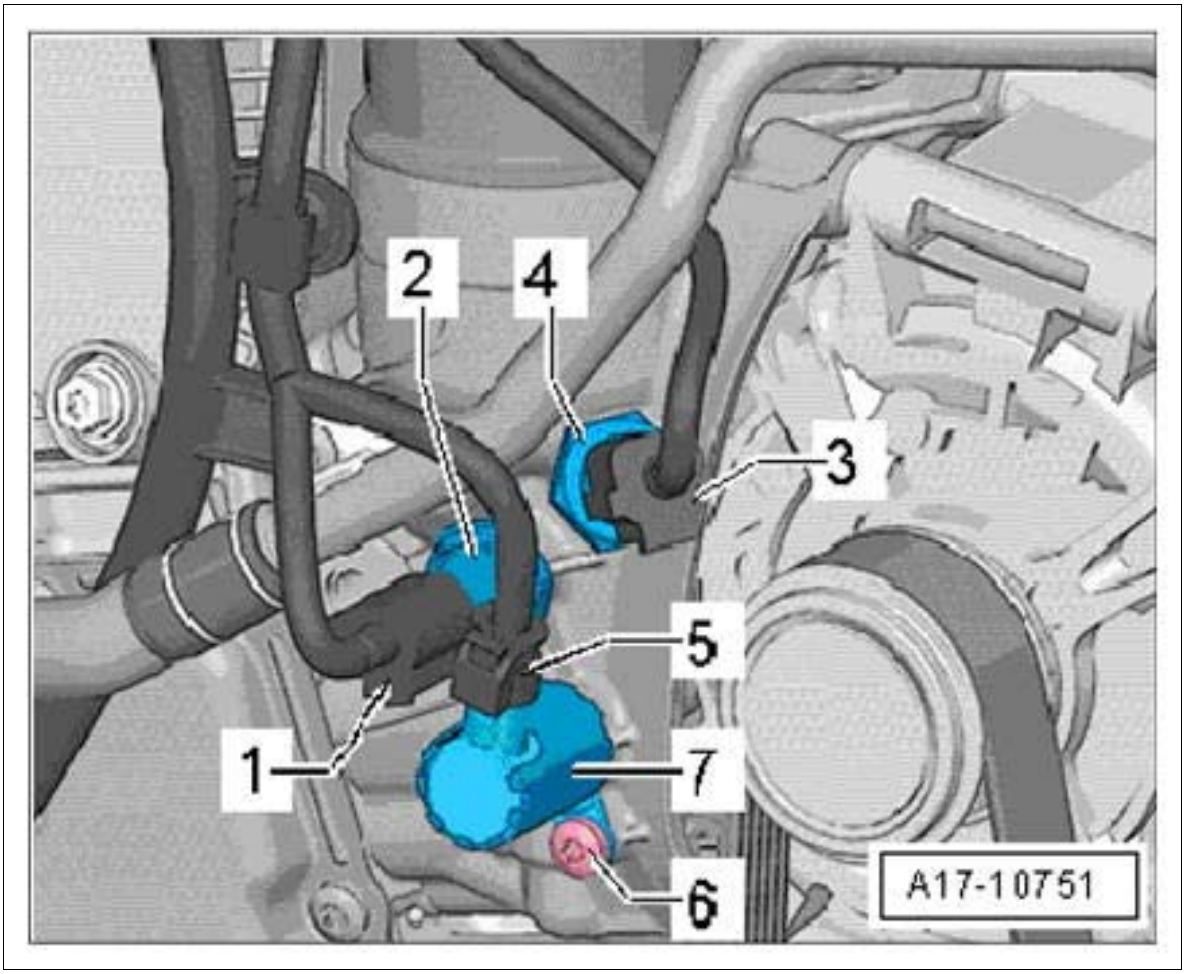

Courtesy of PORSCHE CARS NORTH AMERICA, INC.

WM 170519 REMOVING AND INSTALLING OIL COOLER BRACKET (MACAN) > REMOVING > REMOVING OIL PRESSURE SWITCH

1. Unscrew and remove oil pressure switch **-2-** . Collect emerging oil with a cloth. To prevent excessive oil loss, have new oil pressure switch ready and fit it immediately.

Fig 1: Identifying Oil Pressure Switch

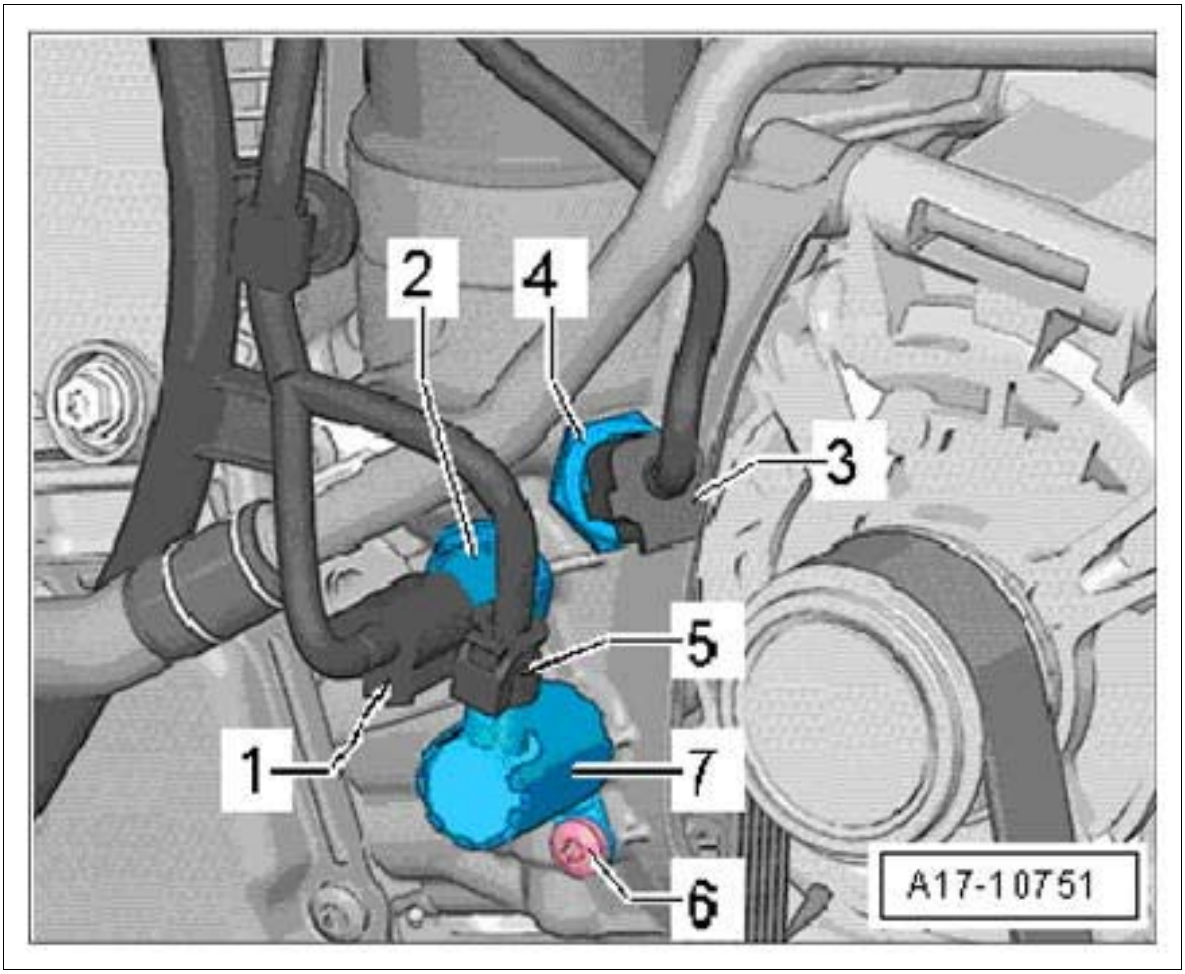

Courtesy of PORSCHE CARS NORTH AMERICA, INC.

WM 170519 REMOVING AND INSTALLING OIL COOLER BRACKET (MACAN) > INSTALLING > INSTALLING OIL PRESSURE SWITCH

1. Screw in and tighten oil pressure switch. **Replace sealing ring** . **Tightening torque: 20 Nm (15 ftlb.)**

WM 170519 REMOVING AND INSTALLING OIL COOLER BRACKET (MACAN) > SUBSEQUENT WORK

1. Check oil level. → 170101 CHECKING ENGINE-OIL LEVEL

WM 170519 REMOVING AND INSTALLING OIL PRESSURE SWITCH FOR OIL SPRAY JETS (MACAN) > TOOLS

Designation	Type	Number	Description	
Articulated wrench	VW tool	T40175		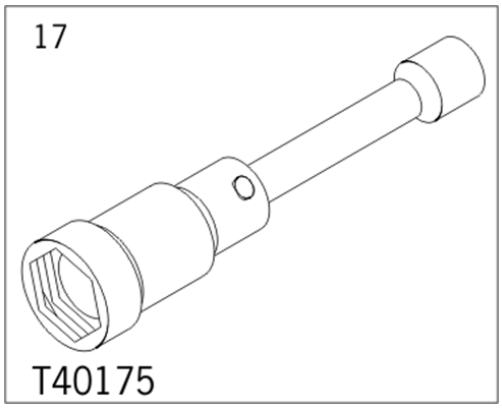

WM 170519 REMOVING AND INSTALLING OIL PRESSURE SWITCH FOR OIL SPRAY JETS (MACAN) > TECHNICAL VALUES

Location	Description	Type	Basic value	Tolerance 1	Tolerance 2
Oil pressure switch		Tightening torque	20 Nm (15 ftlb.)		

WM 170519 REMOVING AND INSTALLING OIL PRESSURE SWITCH FOR OIL SPRAY JETS (MACAN) > PRELIMINARY WORK > PRELIMINARY WORK FOR OIL PRESSURE SWITCH

1. Remove engine cover.
2. Remove belt guard for coolant pump.
    1. 2.1. Unscrew screws **-arrows-** and remove belt guard.
3. Disconnect plug connection from oil pressure switch for oil spray jets **-1-** .

Fig 1: Locating Oil Spray Jets

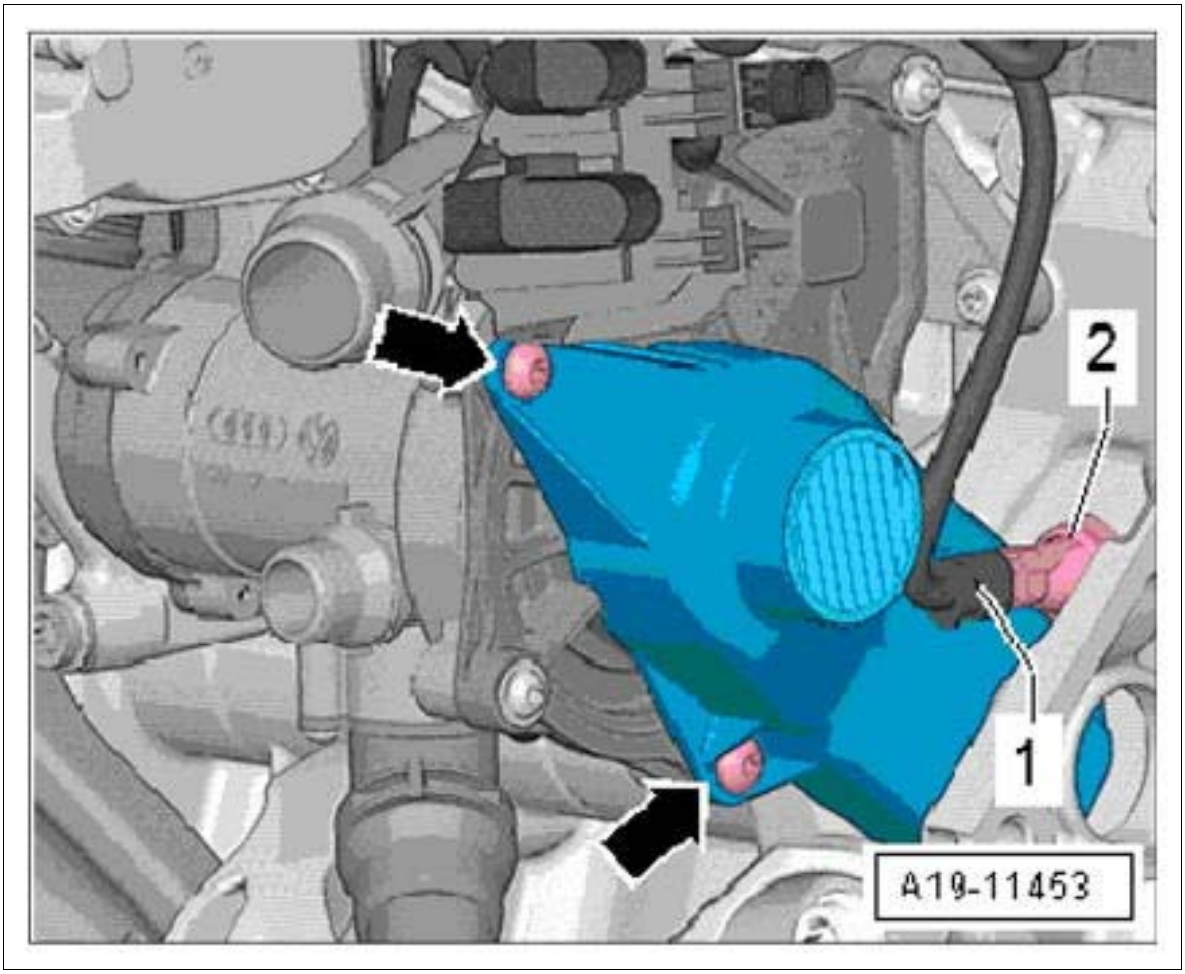

Courtesy of PORSCHE CARS NORTH AMERICA, INC.

WM 170519 REMOVING AND INSTALLING OIL PRESSURE SWITCH FOR OIL SPRAY JETS (MACAN) > REMOVING > REMOVING OIL PRESSURE SWITCH

WARNING: Hot fluid

- *Danger of scalding*

→ Let the fluid cool down.

→ Wear personal protective gear.

1. Remove oil pressure switch using articulated wrench **Articulated wrench T40175. Soak up emerging oil with a cloth.**

WM 170519 REMOVING AND INSTALLING OIL PRESSURE SWITCH FOR OIL SPRAY

JETS (MACAN) > INSTALLING > INSTALLING OIL PRESSURE SWITCH

1. Install oil pressure switch using articulated wrench **Articulated wrench T40175** (**Tightening torque: 20 Nm (15 ftlb.)**). **Replace sealing ring.**

WM 170519 REMOVING AND INSTALLING OIL PRESSURE SWITCH FOR OIL SPRAY JETS (MACAN) > SUBSEQUENT WORK

- When the work is complete, check that all aids and foreign objects (e.g. cloths, tools) are removed from the engine compartment.

Information

1. Connect plug connection to oil pressure switch for oil spray jets.
2. Install belt guard for coolant pump.
3. Check oil level. → 170101 CHECKING ENGINE-OIL LEVEL
4. Install engine cover.

WM 171119 REMOVING AND INSTALLING OIL LEVEL SENSOR (MACAN) > TECHNICAL VALUES

Location	Description	Type	Basic value	Tolerance 1	Tolerance 2
Fastening nut Oil level sensor		Tightening torque	9 Nm (6.5 ftlb.)		

WM 171119 REMOVING AND INSTALLING OIL LEVEL SENSOR (MACAN) > PRELIMINARY WORK

1. Remove cover for front underbody. → 519219 REMOVING AND INSTALLING COVER FOR FRONT UNDERBODY
2. Drain engine oil. → 170117 DRAINING AND FILLING ENGINE OIL

WM 171119 REMOVING AND INSTALLING OIL LEVEL SENSOR (MACAN) > REMOVING OIL LEVEL SENSOR

1. Remove oil level sensor.
    1. 1.1. Disconnect electric plug connection **-3-** .
    2. 1.2. Unscrew fastening nuts **-1-** .

3. 1.3. Remove oil level sensor **-4-** and take off seal **-2-** .

Fig 1: Identifying Oil Level Sensor Components

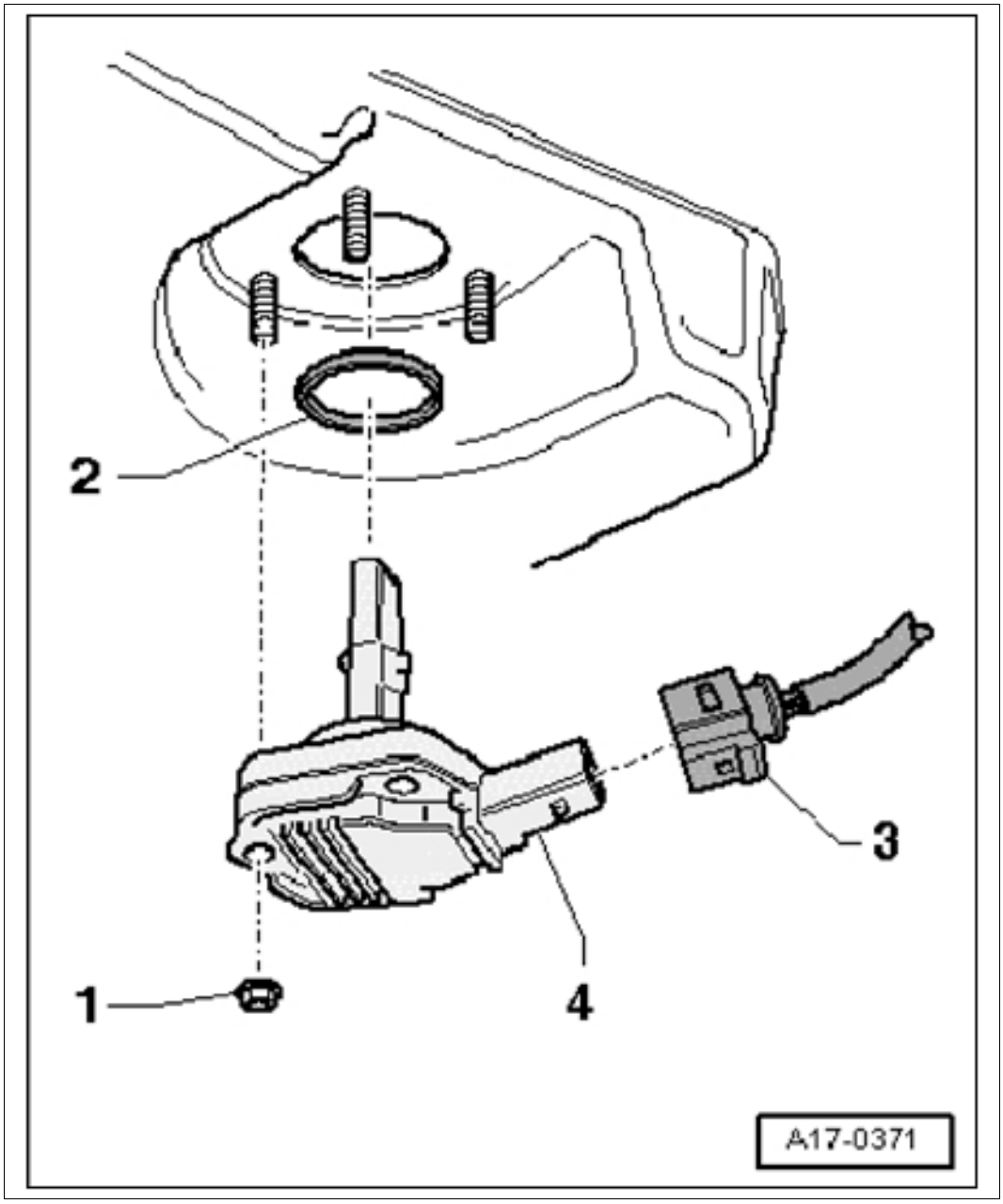

Courtesy of PORSCHE CARS NORTH AMERICA, INC.

WM 171119 REMOVING AND INSTALLING OIL LEVEL SENSOR (MACAN) > INSTALLING OIL LEVEL SENSOR

1. Install oil level sensor.
    1. 1.1. Fit oil level sensor **-4-** with a new seal **-2-** .
    2. 1.2. Fit and tighten fastening nuts **-1-** . **Tightening torque: 9 Nm (6.5 ftlb.)**
    3. 1.3. Plug in electric plug connection **-3-** .

Fig 1: Identifying Oil Level Sensor Components

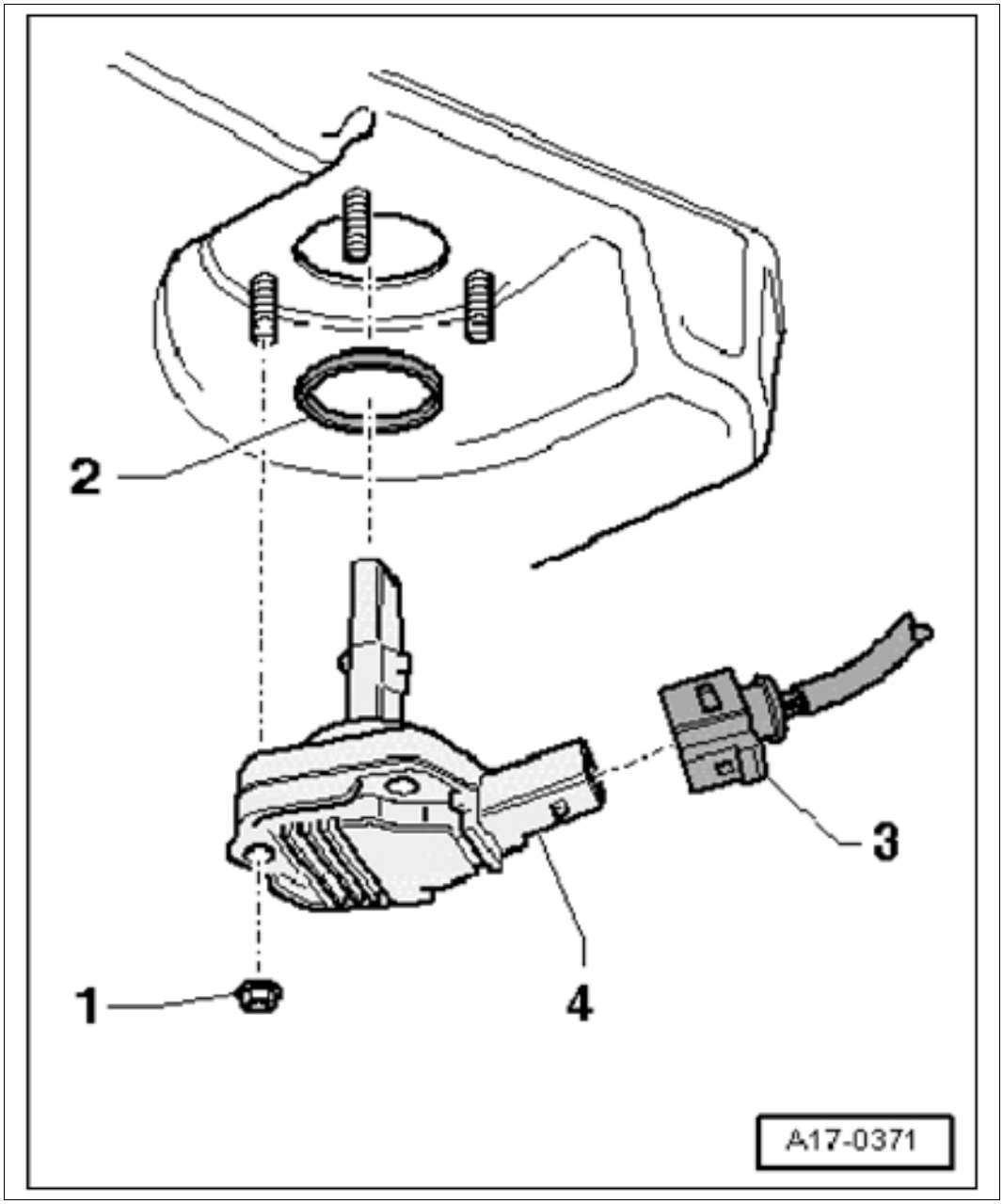

Courtesy of PORSCHE CARS NORTH AMERICA, INC.

WM 171119 REMOVING AND INSTALLING OIL LEVEL SENSOR (MACAN) > SUBSEQUENT WORK

1. Fill in engine oil. → FILLING ENGINE OIL
2. Check engine-oil level. → 170101 CHECKING ENGINE-OIL LEVEL
3. Install cover for front underbody. → INSTALLING COVER FOR FRONT UNDERBODY

WM 172019 REMOVING AND INSTALLING OIL PUMP (MACAN) > TOOLS

Designation	Type	Number	Description	
assembly tool	VW tool	T10118		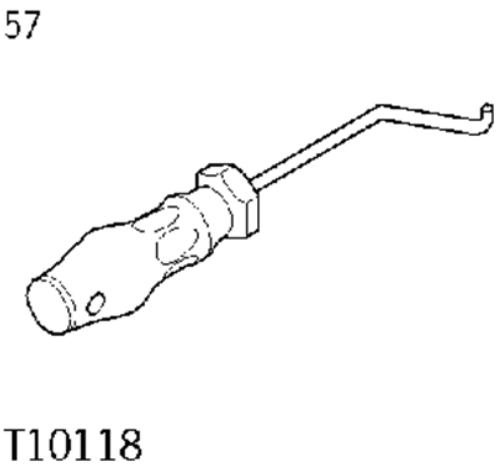
locking tool	VW tool	T40265		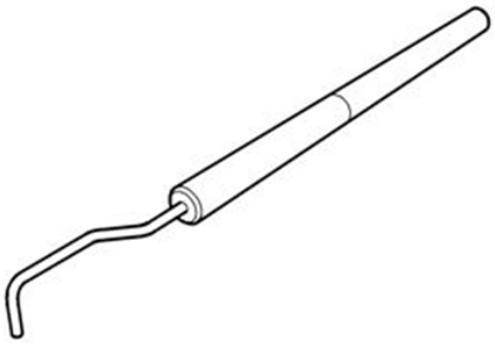

WM 172019 REMOVING AND INSTALLING OIL PUMP (MACAN) > TECHNICAL VALUES

Location	Description	Type	Basic value	Tolerance 1	Tolerance 2
Fastening screw for lower part of oil pan		Initial tightening	8 Nm (6 ftlb.)		
Fastening screw for lower part of oil pan		Final tightening	+90°		
Fastening screw for oil pump		Initial tightening	8 Nm (6 ftlb.)		
Fastening screw for oil pump		Final tightening	+90°		

Fastening screw for oil plate		Initial tightening	4 Nm (3 ftlb.)		
Fastening screw for oil plate		Final tightening	+45°		

WM 172019 REMOVING AND INSTALLING OIL PUMP (MACAN) > PRELIMINARY WORK

1. Remove oil pan (lower part). → 175019 REMOVING AND INSTALLING OIL PAN
2. Remove oil plate.
    1. 2.1. Unscrew screw **-arrow-** and pull off oil plate.

    Fig 1: Locating Oil Plate Screw

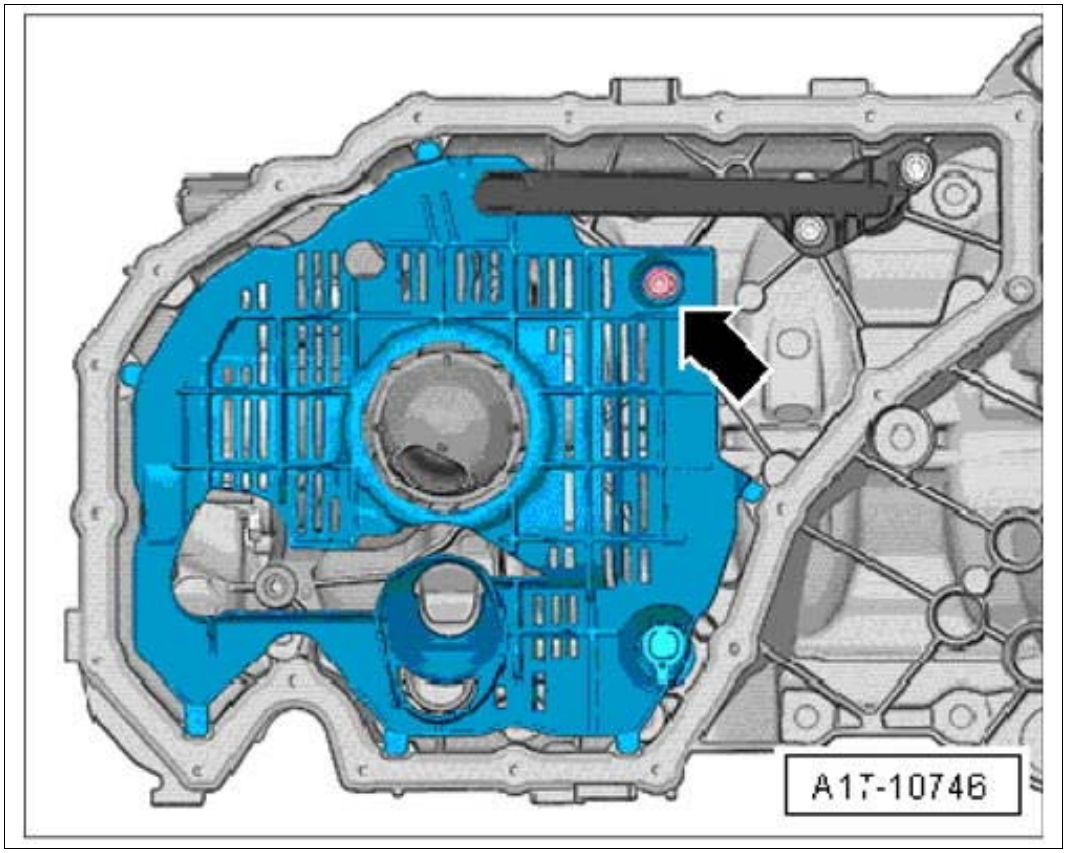

Courtesy of PORSCHE CARS NORTH AMERICA, INC.

3. Use **assembly tool assembly tool T10118** to pull spring on chain tensioner in **-direction of arrow-** and secure with locking tool **locking tool T40265.**

Fig 2: Pulling Chain Tensioner Spring

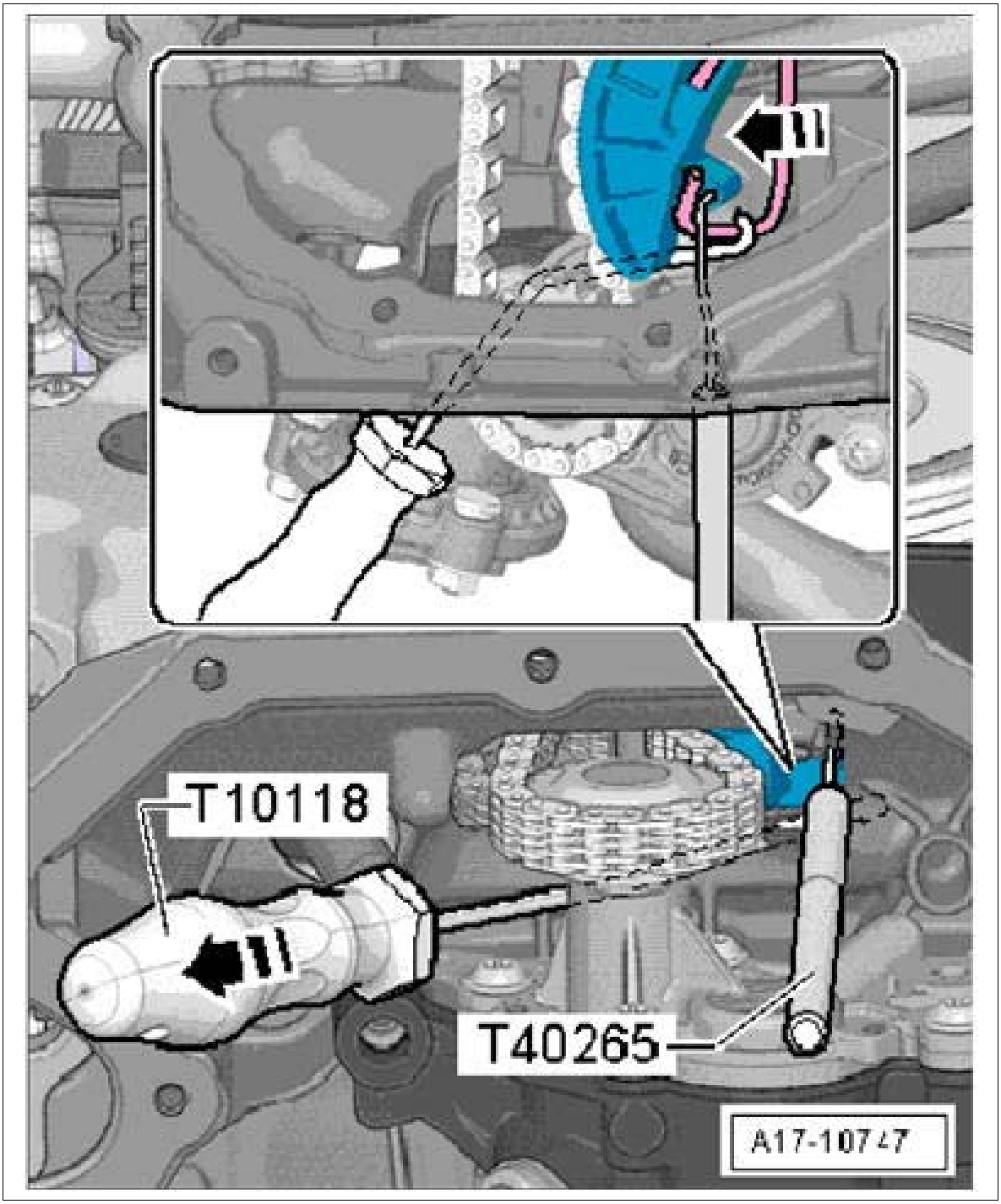

Courtesy of PORSCHE CARS NORTH AMERICA, INC.

WM 172019 REMOVING AND INSTALLING OIL PUMP (MACAN) > REMOVING OIL PUMP

1. Unscrew screws and remove oil pump.

Fig 1: Locating Oil Pump Screws

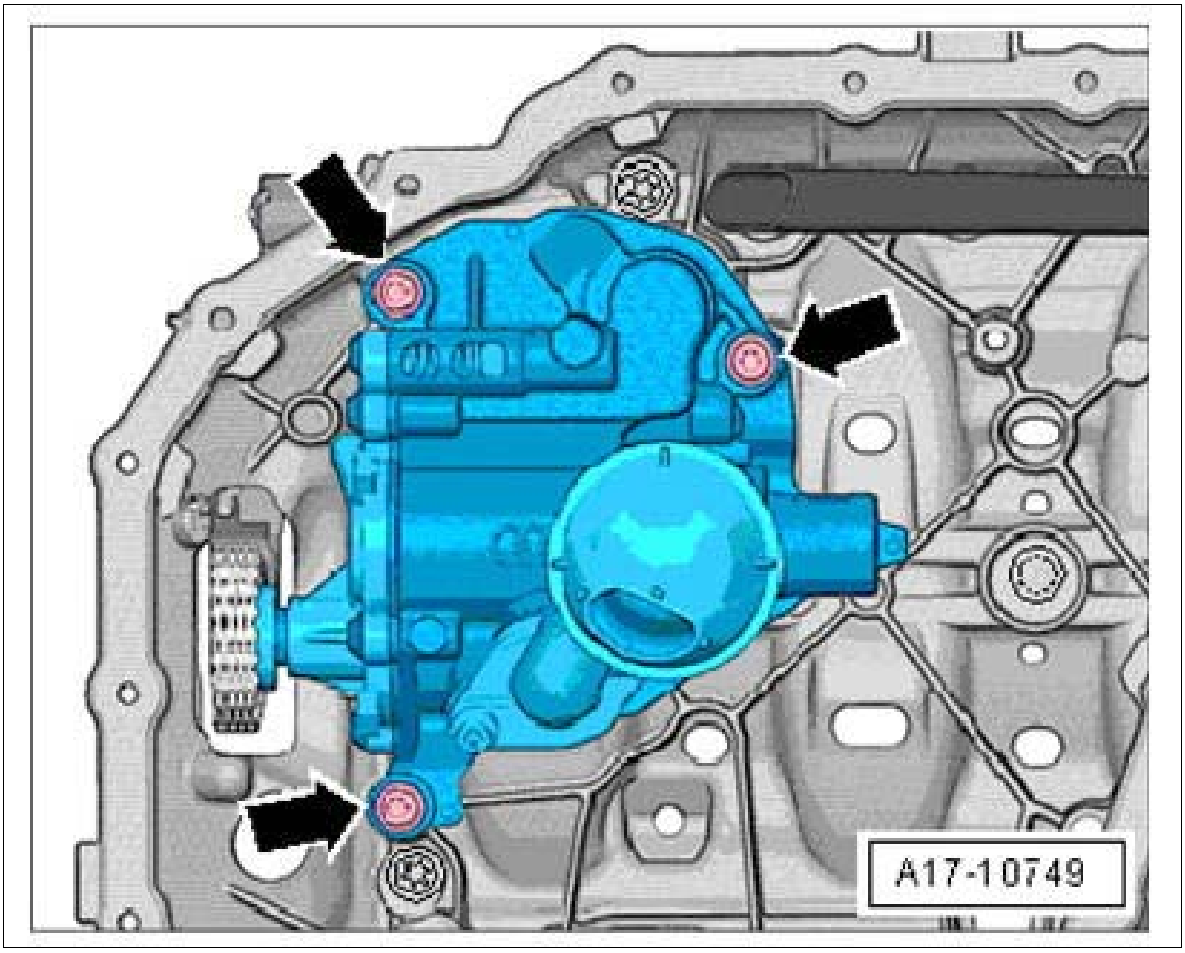

Courtesy of PORSCHE CARS NORTH AMERICA, INC.

WM 172019 REMOVING AND INSTALLING OIL PUMP (MACAN) > INSTALLING OIL PUMP

1. Check the following before installing the oil pump:
    1. 1.1. Check that dowel sleeves for centering the oil pump are fitted.
    2. 1.2. Check oil ducts in upper part of oil pan for dirt.
    3. 1.3. Check strainer in the suction pipe for dirt.
2. Guide sprocket for oil pump into the drive chain and install oil pump. Replace screws. **Initial tightening 8 Nm (6 ftlb.) Final tightening +90°**

WM 172019 REMOVING AND INSTALLING OIL PUMP (MACAN) > SUBSEQUENT WORK

1. Pull the spring of the chain tensioner using **assembly tool T10118** in **-direction of arrow-**

and remove **locking tool T40265.**

Fig 1: Installing Oil Pump

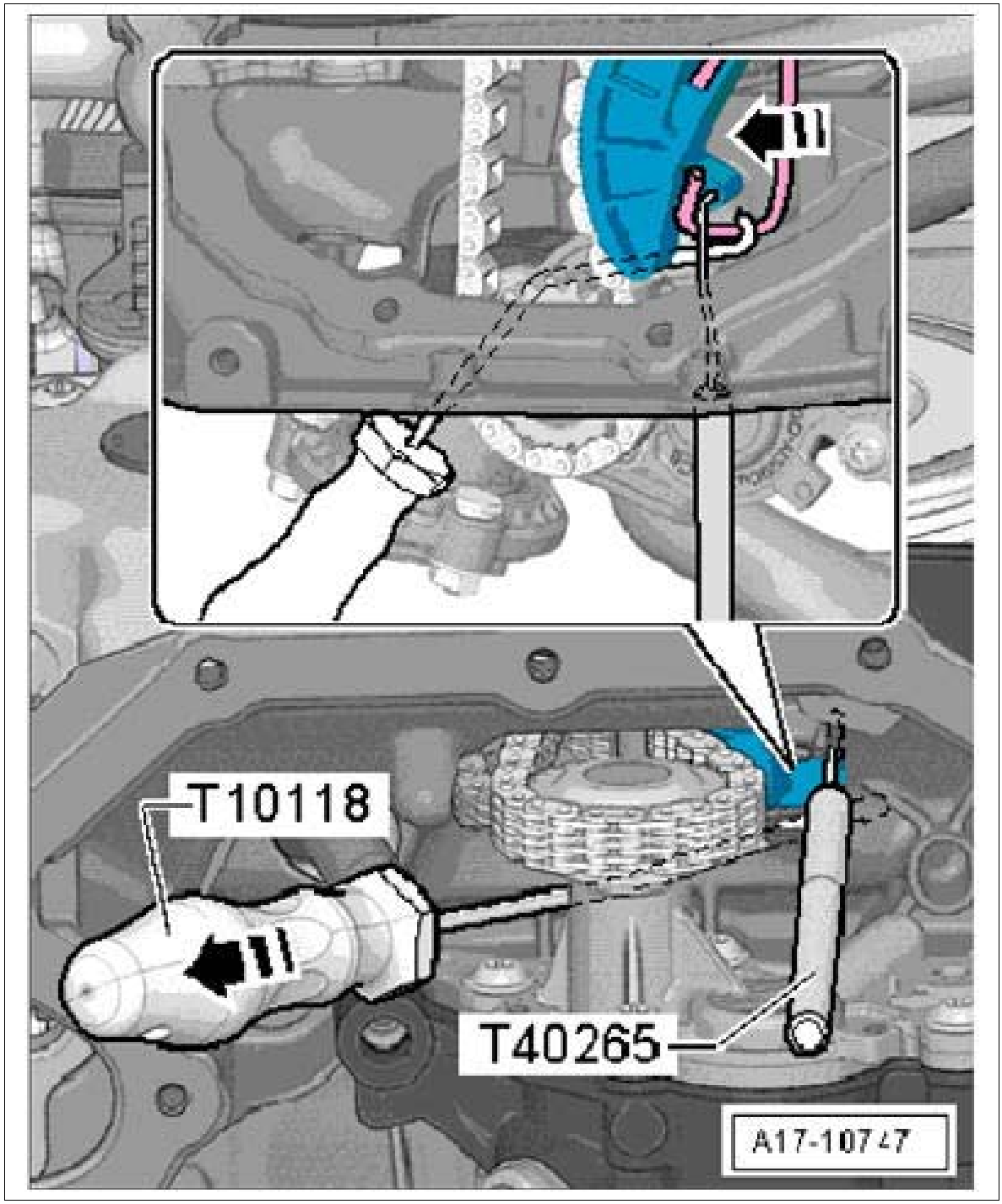

Courtesy of PORSCHE CARS NORTH AMERICA, INC.

2. Fit O-ring on new oil plate. **Coat O-ring with oil.**
3. Fit and tighten new oil plate. **Replace screws . Initial tightening 4 Nm (3 ftlb.) Final tightening +45°**
4. Install lower part of oil pan. → INSTALLING LOWER PART OF OIL PAN **Replace screws. Observe tightening sequence -1 to 19- . Initial tightening 8 Nm (6 ftlb.) Final tightening +90°**

Fig 2: Oil Pan Lower Part Screw Tightening Sequence

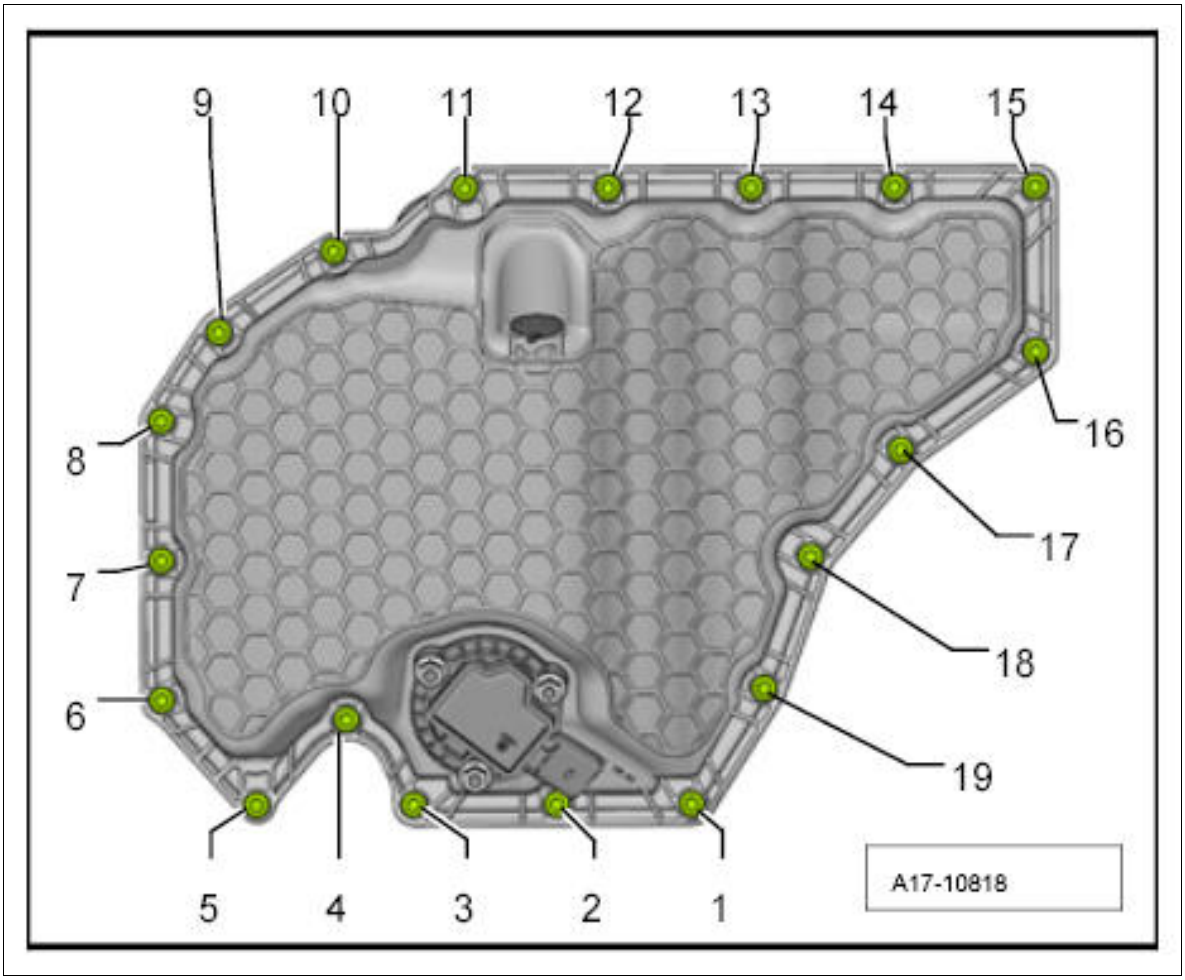

Courtesy of PORSCHE CARS NORTH AMERICA, INC.

5. Fill in engine oil. → FILLING ENGINE OIL

WM 172600 REMOVING AND INSTALLING PRESSURE-REGULATING VALVE (OIL SPRAY JETS) (MACAN) > TECHNICAL VALUES

Location	Description	Type	Basic value	Tolerance 1	Tolerance 2
Fastening screw securing control valve for piston cooling nozzles		Initial tightening	4 Nm (3 ftlb.)		
Fastening screw securing control valve for piston cooling nozzles		Final tightening	45°		

WM 172600 REMOVING AND INSTALLING PRESSURE-REGULATING VALVE (OIL SPRAY JETS) (MACAN) > REMOVING > REMOVING PRESSURE-REGULATING VALVE

Information

- When the work is complete, check that all aids and foreign objects (e.g. cloths, tools) are removed from the engine compartment.

1. Remove pressure-regulating valve.

    1. 1.1. Disconnect electric plug connection **-5-** on the pressure-regulating valve.

    2. 1.2. Unscrew screw **-6-** and remove pressure-regulating valve. **Prepare new pressure-regulating valve and fit immediately to prevent oil loss. Soak up drops of oil with a cloth.**

        Fig 1: Identifying Pressure-Regulating Valve Screws

        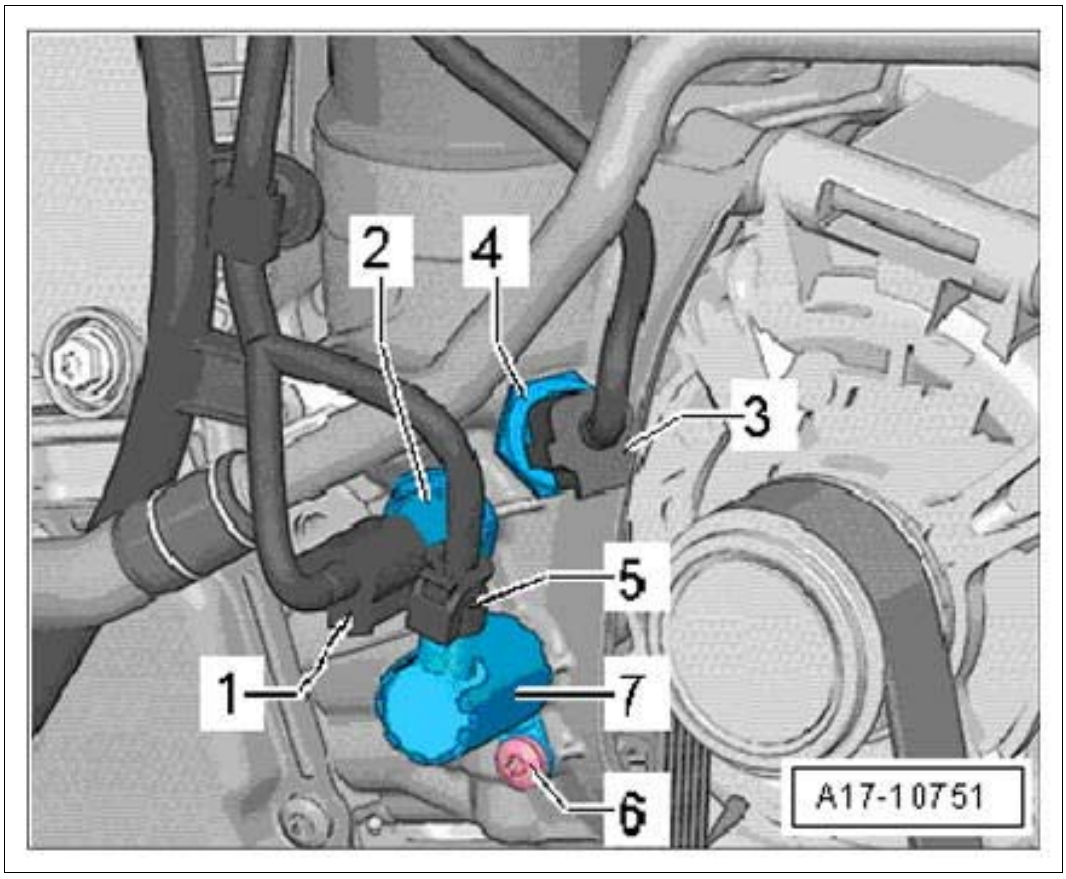

        Courtesy of PORSCHE CARS NORTH AMERICA, INC.

WM 172600 REMOVING AND INSTALLING PRESSURE-REGULATING VALVE (OIL SPRAY JETS) (MACAN) > REMOVING > INSTALLING PRESSURE-REGULATING VALVE

1. Install pressure-regulating valve.
    1. 1.1. Replace O-rings. Replace fastening screw.
    2. 1.2. Insert and tighten pressure-regulating valve. **Initial tightening 4 Nm (3 ftlb.) Final tightening 45°**

WM 172619 REMOVING AND INSTALLING PRESSURE-REGULATING VALVE (MACAN) > PRELIMINARY WORK

1. Remove oil cooler. → 174019 REMOVING AND INSTALLING OIL COOLER

WM 172619 REMOVING AND INSTALLING PRESSURE-REGULATING VALVE (MACAN) > REMOVING > REMOVING PRESSURE-REGULATING VALVE

1. Remove pressure-regulating valve **-1-** from the oil cooler bracket in **-direction of arrow-.**

Fig 1: Removing Pressure-Regulating Valve

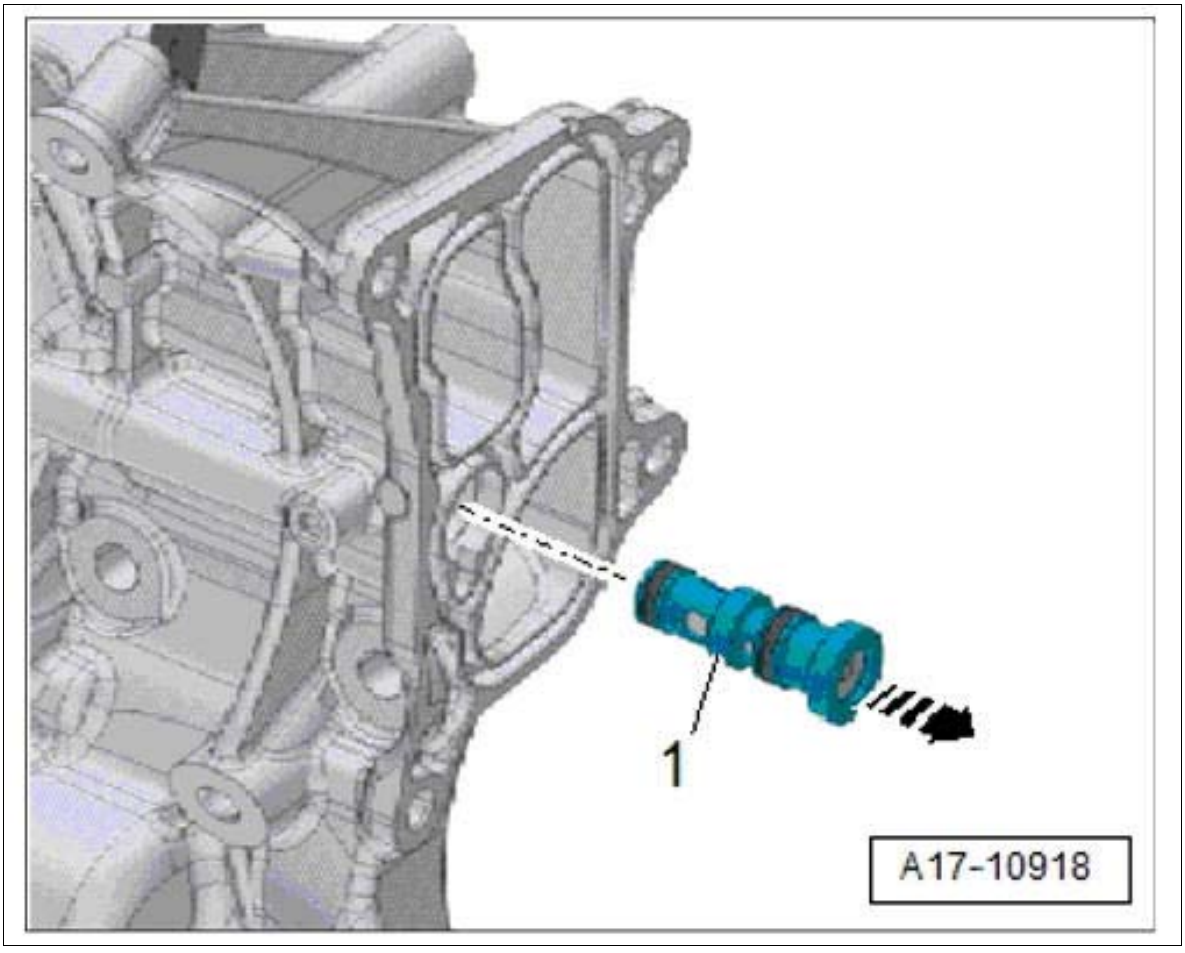

Courtesy of PORSCHE CARS NORTH AMERICA, INC.

WM 172619 REMOVING AND INSTALLING PRESSURE-REGULATING VALVE (MACAN) > INSTALLING > INSTALLING PRESSURE-REGULATING VALVE

1. Insert pressure-regulating valve into oil cooler bracket. Replace sealing rings and coat with oil.

WM 172619 REMOVING AND INSTALLING PRESSURE-REGULATING VALVE (MACAN) > SUBSEQUENT WORK

1. Install oil cooler. → INSTALLING OIL COOLER

WM 173019 REMOVING AND INSTALLING OIL FILTER (MACAN) > TECHNICAL VALUES

Location	Description	Type	Basic value	Tolerance 1	Tolerance 2
Oil-filter housing		Tightening torque	+25 Nm (+19 ftlb.)		

WM 173019 REMOVING AND INSTALLING OIL FILTER (MACAN) > PRELIMINARY WORK

1. Remove design cover (engine cover).

WM 173019 REMOVING AND INSTALLING OIL FILTER (MACAN) > REMOVING > REMOVING OIL FILTER

WARNING: Hot fluid

- *Danger of scalding*

→ Let the fluid cool down.

→ Wear personal protective gear.

1. Loosen and unscrew oil-filter housing. **Collect emerging oil with a cloth.**
2. Pull oil filter element out of the oil-filter housing.

WM 173019 REMOVING AND INSTALLING OIL FILTER (MACAN) > INSTALLING >

INSTALLING OIL FILTER

1. Insert new oil filter element **-3-** with a new O-ring **-4-** in the oil filter element **-5-** .
2. Screw in oil-filter housing and filter. **Coat O-rings with engine oil.**
    1. 2.1. Tighten oil-filter housing to **Tightening torque: +25 Nm (+19 ftlb.)** .

Fig 1: Identifying Oil Filter Components

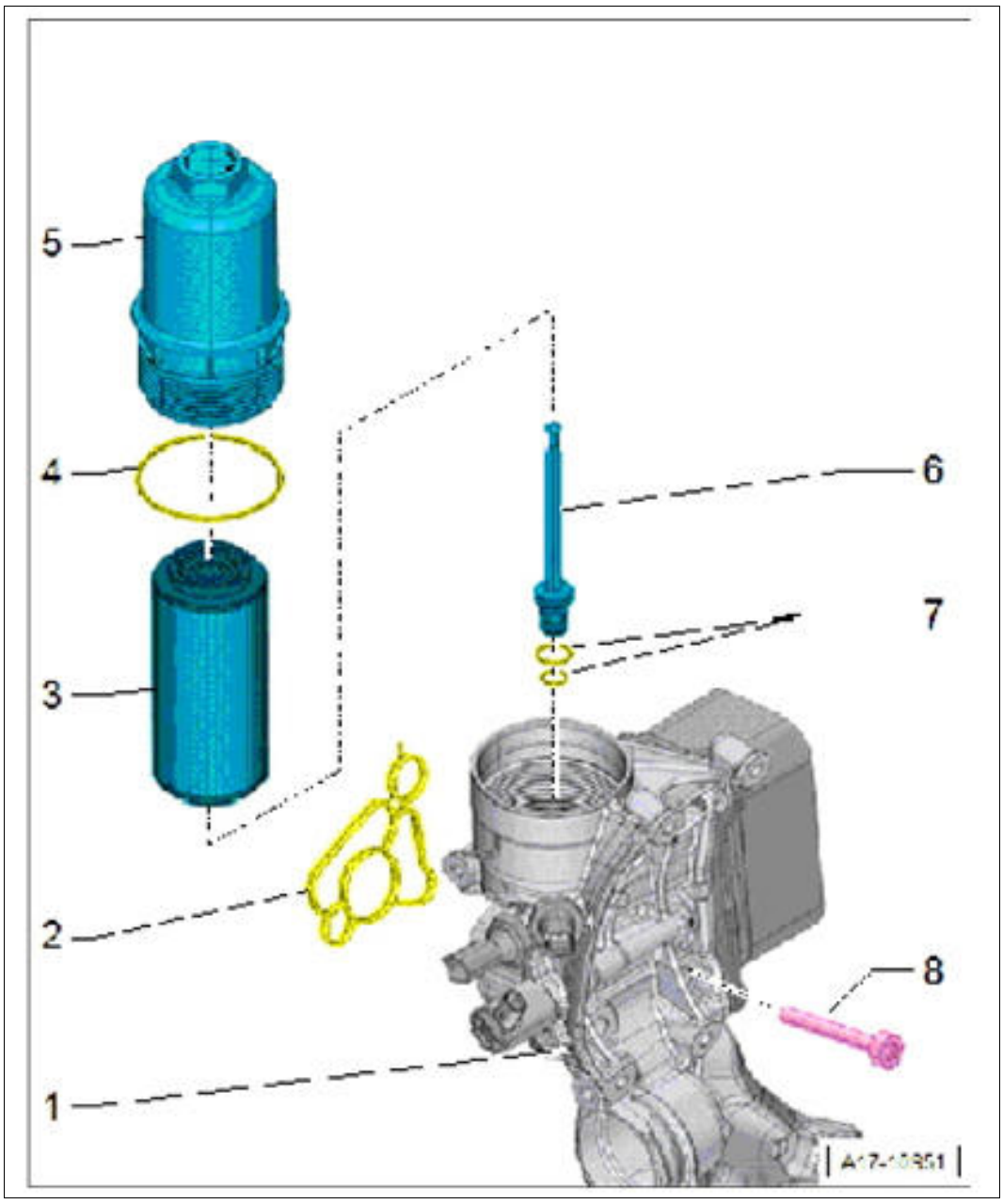

Courtesy of PORSCHE CARS NORTH AMERICA, INC.

WM 173019 REMOVING AND INSTALLING OIL FILTER (MACAN) > SUBSEQUENT WORK

1. Install design cover (engine cover).
2. Check oil level. → 170101 CHECKING ENGINE-OIL LEVEL

WM 173055 CHANGING OIL FILTER (MACAN S, MACAN TURBO) > PRELIMINARY WORK

1. Drain engine oil. → 170117 DRAINING AND FILLING ENGINE OIL

WM 173055 CHANGING OIL FILTER (MACAN S, MACAN TURBO) > CHANGING OIL FILTER

NOTE: Incorrect oil level

- *Risk of damage to engine or catalytic converter*

→ Check the oil level regularly.

→ The oil level must not fall below the Minimum marking or rise above the Maximum marking.

→ Only use engine oil approved by Porsche.

WARNING: Hot fluid

- *Danger of scalding*

→ Avoid contact with hot fluid.

→ Wear personal protective gear.

Information

- Do not remove the sealing ring with a sharp object.
- The oil filter cover contains a cut-out through which the O-ring can be removed.
- Position collecting container as close as possible to the oil filter so that no hot oil sprays out at the side!
- Have sufficient cleaning cloths ready.
- Cover chassis hoses with cleaning cloths.

1. Loosen the oil filter cover **-1-** using a suitable hexagon socket or ring wrench **-2-** and unscrew and remove it.

Fig 1: Loosening Oil Filter Cover

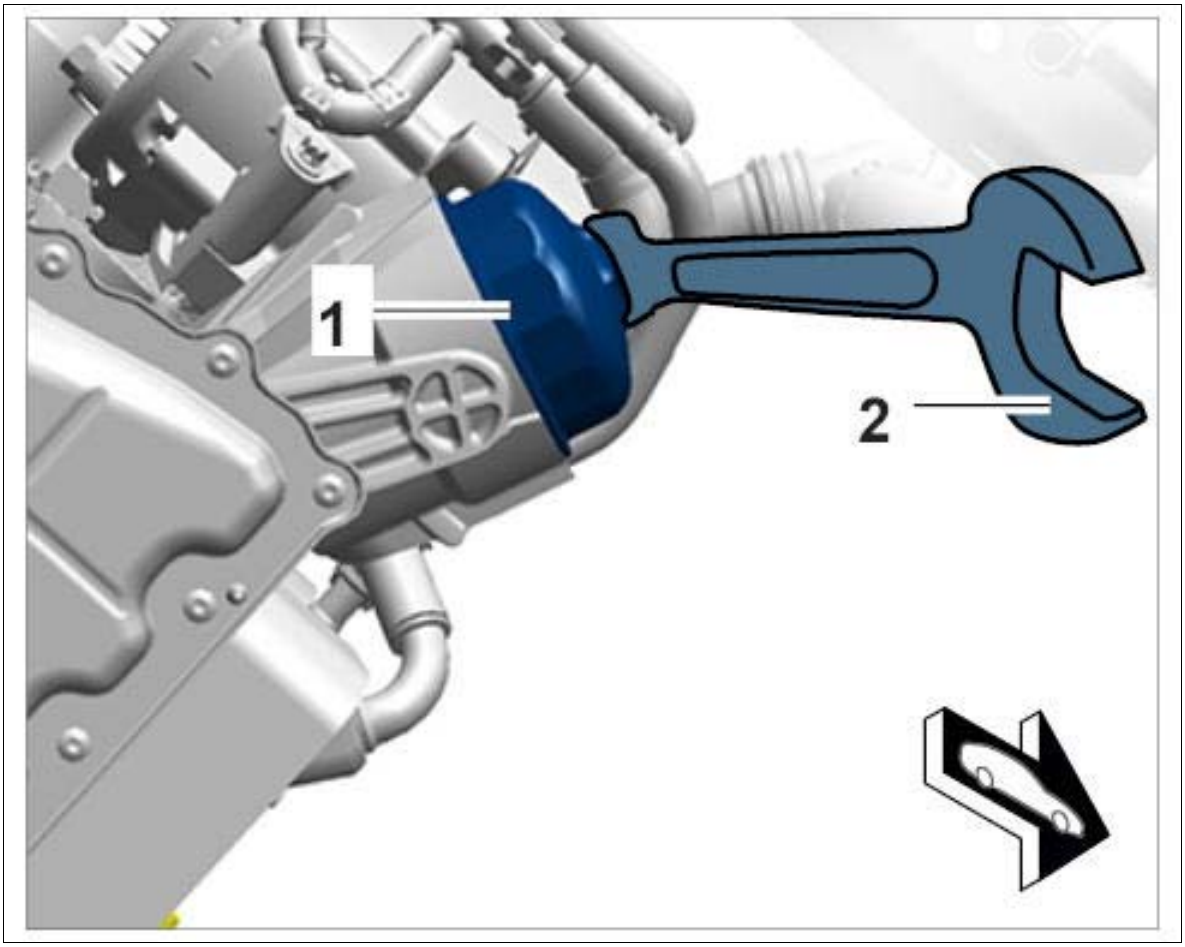

Courtesy of PORSCHE CARS NORTH AMERICA, INC.

2. Slowly open the oil filter cover. Drain the remaining oil into a container.
3. Remove filter element. Dispose of the filter in accordance with legal requirements.
4. Clean the oil filter cover thoroughly inside and outside and replace the sealing ring. Carefully lever off the sealing ring → see Fig 2. Do not damage the oil filter cover.

Fig 2: Removing Oil Filter Cover Sealing Ring



Courtesy of PORSCHE CARS NORTH AMERICA, INC.

5. First fit the filter element into the oil guide housing.
6. Lightly coat the sealing ring on the oil filter cover with engine oil. Screw in the oil filter cover and tighten it hand-tight using a suitable ring wrench.
    1. 6.1. Tightening torque for oil filter cover:

WM 173055 CHANGING OIL FILTER (MACAN S, MACAN TURBO) > SUBSEQUENT WORK

1. Fill in engine oil and check oil level. → FILLING ENGINE OIL and 170101 CHECKING ENGINE-OIL LEVEL .

WM 174019 REMOVING AND INSTALLING OIL COOLER (MACAN) > TECHNICAL VALUES

Location	Description	Type	Basic value	Tolerance 1	Tolerance 2

Fastening screw for oil cooler		Initial tightening	8 Nm (6 ftlb.)		
Fastening screw for oil cooler		Final tightening	+45°		

WM 174019 REMOVING AND INSTALLING OIL COOLER (MACAN) > PRELIMINARY WORK

1. Drain coolant. → 193817 DRAINING AND FILLING COOLANT
2. Remove bracket for oil filter. → 176719 REMOVING AND INSTALLING BRACKET FOR OIL COOLER

WM 174019 REMOVING AND INSTALLING OIL COOLER (MACAN) > REMOVING OIL COOLER

1. Remove engine oil cooler.
    1. 1.1. Unscrew screws **-4-** and **-5-** .
    2. 1.2. Remove engine oil cooler **-3-** and seal **-2-** .
    3. 1.3. Collect emerging oil with a cloth.

Fig 1: Removing Engine Oil Cooler

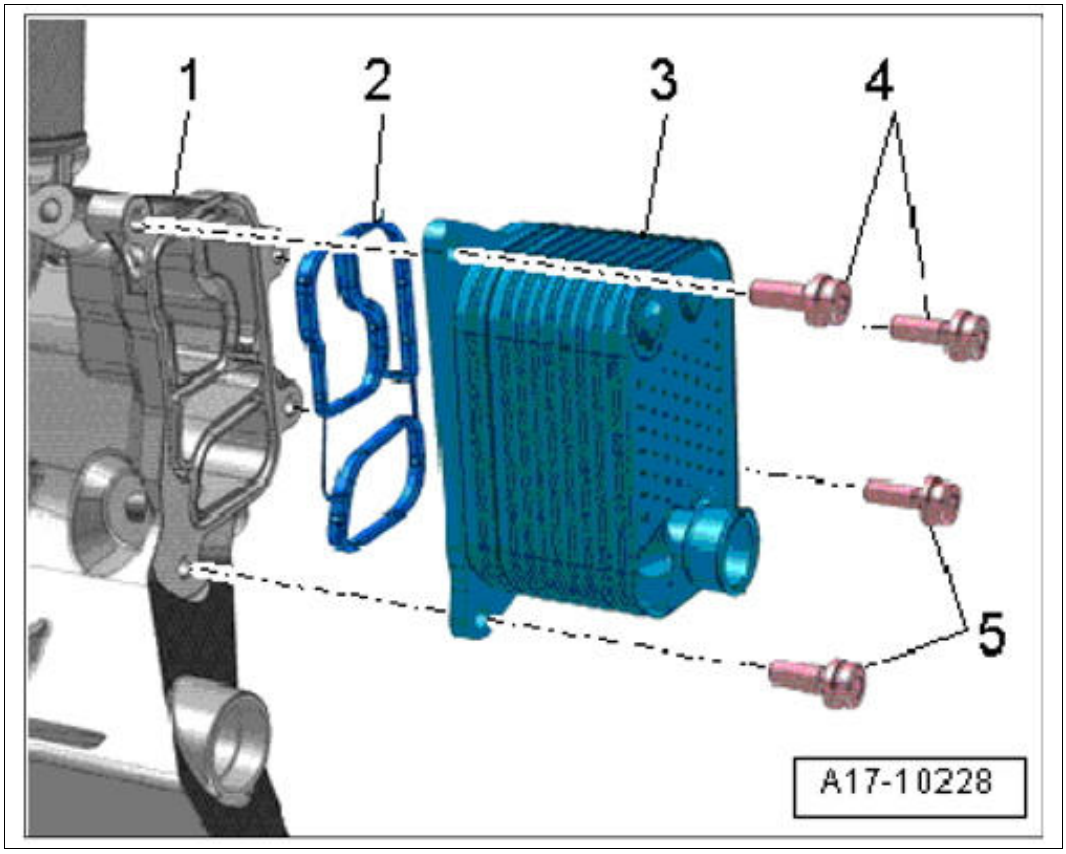

Courtesy of PORSCHE CARS NORTH AMERICA, INC.

WM 174019 REMOVING AND INSTALLING OIL COOLER (MACAN) > INSTALLING OIL COOLER

1. Installation is performed in reverse order. Pay particular attention to the following:
    1. 1.1. Replace seals and sealing rings.
    2. 1.2. Tightening torque for engine oil cooler: **Initial tightening 8 Nm (6 ftlb.) Final tightening +45°**

WM 174019 REMOVING AND INSTALLING OIL COOLER (MACAN) > SUBSEQUENT WORK

1. Install bracket for oil filter. → INSTALLING BRACKET FOR OIL COOLER
2. Fill in coolant. → FILLING COOLANT
3. Check engine oil. → 170101 CHECKING ENGINE-OIL LEVEL

WM 175019 REMOVING AND INSTALLING OIL PAN (MACAN) > TECHNICAL VALUES

Location	Description	Type	Basic value	Tolerance 1	Tolerance 2
Fastening screw for lower part of oil pan		Initial tightening	8 Nm (6 ftlb.)		
Fastening screw for lower part of oil pan		Final tightening	+90°		

WM 175019 REMOVING AND INSTALLING OIL PAN (MACAN) > PRELIMINARY WORK

1. Remove underbody panelling **-1-** and **-2-** . → 519219 REMOVING AND INSTALLING COVER FOR FRONT UNDERBODY

Fig 1: Identifying Underbody Panelling

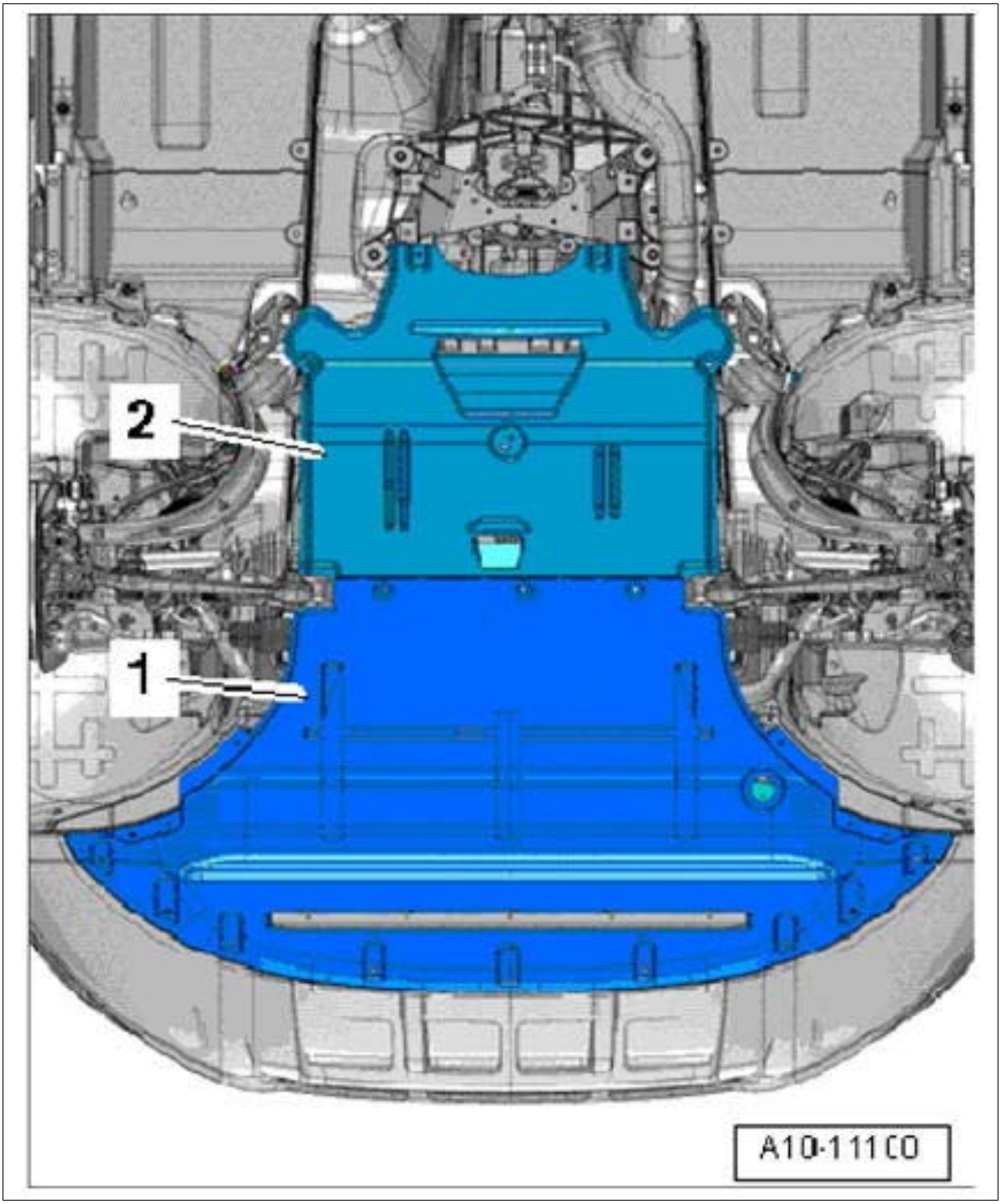

Courtesy of PORSCHE CARS NORTH AMERICA, INC.

2. Remove front-axle support. → 400819 REMOVING AND INSTALLING FRONT-AXLE SUPPORT
3. Remove anti-roll bar. → 407719 REMOVING AND INSTALLING FRONT ANTI-ROLL BAR
4. Remove power-steering gear. → 489055 REPLACING POWER-STEERING GEAR
5. Drain oil. → 170117 DRAINING AND FILLING ENGINE OIL

6. Disconnect connector **-arrow-** from oil level and temperature sensor.

Fig 2: Locating Oil Level And Temperature Sensor

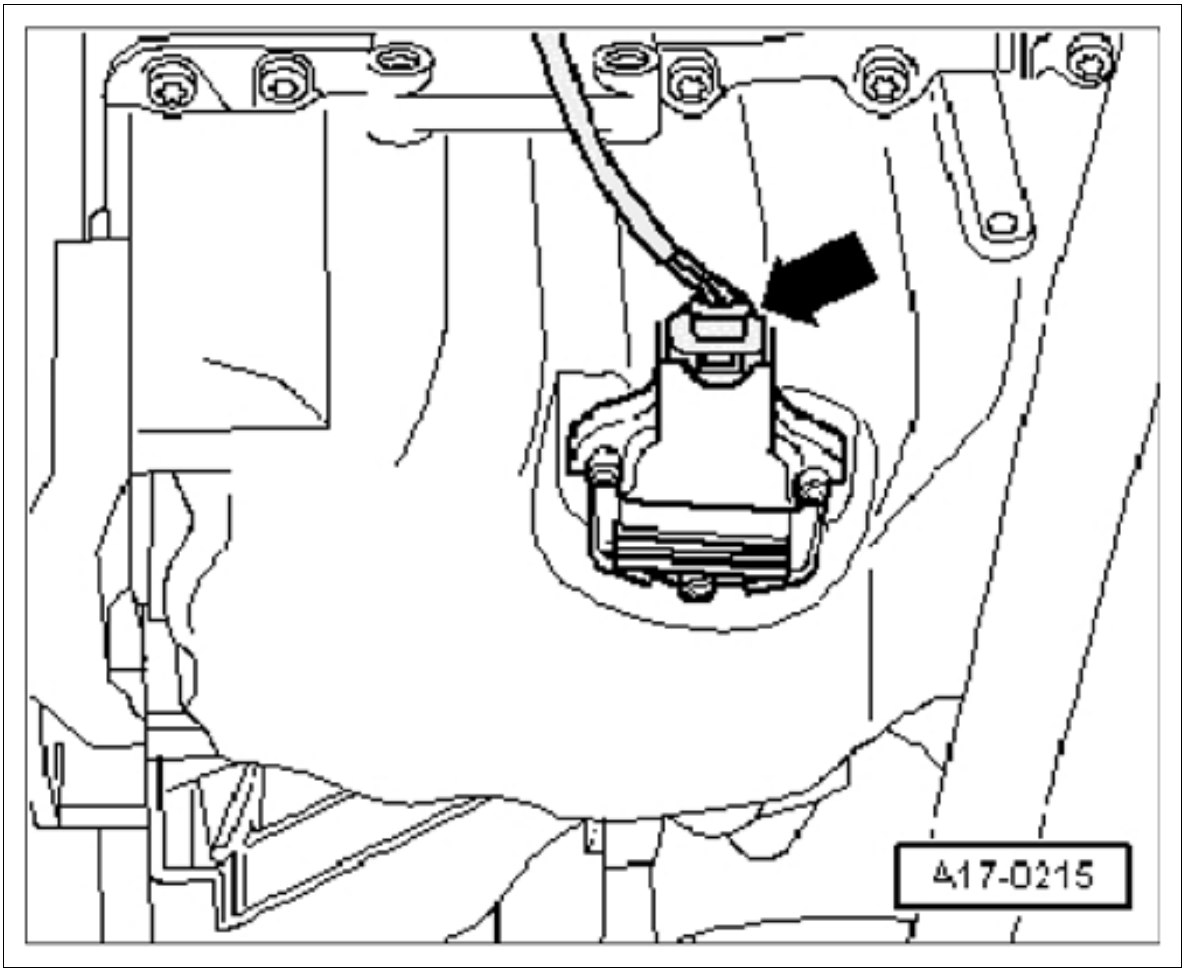

Courtesy of PORSCHE CARS NORTH AMERICA, INC.

7. Remove oil level and temperature sensor. → 171119 REMOVING AND INSTALLING OIL LEVEL SENSOR

WM 175019 REMOVING AND INSTALLING OIL PAN (MACAN) > REMOVING > REMOVING LOWER PART OF OIL PAN

1. Remove oil pan.
    1. 1.1. Unscrew screws 1 to 19.
    2. 1.2. Remove the oil pan.

WM 175019 REMOVING AND INSTALLING OIL PAN (MACAN) > INSTALLING > INSTALLING LOWER PART OF OIL PAN

1. Clean sealing faces and seal and check for damage before fitting lower part of oil pan.

2. Fit lower part of oil pan and tighten screws **-1 to 19 -** in the specified sequence. **Initial tightening 8 Nm (6 ftlb.) Final tightening +90° Replace screws. Replace seal if it is damaged.**

Fig 1: Oil Pan Lower Part Screws Tightening Sequence

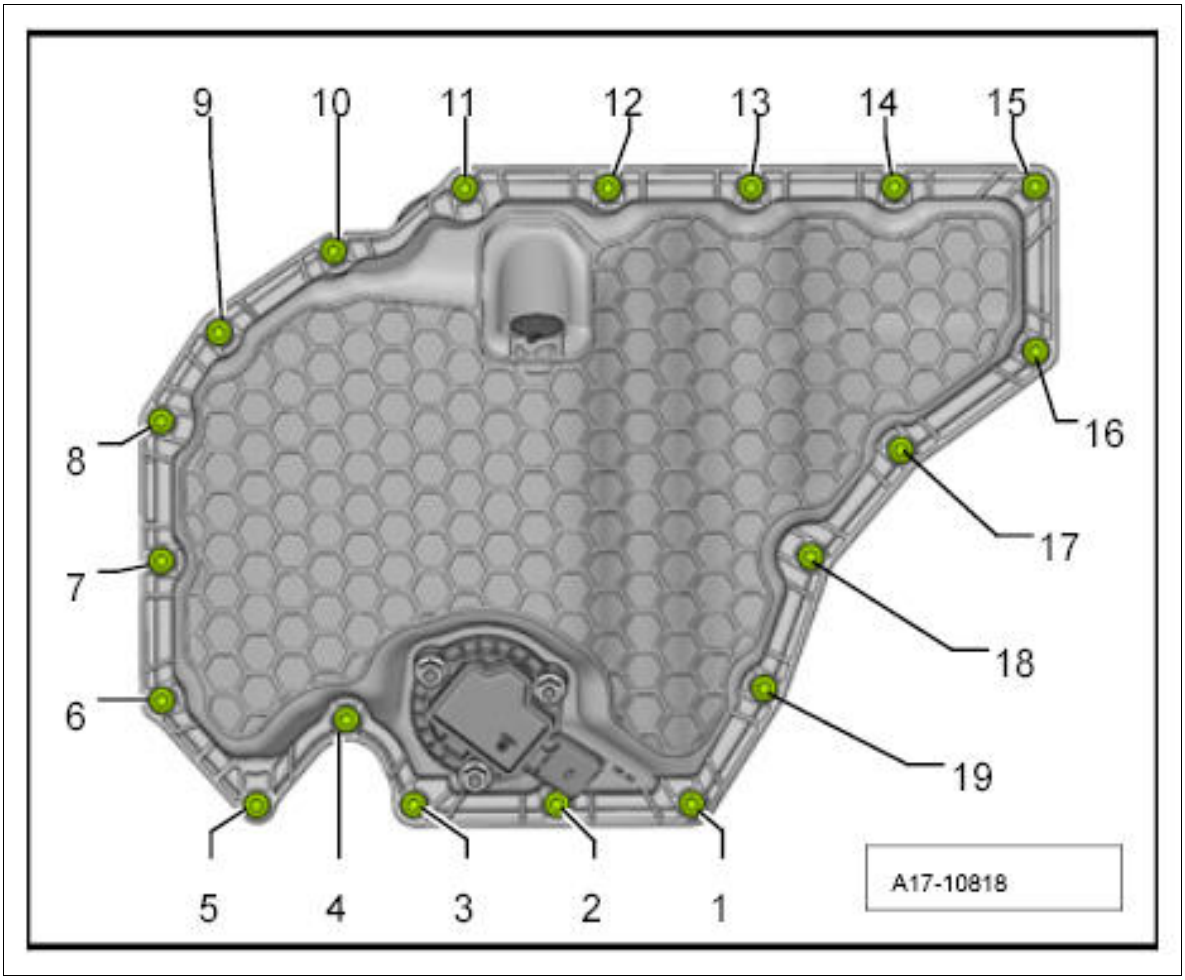

Courtesy of PORSCHE CARS NORTH AMERICA, INC.

WM 175019 REMOVING AND INSTALLING OIL PAN (MACAN) > SUBSEQUENT WORK

1. Install oil level and temperature sensor. → 171119 REMOVING AND INSTALLING OIL LEVEL SENSOR
2. Fit connector for oil level and temperature sensor.
3. Install power-steering gear. → 489055 REPLACING POWER-STEERING GEAR
4. Install underbody panelling. → INSTALLING COVER FOR FRONT UNDERBODY
5. Fill in oil. → FILLING ENGINE OIL

WM 175019 REMOVING AND INSTALLING OIL PAN (OIL GUIDE HOUSING) (MACAN

S, MACAN TURBO) > TECHNICAL VALUES

Location	Description	Type	Basic value	Tolerance 1	Tolerance 2
Oil-filter cover to oil guide housing	Special wrench, a/f 94/36 (1 ea.)	Tightening torque	25 Nm (19 ftlb.)		
Oil/water heat exchanger to oil guide housing	M6 x 20 (6 ea.)	Tightening torque	10 Nm (7.5 ftlb.)		
Fastening screw securing holder to oil guide housing	M6 x 16	Tightening torque	10 Nm (7.5 ftlb.)		
Fastening screw securing upper part of oil pan to crankcase	M6 x 30-ZLAl9/replace	Initial tightening	4 Nm (3 ftlb.)		
Fastening screw securing upper part of oil pan to crankcase		Final tightening	+90°		
Fastening screw securing inside of upper part of oil pan to crankcase	M6 x 25	Tightening torque	10 Nm (7.5 ftlb.)		
Fastening screw securing heat shield to oil cooler		Tightening torque	23 Nm (17 ftlb.)		

WM 175019 REMOVING AND INSTALLING OIL PAN (OIL GUIDE HOUSING) (MACAN S, MACAN TURBO) > TECHNICAL VALUES > UPPER PART OF OIL PAN

Fig 1: Identifying Oil Pan Components (Upper Part)

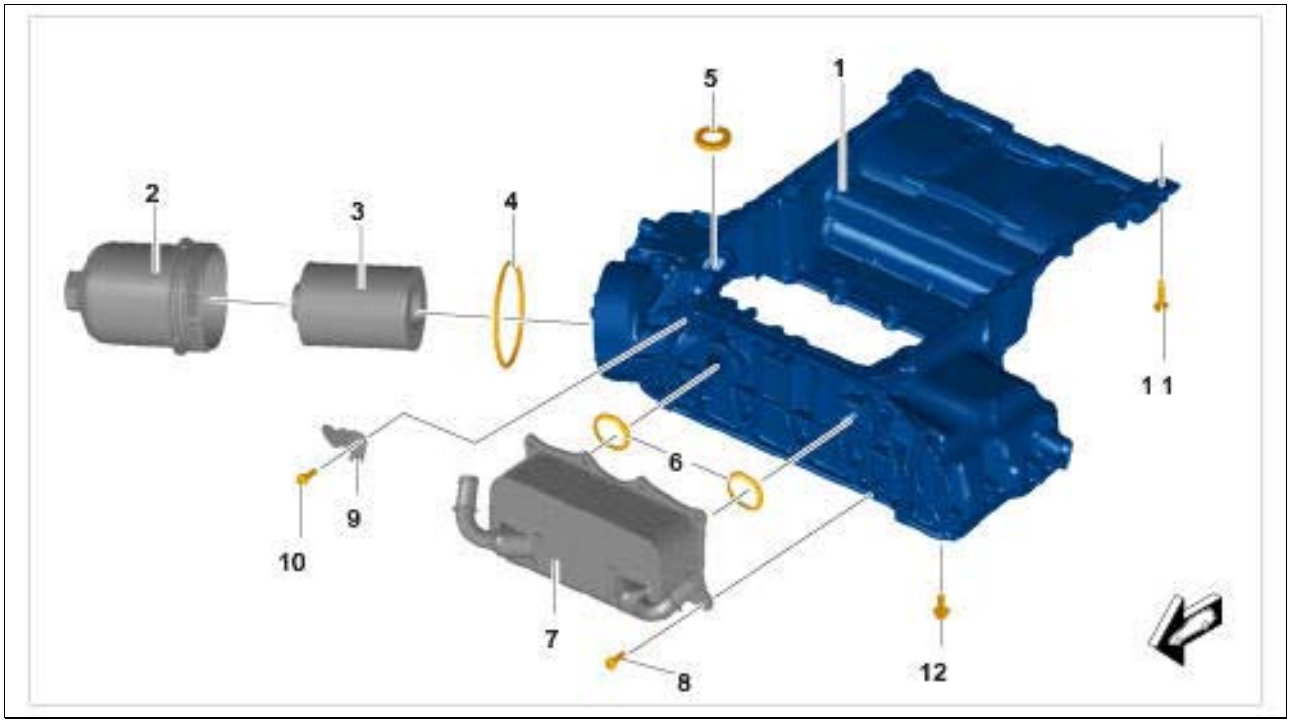

Courtesy of PORSCHE CARS NORTH AMERICA, INC.

1. Oil guide housing (upper part of oil pan)
2. Oil-filter cover → **Tightening torque: 25 Nm (19 ftlb.)**
3. Oil filter
4. Sealing ring on oil filter/oil or grease before fitting replace
5. Oil duct adapter (cannot be replaced)
6. Heat exchanger seal
7. Oil/water heat exchanger
8. Screw → **Tightening torque: 10 Nm (7.5 ftlb.)**
9. Holder
10. Screw, M6 x 16 → **Tightening torque: 10 Nm (7.5 ftlb.)**
11. **Aluminum screw** , M6 x 30 Al9/**replace → Initial tightening: 4 Nm (3 ftlb.) → Final tightening: +90°**
12. Screw, M6 x 25 → **Tightening torque: 10 Nm (7.5 ftlb.)**

Fig 2: Identifying Oil Cooler Heat Shield

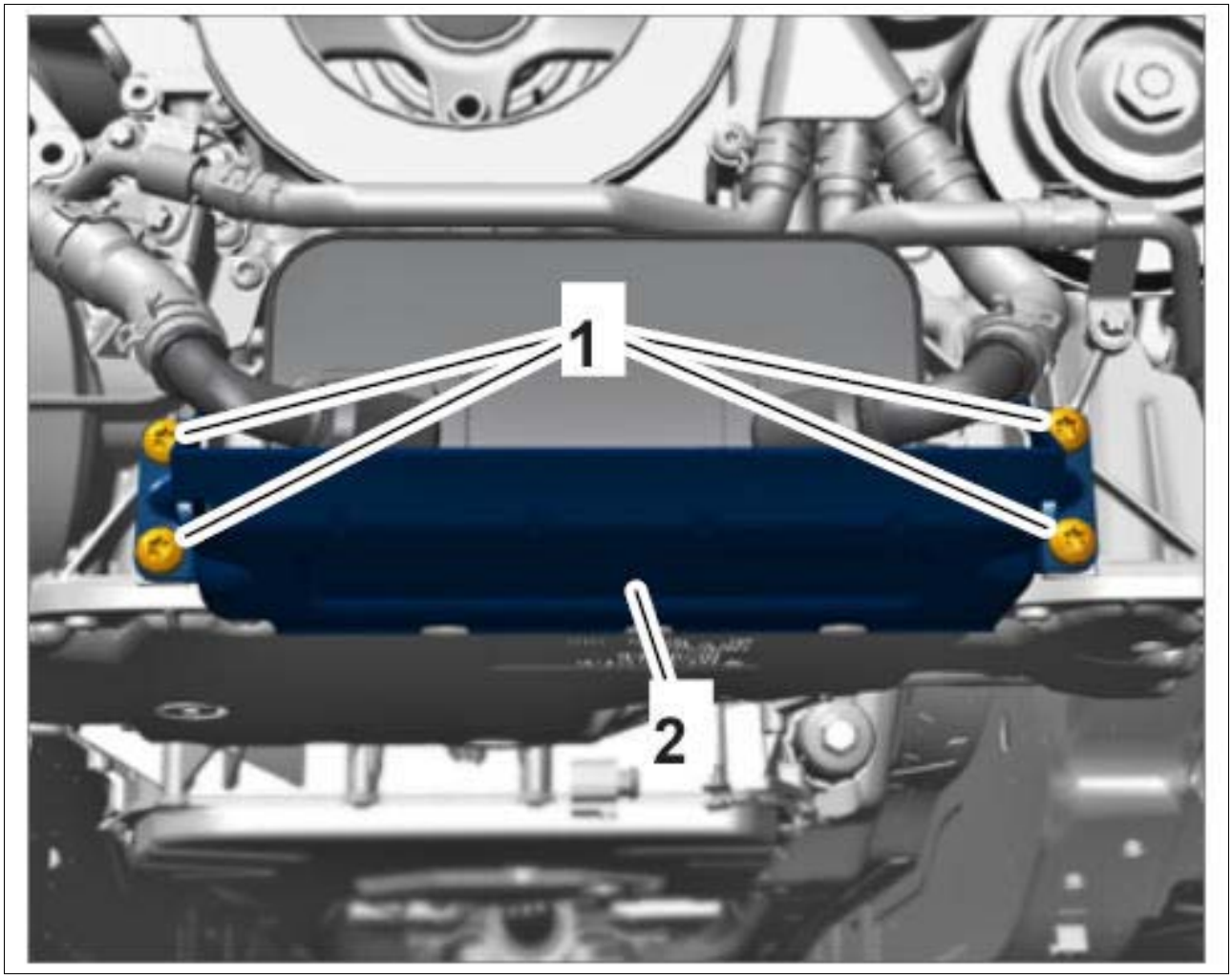

Courtesy of PORSCHE CARS NORTH AMERICA, INC.

1. Screws → **Tightening torque: 23 Nm (17 ftlb.)**
2. Heat shield

WM 175019 REMOVING AND INSTALLING OIL PAN (OIL GUIDE HOUSING) (MACAN S, MACAN TURBO) > PRELIMINARY WORK

1. Secure engine to assembly support. → 1001IN SECURING ENGINE ON ASSEMBLY SUPPORT (MOUNTING BRACKET)
2. Remove turbocharger. → 213019 REMOVING AND INSTALLING TURBOCHARGER
3. Remove generator. → 272219 REMOVING AND INSTALLING GENERATOR
4. Remove air-conditioning compressor. → 873419 REMOVING AND INSTALLING AIR-CONDITIONING COMPRESSOR
5. Remove engine supports at the left and right.

6. Remove crankshaft pulse sender. → 287319 REMOVING AND INSTALLING CRANKSHAFT PULSE SENDER
7. Remove oil-pressure sender. → 170419 REMOVING AND INSTALLING OIL-PRESSURE SENDER
8. Remove sender for oil level sensor. → 171119 REMOVING AND INSTALLING OIL LEVEL SENSOR
9. Remove pulley. → 137619 REMOVING AND INSTALLING PULLEY (VIBRATION BALANCER)
10. Remove lower part of oil pan. → 175019 REMOVING AND INSTALLING OIL PAN

WM 175019 REMOVING AND INSTALLING OIL PAN (OIL GUIDE HOUSING) (MACAN S, MACAN TURBO) > REMOVING OIL PAN (OIL GUIDE HOUSING)

1. Remove oil lines and cover on sprocket.
    1. 1.1. Unscrew screws **-8, 9- and -11-** .

    Fig 1: Identifying Oil Lines

    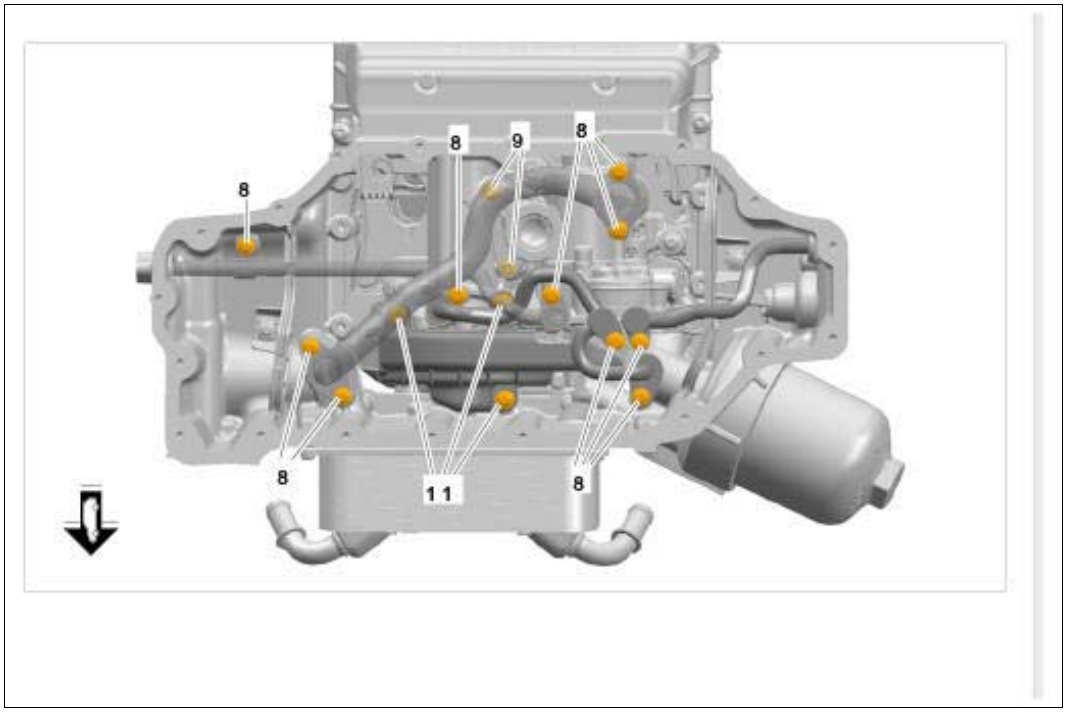

    Courtesy of PORSCHE CARS NORTH AMERICA, INC.

2. Remove oil pump. → 172019 REMOVING AND INSTALLING OIL PUMP
3. Remove oil pan.
    1. 3.1. Unscrew screws **-11-** and **-12-** .
    2. 3.2. Remove oil pan.

Fig 2: Identifying Oil Pan Upper Part

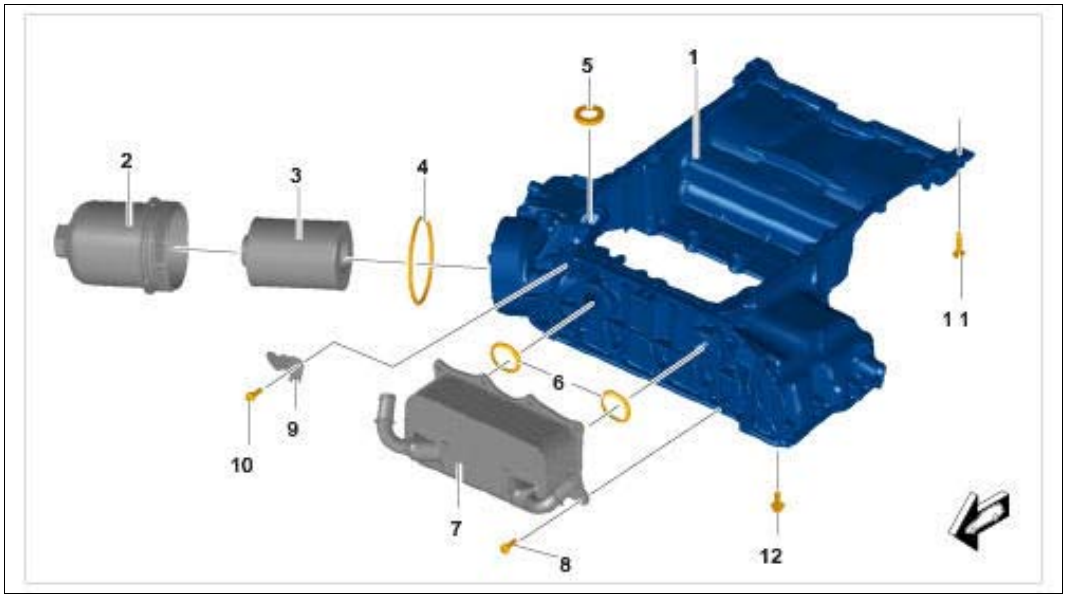

Courtesy of PORSCHE CARS NORTH AMERICA, INC.

WM 175019 REMOVING AND INSTALLING OIL PAN (OIL GUIDE HOUSING) (MACAN S, MACAN TURBO) > INSTALLING OIL PAN (OIL GUIDE HOUSING) > APPLYING SEALANT TO OIL PAN

Fig 1: Applying Sealant To Oil Pan

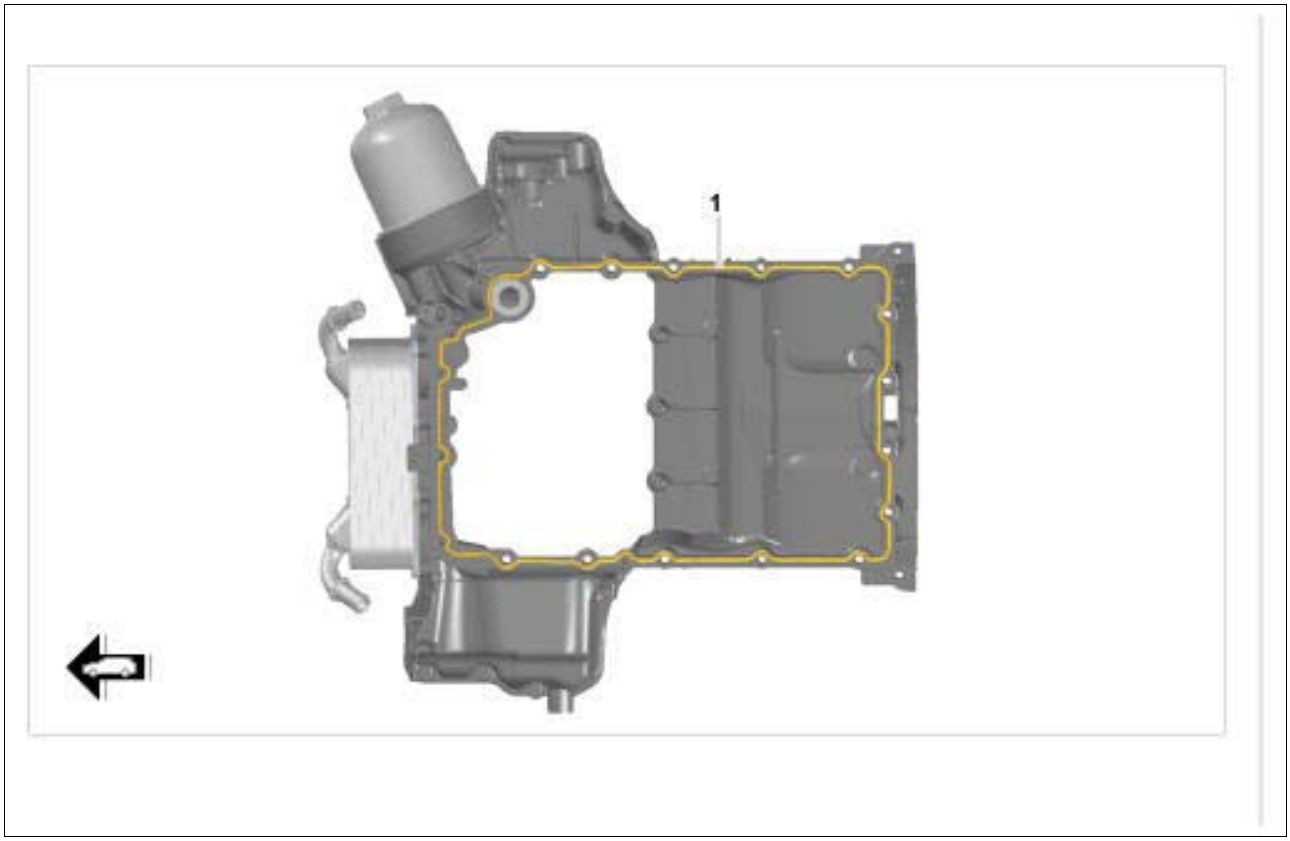

Courtesy of PORSCHE CARS NORTH AMERICA, INC.

1. Applying sealant
    1. Sealant bead diameter: 1.6... 1.8 mm
    2. Processing time following application: max. 5 minutes
    3. The sealing faces must be completely free of oil, grease, residues and burrs before applying sealant.
    4. Always ensure that sealant is applied completely.

WM 175019 REMOVING AND INSTALLING OIL PAN (OIL GUIDE HOUSING) (MACAN S, MACAN TURBO) > INSTALLING OIL PAN (OIL GUIDE HOUSING) > INSTALLING OIL PAN (OIL GUIDE HOUSING)

Information

Tightening torques, tightening sequence and assembly overviews for the engine and transmission:

- Group 1: → 1X00IN TECHNICAL VALUES
- Group 2: → 2X00IN TECHNICAL VALUES
- Group 3: → 3X00IN TECHNICAL VALUES

1. Prepare oil pan for installation.
    1. 1.1. Clean sealing faces on upper part of oil pan and lower part of crankcase.
    2. 1.2. Apply sealant.
2. Install oil pan.
    1. 2.1. Always use new aluminum screws.
    2. 2.2. Fit screws from the inside out in diagonally opposite sequence by hand.
    3. 2.3. Tighten screws from the inside out in diagonally opposite sequence to the specified torque.

WM 175019 REMOVING AND INSTALLING OIL PAN (OIL GUIDE HOUSING) (MACAN S, MACAN TURBO) > SUBSEQUENT WORK

1. Install lower part of oil pan. → INSTALLING LOWER PART OF OIL PAN
2. Install pulley. → INSTALLING PULLEY (vibration balancer)
3. Install sender for oil level sensor. → INSTALLING OIL LEVEL SENSOR
4. Install oil-pressure sender. → INSTALLING OIL-PRESSURE SENDER
5. Install crankshaft pulse sender. → INSTALLING PULSE SENDER
6. Install engine supports at the left and right.
7. Install air-conditioning compressor. → INSTALLING AIR-CONDITIONING COMPRESSOR
8. Install generator. → INSTALLING GENERATOR
9. Install turbocharger. → INSTALLING TURBOCHARGER
10. Install engine. → INSTALLING ENGINE
11. Fill in engine oil. → FILLING ENGINE OIL

WM 175019 REMOVING AND INSTALLING OIL PAN (UPPER PART) (MACAN) > TECHNICAL VALUES

Location	Description	Type	Basic value	Tolerance 1	Tolerance 2
Fastening screw for lower part of oil pan		Initial tightening	8 Nm (6 ftlb.)		
Fastening screw for oil plate		Initial tightening	4 Nm (3 ftlb.)		

Fastening screw for oil plate		Final tightening	+45°		
Fastening screw for upper part of oil pan		Contact force	8 Nm (6 ftlb.)		
Fastening screw for upper part of oil pan		Final tightening	+45°		
Fastening screw for upper part of oil pan		Final tightening	+180°		
Fastening screw for upper part of oil pan		Final tightening	+90°		

WM 175019 REMOVING AND INSTALLING OIL PAN (UPPER PART) (MACAN) > PRELIMINARY WORK

1. Remove transmission. → WM 373427 REMOVING AND MOUNTING PORSCHE DOPPELKUPPLUNG (PDK)
2. Remove oil pan (lower part). → 175019 REMOVING AND INSTALLING OIL PAN
3. Remove rear joint flange.
4. Remove oil pump. → 172019 REMOVING AND INSTALLING OIL PUMP
5. Disconnect electric plug connection **-1-** .

Fig 1: Identifying Oil Pressure Control Valve

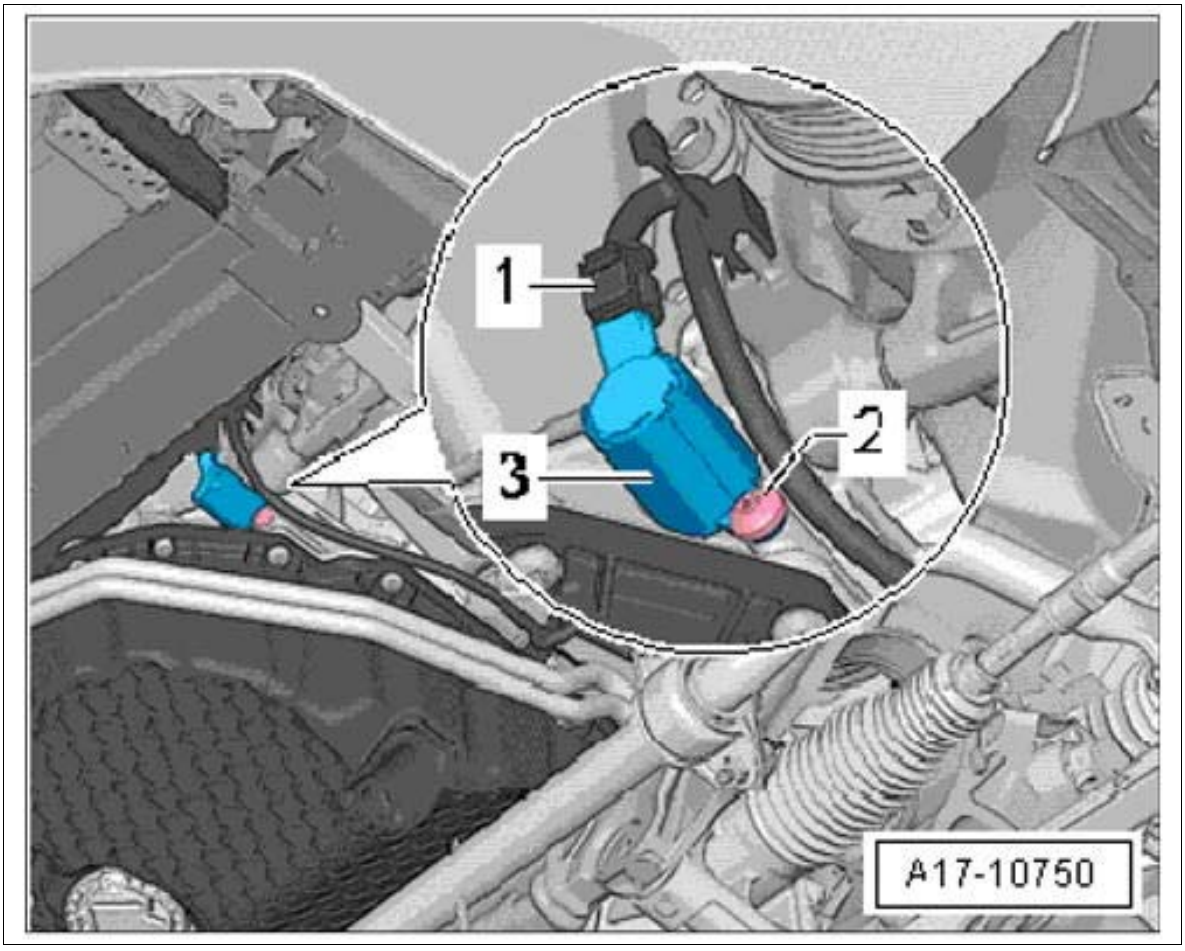

Courtesy of PORSCHE CARS NORTH AMERICA, INC.

WM 175019 REMOVING AND INSTALLING OIL PAN (UPPER PART) (MACAN) > REMOVING OIL PAN (UPPER PART)

1. Unscrew screws **-arrows-** .

Fig 1: Locating Upper Part Of Oil Pan Screws

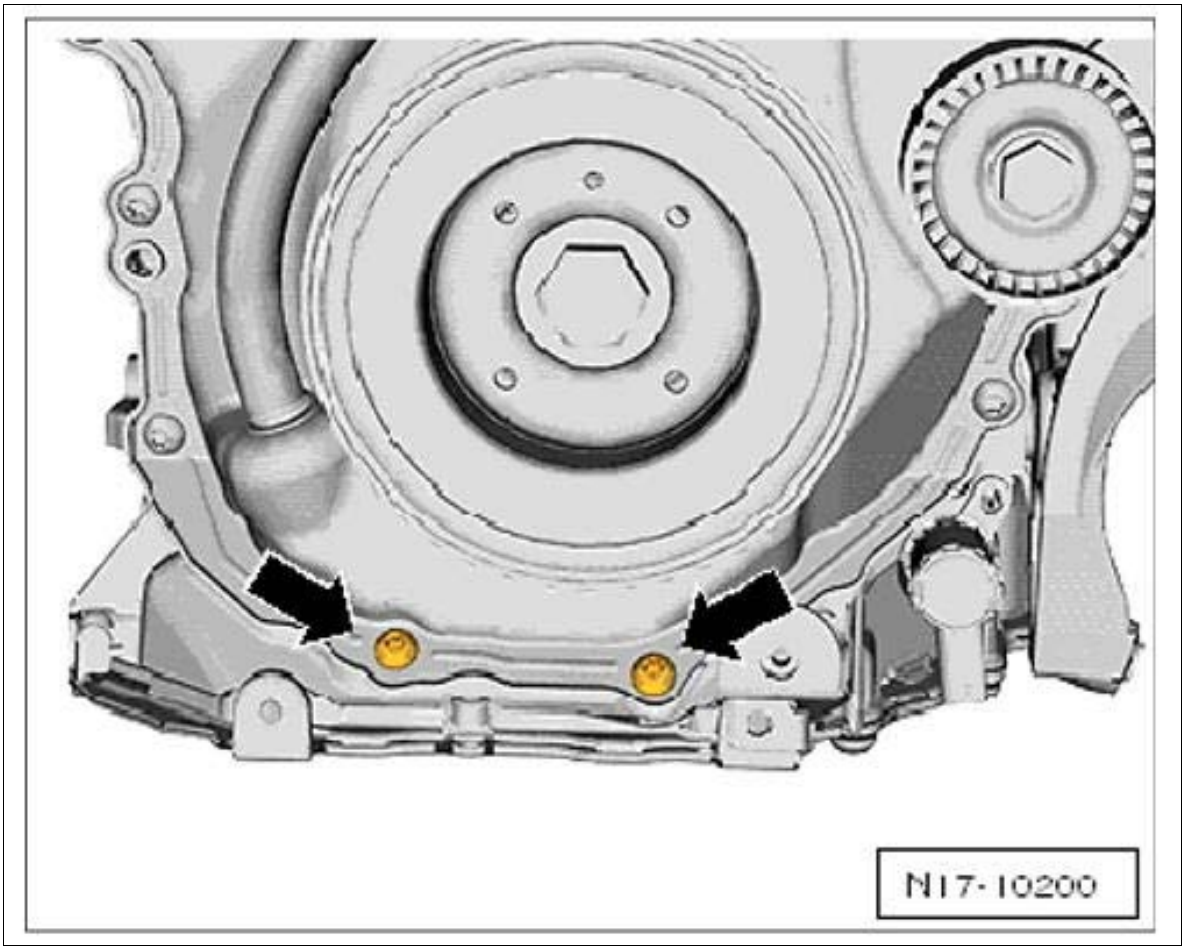

Courtesy of PORSCHE CARS NORTH AMERICA, INC.

2. Unscrew screws **-1-** to **-14-** and remove upper part of oil pan.

Fig 2: Upper Part Of Oil Pan Screws Tightening Sequence

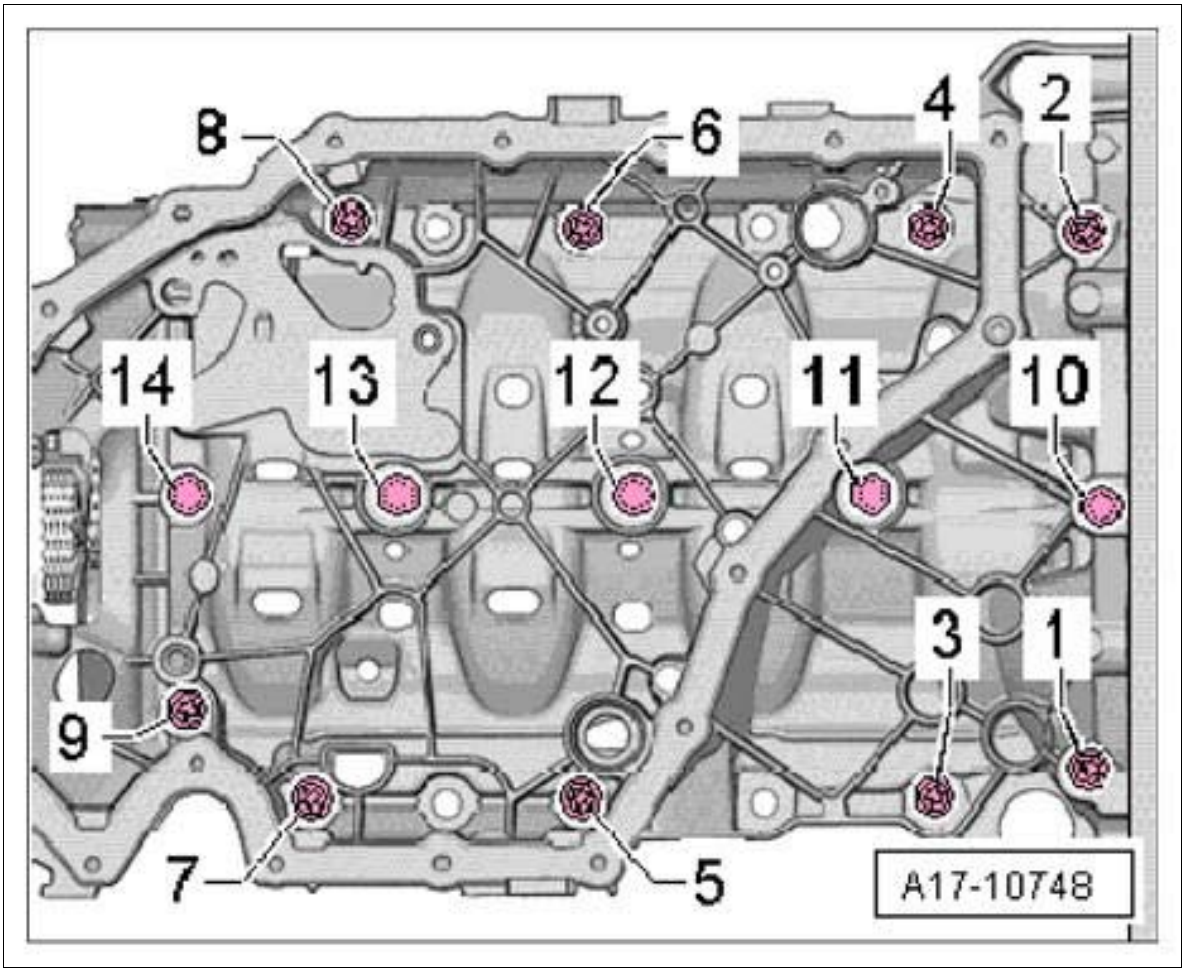

Courtesy of PORSCHE CARS NORTH AMERICA, INC.

WM 175019 REMOVING AND INSTALLING OIL PAN (UPPER PART) (MACAN) > INSTALLING OIL PAN (UPPER PART)

Information

- Check best-before date on the silicone sealant.
- Upper part of oil pan must be installed within 5 minutes of applying the silicone sealant.
- Replace screws that are tightened to an additional torque angle.
- Replace sealing rings, seals and self-locking nuts.
- Remove any residual sealant on the cylinder block using a flat scraper.

WARNING: Risk of damage or injury from foreign bodies flying around during grinding, drilling and milling

- *Risk of eye injuries*

→ Wear protective goggles.

1. Remove residual sealant on upper part of oil pan and on the lower timing chain cover using a rotating plastic brush for example.

   Fig 1: Cleaning Sealing Faces Using Plastic Brush

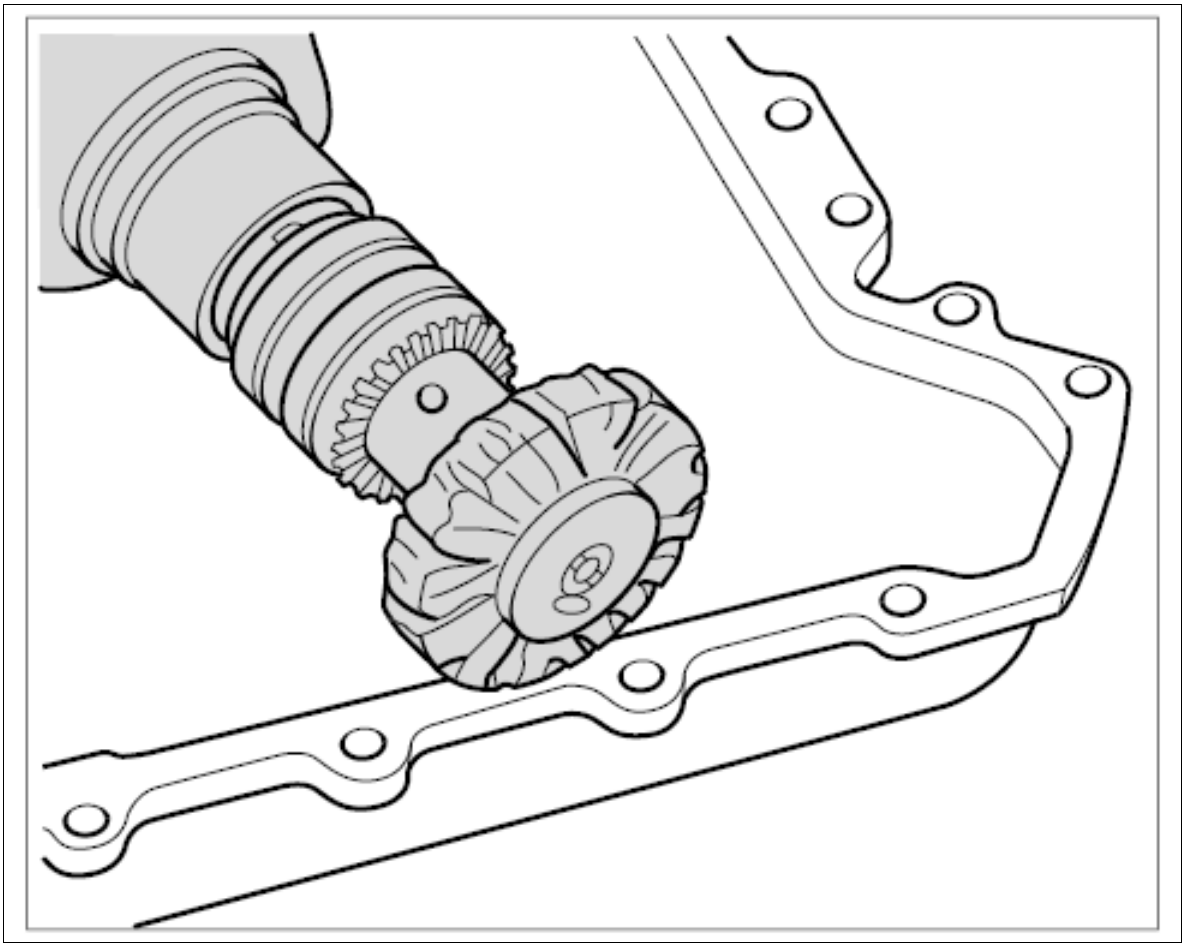

Courtesy of PORSCHE CARS NORTH AMERICA, INC.

2. Clean sealing faces to remove any oil and grease.
3. Check oil ducts in upper part of oil pan and in the cylinder crankcase for dirt.
4. Cut off the nozzle on the tube → Cutting off nozzle on tube at the front marking (nozzle diameter is approx. 2 mm).

Fig 2: Cutting Tube Nozzle

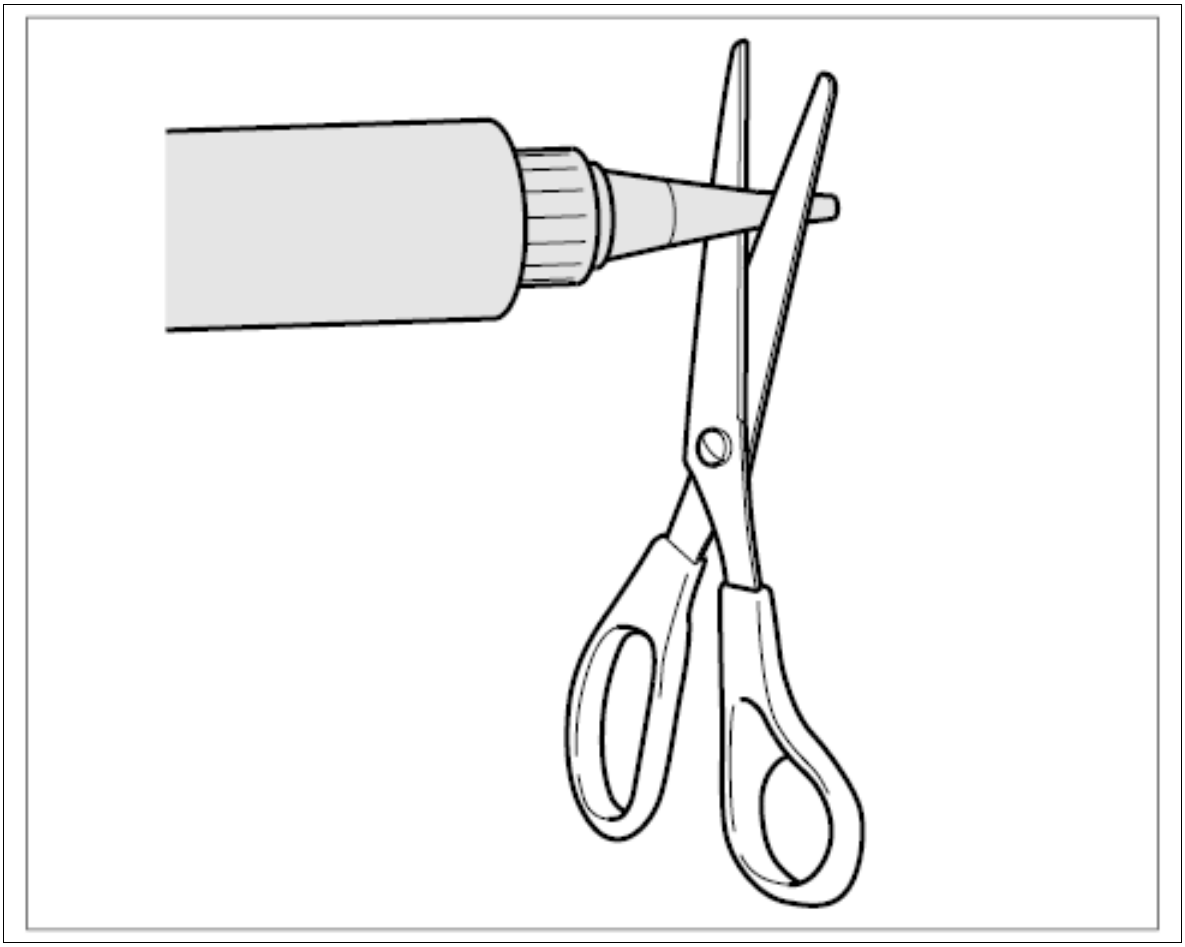

Courtesy of PORSCHE CARS NORTH AMERICA, INC.

Information

1. The bead of sealant must not be thicker than the specified thickness because otherwise excess sealant can get into the oil pan and can block the strainer in the oil pump.

2. The oil pan must be installed within 5 minutes of applying the sealant.

5. Apply silicone sealant to the clean sealing face on the upper part of the oil pan as shown **-arrow-** .

    1. 5.1. Sealant bead thickness: 2... 3 mm.

Fig 3: Applying Silicone Sealant Bead To Pan Oil

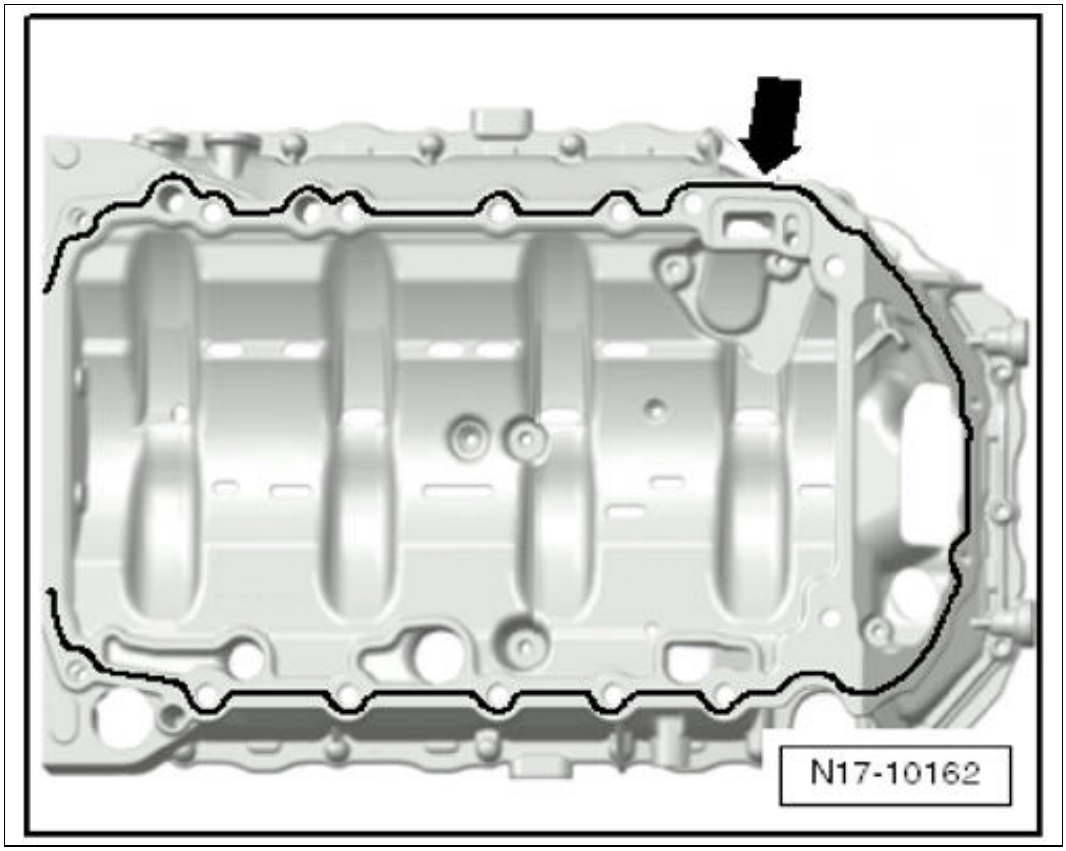

Courtesy of PORSCHE CARS NORTH AMERICA, INC.

Information

1. The bead of sealant must not be thicker than the specified thickness because otherwise excess sealant can get into the oil pan and can block the strainer in the oil pump.

2. The oil pan must be installed within 5 minutes of applying the sealant.

6. Apply silicone sealant as shown in Fig. **-arrows-** between the cylinder block and lower timing chain cover.

Fig 4: Applying Silicone Sealant Bead To Cylinder Block

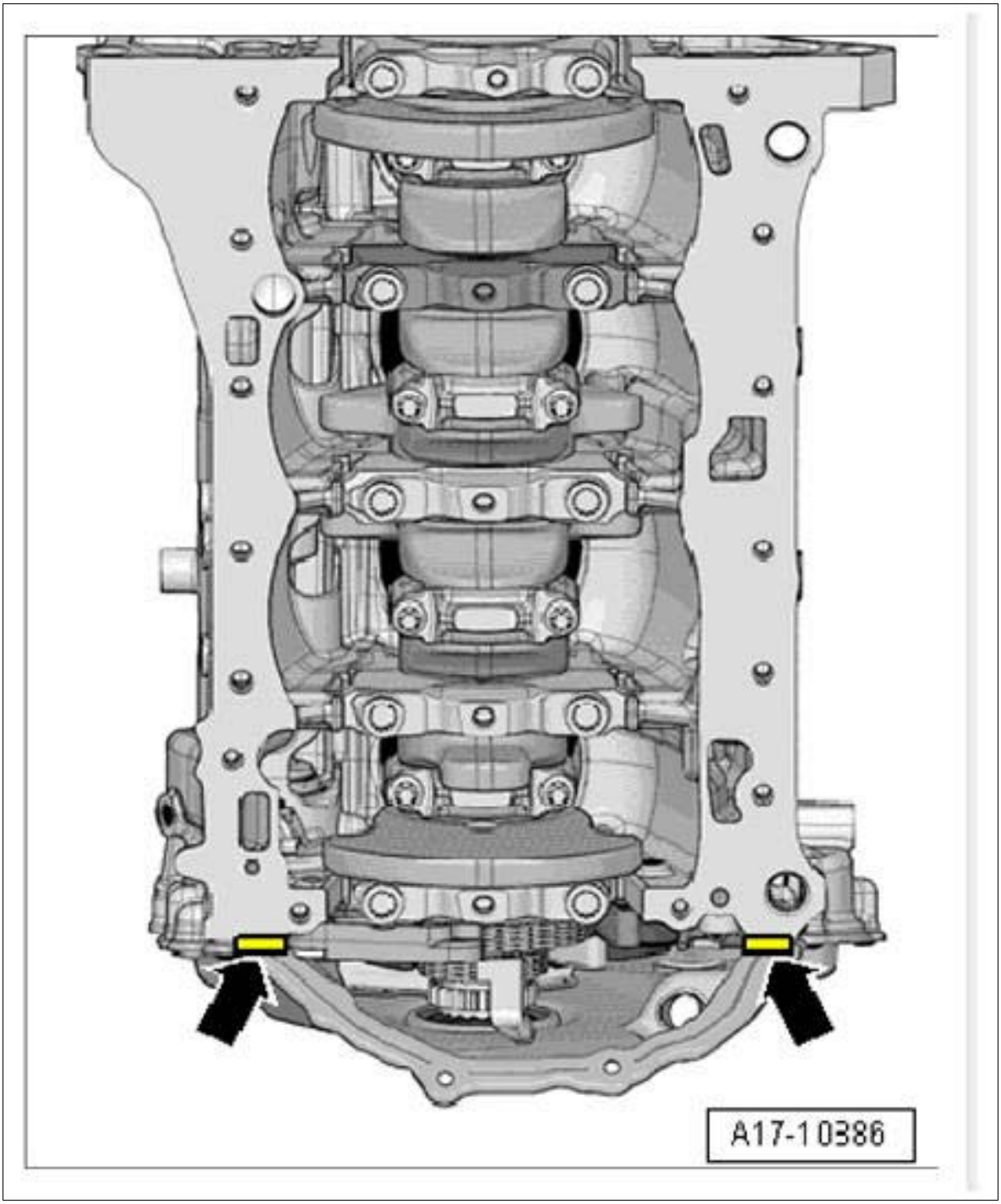

Courtesy of PORSCHE CARS NORTH AMERICA, INC.

7. Upper part of oil pan and crankcase must be flush on the transmission side.
8. Fit upper part of oil pan immediately and tighten screws.
    1. 8.1. Screws 1 to 14. **Initial tightening 8 Nm (6 ftlb.)**
    2. 8.2. Screws 1 and 2. **Final tightening +180°**
    3. 8.3. Screws 3 to 9. **Final tightening +45°**

4. 8.4. Screw 10. **Final tightening +180°**
5. 8.5. Screws 11 to 14. **Final tightening +90°**

Fig 5: Upper Part Of Oil Pan Screws Tightening Sequence

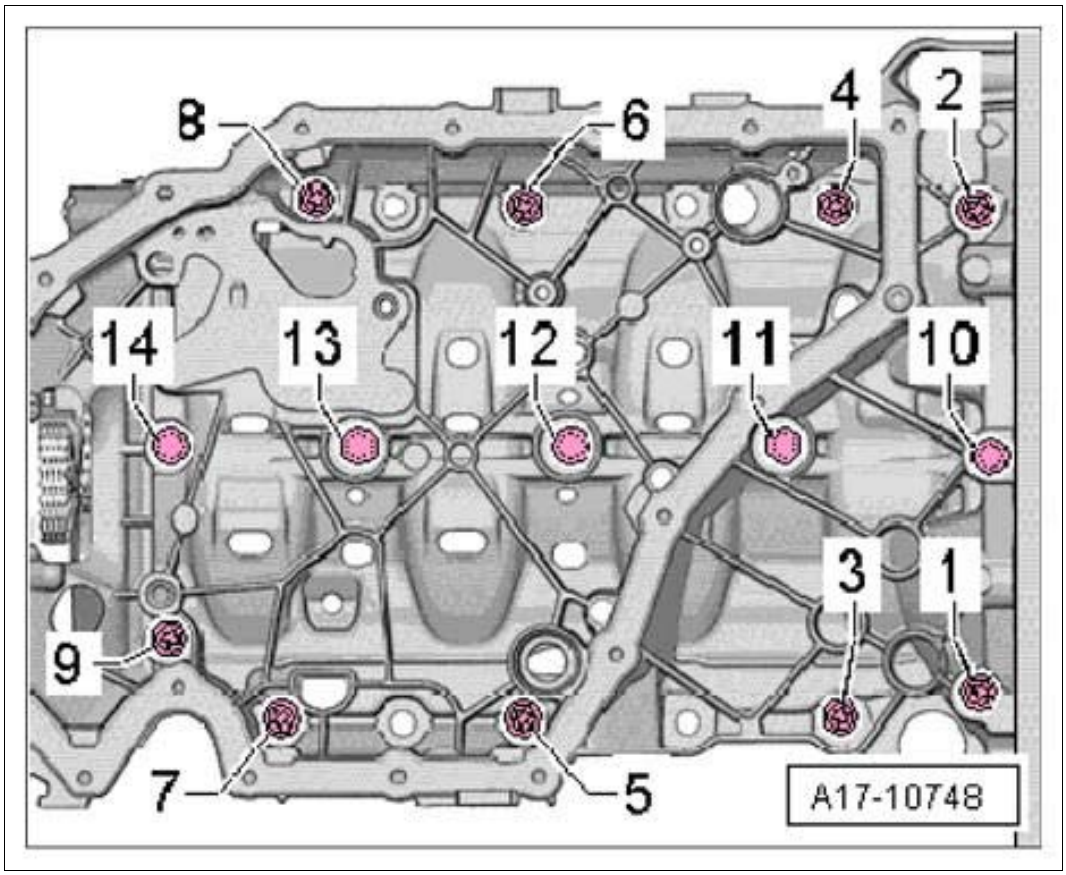

Courtesy of PORSCHE CARS NORTH AMERICA, INC.

9. 9.
10. Tighten screws **-arrows-** . **Contact force 8 Nm (6 ftlb.) Final tightening +90°**

Fig 6: Locating Upper Part Of Oil Pan Screws

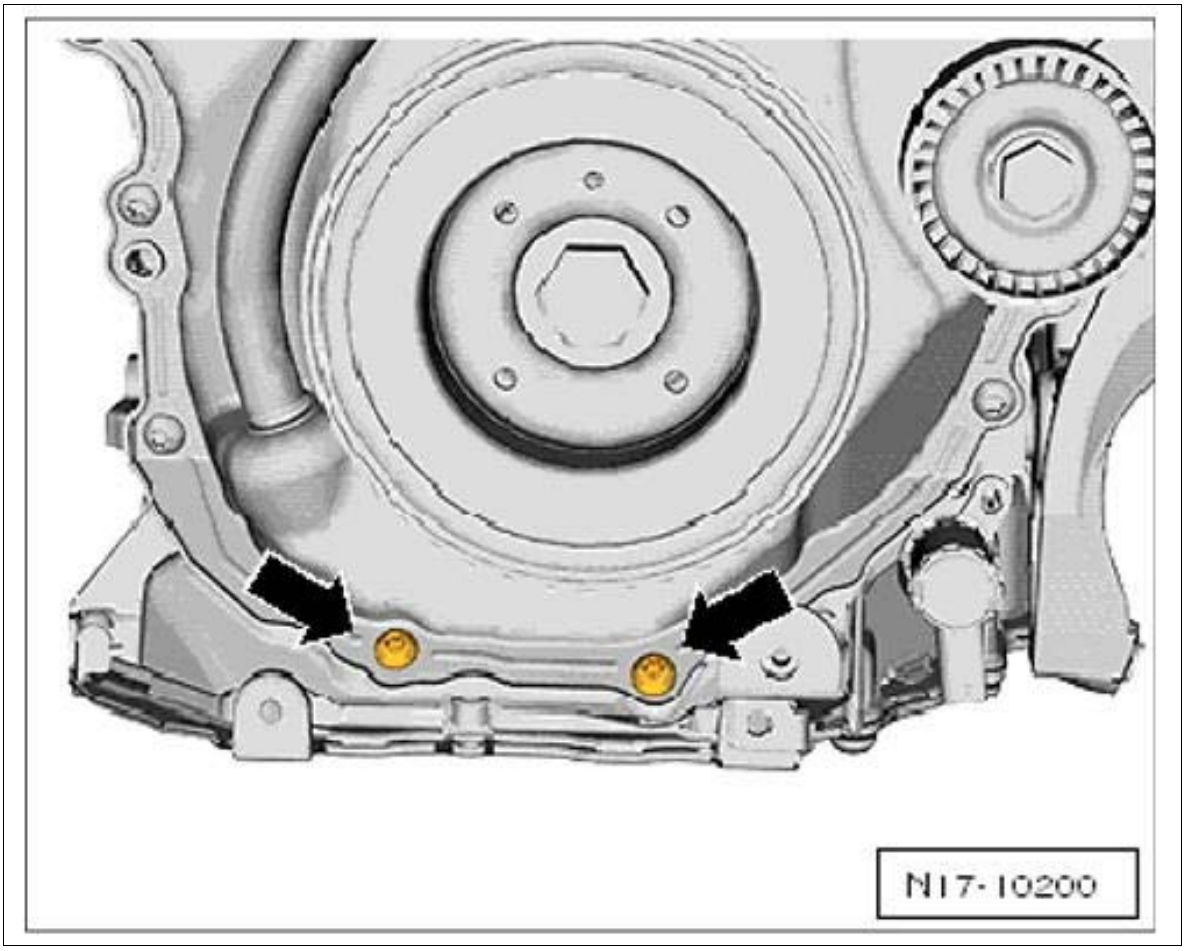

Courtesy of PORSCHE CARS NORTH AMERICA, INC.

WM 175019 REMOVING AND INSTALLING OIL PAN (UPPER PART) (MACAN) > SUBSEQUENT WORK

1. Install oil pump. → INSTALLING OIL PUMP
2. Install rear joint flange.
3. Fit and tighten new baffle plate. **Initial tightening 4 Nm (3 ftlb.) Final tightening +45°**
4. Install lower part of oil pan. → INSTALLING LOWER PART OF OIL PAN
5. Install transmission. → MOUNTING PORSCHE DOPPELKUPPLUNG (PDK)
6. Further assembly is performed in reverse order to removal.
7. Fill in engine oil and correct the oil level. → FILLING ENGINE OIL and 170101 CHECKING ENGINE-OIL LEVEL .

WM 176719 REMOVING AND INSTALLING BRACKET FOR OIL COOLER (MACAN) > PRELIMINARY WORK

1. Drain coolant. → 193817 DRAINING AND FILLING COOLANT
2. Remove drive belt → 137819 REMOVING AND INSTALLING DRIVE BELT
3. Disconnect electric plug connections:
    1. No. 1 for oil pressure switch **-2-**
    2. No. 3 for oil pressure switch for reduced oil pressure **-4-**
    3. No. 5 for control valve for piston cooling nozzles **-7-**

    Fig 1: Identifying Oil Pressure Switch Electric Plug Connections

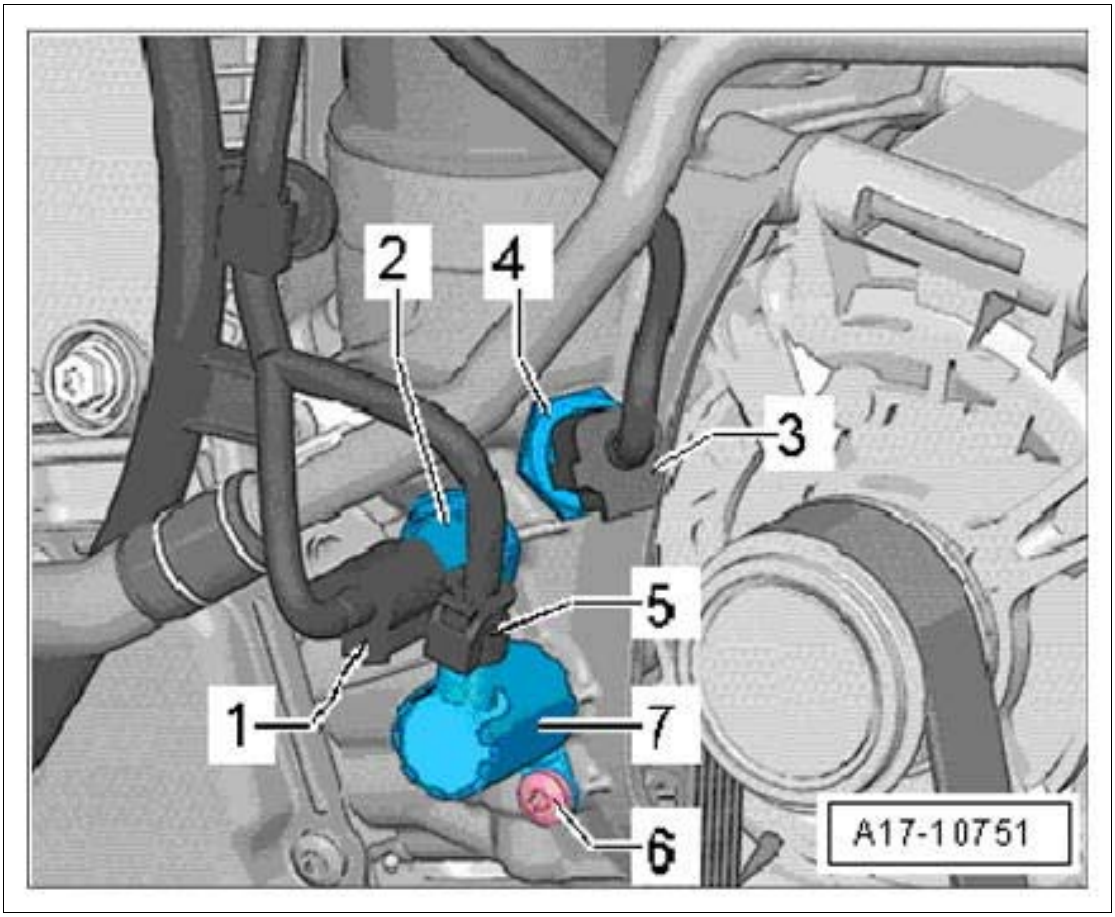

Courtesy of PORSCHE CARS NORTH AMERICA, INC.

4. Remove air guide hose.
    1. 4.1. Loosen hose clamps **-arrows-** and remove air guide hose.
5. Disconnect electric plug connection for boost pressure sensor **-1-** and expose electric line.

Fig 2: Locating Air Guide Hose

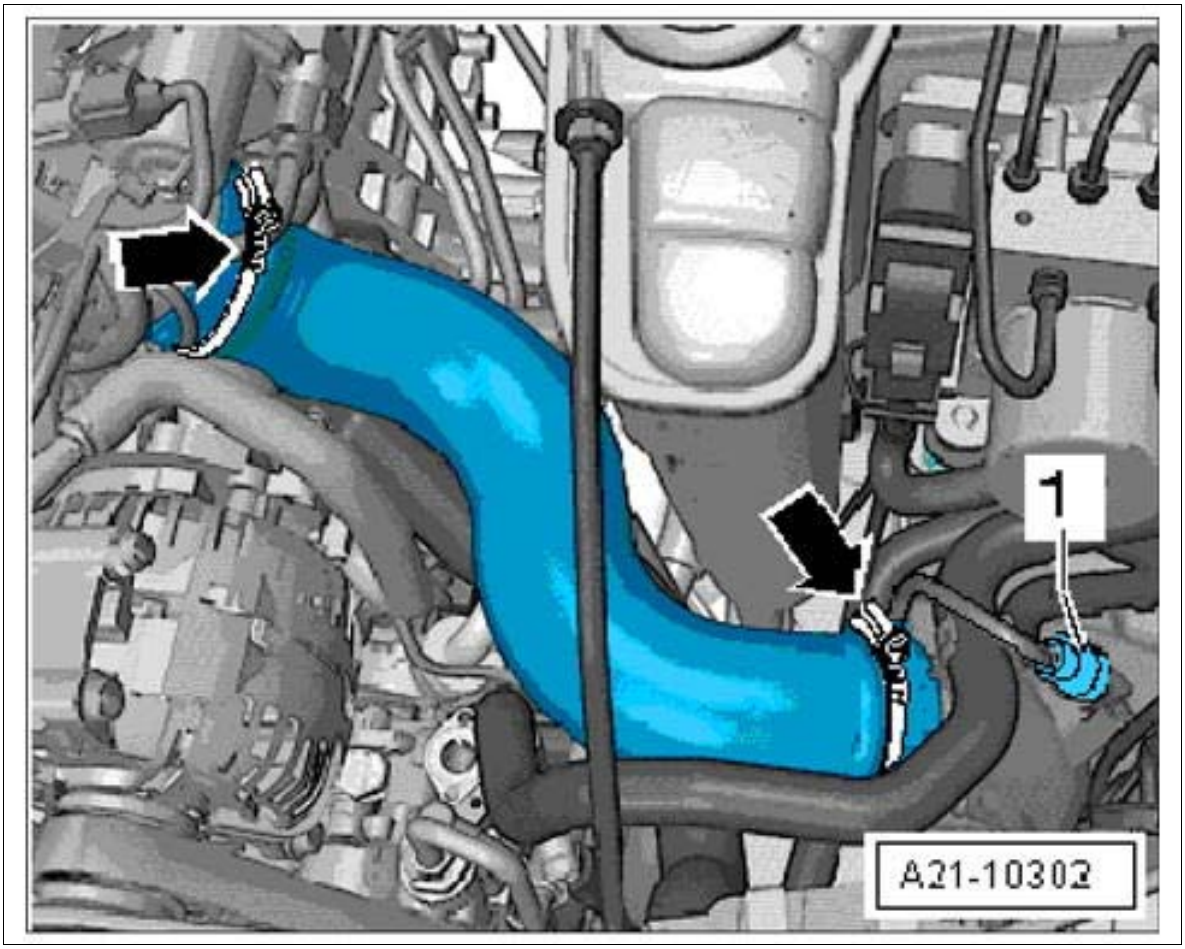

Courtesy of PORSCHE CARS NORTH AMERICA, INC.

6. Unscrew screws **-1 and 2-** and swivel the left coolant pipe upwards. **-arrows- can be ignored** .

Fig 3: Locating Coolant Pipe Screws

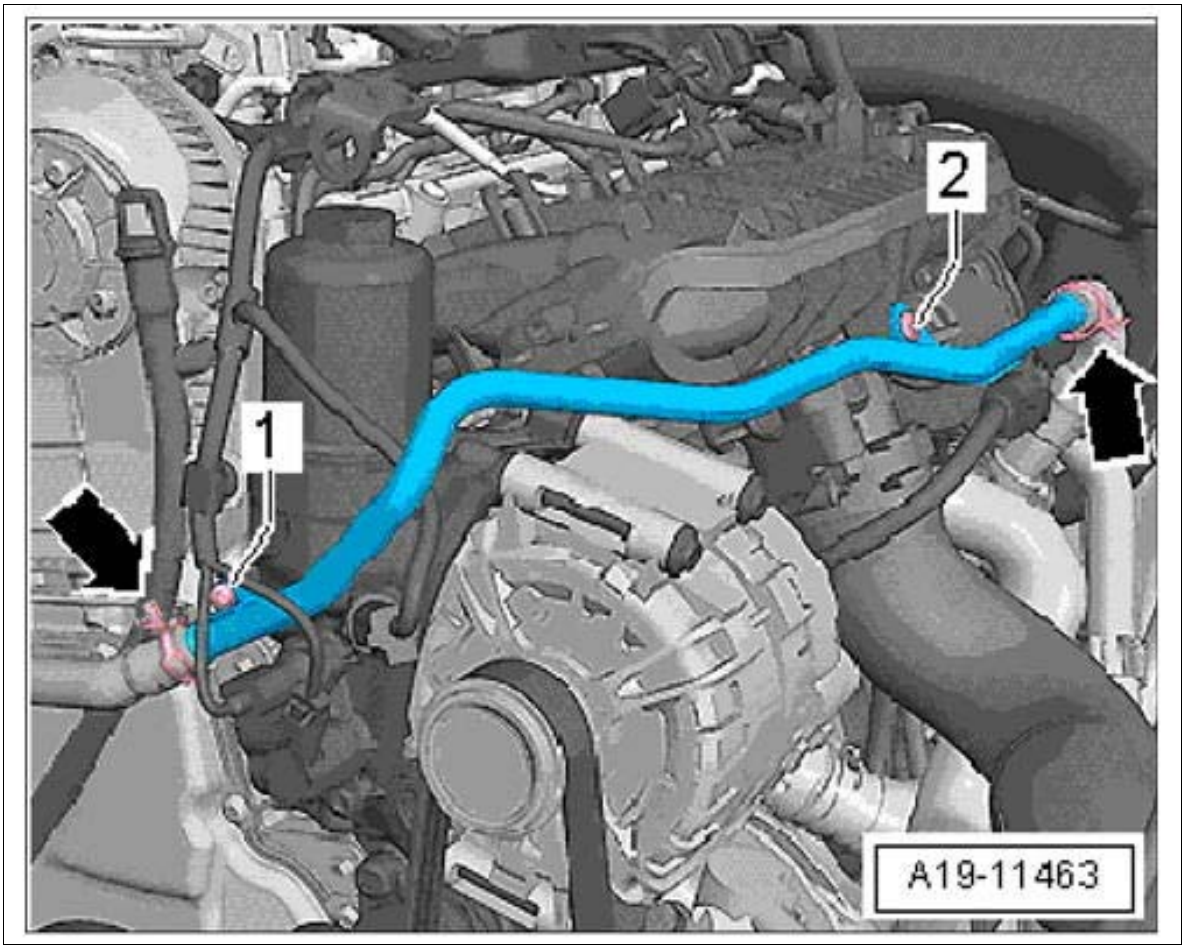

Courtesy of PORSCHE CARS NORTH AMERICA, INC.

7. Remove generator. → 272219 REMOVING AND INSTALLING GENERATOR
8. Disconnect electric plug connection **-1-** for magnetic clutch at the air-conditioning compressor.
9. Unscrew screws **-arrows-** for the air-conditioning compressor.

Fig 4: Locating Air-Conditioning Compressor Screws

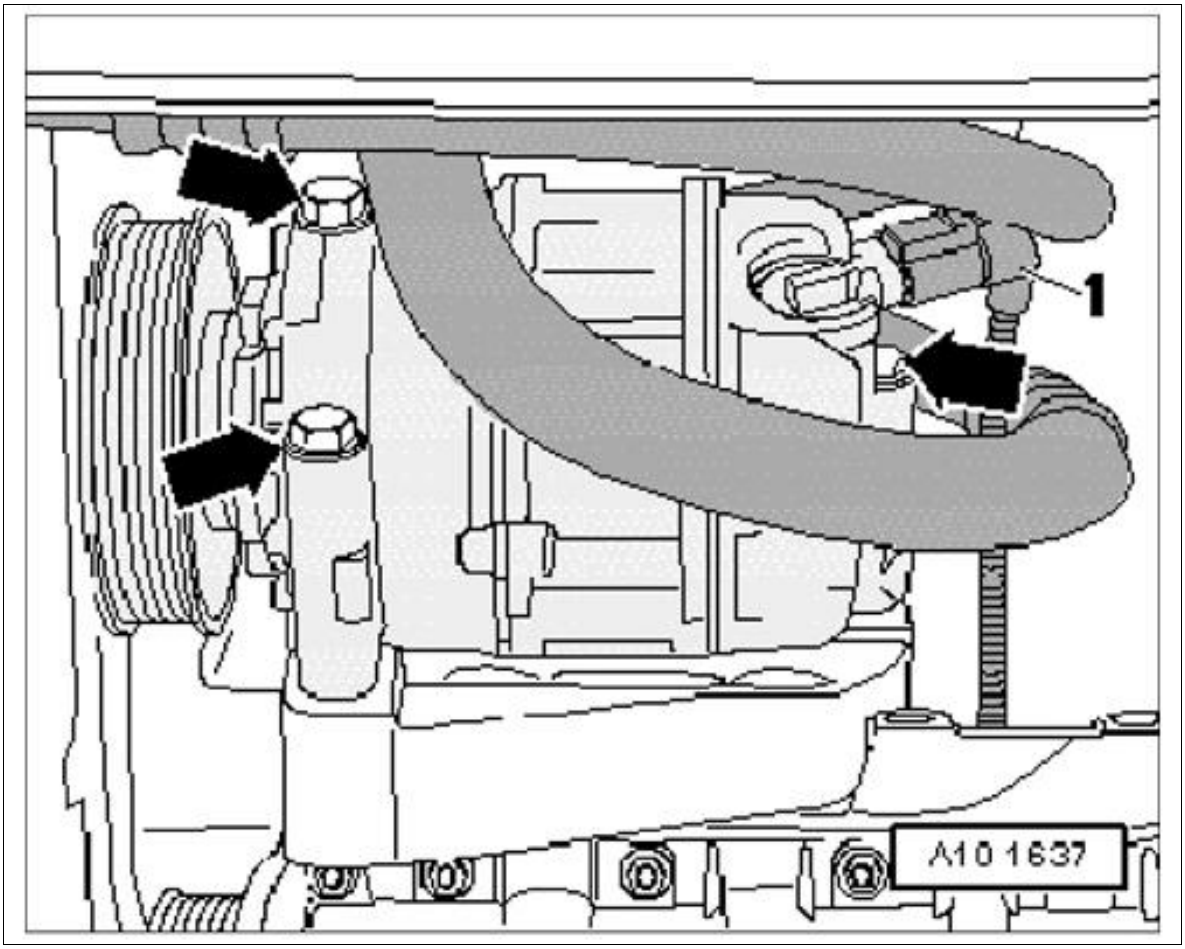

Courtesy of PORSCHE CARS NORTH AMERICA, INC.

10. Engage air-conditioning compressor with refrigerant hoses connected on the longitudinal member. **Do not overstretch, kink or bend refrigerant lines and hoses!**
11. Remove oil filter. → 173019 REMOVING AND INSTALLING OIL FILTER **Collect emerging oil with a cloth.**

WM 176719 REMOVING AND INSTALLING BRACKET FOR OIL COOLER (MACAN) > REMOVING > REMOVING BRACKET FOR OIL COOLER

1. Unscrew screws **-1...5-** .
    1. 1.1. Pull bracket for oil cooler off the coolant pump housing.

Fig 1: Oil Cooler Bracket Screws Loosening Sequence

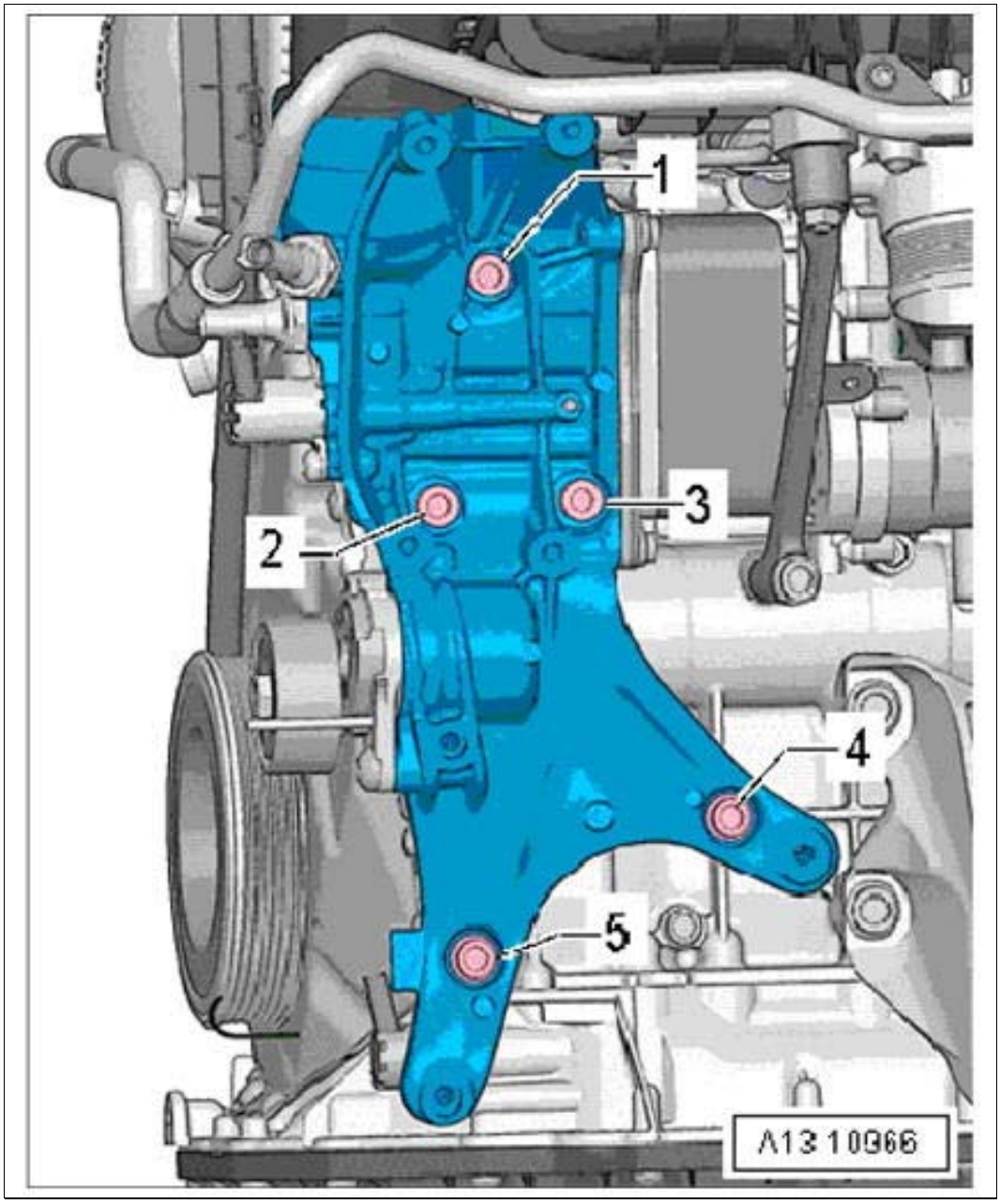

Courtesy of PORSCHE CARS NORTH AMERICA, INC.

WM 176719 REMOVING AND INSTALLING BRACKET FOR OIL COOLER (MACAN) > INSTALLING > INSTALLING BRACKET FOR OIL COOLER

1. Replace O-rings **-4-** and coat new rings with coolant.
2. Insert joining socket **-2-** into the coolant pump housing **-3-** .
3. Press bracket for oil cooler and oil cooler **-1-** onto the joining socket.

Fig 1: Identifying Oil Cooler And Water Pump Housing

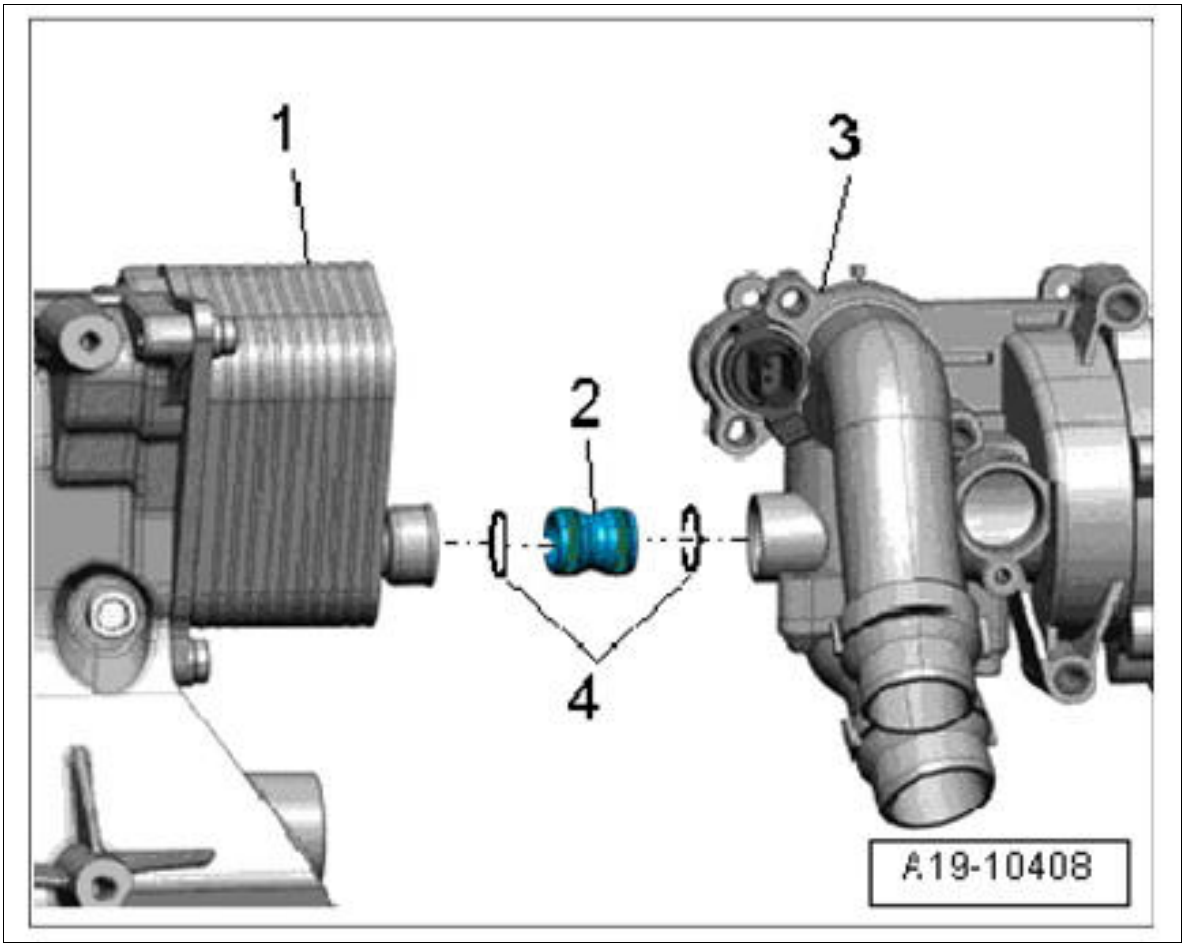

Courtesy of PORSCHE CARS NORTH AMERICA, INC.

4. Tighten bracket for oil cooler.
    1. 4.1. **Fit new** fastening screw **-4-** .
    2. 4.2. **Fit new** fastening screws **-1, 2, 3 and 5-** .
    3. 4.3. Tighten fastening screws in the sequence **-1...5-** .

Fig 2: Oil Cooler Bracket Screws Tightening Sequence

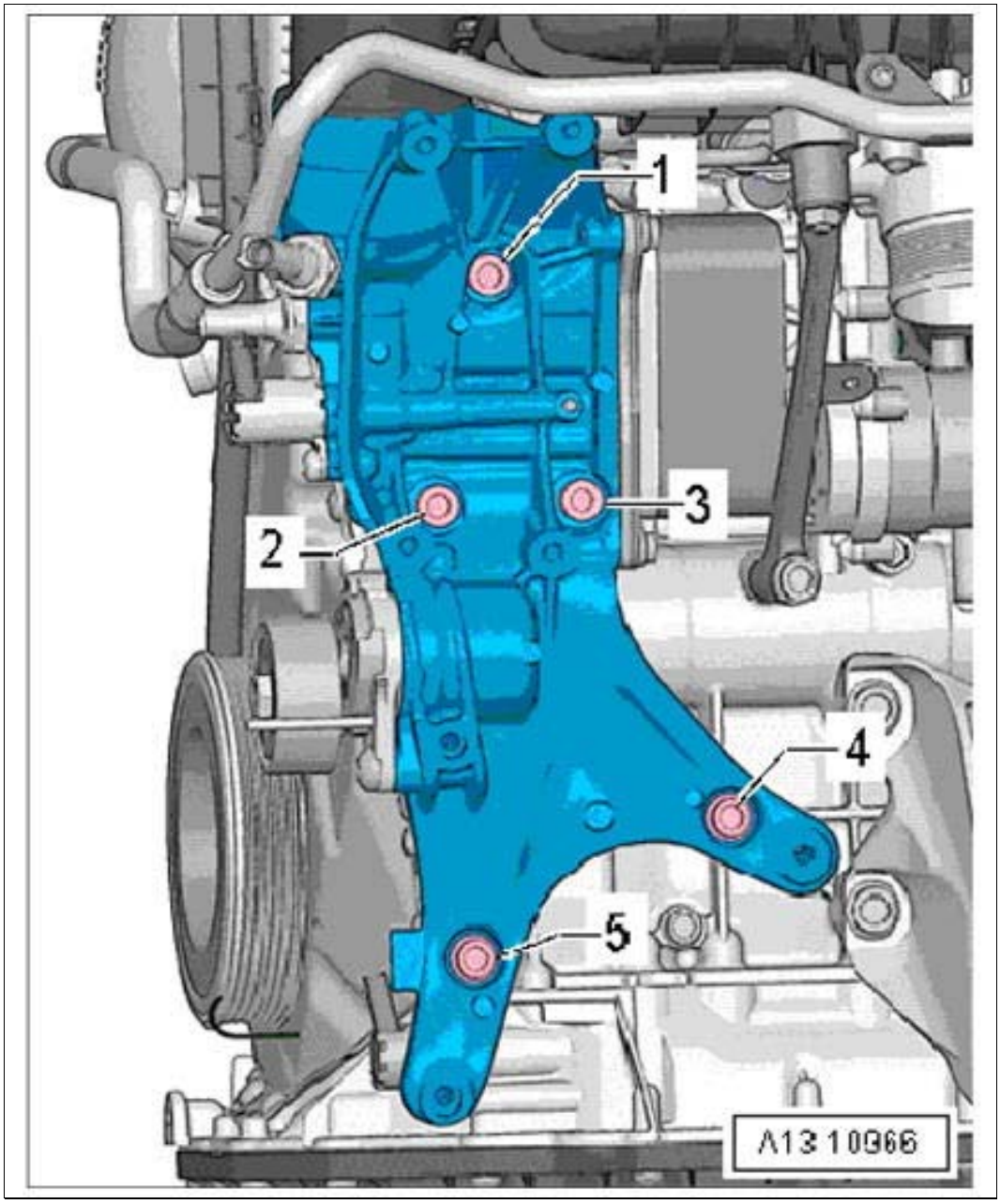

Courtesy of PORSCHE CARS NORTH AMERICA, INC.

WM 176719 REMOVING AND INSTALLING BRACKET FOR OIL COOLER (MACAN) > SUBSEQUENT WORK

1. Install oil filter. → INSTALLING OIL FILTER .
2. Install air-conditioning compressor.
3. Install generator. → INSTALLING GENERATOR
4. Install coolant pipe.

5. Install drive belt. → INSTALLING DRIVE BELT

6. Fill in coolant. → FILLING COOLANT

7. Check oil level. → 170101 CHECKING ENGINE-OIL LEVEL

Service Manual: 19 - ENGINE - COOLING -- (95B) - MACAN

WM 190101 CHECKING THE COOLING SYSTEM (MACAN) > TOOLS

Designation	Type	Number	Description	
Cooling system tester	Workshop equipment	WE 1069		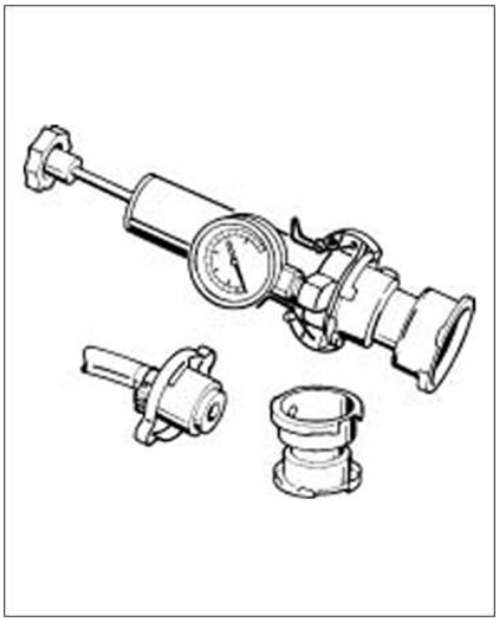
filling device	Special tool	9696		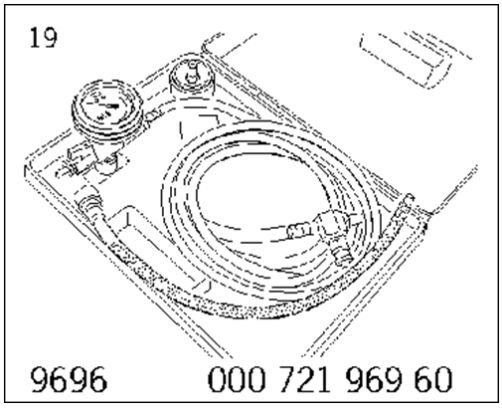

WM 190101 CHECKING THE COOLING SYSTEM (MACAN) > TOOLS AND MATERIALS > TEST EQUIPMENT

Fig 1: Identifying Cooling System Tester

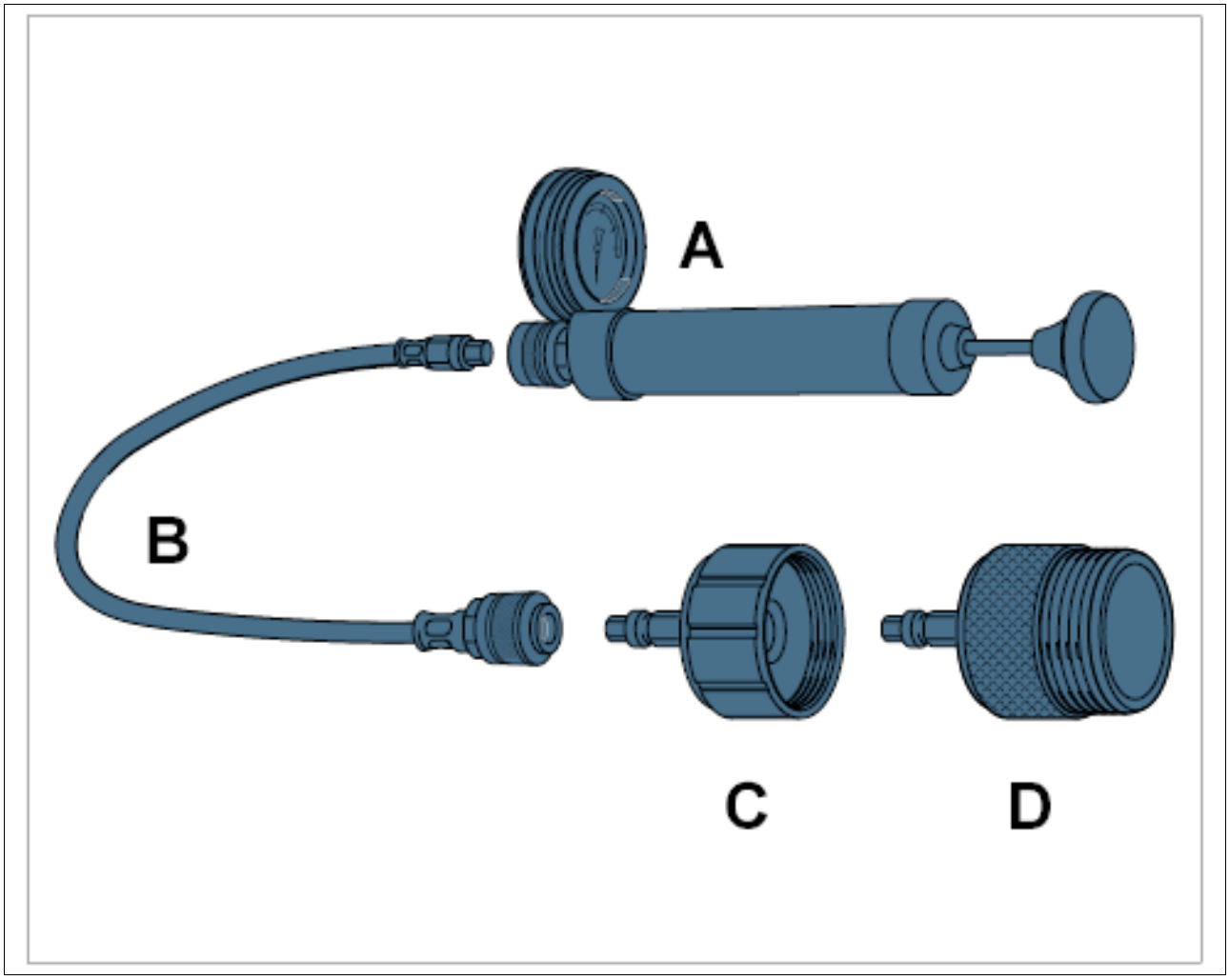

Courtesy of PORSCHE CARS NORTH AMERICA, INC.

-A- - Cooling system leak tester (pump) **Cooling system tester WE 1069**

-B- - Hose extension FZ 100

-C- - Cap adapter K22 (for Sports Cars)

-D- - Cap adapter K65 (supplied with filling device 9696).

WM 190101 CHECKING THE COOLING SYSTEM (MACAN) > CHECKING ENGINE COOLANT LEVEL

- Engine cold.
- Vehicle horizontal.

1. Check coolant level at the reservoir.

    1. 1.1. The ideal level must be between the -MAX- marking **-1-** and -MIN- marking **-2-** .

2. 1.2. If the level is under -MIN-, the level must be corrected.
3. 1.3. If the level is above -MAX-, some coolant must be extracted.

Fig 1: Identifying Coolant Reservoir

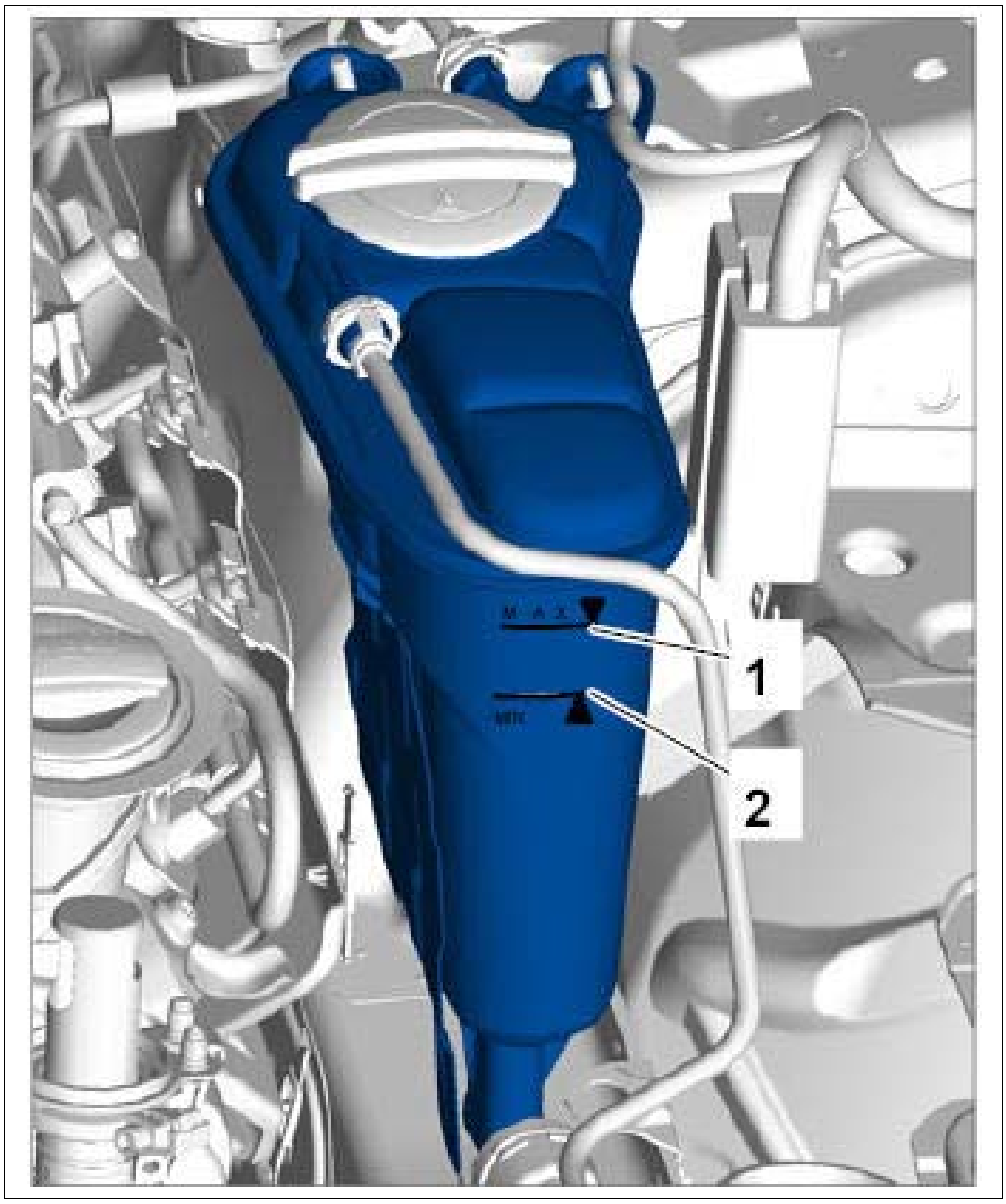

Courtesy of PORSCHE CARS NORTH AMERICA, INC.

WM 190101 CHECKING THE COOLING SYSTEM (MACAN) > CHECKING ENGINE COOLANT LEVEL > CHECKING ANTIFREEZE IN COOLANT

1. Check antifreeze content.
    1. 1.1. Check antifreeze content using antifreeze tester **-1-** .
    2. 1.2. If it is below -35 °C, correct the antifreeze content by increasing the proportion

of pure coolant accordingly.

Fig 1: Identifying Antifreeze Tester

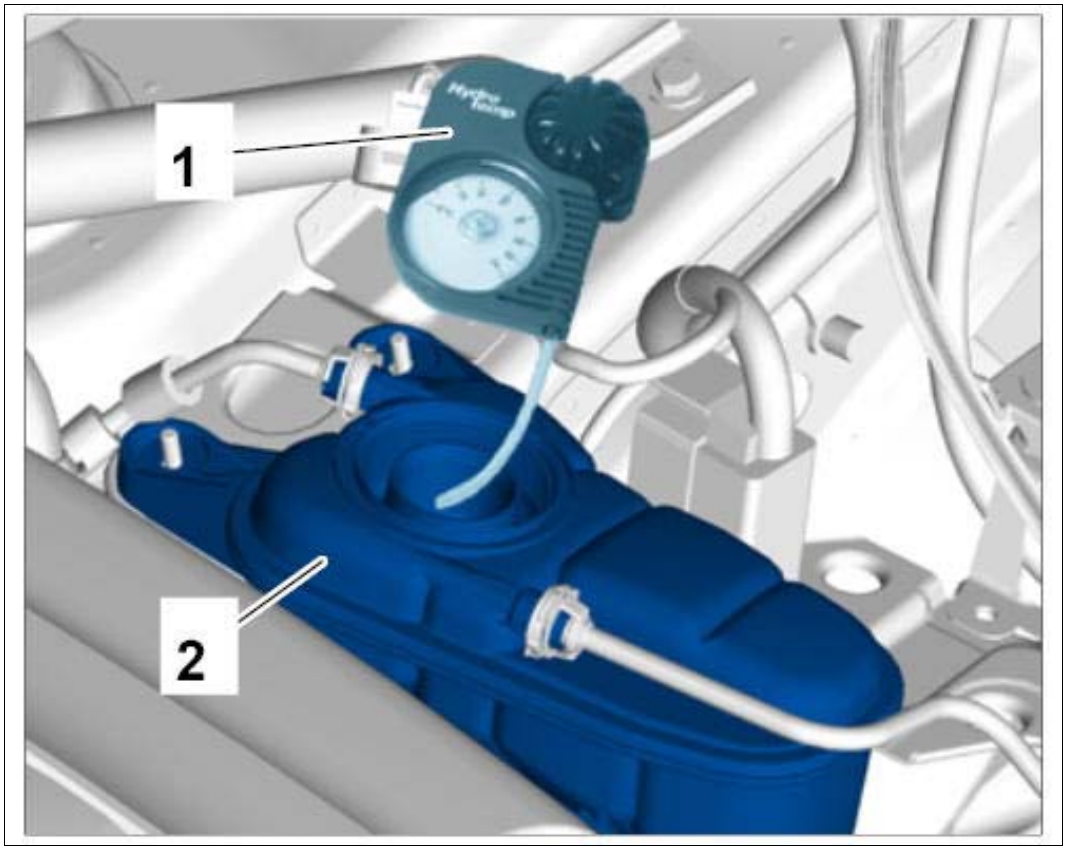

Courtesy of PORSCHE CARS NORTH AMERICA, INC.

2. Close the maintenance flap.

Measured antifreeze protection in °C	Antifreeze quantity to be added (in liters)
- 5	9
- 10	8, 5
- 15	7, 5
- 20	7
- 25	5
- 30	3, 5
- 35	1, 5

WM 190101 CHECKING THE COOLING SYSTEM (MACAN) > CHECKING ENGINE COOLANT LEVEL > CHECKING THE COOLING SYSTEM FOR LEAKS

1. Check the engine coolant level. Top up to the maximum fill level if necessary. → CHECKING ENGINE COOLANT LEVEL .

2. Screw adapter K65 onto the coolant expansion tank. Then apply a test pressure of approx. 1.5 bar using the cooling system test device and check the hose connections, connection pieces, cooling system components for leaks. The pressure must not drop. There must be no drops of coolant.

WM 190101 CHECKING THE COOLING SYSTEM (MACAN) > CHECKING ENGINE COOLANT LEVEL > CHECKING COOLING SYSTEM FOR DIRT

1. Check radiator for external dirt. The radiators should not be excessively dirty. They can be cleaned using a vacuum cleaner with a brush attachment if necessary.
2. Check charge air coolers for external dirt. The charge air coolers should not be excessively dirty. They can be cleaned using a vacuum cleaner with a brush attachment if necessary.
3. Check air guides to the radiators for external dirt and collected leaves. They can be cleaned using a vacuum cleaner with a brush attachment if necessary.

WM 190101 CHECKING THE COOLING SYSTEM (MACAN) > SUBSEQUENT WORK

1. Close the cap on the reservoir → Reservoir (similar to illustration) .

Fig 1: Identifying Cooling System Reservoir

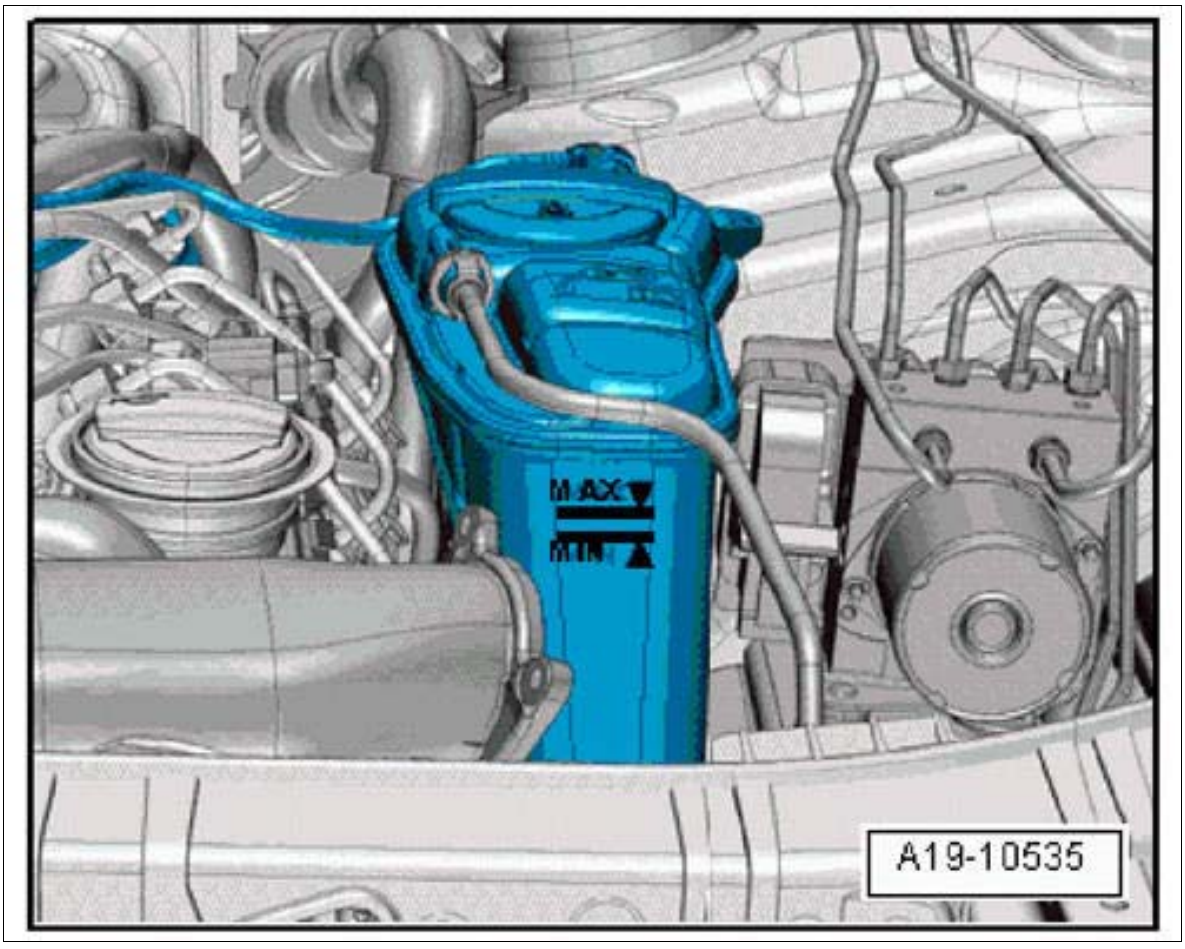

Courtesy of PORSCHE CARS NORTH AMERICA, INC.

WM 190819 REMOVING AND INSTALLING ELECTRIC FAN (MACAN) > PRELIMINARY WORK > PRELIMINARY WORK FOR REMOVING AND INSTALLING ELECTRIC FAN

1. Remove cooling fan housing. → 192019 REMOVING AND INSTALLING COOLING FAN HOUSING

WM 190819 REMOVING AND INSTALLING ELECTRIC FAN (MACAN) > REMOVING > REMOVING ELECTRIC FAN

Information

If tie-wraps had to be removed in order to remove the electric fans, make sure to fit these at the same position again during installation.

1. Remove fan 1.
    1. 1.1. Disconnect plug connection **-1-** and unscrew and remove screws **-arrows-** .
    2. 1.2. Remove fan.

Fig 1: Locating Fan Plug Connection

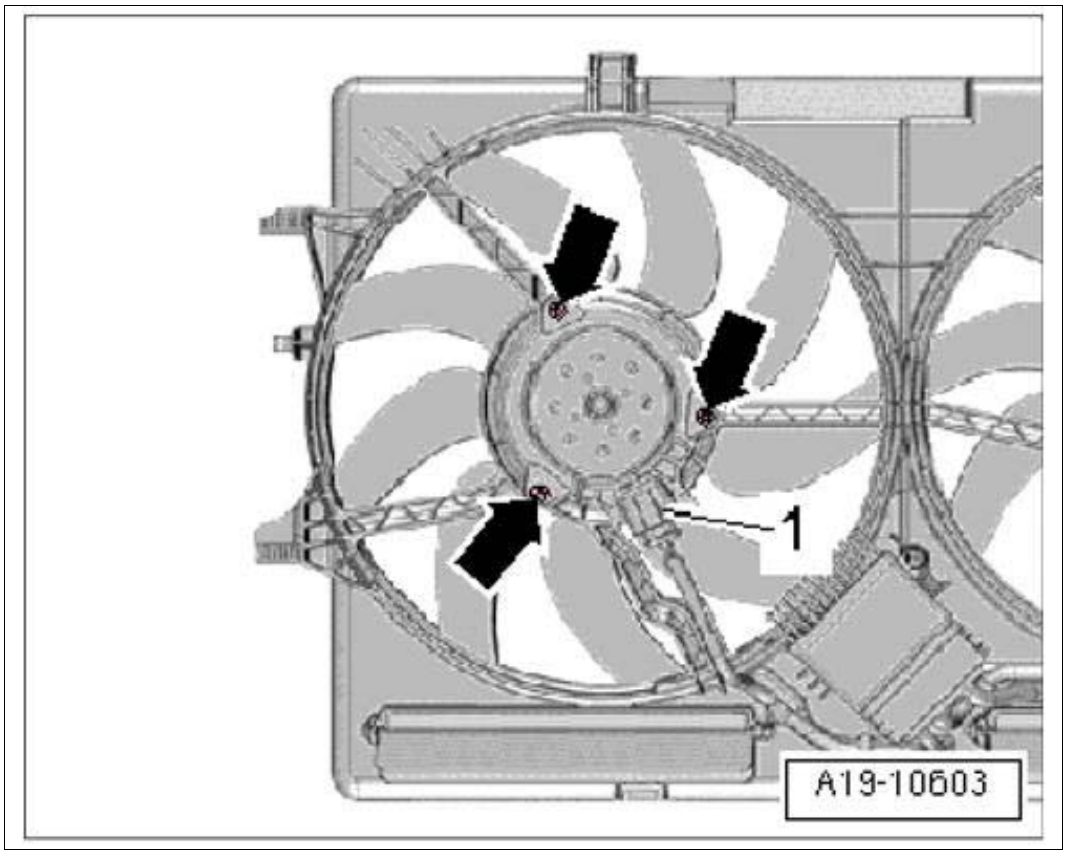

Courtesy of PORSCHE CARS NORTH AMERICA, INC.

2. Remove fan 2.

1. 2.1. Disconnect plug connection **-1-** and unscrew and remove screws **-arrows-** .
2. 2.2. Remove fan.

Fig 2: Locating Fan Plug Connection

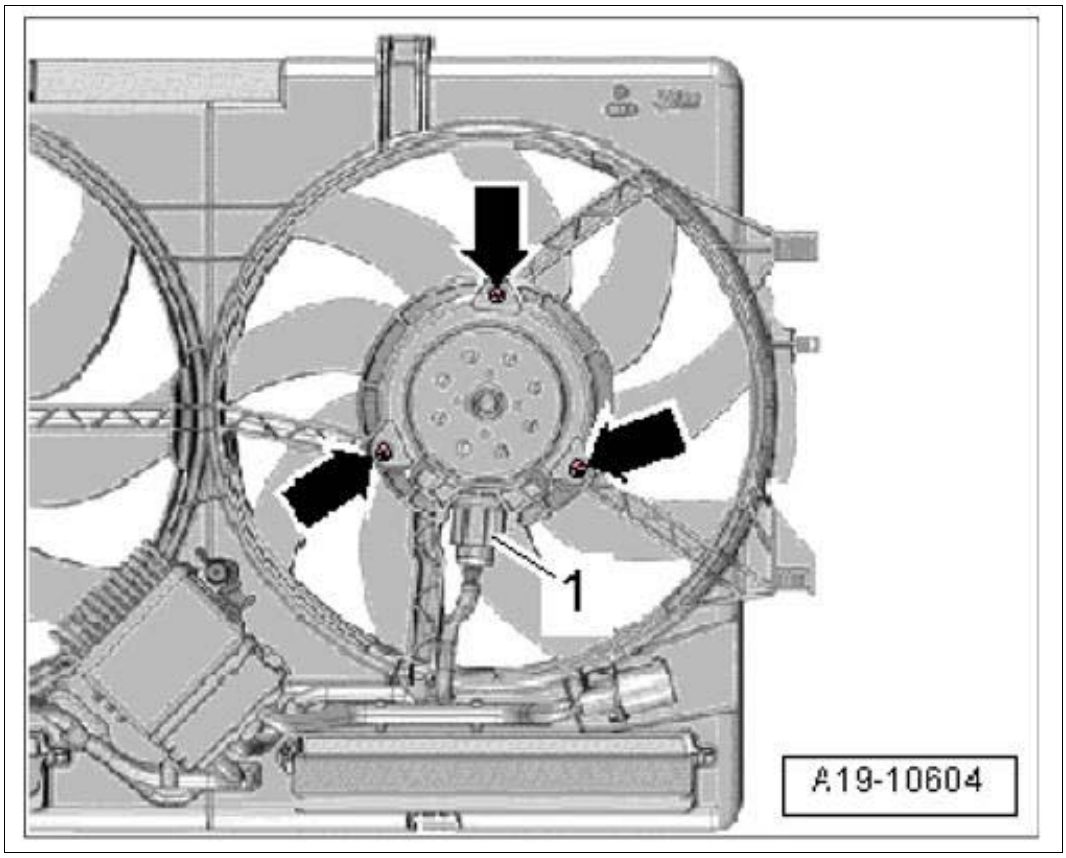

Courtesy of PORSCHE CARS NORTH AMERICA, INC.

WM 190819 REMOVING AND INSTALLING ELECTRIC FAN (MACAN) > INSTALLING > INSTALLING ELECTRIC FAN

Information

If tie-wraps had to be removed in order to remove the electric fans, make sure to fit these at the same position again during installation.

1. Install fan.
    1. 1.1. Insert and secure fan.
    2. 1.2. Close plug connections.

WM 190819 REMOVING AND INSTALLING ELECTRIC FAN (MACAN) > SUBSEQUENT WORK > SUBSEQUENT WORK FOR REMOVING AND INSTALLING ELECTRIC FAN

1. Install cooling fan housing. → INSTALLING COOLING FAN HOUSING .

WM 192019 REMOVING AND INSTALLING COOLING FAN HOUSING (MACAN) > PRELIMINARY WORK > PRELIMINARY WORK FOR REMOVING AND INSTALLING COOLING FAN HOUSING

1. Remove cover for front lock support. → 703919 REMOVING AND INSTALLING COVER FOR FRONT LOCK SUPPORT
2. Remove the cover for the front underbody. → 519219 REMOVING AND INSTALLING COVER FOR FRONT UNDERBODY
3. Drain coolant. → 193817 DRAINING AND FILLING COOLANT

WM 192019 REMOVING AND INSTALLING COOLING FAN HOUSING (MACAN) > REMOVING > REMOVING COOLING FAN HOUSING

WARNING: Electrically moved components

- *Danger of limbs being trapped or severed*

→ Switch off electric power to drive motor.

→ Make sure it does not switch on again.

→ Check that there is no electric charge.

Information

- Replace sealing ring -2- and coat with coolant.

Fig 1: Identifying Radiator Flange And Sealing Ring

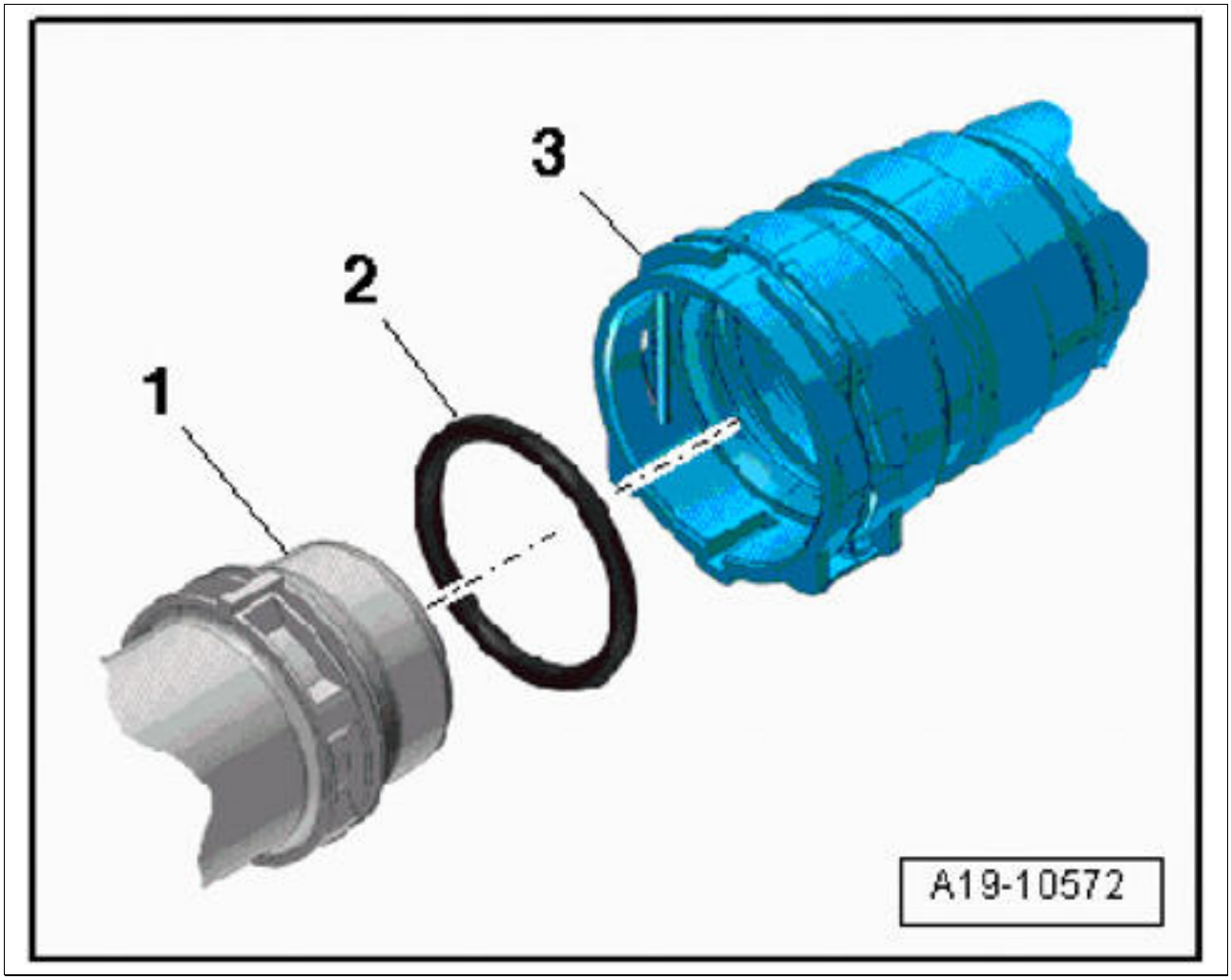

Courtesy of PORSCHE CARS NORTH AMERICA, INC.

1. Pull electric plug connections **-1 and 2-** out of the radiator frame holder and disconnect plug connection **-arrow-** .

Fig 2: Pulling Electric Plug Connection

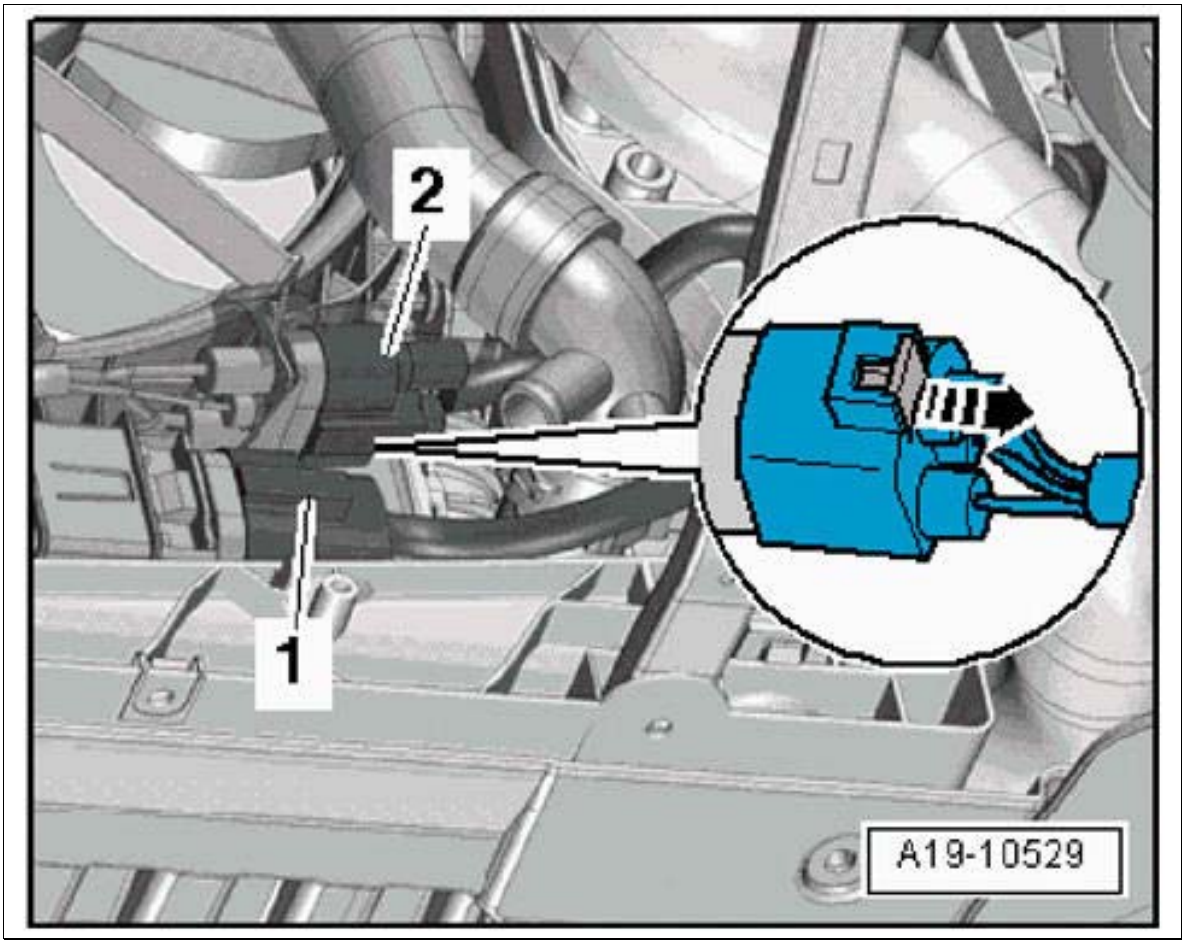

Courtesy of PORSCHE CARS NORTH AMERICA, INC.

2. Unscrew fastening screw **-1-** , disconnect ATF line **-2-** and set it aside.

Fig 3: Identifying ATF Line

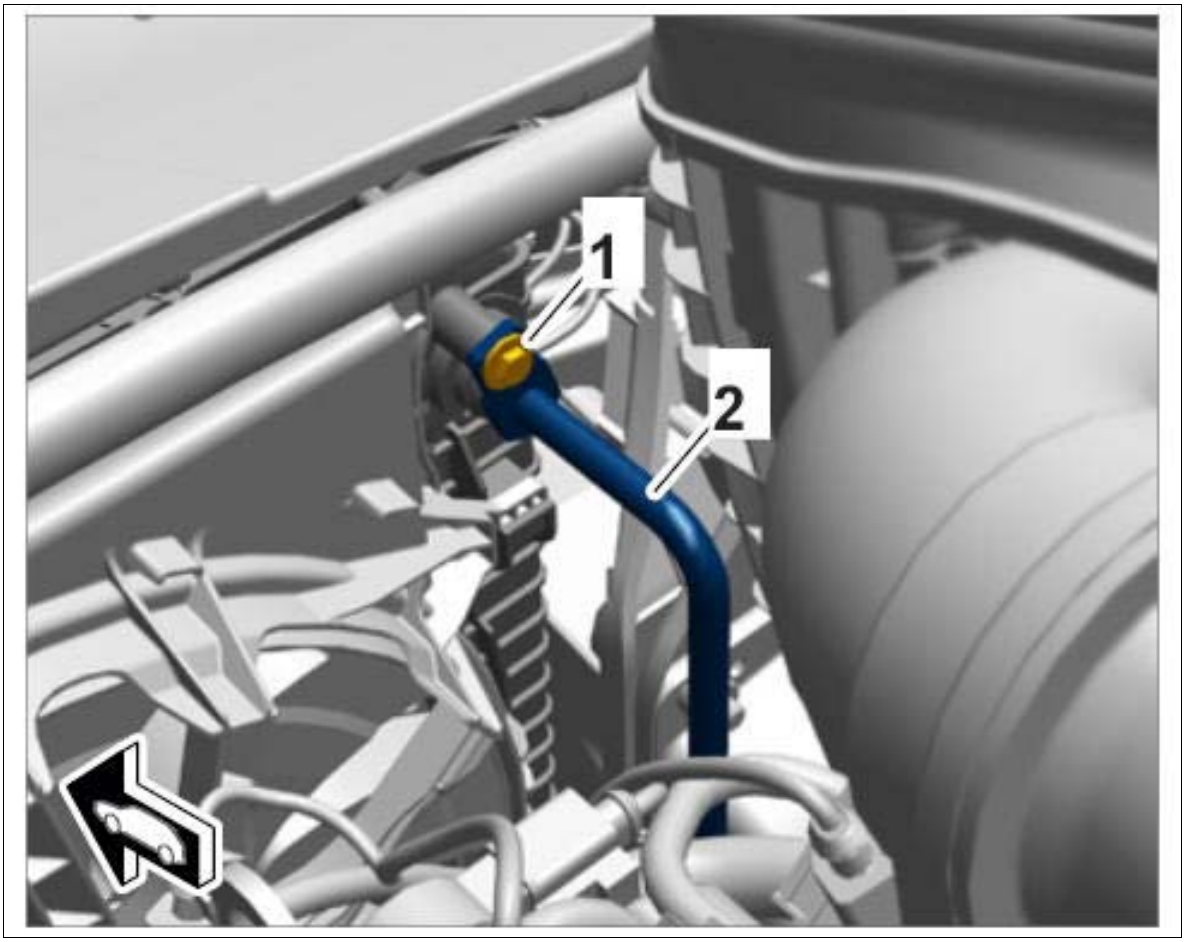

Courtesy of PORSCHE CARS NORTH AMERICA, INC.

3. Open safety clip **-1-** , disconnect coolant hose **-2-** and set it aside.

Fig 4: Identifying Radiator Flange Coolant Hose And Clip

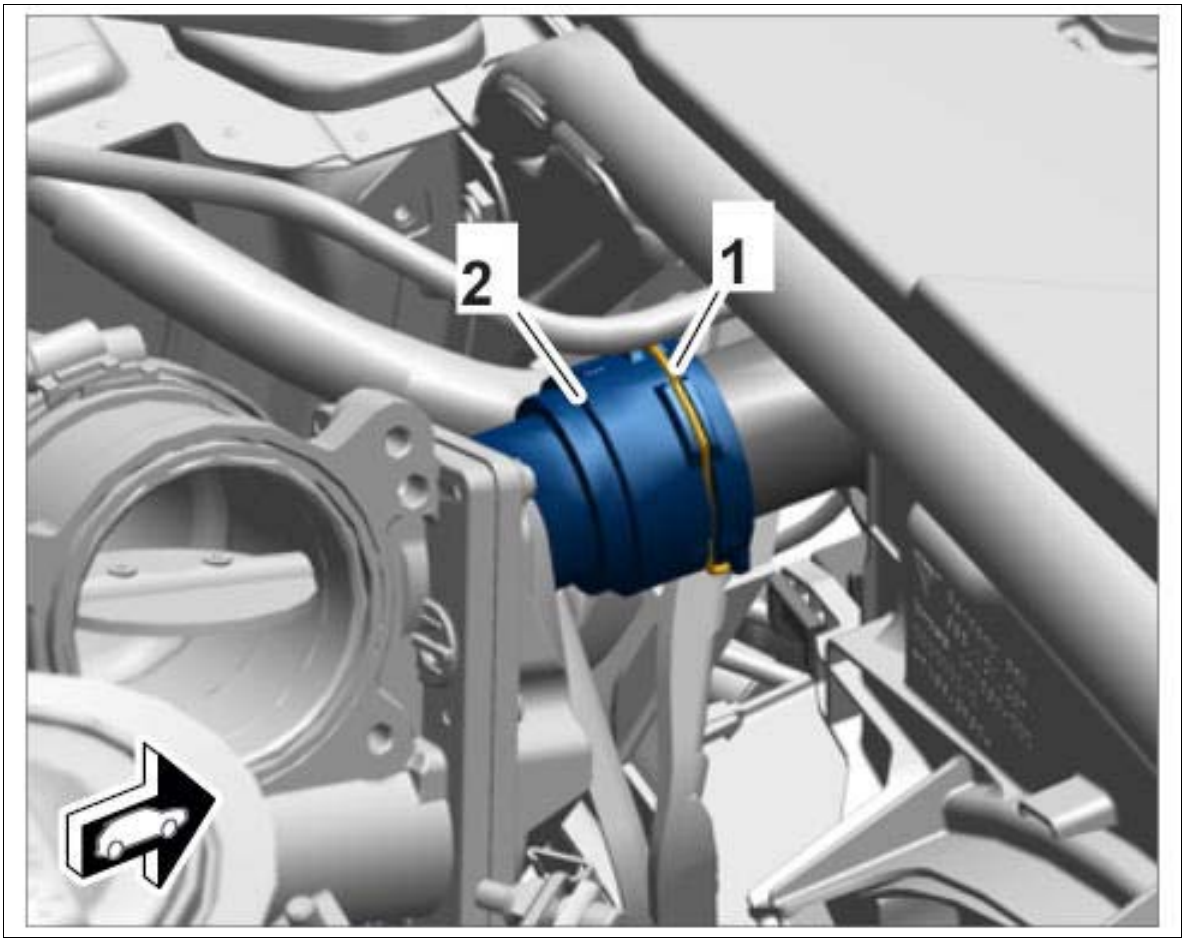

Courtesy of PORSCHE CARS NORTH AMERICA, INC.

4. Remove cooling fan housing **-2-** .

    1. 4.1. Unclip guide lugs **-1-** on both sides from the retaining device for the radiator using a screwdriver.

    2. 4.2. Lift up cooling fan housing **-2-** in **-direction of arrow-** and remove it.

Fig 5: Removing Cooling Fan Housing

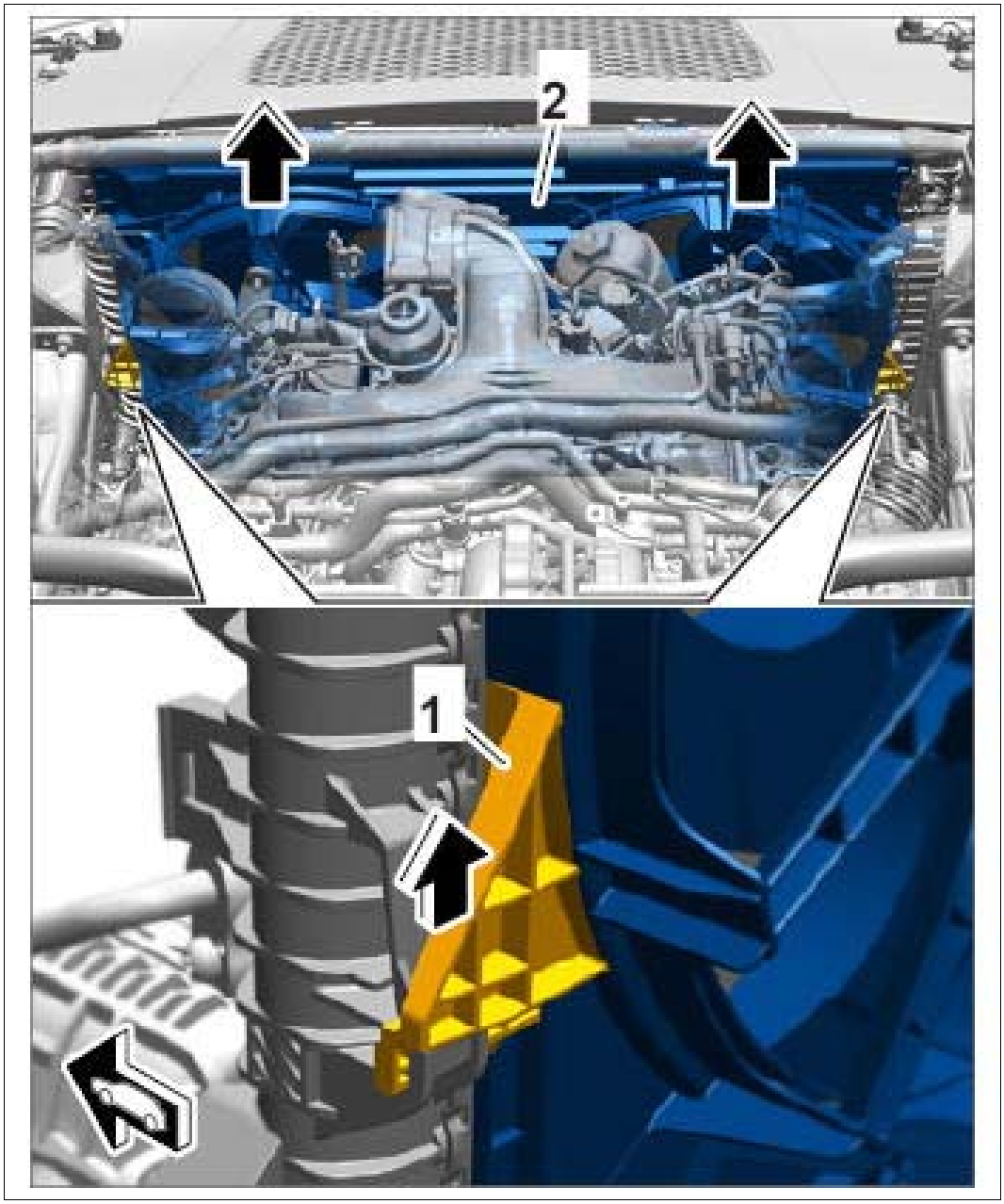

Courtesy of PORSCHE CARS NORTH AMERICA, INC.

WM 192019 REMOVING AND INSTALLING COOLING FAN HOUSING (MACAN) > INSTALLING > INSTALLING COOLING FAN HOUSING

Information

- Replace sealing ring -2- and coat with coolant.

Fig 1: Identifying Radiator Flange And Sealing Ring

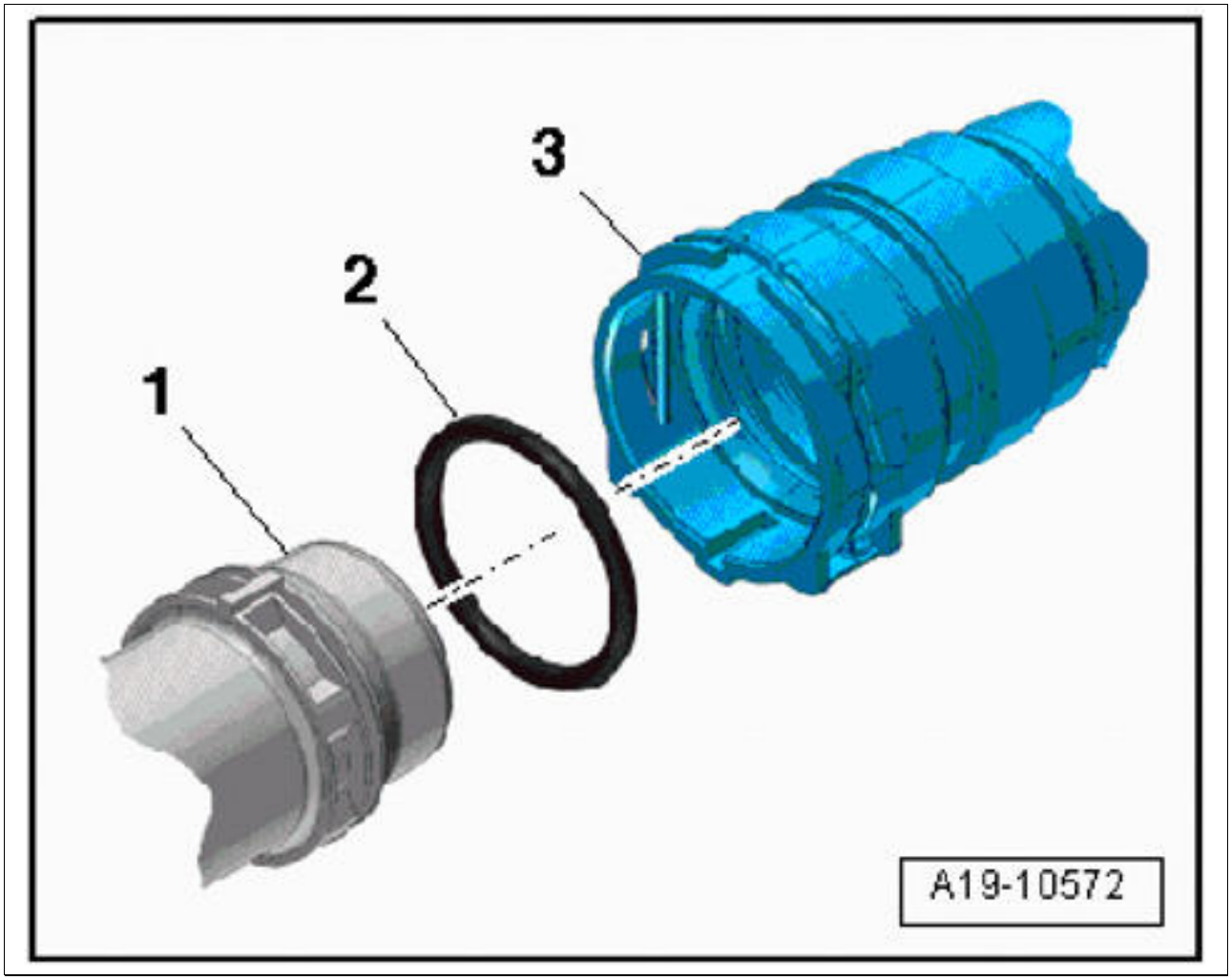

Courtesy of PORSCHE CARS NORTH AMERICA, INC.

1. Install cooling fan housing **-3-** .
    1. 1.1. Position cooling fan housing **-3-** in the engine compartment.
    2. 1.2. The retaining lugs **-2-** must be positioned over the radiator.
    3. 1.3. Clip guide lugs **-1-** and **-4-** at both sides into the retaining device for the radiator until they lock with an audible click.

Fig 2: Installing Cooling Fan Housing

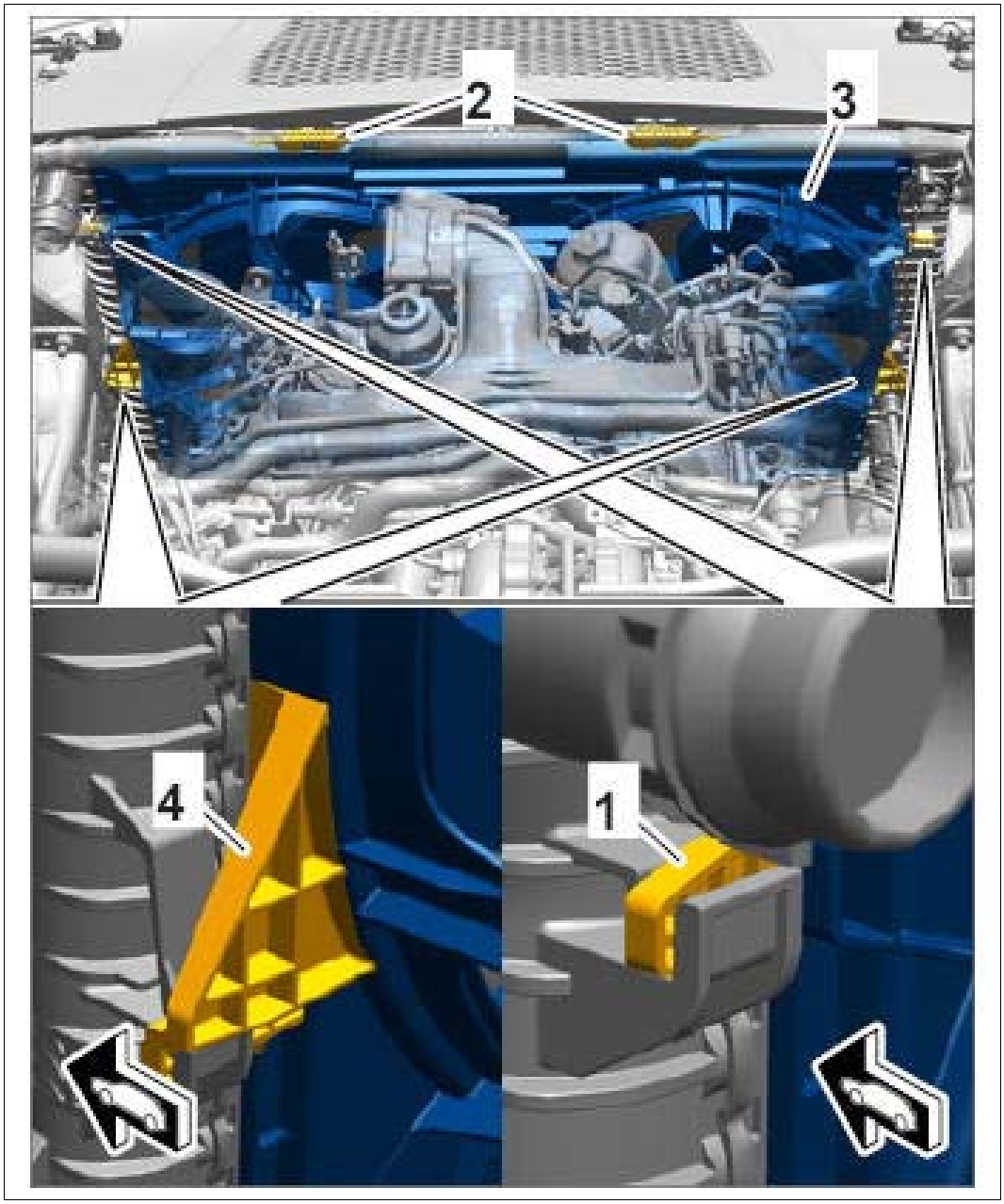

Courtesy of PORSCHE CARS NORTH AMERICA, INC.

2. Engage coolant hose **-2-** on the connection from the radiator until it locks with an audible click.

Fig 3: Identifying Coolant Hose

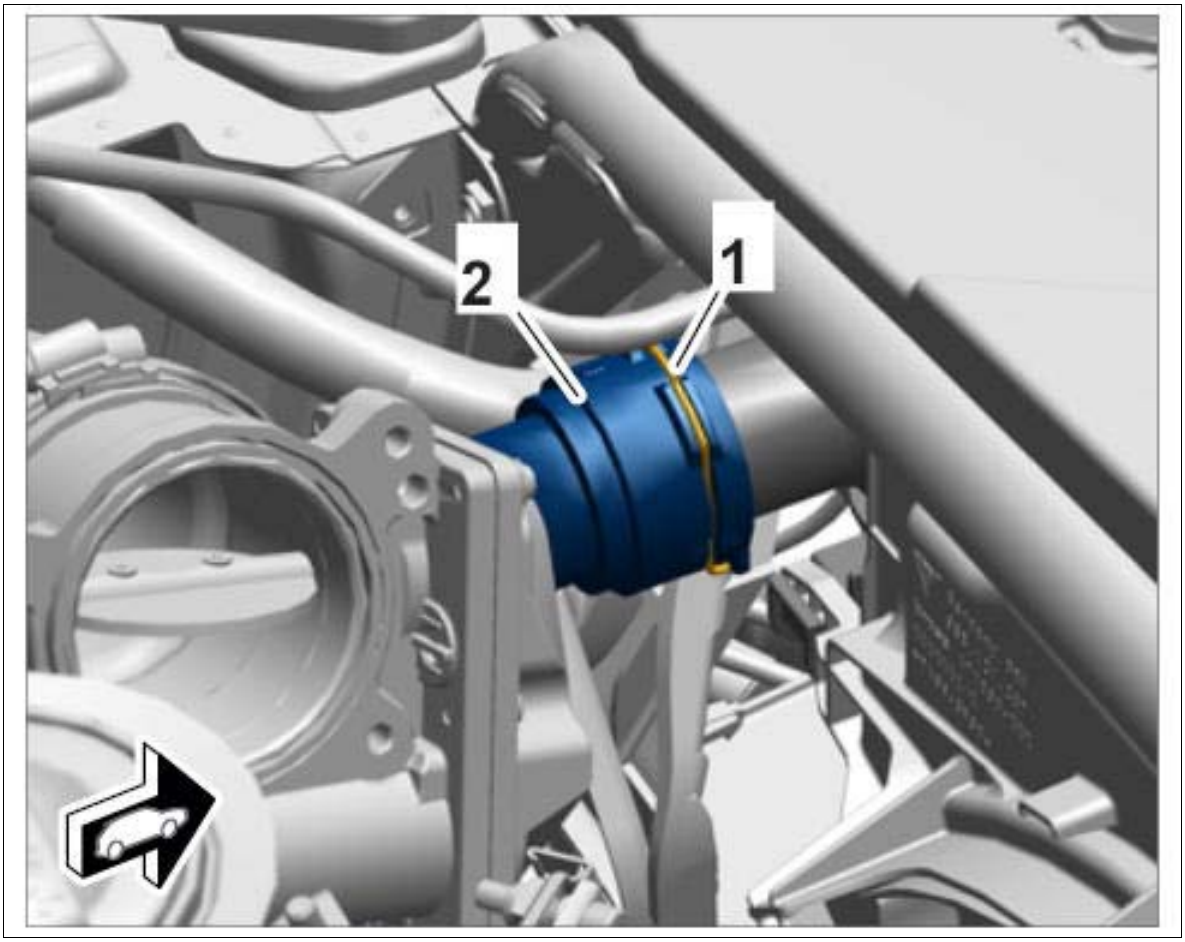

Courtesy of PORSCHE CARS NORTH AMERICA, INC.

3. Install ATF line **-2-** in the radiator and fit and tighten fastening screw **-1-** .

Fig 4: Identifying ATF Line

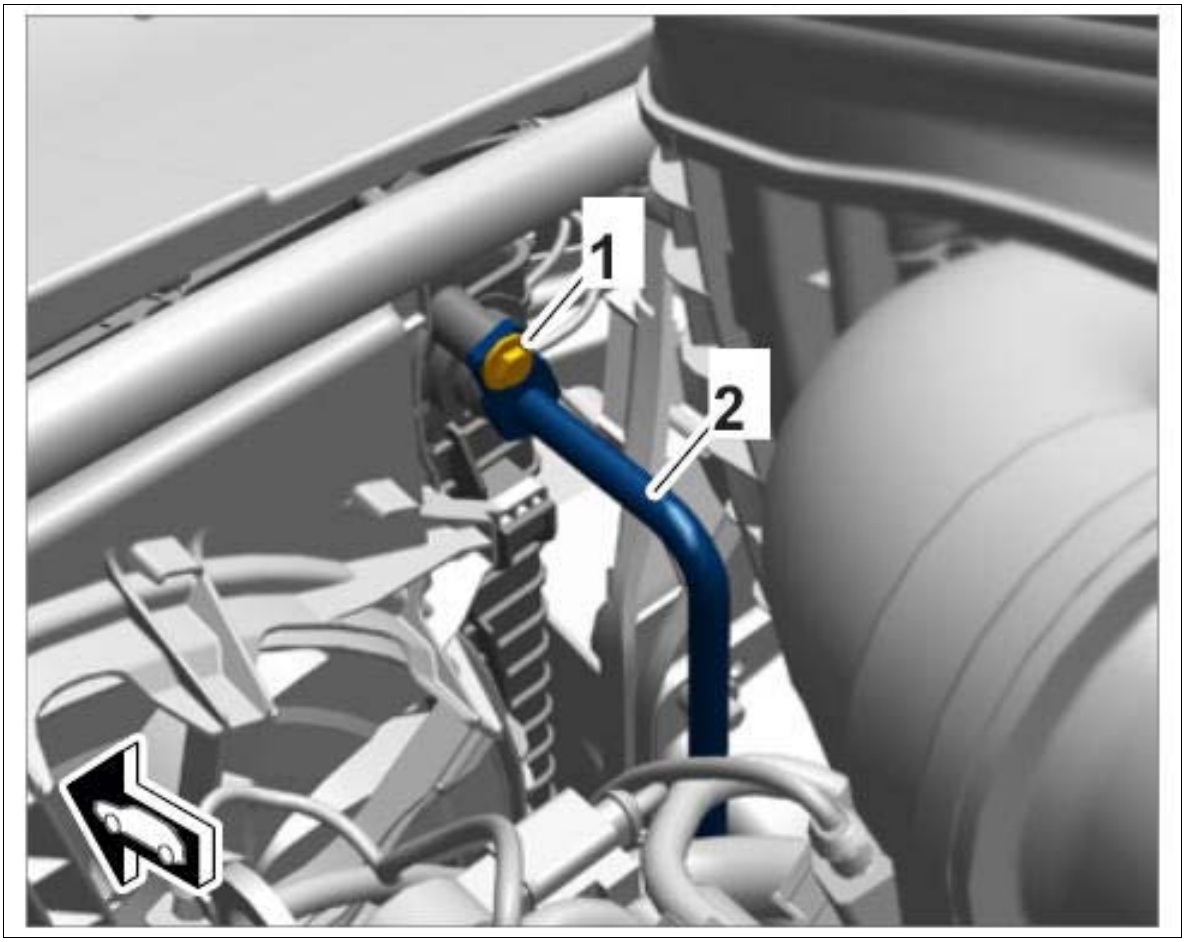

Courtesy of PORSCHE CARS NORTH AMERICA, INC.

4. Connect electric plug connections **-1-** and **-2-** and engage them in the guide for the radiator frame.

Fig 5: Connecting Electric Plug Connection

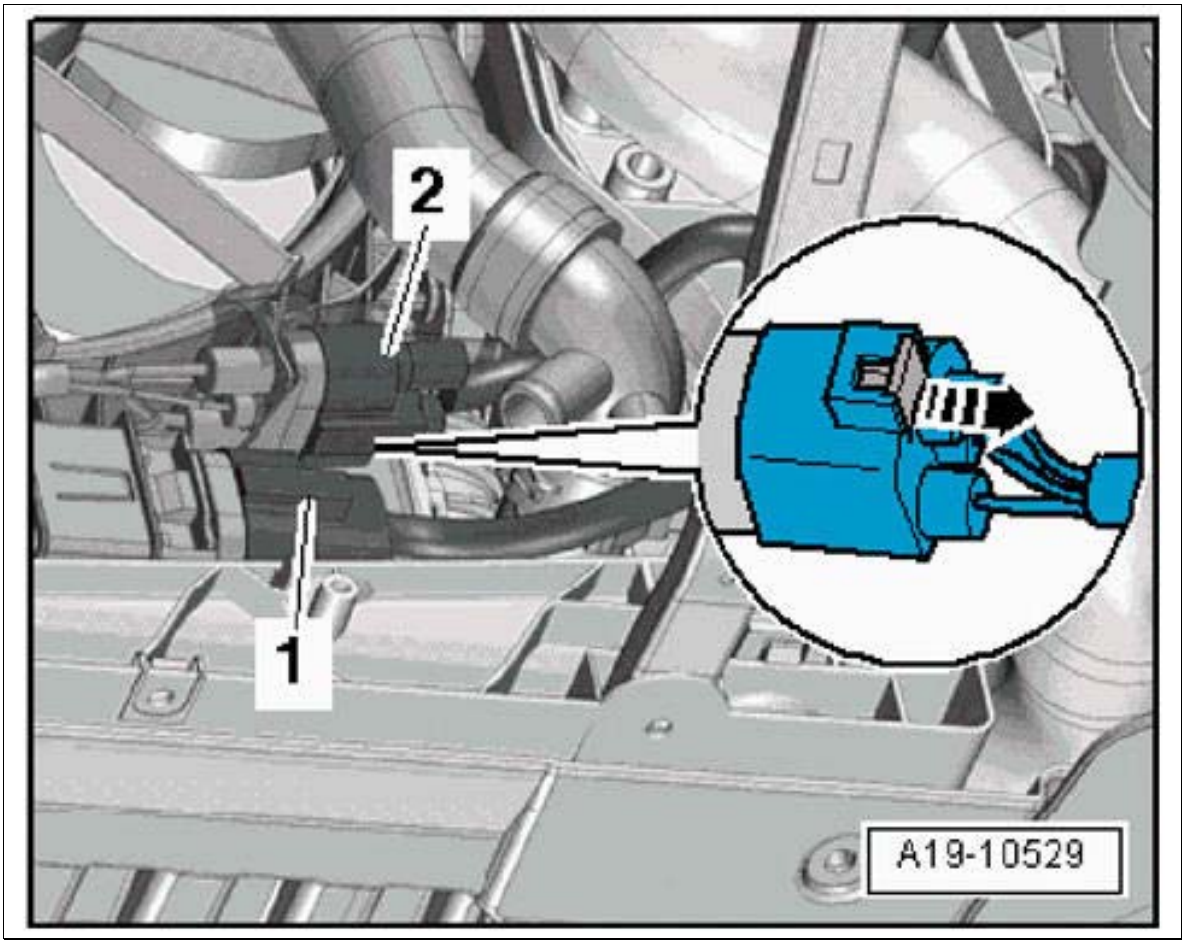

Courtesy of PORSCHE CARS NORTH AMERICA, INC.

WM 192019 REMOVING AND INSTALLING COOLING FAN HOUSING (MACAN) > SUBSEQUENT WORK

1. Fill in coolant. → 193817 DRAINING AND FILLING COOLANT
2. Check and top up ATF. → 370235 CHECKING AND TOPPING UP THE ATF
3. Install cover for front lock support. → INSTALLING COVER FOR FRONT LOCK SUPPORT
4. Remove the cover for the front underbody. → 519219 REMOVING AND INSTALLING COVER FOR FRONT UNDERBODY .

WM 192419 REMOVING AND INSTALLING AIR GUIDE (MACAN) > TECHNICAL VALUES

Location	Description	Type	Basic value	Tolerance 1	Tolerance 2

Fastening screws	Cooling-air flaps to upper part of lock carrier	Tightening torque	2.5 Nm (2 ftlb.)		
Fastening screws	Distance measuring sensor holder to front bumper	Tightening torque	2.5 Nm (2 ftlb.)		
Fastening screws	Cooling-air flaps to lock connection	Tightening torque	9.7 Nm (7.5 ftlb.)		

WM 192419 REMOVING AND INSTALLING AIR GUIDE (MACAN) > INFORMATION > COMPONENT OVERVIEW - AIR GUIDE

Fig 1: Overview Of Radiator Module

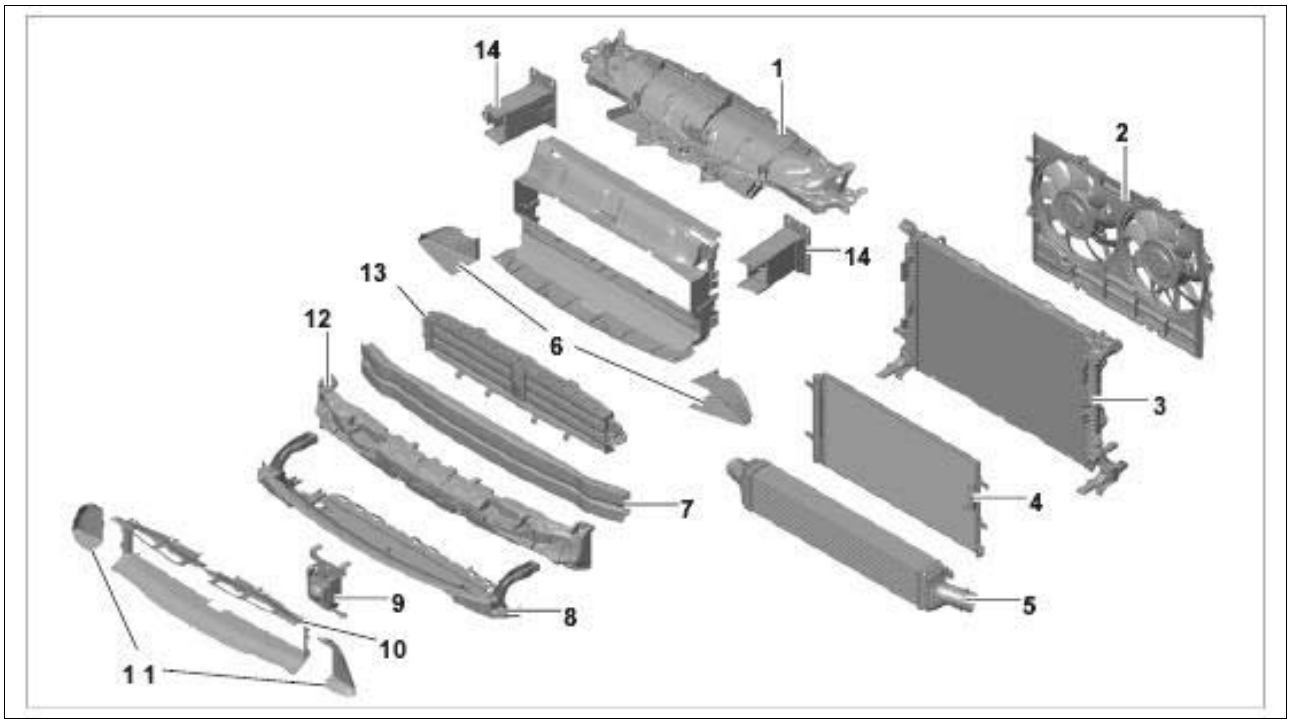

Courtesy of PORSCHE CARS NORTH AMERICA, INC.

1. Upper part of lock carrier
2. Cooling fan housing
3. Radiator
4. Condenser
5. Charge-air cooler
6. Air flaps on rear air guide

7. Front bumper
8. Pedestrian protection, front
9. Distance measuring sensor control unit
10. Front air guide
11. Air flaps on front air guide
12. Plastic foam strip
13. Cooling-air flaps
14. Front carrier
15. Rear air guide

Fig 2: Identifying Cooling-Air Flaps

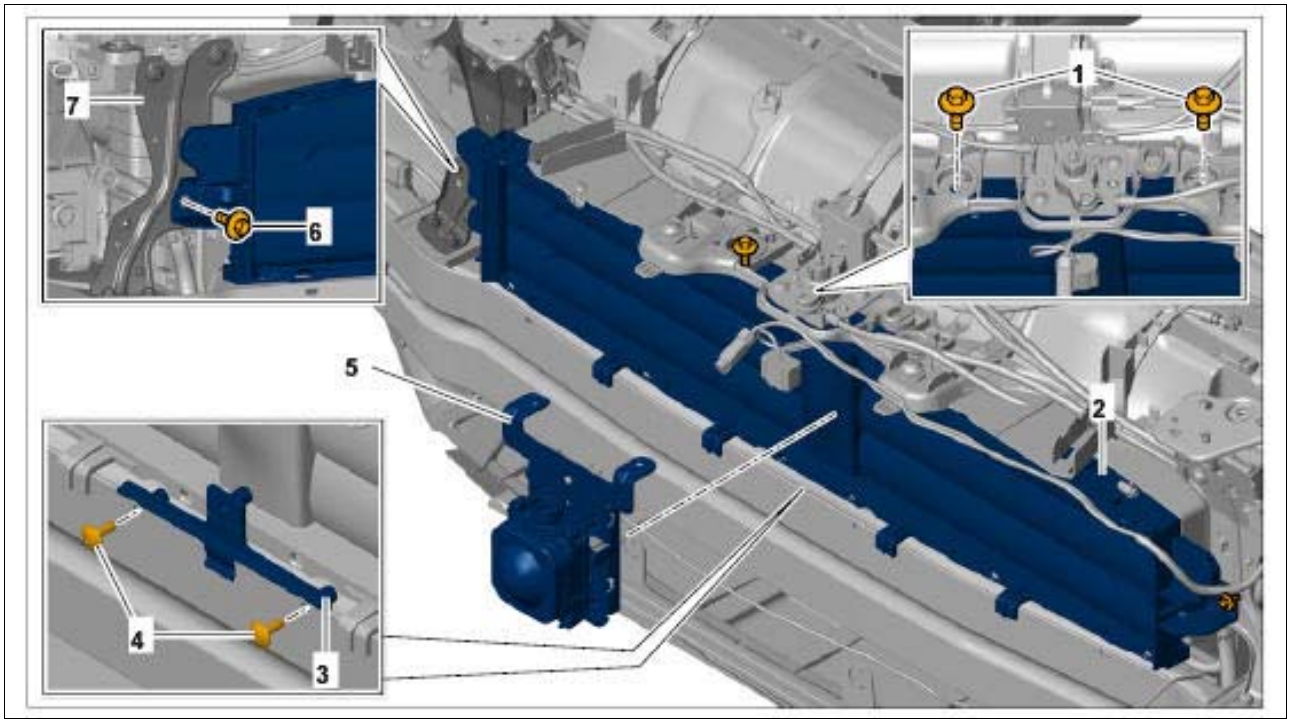

Courtesy of PORSCHE CARS NORTH AMERICA, INC.

1. Fastening screws for cooling-air flaps → **Tightening torque: 2.5 Nm (2 ftlb.)**
2. Cooling-air flaps
3. Distance measuring sensor holder
4. Fastening screws for distance measuring sensor holder → **Tightening torque: 2.5 Nm (2 ftlb.)**
5. Distance measuring sensor control unit
6. Fastening screws for cooling-air flaps → **Tightening torque: 9.7 Nm (7.5 ftlb.)**

7. Lock connection

WM 192419 REMOVING AND INSTALLING AIR GUIDE (MACAN) > PRELIMINARY WORK > PRELIMINARY WORK FOR FRONT AIR GUIDE

1. Remove front apron. → 631519 REMOVING AND INSTALLING FRONT APRON

WM 192419 REMOVING AND INSTALLING AIR GUIDE (MACAN) > PRELIMINARY WORK > PRELIMINARY WORK FOR REAR AIR GUIDE

1. Remove front apron. → 631519 REMOVING AND INSTALLING FRONT APRON
2. Remove cooling-air flaps. → 193519 REMOVING AND INSTALLING COOLING-AIR FLAPS
3. Remove front bumper. → 631019 REMOVING AND INSTALLING FRONT BUMPER
4. Remove upper part of lock carrier. → 503819 REMOVING AND INSTALLING UPPER PART OF LOCK CARRIER

WM 192419 REMOVING AND INSTALLING AIR GUIDE (MACAN) > REMOVING AIR GUIDE > REMOVING FRONT AIR GUIDE

1. Remove front air guide **-2-** .
    1. 1.1. Unclip upper clip connections **-1-** on front air guide **-2-** .
    2. 1.2. Unclip lower clip connections **-3-** on front air guide **-2-** .
    3. 1.3. Remove front air guide **-2-** .

Fig 1: Identifying Front Air Guide And Upper Clip

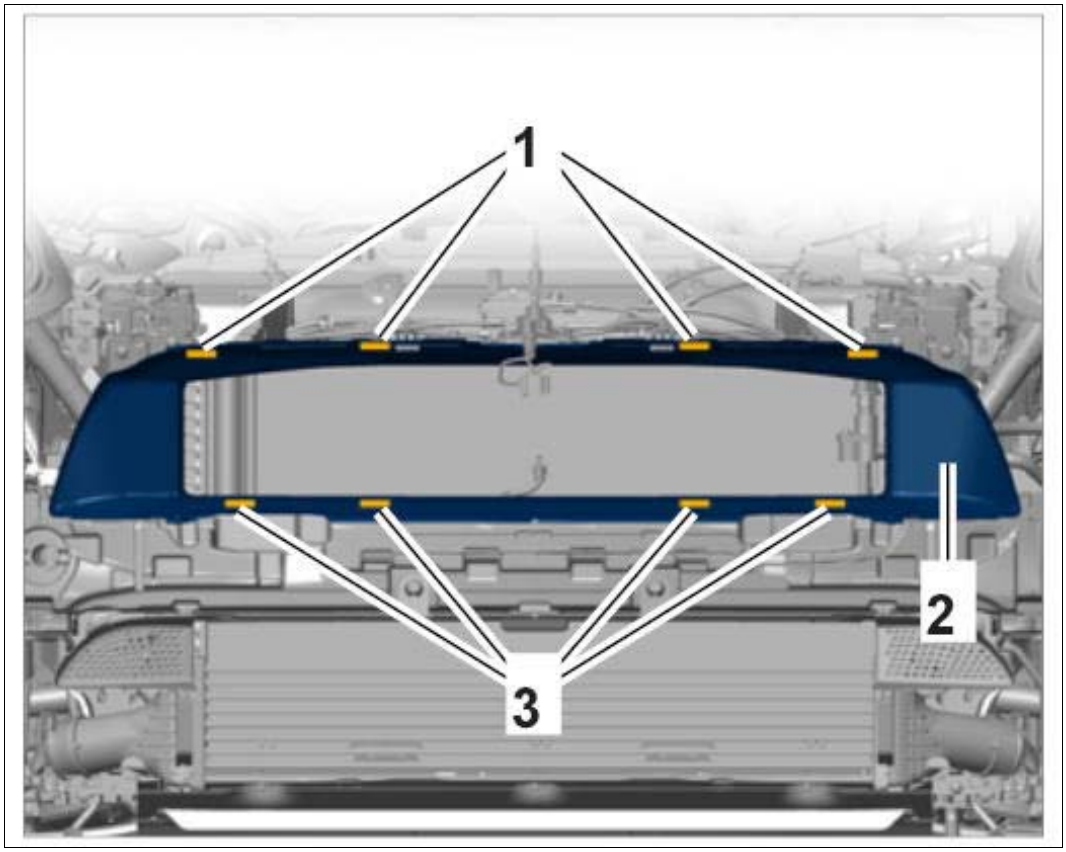

Courtesy of PORSCHE CARS NORTH AMERICA, INC.

WM 192419 REMOVING AND INSTALLING AIR GUIDE (MACAN) > REMOVING AIR GUIDE > REMOVING REAR AIR GUIDE

1. Expose line **-4-** .
    1. 1.1. Disconnect electric plug connection **-3-** .
    2. 1.2. Unclip clip **-2-** on the lock carrier.
    3. 1.3. Expose horn **-1-** with electric line **-4-** .

Fig 1: Identifying Rear Air Guide Electric Line

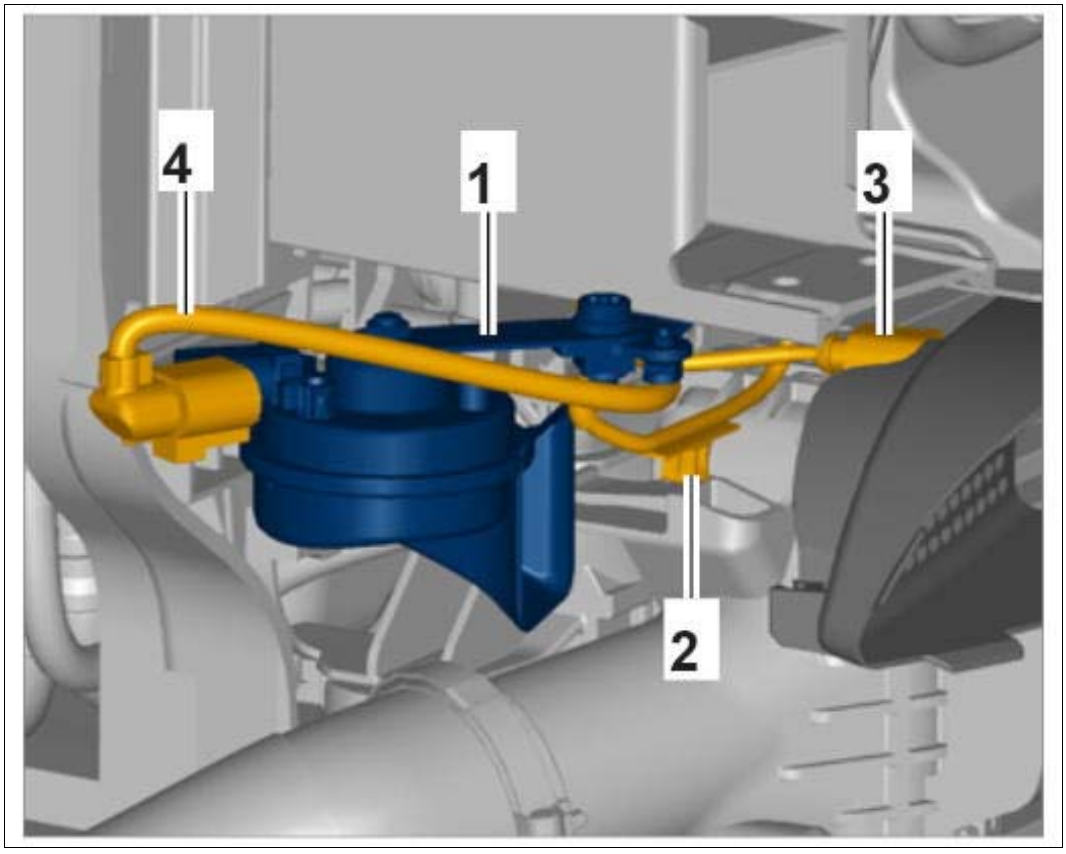

Courtesy of PORSCHE CARS NORTH AMERICA, INC.

2. Expose lines **-3-** and **-4-** .

    1. 2.1. Unclip clips **-1-** on electric line **-4-** at the rear air guide.
    2. 2.2. Unclip clips **-2-** on headlight cleaning line **-3-** at the rear air guide.
    3. 2.3. Set lines **-3-** and **-4-** aside.

Fig 2: Identifying Rear Air Guide Lines

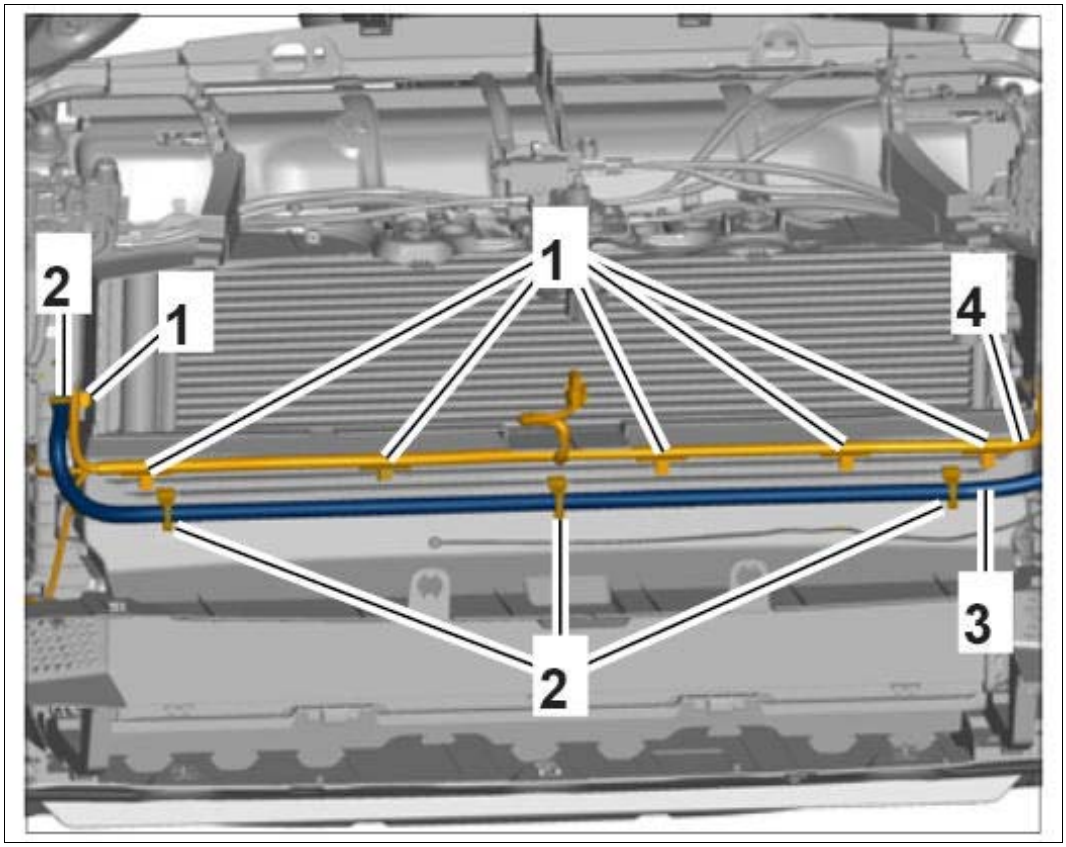

Courtesy of PORSCHE CARS NORTH AMERICA, INC.

3. Disconnect electric plug connection **-1-** and unclip clip **-2-** on rear air guide.

Fig 3: Identifying Rear Air Guide Clip Connections

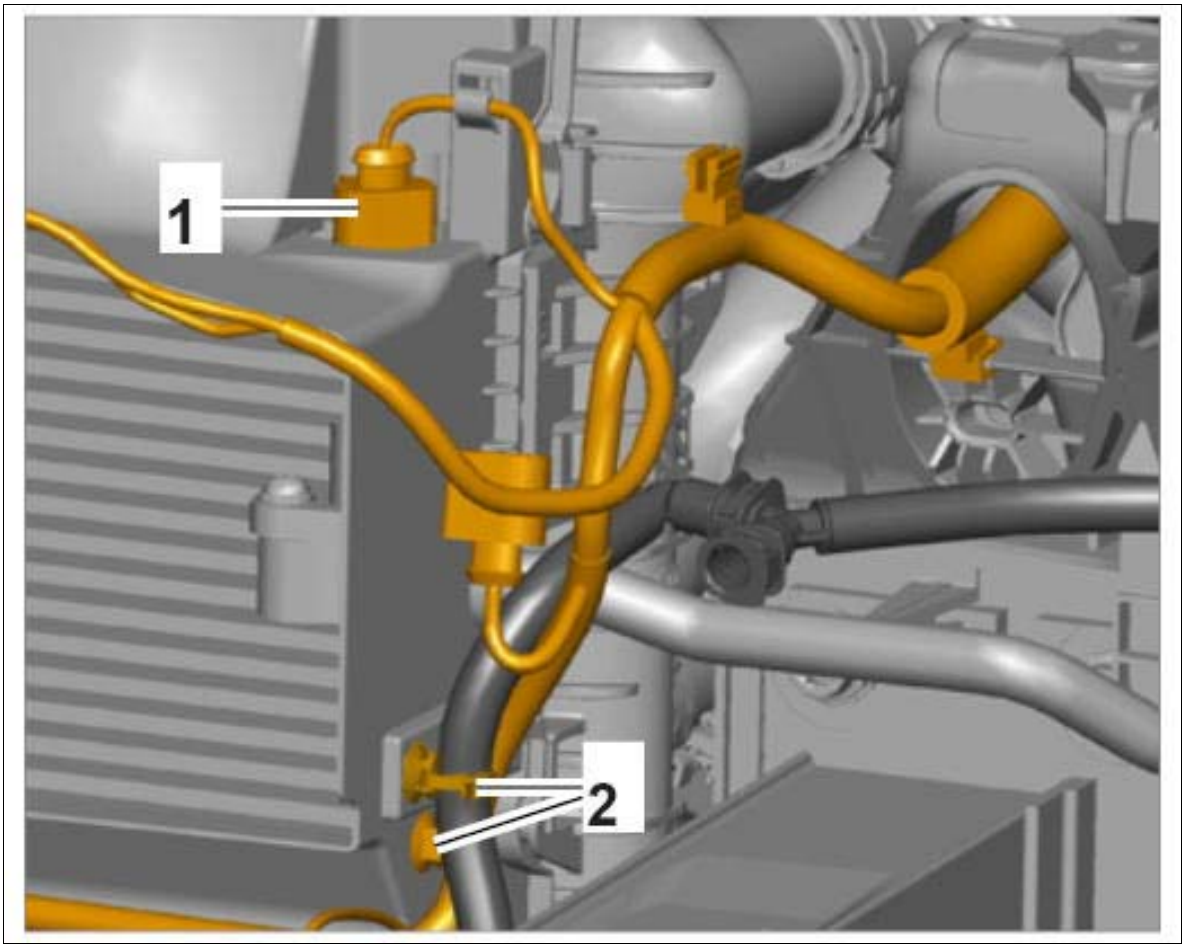

Courtesy of PORSCHE CARS NORTH AMERICA, INC.

4. Pull air flaps **-1-** forward in **-direction of arrow-** and detach them from pedestrian protection and rear air guide **-2-** .

Fig 4: Pulling Air Flaps

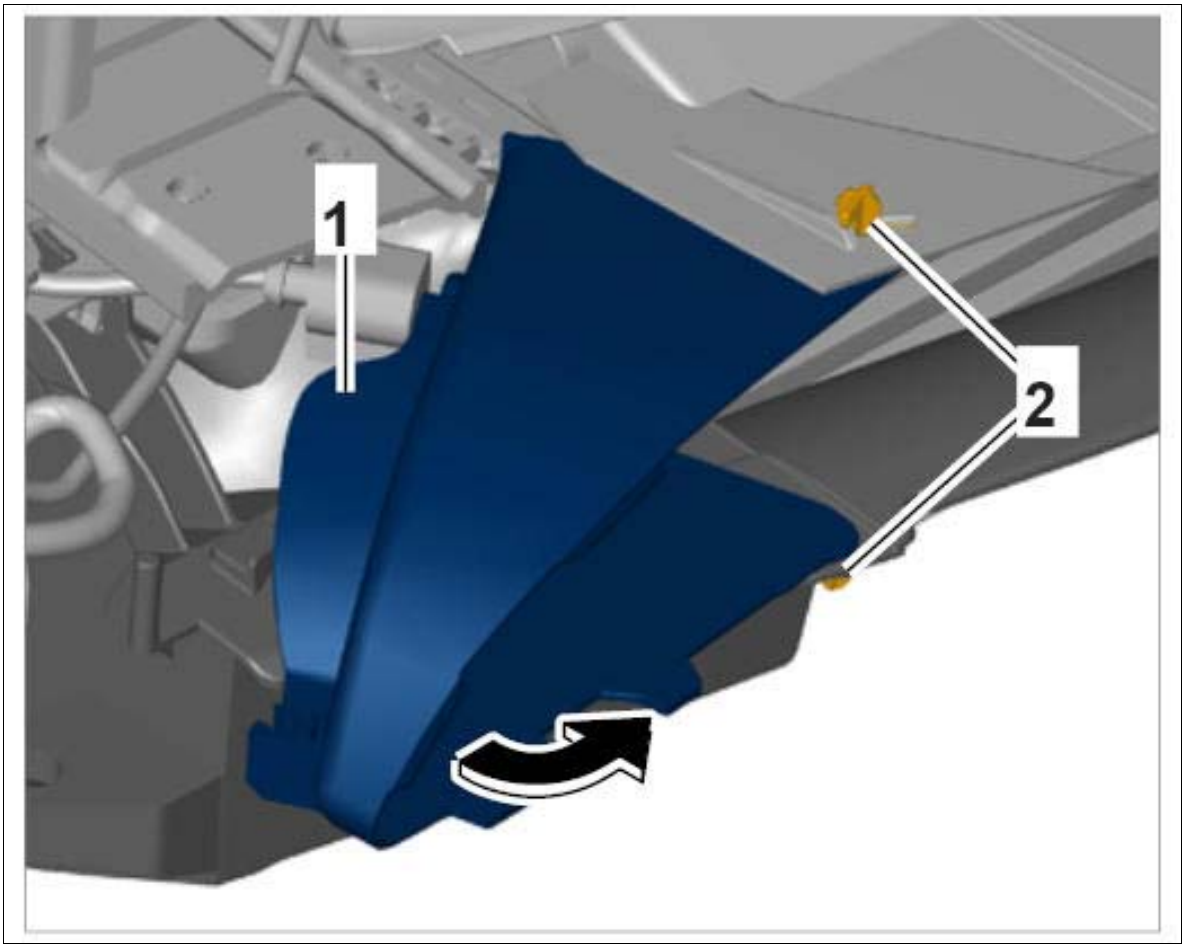

Courtesy of PORSCHE CARS NORTH AMERICA, INC.

5. Remove rear air guide **-1-** .
    1. 5.1. Unclip rear air guide **-1-** from the locking lugs **-2-** on both sides.
    2. 5.2. Lift air guide **-1-** up slightly out of the upper bracket and remove in **-direction of arrow-** .

Fig 5: Lifting Rear Air Guide

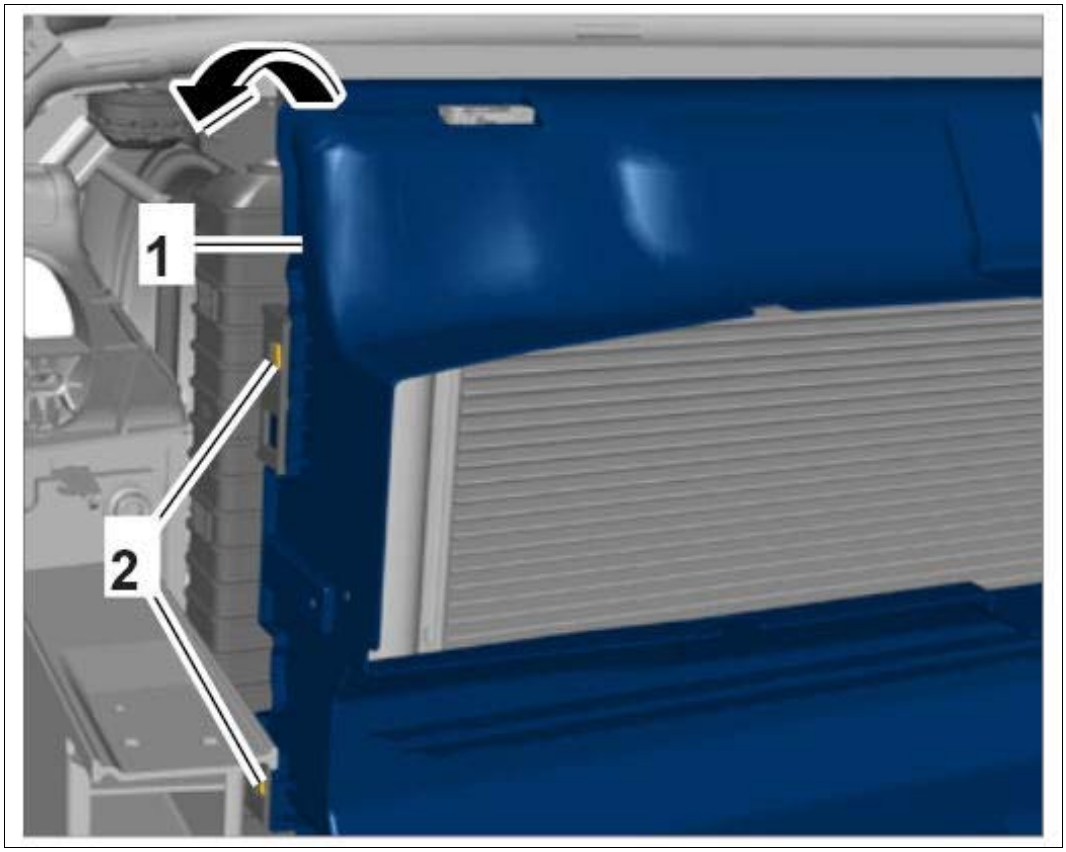

Courtesy of PORSCHE CARS NORTH AMERICA, INC.

WM 192419 REMOVING AND INSTALLING AIR GUIDE (MACAN) > INSTALLING AIR GUIDE > INSTALLING FRONT AIR GUIDE

1. Install front air guide **-2-** .

    1. 1.1. Position front air guide **-2-** and clip in locking lugs **-1-** and **-3-** .

Fig 1: Identifying Front Air Guide Lugs

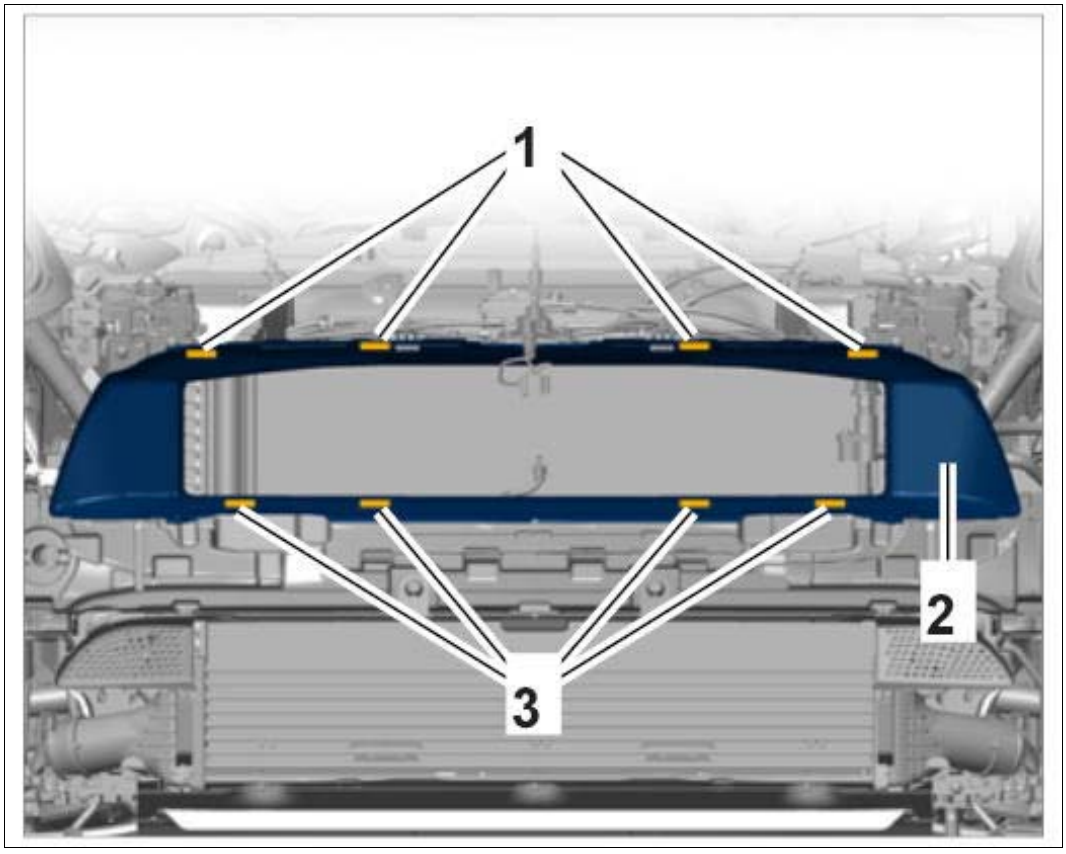

Courtesy of PORSCHE CARS NORTH AMERICA, INC.

WM 192419 REMOVING AND INSTALLING AIR GUIDE (MACAN) > INSTALLING AIR GUIDE > INSTALLING REAR AIR GUIDE

1. Install air guide **-1-** .
    1. 1.1. Position air guide **-1-** .
    2. 1.2. Engage upper locking lugs for air guide above the radiator module **-arrow-** .
    3. 1.3. Clip in locking lugs **-2-** on both sides of the air guide.

Fig 1: Positioning Rear Air Guide

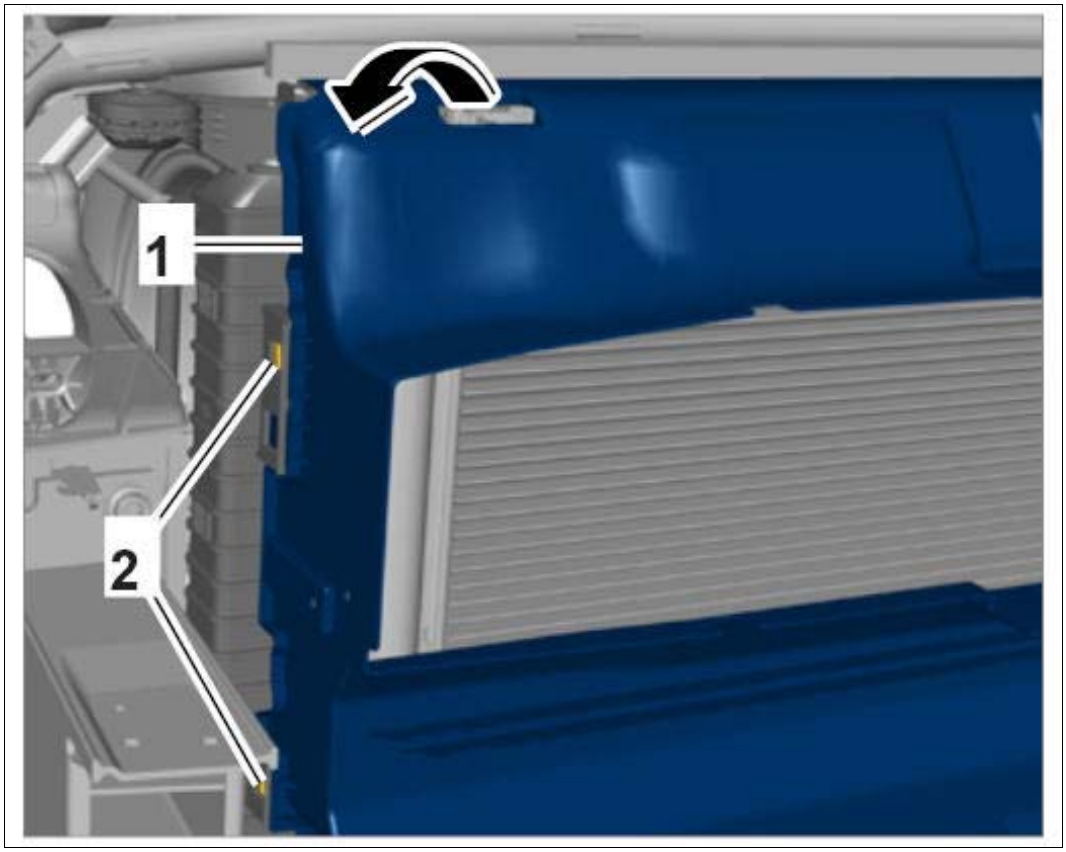

Courtesy of PORSCHE CARS NORTH AMERICA, INC.

2. Connect electric plug connection **-1-** and clip in electric line and headlight cleaning line on the rear air guide **-2-** .

Fig 2: Identifying Rear Air Guide Clip Connections

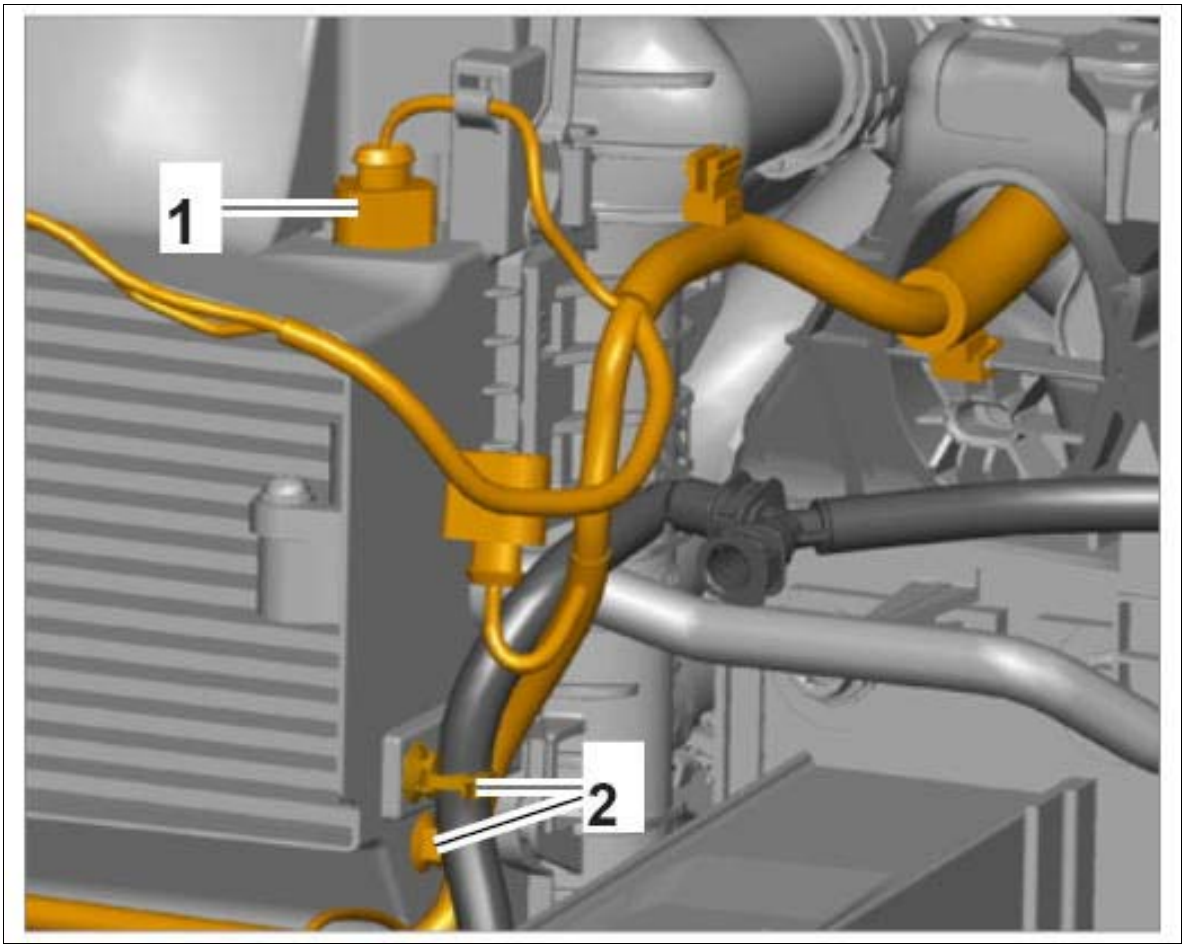

Courtesy of PORSCHE CARS NORTH AMERICA, INC.

3. Secure lines **-3-** and **-4-** .
    1. 3.1. Clip in electric line **-4-** on the rear air guide **-1-** .
    2. 3.2. Clip in headlight cleaning line **-3-** on the rear air guide **-2-** .

Fig 3: Identifying Rear Air Guide Lines

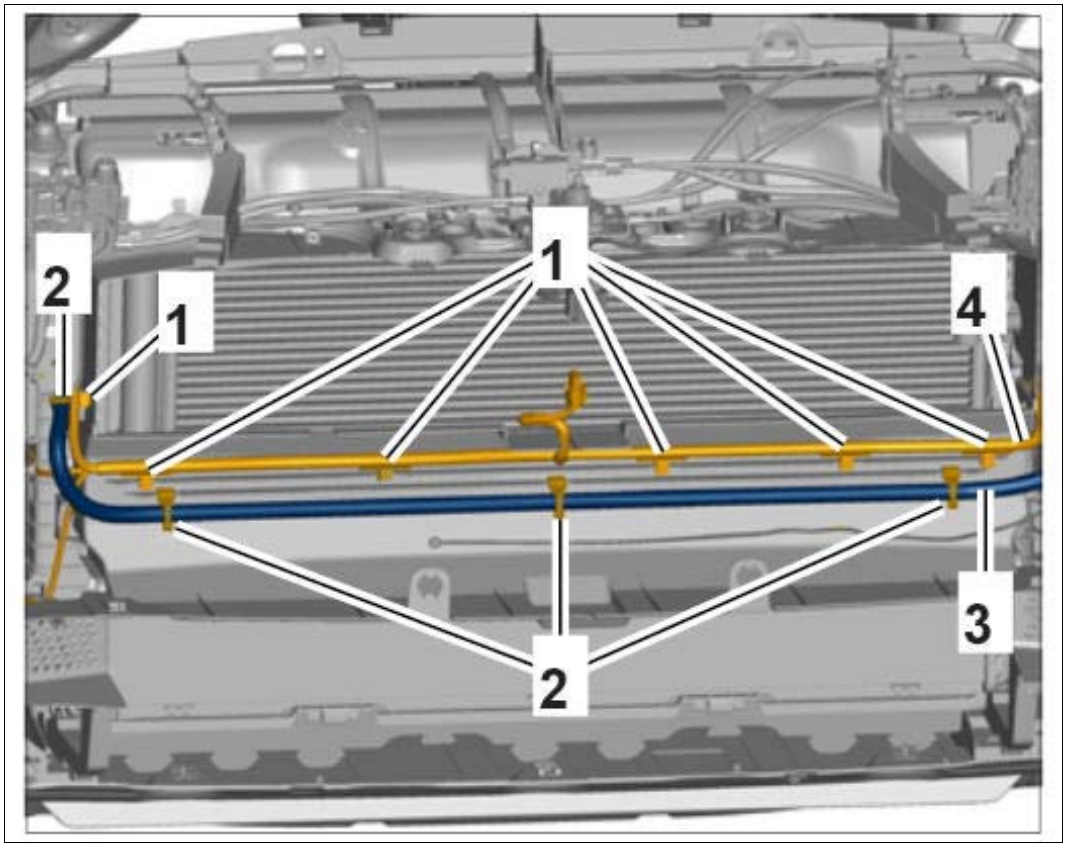

Courtesy of PORSCHE CARS NORTH AMERICA, INC.

4. Position electric line **-4-** with horn, connect electric plug connection **-3-** to the temperature sensor and clip in line at the lock carrier **-2-** .

Fig 4: Identifying Electric Plug Connections

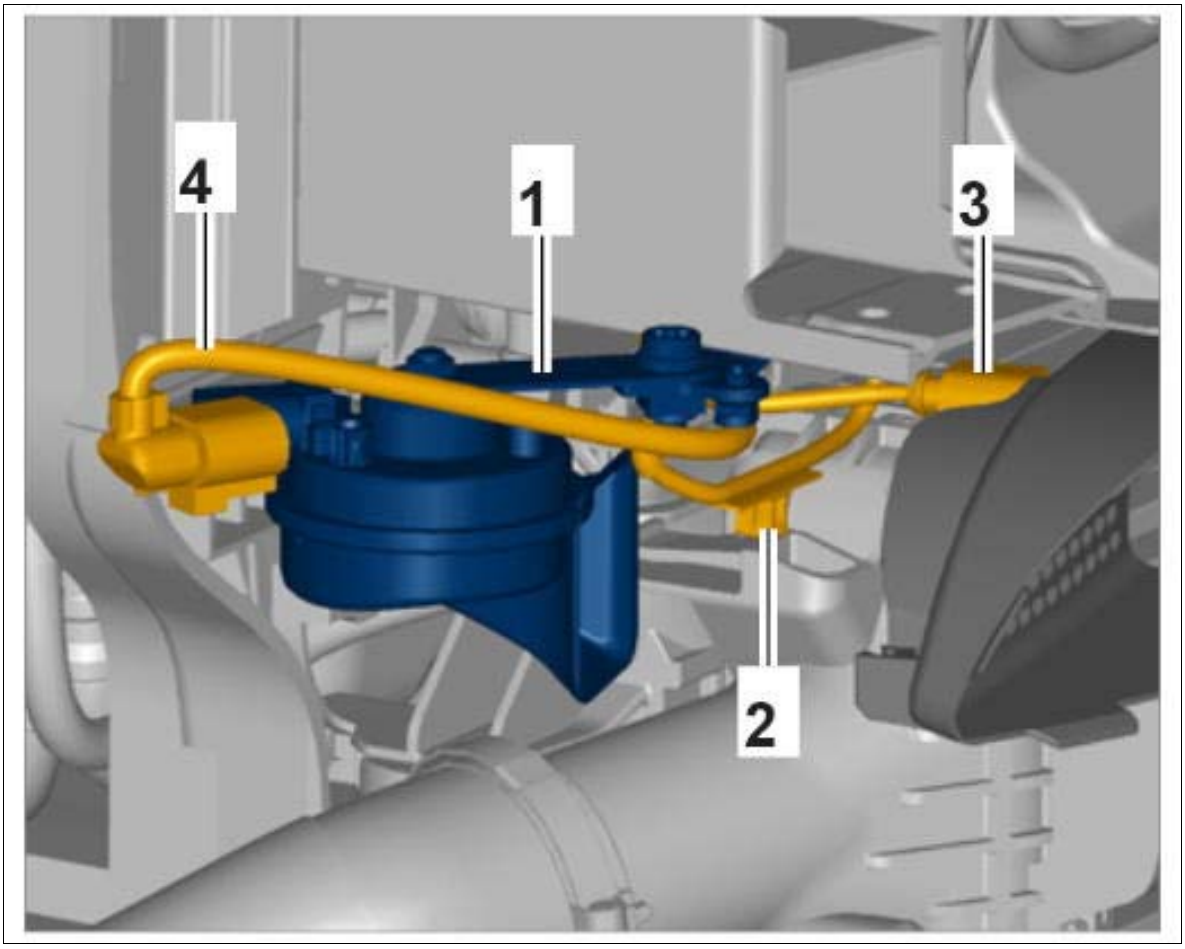

Courtesy of PORSCHE CARS NORTH AMERICA, INC.

5. Position air flaps **-3-** in **-direction of arrow-** and engage locking lug **-1-** in device **-2-** .

Fig 5: Positioning Air Flaps

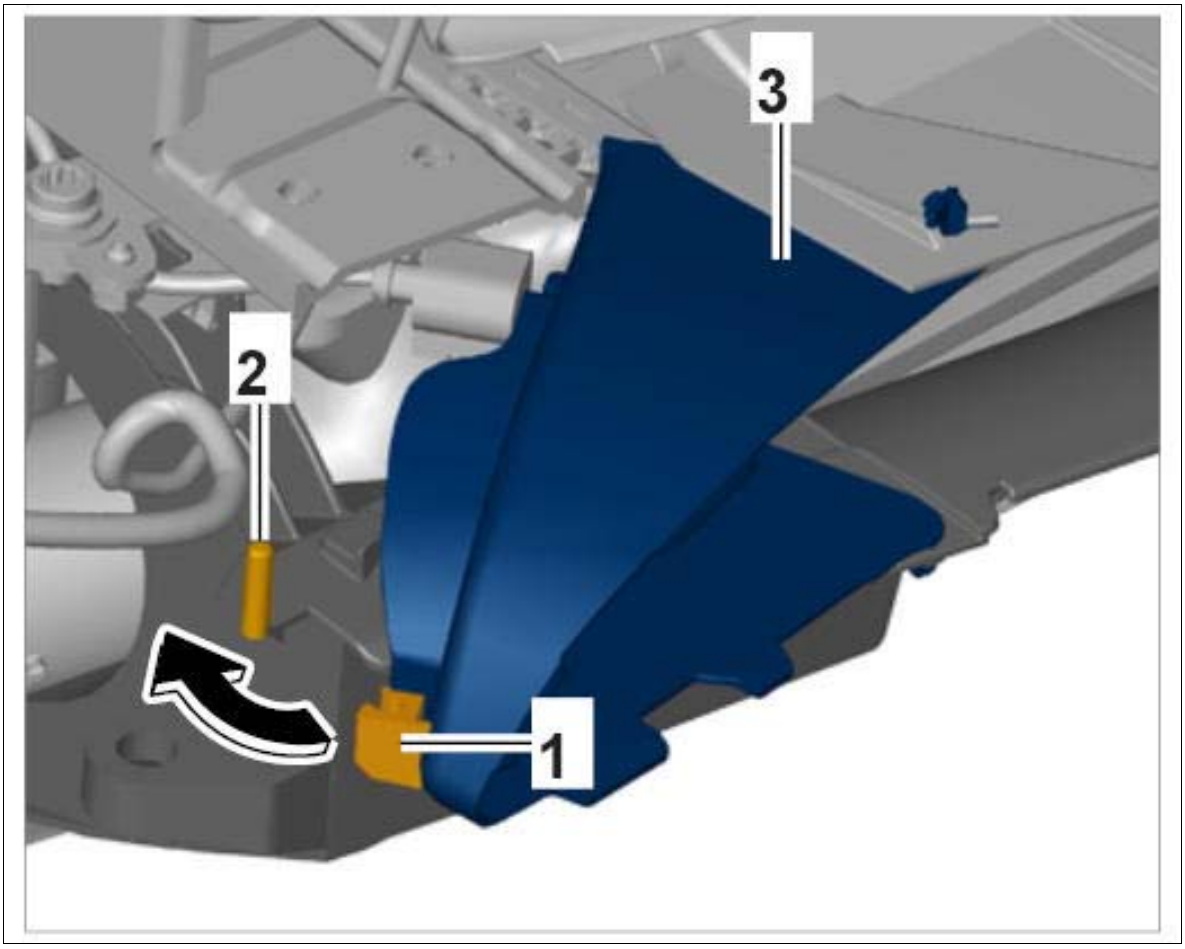

Courtesy of PORSCHE CARS NORTH AMERICA, INC.

WM 192419 REMOVING AND INSTALLING AIR GUIDE (MACAN) > SUBSEQUENT WORK > SUBSEQUENT WORK FOR FRONT AIR GUIDE

1. Install front apron. → INSTALLING FRONT APRON .

WM 192419 REMOVING AND INSTALLING AIR GUIDE (MACAN) > SUBSEQUENT WORK > SUBSEQUENT WORK FOR REAR AIR GUIDE

1. Install upper part of lock carrier. → INSTALLING LOCK CARRIER .
2. Install front bumper. → INSTALLING FRONT BUMPER .
3. Install cooling-air flaps. → INSTALLING COOLING-AIR FLAPS .
4. Install front apron. → INSTALLING FRONT APRON .

WM 193219 REMOVING AND INSTALLING MOTOR FOR COOLING-AIR FLAPS (MACAN, MACAN S, MACAN TURBO) > TECHNICAL VALUES

Location	Description	Type	Basic value	Tolerance 1	Tolerance 2
Fastening screw for motor for cooling-air flaps		Tightening torque	2.5 Nm (2 ftlb.)		

WM 193219 REMOVING AND INSTALLING MOTOR FOR COOLING-AIR FLAPS (MACAN, MACAN S, MACAN TURBO) > PRELIMINARY WORK

1. Loosen cooling-air flaps. → 193519 REMOVING AND INSTALLING COOLING-AIR FLAPS

WM 193219 REMOVING AND INSTALLING MOTOR FOR COOLING-AIR FLAPS (MACAN, MACAN S, MACAN TURBO) > REMOVING MOTOR FOR COOLING-AIR FLAPS

1. Loosen motor for cooling-air flaps **-1-** .
    1. 1.1. Unscrew screw **-2-** and remove holder **-3-** .

Fig 1: Identifying Cooling-Air Flap Motor

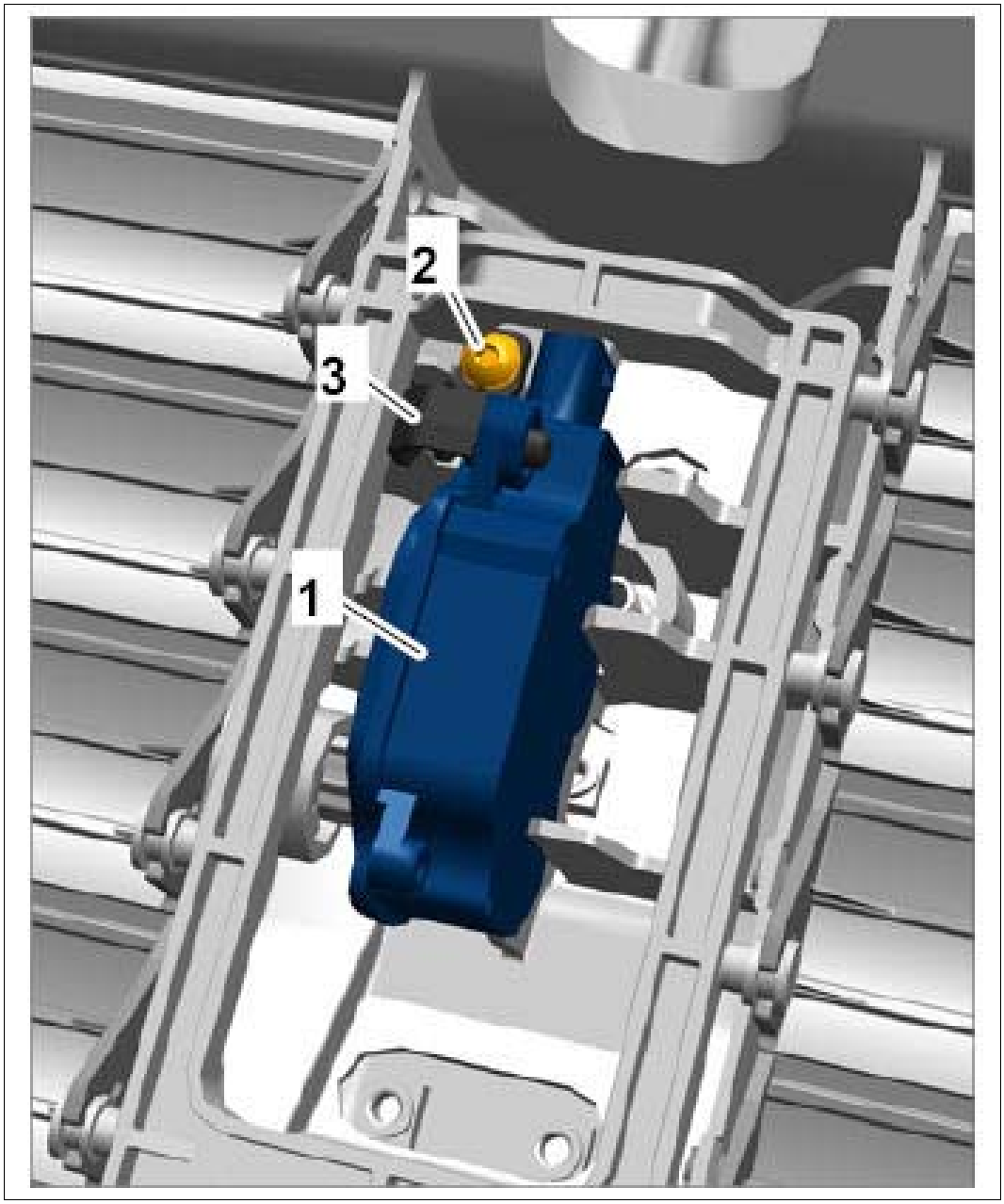

Courtesy of PORSCHE CARS NORTH AMERICA, INC.

2. Remove driver **-1-** for cooling-air flaps **-2-** in **-direction of arrow -** .

Fig 2: Locating Cooling-Air Flaps Driver

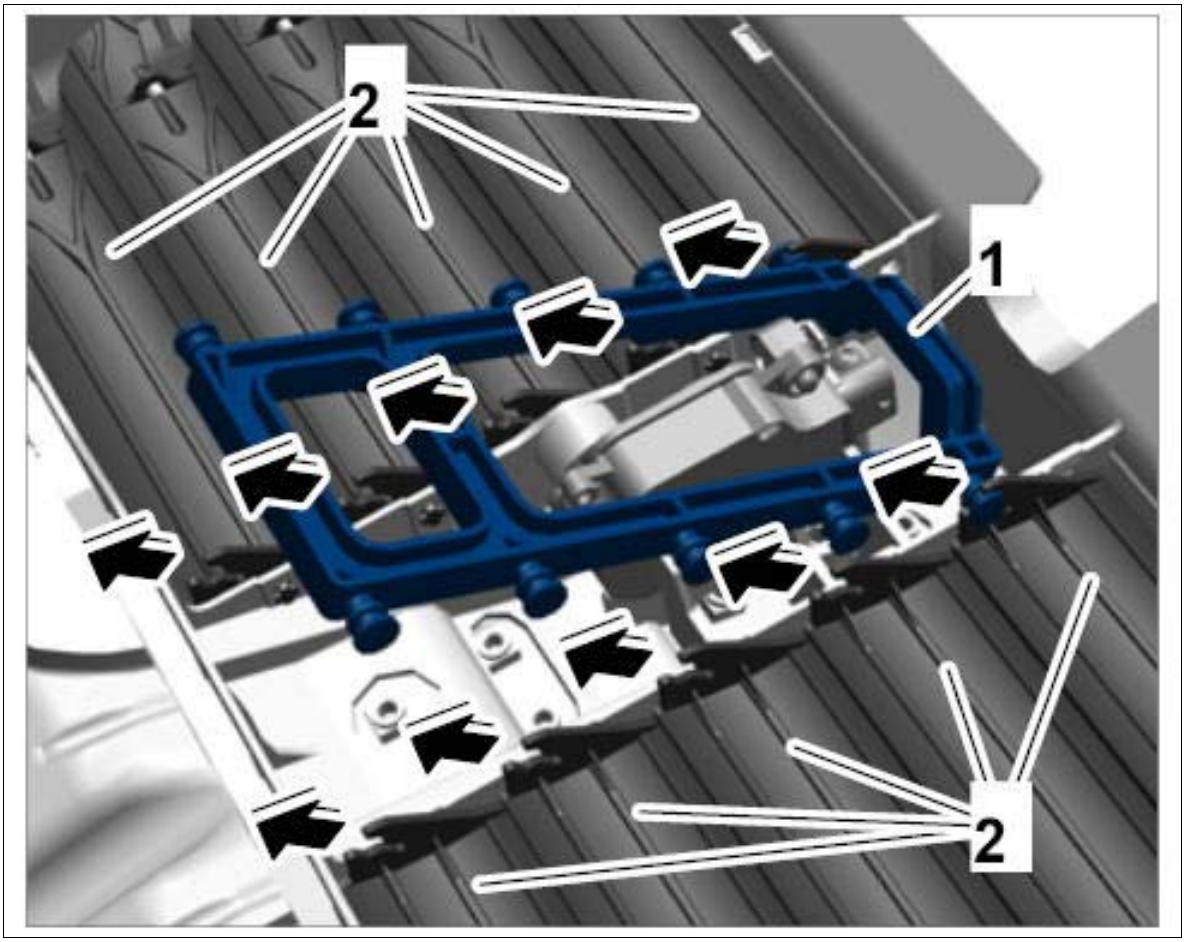

Courtesy of PORSCHE CARS NORTH AMERICA, INC.

3. Loosen cooling-air flap **-1-** at the housing.

    1. 3.1. Press frame **-2-** in **-direction of arrow -** and guide pin **-3-** out of cooling-air flap **-1-** .

    2. 3.2. Press tabs on connection piece **-5-** together **-arrows-** and remove cooling-air flap **-1-** by pulling it downwards.

Fig 3: Removing Cooling-Air Flap

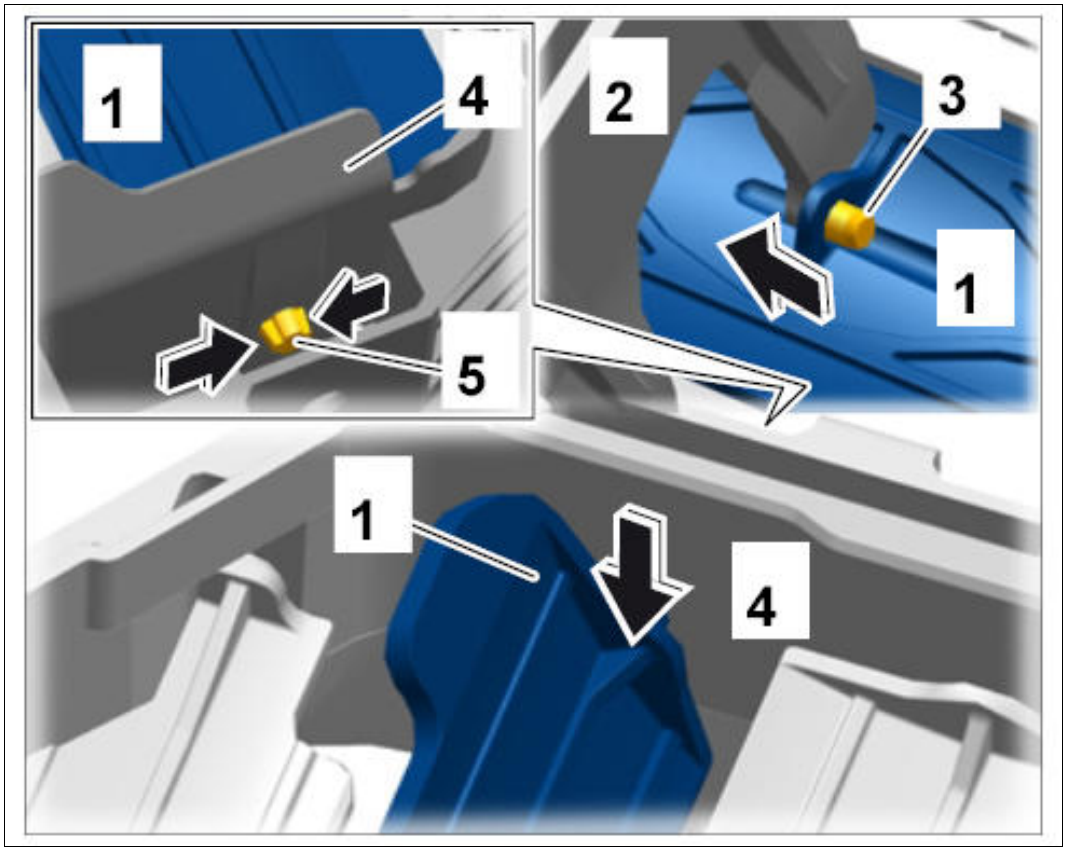

Courtesy of PORSCHE CARS NORTH AMERICA, INC.

4. Remove motor for cooling-air flaps **-1-** .

    1. 4.1. Remove cooling-air flap **-2-** in a downward direction.
    2. 4.2. Lift motor for cooling-air flaps **-1-** up and remove it.

Fig 4: Removing Cooling-Air Flaps Motor

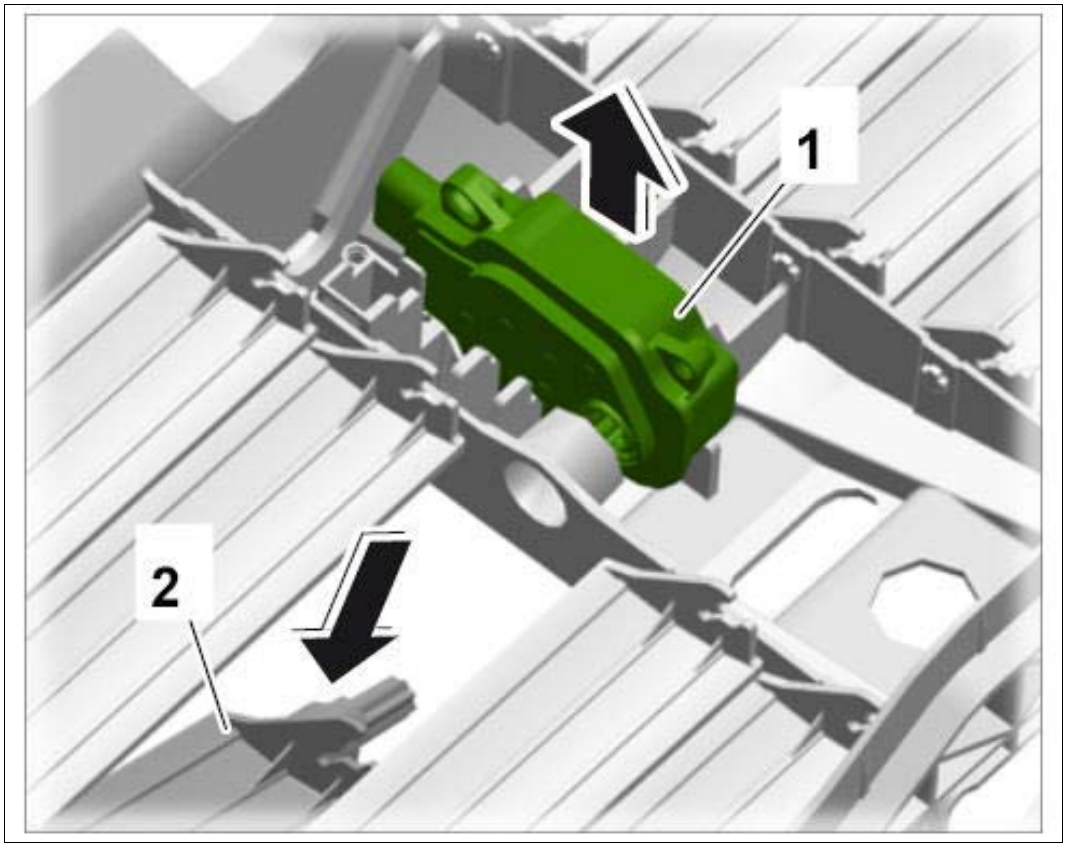

Courtesy of PORSCHE CARS NORTH AMERICA, INC.

WM 193219 REMOVING AND INSTALLING MOTOR FOR COOLING-AIR FLAPS (MACAN, MACAN S, MACAN TURBO) > INSTALLING MOTOR FOR COOLING-AIR FLAPS

1. Installation is performed in reverse order.
    1. 1.1. Tightening torque: → **Tightening torque: 2.5 Nm (2 ftlb.)**

WM 193219 REMOVING AND INSTALLING MOTOR FOR COOLING-AIR FLAPS (MACAN, MACAN S, MACAN TURBO) > SUBSEQUENT WORK

1. Secure cooling-air flaps. → 193519 REMOVING AND INSTALLING COOLING-AIR FLAPS

WM 193519 REMOVING AND INSTALLING COOLING-AIR FLAPS (MACAN) > TOOLS

Designation	Type	Number	Description	

PIWIS Tester II	Special tool	9818		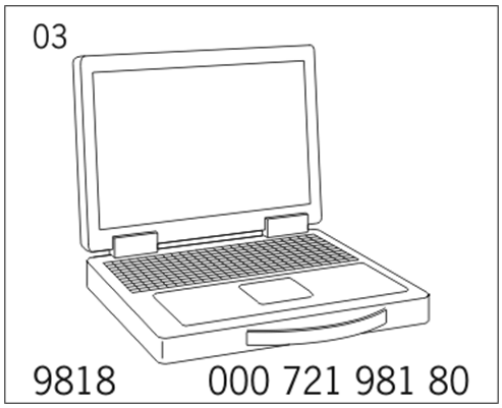

WM 193519 REMOVING AND INSTALLING COOLING-AIR FLAPS (MACAN) > TECHNICAL VALUES

Location	Description	Type	Basic value	Tolerance 1	Tolerance 2
Fastening screws	Cooling-air flaps to upper part of lock carrier	Tightening torque	2.5 Nm (2 ftlb.)		
Fastening screws	Distance measuring sensor holder to front bumper	Tightening torque	2.5 Nm (2 ftlb.)		
Fastening screws	Cooling-air flaps to lock connection	Tightening torque	9.7 Nm (7.5 ftlb.)		

WM 193519 REMOVING AND INSTALLING COOLING-AIR FLAPS (MACAN) > TECHNICAL VALUES > COMPONENT OVERVIEW - AIR GUIDE

Fig 1: Overview Of Radiator Module

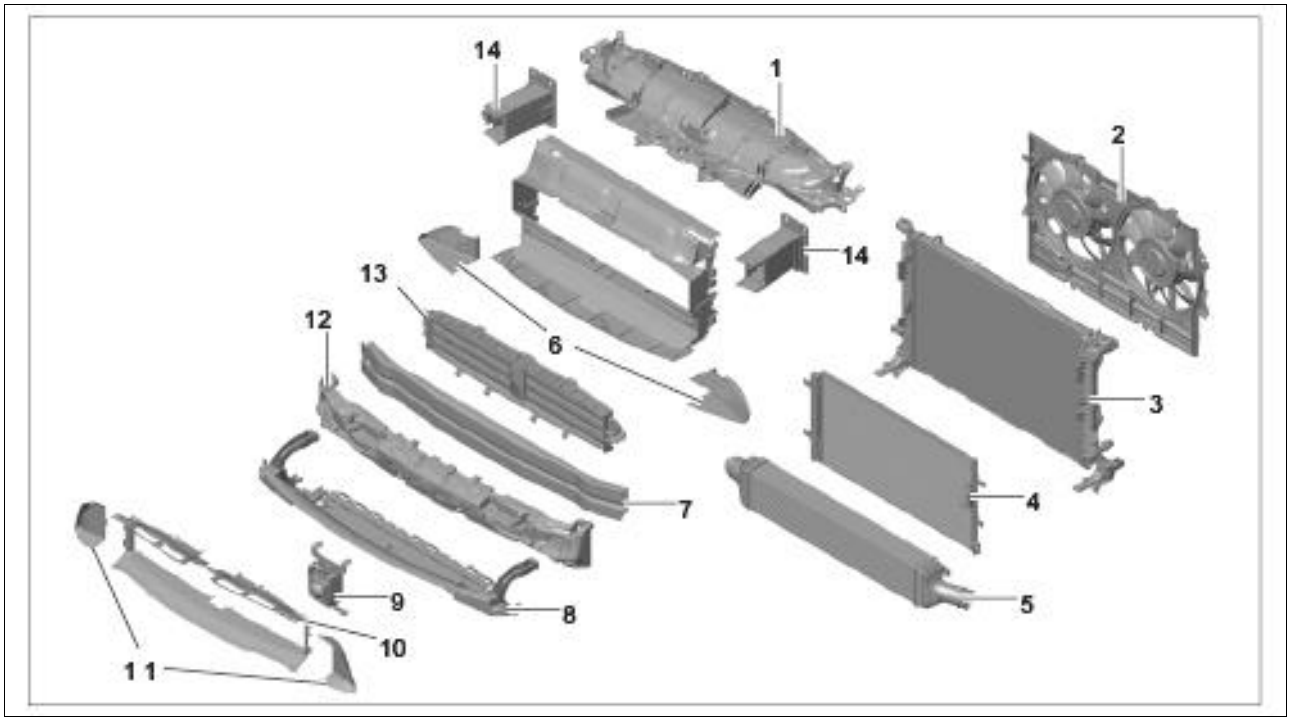

Courtesy of PORSCHE CARS NORTH AMERICA, INC.

1. Upper part of lock carrier
2. Cooling fan housing
3. Radiator
4. Condenser
5. Charge-air cooler
6. Air flaps on rear air guide
7. Front bumper
8. Pedestrian protection, front
9. Distance measuring sensor control unit
10. Front air guide
11. Air flaps on front air guide
12. Plastic foam strip
13. Cooling-air flaps
14. Front carrier
15. Rear air guide

Fig 2: Identifying Cooling-Air Flaps

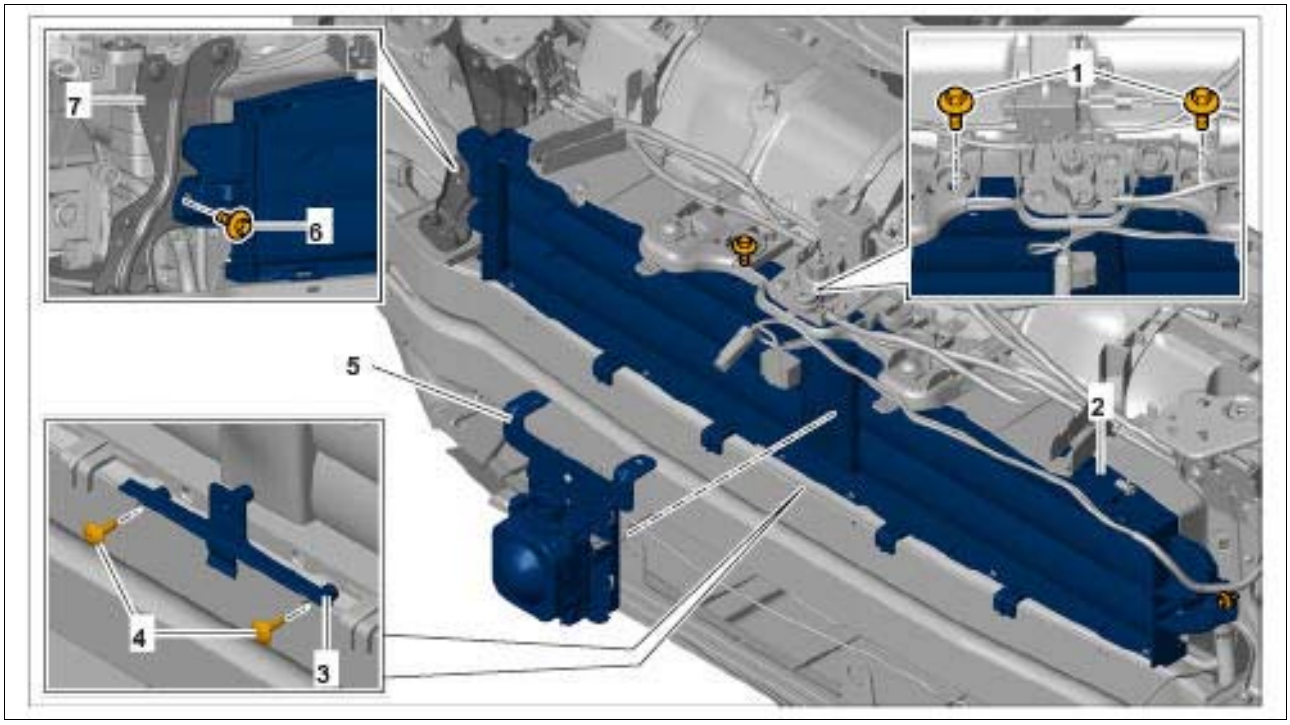

Courtesy of PORSCHE CARS NORTH AMERICA, INC.

1. Fastening screws for cooling-air flaps → **Tightening torque: 2.5 Nm (2 ftlb.)**
2. Cooling-air flaps
3. Distance measuring sensor holder
4. Fastening screws for distance measuring sensor holder → **Tightening torque: 2.5 Nm (2 ftlb.)**
5. Distance measuring sensor control unit
6. Fastening screws for cooling-air flaps → **Tightening torque: 9.7 Nm (7.5 ftlb.)**
7. Lock connection

WM 193519 REMOVING AND INSTALLING COOLING-AIR FLAPS (MACAN) > PRELIMINARY WORK

1. Remove front air guide. → 192419 REMOVING AND INSTALLING AIR GUIDE
2. **Only for vehicles with distance measuring sensor:**

   Remove control unit for distance measuring sensor. → 278519 REMOVING AND INSTALLING CONTROL UNIT FOR DISTANCE MEASURING SENSOR .

WM 193519 REMOVING AND INSTALLING COOLING-AIR FLAPS (MACAN) > REMOVING COOLING-AIR FLAPS

1. Unscrew fastening screws **-2-** and remove holder **-1-** .

   Only for vehicles with distance measuring sensor

   Fig 1: Identifying Sensor Holder Distance

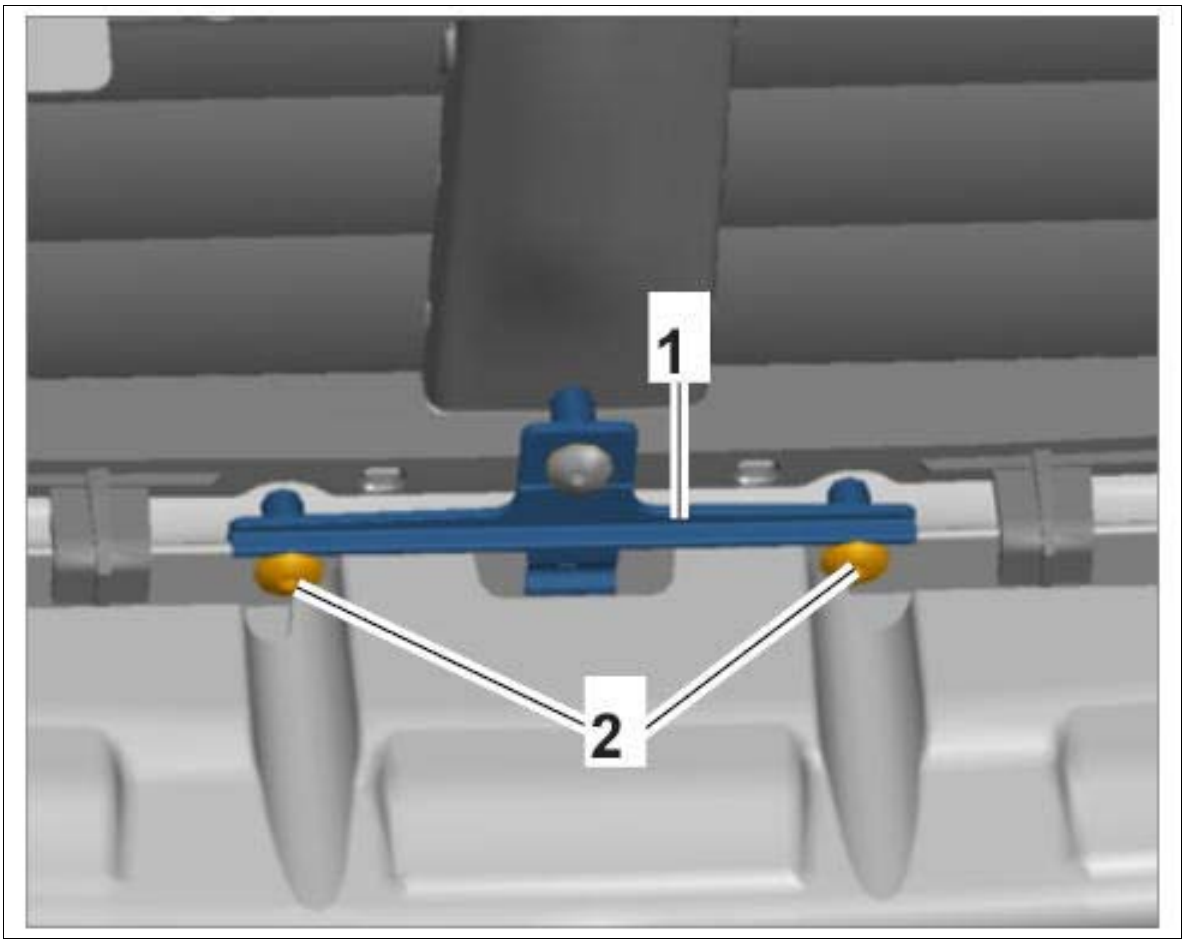

   Courtesy of PORSCHE CARS NORTH AMERICA, INC.

2. Unscrew fastening screws **-2-** .

Fig 2: Identifying Cooling-Air Flaps Screws

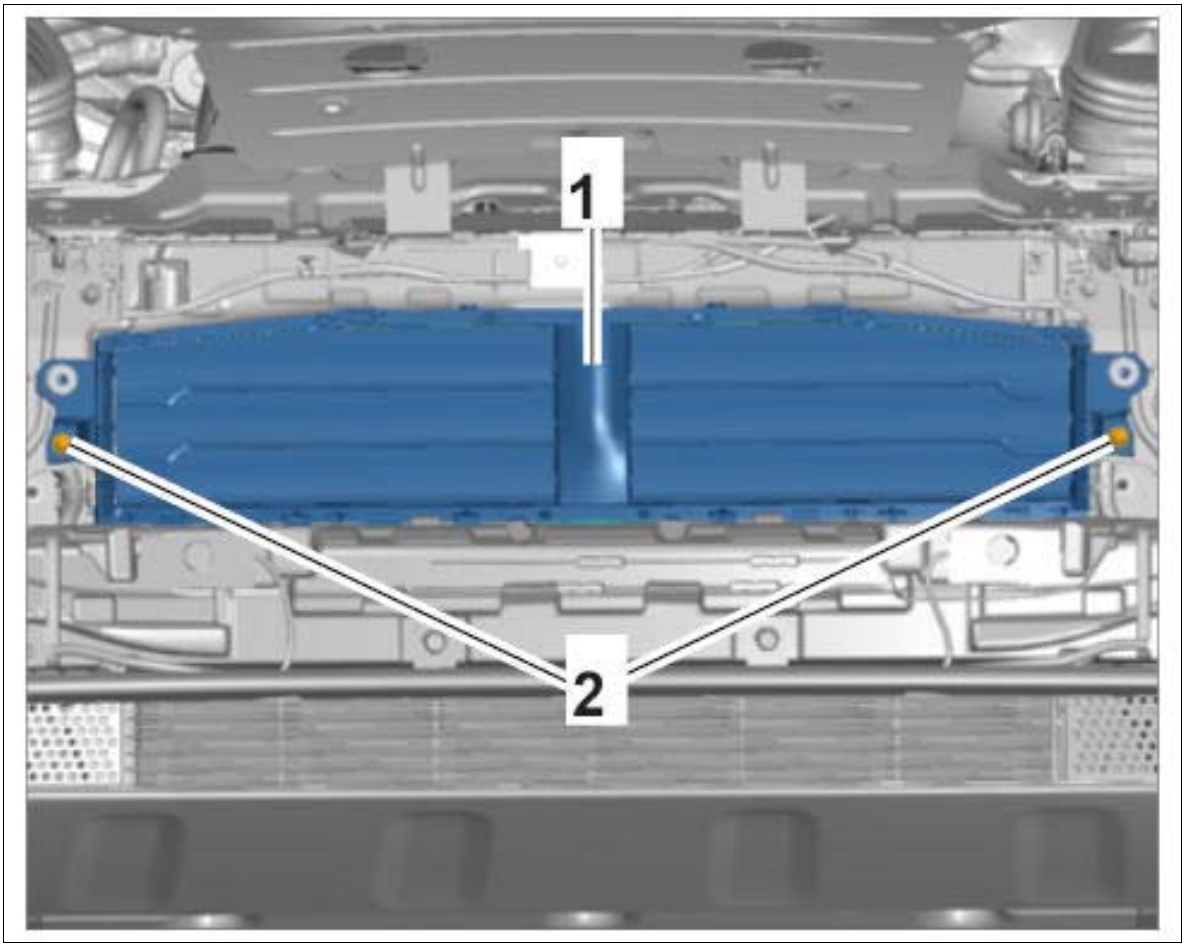

Courtesy of PORSCHE CARS NORTH AMERICA, INC.

3. Unscrew fastening screws **-1-** on upper part of lock carrier.

Fig 3: Identifying Lock Carrier Mounting Screws

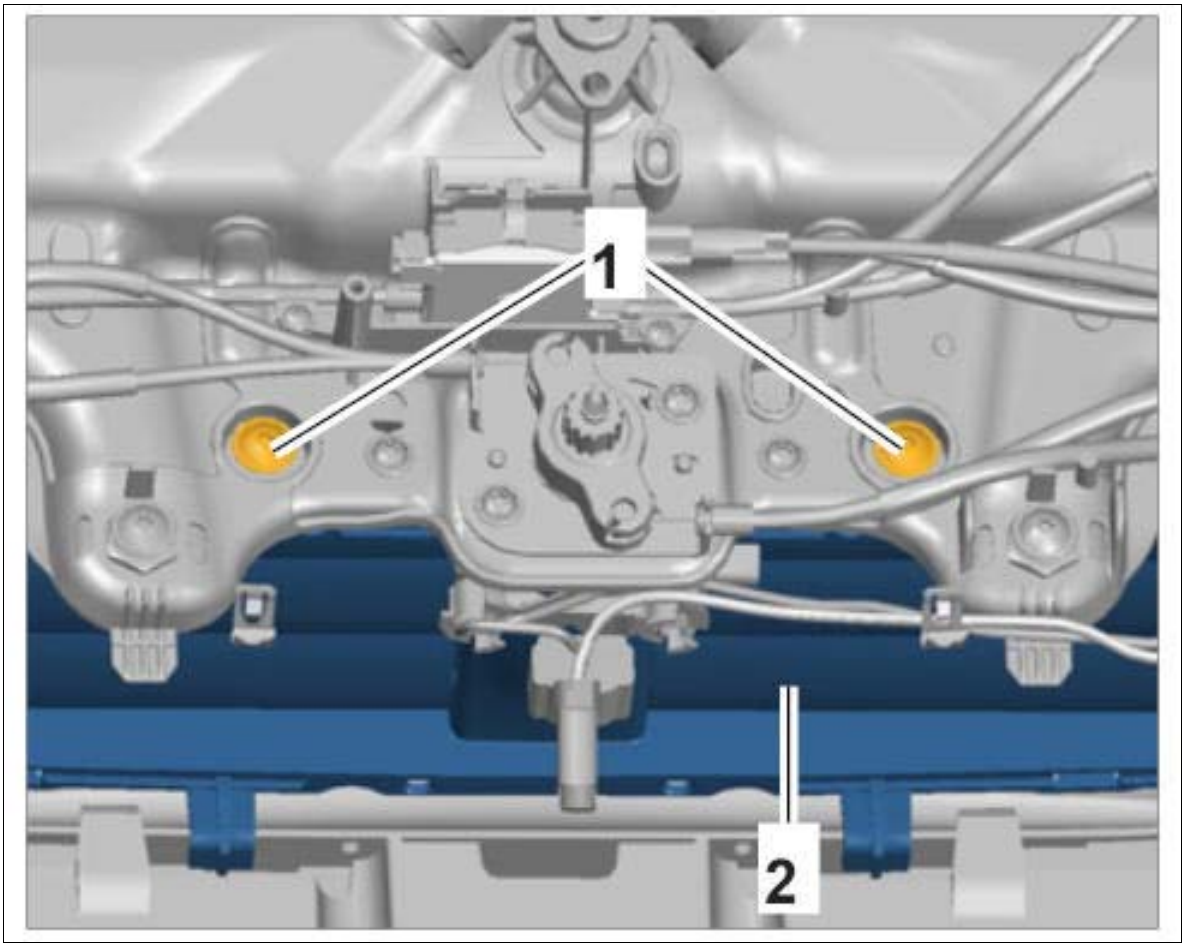

Courtesy of PORSCHE CARS NORTH AMERICA, INC.

4. Remove cooling-air flaps **-1-** .
    1. 4.1. Fold cooling-air flaps **-1-** forward in **-direction of arrow-** .
    2. 4.2. Disconnect electric plug connection **-2-** .
    3. 4.3. Remove cooling-air flaps **-1-** .

Fig 4: Disconnecting Cooling-Air Flap Motor Electric Plug Connection

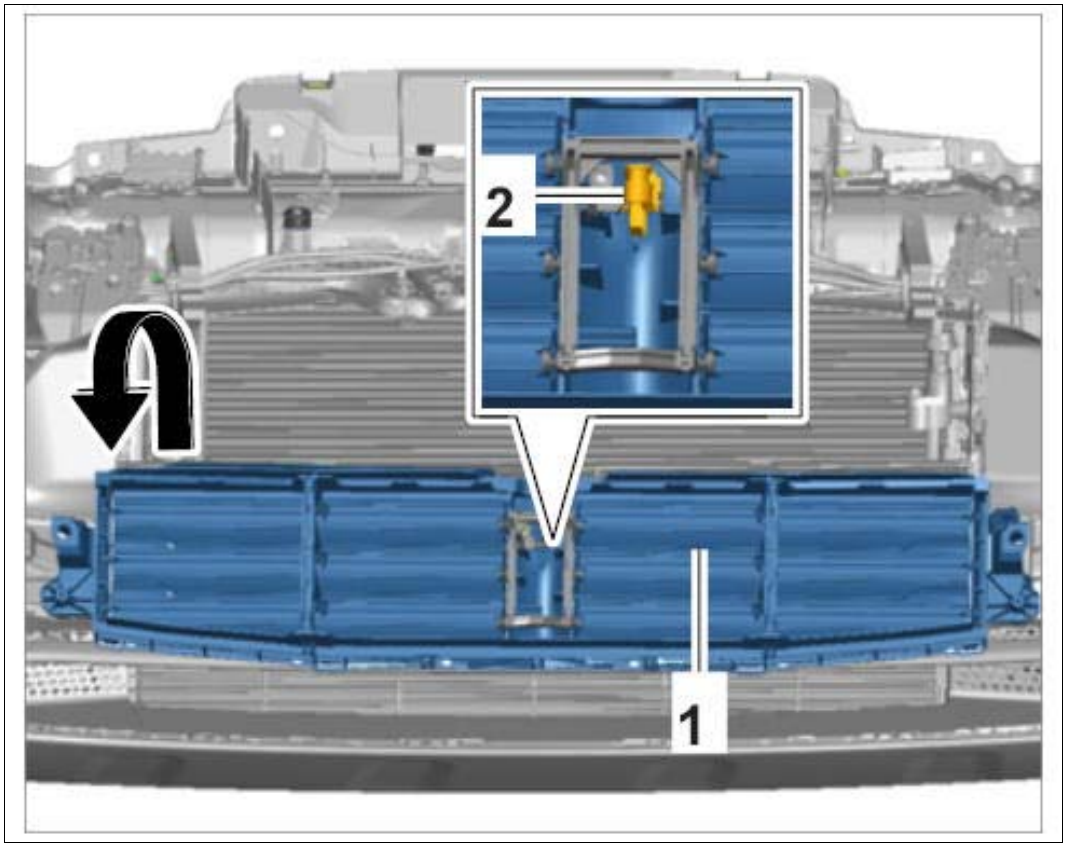

Courtesy of PORSCHE CARS NORTH AMERICA, INC.

WM 193519 REMOVING AND INSTALLING COOLING-AIR FLAPS (MACAN) > INSTALLING COOLING-AIR FLAPS

1. Install cooling-air flaps **-1-** .
    1. 1.1. Position cooling-air flaps **-1-** .
    2. 1.2. Connect electric plug connection **-2-** .
    3. 1.3. Fold cooling-air flaps into position in **-direction of arrow-** .

Fig 1: Installing Cooling-Air Flaps

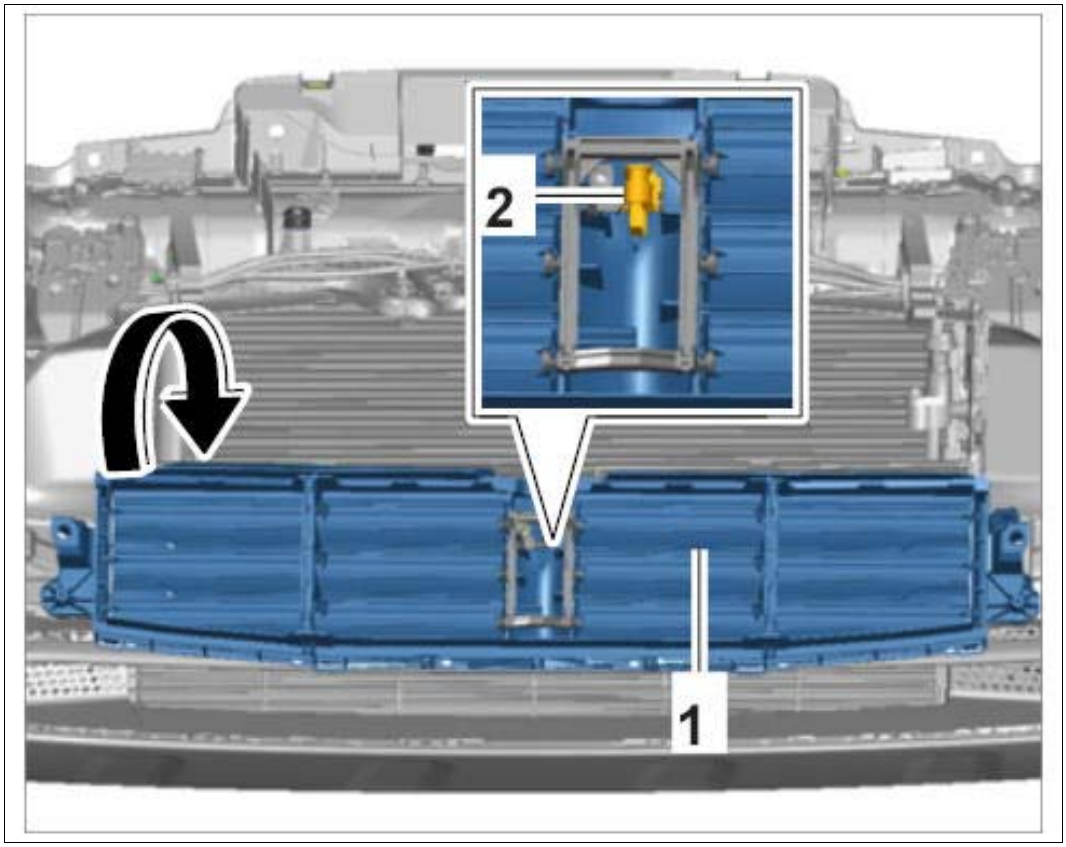

Courtesy of PORSCHE CARS NORTH AMERICA, INC.

2. Fit and tighten fastening screws **-1-** .

Fig 2: Identifying Lock Carrier Mounting Screws

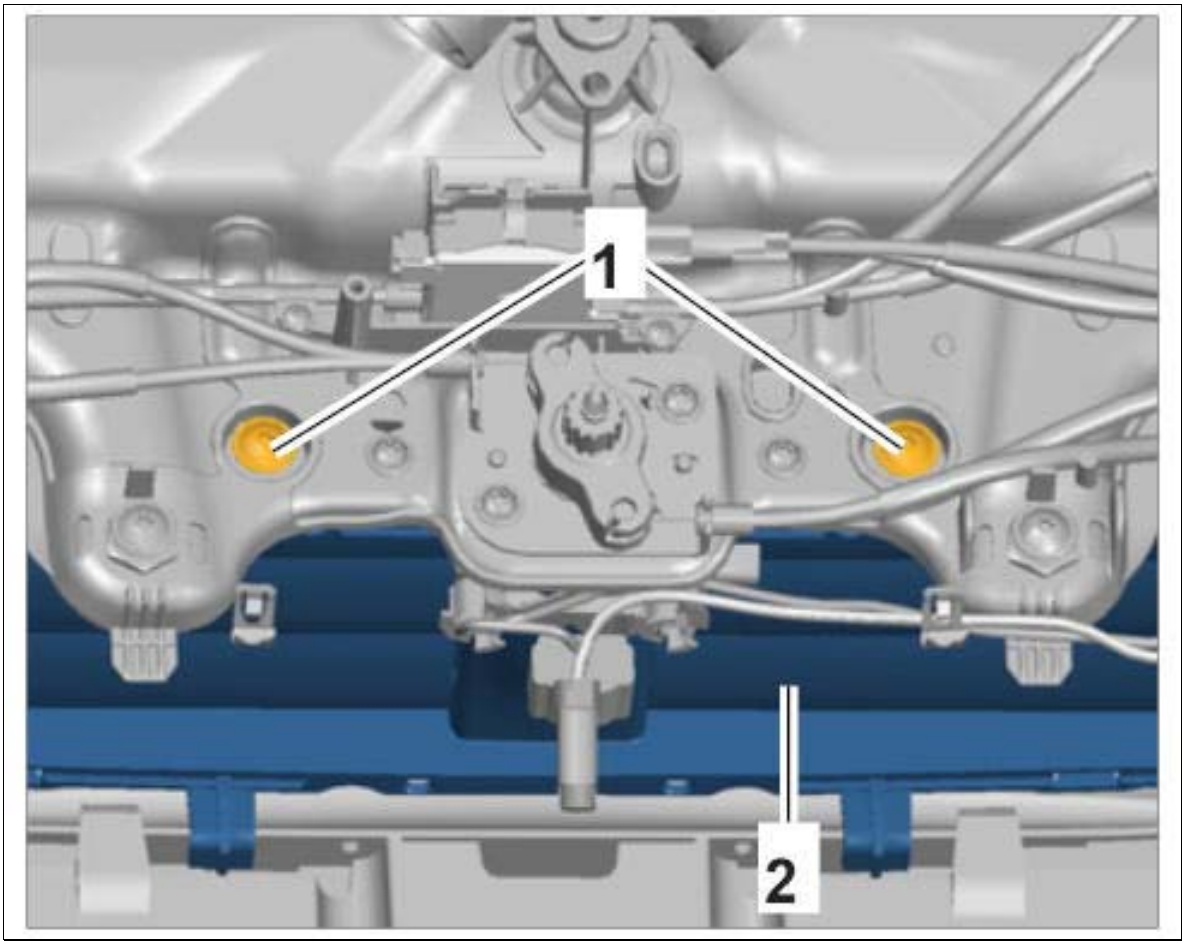

Courtesy of PORSCHE CARS NORTH AMERICA, INC.

3. Fit and tighten fastening screws **-2-** .

Fig 3: Identifying Cooling-Air Flaps Screws

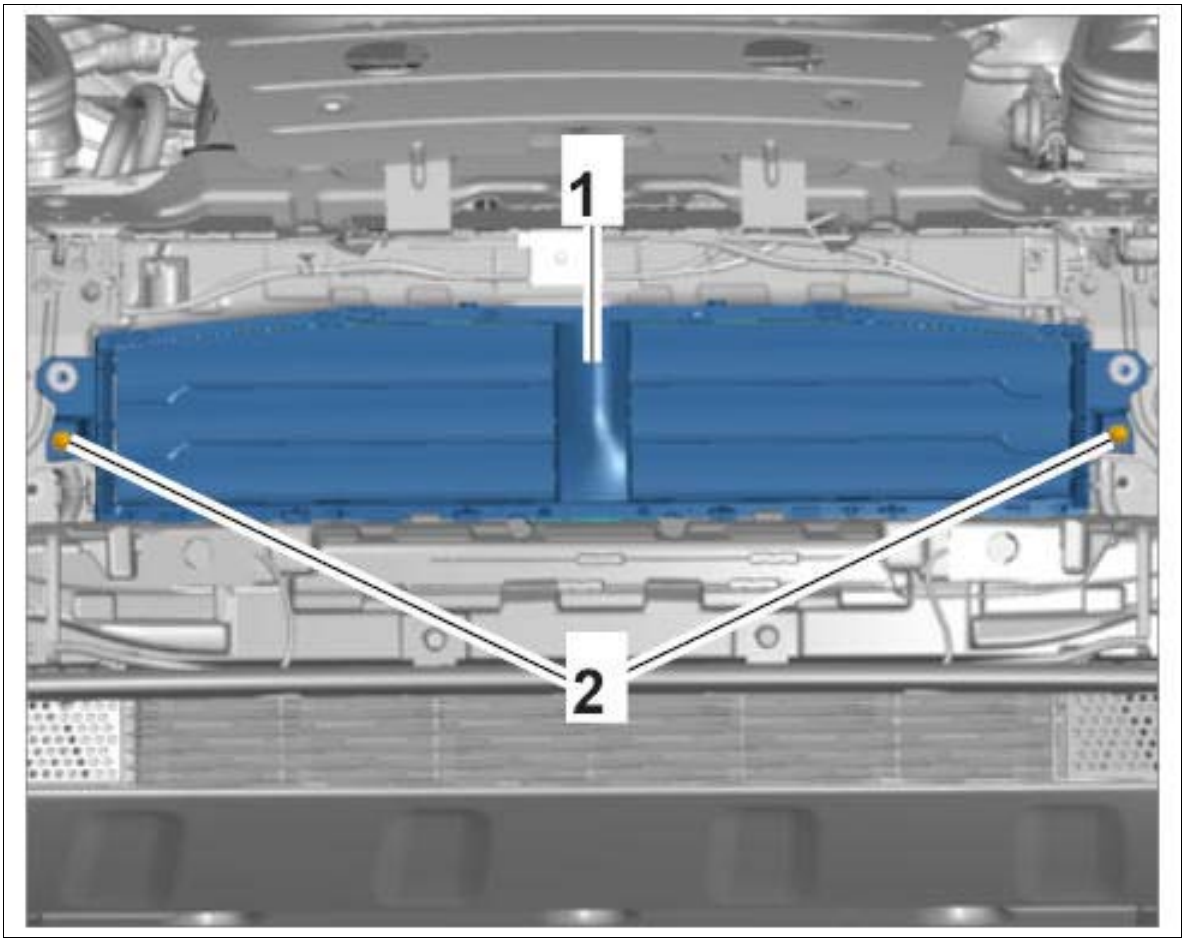

Courtesy of PORSCHE CARS NORTH AMERICA, INC.

4. Position holder **-1-** and fit and tighten fastening screws **-2-** .

Only for vehicles with distance measuring sensor

Fig 4: Identifying Sensor Holder Distance

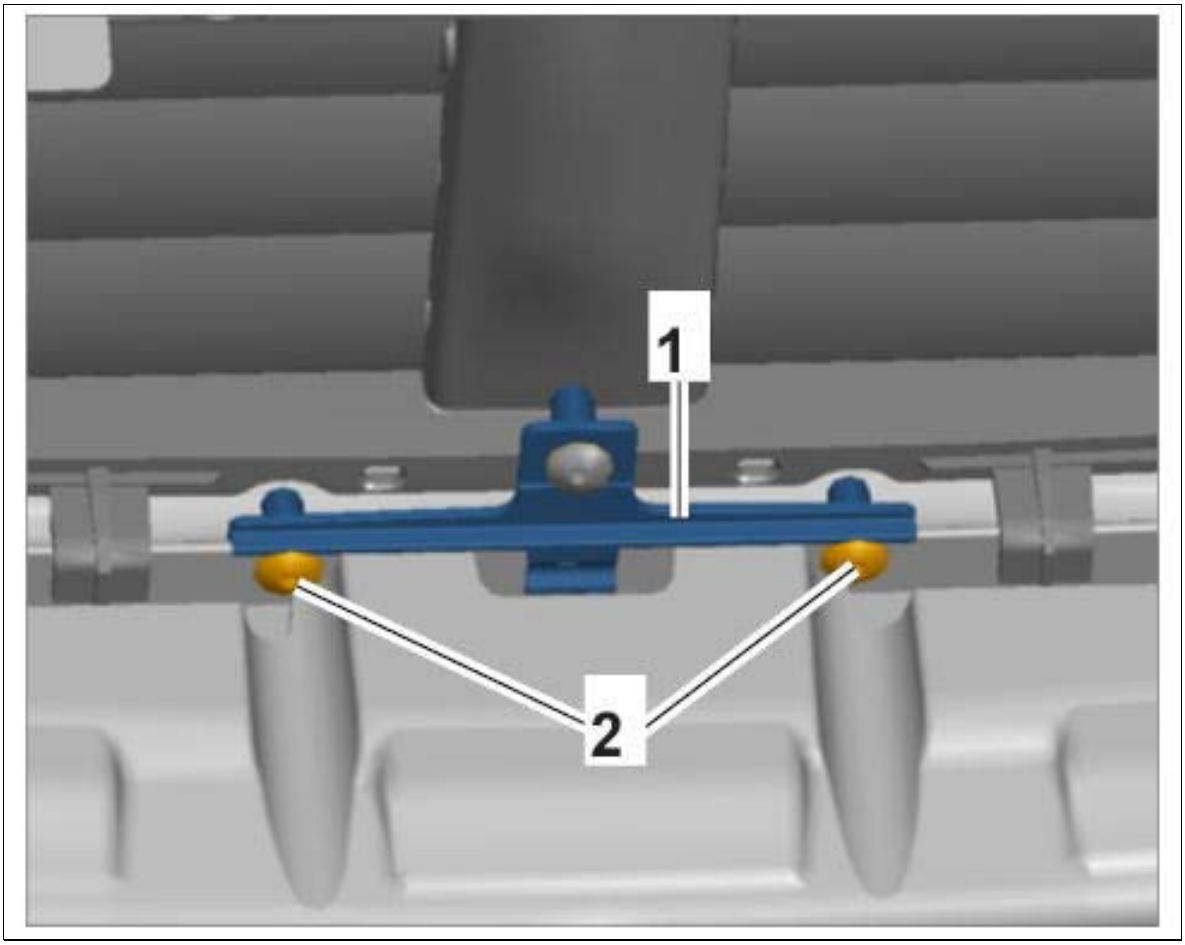

Courtesy of PORSCHE CARS NORTH AMERICA, INC.

WM 193519 REMOVING AND INSTALLING COOLING-AIR FLAPS (MACAN) > SUBSEQUENT WORK

1. **Only for vehicles with distance measuring sensor:**

   Install control unit for distance measuring sensor. → INSTALLING CONTROL UNIT FOR DISTANCE MEASURING SENSOR .

2. Install front air guide. → INSTALLING AIR GUIDE .

3. **Adaptation of cooling-air flaps:**

    1. 3.1. Perform cooling-air flap adaptation using **PIWIS Tester II 9818.**

    2. 3.2. Select Overview -> DME -> Drive links/checks -> Drive links and press [F12]

    3. 3.3. Select Radiator shutter and press [F12]

    4. 3.4. Start radiator shutter adaptation by pressing [F8].

    5. 3.5. Adaptation takes 30 seconds.

6. 3.6. Adaptation complete.

WM 193817 DRAINING AND FILLING COOLANT (MACAN) > TOOLS

Designation	Type	Number	Description	
adapter for the cooling system tester	Workshop equipment	WE 1386		
pipe for coolant cooling system tester	Workshop equipment	WE 1387		
Filling device	Special tool	9696		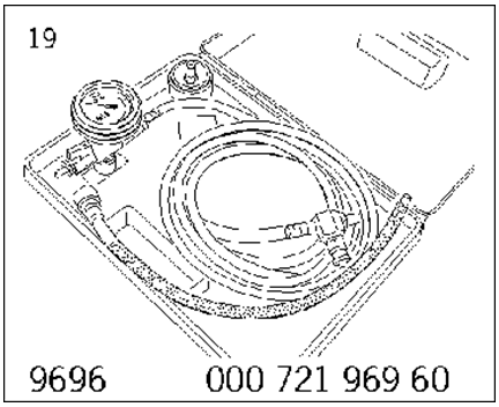

WM 193817 DRAINING AND FILLING COOLANT (MACAN) > TOOLS AND MATERIALS > OVERVIEW AND SETUP - FILLING DEVICE

Information

- Note special features in the corresponding information for vehicles with auxiliary heater.

Fig 1: Identifying Vacuum-Filling Device Components

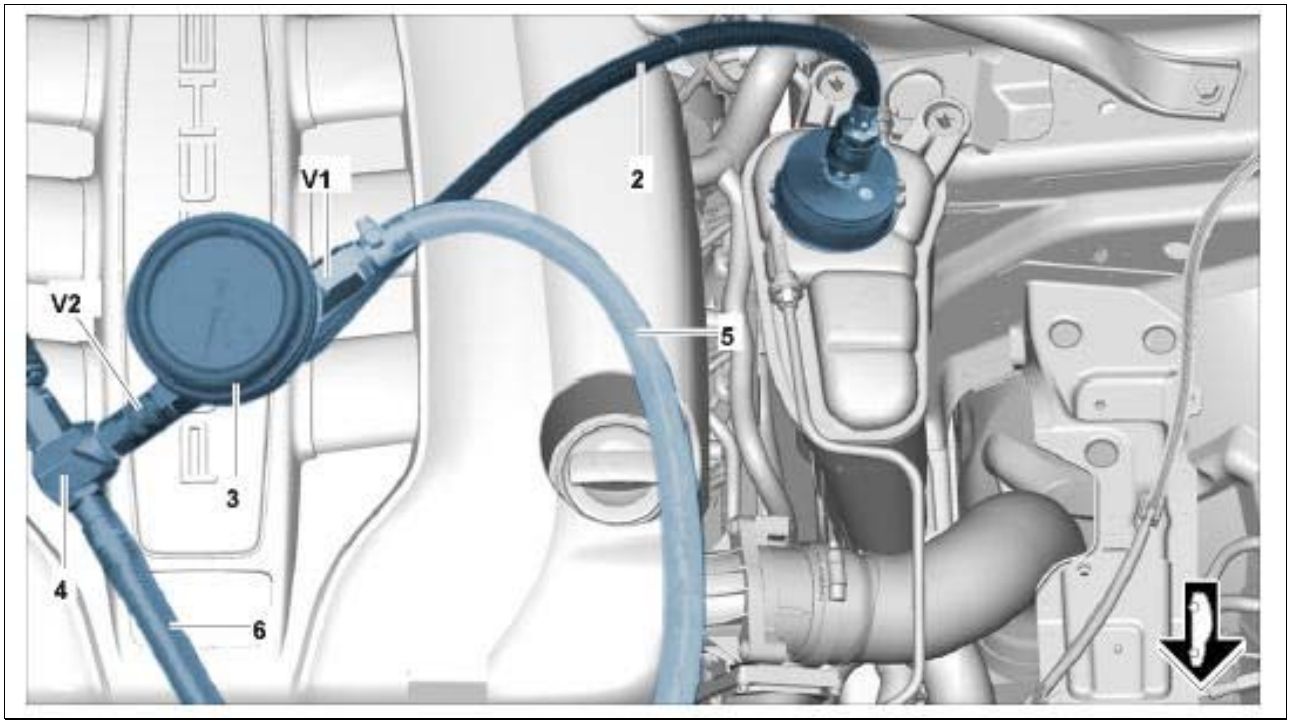

Courtesy of PORSCHE CARS NORTH AMERICA, INC.

-1- - Adapter K65 (Fitted instead of the cap on the coolant expansion tank.)

2 - Hose extension FZ100 (Fitted between K65 and KVB01.)

3 - KVB 01 (Vacuum gauge with two shut-off valves.) **Filling device 9696**

V1 - Shut-off valve V1 (Shutoff valve for the filler hose.)

V2 - Shut-off valve V2 (Shutoff valve for the filler hose - outlet to Venturi nozzle.)

4 - Venturi nozzle (A vacuum is produced in this component by means of compressed air. Pressure of between 6 and 10 bar must be present. The higher the pressure, the better the vacuum in the vehicle cooling system.)

5 - Filler hose (The cooling system is refilled via this hose.)

6 - Return lines (The compressed air and extracted coolant are drawn off via this hose.)

-

1. Return lines
2. Overflow container (bucket or canister)
3. Compressed air connection
4. Compressed air connection (Pressure of between 6 and 10 bar must be present. The higher the pressure, the better the vacuum in the vehicle cooling system.)
5. Filling canister with coolant (It is best to position the canister higher than the reservoir).

6. Adapter K 65 (Fitted instead of the cap on the coolant expansion tank). General illustration provided here. Use an intermediate cable/extension (FZ 100).

Fig 2: Identifying Vacuum-Filling Device Setup

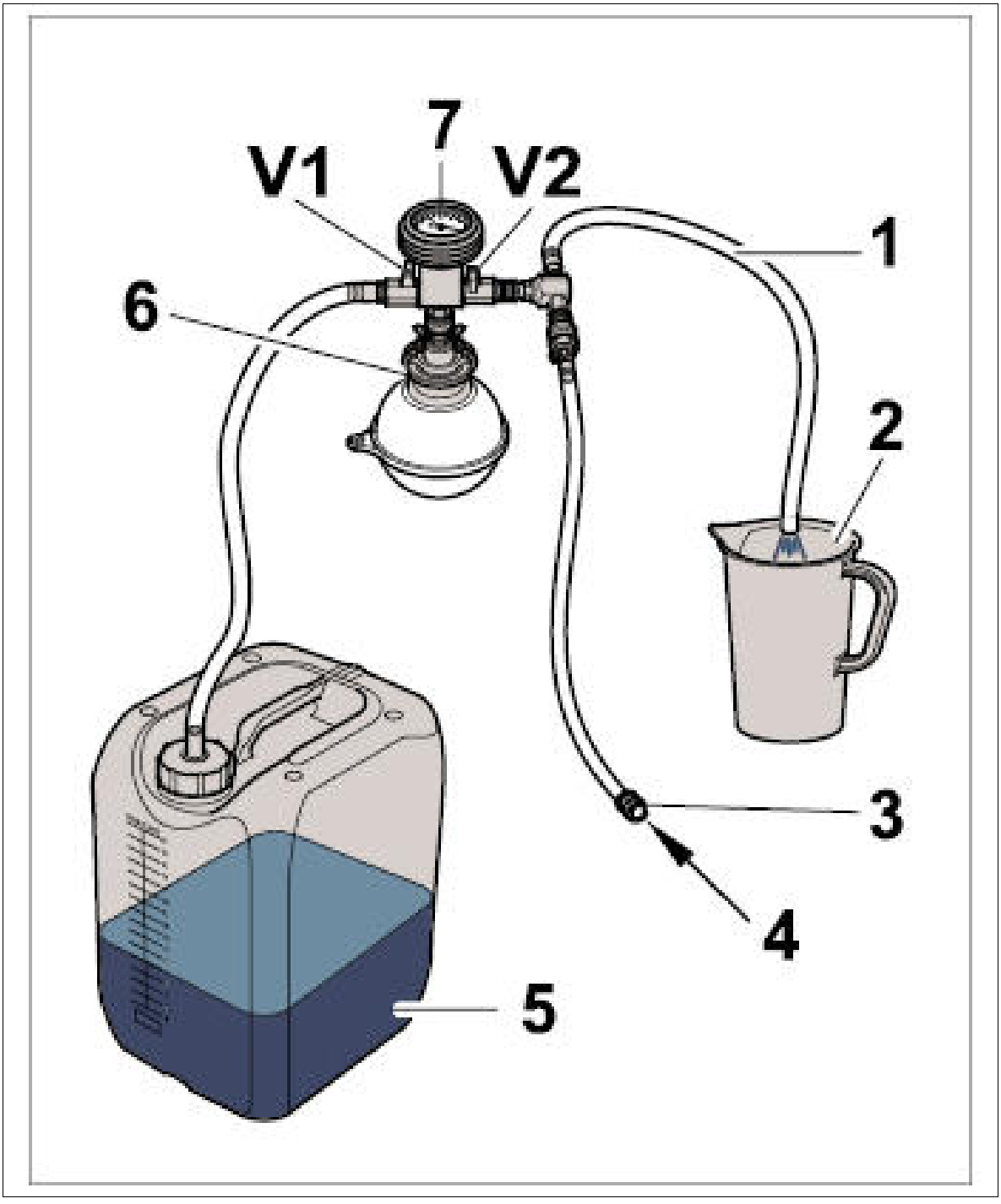

Courtesy of PORSCHE CARS NORTH AMERICA, INC.

7. KVB 01 (Vacuum gauge with two shut-off valves V1 and V2)

V1 - Shut-off valve V1 (Shutoff valve for the filler hose.)

V2 - Shut-off valve V2 (Shutoff valve for the filler hose - outlet to Venturi nozzle.)

WM 193817 DRAINING AND FILLING COOLANT (MACAN) > INFORMATION > COOLANT MIXTURE RATIO

Coolant additive	Water content	Antifreeze content
40%	60%	- 25 °C
50%	50%	- 35 °C

WM 193817 DRAINING AND FILLING COOLANT (MACAN) > PRELIMINARY WORK

1. Switch off ignition.
2. Remove upper engine cover.
3. Remove cover for front underbody. → 519219 REMOVING AND INSTALLING COVER FOR FRONT UNDERBODY

Remove cowl panel cover. → 508719 REMOVING AND INSTALLING COWL PANEL COVER

WM 193817 DRAINING AND FILLING COOLANT (MACAN) > DRAINING COOLANT

WARNING: Hot fluid

- *Danger of scalding*

→ Avoid contact with hot fluid.

→ Wear personal protective gear.

NOTE: Cooling circuit not filled correctly

- *Risk of damage to vehicle components*

→ Do not start the engine after relieving the system pressure.

→ Fill the cooling system correctly and bleed it before starting the engine.

Information

- Cooling systems with thermal management (controlled thermostats or coolant valves for controlling engine temperature) must be vacuum-filled.
- The thermostat must not be activated or electric current must not be applied to the thermostat since this can cause irreparable damage to the thermoelectric couple.

- Filling with a watering can only does not always guarantee a complete fill (trapped air - overheating).
- Clamps on cooling system components should be examined carefully following refilling (check the coolant level while cold and top up several times as required).
- Clamps on cooling system components must also be vacuum-filled if significant amounts of coolant are drained. Drain at least two liters of coolant for vacuum-filling because otherwise the correct vacuum cannot be built up.

Information

- Note special features in the corresponding information for vehicles with auxiliary heater.

1. Slowly open the cap on the reservoir → Reservoir .

   Fig 1: Identifying Reservoir

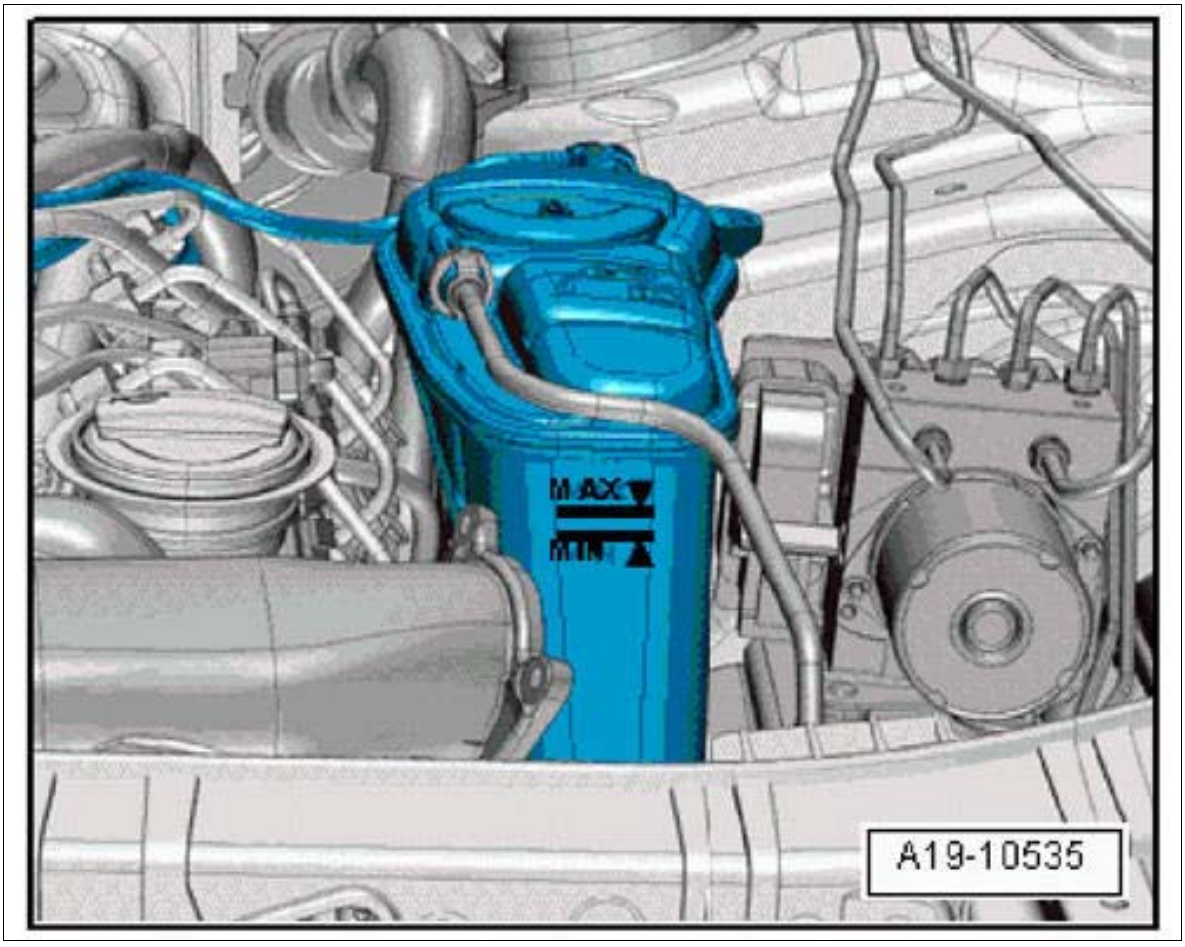

Courtesy of PORSCHE CARS NORTH AMERICA, INC.

2. Place drip pan under the radiator.
3. Open drain plug **-1-** on the adapter and drain coolant.

Fig 2: Identifying Coolant Drain Plug

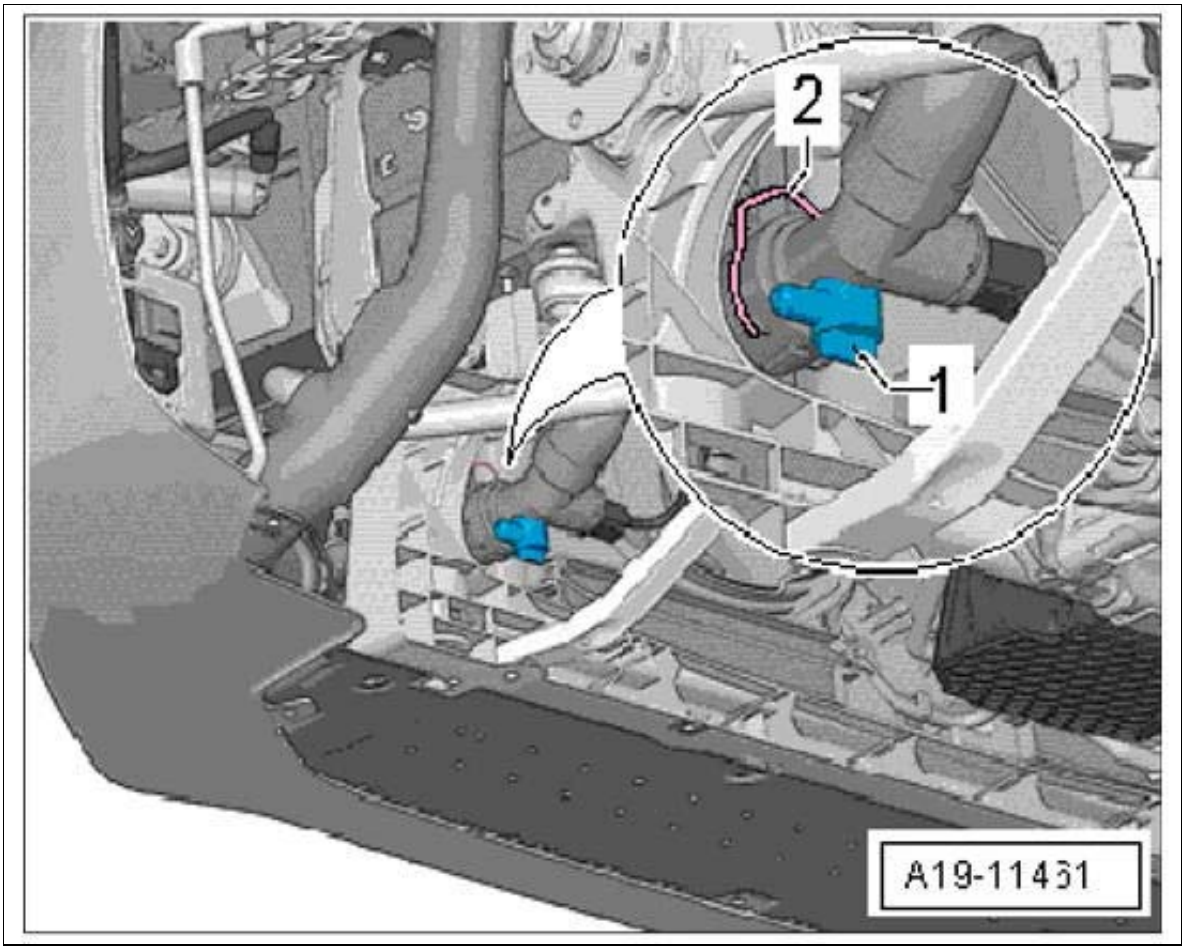

Courtesy of PORSCHE CARS NORTH AMERICA, INC.

WM 193817 DRAINING AND FILLING COOLANT (MACAN) > FILLING COOLANT

Information

- The amount of coolant available must be approx. 2 liters more than the amount to be filled in.
- Because different quantities of coolant can drain away during different types of repairs, the filling capacity can vary greatly. Recommendation: To be on the safe side, fill the canister to 30 l, then bleed the cooling system. The difference after bleeding is the coolant quantity that is sucked in. Check the volume scale on the canister.
- An antifreeze content of -35 °C corresponds to a mixture of 50: 50 (antifreeze: water).

Information

- The filling process is completed more quickly if the canister is positioned at roughly the same height as the coolant reservoir.

Information

- A hissing sound after connecting the compressed air supply is usual.

Information

- If no vacuum is generated (the pointer does not move to the green area), there is a leak in the cooling system.
- If a vacuum is still not established, there is a blockage in the tool. Clean the device, use clean compressed air.
- Deformation of the rubber hoses of the cooling system is normal.
- Pressure of between 6 and 10 bar must be present. The higher the pressure, the better the vacuum in the vehicle cooling system.
- When the pressure gauge pointer is in the green area of the display scale, a sufficient vacuum has been built up.
- After both shutoff valves on the vacuum pressure gauge have been closed and the compressed air supply has been disconnected, the vacuum must not drop. If the vacuum drops within approx. 30 seconds, there is a leak in the coolant circuit.

1. Tighten drain plug **-1-** on the adapter.

   Fig 1: Identifying Coolant Drain Plug

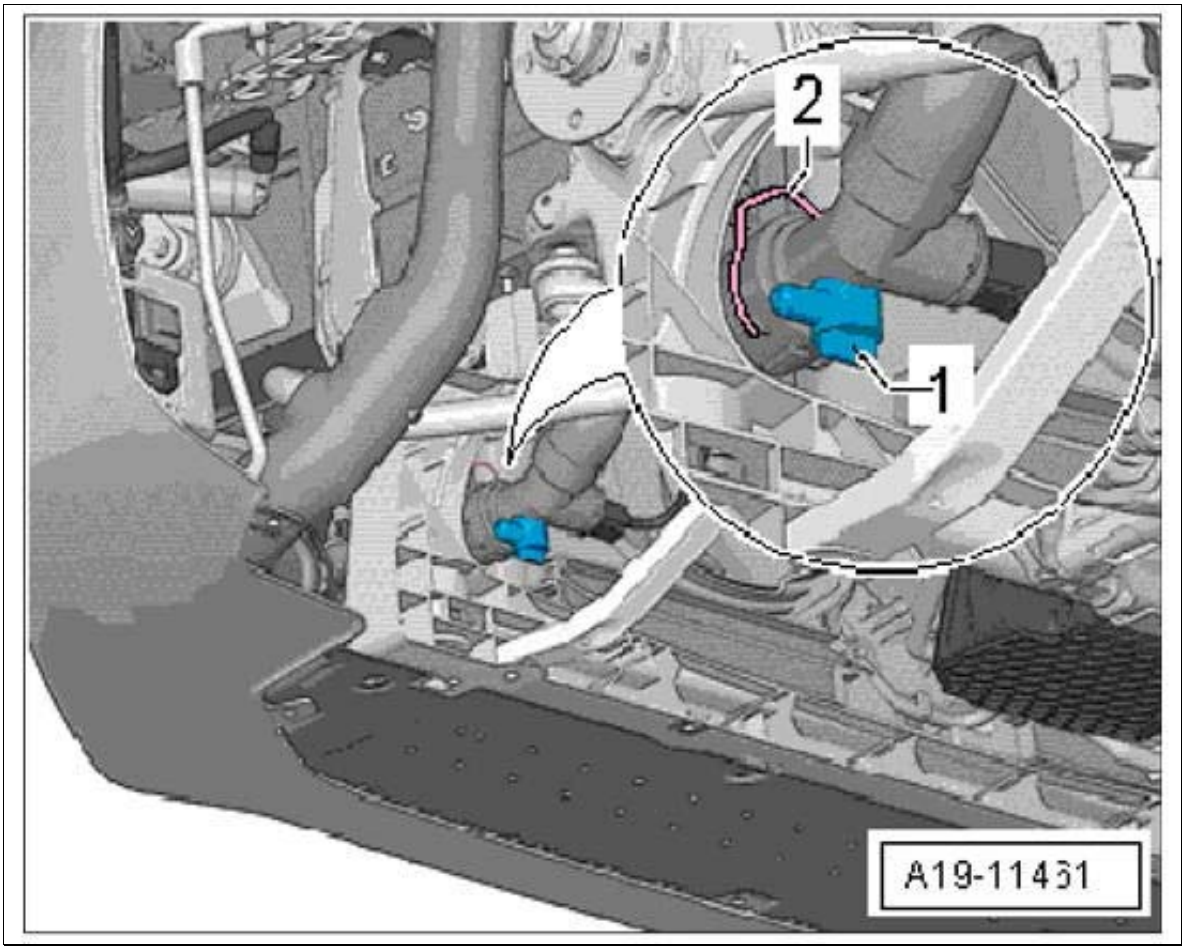

Courtesy of PORSCHE CARS NORTH AMERICA, INC.

2. Set up and connect vacuum filling device.

1. 2.1. Fill coolant reservoir **-5-** with at least 12 liters of pre-mixed coolant in the correct mixture ratio.
2. 2.2. Screw cap adapter K65 **-6-** for the coolant reservoir onto the reservoir.
3. 2.3. Connect the flexible extension (FZ 100) to the cap.
4. 2.4. Connect the vacuum gauge **-7-** of the bleeder tool to the flexible extension and make sure that both shut-off valves **-V1-** and **-V2-** are closed.

   V1 and V2 are at a 90° angle to the flow direction
5. 2.5. Connect the Venturi nozzle to the vacuum gauge.
6. 2.6. Push the filler hose of the vacuum gauge onto the canister connection.
7. 2.7. Route the return line **-1-** from the Venturi nozzle to a second container **-2-** .
8. 2.8. Connect the compressed air supply **-4-** to the filler hose **-3-** .
9. 2.9. Build up overpressure of 6 to 10 bar.

Fig 2: Identifying Vacuum-Filling Device Setup

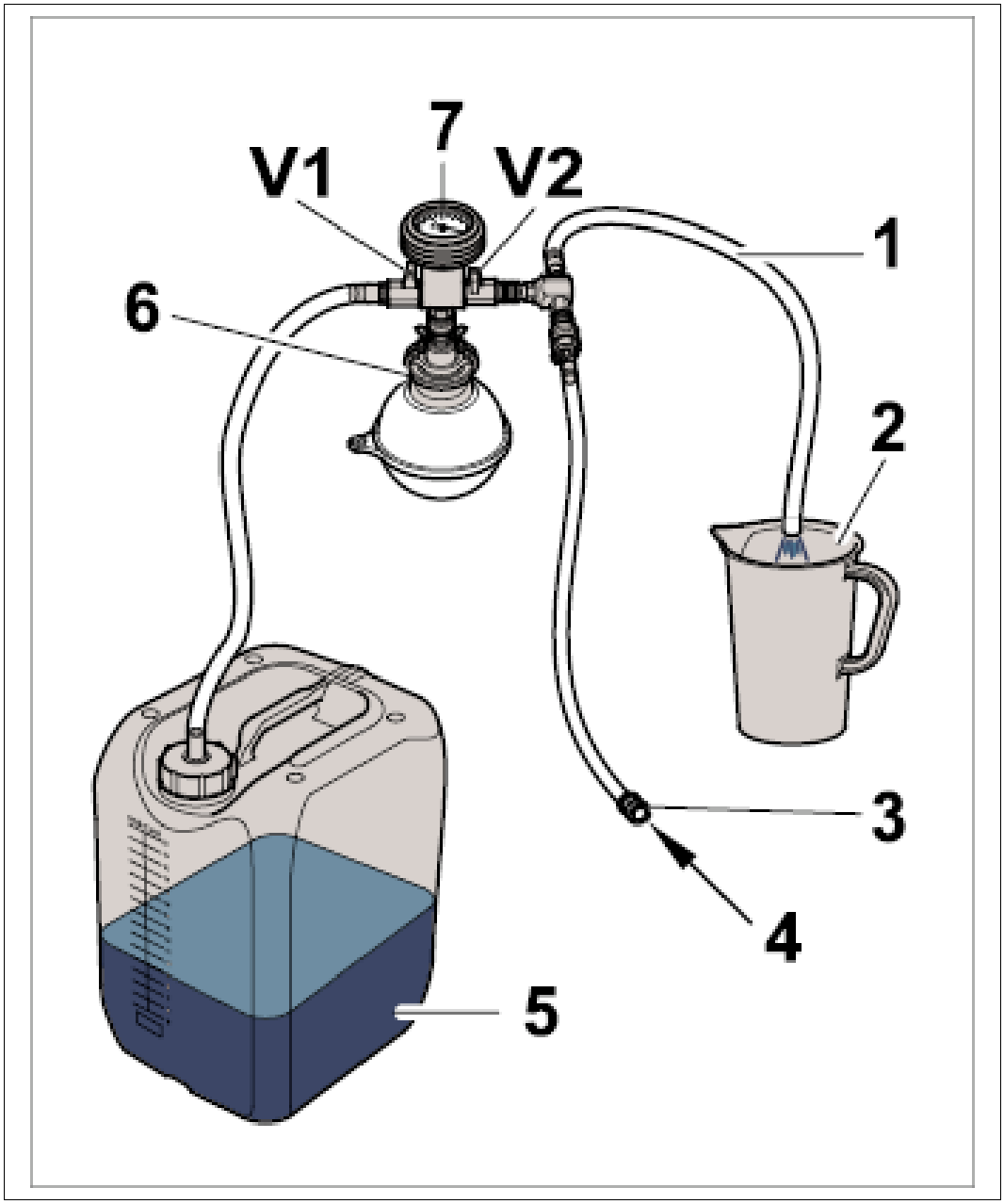

Courtesy of PORSCHE CARS NORTH AMERICA, INC.

3. Open both shut-off valves on the vacuum gauge until the transparent filler hose has completely filled with coolant.

Fig 3: Identifying Shut-Off Valve

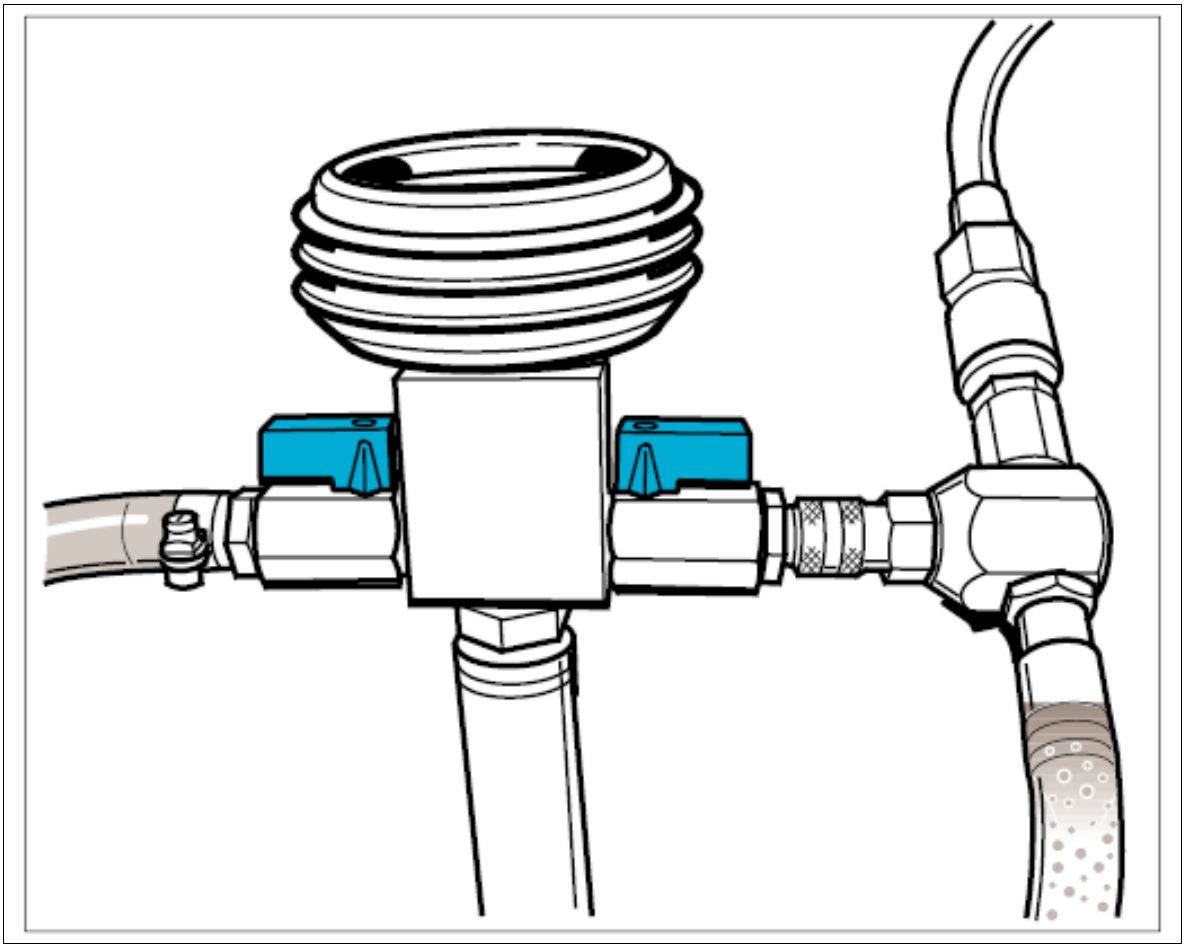

Courtesy of PORSCHE CARS NORTH AMERICA, INC.

4. Close the left shutoff valve (V1) **-arrow-** on the vacuum gauge and allow a vacuum to build up in the coolant circuit.

Fig 4: Locating Shut-Off Valve On Filler Hose

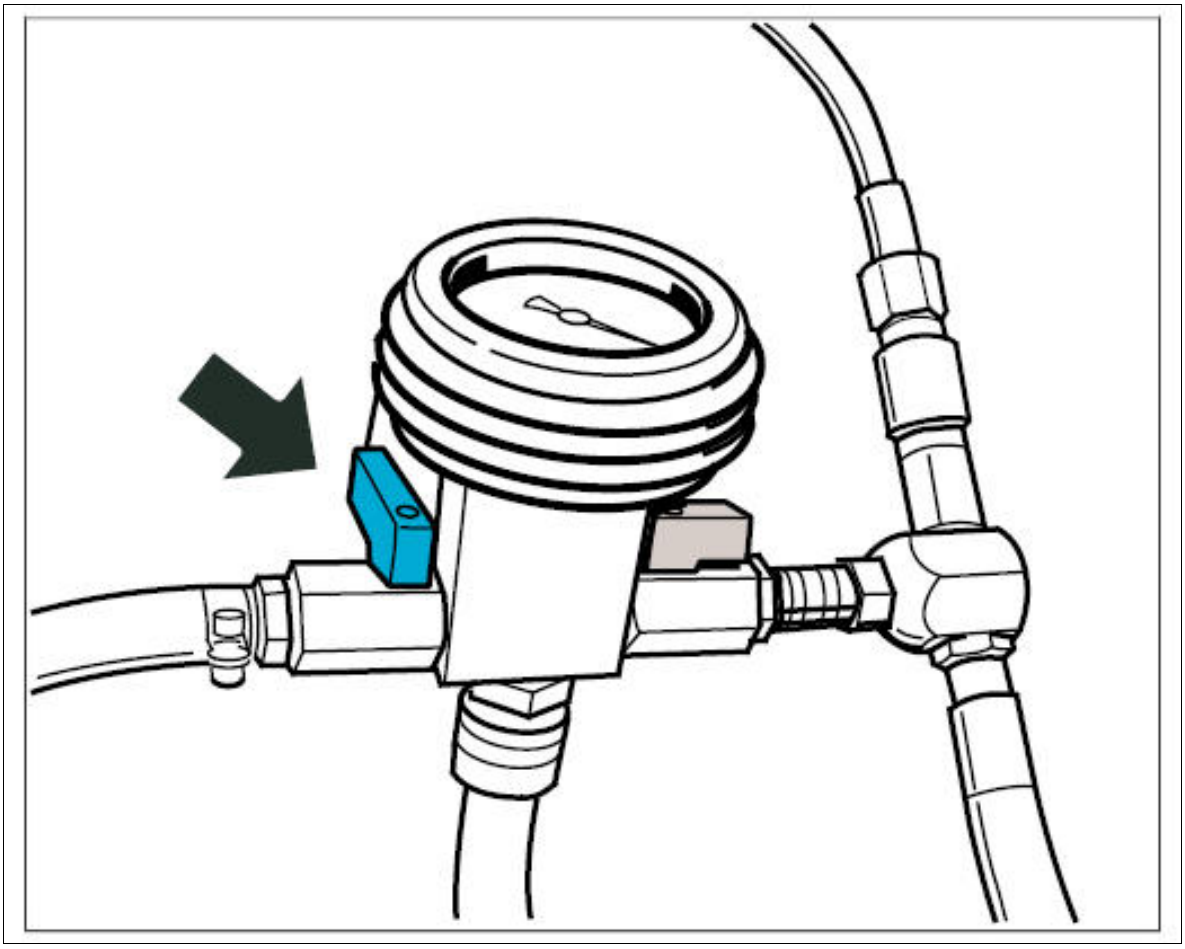

Courtesy of PORSCHE CARS NORTH AMERICA, INC.

5. Allow a sufficient vacuum to build in the cooling system (pointer is in the green area) → Vacuum built up (pointer in green area) .

Fig 5: Identifying Vacuum Built Up (Pointer In Green Area)

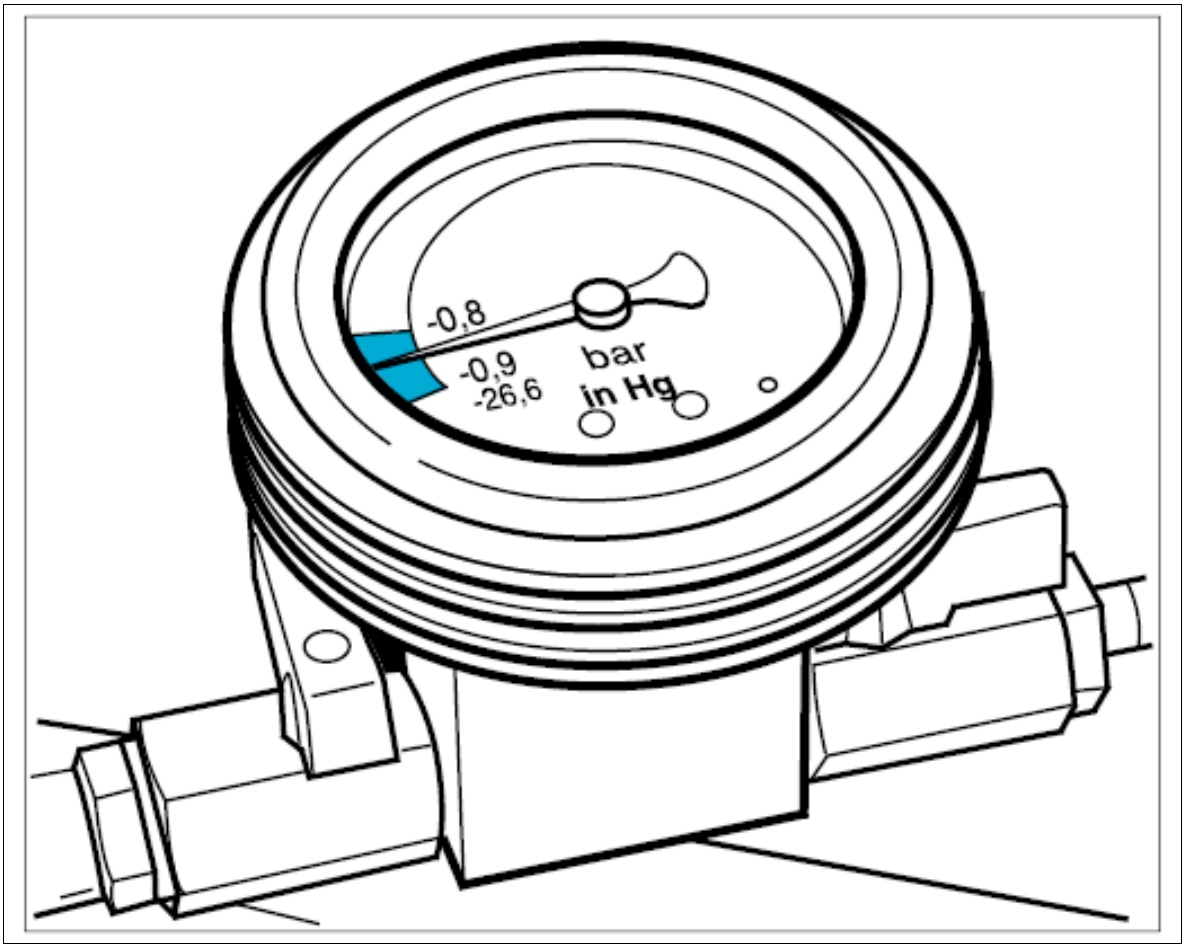

Courtesy of PORSCHE CARS NORTH AMERICA, INC.

6. Close the right shut-off valve (V2) **-arrow-** and then disconnect the compressed air supply.

Fig 6: Locating Shut-Off Valve For Filler Hose

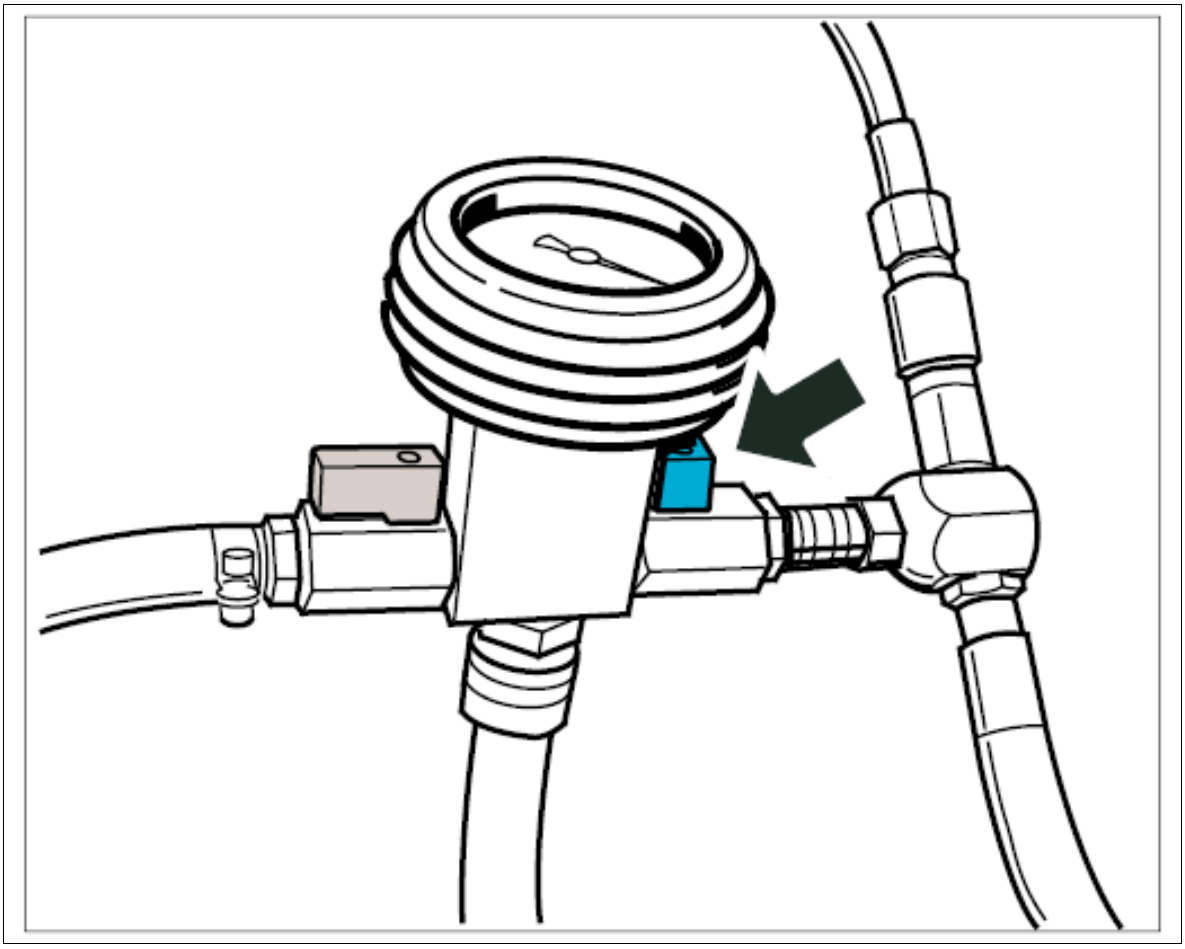

Courtesy of PORSCHE CARS NORTH AMERICA, INC.

7. Open the left shut-off valve (V1) **-arrow-** on the vacuum gauge again. The cooling system is now filled.

Fig 7: Locating Shut-Off Valve On Filler Hose

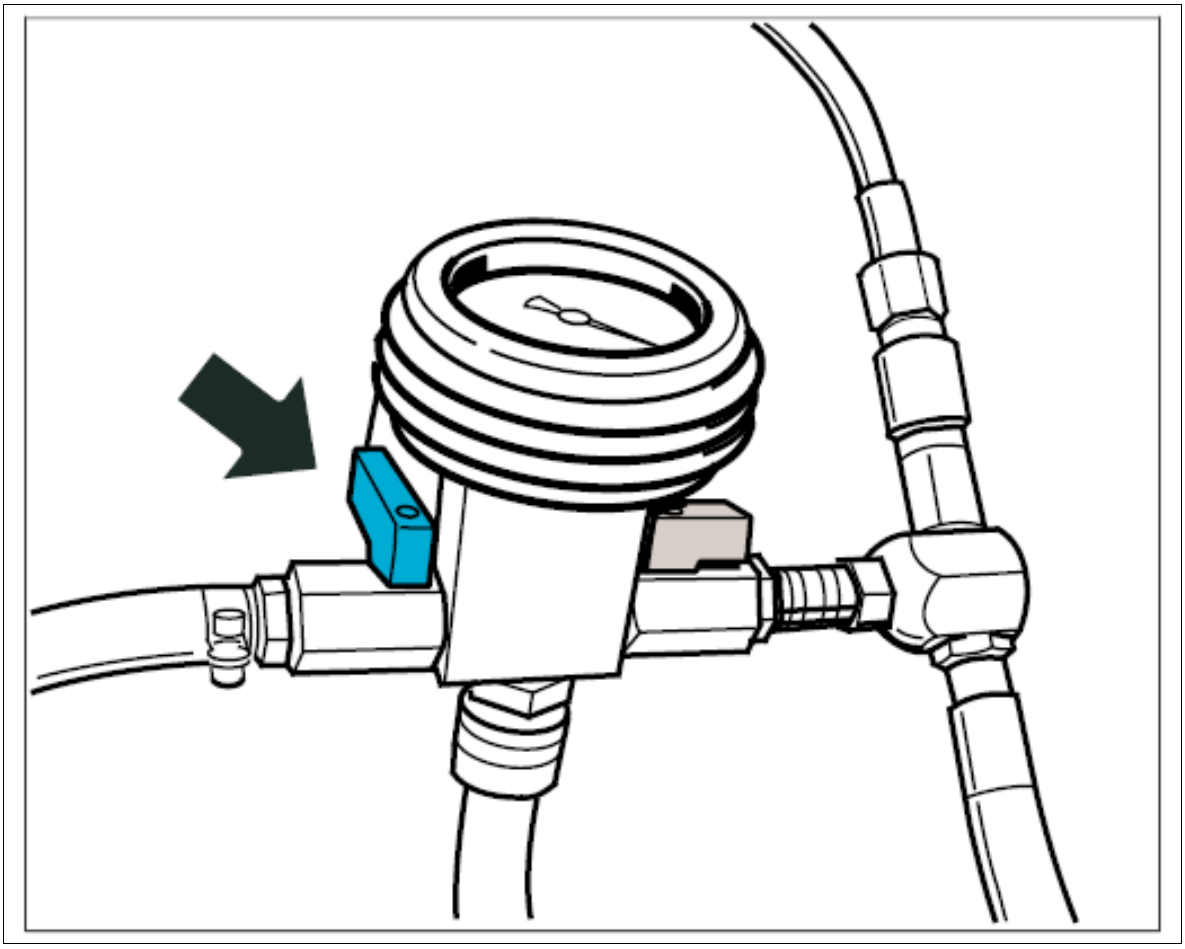

Courtesy of PORSCHE CARS NORTH AMERICA, INC.

8. When there is no trace of vacuum present and no more coolant is being drawn from the canister, open the right shut-off valve (V2). → Opening right shut-off valve

Fig 8: Identifying Right Shut-Off Valve

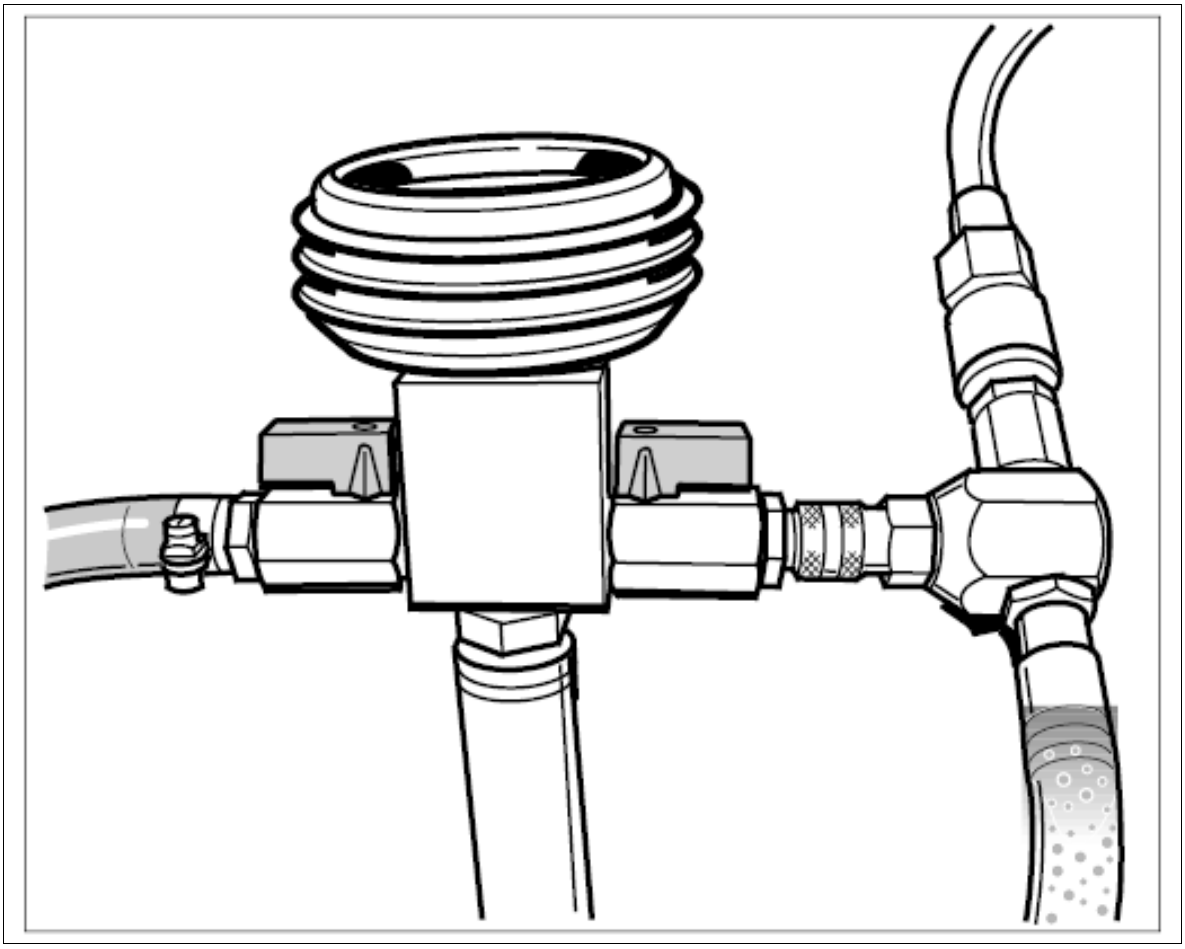

Courtesy of PORSCHE CARS NORTH AMERICA, INC.

9. Then remove the complete filling tool (including the adapter K65).
10. Connect pipe, **pipe for coolant cooling system tester WE 1387 to the adapter for the cooling system tester WE 1386** .

Fig 9: Identifying Cooling System Tester

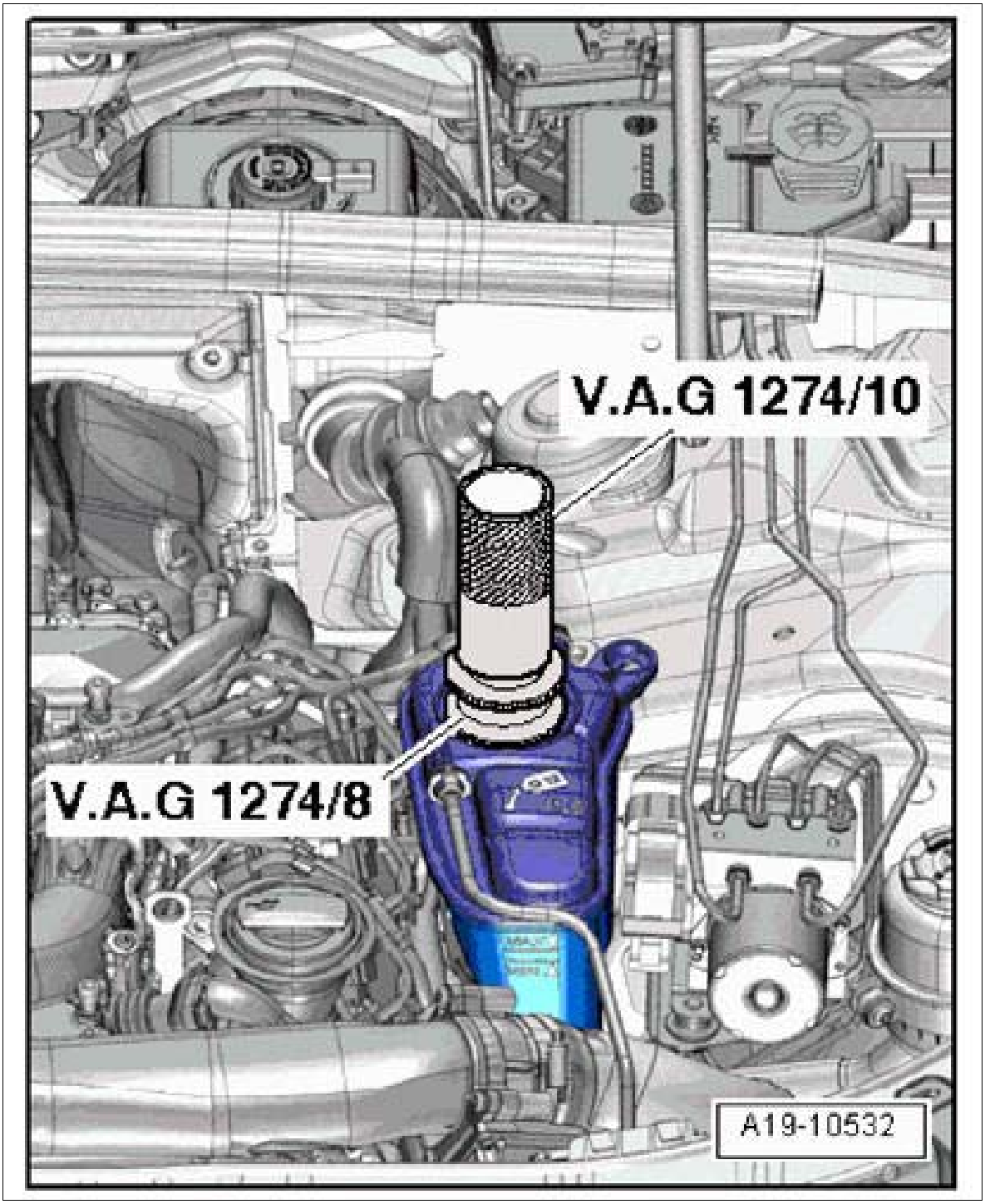

Courtesy of PORSCHE CARS NORTH AMERICA, INC.

11. Fill in coolant until the pipe for the coolant system tester is full.

    Can be topped up during the bleeding process if necessary.

12. Open the front bleeder screw **-arrow-** on the exhaust gas recirculation cooler until coolant emerges and then close it again.

Fig 10: Locating Front Bleeder Screw

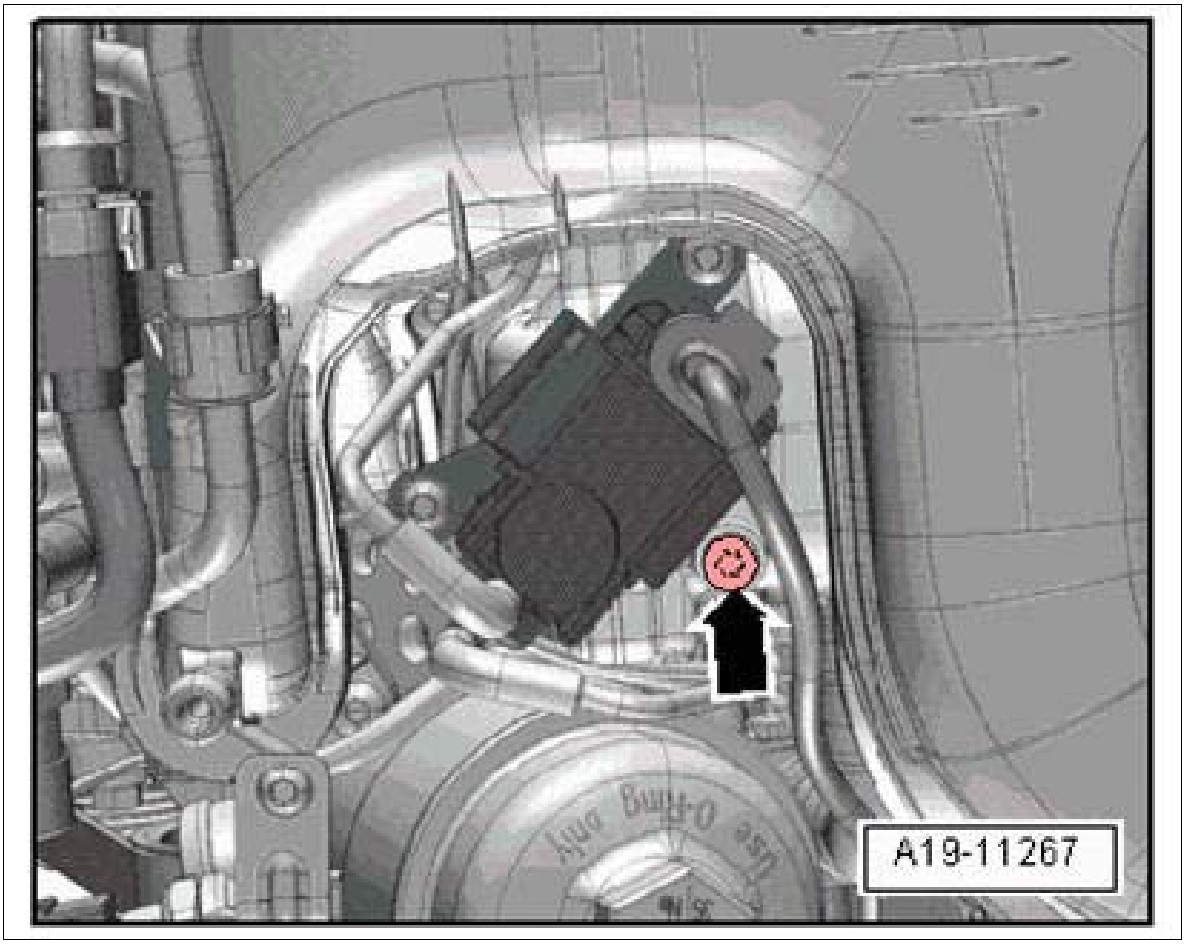

Courtesy of PORSCHE CARS NORTH AMERICA, INC.

13. Loosen and pull back the coolant hose to the heat exchanger for the heater until coolant emerges from the ventilation bore **-1-** in the coolant hose.

Fig 11: Locating Coolant Hose On Firewall

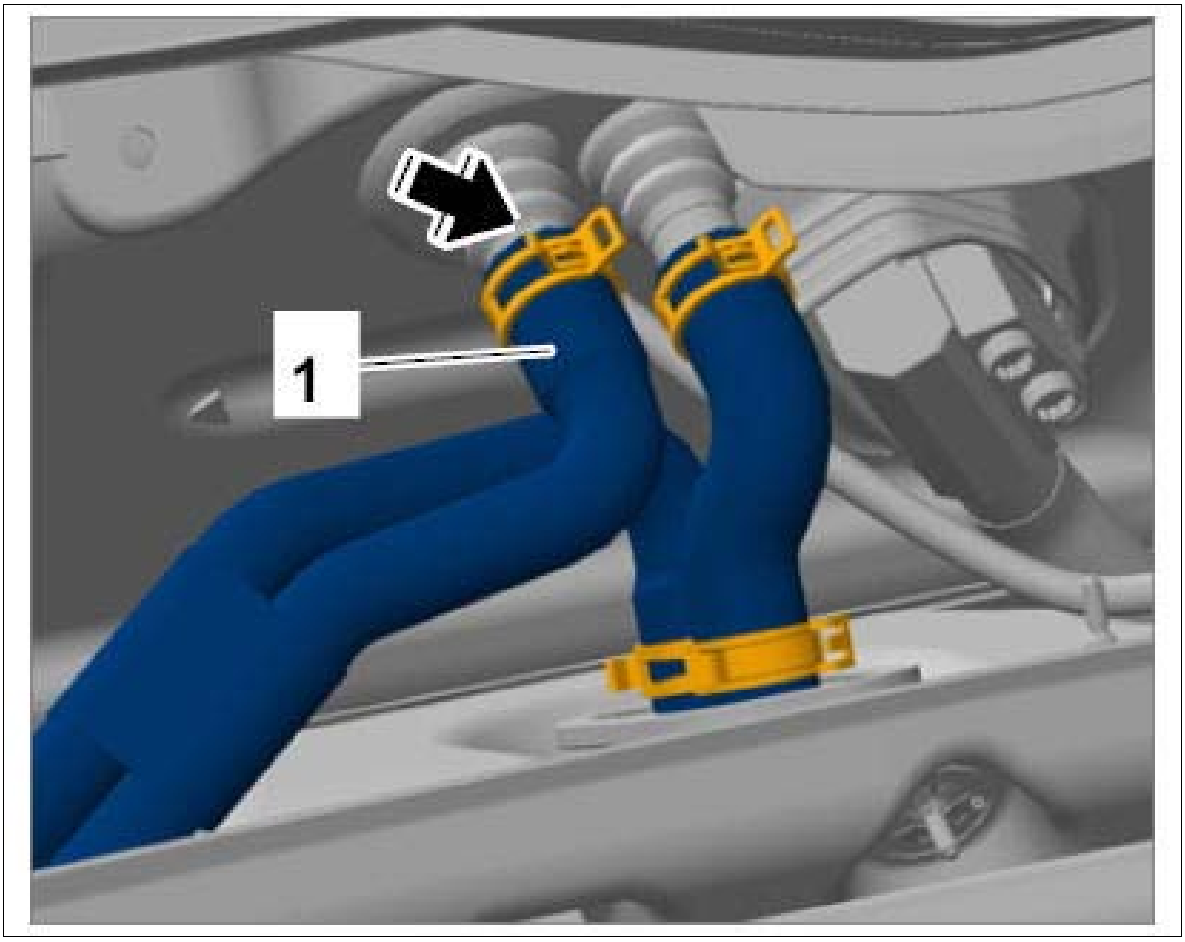

Courtesy of PORSCHE CARS NORTH AMERICA, INC.

14. Push coolant hose onto the adapter and secure with the spring band clamp.
15. For vehicles with an auxiliary heater, switch this on and allow it to run for approx. 30 seconds.
16. Close the cap on the reservoir.

Fig 12: Identifying Reservoir

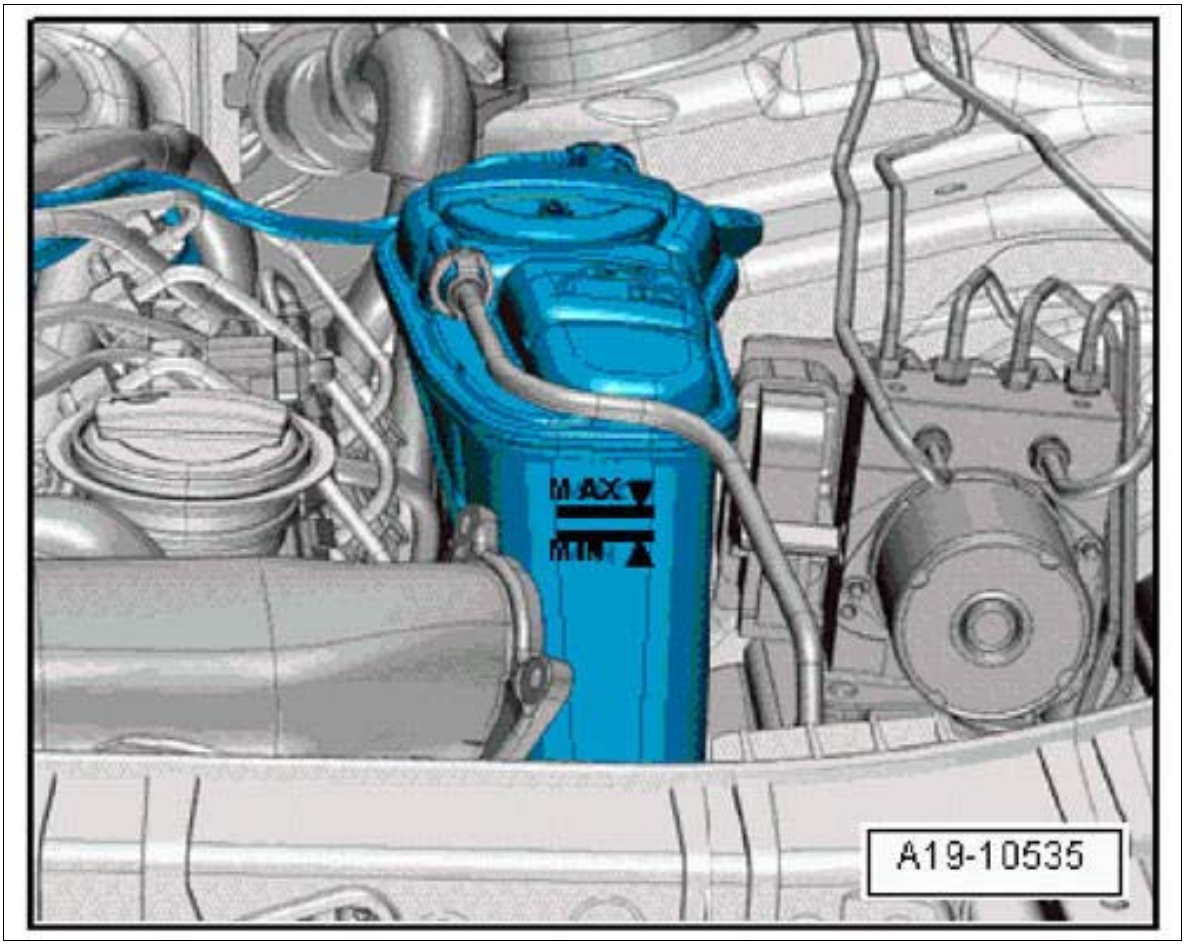

Courtesy of PORSCHE CARS NORTH AMERICA, INC.

17. Start the engine and leave it running at idle speed. Move the selector lever to position "P" and allow the engine to warm up.
18. Switch on cabin heating **-arrows-** .

Fig 13: Locating Heater Control In Passenger Compartment

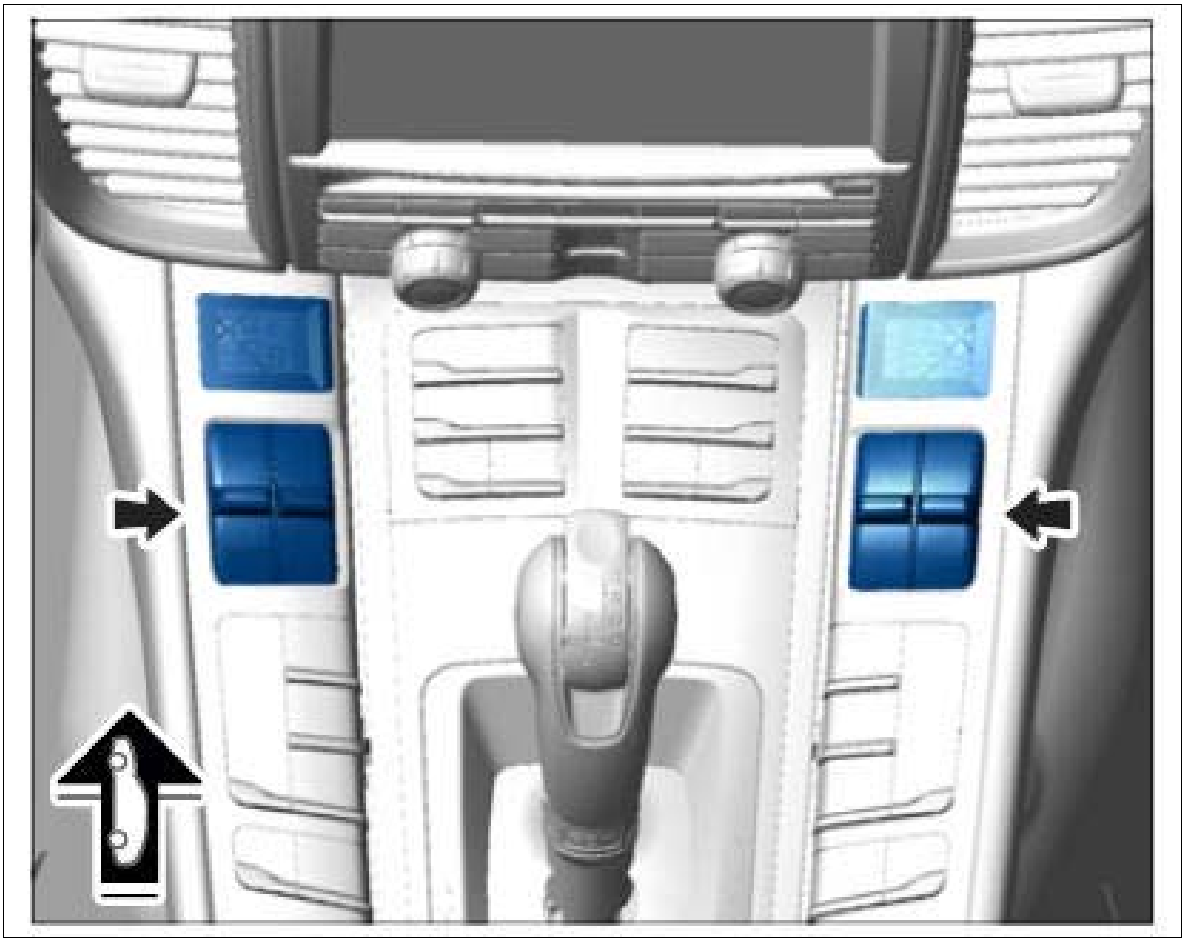

Courtesy of PORSCHE CARS NORTH AMERICA, INC.

19. Press the "Sport button". Leave "Sport" mode activated during the bleeding process.
20. Check the following while the vehicle is warming up.
    1. 20.1. Coolant temperature **-2-** and engine oil temperature **-1-** in the instrument cluster. Figure shows normal, acceptable values.

Fig 14: Identifying Instrument Cluster

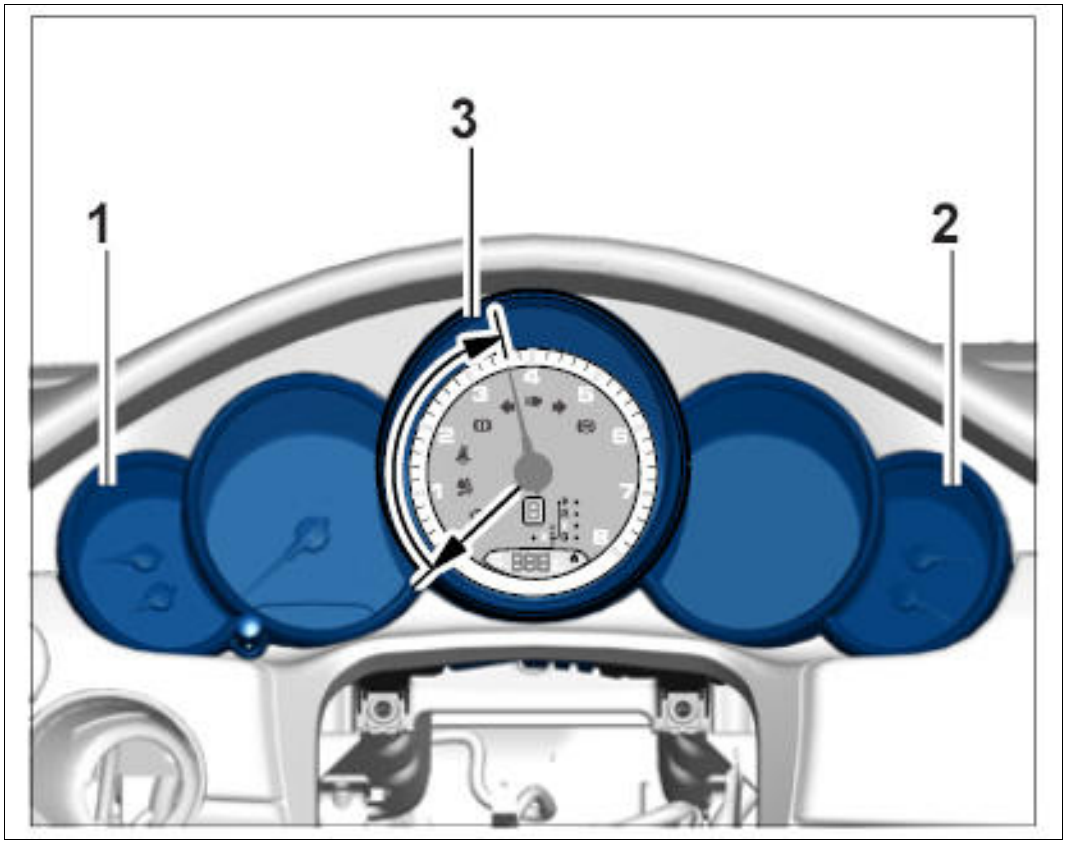

Courtesy of PORSCHE CARS NORTH AMERICA, INC.

Duration	Engine speed	Conditions
3 minutes	2, 000 rpm	1. With air conditioning "Off" 2. Heater "HI", blower setting at one bar
until both coolant hoses on the radiator are warm	Idle speed	1. With air conditioning "Off" 2. Heater "HI"
2 minutes	2, 000 rpm	1. With air conditioning "Off" 2. Heater "HI"

21. The cooling system has been filled and bled correctly if:
    1. All coolant hoses are uniformly warm.
    2. The temperature display in the instrument cluster is in the normal range.

3. The passenger compartment heater is warm.
4. The electric fan for engine cooling comes on.

22. Correct level:
    1. When the engine is cold, the coolant level must be up to the -MAX- marking.
    2. When the engine is at operating temperature, the engine coolant level may be above the -MAX- marking.

Fig 15: Identifying Reservoir

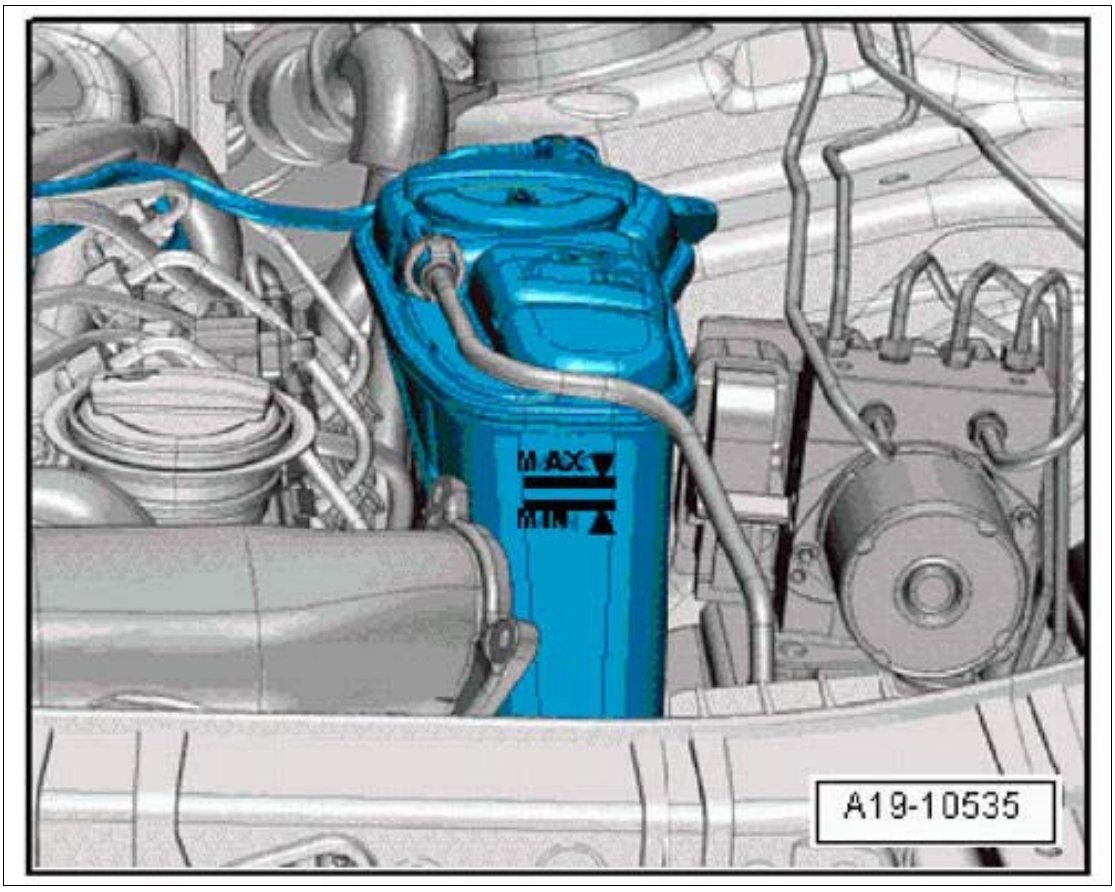

Courtesy of PORSCHE CARS NORTH AMERICA, INC.

WM 193817 DRAINING AND FILLING COOLANT (MACAN) > SUBSEQUENT WORK

1. Install cowl panel cover. → INSTALLING COWL PANEL COVER .
2. Install cover for front underbody. → INSTALLING COVER FOR FRONT UNDERBODY .
3. Install upper engine cover.
4. Test-drive the vehicle, check the fluid level in the reservoir after the cooling system has cooled down and fill up to the MAX marking with coolant if necessary.
5. Check the cooling system if necessary.

WM 194019 REMOVING AND INSTALLING RESERVOIR (MACAN S, MACAN TURBO) > TECHNICAL VALUES

Location	Description	Type	Basic value	Tolerance 1	Tolerance 2
Fastening screw securing coolant reservoir to holder	M6 x 12	Tightening torque	5 Nm (3.5 ftlb.)		

WM 194019 REMOVING AND INSTALLING RESERVOIR (MACAN S, MACAN TURBO) > PRELIMINARY WORK

1. Remove engine cover.
2. Drain coolant. → 193817 DRAINING AND FILLING COOLANT

WM 194019 REMOVING AND INSTALLING RESERVOIR (MACAN S, MACAN TURBO) > REMOVING RESERVOIR

WARNING: Hot fluid

- *Danger of scalding*

→ Avoid contact with hot fluid.

→ Wear personal protective gear.

Information

- Close off open connections and lines using suitable stoppers or caps.

1. Loosen coolant reservoir **-1-** .
    1. 1.1. Release and disconnect electric connector **-2-** .
    2. 1.2. Unscrew screws **-arrows-** .

Fig 1: Locating Coolant Reservoir Screws

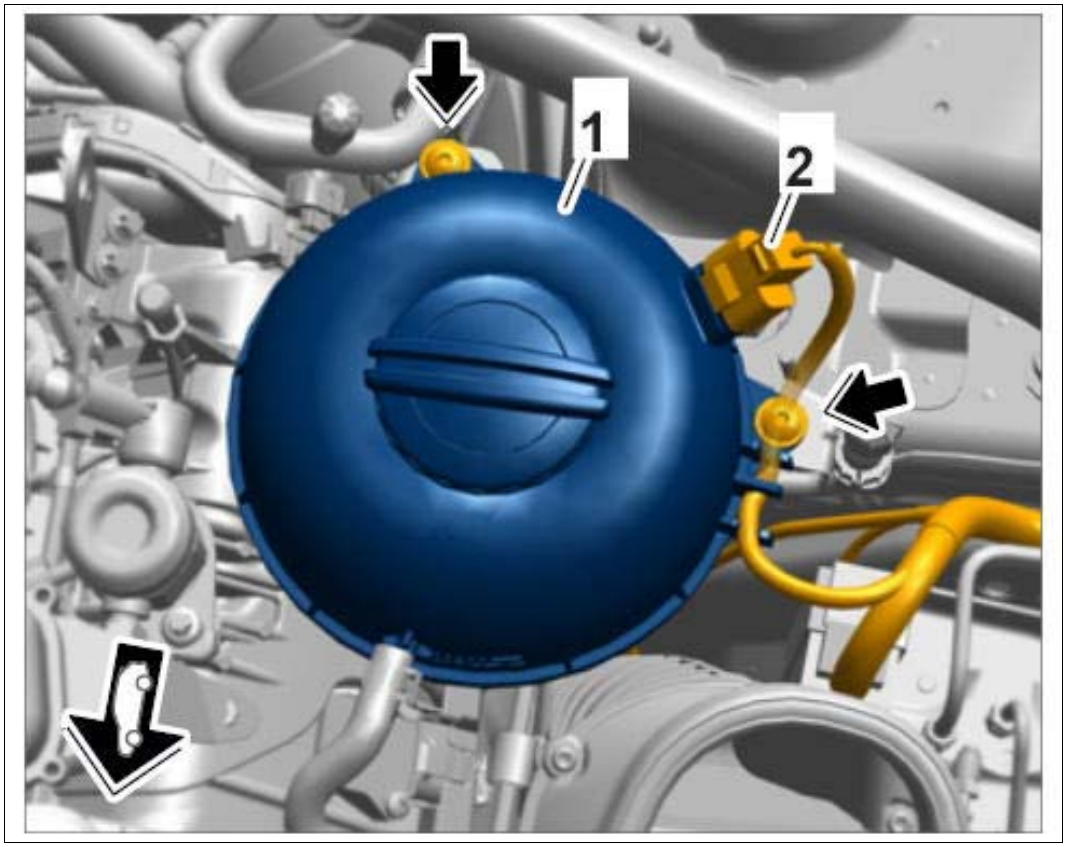

Courtesy of PORSCHE CARS NORTH AMERICA, INC.

2. Disconnect coolant lines at the reservoir.

    1. 2.1. Release vent line **-1-** from the reservoir **-2-** at the bleeder valve **-3-** (**-arrow-**) and pull it off.
    2. 2.2. Loosen clamp **-4-** and pull coolant hose **-5-** off the reservoir **-2-** .
    3. 2.3. Clean up emerging coolant with a cloth.
    4. 2.4. Remove reservoir **-2-** .

Fig 2: Locating Reservoir Coolant Lines

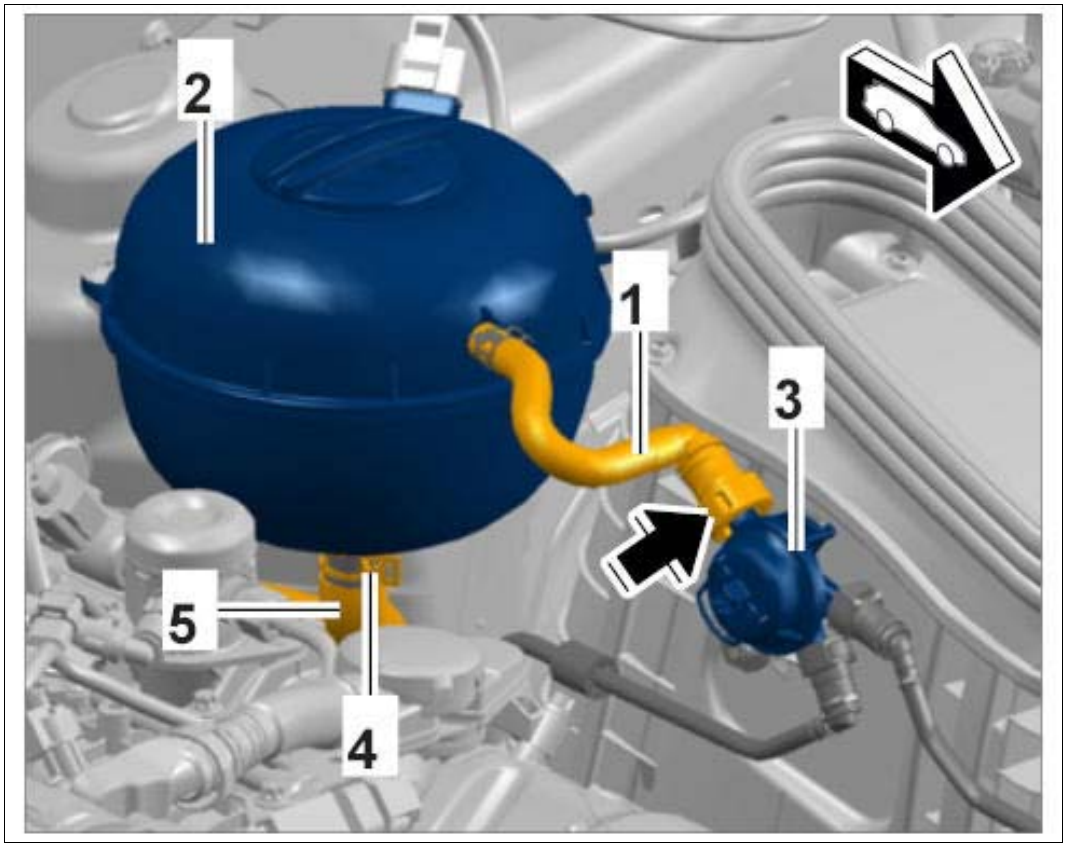

Courtesy of PORSCHE CARS NORTH AMERICA, INC.

WM 194019 REMOVING AND INSTALLING RESERVOIR (MACAN S, MACAN TURBO) > INSTALLING RESERVOIR

Information

- Check O-rings on the plug-in couplings and replace them if necessary.
- Clean plug connection and coolant hoses before assembly.
- Coat O-rings and coolant hoses with Kluber Plus Gel (Part No. 000.043.205.93).
- Remove stoppers before fitting the coolant lines and hoses.

1. Installation is performed in reverse order.

    1. 1.1. Tightening torque for reservoir: **Tightening torque: 5 Nm (3.5 ftlb.)**

WM 194019 REMOVING AND INSTALLING RESERVOIR (MACAN S, MACAN TURBO) > SUBSEQUENT WORK

1. Fill in coolant and bleed the system. → FILLING COOLANT includes bleeding.

2. Install engine cover.

WM 194819 REMOVING AND INSTALLING DRIVE BELT FOR COOLANT PUMP (MACAN) > TECHNICAL VALUES

Location	Description	Type	Basic value	Tolerance 1	Tolerance 2
Fastening screw for toothed-belt drive wheel		Initial tightening	10 Nm (7.5 ftlb.)		
Fastening screw for toothed-belt drive wheel		Final tightening	+90°		

WM 194819 REMOVING AND INSTALLING DRIVE BELT FOR COOLANT PUMP (MACAN) > INSTALLING > INSTALLING DRIVE BELT FOR COOLANT PUMP

1. Replace screw for toothed-belt pulley.
2. Fit the drive belt. **Check installation position of the toothed-belt pulley!**
3. Tighten screw for toothed-belt pulley. **Caution: Left thread! Initial tightening 10 Nm (7.5 ftlb.) Final tightening +90°**

WM 194819 REMOVING AND INSTALLING DRIVE BELT FOR COOLANT PUMP (MACAN) > SUBSEQUENT WORK

1. Install cover for toothed belt.
2. Connect connector to oil pressure switch - setting 3.
3. Install dome strut. → INSTALLING FRONT STRUT .
4. Install engine cover.

WM 195019 REMOVING AND INSTALLING COOLANT PUMP (MACAN S, MACAN TURBO) > TOOLS

Designation	Type	Number	Description	

counter-hold tool	Commercially available tool	Nr.193		
counter-hold tool	Commercially available tool	Nr.38		

WM 195019 REMOVING AND INSTALLING COOLANT PUMP (MACAN S, MACAN TURBO) > TECHNICAL VALUES

Location	Description	Type	Basic value	Tolerance 1	Tolerance 2
Fastening screw for coolant pump		Tightening torque	12 Nm (9 ftlb.)		

WM 195019 REMOVING AND INSTALLING COOLANT PUMP (MACAN S, MACAN TURBO) > PRELIMINARY WORK

Information

The lock carrier must be moved to **service position** for better access in the engine compartment at the front. → 503809 LOOSENING AND SECURING LOCK CARRIER (SERVICE POSITION) .

1. Drain coolant. → 193817 DRAINING AND FILLING COOLANT

WM 195019 REMOVING AND INSTALLING COOLANT PUMP (MACAN S, MACAN TURBO) > REMOVING COOLANT PUMP

Information

- To ease removal, spray the pulley from the rear side with an anti-corrosion agent.

1. Loosen the three fastening screws **-arrows-** on the coolant pump pulley. Block the pulley with **counter-hold tool Nr.38 or counter-hold tool Nr.193** if necessary or if the belt drive is removed.

   Fig 1: Locating Coolant Pump Pulley Fastening Screws

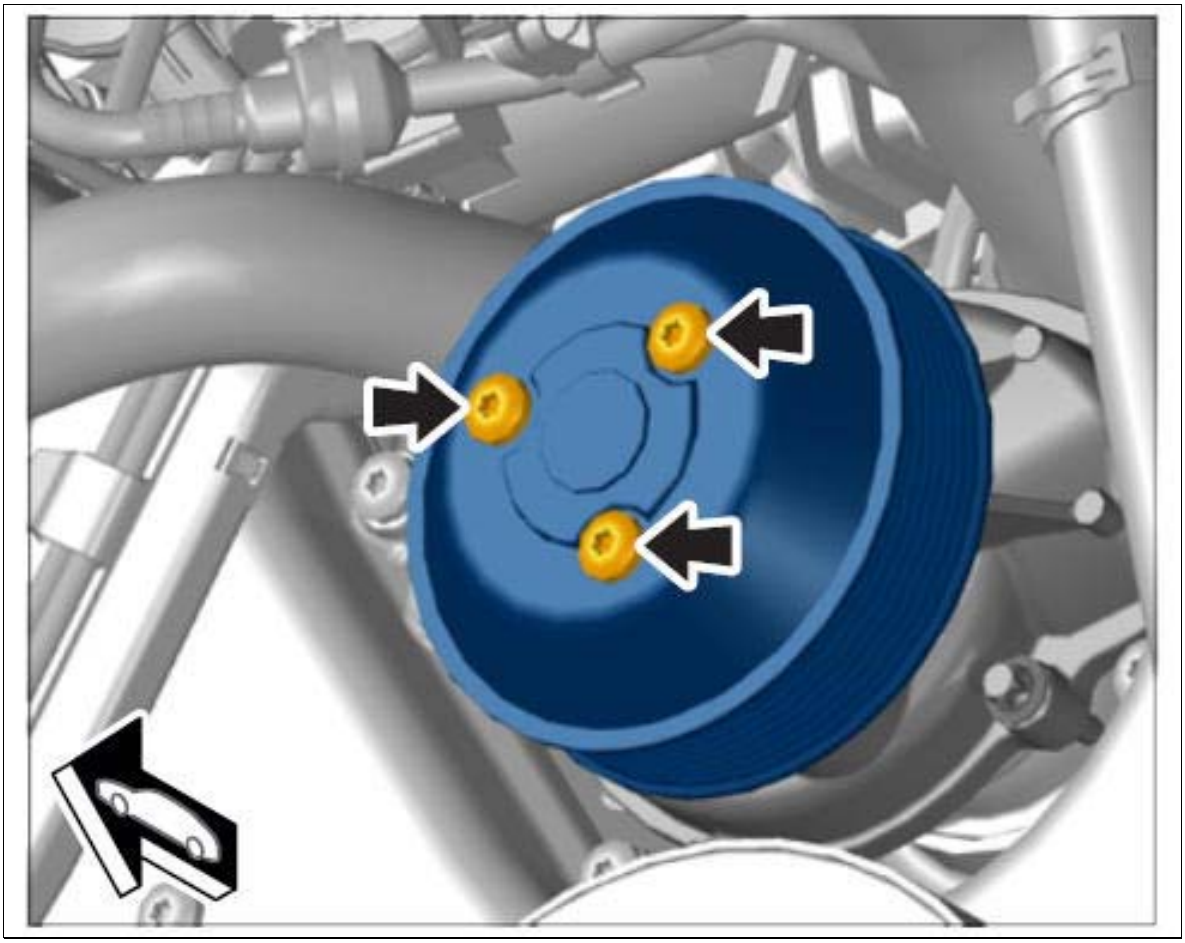

Courtesy of PORSCHE CARS NORTH AMERICA, INC.

2. Loosen drive belt around the coolant pump. For details, → 137819 REMOVING AND INSTALLING DRIVE BELT .

3. Unscrew the three loosened fastening screws **-arrows-** on the pulley and remove the pulley.

> *NOTE: Incorrect handling of pulley*
>
> *1. Risk of damage to pulley*

→ The pulley is sensitive to impact. Do not pry off the pulley with a screwdriver.

→ Do not re-use a damaged pulley.

4. Loosen and unscrew the fastening screws **-2-** on coolant pump **-1-** .

Fig 2: Identifying Coolant Pump Fastening Screws

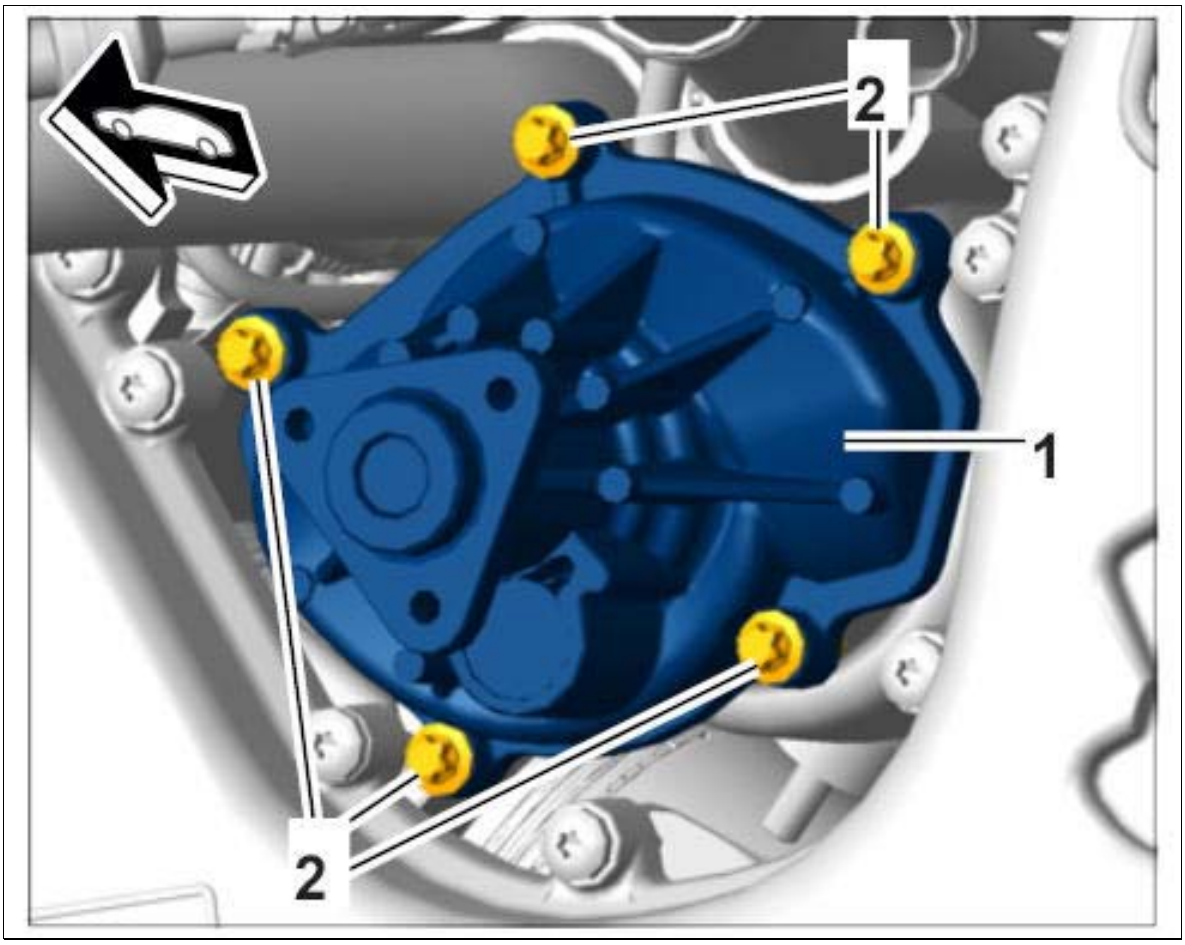

Courtesy of PORSCHE CARS NORTH AMERICA, INC.

5. Remove coolant pump **-1-** (**-arrow-**).

Fig 3: Removing Coolant Pump

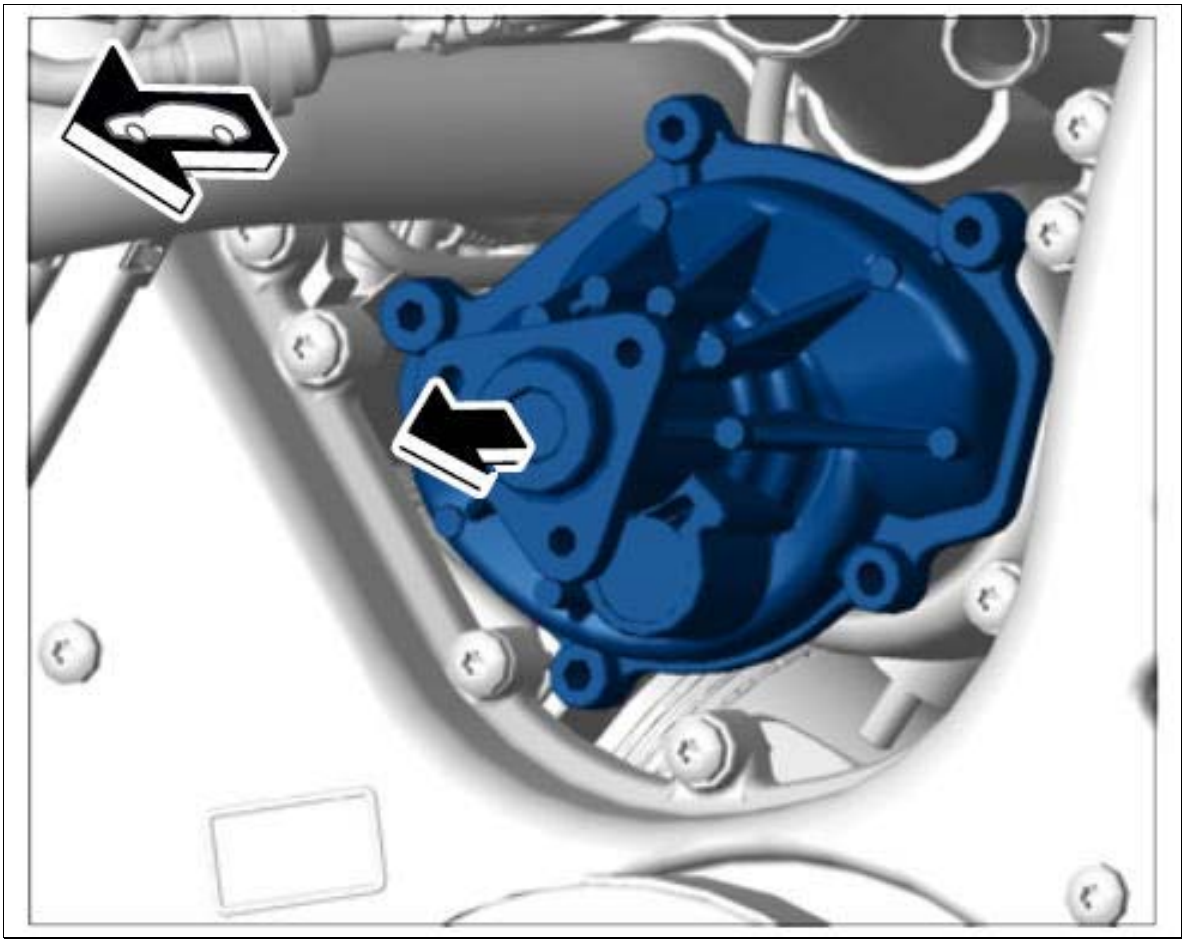

Courtesy of PORSCHE CARS NORTH AMERICA, INC.

6. If the coolant pump is stuck, loosen it by gently tapping with a plastic hammer. → Loosening coolant pump with a plastic hammer

Fig 4: Tapping Coolant Pump Using Plastic Hammer

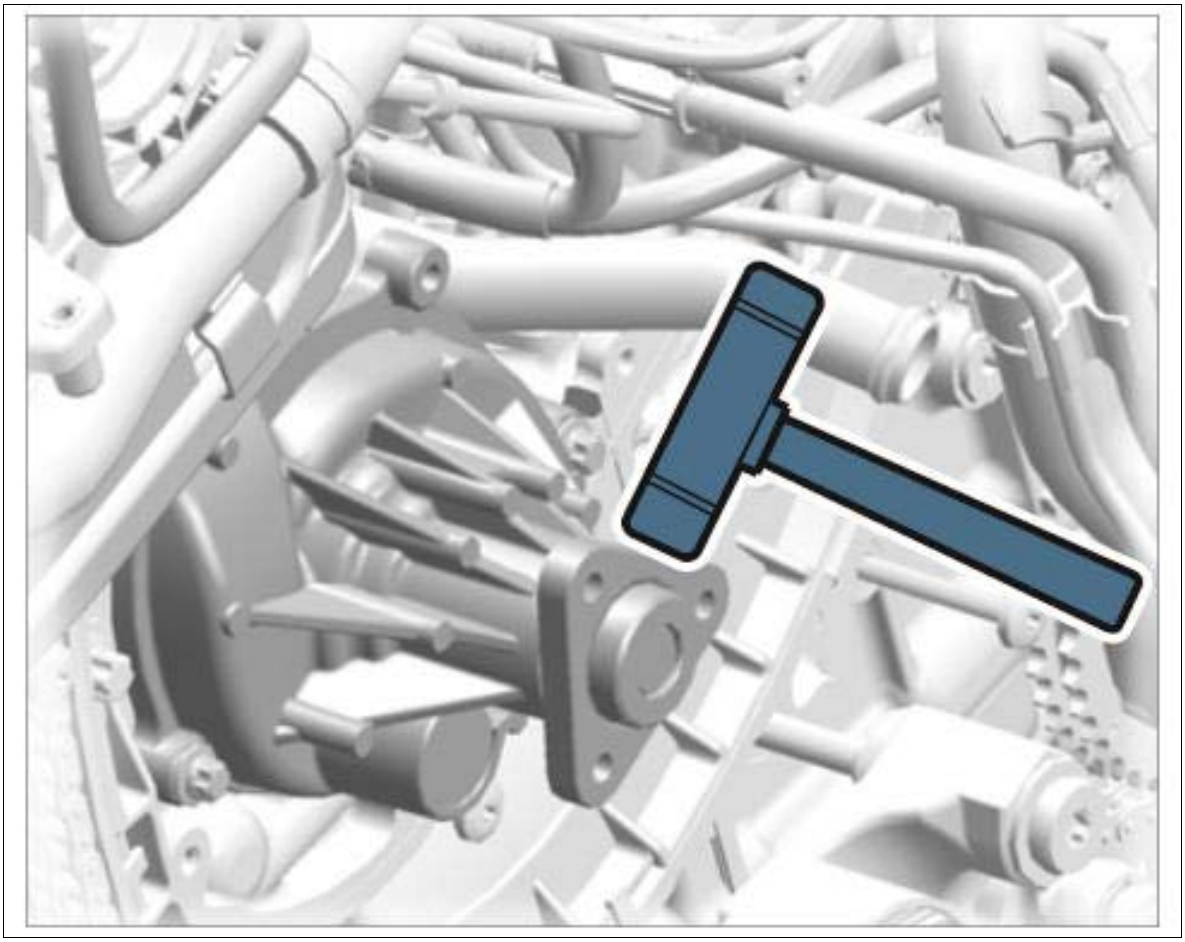

Courtesy of PORSCHE CARS NORTH AMERICA, INC.

WM 195019 REMOVING AND INSTALLING COOLANT PUMP (MACAN S, MACAN TURBO) > INSTALLING COOLANT PUMP

Information

- The coolant pump on the V6 bi-turbo engine has a color marking with the inscription V8 on the housing.
- Mark a coolant pump on the V6 bi-turbo engine clearly with a marker/pen if the V8 inscription is missing.

1. Clean sealing faces. Fit coolant pump with a new seal.

Fig 1: Identifying Coolant Pump, Gasket And Screws

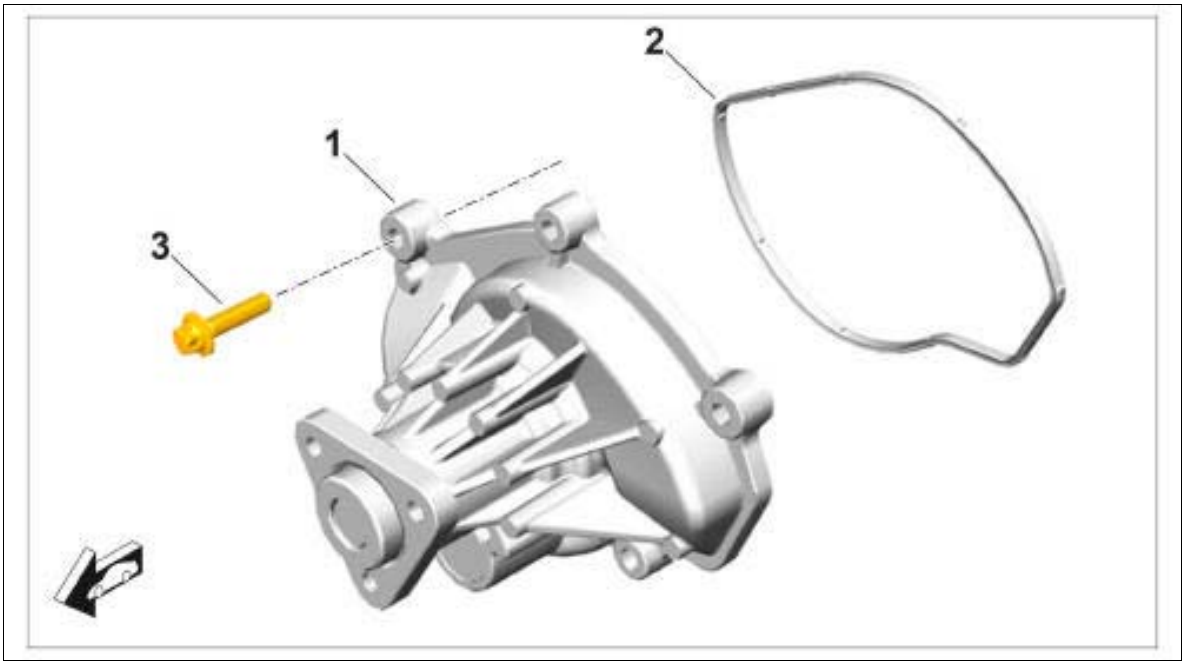

Courtesy of PORSCHE CARS NORTH AMERICA, INC.

1. Coolant pump
2. Seal; rubber seal fitted in coolant pump
3. Screw, M6 x 25

2. Screw in and tighten fastening screws. → Tightening sequence for coolant pump **Tightening torque: 12 Nm (9 ftlb.)**

Fig 2: Coolant Pump Screws Tightening Sequence

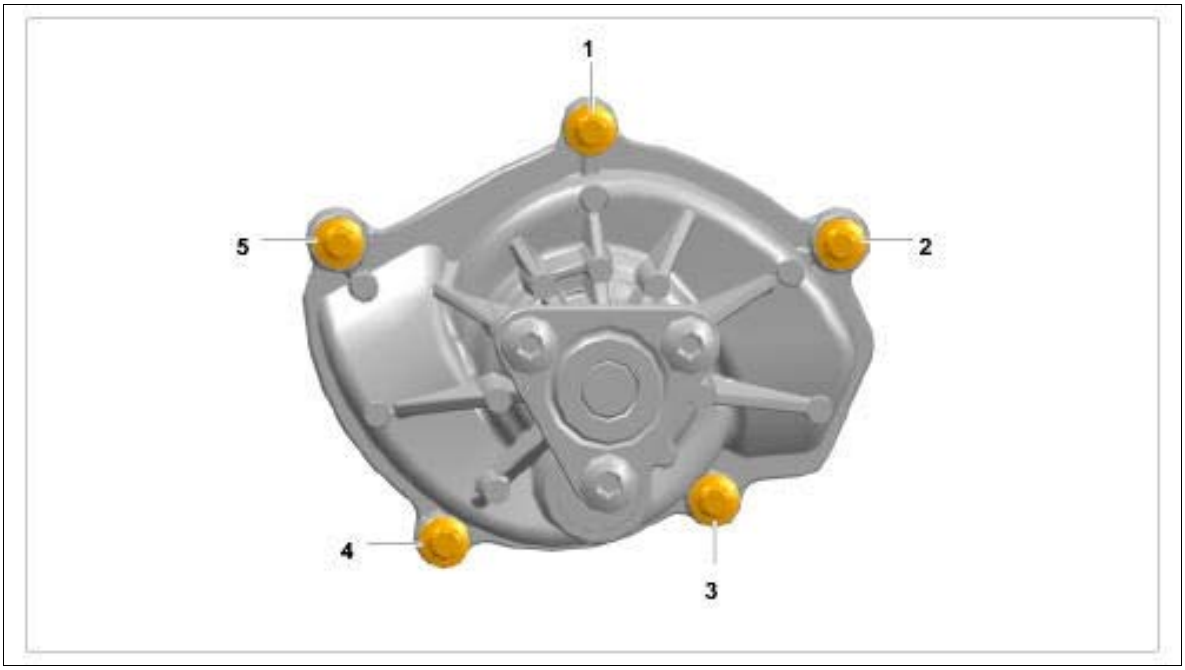

Courtesy of PORSCHE CARS NORTH AMERICA, INC.

NOTE: Incorrect handling of pulley

1. Risk of damage to pulley

→ The pulley is sensitive to impact. Do not pry off the pulley with a screwdriver.

→ Do not re-use a damaged pulley.

3. Fit the pulley on the coolant pump. Screw in the three fastening screws by hand.
4. Screw in and tighten the three fastening screws **-arrows-** on the coolant pump pulley. Block the pulley using a counter-hold tool **counter-hold tool Nr.38** if necessary.

Fig 3: Locating Coolant Pump Pulley Fastening Screws

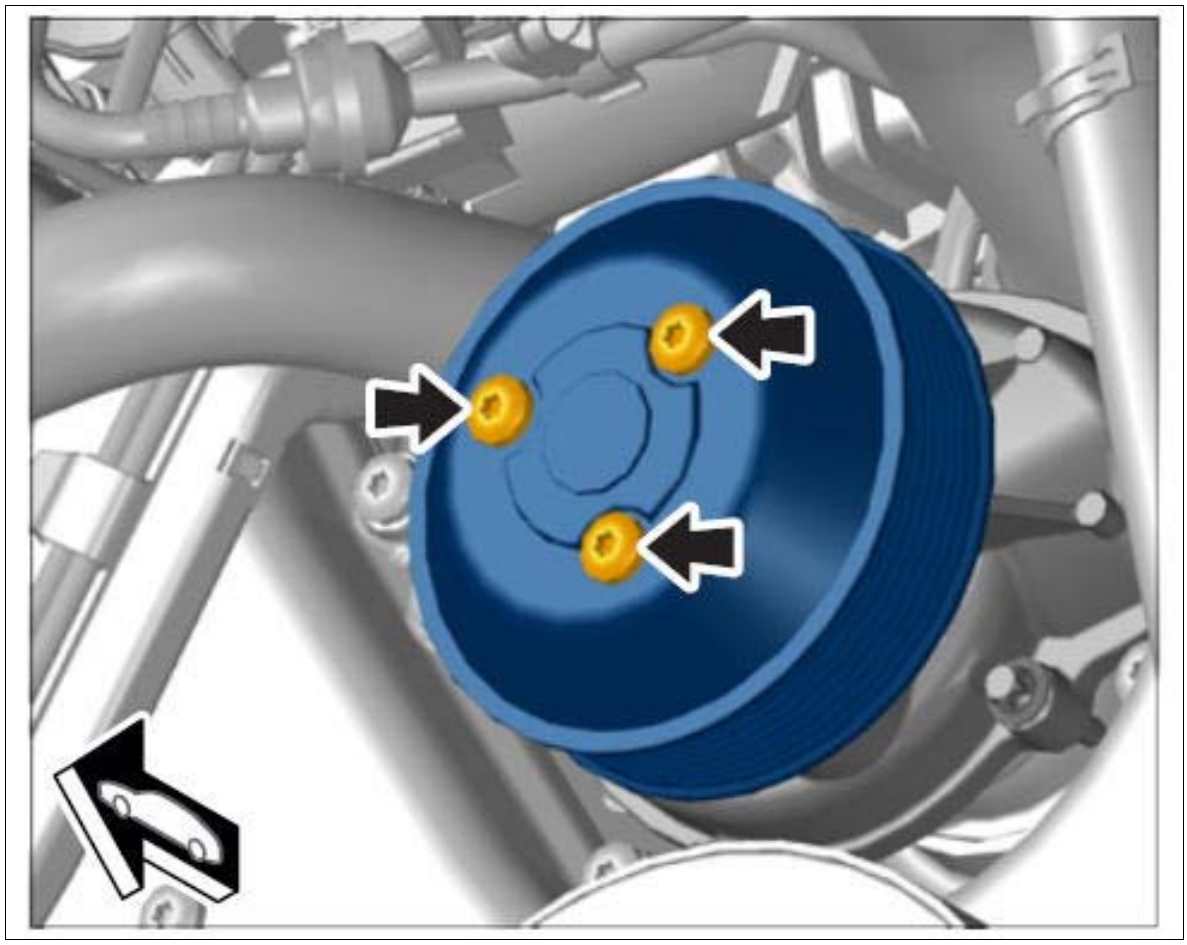

Courtesy of PORSCHE CARS NORTH AMERICA, INC.

WM 195019 REMOVING AND INSTALLING COOLANT PUMP (MACAN S, MACAN TURBO) > SUBSEQUENT WORK

1. Fit drive belt → INSTALLING DRIVE BELT .
2. Fill and bleed the cooling system according to instructions. → FILLING COOLANT includes bleeding.

WM 195519 REMOVING AND INSTALLING COOLANT REGULATOR HOUSING (MACAN) > TECHNICAL VALUES

Location	Description	Type	Basic value	Tolerance 1	Tolerance 2
Fastening screw for actuator		Tightening torque	9 Nm (6.5 ftlb.)		

WM 195519 REMOVING AND INSTALLING COOLANT REGULATOR HOUSING (MACAN) > PRELIMINARY WORK > PRELIMINARY WORK FOR REMOVING COOLANT REGULATOR HOUSING

1. Remove coolant pump. → 195019 REMOVING AND INSTALLING COOLANT PUMP
2. Remove throttle housing. → 244219 REMOVING AND INSTALLING THROTTLE HOUSING
3. Pull off coolant hoses **-1 and 3-** by lifting up the retaining clips. Disregard item 2.

Fig 1: Identifying Coolant Hoses

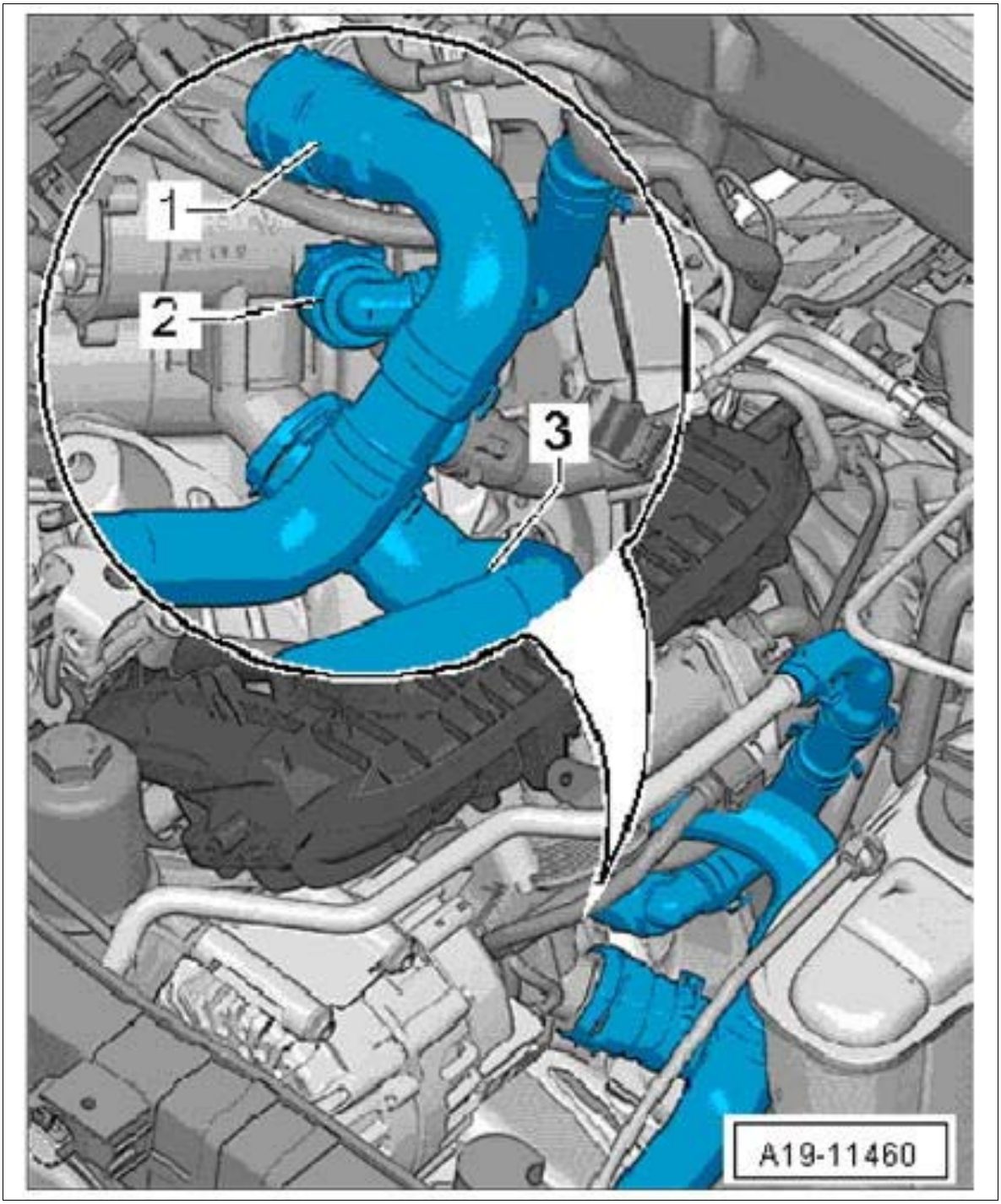

Courtesy of PORSCHE CARS NORTH AMERICA, INC.

4. Disconnect electric plug connection.
    1. 4.1. Disconnect plug connection **-arrow-** from the coolant regulator housing.
    2. 4.2. Unscrew holder for electric connector **-1-** .

Fig 2: Locating Plug Connections

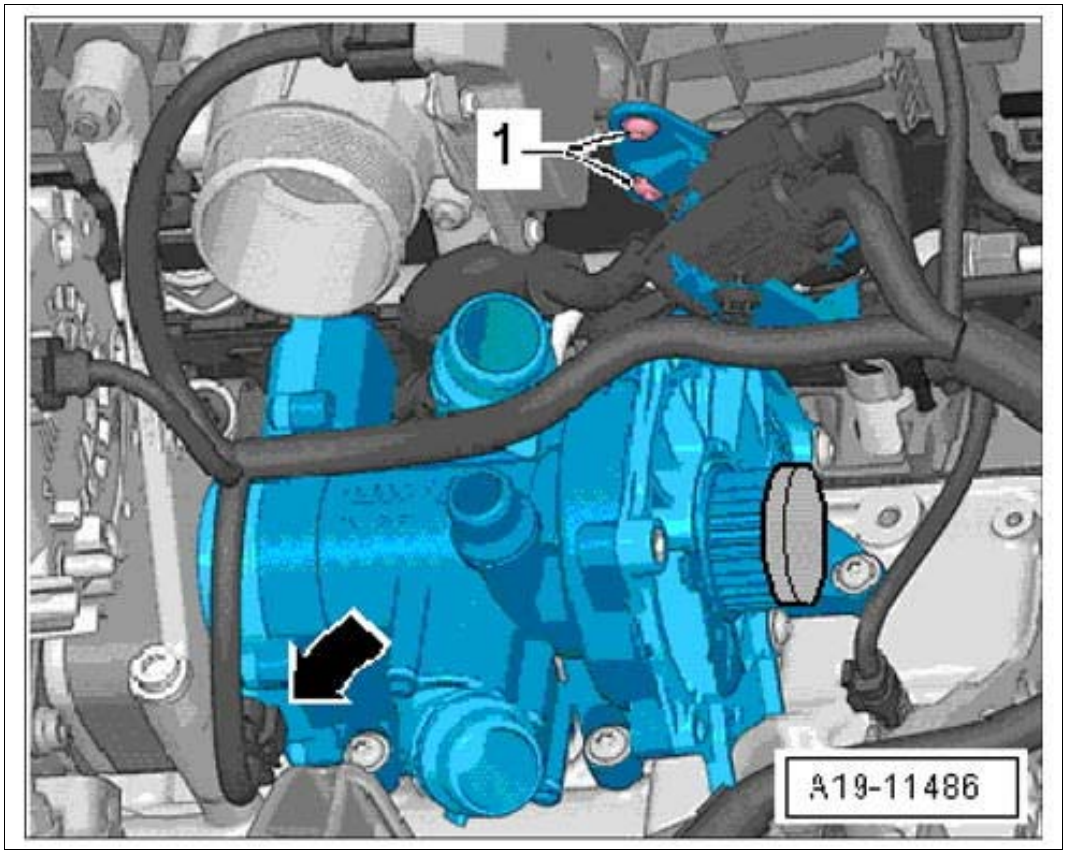

Courtesy of PORSCHE CARS NORTH AMERICA, INC.

WM 195519 REMOVING AND INSTALLING COOLANT REGULATOR HOUSING (MACAN) > REMOVING > REMOVING COOLANT REGULATOR HOUSING

1. Remove coolant regulator housing.
    1. 1.1. Unscrew screws **-1...5-** . Disregard arrow.
    2. 1.2. Lift coolant regulator housing off the centering pins and pull it off the oil cooler.

Fig 1: Locating Coolant Regulator Housing

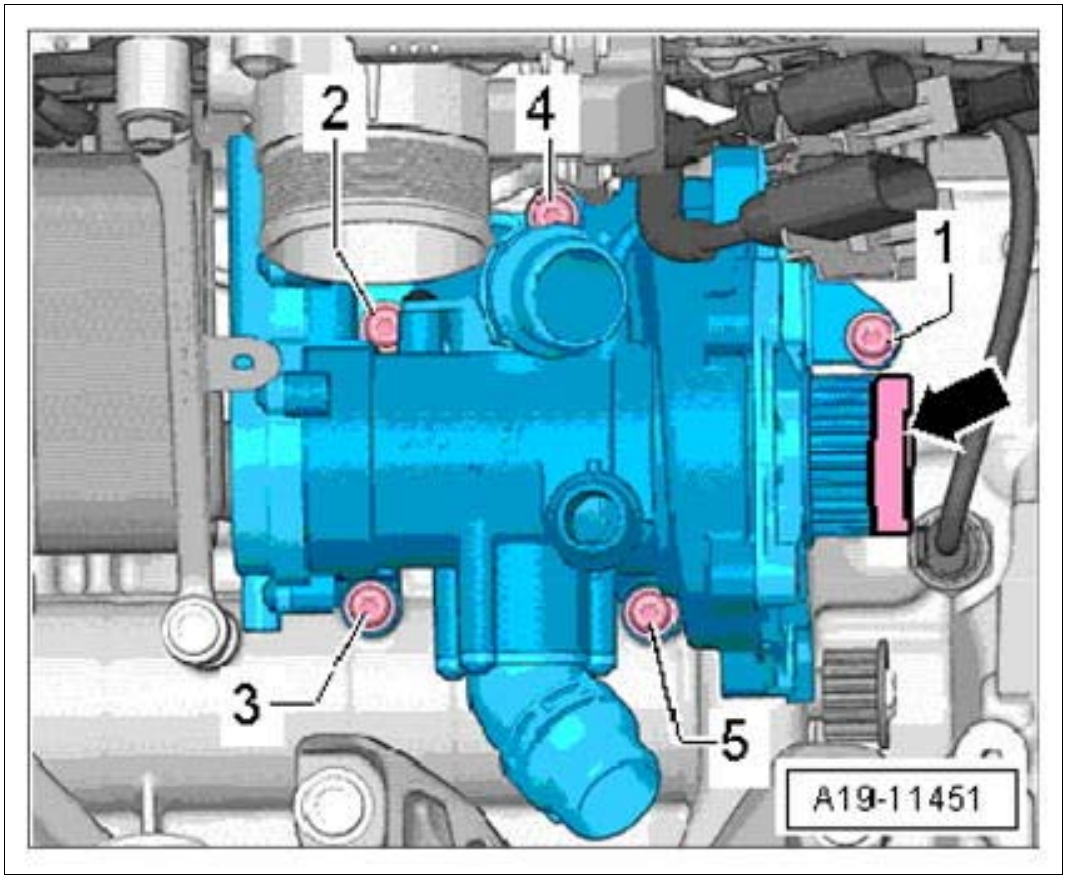

Courtesy of PORSCHE CARS NORTH AMERICA, INC.

WM 195519 REMOVING AND INSTALLING COOLANT REGULATOR HOUSING (MACAN) > INSTALLING > INSTALLING COOLANT REGULATOR HOUSING

1. Prepare for installing the coolant regulator housing.
    1. 1.1. Replace O-rings **-4-** and coat new rings with coolant.
    2. 1.2. Check that both centering pins are inserted in the cylinder block and insert them if necessary.
    3. 1.3. Insert connecting piece **-2-** in the oil cooler.

Fig 1: Identifying Coolant Regulator Housing

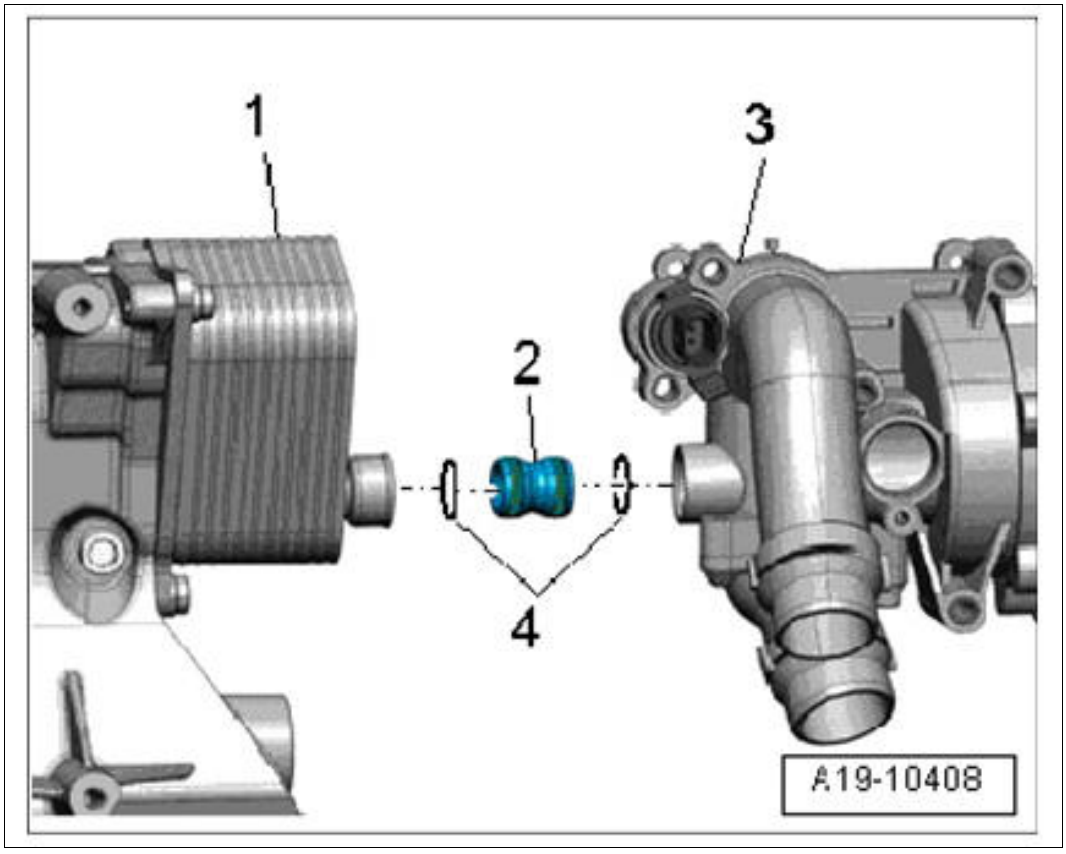

Courtesy of PORSCHE CARS NORTH AMERICA, INC.

2. Push the coolant regulator housing onto the connecting piece and centering pins.

3. Fit and tighten screws **-1... 5-** . **Tightening torque: 9 Nm (6.5 ftlb.)**

Fig 2: Coolant Regulator Housing Screws Tightening Sequence

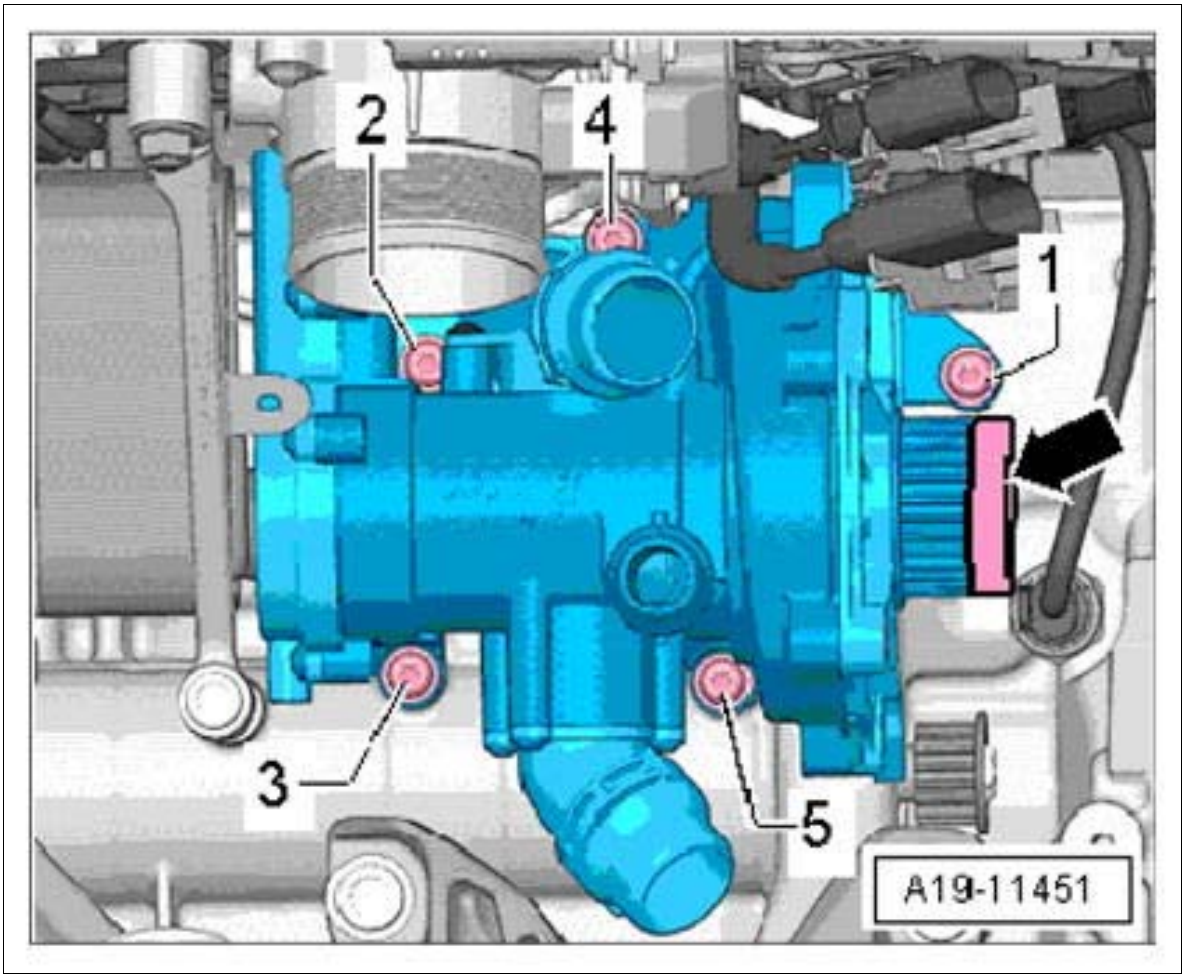

Courtesy of PORSCHE CARS NORTH AMERICA, INC.

4. Secure plug connections.
    1. 4.1. Connect plug connection to the coolant regulator housing **-arrow-** .
    2. 4.2. Secure holder for electric connector **-1-** .

Fig 3: Locating Coolant Regulator Housing

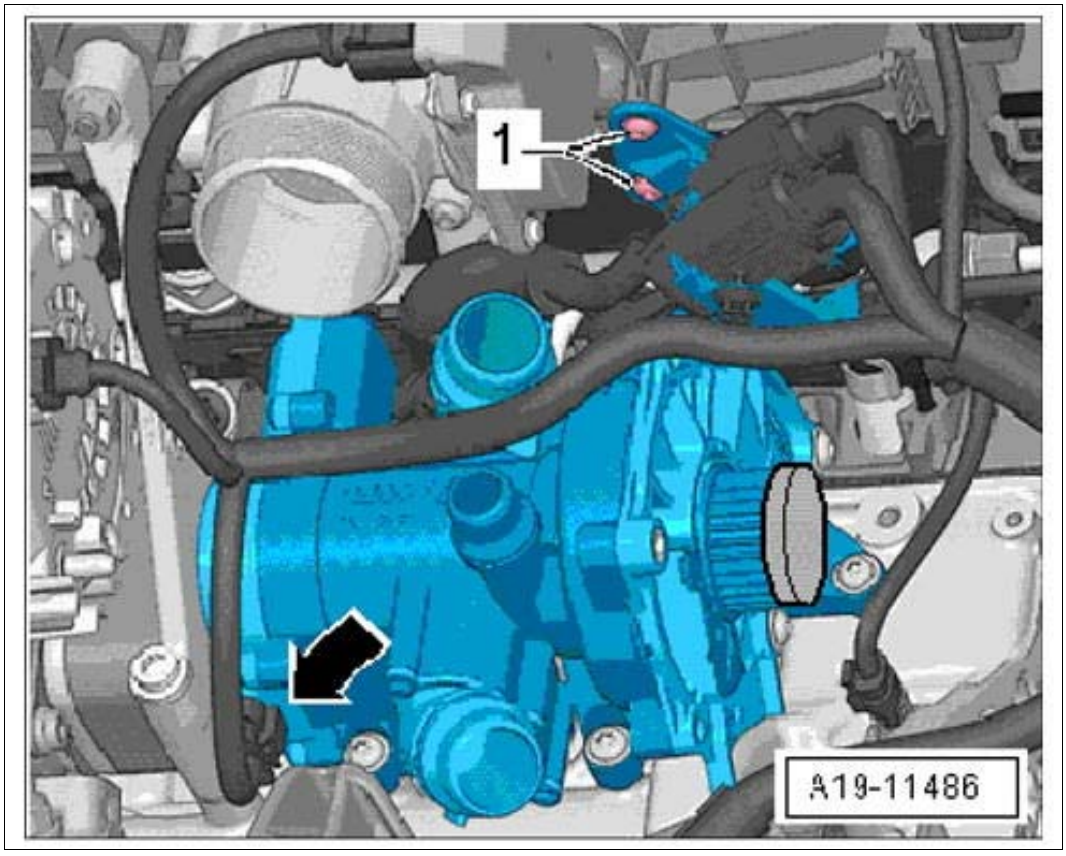

Courtesy of PORSCHE CARS NORTH AMERICA, INC.

WM 195519 REMOVING AND INSTALLING COOLANT REGULATOR HOUSING (MACAN) > SUBSEQUENT WORK

1. Install coolant pump. → INSTALLING COOLANT PUMP .

    1. 1.1. If a new coolant pump was installed, the protection cap **-arrow-** must be removed.

Fig 1: Locating Coolant Pump

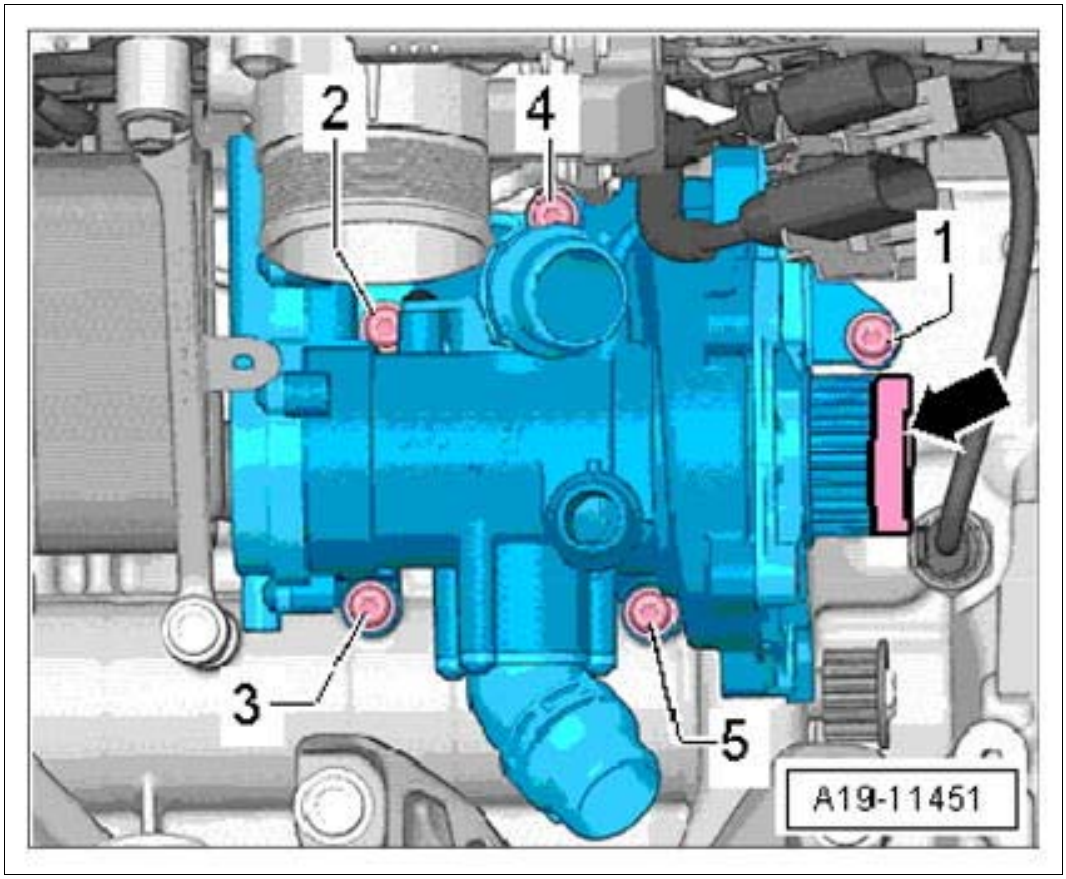

Courtesy of PORSCHE CARS NORTH AMERICA, INC.

2. Connect coolant hoses.
3. Install throttle housing. → INSTALLING THROTTLE HOUSING .
4. Fill in coolant. → FILLING COOLANT includes bleeding.

WM 195819 REMOVING AND INSTALLING COOLANT REGULATOR (MACAN S) > INFORMATION > INFORMATION ON COOLANT REGULATOR

1. **The coolant regulator cannot be replaced separately! It can only be replaced together with the coolant regulator housing** . Procedure: → 195519 REMOVING AND INSTALLING COOLANT REGULATOR HOUSING

WM 197019 REMOVING AND INSTALLING RADIATOR (MACAN S, MACAN TURBO) > TECHNICAL VALUES

Location	Description	Type	Basic value	Tolerance 1	Tolerance 2
Fastening	7 x 16.0	Tightening	4.5 Nm (3 ftlb.)	+/-0.5 Nm (+/-	

screw on front holder		torque		0.5 ftlb.)	
Fastening screw securing charge-air cooler to radiator holder	6 x 25.0	Tightening torque	4.5 Nm (3 ftlb.)	+/-0.5 Nm (+/-0.5 ftlb.)	

WM 197019 REMOVING AND INSTALLING RADIATOR (MACAN S, MACAN TURBO) > PRELIMINARY WORK

1. Drain coolant. → 193817 DRAINING AND FILLING COOLANT
2. Loosen rear air guide and set it aside. → 192419 REMOVING AND INSTALLING AIR GUIDE
3. Remove condenser. → 875019 REMOVING AND INSTALLING CONDENSER

WM 197019 REMOVING AND INSTALLING RADIATOR (MACAN S, MACAN TURBO) > REMOVING RADIATOR

> *WARNING: ATF!*
>
> - *Possible danger of injury or damage (swollen hoses, skin irritation, danger of slipping, etc.)*

→ Before lines are opened, place a cloth underneath them!

→ Components that come into contact with ATF must be cleaned IMMEDIATELY with water!

→ Take appropriate protective measures (e.g. use gloves, safety goggles, oil binding material)

→ Collect emerging ATF!

> *CAUTION: Hot components*
>
> - *Risk of burns*

→ Let hot components cool down.

→ Wear personal protective gear.

1. Release ATF lines **-1 and 2-** at the top of the engine compartment **-arrows-** and disconnect them.
    1. 1.1. Soak up emerging ATF with a cloth.

Fig 1: Locating ATF Lines

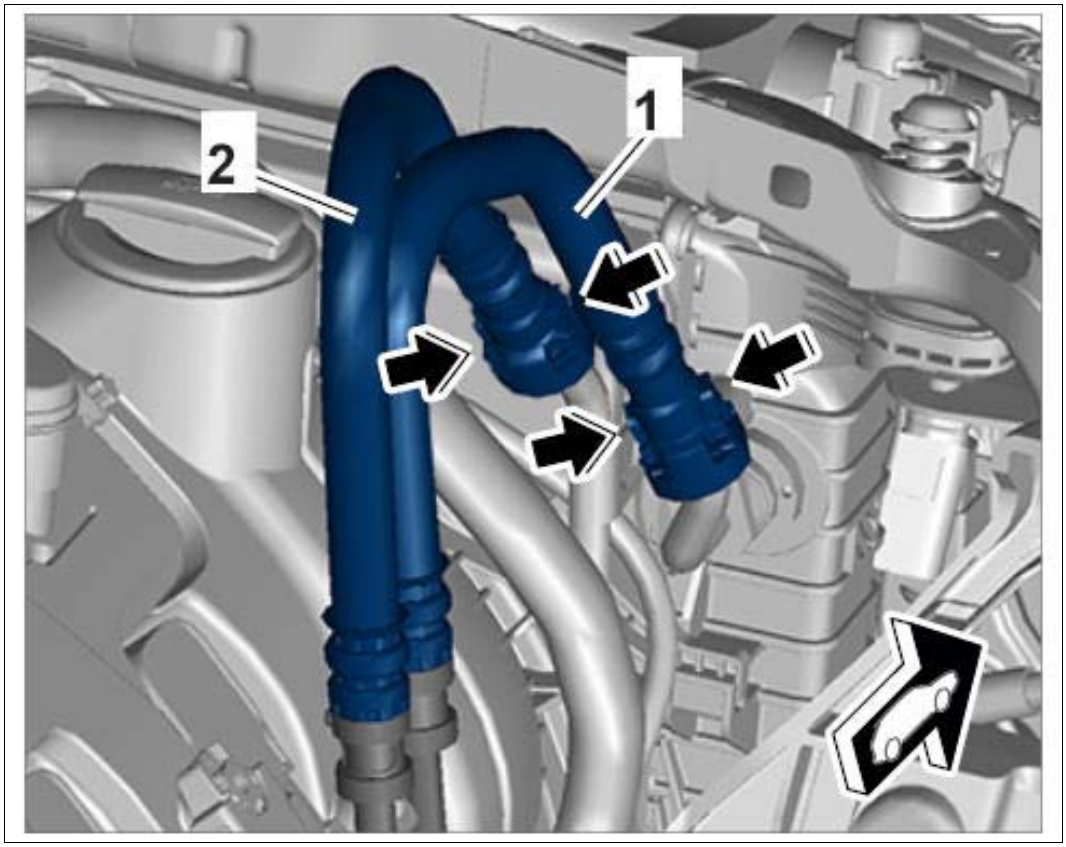

Courtesy of PORSCHE CARS NORTH AMERICA, INC.

2. Release vacuum line **-1-** from the holders **-arrows-** .

Fig 2: Locating Vacuum Line On Radiator

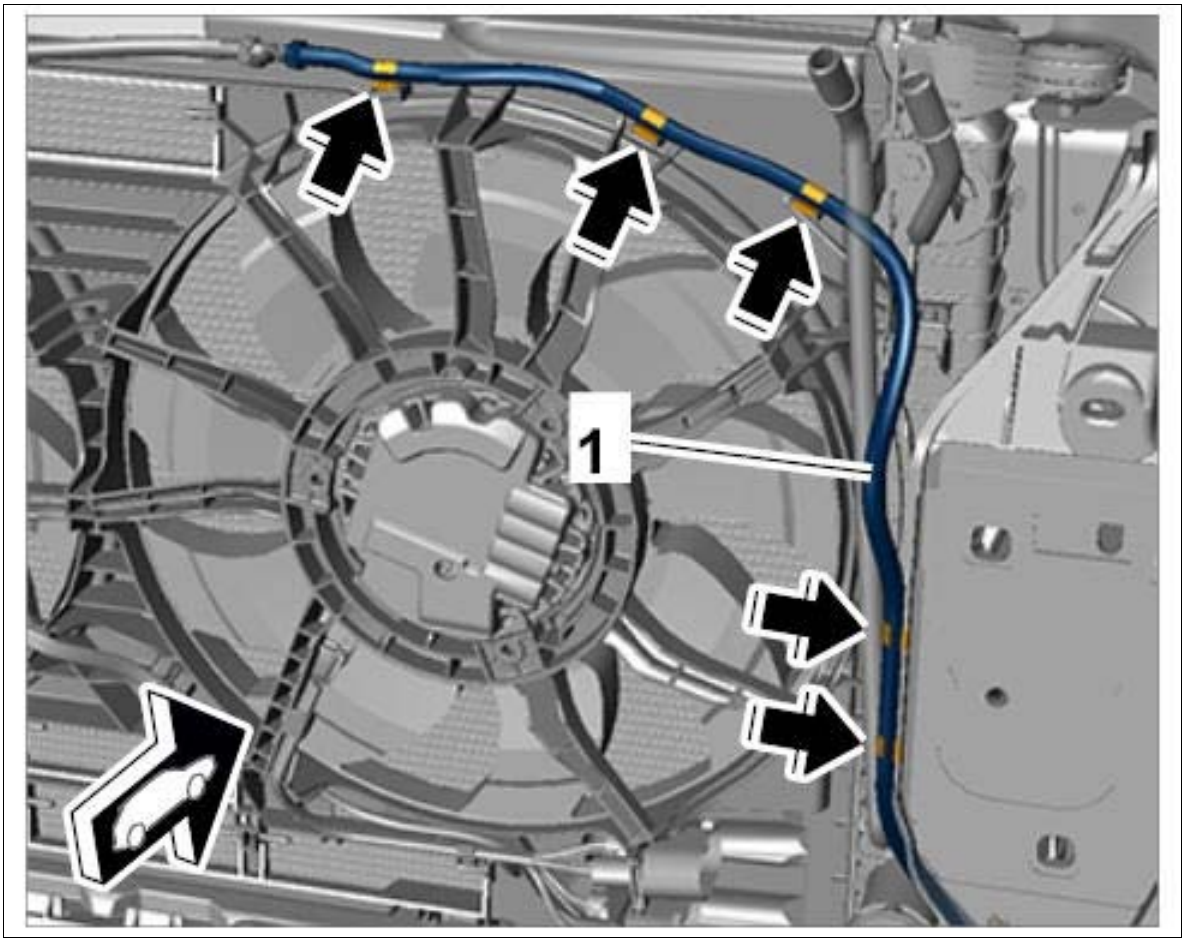

Courtesy of PORSCHE CARS NORTH AMERICA, INC.

3. Release and disconnect electric connectors for fans **-1, 2-** .

Fig 3: Disconnecting Fan Electric Plug Connection

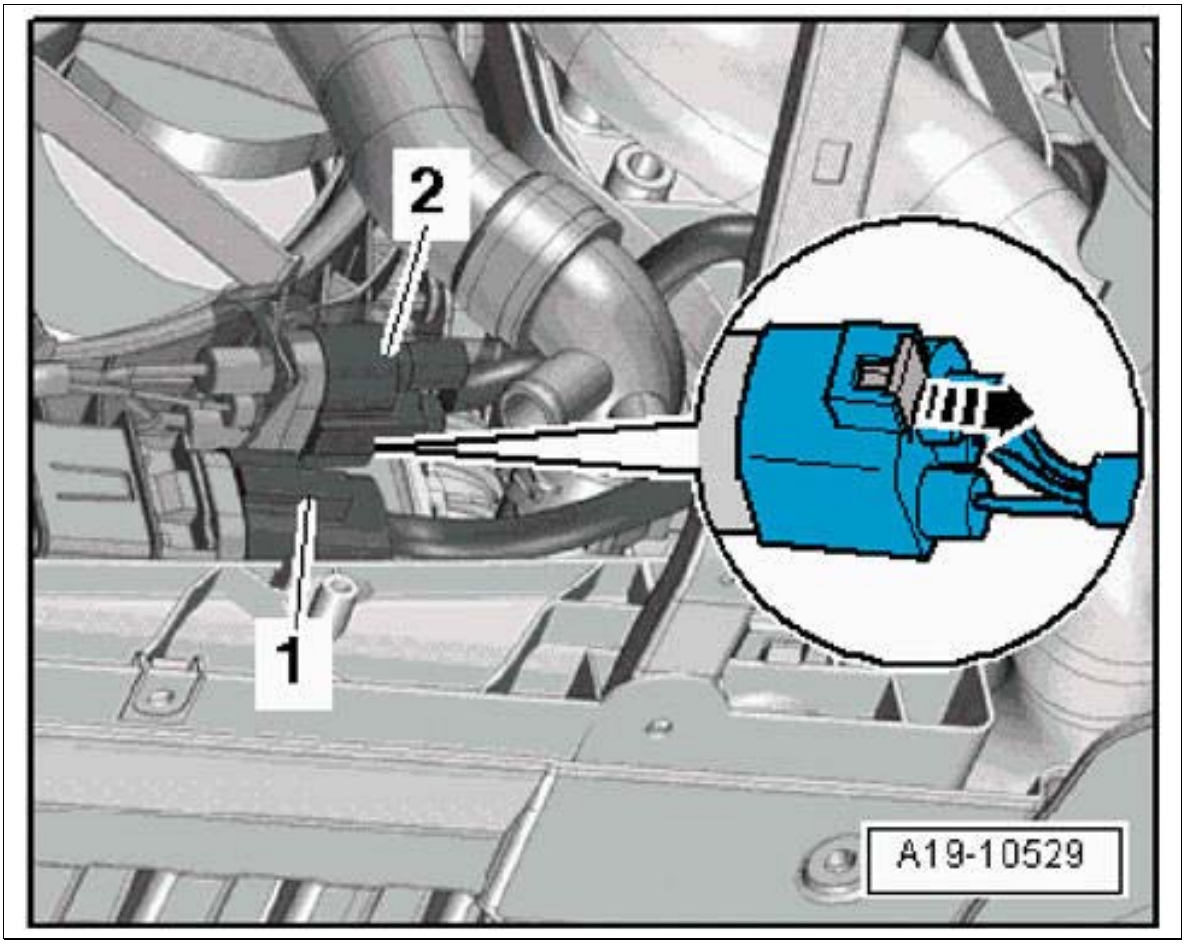

Courtesy of PORSCHE CARS NORTH AMERICA, INC.

4. Release retaining clip **-arrows-** and disconnect upper coolant line **-1-** from the radiator.

Fig 4: Locating Radiator Coolant Line

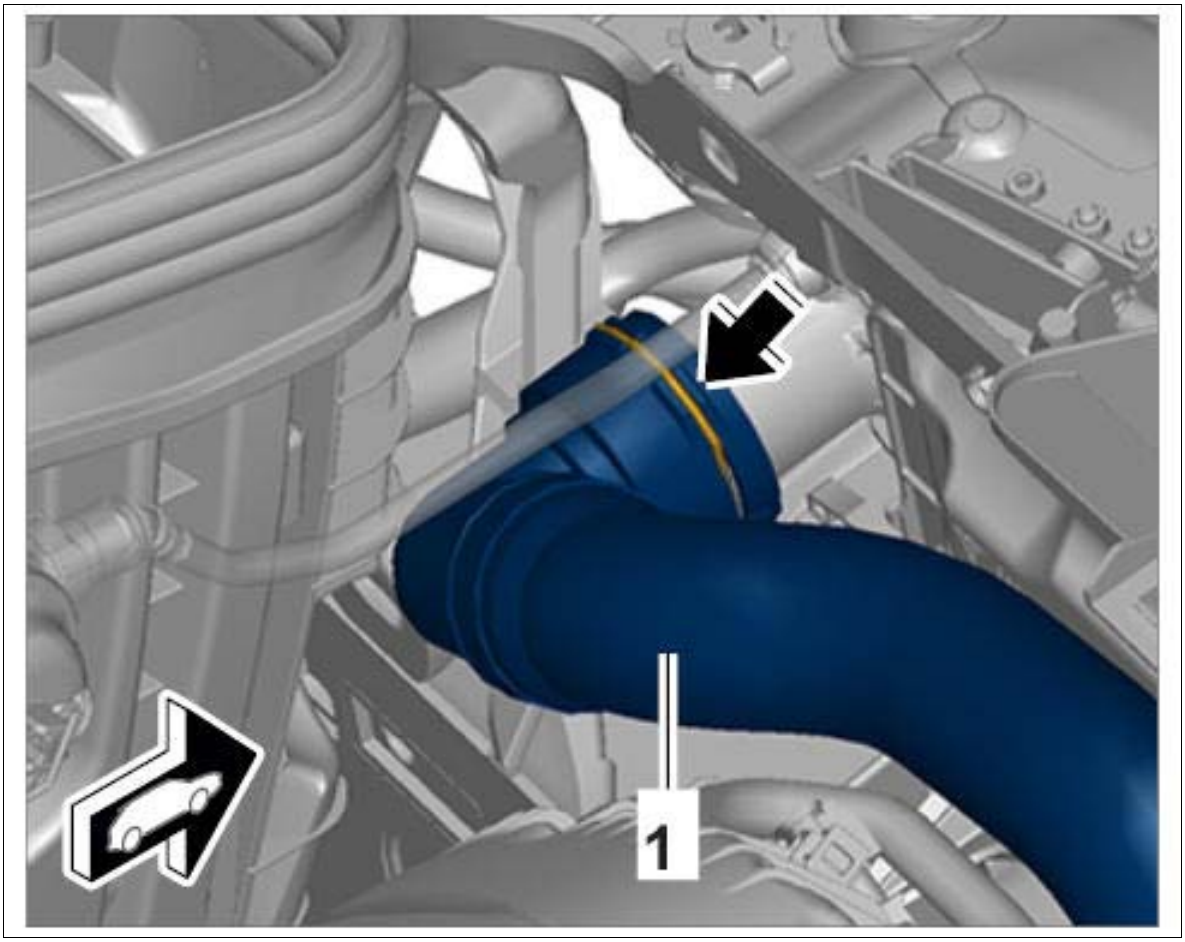

Courtesy of PORSCHE CARS NORTH AMERICA, INC.

5. Disconnect lower coolant line from the radiator.
6. Unscrew screws on the radiator holder.
    1. 6.1. Unscrew screws **-1-** on the holder **-2-** .
    2. 6.2. Unscrew screws **-4-** at the bottom.
    3. 6.3. Lift radiator **-3-** up in direction of travel and remove it by pulling it forward.

Fig 5: Locating Radiator Mounting

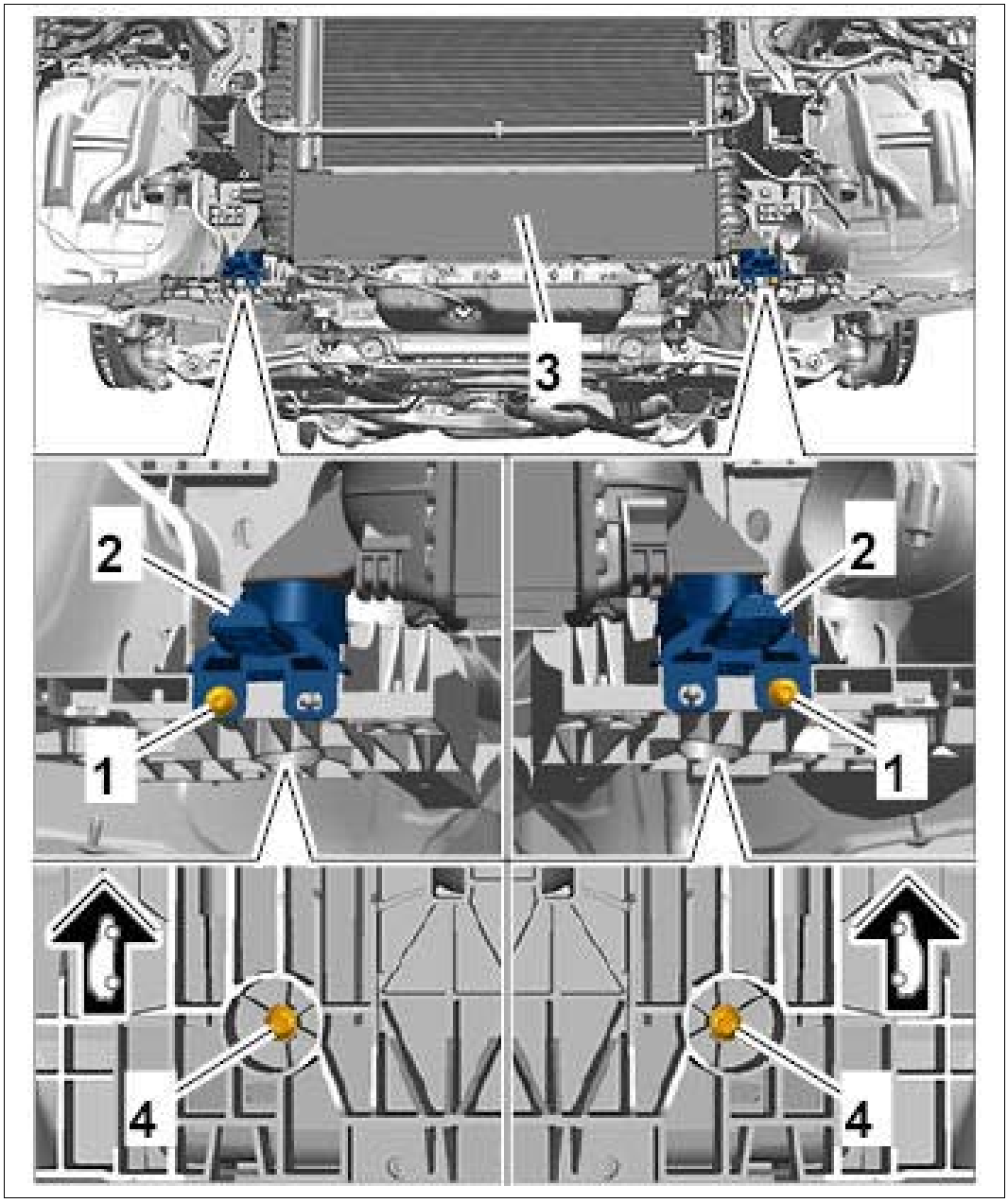

Courtesy of PORSCHE CARS NORTH AMERICA, INC.

WM 197019 REMOVING AND INSTALLING RADIATOR (MACAN S, MACAN TURBO) > INSTALLING RADIATOR

1. Installation is performed in reverse order. Pay particular attention to the following:

    1. 1.1. Tightening torque for screw 1: **Tightening torque: 4.5 Nm (3 ftlb.) +/-0.5 Nm (+/-0.5 ftlb.)**

    2. 1.2. Tightening torque for screw 4: **Tightening torque: 4.5 Nm (3 ftlb.) +/-0.5 Nm (+/-0.5 ftlb.)**

Fig 1: Locating Radiator Mounting

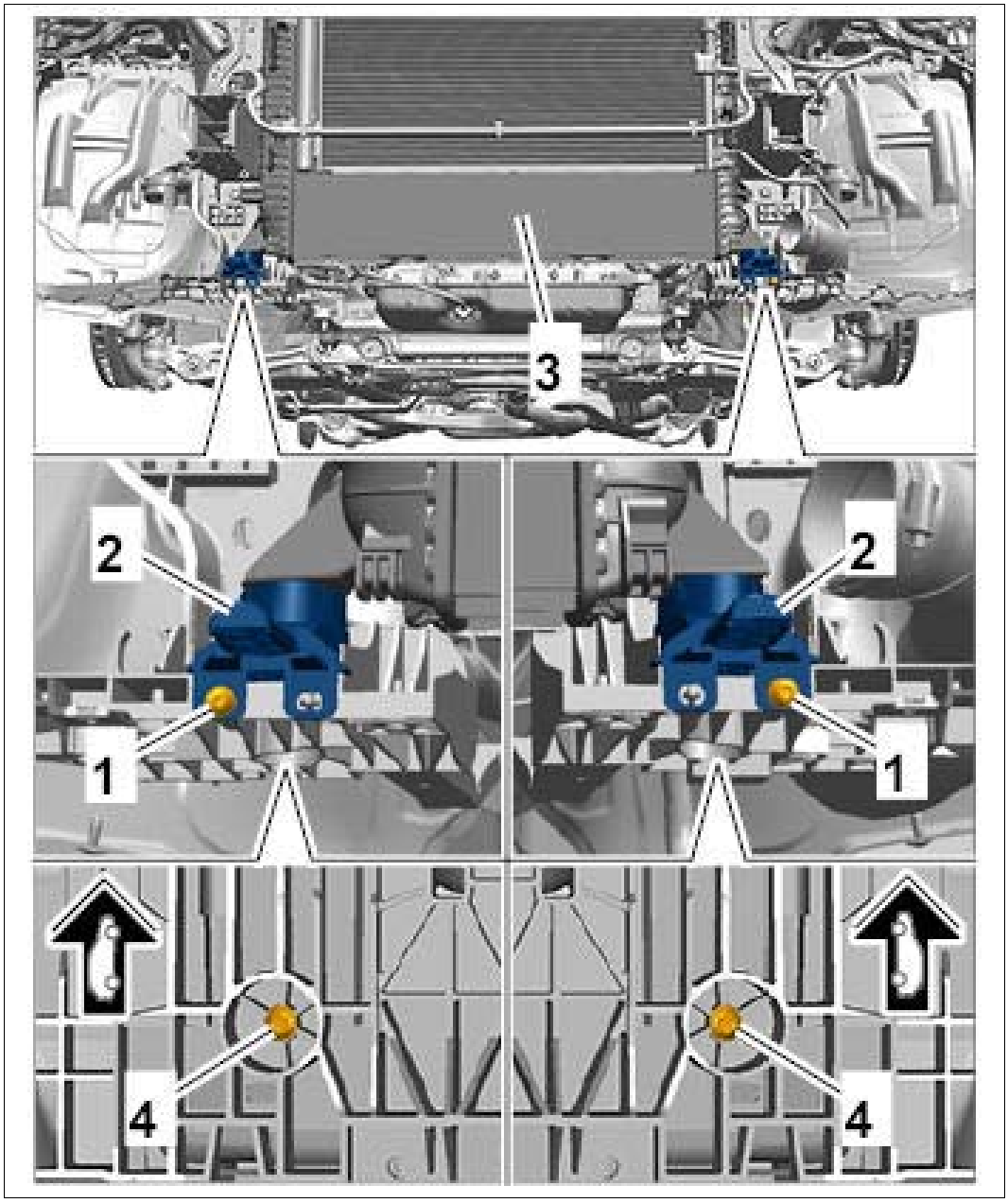

Courtesy of PORSCHE CARS NORTH AMERICA, INC.

WM 197019 REMOVING AND INSTALLING RADIATOR (MACAN S, MACAN TURBO) > SUBSEQUENT WORK

1. Install condenser. → INSTALLING CONDENSER .
2. Secure air guide. → INSTALLING AIR GUIDE .
3. Fill in coolant. → FILLING COOLANT includes bleeding.
4. Check and top up ATF. → 370235 CHECKING AND TOPPING UP ATF

WM 197819 REMOVING AND INSTALLING TEMPERATURE SENSOR (MACAN S, MACAN TURBO) > INFORMATION > COMPONENT OVERVIEW

Fig 1: Overview Of Temperature Sensor

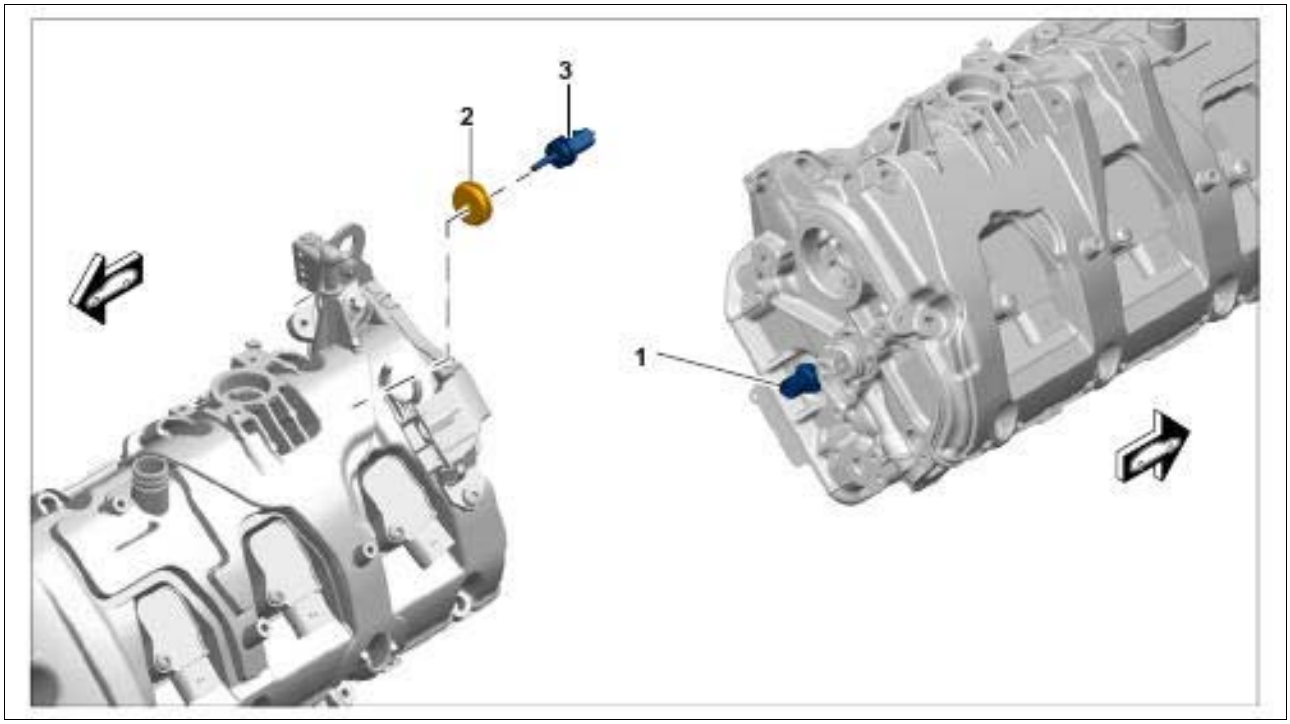

Courtesy of PORSCHE CARS NORTH AMERICA, INC.

1. Temperature sensor (installation position, cylinder 3)
2. Grommet
3. Temperature sensor for engine compartment (installation position, cylinder 6)

The removal and installation instructions in this section relate to the coolant temperature sensor.

WM 197819 REMOVING AND INSTALLING TEMPERATURE SENSOR (MACAN S, MACAN TURBO) > PRELIMINARY WORK

1. Remove design cover.
2. Drain coolant. → 193817 DRAINING AND FILLING COOLANT (INCLUDES BLEEDING)

WM 197819 REMOVING AND INSTALLING TEMPERATURE SENSOR (MACAN S, MACAN TURBO) > REMOVING TEMPERATURE SENSOR

1. Release and disconnect electric plug connection **-1-** on the temperature sensor **-2-** .

Fig 1: Disconnecting Electric Plug Connection For Temperature Sensor

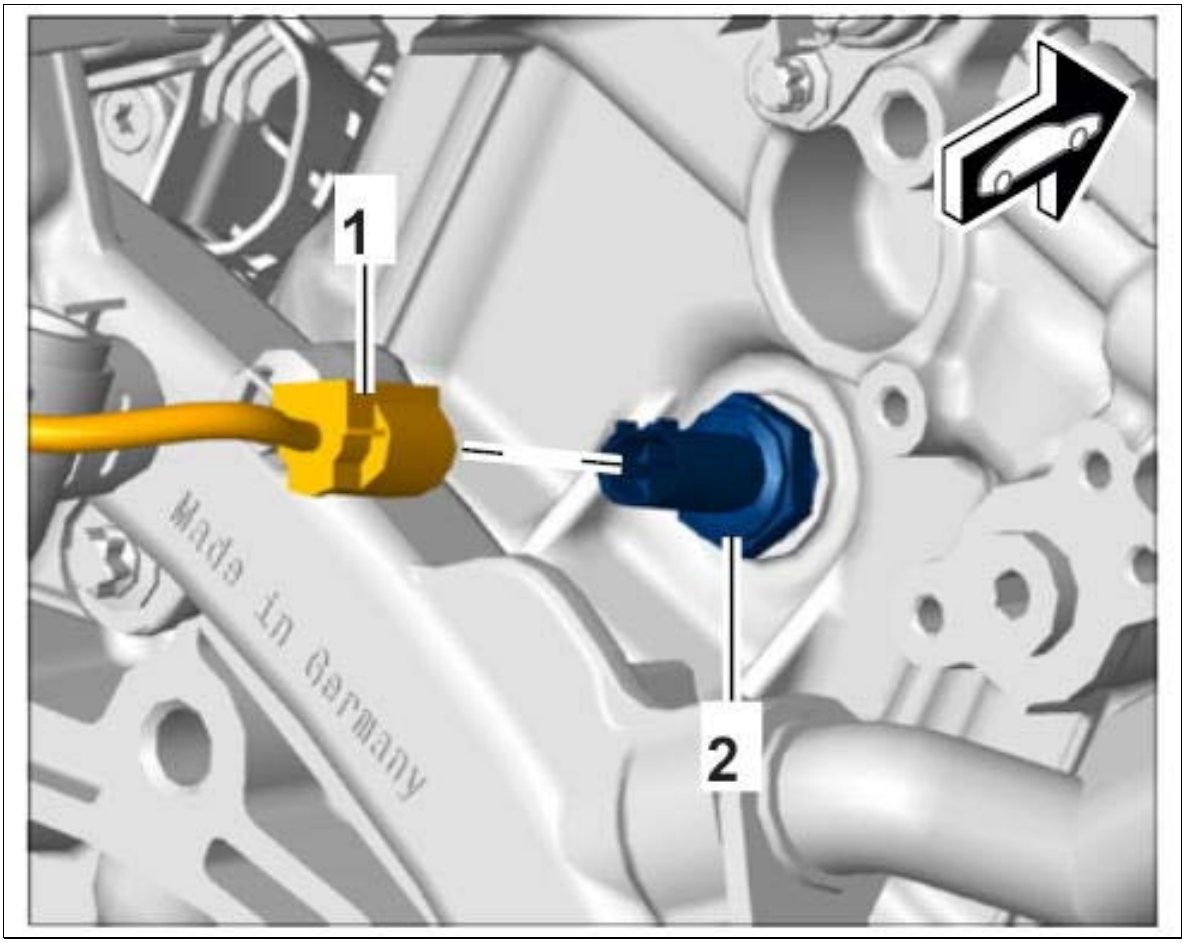

Courtesy of PORSCHE CARS NORTH AMERICA, INC.

2. Unscrew temperature sensor **-1-** from the cylinder head.

Fig 2: Removing Temperature Sensor

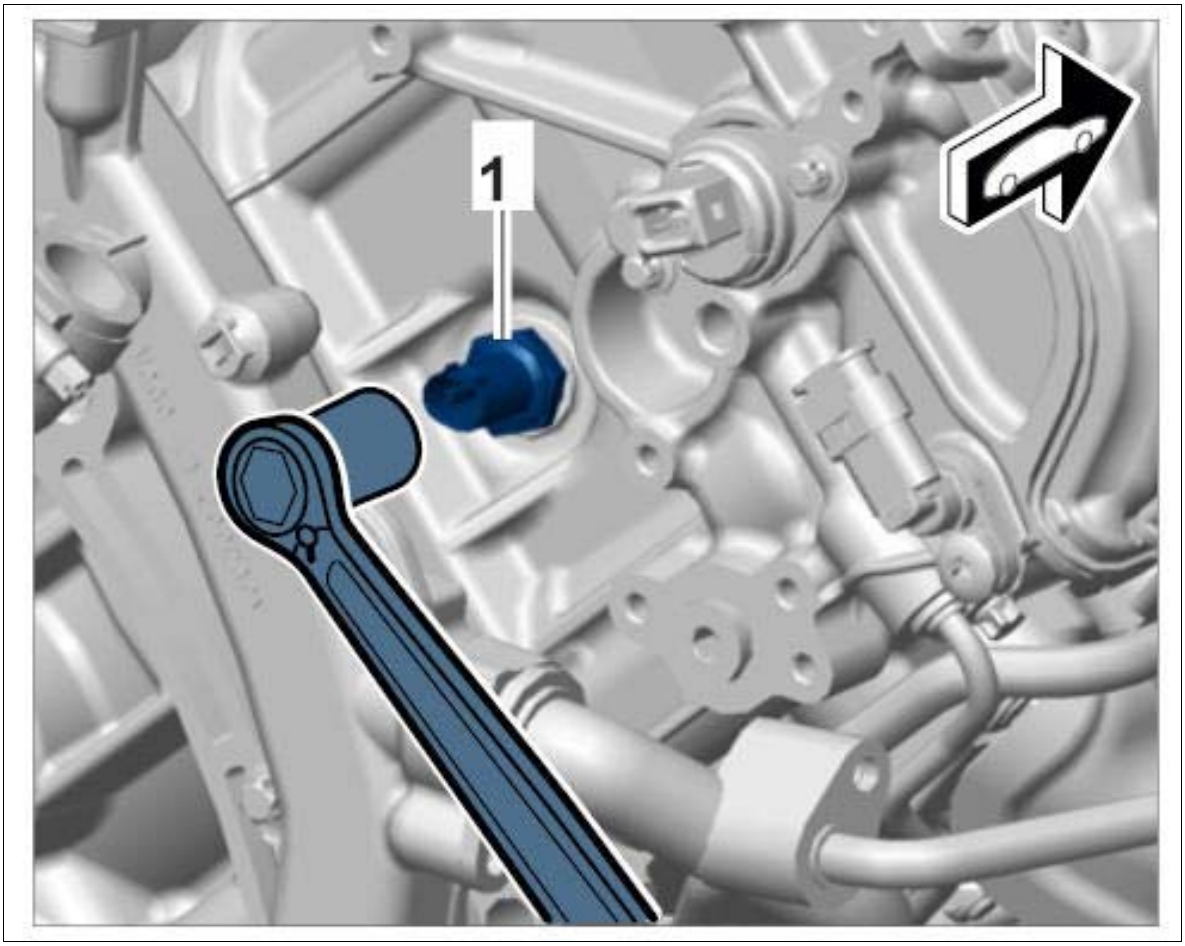

Courtesy of PORSCHE CARS NORTH AMERICA, INC.

WM 197819 REMOVING AND INSTALLING TEMPERATURE SENSOR (MACAN S, MACAN TURBO) > INSTALLING TEMPERATURE SENSOR

1. Fit temperature sensor into the cylinder head and screw it in. Tighten temperature sensor.
2. Plug in and lock electric plug connection on the temperature sensor.

WM 197819 REMOVING AND INSTALLING TEMPERATURE SENSOR (MACAN S, MACAN TURBO) > SUBSEQUENT WORK

1. Fill in coolant and bleed the system. → FILLING COOLANT includes bleeding.
2. Install engine cover.

Service Manual: 1X - ENGINE - GENERAL -- (95B) - MACAN

WM 1X00IN TECHNICAL VALUES (MACAN) > TECHNICAL VALUES

Location	Description	Type	Basic value	Tolerance 1	Tolerance 2
Aluminum screw, M6	AL9	Initial tightening	4 Nm (3 ftlb.)		
Aluminum screw, M6	AL9	Final tightening	90°		
Aluminum screw, M8	AL9	Initial tightening	10 Nm (7.5 ftlb.)		
Aluminum screw, M8	AL9	Final tightening	90°		
Aluminum screw, M10	AL9	Initial tightening	20 Nm (15 ftlb.)		
Aluminum screw, M10	AL9	Final tightening	90°		
Fastening screw for mounting saddle	Replace	Initial tightening	65 Nm (48 ftlb.)		
Fastening screw for mounting saddle		Final tightening	+90°		
Fastening screw for sensor wheel	Replace	Initial tightening	10 Nm (7.5 ftlb.)		
Fastening screw for sensor wheel		Final tightening	+90°		
Fastening screw for mounting saddle	At the sides, replace	Initial tightening	20 Nm (15 ftlb.)		
Fastening screws for mounting saddle	At the sides	Final tightening	+90°		
Fastening screw for mounting saddle		Initial tightening	65 Nm (48 ftlb.)		
Fastening screw for mounting saddle		Final tightening	+90°		
Fastening screw for mounting saddle		Initial tightening	20 Nm (15 ftlb.)		

Fastening screw for mounting saddle		Final tightening	+90 Nm		
Fastening screw for balance shaft	Replace	Initial tightening	4 Nm (3 ftlb.)		
Fastening screw for balance shaft		Final tightening	+45°		
Fastening screw for balance shaft	Replace	Initial tightening	4 Nm (3 ftlb.)		
Fastening screw for balance shaft		Final tightening	+45°		
Fastening screw securing solenoid hydraulic valve for camshaft control	Replace	Initial tightening	4 Nm (3 ftlb.)		
Fastening screw securing solenoid hydraulic valve for camshaft control		Final tightening	+45°		
Fastening screw for chain housing cover, upper		Tightening torque	9 Nm (6.5 ftlb.)		
Fastening screw for chain housing cover, lower		Initial tightening	8 Nm (6 ftlb.)		
Fastening screw for chain housing cover, lower		Final tightening	+45°		
Fastening screw securing guide for oil dipstick		Tightening torque	9 Nm (6.5 ftlb.)		
Fastening screw for chain housing cover		Tightening torque	8 Nm (6 ftlb.)		
Fastening screw for chain housing cover		Tightening torque	+45°		
Fastening screw on cylinder head cover	Observe specified sequence	Initial tightening	8 Nm (6 ftlb.)		

Fastening screw on cylinder head cover	Observe specified sequence	Final tightening	+90°		
Fastening screw for solenoid hydraulic valve for valve lift adjustment		Tightening torque	5 Nm (3.5 ftlb.)		
Ball pin for engine cover		Tightening torque	9 Nm (6.5 ftlb.)		
Fastening screw for hall sender on outlet side		Tightening torque	10 Nm (7.5 ftlb.)		
Fastening screw for oil separator	Observe specified sequence	Tightening torque	9 Nm (6.5 ftlb.)		
Fastening screw for hall sender on intake side		Tightening torque	9 Nm (6.5 ftlb.)		
Fastening screw on holder		Tightening torque	9 Nm (6.5 ftlb.)		
Fastening screw for oil separator		Tightening torque	9 Nm (6.5 ftlb.)		
Fastening nut Oil level sensor		Tightening torque	9 Nm (6.5 ftlb.)		
Fastening screw for lower part of oil pan		Initial tightening	8 Nm (6 ftlb.)		
Fastening screw for lower part of oil pan		Final tightening	+90°		
Fastening screw for intake pipe		Initial tightening	4 Nm (3 ftlb.)		
Fastening screw for intake pipe		Final tightening	+45°		
Fastening screw for pressure-regulating valve		Initial tightening	4 Nm (3 ftlb.)		
Fastening screw for pressure-regulating valve		Final tightening	+90°		
Fastening screw for chain		Tightening torque	9 Nm (6.5 ftlb.)		

tensioner					
Fastening screw Upper part of oil pan		Tightening torque	8 Nm (6 ftlb.)		
Fastening screw for oil return pipe		Initial tightening	4 Nm (3 ftlb.)		
Fastening screw for oil return pipe		Final tightening	+45°		
Fastening screw for oil pump		Initial tightening	8 Nm (6 ftlb.)		
Fastening screw for oil pump		Final tightening	+90°		
Fastening screw for oil plate		Initial tightening	4 Nm (3 ftlb.)		
Fastening screw for oil plate		Final tightening	+45°		
Fastening screw for lower part of oil pan		Tightening torque	8 Nm (6 ftlb.)		
Fastening screw for lower part of oil pan		Final tightening	+90°		
Fastening screw for upper part of oil pan		Contact force	8 Nm (6 ftlb.)		
Fastening screw for upper part of oil pan		Final tightening	+180°		
Fastening screw for upper part of oil pan		Final tightening	+45°		
Fastening screw for upper part of oil pan		Final tightening	+180°		
Fastening screw for upper part of oil pan		Final tightening	+90°		
Fastening screw for oil cooler		Initial tightening	8 Nm (6 ftlb.)		
Fastening screw for oil cooler		Final tightening	+45°		

Fastening screw securing hose to oil separator		Tightening torque	4 Nm (3 ftlb.)		
Fastening screw for oil separator		Tightening torque	9 Nm (6.5 ftlb.)		
Oil-filter housing		Tightening torque	+25 Nm (+19 ftlb.)		
Fastening screw for oil cooler bracket		Initial tightening	20 Nm (15 ftlb.)		
Fastening screw for oil cooler bracket		Final tightening	+90°		
Fastening screw for pressure-regulating valve		Initial tightening	4 Nm (3 ftlb.)		
Fastening screw for pressure-regulating valve		Final tightening	+90°		
Fastening screw securing control valve for piston cooling nozzles		Initial tightening	4 Nm (3 ftlb.)		
Fastening screw securing control valve for piston cooling nozzles		Final tightening	45°		
Oil pressure switch		Tightening torque	20 Nm (15 ftlb.)		
Oil pressure switch for reduced oil pressure		Tightening torque	20 Nm (15 ftlb.)		
Oil pressure switch		Tightening torque	20 Nm (15 ftlb.)		
Fastening screw for actuator		Tightening torque	9 Nm (6.5 ftlb.)		
Fastening screw for coolant pump		Tightening torque	9 Nm (6.5 ftlb.)		
Fastening screw for cover for toothed belt		Tightening torque	9 Nm (6.5 ftlb.)		

Fastening screw for toothed-belt drive wheel		Initial tightening	10 Nm (7.5 ftlb.)		
Fastening screw for toothed-belt drive wheel		Final tightening	+90°		
Fastening screw for left coolant pipe		Tightening torque	9 Nm (6.5 ftlb.)		
Fastening screw for right coolant pipe		Tightening torque	23 Nm (17 ftlb.)		
Fastening screw for right coolant pipe		Tightening torque	9 Nm (6.5 ftlb.)		
Fastening screw for right coolant pipe		Tightening torque	23 Nm (17 ftlb.)		
Fastening screw for left coolant pipe		Tightening torque	9 Nm (6.5 ftlb.)		

WM 1X00IN TECHNICAL VALUES (MACAN) > OVERVIEW

Information

- The tightening steps in the tightening sequences relate to tightening screws uniformly, i.e. all affected screws must first be tightened uniformly to the first torque value, then all screws are tightened one stage further, and so on.
- Replace all O-rings following removal!

The torques in the table below generally apply to screws that are not specifically listed =>

The bolt quality is indicated on the screw head at the top as a decimal number, e.g. "8.8" or "12.9".

Bolt quality 8.8		Bolt quality 10.9		Bolt quality 12.9	
Thread	[Nm (ftlb.)]	Thread	[Nm (ftlb.)]	Thread	[Nm (ftlb.)]
M4	3 (2)	M4	4 (3)	M4	5 (3.5)
M5	6 (4.5)	M5	8 (6)	M5	10 (7.5)
M6	10 (7.5)	M6	13 (9.5)	M6	16 (12)
M8	23 (17)	M8	33 (24)	M8	39 (29)

M10	45 (33)	M10	65 (48)	M10	80 (59)
M10 x 1.25	50 (37)	M10 x 1.25	70 (52)	M10 x 1.25	85 (63)
M12	80 (59)	M12	115 (85)	M12	135 (100)
M12 x 1.25	90 (67)	M12 x 1.25	125 (93)	M12 x 1.25	150 (111)
M12 x 1.5	85 (63)	M12 x 1.5	120 (89)	M12 x 1.5	145 (107)
M14	130 (96)	M14	180 (133)	M14	220 (163)
M16	200 (148)	M16	280 (204)	M16	335 (248)

Aluminum Screws

Thread	Strength	Tightening procedure
M6	AL9	→ **Initial tightening: 4 Nm (3 ftlb.)** and → **Final tightening: 90°** or yield-point wrench.
M8	AL9	→ **Initial tightening: 10 Nm (7.5 ftlb.)** and → **Final tightening: 90°** or yield-point wrench.
M10	AL9	→ **Initial tightening: 20 Nm (15 ftlb.)** and → **Final tightening: 90°** or yield-point wrench.

WM 1X00IN TECHNICAL VALUES (MACAN) > GROUP 13 > CRANKSHAFT

Fig 1: Identifying Crankshaft Components

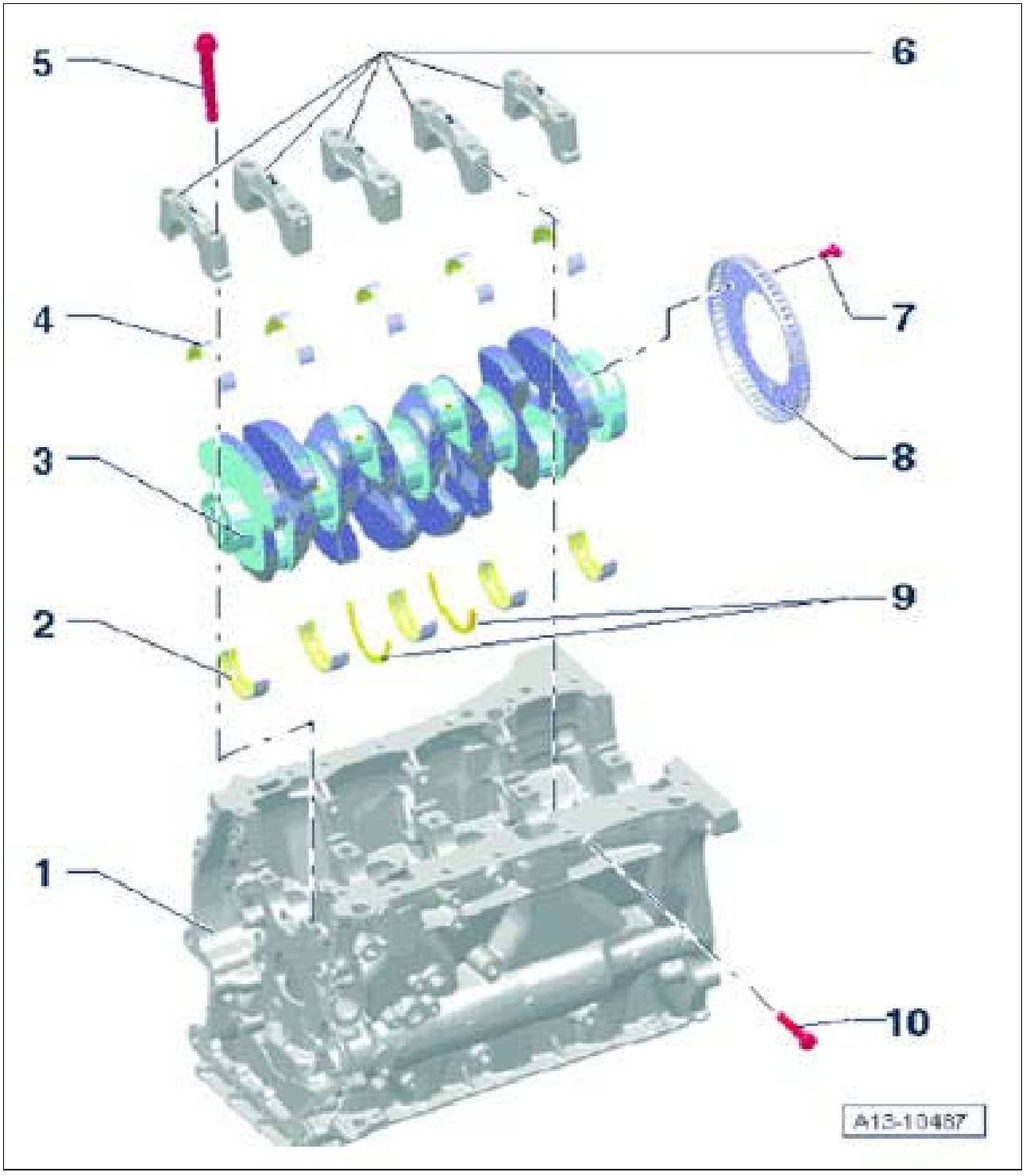

Courtesy of PORSCHE CARS NORTH AMERICA, INC.

1. Cylinder block
2. Crankshaft bearings **with lubricating groove, coat with oil, mark used bearing shells, do not confuse**
3. Crankshaft, **be careful with the sensor wheel after removing the crankshaft**
4. Crankshaft bearings **without lubricating groove, coat with oil, mark used bearing shells,**

do not confuse

5. Screw/**replace/observe specified tightening sequence → Initial tightening: 65 Nm (48 ftlb.) → Final tightening: +90°**
6. Mounting saddle, **mounting saddle no. 1: on pulley side**
7. Screw/**replace/replace sensor wheel whenever it is loosened → Initial tightening: 10 Nm (7.5 ftlb.) → Final tightening: +90°**
8. Sensor wheel/**Can only be fitted at one position, replace sensor wheel whenever it is loosened**
9. Coat thrust washers **with oil**
10. Screw/**replace, observe specified tightening sequence → Initial tightening: 20 Nm (15 ftlb.) → Final tightening: +90°**

    1. step - Screw in screws **-1...10-** and **-arrows A-** and tighten hand-tight

    2. step - Screws **-1...10-** → **Initial tightening: 65 Nm (48 ftlb.)**

    3. step - Screws **-1...10-** → **Final tightening: +90°**

    4. step - Screws **-arrows A-** → **Initial tightening: 20 Nm (15 ftlb.)**

    5. Step - Screws **-arrows A-** → **Final tightening: +90 Nm**

Fig 2: Crankshaft Bearings Screws Tightening Sequence

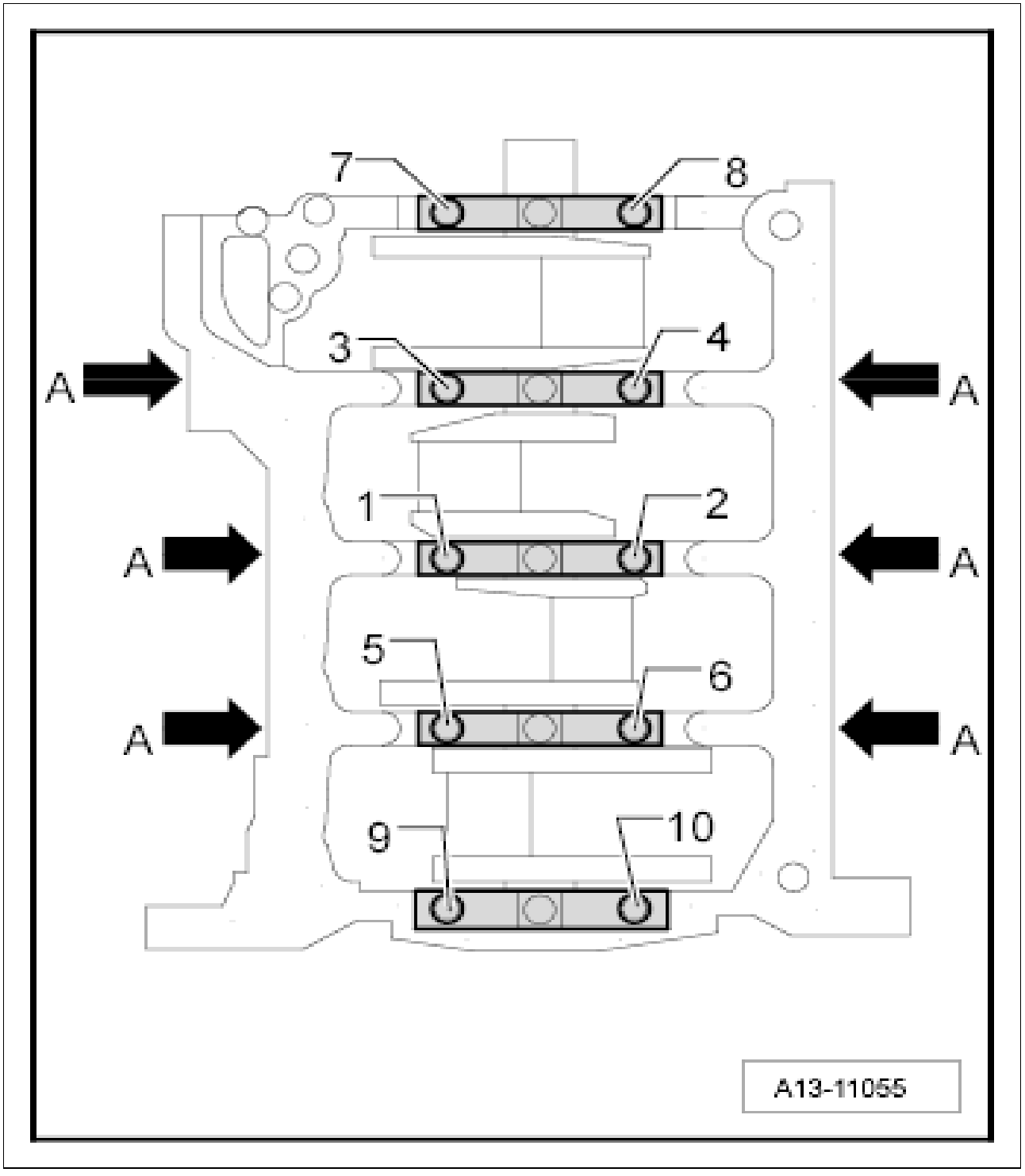

Courtesy of PORSCHE CARS NORTH AMERICA, INC.

WM 1X00IN TECHNICAL VALUES (MACAN) > GROUP 13 > BALANCE SHAFTS

Fig 1: Identifying Balance Shafts Components

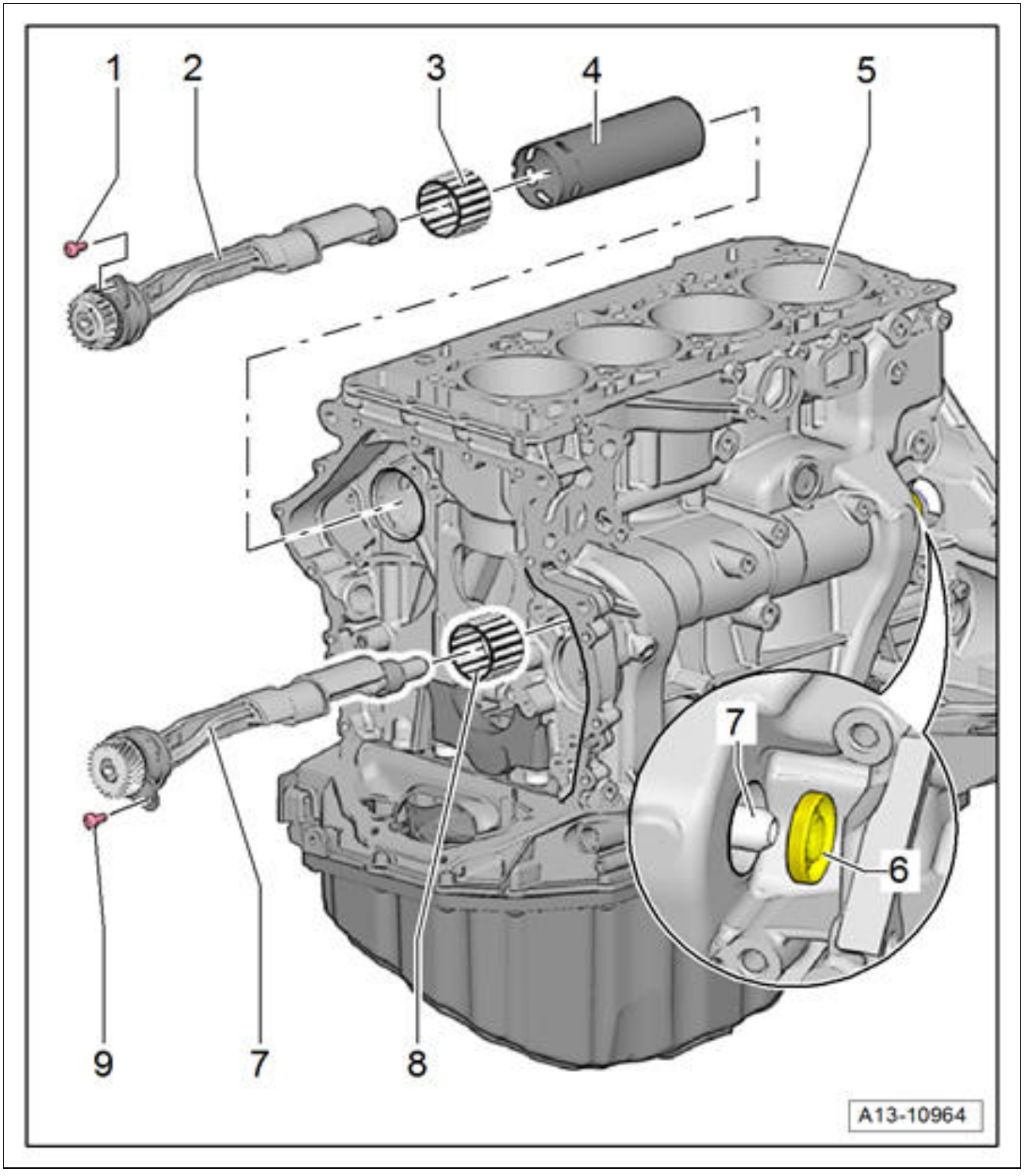

Courtesy of PORSCHE CARS NORTH AMERICA, INC.

1. Screw/**replace → Initial tightening: 4 Nm (3 ftlb.) → Final tightening: +45°**
2. Balance shaft/**replace, coat mount with oil**
3. Needle-roller bearing
4. Pipe for balance shaft/**check installation position**

5. Cylinder block
6. Shaft sealing ring
7. Balance shaft/**replace, coat mount with oil**
8. Needle-roller bearing
9. Screw/**replace → Initial tightening: 4 Nm (3 ftlb.) → Final tightening: +45°**

- Openings -arrow- must be facing the timing chain

Fig 2: Installing Balance Shaft Pipe

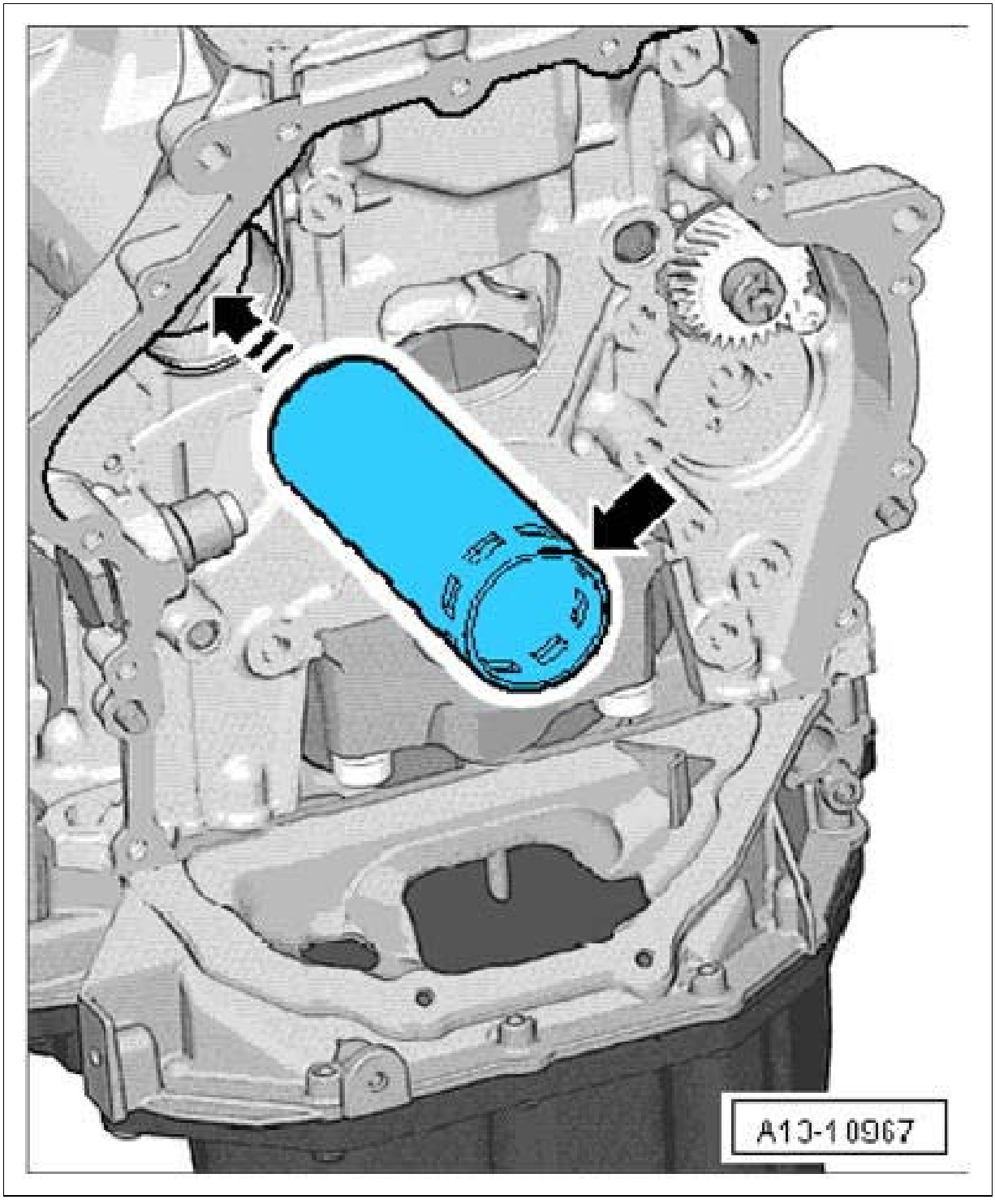

Courtesy of PORSCHE CARS NORTH AMERICA, INC.

WM 1X00IN TECHNICAL VALUES (MACAN) > GROUP 15 > COVERS FOR TIMING CHAINS, CAMSHAFT CONTROL VALVES

Fig 1: Identifying Timing Chains Covers And Camshaft Control Valves

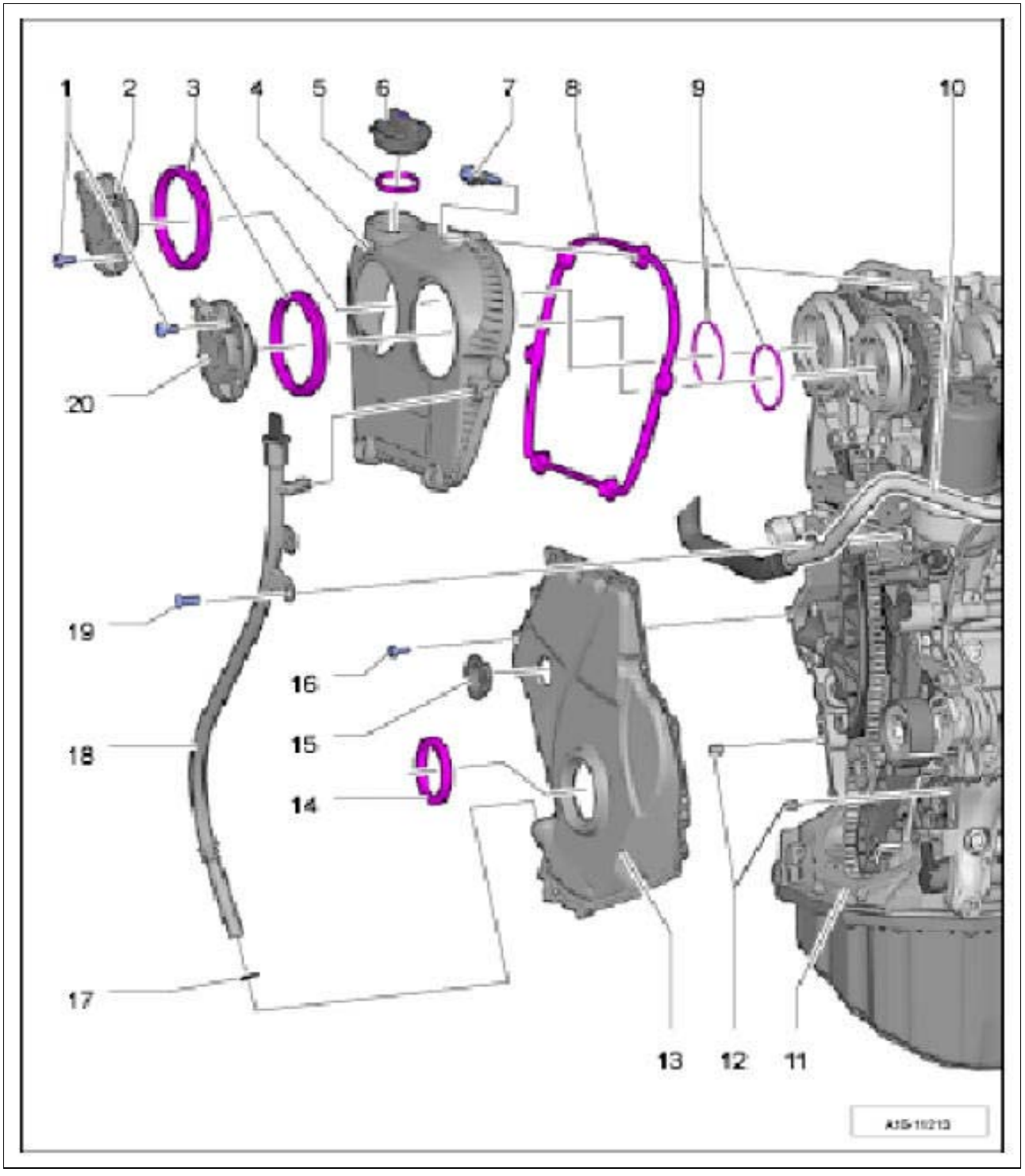

Courtesy of PORSCHE CARS NORTH AMERICA, INC.

1. Screw, **replace → Initial tightening: 4 Nm (3 ftlb.) → Final tightening: +45°**
2. Solenoid hydraulic valve for camshaft control
3. O-ring/**replace, coat with oil**
4. Chain housing cover

5. Seal/**replace if damaged**
6. Oil filler cap
7. Screw, **observe specified tightening sequence → Tightening torque: 9 Nm (6.5 ftlb.)**
8. Seal/**replace if damaged**
9. O-ring/**replace, coat with engine oil**
10. Left coolant pipe
11. Engine
12. Dowel pins
13. Chain housing cover/replace
14. Crankshaft pulley seal/replace
15. Stopper/replace
16. Screw/**replace, observe specified tightening sequence → Initial tightening: 8 Nm (6 ftlb.) → Final tightening: +45°**
17. O-ring/**replace, coat with oil**
18. Guide for oil dipstick
19. Screw → **Tightening torque: 9 Nm (6.5 ftlb.)**
20. Solenoid hydraulic valve for camshaft control

Step 1 - Screws **-1...15-** → **Tightening torque: 8 Nm (6 ftlb.)**

Step 2 - Screws **-1...15-** → **Tightening torque: +45°**

Fig 2: Lower Chain Housing Cover Screws Tightening Sequence

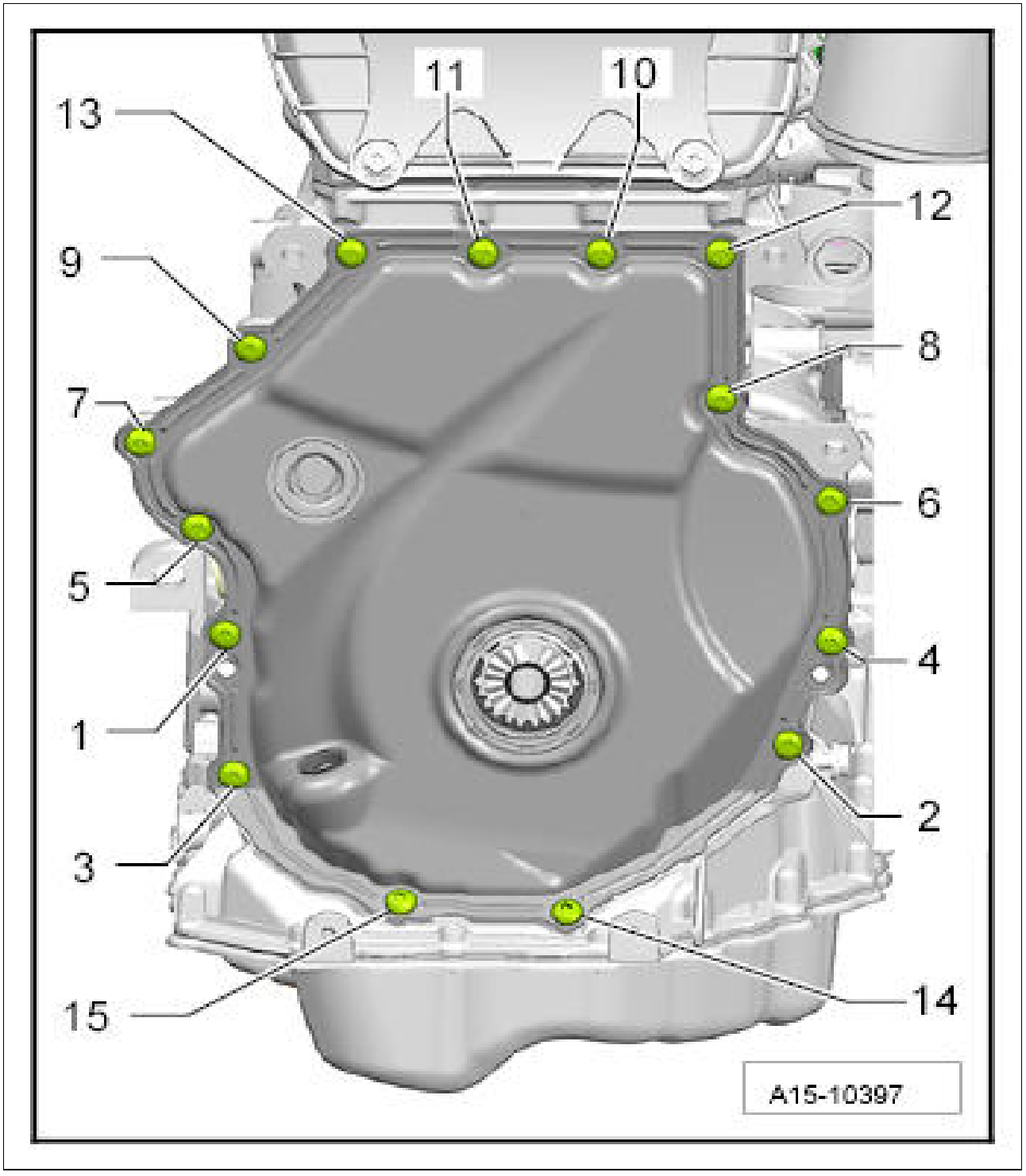

Courtesy of PORSCHE CARS NORTH AMERICA, INC.

WM 1X00IN TECHNICAL VALUES (MACAN) > GROUP 15 > VALVE DRIVE

Fig 1: Identifying Valve Drive, Cylinder Head, Safety Clip And Valve Collet

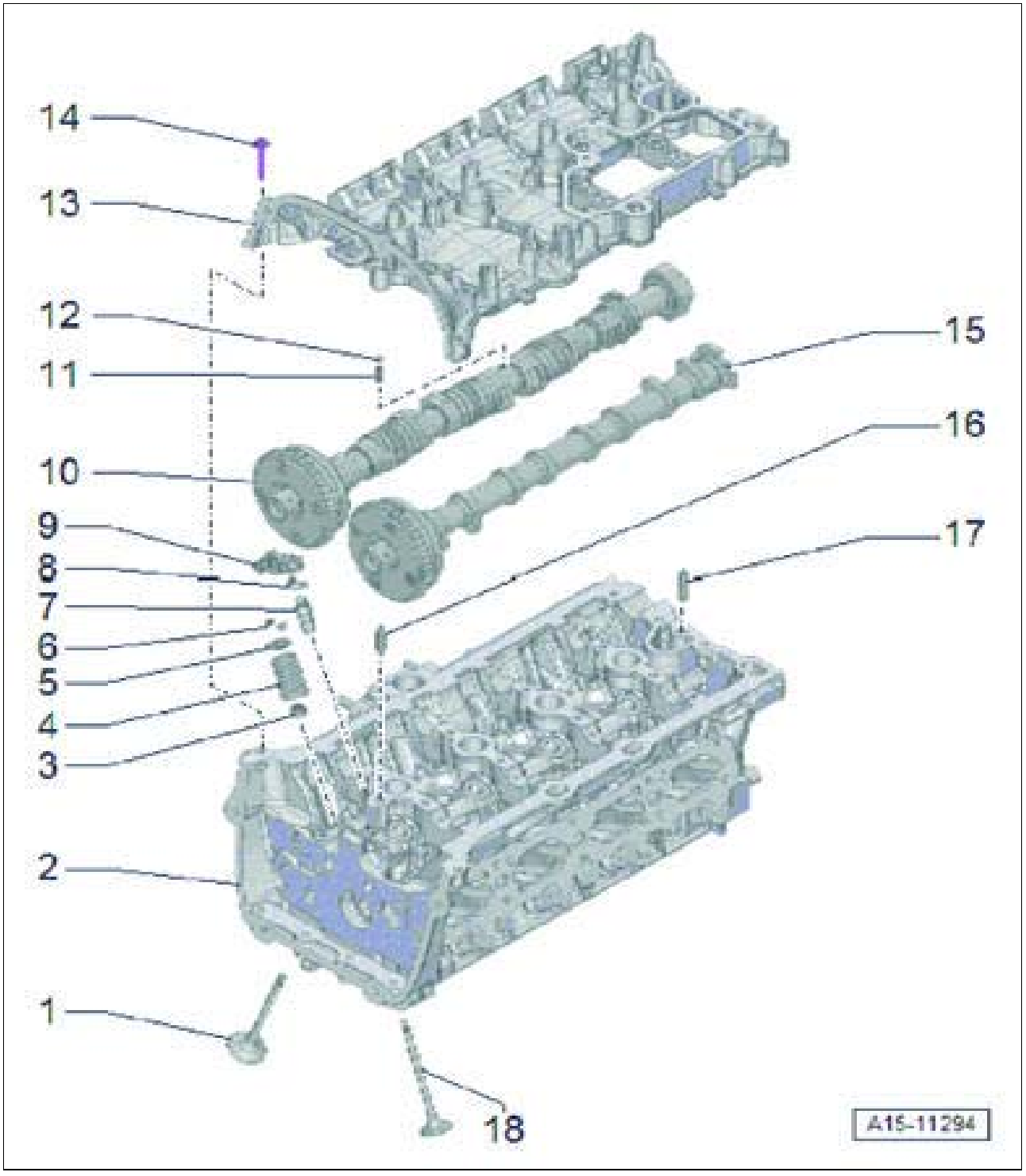

Courtesy of PORSCHE CARS NORTH AMERICA, INC.

1. Do **not rework outlet valve; only grinding is permitted. Check valve guides following removal**
2. Cylinder head
3. Valve stem seal
4. Valve spring

5. Valve-spring plate
6. Valve collet
7. Hydraulic compensating element must **not be interchanged, oil running surface**
8. Safety clip
9. Rocker arms; **mark installation position, check smooth-running movement of roller bearings. Oil running surfaces before installation**
10. Outlet camshaft
11. Spring
12. Ball
13. Cylinder head cover
14. Screw/**replace, observe specified sequence when loosening and tightening**
15. Intake camshaft
16. Dowel pins
17. Dowel pins
18. Do not **rework intake valve; only grinding is permitted. Check valve guides following removal**

1...6 - Loosen screws in the specified sequence

Fig 2: Cylinder Head Cover Screws Loosening Sequence

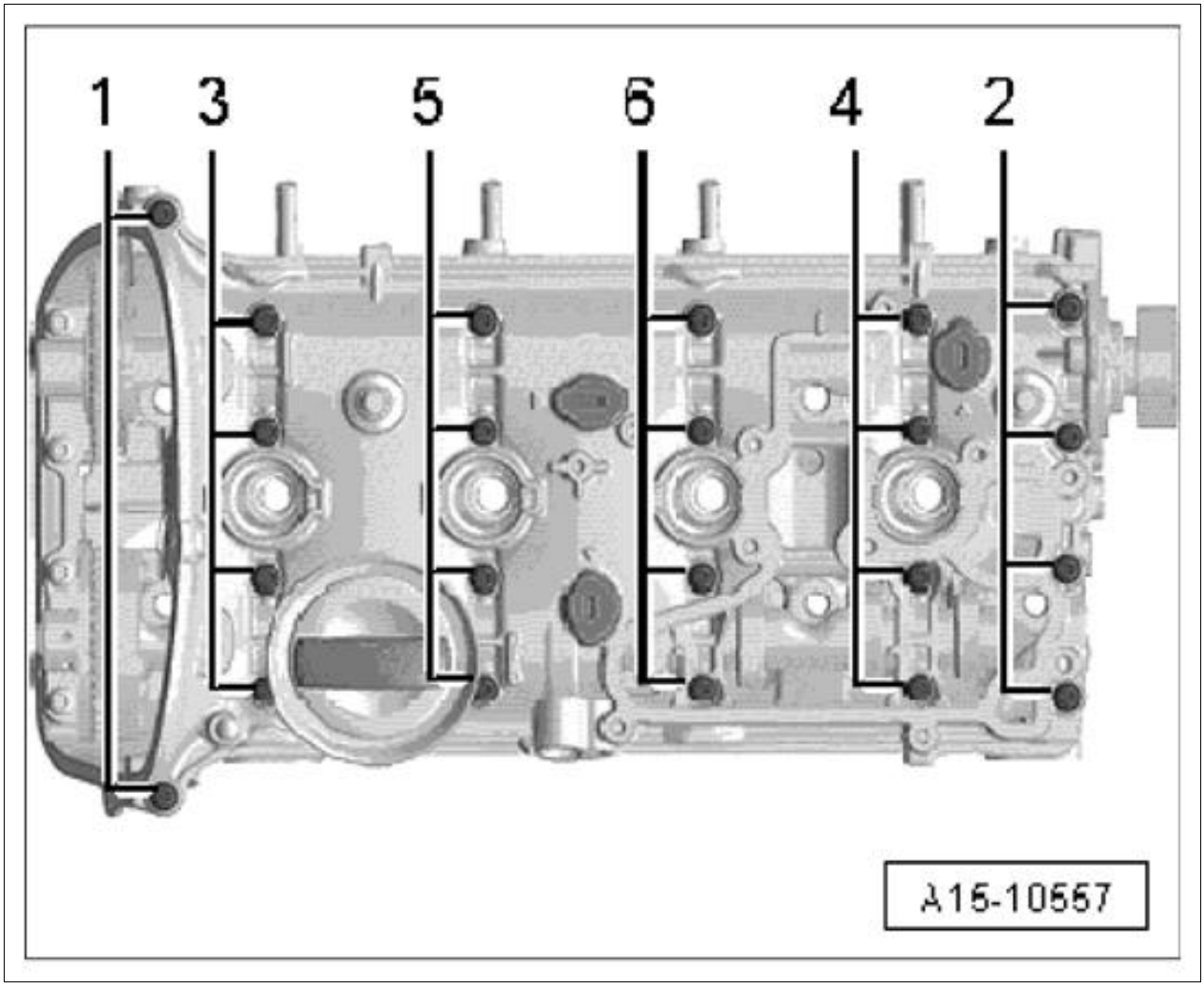

Courtesy of PORSCHE CARS NORTH AMERICA, INC.

1...6 - Screw in screws hand-tight in the specified sequence

1...6 - → **Initial tightening: 8 Nm (6 ftlb.)**

1...6 - → **Final tightening: +90°**

Fig 3: Cylinder Head Cover Screws Tightening Sequence

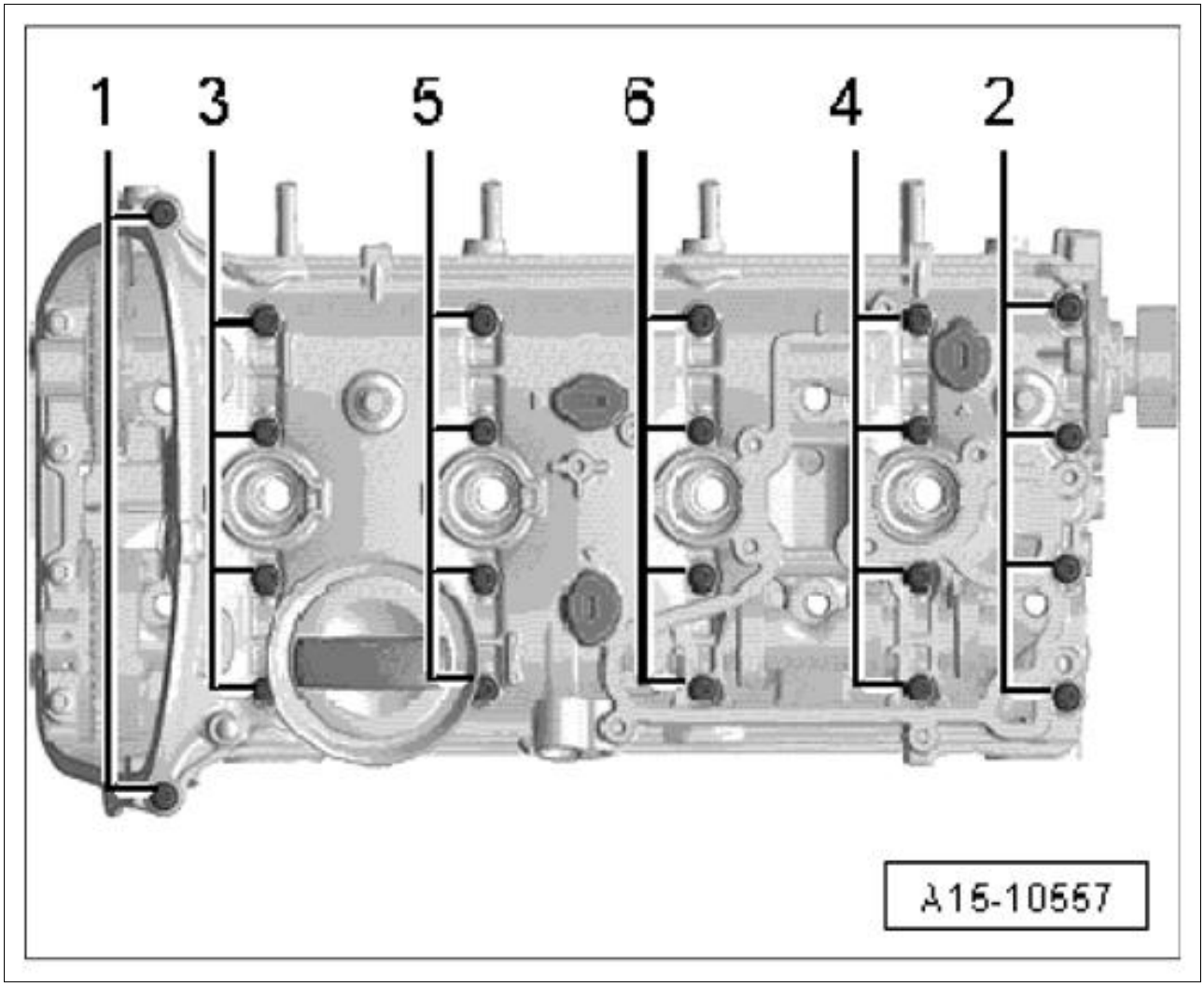

Courtesy of PORSCHE CARS NORTH AMERICA, INC.

Fig 4: Identifying Valve Drive, Cylinder Head, O-Ring And Stopper

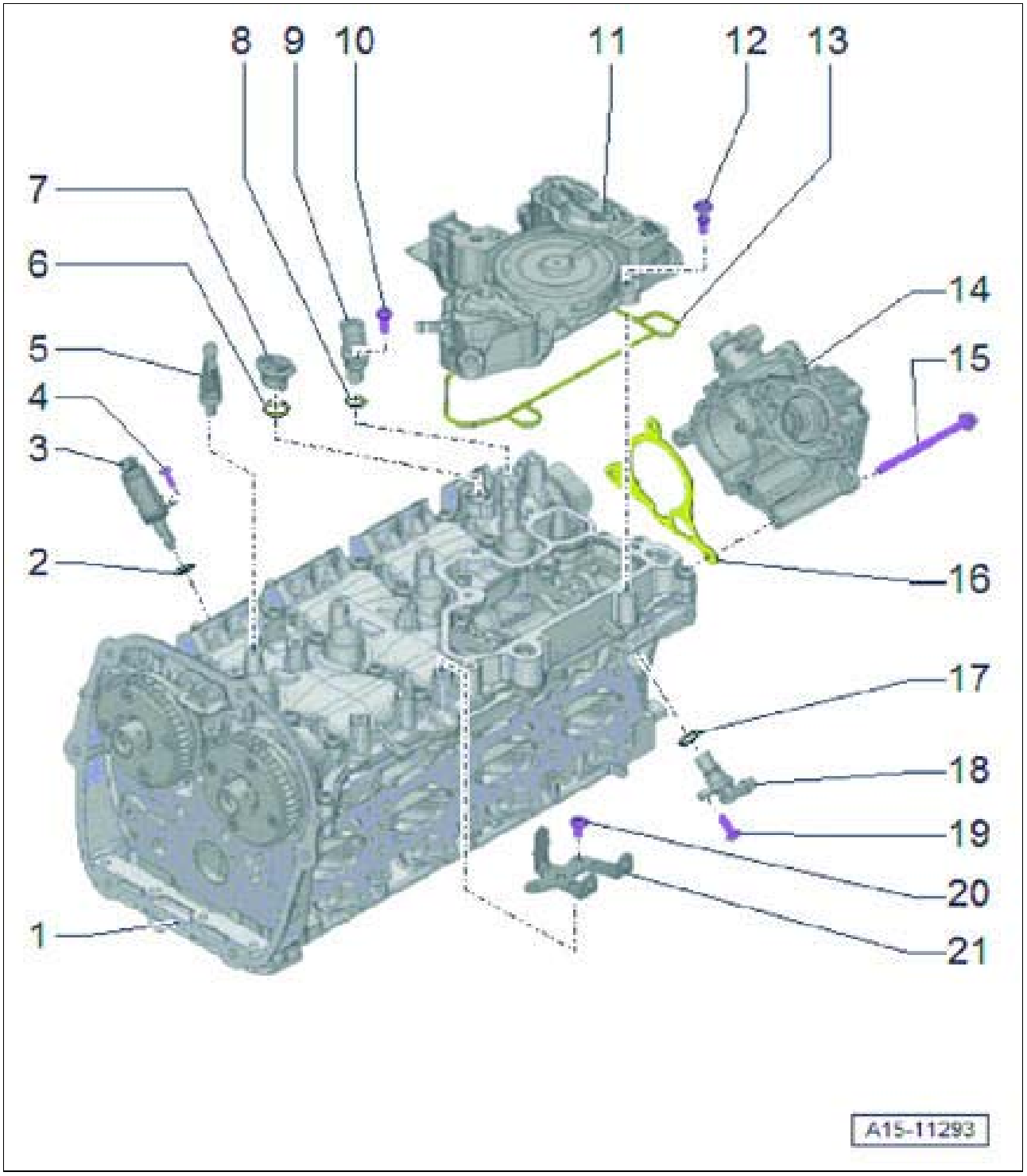

Courtesy of PORSCHE CARS NORTH AMERICA, INC.

1. Cylinder head
2. O-ring
3. Solenoid hydraulic valve for valve lift adjustment
4. Screw → **Tightening torque: 5 Nm (3.5 ftlb.)**

5. Ball pin → **Tightening torque: 9 Nm (6.5 ftlb.)**
6. O-ring/**replace, coat with oil**
7. Stopper
8. O-ring/**replace, coat with oil**
9. Hall sender on outlet side
10. Screw → **Tightening torque: 10 Nm (7.5 ftlb.)**
11. Oil separator
12. Screw, **self-tapping → Tightening torque: 9 Nm (6.5 ftlb.)**
13. Seal/**replace**
14. Vacuum pump
15. Screw, **for tightening torque, see: values for vacuum pump, WM 4X00IN TIGHTENING TORQUES FOR BRAKE HYDRAULIC SYSTEM**
16. Seal/**replace if damaged**
17. O-ring/**replace, coat with oil**
18. Hall sender on intake side
19. Screw → **Tightening torque: 9 Nm (6.5 ftlb.)**
20. Screw → **Tightening torque: 9 Nm (6.5 ftlb.)**
21. Holder

1...7 - Fit and screw in by hand

1...7 - → **Tightening torque: 9 Nm (6.5 ftlb.)**

Fig 5: Oil Separator Screws Tightening Sequence

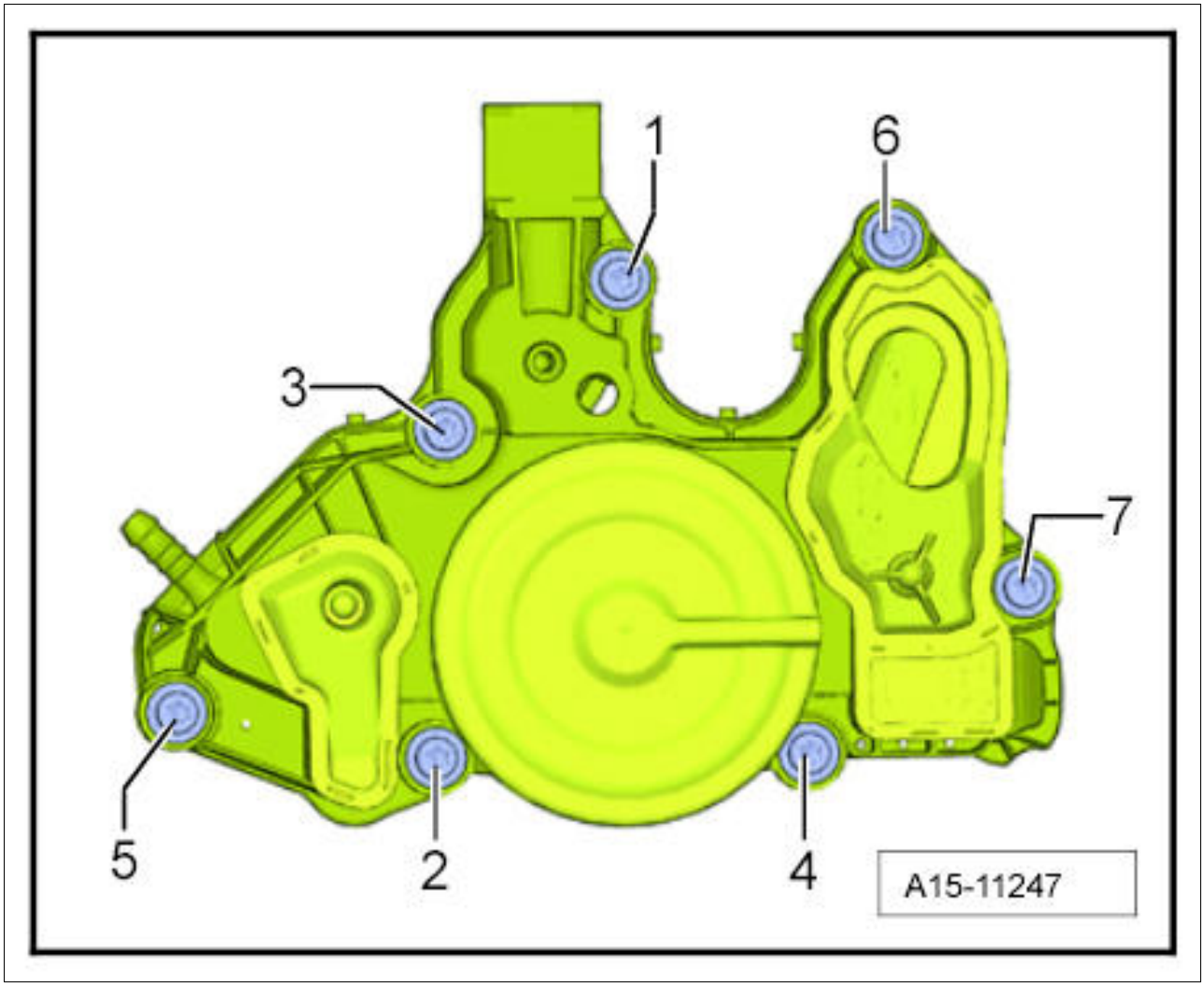

Courtesy of PORSCHE CARS NORTH AMERICA, INC.

WM 1X00IN TECHNICAL VALUES (MACAN) > GROUP 17 > OIL PAN/OIL PUMP

Fig 1: Identifying Oil Pan/Oil Pump Components

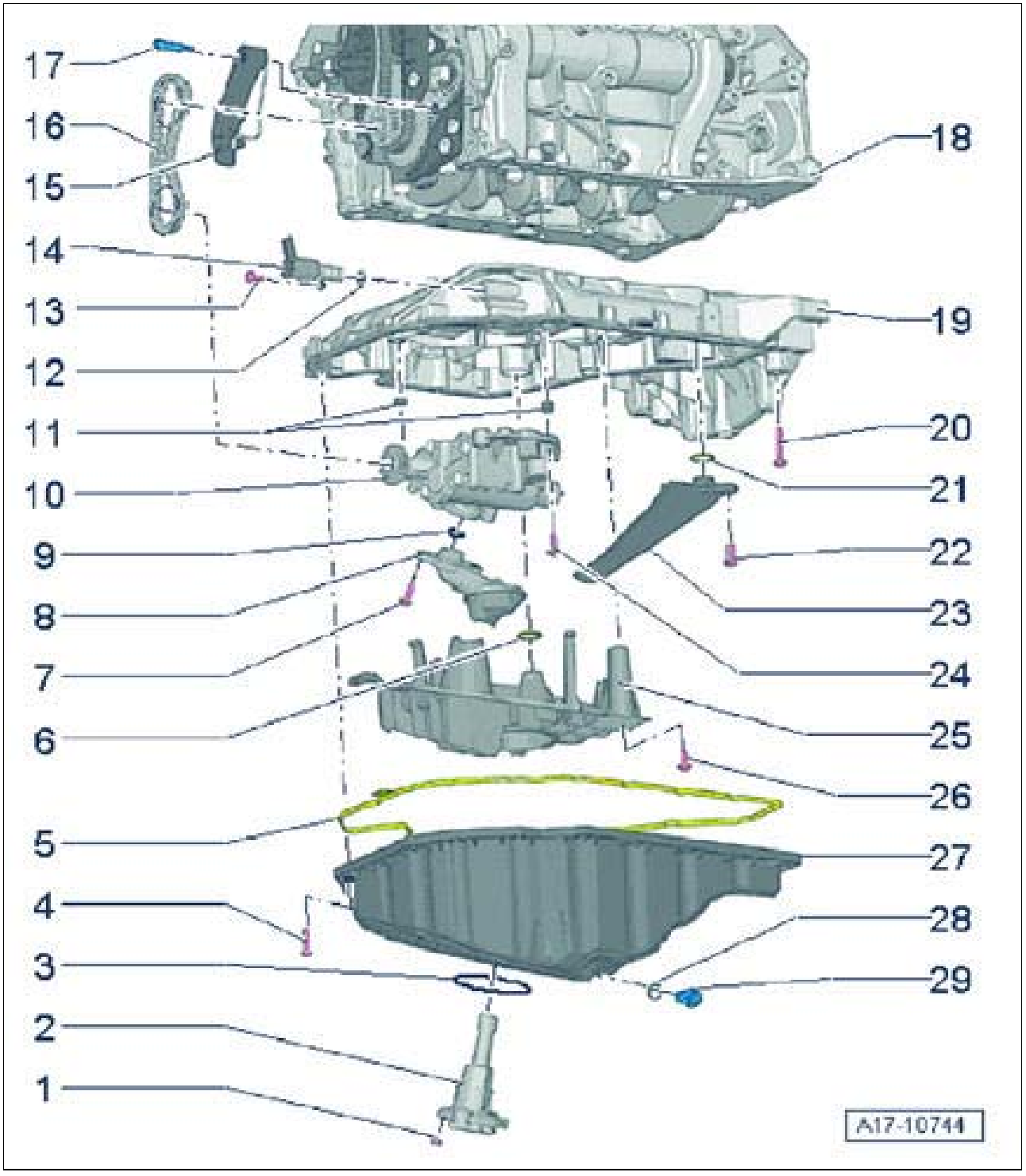

Courtesy of PORSCHE CARS NORTH AMERICA, INC.

1. Nut → **Tightening torque: 9 Nm (6.5 ftlb.)**
2. Oil level sensor and oil temperature sensor
3. Seal/**replace**
4. Screw/**replace, observe specified tightening sequence** → **Initial tightening: 8 Nm (6 ftlb.)** → **Final tightening: +90°**

5. Oil sump gasket
6. O-ring/**replace, coat with oil**
7. Screw, **replace → Initial tightening: 4 Nm (3 ftlb.) → Final tightening: +45°**
8. Intake pipe
9. O-ring/**replace, coat with oil**
10. Oil pump
11. Dowel sleeve
12. O-ring/**replace, coat with oil**
13. Screw/**replace → Initial tightening: 4 Nm (3 ftlb.) → Final tightening: +90°**
14. Pressure-regulating valve
15. Chain tensioner
16. Oil pump drive chain
17. Screw → **Tightening torque: 9 Nm (6.5 ftlb.)**
18. Cylinder block
19. Upper part of oil pan
20. Screw/**replace, observe specified tightening sequence → Tightening torque: 8 Nm (6 ftlb.)**
21. O-ring/**replace, coat with oil**
22. Screw, **replace → Initial tightening: 4 Nm (3 ftlb.) → Final tightening: +45°**
23. Oil return pipe
24. Screw, **replace → Initial tightening: 8 Nm (6 ftlb.) → Final tightening: +90°**
25. Oil plate/**replace**
26. Screw/**replace → Initial tightening: 4 Nm (3 ftlb.) → Final tightening: +45°**
27. Lower part of oil pan
28. O-ring/**replace, coat with oil**
29. Stopper

1...19 - → **Tightening torque: 8 Nm (6 ftlb.)**

1...19 - → **Final tightening: +90°**

Fig 2: Oil Pan Lower Part Screws Tightening Sequence

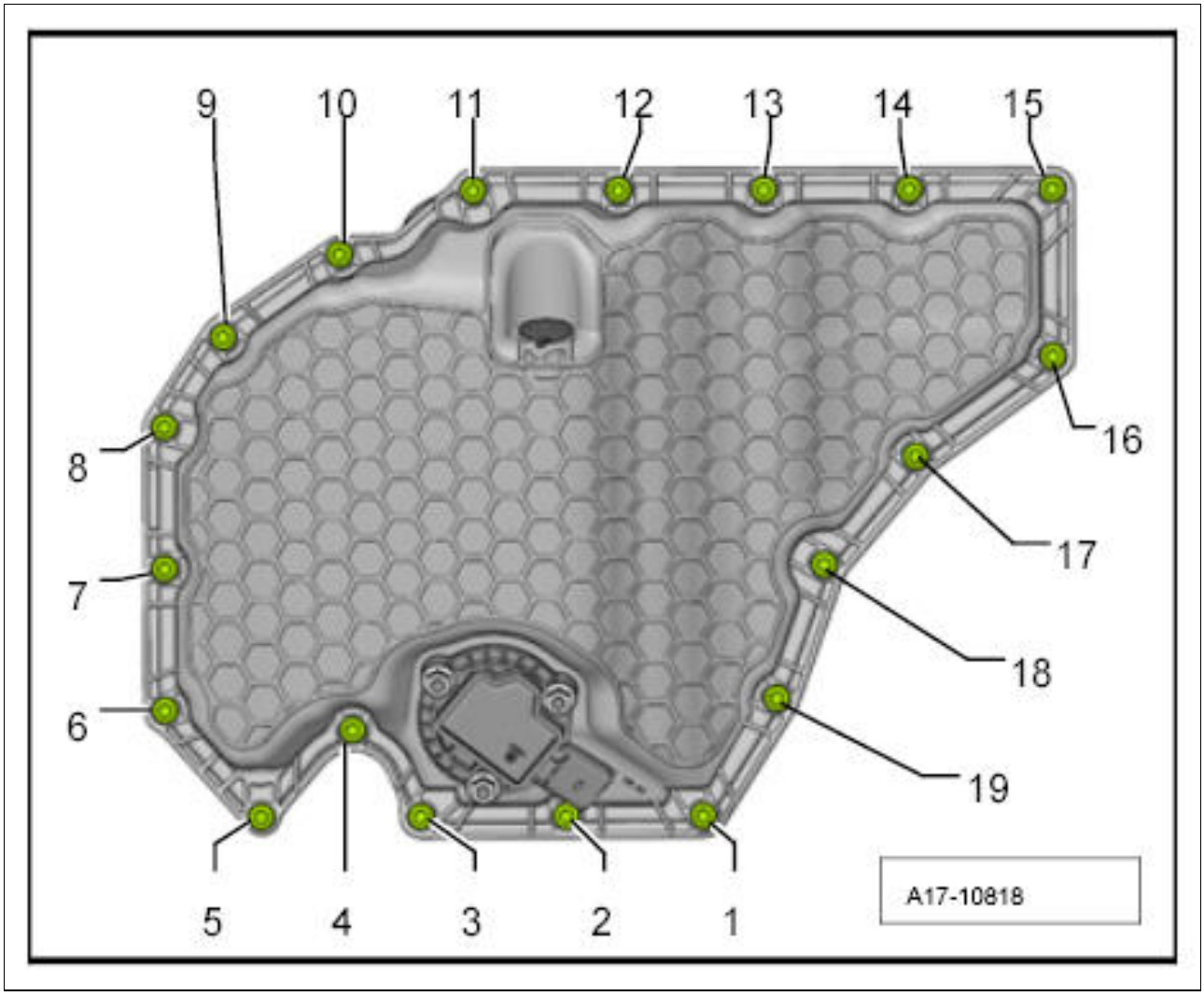

Courtesy of PORSCHE CARS NORTH AMERICA, INC.

1...14 - → Contact force: 8 Nm (6 ftlb.)

1 and 2 - → Final tightening: +180°

3...9 - → Final tightening: +45°

10 - → Final tightening: +180°

11...14 - → Final tightening: +90°

Fig 3: Oil Pan Upper Part Screws Tightening Sequence

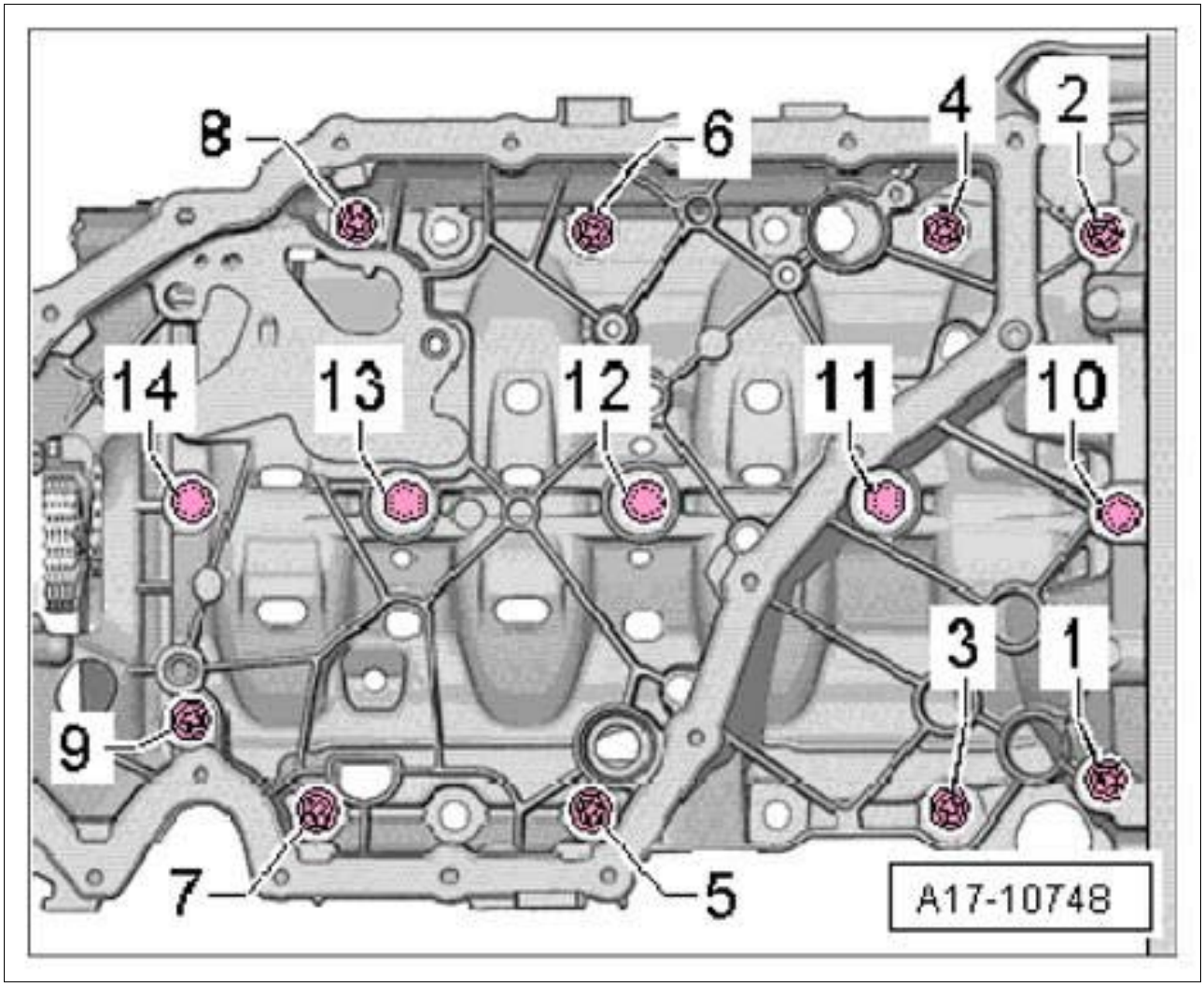

Courtesy of PORSCHE CARS NORTH AMERICA, INC.

WM 1X00IN TECHNICAL VALUES (MACAN) > GROUP 17 > OIL COOLER

Fig 1: Identifying Oil Cooler Components

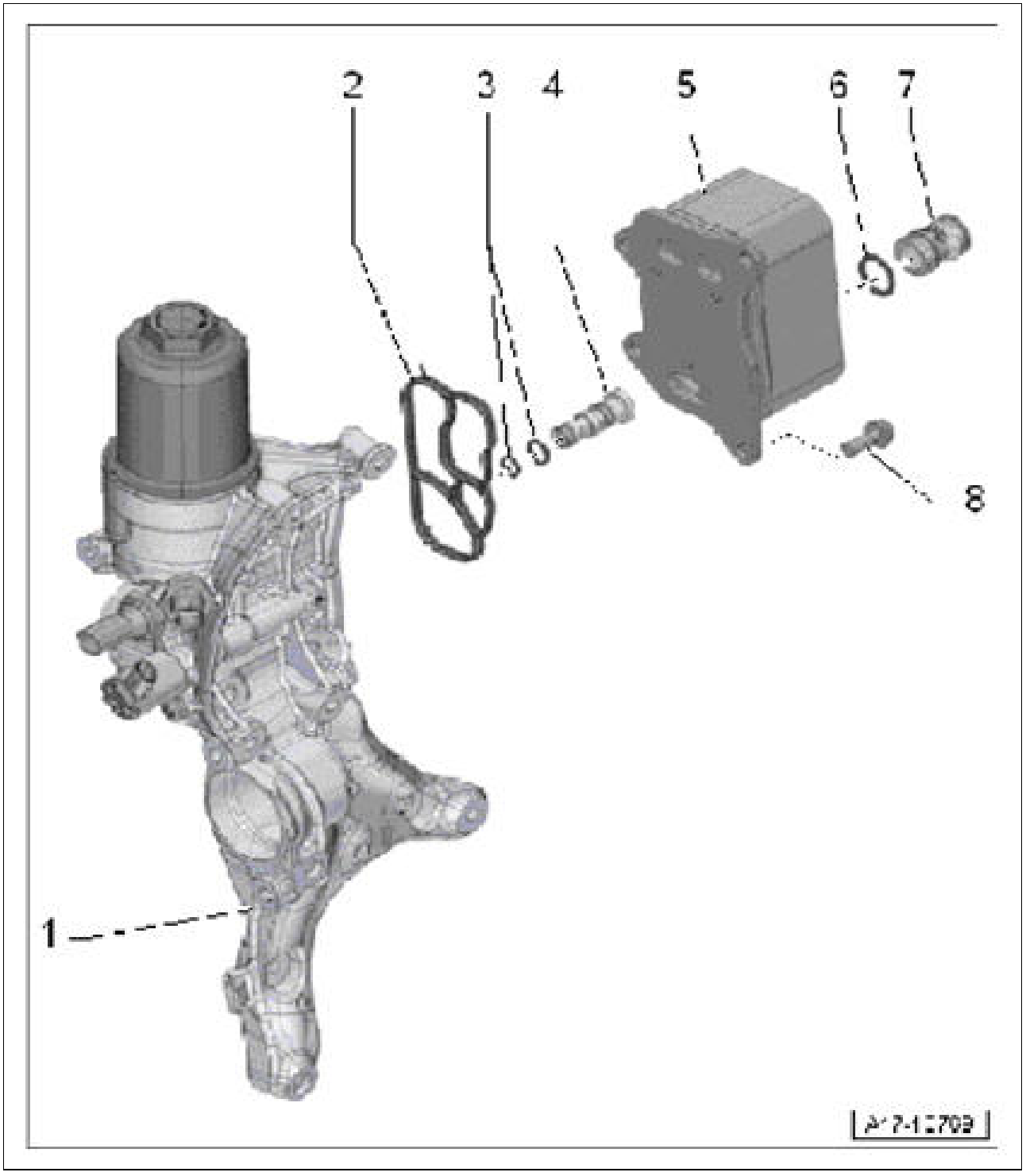

Courtesy of PORSCHE CARS NORTH AMERICA, INC.

1. Auxiliary unit holder
2. Seal/**replace**
3. O-rings/**replace, coat with oil**
4. Mechanical control valve/**replace**

5. Oil cooler
6. Sealing ring/**replace, coat with coolant**
7. Joining socket
8. Screw/**replace → Initial tightening: 8 Nm (6 ftlb.) → Final tightening: +45°**

WM 1X00IN TECHNICAL VALUES (MACAN) > GROUP 17 > POSITIVE CRANKCASE VENTILATION

Fig 1: Identifying Positive Crankcase Ventilation

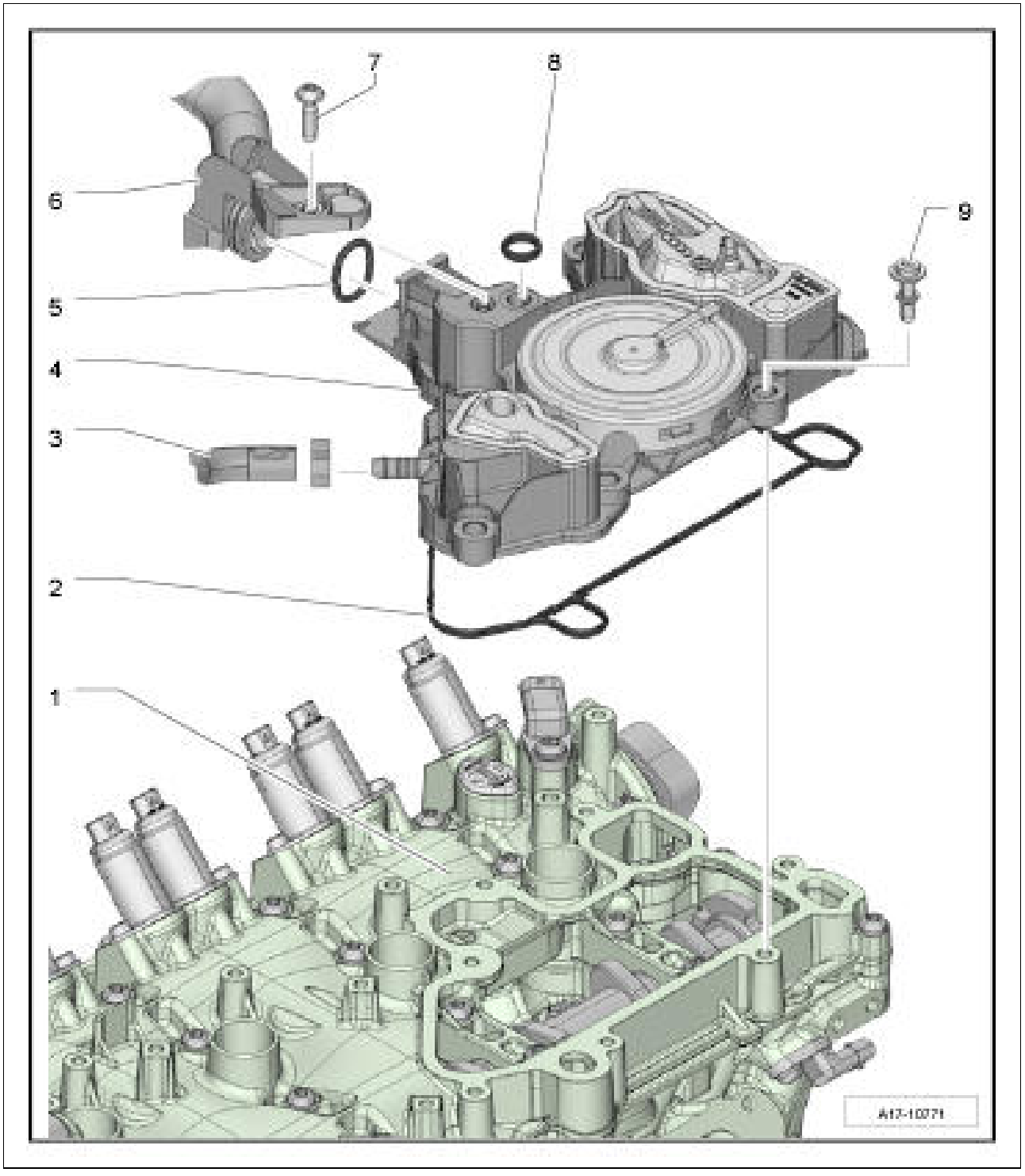

Courtesy of PORSCHE CARS NORTH AMERICA, INC.

1. Cylinder head cover
2. Seal/**replace**
3. Hose
4. Oil separator

5. Sealing ring/**replace**
6. Hose
7. Screw, **self-tapping, screw in by hand → Tightening torque: 4 Nm (3 ftlb.)**
8. Sealing ring/**replace**
9. Screw, **self-tapping, observe specified tightening sequence → Tightening torque: 9 Nm (6.5 ftlb.)**

1...7 - Fit and screw in by hand before tightening

Fig 2: Oil Separator Screws Tightening Sequence

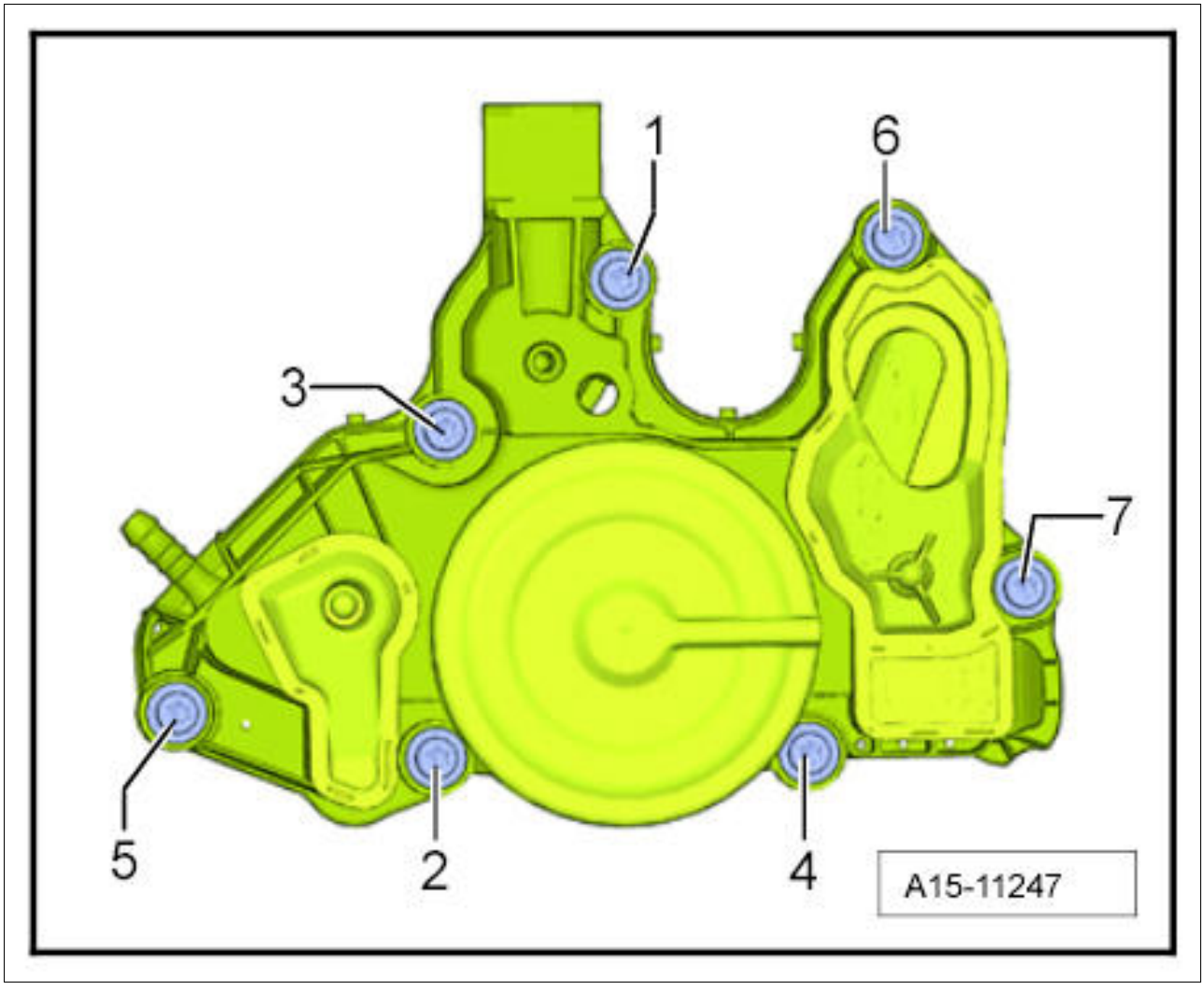

Courtesy of PORSCHE CARS NORTH AMERICA, INC.

WM 1X00IN TECHNICAL VALUES (MACAN) > GROUP 17 > OIL FILTER

Fig 1: Identifying Oil Filter Components

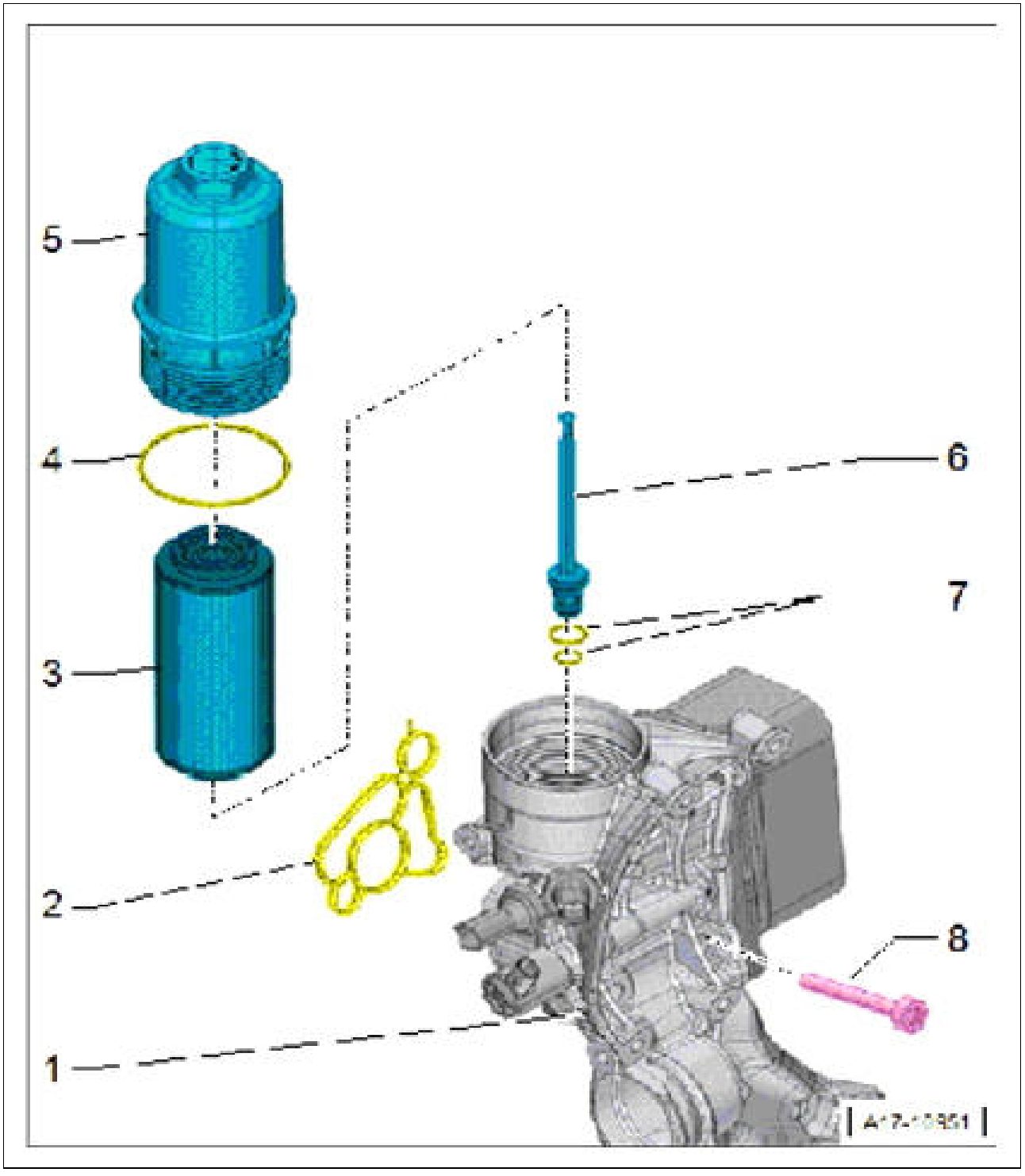

Courtesy of PORSCHE CARS NORTH AMERICA, INC.

1. Bracket for oil cooler
2. Seal/**replace**
3. Oil filter
4. O-ring/**replace, coat with oil**

5. Oil-filter housing → **Tightening torque: +25 Nm (+19 ftlb.)**

6. Connection piece for oil drain

7. Coat O-rings **with oil**

8. Screw/**observe specified tightening sequence**

1...5 - Screw in hand-tight

1...5 - → **Initial tightening: 20 Nm (15 ftlb.)**

1...5 - → **Final tightening: +90°**

Fig 2: Oil Cooler Bracket Screws Tightening Sequence

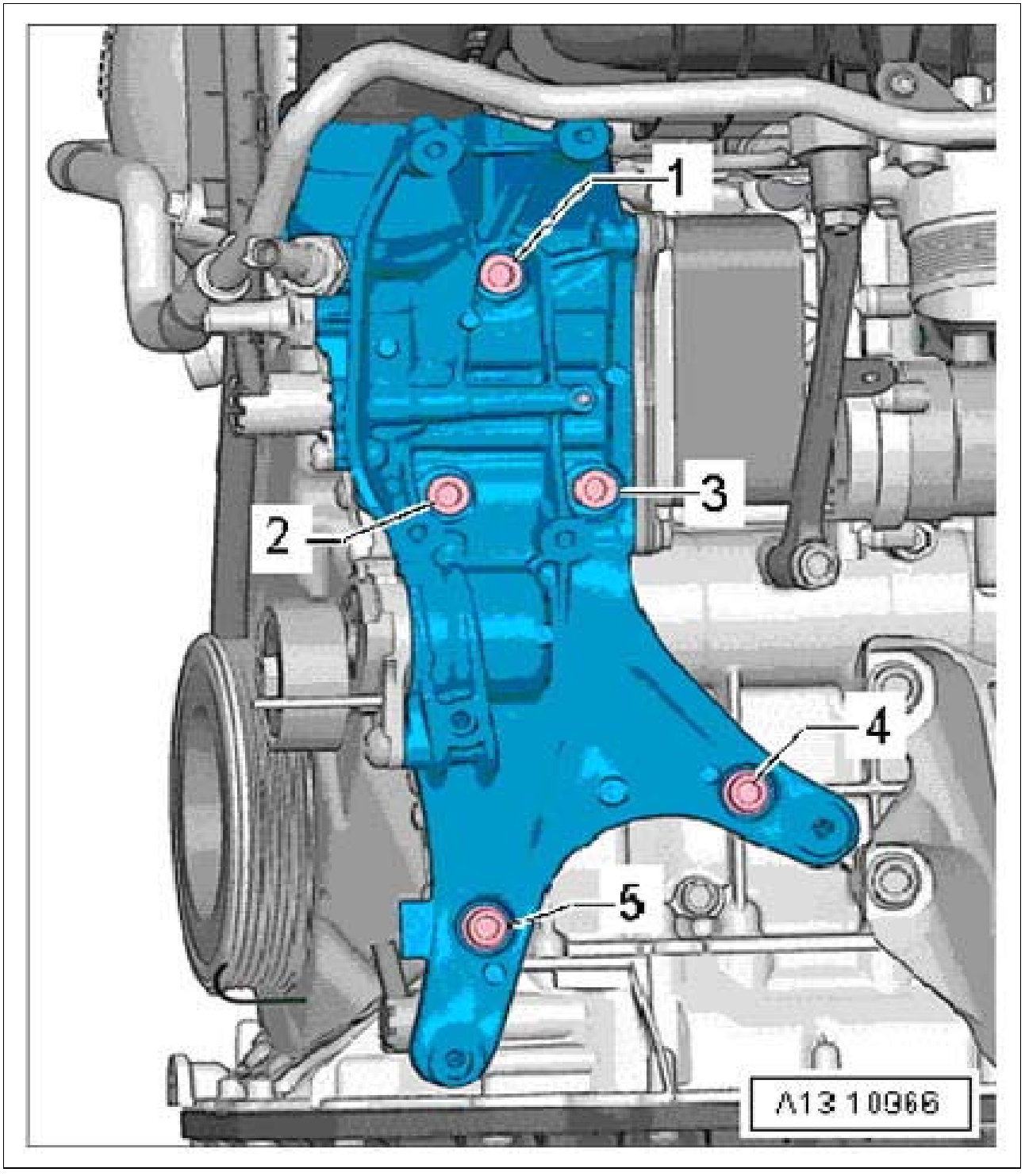

Courtesy of PORSCHE CARS NORTH AMERICA, INC.

WM 1X00IN TECHNICAL VALUES (MACAN) > GROUP 17 > OIL PRESSURE SWITCH/OIL PRESSURE CONTROL

Fig 1: Identifying Oil Pressure Switch/Oil Pressure Control Components

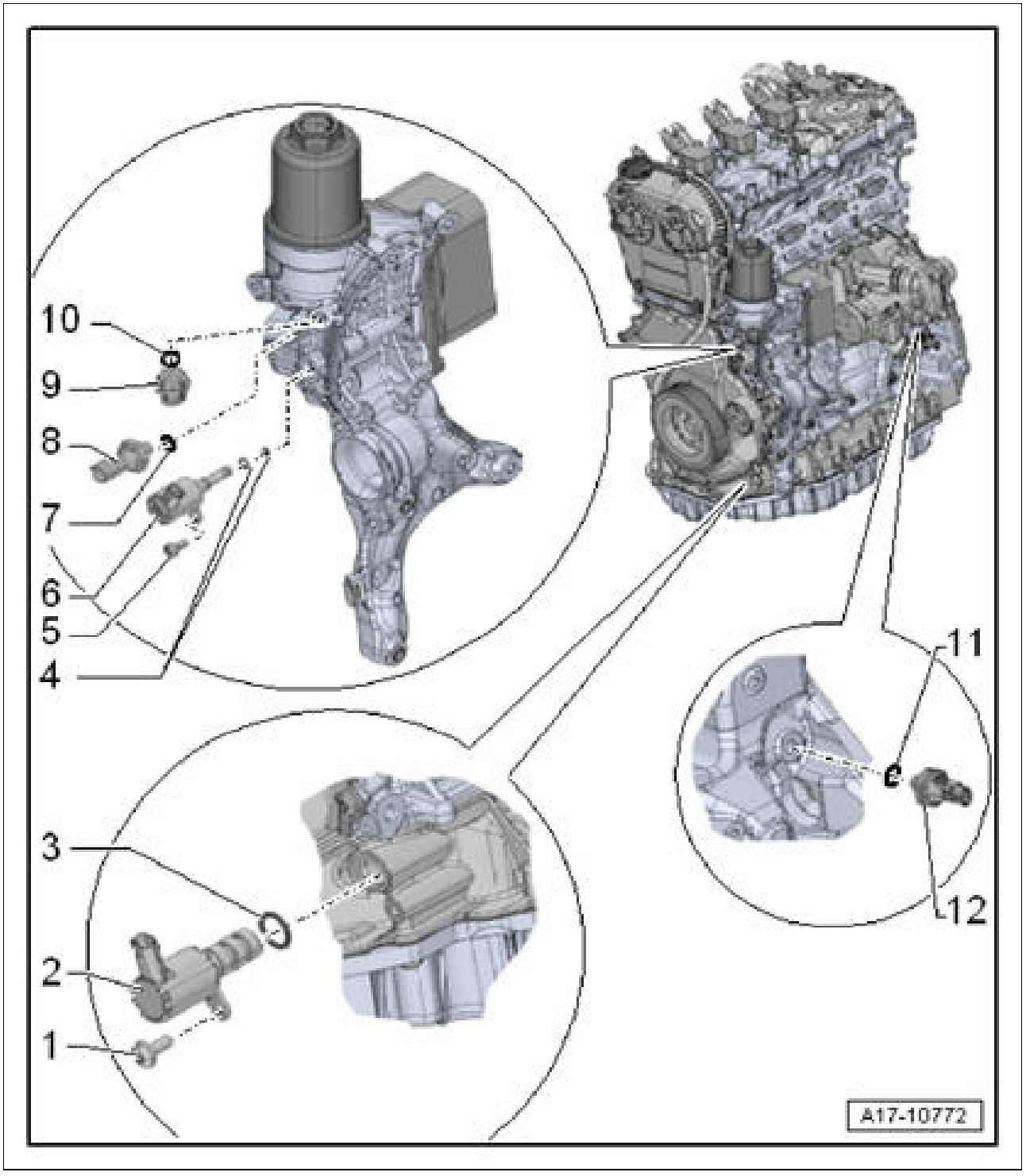

Courtesy of PORSCHE CARS NORTH AMERICA, INC.

1. Screw/**replace → Initial tightening: 4 Nm (3 ftlb.) → Final tightening: +90°**
2. Pressure-regulating valve
3. O-ring/**replace, coat with oil**
4. O-rings/**replace, coat with oil**

5. Screw → **Initial tightening: 4 Nm (3 ftlb.) → Final tightening: 45°**
6. Control valve for piston cooling nozzles
7. Sealing ring/**replace**
8. Oil pressure switch → **Tightening torque: 20 Nm (15 ftlb.)**
9. Oil pressure switch for reduced oil pressure → **Tightening torque: 20 Nm (15 ftlb.)**
10. Sealing ring/**replace**
11. Sealing ring/**replace**
12. Oil pressure switch → **Tightening torque: 20 Nm (15 ftlb.)**

WM 1X00IN TECHNICAL VALUES (MACAN) > GROUP 17 > COOLANT HOSES FOR VEHICLES WITHOUT AUXILIARY HEATER

Fig 1: Vehicles Without Auxiliary Heater Coolant Hoses - Flow Diagram

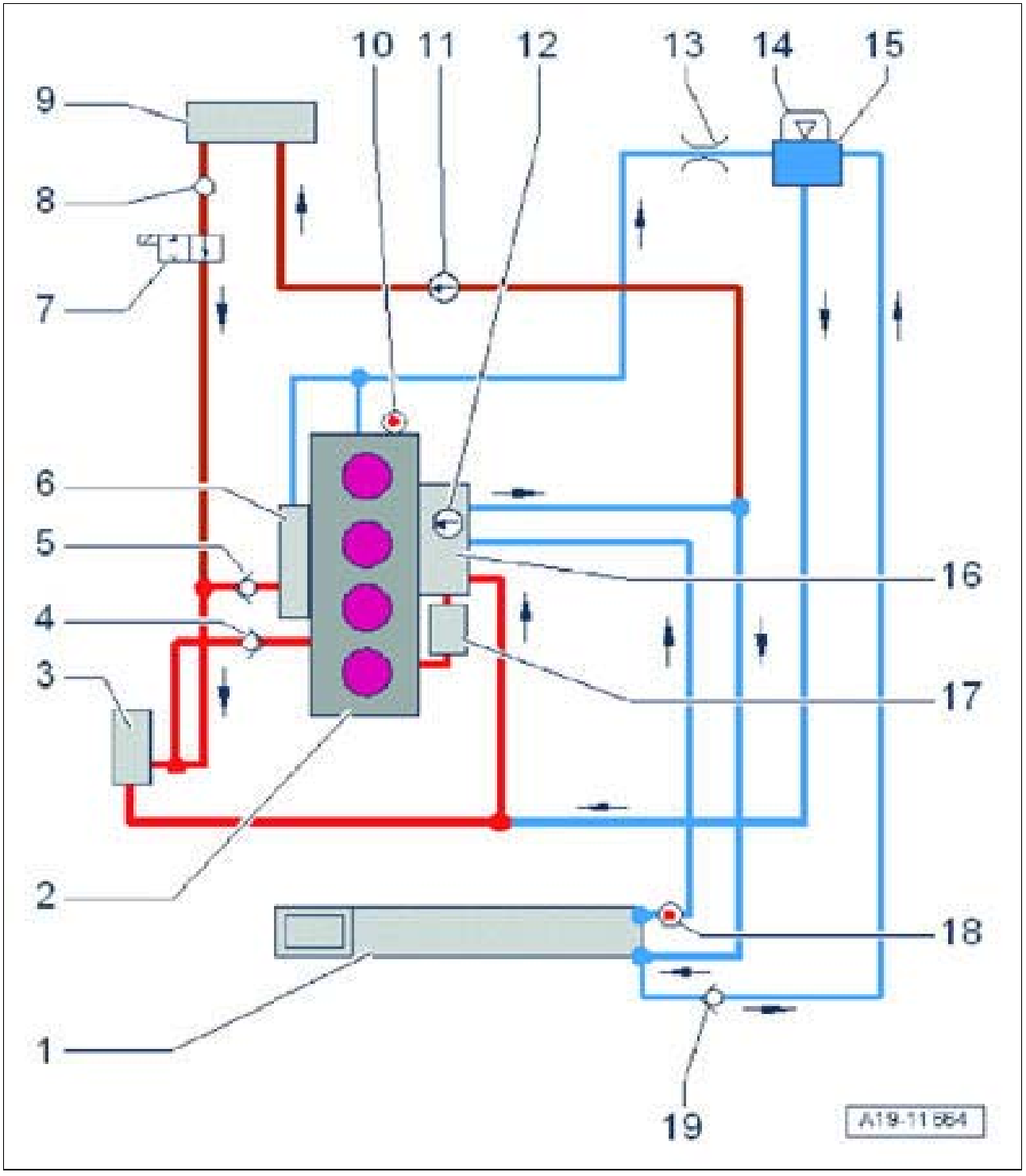

Courtesy of PORSCHE CARS NORTH AMERICA, INC.

1. Radiator; **if replaced, change coolant**
2. Cylinder head/cylinder block; **if replaced, change coolant**
3. Turbocharger
4. Check valve

5. Check valve
6. Exhaust manifold
7. Coolant shut-off valve
8. Ventilation bore
9. Heat exchanger for heater
10. Temperature sensor
11. Coolant pump; **only for vehicles with Start/Stop function**
12. Coolant pump
13. Restrictor
14. Cap on reservoir
15. Reservoir
16. Coolant regulator
17. Oil cooler
18. Temperature sensor at cooler outlet
19. Check valve

WM 1X00IN TECHNICAL VALUES (MACAN) > GROUP 17 > COOLANT PUMP/COOLANT REGULATOR

Fig 1: Identifying Coolant Pump Components

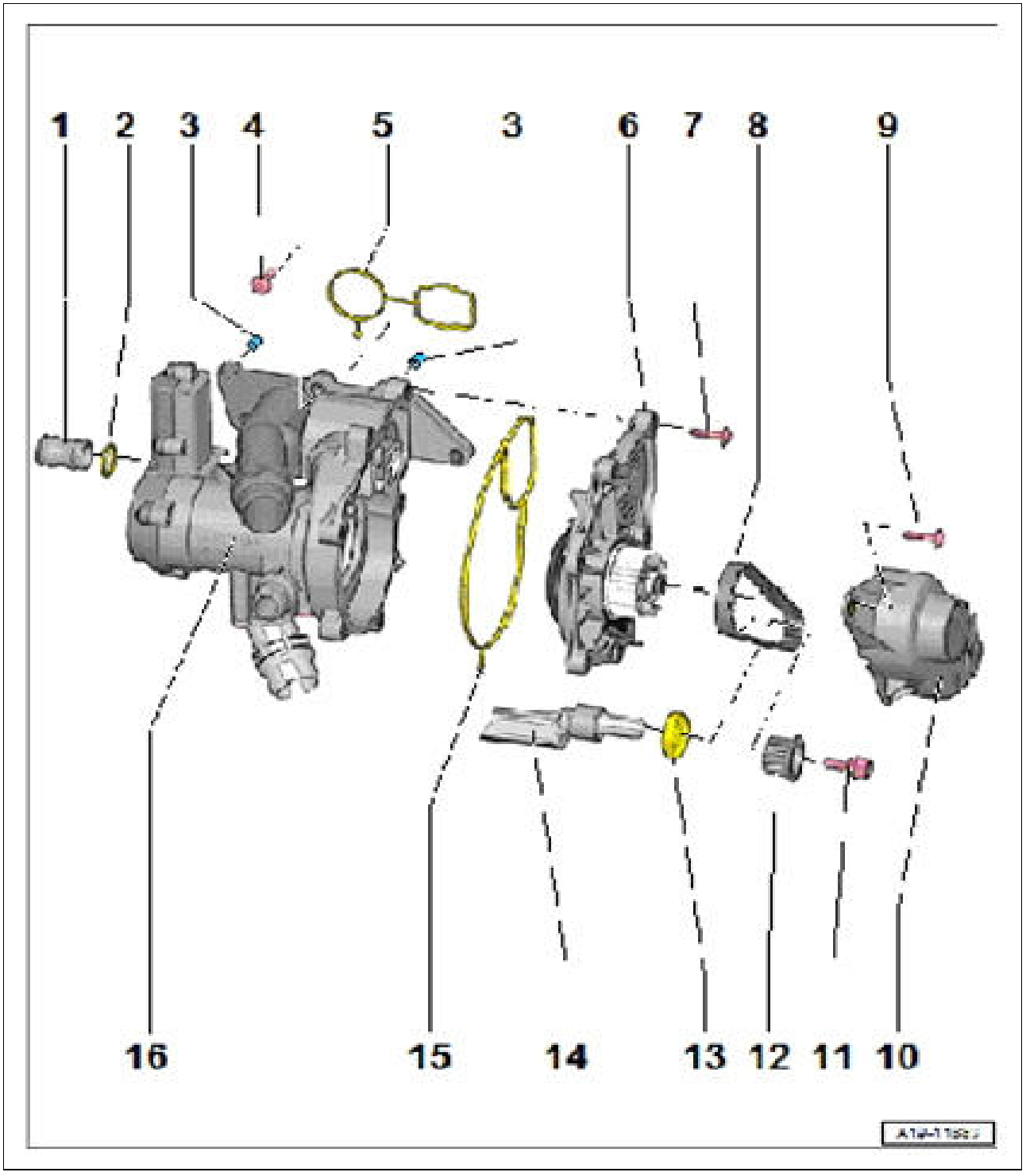

Courtesy of PORSCHE CARS NORTH AMERICA, INC.

1. Joining socket
2. O-ring/**replace, coat with coolant**
3. Centering pin
4. Screw, **observe specified tightening sequence → Tightening torque: 9 Nm (6.5 ftlb.)**

5. Seal, **replace**
6. Coolant pump
7. Screw, **observe specified tightening sequence → Tightening torque: 9 Nm (6.5 ftlb.)**
8. Toothed belt
9. Screw → **Tightening torque: 9 Nm (6.5 ftlb.)**
10. Cover for toothed belt
11. Screw/**replace, left thread → Initial tightening: 10 Nm (7.5 ftlb.) → Final tightening: +90°**
12. Toothed-belt drive wheel
13. Shaft sealing ring
14. Balance shaft
15. Sealing ring
16. Actuator for controlling engine temperature

Fig 2: Actuator Screw Tightening Sequence

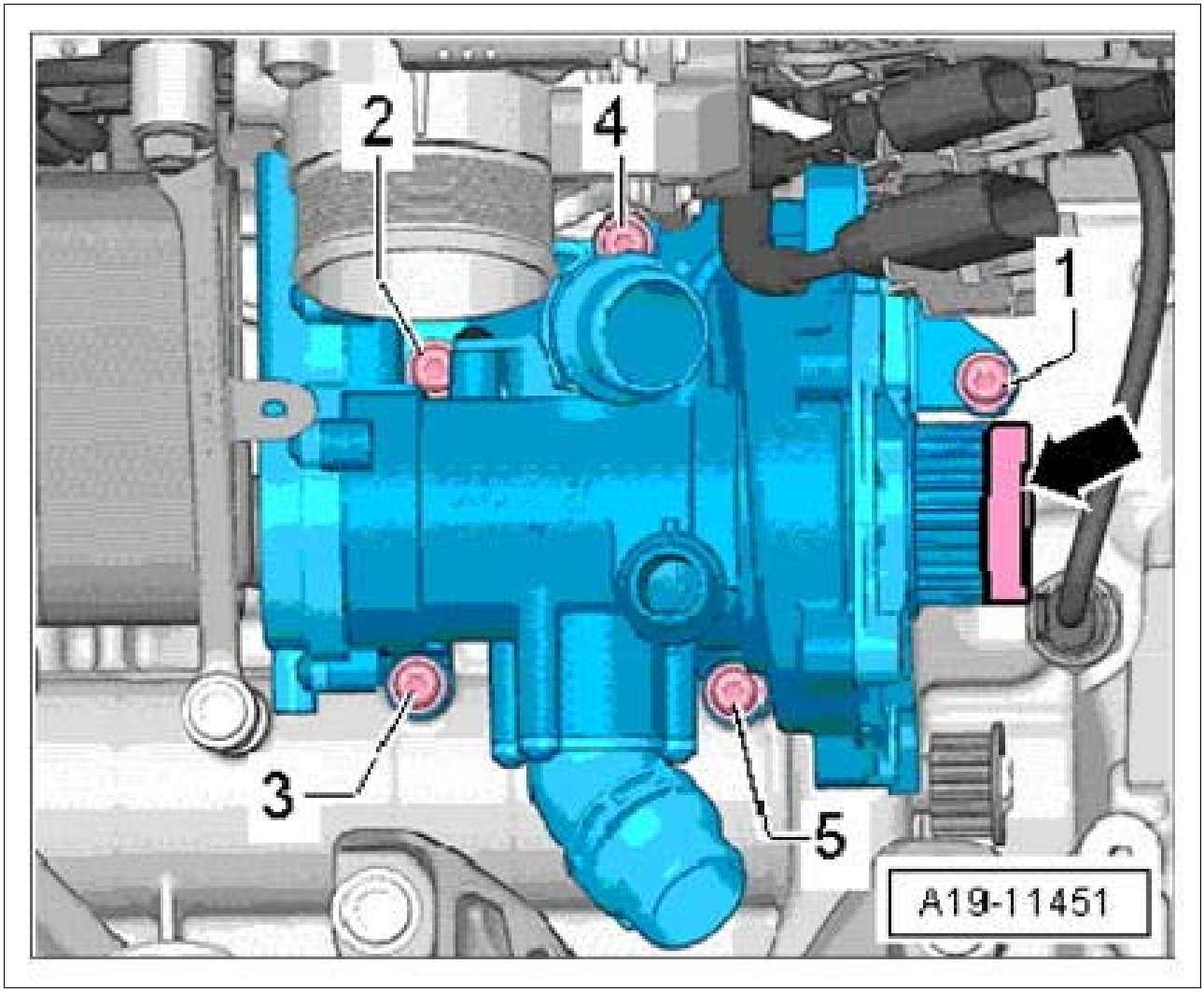

Courtesy of PORSCHE CARS NORTH AMERICA, INC.

Fig 3: Coolant Pump Screw Tightening Sequence

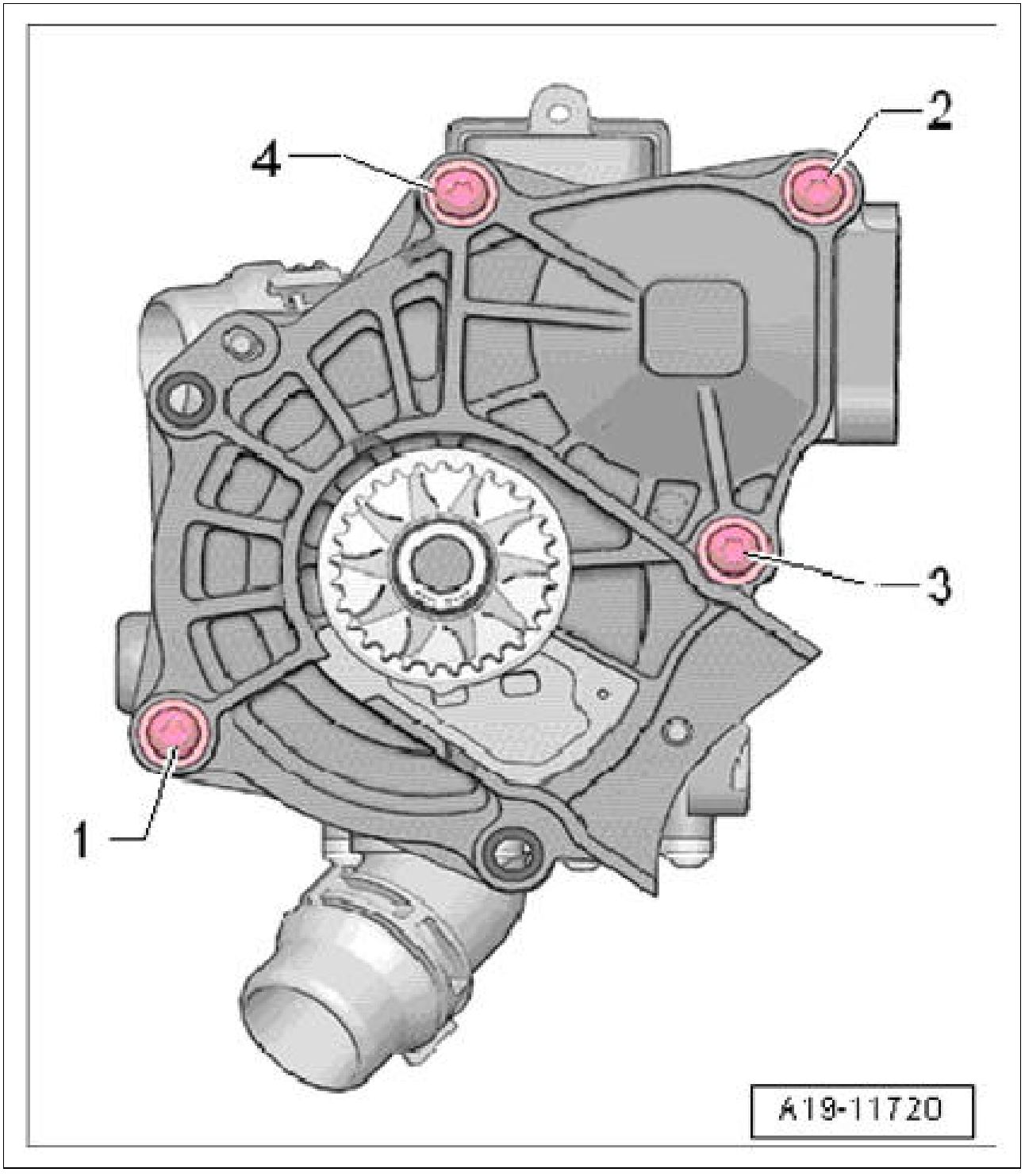

Courtesy of PORSCHE CARS NORTH AMERICA, INC.

WM 1X00IN TECHNICAL VALUES (MACAN) > GROUP 17 > COOLANT PIPES

Fig 1: Identifying Coolant Pipes, Hose And Screws

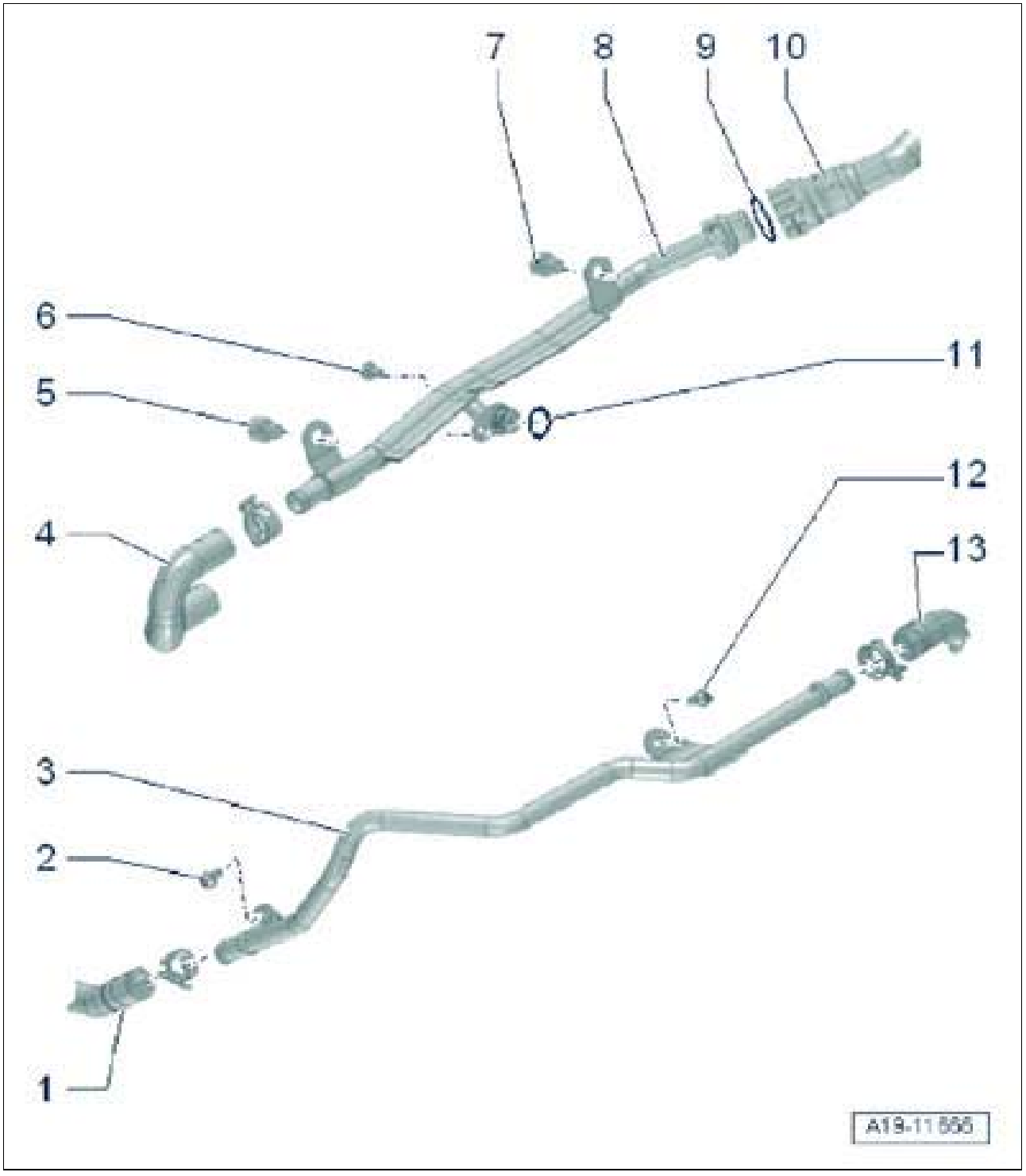

Courtesy of PORSCHE CARS NORTH AMERICA, INC.

1. Coolant hose
2. Screw → **Tightening torque: 9 Nm (6.5 ftlb.)**
3. Left coolant pipe
4. Coolant hose

5. Screw → **Tightening torque: 23 Nm (17 ftlb.)**
6. Screw → **Tightening torque: 9 Nm (6.5 ftlb.)**
7. Screw → **Tightening torque: 23 Nm (17 ftlb.)**
8. Right coolant pipe
9. O-ring/**replace, coat with coolant**
10. Coolant hose
11. O-ring/**replace, coat with coolant**
12. Screw → **Tightening torque: 9 Nm (6.5 ftlb.)**
13. Coolant hose

WM 200101 CHECKING FUEL SYSTEM (HIGH-PRESSURE SIDE) FOR LEAKS (EXCEPT MACAN) > TOOLS

Designation	Type	Number	Description	
Air-spring strut filling unit VAS 6231	Service equipment	WE 1282		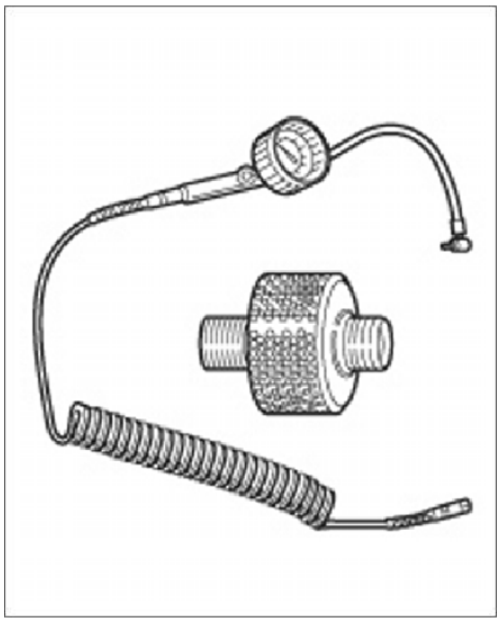
K-Jetronic Tester	Service equipment	WE 1291		
adapter	Special tool	9759		24 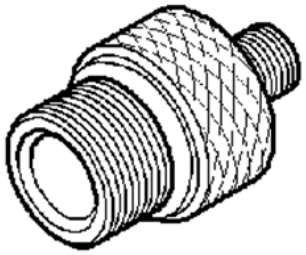 9759 000 721 975 90

WM 200101 CHECKING FUEL SYSTEM (HIGH-PRESSURE SIDE) FOR LEAKS (EXCEPT MACAN) > TECHNICAL VALUES

Location	Description	Type	Basic value	Tolerance 1	Tolerance 2
High-pressure pump		Pressure	10 bar		

Fuel supply line	Thread M16 x 1.5	Tightening torque	35 Nm (26 ftlb.)		

WM 200101 CHECKING FUEL SYSTEM (HIGH-PRESSURE SIDE) FOR LEAKS (EXCEPT MACAN) > PRELIMINARY WORK

WARNING: Toxic substances

- *Danger of poisoning or suffocation*
- *Danger of burns to the eyes and skin*

→ Ventilate the work area well.

→ Never ingest or inhale.

→ Read specific information on the Hazard Sheet.

→ Do not smoke, eat or drink in the work area.

WARNING: Highly inflammable or explosive materials

- *Danger of fire or explosion*

→ Avoid contact with hot parts or sources of ignition.

→ Use suction to remove ignitable vapours.

→ Attach warning sign in a clearly visible position.

NOTE: Dirt on injection system components

- *Material damage*
- *Rough-running engine*
- *Bad exhaust emissions*

→ Thoroughly clean connection points and adjacent areas before loosening them. If the engine is very dirty, wash it before starting disassembly work.

→ Lay removed parts on a clean surface and cover them. Do not use fibre-shedding cloths.

→ Carefully cover components or seal them if repair work will not be carried out immediately. Place rubber caps on connections. Seal intake openings with film or adhesive tape.

→ Only install clean parts. Do not take spare parts out of the packaging until just before installation.

→ Never use compressed air when the system is open. Do not move the vehicle.

WARNING: Leaking fuel supply lines

- *Emerging fuel*
- *Risk of fire*

→ Perform leak test.

Information

- Do not bend high-pressure lines. Always remove the high-pressure distributor pipe and other fuel-supply components in the high-pressure area completely. Check that the connection points are not damaged and are perfectly clean and make sure there is no thread damage. Fit union nuts on all connection points by hand before screwing in screws or bolts. Remove dirt on the conical/ball joints. Check connection points for leaks following fitting.

Information

- The ignition must be switched off when working on the fuel system.
- Absorb any escaping fuel using a suitable binding material or a cloth.
- Cloths which have absorbed fuel must be disposed of according to the applicable national laws.
- The fuel system must be depressurised before starting work on it.
- Only work on the fuel system in well-ventilated rooms.
- Any seals which have been removed must always be replaced.
- After disassembly work on the high-pressure injection system, fit the components to the prescribed torques.
- Visible threaded joints must be checked for leaks with the engine idling after a test drive.
- For the check to be performed correctly, the components to be checked must not contain any fuel. Remove fuel from the lines during disassembly work.

  1. Remove rear engine compartment cover. → Removing front trim panel
  2. Pull out fuse for the fuel pump in the central electrical system or disconnect the battery. This ensures that the fuel pump does not start up when a door is opened.

WM 200101 CHECKING FUEL SYSTEM (HIGH-PRESSURE SIDE) FOR LEAKS (EXCEPT MACAN) > TOOLS AND MATERIALS

Fig 1: Identifying Leak Test Tools

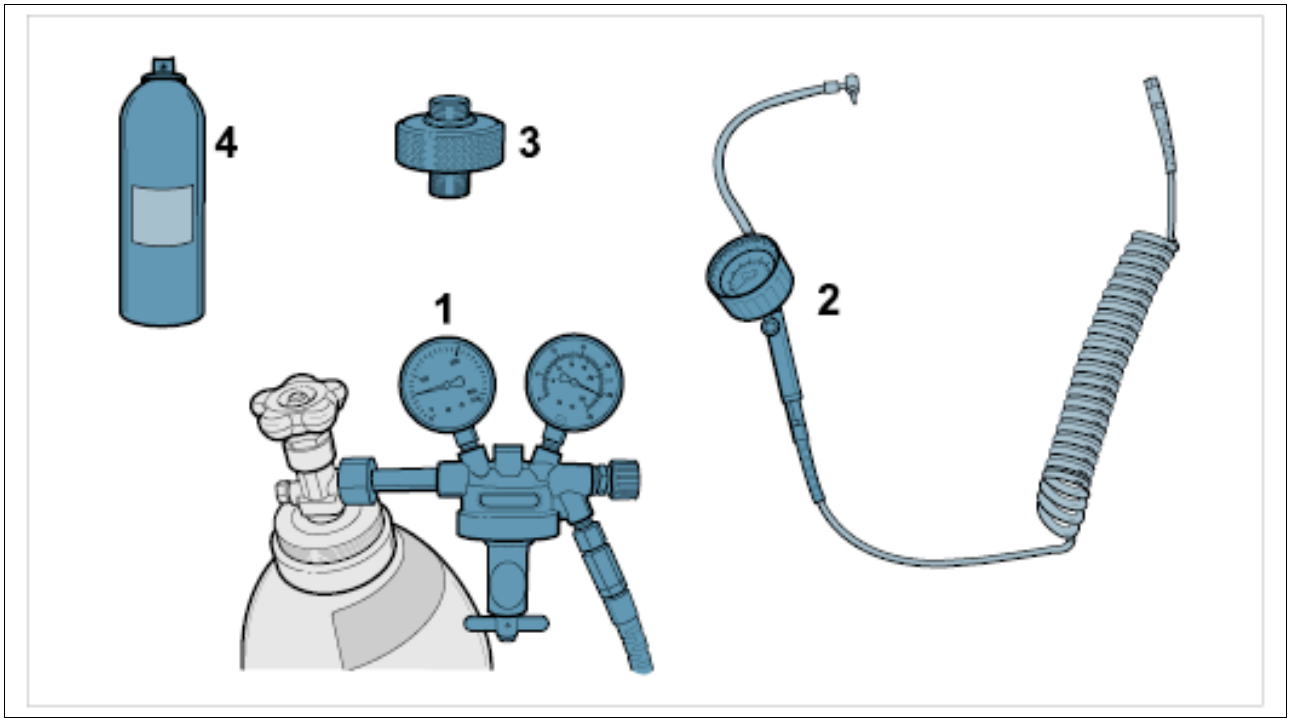

Courtesy of PORSCHE CARS NORTH AMERICA, INC.

1. The required pressure is set on the compressed gas bottle using the commercially available pressure gauge unit (pressure reducer). The commercially available compressed gas bottle must be filled only with approved leak-locating gases.
2. **Air-spring strut filling unit VAS 6231 WE 1282** with air-spring filling unit; the connection is fitted between the pressure reducer and adapter. Perform the leak test using individual bursts of pressure.
3. **K-Jetronic Tester WE 1291** adapter **V.A.G 1318/11** for fitting on the fuel supply line.
4. Commercially available leak-locating spray for detecting gas leaks.

Approved leak-locating gases (test media)

Leak-locating gas (test medium)	Designation	Composition/purity
Helium He (gaseous, compressed)	• 4.6 (minimum quality) • 5.0, etc. **not balloon gas!**	• 99.996 volume % (4.6) He • 99.999 volume % (5.0) He
Forming gas	• Forming gas 5	• 95% nitrogen N_2 and 5% hydrogen H_2

WM 200101 CHECKING FUEL SYSTEM (HIGH-PRESSURE SIDE) FOR LEAKS (EXCEPT MACAN) > CHECKING FUEL SYSTEM FOR LEAKS

WARNING: Toxic substances

- *Danger of poisoning or suffocation*
- *Danger of burns to the eyes and skin*

→ Ventilate the work area well.

→ Never ingest or inhale.

→ Read specific information on the Hazard Sheet.

→ Do not smoke, eat or drink in the work area.

WARNING: Highly inflammable or explosive materials

- *Danger of fire or explosion*

→ Avoid contact with hot parts or sources of ignition.

→ Use suction to remove ignitable vapours.

→ Attach warning sign in a clearly visible position.

WARNING: Leaking fuel supply lines

- *Emerging fuel*
- *Risk of fire*

→ Perform leak test.

1. Loosen hose clamp **-2-** and remove fuel supply line **-1-** from the fuel pipe **-3-** . Absorb escaping fuel.

   Connection point for fuel supply line **-1-** is located close to the torque support.

   Fuel supply line **-1-** must not be damaged, otherwise fuel supply line **-1-** must be replaced.

Fig 1: Identifying Low-Pressure Fuel Line

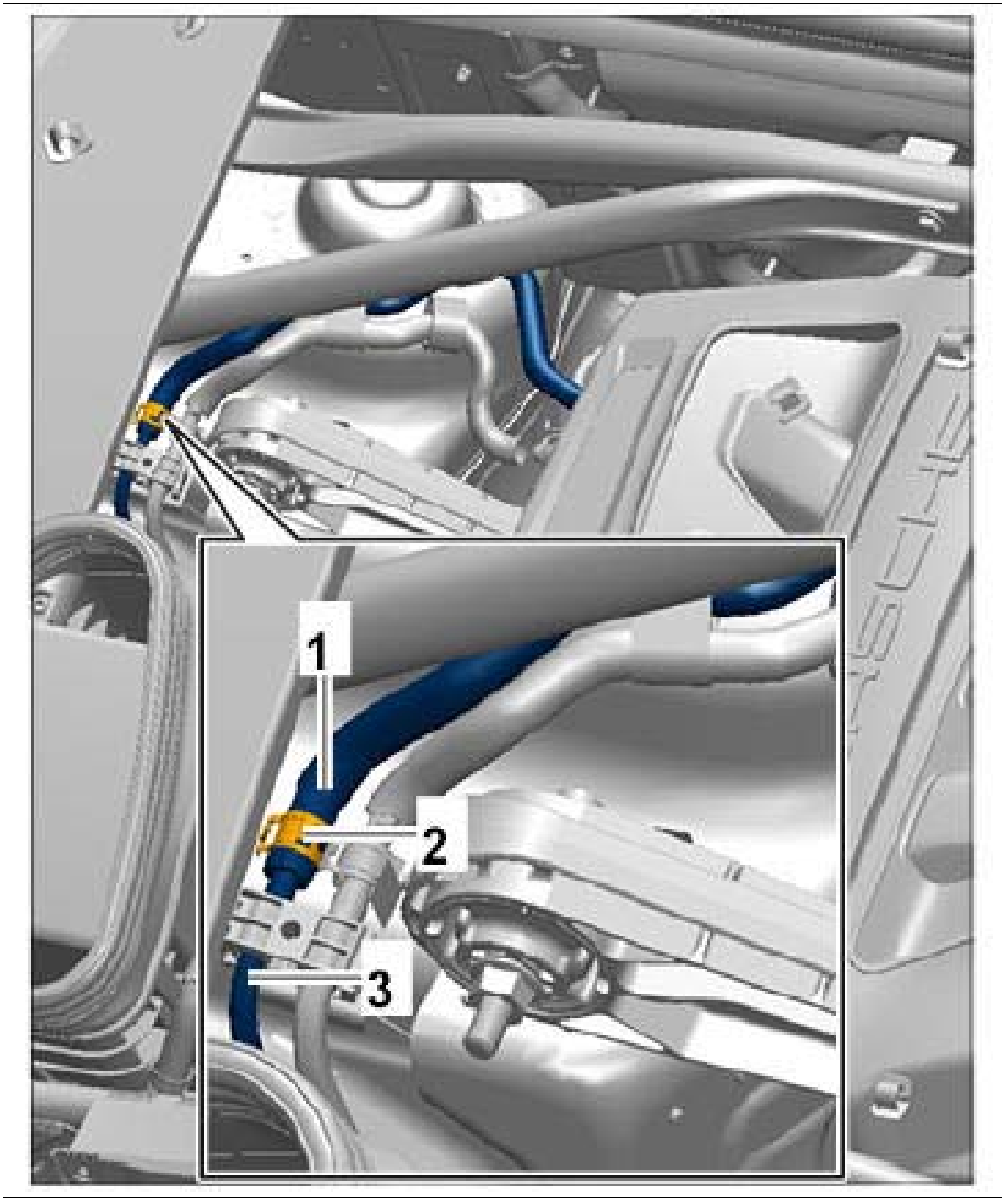

Courtesy of PORSCHE CARS NORTH AMERICA, INC.

Information

1. Check that the tool fittings are clean before starting the leak test.
2. Blow out the tool fittings before assembly using gentle bursts of pressure to prevent dust and foreign bodies from getting into the high-pressure system during the leak test.
3. Ensure that the tools for the leak test remain clean and free of dirt when stored.

2. Fit adapter → Adapter VAG 1318/11 **to the fuel supply line -1-** . Tighten hose clamp **-2-** .

The fuel supply line **-1-** must not be damaged, otherwise the fuel supply line must be replaced.

Fig 2: Identifying Adapter VAG 1318/11



Courtesy of PORSCHE CARS NORTH AMERICA, INC.

Fig 3: Identifying Fuel Supply Line Adapter VAG 1318/11

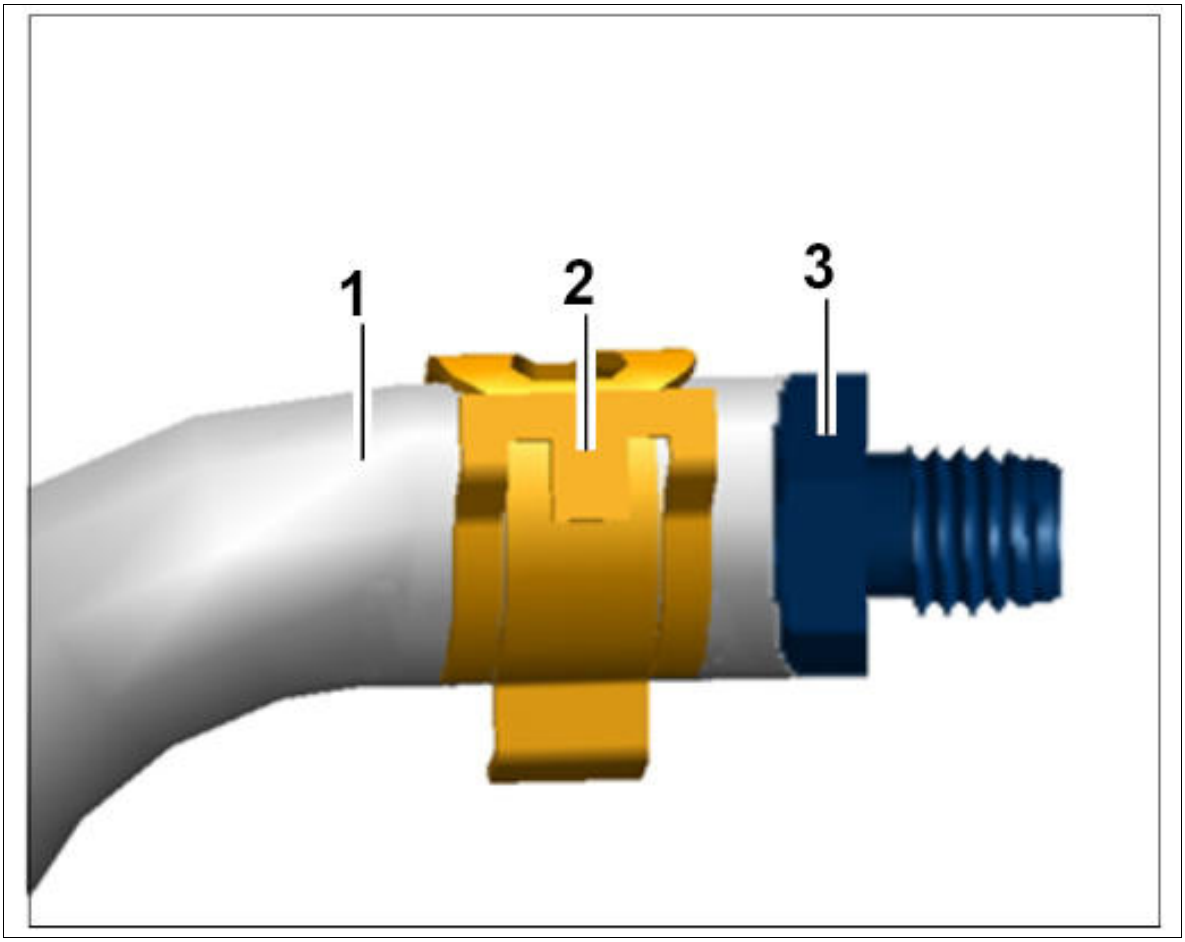

Courtesy of PORSCHE CARS NORTH AMERICA, INC.

NOTE: Test pressure is exceeded

1. Risk of damage to high-pressure pump

→ The test gas test pressure must be set to less than → **Pressure: 10 bar** on the pressure reducer on the test gas bottle.

WARNING: Working with compressed air

1. Risk of eye injuries

2. Risk of damaging and dirtying components

→ Wear protective goggles with side eye protection.

→ Protect the point at which the compressed air emerges with suitable material.

→ Place the point at which the compressed air emerges on suitable surfaces.

Information

The use of unapproved test gases results in incorrect test results. Only approved test gases guarantee comparability with fuel high-pressure systems at pressures of up to **10 bar** .

3. Fit test gas bottle with pressure reducer and **air-spring strut filling unit VAS 6231 WE 1282** securely so that no gas can escape → Test equipment setup . Set pressure reducer to max. 10 bar pressure → Adjusting pressure reducer to between 7 and 9 bar of test gas pressure .

Fig 4: Identifying Air-Spring Strut Filling Unit VAS 6231

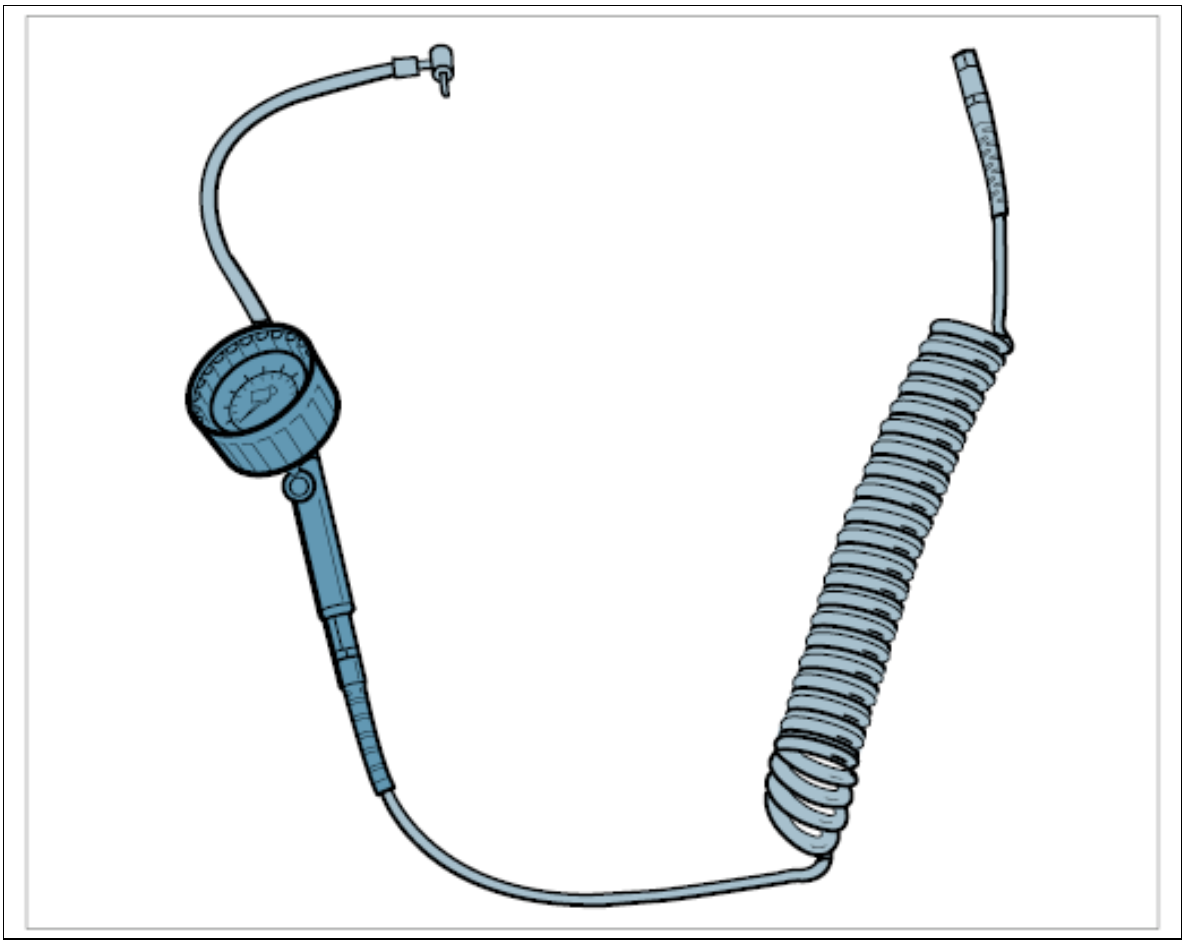

Courtesy of PORSCHE CARS NORTH AMERICA, INC.

Fig 5: Identifying Test Equipment Setup

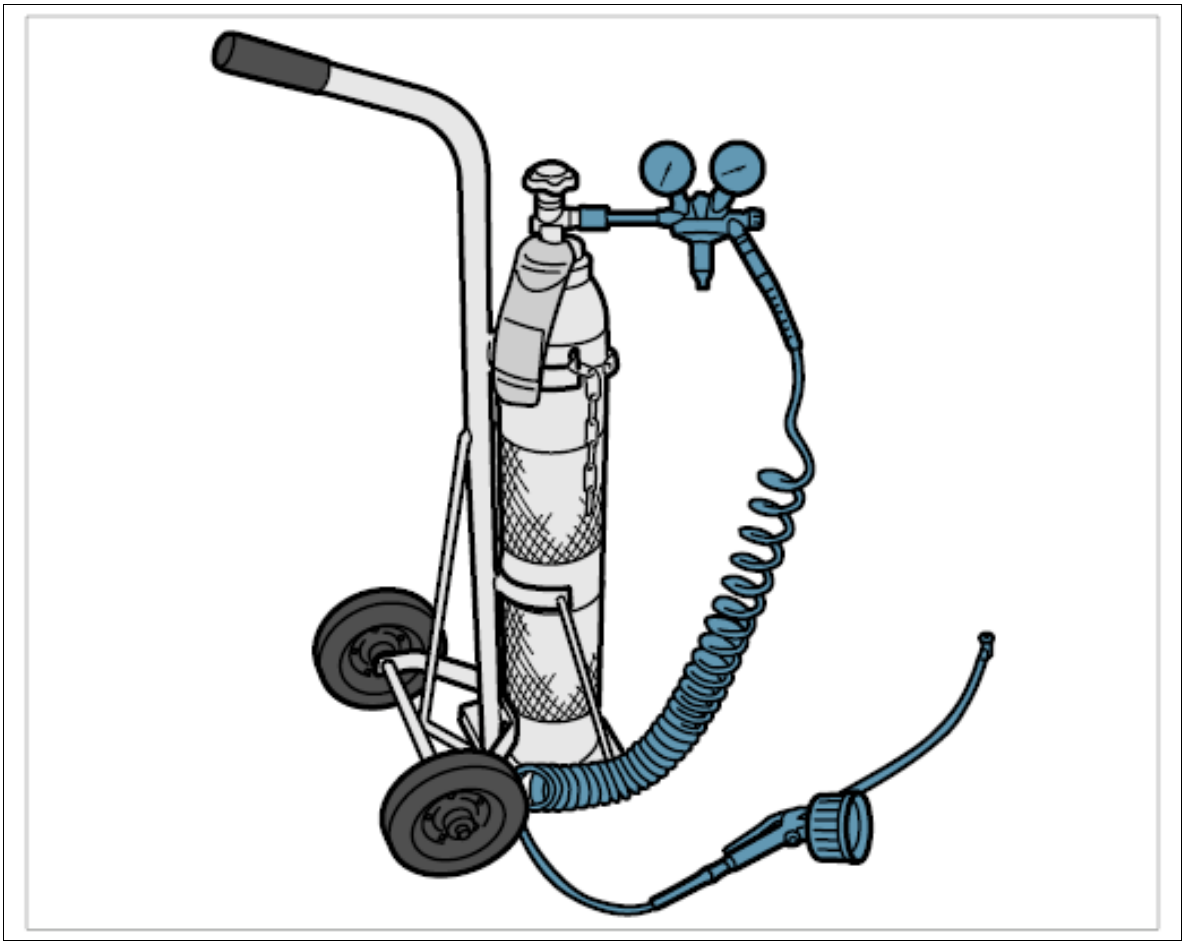

Courtesy of PORSCHE CARS NORTH AMERICA, INC.

Fig 6: Adjusting Pressure Reducer Tool

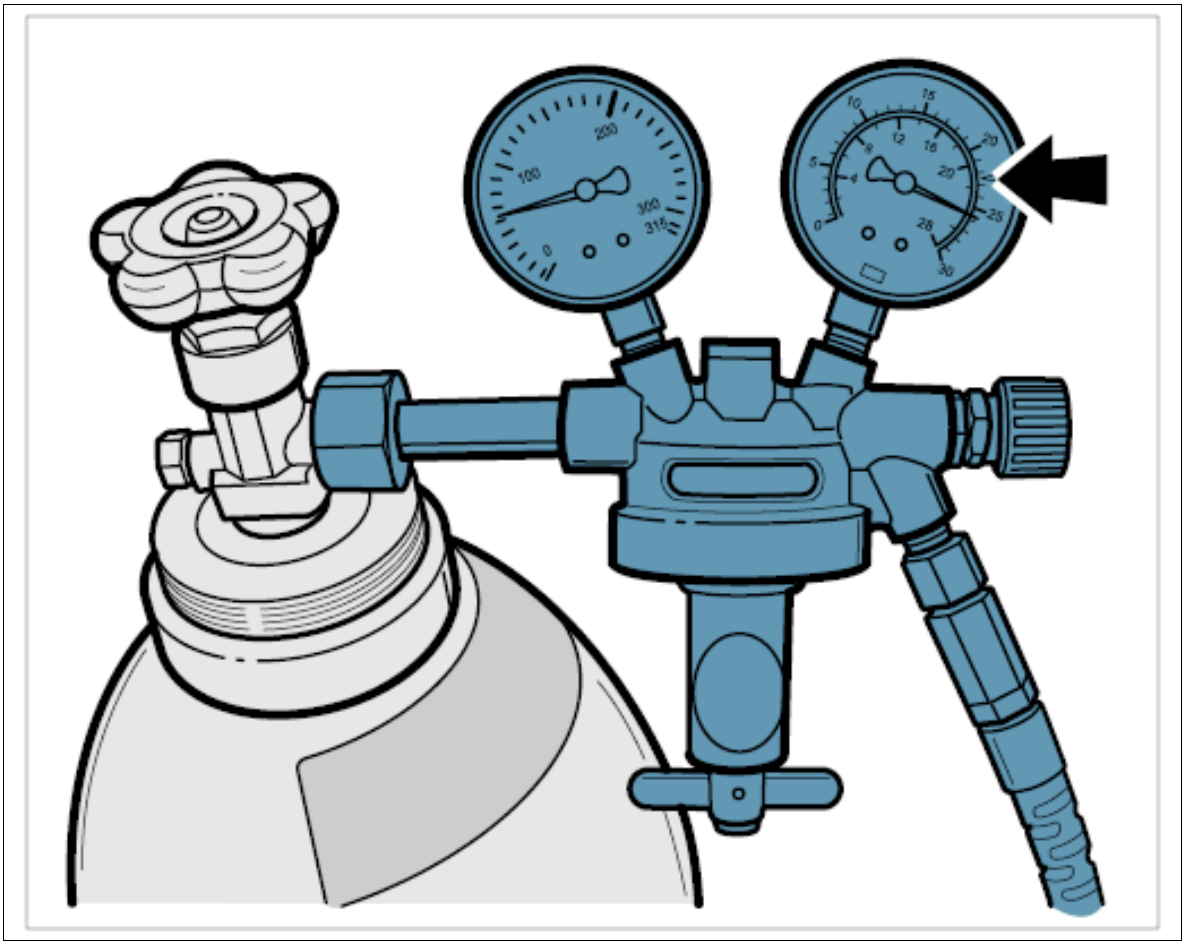

Courtesy of PORSCHE CARS NORTH AMERICA, INC.

4. **Air-spring strut filling unit VAS 6231 WE 1282** must then be connected to the **adapter 9759** (→ Connecting test equipment). Tighten the connection **-4-** if necessary.

Fig 7: Connecting Test Equipment

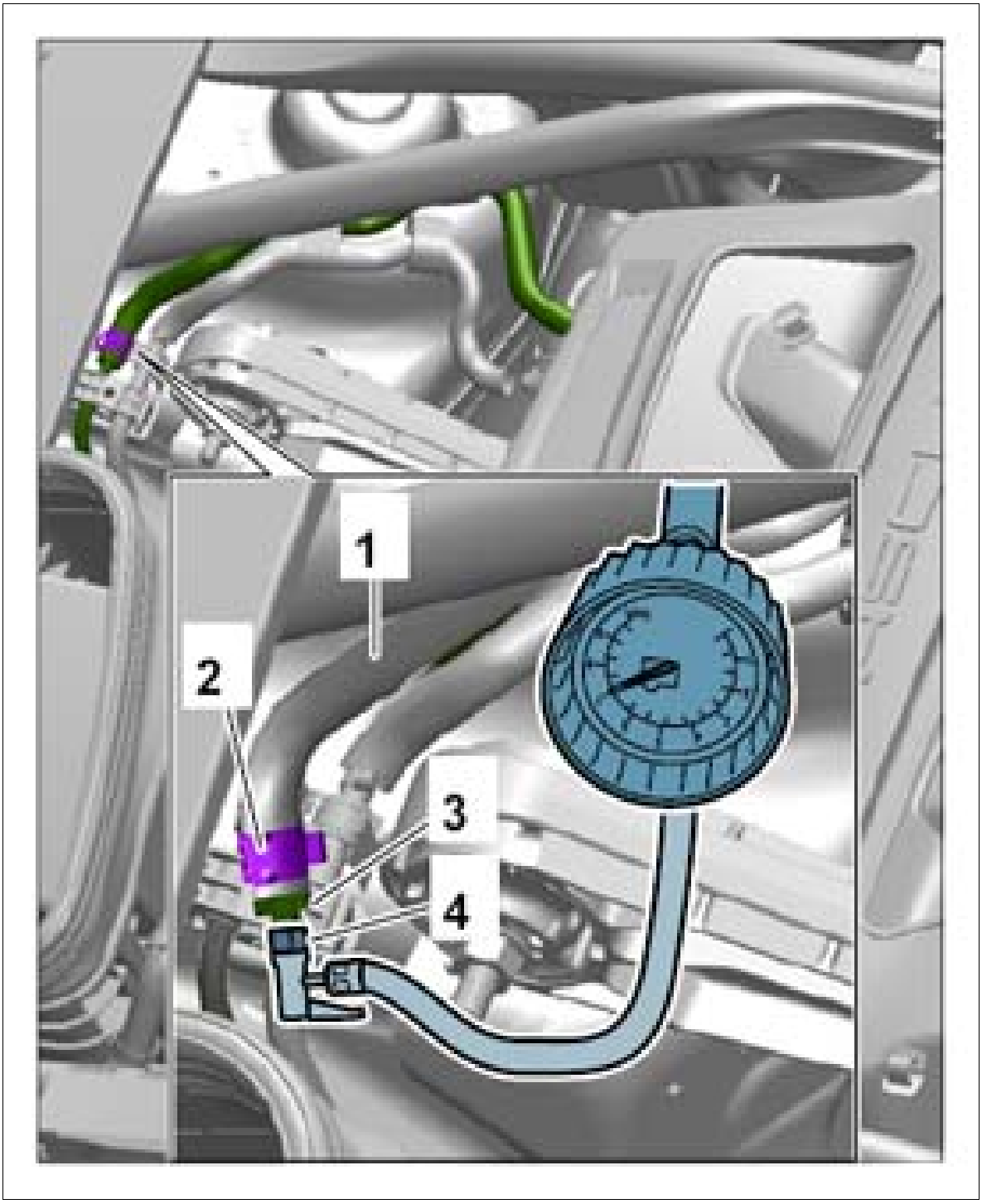

Courtesy of PORSCHE CARS NORTH AMERICA, INC.

5. Depending on the high-pressure connections that were loosened (removed fuel distributor pipe or removed high-pressure pump), complete the following steps =>

   If the fuel distributor pipe (high-pressure rail) was removed =>

6. Before screwing the fuel distributor pipe (high-pressure rail) to the engine, quickly blow out residual fuel from the high-pressure pump and high-pressure line (intake) to the high-pressure rail.

1. 6.1. Apply a quick burst of pressure using the filling unit and blow residual fuel out of the high-pressure pump and high-pressure line. Absorb escaping fuel. → Blowing out high-pressure line

   Fig 8: Identifying High-Pressure Line

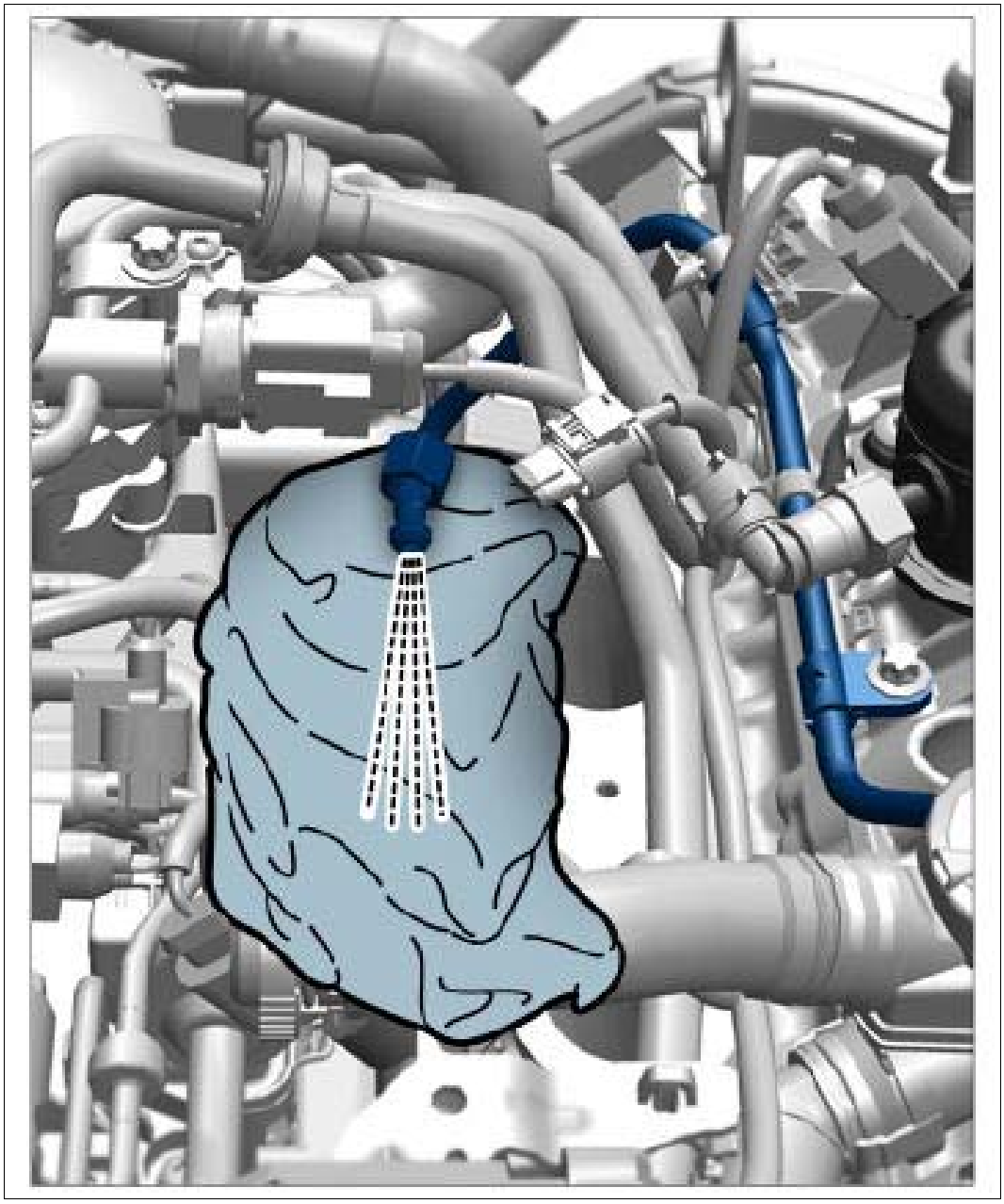

Courtesy of PORSCHE CARS NORTH AMERICA, INC.

2. 6.2. Drain residual fuel from the high-pressure distributor pipe before fitting it. Absorb escaping fuel.

7. Fit high-pressure distributor pipe (high-pressure rail) and tighten it to the correct tightening torques. → Installing fuel collection pipe

NOTE: Test pressure is exceeded

1. Risk of damage to high-pressure pump

→ The test gas test pressure must be set to less than → **Pressure: 10 bar** on the pressure reducer on the test gas bottle.

8. Use **air-spring strut filling device VAS 6231 WE 1282** to apply test gas pressure of between 7 and just under 10 bar to the completely fitted high-pressure system. The pressure is distributed slowly in the system and can increase slightly on the pressure gauge → Building up pressure . If there is a constant drop in pressure, there is a leak in the system.

Fig 9: Testing Gas Pressure Using Tool

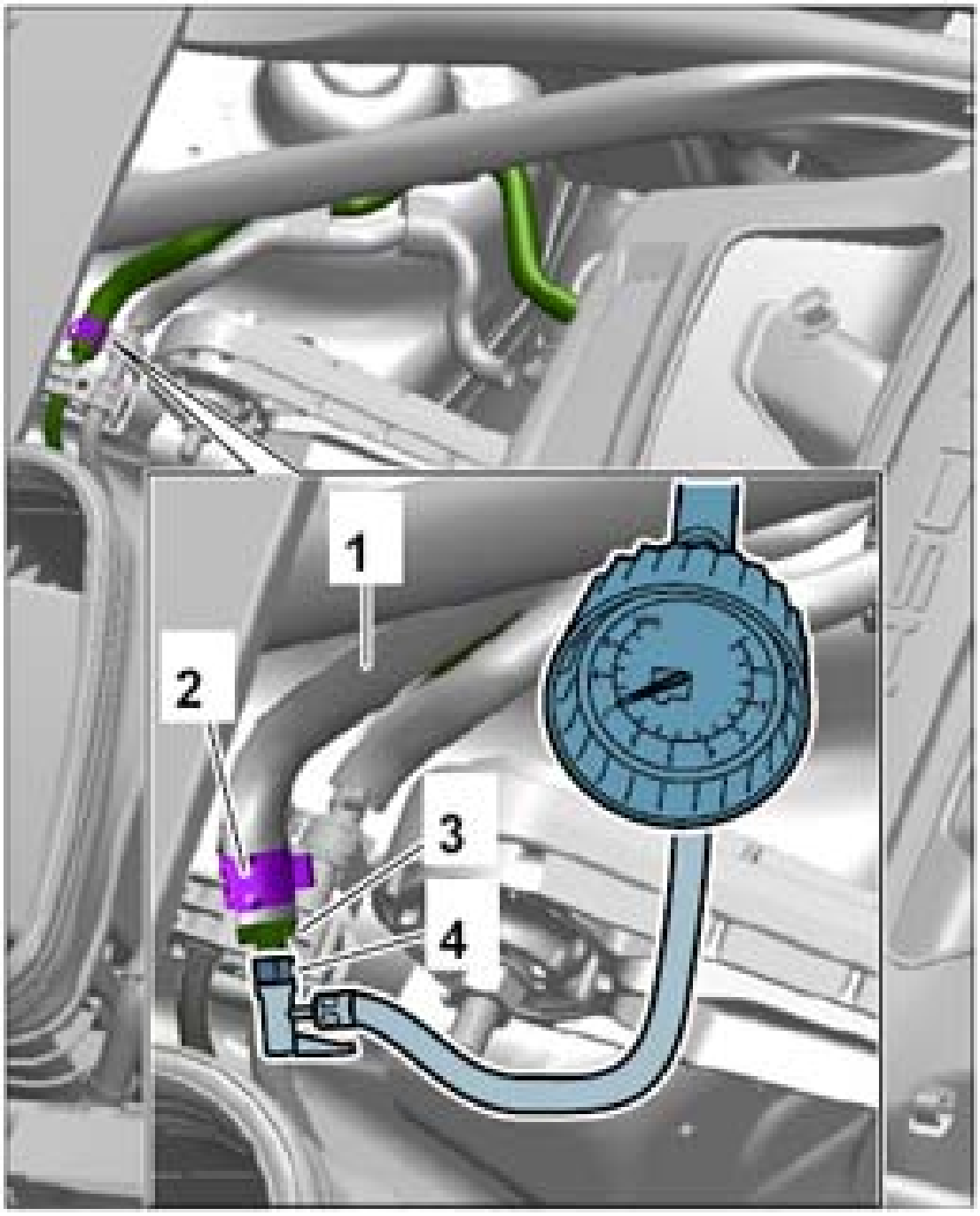

Courtesy of PORSCHE CARS NORTH AMERICA, INC.

9. Spray all connection points in the high-pressure system with commercially available leak-locating spray. If the pressure drops even though the threaded joints are perfectly sealed, also spray the soldered joints and connecting pipes as well as the high-pressure pump and test equipment with leak-locating spray.

10. If there is a leak, **gently sashaying, moving and growing** air bubbles → Leaks will emerge. These could be caused by a damaged seal, loose connections or incorrectly fitted union nuts, for example. The cause must be determined and corrected.

    Fig 10: Locating Pressure Line Leaks

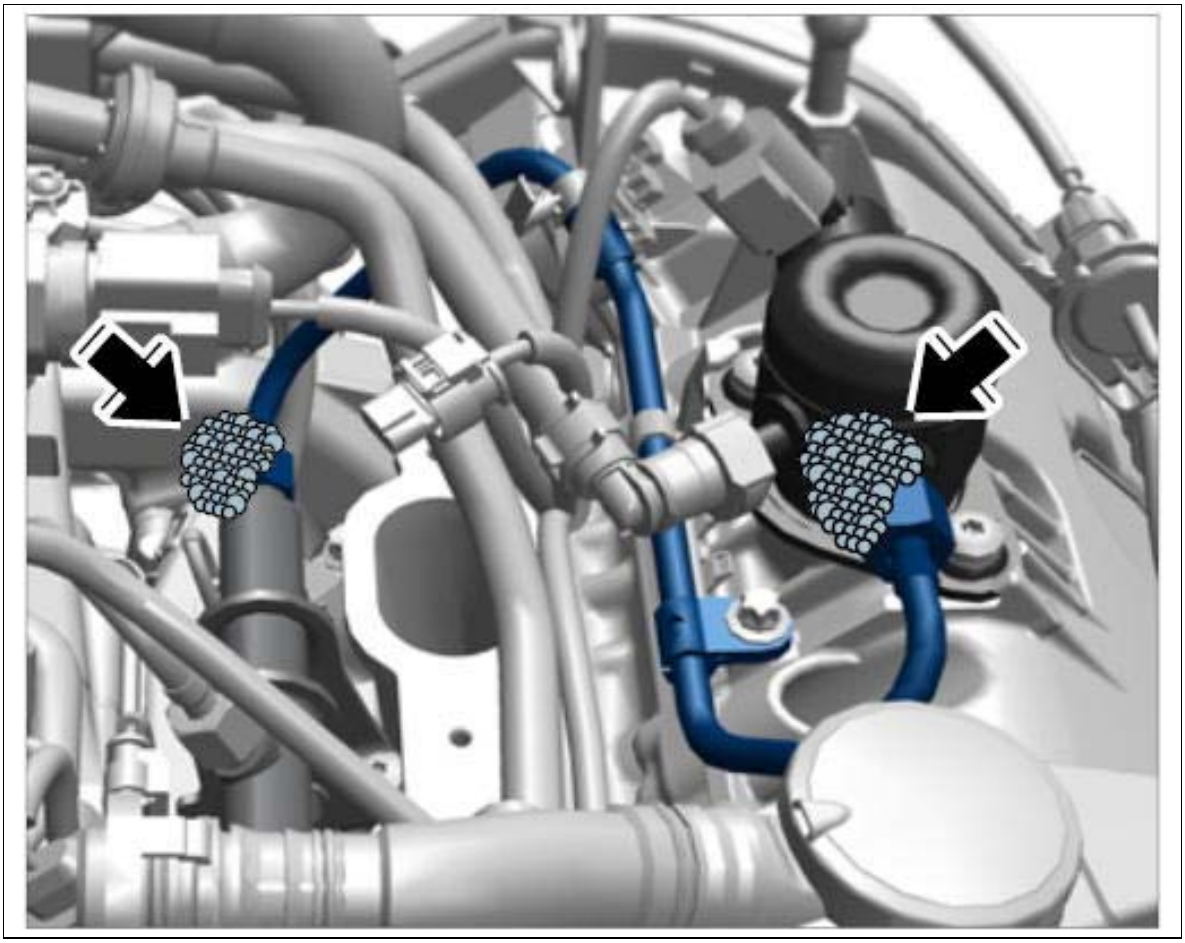

Courtesy of PORSCHE CARS NORTH AMERICA, INC.

If the high-pressure pump was removed =>

11. Before screwing the high-pressure line (intake) to the high-pressure pump, residual fuel must be blown out of the high-pressure pump.

    1. 11.1. Apply a quick burst of pressure using the filling unit and blow any fuel out of the high-pressure pump → Blowing out high-pressure pump . Absorb escaping fuel. → Blowing out high-pressure pump

Fig 11: Applying Pressure Using Filling Unit

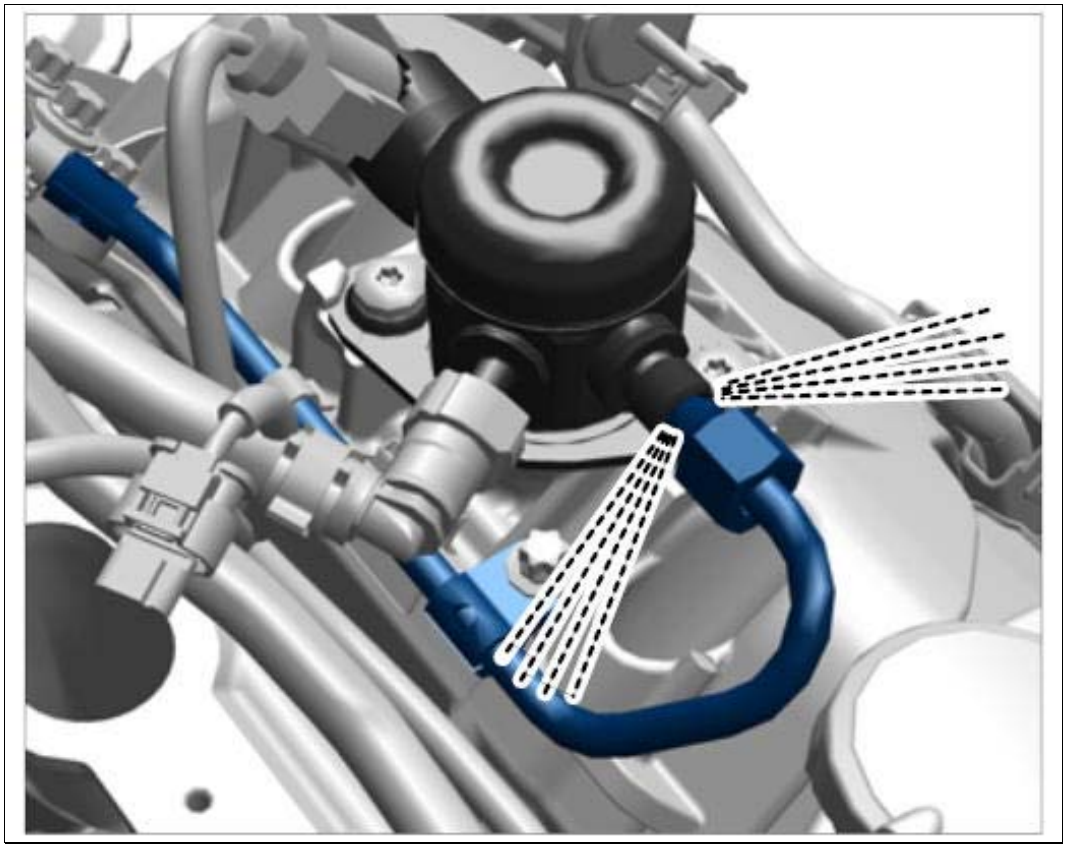

Courtesy of PORSCHE CARS NORTH AMERICA, INC.

12. Screw high-pressure line correctly to the high-pressure pump. → Installing high-pressure pump

> *NOTE: Test pressure is exceeded*
>
> *1. Risk of damage to high-pressure pump*

→ The test gas test pressure must be set to less than → **Pressure: 10 bar** on the pressure reducer on the test gas bottle.

13. Use **air-spring strut filling device VAS 6231 WE 1282** to apply test gas pressure of between 7 and just under 10 bar to the fitted high-pressure pump. The pressure is distributed slowly in the system and can increase slightly on the pressure gauge → Building up pressure . If there is a constant drop in pressure, there is a leak in the system.

Fig 12: Applying Pressure

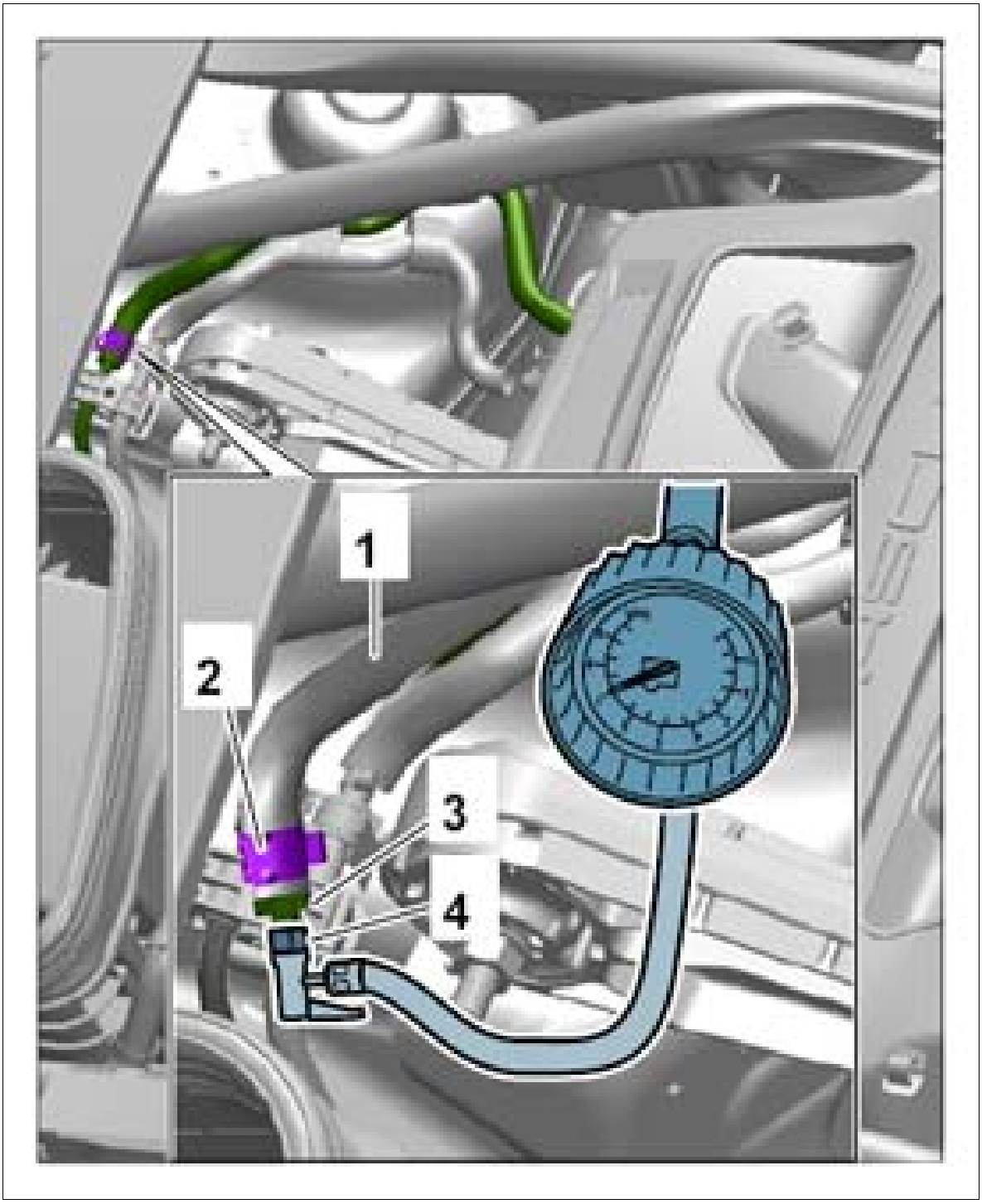

Courtesy of PORSCHE CARS NORTH AMERICA, INC.

14. Spray all connection points for the high-pressure pump with commercially available leak-locating spray. If the pressure drops even though the threaded joints are perfectly sealed, also spray other connection points as well as the high-pressure pump and test equipment with leak-locating spray.

15. If there is a leak, **gently sashaying, moving and growing** air bubbles will emerge (union nut on injector is shown) → Leaks . These could be caused by a damaged seal, loose connections or incorrectly fitted union nuts, for example. The cause must be determined and

corrected.

Fig 13: Locating Pressure Line Leaks

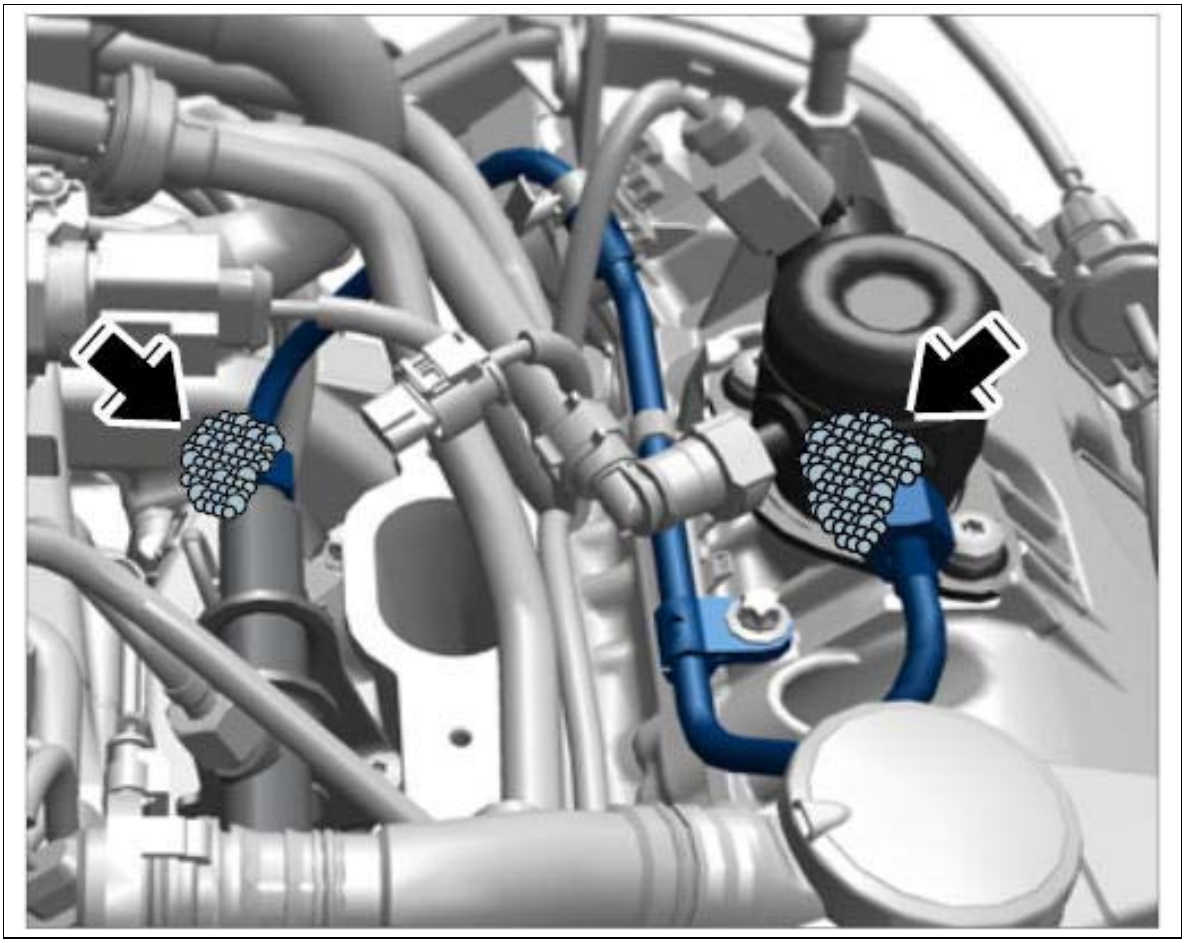

Courtesy of PORSCHE CARS NORTH AMERICA, INC.

WM 200101 CHECKING FUEL SYSTEM (HIGH-PRESSURE SIDE) FOR LEAKS (EXCEPT MACAN) > SUBSEQUENT WORK

1. Remove tool setup.
2. Fit the fuel line. To do this, fit the fuel supply line (low pressure) at the marking correctly. Counter while fitting. → **Tightening torque: 35 Nm (26 ftlb.)**
3. Fit engine cover. For details, see → Installing front trim panel
4. Fit the fuse or connect the battery.
5. Bleed the fuel high-pressure system. → REMOVING FUEL COLLECTION PIPE

WM 200201 CHECKING FUEL PRESSURE (EXCEPT MACAN) > TOOLS

Designation	Type	Number	Descriptions	

K-Jetronic Tester	Service equipment	WE 1291	Graphic not available
PIWIS Tester II	Special tool	9818	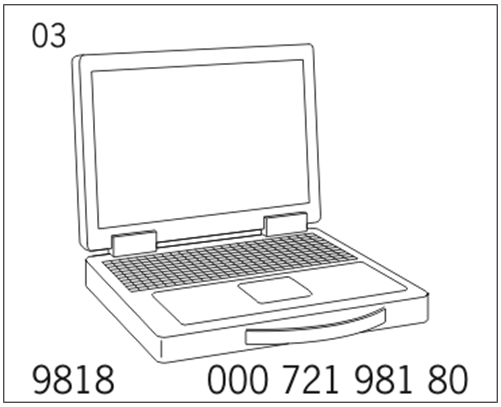
Connecting lines	Special tool	P378c	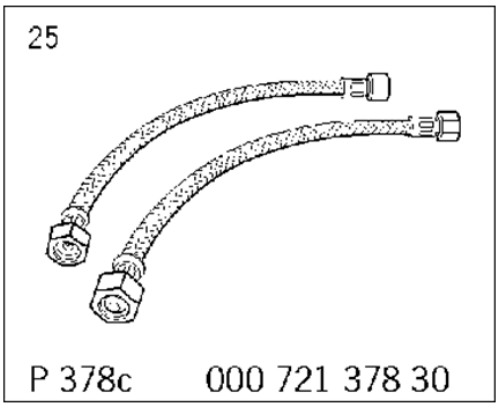

WM 200201 CHECKING FUEL PRESSURE (EXCEPT MACAN) > CHECKING FUEL PRESSURE (LOW PRESSURE) USING THE PIWIS TESTER (QUICK TEST)

Information

- Faults in the fuel high-pressure injection system can also be caused by defects in the pre-delivery system (fuel low pressure)
- In the event of problems in the fuel high-pressure injection system, the pre-delivery system should be checked first

Information

A leak in the fuel high-pressure pump supplying the engine (mechanical drive) dilutes the oil. Check the engine oil and initiate appropriate remedial action if necessary.

Information

The fuel delivery pressure (low pressure) cannot be measured during a test drive. When you drive the vehicle, only the measured value **Fuel high pressure actual value** can be read out with the PIWIS Tester in the DME control unit via the high-pressure sensor. There is no "low pressure" actual value

Information

The fuel system contains a fuel pump, which is controlled according to demand by a control unit, and one

or two supply-driven sucking jet pumps, depending on model.

Information

If you suspect that a pump in the fuel tank is defective (particularly if symptoms include a very low fuel level), always check the sucking jet pumps for dirt or blockages.

Information

- Checking the low-pressure area with the high-pressure sensor cannot be used as the sole reference.
- The high-pressure sensor has a certain percent inaccuracy in the low-pressure area.
- It is best to check the low-pressure area using both test methods (Tester and pressure gauge).

General information on converting pressure =>

- 10000 hPa = 10 bar = 10000 mbar
- 1000 kPa = 10 bar = 10000 mbar
- 1 MPa = 10 bar = 10, 000 mbar

1. Connect the Tester and get it ready. **PIWIS Tester II 9818**
    1. 1.1. Connect a charger to the vehicle battery. The voltage should be approx. 12.5 V (no rapid charging allowed because the voltage is too high!).
    2. 1.2. The fuel pump can be activated and deactivated as follows:
    3. 1.3. **DME** => **Drive link test/checks** => **Drive links** => **Fuel pump 1**
    4. 1.4. 100% is displayed. The fuel pump starts to deliver fuel when you press **Start** .
    5. 1.5. The fuel pump stops when the percentage value changes to 0%. Press **Start** again.
2. Call up the test value **B070 Fuel high pressure actual value** .
    1. 2.1. **DME** => **Actual values/input signals** => **B070 Fuel high-pressure actual value**

Fuel pressure is approx. 5500.0 hPa to 5800.0 hPa when the pump is running.

Fig 1: View Of Both Values One Under The Other On The PIWIS Tester (German illustration)

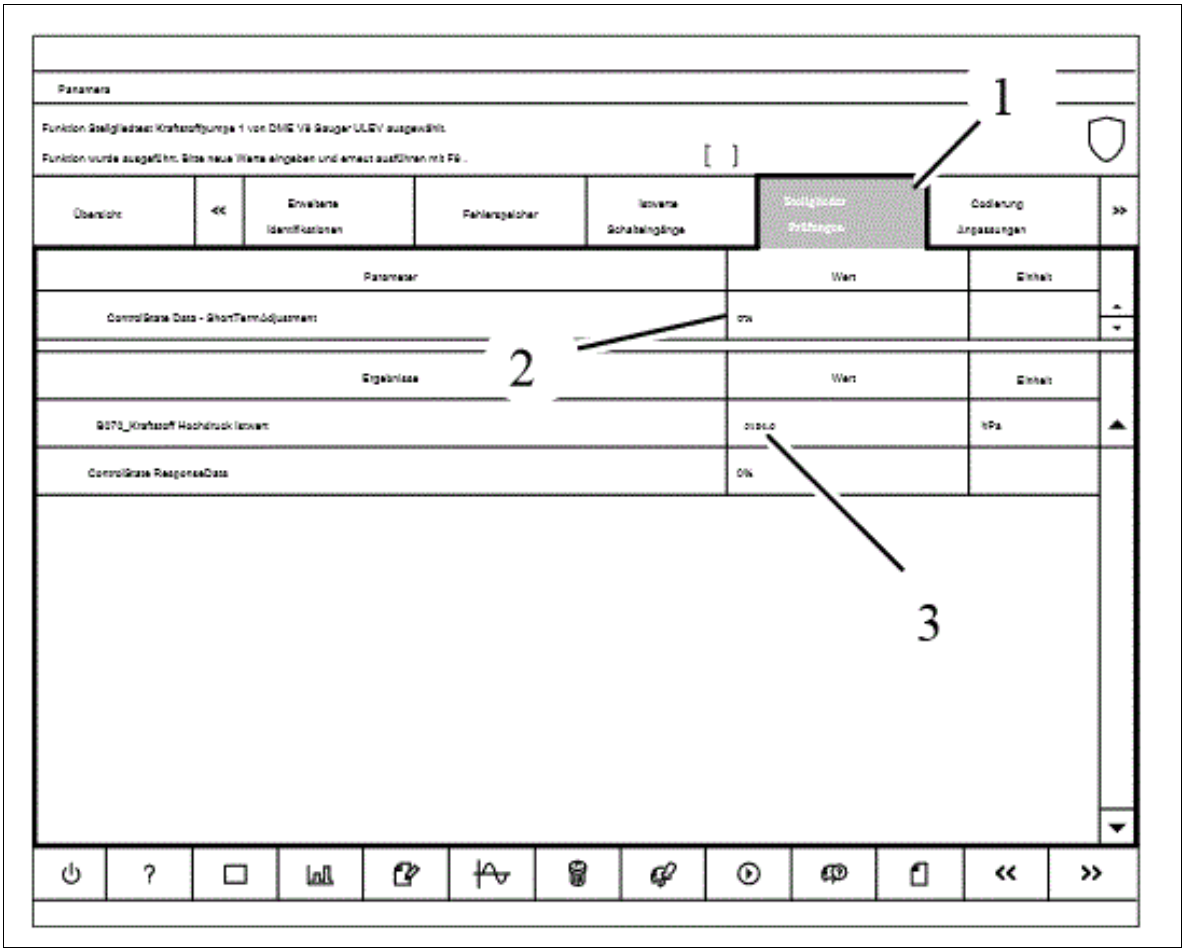

Courtesy of PORSCHE CARS NORTH AMERICA, INC.

1. Drive links/tests
2. Fuel pump status (0% when pump is off - 100% when pump is running). Always confirm by pressing **Start** .
3. Fuel pressure in hPa (figure shows holding pressure shortly after switching pump off).

Information

The fuel holding pressure must only drop by max. 1 bar (1000 mbar) in one hour.

1. **Step 2: Check the fuel system for leaks =>**
    1. 1.1 Read out the **fuel high pressure actual value** in the DME control unit using the PIWIS Tester.
        1. Nominal pressure is approx. 5000 to 5500.0 hPa. Monitor the fuel pressure for about 5 to 10 minutes.
        2. The pressure is **not** maintained. In other words: the **fuel high-pressure actual value** has dropped considerably. There is an internal or external leak in the fuel system.
        3. The pressure is maintained. In other words: the **fuel high-pressure**

actual value has only dropped slightly.

WM 200201 CHECKING FUEL PRESSURE (EXCEPT MACAN) > TOOLS AND MATERIALS > TEST TOOL SETUP

Example; other variants are possible.

Fig 1: Tool setup for pressure test



Courtesy of PORSCHE CARS NORTH AMERICA, INC.

1. Pressure gauge test equipment **K-Jetronic Tester WE 1291**
2. Adapter VAG 1318/12
3. Connecting line **Connecting lines P378c**
4. Adapter VAG 1318/11

5. Connecting line **Connecting lines P378c**
6. Adapter VAG 1318/17
7. Connecting line with 8-mm double socket
8. Connecting line with connector 7.89

WM 200201 CHECKING FUEL PRESSURE (EXCEPT MACAN) > CHECKING FUEL PRESSURE (LOW-PRESSURE) USING THE PRESSURE GAUGE > CHECKING FUEL PRESSURE USING THE PRESSURE GAUGE

WARNING: ***Toxic substances***

- **Danger of poisoning or suffocation**
- **Danger of burns to the eyes and skin**
  - Ventilate the work area well.
  - Never ingest or inhale.
  - Read specific information on the Hazard Sheet.
  - Do not smoke, eat or drink in the work area.

WARNING: ***Highly inflammable or explosive materials***

- ***Danger of fire or explosion***
  - *Avoid contact with hot parts or sources of ignition.*
  - *Use suction to remove ignitable vapours.*
  - *Attach warning sign in a clearly visible position.*

1. Remove engine compartment trim panel at the front right. → REMOVING FRONT TRIM PANEL
2. Disconnect fuel low-pressure line **-2-** at the front left of the wheel housing.
    1. 2.1 Loosen clamp **-1-** and pull off line **-2-** .
    2. 2.2 Collect escaping fuel.

Fig 1: Fuel Supply Line

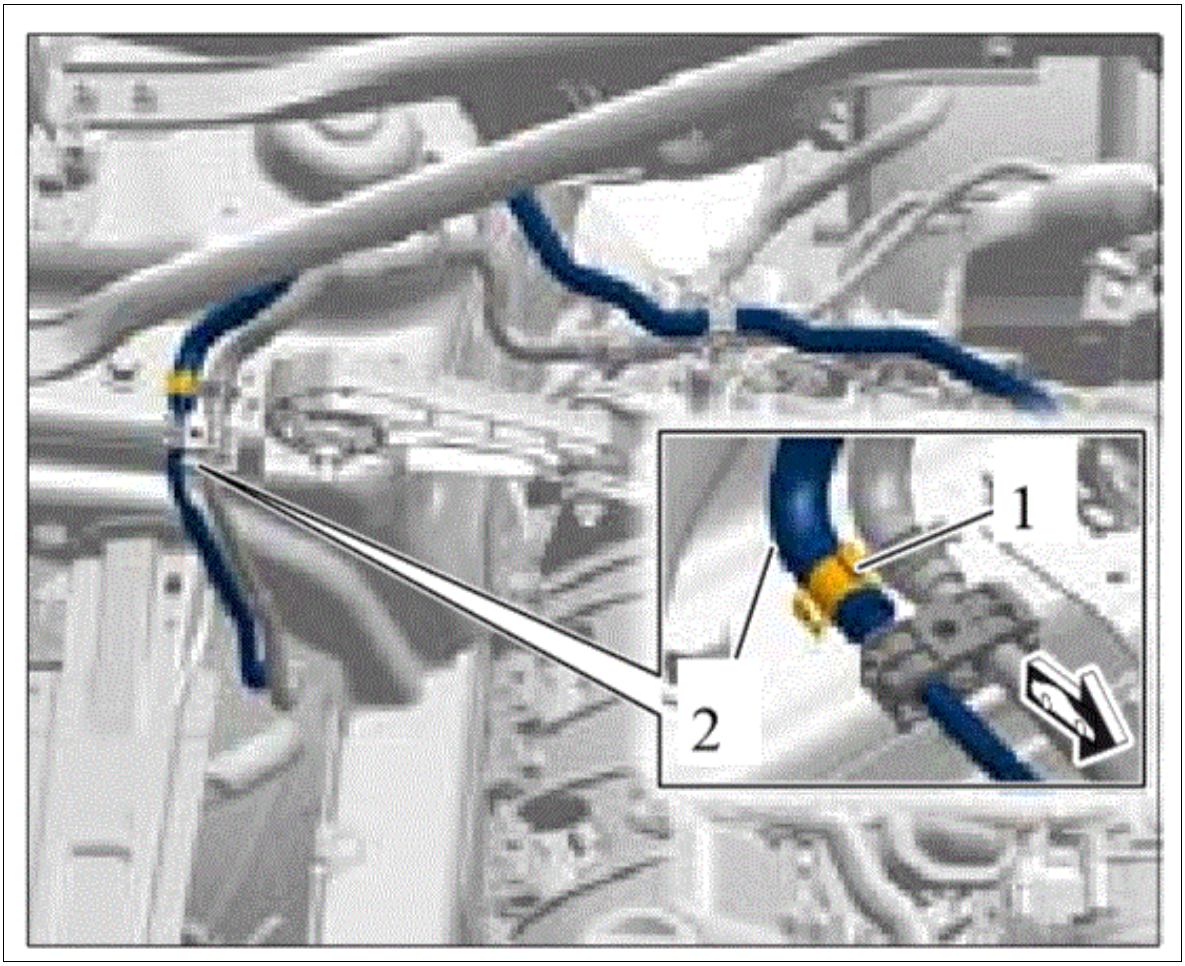

Courtesy of PORSCHE CARS NORTH AMERICA, INC.

3. **Check fuel supply pressure (low-pressure) =>**

    1. 3.1 Connect test equipment and secure connections with a clamp -1- or screw-type clamp **-2-** .

    2. 3.2 The tool setup must be fitted with sealing rings (copper, aluminium, or plastic, etc.) between the individual components. The setup must be fully sealed.

    3. 3.3. Start the engine and leave it running at idle speed. Read off the fuel pressure on the pressure gauge. The pressure gauge pointer can oscillate slightly at idle speed. With increased idle speed (accelerator pressed slightly), the pointer deflection calms down. The fuel low-pressure system operates at a **fuel pressure of 5.5 to 5.8 bar** . The pointer oscillates at around this value. Measurements under load can even generate values of below 5 bar (4.5 bar) briefly. This is not a sign of a defect.

Fig 2: Connection For Measuring Pressure On The Vehicle

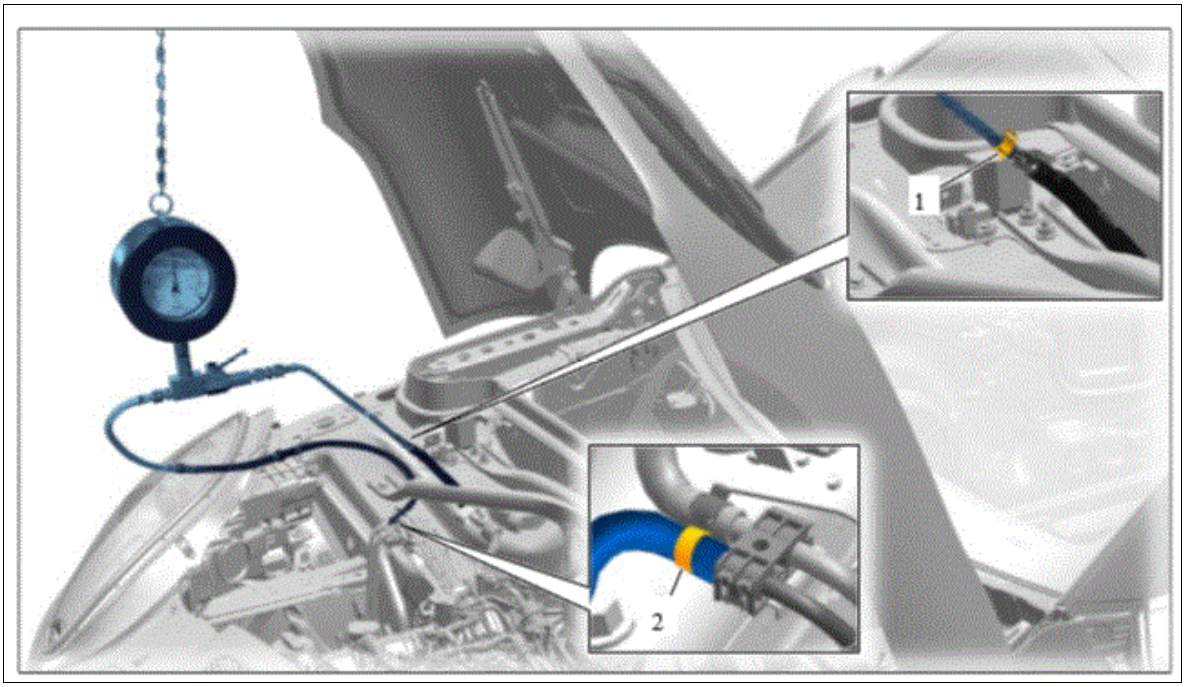

Courtesy of PORSCHE CARS NORTH AMERICA, INC.

4. **Check fuel retaining pressure (low-pressure) =>**
    1. Engine cold
    2. Workshop air-conditioned to normal temperature
    3. Fluctuations may occur if the engine is warm or if the outside temperature is high
    4. Fully sealed measuring tool setup
        1. 6.1 Same tool setup and connection as for measuring the fuel delivery pressure (see above).
        2. 6.2. Allow engine to run for a few minutes. Switch off engine. Check the pressure drop. Drop in fuel pressure after "ignition is switched off" must not exceed **1 bar after 1 hour** . Make sure that the tool setup itself does not have any leaks (even the slightest leak). The fuel retaining pressure will decrease extremely rapidly and falsify the measured result with even the tiniest leak.

WM 200201 CHECKING FUEL PRESSURE (EXCEPT MACAN) > SUBSEQUENT WORK

WARNING: ***Toxic substances***

- ***Danger of poisoning or suffocation***
- ***Danger of burns to the eyes and skin***
    - *Ventilate the work area well.*

- *Never ingest or inhale.*
- *Read specific information on the Hazard Sheet.*
- *Do not smoke, eat or drink in the work area.*

WARNING:

Highly inflammable or explosive materials

- ***Danger of fire or explosion***
  - *Avoid contact with hot parts or sources of ignition.*
  - *Use suction to remove ignitable vapours.*
  - *Attach warning sign in a clearly visible position.*

1. Remove pressure gauge test equipment.
    1. 1.1 Lines are pressurised.
    2. 1.2 Collect escaping fuel.
2. Connect fuel supply line and secure with a clamp.
3. Install engine compartment trim panel at the front right. → INSTALLING FRONT TRIM PANEL

WM 200301 CHECKING FUEL QUALITY (ALL MODELS) > TOOLS

Designation	Type	Number	Description	
Fuel identification unit	Service equipment	WE 1494		

WM 200301 CHECKING FUEL QUALITY (ALL MODELS) > TOOLS AND MATERIALS

Overview of individual components of **Fuel identification unit WE 1494**

Fig 1: Identifying Fuel Identification Unit VAS 6774



Courtesy of PORSCHE CARS NORTH AMERICA, INC.

1. VAS 6774/1: Spindle (density gauge)
2. VAS 6774/2: Measuring cylinder
3. VAS 6774/3: Fuel detector (for measuring diesel)
4. VAS 6774/4: Cleaning brush
5. VAS 6774/5: Adapter with clamps for connecting a 12-volt battery
6. VAS 6774/6: Filter pads for fuel detector
7. Case

WM 200301 CHECKING FUEL QUALITY (ALL MODELS) > CHECKING FUEL QUALITY

WARNING: Highly inflammable or explosive materials

- *Danger of fire or explosion*

→ Avoid contact with hot parts or sources of ignition.

→ Use suction to remove ignitable vapours.

→ Attach warning sign in a clearly visible position.

Information

- Only carry out the analysis in well-ventilated rooms and at room temperature (20° Celsius).
- Before starting the analysis, have a good look at the information on the CD and read the leaflet (supplied in the case) carefully.
- This analysis can only determine a reference value; a laboratory test is required for an exact analysis.
- The analysis does not constitute a legal basis; it is the starting point for further steps.

1. Push the measuring cylinder **-1-** into the fixing clip **-2-** in the case **-arrow-** .

   Fig 1: Pushing Cylinder Into Fixing Clip

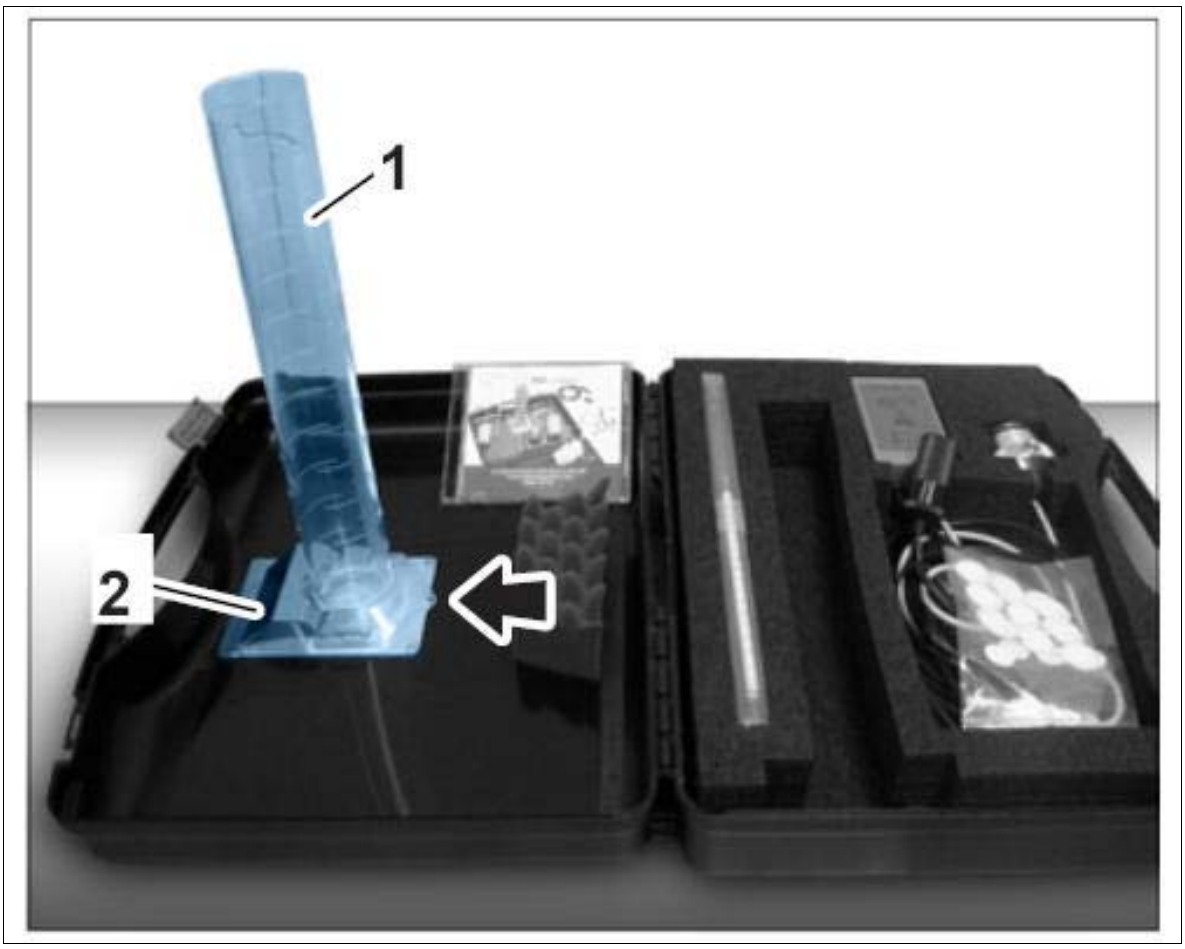

Courtesy of PORSCHE CARS NORTH AMERICA, INC.

2. Place the spindle sleeve **-1-** under the lid of the case **-arrow-** so that the measuring cylinder is horizontal.

Fig 2: Placing Spindle Sleeve Under Case Lid

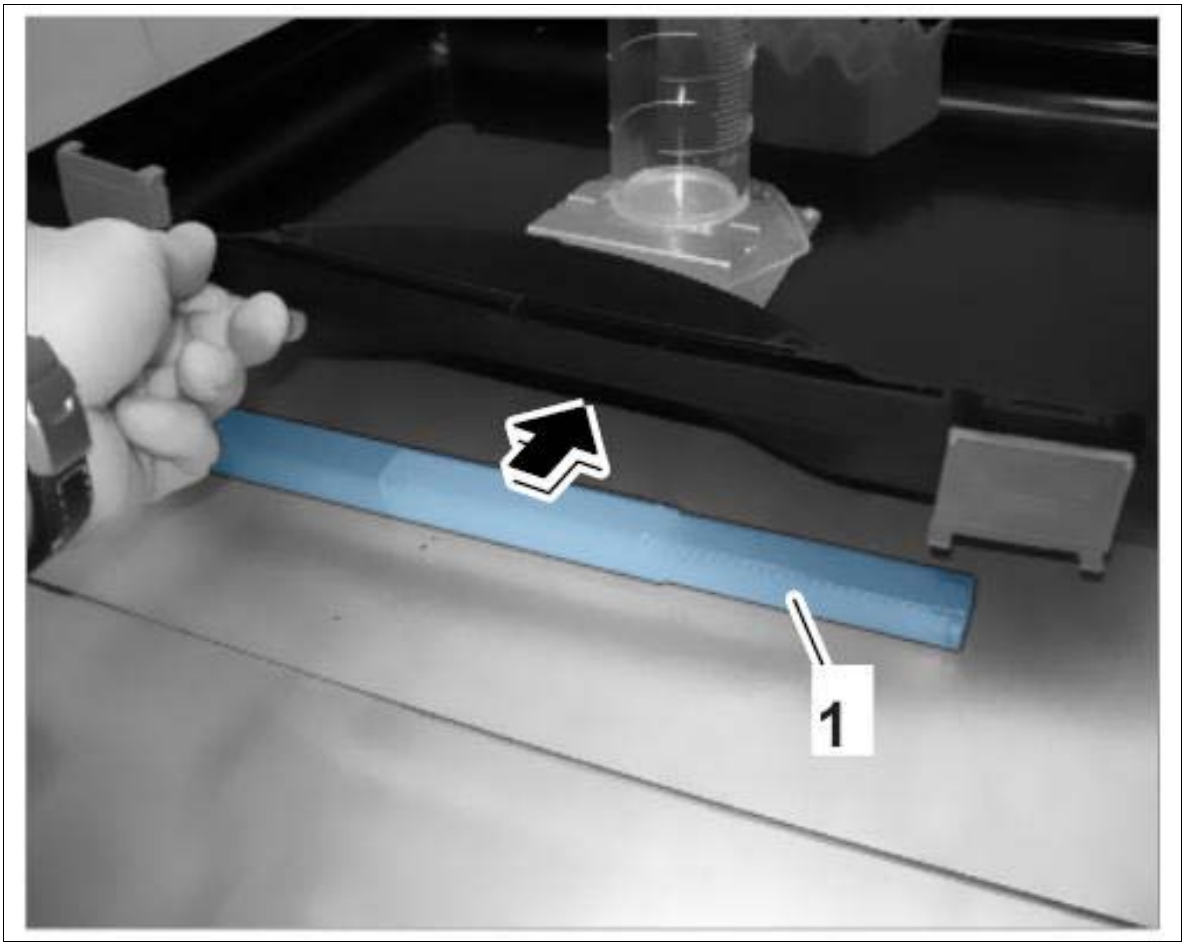

Courtesy of PORSCHE CARS NORTH AMERICA, INC.

3. Pour 500 millilitres (ml) **-arrow-** of fuel into the measuring cylinder.

Fig 3: Filling Fuel Into Measuring Cylinder

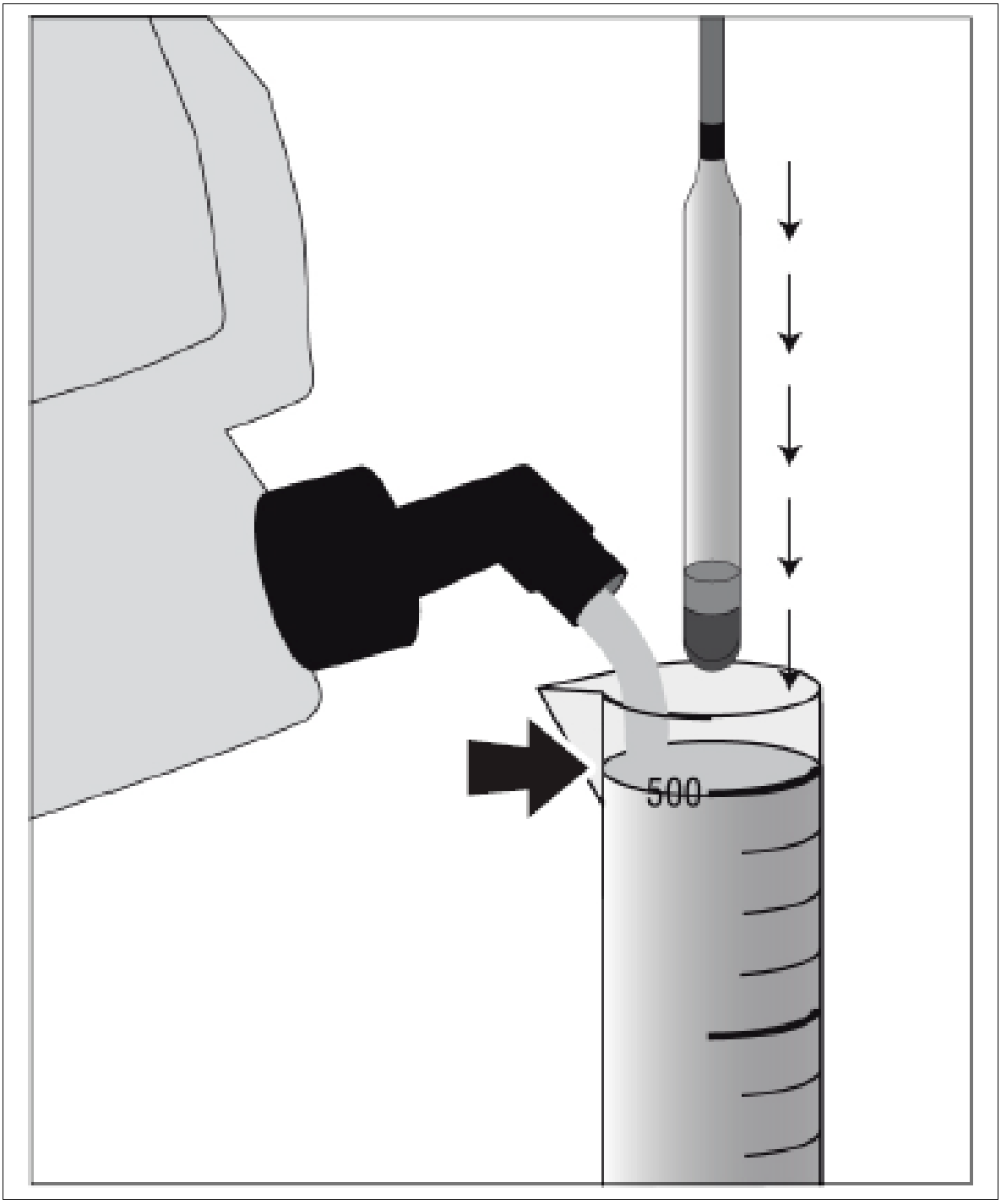

Courtesy of PORSCHE CARS NORTH AMERICA, INC.

4. Carefully immerse the measuring spindle into the liquid and let it go.

   Do not drop the measuring spindle!

Fig 4: Caution - Do Not Drop Measuring Spindle

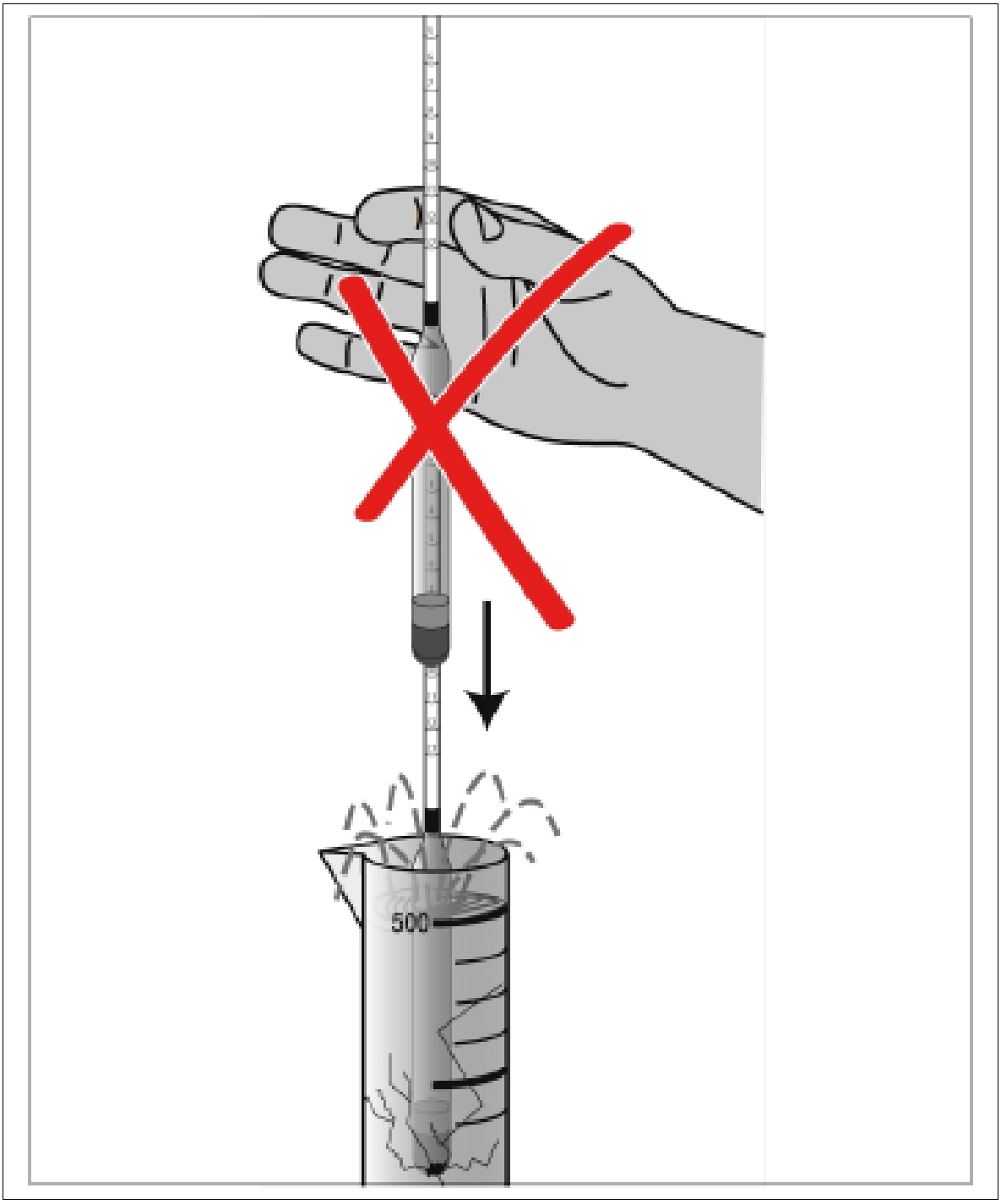

Courtesy of PORSCHE CARS NORTH AMERICA, INC.

1. 4.1. The spindle must be floating in the middle in order to read off the scale value.

Fig 5: Identifying Correct And Incorrect Spindle Position

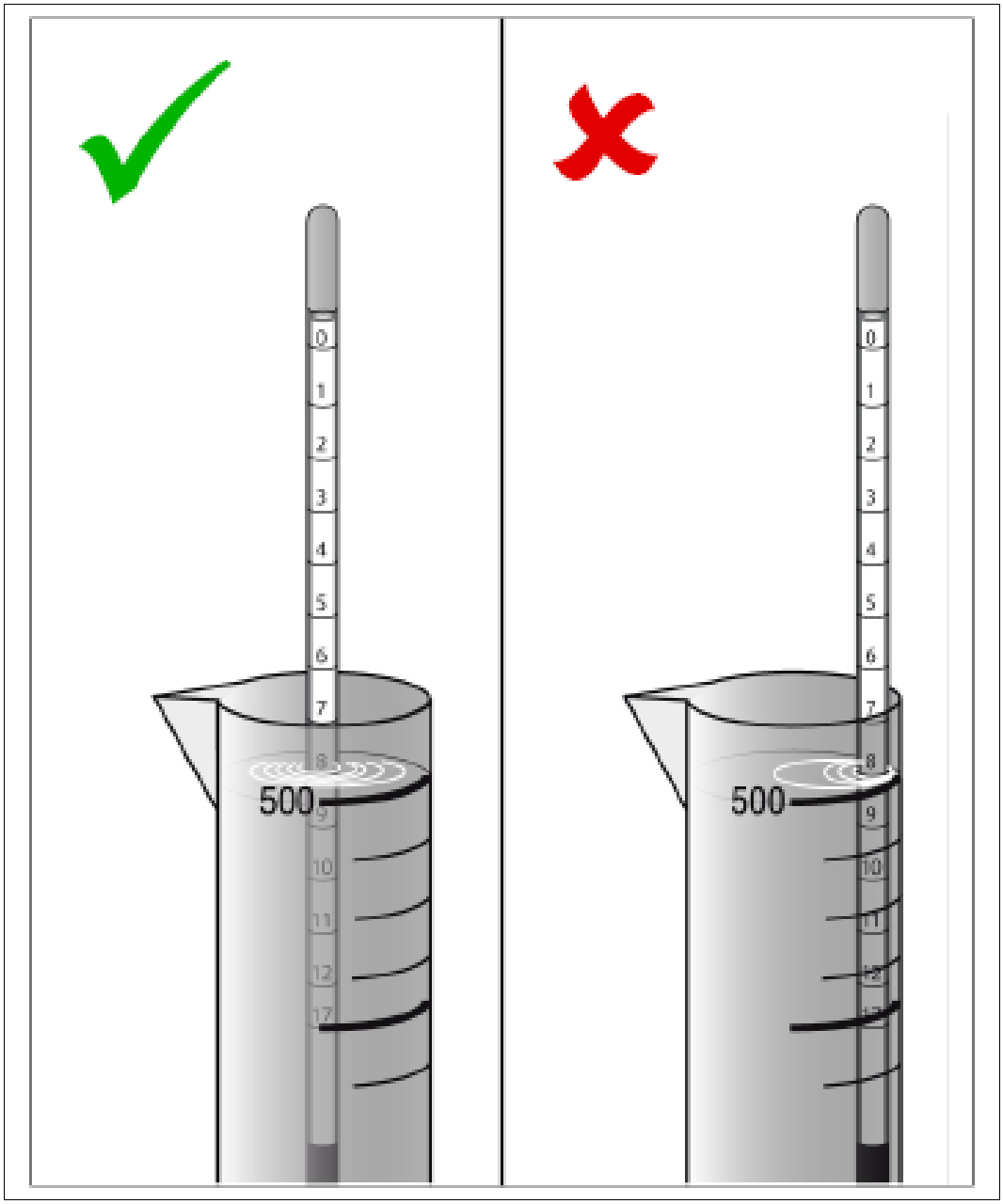

Courtesy of PORSCHE CARS NORTH AMERICA, INC.

2. 4.2. Read off the scale value.

Fig 6: Checking Scale Value On Measuring Spindle

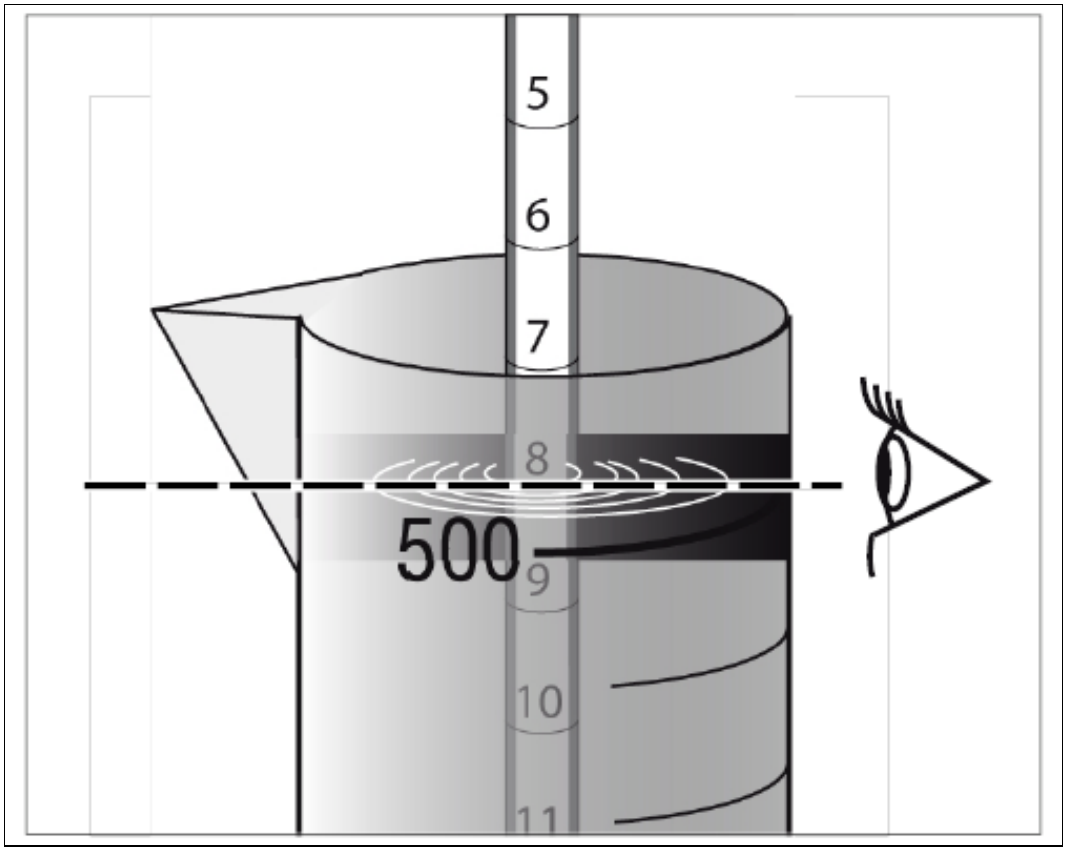

Courtesy of PORSCHE CARS NORTH AMERICA, INC.

5. Assign the scale value using the table below.

Scale value (at 20° Celsius)	Assessment	Comment
below 0	Case for fuel laboratory (neither petrol nor diesel)	Laboratory test required
0... 5.5	Petrol EN 228	
4.5... 6.5	E 85	
approx. 7	E 100 (pure ethanol)	
7... 9	No evaluation possible (neither petrol nor diesel)	Laboratory test required
9... 11	Diesel in Asia (Russia/India)	
10... 13	Diesel in accordance with EN 590 (Europe)	
13... 15	No evaluation possible, "wild mix"	Laboratory test required
15... 17	Biodiesel	Laboratory test required

above 17	Measuring spindle does not stay in the fuel (water-like density)	Laboratory test required

Information

1. Dispose of fuel, fuel mixes and cleaning mixes according to the applicable national regulations!

6. After testing the fuel, wash out and wash off measuring equipment thoroughly using the cleaning brush, washing-up liquid and hot water.

Fig 7: Cleaning Measuring Equipment

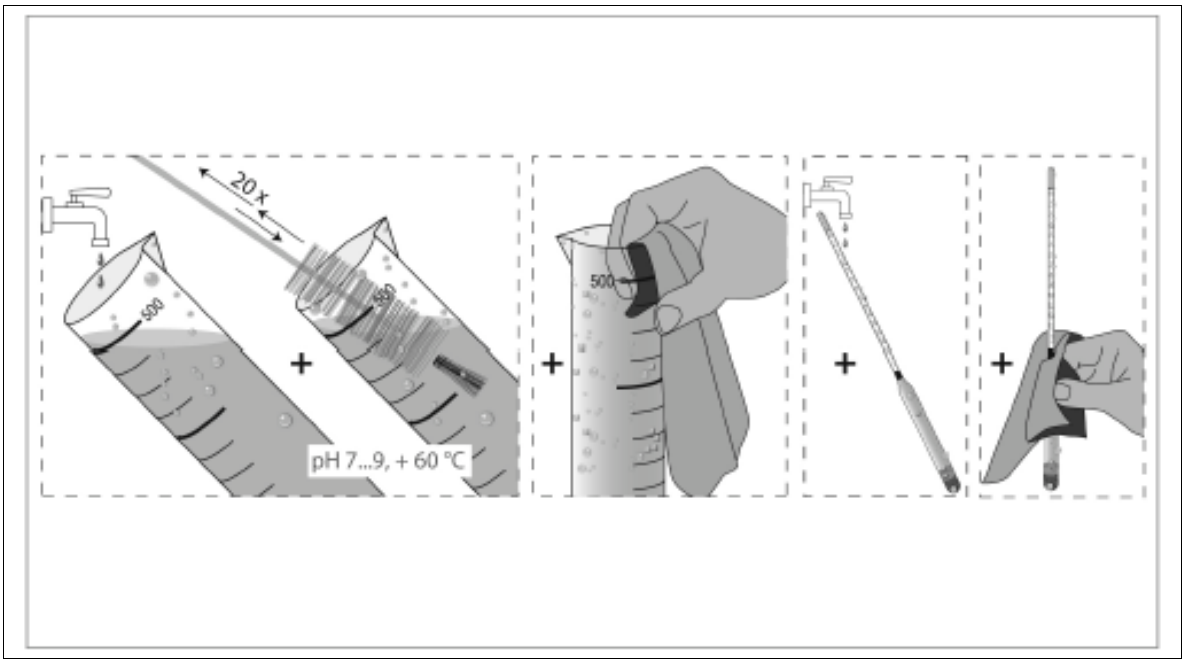

Courtesy of PORSCHE CARS NORTH AMERICA, INC.

7. After analysing the fuel quality, carry out the required measures.

WM 201019 REMOVING AND INSTALLING FUEL TANK (ALL MODELS) > TOOLS

Designation	Type	Number	Description	
transmission jack	Service equipment	WE 1082		

Master Gear unit elevating platform	Service equipment	WE 1206		

WM 201019 REMOVING AND INSTALLING FUEL TANK (ALL MODELS) > PRELIMINARY WORK

1. Drain the fuel tank. → Emptying The Fuel Tank
2. Remove rear seat. → Removing rear seat
3. Disconnect battery ground terminal.
4. Remove rear axle. → Removing rear axle housing
5. Remove rear wheel housing liner at the right. → Removing rear wheel housing liner
6. Remove heat protection.
    1. 6.1. Unscrew nuts **-1-** and remove heat protection panel at the centre rear **-2-** .
    2. 6.2. Unscrew nut **-3-** and remove heat protection panel at the right **-4-** .

Fig 1: Identifying Heat Protection Panel Nut

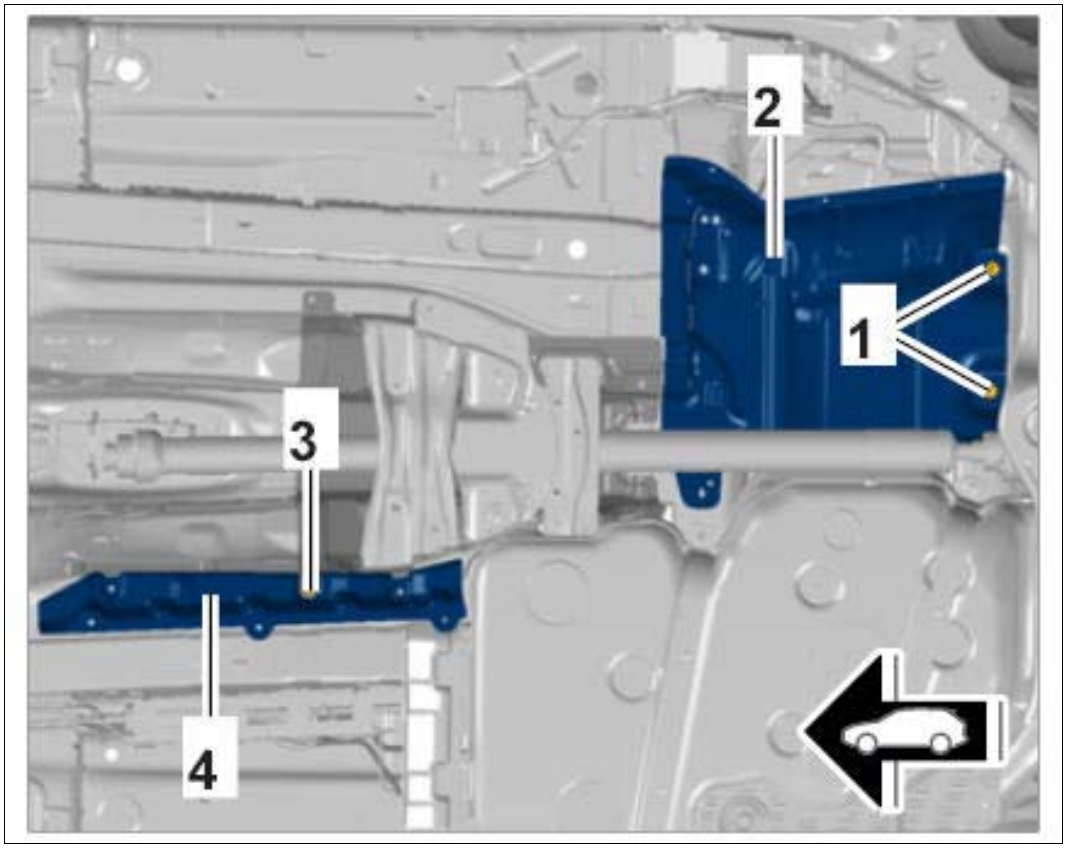

Courtesy of PORSCHE CARS NORTH AMERICA, INC.

7. Unscrew screws **-1-** and remove heat protection for fuel tank **-2-** in direction of **arrow** .

Fig 2: Removing Fuel Tank Heat Protection

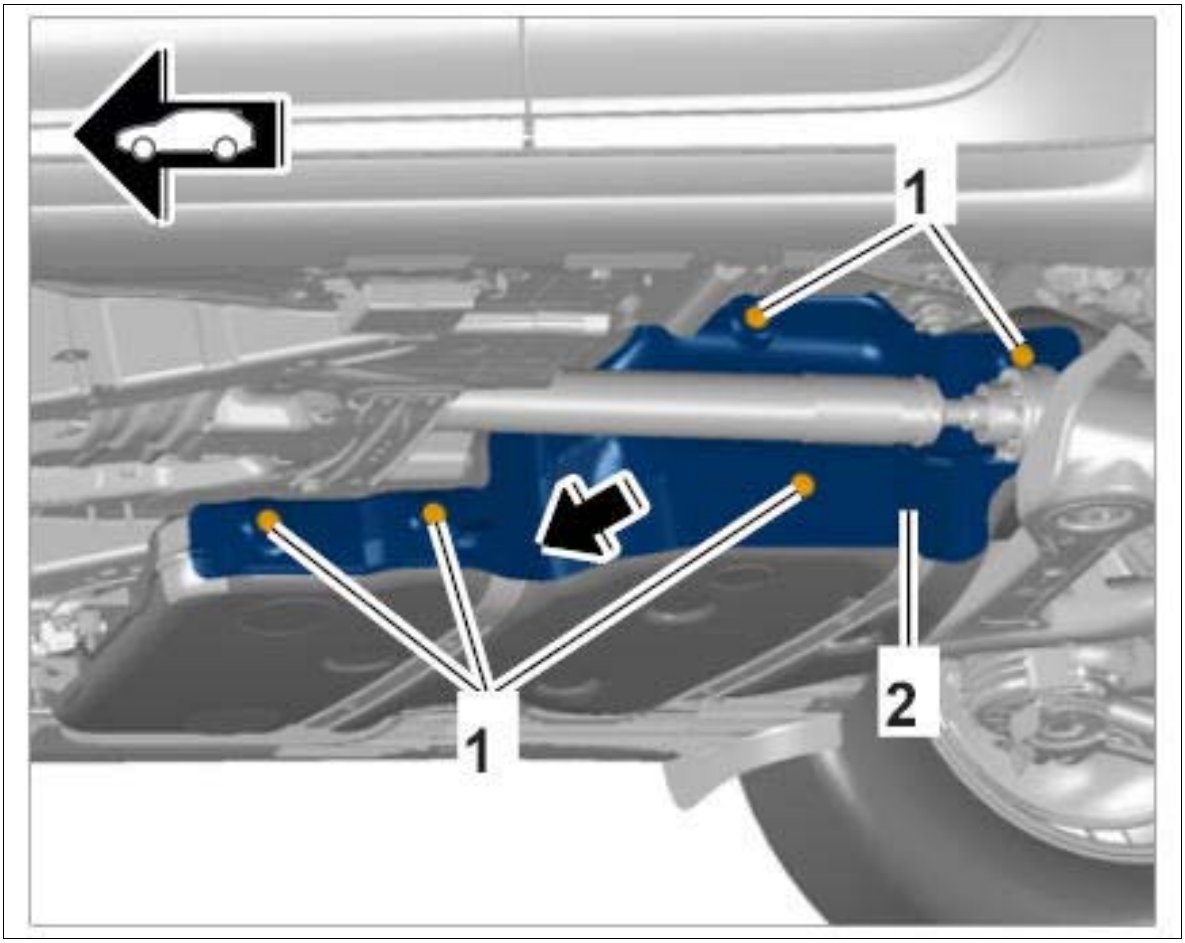

Courtesy of PORSCHE CARS NORTH AMERICA, INC.

WM 201019 REMOVING AND INSTALLING FUEL TANK (ALL MODELS) > REMOVING FUEL TANK

WARNING: Toxic substances

- *Danger of poisoning or suffocation*
- *Danger of burns to the eyes and skin*

→ Ventilate the work area well.

→ Never ingest or inhale.

→ Read specific information on the Hazard Sheet.

→ Do not smoke, eat or drink in the work area.

WARNING: Highly inflammable or explosive materials

- *Danger of fire or explosion*

→ Avoid contact with hot parts or sources of ignition.

→ Use suction to remove ignitable vapours.

→ Attach warning sign in a clearly visible position.

CAUTION: Risk of damaging fuel lines!

- *Lines can become kinked or can crack.*

→ Never leave the carbon canister hanging freely on the lines.

→ A second person must hold the carbon canister during removal.

Information

- Absorb any escaping fuel using a suitable binding material or a cloth.
- Cloths which have absorbed fuel must be disposed of according to the applicable national laws.
- The fuel system must be depressurised before starting work on it.
- Only work on the fuel system in well-ventilated rooms.
- Any seals which have been removed must always be replaced.
- Do not use any sealant containing silicone or silicone spray when the injection system is open. Traces of silicone drawn in by the engine are not combusted and damage the oxygen sensors.

1. Fold protective mat **-1-** aside and open the cover **-2-** .

Fig 1: Identifying Fuel Tank Cover

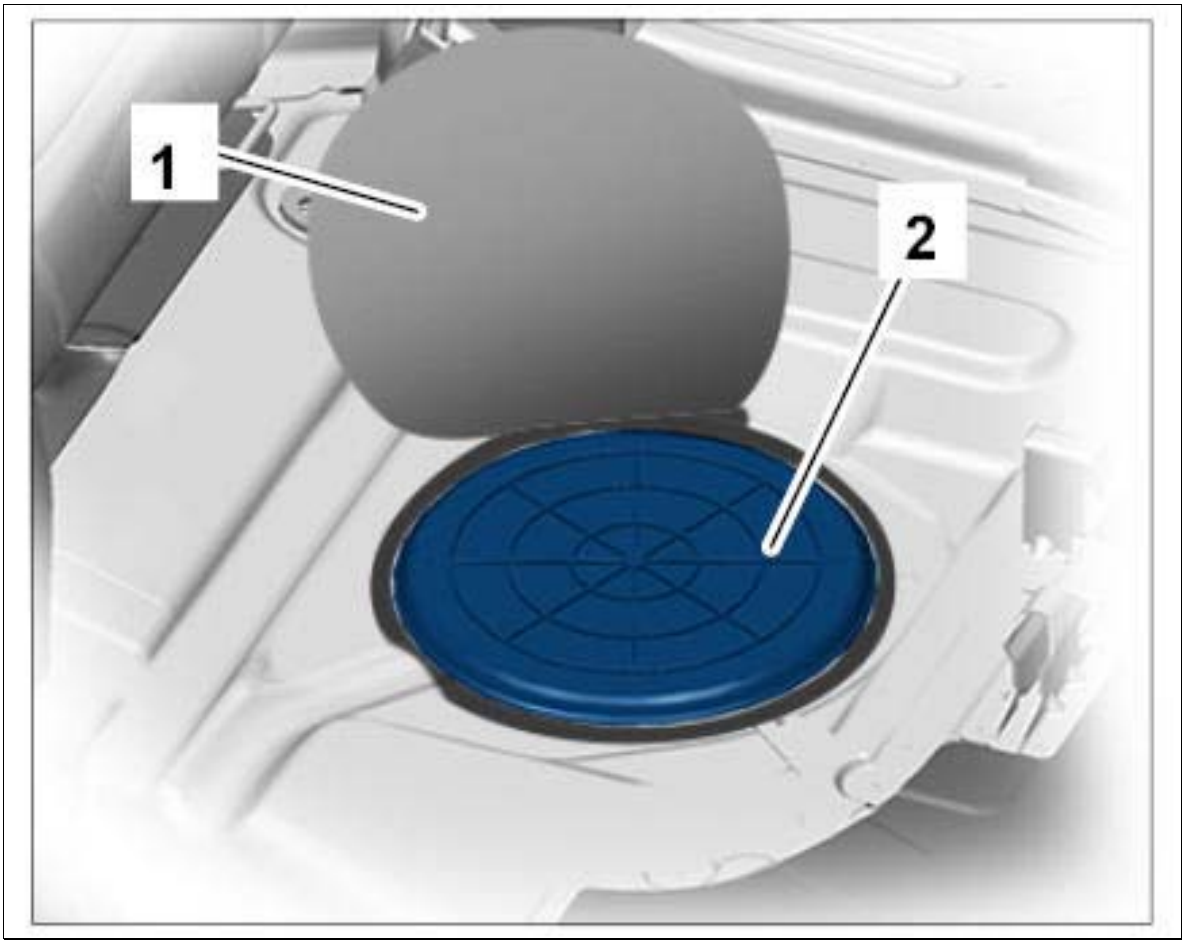

Courtesy of PORSCHE CARS NORTH AMERICA, INC.

2. Loosen connections on the fuel pressure regulator.
    1. 2.1. Release and disconnect electric lines **-5, 6-** .
    2. 2.2. Release and pull off fuel line **-7-** .
    3. 2.3. **If auxiliary heater is installed:** Release and disconnect supply line for auxiliary heater **-4-** .
    4. 2.4. Soak up emerging fuel with a cloth.

Fig 2: Identifying Fuel Pump Connections

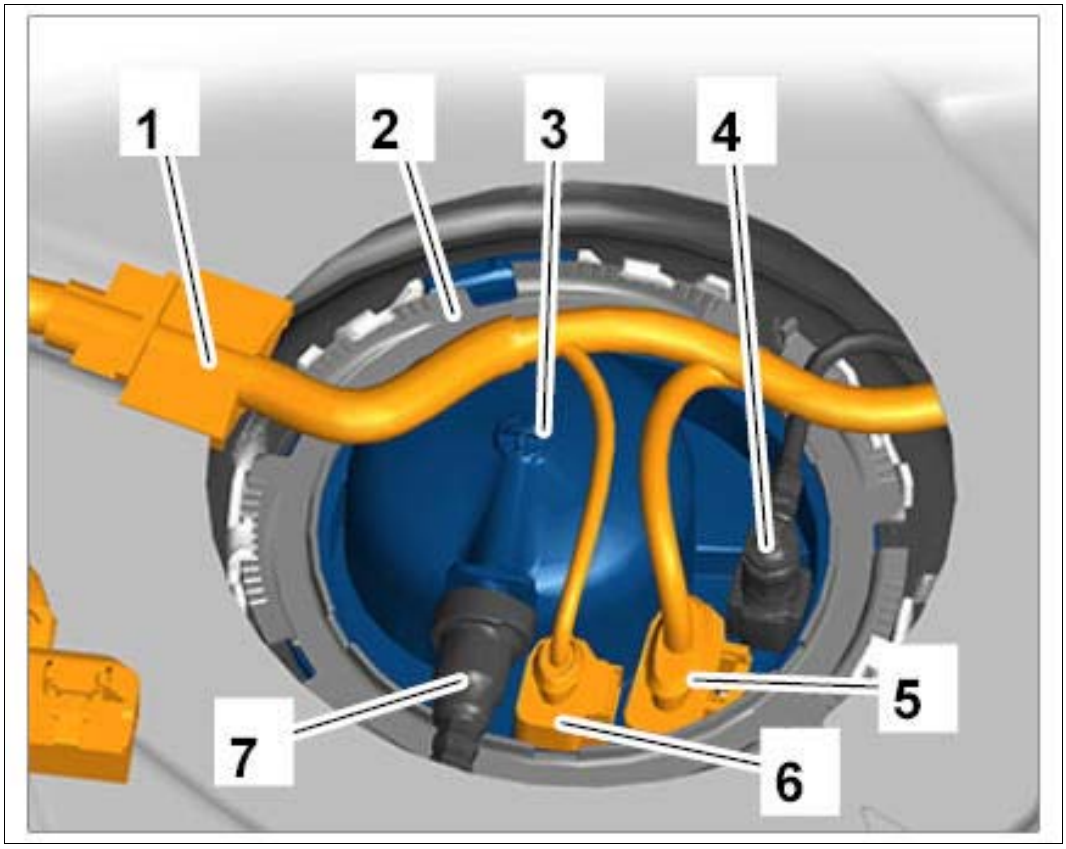

Courtesy of PORSCHE CARS NORTH AMERICA, INC.

3. Loosen tank filler neck.

    1. 3.1. Screw off the cap.
    2. 3.2. Unscrew screws **-1-** on the holder in the wheel housing.
    3. 3.3. Pull tank filler neck **-2-** out of the rubber sleeve **-3-** .

Fig 3: Identifying Tank Filler Neck, Sleeve And Screws

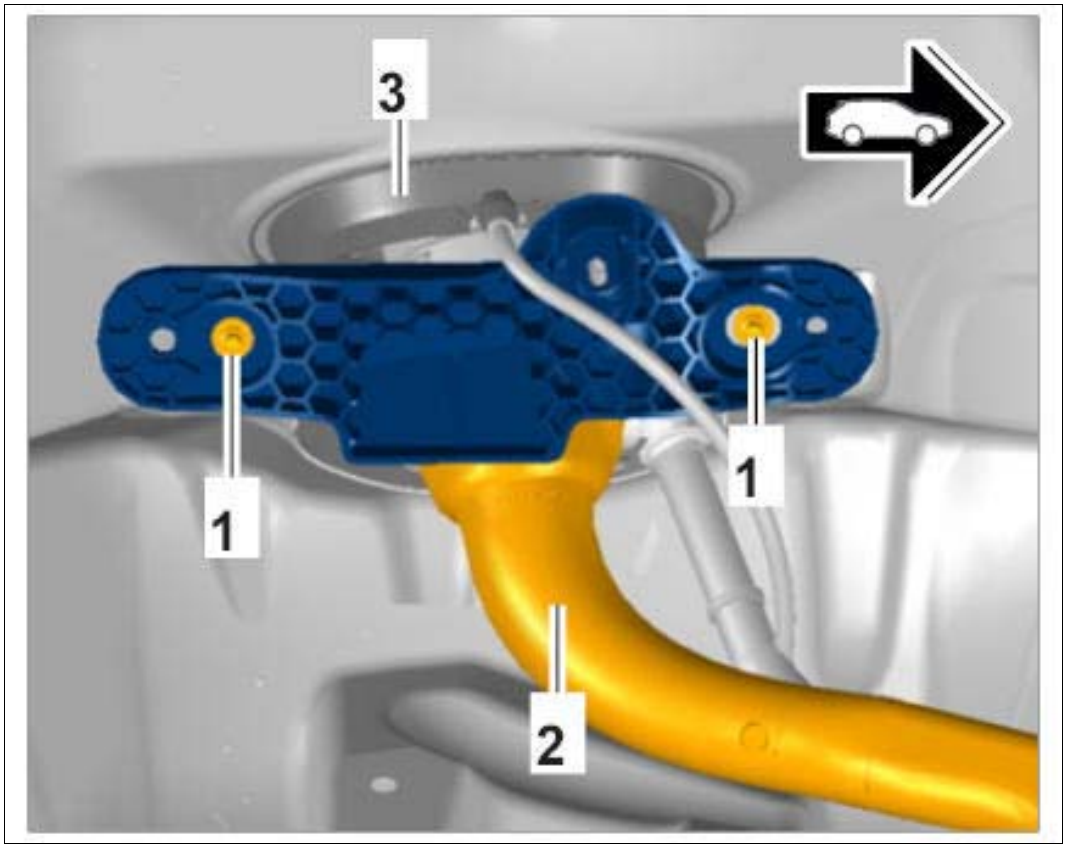

Courtesy of PORSCHE CARS NORTH AMERICA, INC.

4. Support the fuel tank using **Master Gear unit elevating platform WE 1206** or **transmission jack WE 1082** .
5. Loosen holder and restraining straps on the fuel tank.
    1. 5.1. Unscrew screws **-1-** on the stone guard **-2-** .
    2. 5.2. Unscrew screws **-3-** on the tank restraining straps **-4-** .
    3. 5.3. Lower the fuel tank **-5-** slightly.

Fig 4: Identifying Fuel Tank Holder

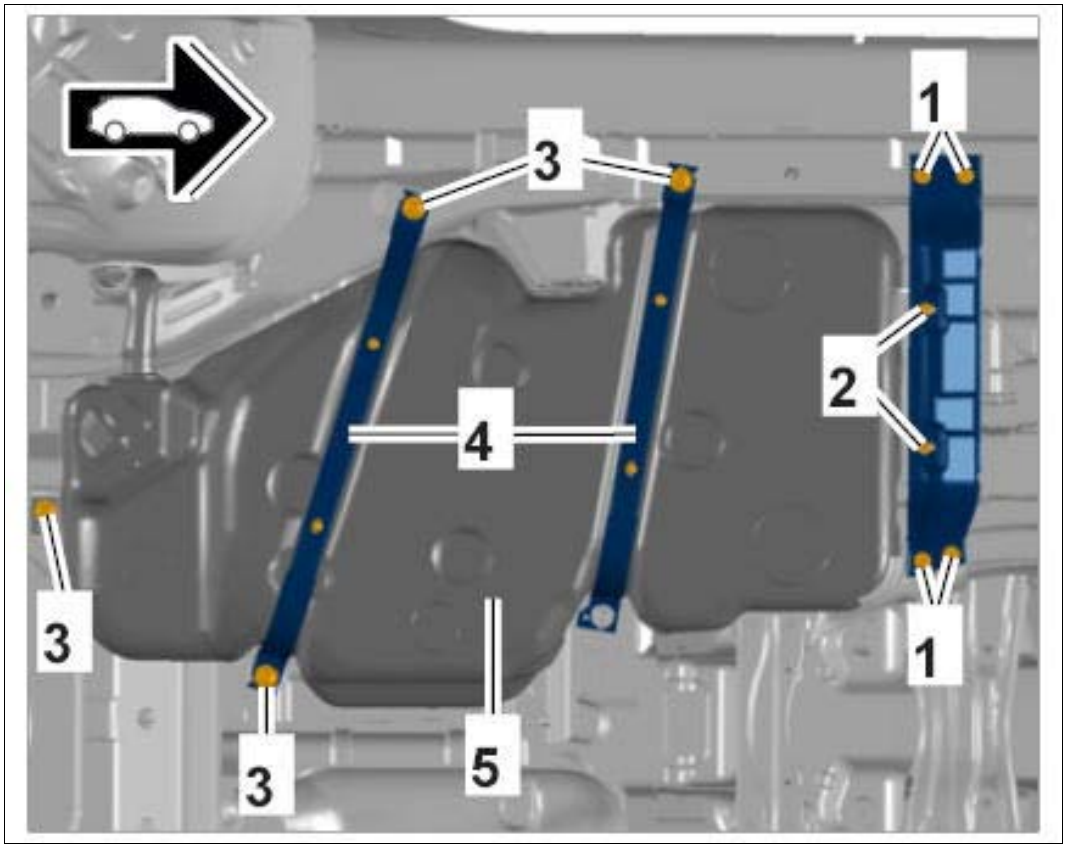

Courtesy of PORSCHE CARS NORTH AMERICA, INC.

6. Release and disconnect supply line **-1-** on the underbody at the right.

    1. 6.1. If auxiliary heater is installed: Loosen auxiliary heater pump **-2-** from the holder **-3-** and disconnect line **-4-** .

Fig 5: Identifying Fuel Supply Line

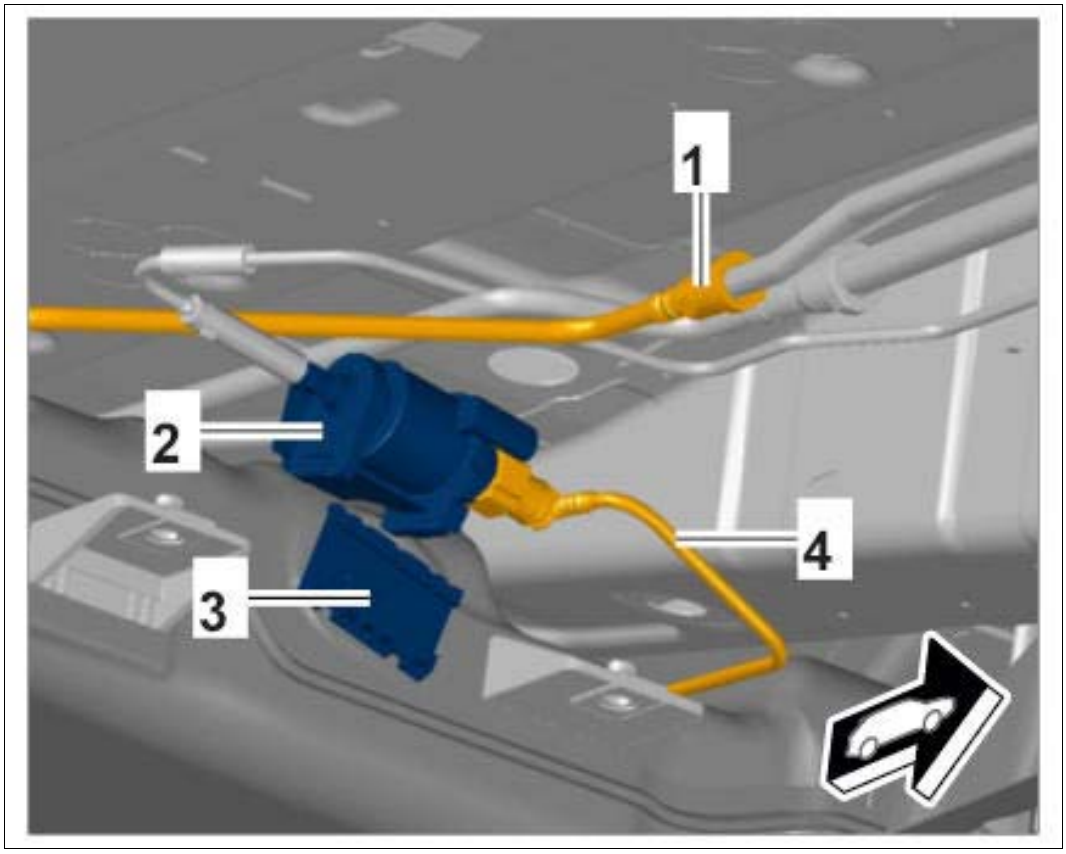

Courtesy of PORSCHE CARS NORTH AMERICA, INC.

7. Disconnect lines for carbon canister.

    1. 7.1. Loosen line for carbon canister **-1-** at the fuel tank **-2-** and underbody from the holder **-arrows-** .

    2. 7.2. Release and pull off line **-1-** at the carbon canister **-3-** .

Fig 6: Locating Carbon Canister Line

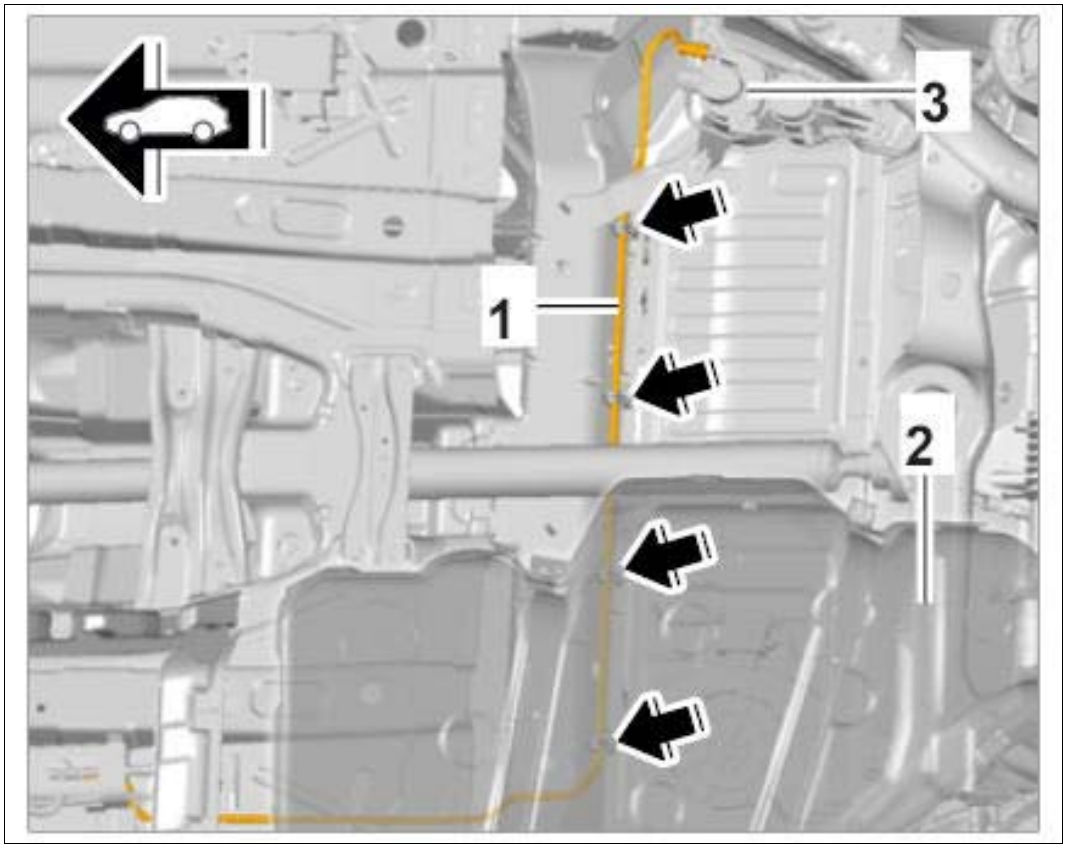

Courtesy of PORSCHE CARS NORTH AMERICA, INC.

8. Slowly lower the fuel tank.

WM 201019 REMOVING AND INSTALLING FUEL TANK (ALL MODELS) > INSTALLING FUEL TANK

Information

Tightening torques, tightening sequence and assembly overviews for the engine and transmission:

- Group 1: → 1X00IN TECHNICAL VALUES
- Group 2: → 2X00IN TECHNICAL VALUES
- Group 3: → 3X00IN TECHNICAL VALUES

1. Installation is performed in reverse order. Pay particular attention to the following:
    1. 1.1. Tightening torque for securing restraining straps to the body:
    2. 1.2. Tightening torque for securing the stone guard to the body:
    3. 1.3. Tank filler neck holder to body:

WM 201019 REMOVING AND INSTALLING FUEL TANK (ALL MODELS) > SUBSEQUENT WORK

1. Install heat protection panel at the fuel tank.
2. Install heat protection panel at the centre rear and centre right.
3. Install rear wheel housing liner at the right. → Installing rear wheel housing liner
4. Install rear axle. → Installing rear axle housing
5. Connect battery ground terminal. → Installing battery-starter wire harness (from external power connection to starter)
6. Install rear seat. → Installing rear seat
7. Fill the fuel tank. → Filling The Fuel Tank

WM 2010EN EMPTYING AND FILLING THE FUEL TANK (MACAN) > TOOLS

Designation	Type	Number	Description	
VAS5190 A Fuel extractor	Commercially available tool	Nr.206		

WM 2010EN EMPTYING AND FILLING THE FUEL TANK (MACAN) > PRELIMINARY WORK > PRELIMINARY WORK FOR EMPTYING FUEL TANK USING VAS 5190A FUEL EXTRACTOR

Information

Fuel can be pumped out using the following methods:

> By activating the fuel pump using PIWIS Tester II when the flange/fuel level sender is installed.

> Directly at the fuel tank when the flange/fuel level sender is removed.

1. Remove fuel level sender. → Removing Fuel Level Sender

WM 2010EN EMPTYING AND FILLING THE FUEL TANK (MACAN) > EMPTYING THE FUEL TANK > EMPTYING FUEL TANK USING VAS 5190 A FUEL EXTRACTOR

WARNING: Toxic substances

- *Danger of poisoning or suffocation*

- *Danger of burns to the eyes and skin*

→ Ventilate the work area well.

→ Never ingest or inhale.

→ Read specific information on the Hazard Sheet.

→ Do not smoke, eat or drink in the work area.

WARNING: Highly inflammable or explosive materials

- *Danger of fire or explosion*

→ Avoid contact with hot parts or sources of ignition.

→ Use suction to remove ignitable vapours.

→ Attach warning sign in a clearly visible position.

Information

Place a cloth underneath to catch escaping fuel.

VAS5190 A Fuel extractor Nr.206:

Fig 1: Identifying Fuel Extractor VAS 5190 A

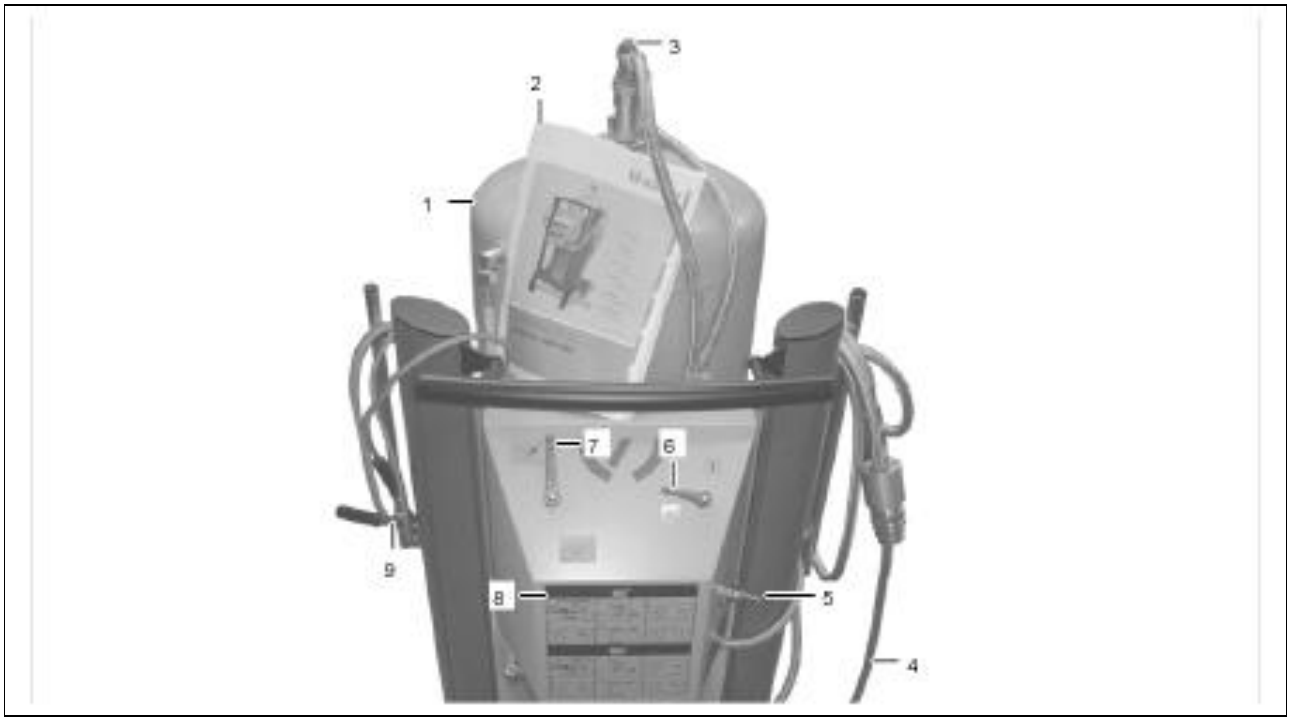

Courtesy of PORSCHE CARS NORTH AMERICA, INC.

1. Fuel tank

2. Operating instructions

3. Valve

4. Suction/filling hose

5. Compressed air connection (connection for unlubricated/oil-free compressed air)

6. Switching pump on/off

7. Pumping out/filling

8. Quick Reference Guide

9. Earth cable with clamping pliers

1. Connect the earth cable.

    1. 1.1. **For both units, the earth cable must be connected to the ground point on the vehicle while working!**

    Fig 2: Attaching Earth Cable To Vehicle

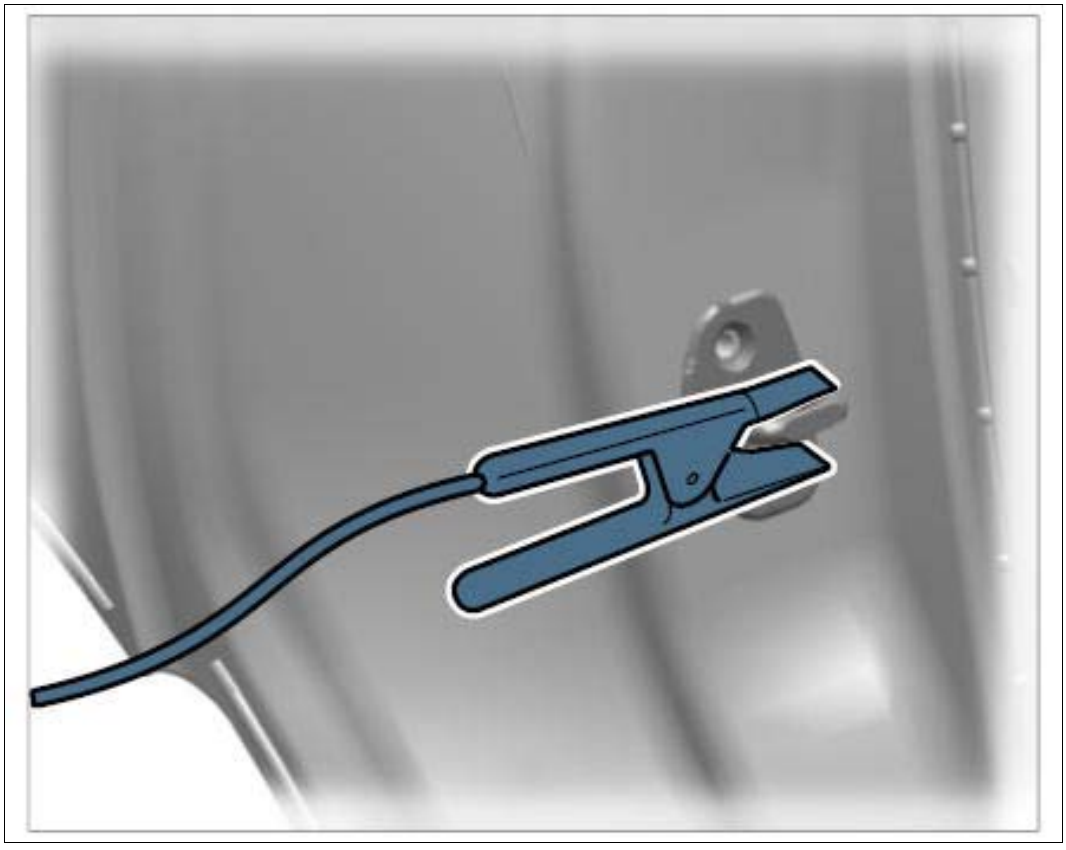

Courtesy of PORSCHE CARS NORTH AMERICA, INC.

2. Guide suction hose into the opening on the fuel level sender.

    1. 2.1. Guide suction hose to the lowest position in the fuel tank.

3. Connect fuel extractor to the compressed air system at the compressed air connection.

4. Pump out fuel.

1. 4.1. Move lever **-1-** to Pumping out position **-4-** .
2. 4.2. Switch on the pump using the lever **-2-** .

Fig 3: Connecting Fuel Extractor To Compressed Air System

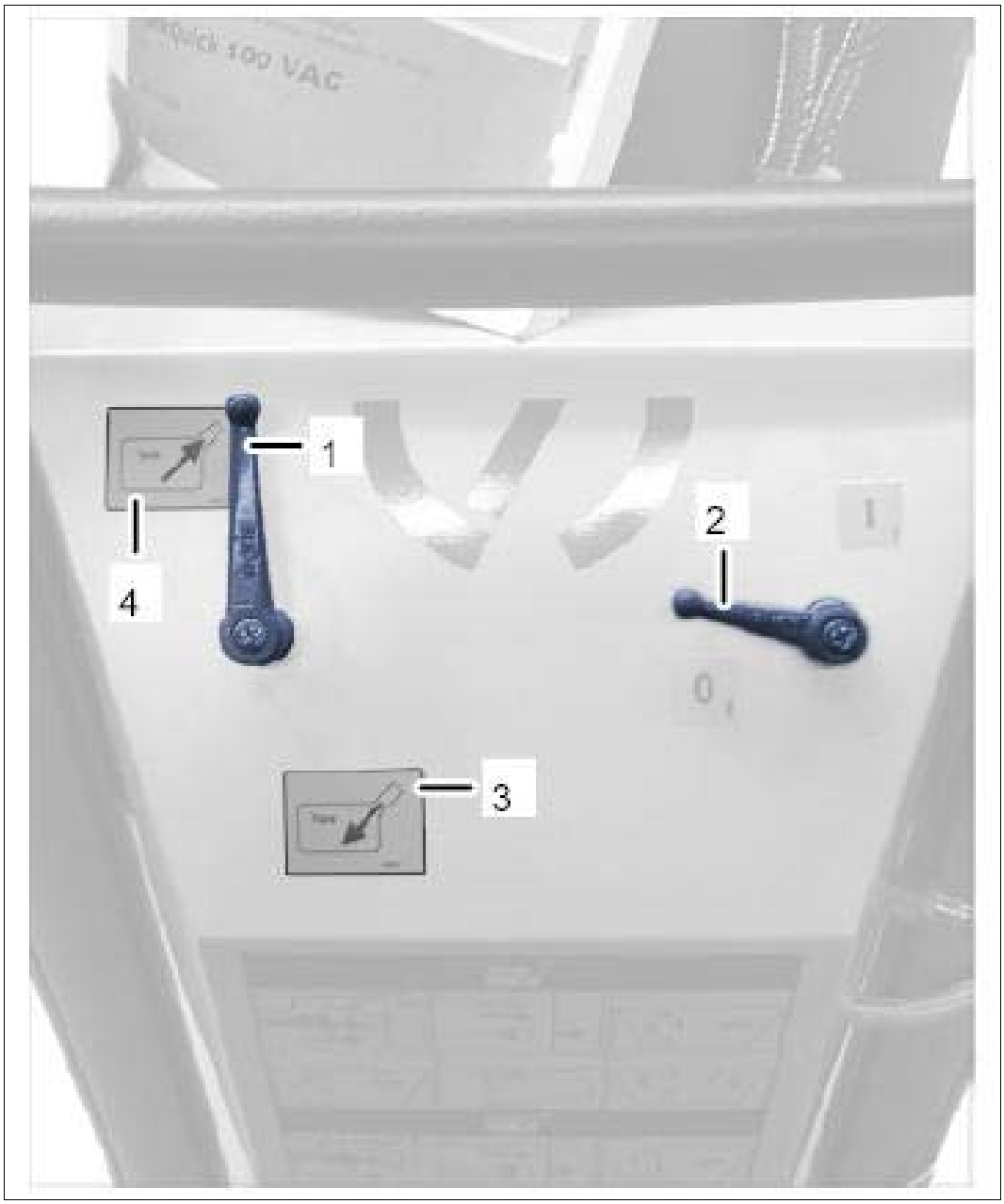

Courtesy of PORSCHE CARS NORTH AMERICA, INC.

WM 2010EN EMPTYING AND FILLING THE FUEL TANK (MACAN) > FILLING THE FUEL TANK

1. **Fuel extractor VAS5190 A:**
    1. 1.1. Move lever **-1-** to Filling position **-3-** .
    2. 1.2. Switch the pump on or off using lever **-2-** .

Fig 1: Identifying Fuel Extractor VAS5190 A

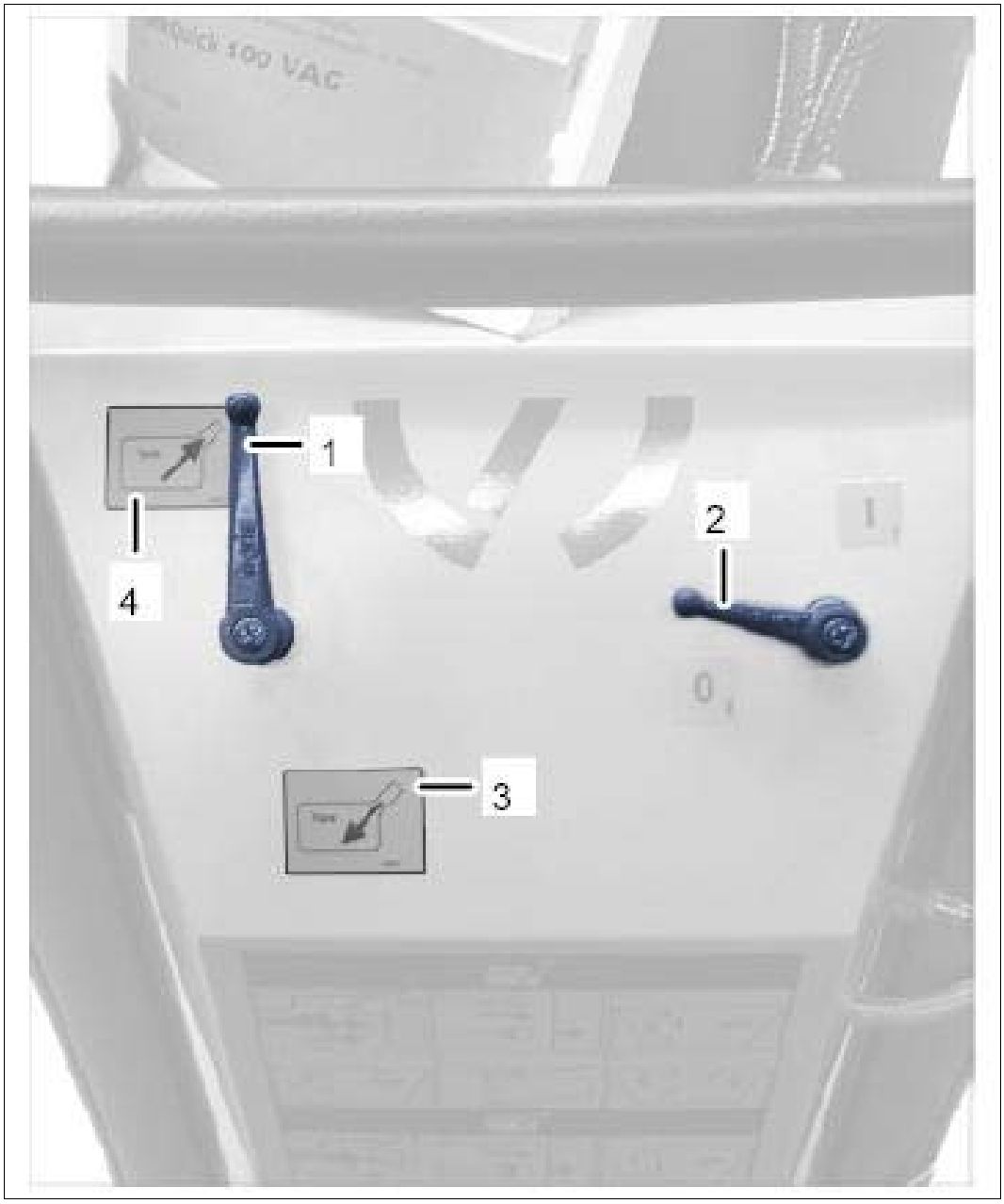

Courtesy of PORSCHE CARS NORTH AMERICA, INC.

WM 2010EN EMPTYING AND FILLING THE FUEL TANK (MACAN) > SUBSEQUENT WORK

1. Install fuel level sender. → Installing Fuel Level Sender

WM 201519 REMOVING AND INSTALLING FUEL LEVEL SENDER (MACAN) > TECHNICAL VALUES

Location	Description	Type	Basic value	Tolerance 1	Tolerance 2
Lock	Fuel pump to fuel tank	Tightening torque	110 Nm (81.5 ftlb.)		

WM 201519 REMOVING AND INSTALLING FUEL LEVEL SENDER (MACAN) > INFORMATION > COMPONENT OVERVIEW - FUEL PUMP

Fig 1: Identifying Fuel Pump Components

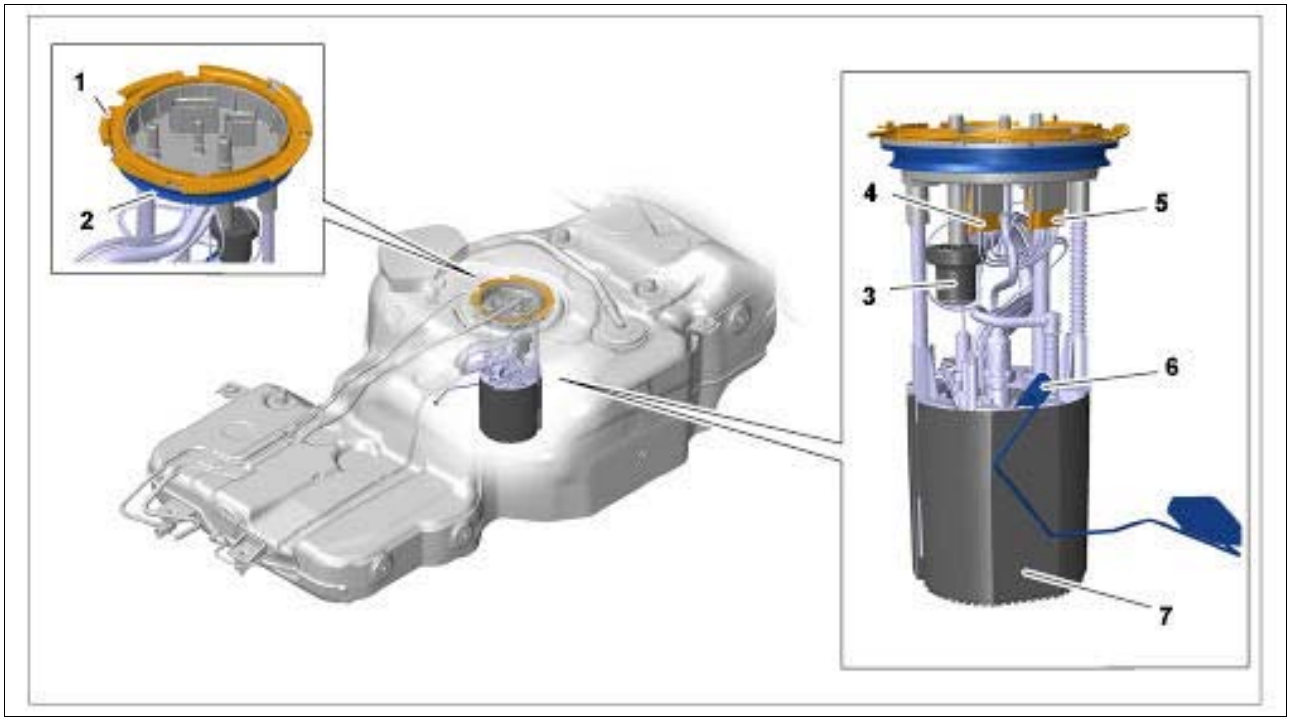

Courtesy of PORSCHE CARS NORTH AMERICA, INC.

1. Fuel pump lock → **Tightening torque: 110 Nm (81.5 ftlb.)**
2. Seal/**replace**
3. Pressure regulator
4. Electric plug connection for fuel level sender
5. Electric plug connection for fuel pump
6. Fuel level sender
7. Fuel pump

WM 201519 REMOVING AND INSTALLING FUEL LEVEL SENDER (MACAN) > PRELIMINARY WORK

1. Disconnect the battery. → Removing Battery
2. Remove fuel pump. → Removing Fuel Pump

WM 201519 REMOVING AND INSTALLING FUEL LEVEL SENDER (MACAN) > REMOVING FUEL LEVEL SENDER

WARNING: Toxic substances

- *Danger of poisoning or suffocation*
- *Danger of burns to the eyes and skin*

→ Ventilate the work area well.

→ Never ingest or inhale.

→ Read specific information on the Hazard Sheet.

→ Do not smoke, eat or drink in the work area.

WARNING: Highly inflammable or explosive materials

- *Danger of fire or explosion*

→ Avoid contact with hot parts or sources of ignition.

→ Use suction to remove ignitable vapours.

→ Attach warning sign in a clearly visible position.

Information

- Absorb any escaping fuel using a suitable binding material or a cloth.
- Cloths which have absorbed fuel must be disposed of according to the applicable national laws.
- The fuel system must be depressurised before starting work on it.
- Only work on the fuel system in well-ventilated rooms.
- Any seals which have been removed must always be replaced.
- Do not use any sealant containing silicone or silicone spray when the injection system is open. Traces of silicone drawn in by the engine are not combusted and damage the oxygen sensors.

Information

- If the tank must be opened for emptying, disconnect all connections.

Information

- The guiding rod of the fuel level sender must not be deformed.
- If the guiding rod is deformed, the fuel level sender must be replaced.

1. Remove fuel level sender **-3-** .
    1. 1.1. Disconnect electric plug connection **-2-** .
    2. 1.2. Remove line **-1-** from the guide.
    3. 1.3. Press locking lugs **-4-** back using a screwdriver.
    4. 1.4. Remove fuel level sender **-3-** in **-direction of arrow -** .

    Fig 1: Removing Fuel Level Sender

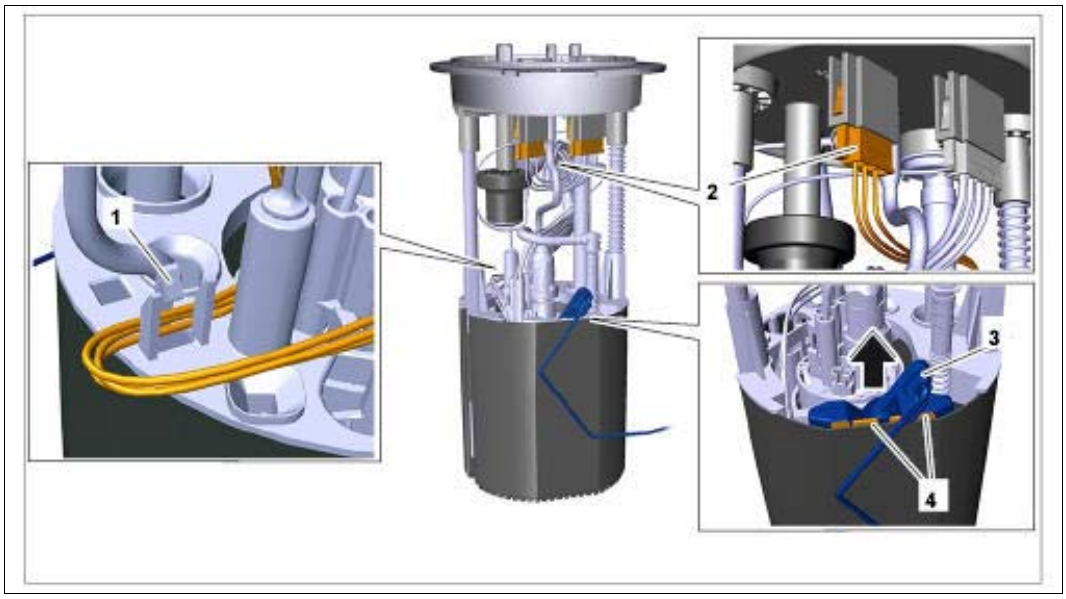

Courtesy of PORSCHE CARS NORTH AMERICA, INC.

2. Place fuel level sender **-1-** on a clean surface.

Fig 2: Identifying Fuel Level Sender

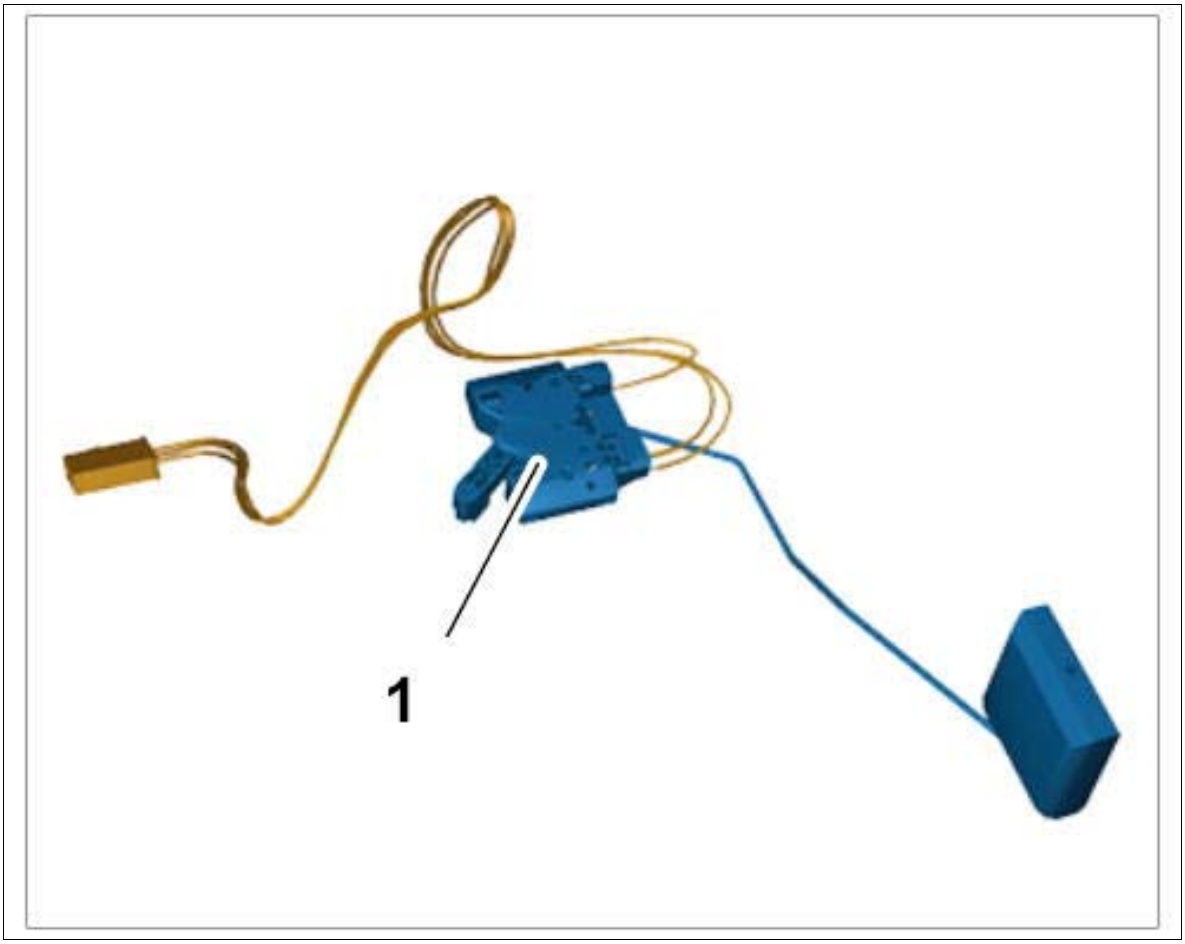

Courtesy of PORSCHE CARS NORTH AMERICA, INC.

WM 201519 REMOVING AND INSTALLING FUEL LEVEL SENDER (MACAN) > INSTALLING FUEL LEVEL SENDER

Information

- The guiding rod of the fuel level sender must not be deformed.
- If the guiding rod is deformed, the fuel level sender must be replaced.

1. Install fuel level sender **-3-** .
    1. 1.1. Install fuel level sender **-3-** in **-direction of arrow-** .
    2. 1.2. Locking lugs **-4-** will lock with an audible click.
    3. 1.3. Position line **-1-** in the guide.
    4. 1.4. Connect electric plug connection **-2-** .

Fig 1: Installing Fuel Level Sender

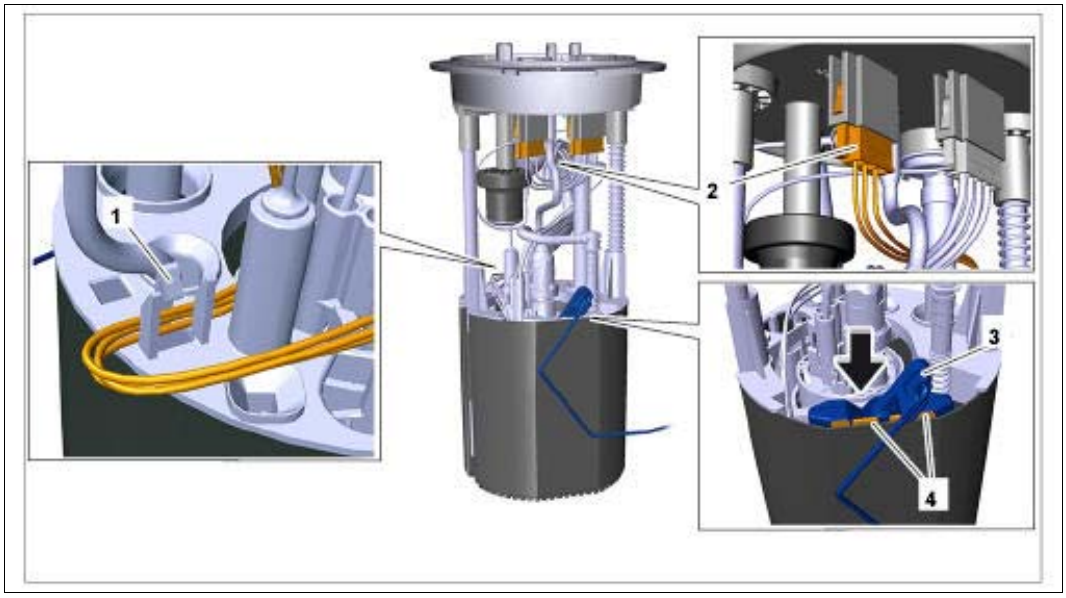

Courtesy of PORSCHE CARS NORTH AMERICA, INC.

WM 201519 REMOVING AND INSTALLING FUEL LEVEL SENDER (MACAN) > SUBSEQUENT WORK

1. Install fuel pump. → Installing Fuel Pump
2. Connect the battery. → Installing Battery
3. Adjust fuel level sender. → Calibrating Fuel Level Sender

WM 2015K2 CALIBRATING FUEL LEVEL SENDER (ALL MODELS) > CALIBRATING FUEL LEVEL SENDER > INFORMATION

WARNING: Highly inflammable or explosive materials

- *Danger of fire or explosion*

→ Avoid contact with hot parts or sources of ignition.

→ Use suction to remove ignitable vapours.

→ Attach warning sign in a clearly visible position.

WARNING: Caustic fluids

- *Danger of chemical burns*

→ Avoid contact with caustic fluid.

→ Wear personal protective gear.

→ Ensure that there is good ventilation.

→ If you do come into contact, wash off immediately with plenty of warm water and contact a doctor if necessary.

Information

- Calibration of the fuel level sender is required after replacing the fuel tank, the fuel level sender or the instrument cluster. Calibrate the sender - after replacing the instrument cluster - only if the function Read out values cannot be performed!
- The fuel level sender does not have to be calibrated if the battery was disconnected or a plug connection on the instrument cluster or sender was disconnected. The values remain stored in the instrument cluster.
- A range on remaining fuel of less than 15 km (9 miles) is not displayed in the instrument cluster.

WM 2015K2 CALIBRATING FUEL LEVEL SENDER (ALL MODELS) > CALIBRATING FUEL LEVEL SENDER > CALIBRATING FUEL LEVEL SENDER

1. Empty the fuel tank. → Emptying The Fuel Tank
2. Wait for a short time (approx. 1 minute) to allow the fuel-level sensor to settle at the current level.
3. Connect the Porsche System Tester to the vehicle and start the System Tester. Switch on ignition. [>>] to continue.
4. Select the vehicle type.
5. Select **Instrument cluster** control unit, then press [>>].
6. Select the **Maintenance/repairs** menu and press [>>].
7. Select **Fuel tank calibration** menu and press [F8] to start the calibration process.
8. The message **Fuel tank calibration completed successfully** appears on the Tester screen.
9. Press [F12] to exit.
10. Fill the vehicle with fuel and check the fuel gauge in the instrument cluster. Wait a few minutes. Fuel gauge shows full.
11. Change terminals.

1. 11.1. Switch off ignition.
2. 11.2. Wait approx. 30 seconds.
3. 11.3. Switch on ignition.

12. Check the fuel gauge in the instrument cluster again. Fuel gauge shows full.

WM 202519 REMOVING AND INSTALLING CARBON CANISTER (ALL MODELS) > PRELIMINARY WORK

1. Remove cover for left underbody. → Removing cover for centre underbody

WM 202519 REMOVING AND INSTALLING CARBON CANISTER (ALL MODELS) > REMOVING CARBON CANISTER

> *WARNING: Toxic substances*
>
> - *Danger of poisoning or suffocation*
> - *Danger of burns to the eyes and skin*

→ Ventilate the work area well.

→ Never ingest or inhale.

→ Read specific information on the Hazard Sheet.

→ Do not smoke, eat or drink in the work area.

> *WARNING: Highly inflammable or explosive materials*
>
> - *Danger of fire or explosion*

→ Avoid contact with hot parts or sources of ignition.

→ Use suction to remove ignitable vapours.

→ Attach warning sign in a clearly visible position.

Information

- Absorb any escaping fuel using a suitable binding material or a cloth.
- Cloths which have absorbed fuel must be disposed of according to the applicable national laws.
- The fuel system must be depressurised before starting work on it.

- Only work on the fuel system in well-ventilated rooms.
- Any seals which have been removed must always be replaced.
- Do not use any sealant containing silicone or silicone spray when the injection system is open. Traces of silicone drawn in by the engine are not combusted and damage the oxygen sensors.

1. Remove carbon canister.

    1. 1.1. Release and disconnect vent line **-1-** , air line **-2-** and line connection for tank ventilation **-3-** .
    2. 1.2. Unscrew screws **-arrows-** and remove carbon canister **-4-** .

    Fig 1: Locating Carbon Canister Screws

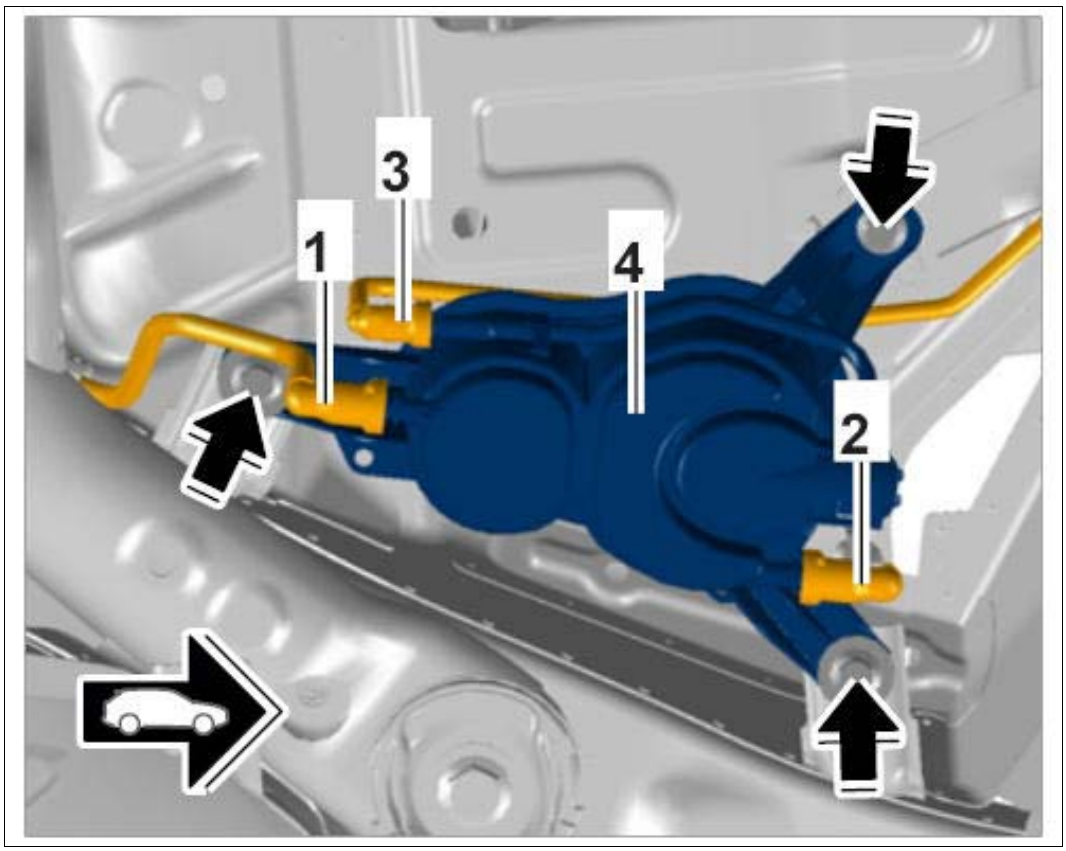

Courtesy of PORSCHE CARS NORTH AMERICA, INC.

WM 202519 REMOVING AND INSTALLING CARBON CANISTER (ALL MODELS) > INSTALLING CARBON CANISTER

1. Installation is performed in reverse order.

    1. 1.1. Tightening torque for securing carbon canister to body:

WM 202519 REMOVING AND INSTALLING CARBON CANISTER (ALL MODELS) >

SUBSEQUENT WORK

1. Install cover for left underbody. → Installing cover for centre underbody

WM 206019 REMOVING AND INSTALLING FINE FUEL STRAINER (ALL MODELS) > TECHNICAL VALUES

Location	Description	Type	Basic value	Tolerance 1	Tolerance 2
Lock	Fuel pump to fuel tank	Tightening torque	110 Nm (81.5 ftlb.)		

WM 206019 REMOVING AND INSTALLING FINE FUEL STRAINER (ALL MODELS) > INFORMATION > COMPONENT OVERVIEW - FUEL PUMP

Fig 1: Overview Of Fuel Pump

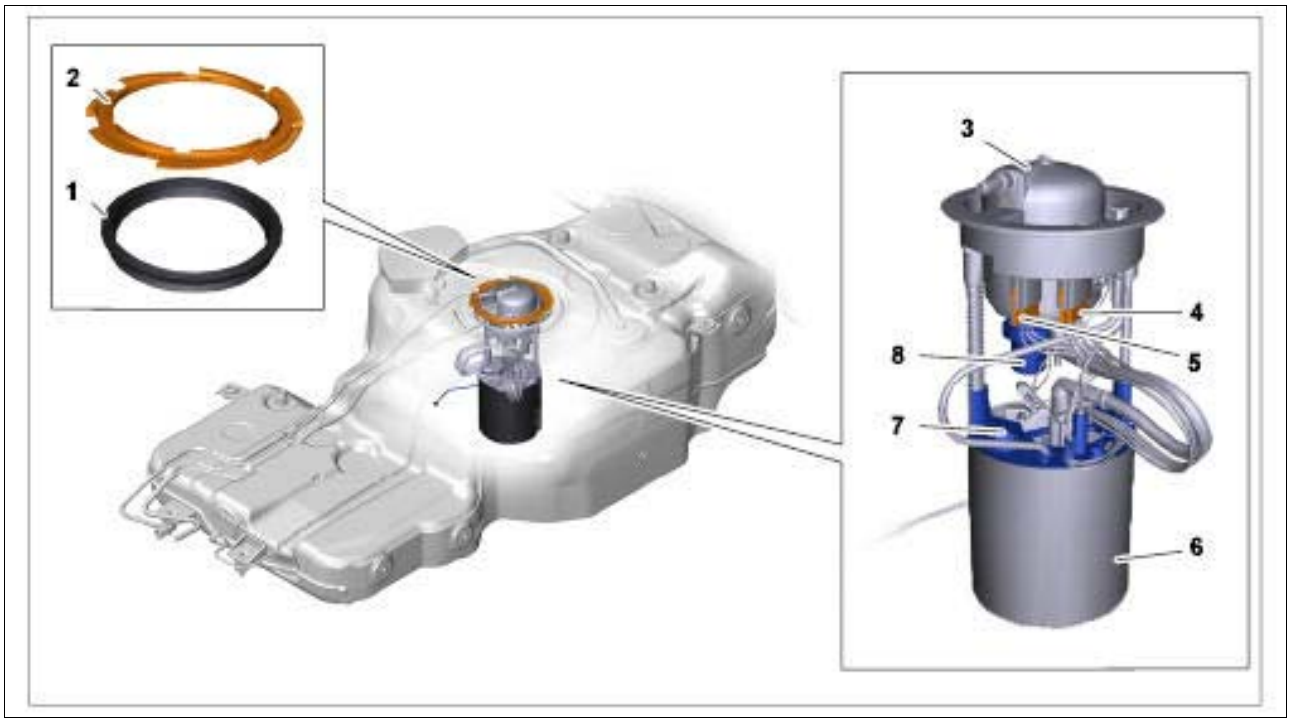

Courtesy of PORSCHE CARS NORTH AMERICA, INC.

1. Seal/**replace**
2. Fuel pump lock → **Tightening torque: 110 Nm (81.5 ftlb.)**
3. Fuel filter
4. Electric plug connection for fuel pump
5. Electric plug connection for fuel level sender

6. Fuel pump
7. Fuel level sender
8. Pressure regulator

WM 206019 REMOVING AND INSTALLING FINE FUEL STRAINER (ALL MODELS) > PRELIMINARY WORK

1. Remove fuel pump. → Removing Fuel Pump

WM 206019 REMOVING AND INSTALLING FINE FUEL STRAINER (ALL MODELS) > REMOVING FINE FUEL STRAINER

> *WARNING: Toxic substances*
>
> - *Danger of poisoning or suffocation*
> - *Danger of burns to the eyes and skin*

→ Ventilate the work area well.

→ Never ingest or inhale.

→ Read specific information on the Hazard Sheet.

→ Do not smoke, eat or drink in the work area.

> *WARNING: Highly inflammable or explosive materials*
>
> - *Danger of fire or explosion*

→ Avoid contact with hot parts or sources of ignition.

→ Use suction to remove ignitable vapours.

→ Attach warning sign in a clearly visible position.

1. Remove fine fuel strainer **-1-** .
    1. 1.1. Disconnect electric plug connection **-2-** and **-3-** .
    2. 1.2. Disconnect fuel line **-5-** .
    3. 1.3. Disconnect auxiliary heater line **-4-** .
    4. 1.4. Unclip cable holder **-6-** from retaining device using a pliers.

5. 1.5. Remove fine fuel strainer **-1-** from the fuel pump in **-direction of arrow-** .
6. 1.6. Place fine fuel strainer **-1-** on a clean surface.

Fig 1: Pulling Fine Fuel Strainer

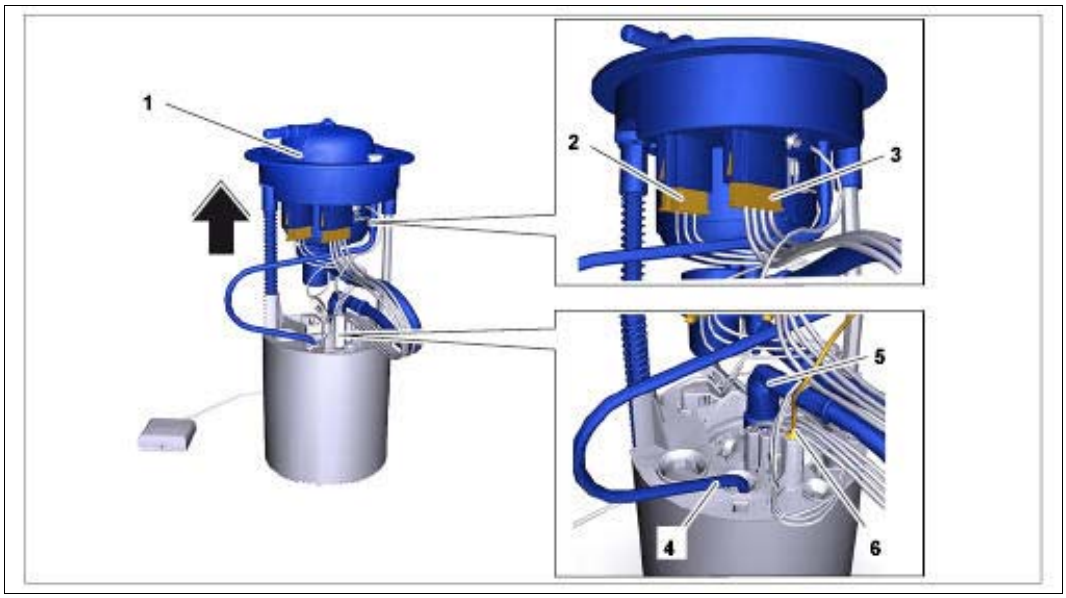

Courtesy of PORSCHE CARS NORTH AMERICA, INC.

WM 206019 REMOVING AND INSTALLING FINE FUEL STRAINER (ALL MODELS) > INSTALLING FINE FUEL STRAINER

WARNING: Toxic substances

- *Danger of poisoning or suffocation*
- *Danger of burns to the eyes and skin*

→ Ventilate the work area well.

→ Never ingest or inhale.

→ Read specific information on the Hazard Sheet.

→ Do not smoke, eat or drink in the work area.

WARNING: Highly inflammable or explosive materials

- *Danger of fire or explosion*

→ Avoid contact with hot parts or sources of ignition.

→ Use suction to remove ignitable vapours.

→ Attach warning sign in a clearly visible position.

1. Install fine fuel strainer **-1-** .
    1. 1.1. Install fine fuel strainer **-1-** in the fuel pump in **-direction of arrow-** .
    2. 1.2. Clip cable holder **-6-** into retaining device.
    3. 1.3. Guide auxiliary heater line **-4-** into the guide.
    4. 1.4. Clip in fuel line **-5-** .
    5. 1.5. Connect electric plug connection **-2-** and **-3-** .

    Fig 1: Installing Fine Fuel Strainer

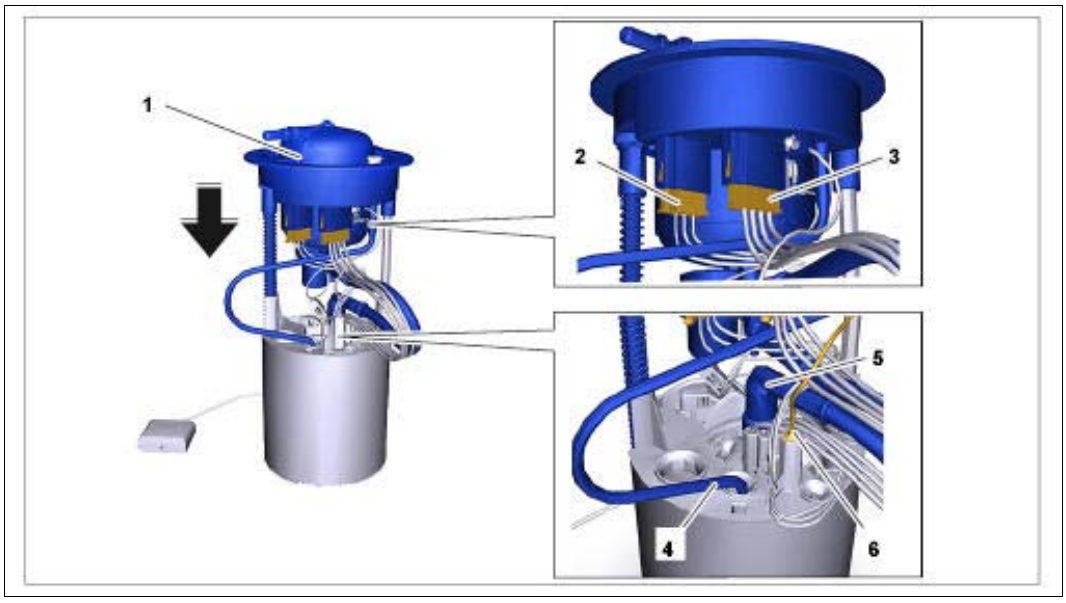

Courtesy of PORSCHE CARS NORTH AMERICA, INC.

WM 206019 REMOVING AND INSTALLING FINE FUEL STRAINER (ALL MODELS) > SUBSEQUENT WORK

1. Install fuel pump. → Installing Fuel Pump
2. Bleed the fuel system.

WM 206601 CHECKING FUEL PUMP DELIVERY RATE (ALL MODELS) > TOOLS

Designation	Type	Number	Description	

K-Jetronic pressure tester V.A.G. 1318	Service equipment	WE 1291		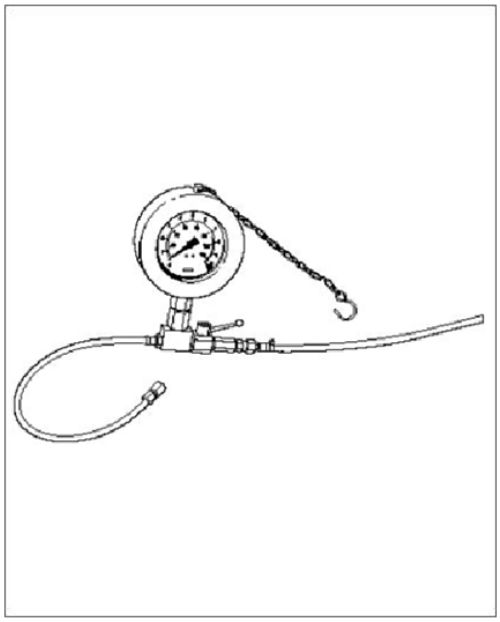
measuring adapter	Special tool	9705		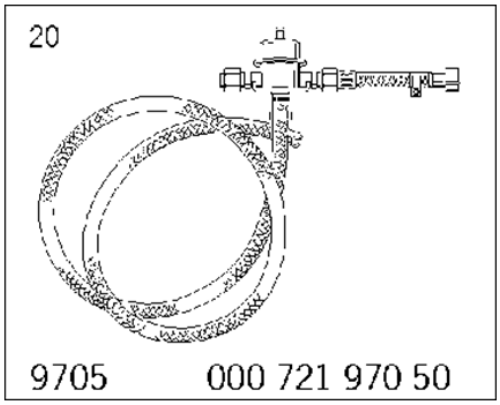
connecting line	Special tool	9705/3		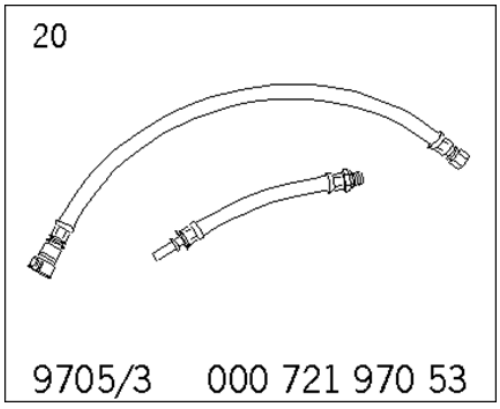

PIWIS Tester II	Special tool	9818		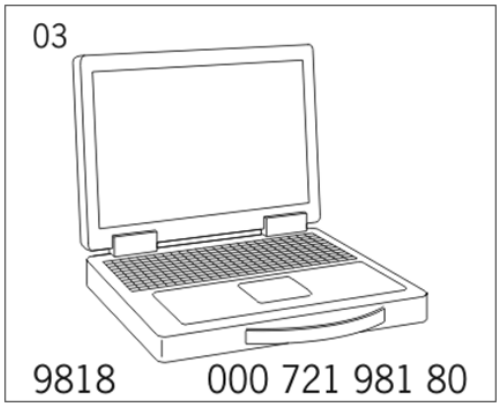
connecting lines	Special tool	P378c		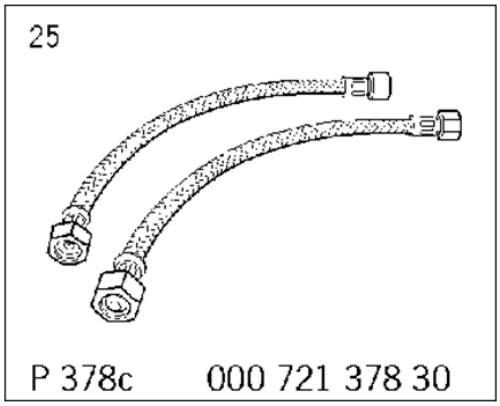

WM 206601 CHECKING FUEL PUMP DELIVERY RATE (ALL MODELS) > INFORMATION > PRELIMINARY WORK

Information

Before checking the fuel quantity, a pressure check must first be performed in accordance with **Guided Fault Finding** in the PIWIS Tester or based on the instructions in the Service Information. → WM 200201 CHECKING FUEL PRESSURE

WM 206601 CHECKING FUEL PUMP DELIVERY RATE (ALL MODELS) > TOOLS AND MATERIALS > TEST TOOL SETUP

Fig 1: Identifying Pressure Test Tool Setup

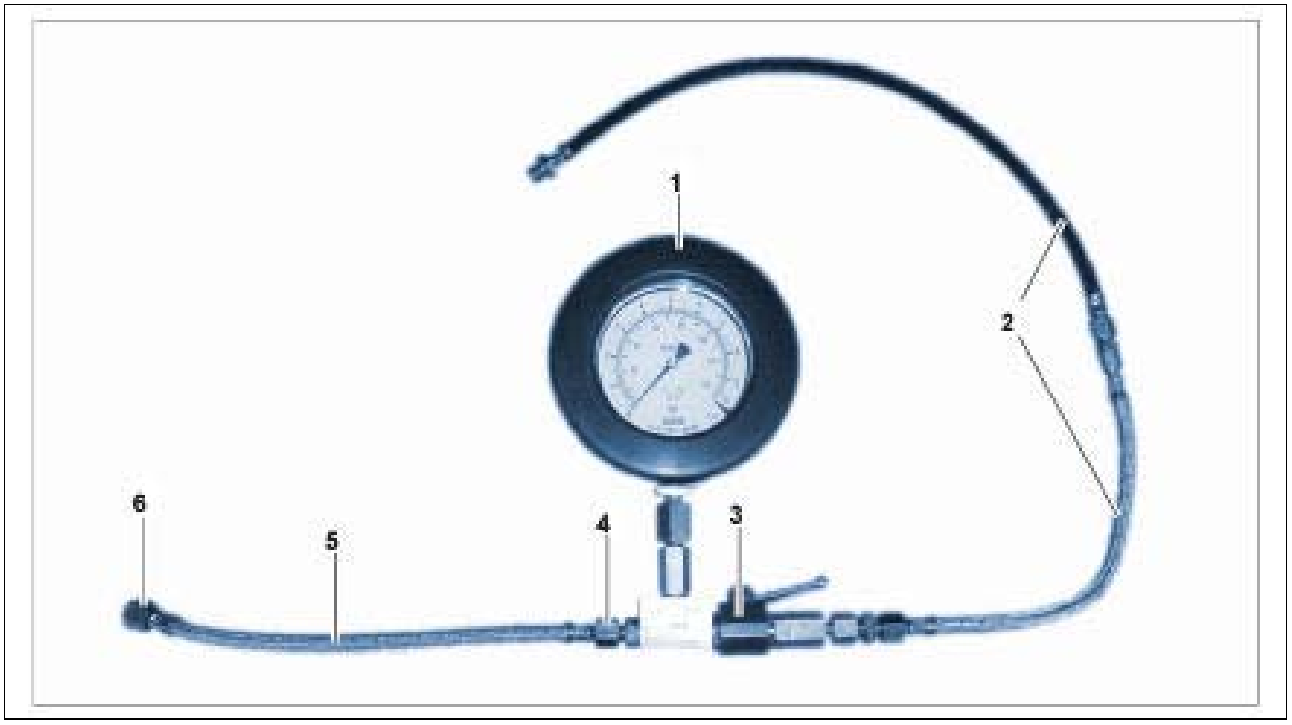

Courtesy of PORSCHE CARS NORTH AMERICA, INC.

1. Test equipment - pressure gauge (without stopcock) **K-Jetronic pressure tester V.A.G. 1318 WE 1291**
2. Connecting line **connecting line 9705/3** (both lines) => Connection to
3. Adapter 1318/15
4. Adapter 1318/23
5. Connecting line **connecting lines P378c**
6. Adapter 1318/12 => Connection to line on engine side

-

Fig 2: Identifying Delivery Rate Check Tool Setup

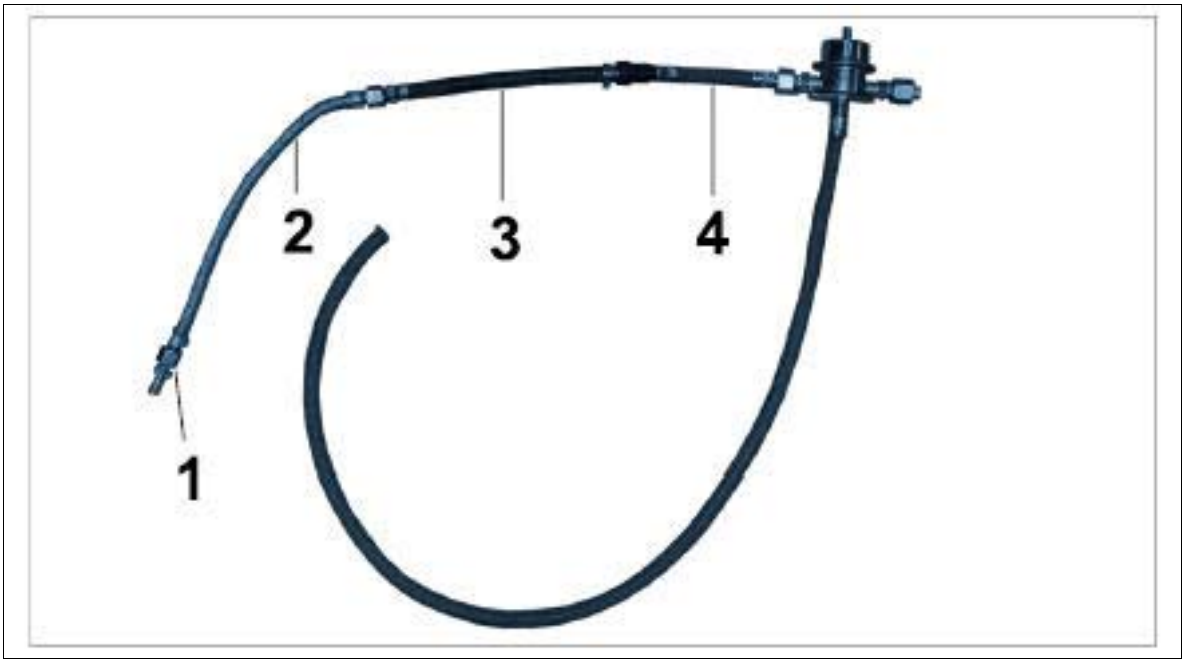

Courtesy of PORSCHE CARS NORTH AMERICA, INC.

1. Adapter 1318/12
2. Connecting line **connecting lines P378c**
3. Connecting line 1318/17
4. Pressure reducer **measuring adapter 9705**

WM 206601 CHECKING FUEL PUMP DELIVERY RATE (ALL MODELS) > CHECKING FUEL PUMP DELIVERY RATE

WARNING: Toxic substances

- *Danger of poisoning or suffocation*
- *Danger of burns to the eyes and skin*

→ Ventilate the work area well.

→ Never ingest or inhale.

→ Read specific information on the Hazard Sheet.

→ Do not smoke, eat or drink in the work area.

WARNING: Highly inflammable or explosive materials

- *Danger of fire or explosion*

→ Avoid contact with hot parts or sources of ignition.

→ Use suction to remove ignitable vapours.

→ Attach warning sign in a clearly visible position.

1. Loosen clamp and pull off fuel supply line (low-pressure). Soak up emerging fuel with a cloth.
2. Connect the tester to the low-pressure hose on the body side. The setup must be fully sealed. → Measuring tool setup (figure shows Panamera) → see Fig 1

   Fig 1: Identifying Measuring Tool Setup

   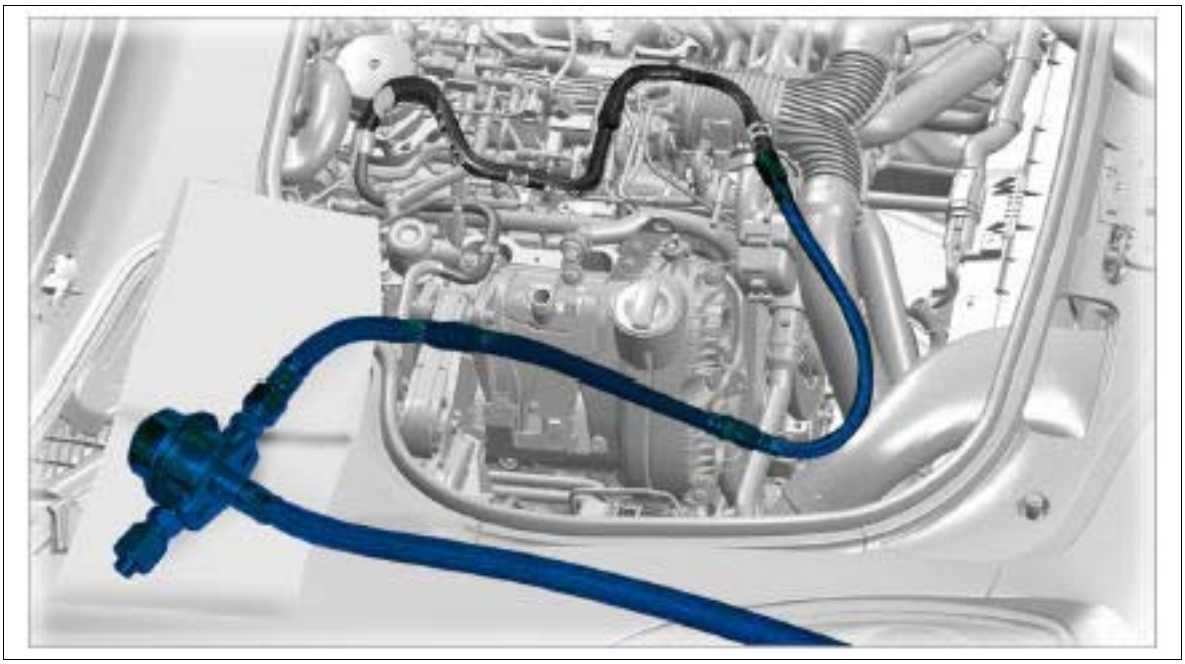

   Courtesy of PORSCHE CARS NORTH AMERICA, INC.

3. Hold the free end of the hose downstream of the pressure reducer into a large measuring container (recommended volume of 5 litres). → see Fig 1
4. Connect the Tester and get it ready. **PIWIS Tester II 9818**
   1. 4.1. Connect charger to the vehicle battery. The voltage should be approx. 12.5 V (no quick charging allowed because the voltage is too high!).
   2. 4.2. The fuel pump can be activated and deactivated as follows:
   3. 4.3. [Diagnostics] => [Macan] => [DME] => [Drive link test/checks] => [Drive links] => [Fuel pump 1]
   4. 4.4. 100% is displayed. The fuel pump starts to deliver fuel when you press [Start].
   5. 4.5. The fuel pump stops when the percentage value changes to 0%. Press [Start] again.
5. Have a stopwatch ready.

6. Activate the fuel pump. The fuel pump must deliver at least **3 litres a minute** .

WM 206601 CHECKING FUEL PUMP DELIVERY RATE (ALL MODELS) > SUBSEQUENT WORK

1. Disconnect tool and re-connect connections on vehicle side.

   Low-pressure threaded joint.

   Absorb and wipe off residual fuel with a cloth.

WM 206619 REMOVING AND INSTALLING FUEL PUMP (MACAN) > TOOLS

Designation	Type	Number	Description	
wrench	VW tool	T10202		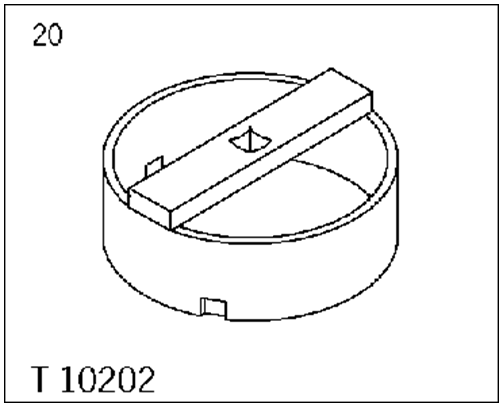

WM 206619 REMOVING AND INSTALLING FUEL PUMP (MACAN) > TECHNICAL VALUES

Location	Description	Type	Basic value	Tolerance 1	Tolerance 2
Lock	Fuel pump to fuel tank	Tightening torque	110 Nm (81.5 ftlb.)		
Lock	Fuel pump to fuel tank	Tightening torque	110 Nm (81.5 ftlb.)		

WM 206619 REMOVING AND INSTALLING FUEL PUMP (MACAN) > TECHNICAL VALUES > COMPONENT OVERVIEW - FUEL PUMP

Fig 1: Identifying Fuel Pump Components

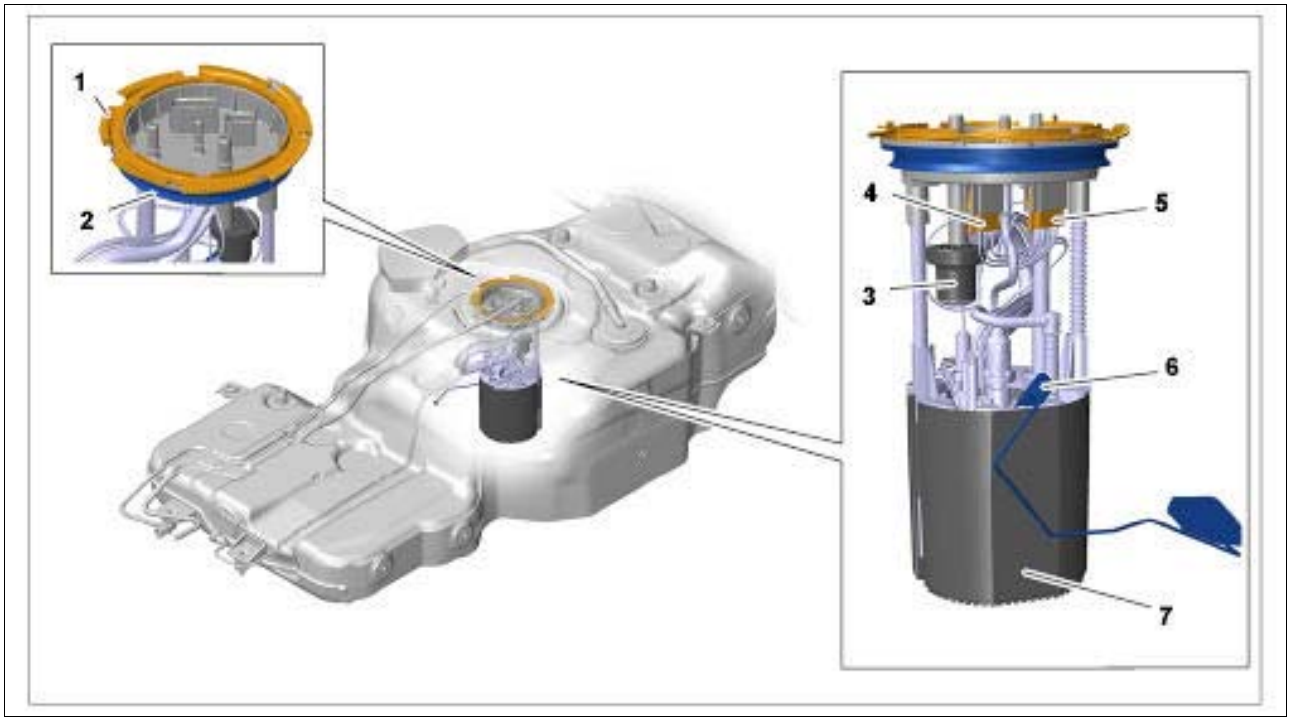

Courtesy of PORSCHE CARS NORTH AMERICA, INC.

1. Fuel pump lock → **Tightening torque: 110 Nm (81.5 ftlb.)**
2. Seal/**replace**
3. Pressure regulator
4. Electric plug connection for fuel level sender
5. Electric plug connection for fuel pump
6. Fuel level sender
7. Fuel pump

WM 206619 REMOVING AND INSTALLING FUEL PUMP (MACAN) > INFORMATION > COMPONENT OVERVIEW - FUEL PUMP

Fig 1: Overview Of Fuel Pump

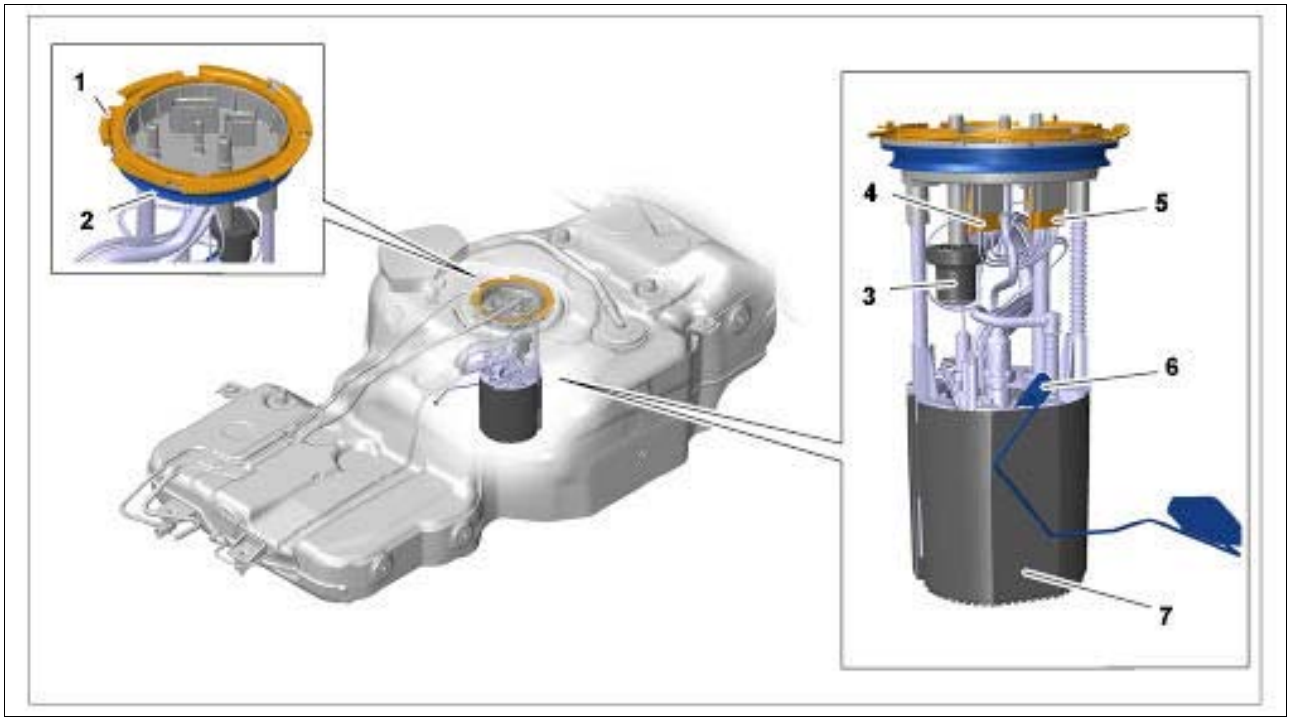

Courtesy of PORSCHE CARS NORTH AMERICA, INC.

1. Fuel pump lock → **Tightening torque: 110 Nm (81.5 ftlb.)**
2. Seal/**replace**
3. Pressure regulator
4. Electric plug connection for fuel level sender
5. Electric plug connection for fuel pump
6. Fuel level sender
7. Fuel pump

WM 206619 REMOVING AND INSTALLING FUEL PUMP (MACAN) > PRELIMINARY WORK

1. Disconnect the battery. → Removing Battery
2. Open the filler flap.
3. Remove fuel in the fuel tank by suction. → Emptying The Fuel Tank
4. Remove rear seat. → Removing rear seat

WM 206619 REMOVING AND INSTALLING FUEL PUMP (MACAN) > REMOVING FUEL

PUMP

WARNING: Toxic substances

- *Danger of poisoning or suffocation*
- *Danger of burns to the eyes and skin*

→ Ventilate the work area well.

→ Never ingest or inhale.

→ Read specific information on the Hazard Sheet.

→ Do not smoke, eat or drink in the work area.

WARNING: Highly inflammable or explosive materials

- *Danger of fire or explosion*

→ Avoid contact with hot parts or sources of ignition.

→ Use suction to remove ignitable vapours.

→ Attach warning sign in a clearly visible position.

Information

- Absorb any escaping fuel using a suitable binding material or a cloth.
- Cloths which have absorbed fuel must be disposed of according to the applicable national laws.
- The fuel system must be depressurised before starting work on it.
- Only work on the fuel system in well-ventilated rooms.
- Any seals which have been removed must always be replaced.
- Do not use any sealant containing silicone or silicone spray when the injection system is open. Traces of silicone drawn in by the engine are not combusted and damage the oxygen sensors.

Information

- If the tank must be opened for emptying, disconnect all connections.

1. Fold protective mat **-1-** aside and open the cover **-2-** .

Fig 1: Identifying Fuel Pump Cover

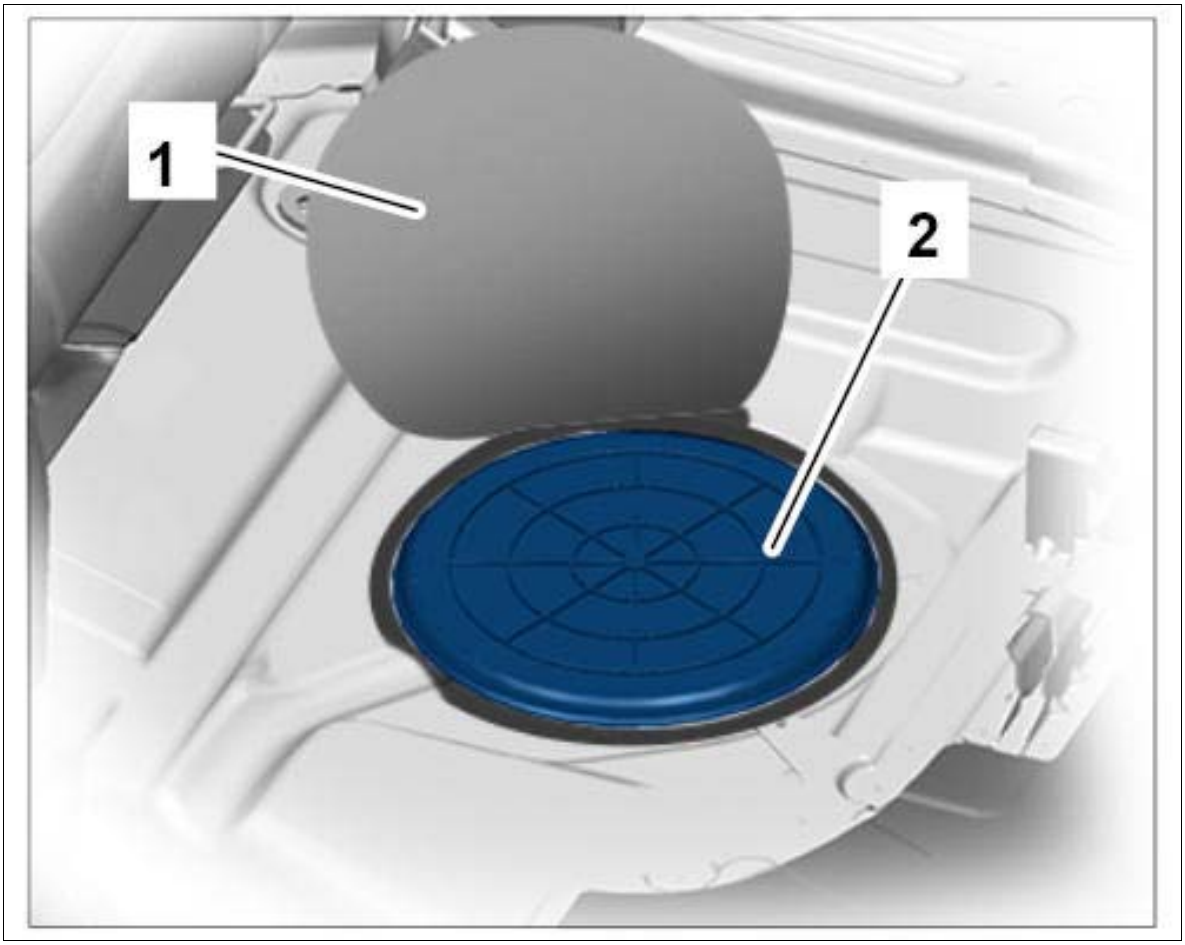

Courtesy of PORSCHE CARS NORTH AMERICA, INC.

2. Disconnect lines above the fuel pump.
    1. 2.1. Disconnect electric plug connection **-2-** and **-5-** .
    2. 2.2. Lift cable bushing **-6-** out of the guide and set it aside.
    3. 2.3. Disconnect fuel lines **-3-** and **-4-** and set them aside.

Fig 2: Identifying Fuel Lines

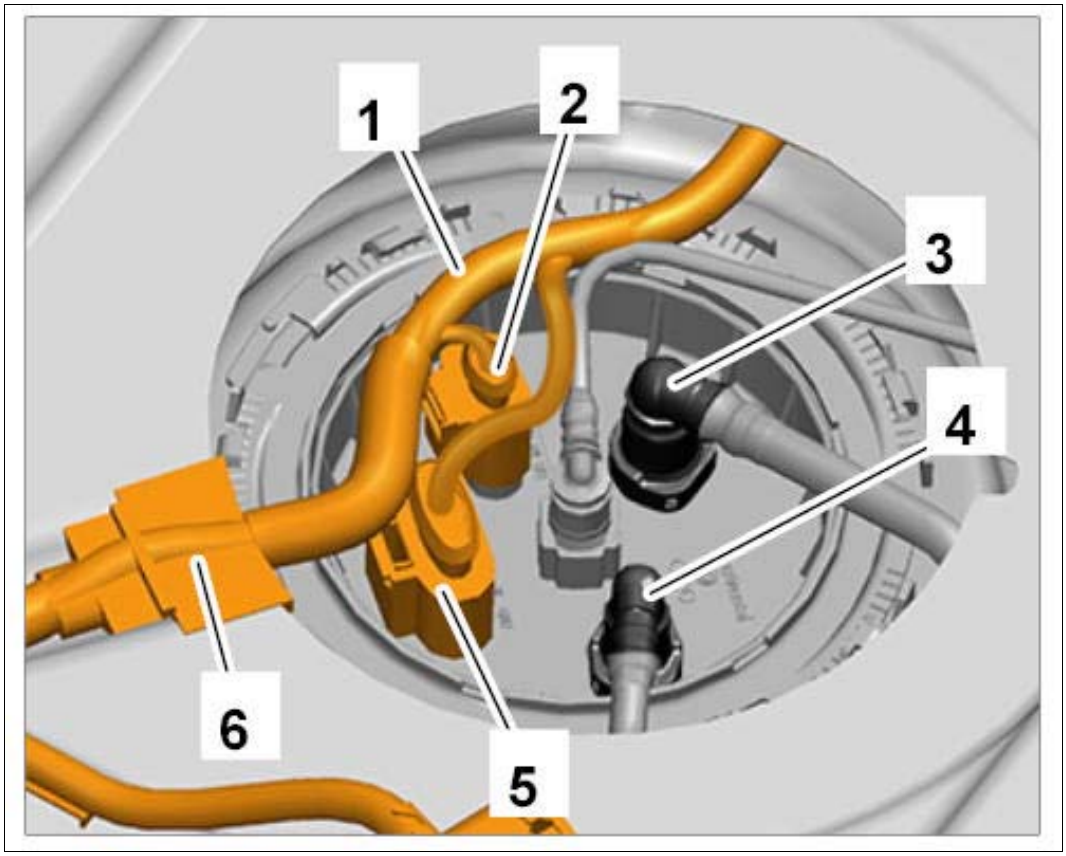

Courtesy of PORSCHE CARS NORTH AMERICA, INC.

3. Mark the position of the lock **-1-** before opening it using a coloured pen.

Fig 3: Identifying Fuel Pump Lock Marking

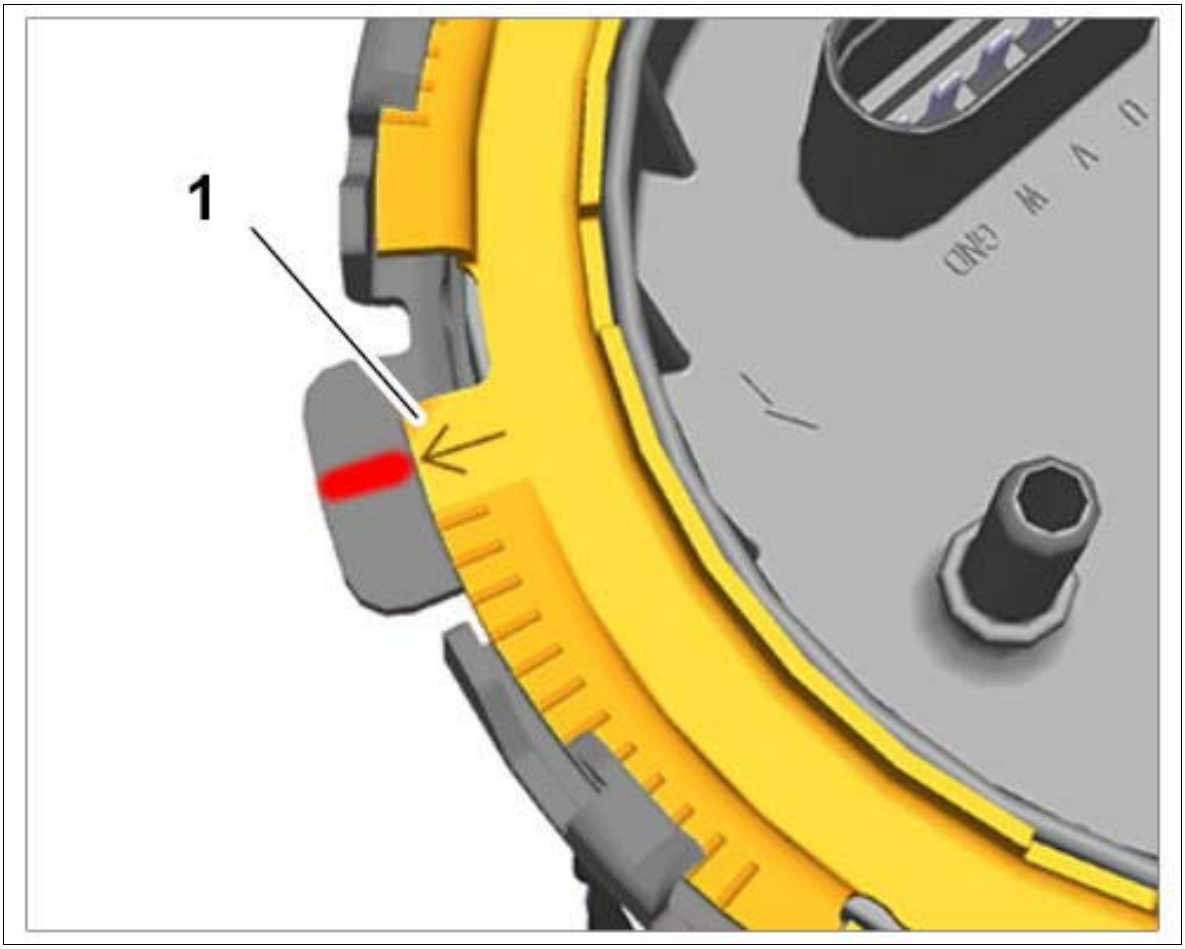

Courtesy of PORSCHE CARS NORTH AMERICA, INC.

4. Open the lock **-1-** using **wrench T10202 -3-** in **-direction of arrow -** .

Fig 4: Opening Fuel Pump Lock

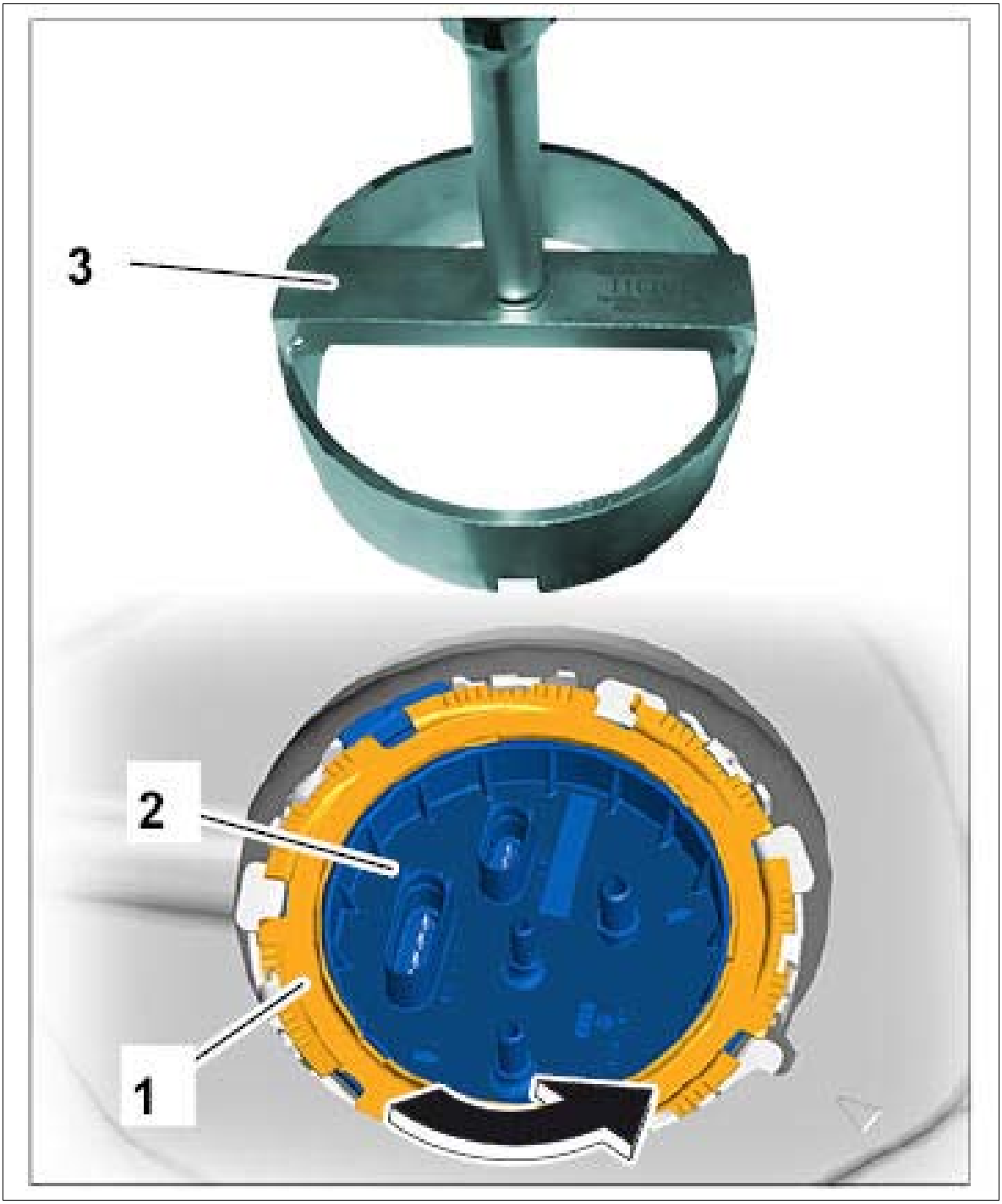

Courtesy of PORSCHE CARS NORTH AMERICA, INC.

Information

1. The guiding rod of the fuel level sender must not be deformed.
2. If the guiding rod is deformed, the fuel level sender must be replaced.

5. Remove lock **-2-** from the fuel pump **-3-** and remove fuel pump **-3-** with seal **-1-** in **-direction of arrow -** .

Fig 5: Removing Fuel Pump

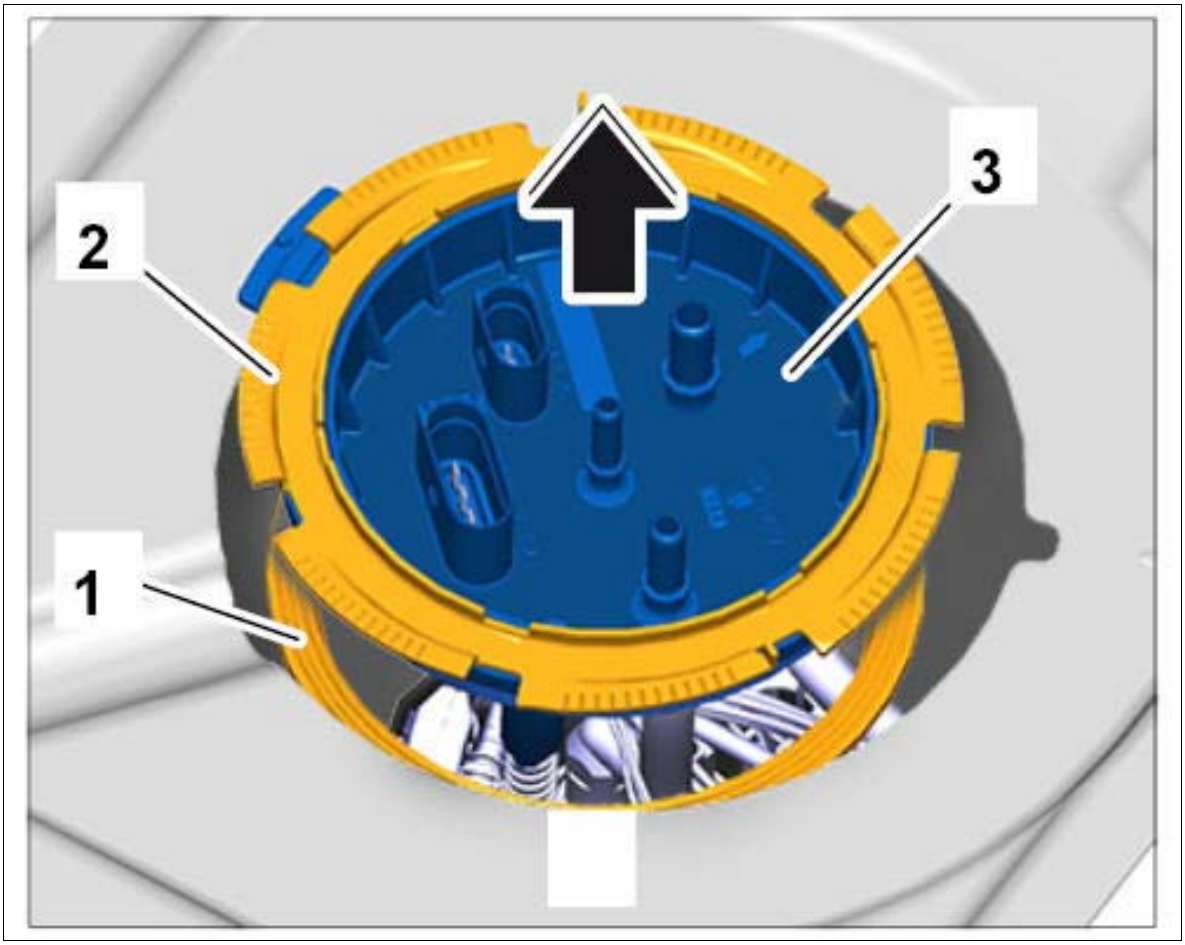

Courtesy of PORSCHE CARS NORTH AMERICA, INC.

6. Place fuel pump **-1-** on a clean surface.

Fig 6: Identifying Fuel Pump

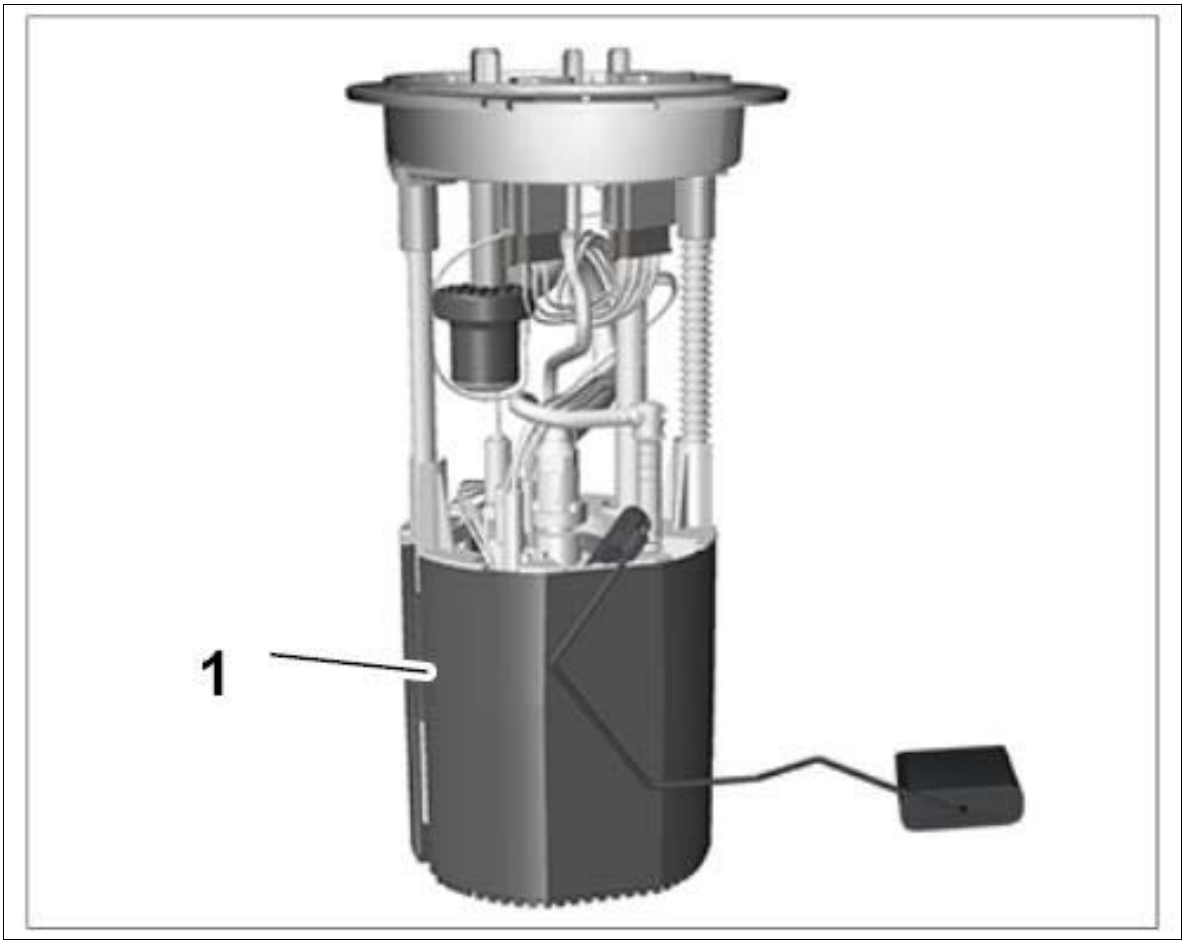

Courtesy of PORSCHE CARS NORTH AMERICA, INC.

WM 206619 REMOVING AND INSTALLING FUEL PUMP (MACAN) > INSTALLING FUEL PUMP

WARNING: Toxic substances

- *Danger of poisoning or suffocation*
- *Danger of burns to the eyes and skin*

→ Ventilate the work area well.

→ Never ingest or inhale.

→ Read specific information on the Hazard Sheet.

→ Do not smoke, eat or drink in the work area.

WARNING: Highly inflammable or explosive materials

- *Danger of fire or explosion*

→ Avoid contact with hot parts or sources of ignition.

→ Use suction to remove ignitable vapours.

→ Attach warning sign in a clearly visible position.

Information

- Absorb any escaping fuel using a suitable binding material or a cloth.
- Cloths which have absorbed fuel must be disposed of according to the applicable national laws.
- The fuel system must be depressurised before starting work on it.
- Only work on the fuel system in well-ventilated rooms.
- Any seals which have been removed must always be replaced.
- Do not use any sealant containing silicone or silicone spray when the injection system is open. Traces of silicone drawn in by the engine are not combusted and damage the oxygen sensors.

Information

- The guiding rod of the fuel level sender must not be deformed.
- If the guiding rod is deformed, the fuel level sender must be replaced.

1. Guide fuel pump **-1-** with **new** seal **-2-** into the fuel tank in **-direction of arrow-** .

Fig 1: Installing Fuel Pump

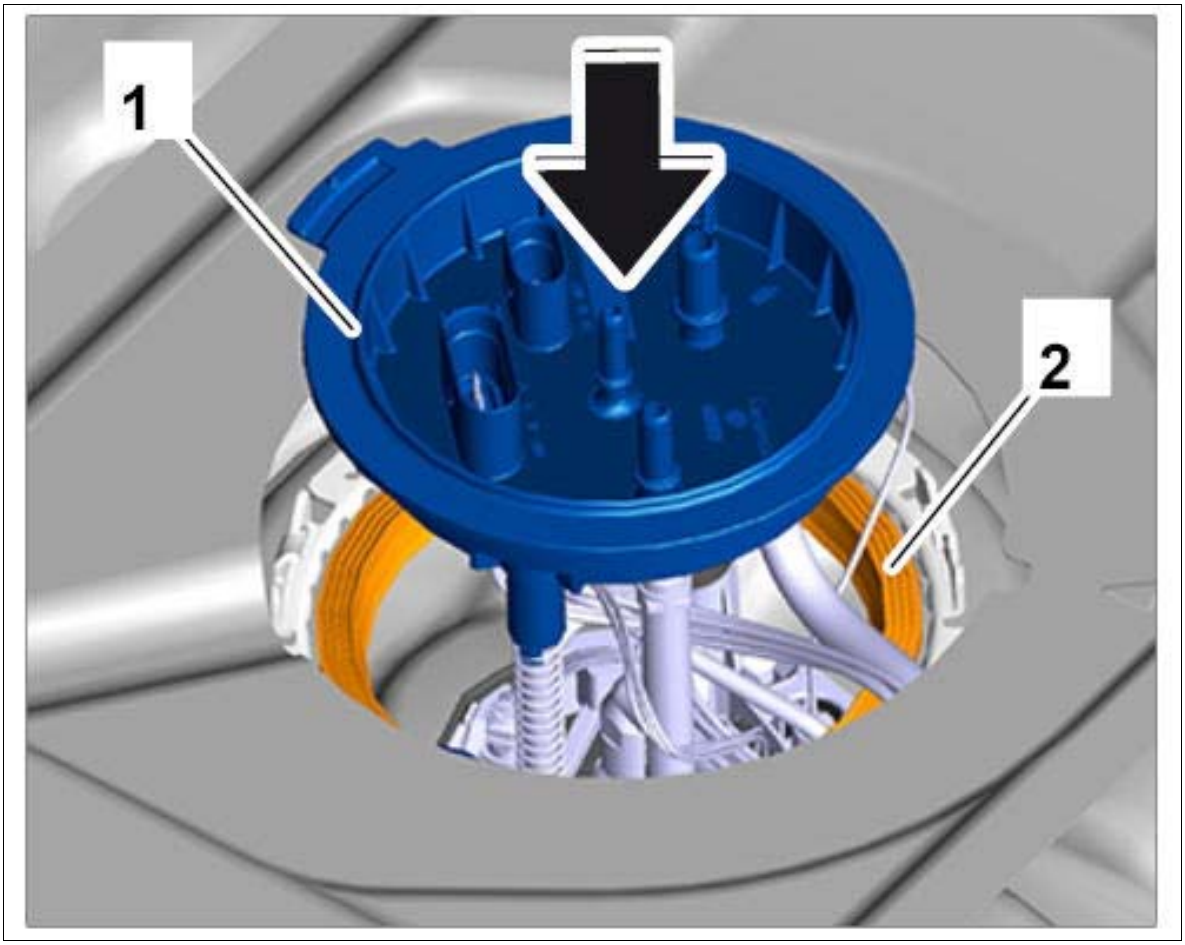

Courtesy of PORSCHE CARS NORTH AMERICA, INC.

2. The fuel pump **-1-** fits at only one position.

Fig 2: Identifying Fuel Pump Installation Position

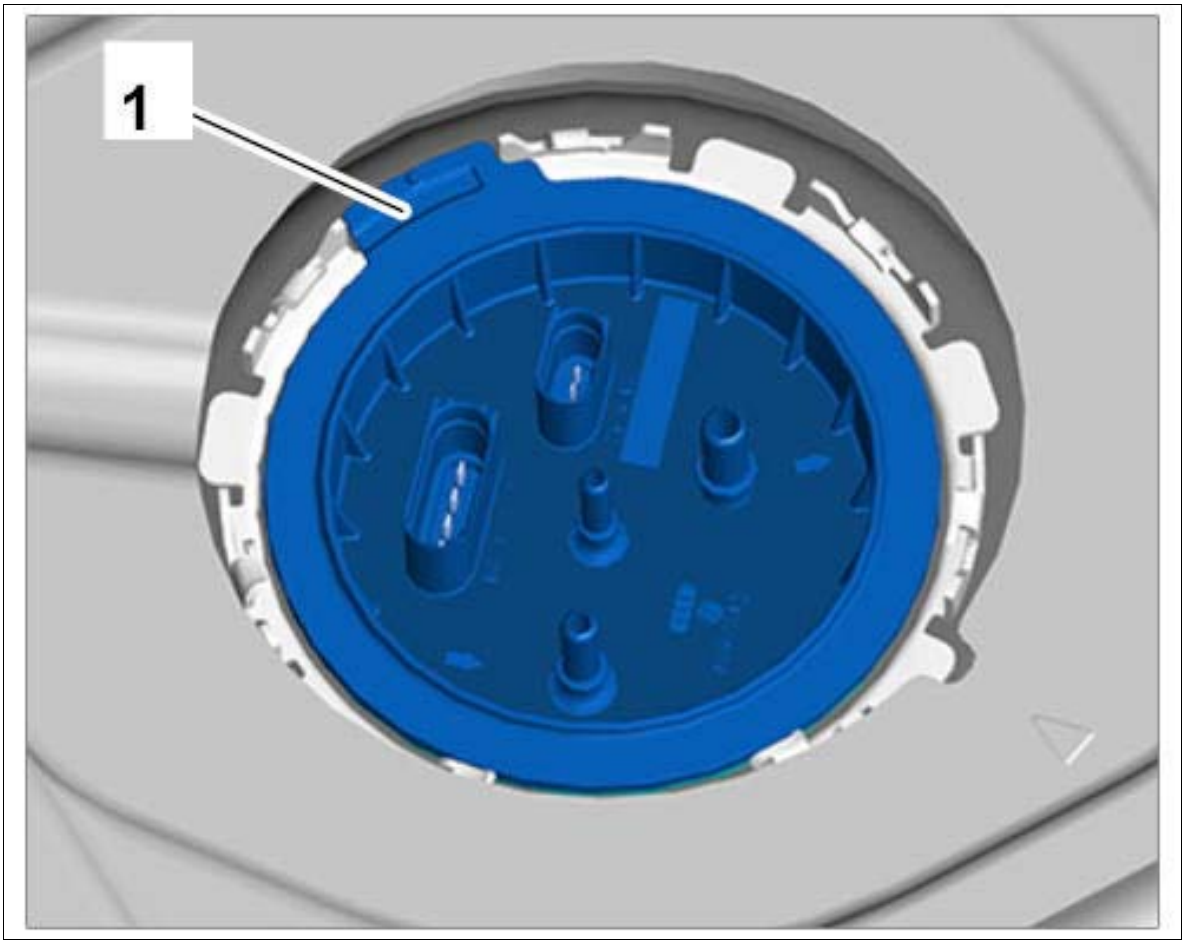

Courtesy of PORSCHE CARS NORTH AMERICA, INC.

3. Fit lock **-1-** and tighten using **wrench T10202** by turning it in **-direction of arrow -** .
   Tightening torque 110 Nm (81.5 ftlb.)

Fig 3: Turning Fuel Pump Lock

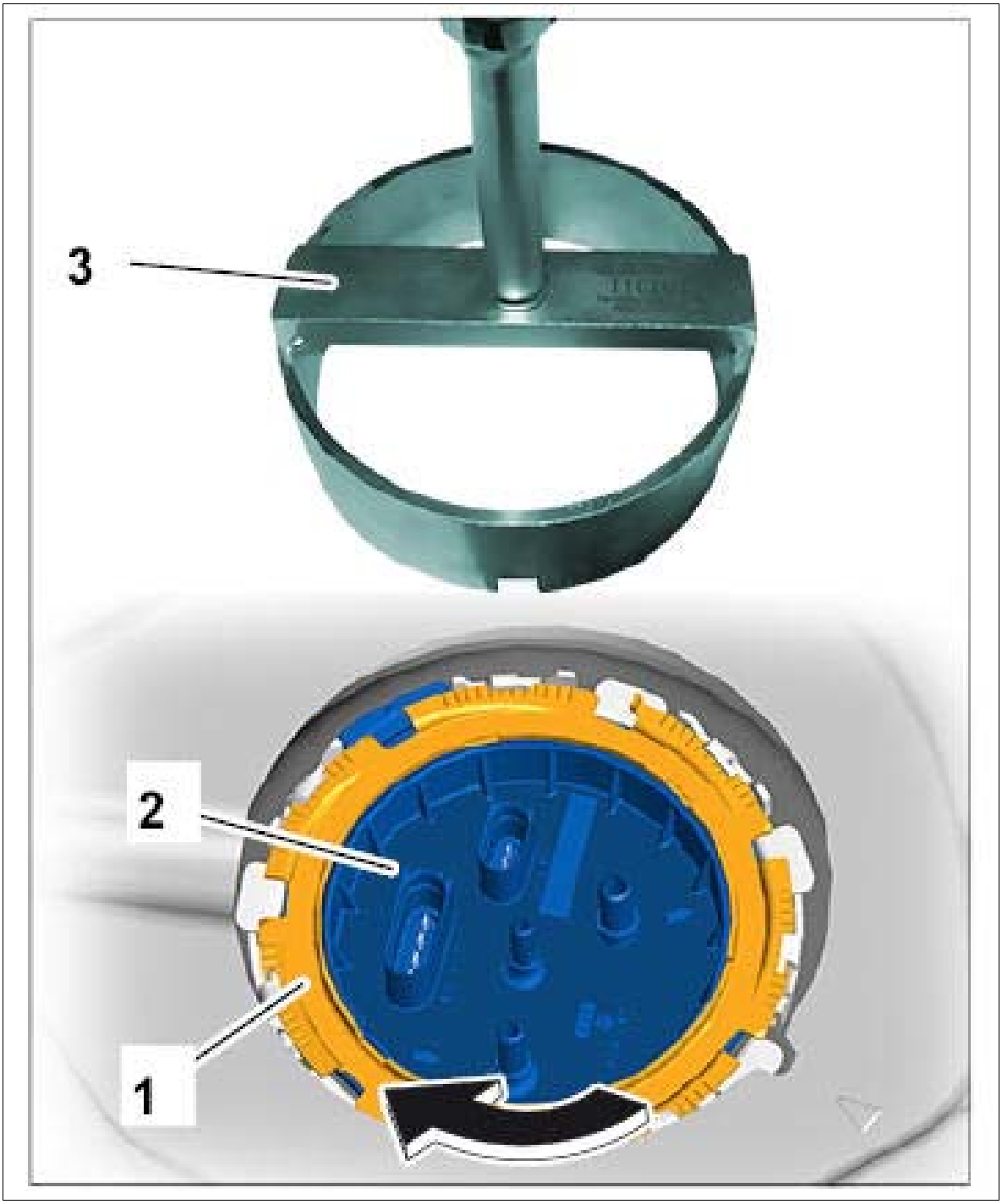

Courtesy of PORSCHE CARS NORTH AMERICA, INC.

4. The arrow on the lock **-1-** must be at the previously marked position.

Fig 4: Identifying Fuel Pump Lock Marking

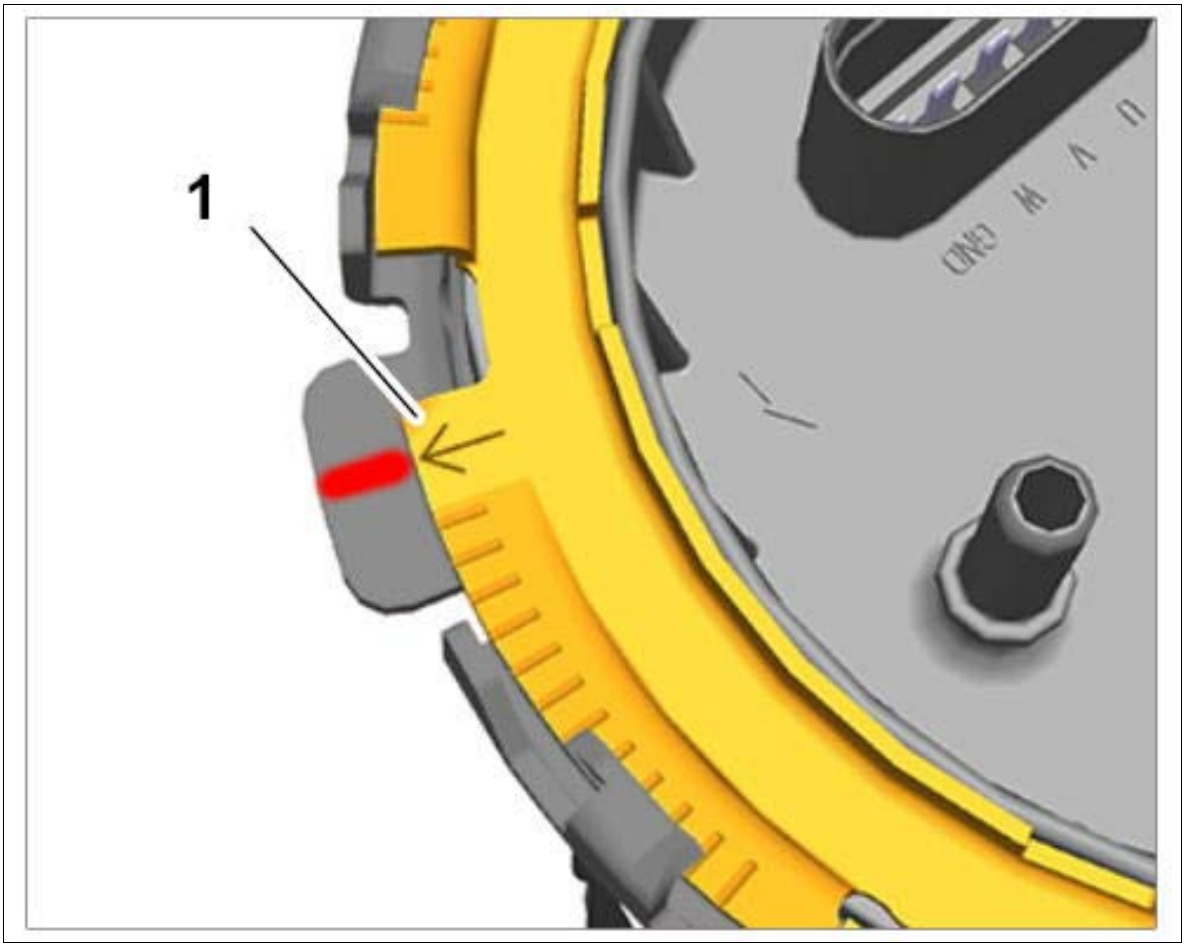

Courtesy of PORSCHE CARS NORTH AMERICA, INC.

5. Connect lines above the fuel pump.
    1. 5.1. Connect electric plug connection **-2-** and **-5-** .
    2. 5.2. Guide cable bushing **-6-** into the guide on the body.
    3. 5.3. Connect fuel lines **-3 -** and **-4-** .

Fig 5: Identifying Fuel Lines

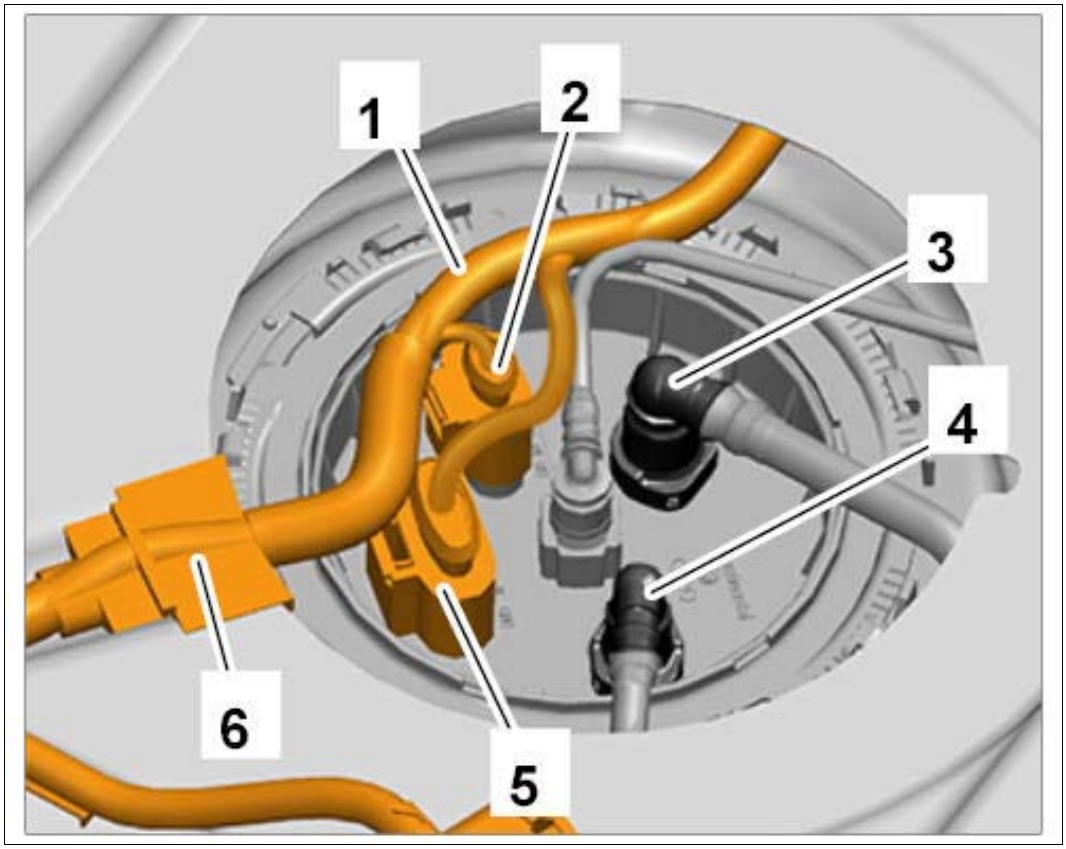

Courtesy of PORSCHE CARS NORTH AMERICA, INC.

6. Close the cover **-2-** and place protective mat **-1-** over the cover.

Fig 6: Identifying Fuel Pump Cover

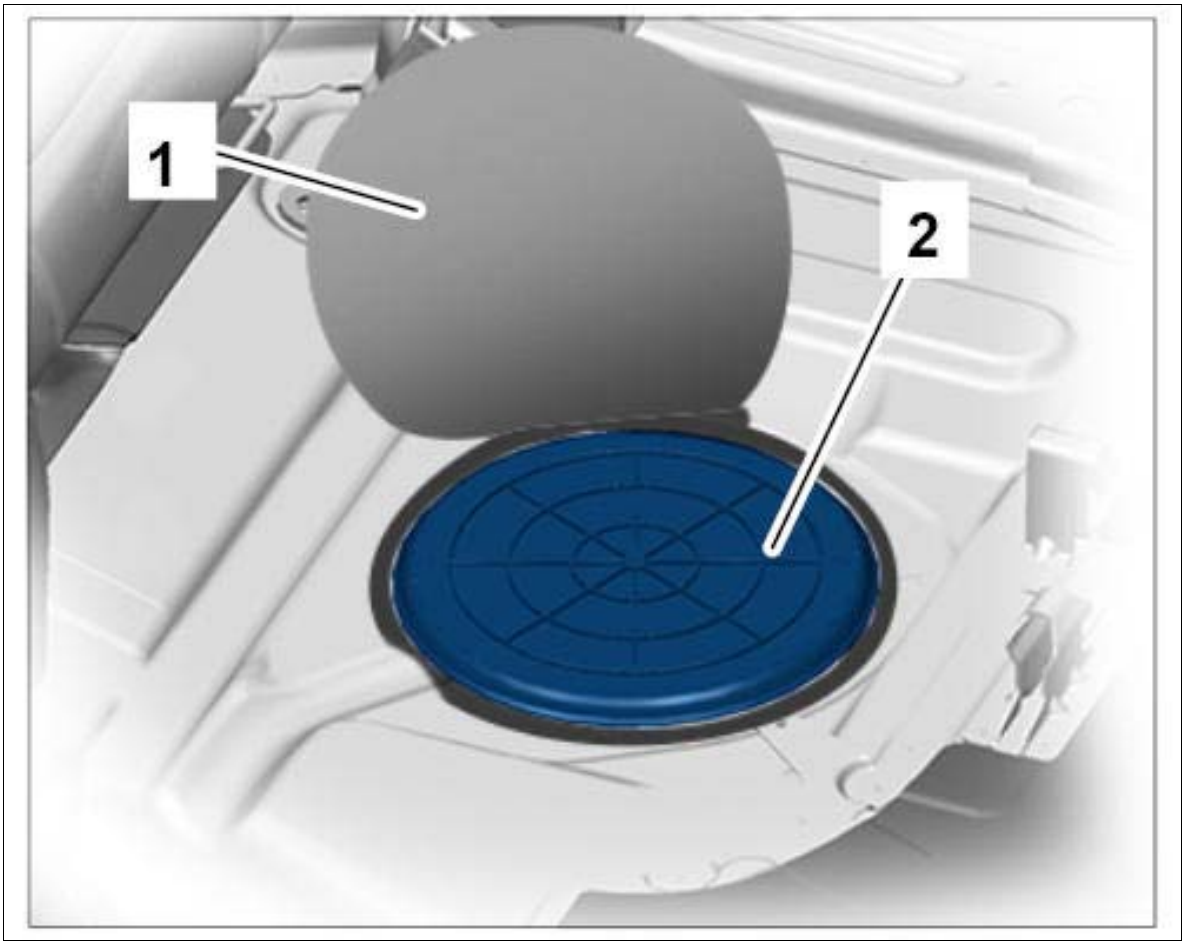

Courtesy of PORSCHE CARS NORTH AMERICA, INC.

WM 206619 REMOVING AND INSTALLING FUEL PUMP (MACAN) > SUBSEQUENT WORK

1. Install rear seat. → Installing rear seat
2. Fill the fuel tank. → Filling The Fuel Tank
3. Close the filler flap.
4. Connect the battery. → Installing Battery

WM 207019 REMOVING AND INSTALLING CONTROL UNIT FOR FUEL PUMP (ALL MODELS) > TOOLS

Designation	Type	Number	Description	

PIWIS Tester II	Special tool	9818		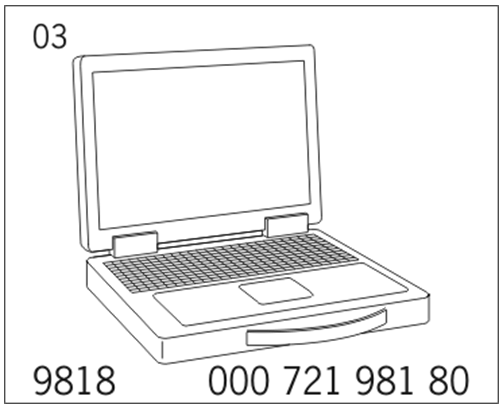

WM 207019 REMOVING AND INSTALLING CONTROL UNIT FOR FUEL PUMP (ALL MODELS) > PRELIMINARY WORK

1. Remove fuel tank. → Removing Fuel Tank

WM 207019 REMOVING AND INSTALLING CONTROL UNIT FOR FUEL PUMP (ALL MODELS) > REMOVING CONTROL UNIT FOR FUEL PUMP

NOTE: Voltage peaks

- *Risk of damage to load or to the control unit*

→ Remove the ignition key and switch off load before disconnecting or removing load.

1. Screw off fastening nuts **-1-** and remove control unit for fuel pump **-2-** from the body.

Fig 1: Identifying Fuel Pump Control Unit Nuts

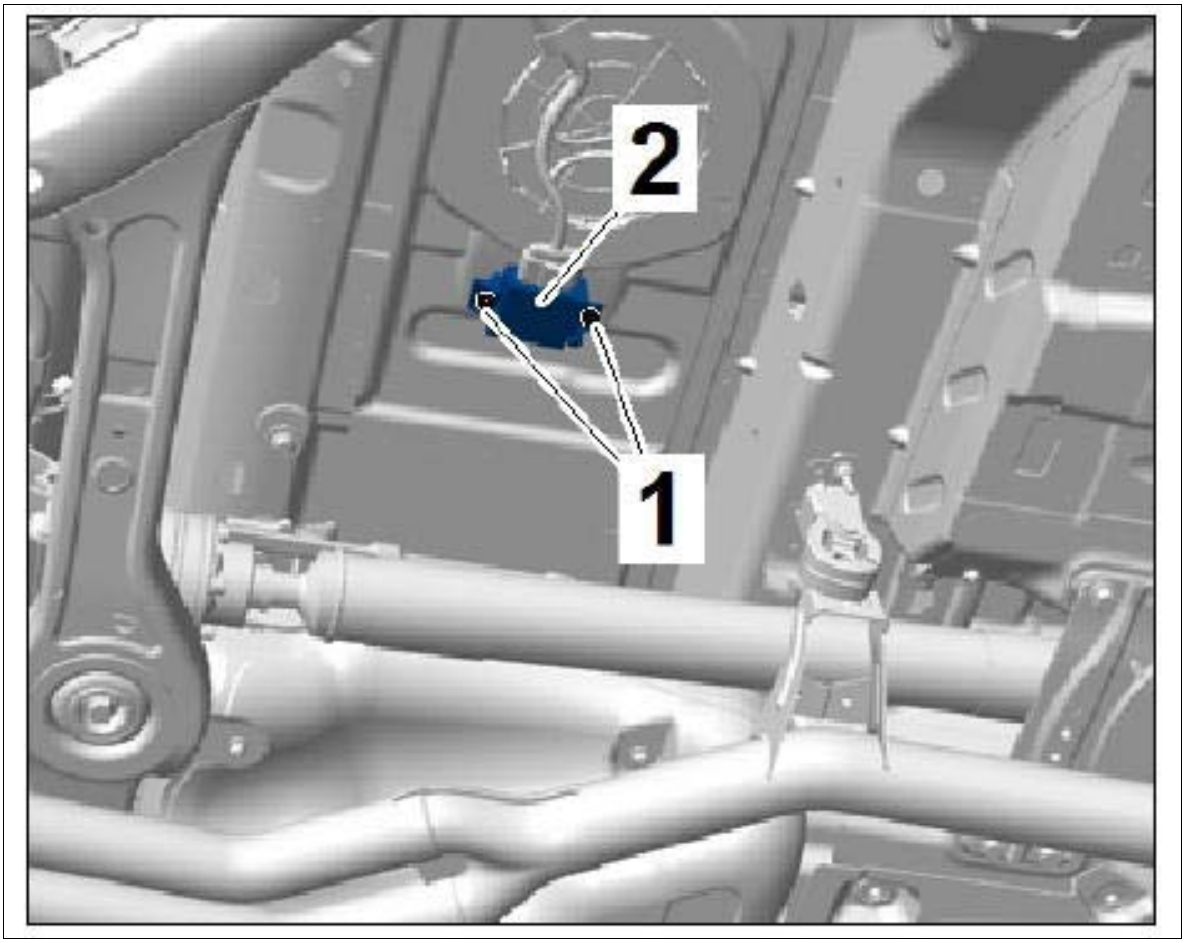

Courtesy of PORSCHE CARS NORTH AMERICA, INC.

Information

Always comply with the regulations for handling ESD-sensitive components!

1. Assembly work may only be carried out if the mechanic is wearing the working clothes and shoes approved by Porsche.
2. The new part must only be removed from the ESD (electrostatic discharge) protective packaging just before installation and at the position at which the part is to be installed.
3. Never touch the electric pins and plug contacts.

2. Release electric plug connection **-1-** (**-a-**) and disconnect it from the fuel pump control unit **-2-** .

Fig 2: Disconnecting Electric Plug Connection

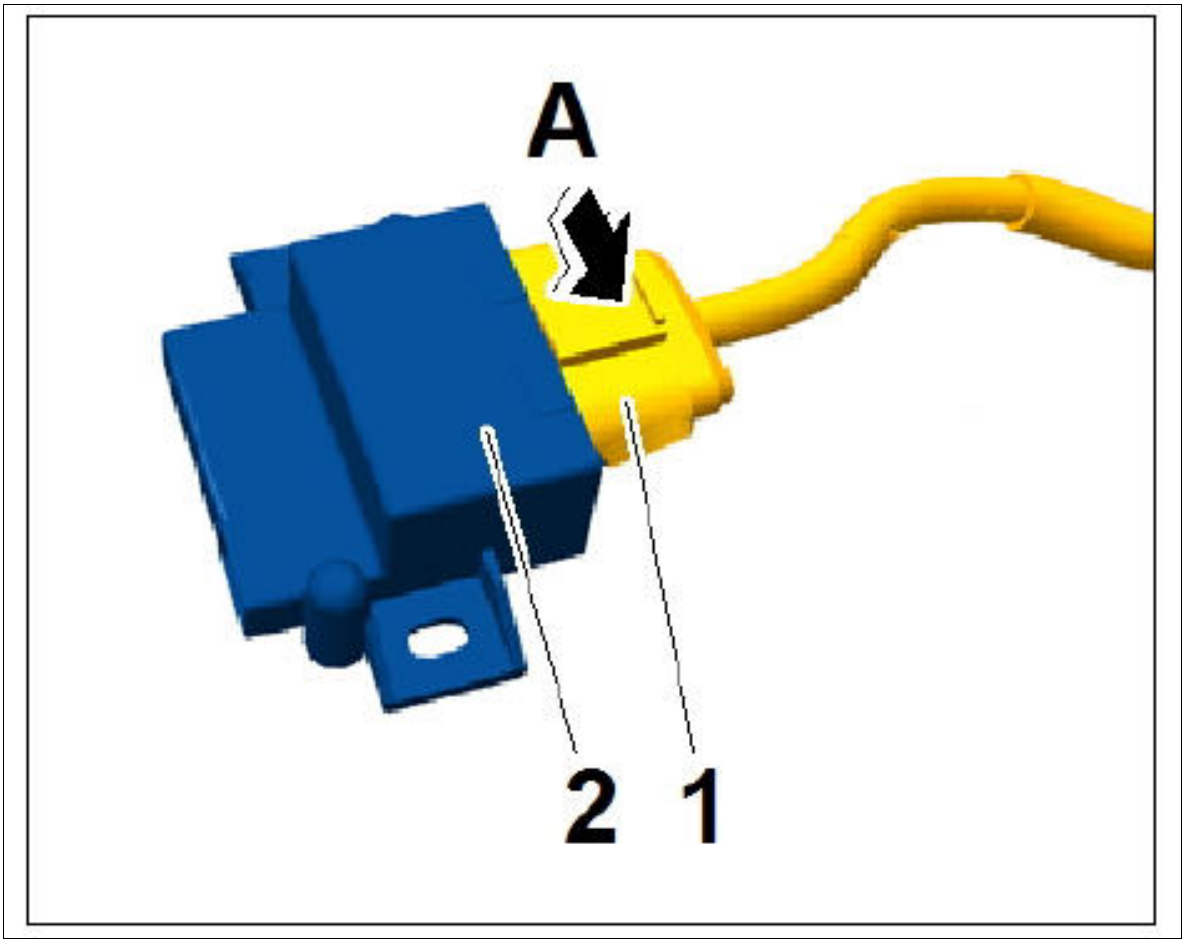

Courtesy of PORSCHE CARS NORTH AMERICA, INC.

WM 207019 REMOVING AND INSTALLING CONTROL UNIT FOR FUEL PUMP (ALL MODELS) > INSTALLING CONTROL UNIT FOR FUEL PUMP

Information

Always comply with the regulations for handling ESD-sensitive components!

- Assembly work may only be carried out if the mechanic is wearing the working clothes and shoes approved by Porsche.
- The new part must only be removed from the ESD (electrostatic discharge) protective packaging just before installation and at the position at which the part is to be installed.
- Never touch the electric pins and plug contacts.

1. Installation is performed in reverse order to removal.
2. Tighten fastening nuts used to secure the fuel pump control unit to the body.

WM 207019 REMOVING AND INSTALLING CONTROL UNIT FOR FUEL PUMP (ALL MODELS) > SUBSEQUENT WORK

1. Install fuel tank. → Installing Fuel Tank
2. If the fuel pump control unit was replaced, teach the new fuel pump control unit to suit the vehicle using **PIWIS Tester II 9818** .

WM 208055 REPLACING ACCELERATOR PEDAL MODULE (ALL MODELS) > TECHNICAL VALUES

Location	Description	Type	Basic value	Tolerance 1	Tolerance 2
Accelerator pedal module to pedals	M6 x 18	Tightening torque	8 Nm (6 ftlb.)		

WM 208055 REPLACING ACCELERATOR PEDAL MODULE (ALL MODELS) > REPLACING ACCELERATOR PEDAL MODULE

1. Switch off ignition.
2. Disconnect connector **-1-** on accelerator pedal module.

Fig 1: Identifying Accelerator Pedal Module Connector

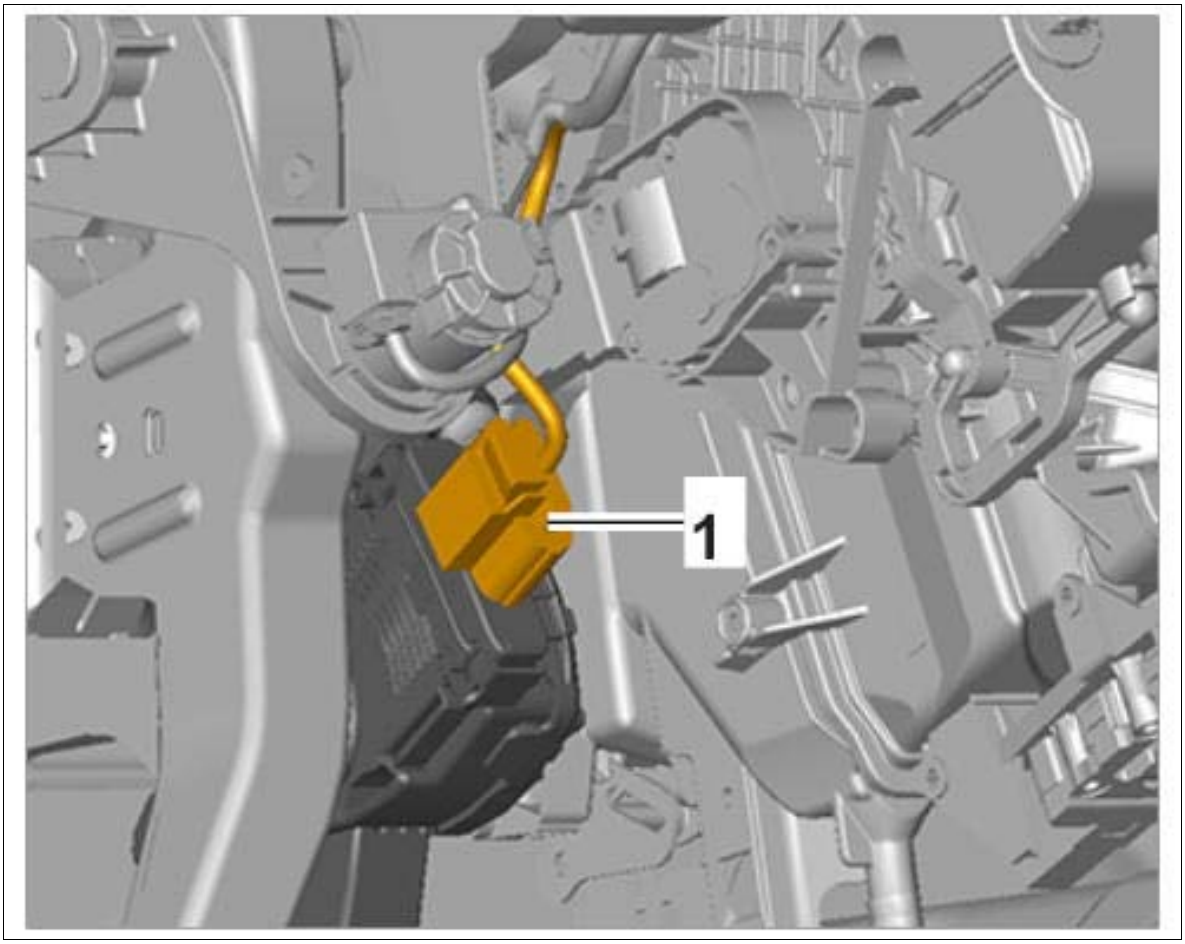

Courtesy of PORSCHE CARS NORTH AMERICA, INC.

3. Unscrew fastening screw **-1-** on the accelerator pedal module **-2-** .

Fig 2: Identifying Accelerator Pedal Module Mounting Screws

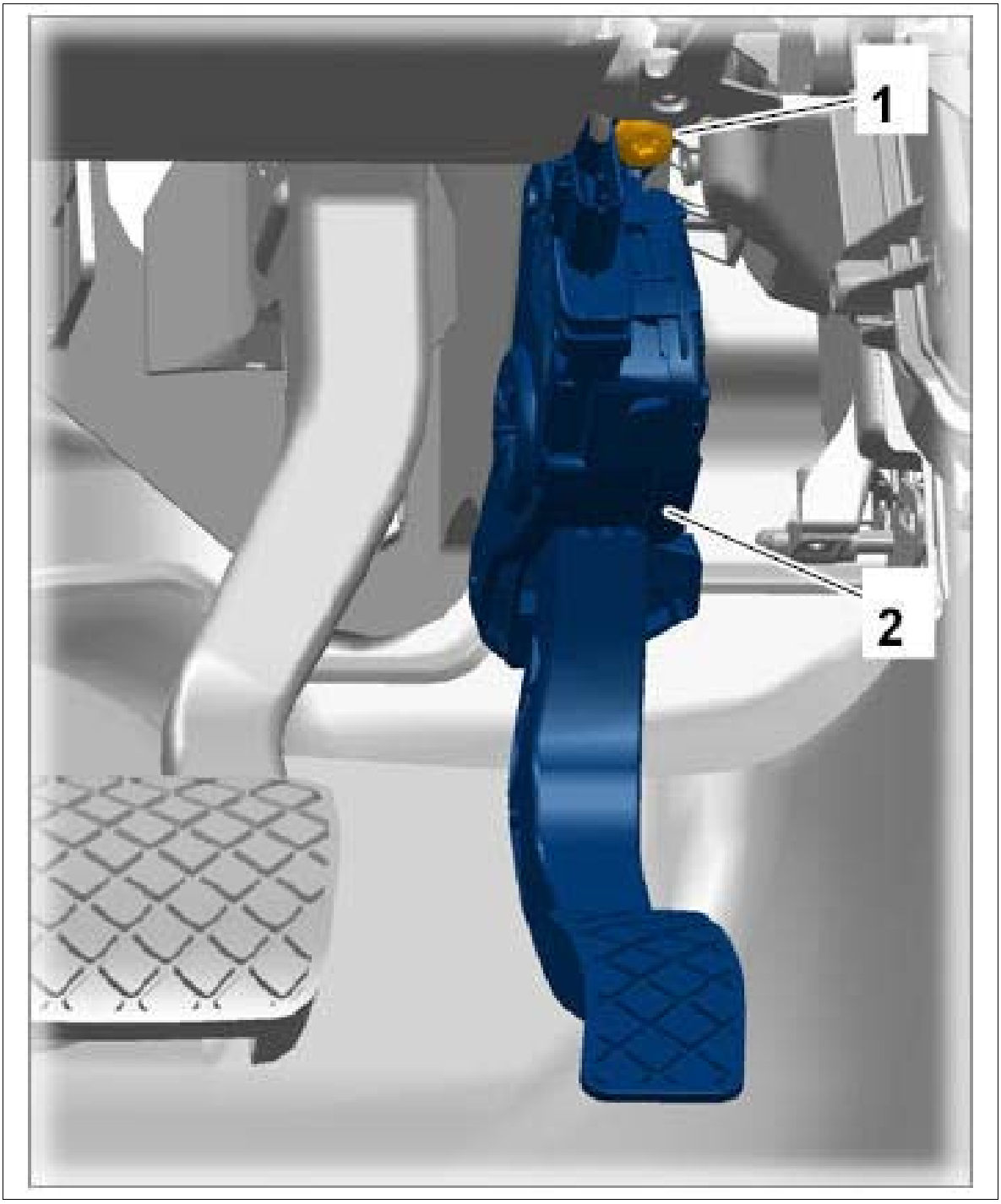

Courtesy of PORSCHE CARS NORTH AMERICA, INC.

4. Remove accelerator pedal module **-arrows 1 and 2-** .

Fig 3: Removing Accelerator Pedal Module

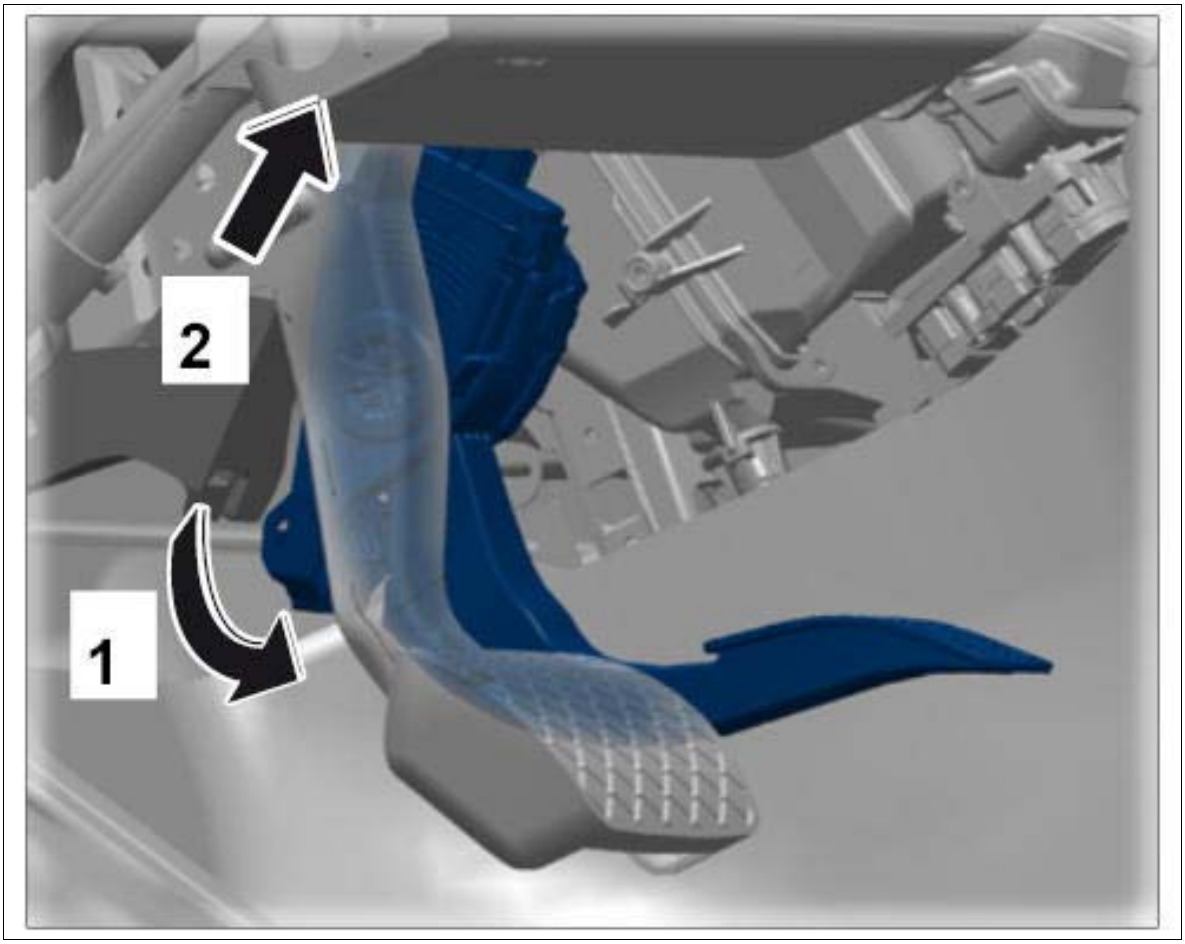

Courtesy of PORSCHE CARS NORTH AMERICA, INC.

WM 208055 REPLACING ACCELERATOR PEDAL MODULE (ALL MODELS) > INSTALLING ACCELERATOR PEDAL MODULE

1. Install accelerator pedal module **-arrows 1 and 2-** .

Fig 1: Installing Accelerator Pedal Module

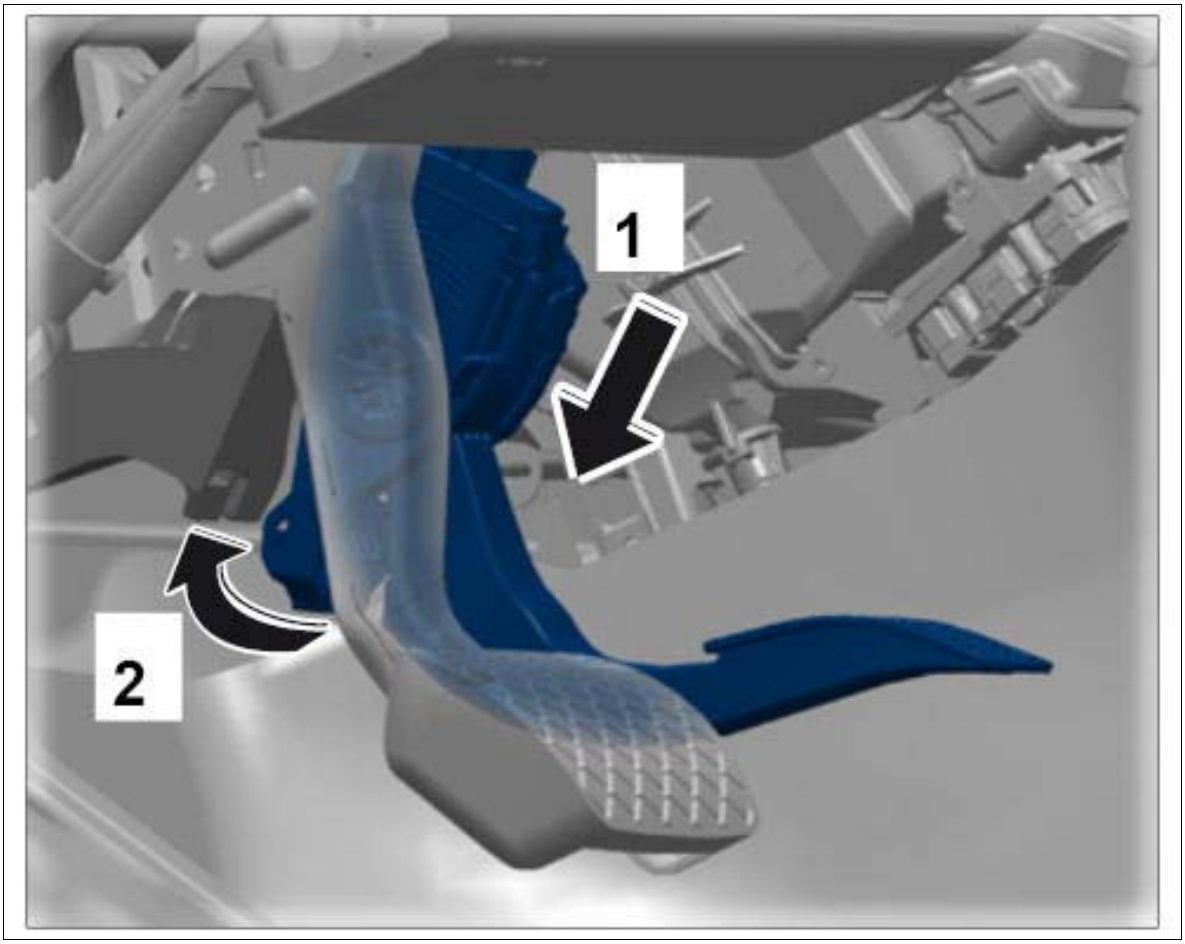

Courtesy of PORSCHE CARS NORTH AMERICA, INC.

2. Tighten fastening screw **-1-** on accelerator pedal module **-2-** . **Tightening torque 8 Nm (6 ftlb.)**

Fig 2: Identifying Accelerator Pedal Module Screws

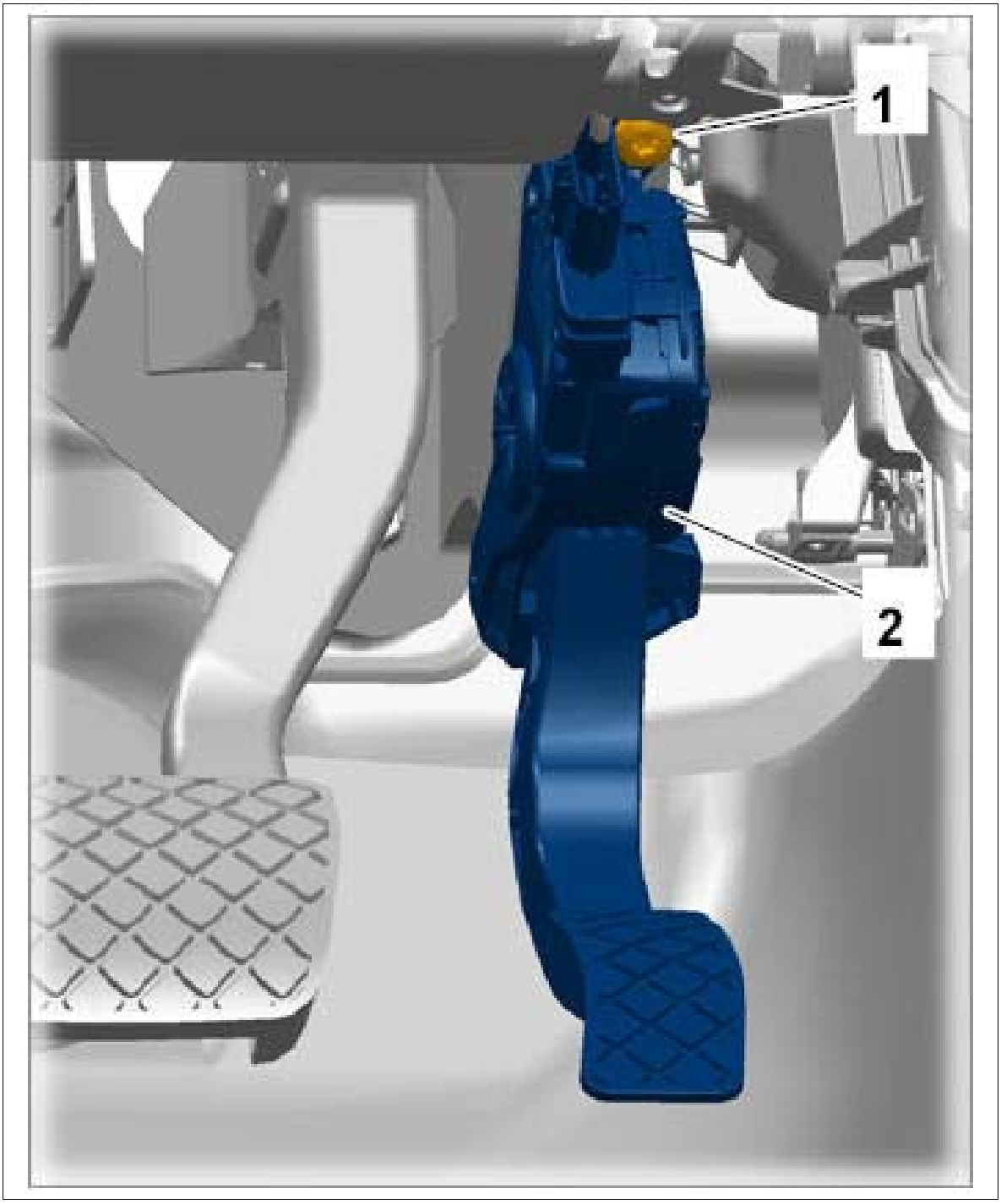

Courtesy of PORSCHE CARS NORTH AMERICA, INC.

3. Connect connector **-1-** to the accelerator pedal module.

Fig 3: Identifying Accelerator Pedal Module Connector

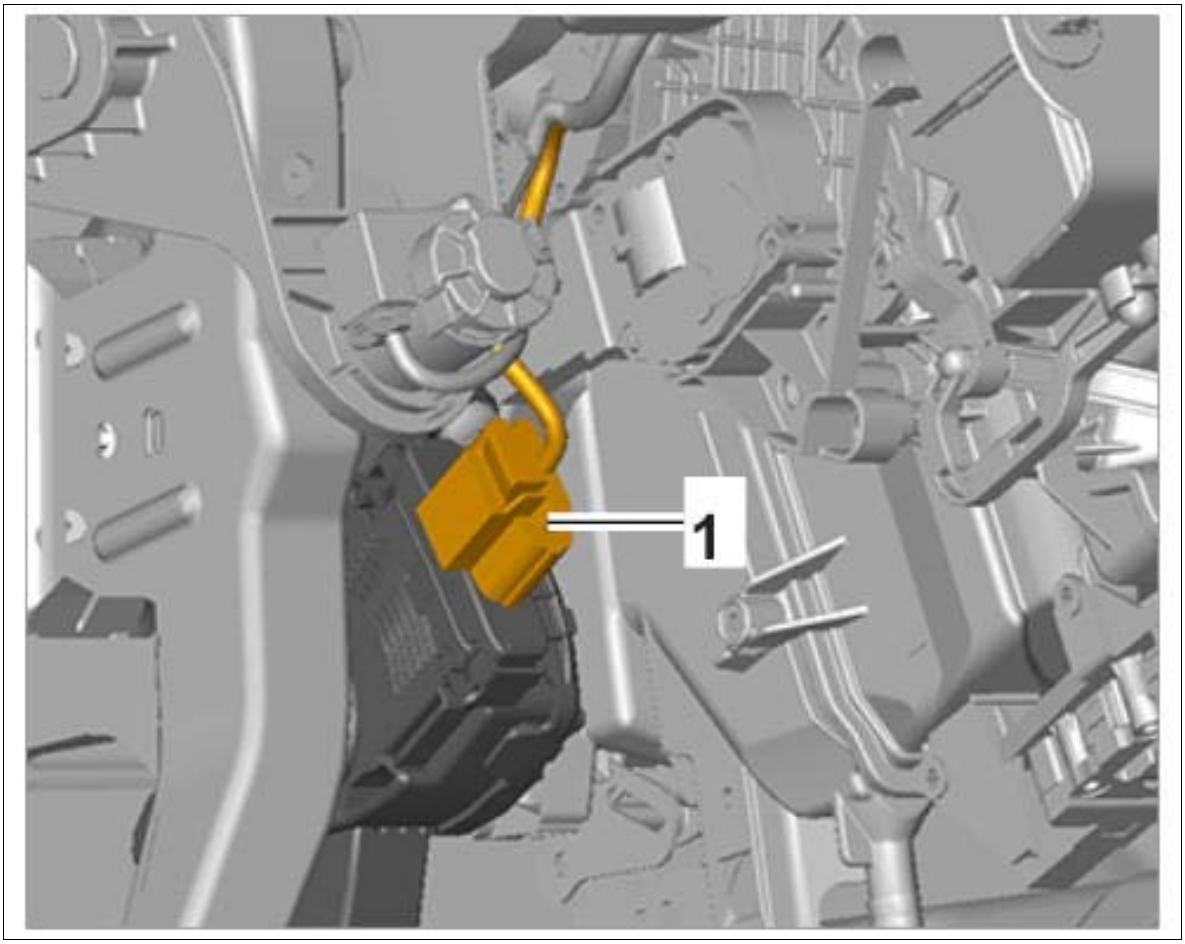

Courtesy of PORSCHE CARS NORTH AMERICA, INC.

WM 213019 REMOVING AND INSTALLING TURBOCHARGER (MACAN) > TOOLS

Designation	Type	Number	Description	
Special inserts	Commercially available tool	Nr.170		

WM 213019 REMOVING AND INSTALLING TURBOCHARGER (MACAN) > PRELIMINARY WORK

1. Drain coolant.
2. Remove air cleaner housing. → 242519 REMOVING AND INSTALLING AIR CLEANER HOUSING
3. Remove catalytic converter. → 267319 REMOVING AND INSTALLING CATALYTIC CONVERTER

WM 213019 REMOVING AND INSTALLING TURBOCHARGER (MACAN) > REMOVING TURBOCHARGER

Information

- Replace gaskets, sealing rings and O-rings.
- Hose adapters and hoses for the charge air system must be free of oil and grease before being fitted.
- Secure all hose connections with standard hose clamps.
- To fasten the charge air hoses securely to their adapters, spray the threaded parts of previously used screw-type clamps with anti-rust agent before installation.
- Refit all heat protection boots at the same position during installation.
- Leave the engine running at idle speed for about 1 minute and avoid revving the engine after

installing the turbocharger to ensure an adequate oil supply for the turbocharger.

Information

Do not damage O-rings!

1. Open cap on reservoir.
2. Loosen spring band clamp **-arrow-** , pull off molded hose on the turbocharger and swivel it aside.

   Fig 1: Locating Turbocharger Spring Band Clamp

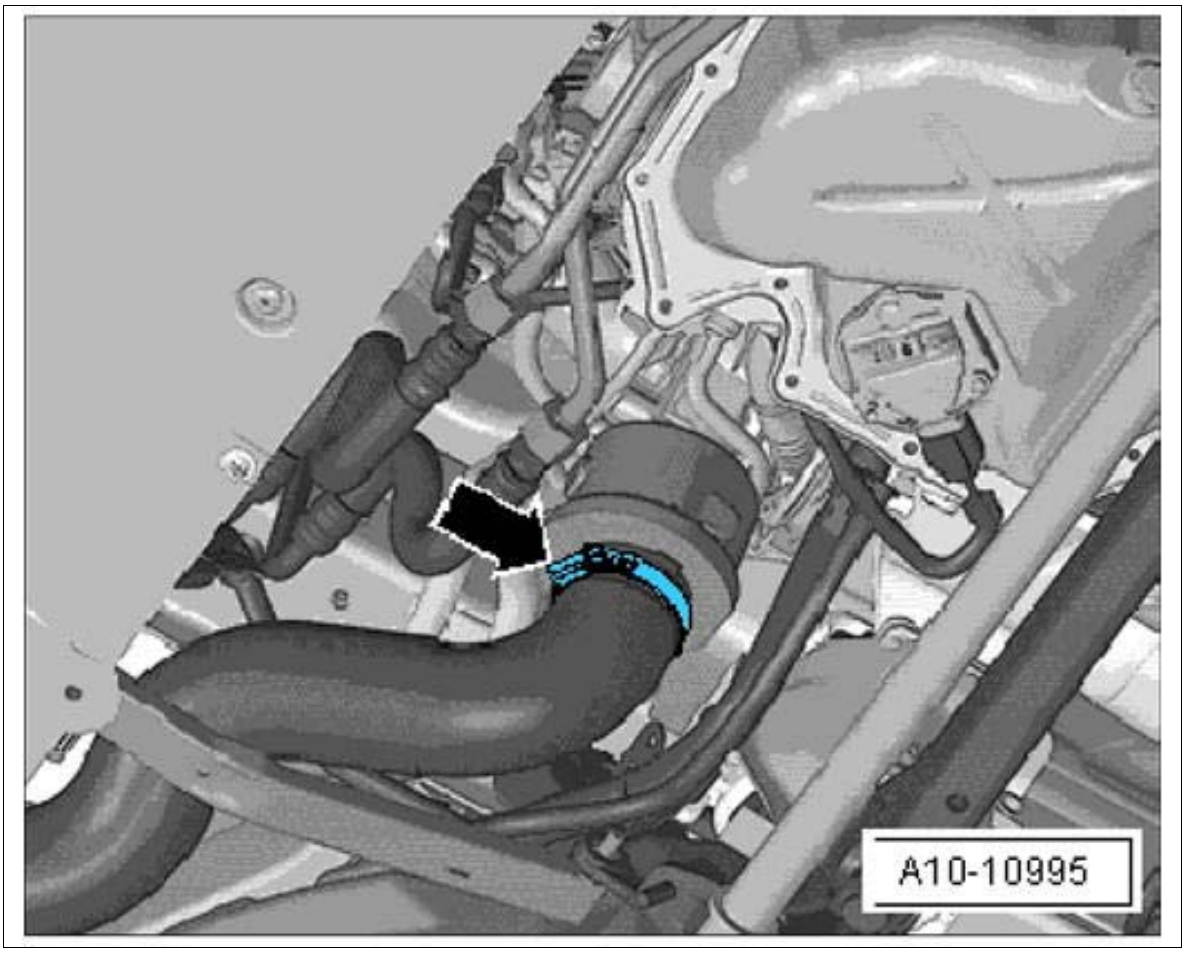

Courtesy of PORSCHE CARS NORTH AMERICA, INC.

3. Loosen fastening screw **-1-** on support for turbocharger **-2-** .

Fig 2: Identifying Turbocharger Support Screws

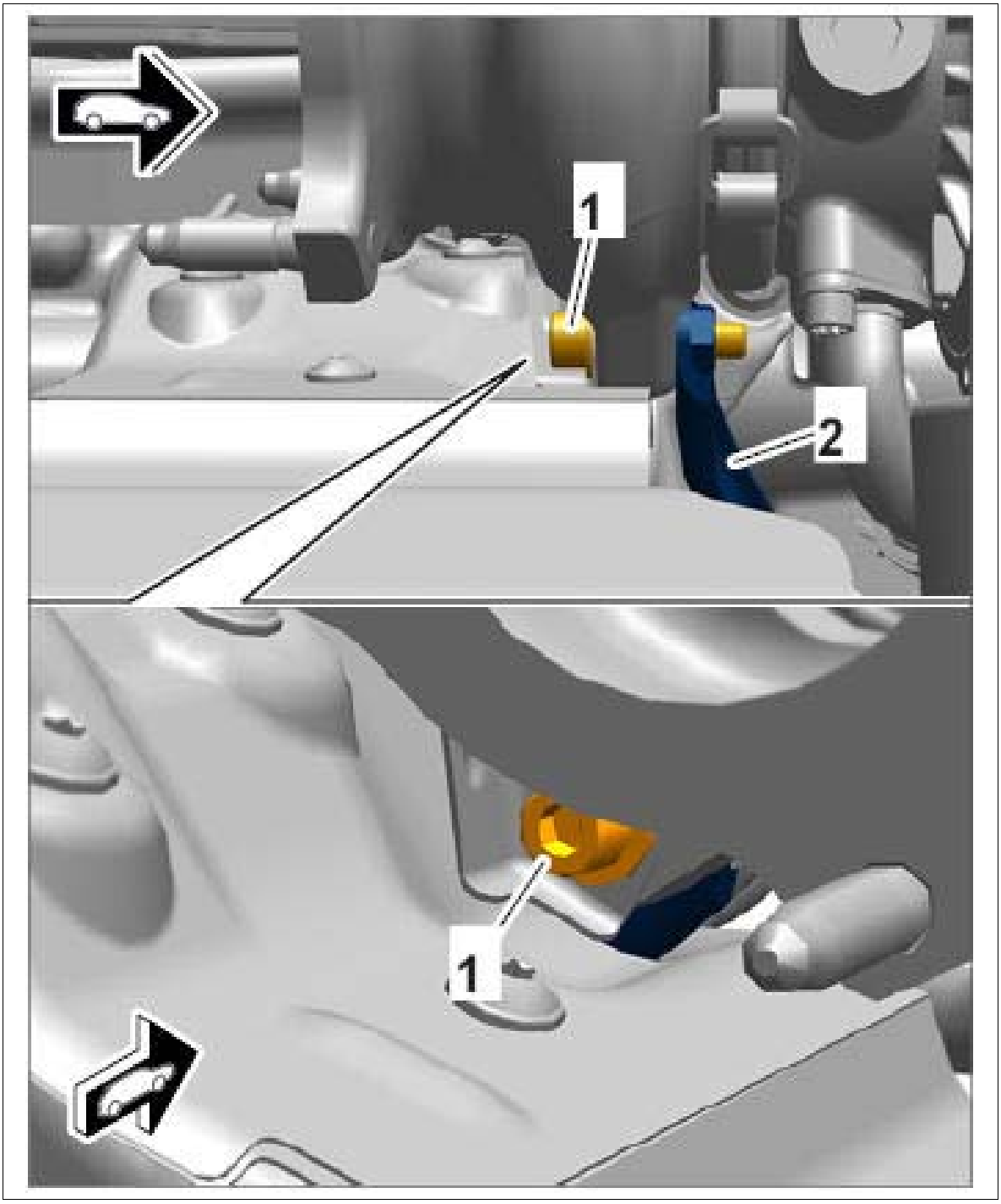

Courtesy of PORSCHE CARS NORTH AMERICA, INC.

4. Disconnect oil return line on the turbocharger.
    1. 4.1. Unscrew fastening screw **-1-** .
    2. 4.2. Pull off oil line at the engine and close off connections.
    3. 4.3. Unscrew fastening screw **-2-** on turbocharger support.

Fig 3: Identifying Turbocharger Oil Return Line

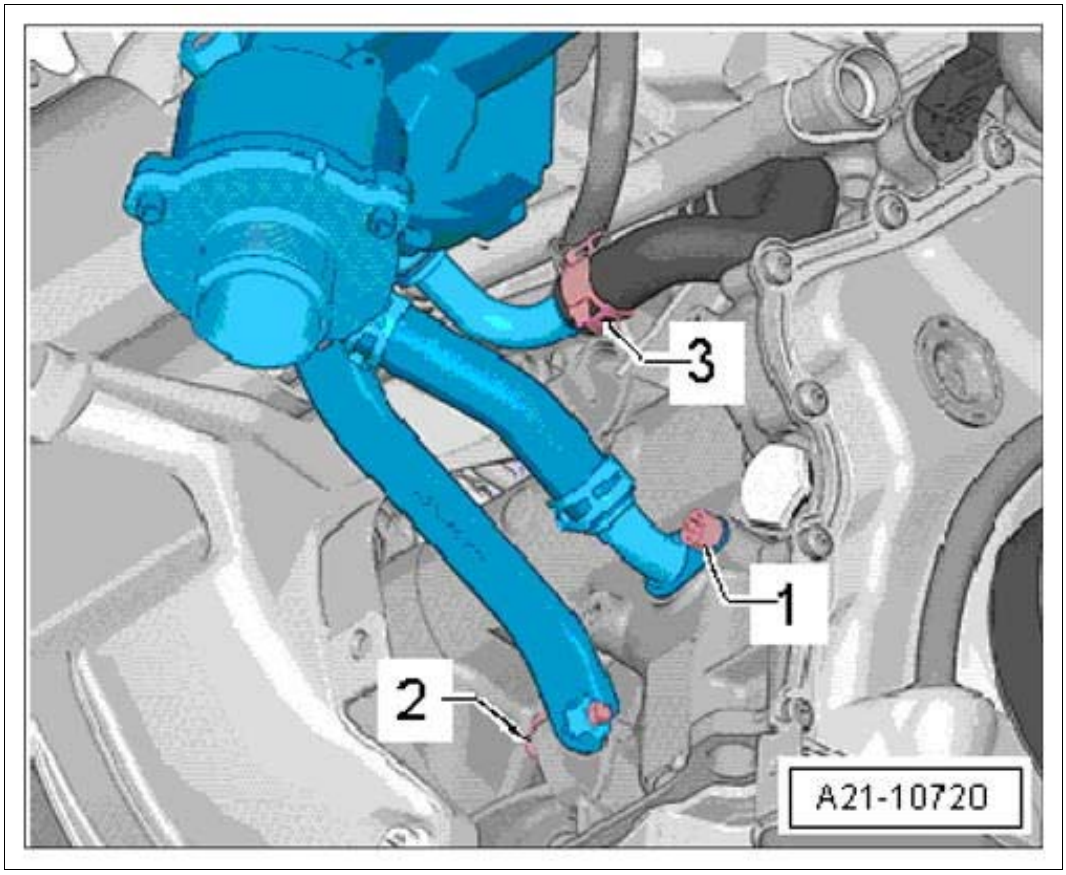

Courtesy of PORSCHE CARS NORTH AMERICA, INC.

5. Take electric plug connection **-1-** out of the holder and disconnect it.

Fig 4: Identifying Oxygen Sensor Electric Plug Connection

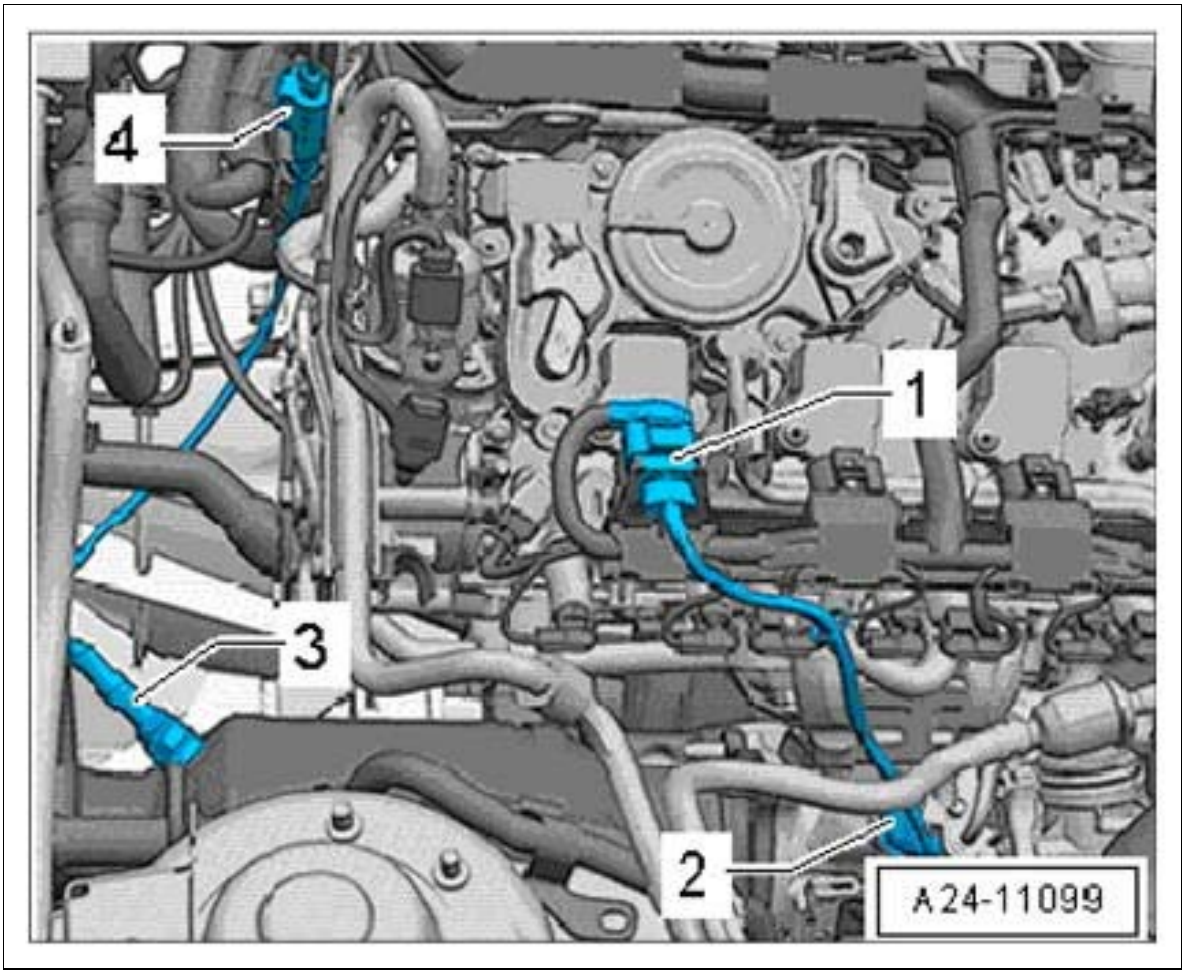

Courtesy of PORSCHE CARS NORTH AMERICA, INC.

6. Unscrew fastening screw **-arrow-** for positive crankcase ventilation at the turbocharger and pull off the line.

Fig 5: Locating Turbocharger Positive Crankcase Ventilation Screws

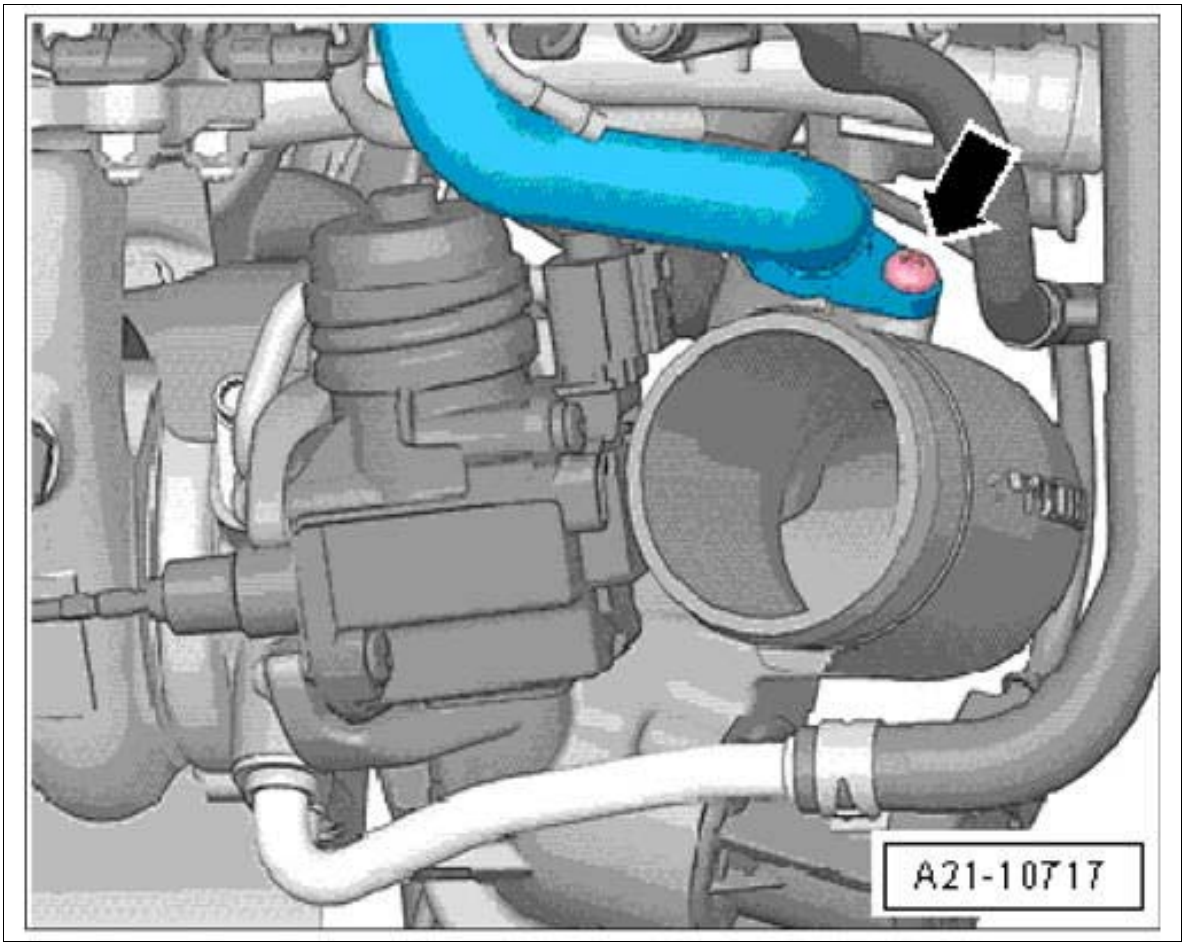

Courtesy of PORSCHE CARS NORTH AMERICA, INC.

7. Disconnect electric plug connection **-1-** for recirculating air valve.

Fig 6: Locating Turbocharger Recirculating Air Valve Electric Plug Connection

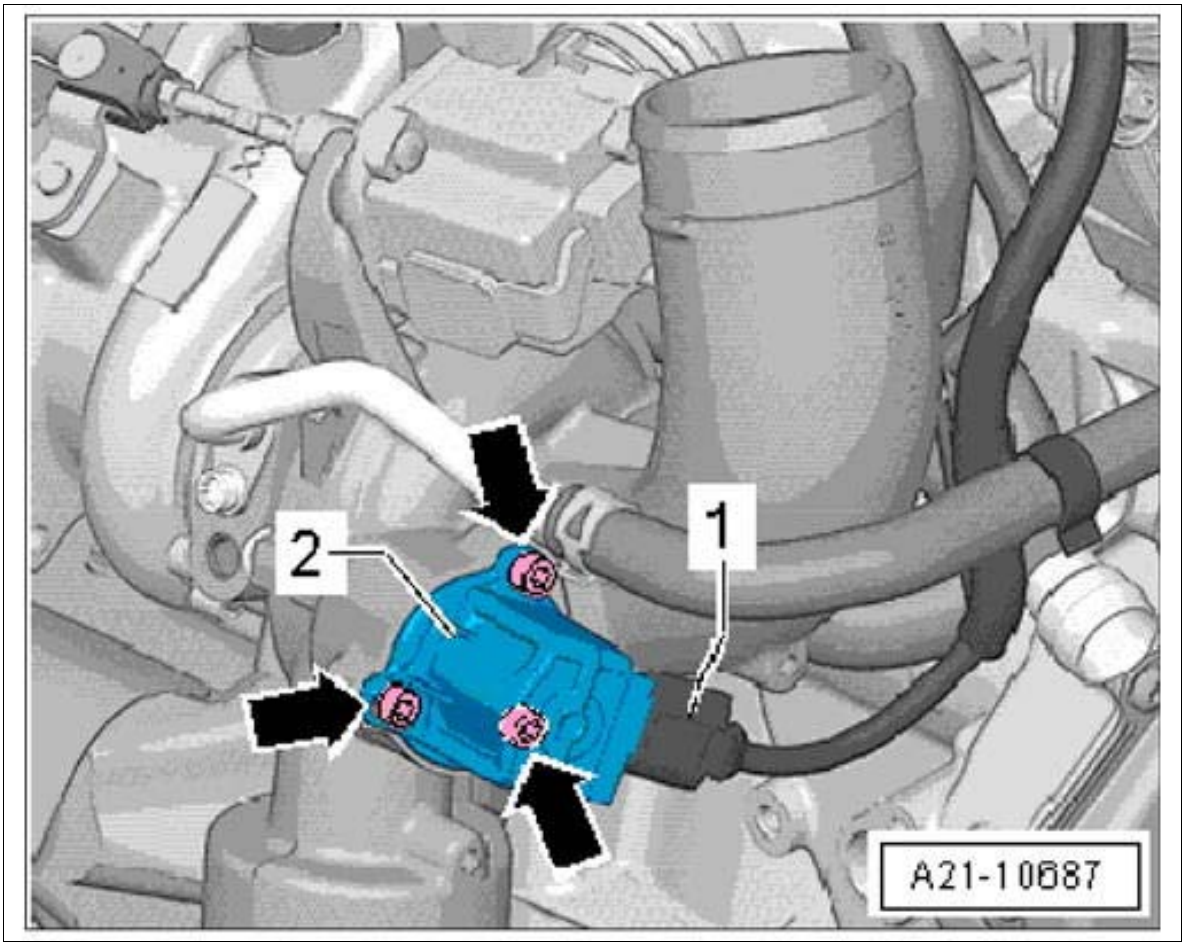

Courtesy of PORSCHE CARS NORTH AMERICA, INC.

8. Unscrew fastening screws **-arrows-** and remove heat shield.

Fig 7: Locating Heat Shield On Turbocharger Screws

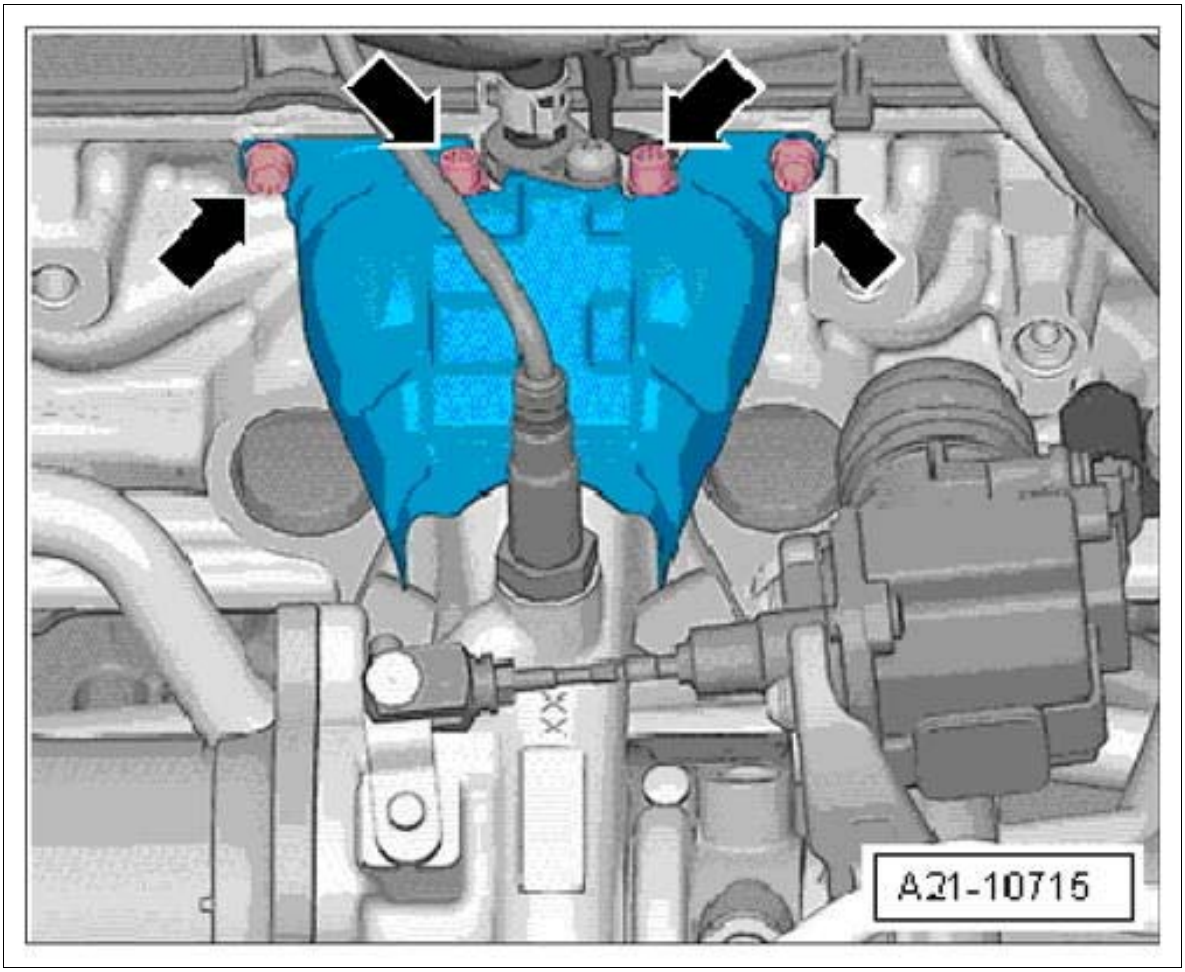

Courtesy of PORSCHE CARS NORTH AMERICA, INC.

9. Loosen accessories from the turbocharger.
    1. 9.1. Unscrew fastening screw **-1-** and pull off coolant return pipe.

       Tool recommendation: **Special inserts Nr.170**
    2. 9.2. Unscrew fastening screw **-2-** and pull off oil feed line for turbocharger.

       Tool recommendation: **Special inserts Nr.170**
    3. 9.3. Disconnect electric plug connection **-3-** at the electronic adjuster for the turbocharger.
    4. 9.4. Unscrew fastening nuts **-arrows-** .

Fig 8: Locating Turbocharger Accessories Screws

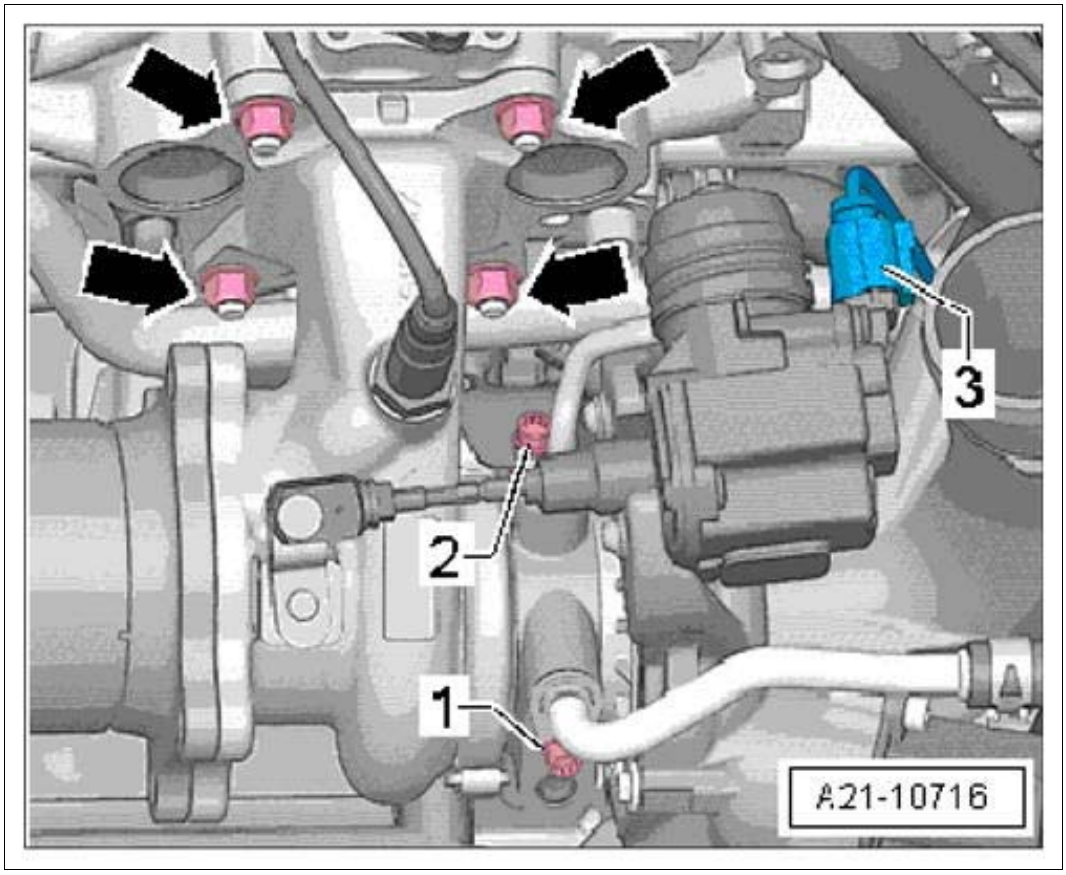

Courtesy of PORSCHE CARS NORTH AMERICA, INC.

10. Remove turbocharger.

    1. 10.1. Pull turbocharger off the studs in **-direction of arrow-** and get a second mechanic to hold it.
    2. 10.2. Unscrew fastening screw **-1-** and pull off coolant supply pipe **-2-** .
    3. 10.3. Close off open lines and connections using stoppers.
    4. 10.4. Lift the turbocharger up and out.

Fig 9: Removing Turbocharger

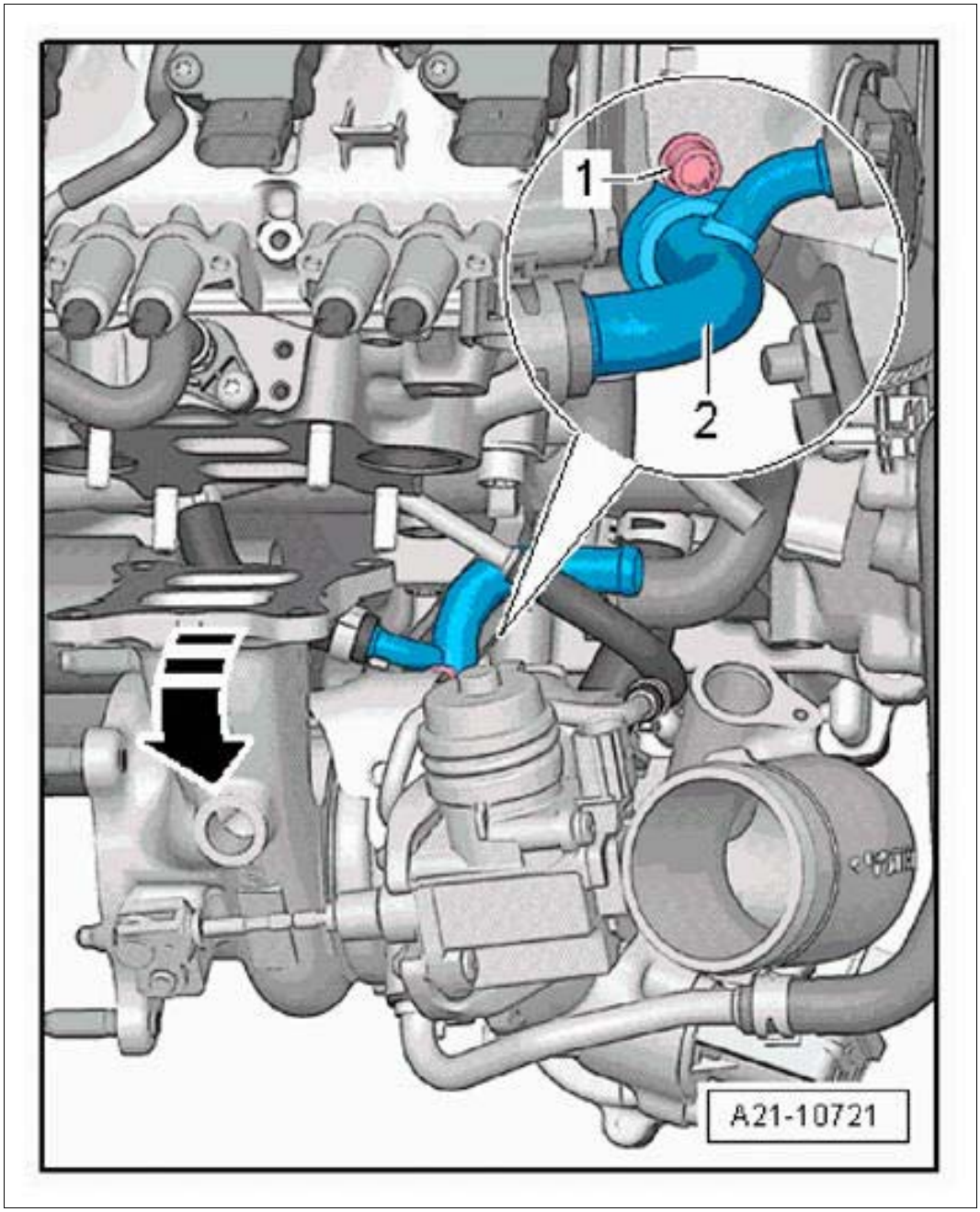

Courtesy of PORSCHE CARS NORTH AMERICA, INC.

WM 213019 REMOVING AND INSTALLING TURBOCHARGER (MACAN) > INSTALLING TURBOCHARGER

Information

- Replace gaskets, sealing rings and O-rings.
- Hose adapters and hoses for the charge air system must be free of oil and grease before being fitted.

- Secure all hose connections with standard hose clamps.
- To fasten the charge air hoses securely to their adapters, spray the threaded parts of previously used screw-type clamps with anti-rust agent before installation.
- Refit all heat protection boots at the same position during installation.
- Leave the engine running at idle speed for about 1 minute and avoid revving the engine after installing the turbocharger to ensure an adequate oil supply for the turbocharger.

Information

Do not damage O-rings!

1. Position the turbocharger.

    1. 1.1. Position the turbocharger and fit coolant supply pipe **-2-** with a **new O-ring** under the heat shield.

       Coat O-ring with coolant.

    2. 1.2. Fit and tighten fastening screw **-1-** over the heat shield.

    3. 1.3. **Fit new** seal at the connection point between the turbocharger and exhaust manifold.

    4. 1.4. Fit the turbocharger on the studs in the opposite direction to the **-direction of arrow-** .

Fig 1: Installing Turbocharger

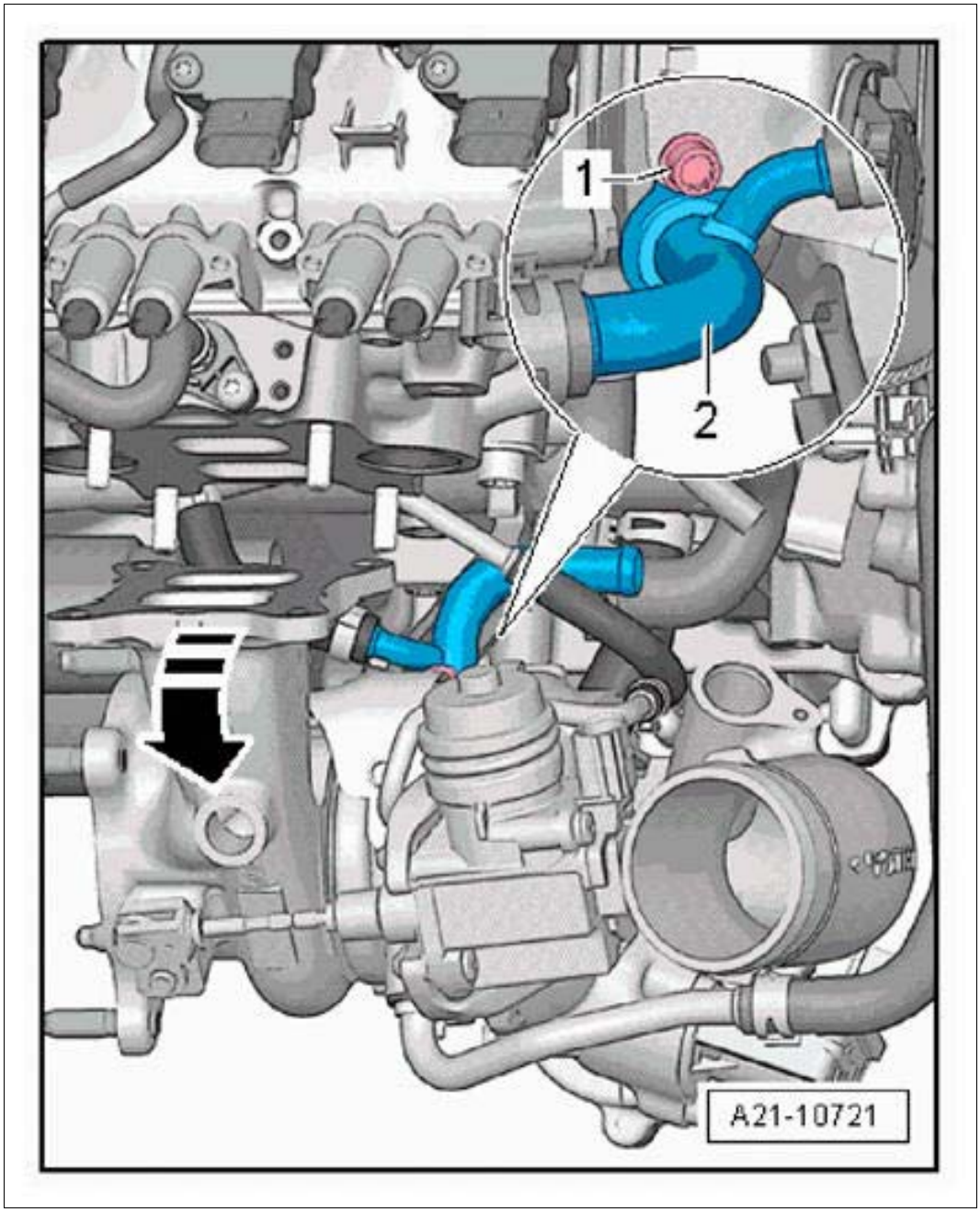

Courtesy of PORSCHE CARS NORTH AMERICA, INC.

2. Install turbocharger.

    1. 2.1. Coat studs with high-temperature paste.
    2. 2.2. **Fit and tighten new** fastening nuts **-arrows-** .
    3. 2.3. Fill the turbocharger with engine oil at the oil supply line adapter.
    4. 2.4. Fit oil supply line with **new O-ring** over the heat shield and press it into position.

       Coat O-ring with engine oil.
    5. 2.5. Fit and tighten fastening screw **-2 -** .

Tool recommendation: **Special inserts Nr.170**

6. 2.6. Fit coolant return pipe with a **new O-ring** .

   Coat O-ring with coolant.

7. 2.7. Fit and tighten fastening screw **-1-** .

   Tool recommendation: **Special inserts Nr.170**

8. 2.8. Connect electric plug connection **-3-** at the electronic adjuster for the turbocharger.

Fig 2: Locating Turbocharger Accessories Screws

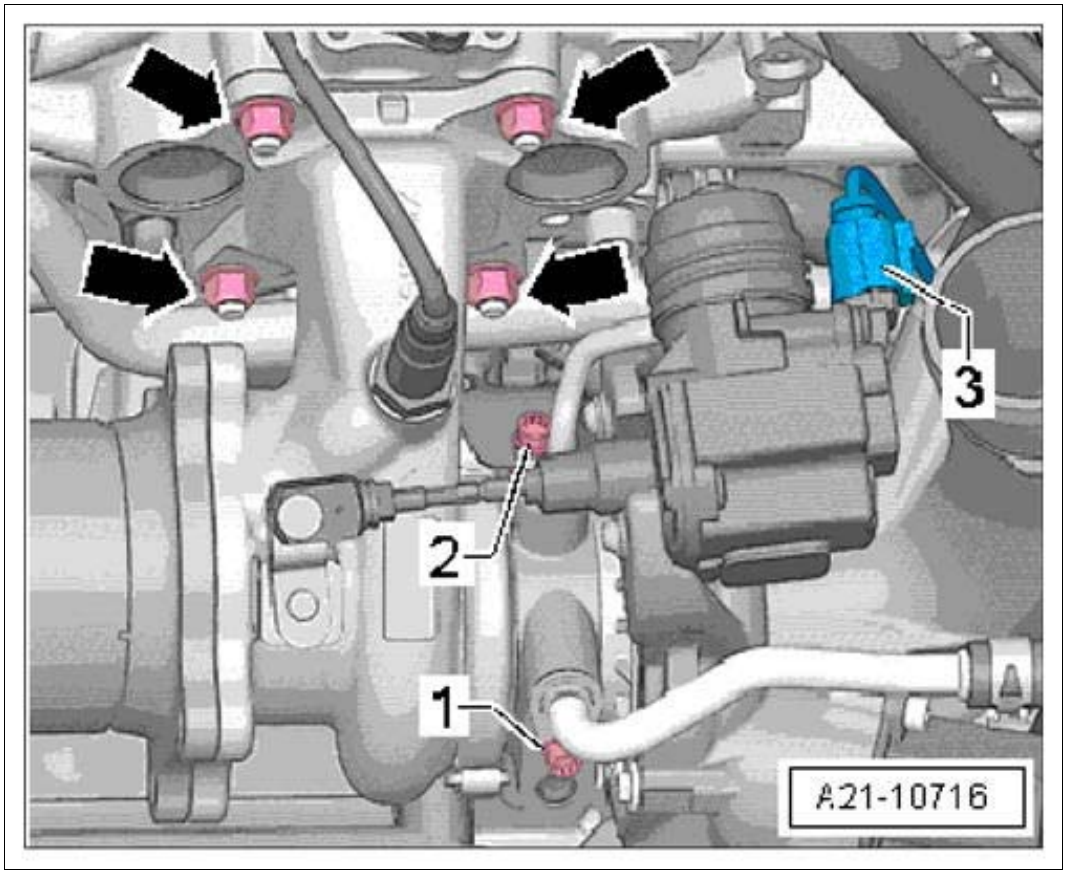

Courtesy of PORSCHE CARS NORTH AMERICA, INC.

3. Position heat shield and fit and tighten fastening screws **-arrows -** .

Fig 3: Locating Turbocharger Heat Shield Screws

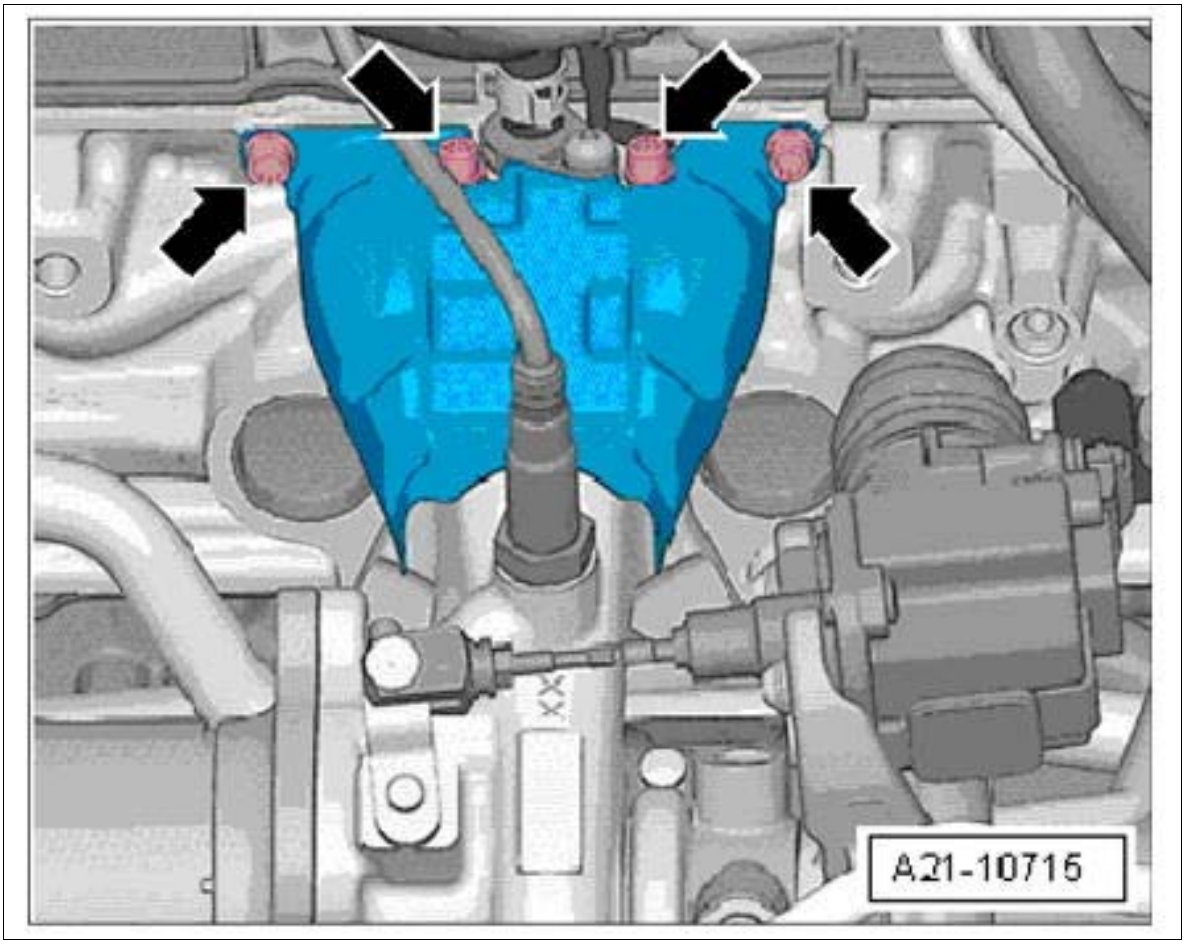

Courtesy of PORSCHE CARS NORTH AMERICA, INC.

4. Connect electric plug connection **-1-** for recirculating air valve for the turbocharger.

Fig 4: Locating Turbocharger Recirculating Air Valve Electric Plug Connection

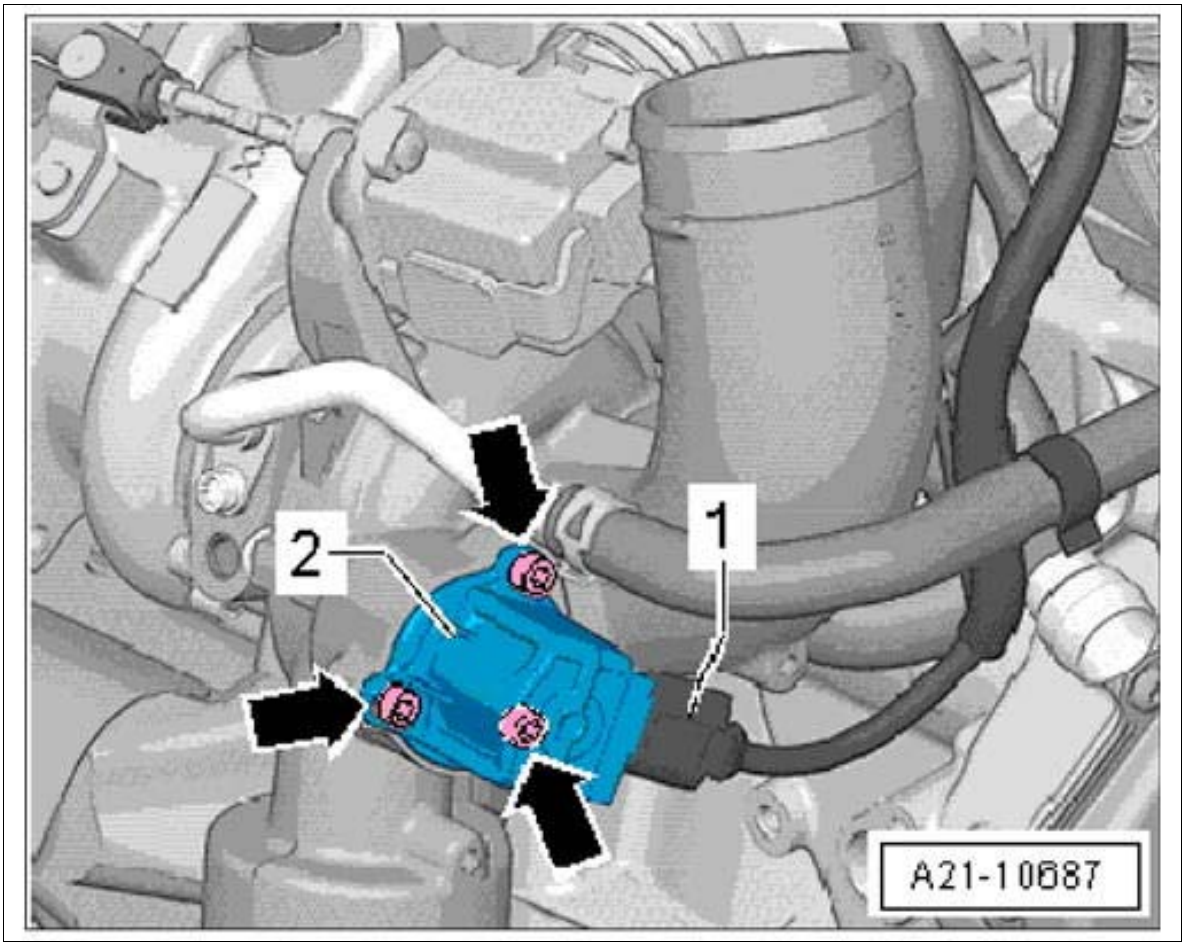

Courtesy of PORSCHE CARS NORTH AMERICA, INC.

5. Position positive crankcase ventilation and fit and tighten fastening screw **-arrow-** .

Fig 5: Locating Turbocharger Positive Crankcase Ventilation Screws

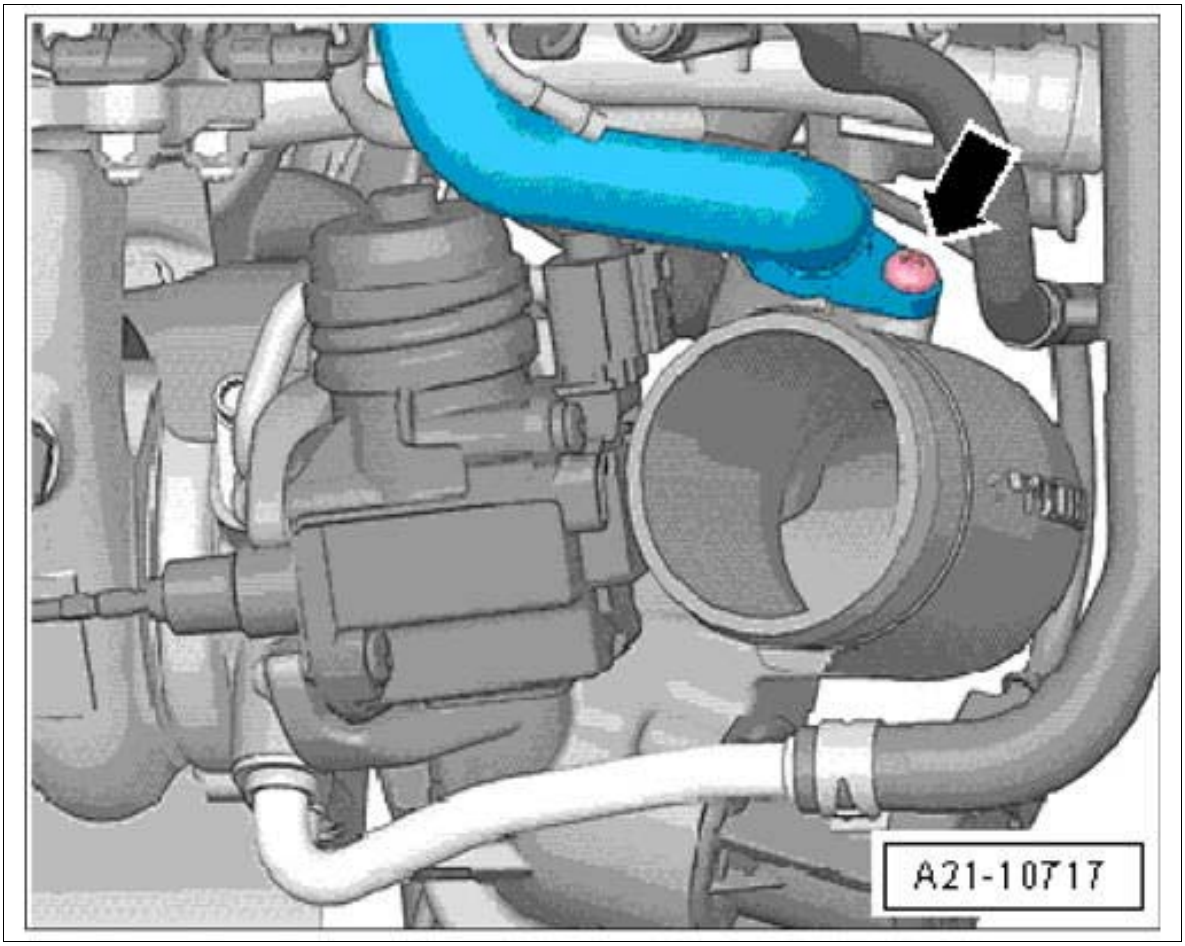

Courtesy of PORSCHE CARS NORTH AMERICA, INC.

6. Connect electric plug connection **-1-** and clip it into the holder.

Fig 6: Identifying Electric Plug Connection For Oxygen Sensor

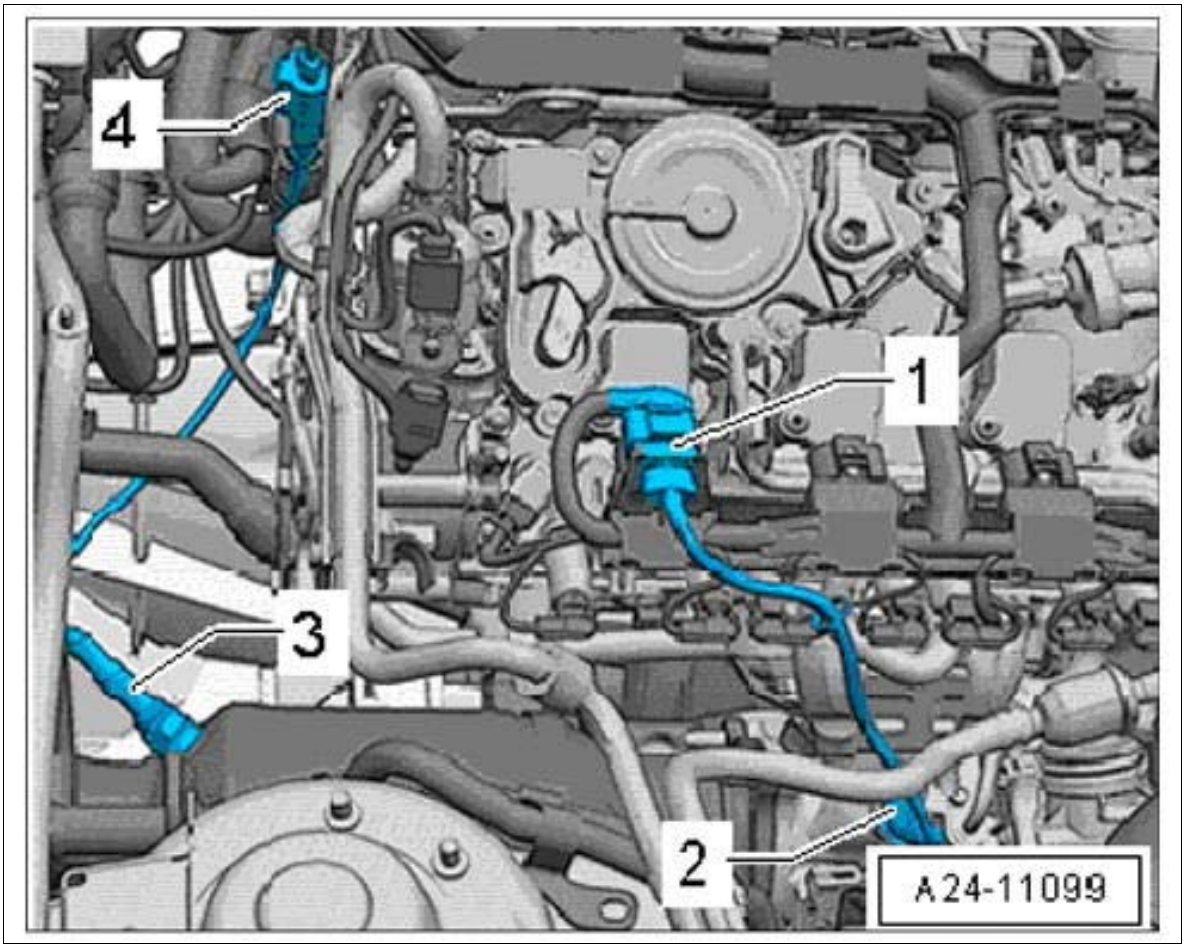

Courtesy of PORSCHE CARS NORTH AMERICA, INC.

7. Secure the oil return line.

    1. 7.1. Connect oil return line with a **new O-ring** .

       Coat O-ring with engine oil.

    2. 7.2. Fit and tighten fastening screw **-1-** .

    3. 7.3. Position support for turbocharger.

    4. 7.4. Fit and tighten fastening screw **-2-** .

Fig 7: Identifying Oil Return Line For Turbocharger

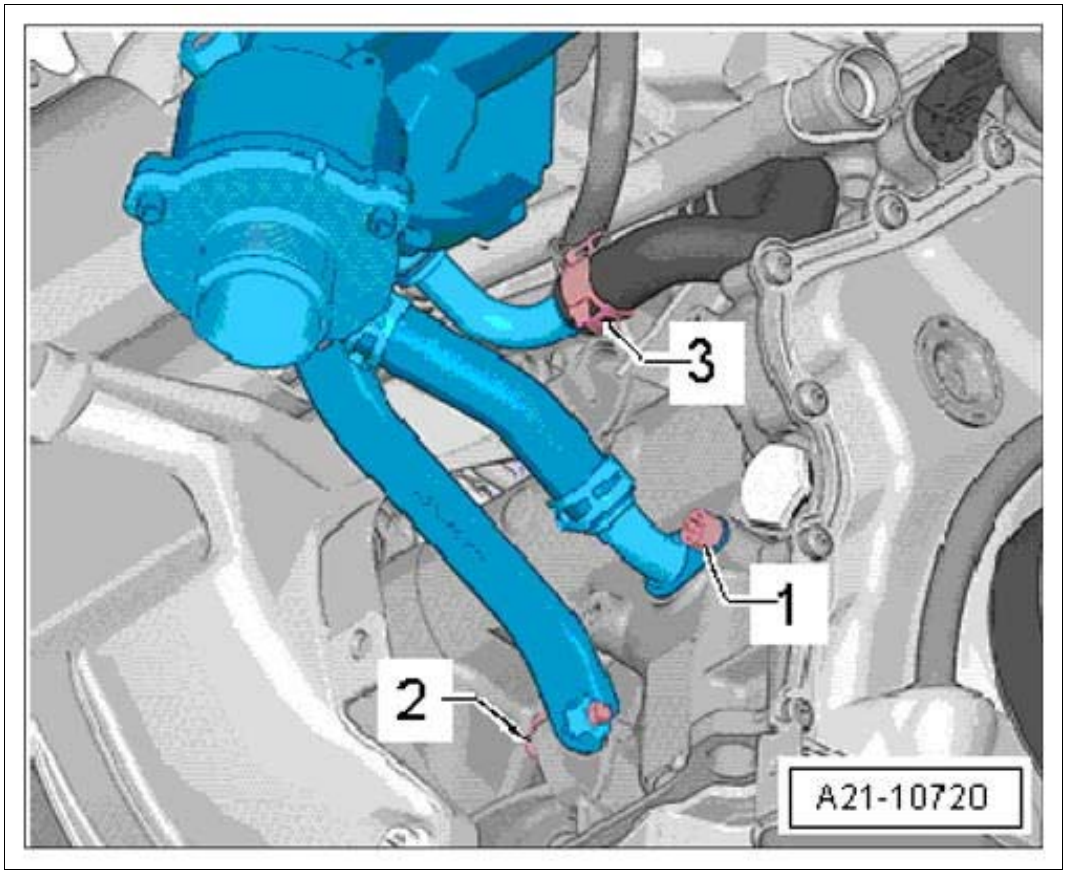

Courtesy of PORSCHE CARS NORTH AMERICA, INC.

8. Tighten fastening screw **-1-** for securing support to turbocharger **-2-** .

Fig 8: Identifying Turbocharger Support

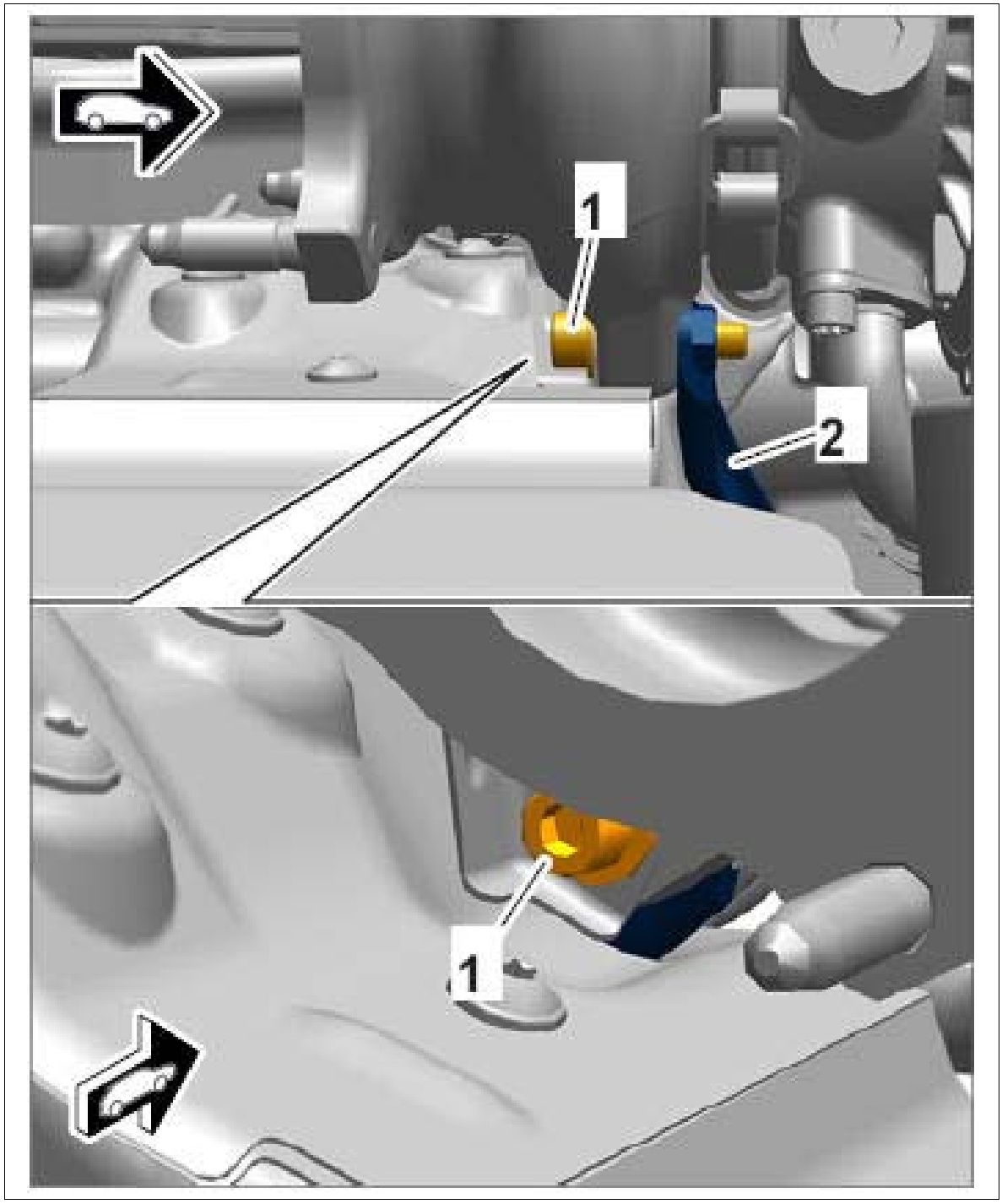

Courtesy of PORSCHE CARS NORTH AMERICA, INC.

9. Connect molded hose to the turbocharger and tighten spring band clamp.

Fig 9: Locating Turbocharger Air Guide Spring Band Clamp

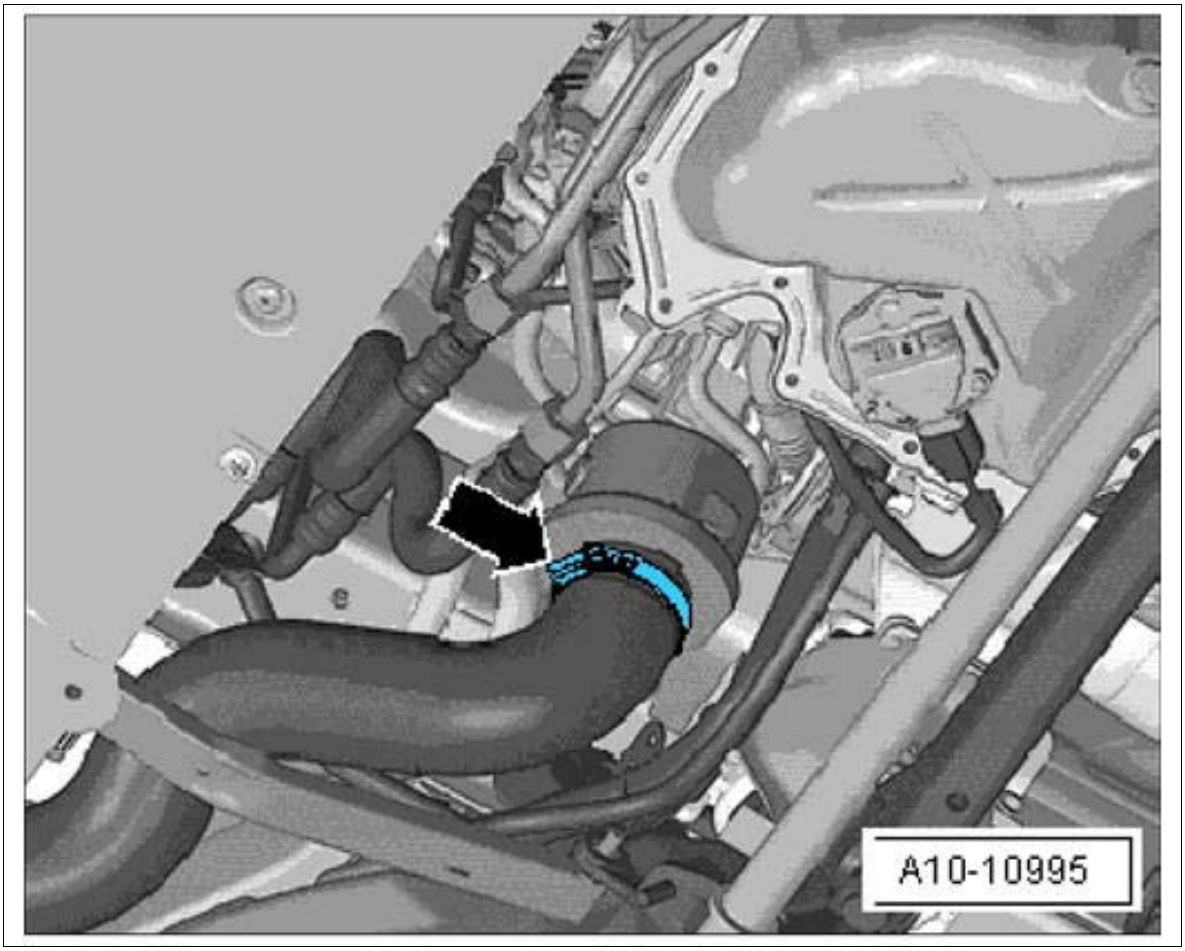

Courtesy of PORSCHE CARS NORTH AMERICA, INC.

10. Close the cap on the reservoir.

WM 213019 REMOVING AND INSTALLING TURBOCHARGER (MACAN) > SUBSEQUENT WORK

1. Install catalytic converter. → INSTALLING CATALYTIC CONVERTER .
2. Install air cleaner housing. → INSTALLING AIR CLEANER HOUSING .
3. Fill in coolant.

WM 214119 REMOVING AND INSTALLING PRESSURE PIPE (MACAN) > TECHNICAL VALUES

Location	Description	Type	Basic value	Tolerance 1	Tolerance 2
Screw-type		Tightening	5.5 Nm (4 ftlb.)		

clamp securing moulded hose to pressure pipe		torque			
Fastening nut for pressure pipe		Tightening torque	9 Nm (6.5 ftlb.)		
Screw-type clamp securing moulded hose to pressure pipe		Tightening torque	5.5 Nm (4 ftlb.)		

WM 214119 REMOVING AND INSTALLING PRESSURE PIPE (MACAN) > PRELIMINARY WORK

1. Remove left wheel housing liner. → 505619 REMOVING AND INSTALLING FRONT WHEEL HOUSING LINER

WM 214119 REMOVING AND INSTALLING PRESSURE PIPE (MACAN) > REMOVING PRESSURE PIPE

1. Loosen screw-type clamp **-2-** and pull off pressure hose **-1-** .

Fig 1: Identifying Pressure Hose Clamp

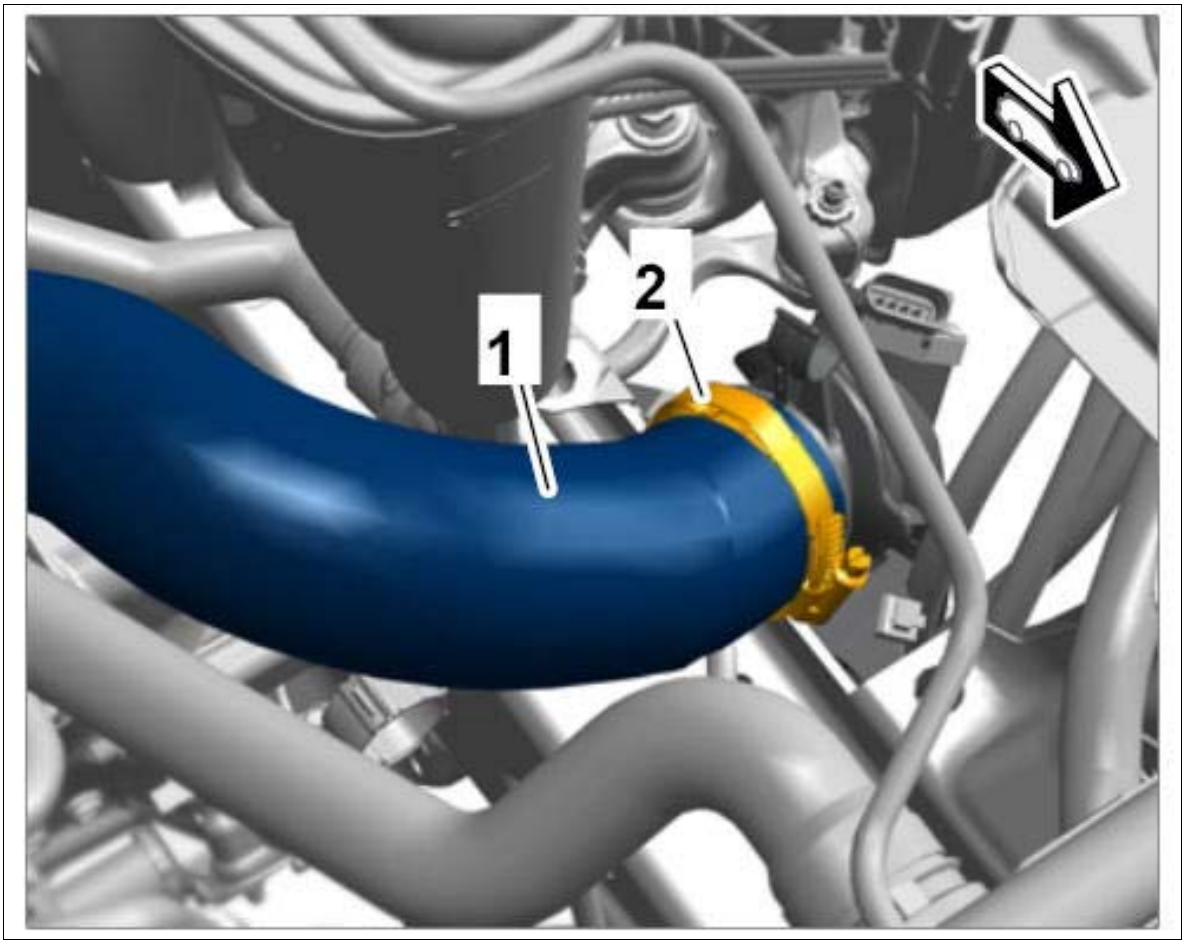

Courtesy of PORSCHE CARS NORTH AMERICA, INC.

2. Disconnect electric plug connection **-1-** on the pressure sensor and expose the cable.

Fig 2: Identifying Pressure Sensor Electric Plug Connection

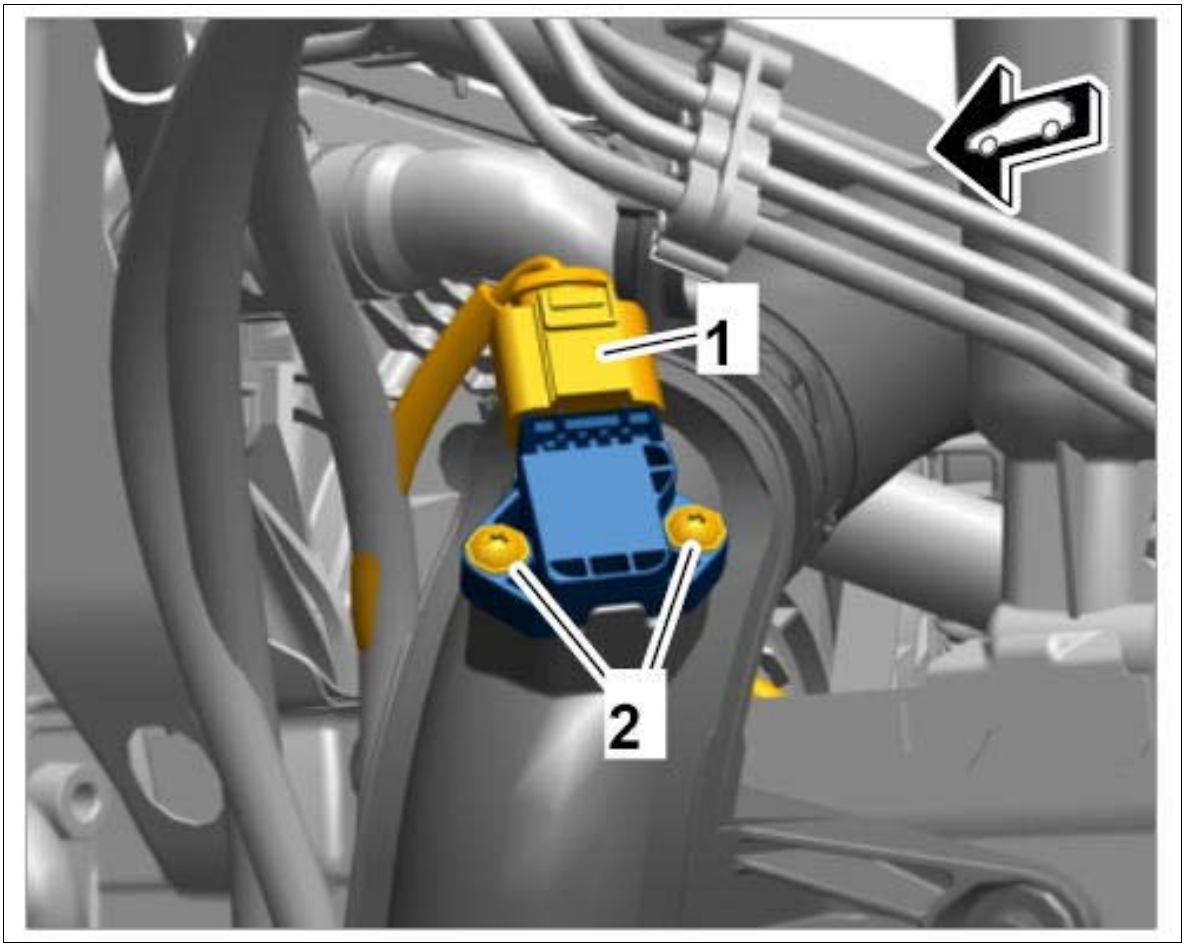

Courtesy of PORSCHE CARS NORTH AMERICA, INC.

3. Loosen screw-type clamp **-2-** and pull off pressure hose **-1-** .

Fig 3: Identifying Pressure Hose Clamp

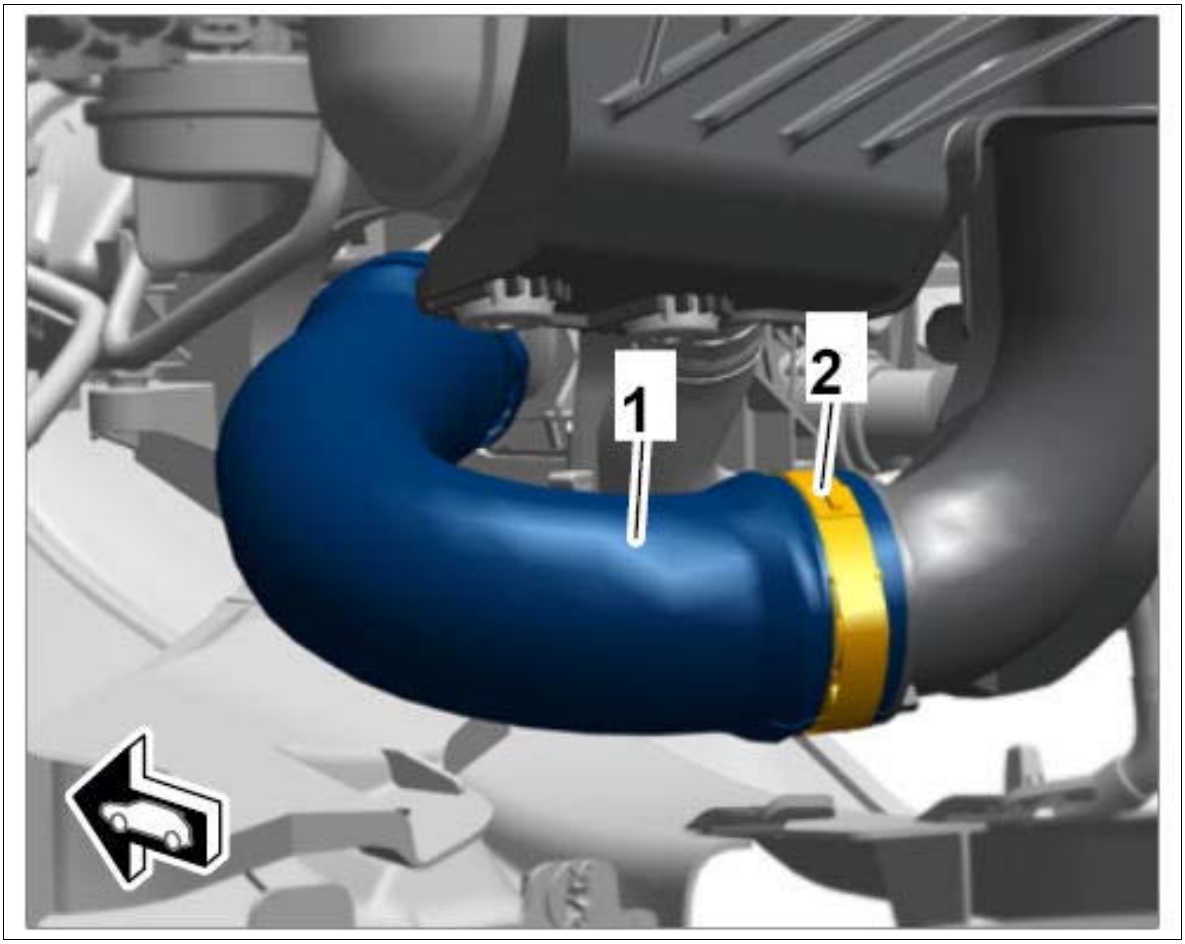

Courtesy of PORSCHE CARS NORTH AMERICA, INC.

4. Loosen fastening nuts **-1-** , disconnect line **-4-** and remove pressure pipe **-2-** .

Fig 4: Identifying Pressure Pipe Nuts

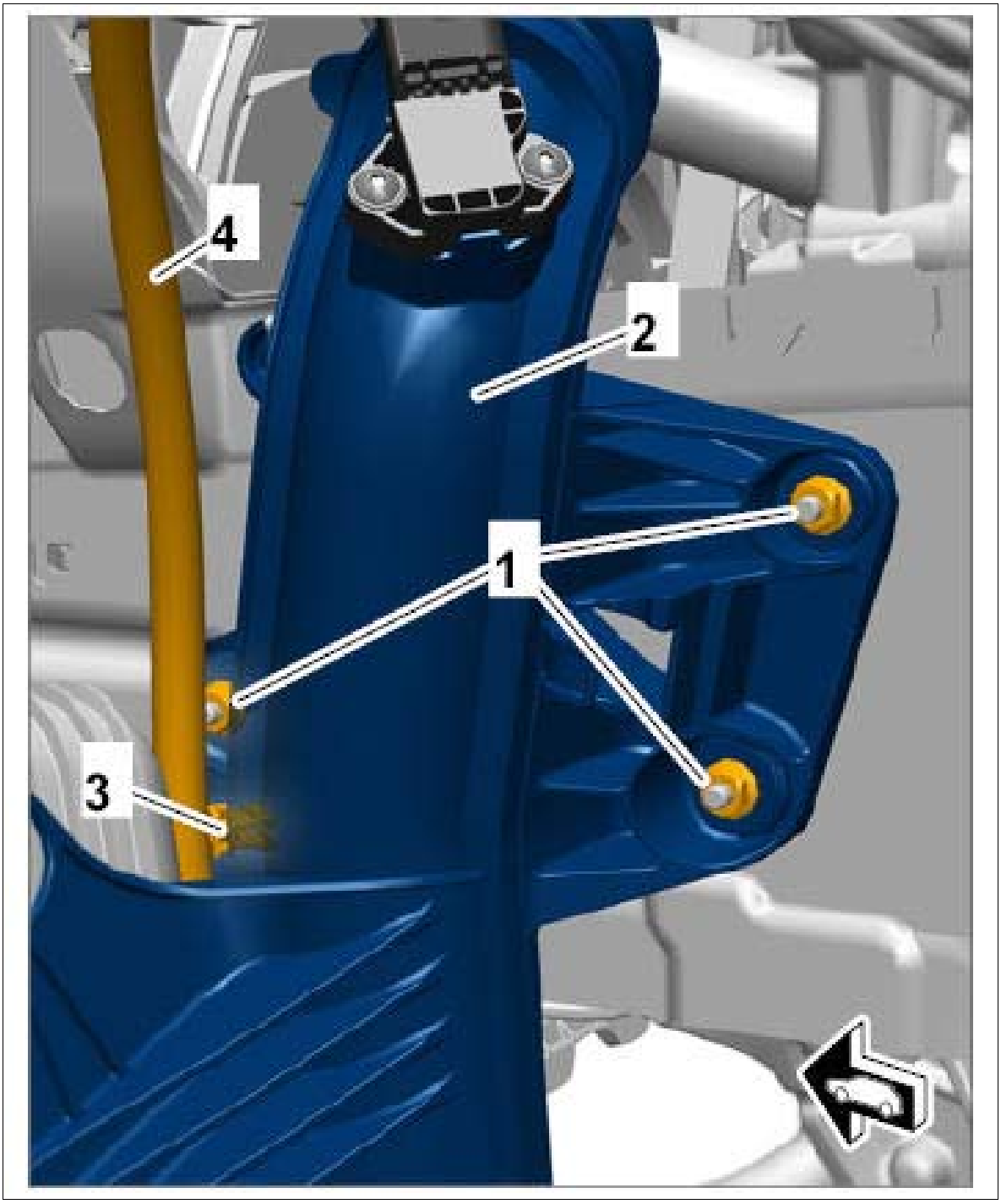

Courtesy of PORSCHE CARS NORTH AMERICA, INC.

WM 214119 REMOVING AND INSTALLING PRESSURE PIPE (MACAN) > INSTALLING PRESSURE PIPE

1. Install pressure pipe.

    1. 1.1. Secure line **-4-** to the pressure pipe. **-3-**

2. 1.2. Position pressure pipe **-2-** and screw on fastening nuts **-1-** .

3. 1.3. Tighten fastening nuts. **Tightening torque 9 Nm (6.5 ftlb.)**

Fig 1: Identifying Pressure Pipe Nuts

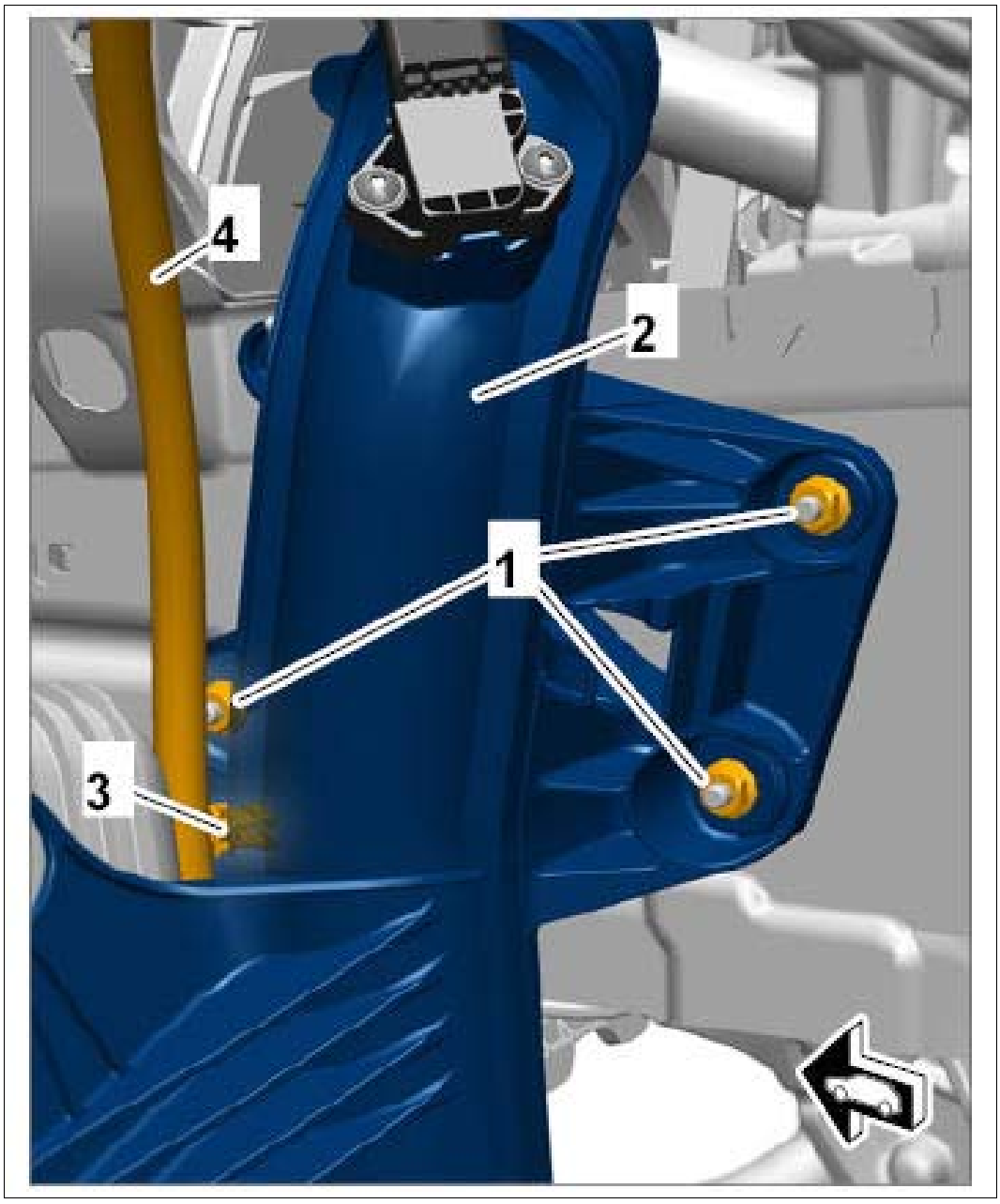

Courtesy of PORSCHE CARS NORTH AMERICA, INC.

2. Fit pressure hose **-1-** and tighten screw-type clamp **-2-** . **Tightening torque 5.5 Nm (4 ftlb.)**

Fig 2: Identifying Pressure Hose Clamp

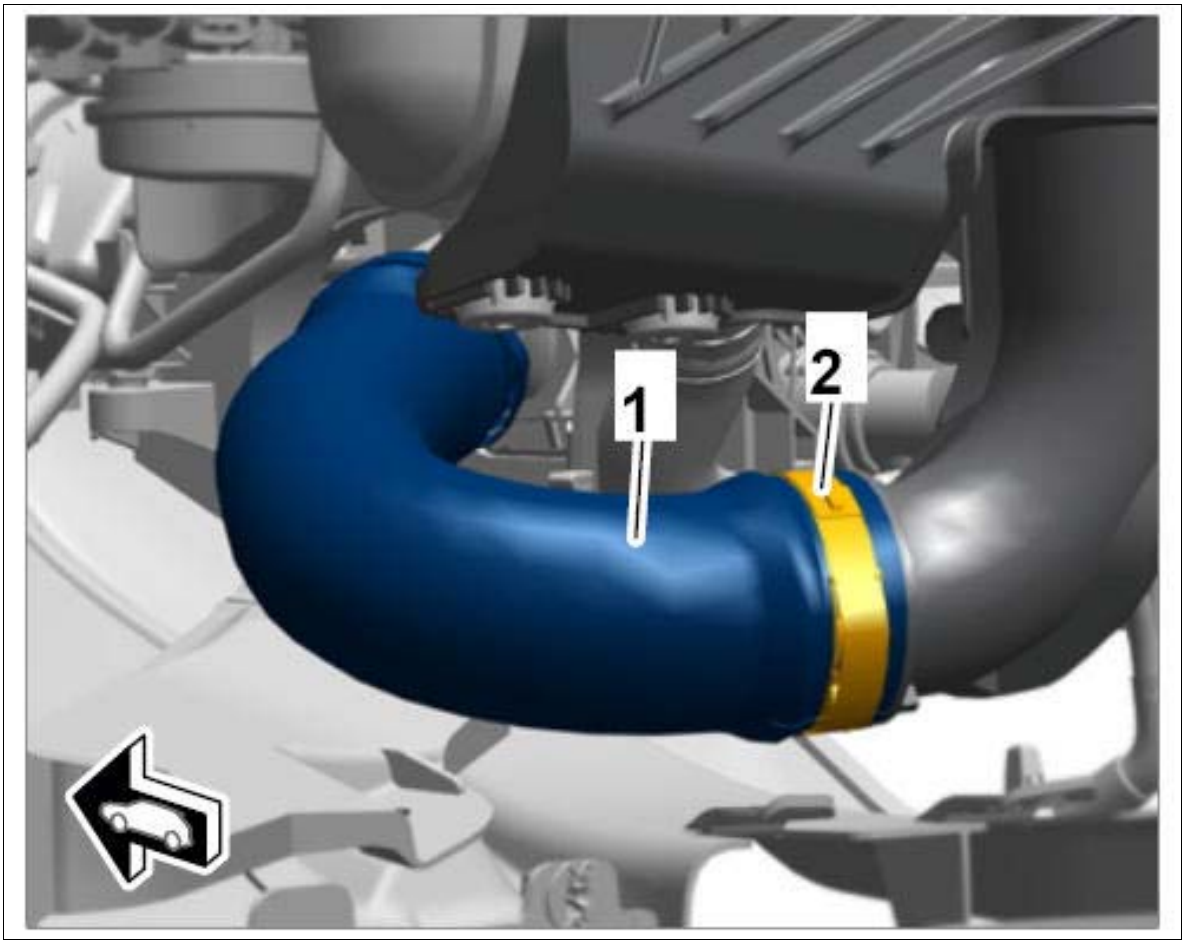

Courtesy of PORSCHE CARS NORTH AMERICA, INC.

3. Connect electric plug connection **-1-** for the pressure sensor and secure the cable.

Fig 3: Identifying Pressure Sensor Electric Plug Connection

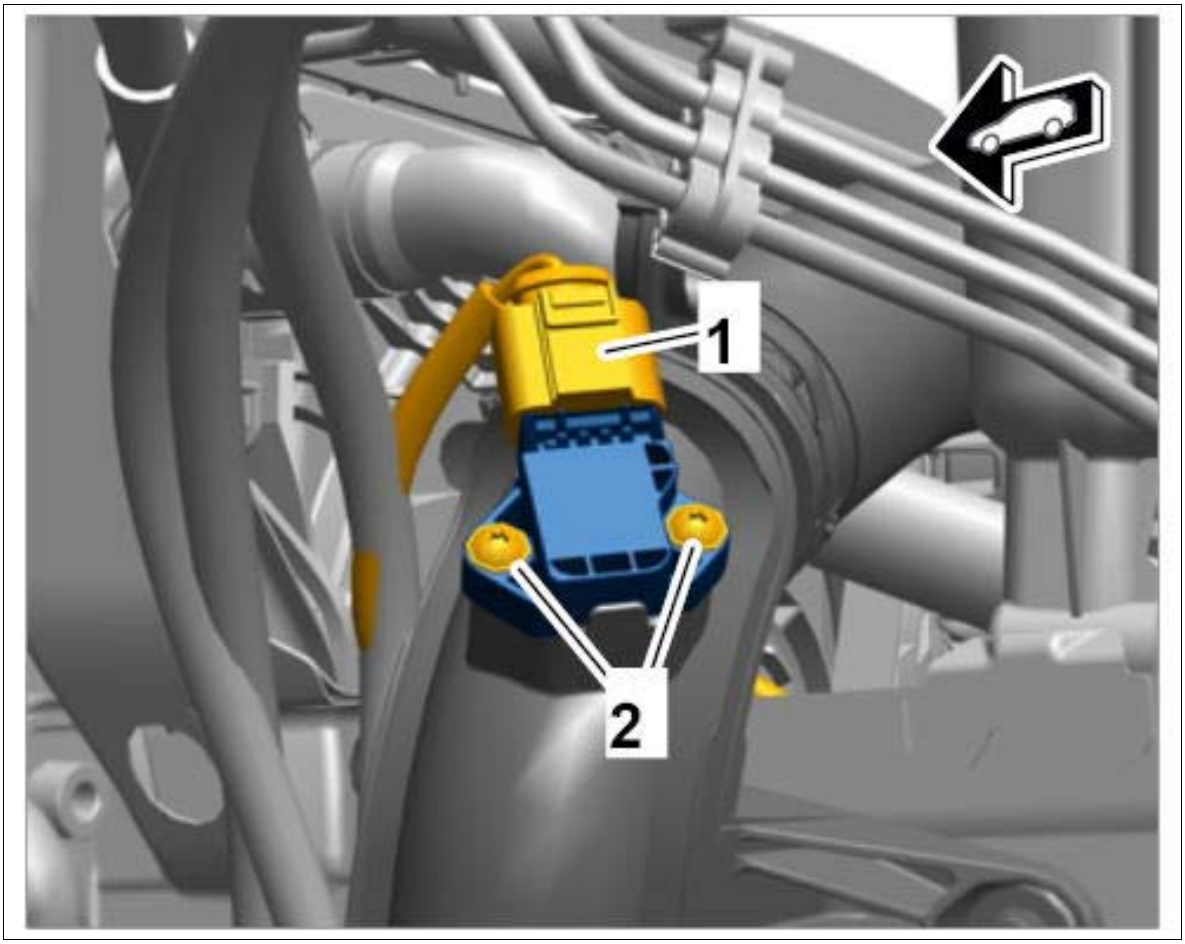

Courtesy of PORSCHE CARS NORTH AMERICA, INC.

4. Fit pressure hose **-1-** and tighten screw-type clamp **-2-** . **Tightening torque 5.5 Nm (4 ftlb.)**

Fig 4: Identifying Pressure Hose Clamp

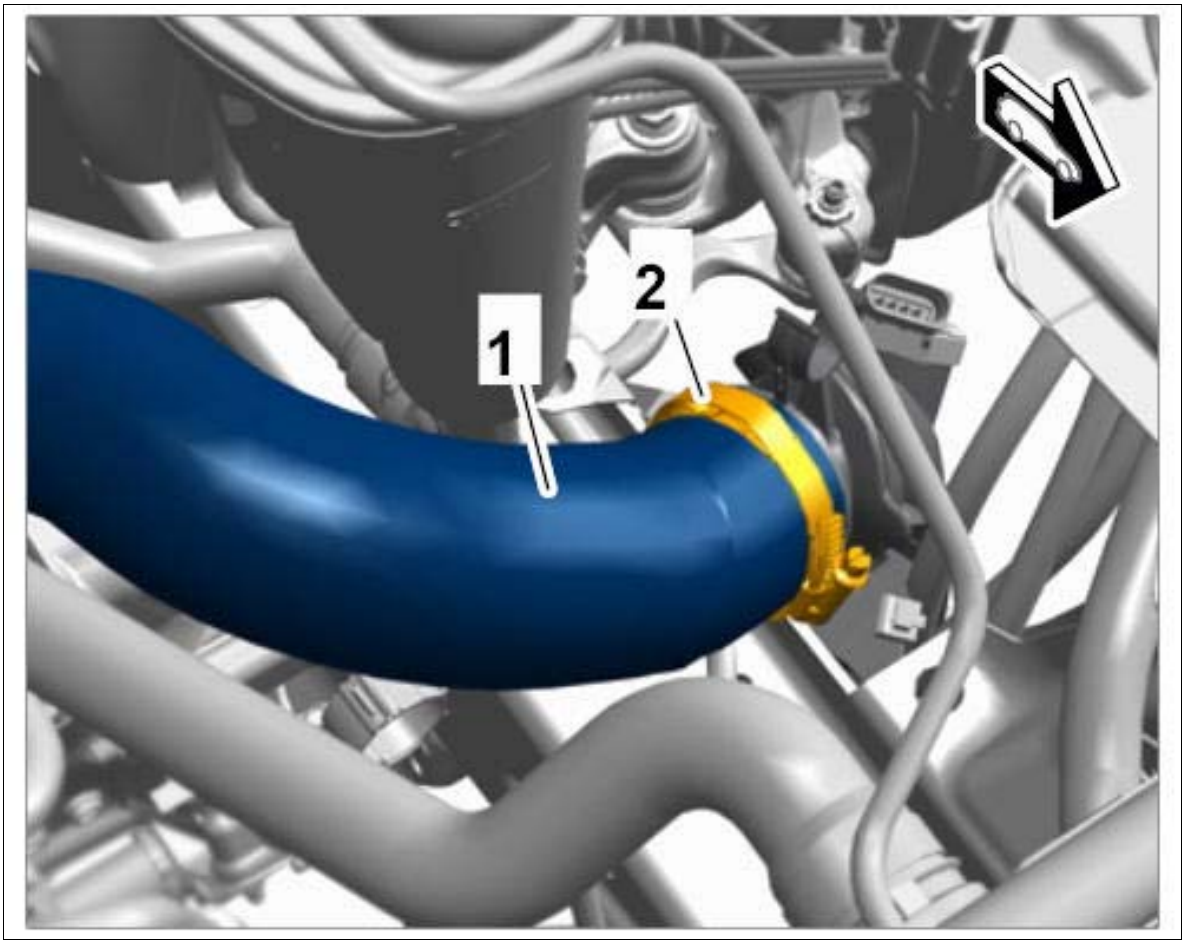

Courtesy of PORSCHE CARS NORTH AMERICA, INC.

WM 214119 REMOVING AND INSTALLING PRESSURE PIPE (MACAN) > SUBSEQUENT WORK

1. Install left wheel housing liner. → INSTALLING FRONT WHEEL HOUSING LINER .

WM 214319 REMOVING AND INSTALLING CHARGE-AIR COOLER (MACAN) > PRELIMINARY WORK

1. Remove pedestrian protection. → 697019 REMOVING AND INSTALLING PEDESTRIAN PROTECTION

WM 214319 REMOVING AND INSTALLING CHARGE-AIR COOLER (MACAN) > REMOVING CHARGE-AIR COOLER

1. Loosen charge-air cooler.

1. 1.1. Unscrew fastening screw **-1-** .
2. 1.2. Loosen screw-type clamp **-arrow-** and pull pressure hose off the charge-air cooler.

Fig 1: Locating Charge-Air Cooler Clamp

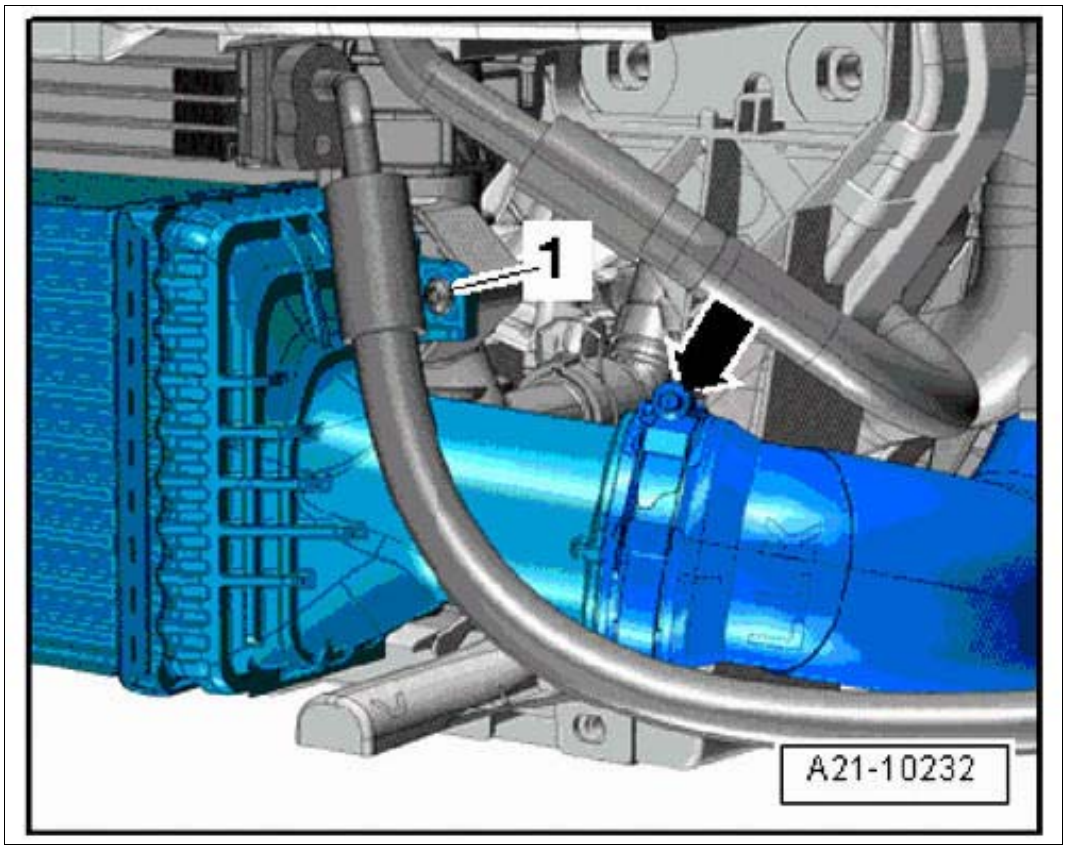

Courtesy of PORSCHE CARS NORTH AMERICA, INC.

2. Remove charge-air cooler.
    1. 2.1. Loosen screw-type clamp **-1-** and pull pressure hose off the charge-air cooler.
    2. 2.2. Unclip charge-air cooler using a screwdriver at the clip **-arrow A-** .
    3. 2.3. Tilt charge-air cooler forward **-arrow B-** .
    4. 2.4. Lift charge-air cooler out of the guides and remove by pulling it in direction of **-arrow B-** .

Fig 2: Pulling Charge-Air Cooler

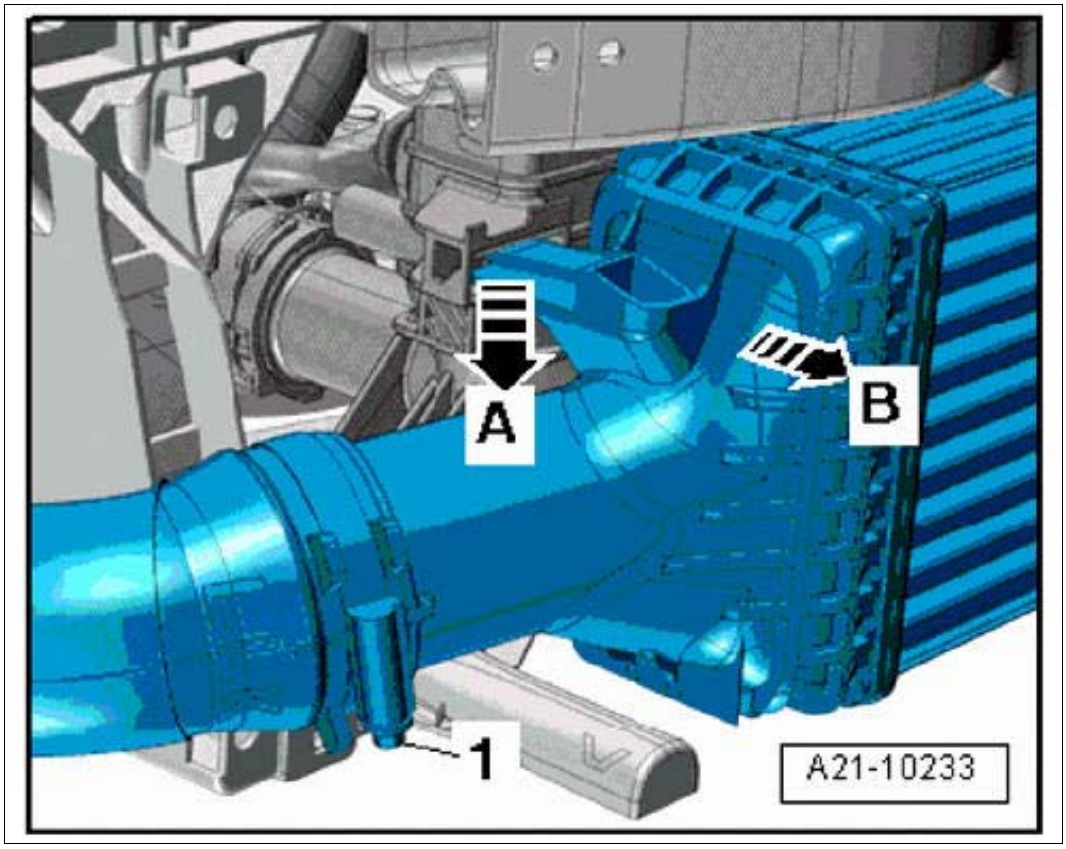

Courtesy of PORSCHE CARS NORTH AMERICA, INC.

WM 214319 REMOVING AND INSTALLING CHARGE-AIR COOLER (MACAN) > INSTALLING CHARGE-AIR COOLER

1. Position charge-air cooler in the guides and clip it in.

Fig 1: Installing Charge-Air Cooler

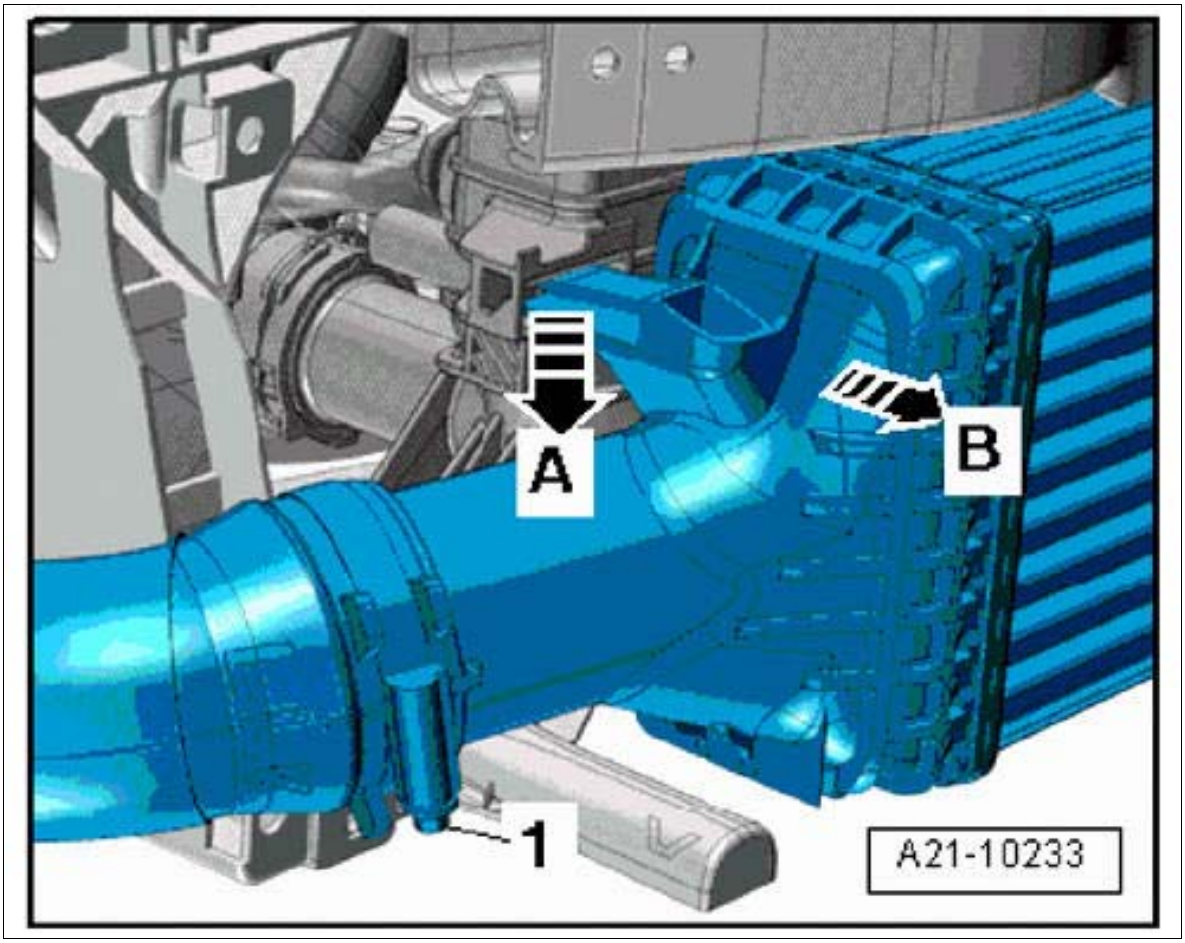

Courtesy of PORSCHE CARS NORTH AMERICA, INC.

2. Install charge-air cooler.
    1. 2.1. Fit pressure hose on charge-air cooler at both sides.
    2. 2.2. Tighten screw-type clamps at both sides **-arrow-** .
    3. 2.3. Fit and tighten fastening screw **-1-** .

Fig 2: Locating Charge-Air Cooler Clamp

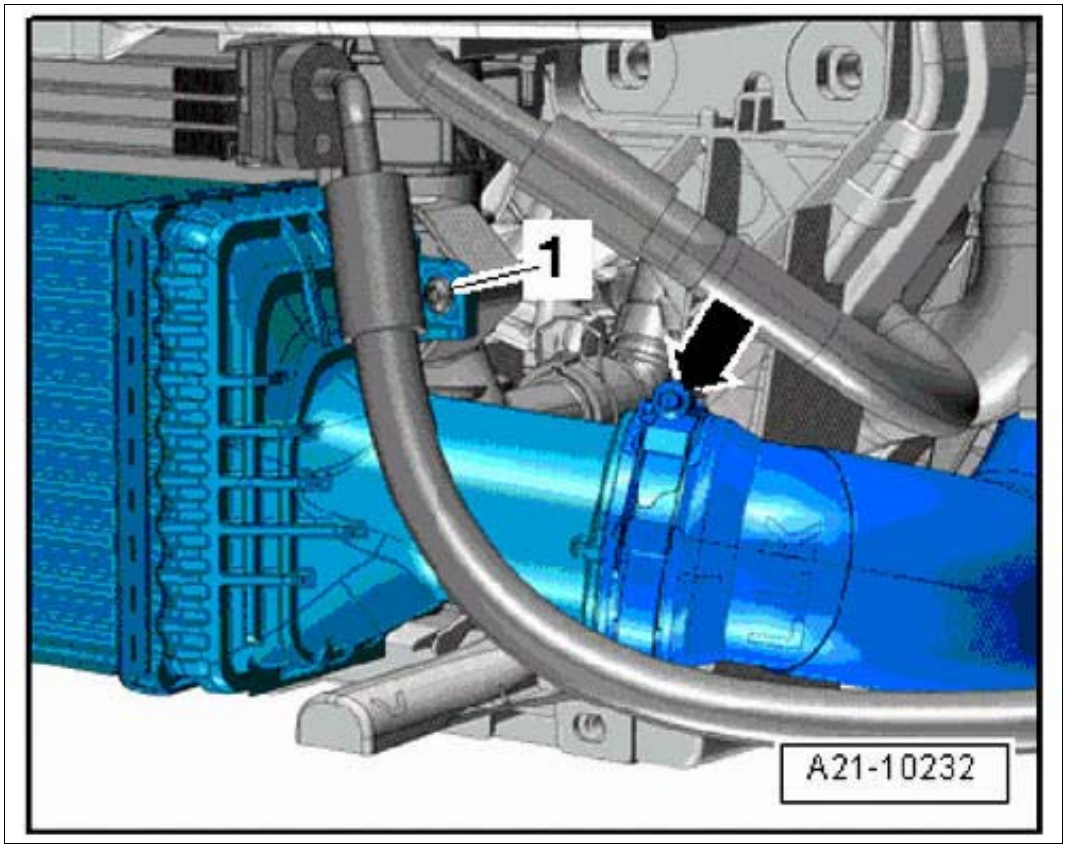

Courtesy of PORSCHE CARS NORTH AMERICA, INC.

WM 214319 REMOVING AND INSTALLING CHARGE-AIR COOLER (MACAN) > SUBSEQUENT WORK

1. Install pedestrian protection. → 697019 REMOVING AND INSTALLING PEDESTRIAN PROTECTION

WM 219019 REMOVING AND INSTALLING PRESSURE SENSOR (MACAN) > TECHNICAL VALUES

Location	Description	Type	Basic value	Tolerance 1	Tolerance 2
Fastening screw for boost pressure sensor		Tightening torque	5 Nm (3.5 ftlb.)		

WM 219019 REMOVING AND INSTALLING PRESSURE SENSOR (MACAN) > REMOVING PRESSURE SENSOR

1. Remove pressure sensor.

    1. 1.1. Disconnect electric plug connection **-1-** .
    2. 1.2. Unscrew fastening screw **-2-** and remove pressure sensor.

    Fig 1: Identifying Pressure Sensor Screws

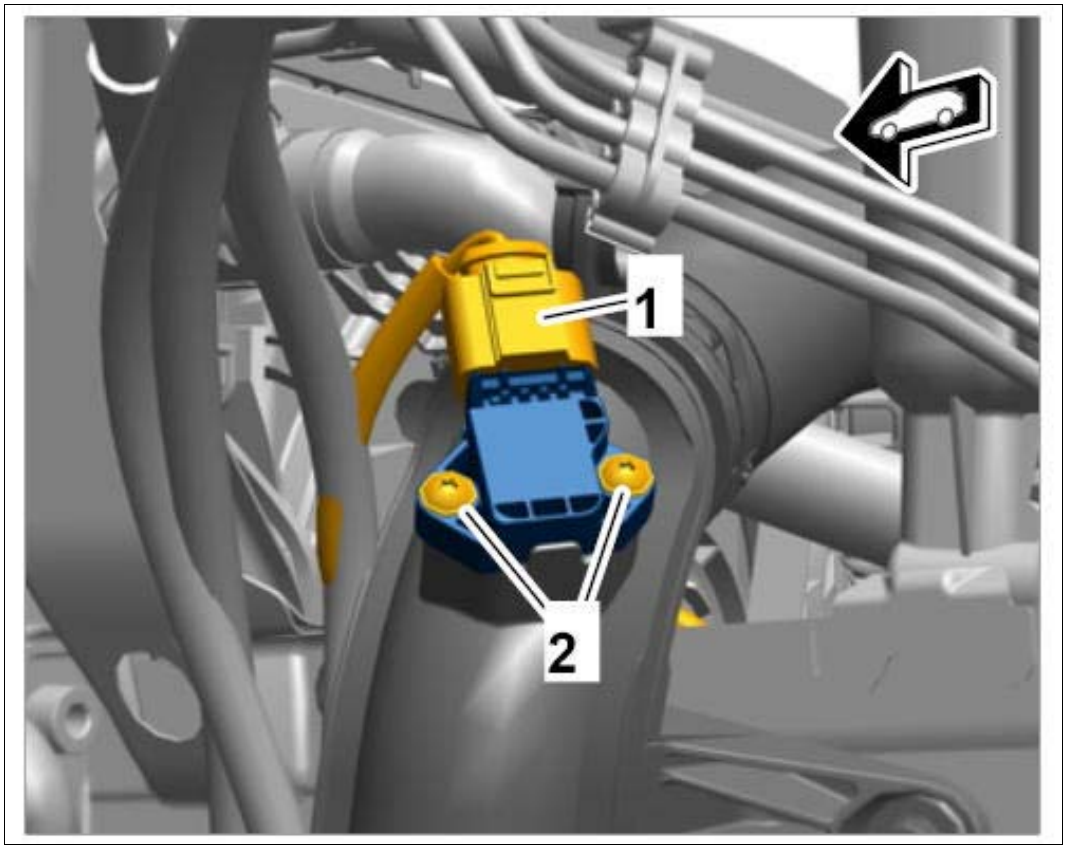

Courtesy of PORSCHE CARS NORTH AMERICA, INC.

WM 219019 REMOVING AND INSTALLING PRESSURE SENSOR (MACAN) > INSTALLING PRESSURE SENSOR

1. Install pressure sensor.

    1. 1.1. Fit pressure sensor with a **new** seal on the pressure pipe.
    2. 1.2. Fit and tighten fastening screws **-2-** . **Tightening torque 5 Nm (3.5 ftlb.)**
    3. 1.3. Plug in electric plug connection **-1-** .

Fig 1: Identifying Pressure Sensor Electric Plug Connection

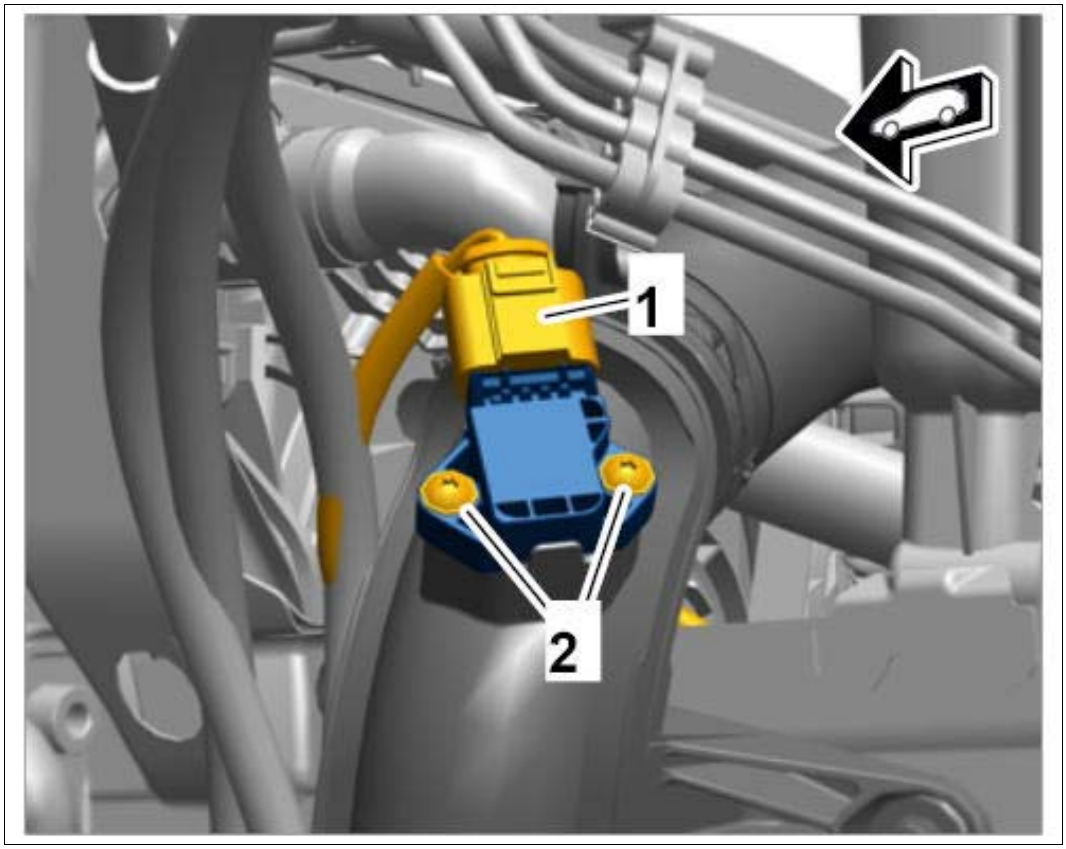

Courtesy of PORSCHE CARS NORTH AMERICA, INC.

WM 240919 REMOVING AND INSTALLING FUEL PRESSURE SENSOR (HIGH-PRESSURE) TOOLS (MACAN) > TOOLS

Designation	Type	Number	Description	
Assembly tool	VW tool	T10118		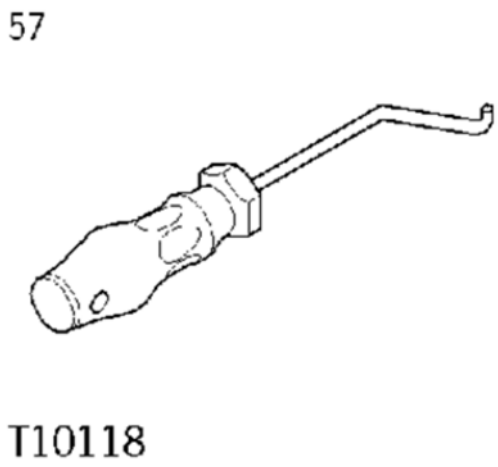
Bit, a/f 27	VW tool	T40218		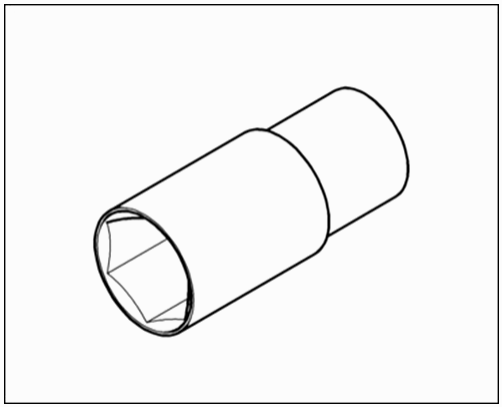

WM 240919 REMOVING AND INSTALLING FUEL PRESSURE SENSOR (HIGH-PRESSURE) TOOLS (MACAN) > TECHNICAL VALUES

Location	Description	Type	Basic value	Tolerance 1	Tolerance 2
Fuel pressure sensor		Tightening torque	27 Nm (20 ftlb.)		

WM 240919 REMOVING AND INSTALLING FUEL PRESSURE SENSOR (HIGH-PRESSURE) TOOLS (MACAN) > TOOLS

The following tools are used:

- Assembly tool. **Assembly tool T10118**
- Bit, a/f 27. **Bit, a/f 27 T40218**

WM 240919 REMOVING AND INSTALLING FUEL PRESSURE SENSOR (HIGH-PRESSURE) TOOLS (MACAN) > PRELIMINARY WORK

1. Remove engine cover.
2. Unscrew screws **-arrows-** .

   Fig 1: Locating Fuel Pressure Sensor Screws

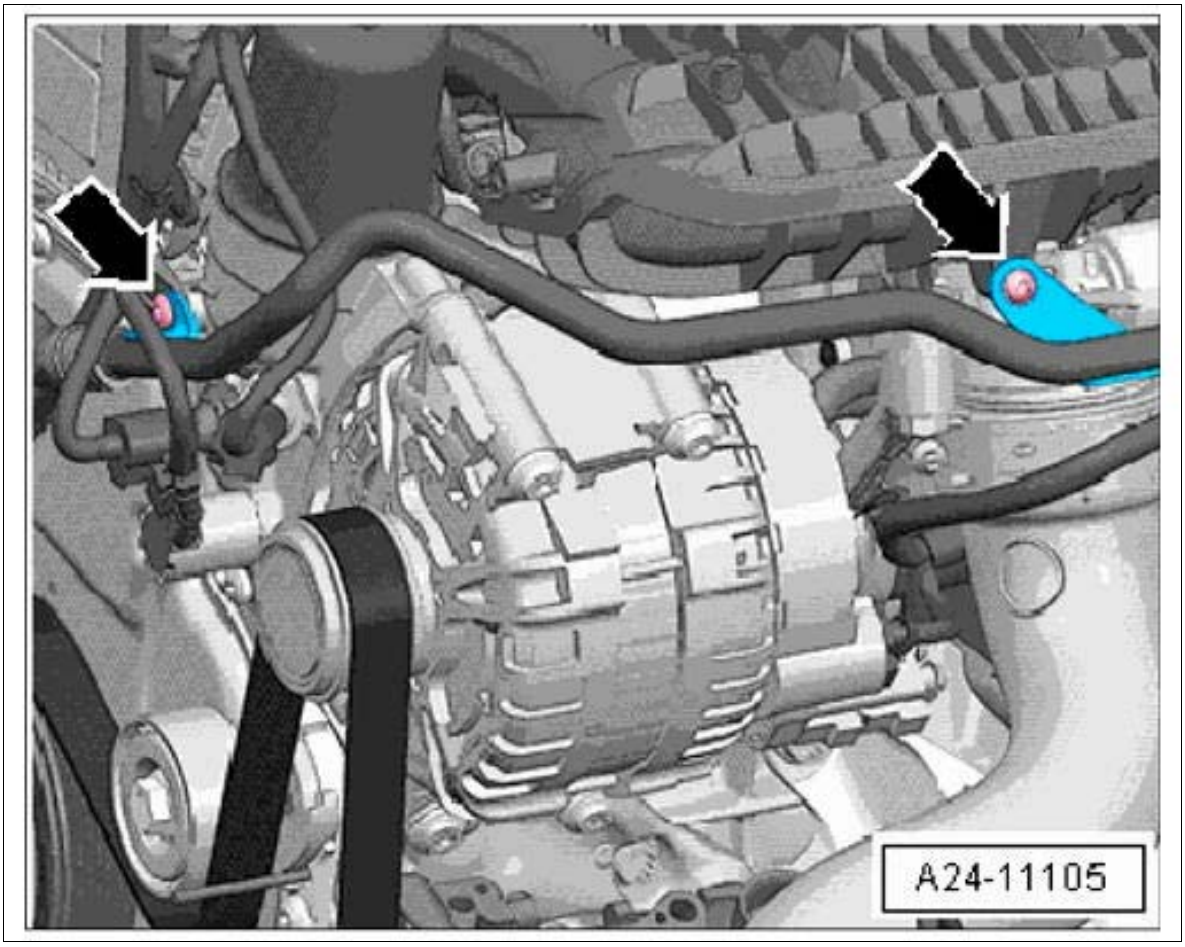

Courtesy of PORSCHE CARS NORTH AMERICA, INC.

3. Unscrew screw **-3-** .
4. Unscrew nut **-2-** and remove intake manifold support.
5. -
6. Remove rubber mounting **-1-** for intake manifold support.

Fig 2: Identifying Intake Manifold Support

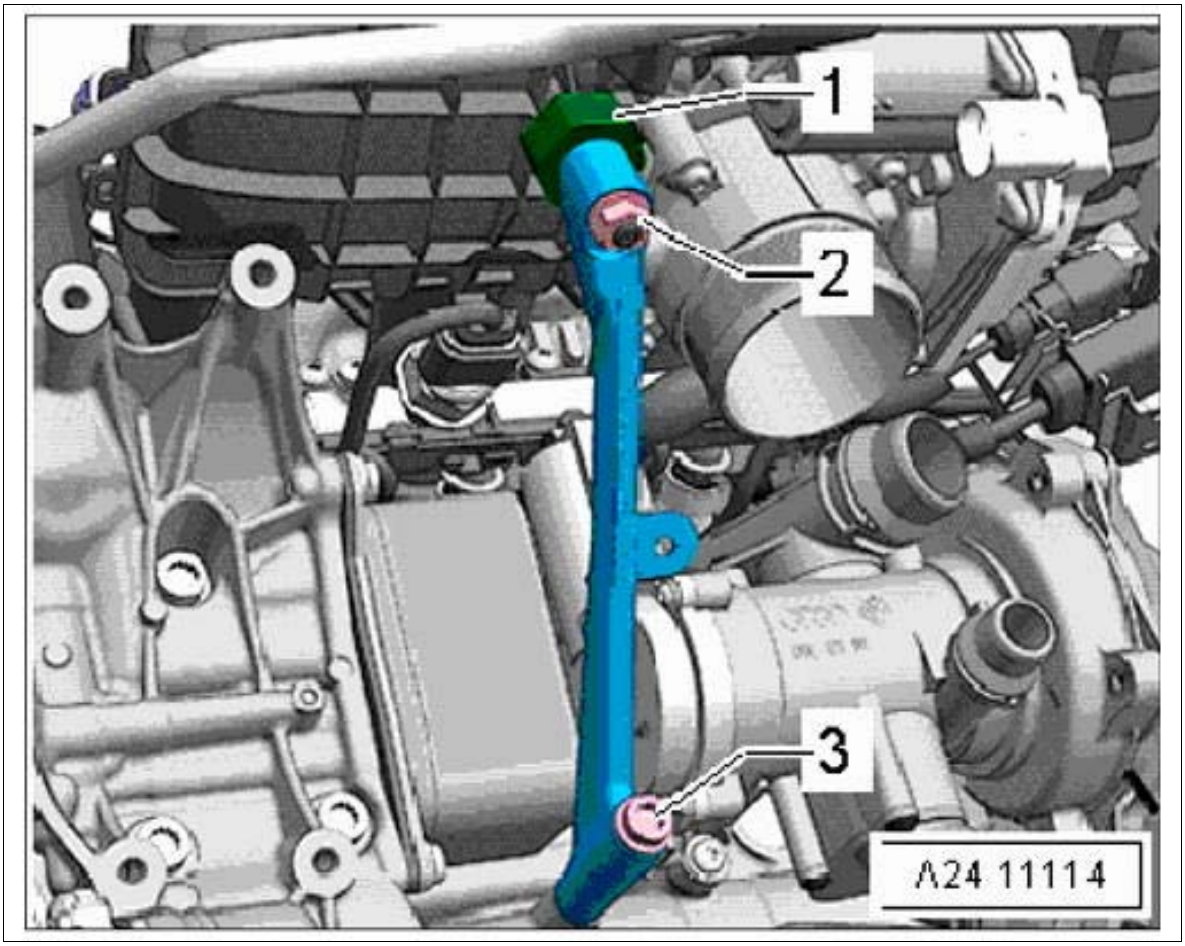

Courtesy of PORSCHE CARS NORTH AMERICA, INC.

WM 240919 REMOVING AND INSTALLING FUEL PRESSURE SENSOR (HIGH-PRESSURE) TOOLS (MACAN) > REMOVING FUEL PRESSURE SENSOR (HIGH-PRESSURE)

WARNING: Toxic substances

- *Danger of poisoning or suffocation*
- *Danger of burns to the eyes and skin*

→ Ventilate the work area well.

→ Never ingest or inhale.

→ Read specific information on the Hazard Sheet.

→ Do not smoke, eat or drink in the work area.

WARNING: Highly inflammable or explosive materials

- *Danger of fire or explosion*

→ Avoid contact with hot parts or sources of ignition.

→ Use suction to remove ignitable vapors.

→ Attach warning sign in a clearly visible position.

WARNING: Leaking fuel supply lines

- *Emerging fuel*
- *Risk of fire*

→ Perform leak test.

NOTE: Dirt on injection system components

- *Material damage*
- *Rough-running engine*
- *Bad exhaust emissions*

→ Thoroughly clean connection points and adjacent areas before loosening them. If the engine is very dirty, wash it before starting disassembly work.

→ Lay removed parts on a clean surface and cover them. Do not use fibre-shedding cloths.

→ Carefully cover components or seal them if repair work will not be carried out immediately. Place rubber caps on connections. Seal intake openings with film or adhesive tape.

→ Only install clean parts. Do not take spare parts out of the packaging until just before installation.

→ Never use compressed air when the system is open. Do not move the vehicle.

1. Release and disconnect electric plug connection from fuel pressure sensor **-1-** . **Assembly tool T10118**
2. Unscrew fuel pressure sensor **-1-** . **Bit, a/f 27 T40218**

Fig 1: Identifying Fuel Pressure Sensor

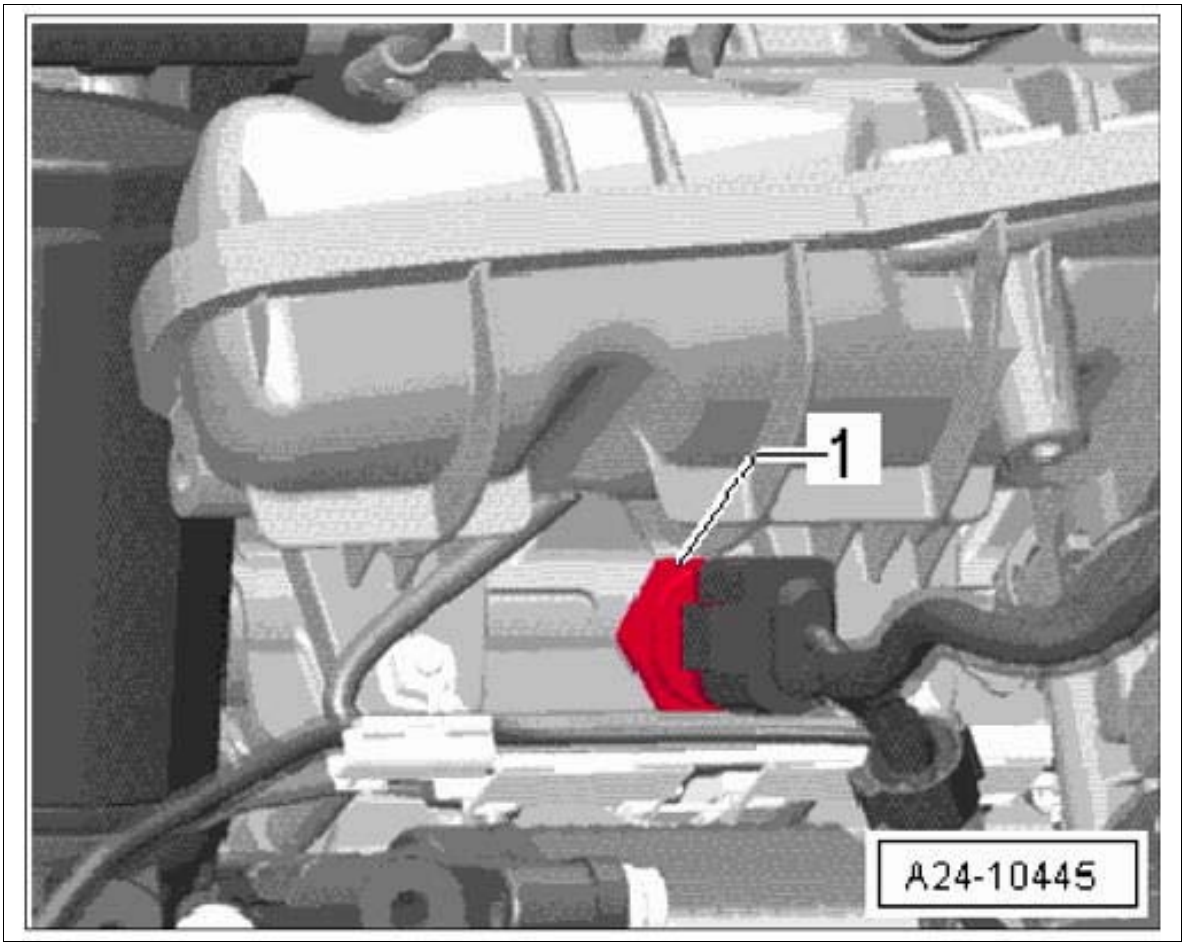

Courtesy of PORSCHE CARS NORTH AMERICA, INC.

WM 240919 REMOVING AND INSTALLING FUEL PRESSURE SENSOR (HIGH-PRESSURE) TOOLS (MACAN) > INSTALLING FUEL PRESSURE SENSOR (HIGH-PRESSURE)

1. Replace sealing ring on fuel pressure sensor **-1-** .
2. Install and tighten fuel pressure sensor **-1-** . **Tightening torque 27 Nm (20 ftlb.) Bit, a/f 27 T40218**

Fig 1: Identifying Fuel Pressure Sensor

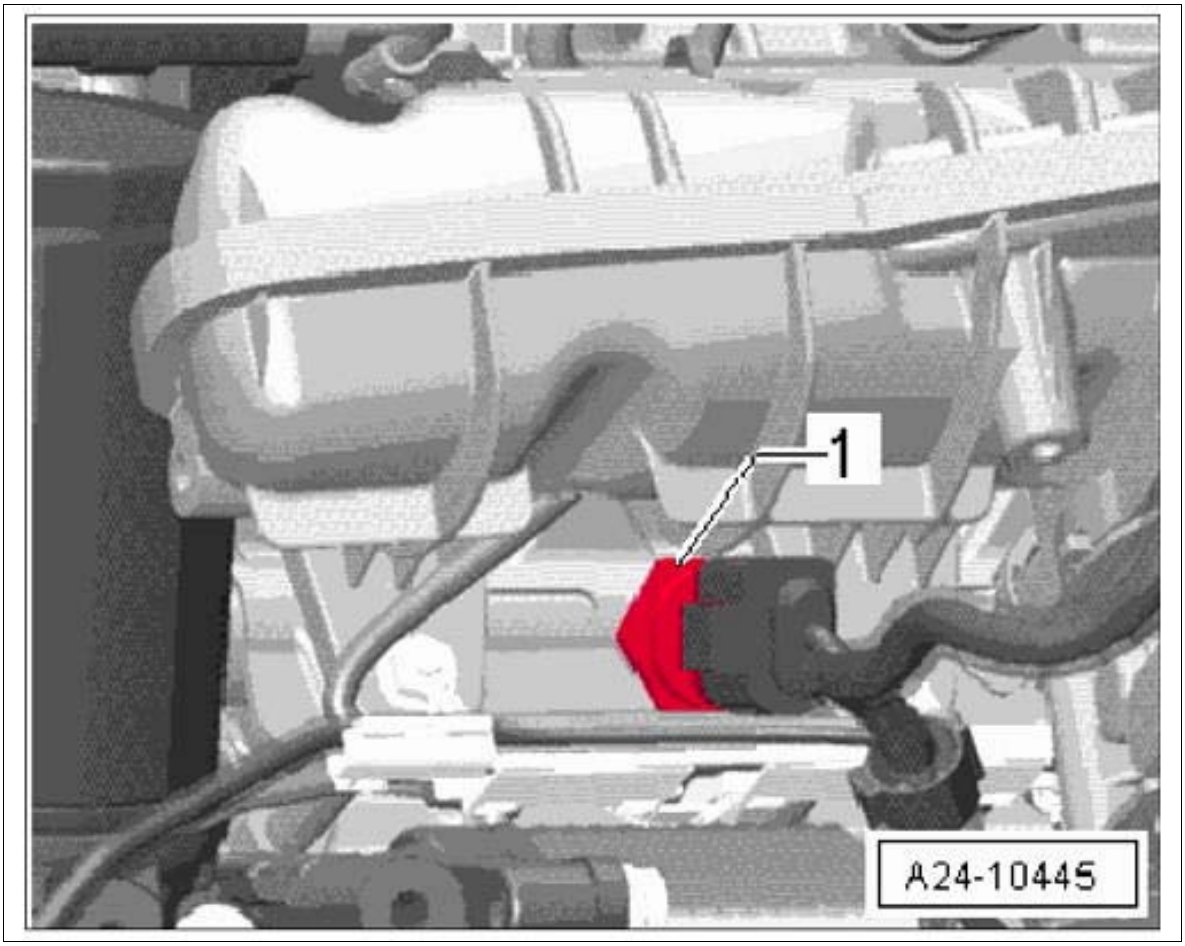

Courtesy of PORSCHE CARS NORTH AMERICA, INC.

3. Connect and engage electric plug connection on the fuel pressure sensor.

WM 240919 REMOVING AND INSTALLING FUEL PRESSURE SENSOR (HIGH-PRESSURE) TOOLS (MACAN) > SUBSEQUENT WORK

1. Install rubber mounting **-1-** for intake manifold support.

Fig 1: Identifying Intake Manifold Support

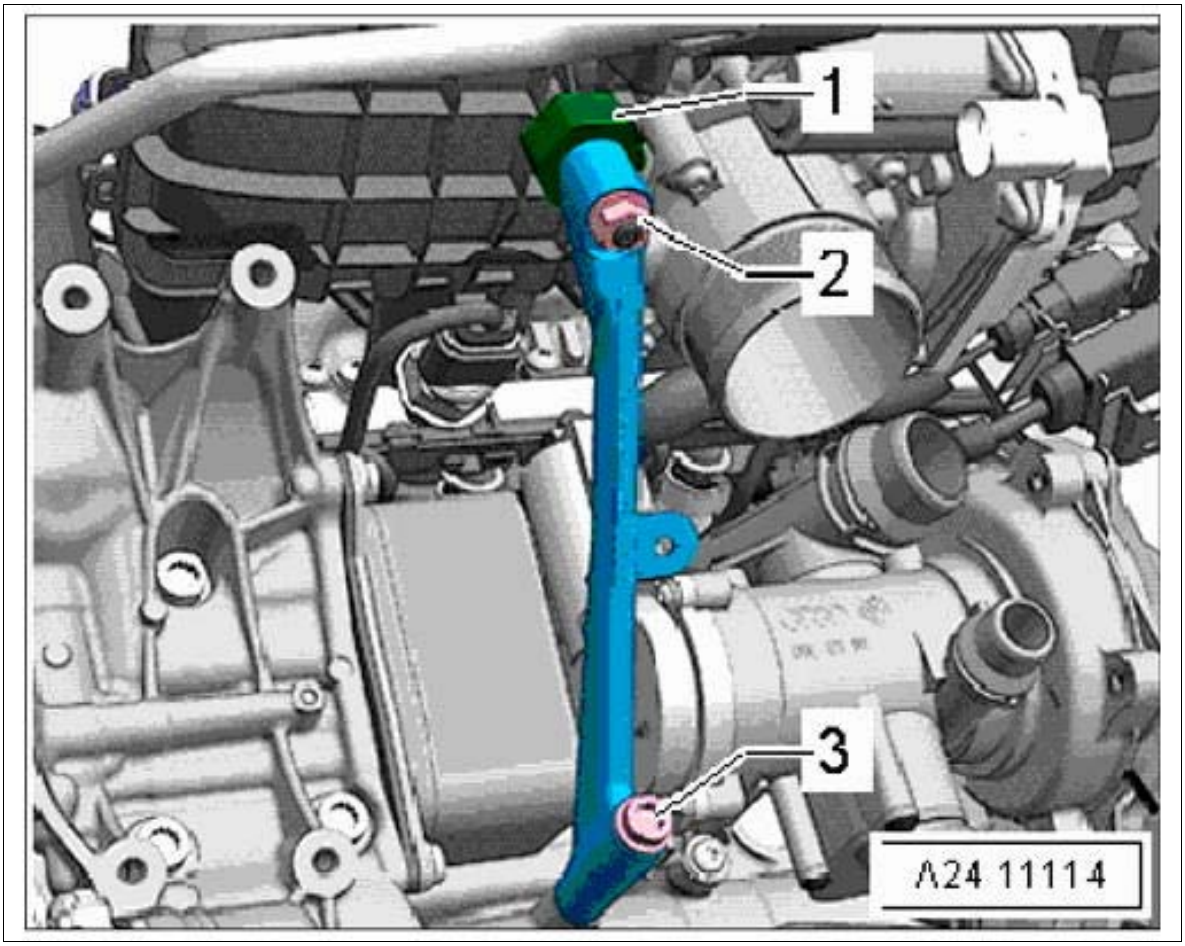

Courtesy of PORSCHE CARS NORTH AMERICA, INC.

2. Fit intake manifold support and tighten nuts (2).
3. Tighten screw **-3-** .
4. Tighten screws **-arrows-** .

Fig 2: Locating Intake Manifold Support Screws

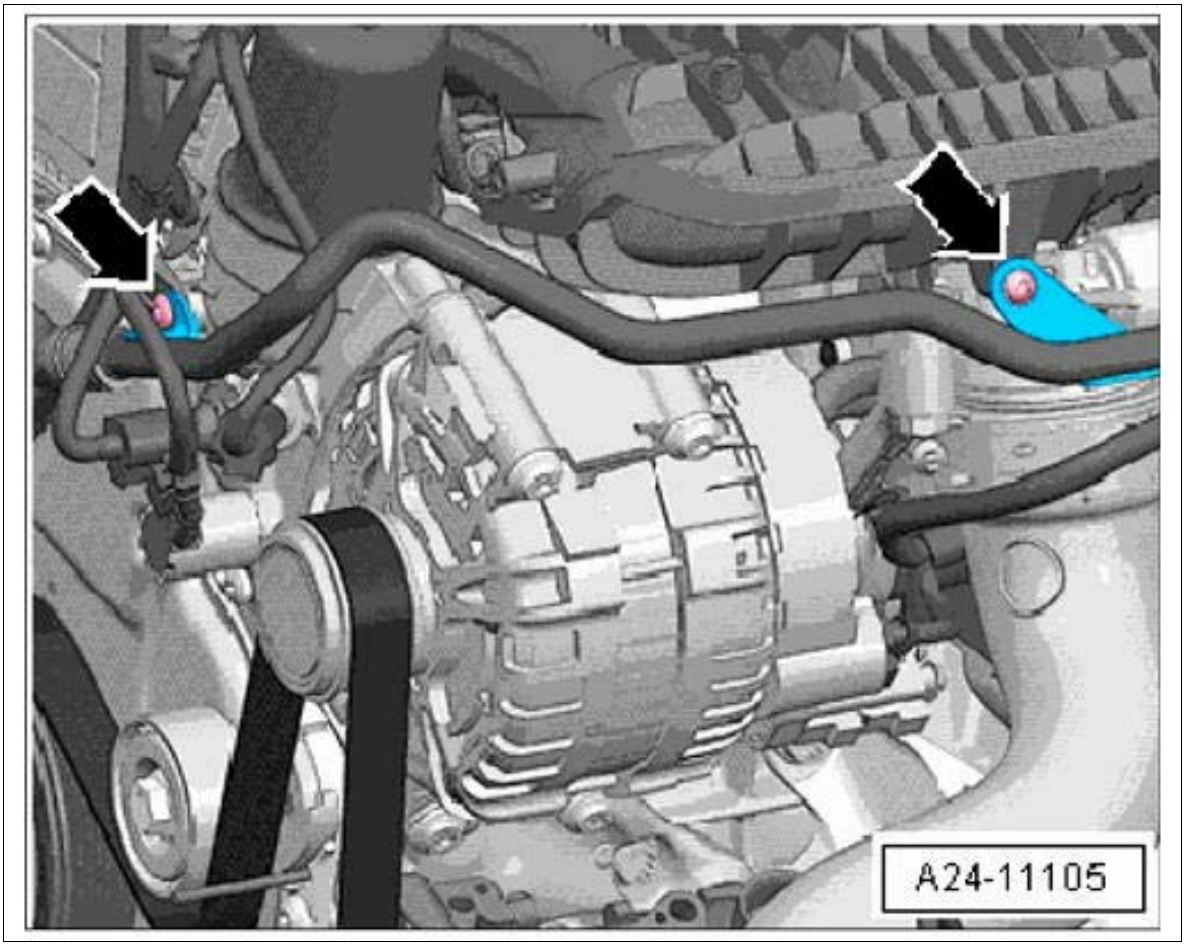

Courtesy of PORSCHE CARS NORTH AMERICA, INC.

5. Fit engine cover.

    1. 5.1. Check that the engine cover is fitted correctly.

WM 240919 REMOVING AND INSTALLING FUEL PRESSURE SENSOR (LOW-PRESSURE) (MACAN) > TECHNICAL VALUES

Location	Description	Type	Basic value	Tolerance 1	Tolerance 2
Fuel pressure sensor for low pressure		Tightening torque	15 Nm (11 ftlb.)		

WM 240919 REMOVING AND INSTALLING FUEL PRESSURE SENSOR (LOW-PRESSURE) (MACAN) > PRELIMINARY WORK

1. Remove engine cover.

WM 240919 REMOVING AND INSTALLING FUEL PRESSURE SENSOR (LOW-PRESSURE) (MACAN) > REMOVING FUEL PRESSURE SENSOR (LOW-PRESSURE)

WARNING: Toxic substances

- *Danger of poisoning or suffocation*
- *Danger of burns to the eyes and skin*

→ Ventilate the work area well.

→ Never ingest or inhale.

→ Read specific information on the Hazard Sheet.

→ Do not smoke, eat or drink in the work area.

WARNING: Highly inflammable or explosive materials

- *Danger of fire or explosion*

→ Avoid contact with hot parts or sources of ignition.

→ Use suction to remove ignitable vapors.

→ Attach warning sign in a clearly visible position.

WARNING: Leaking fuel supply lines

- *Emerging fuel*
- *Risk of fire*

→ Perform leak test.

NOTE: Dirt on injection system components

- *Material damage*
- *Rough-running engine*
- *Bad exhaust emissions*

→ Thoroughly clean connection points and adjacent areas before loosening them. If the engine is very dirty, wash it before starting disassembly work.

→ Lay removed parts on a clean surface and cover them. Do not use fibre-shedding cloths.

→ Carefully cover components or seal them if repair work will not be carried out immediately. Place rubber caps on connections. Seal intake openings with film or adhesive tape.

→ Only install clean parts. Do not take spare parts out of the packaging until just before installation.

→ Never use compressed air when the system is open. Do not move the vehicle.

1. Disconnect electric plug connection **-1-** from the fuel pressure sensor.

   Fig 1: Identifying Fuel Pressure Sensor Electric Plug Connection

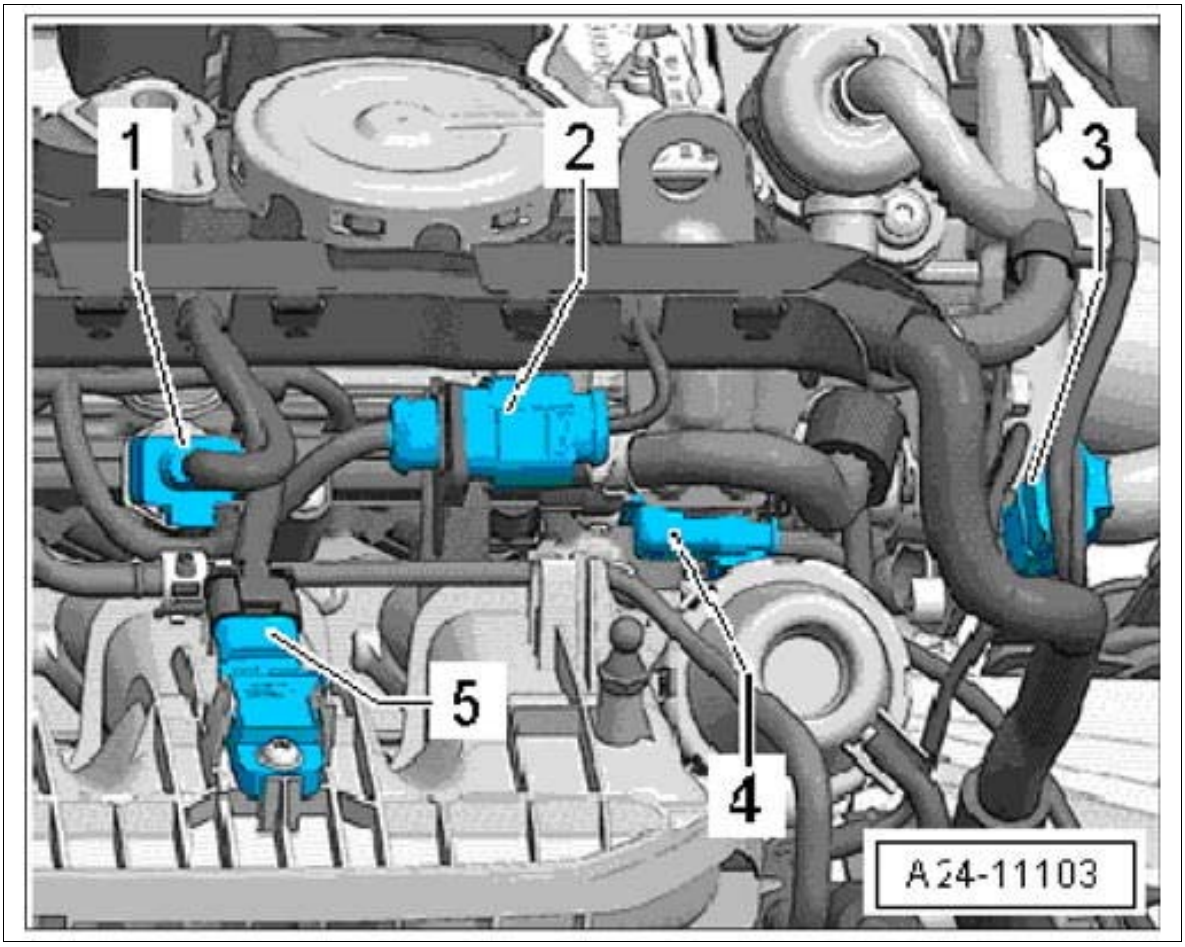

Courtesy of PORSCHE CARS NORTH AMERICA, INC.

2. Pull out clamp **-2-** .
3. Pull fuel pressure sensor **-1-** for low-pressure out of the fuel distributor.

Fig 2: Locating Fuel Pressure Sensor

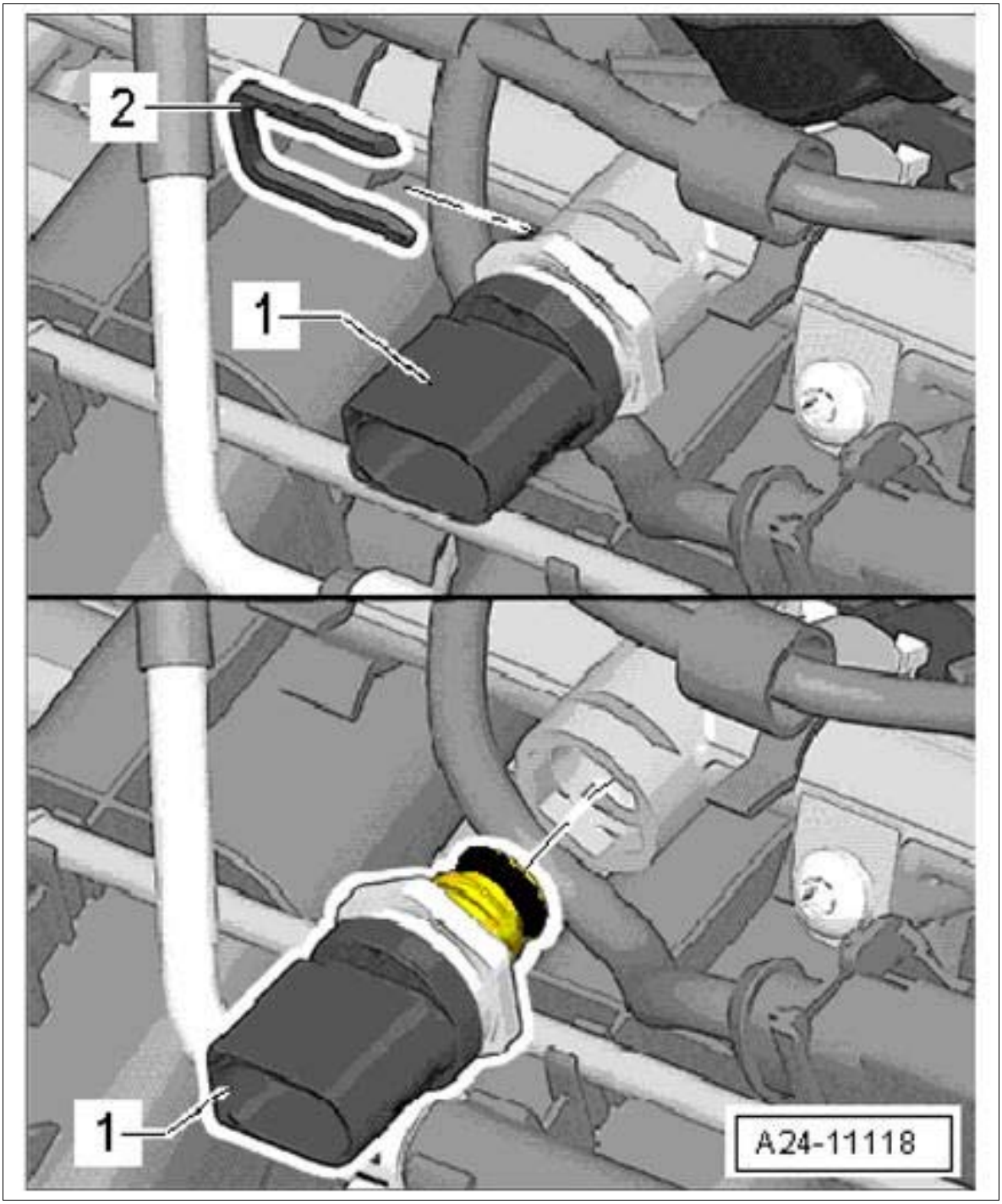

Courtesy of PORSCHE CARS NORTH AMERICA, INC.

4. Remove fuel pressure sensor **-1-** from the adapter **-2-** .

    1. 4.1. Only when replacing the fuel pressure sensor **-1-**

Fig 3: Identifying Fuel Pressure Sensor

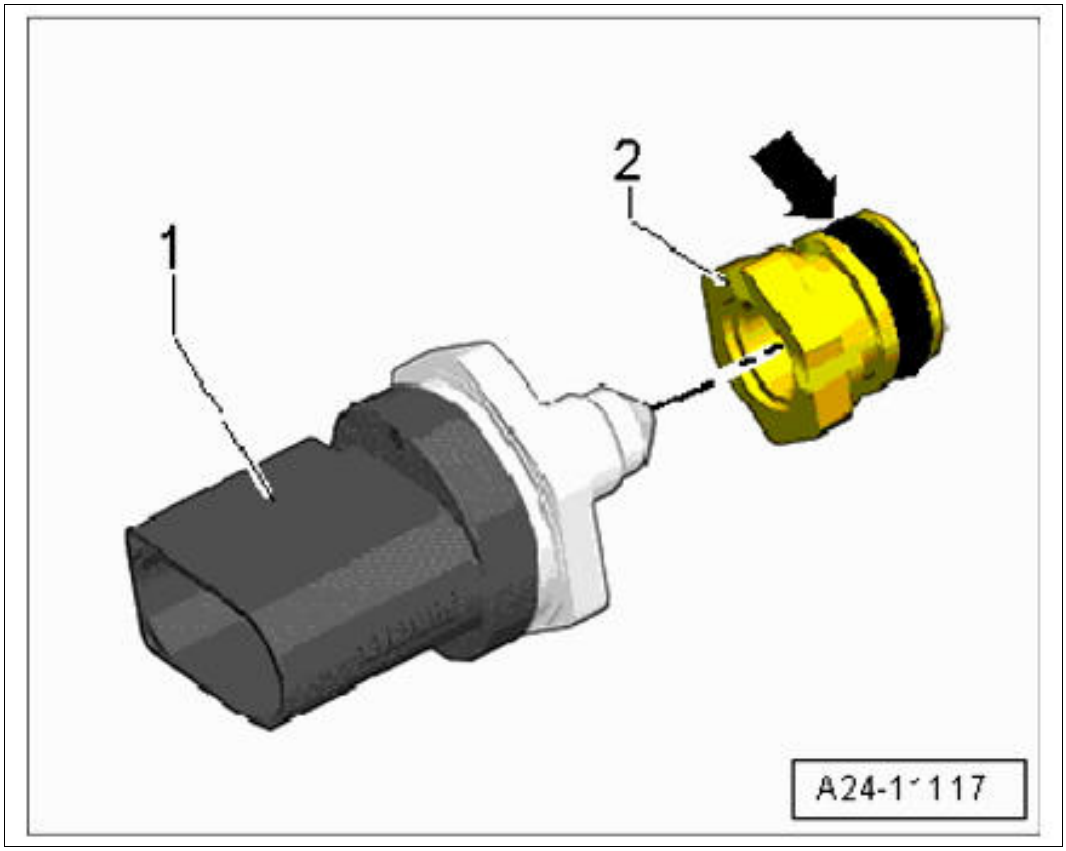

Courtesy of PORSCHE CARS NORTH AMERICA, INC.

WM 240919 REMOVING AND INSTALLING FUEL PRESSURE SENSOR (LOW-PRESSURE) (MACAN) > INSTALLING FUEL PRESSURE SENSOR (LOW-PRESSURE)

1. Replace O-ring **-arrow-** .
2. Screw adapter **-2-** to fuel pressure sensor **-1-** . **Tightening torque 15 Nm (11 ftlb.)**

Fig 1: Locating Fuel Pressure Sensor 2

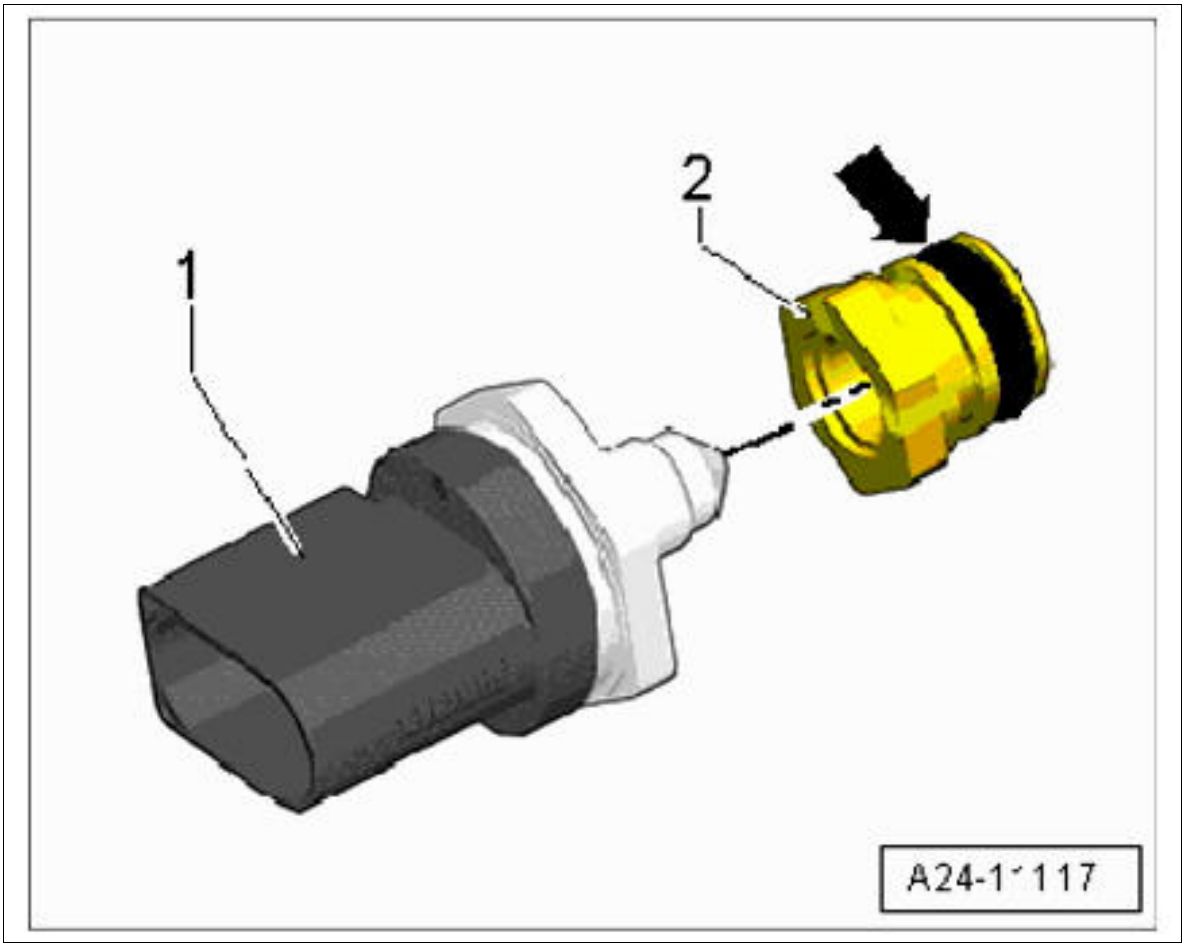

Courtesy of PORSCHE CARS NORTH AMERICA, INC.

3. Oil sealing ring **-arrow-** .
4. Carefully slide fuel pressure sensor **-1-** as far as it will go into the fuel distributor.
5. Slide clamp **-2-** into the groove.
    1. 5.1. Ensure that the clamp **-2-** is fitted correctly.

Fig 2: Locating Fuel Pressure Sensor

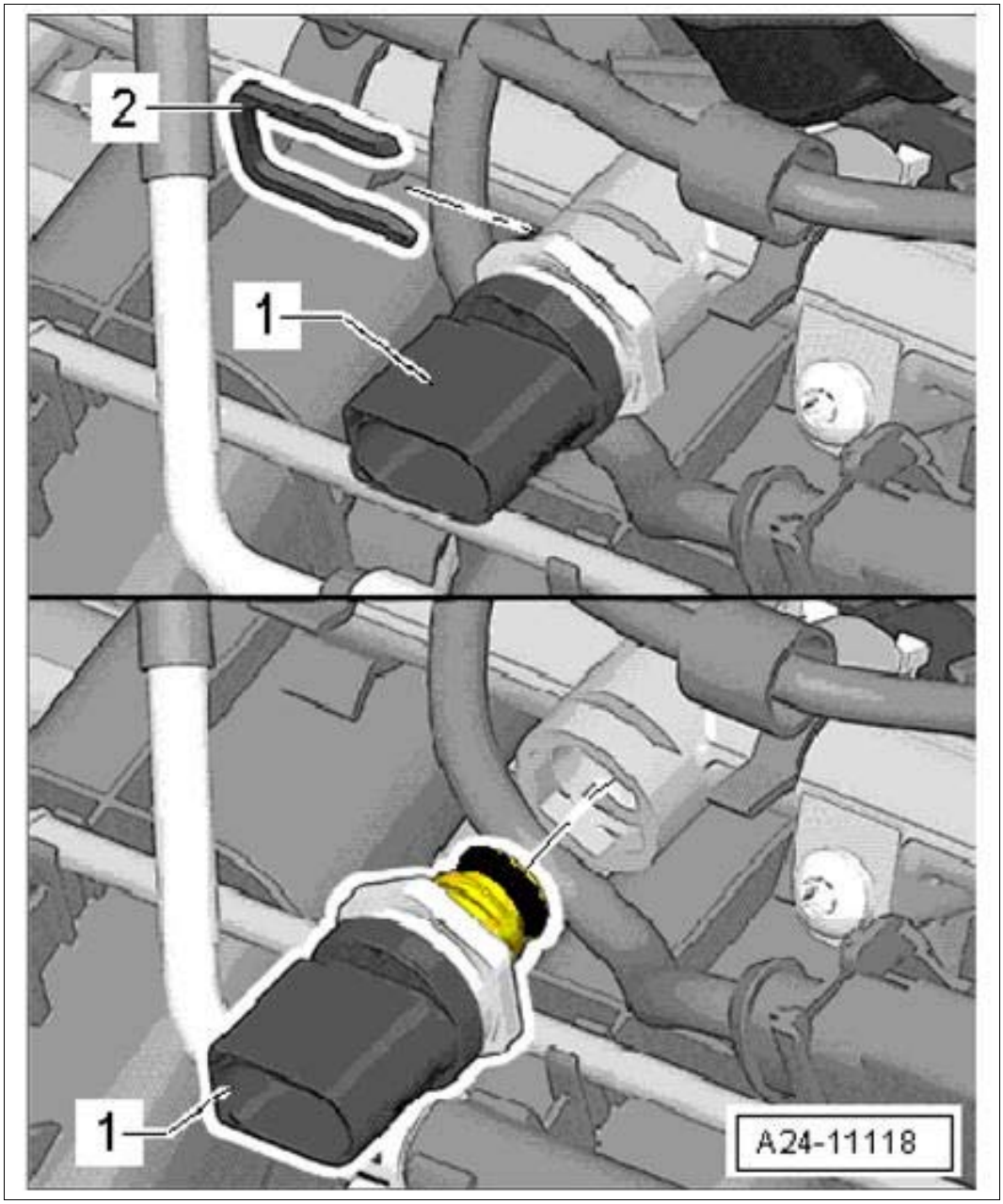

Courtesy of PORSCHE CARS NORTH AMERICA, INC.

6. Connect electric plug connection to the fuel pressure sensor **-1-** .

WM 240919 REMOVING AND INSTALLING FUEL PRESSURE SENSOR (LOW-PRESSURE) (MACAN) > SUBSEQUENT WORK

1. Fit engine cover.

    1. 1.1. Check that the engine cover is fitted correctly.

WM 242419 REMOVING AND INSTALLING AIR-CLEANER ELEMENT (MACAN S, MACAN TURBO) > TECHNICAL VALUES

Location	Description	Type	Basic value	Tolerance 1	Tolerance 2
Fastening screws	Air cleaner housing cover to air cleaner housing	Tightening torque	3.5 Nm (2.5 ftlb.)		
Fastening screws	Air cleaner housing to body	Tightening torque	3.5 Nm (2.5 ftlb.)		
Fastening bolt	Fastening bolt on air guide	Torque angle	90°		

WM 242419 REMOVING AND INSTALLING AIR-CLEANER ELEMENT (MACAN S, MACAN TURBO) > TECHNICAL VALUES > ASSEMBLY OVERVIEW - AIR CLEANER

Fig 1: Overview Of Air Cleaner

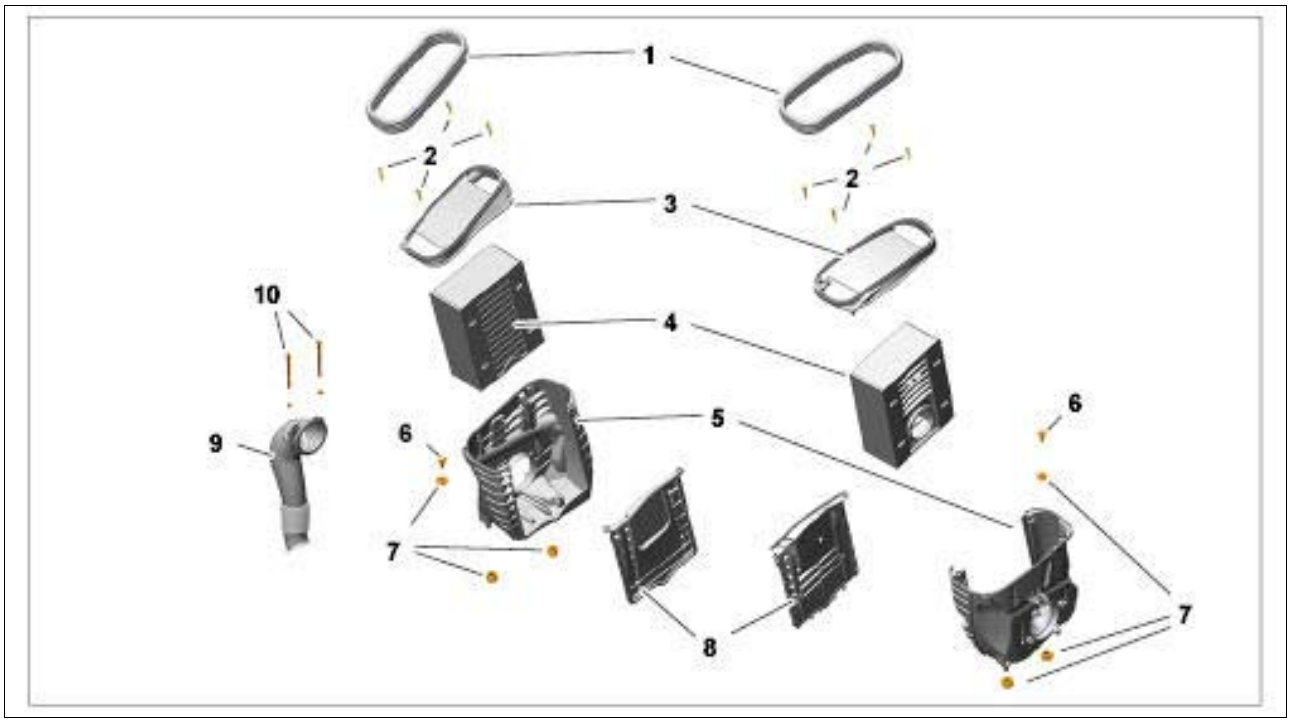

Courtesy of PORSCHE CARS NORTH AMERICA, INC.

1. Rubber seal
2. Fastening screws → **Tightening torque: 3.5 Nm (2.5 ftlb.)**
3. Air cleaner housing cover
4. Air-cleaner element

5. Air cleaner housing
6. Fastening screws → **Tightening torque: 3.5 Nm (2.5 ftlb.)**
7. Rubber sleeves
8. Air-cleaner element cover
9. Air guide
10. Fastening bolt → **Torque angle: 90°**

WM 242419 REMOVING AND INSTALLING AIR-CLEANER ELEMENT (MACAN S, MACAN TURBO) > INFORMATION > COMPONENT OVERVIEW - AIR CLEANER HOUSING

Fig 1: Overview Of Air Cleaner Housings

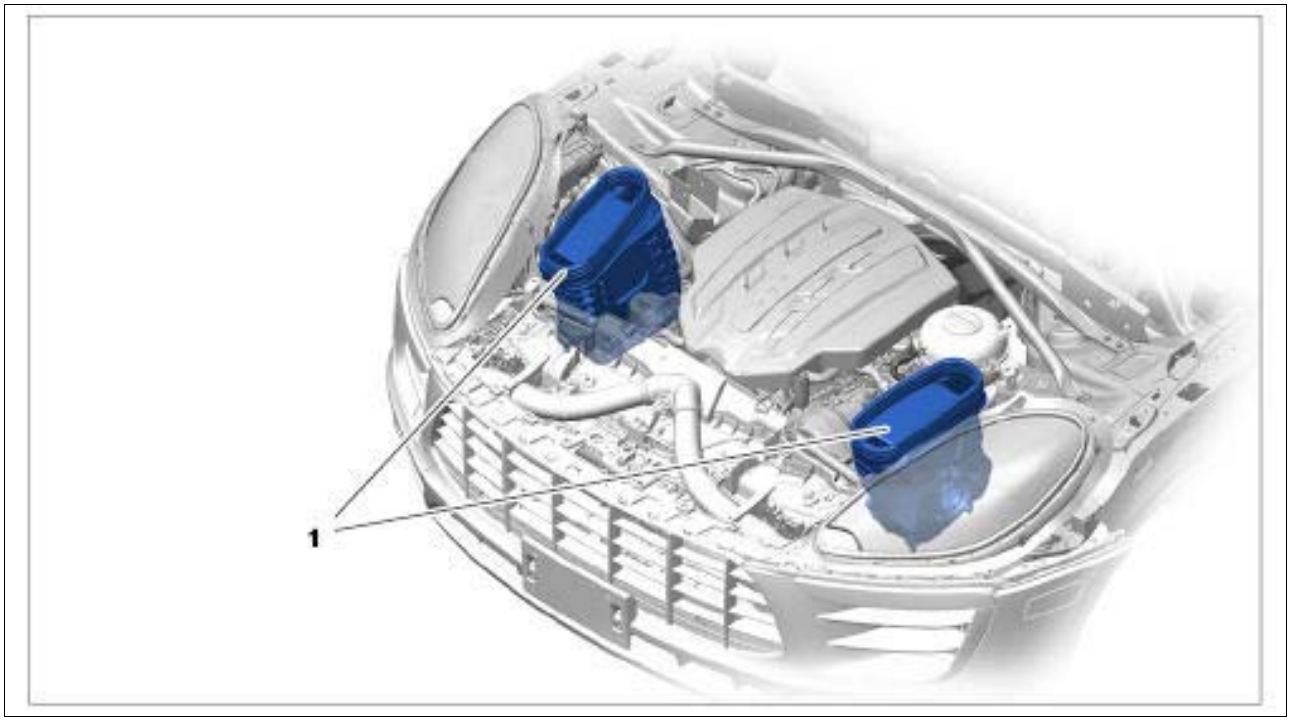

Courtesy of PORSCHE CARS NORTH AMERICA, INC.

1. Air cleaner housing

WM 242419 REMOVING AND INSTALLING AIR-CLEANER ELEMENT (MACAN S, MACAN TURBO) > REMOVING AIR-CLEANER ELEMENT > REMOVING AIR-CLEANER ELEMENT FOR CYLINDER BANK 1

1. Loosen fastening screws **-1-** and remove air cleaner housing cover.

Fig 1: Identifying Air Cleaner Housing Cover Screws



Courtesy of PORSCHE CARS NORTH AMERICA, INC.

2. Open cover **-2-** on air cleaner housing.

Fig 2: Identifying Air-Cleaner Element Cover

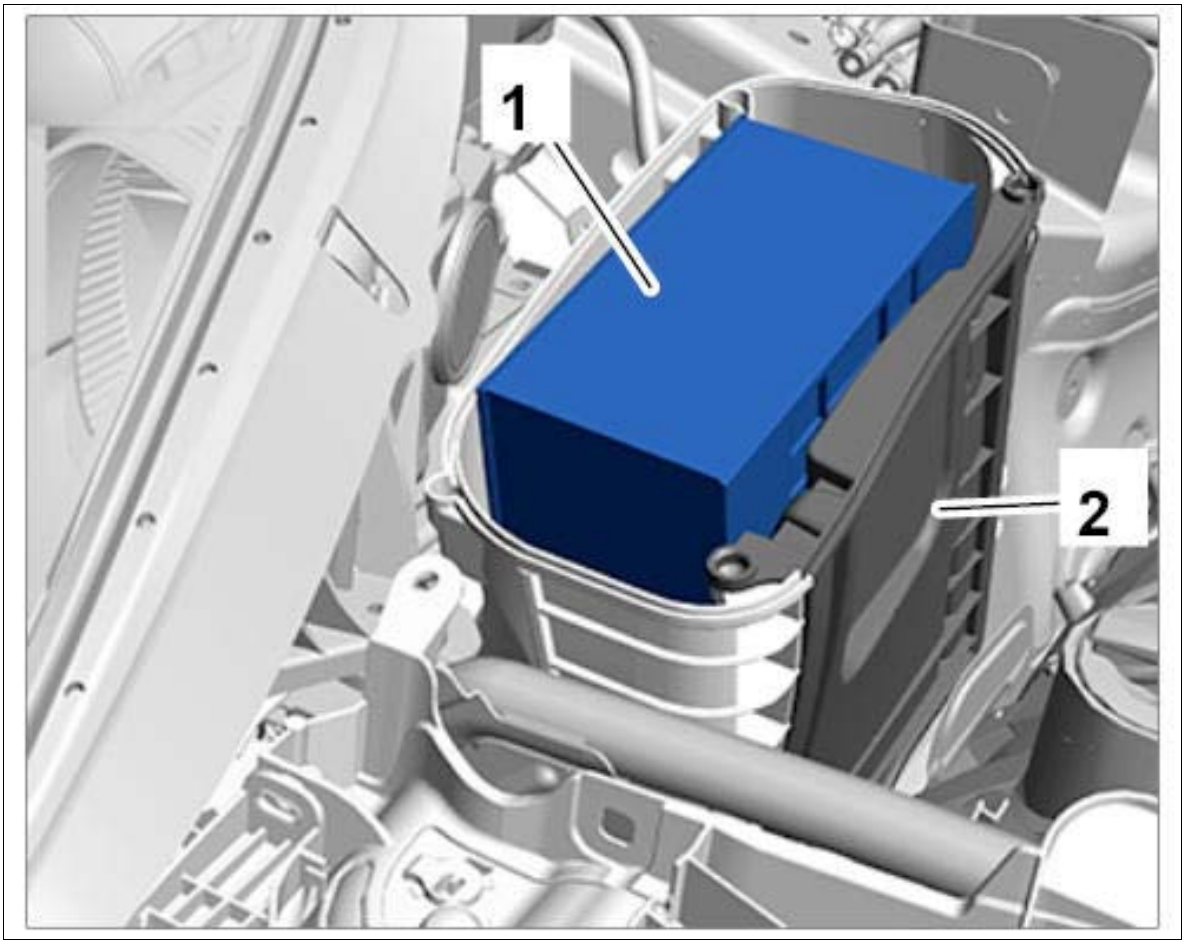

Courtesy of PORSCHE CARS NORTH AMERICA, INC.

3. Remove air-cleaner element **-2-** from air cleaner housing **-1-** .

Fig 3: Identifying Air-Cleaner Element Housing

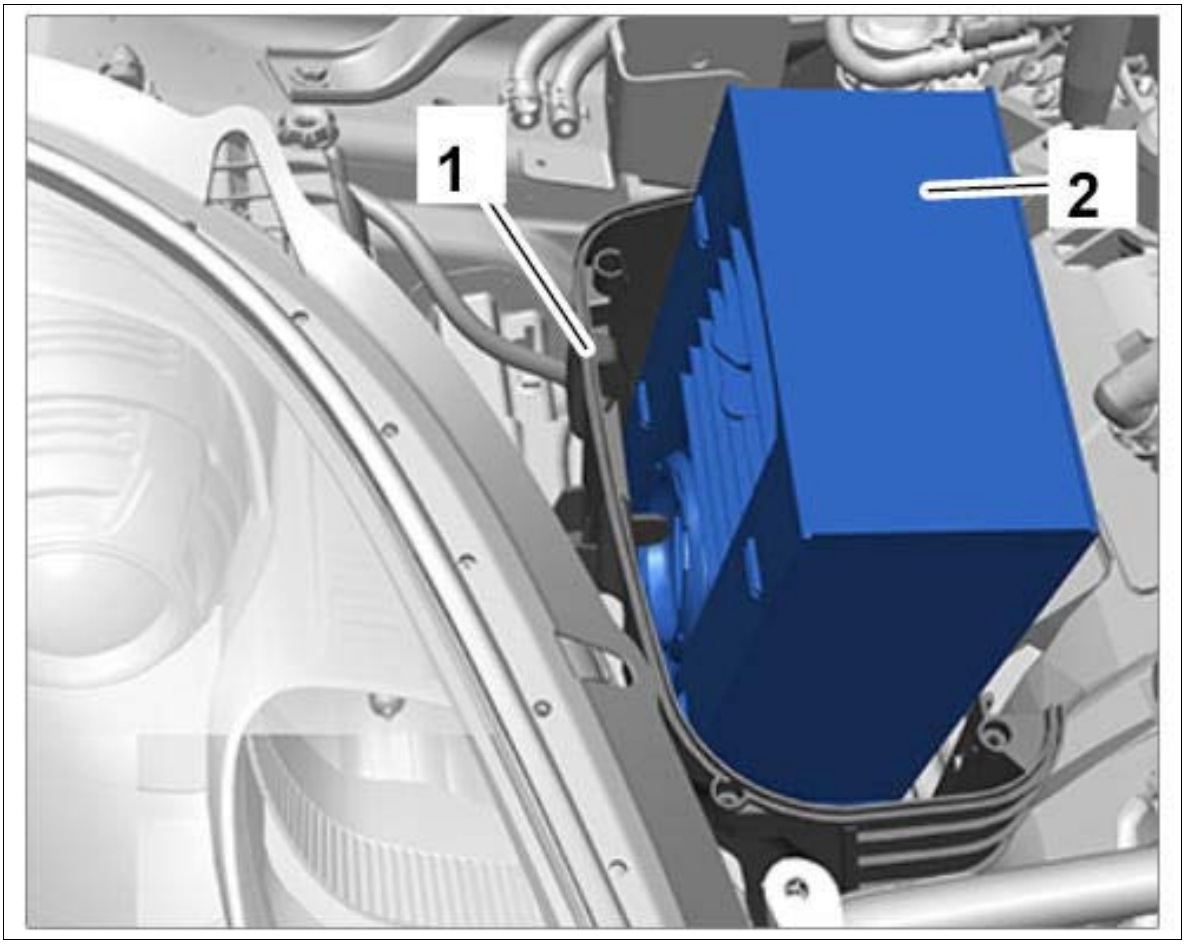

Courtesy of PORSCHE CARS NORTH AMERICA, INC.

WM 242419 REMOVING AND INSTALLING AIR-CLEANER ELEMENT (MACAN S, MACAN TURBO) > REMOVING AIR-CLEANER ELEMENT > REMOVING AIR-CLEANER ELEMENT FOR CYLINDER BANK 2

1. Pull off change-over valve **-1-** in **-direction of arrow -** .

Fig 1: Pulling Change-Over Valve

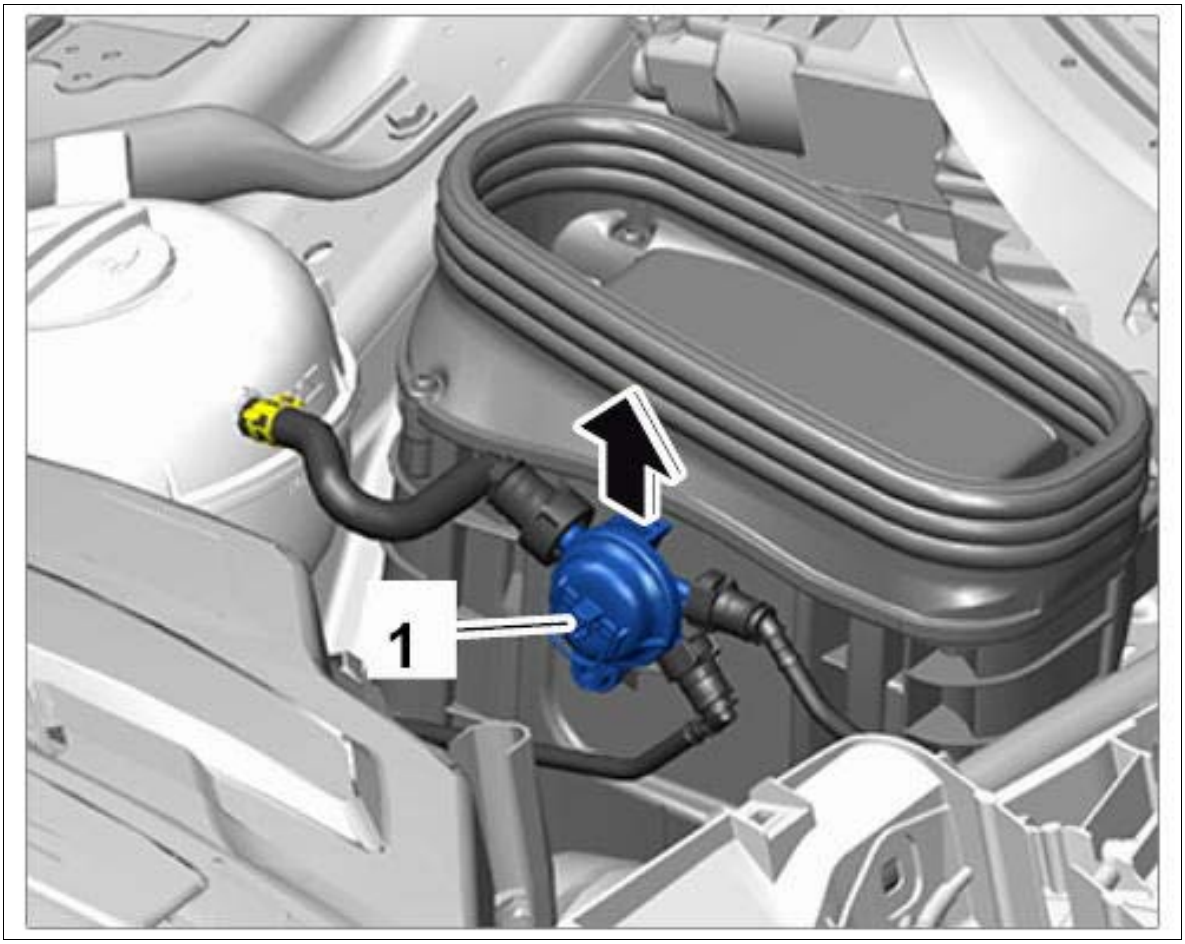

Courtesy of PORSCHE CARS NORTH AMERICA, INC.

2. Loosen fastening screws **-1-** and remove air cleaner housing cover.

Fig 2: Identifying Air Cleaner Housing Cover Screws

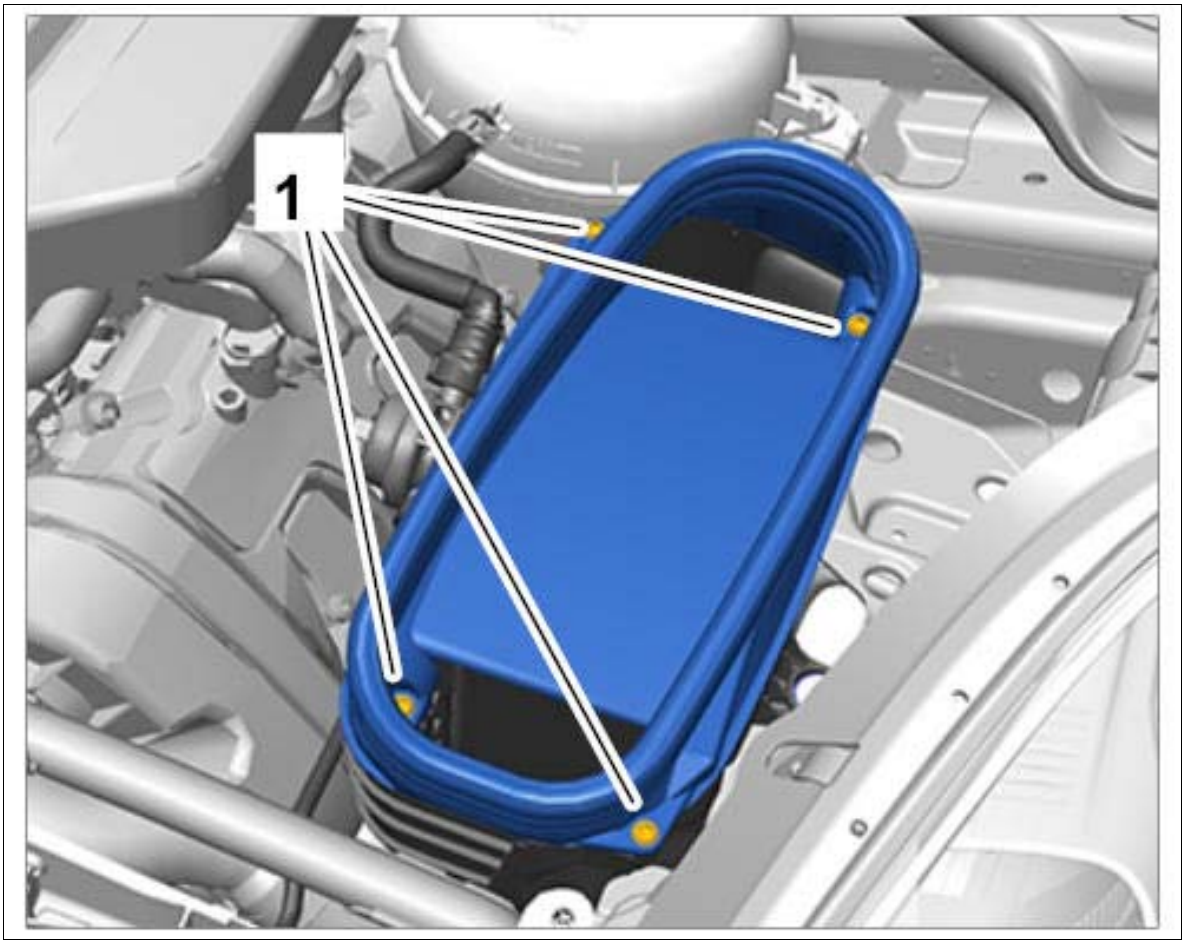

Courtesy of PORSCHE CARS NORTH AMERICA, INC.

3. Open cover **-2-** on air cleaner housing.

Fig 3: Identifying Air-Cleaner Element Cover

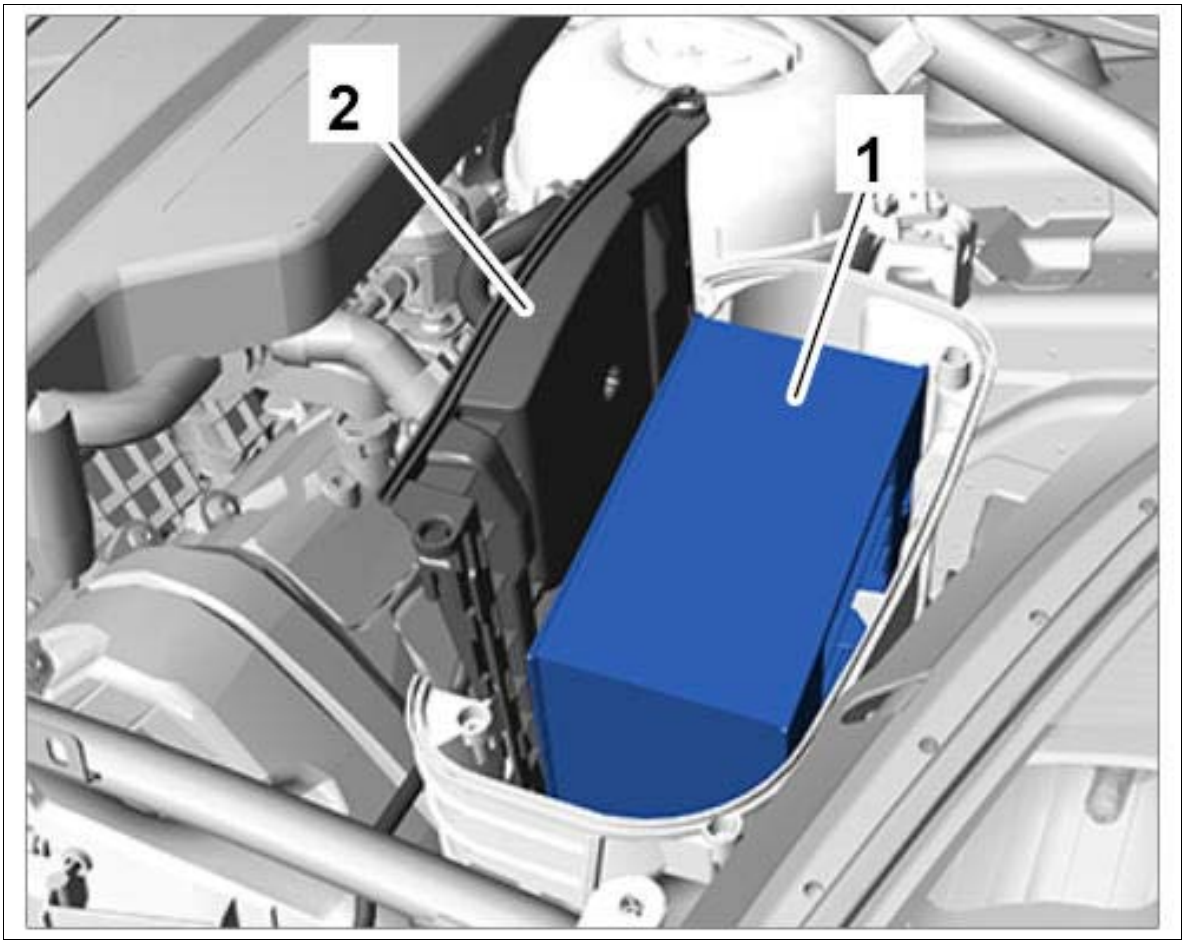

Courtesy of PORSCHE CARS NORTH AMERICA, INC.

4. Remove air-cleaner element **-2-** from air cleaner housing **-1-** .

Fig 4: Identifying Air-Cleaner Element And Housing

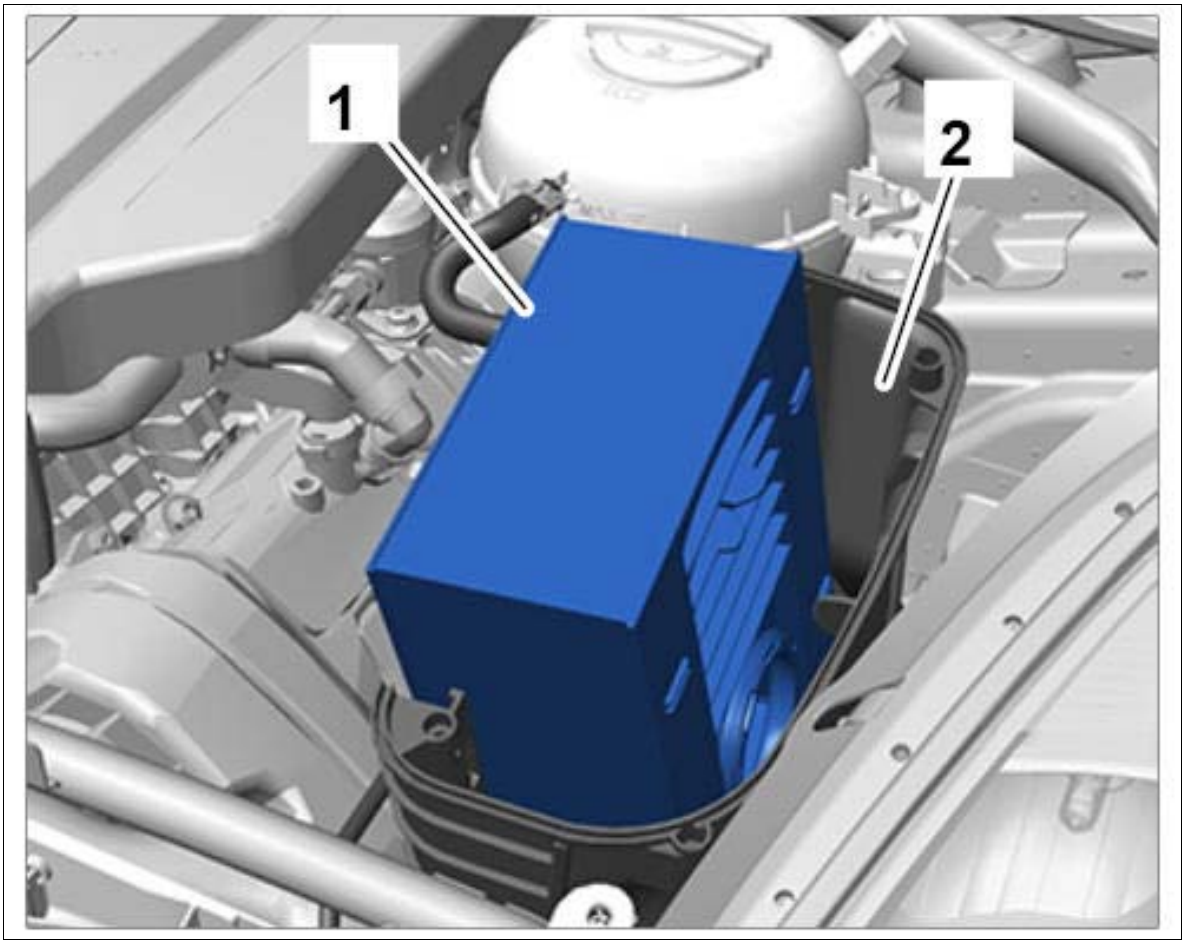

Courtesy of PORSCHE CARS NORTH AMERICA, INC.

WM 242419 REMOVING AND INSTALLING AIR-CLEANER ELEMENT (MACAN S, MACAN TURBO) > INSTALLING AIR-CLEANER ELEMENT > INSTALLING AIR-CLEANER ELEMENT FOR CYLINDER BANK 1

Information

- Always use an original air-cleaner element.
- The air cleaner housing must always be perfectly clean.
- Use (silicone-free) sliding compound for fitting the air guide hoses.
- Secure all hose connections with standard hose clamps.
- Always check the following when blowing out the air cleaner housing: To avoid malfunctions, cover critical air-supply components, such as air guide pipes, etc. with a clean cloth.
- Observe disposal regulations!

1. Position air-cleaner element **-2-** in air cleaner housing **-1-** .

Fig 1: Identifying Air-Cleaner Element

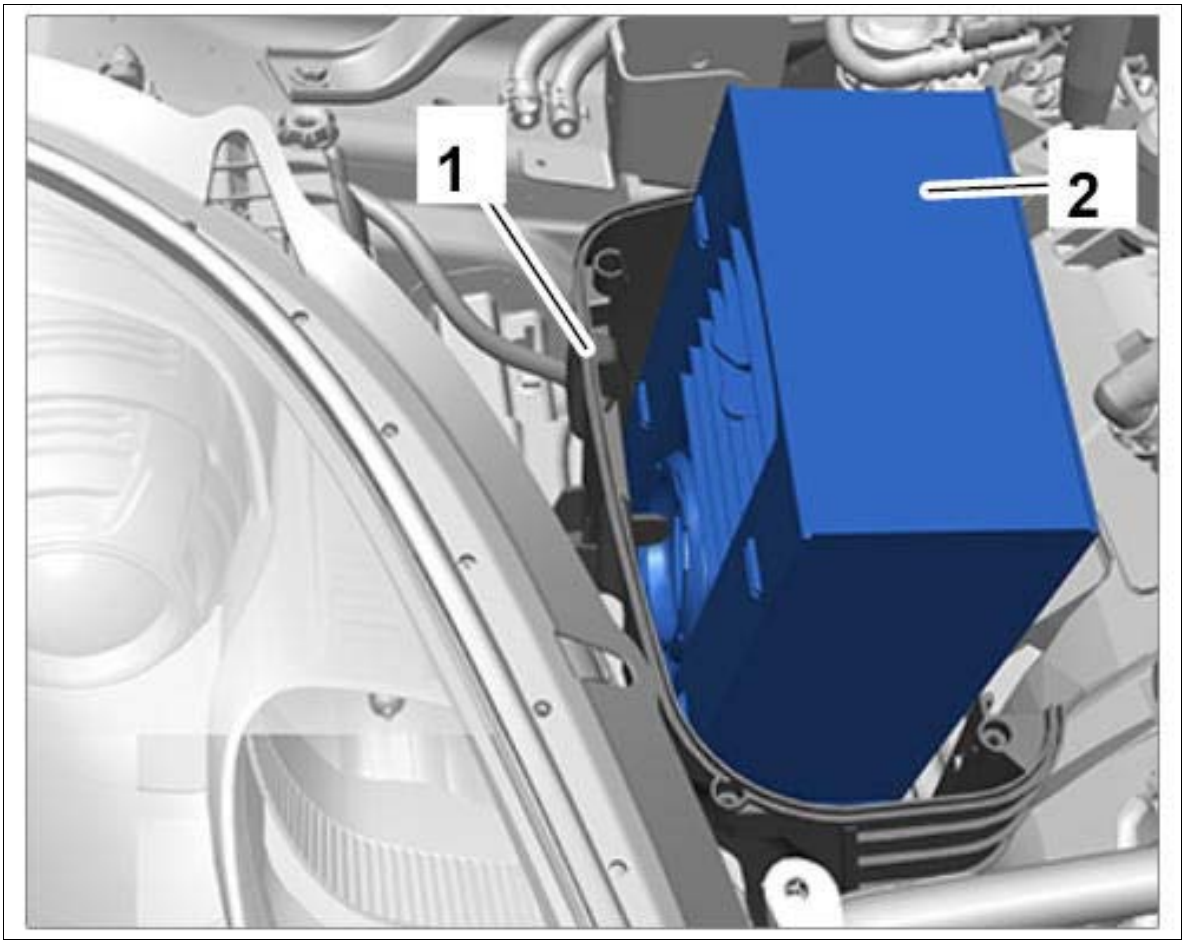

Courtesy of PORSCHE CARS NORTH AMERICA, INC.

2. Position and close cover **-2-** on air cleaner housing.

Fig 2: Identifying Air-Cleaner Element Cover

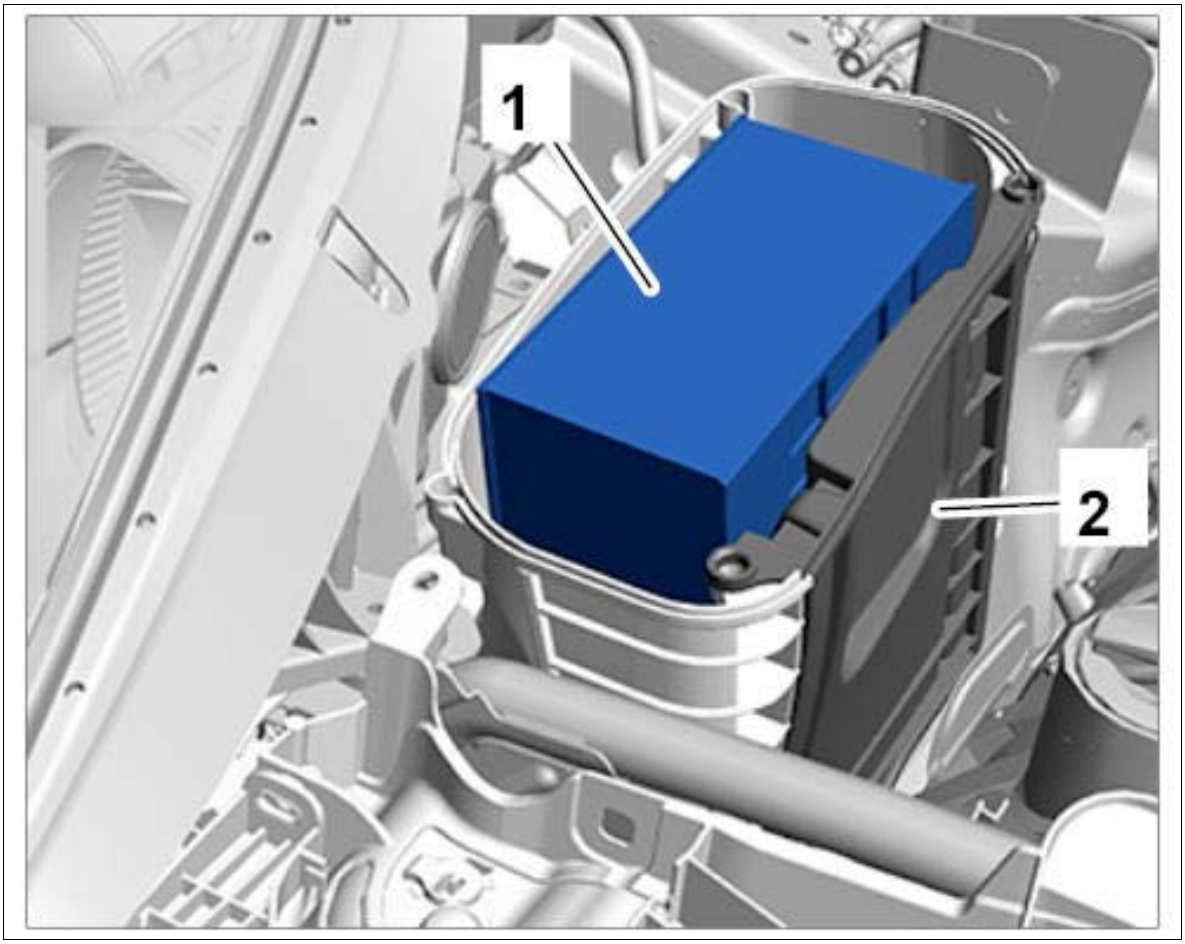

Courtesy of PORSCHE CARS NORTH AMERICA, INC.

3. Position air cleaner housing cover and tighten fastening screws **-1-** . **Tightening torque 3.5 Nm (2.5 ftlb.)**

Fig 3: Identifying Air Cleaner Housing Cover



Courtesy of PORSCHE CARS NORTH AMERICA, INC.

WM 242419 REMOVING AND INSTALLING AIR-CLEANER ELEMENT (MACAN S, MACAN TURBO) > INSTALLING AIR-CLEANER ELEMENT > INSTALLING AIR-CLEANER ELEMENT FOR CYLINDER BANK 2

Information

- Always use an original air-cleaner element.
- The air cleaner housing must always be perfectly clean.
- Use (silicone-free) sliding compound for fitting the air guide hoses.
- Secure all hose connections with standard hose clamps.
- Always check the following when blowing out the air cleaner housing: To avoid malfunctions, cover critical air-supply components, such as air guide pipes, etc. with a clean cloth.
- Observe disposal regulations!

1. Position air-cleaner element **-2-** in air cleaner housing **-1-** .

Fig 1: Identifying Air-Cleaner Element And Housing

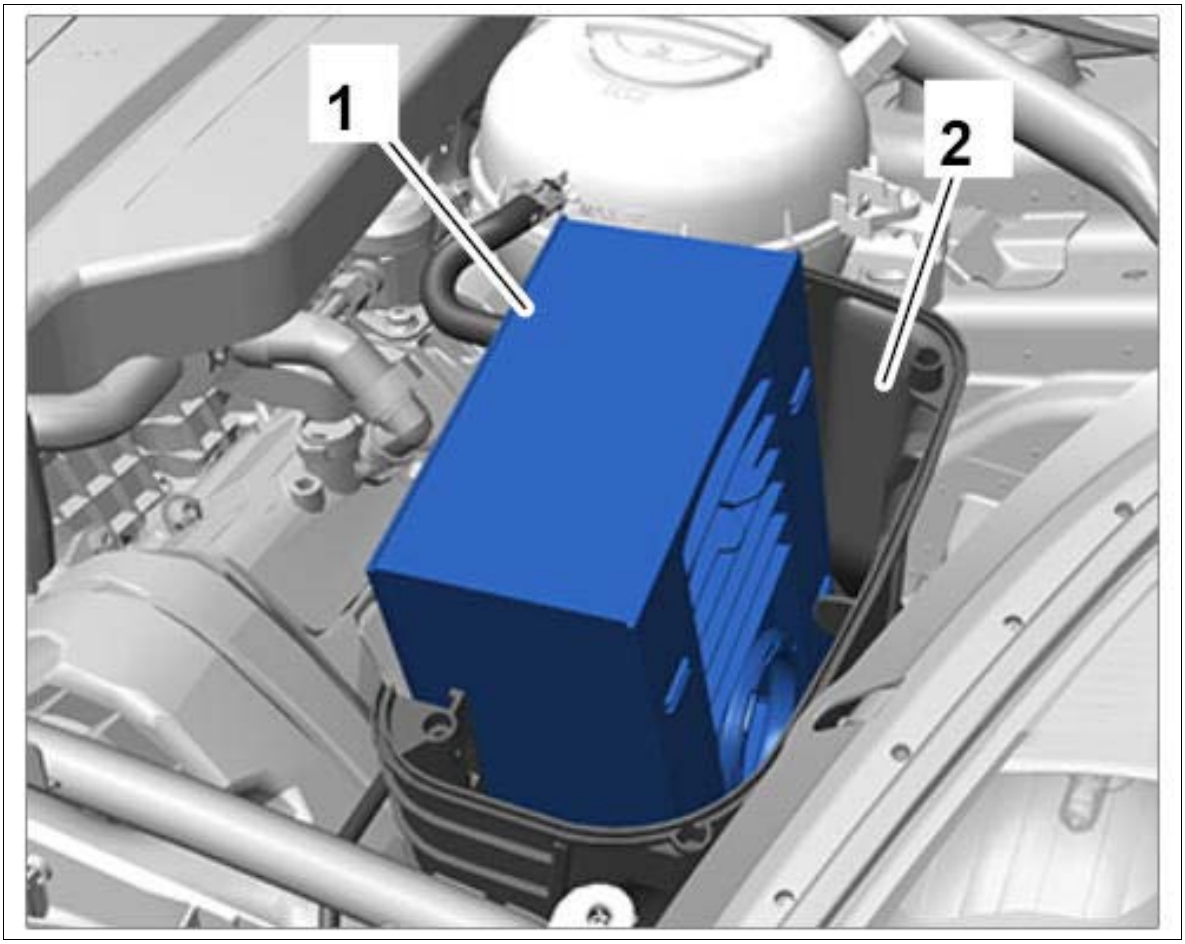

Courtesy of PORSCHE CARS NORTH AMERICA, INC.

2. Position and close cover **-2-** on air cleaner housing.

Fig 2: Identifying Air-Cleaner Element Cover

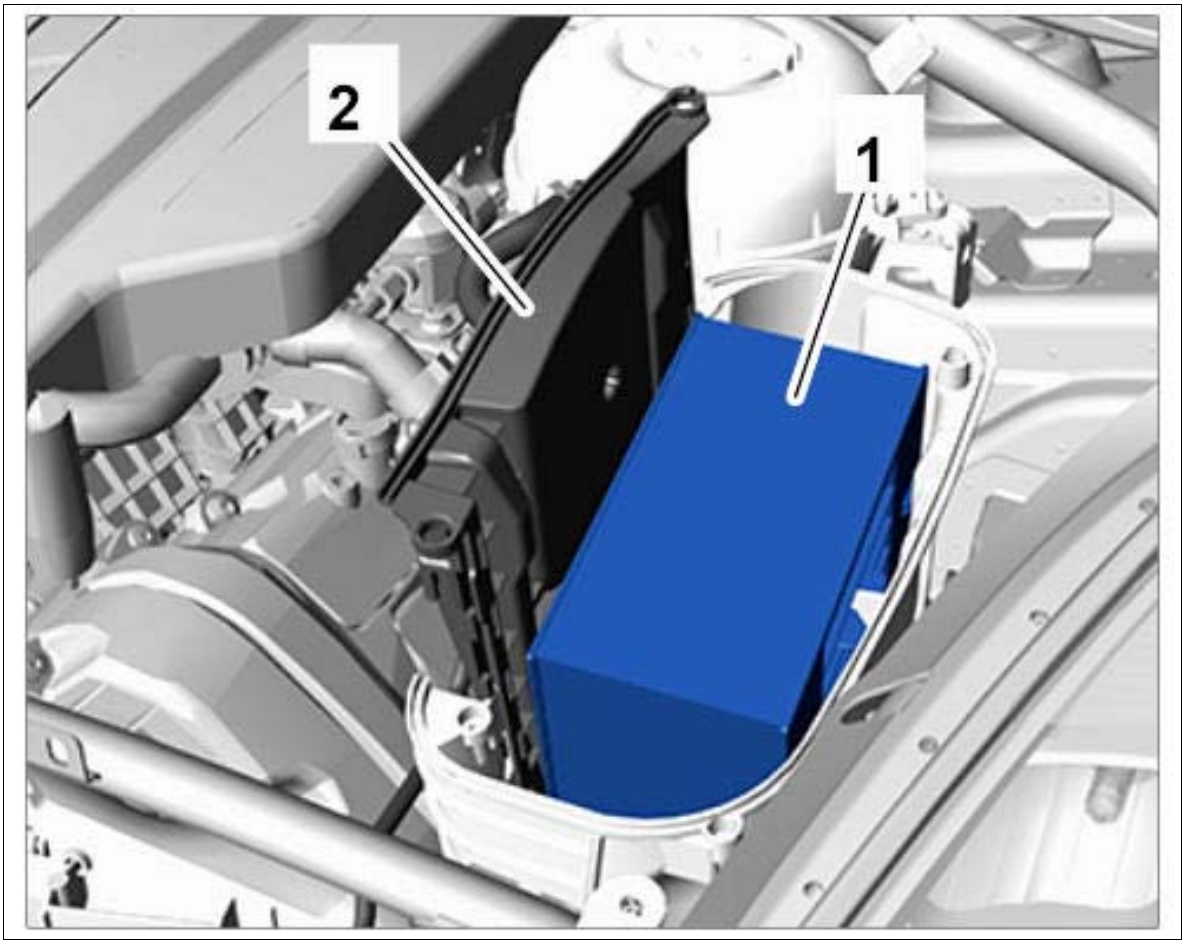

Courtesy of PORSCHE CARS NORTH AMERICA, INC.

3. Position air cleaner housing cover and tighten fastening screws **-1-** . **Tightening torque 3.5 Nm (2.5 ftlb.)**

Fig 3: Identifying Air Cleaner Housing Cover Screws

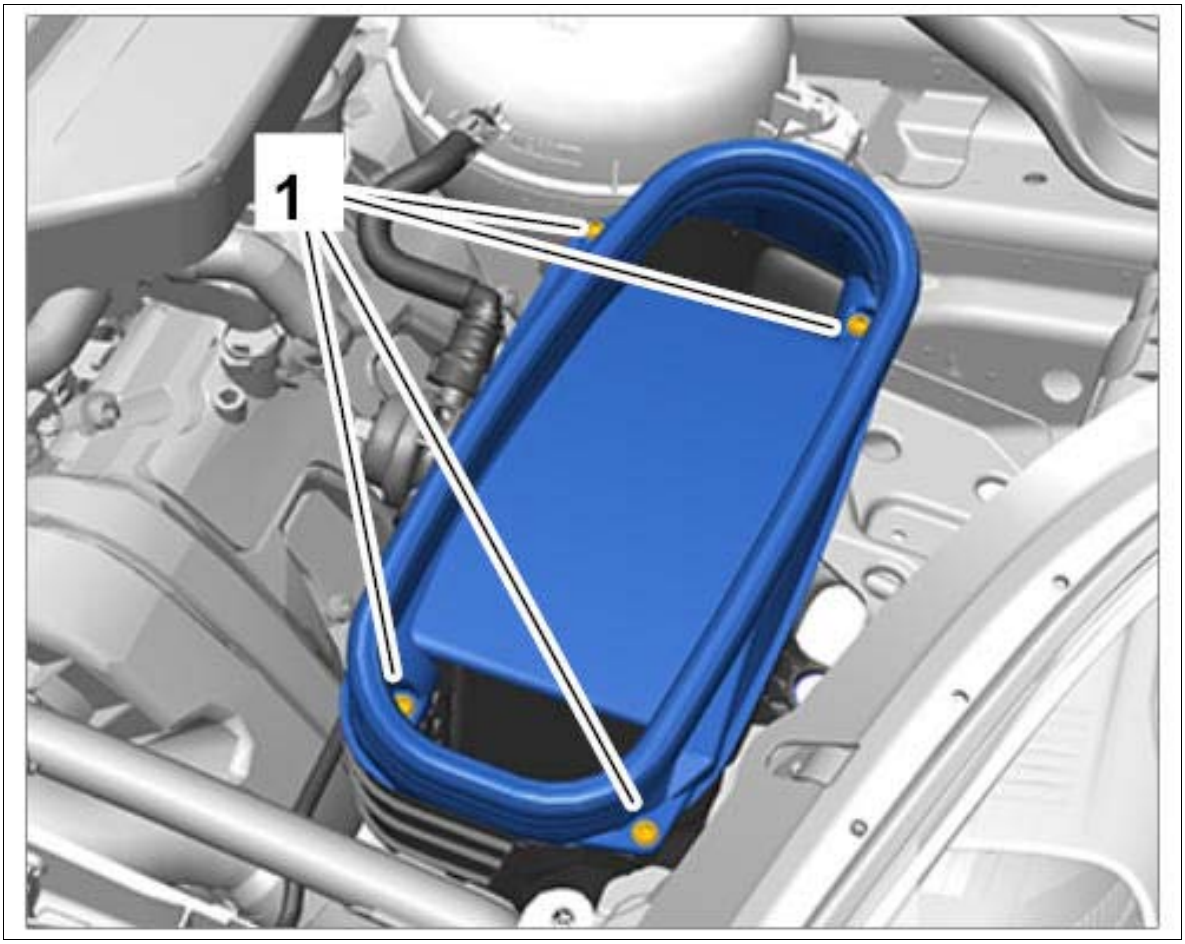

Courtesy of PORSCHE CARS NORTH AMERICA, INC.

4. Fit change-over valve **-1-** on the holder in **-direction of arrow -** .

Fig 4: Installing Change-Over Valve

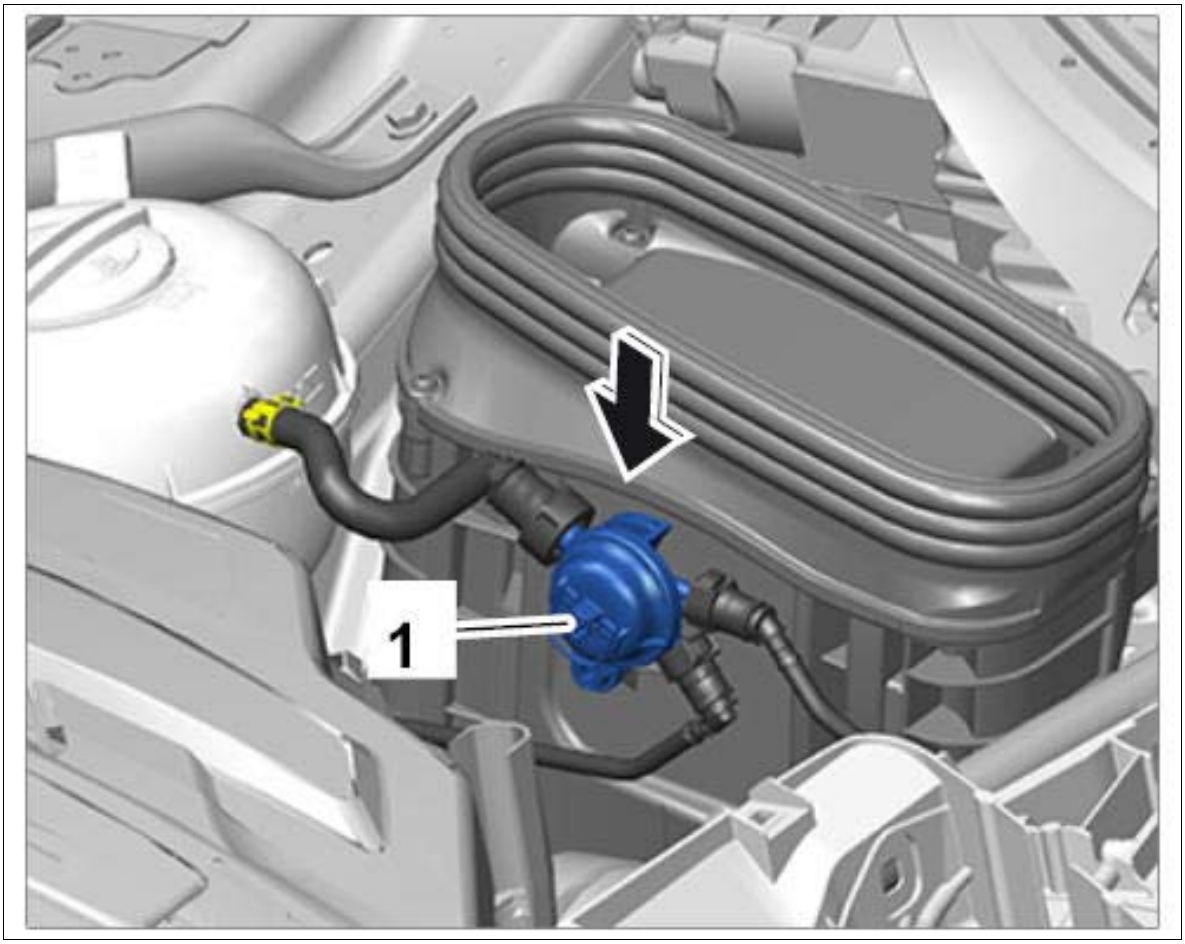

Courtesy of PORSCHE CARS NORTH AMERICA, INC.

WM 242519 REMOVING AND INSTALLING AIR CLEANER HOUSING (MACAN S, MACAN TURBO) > TECHNICAL VALUES

Location	Description	Type	Basic value	Tolerance 1	Tolerance 2
Fastening screws	Air cleaner housing cover to air cleaner housing	Tightening torque	3.5 Nm (2.5 ftlb.)		
Fastening screws	Air cleaner housing to body	Tightening torque	3.5 Nm (2.5 ftlb.)		
Fastening bolt	Fastening bolt on air guide	Torque angle	90°		

WM 242519 REMOVING AND INSTALLING AIR CLEANER HOUSING (MACAN S,

MACAN TURBO) > TECHNICAL VALUES > ASSEMBLY OVERVIEW - AIR CLEANER

Fig 1: Overview Of Air Cleaner

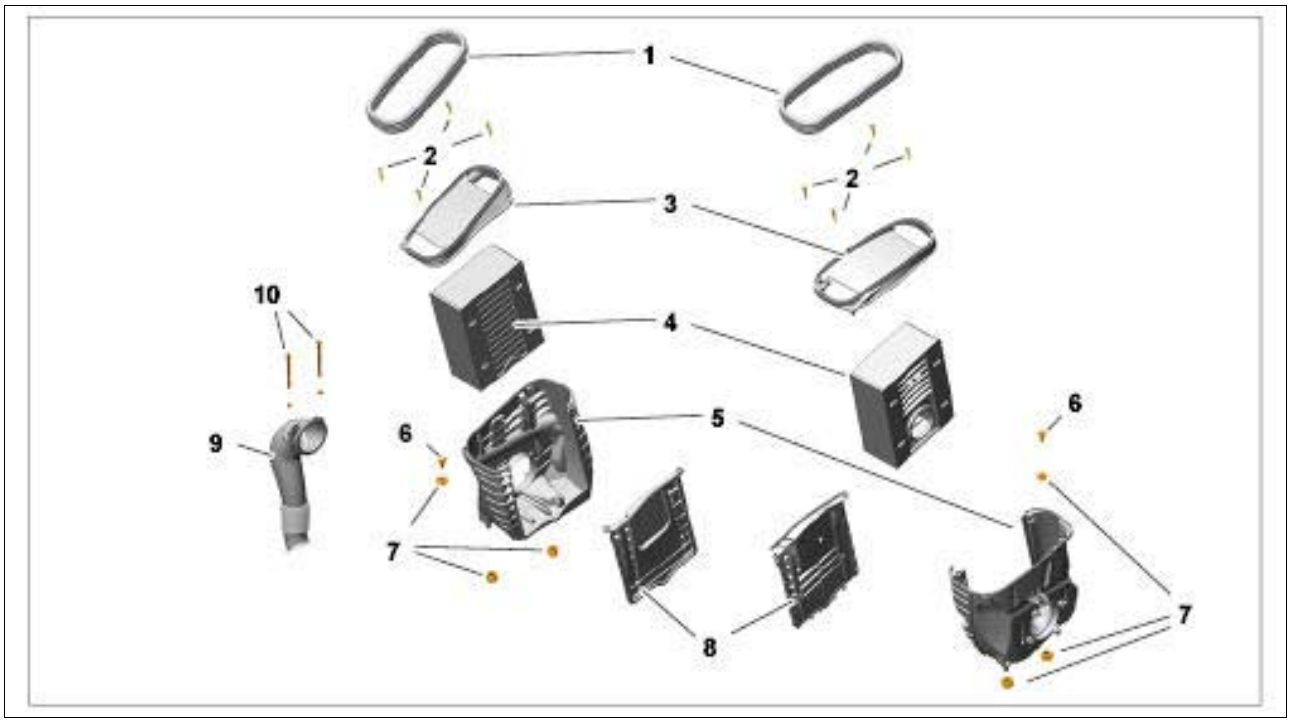

Courtesy of PORSCHE CARS NORTH AMERICA, INC.

1. Rubber seal
2. Fastening screws → **Tightening torque: 3.5 Nm (2.5 ftlb.)**
3. Air cleaner housing cover
4. Air-cleaner element
5. Air cleaner housing
6. Fastening screws → **Tightening torque: 3.5 Nm (2.5 ftlb.)**
7. Rubber sleeves
8. Air-cleaner element cover
9. Air guide
10. Fastening bolt → **Torque angle: 90°**

WM 242519 REMOVING AND INSTALLING AIR CLEANER HOUSING (MACAN S, MACAN TURBO) > INFORMATION > COMPONENT OVERVIEW - AIR CLEANER HOUSING

Fig 1: Overview Of Air Cleaner Housing

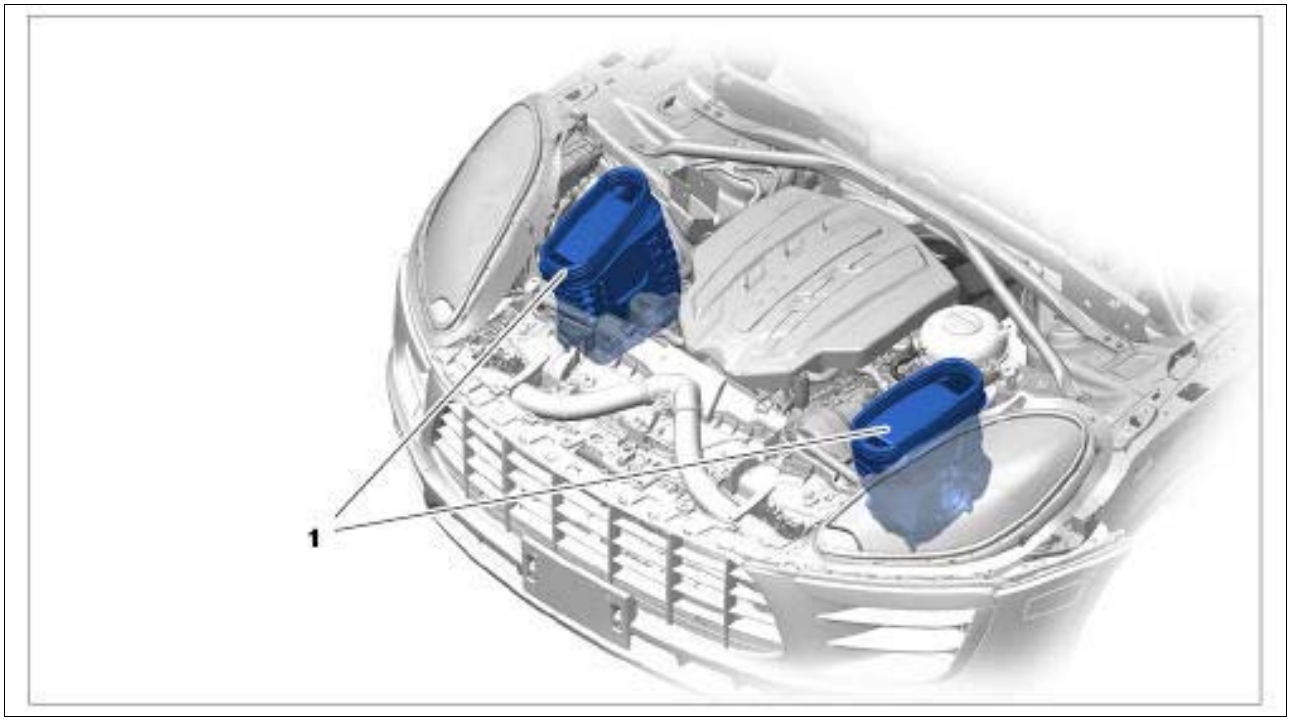

Courtesy of PORSCHE CARS NORTH AMERICA, INC.

1. Air cleaner housing

WM 242519 REMOVING AND INSTALLING AIR CLEANER HOUSING (MACAN S, MACAN TURBO) > PRELIMINARY WORK

1. Remove front wheel housing liner. → 505619 REMOVING AND INSTALLING FRONT WHEEL HOUSING LINER

WM 242519 REMOVING AND INSTALLING AIR CLEANER HOUSING (MACAN S, MACAN TURBO) > REMOVING AIR CLEANER HOUSING

1. Loosen fastening screw **-1-** and press air cleaner housing **-2-** aside carefully in **-direction of arrow-** .

Fig 1: Removing Air Cleaner Housing

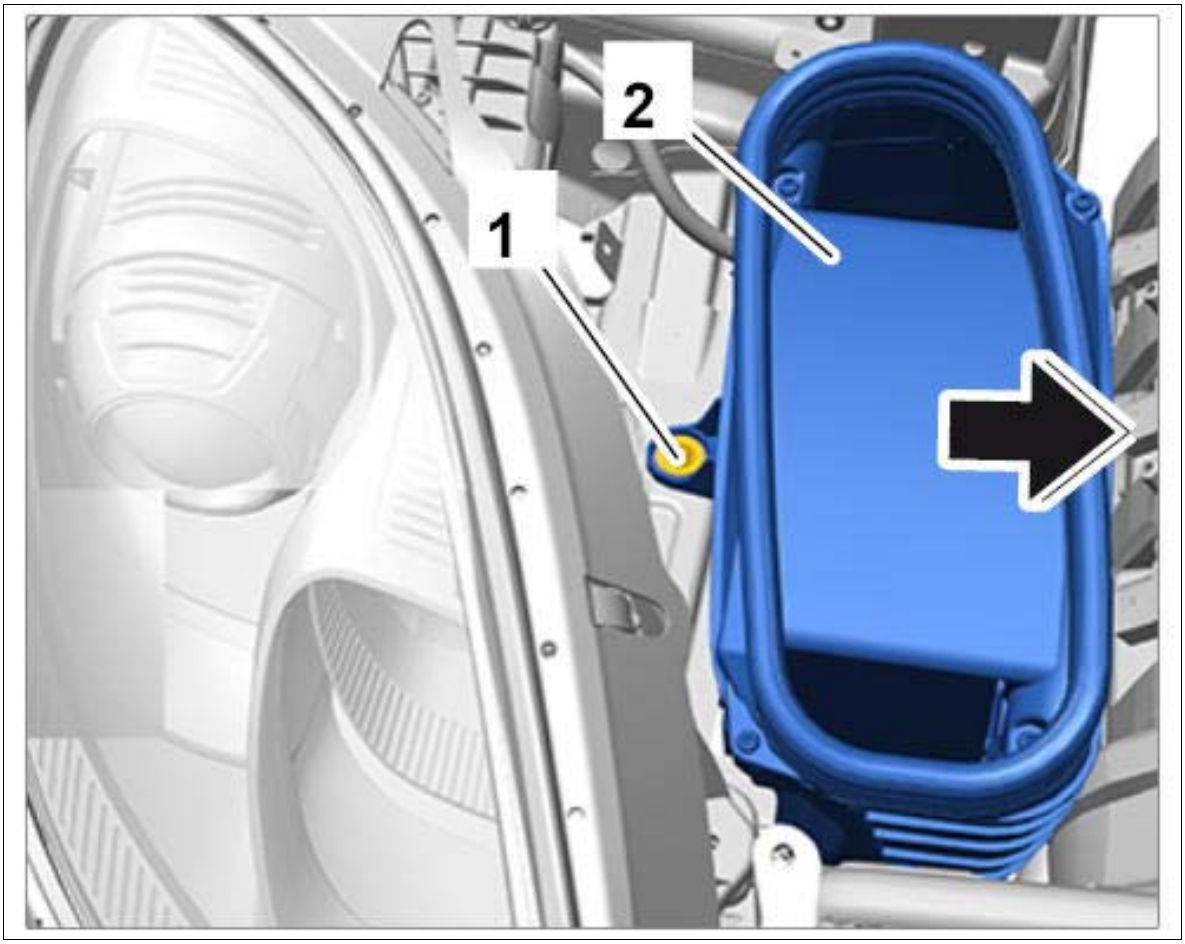

Courtesy of PORSCHE CARS NORTH AMERICA, INC.

Information

1. Loosen and secure fastening bolts only in the specified direction
2. Turn fastening bolts by max. 90°, otherwise the guide lugs will break off.
3. Replace damaged fastening bolts.

Fig 2: Identifying Air Cleaner Housing Fastening Bolts



Courtesy of PORSCHE CARS NORTH AMERICA, INC.

2. Remove fastening bolts **-1-** .
    1. 2.1. Press fastening bolts **-1-** down slightly and turn 90° in **-direction of arrow-** .
    2. 2.2. Pull out loosened fastening bolt **-2-** .

Fig 3: Identifying Air Cleaner Housing Fastening Bolts



Courtesy of PORSCHE CARS NORTH AMERICA, INC.

3. Pull air guide **-1-** out of air cleaner housing **-2-** .

Fig 4: Identifying Air Guide And Air Cleaner Housing

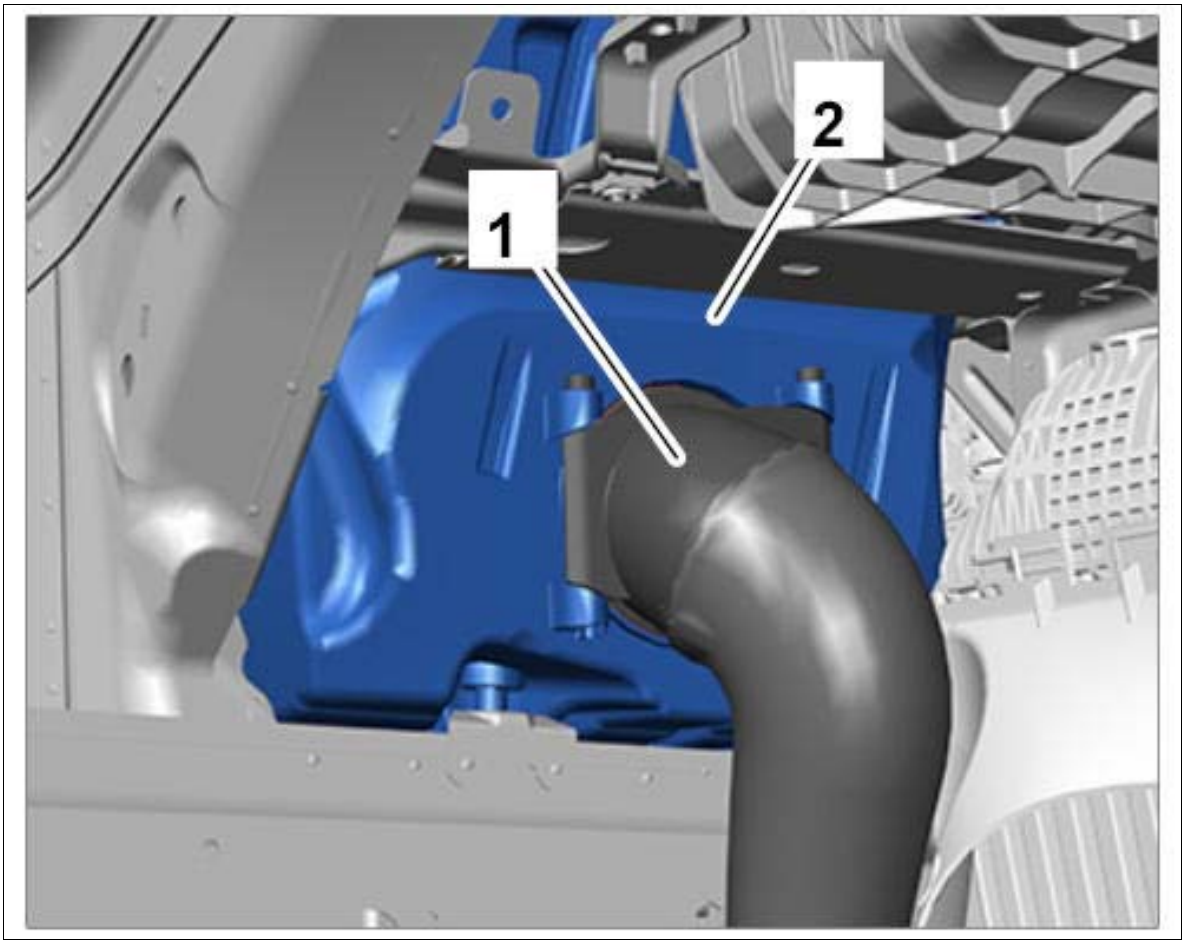

Courtesy of PORSCHE CARS NORTH AMERICA, INC.

4. Remove air guide **-2-** , making sure that the rubber sleeves **-1-** do not fall down.

Fig 5: Identifying Air Guide And Rubber Sleeve



Courtesy of PORSCHE CARS NORTH AMERICA, INC.

WM 242519 REMOVING AND INSTALLING AIR CLEANER HOUSING (MACAN S, MACAN TURBO) > INSTALLING AIR CLEANER HOUSING

1. Check that the rubber sleeves **-1-** are seated correctly and position air cleaner housing **-2-** in the engine compartment, making sure that the rubber sleeves **-1-** do not fall out.

Fig 1: Identifying Air Guide And Rubber Sleeve



Courtesy of PORSCHE CARS NORTH AMERICA, INC.

2. Position air guide **-1-** in air cleaner housing **-2-** .

Fig 2: Identifying Air Guide And Air Cleaner Housing

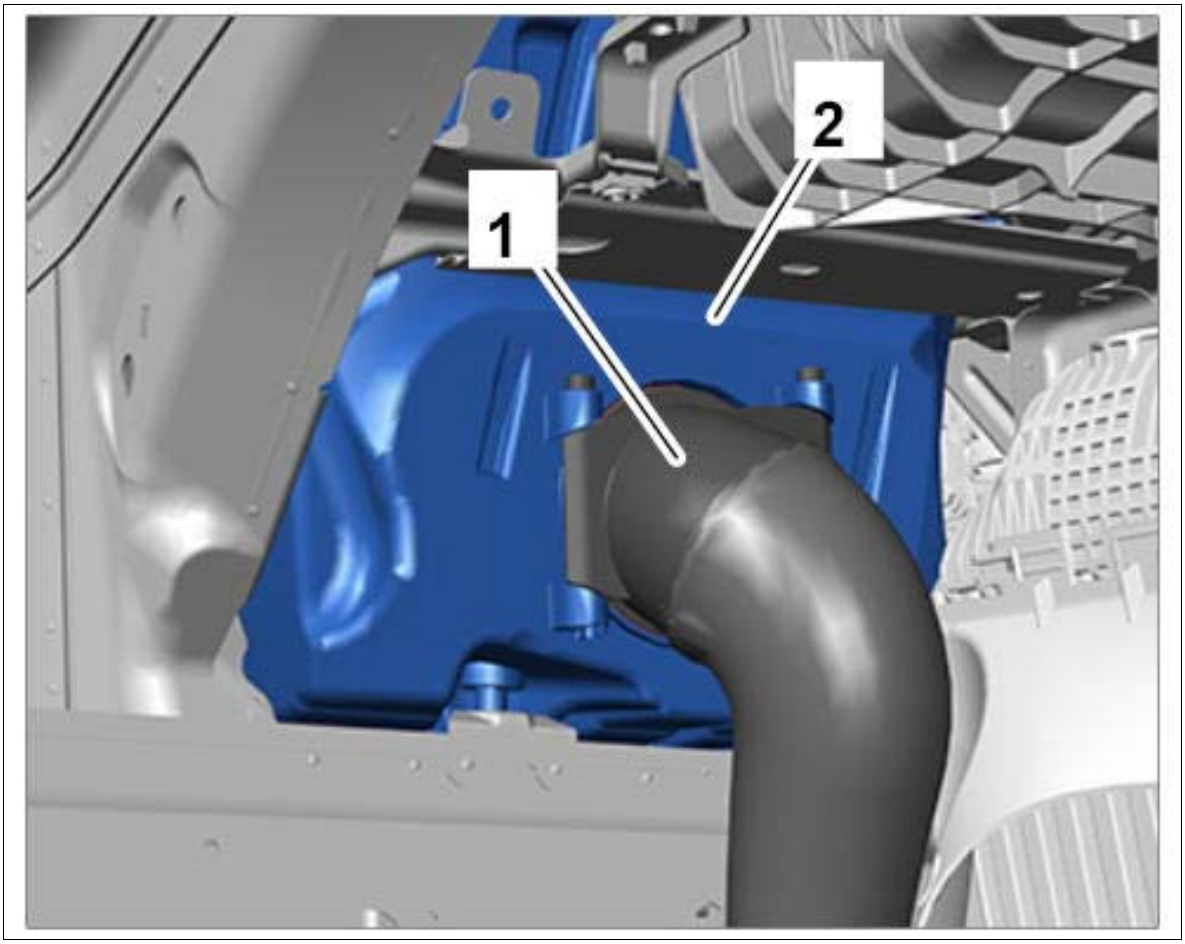

Courtesy of PORSCHE CARS NORTH AMERICA, INC.

Information

1. Loosen and secure fastening bolts only in the specified direction
2. Turn fastening bolts by max. 90°, otherwise the guide lugs will break off.
3. Replace damaged fastening bolts.

Fig 3: Identifying Air Cleaner Housing Fastening Bolts



Courtesy of PORSCHE CARS NORTH AMERICA, INC.

3. Tighten fastening bolts **-2-** .

    1. 3.1. Position fastening bolts **-2-** in air cleaner housing and turn in **-direction of arrow -** by 90° **-1-** . **Torque angle 90°**

Fig 4: Locating Air Cleaner Housing Fastening Bolts



Courtesy of PORSCHE CARS NORTH AMERICA, INC.

4. Position air cleaner housing **-2-** in **-direction of arrow -** and tighten fastening screw **-1-** . **Tightening torque 3.5 Nm (2.5 ftlb.)**

Fig 5: Securing Air Cleaner Housing

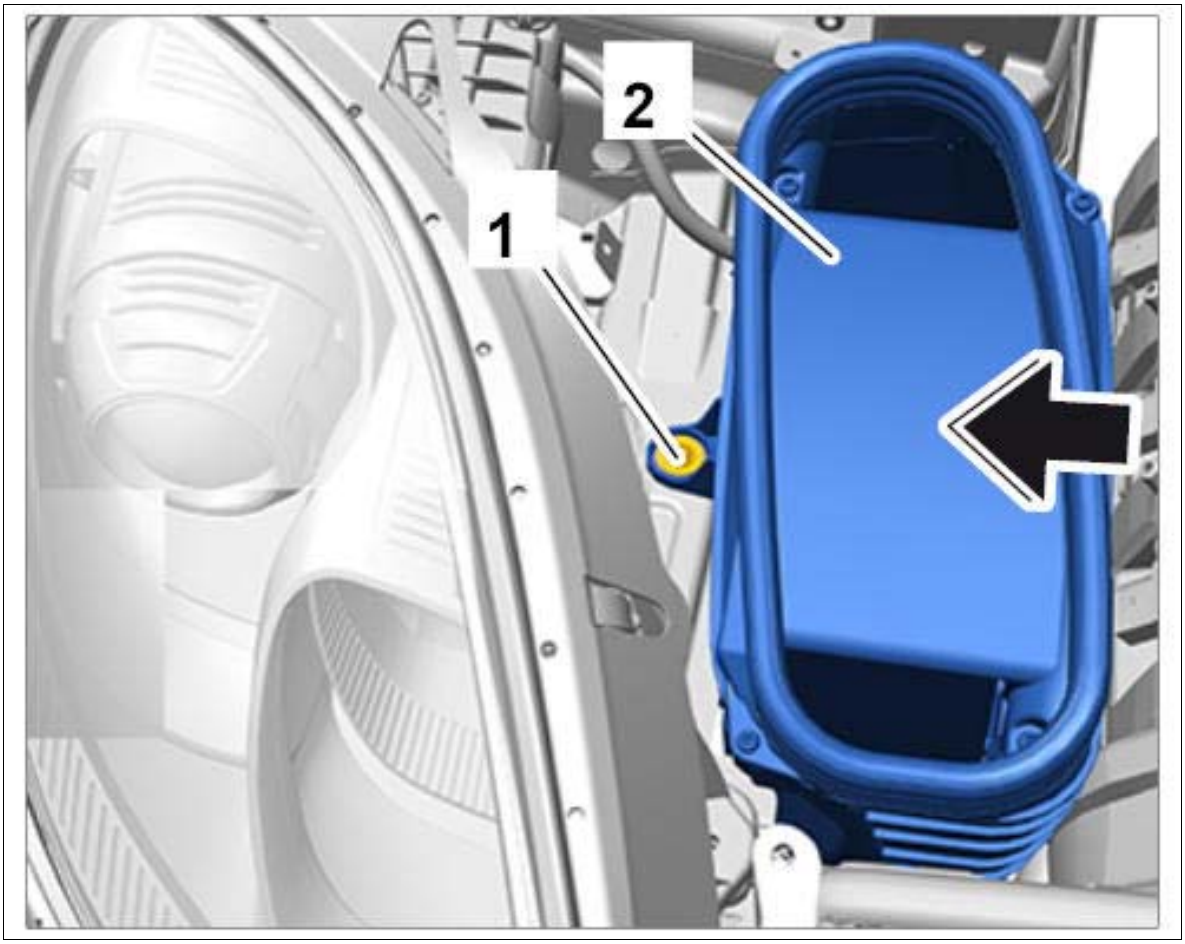

Courtesy of PORSCHE CARS NORTH AMERICA, INC.

WM 242519 REMOVING AND INSTALLING AIR CLEANER HOUSING (MACAN S, MACAN TURBO) > SUBSEQUENT WORK

1. Install wheel housing liner. → 505619 REMOVING AND INSTALLING FRONT WHEEL HOUSING LINER

WM 243019 REMOVING AND INSTALLING FUEL COLLECTION PIPE (MACAN S, MACAN TURBO) > PRELIMINARY WORK

1. Remove intake-air distributor. → 244619 REMOVING AND INSTALLING INTAKE-AIR DISTRIBUTOR .
2. Loosen high-pressure lines and remove them if necessary. → 249019 REMOVING AND INSTALLING FUEL LINE (HIGH-PRESSURE)

WM 243019 REMOVING AND INSTALLING FUEL COLLECTION PIPE (MACAN S, MACAN TURBO) > REMOVING FUEL COLLECTION PIPE

WARNING: Toxic substances

- *Danger of poisoning or suffocation*
- *Danger of burns to the eyes and skin*

→ Ventilate the work area well.

→ Never ingest or inhale.

→ Read specific information on the Hazard Sheet.

→ Do not smoke, eat or drink in the work area.

WARNING: Highly inflammable or explosive materials

- *Danger of fire or explosion*

→ Avoid contact with hot parts or sources of ignition.

→ Use suction to remove ignitable vapors.

→ Attach warning sign in a clearly visible position.

WARNING: Leaking fuel supply lines

- *Emerging fuel*
- *Risk of fire*

→ Perform leak test.

NOTE: Dirt on injection system components

- *Material damage*
- *Rough-running engine*
- *Bad exhaust emissions*

→ Thoroughly clean connection points and adjacent areas before loosening them. If the engine is very dirty, wash it before starting disassembly work.

→ Lay removed parts on a clean surface and cover them. Do not use fibre-shedding cloths.

→ Carefully cover components or seal them if repair work will not be carried out immediately. Place rubber caps on connections. Seal intake openings with film or adhesive tape.

→ Only install clean parts. Do not take spare parts out of the packaging until just before installation.

→ Never use compressed air when the system is open. Do not move the vehicle.

Information

- Do not bend high-pressure lines. Check that the connection points are not damaged and are perfectly clean and make sure there is no thread damage. Fit union nuts on all connection points by hand before screwing in screws or bolts. Remove dirt on the conical/ball joints. Check connection points for leaks following fitting.

Information

- The ignition must be switched off when working on the fuel system.
- Absorb any escaping fuel using a suitable binding material or a cloth.
- Cloths which have absorbed fuel must be disposed of according to the applicable national laws.
- The fuel system must be depressurized before starting work on it.
- Only work on the fuel system in well-ventilated rooms.
- Any seals which have been removed must always be replaced.

1. Unscrew fastening screws **-5-** .

   Fig 1: Identifying Fuel Injectors Components

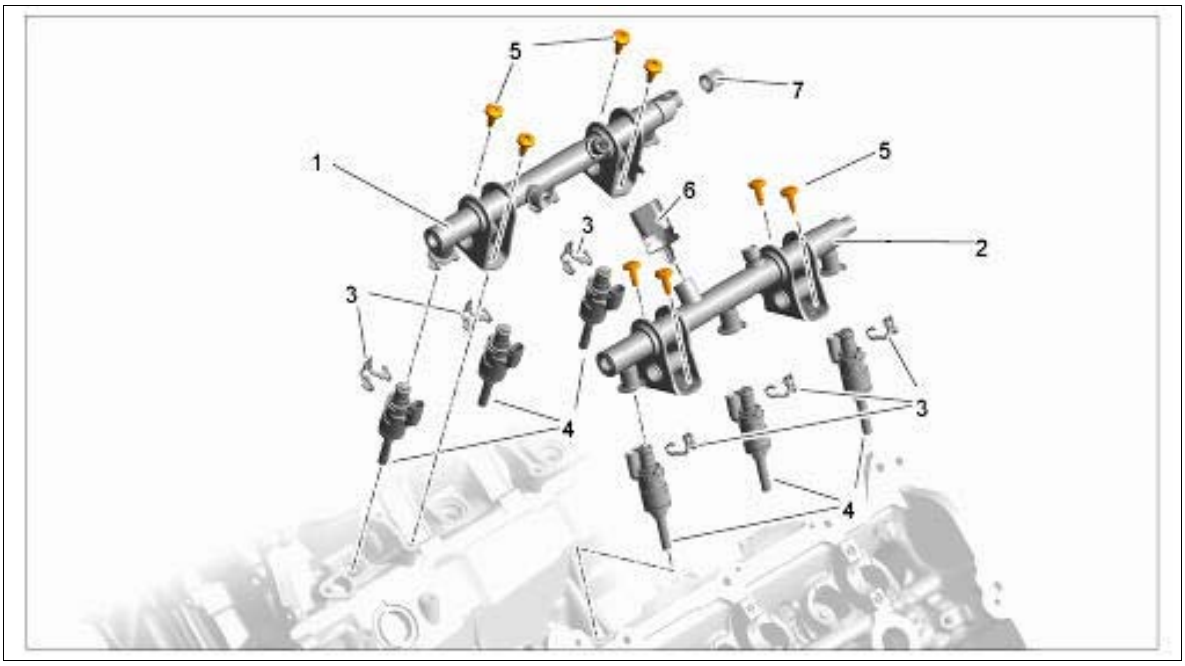

Courtesy of PORSCHE CARS NORTH AMERICA, INC.

2. Loosen retaining clips using a screwdriver. → Retaining clips on fuel injectors

Fig 2: Loosening Fuel Injectors Retaining Clips

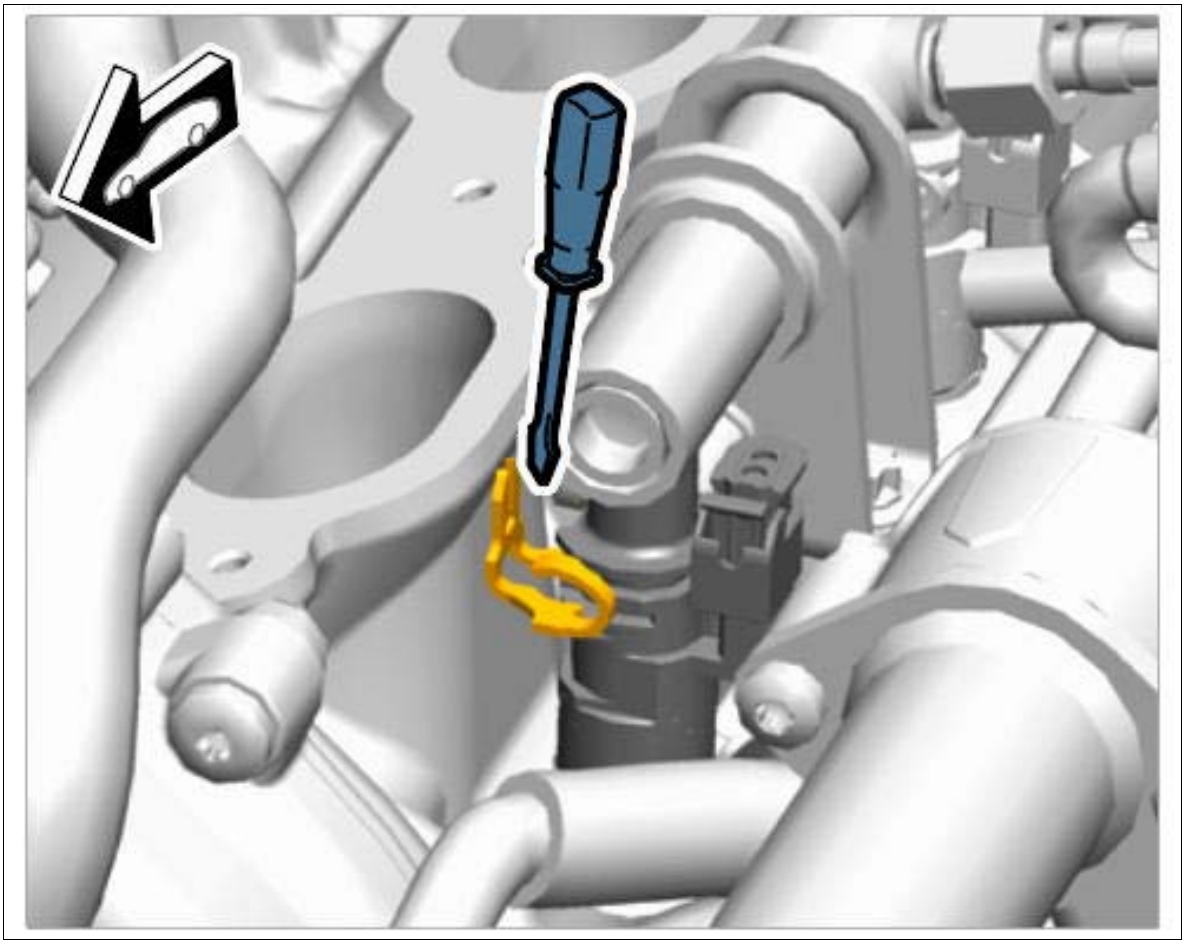

Courtesy of PORSCHE CARS NORTH AMERICA, INC.

For cylinders 1 - 3

3. Remove fuel collection pipe **-1-** .

    1. 3.1. Place fuel collection pipe **-1-** on a clean surface.

For cylinders 4 - 6

4. Remove fuel collection pipe **-2-** .

    1. 4.1. Place fuel collection pipe **-2-** on a clean surface.

5. Remove retaining clips **-3-** .

Fig 3: Identifying Fuel Injectors Components

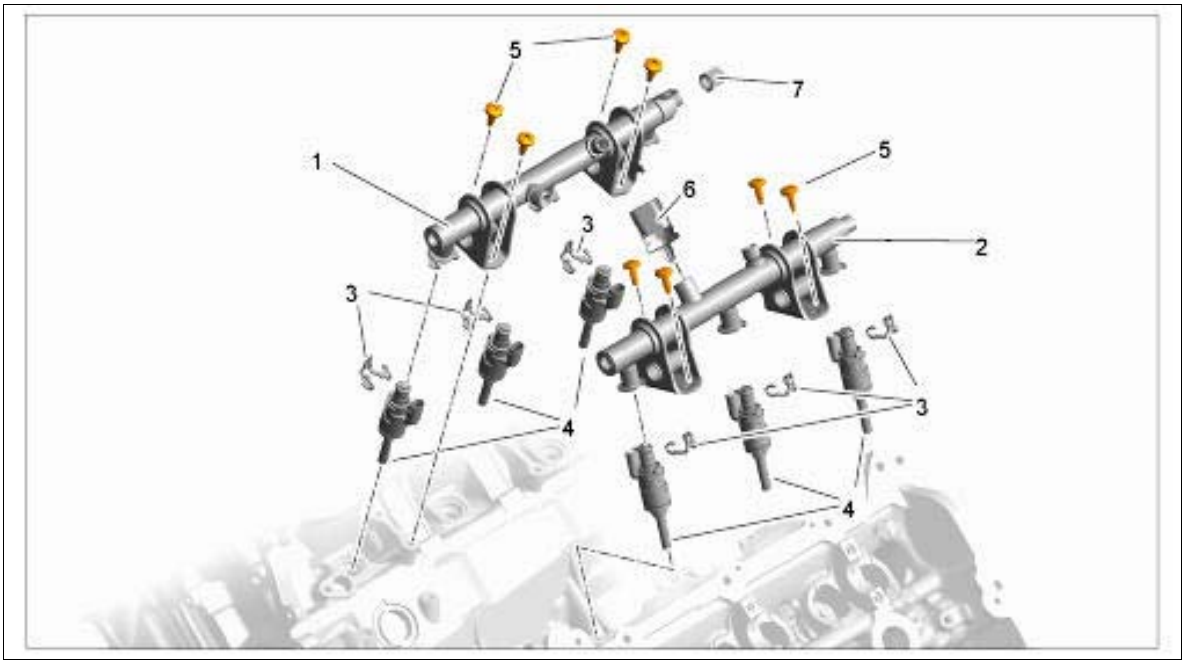

Courtesy of PORSCHE CARS NORTH AMERICA, INC.

WM 243019 REMOVING AND INSTALLING FUEL COLLECTION PIPE (MACAN S, MACAN TURBO) > INSTALLING FUEL COLLECTION PIPE

WARNING: Loose purge connection

- *Emerging fuel*
- *Risk of fire*

→ Check that the purge connection of the fuel distribution pipe is seated securely.

→ Tighten the purge connection of the fuel distribution pipe to the correct tightening torque.

Information

- Do not bend high-pressure lines. Check that the connection points are not damaged and are perfectly clean and make sure there is no thread damage. Fit union nuts on all connection points by hand before screwing in screws or bolts. Remove dirt on the conical/ball joints. Check connection points for leaks following fitting.

Information

- The ignition must be switched off when working on the fuel system.
- Absorb any escaping fuel using a suitable binding material or a cloth.
- Cloths which have absorbed fuel must be disposed of according to the applicable national laws.

- The fuel system must be depressurized before starting work on it.
- Only work on the fuel system in well-ventilated rooms.
- Any seals which have been removed must always be replaced.

1. Fit retaining clips **-3-** on the fuel injectors.

   For cylinders 1 - 3

2. Position fuel collection pipe **-1-** .

   For cylinders 4 - 6

3. Position fuel collection pipe **-2-** .
4. Tighten fastening screws **-5-** .
5. Clip in retaining clips **-3-** .

   Fig 1: Identifying Fuel Injectors Components

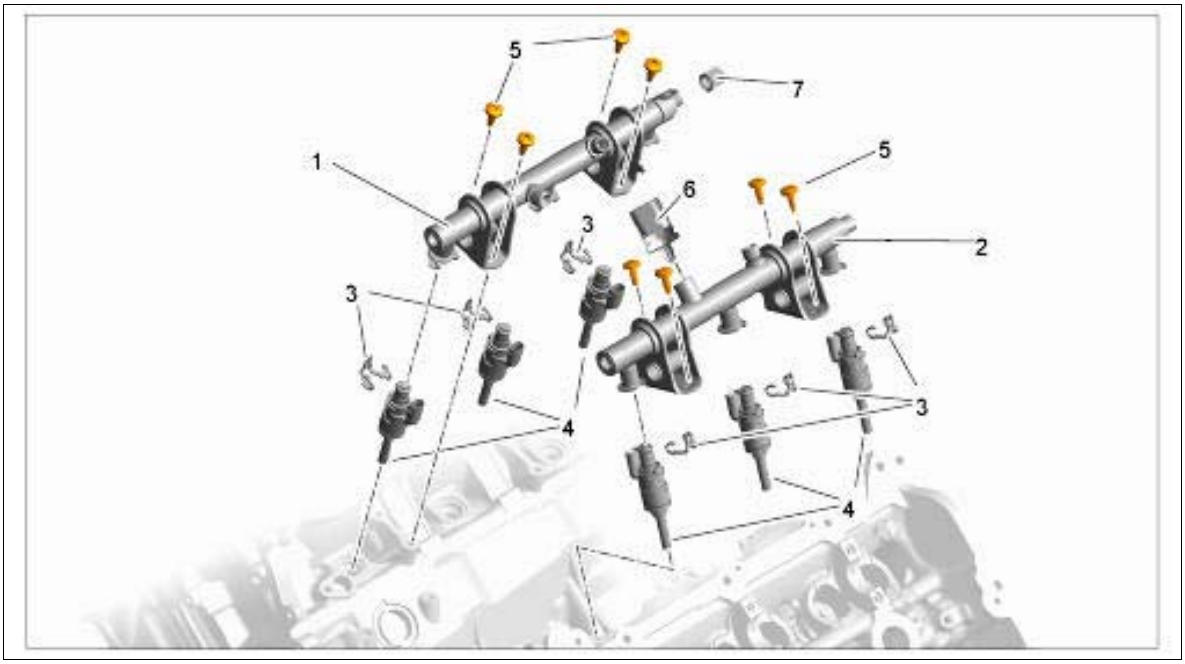

Courtesy of PORSCHE CARS NORTH AMERICA, INC.

WM 243019 REMOVING AND INSTALLING FUEL COLLECTION PIPE (MACAN S, MACAN TURBO) > SUBSEQUENT WORK

1. Install high-pressure lines. → Installing Fuel Line (High-Pressure)
2. Install intake-air distributor. → Installing Intake-Air Distributor .

WM 243519 REMOVING AND INSTALLING THROTTLE-HOUSING COVER (MACAN S,

MACAN TURBO) > PRELIMINARY WORK

1. Remove engine cover.

WM 243519 REMOVING AND INSTALLING THROTTLE-HOUSING COVER (MACAN S, MACAN TURBO) > REMOVING THROTTLE-HOUSING COVER

1. Remove throttle-housing cover.

    1. 1.1. Loosen screw type clamps **-arrow-** and remove cover **-1-** .

    Fig 1: Locating Throttle-Housing Cover And Clamps

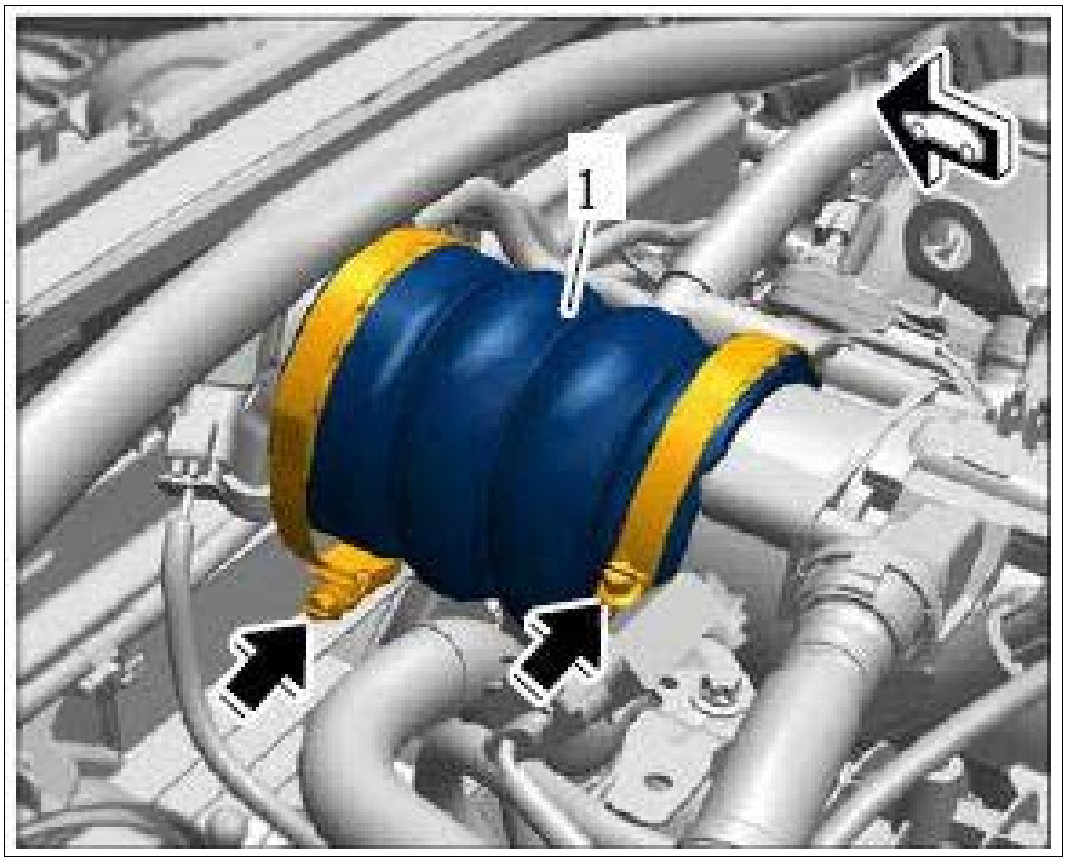

Courtesy of PORSCHE CARS NORTH AMERICA, INC.

WM 243519 REMOVING AND INSTALLING THROTTLE-HOUSING COVER (MACAN S, MACAN TURBO) > INSTALLING THROTTLE-HOUSING COVER

1. Installation is performed in reverse order.

    1. 1.1. Tighten screw-type clamps.

WM 243519 REMOVING AND INSTALLING THROTTLE-HOUSING COVER (MACAN S,

MACAN TURBO) > SUBSEQUENT WORK

1. Install engine cover.

WM 244019 REMOVING AND INSTALLING FUEL INJECTOR (MACAN) > TOOLS

Designation	Type	Number	Description	
Torque wrench, 2-10 Nm 1.5-7.5 ftlb.)	Workshop equipment	WE 1558		
Supplementary set	VW tool	T10133/11-15		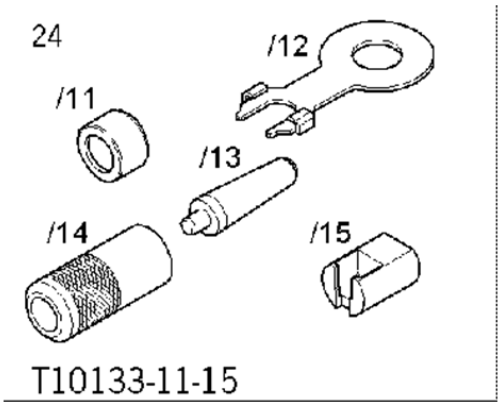
Disassembly tool	VW tool	T10133/16		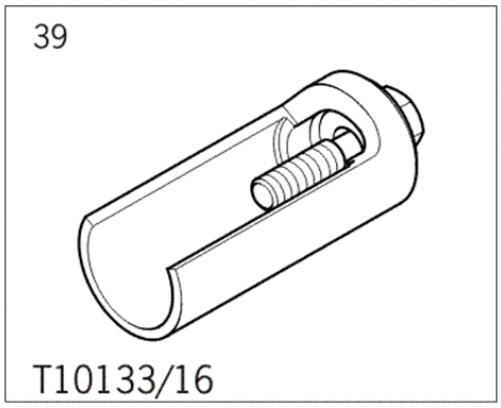

WM 244019 REMOVING AND INSTALLING FUEL INJECTOR (MACAN) > TECHNICAL VALUES

Location	Description	Type	Basic value	Tolerance 1	Tolerance 2
Fastening screw for fuel distributor for intake manifold injection		Tightening torque	9 Nm (6.5 ftlb.)		

WM 244019 REMOVING AND INSTALLING FUEL INJECTOR (MACAN) > PRELIMINARY WORK > PRELIMINARY WORK FOR FUEL INJECTORS FOR DIRECT FUEL INJECTION (DFI)

1. Remove intake-air distributor. → 244619 REMOVING AND INSTALLING INTAKE-AIR DISTRIBUTOR
2. Remove fuel collection pipe for direct fuel injection. → 243019 REMOVING AND INSTALLING FUEL COLLECTION PIPE
    1. 2.1. Carefully remove fuel injectors that remain in the fuel collection pipe.

WM 244019 REMOVING AND INSTALLING FUEL INJECTOR (MACAN) > TOOLS AND MATERIALS > TOOLS

Supplementary set T10133/11-15

Supplementary set T10133/11-15

Disassembly tool T10133/16

Torque wrench, 2-10 Nm (1.5-7.5 ftlb.) WE 1558

WM 244019 REMOVING AND INSTALLING FUEL INJECTOR (MACAN) > REMOVING FUEL INJECTORS > REMOVING FUEL INJECTORS FOR DIRECT FUEL INJECTION (DFI)

Information

- Close off open connections and lines using suitable stoppers or caps.

If fuel injectors remain in the cylinder head, the following procedure applies.

1. Push sleeve **T10133/18** over the fuel injector.

Fig 1: Identifying Sleeve T10133/18

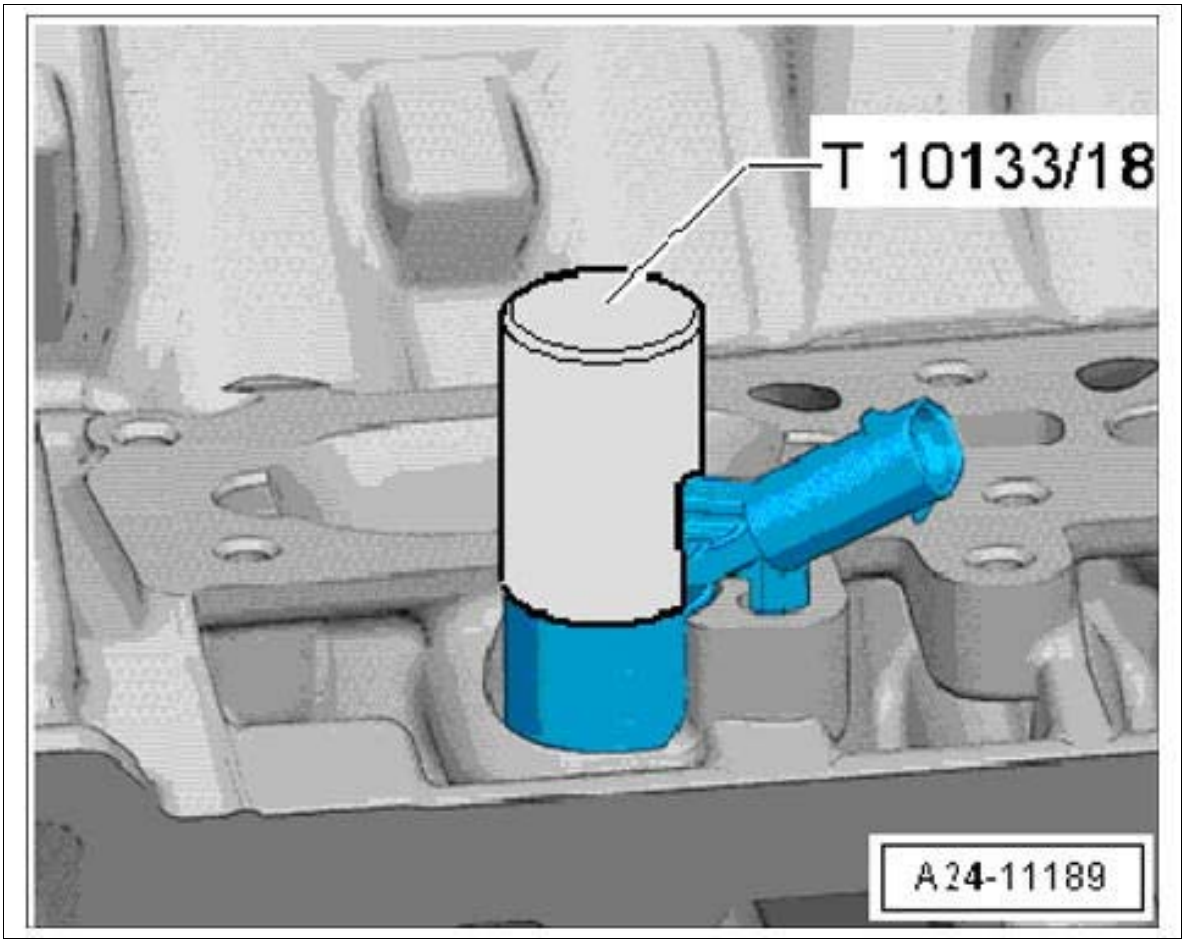

Courtesy of PORSCHE CARS NORTH AMERICA, INC.

2. Carefully tap several times on the sleeve around the fuel injector to loosen it.

Fig 2: Tapping Fuel Injector Sleeve

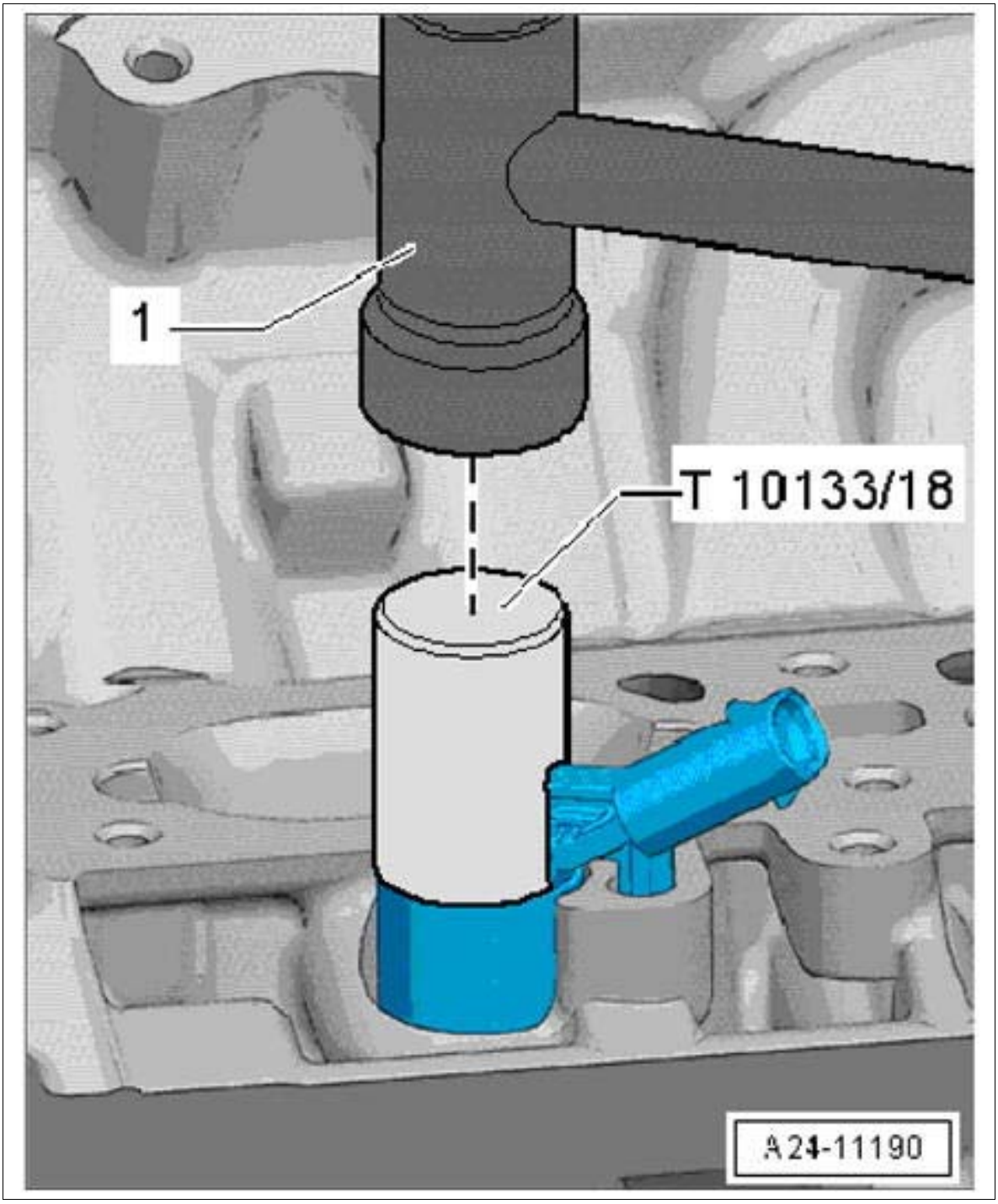

Courtesy of PORSCHE CARS NORTH AMERICA, INC.

3. Loosen fuel injector.
    1. 3.1. Guide puller **T10133/2A** into the groove on the fuel injector.
    2. 3.2. Fit puller **T10133/16A** .
    3. 3.3. Adjust the torque wrench to **5 Nm (3.5 ftlb.)** .
    4. 3.4. Turn the screw with the torque wrench and remove the fuel injector.

5. 3.5. If the torque limit of **5 Nm (3.5 ftlb.)** is reached and the fuel injector is still not loosened, remove the extraction tool and loosen the fuel injector again using the sleeve.

   Non-observance of the specified torque can cause irreparable damage to the fuel injector.

Fig 3: Identifying Puller T10133/2A And T10133/16A

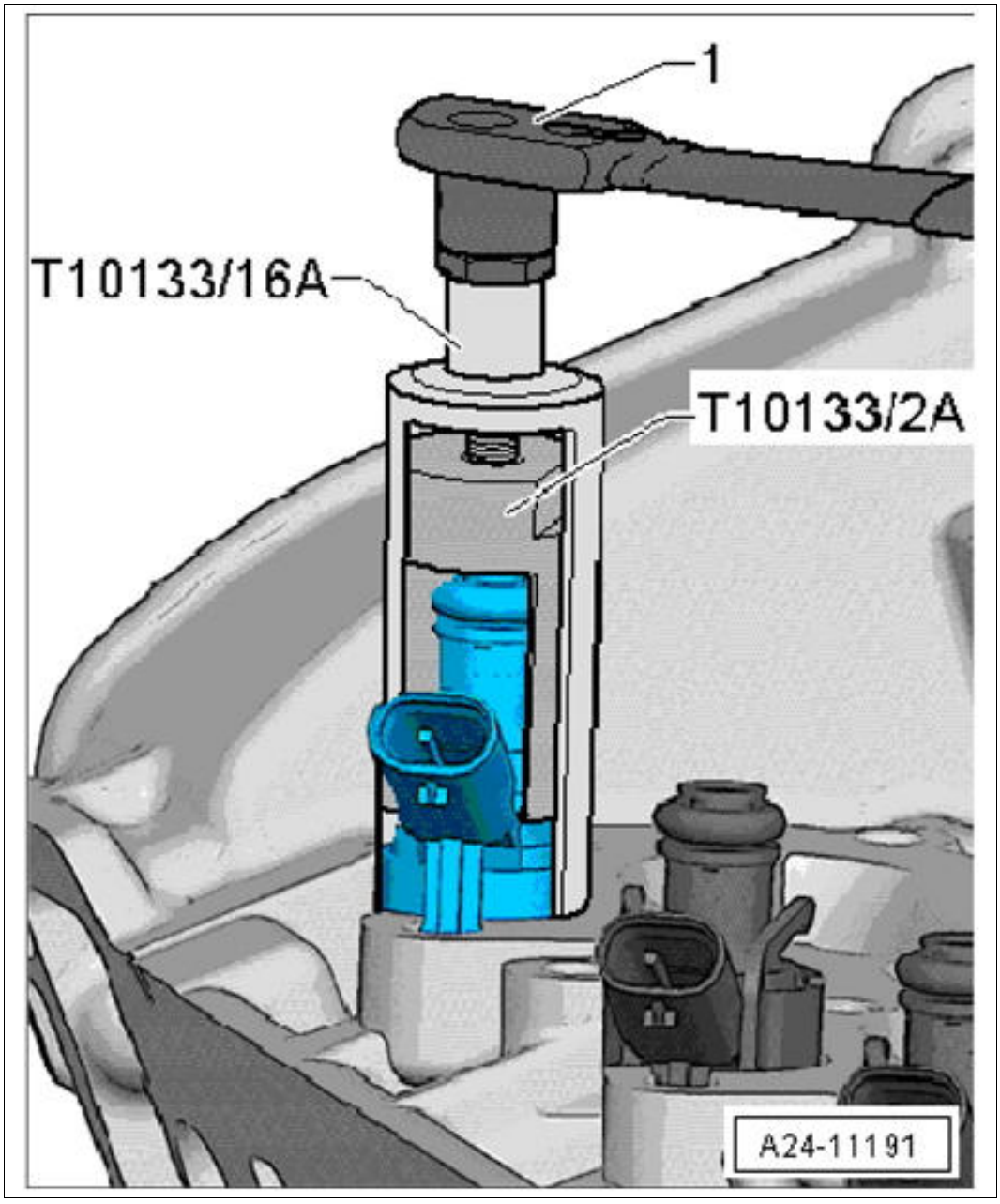

Courtesy of PORSCHE CARS NORTH AMERICA, INC.

WM 244019 REMOVING AND INSTALLING FUEL INJECTOR (MACAN) > REMOVING FUEL INJECTORS > REMOVING FUEL INJECTORS FOR INTAKE MANIFOLD INJECTION

WARNING: Highly inflammable or explosive materials

- *Danger of fire or explosion*

→ Avoid contact with hot parts or sources of ignition.

→ Use suction to remove ignitable vapors.

→ Attach warning sign in a clearly visible position.

WARNING: Toxic substances

- *Danger of poisoning or suffocation*
- *Danger of burns to the eyes and skin*

→ Ventilate the work area well.

→ Never ingest or inhale.

→ Read specific information on the Hazard Sheet.

→ Do not smoke, eat or drink in the work area.

Information

- Absorb any escaping fuel using a suitable binding material or a cloth.
- Cloths which have absorbed fuel must be disposed of according to the applicable national laws.
- The fuel system must be depressurized before starting work on it.
- Only work on the fuel system in well-ventilated rooms.
- Any seals which have been removed must always be replaced.
- Do not use any sealant containing silicone or silicone spray when the injection system is open. Traces of silicone drawn in by the engine are not combusted and damage the oxygen sensors.

Information

- Close off open connections and lines using suitable stoppers or caps.

1. Disconnect lines at the intake-air distributor.

    1. 1.1. Disconnect vacuum line **-1-** and coolant vent line **-2-** on the intake-air distributor.
    2. 1.2. Remove electric plug connection **-3-** from the bracket.
    3. 1.3. Release and disconnect electric connectors **-4-** and **-5-** .

Fig 1: Identifying Intake-Air Distributor Lines

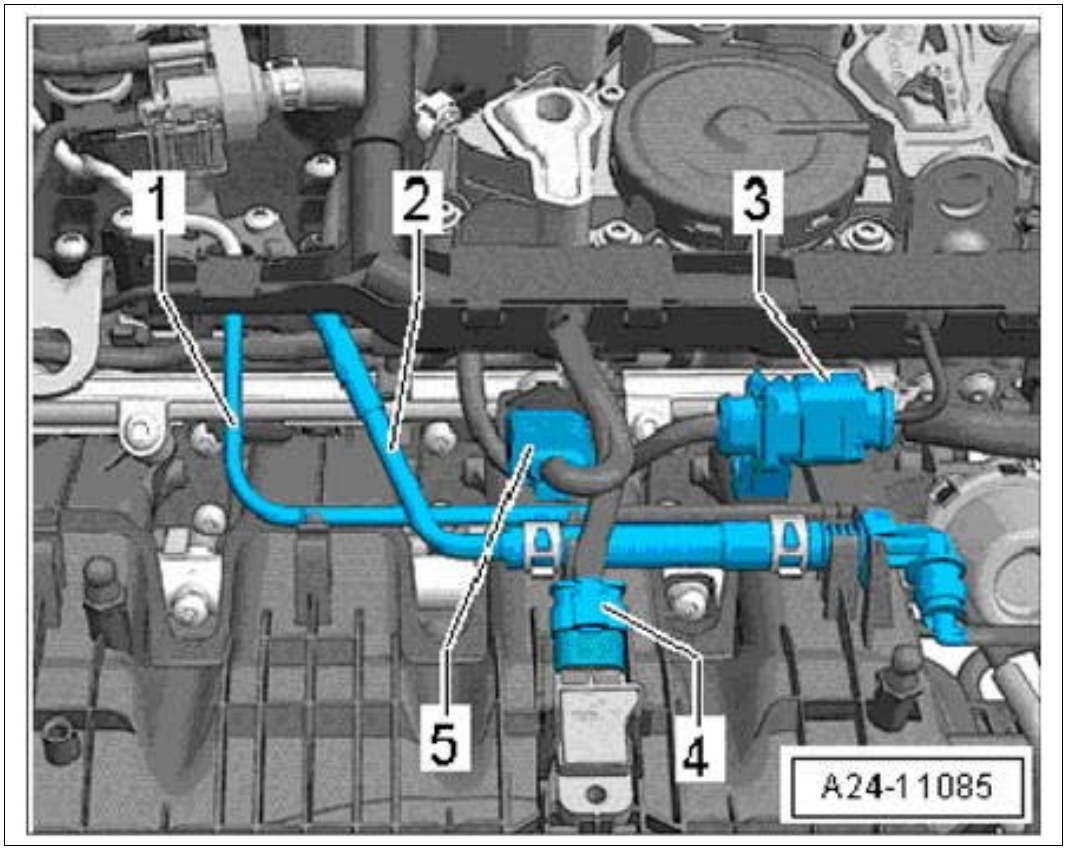

Courtesy of PORSCHE CARS NORTH AMERICA, INC.

2. Remove fuel collection pipe.

    1. 2.1. Expose wiring harness **-1-** from the fuel collection pipe.
    2. 2.2. Loosen clamp and pull off fuel supply line **-2-** .
    3. 2.3. Unscrew screws **-arrows-** .

Fig 2: Locating Intake Manifold Injection Fuel Collection Pipe

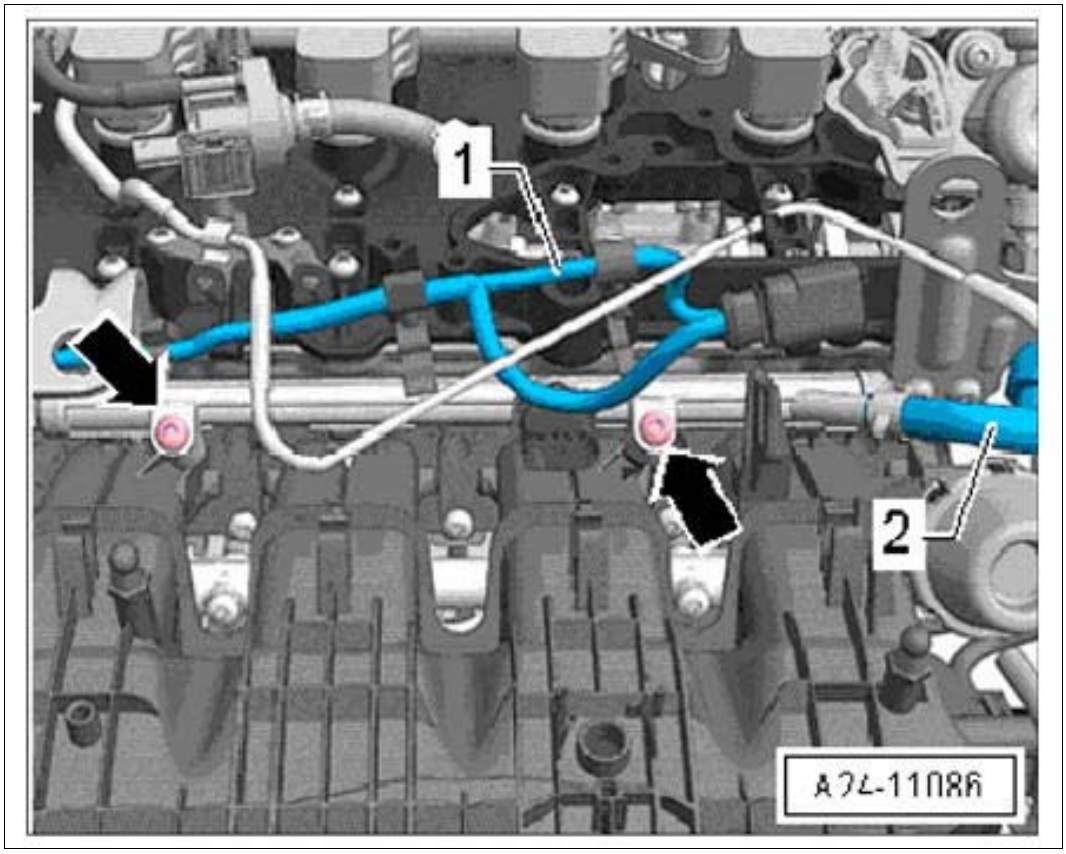

Courtesy of PORSCHE CARS NORTH AMERICA, INC.

3. Remove fuel injector.
    1. 3.1. Carefully pull fuel collection pipe with fuel injectors up and remove them.
    2. 3.2. Release and disconnect electric connectors on the fuel injector.
    3. 3.3. Loosen retaining clip **-3-** and pull fuel injector carefully out of the fuel collection pipe.

Fig 3: Identifying Intake Manifold Injection Fuel Injector

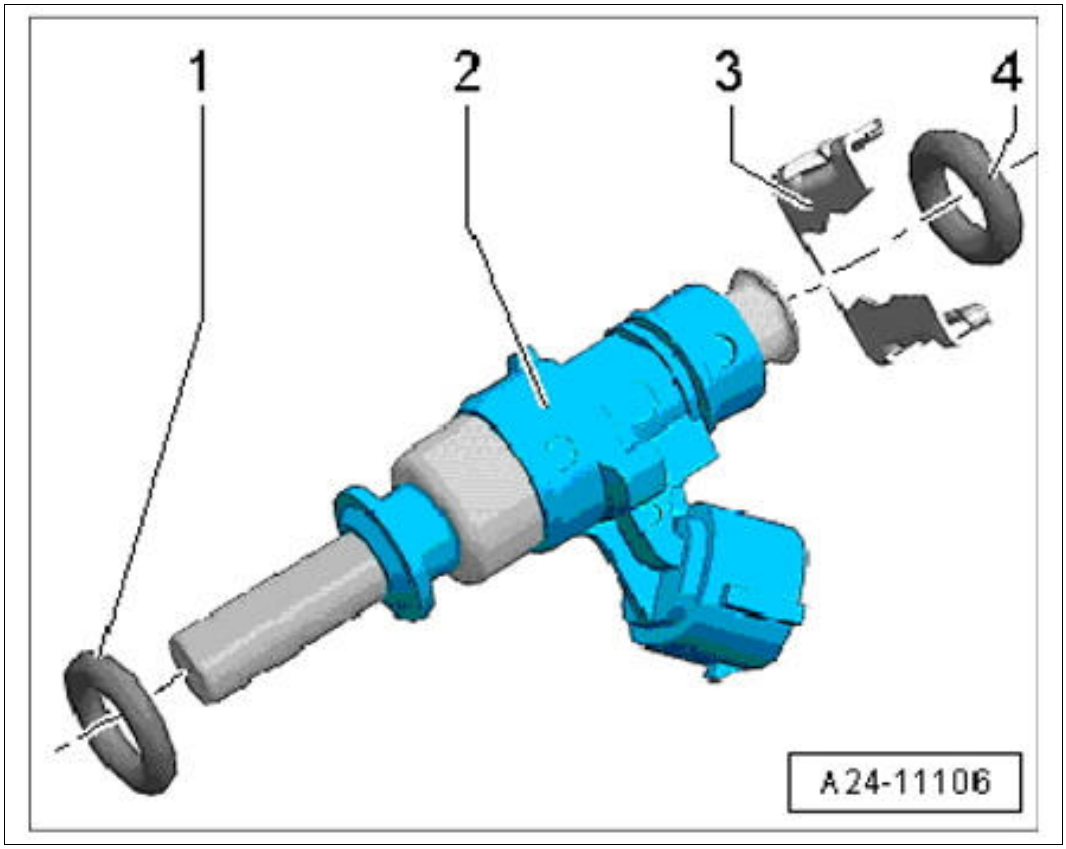

Courtesy of PORSCHE CARS NORTH AMERICA, INC.

WM 244019 REMOVING AND INSTALLING FUEL INJECTOR (MACAN) > INSTALLING FUEL INJECTORS > INSTALLING FUEL INJECTORS FOR DIRECT FUEL INJECTION (DFI)

NOTE: Incorrect handling of sealing rings and covers

- *Leaks*
- *Risk of damage to components*

→ Use clean tools without burrs.

→ Make sure not to leave any scores or scratches when cleaning.

Information

The combustion chamber sealing ring widens out as you slide it onto the fuel injector. It must therefore be closed in again in two steps after fitting.

1. The following work must be carried out before installing the fuel injector.

1. 1.1. Replace intermediate ring **-1-** .
2. 1.2. Replace mounting **-2-** .
3. 1.3. Carefully remove the combustion chamber seal **-3-** by cutting the seal with a knife or widening it with a small screwdriver and then pulling it forward.

   If the groove on the fuel injector is damaged, the fuel injector must be replaced!
4. 1.4. Replace spacer ring **-5-** .
5. 1.5. Replace O-ring **-6-** and coat with clean engine oil.
6. 1.6. Replace support ring **-7-** .

Fig 1: Identifying Fuel Injector Components

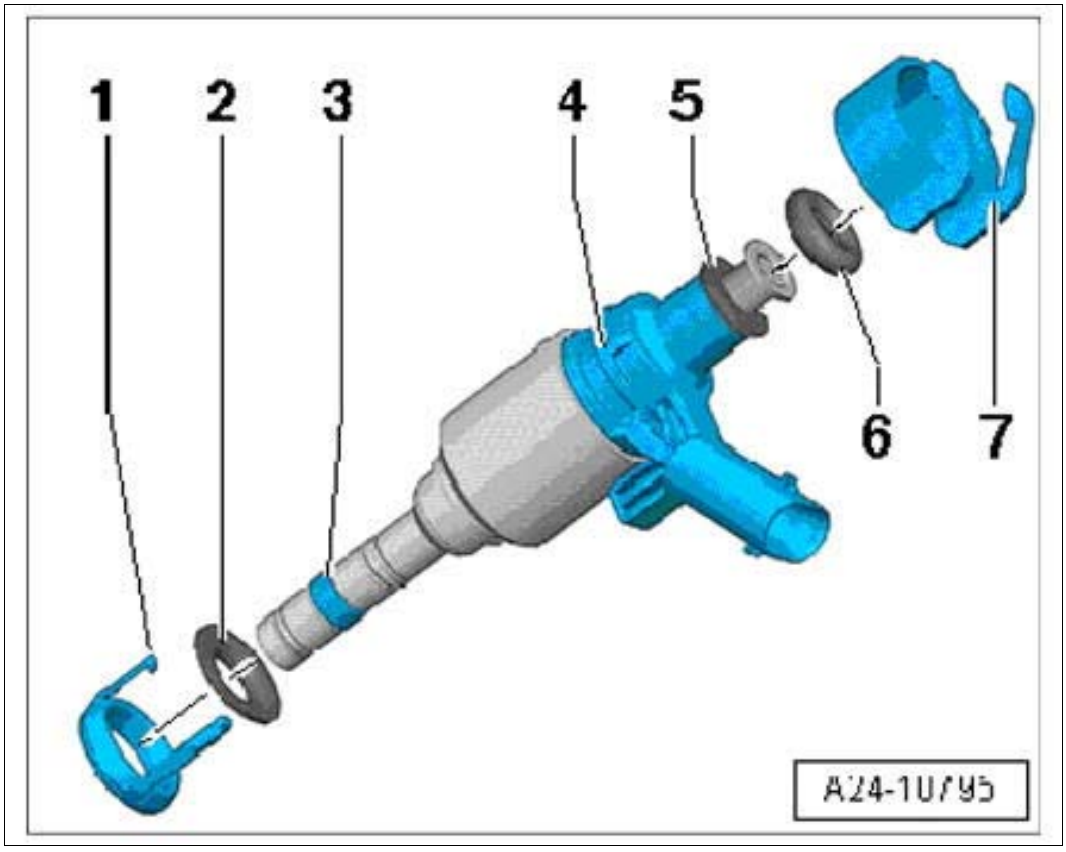

Courtesy of PORSCHE CARS NORTH AMERICA, INC.

2. Clean the bore in the cylinder head using the nylon cylinder brush **-T10133/4-** .

Fig 2: Cleaning Fuel Injector Bore

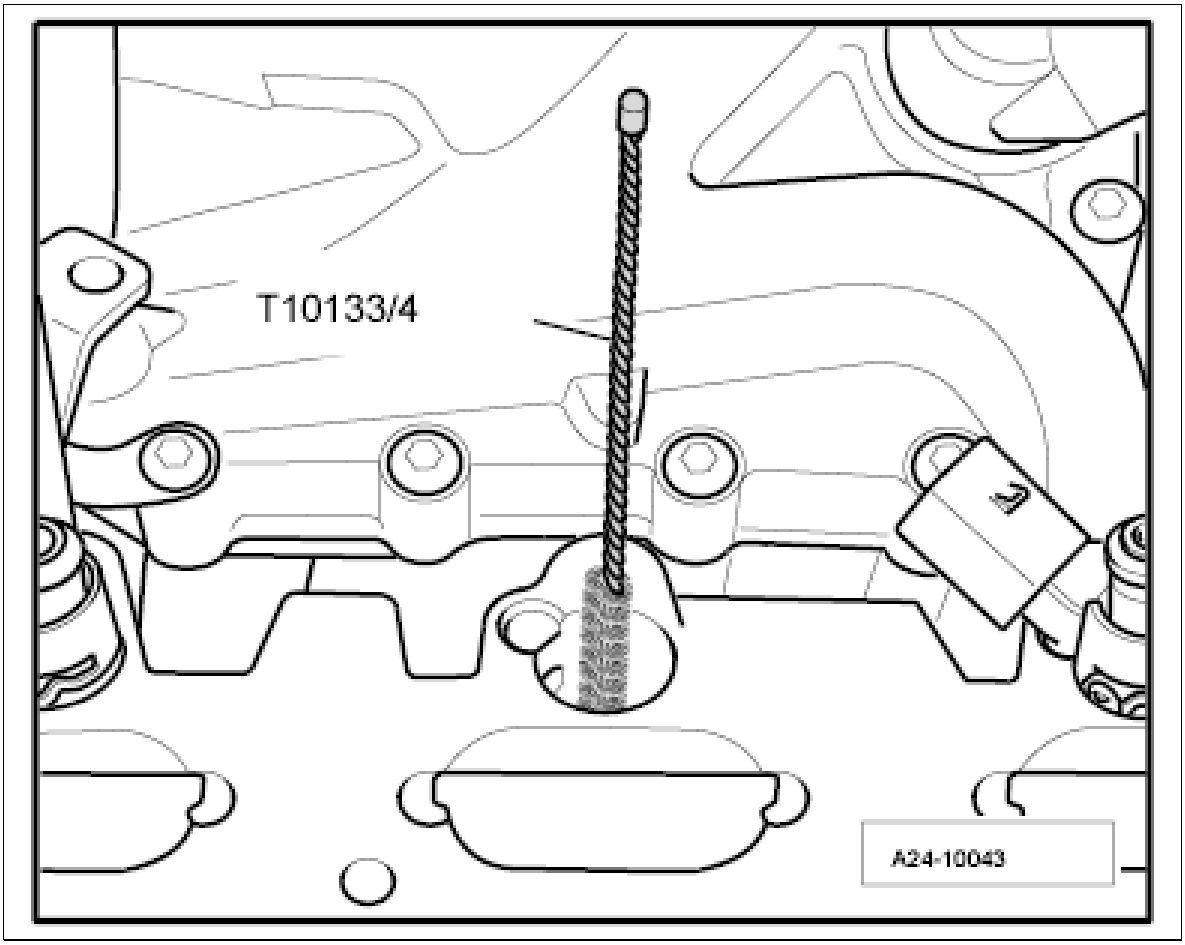

Courtesy of PORSCHE CARS NORTH AMERICA, INC.

3. Fit mounting code **-T 10133/5-** with the new combustion chamber sealing ring **-1-** from the repair kit onto the fuel injector **-2-** .

Fig 3: Identifying Mounting Cone T 10133/5

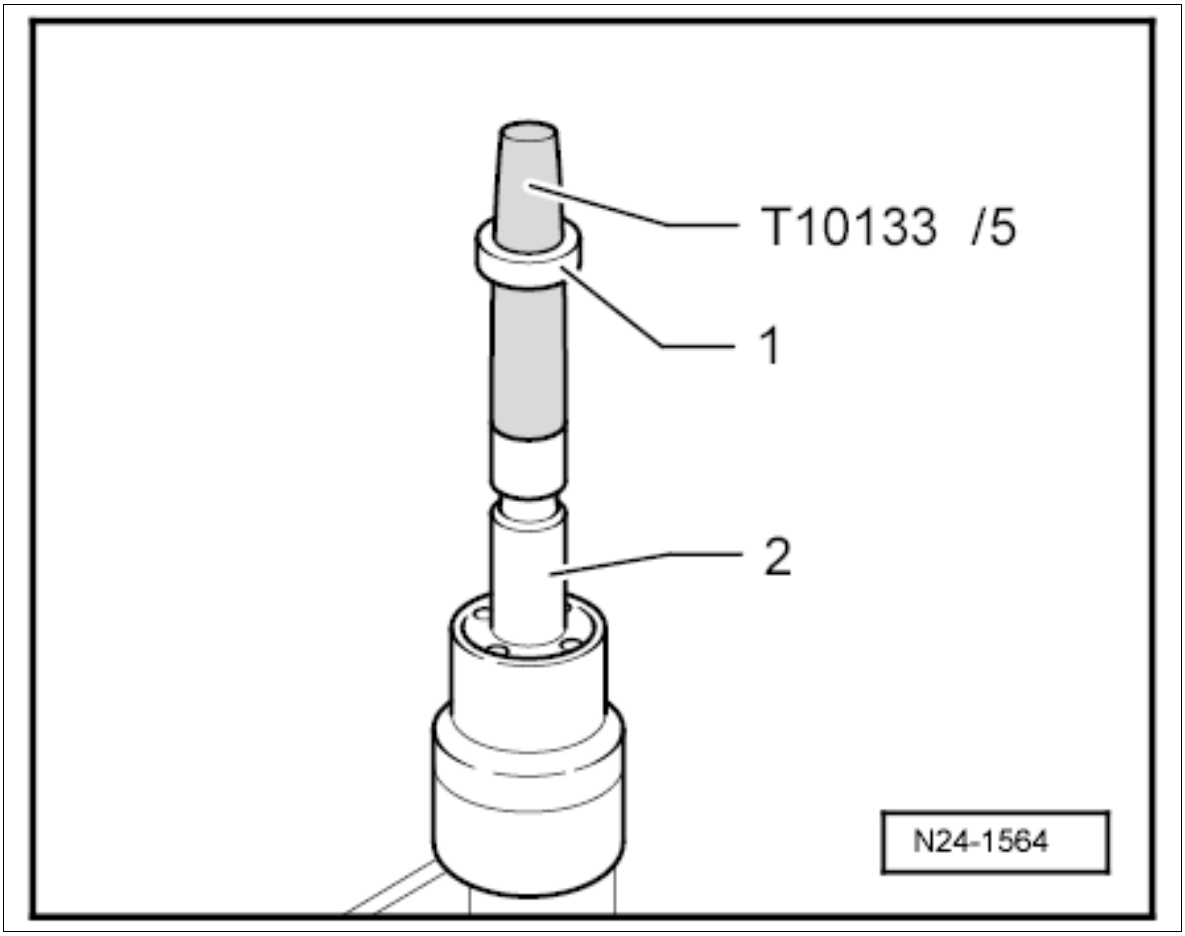

Courtesy of PORSCHE CARS NORTH AMERICA, INC.

4. Slide combustion chamber seal with assembly sleeve **-T 10133/6-** onto assembly cone **-T 10133/5-** as far as it will go.

   Turn the assembly sleeve **-T 10133/6-** around and slide the combustion chamber sealing ring into the sealing ring groove.

Fig 4: Identifying Assembly Sleeve

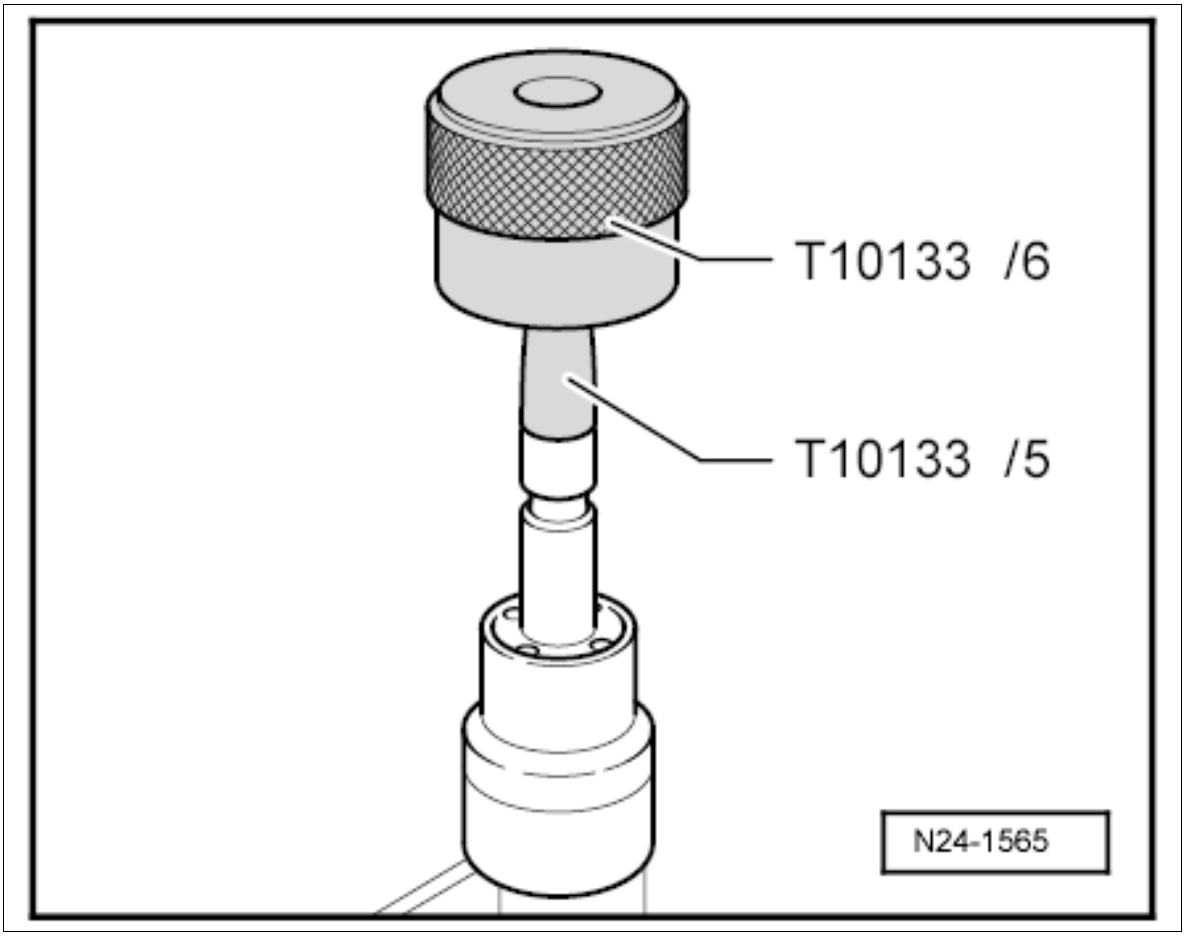

Courtesy of PORSCHE CARS NORTH AMERICA, INC.

5. Press the calibrating nozzle **-T10133/7-** with a slight rotary movement (approx. 180°) as far as it will go onto the fuel injector.

   Pull the calibrating sleeve off again by turning it in the opposite direction.

Fig 5: Identifying Sleeve T10133/7

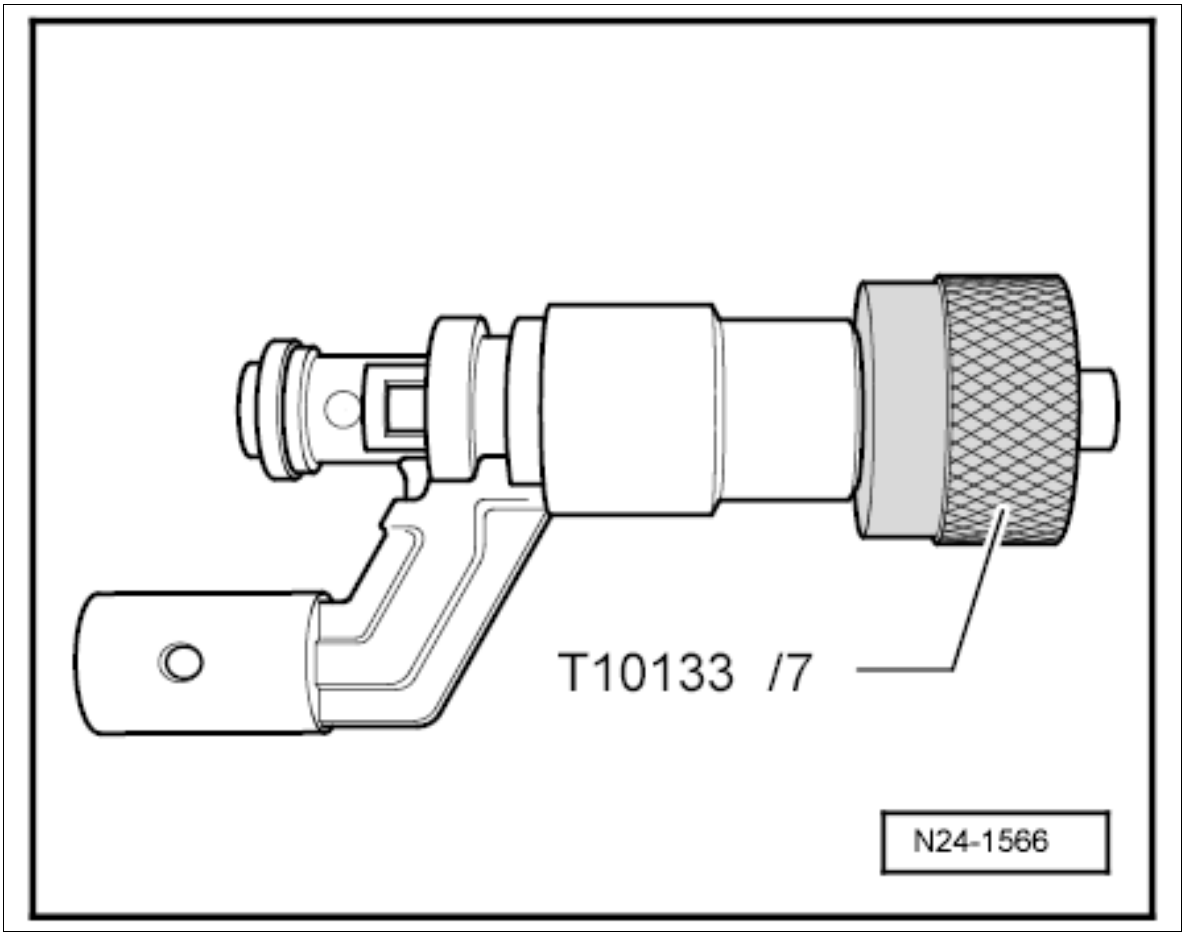

Courtesy of PORSCHE CARS NORTH AMERICA, INC.

6. Press the calibrating nozzle **-T10133/8-** with a slight rotary movement (approx. 180°) as far as it will go onto the fuel injector.

   Pull the calibrating sleeve off again by turning it in the opposite direction.

Fig 6: Identifying Sleeve T10133/8

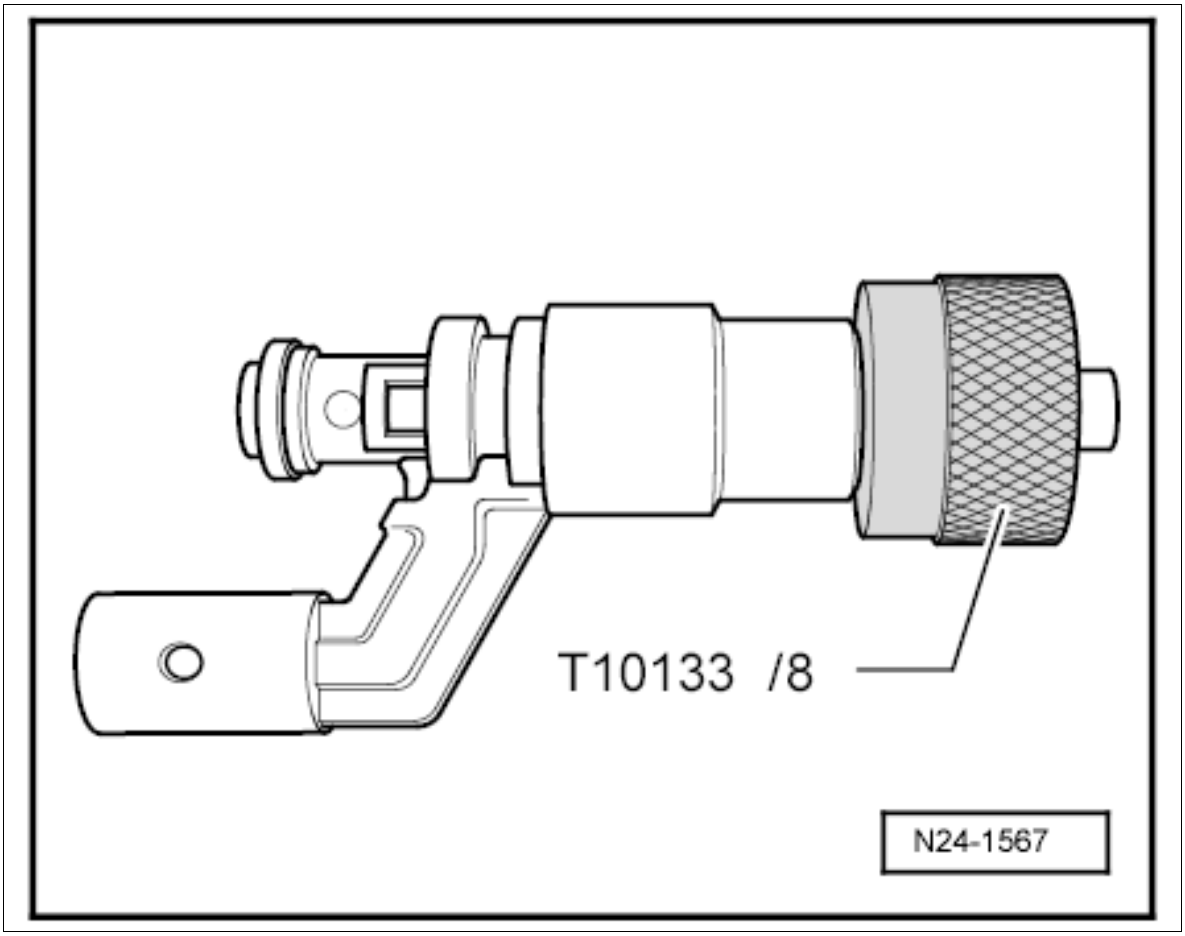

Courtesy of PORSCHE CARS NORTH AMERICA, INC.

7. Install fuel injector.
    1. 7.1.
    2. 7.2. Press the fuel injector as far as it will go into the bore on the cylinder head with your hand.

       Make sure that the fuel injectors are positioned correctly in the cylinder head.
    3. 7.3. The lug **-1-** and the bore in the cylinder head must be aligned.

Fig 7: Locating Fuel Injector Position

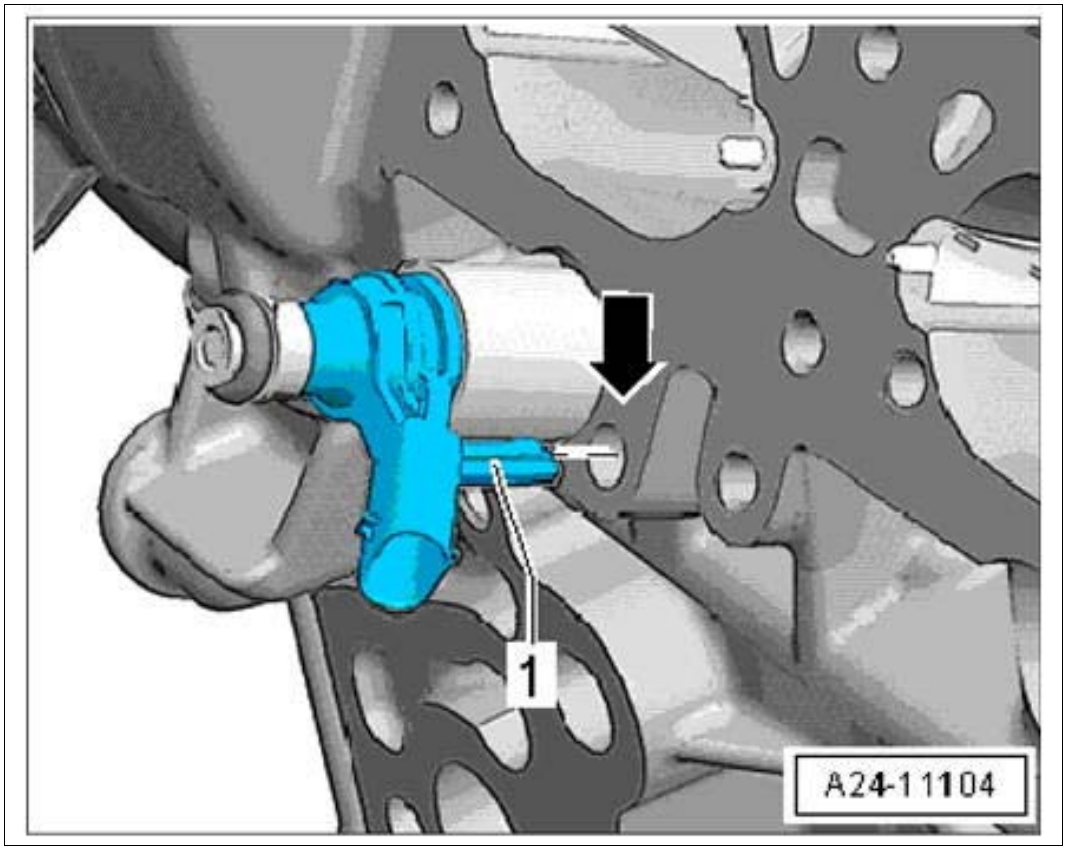

Courtesy of PORSCHE CARS NORTH AMERICA, INC.

8. If the fuel injector cannot be inserted by hand the following procedure must be performed.

    1. 8.1. Use the puller **T10133/2A -2-** with impact hammer **T10133/3 -2-** to guide in the fuel injector.

Fig 8: Identifying Puller T10133/2A And Impact Hammer T10133/3

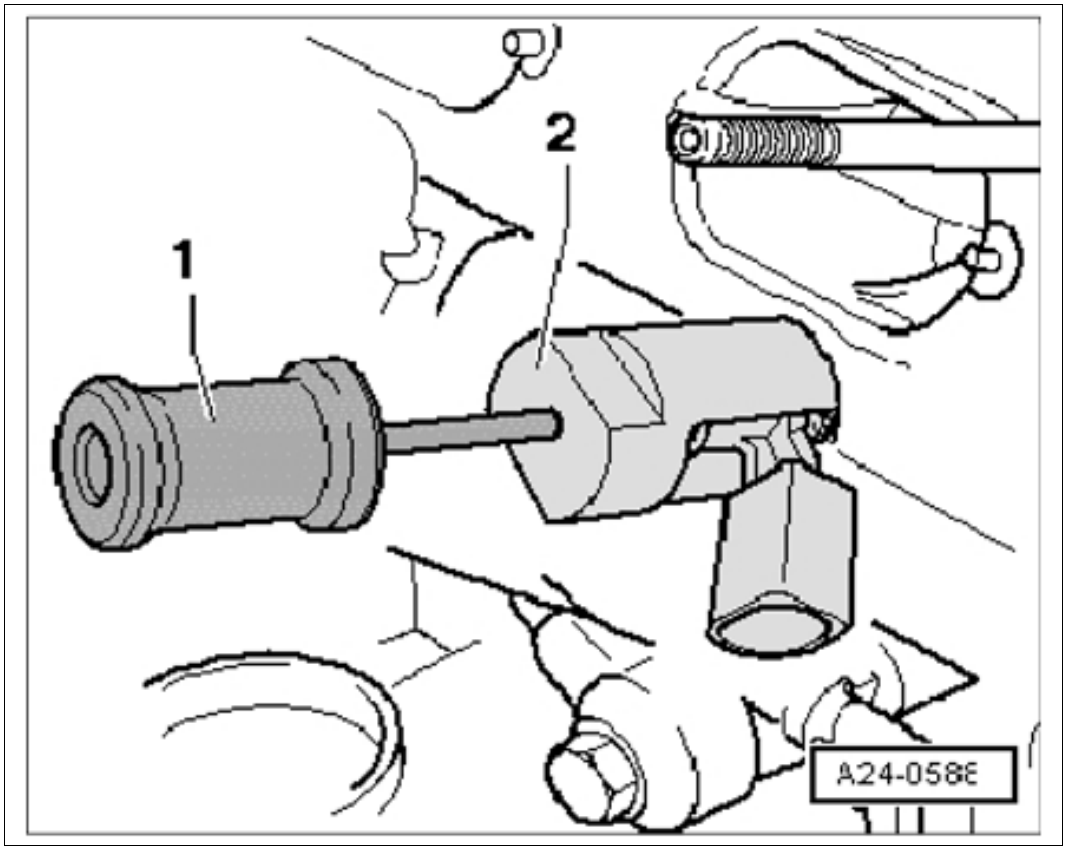

Courtesy of PORSCHE CARS NORTH AMERICA, INC.

9. Further installation is performed in reverse order.

WM 244019 REMOVING AND INSTALLING FUEL INJECTOR (MACAN) > INSTALLING FUEL INJECTORS > INSTALLING FUEL INJECTORS FOR INTAKE MANIFOLD INJECTION

NOTE: Incorrect handling of sealing rings and covers

- *Leaks*
- *Risk of damage to components*

→ Use clean tools without burrs.

→ Make sure not to leave any scores or scratches when cleaning.

1. The fuel injector is installed in reverse order to removal.
    1. 1.1. Replace O-ring **-1-** .
    2. 1.2. Replace O-ring **-4-** and coat with clean engine oil.

3. 1.3. Replace damaged retaining clips **-3-** .

Fig 1: Identifying Intake Manifold Injection Fuel Injector

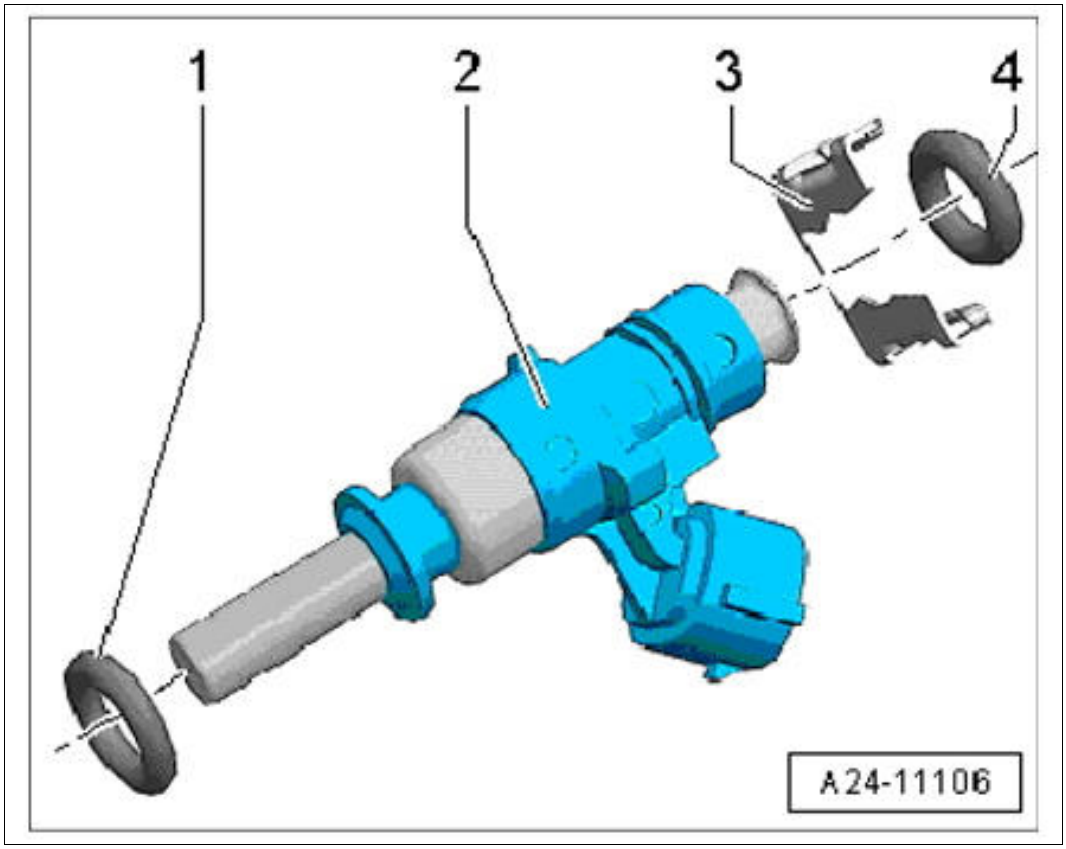

Courtesy of PORSCHE CARS NORTH AMERICA, INC.

Tightening torque for fuel collection pipe: **Tightening torque 9 Nm (6.5 ftlb.)**

WM 244019 REMOVING AND INSTALLING FUEL INJECTOR (MACAN) > SUBSEQUENT WORK > SUBSEQUENT WORK FOR FUEL INJECTORS FOR DIRECT FUEL INJECTION (DFI)

1. Install fuel collection pipe for direct fuel injection system. → Installing Fuel Collection Pipe
2. Install intake-air distributor. → Installing Intake-Air Distributor

WM 244219 REMOVING AND INSTALLING THROTTLE HOUSING (MACAN) > TECHNICAL VALUES

Location	Description	Type	Basic value	Tolerance 1	Tolerance 2
Fastening screws for throttle housing		Tightening torque	7 Nm (5 ftlb.)		

WM 244219 REMOVING AND INSTALLING THROTTLE HOUSING (MACAN) > REMOVING THROTTLE HOUSING

1. Remove engine cover.
2. Open hose clamp **-arrow-** and pull off air guide hose.

   Fig 1: Locating Throttle Housing Clamp

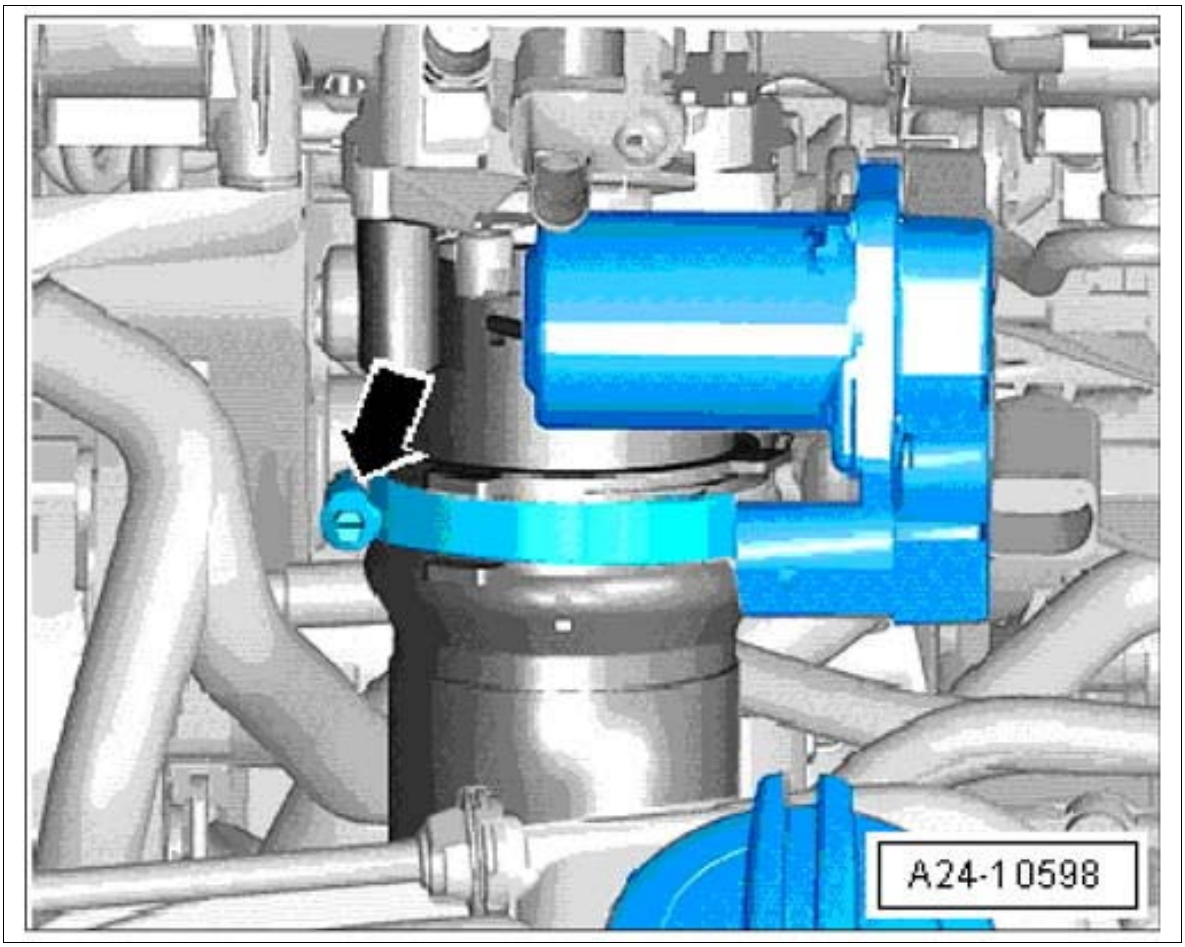

Courtesy of PORSCHE CARS NORTH AMERICA, INC.

3. Disconnect electric plug connection **-1-** .
4. Unscrew screws **-arrows-** and remove throttle housing.

Fig 2: Locating Throttle Housing Screws

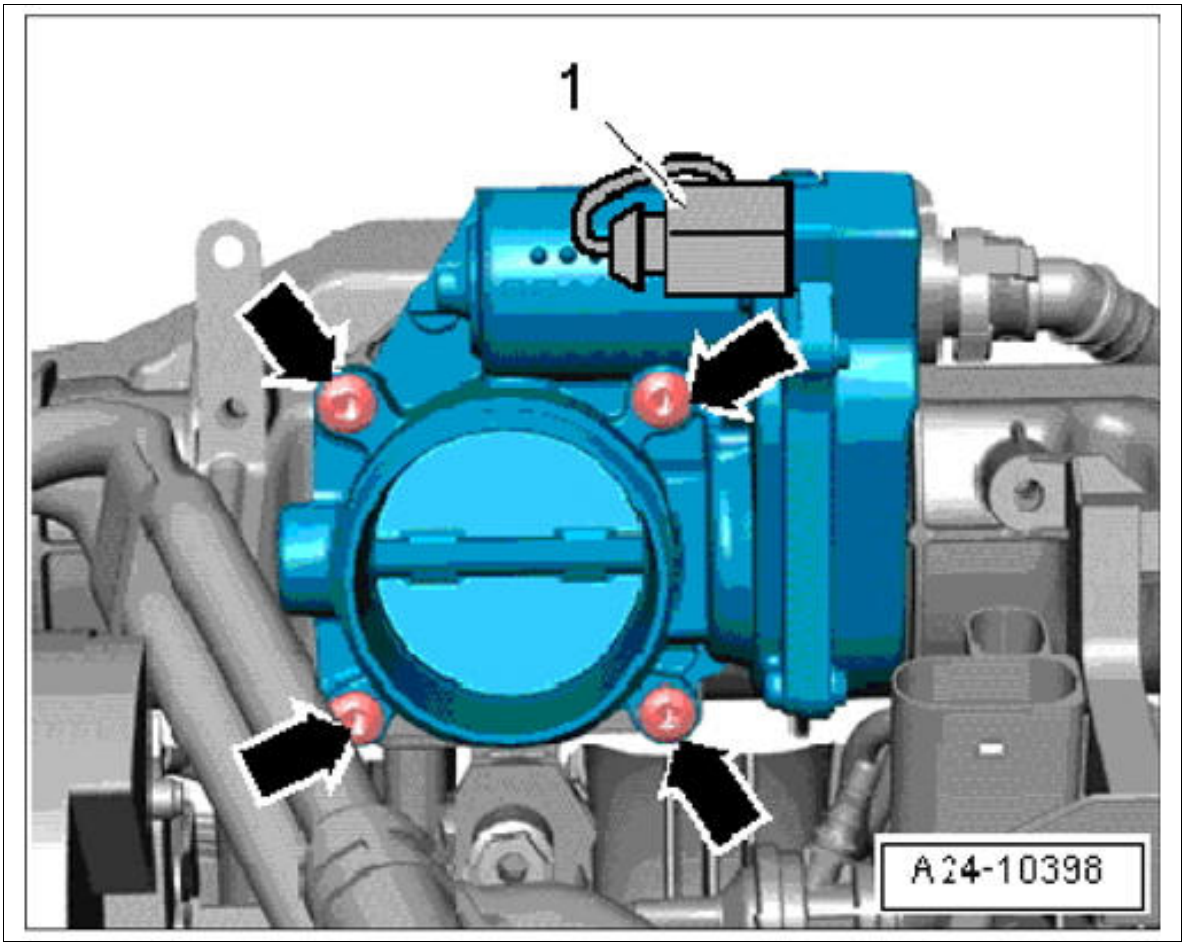

Courtesy of PORSCHE CARS NORTH AMERICA, INC.

WM 244219 REMOVING AND INSTALLING THROTTLE HOUSING (MACAN) > INSTALLING THROTTLE HOUSING

1. Clean sealing face for sealing ring.
2. Replace sealing ring.
3. Install throttle housing and tighten screws **-arrows-** . **Tightening torque 7 Nm (5 ftlb.)**
4. Connect electric plug connection **-1-** to the throttle housing.

Fig 1: Locating Throttle Valve Unit Screws

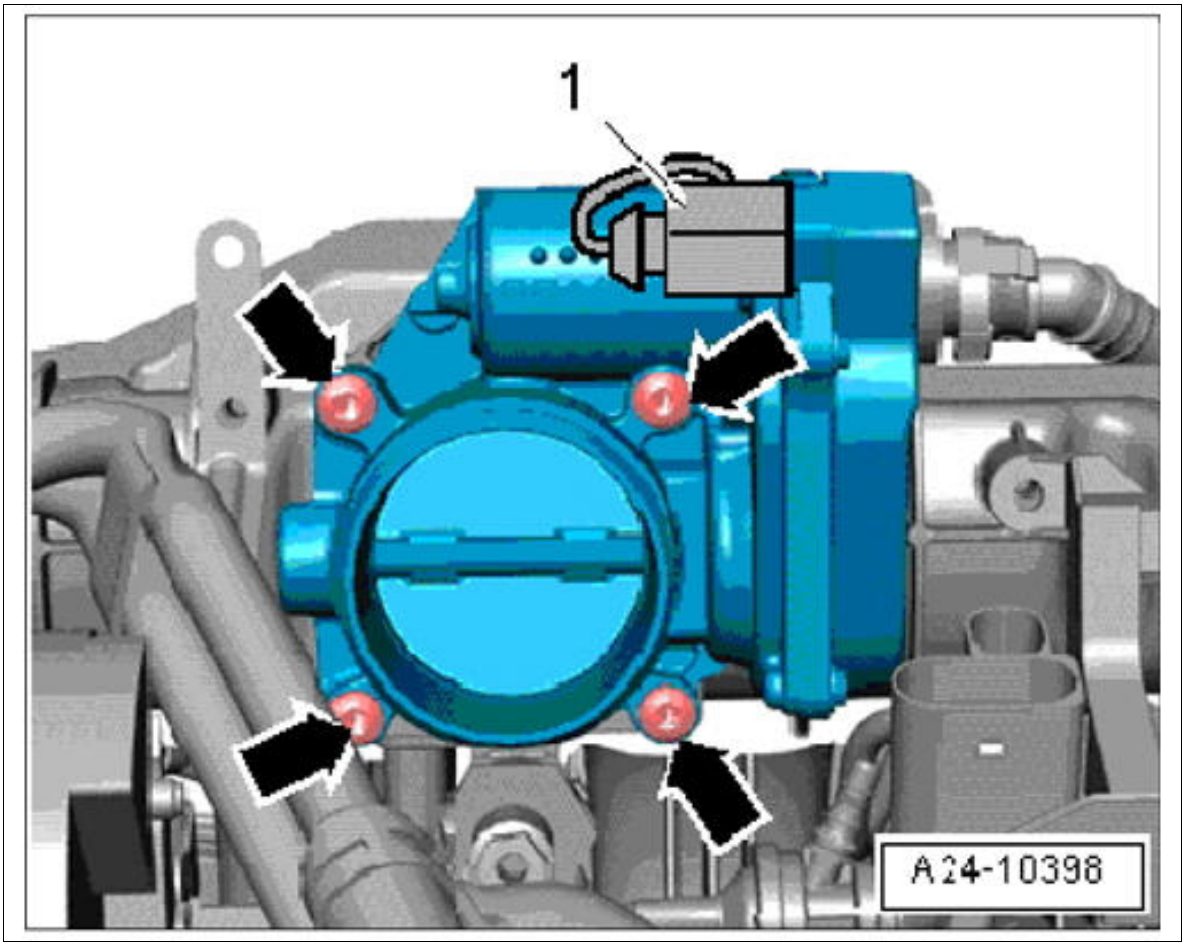

Courtesy of PORSCHE CARS NORTH AMERICA, INC.

5. Connect air guide hose to the throttle housing and tighten hose clamp **-arrow-** .

Fig 2: Locating Throttle Housing Clamp

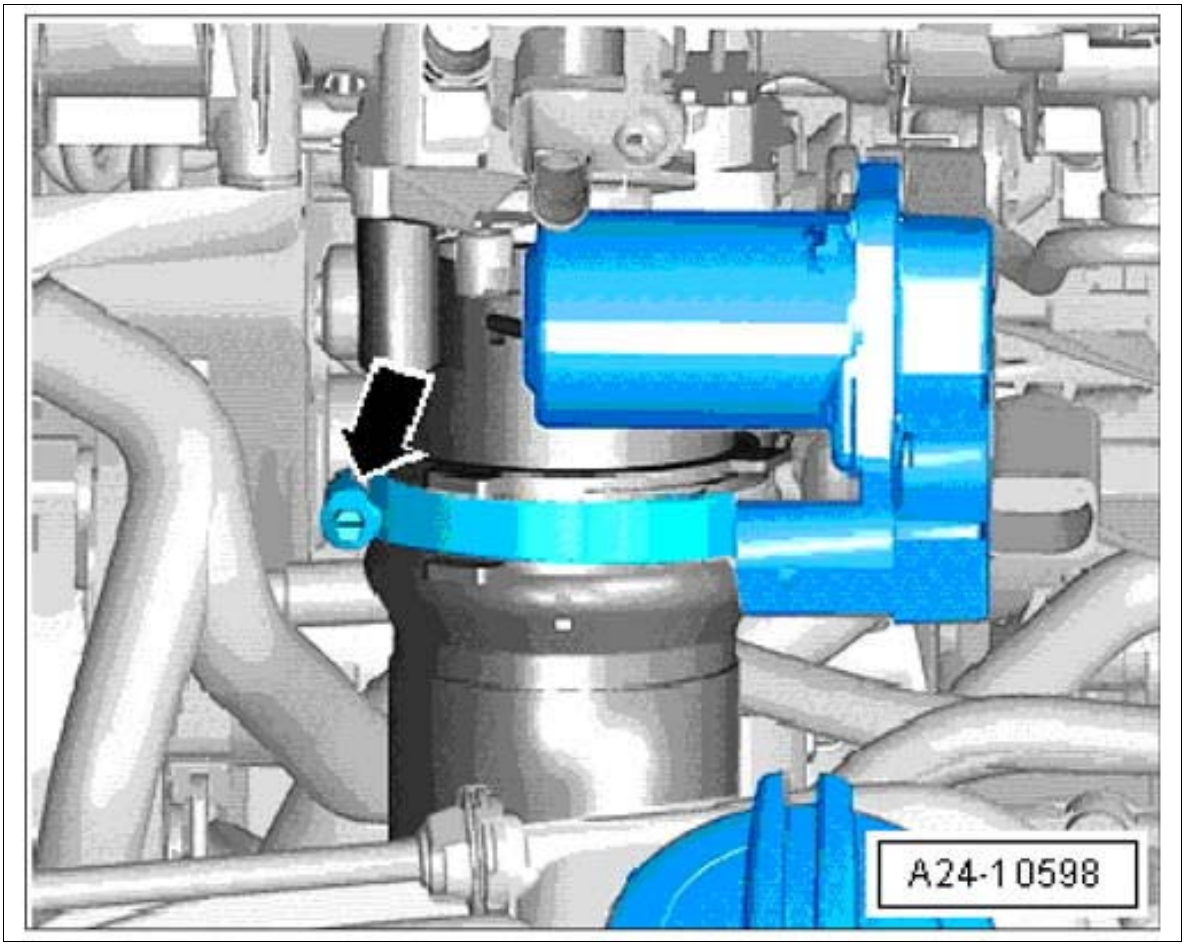

Courtesy of PORSCHE CARS NORTH AMERICA, INC.

6. Install engine cover.
    1. 6.1. Check that the engine cover is fitted correctly.
7. After replacing the throttle housing, this must be re-adapted to suit the engine control module using the vehicle diagnostic tester.

WM 244619 REMOVING AND INSTALLING INTAKE-AIR DISTRIBUTOR (MACAN) > TOOLS

Designation	Type	Number	Description	

PIWIS Tester II	Special tool	9818		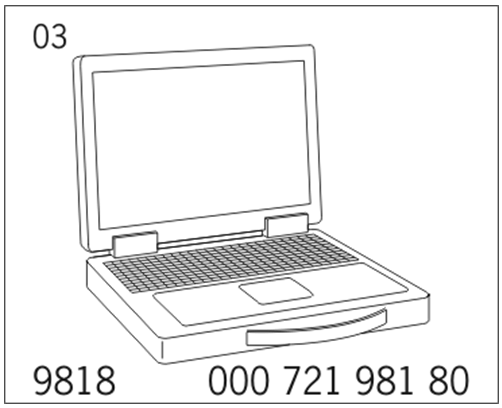

WM 244619 REMOVING AND INSTALLING INTAKE-AIR DISTRIBUTOR (MACAN) > TECHNICAL VALUES

Location	Description	Type	Basic value	Tolerance 1	Tolerance 2
Fuel line adapter	Replace	Tightening torque	40 Nm (30 ftlb.)		
Union nut for fuel line	Coat ball on fuel supply line with engine oil	Tightening torque	20 Nm (15 ftlb.)		
Fastening screw for fuel line		Tightening torque	5 Nm (3.5 ftlb.)		
Fastening screws for intake-air distributor		Tightening torque	9 Nm (6.5 ftlb.)		
Fastening screw securing intake manifold support		Tightening torque	20 Nm (15 ftlb.)		
Fastening nut for intake manifold support		Tightening torque	10 Nm (7.5 ftlb.)		

WM 244619 REMOVING AND INSTALLING INTAKE-AIR DISTRIBUTOR (MACAN) > PRELIMINARY WORK

1. Disconnect the battery. → 270619 REMOVING AND INSTALLING BATTERY
2. Remove engine cover.

WM 244619 REMOVING AND INSTALLING INTAKE-AIR DISTRIBUTOR (MACAN) > REMOVING INTAKE-AIR DISTRIBUTOR

WARNING: Highly inflammable or explosive materials

- *Danger of fire or explosion*

→ Avoid contact with hot parts or sources of ignition.

→ Use suction to remove ignitable vapors.

→ Attach warning sign in a clearly visible position.

Information

- Close off open connections and lines using suitable stoppers or caps.

1. Unscrew screws **-arrows-** .

Fig 1: Locating Intake-Air Distributor Holder Screws

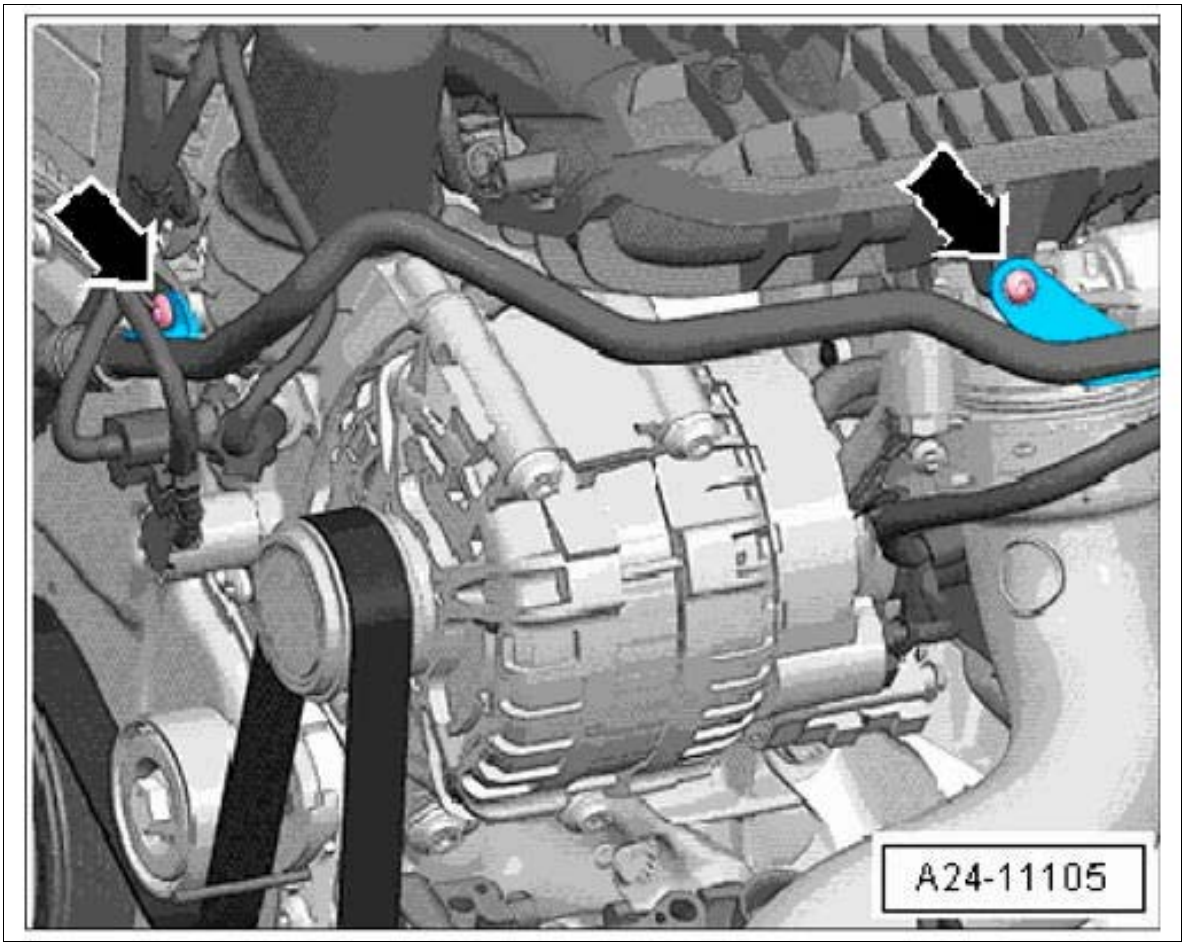

Courtesy of PORSCHE CARS NORTH AMERICA, INC.

2. Release and disconnect electric connector **-2-** on the throttle valve control unit.

Fig 2: Identifying Throttle Valve Electric Connector

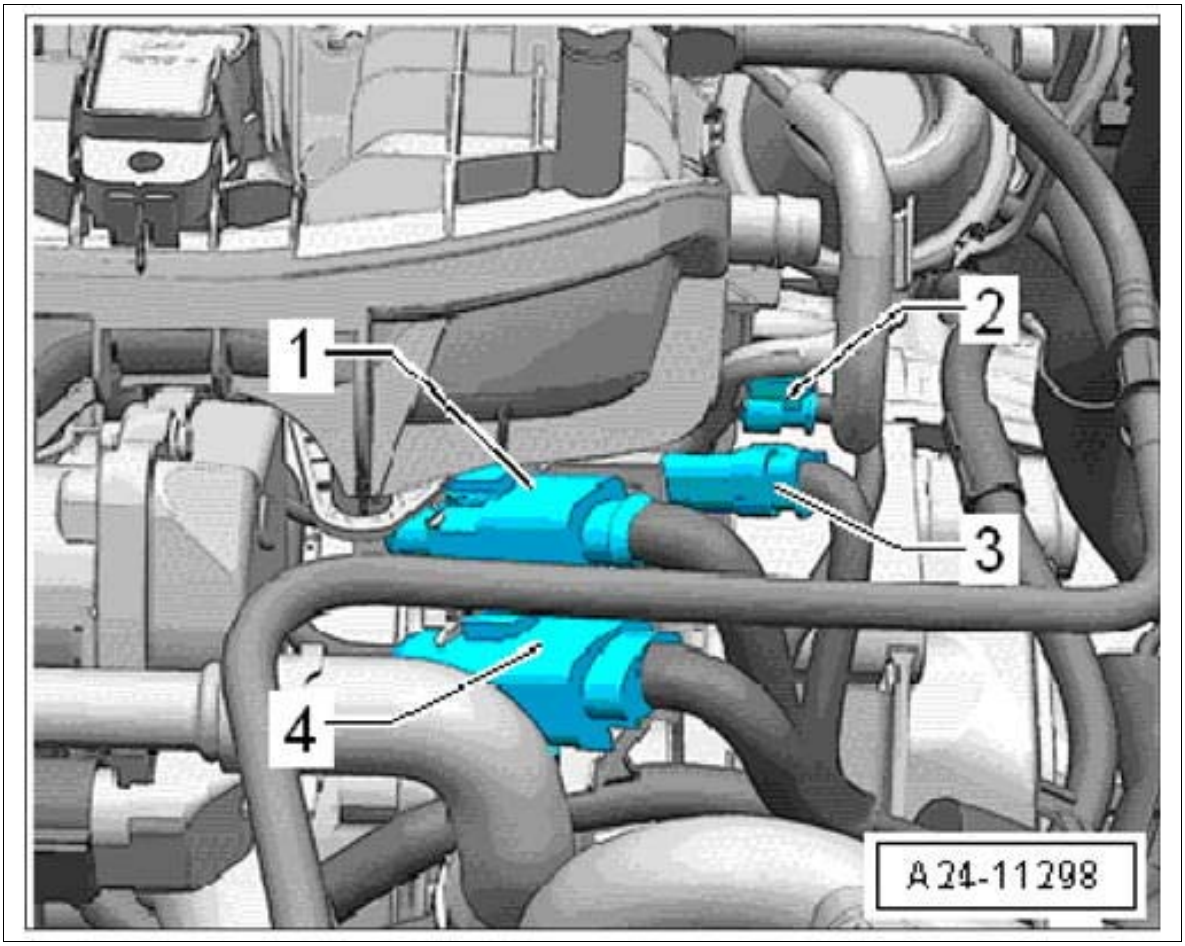

Courtesy of PORSCHE CARS NORTH AMERICA, INC.

3. Loosen hose clamp **-arrow-** and pull off pressure hose.

Fig 3: Locating Pressure Hose Clamp

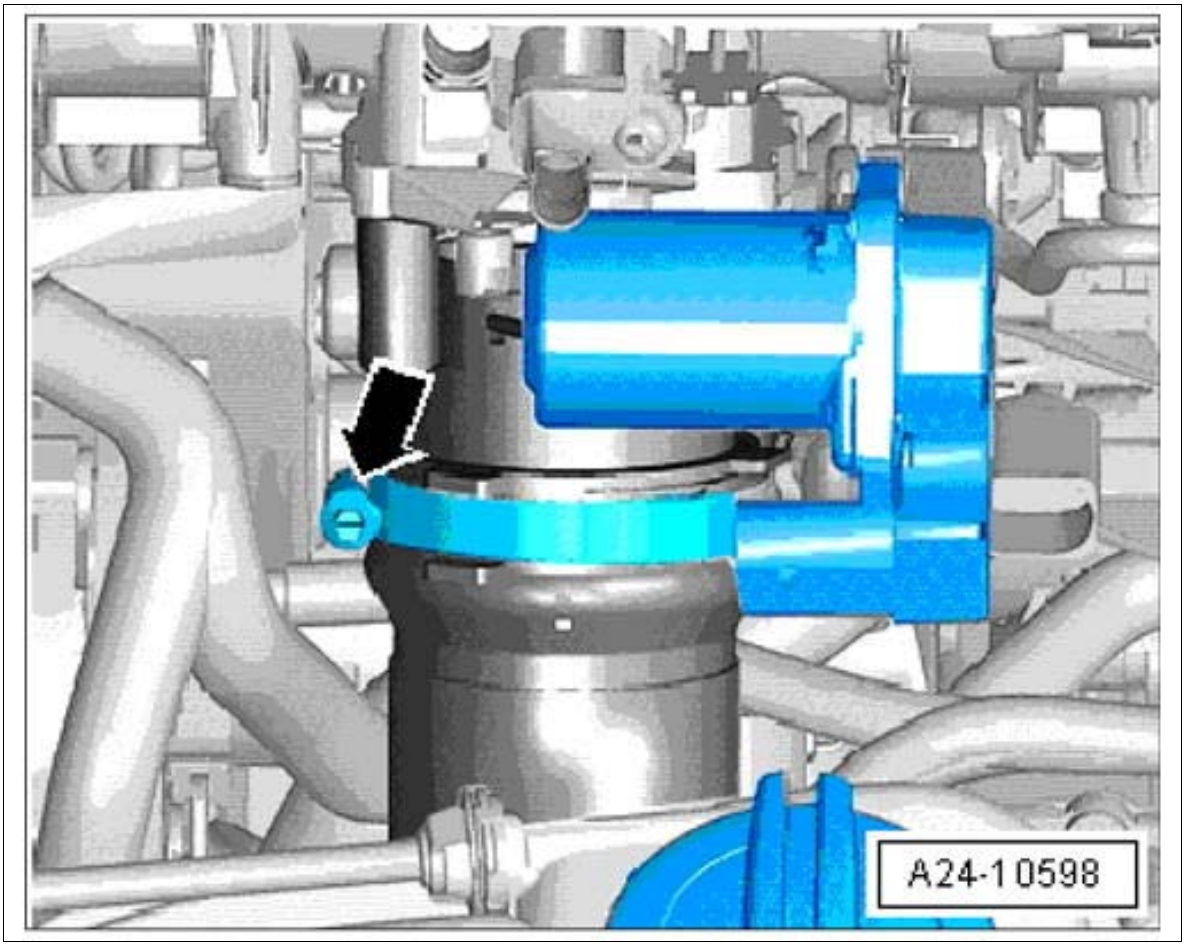

Courtesy of PORSCHE CARS NORTH AMERICA, INC.

4. Release and disconnect electric plug connections.
    1. **-1-** Fuel injectors for direct fuel injection (DFI)
    2. **-2-** Valve for intake-air distributor flap
    3. **-3-** Knock sensor
    4. **-4-** Wiring harness for fuel pressure sensor, potentiometer for intake-air distributor flap, coolant temperature sensor, hall sender

Fig 4: Identifying Fuel Pressure Sensor Electric Plug Connections

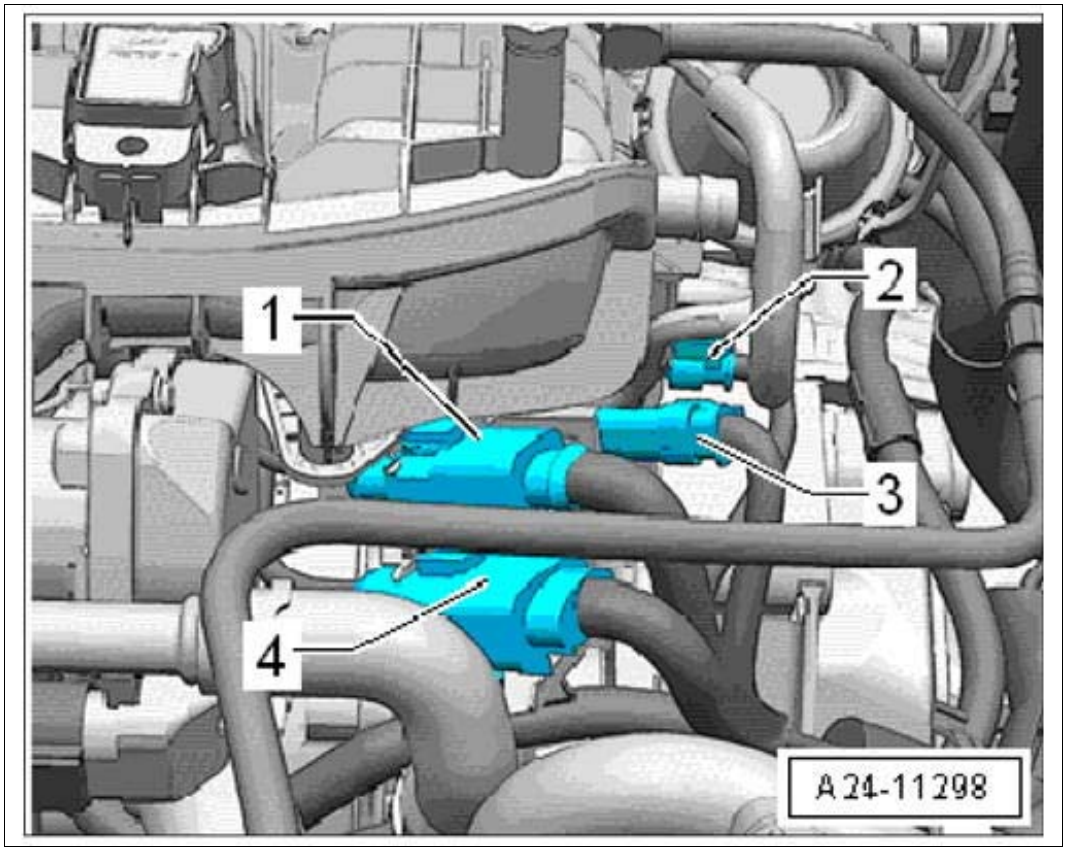

Courtesy of PORSCHE CARS NORTH AMERICA, INC.

> *WARNING: Hot fluid*
>
> *1. Danger of scalding*

→ Let the fluid cool down.

→ Wear personal protective gear.

5. Disconnect lines at the intake-air distributor.
    1. 5.1. Pull vacuum line **-1-** and coolant line **-2-** off the intake-air distributor.
    2. 5.2. Disconnect electric plug connections **-4-** and **-5-** .
    3. 5.3. Pull electric plug connection **-3-** out of the bracket and disconnect it.

Fig 5: Identifying Intake-Air Distributor Lines

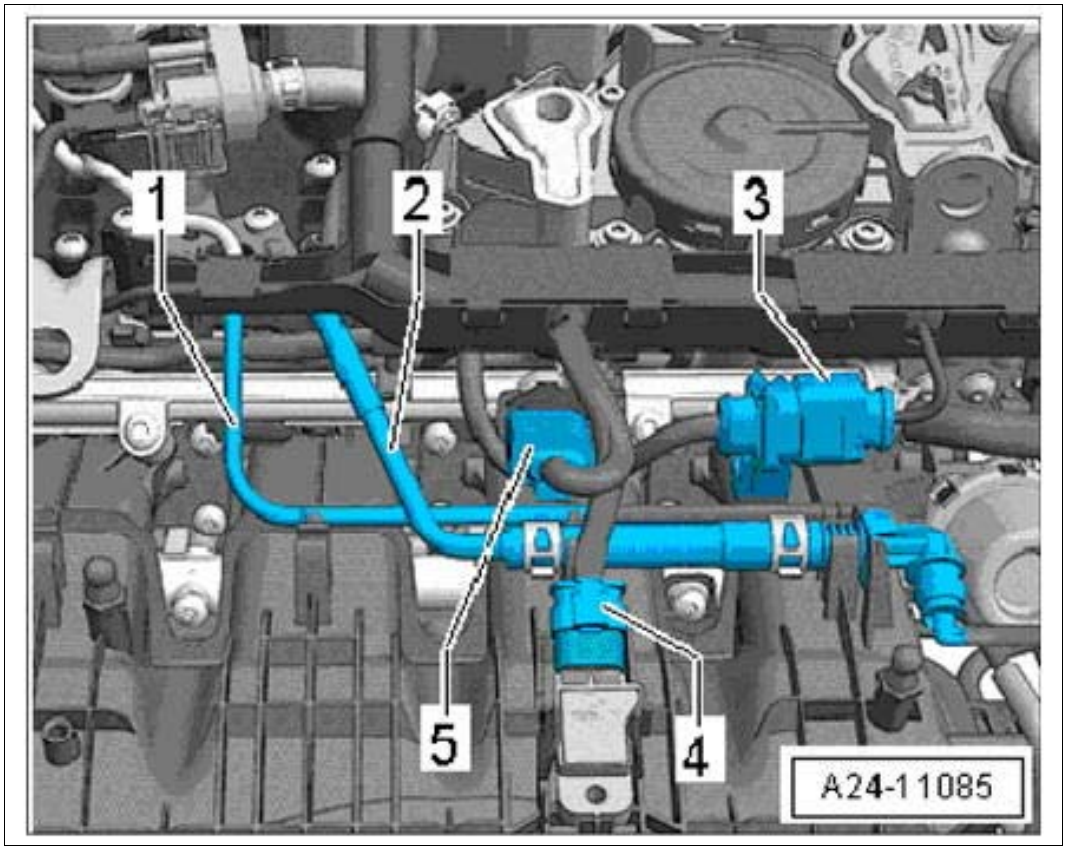

Courtesy of PORSCHE CARS NORTH AMERICA, INC.

6. Disconnect wiring harness from the fuel distributor.
    1. 6.1. Release tab **-1-** and pull holder **-2-** with wiring harness up slightly.
    2. 6.2. Loosen clips **-3-** on the fuel distributor **-4-** .
    3. 6.3. Loosen holder **-5-** at the engine retaining eyelet **-6-** .

Fig 6: Identifying Fuel Distributor Wiring Harness, Holder And Clips

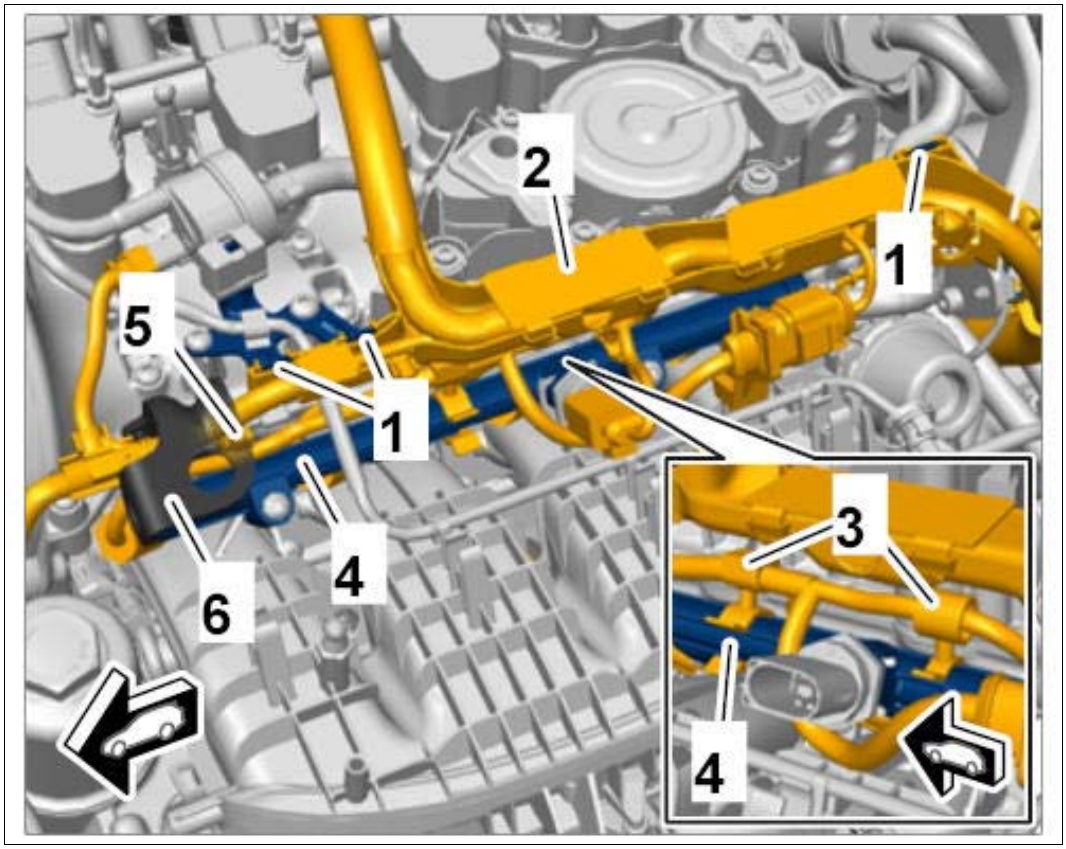

Courtesy of PORSCHE CARS NORTH AMERICA, INC.

Information

1. Absorb any escaping fuel using a suitable binding material or a cloth.
2. Cloths which have absorbed fuel must be disposed of according to the applicable national laws.
3. The fuel system must be depressurized before starting work on it.
4. Only work on the fuel system in well-ventilated rooms.
5. Any seals which have been removed must always be replaced.
6. Do not use any sealant containing silicone or silicone spray when the injection system is open. Traces of silicone drawn in by the engine are not combusted and damage the oxygen sensors.

7. Disconnect fuel supply line **-2-** at the fuel distributor for intake manifold injection **-3-** .
    1. 7.1. Loosen clamp **-1-** and pull off line **-2-** .

Fig 7: Identifying Intake Manifold Injection Fuel Supply Line

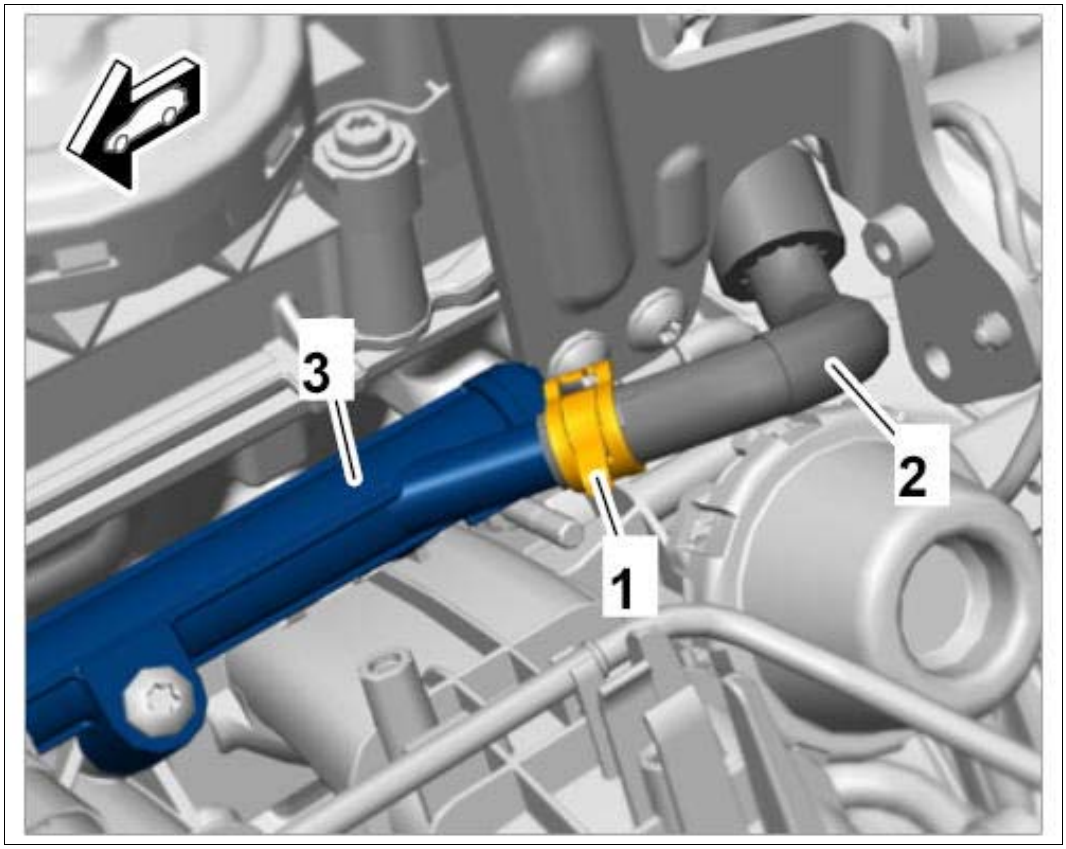

Courtesy of PORSCHE CARS NORTH AMERICA, INC.

8. Release electric plug connection **-1-** at the hall sender and disconnect it.

Fig 8: Locating Hall Sender Electric Plug Connection

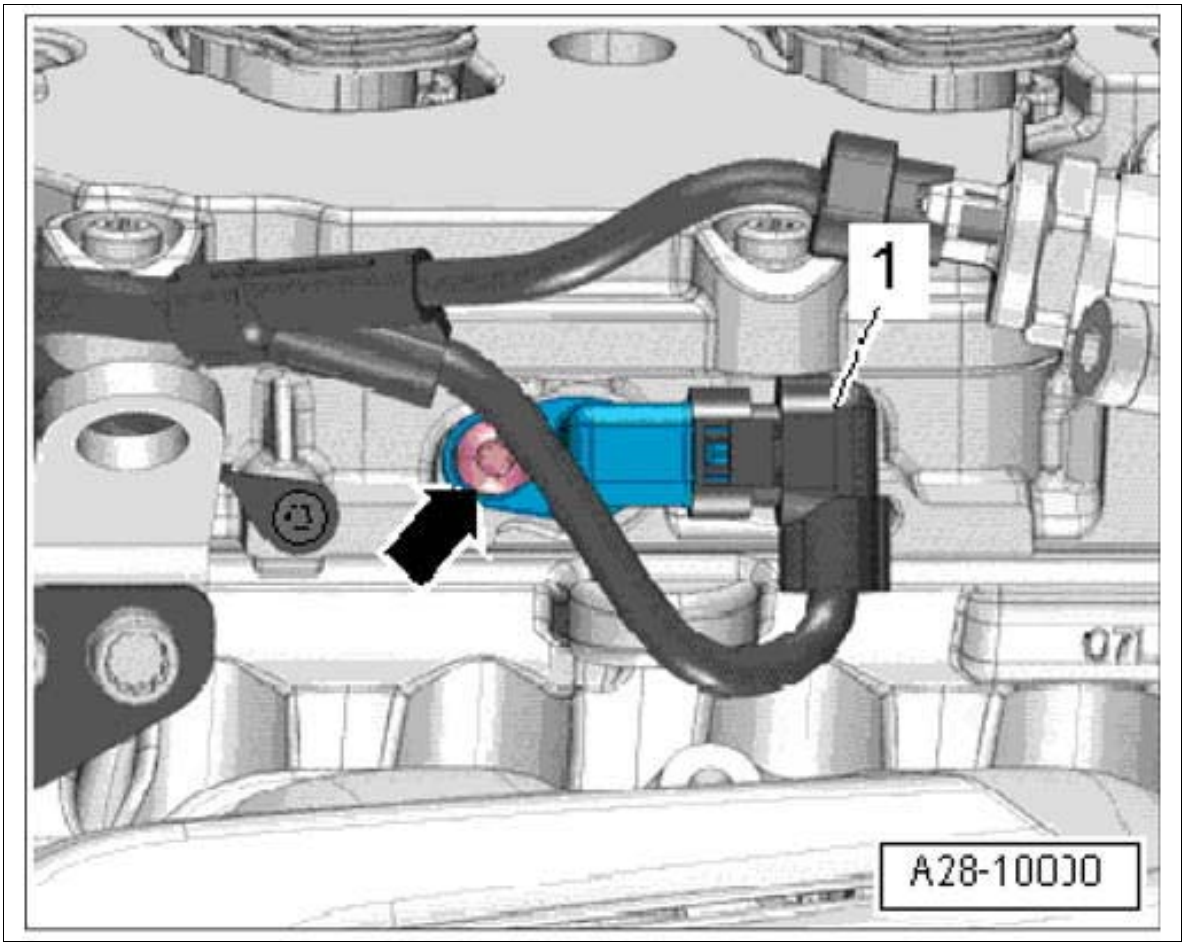

Courtesy of PORSCHE CARS NORTH AMERICA, INC.

9. Pull off vacuum line **-arrow-** for valve for the intake-air distributor flap.

Fig 9: Locating Intake-Air Distributor Flap Vacuum Line

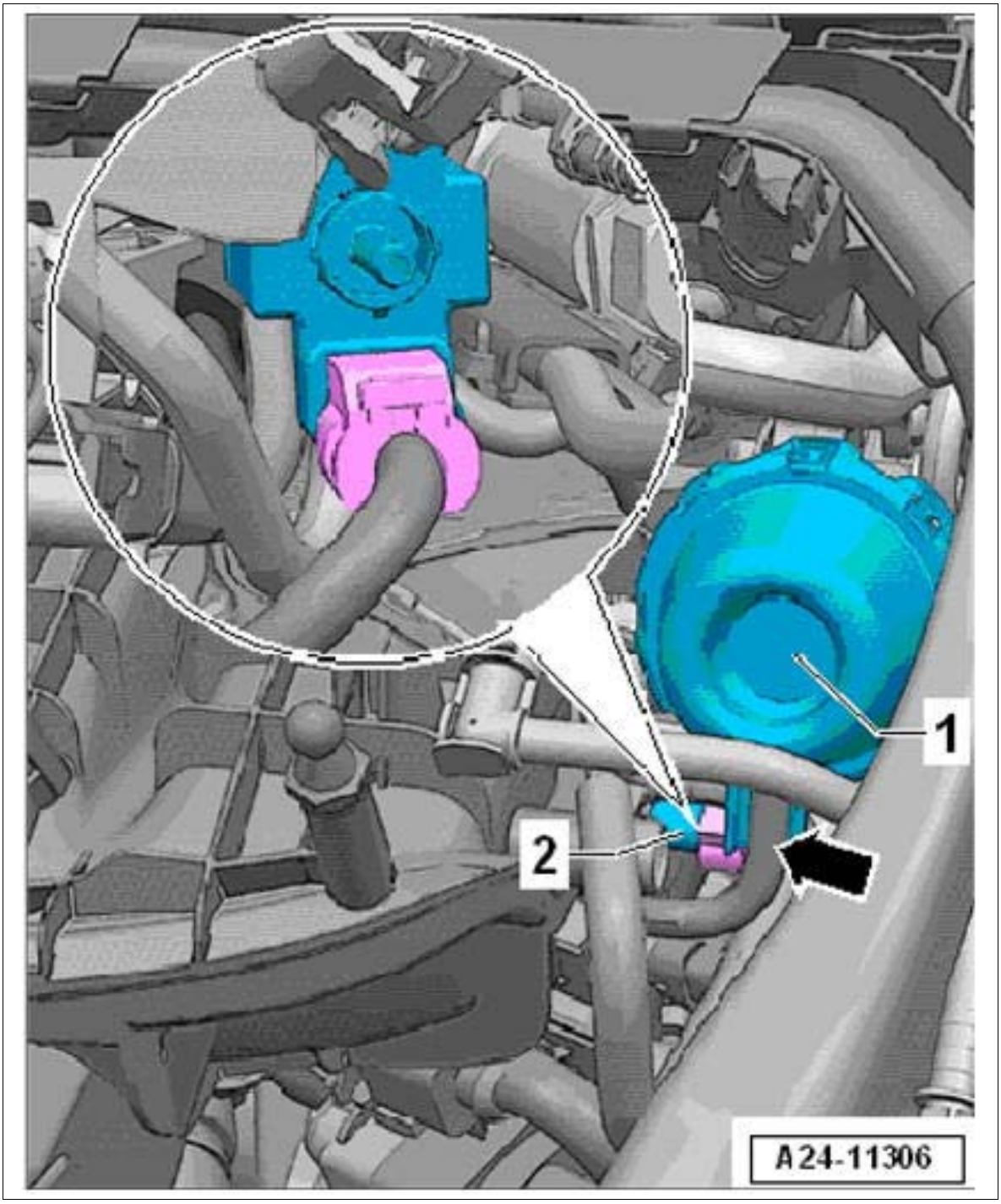

Courtesy of PORSCHE CARS NORTH AMERICA, INC.

Information

1. Absorb any escaping fuel using a suitable binding material or a cloth.
2. Cloths which have absorbed fuel must be disposed of according to the applicable national laws.
3. The fuel system must be depressurized before starting work on it.

4. Only work on the fuel system in well-ventilated rooms.

5. Any seals which have been removed must always be replaced.

6. Do not use any sealant containing silicone or silicone spray when the injection system is open. Traces of silicone drawn in by the engine are not combusted and damage the oxygen sensors.

10. Remove high-pressure line.

    1. 10.1. Unscrew screw **-1-** and loosen holding clamp **-2-** .

    2. 10.2. Unscrew union nuts **-3-** on the high-pressure line **-4-** at the high-pressure pump **-5-** and fuel distributor **-6-** .

    3. 10.3. Remove high-pressure line **-4-** .

    4. 10.4. Replace adapter for the high-pressure line.

Fig 10: Identifying High-Pressure Line

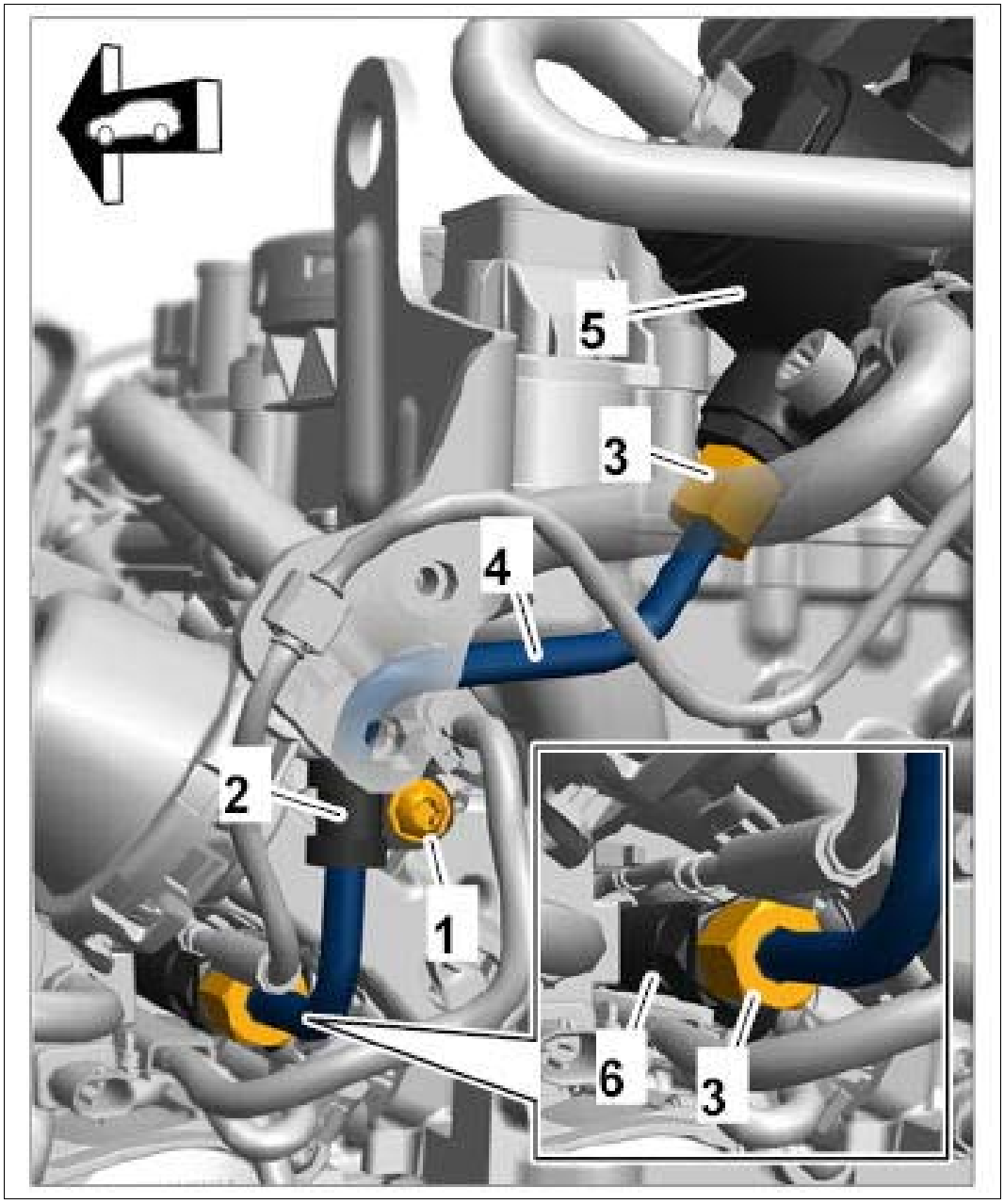

Courtesy of PORSCHE CARS NORTH AMERICA, INC.

11. Remove support.

    1. 11.1. Unscrew nut **-2-** and screw **-3-** and remove support.

Fig 11: Identifying Intake-Air Distributor Support Screw And Nut

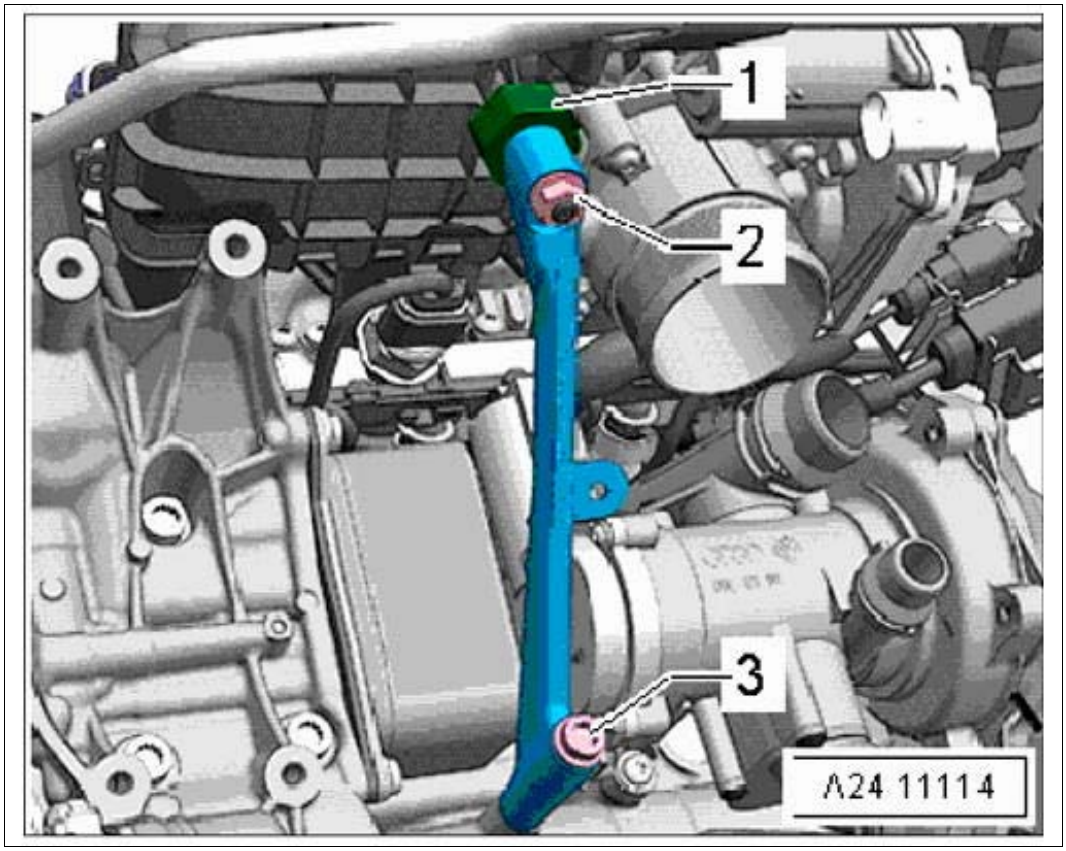

Courtesy of PORSCHE CARS NORTH AMERICA, INC.

12. Release and disconnect electric connector **-1-** for potentiometer for intake-air distributor flap.

Fig 12: Identifying Intake-Air Distributor Flap Potentiometer Electric Connector

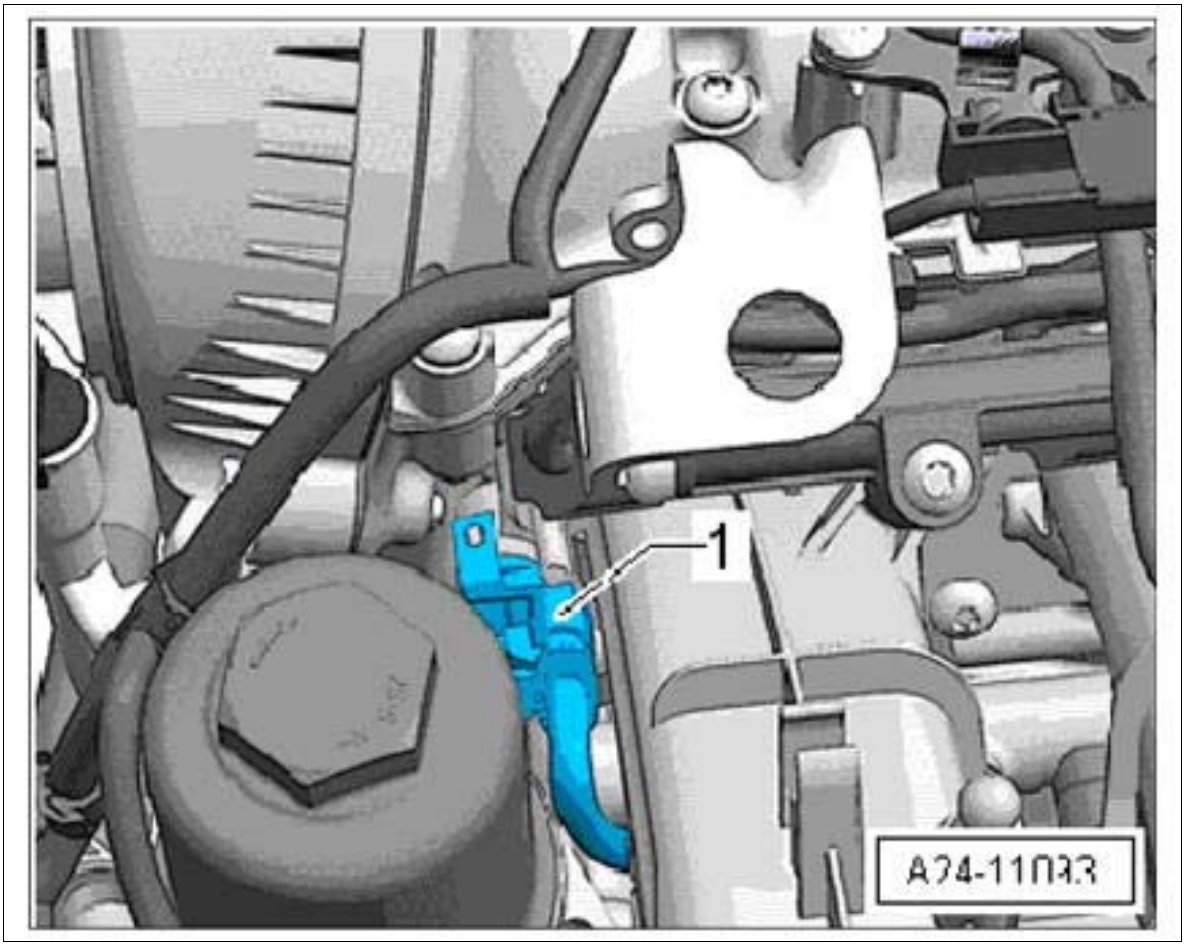

Courtesy of PORSCHE CARS NORTH AMERICA, INC.

13. Loosen intake-air distributor from the cylinder head.
    1. 13.1. Unscrew and remove nuts.
    2. 13.2. Unscrew screws.
14. Remove intake-air distributor.
    1. 14.1. Lift intake-air distributor off the cylinder head slightly.
    2. 14.2. Unscrew screws **-1-** and loosen holder **-2-** for electric plug connections.
    3. 14.3. Pull vacuum line **-3-** off the change-over valve **-4-** .
    4. 14.4. Remove intake-air distributor **-5-** .

Fig 13: Identifying Intake-Air Distributor Holder Electric Plug Connections

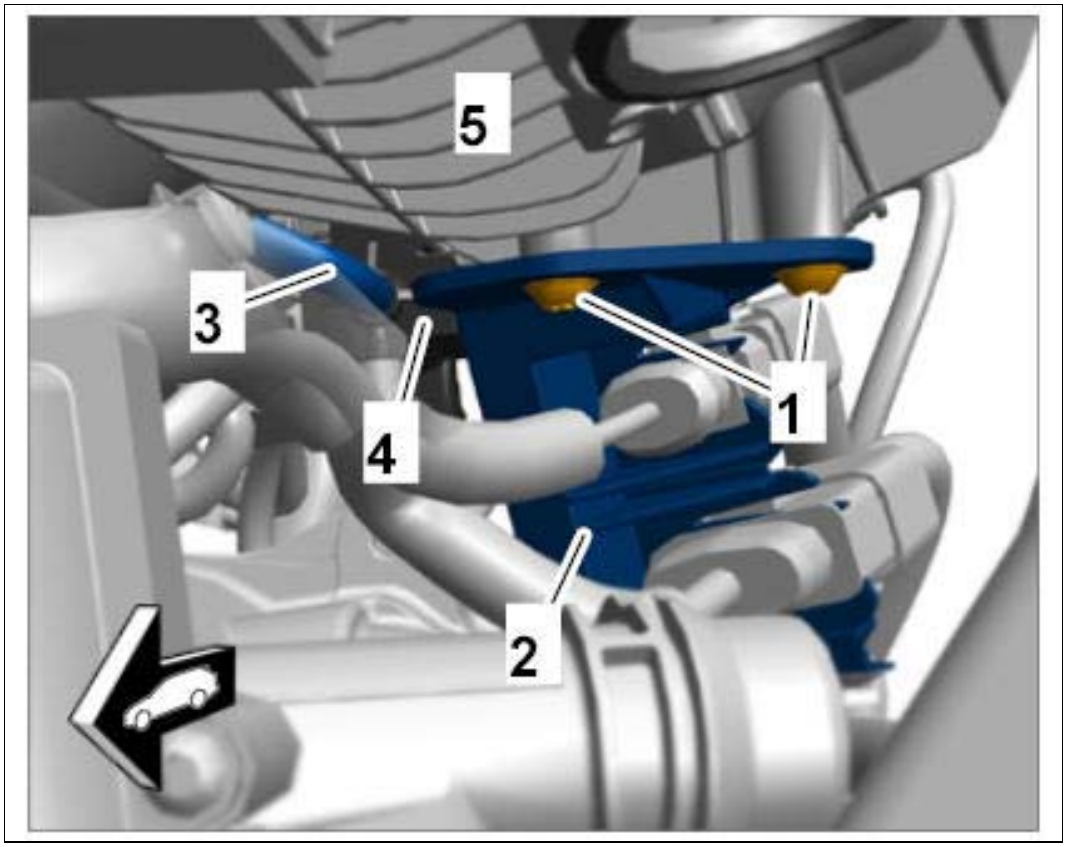

Courtesy of PORSCHE CARS NORTH AMERICA, INC.

WM 244619 REMOVING AND INSTALLING INTAKE-AIR DISTRIBUTOR (MACAN) > INSTALLING INTAKE-AIR DISTRIBUTOR

Information

Tightening torques, tightening sequence and assembly overviews for the engine and transmission:

- Group 1: → 1X00IN TECHNICAL VALUES
- Group 2: → 2X00IN TECHNICAL VALUES
- Group 3: → 3X00IN TECHNICAL VALUES

1. Installation is performed in reverse order. Pay particular attention to the following:

    1. 1.1. Replace adapter for the high-pressure line.

       Tightening torque for adapter: **Tightening torque 40 Nm (30 ftlb.)**

    2. 1.2. Tightening torque for high-pressure line: **Tightening torque 20 Nm (15 ftlb.)**

    3. 1.3. Tightening torque for holding clamp for high-pressure line: **Tightening torque 5 Nm (3.5 ftlb.)**

4. 1.4. Tightening torque for intake-air distributor: **Tightening torque 9 Nm (6.5 ftlb.)**

   Tighten all screws by hand first.

5. 1.5. Tightening torque for support for intake-air distributor:

   Screw: **Tightening torque 20 Nm (15 ftlb.)**

   Nut: **Tightening torque 10 Nm (7.5 ftlb.)**

WM 244619 REMOVING AND INSTALLING INTAKE-AIR DISTRIBUTOR (MACAN) > SUBSEQUENT WORK

1. Install engine cover.
2. Connect the battery. → Installing Battery
3. Reset adaptation values for the intake manifold flap in the engine control unit using PIWIS Tester II 9818.

WM 245419 REMOVING AND INSTALLING VACUUM RESERVOIR (MACAN S, MACAN TURBO) > TECHNICAL VALUES

Location	Description	Type	Basic value	Tolerance 1	Tolerance 2
Fastening screw with guide sleeve for vacuum reservoir to crankcase		Tightening torque	10 Nm (7.5 ftlb.)		

WM 245419 REMOVING AND INSTALLING VACUUM RESERVOIR (MACAN S, MACAN TURBO) > TECHNICAL VALUES > VACUUM RESERVOIR

Fig 1: Identifying Vacuum Reservoir And Guide Sleeve

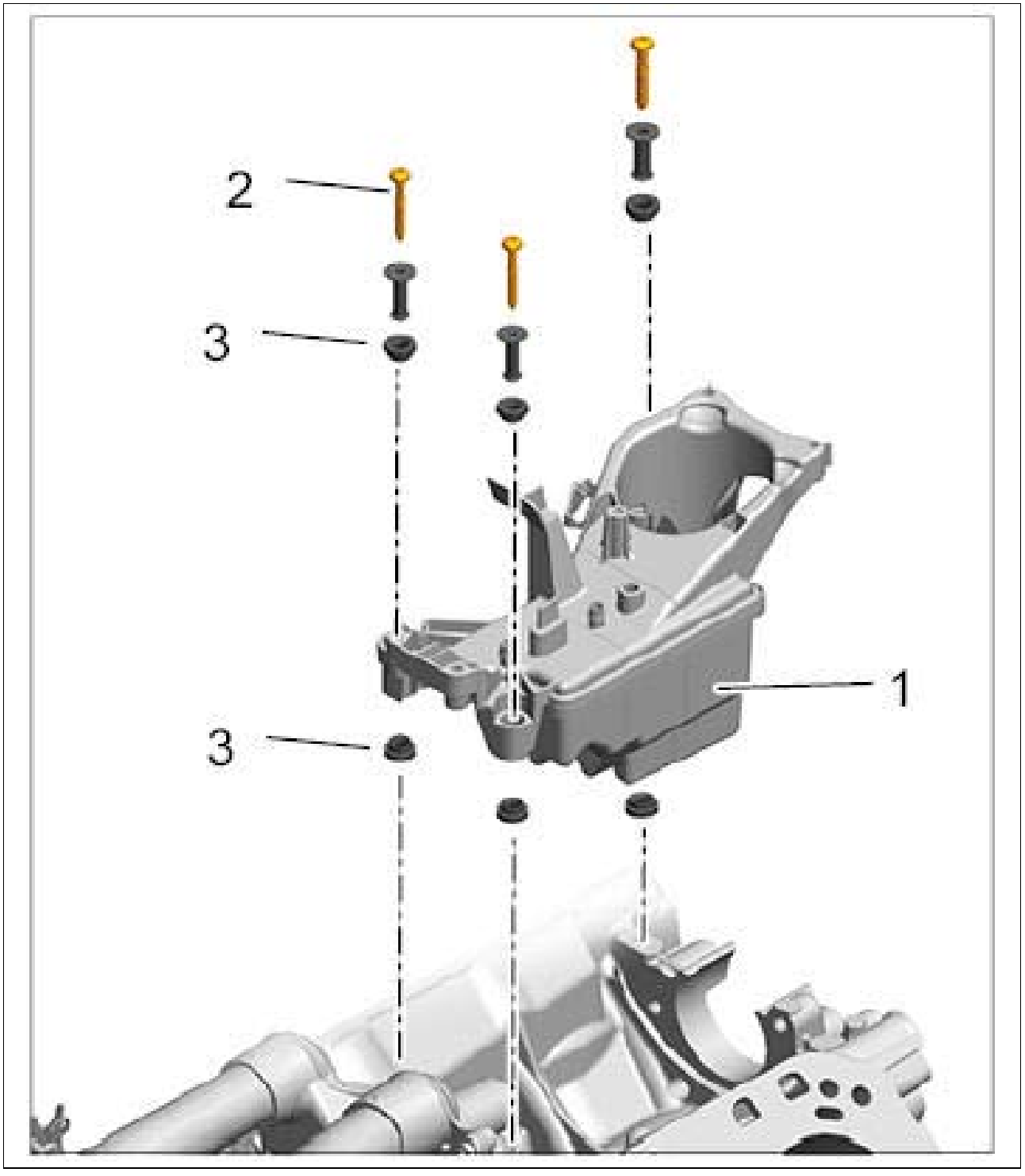

Courtesy of PORSCHE CARS NORTH AMERICA, INC.

1. Vacuum reservoir
2. Screw with guide sleeve → **Tightening torque: 10 Nm (7.5 ftlb.)**
3. Decoupling element

WM 245419 REMOVING AND INSTALLING VACUUM RESERVOIR (MACAN S, MACAN TURBO) > PRELIMINARY WORK

1. Remove intake-air distributor. → 244619 REMOVING AND INSTALLING INTAKE-AIR DISTRIBUTOR
2. Remove secondary-air pump. → 266519 REMOVING AND INSTALLING SECONDARY-AIR PUMP

WM 245419 REMOVING AND INSTALLING VACUUM RESERVOIR (MACAN S, MACAN TURBO) > REMOVING VACUUM RESERVOIR

1. Remove vacuum reservoir.
    1. 1.1. Release electric plug connection **-1-** for the boost pressure control cycle valve and pull it off.
    2. 1.2. Pull off pressure line **-2-** for boost pressure control at the cycle valve.
    3. 1.3. Release and pull off plug connections **-3-** for the tank vent line. Unclip tank vent line from the bracket.
    4. 1.4. Release and pull off electric plug connection **-4-** for the tank vent valve.
    5. 1.5. Pull off circulating air line **-5-** .
    6. 1.6. Release and pull off electric plug connection **-6-** for change-over valve for recirculated air.
    7. 1.7. Loosen screw **-7-** on the fuel connection line holder.
    8. 1.8. Loosen connections **-8-** for the fuel connection line.
    9. 1.9. Loosen screws **-9-** on the vacuum reservoir.
    10. 1.10. Remove vacuum reservoir.

Fig 1: Overview Of Vacuum Reservoir

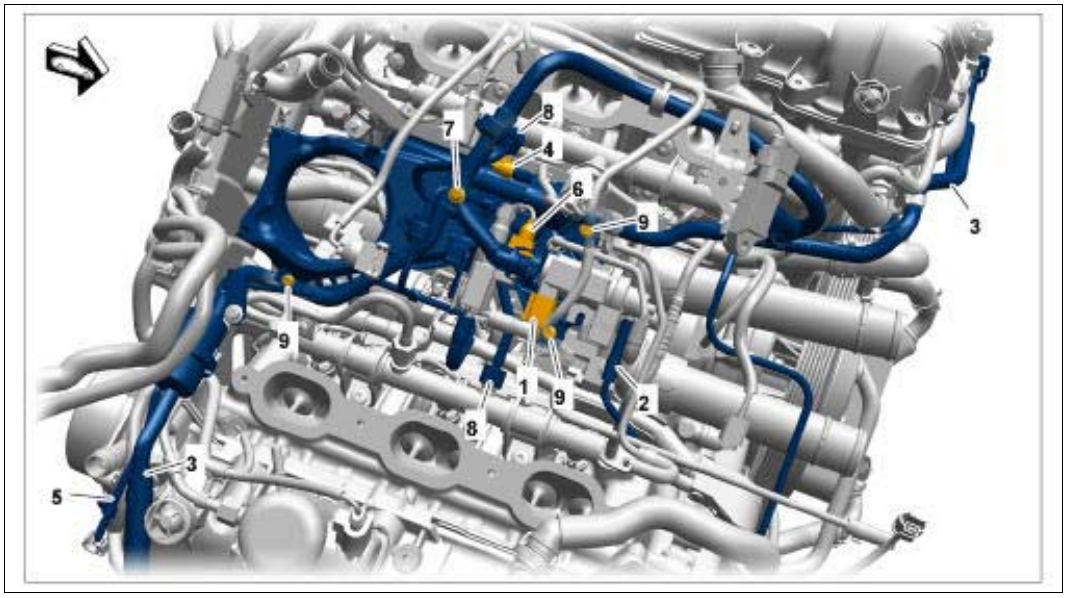

Courtesy of PORSCHE CARS NORTH AMERICA, INC.

WM 245419 REMOVING AND INSTALLING VACUUM RESERVOIR (MACAN S, MACAN TURBO) > INSTALLING VACUUM RESERVOIR

Information

Tightening torques, tightening sequence and assembly overviews for the engine and transmission:

- Group 1: → 1X00IN TECHNICAL VALUES
- Group 2: → 2X00IN TECHNICAL VALUES
- Group 3: → 3X00IN TECHNICAL VALUES

1. Install vacuum reservoir.
    1. 1.1. Insert vacuum reservoir.
    2. 1.2. Screw in and tighten screws.
    3. 1.3. Tighten connections for the fuel connection line.
    4. 1.4. Tighten screw on the fuel connection line holder.
    5. 1.5. Plug in and lock electric plug connection for change-over valve for recirculated air.

       (Check locking mechanism by pulling on it)
    6. 1.6. Plug in and lock electric plug connection for tank vent valve.

       (Check locking mechanism by pulling on it)

7. 1.7. Plug in and lock plug connections for the tank vent line. Clip tank vent line into the bracket.

   (Check locking mechanism by pulling on it)

8. 1.8. Insert pressure line for boost pressure control at the cycle valve.

9. 1.9. Plug in and lock electric plug connection for the boost pressure control cycle valve.

   (Check locking mechanism by pulling on it)

Fig 1: Overview Of Vacuum Reservoir

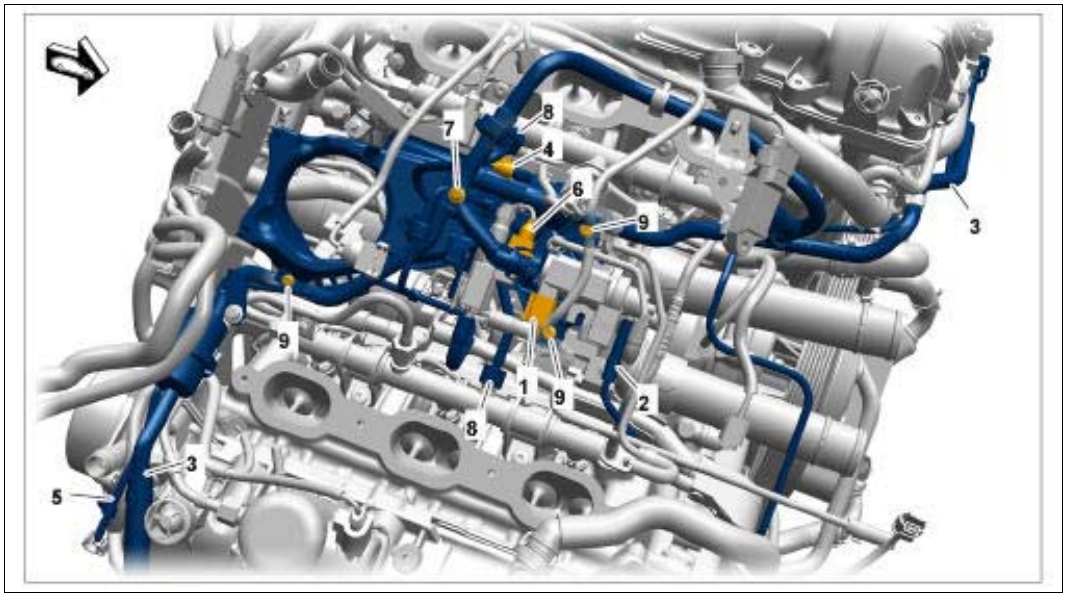

Courtesy of PORSCHE CARS NORTH AMERICA, INC.

WM 245419 REMOVING AND INSTALLING VACUUM RESERVOIR (MACAN S, MACAN TURBO) > SUBSEQUENT WORK

1. Install secondary-air pump. → 266519 REMOVING AND INSTALLING SECONDARY-AIR PUMP

2. Install intake-air distributor. → Installing Intake-Air Distributor

WM 246319 REMOVING AND INSTALLING HIGH-PRESSURE PUMP (MACAN) > TECHNICAL VALUES

Location	Description	Type	Basic value	Tolerance 1	Tolerance 2
Fastening screw for high-pressure pump	Replace	Tightening torque	20 Nm (15 ftlb.)		

Fuel line adapter	Replace	Tightening torque	40 Nm (30 ftlb.)		
Union nut on fuel line		Tightening torque	20 Nm (15 ftlb.)		

WM 246319 REMOVING AND INSTALLING HIGH-PRESSURE PUMP (MACAN) > PRELIMINARY WORK

1. Disconnect the battery.
2. Remove engine cover.

WM 246319 REMOVING AND INSTALLING HIGH-PRESSURE PUMP (MACAN) > REMOVING HIGH-PRESSURE PUMP

WARNING: Highly inflammable or explosive materials

- *Danger of fire or explosion*

→ Avoid contact with hot parts or sources of ignition.

→ Use suction to remove ignitable vapors.

→ Attach warning sign in a clearly visible position.

WARNING: Toxic substances

- *Danger of poisoning or suffocation*
- *Danger of burns to the eyes and skin*

→ Ventilate the work area well.

→ Never ingest or inhale.

→ Read specific information on the Hazard Sheet.

→ Do not smoke, eat or drink in the work area.

Information

- Absorb any escaping fuel using a suitable binding material or a cloth.
- Cloths which have absorbed fuel must be disposed of according to the applicable national laws.

- The fuel system must be depressurized before starting work on it.
- Only work on the fuel system in well-ventilated rooms.
- Any seals which have been removed must always be replaced.
- Do not use any sealant containing silicone or silicone spray when the injection system is open. Traces of silicone drawn in by the engine are not combusted and damage the oxygen sensors.

Information

- Close off open connections and lines using suitable stoppers or caps.

1. Unscrew screw **-arrow-** and loosen holding clamp on fuel high-pressure line.

   Fig 1: Locating High-Pressure Line Holding Clamp

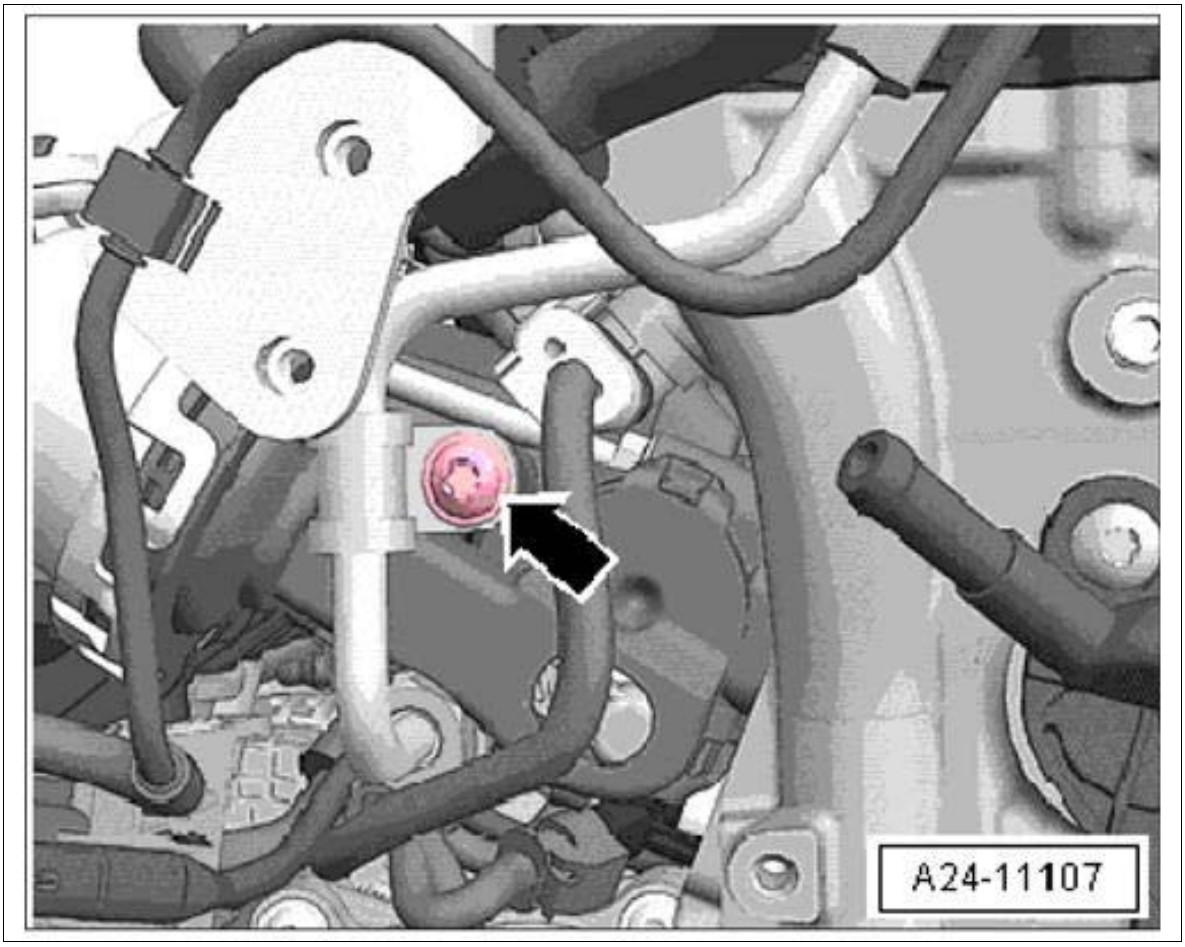

Courtesy of PORSCHE CARS NORTH AMERICA, INC.

2. Remove high-pressure pump.

    1. 2.1. Release and disconnect electric connector **-2-** for the fuel pressure sensor.
    2. 2.2. Loosen clamps and pull off fuel lines **-3-** and **-4-** .
    3. 2.3. Unscrew union nut and loosen fuel high-pressure line **-5-** at the adapter.

       Replace adapter on the high-pressure pump.

4. 2.4. Unscrew screws **-arrows-** and remove high-pressure pump.

   The roller tappet can remain in the vacuum pump.

   Fig 2: Locating High-Pressure Pump Screws

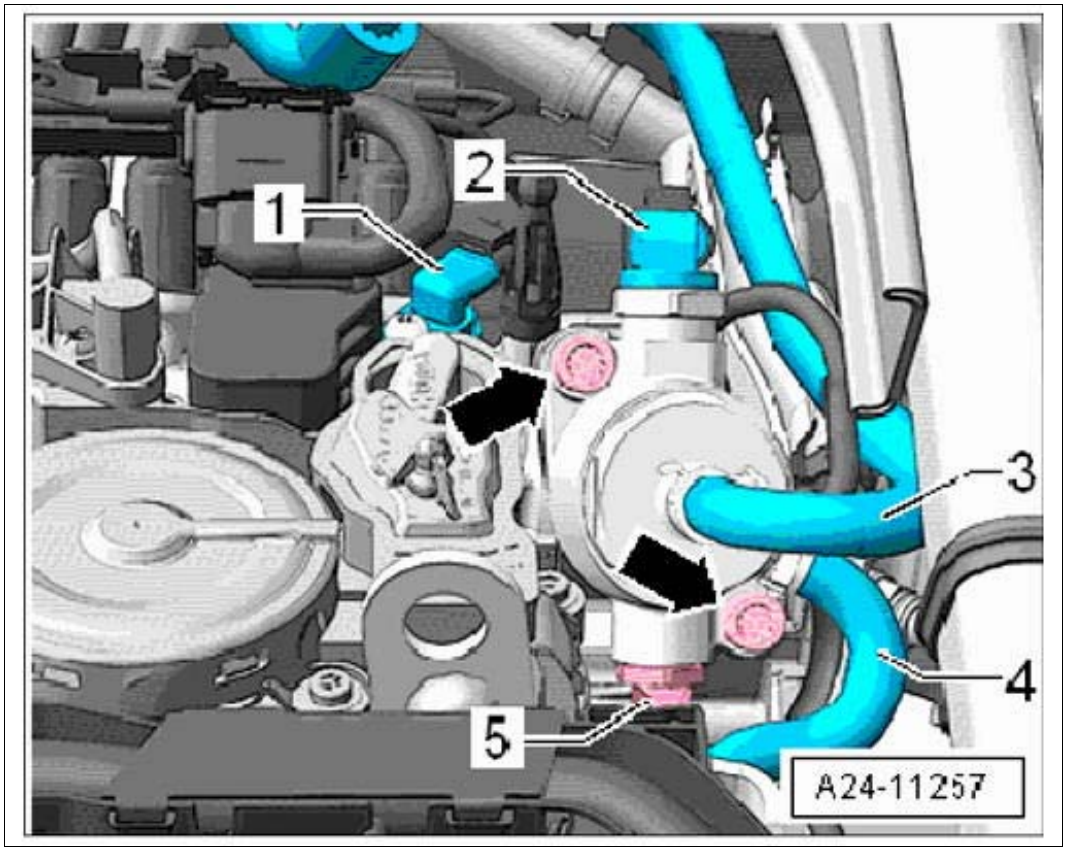

Courtesy of PORSCHE CARS NORTH AMERICA, INC.

WM 246319 REMOVING AND INSTALLING HIGH-PRESSURE PUMP (MACAN) > INSTALLING HIGH-PRESSURE PUMP

Information

An adaptation must be performed after replacing the high-pressure pump and/or the fuel pressure control valve. Use the vehicle diagnostic tester to do this.

1. Install high-pressure pump.
    1. 1.1. Replace O-ring on high-pressure pump.
    2. 1.2. Fit roller tappet into the vacuum pump.
    3. 1.3. Turn the crankshaft until the roller tappet is set to the lowest point.
    4. 1.4. Replace adapter for high-pressure pump. **Tightening torque 40 Nm (30 ftlb.)**
    5. 1.5. Insert high-pressure pump into the vacuum pump and tighten screws hand-tight.

6. 1.6. Tighten screws to the specified tightening torque. **Tightening torque 20 Nm (15 ftlb.)**

2. Install fuel high-pressure line.

    1. 2.1. Tighten union nut on high-pressure line hand-tight.
    2. 2.2. Secure holding clamp for high-pressure line.
    3. 2.3. Align high-pressure line without tension and tighten to the specified tightening torque. **Tightening torque 20 Nm (15 ftlb.)**
    4. 2.4. Tighten screw on the holding clamp.

3. Further installation is performed in reverse order.

WM 246319 REMOVING AND INSTALLING HIGH-PRESSURE PUMP (MACAN) > SUBSEQUENT WORK

1. Connect the battery.
2. Check the fuel system for leaks.
3. Install engine cover.

WM 246919 REMOVING AND INSTALLING OXYGEN SENSOR UPSTREAM OF CATALYTIC CONVERTER (MACAN) > TECHNICAL VALUES

Location	Description	Type	Basic value	Tolerance 1	Tolerance 2
Oxygen sensor upstream of catalytic converter	Grease thread with high-temperature paste.	Tightening torque	55 Nm (41 ftlb.)		

WM 246919 REMOVING AND INSTALLING OXYGEN SENSOR UPSTREAM OF CATALYTIC CONVERTER (MACAN) > PRELIMINARY WORK

1. Remove engine cover.

WM 246919 REMOVING AND INSTALLING OXYGEN SENSOR UPSTREAM OF CATALYTIC CONVERTER (MACAN) > REMOVING OXYGEN SENSOR UPSTREAM OF CATALYTIC CONVERTER

NOTE: Incorrect handling of oxygen sensors

- *Damage to oxygen sensors*
- *Different exhaust emission behavior*

→ Do not remove the plastic cap on the thread until just prior to fitting.

→ Protect oxygen sensors from impact of any kind.

→ Do not kink or twist the cables when screwing in the sensors.

→ Do not re-use dirty or damaged components.

1. Remove oxygen sensor **-1-** .
    1. 1.1. Release and disconnect electric connector **-3-** .
    2. 1.2. Loosen connector housing **-2-** from the holder **-4-** .
    3. 1.3. Loosen electric line **-5-** at the holder **-arrow-** and expose line.
    4. 1.4. Unscrew and remove oxygen sensor.

Fig 1: Locating Catalytic Converter Oxygen Sensor Upstream Electric Line

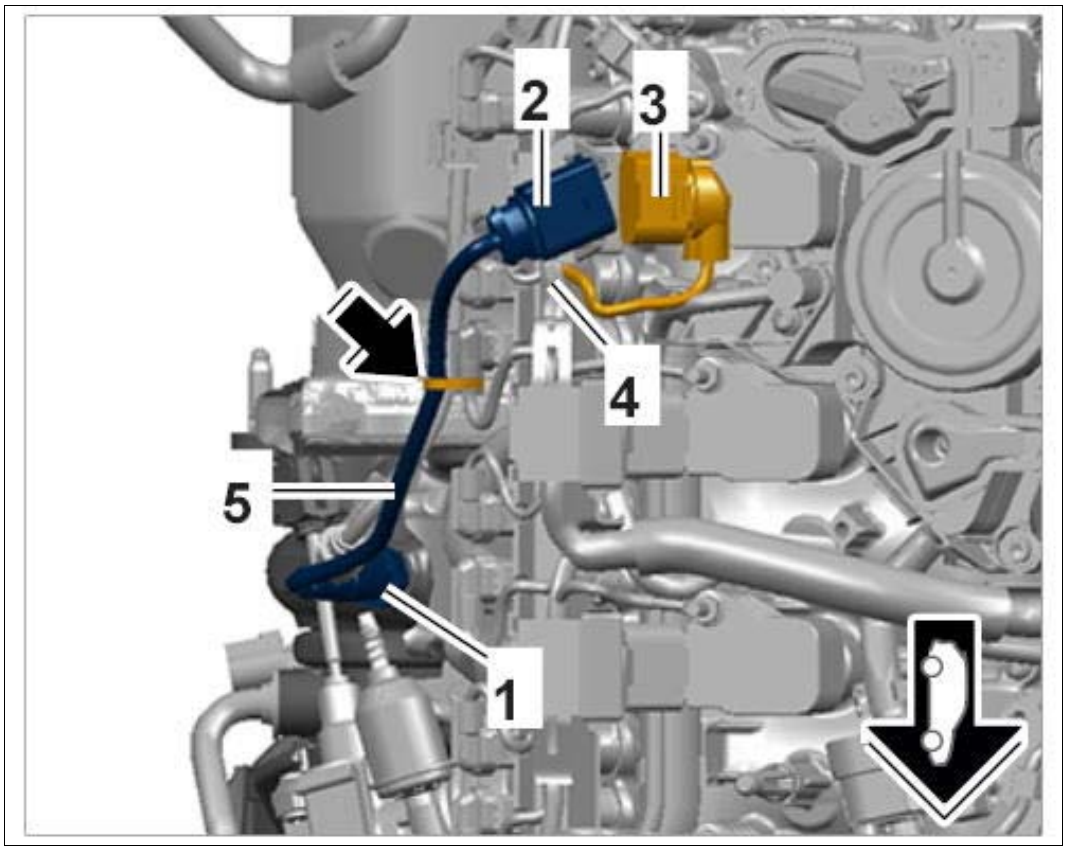

Courtesy of PORSCHE CARS NORTH AMERICA, INC.

WM 246919 REMOVING AND INSTALLING OXYGEN SENSOR UPSTREAM OF CATALYTIC CONVERTER (MACAN) > INSTALLING OXYGEN SENSOR UPSTREAM OF CATALYTIC CONVERTER

NOTE: Incorrect handling of oxygen sensors

- *Damage to oxygen sensors*
- *Different exhaust emission behavior*

→ Do not remove the plastic cap on the thread until just prior to fitting.

→ Protect oxygen sensors from impact of any kind.

→ Do not kink or twist the cables when screwing in the sensors.

→ Do not re-use dirty or damaged components.

1. Installation is performed in reverse order. Pay particular attention to the following:
    1. 1.1. Coat oxygen sensor thread with assembly grease 000.043.207.07.
    2. 1.2. Tightening torque: **Tightening torque 55 Nm (41 ftlb.)**

WM 246919 REMOVING AND INSTALLING OXYGEN SENSOR UPSTREAM OF CATALYTIC CONVERTER (MACAN) > SUBSEQUENT WORK

1. Install engine cover.

WM 247019 REMOVING AND INSTALLING DME CONTROL UNIT (MACAN S, MACAN TURBO) > TOOLS

Designation	Type	Number	Description	
PIWIS Tester II	Special tool	9818		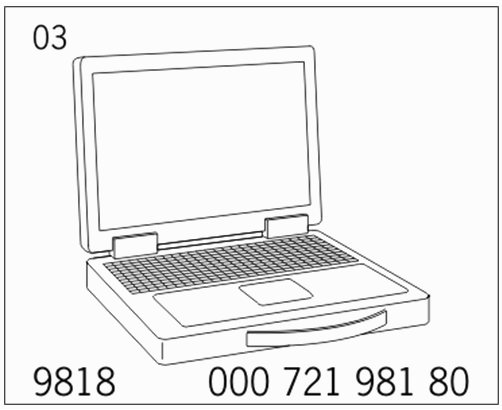

WM 247019 REMOVING AND INSTALLING DME CONTROL UNIT (MACAN S, MACAN TURBO) > TECHNICAL VALUES

Location	Description	Type	Basic value	Tolerance 1	Tolerance 2
Filler neck for windscreen washer system to body	Internal Torx screw, M6 x 14	Tightening torque	7 Nm (5 ftlb.)		
Cover on fuse box in the plenum panel	Internal Torx screw,	Tightening torque	3.5 Nm (2.5 ftlb.)		

WM 247019 REMOVING AND INSTALLING DME CONTROL UNIT (MACAN S, MACAN TURBO) > PRELIMINARY WORK

1. Remove cowl panel cover. → 508719 REMOVING AND INSTALLING COWL PANEL COVER

WM 247019 REMOVING AND INSTALLING DME CONTROL UNIT (MACAN S, MACAN TURBO) > REMOVING DME CONTROL UNIT

NOTE: Voltage peaks

- *Risk of damage to load or to the control unit*

→ Remove the ignition key and switch off load before disconnecting or removing load.

Information

Always comply with the regulations for handling ESD-sensitive components!

- Assembly work may only be carried out if the mechanic is wearing the working clothes and shoes approved by Porsche.
- The new part must only be removed from the ESD (electrostatic discharge) protective packaging just before installation and at the position at which the part is to be installed.
- Never touch the electric pins and plug contacts.

1. Switch off ignition and pull remote control out of ignition lock.
2. Remove filler neck from the windscreen-washer reservoir **-1-** .
    1. 2.1. Unscrew fastening screws **-2-** .

2. 2.2. Pull filler neck out of the windscreen-washer reservoir and remove it.

Fig 1: Removing Filler Neck From Windscreen-Washer Reservoir

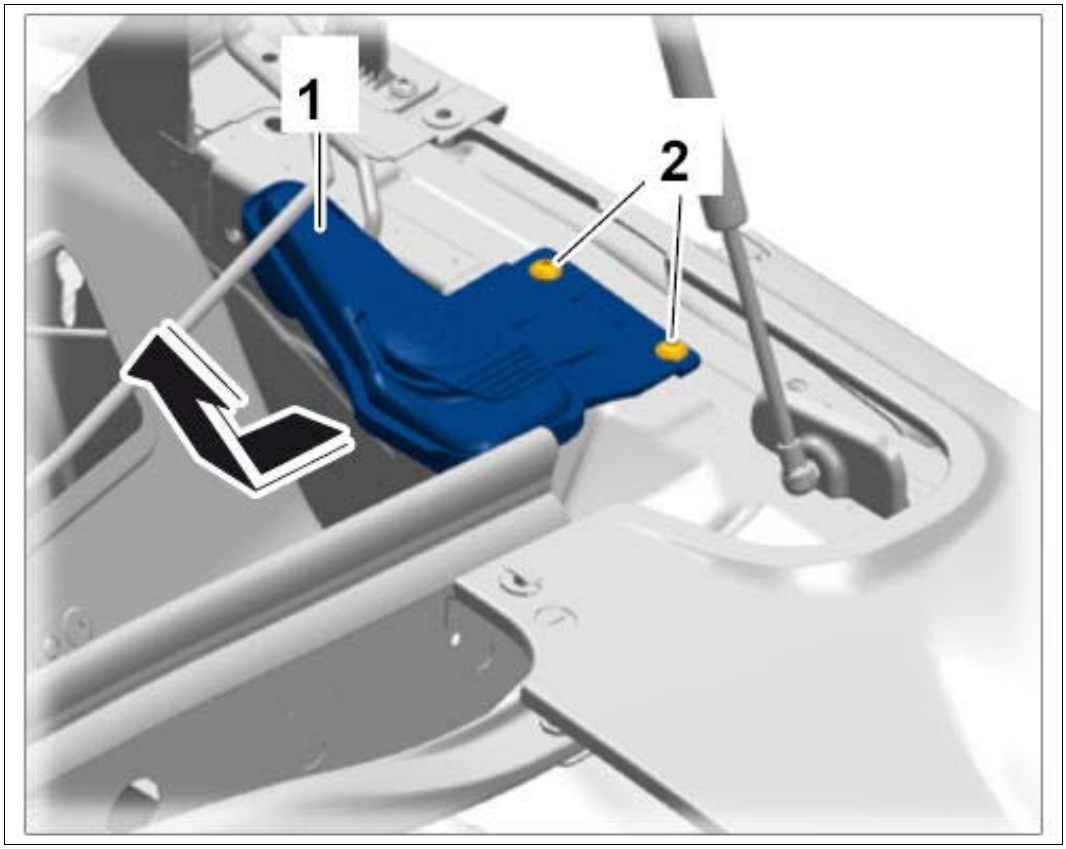

Courtesy of PORSCHE CARS NORTH AMERICA, INC.

3. Unscrew fastening screws **-1, 2 and 4-** and remove cover **-3-** on the fuse box.

Fig 2: Removing Fuse Box Cover

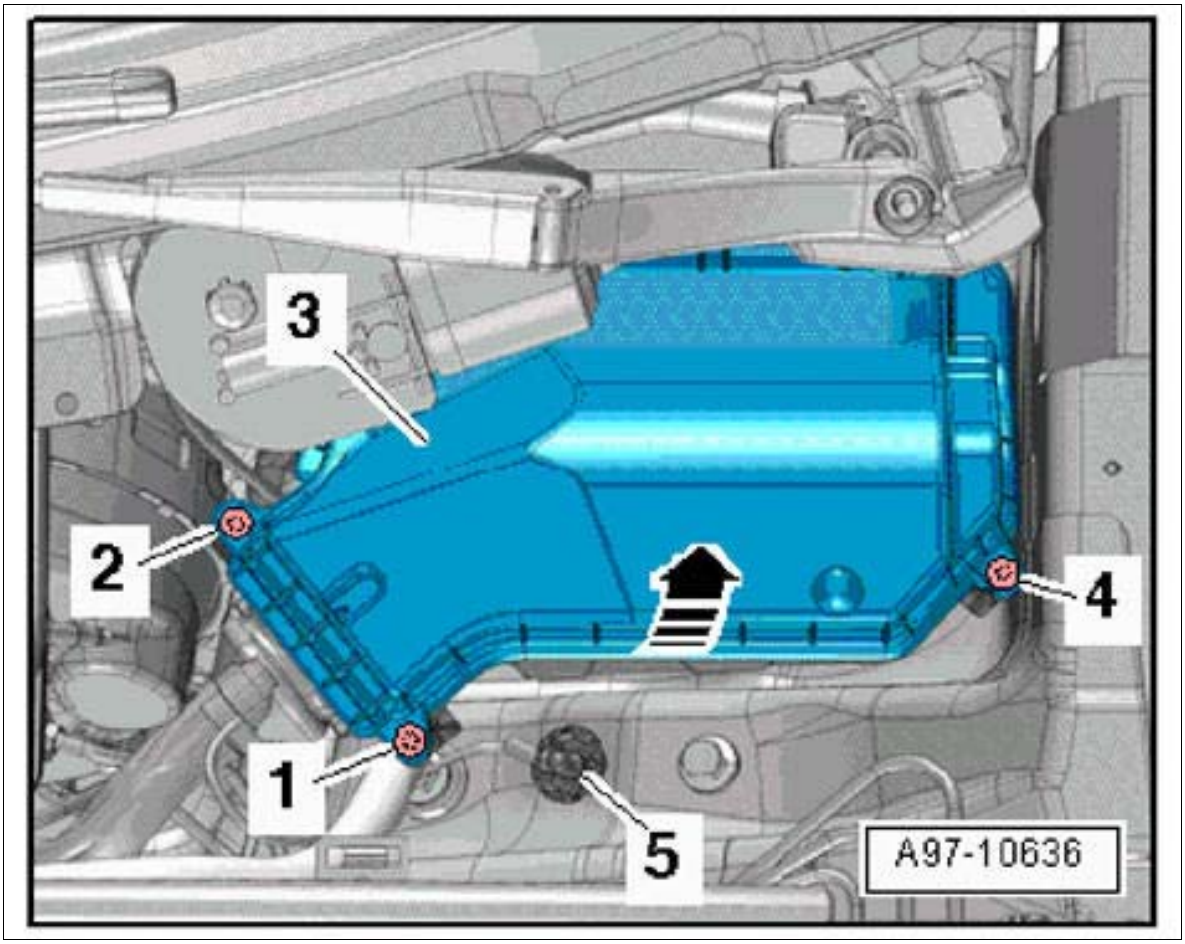

Courtesy of PORSCHE CARS NORTH AMERICA, INC.

4. Release electric plug connections **-A-** and pull DME control unit out of the fuse box housing **-B-** .

Fig 3: Removing DME Control Unit

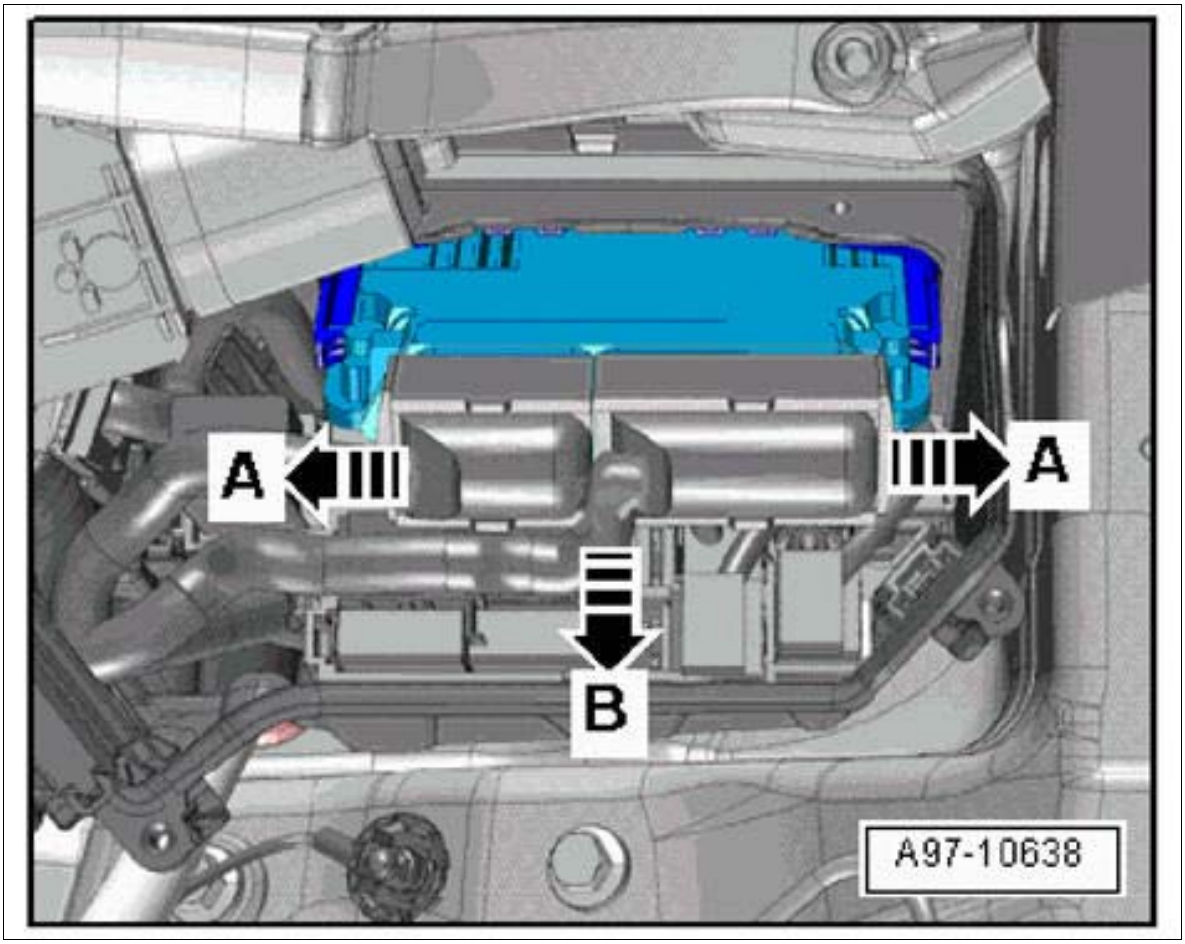

Courtesy of PORSCHE CARS NORTH AMERICA, INC.

WM 247019 REMOVING AND INSTALLING DME CONTROL UNIT (MACAN S, MACAN TURBO) > INSTALLING DME CONTROL UNIT

1. Installation is performed in reverse order to removal.
2. Tighten fastening screws securing cover to fuse box housing. **Tightening torque 3.5 Nm (2.5 ftlb.)**
3. Tighten fastening screws securing filler neck to the body. **Tightening torque 7 Nm (5 ftlb.)**

WM 247019 REMOVING AND INSTALLING DME CONTROL UNIT (MACAN S, MACAN TURBO) > SUBSEQUENT WORK

1. Install cowl panel cover. → 508719 REMOVING AND INSTALLING COWL PANEL COVER
2. If the DME control unit was replaced, the new DME control unit must be taught to suit the vehicle using **PIWIS Tester II 9818** .

WM 247319 REMOVING AND INSTALLING OXYGEN SENSOR DOWNSTREAM OF CATALYTIC CONVERTER (MACAN S, MACAN TURBO) > TOOLS

Designation	Type	Number	Description	
crow foot wrench	Commercially available tool	Nr.189-1		
socket insert a/f 17	VW tool	T10491		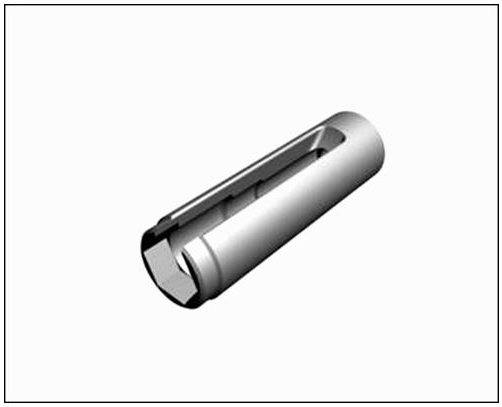

WM 247319 REMOVING AND INSTALLING OXYGEN SENSOR DOWNSTREAM OF CATALYTIC CONVERTER (MACAN S, MACAN TURBO) > PRELIMINARY WORK

1. Remove engine cover.

WM 247319 REMOVING AND INSTALLING OXYGEN SENSOR DOWNSTREAM OF CATALYTIC CONVERTER (MACAN S, MACAN TURBO) > REMOVING OXYGEN SENSOR DOWNSTREAM OF CATALYTIC CONVERTER

NOTE: Incorrect handling of oxygen sensors

- *Damage to oxygen sensors*
- *Different exhaust emission behavior*

→ Do not remove the plastic cap on the thread until just prior to fitting.

→ Protect oxygen sensors from impact of any kind.

→ Do not kink or twist the cables when screwing in the sensors.

→ Do not re-use dirty or damaged components.

Information

The procedure for removing and installing is described for one side as an example. The procedure for the other side is practically identical.

1. Remove oxygen sensor.
    1. 1.1. Release and disconnect electric connector **-1-** .
    2. 1.2. Loosen electric line **-2-** from the holder **-3-** .
    3. 1.3. Unscrew oxygen sensor **-4-** using **crow foot wrench Nr.189-1** or **socket insert a/f 17 T10491 -5-** .

Fig 1: Identifying Oxygen Sensor (Cylinder Bank 1-3)

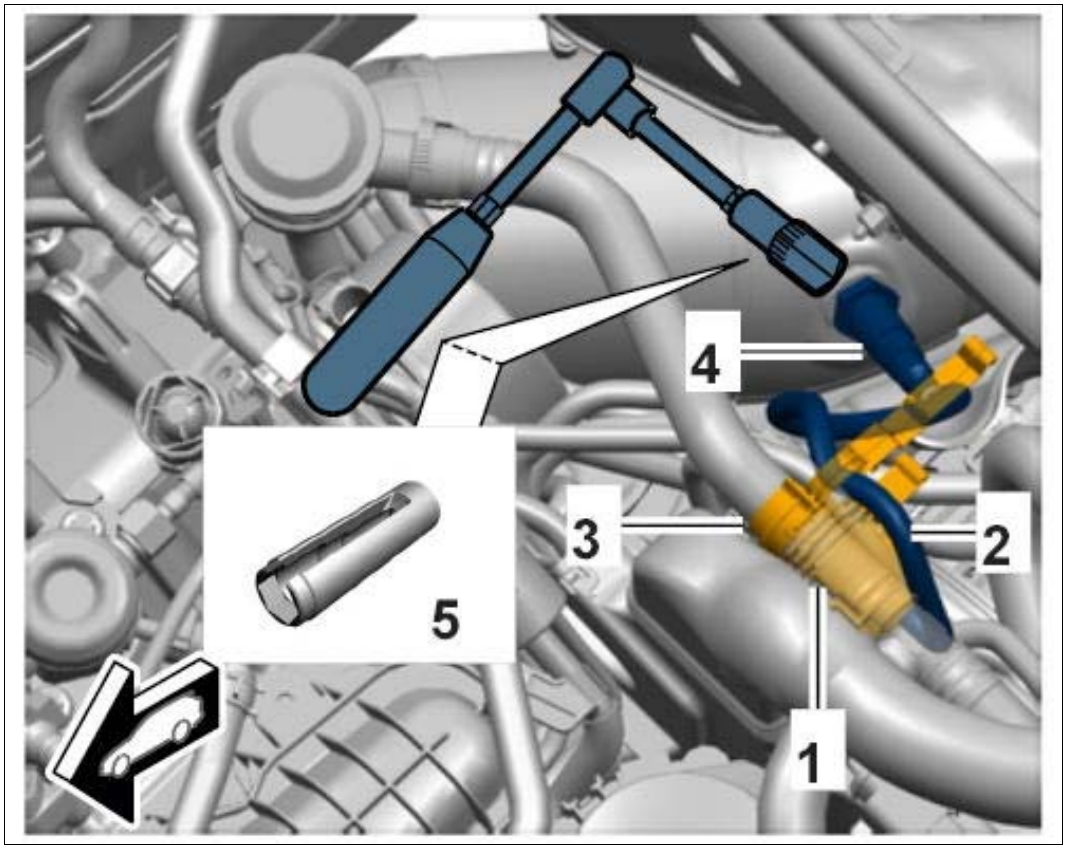

Courtesy of PORSCHE CARS NORTH AMERICA, INC.

WM 247319 REMOVING AND INSTALLING OXYGEN SENSOR DOWNSTREAM OF CATALYTIC CONVERTER (MACAN S, MACAN TURBO) > INSTALLING OXYGEN SENSOR DOWNSTREAM OF CATALYTIC CONVERTER

NOTE: Incorrect handling of oxygen sensors

- *Damage to oxygen sensors*
- *Different exhaust emission behavior*

→ Do not remove the plastic cap on the thread until just prior to fitting.

→ Protect oxygen sensors from impact of any kind.

→ Do not kink or twist the cables when screwing in the sensors.

→ Do not re-use dirty or damaged components.

Information

The procedure for removing and installing is described for one side as an example. The procedure for

the other side is practically identical.

1. Installation is performed in reverse order. Pay particular attention to the following:
    1. 1.1. Coat oxygen sensor thread with assembly grease 000.043.207.07.
    2. 1.2. Tightening torque:

WM 247319 REMOVING AND INSTALLING OXYGEN SENSOR DOWNSTREAM OF CATALYTIC CONVERTER (MACAN S, MACAN TURBO) > SUBSEQUENT WORK

1. Install engine cover.

WM 247319 REMOVING AND INSTALLING OXYGEN SENSOR DOWNSTREAM OF CATALYTIC CONVERTER (MACAN) > TECHNICAL VALUES

Location	Description	Type	Basic value	Tolerance 1	Tolerance 2
Oxygen sensor downstream of catalytic converter	Grease thread with high-temperature paste.	Tightening torque	55 Nm (41 ftlb.)		

WM 247319 REMOVING AND INSTALLING OXYGEN SENSOR DOWNSTREAM OF CATALYTIC CONVERTER (MACAN) > PRELIMINARY WORK

1. Remove engine cover.

WM 247319 REMOVING AND INSTALLING OXYGEN SENSOR DOWNSTREAM OF CATALYTIC CONVERTER (MACAN) > REMOVING OXYGEN SENSOR DOWNSTREAM OF CATALYTIC CONVERTER

NOTE: Incorrect handling of oxygen sensors

- *Damage to oxygen sensors*
- *Different exhaust emission behavior*

→ Do not remove the plastic cap on the thread until just prior to fitting.

→ Protect oxygen sensors from impact of any kind.

→ Do not kink or twist the cables when screwing in the sensors.

→ Do not re-use dirty or damaged components.

1. Remove oxygen sensor **-1-** .

    1. 1.1. Release and disconnect electric connector **-2-** .
    2. 1.2. Loosen connector housing **-3-** from the holder **-4-** .
    3. 1.3. Unclip electric line **-5-** (**-arrow-**) and unscrew oxygen sensor.

Fig 1: Locating Catalytic Converter Oxygen Sensor Downstream Electric Line

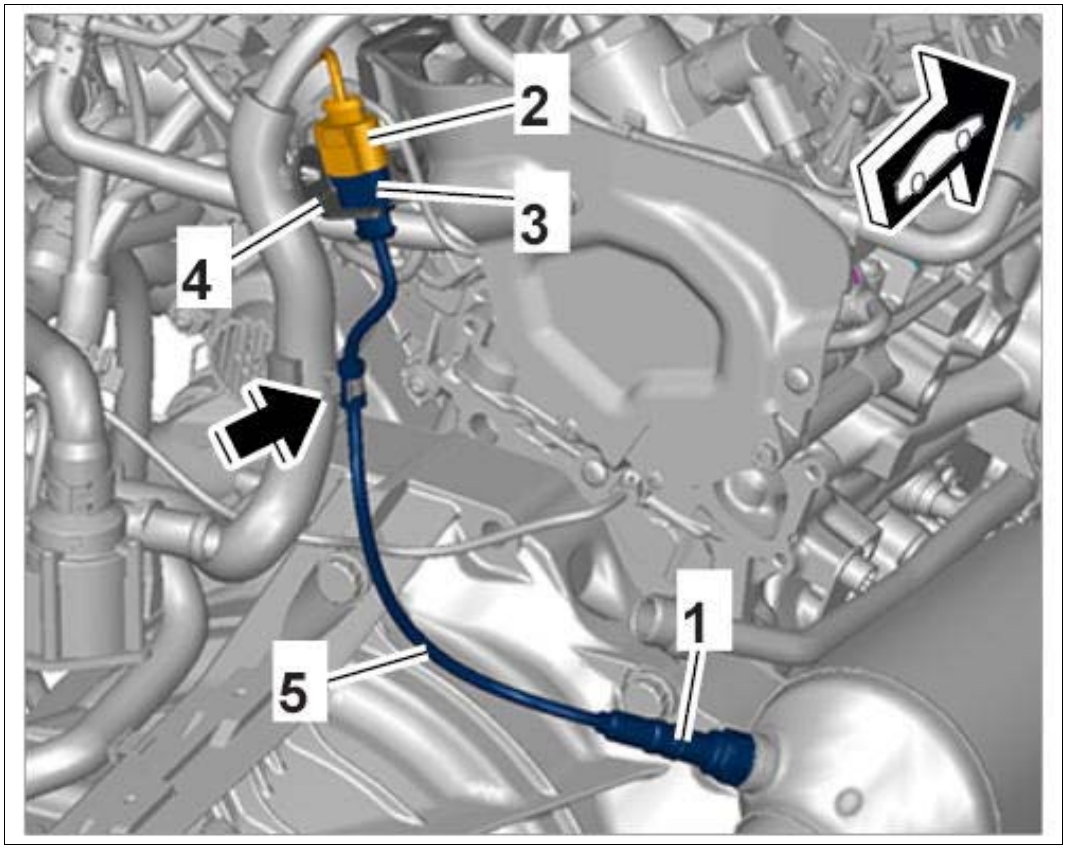

Courtesy of PORSCHE CARS NORTH AMERICA, INC.

WM 247319 REMOVING AND INSTALLING OXYGEN SENSOR DOWNSTREAM OF CATALYTIC CONVERTER (MACAN) > INSTALLING OXYGEN SENSOR DOWNSTREAM OF CATALYTIC CONVERTER

NOTE: Incorrect handling of oxygen sensors

- *Damage to oxygen sensors*
- *Different exhaust emission behavior*

→ Do not remove the plastic cap on the thread until just prior to fitting.

→ Protect oxygen sensors from impact of any kind.

→ Do not kink or twist the cables when screwing in the sensors.

→ Do not re-use dirty or damaged components.

1. Installation is performed in reverse order. Pay particular attention to the following:
    1. 1.1. Coat oxygen sensor thread with assembly grease 000.043.207.07.
    2. 1.2. Tightening torque: **Tightening torque 55 Nm (41 ftlb.)**

WM 247319 REMOVING AND INSTALLING OXYGEN SENSOR DOWNSTREAM OF CATALYTIC CONVERTER (MACAN) > SUBSEQUENT WORK

1. Install engine cover.

WM 248019 REMOVING AND INSTALLING PRESSURE SENSOR (MACAN S, MACAN TURBO) > TECHNICAL VALUES

Location	Description	Type	Basic value	Tolerance 1	Tolerance 2
Fastening screw securing pressure and temperature sensor to intake system		Tightening torque	3 Nm (2 ftlb.)		

WM 248019 REMOVING AND INSTALLING PRESSURE SENSOR (MACAN S, MACAN TURBO) > PRELIMINARY WORK

1. Remove engine cover.

WM 248019 REMOVING AND INSTALLING PRESSURE SENSOR (MACAN S, MACAN TURBO) > REMOVING AND INSTALLING PRESSURE SENSOR

1. Remove pressure sensor.
    1. 1.1. Release electric plug connection for the pressure sensor **-1-** and disconnect it.
    2. 1.2. Unscrew screw **-2-** .
    3. 1.3. Remove pressure sensor **-1-** by pressing and turning it slightly.

Fig 1: Identifying Intake-Air Distributor Pressure Sensor

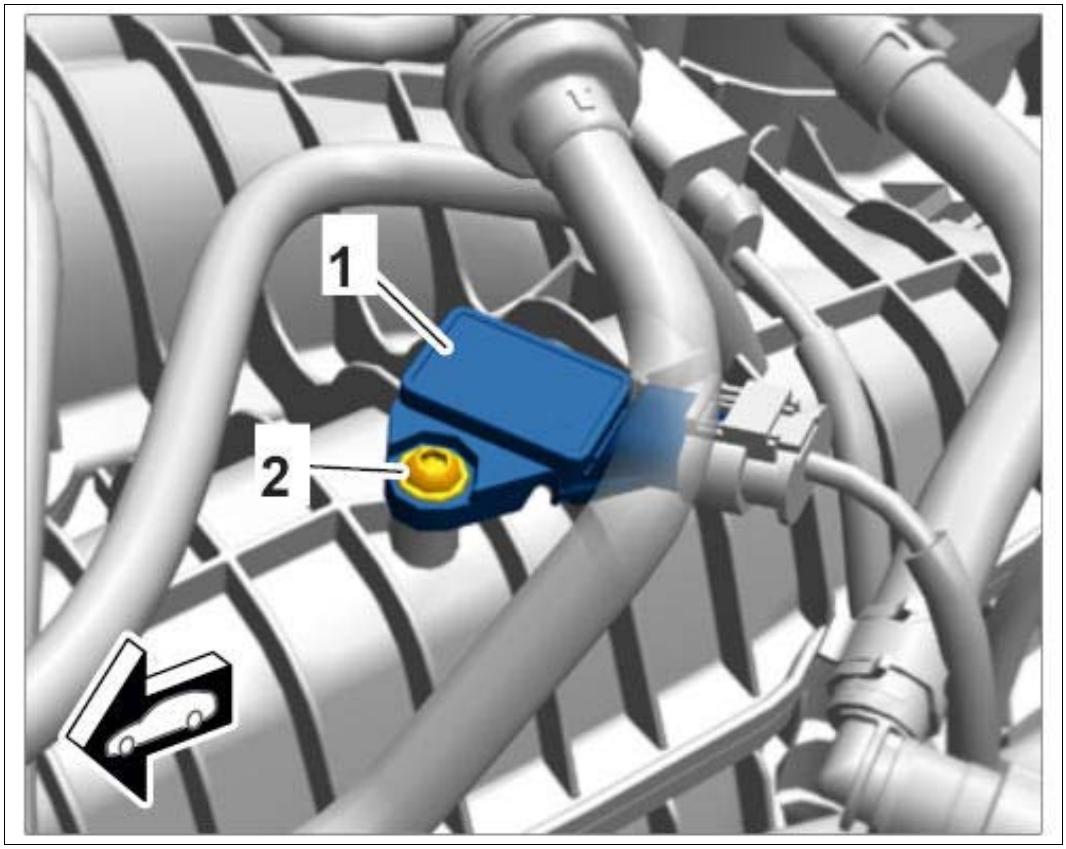

Courtesy of PORSCHE CARS NORTH AMERICA, INC.

2. If the sealing ring is damaged, replace the pressure sensor.
3. Insert pressure sensor **-1-** into the intake-air distributor by turning it slightly.
    1. 3.1. Screw in and tighten screw **-2-** . **Tightening torque 3 Nm (2 ftlb.)**
    2. 3.2. Plug in and lock electric plug connection for the pressure sensor **-1-** .

WM 248019 REMOVING AND INSTALLING PRESSURE SENSOR (MACAN S, MACAN TURBO) > SUBSEQUENT WORK

1. Install engine cover.

WM 249019 REMOVING AND INSTALLING FUEL LINE (HIGH-PRESSURE) (MACAN S, MACAN TURBO) > TECHNICAL VALUES

Location	Description	Type	Basic value	Tolerance 1	Tolerance 2
Fastening screw for high-pressure		Tightening torque	10 Nm (7.5 ftlb.)		

line					
Union nuts for high-pressure lines	After opening the conical/ball joints, always replace high-pressure line with the latest type	Initial tightening	20 Nm (15 ftlb.)		
Fastening screw for high-pressure line		Tightening torque	10 Nm (7.5 ftlb.)		
Union nuts for high-pressure lines		Final tightening	+35 Nm (+26 ftlb.)		

WM 249019 REMOVING AND INSTALLING FUEL LINE (HIGH-PRESSURE) (MACAN S, MACAN TURBO) > TECHNICAL VALUES > HIGH-PRESSURE PUMP WITH HIGH-PRESSURE LINES

Information

- For more information, see P ORSCHE E LECTRONIC PARTS CATALOGUE "PET"

Fig 1: Identifying High-Pressure Pump With High-Pressure Lines

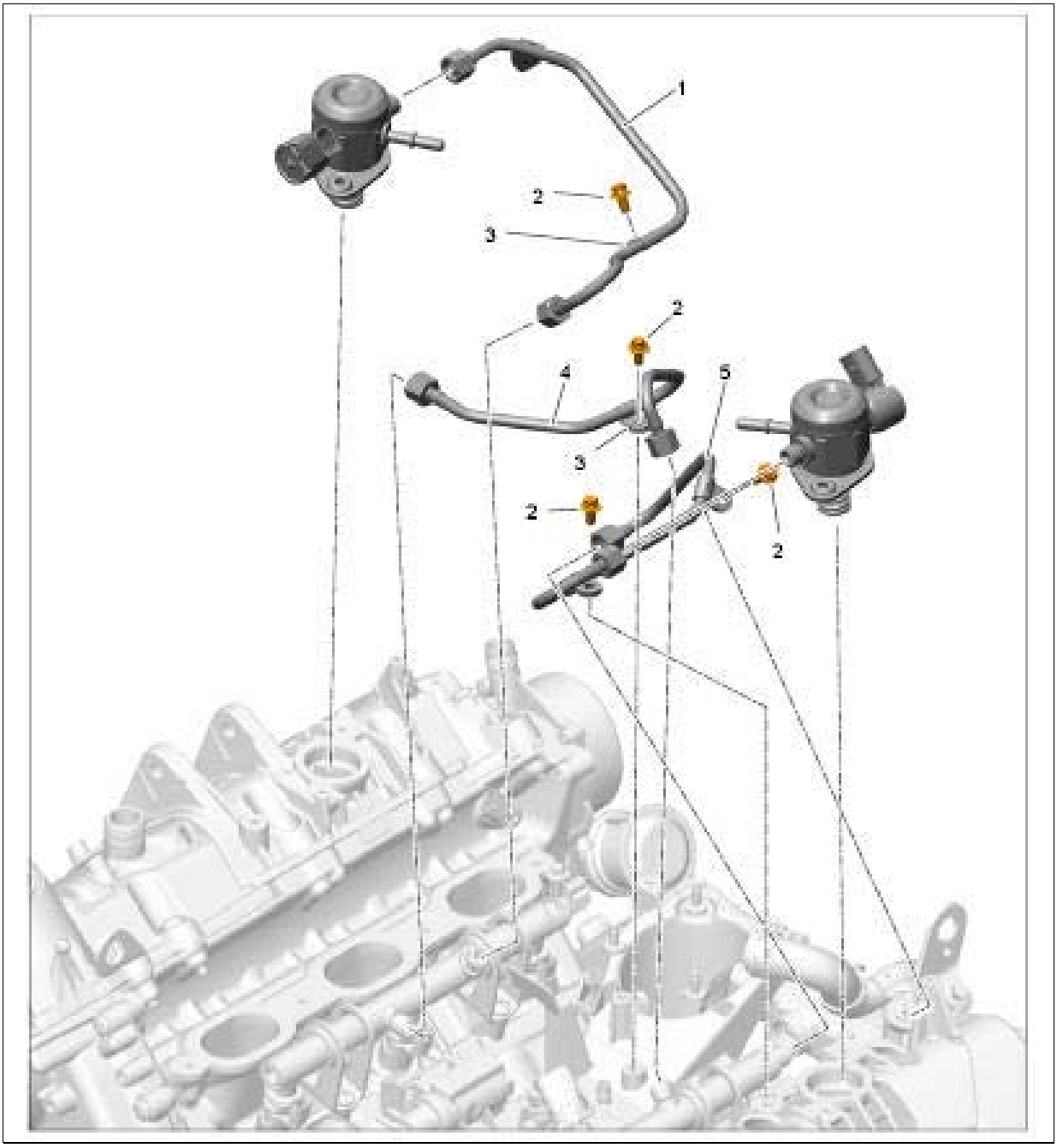

Courtesy of PORSCHE CARS NORTH AMERICA, INC.

1. High-pressure line, cylinder 1-3/**After opening the conical/ball joints, always replace high-pressure line with the latest type**
2. Screw, M6 x 16 → **Tightening torque: 10 Nm (7.5 ftlb.)**
3. Clamp
4. High-pressure connecting line/**After opening the conical/ball joints, always replace high-pressure line with the latest type**
5. High-pressure line, cylinder 4-6/**After opening the conical/ball joints, always replace high-pressure line with the latest type**

Tightening specifications for fuel lines to high-pressure pump and fuel gallery:

1. Fit union nuts hand-tight.
2. Screw in and align holder/clamp.
3. Tighten union nuts to → **Initial tightening: 20 Nm (15 ftlb.)**
4. Tighten holder/clamp to → **Tightening torque: 10 Nm (7.5 ftlb.).**
5. Tighten union nuts to → **Final tightening: +35 Nm (+26 ftlb.)** until secure.

WM 249019 REMOVING AND INSTALLING FUEL LINE (HIGH-PRESSURE) (MACAN S, MACAN TURBO) > PRELIMINARY WORK

1. Remove intake-air distributor. → 244619 REMOVING AND INSTALLING INTAKE-AIR DISTRIBUTOR

WM 249019 REMOVING AND INSTALLING FUEL LINE (HIGH-PRESSURE) (MACAN S, MACAN TURBO) > REMOVING FUEL LINE (HIGH-PRESSURE)

WARNING: Hot fuel and hot fuel lines.

- *Danger of scalding*

→ Allow the fuel to cool down before opening line connections.

→ Wear protective gloves.

→ Wear protective goggles.

Information

Always read the rules relating to cleanliness and instructions for working on the fuel system.

These instructions must always be observed before and while working on the fuel system.

Information

- Close off open connections and lines using suitable stoppers or caps.

1. Unscrew fastening screws **-2-** for the high-pressure lines **-1, 4 and 5-** .
2. Loosen union nuts on high-pressure line **-1-** .
    1. 2.1. Remove high-pressure line **-1-** .
3. Loosen union nuts on high-pressure line **-4-** .
    1. 3.1. Remove high-pressure line **-4-** .

4. Loosen union nuts on high-pressure line **-5-** .

    1. 4.1. Remove high-pressure line **-5-** .

5. Place high-pressure lines **-1, 4 and 5-** on a clean surface.

Fig 1: Identifying High-Pressure Pump With High-Pressure Lines

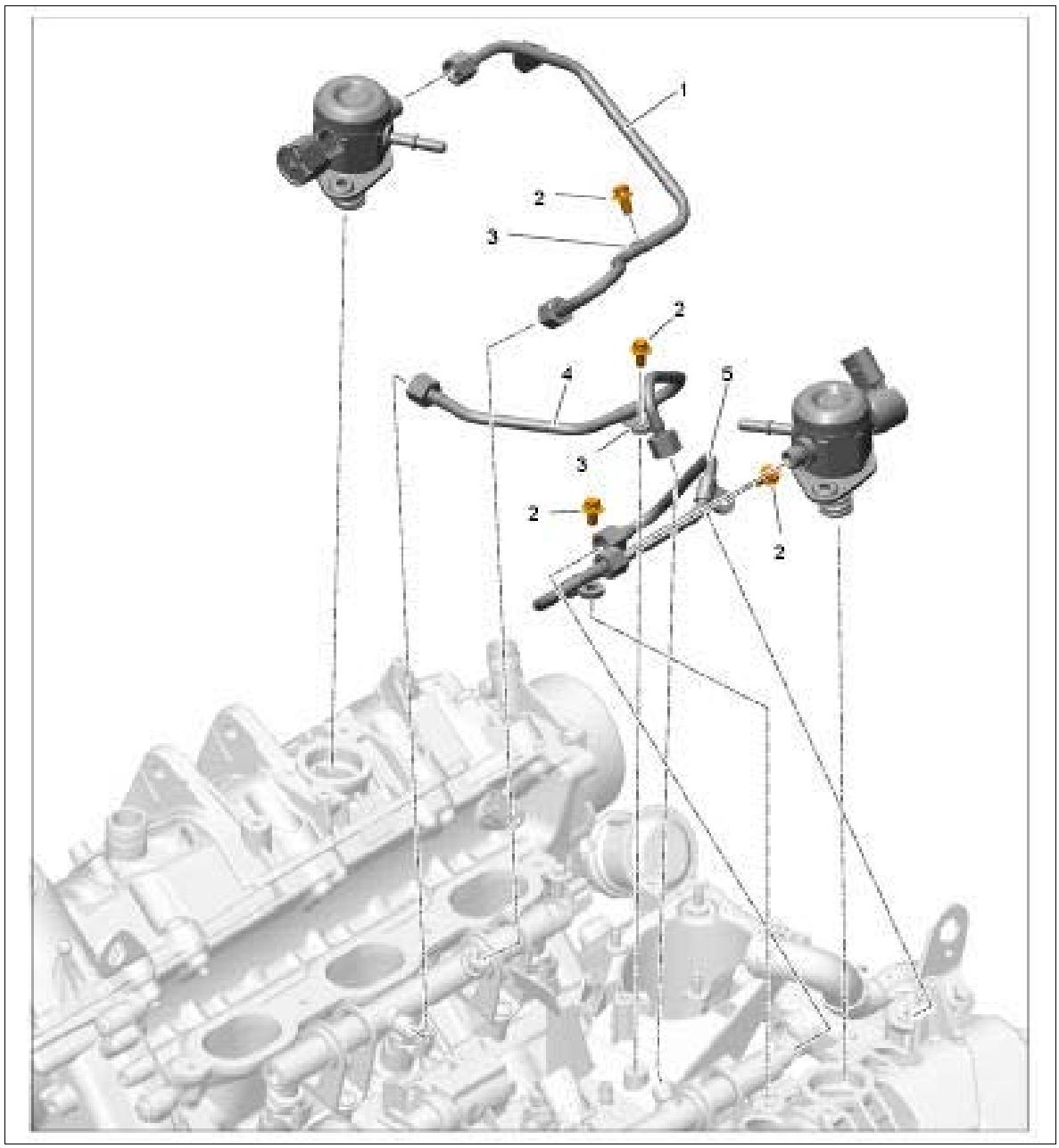

Courtesy of PORSCHE CARS NORTH AMERICA, INC.

WM 249019 REMOVING AND INSTALLING FUEL LINE (HIGH-PRESSURE) (MACAN S, MACAN TURBO) > INSTALLING FUEL LINE (HIGH-PRESSURE)

Information

- Observe cylinder-specific markings if high-pressure lines are to be reused.

- High-pressure lines can always be reused.
- Check the sealing cone of each high-pressure line for deformities and tears before installation.
- The line bore must not be deformed, narrowed or damaged.

1. Remove dirt from the sealing cone on the fuel collection pipe by suction.
2. Clean high-pressure lines and line heads with a cold-cleaning product and blow-dry with compressed air.
3. Coat the thread on the union nuts with fuel.
4. Install high-pressure lines.

    1. 4.1. Observe specified tightening sequence.

WM 249019 REMOVING AND INSTALLING FUEL LINE (HIGH-PRESSURE) (MACAN S, MACAN TURBO) > SUBSEQUENT WORK

Information

- The high-pressure connections do not have to be opened in order to bleed the system. The fuel system is bled automatically.
- If there is still air in the fuel system, the engine can switch to emergency operation during the test drive. Switch off the engine and erase the fault memory. Then continue to test drive the vehicle.

1. Bleed the fuel system and perform a leak test.

    1. 1.1. Leave the engine running at idle speed for a few minutes without pressing the accelerator.
    2. 1.2. Switch off the engine and turn off the ignition.
    3. 1.3. Carefully check the entire high-pressure area of the injection system.
    4. 1.4. Then perform a test drive for more than 20 km (12 miles) with at least one full-throttle acceleration. Then check the high-pressure area for leaks again.
2. Install engine cover (design cover).

Service Manual: 26 - EXHAUST SYSTEM -- (95B) - MACAN

WM 260119 REMOVING AND INSTALLING EXHAUST SYSTEM (MACAN) > TECHNICAL VALUES

Location	Description	Type	Basic value	Tolerance 1	Tolerance 2
Clamping sleeve, D65		Tightening torque	33 Nm (24 ftlb.)		
Fastening nuts securing front silencer to catalytic converter	Replace	Tightening torque	23 Nm (17 ftlb.)		
Fastening screw securing rubber stop to bracket		Tightening torque	23 Nm (17 ftlb.)		
Fastening screw securing bracket to transmission		Tightening torque	23 Nm (17 ftlb.)		
Fastening screw securing compression spring to tab		Tightening torque	23 Nm (17 ftlb.)		
Oxygen sensor downstream of catalytic converter	Grease thread with high-temperature paste.	Tightening torque	55 Nm (41 ftlb.)		
Fastening nuts securing catalytic converter to turbocharger	Replace	Tightening torque	23 Nm (17 ftlb.)		
Fastening nuts for exhaust-system mount		Tightening torque	20 Nm (15 ftlb.)		
Fastening screws for rear silencer bracket		Tightening torque	20 Nm (15 ftlb.)		
Screws on tailpipe cover with A-pipe		Tightening torque	8 Nm (6 ftlb.)		

WM 260119 REMOVING AND INSTALLING EXHAUST SYSTEM (MACAN) >

TECHNICAL VALUES > EXHAUST SYSTEM

Fig 1: Identifying Exhaust System Components

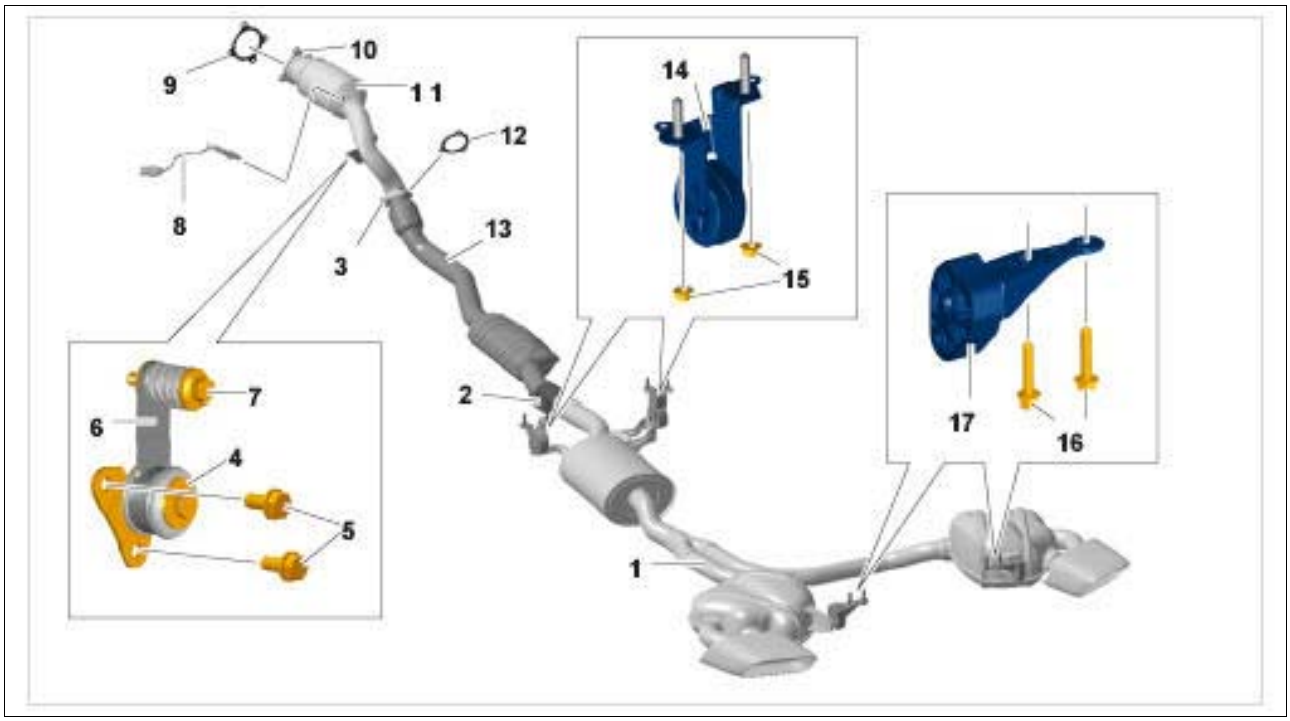

Courtesy of PORSCHE CARS NORTH AMERICA, INC.

1. Front and rear silencers
2. Clamping sleeve → **Tightening torque: 33 Nm (24 ftlb.)**
3. Nuts/replace → **Tightening torque: 23 Nm (17 ftlb.)**
4. Screw → **Tightening torque: 23 Nm (17 ftlb.)**
5. Screws → **Tightening torque: 23 Nm (17 ftlb.)**
6. Spring/tab assembly, FLP
7. Screw → **Tightening torque: 23 Nm (17 ftlb.)**
8. Oxygen sensor downstream of catalytic converter → **Tightening torque: 55 Nm (41 ftlb.)** **High-temperature paste must not get into the slits on the oxygen sensor body.**
9. Seal/replace
10. Nuts/replace → **Tightening torque: 23 Nm (17 ftlb.)**
11. Catalytic converter
12. Seal/**replace**
13. Front silencer
14. Exhaust-system mount

15. Nuts → **Tightening torque: 20 Nm (15 ftlb.)**
16. Screws → **Tightening torque: 20 Nm (15 ftlb.)**
17. Rear silencer bracket

- - Screws on tailpipe cover with A-pipe → **Tightening torque: 8 Nm (6 ftlb.)**

WM 260119 REMOVING AND INSTALLING EXHAUST SYSTEM (MACAN) > PRELIMINARY WORK

1. Remove cover for center underbody. → 519319 REMOVING AND INSTALLING COVER FOR CENTRE UNDERBODY

WM 260119 REMOVING AND INSTALLING EXHAUST SYSTEM (MACAN) > REMOVING EXHAUST SYSTEM

⚠ *CAUTION: Hot components*

- *Risk of burns*

→ Let hot components cool down.

→ Wear personal protective gear.

⚠ *CAUTION: Heavy components*

- *Risk of squashing*

→ Wear personal protective gear.

→ Get someone to help if necessary.

Information

- Before the rear silencer is released, the exhaust system must be supported with a transmission jack or held by another person.

1. Unscrew screws on rear silencer holder.

Fig 1: Identifying Rear Silencer Holder Screws

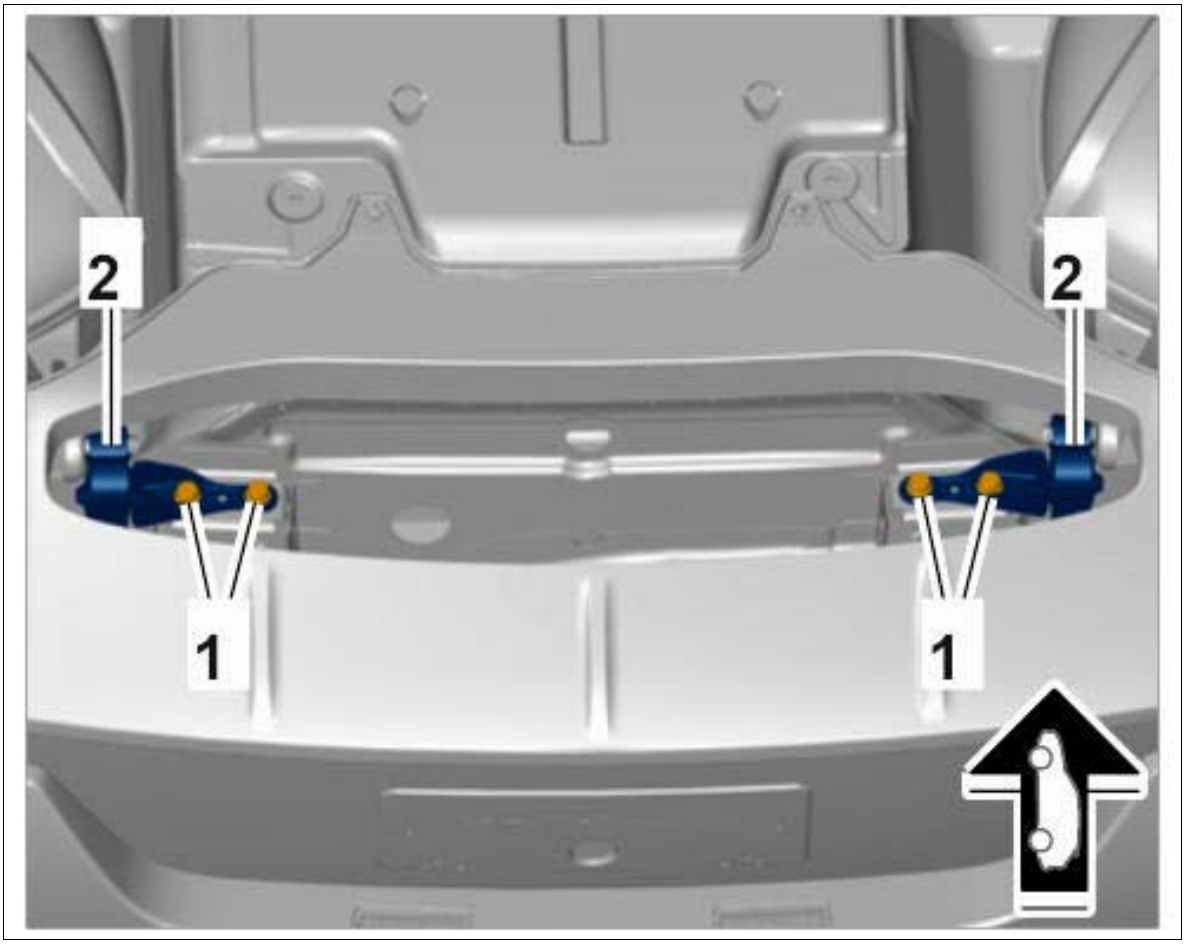

Courtesy of PORSCHE CARS NORTH AMERICA, INC.

2. Loosen clamp for catalytic converter at the rear silencer.

    1. 2.1. Loosen nuts **-2-** and move clamp **-1-** .

Fig 2: Identifying Rear Silencer Clamp

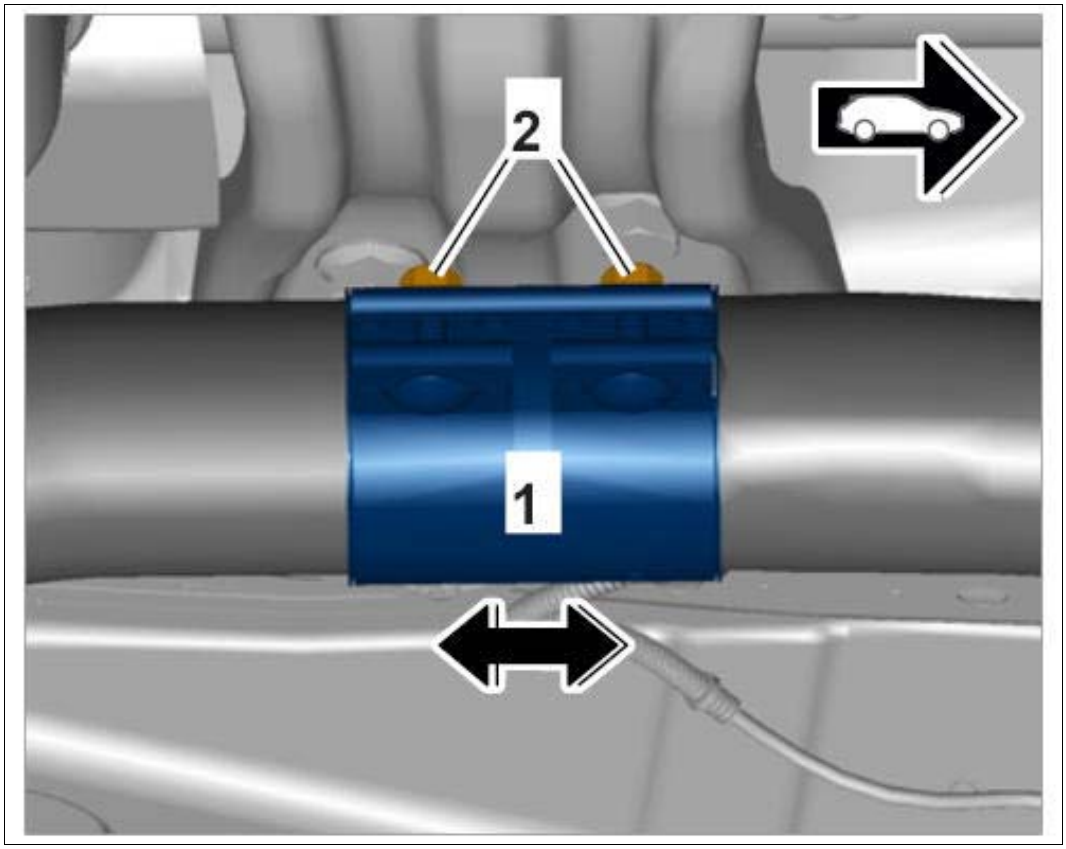

Courtesy of PORSCHE CARS NORTH AMERICA, INC.

3. Unscrew nuts **-1-** on holder **-2-** for rear silencer.

Fig 3: Identifying Rear Silencer Holder Nuts

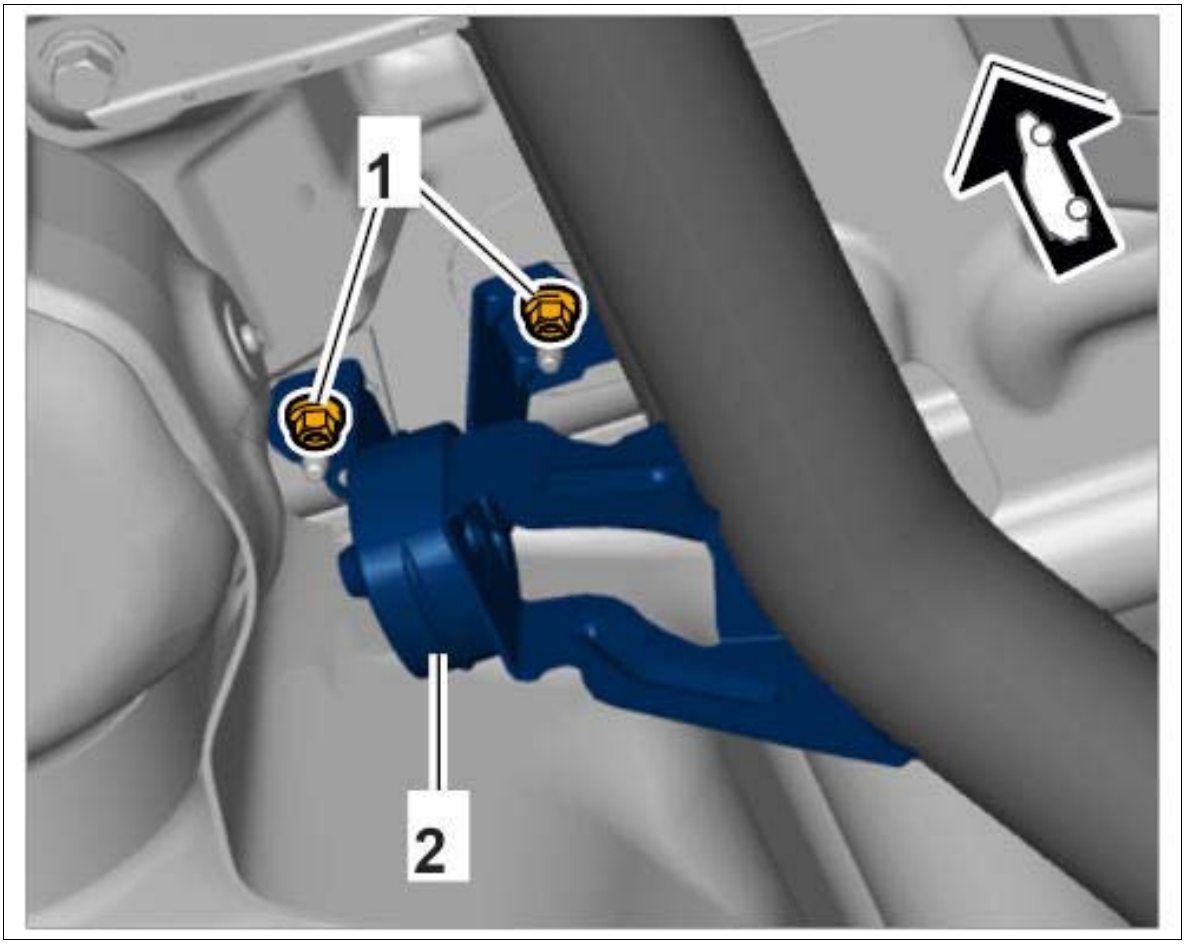

Courtesy of PORSCHE CARS NORTH AMERICA, INC.

4. Remove exhaust system.

WM 260119 REMOVING AND INSTALLING EXHAUST SYSTEM (MACAN) > INSTALLING EXHAUST SYSTEM

1. Installation is performed in reverse order. Pay particular attention to the following:
    1. 1.1. Tightening torque for nuts securing rear silencer holder to body: **Tightening torque 20 Nm (15 ftlb.)**
    2. 1.2. Tightening torque for screws securing rear silencer holder to rear body: **Tightening torque 20 Nm (15 ftlb.)**
    3. 1.3. Tightening torque for nuts on clamp: **Tightening torque 33 Nm (24 ftlb.)**
    4. 1.4. Align clamp.

WM 260119 REMOVING AND INSTALLING EXHAUST SYSTEM (MACAN) >

SUBSEQUENT WORK

1. Install cover for center underbody. → Installing Cover For Center Underbody

WM 261019 REMOVING AND INSTALLING EXHAUST MANIFOLD (MACAN S, MACAN TURBO) > REMOVING AND INSTALLING EXHAUST MANIFOLD

The procedure for removing and installing the exhaust manifold is described under → 213019 REMOVING AND INSTALLING TURBOCHARGER .

Information

- For more information, see P ORSCHE E LECTRONIC PAR T S CATALOGUE "PET"

The exhaust manifold and turbocharger are integrated components and cannot be replaced individually.

WM 262519 REMOVING AND INSTALLING FRONT SILENCER (MACAN) > TECHNICAL VALUES

Location	Description	Type	Basic value	Tolerance 1	Tolerance 2
Clamping sleeve, D65		Tightening torque	33 Nm (24 ftlb.)		
Fastening nuts securing front silencer to catalytic converter	Replace	Tightening torque	23 Nm (17 ftlb.)		

WM 262519 REMOVING AND INSTALLING FRONT SILENCER (MACAN) > PRELIMINARY WORK

1. Remove engine cover.
2. Remove underbody panelling.

WM 262519 REMOVING AND INSTALLING FRONT SILENCER (MACAN) > REMOVING FRONT SILENCER

1. Loosen front silencer at the catalytic converter.
    1. 1.1. The two upper screws are accessible from above through the engine compartment.

Fig 1: Locating Catalytic Converter Screws

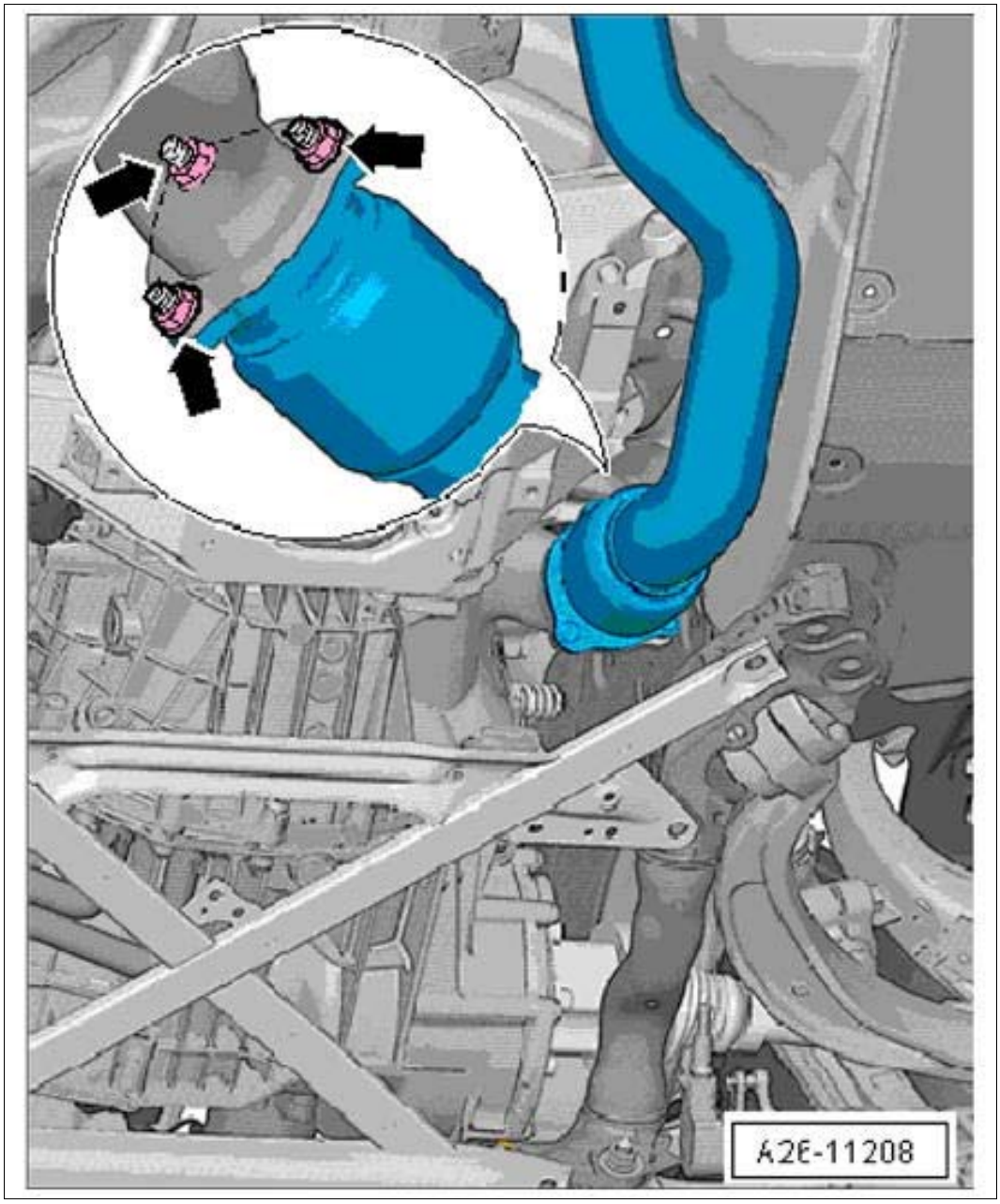

Courtesy of PORSCHE CARS NORTH AMERICA, INC.

2. Loosen clamping sleeve and push it to the rear.

Fig 2: Locating Front Silencer Clamping Sleeve

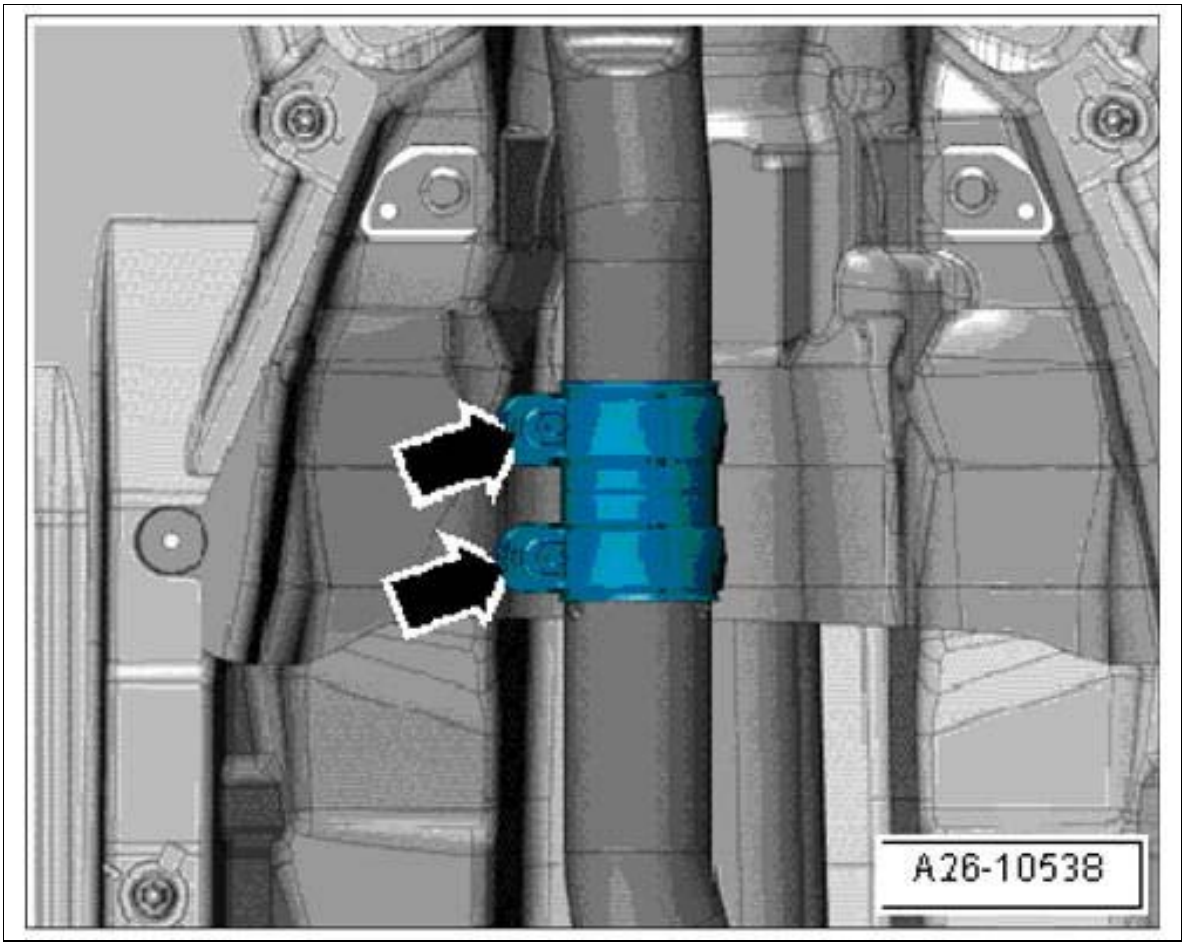

Courtesy of PORSCHE CARS NORTH AMERICA, INC.

3. Remove front silencer by pulling it downwards.

WM 262519 REMOVING AND INSTALLING FRONT SILENCER (MACAN) > INSTALLING FRONT SILENCER

1. Installation is performed in reverse order. Pay particular attention to the following:
    1. 1.1. Replace nuts.
    2. 1.2. Replace seal.
    3. 1.3. Tightening torque: **Tightening torque 23 Nm (17 ftlb.)**
    4. 1.4. Tightening torque for clamping sleeve: **Tightening torque 33 Nm (24 ftlb.)**

WM 262519 REMOVING AND INSTALLING FRONT SILENCER (MACAN) > SUBSEQUENT WORK

1. Install underbody panelling.
2. Install engine cover.

WM 263355 REPLACING REAR SILENCER (ALL MODELS) > TOOLS

Designation	Type	Number	Description	
chain pipe cutters	Commercially available tool	Nr.166		
ratchet-type pipe cutters	Commercially available tool	Nr.166-1		

WM 263355 REPLACING REAR SILENCER (ALL MODELS) > REPLACING REAR SILENCER

⚠ *CAUTION: Hot components*

- *Risk of burns*

→ Let hot components cool down.

→ Wear personal protective gear.

Information

- Before the rear silencer is released, the exhaust system must be supported with a transmission jack or held by another person.

1. On the underside of each exhaust pipe, there are three grooves **-arrows-** marking the connection points.

    1. 1.1. Use the center groove.

    Fig 1: Locating Rear Silencer Connection Point Marking

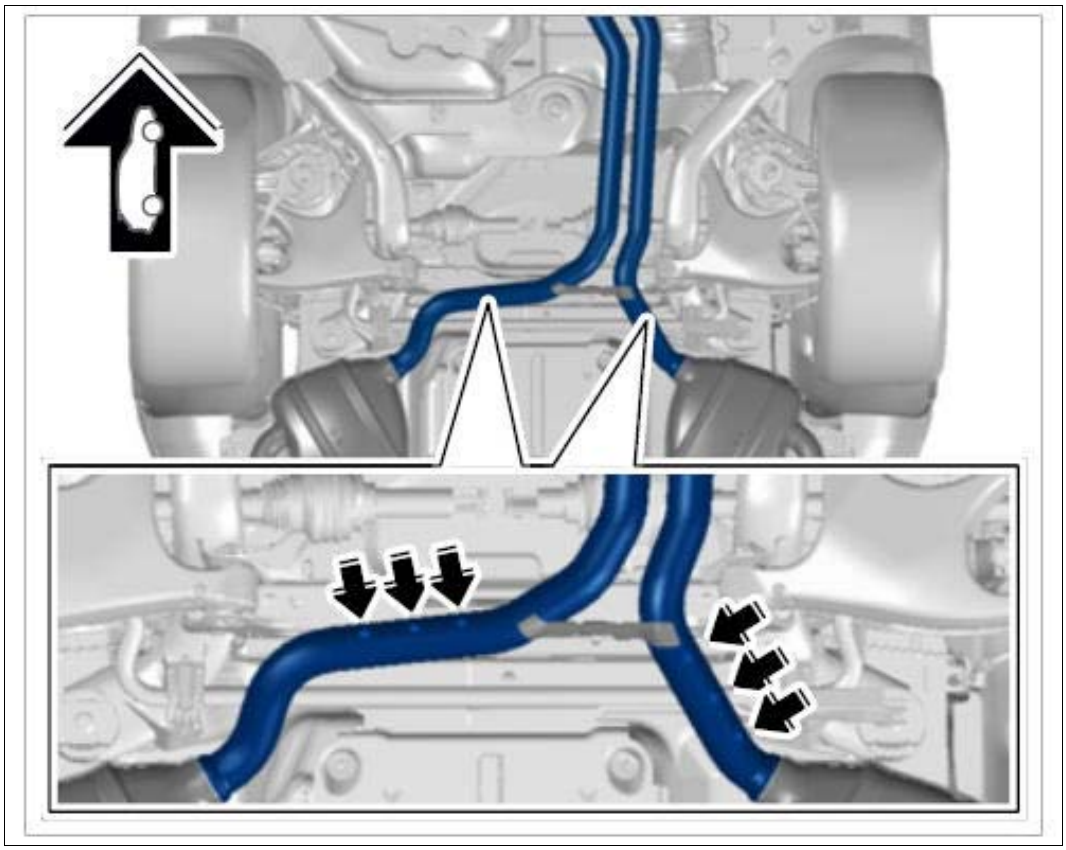

Courtesy of PORSCHE CARS NORTH AMERICA, INC.

2. Disconnect exhaust pipe at the connection point marking using **chain pipe cutters Nr.166 or ratchet-type pipe cutters Nr.166-1** (or a similar tool).

    Only for installing sports exhaust system:

3. At the servo motor for exhaust flap control **-1-** , release and disconnect electric connector **-2-** .

Fig 2: Identifying Exhaust Flap Control & Connector

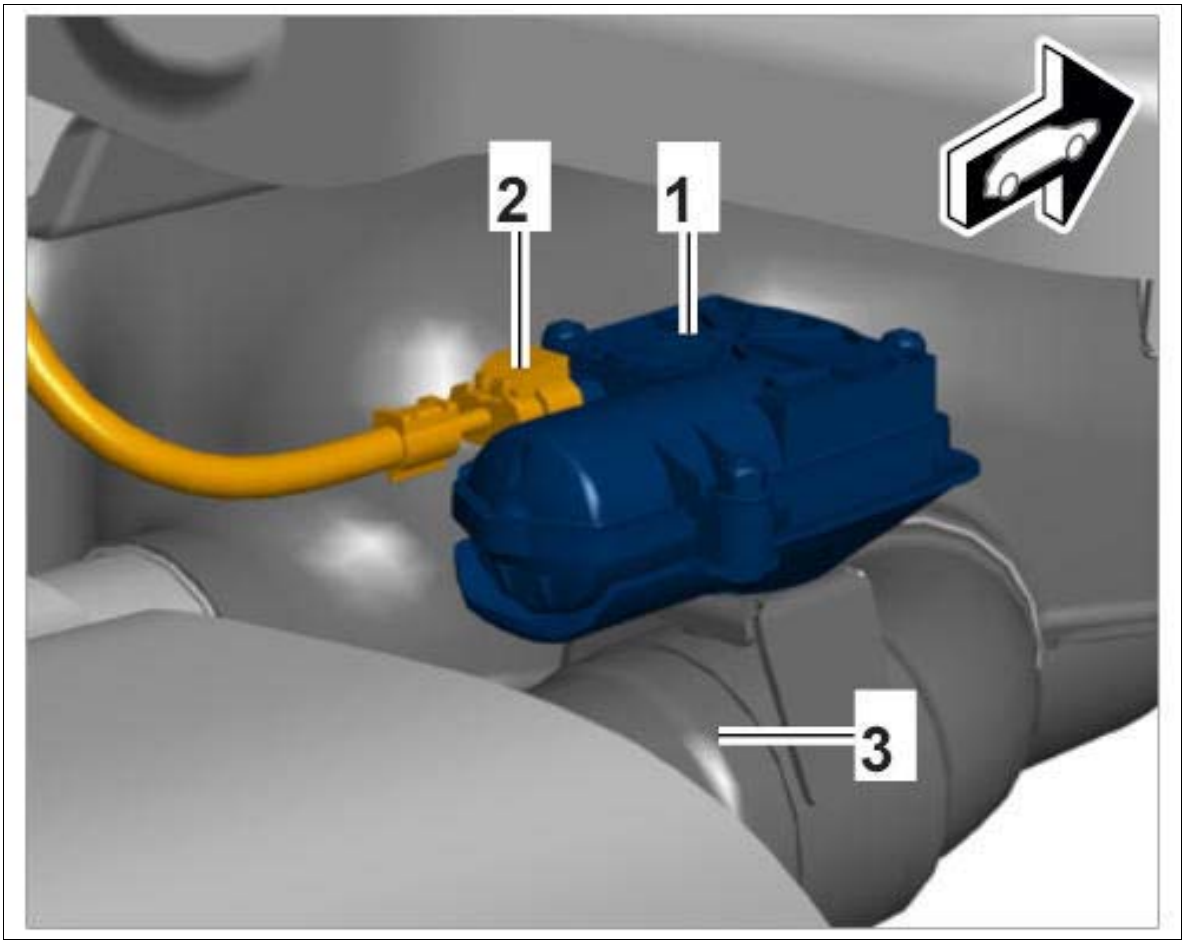

Courtesy of PORSCHE CARS NORTH AMERICA, INC.

4. Unscrew screws **-1-** on holder **-2-** for the rear silencer.

    1. 4.1. **If replacing only one rear silencer:** Unscrew screws on the relevant side.

Fig 3: Identifying Rear Silencer Holder Screws

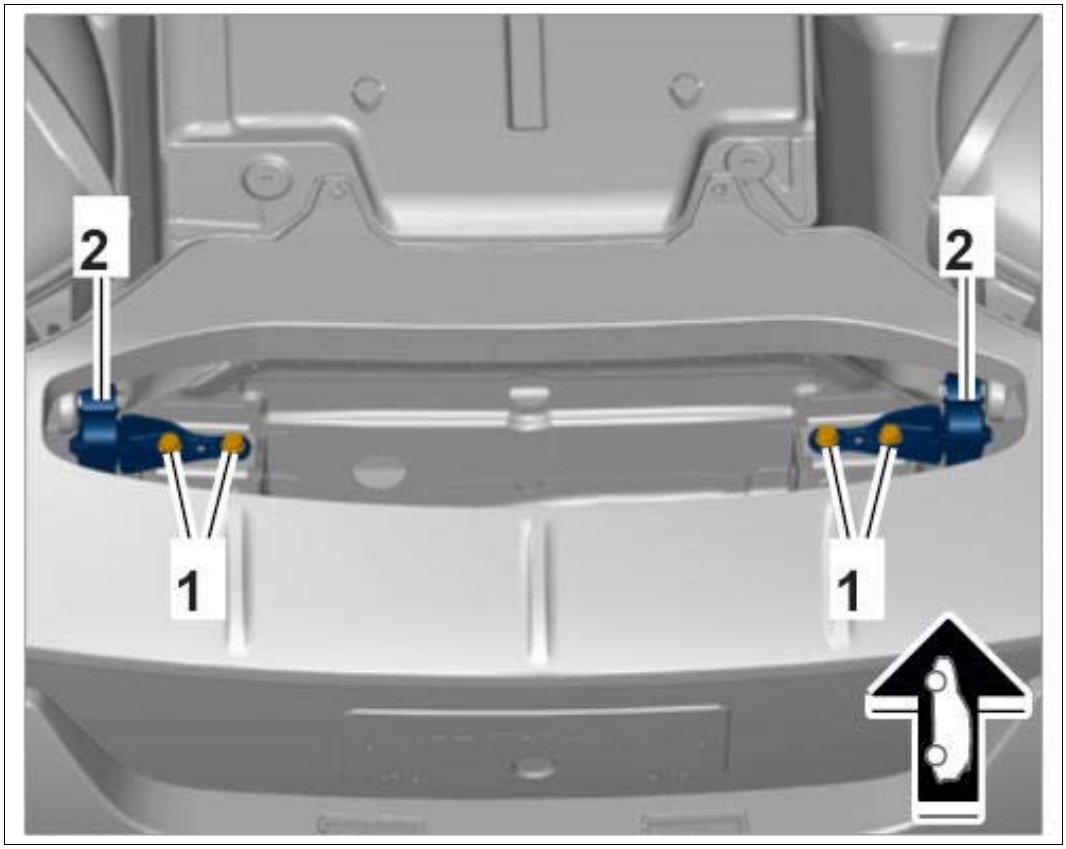

Courtesy of PORSCHE CARS NORTH AMERICA, INC.

5. Remove rear silencer by pulling it downwards.
6. De-burr cut on inside and outside of the exhaust pipe. If necessary, remove rust from exhaust pipe using suitable polishing agents and manually restore its round shape.
7. Convert rear holder for rear silencer.
    1. 7.1. Fit new support rubbers or holders if necessary.
8. Push new clamping sleeve onto the exhaust pipe.
9. Lift the rear silencer into installation position with the help of another person or a transmission jack. Tighten two fastening screws on each holder to the specified tightening torque.
    1. 9.1. Tightening torque for screws securing holder for rear silencer to rear body:
10. Position clamping sleeves **-arrows-** in the center of the cutting point during installation.
    1. 10.1. Align clamping sleeve.
    2. 10.2. Tightening torque for clamping sleeve:

Fig 4: Locating Rear Silencer Clamping Sleeves

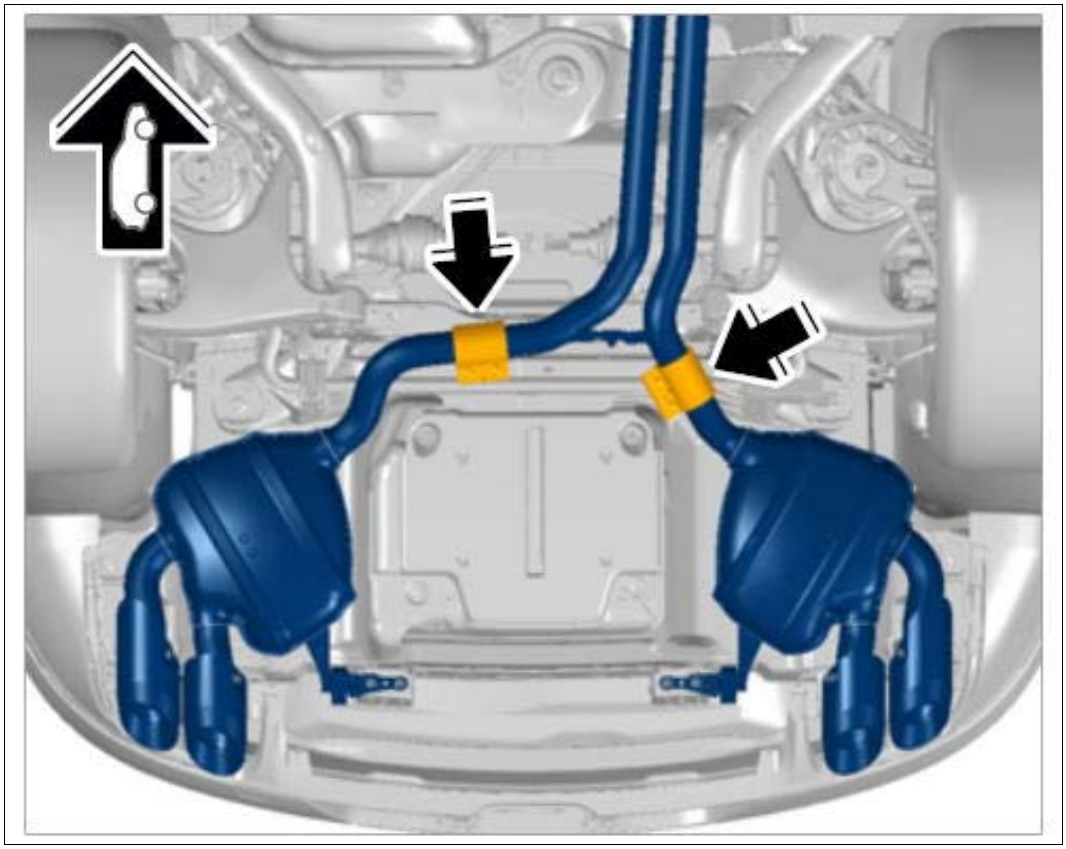

Courtesy of PORSCHE CARS NORTH AMERICA, INC.

1. **1 - 3** mm/Clip contour must not be lower than the lower edge of the clamping sleeve.

Fig 5: Aligning Clamping Sleeve

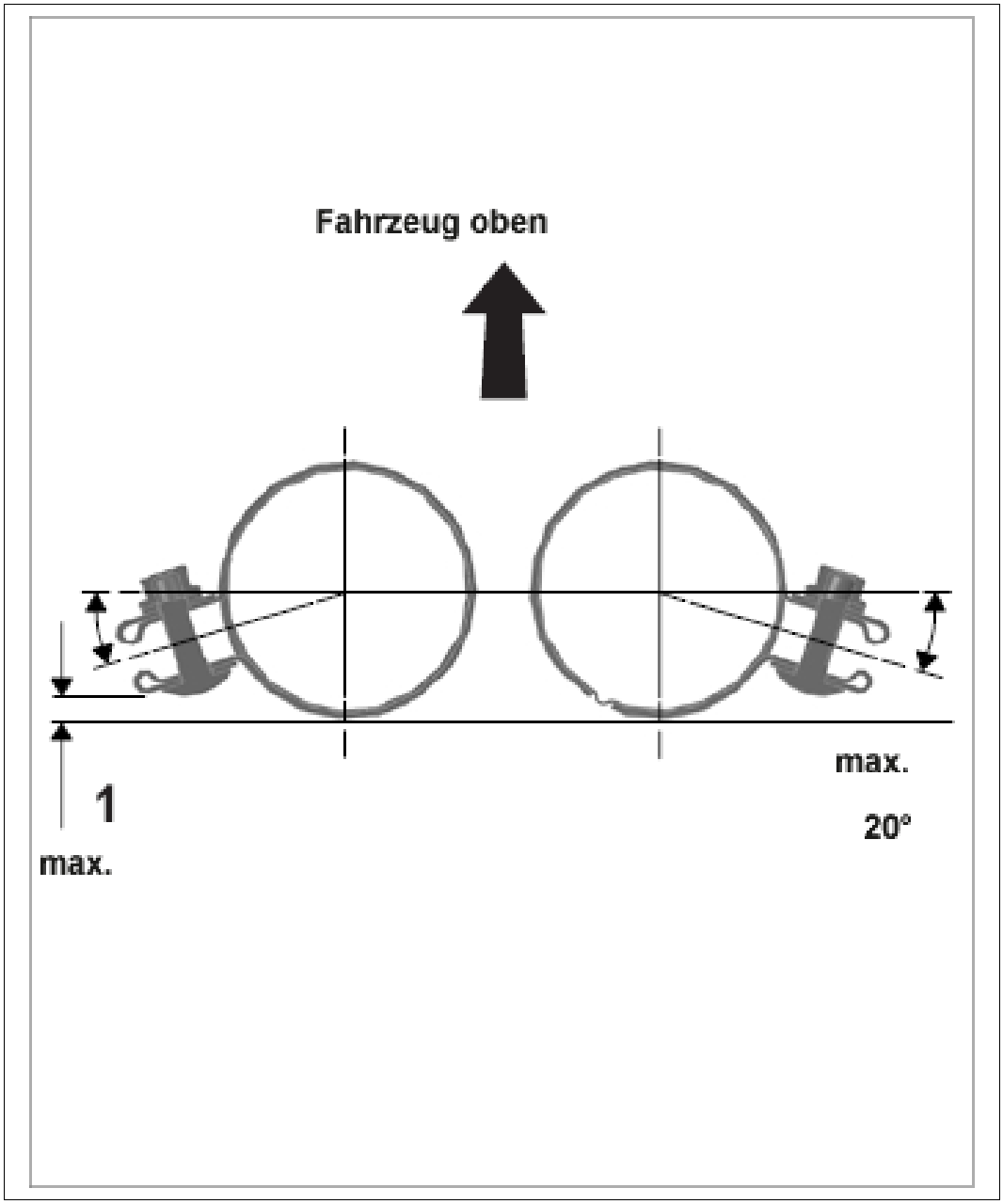

Courtesy of PORSCHE CARS NORTH AMERICA, INC.

WM 263355 REPLACING REAR SILENCER (ALL MODELS) > SUBSEQUENT WORK

1. Convert tailpipe covers. → 263519 REMOVING AND INSTALLING TAILPIPE COVER

WM 263519 REMOVING AND INSTALLING TAILPIPE COVER (ALL MODELS) > REMOVING TAILPIPE COVER

⚠ *CAUTION: Hot components*

- *Risk of burns*

→ Let hot components cool down.

→ Wear personal protective gear.

Information

The procedure for removing and installing is described for one side as an example. The procedure for the other side is practically identical.

Information

- The pictures shown in this document may differ from the original.

1. Unscrew screw **-1-** and pull off tailpipe cover **-2-** in direction of arrow.

1. 1.1. Mark installation position.

Fig 1: Identifying Tailpipe Cover & Fastener

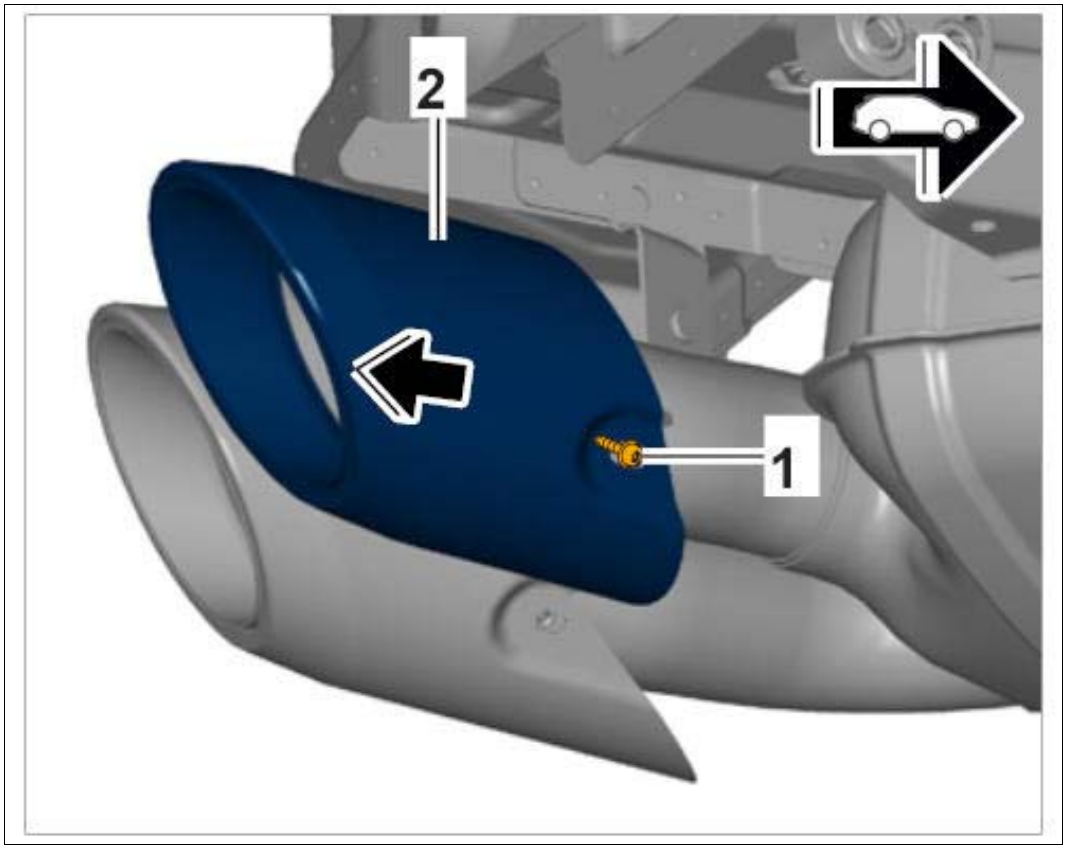

Courtesy of PORSCHE CARS NORTH AMERICA, INC.

WM 263519 REMOVING AND INSTALLING TAILPIPE COVER (ALL MODELS) >

INSTALLING TAILPIPE COVER

1. Installation is performed in reverse order.
    1. 1.1. Place tailpipe cover in installation position.
    2. 1.2. Tightening torque for tailpipe cover:

WM 266519 REMOVING AND INSTALLING SECONDARY-AIR PUMP (MACAN S, MACAN TURBO) > PRELIMINARY WORK

1. Remove engine cover.

WM 266519 REMOVING AND INSTALLING SECONDARY-AIR PUMP (MACAN S, MACAN TURBO) > REMOVING SECONDARY-AIR PUMP

1. Remove secondary-air pump.
    1. 1.1. Release and disconnect electric connector **-1-** and unclip it from the holder
    2. 1.2. Loosen hose clamp **-2-** and pull off secondary air hose **-3-** .
    3. 1.3. Unscrew fastening screws **-4-** . Remove secondary-air pump **-5-** .

Fig 1: Identifying Secondary-Air Pump Components

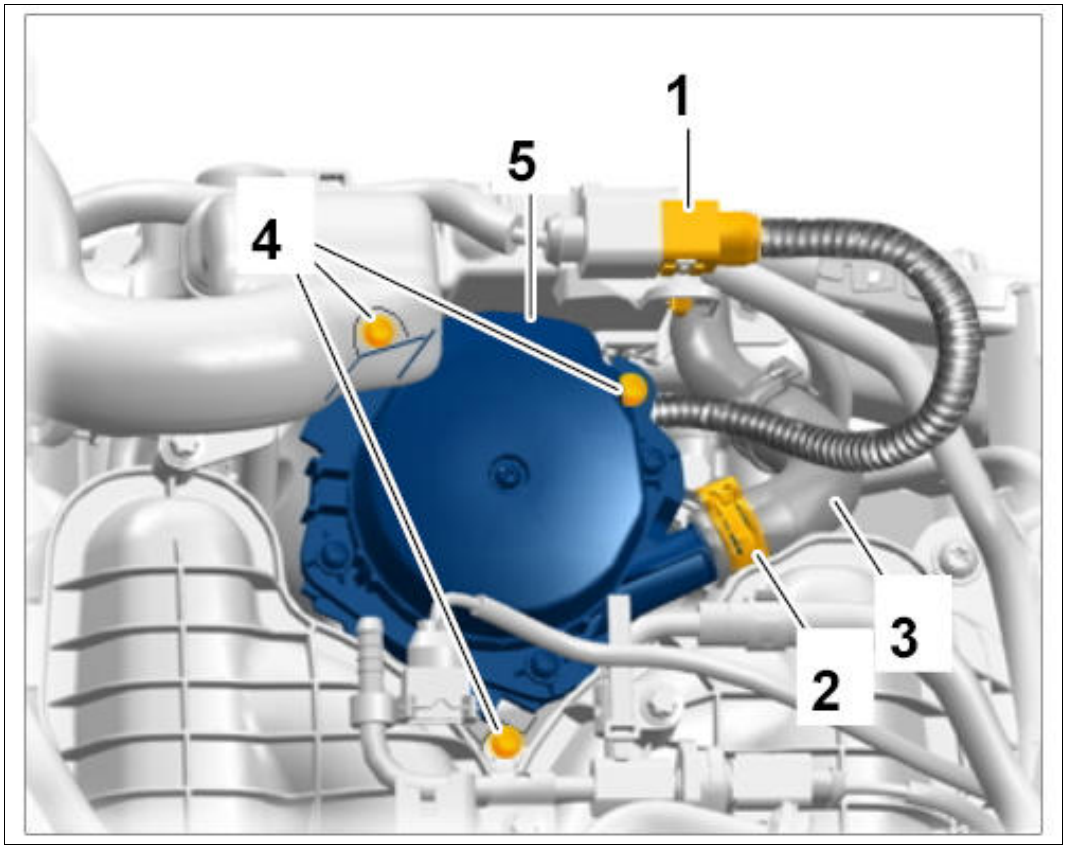

Courtesy of PORSCHE CARS NORTH AMERICA, INC.

WM 266519 REMOVING AND INSTALLING SECONDARY-AIR PUMP (MACAN S, MACAN TURBO) > INSTALLING SECONDARY-AIR PUMP

Information

Tightening torques, tightening sequence and assembly overviews for the engine and transmission:

- Group 1: → 1X00IN TECHNICAL VALUES
- Group 2: → 2X00IN TECHNICAL VALUES
- Group 3: → 3X00IN TECHNICAL VALUES

1. Install secondary-air pump.

    1. 1.1. Move secondary-air pump into installation position and tighten screws to the specified torque.
    2. 1.2. Insert secondary air hose **-3-** and tighten clamp **-2-** .
    3. 1.3. Clip in cable plug on the holder and plug it in **-1-** .

Fig 1: Identifying Secondary-Air Pump Components

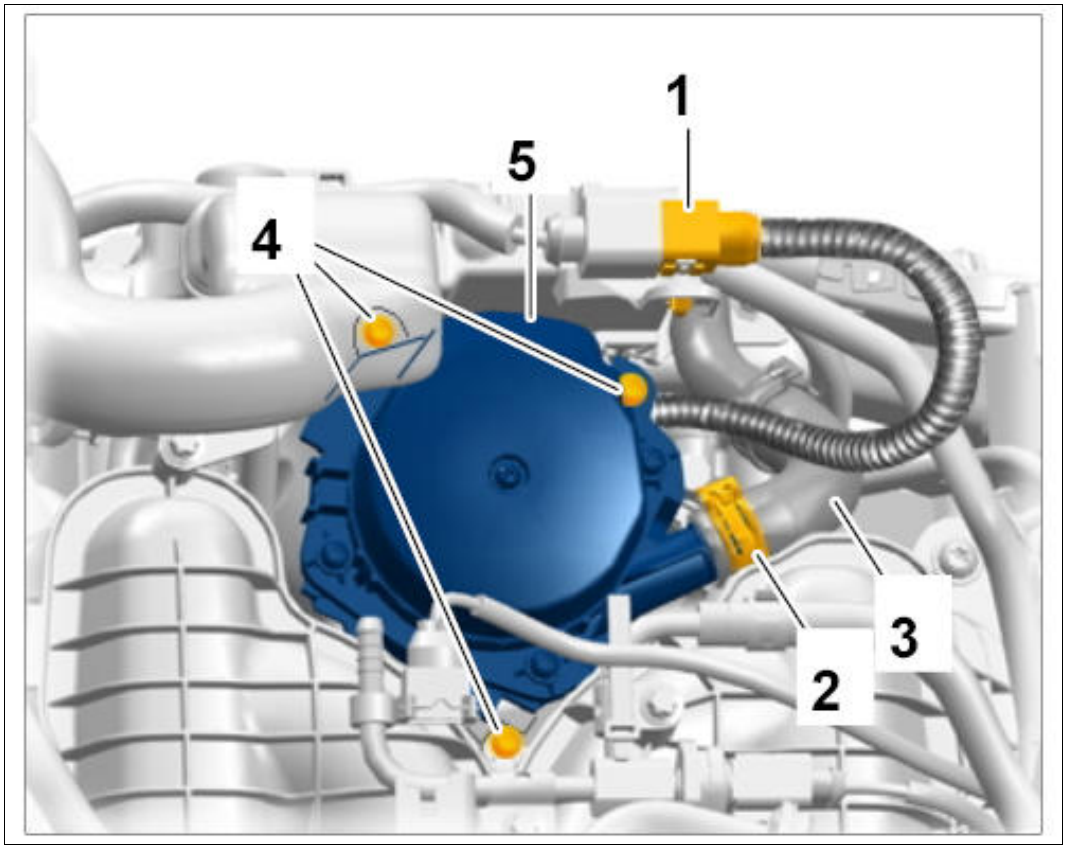

Courtesy of PORSCHE CARS NORTH AMERICA, INC.

WM 266519 REMOVING AND INSTALLING SECONDARY-AIR PUMP (MACAN S, MACAN TURBO) > SUBSEQUENT WORK

1. Install engine cover.

WM 266919 REMOVING AND INSTALLING SECONDARY AIR VALVE (MACAN S, MACAN TURBO) > TOOLS

Designation	Type	Number	Description	

Insert for torque wrench	Special tool	9792		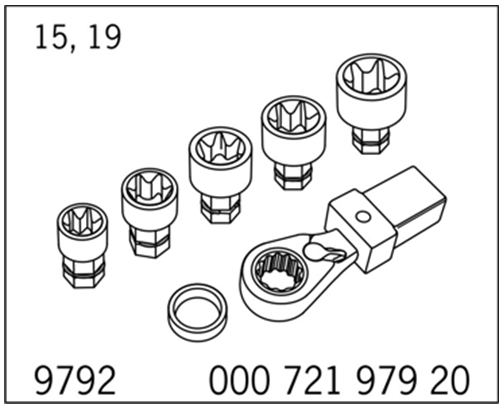

WM 266919 REMOVING AND INSTALLING SECONDARY AIR VALVE (MACAN S, MACAN TURBO) > PRELIMINARY WORK > PRELIMINARY WORK FOR CYLINDERS 1-3

With engine installed =>

1. Remove front strut. → 408619 REMOVING AND INSTALLING FRONT STRUT (DOME STRUT)

   If cylinder head is replaced =>

2. Remove stopper.

   Fig 1: Identifying Secondary-Air Duct Stopper

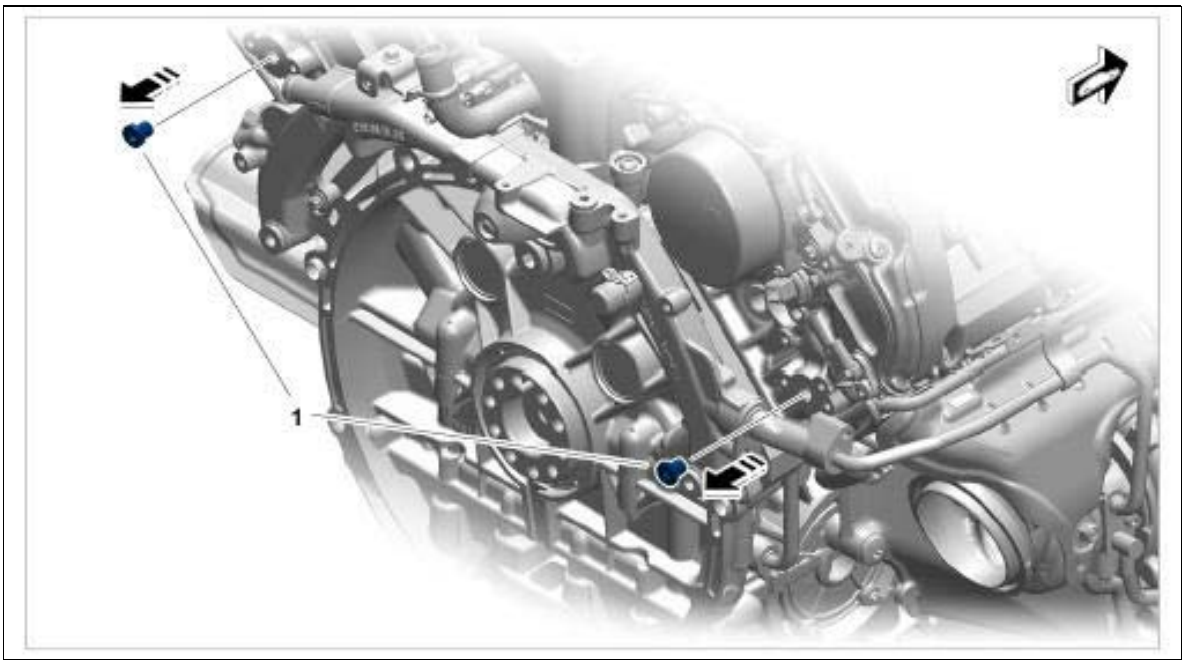

Courtesy of PORSCHE CARS NORTH AMERICA, INC.

WM 266919 REMOVING AND INSTALLING SECONDARY AIR VALVE (MACAN S,

MACAN TURBO) > PRELIMINARY WORK > PRELIMINARY WORK FOR CYLINDERS 4-6

With engine installed =>

1. Remove front strut. → 408619 REMOVING AND INSTALLING FRONT STRUT (DOME STRUT)
2. Remove oxygen sensor. → 247319 REMOVING AND INSTALLING OXYGEN SENSOR DOWNSTREAM OF CATALYTIC CONVERTER
3. Loosen coolant line **-1-** from holder **-2-** .

   Fig 1: Identifying Heating Coolant Line & Holder

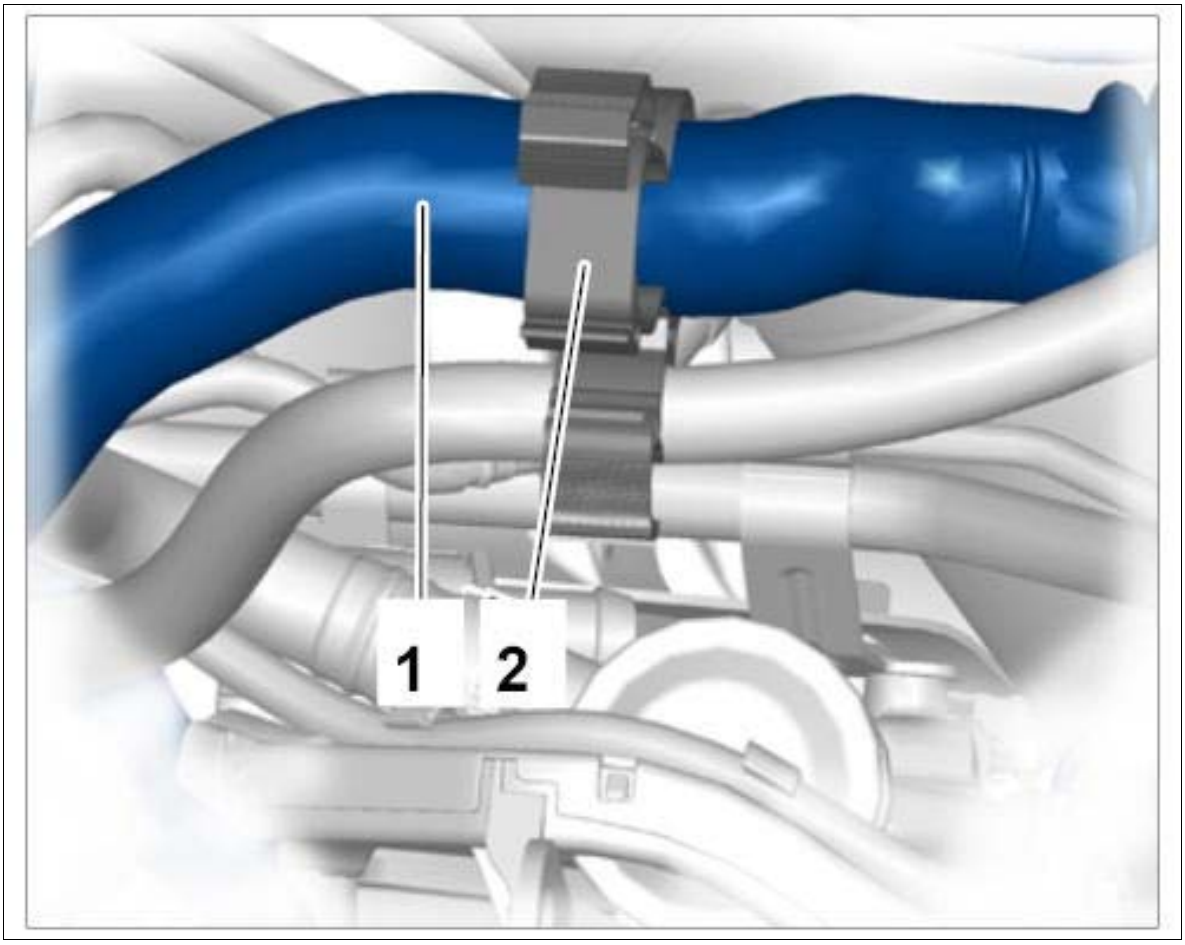

Courtesy of PORSCHE CARS NORTH AMERICA, INC.

If cylinder head is replaced =>

4. Remove stopper.

Fig 2: Identifying Secondary-Air Duct Stopper

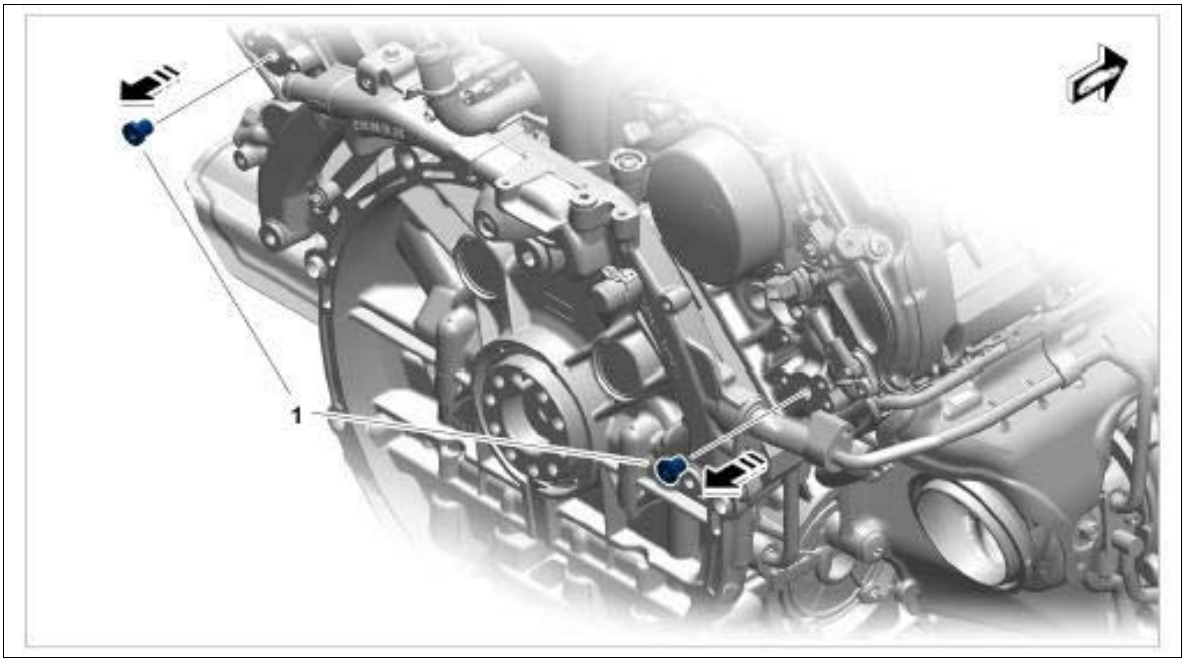

Courtesy of PORSCHE CARS NORTH AMERICA, INC.

WM 266919 REMOVING AND INSTALLING SECONDARY AIR VALVE (MACAN S, MACAN TURBO) > REMOVING SECONDARY AIR VALVE

⚠ *CAUTION: Hot components*

- *Risk of burns*

→ Let hot components cool down.

→ Wear personal protective gear.

Information

The procedure for removing and installing is described for one side as an example. The procedure for the other side is practically identical.

1. Remove secondary air valve **-1-** .
    1. 1.1. Release and disconnect secondary air hose **-2-** .
    2. 1.2. Unscrew screws **-3-** with decoupling elements **-4-** and remove secondary air valve with seal **-5-** .

Fig 1: Identifying Secondary Air Valve Components

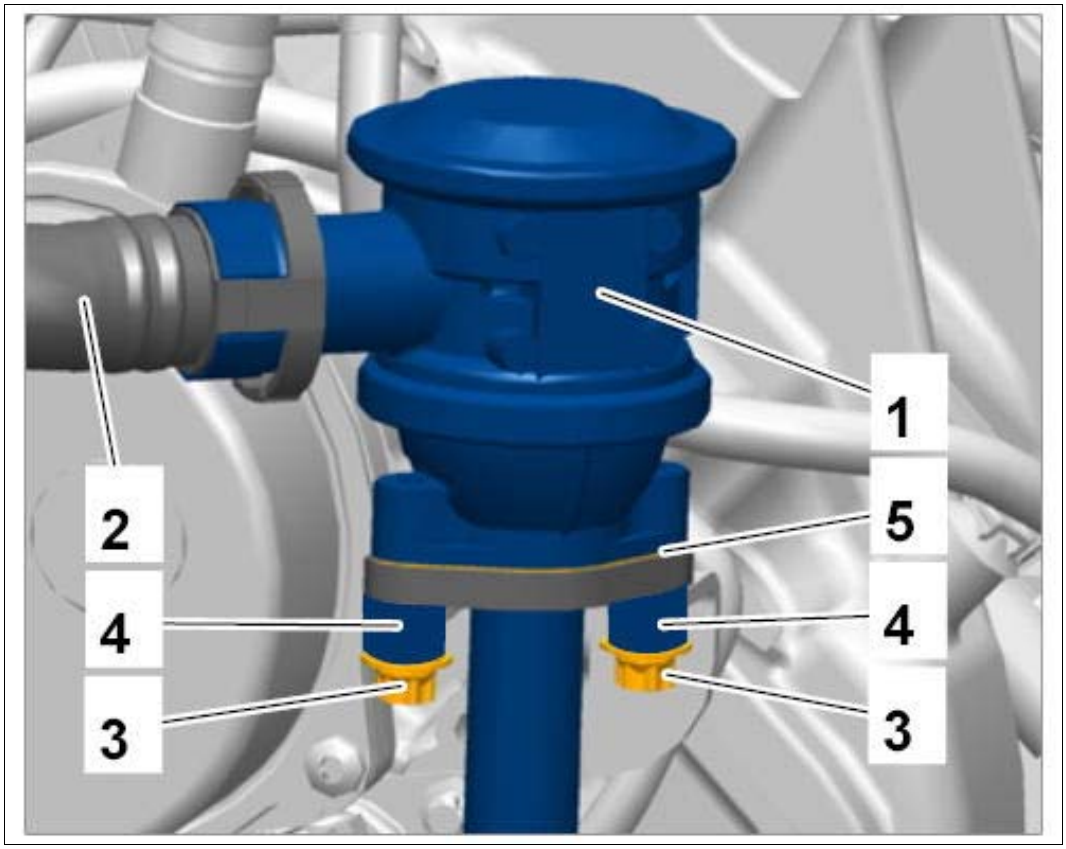

Courtesy of PORSCHE CARS NORTH AMERICA, INC.

WM 266919 REMOVING AND INSTALLING SECONDARY AIR VALVE (MACAN S, MACAN TURBO) > INSTALLING SECONDARY AIR VALVE

1. Install secondary air valve.
    1. 1.1. Clean sealing surfaces and replace seal.
    2. 1.2. Position secondary air valve and tighten screws to 10 Nm (7.5 ftlb.).

       Tool recommendation: Insert for torque wrench 9792
    3. 1.3. Connect secondary air line to secondary air valve.

WM 266919 REMOVING AND INSTALLING SECONDARY AIR VALVE (MACAN S, MACAN TURBO) > SUBSEQUENT WORK > SUBSEQUENT WORK FOR CYLINDERS 1-3

1. Install front strut. → 408619 REMOVING AND INSTALLING FRONT STRUT (DOME STRUT)

WM 266919 REMOVING AND INSTALLING SECONDARY AIR VALVE (MACAN S, MACAN TURBO) > SUBSEQUENT WORK > SUBSEQUENT WORK FOR CYLINDERS 4-6

1. Secure the coolant line.
2. Install oxygen sensor. → 247319 REMOVING AND INSTALLING OXYGEN SENSOR DOWNSTREAM OF CATALYTIC CONVERTER
3. Install strut. → 408619 REMOVING AND INSTALLING FRONT STRUT (DOME STRUT)

WM 267319 REMOVING AND INSTALLING CATALYTIC CONVERTER (MACAN) > PRELIMINARY WORK

1. Remove front silencer. → 262519 REMOVING AND INSTALLING FRONT SILENCER
2. Remove right front wheel. → 440519 REMOVING AND INSTALLING WHEEL
3. Unscrew screws **-arrows-** and remove heat shield on the halfshaft flange at the front right.

Fig 1: Locating Drive Shaft Heat Shield

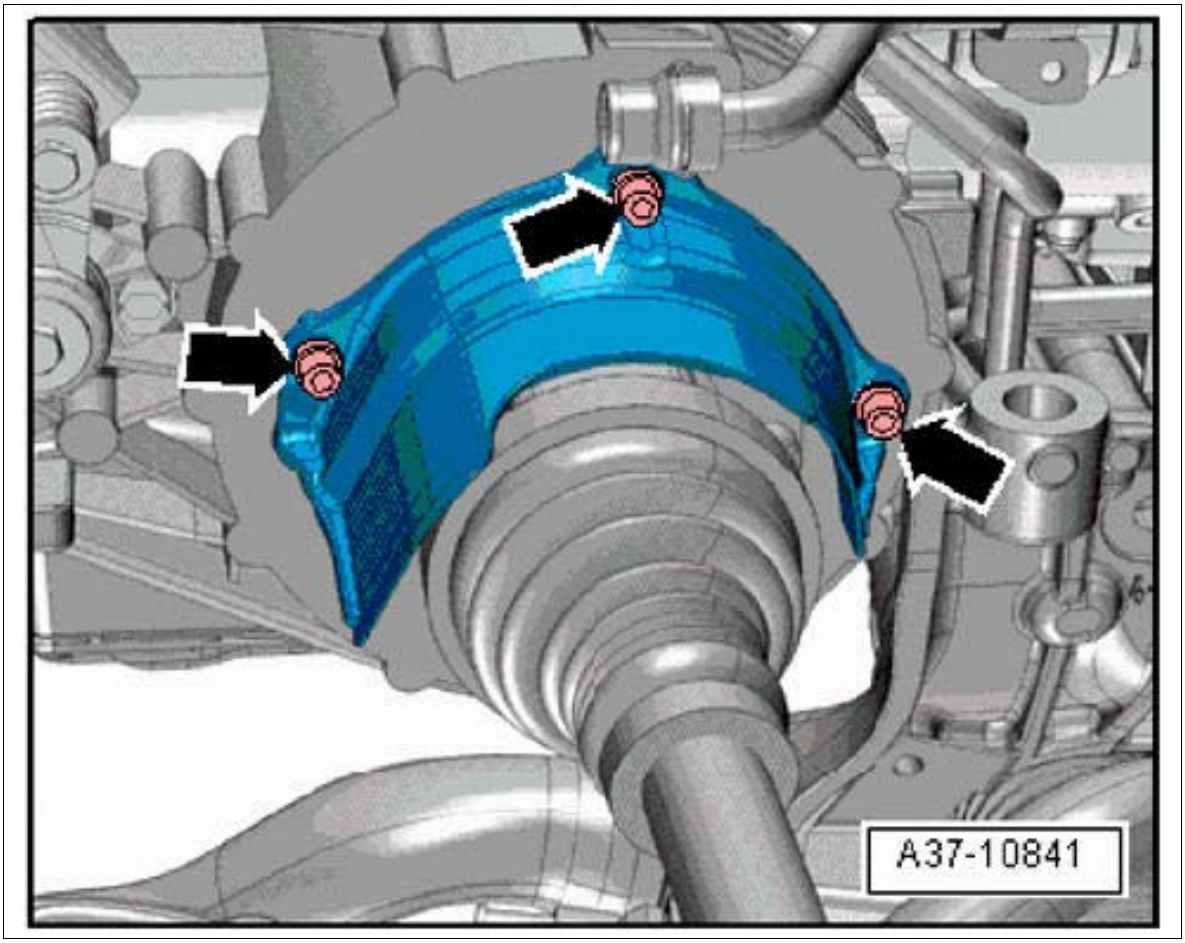

Courtesy of PORSCHE CARS NORTH AMERICA, INC.

4. Remove oxygen sensor downstream of catalytic converter. → 247319 REMOVING AND

WM 267319 REMOVING AND INSTALLING CATALYTIC CONVERTER (MACAN) > REMOVING CATALYTIC CONVERTER

⚠ *CAUTION: Hot components*

- *Risk of burns*

→ Let hot components cool down.

→ Wear personal protective gear.

1. Loosen catalytic converter at the transmission.

1. 1.1. Unscrew screw **-1-** on the spring/tab assembly **-2-** .

Fig 1: Identifying Spring/Tab Assembly & Screws

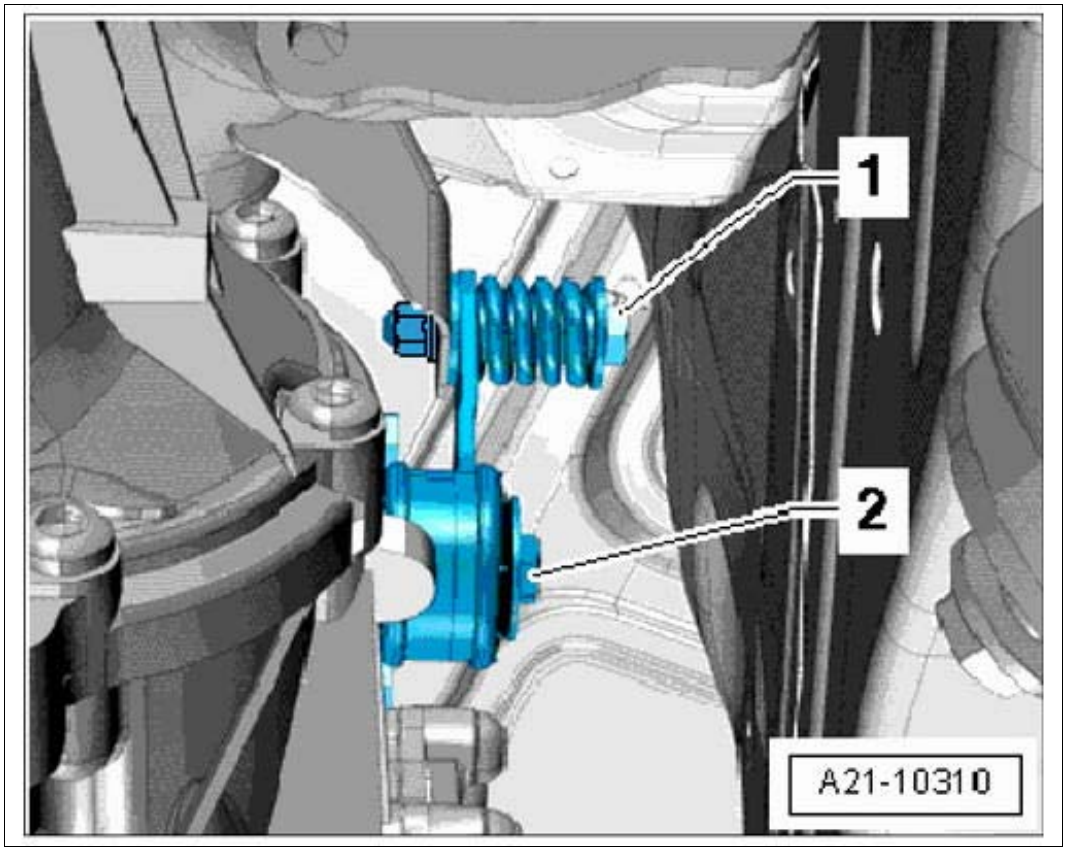

Courtesy of PORSCHE CARS NORTH AMERICA, INC.

2. Loosen catalytic converter at the turbocharger.

1. 2.1. Loosen and unscrew nuts **-1-** from above.

2. 2.2. Loosen and unscrew nut **-2-** from below.

3. 2.3. Remove catalytic converter in a downward direction.

Fig 2: Identifying Turbocharger Catalytic Converter & Nuts

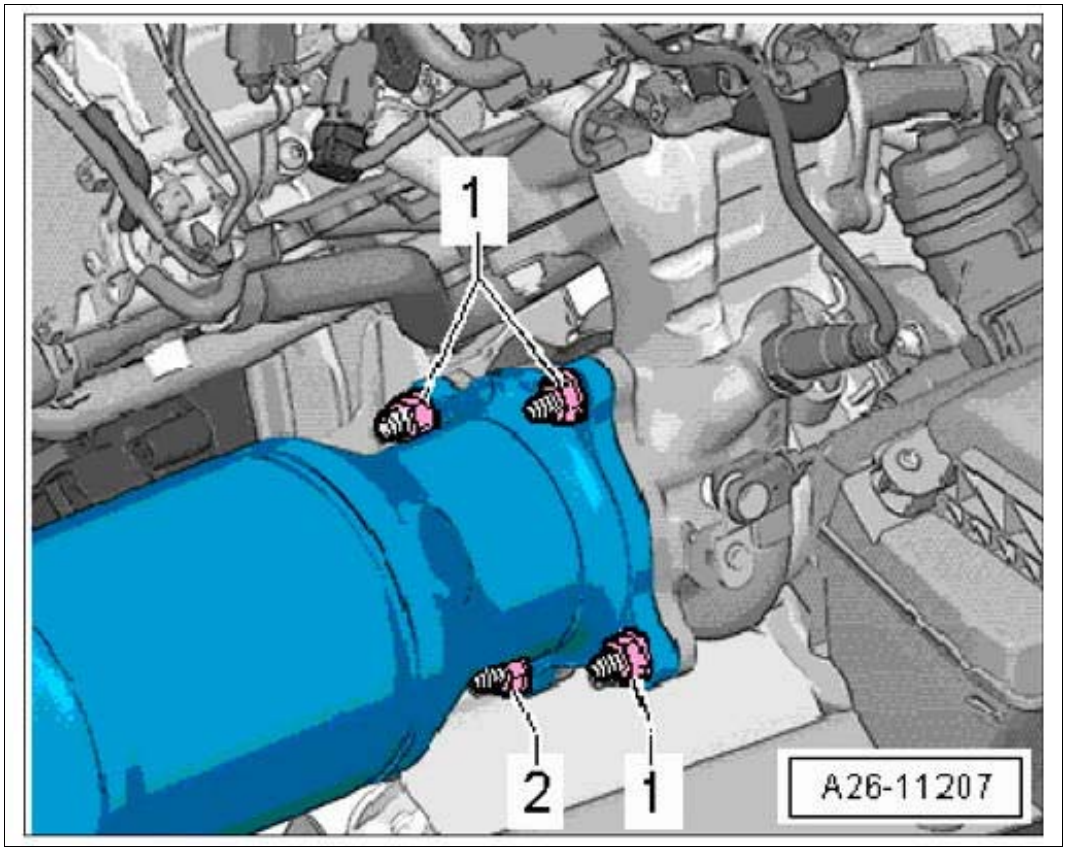

Courtesy of PORSCHE CARS NORTH AMERICA, INC.

WM 267319 REMOVING AND INSTALLING CATALYTIC CONVERTER (MACAN) > INSTALLING CATALYTIC CONVERTER

Information

Tightening torques, tightening sequence and assembly overviews for the engine and transmission:

- Group 1: → 1X00IN TECHNICAL VALUES
- Group 2: → 2X00IN TECHNICAL VALUES
- Group 3: → 3X00IN TECHNICAL VALUES

1. Installation is performed in reverse order. Pay particular attention to the following:
    1. 1.1. Replace seal.
    2. 1.2. Replace nuts.

WM 267319 REMOVING AND INSTALLING CATALYTIC CONVERTER (MACAN) >

SUBSEQUENT WORK

1. Install oxygen sensor downstream of catalytic converter. → 247319 REMOVING AND INSTALLING OXYGEN SENSOR DOWNSTREAM OF CATALYTIC CONVERTER
2. Install heat shield for halfshaft flange.
3. Install front silencer. → 262519 REMOVING AND INSTALLING FRONT SILENCER
4. Fit right front wheel. → Installing Wheel

WM 270419 REMOVING AND INSTALLING DC/DC CONVERTER (ALL MODELS) > PRELIMINARY WORK

1. Remove trim panel for luggage compartment (luggage compartment cover) at the right side. → Removing center trim panel for luggage compartment (luggage compartment cover)

WM 270419 REMOVING AND INSTALLING DC/DC CONVERTER (ALL MODELS) > REMOVING DC/DC CONVERTER

NOTE: Voltage peaks

- *Risk of damage to load or to the control unit*

→ Remove the ignition key and switch off load before disconnecting or removing load.

Fig 1: Identifying DC/DC Converter Position

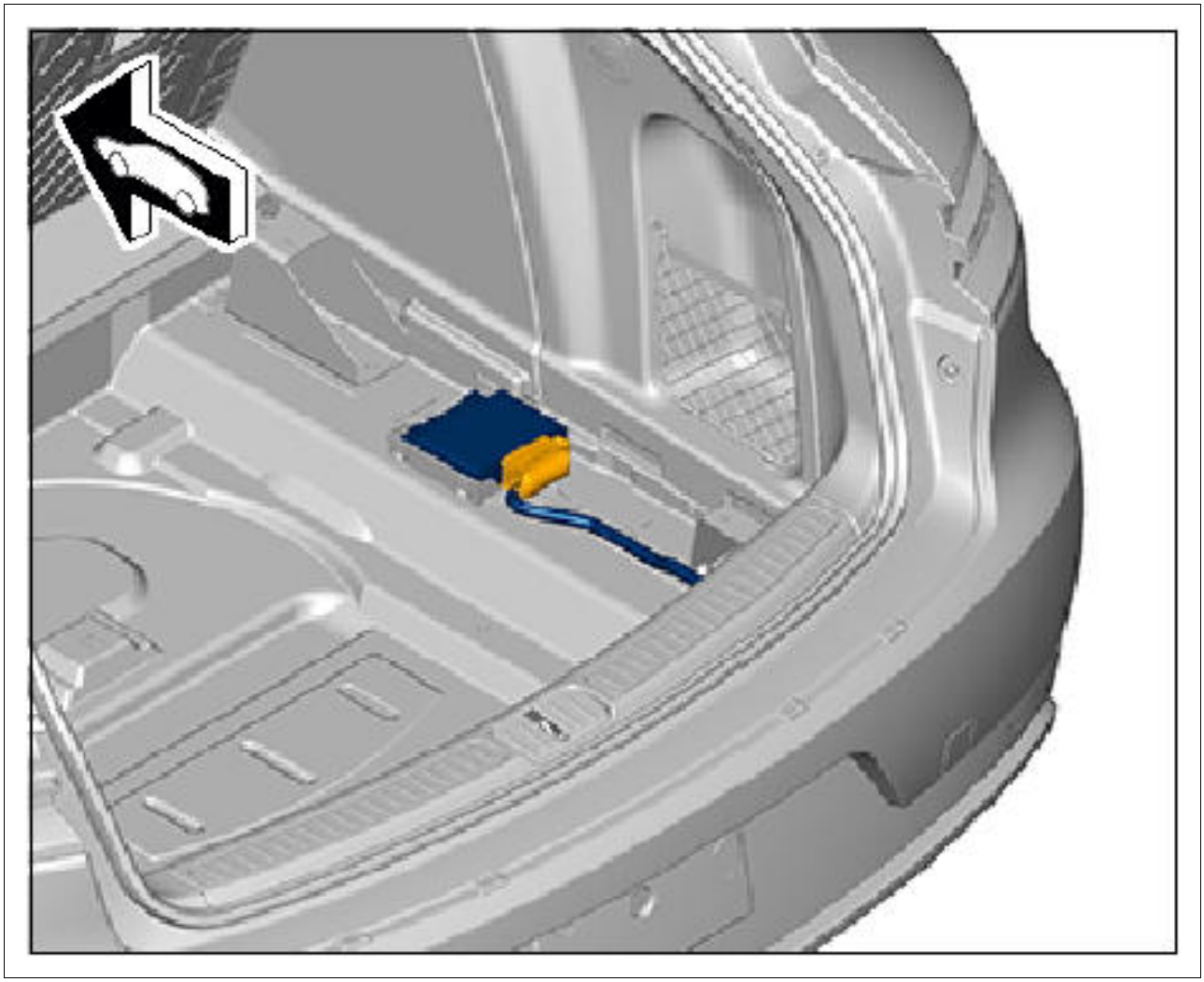

Courtesy of PORSCHE CARS NORTH AMERICA, INC.

1. Switch off ignition and pull remote control out of ignition lock.
2. Take DC/DC converter **-1-** out of the holder **-2-** .
    1. 2.1. Disengage retaining lugs **-a-** .
    2. 2.2. Lift DC/DC converter up slightly at the left.
    3. 2.3. Pull DC/DC converter at the right out of the holder **-b-** .

Fig 2: Removing DC/DC Converter

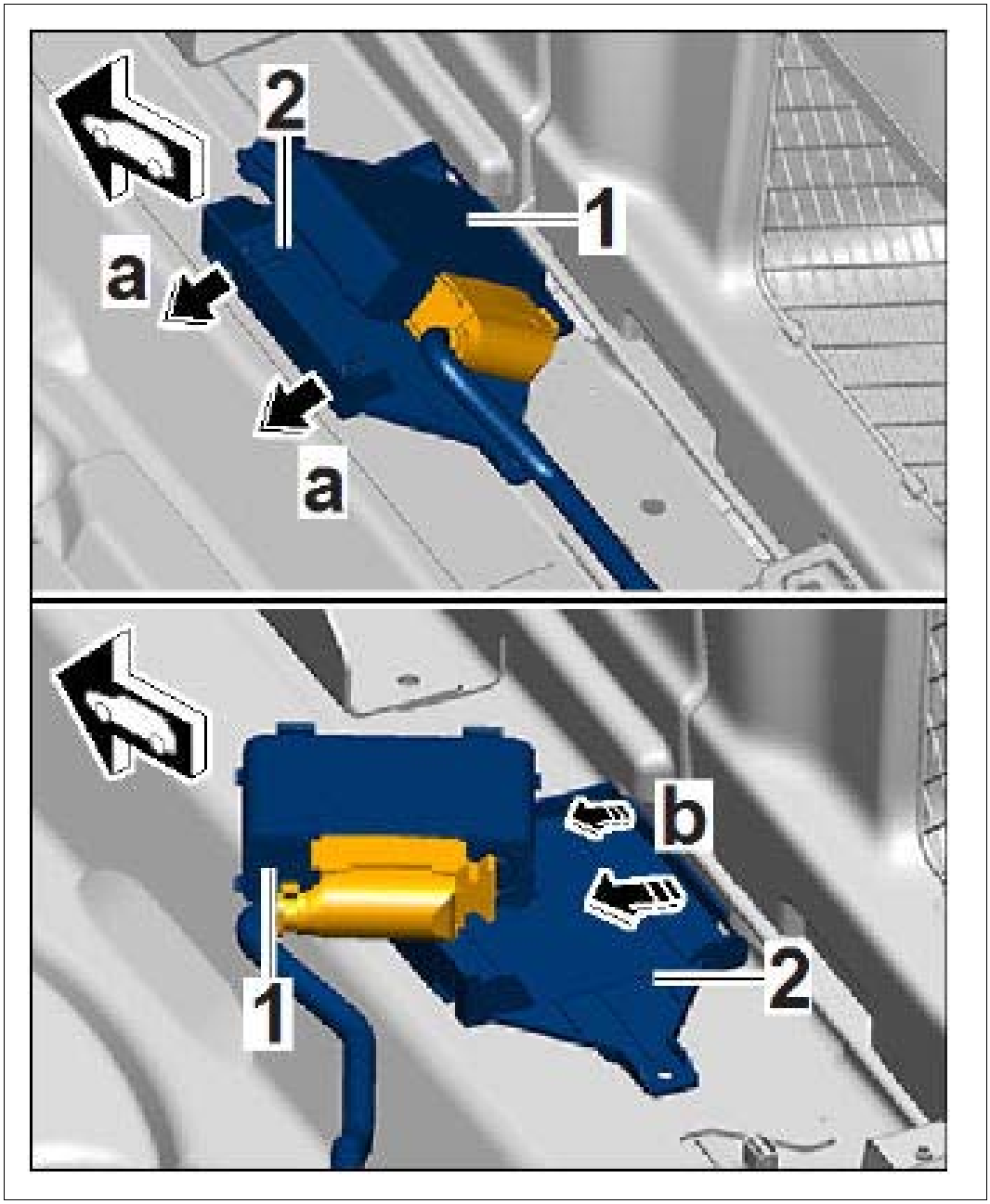

Courtesy of PORSCHE CARS NORTH AMERICA, INC.

Information

Always comply with the regulations for handling ESD-sensitive components!

1. Assembly work may only be carried out if the mechanic is wearing the working clothes and shoes approved by Porsche.
2. The new part must only be removed from the ESD (electrostatic discharge) protective packaging just before installation and at the position at which the part is to be installed.
3. Never touch the electric pins and plug contacts.

3. Pull slide **-2-** out of the electric plug connection **-1-** (**-a-**) and disconnect electric plug connection from the DC/DC converter **-A-** .

Fig 3: Disconnecting Electric Plug Connection (Shown On 991)

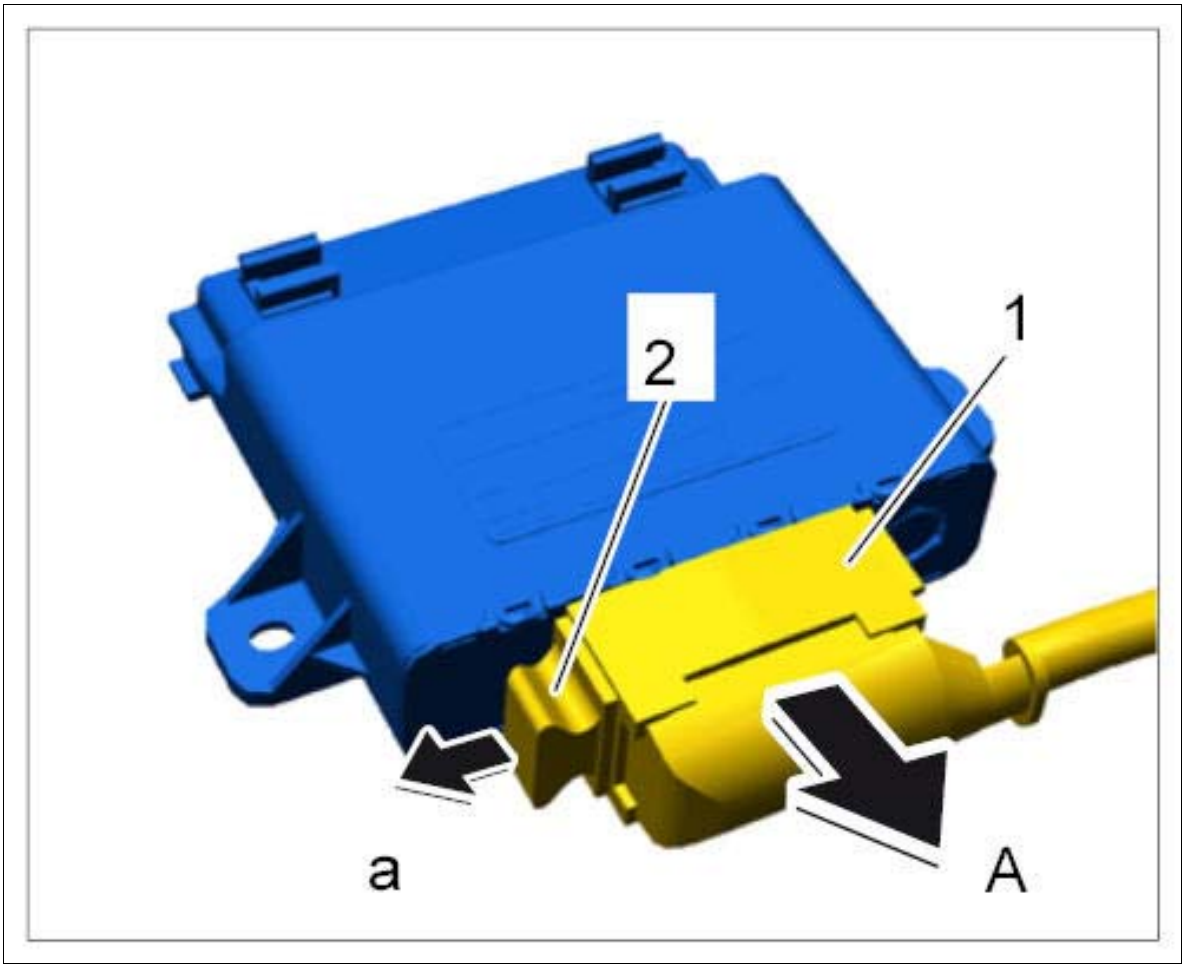

Courtesy of PORSCHE CARS NORTH AMERICA, INC.

WM 270419 REMOVING AND INSTALLING DC/DC CONVERTER (ALL MODELS) > INSTALLING DC/DC CONVERTER

Information

Always comply with the regulations for handling ESD-sensitive components!

- Assembly work may only be carried out if the mechanic is wearing the working clothes and shoes approved by Porsche.
- The new part must only be removed from the ESD (electrostatic discharge) protective packaging just before installation and at the position at which the part is to be installed.
- Never touch the electric pins and plug contacts.

1. Installation is performed in reverse order to removal.

WM 270419 REMOVING AND INSTALLING DC/DC CONVERTER (ALL MODELS) > SUBSEQUENT WORK

1. Install trim panel for luggage compartment (luggage compartment cover) at the right side. → Installing center trim panel for luggage compartment (luggage compartment cover)

WM 270619 REMOVING AND INSTALLING BATTERY (ALL MODELS) > TOOLS

Designation	Type	Number	Description	
PIWIS Tester II	Special tool	9818		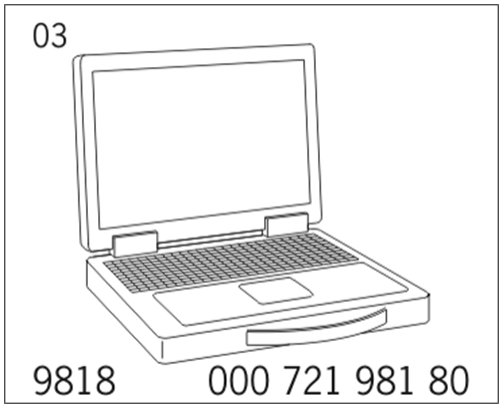

WM 270619 REMOVING AND INSTALLING BATTERY (ALL MODELS) > TECHNICAL VALUES

Location	Description	Type	Basic value	Tolerance 1	Tolerance 2
Terminal clamp to battery terminal	M6 nut	Tightening torque	5 Nm (3.5 ftlb.)		
Clamp support for battery to body	Hexagon-head bolt, M8 x 25	Tightening torque	23 Nm (17 ftlb.)		

WM 270619 REMOVING AND INSTALLING BATTERY (ALL MODELS) > PRELIMINARY WORK > VEHICLES WITH SOUND SYSTEM

1. Remove subwoofer. → Removing subwoofer

WM 270619 REMOVING AND INSTALLING BATTERY (ALL MODELS) > REMOVING BATTERY

WARNING: Static battery charge

- *Battery can explode*
- *Electrical discharges*

→ Do not rub the battery with a dry cloth.

NOTE: Using charging cables/jump leads directly on the vehicle battery.

- *Risk of damage to battery sensors.*

→ Always connect charging cables/jump leads to the external power supply for jump-lead starting.

Information

Switch off all loads and remove the ignition key.

- Do not disconnect the battery while the engine is running.
- Disconnect and reconnect battery with extreme caution.
- Do not rub the battery with a dry cloth.

1. Switch off ignition and pull remote control out of ignition lock.
2. Switch off electrical loads.
3. Remove luggage compartment floor.
4. Remove collapsible wheel, if necessary.
5. Lift carpet **-1-** .
6. Disengage cover **-2-** (**-arrows-**) and fold it forward.

Fig 1: Opening Battery Cover

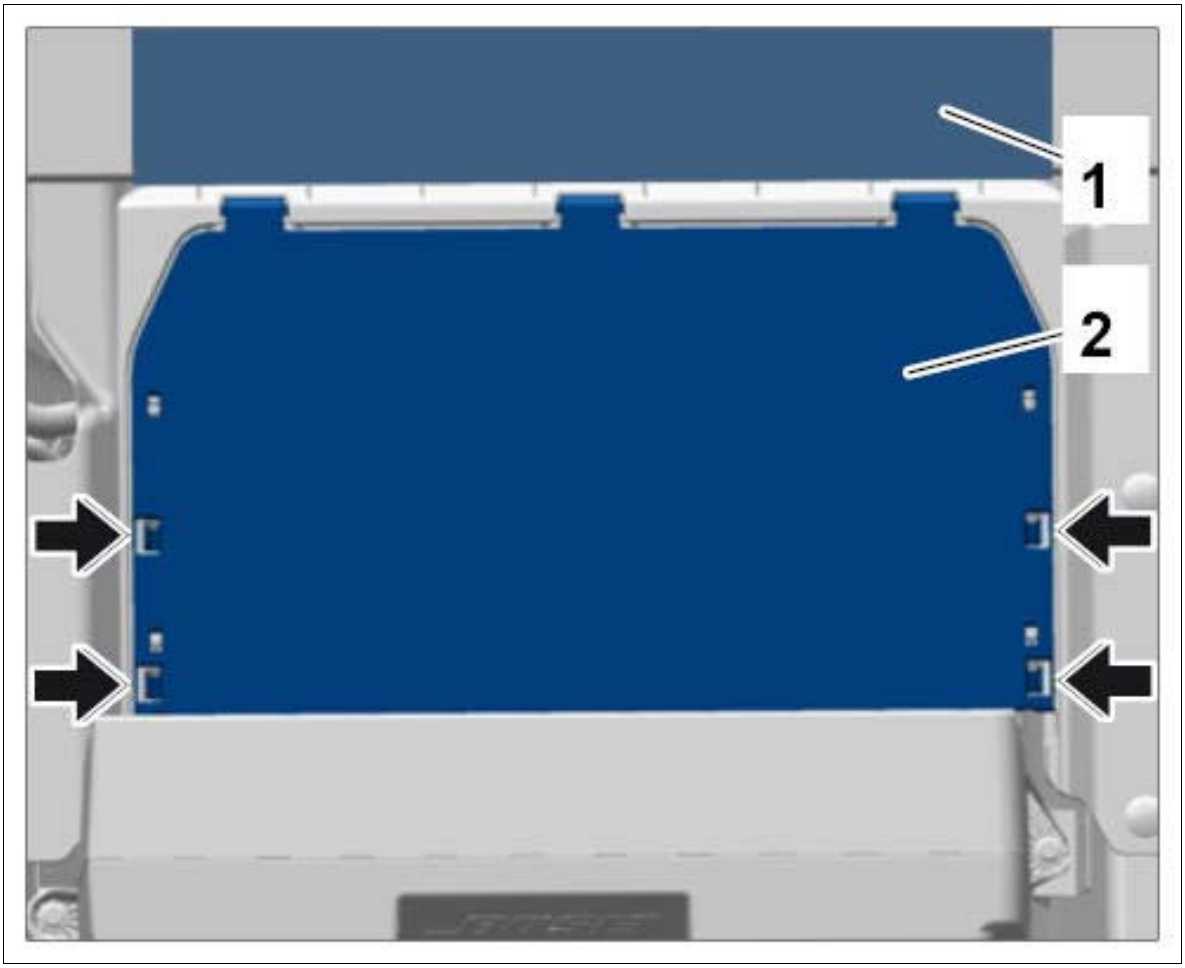

Courtesy of PORSCHE CARS NORTH AMERICA, INC.

7. **Danger of short circuit when loosening the terminal clamps!**

    1. 7.1. **First** open the cover on the negative terminal and disconnect **terminal clamp -1- for the ground strap from the battery terminal!**
    2. 7.2. Insulate terminal clamp or route ground strap to prevent any contact with the battery terminal!
    3. 7.3. Open cover on the positive terminal and disconnect terminal clamp **-2-** for the B+ line from the battery terminal.

Fig 2: Identifying Battery Terminal Clamps

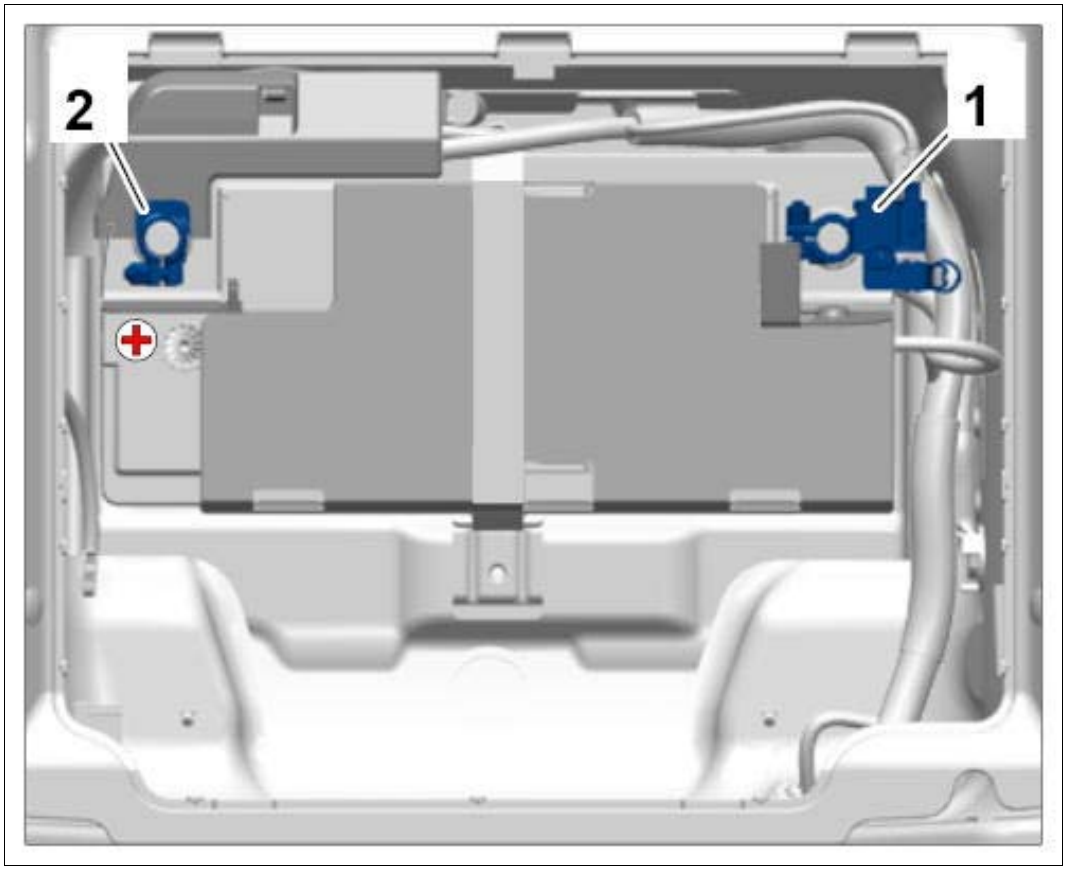

Courtesy of PORSCHE CARS NORTH AMERICA, INC.

8. Unscrew fastening screw **-1-** , remove clamp support **-2-** and move it forward with a rebound strap.

Fig 3: Identifying Battery Clamp Support Screw

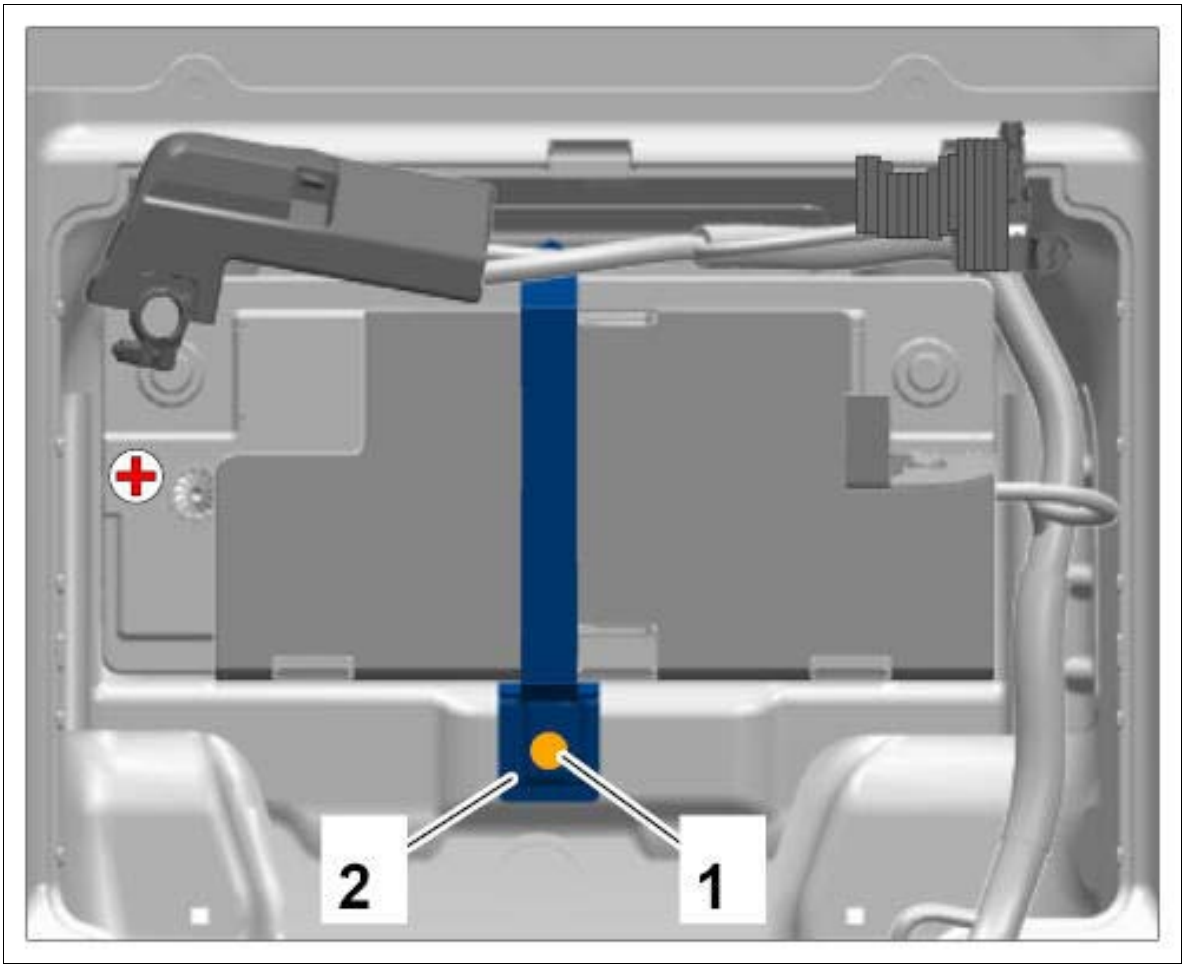

Courtesy of PORSCHE CARS NORTH AMERICA, INC.

9. Disengage cover **-1-** (**-arrows-**) and remove it.

Fig 4: Removing Battery Cover

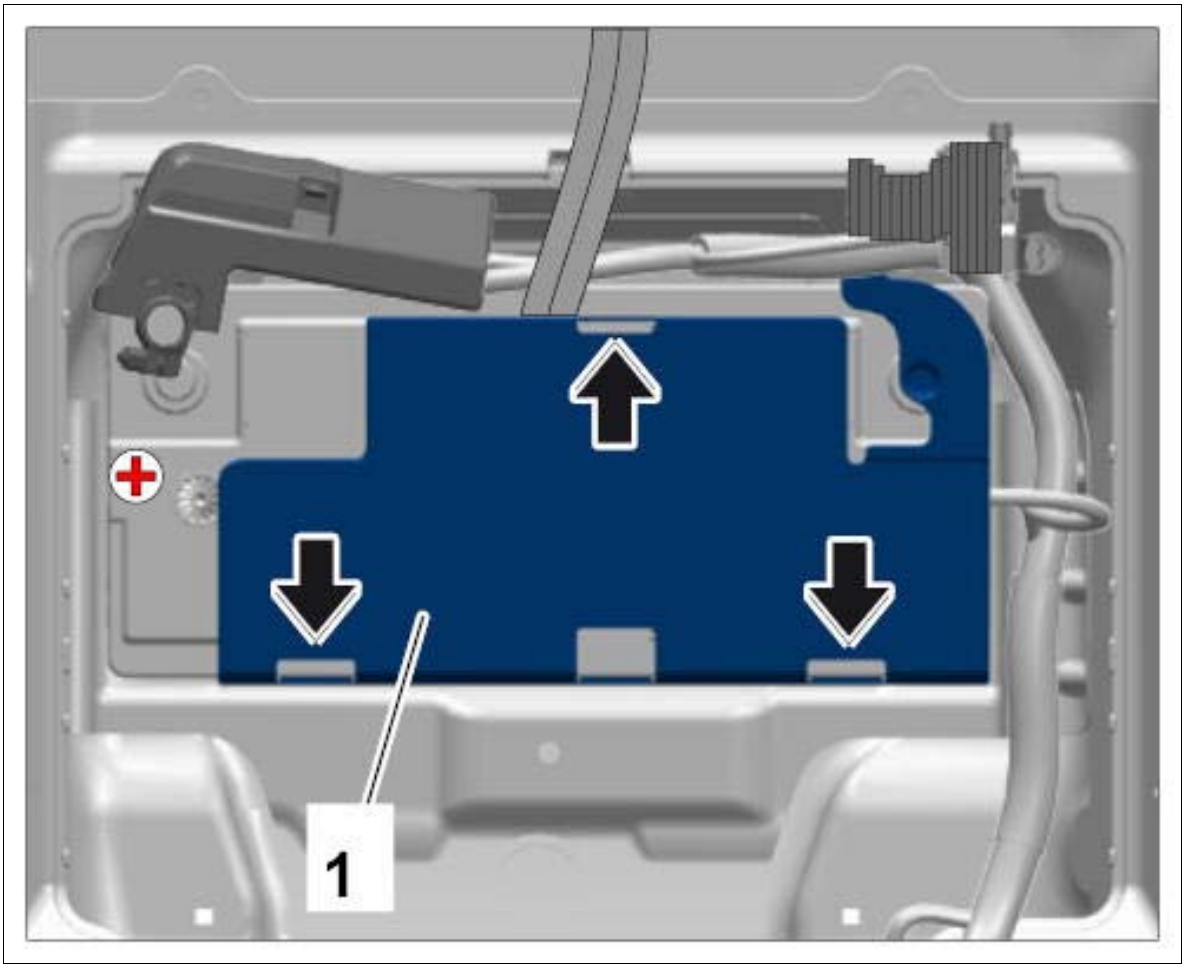

Courtesy of PORSCHE CARS NORTH AMERICA, INC.

10. Pull breather hose **-1-** off the battery **-2-** .
11. Bend up support clips **-3-** and lift the battery out. Get another person to help if necessary.

Fig 5: Identifying Battery And Breather Hose

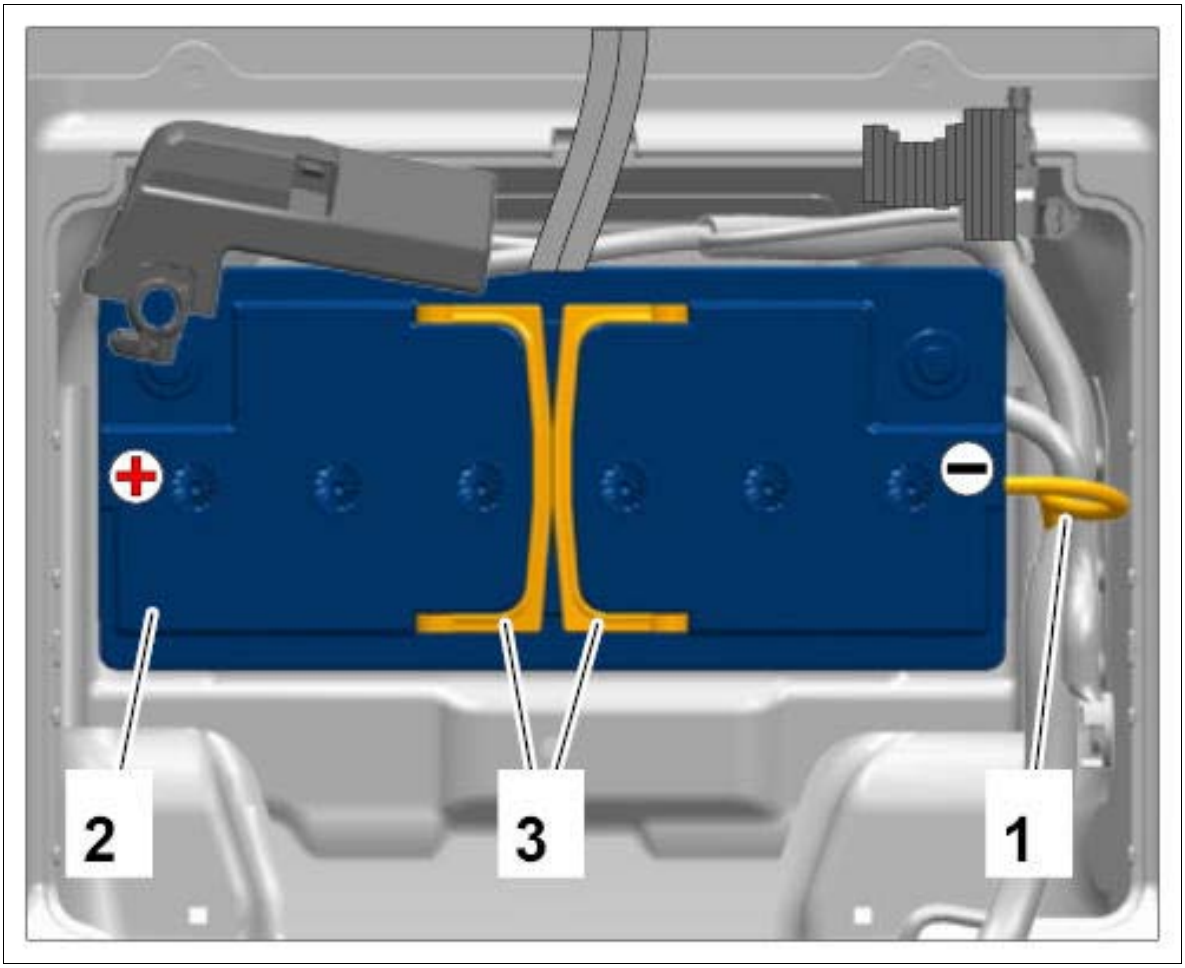

Courtesy of PORSCHE CARS NORTH AMERICA, INC.

WM 270619 REMOVING AND INSTALLING BATTERY (ALL MODELS) > INSTALLING BATTERY

WARNING: Static battery charge

- *Battery can explode*
- *Electrical discharges*

→ Do not rub the battery with a dry cloth.

Information

Switch off all loads and remove the ignition key.

- Do not disconnect the battery while the engine is running.

- Disconnect and reconnect battery with extreme caution.
- Do not rub the battery with a dry cloth.

1. Installation is performed in reverse order to removal.
2. Tighten fastening screw for clamp support securing battery to the body. **Tightening torque 23 Nm (17 ftlb.)**
3. Tighten fastening nuts on terminal clamps. **Tightening torque 5 Nm (3.5 ftlb.)**

WM 270619 REMOVING AND INSTALLING BATTERY (ALL MODELS) > SUBSEQUENT WORK > VEHICLES WITH SOUND SYSTEM

1. Install subwoofer. → Installing subwoofer
2. If the battery was replaced, write new battery data into the gateway control unit using **PIWIS Tester II 9818.** → WM 270619 REMOVING AND INSTALLING BATTERY
3. Follow work instructions after disconnecting the battery. → 2X00IN WORK INSTRUCTIONS AFTER DISCONNECTING THE BATTERY

WM 2706IN EXTERNAL POWER CONNECTION, JUMP-LEAD STARTING (ALL MODELS) > INFORMATION > EXTERNAL POWER CONNECTION, JUMP-LEAD STARTING

WARNING: Live jump leads

- *Risk of electric shock*
- *Risk of short circuit*

→ Route the jump leads so that they do not become entangled in moving parts in the engine compartment.

→ There must be no contact between the vehicles.

NOTE: Using charging cables/jump leads directly on the vehicle battery.

- *Risk of damage to battery sensors.*

→ Always connect charging cables/jump leads to the external power supply for jump-lead starting.

Information

- If the battery is flat, jump leads can be used together with the battery of another vehicle to start the

car or to supply external power to the vehicle.

Information

Both batteries must be 12 V batteries.

The capacity (AH) of the donor battery must not be significantly lower than that of the flat battery.

The flat battery must be properly connected to the vehicle electrical system.

1. Open protective cover on the positive terminal for jump-lead starting **-+-** (**-arrow-**).
2. Connect the positive cable to the positive terminal for jump-lead starting **-+-** , then to the positive terminal of the donor battery.
3. First, connect the negative cable to the negative terminal of the donor battery, then to the ground point for jump-lead starting **-** .

Fig 1: Connecting Battery To Vehicle Electrical System

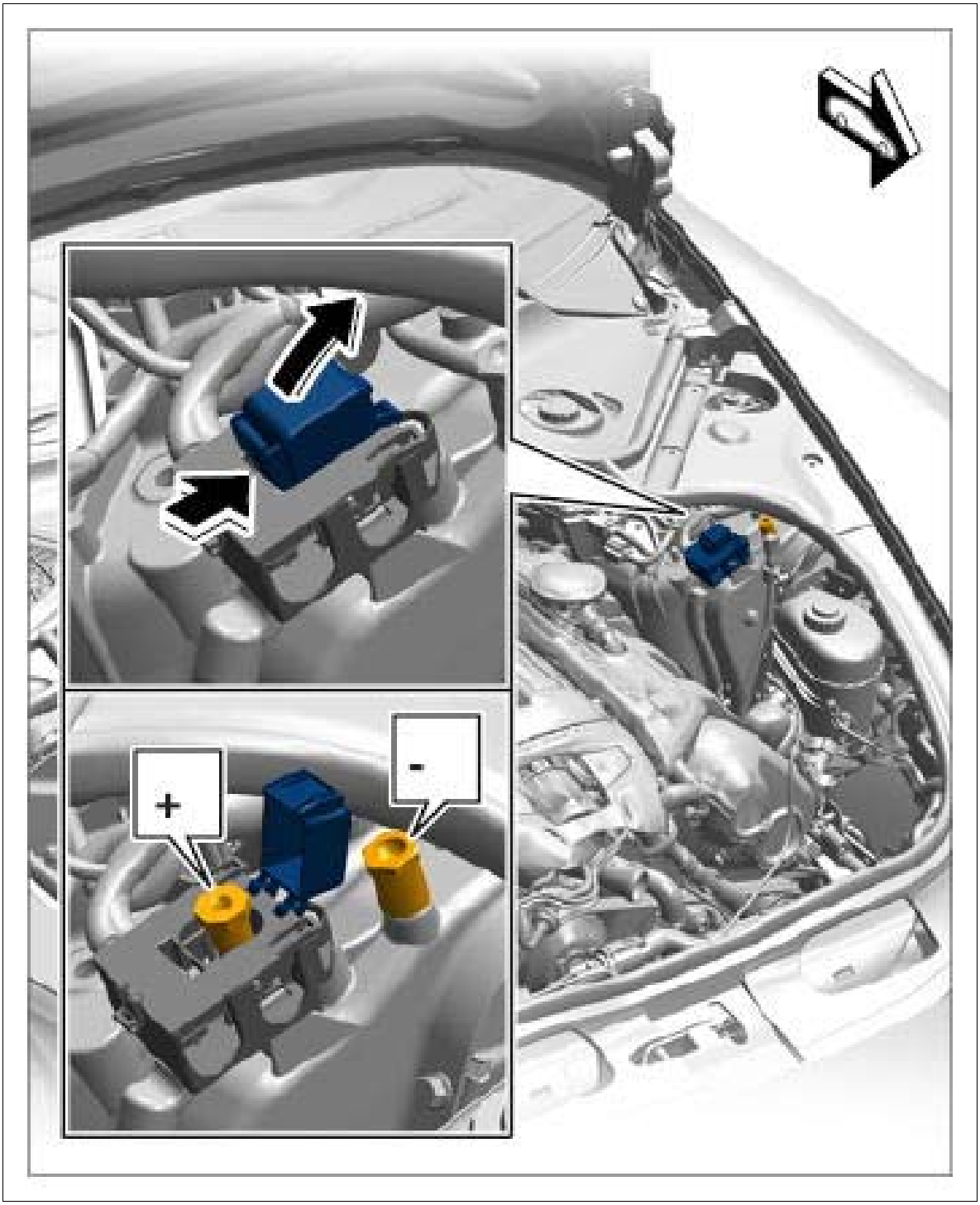

Courtesy of PORSCHE CARS NORTH AMERICA, INC.

4. Leave the engine of the vehicle supplying the power running at higher revs.
5. Start the engine. Do not spend longer than 15 seconds trying to start the vehicle with the jump leads, then wait for at least one minute before trying again.
6. Disconnect the two jump leads in reverse order when the engine is running.
7. Close protective cover.

WM 2706IN GENERAL INFORMATION ON AGM VEHICLE BATTERY (ALL MODELS) > TOOLS

Designation	Type	Number	Description	
PIWIS Tester II	Special tool	9818		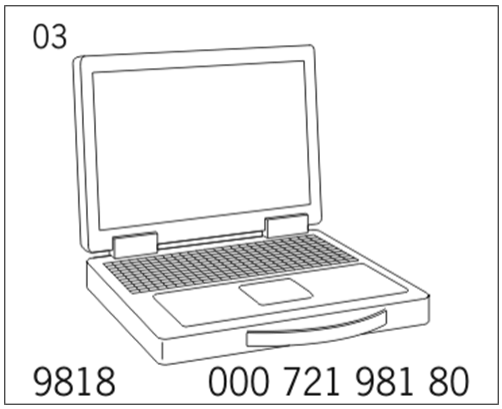

WM 2706IN GENERAL INFORMATION ON AGM VEHICLE BATTERY (ALL MODELS) > TECHNICAL VALUES

Location	Description	Type	Basic value	Tolerance 1	Tolerance 2
Battery terminal		Torque	5 Nm (3.5 ftlb.)		

WM 2706IN GENERAL INFORMATION ON AGM VEHICLE BATTERY (ALL MODELS) > INFORMATION

NOTE: A battery charger for providing an external power supply or for jump-lead starting is connected directly to the battery in the vehicle.

- *Risk of damage to the battery sensor.*
- *Battery sensor sends incorrect battery values to the vehicle electrical system.*

→ Always connect a battery charger for providing an external power supply or for jump-lead starting to the defined connections in the engine compartment. → 2X00IN BATTERY TRICKLE CHARGING

Information

The AGM (**A** bsorbent **G** lass **M** at) battery is a **maintenance-free, sealed** battery.

- This battery must not be opened. If the battery is opened, it must be replaced.

- There is a serial number -A- and a part number -B- on the top right-hand side of the battery.

  Fig 1: Identifying Battery Serial And Part Number

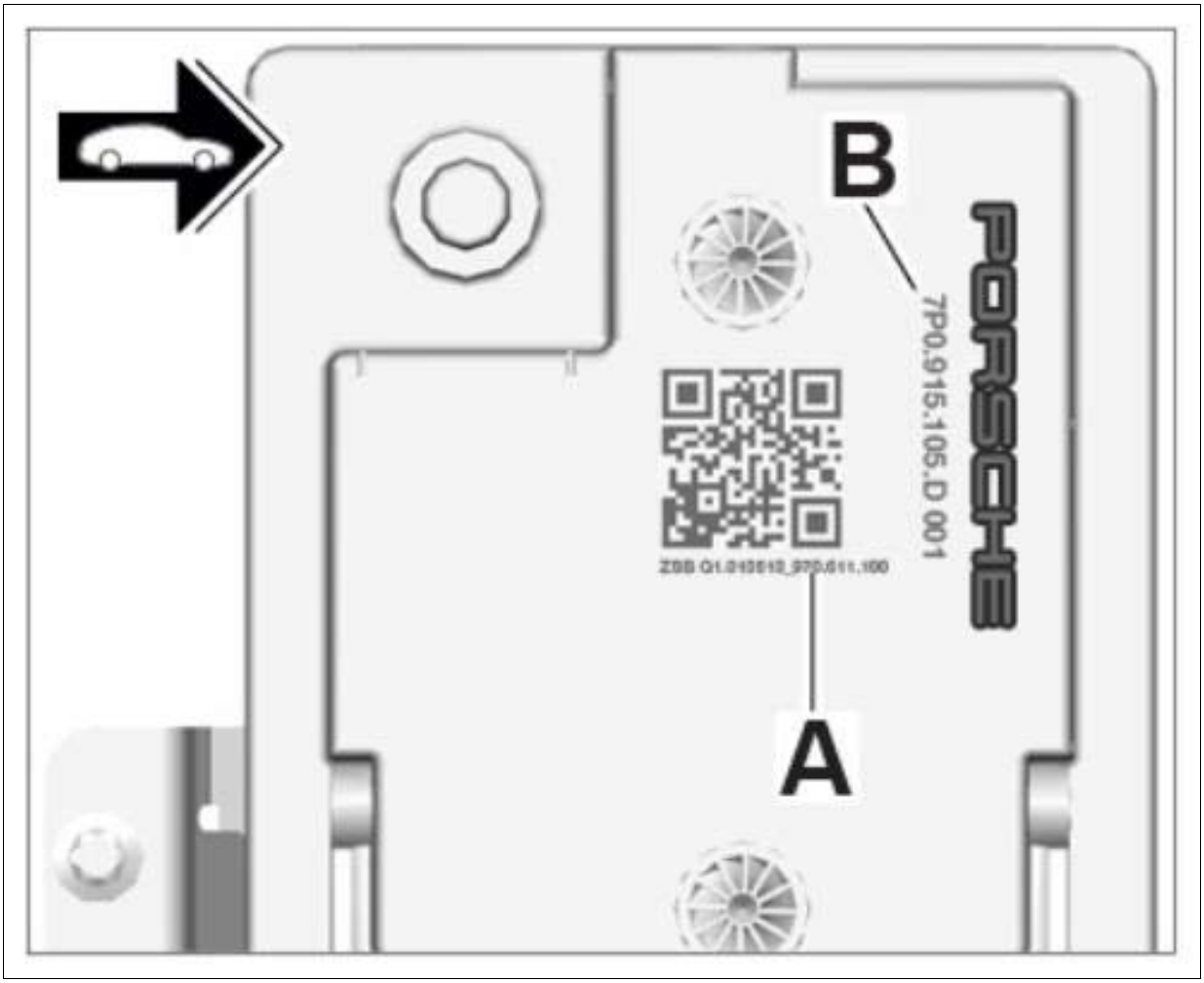

Courtesy of PORSCHE CARS NORTH AMERICA, INC.

- After replacing the battery, the serial number and part number as well as the battery size and manufacturer must be entered using the PIWIS Tester under: Gateway/Maintenance/repairs /Change battery.
- The battery size and battery manufacturer must also be entered when changing the battery.

Information

- To prevent contact corrosion, only approved bolts, nuts, washers, etc. should be used. These elements have a special surface coating and must be stored separately.

The battery is one of the most important electrical components in the vehicle. Fault-free functioning of the battery contributes greatly to customer satisfaction. To guarantee long and efficient operation, the battery must be checked and maintained according to the instructions provided here.

Besides starting the vehicle, the battery also acts as a buffer and supplier of electrical power for the entire vehicle electrical system.

An AGM (**A** bsorbent **G** lass **M** at) battery is used as standard. The AGM battery offers the following advantages, for example:

- Sealed, valve-controlled battery
- High-cycle battery
- High cold-start performance
- Cannot leak or tilt
- Totally maintenance-free
- Shake-resistant
- No acid leakage if the housing is damaged
- Flexible installation and safe to handle
- High load capacity and longer service life
- Ideal for Start/Stop function

WM 2706IN GENERAL INFORMATION ON AGM VEHICLE BATTERY (ALL MODELS) > INFORMATION > INSTRUCTIONS FOR HANDLING BATTERIES

Information

- Battery terminals do not need to be greased.
- The battery terminal clamps should only be attached by hand - without excessive force - to prevent damage to the battery.
- The tightening torque for the battery terminals is → Torque: 5 Nm (3.5 ftlb.).
- If the battery is reconnected, proceed according to → 2X0000 WORK INSTRUCTIONS AFTER DISCONNECTING THE BATTERY .

WM 2706IN GENERAL INFORMATION ON AGM VEHICLE BATTERY (ALL MODELS) > INFORMATION > WARNING NOTES AND SAFETY REGULATIONS FOR BATTERIES

1. **-1-** No fire, sparks, naked flames or smoking:
    1. Avoid sparking when using cables and electrical devices.
    2. Avoid short circuits.
    3. On batteries with central venting, there is an increased concentration of oxyhydrogen gas at the hose opening. The vent hose should not be bent or blocked by dirt.
2. **-2-** Wear eye protection.
3. **-3-** Keep children away from acids and batteries.
4. **-4-** Risk of acid burns:

1. Battery acid is highly caustic, so wear protective gloves.
2. Do not tip battery; acid can emerge from the vent opening.

Fig 1: Identifying Battery Symbols

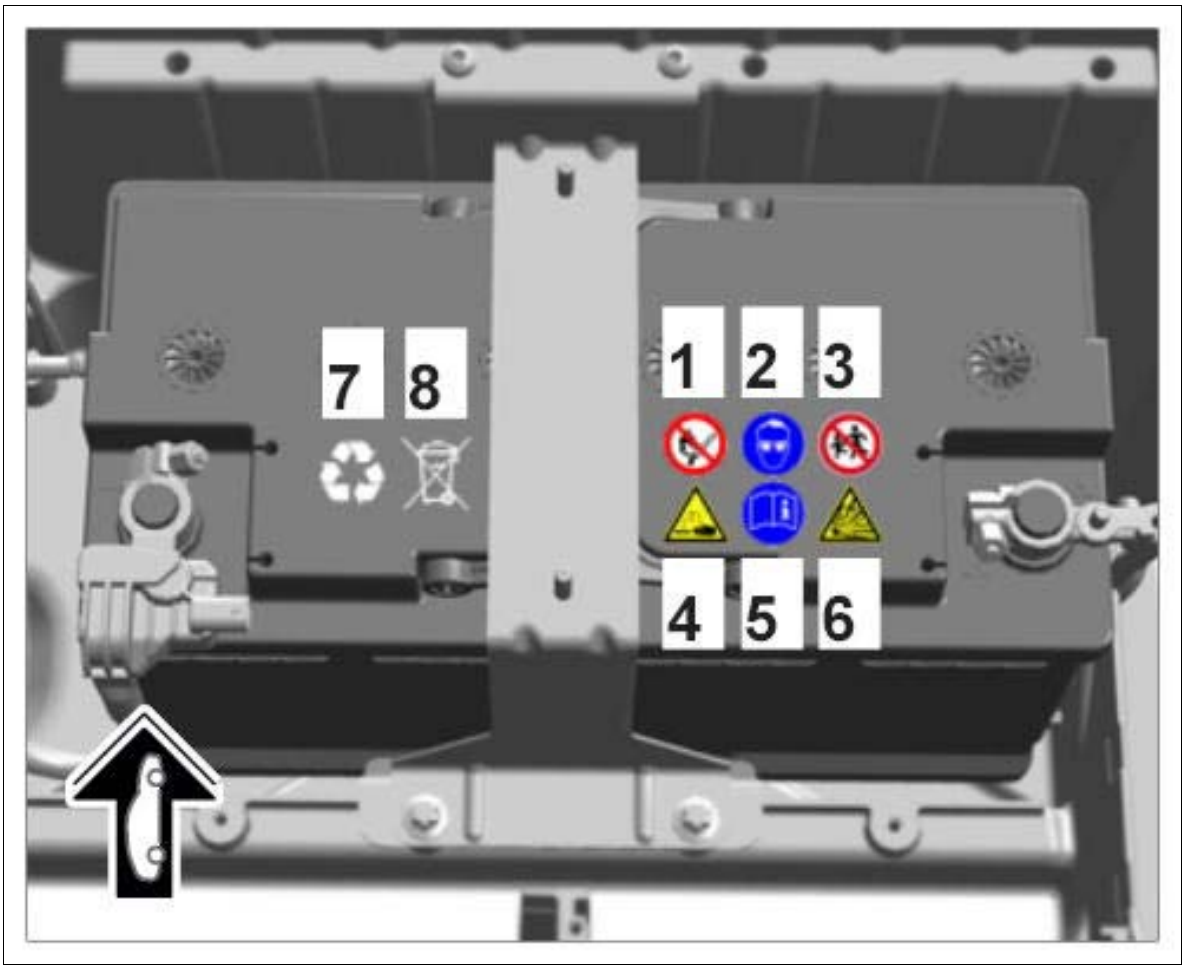

Courtesy of PORSCHE CARS NORTH AMERICA, INC.

Information

1. First aid: Rinse acid splashes in the eyes immediately with clean water for a few minutes. Consult a doctor immediately. Neutralize acid splashes on the skin or clothing immediately with soap suds and rinse again with plenty of water. If acid has been drunk unintentionally, consult a doctor immediately.

5. **-5-** Follow the instructions on the battery, in the Technical Information and in the Driver's Manual.
6. **-6-** Risk of explosion:
    1. A highly explosive detonating gas mixture is formed when charging batteries.
7. **-7-** Disposal:
    1. Hand in old batteries at a collection point.
8. **-8-** Never dispose of old batteries in domestic rubbish!

WM 2706IN GENERAL INFORMATION ON AGM VEHICLE BATTERY (ALL MODELS) > NOTES ON REMOVING AND INSTALLING THE BATTERY

NOTE: A battery charger for providing an external power supply or for jump-lead starting is connected directly to the battery in the vehicle.

- *Risk of damage to the battery sensor.*
- *Battery sensor sends incorrect battery values to the vehicle electrical system.*

→ Always connect a battery charger for providing an external power supply or for jump-lead starting to the defined connections in the engine compartment. → 2X00IN BATTERY TRICKLE CHARGING

Information

- The battery is located in the luggage compartment under the loadspace floor.
- In order to avoid triggering the siren in vehicles with an additional alarm siren, the battery must be disconnected while the ignition is on!
- All loads must be switched off beforehand! Remove ignition key!
- Never disconnect battery with engine running!
- Never start engine without a securely connected battery!
- To prevent damage to the battery, the battery terminal clamps should only be attached by hand - without excessive force.
- Check that the battery is seated correctly after installation. A loose battery presents other dangers, such as: - Reduced service life due to vibration damage. - Noises. - Damage to the battery housing from mounting parts. - Inadequate crash safety.

WM 2706IN GENERAL INFORMATION ON AGM VEHICLE BATTERY (ALL MODELS) > NOTES ON REMOVING AND INSTALLING THE BATTERY > OPERATING PRINCIPLE OF CENTRAL VENTING

Information

- State-of-the-art batteries have central venting -A- .
- In certain battery states, the gas produced during charging can emerge centrally through an opening on the upper cover side. Backfire protection is integrated at the same position and prevents the combustible gas in the battery from igniting.
- On batteries with a vent hose -A- , check that the vent hose is not disconnected or pinched. Only then can the battery be freely vented.

Fig 1: Identifying Battery Vent Hose

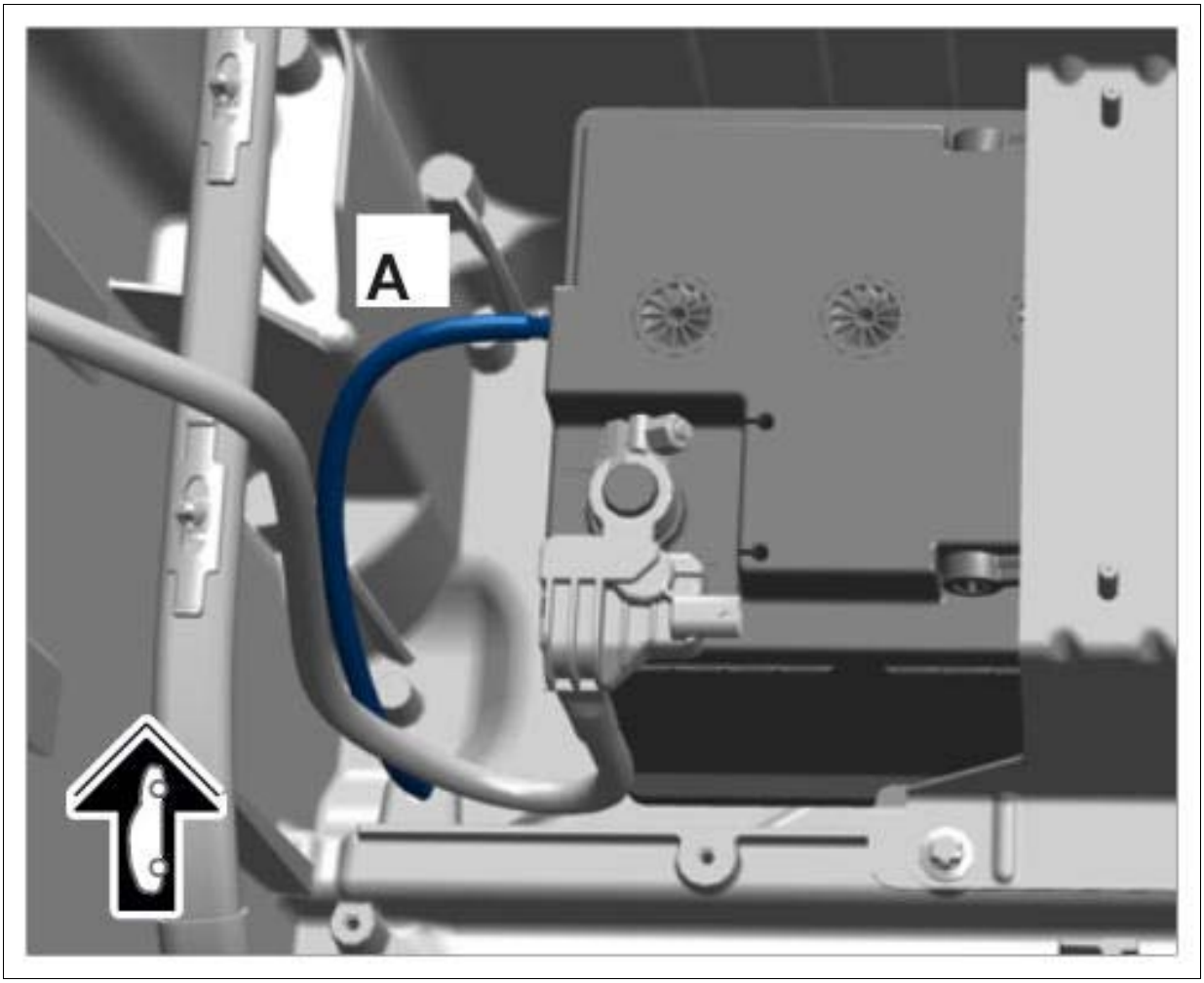

Courtesy of PORSCHE CARS NORTH AMERICA, INC.

WM 2706IN GENERAL INFORMATION ON AGM VEHICLE BATTERY (ALL MODELS) > VISUAL INSPECTION

A visual inspection of the battery must be performed before taking measurements, e.g. measuring the open-circuit voltage, or before carrying out the battery load test.

This test can be used to determine:

- Whether the battery housing is damaged. Leak-free operation and function of the battery cannot be guaranteed if the housing is damaged.
- Whether the battery terminals (battery line connections) are damaged. The line connections might not make contact if the battery terminals are damaged. This can cause the lines to catch fire and can result in malfunctions in the electrical system.

WM 2706IN GENERAL INFORMATION ON AGM VEHICLE BATTERY (ALL MODELS) >

CHECKING BATTERY VENT HOSE

Information

- Make sure that the vent hose -A- is not kinked or damaged. If in doubt, replace it.
- The vent hose -A- must be inserted in the battery and in the battery box.

Fig 1: Identifying Vent Hose (Panamera)

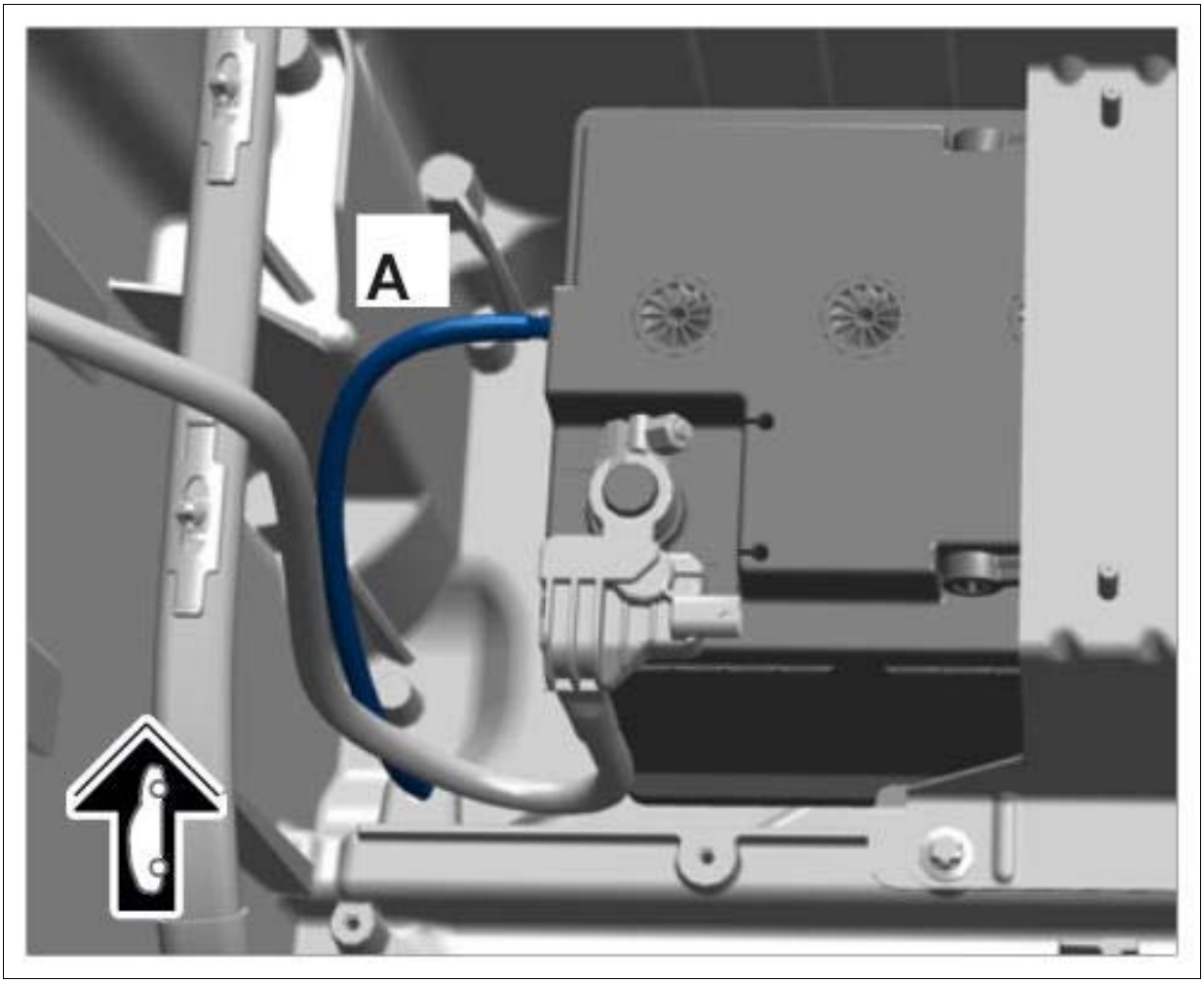

Courtesy of PORSCHE CARS NORTH AMERICA, INC.

WM 2706IN GENERAL INFORMATION ON AGM VEHICLE BATTERY (ALL MODELS) > OPEN-CIRCUIT VOLTAGE MEASUREMENT

Information

- Compared with the value from PIWIS Tester II 9818, the battery voltage can be measured using a hand-held multimeter.
- Proceed as follows:

Information

The open-circuit voltage measurement should be read out using **PIWIS Tester II 9818** in the **Gateway** control unit by selecting **Energy management, Quick closed-circuit current measurement** in the menu.

1. Switch off ignition and remove ignition key.
2. Disconnect ground strap on the battery.

   Information

   1. After charging and waiting for at least 2 hours, during which time the battery should neither be loaded nor charged:
3. Measure the battery voltage with a hand-held multimeter.
   1. The battery open-circuit voltage should not fall below 12.5 V.
   2. If the hand-held multimeter shows 12.5 V or more, the battery voltage is OK.
   3. If the hand-held multimeter shows a battery voltage below 12.5 V: Charge the battery.

Charging the battery

WARNING: Highly inflammable or explosive materials

- *Danger of fire or explosion*

→ Avoid contact with hot parts or sources of ignition.

→ Use suction to remove ignitable vapors.

→ Attach warning sign in a clearly visible position.

Information

- A battery charger is required.
- Read operating instructions for the charger.
- The battery must have a minimum temperature of 0 °C.
- If possible, do not rapid-charge batteries as this can damage them.
- If exhaustively discharged batteries are charged quickly, they will not take up a charge current or they will be identified too early as full due to the so-called "surface charge".

NOTE: A battery charger for providing an external power supply or for jump-lead starting is connected directly to the battery in the vehicle.

- *Risk of damage to the battery sensor.*
- *Battery sensor sends incorrect battery values to the vehicle electrical system.*

→ Always connect a battery charger for providing an external power supply or for jump-lead starting to the defined connections in the engine compartment. → 2X00IN BATTERY TRICKLE CHARGING

1. Switch off the battery charger.
2. Switch off ignition and remove ignition key.
3. Connect cables from the charger to the external power supply points.
4. Set the charge current on the battery charger according to the battery capacity.
5. Switch on the battery charger.

   Procedure for charging exhaustively discharged batteries:

   Batteries that have not been used for a long time discharge automatically.

   A battery is exhaustively discharged if the open-circuit voltage has dropped below 11.6 V, see OPEN-CIRCUIT VOLTAGE MEASUREMENT

   In exhaustively discharged batteries, the battery acid (sulfuric acid and water mixture) consists of virtually only water, as the sulfuric acid proportion is considerably reduced.

   Exhaustively discharged batteries sulphatise, i.e. the entire plate surfaces of the batteries harden.

   If exhaustively discharged batteries are immediately recharged after an exhaustive discharge, the sulphatisation recedes again.

   If these batteries are not recharged, the plates continue to harden and charge take-up ability is limited. This results in reduced battery performance.

   Exhaustively discharged batteries must be charged using a low charge current as follows:

   1. Set the charge current to maximum 10% of battery capacity, i.e. with a 95 AH battery, the charge current is max. 9.5 A.

6. Charge the battery.

WM 2706IN GENERAL INFORMATION ON AGM VEHICLE BATTERY (ALL MODELS) > BATTERY TRICKLE CHARGING

Information

- When working or carrying out tests on the vehicle or when the vehicle is in the workshop, a battery charger with a rated current of at least 40 A must be connected.
- As soon as the vehicle is unlocked, e.g. the vehicle is in the workshop or salesroom, it must be trickle charged with a battery charging device.

1. Switch off the battery charger.
2. Switch off ignition and remove remote control (hand-held transmitter).
3. Switch off all electrical loads (e.g. lights).

4. Open protective cover on the positive terminal for jump-lead starting.
5. First, connect the positive cable to the positive terminal for jump-lead starting, then to the positive terminal of the donor battery.
6. First, connect the negative cable to the negative terminal of the donor battery, then to the ground point for jump-lead starting.
7. Set the charge current on the battery charger according to the battery capacity.
8. Switch on the battery charger.

WM 2706IN GENERAL INFORMATION ON AGM VEHICLE BATTERY (ALL MODELS) > CONNECTING THE BATTERY FOR TRICKLE CHARGING

A charger with a current rating of at least 40 A must be connected to the external power supply points/jump-lead starting points.

Set the charger to maximum A (amps).

Switch off all unnecessary loads (e.g. lights).

When working on the vehicle for more than 15 minutes.

When running diagnostics using the Porsche System Tester.

When adjusting the headlights.

When working on or with the Infotainment system.

If the doors, bonnet and rear lid are open for a long period of time or if these components are actuated frequently.

WM 272219 REMOVING AND INSTALLING GENERATOR (MACAN) > PRELIMINARY WORK

1. Disconnect the battery. → Removing Battery
2. Remove engine cover.
3. Loosen drive belt. → Removing Drive Belt

WM 272219 REMOVING AND INSTALLING GENERATOR (MACAN) > REMOVING GENERATOR

1. Remove the generator.
    1. 1.1. Release and disconnect electric connector **-1-** .
    2. 1.2. Unscrew nut **-2-** and remove B+ line **-3-** .

3. 1.3. Unscrew screws **-4-** and remove the generator.

Fig 1: Identifying Generator Electric Connector Nut And Screw

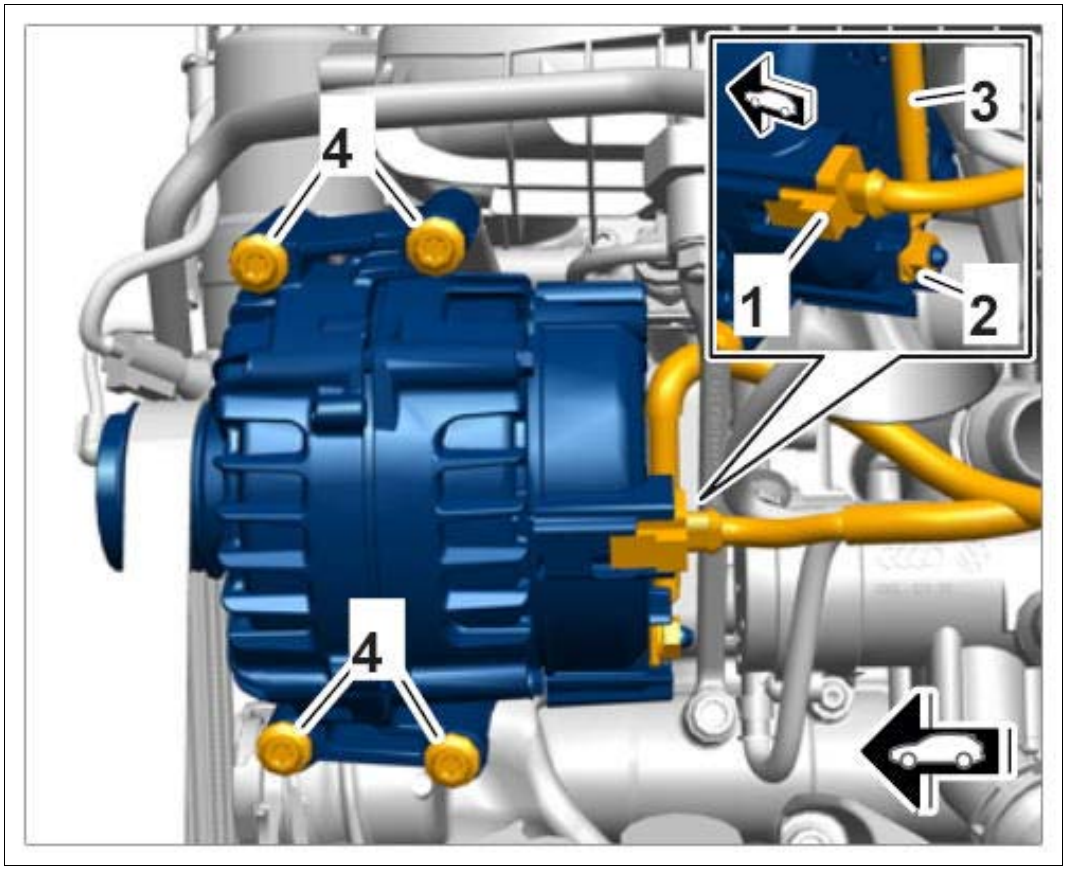

Courtesy of PORSCHE CARS NORTH AMERICA, INC.

WM 272219 REMOVING AND INSTALLING GENERATOR (MACAN) > INSTALLING GENERATOR

1. Installation is performed in reverse order. Pay particular attention to the following:
    1. 1.1. Tightening torque for nut on B+ line:
    2. 1.2. Tightening torque for screws on generator:

WM 272219 REMOVING AND INSTALLING GENERATOR (MACAN) > SUBSEQUENT WORK

1. Secure the drive belt. → Installing Drive Belt
2. Install engine cover.
3. Connect the battery. → Installing Battery

WM 276019 REMOVING AND INSTALLING STARTER (MACAN) > TECHNICAL VALUES

Location	Description	Type	Basic value	Tolerance 1	Tolerance 2
Fastening screw	Engine support	Tightening torque	40 Nm (30 ftlb.)		
Fastening screw for starter (transmission side)	Replace	Initial tightening	30 Nm (22 ftlb.)		
Fastening screw for starter (transmission side)	Replace	Final tightening	+105°	+/-30°	
Fastening nut on B+ line		Tightening torque	15 Nm (11 ftlb.)		
Fastening screw for starter (engine side)		Tightening torque	65 Nm (48 ftlb.)		

WM 276019 REMOVING AND INSTALLING STARTER (MACAN) > PRELIMINARY WORK

1. Disconnect battery ground terminal. → Removing Battery
2. Remove turbocharger. → Removing Turbocharger
3. Remove right engine mount. → Removing engine mount
4. Remove support for engine mount **-2-** at the right.
    1. 4.1. Unscrew screws **-arrows-** and remove support.

Fig 1: Locating Engine Mount Support Screws

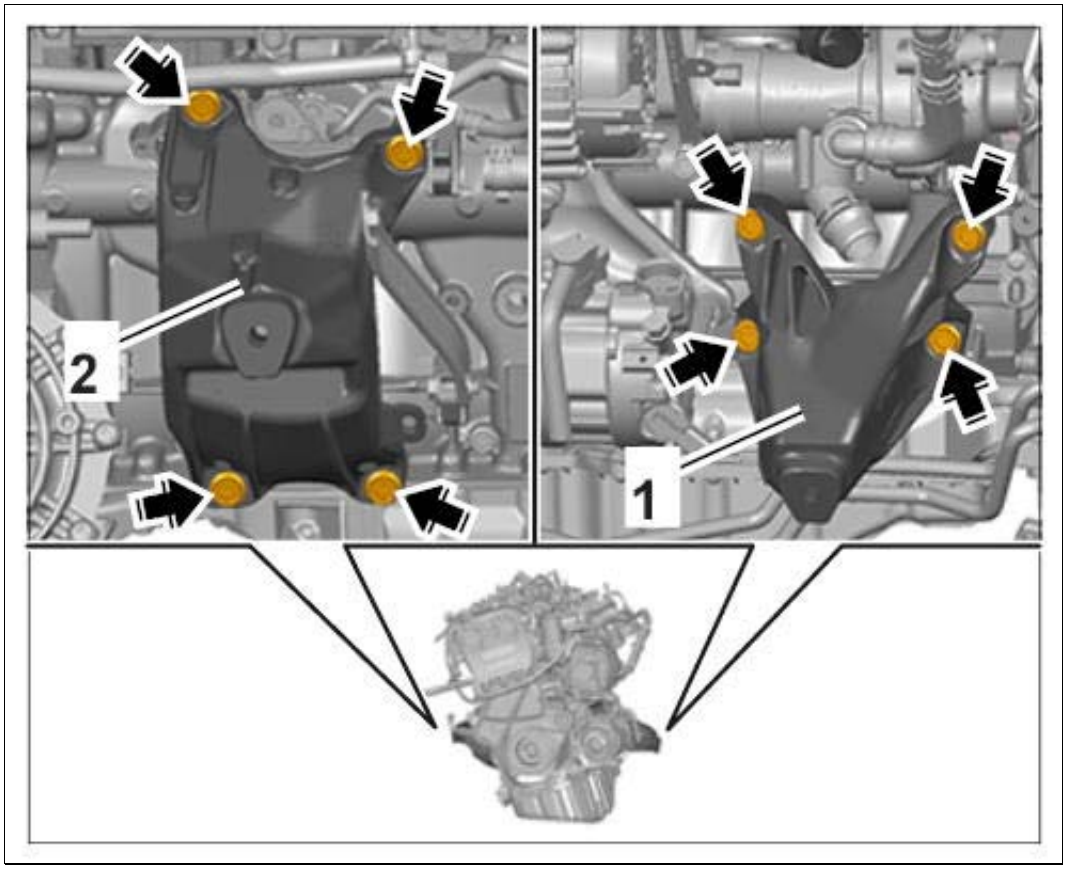

Courtesy of PORSCHE CARS NORTH AMERICA, INC.

WM 276019 REMOVING AND INSTALLING STARTER (MACAN) > REMOVING STARTER

1. Remove starter.

    1. 1.1. Release and disconnect electric connector **-1-** .
    2. 1.2. Unscrew nut **-2-** and remove B+ line **-3-** .
    3. 1.3. Unscrew screw -4 - at the top and remove spacer sleeve **-5-** .
    4. 1.4. Unscrew screw **-6-** at the bottom.
    5. 1.5. Remove the starter **-7-** .

Fig 1: Identifying Starter Electric Connector Nut And Screw

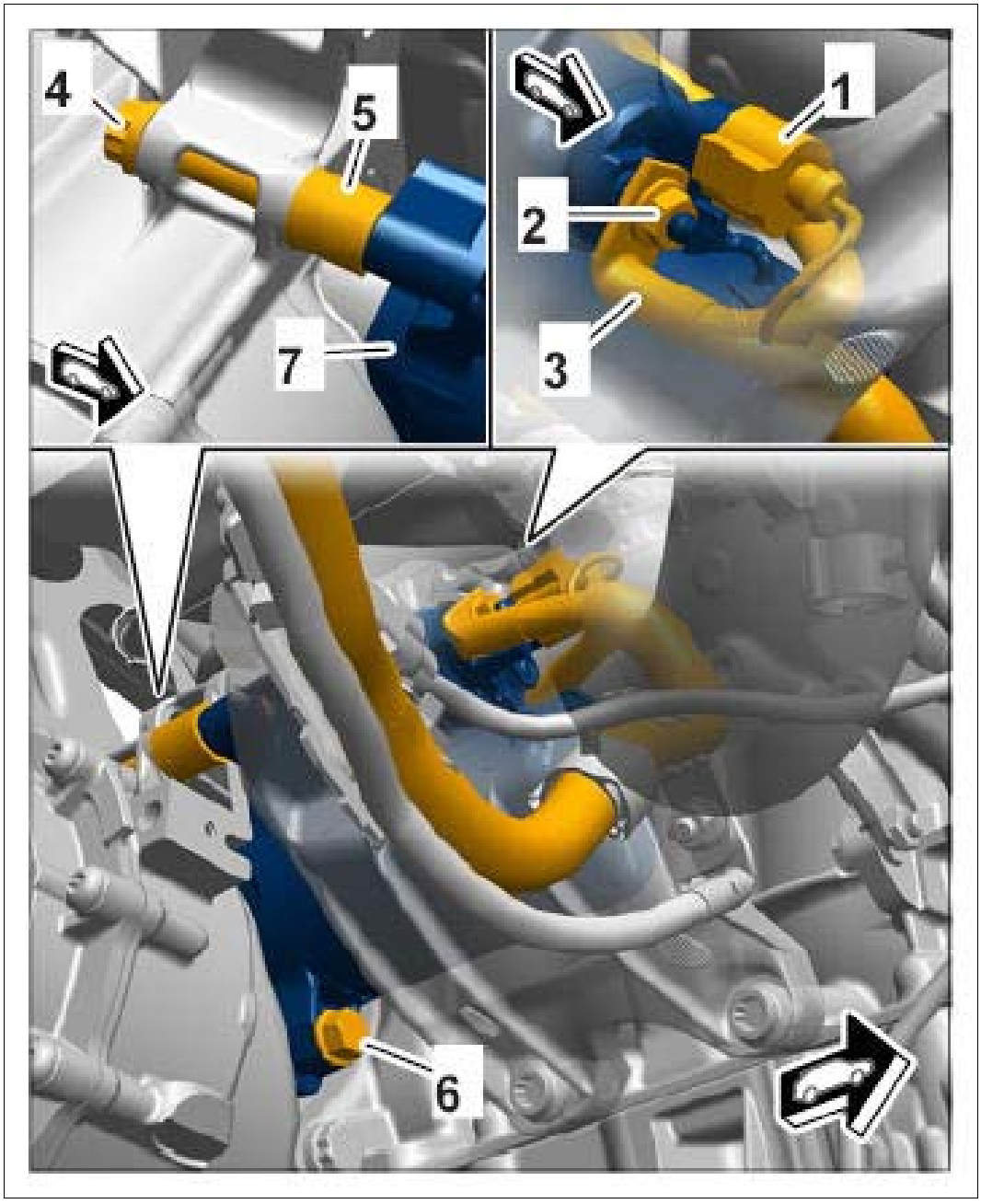

Courtesy of PORSCHE CARS NORTH AMERICA, INC.

WM 276019 REMOVING AND INSTALLING STARTER (MACAN) > INSTALLING STARTER

1. Installation is performed in reverse order. Pay particular attention to the following:
    1. 1.1. Position spacer sleeve.
    2. 1.2. Tightening torque for starter (top): **Initial tightening 30 Nm (22 ftlb.) Final tightening +105° +/-30°**

Replace screw.

3. 1.3. Tightening torque for starter (bottom): **Tightening torque 65 Nm (48 ftlb.)**
4. 1.4. Tightening torque for nut on B+ line: **Tightening torque 15 Nm (11 ftlb.)**

WM 276019 REMOVING AND INSTALLING STARTER (MACAN) > SUBSEQUENT WORK

1. Install support for engine mount.
    1. 1.1. Tightening torque for securing support to engine: **Tightening torque 40 Nm (30 ftlb.)**
2. Install engine mount. → Installing engine mount
3. Install turbocharger. → Installing Turbocharger
4. Connect battery ground terminal. → Removing Battery

WM 278515 ADJUSTING CONTROL UNIT FOR DISTANCE MEASURING SENSOR (ALL MODELS) > TOOLS

Designation	Type	Number	Description	
wheel alignment system ML 5000 Porsche	Service equipment	WE 1272		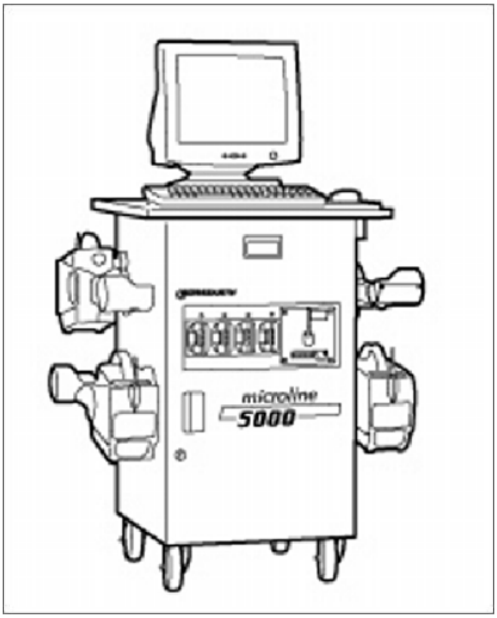

axle alignment system with DSP508XF sensors	Service equipment	WE 1328		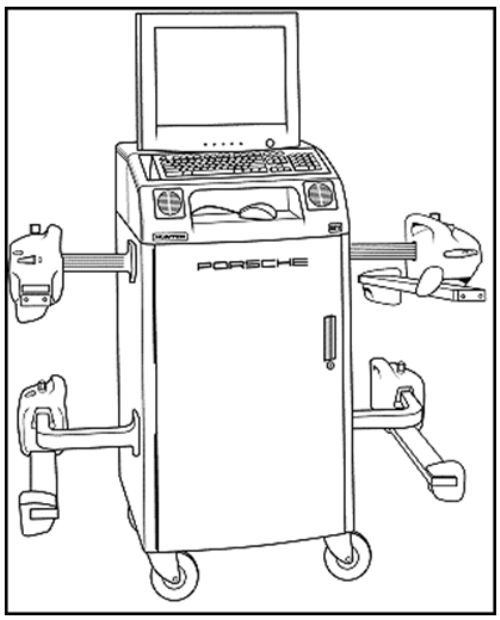
adjustment device with reflector VAS 6430/1	Service equipment	WE 1362		
T-socket wrench for ACC sensor VAS 6190/2	Service equipment	WE 1364		
PIWIS Tester II	Special tool	9818		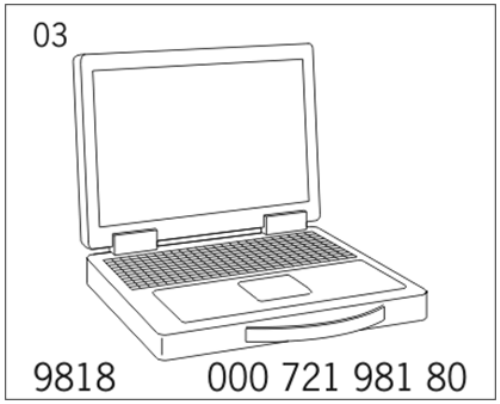

WM 278515 ADJUSTING CONTROL UNIT FOR DISTANCE MEASURING SENSOR (ALL MODELS) > PRELIMINARY WORK > WHEN DOES DISTANCE MEASURING SENSOR CONTROL UNIT NEED TO BE ADJUSTED?

The distance measuring sensor control unit must be re-adjusted in the following situations:

1. Suspension was aligned and adjusted.
2. Distance measuring sensor control unit or distance measuring sensor control unit holder was loosened or removed and installed.
3. Bumper was loosened or removed and installed.
4. The front end is damaged.
5. Fault memory entry: ACC sensor incorrectly adjusted (D00004).
    1. 5.1. The misalignment angle is outside of the range -1.5° to +1.5°.

WM 278515 ADJUSTING CONTROL UNIT FOR DISTANCE MEASURING SENSOR (ALL MODELS) > PRELIMINARY WORK > REQUIREMENTS FOR TESTING AND ADJUSTMENT

1. Tyre tread depth of the tires of one axle must not deviate by more than 2 mm.
2. Tyre inflation pressure in accordance with regulations ("Comfort" or "Normal" tire pressure).
3. As with complete suspension alignment, make sure that there is no sliding base or turnplate at the end stop during alignment.
    1. 3.1. Take the track width and wheel base into consideration.
4. Check that vehicle weight corresponds to empty weight. Weight of the vehicle ready for driving (completely full fuel tank, reducing agent tank and water reservoir for the windscreen washer/headlight cleaning system, spare wheel, tool kit, jack) without driver.
5. Spare wheel, tool kit and jack must be located at the positions specified by the vehicle manufacturer.
6. Vehicle aligned correctly, having been bounced multiple times.
7. Wheel suspension, steering and steering linkage show no signs of play or damage.
    1. 7.1. Check for play and damage and carry out repairs if necessary.
8. Set vehicles with air suspension to normal level.
    1. 8.1. Switch off ignition, close and lock all doors.
    2. 8.2. Wait 15 seconds until vehicle has settled in normal level.
    3. 8.3. Open door and leave it open during the measurement, switch on ignition.

WM 278515 ADJUSTING CONTROL UNIT FOR DISTANCE MEASURING SENSOR (ALL MODELS) > PRELIMINARY WORK > SETTING UP THE MEASURING SYSTEM

Information

Check that there is sufficient floor space between the vehicle and the adjustment device - the gap between the adjustment device and vehicle must be approx. 120 cm.

The vehicle can be reversed onto the axle alignment platform if there is not enough floor space in front of the measuring platform.

The vehicle must be positioned so that the front and rear axles are centered on turnplates/sliding plates.

Information

The procedure described here is for the **wheel alignment system ML 5000 Porsche WE 1272 and the axle alignment system with DSP508XF sensors WE 1328.**

Deviations can occur with other alignment systems.

1. Select **the relevant vehicle in the wheel alignment computer.**
2. Select quick function **Calibrate distance measuring sensor** .
3. Fit instrument holders onto the wheels on the rear axle.
4. Fit the rear sensors onto the rear axle using the spoiler adapter (Beissbarth only, this sets the sensors to a lower position).
5. Align the rear sensors on the rear axle using the spirit level and clamp the instrument holders using the wing screws.

   Information

   Once the vehicle and adjustment tool are aligned, the vehicle and adjustment tool must no longer be moved.

   1. The vehicle is standing on turnplates/sliding plates that are released on one side , allowing the vehicle to be moved slightly.
   2. If the vehicle is moved while taking measurements on the turnplates, the measurement process must be repeated.
   3. If the adjustment tool is moved following alignment, the measurement process must be repeated.
6. Attach the front sensors to the measuring mirror, align using the spirit level and clamp.

   1. 6.1. Centre the adjustment tool.
   2. 6.2. Set distance of adjustment tool and vehicle in accordance with the specifications provided by the measuring equipment manufacturer.
   3. 6.3. The distance between the left sensor and the vehicle **-Bl-** should be identical to the distance between the right sensor and the vehicle **-Br-** .

Fig 1: Identifying Right Sensor Dimension

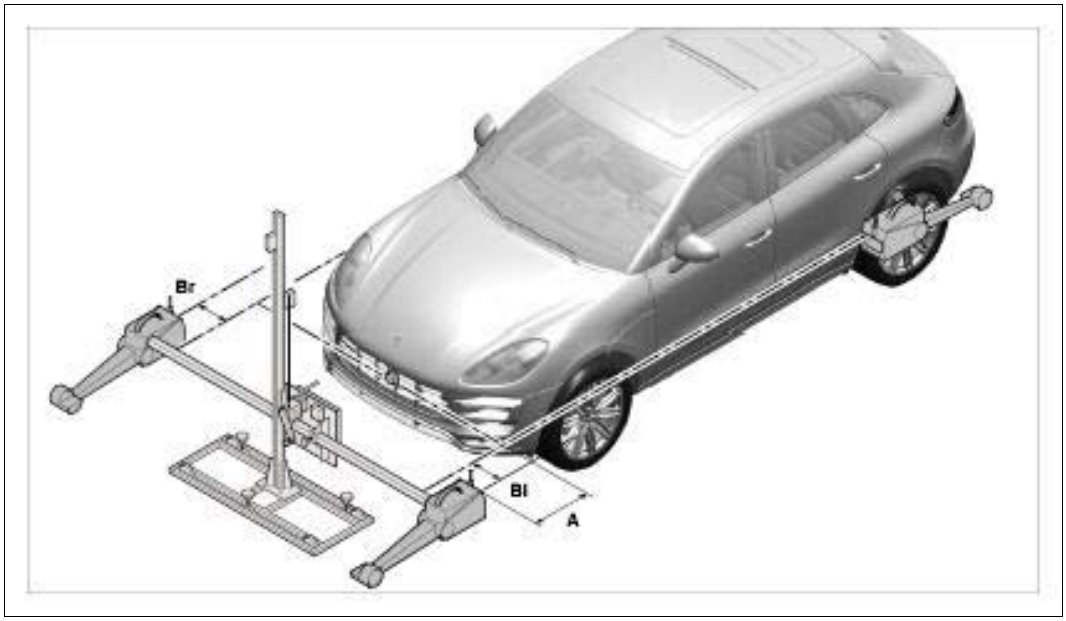

Courtesy of PORSCHE CARS NORTH AMERICA, INC.

7. Switch on (initialize) the sensors.

WM 278515 ADJUSTING CONTROL UNIT FOR DISTANCE MEASURING SENSOR (ALL MODELS) > PRELIMINARY WORK > PREPARATION FOR ADJUSTING DISTANCE MEASURING SENSOR

1. Connect a battery charger with a current rating of at least 40 A to the external power feed points.
2. Read out the fault memory using **PIWIS Tester II 9818** , create a vehicle analysis log if necessary → 0X03IN CREATING VEHICLE ANALYSIS LOG (VAL) and correct any faults.
3. Remove trim cover **-1-** from the distance measuring sensor control unit.
    1. 3.1. Push trim cover up **-a-** .
    2. 3.2. Pull trim cover forward and remove it **-b-** .

Fig 1: Removing Trim Cover

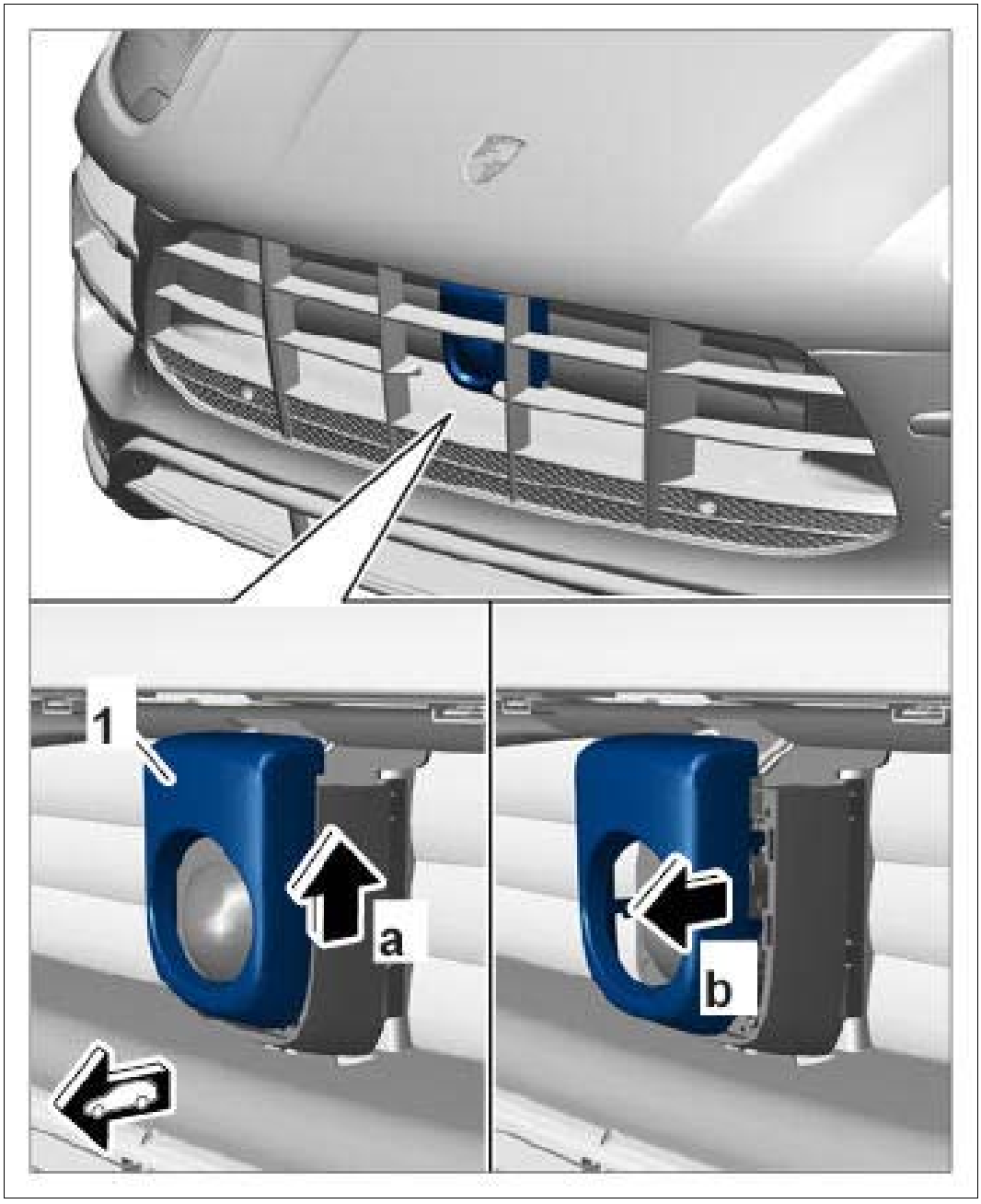

Courtesy of PORSCHE CARS NORTH AMERICA, INC.

4. Clean distance measuring sensor control unit and trim cover using commercially available cleaning agent.

5. Fit the front sensors onto the adjustment device, align using the spirit levels and clamp using the wing screws, and switch them on (initialize).

6. Set the distance between the **adjustment device with reflector VAS 6430/1 WE 1362** and the **vehicle** in accordance with the specifications provided by the measuring equipment manufacturer.

    1. 6.1. The distance between the left sensor and the vehicle **-Bl-** should be identical to the distance between the right spirit level and the vehicle **-Br-** .

Fig 2: Identifying Right Sensor Dimension

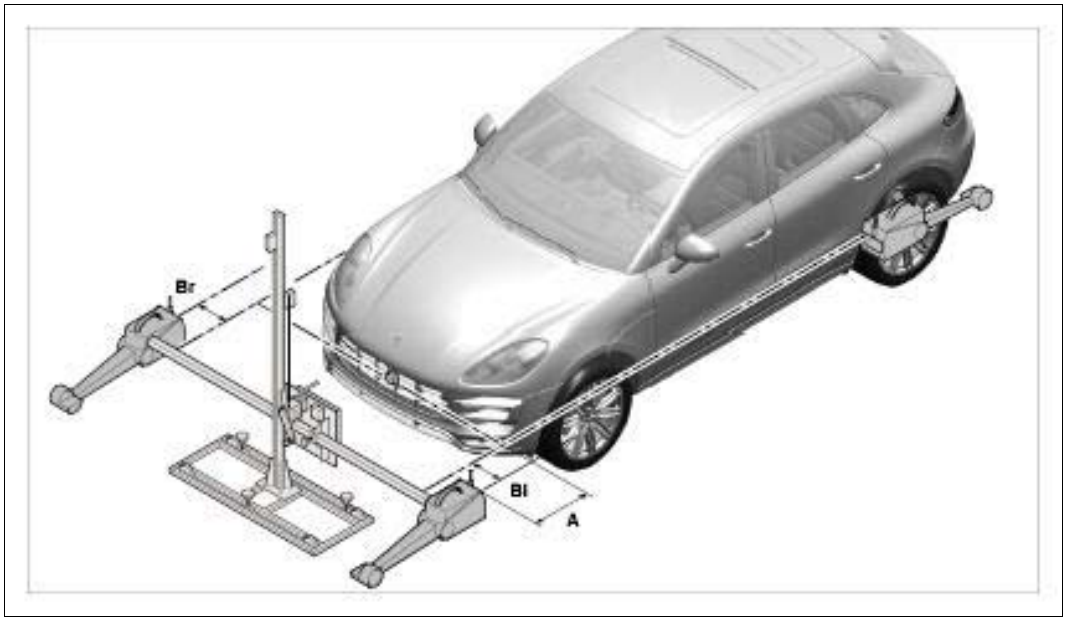

Courtesy of PORSCHE CARS NORTH AMERICA, INC.

7. On the adjustment device, move the mirror into the position **-2-** in alignment with the marking (**-A-** the number 2 on the rotary knob must point towards the vehicle).

Fig 3: Identifying Adjustment Device Position

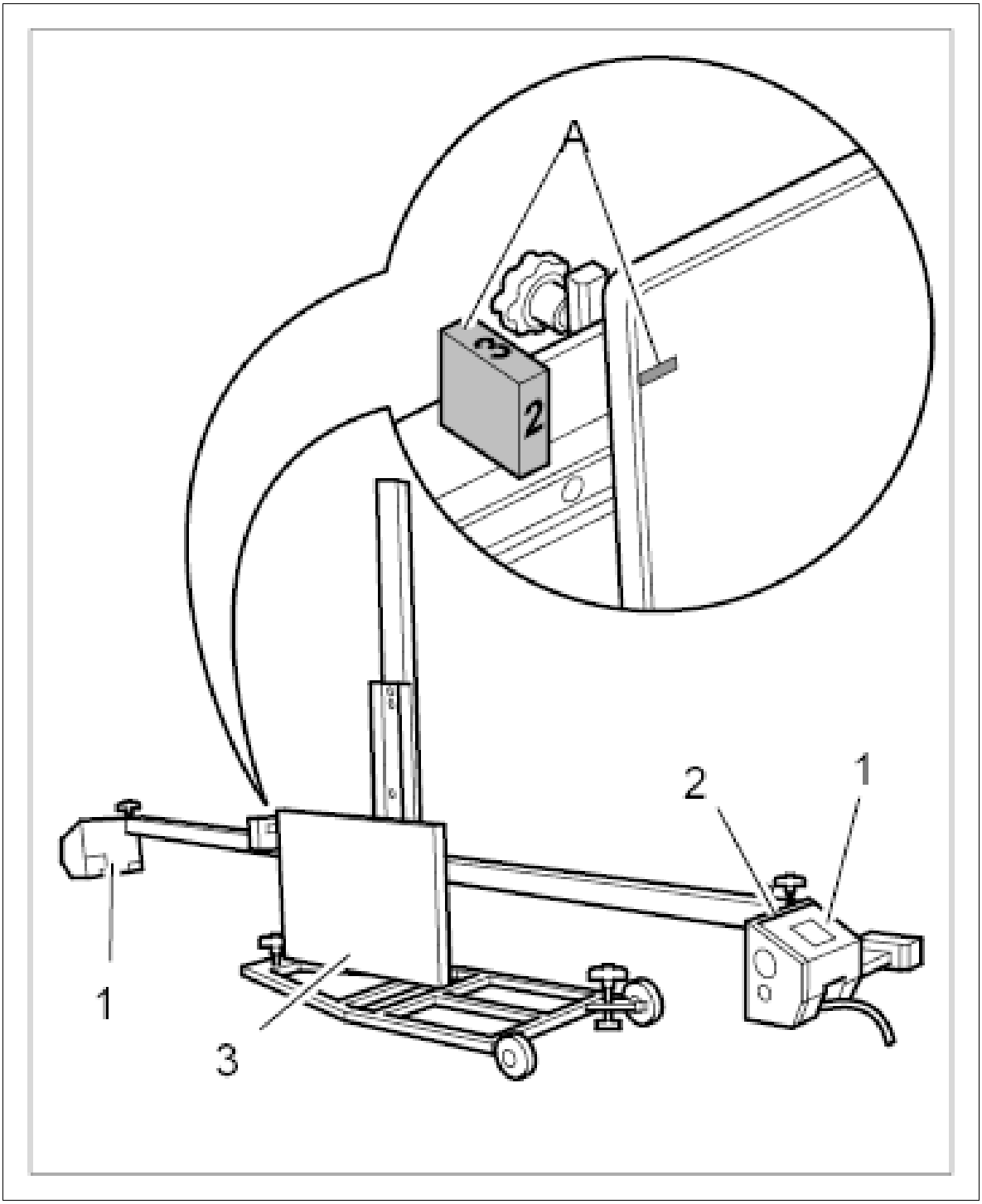

Courtesy of PORSCHE CARS NORTH AMERICA, INC.

Information

Once the vehicle and adjustment tool are aligned, the vehicle and adjustment tool must no longer be moved.

1. The vehicle is standing on turnplates/sliding plates that are released on one side, allowing the vehicle to be moved.

2. If the vehicle is moved while taking measurements on the turnplates, the measurement process must be repeated.

3. If the adjustment tool is moved following alignment, the measurement process must be repeated.

8. Release turnplates/sliding plates on **one side of the vehicle** .

9. Start the menu for adjusting the distance measuring sensor control unit, see **operating instructions for measuring platform** .

10. Before starting the adjustment process, use the laser beam at the mirror **-3-** on the adjustment device (for switching on the laser beam, see operating instructions for adjustment device) to check that the laser beam strikes the sensor lens. Info:

    1. 10.1. The adjustment device is positioned correctly if the laser beam still strikes the sensor lens even after the identical individual toe values have been set.

    2. 10.2. If the laser beam does not strike the sensor lens, the alignment of the adjustment device must be repeated.

Fig 4: Identifying Adjustment Device Position

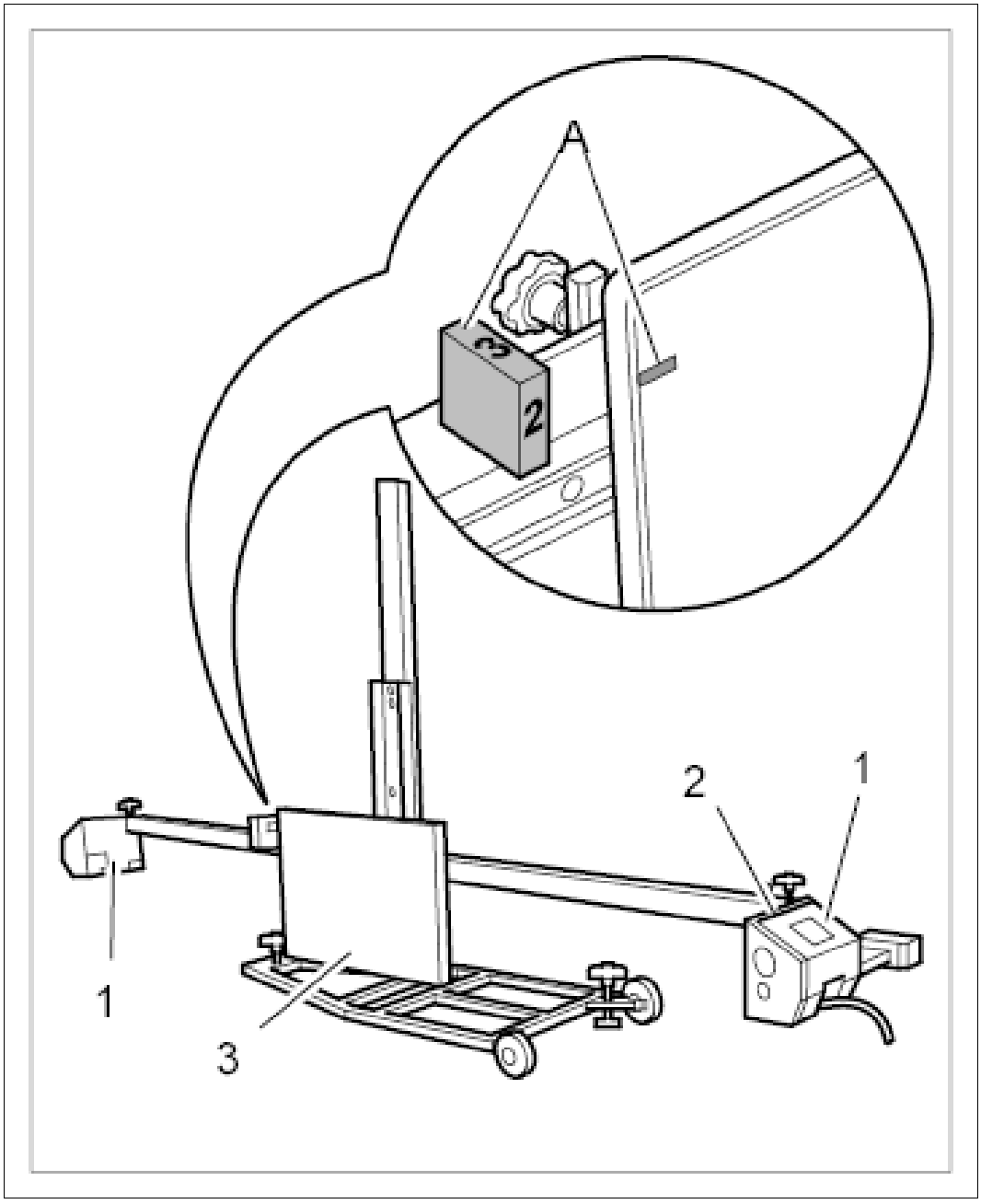

Courtesy of PORSCHE CARS NORTH AMERICA, INC.

11. Align adjustment device at the side:

    1. 11.1. The laser beam of the adjustment device must strike the center of the sensor lens.

Fig 5: Aligning Adjustment Device

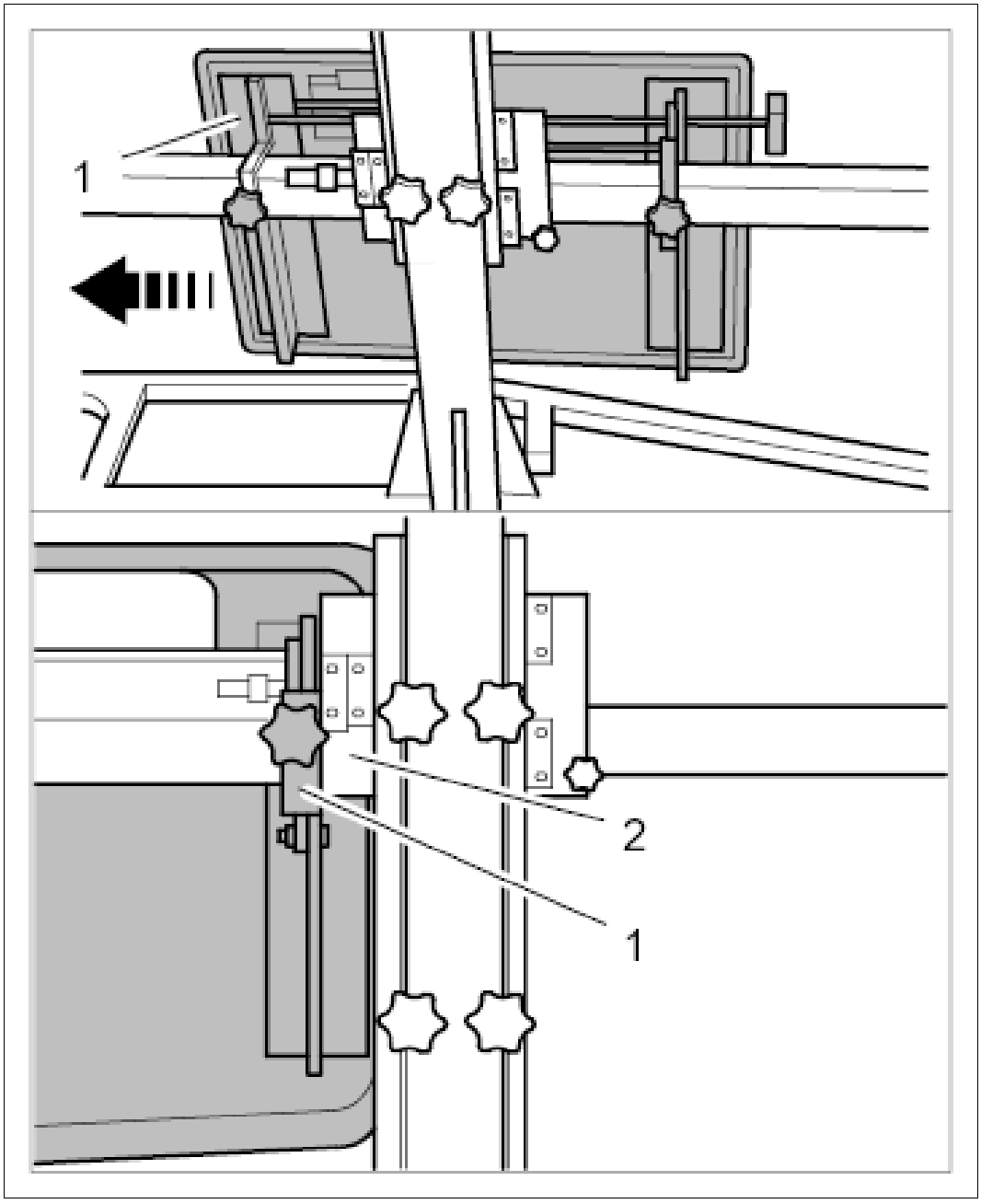

Courtesy of PORSCHE CARS NORTH AMERICA, INC.

12. Use the adjusting screws **-1, 2, 3, 4, 5-** on the adjustment device to level the mirror's spirit levels **-A, B-** horizontally.

13. Use the crank **-arrow-** on the adjustment device to adjust the mirror so that the laser beam strikes the center of the sensor lens on the vertical line.

Fig 6: Aligning Mirror's Spirit Levels

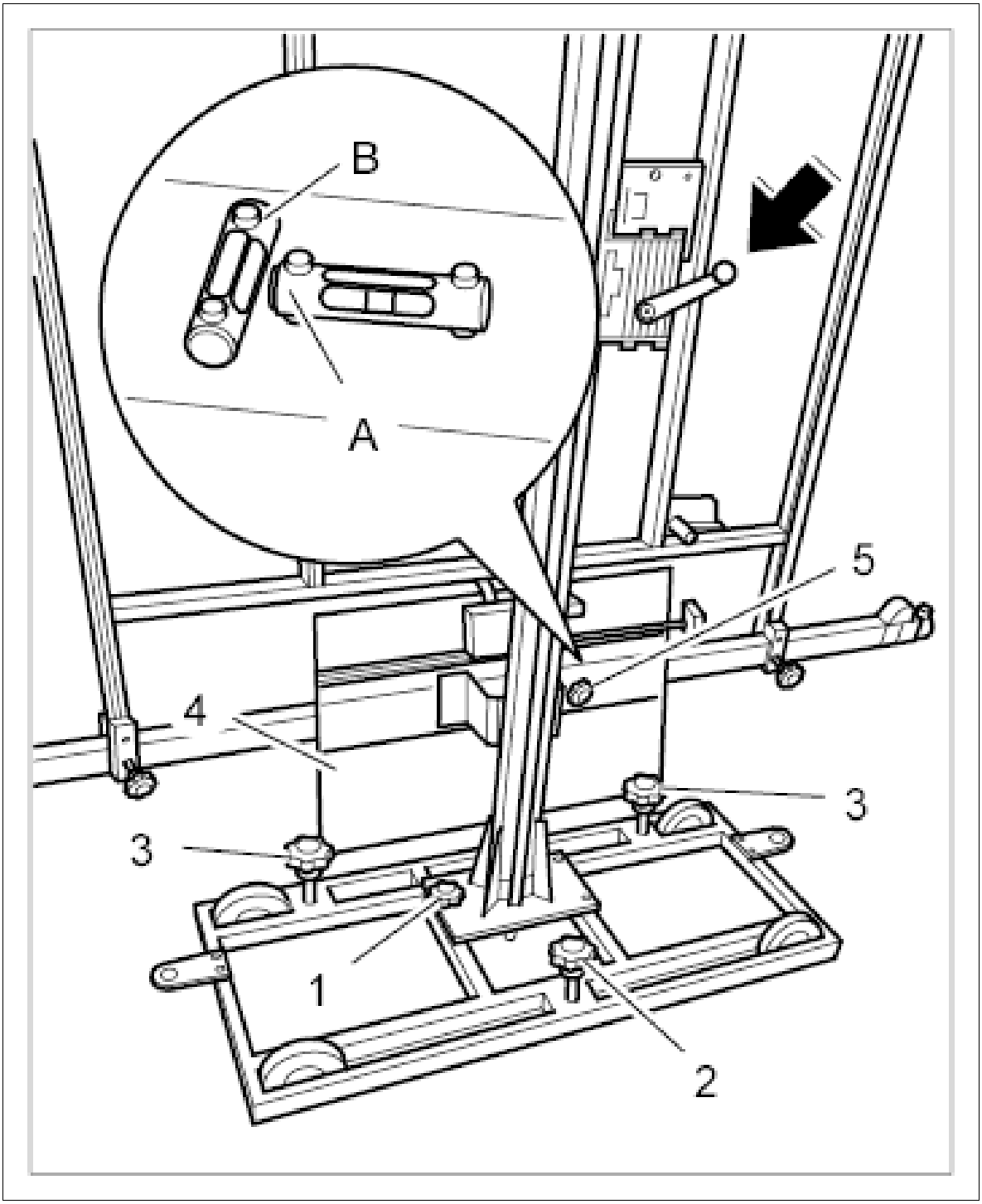

Courtesy of PORSCHE CARS NORTH AMERICA, INC.

14. Turn the adjustment bar on the adjustment device to the side using the adjustment screw **-5-** until the green indicator on the adjustment bar is displayed on the measuring platform screen.

Fig 7: Example Of Adjustment Bar Display

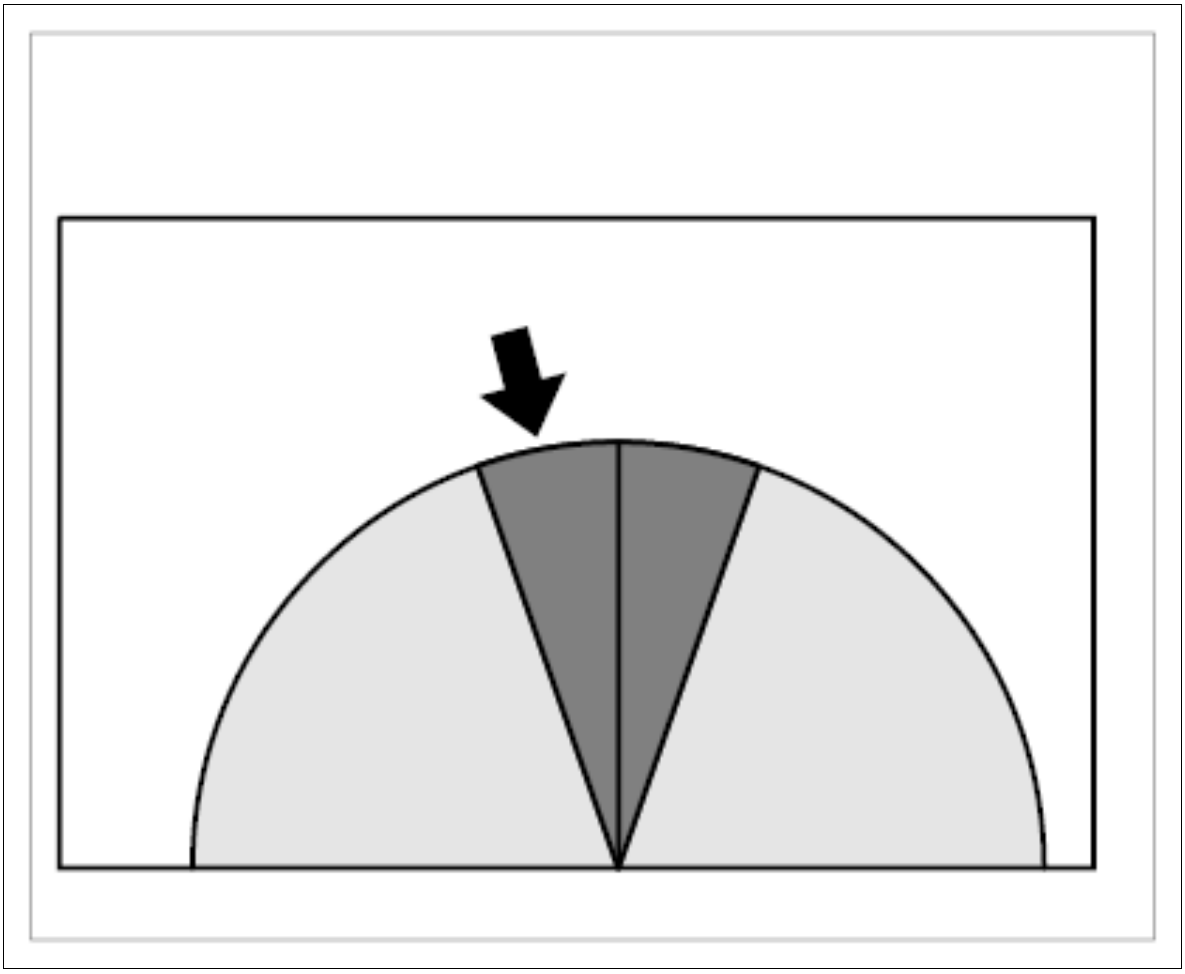

Courtesy of PORSCHE CARS NORTH AMERICA, INC.

Fig 8: Example Of Hunter Display

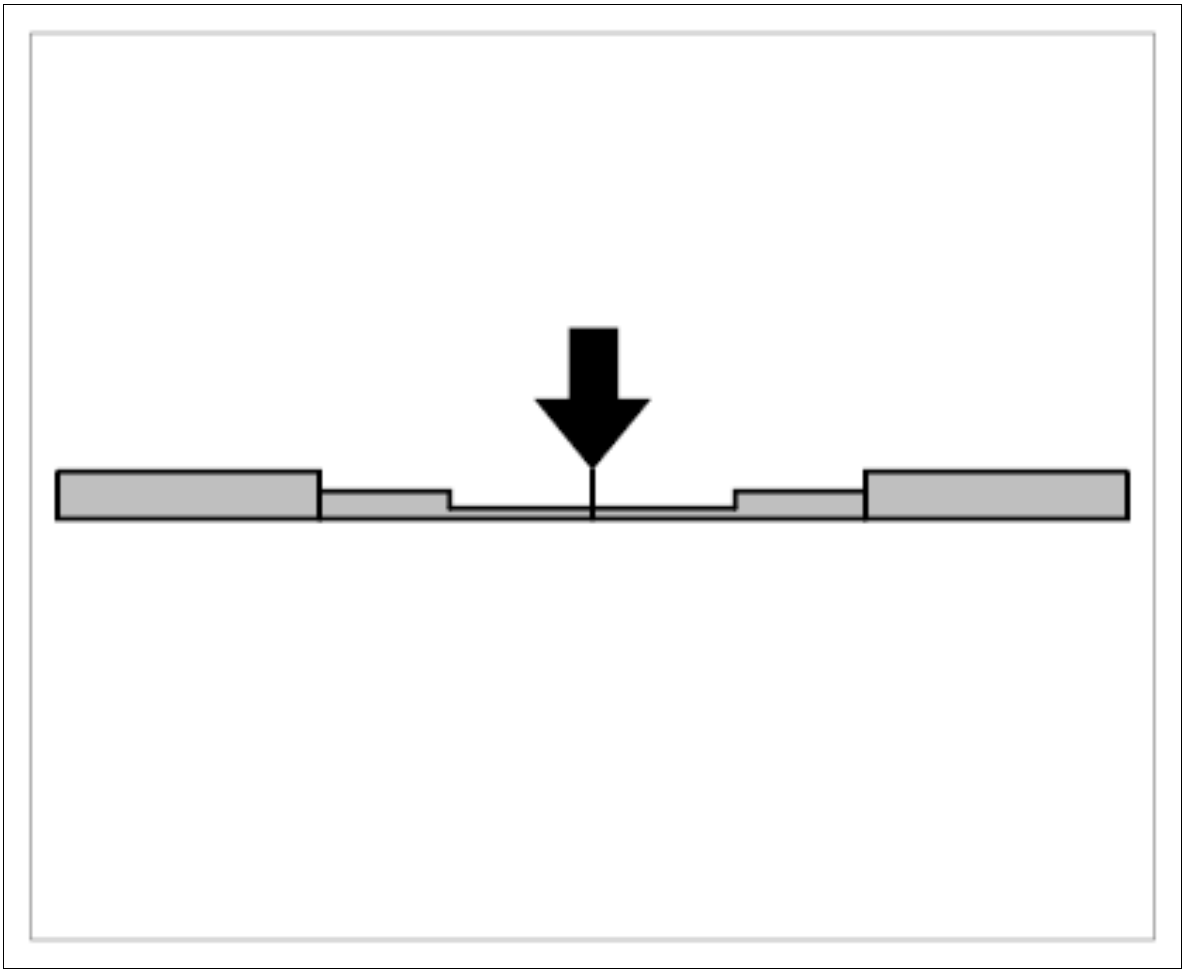

Courtesy of PORSCHE CARS NORTH AMERICA, INC.

WM 278515 ADJUSTING CONTROL UNIT FOR DISTANCE MEASURING SENSOR (ALL MODELS) > ADJUSTING CONTROL UNIT FOR DISTANCE MEASURING SENSOR

1. Connect **PIWIS Tester II 9818** to the vehicle and start it.
2. Switch on ignition.
3. Select the required vehicle and the **Adaptive cruise control** control unit. Press [F12] to continue.
4. Select the **Maintenance/repairs** sub-menu in the **Adaptive cruise control** menu. Press [F12] to continue.
5. Follow the instructions on **PIWIS Tester II 9818** and adjust the distance measuring sensor control unit **-1-** as required using adjustment tool **T-socket wrench for ACC sensor VAS 6190/2 WE 1364 -2-** by turning the relevant adjusting screw **-3-** according to specifications.

Fig 1: Identifying Sensor Control Unit Adjusting Screws

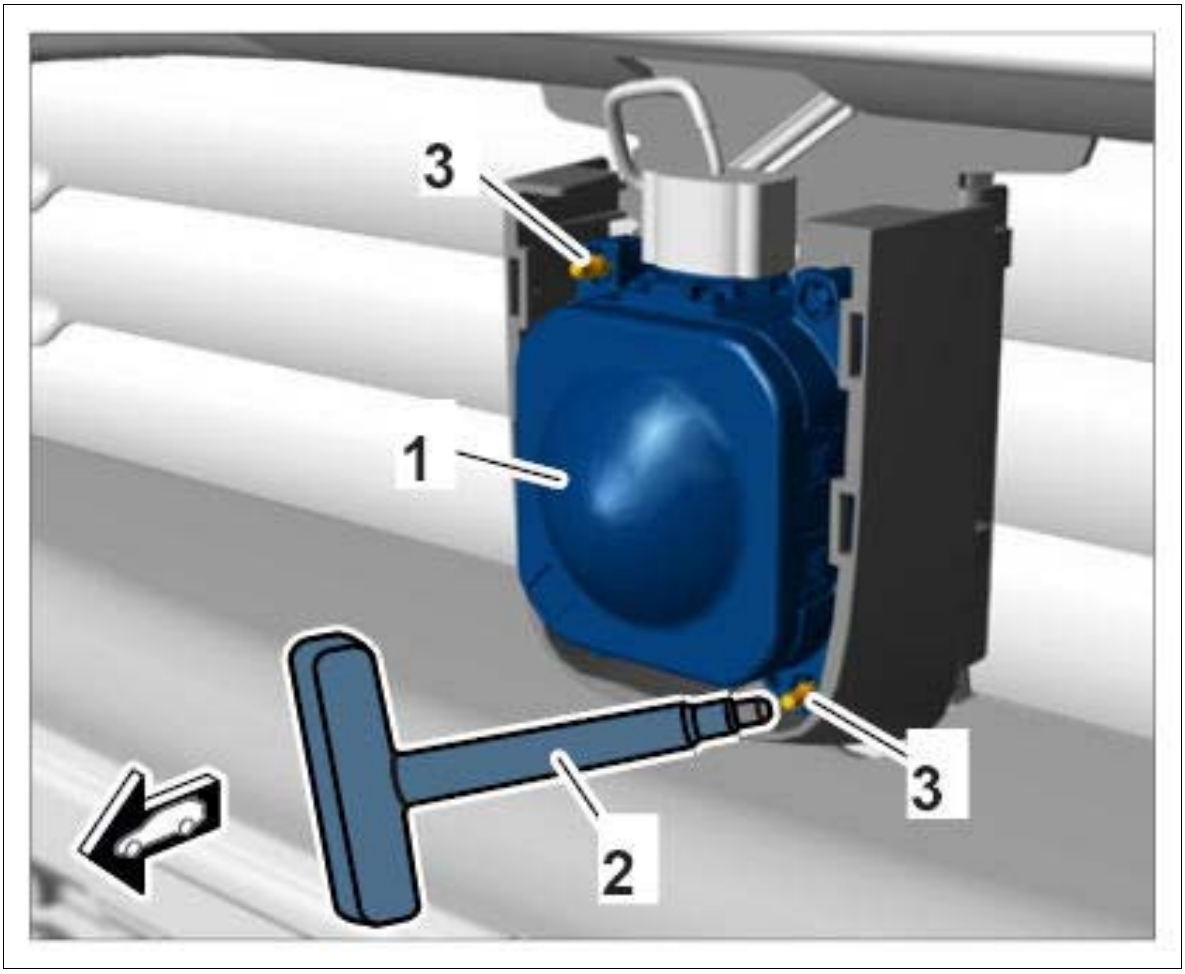

Courtesy of PORSCHE CARS NORTH AMERICA, INC.

6. Repeat the process until PIWIS Tester II 9818 displays the message Adjustment successful.

WM 278515 ADJUSTING CONTROL UNIT FOR DISTANCE MEASURING SENSOR (ALL MODELS) > SUBSEQUENT WORK

1. Switch off ignition and pull remote control out of ignition lock.
2. **PIWIS Tester II 9818** must now be disconnected from the vehicle.
3. Disconnect battery charger.
4. Remove sensors and instrument holders.

   Information

   Before and after fitting the trim cover for the distance measuring sensor control unit, check the following points:

   1. The holder for the distance measuring sensor control unit must not show any signs of deformation, which may have been caused, for example, by removing or installing the trim

cover for the distance measuring sensor control unit. If the holder for the distance measuring sensor control unit is deformed, carefully push it back into shape.

2. If the trim cover is damaged or cracked, replace the trim cover.

3. After fitting the trim cover, check that it is seated correctly and securely.

5. Install trim cover **-1-** on the distance measuring sensor control unit.

1. 5.1. Fit trim cover **-a-** .

2. 5.2. Push trim cover down **-b-** until it engages securely.

Fig 1: Installing Trim Cover On Distance Measuring Sensor Control Unit

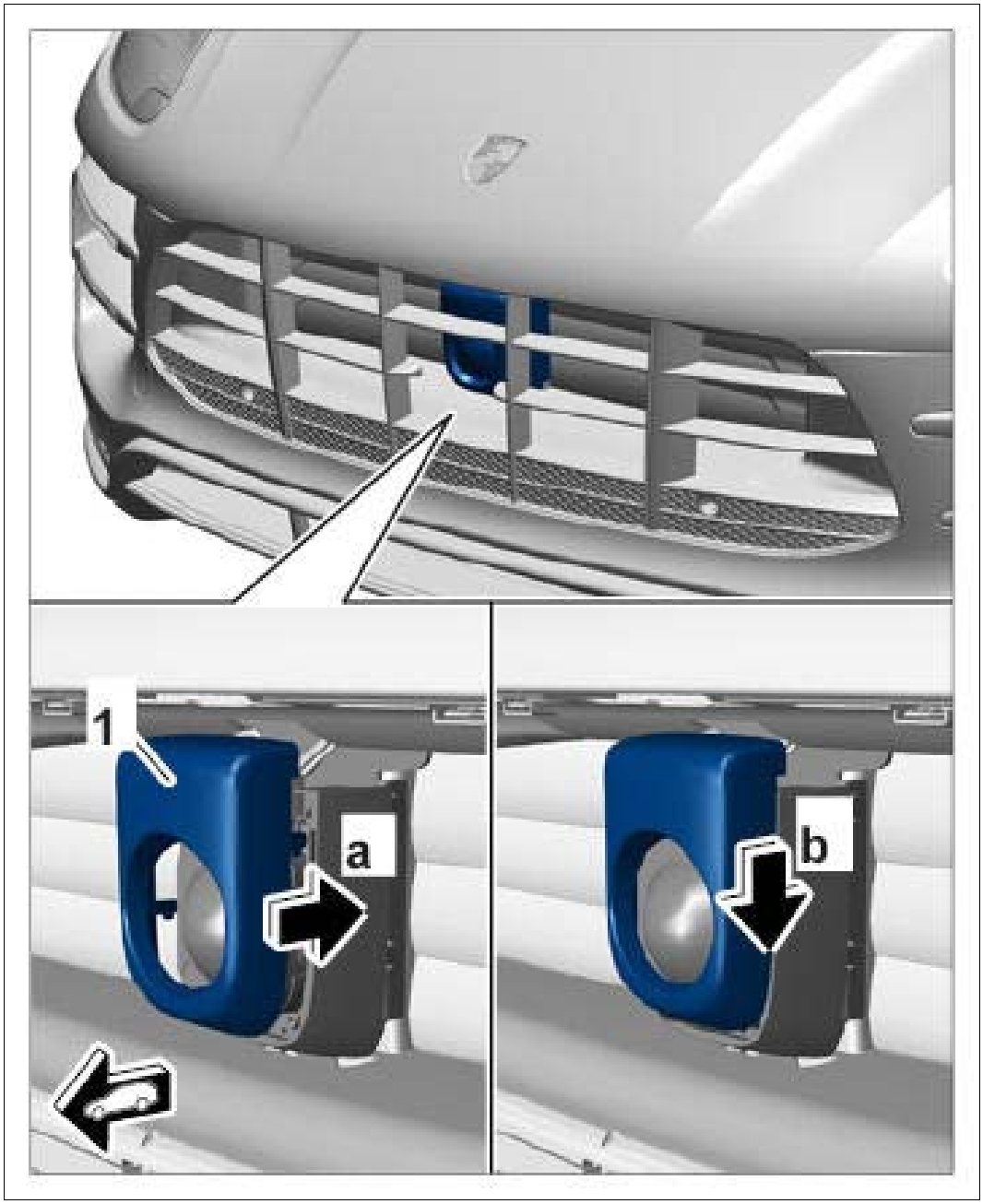

Courtesy of PORSCHE CARS NORTH AMERICA, INC.

6. Perform a test drive and check operation of distance measuring sensor control unit.

7. Read out the fault memory of the distance measuring sensor control unit.

WM 278519 REMOVING AND INSTALLING CONTROL UNIT FOR DISTANCE MEASURING SENSOR (ALL MODELS) > TECHNICAL VALUES

Location	Description	Type	Basic value	Tolerance 1	Tolerance 2
Holder for distance measuring sensor control unit to closing panel	Internal Torx screw, M6 x 12	Tightening torque	8 Nm (6 ftlb.)		
Holder for distance measuring sensor control unit, lower to plastic bracket	Internal Torx screw, Ø 5 x 16	Tightening torque	2.5 Nm (2 ftlb.)		

WM 278519 REMOVING AND INSTALLING CONTROL UNIT FOR DISTANCE MEASURING SENSOR (ALL MODELS) > PRELIMINARY WORK

1. Remove front apron. → Removing Front Apron

WM 278519 REMOVING AND INSTALLING CONTROL UNIT FOR DISTANCE MEASURING SENSOR (ALL MODELS) > REMOVING CONTROL UNIT FOR DISTANCE MEASURING SENSOR

NOTE: Voltage peaks

- *Risk of damage to load or to the control unit*

→ Remove the ignition key and switch off load before disconnecting or removing load.

1. Switch off ignition and pull remote control out of the ignition lock.
2. Disengage trim cover **-1-** at the left and right of the holder **-2-** for the distance measuring sensor control unit **-3-** and remove it.

Fig 1: Removing Distance Measuring Sensor Control Unit Cover

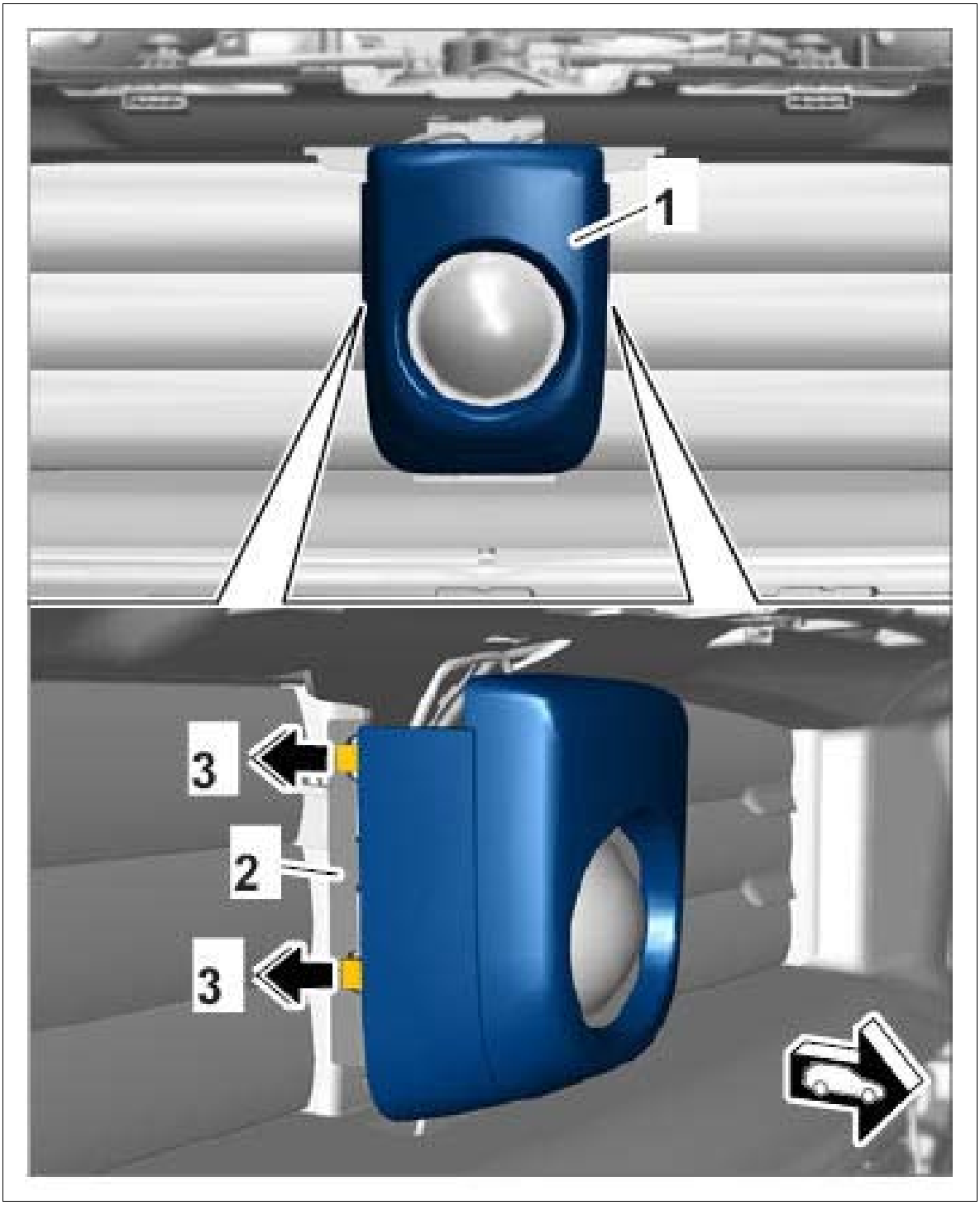

Courtesy of PORSCHE CARS NORTH AMERICA, INC.

Information

Always comply with the regulations for handling ESD-sensitive components!

1. Assembly work may only be carried out if the mechanic is wearing the working clothes and shoes approved by Porsche.

2. The new part must only be removed from the ESD (electrostatic discharge) protective

packaging just before installation and at the position at which the part is to be installed.

3. Never touch the electric pins and plug contacts.

3. Release electric plug connection **-1-** (**-2-**) and disconnect it from the distance measuring sensor control unit **-3-** .

4. Unclip bracket for electric line **-4-** at the holder for the distance measuring sensor control unit and set electric line aside.

Fig 2: Disconnecting Electric Plug Connection

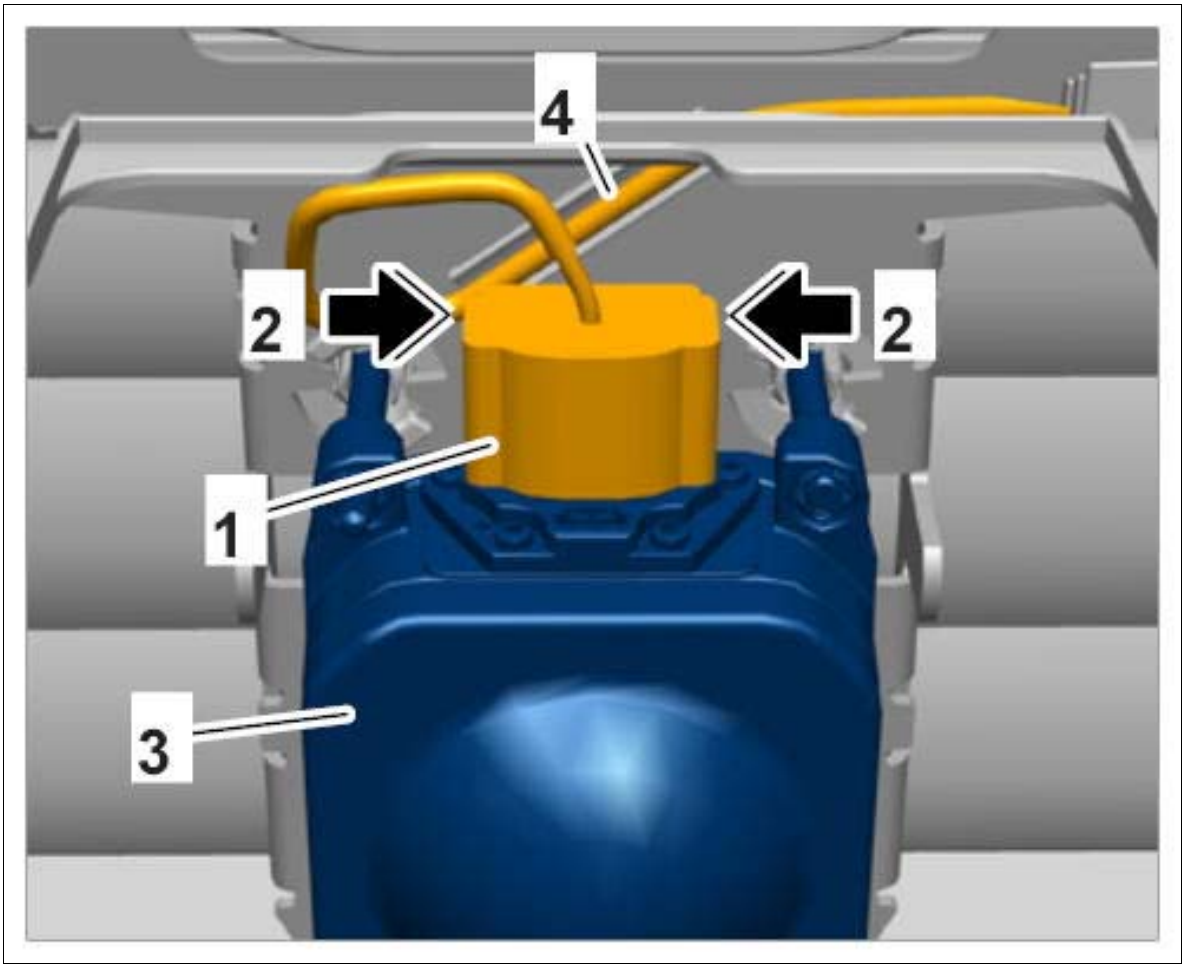

Courtesy of PORSCHE CARS NORTH AMERICA, INC.

5. Loosen air guide **-1-** close to the distance measuring sensor control unit **-2-** at the lock carrier.

6. Unscrew fastening screws **-3-** and remove distance measuring sensor control unit and holder.

Fig 3: Identifying Distance Measuring Sensor Control Unit

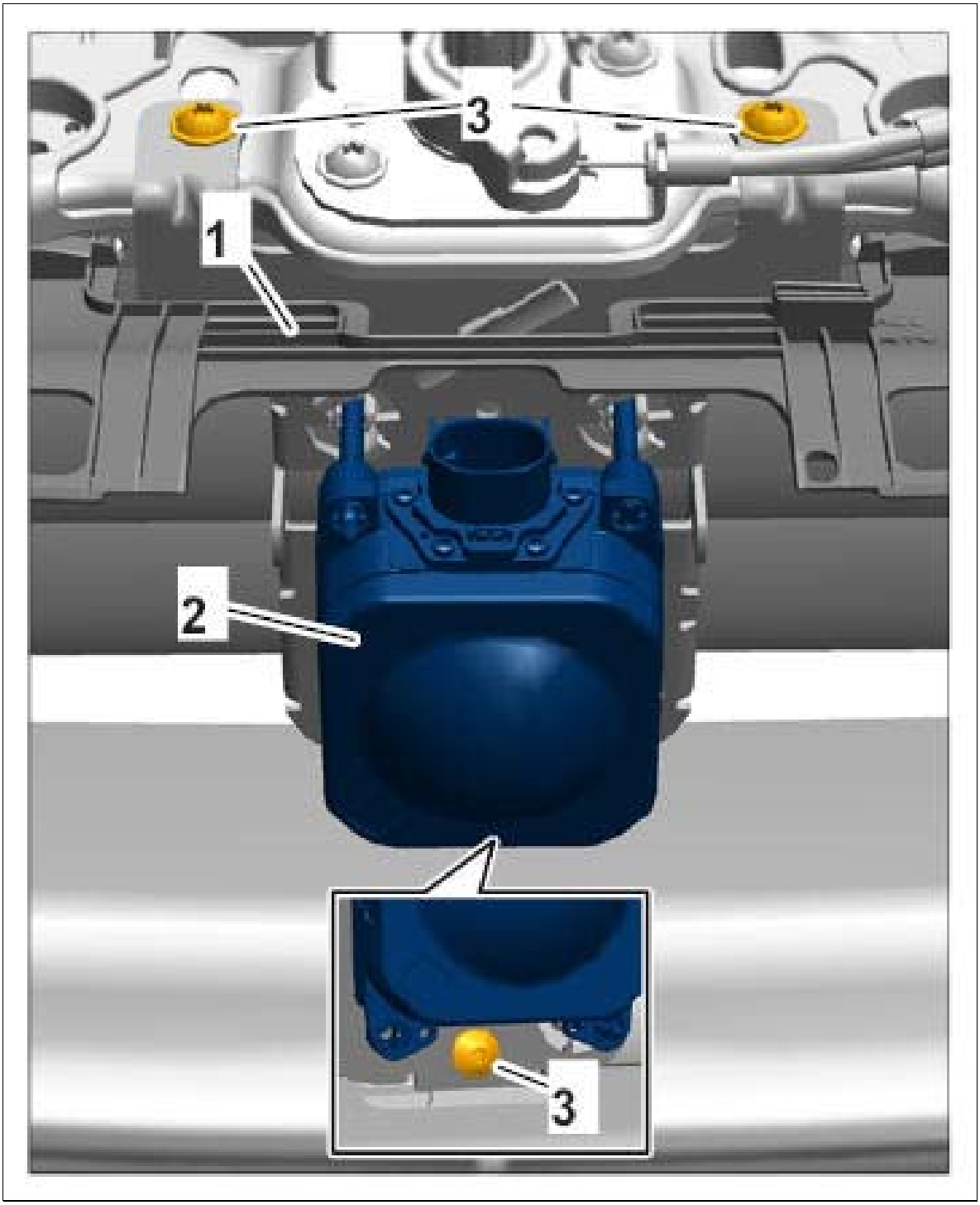

Courtesy of PORSCHE CARS NORTH AMERICA, INC.

WM 278519 REMOVING AND INSTALLING CONTROL UNIT FOR DISTANCE MEASURING SENSOR (ALL MODELS) > INSTALLING CONTROL UNIT FOR DISTANCE MEASURING SENSOR

Information

Before and after fitting the trim cover for the distance measuring sensor control unit, check the following points:

- The holder for the distance measuring sensor control unit must not show any signs of deformation, which may have been caused, for example, by removing or installing the trim cover for the distance measuring sensor control unit. If the holder for the distance measuring sensor control unit is deformed, carefully push it back into shape.
- If the trim cover is damaged or cracked, replace the trim cover.
- After fitting the trim cover, check that it is seated correctly and securely.

1. Installation is performed in reverse order to removal.
2. Tighten fastening screw at the bottom of the holder for the distance measuring sensor control unit. **Tightening torque 2.5 Nm (2 ftlb.)**
3. Tighten fastening screw at the top of the holder for the distance measuring sensor control unit. **Tightening torque 8 Nm (6 ftlb.)**

WM 278519 REMOVING AND INSTALLING CONTROL UNIT FOR DISTANCE MEASURING SENSOR (ALL MODELS) > SUBSEQUENT WORK

1. The distance measuring sensor control unit must be adjusted whenever it is removed and installed. → 278515 ADJUSTING CONTROL UNIT FOR DISTANCE MEASURING SENSOR

Service Manual: 28 - IGNITION SYSTEM -- (95B) - MACAN

WM 280419 REMOVING AND INSTALLING IGNITION STARTER SWITCH (MACAN, MACAN S, MACAN TURBO) > TOOLS

Designation	Type	Number	Description	
wrench	Special tool	9800		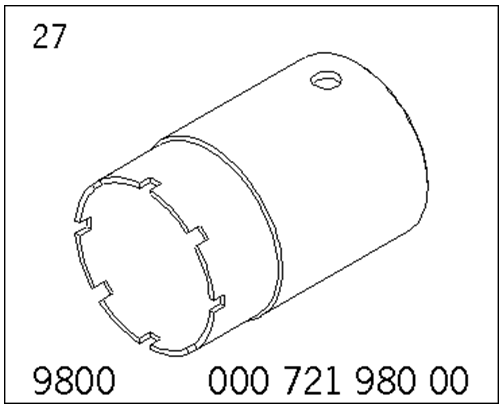

WM 280419 REMOVING AND INSTALLING IGNITION STARTER SWITCH (MACAN, MACAN S, MACAN TURBO) > PRELIMINARY WORK

1. Remove trim panel under dashboard at the left. → 70191901 REMOVING AND INSTALLING TRIM PANEL UNDER DASHBOARD AT THE LEFT .

WM 280419 REMOVING AND INSTALLING IGNITION STARTER SWITCH (MACAN, MACAN S, MACAN TURBO) > REMOVING IGNITION STARTER SWITCH

1. Remove trim panel **-1-** on main headlight switch and ignition starter switch.
    1. 1.1. Disconnect electric plug connection **-2-** on ignition starter switch light.
    2. 1.2. Unclip locking lugs **-a-** and remove trim panel.

Fig 1: Removing Main Headlight Switch Trim Panel

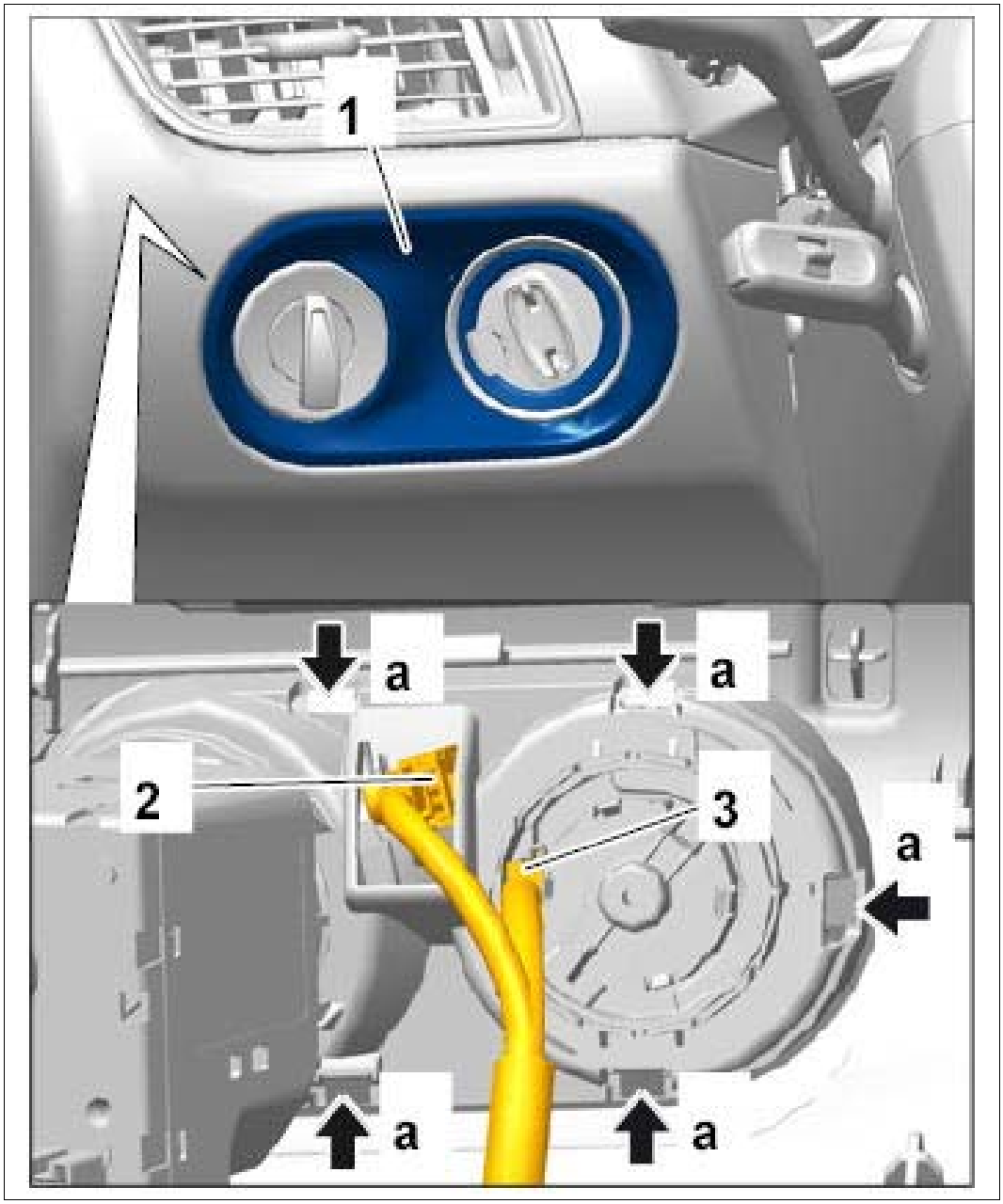

Courtesy of PORSCHE CARS NORTH AMERICA, INC.

2. Remove ignition starter switch.

    1. 2.1. Loosen and unscrew union nut **-1-** using **wrench 9800.**
    2. 2.2. Remove ignition starter switches from trim panel under dashboard at the left.

Fig 2: Removing Ignition Starter Switch

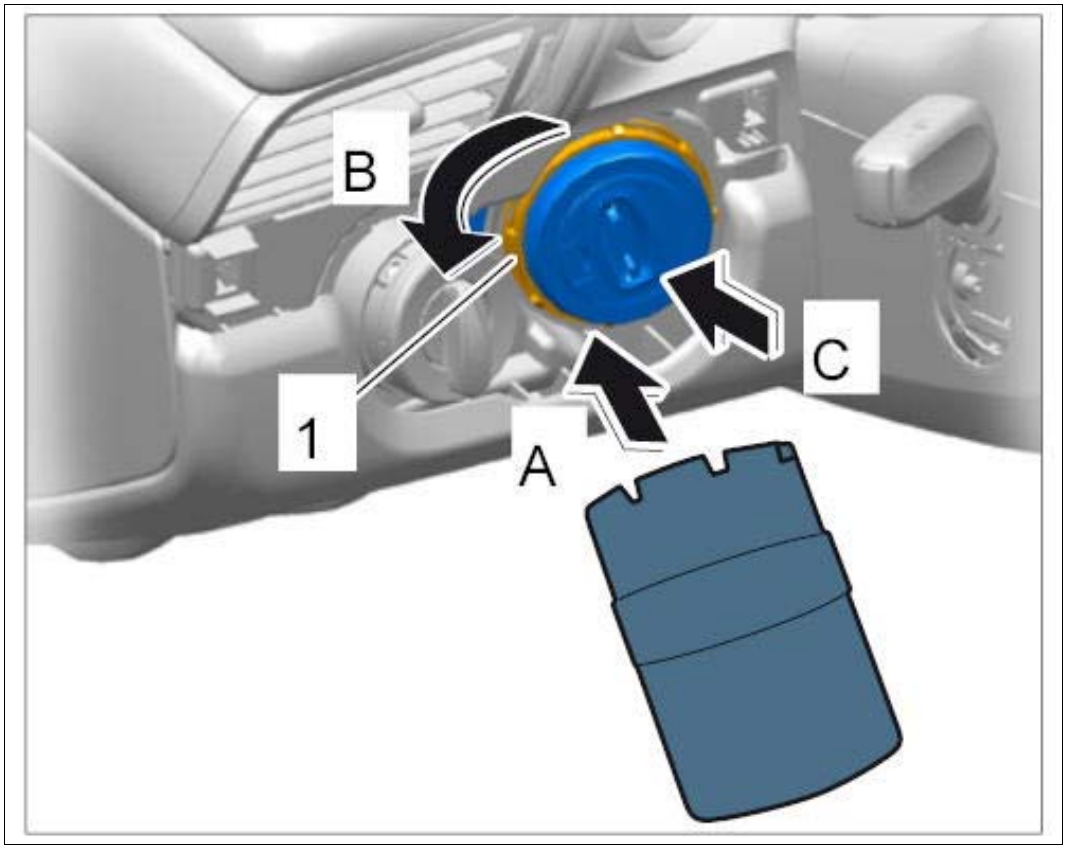

Courtesy of PORSCHE CARS NORTH AMERICA, INC.

3. Release electric plug connection **-a-** and disconnect it **-arrow-** .

Fig 3: Disconnecting Electric Plug Connection

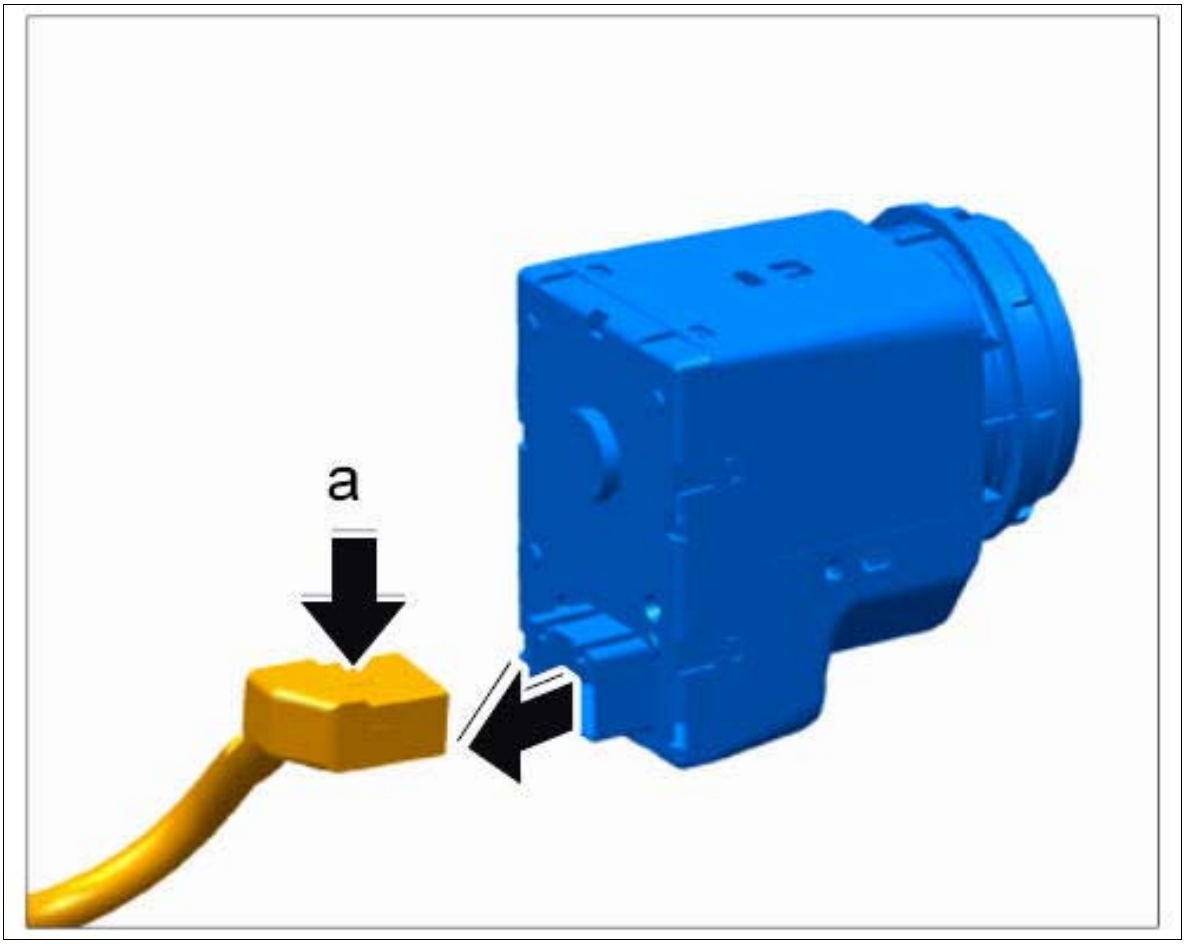

Courtesy of PORSCHE CARS NORTH AMERICA, INC.

WM 280419 REMOVING AND INSTALLING IGNITION STARTER SWITCH (MACAN, MACAN S, MACAN TURBO) > INSTALLING IGNITION STARTER SWITCH

1. Installation is performed in reverse order to removal.

WM 280419 REMOVING AND INSTALLING IGNITION STARTER SWITCH (MACAN, MACAN S, MACAN TURBO) > SUBSEQUENT WORK

1. Install trim panel under dashboard at the left. → INSTALLING TRIM PANEL UNDER DASHBOARD AT THE LEFT .

WM 282020 REMOVING AND INSTALLING IGNITION COILS (MACAN) > TOOLS

Designation	Type	Number	Description	

Puller	VW tool	T10530		

WM 282020 REMOVING AND INSTALLING IGNITION COILS (MACAN) > TECHNICAL VALUES

Location	Description	Type	Basic value	Tolerance 1	Tolerance 2
Fastening screw for ignition coil		Tightening torque	10 Nm (7.5 ftlb.)		
Fastening nut securing ground line to ignition coil		Tightening torque	10 Nm (7.5 ftlb.)		

WM 282020 REMOVING AND INSTALLING IGNITION COILS (MACAN) > PRELIMINARY WORK

1. Switch off ignition and remove ignition key.
2. Remove engine cover.

WM 282020 REMOVING AND INSTALLING IGNITION COILS (MACAN) > REMOVING IGNITION COILS

1. Release electric connector **-3-** for oxygen sensor upstream of catalytic converter **-1-** from the holder **-4-** .

Fig 1: Locating Catalytic Converter Oxygen Sensor Upstream

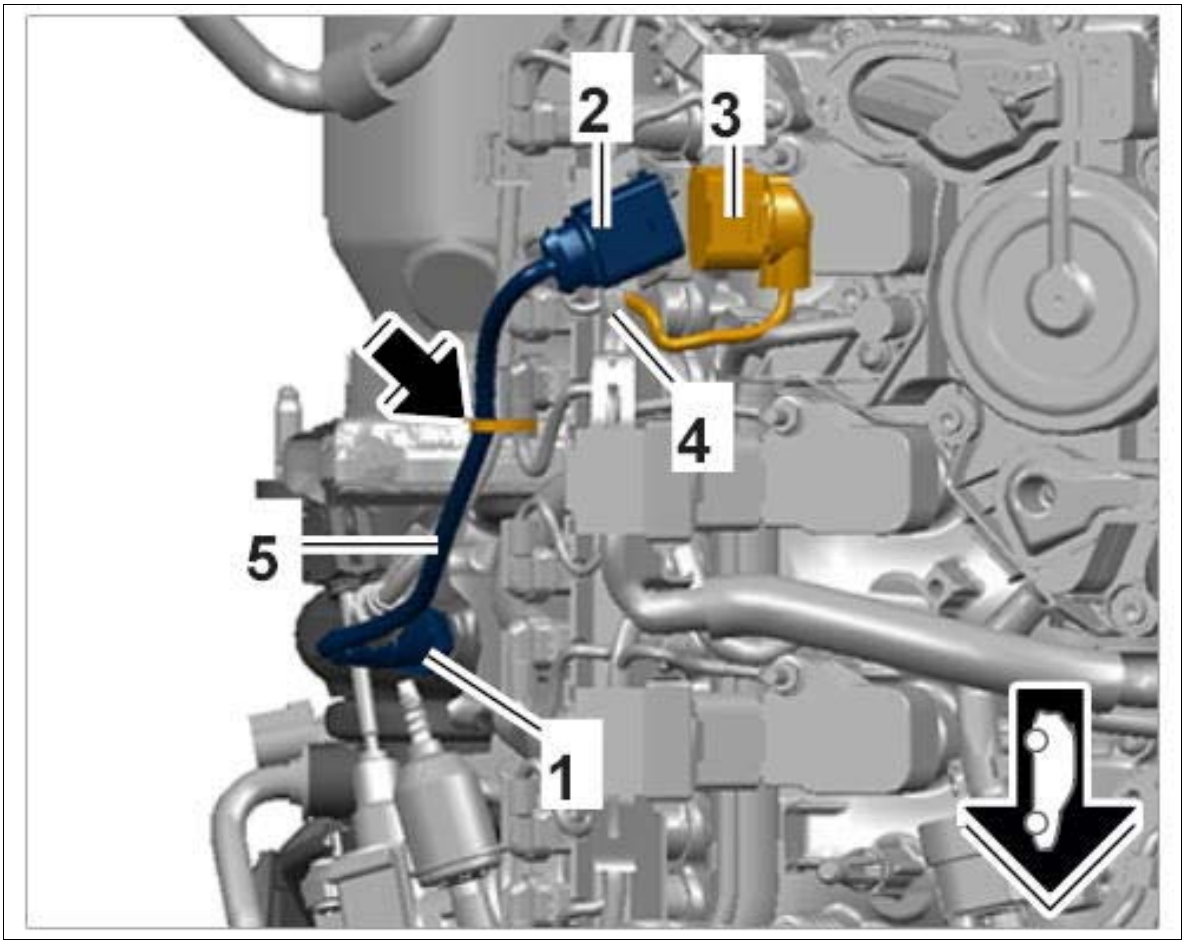

Courtesy of PORSCHE CARS NORTH AMERICA, INC.

2. Loosen ignition coils.

    1. 2.1. Release all electric connectors **-1-2-3-4-** and disconnect them at the same time **-arrows-** .
    2. 2.2. Unscrew nut and disconnect ground cable from the ignition coil to be removed.
    3. 2.3. Unscrew screw on the ignition coil to be removed.

Fig 2: Removing Ignition Coils Plug Connection

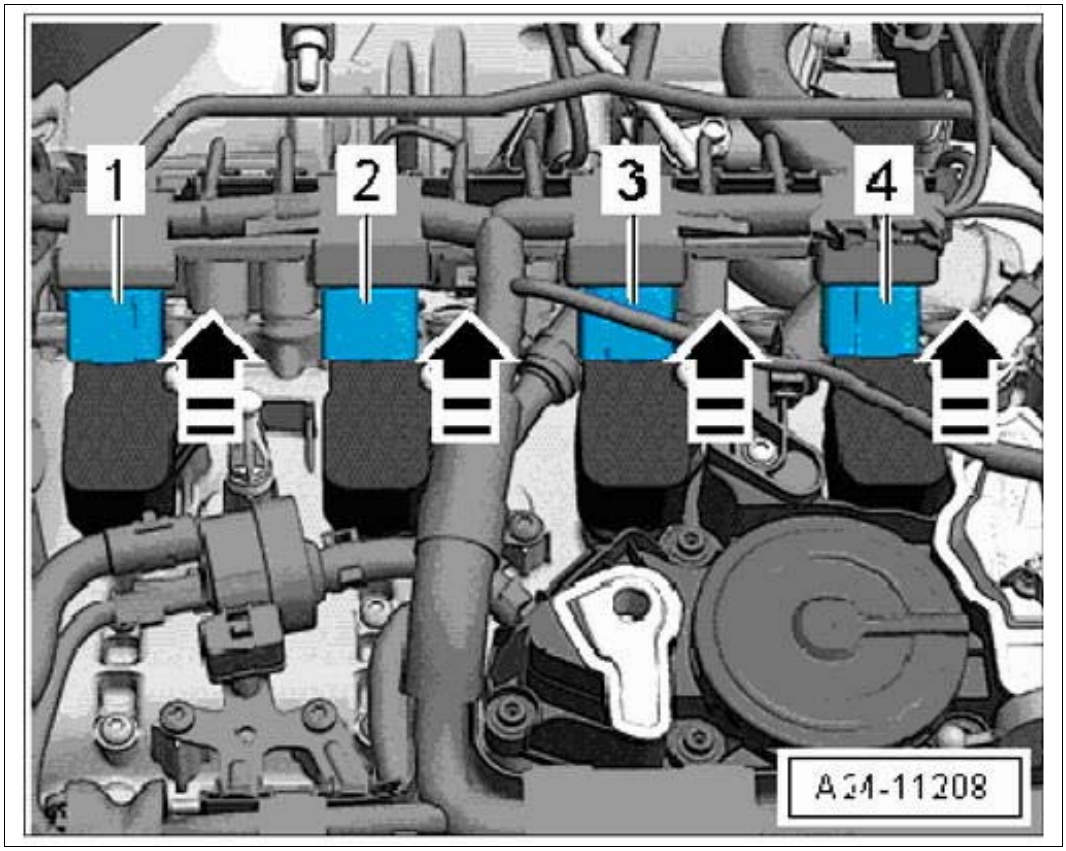

Courtesy of PORSCHE CARS NORTH AMERICA, INC.

3. Remove ignition coils.

    1. 3.1. **Puller T10530** must be inserted into the bore **-1-** on the ignition coil.
    2. 3.2. Turn knurled nut **-2-** clockwise until the puller is attached securely.

Fig 3: Attaching Puller T10530

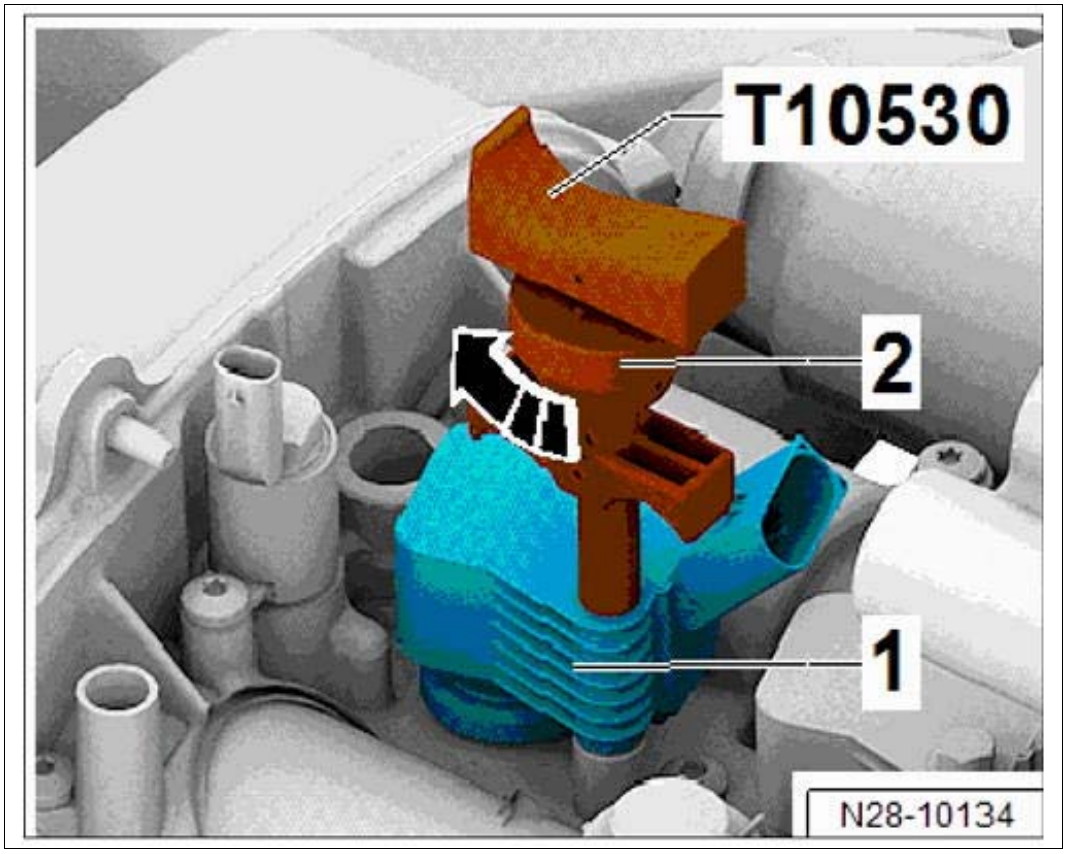

Courtesy of PORSCHE CARS NORTH AMERICA, INC.

4. Carefully pull ignition coil straight up and out.

Fig 4: Removing Ignition Coil

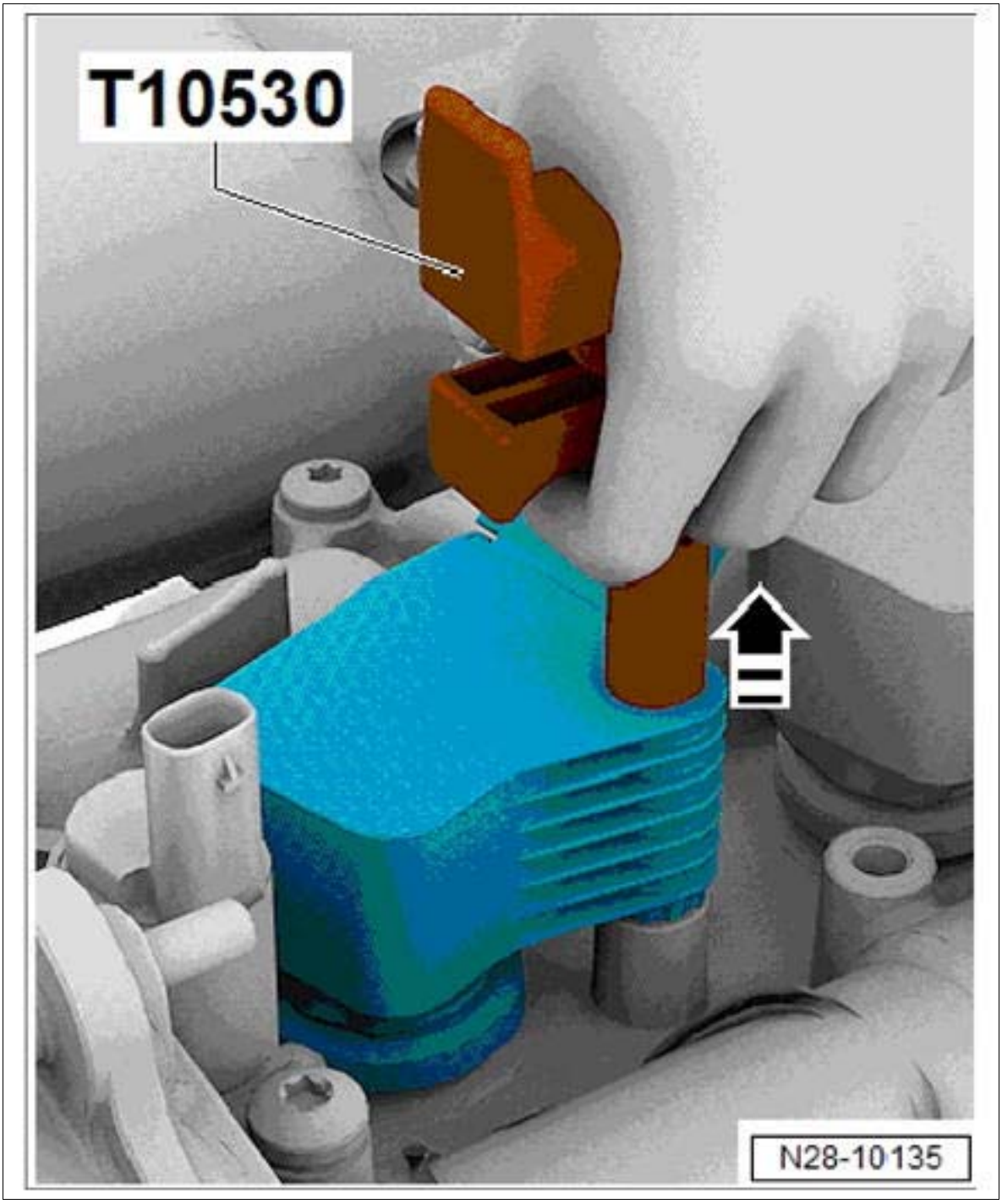

Courtesy of PORSCHE CARS NORTH AMERICA, INC.

WM 282020 REMOVING AND INSTALLING IGNITION COILS (MACAN) > INSTALLING IGNITION COILS

1. Installation is performed in reverse order.

    1. 1.1. Tightening torque for ignition coil,

Tightening torque: 10 Nm (7.5 ftlb.)

2. 1.2. Tightening torque for nut securing ground cable,

   Tightening torque: 10 Nm (7.5 ftlb.)

   Replace nut.

WM 282020 REMOVING AND INSTALLING IGNITION COILS (MACAN) > SUBSEQUENT WORK

1. Install engine cover.

WM 283919 REMOVING AND INSTALLING HALL SENDER (MACAN) > TECHNICAL VALUES

Location	Description	Type	Basic value	Tolerance 1	Tolerance 2
Fastening screw for hall sender		Tightening torque	9 Nm (6.5 ftlb.)		

WM 283919 REMOVING AND INSTALLING HALL SENDER (MACAN) > PRELIMINARY WORK

Hall sender on intake side

1. Remove intake-air distributor. → 244619 REMOVING AND INSTALLING INTAKE-AIR DISTRIBUTOR .

WM 283919 REMOVING AND INSTALLING HALL SENDER (MACAN) > REMOVING HALL SENDER

Hall sender on intake side

1. Remove hall sender.

   1. 1.1. Release and disconnect electric connector **-1-** .

   2. 1.2. Unscrew screw **-1-** and remove hall sender.

Fig 1: Locating Hall Sender Screw

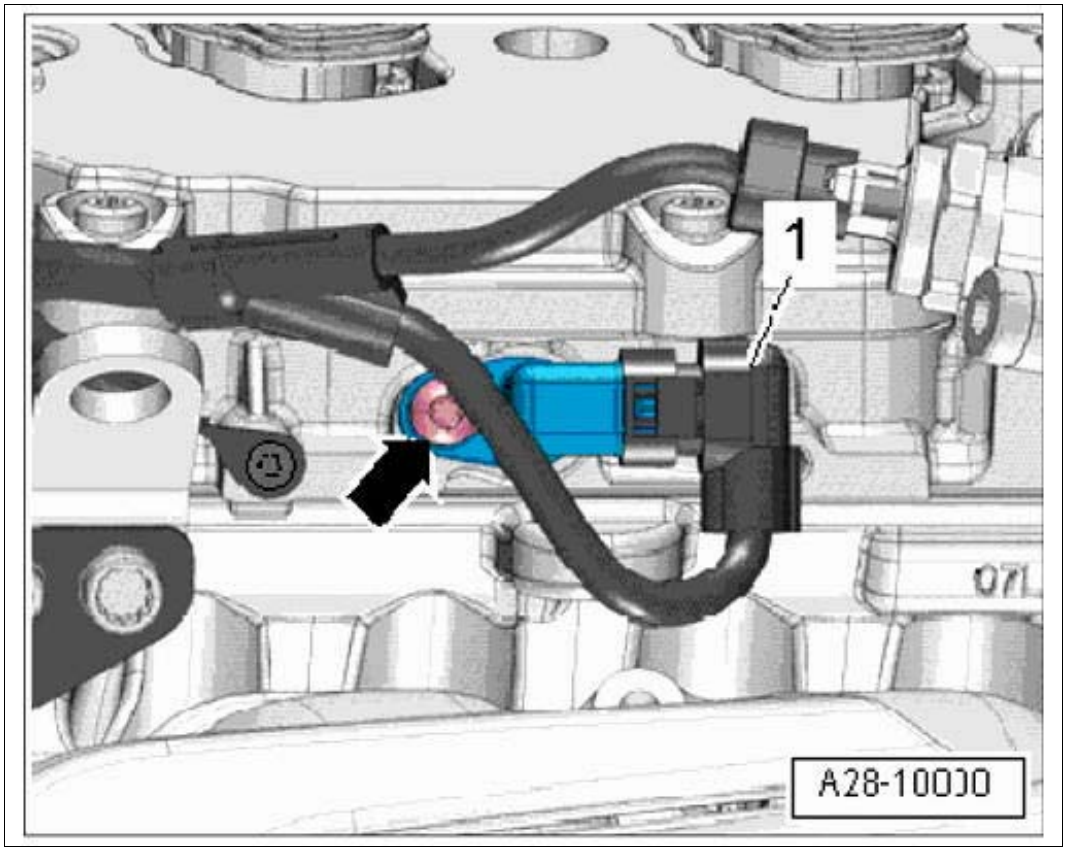

Courtesy of PORSCHE CARS NORTH AMERICA, INC.

Hall sender on outlet side

2. Remove hall sender.
    1. 2.1. Release and disconnect electric connectors.
    2. 2.2. Unscrew screw and remove hall sender **-1-** .

Fig 2: Locating Hall Sender Screw - Outlet

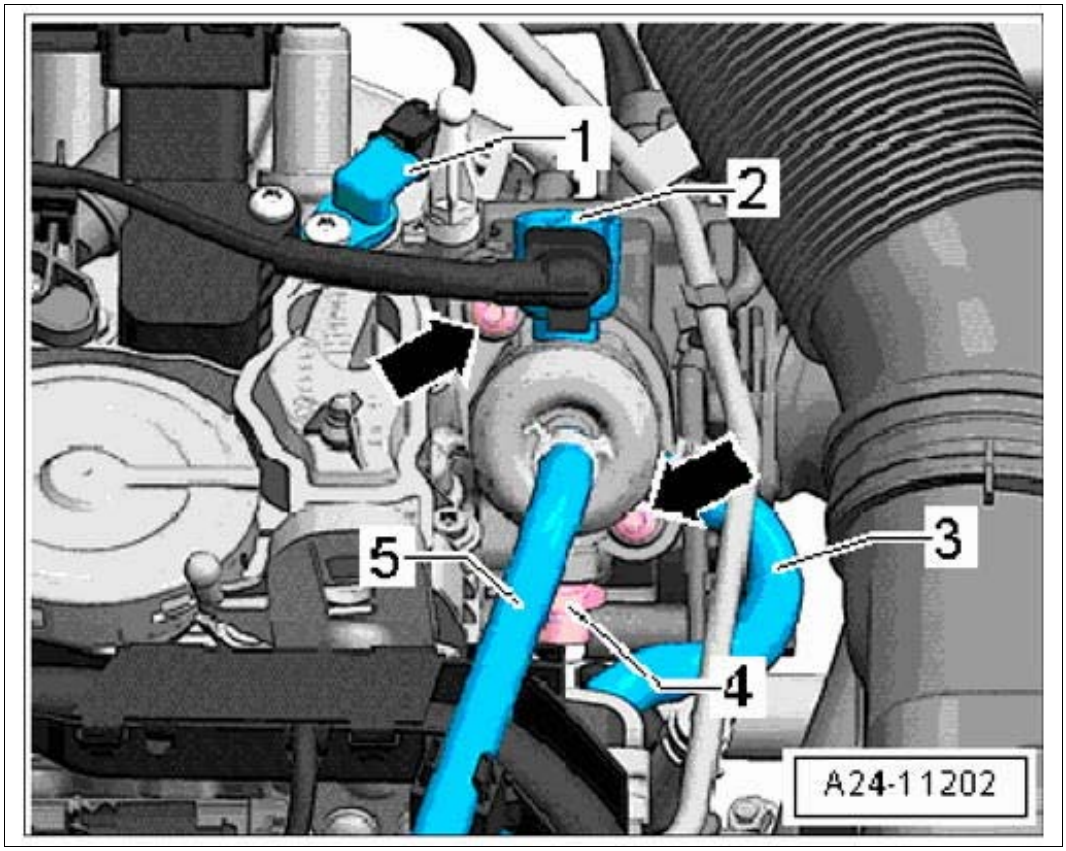

Courtesy of PORSCHE CARS NORTH AMERICA, INC.

WM 283919 REMOVING AND INSTALLING HALL SENDER (MACAN) > INSTALLING HALL SENDER

Information

- Replace O-rings.
- Grease O-rings with a light coating of Kluber Syntheso Glep (Part No.: 000.043.204.68).

1. Installation is performed in reverse order. Pay particular attention to the following:

    1. 1.1. Replace O-ring.

    2. 1.2. **Tightening torque: 9 Nm (6.5 ftlb.)**

WM 283919 REMOVING AND INSTALLING HALL SENDER (MACAN) > SUBSEQUENT WORK

1. Install intake-air distributor. → INSTALLING INTAKE-AIR DISTRIBUTOR .

WM 284419 REMOVING AND INSTALLING HALL-SENDER ROTOR (MACAN S, MACAN TURBO) > TOOLS

Designation	Type	Number	Description	
insertion tool	Special tool	9837		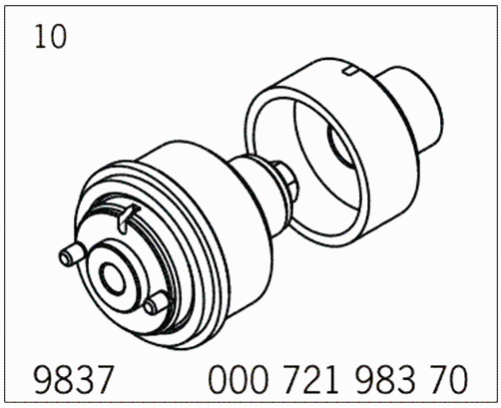
slide hammer kit	Commercially available tool	Nr.168		
test card	VW tool	T10473		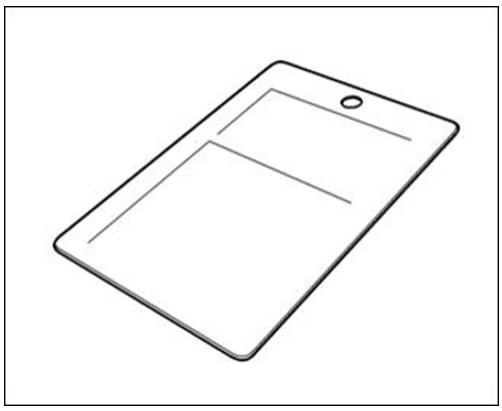

WM 284419 REMOVING AND INSTALLING HALL-SENDER ROTOR (MACAN S, MACAN TURBO) > INFORMATION > INSTALLATION INSTRUCTIONS FOR CRANKSHAFT SEALING RING AND HALL-SENDER ROTOR

Fig 1: Identifying Crankshaft Sealing Ring Installation Position

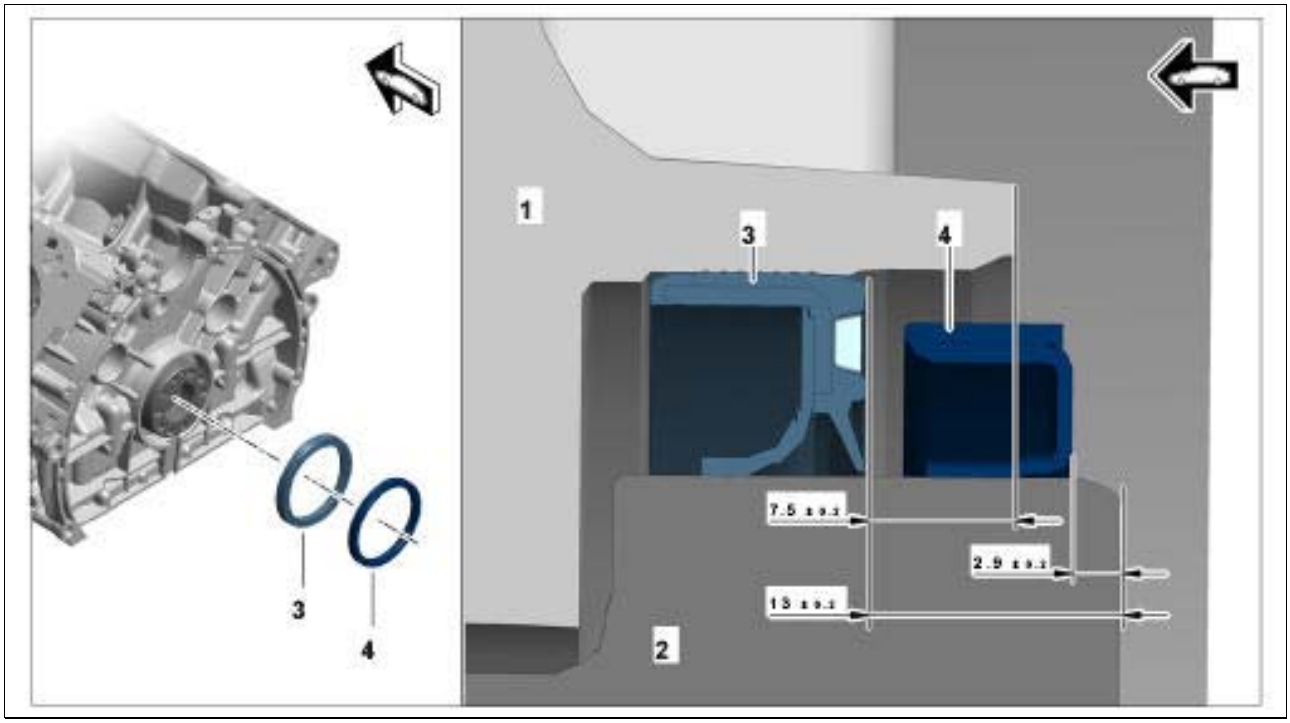

Courtesy of PORSCHE CARS NORTH AMERICA, INC.

1. Upper part of crankcase
2. Crankshaft
3. Crankshaft sealing ring
4. Hall-sender rotor

Installation dimensions for shaft sealing ring and hall-sender rotor [in mm]		
Installation dimension	Reference point 1	Reference point 2
2.9 mm	Crankshaft	Hall-sender rotor
7.5 mm	Crankcase	Crankshaft sealing ring
13.0 mm	Crankshaft	Crankshaft sealing ring

WM 284419 REMOVING AND INSTALLING HALL-SENDER ROTOR (MACAN S, MACAN TURBO) > PRELIMINARY WORK

1. Remove drive plate. → 136319 REMOVING AND INSTALLING DRIVE PLATE
2. Remove crankshaft pulse sender. → 287319 REMOVING AND INSTALLING CRANKSHAFT PULSE SENDER

WM 284419 REMOVING AND INSTALLING HALL-SENDER ROTOR (MACAN S, MACAN TURBO) > REMOVING HALL-SENDER ROTOR

Information

- The work steps for the hall-sender rotor and sealing ring are identical

1. Pull out the crankshaft pulse sender **-1-** slightly.

   Fig 1: Identifying Crankshaft Pulse Sender And Hall-Sender Rotor

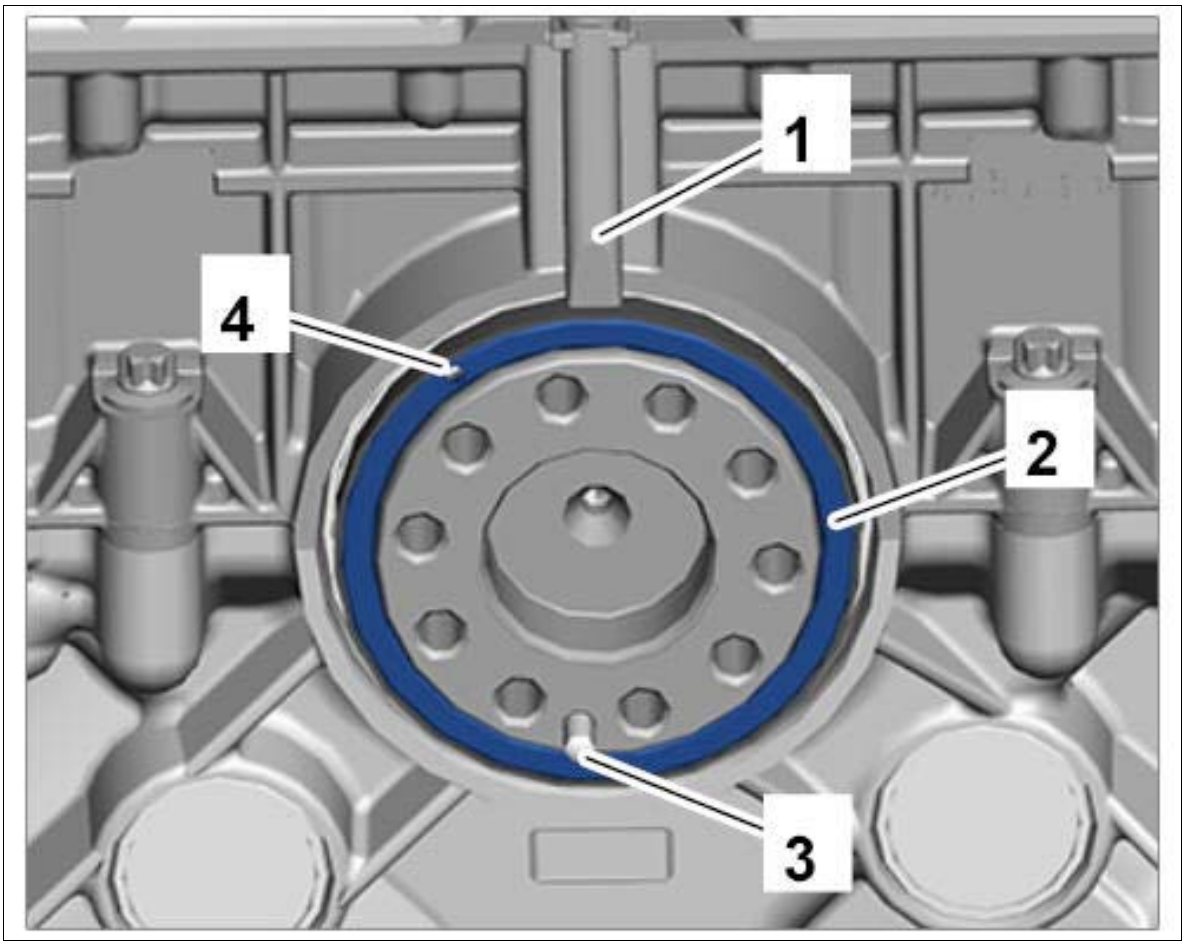

Courtesy of PORSCHE CARS NORTH AMERICA, INC.

2. Screw in the extractor tip in the "TDC marking" **-4-** .

Fig 2: Identifying Hall-Sender Rotor Extractor Tip

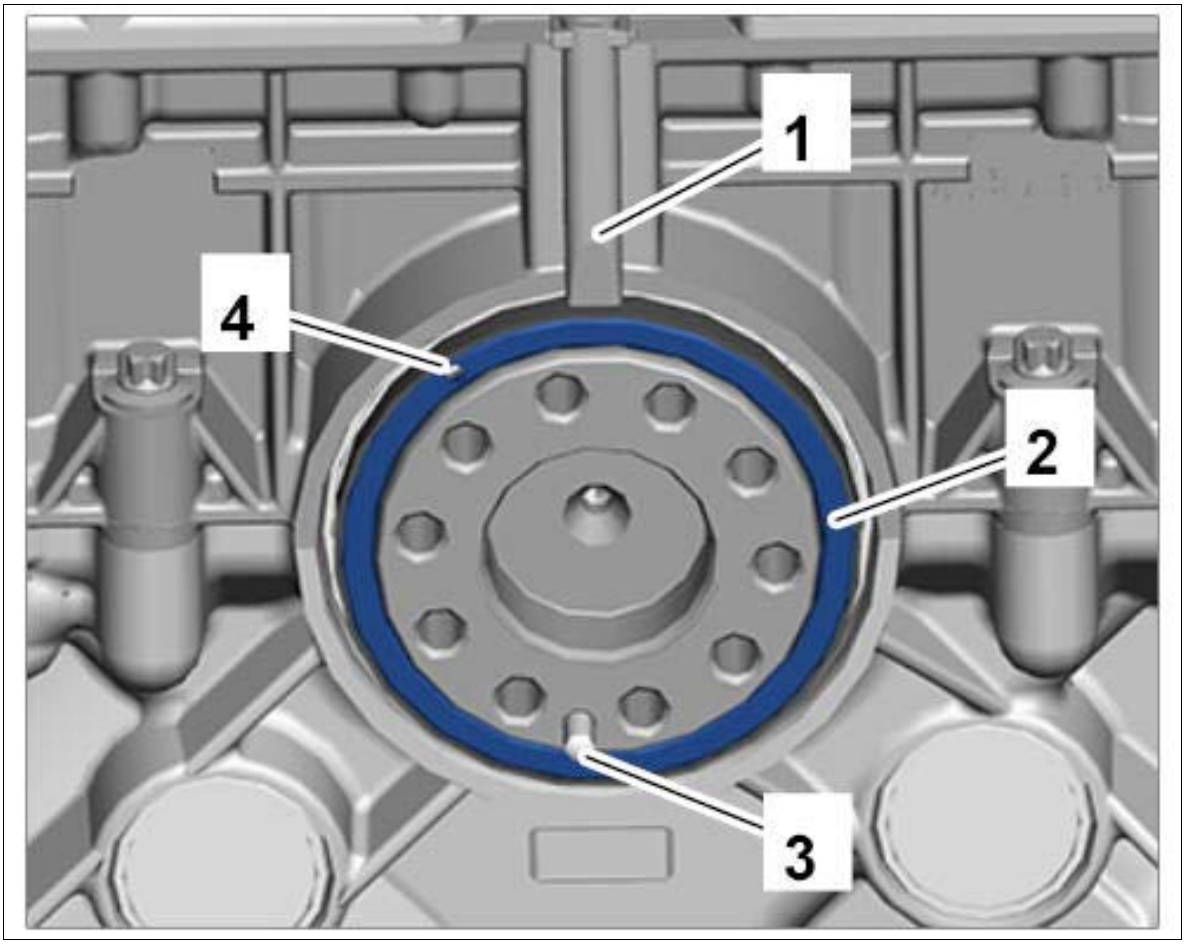

Courtesy of PORSCHE CARS NORTH AMERICA, INC.

3. Use the **slide hammer kit Nr.168** to knock out the extractor tip **-1-** together with the hall-sender rotor **-2-** .

Fig 3: Removing Hall-Sender Rotor Extractor Tip

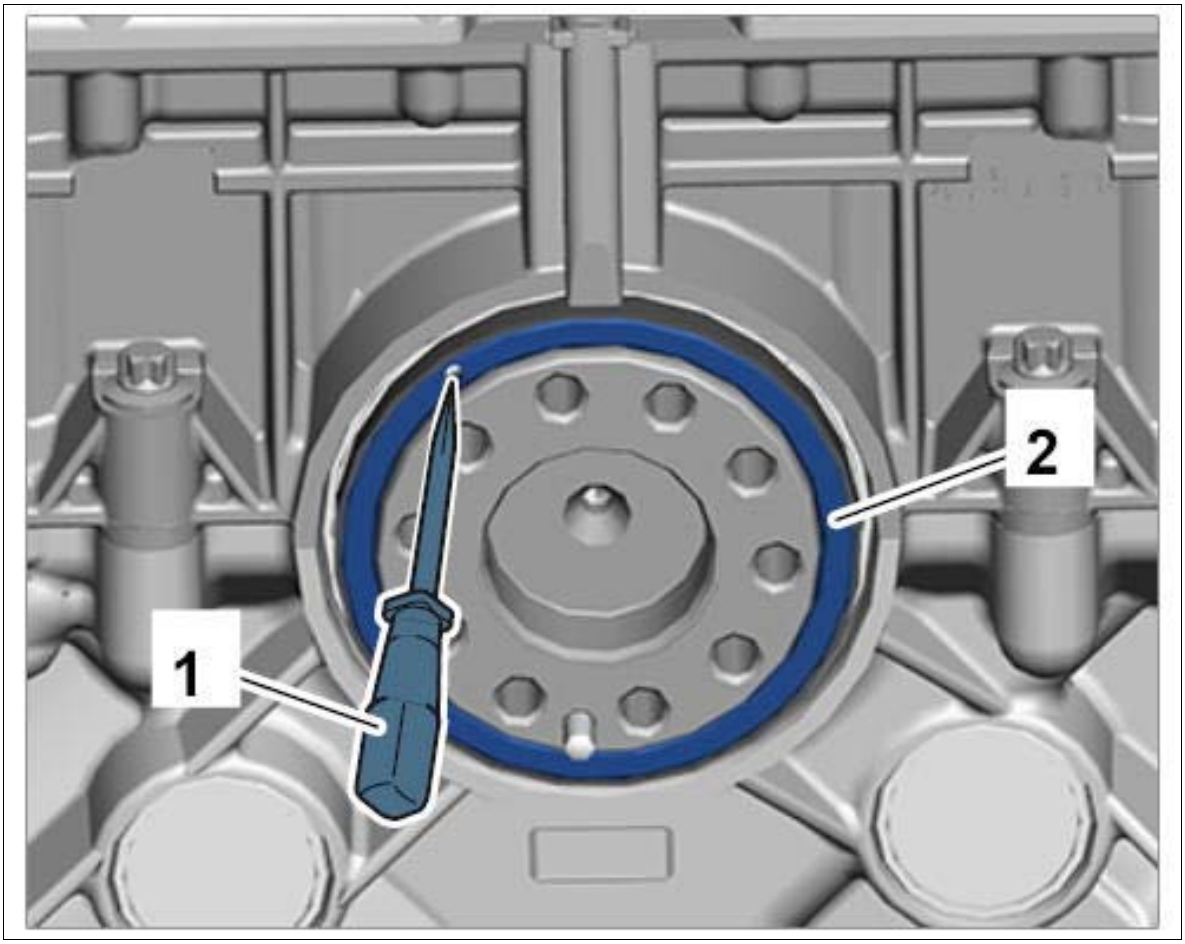

Courtesy of PORSCHE CARS NORTH AMERICA, INC.

4. Clean the crankshaft flange. → Cleaning crankshaft flange

    1. 4.1. The crankshaft flange must not be dirty or rusty.
    2. 4.2. If necessary clean with brake cleaner and remove rust with a metal-polishing pad.

Fig 4: Cleaning Crankshaft Flange

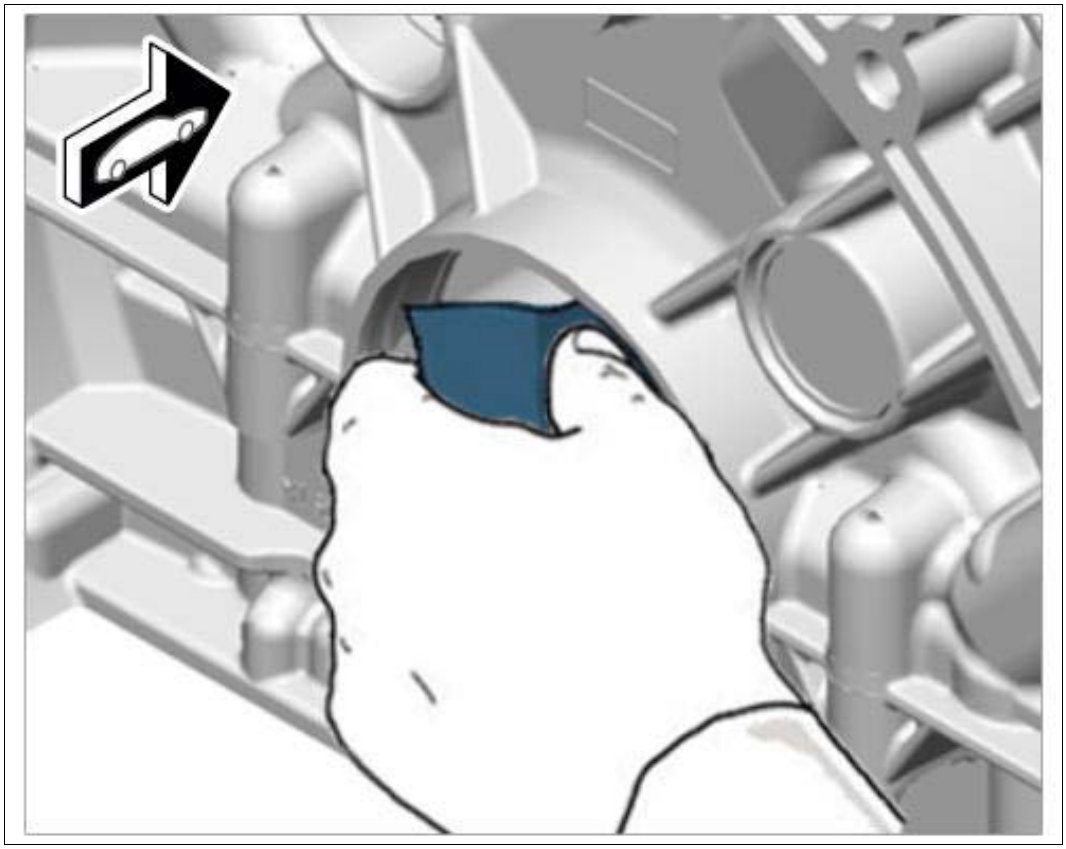

Courtesy of PORSCHE CARS NORTH AMERICA, INC.

WM 284419 REMOVING AND INSTALLING HALL-SENDER ROTOR (MACAN S, MACAN TURBO) > CHECKING HALL-SENDER ROTOR > CHECKING ROTOR FOR HALL SENDER

Information

- Check the hall-sender rotor before installing it.
- The hall-sender rotor must not come into contact with a magnet.
- If the hall-sender rotor does come into proximity of a magnet, replace it without exception.

1. Check the condition of the new hall-sender rotor using the **test card T10473** tool.
    1. 1.1. Hold the **test card T10473 -2-** over the hall-sender rotor **-1-** and turn it.
    2. 1.2. Continuous stripes **-arrows-** on undamaged hall-sender rotor **-1-** .

Fig 1: Locating Hall-Sender Rotor Stripes



Courtesy of PORSCHE CARS NORTH AMERICA, INC.

2. Only use undamaged hall-sender rotors.

    1. 2.1. "TDC marking" **-arrow-** on undamaged hall-sender rotor.

Fig 2: Locating Hall-Sender Rotors TDC Marking (Undamaged)

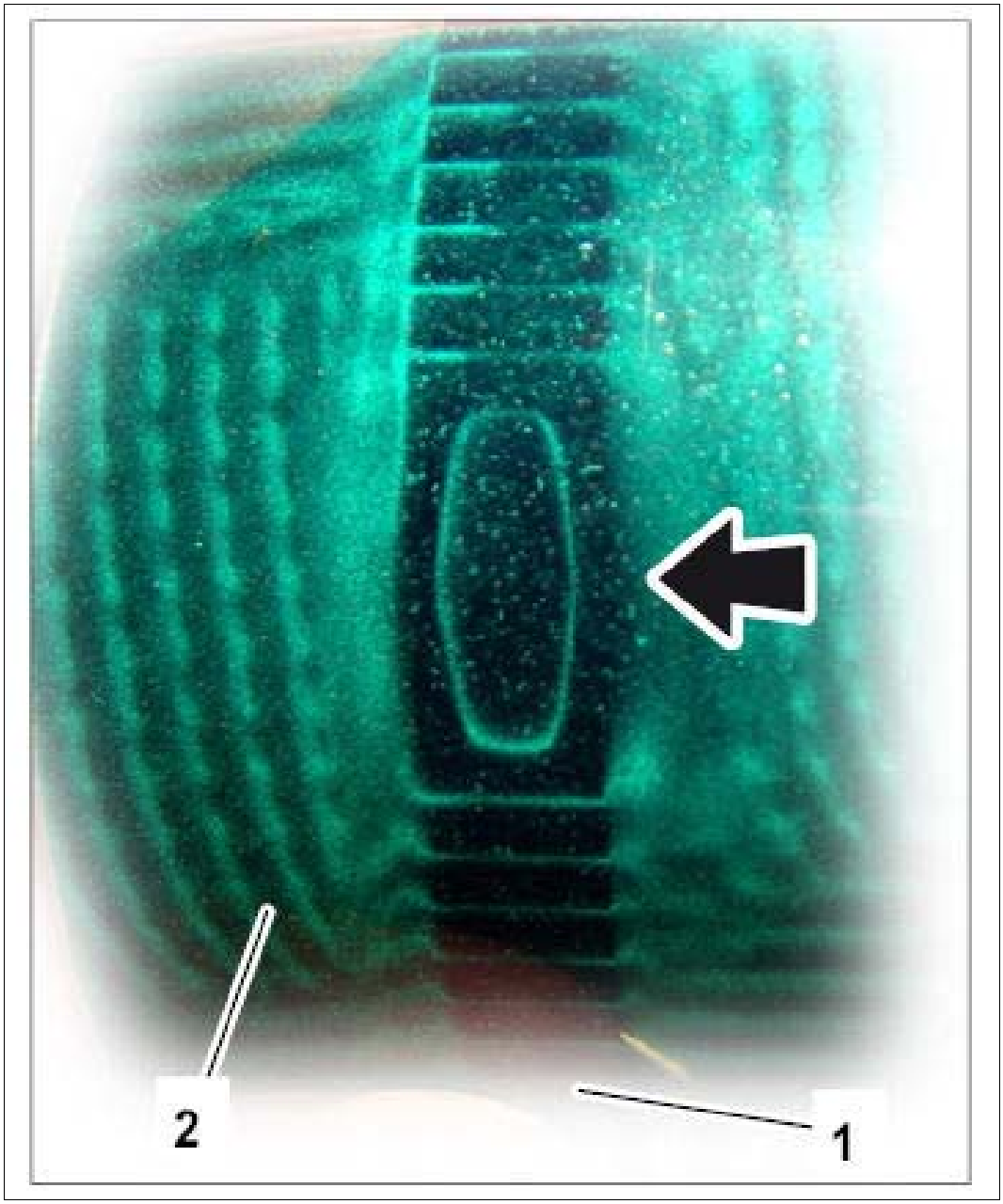

Courtesy of PORSCHE CARS NORTH AMERICA, INC.

3. A damaged hall-sender rotor must be replaced.

    1. 3.1. The stripes **-arrow-** cannot be seen on damaged hall-sender rotors.

Fig 3: Locating Hall-Sender Rotors TDC Marking (Damaged)

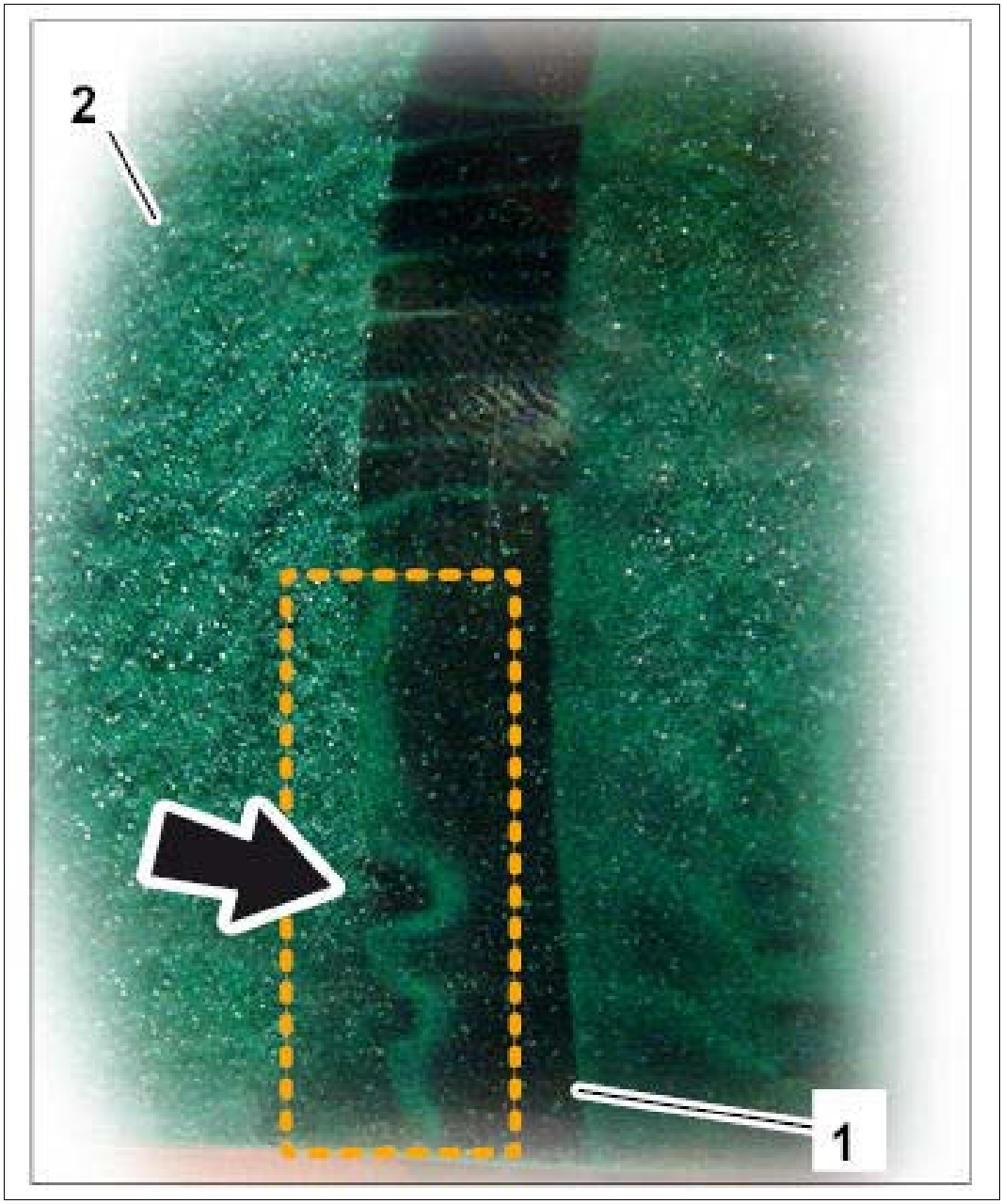

Courtesy of PORSCHE CARS NORTH AMERICA, INC.

WM 284419 REMOVING AND INSTALLING HALL-SENDER ROTOR (MACAN S, MACAN TURBO) > INSTALLING HALL-SENDER ROTOR > INSTALLING ROTOR FOR HALL SENDER

Information

- Check the hall-sender rotor before installing it.
- The hall-sender rotor must not come into contact with a magnet.

- If the hall-sender rotor does come into proximity of a magnet, replace it without exception.

Information

Sealing rings become damaged as a result of improper fitting. Do not oil sealing rings on the running surface and do not pull sealing rings off the plastic sleeve.

1. Fit hall-sender rotor to crankshaft flange using the **insertion tool 9837.**

    1. 1.1. While doing so align the centering notch **-1-** of the **insertion tool 9837** to the centering pin of the crankshaft flange.

    2. 1.2. Press rotor for hall sender only slightly onto the crankshaft flange in order to align the TDC marking.

        Fig 1: Identifying Insertion Tool (9837)

        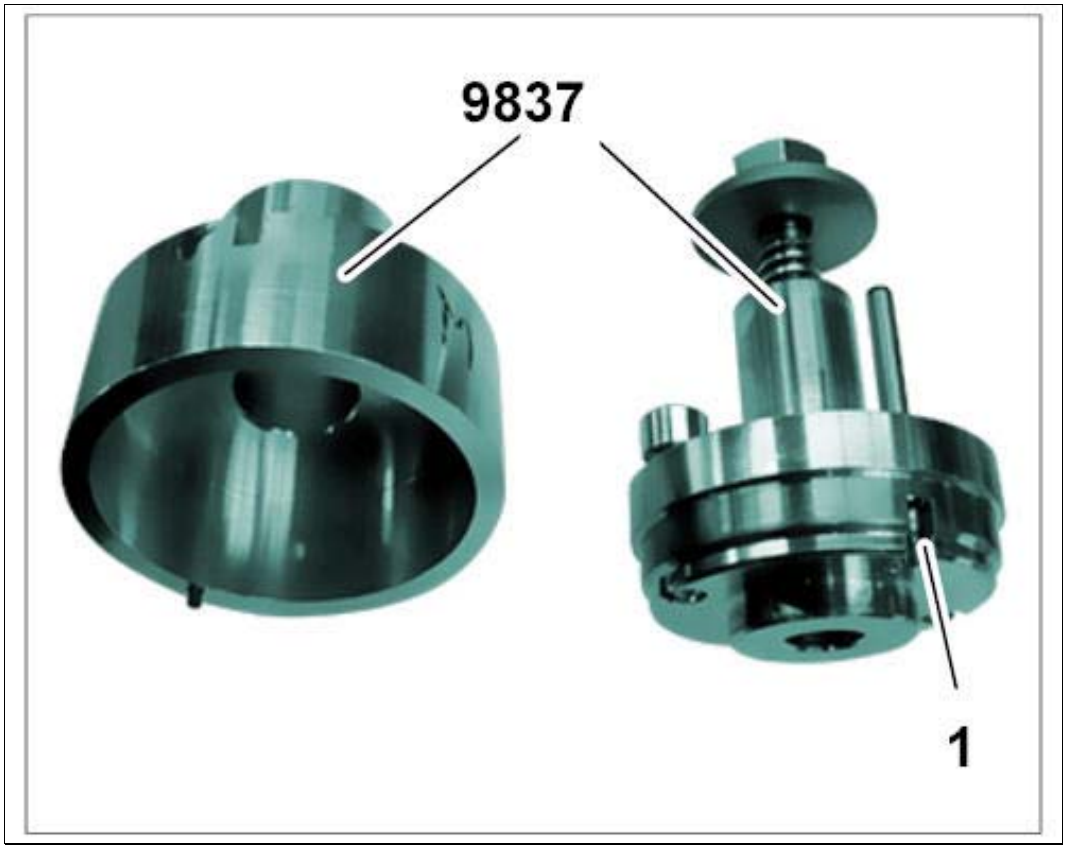

        Courtesy of PORSCHE CARS NORTH AMERICA, INC.

2. Tighten the screws **-2-** .

Fig 2: Installing Insertion Tool To Crankshaft Flange

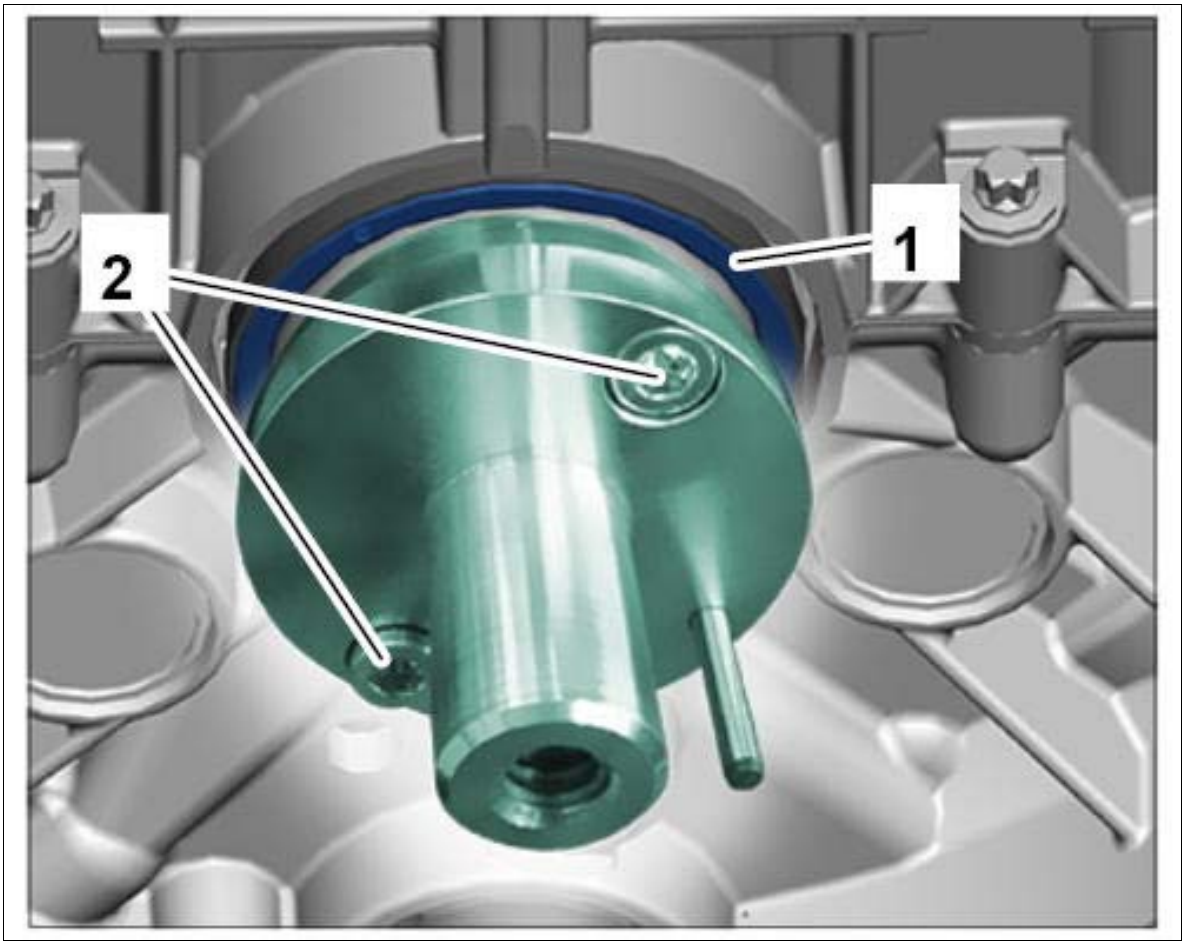

Courtesy of PORSCHE CARS NORTH AMERICA, INC.

3. Slide the upper **insertion tool 9837 -1-** onto the lower **insertion tool 9837** .

    1. 3.1. Pay attention to the centering pin **-2-** .

Fig 3: Identifying Insertion Tool And Centering Pin

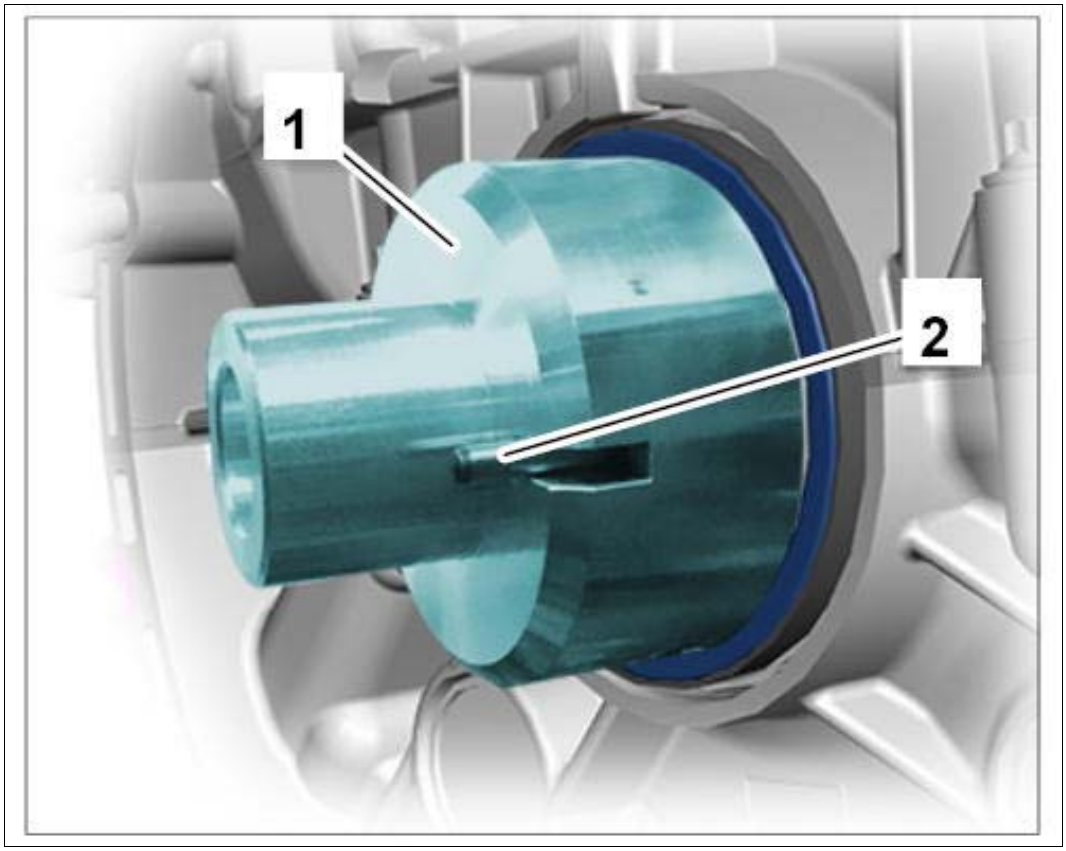

Courtesy of PORSCHE CARS NORTH AMERICA, INC.

4. Push centering pin **-2-** into the "TDC marking" **-1-** on the hall-sender rotor.

    1. 4.1. Turn the hall-sender rotor slightly if necessary.

Fig 4: Identifying Hall-Sender Rotor Centering Pin And TDC Marking

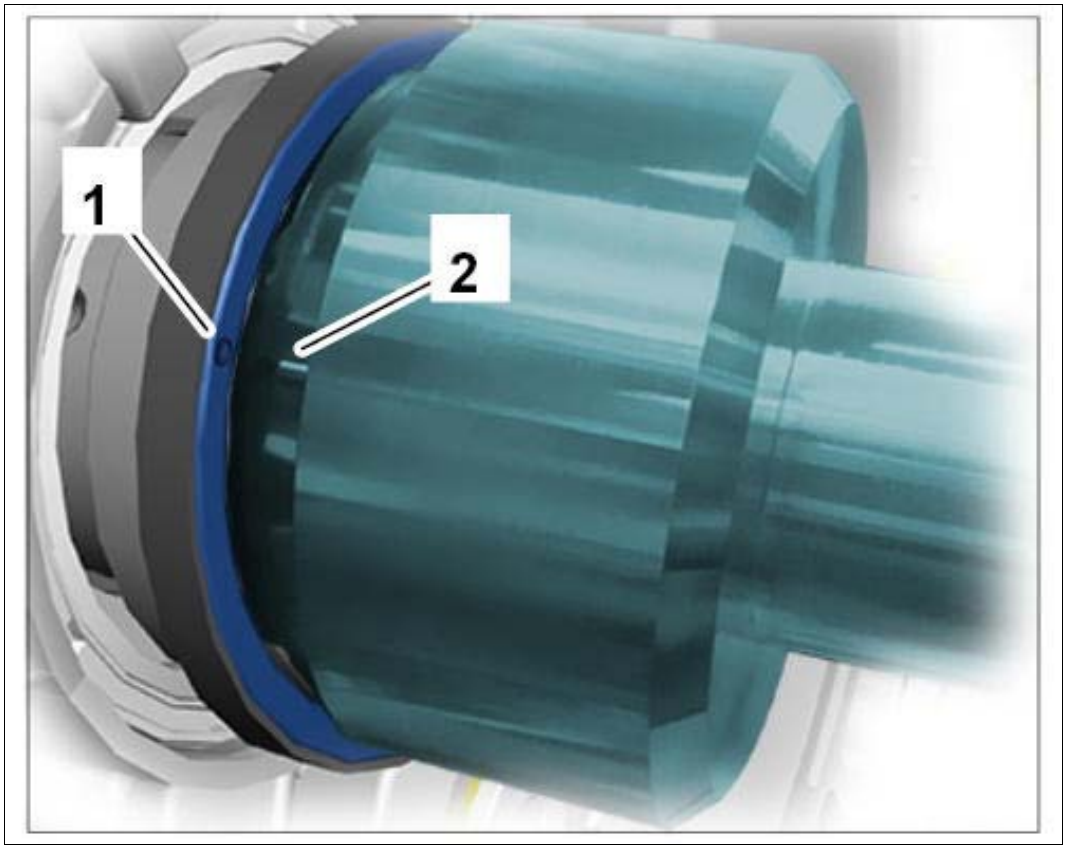

Courtesy of PORSCHE CARS NORTH AMERICA, INC.

5. Tighten central screw **-1-** as far as possible and press in the hall-sender rotor **-3-** .

Fig 5: Identifying Insertion Tool

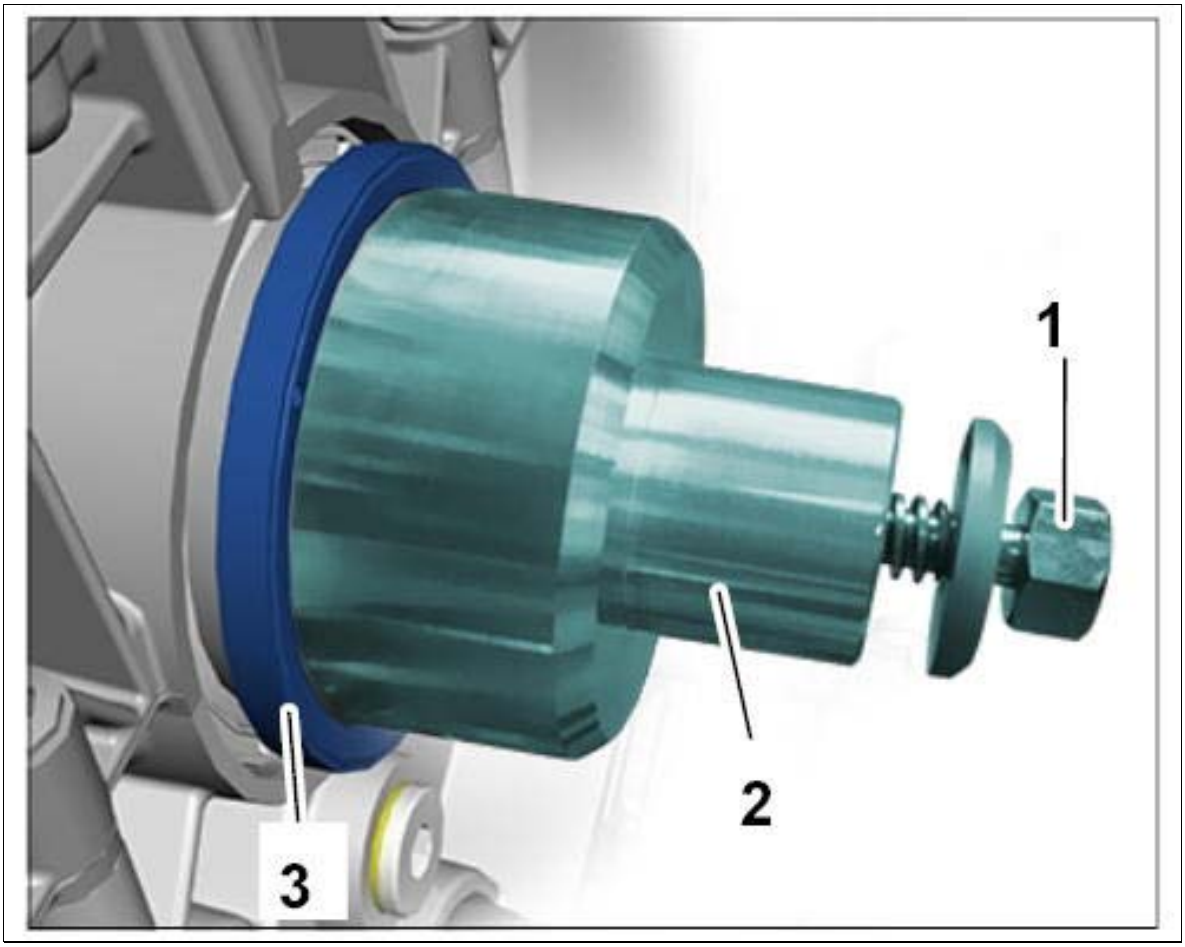

Courtesy of PORSCHE CARS NORTH AMERICA, INC.

6. Unscrew the **insertion tool 9837** central screw.
    1. 6.1. Remove the upper **insertion tool 9837** .
    2. 6.2. Undo the screws **-2-** and remove the lower **insertion tool 9837** .

Fig 6: Removing Crankshaft Flange Insertion Tool

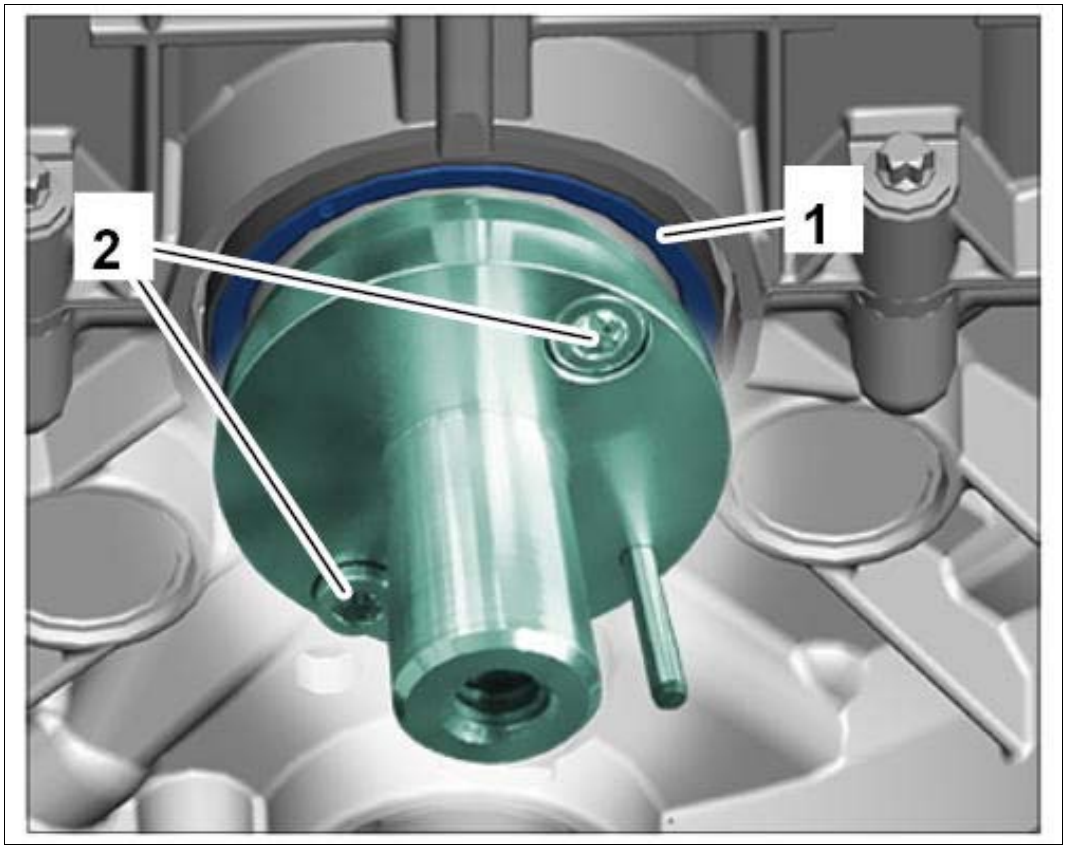

Courtesy of PORSCHE CARS NORTH AMERICA, INC.

7. Slide the crankshaft pulse sender **-1-** onto the hall-sender rotor **-2-** .

Fig 7: Identifying Hall-Sender Rotor

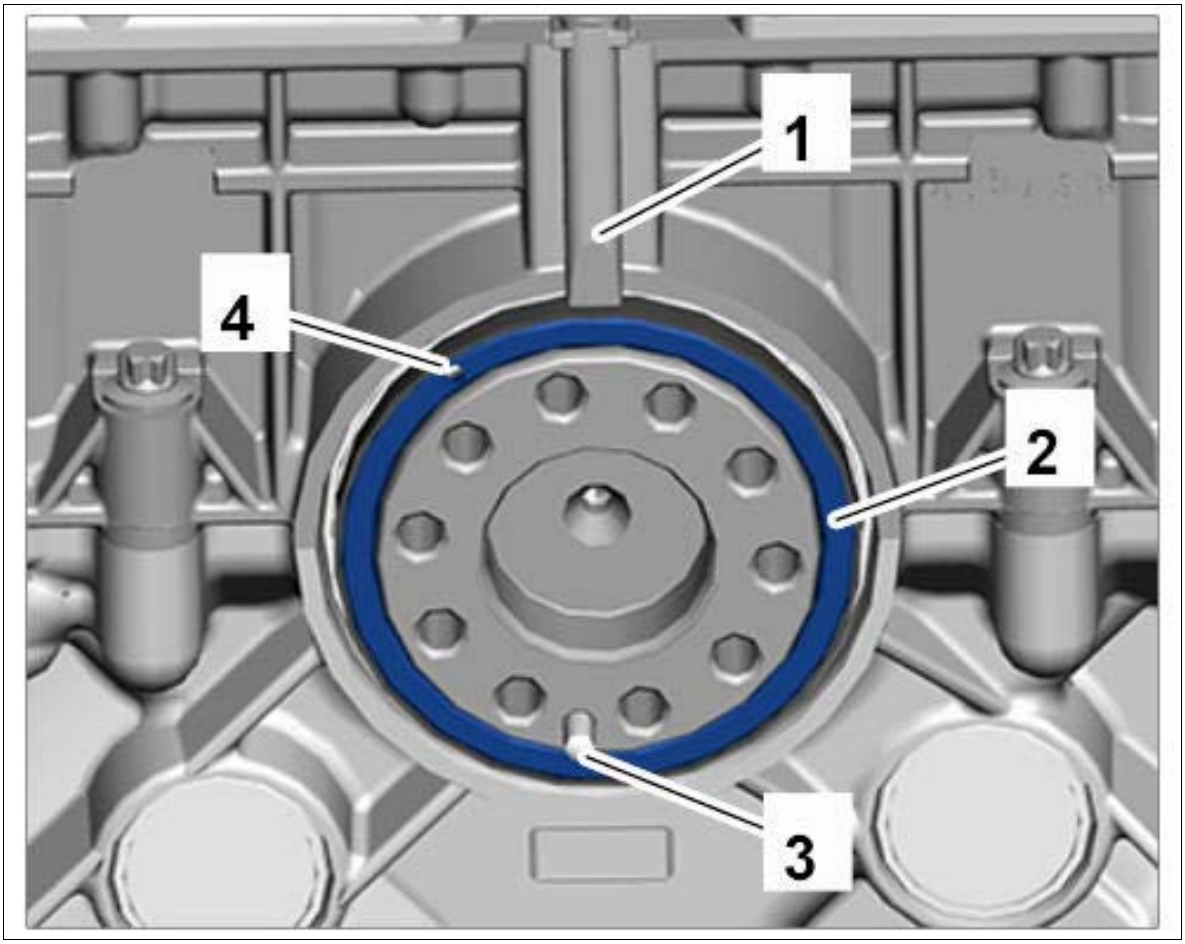

Courtesy of PORSCHE CARS NORTH AMERICA, INC.

WM 284419 REMOVING AND INSTALLING HALL-SENDER ROTOR (MACAN S, MACAN TURBO) > SUBSEQUENT WORK

1. Install crankshaft pulse sender. → INSTALLING PULSE SENDER .
2. Install drive plate. → INSTALLING DRIVE PLATE .

WM 287020 REMOVING AND INSTALLING SPARK PLUGS (MACAN) > TOOLS

Designation	Type	Number	Description	

spark plug socket and extension	VW tool	3122 B		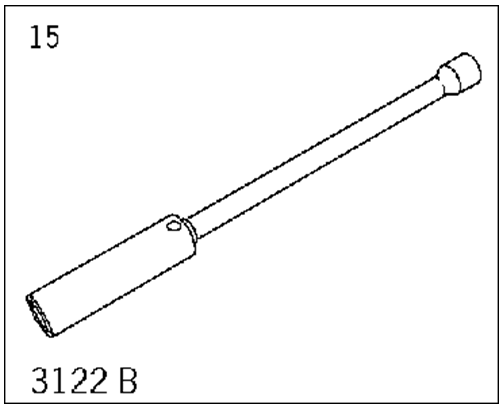

WM 287020 REMOVING AND INSTALLING SPARK PLUGS (MACAN) > TECHNICAL VALUES

Location	Description	Type	Basic value	Tolerance 1	Tolerance 2
Spark plug - NEW	Initial tightening/do not use lubricant	Tightening torque	25 Nm (19 ftlb.)		
Spark plug	Re-use/do not use lubricant	Tightening torque	30 Nm (22 ftlb.)		

WM 287020 REMOVING AND INSTALLING SPARK PLUGS (MACAN) > PRELIMINARY WORK

1. Remove ignition coils. → 282020 REMOVING AND INSTALLING IGNITION COILS

WM 287020 REMOVING AND INSTALLING SPARK PLUGS (MACAN) > REMOVING SPARK PLUGS

NOTE: Broken spark plug electrodes

- *Bits of electrodes can fall into the combustion chamber*

→ Only check electrode gap of spark plugs, but do not bend them.

→ Spark plugs with an incorrect electrode gap must be replaced.

Information

- Only use spark plugs approved by Porsche AG!

- Check electrode gap before screwing in a new spark plug.

1. Unscrew spark plugs using special tool; **spark plug socket and extension 3122 B.**

WM 287020 REMOVING AND INSTALLING SPARK PLUGS (MACAN) > INSTALLING SPARK PLUGS

NOTE: Broken spark plug electrodes

- *Bits of electrodes can fall into the combustion chamber*

→ Only check electrode gap of spark plugs, but do not bend them.

→ Spark plugs with an incorrect electrode gap must be replaced.

Information

- Only use spark plugs approved by Porsche AG!
- Check electrode gap before screwing in a new spark plug.

1. Tighten spark plugs using special tool; **spark plug socket and extension 3122 B.**

1. 1.1. Tightening torque - initial tightening: **Tightening torque: 25 Nm (19 ftlb.)**

Tightening torque - re-use: **Tightening torque: 30 Nm (22 ftlb.)**

WM 287020 REMOVING AND INSTALLING SPARK PLUGS (MACAN) > SUBSEQUENT WORK

1. Install ignition coils. → INSTALLING IGNITION COILS .

WM 287219 REMOVING AND INSTALLING KNOCK SENSOR (MACAN) > TECHNICAL VALUES

Location	Description	Type	Basic value	Tolerance 1	Tolerance 2
Fastening screw for knock sensor	Replace	Tightening torque	20 Nm (15 ftlb.)		

WM 287219 REMOVING AND INSTALLING KNOCK SENSOR (MACAN) > PRELIMINARY WORK

1. Remove coolant regulator housing. → 195519 REMOVING AND INSTALLING COOLANT REGULATOR HOUSING

WM 287219 REMOVING AND INSTALLING KNOCK SENSOR (MACAN) > REMOVING KNOCK SENSOR

1. Release and disconnect electric connector **-1-** .

   Fig 1: Identifying Knock Sensor Electric Connector

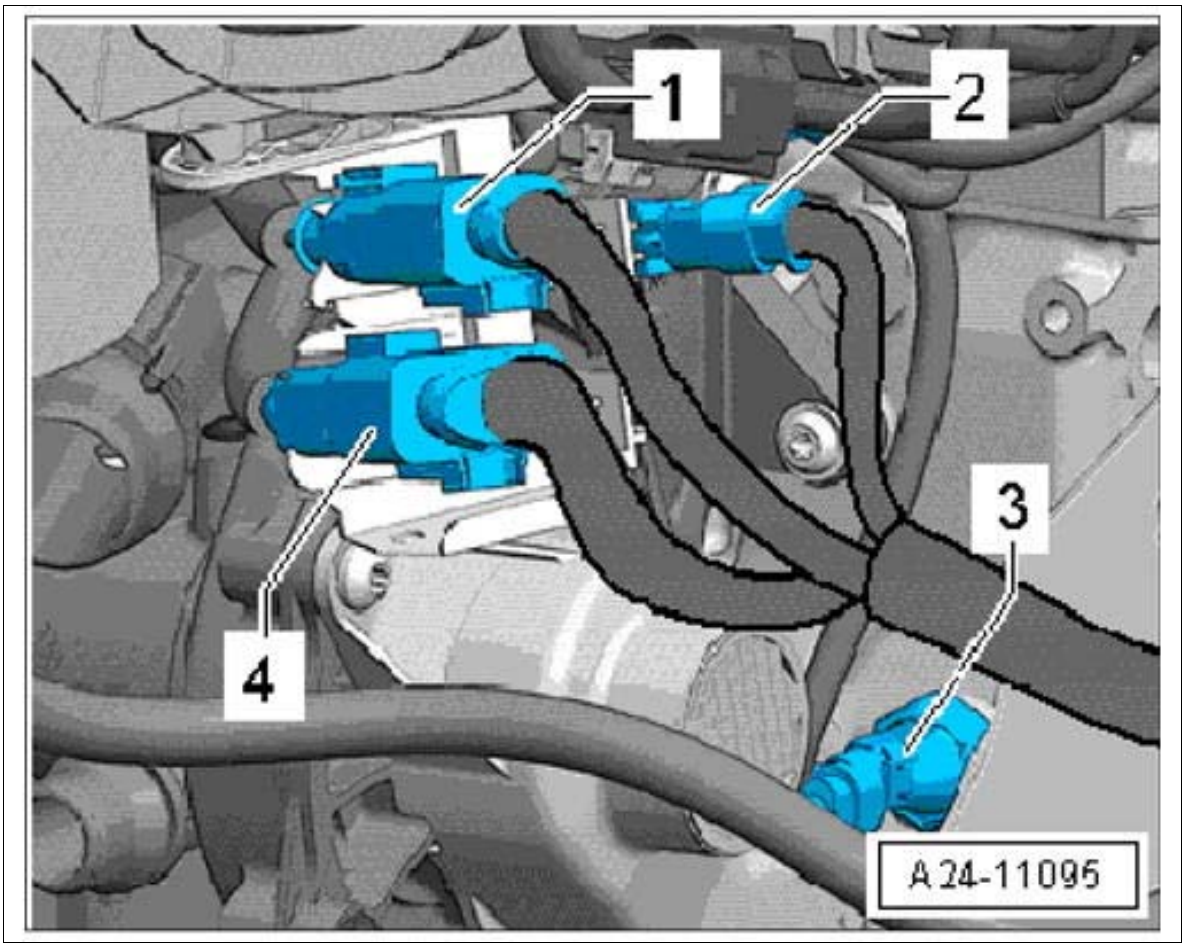

Courtesy of PORSCHE CARS NORTH AMERICA, INC.

2. Unscrew screw **-arrow-** and remove knock sensor.

Fig 2: Locating Knock Sensor

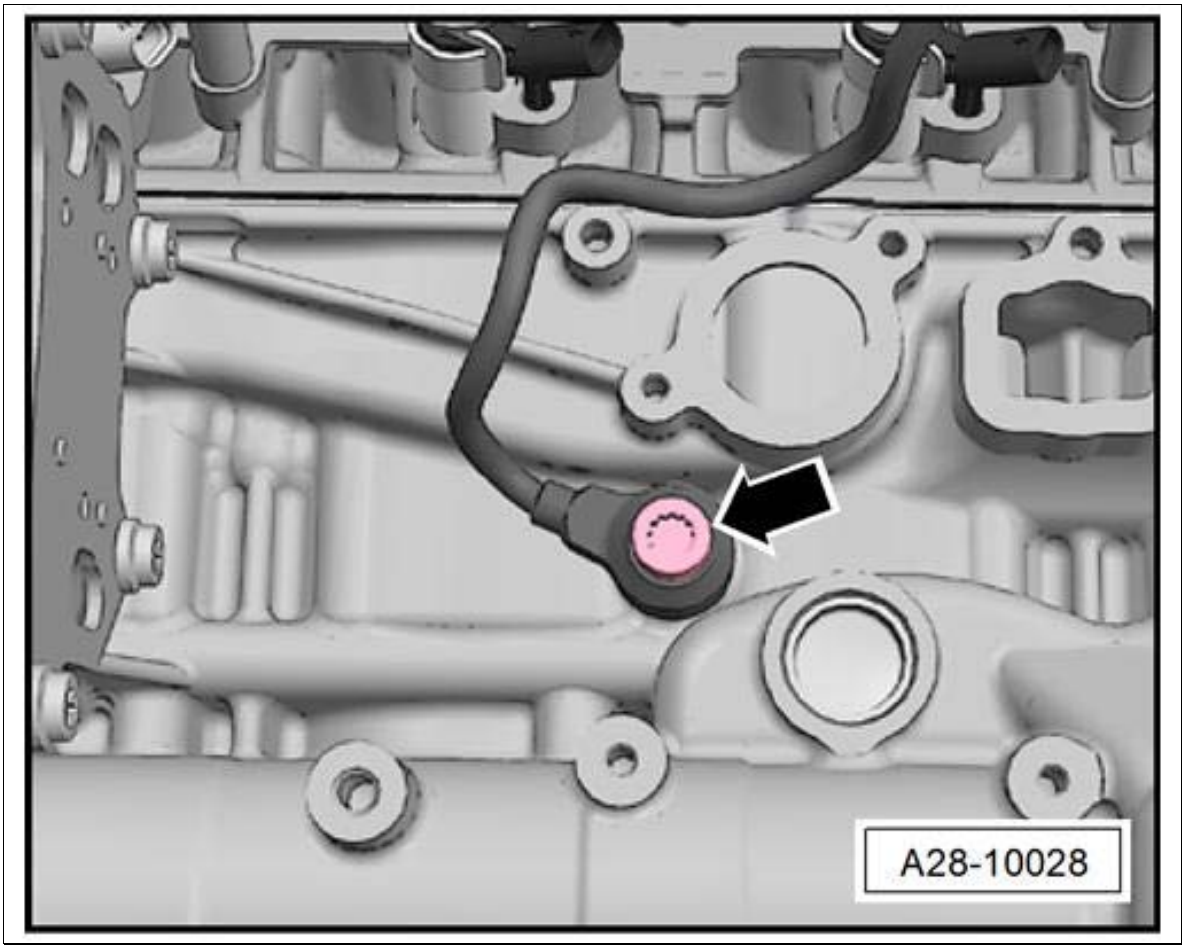

Courtesy of PORSCHE CARS NORTH AMERICA, INC.

WM 287219 REMOVING AND INSTALLING KNOCK SENSOR (MACAN) > INSTALLING KNOCK SENSOR

1. Installation is performed in reverse order. Pay particular attention to the following:
    1. 1.1. Replace screw.
    2. 1.2. **Tightening torque: 20 Nm (15 ftlb.)**

WM 287219 REMOVING AND INSTALLING KNOCK SENSOR (MACAN) > SUBSEQUENT WORK

1. Install coolant regulator housing. → INSTALLING COOLANT REGULATOR HOUSING .

WM 287319 REMOVING AND INSTALLING PULSE SENDER (MACAN) > TECHNICAL

VALUES

Location	Description	Type	Basic value	Tolerance 1	Tolerance 2
Fastening screw for pulse sender		Tightening torque	10 Nm (7.5 ftlb.)		

WM 287319 REMOVING AND INSTALLING PULSE SENDER (MACAN) > PRELIMINARY WORK

1. Remove engine cover.

WM 287319 REMOVING AND INSTALLING PULSE SENDER (MACAN) > REMOVING PULSE SENDER

1. Remove pulse sender for engine speed.
    1. 1.1. Release and disconnect electric connector **-1-** .
    2. 1.2. Unscrew screw **-arrow-** and remove pulse sender.

Fig 1: Removing Pulse Sender

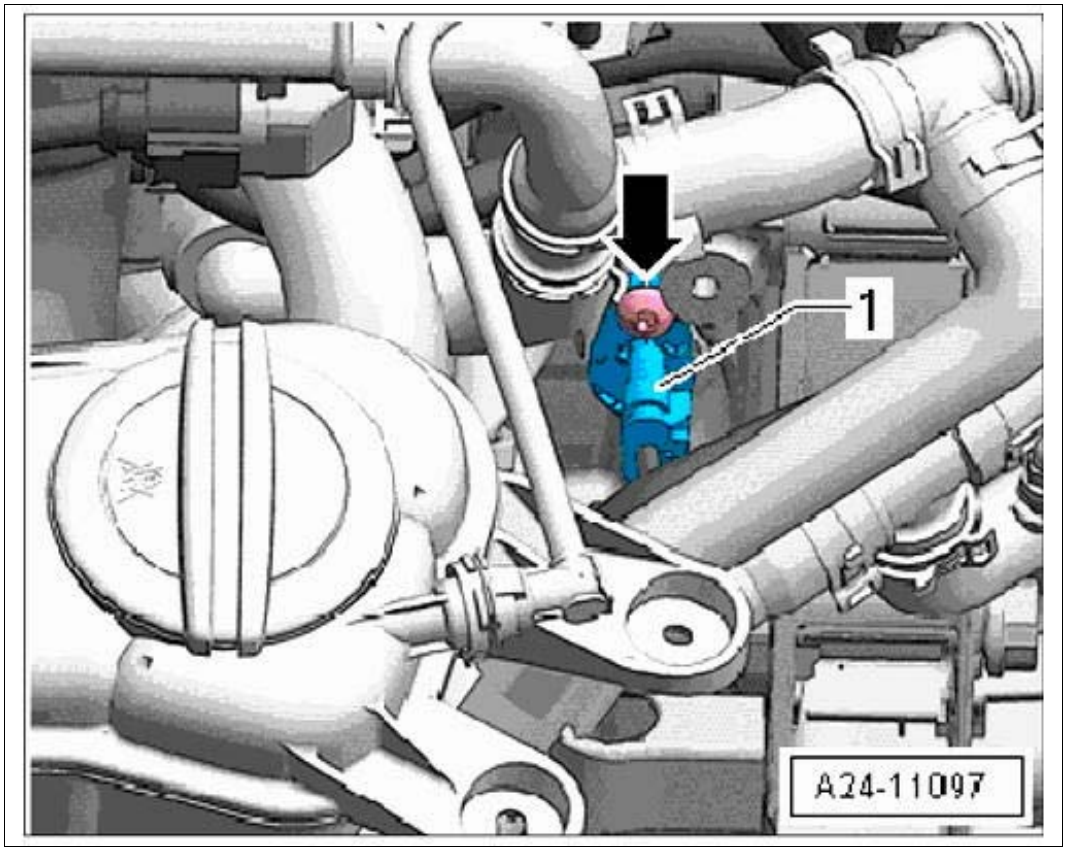

Courtesy of PORSCHE CARS NORTH AMERICA, INC.

WM 287319 REMOVING AND INSTALLING PULSE SENDER (MACAN) > INSTALLING PULSE SENDER

1. Installation is performed in reverse order.
    1. 1.1. Replace screw.
    2. 1.2. **Tightening torque: 10 Nm (7.5 ftlb.)**

WM 287319 REMOVING AND INSTALLING PULSE SENDER (MACAN) > SUBSEQUENT WORK

1. Install engine cover.

Service Manual: 82 - AUXILIARY HEATING -- (95B) - MACAN

WM 8209AN TEACHING REMOTE CONTROL FOR AUXILIARY HEATING (ALL MODELS) > TOOLS

Designation	Type	Number	Description	
PIWIS Tester II	Special tool	9818		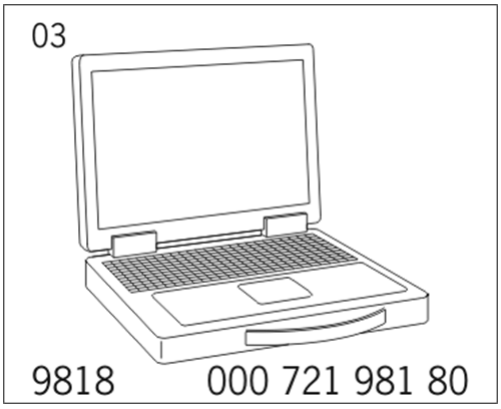

WM 8209AN TEACHING REMOTE CONTROL FOR AUXILIARY HEATING (ALL MODELS) > TEACHING REMOTE CONTROL FOR AUXILIARY HEATING

Information

- The remote control for the auxiliary heater can only be taught using the Porsche System Tester.
- A maximum of three remote controls can be taught per vehicle.

Fig 1: Identifying Auxiliary Heating Remote Control

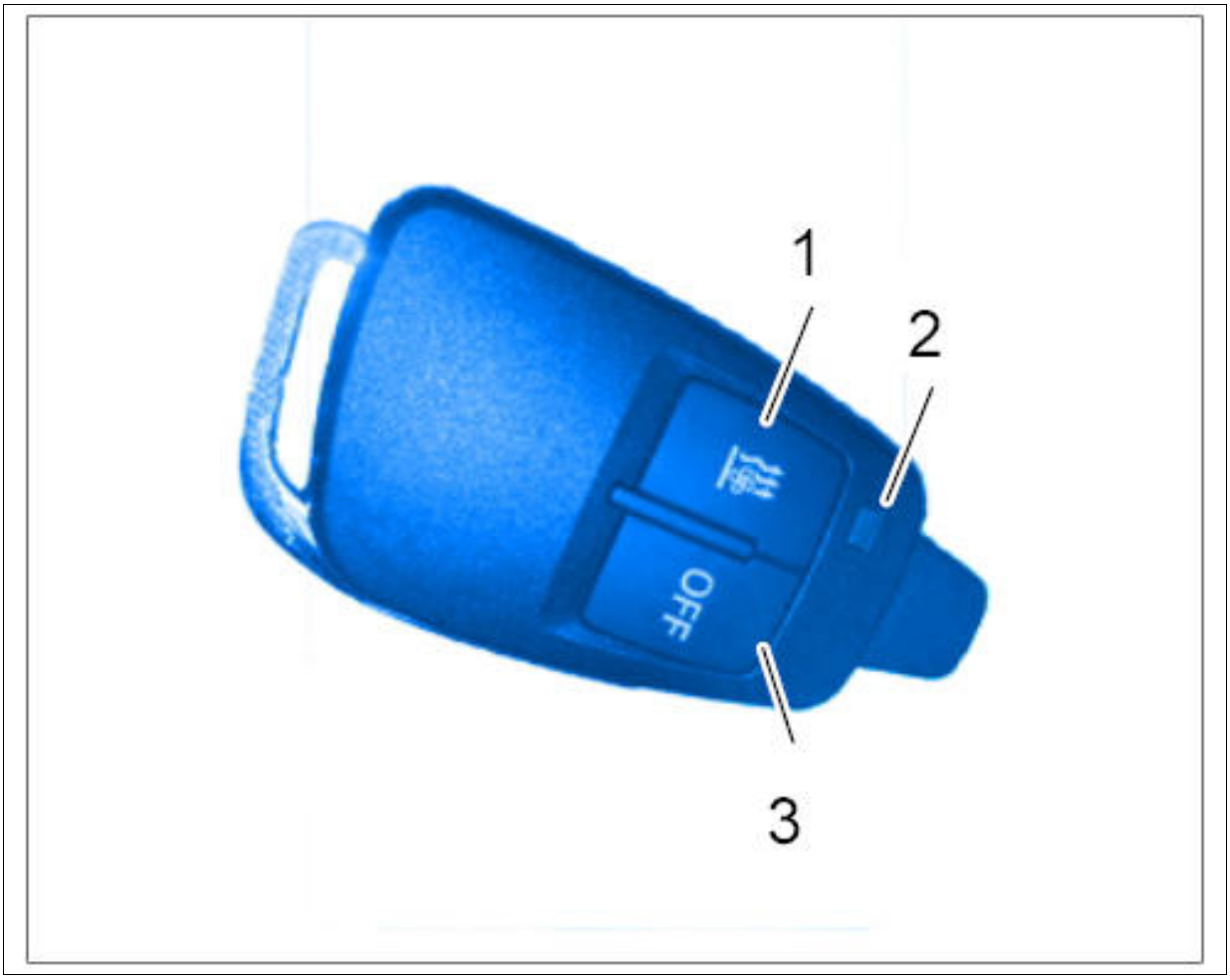

Courtesy of PORSCHE CARS NORTH AMERICA, INC.

1. ON button
2. LED
3. OFF button

1. **PIWIS Tester II 9818** must be connected to the vehicle before starting the System Tester. Switch on ignition.
2. Select the vehicle type.
3. Select the **Drive links/checks** menu and press [F12] to continue.
4. Select the **Teach remote control to receiver** menu, press [F12] and follow the instructions on the System Tester.
5. Press [F8] to start the teaching process.
6. After the **SEND** message appears, press the [OFF] button **-3-** on the remote control within 5 seconds until the "saved" message appears. The remote control is now taught.
7. To teach other remote controls, repeat the process.

8. Carry out a function test on the remote control and then read out the fault memory.
9. **PIWIS Tester II 9818** must now be disconnected from the vehicle.

WM 8209AN TEACHING REMOTE CONTROL FOR AUXILIARY HEATING (ALL MODELS) > SWITCHING AUXILIARY HEATING ON AND OFF WITH REMOTE CONTROL > SWITCHING ON AUXILIARY HEATING WITH REMOTE CONTROL

1. [ON] button **-1-** must be pressed for approx. 2 seconds. The LED **-2-** flashes green and goes out once the auxiliary heater is started completely.

    1. ON button
    2. LED
    3. OFF button

Fig 1: Identifying Auxiliary Heating Remote Control

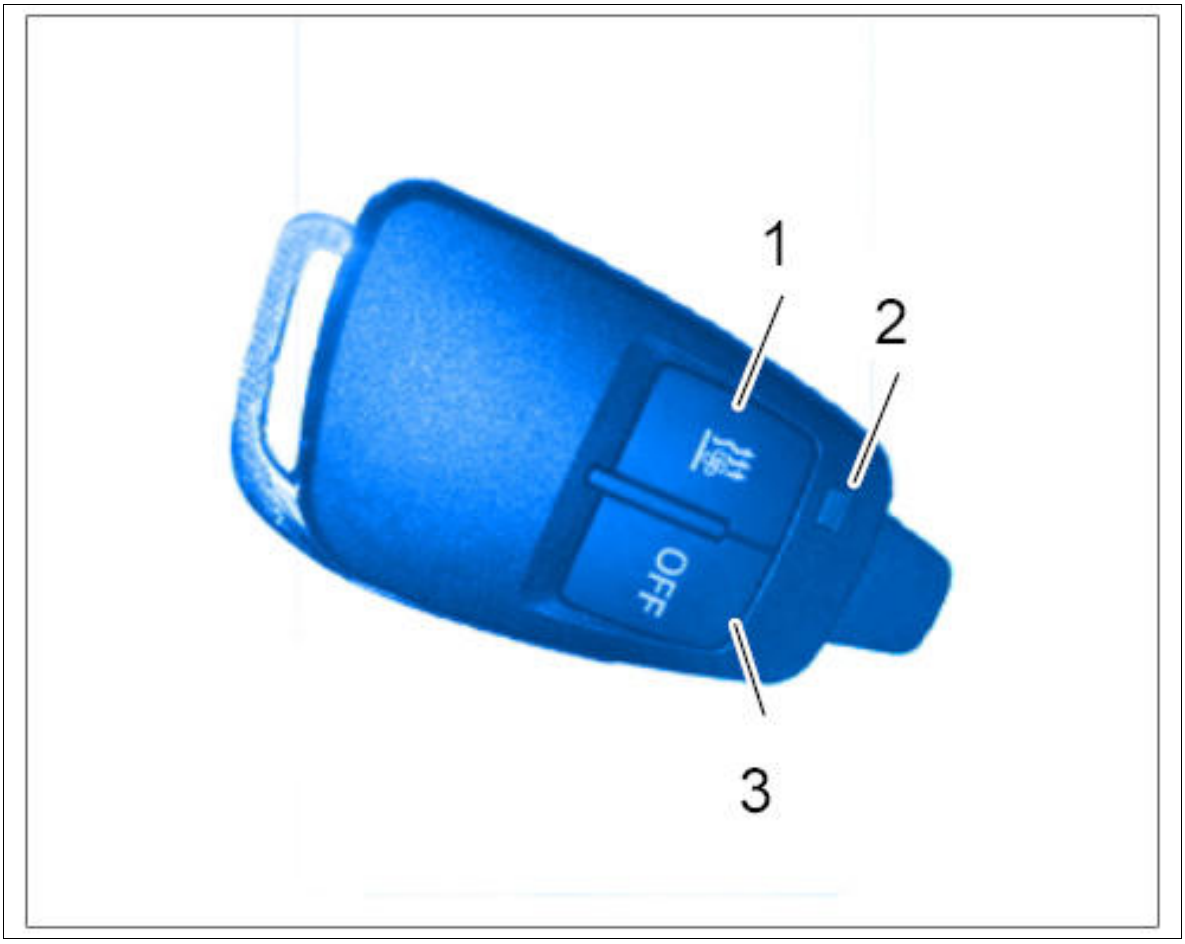

Courtesy of PORSCHE CARS NORTH AMERICA, INC.

WM 8209AN TEACHING REMOTE CONTROL FOR AUXILIARY HEATING (ALL

MODELS) > SWITCHING AUXILIARY HEATING ON AND OFF WITH REMOTE CONTROL > SWITCHING OFF AUXILIARY HEATING WITH REMOTE CONTROL

1. [OFF] button **-3-** must be pressed for approx. 2 seconds. The LED **-2-** flashes red and goes out once the auxiliary heater is shut down completely.

    1. ON button
    2. LED
    3. OFF button

Fig 1: Identifying Auxiliary Heating Remote Control

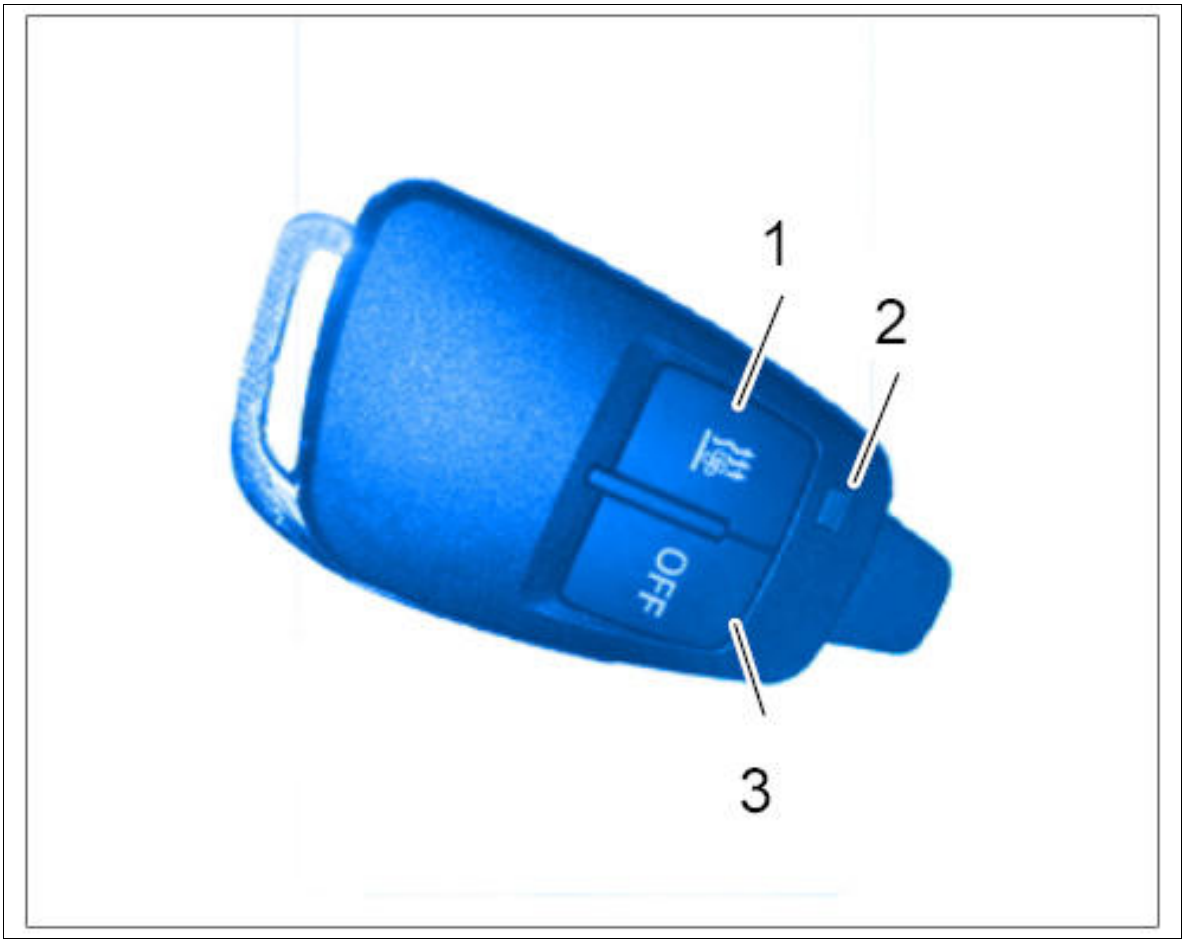

Courtesy of PORSCHE CARS NORTH AMERICA, INC.

WM 821819 REMOVING AND INSTALLING CONTROL UNIT FOR AUXILIARY HEATER (ALL MODELS) > REMOVING AND INSTALLING CONTROL UNIT FOR AUXILIARY HEATER > REMOVING CONTROL UNIT FOR AUXILIARY HEATER

1. Unscrew fastening screws **-2-** on control unit for auxiliary heater **-1-** .

Fig 1: Loosening Control Unit

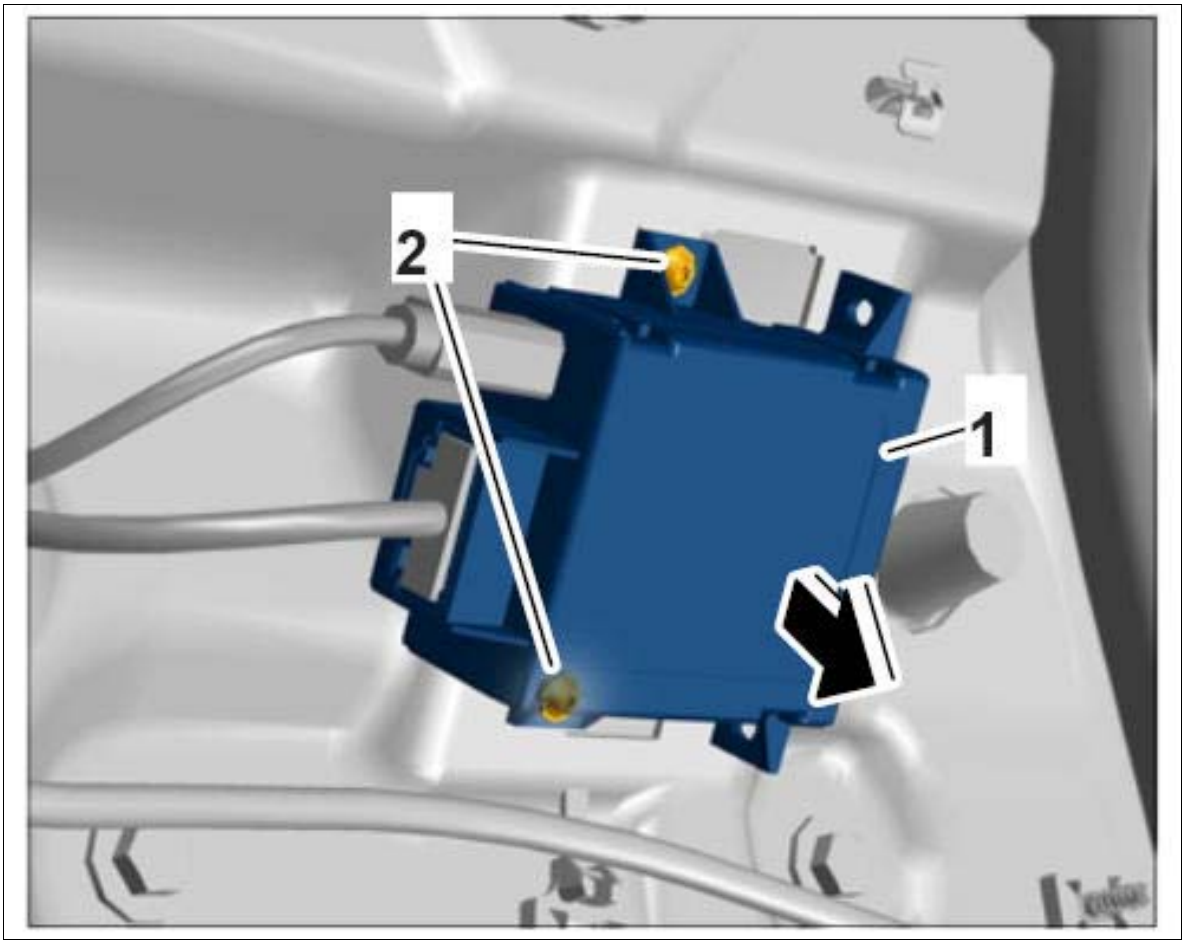

Courtesy of PORSCHE CARS NORTH AMERICA, INC.

2. Release plug connections **-arrow A-** and pull them off **-arrow B-** .

Fig 2: Disconnecting Plug Connections

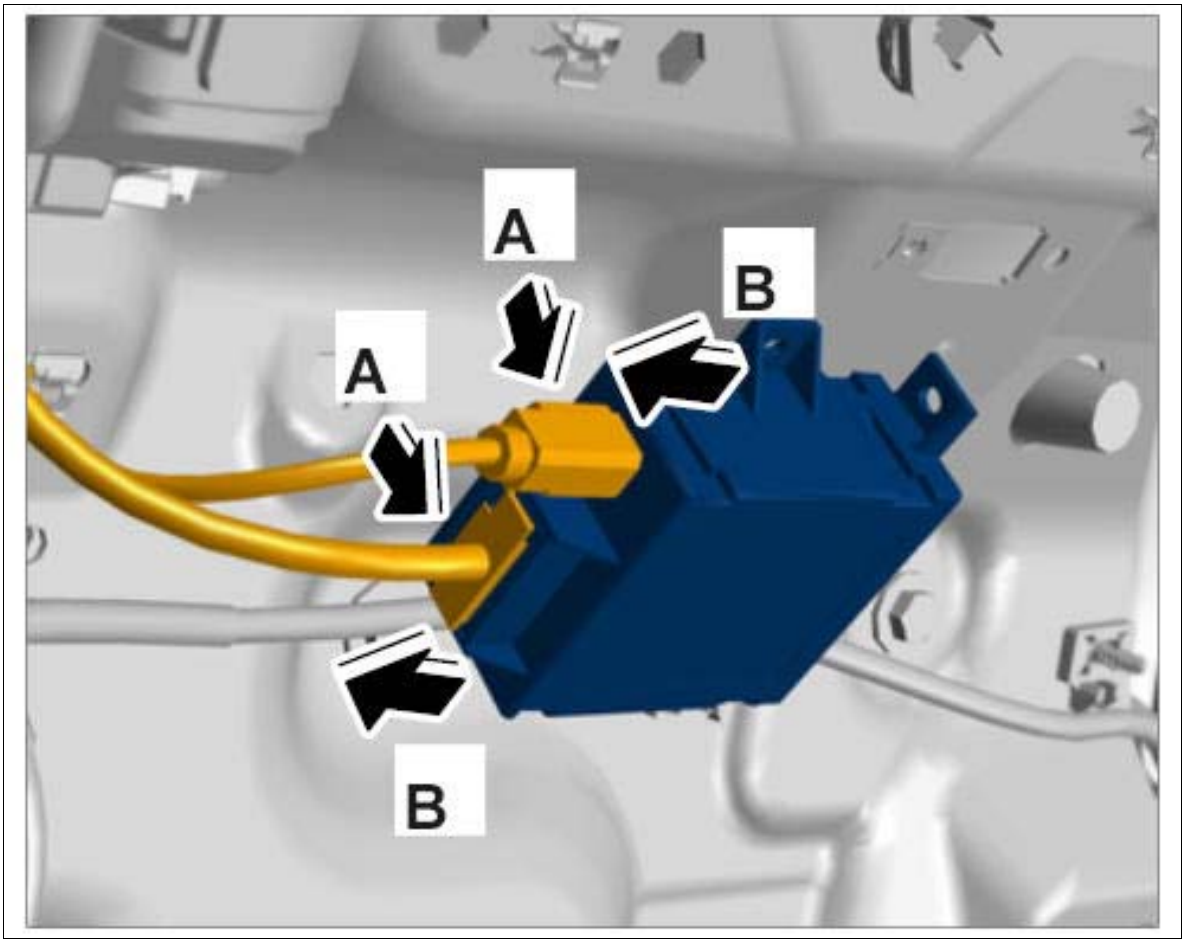

Courtesy of PORSCHE CARS NORTH AMERICA, INC.

WM 821819 REMOVING AND INSTALLING CONTROL UNIT FOR AUXILIARY HEATER (ALL MODELS) > REMOVING AND INSTALLING CONTROL UNIT FOR AUXILIARY HEATER > INSTALLING CONTROL UNIT FOR AUXILIARY HEATER

1. Connect plug connections until they engage securely.

Fig 1: Connecting Plug Connections

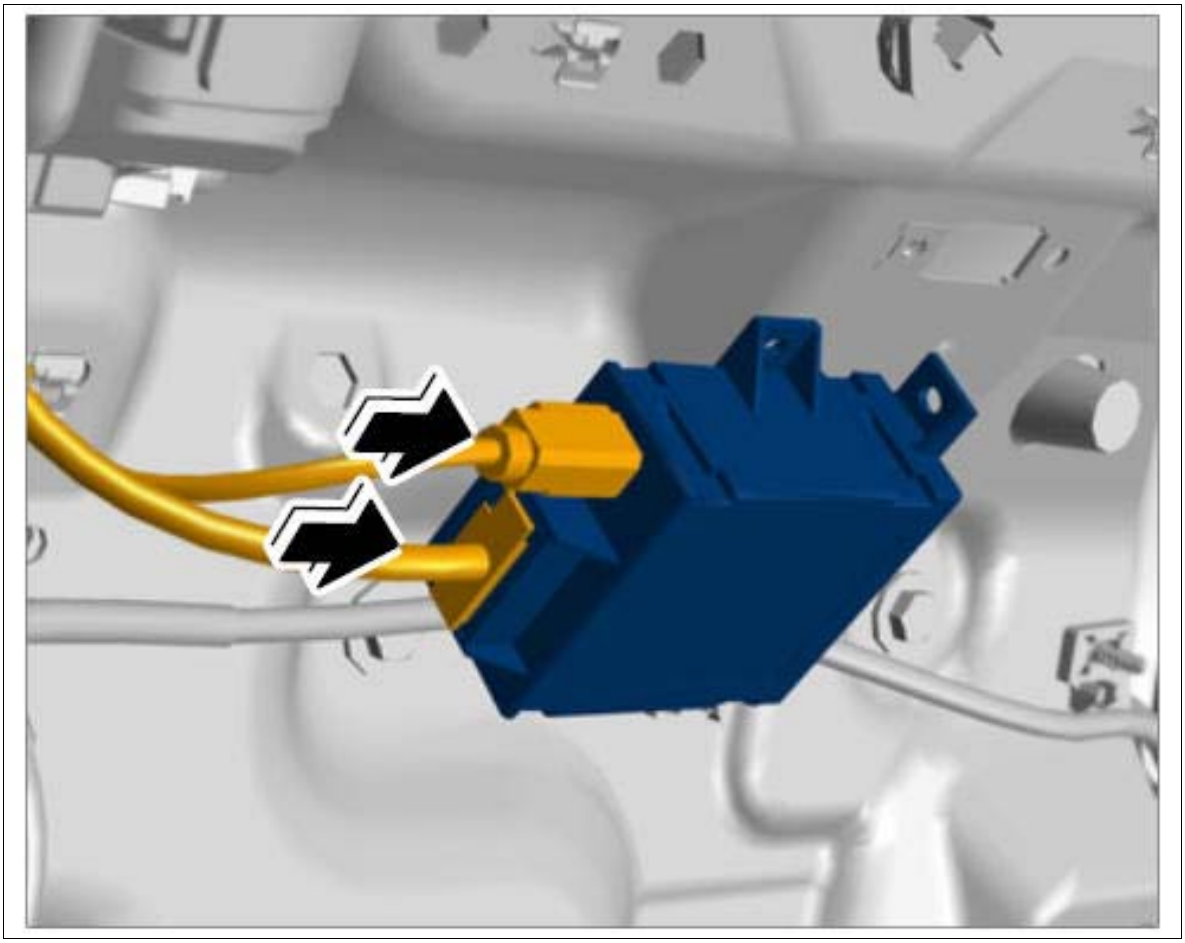

Courtesy of PORSCHE CARS NORTH AMERICA, INC.

2. Screw in fastening screws **-2-** for control unit for auxiliary heater **-1-** .

Fig 2: Securing Control Unit

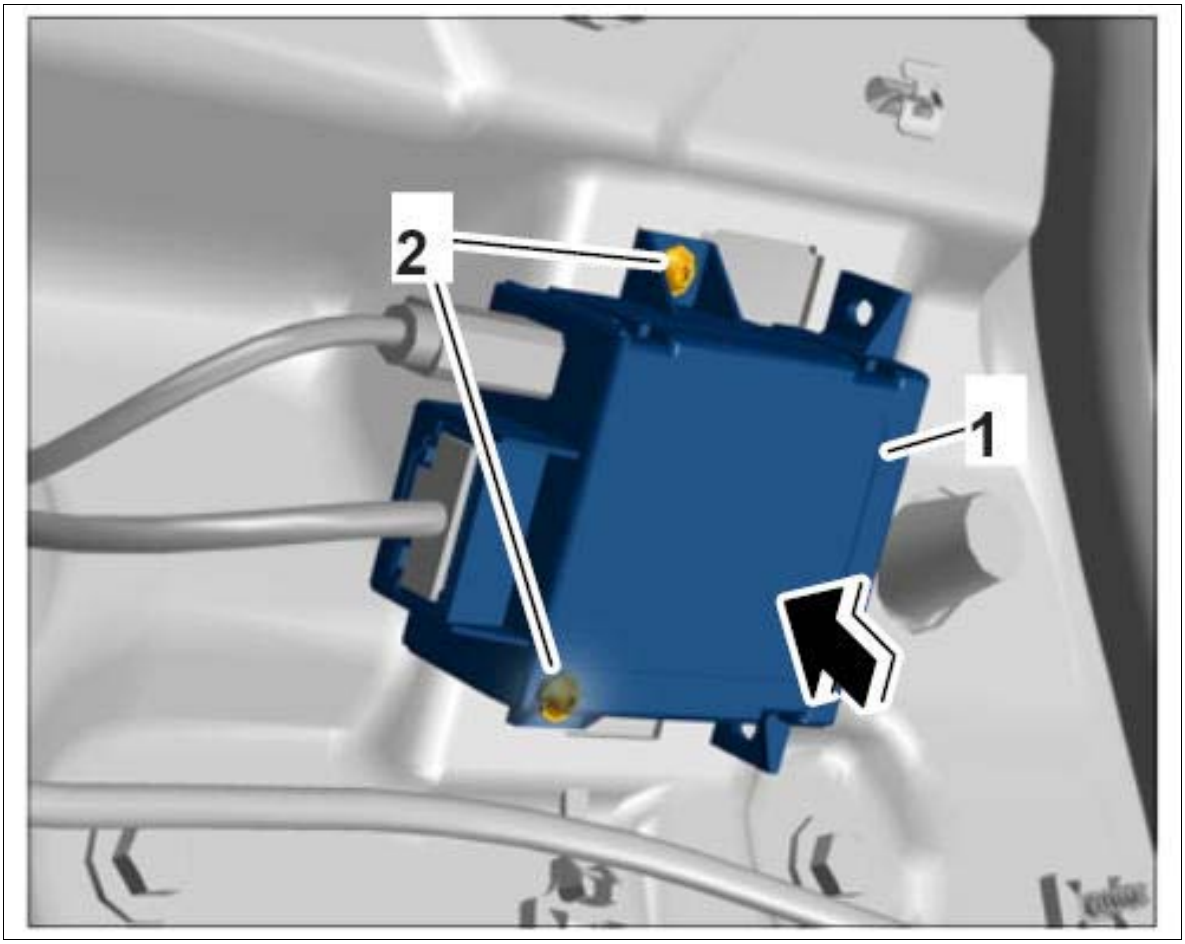

Courtesy of PORSCHE CARS NORTH AMERICA, INC.

WM 822019 REMOVING AND INSTALLING COMPLETE HEATER (ALL MODELS) > TOOLS

Designation	Type	Number	Description	
hose clamp	VW tool	3094		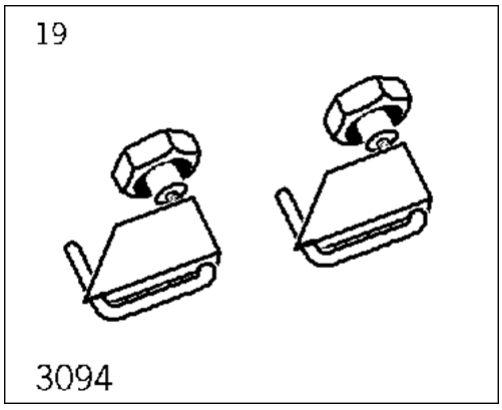

PIWIS Tester II	Special tool	9818		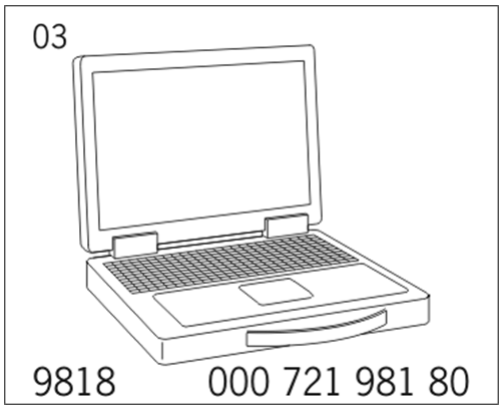
assembly pliers	Commercially available tool	Nr.72 Pos.1		

WM 822019 REMOVING AND INSTALLING COMPLETE HEATER (ALL MODELS) > TECHNICAL VALUES

Location	Description	Type	Basic value	Tolerance 1	Tolerance 2
Heater holder to body	M6 x 30 thread	Tightening torque	20 Nm (15 ftlb.)		

WM 822019 REMOVING AND INSTALLING COMPLETE HEATER (ALL MODELS) > INFORMATION > INSTALLATION POSITION OF HEATER

The heater is behind the wheel housing liner in the front right wheel housing.

Fig 1: Overview Of Heater Wheel Housing



Courtesy of PORSCHE CARS NORTH AMERICA, INC.

WM 822019 REMOVING AND INSTALLING COMPLETE HEATER (ALL MODELS) > PRELIMINARY WORK

1. Remove right front wheel → Removing Wheel
2. Remove front wheel housing liner at the right → Removing front wheel housing liner

WM 822019 REMOVING AND INSTALLING COMPLETE HEATER (ALL MODELS) > REMOVING AND INSTALLING HEATER > REMOVING HEATER

NOTE: Danger of scalding

- *Coolant can be very hot.*
- *Coolant may be pressurized.*

→ Only remove the heater when the cooling system has cooled down.

→ By carefully opening the catch on the reservoir, make sure that the cooling system is depressurized.

NOTE: Danger of slipping due to emerging coolant

- *The emerging coolant will make the floor of the workshop slippery and may cause people to slip and fall over.*

→ Collect emerging coolant in a suitable pan.

1. Remove coolant hoses.

    1. 1.1. Clamp coolant hoses **-1-** using hose clamp 3094 **-3-** .

    2. 1.2. Loosen spring band clamps **-2-** using assembly pliers Nr.72 Pos.1 and pull off coolant hoses **-1-** .

WARNING: Emerging fuel

1. Risk of fire

Fig 1: Identifying Coolant Hoses

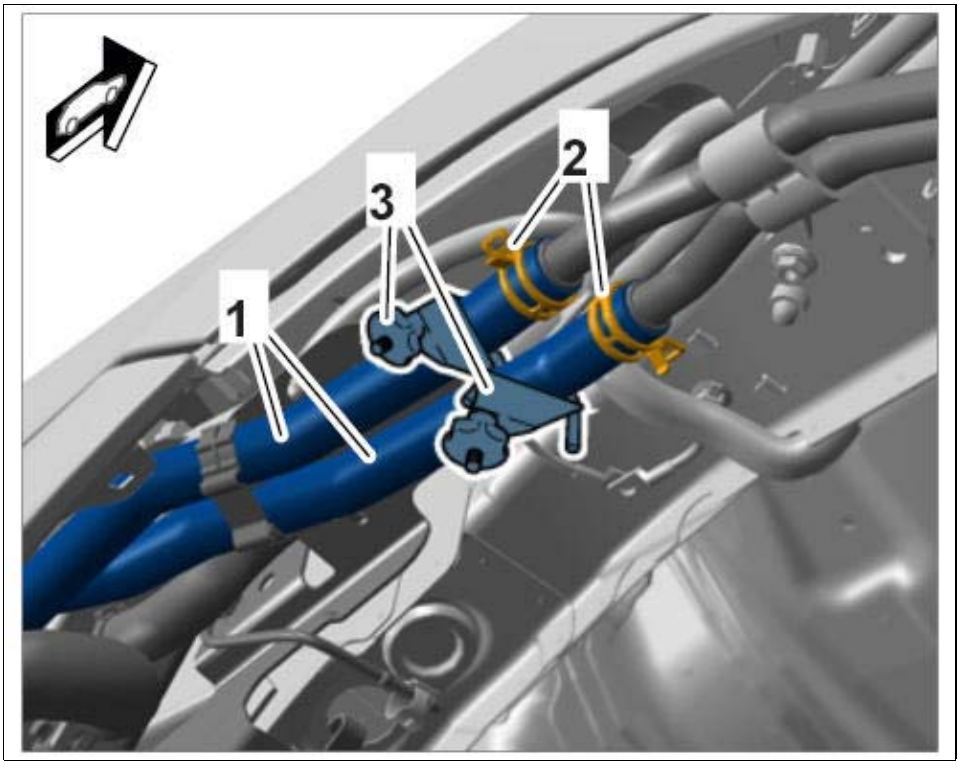

Courtesy of PORSCHE CARS NORTH AMERICA, INC.

→ Avoid contact with hot parts or sources of ignition.

→ Collect emerging fuel, absorb it if necessary with a suitable binding material and dispose of properly.

→ Use suction to remove ignitable vapors.

→ Attach warning sign to vehicle in a clearly visible position.

2. Disconnect fuel line.

1. 2.1. Loosen spring band clamp **-3-** using **assembly pliers Nr.72 Pos.1** and disconnect fuel line **-2-** .

Fig 2: Locating Fuel Line In Wheel Housing

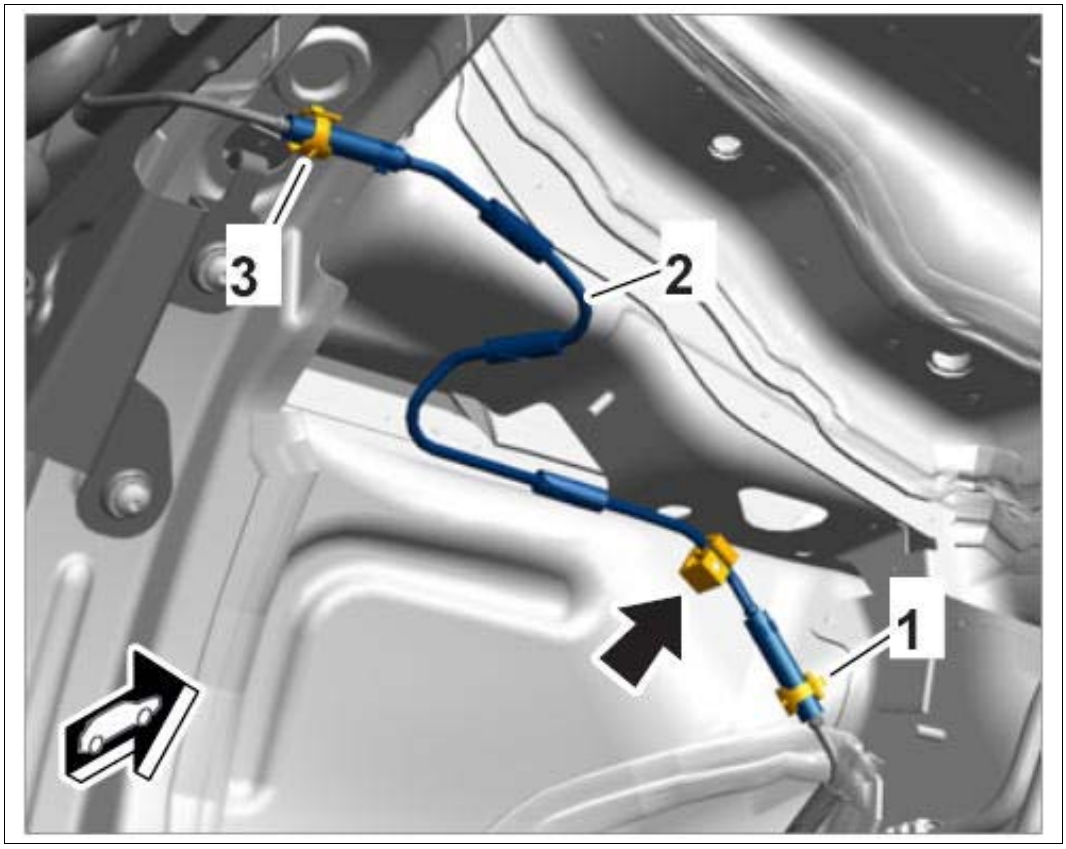

Courtesy of PORSCHE CARS NORTH AMERICA, INC.

3. Disconnect exhaust pipe from silencer.

1. 3.1. Loosen screw-type clamp **-1-** .
2. 3.2. Pull flexi-pipe **-2-** off the silencer pipe **-3-** .

Fig 3: Identifying Exhaust Pipe On Silencer



Courtesy of PORSCHE CARS NORTH AMERICA, INC.

4. Unclip wiring harness **-1-** at position **-arrow-** and remove it from the holder **-2-** .

Fig 4: Locating Wiring Harness On Holder

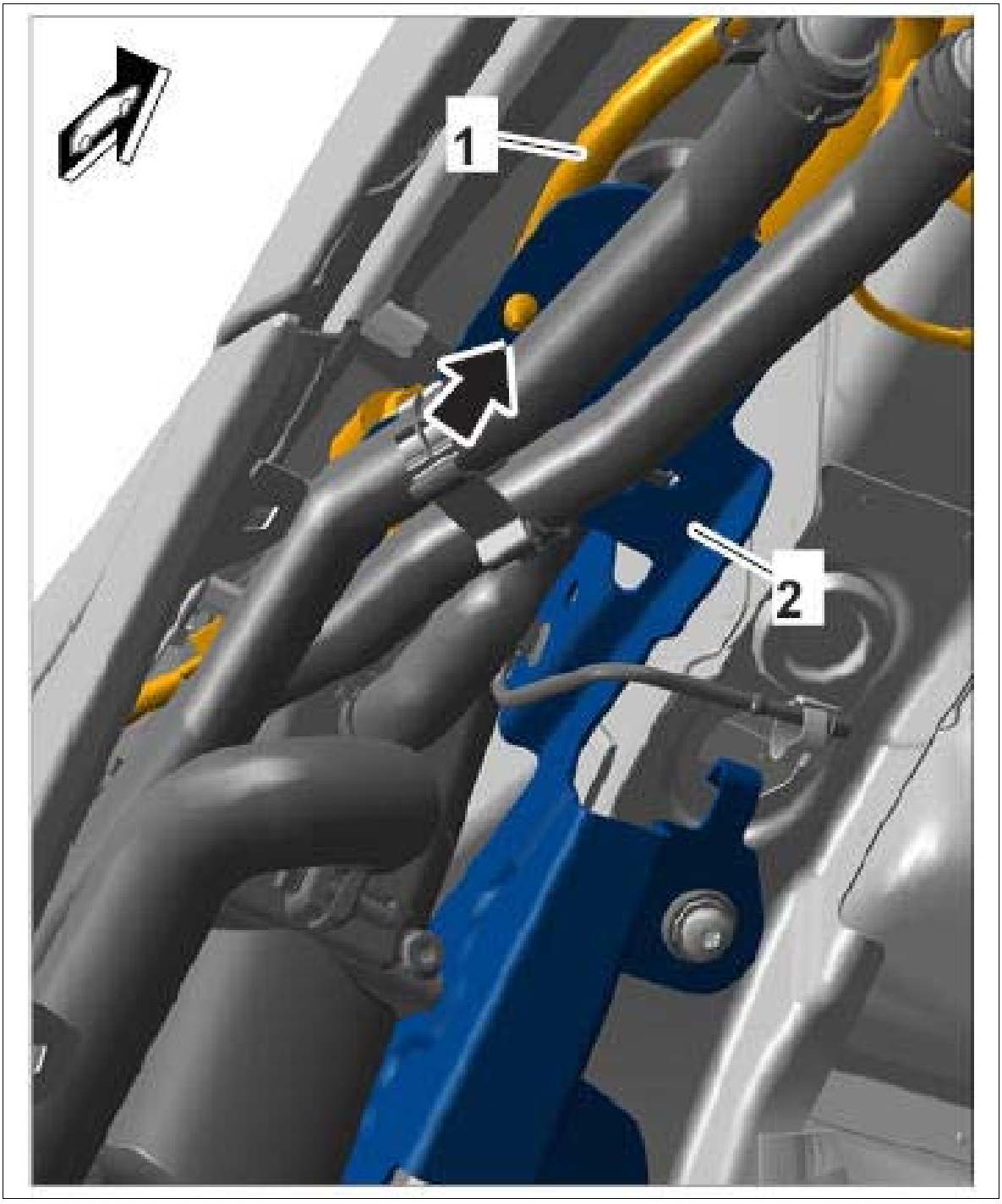

Courtesy of PORSCHE CARS NORTH AMERICA, INC.

5. Release electric plug connection **-1-** from the circulating pump **-2-** and disconnect it.

Fig 5: Identifying Circulating Pump Connector

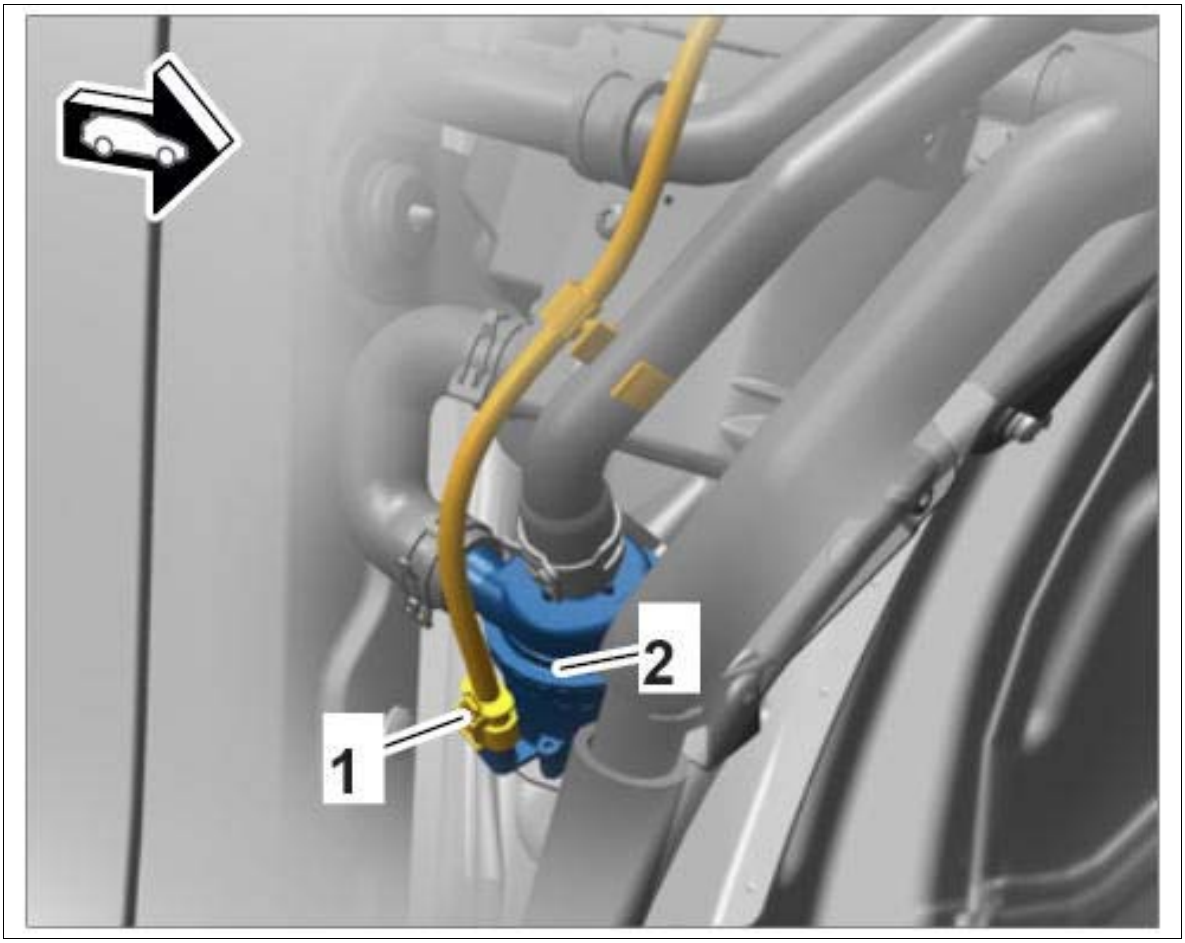

Courtesy of PORSCHE CARS NORTH AMERICA, INC.

6. Unclip wiring harness **-1-** from the coolant hose **-2-** at the marked positions **-arrows-** .

Fig 6: Locating Wiring Harness On Coolant Hose

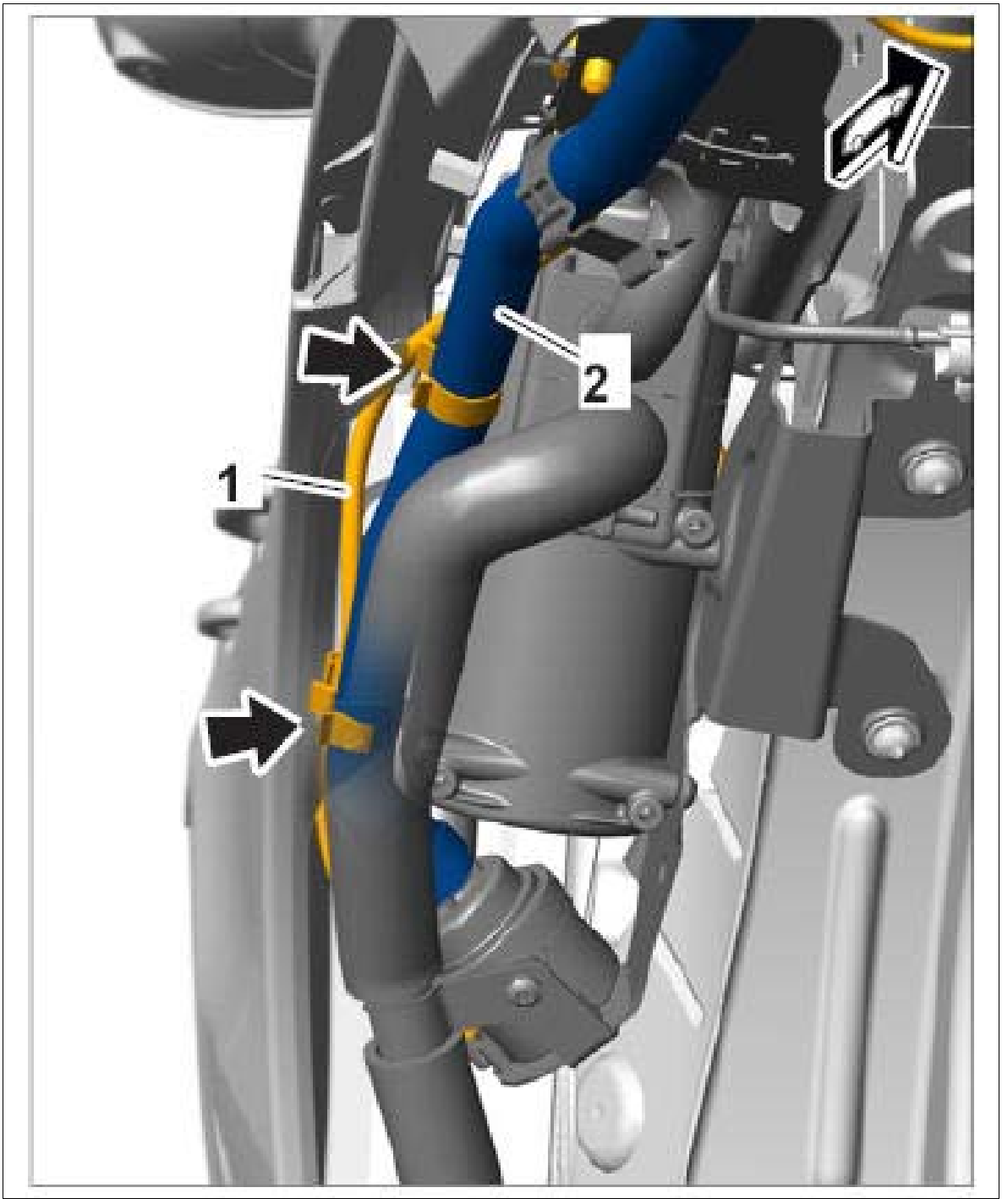

Courtesy of PORSCHE CARS NORTH AMERICA, INC.

7. Remove heater.
    1. 7.1. Unscrew fastening screws **-1-** .
    2. 7.2. Remove heater with holder **-2-** and pull it forward slightly.

Fig 7: Identifying Heater

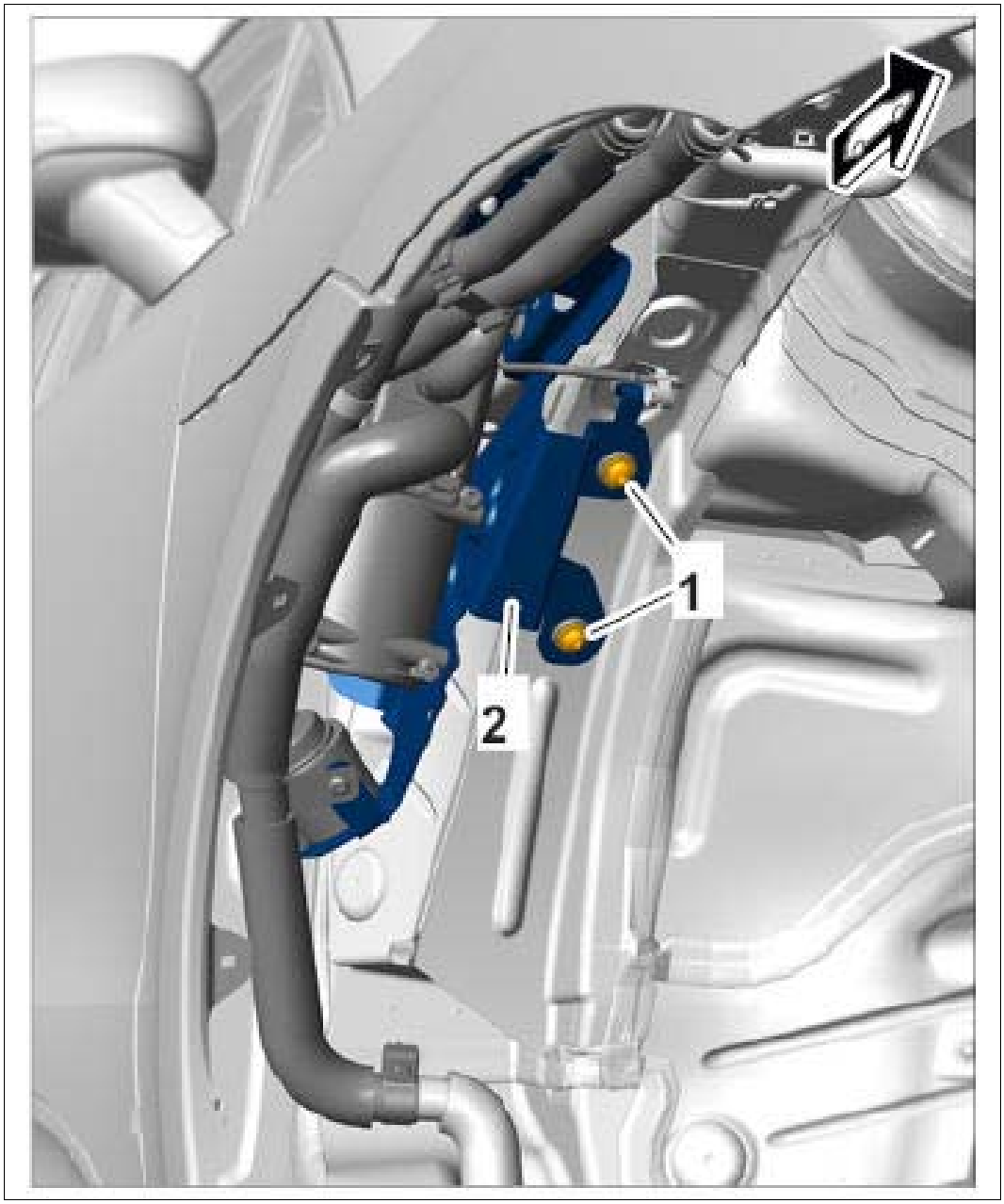

Courtesy of PORSCHE CARS NORTH AMERICA, INC.

3. 7.3. Release and disconnect electric plug connections **-1-** .

Fig 8: Identifying Heater Connectors

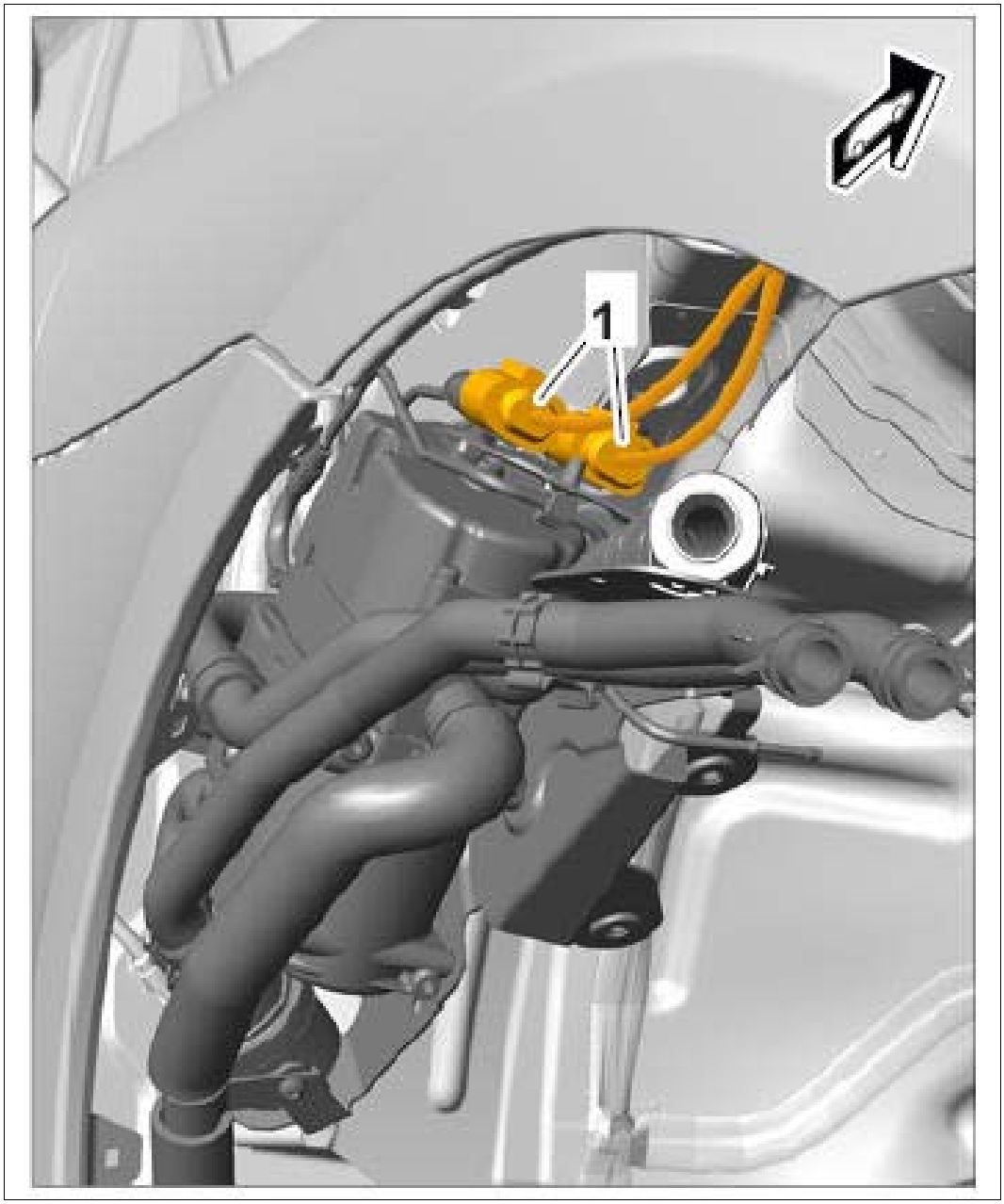

Courtesy of PORSCHE CARS NORTH AMERICA, INC.

WM 822019 REMOVING AND INSTALLING COMPLETE HEATER (ALL MODELS) > REMOVING AND INSTALLING HEATER > INSTALLING HEATER

Information

- There is no guarantee that re-used clamps will secure the component properly.
- Removed clamps must be replaced.
- Always use new clamps during installation.

1. Connect electric plug connections **-1-** until they engage securely.

Fig 1: Identifying Heater Connectors

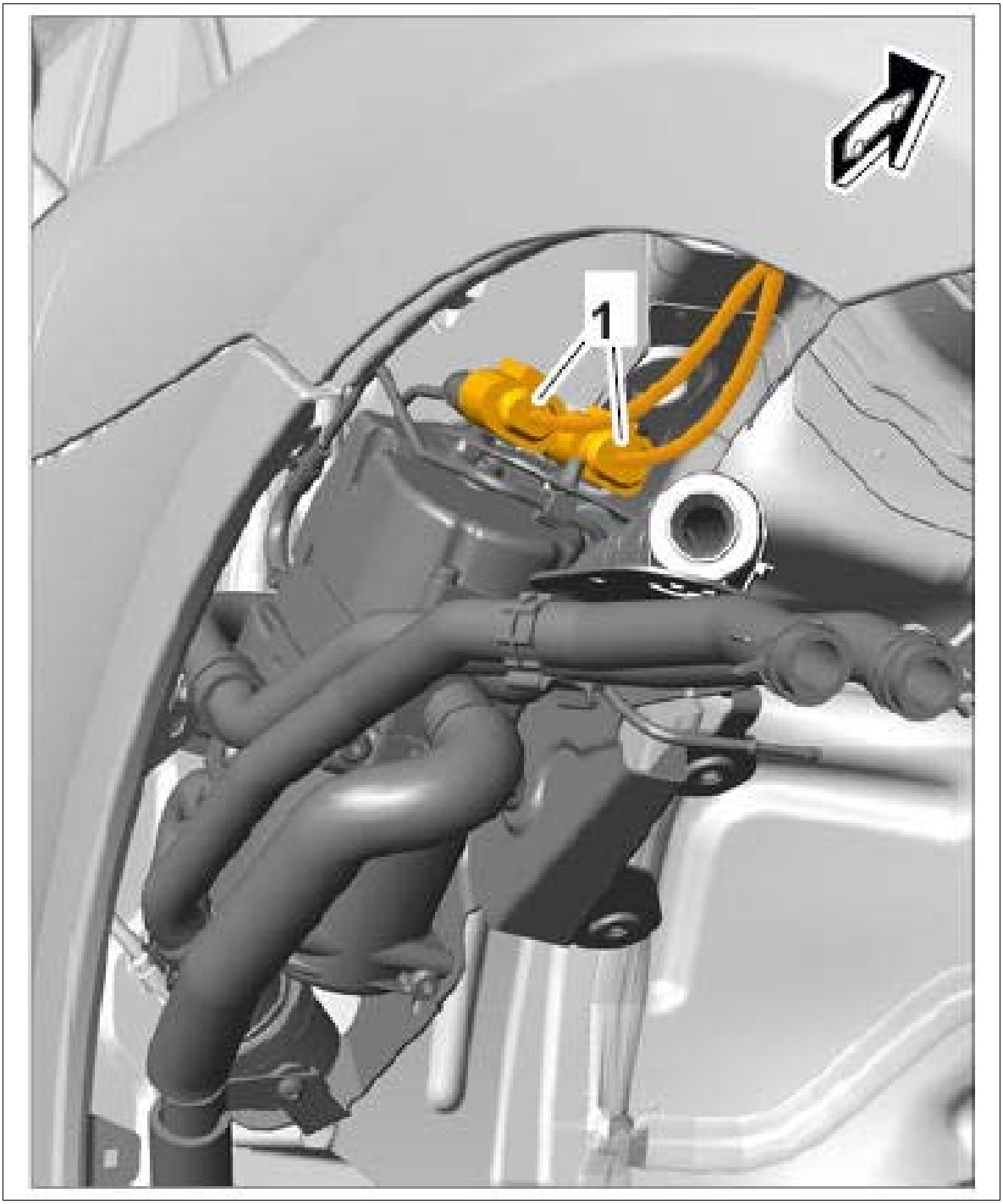

Courtesy of PORSCHE CARS NORTH AMERICA, INC.

2. Position the heater.

    1. 2.1. Position rubber sleeve **-1-** on the retaining pin **-2-** .
    2. 2.2. Engage clip **-3-** for the holder in the cut-out **-4-** .

Fig 2: Positioning Heater

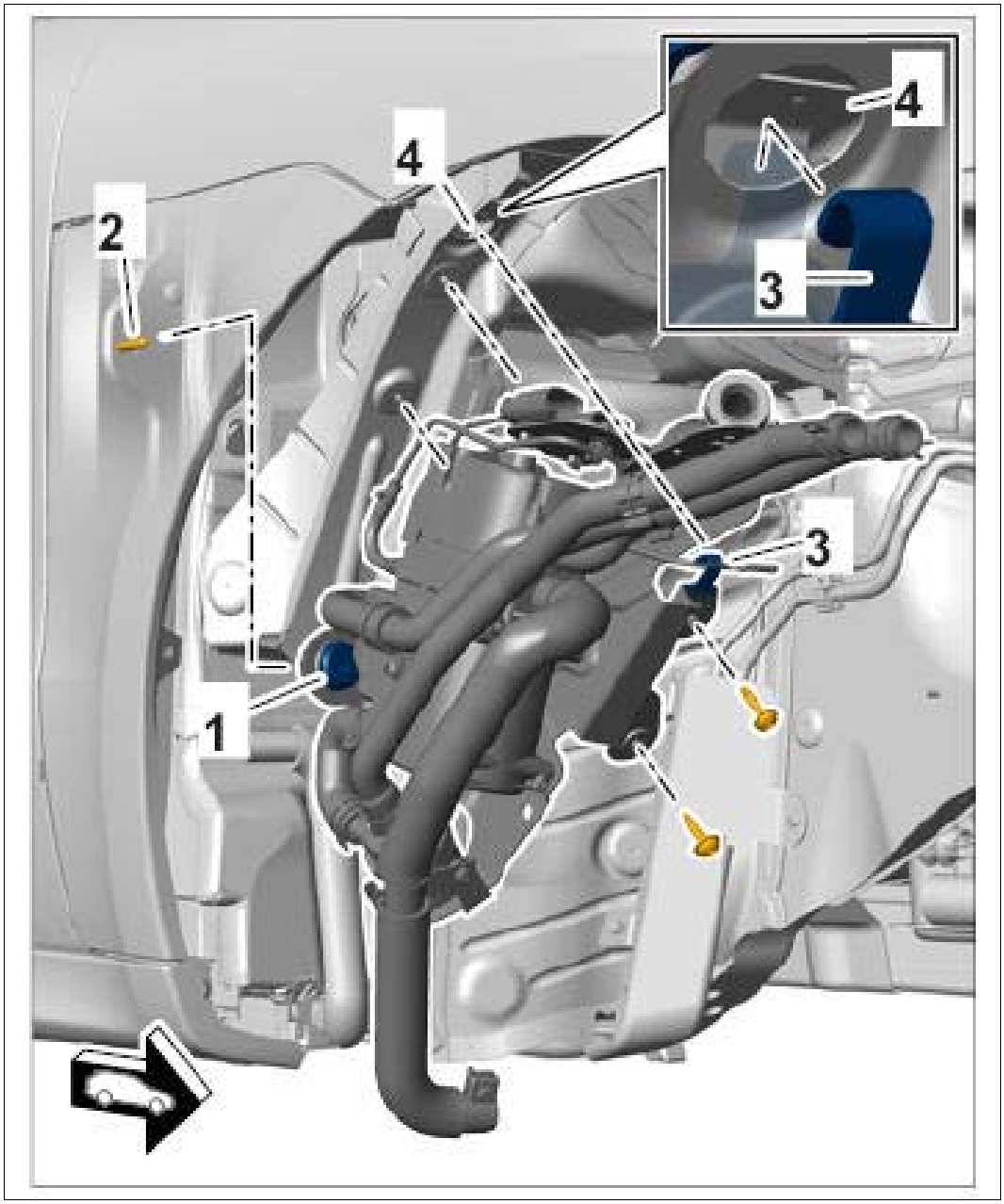

Courtesy of PORSCHE CARS NORTH AMERICA, INC.

3. Secure the heater.

    1. 3.1. Loosely fit fastening screws **-1-** for the holder **-2-** at the top and bottom.

Fig 3: Identifying Heater Mounting

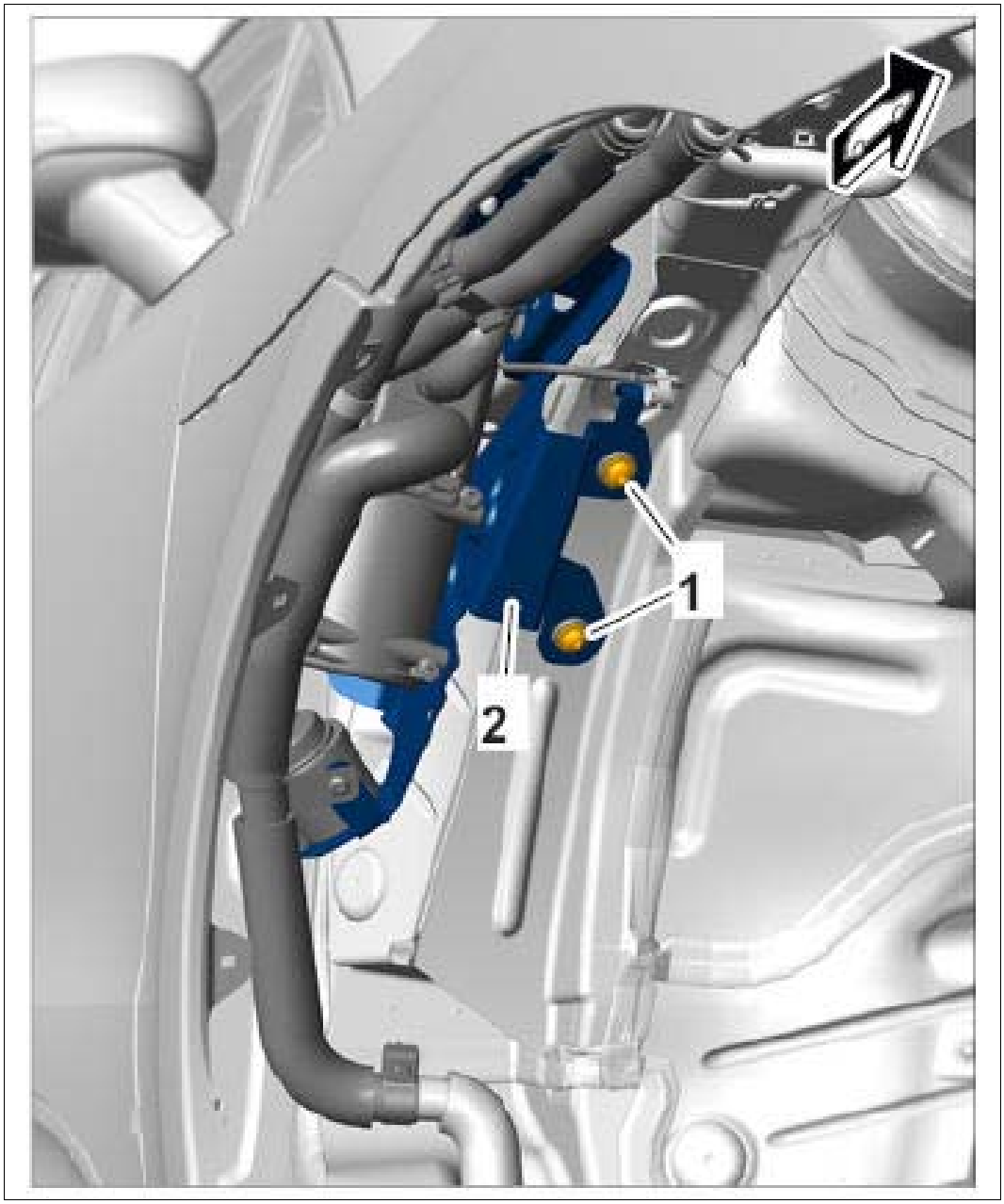

Courtesy of PORSCHE CARS NORTH AMERICA, INC.

2. 3.2. Slide flexi-pipe **-2-** and screw-type clamp **-1-** onto the silencer pipe **-3-** .

Fig 4: Identifying Exhaust Pipe On Silencer



Courtesy of PORSCHE CARS NORTH AMERICA, INC.

3. 3.3. Tighten fastening screws **-1-** on the holder **-2-** to the prescribed tightening torque. **Tightening torque 20 Nm (15 ftlb.)**

4. 3.4. Tighten screw-type clamp **-1-** .

4. Secure coolant hoses.

1. 4.1. Push coolant hoses **-1-** as far as they will go over the adapters.

2. 4.2. Tighten spring band clamps **-2-** using **assembly pliers Nr.72 Pos.1.**

3. 4.3. **Hose clamp 3094 -3-** must then be removed from the coolant hoses **-1-** .

Fig 5: Identifying Coolant Hoses

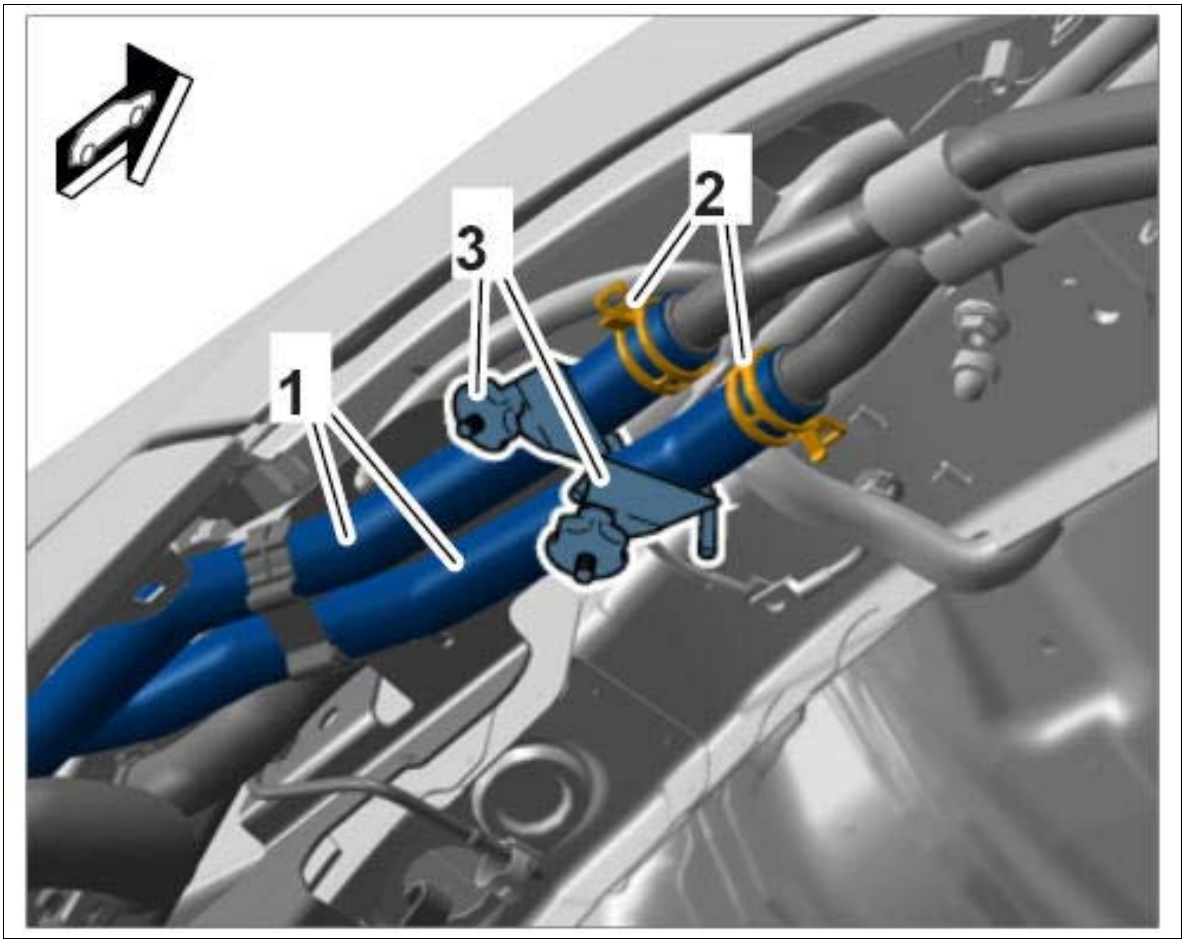

Courtesy of PORSCHE CARS NORTH AMERICA, INC.

5. Clip wiring harness **-1-** onto the coolant hose **-2-** at the marked positions **-arrows-** .

Fig 6: Locating Wiring Harness On Coolant Hose

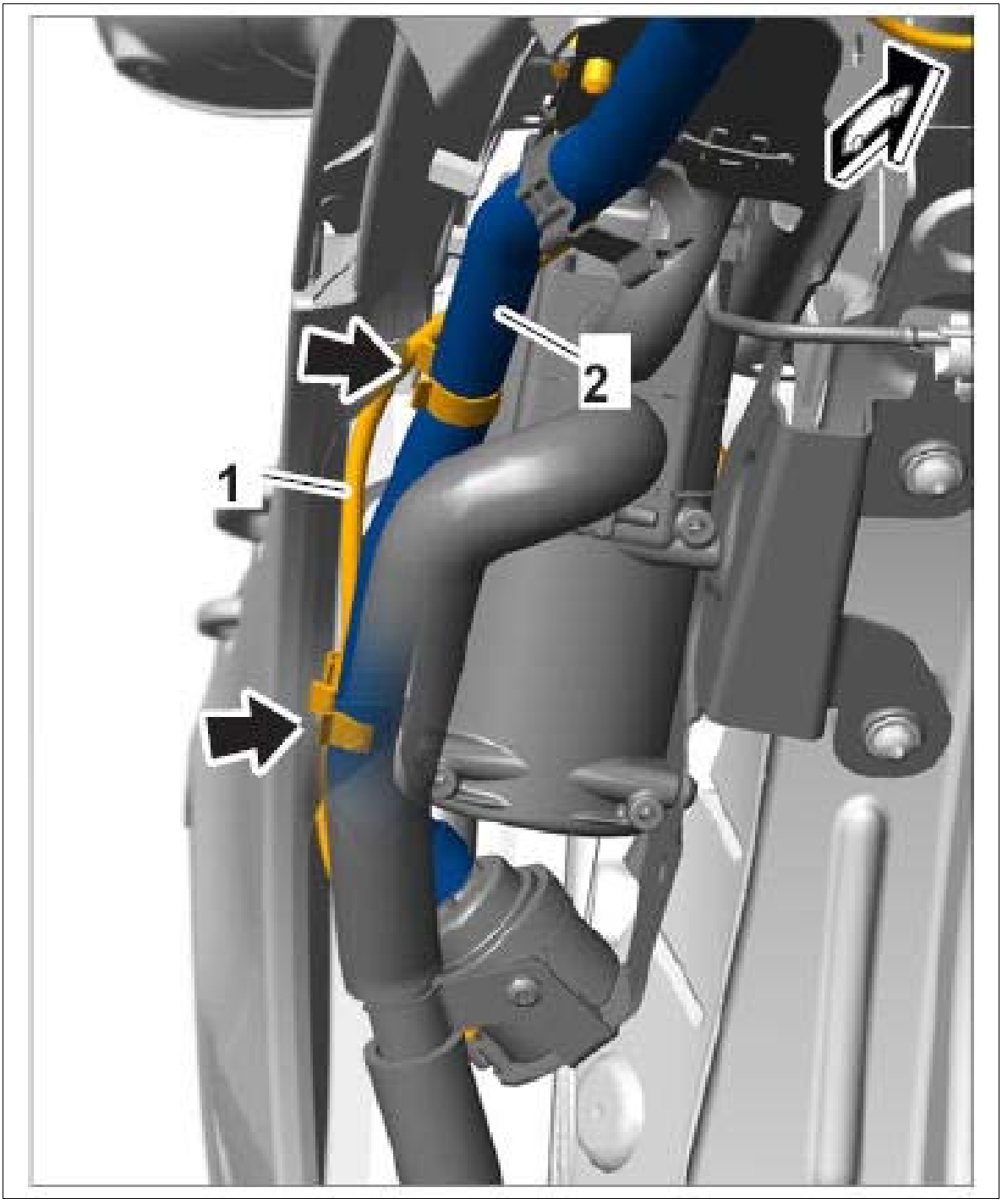

Courtesy of PORSCHE CARS NORTH AMERICA, INC.

6. Connect electric plug connection **-1-** to the circulating pump **-2-** until it engages securely.

Fig 7: Identifying Circulating Pump Connector

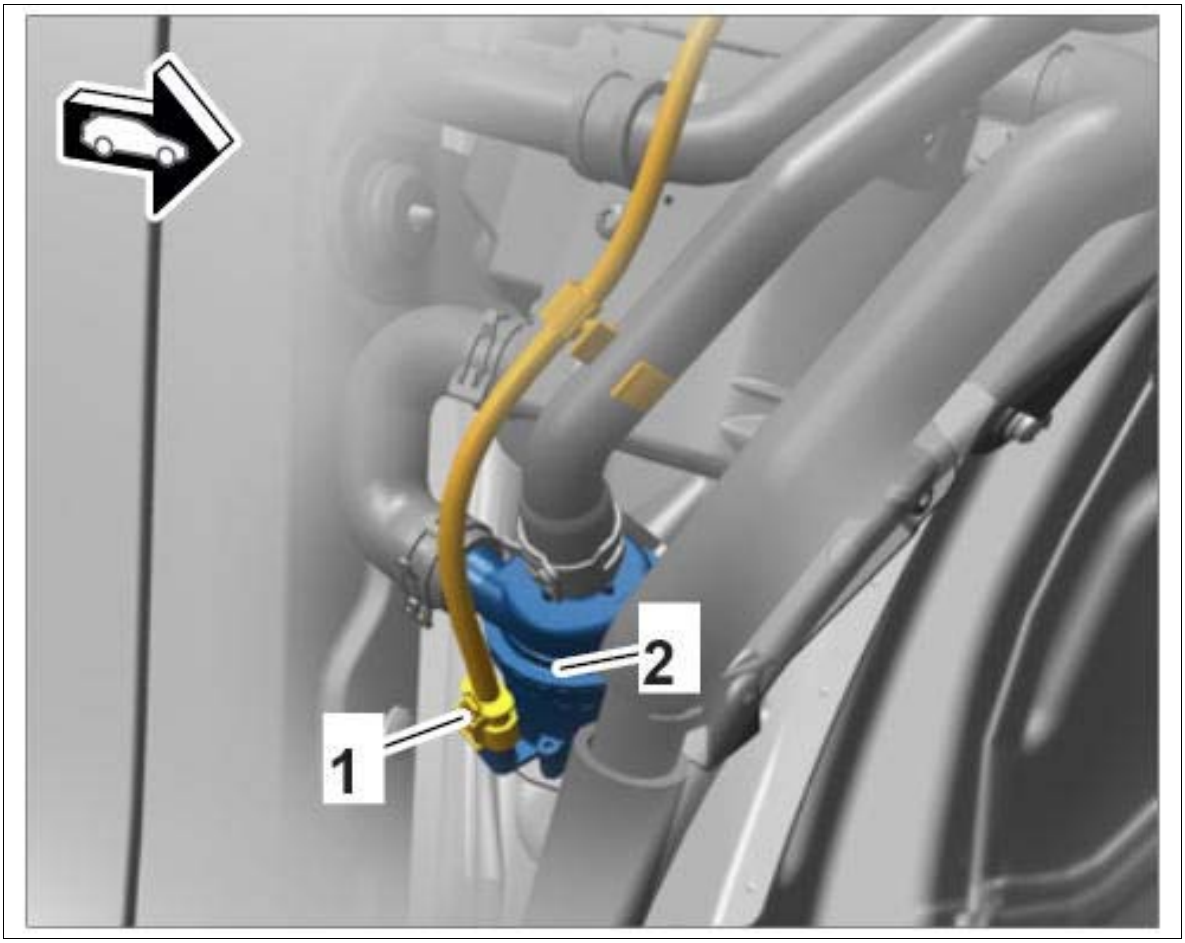

Courtesy of PORSCHE CARS NORTH AMERICA, INC.

7. Clip wiring harness **-1-** into the holder **-2-** at position **-arrow-** .

Fig 8: Locating Wiring Harness On Holder

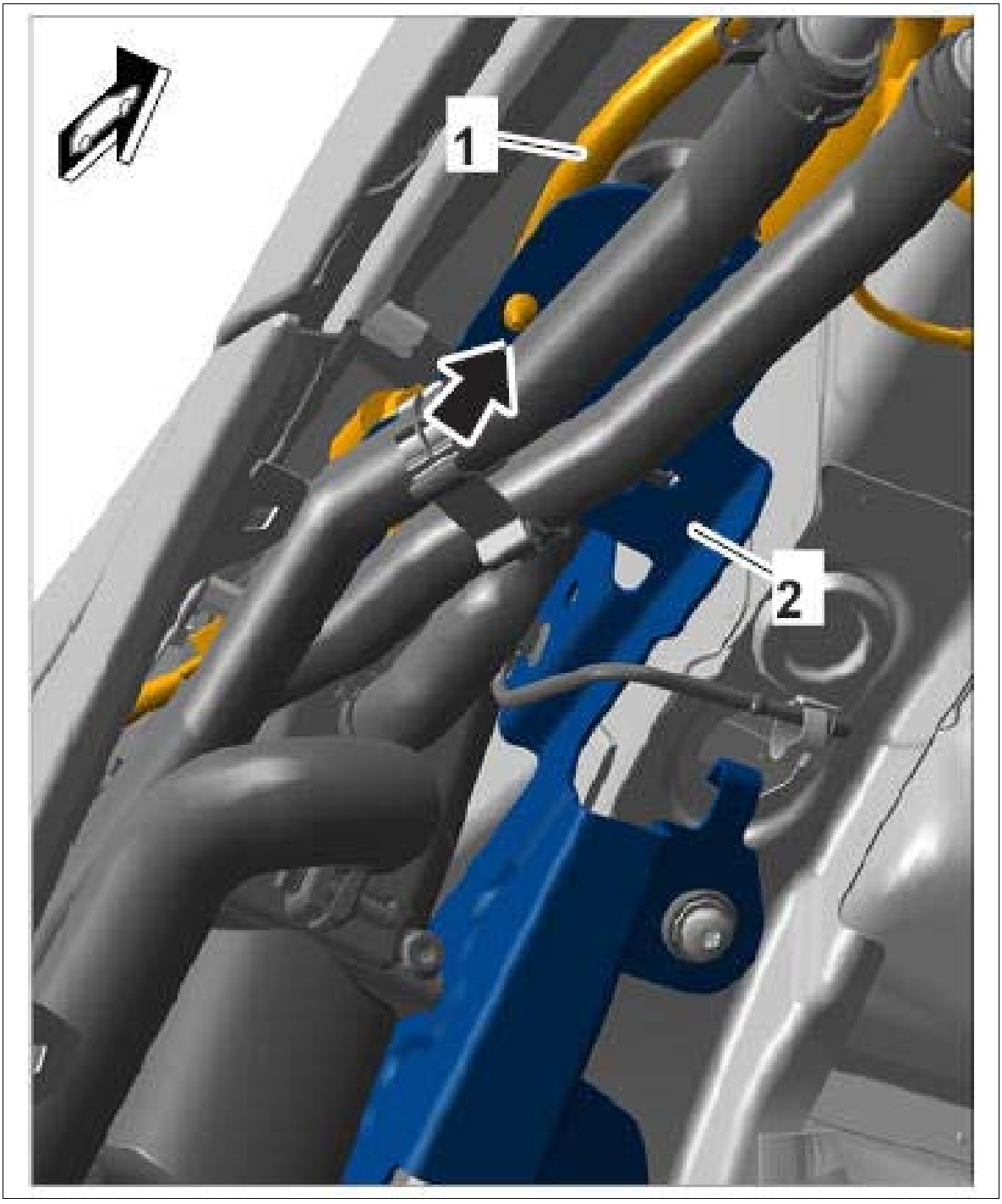

Courtesy of PORSCHE CARS NORTH AMERICA, INC.

8. Secure the fuel line to the heater.

Fig 9: Locating Fuel Line In Wheel Housing

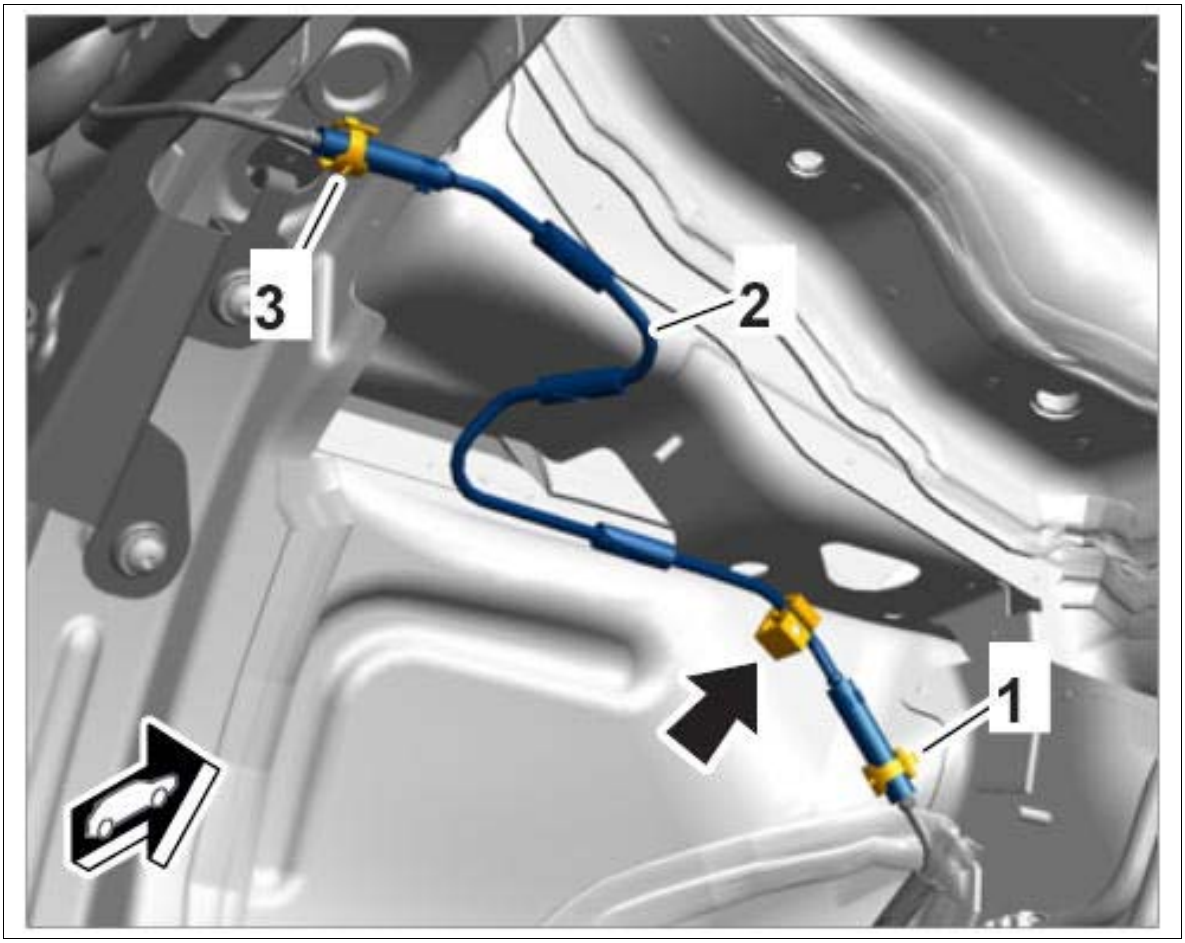

Courtesy of PORSCHE CARS NORTH AMERICA, INC.

1. 8.1. Push on fuel line **-2-** as far as it will go or up to the marking - minimum overlap: 25 mm.
2. 8.2. Tighten spring band clamp **-3-** using **assembly pliers Nr.72 Pos.1.**

9. The fuel system must also be pre-filled. To do this, connect **PIWIS Tester II 9818** to the vehicle.
10. Switch on ignition.
11. Select the vehicle type and start the PIDT.
12. Select the **auxiliary heater** control unit in the **overview** .
13. **Maintenance/repairs** must then be selected.
14. **Line filling** must now be selected. Then press [Next].

WM 822019 REMOVING AND INSTALLING COMPLETE HEATER (ALL MODELS) > SUBSEQUENT WORK

1. Add coolant and bleed the cooling system → 193817 DRAINING AND FILLING COOLANT .
2. Install front wheel housing liner at the right → Installing front wheel housing liner
3. Fit right front wheel → Installing Wheel .

WM 822119 REMOVING AND INSTALLING INTAKE MUFFLER (ALL MODELS) > PRELIMINARY WORK

1. Loosen heater with holder → Loosening Heater With Holder .

WM 822119 REMOVING AND INSTALLING INTAKE MUFFLER (ALL MODELS) > REMOVING AND INSTALLING INTAKE MUFFLER > REMOVING INTAKE MUFFLER

1. Cut tie-wrap **-1-** on intake muffler **-2-** .

   Fig 1: Identifying Intake Muffler Mounting On Holder

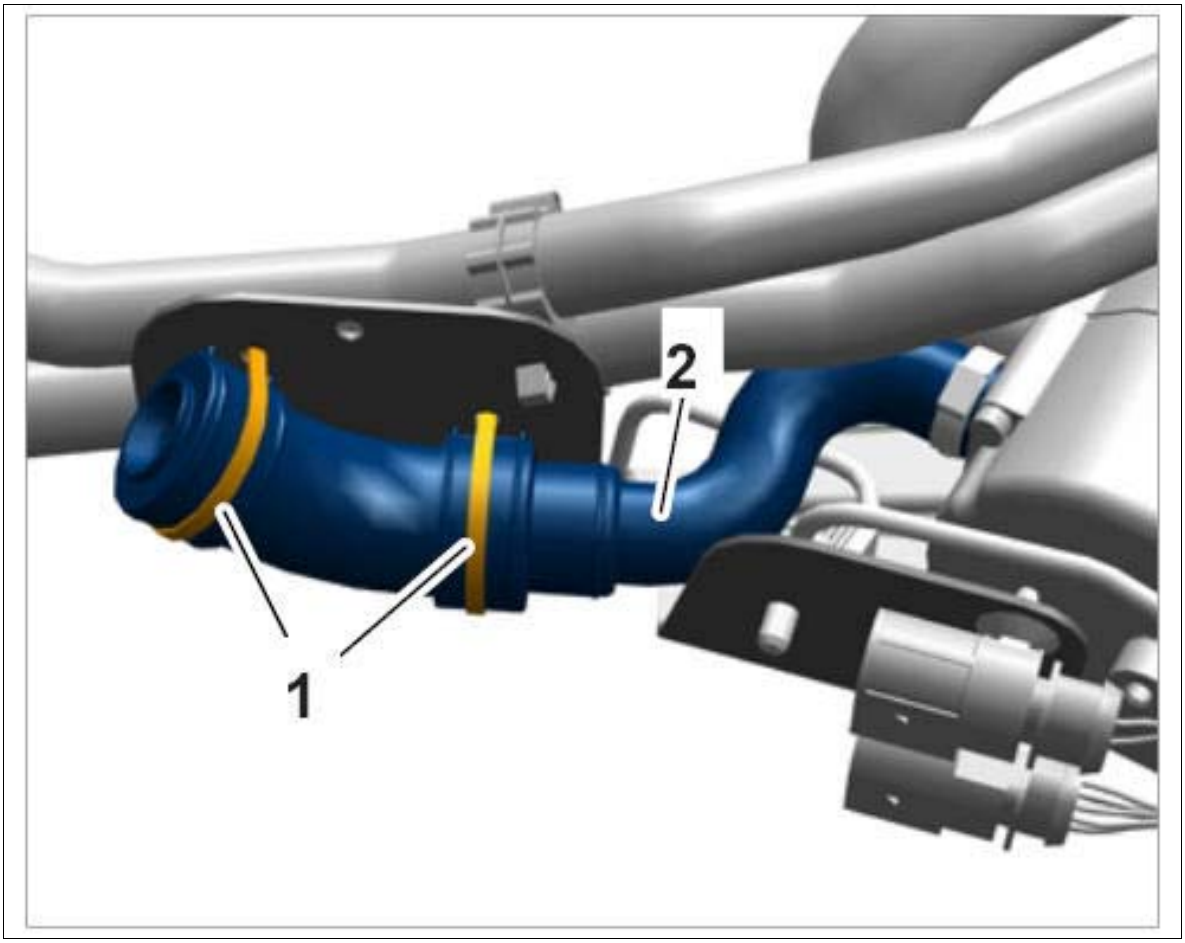

Courtesy of PORSCHE CARS NORTH AMERICA, INC.

2. Loosen clamp **-1-** using a suitable tool.

Fig 2: Identifying Intake Muffler Mounting On Heater

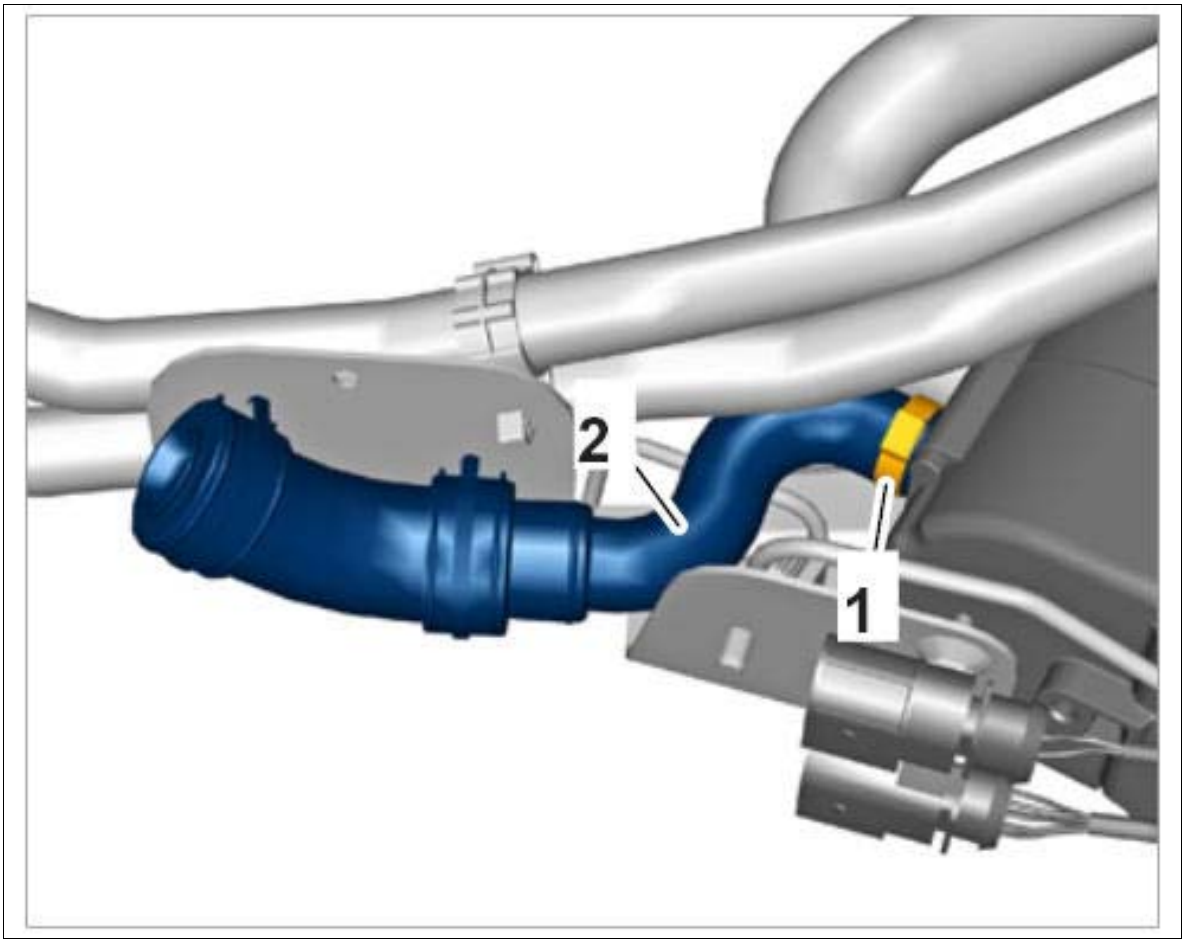

Courtesy of PORSCHE CARS NORTH AMERICA, INC.

3. Remove intake muffler **-2-** .

WM 822119 REMOVING AND INSTALLING INTAKE MUFFLER (ALL MODELS) > REMOVING AND INSTALLING INTAKE MUFFLER > INSTALLING INTAKE MUFFLER

Information

- There is no guarantee that re-used clamps will secure the component properly.
- Removed clamps must be replaced.
- Always use new clamps during installation.

1. Position intake muffler **-2-** on the heater.
2. Tighten new clamp **-1-** using a suitable tool.

Fig 1: Identifying Intake Muffler Mounting On Heater

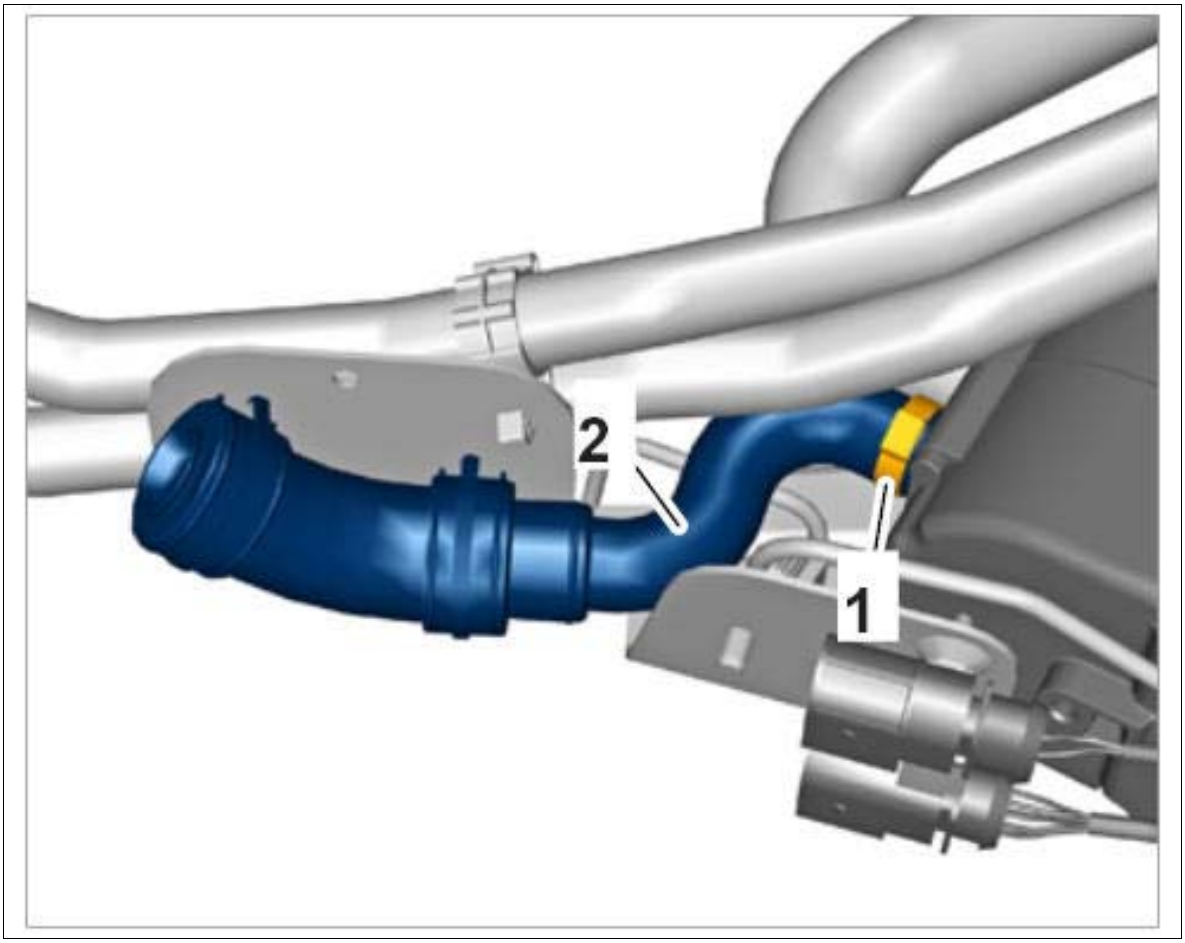

Courtesy of PORSCHE CARS NORTH AMERICA, INC.

3. Position intake muffler **-2-** in the cut-outs in the holder and secure it to the holder using new tie-wraps **-1-** .

Fig 2: Securing Intake Muffler To Holder

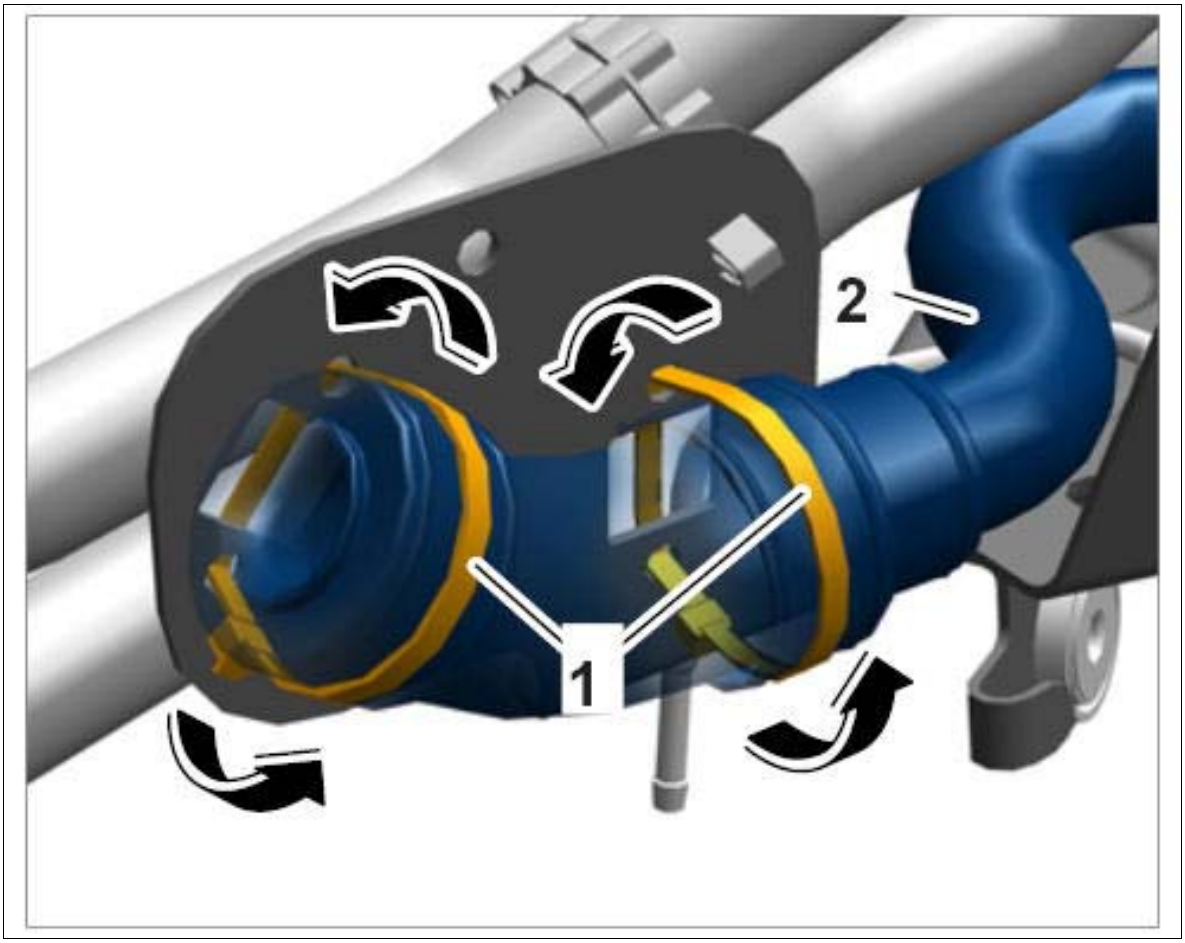

Courtesy of PORSCHE CARS NORTH AMERICA, INC.

WM 822119 REMOVING AND INSTALLING INTAKE MUFFLER (ALL MODELS) > SUBSEQUENT WORK

1. Secure heater with holder → Securing Heater With Holder

WM 822219 REMOVING AND INSTALLING HOLDER FOR HEATER (ALL MODELS) > TECHNICAL VALUES

Location	Description	Type	Basic value	Tolerance 1	Tolerance 2
Heater holder to body	M6 x 30 thread	Tightening torque	20 Nm (15 ftlb.)		

WM 822219 REMOVING AND INSTALLING HOLDER FOR HEATER (ALL MODELS) >

PRELIMINARY WORK

1. Remove right front wheel → Removing Wheel
2. Remove front wheel housing liner at the right → Removing front wheel housing liner

WM 822219 REMOVING AND INSTALLING HOLDER FOR HEATER (ALL MODELS) > LOOSENING HEATER WITH HOLDER

1. Disconnect exhaust pipe from silencer.
    1. 1.1. Loosen screw-type clamp **-1-** .
    2. 1.2. Pull flexi-pipe **-2-** off the silencer pipe **-3-** .

Fig 1: Identifying Exhaust Pipe On Silencer



Courtesy of PORSCHE CARS NORTH AMERICA, INC.

2. Unclip fuel line **-2-** in the wheel housing at position **-arrow-** .

Fig 2: Locating Fuel Line In Wheel Housing

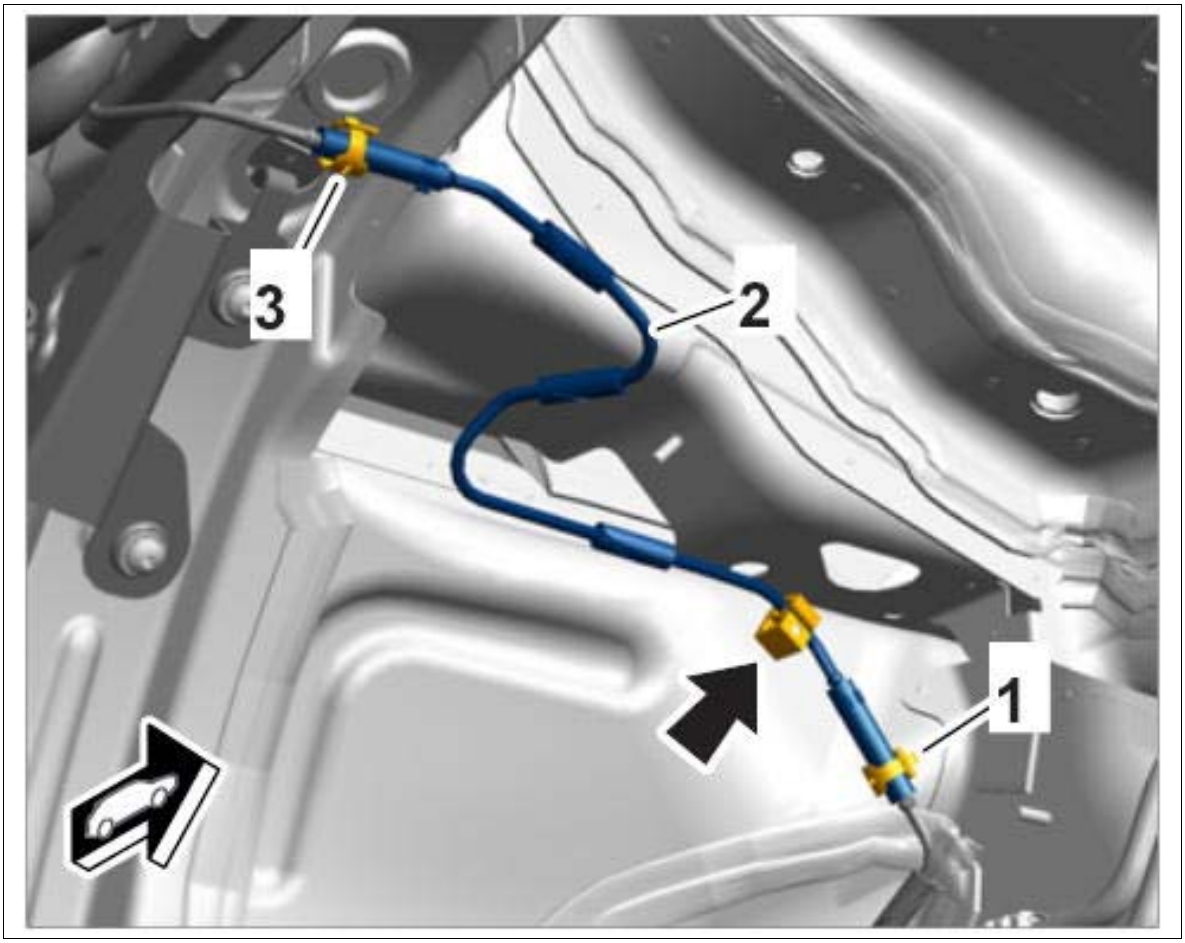

Courtesy of PORSCHE CARS NORTH AMERICA, INC.

3. Unscrew fastening screws **-1-** and remove heater with holder **-2-** .

Fig 3: Identifying Heater Mounting

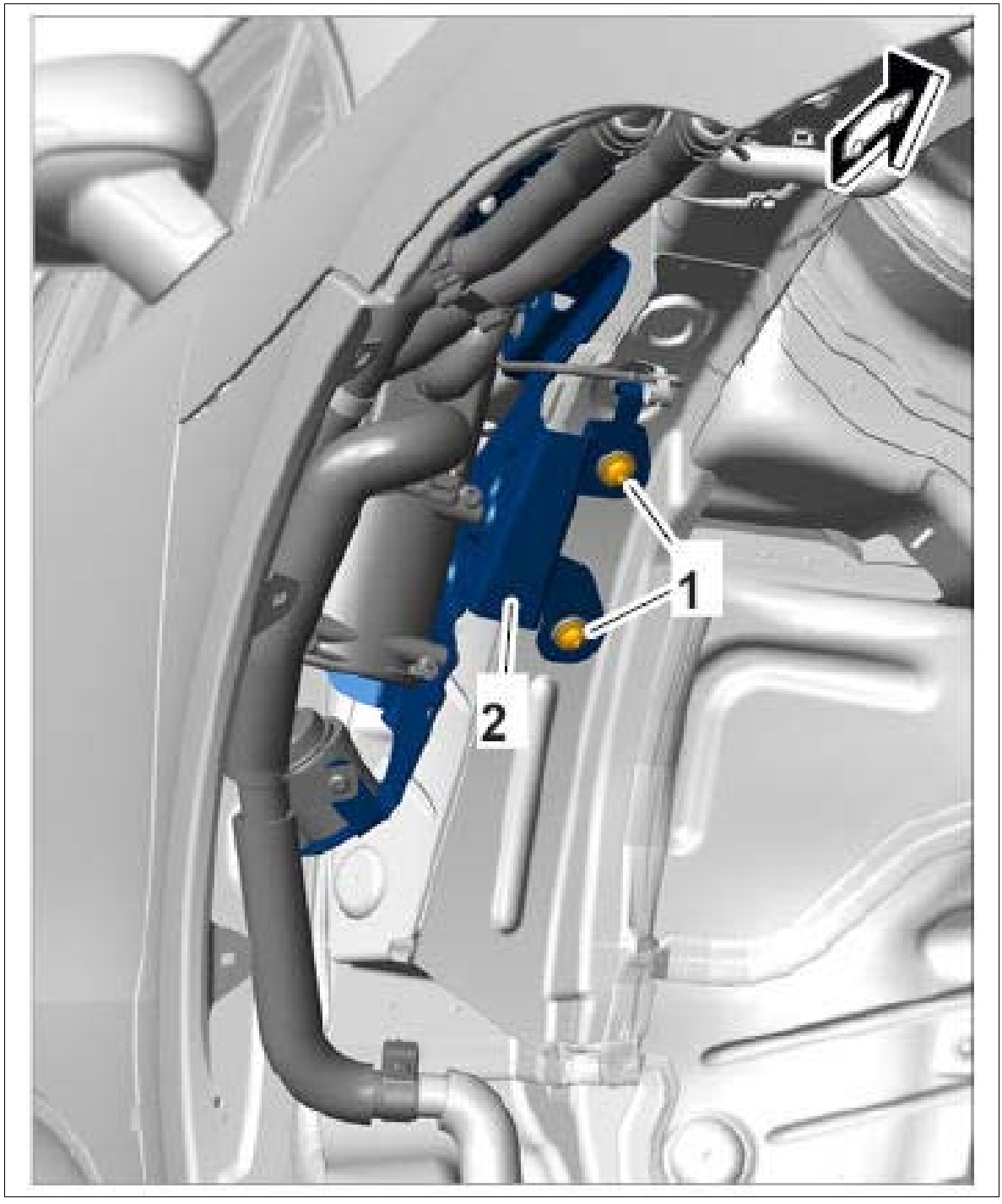

Courtesy of PORSCHE CARS NORTH AMERICA, INC.

4. Pull out heater with holder in direction of travel and suspend it at a suitable place in the wheel housing.

WM 822219 REMOVING AND INSTALLING HOLDER FOR HEATER (ALL MODELS) > DETACHING HOLDER FROM HEATER

1. Remove heater with holder → Removing Heater
2. Unclip coolant hoses **-1-** from holder **-2-** .

   Fig 1: Identifying Coolant Hoses Bracket

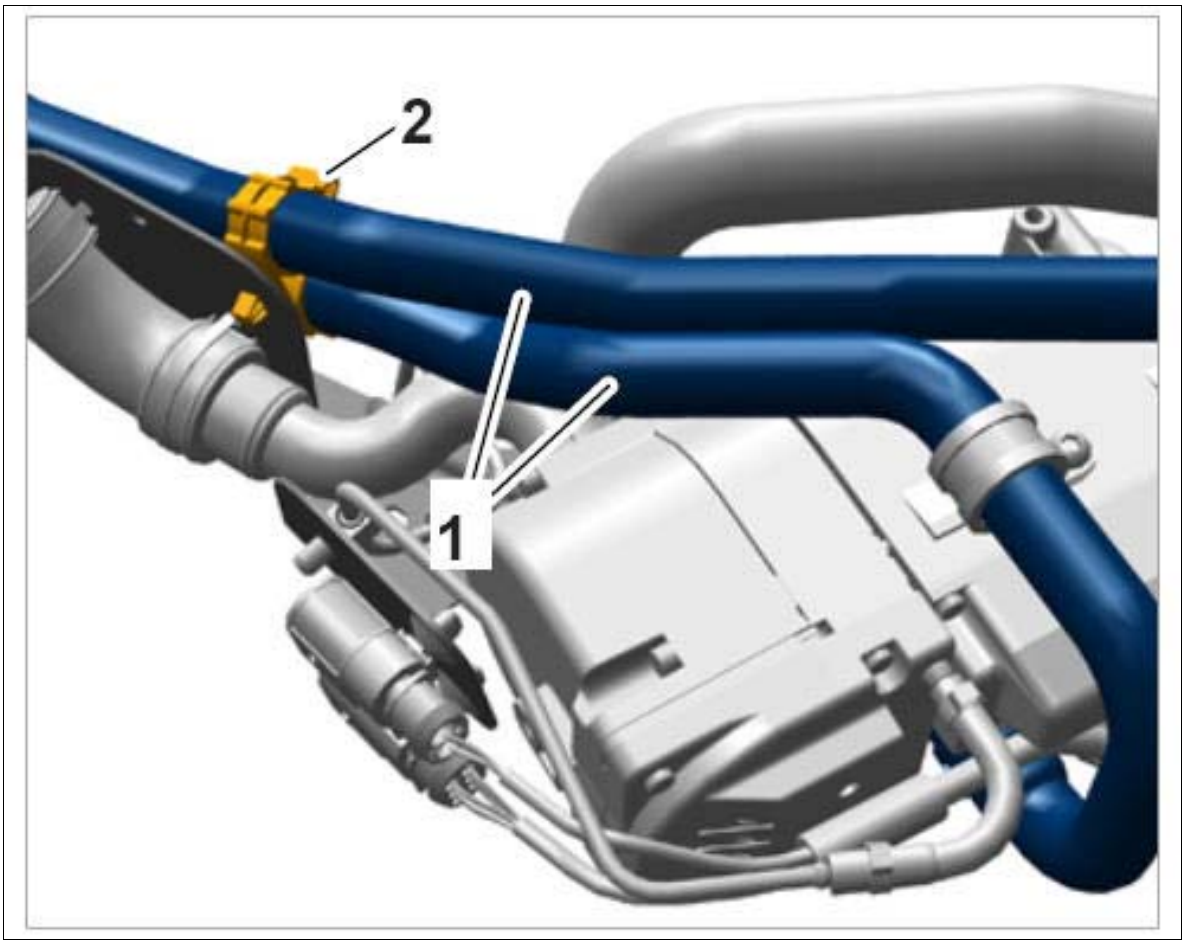

Courtesy of PORSCHE CARS NORTH AMERICA, INC.

3. Release electric plug connections **-1-** and disconnect them by pulling them sideways **-arrows-** off the holder **-2-** .

Fig 2: Disconnecting Heater Connector From Holder

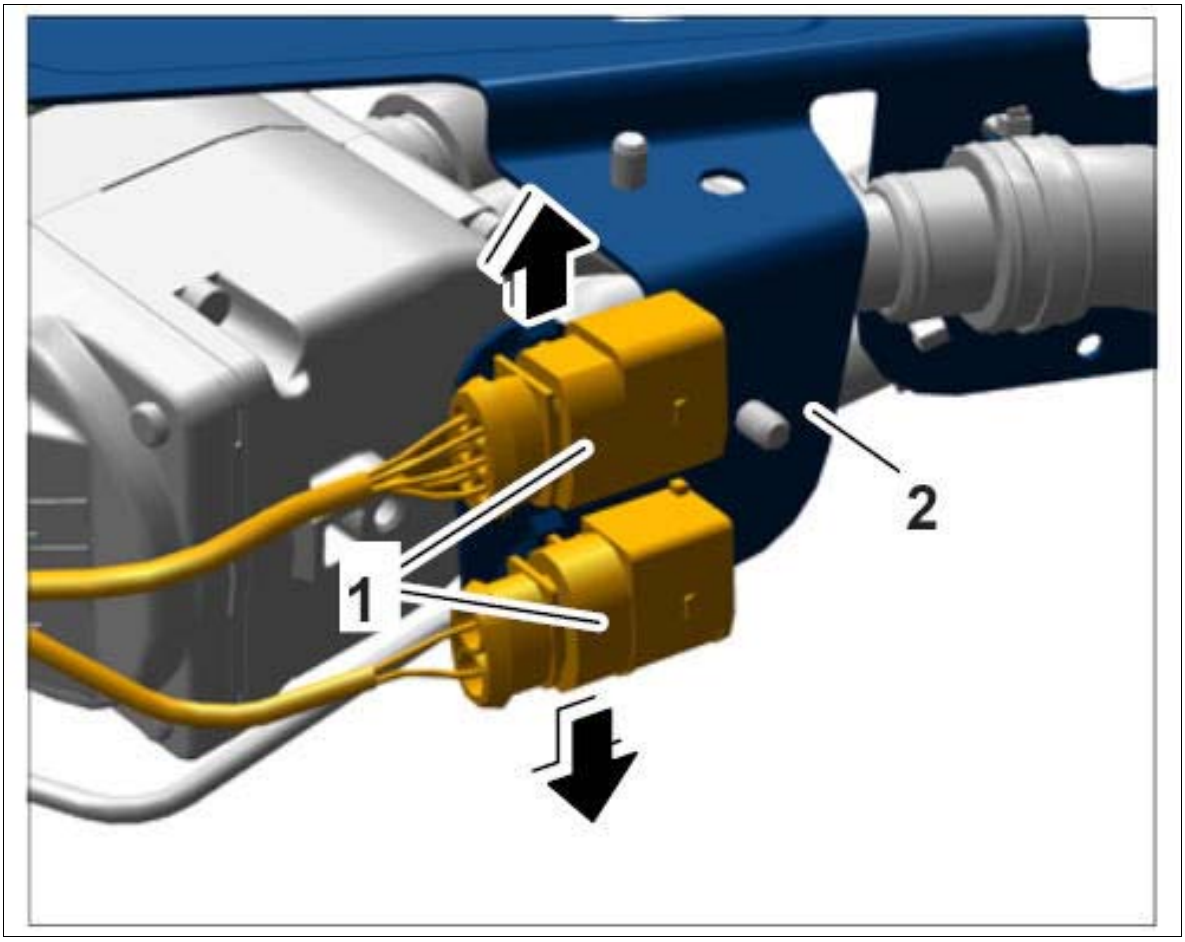

Courtesy of PORSCHE CARS NORTH AMERICA, INC.

4. Cut tie-wrap **-1-** on intake muffler **-2-** .

Fig 3: Identifying Intake Muffler Mounting On Holder

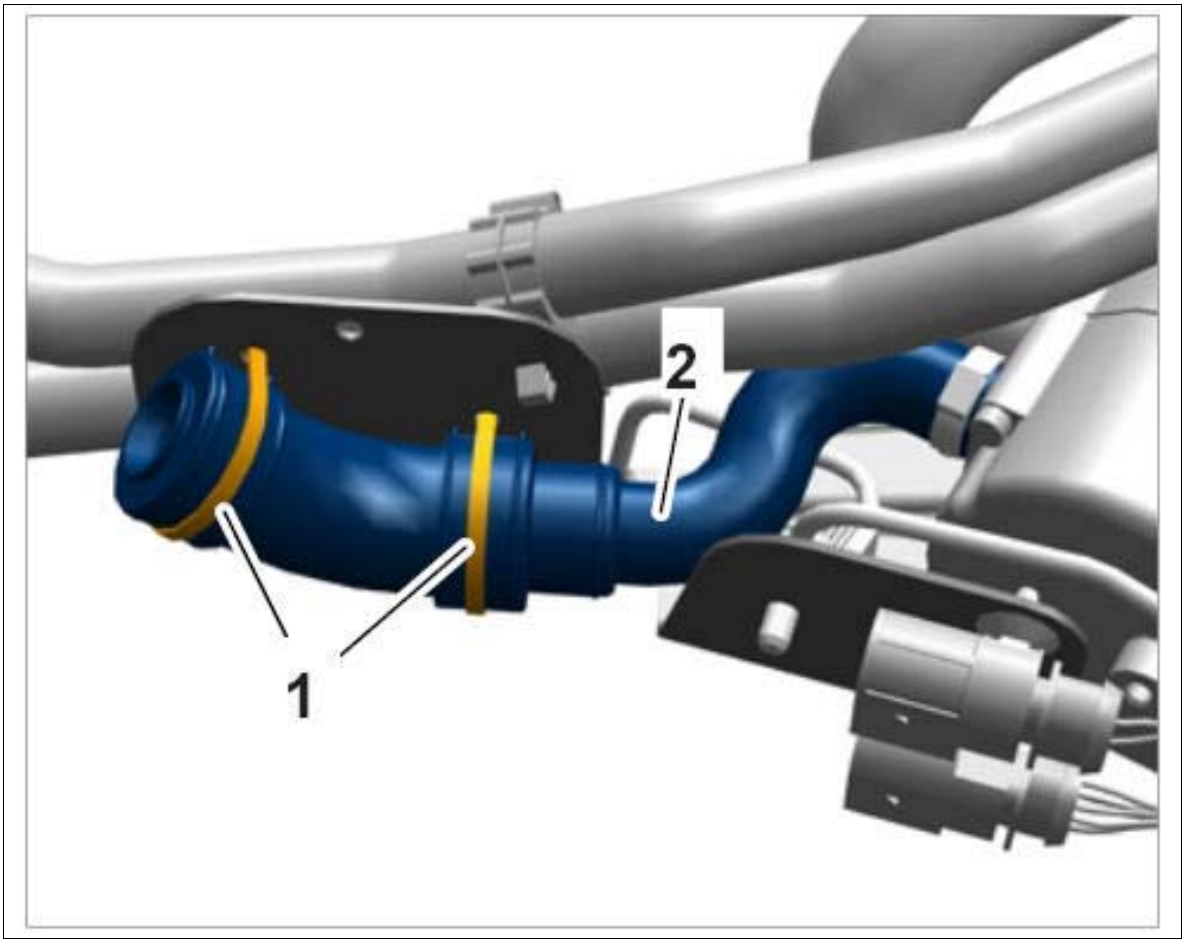

Courtesy of PORSCHE CARS NORTH AMERICA, INC.

5. Unscrew fastening screw **-2-** on the exhaust pipe **-1-**

> *NOTE: Illustration shows heater when installed.*

Fig 4: Identifying Exhaust Pipe Mounting On Holder

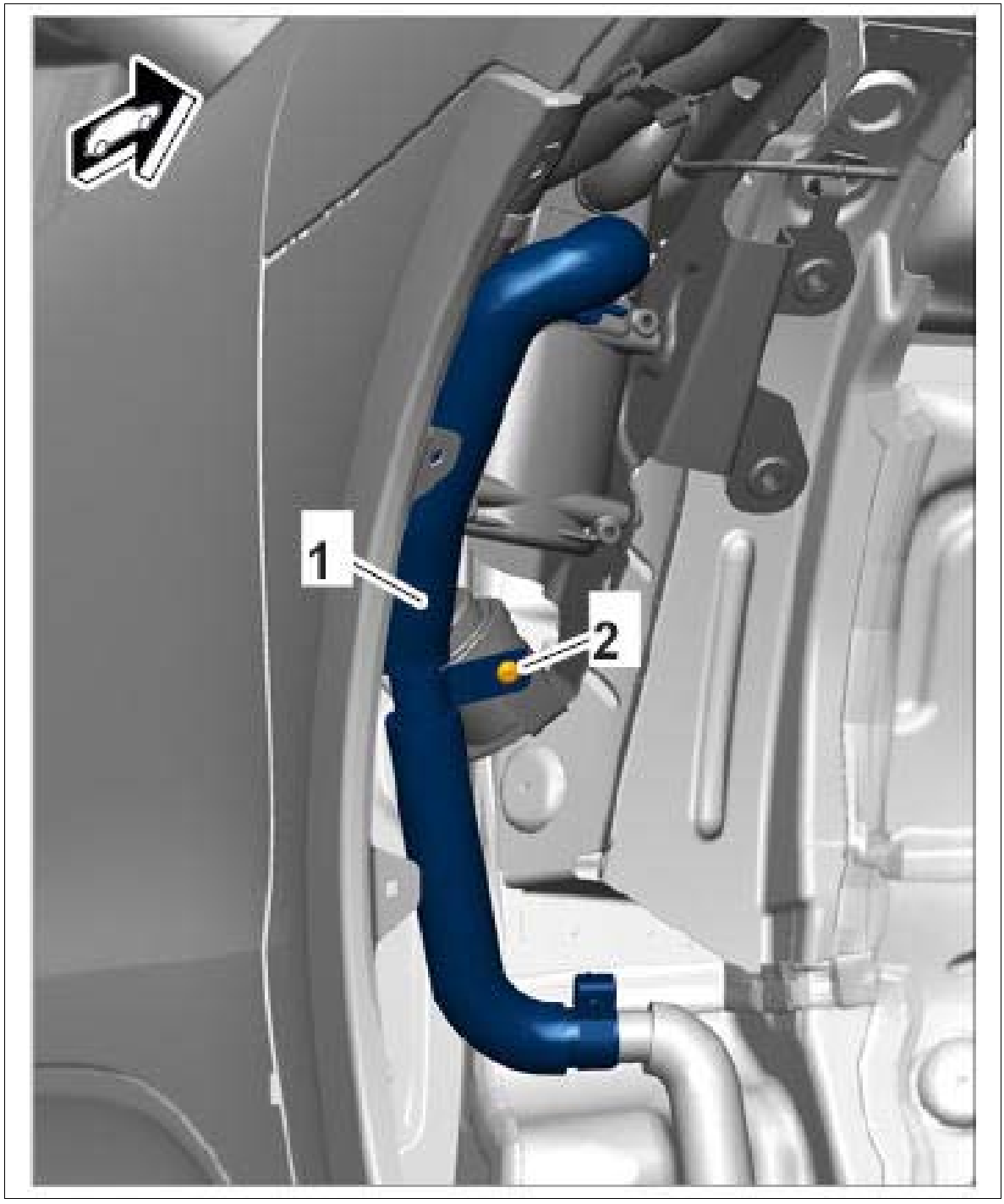

Courtesy of PORSCHE CARS NORTH AMERICA, INC.

6. Unclip fuel line **-1-** at the marked positions **-arrows-** .

Fig 5: Identifying Fuel Line Mounting On Holder

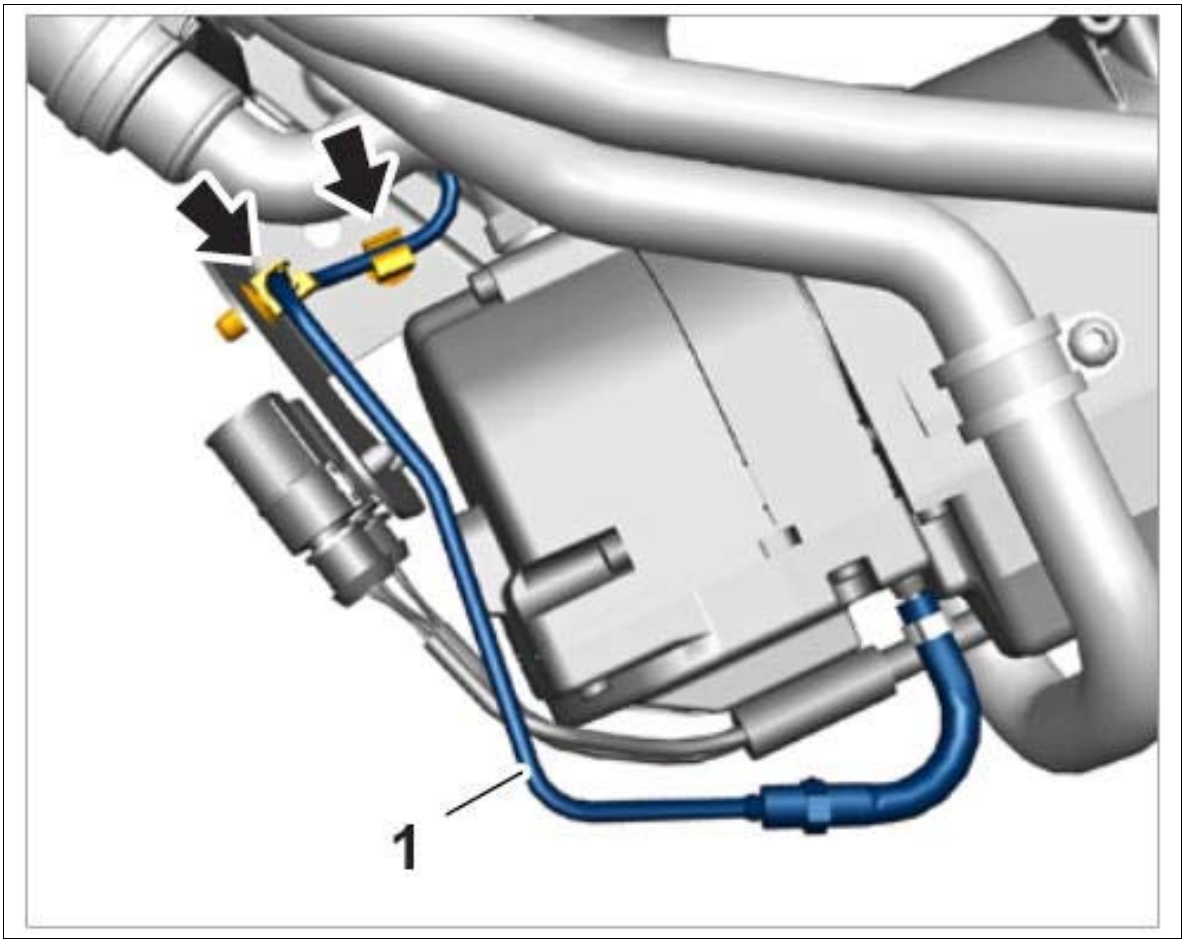

Courtesy of PORSCHE CARS NORTH AMERICA, INC.

7. Unscrew fastening screws **-1-** and remove circulating pump **-2-** .

Fig 6: Identifying Circulating Pump Mounting On Holder

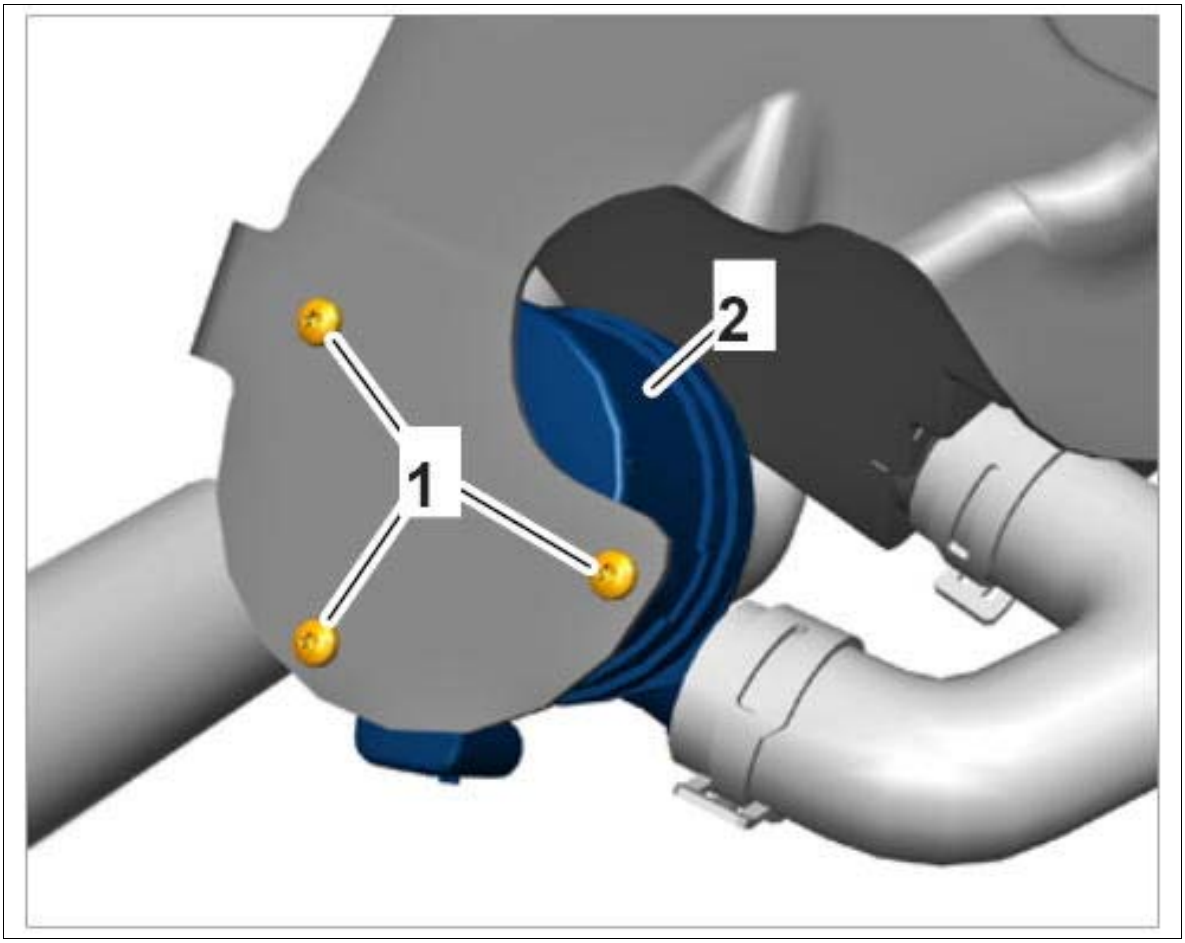

Courtesy of PORSCHE CARS NORTH AMERICA, INC.

8. Loosen fastening screws **-1-** and remove holder **-2-** from the heater.

Fig 7: Identifying Holder On Heater

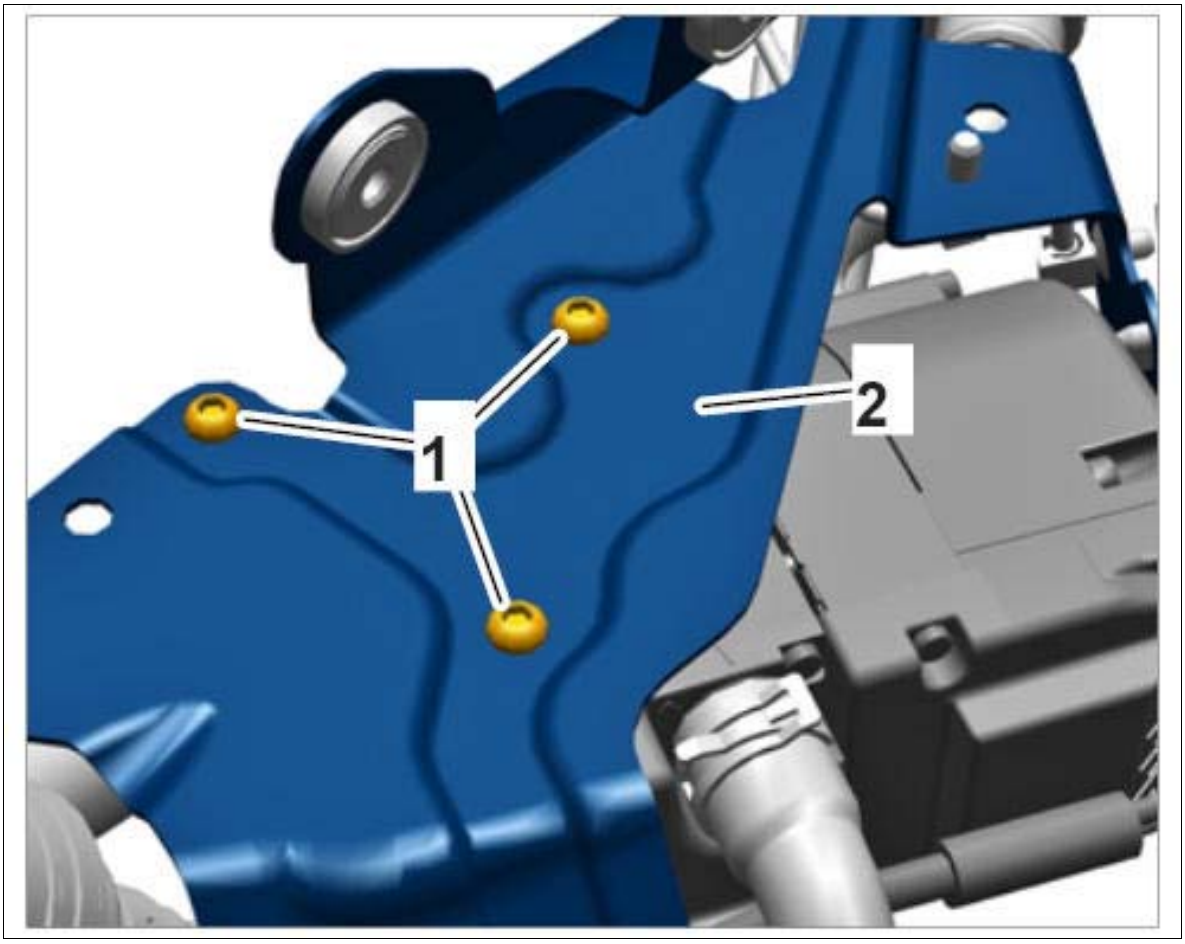

Courtesy of PORSCHE CARS NORTH AMERICA, INC.

WM 822219 REMOVING AND INSTALLING HOLDER FOR HEATER (ALL MODELS) > FITTING HOLDER TO HEATER

1. Position holder **-2-** on the heater.
2. Tighten fastening screws **-1-** .

Fig 1: Identifying Holder On Heater

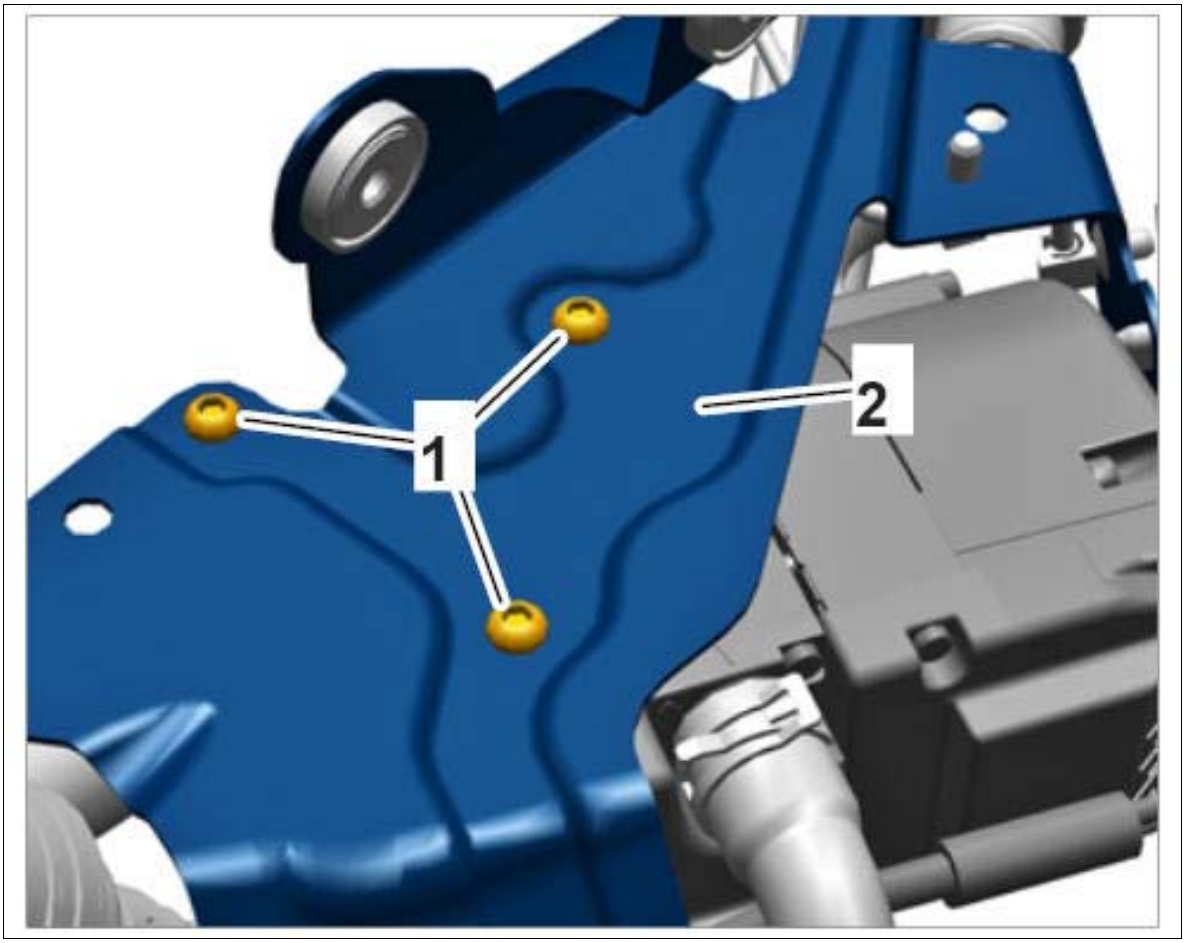

Courtesy of PORSCHE CARS NORTH AMERICA, INC.

3. Position circulating pump and tighten fastening screws **-1-** .

Fig 2: Identifying Circulating Pump Mounting On Holder

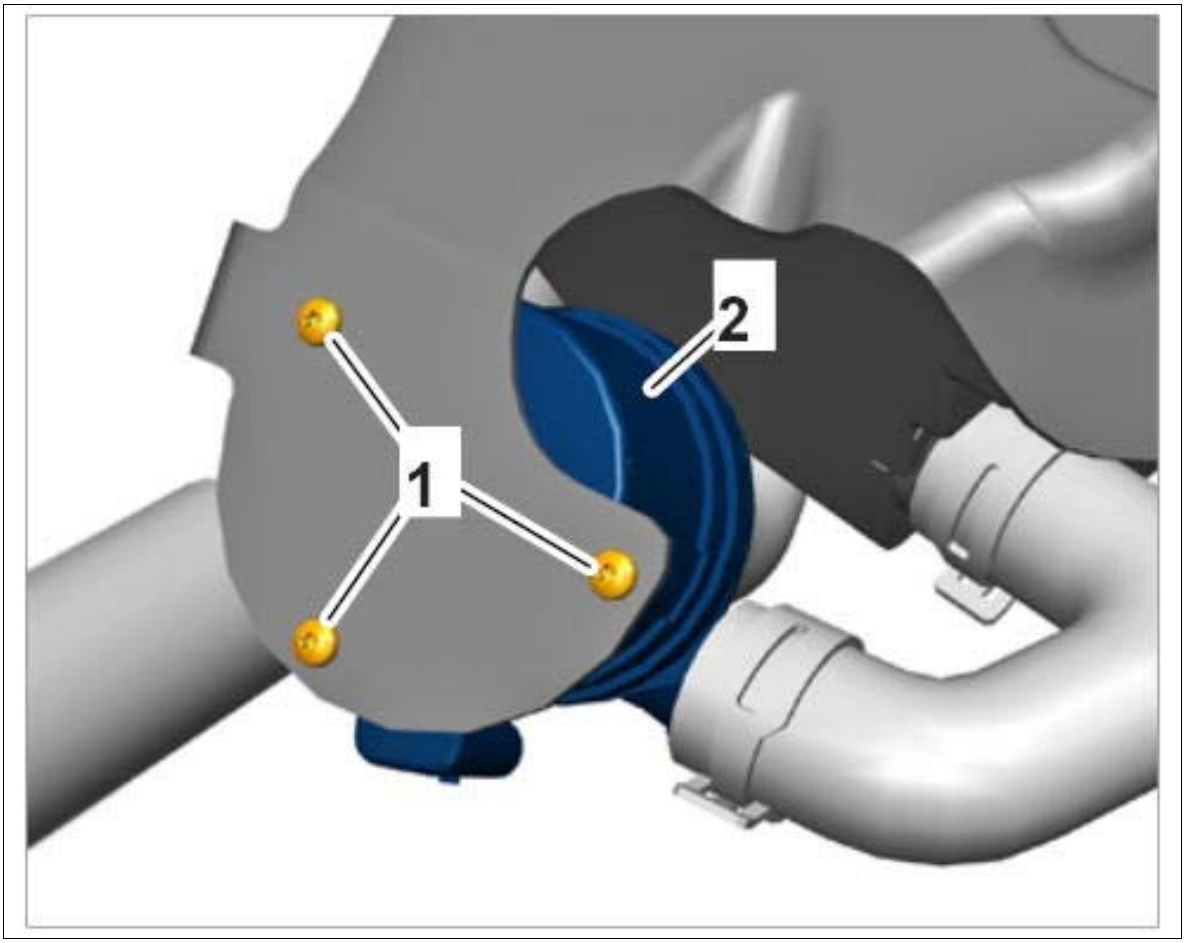

Courtesy of PORSCHE CARS NORTH AMERICA, INC.

4. Clip in fuel line **-1-** at the marked positions **-arrows-** .

Fig 3: Locating Fuel Line On Holder

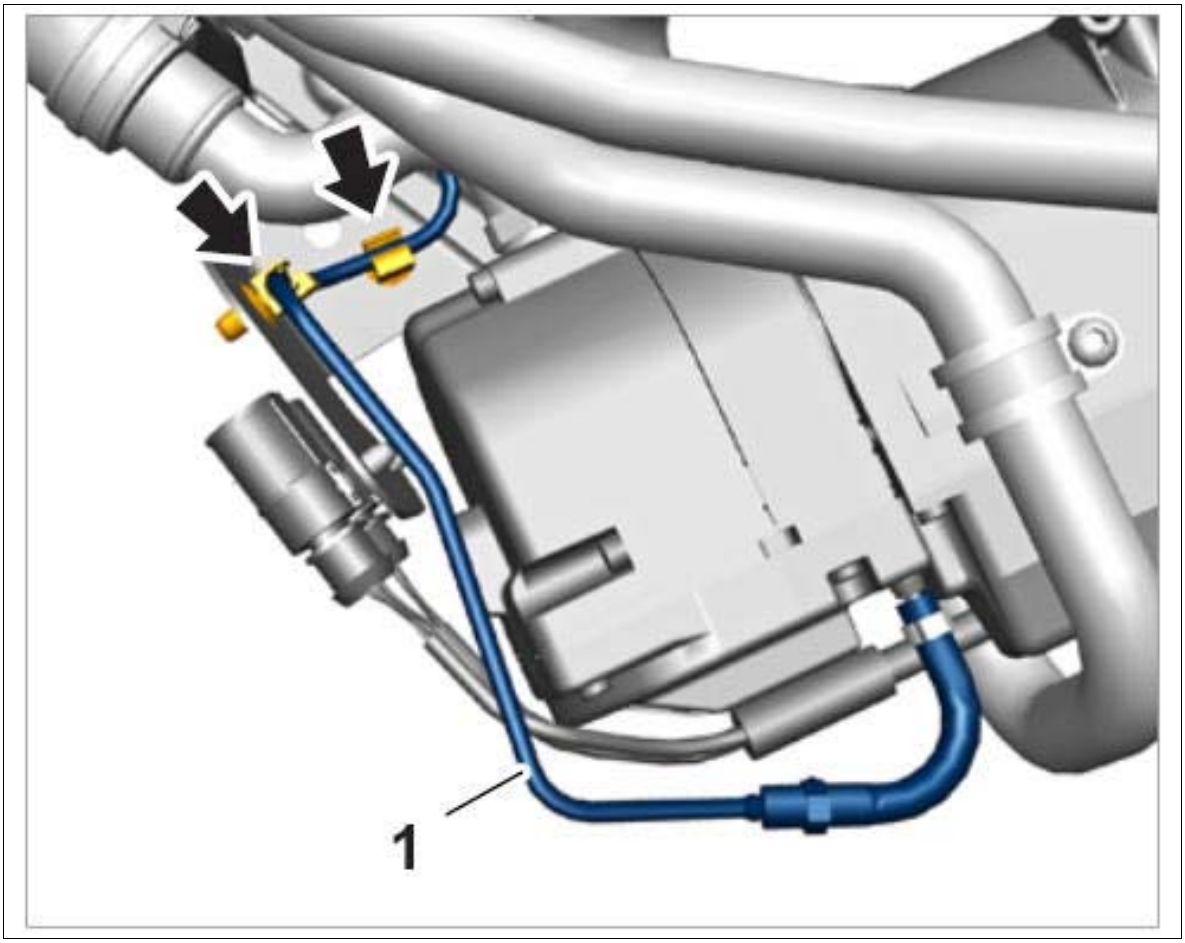

Courtesy of PORSCHE CARS NORTH AMERICA, INC.

5. Tighten fastening screw **-2-** on the exhaust pipe **-1-**

NOTE: Illustration shows heater when installed.

Fig 4: Identifying Exhaust Pipe On Holder

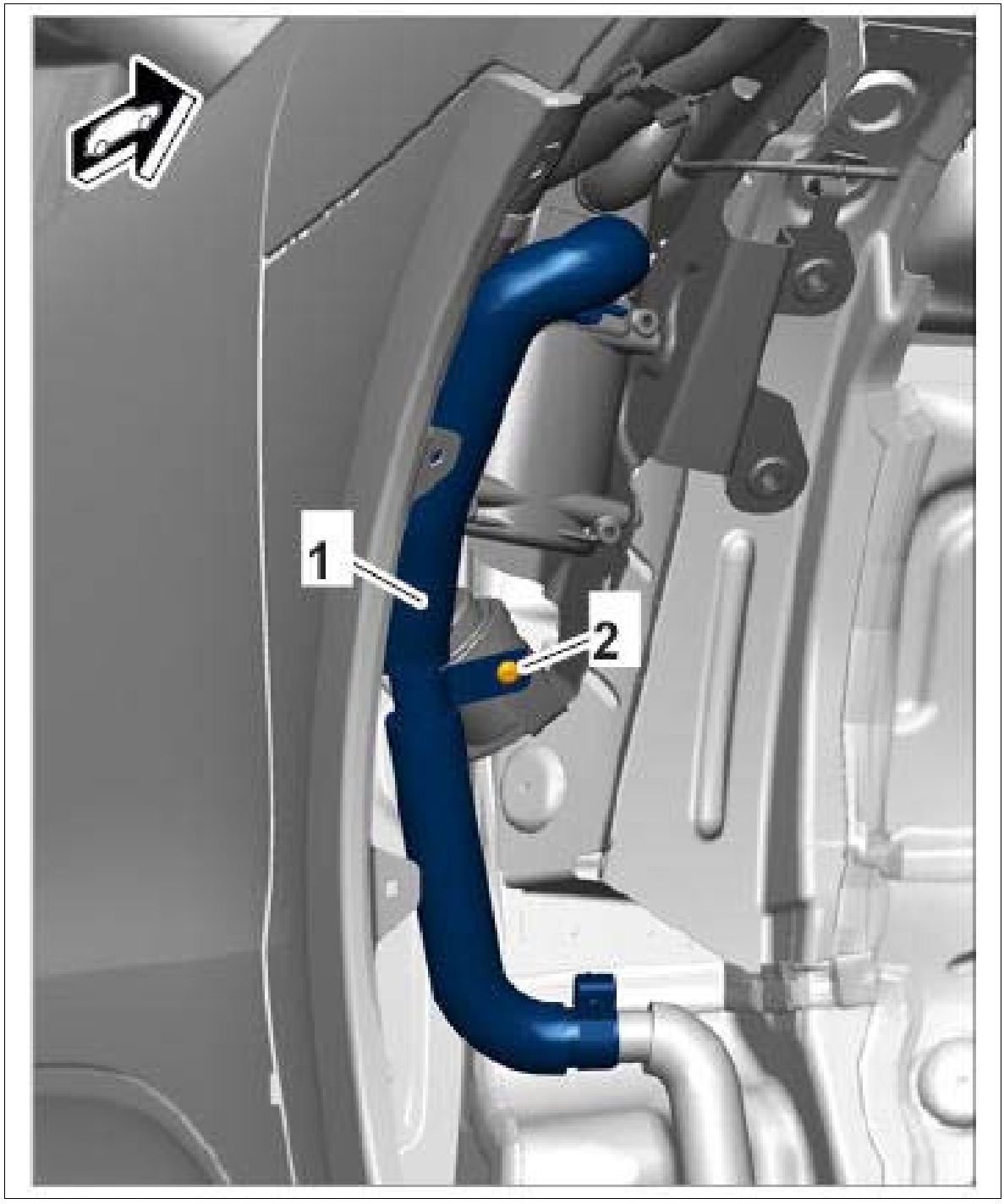

Courtesy of PORSCHE CARS NORTH AMERICA, INC.

6. Position intake muffler **-2-** in the cut-outs in the holder and secure it to the holder using new tie-wraps **-1-** .

Fig 5: Securing Intake Muffler To Holder

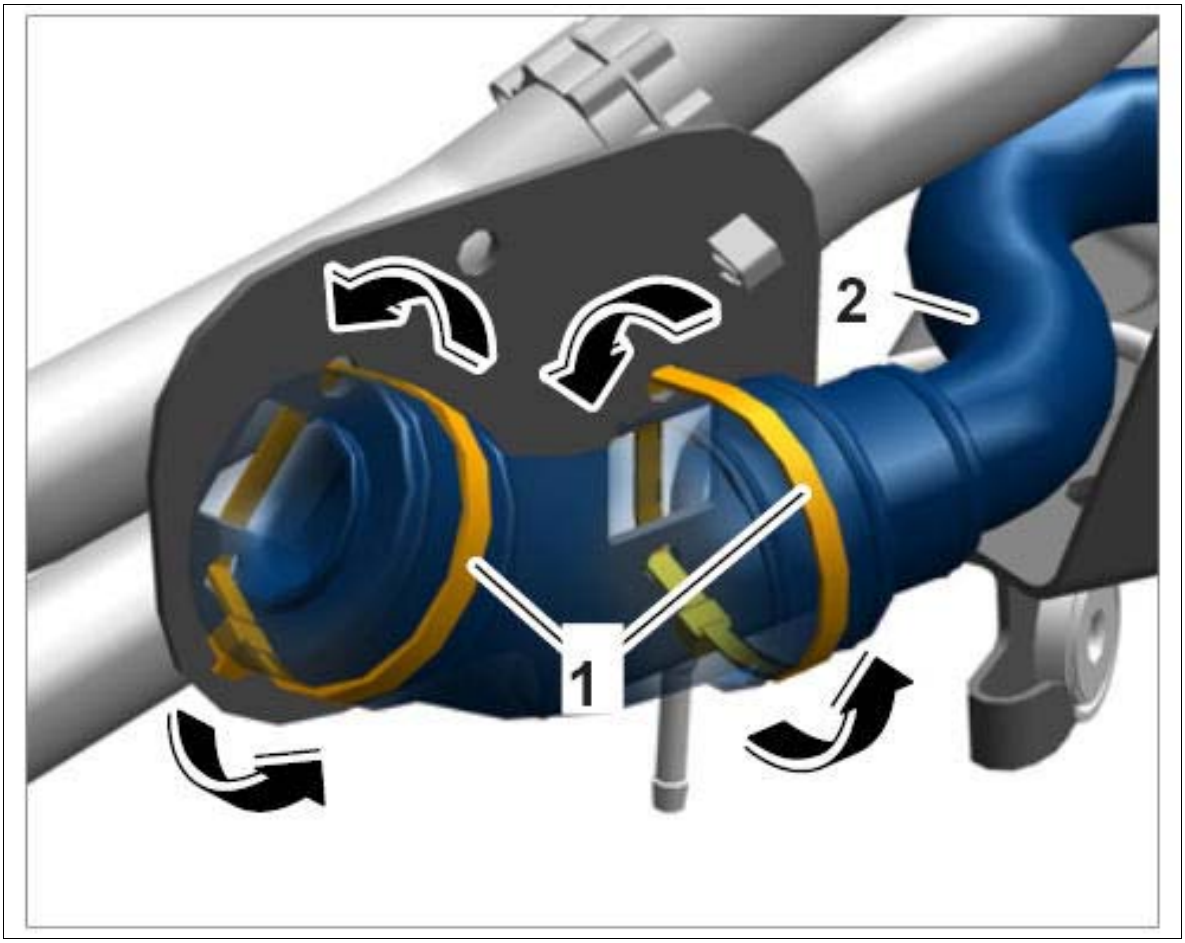

Courtesy of PORSCHE CARS NORTH AMERICA, INC.

7. Push electric plug connections **-1-** sideways onto the holder **-2-** and engage them.

Fig 6: Pushing Heater Connectors Onto Holder

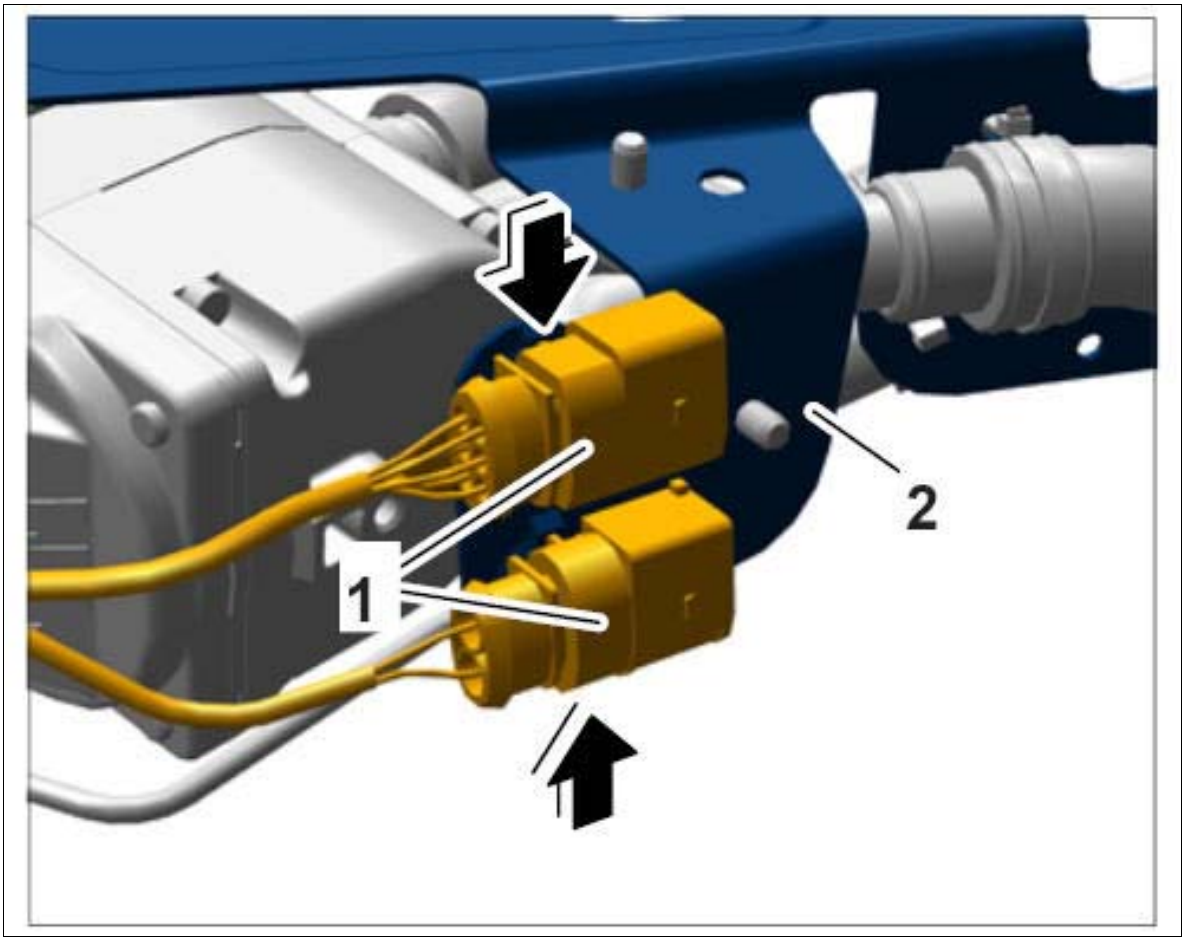

Courtesy of PORSCHE CARS NORTH AMERICA, INC.

8. Insert coolant hoses **-1-** in the holder **-2-** and clip them in.

Fig 7: Identifying Coolant Hoses Bracket

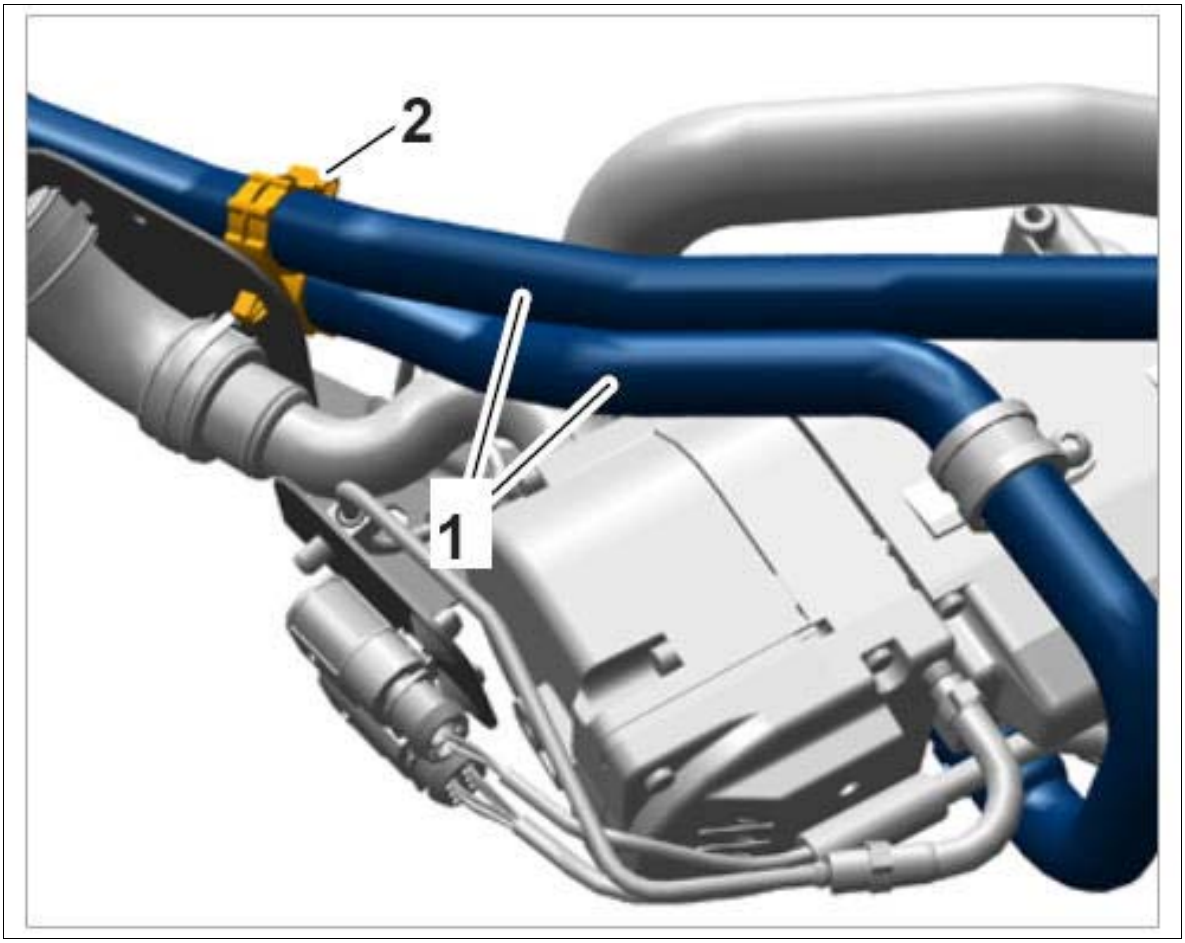

Courtesy of PORSCHE CARS NORTH AMERICA, INC.

WM 822219 REMOVING AND INSTALLING HOLDER FOR HEATER (ALL MODELS) > SECURING HEATER WITH HOLDER

1. Place heater in position.
    1. 1.1. Position rubber sleeve **-1-** on the retaining pin **-2-** .
    2. 1.2. Engage clip **-3-** on the holder into the cut-out **-4-** .

Fig 1: Positioning Heater

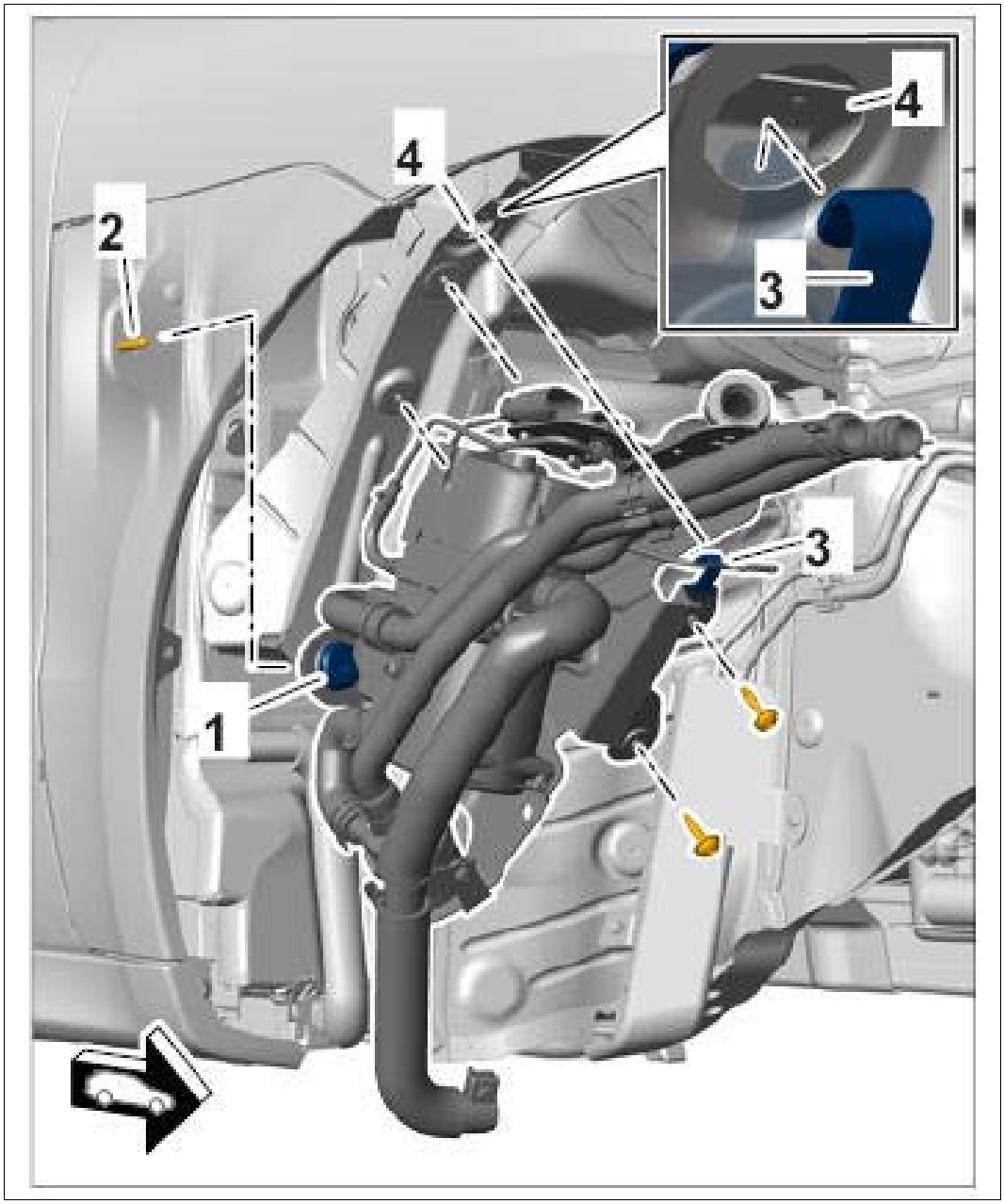

Courtesy of PORSCHE CARS NORTH AMERICA, INC.

2. Secure heater.

    1. 2.1. Loosely fit fastening screws **-1-** for the holder **-2-** at the top and bottom.

Fig 2: Identifying Heater Fastening Screws

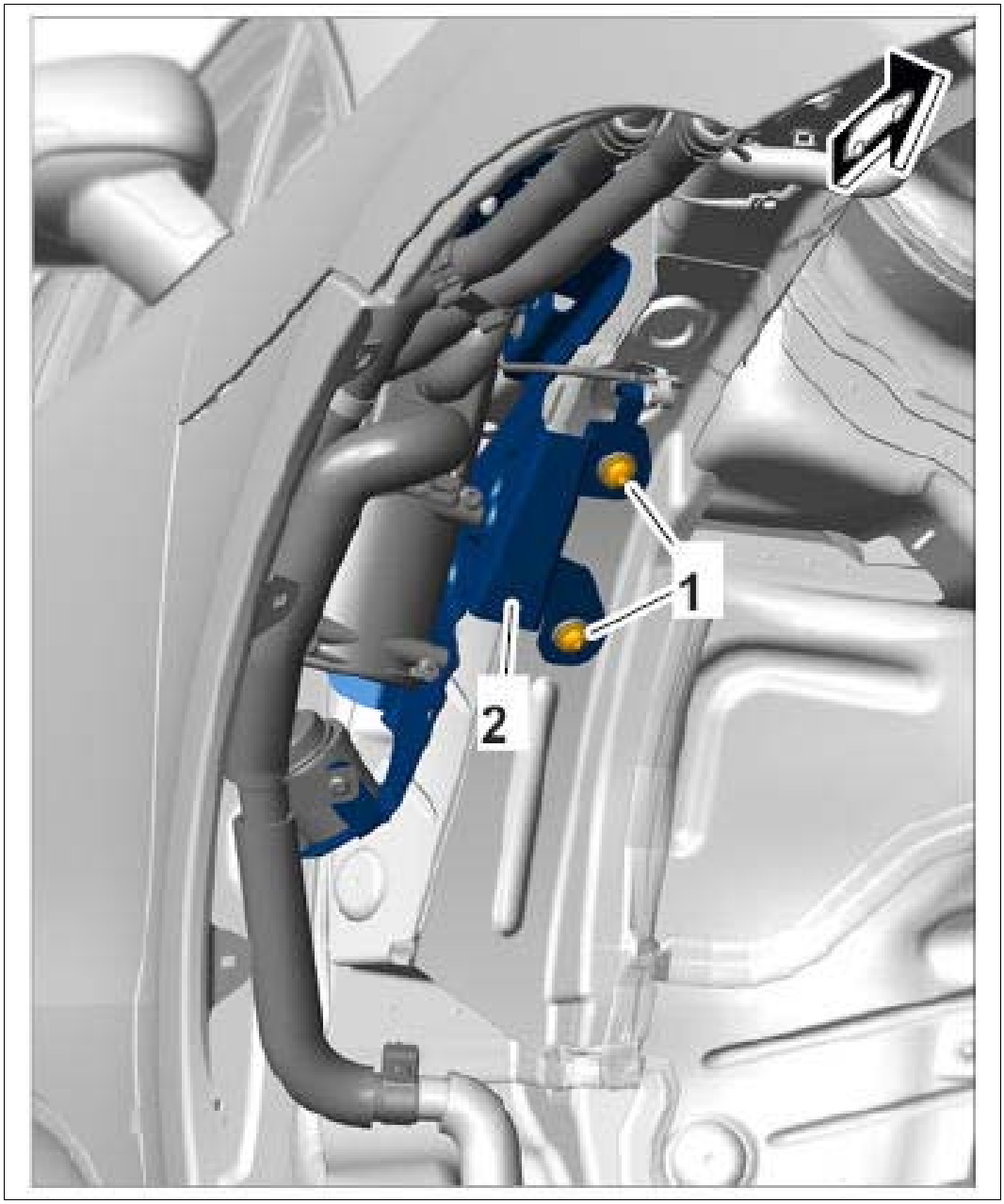

Courtesy of PORSCHE CARS NORTH AMERICA, INC.

2. 2.2. Slide flexi-pipe **-2-** and screw-type clamp **-1-** onto the silencer **-3-** .

Fig 3: Identifying Exhaust Pipe On Silencer



Courtesy of PORSCHE CARS NORTH AMERICA, INC.

3. 2.3. Tighten fastening screws **-1-** on the holder **-2-** to the prescribed tightening torque. **Tightening torque 20 Nm (15 ftlb.)**

4. 2.4. Tighten screw-type clamp **-1-** .

3. Clip in fuel line **-2-** in the wheel housing at position **-arrow-** .

Fig 4: Locating Fuel Line In Wheel Housing

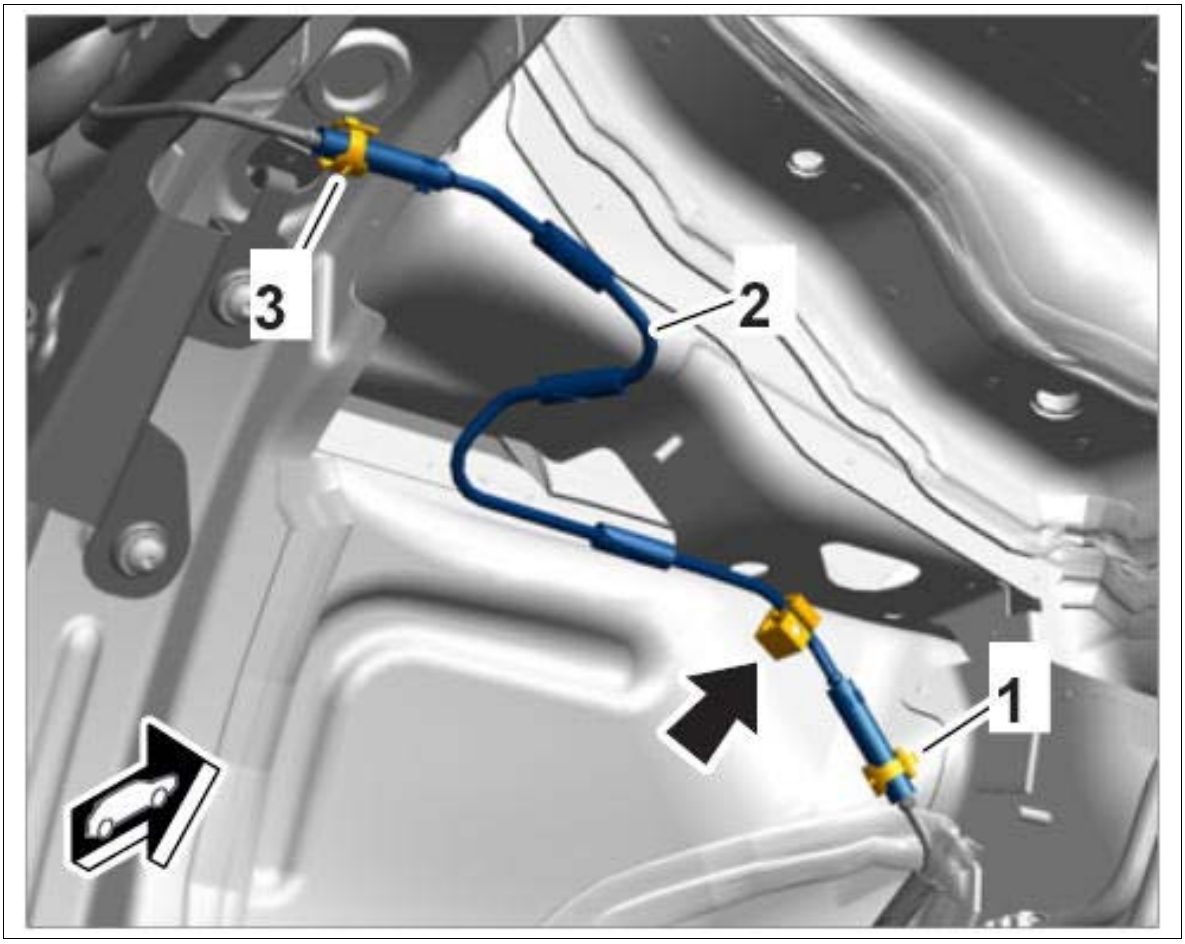

Courtesy of PORSCHE CARS NORTH AMERICA, INC.

WM 822219 REMOVING AND INSTALLING HOLDER FOR HEATER (ALL MODELS) > SUBSEQUENT WORK

1. Install front wheel housing liner at the right → Installing front wheel housing liner
2. Fit right front wheel → Installing Wheel

WM 824519 REMOVING AND INSTALLING FUEL PUMP FOR AUXILIARY HEATING (ALL MODELS) > TOOLS

Designation	Type	Number	Description	

PIWIS Tester II	Special tool	9818		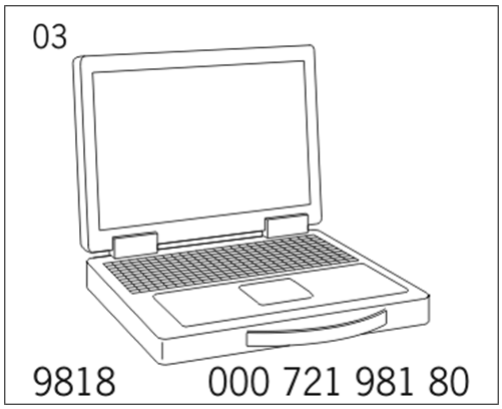

WM 824519 REMOVING AND INSTALLING FUEL PUMP FOR AUXILIARY HEATING (ALL MODELS) > PRELIMINARY WORK

1. Remove cover for center underbody at the right side → Removing cover for center underbody .

WM 824519 REMOVING AND INSTALLING FUEL PUMP FOR AUXILIARY HEATING (ALL MODELS) > REMOVING AND INSTALLING FUEL PUMP FOR AUXILIARY HEATING > REMOVING FUEL PUMP FOR AUXILIARY HEATING

WARNING: Emerging fuel

- *Risk of fire*

→ Disconnect the battery.

→ Avoid contact with hot parts or sources of ignition.

→ Allow engine to cool down.

→ Relieve the fuel pressure before opening the fuel lines.

→ Collect emerging fuel, absorb it if necessary with a suitable binding material and dispose of properly.

→ Use suction to remove ignitable vapors.

→ Attach warning sign to vehicle in a clearly visible position.

1. Loosen fuel pump **-1-** from the holder **-2-** .
2. Release and disconnect connector **-5-** .
3. Disconnect line **-3-** for the auxiliary heating and pull it off the fuel pump.
4. Disconnect fuel line **-4-** to the fuel tank.

5. Remove fuel pump **-1-** .

Fig 1: Identifying Auxiliary Heating Fuel Pump

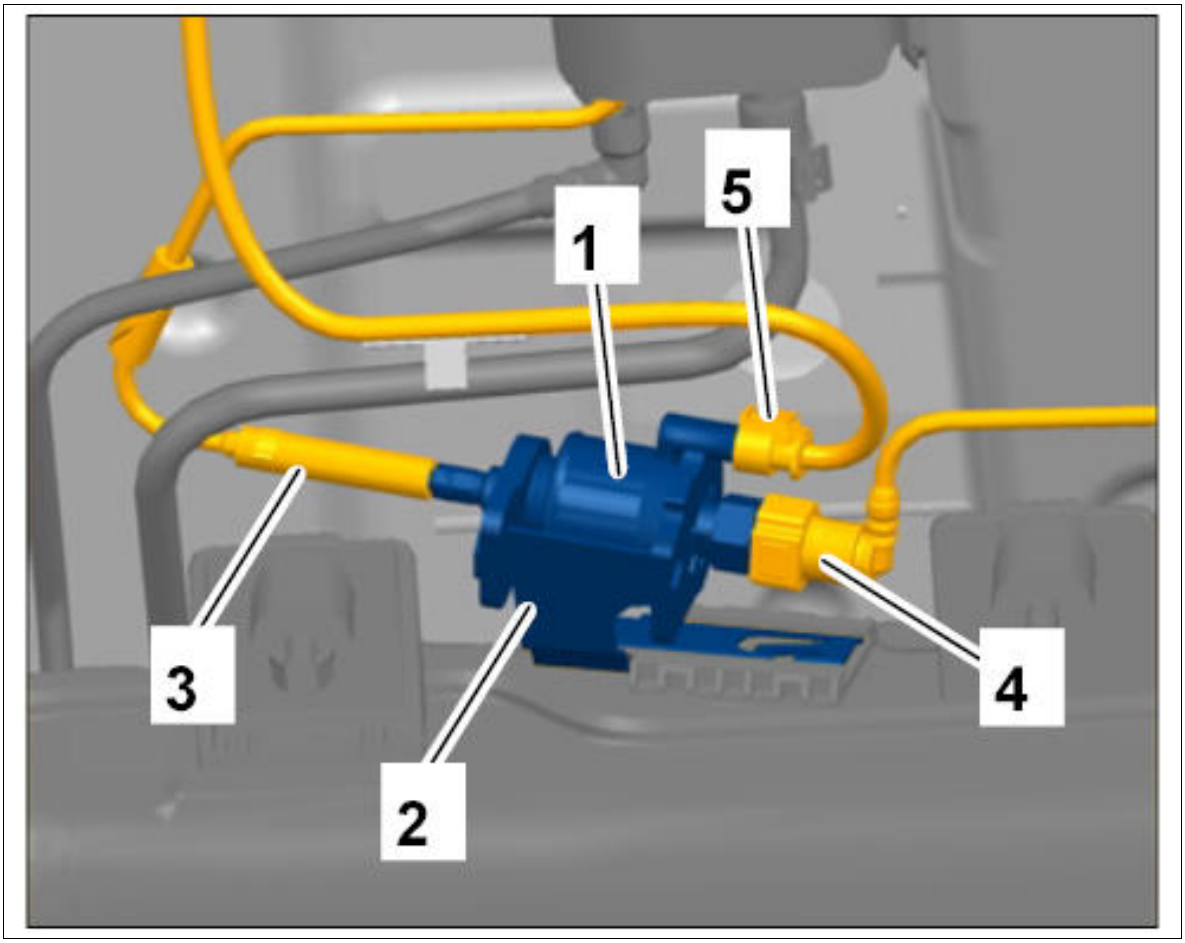

Courtesy of PORSCHE CARS NORTH AMERICA, INC.

WM 824519 REMOVING AND INSTALLING FUEL PUMP FOR AUXILIARY HEATING (ALL MODELS) > REMOVING AND INSTALLING FUEL PUMP FOR AUXILIARY HEATING > INSTALLING FUEL PUMP FOR AUXILIARY HEATING

1. Installation is performed in reverse order.
2. The fuel system must also be pre-filled. To do this, connect **PIWIS Tester II 9818** to the vehicle.
3. Switch on ignition.
4. Select the vehicle type and start the PIDT.
5. Select the **auxiliary heater** control unit in the **overview** .
6. **Maintenance/repairs** must then be selected.
7. **Line filling** must now be selected. Then press [Next].

WM 824519 REMOVING AND INSTALLING FUEL PUMP FOR AUXILIARY HEATING (ALL MODELS) > SUBSEQUENT WORK

1. Install cover for center underbody at the right side → Removing cover for center underbody .

WM 825419 REMOVING AND INSTALLING FUEL LINE - FRONT WHEEL HOUSING CONNECTION TO REAR UNDERBODY (ALL MODELS) > TOOLS

Designation	Type	Number	Description	
PIWIS Tester II	Special tool	9818		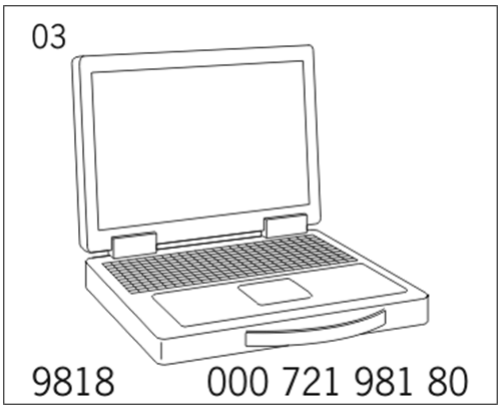
assembly pliers	Commercially available tool	Nr.72 Pos.1		

WM 825419 REMOVING AND INSTALLING FUEL LINE - FRONT WHEEL HOUSING CONNECTION TO REAR UNDERBODY (ALL MODELS) > PRELIMINARY WORK

1. Remove cover for center underbody at the right side → Removing cover for center underbody .
2. Remove right front wheel → Removing Wheel
3. Remove front wheel housing liner at the right → Removing front wheel housing liner

WM 825419 REMOVING AND INSTALLING FUEL LINE - FRONT WHEEL HOUSING

CONNECTION TO REAR UNDERBODY (ALL MODELS) > REMOVING AND INSTALLING FUEL LINE - FRONT WHEEL HOUSING CONNECTION TO REAR UNDERBODY > REMOVING FUEL LINE

WARNING: Emerging fuel

- *Risk of fire*

→ Disconnect the battery.

→ Avoid contact with hot parts or sources of ignition.

→ Allow engine to cool down.

→ Relieve the fuel pressure before opening the fuel lines.

→ Collect emerging fuel, absorb it if necessary with a suitable binding material and dispose of properly.

→ Use suction to remove ignitable vapors.

→ Attach warning sign to vehicle in a clearly visible position.

1. Loosen spring band clamp **-1-** using **assembly pliers Nr.72 Pos.1** and disconnect fuel line **-2-** .
2. Loosen fuel line **-3-** for auxiliary heating **-1-** and disconnect it.

Fig 1: Locating Fuel Line In Wheel Housing

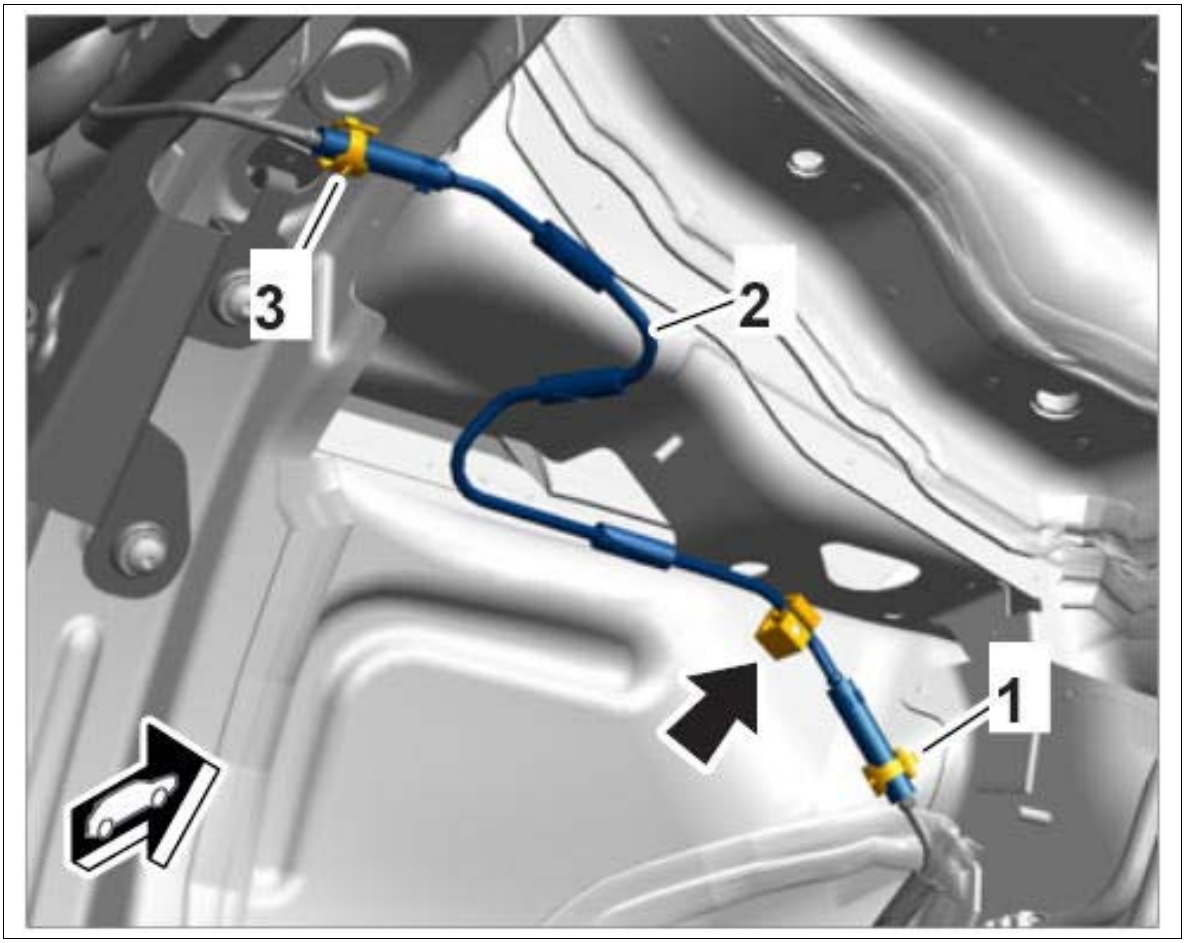

Courtesy of PORSCHE CARS NORTH AMERICA, INC.

Fig 2: Identifying Auxiliary Heating Fuel Pump

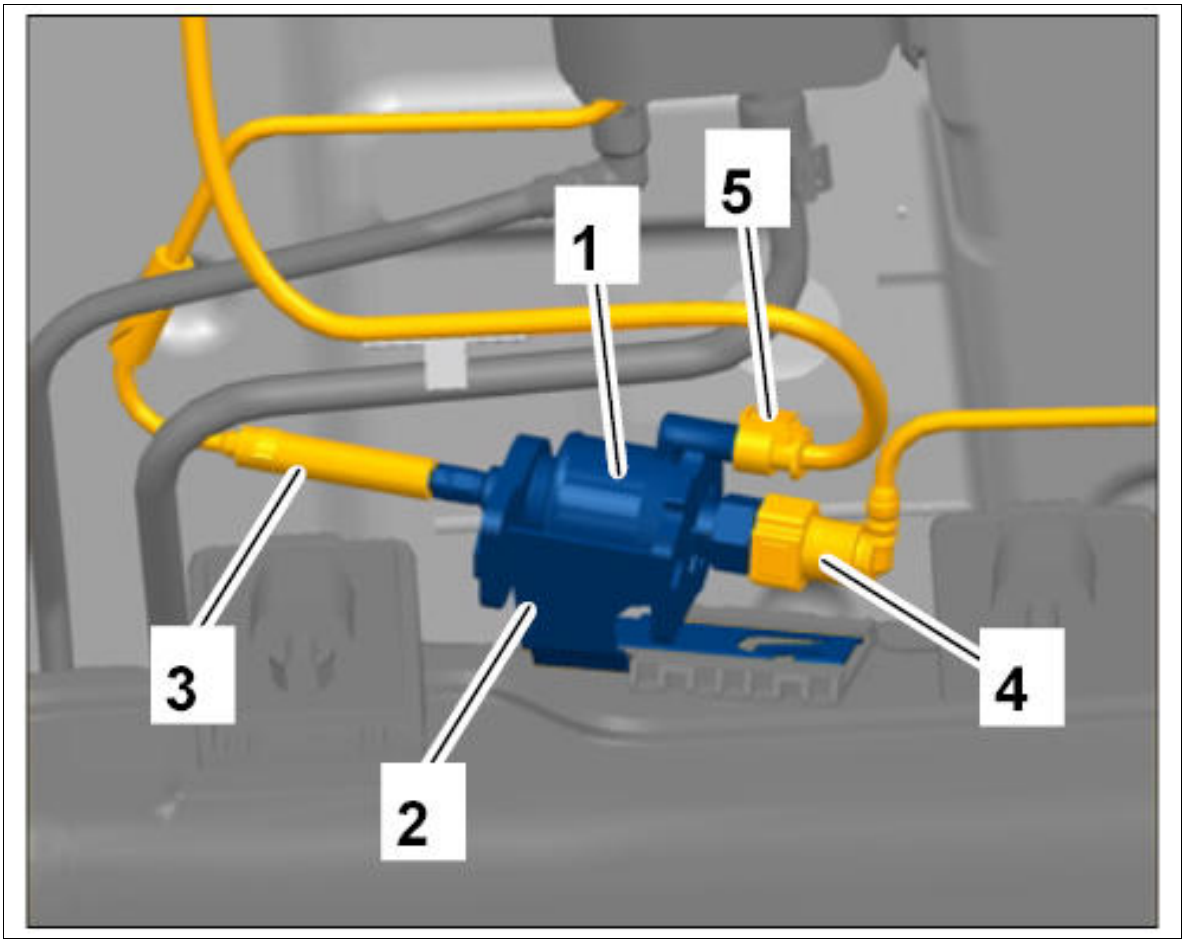

Courtesy of PORSCHE CARS NORTH AMERICA, INC.

3. Take fuel line out of the brackets and remove it from the vehicle.

WM 825419 REMOVING AND INSTALLING FUEL LINE - FRONT WHEEL HOUSING CONNECTION TO REAR UNDERBODY (ALL MODELS) > REMOVING AND INSTALLING FUEL LINE - FRONT WHEEL HOUSING CONNECTION TO REAR UNDERBODY > INSTALLING FUEL LINE - FRONT WHEEL HOUSING CONNECTION TO UNDERBODY

1. Installation is performed in reverse order.
2. The fuel system must also be pre-filled. To do this, connect **PIWIS Tester II 9818** to the vehicle.
3. Switch on ignition.
4. Select the vehicle type and start the PIDT.
5. Select the **auxiliary heater** control unit in the **overview** .
6. **Maintenance/repairs** must then be selected.

7. **Line filling** must now be selected. Then press [Next].

WM 825419 REMOVING AND INSTALLING FUEL LINE - FRONT WHEEL HOUSING CONNECTION TO REAR UNDERBODY (ALL MODELS) > SUBSEQUENT WORK

1. Install front wheel housing liner at the right → Installing front wheel housing liner .
2. Install right front wheel → Installing Wheel
3. Install cover for center underbody at the right side → 519319 REMOVING AND INSTALLING COVER FOR CENTRE UNDERBODY .

WM 825419 REMOVING AND INSTALLING FUEL LINE - REAR UNDERBODY TO FUEL PUMP (ALL MODELS) > TOOLS

Designation	Type	Number	Description	
PIWIS Tester II	Special tool	9818		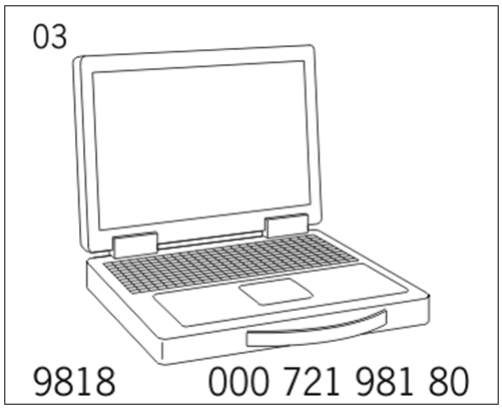

WM 825419 REMOVING AND INSTALLING FUEL LINE - REAR UNDERBODY TO FUEL PUMP (ALL MODELS) > PRELIMINARY WORK

1. Remove fuel tank → Removing fuel tank .

WM 825419 REMOVING AND INSTALLING FUEL LINE - REAR UNDERBODY TO FUEL PUMP (ALL MODELS) > REMOVING AND INSTALLING FUEL LINE - REAR UNDERBODY TO FUEL PUMP > REMOVING FUEL LINE FROM REAR UNDERBODY TO FUEL PUMP

WARNING: Emerging fuel

- *Risk of fire*

→ Disconnect the battery.

→ Avoid contact with hot parts or sources of ignition.

→ Allow engine to cool down.

→ Relieve the fuel pressure before opening the fuel lines.

→ Collect emerging fuel, absorb it if necessary with a suitable binding material and dispose of properly.

→ Use suction to remove ignitable vapors.

→ Attach warning sign to vehicle in a clearly visible position.

1. Release and pull off supply line for auxiliary heater **-4-** .

Fig 1: Identifying Fuel Pump Connections

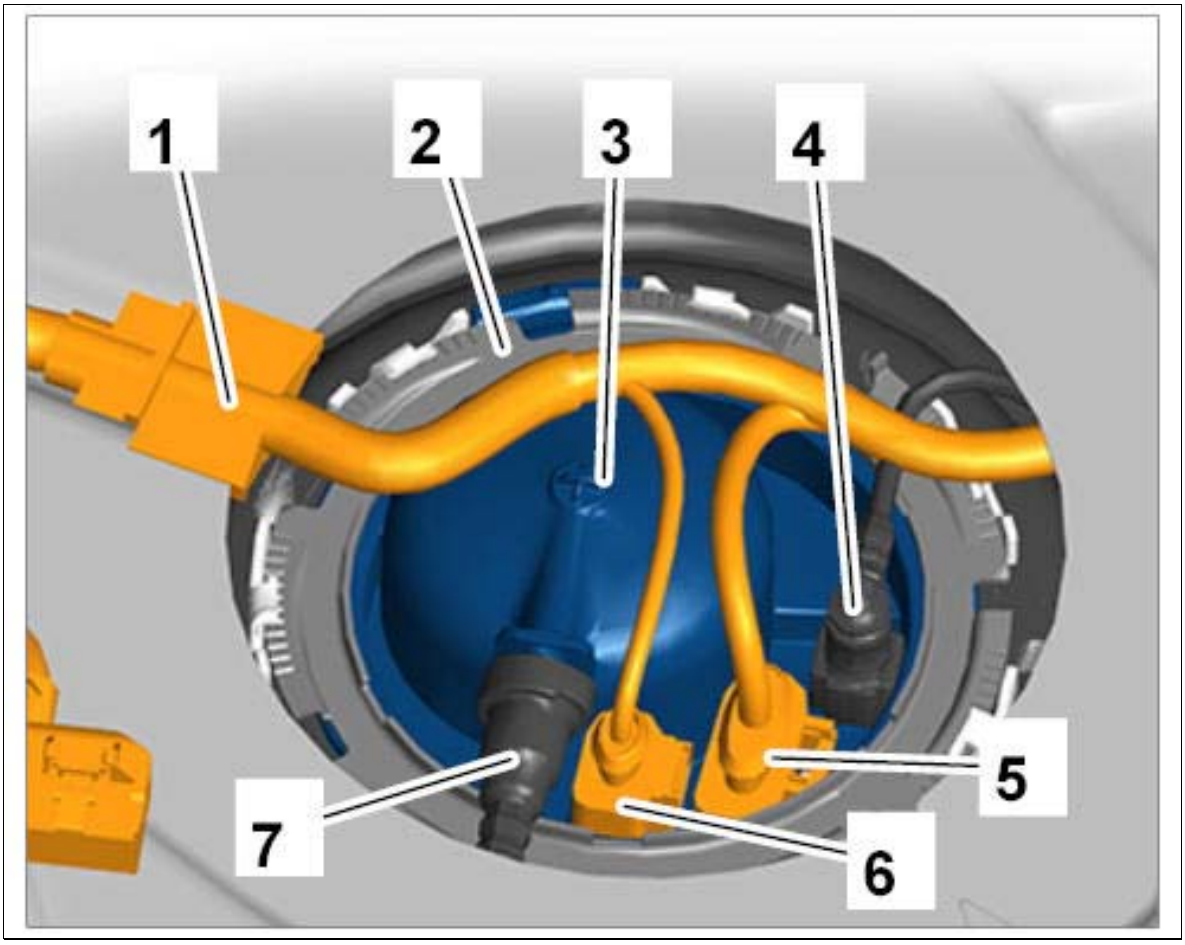

Courtesy of PORSCHE CARS NORTH AMERICA, INC.

2. Loosen auxiliary heater pump **-2-** from the holder **-3-** and disconnect line **-4-** .

Fig 2: Identifying Supply Line

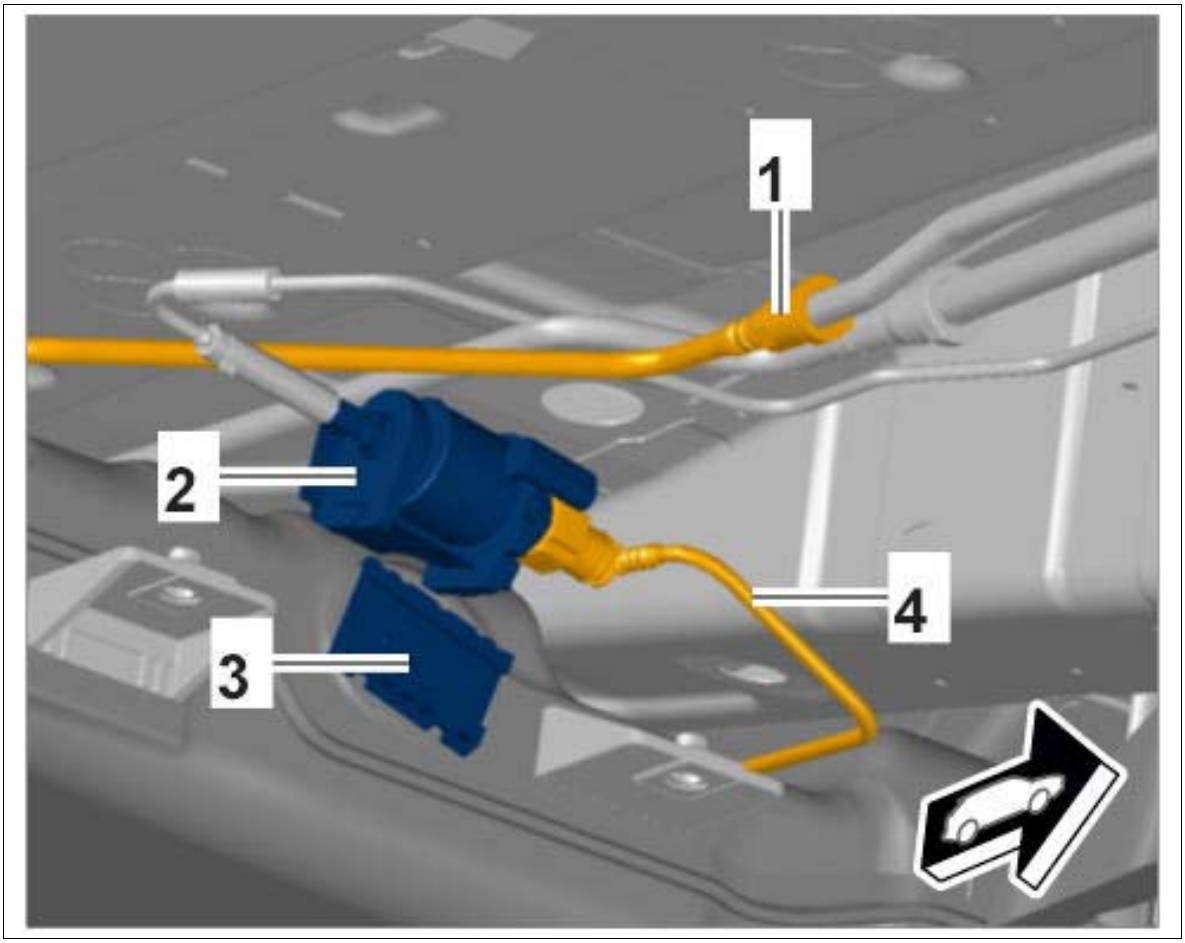

Courtesy of PORSCHE CARS NORTH AMERICA, INC.

3. Remove line from the brackets.

WM 825419 REMOVING AND INSTALLING FUEL LINE - REAR UNDERBODY TO FUEL PUMP (ALL MODELS) > REMOVING AND INSTALLING FUEL LINE - REAR UNDERBODY TO FUEL PUMP > INSTALLING FUEL LINE FROM REAR UNDERBODY TO FUEL PUMP

1. Installation is performed in reverse order.
2. The fuel system must also be pre-filled. To do this, connect **PIWIS Tester II 9818** to the vehicle.
3. Switch on ignition.
4. Select the vehicle type and start the PIDT.
5. Select the **auxiliary heater** control unit in the **overview** .
6. **Maintenance/repairs** must then be selected.

7. **Line filling** must now be selected. Then press [Next].

WM 825419 REMOVING AND INSTALLING FUEL LINE - REAR UNDERBODY TO FUEL PUMP (ALL MODELS) > SUBSEQUENT WORK

1. Install fuel tank → Installing fuel tank

WM 825419 REMOVING AND INSTALLING FUEL LINE - WHEEL HOUSING CONNECTION TO HEATER (ALL MODELS) > TOOLS

Designation	Type	Number	Description	
PIWIS Tester II	Special tool	9818		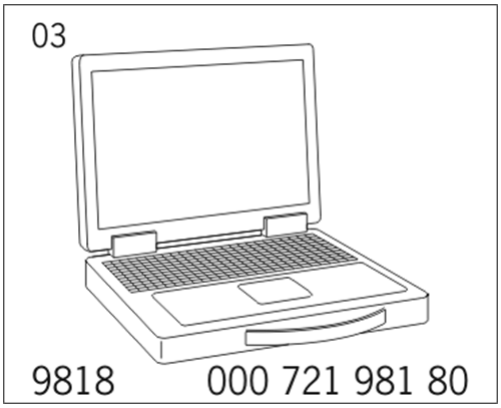
assembly pliers	Commercially available tool	Nr.72 Pos.1		

WM 825419 REMOVING AND INSTALLING FUEL LINE - WHEEL HOUSING CONNECTION TO HEATER (ALL MODELS) > INFORMATION > INSTALLATION POSITION OF FUEL LINE - WHEEL HOUSING CONNECTION TO HEATER

The fuel line is behind the front right wheel housing liner.

WM 825419 REMOVING AND INSTALLING FUEL LINE - WHEEL HOUSING

CONNECTION TO HEATER (ALL MODELS) > PRELIMINARY WORK

1. Remove right front wheel → Removing Wheel .
2. Remove front wheel housing liner at the right → Removing front wheel housing liner .

WM 825419 REMOVING AND INSTALLING FUEL LINE - WHEEL HOUSING CONNECTION TO HEATER (ALL MODELS) > REMOVING AND INSTALLING FUEL LINE - WHEEL HOUSING CONNECTION TO HEATER > REMOVING FUEL LINE - WHEEL HOUSING CONNECTION TO HEATER

WARNING: Emerging fuel

- *Risk of fire*

→ Disconnect the battery.

→ Avoid contact with hot parts or sources of ignition.

→ Allow engine to cool down.

→ Relieve the fuel pressure before opening the fuel lines.

→ Collect emerging fuel, absorb it if necessary with a suitable binding material and dispose of properly.

→ Use suction to remove ignitable vapors.

→ Attach warning sign to vehicle in a clearly visible position.

1. Unclip fuel line **-2-** in the wheel housing at the marked position **-arrow-** .
2. Loosen spring band clamp **-3-** using **assembly pliers Nr.72 Pos.1** and disconnect fuel line **-2-** .
3. Loosen spring band clamp **-1-** using **assembly pliers Nr.72 Pos.1** and disconnect fuel line **-2-** .
4. Remove fuel line.

Fig 1: Locating Fuel Line In Wheel Housing

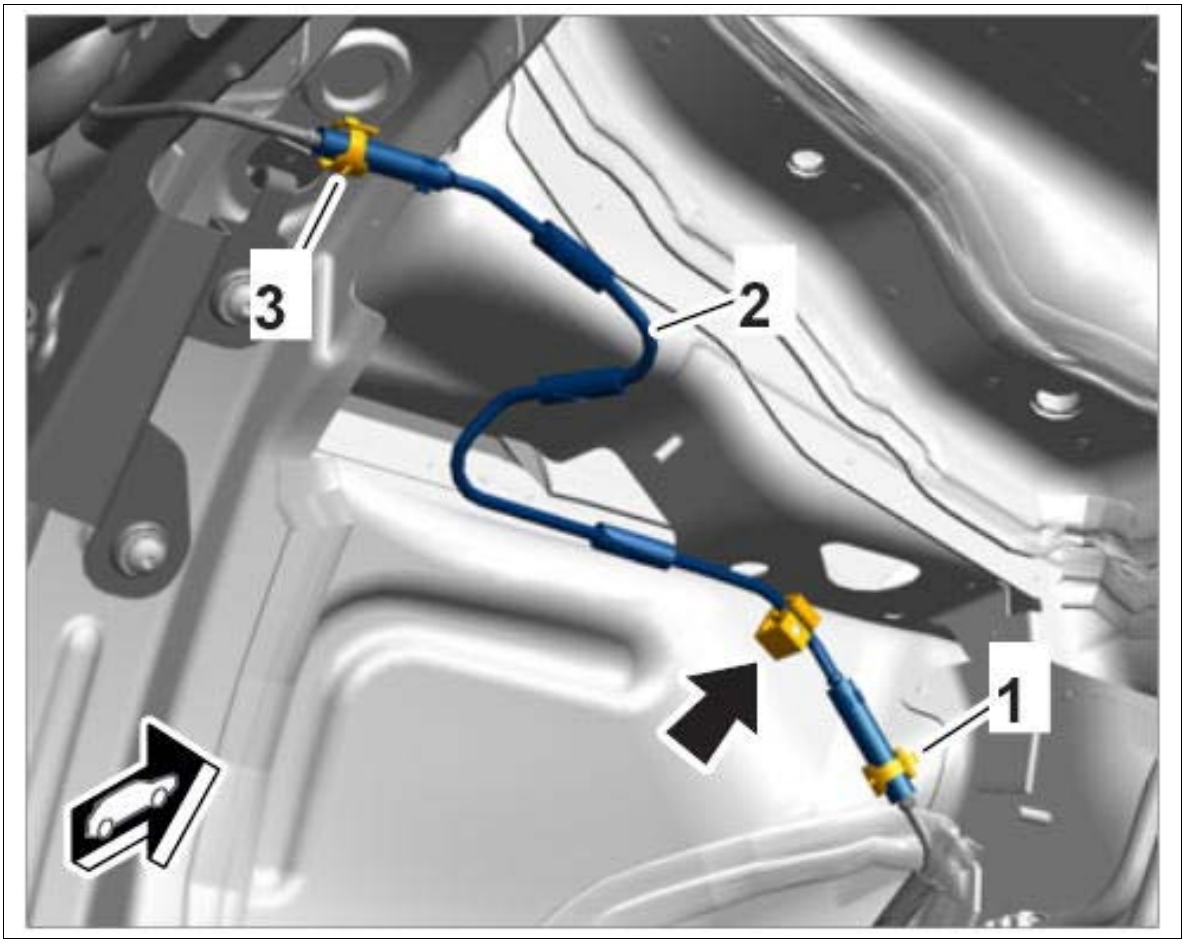

Courtesy of PORSCHE CARS NORTH AMERICA, INC.

WM 825419 REMOVING AND INSTALLING FUEL LINE - WHEEL HOUSING CONNECTION TO HEATER (ALL MODELS) > REMOVING AND INSTALLING FUEL LINE - WHEEL HOUSING CONNECTION TO HEATER > INSTALLING FUEL LINE - WHEEL HOUSING CONNECTION TO HEATER

WARNING: Emerging fuel

- *Risk of fire*

→ Disconnect the battery.

→ Avoid contact with hot parts or sources of ignition.

→ Allow engine to cool down.

→ Relieve the fuel pressure before opening the fuel lines.

→ Collect emerging fuel, absorb it if necessary with a suitable binding material and dispose of properly.

→ Use suction to remove ignitable vapors.

→ Attach warning sign to vehicle in a clearly visible position.

Information

- There is no guarantee that re-used clamps will secure the component properly.
- Removed clamps must be replaced.
- Always use new clamps during installation.

1. Installation is performed in reverse order to removal.

   Pay particular attention to the following:

   Push on fuel line **-2-** as far as it will go or up to the marking - minimum overlap: 25 mm.

   Fig 1: Locating Fuel Line In Wheel Housing

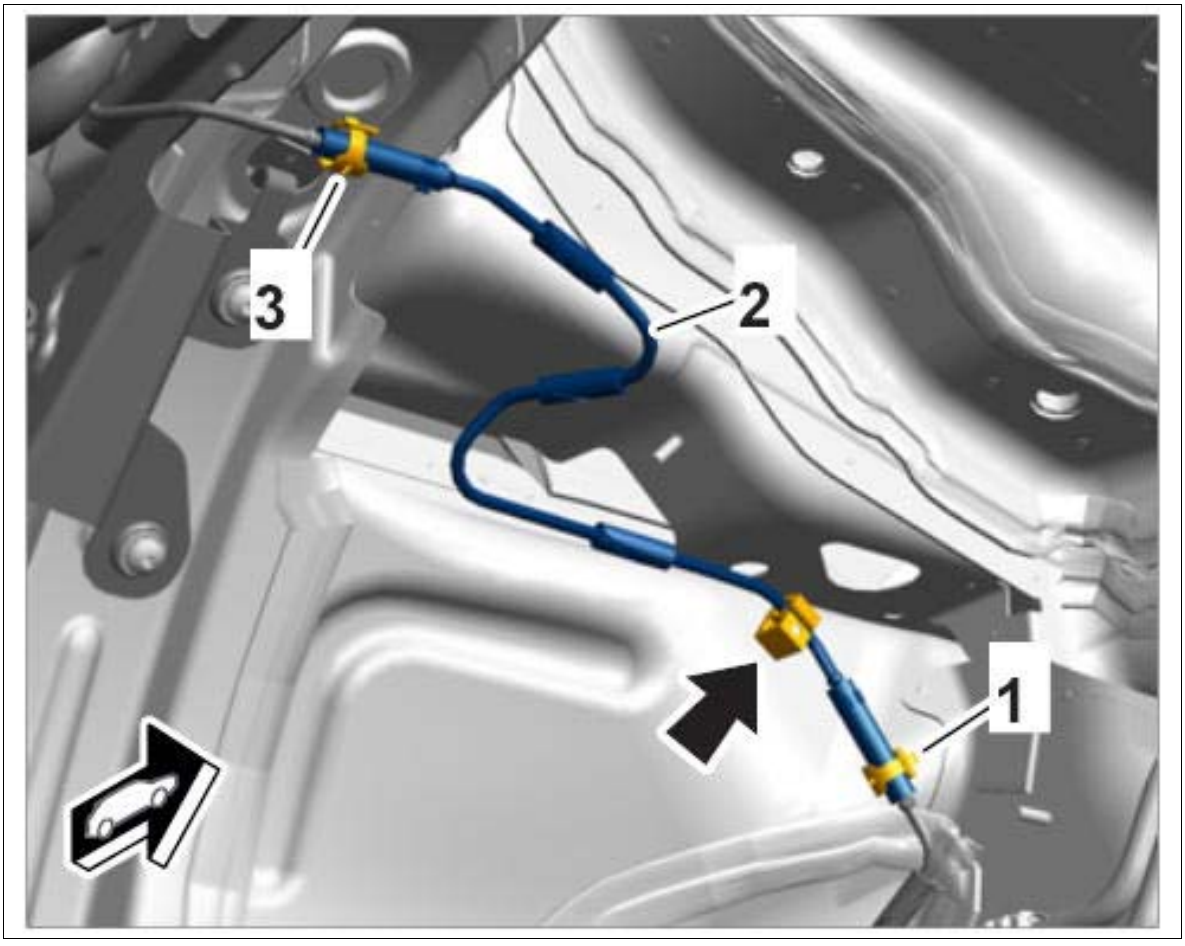

Courtesy of PORSCHE CARS NORTH AMERICA, INC.

2. The fuel system must also be pre-filled. To do this, connect **PIWIS Tester II 9818** to the vehicle.
3. Switch on ignition.

4. Select the vehicle type and start the PIDT.
5. Select the **auxiliary heater** control unit in the **overview** .
6. **Maintenance/repairs** must then be selected.
7. **Line filling** must now be selected. Then press [Next].

WM 825419 REMOVING AND INSTALLING FUEL LINE - WHEEL HOUSING CONNECTION TO HEATER (ALL MODELS) > SUBSEQUENT WORK

1. Install front wheel housing liner at the right → Removing front wheel housing liner .
2. Fit right front wheel → Installing Wheel .

WM 825919 REMOVING AND INSTALLING MUFFLER (SILENCER) (ALL MODELS) > TECHNICAL VALUES

Location	Description	Type	Basic value	Tolerance 1	Tolerance 2
Exhaust silencer pipe to underbody	Nut, M6	Tightening torque	9 Nm (6.5 ftlb.)		
Exhaust silencer holder to underbody	Nut, M6	Tightening torque	9 Nm (6.5 ftlb.)		

WM 825919 REMOVING AND INSTALLING MUFFLER (SILENCER) (ALL MODELS) > INFORMATION > INSTALLATION POSITION OF SILENCER

Fig 1: Overview Of Silencer Position



Courtesy of PORSCHE CARS NORTH AMERICA, INC.

WM 825919 REMOVING AND INSTALLING MUFFLER (SILENCER) (ALL MODELS) > PRELIMINARY WORK

1. Remove right front wheel → Removing Wheel .
2. Remove front wheel housing liner at the right → Removing front wheel housing liner .
3. Remove central cover for center underbody → Removing cover for center underbody
4. Remove right side panel cover for center underbody → Removing cover for center underbody .

WM 825919 REMOVING AND INSTALLING MUFFLER (SILENCER) (ALL MODELS) > REMOVING AND INSTALLING MUFFLER (SILENCER) > REMOVING SILENCER

1. Loosen screw-type clamp **-1-** .
2. Pull flexi-pipe **-2-** off the silencer pipe **-3-** .

Fig 1: Identifying Exhaust Pipe On Silencer



Courtesy of PORSCHE CARS NORTH AMERICA, INC.

3. Disconnect line **-1-** from the silencer holder **-2-** .

Fig 2: Identifying Silencer Holder

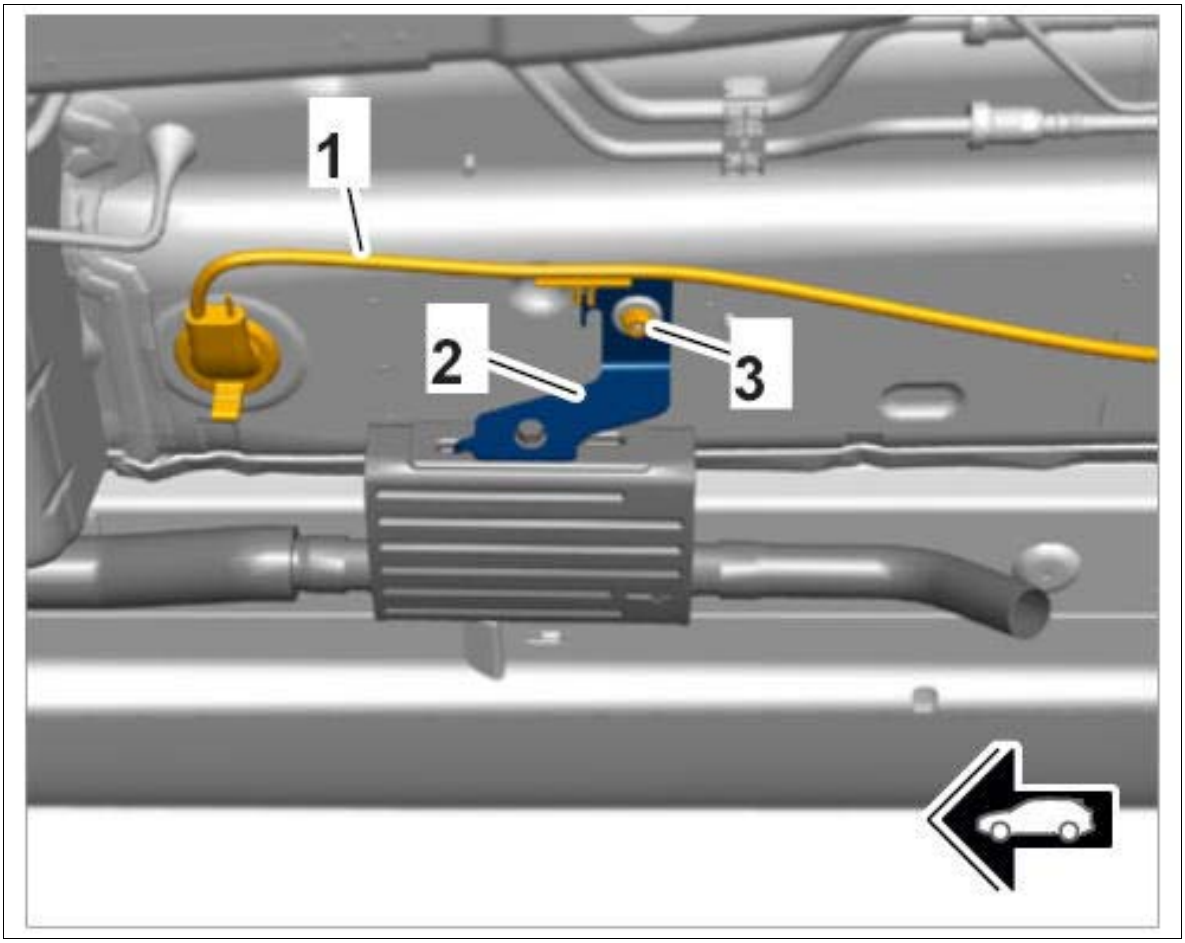

Courtesy of PORSCHE CARS NORTH AMERICA, INC.

4. Unscrew and remove fastening nut **-1-** at the bottom of the wheel housing.

Fig 3: Identifying Silencer On Underbody



Courtesy of PORSCHE CARS NORTH AMERICA, INC.

5. Unscrew and remove fastening nut **-3-** on the silencer holder.

Fig 4: Identifying Silencer Holder

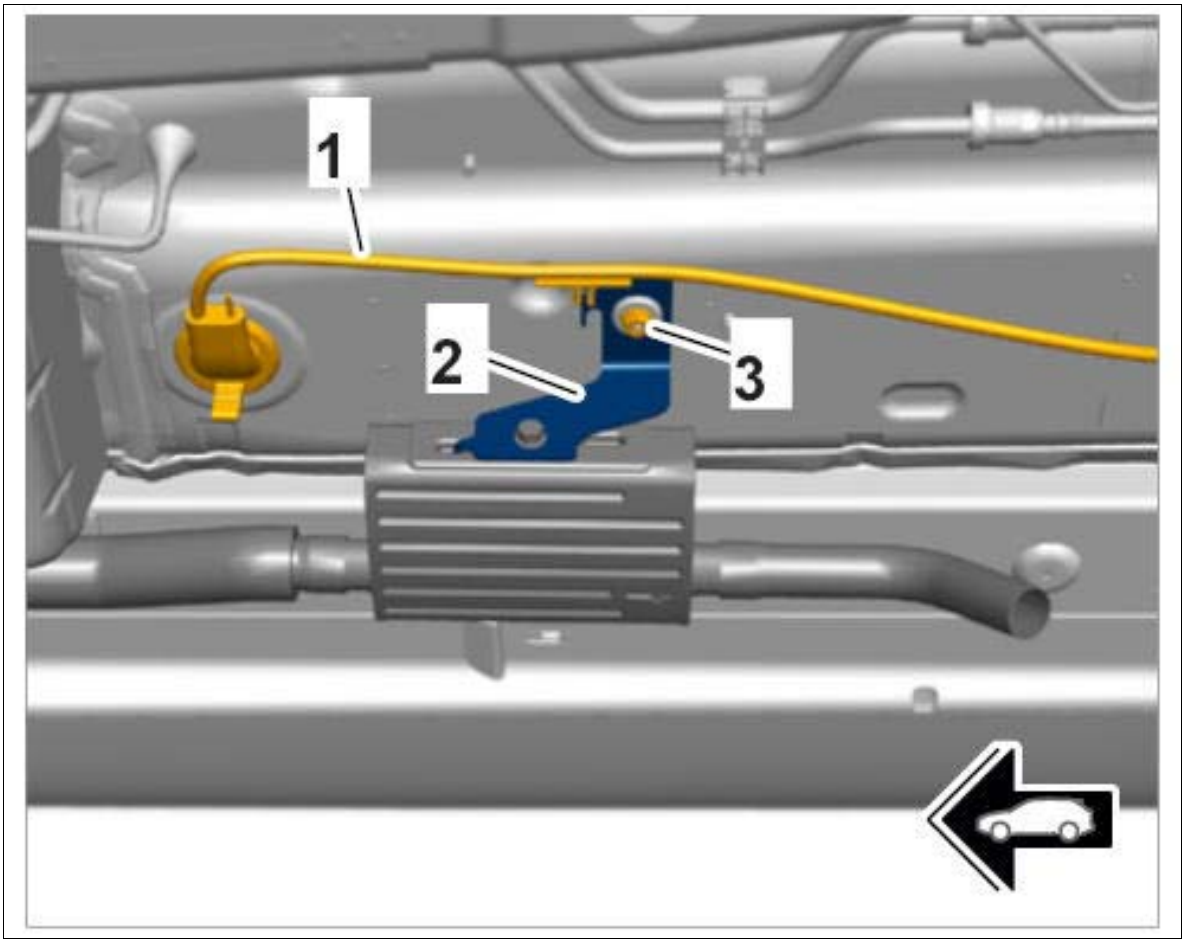

Courtesy of PORSCHE CARS NORTH AMERICA, INC.

6. Remove silencer.

WM 825919 REMOVING AND INSTALLING MUFFLER (SILENCER) (ALL MODELS) > REMOVING AND INSTALLING MUFFLER (SILENCER) > INSTALLING SILENCER

1. Position silencer.
2. Tighten fastening nut **-3-** on the silencer holder to the prescribed tightening torque **Tightening torque 9 Nm (6.5 ftlb.)** .

Fig 1: Identifying Silencer Holder

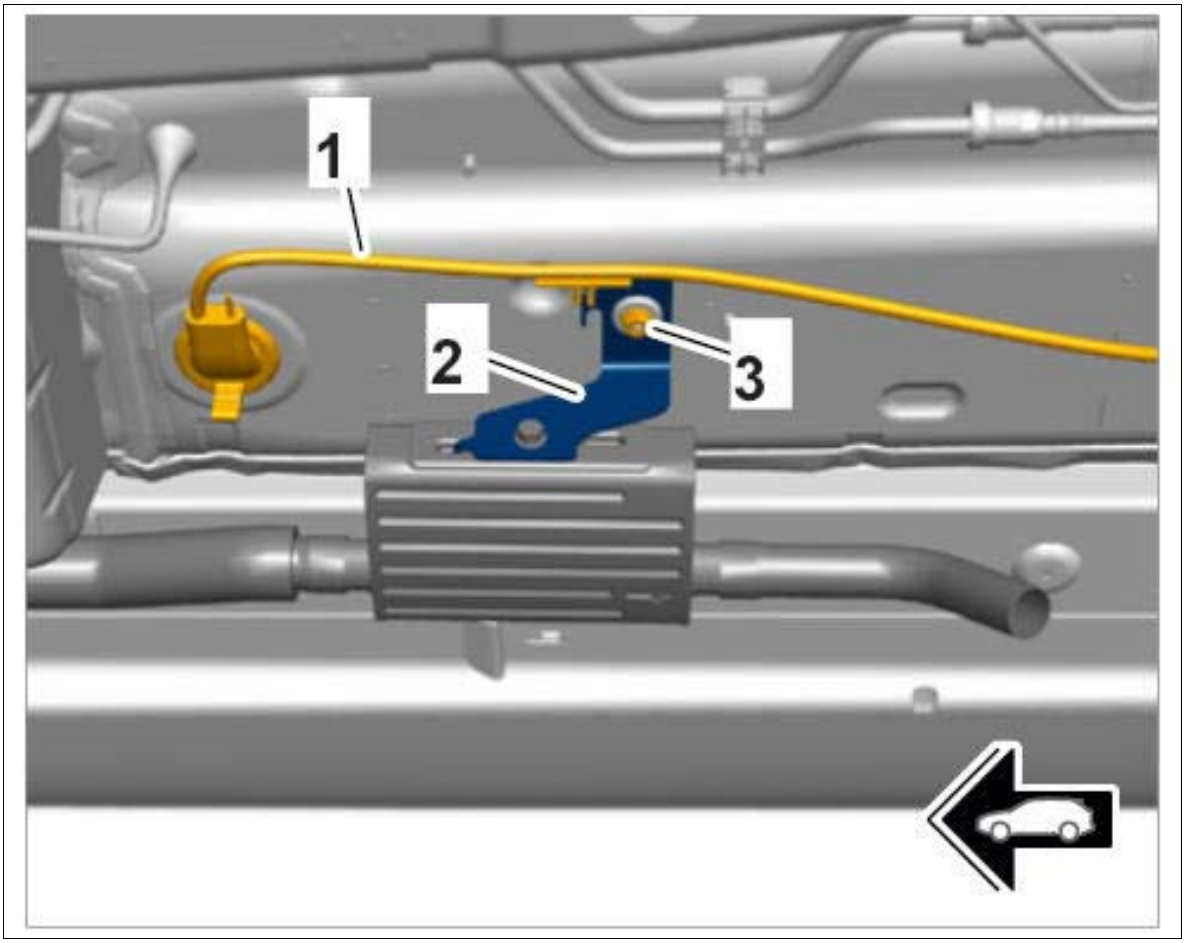

Courtesy of PORSCHE CARS NORTH AMERICA, INC.

3. Tighten fastening nut **-1-** at the bottom of the wheel housing to the prescribed tightening torque **Tightening torque 9 Nm (6.5 ftlb.)** .

Fig 2: Identifying Silencer On Underbody



Courtesy of PORSCHE CARS NORTH AMERICA, INC.

4. Secure line **-1-** to the silencer holder **-2-** .
5. Slide flexi-pipe **-2-** onto the silencer pipe **-3-** .

Fig 3: Identifying Silencer Holder

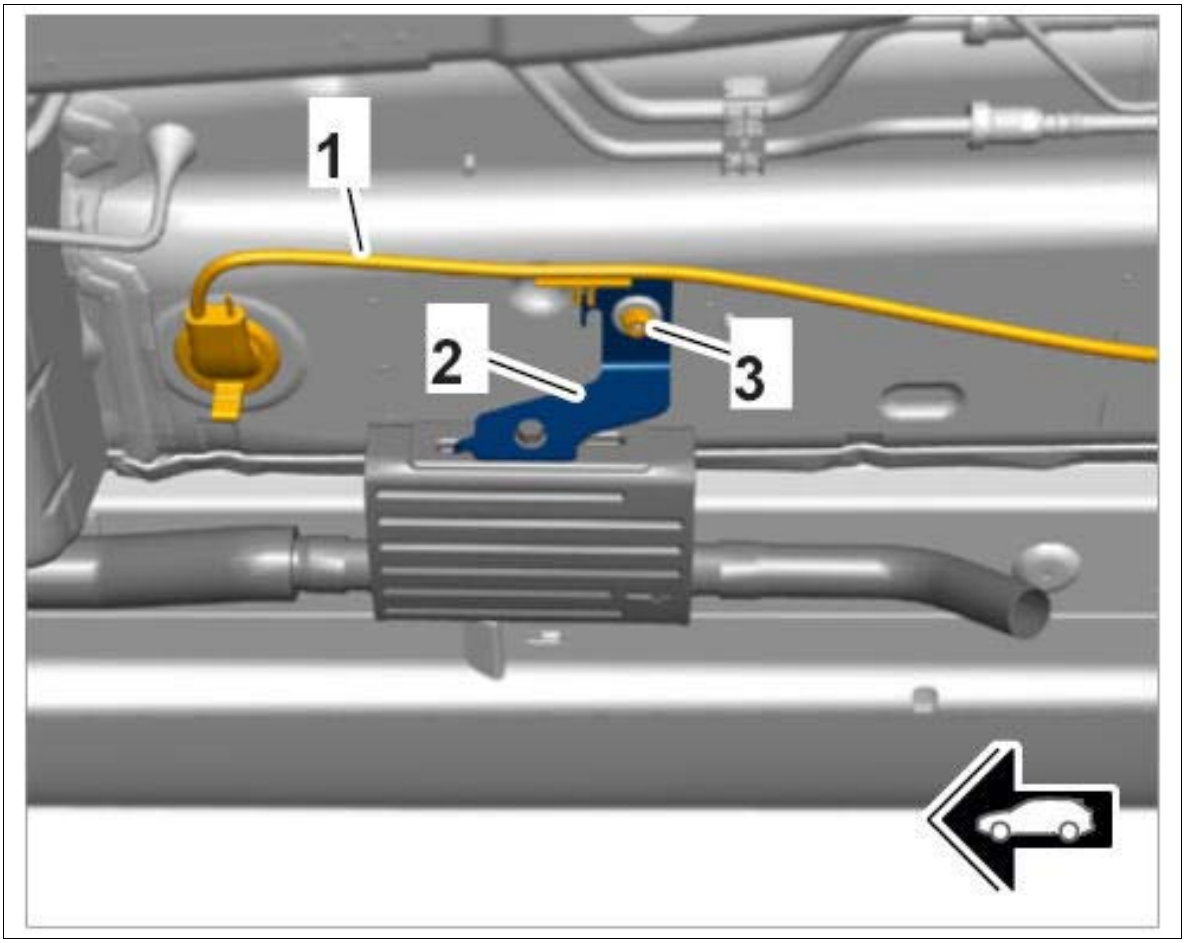

Courtesy of PORSCHE CARS NORTH AMERICA, INC.

6. Tighten screw-type clamp **-1-** .

Fig 4: Identifying Exhaust Pipe On Silencer



Courtesy of PORSCHE CARS NORTH AMERICA, INC.

WM 825919 REMOVING AND INSTALLING MUFFLER (SILENCER) (ALL MODELS) > SUBSEQUENT WORK

1. Install right side panel cover for center underbody → Installing cover for center underbody .
2. Install central cover for center underbody → Installing cover for center underbody

3. Install front wheel housing liner at the right → Installing front wheel housing liner .

4. Fit right front wheel → Installing Wheel .

WM 826019 REMOVING AND INSTALLING EXHAUST PIPE (ALL MODELS) > INFORMATION > INSTALLATION POSITION OF EXHAUST PIPE

The exhaust pipe is on the heater in the front right wheel housing, behind the wheel housing liner.

WM 826019 REMOVING AND INSTALLING EXHAUST PIPE (ALL MODELS) > PRELIMINARY WORK

1. Loosen heater with holder → Loosening Heater With Holder .

WM 826019 REMOVING AND INSTALLING EXHAUST PIPE (ALL MODELS) > REMOVING AND INSTALLING EXHAUST PIPE > REMOVING EXHAUST PIPE

1. Unscrew fastening screw **-2-** on the exhaust pipe **-1-** .

Fig 1: Identifying Exhaust Pipe On Holder

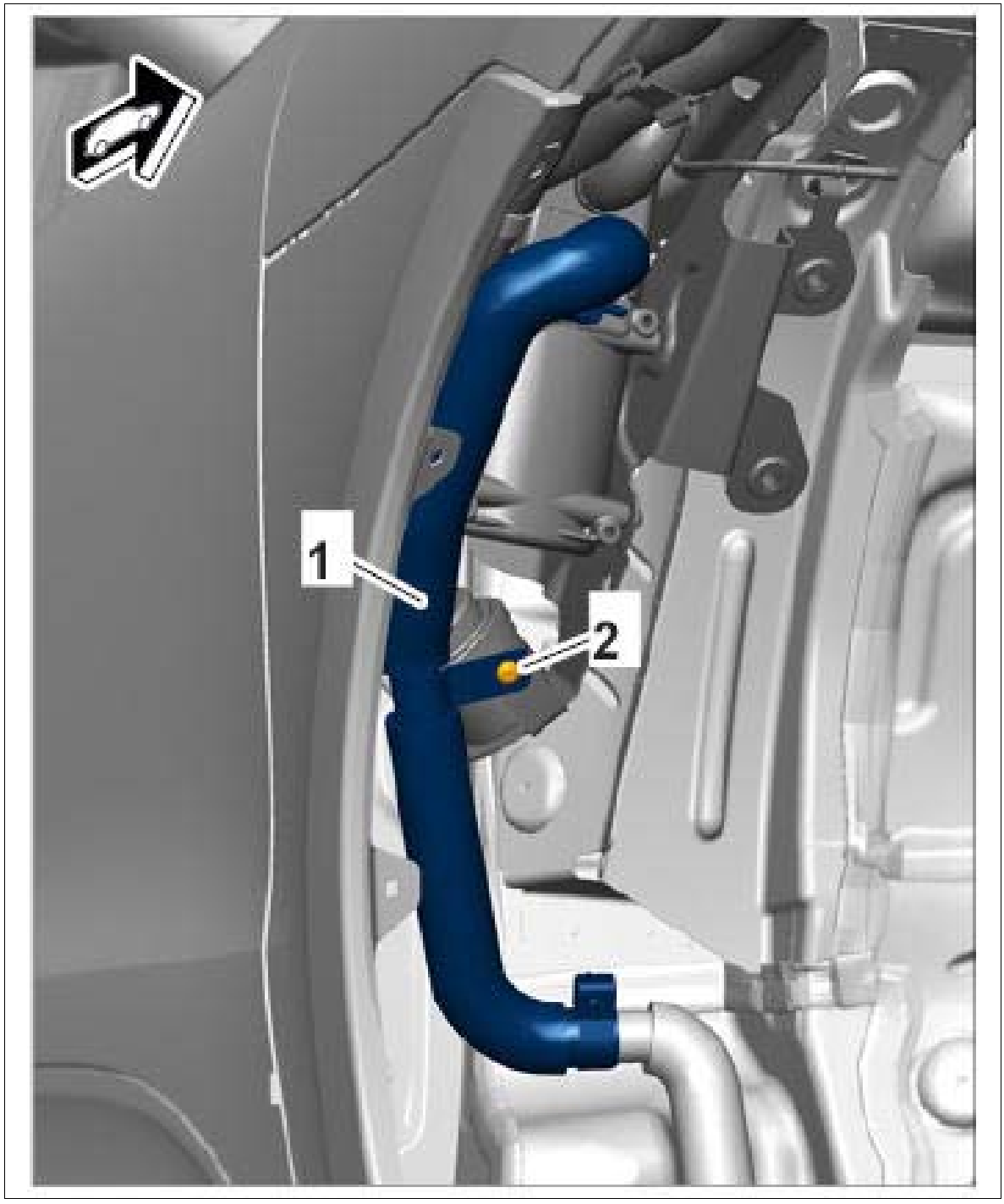

Courtesy of PORSCHE CARS NORTH AMERICA, INC.

2. Remove exhaust pipe from heater.
    1. 2.1 Loosen screw-type clamp **-1-** .
    2. 2.2 Remove exhaust pipe **-2-** from heater.

Fig 2: Identifying Exhaust Pipe On Heater

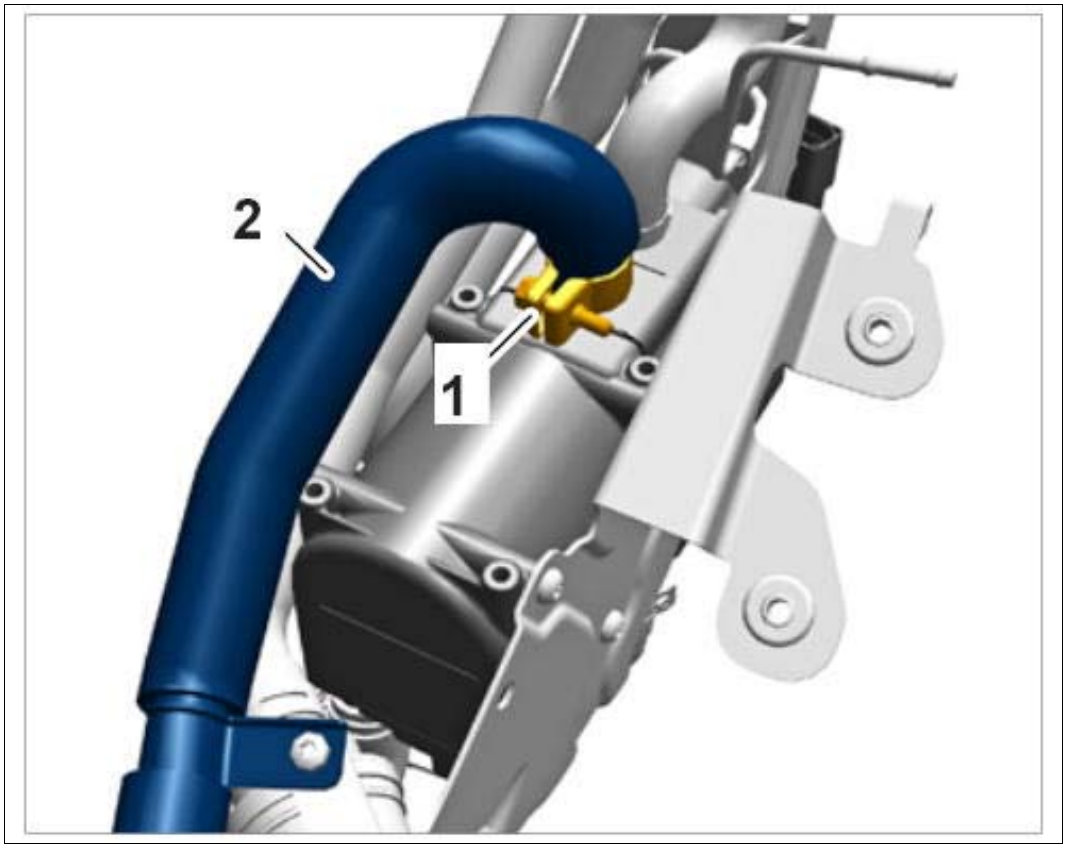

Courtesy of PORSCHE CARS NORTH AMERICA, INC.

WM 826019 REMOVING AND INSTALLING EXHAUST PIPE (ALL MODELS) > REMOVING AND INSTALLING EXHAUST PIPE > INSTALLING EXHAUST PIPE

1. Fit exhaust pipe on heater.
    1. 1.1. Position exhaust pipe **-2-** on the heater.
    2. 1.2. Tighten screw-type clamp **-1-** .

Fig 1: Identifying Exhaust Pipe On Heater

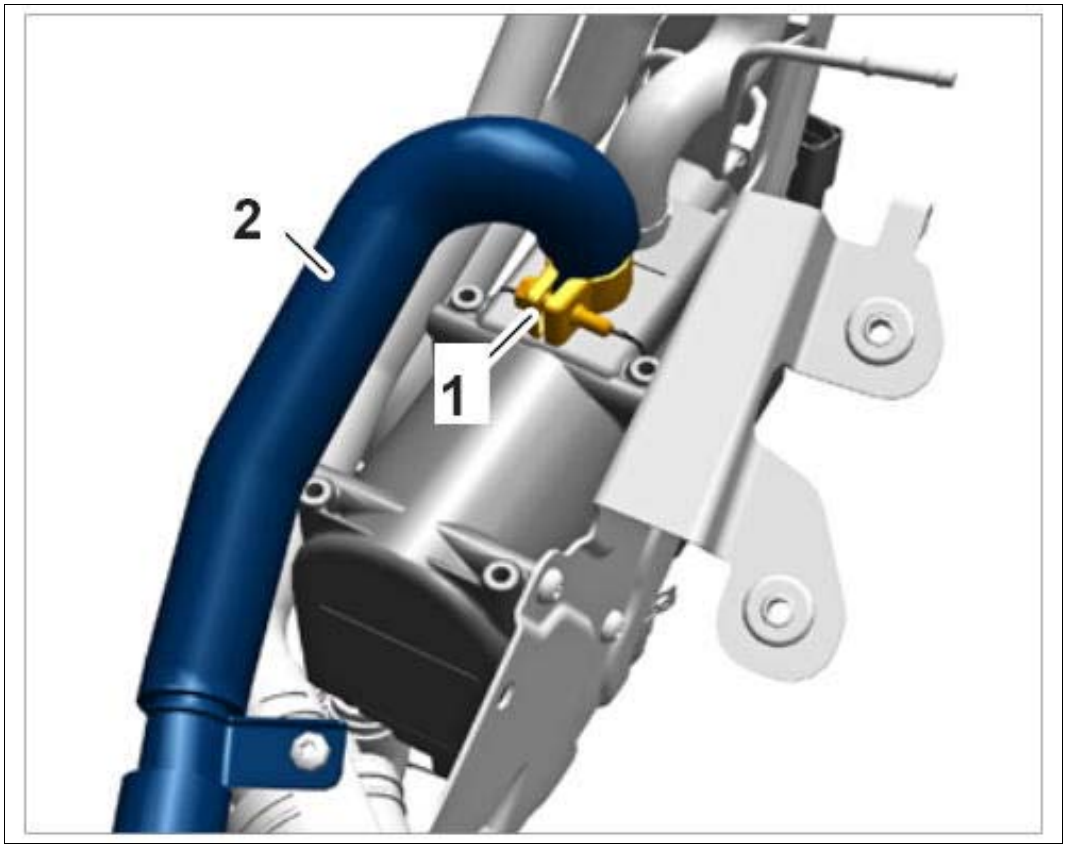

Courtesy of PORSCHE CARS NORTH AMERICA, INC.

2. Tighten fastening screw **-2-** on the exhaust pipe **-1-** .

Fig 2: Identifying Exhaust Pipe On Holder

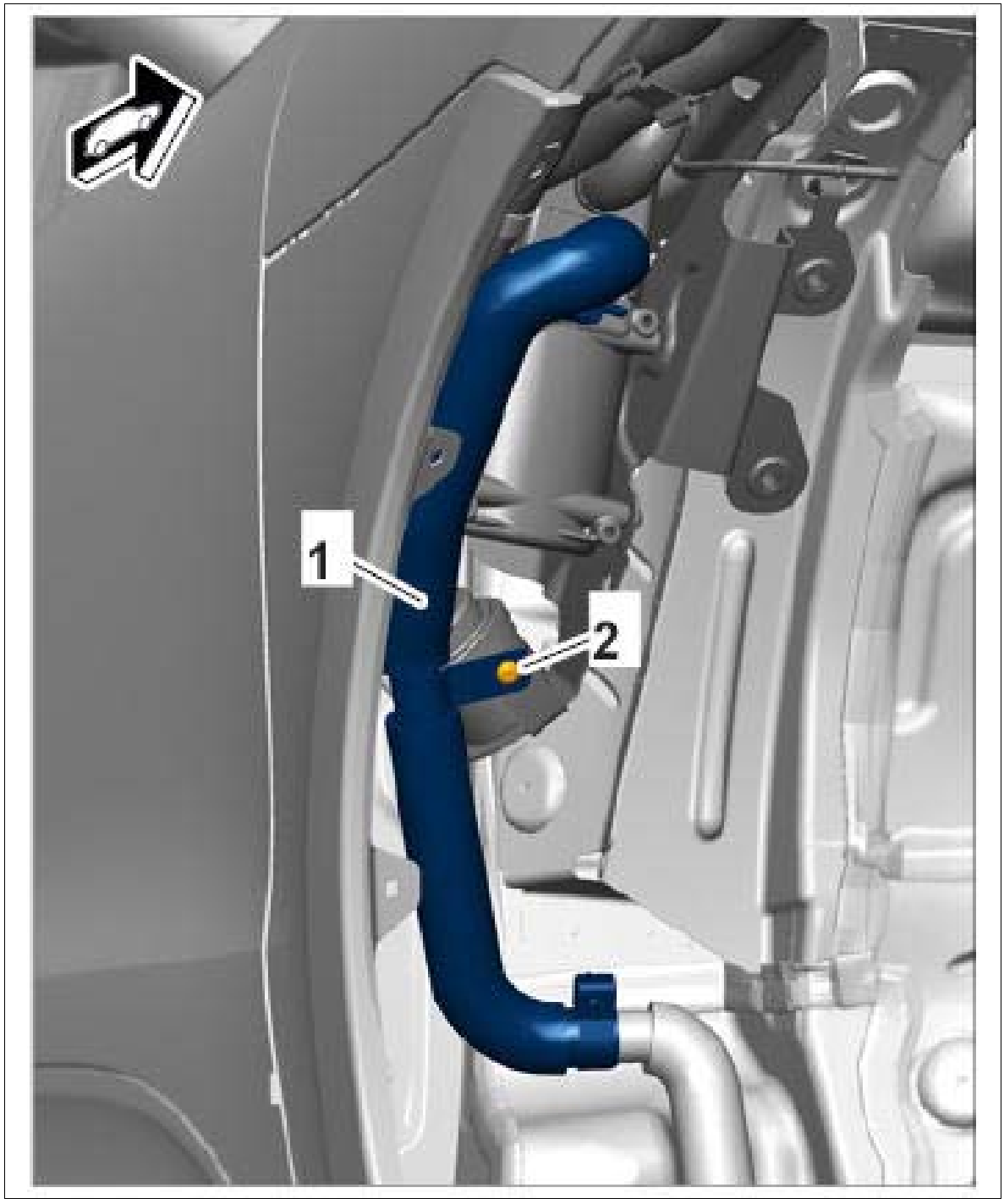

Courtesy of PORSCHE CARS NORTH AMERICA, INC.

WM 826019 REMOVING AND INSTALLING EXHAUST PIPE (ALL MODELS) > SUBSEQUENT WORK

1. Secure heater with holder → Securing Heater With Holder .

WM 827219 REMOVING AND INSTALLING CIRCULATING PUMP FOR AUXILIARY HEATER (ALL MODELS) > TOOLS

Designation	Type	Number	Description	
hose clamp	VW tool	3094		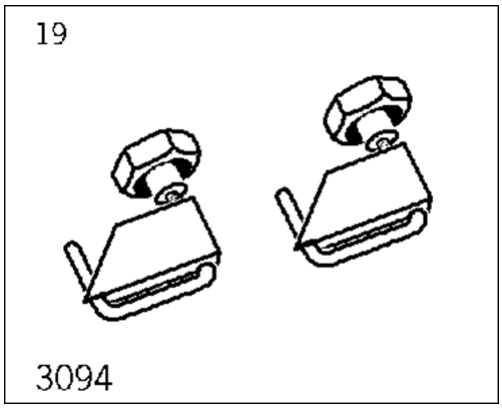
assembly pliers	Commercially available tool	Nr.72 Pos.1		

WM 827219 REMOVING AND INSTALLING CIRCULATING PUMP FOR AUXILIARY HEATER (ALL MODELS) > INFORMATION > INSTALLATION POSITION

The circulating pump is behind the right front wheel housing liner under the heater.

WM 827219 REMOVING AND INSTALLING CIRCULATING PUMP FOR AUXILIARY HEATER (ALL MODELS) > PRELIMINARY WORK

1. Loosen heater with holder → Loosening Heater With Holder .

WM 827219 REMOVING AND INSTALLING CIRCULATING PUMP FOR AUXILIARY HEATER (ALL MODELS) > REMOVING AND INSTALLING CIRCULATING PUMP FOR AUXILIARY HEATER > REMOVING CIRCULATING PUMP FOR AUXILIARY HEATER

NOTE: Danger of scalding

- *Coolant can be very hot.*
- *Coolant may be pressurized.*

→ Only remove the heater when the cooling system has cooled down.

→ By carefully opening the catch on the reservoir, make sure that the cooling system is depressurized.

1. Release electric plug connection **-1-** from the circulating pump **-2-** and disconnect it.

   Fig 1: Identifying Circulating Pump Connector

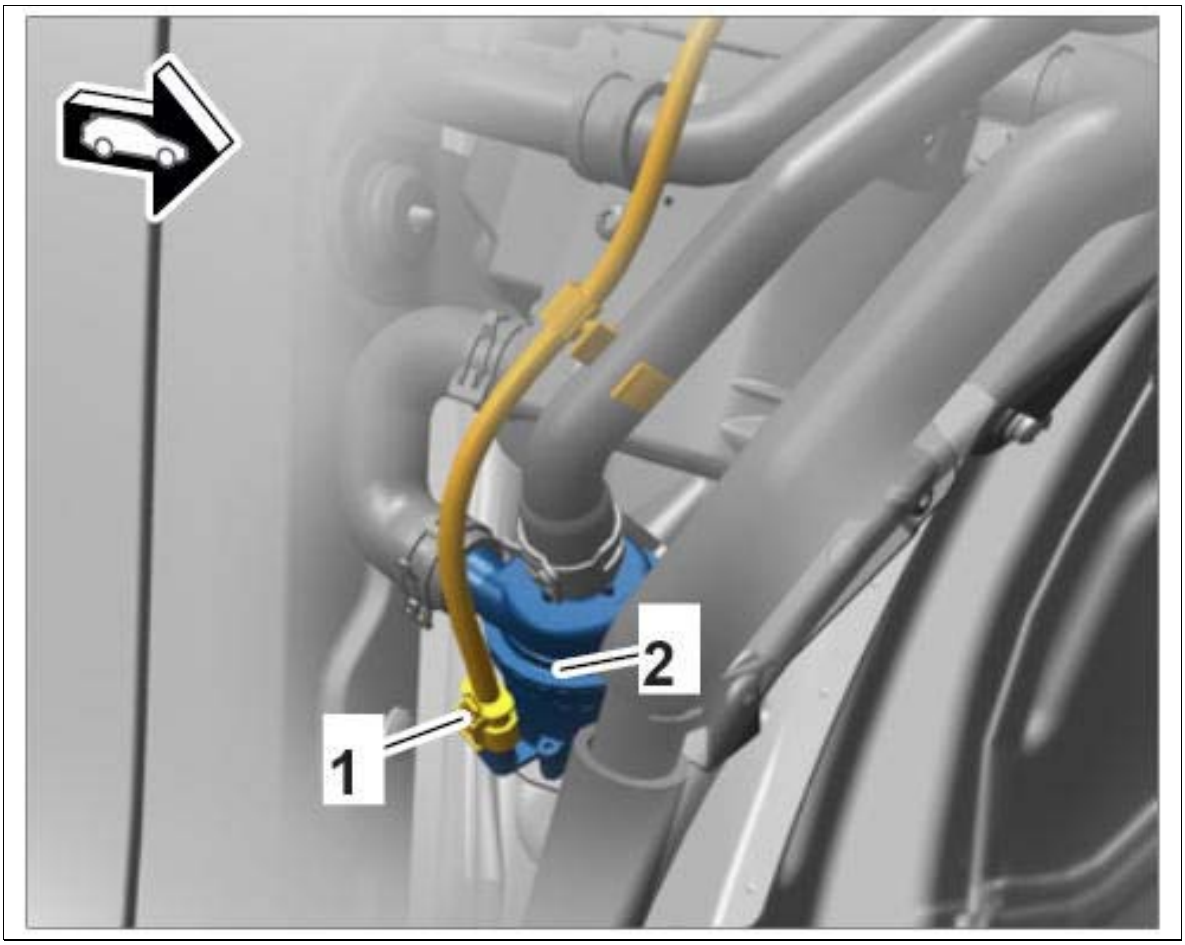

Courtesy of PORSCHE CARS NORTH AMERICA, INC.

2. Clamp both coolant hoses **-2-** and **-4-** using **hose clamp 3094.** → Mounting for coolant hoses on circulating pump

Fig 2: Identifying Coolant Hoses On Circulating Pump

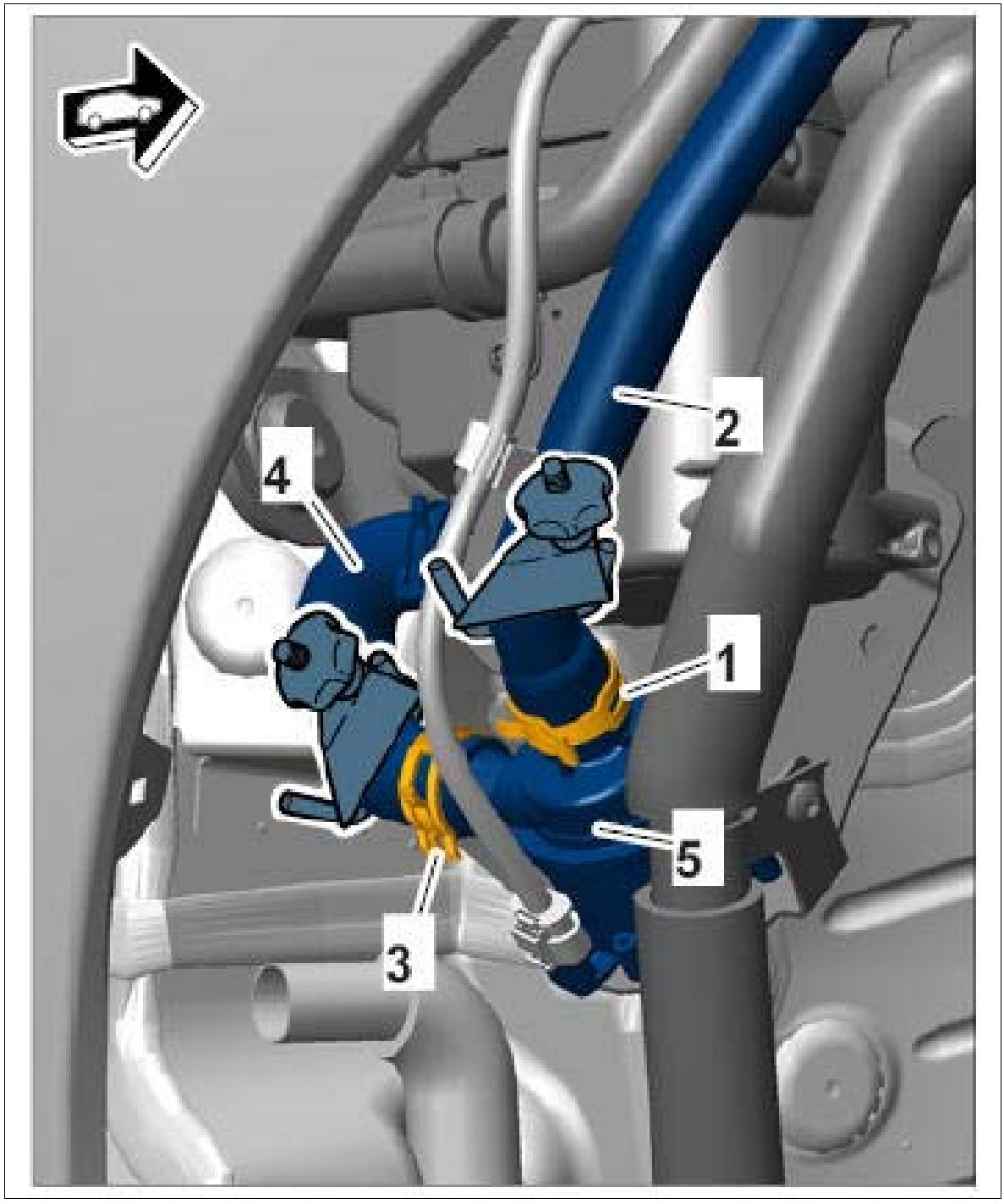

Courtesy of PORSCHE CARS NORTH AMERICA, INC.

NOTE: Danger of slipping due to emerging coolant

1. *The emerging coolant will make the floor of the workshop slippery and may cause people to slip and fall over.*

→ Collect emerging coolant in a suitable pan.

3. Loosen spring band clamps **-1-** and **-3-** using **assembly pliers Nr.72 Pos.1** and pull off coolant hoses **-2-** and **-4-** .

4. Unscrew fastening screws **-1-** and remove circulating pump **-2-** .

Fig 3: Identifying Circulating Pump On Holder

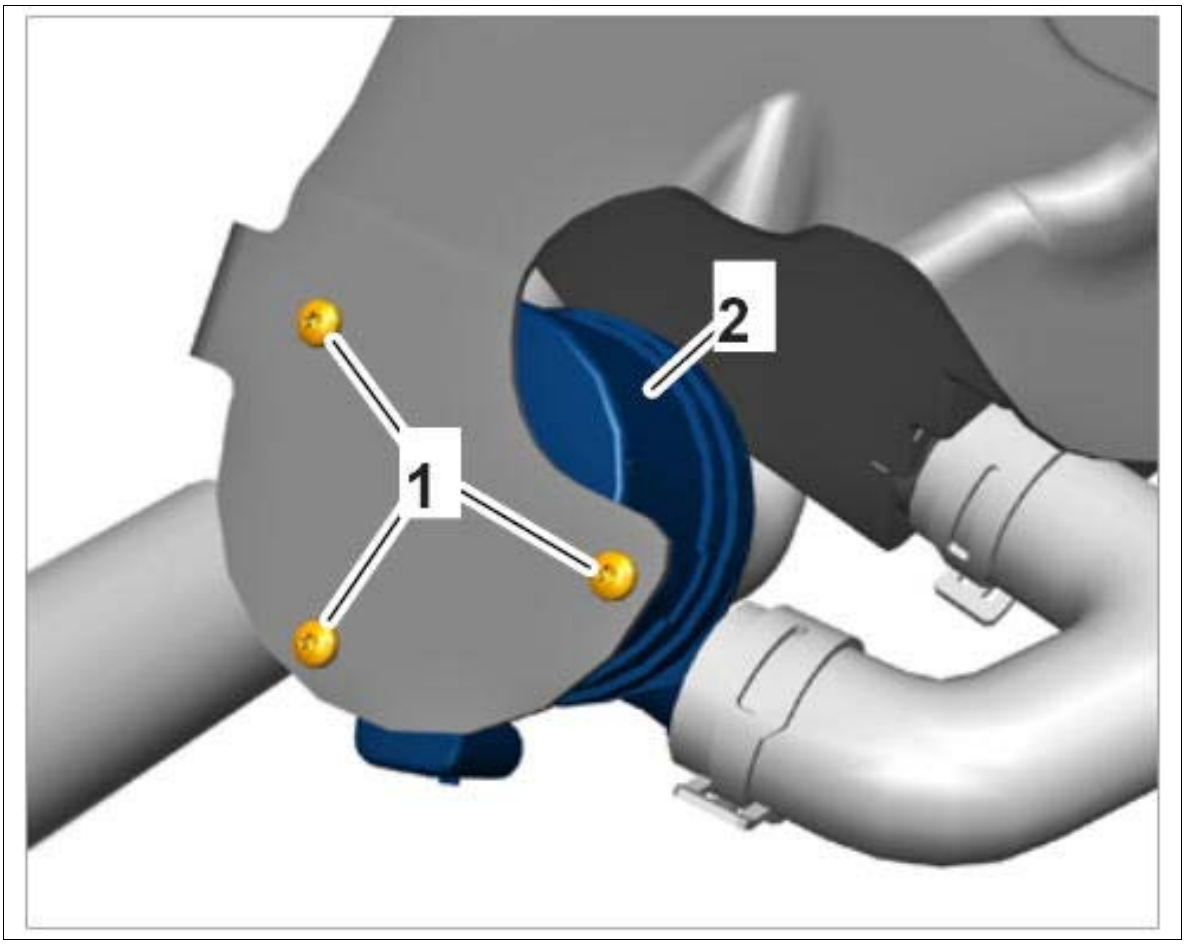

Courtesy of PORSCHE CARS NORTH AMERICA, INC.

WM 827219 REMOVING AND INSTALLING CIRCULATING PUMP FOR AUXILIARY HEATER (ALL MODELS) > REMOVING AND INSTALLING CIRCULATING PUMP FOR AUXILIARY HEATER > INSTALLING CIRCULATING PUMP FOR AUXILIARY HEATER

1. Position circulating pump **-2-** on the holder and tighten fastening screws **-1-** .

Fig 1: Identifying Circulating Pump On Holder

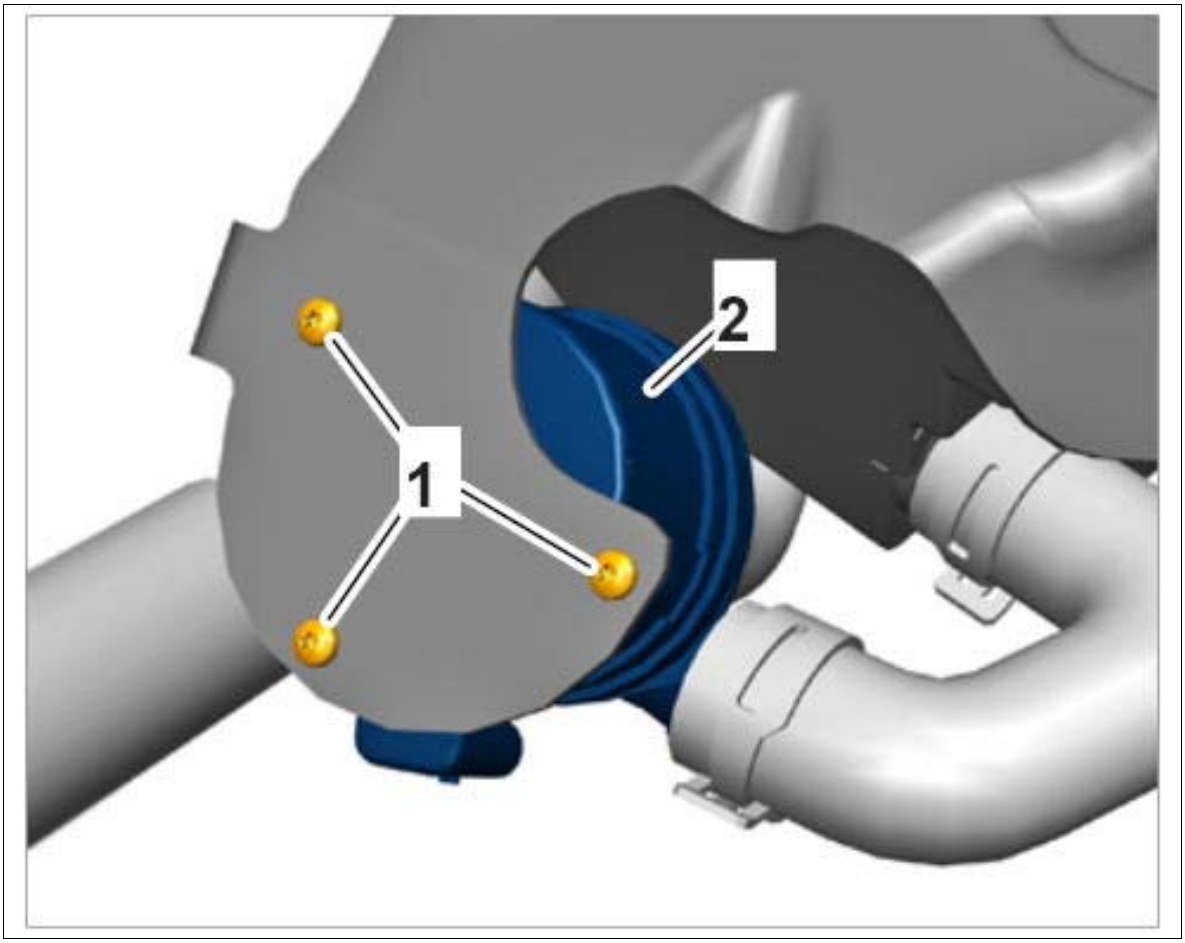

Courtesy of PORSCHE CARS NORTH AMERICA, INC.

2. Secure coolant hoses.

    1. 2.1. Push coolant hoses **-2-** and **-4-** as far as they will go over the adapters.

       Tighten spring band clamps **-1-** and **-3-** using **assembly pliers Nr.72 Pos.1.**

Fig 2: Identifying Coolant Hoses On Circulating Pump

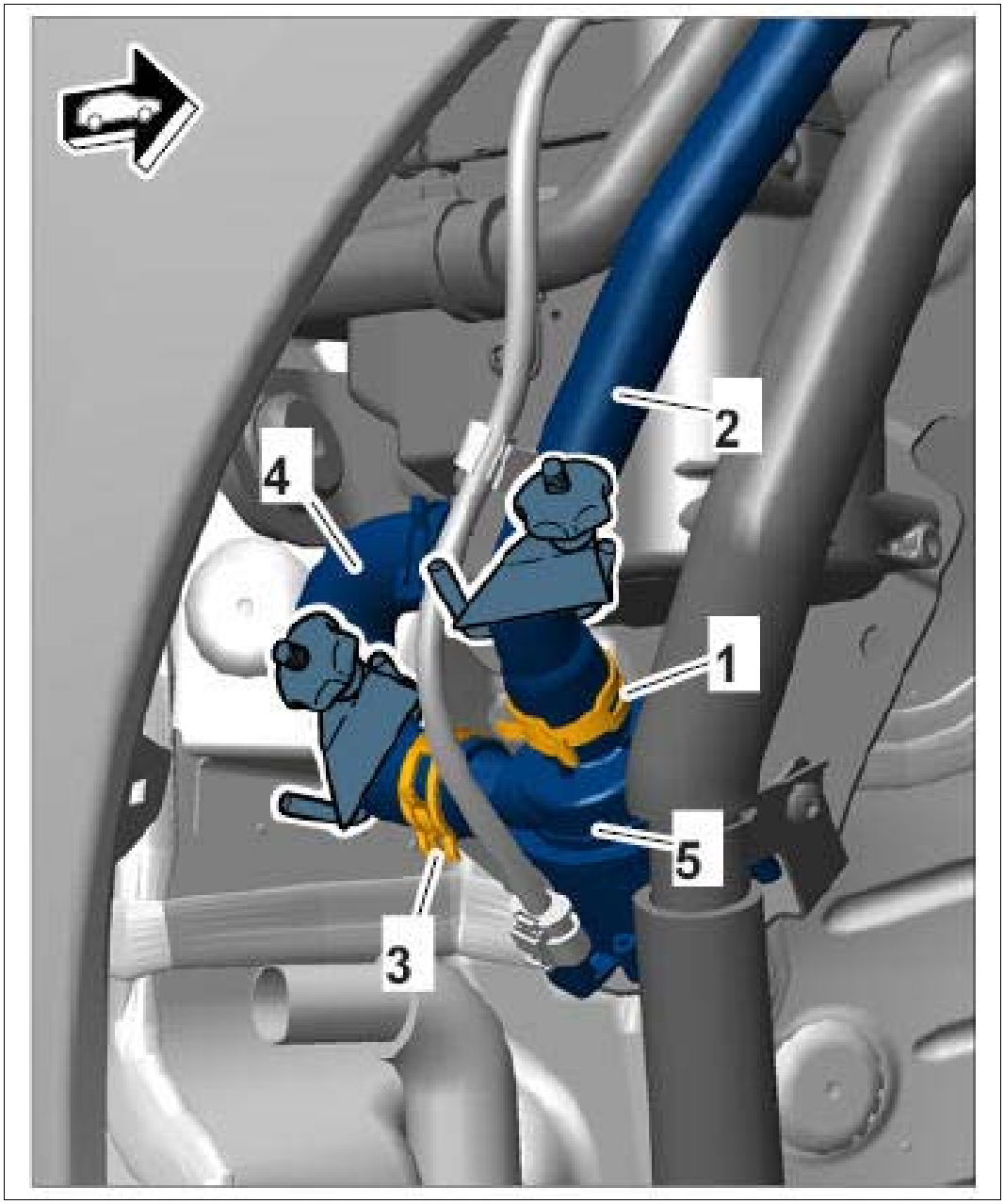

Courtesy of PORSCHE CARS NORTH AMERICA, INC.

2. 2.2. **Hose clamp 3094** must then be removed from the coolant hoses **-2-** and **-4-** .

3. Connect electric plug connection **-1-** to the circulating pump **-2-** until it engages securely.

Fig 3: Identifying Circulating Pump Connector

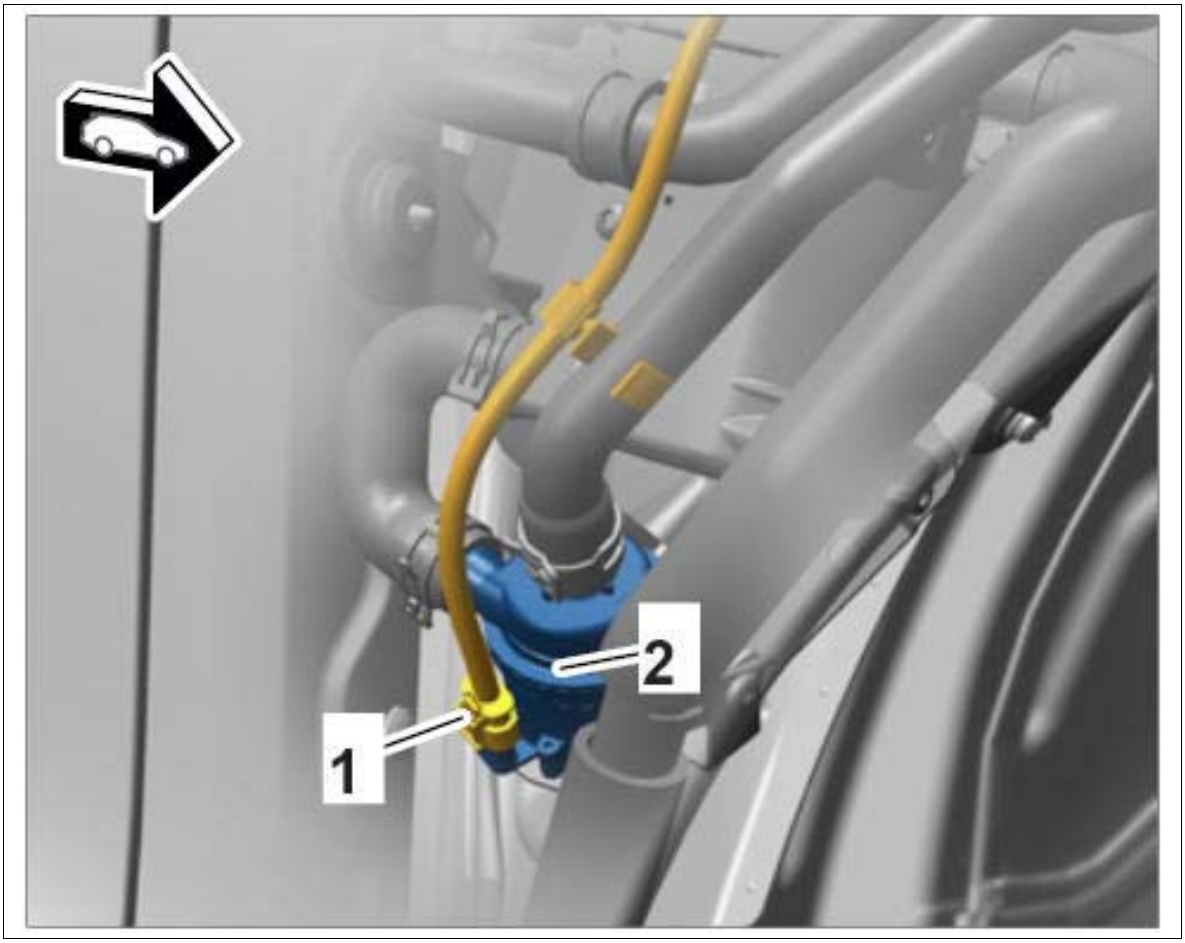

Courtesy of PORSCHE CARS NORTH AMERICA, INC.

WM 827219 REMOVING AND INSTALLING CIRCULATING PUMP FOR AUXILIARY HEATER (ALL MODELS) > SUBSEQUENT WORK

1. Secure heater with holder → Securing Heater With Holder
2. Add coolant and bleed the cooling system → Filling Coolant .

WM 827419 REMOVING AND INSTALLING DIRECTIONAL-CONTROL VALVE (ALL MODELS) > PRELIMINARY WORK

1. Drain coolant → Draining Coolant .
2. Remove cowl panel cover → Removing cowl panel cover .

WM 827419 REMOVING AND INSTALLING DIRECTIONAL-CONTROL VALVE (ALL

MODELS) > REMOVING AND INSTALLING DIRECTIONAL-CONTROL VALVE > REMOVING DIRECTIONAL-CONTROL VALVE

1. Unscrew fastening screws **-1-** and remove air inlet housing cover **-2-** .

   Fig 1: Identifying Air Inlet Housing Cover

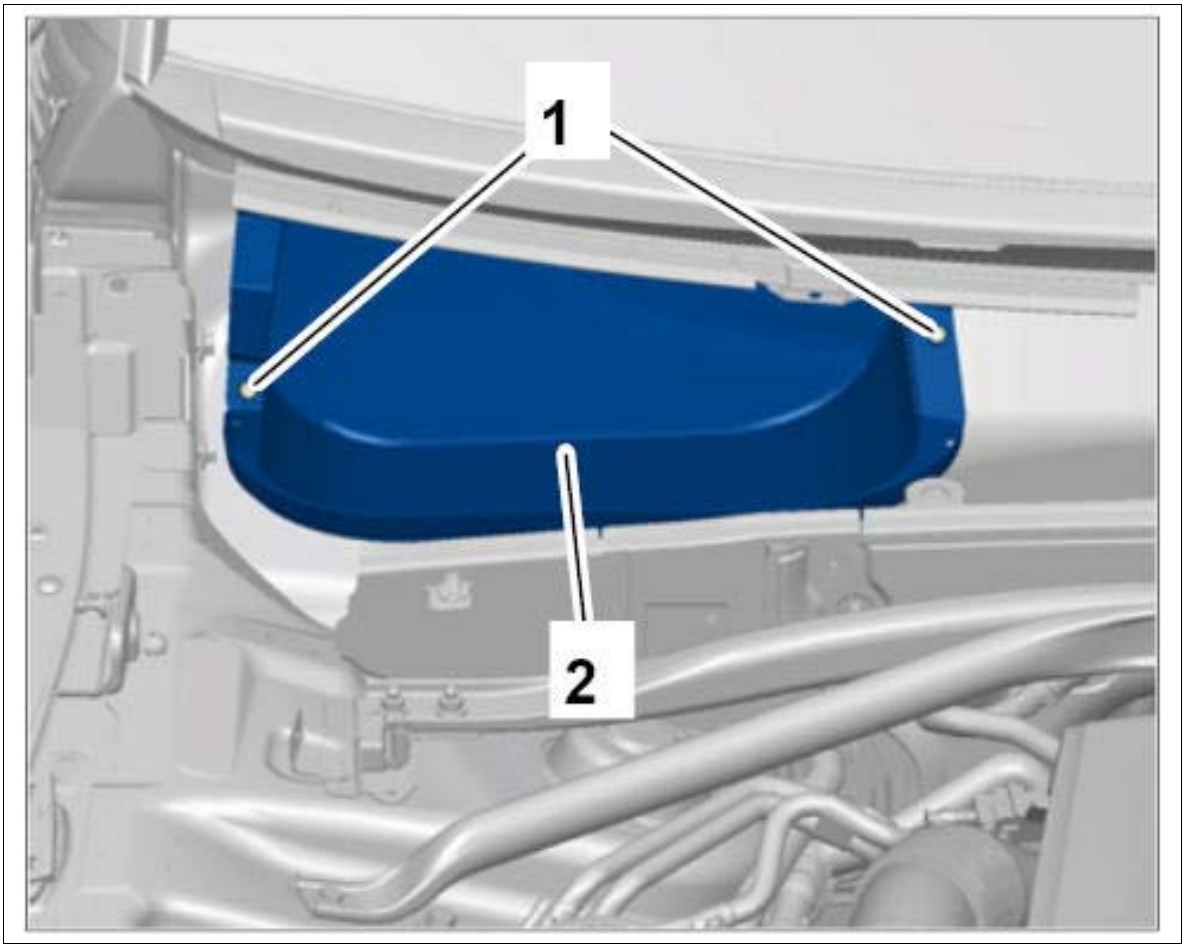

Courtesy of PORSCHE CARS NORTH AMERICA, INC.

2. Disconnect connector **-1-** .
3. Loosen spring band clamps **-2- (-arrows-)** .
4. Pull off hoses.
5. Unscrew fastening screws.
6. Remove directional-control valve **-5-** .

Fig 2: Removing Directional-Control Valve

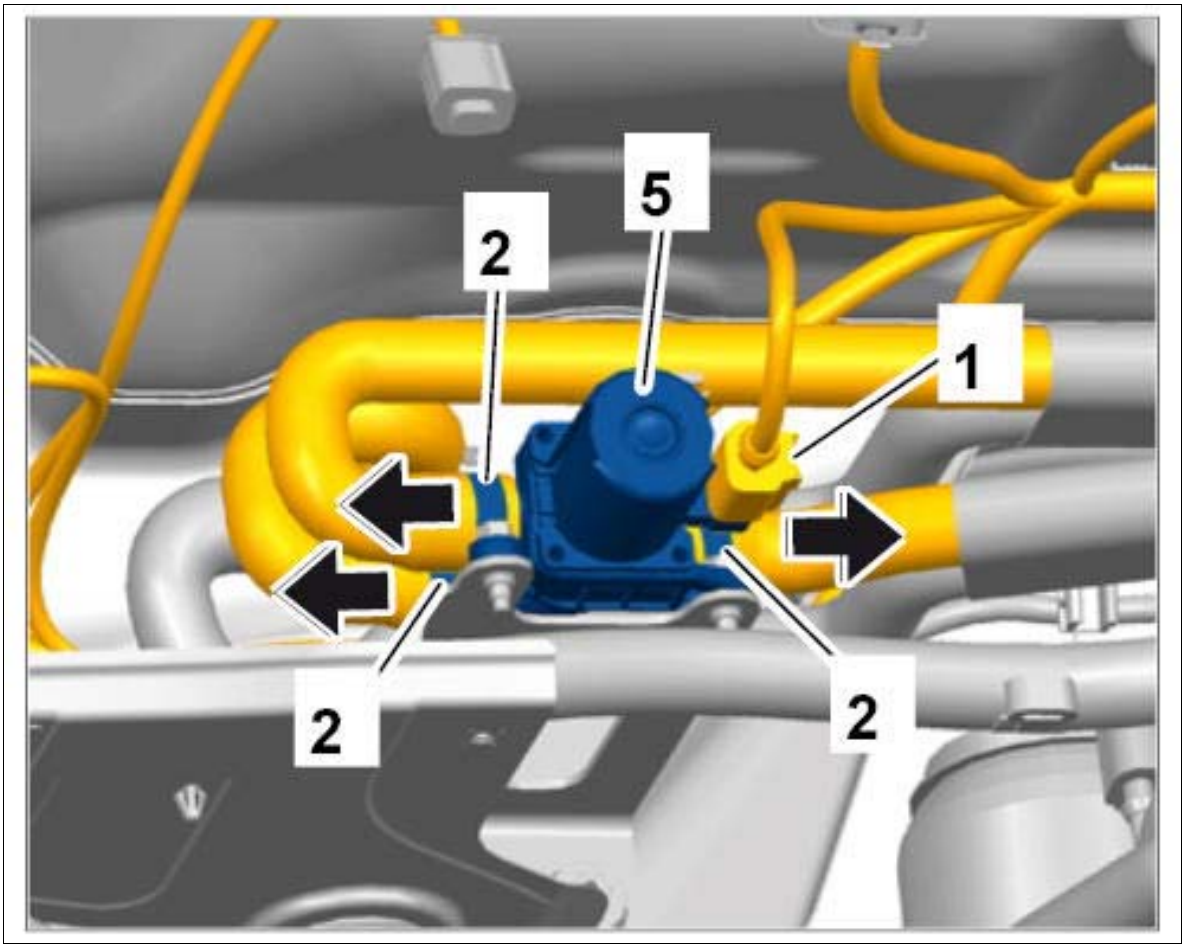

Courtesy of PORSCHE CARS NORTH AMERICA, INC.

WM 827419 REMOVING AND INSTALLING DIRECTIONAL-CONTROL VALVE (ALL MODELS) > REMOVING AND INSTALLING DIRECTIONAL-CONTROL VALVE > INSTALLING DIRECTIONAL-CONTROL VALVE

1. Installation is performed in reverse order.

WM 827419 REMOVING AND INSTALLING DIRECTIONAL-CONTROL VALVE (ALL MODELS) > SUBSEQUENT WORK

1. Install cowl panel cover → Installing cowl panel cover .
2. Fill in coolant → Filling Coolant .

Service Manual: EMISSION APPLICATIONS

EMISSION APPLICATIONS

2015 Macan

Engine & Fuel System	(1) Emission Control Systems & Devices	EGR Test No.
3.0L (183") V6 DI Twin Turbo	**PCV, EVAP, (2) TWC, FR, SPK, (3) HO2S, CEC, MIL,** EVAP-LDP, EVAP-VC	...
3.6L (219") V6 DI Twin Turbo	**PCV, EVAP, (2) TWC, FR, SPK, (3) HO2S, CEC, MIL,** EVAP-LDP, EVAP-VC	...

(1)	Major emission control systems and devices are listed in bold type; components and other related devices are listed in light type.
(2)	Equipped with 2.
(3)	Equipped with 4.

Service Manual: EMISSION CONTROL ABBREVIATIONS

"A"

A/C

Air Conditioning

A/C-ISUS

A/C Idle Speed-Up Solenoid

A/F

Air/Fuel

AAI

Air Assist Injector

ACL

Air Cleaner (Thermostatic Air Cleaner)

ACL-BMS

ACL Bimetallic Sensor

ACL-CKV

ACL Check Valve

ACL-DV

ACL Delay Valve

ACL-PVS

ACL Ported Vacuum Switch

ACL-RDV

ACL Reverse Delay Valve

ACL-RDVS

ACL Reverse Delay Valve (Single)

ACL-TCV

ACL Thermal Control Valve

ACL-TS

ACL Temperature Sensor

ACL-TSOV

ACL Temperature Sensor Override Valve

ACL-TVS

ACL Thermal Vacuum Switch

ACL-TVV

ACL Thermal Vacuum Valve

ACL-VCDV

ACL Vacuum Control Delay Valve

ACL-VCV

ACL Vacuum Control Valve

ACL-VM

ACL Vacuum Motor

ACL-WP

ACL Wax Pellet Type Motor

ADS

Anti-Dieseling Solenoid

AFR

Air/Fuel Ratio Sensor

AFS

Air/Fuel Ratio Sensor

AIH

Air Intake Heaters

AIH-TS

AIH Temperature Sensor

AIR

Air Injection System

AIS

Air Injection System

AIS-ACV

AIS Air Control Valve

AIS-AF

Air Injection System Air Filter

AIS-AMV

AIS Air Management Valve

AIS-ASV

AIS Air Switching Valve

AIS-BPV

AIS By-Pass Valve

AIS-CC

AIS Computer Controlled

AIS-CKV

AIS Check Valve

AIS-CSV

AIS Control Solenoid Valve

AIS-CV

AIS Combination Valve

AIS-DV

AIS Diverter Valve

AIS-IMCV

AIS Intake Manifold Change-Over Valve

AIS-MCV

AIS Manifold Change-Over Valve

AIS-PAF

AIS Pulse Air Feeder

AIS-PM

AIS Pump Motor

AIS-PV

AIS Pneumatic Valve

AIS-RV

AIS Relief Valve

AIS-SAV

AIS Secondary Air Valve

AIS-SOL

AIS Solenoid

AIS-SV

AIS Solenoid Valve

AIS-VCV

AIS Vacuum Control Valve

AIS-VSV

AIS Vacuum Switching Valve

AIS-VT

AIS Vacuum Tank

AIS-VCV

AIS Vacuum Control Valve

AIS-VSV

AIS Vacuum Switching Valve

AIV

Air Injection Valve

AIV-SOL

Air Injection Valve Solenoid

ALVW

Adjusted Loaded Vehicle Weight

AMV

Air Management Valve

AP

Air Pump Injection System

AP-ACV

AP Air Control Valve

AP-AMV

AP Air Management Valve

AP-ASRV

AP Air Switching Relief Valve

AP-ASS

AP Air Switching Solenoid

AP-ASV

AP Air Switching Valve

AP-BPV

AP By-Pass Valve

AP-CKV

AP Check Valve

AP-CS

AP Control Solenoid

AP-CV

AIR Cut-Off Valve

AP-DCTO

AP Dual Coolant Temperature Override

AP-DLY

AP Delay Valve

AP-DV

AP Diverter Valve

AP-EADV

AP Electric Air Control Diverter Valve

AP-EAMR

AP Electric Air Management Relay

AP-EAMS

AP Electric Air Management Solenoid

AP-EAP

AP Electric Air Pump

AP-EC

AP Electromagnetic Clutch

AP-ERLY

AP Electric Air Pump Relay

AP-RDV

AP Reed Valve

AP-RV

AP Relief Valve

AP-SOL

AP Solenoid

AP-SOV

AP Shut-Off Valve

AP-SV

AP Solenoid Valve

AP-SWV

AP Switchover Valve

AP-TV

AP Transmitting Valve

AP-VCS

AP Vacuum Control Solenoid

AP-VCSV

AP Vacuum Controlled Air Shut-Off Valve

AP-VCV

AP Vacuum Control Valve

AP-VSV

AP Vacuum Switching Valve

A/T

Automatic Transmission

ATCV

Air Temperature Control Valve

"B"

BP/EGR

Backpressure EGR System

BP/EGR-BPS

BP/EGR Backpressure Sensor

BP/EGR-BPT

BP/EGR Backpressure Transducer

BP/EGR-BPV

BP/EGR Backpressure Valve

BP/EGR-BS

BP/EGR Bleed Solenoid

BP/EGR-BVSV

BP/EGR Bimetallic Vacuum Switching Valve

BP/EGR-C

BP/EGR Controller

BP/EGR-CLR

BP/EGR Cooler

BP/EGR-CS

BP/EGR Control Solenoid

BP/EGR-CTO

BP/EGR Coolant Temperature Override

BP/EGR-CV

BP/EGR Control Valve

BP/EGR-DCTO

BP/EGR Dual Coolant Temperature Override

BP/EGR-DS

BP/EGR Diagnostic Solenoid

BP/EGR-DSOL

BP/EGR Duty Solenoid

BP/EGR-DTVSW

BP/EGR Distributor Thermal Vacuum Switch

BP/EGR-DV

BP/EGR Delay Valve

BP/EGR-EET

BP/EGR Electric Transducer

BP/EGR-EPV

BP/EGR External Pressure Valve

BP/EGR-FDV

BP/EGR Forward Delay Valve

BP/EGR-LC

BP/EGR Load Control Valve

BP/EGR-PS

BP/EGR Position Sensor

BP/EGR-PT

BP/EGR Pressure Tranducer

BP/EGR-PVS

BP/EGR Ported Vacuum Switch

BP/EGR-RES

BP/EGR Reservoir

BP/EGR-RST

BP/EGR Restrictor

BP/EGR-SOL

BP/EGR Solenoid

BP/EGR-TCTVS

BP/EGR Torque Converter Thermal Vacuum Switch

BP/EGR-TCV

BP/EGR Thermal Control Valve

BP/EGR-TCVLV

BP/EGR Temperature Control Valve

BP/EGR-TS

BP/EGR Temperature Sensor

BP/EGR-TVS

BP/EGR Thermal Vacuum Switch

BP/EGR-TVV

BP/EGR Thermal Vacuum Valve

BP/EGR-VCV

BP/EGR Vacuum Control Valve

BP/EGR-VM

BP/EGR Vacuum Modulator

BP/EGR-VRV

BP/EGR Vacuum Regulator Valve

BP/EGR-VS

BP/EGR Vacuum Switch

BP/EGR-VSOL

BP/EGR Vent Solenoid

BP/EGR-VSV

BP/EGR Vacuum Switching Valve

"C"

C-4

Computer Controlled Catalytic Converter

CAC

Charge Air Cooler

CAS

Clean Air System

CB

Crankcase Breather

CB-VC

Crankcase Breather-Vapor Canister

CBPS

Coasting By-Pass System

CBVC

Crankcase Breather Vapor Canister

CCIEV

Coolant Controlled Idle Enrichment Valve

CCS

Controlled Combustion System

CCV

Closed Crankcase Ventilation

CD-REGVLV

Crankcase Depression Regulator Valve

CDRV

Crankcase Depression Relief Valve

CEAB

Cold Engine Air Bleed

CEAB-TVS

CEAB Thermal Vacuum Switch

CEAB-TVV

CEAB Thermal Vacuum Valve

CEC

Computerized Engine Controls

CESS

Cold Engine Sensor Switch

CETS

Cold Engine Temperature Switch

CFI

Continuous Fuel Injection

CMH

Cold Mixture Heater

CNG

Compressed Natural Gas

CO

Carbon Monoxide

CO2

Carbon Dioxide

CPI

Central Port Injection

CRV

Coasting Richer Valve

CSI

Central Sequential Injection

CTAVS

Cold Temperature Activated Vacuum System

CTOX

Continous Trap Oxidizer

"D"

DCLV

Deceleration Valve

DCS

Deceleration Control System

DDI

Direct Diesel Injection

DFI

Direct Diesel Injection

DI

Direct Injection

DKV

Deceleration Kick Valve

DMCV

Deceleration Mixture Control Valve

DMS

Dual Manifold System

DOC

Diesel Oxidation Catalyst

DOHC

Dual Overhead Cam

DPF

Diesel Particulate Filter

DPF/TWC

Combination Diesel Particulate Filter and Three Way Catalyst

DPFE

Differential Pressure Feedback EGR Valve

DPFEGR

Differential Pressure Feedback EGR Valve

DTM

Deceleration Throttle Modulator

"E"

EAIR

Electric Air Injection System

EAIR-DV

EAIR Diverter Valve

ECM

Electronic Control Module

ECU

Electronic Control Unit

EDC

Electronic Diesel Control

EDS

Electronic Diesel System

EEC

Electronic Engine Control

EFE

Early Fuel Evaporation

EFE-CKV

EFE Check Valve

EFE-CV

EFE Control Valve

EFE-DTVS

EFE Delay Thermal Vacuum Switch

EFE-HTR

EFE Heater

EFE-HCV

EFE Heat Control Valve

EFE-OTS

EFE Oil Temperature Switch

EFE-PTC

EFE Positive Temperature Coefficient (Intake Heater Grid)

EFE-PVS

EFE Ported Vacuum Switch

EFE-SOL

EFE Solenoid

EFE-TVS

EFE Thermal Vacuum Switch

EFE-TVV

EFE Thermal Vacuum Valve

EFE-VSV

EFE Vacuum Switching Valve

EFI

Electronic Fuel Injection

EFI-MA

EFI Mass Airflow Sensor

EFI-MAF

EFI Mass Airflow Sensor

EGR

Exhaust Gas Recirculation System

EGR-BCS

EGR Boost Check Solenoid

EGR-BPBV

EGR By-Pass Backpressure Valve

EGR-BPT

EGR Backpressure Transducer

EGR-BPV

EGR By-Pass Valve

EGR-BS

EGR Bleed Solenoid

EGR-BSSV

EGR Boost Sensor Solenoid Valve

EGR-BV

EGR Bypass Valve

EGR-BVSV

EGR Bimetallic Vacuum Switching Valve

EGR-C

EGR Controller

EGR-CC

EGR Coolant Controlled

EGR-CLR

EGR Cooler

EGR-VSOL

EGR Vacuum Solenoid

EGR-CKV

EGR Check Valve

EGR-CS

EGR Control Solenoid

EGR-CSOL

EGR Cut-Off Solenoid

EGR-CSV

EGR Control Solenoid

EGR-CTO

EGR Coolant Temperature Override

EGR-CTS

EGR Charge Temperature Sensor

EGR-CTSW

EGR Charge Temperature Switch

EGR-CTTS

EGR Coolant Temperature Thermoswitch

EGR-CV

EGR Control Valve

EGR-CVCV

EGR Constant Vacuum Control Valve

EGR-CVS

EGR Control Vent Solenoid

EGR-DC

EGR Digital Control

EGR-DCTO

EGR Dual Coolant Temperature Override

EGR-DPFE

Differential Pressure Feedback EGR Sensor

EGR-DPFS

EGR Differential Pressure Feedback Sensor

EGR-DS

EGR Diagnostic Solenoid

EGR-DSOL

EGR Duty Solenoid

EGR-DTVS

EGR Delay Thermal Vacuum Switch

EGR-DTVSW

EGR Distributor Thermal Vacuum Switch

EGR-DV

EGR Delay Valve

EGR-EPRS

EGR Exhaust Pressure Regulator Solenoid

EGR-EPRV

EGR Exhaust Pressure Regulator Valve

EGR-EPV

EGR External Pressure Valve

EGR/EVAP-CSV

EGR/EVAP Control Solenoid Valve

EGR-EVR

EGR Vacuum Regulator

EGR-EVRV

EGR Electronic Vacuum Regulator Valve

EGR-FDV

EGR Forward Delay Valve

EGR-FJS

EGR Floor Jet System

EGR-FPS

EGR Feedback Pressure Sensor

EGR-LCV

EGR Load Control Valve

EGR-MAP

EGR Manifold Absolute Pressure Sensor

EGR-PFE

EGR-PFE Sensor

EGR-PS

EGR Position Sensor

EGR-PSW

EGR Pulse Switch

EGR-PVS

EGR Ported Vacuum Switch

EGR-REG

EGR Regulator

EGR-RES

EGR Reservoir

EGR-RST

EGR Restrictor

EGR-SC

EGR Signal Converter

EGR-SEC

EGR, Secondary

EGR-SEN

EGR Sensor

EGR-SOL

EGR Solenoid

EGR-SU

EGR Switchover Valve

EGR-SUB

Sub-EGR Valve

EGR-SVV

EGR Solenoid Vacuum Valve

EGR-T

EGR Temperature Sensor

EGR-TC

EGR Transmission Controlled

EGR-TCTVS

EGR Torque Converter Thermal Vacuum Switch

EGR-TCV

EGR Thermal Control Valve

EGR-TCVLV

EGR Temperature Control Valve

EGR-TRANS

EGR Transducer

EGR-TS

EGR Temperature Sensor

EGR-TSW

EGR Temperature Switch

EGR-TVD

EGR Throttle Valve Diaphragm

EGR-TVS

EGR Thermal Vacuum Switch

EGR-TVSOL

EGR Throttle Valve Solenoid

EGR-TVV

EGR Thermal Vacuum Valve

EGR-VA

EGR Vacuum Amplifier

EGR-VCV

EGR Vacuum Control Valve

EGR-VM

EGR Vacuum Modulator

EGR-VR

EGR Vacuum Regulator

EGR-VRS

EGR Vacuum Regulator Solenoid

EGR-VRSV

EGR Vacuum Regulator Solenoid Valve

EGR-VRV

EGR Vacuum Regulator Valve

EGR-VS

EGR Vacuum Switch

EGR-VSDV

EGR Vacuum Switch Dump Valve

EGR-VSEN

EGR Vacuum Sensor

EGR-VSOL

EGR Vent Solenoid

EGR-VSS

EGR Vacuum Switching Solenoid

EGR-VST

EGR Vacuum Surge Tank

EGR-VSV

EGR Vacuum Switching Valve

EGR-VVCS

EGR Venturi Vacuum Control System

EGRB

EGR Boost Sensor

EGRC

EGR Control Solenoid

EGRC-BPT

EGR Control Backpressure Transducer

EGRC-SV

EGR Control Solenoid Valve

EHOC

Electronically Heated Oxidation Catalyst

EHTWC

Electronically Heated Three-Way Catalyst

EI

Electronic Ignition System

EIS

Electronic Ignition System

ELB

Electronic Lean Burn

EPR

Exhaust Pressure Regulator

EPR-SOL

EPR Solenoid

ESA

Electronic Spark Advance

ESIM

Evaporative System Integrity Monitor

EVAP

Fuel Evaporative System

EVAP-AAC

EVAP Auxiliary Air Control

EVAP-BPSV

EVAP By-Pass Solenoid Valve

EVAP-BVSV

EVAP Bimetallic Vacuum Switching Valve

EVAP-CAV

EVAP Canister Air Valve

EVAP-CCV

EVAP Control Canister Close Valve

EVAP-CCVSV

EVAP Control Canister Vent Shut Valve

EVAP-CCVVSV

EVAP Closed Canister Valve Vacuum Switching Valve

EVAP-CDCV

EVAP Canister Drain Cut Valve

EVAP-CKV

EVAP Check Valve

EVAP-CPCS

EVAP Canister Purge Control Solenoid

EVAP-CPCSV

EVAP Canister Purge Control Solenoid Valve

EVAP-CPCV

EVAP Canister Purge Control Valve

EVAP-CPRV

EVAP Canister Purge Regulator Valve

EVAP-CPSV

EVAP Canister Vent Shut Valve

EVAP-CPT

EVAP Canister Purge Timer

EVAP-CPTVS

EVAP Canister Purge Thermal Vacuum Switch

EVAP-CPV

EVAP Canister Vent Valve

EVAP-CPVCSV

EVAP Canister Purge Volume Control

EVAP-CPVCV

EVAP Canister Purge Volume Control Valve

EVAP-CPVDV

EVAP Canister Purge Vacuum Delay Valve

EVAP-CPVR

EVAP Canister Purge Valve Resonator

EVAP-CS

EVAP Control Solenoid

EVAP-CSPS

EVAP Control System Pressure Sensor

EVAP-CST

EVAP Canister Surge Tank

EVAP-CT

EVAP Catch Tank

EVAP-CVCS

EVAP Canister Vent Control Solenoid

EVAP-CVCV

EVAP Canister Vent Control Valve

EVAP-CVS

EVAP Canister Vent Solenoid

EVAP-CVSV

EVAP Carburetor Vent Switching Valve

EVAP-CVV

EVAP Canister Vent Valve

EVAP-DCTO

EVAP Dual Coolant Temperature Override

EVAP-DF

EVAP Drain Filter

EVAP-DPS

EVAP Differential Pressure Sensor

EVAP-DV

EVAP-Drain Valve

EVAP-EV

EVAP Emission Valve

EVAP-FBVV

EVAP Fuel Bowl Vent Valve

EVAP-FBVS

EVAP Fuel Bowl Vent Solenoid

EVAP-FCV

EVAP Fuel Cut Valve

EVAP-FLS

EVAP Fuel Level Sensor

EVAP-FOLV

EVAP Fuel Overflow Limiter Valve

EVAP-FS

EVAP Flow Switch

EVAP-FSV

EVAP Flow Switchover Valve<

EVAP-FTEV

EVAP Fuel Tank EVAP Valve

EVAP-FTPCSV

EVAP Fuel Tank Pressure Control Solenoid Valve

EVAP-FTPS

EVAP Fuel Tank Pressure Sensor

EVAP-FTS

EVAP Fuel Temperature Sensor

EVAP-FVCV

EVAP Fuel Vapor Control Valve

EVAP-FVS

EVAP Fuel Vapor Separator

EVAP-FVTS

EVAP Fuel Vapor Temperature Sensor

EVAP-FVV

EVAP Fuel Vent Valve

EVAP-FVVV

EVAP Fuel Vapor Vent Valve

EVAP-IVS

EVAP Inner Vent Solenoid

EVAP-LDP

EVAP Leak Detection Pump

EVAP-LDPAF

EVAP Leak Detection Pump Air Filter

EVAP-LDPF

EVAP Leak Detection Pump Filter

EVAP-LDPVV

EVAP Leak Detection Pump Vent Valve

EVAP-LSEP

EVAP Liquid Separator

EVAP-NVLD

EVAP Natural Vacuum Leak Detection

EVAP-ORVR

Evaporative On-Board Refueling Vapor Recovery System

EVAP-ORVRCV

Evaporative On-Board Refueling Vapor Recovery Check Valve

EVAP-ORVRFTVRV

EVAP-ORVR Fuel Tank Vapor Recirculation

EVAP-OVCV

EVAP Outer Vent Control Valve

EVAP-OWV

EVAP One-Way Valve

EVAP-PCDV

EVAP Purge Control Diaphram Valve

EVAP-PCSV

EVAP Purge Cut-Off Solenoid Valve

EVAP-PFS

EVAP Purge Flow Sensor

EVAP-PFSVVSV

EVAP Purge Flow Switching Valve Vacuum Switching Valve

EVAP-PRRV

EVAP Pressure Relief Rollover Valve

EVAP-PSVVSV

EVAP Pressure Switching Valve Vacuum Switching Valve

EVAP-PSOL

EVAP Purge Solenoid

EVAP-PSSV

EVAP Pressure Switching Solenoid

EVAP-PSVVSV

EVAP Pressure Switching Valve Vacuum Switching Valve

EVAP-PV

EVAP Purge (Frequency) Valve

EVAP-PVS

EVAP Ported Vacuum Switch

EVAP-RV

EVAP Rollover Valve

EVAP-RV/FTPS

EVAP Rollover Valve/Fuel Tank

EVAP-RVSV

EVAP Rollover Vapor Separator Valve

EVAP-SNR

EVAP Canister Sensor

EVAP-SOL

EVAP Solenoid

EVAP-SOV

EVAP Shutoff Valve

EVAP-SSV

EVAP Shut-Off Solenoid Valve

EVAP-SV

EVAP Solenoid Valve

EVAP-TC

EVAP Trap Canister

EVAP-TS

EVAP Temperature Switch

EVAP-TPBPV

EVAP Tank Pressure By-Pass Valve

EVAP-TPCS

EVAP Tank Pressure Control Solenoid

EVAP-TPCV

EVAP Tank Pressure Control Valve

EVAP-TRWV

EVAP Tree-Way Valve

EVAP-TV

EVAP Thermal Valve

EVAP-TVS

EVAP Thermal Vacuum Switch

EVAP-TVV

EVAP Thermal Vacuum Valve

EVAP-TWV

EVAP Two-Way Valve

EVAP-VC

EVAP Vapor Canister

EVAP-VCAT

EVAP Vapor Canister Air Tank

EVAP-VCF

EVAP Vapor Canister Filter

EVAP-VCSV

EVAP Vapor Canister Shut-off Valve

EVAP-VCTV

EVAP Vacuum Control Valve

EVAP-VCV

EVAP Vacuum Canister Valve

EVAP-VCVS

EVAP Vapor Canister Vent Solenoid

EVAP-VM

EVAP Vacuum Motor

EVAP-VPS

EVAP Vapor Pressure Sensor

EVAP-VPSVSV

EVAP Vapor Pressure Sensor Vacuum Switching Valve

EVAP-VS

EVAP Vacuum Sensor

EVAP-VSOL

EVAP Ventilation Solenoid

EVAP-VSOL/LDP

EVAP Ventilation Solenoid/Leak Detection Pump

EVAP-VST

EVAP Vacuum Surge Tank

EVAP-VSV

EVAP Vacuum Switching Valve

EVAP-VV

EVAP Ventilation Valve

EVRS

EGR Vacuum Regulator Solenoid

"F"

FBC

Feedback Carburetor

FCOV

Fuel Change Over Valve

FF

Flex Fuel

FF-CKV

Fuel Fill Check Valve

FF-FCV

Fuel Tank Fuel Cut-Off Valve

FF-FLVV

Fuel Tank Fill Limit Vent Valve

FGOV

Fuel Gravity/Overflow Valve

FGVV

Fuel Gravity Vent Valve

FI

Fuel Injected

FICD

Fast Idle Control Device

FISR

Fast Idle Solenoid Relay

FLV

Fill Limit Valve

FLVV

Fill Limiting Vent Valve

FP-CKV

Fill Pipe Check Valve

FP-RV

Fill Pipe Rollover Valve

FR

Fill Pipe Restrictor

FT-FLVV

Fuel Tank Fill Limit Vent Valve

FT-GVV

Fuel Tank Grade Vent Valve

FT-OPRV

Fuel Tank Over Pressure Vent Valve

FT-PCV

Fuel Tank Pressure Control Valve

FT-VCV

Fuel Tank Vapor Control Valve

FT-VRV

Fuel Tank Vapor Recirculation Valve

FTCV

Fuel Tank Check Valve

FTDPS

Fuel Tank Differential Pressure Sensor

FTEV

Fuel Tank EVAP Valve

FTPS

Fuel Tank Pressure Sensor

FTT

Fuel Tank Temperature Sensor

FTTS

Fuel Tank Temperature Sensor

FTV/LSV

Fuel Tank Vapor/Liquid Seperation Valve

FTVCV

Fuel Tank Vapor Control Valve

FTVPRV

Fuel Tank Ventilation Pressure Retention Valve

FVPS

Fuel Vapor Pressure Sensor

FTVV

Fuel Tank Vent Valve

FVV

Fuel Vapor Valve

"G"

GVWR

Gross Vehicle Weight Rating

"H"

HAC

High Altitude Compensator

HAFS

Heated Air Fuel Ratio Sensor

HAI

Hot Air Intake

HAS

High Altitude System

HC

Hydrocarbons

HCAC-VSV

Hydrocarbon Absorber Catalyst Vacuum Switching Valve

HDC

Heavy Duty Cooling

HDC-CTO

HDC Coolant Temperature Override

HFM-SFI

Hot Film Engine Management SFI

HIC

Hot Idle Compensator

HIM

Heated Intake Manifold

HO

High Output

HO2S

Heated Oxygen Sensor

HP

High Performance

HP

Horsepower

HPCA

Housing Pressure Cold Advance

HSC

High Swirl Combustion

"I"

IAC

Idle Air Control Valve

IACV-SW

IACV Switch

ICOM

Idle Compensator

IDI

Indirect Diesel Injection

IES

Idle Enrichment System

IMCO

Improved Combustion System

"K"

KS

Knock Sensor

"L"

LH-SFI

Hot Wire Sequential Multiport Fuel Injection

LVFD

Liquid/Vapor Fuel Discriminator

LVW

Loaded Vehicle Weight

"M"

MD-TICS

Timing & Injection rate Control System

MDP

Manifold Differential Pressure sensor

ME-SFI

Motor Electronics Sequential Fuel Injection

MFI

Multiport Fuel Injection

MFI-MAF

MFI Mass Airflow Sensor

MFLS

Main Fuel Level Sensor

MI

Mechanical Fuel Injection

MIL

Malfunction Indicator Light

M/T

Manual Transmission

"N"

NAC

Nitrogen Oxides (NOx) Adsorbing Catalyst

NLV

Non-Linear Valve

NOS

NOx Sensor

NOx

NOx Emission Control

NOxC

Nitrogen Oxide Catalyst

NOxS

Nitrogen Oxide Sensor

NOxTWC

NOx adsorptive TWC

NSC

Nitrogen Oxides (NOx) Storage Catalyst

"O"

OBD

On-Board Diagnostic System

PBD (F)/(P)

Full/Partial On-Board Diagnostic

OC

Oxidation Catalytic Converter

OHC

Overhead Cam

ORVR

On-Board Refueling Vapor Recovery

ORVR-COV

ORVR Cut-Off Valve

ORVR-CV

ORVR Control Valve

ORVR-FMV

ORVR Flow Management Valve

ORVR-FTVCV

ORVR Fuel Tank Vapor Control Valve

ORVR-FTVRV

ORVR Fuel Tank Vapor Recirculation Valve

ORVR-LV

ORVR Leveling Valve

ORVR-OCKV

ORVR Overfill Check Valve

ORVR-RCV

ORVR Refueling Control Valve

ORVR-VCV

ORVR Vapor Cut Valve

ORVR-VRV

ORVR Vapor Recirculating Valve

ORVR-VSV

ORVR Vent Shut Valve

ORVR-VV

ORVR Vent Valve

OVCV

Outer Vent Control Valve

O2S

Oxygen Sensor

"P"

PAIR

Pulsed Secondary Air Injection

PAIR-ABV

PAIR Anti-Backfire Valve

PAIR-ACOV

PAIR Air Cut-Off Valve

PAIR-ACS

PAIR Air Control Solenoid

PAIR-ACV

PAIR Air Control Valve

PAIR-AIV

PAIR Air Injection Valve

PAIR-ASCS

PAIR Air Suction Control Solenoid

PAIR-ASOV

PAIR Air Shutoff Valve

PAIR-ASS

PAIR Air Switching Solenoid

PAIR-ASV

PAIR Air Switching Valve

PAIR-ASVL

PAIR Air Suction Valve

PAIR-AVCS

PAIR Air Valve Control Solenoid

PAIR-CSV

PAIR Control Solenoid Valve

PAIR-CKV

PAIR Check Valve

PAIR-DV

PAIR Diverter Valve

PAIR-PAF

PAIR Pulse Air Feeder

PAIR-PAV

PAIR Pulse Air Valve

PAIR-RES

PAIR Resonator

PAIR-RV

PAIR Reed Valve

PAIR-SCSV

PAIR Swirl Control Solenoid Valve

PAIR-SCV

PAIR Swirl Control Valve

PAIR-SOL

PAIR Solenoid

PAIR-VSV

PAIR Vacuum Switching Valve

PCM

Powertrain Control Module

PCV

Positive Crankcase Ventilation

PCV-DOV

PCV Dual Orifice Valve

PCV-HCB

PCV Heated Crankcase Breather

PCV-HE

PCV Heating Element

PCV-PRV

PCV Pressure Regulator Valve

PCV-SOL

PCV Solenoid

PEVR

Power Enrichment Vacuum Regulator

PPM

Parts Per Million

PTOX

Periodic Trap Oxidizer

PURCV

Purge Crankcase Ventilation

PVCS

Ported Valve Control System

PVCS-A

PVCS Actuator

PVCS-CS

PVCS Control Solenoid

PVLCS

Power Valve Control System

"R"

RC

NOx Reduction Catalyst

ROV

Rollover Valve

"S"

SAI-SV

Secondary Air Injection Shutoff Valve

SAIR-CV

Secondary Air Injection Control Valve

SC

Supercharged or Super Charger

SC MFI

Supercharged Multiport Fuel Injection

SCR

Selective Catalytic Reduction

SCSV

Swirl Control Solenoid Valve

SCV

Swirl Control Valve

SCV-A

SCV Actuator

SFI

Sequential Multiport Fuel Injection

SFI-MAF

SFI Mass Airflow Sensor

SFLS

Sub-Fuel Level Sensor

SOHC

Single Overhead Cam

SPK

Spark Controls

SPK-AVM

SPK Advance Vacuum Modulator

SPK-BVSV

SPK Bimetal Vacuum Switching Valve

SPK-CC

SPK Computer Controlled

SPK-CKV

SPK Check Valve

SPK-CSSA

SPK Cold Start Spark Advance System

SPK-CSSH

SPK Cold Start Spark Hold System

SPK-CTO

SPK Coolant Temperature Override

SPK-DAVS

SPK Distributor Vacuum Advance Solenoid

SPK-DCKV

SPK Distributor Check Valve

SPK-DCTO

SPK Dual Coolant Temperature Override

SPK-DDD

SPK Dual Diaphragm Distributor

SPK-DMV

SPK Distributor Modulator Valve

SPK-DPD

SPK Dual Point Distributor

SPK-DPVS

SPK Distributor Ported Vacuum Switch

SPK-DRCV

SPK Distributor Retard Control Valve

SPK-DRS

SPK Distributor Retard Solenoid

SPK-DSVMV

SPK Distributor Spark Vacuum Modulator Valve

SPK-DTVS

SPK Distributor Thermal Vacuum Switch

SPK-DTVV

SPK Distributor Thermal Vacuum Valve

SPK-DV

SPK Delay Valve

SPK-DVA

SPK Distributor Vacuum Advance

SPK-DVAS

SPK Distributor Vacuum Advance Solenoid

SPK-DVCS

SPK Distributor Vacuum Control Solenoid

SPK-DVCSW

SPK Distributor Vacuum Controlled Switch

SPK-DVCV

SPK Distributor Vacuum Control Valve

SPK-DVDV

SPK Distributor Vacuum Delay Valve

SPK-DVRS

SPK Distributor Vacuum Retard Switch

SPK-DVRV

SPK Distributor Vacuum Regulating Valve

SPK-DVVV

SPK Distributor Vacuum Vent Valve

SPK-EAVS

SPK Electronically Actuated Vacuum Switch

SPK-EDM

SPK Electronic Distributor Modulator

SPK-EI

SPK Electronic Ignition

SPK-ESA

SPK Electronic Spark Advance

SPK-ESC

SPK Electronic Spark Control (Retard)

SPK-ESS

SPK Electronic Spark Selection

SPK-EST

SPK Electronic Spark Timing

SPK-FDV

SPK Forward Delay Valve

SPK-HPCA

SPK Housing Pressure Cold Advance

SPK-ITCS

SPK Ignition Timing Control System

SPK-ITVS

SPK Ignition Timing Vacuum Switch

SPK-NLVR

SPK Non-Linear Vacuum Regulator

SPK-OSAC

SPK Orifice Spark Advance Control

SPK-PVA

SPK Ported Vacuum Advance

SPK-PVS

SPK Ported Vacuum Switch

SPK-RDO

SPK Retard Delay Orifice

SPK-RDV

SPK Reverse Delay Valve

SPK-RDVD

SPK Reverse Delay Valve (Dual)

SPK-RDVLV

SPK Retard Delay Valve

SPK-RDVS

SPK Reverse Delay Valve (Single)

SPK-RETS

SPK Retard Switch

SPK-SC

SPK Speed Controlled

SPK-SOL

SPK Solenoid

SPK-SRRV

SPK Spark Relay Regulator Valve

SPK-TAVIA

SPK Temperature Activated Vacuum Ignition Advance

SPK-TCS

SPK Transmission Controlled Spark

SPK-TCSYS

SPK Timing Control System

SPK-TIDC

SPK Thermostatic Ignition Distributor Control

SPK-TV

SPK Thermal Valve

SPK-TVS

SPK Thermal Vacuum Switch

SPK-VACTO

SPK Vacuum Advance Coolant Temperature Override

SPK-VAS

SPK Vacuum Advance Solenoid

SPK-VAV

SPK Vacuum Advance Valve

SPK-VR

SPK Vacuum Retard

SPK-VRSW

SPK Vacuum Retard Switch

SPK-VSV

SPK Vacuum Switching Valve

SPK-VTCS

SPK Vacuum Timing Control System

SPL

Smoke Puff Limiter

SRI

Service Reminder Indicator

SSCA

Stepped Speed Control Actuator

SSCS

Stepped Speed Control Solenoid

STS

Service Throttle Soon Light

STVS

Secondary Throttle Valve System

SUB-HO2S

Sub-Heated Oxygen Sensor (after CAT)

SUB-O2S

Sub-Oxygen Sensor

SUB-TWC

Sub Three-Way Catalytic Converter

"T"

TAA

Turbo Air-To-Air

TAA

Throttle Actuator Assembly

TAB

Thermactor Air By-Pass

TAD

Thermactor Air Diverter

TAC

Thermostatic Air Cleaner

TBI

Throttle Body Injection

TBPCS

Throttle By-Pass Control System

TC

Turbo Charger

TCC

Torque Converter Clutch

TCCL

Torque Converter Control

TCD

Throttle Closing Dashpot

TC-DV

TC Delay Valve

TC-TVC

TC Thermal Vacuum Switch

TC-VS

TC Vacuum Switch

TD

Thermactor Diverter

TFT

Tank Fuel Temperature Sensor

THOS2

Third Heated Oxygen Sensor

TICV

Thermal Ignition Control Valve

TIV

Thermal Idle Valve

TK

Throttle Kicker

TLUC

Transmission Lock-Up Converter

TLUC-TVS

TLUC Thermal Vacuum Switch

TLUC-VS

TLUC Vacuum Switch

TM

Throttle Modulator

TOS

Throttle Opener System

TP

Throttle Positioner

TPI

Tuned Port Fuel Injection

TPV

Throttle Poppet Valve

TR

Thermal Reactor

TRC

Throttle Return Control

TRCS

Throttle Return Control Solenoid

TRCTL

Throttle Return Control Throttle Lever Actuator

TRSCV

Throttle Return Solenoid Control Valve

TRTVV

Temperature Regulator Thermal Vacuum Valve

TRVV

Transmission Vacuum Valve

TSOL

Throttle Solenoid

TVISD

Throttle Vacuum Idle Speed Diaphragm

TVM

Transmission Vacuum Modulator

TWC

Three-Way Catalytic Converter

TWC+OC

Three-Way + Oxidation Catalytic Converter

"V"

VA

Vacuum Advance Unit

VAC-AMP

Vacuum Amplifier

VA-CTO

VA Coolant Temperature Override

VCV

Vacuum Cut Valve

VCV-BV

VCV By-Pass Valve

VLFR

Vent Line Flow Restrictor/Anti-Trickle Fill Valve

"W"

WU

Warm-Up Catalyst

WU-OC

Warm-Up Oxidation Converter

WU-TWC

Warm-Up Three-Way Catalytic Converter

Service Manual: STATE EMISSION STANDARDS - DIESEL

ARIZONA

NOTE: Because of frequent revisions in state emission standards, the emission standards listed in this article should only be used as a guide.

ARIZONA EMISSION STANDARDS - PHOENIX & TUCSON AREA (DIESEL OPACITY LOADED CRUISE TEST)

Application	Altitude (Feet)	Opacity (% For 10 Seconds)
Light Duty Vehicles (8500 GVWR Or Less)		
All Years	Less Than 2000	20 Or Less
	2001-4000	30 Or Less
	Greater Than 4000	40 Or Less

ARIZONA EMISSION STANDARDS - PHOENIX & TUCSON AREA (DIESEL J1667 SNAP IDLE TEST)

Application	Altitude (Feet)	Opacity (% For 10 Seconds)
Heavy Duty Vehicles (8500 GVWR Or Greater)		
1990 & Earlier	All	55
1991 & Newer	All	40

COLORADO

COLORADO EMISSION STANDARDS - DIESEL OPACITY

Application	Opacity %
14,000 GVWR Or Less	
Non-Turbo	40
Turbo	35
14,000 GVWR Or More	
Non-Turbo	35
Turbo	20

CONNECTICUT

CONNECTICUT EMISSION STANDARDS - DIESEL OPACITY

Application	Opacity %
10,000 GVWR Or Less	
1979 & Newer	20
26,000 GVWR Or More	
1974 & Earlier	70
1974-90	55
1991 & Newer	40

IDAHO

IDAHO EMISSION STANDARDS - DIESEL OPACITY

Application	Opacity %
All Weight Range	
1965-74	70
1975-91	55
1992 & Newer	40

KENTUCKY

KENTUCKY EMISSION STANDARDS - BOONE, CAMPBELL & KENTON COUNTIES (DIESEL OPACITY)

Application	Opacity
18,000 GVWR Or Less	
All Years	10% @ Idle

MASSACHUSETTS

MASSACHUSETTS EMISSION STANDARDS - DIESEL OPACITY

Application	Opacity %
Light Duty (8500 GVWR Or Less)	
1984 & Newer	20
Light Duty (8501-10,000 GVWR Or Less)	
1984 & Newer	40
Heavy Duty Buses (10,000 GVWR Or More)	
1984-93	40
1994 & Newer	30
Heavy Duty Trucks (10,000 Or Less GVWR)	
1984-90	55
1991 & Newer	40

NEW YORK

NEW YORK EMISSION STANDARDS - DIESEL OPACITY TEST

Application	Opacity %
Heavy Duty Vehicles (8500 GVWR Or More)	
1973 & Earlier	70
1974-90	55
1991 & Newer	40

OHIO

OHIO EMISSION STANDARDS - DIESEL OPACITY TEST

Application	Opacity %
Light Duty Diesel	20

RHODE ISLAND

RHODE ISLAND EMISSION STANDARDS - DIESEL OPACITY TEST

Application	Opacity %

All Model Years (8500 GVWR Or Less)	20

UTAH

UTAH EMISSION STANDARDS - DAVIS COUNTY - DIESEL OPACITY TEST

Application	Opacity %
Light Duty Diesel - Turbo (16,000 GVWR Or Less)	30
Light Duty Diesel - Non-Turbo (16,000 GVWR Or Less)	35
Heavy Duty Diesel (16,000 GVWR Or More)	70

UTAH EMISSION STANDARDS - SALT LAKE COUNTY - DIESEL OPACITY TEST

Application	Opacity %
All Model Years - Turbo (16,000 GVWR Or Less)	30
All Model Years - Non-Turbo (16,000 GVWR Or Less)	35
All Model Years (16,000 GVWR Or More)	70

UTAH EMISSION STANDARDS - UTAH COUNTY - DIESEL OPACITY TEST

Application	Opacity %
All Model Years - Turbo (16,000 GVWR Or Less)	30
All Model Years - Non-Turbo (16,000 GVWR Or Less)	35
All Model Years (16,000 GVWR Or More)	70

WASHINGTON

WASHINGTON EMISSION STANDARDS - DIESEL OPACITY TEST

Application	Opacity %
Light Duty Diesel (8500 GVWR Or Less)	
All Model Years	20
Heavy Duty Diesel (8500 GVWR Or More)	
1991 & Earlier	55
1992 & Newer	40

Service Manual: STATE EMISSION STANDARDS - GAS

ALASKA

> *NOTE: Because of frequent revisions in state emission standards, the emission standards listed in this article should only be used as a guide.*

> *NOTE: As of March 1, 2012, Alaska is not testing for tailpipe emissions.*

ALASKA EMISSION STANDARDS - ANCHORAGE & FAIRBANKS (2-SPEED IDLE TEST)

Application	Idle HC ppm (CO %)	2500 RPM HC ppm (CO %)
Passenger Cars (1)		
1968-71	1000 (5.0)	1000 (4.0)
1972-74	1000 (4.0)	1000 (3.0)
1975-80	1000 (2.0)	1000 (2.0)
1981-83	1000 (1.0)	1000 (1.0)
1984-93	750 (1.0)	750 (1.0)
1994-	200 (0.5)	200 (0.5)
Light & Medium Duty Trucks (1)		
1968-72	1000 (5.0)	1000 (4.0)
1973-78	1000 (4.0)	1000 (3.0)
1979-83	1000 (2.0)	1000 (2.0)
1984-93	750 (1.0)	750 (1.0)
1994-	220 (0.5)	220 (0.5)
Heavy Duty Vehicles (2)		
1968-73	1000 (5.0)	1000 (5.0)
1974-93	1000 (4.0)	1000 (4.0)
1994-	220 (1.0)	220 (1.0)

(1) 8500 GVWR or less.

(2) 8500 GVWR or more.

ARIZONA

NOTE: Curb idle only test are for vehicles with full-time 4WD, non-defeatable traction control and motorcycles. Curb idle and loaded cruise tests are performed on 1967-80 light-duty gasoline powered vehicles and all heavy-duty gasoline powered vehicles.

ARIZONA EMISSION STANDARDS - PHOENIX AREA (CURB IDLE & LOADED CRUISE TESTS)

Application (1)	Idle HC ppm (CO %)	(2) Loaded/Cruise HC ppm (CO %)
Light Duty Vehicles (6000 GVWR Or Less)		
1967-71 4-Cyl. Or Less	500 (5.50)	500 (4.20)
1967-71 More Than 4-Cyl.	450 (5.00)	450 (3.75)
1972-74 4-Cyl. Or Less	400 (5.50)	400 (4.20)
1972-74 More Than 4-Cyl.	400 (5.00)	400 (3.75)
1975-78 4-Cyl. Or Less	250 (2.20)	250 (1.65)
1975-78 More Than 4-Cyl.	250 (2.00)	250 (1.50)
Light Duty Vehicles (8500 GVWR Or Less)		
1979 4-Cyl. Or Less	220 (2.20)	220 (1.65)
1979 More Than 4-Cyl.	220 (2.20)	220 (1.50)
1980	220 (1.20)	220 (1.20)
1981 & Newer	220 (1.20)	.....
Light Duty Trucks (6000 GVWR Or Less)		
1967-80	(3)	(3)
Light Duty Trucks (6001-8500 GVWR)		
1967-74	(3)	(3)
1975-78	350 (4.00)	350 (3.00)
1979 4-Cyl. Or Less	220 (2.20)	220 (1.65)
1979 More Than 4-Cyl.	220 (2.00)	220 (1.50)
1980	220 (1.20)	220 (1.20)
1981 & Newer	220 (1.20)	.....
Heavy Duty Trucks (Greater Than 8500 GVWR)		
1967-74	(3)	(3)
1975-78	350 (4.00)	350 (3.00)

1979 & Newer	300 (4.00)	300 (3.00)
Motorcycles		
1967 & Newer	1800 (5.50)	.....

(1)	4-stroke engines only.
(2)	Except AWD, non-defeatable traction control and motorcycles.
(3)	Same as light duty vehicles.

ARIZONA EMISSION STANDARDS - PHOENIX AREA (IM147 TEST)

Application	HC gpm (CO gpm)	NOx gpm
Light Duty Vehicles		
1981-82	3.0 (25.0)	3.5
1983-85	2.4 (20.0)	3.5
1986-89	1.6 (15.0)	2.5
1990-93	1.0 (12.0)	2.5
1994 & Newer	0.8 (12.0)	2.0
Light Trucks (6000 GVWR Or Less)		
1981-85	4.0 (40.0)	5.5
1986-89	3.0 (25.0)	4.5
1990-93	2.0 (20.0)	4.0
1994 & Newer	1.6 (20.0)	3.0
Light Duty Trucks (6000-8500 GVWR)		
1981-85	4.4 (48.0)	7.0
1986-87	4.0 (40.0)	5.5
1988-89	3.0 (25.0)	5.5
1990-93	3.0 (25.0)	5.0
1994 & Newer	2.4 (25.0)	4.0

NOTE: Curb idle test only for 1967-80 light-duty gasoline vehicles, all vehicles with full-time 4WD and/or non-defeatable traction control and motorcycles. Curb idle and loaded cruise tests are performed on all 1981 and later vehicles except those with full-time 4WD and/or non-defeatable traction control.

ARIZONA EMISSION STANDARDS - TUCSON AREA (CURB IDLE & LOADED CRUISE TESTS)

Application [1]	Idle HC ppm (CO %)	[2] Loaded/Cruise HC ppm (CO %)
Light Duty Vehicles (6000 GVWR Or Less)		
1967-71 4-Cyl. Or Less	500 (5.50)	.....
1967-71 More Than 4-Cyl.	450 (5.00)	.....
1972-74 4-Cyl. Or Less	400 (5.50)	.....
1972-74 More Than 4-Cyl.	400 (5.00)	.....
1975-78 4-Cyl. Or Less	250 (2.20)	.....
1975-78 More Than 4-Cyl.	250 (2.00)	.....
Light Duty Vehicles (8500 GVWR Or Less)		
1979 4-Cyl. Or Less	220 (2.20)	.....
1979 More Than 4-Cyl.	220 (2.20)	.....
1980	220 (1.20)	.....
1981 & Newer	220 (1.20)	220 (1.20)
Light Duty Trucks (6000 GVWR Or Less)		
1967-80	[3]	[3]
Light Duty Trucks (6001-8500 GVWR)		
1967-74	[3]	[3]
1975-78	350 (4.00)	.....
1979 4-Cyl. Or Less	220 (2.20)	.....
1979 More Than 4-Cyl.	220 (2.00)	.....
1980	220 (1.20)	.....
1981 & Newer	220 (1.20)	220 (1.20)
Heavy Duty Trucks (Greater Than 8500 GVWR)		
1967-74	[3]	[3]
1975-78	350 (4.00)	.....
1979-80	300 (4.00)	.....
1981 & Newer	300 (4.00)	300 (3.00)
Motorcycles		
1967 & Newer	1800 (5.50)	.....

[1]	4-stroke engines only.
[2]	Except AWD, non-defeatable traction control and motorcycles.

(3)	Same as light duty vehicles.

CALIFORNIA > CALIFORNIA EMISSION STANDARDS ASM TESTS

Specific vehicle cutpoints are available on the California BAR web site at www.bar.ca.gov under the Industry tab, then Cutpoints Application.

Fig 1: California Emission Standards - Enhanced & Partially Enhanced Program Areas - Light & Medium Duty Vehicles (ASM Test)

ESC	MODEL YEAR GROUP	VEHICLE TYPE (by GVWR and LVW)					PASS/FAIL EMISSION STANDARD						GROSS POLLUTER STANDARD					
							ASM 5015			ASM 2525			ASM 5015			ASM 2525		
		PC	LDT1	LDT2	MDV		HC	CO	NO	HC	CO	NO	HC	CO	NO	HC	CO	NO
1	1974-	X	X	X		A	235.4	2.56	1301.5	185.4	2.36	1161.5	435.4	4.26	2659.3	385.4	4.06	2459.3
						B	436041.7	4453.19	1192593.0	436041.7	4453.19	1192593.0	436041.7	4453.19	1703703.7	436041.7	4453.19	1703703.7
2	1975-1980	X				A	123.0	0.91	1016.3	90.3	0.71	876.3	315.3	2.51	2051.9	265.3	2.31	1851.9
						B	273316.7	1362.96	1043519.0	273316.7	1362.96	1043519.0	273316.7	1362.96	1490740.7	273316.7	1362.96	1490740.7
3	1981-1983	X				A	63.2	0.64	850.0	42.1	0.44	680.0	253.1	2.14	1844.4	192.4	1.94	1644.4
						B	234259.3	1064.81	894444.5	212963.0	1064.81	894444.5	234259.3	1064.81	1277777.8	212963.0	1064.81	1277777.8
4	1984-1986	X				A	67.0	0.52	850.0	42.1	0.32	680.0	242.4	2.02	1744.4	192.4	1.82	1544.4
						B	212963.0	979.63	894444.5	212963.0	979.63	894444.5	212963.0	979.63	1277777.8	212963.0	979.63	1277777.8
5	1987-1992	X				A	57.0	0.48	608.0	31.7	0.32	547.0	231.7	1.98	1729.6	181.7	1.82	1529.6
						B	191666.7	851.85	596296.3	191666.7	979.63	596296.3	191666.7	851.85	851851.9	191666.7	979.63	851851.9
6	1993-1995	X				A	59.0	0.29	617.1	24.3	0.23	547.0	234.3	1.79	1759.3	184.3	1.73	1559.3
						B	89951.3	724.07	271314.8	89951.3	851.85	596296.3	128501.9	724.07	553703.7	128501.9	851.85	553703.7
7	1996-2000	X				A	16.8	0.29	260.0	0.5	0.23	547.0	234.3	1.79	1759.3	184.3	1.73	1559.3
						B	128501.9	724.07	596296.3	128501.9	851.85	596296.3	128501.9	724.07	553703.7	128501.9	851.85	553703.7
8	2001-2003	X				A	16.8	0.29	260.0	0.5	0.23	547.0	234.3	1.79	1759.3	184.3	1.73	1559.3
						B	128501.9	724.07	596296.3	128501.9	851.85	596296.3	128501.9	724.07	553703.7	128501.9	851.85	553703.7
9	2004+	X				A	16.8	0.29	260.0	0.5	0.23	547.0	234.3	1.79	1759.3	184.3	1.73	1559.3
						B	128501.9	724.07	596296.3	128501.9	851.85	596296.3	128501.9	724.07	553703.7	128501.9	851.85	553703.7
10	1975-1978		X			A	139.4	1.08	1320.9	105.0	0.88	1180.9	330.0	2.58	2487.0	280.0	2.38	2287.0
						B	225000.0	2025.00	745370.4	225000.0	2025.00	745370.4	225000.0	2025.00	1064814.8	225000.0	2025.00	1064814.8
11	1979-1983		X			A	139.4	0.88	1315.7	80.0	0.68	1175.7	320.0	2.38	2479.6	255.0	2.18	2279.6
						B	225000.0	2025.00	596296.3	150000.0	2025.00	596296.3	225000.0	2025.00	851851.9	150000.0	2025.00	851851.9
12	1984-1987		X			A	91.3	0.41	945.0	63.1	0.50	840.0	280.0	1.71	1850.0	230.0	1.80	1700.0
						B	150000.0	1725.00	525000.0	150000.0	2250.00	1050000.0	150000.0	1725.00	750000.0	150000.0	2250.00	1500000.0
13	1988-1992		X			A	83.0	0.27	875.0	63.1	0.43	735.0	270.0	1.57	1600.0	220.0	1.73	1400.0
						B	150000.0	1725.00	525000.0	150000.0	1875.00	525000.0	150000.0	1725.00	750000.0	150000.0	1875.00	750000.0
14	1993-1995		X			A	68.3	0.30	377.0	33.3	0.40	630.0	247.5	1.60	1350.0	197.5	1.70	1400.0
						B	78750.0	1350.00	525000.0	78750.0	1500.00	525000.0	112500.0	1350.00	750000.0	112500.0	1500.00	750000.0
15	1996-2000		X			A	22.1	0.30	377.0	5.8	0.40	630.0	247.5	1.60	1350.0	197.5	1.70	1400.0
						B	112500.0	1350.00	525000.0	112500.0	1500.00	525000.0	112500.0	1350.00	750000.0	112500.0	1500.00	750000.0
16	2001-2003		X			A	22.1	0.30	377.0	5.8	0.40	630.0	247.5	1.60	1350.0	197.5	1.70	1400.0
						B	112500.0	1350.00	525000.0	112500.0	1500.00	525000.0	112500.0	1350.00	750000.0	112500.0	1500.00	750000.0
17	2004+		X			A	22.1	0.30	377.0	5.8	0.40	630.0	247.5	1.60	1350.0	197.5	1.70	1400.0
						B	112500.0	1350.00	525000.0	112500.0	1500.00	525000.0	112500.0	1350.00	750000.0	112500.0	1500.00	750000.0
18	1975-1978			X		A	139.4	1.08	1320.9	105.0	0.88	1180.9	330.0	2.58	2487.0	280.0	2.38	2287.0
						B	225000.0	2025.00	745370.4	225000.0	2025.00	745370.4	225000.0	2025.00	1064814.8	225000.0	2025.00	1064814.8
19	1979-1983			X		A	139.4	0.88	1315.7	80.0	0.68	1175.7	320.0	2.38	2479.6	255.0	2.18	2279.6
						B	225000.0	2025.00	596296.3	150000.0	2025.00	596296.3	225000.0	2025.00	851851.9	150000.0	2025.00	851851.9
20	1984-1987			X		A	91.3	0.41	945.0	63.1	0.50	840.0	280.0	1.71	1850.0	230.0	1.80	1700.0
						B	150000.0	1725.00	525000.0	150000.0	2250.00	1050000.0	150000.0	1725.00	750000.0	150000.0	2250.00	1500000.0
21	1988-1992			X		A	83.0	0.27	875.0	63.1	0.43	735.0	270.0	1.57	1600.0	220.0	1.73	1400.0
						B	150000.0	1725.00	525000.0	150000.0	1875.00	525000.0	150000.0	1725.00	750000.0	150000.0	1875.00	750000.0
22	1993-1995			X		A	68.3	0.30	377.0	33.3	0.40	630.0	247.5	1.60	1350.0	197.5	1.70	1400.0
						B	78750.0	1350.00	525000.0	78750.0	1500.00	525000.0	112500.0	1350.00	750000.0	112500.0	1500.00	750000.0
23	1996-2000			X		A	22.1	0.30	377.0	5.8	0.40	630.0	247.5	1.60	1350.0	197.5	1.70	1400.0
						B	112500.0	1350.00	525000.0	112500.0	1500.00	525000.0	112500.0	1350.00	750000.0	112500.0	1500.00	750000.0
24	2001-2003			X		A	22.1	0.30	377.0	5.8	0.40	630.0	247.5	1.60	1350.0	197.5	1.70	1400.0
						B	112500.0	1350.00	525000.0	112500.0	1500.00	525000.0	112500.0	1350.00	750000.0	112500.0	1500.00	750000.0
25	2004+			X		A	22.1	0.30	377.0	5.8	0.40	630.0	247.5	1.60	1350.0	197.5	1.70	1400.0
						B	112500.0	1350.00	525000.0	112500.0	1500.00	525000.0	112500.0	1350.00	750000.0	112500.0	1500.00	750000.0
26	1978-				X	A	173.3	2.90	1703.3	123.3	2.70	1563.3	423.3	5.40	3233.3	373.3	5.20	3033.3
						B	583333.3	3500.00	1633333.3	583333.3	3500.00	1633333.3	583333.3	3500.00	2333333.3	583333.3	3500.00	2333333.3
27	1979-1983				X	A	139.4	0.88	1315.7	80.0	0.68	1175.7	320.0	2.38	2479.6	255.0	2.18	2279.6
						B	225000.0	2025.00	596296.3	150000.0	2025.00	596296.3	225000.0	2025.00	851851.9	150000.0	2025.00	851851.9
28	1984-1987				X	A	91.3	0.41	945.0	63.1	0.50	840.0	280.0	1.71	1850.0	230.0	1.80	1700.0
						B	150000.0	1725.00	525000.0	150000.0	2250.00	1050000.0	150000.0	1725.00	750000.0	150000.0	2250.00	1500000.0
29	1988-1992				X	A	83.0	0.27	875.0	63.1	0.43	735.0	270.0	1.57	1600.0	220.0	1.73	1400.0
						B	150000.0	1725.00	525000.0	150000.0	1875.00	525000.0	150000.0	1725.00	750000.0	150000.0	1875.00	750000.0
30	1993-1995				X	A	83.0	0.30	875.0	60.0	0.70	735.0	300.0	1.60	1750.0	250.0	2.00	1550.0
						B	150000.0	1350.00	525000.0	150000.0	1500.00	525000.0	150000.0	1350.00	750000.0	150000.0	1500.00	750000.0
31	1996-2000				X	A	71.2	0.30	875.0	60.0	0.70	735.0	300.0	1.60	1750.0	250.0	2.00	1550.0
						B	150000.0	1350.00	525000.0	150000.0	1500.00	525000.0	150000.0	1350.00	750000.0	150000.0	1500.00	750000.0
32	2001-2003				X	A	71.2	0.30	875.0	60.0	0.70	735.0	300.0	1.60	1750.0	250.0	2.00	1550.0
						B	150000.0	1350.00	525000.0	150000.0	1500.00	525000.0	150000.0	1350.00	750000.0	150000.0	1500.00	750000.0
33	2004+				X	A	71.2	0.30	875.0	60.0	0.70	735.0	300.0	1.60	1750.0	250.0	2.00	1550.0
						B	150000.0	1350.00	525000.0	150000.0	1500.00	525000.0	150000.0	1350.00	750000.0	150000.0	1500.00	750000.0

Fig 2: California Emission Standards - Enhanced & Partially Enhanced Program Areas - Heavy Duty Vehicles (ASM Test)

ESC	MODEL YEAR GROUP	VEHICLE TYPE (by GVWR and LVW)						PASS/FAIL EMISSION STANDARD						GROSS POLLUTER STANDARD					
								ASM 5015			ASM 2525			ASM 5015			ASM 2525		
		PC	LDT1	LDT2	MDV	HDV		HC	CO	NO	HC	CO	NO	HC	CO	NO	HC	CO	NO
46	1978-					X	A	243.8	3.92	2615.8	199.8	3.92	2770.8	594.9	7.29	4970.0	605.4	7.57	5375.4
							B	583333.3	3500.00	1633333.3	583333.3	3500.00	1633333.3	583333.3	3500.00	1633333.3	583333.3	3500.00	1633333.3
47	1979 - 1983					X	A	205.5	2.16	2250.6	106.0	1.96	2400.6	454.2	6.62	4231.1	338.1	6.54	4657.2
							B	225000.0	2025.00	596296.3	150000.0	2025.00	596296.3	225000.0	2025.00	596296.3	150000.0	2025.00	596296.3
48	1984 - 1987					X	A	143.0	1.60	2162.5	78.0	1.80	1975.0	307.5	6.67	4238.5	250.0	6.48	3989.5
							B	150000.0	1725.00	525000.0	150000.0	2250.00	1050000.0	150000.0	1725.00	525000.0	150000.0	2250.00	1050000.0
49	1988 - 1992					X	A	105.0	1.01	2112.5	78.0	1.24	2062.5	300.0	5.87	3865.9	250.0	4.98	3929.9
							B	150000.0	1725.00	525000.0	150000.0	1875.00	525000.0	150000.0	1725.00	525000.0	150000.0	1875.00	525000.0
50	1993 - 1995					X	A	105.0	0.49	1912.5	75.0	1.22	1862.5	300.0	2.61	3825.0	250.0	3.49	3929.9
							B	150000.0	1350.00	525000.0	150000.0	1500.00	525000.0	150000.0	1350.00	525000.0	150000.0	1500.00	525000.0
51	1996 - 2000					X	A	105.0	0.49	1662.5	75.0	1.16	1462.5	300.0	2.61	3325.0	250.0	3.32	3085.9
							B	150000.0	1350.00	525000.0	150000.0	1500.00	525000.0	150000.0	1350.00	525000.0	150000.0	1500.00	525000.0
52	2001+					X	A	105.0	0.49	1662.5	75.0	1.16	1462.5	300.0	2.61	3325.0	250.0	3.32	3085.9
							B	150000.0	1350.00	525000.0	150000.0	1500.00	525000.0	150000.0	1350.00	525000.0	150000.0	1500.00	525000.0

CALIFORNIA > LEGEND

ESC - Emission Standard Category

GVWR - Manufacture's Gross Vehicle Weight Rating

LVW - Loaded Vehicle Weight

PC - Passenger Car

LDT1 - Light-Duty Truck up through 3750 LVW and GVWR no greater than 6000 lbs.

LDT2 - Light-Duty Truck greater than 3750 LVW and GVWR no greater than 6000 lbs.

MDV - Medium-Duty Vehicle, GVWR from 6001 to 8500 lbs.

HC - Hydrocarbon, ppm

CO - Carbon Monoxide, %

NO - Nitric Oxide, ppm

CALIFORNIA > PASS/FAIL EMISSION STANDARDS = A+B / VTW

PASS/FAIL STANDARDS - Emission standards used to determine if a vehicle passes the emission inspection. A vehicle passes if the emission levels are equal to or less than the standards for HC, CO and NO for ASM 5015 and ASM 2525.

GROSS POLLUTER STANDARDS - Emission standards used to designate a vehicle as a gross polluter. A vehicle is designated as a gross polluter if the emission levels at the time of the initial inspection, before repairs are greater than the gross polluter standards for HC, CO or NO for ASM 5015 or ASM 2525.

NOTE: If test data on emission pass/fail rates or gross polluter identification rates

indicate adjustments are required, the emission standards may be increased or decreased by the bureau by 30% or by the following tolerances, or standards may be set for any specific vehicle and engine configuration which the bureau determines has excessive errors of commission of omission, whichever is necessary to comply with Section 44001.5 of the Health and Safety Code.

COLORADO

COLORADO EMISSION STANDARDS - ENHANCED PROGRAM (IM240)

Application	HC gpm	CO gpm	NOx gpm
Passenger Cars			
1982	3.5	45	5.0
1983	3.5	30	4.5
1984	3.0	30	4.5
1985	2.5	20	4.5
1986	2.5	20	4.5
1987	2.5	20	4.0
1988 & 1989	2.0	20	4.0
1990	2.0	20	3.5
1991	1.5	20	3.5
1992	1.5	15	3.5
1993	1.5	15	3.5
1994	1.2	15	3.0
1995	1.2	15	2.5
1996	1.2	15	2.0
1997	1.2	15	2.0
1998 & Newer	1.2	15	1.5
Light Duty Vehicles			
1982	6.0	65	6.0
1983	6.0	65	6.0
1984	5.0	55	6.0
1985	4.5	45	6.0
1986	4.0	40	6.0

1987	3.5	30	5.5
1988 & 1989	3.0	25	5.0
1990	3.0	25	5.0
1991	2.5	25	4.5
1992	2.5	25	4.5
1993	2.5	25	4.5
1994	2.0	20	4.0
1995	2.0	20	4.0
1996	1.2	15	3.5
1997	1.2	15	3.0
1998	1.2	15	2.0
1999 & Newer	1.2	15	2.0

COLORADO EMISSION STANDARDS - 2-SPEED IDLE TEST

Application	HC ppm	CO %
Passenger Cars & Light Duty Trucks		
1970 & Earlier	1000	3.5
1971	1000	3.0
1972	1000	3.0
1973	1000	3.0
1974	1000	3.0
1975	600	2.0
1976	600	2.0
1977	400	1.5
1978	400	1.5
1979	400	1.5
1980	400	1.5
1981 & Newer	220	1.2
Heavy Duty Trucks (6000 GVWR Or Greater)		
1967 Or Earlier	1500	7.0
1968-69	1200	6.5
1969	1200	6.5

1970	1000	5.5
1971	1000	5.5
1972	1000	5.5
1973	1000	5.5
1974	1000	5.5
1975	1000	5.5
1976	1000	5.5
1977	1000	5.5
1978	1000	5.5
Heavy Duty Trucks (8501 GVWR Or Greater)		
1979	800	4.0
1980	800	3.5
1981	600	3.0
1982	600	3.0
1983	600	3.0
1984	600	3.0
1985	600	3.0
1986 & Newer	300	2.0

CONNECTICUT

CONNECTICUT EMISSION STANDARDS - IDLE TEST

Application	HC ppm (CO)
10,000 GVWR Or Less	
1979	250 (2.1)
1980	225 (2.0)
1981-82	200 (1.2)
1983	175 (1.0)
1984-87	150 (1.0)
1988 & Newer	125 (1.0)

DELAWARE

DELAWARE EMISSION STANDARDS - KENT, NEW CASTLE & SUSSEX COUNTIES (IDLE TEST)

Application	HC ppm (CO %)
Light Duty Vehicles (6000 GVWR Or Less)	
1968-70	900 (9.0)
1971-74	600 (6.0)
1975-79	400 (4.0)
1980	220 (2.0)
1981 & Newer	220 (1.2)
Light Duty Trucks (6001-8500 GVWR)	
1970-72	900 (9.0)
1973-78	600 (6.0)
1979-83	400 (4.0)
1984 & Newer	220 (1.2)

DISTRICT OF COLUMBIA

DISTRICT OF COLUMBIA EMISSION STANDARDS - IDLE TEST

Application	HC ppm (CO %)
Light Duty Vehicles & Trucks (26000 GVWR Or Less)	
1968-70	1250 (11.0)
1971-74	1200 (9.0)
1975-79	600 (6.5)
1980	300 (1.5)
1981 & Newer	220 (1.2)

GEORGIA

NOTE: The Georgia program incorporates original U.S. EPA recommended start-up ASM2525 and ASM5015 standards for 1995 and older model year vehicles. Refer to appropriate model year range in appropriate table. See U. S. EPA ASM2525 & ASM5015 START-UP EMISSION STANDARDS .

GEORGIA EMISSION STANDARDS - 2-SPEED IDLE TEST

Application [1]	HC ppm (CO %)
1979	500 (5.0)
1980	350 (3.5)
1981-83	250 (1.5)
1984 & Newer	220 (1.2)

[1] 8500 GVWR or less.

IDAHO

IDAHO EMISSION STANDARDS - 2-SPEED IDLE TEST

Application	HC ppm (CO %)
Light Duty Vehicles	
8500 GVWR Or Less	
1965-74	900 (5.0)
1975-79	700 (3.0)
1980	400 (1.5)
1981 & Newer	220 (1.2)
Heavy Duty Trucks	
8501 GVWR Or More	
1965-74	900 (6.0)
1975-80	700 (5.0)
1981 & Newer	500 (3.0)

ILLINOIS

ILLINOIS EMISSION STANDARDS - IM240 TEST

Application	HC gpm	CO gpm
Light Duty Vehicles (6000 GVWR Or Less)		
1981-82	2.00	60.0

1983-87	2.00	30.0
1988-95	0.80	15.0
1996 & Newer	0.60	10.0
Light Duty Trucks (6000 GVWR Or Less)		
1981-83	7.50	100.0
1984-87	3.20	80.0
1988-95	1.60	40.0
1996 & Newer (3750 LVW Or More) (1)	0.80	13.0
1996 & Newer (3750 LVW Or Less) (1)	0.60	10.0
Light Duty Trucks (6001-6500 GVWR)		
1981-83	7.50	100.0
1984-87	3.20	80.0
1988-95	1.60	40.0
1996 & Newer (5750 ALVW Or More)	0.80	15.0
1996 & Newer (5750 ALVW Or Less)	0.80	13.0
(1) Loaded Vehicle Weight (LVW) is vehicle curb weight plus 300 lbs.		

ILLINOIS EMISSION STANDARDS - IDLE TEST

Application	HC ppm (CO %)
Passenger Vehicles (6000 GVWR Or Less)	
1968-71	900 (9.0)
1972-74	800 (8.0)
1975-77	700 (7.0)
1978-79	600 (6.0)
1980	300 (3.0)
1981 & Newer	220 (1.2)
Light Duty Vehicles (8000 GVWR Or Less)	
1968-71	900 (9.0)
1972-74	800 (8.0)
1975-78	700 (7.0)
1979-80	600 (6.0)
1981-83	300 (3.0)

1984 & Newer	220 (1.2)
Heavy Duty Vehicles (8001 GVWR Or More)	
1968-71	1500 (9.5)
1972-78	900 (9.0)
1979-84	700 (7.0)
1985 & Newer	300 (3.0)

INDIANA

INDIANA EMISSION STANDARDS - IM93 TEST

Application	HC gpm (CO gpm)	NOx (gpm)
Passenger Cars		
1981-82	2.0 (60)	3.0
1983-86	2.0 (30)	3.0
1987-90	1.4 (20)	3.0
1991-95	0.8 (15)	2.5
1996 & Newer	0.6 (10)	2.5
Light Duty Trucks (6000 GVWR Or Less)		
1981-83	5.0 (80)	7.0
1984-86	3.2 (70)	7.0
1987-90	2.2 (55)	3.5
1991-95	1.6 (40)	3.0
1996 & Newer	0.8 (20)	3.0
Light Duty Trucks (6001-8500 GVWR)		
1981-83	5.0 (80)	7.0
1984-86	3.2 (70)	7.0
1987-90	2.2 (55)	5.0
1991-96	1.6 (40)	4.5
1997 & Newer	0.8 (20)	4.5
Heavy Duty Trucks (8501-9000 GVWR)		
1981-82	7.5 (100)	8.0
1983-84	6.0 (100)	8.0

1985-86	5.0 (75)	8.0
1987-90	3.0 (60)	8.0
1991-97	2.4 (40)	8.0
1998 & Newer	2.0 (30)	6.0

INDIANA EMISSION STANDARDS - IDLE TEST

Application	HC ppm (CO %)
Passenger Cars	
1976-79	350 (3.5)
1980	250 (2.0)
1981 & Newer	220 (1.2)
Light Duty Trucks (6000 GVWR Or Less)	
1976-78	500 (5.0)
1979-83	350 (3.5)
1984 & Newer	220 (1.2)
Medium Duty Trucks (6001-8500 GVWR)	
1976-78	500 (5.0)
1979-83	350 (3.5)
1984 & Newer	220 (1.2)

KENTUCKY

NOTE: Currently, there is no emission testing in Kentucky.

KENTUCKY EMISSION STANDARDS - BOONE, CAMPBELL & KENTON COUNTIES (IDLE TEST)

Application	HC ppm (CO)
Passenger Cars (Automobiles)	
1968	950 (8.5)
1969	900 (8.5)
1970	850 (8.1)
1972	800 (8.0)

1973	800 (7.8)
1974	800 (7.6)
1975	700 (7.5)
1976	700 (6.5)
1977	650 (6.3)
1978	600 (5.5)
1979	600 (4.5)
1980	250 (2.5)
1981 & Newer	220 (1.2)
Light Duty Trucks (6000 GVWR Or Less)	
1968	1300 (8.0)
1969	1200 (8.0)
1970-71	1100 (8.0)
1972-73	1000 (7.8)
1974	950 (7.8)
1975	900 (7.0)
1976-77	700 (7.0)
1978	700 (6.3)
1979	450 (5.5)
1980	450 (4.0)
1981	350 (1.7)
1982 & Newer	220 (1.2)
Light Duty Trucks (6001-10,000 GVWR)	
1969	1500 (9.0)
1970	1100 (8.0)
1971	1000 (8.0)
1972-75	950 (7.5)
1976	900 (7.5)
1977	850 (7.5)
1978	700 (6.0)
1979	650 (5.5)
1980	550 (5.0)
1981	450 (4.0)

1982	400 (2.5)
1983	350 (2.0)
1984	220 (1.5)
1985 & Newer	220 (1.2)
Heavy Duty Trucks (10,001-18,000 GVWR)	
1968	1500 (9.0)
1969-70	1300 (8.5)
1971	1200 (8.5)
1972-76	1000 (7.0)
1977-80	900 (6.5)
1982-83	400 (3.0)
1984 & Newer	250 (1.5)

MARYLAND

MARYLAND EMISSION STANDARDS - IM240 TEST

Application	HC gpm (CO gpm)	NOx gpm
Light Duty Vehicles (6000 GVWR Or Less)		
1984-87	1.80 (30.0)	2.8
1988-90	1.40 (30.0)	2.5
1991-93	1.00 (20.0)	2.2
1994-95	0.90 (20.0)	2.1
Light Duty Trucks (6000 GVWR Or Less)		
1984-87	2.80 (80.0)	5.8
1988-90	2.40 (80.0)	3.0
1991-93	2.00 (60.0)	2.7
1994-95	1.80 (60.0)	2.6
Light Duty Trucks (6001-8500 GVWR)		
1984-87	2.90 (80.0)	6.6
1988-90	2.40 (80.0)	4.2
1991-93	2.00 (60.0)	4.0
1994-95	1.80 (60.0)	3.7

Heavy Duty Trucks (8501-9999 GVWR)		
1984	5.80 (100.0)	7.7
1985-86	4.70 (80.0)	7.7
1987	3.00 (80.0)	7.7
1988-90	2.60 (80.0)	7.0
1991-97	2.50 (60.0)	5.5
1998 & Newer	2.20 (60.0)	4.0

MARYLAND EMISSION STANDARDS - IDLE TEST

Application	HC ppm (CO %)
Light Duty Vehicles (6000 GVWR Or Less)	
1977	500 (6.0)
1978	430 (5.5)
1979	400 (4.0)
1980	220 (1.7)
1981 & Newer	220 (1.2)
Light Duty Trucks (6001-9999 GVWR)	
1977	580 (7.0)
1978	550 (6.7)
1979	470 (5.0)
1980	350 (5.0)
1981	250 (3.0)
1982	220 (2.5)
1983	220 (1.5)
1984 & Newer	220 (1.2)
Heavy Duty Trucks (10,000-26,000 GVWR)	
1977-78	650 (7.0)
1979	650 (6.5)
1980-82	500 (6.0)
1983	500 (3.5)
1984-85	440 (3.0)
1986	280 (2.5)

1987 & Newer	220 (1.2)

MASSACHUSETTS

MASSACHUSETTS EMISSION STANDARDS - MA31 TEST

Application	HC gpm (CO gpm)	NOx gpm
Passenger Cars		
1984-90	2.0 (30)	3.0
1991-95	1.2 (20)	2.5
1996 & Newer	0.8 (13)	2.0
Light Duty Trucks (6000 GVWR Or Less)		
1984-87	3.2 (80)	7.0
1988-1990	3.2 (80)	3.5
1991-95	2.4 (60)	3.0
1996 & Newer (3750 LVW (1) Or Less)	0.8 (15)	2.0
1996 & Newer (3751 LVW (1) Or Greater)	1.0 (20)	2.5
Light Duty Trucks (6001-8500 GVWR)		
1984-87	3.2 (80)	7.0
1988-90	3.2 (80)	5.0
1991-95	2.4 (60)	4.5
1996 & Newer (5750 ALVW (2) Or Less)	1.0 (20)	2.5
1996 & Newer (5751 ALVW (2) Or Greater)	2.4 (60)	4.0
Heavy Duty Trucks (8501-10,000 Or Greater)		
1984-87	3.2 (80)	7.0
1988-90	3.2 (80)	5.0
1991-95	2.4 (60)	4.5
1996 & Newer	2.4 (60)	4.0

(1)	Loaded Vehicle Weight (LVW).
(2)	Adjusted Loaded Vehicle Weight (ALVW).

MASSACHUSETTS EMISSION STANDARDS - 2-SPEED IDLE TEST

Application	HC ppm (CO %)
All Vehicles	
1984-86	220 (0.80)
1987 & Newer	100 (0.60)

MISSOURI

MISSOURI EMISSION STANDARDS - JEFFERSON, ST. CHARLES & ST. LOUIS COUNTIES - IM240 TEST

Application	HC gpm (CO gpm)	NOx gpm
Light Duty Vehicles (6000 GVWR Or Less)		
1981-82	0.80 (30.0)	2.0
1983-95	0.80 (15.0)	2.0
1996 & Newer	0.60 (10.0)	1.5
Light Duty Trucks (6000 GVWR Or Less)		
1981-83	3.40 (70.0)	4.5
1984-87	1.60 (40.0)	4.5
1988-95	1.60 (40.0)	2.5
1996 & Newer (Less Than 3750 LVW)	0.80 (13.0)	1.8
1996 & Newer (3750 LVW Or Less)	0.60 (10.0)	1.5
Light Duty Trucks (6001-8500 GVWR)		
1981-83	3.4 (70.0)	4.5
1984-87	1.6 (40.0)	4.5
1988-95	1.60 (40.0)	3.5
1996 & Newer (5750 ALVW Or Less)	0.80 (13.0)	1.8
1996 & Newer (5750 ALVW Or More)	0.80 (15.0)	2.0

MISSOURI EMISSION STANDARDS - FRANKLIN, JEFFERSON, ST. CHARLES & ST. LOUIS COUNTIES - IDLE TEST

Application [1]	HC ppm (CO %)
1971-74	700 (7.0)
1975-79	600 (6.0)

1980	300 (3.0)
1981 & Newer	220 (1.2)

(1) 8500 GVWR or less.

MISSOURI EMISSION STANDARDS - FRANKLIN, JEFFERSON, ST. CHARLES & ST. LOUIS COUNTIES - REMOTE SENSING CLEAN SCREEN TEST

Application (1)	HC ppm (CO %)	NOx ppm
All Vehicles (8500 GVWR Or Less)		
1971 & Newer	200 (0.5)	2000

(1) 8500 GVWR or less.

NEVADA

NEVADA EMISSION STANDARDS - 2-SPEED IDLE TEST

Application	HC ppm (CO %)
Light Duty Vehicles (8500 GVWR Or Less)	
1968-69	800 (4.0)
1970-74	700 (3.5)
1975-78	500 (2.5)
1979-80	500 (2.0)
1981 & Newer	220 (1.2)
Heavy Duty Vehicles (8501 GVWR Or More)	
1968-69	1400 (7.0)
1970-78	1400 (6.0)
1979	1000 (5.0)
1980	1000 (4.0)
1981 & Newer	1000 (3.5)

NEW JERSEY

NOTE: The New Jersey program incorporates original U.S. EPA recommended start-up

ASM5015 standards for 1981 and newer model year vehicles. Refer to appropriate model year range in appropriate table. See U. S. EPA ASM2525 & ASM5015 START-UP EMISSION STANDARDS .

NEW JERSEY EMISSION STANDARDS - 2-SPEED IDLE TEST

Application	Idle HC ppm (CO %)	2500 RPM HC ppm (CO %)
Light Duty Vehicles (8500 GVWR Or Less)		
1967 & Earlier	1400 (8.5)	.....
1968-70	700 (7.0)	.....
1971-74	500 (5.0)	.....
1975-80	300 (3.0)	.....
1981 & Newer	220 (1.2)	100 (0.5)
Heavy Duty Vehicles (8501 GVWR Or Greater)		
1967 & Earlier	1400 (8.5)	.....
1968-70	1200 (8.5)	.....
1971-74	700 (6.0)	.....
1975-78	500 (4.0)	.....
1979 & Earlier	300 (3.0)	.....

NEW MEXICO

NEW MEXICO EMISSION STANDARDS - 2-SPEED IDLE TEST

Application	Idle HC ppm (CO %)	2500 RPM HC ppm (CO %)
Light Duty Vehicles (6000 GVWR Or Less)		
1975-78	500 (5.0)	500 (5.0)
1979-80	400 (4.0)	400 (4.0)
1981-85	220 (1.2)	220 (1.2)
1986-90	200 (1.2)	200 (1.2)
1991-95	180 (1.2)	180 (1.2)
Light Duty Trucks (6001-8000 GVWR)		
1975-78	600 (6.0)	600 (6.0)
1979-80	600 (4.5)	600 (4.5)

1981-82	400 (2.7)	400 (3.0)
1983-88	300 (1.2)	300 (3.0)
1989-95	220 (1.2)	220 (1.2)
Medium Duty Trucks (8001-10,000 GVWR)		
1975 & Newer	650 (6.5)	650 (6.5)

NEW YORK

NEW YORK EMISSION STANDARDS - IM240 TEST

Application	HC gpm Composite	HC gpm Phase 2	CO gpm Composite	CO gpm Phase 2	NOx gpm Both
Light Duty Vehicles					
1981-82	0.80	0.50	30.0	24.0	2.0
1983-95	0.80	0.50	15.0	12.0	2.0
1996 & Newer	0.60	0.40	10.0	8.0	1.5
Light Duty Trucks (6000 GVWR Or Less)					
1981-83	3.40	2.00	70.0	56.0	4.5
1984-87	1.60	1.00	40.0	32.0	4.5
1988-95	1.60	1.00	40.0	32.0	2.5
1996 & Newer (3750 LVW Or Less)	0.60	0.40	10.0	8.0	1.5
1996 & Newer (3751 LVW Or More)	0.80	0.50	13.0	10.0	1.8
Light Duty Trucks (6501-8500 GVWR)					
1981-83	3.40	2.00	70.0	56.0	4.5
1984-87	1.60	1.00	40.0	32.0	4.5
1988-95	1.60	1.00	40.0	32.0	3.5
1996 & Newer (5750 ALVW Or Less)	0.80	0.50	13.0	10.0	1.8
1996 & Newer (5751 ALVW Or More)	0.80	0.50	15.0	12.0	2.0

NEW YORK EMISSION STANDARDS - IDLE TEST

Application	HC ppm (CO %)

Light Duty Vehicles (8500 GVWR Or Less)	
1978	300 (3.0)
1979-80	300 (2.5)
1981 & Newer	220 (1.2)
Heavy Duty Vehicles (8501 GVWR Or More)	
1978	600 (4.5)
1979 & Newer	300 (3.0)

NORTH CAROLINA

NORTH CAROLINA EMISSION STANDARDS - IDLE TEST

Application	HC ppm (CO %)
Light Duty Vehicles (8500 GVWR Or Less)	
1977	450 (4.5)
1978-79	350 (3.5)
1980	250 (2.0)
1981 & Newer	250 (1.2)
Heavy Duty Trucks (8501 GVWR Or More)	
1977-78	500 (5.0)
1979 & Newer	400 (4.0)

OHIO

NOTE: The Ohio program incorporates original U.S. EPA recommended start-up ASM2525 standards for all model year vehicles. Refer to appropriate model year range in appropriate table. See U. S. EPA ASM2525 & ASM5015 START-UP EMISSION STANDARDS .

OHIO EMISSION STANDARDS - 2-SPEED IDLE TEST

Application	HC ppm (CO %)
1978	350 (4.0)
1979	275 (3.0)

1980	230 (2.0)
1981 & Newer	220 (1.2)

OREGON

OREGON EMISSION STANDARDS - METROPOLITAN PORTLAND ENHANCED AREA - BAR31

Application	HC gpm (CO gpm)	NOx gpm
Light Duty Passenger Cars		
1981-82	2.0 (64)	3.70
1983-89	2.0 (32)	3.70
1990-95	1.2 (30)	3.00
1996 & Newer	OBD-II Test	OBD-II Test
Light Duty Trucks (6000 GVWR Or Less)		
1981-83	8.5 (149)	8.32
1984-87	4.0 (85)	8.32
1988-89	4.0 (85)	4.62
1990-95	2.4 (80)	3.75
1996 & Newer	OBD-II Test	OBD-II Test
Light Duty Trucks (6001-8500 GVWR)		
1981-83	8.5 (149)	8.32
1984-87	4.0 (85)	8.32
1988-89	4.0 (85)	6.47
1990-95	2.4 (80)	5.25
1996 & Newer	OBD-II Test	OBD-II Test

OREGON EMISSION STANDARDS - METROPOLITAN PORTLAND & ROGUE VALLEY AREA BASIC TEST - 2-SPEED IDLE TEST

Application	Idle HC ppm (CO %)	2500 RPM HC ppm (CO %)
Light Duty Passenger Cars (6000 GVWR Or Less)		
1975-80 (No Catalyst)	300 (2.5)	-
1975-80 (Catalyst)	220 (1.0)	-
1981 & Newer (All)	220 (1.0)	220 (1.0)

1975 & Newer (2-Stroke)	n/a (7.0)	-
Light Duty Trucks (6001-8500 GVWR)		
1975-78 (All)	350 (2.5)	-
1979-80 (No Catalyst)	300 (2.5)	-
1979-80 (Catalyst)	220 (1.0)	-
1981 & Newer (All)	220 (1.0)	220 (1.0)
1996 & Newer (3750 LVW Or Less)	0.9 (20)	2.25
Heavy Duty Trucks (8501 GVWR Or More)		
1975-78 (Carbureted)	500 (4.0)	n/a (3.0)
1975-78 (Fuel Injection)	500 (4.0)	-
1979-84 (Carbureted)	350 (3.0)	n/a (3.0)
1979-84 (Fuel Injection)	350 (3.0)	-
1985 & Newer (No Catalyst)	350 (3.0)	n/a (3.0)
1985 & Newer (W/Catalyst)	220 (1.0)	220 (1.0)

OREGON EMISSION STANDARDS - METROPOLITAN PORTLAND & ROGUE VALLEY AREA BASIC TEST - EXHAUST OPACITY TEST

Application	Opacity % @ Idle	Opacity % @ High Idle
1975 & Newer		
2-Cycle Engines	20	.....
Gasoline Engines	0	0

PENNSYLVANIA

NOTE: The Pennsylvania (in Philadelphia area) program incorporates original U.S. EPA recommended start-up ASM5015 standards for 1981 and newer model year vehicles. Refer to appropriate model year range in appropriate table. See U. S. EPA ASM2525 & ASM5015 START-UP EMISSION STANDARDS .

PENNSYLVANIA EMISSION STANDARDS - PITTSBURGH & OLDER PHILADELPHIA VEHICLES - IDLE TEST

Application	HC ppm (CO %)
6000 GVWR Or Less	

1975-79	400 (4.0)
1980	300 (3.0)
1981-92	220 (1.2)
1993 & Newer	130 (1.0)
6001-9000 GVWR	
1975-78	650 (6.0)
1979	400 (4.0)
1980	300 (3.0)
1981-92	220 (1.2)
1993 & Newer	180 (1.0)

RHODE ISLAND

RHODE ISLAND EMISSION STANDARDS - RI2000 TEST

Application	HC gpm (CO gpm)	NOx gpm
Light Duty Vehicles		
1974 & Earlier	15.92 (132.44)	14.92
1975-76	6.74 (96.21)	9.92
1977-79	6.74 (96.21)	6.59
1980	2.25 (45.48)	6.59
1981-82	2.25 (45.48)	3.25
1983-95	2.25 (23.74)	3.25
1996 & Newer	1.84 (16.50)	2.42
Light Duty Trucks (6000 GVWR Or Less)		
1975 & Earlier	16.94 (175.92)	14.92
1975-78	8.78 (117.95)	9.92
1979-83	7.55 (103.45)	7.42
1984-87	3.88 (59.97)	7.42
1988-90	3.88 (59.97)	4.09
1991-95	3.88 (59.97)	4.09
1996 & Newer (3750 LVW Or Less)	1.84 (16.50)	2.42
1996 & Newer (3751 LVW Or More)	2.25 (20.84)	2.92

Light Duty Trucks (6001-8500 GVWR)		
1974 & Earlier	16.94 (175.92)	14.92
1975-78	8.78 (117.95)	9.92
1979-83	7.55 (103.45)	7.42
1984-87	3.88 (59.97)	7.42
1989-90	3.88 (59.97)	5.75
1991-95	3.88 (59.97)	5.75
1996 & Newer (5750 LVW Or Less)	2.25 (20.84)	2.92
1996 & Newer (5751 LVW or More)	5.51 (23.74)	3.25

RHODE ISLAND EMISSION STANDARDS - 2-SPEED IDLE TEST

Application Idle (1)	HC ppm (CO %)
1967 & Earlier	800 (7.0)
1968-74	700 (6.0)
1975-78	300 (3.0)
1979-80	300 (2.5)
1981 & Newer	220 (1.2)

(1) 8500 GVWR or less.

TENNESSEE

TENNESSEE EMISSION STANDARDS - MEMPHIS - IDLE TEST

Application	HC ppm (CO %)
Light Duty Vehicles (9000 GVWR Or Less)	
1971 & Older	900 (8.9)
1972-74	700 (8.2)
1975-79	600 (7.5)
1980	400 (4.7)
1981 & Newer	220 (1.2)
Heavy Duty Trucks (9001-25,999 GVWR)	
1971 & Older	1000 (8.9)

1972-74	1000 (8.2)
1975-79	1000 (8.0)
1980	800 (6.0)
1981 & Newer	400 (4.0)

TENNESSEE EMISSION STANDARDS - DAVIDSON & NASHVILLE COUNTIES - IDLE TEST

Application	HC ppm (CO %)
Light Duty Vehicles (6000 GVWR Or Less)	
1975-77	500 (5.0)
1978-79	400 (4.0)
1980	300 (3.0)
1981 & Newer	220 (1.2)
Medium Duty Trucks (6001-8500 GVWR)	
1975-77	750 (6.5)
1978-79	600 (6.0)
1980	400 (4.5)
1981 & Newer	400 (4.0)

TENNESSEE EMISSION STANDARDS - FOUR COUNTY AREA SURROUNDING NASHVILLE - IDLE TEST

Application	HC ppm (CO %)
Light Duty Vehicles (6000 GVWR Or Less)	
1975-77	500 (5.0)
1978-79	400 (4.0)
1980	300 (3.0)
1981 & Newer	220 (1.2)
Medium Duty Trucks (6001-8500 GVWR)	
1975-77	750 (6.5)
1978-79	600 (6.0)
1980	400 (4.5)
1981 & Newer	400 (4.0)

TEXAS

NOTE: The Texas program incorporates original U.S. EPA recommended start-up ASM2525 and ASM5015 standards for 1995 and newer model year vehicles. Refer to appropriate model year range in appropriate table. See U. S. EPA ASM2525 & ASM5015 START-UP EMISSION STANDARDS .

TEXAS EMISSION STANDARDS - 2-SPEED IDLE TEST

Application	HC ppm (CO %)
Light Duty Vehicles (8500 GVWR Or Less)	
1979	600 (6.0)
1980	400 (4.0)
1981 & Newer	220 (1.2)
Heavy Duty Vehicles (8501 GVWR Or More)	
1979-81	700 (7.0)
1982-84	500 (5.0)
1985 & Newer	300 (3.0)

UTAH

UTAH EMISSION STANDARDS - DAVIS COUNTY - DC98 TEST

Application	HC gpm (CO gpm)	NOx gpm
Light Duty Vehicles (6000 GVWR Or Less)		
1989-90	2.00 (30)	3.0
1991-95	1.2 (20)	2.5
Light Duty Trucks (6000 GVWR Or Less)		
1989-90	3.2 (80)	3.5
1991-95	2.4 (60)	3.0
Light Duty Trucks (6001-8500 GVWR)		
1989-90	3.2 (80)	5.0
1991-95	2.4 (60)	4.5

UTAH EMISSION STANDARDS - DAVIS COUNTY - 2-SPEED IDLE TEST

Application	HC ppm (CO %)
Light Duty Vehicles (6000 GVWR Or Less)	
1968-69	800 (6.0)
1970-74	700 (5.0)
1975-76	600 (4.0)
1977-79	500 (3.0)
1980	300 (2.0)
1981-95	220 (1.2)
Light Duty Vehicles (6001-8500 GVWR)	
1968-69	1500 (7.0)
1970-78	1200 (5.0)
1979	500 (3.0)
1980	300 (2.0)
1981-95	220 (1.2)
Heavy Duty Vehicles (8501 GVWR Or More)	
1968-69	1500 (7.0)
1970-78	1200 (5.0)
1979-80	1000 (4.0)
1981 & Newer	800 (3.5)



NOTE: The Salt Lake County program incorporates California style ASM2525 and ASM5015 standards for 1968 and newer model year vehicles; however, actual cutpoints are unique to this program and current information is not available at this time.

UTAH EMISSION STANDARDS - SALT LAKE COUNTY - 2-SPEED IDLE TEST

Application	HC ppm (CO %)
Light Duty Vehicles (6000 GVWR Or Less)	
1968-69	800 (6.0)
1970-74	700 (5.0)
1975-76	600 (4.0)
1977-79	500 (3.0)
1980	300 (2.0)

1981 & Newer	220 (1.2)
Light Duty Trucks (6000 GVWR Or Less)	
1968-99	800 (6.0)
1970-74	700 (5.0)
1975-76	600 (4.0)
1977-79	500 (3.0)
1980	300 (2.0)
1981 & Newer	220 (1.2)
Light Duty Trucks (6001-8500 GVWR)	
1968-69	1500 (7.0)
1970-78	1200 (5.0)
1979	500 (3.0)
1980	300 (2.0)
1981 & Newer	220 (1.2)
Heavy Duty Trucks (8500 GVWR Or More)	
1968-69	1500 (7.0)
1970-78	1200 (5.0)
1979-80	1000 (4.0)
1981 & Newer	800 (3.5)

UTAH EMISSION STANDARDS - UTAH & WEBER COUNTIES - 2-SPEED IDLE TEST

Application	HC ppm (CO %)
Light Duty Vehicles (6000 GVWR Or Less)	
1968-69	800 (6.0)
1970-74	700 (5.0)
1975-76	600 (4.0)
1977-79	500 (3.0)
1980	300 (2.0)
1981-95	220 (1.2)
Light Duty Trucks (6000 GVWR Or Less)	
1968-99	800 (6.0)
1970-74	700 (5.0)

1975-76	600 (4.0)
1977-79	500 (3.0)
1980	300 (2.0)
1981 & Newer	220 (1.2)
Light Duty Trucks (6001-8500 GVWR)	
1968-69	1500 (7.0)
1970-78	1200 (5.0)
1979	500 (3.0)
1980	300 (2.0)
1981 & Newer	220 (1.2)
Heavy Duty Trucks (8500 GVWR Or More)	
1968-69	1500 (7.0)
1970-78	1200 (5.0)
1979-80	1000 (4.0)
1981 & Newer	800 (3.5)

VIRGINIA

NOTE: The Virginia program incorporates original U.S. EPA recommended start-up ASM2525 and ASM5015 standards for 1981 and newer model year vehicles. Refer to appropriate model year range in appropriate table. See U. S. EPA ASM2525 & ASM5015 START-UP EMISSION STANDARDS .

VIRGINIA EMISSION STANDARDS - 2-SPEED IDLE TEST

Application	HC ppm (CO %)
8500 GVWR Or Less	
1975-90	400 (4.0)
1980	220 (2.0)
1981-89	220 (1.2)
1990-95	125 (1.0)
1996 & Newer	100 (0.75)
8501-10,000 GVWR	
1975-79	400 (4.0)

1980	220 (2.0)
1981-90	220 (1.2)
1991-96	150 (1.0)
1997 & Newer	125 (0.75)

WASHINGTON

WASHINGTON EMISSION STANDARDS - ASM2525 TEST

Application	HC ppm (CO %)
1980 & Earlier (Light-Duty Vehicles)	
1750 GVWR	400 (4.2)
1875 GVWR	380 (4.0)
2000 GVWR	350 (3.8)
2125 GVWR	340 (3.6)
2250 GVWR	320 (3.4)
2375 GVWR	300 (3.2)
2500 GVWR	290 (3.0)
2625 GVWR	270 (2.9)
2750 GVWR	260 (2.8)
2875 GVWR	250 (2.7)
3000 GVWR	240 (2.6)
3125 GVWR	230 (2.5)
3250 GVWR	220 (2.4)
3375 GVWR	220 (2.3)
3500 GVWR	210 (2.2)
3625 GVWR	200 (2.1)
3750 Or Greater GVWR (Passenger Cars Only)	200 (2.1)
3750 Or Greater GVWR (Light Duty Trucks)	300 (2.5)
1981 & Newer (Light-Duty Vehicles)	
1750 GVWR	250 (1.8)
1875 GVWR	240 (1.7)
2000 GVWR	220 (1.6)

2125 GVWR	210 (1.5)
2250 GVWR	200 (1.5)
2375 GVWR	190 (1.4)
2500 GVWR	180 (1.3)
2625 GVWR	180 (1.3)
2750 GVWR	171 (1.2)
2875 GVWR	160 (1.2)
3000 GVWR	160 (1.1)
3125 GVWR	150 (1.1)
3250 GVWR	150 (1.0)
3375 GVWR	150 (1.0)
3500 GVWR	150 (1.0)
3625 GVWR	150 (1.0)
3750 Or Greater GVWR (Passenger Cars Only)	150 (1.0)
3750 Or Greater GVWR (Light Duty Trucks)	300 (2.5)

WASHINGTON EMISSION STANDARDS - 2-SPEED IDLE TEST

Application	Idle/2500 RPM HC ppm (CO %)
Light Duty Vehicles (8500 GVWR Or Less)	
1980 & Earlier	600 (3.0)
1981 & Newer	220 (1.2)
Heavy Duty Trucks (8500 GVWR Or More)	
1981 & Newer	400 (3.0)

WISCONSIN

WISCONSIN EMISSION STANDARDS - IM240 TEST

Application	HC gpm (CO gpm)	NOx gpm
Light Duty Vehicles (6000 GVWR Or Less)		
1968-72	7.0 (120)	7.0
1973-74	7.0 (120)	6.0
1975-76	3.0 (65)	6.0

1977-79	3.0 (65)	4.0
1980	2.0 (60)	4.0
1981-82	2.0 (60)	3.0
1983-86	2.0 (30)	3.0
1987-93	0.8 (15)	2.0
1991-95	0.8 (15)	2.0
1996 & Newer	0.6 (10)	1.5
Light Duty Trucks (6000 GVWR Or Less)		
1968-72	7.0 (120)	7.0
1973-74	7.0 (120)	6.0
1975-78	4.0 (80)	6.0
1979-83	3.4 (70)	4.5
1984-86	3.2 (70)	4.5
1987	1.6 (40)	4.5
1988-95	1.6 (40)	2.5
1996 & Newer (3750 LVW Or Less)	0.6 (10)	1.5
1996 & Newer (3751 LVW Or More)	0.8 (13)	1.8
Light Duty Trucks (6001-8500 GVWR)		
1968-72	7.0 (120)	7.0
1973-74	7.0 (120)	6.0
1975-78	4.0 (80)	6.0
1979-83	3.4 (70)	4.5
1984-86	3.2 (70)	4.5
1988-96	1.6 (40)	3.5
1997 & Newer (5750 ALVW Or Less)	0.8 (13)	1.8
1997 & Newer (5751 ALVW Or More)	0.8 (15)	2.0
Heavy Duty Trucks (8501-10,000 GVWR)		
1968-69	20.0 (200)	15.0
1970-73	10.0 (175)	10.0
1974-78	10.0 (150)	10.0
1979-84	7.5 (100)	8.0
1985-86	5.0 (80)	8.0
1987-90	2.0 (40)	6.0

1991-97	2.0 (40)	5.0
1998 & Newer	2.0 (30)	4.0
Heavy Duty Trucks (10,001 GVWR or More)		
1968-69	24.0 (250)	30.0
1970-73	13.0 (175)	20.0
1974-78	13.0 (150)	20.0
1979-84	11.5 (150)	16.0
1985-86	10.0 (150)	16.0
1987-90	3.5 (70)	11.0
1991-97	3.5 (70)	9.0
1998 & Newer	3.5 (60)	7.0

WISCONSIN EMISSION STANDARDS - 2-SPEED IDLE TEST

Application	HC ppm (CO %)
Passenger Cars	
1968-71	800 (8.0)
1972-74	550 (7.0)
1975-77	450 (5.5)
1978	350 (4.0)
1979	275 (3.0)
1980	230 (2.0)
1981 & Newer	220 (1.2)
Light Duty Trucks (6000 GVWR Or Less)	
1968-71	800 (8.0)
1972-74	700 (7.0)
1975-77	500 (6.0)
1978	450 (5.0)
1979	300 (3.0)
1980	275 (2.5)
1981-84	250 (2.0)
1985 & Newer	220 (1.2)
Light Duty Trucks (6001-8500 GVWR)	

1968-69	1450 (9.0)
1970-71	800 (8.0)
1972-74	700 (7.0)
1975-77	550 (6.5)
1978	450 (5.5)
1979	300 (3.0)
1980	275 (2.5)
1981-84	250 (2.0)
1985 & Newer	220 (1.2)
Heavy Duty Trucks (8501 GVWR Or More)	
1968-71	1500 (9.5)
1972-78	900 (9.0)
1979-84	700 (7.0)
1985 & Newer	300 (3.0)

U. S. EPA ASM2525 & ASM5015 START-UP EMISSION STANDARDS

U.S. EPA ASM EMISSION STANDARDS - 1968-72 LIGHT DUTY VEHICLES

Test Weight	ASM5015		ASM2525	
	HC ppm (CO %)	NOx ppm	HC ppm (CO %)	NOx ppm
1750	1118 (8.02)	4990	1098 (9.90)	4990
1875	1052 (7.56)	4990	1034 (9.90)	4990
2000	992 (7.14)	4990	975 (9.90)	4990
2125	938 (6.75)	4990	921 (9.66)	4990
2250	887 (6.40)	4990	872 (9.14)	4990
2375	841 (6.07)	4990	827 (8.67)	4990
2500	800 (5.78)	4990	786 (8.25)	4990
2625	761 (5.51)	4990	748 (7.85)	4990
2750	726 (5.26)	4990	714 (7.50)	4772
2875	695 (5.03)	4892	683 (7.17)	4556
3000	666 (4.83)	4680	654 (6.87)	4359

3125	639 (4.64)	4488	628 (6.60)	4180
3250	615 (4.47)	4311	604 (6.35)	4016
3375	593 (4.31)	4150	583 (6.13)	3866
3500	573 (4.17)	4002	563 (5.92)	3728
3625	554 (4.04)	3867	544 (5.73)	3602
3750	537 (3.91)	3741	527 (5.55)	3485
3875	521 (3.80)	3625	512 (5.39)	3377
4000	506 (3.70)	3517	497 (5.24)	3276
4125	492 (3.60)	3416	484 (5.09)	3182
4250	479 (3.51)	3321	471 (4.96)	3094
4375	467 (3.42)	3230	459 (4.83)	3010
4500	455 (3.34)	3145	447 (4.71)	2930
4625	444 (3.26)	3063	436 (4.60)	2854
4750	433 (3.18)	2983	425 (4.49)	2780
4875	423 (3.11)	2907	415 (4.38)	2709
5000	412 (3.03)	2833	405 (4.28)	2540
5125	402 (2.97)	2760	395 (4.18)	2573
5250	393 (2.90)	2690	386 (4.08)	2507
5375	383 (2.83)	2621	376 (3.98)	2443
5500	374 (2.77)	2554	367 (3.89)	2381
5625	365 (2.70)	2489	359 (3.80)	2321
5750	357 (2.64)	2426	350 (3.71)	2262
5875	348 (2.59)	2366	342 (3.62)	2206
6000	341 (2.53)	2308	334 (3.54)	2152
6125	333 (2.48)	2254	327 (3.47)	2102
6250	326 (2.43)	2204	320 (3.40)	2056
6375	320 (2.39)	2159	314 (3.34)	2014
6500	315 (2.35)	2119	309 (3.28)	1977
6625	310 (2.32)	2087	304 (3.23)	1947
6750	307 (2.29)	2062	301 (3.20)	1924
6875	305 (2.28)	2046	299 (3.17)	1909
7000	304 (2.27)	2040	298 (3.17)	1904
7125 Or More	304 (2.27)	2045	298 (3.17)	1904

U.S. EPA ASM EMISSION STANDARDS - 1973-74 LIGHT DUTY VEHICLES

Test Weight	ASM5015		ASM2525	
	HC ppm (CO %)	NOx ppm	HC ppm (CO %)	NOx ppm
1750	1118 (8.02)	4990	1098 (9.90)	4980
1875	1052 (7.56)	4990	1034 (9.90)	4906
2000	992 (7.14)	4919	975 (9.90)	4838
2125	938 (6.75)	4853	921 (9.66)	4776
2250	887 (6.40)	4792	872 (9.14)	4720
2375	841 (6.07)	4736	827 (8.67)	4668
2500	800 (5.78)	4685	786 (8.25)	4620
2625	761 (5.51)	4639	748 (7.85)	4577
2750	726 (5.26)	4596	714 (7.50)	4374
2875	695 (5.03)	4484	683 (7.17)	4176
3000	666 (4.83)	4290	654 (6.87)	3996
3125	639 (4.64)	4114	628 (6.60)	3832
3250	615 (4.47)	3952	604 (6.35)	3681
3375	593 (4.31)	3804	583 (6.13)	3544
3500	573 (4.17)	3669	563 (5.92)	3418
3625	554 (4.04)	3544	544 (5.73)	3302
3750	537 (3.91)	3429	527 (5.55)	3195
3875	521 (3.80)	3323	512 (5.39)	3096
4000	506 (3.70)	3224	497 (5.24)	3003
4125	492 (3.60)	3131	484 (5.09)	2917
4250	479 (3.51)	3044	471 (4.96)	2836
4375	467 (3.42)	2961	459 (4.83)	2759
4500	455 (3.34)	2883	447 (4.71)	2686
4625	444 (3.26)	2807	436 (4.60)	2616
4750	433 (3.18)	2735	425 (4.49)	2549
4875	423 (3.11)	2665	415 (4.38)	2483
5000	412 (3.03)	2597	405 (4.28)	2420
5125	402 (2.97)	2530	395 (4.18)	2359

5250	393 (2.90)	2466	386 (4.08)	2298
5375	383 (2.83)	2403	376 (3.98)	2240
5500	374 (2.77)	2341	367 (3.89)	2183
5625	365 (2.70)	2282	359 (3.80)	2127
5750	357 (2.64)	2224	350 (3.71)	2074
5875	348 (2.59)	2168	342 (3.62)	2022
6000	341 (2.53)	2116	334 (3.54)	1973
6125	333 (2.48)	2066	327 (3.47)	1927
6250	326 (2.43)	2020	320 (3.40)	1884
6375	320 (2.39)	1979	314 (3.34)	1846
6500	315 (2.35)	1943	309 (3.28)	1813
6625	310 (2.32)	1913	304 (3.23)	1785
6750	307 (2.29)	1890	301 (3.20)	1764
6875	305 (2.28)	1875	299 (3.17)	1750
7000	304 (2.27)	1870	298 (3.17)	1745
7125 Or More	304 (2.27)	1874	298 (3.17)	1745

U.S. EPA ASM EMISSION STANDARDS - 1975-76 LIGHT DUTY VEHICLES

Test Weight	ASM5015		ASM2525	
	HC ppm (CO %)	NOx ppm	HC ppm (CO %)	NOx ppm
1750	774 (3.92)	4990	761 (5.45)	4980
1875	729 (3.70)	4990	717 (5.14)	4906
2000	688 (3.49)	4919	676 (4.85)	4838
2125	650 (3.31)	4853	638 (4.58)	4776
2250	615 (3.13)	4792	604 (4.34)	4720
2375	583 (2.98)	4736	573 (4.12)	4668
2500	554 (2.83)	4685	544 (3.91)	4620
2625	528 (2.70)	4639	518 (3.73)	4577
2750	503 (2.58)	4596	495 (3.56)	4374
2875	481 (2.47)	4484	473 (3.41)	4176
3000	461 (2.37)	4290	453 (3.27)	3996
3125	443 (2.28)	4114	435 (3.14)	3832

3250	426 (2.20)	3952	419 (3.02)	3681
3375	411 (2.12)	3804	404 (2.91)	3544
3500	397 (2.05)	3669	390 (2.82)	3418
3625	384 (1.99)	3544	377 (2.73)	3302
3750	372 (1.93)	3429	365 (2.64)	3195
3875	361 (1.87)	3323	355 (2.57)	3096
4000	351 (1.82)	3224	345 (2.49)	3003
4125	341 (1.77)	3131	335 (2.43)	2917
4250	332 (1.73)	3044	326 (2.36)	2836
4375	323 (1.68)	2961	318 (2.31)	2759
4500	315 (1.64)	2883	310 (2.25)	2686
4625	308 (1.61)	2807	302 (2.19)	2616
4750	300 (1.57)	2735	295 (2.14)	2549
4875	293 (1.53)	2665	288 (2.09)	2483
5000	286 (1.50)	2597	281 (2.04)	2420
5125	279 (1.46)	2530	274 (2.00)	2359
5250	272 (1.43)	2466	267 (1.95)	2298
5375	266 (1.40)	2403	261 (1.90)	2240
5500	259 (1.37)	2341	255 (1.86)	2183
5625	253 (1.34)	2282	248 (1.82)	2127
5750	247 (1.31)	2224	243 (1.78)	2074
5875	241 (1.28)	2168	237 (1.74)	2022
6000	236 (1.25)	2116	232 (1.70)	1973
6125	231 (1.23)	2066	227 (1.66)	1927
6250	226 (1.20)	2020	222 (1.63)	1884
6375	222 (1.18)	1979	218 (1.60)	1846
6500	218 (1.16)	1943	214 (1.57)	1813
6625	215 (1.15)	1913	211 (1.55)	1785
6750	213 (1.14)	1890	209 (1.54)	1764
6875	211 (1.13)	1875	207 (1.52)	1750
7000	211 (1.12)	1870	207 (1.52)	1745
7125 Or More	211 (1.12)	1874	206 (1.52)	1745

U.S. EPA ASM EMISSION STANDARDS - 1977-79 LIGHT DUTY VEHICLES

Test Weight	ASM5015		ASM2525	
	HC ppm (CO %)	NOx ppm	HC ppm (CO %)	NOx ppm
1750	774 (3.92)	4990	761 (5.45)	4950
1875	729 (3.70)	4990	717 (5.14)	4655
2000	688 (3.49)	4707	676 (4.85)	4384
2125	650 (3.31)	4441	638 (4.58)	4136
2250	615 (3.13)	4197	604 (4.34)	3909
2375	583 (2.98)	3974	573 (4.12)	3701
2500	554 (2.83)	3771	544 (3.91)	3512
2625	528 (2.70)	3585	518 (3.73)	3339
2750	503 (2.58)	3416	495 (3.56)	3181
2875	481 (2.47)	3261	473 (3.41)	3037
3000	461 (2.37)	3120	453 (3.27)	2906
3125	443 (2.28)	2992	435 (3.14)	2787
3250	426 (2.20)	2874	419 (3.02)	2677
3375	411 (2.12)	2767	404 (2.91)	2577
3500	397 (2.05)	2668	390 (2.82)	2486
3625	384 (1.99)	2578	377 (2.73)	2401
3750	372 (1.93)	2494	365 (2.64)	2323
3875	361 (1.87)	2417	355 (2.57)	2251
4000	351 (1.82)	2345	345 (2.49)	2184
4125	341 (1.77)	2277	335 (2.43)	2122
4250	332 (1.73)	2214	326 (2.36)	2063
4375	323 (1.68)	2154	318 (2.31)	2007
4500	315 (1.64)	2096	310 (2.25)	1953
4625	308 (1.61)	2042	302 (2.19)	1903
4750	300 (1.57)	1989	295 (2.14)	1854
4875	293 (1.53)	1938	288 (2.09)	1806
5000	286 (1.50)	1889	281 (2.04)	1760
5125	279 (1.46)	1840	274 (2.00)	1715
5250	272 (1.43)	1793	267 (1.95)	1672

5375	266 (1.40)	1747	261 (1.90)	1629
5500	259 (1.37)	1703	255 (1.86)	1587
5625	253 (1.34)	1659	248 (1.82)	1547
5750	247 (1.31)	1617	243 (1.78)	1508
5875	241 (1.28)	1577	237 (1.74)	1471
6000	236 (1.25)	1539	232 (1.70)	1435
6125	231 (1.23)	1503	227 (1.66)	1401
6250	226 (1.20)	1469	222 (1.63)	1371
6375	222 (1.18)	1439	218 (1.60)	1343
6500	218 (1.16)	1413	214 (1.57)	1318
6625	215 (1.15)	1391	211 (1.55)	1298
6750	213 (1.14)	1374	209 (1.54)	1283
6875	211 (1.13)	1364	207 (1.52)	1273
7000 Or More	211 (1.12)	1360	207 (1.52)	1269

U.S. EPA ASM EMISSION STANDARDS - 1980 LIGHT DUTY VEHICLES

Test Weight	ASM5015		ASM2525	
	HC ppm (CO %)	NOx ppm	HC ppm (CO %)	NOx ppm
1750	291 (2.78)	4990	282 (3.64)	4950
1875	275 (2.63)	4990	266 (3.43)	4655
2000	260 (2.48)	4707	252 (3.24)	4384
2125	246 (2.35)	4441	239 (3.06)	4136
2250	234 (2.23)	4197	227 (2.90)	3909
2375	223 (2.12)	3974	216 (2.76)	3701
2500	212 (2.02)	3771	206 (2.62)	3512
2625	203 (1.92)	3585	197 (2.50)	3339
2750	194 (1.84)	3416	189 (2.39)	3181
2875	187 (1.76)	3261	181 (2.29)	3037
3000	180 (1.69)	3120	174 (2.19)	2906
3125	173 (1.63)	2992	168 (2.11)	2787
3250	167 (1.57)	2874	162 (2.03)	2677
3375	162 (1.52)	2767	157 (1.96)	2577

3500	157 (1.47)	2668	152 (1.89)	2486
3625	152 (1.42)	2578	148 (1.84)	2401
3750	148 (1.38)	2492	144 (1.78)	2323
3875	144 (1.34)	2417	140 (1.73)	2251
4000	140 (1.31)	2345	137 (1.68)	2184
4125	137 (1.27)	2277	133 (1.64)	2122
4250	134 (1.24)	2214	130 (1.60)	2063
4375	131 (1.21)	2154	127 (1.56)	2007
4500	128 (1.18)	2096	124 (1.52)	1953
4625	125 (1.15)	2042	122 (1.48)	1903
4750	122 (1.13)	1989	119 (1.45)	1854
4875	120 (1.10)	1938	117 (1.42)	1806
5000	117 (1.08)	1889	114 (1.38)	1760
5125	115 (1.05)	1840	112 (1.35)	1715
5250	112 (1.03)	1793	110 (1.32)	1672
5375	110 (1.01)	1747	107 (1.29)	1629
5500	108 (0.99)	1703	105 (1.26)	1587
5625	106 (0.97)	1659	103 (1.24)	1547
5750	104 (0.94)	1617	101 (1.21)	1508
5875	102 (0.92)	1577	99 (1.18)	1471
6000	100 (0.91)	1539	97 (1.16)	1435
6125	98 (0.89)	1503	95 (1.13)	1401
6250	96 (0.87)	1469	94 (1.11)	1371
6375	95 (0.86)	1439	92 (1.09)	1343
6500	93 (0.84)	1413	91 (1.08)	1318
6625	92 (0.83)	1391	90 (1.06)	1298
6750	91 (0.82)	1374	89 (1.05)	1283
6875	91 (0.82)	1364	89 (1.04)	1273
7000	91 (0.82)	1360	88 (1.04)	1269
7125 Or More	90 (0.81)	1360	88 (1.04)	1269

U.S. EPA ASM EMISSION STANDARDS - 1981-82 LIGHT DUTY VEHICLES

Test Weight	ASM5015		ASM2525	
	HC ppm (CO %)	NOx ppm	HC ppm (CO %)	NOx ppm
1750	291 (2.78)	2272	282 (3.64)	2114
1875	275 (2.63)	2181	266 (3.43)	1991
2000	260 (2.48)	2058	252 (3.24)	1877
2125	246 (2.35)	1944	239 (3.06)	1774
2250	234 (2.23)	1839	227 (2.90)	1678
2375	223 (2.12)	1744	216 (2.76)	1592
2500	212 (2.02)	1657	206 (2.62)	1512
2625	203 (1.92)	1577	197 (2.50)	1440
2750	194 (1.84)	1504	189 (2.39)	1374
2875	187 (1.76)	1438	181 (2.29)	1313
3000	180 (1.69)	1378	174 (2.19)	1258
3125	173 (1.63)	1323	168 (2.11)	1208
3250	167 (1.57)	1273	162 (2.03)	1163
3375	162 (1.52)	1227	157 (1.96)	1121
3500	157 (1.47)	1184	152 (1.89)	1082
3625	152 (1.42)	1146	148 (1.84)	1047
3750	148 (1.38)	1110	144 (1.78)	1014
3875	144 (1.34)	1077	140 (1.73)	984
4000	140 (1.31)	1046	137 (1.68)	956
4125	137 (1.27)	1017	133 (1.64)	930
4250	134 (1.24)	990	130 (1.60)	905
4375	131 (1.21)	964	127 (1.56)	882
4500	128 (1.18)	939	124 (1.52)	859
4625	125 (1.15)	916	122 (1.48)	838
4750	122 (1.13)	893	119 (1.45)	818
4875	120 (1.10)	872	117 (1.42)	798
5000	117 (1.08)	850	114 (1.38)	778
5125	115 (1.05)	830	112 (1.35)	760
5250	112 (1.03)	810	110 (1.32)	741
5375	110 (1.01)	790	107 (1.29)	723

5500	108 (0.99)	771	105 (1.26)	706
5625	106 (0.97)	752	103 (1.24)	689
5750	104 (0.94)	734	101 (1.21)	673
5875	102 (0.92)	717	99 (1.18)	657
6000	100 (0.91)	701	97 (1.16)	642
6125	98 (0.89)	685	95 (1.13)	628
6250	96 (0.87)	671	94 (1.11)	615
6375	95 (0.86)	658	92 (1.09)	604
6500	93 (0.84)	647	91 (1.08)	593
6625	92 (0.83)	638	90 (1.06)	585
6750	91 (0.82)	631	89 (1.05)	578
6875	91 (0.82)	626	89 (1.04)	574
7000	91 (0.82)	624	88 (1.04)	573
7125 Or More	90 (0.81)	625	88 (1.04)	573

U.S. EPA ASM EMISSION STANDARDS - 1983-90 LIGHT DUTY VEHICLES

Test Weight	ASM5015		ASM2525	
	HC ppm (CO %)	NOx ppm	HC ppm (CO %)	NOx ppm
1750	291 (1.64)	2272	282 (1.83)	2114
1875	275 (1.55)	2181	266 (1.72)	1991
2000	260 (1.47)	2058	252 (1.63)	1877
2125	246 (1.39)	1944	239 (1.54)	1774
2250	234 (1.31)	1839	227 (1.47)	1678
2375	223 (1.26)	1744	216 (1.39)	1592
2500	212 (1.20)	1657	206 (1.33)	1512
2625	203 (1.15)	1577	197 (1.27)	1440
2750	194 (1.10)	1504	189 (1.21)	1374
2875	187 (1.05)	1438	181 (1.16)	1313
3000	180 (1.01)	1378	174 (1.12)	1258
3125	173 (0.98)	1323	168 (1.08)	1208
3250	167 (0.94)	1273	162 (1.04)	1163
3375	162 (0.91)	1227	157 (1.00)	1121

3500	157 (0.88)	1184	152 (0.97)	1082
3625	152 (0.86)	1146	148 (0.94)	1047
3750	148 (0.83)	1110	144 (0.92)	1014
3875	144 (0.81)	1077	140 (0.89)	984
4000	140 (0.79)	1046	137 (0.87)	956
4125	137 (0.77)	1017	133 (0.85)	930
4250	134 (0.75)	990	130 (.83)	905
4375	131 (0.74)	964	127 (0.81)	882
4500	128 (0.72)	939	124 (0.79)	859
4625	125 (0.70)	916	122 (0.77)	838
4750	122 (0.69)	893	119 (0.76)	818
4875	120 (0.67)	872	117 (0.74)	798
5000	117 (0.66)	850	114 (0.73)	778
5125	115 (0.65)	830	112 (0.71)	760
5250	112 (0.63)	810	110 (0.70)	741
5375	110 (0.62)	790	107 (0.68)	723
5500	108 (0.61)	771	105 (0.67)	706
5625	106 (0.59)	752	103 (0.65)	689
5750	104 (0.58)	734	101 (0.64)	673
5875	102 (0.57)	717	99 (0.63)	657
6000	100 (0.56)	701	97 (0.62)	642
6125	98 (0.55)	685	95 (0.61)	628
6250	96 (0.54)	671	94 (0.60)	615
6375	95 (0.53)	658	92 (0.59)	604
6500	93 (0.52)	647	91 (0.58)	593
6625	92 (0.52)	638	90 (0.57)	585
6750	91 (0.51)	631	89 (0.57)	578
6875	91 (0.51)	626	89 (0.56)	574
7000	91 (0.51)	624	88 (0.56)	573
7125	90 (0.51)	625	88 (0.56)	573
7250 Or More	90 (0.50)	625	88 (0.56)	573

U.S. EPA ASM EMISSION STANDARDS - 1991-95 LIGHT DUTY VEHICLES

Test Weight	ASM5015		ASM2525	
	HC ppm (CO %)	NOx ppm	HC ppm (CO %)	NOx ppm
1750	224 (1.26)	1819	216 (1.22)	1642
1875	212 (1.19)	1713	205 (1.16)	1547
2000	201 (1.13)	1616	194 (1.09)	1460
2125	191 (1.07)	1527	184 (1.04)	1380
2250	182 (1.02)	1446	175 (0.99)	1307
2375	173 (0.97)	1372	167 (0.94)	1240
2500	166 (0.93)	1304	160 (0.90)	1179
2625	159 (0.89)	1242	153 (0.86)	1123
2750	152 (0.85)	1186	147 (0.82)	1072
2875	146 (0.82)	1134	141 (0.79)	1026
3000	141 (0.79)	1088	136 (0.76)	984
3125	136 (0.76)	1045	132 (0.73)	945
3250	132 (0.73)	1006	127 (0.71)	910
3375	128 (0.71)	970	123 (0.69)	878
3500	124 (0.69)	937	120 (0.67)	848
3625	120 (0.67)	907	117 (0.65)	821
3750	117 (0.65)	879	114 (0.63)	796
3875	114 (0.63)	853	111 (0.61)	773
4000	112 (0.62)	829	108 (0.60)	751
4125	109 (0.60)	807	106 (0.58)	731
4250	107 (0.59)	786	103 (0.57)	712
4375	104 (0.58)	766	101 (0.56)	694
4500	102 (0.57)	747	99 (0.55)	677
4625	100 (0.55)	728	97 (0.54)	661
4750	98 (0.54)	711	95 (0.53)	645
4875	96 (0.53)	694	93 (0.52)	630
5000	94 (0.52)	677	92 (0.51)	615
5125	93 (0.51)	661	90 (0.50)	600
5250	91 (0.50)	646	88 (0.49)	586
5375	89 (0.49)	631	86 (0.48)	573

5500	87 (0.48)	616	85 (0.47)	559
5625	86 (0.47)	601	83 (0.46)	546
5750	84 (0.46)	587	82 (0.45)	534
5875	83 (0.45)	574	80 (0.44)	522
6000	81 (0.44)	561	79 (0.44)	510
6125	80 (0.44)	549	78 (0.43)	499
6250	79 (0.43)	538	76 (0.42)	489
6375	77 (0.42)	528	75 (0.42)	480
6500	76 (0.42)	519	74 (0.41)	473
6625	76 (0.41)	512	74 (0.41)	466
6750	75 (0.41)	507	73 (0.41)	461
6875	75 (0.40)	503	73 (0.40)	458
7000 Or More	74 (0.40)	502	72 (0.40)	457

U.S. EPA ASM EMISSION STANDARDS - 1994 & NEWER + TIER 1 LIGHT DUTY VEHICLES

Test Weight	ASM5015		ASM2525	
	HC ppm (CO %)	NOx ppm	HC ppm (CO %)	NOx ppm
1750	142 (0.80)	1212	136 (0.77)	1095
1875	134 (0.75)	1142	129 (0.73)	1031
2000	127 (0.71)	1077	123 (0.69)	973
2125	121 (0.68)	1018	116 (0.66)	920
2250	115 (0.64)	964	111 (0.62)	871
2375	109 (0.61)	915	106 (0.59)	827
2500	105 (0.59)	869	101 (0.57)	786
2625	100 (0.56)	828	97 (0.54)	749
2750	96 (0.54)	791	93 (0.52)	715
2875	92 (0.52)	756	89 (0.50)	684
3000	89 (0.50)	725	86 (0.48)	656
3125	86 (0.48)	696	83 (0.46)	630
3250	83 (0.46)	670	80 (0.45)	607
3375	81 (0.45)	647	78 (0.43)	585
3500	78 (0.44)	625	76 (0.42)	566

3625	76 (0.42)	605	74 (0.41)	547
3750	74 (0.41)	586	72 (0.40)	531
3875	72 (0.40)	569	70 (0.39)	515
4000	71 (0.39)	553	68 (0.38)	501
4125	69 (0.38)	538	67 (0.37)	487
4250	67 (0.37)	524	65 (0.36)	475
4375	66 (0.36)	510	64 (0.35)	463
4500	65 (0.36)	498	63 (0.35)	440
4625	63 (0.35)	486	61 (0.34)	440
4750	62 (0.34)	474	60 (0.33)	430
4875	61 (0.34)	463	59 (0.33)	420
5000	60 (0.33)	452	58 (0.32)	410
5125	58 (0.32)	441	57 (0.31)	400
5250	57 (0.32)	431	56 (0.31)	391
5375	56 (0.31)	420	55 (0.30)	382
5500	55 (0.30)	410	54 (0.30)	373
5625	54 (0.30)	401	53 (0.29)	364
5750	53 (0.29)	391	52 (0.29)	356
5875	52 (0.29)	383	51 (0.28)	348
6000	51 (0.28)	374	50 (0.28)	340
6125	50 (0.28)	366	49 (0.27)	333
6250	50 (0.27)	359	48 (0.27)	326
6375	49 (0.27)	352	48 (0.26)	320
6500	48 (0.26)	346	47 (0.26)	315
6625	48 (0.26)	341	46 (0.26)	311
6750	47 (0.26)	338	46 (0.26)	307
6875	47 (0.26)	335	46 (0.25)	305
7000 Or More	47 (0.25)	335	46 (0.25)	305

U.S. EPA ASM EMISSION STANDARDS - 1968-72 LIGHT DUTY TRUCKS (6000 GVWR OR LESS)

Test Weight	ASM5015		ASM2525	
	HC ppm (CO %)	NOx ppm	HC ppm (CO %)	NOx ppm

1750	1118 (8.02)	4990	1098 (9.90)	4990
1875	1052 (7.56)	4990	1034 (9.90)	4990
2000	992 (7.14)	4990	975 (9.90)	4990
2125	938 (6.75)	4990	921 (9.66)	4990
2250	887 (6.40)	4990	872 (9.14)	4990
2375	841 (6.07)	4990	827 (8.67)	4990
2500	800 (5.78)	4990	786 (8.25)	4990
2625	761 (5.51)	4990	748 (7.85)	4990
2750	726 (5.26)	4990	714 (7.50)	4772
2875	695 (5.03)	4892	683 (7.17)	4556
3000	666 (4.83)	4680	654 (6.87)	4359
3125	639 (4.64)	4488	628 (6.60)	4180
3250	615 (4.47)	4311	604 (6.35)	4016
3375	593 (4.31)	4150	583 (6.13)	3866
3500	573 (4.17)	4002	563 (5.92)	3728
3625	554 (4.04)	3867	544 (5.73)	3602
3750	537 (3.91)	3741	527 (5.55)	3485
3875	521 (3.80)	3625	512 (5.39)	3377
4000	506 (3.70)	3517	497 (5.24)	3276
4125	492 (3.60)	3416	484 (5.09)	3182
4250	479 (3.51)	3321	471 (4.96)	3094
4375	467 (3.42)	3230	459 (4.83)	3010
4500	455 (3.34)	3145	447 (4.71)	2930
4625	444 (3.26)	3063	436 (4.60)	2854
4750	433 (3.18)	2983	425 (4.49)	2780
4875	423 (3.11)	2907	415 (4.38)	2709
5000	412 (3.03)	2833	405 (4.28)	2540
5125	402 (2.97)	2760	395 (4.18)	2573
5250	393 (2.90)	2690	386 (4.08)	2507
5375	383 (2.83)	2621	376 (3.98)	2443
5500	374 (2.77)	2554	367 (3.89)	2381
5625	365 (2.70)	2489	359 (3.80)	2321
5750	357 (2.64)	2426	350 (3.71)	2262

5875	348 (2.59)	2366	342 (3.62)	2206
6000	341 (2.53)	2308	334 (3.54)	2152
6125	333 (2.48)	2254	327 (3.47)	2102
6250	326 (2.43)	2204	320 (3.40)	2056
6375	320 (2.39)	2159	314 (3.34)	2014
6500	315 (2.35)	2119	309 (3.28)	1977
6625	310 (2.32)	2087	304 (3.23)	1947
6750	307 (2.29)	2062	301 (3.20)	1924
6875	305 (2.28)	2046	299 (3.17)	1909
7000	304 (2.27)	2040	298 (3.17)	1904
7125 Or More	304 (2.27)	2045	298 (3.17)	1904

U.S. EPA ASM EMISSION STANDARDS - 1973-74 LIGHT DUTY TRUCKS (6000 GVWR OR LESS)

Test Weight	ASM5015		ASM2525	
	HC ppm (CO %)	NOx ppm	HC ppm (CO %)	NOx ppm
1750	1118 (8.02)	4990	1098 (9.90)	4980
1875	1052 (7.56)	4990	1034 (9.90)	4906
2000	992 (7.14)	4919	975 (9.90)	4838
2125	938 (6.75)	4853	921 (9.66)	4776
2250	887 (6.40)	4792	872 (9.14)	4720
2375	841 (6.07)	4736	827 (8.67)	4668
2500	800 (5.78)	4685	786 (8.25)	4620
2625	761 (5.51)	4639	748 (7.85)	4577
2750	726 (5.26)	4596	714 (7.50)	4374
2875	695 (5.03)	4484	683 (7.17)	4176
3000	666 (4.83)	4290	654 (6.87)	3996
3125	639 (4.64)	4114	628 (6.60)	3832
3250	615 (4.47)	3952	604 (6.35)	3681
3375	593 (4.31)	3804	583 (6.13)	3544
3500	573 (4.17)	3669	563 (5.92)	3418
3625	554 (4.04)	3544	544 (5.73)	3302
3750	537 (3.91)	3429	527 (5.55)	3195

3875	521 (3.80)	3323	512 (5.39)	3096
4000	506 (3.70)	3224	497 (5.24)	3003
4125	492 (3.60)	3131	484 (5.09)	2917
4250	479 (3.51)	3044	471 (4.96)	2836
4375	467 (3.42)	2961	459 (4.83)	2759
4500	455 (3.34)	2883	447 (4.71)	2686
4625	444 (3.26)	2807	436 (4.60)	2616
4750	433 (3.18)	2735	425 (4.49)	2549
4875	423 (3.11)	2665	415 (4.38)	2483
5000	412 (3.03)	2597	405 (4.28)	2420
5125	402 (2.97)	2530	395 (4.18)	2359
5250	393 (2.90)	2466	386 (4.08)	2298
5375	383 (2.83)	2403	376 (3.98)	2240
5500	374 (2.77)	2341	367 (3.89)	2183
5625	365 (2.70)	2282	359 (3.80)	2127
5750	357 (2.64)	2224	350 (3.71)	2074
5875	348 (2.59)	2168	342 (3.62)	2022
6000	341 (2.53)	2116	334 (3.54)	1973
6125	333 (2.48)	2066	327 (3.47)	1927
6250	326 (2.43)	2020	320 (3.40)	1884
6375	320 (2.39)	1979	314 (3.34)	1846
6500	315 (2.35)	1943	309 (3.28)	1813
6625	310 (2.32)	1913	304 (3.23)	1785
6750	307 (2.29)	1890	301 (3.20)	1764
6875	305 (2.28)	1875	299 (3.17)	1750
7000	304 (2.27)	1870	298 (3.17)	1745
7125 Or More	304 (2.27)	1874	298 (3.17)	1745

U.S. EPA ASM EMISSION STANDARDS - 1975-78 LIGHT DUTY TRUCKS (6000 GVWR OR LESS)

Test Weight	ASM5015		ASM2525	
	HC ppm (CO %)	NOx ppm	HC ppm (CO %)	NOx ppm
1750	843 (5.07)	4990	828 (7.26)	4980

1875	794 (4.78)	4990	780 (6.84)	4906
2000	749 (4.51)	4919	736 (6.45)	4838
2125	707 (4.26)	4853	695 (6.10)	4776
2250	669 (4.04)	4792	658 (5.78)	4720
2375	635 (3.83)	4736	624 (5.48)	4668
2500	603 (3.65)	4685	593 (5.21)	4620
2625	574 (3.48)	4639	564 (4.96)	4577
2750	548 (3.32)	4596	539 (4.73)	4374
2875	524 (3.18)	4484	515 (4.53)	4176
3000	502 (3.05)	4290	493 (4.34)	3996
3125	482 (2.93)	4114	474 (4.17)	3832
3250	464 (2.82)	3952	456 (4.01)	3681
3375	447 (2.72)	3804	440 (3.87)	3544
3500	432 (2.63)	3669	424 (3.74)	3418
3625	418 (2.55)	3544	411 (3.62)	3302
3750	405 (2.47)	3429	398 (3.51)	3195
3875	393 (2.40)	3323	386 (3.40)	3096
4000	382 (2.33)	3224	375 (3.31)	3003
4125	371 (2.27)	3131	365 (3.22)	2917
4250	361 (2.21)	3044	355 (3.13)	2836
4375	352 (2.16)	2961	346 (3.05)	2759
4500	343 (2.11)	2883	337 (2.98)	2686
4625	335 (2.06)	2807	329 (2.90)	2616
4750	327 (2.01)	2735	321 (2.83)	2549
4875	319 (1.96)	2665	313 (2.77)	2483
5000	311 (1.92)	2597	305 (2.70)	2420
5125	304 (1.87)	2530	298 (2.64)	2359
5250	296 (1.83)	2466	291 (2.58)	2298
5375	289 (1.79)	2403	284 (2.51)	2240
5500	282 (1.75)	2341	277 (2.46)	2183
5625	276 (1.71)	2282	271 (2.40)	2127
5750	269 (1.67)	2224	264 (2.34)	2074
5875	263 (1.63)	2168	258 (2.29)	2022

6000	257 (1.60)	2116	252 (2.24)	1973
6125	251 (1.57)	2066	247 (2.19)	1927
6250	246 (1.54)	2020	242 (2.15)	1884
6375	242 (1.51)	1979	237 (2.11)	1846
6500	238 (1.48)	1943	233 (2.07)	1813
6625	234 (1.46)	1913	230 (2.04)	1785
6750	232 (1.45)	1890	227 (2.02)	1764
6875	230 (1.44)	1875	225 (2.00)	1750
7000	229 (1.43)	1870	225 (2.00)	1745
7125 Or More	229 (1.43)	1874	225 (2.00)	1745

U.S. EPA ASM EMISSION STANDARDS - 1979-83 LIGHT DUTY TRUCKS (6000 GVWR OR LESS)

Test Weight	ASM5015		ASM2525	
	HC ppm (CO %)	NOx ppm	HC ppm (CO %)	NOx ppm
1750	774 (4.31)	4990	761 (6.06)	4960
1875	729 (4.06)	4990	717 (5.70)	4738
2000	688 (3.83)	4778	676 (5.38)	4535
2125	650 (3.63)	4578	638 (5.09)	4349
2250	615 (3.44)	4395	604 (4.82)	4179
2375	583 (3.26)	4228	573 (4.57)	4024
2500	554 (3.10)	4076	544 (4.35)	3881
2625	528 (2.96)	3936	518 (4.14)	3752
2750	503 (2.83)	3809	495 (3.95)	3579
2875	481 (2.71)	3669	473 (3.78)	3417
3000	461 (2.60)	3510	453 (3.62)	3270
3125	443 (2.50)	3366	435 (3.48)	3135
3250	426 (2.40)	3234	419 (3.35)	3012
3375	411 (2.32)	3113	404 (3.23)	2899
3500	397 (2.24)	3002	390 (3.12)	2796
3625	384 (2.17)	2900	377 (3.02)	2701
3750	372 (2.11)	2806	365 (2.93)	2614
3875	361 (2.05)	2719	355 (2.58)	2533

4000	351 (1.99)	2638	345 (2.77)	2457
4125	341 (1.94)	2562	335 (2.69)	2387
4250	332 (1.89)	2490	326 (2.62)	2320
4375	323 (1.84)	2423	318 (2.55)	2258
4500	315 (1.80)	2359	310 (2.49)	2198
4625	308 (1.76)	2297	302 (2.43)	2140
4750	300 (1.72)	2238	295 (2.37)	2085
4875	293 (1.68)	2180	288 (2.32)	2032
5000	286 (1.64)	2125	281 (2.26)	1980
5125	279 (1.60)	2070	274 (2.21)	1930
5250	272 (1.56)	2017	267 (2.16)	1881
5375	26 (1.53)	1966	261 (2.11)	1833
5500	259 (1.49)	1916	255 (2.06)	1786
5625	253 (1.46)	1867	248 (2.01)	1740
5750	247 (1.43)	1820	243 (1.96)	1697
5875	241 (1.40)	1774	237 (1.92)	1654
6000	236 (1.37)	1731	232 (1.88)	1614
6125	231 (1.34)	1690	227 (1.84)	1577
6250	226 (1.31)	1653	222 (1.80)	1542
6375	222 (1.29)	1619	218 (1.77)	1510
6500	218 (1.27)	1590	214 (1.74)	1483
6625	215 (1.25)	1565	211 (1.72)	1460
6750	213 (1.24)	1546	209 (1.70)	1443
6875	211 (1.23)	1534	207 (1.68)	1432
7000	211 (1.23)	1530	207 (1.68)	1428
7125 Or More	211 (1.22)	1531	206 (1.68)	1428

U.S. EPA ASM EMISSION STANDARDS - 1984-87 LIGHT DUTY TRUCKS (6000 GVWR OR LESS)

Test Weight	ASM5015		ASM2525	
	HC ppm (CO %)	NOx ppm	HC ppm (CO %)	NOx ppm
1750	390 (3.54)	4990	381 (4.85)	4960
1875	368 (3.34)	4990	359 (4.57)	4738

2000	348 (3.16)	4778	339 (4.31)	4535
2125	329 (2.99)	4578	321 (4.08)	4349
2250	312 (2.83)	4395	305 (3.86)	4179
2375	297 (2.69)	4228	290 (3.66)	4024
2500	283 (2.56)	4076	276 (3.48)	3881
2625	270 (2.44)	3936	263 (3.32)	3752
2750	258 (2.33)	3809	252 (3.17)	3579
2875	247 (2.23)	3669	241 (3.03)	3417
3000	237 (2.14)	3510	232 (2.91)	3270
3125	228 (2.06)	3366	223 (2.79)	3135
3250	220 (1.99)	3234	215 (2.69)	3012
3375	213 (1.92)	3113	208 (2.60)	2899
3500	206 (1.86)	3002	201 (2.51)	2796
3625	200 (1.80)	2900	195 (2.43)	2701
3750	194 (1.74)	2806	189 (2.36)	2614
3875	188 (1.69)	2719	184 (2.29)	2533
4000	183 (1.65)	2638	179 (2.22)	2457
4125	179 (1.61)	2562	175 (2.16)	2387
4250	174 (1.56)	2490	170 (2.11)	2320
4375	170 (1.53)	2423	166 (2.06)	2258
4500	166 (1.49)	2359	162 (2.01)	2198
4625	162 (1.46)	2297	159 (1.96)	2140
4750	159 (1.42)	2238	155 (1.91)	2085
4875	155 (1.39)	2180	152 (1.87)	2032
5000	152 (1.36)	2125	148 (1.82)	1980
5125	148 (1.33)	2070	145 (1.78)	1930
5250	145 (1.30)	2017	142 (1.74)	1881
5375	142 (1.27)	1966	139 (1.70)	1833
5500	139 (1.24)	1916	136 (1.66)	1786
5625	136 (1.12)	1867	133 (1.62)	1740
5750	133 (1.19)	1820	130 (1.59)	1697
5875	130 (1.16)	1774	127 (1.55)	1654
6000	127 (1.14)	1731	124 (1.52)	1614

6125	125 (1.11)	1690	122 (1.49)	1577
6250	123 (1.09)	1653	120 (1.46)	1542
6375	120 (1.07)	1619	118 (1.43)	1510
6500	119 (1.06)	1590	116 (1.41)	1483
6625	117 (1.04)	1565	114 (1.39)	1460
6750	116 (1.03)	1546	113 (1.37)	1443
6875	115 (1.02)	1534	113 (1.36)	1432
7000	115 (1.02)	1530	112 (1.36)	1428
7125 Or More	115 (1.02)	1531	112 (1.36)	1428

U.S. EPA ASM EMISSION STANDARDS - 1988-90 LIGHT DUTY TRUCKS (6000 GVWR OR LESS)

Test Weight	ASM5015		ASM2525	
	HC ppm (CO %)	NOx ppm	HC ppm (CO %)	NOx ppm
1750	390 (3.54)	2725	381 (4.85)	2587
1875	368 (3.34)	2649	359 (4.57)	2435
2000	348 (3.16)	2499	339 (4.31)	2295
2125	329 (2.99)	2360	321 (4.08)	2167
2250	312 (2.83)	2232	305 (3.86)	2050
2375	297 (2.69)	2115	290 (3.66)	1943
2500	283 (2.56)	2009	276 (3.48)	1845
2625	270 (2.44)	1912	263 (3.32)	1756
2750	258 (2.33)	1823	252 (3.17)	1675
2875	247 (2.23)	1742	241 (3.03)	1601
3000	237 (2.14)	1668	232 (2.91)	1533
3125	228 (2.06)	1601	223 (2.79)	1471
3250	220 (1.99)	1539	215 (2.69)	1415
3375	213 (1.92)	1483	208 (2.60)	1363
3500	206 (1.86)	1432	201 (2.51)	1316
3625	200 (1.80)	1384	195 (2.43)	1273
3750	194 (1.74)	1340	189 (2.36)	1233
3875	188 (1.69)	1300	184 (2.29)	1195
4000	183 (1.65)	1262	179 (2.22)	1161

4125	179 (1.61)	1227	175 (2.16)	1126
4250	174 (1.56)	1194	170 (2.11)	1098
4375	170 (1.53)	1162	166 (2.06)	1069
4500	166 (1.49)	1132	162 (2.01)	1042
4625	162 (1.46)	1104	159 (1.96)	1015
4750	159 (1.42)	1076	155 (1.91)	990
4875	155 (1.39)	1049	152 (1.87)	966
5000	152 (1.36)	1023	148 (1.82)	942
5125	148 (1.33)	998	145 (1.78)	919
5250	145 (1.30)	974	142 (1.74)	896
5375	142 (1.27)	950	139 (1.70)	874
5500	139 (1.24)	926	136 (1.66)	853
5625	136 (1.12)	904	133 (1.62)	832
5750	133 (1.19)	882	130 (1.59)	812
5875	130 (1.16)	860	127 (1.55)	793
6000	127 (1.14)	840	124 (1.52)	774
6125	125 (1.11)	822	122 (1.49)	757
6250	123 (1.09)	804	120 (1.46)	741
6375	120 (1.07)	788	118 (1.43)	727
6500	119 (1.06)	775	116 (1.41)	714
6625	117 (1.04)	763	114 (1.39)	704
6750	116 (1.03)	755	113 (1.37)	696
6875	115 (1.02)	749	113 (1.36)	691
7000 Or More	115 (1.02)	747	112 (1.36)	689

U.S. EPA ASM EMISSION STANDARDS - 1991-95 LIGHT DUTY TRUCKS (6000 GVWR OR LESS)

Test Weight	ASM5015		ASM2525	
	HC ppm (CO %)	NOx ppm	HC ppm (CO %)	NOx ppm
1750	324 (2.78)	2272	315 (3.64)	2114
1875	306 (2.63)	2181	297 (3.43)	1991
2000	289 (2.48)	2058	281 (3.24)	1877
2125	274 (2.35)	1944	267 (3.06)	1774

2250	260 (2.23)	1839	253 (2.90)	1678
2375	247 (2.12)	1744	241 (2.76)	1592
2500	236 (2.02)	1657	230 (2.62)	1512
2625	225 (1.92)	1577	219 (2.50)	1440
2750	216 (1.84)	1504	210 (2.39)	1374
2875	207 (1.76)	1438	210 (2.29)	1313
3000	199 (1.69)	1378	194 (2.19)	1258
3125	191 (1.63)	1323	186 (2.11)	1208
3250	185 (1.57)	1273	180 (2.03)	1163
3375	179 (1.52)	1227	174 (1.96)	1121
3500	173 (1.47)	1184	169 (1.89)	1082
3625	168 (1.42)	1146	164 (1.84)	1047
3750	163 (1.38)	1110	159 (1.78)	1014
3875	159 (1.34)	1077	155 (1.73)	984
4000	155 (1.31)	1046	151 (1.68)	956
4125	151 (1.27)	1017	147 (1.64)	930
4250	147 (1.24)	990	143 (1.60)	905
4375	144 (1.21)	964	140 (1.56)	882
4500	141 (1.18)	939	137 (1.52)	859
4625	137 (1.15)	916	134 (1.48)	838
4750	134 (1.13)	893	131 (1.45)	818
4875	132 (1.10)	872	128 (1.42)	798
5000	129 (1.08)	850	126 (1.38)	778
5125	126 (1.05)	830	123 (1.35)	760
5250	123 (1.03)	810	120 (1.32)	741
5375	121 (1.01)	790	118 (1.29)	723
5500	118 (0.99)	771	115 (1.26)	706
5625	116 (0.97)	752	113 (1.24)	689
5750	113 (0.94)	734	111 (1.21)	673
5875	111 (0.92)	717	108 (1.18)	657
6000	109 (0.91)	701	106 (1.16)	642
6125	107 (0.89)	685	104 (1.13)	628
6250	105 (.087)	671	102 (1.11)	615

6375	103 (0.86)	658	101 (1.09)	604
6500	102 (0.84)	647	99 (1.08)	593
6625	101 (0.83)	638	98 (1.06)	585
6750	100 (0.82)	631	97 (1.05)	578
6875	99 (0.82)	626	97 (1.04)	574
7000	99 (0.82)	624	96 (1.04)	573
7125 Or More	98 (0.81)	625	96 (1.04)	573

U.S. EPA ASM EMISSION STANDARDS - 1994 + TIER 1 LIGHT DUTY TRUCKS (3750 LVW OR LESS)

Test Weight	ASM5015		ASM2525	
	HC ppm (CO %)	NOx ppm	HC ppm (CO %)	NOx ppm
1750	142 (0.80)	1212	136 (0.77)	1095
1875	134 (0.75)	1142	129 (0.73)	1031
2000	127 (0.71)	1077	123 (0.69)	973
2125	121 (0.68)	1018	116 (0.66)	920
2250	115 (0.64)	964	111 (0.62)	871
2375	109 (0.61)	915	106 (0.59)	827
2500	105 (0.59)	869	101 (0.57)	786
2625	100 (0.56)	828	97 (0.54)	749
2750	96 (0.54)	791	93 (0.52)	715
2875	92 (0.52)	756	89 (0.50)	684
3000	89 (0.50)	725	86 (0.48)	656
3125	86 (0.48)	696	83 (0.46)	630
3250	83 (0.46)	670	80 (0.45)	607
3375	81 (0.45)	647	78 (0.43)	585
3500	78 (0.44)	625	76 (0.42)	566
3625	76 (0.42)	605	74 (0.41)	547
3750	74 (0.41)	586	72 (0.40)	531
3875	72 (0.40)	569	70 (0.39)	515
4000	71 (0.39)	553	68 (0.38)	501
4125	69 (0.38)	538	67 (0.37)	487
4250	67 (0.37)	524	65 (0.36)	475

4375	66 (0.36)	510	64 (0.35)	463
4500	65 (0.36)	498	63 (0.35)	440
4625	63 (0.35)	486	61 (0.34)	440
4750	62 (0.34)	474	60 (0.33)	430
4875	61 (0.34)	463	59 (0.33)	420
5000	60 (0.33)	452	58 (0.32)	410
5125	58 (0.32)	441	57 (0.31)	400
5250	57 (0.32)	431	56 (0.31)	391
5375	56 (0.31)	420	55 (0.30)	382
5500	55 (0.30)	410	54 (0.30)	373
5625	54 (0.30)	401	53 (0.29)	364
5750	53 (0.29)	391	52 (0.29)	356
5875	52 (0.29)	383	51 (0.28)	348
6000	51 (0.28)	374	50 (0.28)	340
6125	50 (0.28)	366	49 (0.27)	333
6250	50 (0.27)	359	48 (0.27)	326
6375	49 (0.27)	352	48 (0.26)	320
6500	48 (0.26)	346	47 (0.26)	315
6625	48 (0.26)	341	46 (0.26)	311
6750	47 (0.26)	338	46 (0.26)	307
6875	47 (0.26)	335	46 (0.25)	305
7000 Or More	47 (0.25)	335	46 (0.25)	305

U.S. EPA ASM EMISSION STANDARDS - 1994 + TIER 1 LIGHT DUTY TRUCKS (3751 LVW OR MORE)

Test Weight	ASM5015		ASM2525	
	HC ppm (CO %)	NOx ppm	HC ppm (CO %)	NOx ppm
1750	224 (1.26)	1819	216 (1.22)	1642
1875	212 (1.19)	1713	205 (1.16)	1547
2000	201 (1.13)	1616	194 (1.09)	1460
2125	191 (1.07)	1527	184 (1.04)	1380
2250	182 (1.02)	1446	175 (0.99)	1307
2375	173 (0.97)	1372	167 (0.94)	1240

2500	166 (0.93)	1304	160 (0.90)	1179
2625	159 (0.89)	1242	153 (0.86)	1123
2750	152 (0.85)	1186	147 (0.82)	1072
2875	146 (0.82)	1134	141 (0.79)	1026
3000	141 (0.79)	1088	136 (0.76)	984
3125	136 (0.76)	1045	132 (0.73)	945
3250	132 (0.73)	1006	127 (0.71)	910
3375	128 (0.71)	970	123 (0.69)	878
3500	124 (0.69)	937	120 (0.67)	848
3625	120 (0.67)	907	117 (0.65)	821
3750	117 (0.65)	879	114 (0.63)	796
3875	114 (0.63)	853	111 (0.61)	773
4000	112 (0.62)	829	108 (0.60)	751
4125	109 (0.60)	807	106 (0.58)	731
4250	107 (0.59)	786	103 (0.57)	712
4375	104 (0.58)	766	101 (0.56)	694
4500	102 (0.57)	747	99 (0.55)	677
4625	100 (0.55)	728	97 (0.54)	661
4750	98 (0.54)	711	95 (0.53)	645
4875	96 (0.53)	694	93 (0.52)	630
5000	94 (0.52)	677	92 (0.51)	615
5125	93 (0.51)	661	90 (0.50)	600
5250	91 (0.50)	646	88 (0.49)	586
5375	89 (0.49)	631	86 (0.48)	573
5500	87 (0.48)	616	85 (0.47)	559
5625	86 (0.47)	601	83 (0.46)	546
5750	84 (0.46)	587	82 (0.45)	534
5875	83 (0.45)	574	80 (0.44)	522
6000	81 (0.44)	561	79 (0.44)	510
6125	80 (0.44)	549	78 (0.43)	499
6250	79 (0.43)	538	76 (0.42)	489
6375	77 (0.42)	528	75 (0.42)	480
6500	76 (0.42)	519	74 (0.41)	473

6625	76 (0.41)	512	74 (0.41)	466
6750	75 (0.41)	507	73 (0.41)	461
6875	75 (0.40)	503	73 (0.40)	458
7000 Or More	74 (0.40)	502	72 (0.40)	457

U.S. EPA ASM EMISSION STANDARDS - 1968-72 LIGHT DUTY TRUCKS (6001 GVWR OR MORE)

Test Weight	ASM5015		ASM2525	
	HC ppm (CO %)	NOx ppm	HC ppm (CO %)	NOx ppm
1750	1118 (8.02)	4990	1098 (9.90)	4990
1875	1052 (7.56)	4990	1034 (9.90)	4990
2000	992 (7.14)	4990	975 (9.90)	4990
2125	938 (6.75)	4990	921 (9.66)	4990
2250	887 (6.40)	4990	872 (9.14)	4990
2375	841 (6.07)	4990	827 (8.67)	4990
2500	800 (5.78)	4990	786 (8.25)	4990
2625	761 (5.51)	4990	748 (7.85)	4990
2750	726 (5.26)	4990	714 (7.50)	4772
2875	695 (5.03)	4892	683 (7.17)	4556
3000	666 (4.83)	4680	654 (6.87)	4359
3125	639 (4.64)	4488	628 (6.60)	4180
3250	615 (4.47)	4311	604 (6.35)	4016
3375	593 (4.31)	4150	583 (6.13)	3866
3500	573 (4.17)	4002	563 (5.92)	3728
3625	554 (4.04)	3867	544 (5.73)	3602
3750	537 (3.91)	3741	527 (5.55)	3485
3875	521 (3.80)	3625	512 (5.39)	3377
4000	506 (3.70)	3517	497 (5.24)	3276
4125	492 (3.60)	3416	484 (5.09)	3182
4250	479 (3.51)	3321	471 (4.96)	3094
4375	467 (3.42)	3230	459 (4.83)	3010
4500	455 (3.34)	3145	447 (4.71)	2930
4625	444 (3.26)	3063	436 (4.60)	2854

4750	433 (3.18)	2983	425 (4.49)	2780
4875	423 (3.11)	2907	415 (4.38)	2709
5000	412 (3.03)	2833	405 (4.28)	2640
5125	402 (2.97)	2760	395 (4.18)	2573
5250	393 (2.90)	2690	386 (4.08)	2507
5375	383 (2.83)	2621	376 (3.98)	2443
5500	374 (2.77)	2554	367 (3.89)	2381
5625	365 (2.70)	2489	359 (3.80)	2321
5750	357 (2.64)	2426	350 (3.71)	2262
5875	348 (2.59)	2366	342 (3.62)	2206
6000	341 (2.53)	2308	334 (3.54)	2152
6125	333 (2.48)	2254	327 (3.47)	2102
6250	326 (2.43)	2204	320 (3.40)	2056
6375	320 (2.39)	2159	314 (3.34)	2014
6500	315 (2.35)	2119	309 (3.28)	1977
6625	310 (2.32)	2087	304 (3.23)	1947
6750	307 (2.29)	2062	301 (3.20)	1924
6875	305 (2.28)	2046	299 (3.17)	1909
7000	304 (2.27)	2040	298 (3.17)	1904
7125 Or More	304 (2.27)	2045	298 (3.17)	1904

U.S. EPA ASM EMISSION STANDARDS - 1973-74 LIGHT DUTY TRUCKS (6001 GVWR OR MORE)

Test Weight	ASM5015		ASM2525	
	HC ppm (CO %)	NOx ppm	HC ppm (CO %)	NOx ppm
1750	1118 (8.02)	4990	1098 (9.90)	4980
1875	1052 (7.56)	4990	1034 (9.90)	4906
2000	992 (7.14)	4919	975 (9.90)	4838
2125	938 (6.75)	4853	921 (9.66)	4776
2250	887 (6.40)	4792	872 (9.14)	4720
2375	841 (6.07)	4736	827 (8.67)	4668
2500	800 (5.78)	4685	786 (8.25)	4620
2625	761 (5.51)	4639	748 (7.85)	4577

2750	726 (5.26)	4596	714 (7.50)	4374
2875	695 (5.03)	4484	683 (7.17)	4176
3000	666 (4.83)	4290	654 (6.87)	3996
3125	639 (4.64)	4114	628 (6.60)	3832
3250	615 (4.47)	3952	604 (6.35)	3681
3375	593 (4.31)	3804	583 (6.13)	3544
3500	573 (4.17)	3669	563 (5.92)	3418
3625	554 (4.04)	3544	544 (5.73)	3302
3750	537 (3.91)	3429	527 (5.55)	3195
3875	521 (3.80)	3323	512 (5.39)	3096
4000	506 (3.70)	3224	497 (5.24)	3003
4125	492 (3.60)	3131	484 (5.09)	2917
4250	479 (3.51)	3044	471 (4.96)	2836
4375	467 (3.42)	2961	459 (4.83)	2759
4500	455 (3.34)	2883	447 (4.71)	2686
4625	444 (3.26)	2807	436 (4.60)	2616
4750	433 (3.18)	2735	425 (4.49)	2549
4875	423 (3.11)	2665	415 (4.38)	2483
5000	412 (3.03)	2597	405 (4.28)	2420
5125	402 (2.97)	2530	395 (4.18)	2359
5250	393 (2.90)	2466	386 (4.08)	2298
5375	383 (2.83)	2403	376 (3.98)	2240
5500	374 (2.77)	2341	367 (3.89)	2183
5625	365 (2.70)	2282	359 (3.80)	2127
5750	357 (2.64)	2224	350 (3.71)	2074
5875	348 (2.59)	2168	342 (3.62)	2022
6000	341 (2.53)	2116	334 (3.54)	1973
6125	333 (2.48)	2066	327 (3.47)	1927
6250	326 (2.43)	2020	320 (3.40)	1884
6375	320 (2.39)	1979	314 (3.34)	1846
6500	315 (2.35)	1943	309 (3.28)	1813
6625	310 (2.32)	1913	304 (3.23)	1785
6750	307 (2.29)	1890	301 (3.20)	1764

6875	305 (2.28)	1875	299 (3.17)	1750
7000	304 (2.27)	1870	298 (3.17)	1745
7125 Or More	304 (2.27)	1874	298 (3.17)	1745

U.S. EPA ASM EMISSION STANDARDS - 1975-78 LIGHT DUTY TRUCKS (6001 GVWR OR MORE)

Test Weight	ASM5015		ASM2525	
	HC ppm (CO %)	NOx ppm	HC ppm (CO %)	NOx ppm
1750	843 (5.07)	4990	828 (7.26)	4980
1875	794 (4.78)	4990	780 (6.84)	4906
2000	749 (4.51)	4919	736 (6.45)	4838
2125	707 (4.26)	4853	695 (6.10)	4776
2250	669 (4.04)	4792	658 (5.78)	4720
2375	635 (3.83)	4736	624 (5.48)	4668
2500	603 (3.65)	4685	593 (5.21)	4620
2625	574 (3.48)	4639	564 (4.96)	4577
2750	548 (3.32)	4596	539 (4.73)	4374
2875	524 (3.18)	4484	515 (4.53)	4176
3000	502 (3.05)	4290	493 (4.34)	3996
3125	482 (2.93)	4114	474 (4.17)	3832
3250	464 (2.82)	3952	456 (4.01)	3681
3375	447 (2.72)	3804	440 (3.87)	3544
3500	432 (2.63)	3669	424 (3.74)	3418
3625	418 (2.55)	3544	411 (3.62)	3302
3750	405 (2.47)	3429	398 (3.51)	3195
3875	393 (2.40)	3323	386 (3.40)	3096
4000	382 (2.33)	3224	375 (3.31)	3003
4125	371 (2.27)	3131	365 (3.22)	2917
4250	361 (2.21)	3044	355 (3.13)	2836
4375	352 (2.16)	2961	346 (3.05)	2759
4500	343 (2.11)	2883	337 (2.98)	2686
4625	335 (2.06)	2807	329 (2.90)	2616
4750	327 (2.01)	2735	321 (2.83)	2549

4875	319 (1.96)	2665	313 (2.77)	2483
5000	311 (1.92)	2597	305 (2.70)	2420
5125	304 (1.87)	2530	298 (2.64)	2359
5250	296 (1.83)	2466	291 (2.58)	2298
5375	289 (1.79)	2403	284 (2.51)	2240
5500	282 (1.75)	2341	277 (2.46)	2183
5625	276 (1.71)	2282	271 (2.40)	2127
5750	269 (1.67)	2224	264 (2.34)	2074
5875	263 (1.63)	2168	258 (2.29)	2022
6000	257 (1.60)	2116	252 (2.24)	1973
6125	251 (1.57)	2066	247 (2.19)	1927
6250	246 (1.54)	2020	242 (2.15)	1884
6375	242 (1.51)	1979	237 (2.11)	1846
6500	238 (1.48)	1943	233 (2.07)	1813
6625	234 (1.46)	1913	230 (2.04)	1785
6750	232 (1.45)	1890	227 (2.02)	1764
6875	230 (1.44)	1875	225 (2.00)	1750
7000	229 (1.43)	1870	225 (2.00)	1745
7125 Or More	229 (1.43)	1874	225 (2.00)	1745

U.S. EPA ASM EMISSION STANDARDS - 1979-83 LIGHT DUTY TRUCKS (6001 GVWR OR MORE)

Test Weight	ASM5015		ASM2525	
	HC ppm (CO %)	NOx ppm	HC ppm (CO %)	NOx ppm
1750	774 (4.31)	4990	761 (6.06)	4960
1875	729 (4.06)	4990	717 (5.70)	4738
2000	688 (3.83)	4778	676 (5.38)	4535
2125	650 (3.63)	4578	638 (5.09)	4349
2250	615 (3.44)	4395	604 (4.82)	4179
2375	583 (3.26)	4228	573 (4.57)	4024
2500	554 (3.10)	4076	544 (4.35)	3881
2625	528 (2.96)	3936	518 (4.14)	3752
2750	503 (2.83)	3809	495 (3.95)	3579

2875	481 (2.71)	3669	473 (3.78)	3417
3000	461 (2.60)	3510	453 (3.62)	3270
3125	443 (2.50)	3366	435 (3.48)	3135
3250	426 (2.40)	3234	419 (3.35)	3012
3375	411 (2.32)	3113	404 (3.23)	2899
3500	397 (2.24)	3002	390 (3.12)	2796
3625	384 (2.17)	2900	377 (3.02)	2701
3750	372 (2.11)	2806	365 (2.93)	2614
3875	361 (2.05)	2719	355 (2.58)	2533
4000	351 (1.99)	2638	345 (2.77)	2457
4125	341 (1.94)	2562	335 (2.69)	2387
4250	332 (1.89)	2490	326 (2.62)	2320
4375	323 (1.84)	2423	318 (2.55)	2258
4500	315 (1.80)	2359	310 (2.49)	2198
4625	308 (1.76)	2297	302 (2.43)	2140
4750	300 (1.72)	2238	295 (2.37)	2085
4875	293 (1.68)	2180	288 (2.32)	2032
5000	286 (1.64)	2125	281 (2.26)	1980
5125	279 (1.60)	2070	274 (2.21)	1930
5250	272 (1.56)	2017	267 (2.16)	1881
5375	26 (1.53)	1966	261 (2.11)	1833
5500	259 (1.49)	1916	255 (2.06)	1786
5625	253 (1.46)	1867	248 (2.01)	1740
5750	247 (1.43)	1820	243 (1.96)	1697
5875	241 (1.40)	1774	237 (1.92)	1654
6000	236 (1.37)	1731	232 (1.88)	1614
6125	231 (1.34)	1690	227 (1.84)	1577
6250	226 (1.31)	1653	222 (1.80)	1542
6375	222 (1.29)	1619	218 (1.77)	1510
6500	218 (1.27)	1590	214 (1.74)	1483
6625	215 (1.25)	1565	211 (1.72)	1460
6750	213 (1.24)	1546	209 (1.70)	1443
6875	211 (1.23)	1534	207 (1.68)	1432

7000	211 (1.23)	1530	207 (1.68)	1428
7125 Or More	211 (1.22)	1531	206 (1.68)	1428

U.S. EPA ASM EMISSION STANDARDS - 1984-87 LIGHT DUTY TRUCKS (6001 GVWR OR MORE)

Test Weight	ASM5015		ASM2525	
	HC ppm (CO %)	NOx ppm	HC ppm (CO %)	NOx ppm
1750	390 (3.54)	4990	381 (4.85)	4960
1875	368 (3.34)	4990	359 (4.57)	4738
2000	348 (3.16)	4778	339 (4.31)	4535
2125	329 (2.99)	4578	321 (4.08)	4349
2250	312 (2.83)	4395	305 (3.86)	4179
2375	297 (2.69)	4228	290 (3.66)	4024
2500	283 (2.56)	4076	276 (3.48)	3881
2625	270 (2.44)	3936	263 (3.32)	3752
2750	258 (2.33)	3809	252 (3.17)	3579
2875	247 (2.23)	3669	241 (3.03)	3417
3000	237 (2.14)	3510	232 (2.91)	3270
3125	228 (2.06)	3366	223 (2.79)	3135
3250	220 (1.99)	3234	215 (2.69)	3012
3375	213 (1.92)	3113	208 (2.60)	2899
3500	206 (1.86)	3002	201 (2.51)	2796
3625	200 (1.80)	2900	195 (2.43)	2701
3750	194 (1.74)	2806	189 (2.36)	2614
3875	188 (1.69)	2719	184 (2.29)	2533
4000	183 (1.65)	2638	179 (2.22)	2457
4125	179 (1.61)	2562	175 (2.16)	2387
4250	174 (1.56)	2490	170 (2.11)	2320
4375	170 (1.53)	2423	166 (2.06)	2258
4500	166 (1.49)	2359	162 (2.01)	2198
4625	162 (1.46)	2297	159 (1.96)	2140
4750	159 (1.42)	2238	155 (1.91)	2085
4875	155 (1.39)	2180	152 (1.87)	2032

5000	152 (1.36)	2125	148 (1.82)	1980
5125	148 (1.33)	2070	145 (1.78)	1930
5250	145 (1.30)	2017	142 (1.74)	1881
5375	142 (1.27)	1966	139 (1.70)	1833
5500	139 (1.24)	1916	136 (1.66)	1786
5625	136 (1.12)	1867	133 (1.62)	1740
5750	133 (1.19)	1820	130 (1.59)	1697
5875	130 (1.16)	1774	127 (1.55)	1654
6000	127 (1.14)	1731	124 (1.52)	1614
6125	125 (1.11)	1690	122 (1.49)	1577
6250	123 (1.09)	1653	120 (1.46)	1542
6375	120 (1.07)	1619	118 (1.43)	1510
6500	119 (1.06)	1590	116 (1.41)	1483
6625	117 (1.04)	1565	114 (1.39)	1460
6750	116 (1.03)	1546	113 (1.37)	1443
6875	115 (1.02)	1534	113 (1.36)	1432
7000	115 (1.02)	1530	112 (1.36)	1428
7125 Or More	115 (1.02)	1531	112 (1.36)	1428

U.S. EPA ASM EMISSION STANDARDS - 1988-90 LIGHT DUTY TRUCKS (6001 GVWR OR MORE)

Test Weight	ASM5015		ASM2525	
	HC ppm (CO %)	NOx ppm	HC ppm (CO %)	NOx ppm
1750	390 (3.54)	4084	381 (4.85)	4005
1875	368 (3.34)	4054	359 (4.57)	3767
2000	348 (3.16)	3824	339 (4.31)	3548
2125	329 (2.99)	3609	321 (4.08)	3348
2250	312 (2.83)	3411	305 (3.86)	3165
2375	297 (2.69)	3231	290 (3.66)	2998
2500	283 (2.56)	3066	276 (3.48)	2845
2625	270 (2.44)	2916	263 (3.32)	2706
2750	258 (2.33)	2779	252 (3.17)	2579
2875	247 (2.23)	2654	241 (3.03)	2463

3000	237 (2.14)	2539	232 (2.91)	2357
3125	228 (2.06)	2435	223 (2.79)	2260
3250	220 (1.99)	2340	215 (2.69)	2172
3375	213 (1.92)	2253	208 (2.60)	2092
3500	206 (1.86)	2174	201 (2.51)	2018
3625	200 (1.80)	2100	195 (2.43)	1950
3750	194 (1.74)	2033	189 (2.36)	1887
3875	188 (1.69)	1970	184 (2.29)	1829
4000	183 (1.65)	1912	179 (2.22)	1775
4125	179 (1.61)	1857	175 (2.16)	1724
4250	174 (1.56)	1806	170 (2.11)	1677
4375	170 (1.53)	1757	166 (2.06)	1632
4500	166 (1.49)	1711	162 (2.01)	1589
4625	162 (1.46)	1666	159 (1.96)	1548
4750	159 (1.42)	1624	155 (1.91)	1508
4875	155 (1.39)	1583	152 (1.87)	1470
5000	152 (1.36)	1542	148 (1.82)	1433
5125	148 (1.33)	1503	145 (1.78)	1397
5250	145 (1.30)	1465	142 (1.74)	1362
5375	142 (1.27)	1428	139 (1.70)	1327
5500	139 (1.24)	1392	136 (1.66)	1294
5625	136 (1.12)	1357	133 (1.62)	1261
5750	133 (1.19)	1323	130 (1.59)	1230
5875	130 (1.16)	1290	127 (1.55)	1199
6000	127 (1.14)	1259	124 (1.52)	1171
6125	125 (1.11)	1230	122 (1.49)	1144
6250	123 (1.09)	1203	120 (1.46)	1119
6375	120 (1.07)	1179	118 (1.43)	1096
6500	119 (1.06)	1158	116 (1.41)	1077
6625	117 (1.04)	1140	114 (1.39)	1060
6750	116 (1.03)	1127	113 (1.37)	1048
6875	115 (1.02)	1118	113 (1.36)	1040
7000 Or More	115 (1.02)	1115	112 (1.36)	1037

U.S. EPA ASM EMISSION STANDARDS - 1991-95 LIGHT DUTY TRUCKS (6001 GVWR OR MORE)

Test Weight	ASM5015		ASM2525	
	HC ppm (CO %)	NOx ppm	HC ppm (CO %)	NOx ppm
1750	324 (2.78)	3631	315 (3.64)	3532
1875	306 (2.63)	3586	297 (3.43)	3323
2000	289 (2.48)	3383	281 (3.24)	3131
2125	274 (2.35)	3192	267 (3.06)	2955
2250	260 (2.23)	3018	253 (2.90)	2794
2375	247 (2.12)	2859	241 (2.76)	2646
2500	236 (2.02)	2714	230 (2.62)	2512
2625	225 (1.92)	2581	219 (2.50)	2389
2750	216 (1.84)	2460	210 (2.39)	2277
2875	207 (1.76)	2350	210 (2.29)	2175
3000	199 (1.69)	2249	194 (2.19)	2082
3125	191 (1.63)	2157	186 (2.11)	1997
3250	185 (1.57)	2073	180 (2.03)	1920
3375	179 (1.52)	1997	174 (1.96)	1849
3500	173 (1.47)	1926	169 (1.89)	1784
3625	168 (1.42)	1862	164 (1.84)	1724
3750	163 (1.38)	1802	159 (1.78)	1669
3875	159 (1.34)	1747	155 (1.73)	1618
4000	155 (1.31)	1695	151 (1.68)	1570
4125	151 (1.27)	1647	147 (1.64)	1526
4250	147 (1.24)	1602	143 (1.60)	1484
4375	144 (1.21)	1559	140 (1.56)	1444
4500	141 (1.18)	1518	137 (1.52)	1406
4625	137 (1.15)	1479	134 (1.48)	1370
4750	134 (1.13)	1441	131 (1.45)	1336
4875	132 (1.10)	1405	128 (1.42)	1302
5000	129 (1.08)	1369	126 (1.38)	1269
5125	126 (1.05)	1335	123 (1.35)	1237
5250	123 (1.03)	1031	120 (1.32)	1206

5375	121 (1.01)	1269	118 (1.29)	1176
5500	118 (0.99)	1237	115 (1.26)	1147
5625	116 (0.97)	1206	113 (1.24)	1118
5750	113 (0.94)	1176	111 (1.21)	1090
5875	111 (0.92)	1147	108 (1.18)	1064
6000	109 (0.91)	1120	106 (1.16)	1039
6125	107 (0.89)	1094	104 (1.13)	1015
6250	105 (.087)	1070	102 (1.11)	993
6375	103 (0.86)	1049	101 (1.09)	973
6500	102 (0.84)	1030	99 (1.08)	956
6625	101 (0.83)	1014	98 (1.06)	941
6750	100 (0.82)	1003	97 (1.05)	931
6875	99 (0.82)	995	97 (1.04)	924
7000	99 (0.82)	992	96 (1.04)	921
7125 Or More	98 (0.81)	992	96 (1.04)	921

U.S. EPA ASM EMISSION STANDARDS - 1994 + TIER 1 LIGHT DUTY TRUCKS (5750 LVW OR LESS)

Test Weight	ASM5015		ASM2525	
	HC ppm (CO %)	NOx ppm	HC ppm (CO %)	NOx ppm
1750	224 (1.26)	1819	216 (1.22)	1642
1875	212 (1.19)	1713	205 (1.16)	1547
2000	201 (1.13)	1616	194 (1.09)	1460
2125	191 (1.07)	1527	184 (1.04)	1380
2250	182 (1.02)	1446	175 (0.99)	1307
2375	173 (0.97)	1372	167 (0.94)	1240
2500	166 (0.93)	1304	160 (0.90)	1179
2625	159 (0.89)	1242	153 (0.86)	1123
2750	152 (0.85)	1186	147 (0.82)	1072
2875	146 (0.82)	1134	141 (0.79)	1026
3000	141 (0.79)	1088	136 (0.76)	984
3125	136 (0.76)	1045	132 (0.73)	945
3250	132 (0.73)	1006	127 (0.71)	910

3375	128 (0.71)	970	123 (0.69)	878
3500	124 (0.69)	937	120 (0.67)	848
3625	120 (0.67)	907	117 (0.65)	821
3750	117 (0.65)	879	114 (0.63)	796
3875	114 (0.63)	853	111 (0.61)	773
4000	112 (0.62)	829	108 (0.60)	751
4125	109 (0.60)	807	106 (0.58)	731
4250	107 (0.59)	786	103 (0.57)	712
4375	104 (0.58)	766	101 (0.56)	694
4500	102 (0.57)	747	99 (0.55)	677
4625	100 (0.55)	728	97 (0.54)	661
4750	98 (0.54)	711	95 (0.53)	645
4875	96 (0.53)	694	93 (0.52)	630
5000	94 (0.52)	677	92 (0.51)	615
5125	93 (0.51)	661	90 (0.50)	600
5250	91 (0.50)	646	88 (0.49)	586
5375	89 (0.49)	631	86 (0.48)	573
5500	87 (0.48)	616	85 (0.47)	559
5625	86 (0.47)	601	83 (0.46)	546
5750	84 (0.46)	587	82 (0.45)	534
5875	83 (0.45)	574	80 (0.44)	522
6000	81 (0.44)	561	79 (0.44)	510
6125	80 (0.44)	549	78 (0.43)	499
6250	79 (0.43)	538	76 (0.42)	489
6375	77 (0.42)	528	75 (0.42)	480
6500	76 (0.42)	519	74 (0.41)	473
6625	76 (0.41)	512	74 (0.41)	466
6750	75 (0.41)	507	73 (0.41)	461
6875	75 (0.40)	503	73 (0.40)	458
7000 Or More	74 (0.40)	502	72 (0.40)	457

U.S. EPA ASM EMISSION STANDARDS - 1994 + TIER 1 LIGHT DUTY TRUCKS (5751 LVW OR MORE)

Test Weight	ASM5015		ASM2525	
	HC ppm (CO %)	NOx ppm	HC ppm (CO %)	NOx ppm
1750	324 (2.78)	3178	315 (3.64)	3060
1875	306 (2.63)	3117	297 (3.43)	2879
2000	289 (2.48)	2941	281 (3.24)	2713
2125	274 (2.35)	2776	267 (3.06)	2561
2250	260 (2.23)	2625	253 (2.90)	2422
2375	247 (2.12)	2487	241 (2.76)	2295
2500	236 (2.02)	2361	230 (2.62)	2179
2625	225 (1.92)	2246	219 (2.50)	2073
2750	216 (1.84)	2142	210 (2.39)	1976
2875	207 (1.76)	2046	210 (2.29)	1888
3000	199 (1.69)	1959	194 (2.19)	1808
3125	191 (1.63)	1879	186 (2.11)	1734
3250	185 (1.57)	1806	180 (2.03)	1667
3375	179 (1.52)	1740	174 (1.96)	1606
3500	173 (1.47)	1679	169 (1.89)	1550
3625	168 (1.42)	1623	164 (1.84)	1498
3750	163 (1.38)	1571	159 (1.78)	1451
3875	159 (1.34)	1523	155 (1.73)	1407
4000	155 (1.31)	1479	151 (1.68)	1365
4125	151 (1.27)	1437	147 (1.64)	1327
4250	147 (1.24)	1398	143 (1.60)	1291
4375	144 (1.21)	1360	140 (1.56)	1257
4500	141 (1.18)	1325	137 (1.52)	1224
4625	137 (1.15)	1291	134 (1.48)	1193
4750	134 (1.13)	1259	131 (1.45)	1163
4875	132 (1.10)	1227	128 (1.42)	1134
5000	129 (1.08)	1196	126 (1.38)	1106
5125	126 (1.05)	1167	123 (1.35)	1078
5250	123 (1.03)	1138	120 (1.32)	1051
5375	121 (1.01)	1109	118 (1.29)	1025

5500	118 (0.99)	1082	115 (1.26)	1000
5625	116 (0.97)	1055	113 (1.24)	975
5750	113 (0.94)	1029	111 (1.21)	951
5875	111 (0.92)	1004	108 (1.18)	928
6000	109 (0.91)	980	106 (1.16)	906
6125	107 (0.89)	958	104 (1.13)	886
6250	105 (.087)	937	102 (1.11)	867
6375	103 (0.86)	919	101 (1.09)	850
6500	102 (0.84)	902	99 (1.08)	835
6625	101 (0.83)	889	98 (1.06)	823
6750	100 (0.82)	879	97 (1.05)	813
6875	99 (0.82)	872	97 (1.04)	807
7000	99 (0.82)	870	96 (1.04)	805
7125 Or More	98 (0.81)	870	96 (1.04)	805

U. S. EPA REVISED FINAL ASM EMISSION STANDARDS (ASM5015 & ASM2525)

NOTE: EPA has not published a revised final standards for High Altitude, Light Duty Trucks 2 (6000-8500 GVWR), or vehicles older than 1980 model year. EPA guidance as of February 2003 states that a program may choose to use combinations of the Original and the Revised Final Standards.

U.S. EPA REVISED FINAL ASM EMISSION STANDARDS

Application	ASM5015		ASM2525	
	HC ppm (CO %)	NOx ppm	HC ppm (CO %)	NOx ppm
Passenger Cars				
1980	275 (1.3)	8500	500 (2.3)	4750
1981-82	275 (1.3)	3600	500 (2.3)	3500
1983-89	275 (1.1)	3600	500 (1.6)	3500
1990 & Newer	275 (1.1)	3600	300 (1.6)	3500

Light Duty Trucks (Less Than 6000 GVWR)				
1980-83	1140 (9.7)	14,145	340 (23.28)	32,200
1984-87	537 (5.4)	14,145	160 (12.96)	32,200
1988-95	537 (5.4)	7380	160 (12.96)	16,800
1996 & Newer	275 (1.1)	6150	82 (4.40)	14,000

U.S. EPA IM240 EMISSION STANDARDS > START-UP STANDARDS

Start-up standards should be used during the first 2 years of program operation. Tier 1 standards are recommended for all 1996 and newer vehicles and may be used for 1994 and newer vehicles certified to Tier 1 standards as well.

U.S. EPA IM240 HYDROCARBONS EMISSION START-UP STANDARDS

Application	Hydrocarbons (Grams/Mile)	
Composite		Phase 2
Light Duty Vehicles		
1996 & Newer	0.80	0.50
1991-95	1.20	0.75
1983-90	2.00	1.25
1980-82	2.00	1.25
1975-79	7.50	5.00
1968-74	10.0	6.00
High Altitude Light Duty Vehicles		
1983-84	2.00	1.25
1982	2.00	1.25
Light Duty Trucks (0-6000 Lbs. GVWR)		
1996 & Newer (Less Than 3750 LVW)	0.80	0.50
1996 & Newer (More Than 3750 LVW)	1.00	0.63
1991-95	2.40	1.50
1984-90	3.20	2.00
1979-83	7.50	5.00

1975-78	8.00	5.00
1968-74	10.0	6.00
High Altitude Light Duty Trucks (0-6000 Lbs. GVWR)		
1991 & Newer	3.00	2.00
1984-90	4.00	2.50
1982-83	8.00	5.00
Light Duty Trucks (6001-8500 Lbs. GVWR)		
1996 & Newer (Less Than 5750 ALVW)	1.00	0.63
1996 & Newer (More Than 5750 ALVW)	2.40	1.50
1991-95	2.40	1.50
1984-90	3.20	2.00
1979-83	7.50	5.00
1975-78	8.00	5.00
1968-74	10.0	6.00
High Altitude Light Duty Trucks (6001-8500 Lbs. GVWR)		
1991 & Newer	3.00	2.00
1984-90	4.00	2.50
1982-83	8.00	5.00
Heavy Duty Trucks (Greater Than 8500 Lbs. GVWR)		
1998 & Newer	2.00	1.30
1987-97	3.00	1.90
1985-86	5.00	3.10
1979-84	6.00	3.80
1970-78	10.0	6.30
1969 & Earlier	20.0	12.50

U.S. EPA IM240 CARBON MONOXIDE EMISSION START-UP STANDARDS

Application	Carbon Monoxide (Grams/Mile)	
Composite		Phase 2
Light Duty Vehicles		
1996 & Newer	15.0	12.0
1991-95	20.0	16.0

1983-90	30.0	24.0
1980-82	60.0	48.0
1975-79	90.0	72.0
1968-74	150.0	120.0
High Altitude Light Duty Vehicles		
1983-84	60.0	48.0
1982	75.0	60.0
Light Duty Trucks (0-6000 Lbs. GVWR)		
1996 & Newer (Less Than 3750 LVW)	15.0	12.0
1996 & Newer (More Than 3750 LVW)	20.0	16.0
1991-95	60.0	48.0
1984-90	80.0	64.0
1979-83	100.0	80.0
1975-78	120.0	96.0
1968-74	150.0	120.0
High Altitude Light Duty Trucks (0-6000 Lbs. GVWR)		
1991 & Newer	70.0	56.0
1984-90	90.0	72.0
1982-83	130.0	104.0
Light Duty Trucks (6001-8500 Lbs. GVWR)		
1996 & Newer (Less Than 5750 ALVW)	20.0	16.0
1996 & Newer (More Than 5750 ALVW)	60.0	48.0
1991-95	60.0	48.0
1984-90	80.0	64.0
1979-83	100.0	80.0
1975-78	120.0	96.0
1968-74	150.0	120.0
High Altitude Light Duty Trucks (6001-8500 Lbs. GVWR)		
1991 & Newer	70.0	56.0
1984-90	90.0	72.0
1982-83	130.0	104.0
Heavy Duty Trucks (Greater Than 8500 Lbs. GVWR)		
1998 & Newer	30.0	24.0

1987-97	60.0	48.0
1985-86	75.0	60.0
1979-84	100.0	80.0
1974-78	150.00	120.0
1970-73	175.00	140.00
1969 & Earlier	200.0	160.0

U.S. EPA IM240 OXIDES OF NITROGEN EMISSION START-UP STANDARDS

Application	Oxides Of Nitrogen (Grams/Mile)	
Composite		Phase 2
Light Duty Vehicles		
1996 & Newer	2.0	2.0
1991-95	2.5	2.5
1981-90	3.0	3.0
1977-80	6.0	6.0
1973-76	9.0	9.0
1968-72	10.0	10.0
High Altitude Light Duty Vehicles		
1982-84	3.0	3.0
Light Duty Trucks (0-6000 Lbs. GVWR)		
1996 & Newer (Less Than 3750 LVW)	2.0	2.0
1996 & Newer (More Than 3750 LVW)	2.5	2.5
1991-95	3.0	3.0
1988-90	3.5	3.5
1979-87	7.0	7.0
1973-78	9.0	9.0
1968-72	10.0	10.0
High Altitude Light Duty Trucks (0-6000 Lbs. GVWR)		
1991 & Newer	3.0	3.0
1988-90	3.5	3.5
1982-87	7.0	7.0
Light Duty Trucks (6001-8500 Lbs. GVWR)		

1996 & Newer (Less Than 5750 ALVW)	2.5	2.5
1996 & Newer (More Than 5750 ALVW)	4.0	4.0
1991-95	4.5	4.5
1988-90	5.0	5.0
1979-87	7.0	7.0
1973-78	9.0	9.0
1968-72	10.0	10.0
High Altitude Light Duty Trucks (6001-8500 Lbs. GVWR)		
1991 & Newer	4.5	4.5
1988-90	5.0	5.0
1982-87	7.0	7.0
Heavy Duty Trucks (Greater Than 8500 Lbs. GVWR)		
1998 & Newer	4.0	4.0
1991-97	6.0	6.0
1979-90	8.0	8.0
1970-78	10.0	10.0
1969 & Earlier	15.0	15.0

U.S. EPA IM240 EMISSION STANDARDS > FINAL STANDARDS

Final standards are recommended for vehicles tested in calendar years 1997 and later. Tier 1 standards are recommended for all 1996 and newer vehicles and may be used for 1994 and newer vehicles.

U.S. EPA IM240 HYDROCARBONS EMISSION FINAL STANDARDS

Application	Hydrocarbons (Grams/Mile)	
Composite		Phase 2
Light Duty Vehicles		
1996 & Newer	0.60	0.40
1980-95	0.80	0.50
1975-79	3.00	2.00
1968-74	7.00	4.50
High Altitude Light Duty Vehicles		
1982-84	1.20	0.75

Light Duty Trucks (0-6000 Lbs. GVWR)		
1996 & Newer (Less Than 3750 LVW)	0.60	0.40
1996 & Newer (More Than 3750 LVW)	0.80	0.50
1984-95	1.60	1.00
1979-83	3.40	2.00
1975-78	4.00	2.50
1968-74	7.00	4.50
High Altitude Light Duty Trucks (0-6000 Lbs. GVWR)		
1988 & Newer	2.00	1.25
1984-87	2.00	1.25
1982-83	4.00	2.50
Light Duty Trucks (6001-8500 Lbs. GVWR)		
1996 & Newer (Less Than 5750 ALVW)	0.80	0.50
1996 & Newer (More Than 5750 ALVW)	0.80	0.50
1984-95	1.60	1.00
1979-83	3.40	2.00
1975-78	4.00	2.50
1968-74	7.00	4.50
High Altitude Light Duty Trucks (6001-8500 Lbs. GVWR)		
1988 & Newer	2.00	1.25
1984-87	2.00	1.25
1982-83	4.00	2.50
Heavy Duty Trucks (Greater Than 8500 Lbs. GVWR)		
1998 & Newer	2.00	1.30
1987-97	2.00	1.30
1985-86	3.00	1.90
1979-84	5.00	3.10
1970-78	10.0	6.30
1969 & Earlier	20.0	12.50

U.S. EPA IM240 CARBON MONOXIDE EMISSION FINAL STANDARDS

Application	Carbon Monoxide (Grams/Mile)

Composite		Phase 2
Light Duty Vehicles		
1996 & Newer	10.0	8.0
1983-95	15.0	12.0
1980-82	30.0	24.0
1975-79	65.0	52.0
1968-74	120.0	96.0
High Altitude Light Duty Vehicles		
1983-84	30.0	24.0
1982	45.0	36.0
Light Duty Trucks (0-6000 Lbs. GVWR)		
1996 & Newer (Less Than 3750 LVW)	10.0	8.0
1996 & Newer (More Than 3750 LVW)	13.0	10.0
1984-95	40.0	32.0
1979-83	70.0	56.0
1975-78	80.0	64.0
1968-74	120.0	96.0
High Altitude Light Duty Trucks (0-6000 Lbs. GVWR)		
1988 & Newer	60.0	48.0
1984-87	60.0	48.0
1982-83	90.0	72.0
Light Duty Trucks (6001-8500 Lbs. GVWR)		
1996 & Newer (Less Than 5750 ALVW)	13.0	10.0
1996 & Newer (More Than 5750 ALVW)	15.0	12.0
1984-95	40.0	32.0
1979-83	70.0	56.0
1975-78	80.0	64.0
1968-74	120.0	96.0
High Altitude Light Duty Trucks (6001-8500 Lbs. GVWR)		
1984 & Newer	60.0	48.0
1982-83	90.0	72.0
Heavy Duty Trucks (Greater Than 8500 Lbs. GVWR)		

1998 & Newer	30.0	24.0
1987-97	40.0	32.0
1985-86	50.0	40.0
1979-84	75.0	60.0
1974-78	150.0	120.0
1970-73	175.0	140.0
1969 & Earlier	200.0	160.0

U.S. EPA IM240 OXIDES OF NITROGEN EMISSION FINAL STANDARDS

Application	Oxides Of Nitrogen (Grams/Mile)	
Composite		Phase 2
Light Duty Vehicles		
1996 & Newer	1.5	1.5
1981-95	2.0	2.0
1977-80	4.0	4.0
1973-76	6.0	6.0
1968-72	7.0	7.0
High Altitude Light Duty Vehicles		
1982-84	2.0	2.0
Light Duty Trucks (0-6000 Lbs. GVWR)		
1996 & Newer (Less Than 3750 LVW)	1.5	1.5
1996 & Newer (More Than 3750 LVW)	1.8	1.8
1988-95	2.5	2.5
1979-87	4.5	4.5
1973-78	6.0	6.0
1968-72	7.0	7.0
High Altitude Light Duty Trucks (0-6000 Lbs. GVWR)		
1988 & Newer	2.5	2.5
1982-87	4.5	4.5
Light Duty Trucks (6001-8500 Lbs. GVWR)		
1996 & Newer (Less Than 5750 ALVW)	1.8	1.8
1996 & Newer (More Than 5750 ALVW)	2.0	2.0

1988-95	3.5	3.5
1979-87	4.5	4.5
1973-78	6.0	6.0
1968-72	7.0	7.0
High Altitude Light Duty Trucks (6001-8500 Lbs. GVWR)		
1988 & Newer	3.5	3.5
1982-87	4.5	4.5
Heavy Duty Trucks (Greater Than 8500 Lbs. GVWR)		
1998 & Newer	4.0	4.0
1991-97	5.0	5.0
1979-90	6.0	6.0
1970-78	10.0	10.0
1969 & Earlier	15.0	15.0

Service Manual: 80 - HEATING -- (95B) - MACAN

WM 803019 REMOVING AND INSTALLING HEAT EXCHANGER SUPPLY HOSE (MACAN, MACAN S, MACAN TURBO) > PRELIMINARY WORK

1. Drain refrigerant → 870317 DRAINING AND FILLING REFRIGERANT .
2. Remove cowl panel cover → 508719 REMOVING AND INSTALLING COWL PANEL COVER .

WM 803019 REMOVING AND INSTALLING HEAT EXCHANGER SUPPLY HOSE (MACAN, MACAN S, MACAN TURBO) > REMOVING AND INSTALLING HEAT EXCHANGER SUPPLY HOSE > REMOVING HEAT EXCHANGER SUPPLY HOSE

Information

The procedure for removal and installation can be different for other vehicle types.

1. Loosen spring band clamp **-1- (-arrow-)** .
2. Pull hose **-2-** off the heat exchanger connection piece.

Fig 1: Removing Heat Exchanger Hose Connection

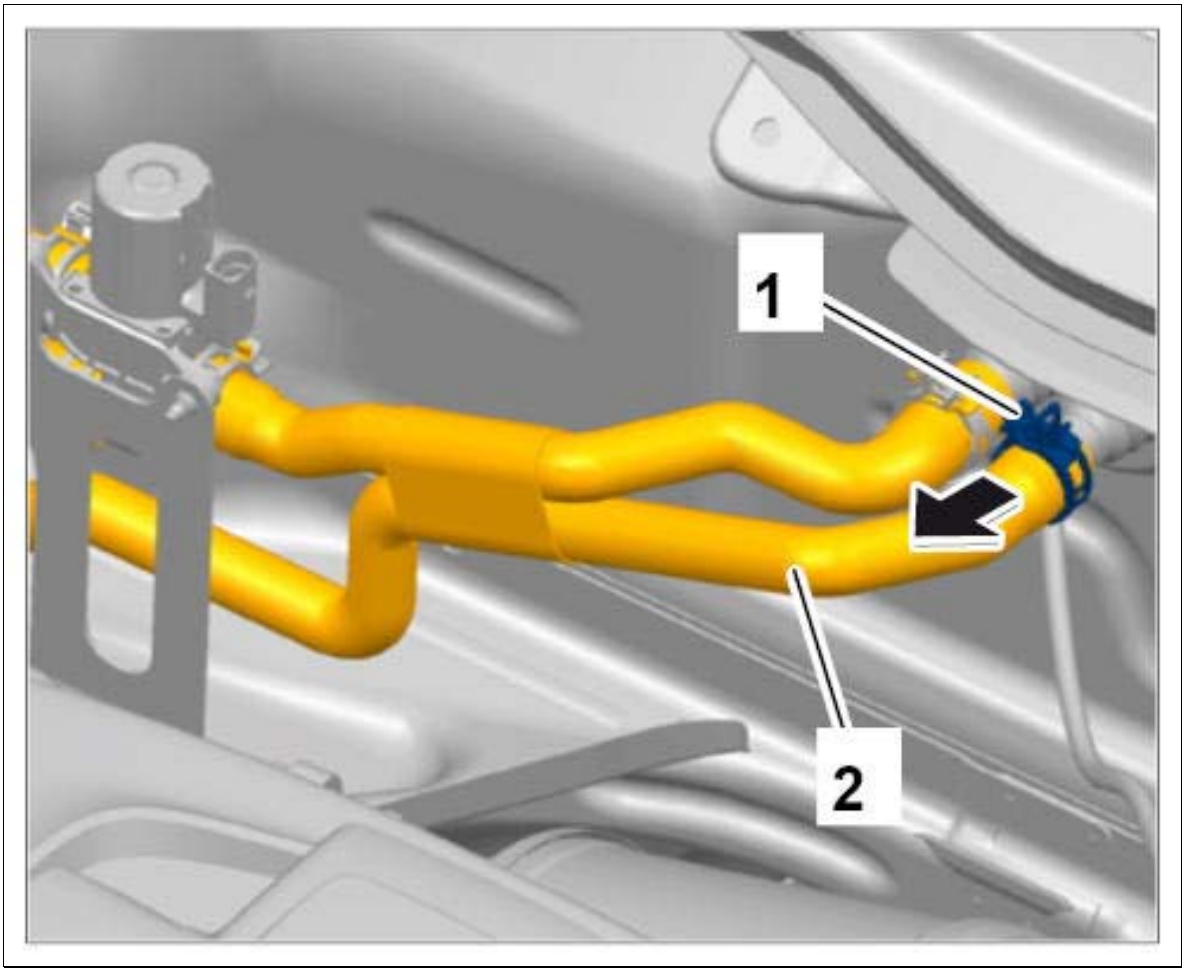

Courtesy of PORSCHE CARS NORTH AMERICA, INC.

3. Loosen spring band clamp **-1- (-arrow-)** .

Fig 2: Loosening Spring Band Clamp

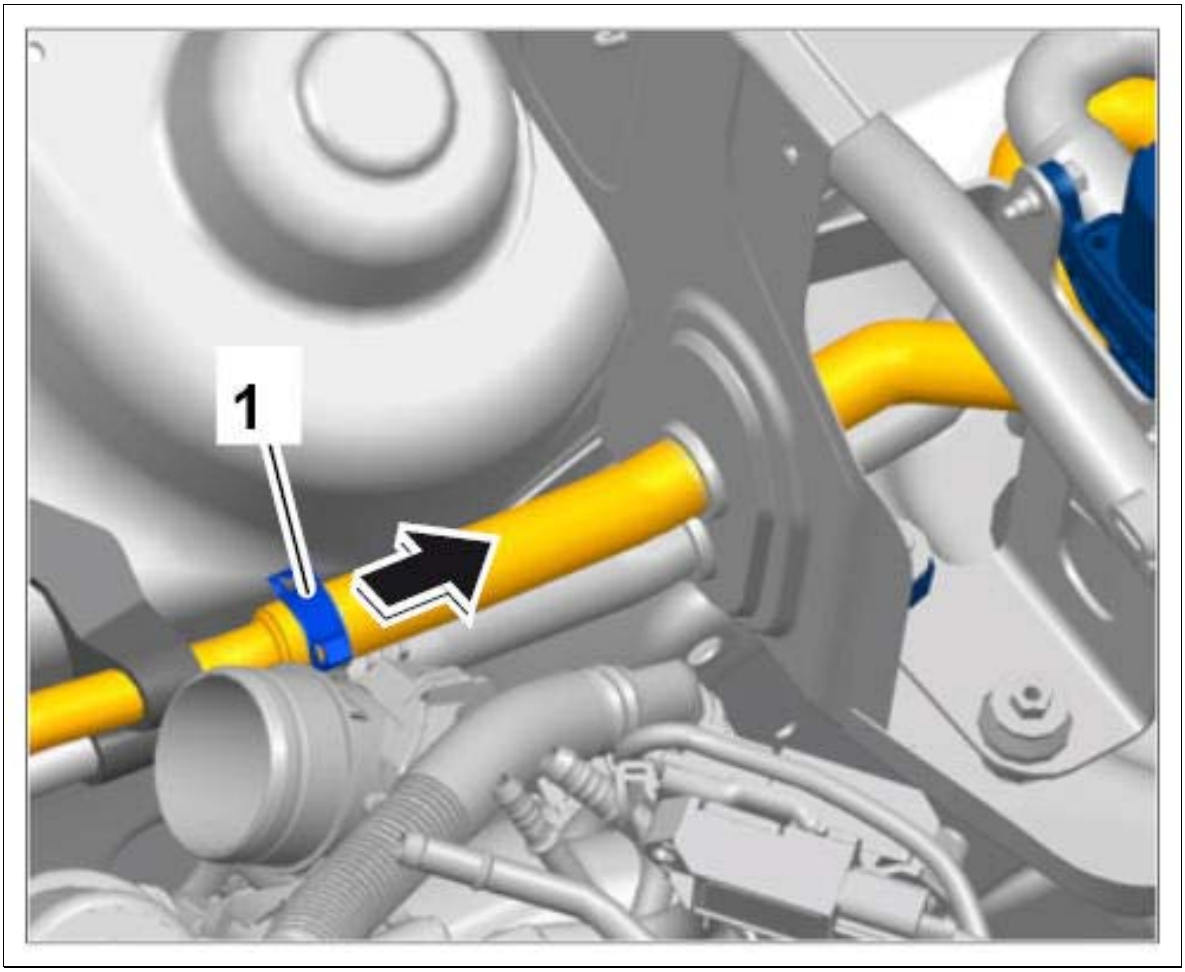

Courtesy of PORSCHE CARS NORTH AMERICA, INC.

4. Pull hose through the grommet in the plenum panel wall and remove it.

WM 803019 REMOVING AND INSTALLING HEAT EXCHANGER SUPPLY HOSE (MACAN, MACAN S, MACAN TURBO) > REMOVING AND INSTALLING HEAT EXCHANGER SUPPLY HOSE > INSTALLING HEAT EXCHANGER SUPPLY HOSE

1. Installation is performed in reverse order.

WM 803019 REMOVING AND INSTALLING HEAT EXCHANGER SUPPLY HOSE (MACAN, MACAN S, MACAN TURBO) > SUBSEQUENT WORK

1. Install cowl panel cover → INSTALLING COWL PANEL COVER .
2. Fill in refrigerant → DRAINING AND FILLING REFRIGERANT .

WM 803219 REMOVING AND INSTALLING HEAT EXCHANGER RETURN HOSE (MACAN, MACAN S, MACAN TURBO) > PRELIMINARY WORK

1. Drain refrigerant → 870317 DRAINING AND FILLING REFRIGERANT .
2. Remove cowl panel cover → 508719 REMOVING AND INSTALLING COWL PANEL COVER .

WM 803219 REMOVING AND INSTALLING HEAT EXCHANGER RETURN HOSE (MACAN, MACAN S, MACAN TURBO) > REMOVING AND INSTALLING HEAT EXCHANGER RETURN HOSE > REMOVING HEAT EXCHANGER RETURN HOSE

Information

The procedure for removal and installation can be different for other vehicle types.

1. Loosen spring band clamps **-1- (-arrows-)** .
2. Pull hose **-2-** off the heat exchanger return connection piece and directional-control valve connection piece.

Fig 1: Removing Heat Exchanger Return Hose

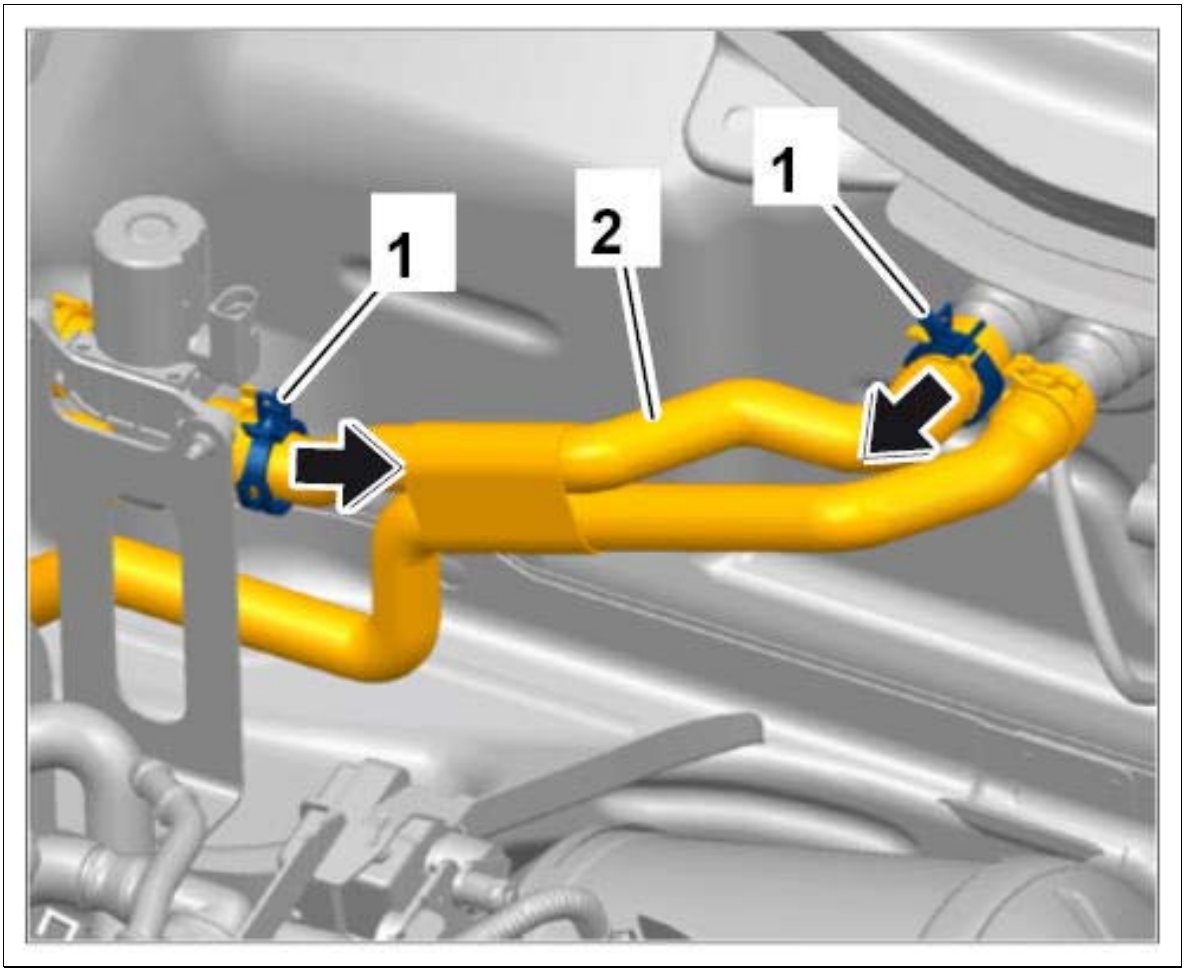

Courtesy of PORSCHE CARS NORTH AMERICA, INC.

WM 803219 REMOVING AND INSTALLING HEAT EXCHANGER RETURN HOSE (MACAN, MACAN S, MACAN TURBO) > REMOVING AND INSTALLING HEAT EXCHANGER RETURN HOSE > REMOVING HEAT EXCHANGER RETURN HOSE (AUXILIARY HEATING)

If auxiliary heating system is installed:

1. Loosen spring band clamps **-1- (-arrows-)** .
2. Pull hose **-2-** off the heat exchanger return connection piece and directional-control valve connection piece.

Fig 1: Removing Heat Exchanger Return Hose

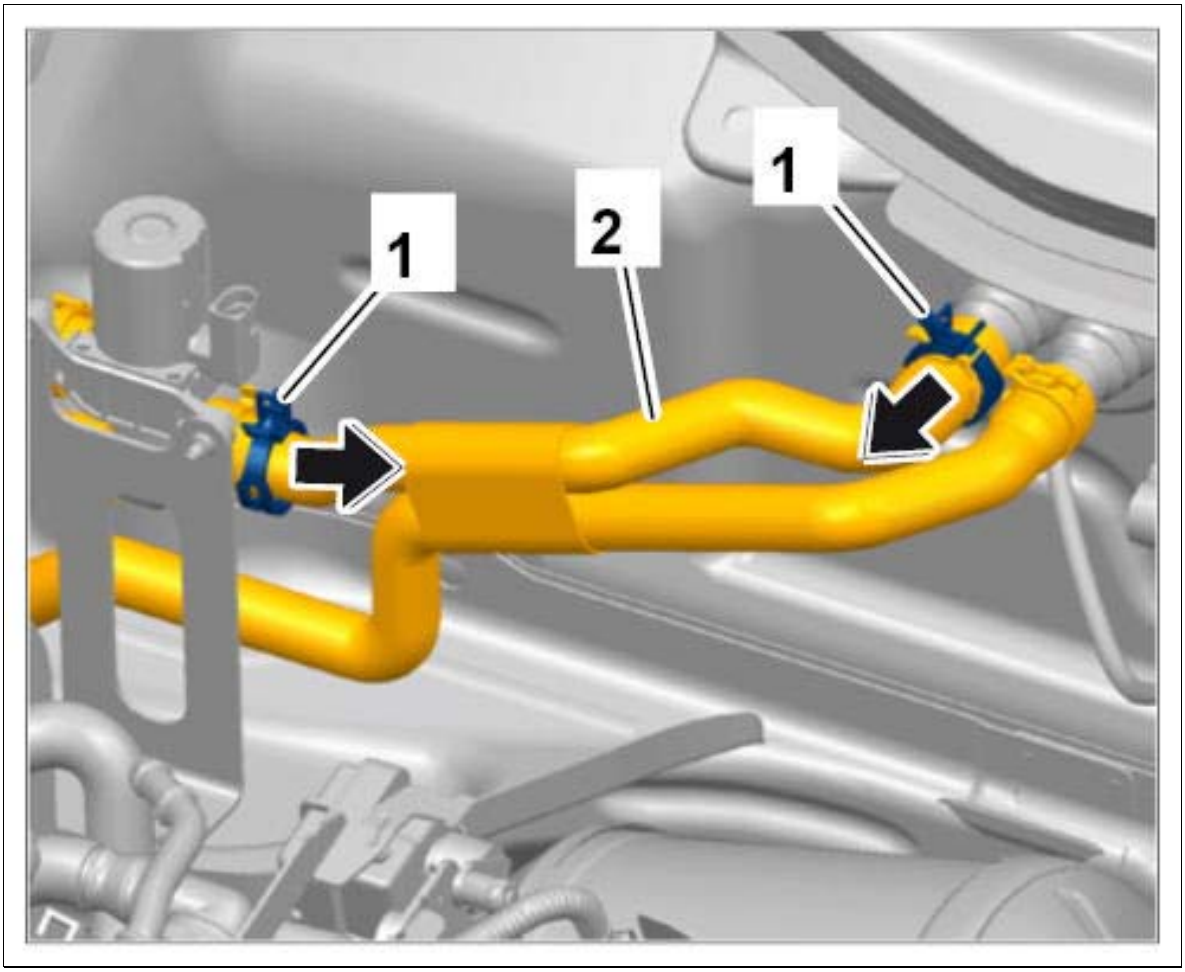

Courtesy of PORSCHE CARS NORTH AMERICA, INC.

If auxiliary heating system is not installed:

3. Disconnect spring band clamp **-1-** on heat exchanger return connection piece **-arrow-** .

Fig 2: Disconnecting Spring Band Clamp On Heat Exchanger Return Hose Connection

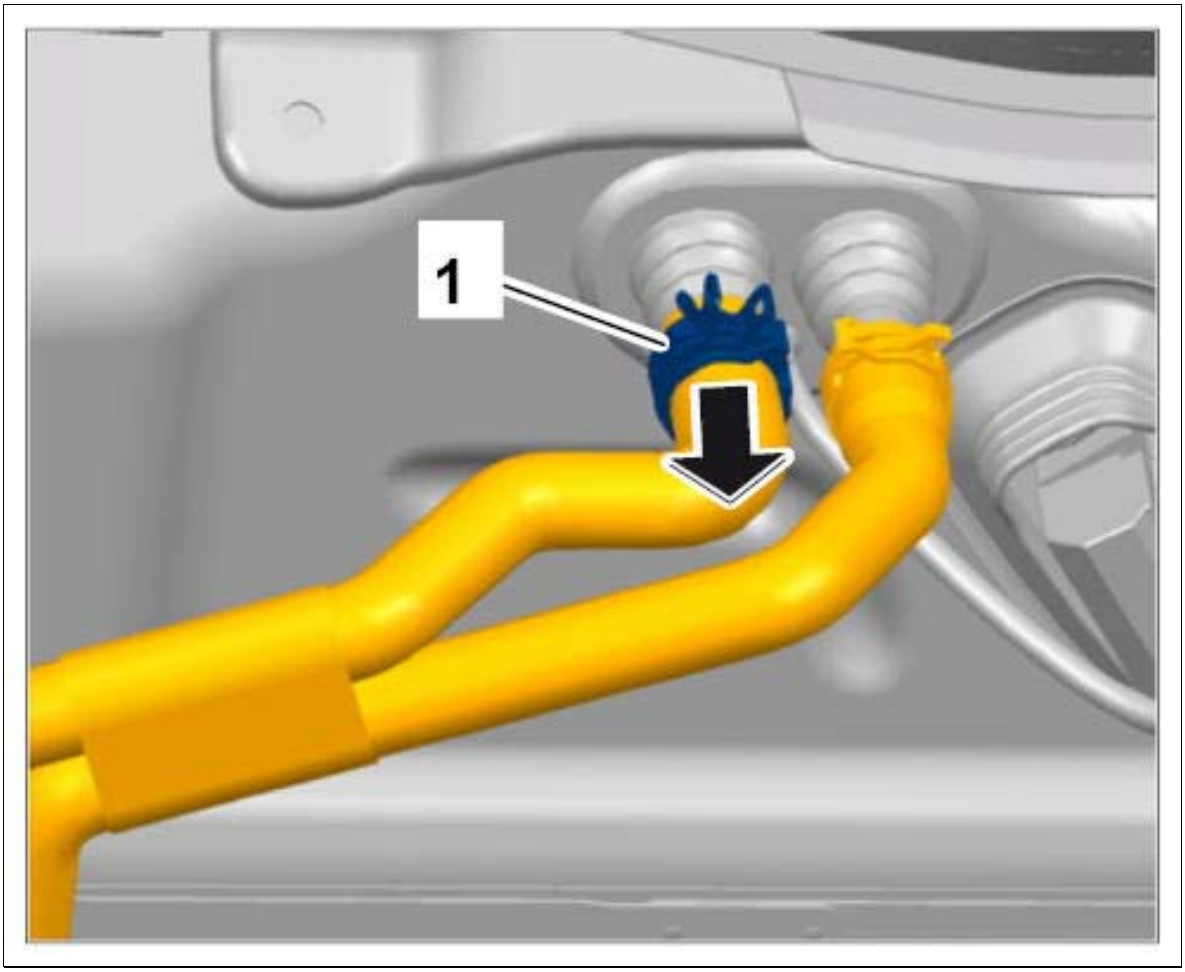

Courtesy of PORSCHE CARS NORTH AMERICA, INC.

4. Loosen spring band clamp **-1-** on the auxiliary pump connection piece **-arrow-** .

Fig 3: Loosening Spring Band Clamp On Auxiliary Pump Connection

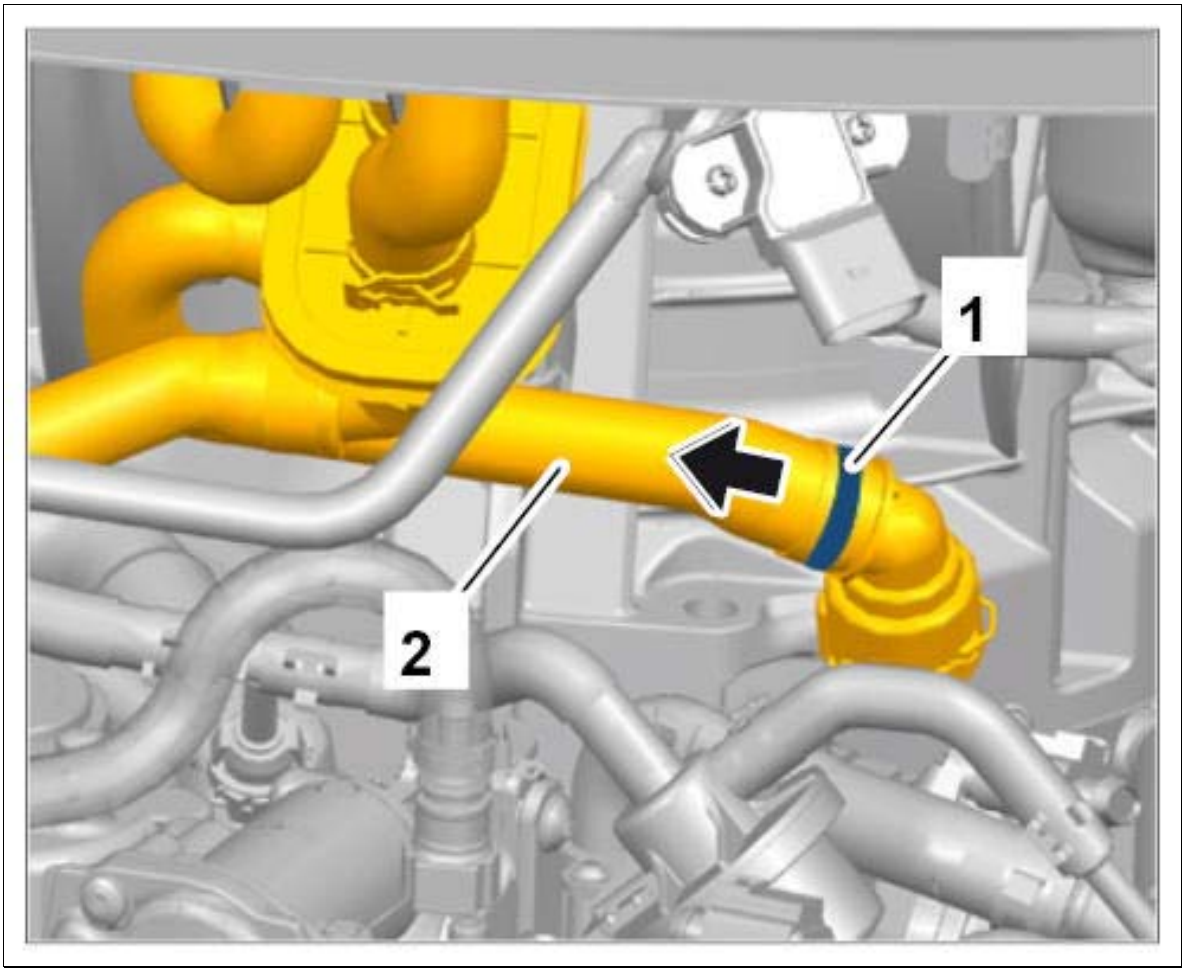

Courtesy of PORSCHE CARS NORTH AMERICA, INC.

5. Pull heat exchanger return hose **-2-** through the grommet in the plenum panel wall and remove it.

WM 803219 REMOVING AND INSTALLING HEAT EXCHANGER RETURN HOSE (MACAN, MACAN S, MACAN TURBO) > REMOVING AND INSTALLING HEAT EXCHANGER RETURN HOSE > INSTALLING HEAT EXCHANGER RETURN HOSE

1. Installation is performed in reverse order.

WM 803219 REMOVING AND INSTALLING HEAT EXCHANGER RETURN HOSE (MACAN, MACAN S, MACAN TURBO) > SUBSEQUENT WORK

1. Install cowl panel cover → 508719 REMOVING AND INSTALLING COWL PANEL COVER .
2. Fill in refrigerant → DRAINING AND FILLING REFRIGERANT .

WM 805519 REMOVING AND INSTALLING FRONT FOOTWELL OUTLET VENTS (MACAN, MACAN S, MACAN TURBO) > PRELIMINARY WORK

1. **Applies to left footwell outlet vent:**

   Remove trim panel under dashboard at the left → 70191901 REMOVING AND INSTALLING TRIM PANEL UNDER DASHBOARD AT THE LEFT .

   Applies to right footwell outlet vent:

   Remove glove compartment → 681519 REMOVING AND INSTALLING GLOVE COMPARTMENT .

WM 805519 REMOVING AND INSTALLING FRONT FOOTWELL OUTLET VENTS (MACAN, MACAN S, MACAN TURBO) > REMOVING AND INSTALLING FRONT LEFT FOOTWELL OUTLET VENTS > REMOVING FRONT LEFT FOOTWELL OUTLET VENT

1. Release and disconnect connector **-1-** for the temperature sensor.
2. Unscrew fastening screw **-2-** .
3. Guide footwell outlet vent out to the left **-arrow-** .

Fig 1: Identifying Front Left Footwell Outlet Vent Temperature Sensor

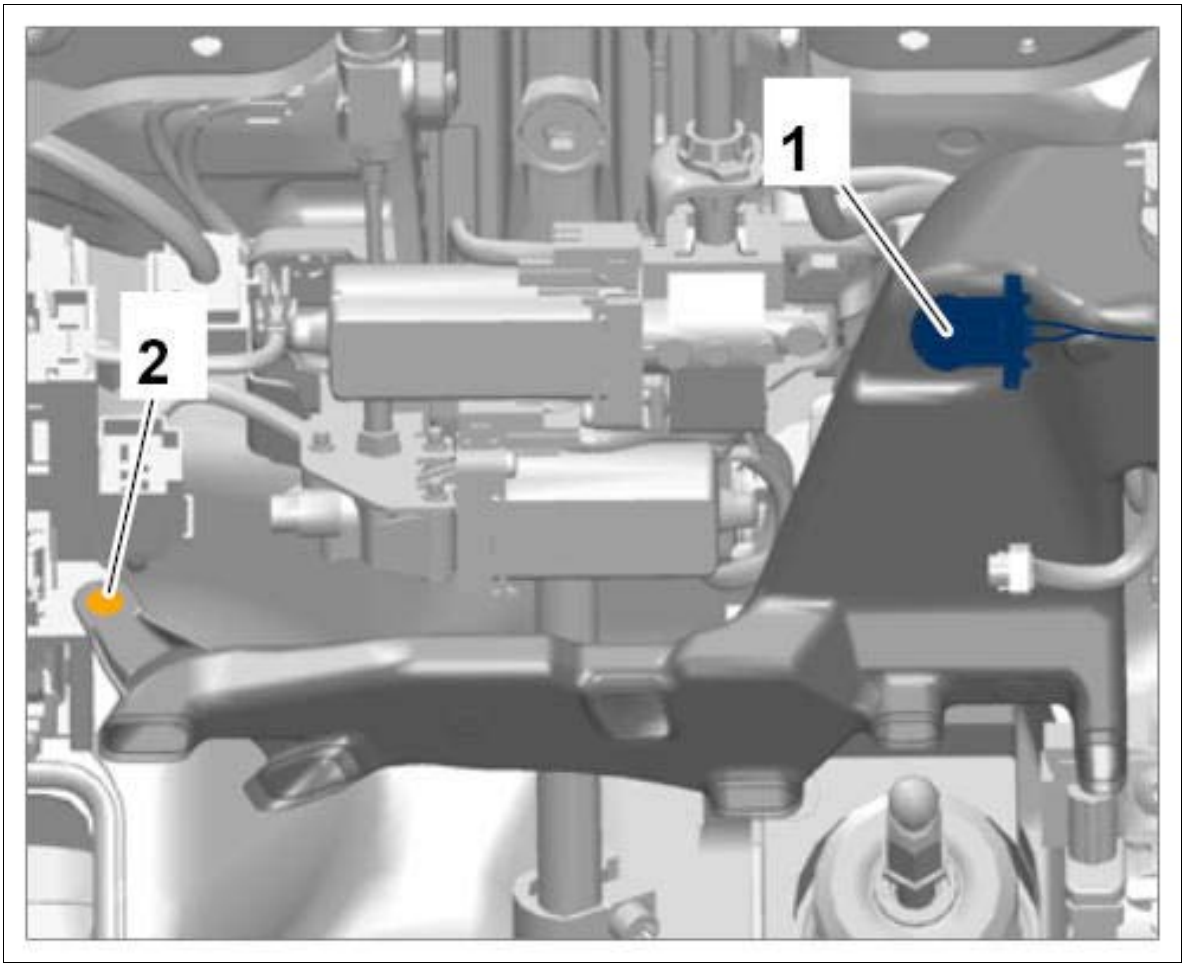

Courtesy of PORSCHE CARS NORTH AMERICA, INC.

4. If the footwell outlet vent will be replaced, the temperature sensor must be converted beforehand. → Temperature sensor

Fig 2: Identifying Temperature Sensor



Courtesy of PORSCHE CARS NORTH AMERICA, INC.

WM 805519 REMOVING AND INSTALLING FRONT FOOTWELL OUTLET VENTS (MACAN, MACAN S, MACAN TURBO) > REMOVING AND INSTALLING FRONT LEFT FOOTWELL OUTLET VENTS > INSTALLING FRONT LEFT FOOTWELL OUTLET VENT

1. Installation is performed in reverse order.

WM 805519 REMOVING AND INSTALLING FRONT FOOTWELL OUTLET VENTS (MACAN, MACAN S, MACAN TURBO) > REMOVING AND INSTALLING FRONT RIGHT FOOTWELL OUTLET VENTS > REMOVING FOOTWELL OUTLET VENT AT THE FRONT RIGHT

1. Release and disconnect connector **-1-** for the temperature sensor.
2. Unscrew fastening screw **-2-** .
3. Guide footwell outlet vent out to the right **-arrow-** .

Fig 1: Identifying Front Right Footwell Outlet Vent Temperature Sensor

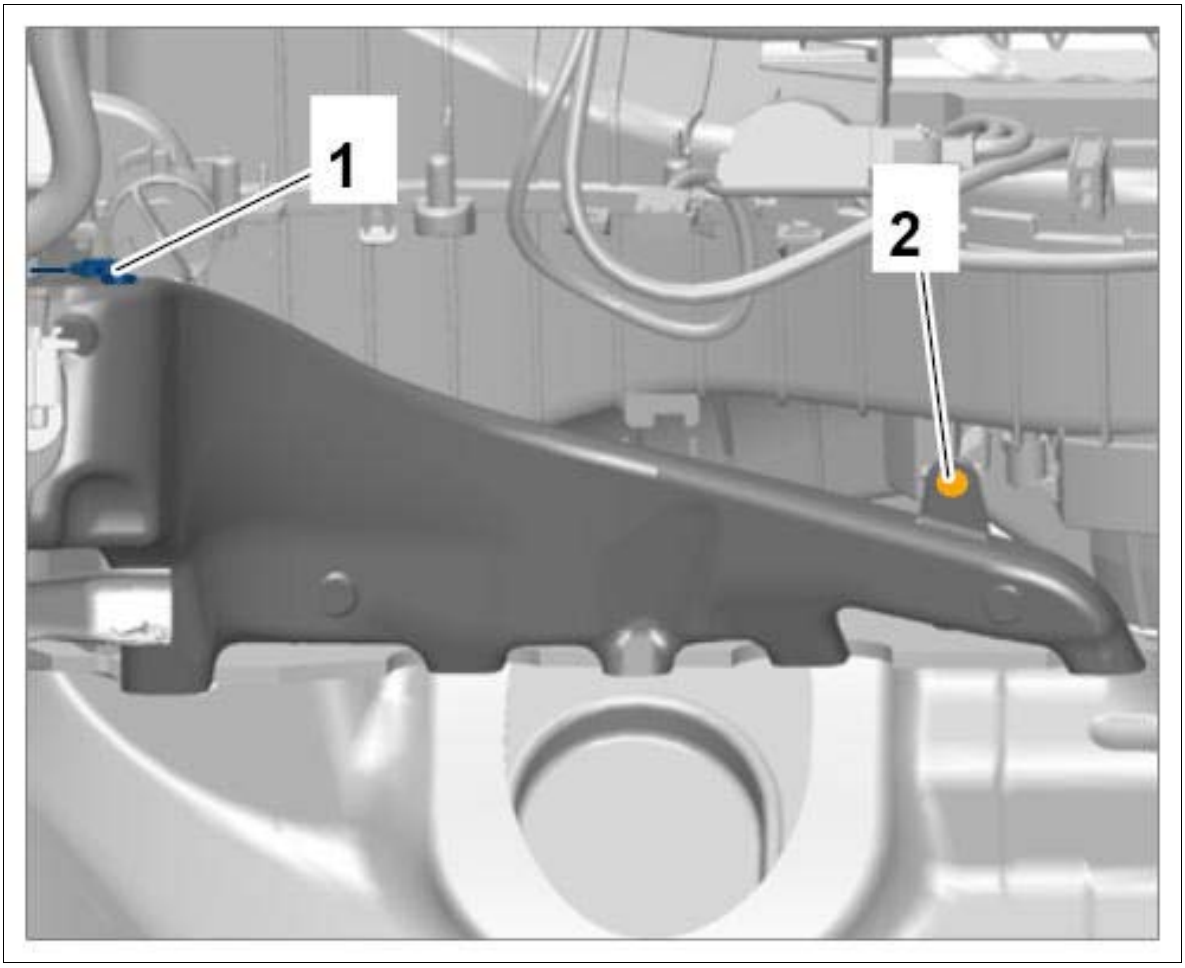

Courtesy of PORSCHE CARS NORTH AMERICA, INC.

4. If the footwell outlet vent will be replaced, the temperature sensor must be converted beforehand. → Temperature sensor

Fig 2: Identifying Temperature Sensor



Courtesy of PORSCHE CARS NORTH AMERICA, INC.

WM 805519 REMOVING AND INSTALLING FRONT FOOTWELL OUTLET VENTS (MACAN, MACAN S, MACAN TURBO) > REMOVING AND INSTALLING FRONT RIGHT FOOTWELL OUTLET VENTS > INSTALLING FOOTWELL OUTLET VENT AT THE FRONT RIGHT

1. Installation is performed in reverse order.

   Observe specified tightening torques:

   Left footwell outlet vent to body:

   Right footwell outlet vent to air conditioner:

WM 805519 REMOVING AND INSTALLING FRONT FOOTWELL OUTLET VENTS (MACAN, MACAN S, MACAN TURBO) > SUBSEQUENT WORK

1. **Applies to left footwell outlet vent:**

   Install trim panel under dashboard at the left → INSTALLING TRIM PANEL UNDER DASHBOARD AT THE LEFT .

   Applies to right footwell outlet vent:

   Install glove compartment → INSTALLING GLOVE COMPARTMENT .

Service Manual: 82 - AUXILIARY HEATING -- (95B) - MACAN

WM 8209AN TEACHING REMOTE CONTROL FOR AUXILIARY HEATING (ALL MODELS) > TOOLS

Designation	Type	Number	Description	
PIWIS Tester II	Special tool	9818		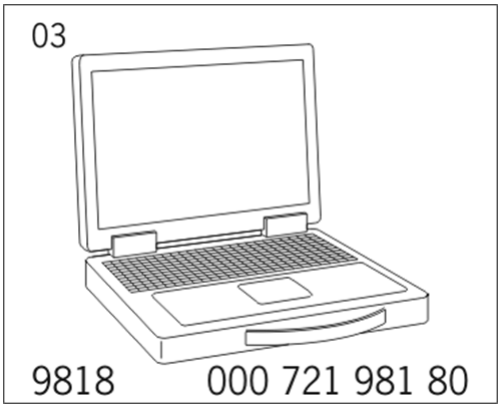

WM 8209AN TEACHING REMOTE CONTROL FOR AUXILIARY HEATING (ALL MODELS) > TEACHING REMOTE CONTROL FOR AUXILIARY HEATING

Information

- The remote control for the auxiliary heater can only be taught using the Porsche System Tester.
- A maximum of three remote controls can be taught per vehicle.

Fig 1: Identifying Auxiliary Heating Remote Control

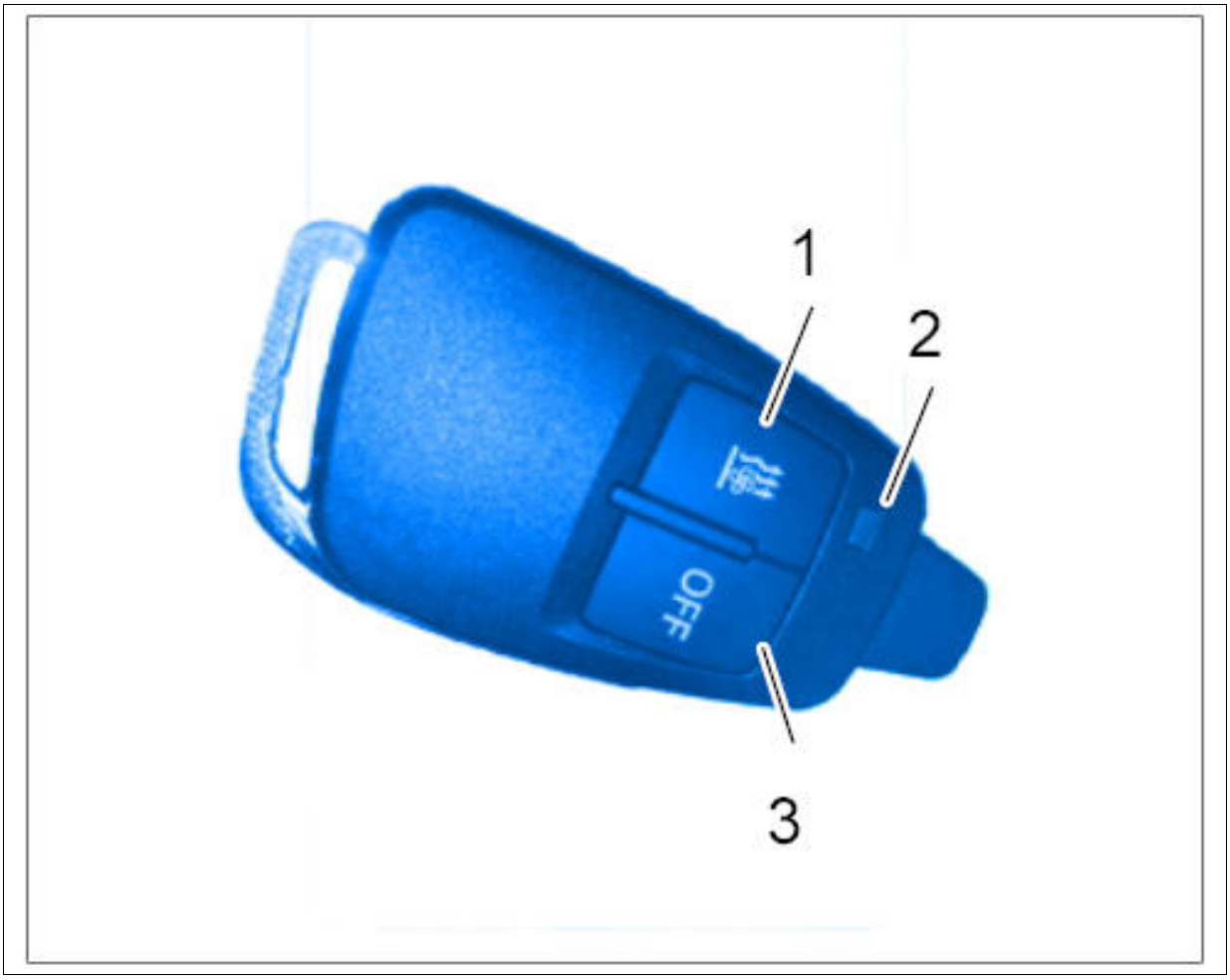

Courtesy of PORSCHE CARS NORTH AMERICA, INC.

1. ON button
2. LED
3. OFF button

1. **PIWIS Tester II 9818** must be connected to the vehicle before starting the System Tester. Switch on ignition.
2. Select the vehicle type.
3. Select the **Drive links/checks** menu and press [F12] to continue.
4. Select the **Teach remote control to receiver** menu, press [F12] and follow the instructions on the System Tester.
5. Press [F8] to start the teaching process.
6. After the **SEND** message appears, press the [OFF] button **-3-** on the remote control within 5 seconds until the "saved" message appears. The remote control is now taught.
7. To teach other remote controls, repeat the process.

8. Carry out a function test on the remote control and then read out the fault memory.
9. **PIWIS Tester II 9818** must now be disconnected from the vehicle.

WM 8209AN TEACHING REMOTE CONTROL FOR AUXILIARY HEATING (ALL MODELS) > SWITCHING AUXILIARY HEATING ON AND OFF WITH REMOTE CONTROL > SWITCHING ON AUXILIARY HEATING WITH REMOTE CONTROL

1. [ON] button **-1-** must be pressed for approx. 2 seconds. The LED **-2-** flashes green and goes out once the auxiliary heater is started completely.

    1. ON button
    2. LED
    3. OFF button

Fig 1: Identifying Auxiliary Heating Remote Control

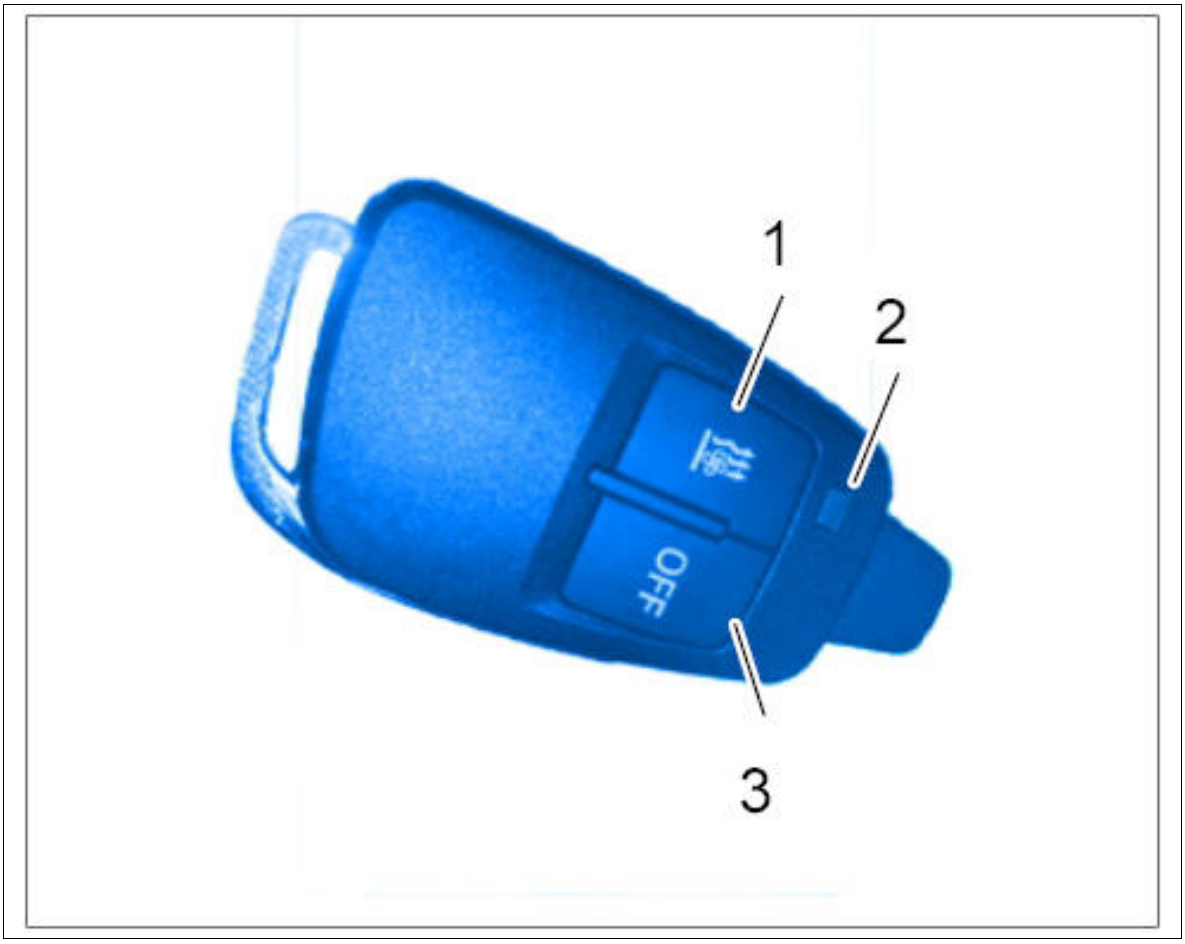

Courtesy of PORSCHE CARS NORTH AMERICA, INC.

WM 8209AN TEACHING REMOTE CONTROL FOR AUXILIARY HEATING (ALL

MODELS) > SWITCHING AUXILIARY HEATING ON AND OFF WITH REMOTE CONTROL > SWITCHING OFF AUXILIARY HEATING WITH REMOTE CONTROL

1. [OFF] button **-3-** must be pressed for approx. 2 seconds. The LED **-2-** flashes red and goes out once the auxiliary heater is shut down completely.

    1. ON button
    2. LED
    3. OFF button

Fig 1: Identifying Auxiliary Heating Remote Control

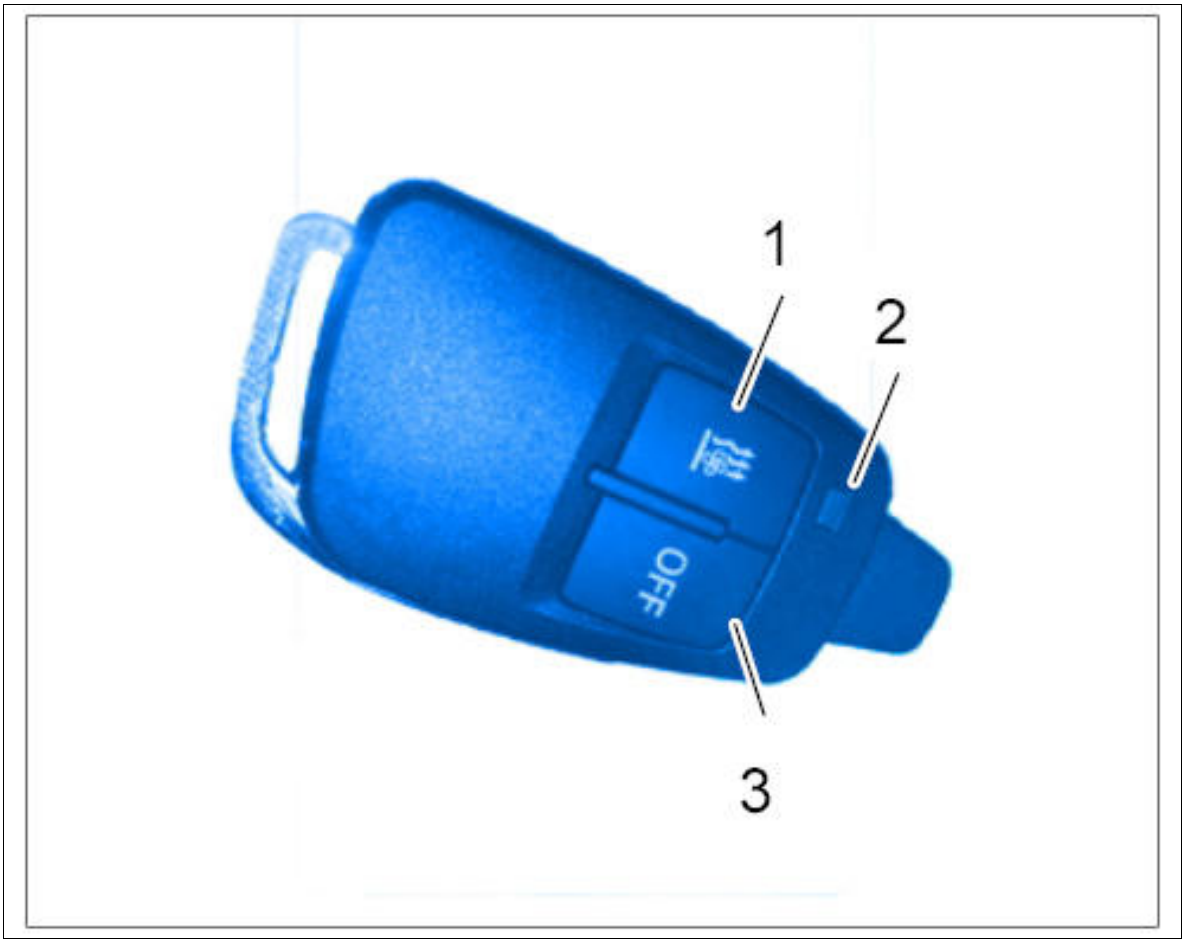

Courtesy of PORSCHE CARS NORTH AMERICA, INC.

WM 821819 REMOVING AND INSTALLING CONTROL UNIT FOR AUXILIARY HEATER (ALL MODELS) > REMOVING AND INSTALLING CONTROL UNIT FOR AUXILIARY HEATER > REMOVING CONTROL UNIT FOR AUXILIARY HEATER

1. Unscrew fastening screws **-2-** on control unit for auxiliary heater **-1-** .

Fig 1: Loosening Control Unit

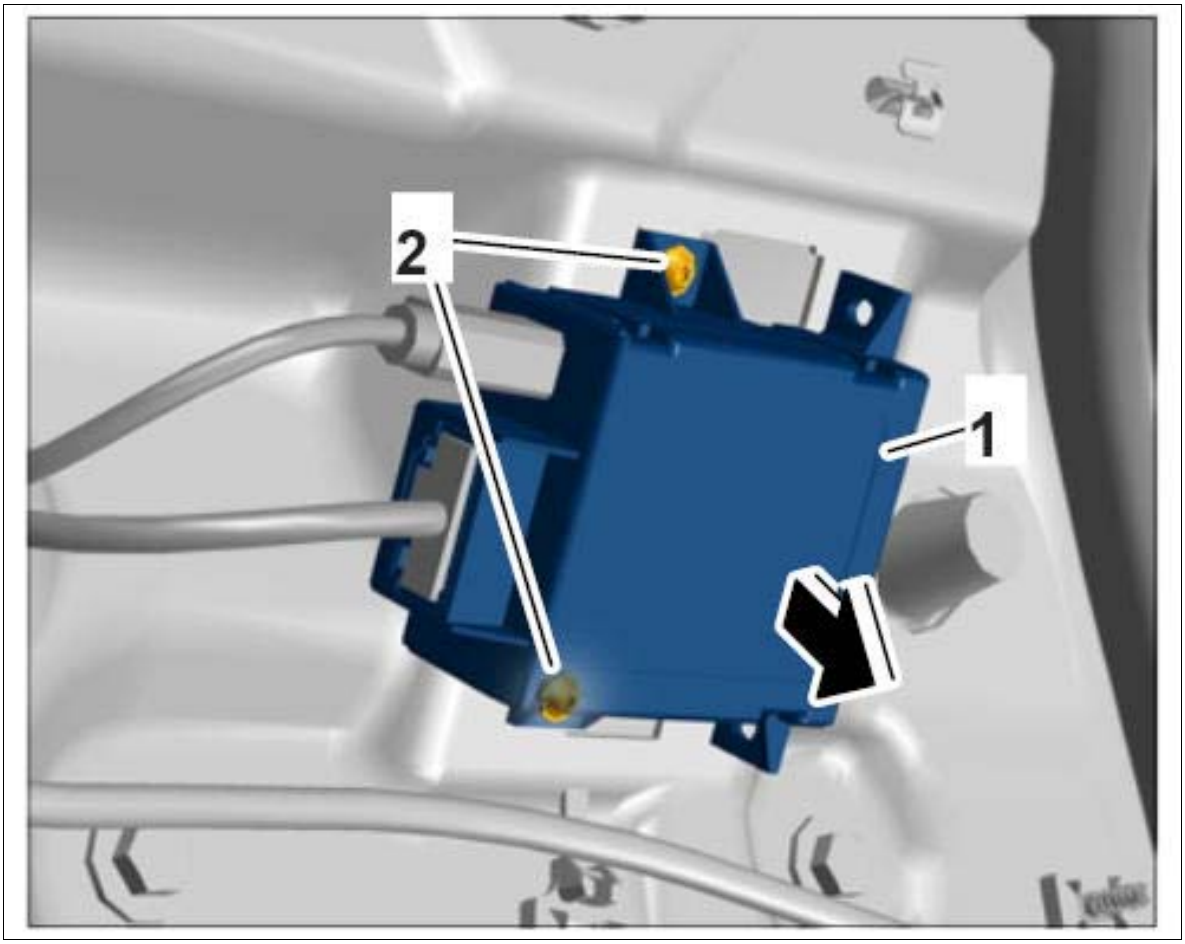

Courtesy of PORSCHE CARS NORTH AMERICA, INC.

2. Release plug connections **-arrow A-** and pull them off **-arrow B-** .

Fig 2: Disconnecting Plug Connections

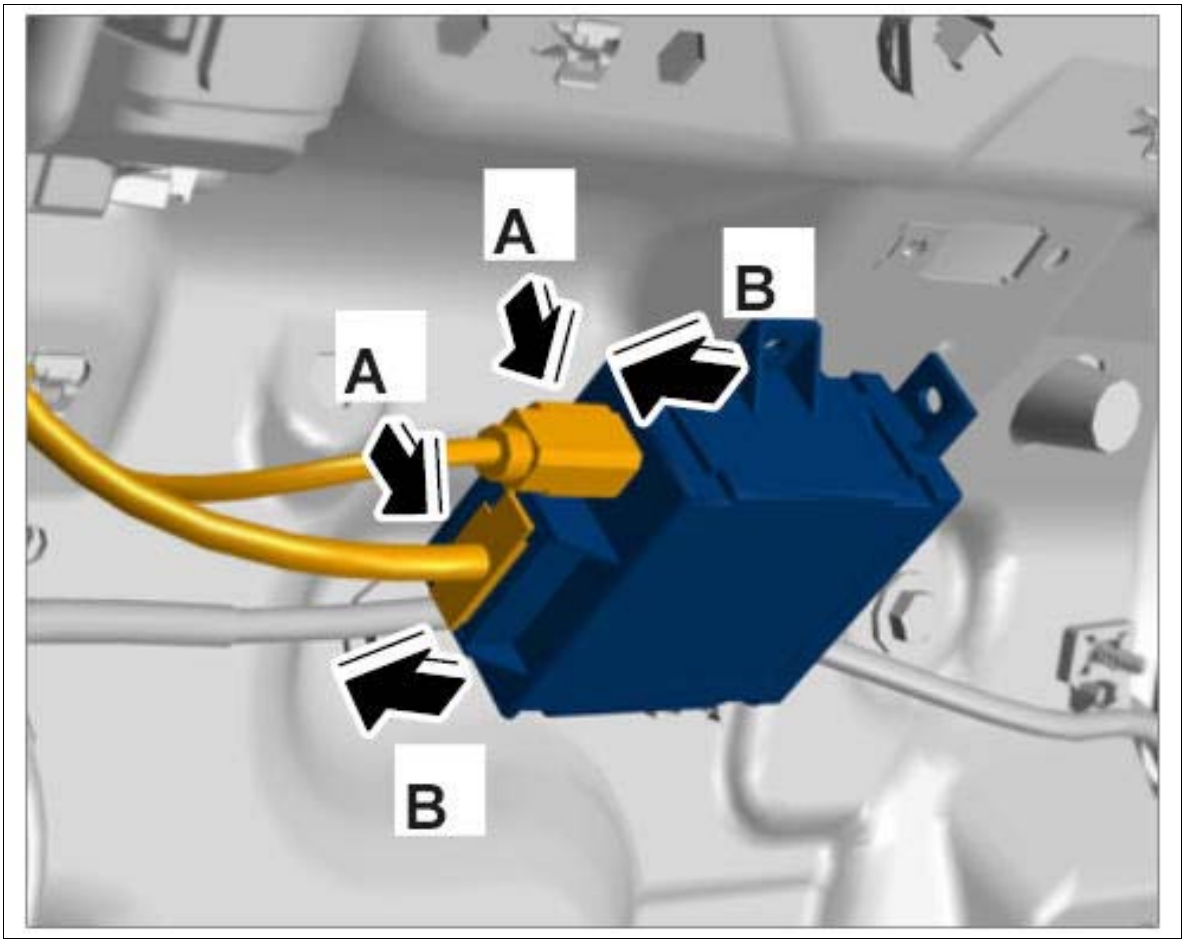

Courtesy of PORSCHE CARS NORTH AMERICA, INC.

WM 821819 REMOVING AND INSTALLING CONTROL UNIT FOR AUXILIARY HEATER (ALL MODELS) > REMOVING AND INSTALLING CONTROL UNIT FOR AUXILIARY HEATER > INSTALLING CONTROL UNIT FOR AUXILIARY HEATER

1. Connect plug connections until they engage securely.

Fig 1: Connecting Plug Connections

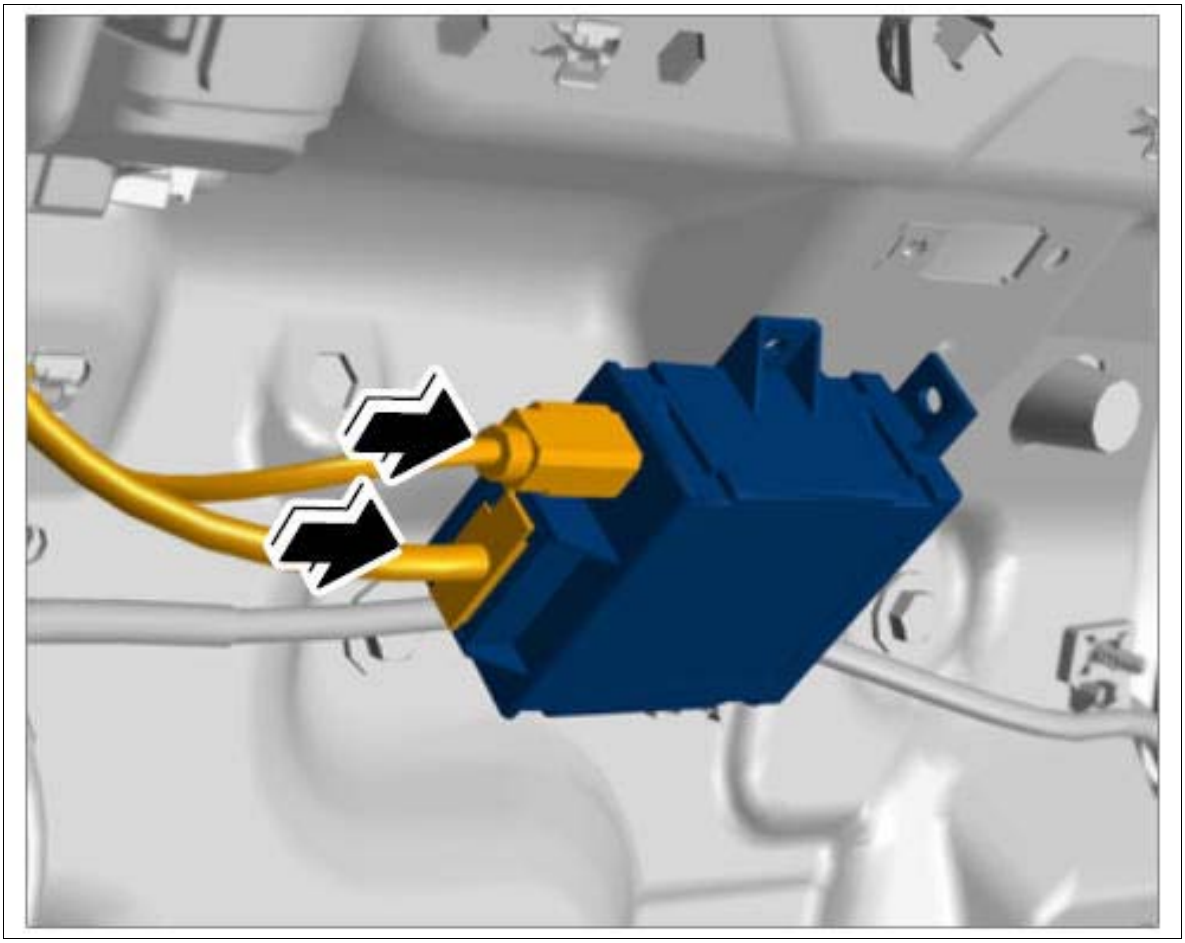

Courtesy of PORSCHE CARS NORTH AMERICA, INC.

2. Screw in fastening screws **-2-** for control unit for auxiliary heater **-1-** .

Fig 2: Securing Control Unit

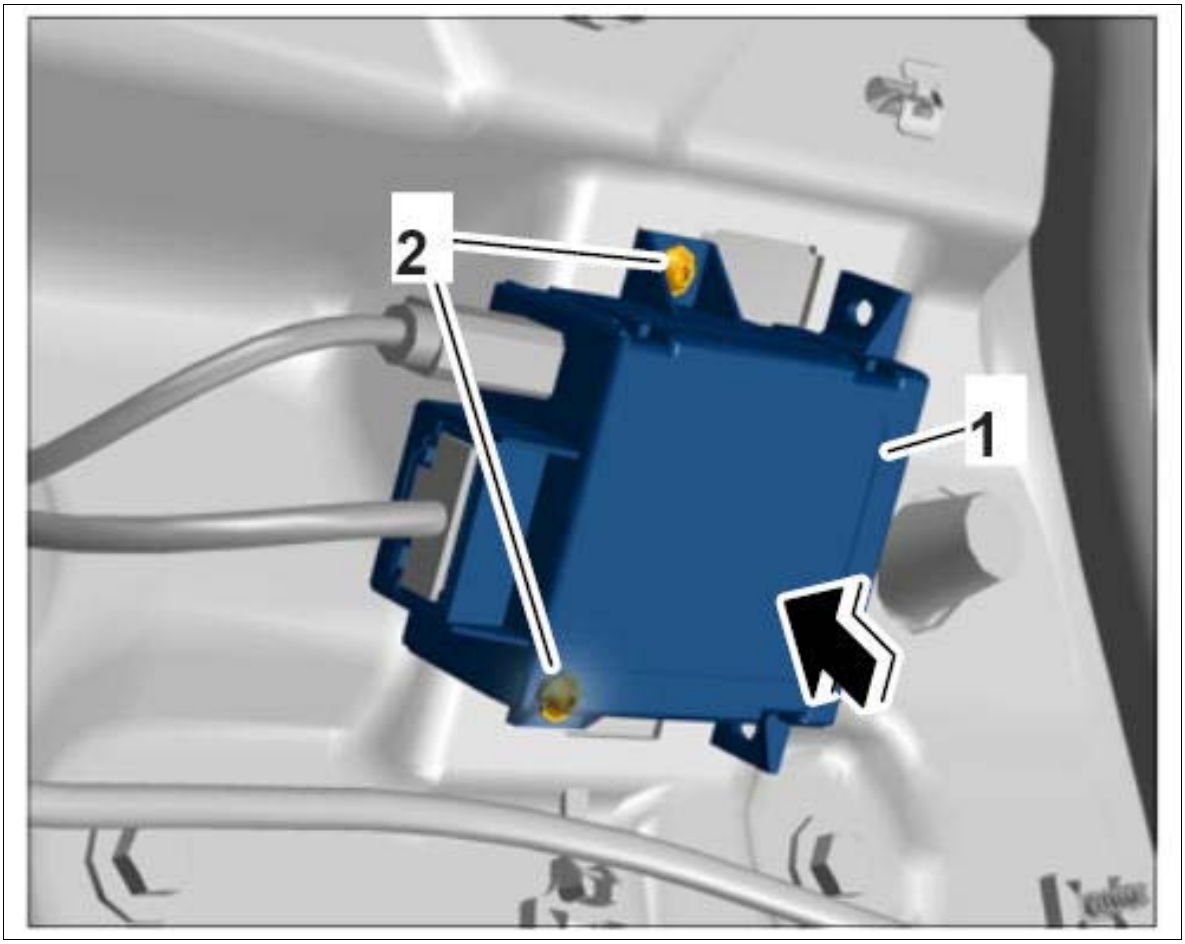

Courtesy of PORSCHE CARS NORTH AMERICA, INC.

WM 822019 REMOVING AND INSTALLING COMPLETE HEATER (ALL MODELS) > TOOLS

Designation	Type	Number	Description	
hose clamp	VW tool	3094		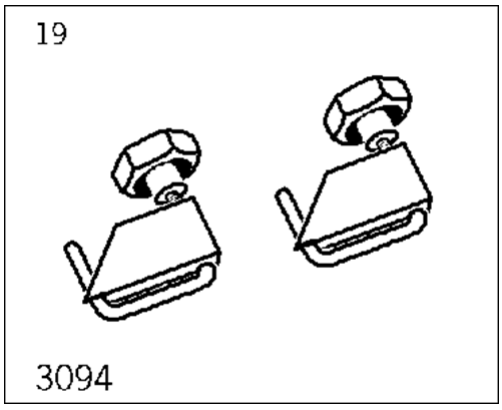

PIWIS Tester II	Special tool	9818		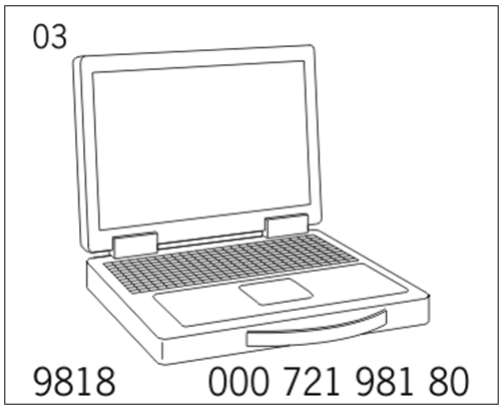
assembly pliers	Commercially available tool	Nr.72 Pos.1		

WM 822019 REMOVING AND INSTALLING COMPLETE HEATER (ALL MODELS) > TECHNICAL VALUES

Location	Description	Type	Basic value	Tolerance 1	Tolerance 2
Heater holder to body	M6 x 30 thread	Tightening torque	20 Nm (15 ftlb.)		

WM 822019 REMOVING AND INSTALLING COMPLETE HEATER (ALL MODELS) > INFORMATION > INSTALLATION POSITION OF HEATER

The heater is behind the wheel housing liner in the front right wheel housing.

Fig 1: Overview Of Heater Wheel Housing



Courtesy of PORSCHE CARS NORTH AMERICA, INC.

WM 822019 REMOVING AND INSTALLING COMPLETE HEATER (ALL MODELS) > PRELIMINARY WORK

1. Remove right front wheel → Removing Wheel
2. Remove front wheel housing liner at the right → Removing front wheel housing liner

WM 822019 REMOVING AND INSTALLING COMPLETE HEATER (ALL MODELS) > REMOVING AND INSTALLING HEATER > REMOVING HEATER

NOTE: Danger of scalding

- *Coolant can be very hot.*
- *Coolant may be pressurized.*

→ Only remove the heater when the cooling system has cooled down.

→ By carefully opening the catch on the reservoir, make sure that the cooling system is depressurized.

NOTE: Danger of slipping due to emerging coolant

- *The emerging coolant will make the floor of the workshop slippery and may cause people to slip and fall over.*

→ Collect emerging coolant in a suitable pan.

1. Remove coolant hoses.

    1. 1.1. Clamp coolant hoses **-1-** using hose clamp 3094 **-3-** .

    2. 1.2. Loosen spring band clamps **-2-** using assembly pliers Nr.72 Pos.1 and pull off coolant hoses **-1-** .

WARNING: Emerging fuel

1. Risk of fire

Fig 1: Identifying Coolant Hoses

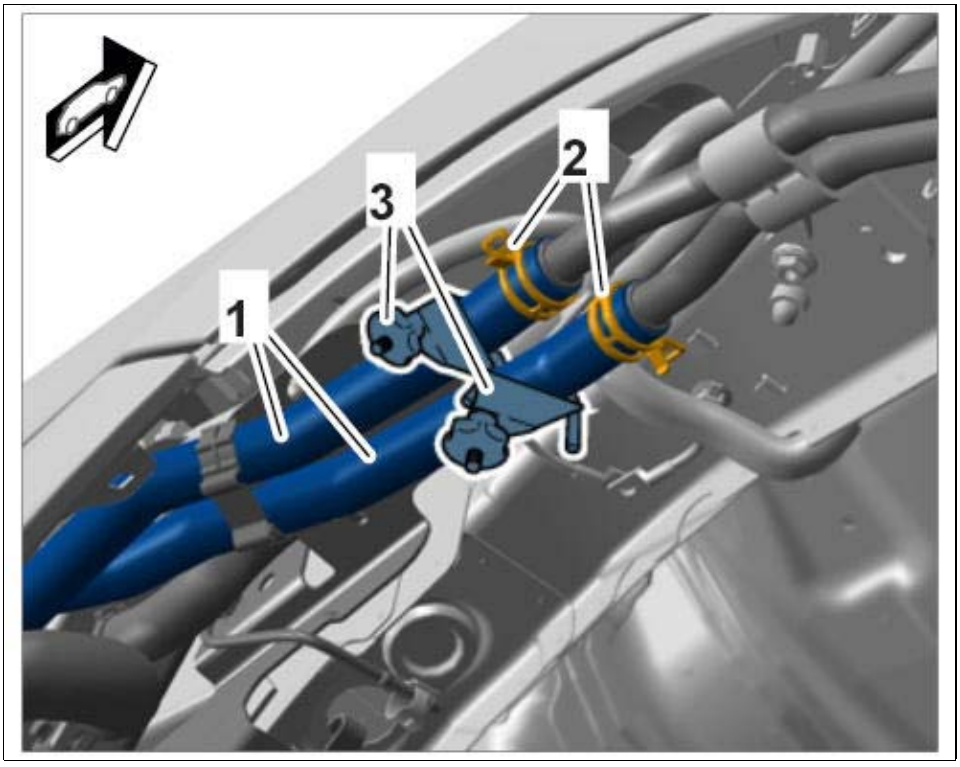

Courtesy of PORSCHE CARS NORTH AMERICA, INC.

→ Avoid contact with hot parts or sources of ignition.

→ Collect emerging fuel, absorb it if necessary with a suitable binding material and dispose of properly.

→ Use suction to remove ignitable vapors.

→ Attach warning sign to vehicle in a clearly visible position.

2. Disconnect fuel line.

1. 2.1. Loosen spring band clamp **-3-** using **assembly pliers Nr.72 Pos.1** and disconnect fuel line **-2-** .

Fig 2: Locating Fuel Line In Wheel Housing

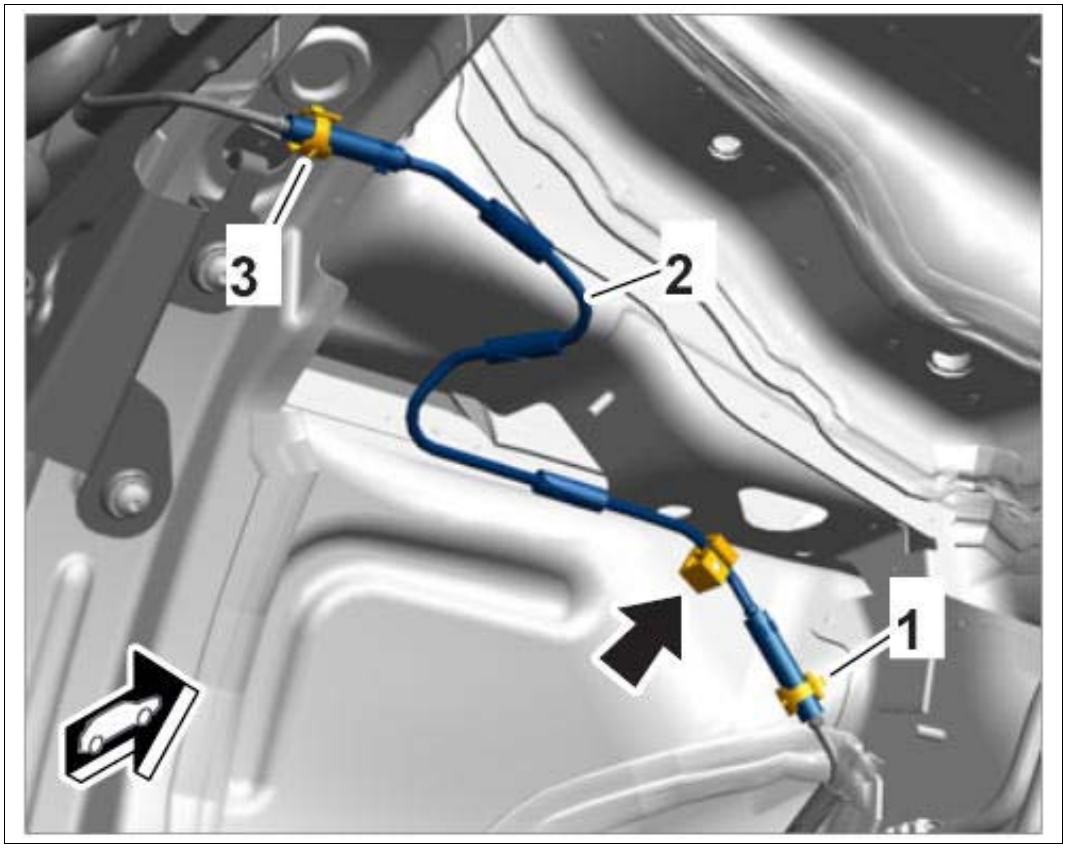

Courtesy of PORSCHE CARS NORTH AMERICA, INC.

3. Disconnect exhaust pipe from silencer.

1. 3.1. Loosen screw-type clamp **-1-** .
2. 3.2. Pull flexi-pipe **-2-** off the silencer pipe **-3-** .

Fig 3: Identifying Exhaust Pipe On Silencer



Courtesy of PORSCHE CARS NORTH AMERICA, INC.

4. Unclip wiring harness **-1-** at position **-arrow-** and remove it from the holder **-2-** .

Fig 4: Locating Wiring Harness On Holder

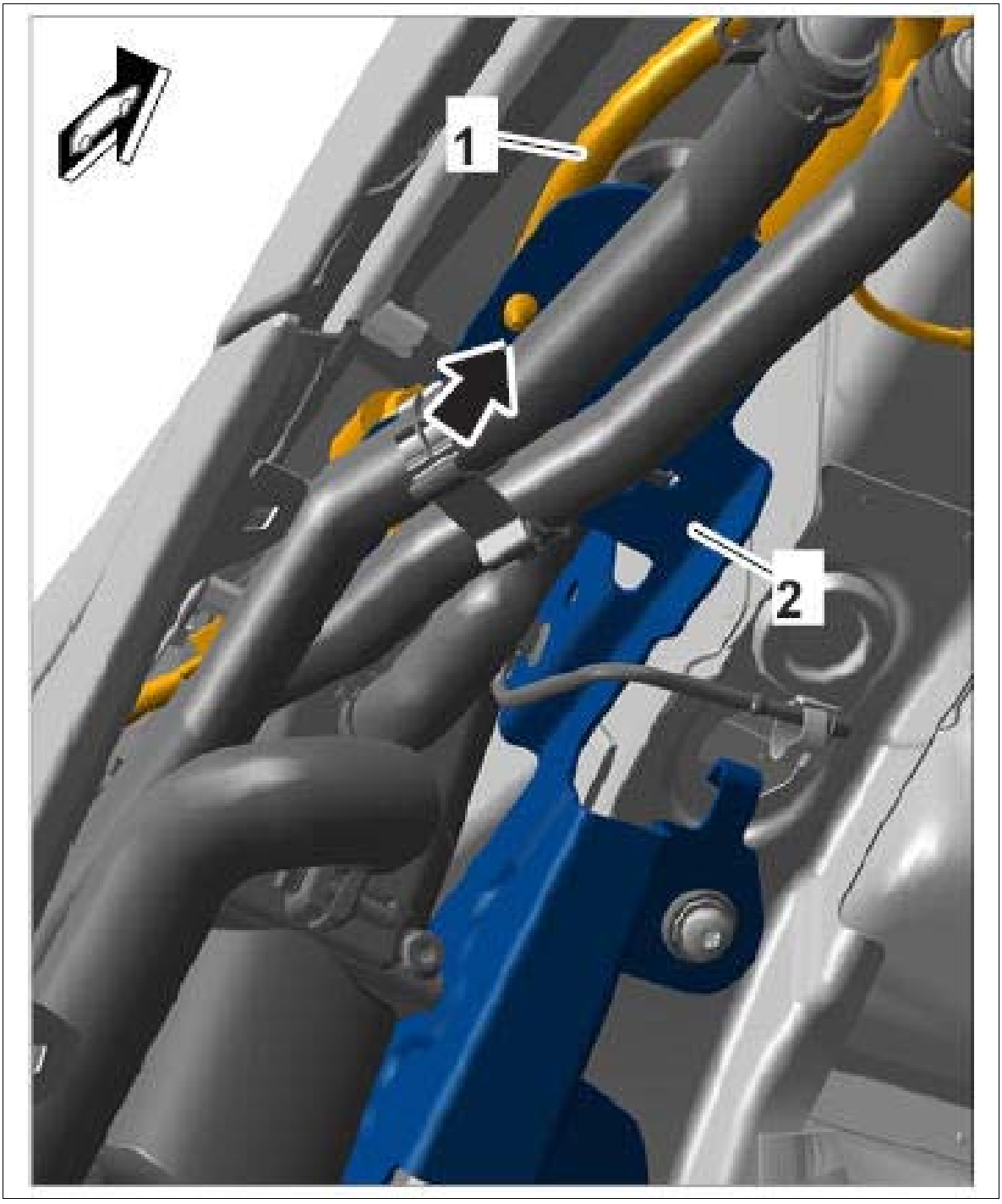

Courtesy of PORSCHE CARS NORTH AMERICA, INC.

5. Release electric plug connection **-1-** from the circulating pump **-2-** and disconnect it.

Fig 5: Identifying Circulating Pump Connector

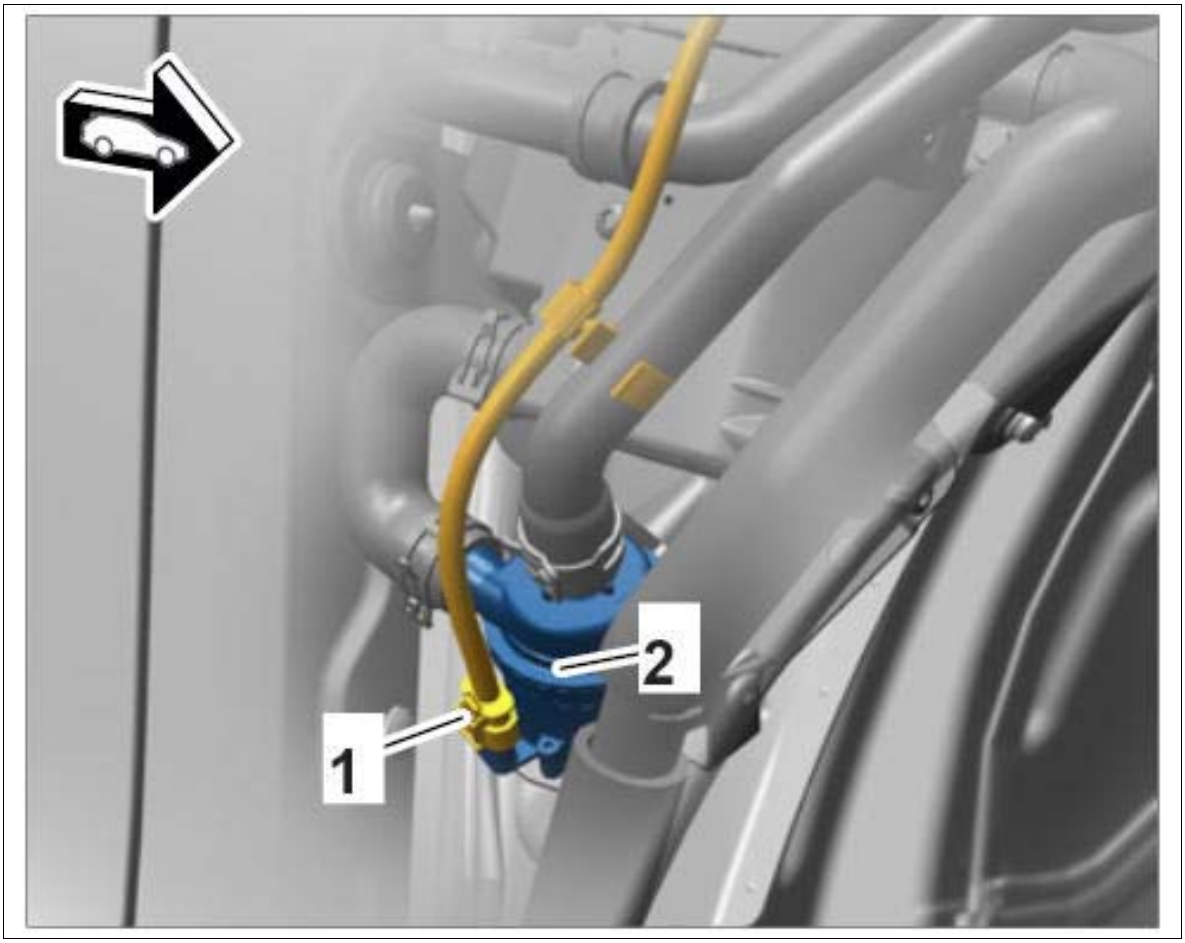

Courtesy of PORSCHE CARS NORTH AMERICA, INC.

6. Unclip wiring harness **-1-** from the coolant hose **-2-** at the marked positions **-arrows-** .

Fig 6: Locating Wiring Harness On Coolant Hose

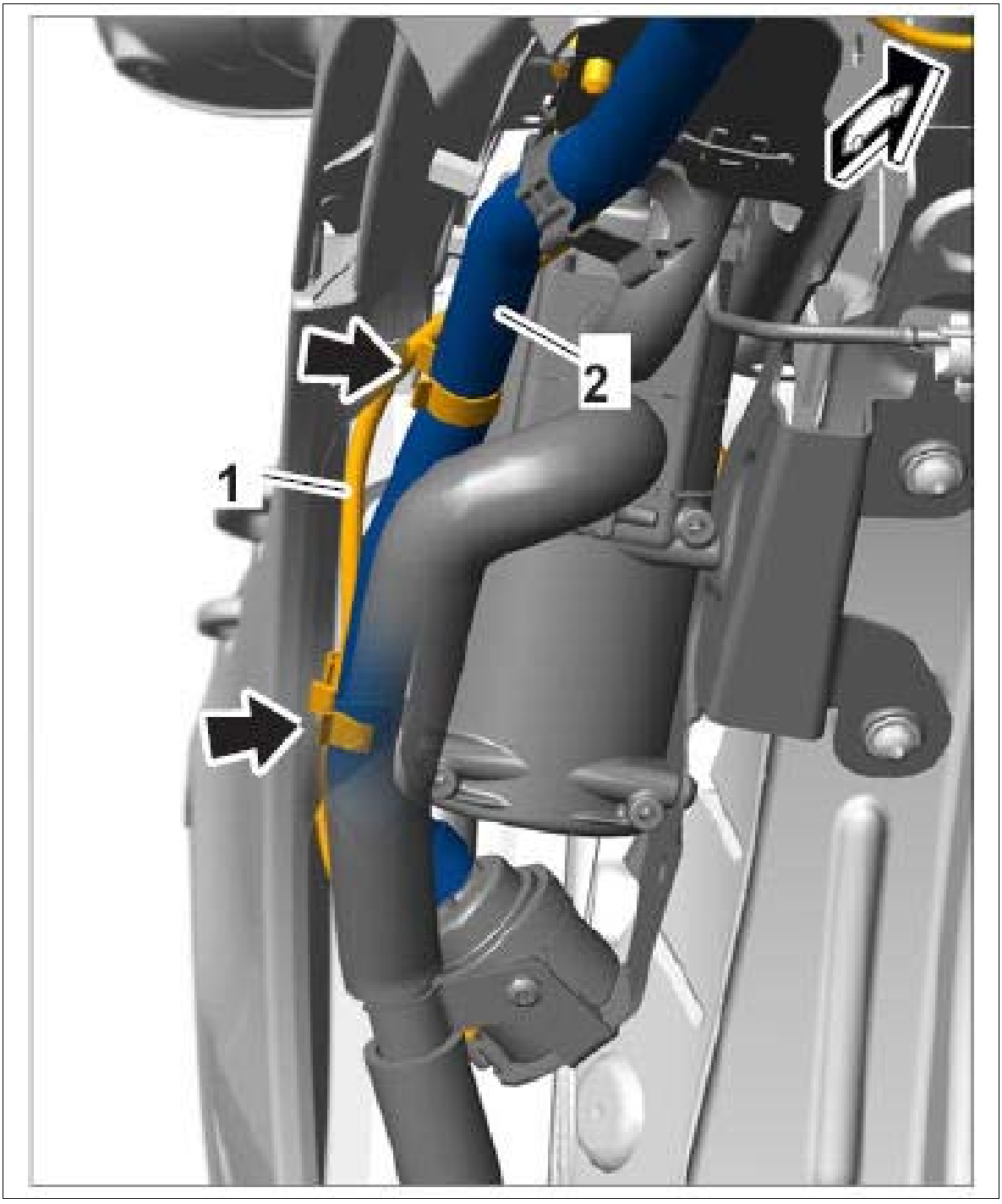

Courtesy of PORSCHE CARS NORTH AMERICA, INC.

7. Remove heater.
    1. 7.1. Unscrew fastening screws **-1-** .
    2. 7.2. Remove heater with holder **-2-** and pull it forward slightly.

Fig 7: Identifying Heater

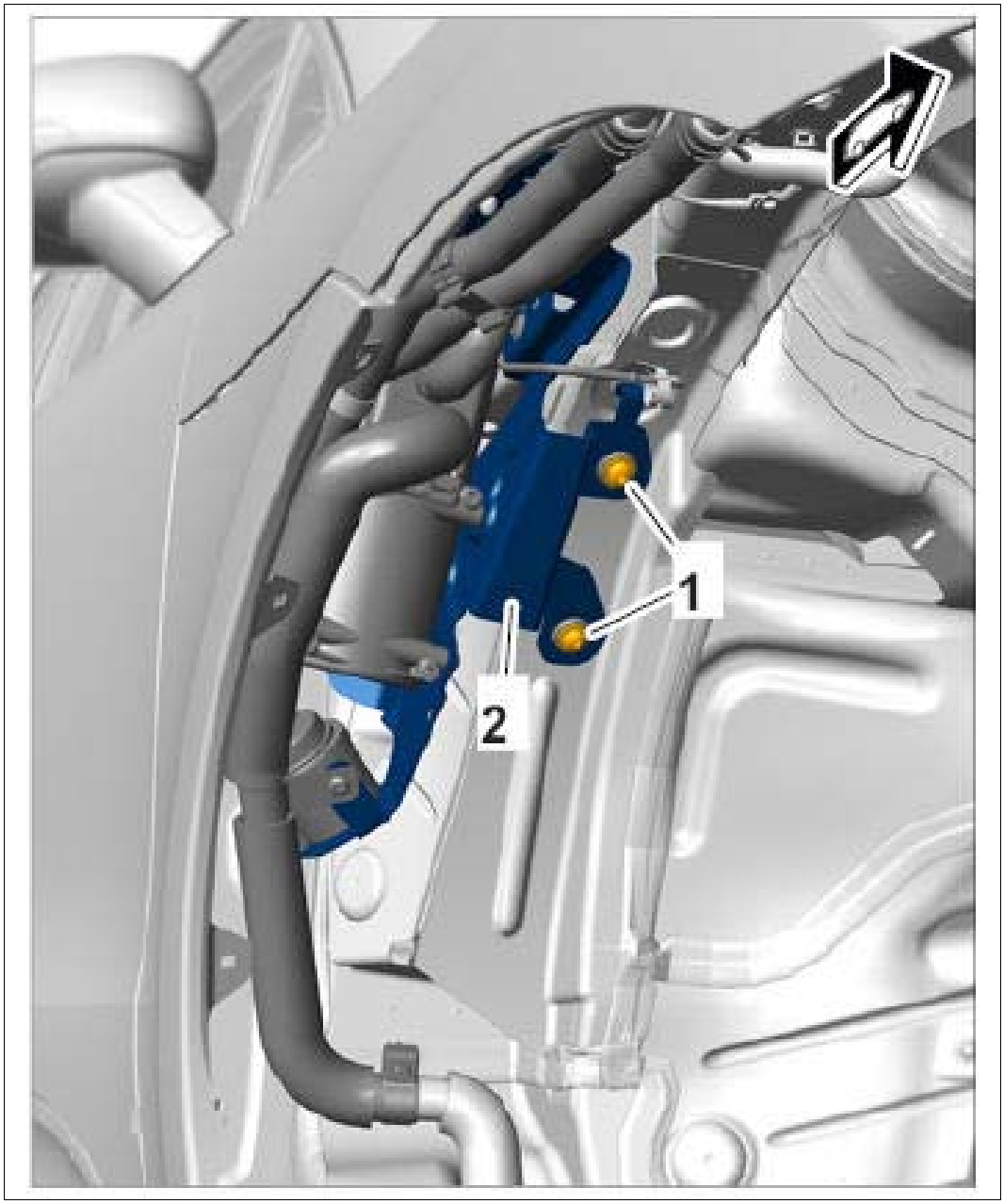

Courtesy of PORSCHE CARS NORTH AMERICA, INC.

3. 7.3. Release and disconnect electric plug connections **-1-** .

Fig 8: Identifying Heater Connectors

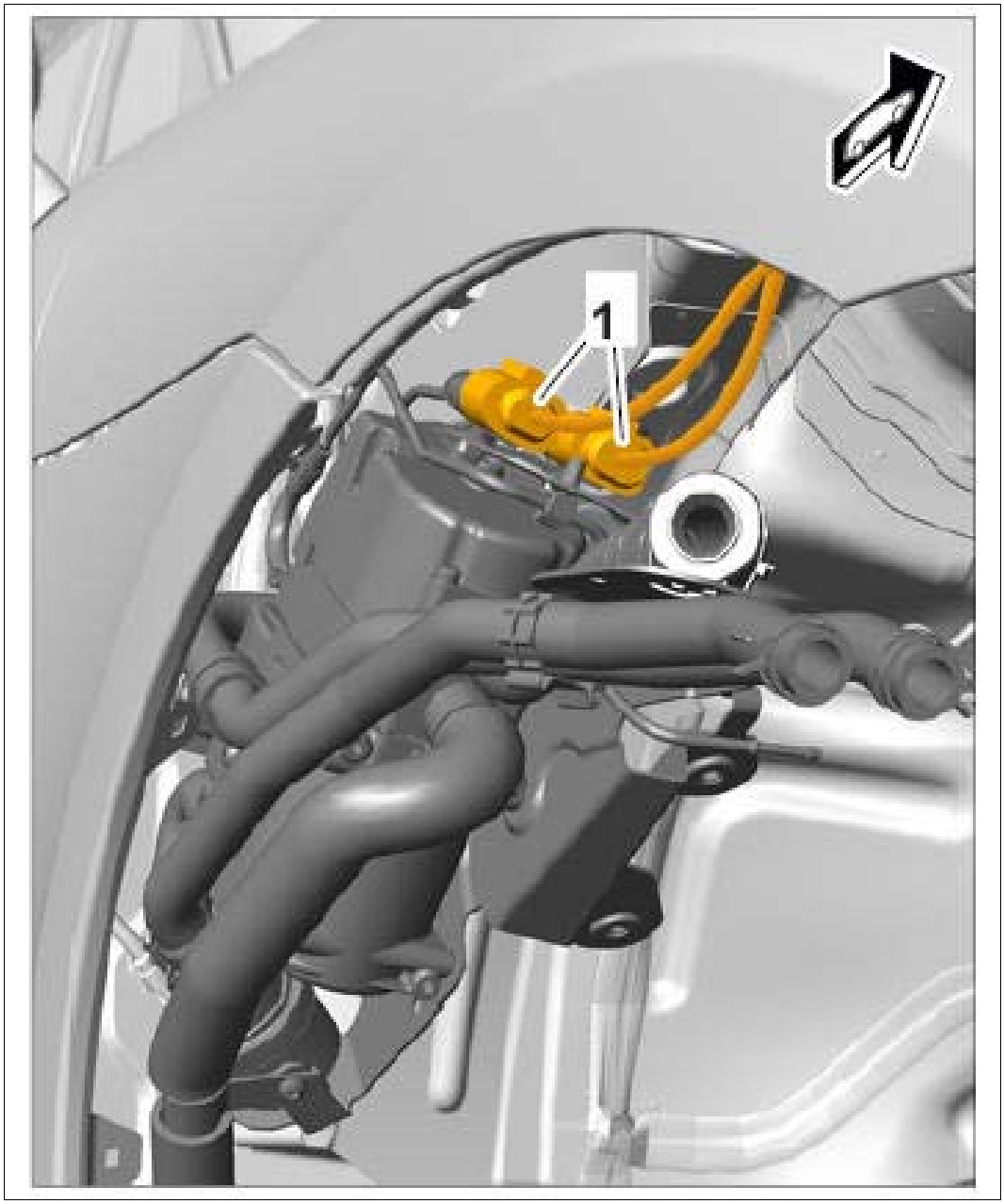

Courtesy of PORSCHE CARS NORTH AMERICA, INC.

WM 822019 REMOVING AND INSTALLING COMPLETE HEATER (ALL MODELS) > REMOVING AND INSTALLING HEATER > INSTALLING HEATER

Information

- There is no guarantee that re-used clamps will secure the component properly.
- Removed clamps must be replaced.
- Always use new clamps during installation.

1. Connect electric plug connections **-1-** until they engage securely.

Fig 1: Identifying Heater Connectors

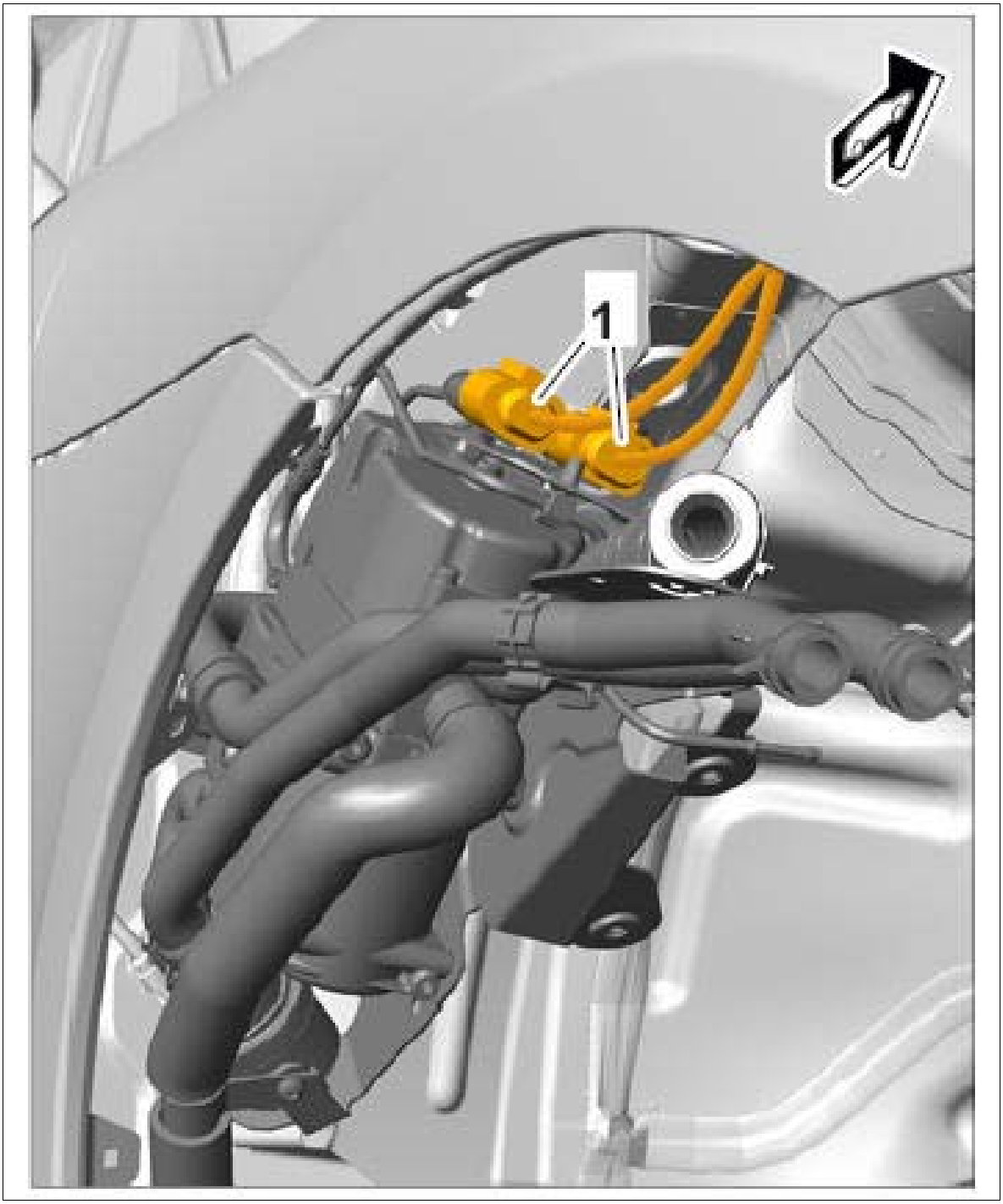

Courtesy of PORSCHE CARS NORTH AMERICA, INC.

2. Position the heater.

    1. 2.1. Position rubber sleeve **-1-** on the retaining pin **-2-** .
    2. 2.2. Engage clip **-3-** for the holder in the cut-out **-4-** .

Fig 2: Positioning Heater

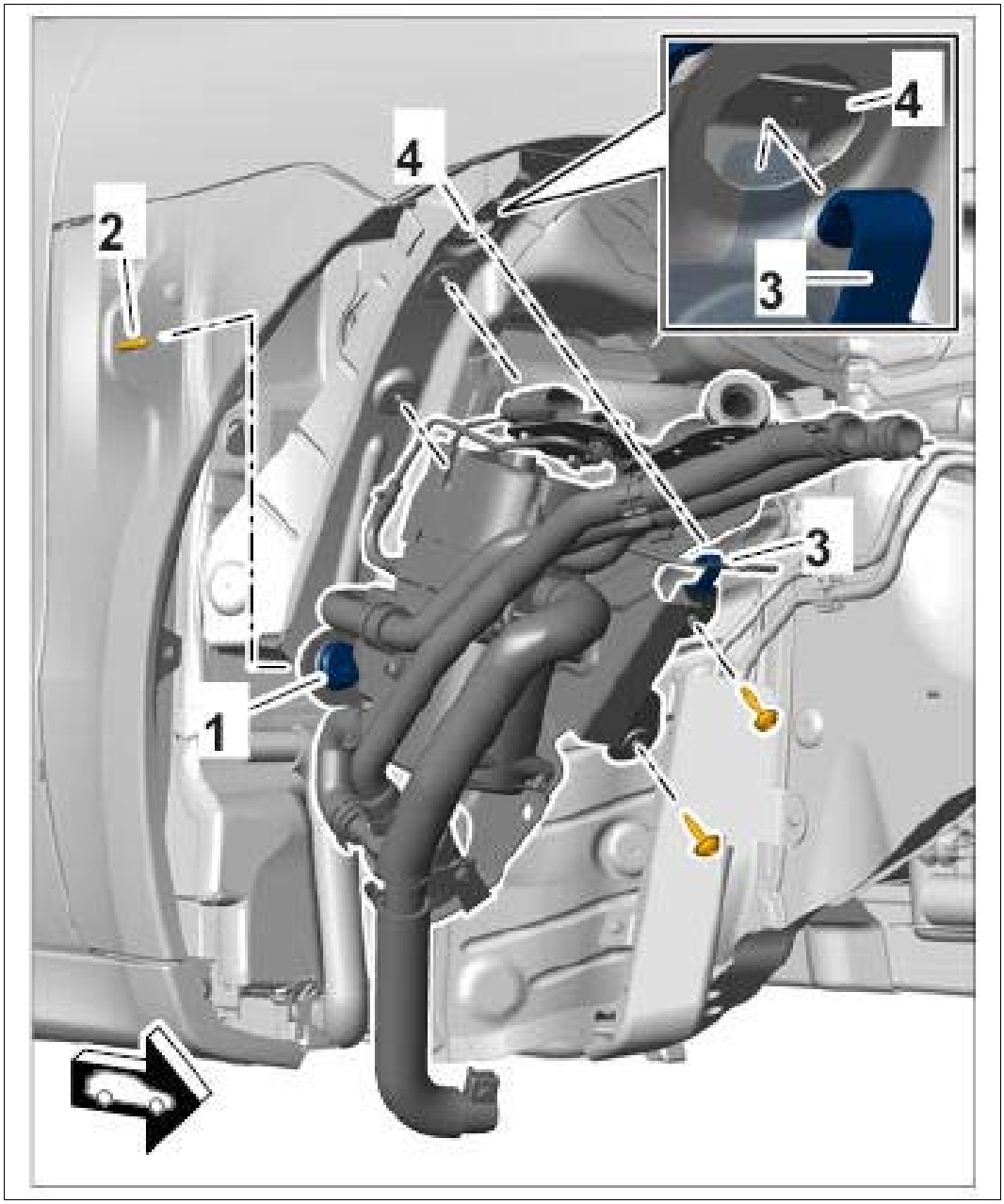

Courtesy of PORSCHE CARS NORTH AMERICA, INC.

3. Secure the heater.

    1. 3.1. Loosely fit fastening screws **-1-** for the holder **-2-** at the top and bottom.

Fig 3: Identifying Heater Mounting

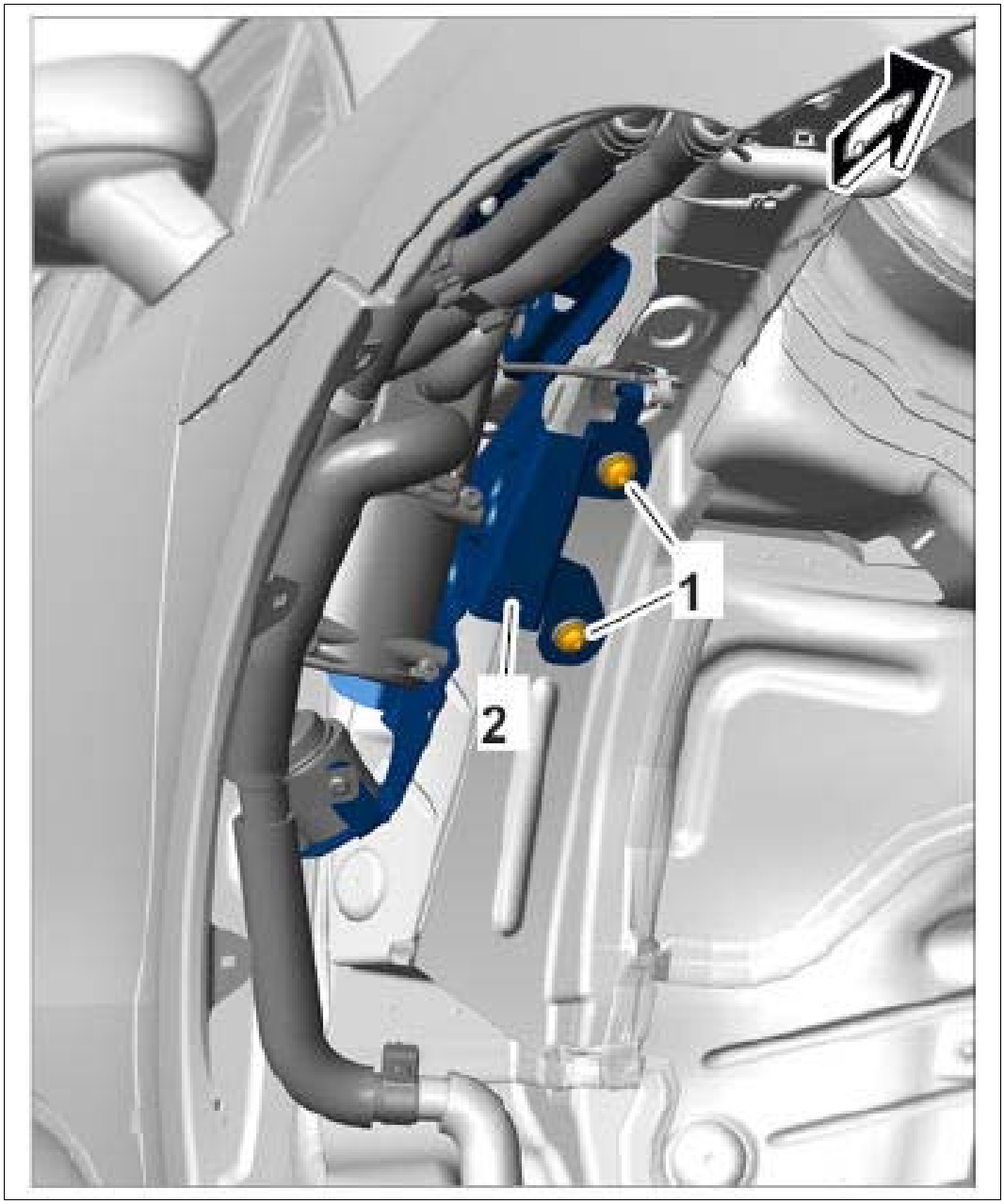

Courtesy of PORSCHE CARS NORTH AMERICA, INC.

2. 3.2. Slide flexi-pipe **-2-** and screw-type clamp **-1-** onto the silencer pipe **-3-** .

Fig 4: Identifying Exhaust Pipe On Silencer



Courtesy of PORSCHE CARS NORTH AMERICA, INC.

3. 3.3. Tighten fastening screws **-1-** on the holder **-2-** to the prescribed tightening torque. **Tightening torque 20 Nm (15 ftlb.)**

4. 3.4. Tighten screw-type clamp **-1-** .

4. Secure coolant hoses.

1. 4.1. Push coolant hoses **-1-** as far as they will go over the adapters.

2. 4.2. Tighten spring band clamps **-2-** using **assembly pliers Nr.72 Pos.1.**

3. 4.3. **Hose clamp 3094 -3-** must then be removed from the coolant hoses **-1-** .

Fig 5: Identifying Coolant Hoses

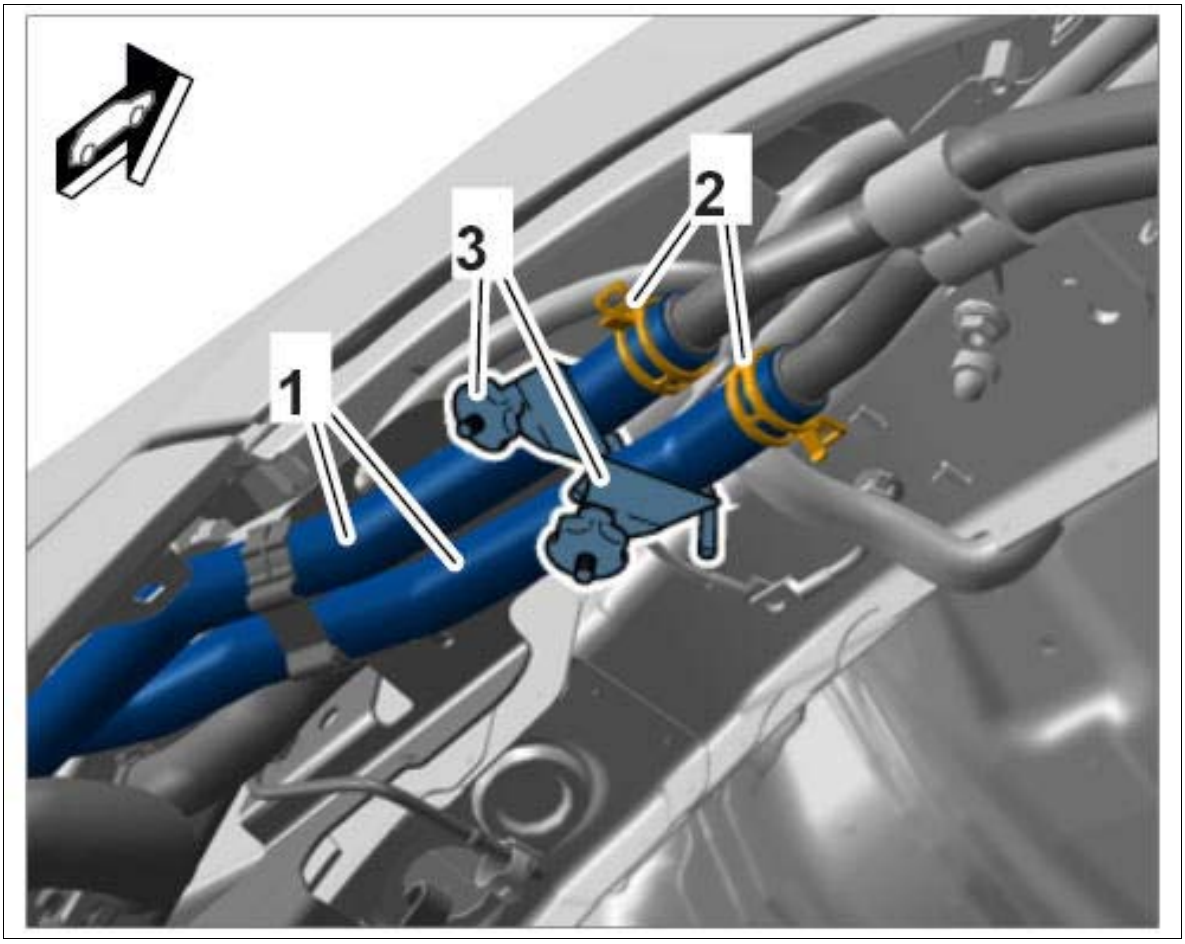

Courtesy of PORSCHE CARS NORTH AMERICA, INC.

5. Clip wiring harness **-1-** onto the coolant hose **-2-** at the marked positions **-arrows-** .

Fig 6: Locating Wiring Harness On Coolant Hose

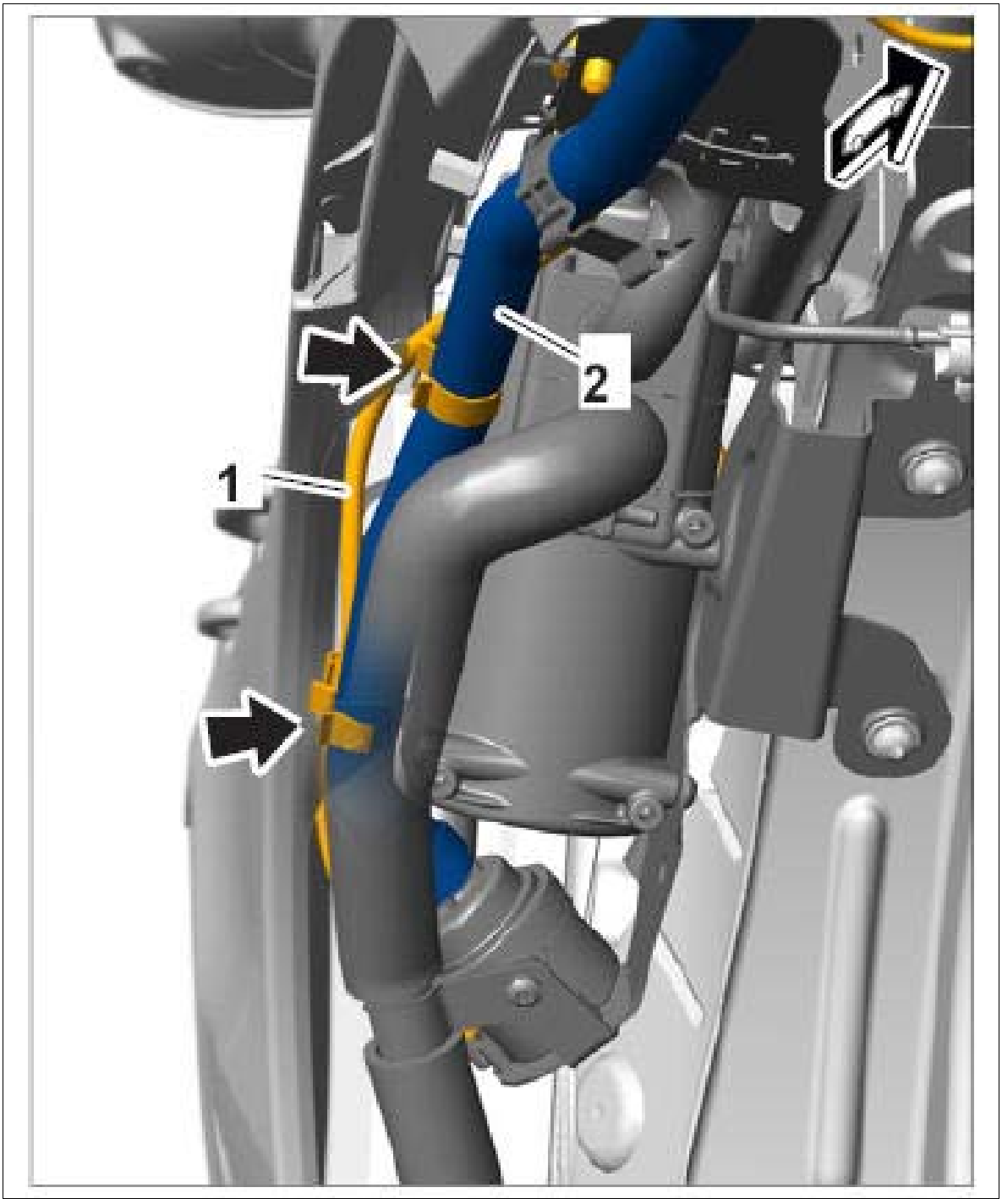

Courtesy of PORSCHE CARS NORTH AMERICA, INC.

6. Connect electric plug connection **-1-** to the circulating pump **-2-** until it engages securely.

Fig 7: Identifying Circulating Pump Connector

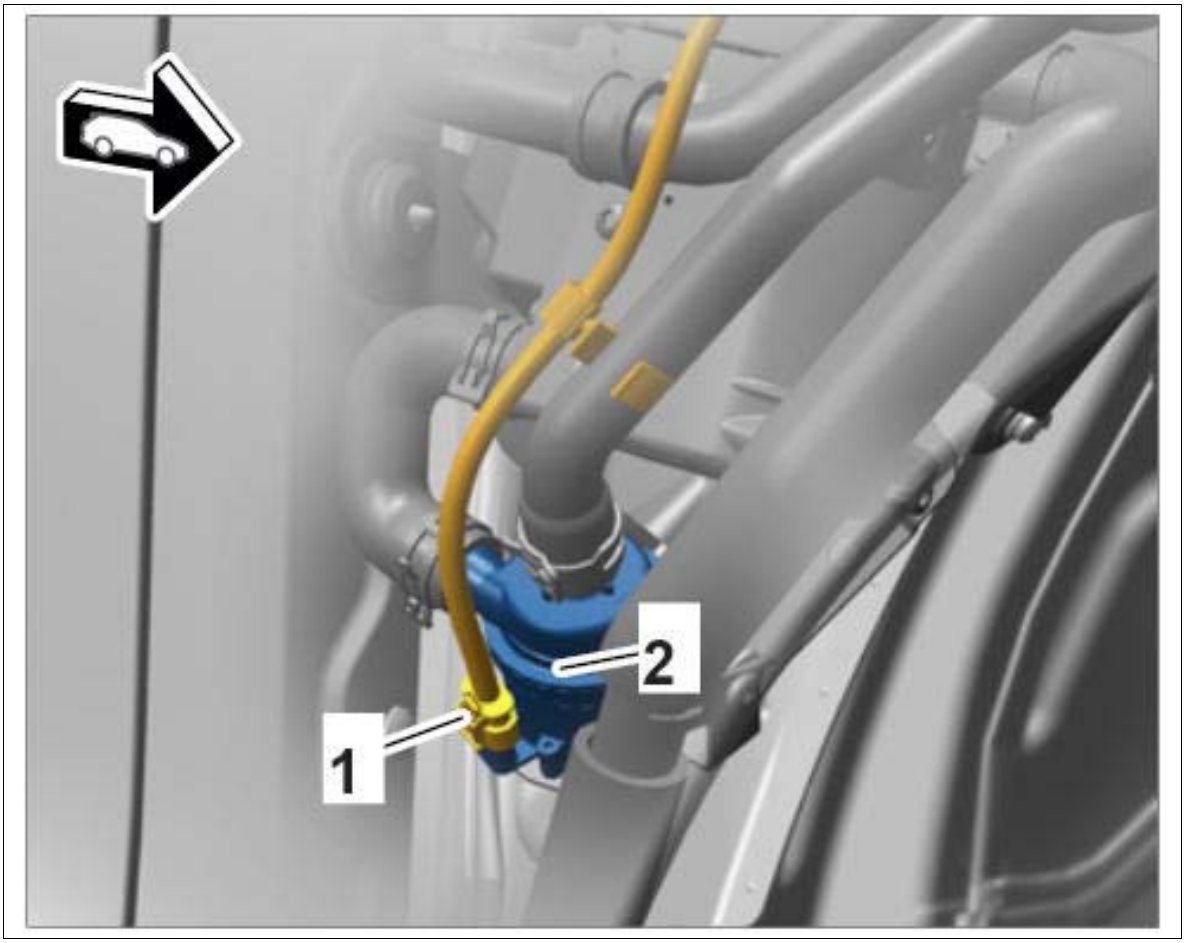

Courtesy of PORSCHE CARS NORTH AMERICA, INC.

7. Clip wiring harness **-1-** into the holder **-2-** at position **-arrow-** .

Fig 8: Locating Wiring Harness On Holder

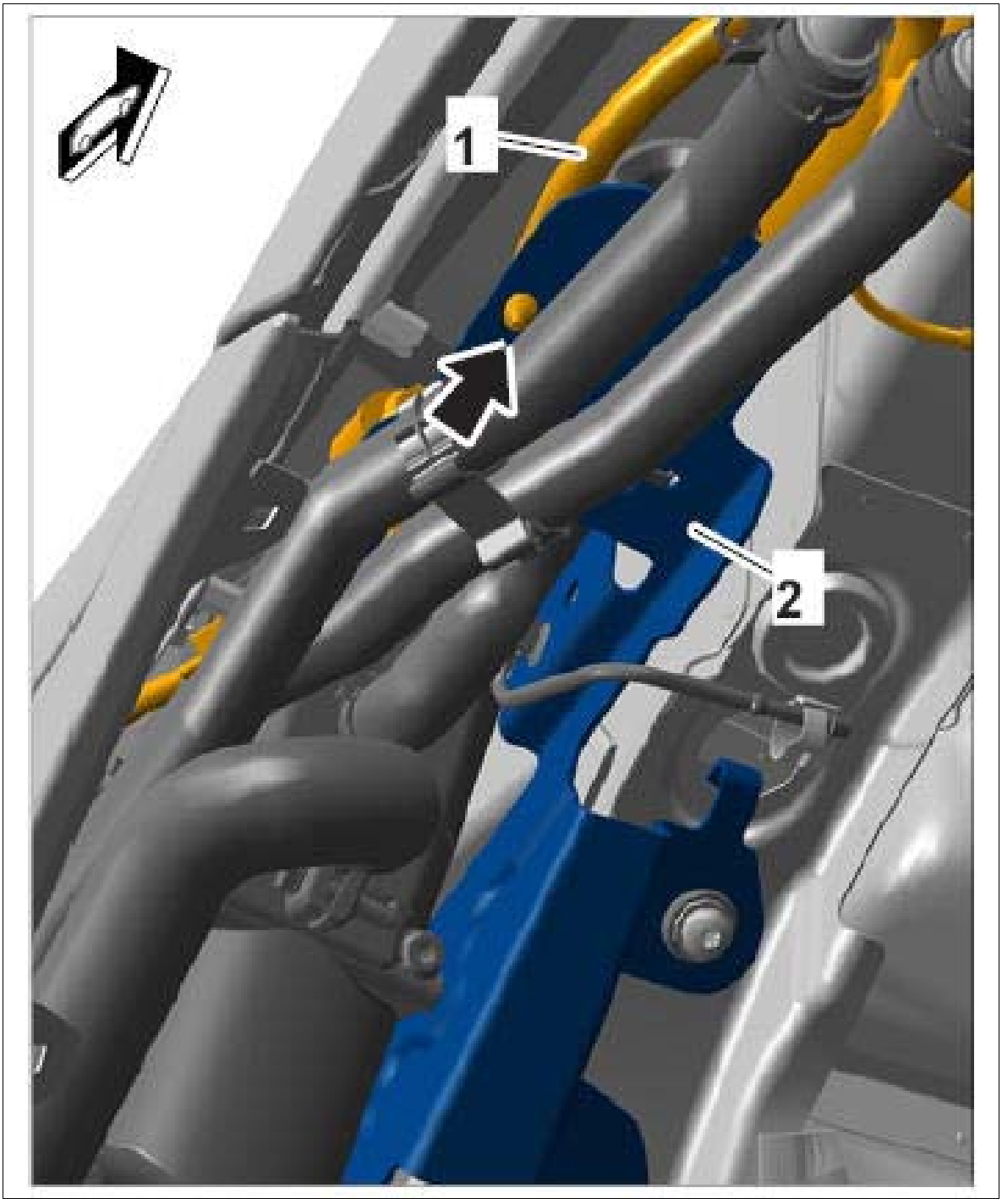

Courtesy of PORSCHE CARS NORTH AMERICA, INC.

8. Secure the fuel line to the heater.

Fig 9: Locating Fuel Line In Wheel Housing

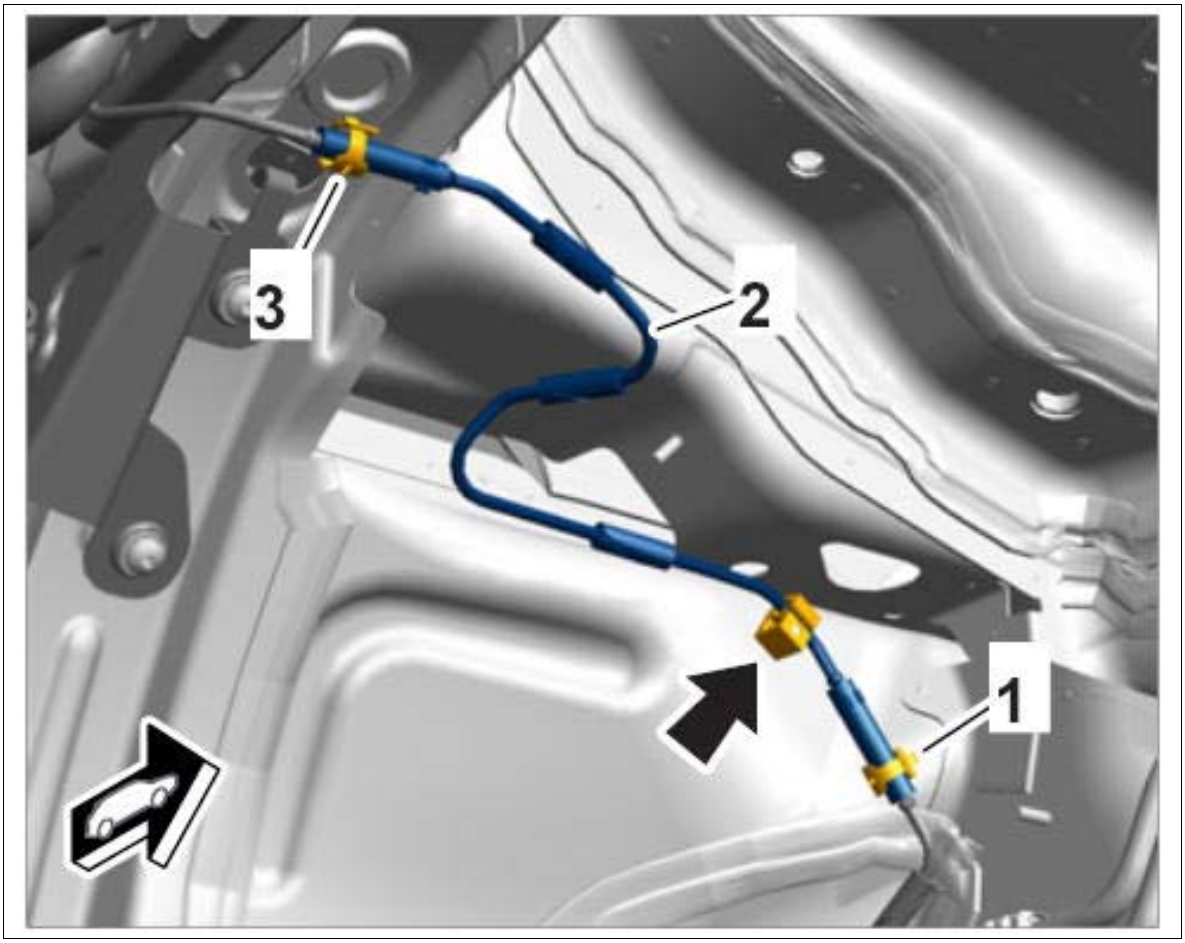

Courtesy of PORSCHE CARS NORTH AMERICA, INC.

1. 8.1. Push on fuel line **-2-** as far as it will go or up to the marking - minimum overlap: 25 mm.
2. 8.2. Tighten spring band clamp **-3-** using **assembly pliers Nr.72 Pos.1.**

9. The fuel system must also be pre-filled. To do this, connect **PIWIS Tester II 9818** to the vehicle.
10. Switch on ignition.
11. Select the vehicle type and start the PIDT.
12. Select the **auxiliary heater** control unit in the **overview** .
13. **Maintenance/repairs** must then be selected.
14. **Line filling** must now be selected. Then press [Next].

WM 822019 REMOVING AND INSTALLING COMPLETE HEATER (ALL MODELS) > SUBSEQUENT WORK

1. Add coolant and bleed the cooling system → 193817 DRAINING AND FILLING COOLANT .
2. Install front wheel housing liner at the right → Installing front wheel housing liner
3. Fit right front wheel → Installing Wheel .

WM 822119 REMOVING AND INSTALLING INTAKE MUFFLER (ALL MODELS) > PRELIMINARY WORK

1. Loosen heater with holder → Loosening Heater With Holder .

WM 822119 REMOVING AND INSTALLING INTAKE MUFFLER (ALL MODELS) > REMOVING AND INSTALLING INTAKE MUFFLER > REMOVING INTAKE MUFFLER

1. Cut tie-wrap **-1-** on intake muffler **-2-** .

   Fig 1: Identifying Intake Muffler Mounting On Holder

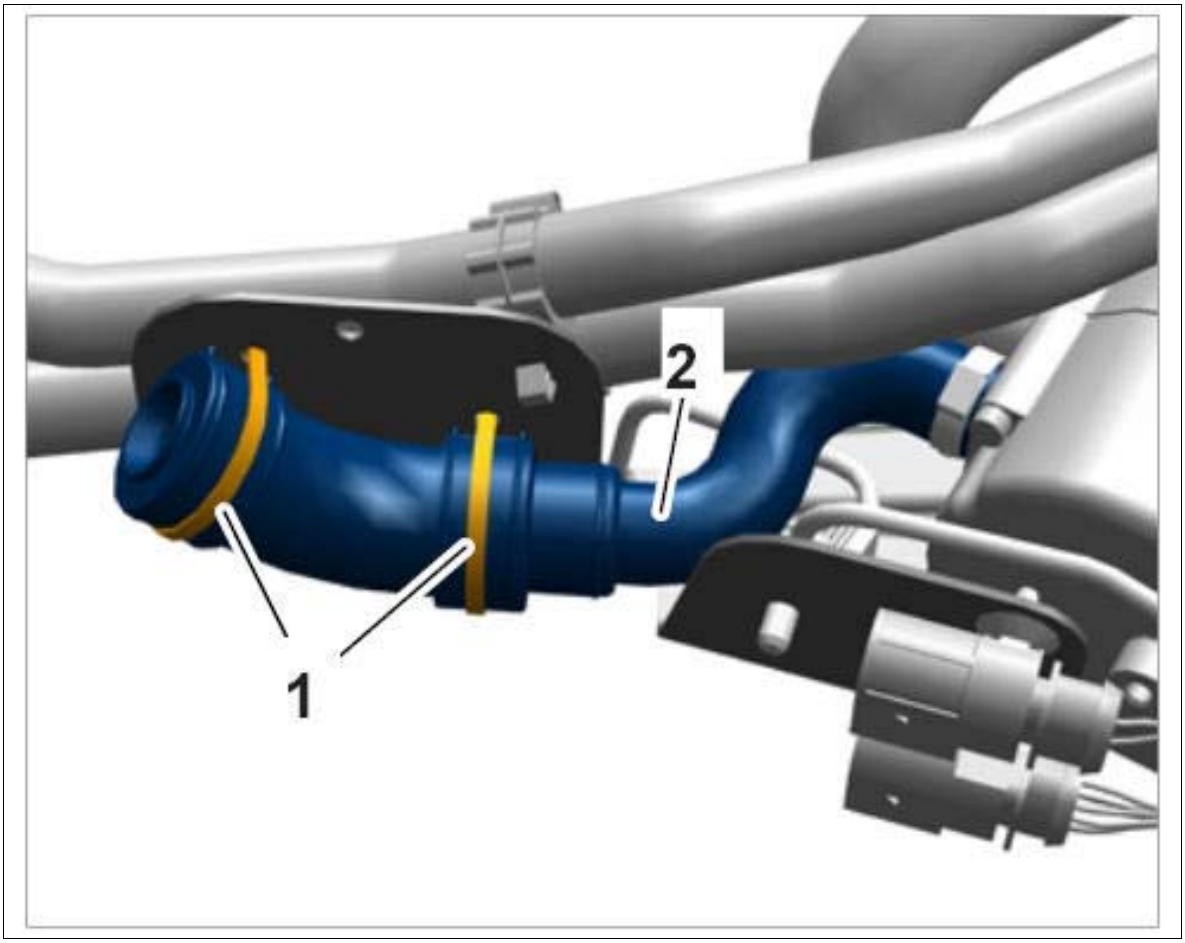

Courtesy of PORSCHE CARS NORTH AMERICA, INC.

2. Loosen clamp **-1-** using a suitable tool.

Fig 2: Identifying Intake Muffler Mounting On Heater

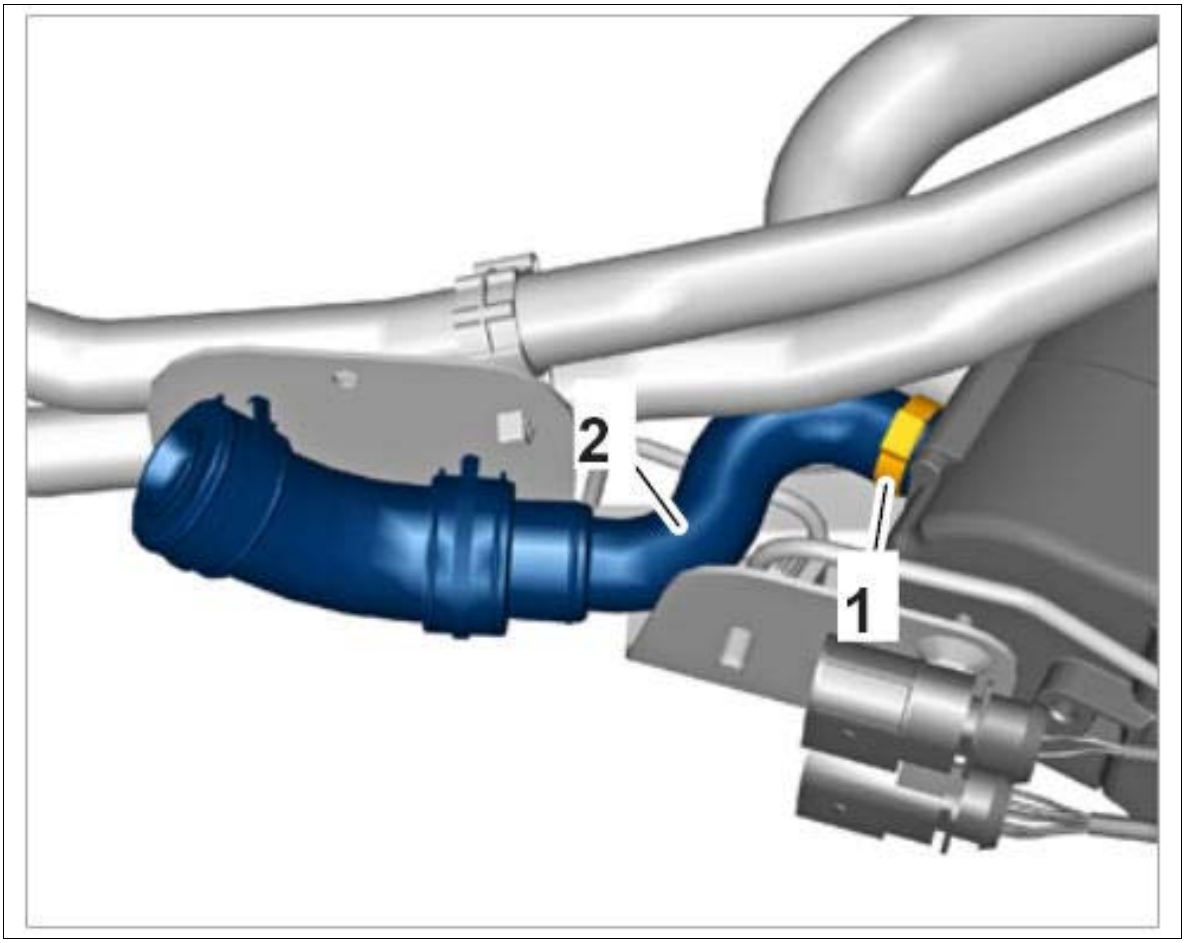

Courtesy of PORSCHE CARS NORTH AMERICA, INC.

3. Remove intake muffler **-2-** .

WM 822119 REMOVING AND INSTALLING INTAKE MUFFLER (ALL MODELS) > REMOVING AND INSTALLING INTAKE MUFFLER > INSTALLING INTAKE MUFFLER

Information

- There is no guarantee that re-used clamps will secure the component properly.
- Removed clamps must be replaced.
- Always use new clamps during installation.

1. Position intake muffler **-2-** on the heater.
2. Tighten new clamp **-1-** using a suitable tool.

Fig 1: Identifying Intake Muffler Mounting On Heater

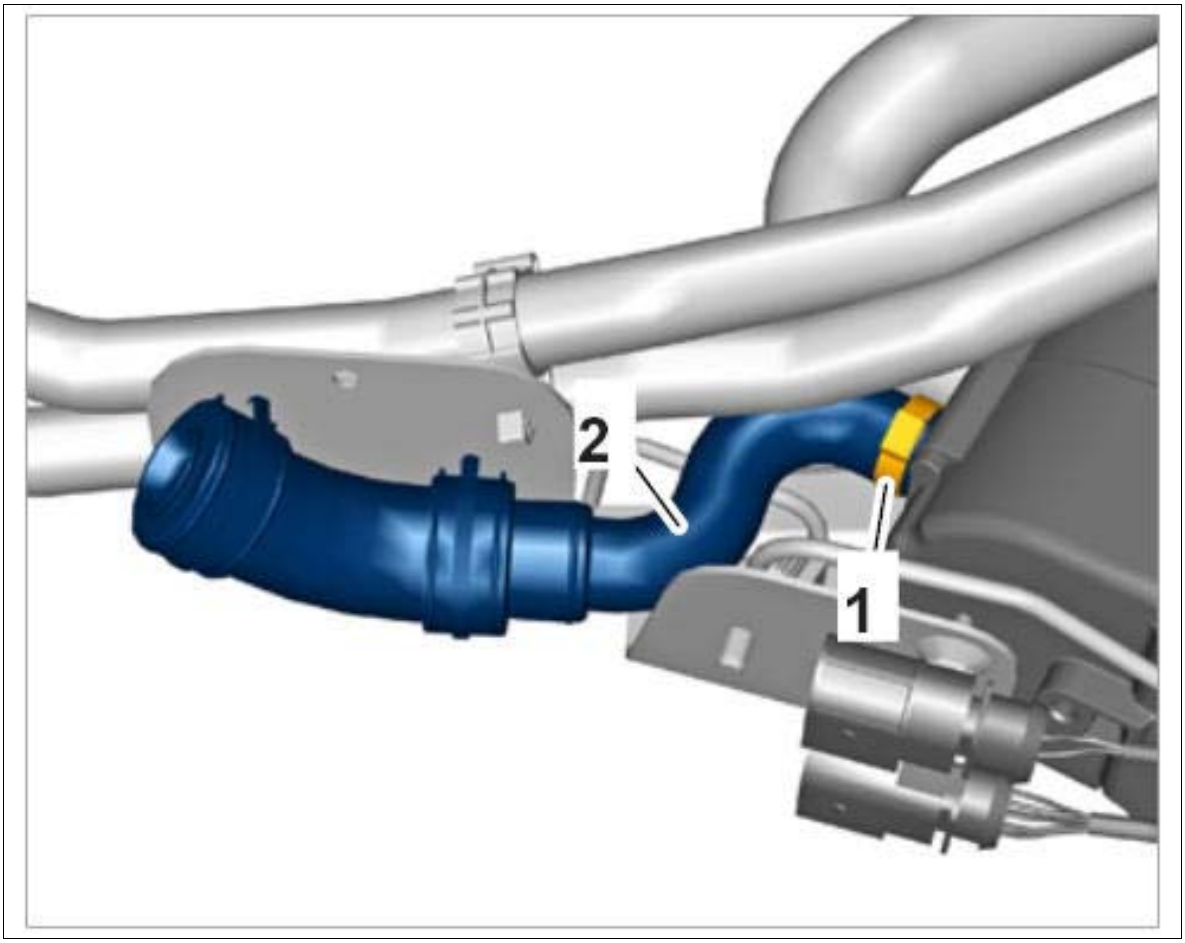

Courtesy of PORSCHE CARS NORTH AMERICA, INC.

3. Position intake muffler **-2-** in the cut-outs in the holder and secure it to the holder using new tie-wraps **-1-** .

Fig 2: Securing Intake Muffler To Holder

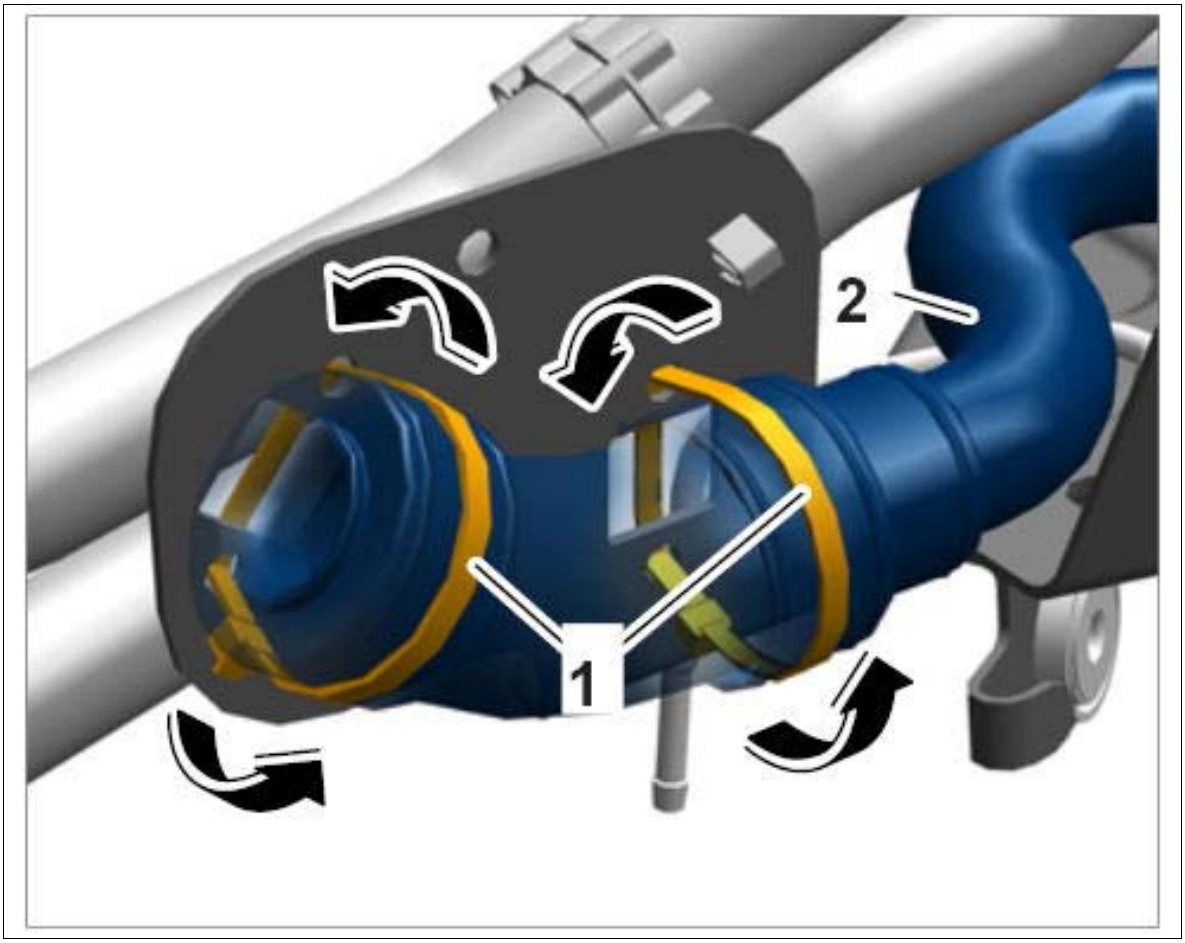

Courtesy of PORSCHE CARS NORTH AMERICA, INC.

WM 822119 REMOVING AND INSTALLING INTAKE MUFFLER (ALL MODELS) > SUBSEQUENT WORK

1. Secure heater with holder → Securing Heater With Holder

WM 822219 REMOVING AND INSTALLING HOLDER FOR HEATER (ALL MODELS) > TECHNICAL VALUES

Location	Description	Type	Basic value	Tolerance 1	Tolerance 2
Heater holder to body	M6 x 30 thread	Tightening torque	20 Nm (15 ftlb.)		

WM 822219 REMOVING AND INSTALLING HOLDER FOR HEATER (ALL MODELS) >

PRELIMINARY WORK

1. Remove right front wheel → Removing Wheel
2. Remove front wheel housing liner at the right → Removing front wheel housing liner

WM 822219 REMOVING AND INSTALLING HOLDER FOR HEATER (ALL MODELS) > LOOSENING HEATER WITH HOLDER

1. Disconnect exhaust pipe from silencer.
    1. 1.1. Loosen screw-type clamp **-1-** .
    2. 1.2. Pull flexi-pipe **-2-** off the silencer pipe **-3-** .

Fig 1: Identifying Exhaust Pipe On Silencer



Courtesy of PORSCHE CARS NORTH AMERICA, INC.

2. Unclip fuel line **-2-** in the wheel housing at position **-arrow-** .

Fig 2: Locating Fuel Line In Wheel Housing

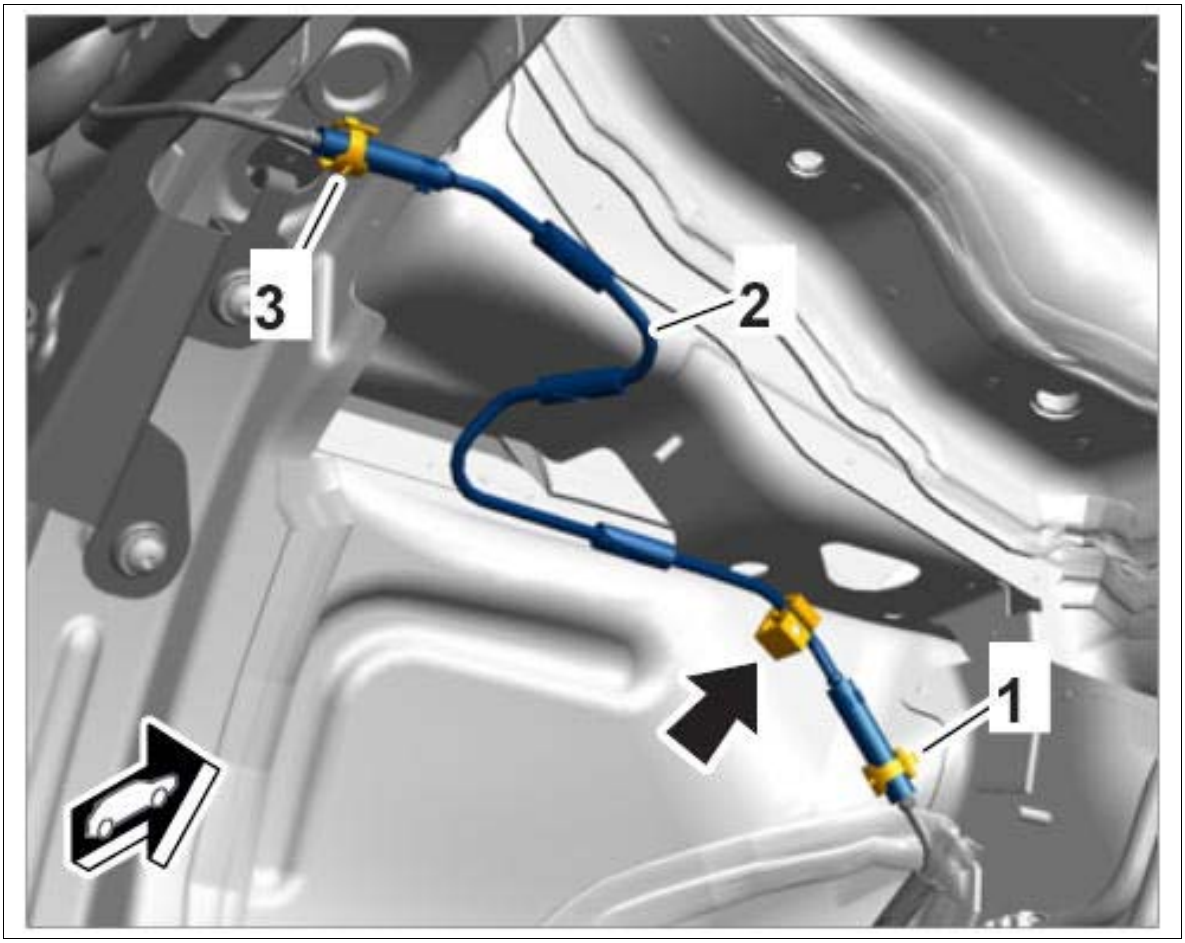

Courtesy of PORSCHE CARS NORTH AMERICA, INC.

3. Unscrew fastening screws **-1-** and remove heater with holder **-2-** .

Fig 3: Identifying Heater Mounting

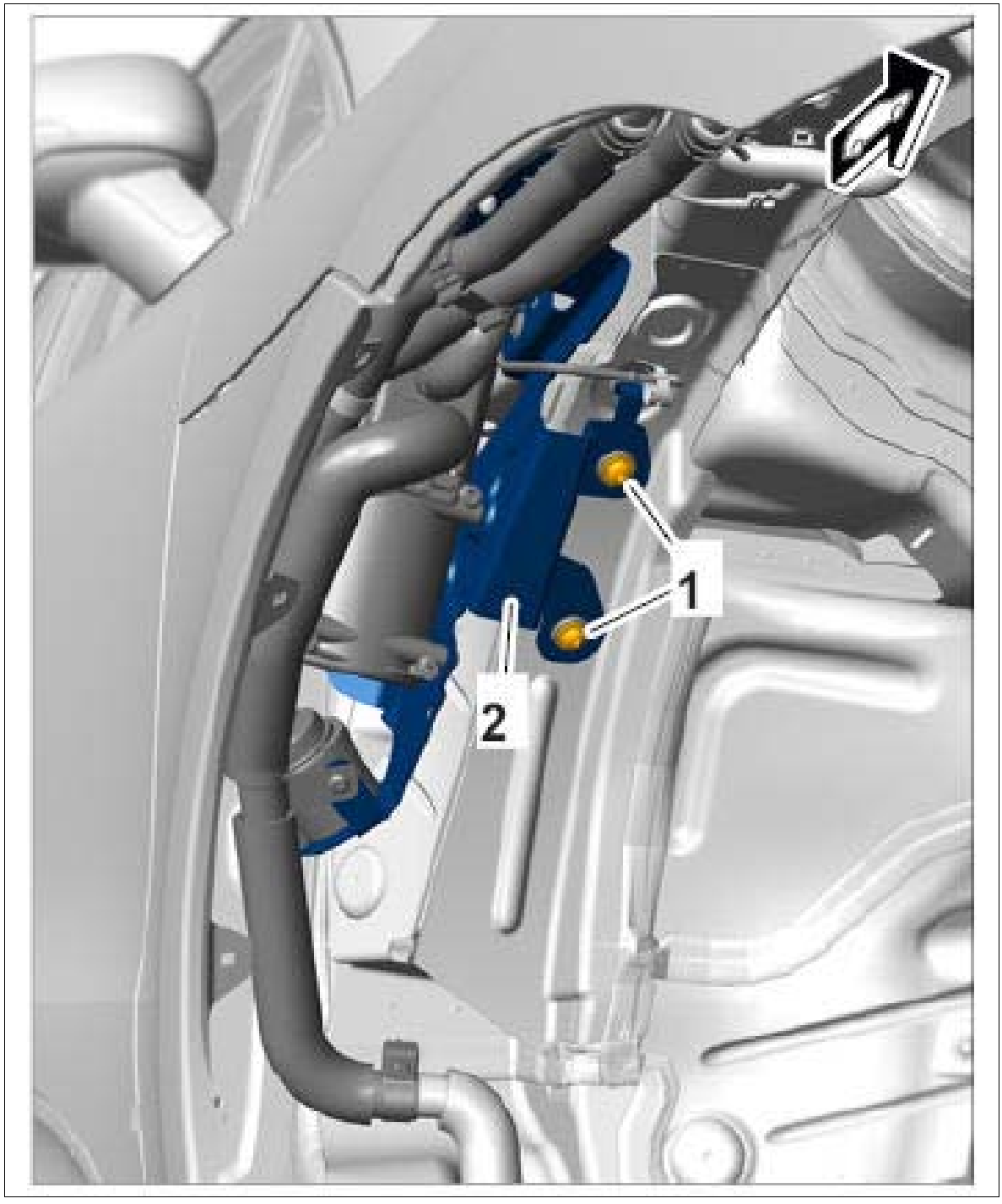

Courtesy of PORSCHE CARS NORTH AMERICA, INC.

4. Pull out heater with holder in direction of travel and suspend it at a suitable place in the wheel housing.

WM 822219 REMOVING AND INSTALLING HOLDER FOR HEATER (ALL MODELS) > DETACHING HOLDER FROM HEATER

1. Remove heater with holder → Removing Heater
2. Unclip coolant hoses **-1-** from holder **-2-** .

   Fig 1: Identifying Coolant Hoses Bracket

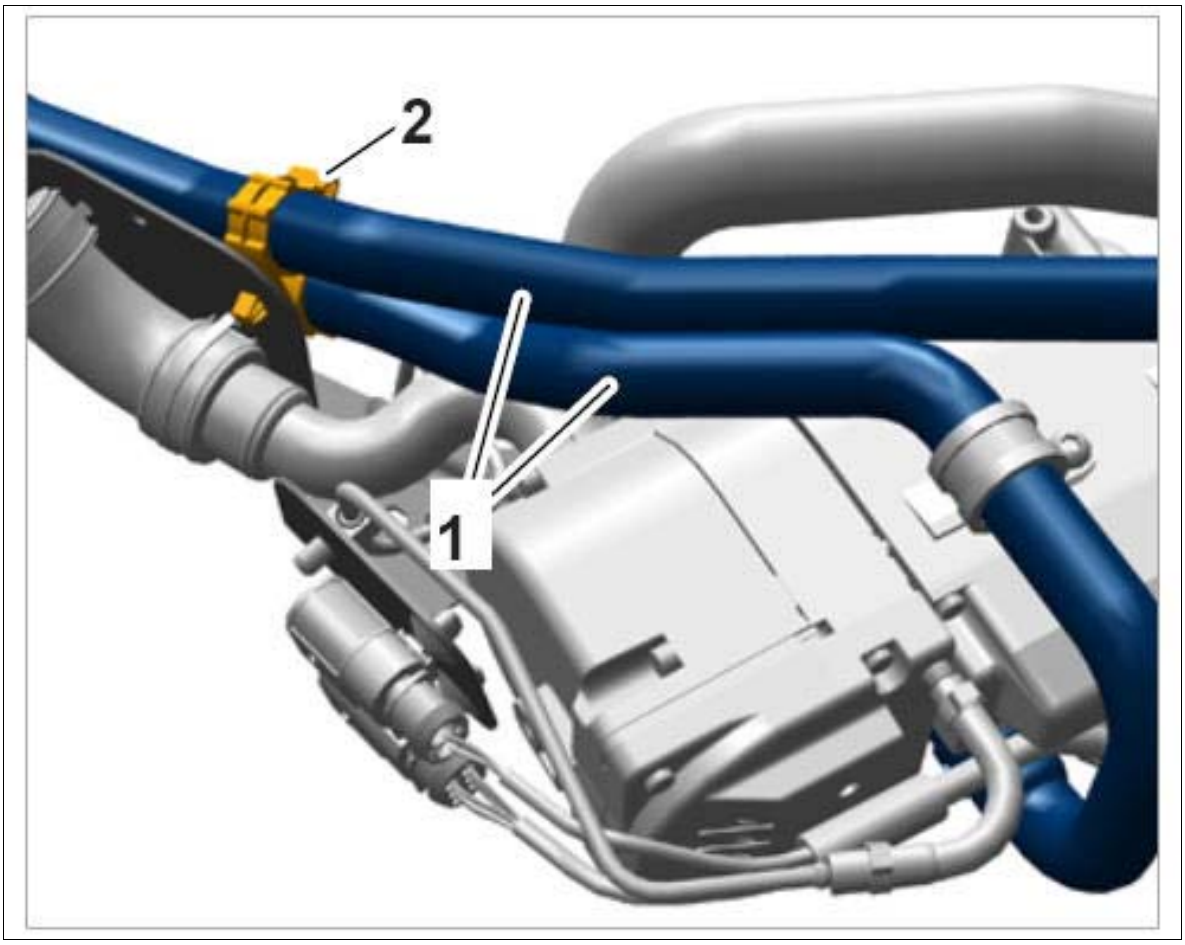

Courtesy of PORSCHE CARS NORTH AMERICA, INC.

3. Release electric plug connections **-1-** and disconnect them by pulling them sideways **-arrows-** off the holder **-2-** .

Fig 2: Disconnecting Heater Connector From Holder

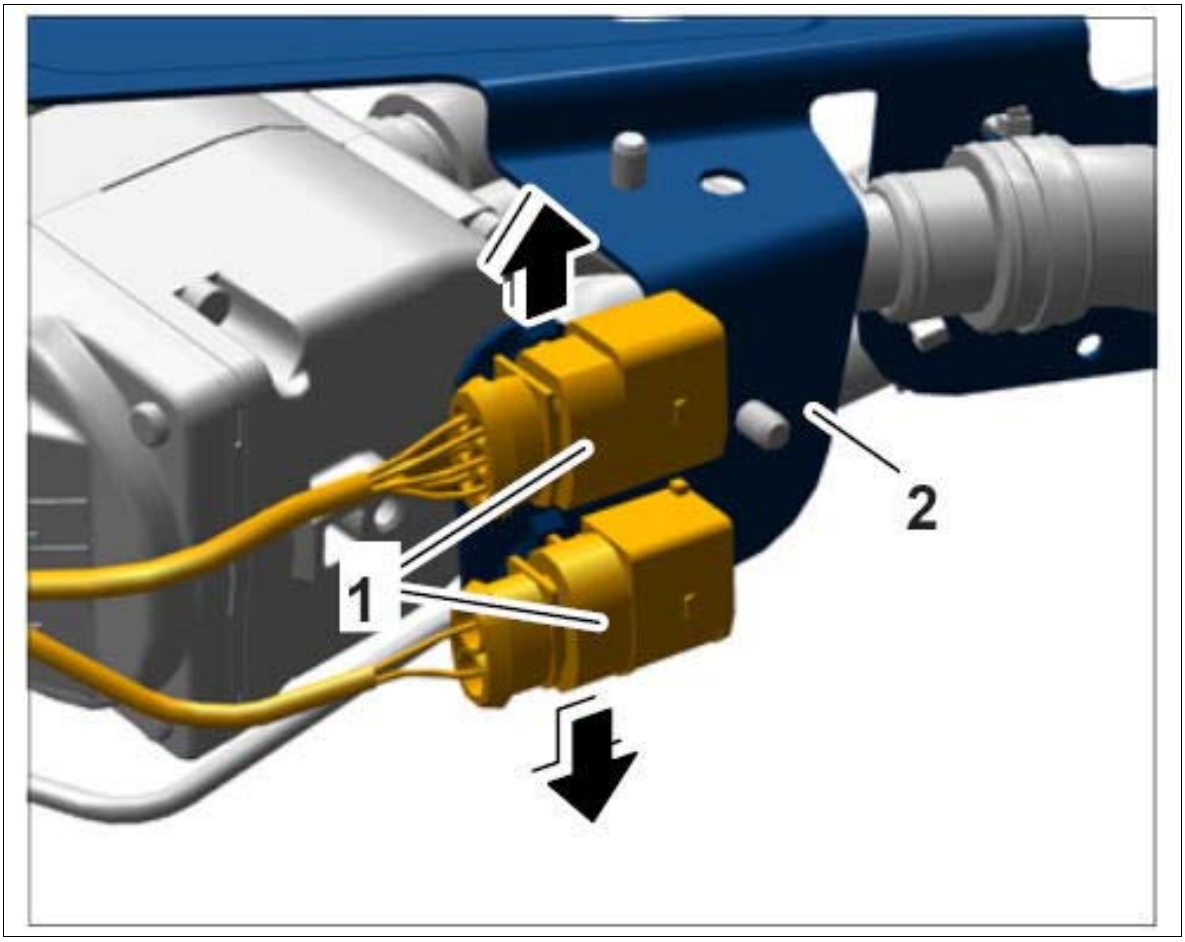

Courtesy of PORSCHE CARS NORTH AMERICA, INC.

4. Cut tie-wrap **-1-** on intake muffler **-2-** .

Fig 3: Identifying Intake Muffler Mounting On Holder

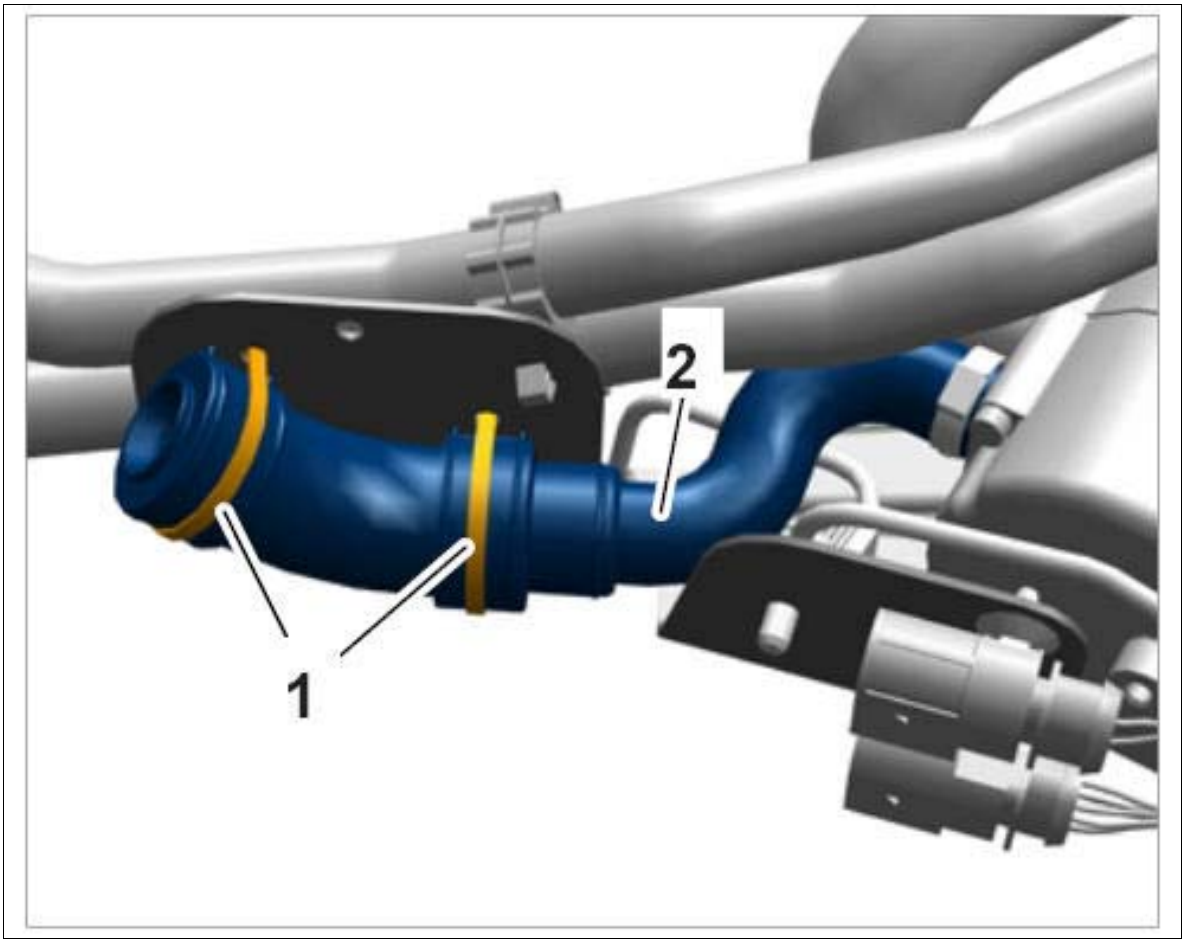

Courtesy of PORSCHE CARS NORTH AMERICA, INC.

5. Unscrew fastening screw **-2-** on the exhaust pipe **-1-**

> *NOTE: Illustration shows heater when installed.*

Fig 4: Identifying Exhaust Pipe Mounting On Holder

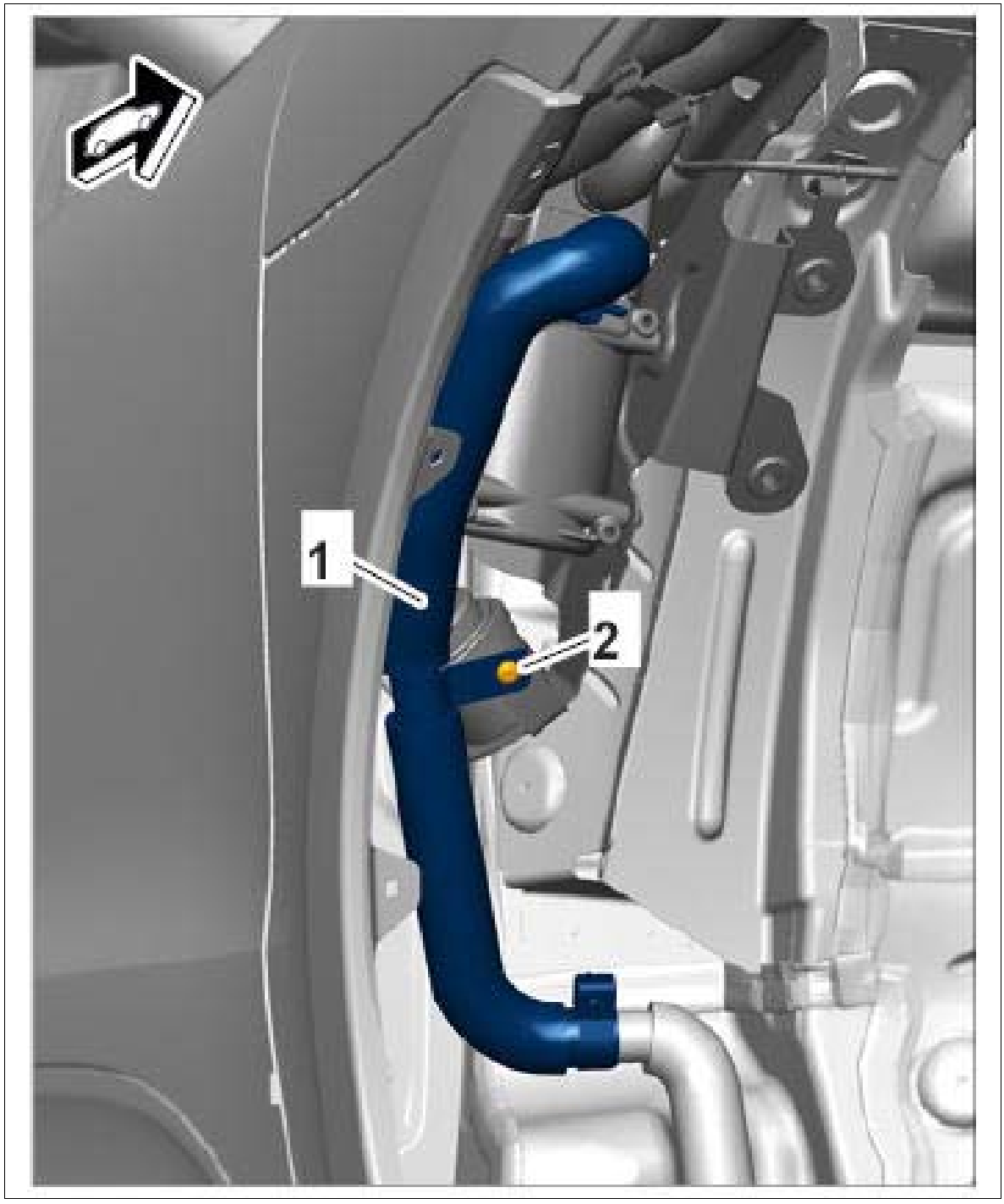

Courtesy of PORSCHE CARS NORTH AMERICA, INC.

6. Unclip fuel line **-1-** at the marked positions **-arrows-** .

Fig 5: Identifying Fuel Line Mounting On Holder

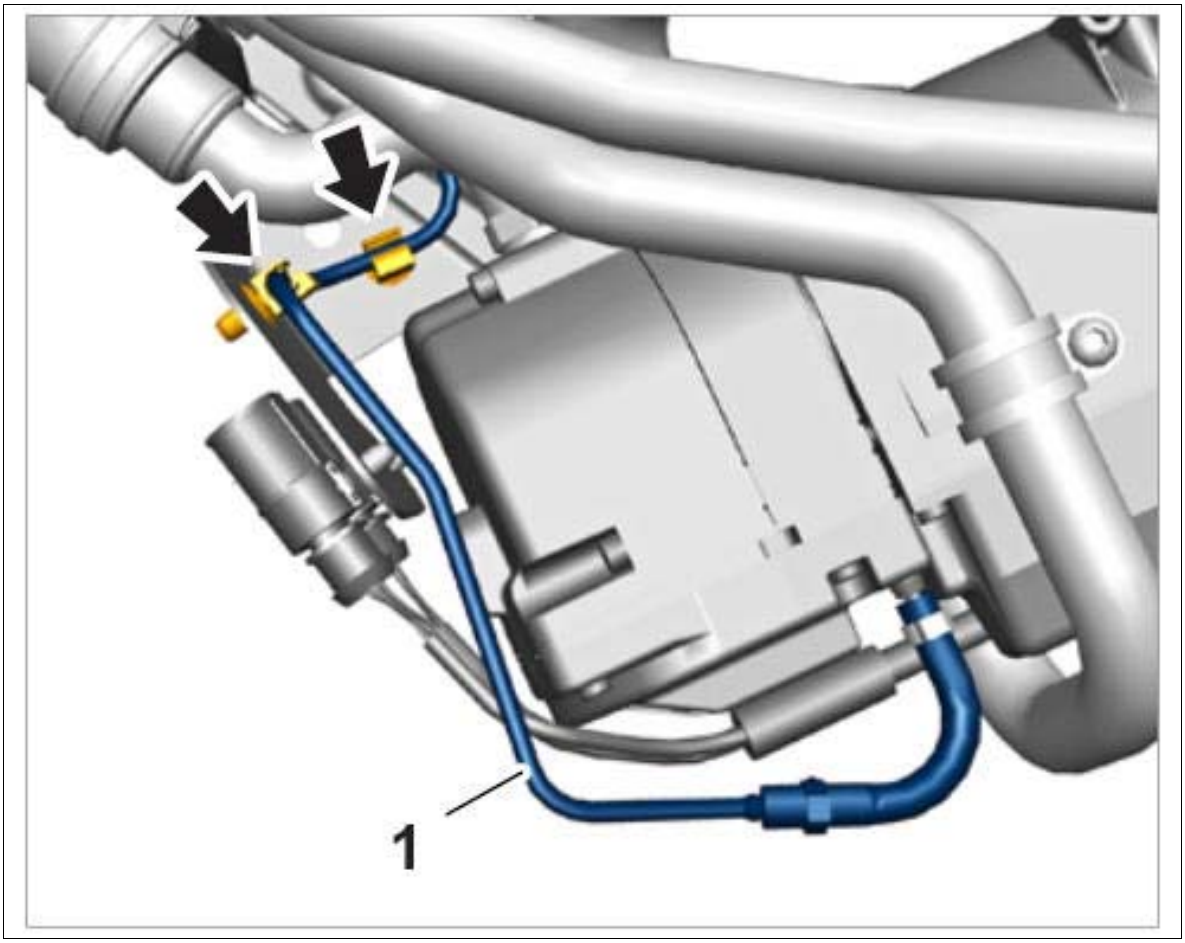

Courtesy of PORSCHE CARS NORTH AMERICA, INC.

7. Unscrew fastening screws **-1-** and remove circulating pump **-2-** .

Fig 6: Identifying Circulating Pump Mounting On Holder

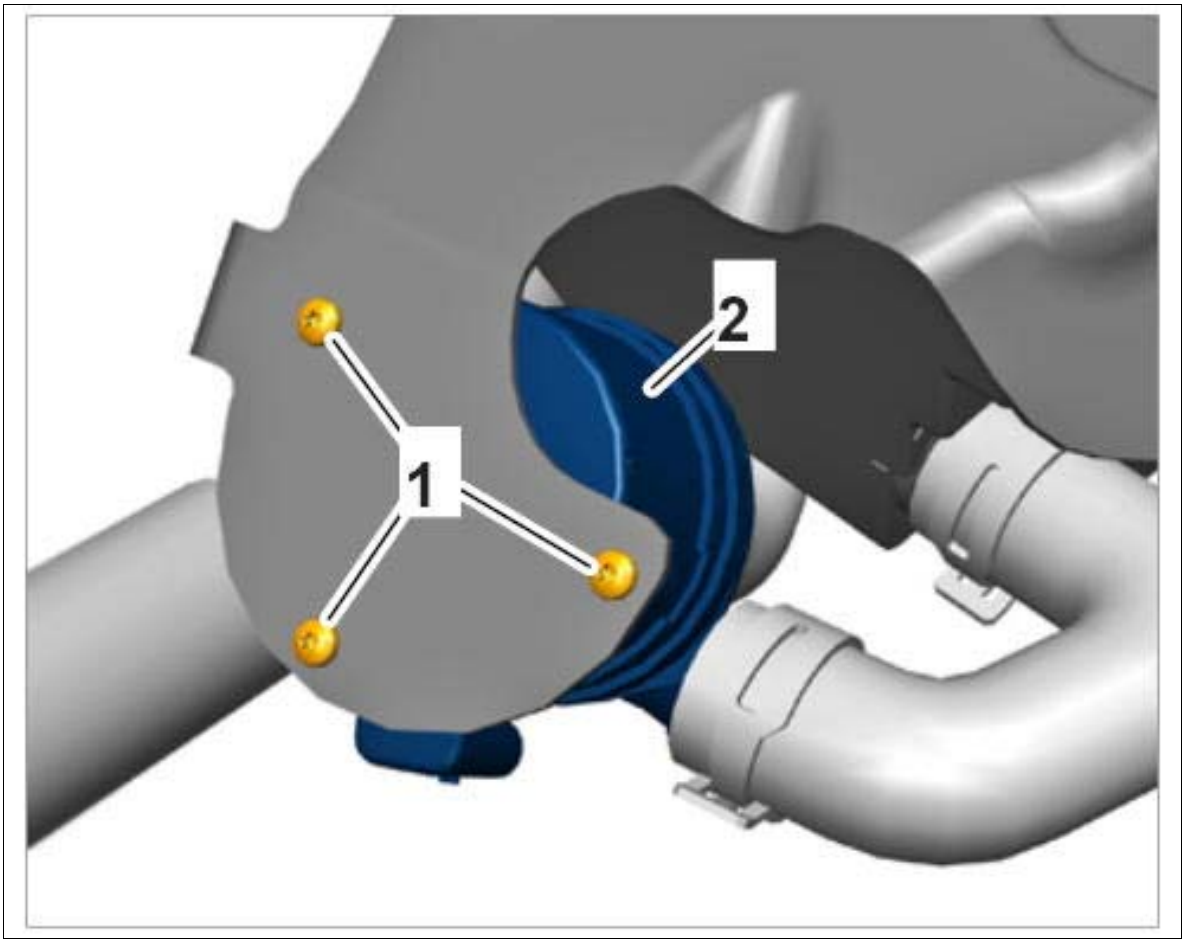

Courtesy of PORSCHE CARS NORTH AMERICA, INC.

8. Loosen fastening screws **-1-** and remove holder **-2-** from the heater.

Fig 7: Identifying Holder On Heater

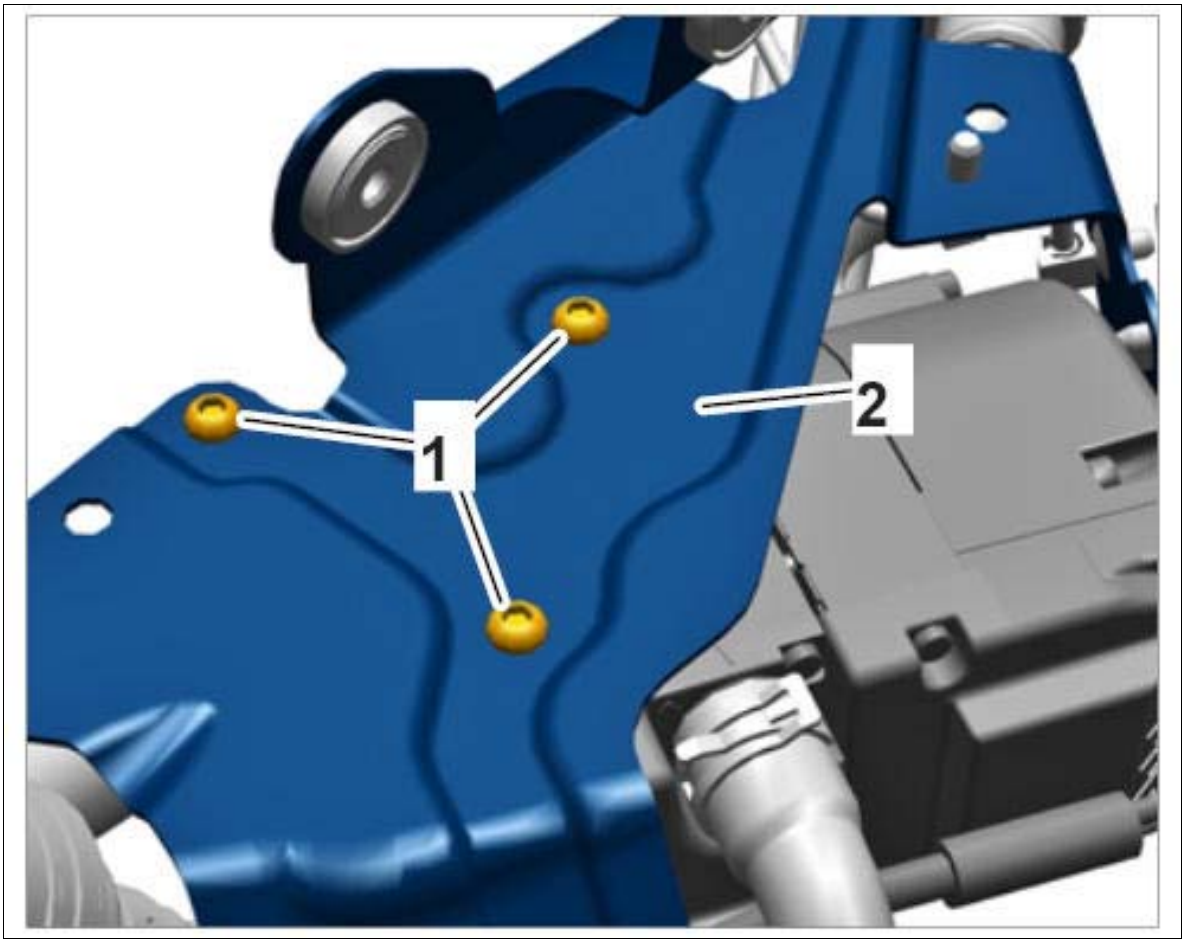

Courtesy of PORSCHE CARS NORTH AMERICA, INC.

WM 822219 REMOVING AND INSTALLING HOLDER FOR HEATER (ALL MODELS) > FITTING HOLDER TO HEATER

1. Position holder **-2-** on the heater.
2. Tighten fastening screws **-1-** .

Fig 1: Identifying Holder On Heater

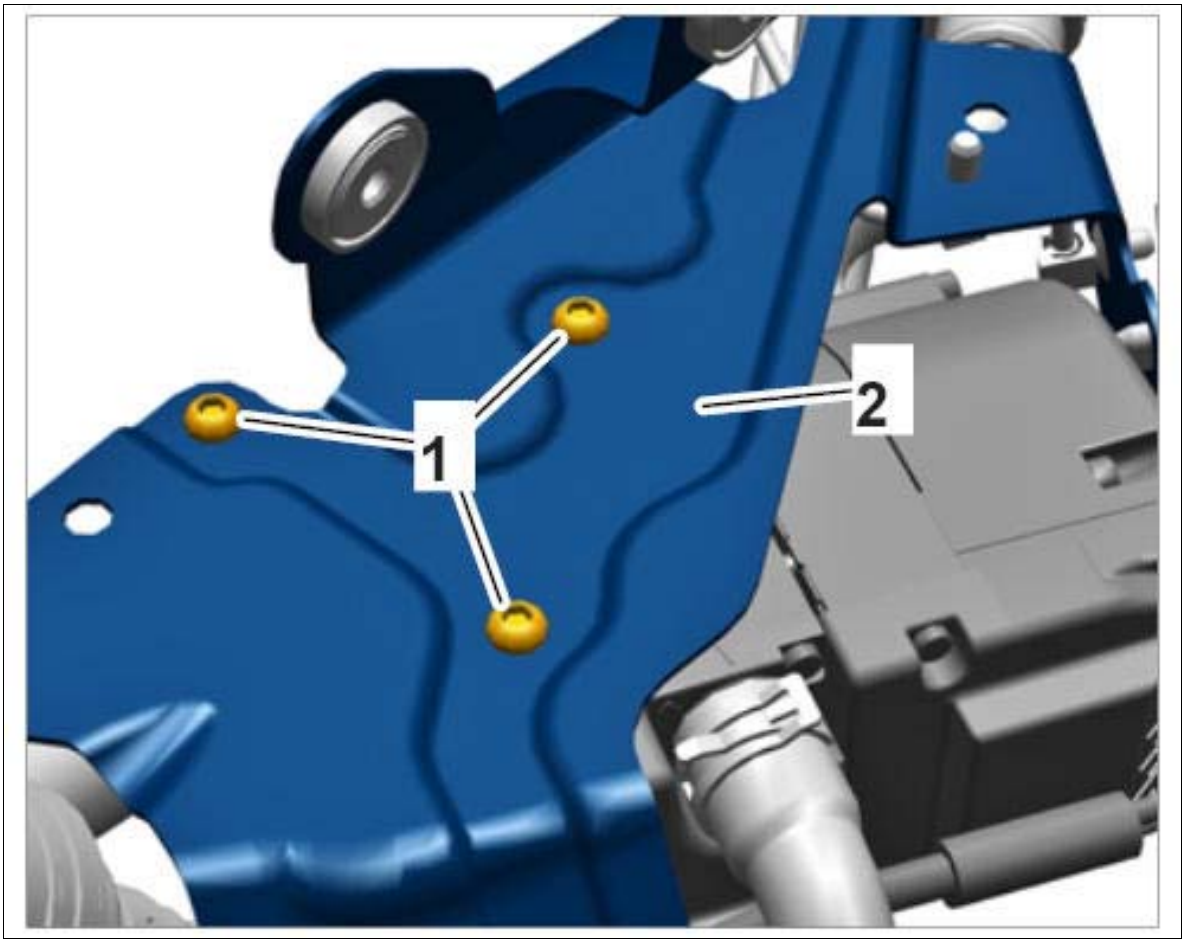

Courtesy of PORSCHE CARS NORTH AMERICA, INC.

3. Position circulating pump and tighten fastening screws **-1-** .

Fig 2: Identifying Circulating Pump Mounting On Holder

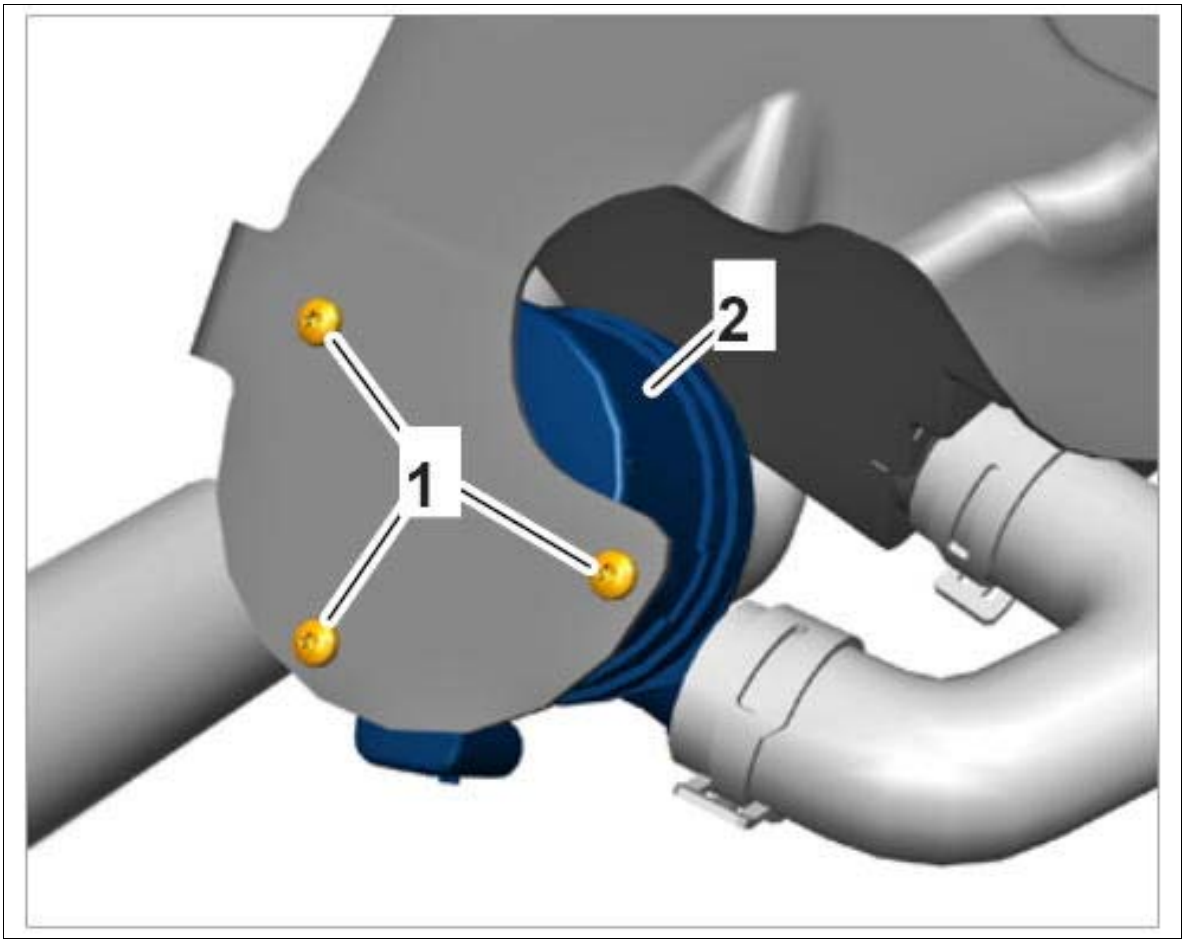

Courtesy of PORSCHE CARS NORTH AMERICA, INC.

4. Clip in fuel line **-1-** at the marked positions **-arrows-** .

Fig 3: Locating Fuel Line On Holder

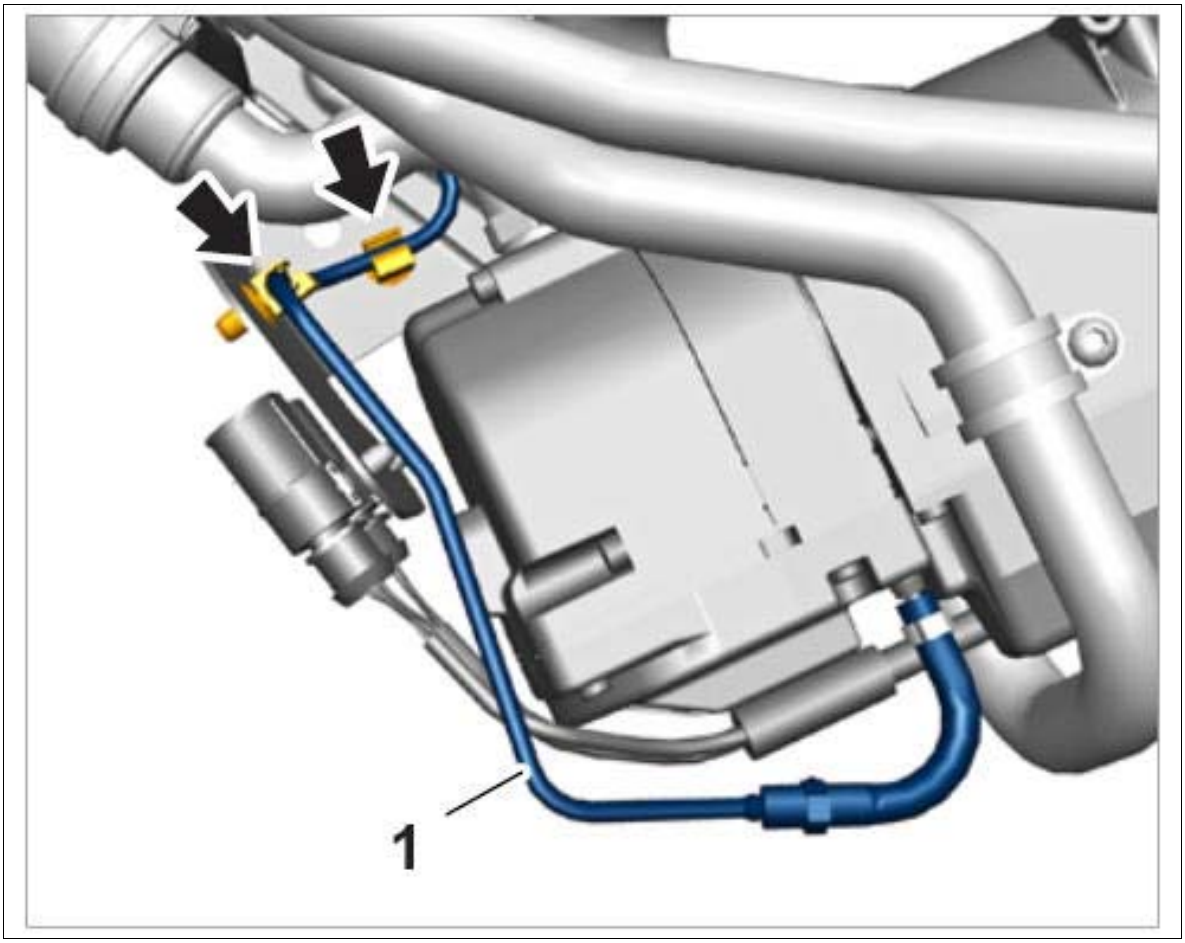

Courtesy of PORSCHE CARS NORTH AMERICA, INC.

5. Tighten fastening screw **-2-** on the exhaust pipe **-1-**

NOTE: Illustration shows heater when installed.

Fig 4: Identifying Exhaust Pipe On Holder

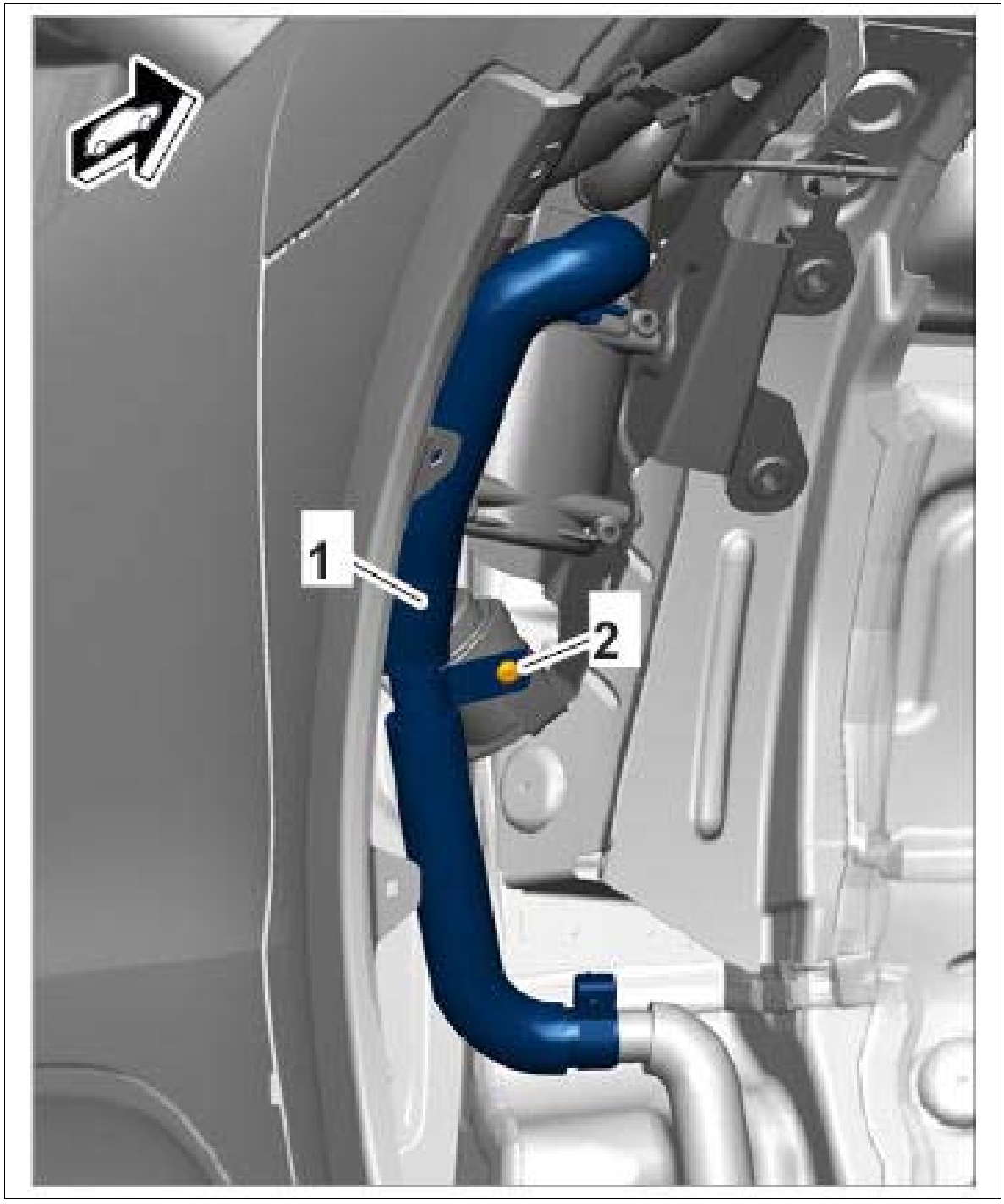

Courtesy of PORSCHE CARS NORTH AMERICA, INC.

6. Position intake muffler **-2-** in the cut-outs in the holder and secure it to the holder using new tie-wraps **-1-** .

Fig 5: Securing Intake Muffler To Holder

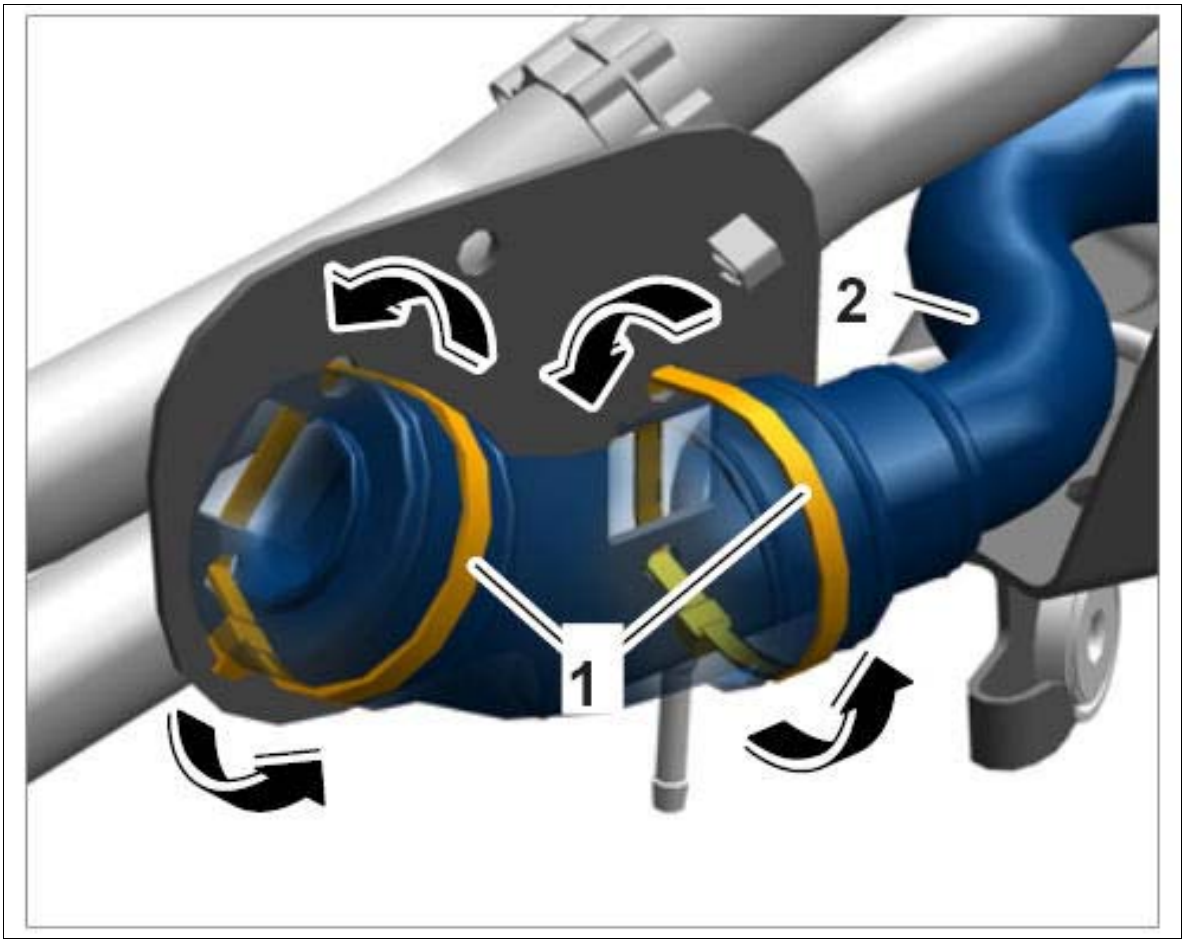

Courtesy of PORSCHE CARS NORTH AMERICA, INC.

7. Push electric plug connections **-1-** sideways onto the holder **-2-** and engage them.

Fig 6: Pushing Heater Connectors Onto Holder

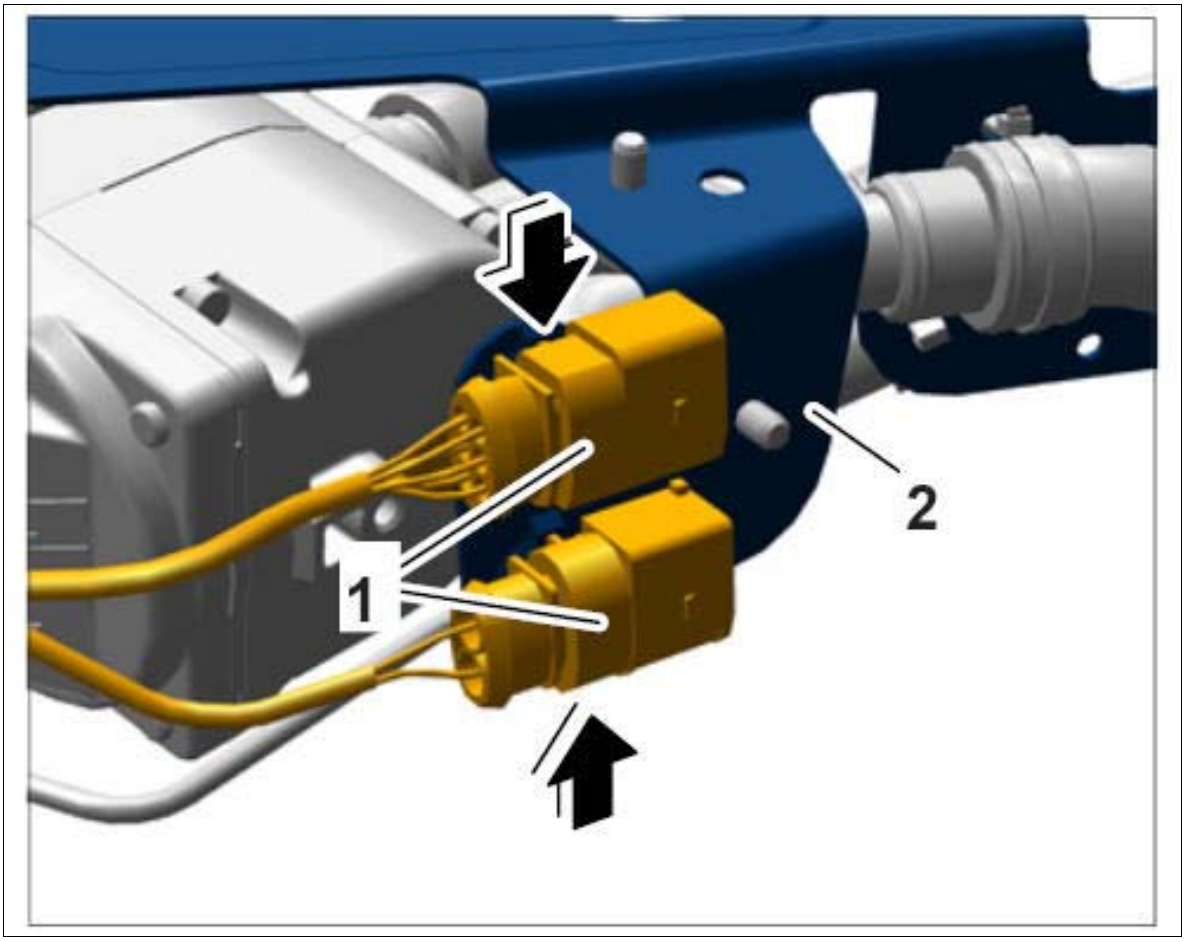

Courtesy of PORSCHE CARS NORTH AMERICA, INC.

8. Insert coolant hoses **-1-** in the holder **-2-** and clip them in.

Fig 7: Identifying Coolant Hoses Bracket

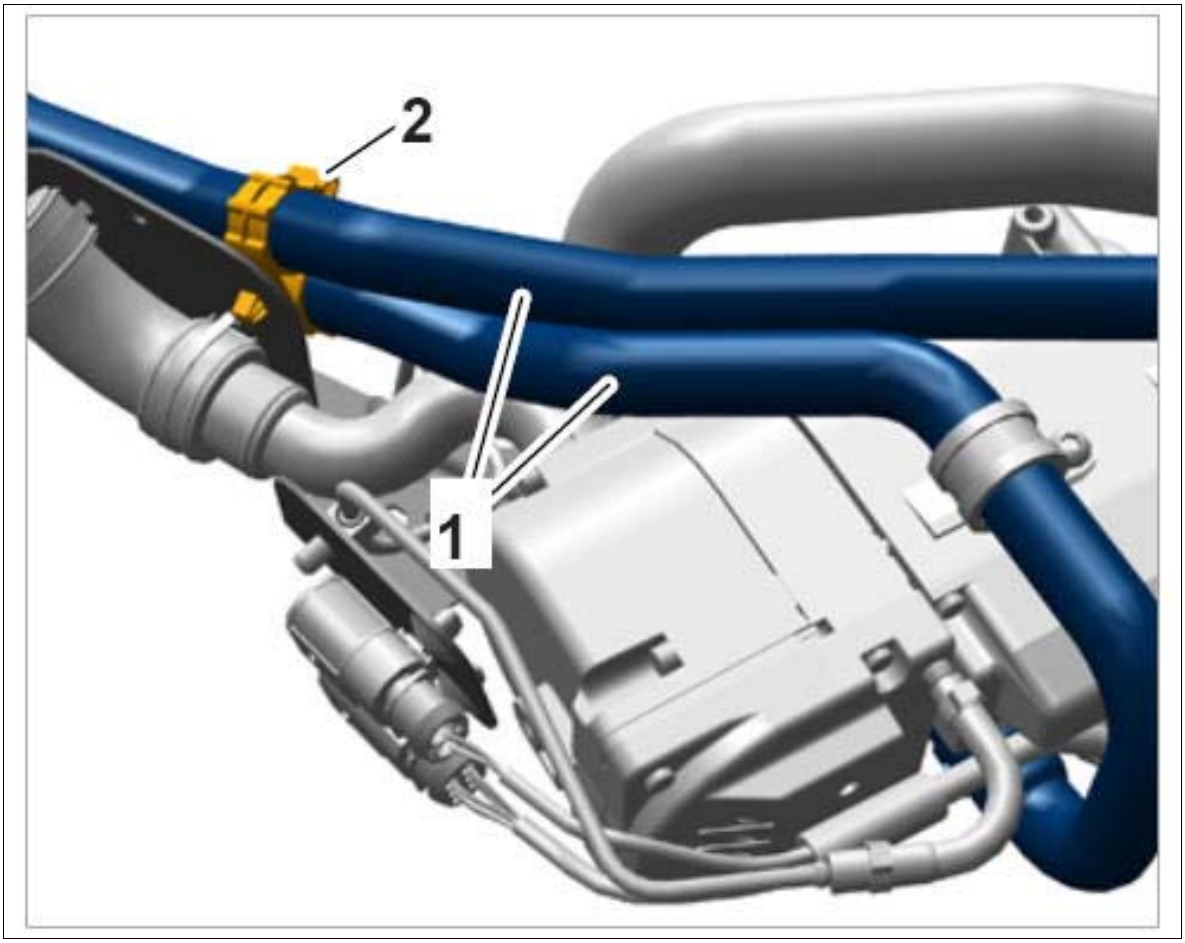

Courtesy of PORSCHE CARS NORTH AMERICA, INC.

WM 822219 REMOVING AND INSTALLING HOLDER FOR HEATER (ALL MODELS) > SECURING HEATER WITH HOLDER

1. Place heater in position.
    1. 1.1. Position rubber sleeve **-1-** on the retaining pin **-2-** .
    2. 1.2. Engage clip **-3-** on the holder into the cut-out **-4-** .

Fig 1: Positioning Heater

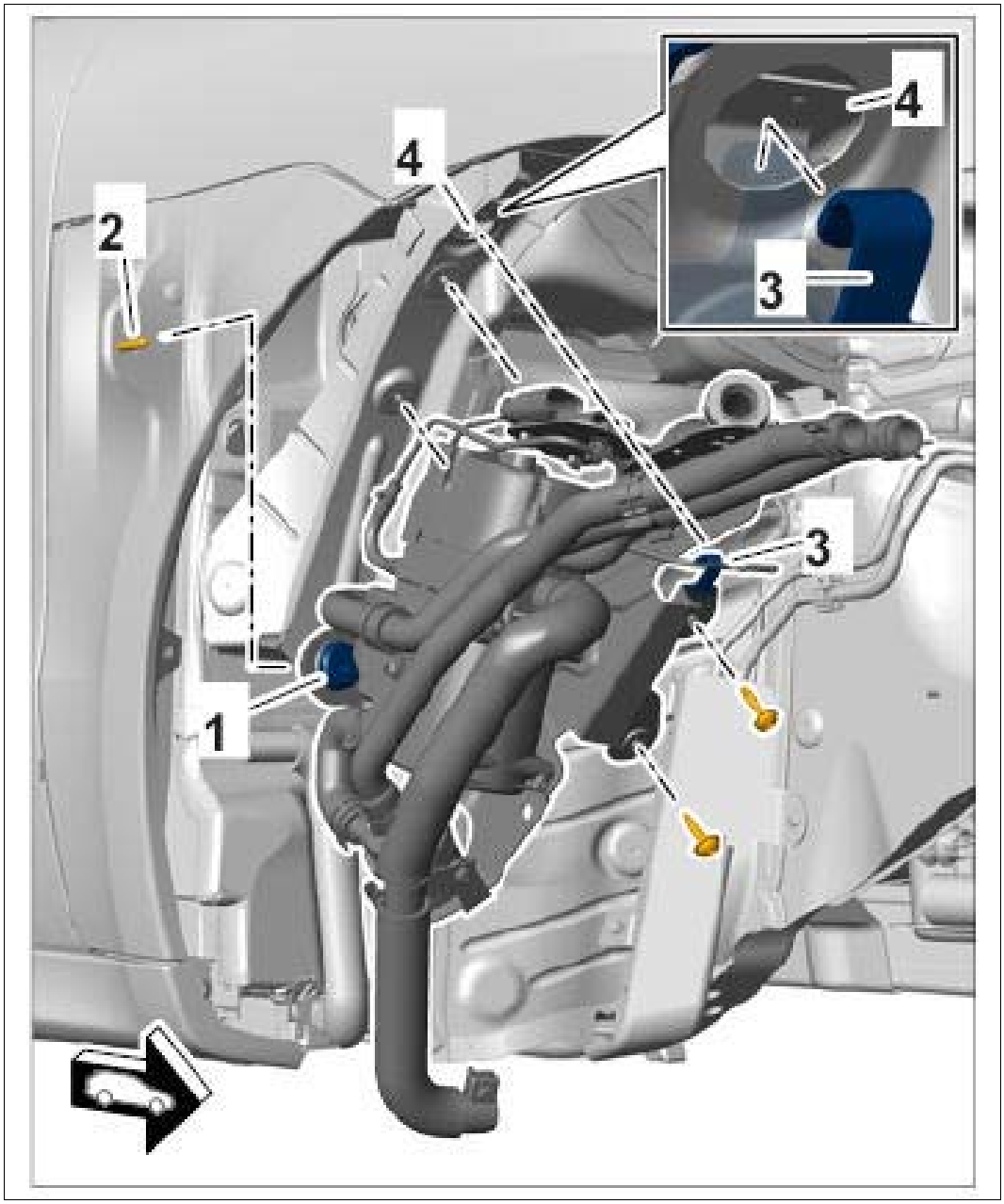

Courtesy of PORSCHE CARS NORTH AMERICA, INC.

2. Secure heater.

    1. 2.1. Loosely fit fastening screws **-1-** for the holder **-2-** at the top and bottom.

Fig 2: Identifying Heater Fastening Screws

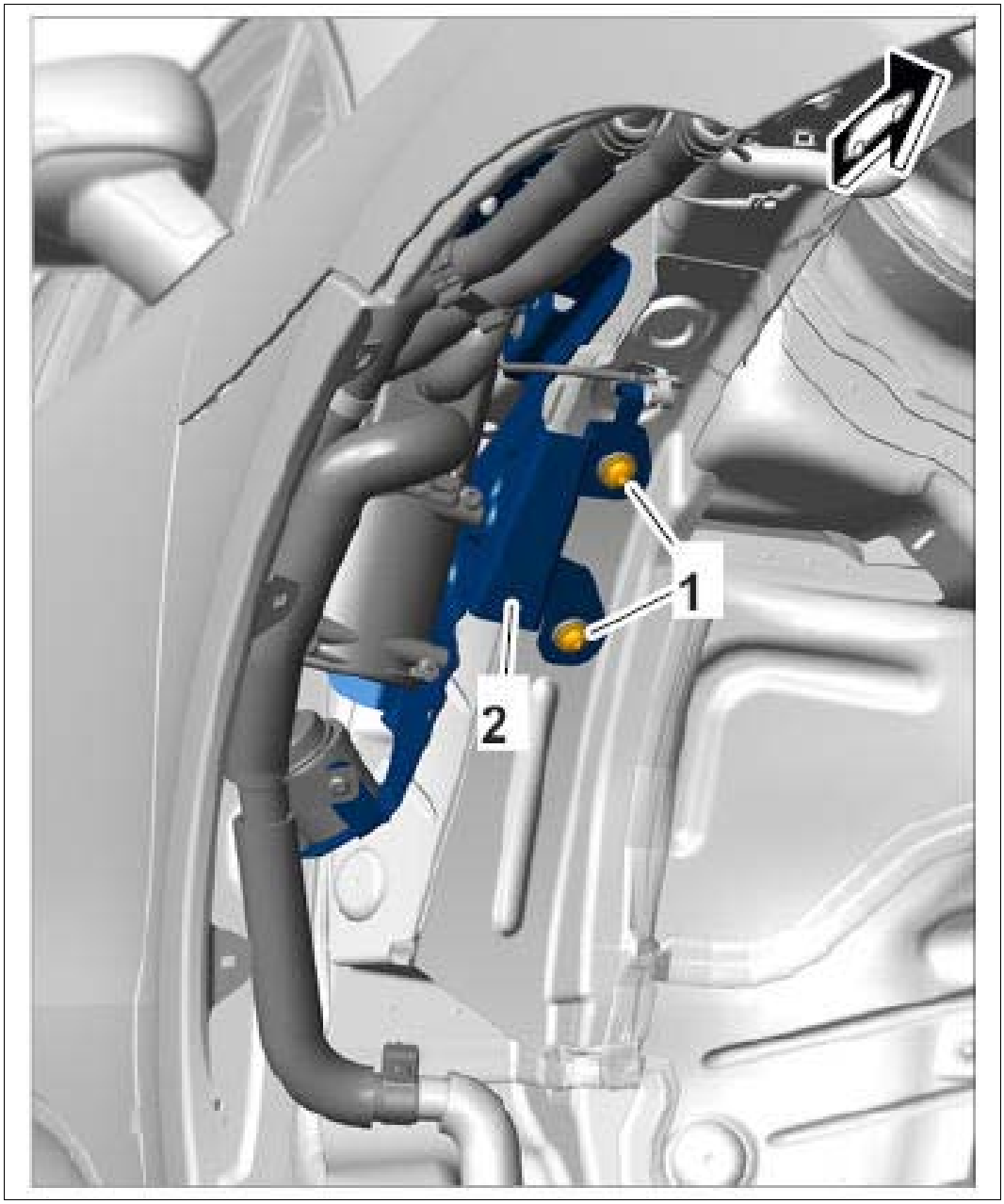

Courtesy of PORSCHE CARS NORTH AMERICA, INC.

2. 2.2. Slide flexi-pipe **-2-** and screw-type clamp **-1-** onto the silencer **-3-** .

Fig 3: Identifying Exhaust Pipe On Silencer



Courtesy of PORSCHE CARS NORTH AMERICA, INC.

3. 2.3. Tighten fastening screws **-1-** on the holder **-2-** to the prescribed tightening torque. **Tightening torque 20 Nm (15 ftlb.)**

4. 2.4. Tighten screw-type clamp **-1-** .

3. Clip in fuel line **-2-** in the wheel housing at position **-arrow-** .

Fig 4: Locating Fuel Line In Wheel Housing

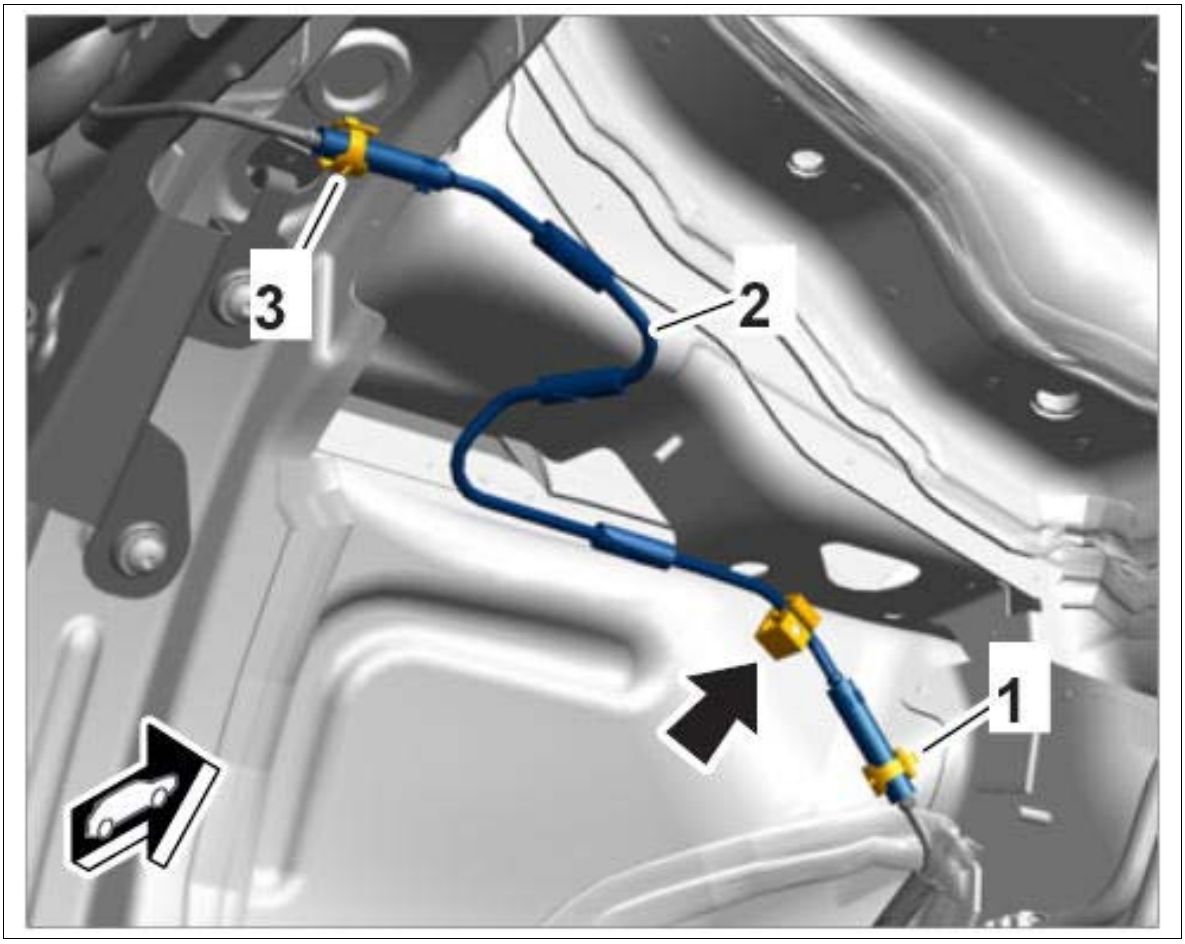

Courtesy of PORSCHE CARS NORTH AMERICA, INC.

WM 822219 REMOVING AND INSTALLING HOLDER FOR HEATER (ALL MODELS) > SUBSEQUENT WORK

1. Install front wheel housing liner at the right → Installing front wheel housing liner
2. Fit right front wheel → Installing Wheel

WM 824519 REMOVING AND INSTALLING FUEL PUMP FOR AUXILIARY HEATING (ALL MODELS) > TOOLS

Designation	Type	Number	Description	

PIWIS Tester II	Special tool	9818		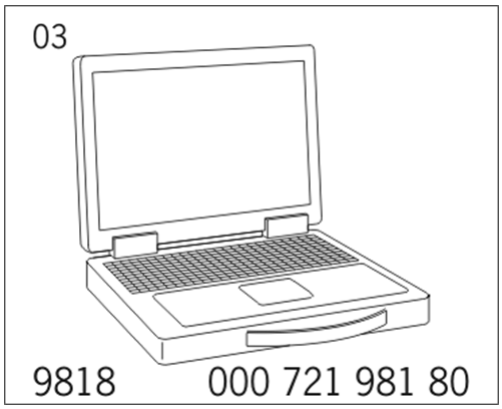

WM 824519 REMOVING AND INSTALLING FUEL PUMP FOR AUXILIARY HEATING (ALL MODELS) > PRELIMINARY WORK

1. Remove cover for center underbody at the right side → Removing cover for center underbody .

WM 824519 REMOVING AND INSTALLING FUEL PUMP FOR AUXILIARY HEATING (ALL MODELS) > REMOVING AND INSTALLING FUEL PUMP FOR AUXILIARY HEATING > REMOVING FUEL PUMP FOR AUXILIARY HEATING

WARNING: Emerging fuel

- *Risk of fire*

→ Disconnect the battery.

→ Avoid contact with hot parts or sources of ignition.

→ Allow engine to cool down.

→ Relieve the fuel pressure before opening the fuel lines.

→ Collect emerging fuel, absorb it if necessary with a suitable binding material and dispose of properly.

→ Use suction to remove ignitable vapors.

→ Attach warning sign to vehicle in a clearly visible position.

1. Loosen fuel pump **-1-** from the holder **-2-** .
2. Release and disconnect connector **-5-** .
3. Disconnect line **-3-** for the auxiliary heating and pull it off the fuel pump.
4. Disconnect fuel line **-4-** to the fuel tank.

5. Remove fuel pump **-1-** .

Fig 1: Identifying Auxiliary Heating Fuel Pump

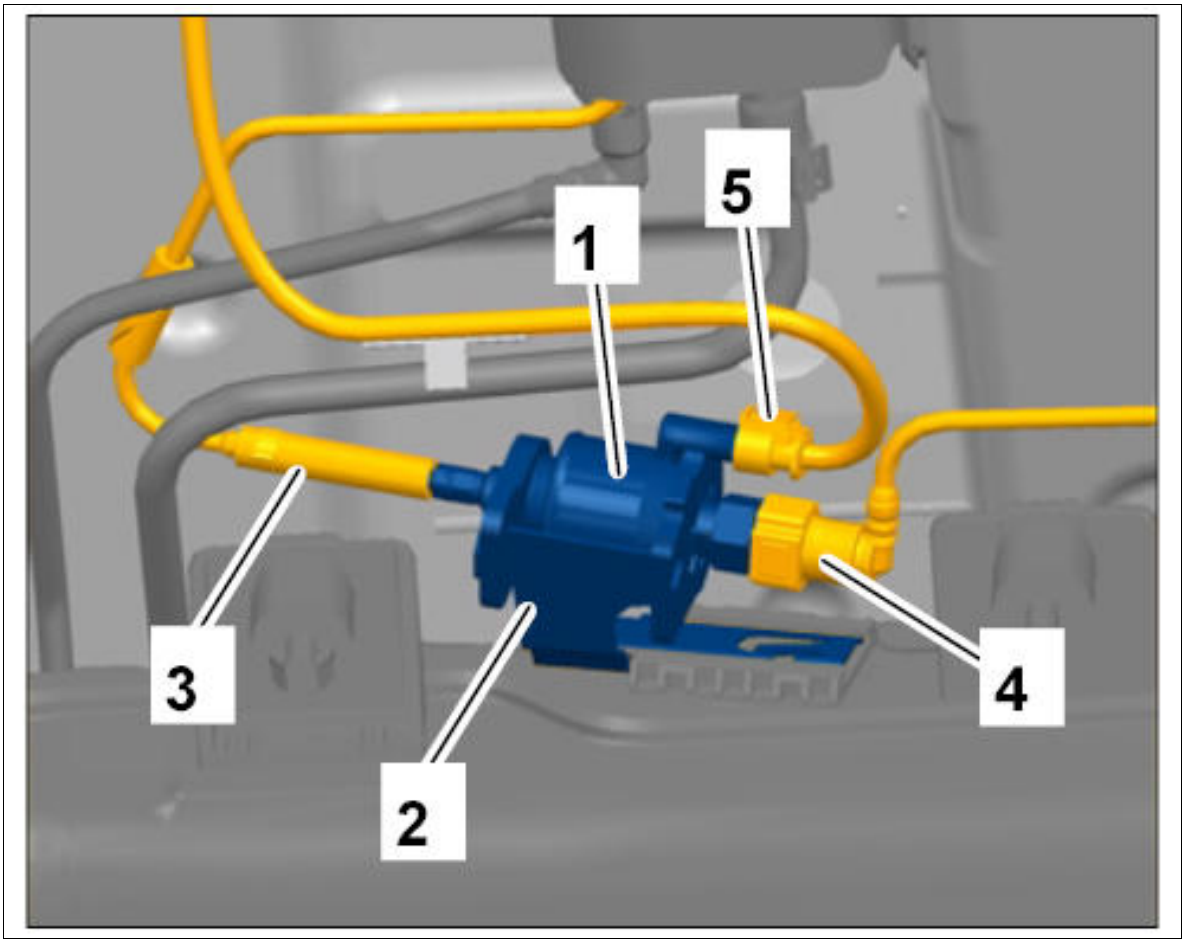

Courtesy of PORSCHE CARS NORTH AMERICA, INC.

WM 824519 REMOVING AND INSTALLING FUEL PUMP FOR AUXILIARY HEATING (ALL MODELS) > REMOVING AND INSTALLING FUEL PUMP FOR AUXILIARY HEATING > INSTALLING FUEL PUMP FOR AUXILIARY HEATING

1. Installation is performed in reverse order.
2. The fuel system must also be pre-filled. To do this, connect **PIWIS Tester II 9818** to the vehicle.
3. Switch on ignition.
4. Select the vehicle type and start the PIDT.
5. Select the **auxiliary heater** control unit in the **overview** .
6. **Maintenance/repairs** must then be selected.
7. **Line filling** must now be selected. Then press [Next].

WM 824519 REMOVING AND INSTALLING FUEL PUMP FOR AUXILIARY HEATING (ALL MODELS) > SUBSEQUENT WORK

1. Install cover for center underbody at the right side → Removing cover for center underbody .

WM 825419 REMOVING AND INSTALLING FUEL LINE - FRONT WHEEL HOUSING CONNECTION TO REAR UNDERBODY (ALL MODELS) > TOOLS

Designation	Type	Number	Description	
PIWIS Tester II	Special tool	9818		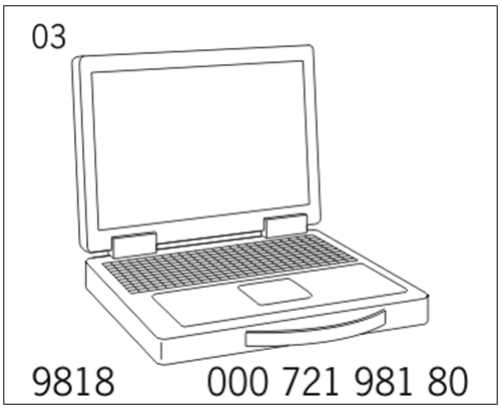
assembly pliers	Commercially available tool	Nr.72 Pos.1		

WM 825419 REMOVING AND INSTALLING FUEL LINE - FRONT WHEEL HOUSING CONNECTION TO REAR UNDERBODY (ALL MODELS) > PRELIMINARY WORK

1. Remove cover for center underbody at the right side → Removing cover for center underbody .
2. Remove right front wheel → Removing Wheel
3. Remove front wheel housing liner at the right → Removing front wheel housing liner

WM 825419 REMOVING AND INSTALLING FUEL LINE - FRONT WHEEL HOUSING

CONNECTION TO REAR UNDERBODY (ALL MODELS) > REMOVING AND INSTALLING FUEL LINE - FRONT WHEEL HOUSING CONNECTION TO REAR UNDERBODY > REMOVING FUEL LINE

WARNING: Emerging fuel

- *Risk of fire*

→ Disconnect the battery.

→ Avoid contact with hot parts or sources of ignition.

→ Allow engine to cool down.

→ Relieve the fuel pressure before opening the fuel lines.

→ Collect emerging fuel, absorb it if necessary with a suitable binding material and dispose of properly.

→ Use suction to remove ignitable vapors.

→ Attach warning sign to vehicle in a clearly visible position.

1. Loosen spring band clamp **-1-** using **assembly pliers Nr.72 Pos.1** and disconnect fuel line **-2-** .
2. Loosen fuel line **-3-** for auxiliary heating **-1-** and disconnect it.

Fig 1: Locating Fuel Line In Wheel Housing

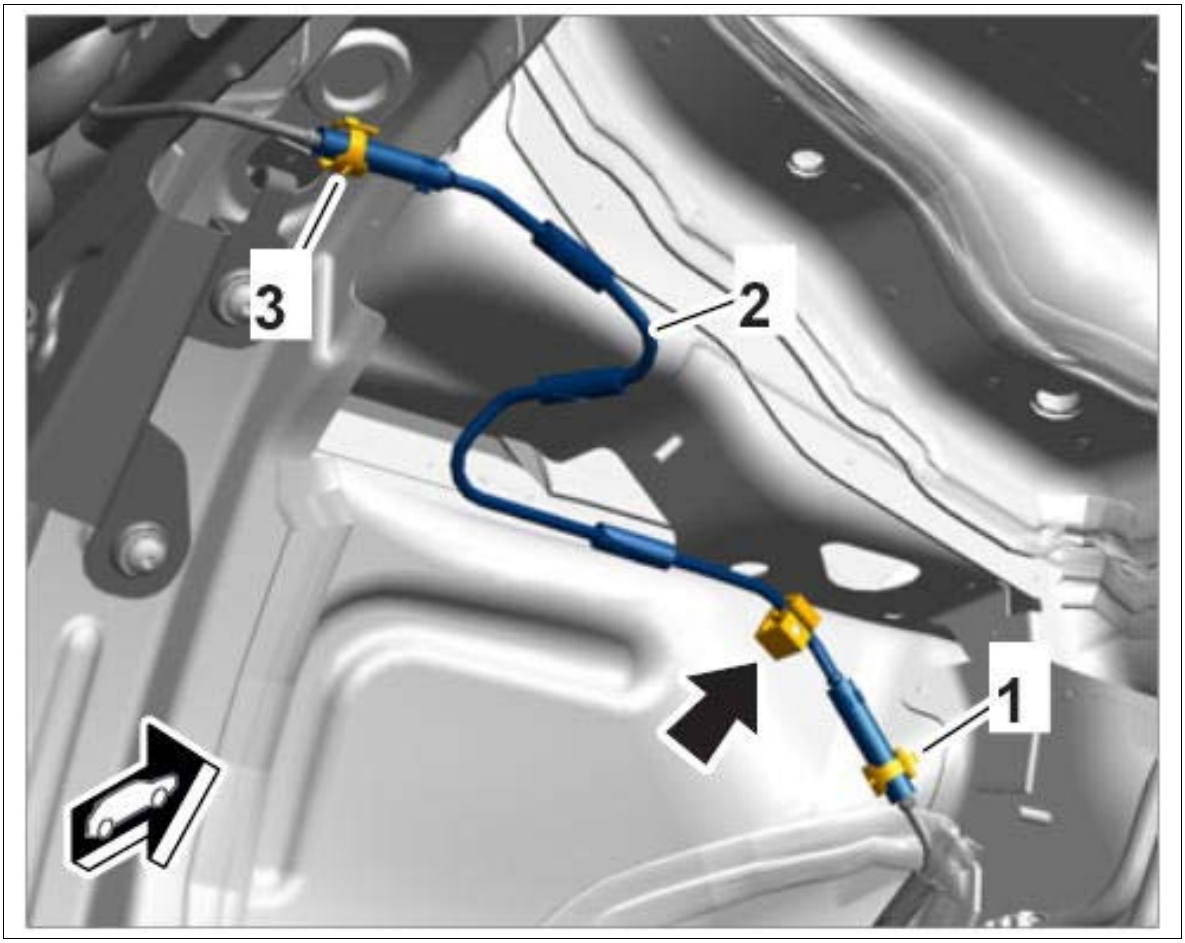

Courtesy of PORSCHE CARS NORTH AMERICA, INC.

Fig 2: Identifying Auxiliary Heating Fuel Pump

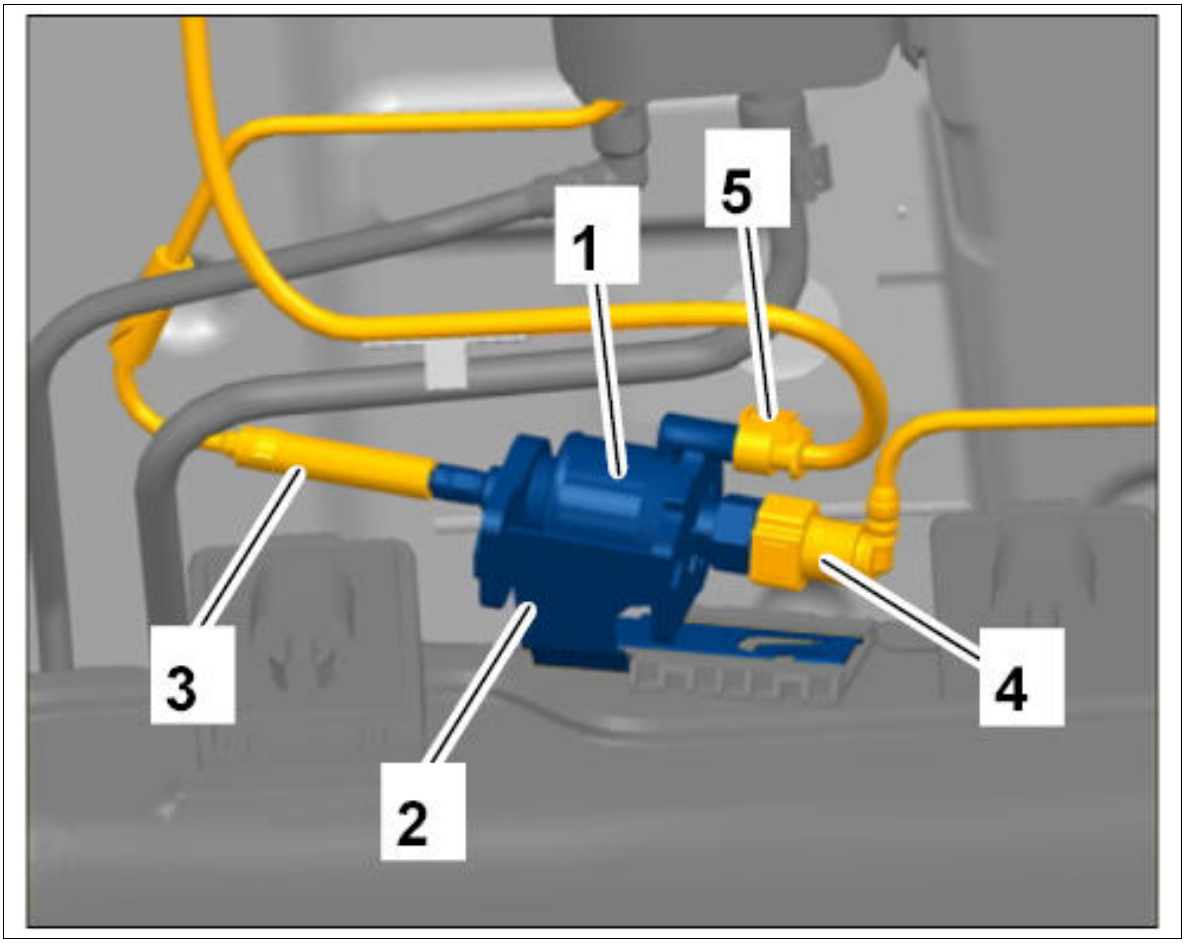

Courtesy of PORSCHE CARS NORTH AMERICA, INC.

3. Take fuel line out of the brackets and remove it from the vehicle.

WM 825419 REMOVING AND INSTALLING FUEL LINE - FRONT WHEEL HOUSING CONNECTION TO REAR UNDERBODY (ALL MODELS) > REMOVING AND INSTALLING FUEL LINE - FRONT WHEEL HOUSING CONNECTION TO REAR UNDERBODY > INSTALLING FUEL LINE - FRONT WHEEL HOUSING CONNECTION TO UNDERBODY

1. Installation is performed in reverse order.
2. The fuel system must also be pre-filled. To do this, connect **PIWIS Tester II 9818** to the vehicle.
3. Switch on ignition.
4. Select the vehicle type and start the PIDT.
5. Select the **auxiliary heater** control unit in the **overview** .
6. **Maintenance/repairs** must then be selected.

7. **Line filling** must now be selected. Then press [Next].

WM 825419 REMOVING AND INSTALLING FUEL LINE - FRONT WHEEL HOUSING CONNECTION TO REAR UNDERBODY (ALL MODELS) > SUBSEQUENT WORK

1. Install front wheel housing liner at the right → Installing front wheel housing liner .
2. Install right front wheel → Installing Wheel
3. Install cover for center underbody at the right side → 519319 REMOVING AND INSTALLING COVER FOR CENTRE UNDERBODY .

WM 825419 REMOVING AND INSTALLING FUEL LINE - REAR UNDERBODY TO FUEL PUMP (ALL MODELS) > TOOLS

Designation	Type	Number	Description	
PIWIS Tester II	Special tool	9818		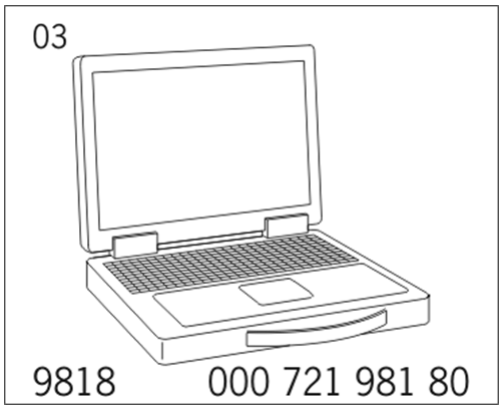

WM 825419 REMOVING AND INSTALLING FUEL LINE - REAR UNDERBODY TO FUEL PUMP (ALL MODELS) > PRELIMINARY WORK

1. Remove fuel tank → Removing fuel tank .

WM 825419 REMOVING AND INSTALLING FUEL LINE - REAR UNDERBODY TO FUEL PUMP (ALL MODELS) > REMOVING AND INSTALLING FUEL LINE - REAR UNDERBODY TO FUEL PUMP > REMOVING FUEL LINE FROM REAR UNDERBODY TO FUEL PUMP

WARNING: Emerging fuel

- *Risk of fire*

→ Disconnect the battery.

→ Avoid contact with hot parts or sources of ignition.

→ Allow engine to cool down.

→ Relieve the fuel pressure before opening the fuel lines.

→ Collect emerging fuel, absorb it if necessary with a suitable binding material and dispose of properly.

→ Use suction to remove ignitable vapors.

→ Attach warning sign to vehicle in a clearly visible position.

1. Release and pull off supply line for auxiliary heater **-4-** .

Fig 1: Identifying Fuel Pump Connections

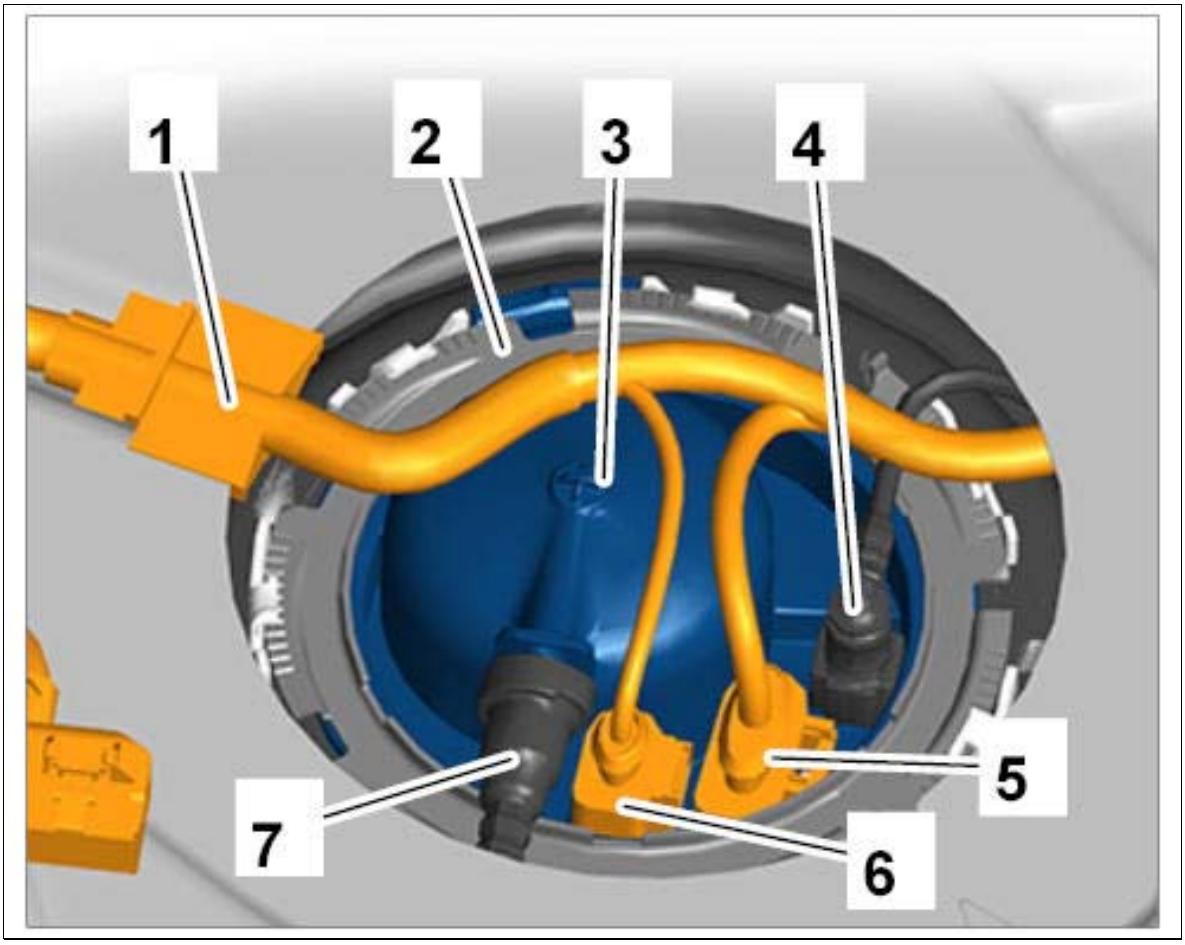

Courtesy of PORSCHE CARS NORTH AMERICA, INC.

2. Loosen auxiliary heater pump **-2-** from the holder **-3-** and disconnect line **-4-** .

Fig 2: Identifying Supply Line

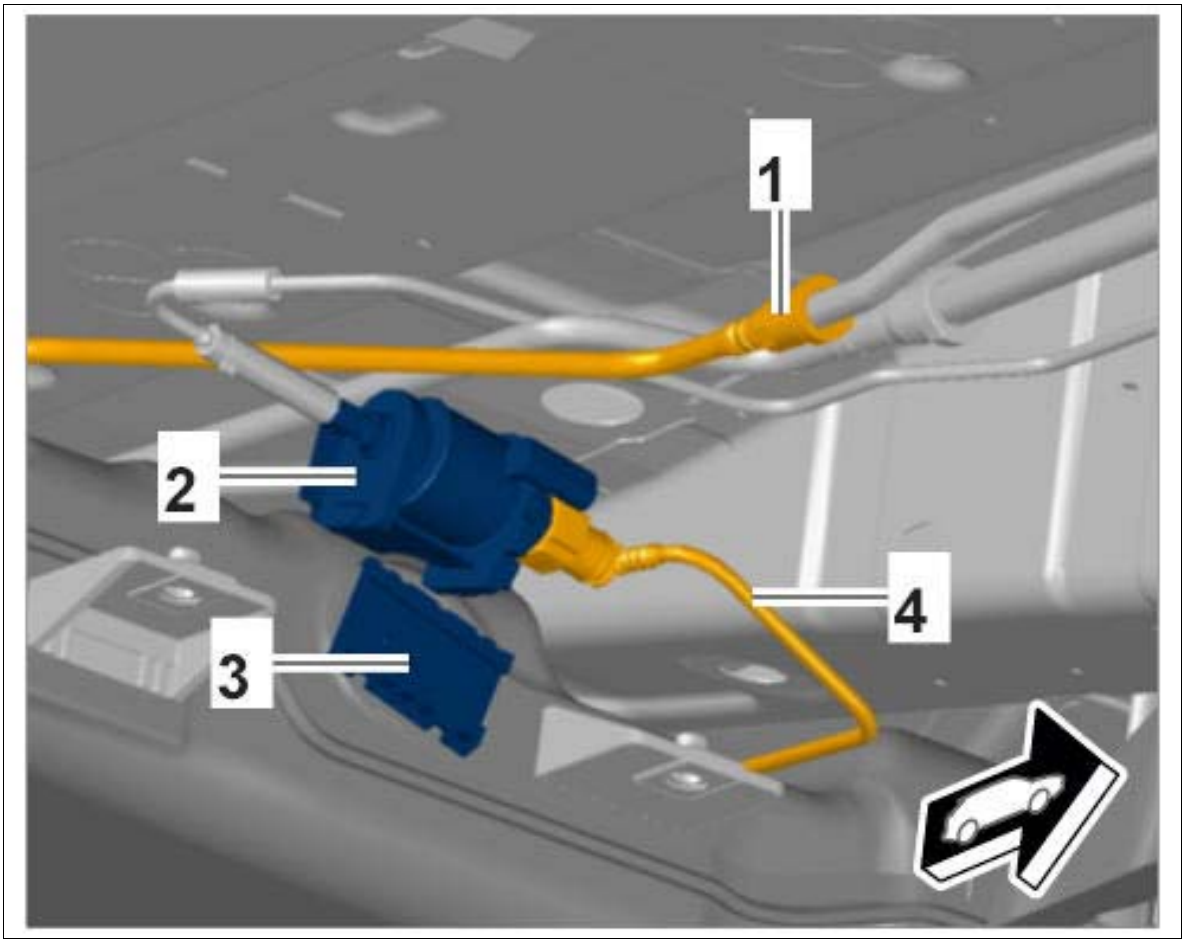

Courtesy of PORSCHE CARS NORTH AMERICA, INC.

3. Remove line from the brackets.

WM 825419 REMOVING AND INSTALLING FUEL LINE - REAR UNDERBODY TO FUEL PUMP (ALL MODELS) > REMOVING AND INSTALLING FUEL LINE - REAR UNDERBODY TO FUEL PUMP > INSTALLING FUEL LINE FROM REAR UNDERBODY TO FUEL PUMP

1. Installation is performed in reverse order.
2. The fuel system must also be pre-filled. To do this, connect **PIWIS Tester II 9818** to the vehicle.
3. Switch on ignition.
4. Select the vehicle type and start the PIDT.
5. Select the **auxiliary heater** control unit in the **overview** .
6. **Maintenance/repairs** must then be selected.

7. **Line filling** must now be selected. Then press [Next].

WM 825419 REMOVING AND INSTALLING FUEL LINE - REAR UNDERBODY TO FUEL PUMP (ALL MODELS) > SUBSEQUENT WORK

1. Install fuel tank → Installing fuel tank

WM 825419 REMOVING AND INSTALLING FUEL LINE - WHEEL HOUSING CONNECTION TO HEATER (ALL MODELS) > TOOLS

Designation	Type	Number	Description	
PIWIS Tester II	Special tool	9818		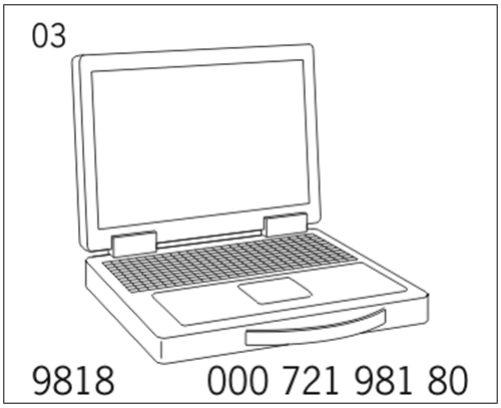
assembly pliers	Commercially available tool	Nr.72 Pos.1		

WM 825419 REMOVING AND INSTALLING FUEL LINE - WHEEL HOUSING CONNECTION TO HEATER (ALL MODELS) > INFORMATION > INSTALLATION POSITION OF FUEL LINE - WHEEL HOUSING CONNECTION TO HEATER

The fuel line is behind the front right wheel housing liner.

WM 825419 REMOVING AND INSTALLING FUEL LINE - WHEEL HOUSING

CONNECTION TO HEATER (ALL MODELS) > PRELIMINARY WORK

1. Remove right front wheel → Removing Wheel .
2. Remove front wheel housing liner at the right → Removing front wheel housing liner .

WM 825419 REMOVING AND INSTALLING FUEL LINE - WHEEL HOUSING CONNECTION TO HEATER (ALL MODELS) > REMOVING AND INSTALLING FUEL LINE - WHEEL HOUSING CONNECTION TO HEATER > REMOVING FUEL LINE - WHEEL HOUSING CONNECTION TO HEATER

WARNING: Emerging fuel

- *Risk of fire*

→ Disconnect the battery.

→ Avoid contact with hot parts or sources of ignition.

→ Allow engine to cool down.

→ Relieve the fuel pressure before opening the fuel lines.

→ Collect emerging fuel, absorb it if necessary with a suitable binding material and dispose of properly.

→ Use suction to remove ignitable vapors.

→ Attach warning sign to vehicle in a clearly visible position.

1. Unclip fuel line **-2-** in the wheel housing at the marked position **-arrow-** .
2. Loosen spring band clamp **-3-** using **assembly pliers Nr.72 Pos.1** and disconnect fuel line **-2-** .
3. Loosen spring band clamp **-1-** using **assembly pliers Nr.72 Pos.1** and disconnect fuel line **-2-** .
4. Remove fuel line.

Fig 1: Locating Fuel Line In Wheel Housing

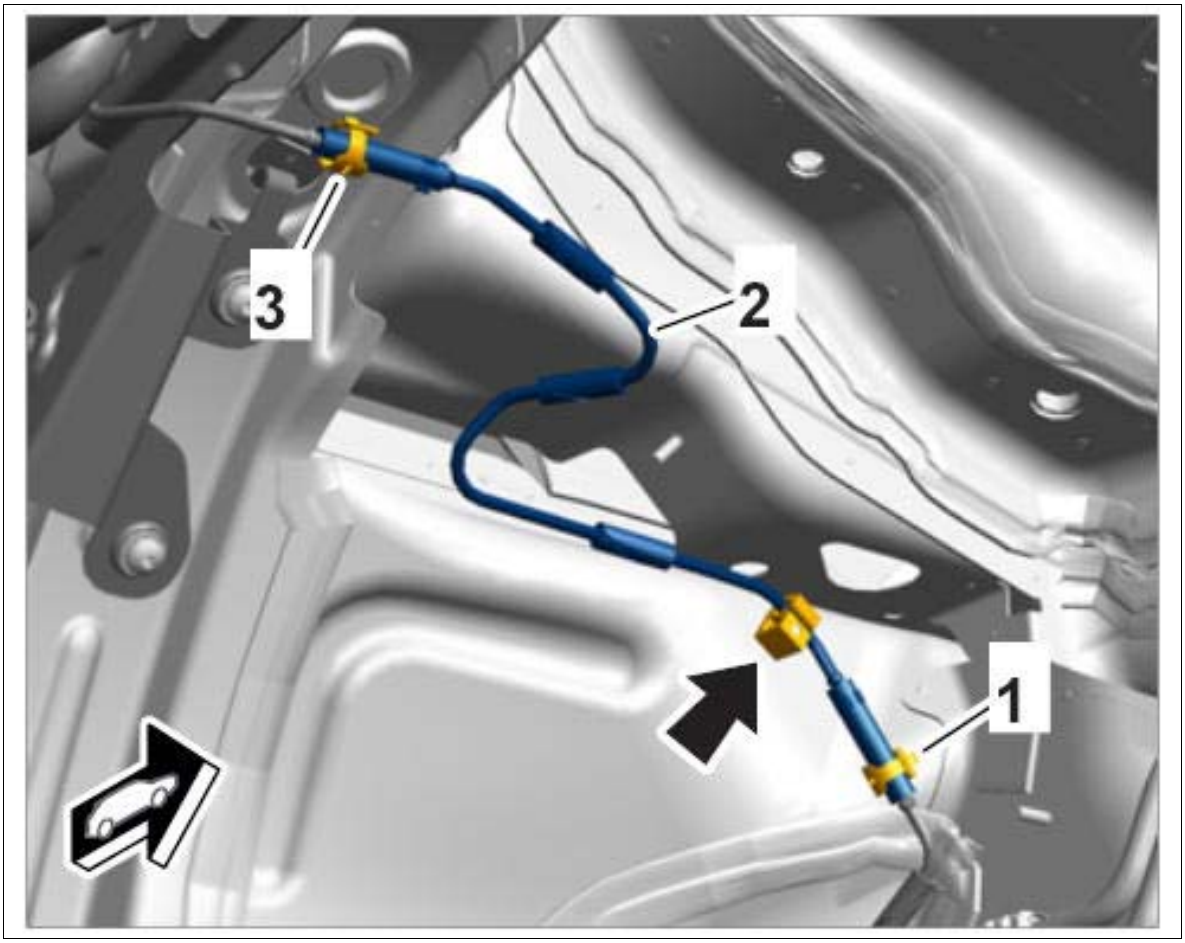

Courtesy of PORSCHE CARS NORTH AMERICA, INC.

WM 825419 REMOVING AND INSTALLING FUEL LINE - WHEEL HOUSING CONNECTION TO HEATER (ALL MODELS) > REMOVING AND INSTALLING FUEL LINE - WHEEL HOUSING CONNECTION TO HEATER > INSTALLING FUEL LINE - WHEEL HOUSING CONNECTION TO HEATER

WARNING: Emerging fuel

- *Risk of fire*

→ Disconnect the battery.

→ Avoid contact with hot parts or sources of ignition.

→ Allow engine to cool down.

→ Relieve the fuel pressure before opening the fuel lines.

→ Collect emerging fuel, absorb it if necessary with a suitable binding material and dispose of properly.

→ Use suction to remove ignitable vapors.

→ Attach warning sign to vehicle in a clearly visible position.

Information

- There is no guarantee that re-used clamps will secure the component properly.
- Removed clamps must be replaced.
- Always use new clamps during installation.

1. Installation is performed in reverse order to removal.

   Pay particular attention to the following:

   Push on fuel line **-2-** as far as it will go or up to the marking - minimum overlap: 25 mm.

   Fig 1: Locating Fuel Line In Wheel Housing

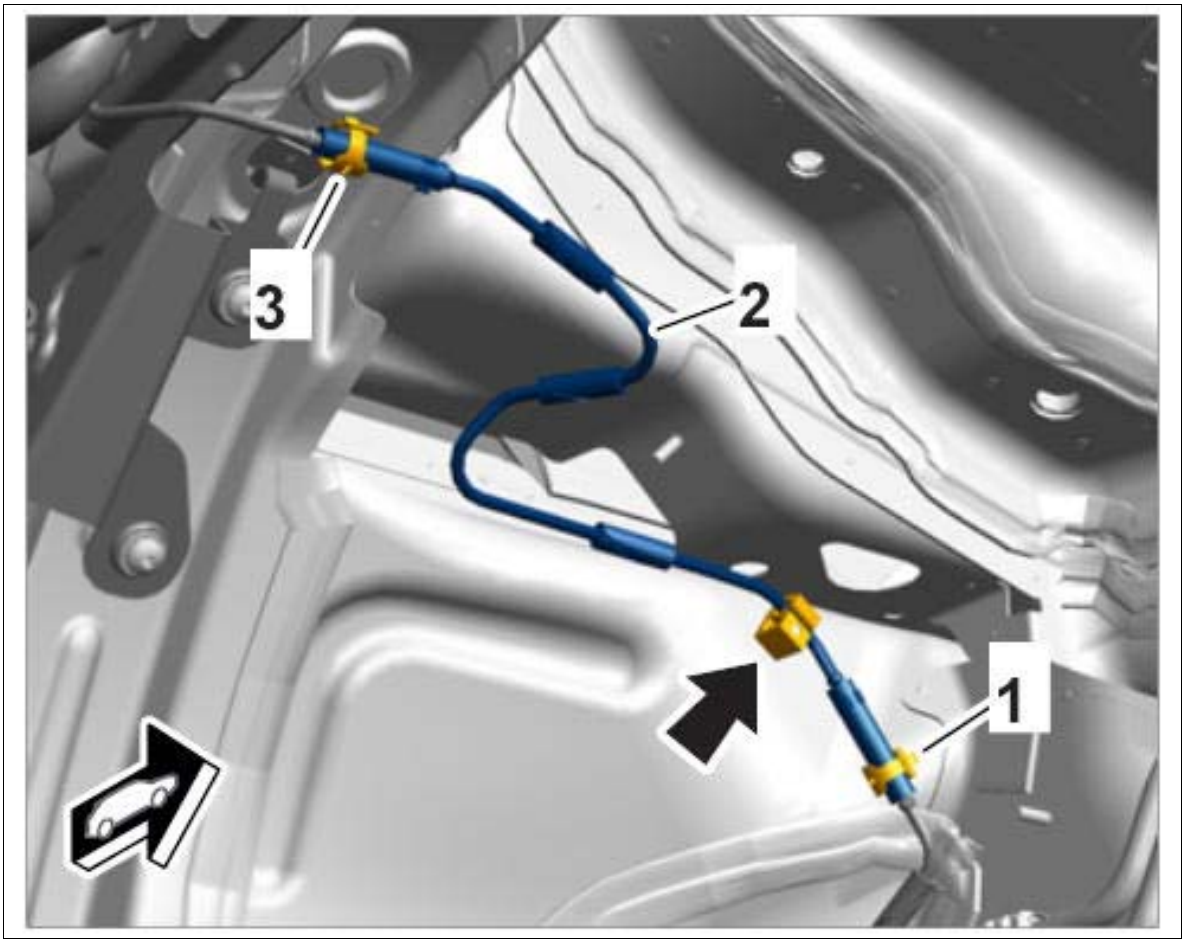

Courtesy of PORSCHE CARS NORTH AMERICA, INC.

2. The fuel system must also be pre-filled. To do this, connect **PIWIS Tester II 9818** to the vehicle.
3. Switch on ignition.

4. Select the vehicle type and start the PIDT.
5. Select the **auxiliary heater** control unit in the **overview** .
6. **Maintenance/repairs** must then be selected.
7. **Line filling** must now be selected. Then press [Next].

WM 825419 REMOVING AND INSTALLING FUEL LINE - WHEEL HOUSING CONNECTION TO HEATER (ALL MODELS) > SUBSEQUENT WORK

1. Install front wheel housing liner at the right → Removing front wheel housing liner .
2. Fit right front wheel → Installing Wheel .

WM 825919 REMOVING AND INSTALLING MUFFLER (SILENCER) (ALL MODELS) > TECHNICAL VALUES

Location	Description	Type	Basic value	Tolerance 1	Tolerance 2
Exhaust silencer pipe to underbody	Nut, M6	Tightening torque	9 Nm (6.5 ftlb.)		
Exhaust silencer holder to underbody	Nut, M6	Tightening torque	9 Nm (6.5 ftlb.)		

WM 825919 REMOVING AND INSTALLING MUFFLER (SILENCER) (ALL MODELS) > INFORMATION > INSTALLATION POSITION OF SILENCER

Fig 1: Overview Of Silencer Position



Courtesy of PORSCHE CARS NORTH AMERICA, INC.

WM 825919 REMOVING AND INSTALLING MUFFLER (SILENCER) (ALL MODELS) > PRELIMINARY WORK

1. Remove right front wheel → Removing Wheel .
2. Remove front wheel housing liner at the right → Removing front wheel housing liner .
3. Remove central cover for center underbody → Removing cover for center underbody
4. Remove right side panel cover for center underbody → Removing cover for center underbody .

WM 825919 REMOVING AND INSTALLING MUFFLER (SILENCER) (ALL MODELS) > REMOVING AND INSTALLING MUFFLER (SILENCER) > REMOVING SILENCER

1. Loosen screw-type clamp **-1-** .
2. Pull flexi-pipe **-2-** off the silencer pipe **-3-** .

Fig 1: Identifying Exhaust Pipe On Silencer



Courtesy of PORSCHE CARS NORTH AMERICA, INC.

3. Disconnect line **-1-** from the silencer holder **-2-** .

Fig 2: Identifying Silencer Holder

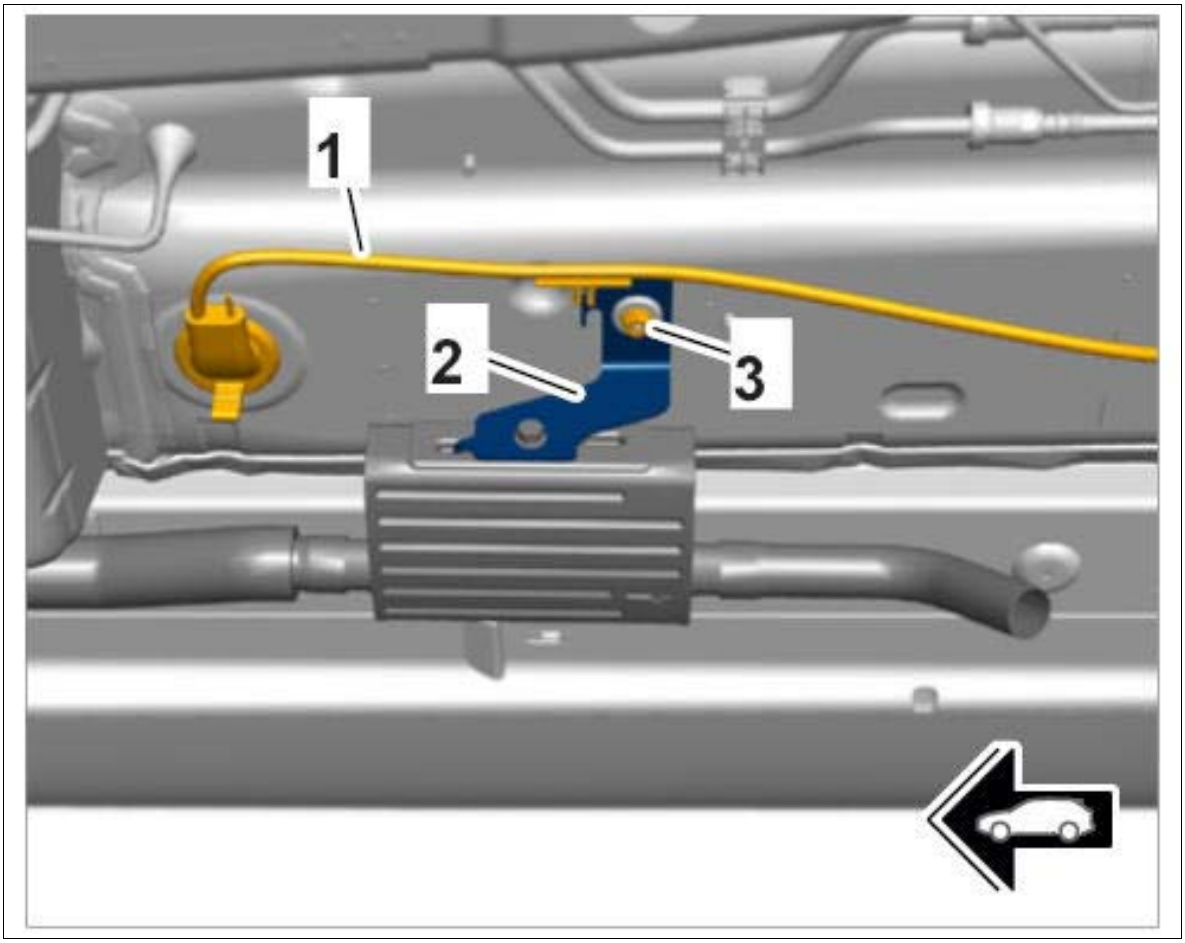

Courtesy of PORSCHE CARS NORTH AMERICA, INC.

4. Unscrew and remove fastening nut **-1-** at the bottom of the wheel housing.

Fig 3: Identifying Silencer On Underbody



Courtesy of PORSCHE CARS NORTH AMERICA, INC.

5. Unscrew and remove fastening nut **-3-** on the silencer holder.

Fig 4: Identifying Silencer Holder

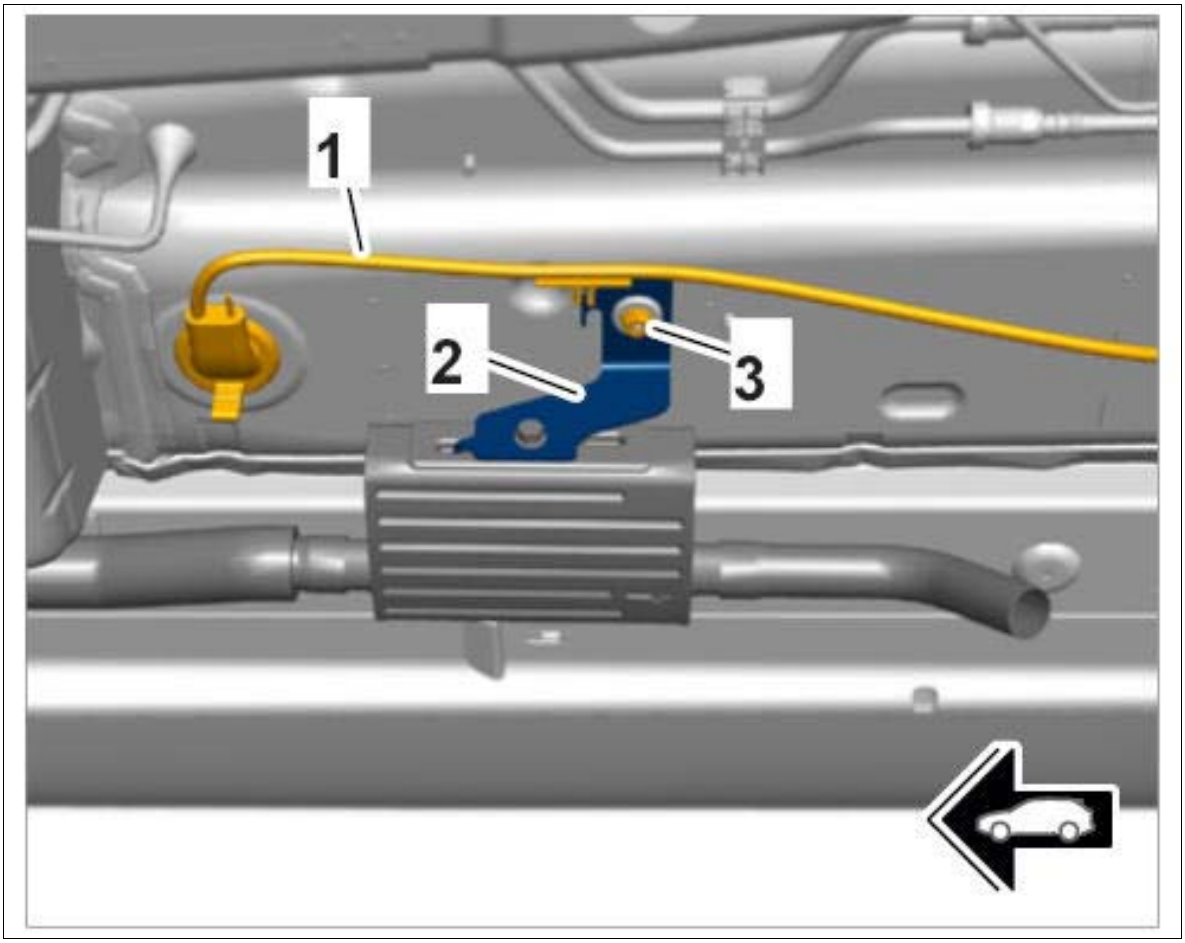

Courtesy of PORSCHE CARS NORTH AMERICA, INC.

6. Remove silencer.

WM 825919 REMOVING AND INSTALLING MUFFLER (SILENCER) (ALL MODELS) > REMOVING AND INSTALLING MUFFLER (SILENCER) > INSTALLING SILENCER

1. Position silencer.
2. Tighten fastening nut **-3-** on the silencer holder to the prescribed tightening torque **Tightening torque 9 Nm (6.5 ftlb.)** .

Fig 1: Identifying Silencer Holder

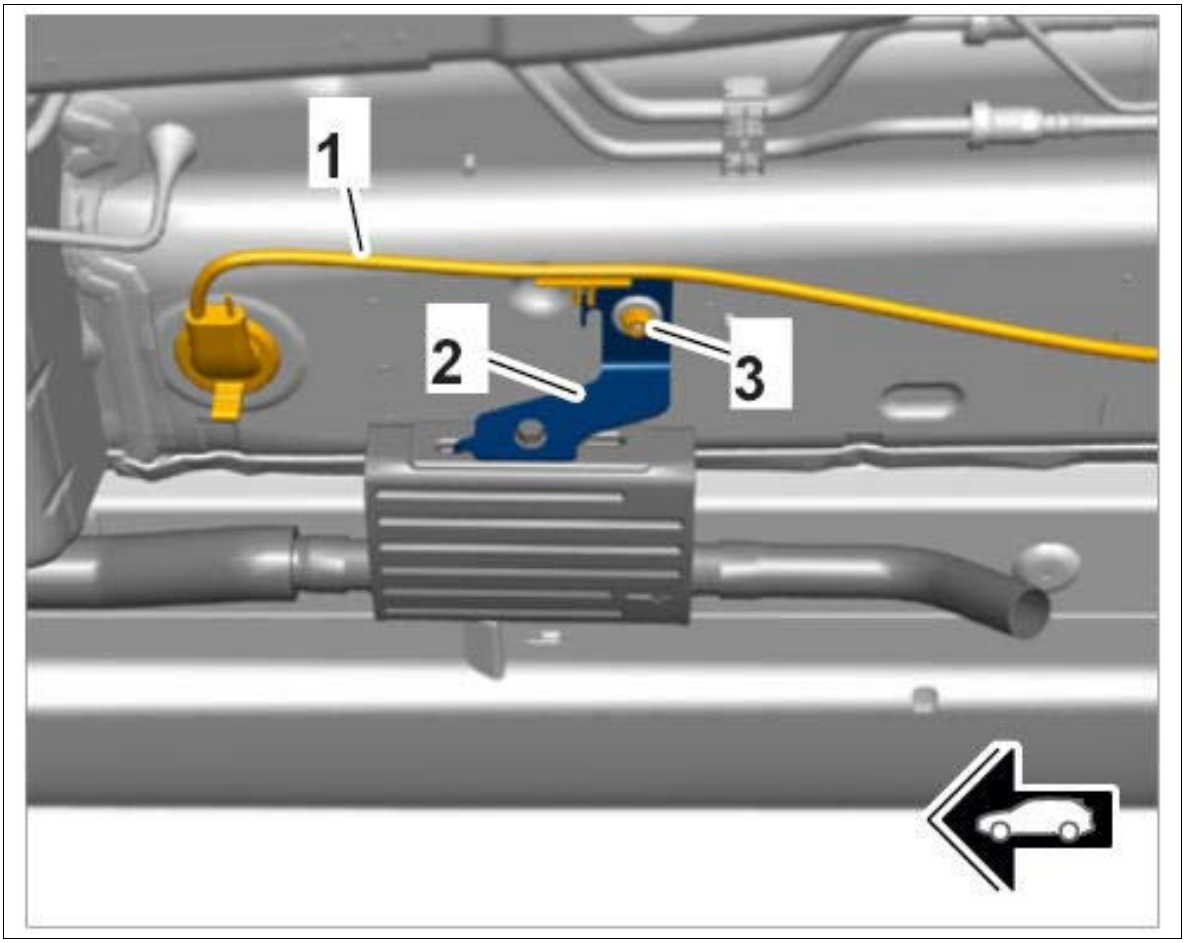

Courtesy of PORSCHE CARS NORTH AMERICA, INC.

3. Tighten fastening nut **-1-** at the bottom of the wheel housing to the prescribed tightening torque **Tightening torque 9 Nm (6.5 ftlb.)** .

Fig 2: Identifying Silencer On Underbody



Courtesy of PORSCHE CARS NORTH AMERICA, INC.

4. Secure line **-1-** to the silencer holder **-2-** .
5. Slide flexi-pipe **-2-** onto the silencer pipe **-3-** .

Fig 3: Identifying Silencer Holder

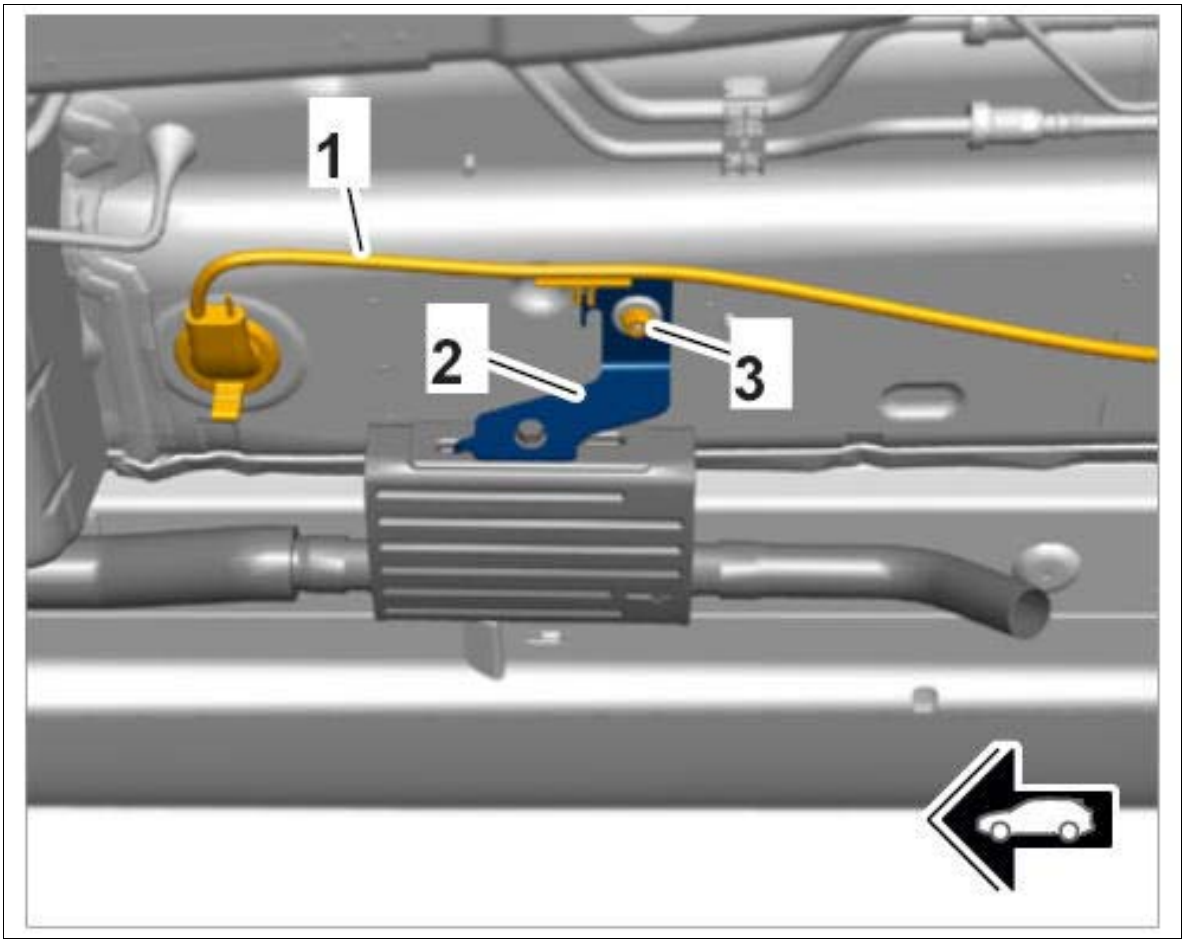

Courtesy of PORSCHE CARS NORTH AMERICA, INC.

6. Tighten screw-type clamp **-1-** .

Fig 4: Identifying Exhaust Pipe On Silencer



Courtesy of PORSCHE CARS NORTH AMERICA, INC.

WM 825919 REMOVING AND INSTALLING MUFFLER (SILENCER) (ALL MODELS) > SUBSEQUENT WORK

1. Install right side panel cover for center underbody → Installing cover for center underbody .
2. Install central cover for center underbody → Installing cover for center underbody

3. Install front wheel housing liner at the right → Installing front wheel housing liner .

4. Fit right front wheel → Installing Wheel .

WM 826019 REMOVING AND INSTALLING EXHAUST PIPE (ALL MODELS) > INFORMATION > INSTALLATION POSITION OF EXHAUST PIPE

The exhaust pipe is on the heater in the front right wheel housing, behind the wheel housing liner.

WM 826019 REMOVING AND INSTALLING EXHAUST PIPE (ALL MODELS) > PRELIMINARY WORK

1. Loosen heater with holder → Loosening Heater With Holder .

WM 826019 REMOVING AND INSTALLING EXHAUST PIPE (ALL MODELS) > REMOVING AND INSTALLING EXHAUST PIPE > REMOVING EXHAUST PIPE

1. Unscrew fastening screw **-2-** on the exhaust pipe **-1-** .

Fig 1: Identifying Exhaust Pipe On Holder

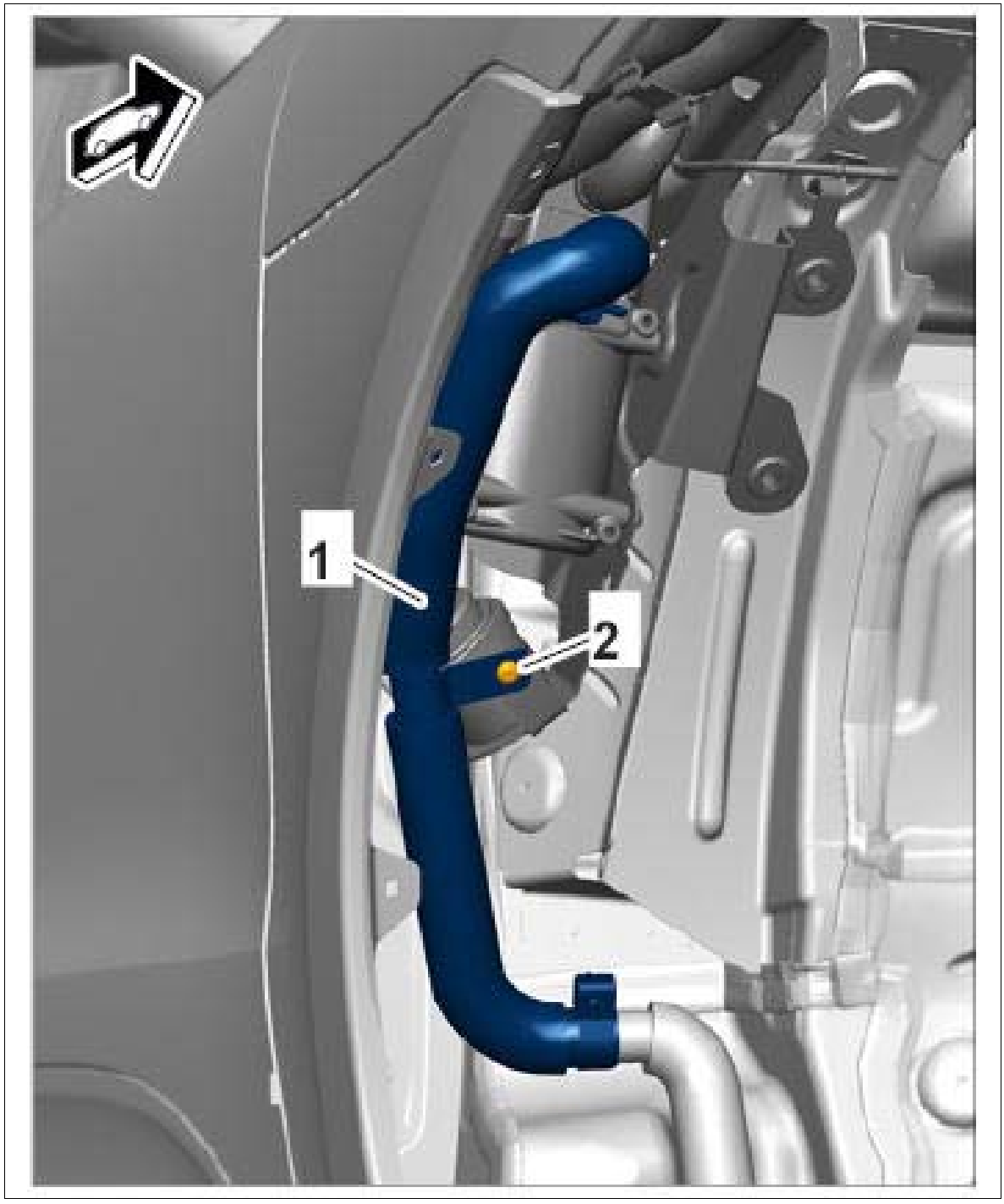

Courtesy of PORSCHE CARS NORTH AMERICA, INC.

2. Remove exhaust pipe from heater.
    1. 2.1 Loosen screw-type clamp **-1-** .
    2. 2.2 Remove exhaust pipe **-2-** from heater.

Fig 2: Identifying Exhaust Pipe On Heater

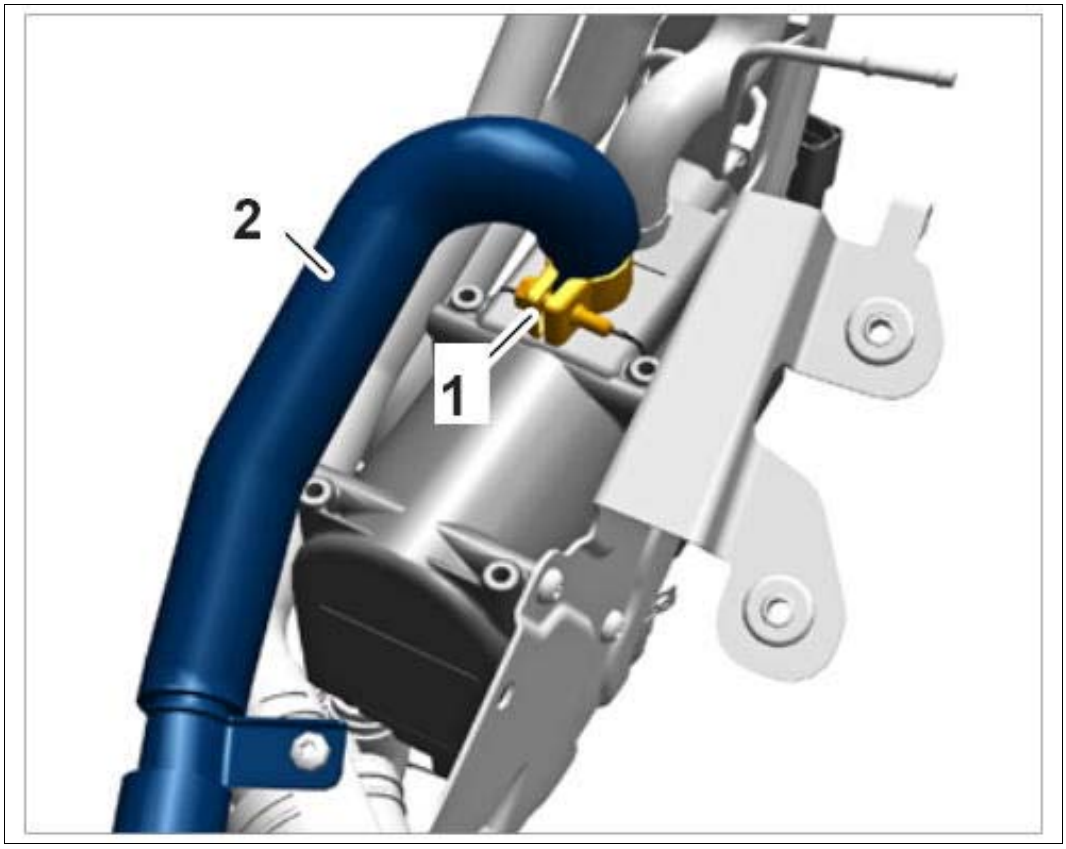

Courtesy of PORSCHE CARS NORTH AMERICA, INC.

WM 826019 REMOVING AND INSTALLING EXHAUST PIPE (ALL MODELS) > REMOVING AND INSTALLING EXHAUST PIPE > INSTALLING EXHAUST PIPE

1. Fit exhaust pipe on heater.
    1. 1.1. Position exhaust pipe **-2-** on the heater.
    2. 1.2. Tighten screw-type clamp **-1-** .

Fig 1: Identifying Exhaust Pipe On Heater

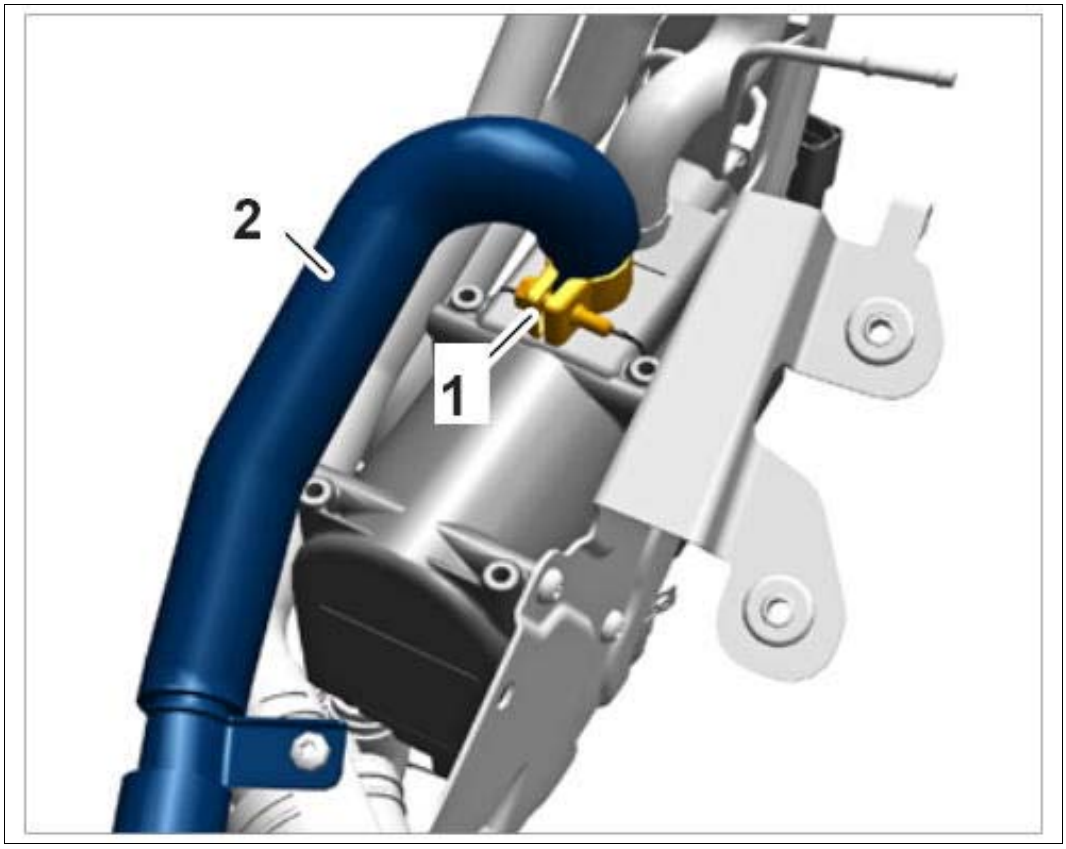

Courtesy of PORSCHE CARS NORTH AMERICA, INC.

2. Tighten fastening screw **-2-** on the exhaust pipe **-1-** .

Fig 2: Identifying Exhaust Pipe On Holder

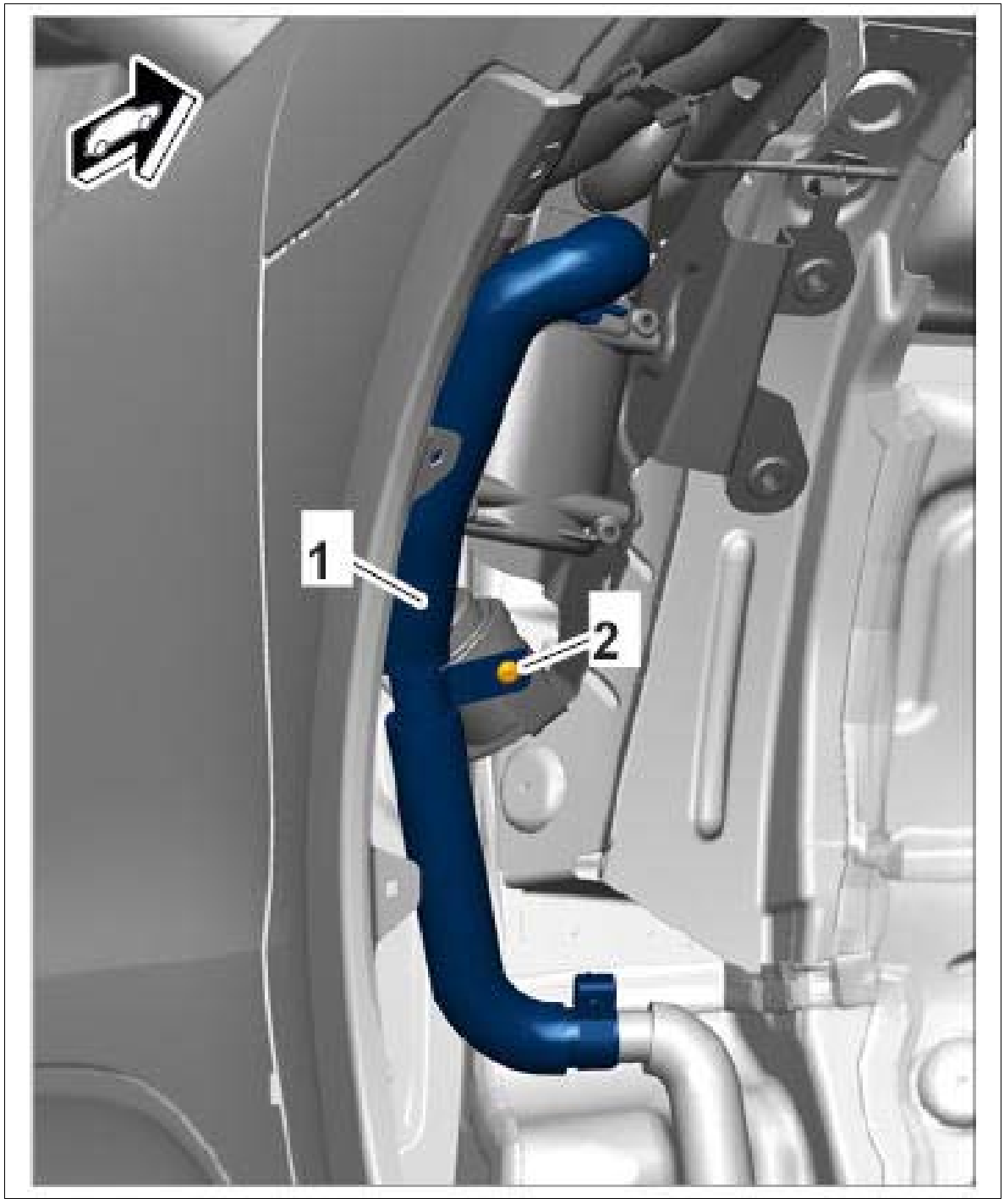

Courtesy of PORSCHE CARS NORTH AMERICA, INC.

WM 826019 REMOVING AND INSTALLING EXHAUST PIPE (ALL MODELS) > SUBSEQUENT WORK

1. Secure heater with holder → Securing Heater With Holder .

WM 827219 REMOVING AND INSTALLING CIRCULATING PUMP FOR AUXILIARY HEATER (ALL MODELS) > TOOLS

Designation	Type	Number	Description	
hose clamp	VW tool	3094		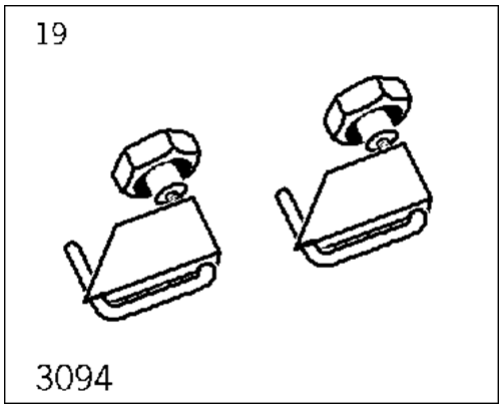
assembly pliers	Commercially available tool	Nr.72 Pos.1		

WM 827219 REMOVING AND INSTALLING CIRCULATING PUMP FOR AUXILIARY HEATER (ALL MODELS) > INFORMATION > INSTALLATION POSITION

The circulating pump is behind the right front wheel housing liner under the heater.

WM 827219 REMOVING AND INSTALLING CIRCULATING PUMP FOR AUXILIARY HEATER (ALL MODELS) > PRELIMINARY WORK

1. Loosen heater with holder → Loosening Heater With Holder .

WM 827219 REMOVING AND INSTALLING CIRCULATING PUMP FOR AUXILIARY HEATER (ALL MODELS) > REMOVING AND INSTALLING CIRCULATING PUMP FOR AUXILIARY HEATER > REMOVING CIRCULATING PUMP FOR AUXILIARY HEATER

NOTE: Danger of scalding

- *Coolant can be very hot.*
- *Coolant may be pressurized.*

→ Only remove the heater when the cooling system has cooled down.

→ By carefully opening the catch on the reservoir, make sure that the cooling system is depressurized.

1. Release electric plug connection **-1-** from the circulating pump **-2-** and disconnect it.

   Fig 1: Identifying Circulating Pump Connector

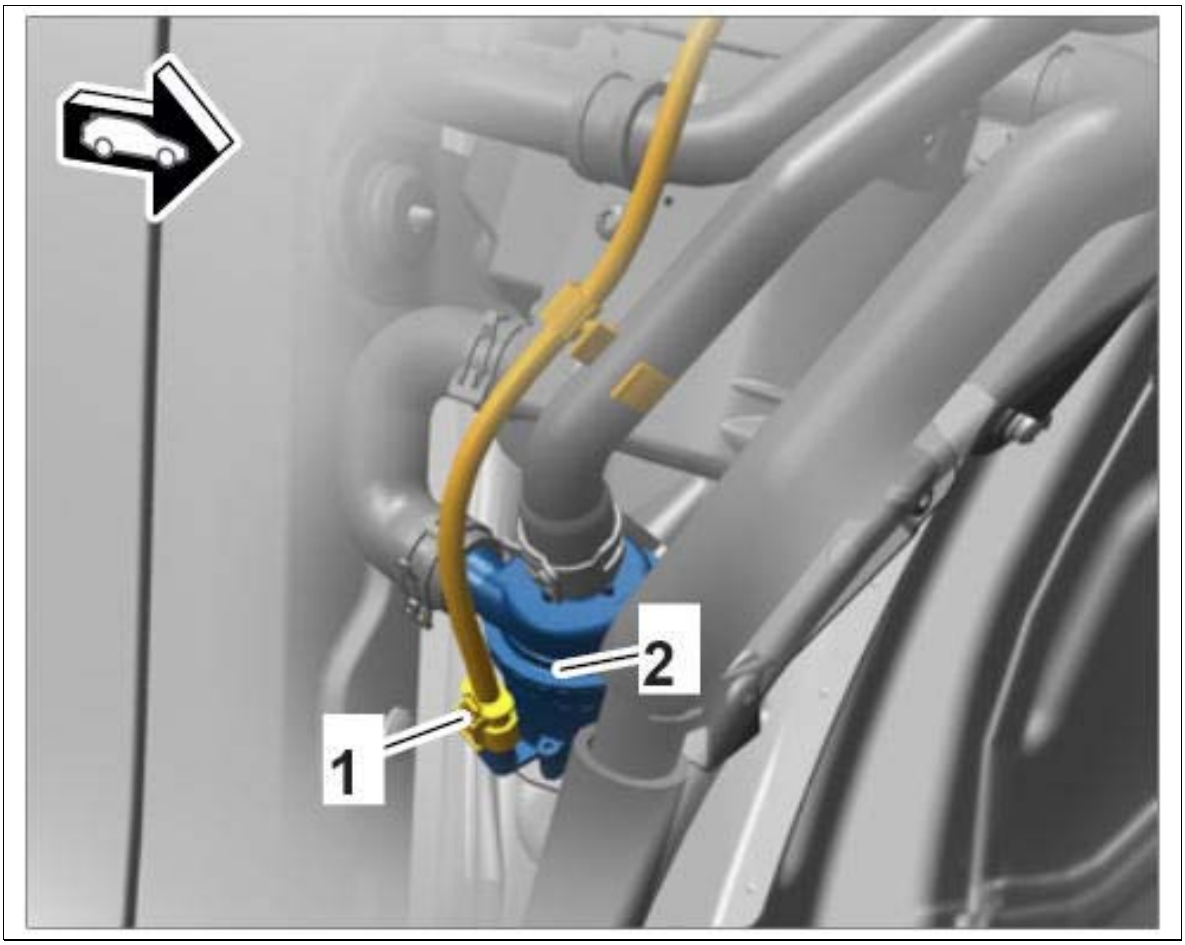

Courtesy of PORSCHE CARS NORTH AMERICA, INC.

2. Clamp both coolant hoses **-2-** and **-4-** using **hose clamp 3094.** → Mounting for coolant hoses on circulating pump

Fig 2: Identifying Coolant Hoses On Circulating Pump

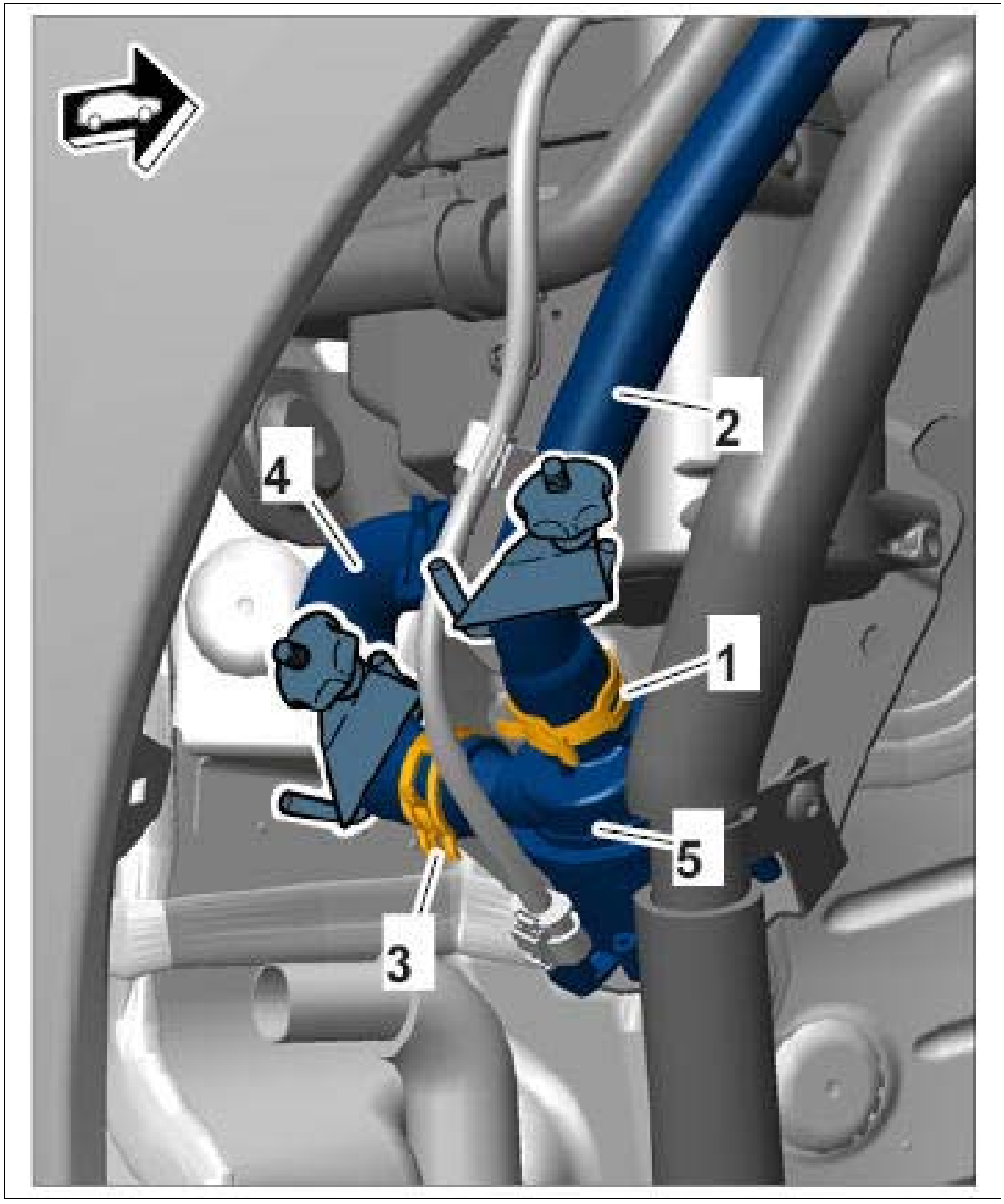

Courtesy of PORSCHE CARS NORTH AMERICA, INC.

NOTE: Danger of slipping due to emerging coolant

1. *The emerging coolant will make the floor of the workshop slippery and may cause people to slip and fall over.*

→ Collect emerging coolant in a suitable pan.

3. Loosen spring band clamps **-1-** and **-3-** using **assembly pliers Nr.72 Pos.1** and pull off coolant hoses **-2-** and **-4-** .

4. Unscrew fastening screws **-1-** and remove circulating pump **-2-** .

Fig 3: Identifying Circulating Pump On Holder

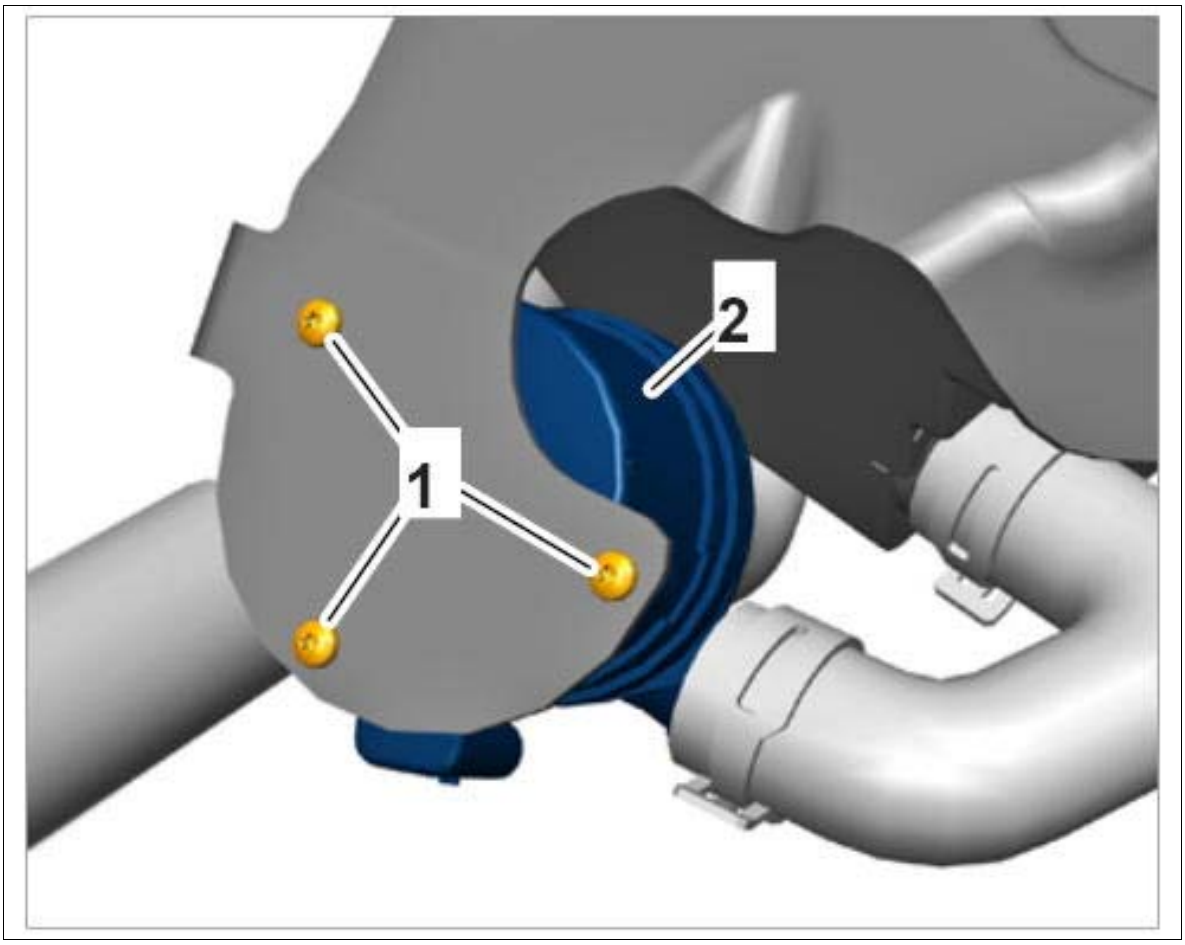

Courtesy of PORSCHE CARS NORTH AMERICA, INC.

WM 827219 REMOVING AND INSTALLING CIRCULATING PUMP FOR AUXILIARY HEATER (ALL MODELS) > REMOVING AND INSTALLING CIRCULATING PUMP FOR AUXILIARY HEATER > INSTALLING CIRCULATING PUMP FOR AUXILIARY HEATER

1. Position circulating pump **-2-** on the holder and tighten fastening screws **-1-** .

Fig 1: Identifying Circulating Pump On Holder

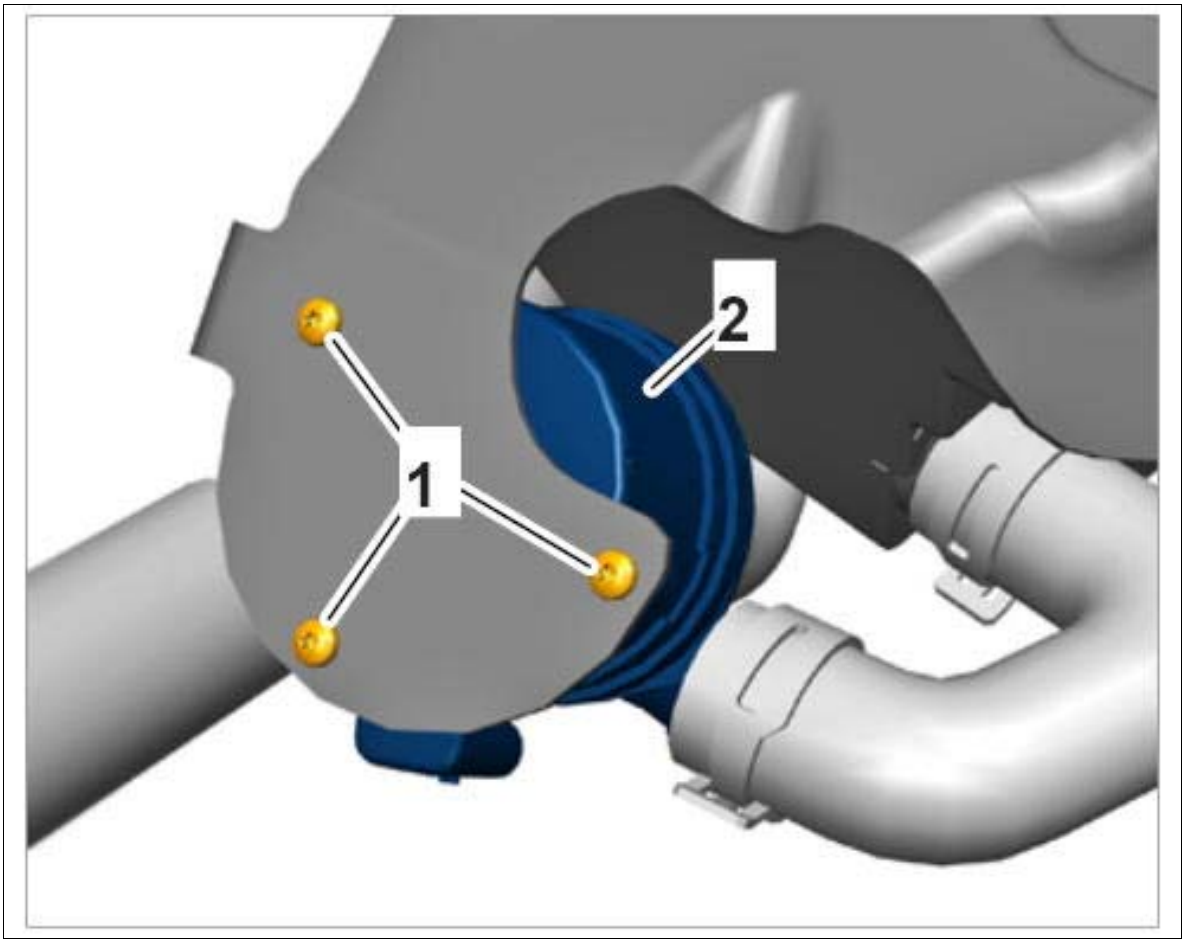

Courtesy of PORSCHE CARS NORTH AMERICA, INC.

2. Secure coolant hoses.

    1. 2.1. Push coolant hoses **-2-** and **-4-** as far as they will go over the adapters.

       Tighten spring band clamps **-1-** and **-3-** using **assembly pliers Nr.72 Pos.1.**

Fig 2: Identifying Coolant Hoses On Circulating Pump

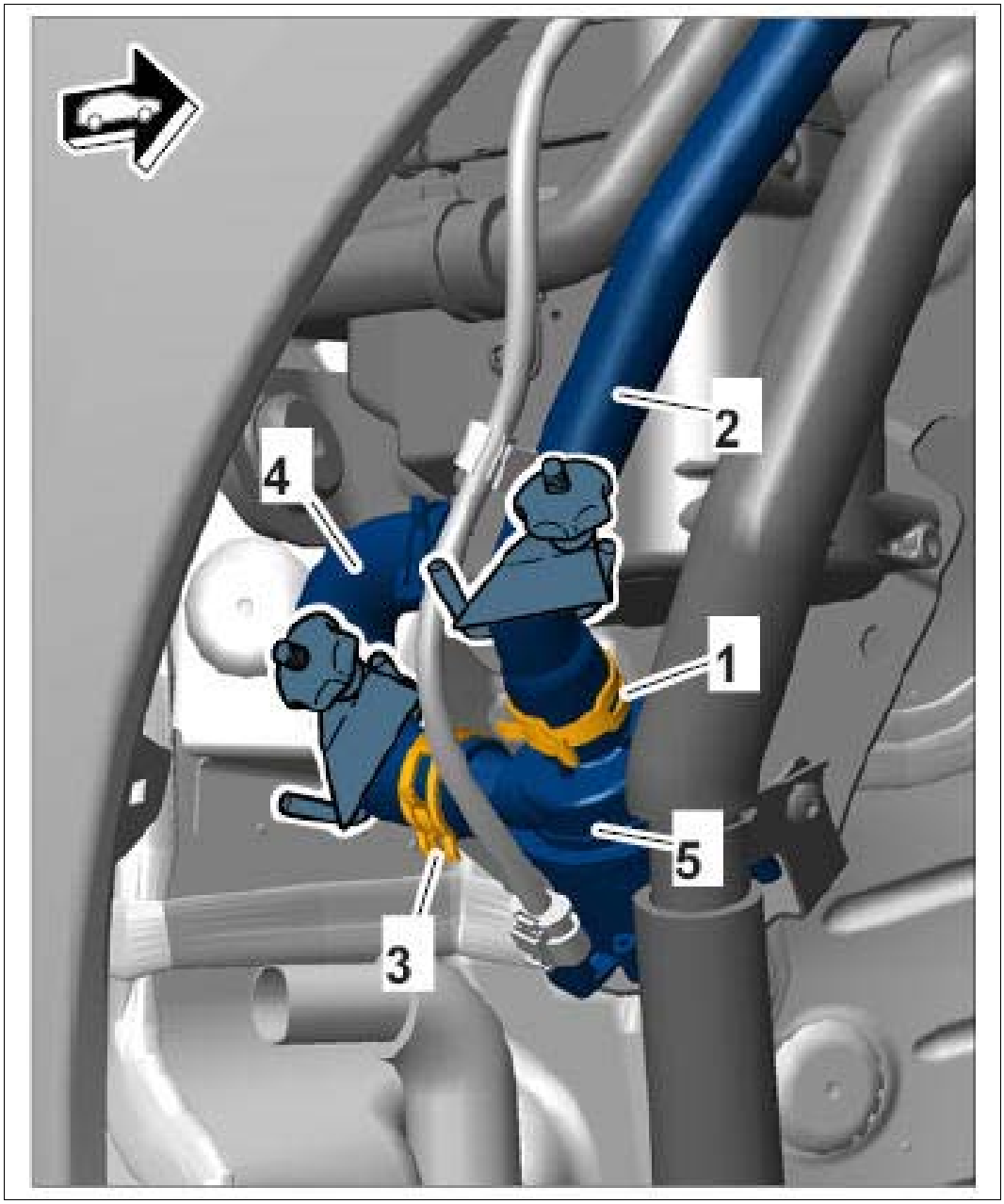

Courtesy of PORSCHE CARS NORTH AMERICA, INC.

2. 2.2. **Hose clamp 3094** must then be removed from the coolant hoses **-2-** and **-4-** .

3. Connect electric plug connection **-1-** to the circulating pump **-2-** until it engages securely.

Fig 3: Identifying Circulating Pump Connector

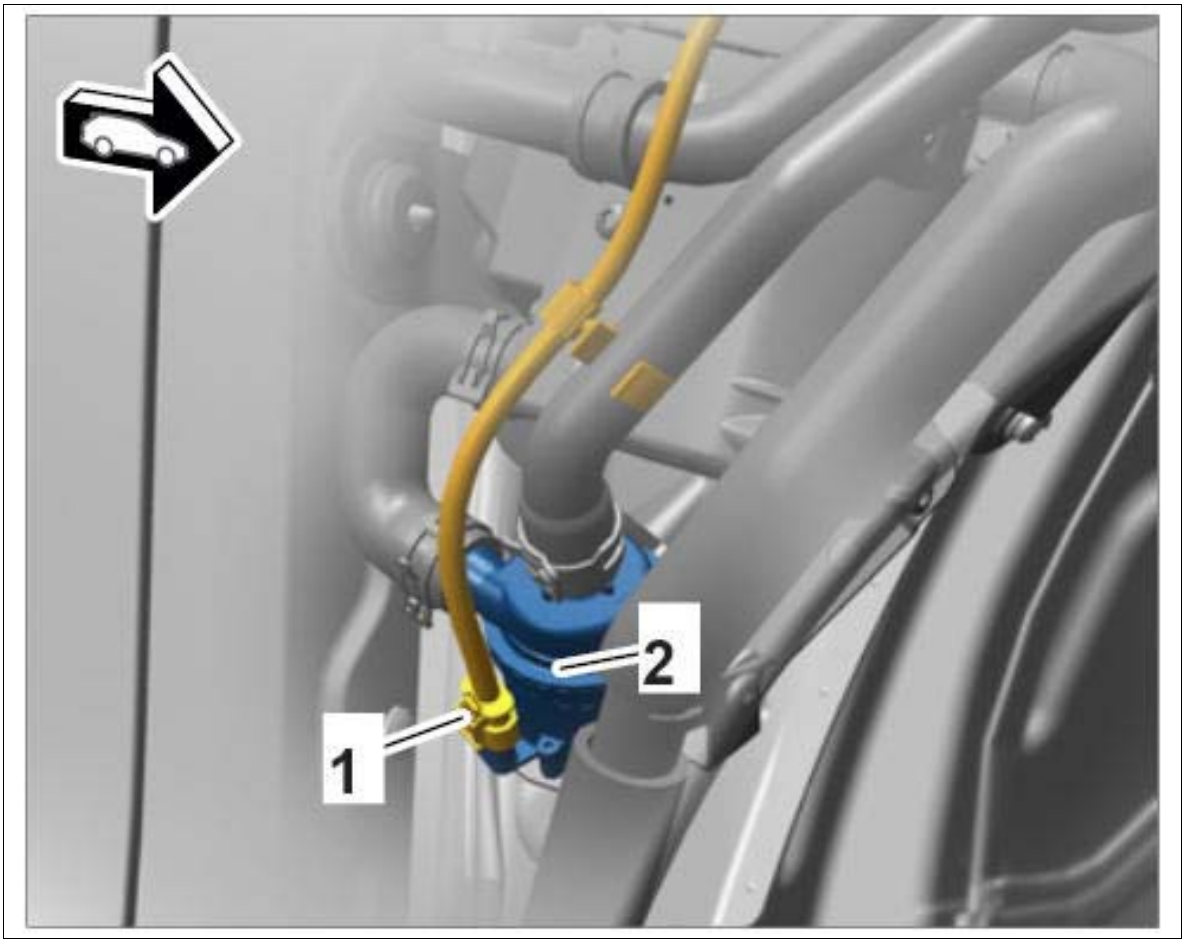

Courtesy of PORSCHE CARS NORTH AMERICA, INC.

WM 827219 REMOVING AND INSTALLING CIRCULATING PUMP FOR AUXILIARY HEATER (ALL MODELS) > SUBSEQUENT WORK

1. Secure heater with holder → Securing Heater With Holder
2. Add coolant and bleed the cooling system → Filling Coolant .

WM 827419 REMOVING AND INSTALLING DIRECTIONAL-CONTROL VALVE (ALL MODELS) > PRELIMINARY WORK

1. Drain coolant → Draining Coolant .
2. Remove cowl panel cover → Removing cowl panel cover .

WM 827419 REMOVING AND INSTALLING DIRECTIONAL-CONTROL VALVE (ALL

MODELS) > REMOVING AND INSTALLING DIRECTIONAL-CONTROL VALVE > REMOVING DIRECTIONAL-CONTROL VALVE

1. Unscrew fastening screws **-1-** and remove air inlet housing cover **-2-** .

   Fig 1: Identifying Air Inlet Housing Cover

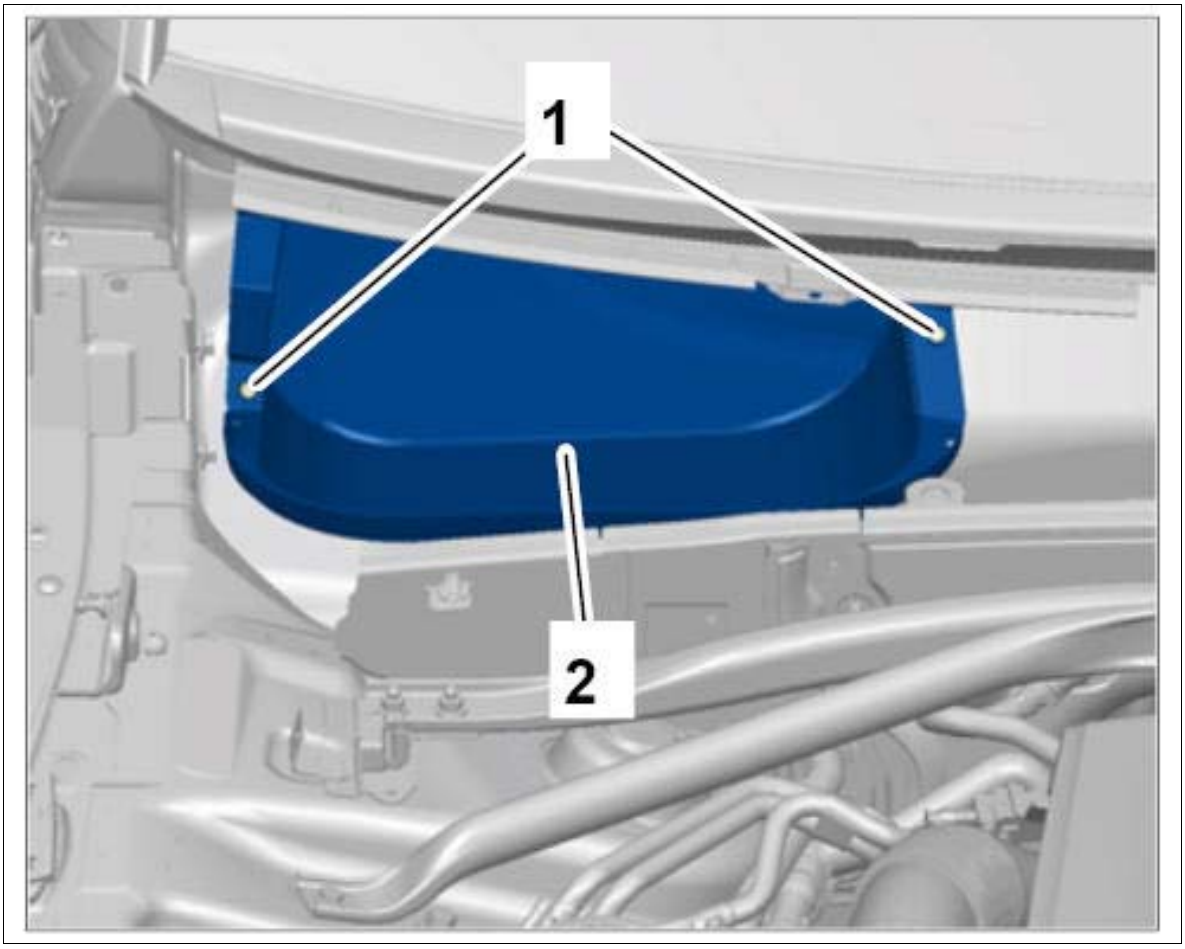

Courtesy of PORSCHE CARS NORTH AMERICA, INC.

2. Disconnect connector **-1-** .
3. Loosen spring band clamps **-2- (-arrows-)** .
4. Pull off hoses.
5. Unscrew fastening screws.
6. Remove directional-control valve **-5-** .

Fig 2: Removing Directional-Control Valve

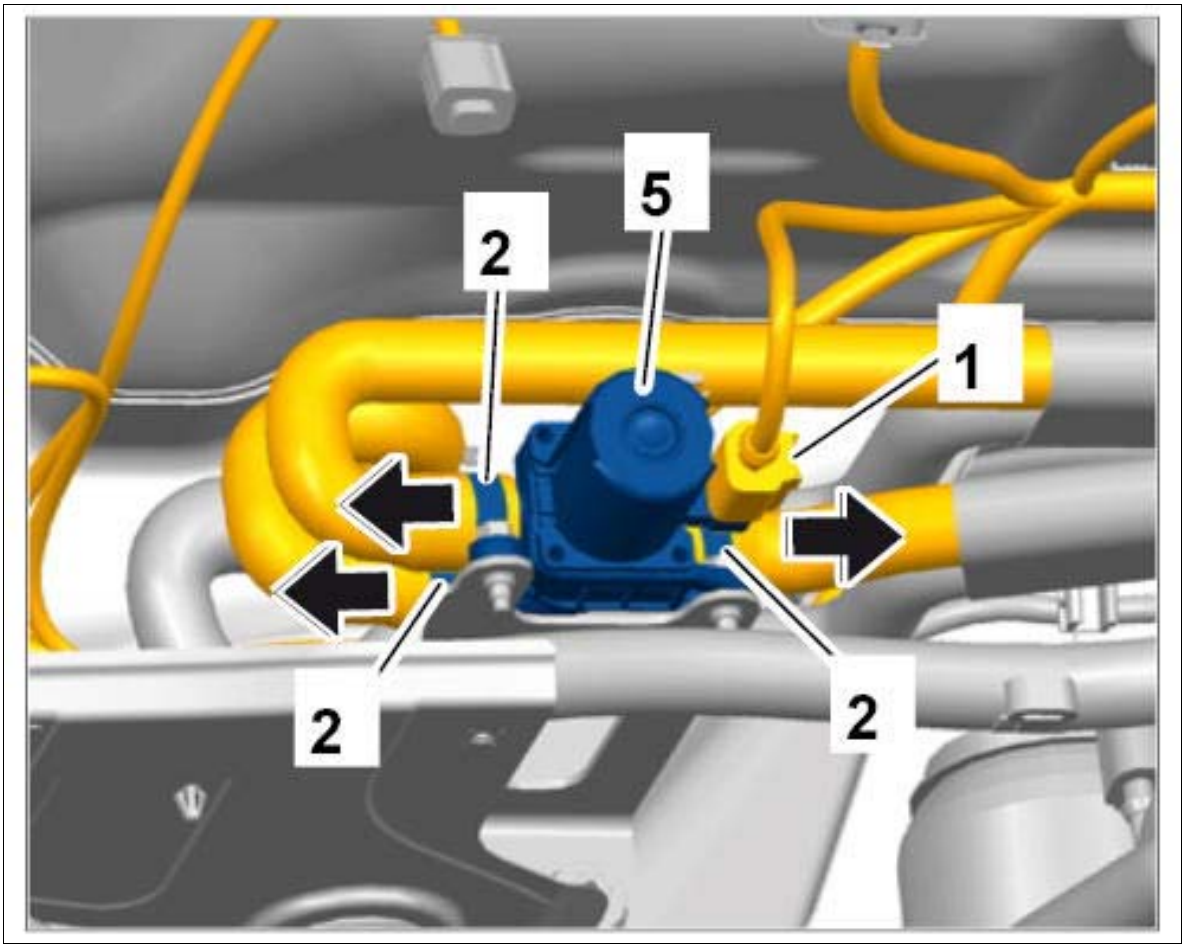

Courtesy of PORSCHE CARS NORTH AMERICA, INC.

WM 827419 REMOVING AND INSTALLING DIRECTIONAL-CONTROL VALVE (ALL MODELS) > REMOVING AND INSTALLING DIRECTIONAL-CONTROL VALVE > INSTALLING DIRECTIONAL-CONTROL VALVE

1. Installation is performed in reverse order.

WM 827419 REMOVING AND INSTALLING DIRECTIONAL-CONTROL VALVE (ALL MODELS) > SUBSEQUENT WORK

1. Install cowl panel cover → Installing cowl panel cover .
2. Fill in coolant → Filling Coolant .

Service Manual: 85 - VENTILATION -- (95B) - MACAN

WM 851519 REMOVING AND INSTALLING HEATING/FRESH-AIR UNIT (MACAN, MACAN S, MACAN TURBO) > PRELIMINARY WORK

If only the fresh air/recirculated air/ram air housing will be removed:

1. Remove glove compartment → 681519 REMOVING AND INSTALLING GLOVE COMPARTMENT .
2. Remove footwell outlet vent at the front right → 805519 REMOVING AND INSTALLING FRONT FOOTWELL OUTLET VENT .

   If the entire heating/fresh-air unit will be removed:

3. Disconnect battery ground strap → WM 270619 REMOVING AND INSTALLING BATTERY .
4. Drain refrigerant → 870317 DRAINING AND FILLING REFRIGERANT .
5. Drain coolant → 193817 DRAINING AND FILLING COOLANT .
6. Remove cowl panel cover → 508719 REMOVING AND INSTALLING COWL PANEL COVER .
7. Remove center plenum panel wall → 508119 REMOVING AND INSTALLING CROSS PANEL (DISASSEMBLING PLENUM PANEL) .
8. Disconnect heat exchanger supply hose at the connection point for the passenger compartment → 803019 REMOVING AND INSTALLING HEAT EXCHANGER SUPPLY HOSE .
9. Disconnect heat exchanger return hose at the connection point for the passenger compartment → 803219 REMOVING AND INSTALLING HEAT EXCHANGER RETURN HOSE .
10. Remove front footwell outlet vent (at the left and right) → 805519 REMOVING AND INSTALLING FRONT FOOTWELL OUTLET VENT .
11. Remove dashboard bracket → 516819 REMOVING AND INSTALLING DASHBOARD BRACKET .

WM 851519 REMOVING AND INSTALLING HEATING/FRESH-AIR UNIT (MACAN, MACAN S, MACAN TURBO) > REMOVING AND INSTALLING HEATING/FRESH-AIR UNIT > REMOVING FRESH AIR/RECIRCULATED AIR/RAM AIR HOUSING

Fig 1: Overview Of Heating/Fresh-Air Unit

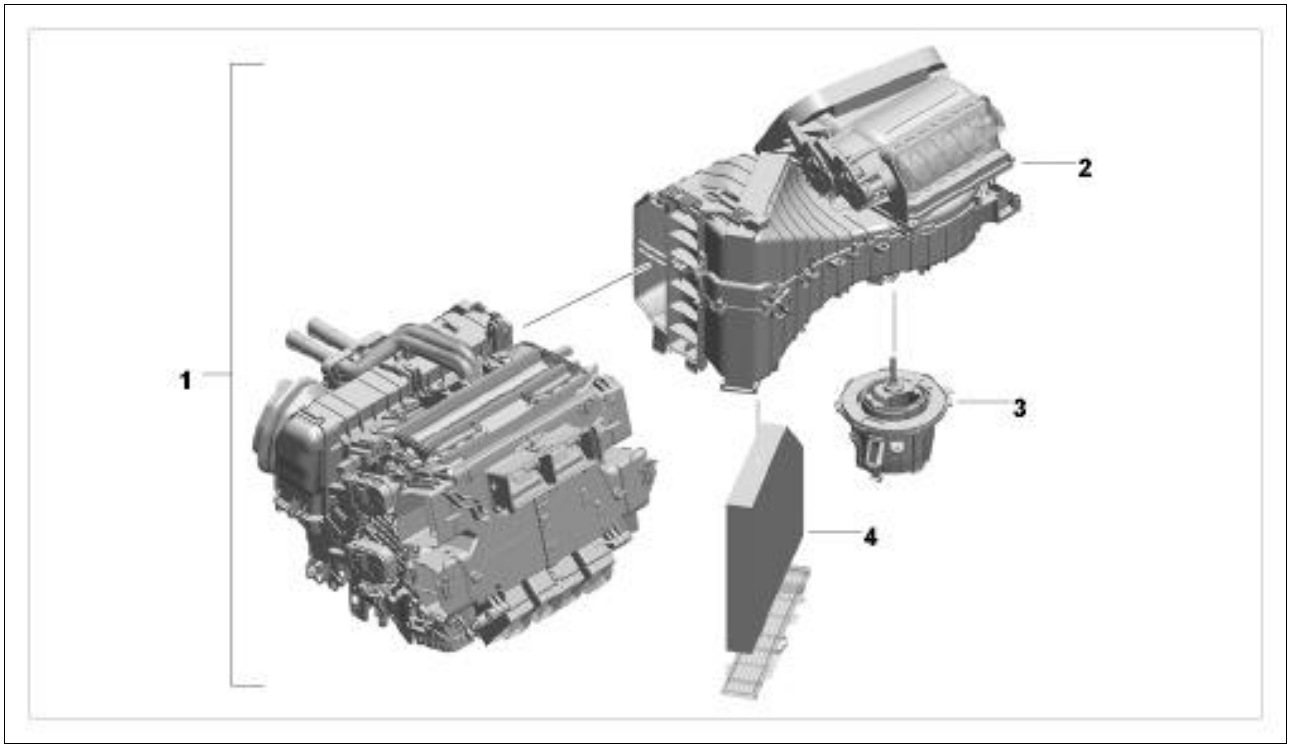

Courtesy of PORSCHE CARS NORTH AMERICA, INC.

1. Heating/fresh-air unit
2. Fresh air/recirculated air/ram air housing
3. Heating/fresh-air blower motor → 853019 REMOVING AND INSTALLING HEATING/FRESH-AIR BLOWER MOTOR
4. Particle filter

1. Remove fastening screw **-A-** .
2. Loosen air guide for the right dashboard vent from the retaining frame.
3. Remove air guide duct **-B-** for the right dashboard vent.

Fig 2: Identifying Right Dashboard Vent Air Guide

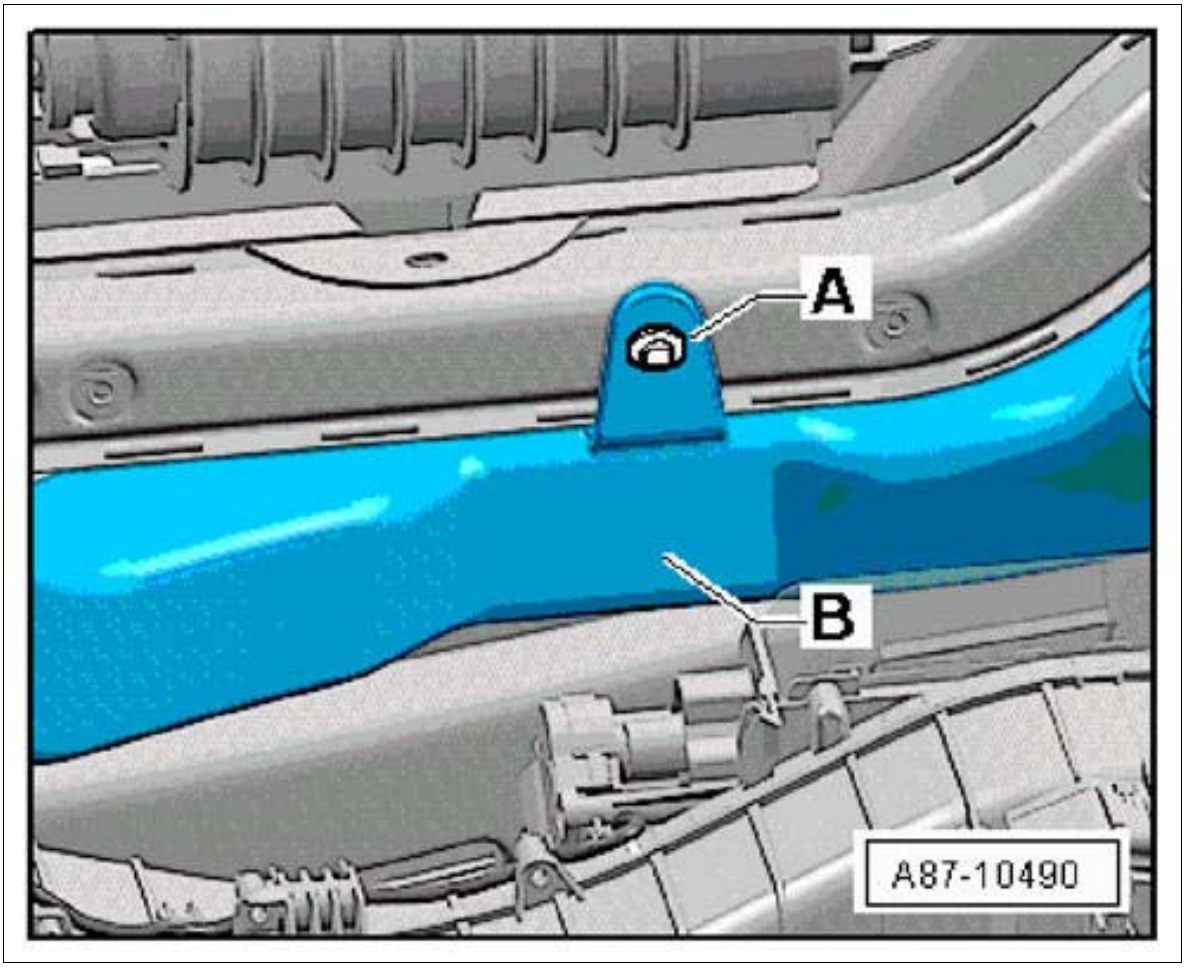

Courtesy of PORSCHE CARS NORTH AMERICA, INC.

4. Disconnect connector **-A-** from the fan control.
5. Remove holder **-B-** .

Fig 3: Identifying Holder And Plug Connection

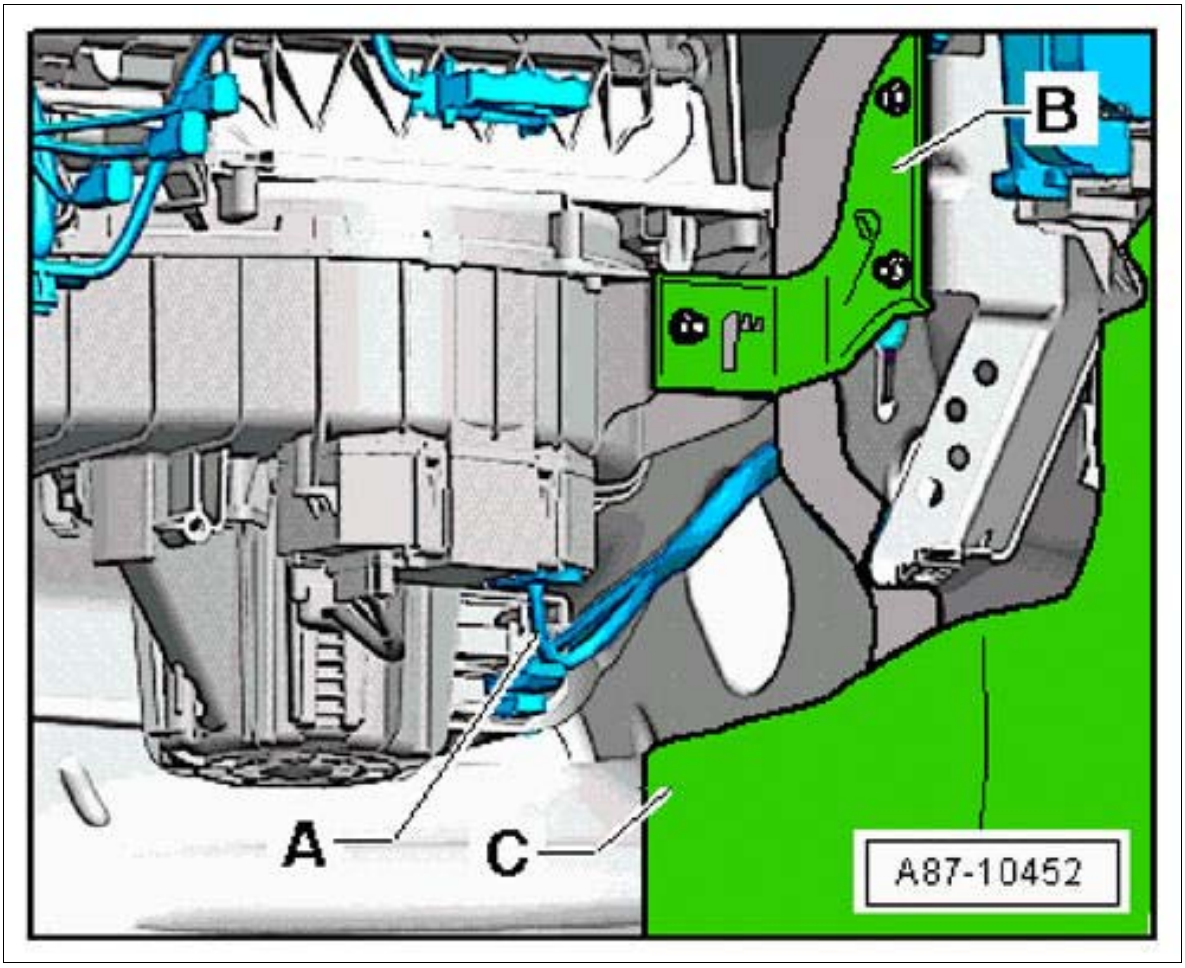

Courtesy of PORSCHE CARS NORTH AMERICA, INC.

6. Disconnect wiring **-A-** .
7. Loosen locking mechanism **-C-** .
8. Pull fresh air/recirculated air/ram air housing at the right down **-arrow-** .
9. Disconnect connector for servo motors **-E and F-** .

Fig 4: Pulling Fresh Air/Recirculated Air/Ram Air Housing

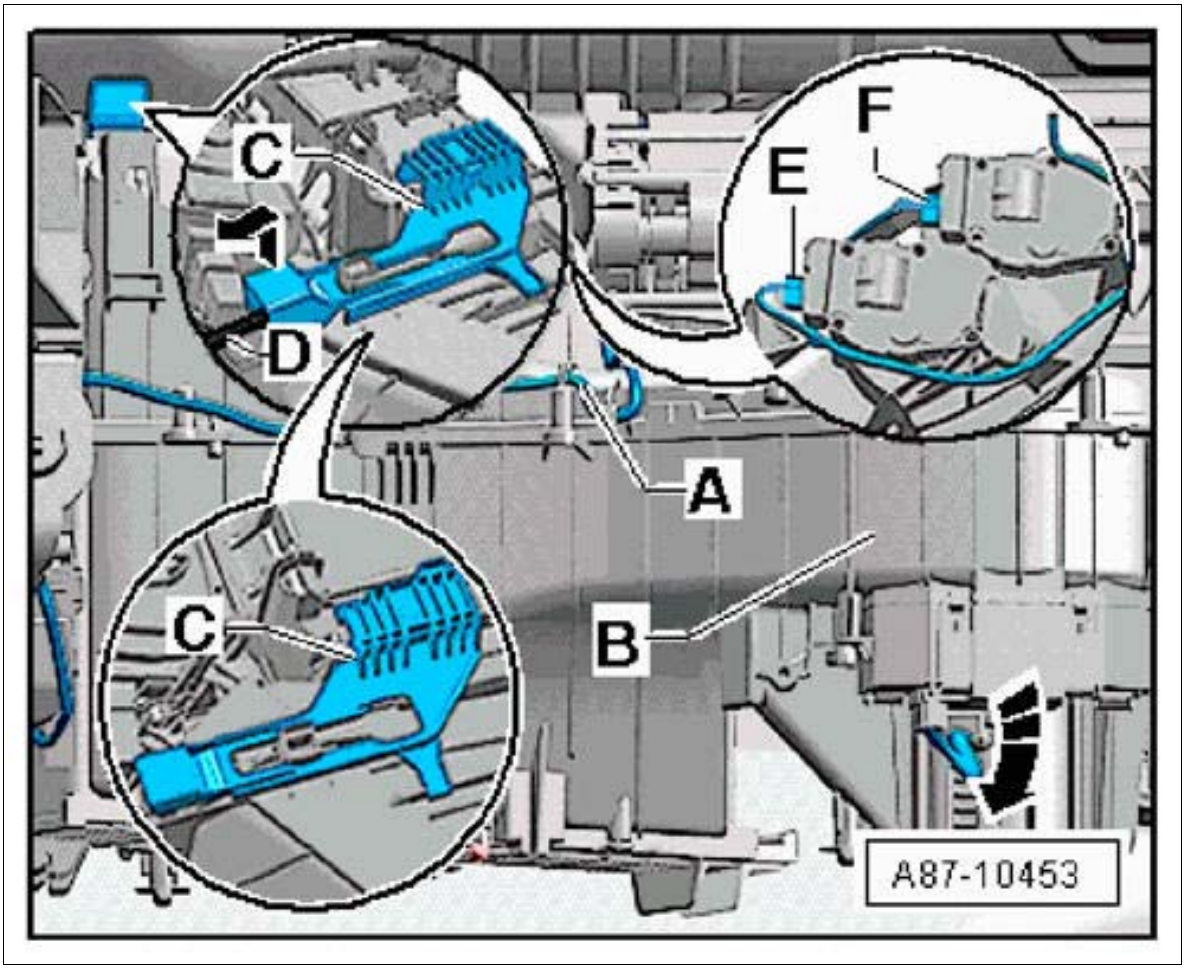

Courtesy of PORSCHE CARS NORTH AMERICA, INC.

10. Disengage upper tab **-E-** of the heating/fresh-air unit from the mounting **-D-** for the fresh air/recirculated air/ram air housing.
11. Loosen lower mounting points **-A and B-** .

Fig 5: Removing Fresh Air/Recirculated Air/Ram Air Housing

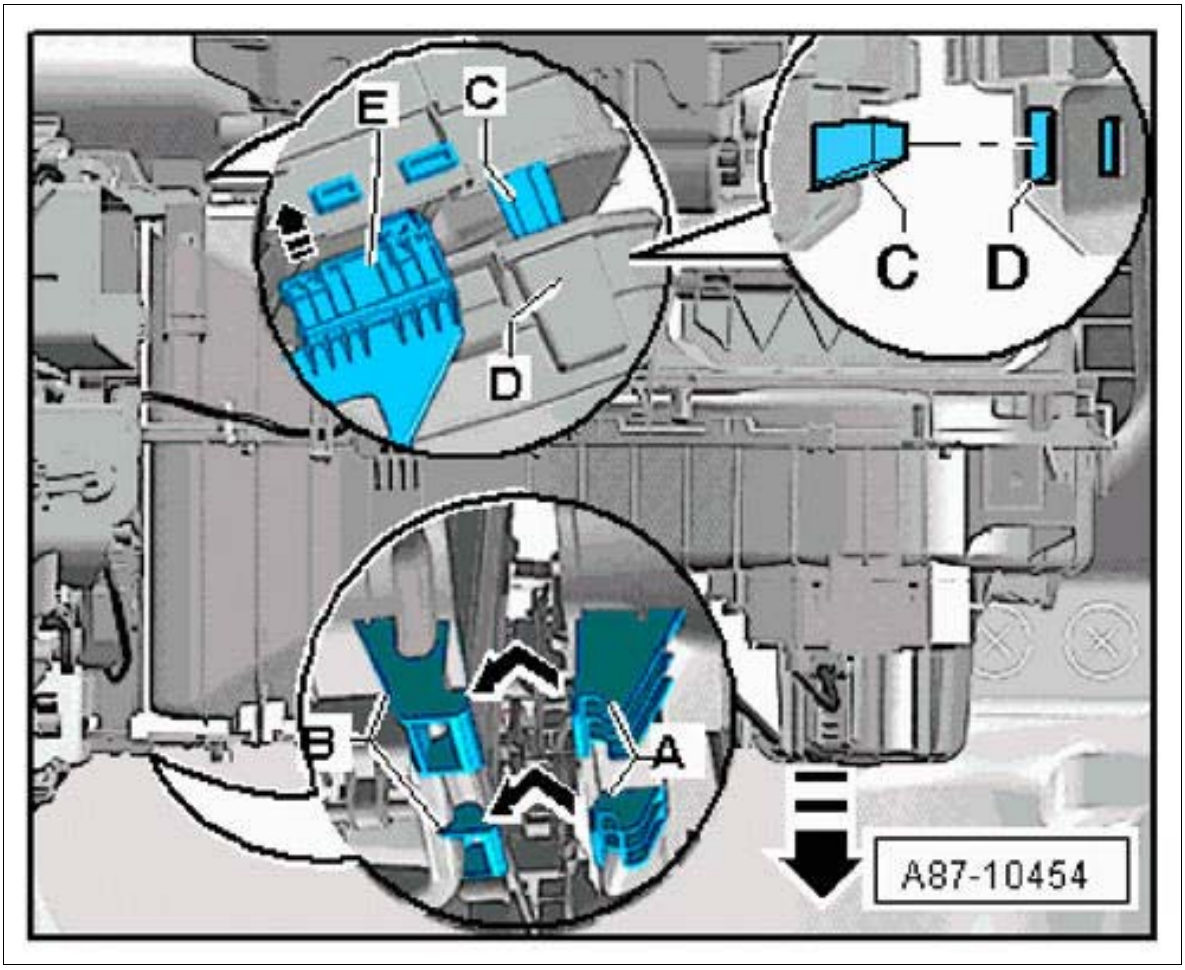

Courtesy of PORSCHE CARS NORTH AMERICA, INC.

12. Remove fresh air/recirculated air/ram air housing.
13. If the fresh air/recirculated air/ram air housing is replaced, the following work must still be carried out:
    1. 13.1. Convert heating/fresh-air blower motor → 853019 REMOVING AND INSTALLING HEATING/FRESH-AIR BLOWER MOTOR .
    2. 13.2. Convert fan control → 877819 REMOVING AND INSTALLING FAN CONTROL .

WM 851519 REMOVING AND INSTALLING HEATING/FRESH-AIR UNIT (MACAN, MACAN S, MACAN TURBO) > REMOVING AND INSTALLING HEATING/FRESH-AIR UNIT > REMOVING HEATING/FRESH-AIR UNIT

WARNING: Refrigerant

- *Danger of freezing*

→ Avoid contact with refrigerant.

→ Wear personal protective gear.

→ Observe the safety regulations for working on air-conditioned vehicles and dealing with refrigerant.

→ Observe the safety regulations for extraction and filling systems.

→ Observe the instructions for repairing air conditioning systems and storing spare parts.

Information

Before re-installing the component, check the O-rings of the refrigerant lines for damage and replace them if necessary.

Wet the O-rings of the refrigerant lines with refrigerant oil.

Close off all lines and connections using suitable stoppers during removal.

Do not open the stoppers for the lines and connections until shortly before installation.

1. Remove fresh air/recirculated air/ram air housing.
2. Unscrew fastening screws **-1-** on the air-conditioning lines **-2-** .
3. Disconnect air-conditioning line **-2-** from the expansion valve.

Fig 1: Identifying Air-Conditioning Line

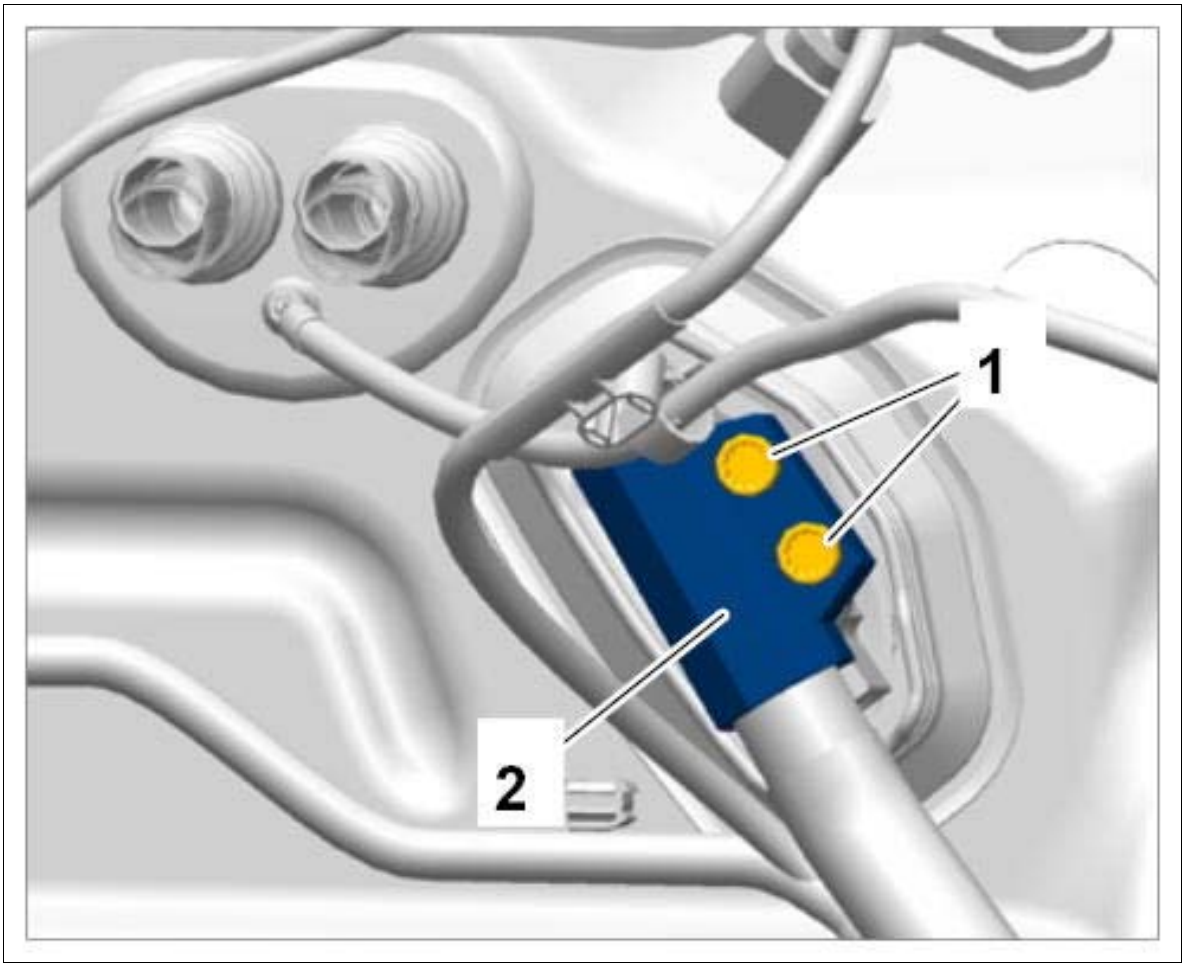

Courtesy of PORSCHE CARS NORTH AMERICA, INC.

4. Remove air guides for dashboard outlet vents at the left and right

Fig 2: Removing Air Guides

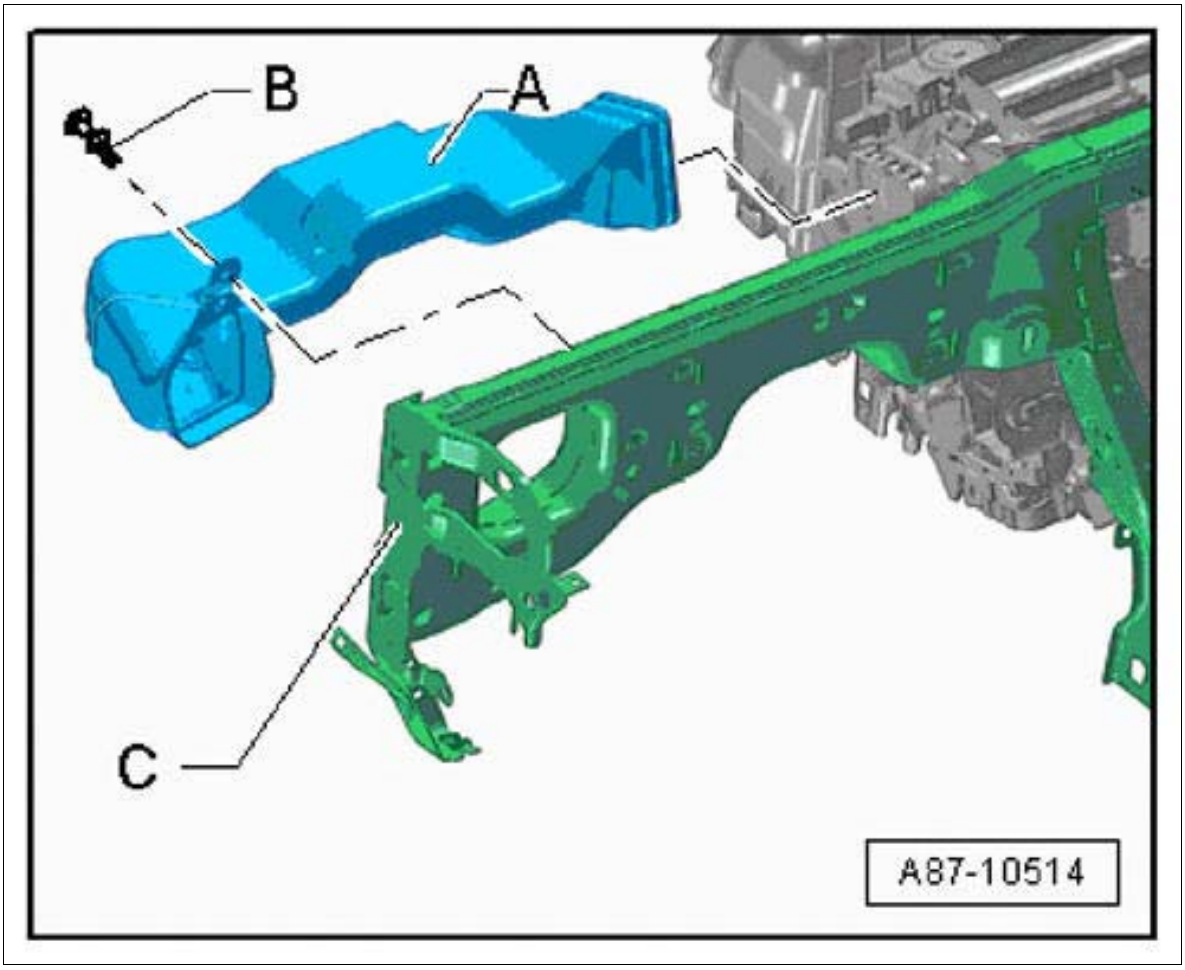

Courtesy of PORSCHE CARS NORTH AMERICA, INC.

5. **If installed in the vehicle:** Remove air guide for the air vent in the rear center console **-C-** .
6. Loosen air guides for rear footwell outlet vents **-A and B-** from intermediate piece **-D-** and remove intermediate piece **-D-** .

Fig 3: Identifying Rear Air Guides

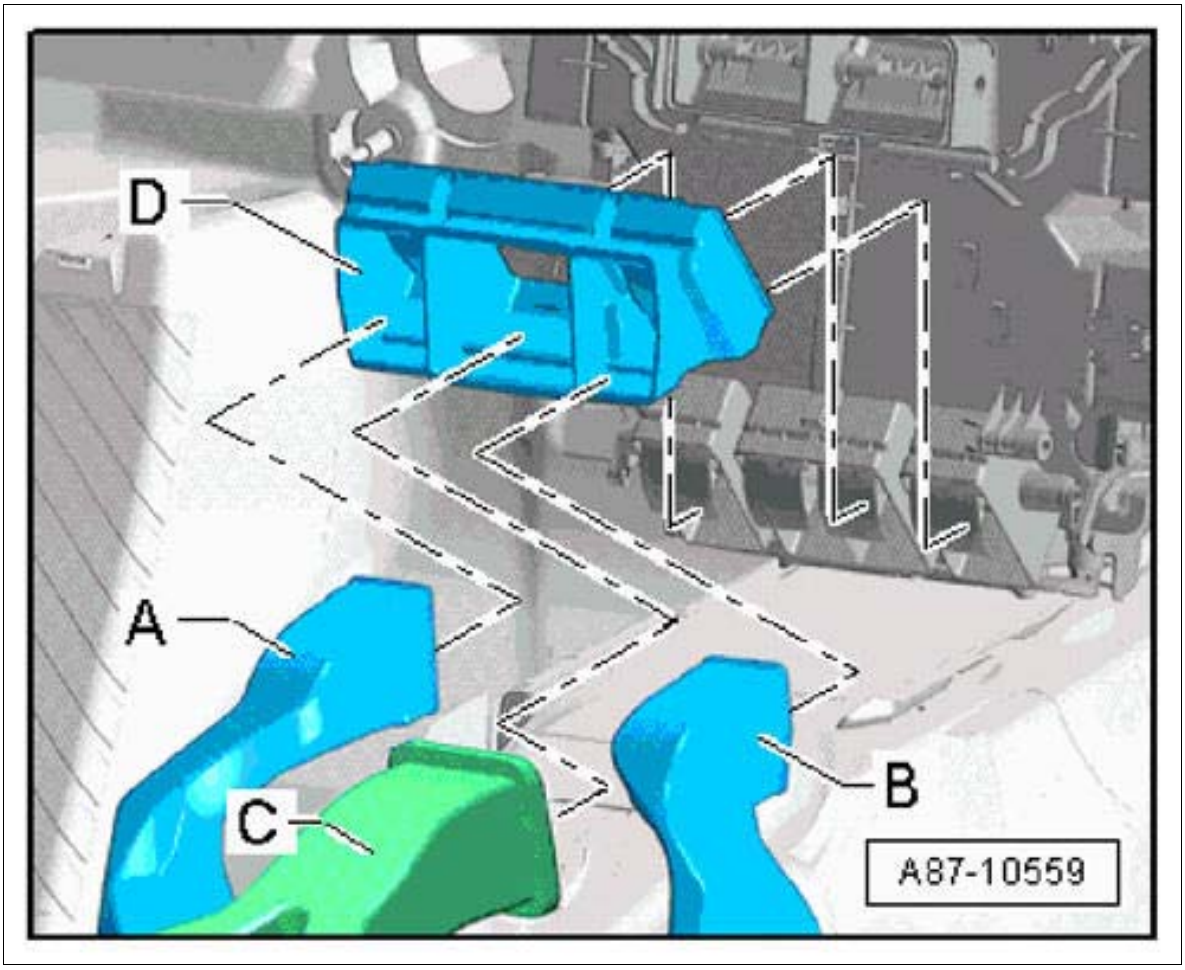

Courtesy of PORSCHE CARS NORTH AMERICA, INC.

7. Release and disconnect electric plug connection for servo motors **-1-** .

Fig 4: Disconnecting Servo Motors Connector

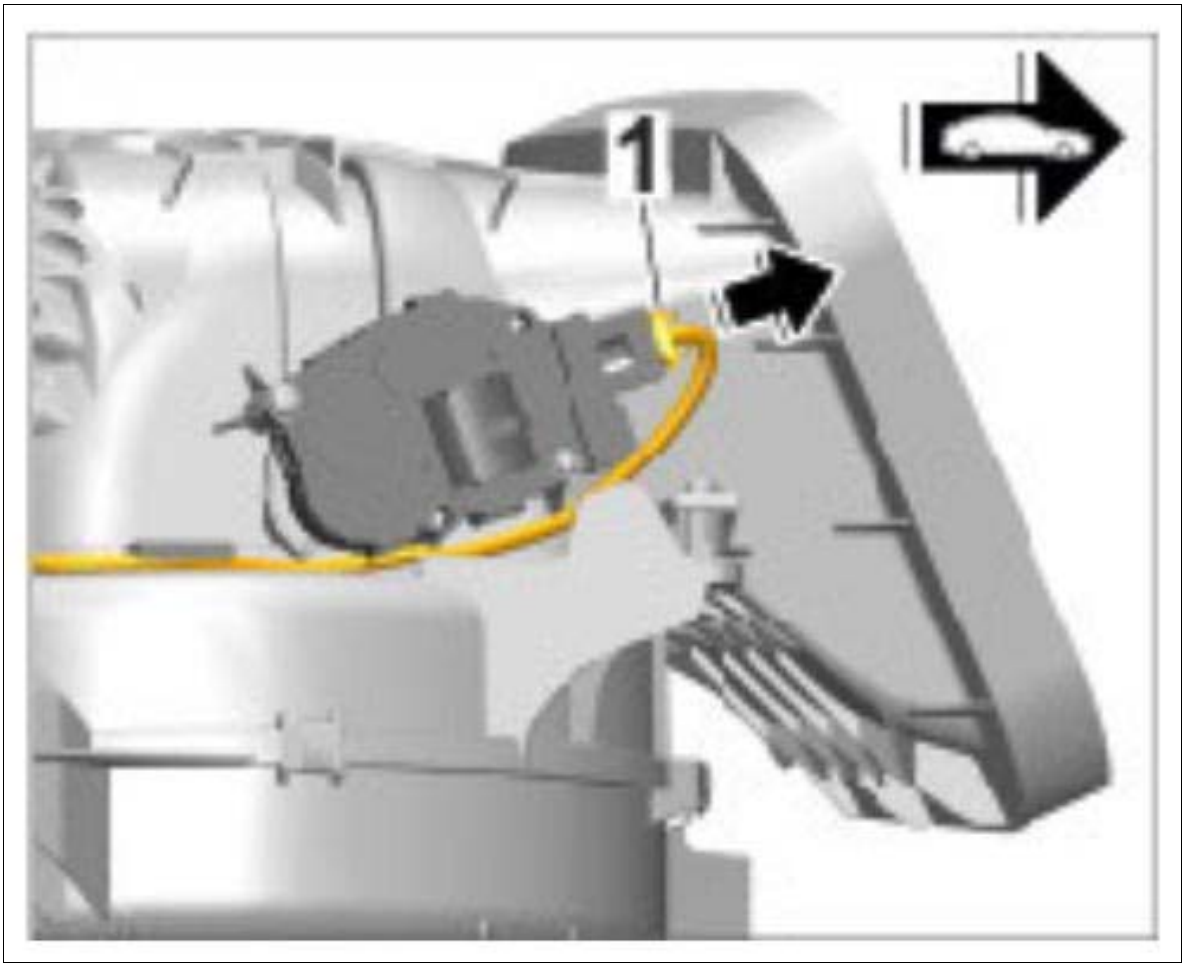

Courtesy of PORSCHE CARS NORTH AMERICA, INC.

8. Remove heating/fresh-air unit from the vehicle.

WM 851519 REMOVING AND INSTALLING HEATING/FRESH-AIR UNIT (MACAN, MACAN S, MACAN TURBO) > REMOVING AND INSTALLING HEATING/FRESH-AIR UNIT > INSTALLING HEATING/FRESH-AIR UNIT

1. Installation is performed in reverse order.

WM 851519 REMOVING AND INSTALLING HEATING/FRESH-AIR UNIT (MACAN, MACAN S, MACAN TURBO) > SUBSEQUENT WORK

If only the fresh air/recirculated air/ram air housing will be installed:

1. Install footwell outlet vent at the front right → INSTALLING FOOTWELL OUTLET VENT AT THE FRONT RIGHT .
2. Install glove compartment → INSTALLING GLOVE COMPARTMENT .

If the entire heating/fresh-air unit will be installed:

3. Install dashboard bracket → INSTALLING DASHBOARD SUPPORT .
4. Install front footwell outlet vent (at the left and right) → INSTALLING FRONT LEFT FOOTWELL OUTLET VENT and INSTALLING FOOTWELL OUTLET VENT AT THE FRONT RIGHT .
5. Secure heat exchanger return hose at the connection point for the passenger compartment → INSTALLING HEAT EXCHANGER RETURN HOSE .
6. Secure heat exchanger supply hose at the connection point for the passenger compartment → INSTALLING HEAT EXCHANGER SUPPLY HOSE .
7. Install center plenum panel wall → INSTALLING CROSS PANEL .
8. Install cowl panel cover → INSTALLING COWL PANEL COVER .
9. Fill in coolant → FILLING COOLANT .
10. Fill in refrigerant → DRAINING AND FILLING REFRIGERANT .
11. Connect battery ground strap → INSTALLING BATTERY .

WM 851819 REMOVING AND INSTALLING PARTICLE FILTER (MACAN, MACAN S, MACAN TURBO) > REMOVING AND INSTALLING PARTICLE FILTER > REMOVING PARTICLE FILTER

Information

1. Remove screw-type clips **-A-** and remove insulating mat **-B-** .

Fig 1: Identifying Insulating Mat

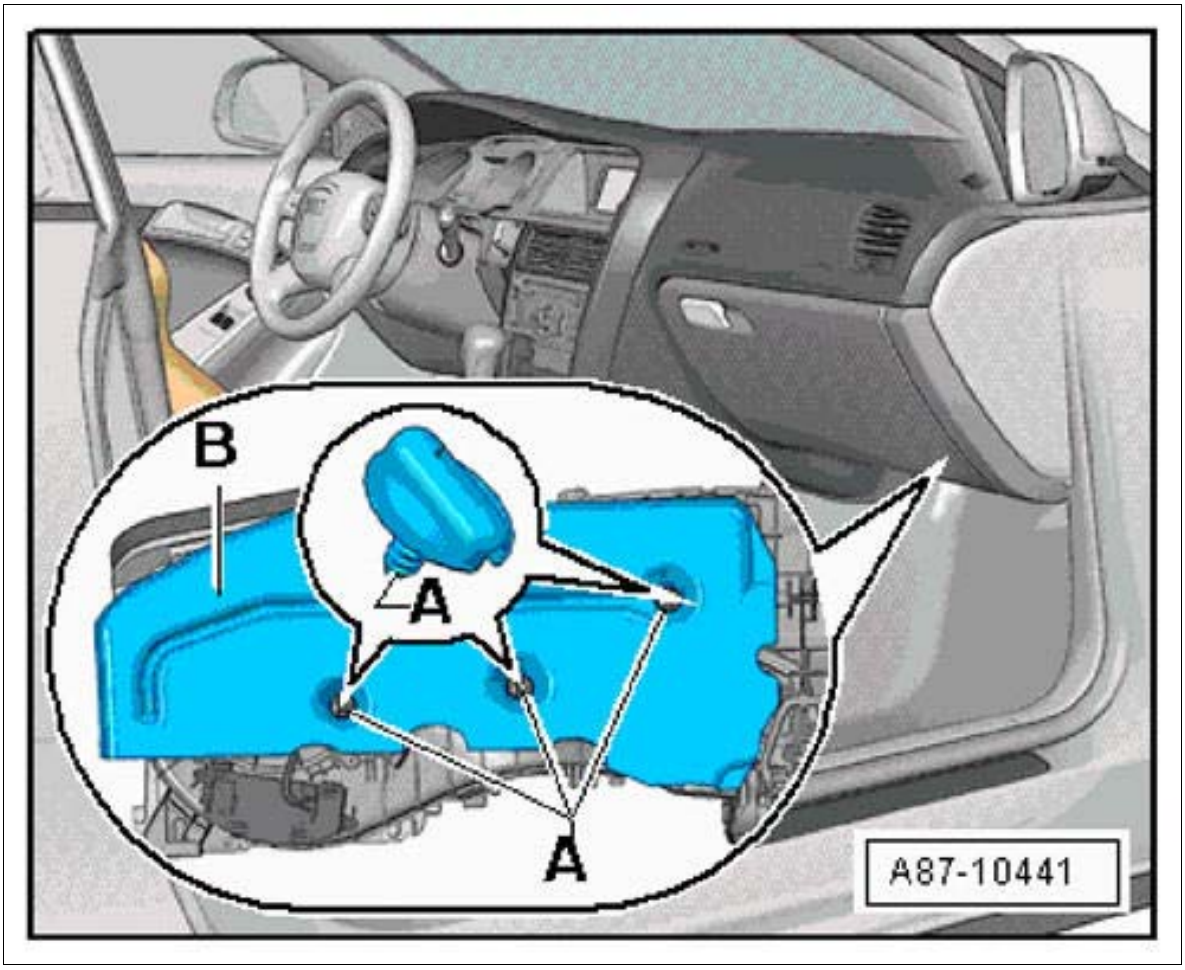

Courtesy of PORSCHE CARS NORTH AMERICA, INC.

2. Release catches **-B-** , push cover **-A-** in **-direction of arrow-** and remove cover.

Fig 2: Removing Particle Filter Housing Cover

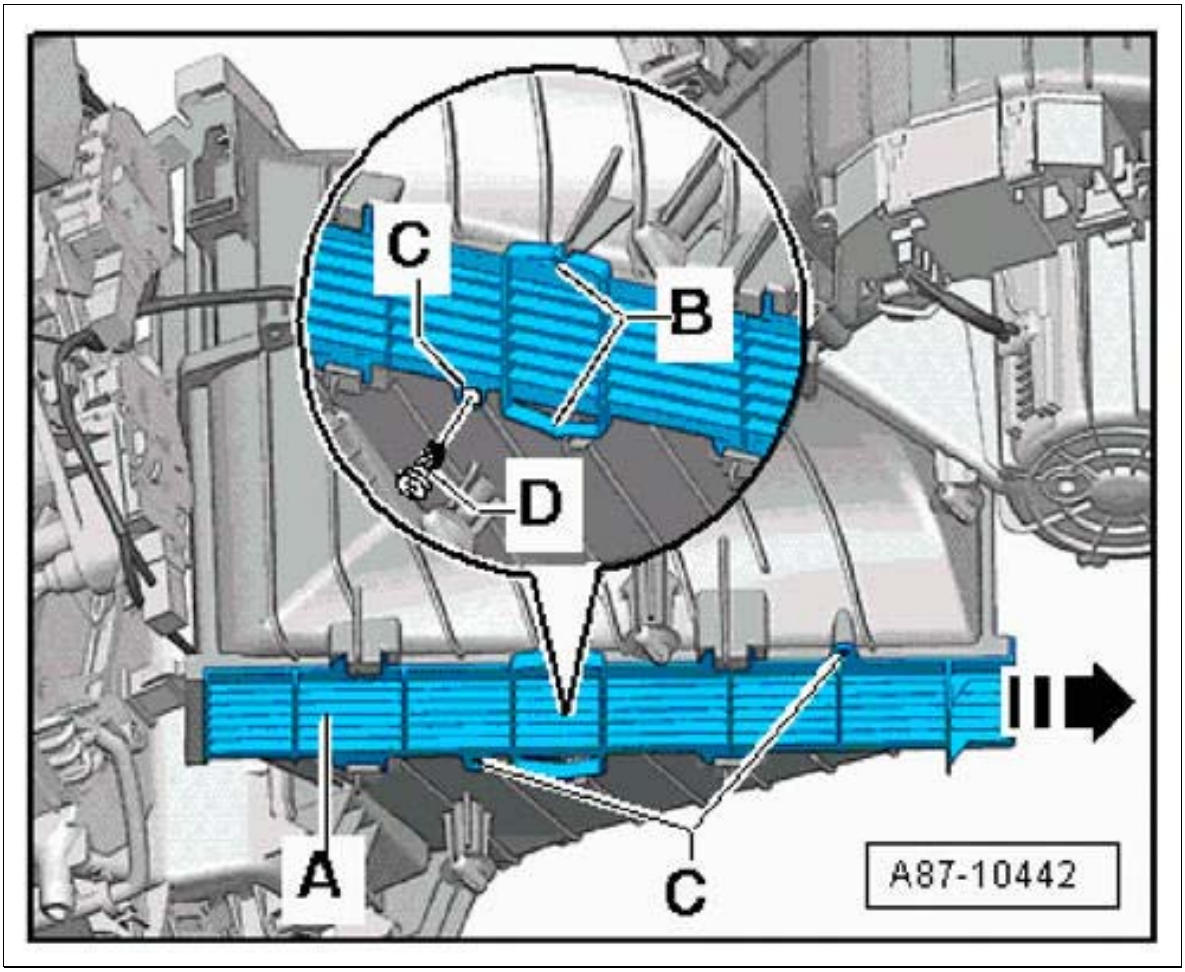

Courtesy of PORSCHE CARS NORTH AMERICA, INC.

3. Pull particle filter **-A-** out of the slot **-B-** on the air conditioner.

Fig 3: Removing Particle Filter

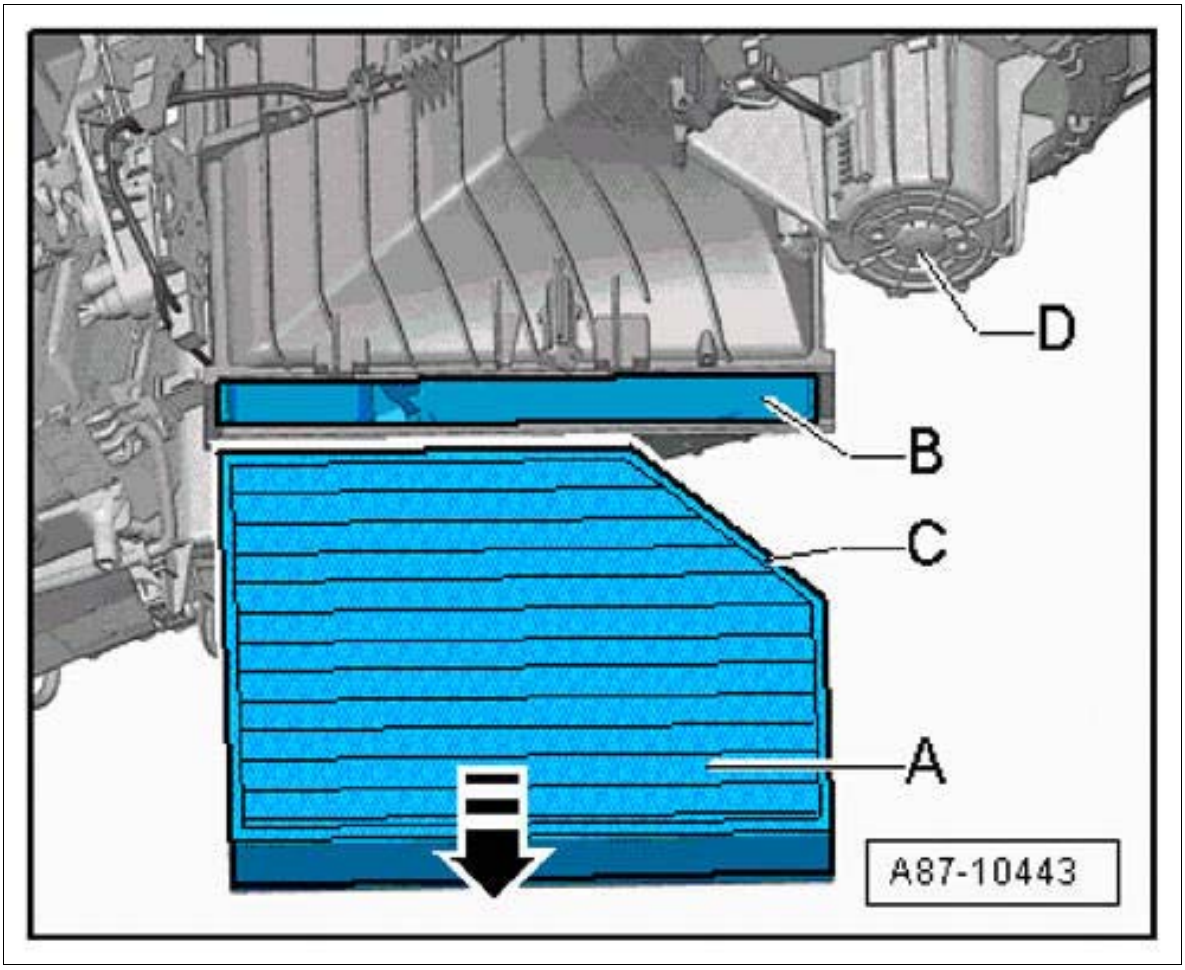

Courtesy of PORSCHE CARS NORTH AMERICA, INC.

WM 851819 REMOVING AND INSTALLING PARTICLE FILTER (MACAN, MACAN S, MACAN TURBO) > REMOVING AND INSTALLING PARTICLE FILTER > INSTALLING PARTICLE FILTER

1. Installation is performed in reverse order.

WM 852719 REMOVING AND INSTALLING INNER TEMPERATURE SENSOR (MACAN, MACAN S, MACAN TURBO) > PRELIMINARY WORK

1. Remove cowl panel cover → 508719 REMOVING AND INSTALLING COWL PANEL COVER .

WM 852719 REMOVING AND INSTALLING INNER TEMPERATURE SENSOR (MACAN, MACAN S, MACAN TURBO) > REMOVING AND INSTALLING INNER TEMPERATURE

SENSOR > REMOVING INNER TEMPERATURE SENSOR

The inner temperature sensor is located on the right in the plenum panel (at the air inlet housing for air conditioning).

Fig 1: Identifying Inner Temperature Sensor

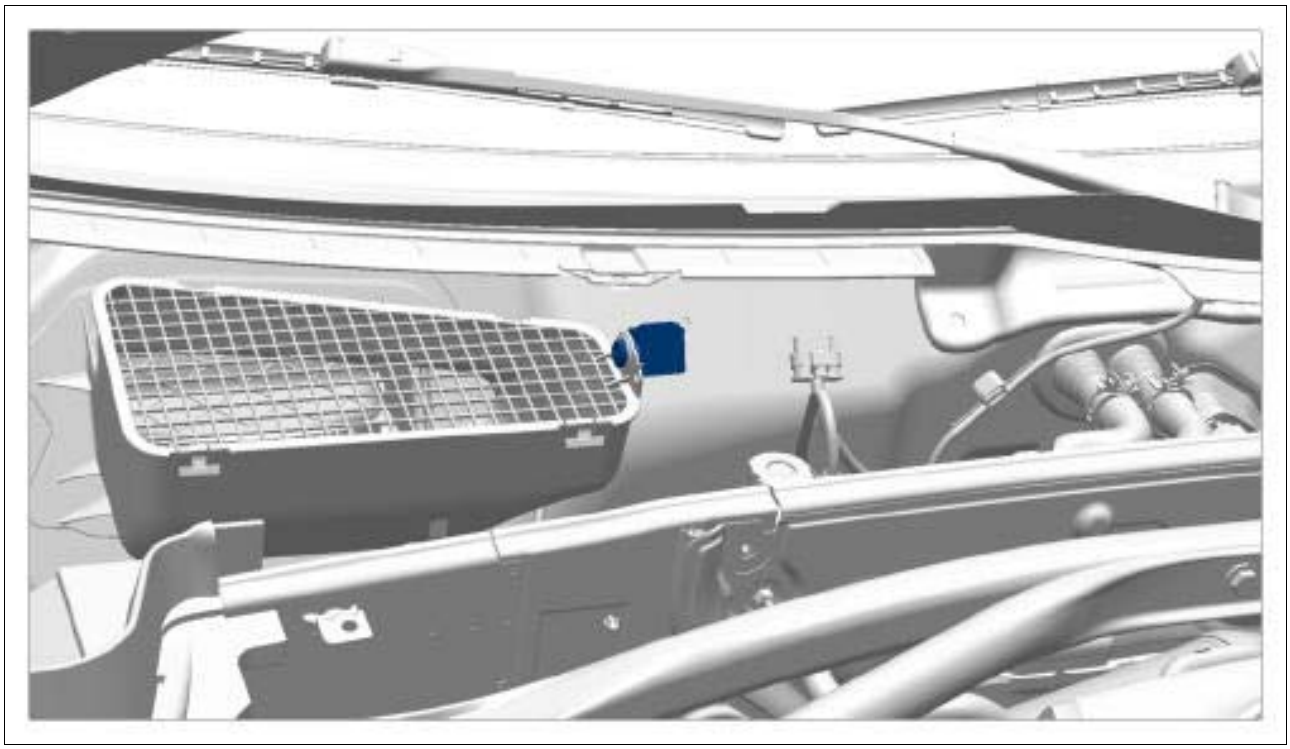

Courtesy of PORSCHE CARS NORTH AMERICA, INC.

1. Unscrew fastening screws **-1-** and remove air inlet housing cover **-2-** .

Fig 2: Identifying Air Inlet Housing Cover

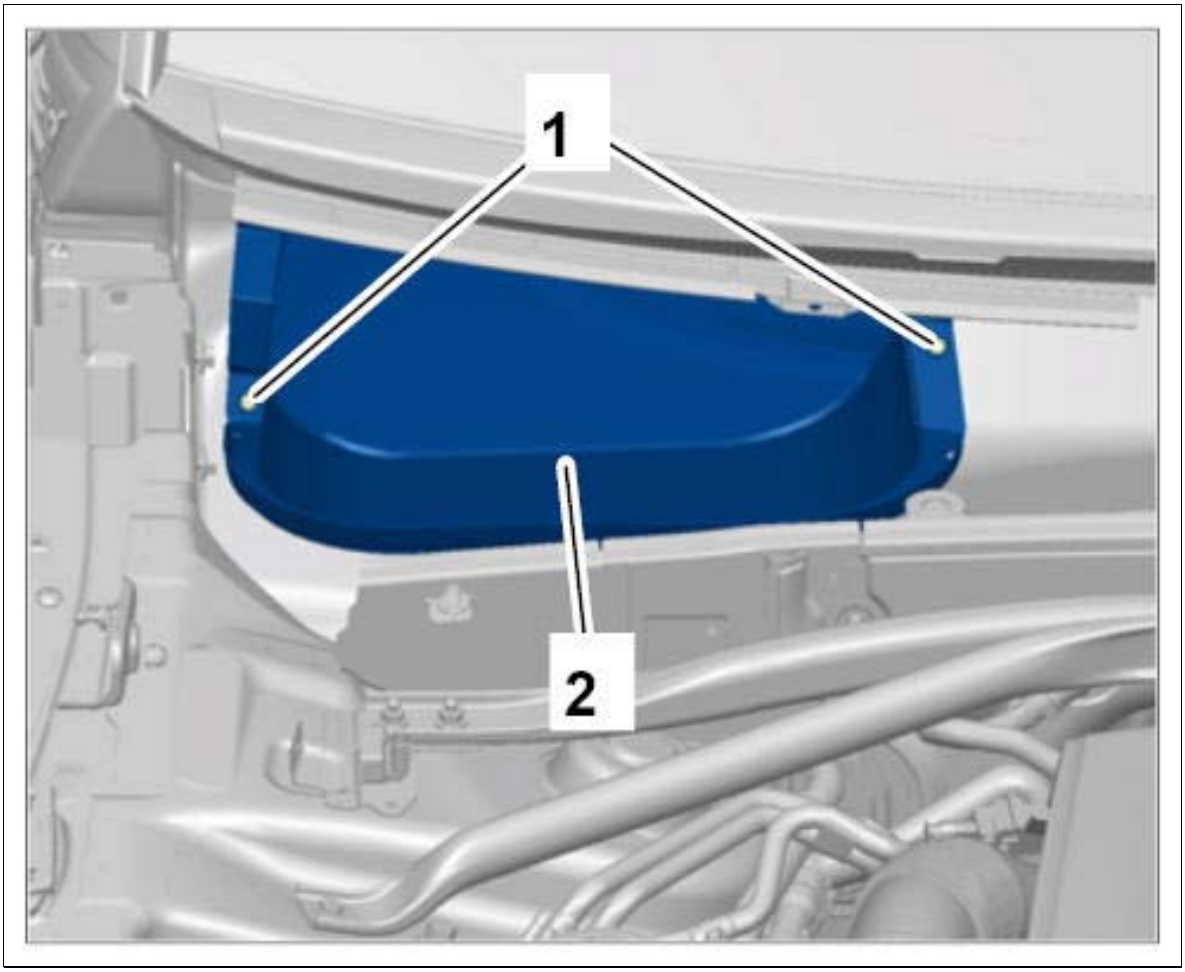

Courtesy of PORSCHE CARS NORTH AMERICA, INC.

2. Turn inner temperature sensor clockwise **-arrow-** and remove it to the rear.

Fig 3: Turning Inner Temperature Sensor

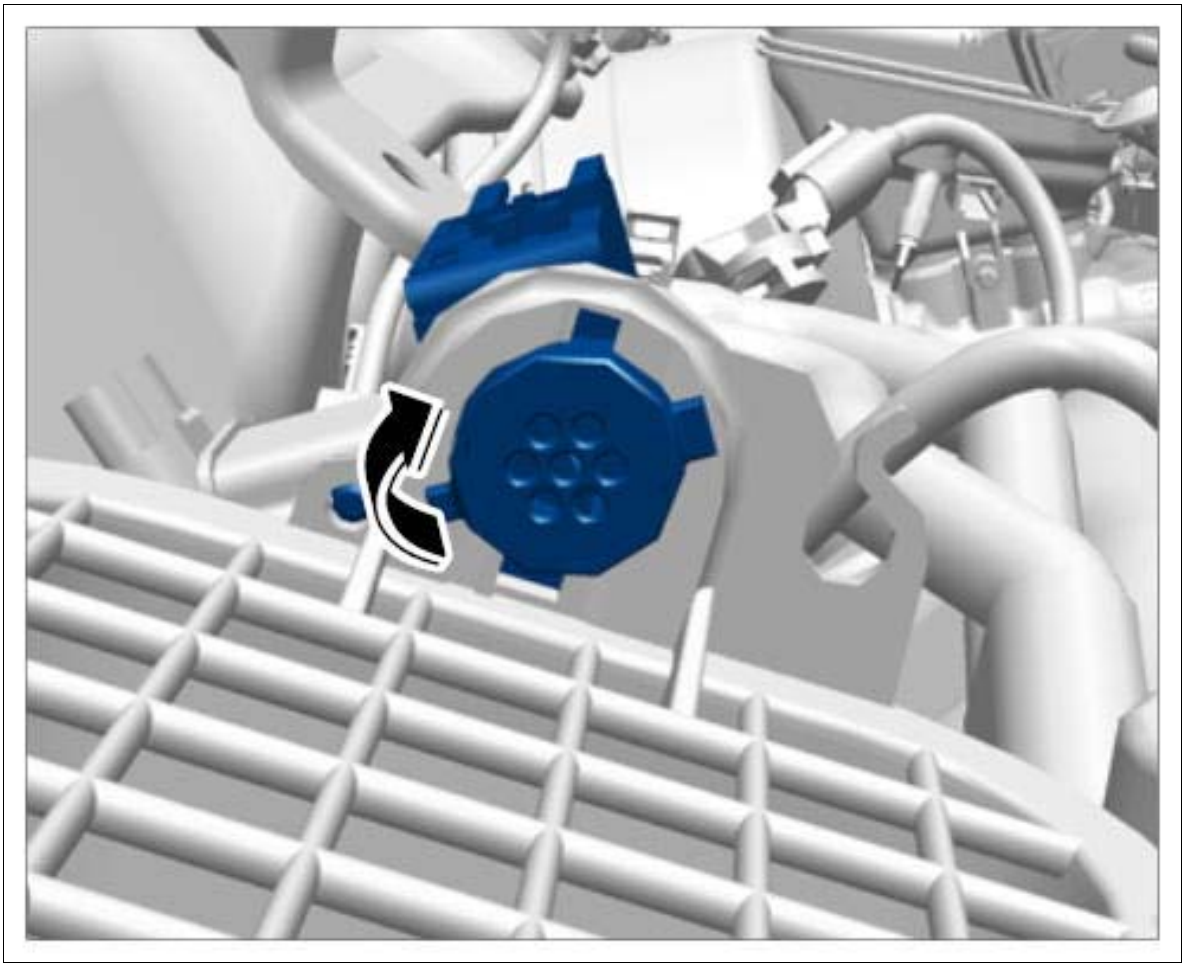

Courtesy of PORSCHE CARS NORTH AMERICA, INC.

3. Disconnect connector **-1-** from the inner temperature sensor **-2-** .

Fig 4: Disconnecting Inner Temperature Sensor Connector

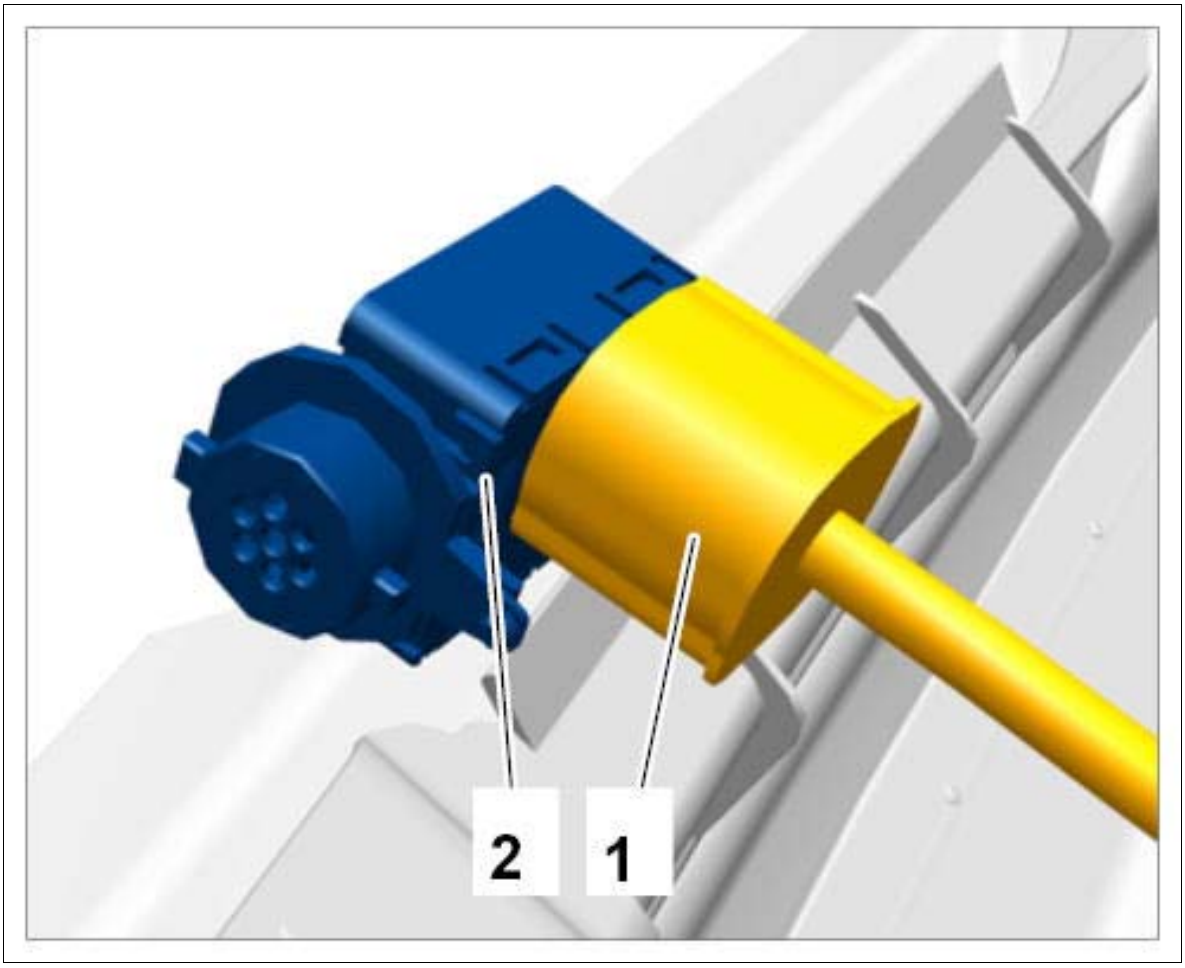

Courtesy of PORSCHE CARS NORTH AMERICA, INC.

WM 852719 REMOVING AND INSTALLING INNER TEMPERATURE SENSOR (MACAN, MACAN S, MACAN TURBO) > REMOVING AND INSTALLING INNER TEMPERATURE SENSOR > INSTALLING INNER TEMPERATURE SENSOR

1. Installation is performed in reverse order.

WM 852719 REMOVING AND INSTALLING INNER TEMPERATURE SENSOR (MACAN, MACAN S, MACAN TURBO) > SUBSEQUENT WORK

1. Install cowl panel cover → INSTALLING COWL PANEL COVER .

WM 853019 REMOVING AND INSTALLING HEATER/FRESH-AIR FAN MOTOR (MACAN, MACAN S, MACAN TURBO) > PRELIMINARY WORK

1. Remove glove compartment → 681519 REMOVING AND INSTALLING GLOVE COMPARTMENT .
2. Remove blower regulator → 877819 REMOVING AND INSTALLING BLOWER REGULATOR .

WM 853019 REMOVING AND INSTALLING HEATER/FRESH-AIR FAN MOTOR (MACAN, MACAN S, MACAN TURBO) > REMOVING AND INSTALLING HEATER/FRESH-AIR FAN MOTOR > REMOVING HEATER/FRESH-AIR FAN MOTOR

1. Loosen locking mechanism **-A-** .
2. Turn heater/fresh-air fan motor **-B-** in **-direction of arrow-** .

Fig 1: Turning Heater/Fresh-Air Fan Motor

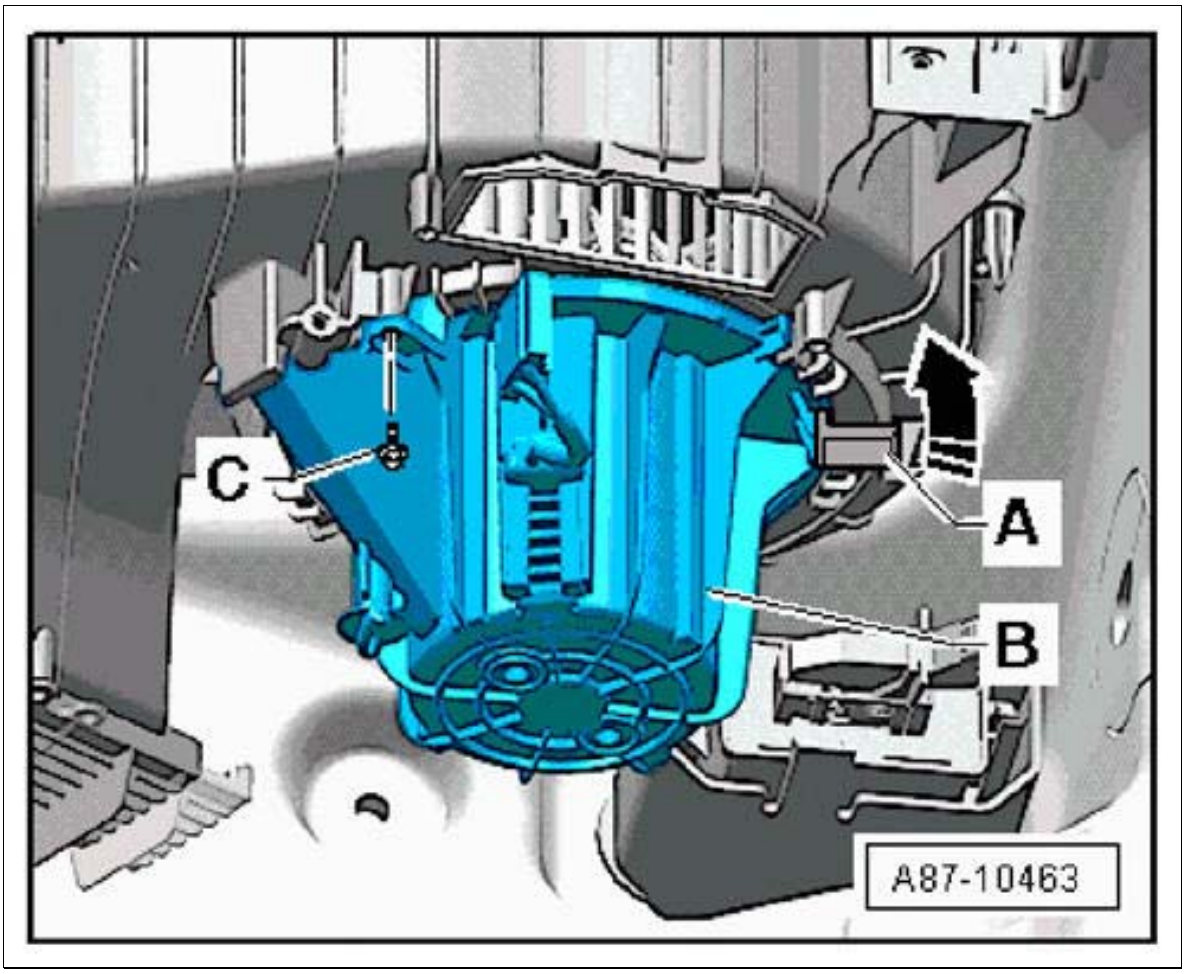

Courtesy of PORSCHE CARS NORTH AMERICA, INC.

WM 853019 REMOVING AND INSTALLING HEATER/FRESH-AIR FAN MOTOR (MACAN, MACAN S, MACAN TURBO) > REMOVING AND INSTALLING HEATER/FRESH-AIR FAN MOTOR > INSTALLING HEATER/FRESH-AIR FAN MOTOR

1. Installation is performed in reverse order.
2. If the locking mechanism **-A-** breaks off or no longer works, the heater/fresh-air fan motor can also be secured with a fastening screw **-C-** .

Fig 1: Turning Heater/Fresh-Air Fan Motor

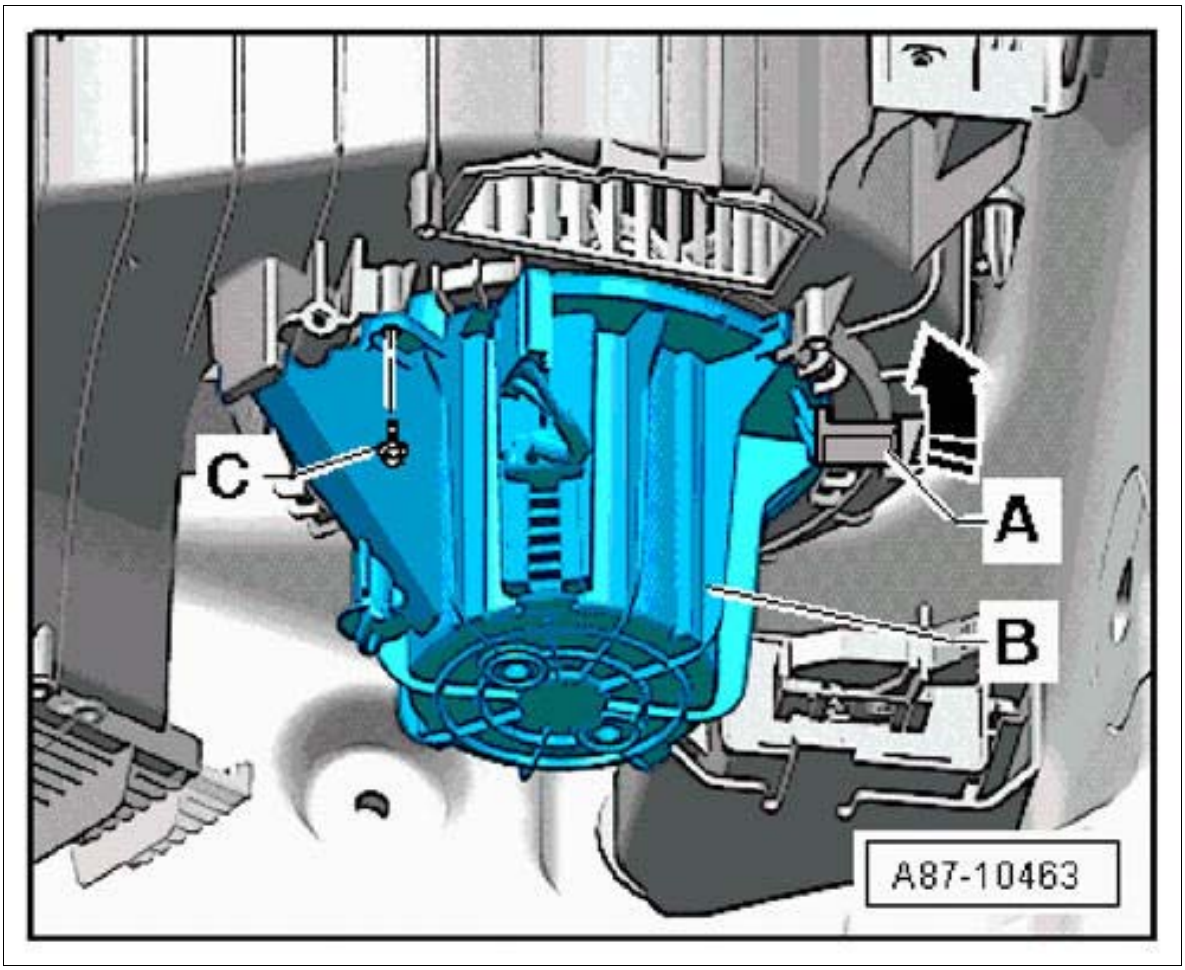

Courtesy of PORSCHE CARS NORTH AMERICA, INC.

WM 853019 REMOVING AND INSTALLING HEATER/FRESH-AIR FAN MOTOR (MACAN, MACAN S, MACAN TURBO) > SUBSEQUENT WORK

1. Install blower regulator → INSTALLING FAN CONTROL .
2. Install glove compartment → INSTALLING GLOVE COMPARTMENT .

WM 855319 REMOVING AND INSTALLING CENTER AIR VENT (MACAN, MACAN S, MACAN TURBO) > PRELIMINARY WORK > APPLIES TO LEFT CENTER AIR VENT

1. Remove dashboard molding on driver's side at the right → 70581902 REMOVING AND INSTALLING DASHBOARD MOLDING ON DRIVER'S SIDE AT THE RIGHT .

WM 855319 REMOVING AND INSTALLING CENTER AIR VENT (MACAN, MACAN S, MACAN TURBO) > PRELIMINARY WORK > APPLIES TO LEFT CENTER AIR VENT

1. Remove dashboard molding on passenger's side → 705819 REMOVING AND INSTALLING DASHBOARD MOLDING ON PASSENGER'S SIDE .

WM 855319 REMOVING AND INSTALLING CENTER AIR VENT (MACAN, MACAN S, MACAN TURBO) > SUBSEQUENT WORK > APPLIES TO LEFT CENTER AIR VENT

1. Install dashboard molding on driver's side at the right → INSTALLING DASHBOARD MOLDING ON DRIVER'S SIDE AT THE RIGHT .

WM 855319 REMOVING AND INSTALLING CENTER AIR VENT (MACAN, MACAN S, MACAN TURBO) > SUBSEQUENT WORK > APPLIES TO RIGHT CENTER AIR VENT

1. Install dashboard molding on passenger's side → INSTALLING DASHBOARD MOLDING ON PASSENGER'S SIDE .

WM 855719 REMOVING AND INSTALLING REAR CENTER AIR VENT (MACAN, MACAN S, MACAN TURBO) > PRELIMINARY WORK

1. Remove covering frame for center console → 683419 REMOVING AND INSTALLING COVERING FRAME FOR CENTRE CONSOLE .

WM 855719 REMOVING AND INSTALLING REAR CENTER AIR VENT (MACAN, MACAN S, MACAN TURBO) > REMOVING AND INSTALLING REAR CENTER AIR VENT > REMOVING REAR CENTER AIR VENT

1. Unscrew fastening screws **-1-** on the air vent and disconnect air vent from the covering frame.

Fig 1: Removing Rear Center Air Vent

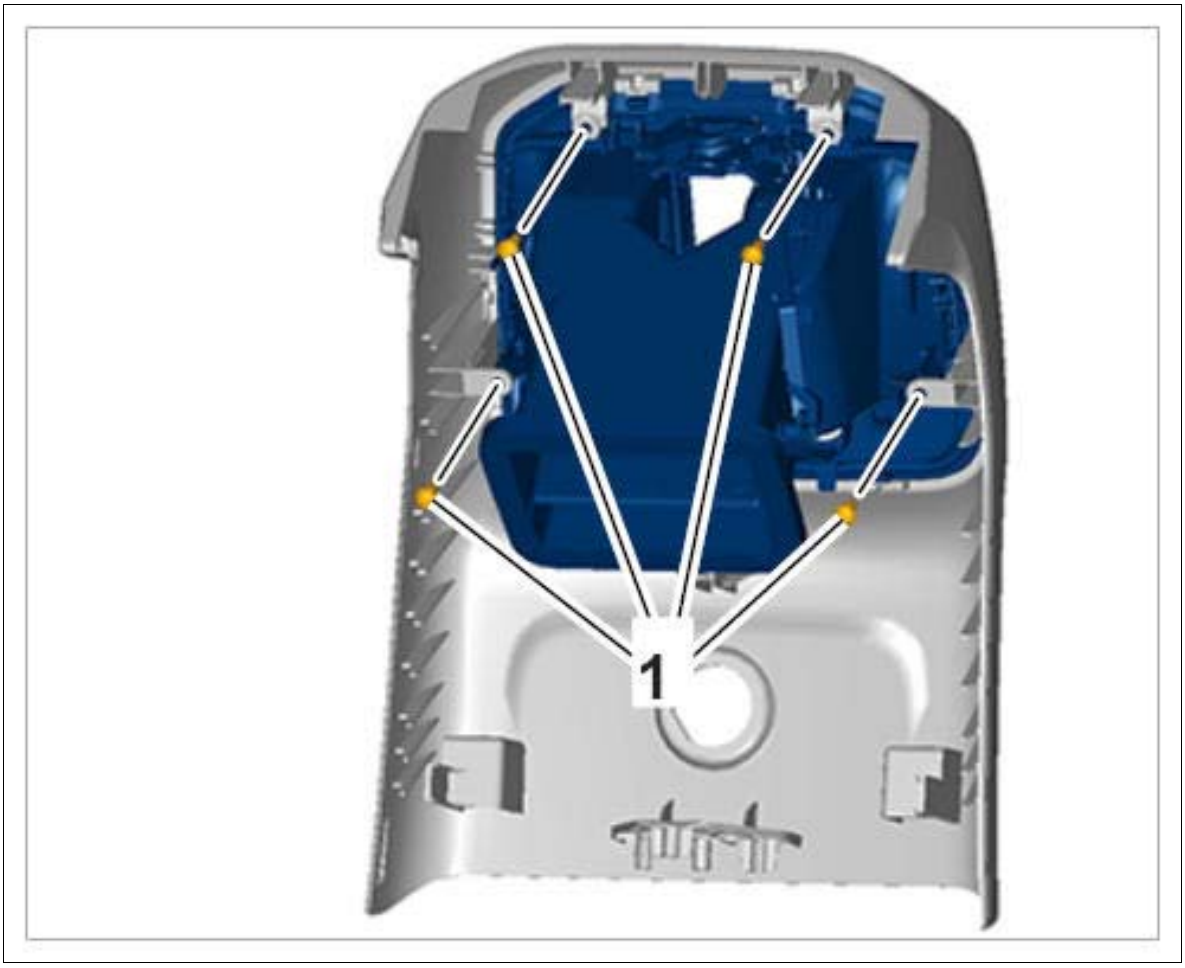

Courtesy of PORSCHE CARS NORTH AMERICA, INC.

WM 855719 REMOVING AND INSTALLING REAR CENTER AIR VENT (MACAN, MACAN S, MACAN TURBO) > REMOVING AND INSTALLING REAR CENTER AIR VENT > INSTALLING REAR CENTER AIR VENT

Insert air vent in covering frame and tighten fastening screws **-1-** .

Fig 1: Installing Rear Center Air Vent

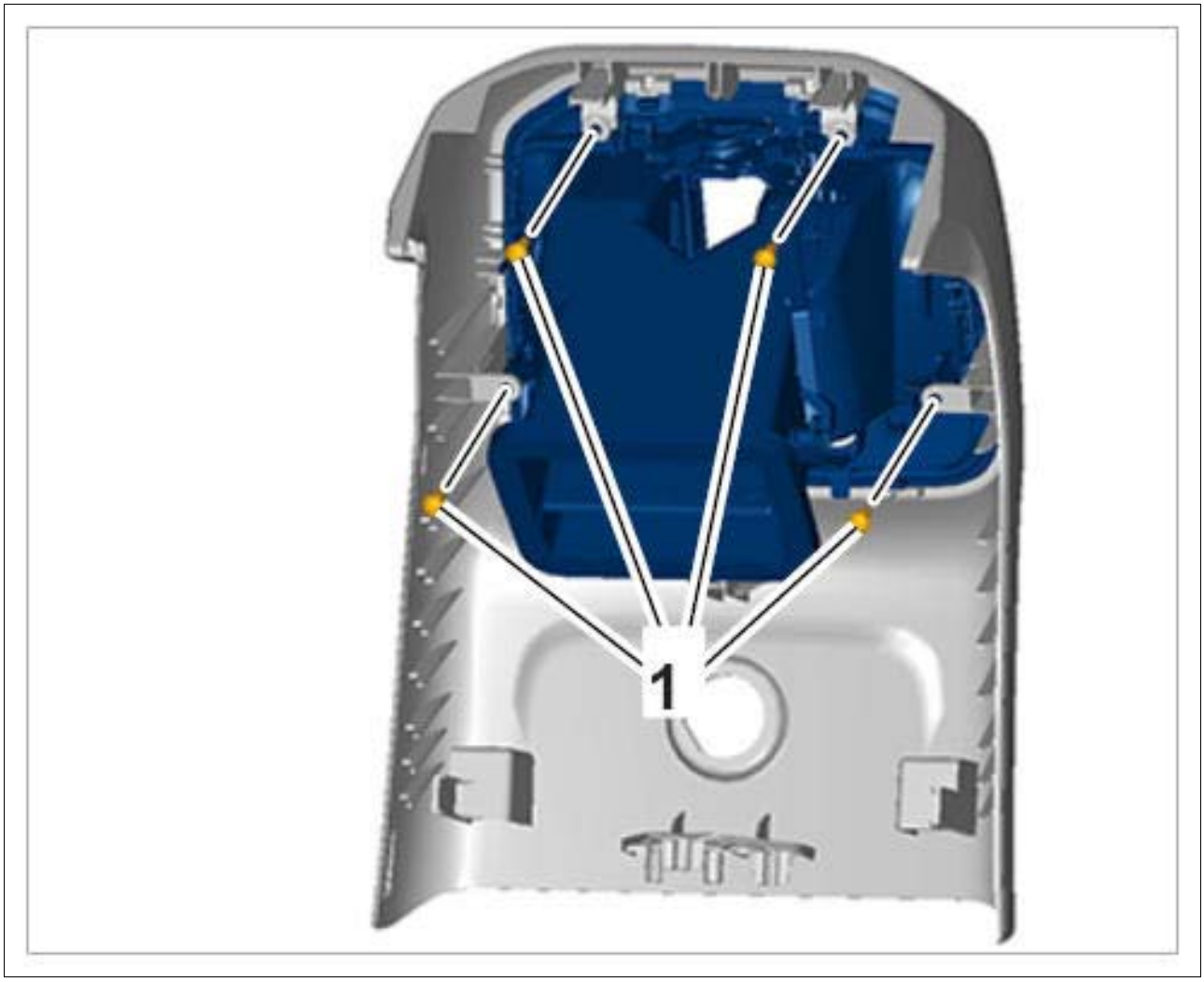

Courtesy of PORSCHE CARS NORTH AMERICA, INC.

WM 855719 REMOVING AND INSTALLING REAR CENTER AIR VENT (MACAN, MACAN S, MACAN TURBO) > SUBSEQUENT WORK

1. Install covering frame for center console → INSTALLING COVERING FRAME FOR CENTRE CONSOLE .

WM 855919 REMOVING AND INSTALLING AIR VENT FOR DOOR WINDOW (MACAN, MACAN S, MACAN TURBO) > PRELIMINARY WORK > APPLIES TO AIR VENTS FOR DOOR WINDOW AT THE LEFT AND RIGHT

1. Remove dashboard molding on driver's side at the left and right → 70581901 REMOVING AND INSTALLING DASHBOARD MOLDING ON DRIVER'S SIDE AT THE LEFT .

WM 855919 REMOVING AND INSTALLING AIR VENT FOR DOOR WINDOW (MACAN, MACAN S, MACAN TURBO) > PRELIMINARY WORK > APPLIES TO AIR VENTS ON PASSENGER'S SIDE

1. Remove dashboard molding on passenger's side → 705819 REMOVING AND INSTALLING DASHBOARD MOLDING ON PASSENGER'S SIDE .

WM 855919 REMOVING AND INSTALLING AIR VENT FOR DOOR WINDOW (MACAN, MACAN S, MACAN TURBO) > SUBSEQUENT WORK > APPLIES TO AIR VENT FOR DOOR WINDOW AT THE LEFT AND RIGHT

1. Install dashboard molding on driver's side at the left and right → INSTALLING DASHBOARD MOLDING ON DRIVER'S SIDE AT THE LEFT and INSTALLING DASHBOARD MOLDING ON DRIVER'S SIDE AT THE RIGHT .

WM 855919 REMOVING AND INSTALLING AIR VENT FOR DOOR WINDOW (MACAN, MACAN S, MACAN TURBO) > SUBSEQUENT WORK > APPLIES TO AIR VENT FOR RIGHT DOOR WINDOW

1. Install dashboard molding on passenger's side → INSTALLING DASHBOARD MOLDING ON PASSENGER'S SIDE .

WM 856519 REMOVING AND INSTALLING VENTILATION COVER (MACAN, MACAN S, MACAN TURBO) > PRELIMINARY WORK

1. Remove rear apron → WM 635519 REMOVING AND INSTALLING REAR APRON (MACAN, MACAN S, MACAN TURBO) .

WM 856519 REMOVING AND INSTALLING VENTILATION COVER (MACAN, MACAN S, MACAN TURBO) > REMOVING AND INSTALLING VENTILATION COVER > REMOVING VENTILATION COVER

1. Remove flap in side trim panel for rear luggage compartment.
2. Carefully unclip inner housing **-1-** at the top and bottom and remove it **-arrow-** .

Fig 1: Removing Inner Housing

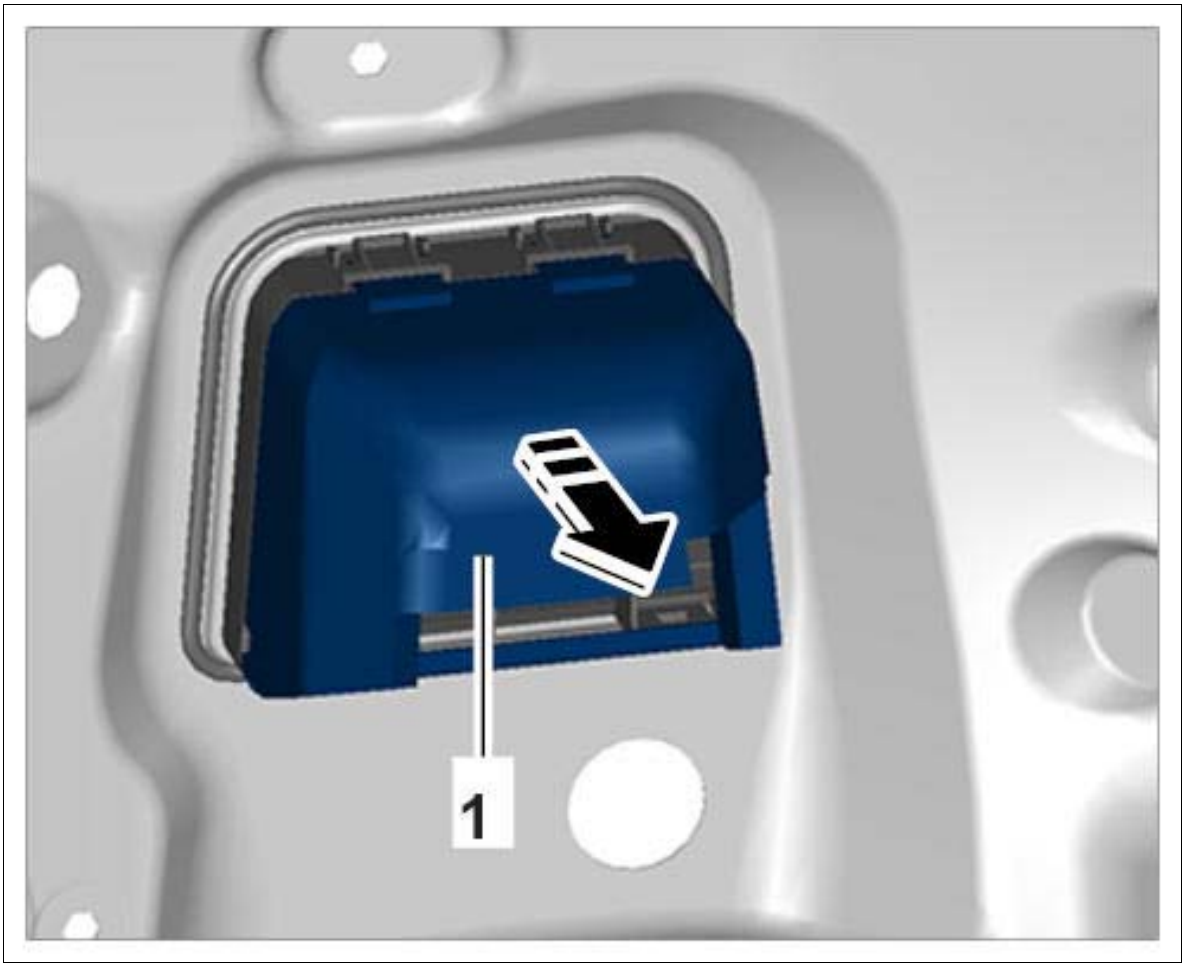

Courtesy of PORSCHE CARS NORTH AMERICA, INC.

3. Press in clips at the top **-1-** and carefully remove ventilation cover **-2-** by pulling it outwards.

Fig 2: Identifying Ventilation Cover

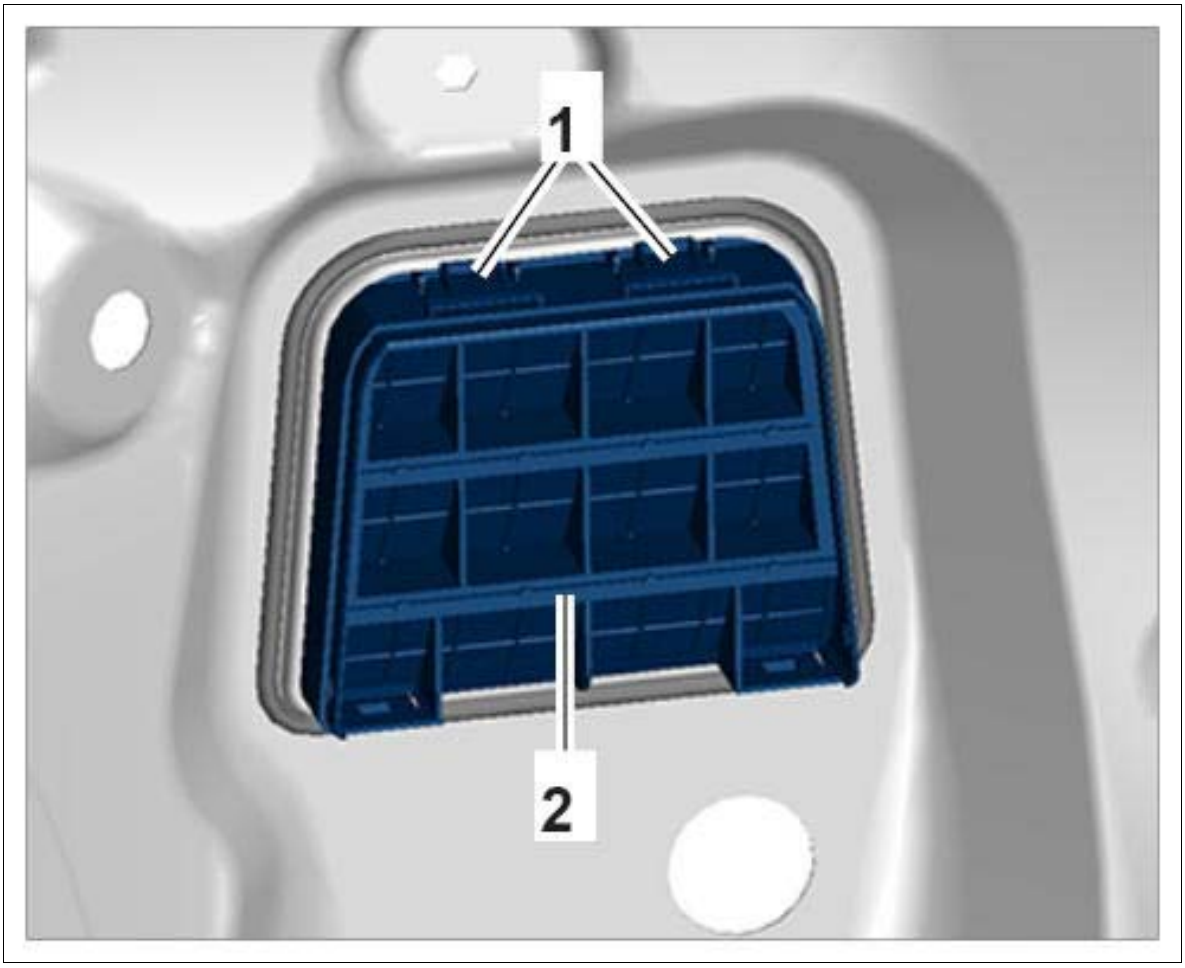

Courtesy of PORSCHE CARS NORTH AMERICA, INC.

WM 856519 REMOVING AND INSTALLING VENTILATION COVER (MACAN, MACAN S, MACAN TURBO) > REMOVING AND INSTALLING VENTILATION COVER > INSTALLING VENTILATION COVER

1. Installation is performed in reverse order.

WM 856519 REMOVING AND INSTALLING VENTILATION COVER (MACAN, MACAN S, MACAN TURBO) > SUBSEQUENT WORK

1. Install rear apron → INSTALLING REAR APRON .

Service Manual: 87 - AIR CONDITIONING -- (95B) - MACAN

WM 870101 CHECKING AIR-CONDITIONING SYSTEM (MACAN, MACAN S, MACAN TURBO) > TOOLS

Designation	Type	Number	Description	
PIWIS Tester II	Special tool	9818		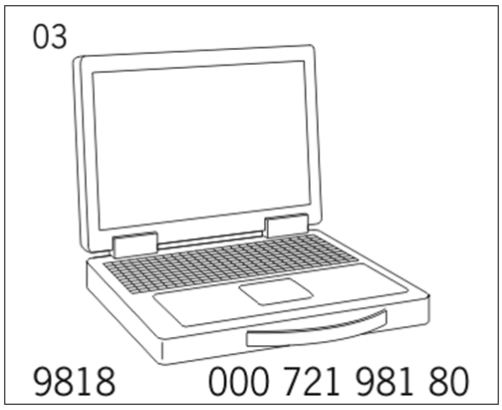

WM 870101 CHECKING AIR-CONDITIONING SYSTEM (MACAN, MACAN S, MACAN TURBO) > TROUBLESHOOTING THE AIR-CONDITIONING SYSTEM FOLLOWING COMPLAINTS ABOUT COOLING OUTPUT

Information

The troubleshooting steps shown must be used if complaints are received about the cooling output of the air-conditioning system.

→ 8X00IN INSTRUCTIONS FOR REPAIRING AIR-CONDITIONING SYSTEMS AND STORING SPARE PARTS .

Information

If it is not possible to clearly detect a leak using a leak detector, then only the leak detector additive supplied by SPEKTRONICS may be used. **Leak detector additive: Traserline TP 3860 in dissolved form.**

This leak detector additive is available from service equipment providers (e.g. Waeco). → WE1281 Air conditioning service equipment RS 2

For filling this Traser additive, special adapter kits are required, which are also available from service equipment providers (e.g. Waeco).

Information on how to use the air-conditioning system and the procedure for filling it can be found in the operating instructions for the adapter kits.

Status	Specification OK	Specification not OK
1) Check the cooling output,	Specified air flow and	Insufficient air flow from the

temperature and air flow. Check the air distribution by making adjustments to the air-conditioning control panel. Start the vehicle and check the air-conditioning system for the prescribed nominal temperature values. → WM 8X00IN TECHNICAL VALUES - AIR CONDITIONING (ALL MODELS) .	temperature is reached. Air distribution is working. Continue with **Step 2)** .	exhaust vents. Continue with **Step 3)** . Required temperature is not reached. Continue with **Step 2)** .
2) Perform on-board diagnosis on all control units. **PIWIS Tester II 9818**	No fault memory stored, air flow and temperature complies with specified nominal values. **Function OK. No further action required.** No fault memory stored and the temperature does not reach the specified nominal values. Continue with **Step 4)** .	Fault present: Work through fault memory in accordance with "Guided Fault Finding". Continue with **Step 1)** .
3) Check the following points one after the other. Replace if necessary. Remove active carbon/particle filter and check for dirt and dust particles. → 85181900 REMOVING AND INSTALLING PARTICLE FILTER . Check fan motor for correct function and adjustment. Use wiring diagram if necessary.	Fan motor and active carbon filter OK. Continue with **Step 4)** .	Replace active carbon/particle filter if necessary. Check mechanical operation (air distribution) of the servo motors/flaps and repair them if necessary. Following repairs, continue with **Step 1)** .
4) Connect air-conditioning service equipment, measure high and low pressure and compare with nominal values. → WM 8X00IN TECHNICAL VALUES - AIR CONDITIONING (ALL MODELS) .	High and low pressure OK. **Function OK. No further action required.**	High pressure too high, continue with **Step 5)** . High pressure too low, continue with **Step 6)** . Low pressure too high, continue with **Step 7)** . Low pressure too low, continue with **Step 8)** .
5) High pressure too high. Check the following points one after the other: Check condenser for dirt/dust particles and damage. Check electrical function, condenser fan activation. Drain refrigerant, measure and document the amount of refrigerant removed. >> Too much refrigerant. → 87031700 DRAINING AND FILLING		Clean the condenser. Repair condenser fan activation mechanism. Use wiring diagram. Fill the air-conditioning system with the prescribed amount of refrigerant. → WM 8X00IN TECHNICAL DATA FOR AIR-CONDITIONING SYSTEM (ALL MODELS) Continue with **Step 1)** .

REFRIGERANT		
6) High pressure too low. Check the following points one after the other: Check electrical function, air-conditioning compressor activation. Drain refrigerant, measure and document the amount of refrigerant.	>> If the amount of refrigerant is correct, remove the expansion valve and check for foreign bodies (e.g. chips, abrasion). → 87701900 REMOVING AND INSTALLING EXPANSION VALVE → 87031700 DRAINING AND FILLING REFRIGERANT Replace expansion valve if necessary. Continue with **Step 1)**	Repair air-conditioning compressor activation mechanism. Use wiring diagram. >> If there is not enough refrigerant, fill the air-conditioning system according to specifications. →WM 8X00IN TECHNICAL DATA FOR AIR-CONDITIONING SYSTEM (ALL MODELS) Check refrigerant circuit and connection points using a leak detector. >> Once you have determined the cause of refrigerant loss, replace seal or spare part. Continue with **Step 1)**
7) Low pressure too high. Check the following points one after the other: Drain refrigerant, measure and document the amount of refrigerant. >> Too much refrigerant. → 87031700 DRAINING AND FILLING REFRIGERANT	If the amount of refrigerant is correct, remove the expansion valve and check for foreign bodies (e.g. chips, abrasion). → 87701900 REMOVING AND INSTALLING EXPANSION VALVE → 87031700 DRAINING AND FILLING REFRIGERANT Replace expansion valve if necessary. Continue with **Step 1)**	>> If there is too much refrigerant, fill the air-conditioning system according to specifications. → WM 8X00IN TECHNICAL DATA FOR AIR-CONDITIONING SYSTEM (ALL MODELS) Continue with **Step 1)**
8) Low pressure too low. Check the following points one after the other: Drain refrigerant and measure the amount of refrigerant. >> Not enough refrigerant. → 87031700 DRAINING AND FILLING REFRIGERANT Loosen lines on the air-conditioning compressor and check for foreign bodies (e.g. chips, abrasion). → 873419 REMOVING AND INSTALLING AIR-CONDITIONING COMPRESSOR	If the amount of refrigerant is correct, remove the expansion valve and check for foreign bodies (e.g. chips, abrasion). → 87701900 REMOVING AND INSTALLING EXPANSION VALVE → 87031700 DRAINING AND FILLING REFRIGERANT Replace expansion valve if necessary. Continue with **Step 1)**	Fill the air-conditioning system with the prescribed amount of refrigerant. → WM 8X00IN TECHNICAL DATA FOR AIR-CONDITIONING SYSTEM (ALL MODELS) Check refrigerant circuit and connection points using a leak detector. >> Once you have determined the cause of refrigerant loss, replace seal or spare part. Replace air-conditioning compressor if necessary. Continue with **Step 1)**

WM 870101 CHECKING AIR-CONDITIONING SYSTEM (MACAN, MACAN S, MACAN TURBO) > TROUBLESHOOTING THE AIR CONDITIONING SYSTEM FOLLOWING COMPLAINTS ABOUT NOISES

Information

The troubleshooting steps shown must be used if complaints are received about noises in the air-conditioning system.

→ 8X00IN INSTRUCTIONS FOR REPAIRING AIR-CONDITIONING SYSTEMS AND STORING SPARE PARTS

Information

If it is not possible to clearly detect a leak using a leak detector, then only the leak detector additive supplied by SPEKTRONICS may be used. **Leak detector additive: Traserline TP 3860 in dissolved form.**

This leak detector additive is available from service equipment providers (e.g. Waeco). → WE1281 Air conditioning service equipment RS 2

For filling this Traser additive, special adapter kits are required, which are also available from service equipment providers (e.g. Waeco).

Information on how to use the air-conditioning system and the procedure for filling it can be found in the operating instructions for the adapter kits.

Status	Specification OK	Specification not OK
1) Check for noises from around the compressor. Start the engine and switch on air conditioning.	No unusual operating noises can be heard from the air-conditioning system. Continue with **Step 2)** .	Noises coming from the air-conditioning system. >> Mechanical noises, continue with **Step 3)** If you have already carried out **Step 3)** , continue with **Step 5)** >> Squeaking noises, continue with **Step 4)**
2) Start the vehicle and check the air-conditioning system for the prescribed nominal temperature values. → WM 8X00IN TECHNICAL VALUES - AIR CONDITIONING (ALL MODELS) .	Nominal values OK and no noises from the air-conditioning system. **Function OK. No further action required.**	Nominal values not OK, proceed according to "Troubleshooting the air conditioning system following complaints about cooling output".
3) Check the following points one after the other: Remove drive belt and check condition. Check the bearing clearance of the pulley. Check refrigerant level. Drain refrigerant and measure the amount of refrigerant. >> Not enough refrigerant. → 87031700 DRAINING AND FILLING REFRIGERANT		Replace drive belt if necessary. Replace pulley if necessary. Fill the air-conditioning system with the prescribed amount of refrigerant. →WM 8X00IN TECHNICAL DATA FOR AIR-CONDITIONING SYSTEM (ALL MODELS) Check refrigerant circuit and connection points using a leak detector. >> Once you have determined the cause of refrigerant loss, replace seal or

		spare part. Continue with **Step 1)**
4) Remove drive belt and check for signs of wear or damage.	Systematically broaden the check to determine if there are noises coming from other components.	Replace drive belt if necessary. Continue with **Step 1)**
5) Replace air-conditioning compressor. → 873419 REMOVING AND INSTALLING AIR-CONDITIONING COMPRESSOR	**Function OK. No further action required.**	

WM 870101 FUNCTION TEST ON AIR CONDITIONING (MACAN, MACAN S, MACAN TURBO) > FUNCTION TEST ON AIR CONDITIONING > GENERAL INFORMATION

Information

- The air outlet temperatures at the center vent on the dashboard and the high pressure in the air-conditioning system must not be higher or lower than the specified tolerance ranges after a running time of 7 minutes (high-pressure measurement).

WM 870101 FUNCTION TEST ON AIR CONDITIONING (MACAN, MACAN S, MACAN TURBO) > FUNCTION TEST ON AIR CONDITIONING > PROCEDURE AND GENERAL REQUIREMENTS FOR TESTING

Information

- The safety regulations must be observed during all work on the refrigerant system! → 8X00IN SAFETY REGULATIONS FOR WORKING ON AIR-CONDITIONED VEHICLES AND DEALING WITH REFRIGERANT R134A , → 8X00IN SAFETY REGULATIONS FOR EXTRACTION AND FILLING SYSTEMS .

Information

- If the specified nominal values are not reached, the air conditioning must be checked for leaks and repaired.

Information

- Check condensed water drain tubes: Must not be blocked by wax or underbody protection or otherwise dirty. Condensate must be able to drain away freely.
- Check fresh-air intake system: Water must not be allowed to run into the air conditioner. Must be completely dirt-free.
- Check that there is sufficient ventilation in the outside-temperature sensor area.
- Do not allow heat from the warm engine to build up near the outside-temperature sensor.

- Check particle filter: Must be dry and not excessively dirty.
- Condenser must be dirt-free.
- Make sure that all servo motors/flaps move to their end positions.
- Switch on MONO mode or SYNC mode using the button on the front air conditioning control panel.

1. Connect air conditioning service unit. → 870317 DRAINING AND FILLING REFRIGERANT .
2. Measure outside temperature using a thermometer.
3. Open all air outlet vents on the dashboard/center console (direct the blower towards the test person if necessary).
4. **Insert sensor of the temperature measuring device approx. 4 cm into the middle of the left center vent.**
5. Check stopwatch and keep an eye on the relevant temperature and high pressure on the air conditioning service unit.
6. Switch on ignition.
7. Open driver's and passenger's side windows and close sliding roof.
8. Press A/C Max button.
9. Start the engine and leave it running at idle speed (do not rev engine unnecessarily after starting!).
10. Operate air conditioning for 5 minutes at idle speed.
11. **Increase engine speed** depending on engine type and **maintain a constant engine speed for 2 minutes.** Start the time measurement immediately.
    1. 11.1. **Increase engine speed on V6 petrol vehicles to 2, 000 RPM.**
    2. 11.2. **Increase engine speed on diesel vehicles to 1, 500 RPM.**
12. Note center vent temperature and pressure values after 2 minutes.
13. Compare values (center vent temperature and pressure values) with the specified tolerances.

WM 870101 FUNCTION TEST ON AIR CONDITIONING (MACAN, MACAN S, MACAN TURBO) > TECHNICAL VALUES > CENTER VENT TEMPERATURE AS A FUNCTION OF OUTSIDE TEMPERATURE

Fig 1: Center Vent Temperature Graph

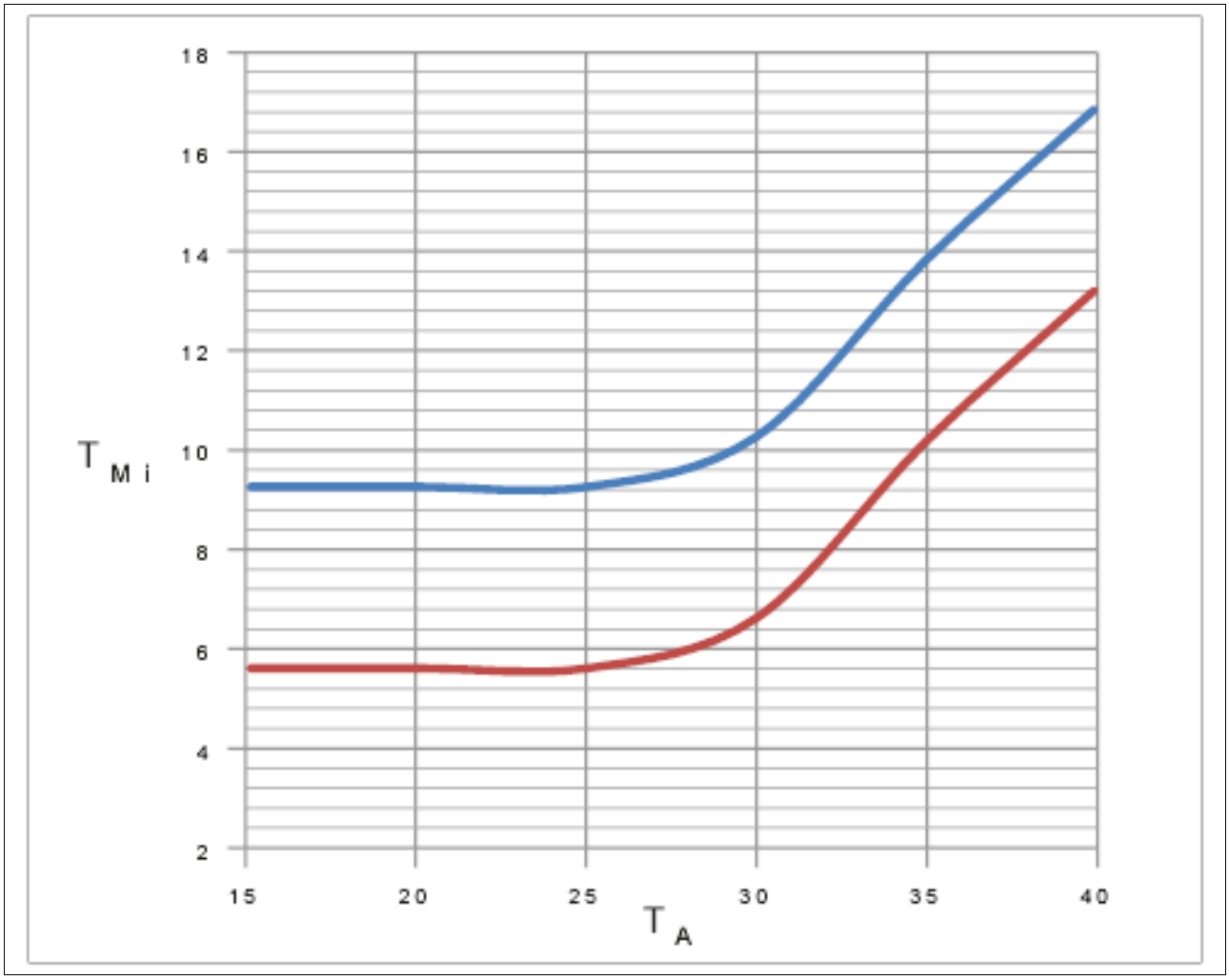

Courtesy of PORSCHE CARS NORTH AMERICA, INC.

Blue - Upper limit

Red - Lower limit

TA - Outside temperature (°C)

TMi - Center vent temperature (°C)

WM 870101 FUNCTION TEST ON AIR CONDITIONING (MACAN, MACAN S, MACAN TURBO) > TECHNICAL VALUES > HIGH PRESSURE IN REFRIGERANT CIRCUIT AS A FUNCTION OF OUTSIDE TEMPERATURE

Fig 1: High Pressure In Refrigerant Circuit Temperature Graph

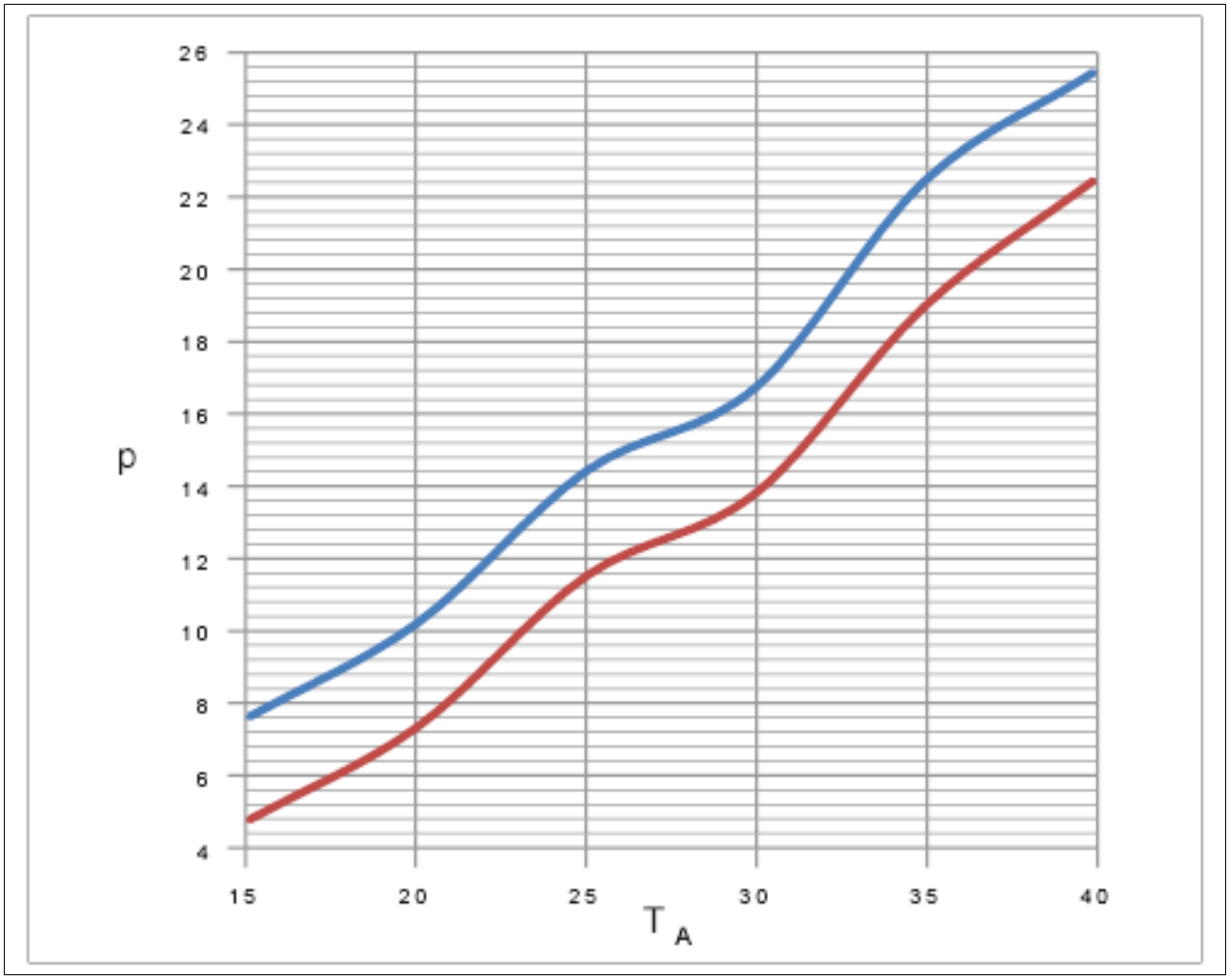

Courtesy of PORSCHE CARS NORTH AMERICA, INC.

Blue - Upper limit

Red - Lower limit

TA - Outside temperature (°C)

P - High pressure in refrigerant circuit (bar)

WM 870317 DRAINING AND FILLING REFRIGERANT (MACAN, MACAN S, MACAN TURBO) > TECHNICAL VALUES

Location	Description	Type	Basic value	Tolerance 1	Tolerance 2
Low-pressure gauge reading		Nominal value	3 bar		

WM 870317 DRAINING AND FILLING REFRIGERANT (MACAN, MACAN S, MACAN TURBO) > DRAINING AND FILLING REFRIGERANT > ASSEMBLY WORK INVOLVING THE REFRIGERANT SYSTEM

Information

During all work on the air-conditioning system which necessitates opening the refrigerant system, the system contents must first be disposed of in accordance with regulations!

Dirt and moisture must be kept out of the air-conditioning system's pipe system!

Thorough cleanliness must be ensured during all work!

System components must never be cleaned on the inside with hot steam!

Use only nitrogen for cleaning purposes!

When replacing a component, all openings must be closed off using suitable stoppers immediately after opening the system!

WM 870317 DRAINING AND FILLING REFRIGERANT (MACAN, MACAN S, MACAN TURBO) > DRAINING AND FILLING REFRIGERANT > GENERAL INSTALLATION SEQUENCE

The charging valves are located in the plenum panel at the rear left.

1. Screw off the protection caps on the charging valves.

   Be careful of the sealing rings when disconnecting or connecting the hose connections!

   Before connecting the high-pressure and low-pressure lines for the air conditioner to the vehicle, remove any refrigerant remaining in the lines by suction.

2. Connect the high-pressure and low-pressure lines on the air conditioner.

   Information

   In the case of servicing equipment with a transparent oil separator, read and take note of the oil level before removing the refrigerant.

   Do not carry out this step on empty air-conditioning systems (pressure gauge approx. 0 bar) because if you do, air will get into the refrigerant bottle.

   If the vehicle is cold, it may be necessary to repeat the suction procedure until all refrigerant has been removed from the air-conditioning system. This step is carried out automatically with some units.

   1. 2.1.

   2. 2.2. Leave the engine running for a short time with the air conditioning on, then connect the high-pressure and low-pressure lines of the air conditioner.

   3. 2.3. Open the valves of the high-pressure and low-pressure lines.

3. Remove refrigerant by suction.

    1. 3.1. If the vehicle is cold, it may be necessary to repeat the suction procedure until all refrigerant has been removed from the air-conditioning system. This step is carried out automatically with some units.

    2. 3.2. Wait for approx. 2 minutes after the servicing equipment has switched itself off. If the pressure gauge reading rises above 0 bar, repeat the suction process.

    3. 3.3. Drain the extracted refrigerant oil into a measuring cup on the servicing equipment and determine the volume.

       Information

       The open air-conditioning system should not be left open unnecessarily, but must be closed off using suitable stoppers immediately after being opened.

4. Carry out repairs.

   Information

   The desiccator must be replaced in the following situations:

    1. Refrigerant circuit is open for > 20 minutes.
    2. Amount of refrigerant extracted is < 30% of the required quantity.
    3. Refrigerant circuit has been open for an indefinite period of time (gradual leak, stone damage to condenser).
    4. Air-conditioning compressor has become blocked.
    5. Dryer cartridge is damaged.
    6. After opening the packaging and line connections (on a new desiccator), the desiccator must be installed within 20 minutes at the latest and the refrigerant circuit must be closed, evacuated and filled.

   The desiccator must not be replaced in the following situations:

    1. If the components are closed off using stoppers immediately after opening the refrigerant circuit and the refrigerant circuit is closed and evacuated within 20 minutes at the latest.

        1. 4.1. Before closing off the refrigerant circuit, check whether the desiccator needs to be replaced.

        2. 4.2. If necessary, reconnect high-pressure and low-pressure lines.

5. Evacuate the system and check for leaks.

    1. 5.1. If the air-conditioning system has been opened, evacuation should last at least 20 minutes so that the moisture can evaporate and be removed by suction.

    2. 5.2. If the air-conditioning system has been open for a long time, evacuation can be carried out for up to 120 minutes.

    3. 5.3. Check the pressure gauge for approx. 2 minutes. If the pressure rises, air is entering the vehicle's air-conditioning system. The leak must be located and repaired.

If the pressure remains constant, add refrigerant oil.

Information

Only ND8 refrigerant oil must be used.

6. Add refrigerant oil.
    1. 6.1. For units without an integrated oil filling system:
    2. 6.2. Start the vacuum pump. At the start of this vacuum phase, add the measured quantity of refrigerant oil using an oil injector or a hose disconnected from the servicing equipment. Reconnect the hose to the servicing equipment immediately after adding the oil.
    3. 6.3. For units with an integrated oil filling system: Add the measured quantity of refrigerant oil and wait for it to be taken in.
    4. 6.4. Do not allow any air to be taken in, otherwise Step 5 must be repeated.
7. Evacuate the system.
    1. 7.1. If the air-conditioning system has been opened, evacuation should last at least 20 minutes so that the moisture can evaporate and be removed by suction.
    2. 7.2. If the air-conditioning system has been open for a long time, evacuation can be carried out for up to 120 minutes.
    3. 7.3. For equipment with an integrated oil filling system, add refrigerant oil now.
8. Fill the air-conditioning system.
    1. 8.1. Using the servicing equipment, add the refrigerant quantity stated in the service information to the air-conditioning lines → 8X00IN TECHNICAL DATA FOR AIR-CONDITIONING SYSTEM .
    2. 8.2. As refrigerant usually flows instead of being pumped, it may not be possible - especially if the vehicle is warm and the servicing equipment is cold - to add the entire quantity. If this is the case, switch the engine and air conditioning on. Wait for the suction pressure to fall below 2 bar. Now open the low-pressure valve on the unit slowly and carefully until the remaining quantity has been added.

        NOTE: Excessively high pressure in refrigerant circuit

        1. Risk of damage to air-conditioning compressor

        → Do not allow the low-pressure gauge to exceed → **Nominal value: 3 bar** at any time.
    3. 8.3.
9. Add refrigerant from both connection hoses to the air-conditioning system in the vehicle.
    1. 9.1. The refrigerant in the high-pressure and low-pressure lines is part of the filling capacity of the refrigerant in the air-conditioning system in the vehicle.

2. 9.2. Close the valve on the high-pressure line and disconnect it from the vehicle.
3. 9.3. Start the engine and air-conditioning system. When the pressure on both pressure gauges falls below 2 bar, close the valve on the low-pressure line and disconnect it from the vehicle.

   Information

   After filling the air-conditioning system, the valve on the high-pressure and low-pressure connection must be checked using a leak detector.

   The protection caps must not be fitted.

   Position the leak detector at a specified distance (see operating instructions for each leak detector) above the valves and check the valves for signs of any leaks.

10. If there are no leaks in the high-pressure and low-pressure connection valves, fit the caps.

WM 871419 REMOVING AND INSTALLING SUN SENSOR (MACAN, MACAN S, MACAN TURBO) > PRELIMINARY WORK

1. Remove cover for center loudspeaker → 70901900 REMOVING AND INSTALLING COVER FOR CENTER LOUDSPEAKER .
2. Remove cover on defroster.

WM 871419 REMOVING AND INSTALLING SUN SENSOR (MACAN, MACAN S, MACAN TURBO) > REMOVING AND INSTALLING SUN SENSOR > REMOVING SUN SENSOR

1. Disconnect connector **-1-** on the sun sensor **-2-** .

Fig 1: Identifying Sun Sensor Connector

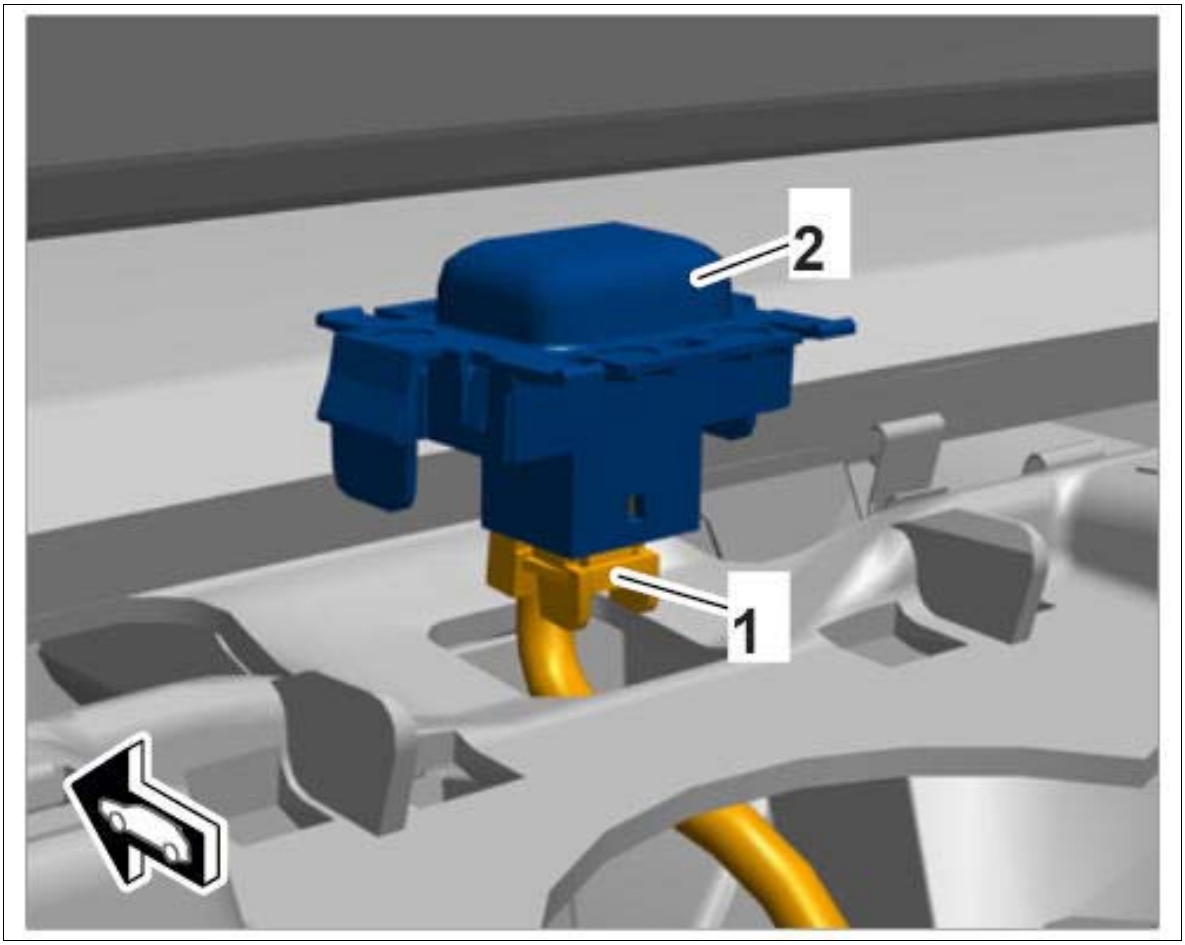

Courtesy of PORSCHE CARS NORTH AMERICA, INC.

WM 871419 REMOVING AND INSTALLING SUN SENSOR (MACAN, MACAN S, MACAN TURBO) > REMOVING AND INSTALLING SUN SENSOR > INSTALLING SUN SENSOR

1. Plug in connector **-1-** on the sun sensor **-2-** .

Fig 1: Identifying Sun Sensor Connector

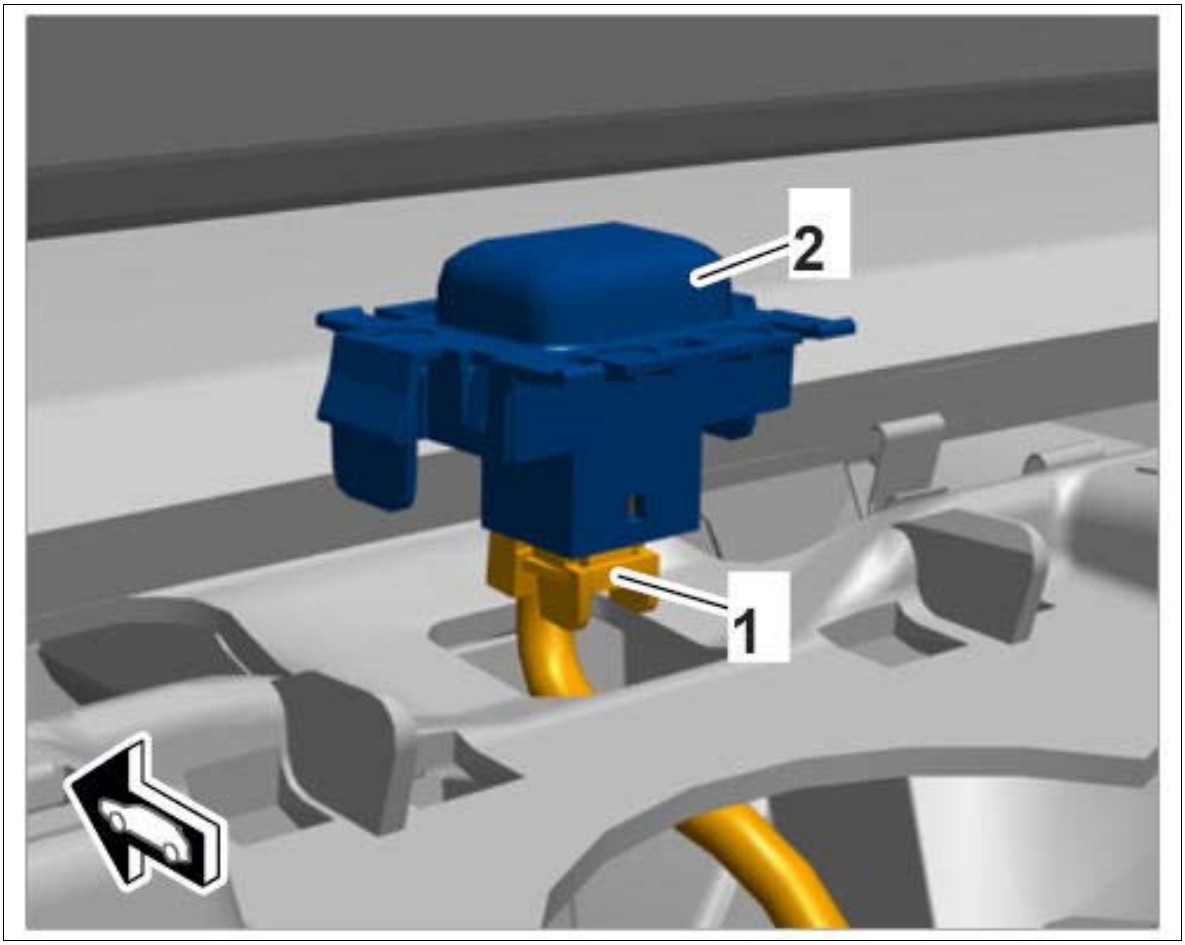

Courtesy of PORSCHE CARS NORTH AMERICA, INC.

WM 871419 REMOVING AND INSTALLING SUN SENSOR (MACAN, MACAN S, MACAN TURBO) > SUBSEQUENT WORK

1. Install cover on defroster.
2. Install cover for center loudspeaker → INSTALLING COVER FOR CENTER LOUDSPEAKER .

WM 872019 REMOVING AND INSTALLING SERVO MOTOR FOR FRESH AIR/RECIRCULATED AIR (MACAN, MACAN S, MACAN TURBO) > PRELIMINARY WORK

1. Remove glove compartment → 681519 REMOVING AND INSTALLING GLOVE COMPARTMENT .
2. Remove footwell outlet vent at the front right → 805519 REMOVING AND INSTALLING FRONT FOOTWELL OUTLET VENT .

3. Remove fresh air/recirculated air/ram air housing. → 851519 REMOVING AND INSTALLING HEATING/FRESH-AIR UNIT .

WM 872019 REMOVING AND INSTALLING SERVO MOTOR FOR FRESH AIR/RECIRCULATED AIR (MACAN, MACAN S, MACAN TURBO) > REMOVING AND INSTALLING SERVO MOTOR FOR FRESH AIR > REMOVING SERVO MOTOR FOR FRESH AIR

1. Unclip the fresh air/recirculated air housing at the marked positions **-arrows-** and remove it.

   Fig 1: Removing Fresh Air/Recirculated Air Housing

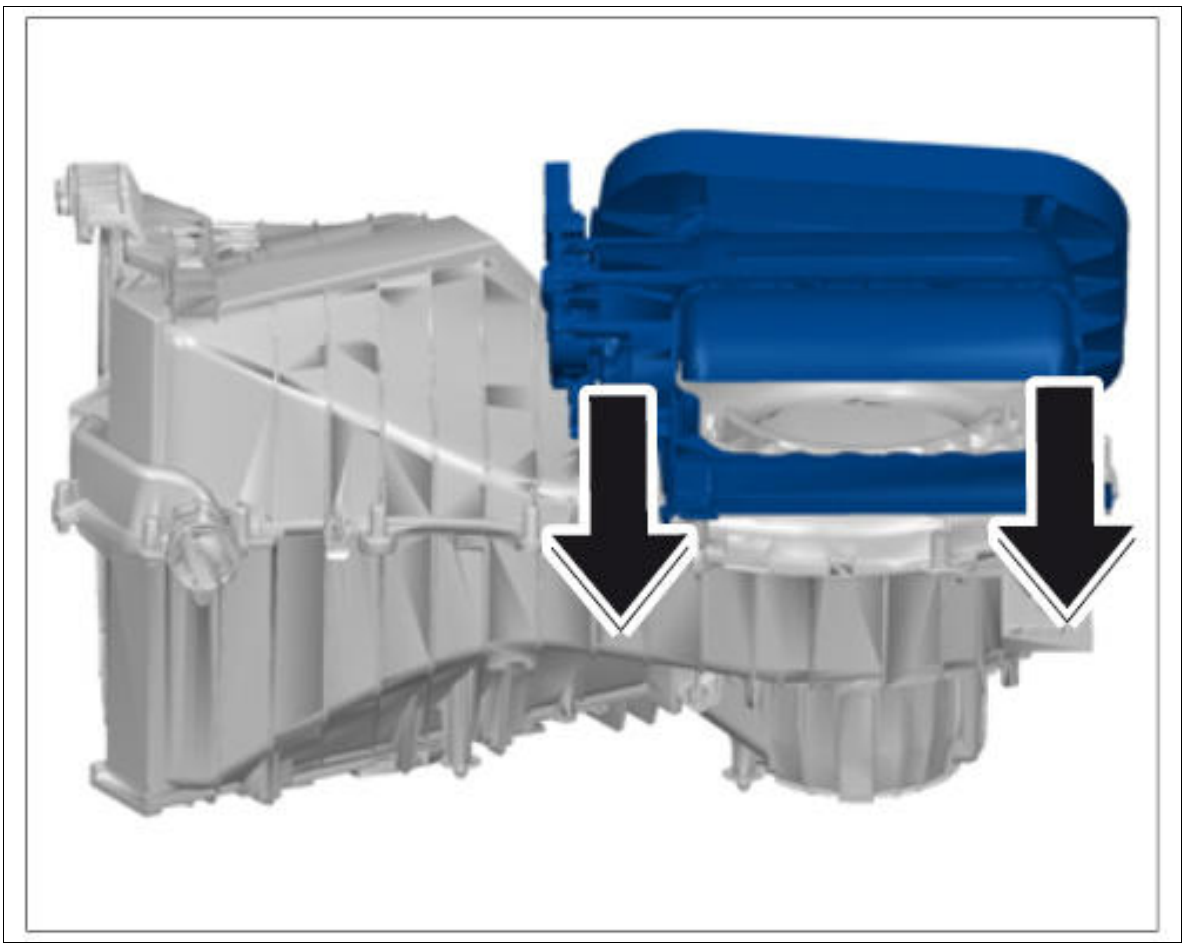

Courtesy of PORSCHE CARS NORTH AMERICA, INC.

2. Disconnect connector **-3-** .
3. Unscrew fastening screws **-1-** on the servo motor for fresh air **-2-** .

Fig 2: Identifying Fresh Air Servo Motor Connector

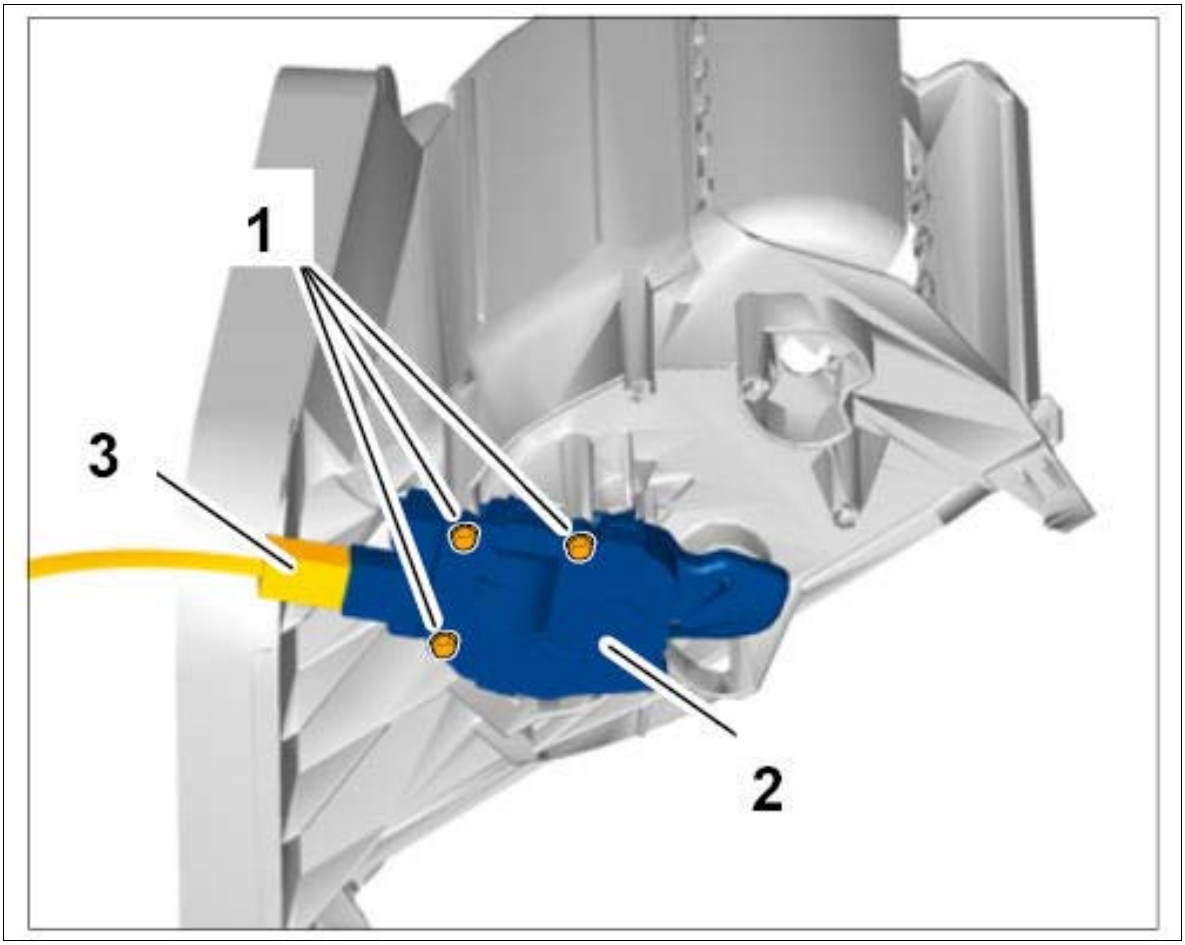

Courtesy of PORSCHE CARS NORTH AMERICA, INC.

4. Remove servo motor for fresh air.

WM 872019 REMOVING AND INSTALLING SERVO MOTOR FOR FRESH AIR/RECIRCULATED AIR (MACAN, MACAN S, MACAN TURBO) > REMOVING AND INSTALLING SERVO MOTOR FOR FRESH AIR > INSTALLING SERVO MOTOR FOR FRESH AIR

1. Installation is performed in reverse order.

WM 872019 REMOVING AND INSTALLING SERVO MOTOR FOR FRESH AIR/RECIRCULATED AIR (MACAN, MACAN S, MACAN TURBO) > SUBSEQUENT WORK

1. Install fresh air/recirculated air/ram air housing. → INSTALLING HEATING/FRESH-AIR UNIT .
2. Install footwell outlet vent at the front right → INSTALLING FRONT LEFT FOOTWELL OUTLET VENT .

3. Install dashboard → INSTALLING DASHBOARD .

WM 872019 REMOVING AND INSTALLING SERVO MOTOR FOR RAM AIR (MACAN, MACAN S, MACAN TURBO) > PRELIMINARY WORK

1. Remove glove compartment → 681519 REMOVING AND INSTALLING GLOVE COMPARTMENT .

WM 872019 REMOVING AND INSTALLING SERVO MOTOR FOR RAM AIR (MACAN, MACAN S, MACAN TURBO) > REMOVING AND INSTALLING SERVO MOTOR FOR RECIRCULATED AIR > REMOVING SERVO MOTOR FOR RECIRCULATED AIR

Fig 1: Locating Recirculated Air Servo Motor Position

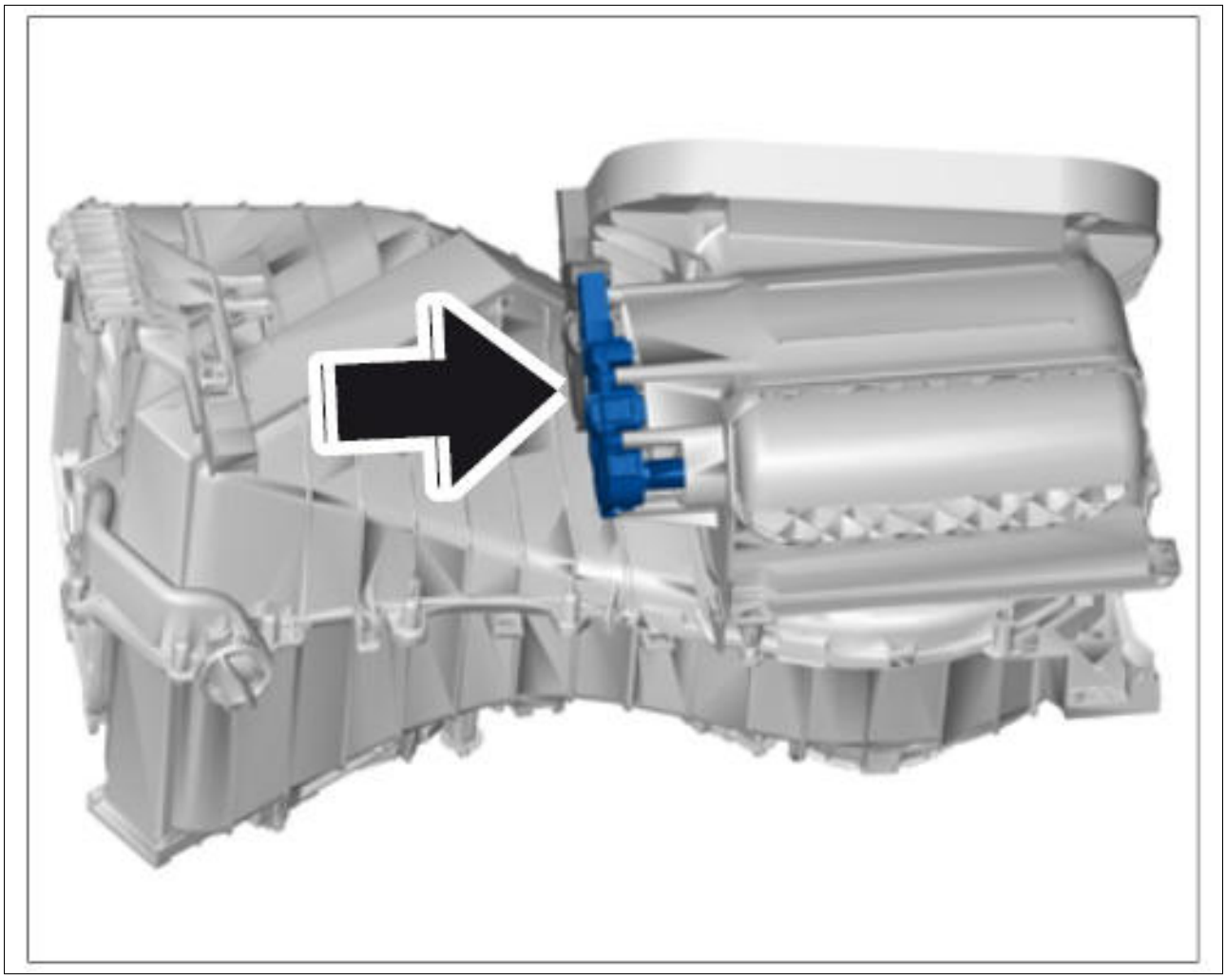

Courtesy of PORSCHE CARS NORTH AMERICA, INC.

1. Unclip electric line for the servo motor for recirculated air at the fresh air/recirculated air/ram air housing.

2. Unscrew fastening screws **-1-** on the servo motor for recirculated air **-2-** .

Fig 2: Identifying Recirculated Air Servo Motor Fastening Screws

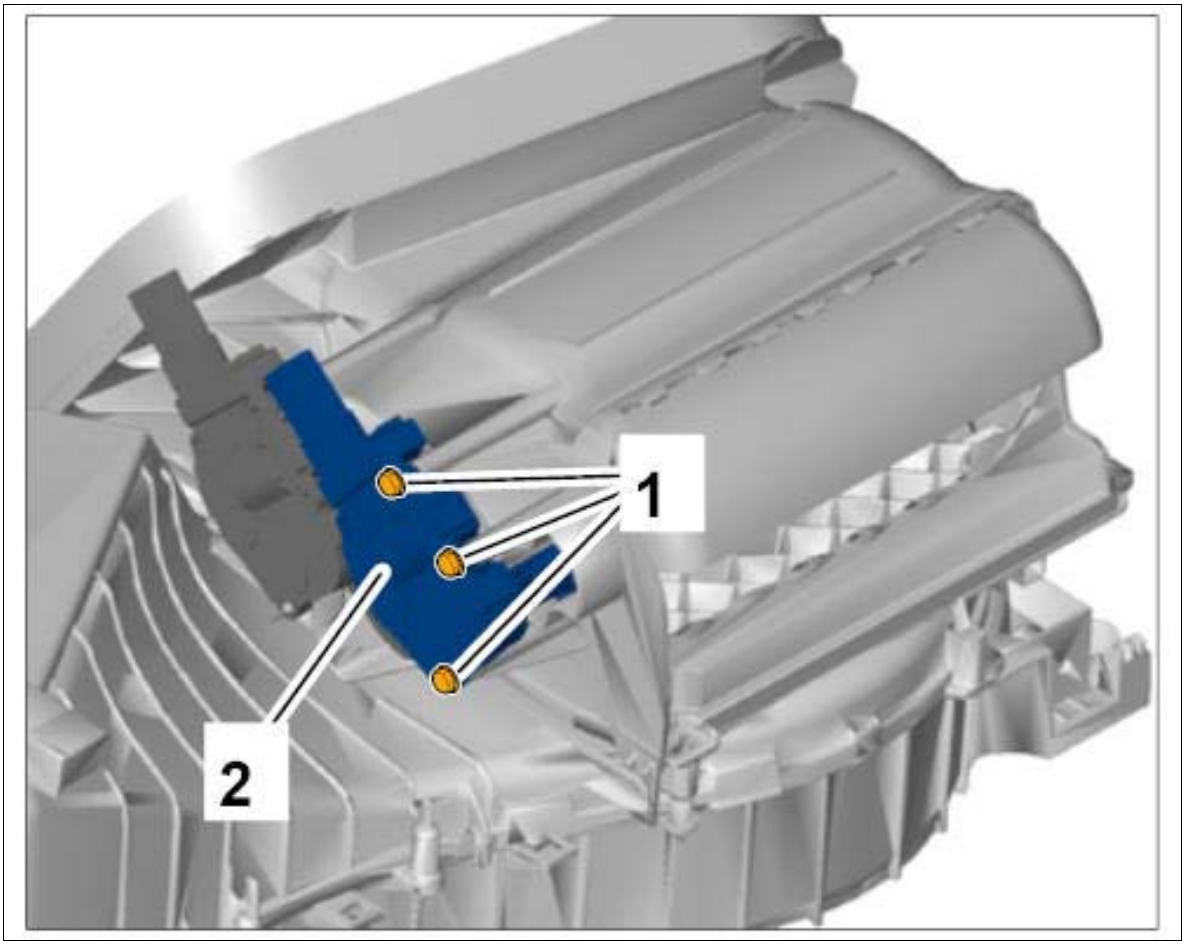

Courtesy of PORSCHE CARS NORTH AMERICA, INC.

3. Carefully move servo motor for recirculated air aside.
4. Disconnect connector from servo motor.

WM 872019 REMOVING AND INSTALLING SERVO MOTOR FOR RAM AIR (MACAN, MACAN S, MACAN TURBO) > REMOVING AND INSTALLING SERVO MOTOR FOR RECIRCULATED AIR > INSTALLING SERVO MOTOR FOR RECIRCULATED AIR

1. Installation is performed in reverse order.

WM 872019 REMOVING AND INSTALLING SERVO MOTOR FOR RAM AIR (MACAN, MACAN S, MACAN TURBO) > SUBSEQUENT WORK

1. Install glove compartment → INSTALLING GLOVE COMPARTMENT .

WM 872019 REMOVING AND INSTALLING SERVO MOTOR FOR DEFROSTER (MACAN, MACAN S, MACAN TURBO) > PRELIMINARY WORK

1. Remove footwell outlet vent at the front left → 805519 REMOVING AND INSTALLING FRONT FOOTWELL OUTLET VENT .
2. Remove mounting saddle → 461019 REMOVING AND INSTALLING MOUNTING SADDLE .

WM 872019 REMOVING AND INSTALLING SERVO MOTOR FOR DEFROSTER (MACAN, MACAN S, MACAN TURBO) > REMOVING AND INSTALLING SERVO MOTOR FOR DEFROSTER > REMOVING SERVO MOTOR FOR DEFROSTER

1. Disconnect connector **-1-** .
2. Unscrew fastening screws **-2-** .

Fig 1: Identifying Defroster Servo Motor Connector

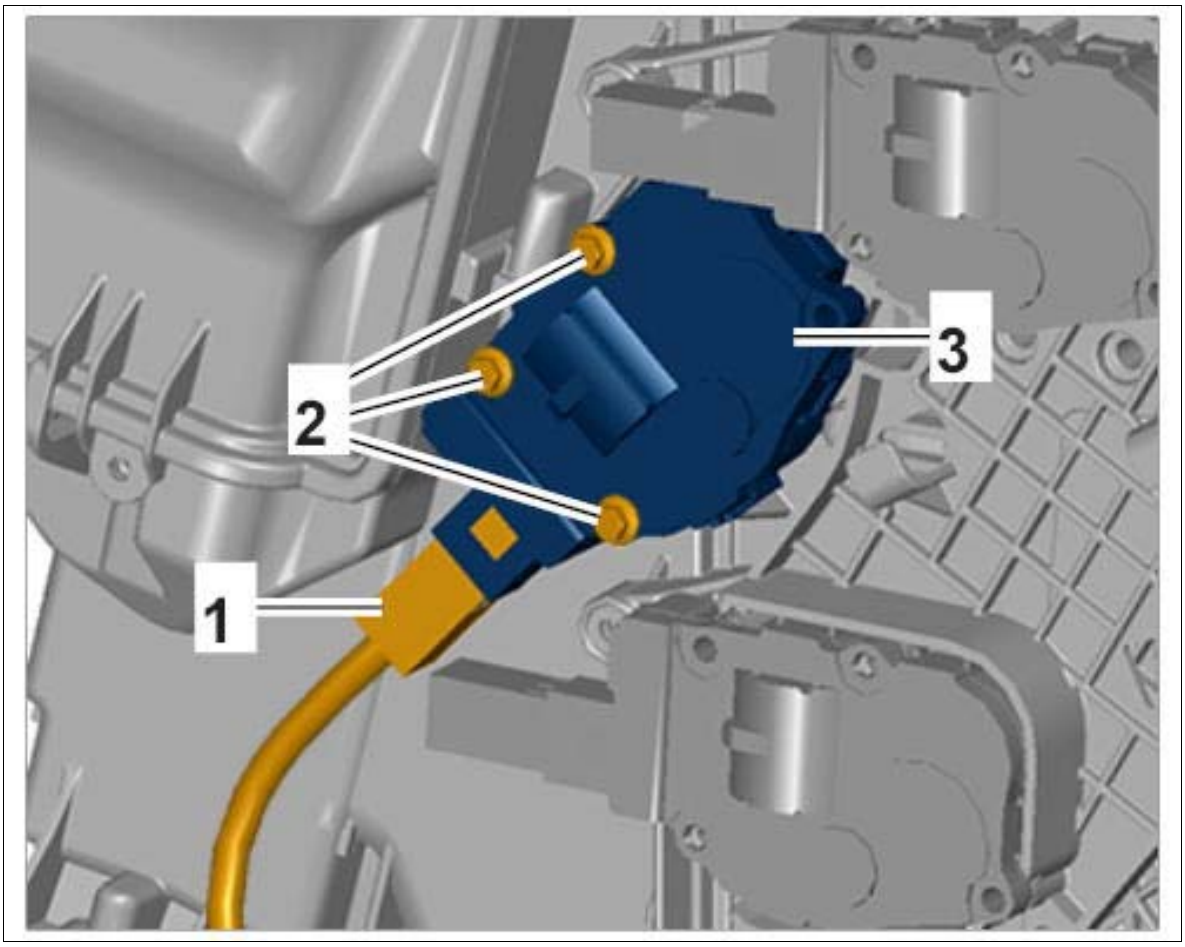

Courtesy of PORSCHE CARS NORTH AMERICA, INC.

3. Remove servo motor for defroster **-3-** .

WM 872019 REMOVING AND INSTALLING SERVO MOTOR FOR DEFROSTER (MACAN, MACAN S, MACAN TURBO) > REMOVING AND INSTALLING SERVO MOTOR FOR DEFROSTER > INSTALLING SERVO MOTOR FOR DEFROSTER

1. Installation is performed in reverse order.

WM 872019 REMOVING AND INSTALLING SERVO MOTOR FOR DEFROSTER (MACAN, MACAN S, MACAN TURBO) > SUBSEQUENT WORK

1. Install mounting saddle → INSTALLING MOUNTING SADDLE .
2. Install footwell outlet vent at the front left → INSTALLING FRONT LEFT FOOTWELL OUTLET VENT .

WM 872019 REMOVING AND INSTALLING SERVO MOTOR FOR FRONT LEFT TEMPERATURE VALVE (MACAN, MACAN S, MACAN TURBO) > PRELIMINARY WORK

1. Remove dashboard → 701819 REMOVING AND INSTALLING DASHBOARD .
2. Remove footwell outlet vent at the front left → 805519 REMOVING AND INSTALLING FRONT FOOTWELL OUTLET VENT .

WM 872019 REMOVING AND INSTALLING SERVO MOTOR FOR FRONT LEFT TEMPERATURE VALVE (MACAN, MACAN S, MACAN TURBO) > REMOVING AND INSTALLING SERVO MOTOR FOR FRONT LEFT TEMPERATURE VALVE > REMOVING SERVO MOTOR FOR FRONT LEFT TEMPERATURE VALVE

Fig 1: Locating Front Left Temperature Valve Servo Motor Position

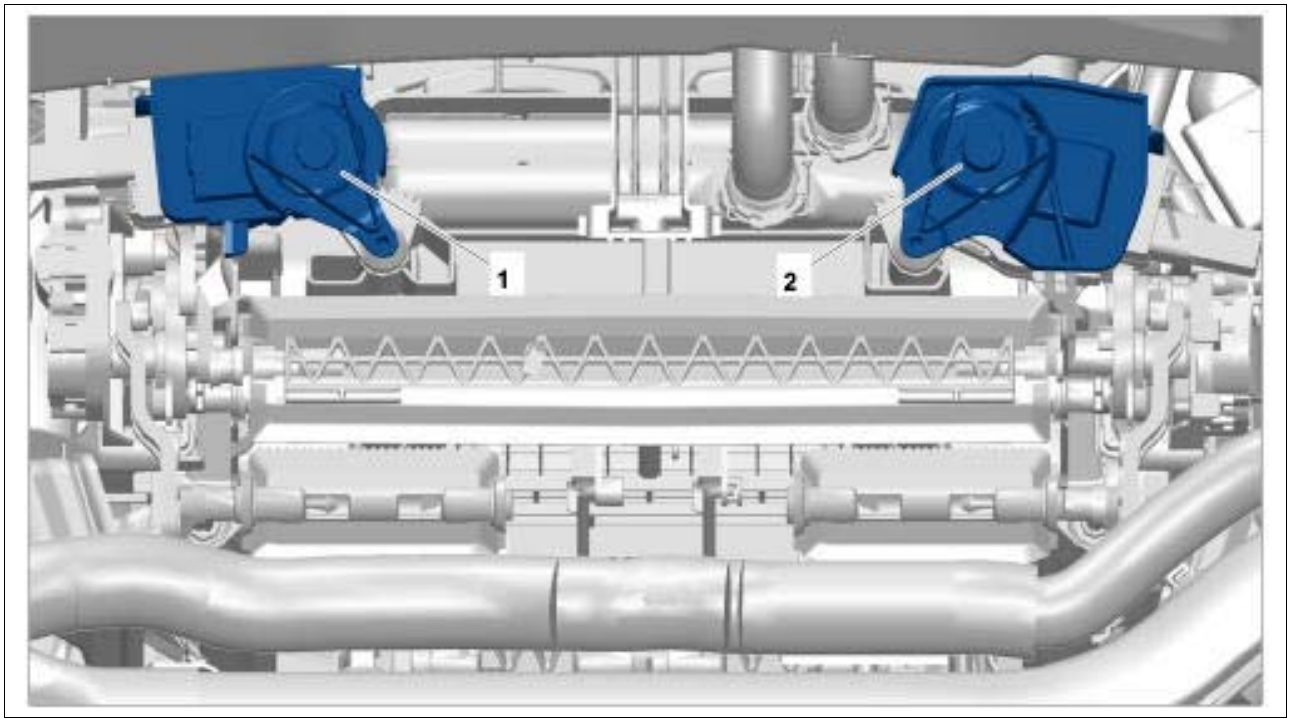

Courtesy of PORSCHE CARS NORTH AMERICA, INC.

1. Servo motor for front left temperature valves
2. Servo motor for front right temperature valves

1. Unscrew fastening screws **-B-** .
2. Disconnect connector **-C-** .

Fig 2: Removing Servo Motor Connector

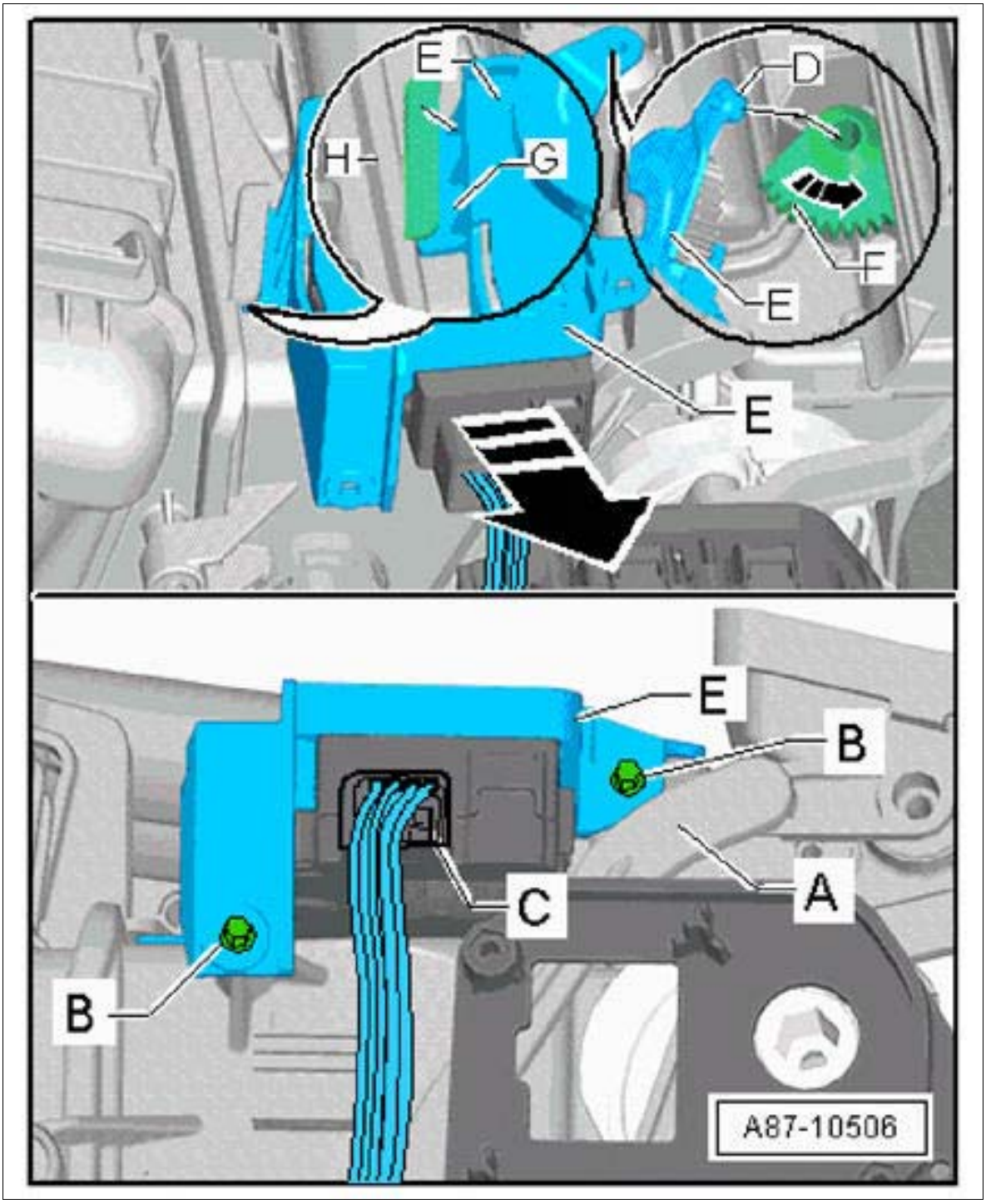

Courtesy of PORSCHE CARS NORTH AMERICA, INC.

3. Guide servo motor out to the right.

WM 872019 REMOVING AND INSTALLING SERVO MOTOR FOR FRONT LEFT TEMPERATURE VALVE (MACAN, MACAN S, MACAN TURBO) > REMOVING AND INSTALLING SERVO MOTOR FOR FRONT LEFT TEMPERATURE VALVE >

INSTALLING SERVO MOTOR FOR FRONT LEFT TEMPERATURE VALVES

1. Installation is performed in reverse order.

WM 872019 REMOVING AND INSTALLING SERVO MOTOR FOR FRONT LEFT TEMPERATURE VALVE (MACAN, MACAN S, MACAN TURBO) > SUBSEQUENT WORK

1. Install footwell outlet vent at the front left → INSTALLING FRONT LEFT FOOTWELL OUTLET VENT .
2. Install dashboard → INSTALLING DASHBOARD .

WM 872019 REMOVING AND INSTALLING SERVO MOTOR FOR REAR LEFT TEMPERATURE VALVE (3-ZONE AIR CONDITIONING) (MACAN, MACAN S, MACAN TURBO) > PRELIMINARY WORK

1. Remove footwell outlet vent at the front left → 805519 REMOVING AND INSTALLING FRONT FOOTWELL OUTLET VENT .

WM 872019 REMOVING AND INSTALLING SERVO MOTOR FOR REAR LEFT TEMPERATURE VALVE (3-ZONE AIR CONDITIONING) (MACAN, MACAN S, MACAN TURBO) > REMOVING AND INSTALLING SERVO MOTOR FOR REAR LEFT TEMPERATURE VALVE > REMOVING SERVO MOTOR FOR REAR LEFT TEMPERATURE VALVE

1. Push carpet aside slightly to allow access to the servo motor.
2. Unscrew fastening screws **-1-** .
3. Pull servo motor for rear left temperature valve **-3-** out of the supports in **-direction of arrow-** .
4. Disconnect connector **-2-** .

Fig 1: Locating Rear Left Temperature Valve Servo Motor Connector

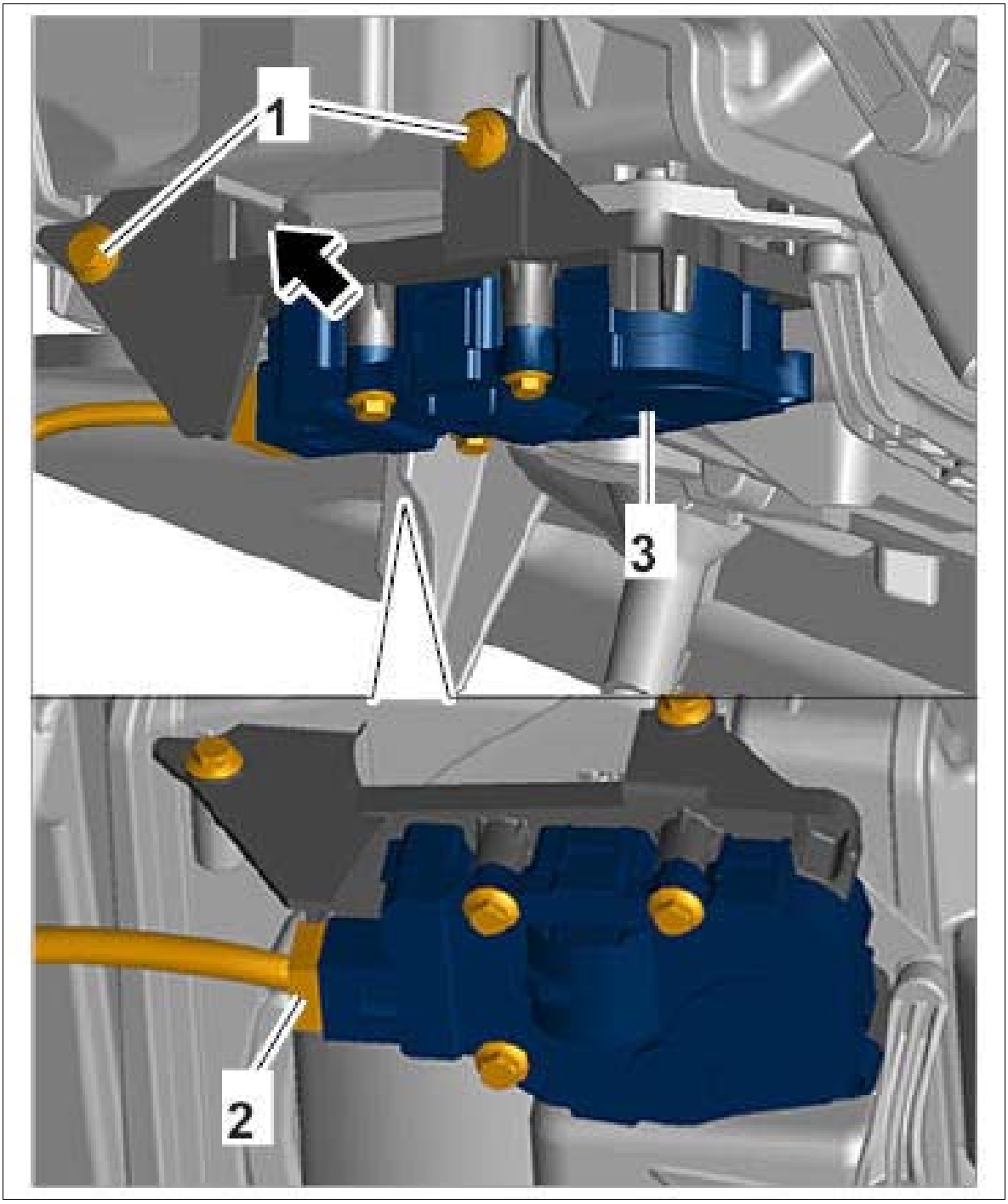

Courtesy of PORSCHE CARS NORTH AMERICA, INC.

WM 872019 REMOVING AND INSTALLING SERVO MOTOR FOR REAR LEFT TEMPERATURE VALVE (3-ZONE AIR CONDITIONING) (MACAN, MACAN S, MACAN TURBO) > REMOVING AND INSTALLING SERVO MOTOR FOR REAR LEFT TEMPERATURE VALVE > INSTALLING SERVO MOTOR FOR REAR LEFT TEMPERATURE VALVE

1. Installation is performed in reverse order.

WM 872019 REMOVING AND INSTALLING SERVO MOTOR FOR REAR LEFT TEMPERATURE VALVE (3-ZONE AIR CONDITIONING) (MACAN, MACAN S, MACAN TURBO) > SUBSEQUENT WORK

1. Remove footwell outlet vent at the front left → 805519 REMOVING AND INSTALLING FRONT FOOTWELL OUTLET VENT .

WM 872019 REMOVING AND INSTALLING SERVO MOTOR FOR FRONT LEFT FOOTWELL (MACAN, MACAN S, MACAN TURBO) > PRELIMINARY WORK

1. Remove footwell outlet vent at the front left → 805519 REMOVING AND INSTALLING FRONT FOOTWELL OUTLET VENT .

WM 872019 REMOVING AND INSTALLING SERVO MOTOR FOR FRONT LEFT FOOTWELL (MACAN, MACAN S, MACAN TURBO) > REMOVING AND INSTALLING SERVO MOTOR FOR FRONT LEFT FOOTWELL > REMOVING SERVO MOTOR FOR FRONT LEFT FOOTWELL

1. Disconnect connector **-1-** .
2. Unscrew fastening screws **-2-** .

Fig 1: Identifying Left Footwell Servo Motor

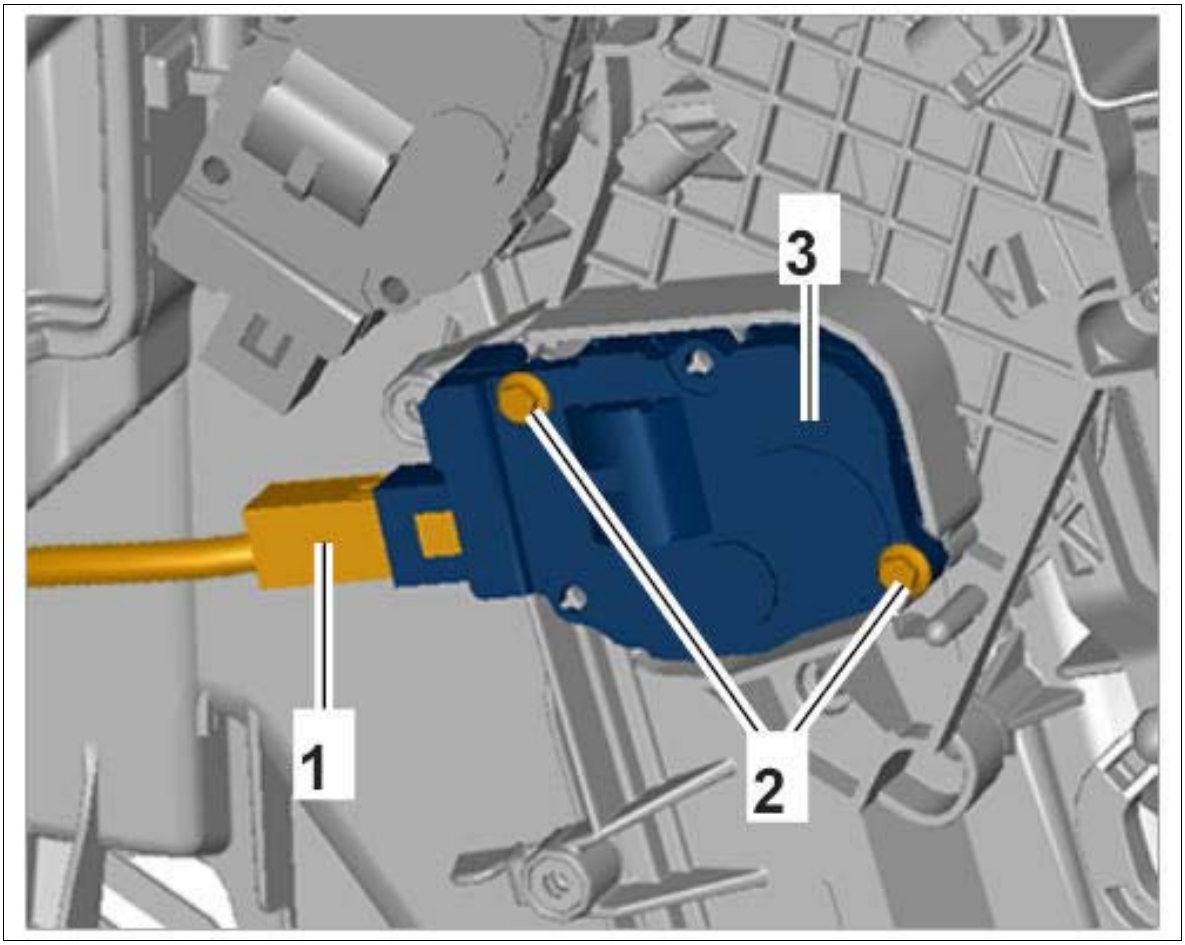

Courtesy of PORSCHE CARS NORTH AMERICA, INC.

3. Remove servo motor for left footwell **-3-** .

WM 872019 REMOVING AND INSTALLING SERVO MOTOR FOR FRONT LEFT FOOTWELL (MACAN, MACAN S, MACAN TURBO) > REMOVING AND INSTALLING SERVO MOTOR FOR FRONT LEFT FOOTWELL > INSTALLING SERVO MOTOR FOR FRONT LEFT FOOTWELL

1. Installation is performed in reverse order.

WM 872019 REMOVING AND INSTALLING SERVO MOTOR FOR FRONT LEFT FOOTWELL (MACAN, MACAN S, MACAN TURBO) > SUBSEQUENT WORK

1. Install footwell outlet vent at the front left → INSTALLING FRONT LEFT FOOTWELL OUTLET VENT .

WM 872019 REMOVING AND INSTALLING SERVO MOTOR FOR RIGHT CENTER VENT (MACAN, MACAN S, MACAN TURBO) > PRELIMINARY WORK

1. Remove glove compartment → 681519 REMOVING AND INSTALLING GLOVE COMPARTMENT .
2. Remove footwell outlet vent at the front right → 805519 REMOVING AND INSTALLING FRONT FOOTWELL OUTLET VENT .
3. Remove fresh air/recirculated air/ram air housing. → 851519 REMOVING AND INSTALLING HEATING/FRESH-AIR UNIT .

WM 872019 REMOVING AND INSTALLING SERVO MOTOR FOR RIGHT CENTER VENT (MACAN, MACAN S, MACAN TURBO) > REMOVING AND INSTALLING SERVO MOTOR FOR RIGHT CENTER VENT > REMOVING SERVO MOTOR FOR RIGHT CENTER VENT

1. Disconnect connector **-1-** .
2. Unscrew and remove fastening screws **-2-** .

Fig 1: Identifying Right Center Vent Servo Motor

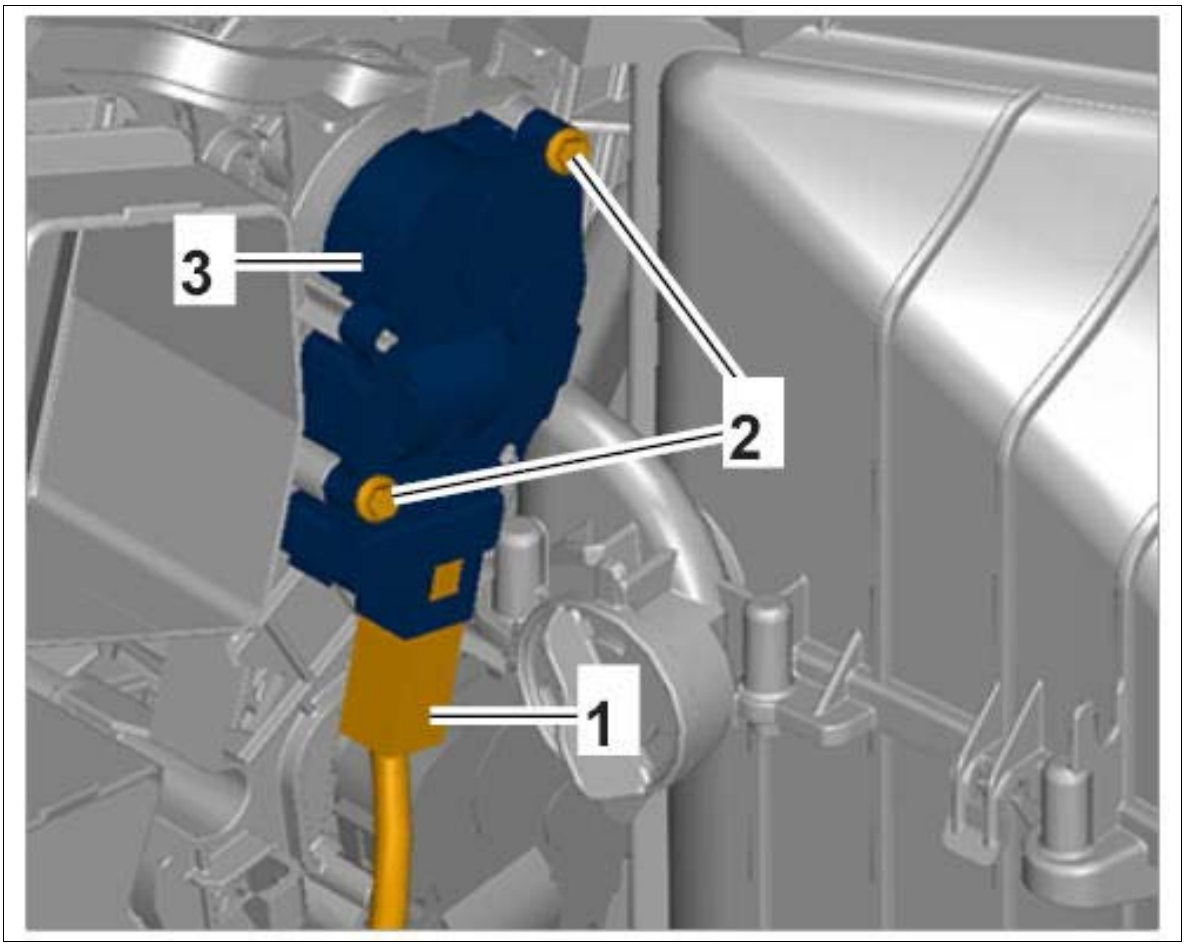

Courtesy of PORSCHE CARS NORTH AMERICA, INC.

3. Remove servo motor for right center vent **-3-** .

WM 872019 REMOVING AND INSTALLING SERVO MOTOR FOR RIGHT CENTER VENT (MACAN, MACAN S, MACAN TURBO) > REMOVING AND INSTALLING SERVO MOTOR FOR RIGHT CENTER VENT > INSTALLING SERVO MOTOR FOR RIGHT CENTER VENT

1. Installation is performed in reverse order.

WM 872019 REMOVING AND INSTALLING SERVO MOTOR FOR RIGHT CENTER VENT (MACAN, MACAN S, MACAN TURBO) > SUBSEQUENT WORK

1. Install fresh air/recirculated air/ram air housing. → SUBSEQUENT WORK .
2. Install footwell outlet vent at the front right → INSTALLING FOOTWELL OUTLET VENT AT THE FRONT RIGHT .
3. Install glove compartment → INSTALLING GLOVE COMPARTMENT .

WM 872019 REMOVING AND INSTALLING SERVO MOTOR FOR FRONT RIGHT FOOTWELL (MACAN, MACAN S, MACAN TURBO) > PRELIMINARY WORK

1. Remove glove compartment → 681519 REMOVING AND INSTALLING GLOVE COMPARTMENT .
2. Remove footwell outlet vent at the front right → 805519 REMOVING AND INSTALLING FRONT FOOTWELL OUTLET VENT .

WM 872019 REMOVING AND INSTALLING SERVO MOTOR FOR FRONT RIGHT FOOTWELL (MACAN, MACAN S, MACAN TURBO) > REMOVING AND INSTALLING SERVO MOTOR FOR FRONT RIGHT FOOTWELL > REMOVING SERVO MOTOR FOR FRONT RIGHT FOOTWELL

1. Disconnect connector **-1-** .
2. Unscrew fastening screws **-2-** .

Fig 1: Identifying Front Right Footwell Servo Motor

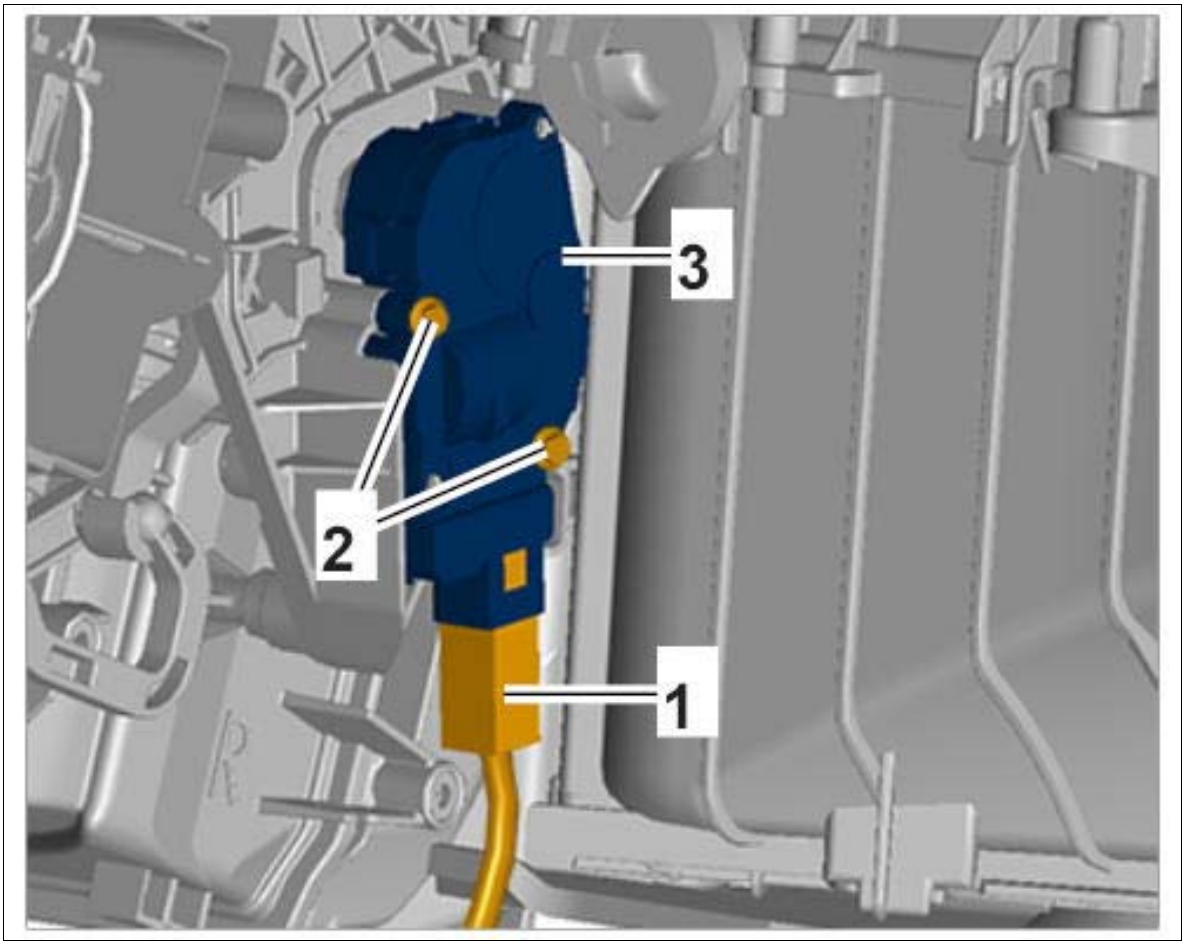

Courtesy of PORSCHE CARS NORTH AMERICA, INC.

3. Remove servo motor for front right footwell.

WM 872019 REMOVING AND INSTALLING SERVO MOTOR FOR FRONT RIGHT FOOTWELL (MACAN, MACAN S, MACAN TURBO) > REMOVING AND INSTALLING SERVO MOTOR FOR FRONT RIGHT FOOTWELL > INSTALLING SERVO MOTOR FOR FRONT RIGHT FOOTWELL

1. Installation is performed in reverse order.

WM 872019 REMOVING AND INSTALLING SERVO MOTOR FOR FRONT RIGHT FOOTWELL (MACAN, MACAN S, MACAN TURBO) > SUBSEQUENT WORK

1. Install footwell outlet vent at the front right → INSTALLING FOOTWELL OUTLET VENT AT THE FRONT RIGHT .
2. Install glove compartment → INSTALLING GLOVE COMPARTMENT .

WM 872019 REMOVING AND INSTALLING SERVO MOTOR FOR FRONT RIGHT TEMPERATURE VALVES (MACAN, MACAN S, MACAN TURBO) > PRELIMINARY WORK

1. Remove dashboard → 701819 REMOVING AND INSTALLING DASHBOARD .
2. Remove footwell outlet vent at the front right → 805519 REMOVING AND INSTALLING FRONT FOOTWELL OUTLET VENT .
3. Remove fresh air/recirculated air/ram air housing. → 851519 REMOVING AND INSTALLING HEATING/FRESH-AIR UNIT .

WM 872019 REMOVING AND INSTALLING SERVO MOTOR FOR FRONT RIGHT TEMPERATURE VALVES (MACAN, MACAN S, MACAN TURBO) > REMOVING AND INSTALLING SERVO MOTOR FOR FRONT RIGHT TEMPERATURE VALVES > REMOVING SERVO MOTOR FOR FRONT RIGHT TEMPERATURE VALVES

Fig 1: Locating Front Right Temperature Valves Servo Motor Position

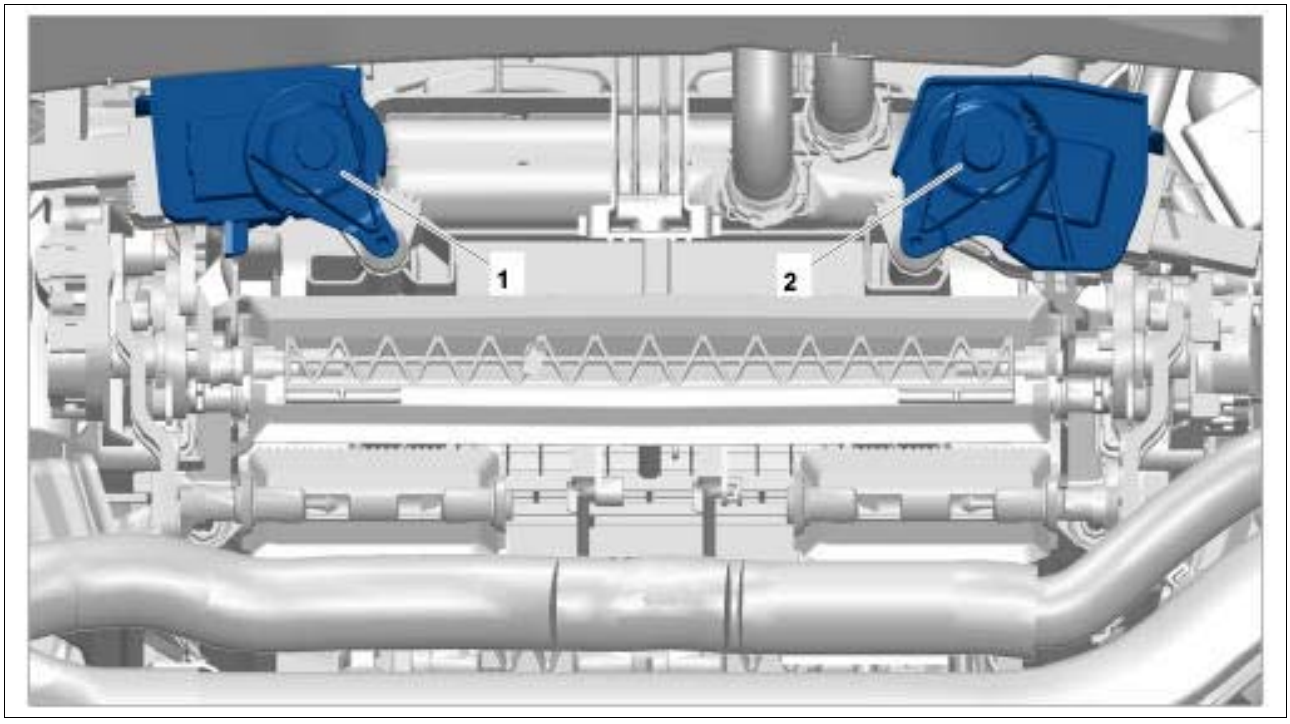

Courtesy of PORSCHE CARS NORTH AMERICA, INC.

1. Servo motor for front left temperature valves
2. Servo motor for front right temperature valves

1. Unscrew fastening screws **-1-** .
2. Disconnect connector **-2-** .

Fig 2: Identifying Servo Motor Connector

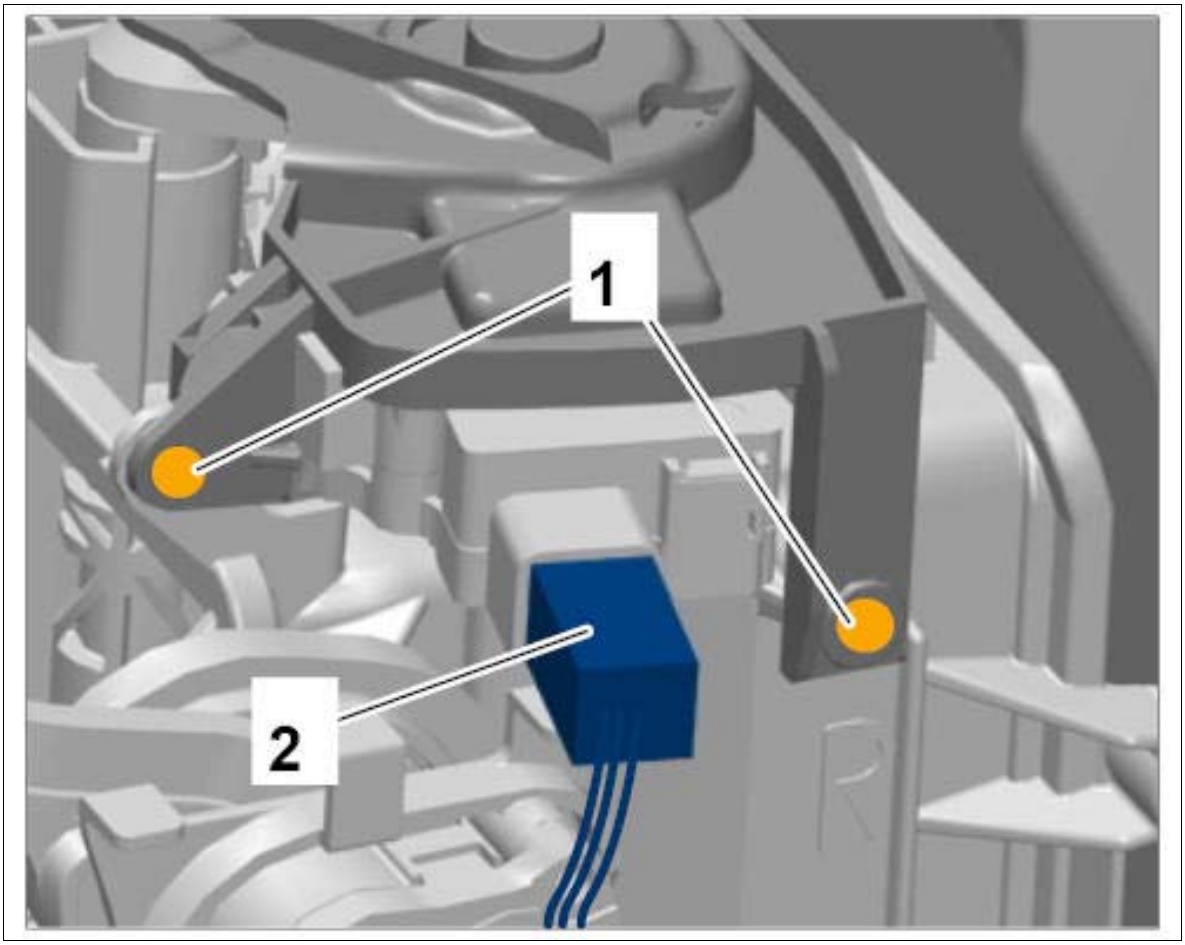

Courtesy of PORSCHE CARS NORTH AMERICA, INC.

3. Guide servo motor out to the right.

WM 872019 REMOVING AND INSTALLING SERVO MOTOR FOR FRONT RIGHT TEMPERATURE VALVES (MACAN, MACAN S, MACAN TURBO) > REMOVING AND INSTALLING SERVO MOTOR FOR FRONT RIGHT TEMPERATURE VALVES > INSTALLING SERVO MOTOR FOR FRONT RIGHT TEMPERATURE VALVES

1. Installation is performed in reverse order.

WM 872019 REMOVING AND INSTALLING SERVO MOTOR FOR FRONT RIGHT TEMPERATURE VALVES (MACAN, MACAN S, MACAN TURBO) > SUBSEQUENT WORK

1. Install fresh air/recirculated air/ram air housing. → SUBSEQUENT WORK .
2. Install footwell outlet vent at the front right → INSTALLING FOOTWELL OUTLET VENT AT THE FRONT RIGHT .

3. Install dashboard → INSTALLING DASHBOARD .

WM 872019 REMOVING AND INSTALLING SERVO MOTOR FOR LEFT CENTER VENT (MACAN, MACAN S, MACAN TURBO) > PRELIMINARY WORK

1. Remove footwell outlet vent at the front left → 805519 REMOVING AND INSTALLING FRONT FOOTWELL OUTLET VENT .
2. Remove mounting saddle → 461019 REMOVING AND INSTALLING MOUNTING SADDLE .

WM 872019 REMOVING AND INSTALLING SERVO MOTOR FOR LEFT CENTER VENT (MACAN, MACAN S, MACAN TURBO) > REMOVING AND INSTALLING SERVO MOTOR FOR LEFT CENTER VENT > REMOVING SERVO MOTOR FOR LEFT CENTER VENT

1. Disconnect connector **-D-** .
2. Unscrew fastening screws **-C-** .
3. Press cam disc **-E-** towards the heating/fresh-air unit and pull the shaft **-A-** off the cam disc **-E-** .
4. Remove servo motor **-B-** .

Fig 1: Identifying Left Center Vent Servo Motor

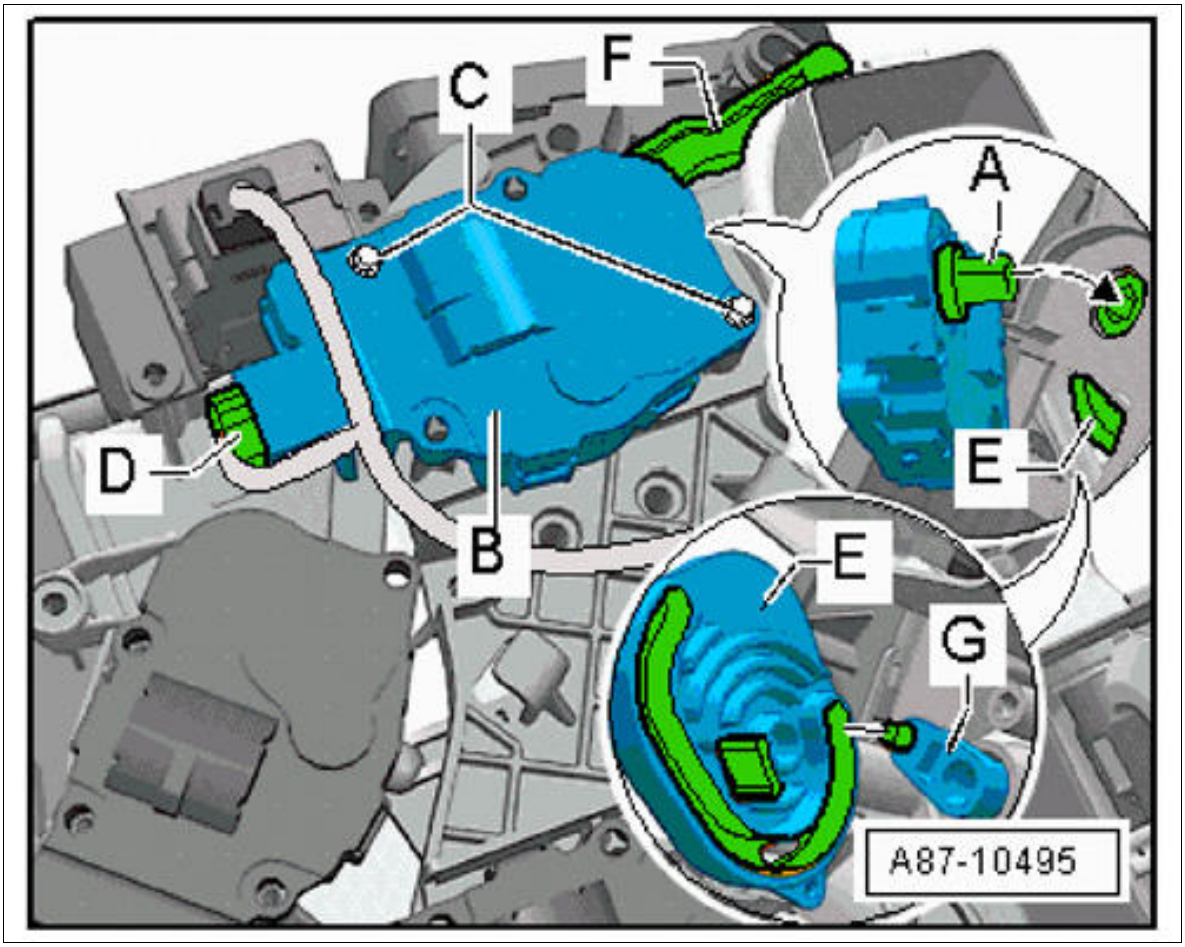

Courtesy of PORSCHE CARS NORTH AMERICA, INC.

WM 872019 REMOVING AND INSTALLING SERVO MOTOR FOR LEFT CENTER VENT (MACAN, MACAN S, MACAN TURBO) > REMOVING AND INSTALLING SERVO MOTOR FOR LEFT CENTER VENT > INSTALLING SERVO MOTOR FOR LEFT CENTER VENT

1. Installation is performed in reverse order.

WM 872019 REMOVING AND INSTALLING SERVO MOTOR FOR LEFT CENTER VENT (MACAN, MACAN S, MACAN TURBO) > SUBSEQUENT WORK

1. Install mounting saddle → INSTALLING MOUNTING SADDLE .
2. Install footwell outlet vent at the front left → INSTALLING FRONT LEFT FOOTWELL OUTLET VENT .

WM 8720IN INSTALLATION POSITION OF SERVO MOTORS ON HEATING/FRESH-AIR UNIT (MACAN S, MACAN TURBO) > INFORMATION > COMPONENT INFORMATION

Information

The servo motors for the air conditioning system are described in the following list and provides an overview of the installation positions of the installed servo motors.

Fig 1: Locating Servo Motors Position

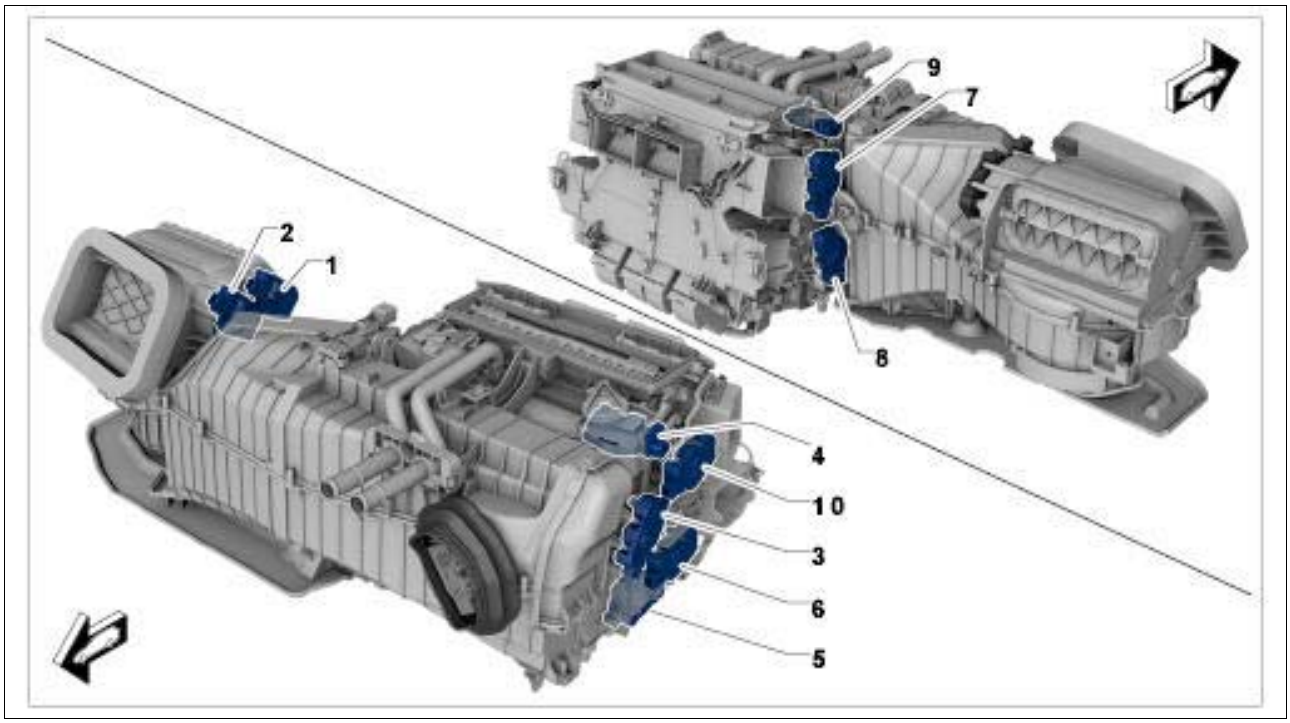

Courtesy of PORSCHE CARS NORTH AMERICA, INC.

1. Servo motor for fresh air/recirculated air
2. Servo motor for ram air
3. Servo motor for defroster
4. Servo motor for front left temperature valve
5. Servo motor for rear left temperature valve (3-zone air conditioning)
6. Servo motor for front left footwell
7. Servo motor for right center vent
8. Servo motor for front right footwell
9. Servo motor for front right temperature valve
10. Servo motor for left center vent

WM 872219 REMOVING AND INSTALLING AIR QUALITY SENSOR (MACAN, MACAN S, MACAN TURBO) > INFORMATION

1. The air quality sensor is integrated in the inner temperature sensor → 852719 REMOVING AND INSTALLING INNER TEMPERATURE SENSOR .

WM 873419 REMOVING AND INSTALLING AIR-CONDITIONING COMPRESSOR (MACAN, MACAN S, MACAN TURBO) > TOOLS

Designation	Type	Number	Description	
release tool	VW tool	T40149		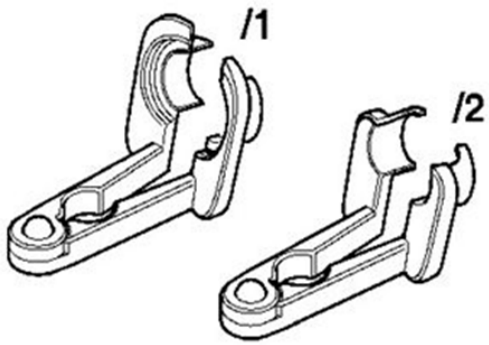

WM 873419 REMOVING AND INSTALLING AIR-CONDITIONING COMPRESSOR (MACAN, MACAN S, MACAN TURBO) > TECHNICAL VALUES

Location	Description	Type	Basic value	Tolerance 1	Tolerance 2
Support to lock carrier		Tightening torque	5 Nm (3.5 ftlb.)		
Support to suspension subframe		Tightening torque	23 Nm (17 ftlb.)		
Compressor to engine	M8 x 90 thread	Tightening torque	25 Nm (19 ftlb.)		
Refrigerant lines to air-conditioning compressor		Tightening torque	20 Nm (15 ftlb.)		
Refrigerant line holder to engine	M6 thread/section of line from evaporator to compressor	Tightening torque	9 Nm (6.5 ftlb.)		

WM 873419 REMOVING AND INSTALLING AIR-CONDITIONING COMPRESSOR (MACAN, MACAN S, MACAN TURBO) > PRELIMINARY WORK

1. Drain refrigerant → 870317 DRAINING AND FILLING REFRIGERANT .
2. Remove reservoir (do not open hydraulic system!) → 194019 REMOVING AND INSTALLING RESERVOIR .
3. Remove cover for front underbody at the left → 519219 REMOVING AND INSTALLING COVER FOR FRONT UNDERBODY .
4. Remove drive belt → 137819 REMOVING AND INSTALLING DRIVE BELT .

WM 873419 REMOVING AND INSTALLING AIR-CONDITIONING COMPRESSOR (MACAN, MACAN S, MACAN TURBO) > PRELIMINARY WORK > PRELIMINARY WORK

1. Drain refrigerant → 870317 DRAINING AND FILLING REFRIGERANT .

3. Remove reservoir → 194019 REMOVING AND INSTALLING RESERVOIR .

4. Remove dome strut → 408619 REMOVING AND INSTALLING FRONT STRUT (DOME STRUT) .

5. Remove cover for front underbody at the left → 519219 REMOVING AND INSTALLING COVER FOR FRONT UNDERBODY .

6. Remove front apron → 631519 REMOVING AND INSTALLING FRONT APRON .

7. Move lock carrier into service position → 503809 LOOSENING AND SECURING LOCK CARRIER (SERVICE POSITION) .

8. Remove drive belt → 137819 REMOVING AND INSTALLING DRIVE BELT .

WM 873419 REMOVING AND INSTALLING AIR-CONDITIONING COMPRESSOR (MACAN, MACAN S, MACAN TURBO) > REMOVING AND INSTALLING AIR-CONDITIONING COMPRESSOR > REMOVING AIR-CONDITIONING COMPRESSOR

WARNING: Refrigerant

- *Danger of freezing*

→ Avoid contact with refrigerant.

→ Wear personal protective gear.

→ Observe the safety regulations for working on air-conditioned vehicles and dealing with refrigerant.

→ Observe the safety regulations for extraction and filling systems.

→ Observe the instructions for repairing air conditioning systems and storing spare parts.

1. Remove strut **-2-** on the lock carrier at the bottom left.
    1. 1.1. Unscrew fastening nut **-3-** .
    2. 1.2. Unscrew fastening screw **-1-** .
    3. 1.3. Remove strut **-2-** on both sides.

    Fig 1: Identifying Lower Strut On Both Sides

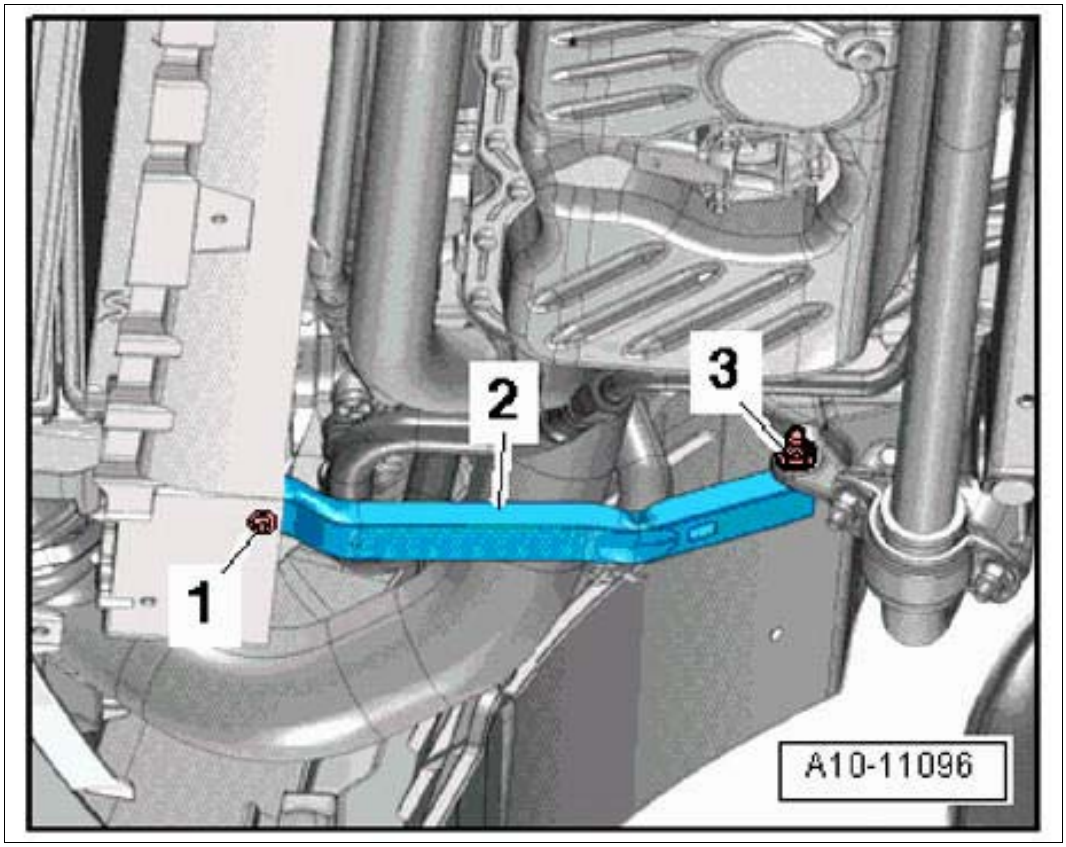

Courtesy of PORSCHE CARS NORTH AMERICA, INC.

2. Unscrew fastening screws **-2 and 3-** and disconnect air-conditioning lines from the air-conditioning compressor.
3. Disconnect connector **-1-** .

Fig 2: Identifying Lines On Air-Conditioning Compressor

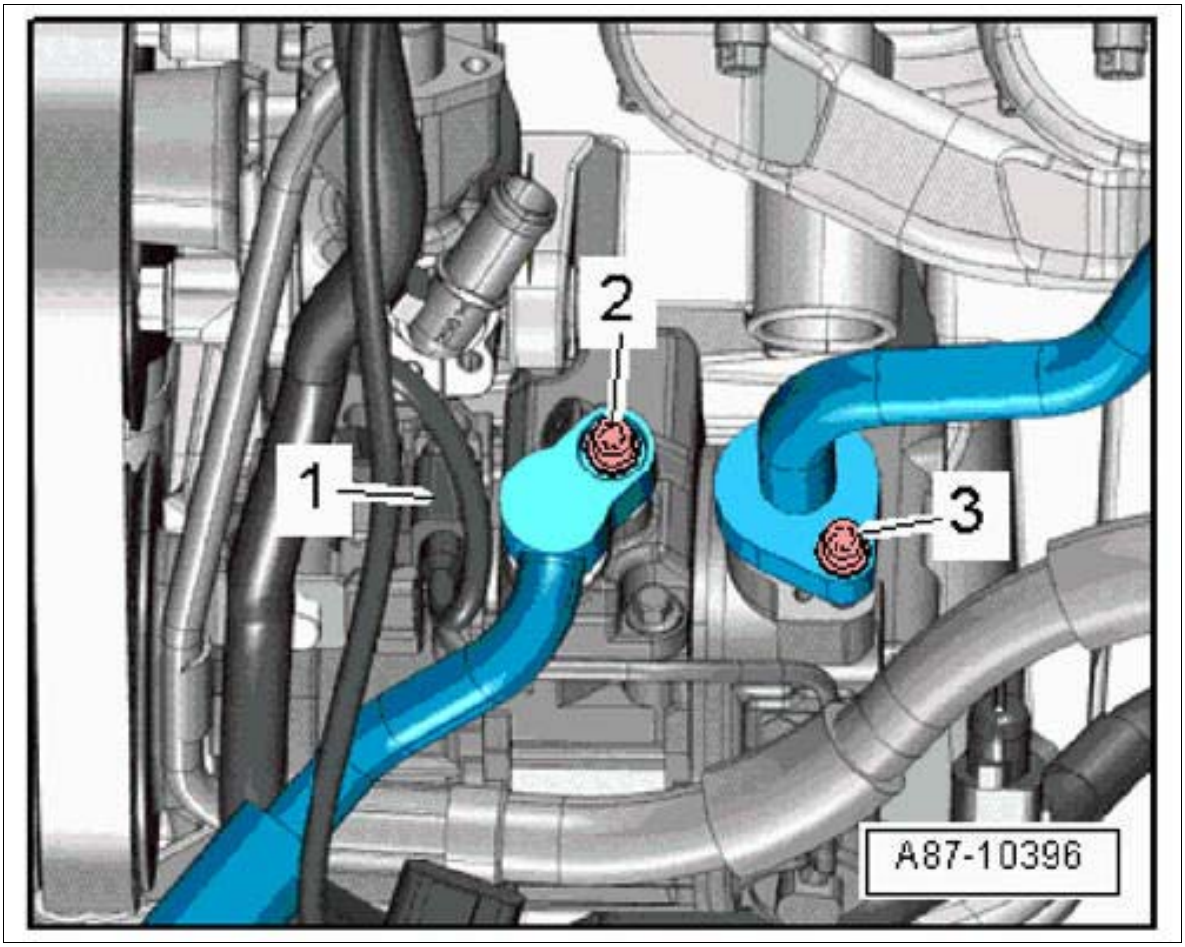

Courtesy of PORSCHE CARS NORTH AMERICA, INC.

4. Unscrew fastening screws **-arrows-** on the air-conditioning compressor and remove air-conditioning compressor.

Fig 3: Locating Air-Conditioning Compressor Fastening Screws

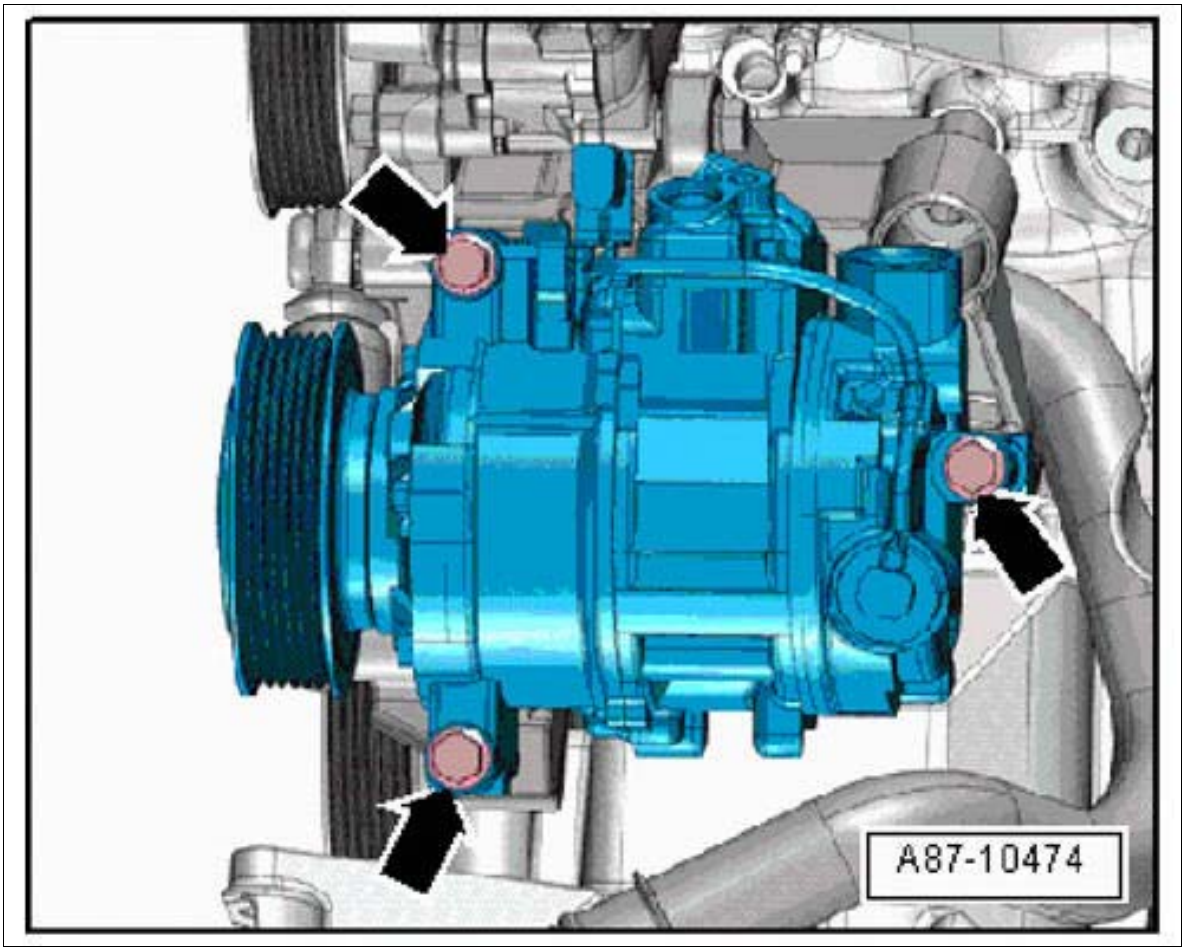

Courtesy of PORSCHE CARS NORTH AMERICA, INC.

WM 873419 REMOVING AND INSTALLING AIR-CONDITIONING COMPRESSOR (MACAN, MACAN S, MACAN TURBO) > REMOVING AND INSTALLING AIR-CONDITIONING COMPRESSOR > REMOVING AIR-CONDITIONING COMPRESSOR

1. Release air-conditioning line from evaporator to compressor **-1-** using **release tool T40149 -2-** and pull it off.

    1. 1.1. Close off air-conditioning lines using suitable stoppers.

Fig 1: Identifying Release Tool (T40149)

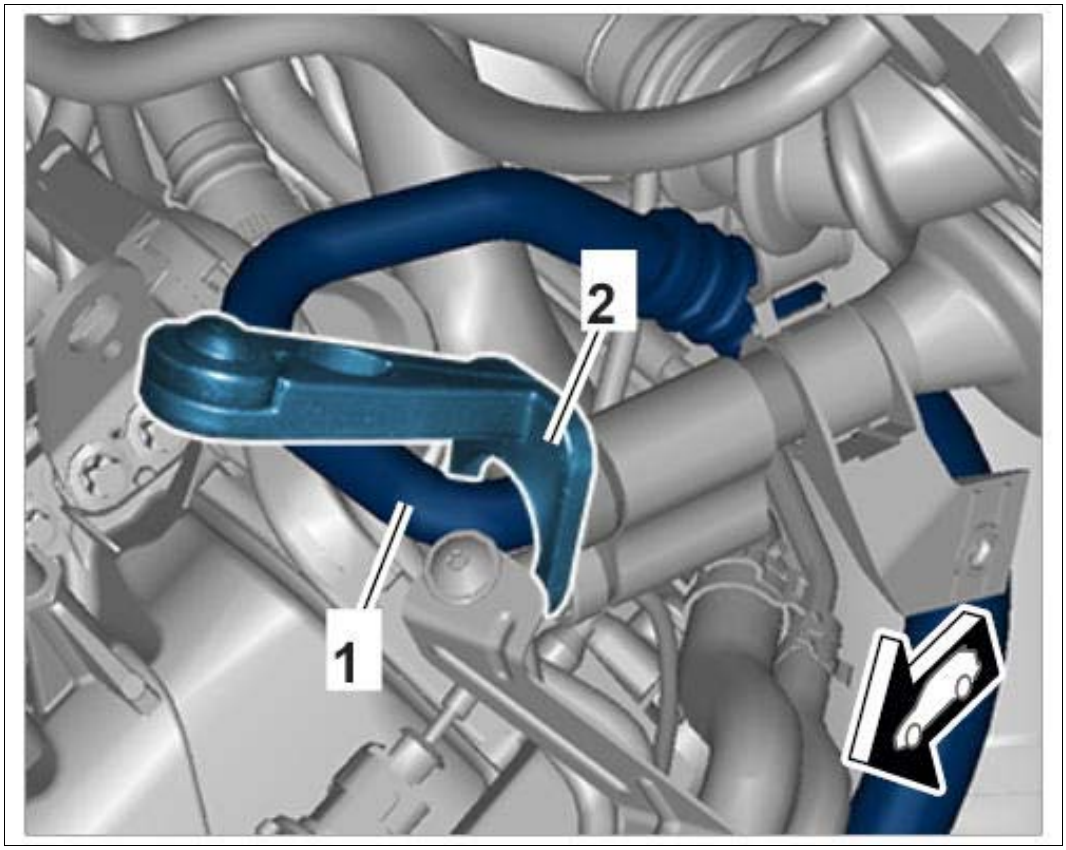

Courtesy of PORSCHE CARS NORTH AMERICA, INC.

2. Disconnect air-conditioning line from evaporator to the compressor at the holder for the engine.
3. Unscrew fastening screw **-2-** and pull off air-conditioning line to the condenser from the air-conditioning compressor.
4. Disconnect connector **-1-** .

Fig 2: Identifying Lines On Air-Conditioning Compressor

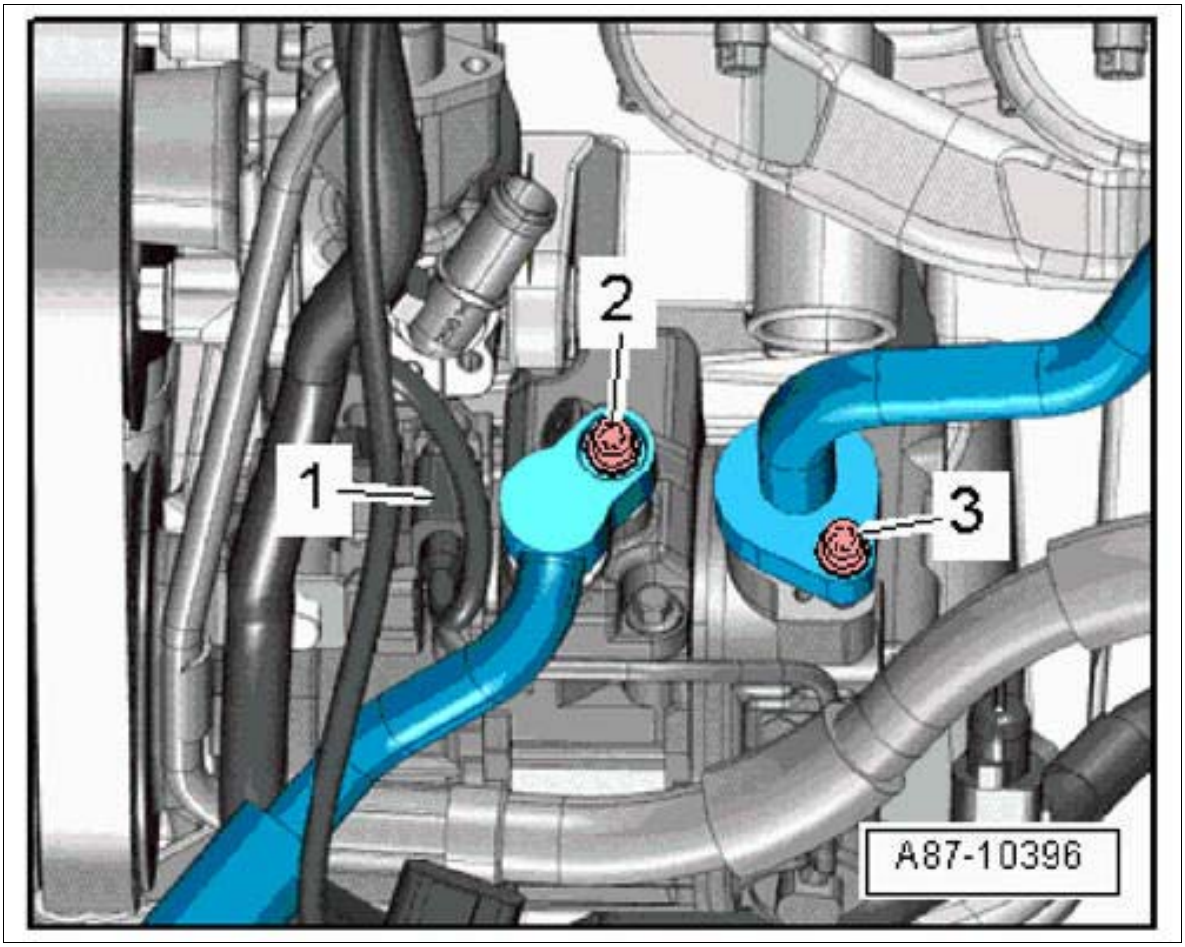

Courtesy of PORSCHE CARS NORTH AMERICA, INC.

5. Unscrew fastening screws **-arrows-** on the air-conditioning compressor.

Fig 3: Locating Air-Conditioning Compressor Fastening Screws

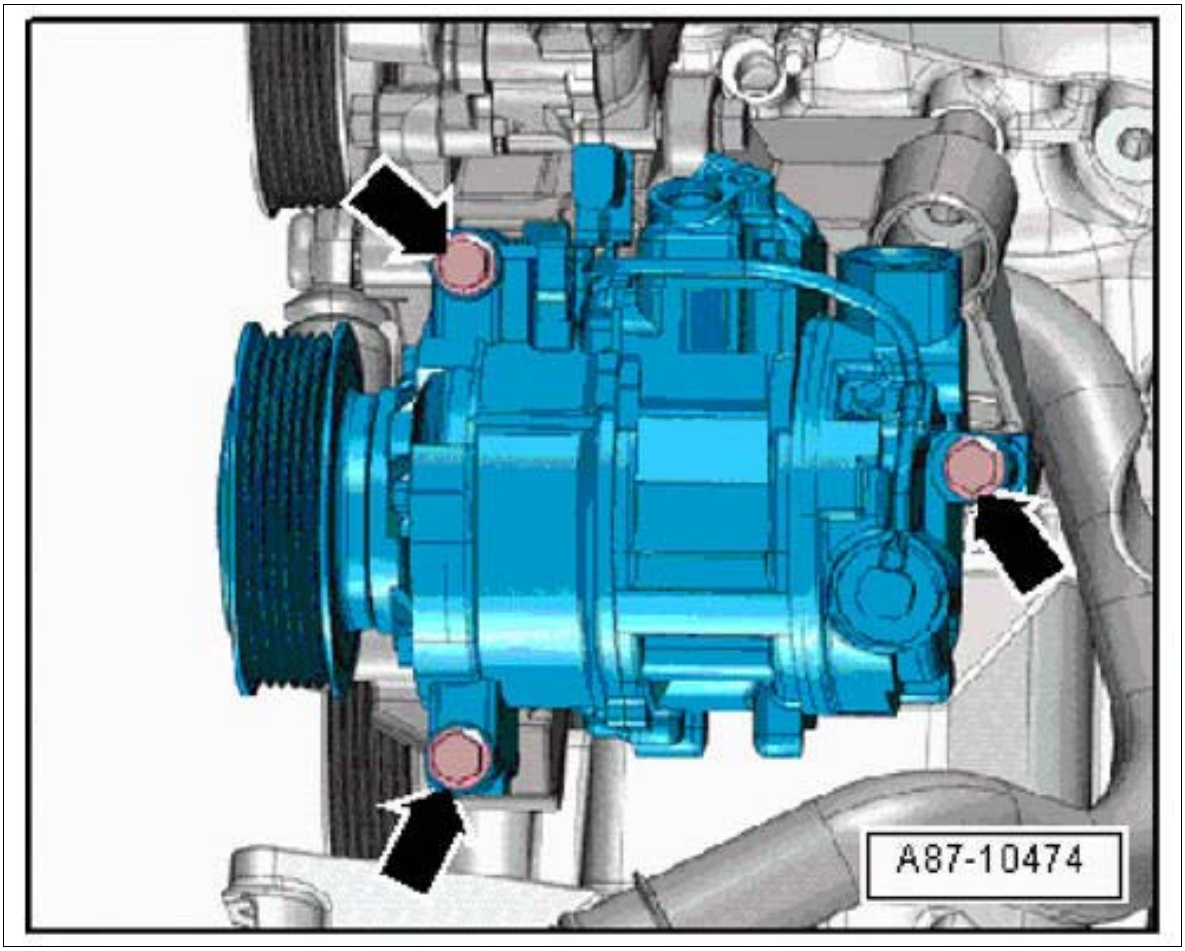

Courtesy of PORSCHE CARS NORTH AMERICA, INC.

6. Carefully lower the air-conditioning compressor with line to the evaporator so that the fastening screw **-3-** for the line to the evaporator can be reached.
7. Unscrew fastening screw **-3-** and pull off line to the evaporator.

WM 873419 REMOVING AND INSTALLING AIR-CONDITIONING COMPRESSOR (MACAN, MACAN S, MACAN TURBO) > REMOVING AND INSTALLING AIR-CONDITIONING COMPRESSOR > REPLACING AIR-CONDITIONING COMPRESSOR

NOTE: Fill level too low

- *Risk of damage to components.*

→ Do not start the engine.

→ Do not tow the vehicle.

NOTE: Too much or too little refrigerant oil in air conditioning circuit

- *Reduced cooling output*
- *Lack of lubrication and failure of the air conditioning compressor*

→ If a new air conditioning compressor or a component in the circuit is replaced, the oil quantity must be checked and adjusted.

Information

All connection points must be completely dirt-free.

The air-conditioning compressor must be dry (washing the vehicle) and the air-conditioning compressor and lines must be free of moisture.

The connection points must be closed after they have been opened. Use the original transport caps.

A clean measuring cylinder with a capacity of approx. 300 ml is required.

Information

- If the air-conditioning compressor is blocked or seized up, then additional steps must be carried out to ensure that the air-conditioning system is working. See WORK STEPS FOR BLOCKED OR SEIZED UP AIR-CONDITIONING COMPRESSOR

Information

- New air-conditioning compressors are pressurized and filled with the required amount of oil for the refrigerant circuit.
- The remaining oil quantity in the individual components must therefore be taken into account!
- Refrigerant oil from the compressor or refrigerant oil removed by suction from a previously run air-conditioning system may no longer be used (special-category waste)!

1. Carefully open the cap on the high-pressure side and relieve the pressure from the air-conditioning compressor **-A-** .
2. Open the oil filler screw **-B-** on the air-conditioning compressor.

Fig 1: Identifying Cap And Oil Filler Screw (Shown Examples, Original May Differ)

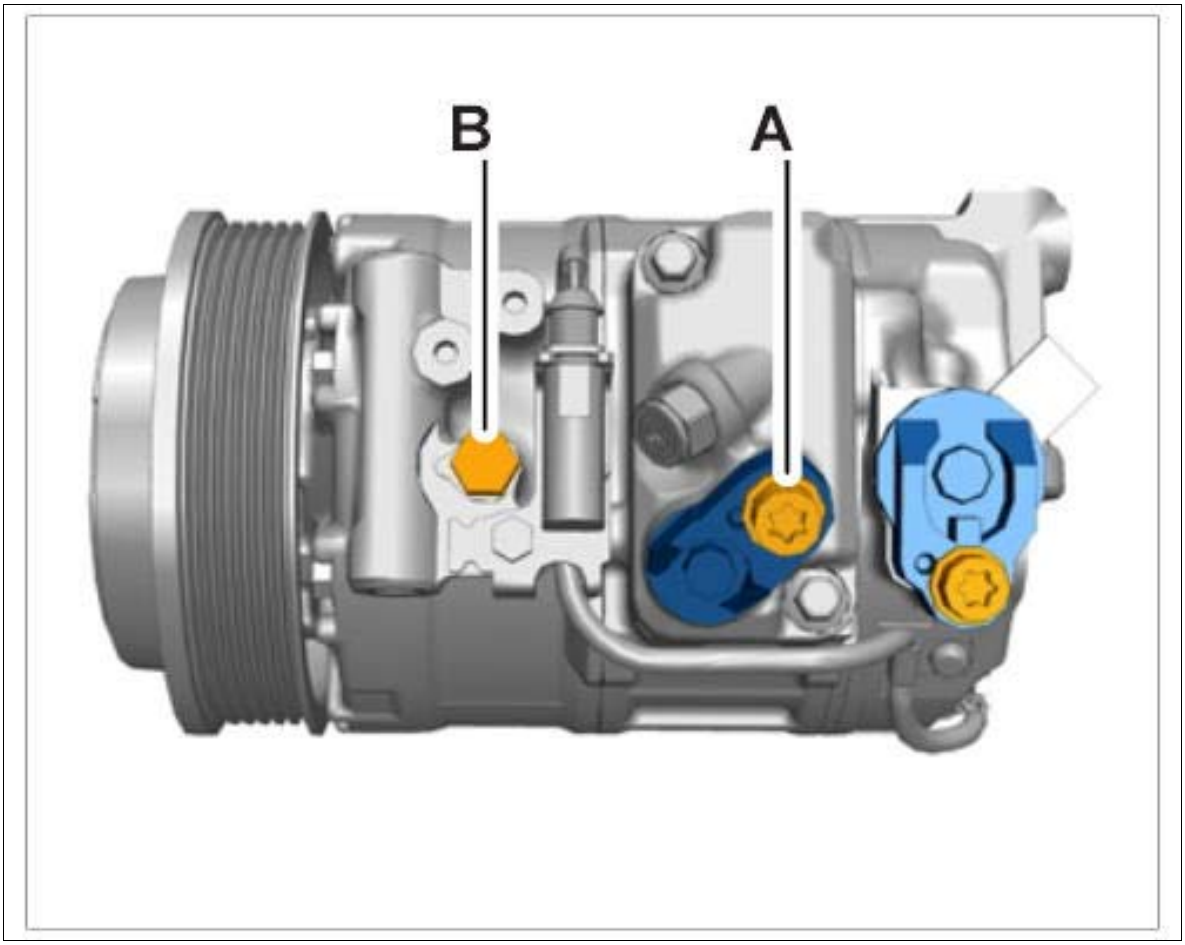

Courtesy of PORSCHE CARS NORTH AMERICA, INC.

3. Empty approx. 40 cm^3 of refrigerant oil out of the air-conditioning compressor and into a measuring glass. The remaining quantity of oil (approx. 60 cm^3) remains in the air-conditioning compressor.
4. Always replace the sealing ring for the oil filler screw.
5. Use fastening screws from the new air-conditioning compressor. Replace O-rings and coat new O-rings with refrigerant oil.

WM 873419 REMOVING AND INSTALLING AIR-CONDITIONING COMPRESSOR (MACAN, MACAN S, MACAN TURBO) > REMOVING AND INSTALLING AIR-CONDITIONING COMPRESSOR > WORK STEPS FOR BLOCKED/SEIZED UP AIR-CONDITIONING COMPRESSOR

1. Remove desiccator from the condenser. → REMOVING AND INSTALLING DESICCATOR .
2. Check the desiccator for wear/chips.

   If there are signs of wear/chips:

3. Remove the refrigerant line between the compressor and condenser. → 874319 REMOVING AND INSTALLING COMPRESSOR/CONDENSER LINE .

4. Replace the refrigerant line between the compressor and condenser.

5. Replace the condenser with desiccator. → 875019 REMOVING AND INSTALLING CONDENSER .

6. Install the new refrigerant line between the compressor and condenser. → INSTALLING COMPRESSOR/CONDENSER LINE .

7. Install air-conditioning compressor → 873419 REMOVING AND INSTALLING AIR-CONDITIONING COMPRESSOR .

   If there are no signs of wear/chips:

   1. Replace the desiccator. → REMOVING AND INSTALLING DESICCATOR .

WM 873419 REMOVING AND INSTALLING AIR-CONDITIONING COMPRESSOR (MACAN, MACAN S, MACAN TURBO) > REMOVING AND INSTALLING AIR-CONDITIONING COMPRESSOR > INSTALLING AIR-CONDITIONING COMPRESSOR

1. Installation is performed in reverse order.

   Observe specified tightening torques:

   Air-conditioning compressor to engine: **Tightening torque 25 Nm (19 ftlb.)**

   Air-conditioning lines to air-conditioning compressor: **Tightening torque 20 Nm (15 ftlb.)**

   Air-conditioning line holder to engine: **Tightening torque 9 Nm (6.5 ftlb.)**

   Strut to lock carrier: **Tightening torque 5 Nm (3.5 ftlb.)**

   Strut to front-axle carrier: **Tightening torque 23 Nm (17 ftlb.)**

WM 873419 REMOVING AND INSTALLING AIR-CONDITIONING COMPRESSOR (MACAN, MACAN S, MACAN TURBO) > SUBSEQUENT WORK

1. Install drive belt → INSTALLING DRIVE BELT .

2. Install cover for front underbody at the left → INSTALLING COVER FOR FRONT UNDERBODY .

3. Install reservoir → INSTALLING RESERVOIR .

4. Fill in refrigerant → 870317 DRAINING AND FILLING REFRIGERANT .

WM 873419 REMOVING AND INSTALLING AIR-CONDITIONING COMPRESSOR (MACAN, MACAN S, MACAN TURBO) > SUBSEQUENT WORK > SUBSEQUENT WORK

1. Install drive belt → INSTALLING DRIVE BELT .
2. Install lock carrier → SECURING LOCK CARRIER .
3. Install front apron → INSTALLING FRONT APRON .
4. Install cover for front underbody at the left → INSTALLING COVER FOR FRONT UNDERBODY .
5. Install dome strut → INSTALLING FRONT STRUT (DOME STRUT) .
6. Install reservoir → INSTALLING RESERVOIR .
7. Fill in refrigerant → 870317 DRAINING AND FILLING REFRIGERANT .

WM 874319 REMOVING AND INSTALLING COMPRESSOR/CONDENSER LINE (MACAN, MACAN S, MACAN TURBO) > TECHNICAL VALUES

Location	Description	Type	Basic value	Tolerance 1	Tolerance 2
Refrigerant lines to air-conditioning compressor		Tightening torque	20 Nm (15 ftlb.)		
Refrigerant lines to condenser	M6 x 25 thread	Tightening torque	9 Nm (6.5 ftlb.)		
Refrigerant lines to connection point in front left wheel housing	M8 x 28 thread	Tightening torque	12 Nm (9 ftlb.)		

WM 874319 REMOVING AND INSTALLING COMPRESSOR/CONDENSER LINE (MACAN, MACAN S, MACAN TURBO) > PRELIMINARY WORK

Compressor/wheel housing section:

1. Drain refrigerant → 870317 DRAINING AND FILLING REFRIGERANT .
2. Remove wheel housing liner at the left → 505619 REMOVING AND INSTALLING FRONT WHEEL HOUSING LINER .

   The following work must also be carried out for the wheel housing/condenser section:

3. Remove front apron → 631519 REMOVING AND INSTALLING FRONT APRON .
4. Remove control unit for distance measuring sensor, if installed → 278519 REMOVING AND

INSTALLING CONTROL UNIT FOR DISTANCE MEASURING SENSOR .

5. Remove front air guide → 192419 REMOVING AND INSTALLING AIR GUIDE .
6. Remove cooling air flaps → 193519 REMOVING AND INSTALLING COOLING AIR FLAPS .

WM 874319 REMOVING AND INSTALLING COMPRESSOR/CONDENSER LINE (MACAN, MACAN S, MACAN TURBO) > PRELIMINARY WORK > PRELIMINARY WORK

Compressor/wheel housing section:

1. Drain refrigerant → 870317 DRAINING AND FILLING REFRIGERANT .
2. Remove air cleaner housing at the left → 242519 REMOVING AND INSTALLING AIR CLEANER HOUSING .
3. Remove wheel housing liner at the left → 505619 REMOVING AND INSTALLING FRONT WHEEL HOUSING LINER .
4. Remove cover for front underbody at the left → 519219 REMOVING AND INSTALLING COVER FOR FRONT UNDERBODY .

   The following work must also be carried out for the wheel housing/condenser section:

5. Remove front apron → 631519 REMOVING AND INSTALLING FRONT APRON .
6. Remove control unit for distance measuring sensor, if installed → 278519 REMOVING AND INSTALLING CONTROL UNIT FOR DISTANCE MEASURING SENSOR .
7. Remove front air guide → 192419 REMOVING AND INSTALLING AIR GUIDE .
8. Remove cooling air flaps → 193519 REMOVING AND INSTALLING COOLING AIR FLAPS .

WM 874319 REMOVING AND INSTALLING COMPRESSOR/CONDENSER LINE (MACAN, MACAN S, MACAN TURBO) > REMOVING AND INSTALLING COMPRESSOR/CONDENSER LINE > REMOVING COMPRESSOR/CONDENSER LINE SECTION FROM COMPRESSOR TO WHEEL HOUSING

1. Turn steering fully to the left for easier access.
2. Unscrew fastening screw **-2-** and remove air-conditioning line from the air-conditioning compressor.

Fig 1: Identifying Air-Conditioning Lines On Compressor

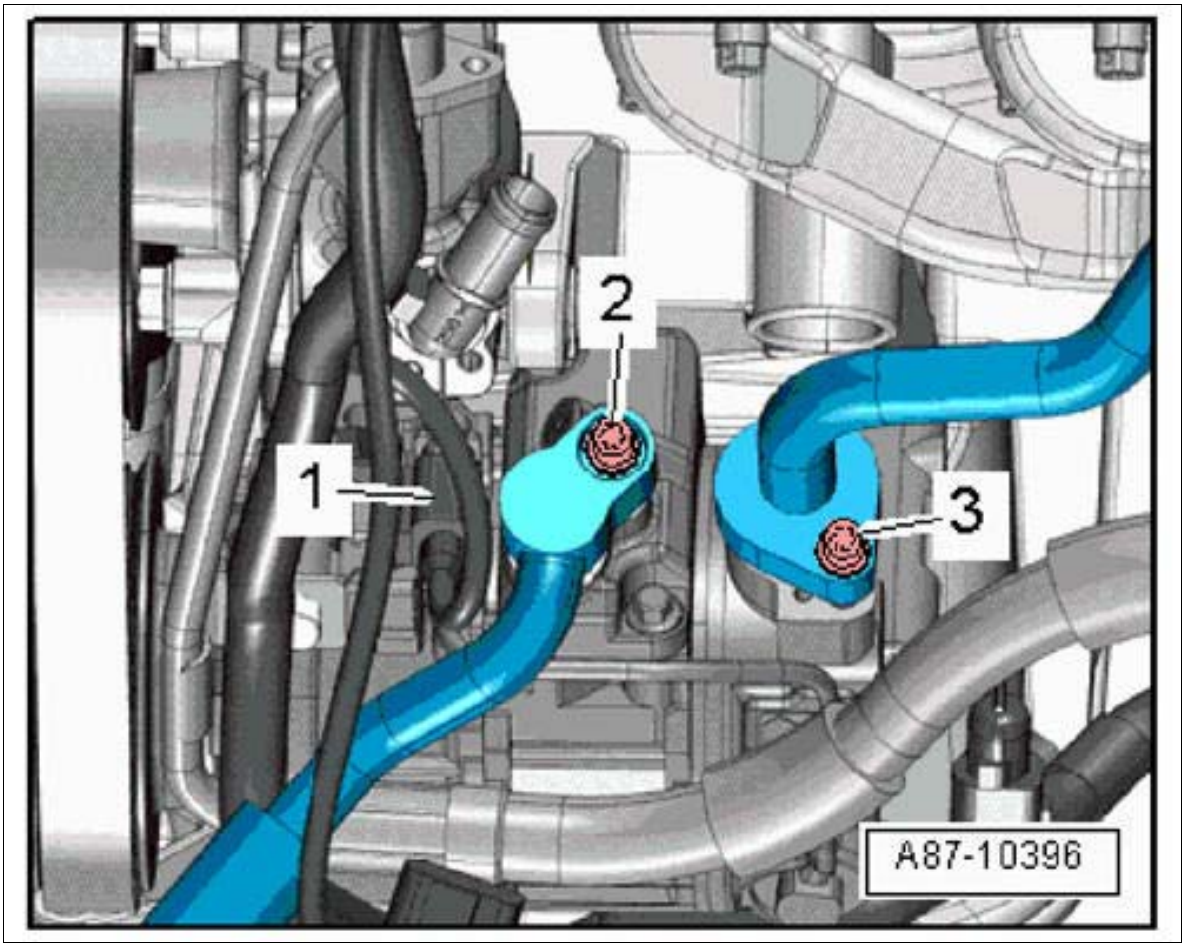

Courtesy of PORSCHE CARS NORTH AMERICA, INC.

3. Unscrew fastening screw **-1-** and remove air-conditioning line.

Fig 2: Identifying Air-Conditioning Lines In Wheel Housing

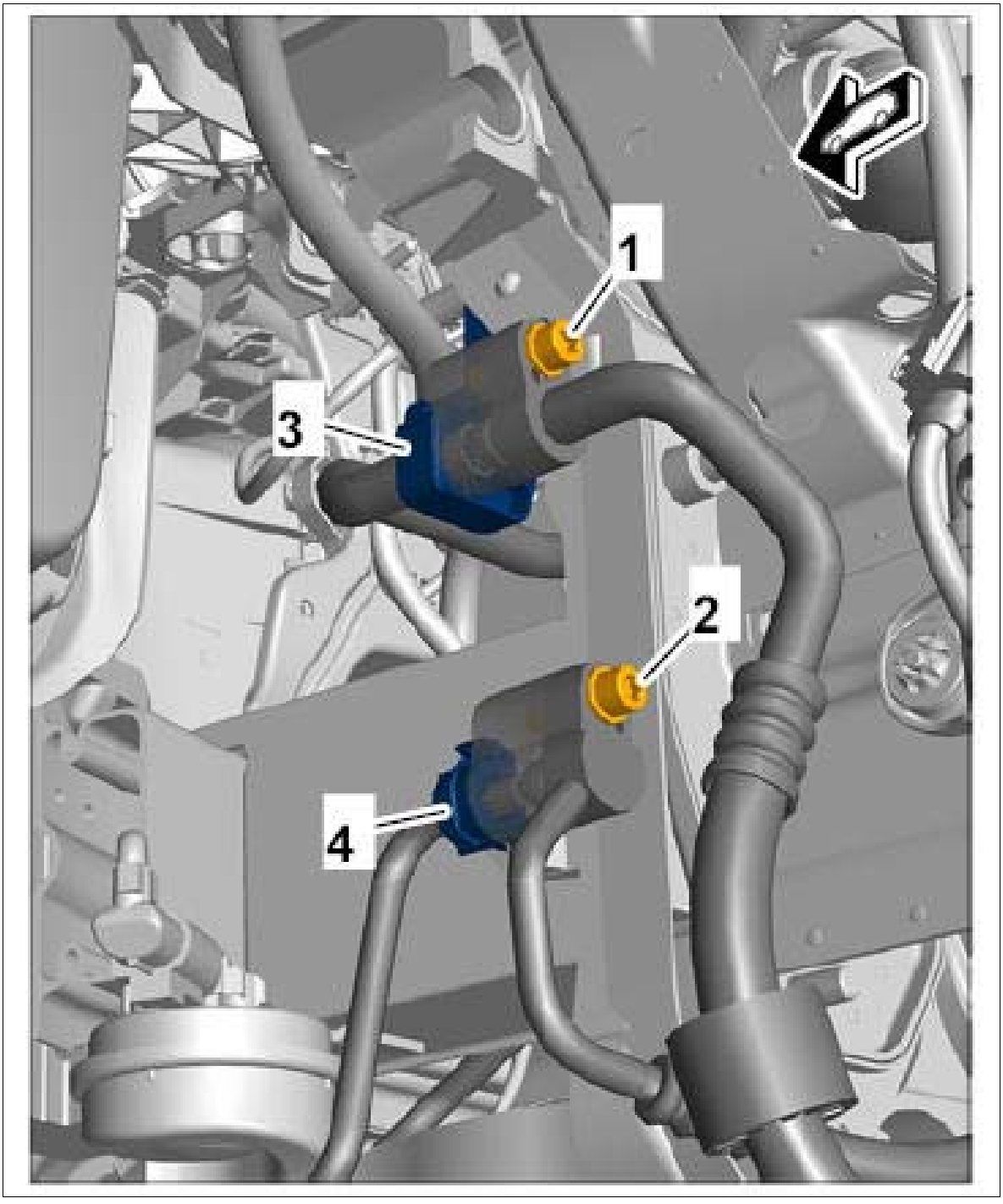

Courtesy of PORSCHE CARS NORTH AMERICA, INC.

4. Close off air-conditioning lines using suitable stoppers.

WM 874319 REMOVING AND INSTALLING COMPRESSOR/CONDENSER LINE (MACAN, MACAN S, MACAN TURBO) > REMOVING AND INSTALLING COMPRESSOR/CONDENSER LINE > REMOVING COMPRESSOR/CONDENSER LINE SECTION FROM WHEEL HOUSING TO CONDENSER

1. Unclip rear air guide **-1-** from the locking lugs **-2-** on the right side only.

Fig 1: Removing Rear Air Guide (Left Side)

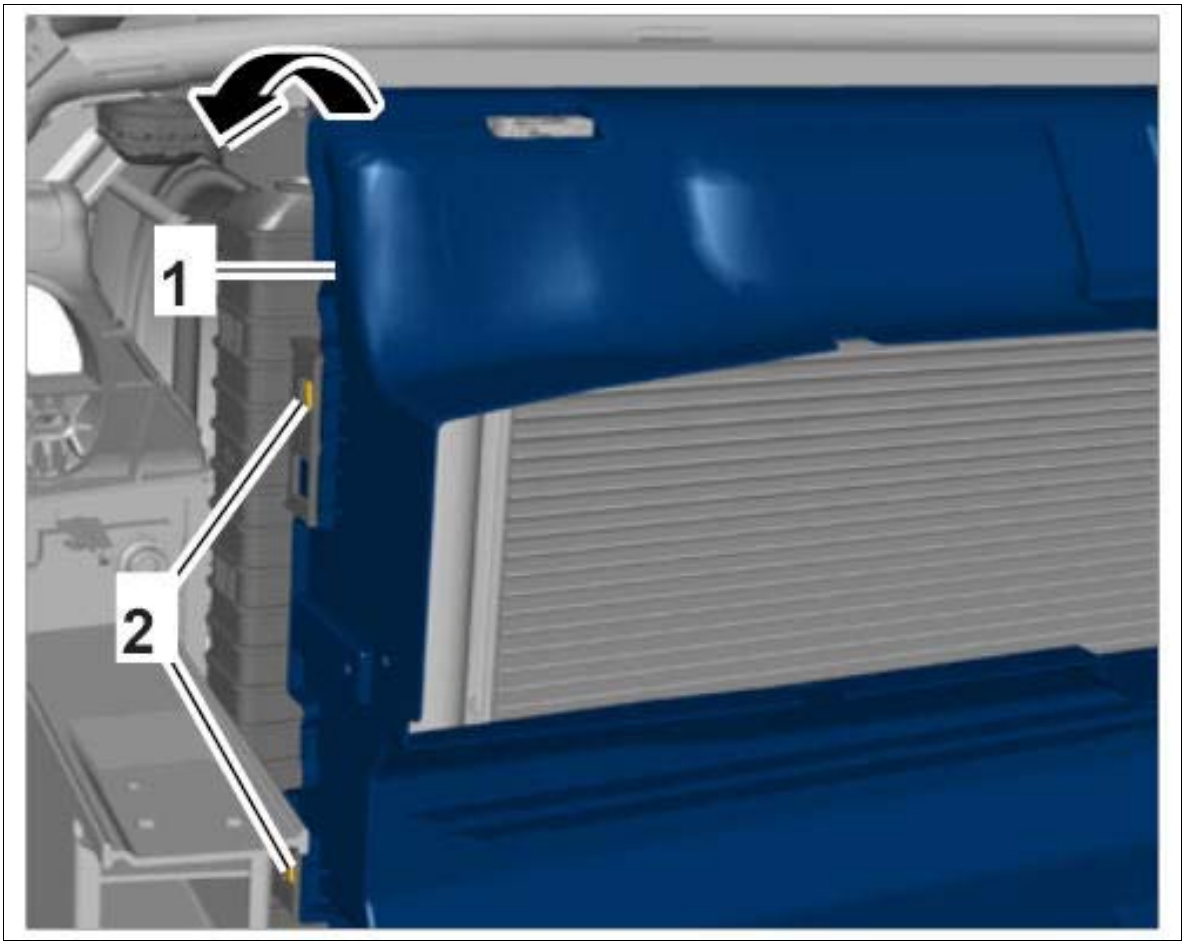

Courtesy of PORSCHE CARS NORTH AMERICA, INC.

2. Unscrew fastening screw **-D-** .
3. Disconnect air-conditioning line **-E-** from the condenser.

Fig 2: Locating Condenser Connection

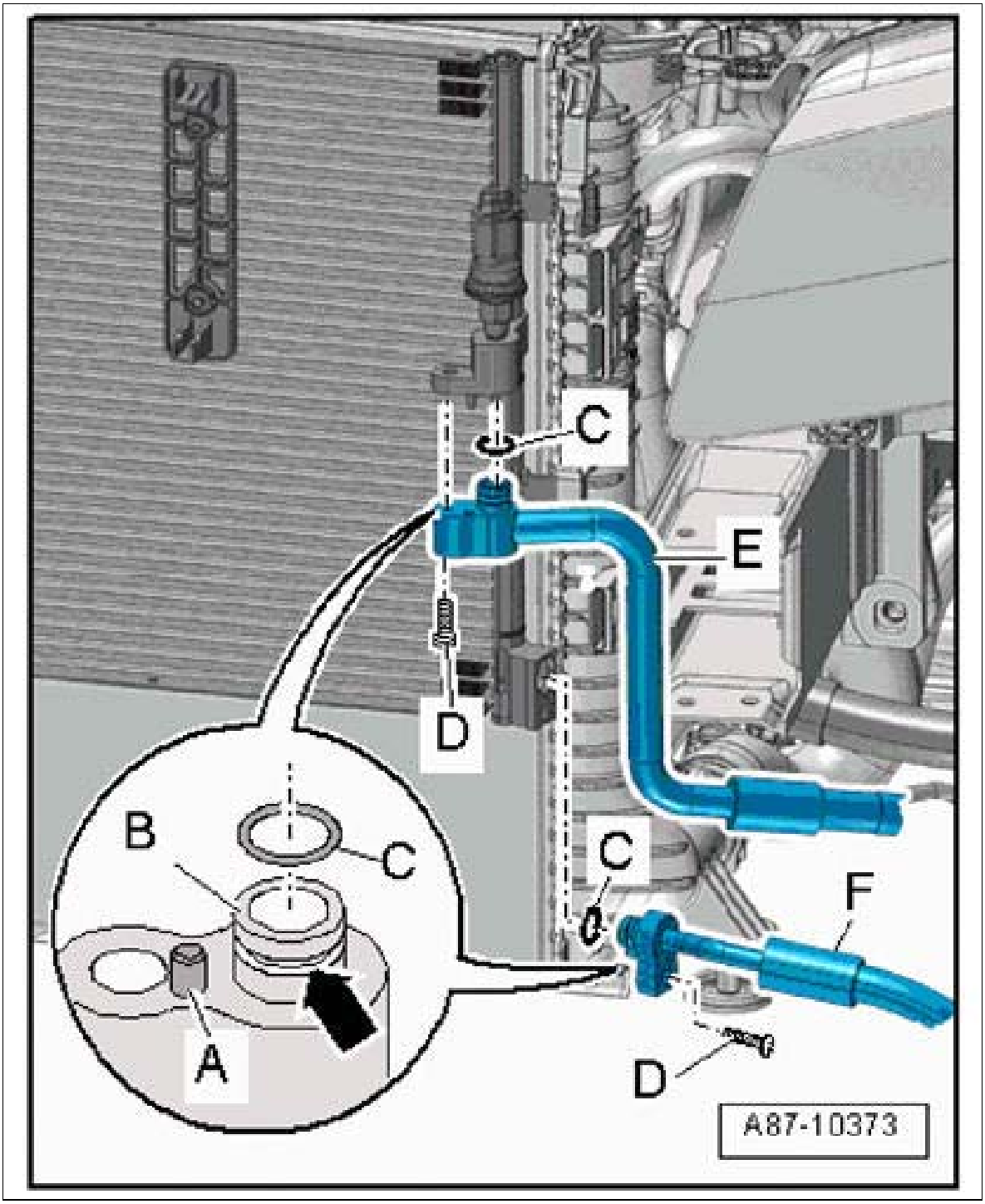

Courtesy of PORSCHE CARS NORTH AMERICA, INC.

Applies only to the Macan Diesel:

4. Unscrew fastening screw **-1-** .
5. Remove refrigerant line for the condenser from the holder **-3-** .

Fig 3: Identifying Air-Conditioning Lines In Wheel Housing

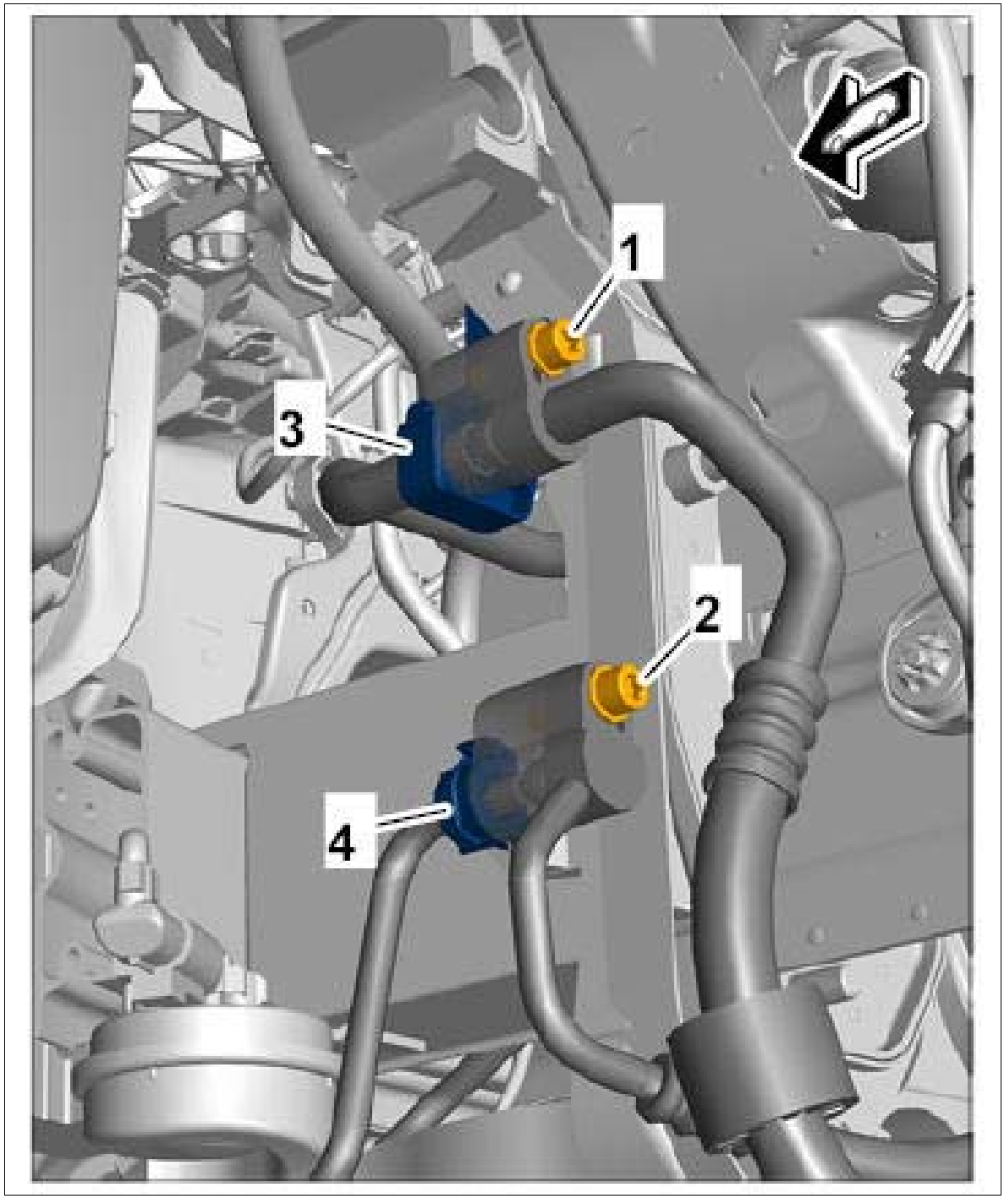

Courtesy of PORSCHE CARS NORTH AMERICA, INC.

Applies to all other Macan vehicles:

6. Disconnect air-conditioning line in the front left wheel housing.
    1. 6.1. Unscrew screw **-1-** and pull off air-conditioning line **-2-** .
    2. 6.2. Take air-conditioning line for the condenser out of the holder.
    3. 6.3. Close off air-conditioning lines using suitable stoppers.

Fig 4: Identifying High-Pressure Air-Conditioning Line

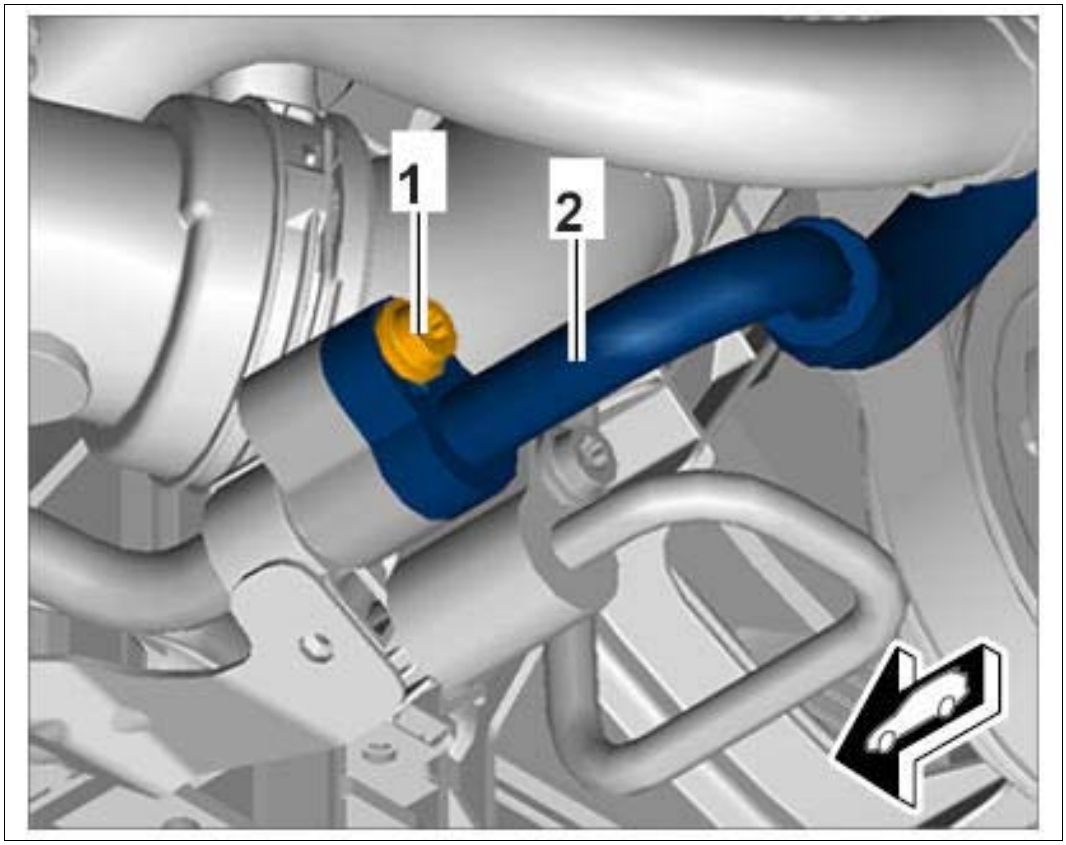

Courtesy of PORSCHE CARS NORTH AMERICA, INC.

7. Close off air-conditioning lines using suitable stoppers.

WM 874319 REMOVING AND INSTALLING COMPRESSOR/CONDENSER LINE (MACAN, MACAN S, MACAN TURBO) > REMOVING AND INSTALLING COMPRESSOR/CONDENSER LINE > REMOVING COMPRESSOR/CONDENSER LINE SECTION FROM COMPRESSOR TO WHEEL HOUSING

1. Turn steering fully to the left for easier access.
2. Unscrew fastening screw **-2-** and remove refrigerant line from the compressor.

Fig 1: Identifying Air-Conditioning Lines On Compressor

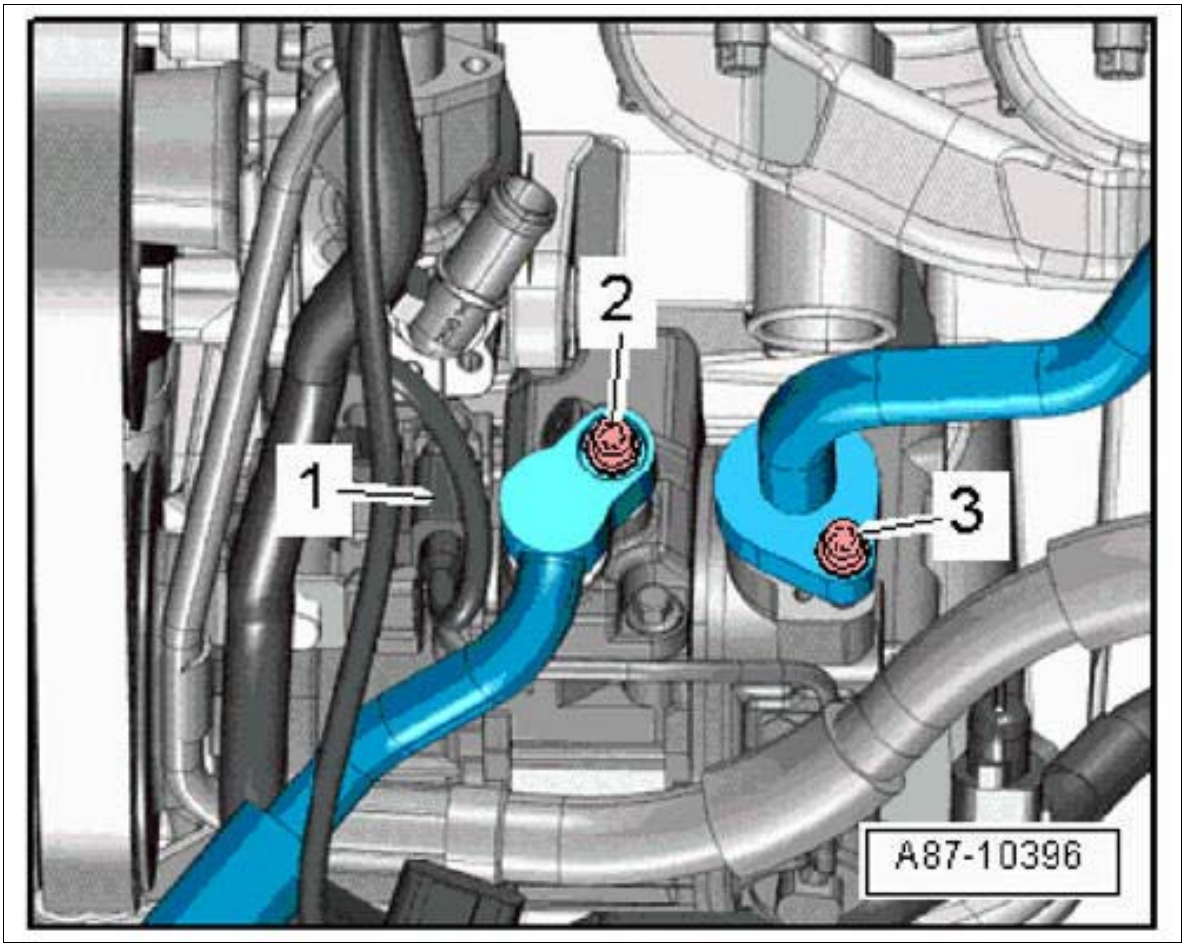

Courtesy of PORSCHE CARS NORTH AMERICA, INC.

3. Disconnect air-conditioning line in the front left wheel housing.
    1. 3.1. Unscrew screw **-1-** and pull off air-conditioning line **-2-** .
    2. 3.2. Close off air-conditioning lines using suitable stoppers.

Fig 2: Identifying High-Pressure Air-Conditioning Line

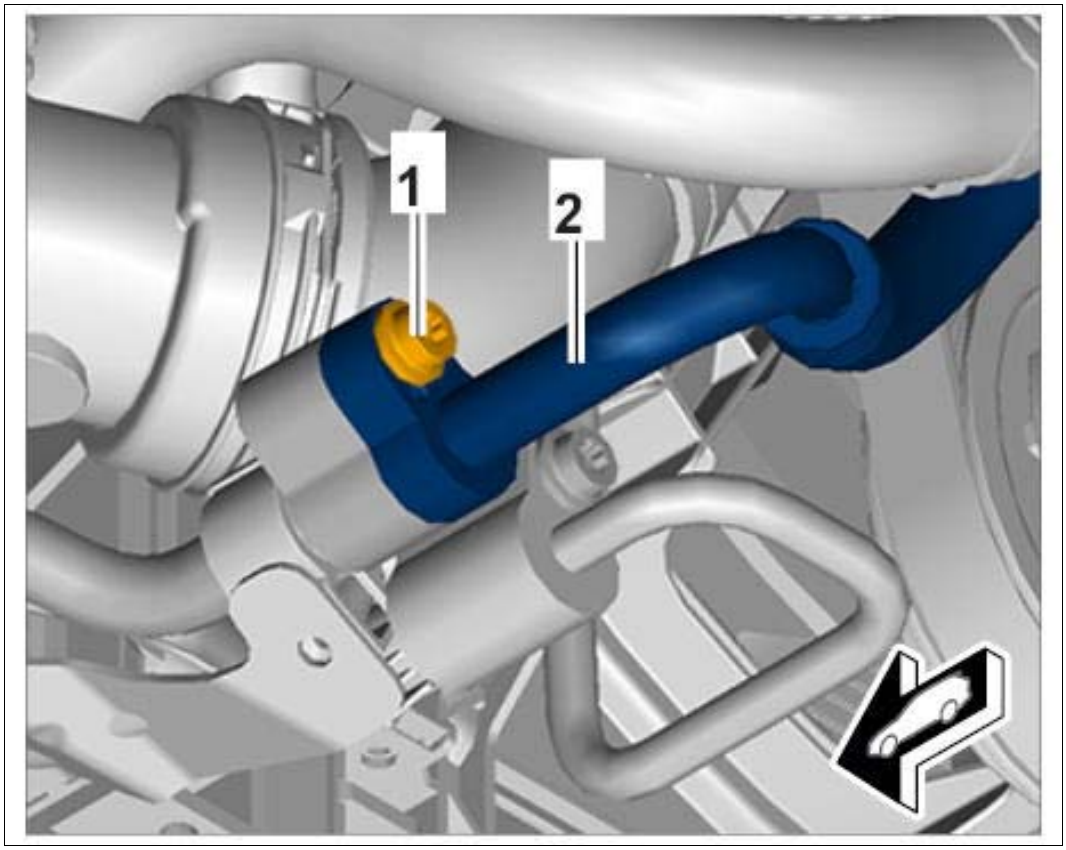

Courtesy of PORSCHE CARS NORTH AMERICA, INC.

WM 874319 REMOVING AND INSTALLING COMPRESSOR/CONDENSER LINE (MACAN, MACAN S, MACAN TURBO) > SUBSEQUENT WORK

Compressor/wheel housing section:

1. Install wheel housing liner at the left → INSTALLING FRONT WHEEL HOUSING LINER .
2. Fill in refrigerant → 870317 DRAINING AND FILLING REFRIGERANT .

   The following work must also be carried out for the wheel housing/condenser section:

3. Install cooling air flaps → INSTALLING COOLING-AIR FLAPS .
4. Install front air guide → INSTALLING AIR GUIDE .
5. Install control unit for distance measuring sensor, if installed → INSTALLING CONTROL UNIT FOR DISTANCE MEASURING SENSOR .
6. Install front apron → INSTALLING FRONT APRON .

WM 874319 REMOVING AND INSTALLING COMPRESSOR/CONDENSER LINE

(MACAN, MACAN S, MACAN TURBO) > SUBSEQUENT WORK > INSTALLING COMPRESSOR/CONDENSER LINE

1. Replace O-rings on the lines.
2. Installation is performed in reverse order.

   Observe specified tightening torques:

   Air-conditioning line to condenser: **Tightening torque 9 Nm (6.5 ftlb.)**

   Air-conditioning line to air-conditioning compressor: **Tightening torque 20 Nm (15 ftlb.)**

   Air-conditioning line to connection point in front left wheel housing: **Tightening torque 12 Nm (9 ftlb.)**

WM 874319 REMOVING AND INSTALLING COMPRESSOR/CONDENSER LINE (MACAN, MACAN S, MACAN TURBO) > SUBSEQUENT WORK > SUBSEQUENT WORK

Compressor/wheel housing section:

1. Install cover for front underbody at the left → INSTALLING COVER FOR FRONT UNDERBODY .
2. Install wheel housing liner at the left → INSTALLING FRONT WHEEL HOUSING LINER .
3. Install air cleaner housing at the left → INSTALLING AIR CLEANER HOUSING .
4. Fill in refrigerant → 870317 DRAINING AND FILLING REFRIGERANT .

   The following work must also be carried out for the wheel housing/condenser section:

5. Install cooling air flaps → INSTALLING COOLING-AIR FLAPS .
6. Install front air guide → INSTALLING AIR GUIDE .
7. Install control unit for distance measuring sensor, if installed → INSTALLING CONTROL UNIT FOR DISTANCE MEASURING SENSOR .
8. Install front apron → INSTALLING FRONT APRON .

WM 874419 REMOVING AND INSTALLING CONDENSER-EVAPORATOR LINE (MACAN, MACAN S, MACAN TURBO) > TOOLS

Designation	Type	Number	Description	

release tool	VW tool	T40149		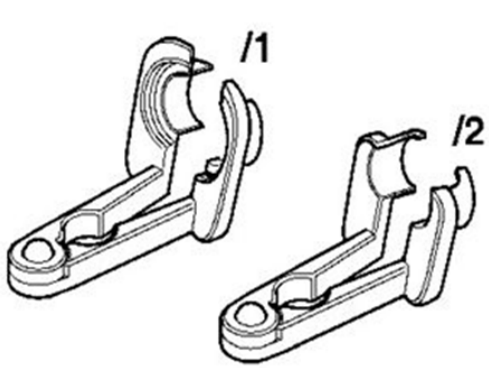

WM 874419 REMOVING AND INSTALLING CONDENSER-EVAPORATOR LINE (MACAN, MACAN S, MACAN TURBO) > TECHNICAL VALUES

Location	Description	Type	Basic value	Tolerance 1	Tolerance 2
Refrigerant line to expansion valve	M8 x 35 thread	Tightening torque	12 Nm (9 ftlb.)		
Refrigerant lines to condenser	M6 x 25 thread	Tightening torque	9 Nm (6.5 ftlb.)		
Refrigerant lines to connection point in front left wheel housing	M8 x 28 thread	Tightening torque	12 Nm (9 ftlb.)		

WM 874419 REMOVING AND INSTALLING CONDENSER-EVAPORATOR LINE (MACAN, MACAN S, MACAN TURBO) > PRELIMINARY WORK

Condenser/wheel housing section:

1. Drain refrigerant → 870317 DRAINING AND FILLING REFRIGERANT .
2. Remove cover for front underbody at the left → 519219 REMOVING AND INSTALLING COVER FOR FRONT UNDERBODY .
3. Remove front apron → 631519 REMOVING AND INSTALLING FRONT APRON .
4. Remove control unit for distance measuring sensor, if installed → 278519 REMOVING AND INSTALLING CONTROL UNIT FOR DISTANCE MEASURING SENSOR .
5. Remove front air guide → 192419 REMOVING AND INSTALLING AIR GUIDE .
6. Remove cooling air flaps → 193519 REMOVING AND INSTALLING COOLING AIR FLAPS .
7. Remove bumper → 631019 REMOVING AND INSTALLING FRONT BUMPER .
8. Remove front left carrier → 633319 REMOVING AND INSTALLING FRONT CARRIER .

Section between wheel housing/line with internal heat exchanger:

1. Drain refrigerant → 870317 DRAINING AND FILLING REFRIGERANT .
2. Remove cover for front underbody at the left → 519219 REMOVING AND INSTALLING COVER FOR FRONT UNDERBODY .
3. Remove wheel housing liner at the left → 505619 REMOVING AND INSTALLING FRONT WHEEL HOUSING LINER .
4. Remove air cleaner housing at the left → 242519 REMOVING AND INSTALLING AIR CLEANER HOUSING .
5. Remove reservoir (do not open hydraulic system!) → 194019 REMOVING AND INSTALLING RESERVOIR

Section of line with internal heat exchanger:

1. Drain refrigerant → 870317 DRAINING AND FILLING REFRIGERANT .

7. Remove reservoir (do not open hydraulic system!) → 194019 REMOVING AND INSTALLING RESERVOIR

8. Remove cross panel → 508119 REMOVING AND INSTALLING CROSS PANEL (DISASSEMBLING PLENUM PANEL) .

WM 874419 REMOVING AND INSTALLING CONDENSER-EVAPORATOR LINE (MACAN, MACAN S, MACAN TURBO) > PRELIMINARY WORK > PRELIMINARY WORK

Condenser/wheel housing section:

1. Drain refrigerant → 870317 DRAINING AND FILLING REFRIGERANT .
2. Remove cover for front underbody at the left → 519219 REMOVING AND INSTALLING COVER FOR FRONT UNDERBODY .
3. Remove front apron → 631519 REMOVING AND INSTALLING FRONT APRON .
4. Remove control unit for distance measuring sensor, if installed → 278519 REMOVING AND INSTALLING CONTROL UNIT FOR DISTANCE MEASURING SENSOR .
5. Remove front air guide → 192419 REMOVING AND INSTALLING AIR GUIDE .
6. Remove cooling air flaps → 193519 REMOVING AND INSTALLING COOLING AIR FLAPS .
7. Remove bumper → 631019 REMOVING AND INSTALLING FRONT BUMPER .
8. Remove front left carrier → 633319 REMOVING AND INSTALLING FRONT CARRIER .

Section between wheel housing/line with internal heat exchanger:

1. Drain refrigerant → 870317 DRAINING AND FILLING REFRIGERANT .

11. Remove wheel housing liner at the left → 505619 REMOVING AND INSTALLING FRONT

WHEEL HOUSING LINER .

12. Remove cover for front underbody at the left → 519219 REMOVING AND INSTALLING COVER FOR FRONT UNDERBODY .

13. Remove reservoir → 194019 REMOVING AND INSTALLING RESERVOIR .

Section of line with internal heat exchanger:

1. Drain refrigerant → 870317 DRAINING AND FILLING REFRIGERANT .

15. Remove reservoir → 194019 REMOVING AND INSTALLING RESERVOIR .

16. Remove cross panel → 508119 REMOVING AND INSTALLING CROSS PANEL (DISASSEMBLING PLENUM PANEL) .

WM 874419 REMOVING AND INSTALLING CONDENSER-EVAPORATOR LINE (MACAN, MACAN S, MACAN TURBO) > REMOVING AND INSTALLING CONDENSER-EVAPORATOR LINE > REMOVING CONDENSER-EVAPORATOR LINE SECTION FROM CONDENSER TO WHEEL HOUSING

1. Unscrew fastening screw **-D-** .
2. Disconnect air-conditioning line **-F-** from the condenser.

Fig 1: Locating Condenser Connection

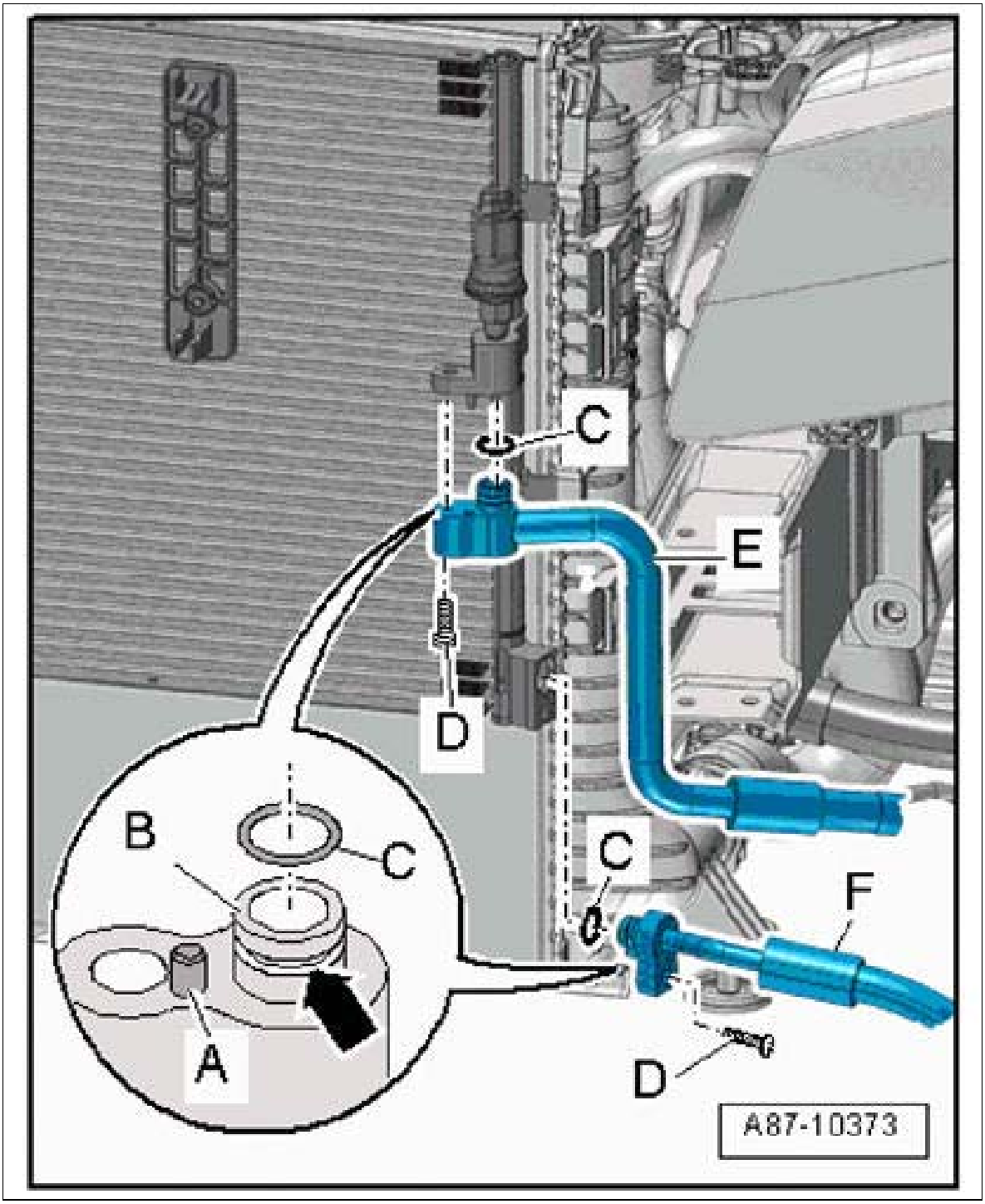

Courtesy of PORSCHE CARS NORTH AMERICA, INC.

Applies only to the Macan Diesel:

3. Unscrew fastening screw **-2-** .
4. Remove refrigerant line for the condenser from the holder **-4-** .

Fig 2: Identifying Air-Conditioning Lines In Wheel Housing

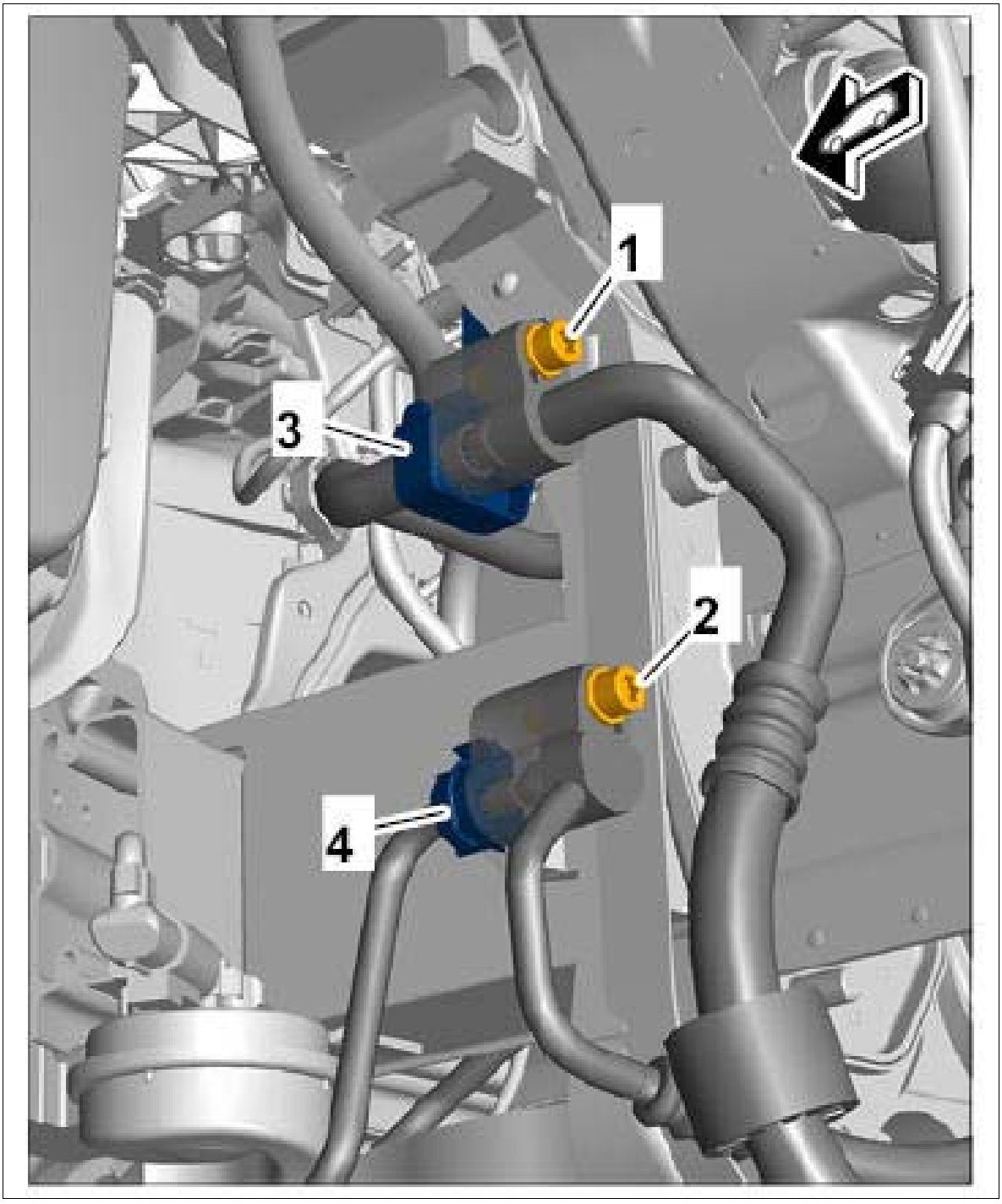

Courtesy of PORSCHE CARS NORTH AMERICA, INC.

Applies to all other Macan vehicles:

5. Unscrew fastening screw **-1-** .
6. Disconnect air-conditioning line for the condenser from the holder **-3-** .

Fig 3: Identifying Wheel Housing Connection

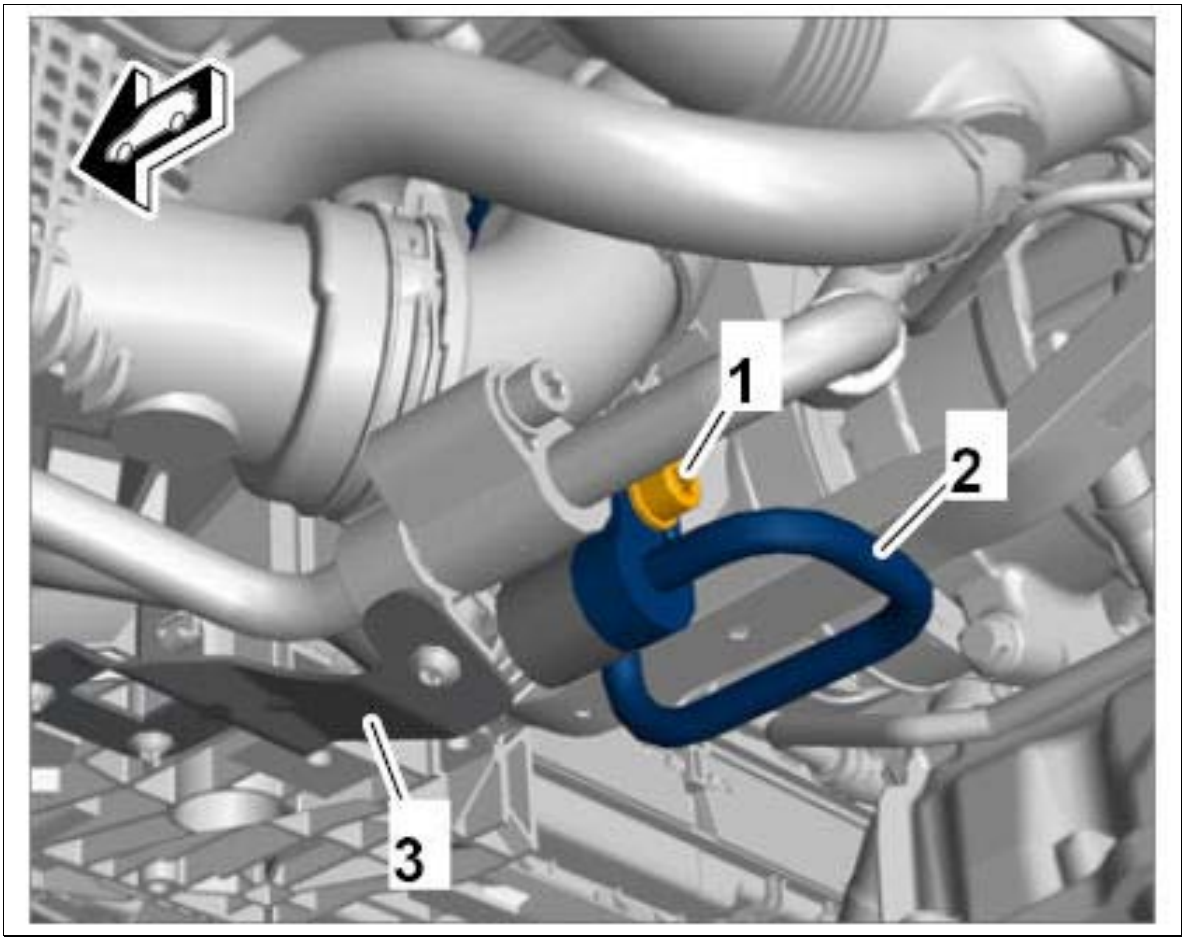

Courtesy of PORSCHE CARS NORTH AMERICA, INC.

7. Close off air-conditioning lines using suitable stoppers.

WM 874419 REMOVING AND INSTALLING CONDENSER-EVAPORATOR LINE (MACAN, MACAN S, MACAN TURBO) > REMOVING AND INSTALLING CONDENSER-EVAPORATOR LINE > REMOVING CONDENSER-EVAPORATOR LINE SECTION IN WHEEL HOUSING - LINE WITH INNER HEAT EXCHANGER

1. Release air-conditioning line **-C-** using **release tool T40149** and pull it off.

Fig 1: Identifying Inner Heat Exchanger Connection To Line

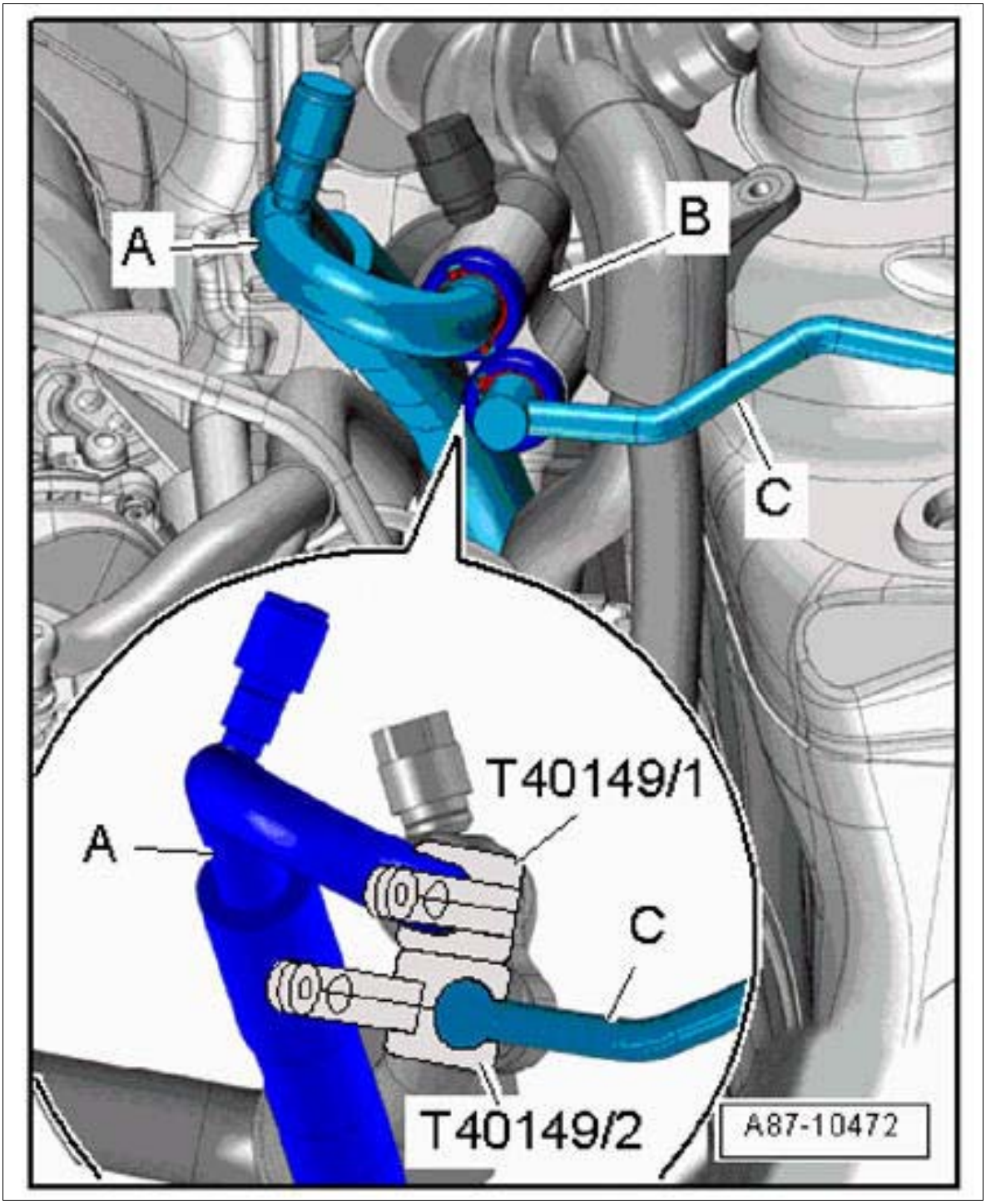

Courtesy of PORSCHE CARS NORTH AMERICA, INC.

Applies to the Macan Diesel:

2. Unscrew fastening screw **-2-** .
3. Remove refrigerant line.

Fig 2: Identifying Air-Conditioning Lines In Wheel Housing

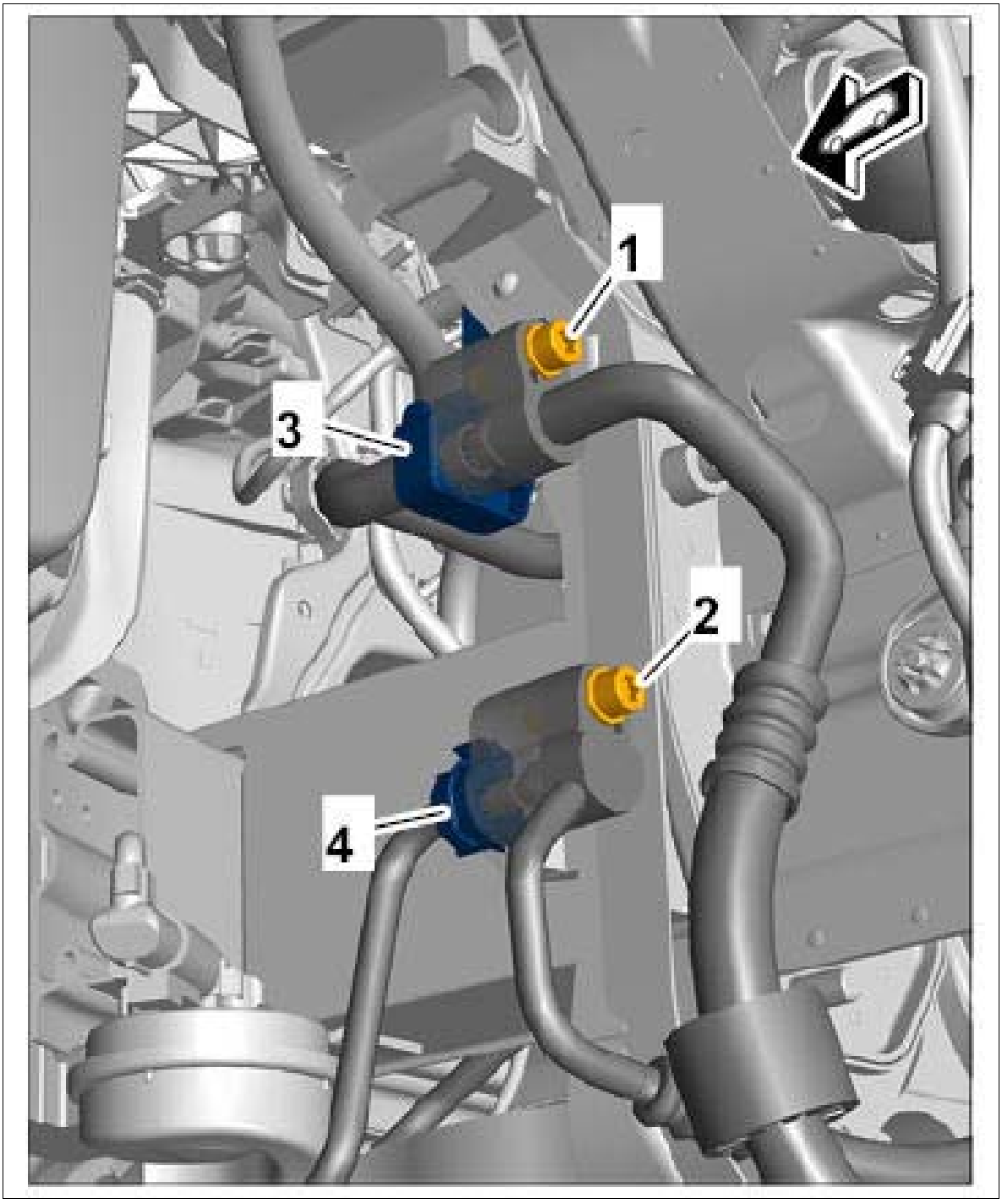

Courtesy of PORSCHE CARS NORTH AMERICA, INC.

Applies to all other Macan vehicles:

4. Unscrew fastening screw **-1-** .
5. Pull off air-conditioning line **-2-** .

Fig 3: Identifying Wheel Housing Connection

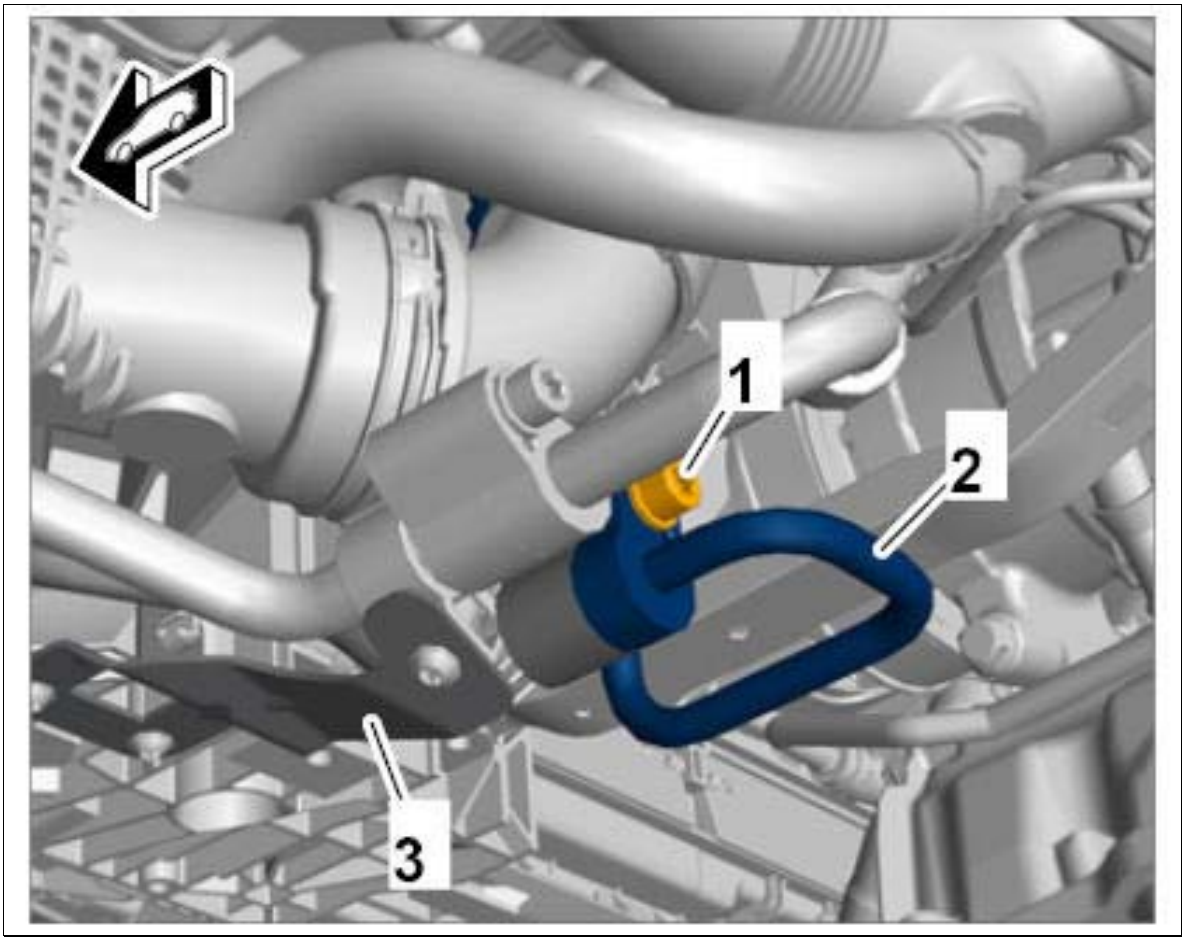

Courtesy of PORSCHE CARS NORTH AMERICA, INC.

6. Close off air-conditioning lines using suitable stoppers.

1. Release air-conditioning lines **-A and C-** using **release tool T40149** and pull them off.

Fig 4: Identifying Inner Heat Exchanger Connection To Line

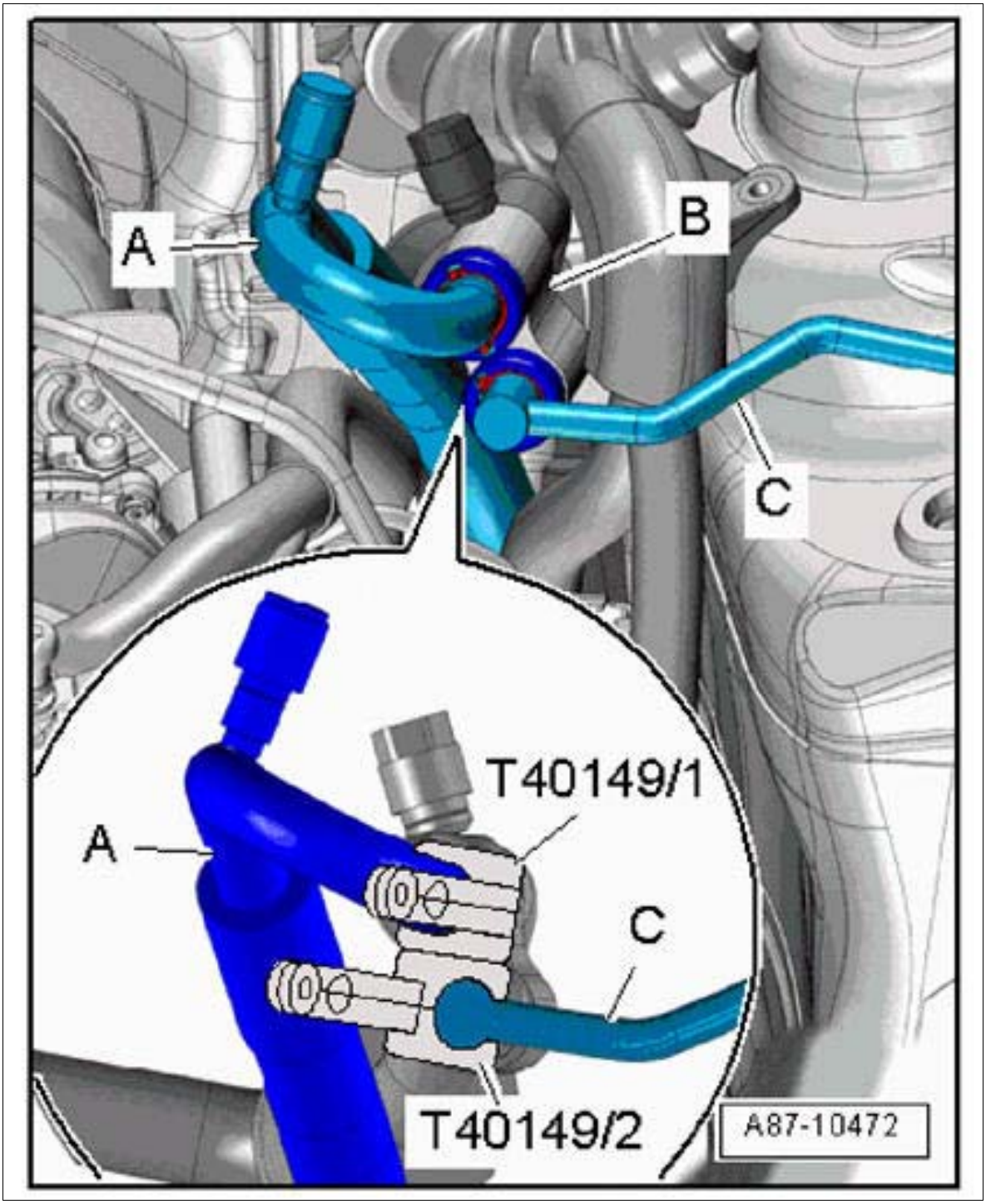

Courtesy of PORSCHE CARS NORTH AMERICA, INC.

2. Unscrew nut **-C-** on the spring strut dome.
3. Unscrew fastening screws **-A-** .
4. Pull air-conditioning line with inner heat exchanger **-B-** off the expansion valve and remove it in an upward direction.

Fig 5: Pulling Air-Conditioning Line With Inner Heat Exchanger

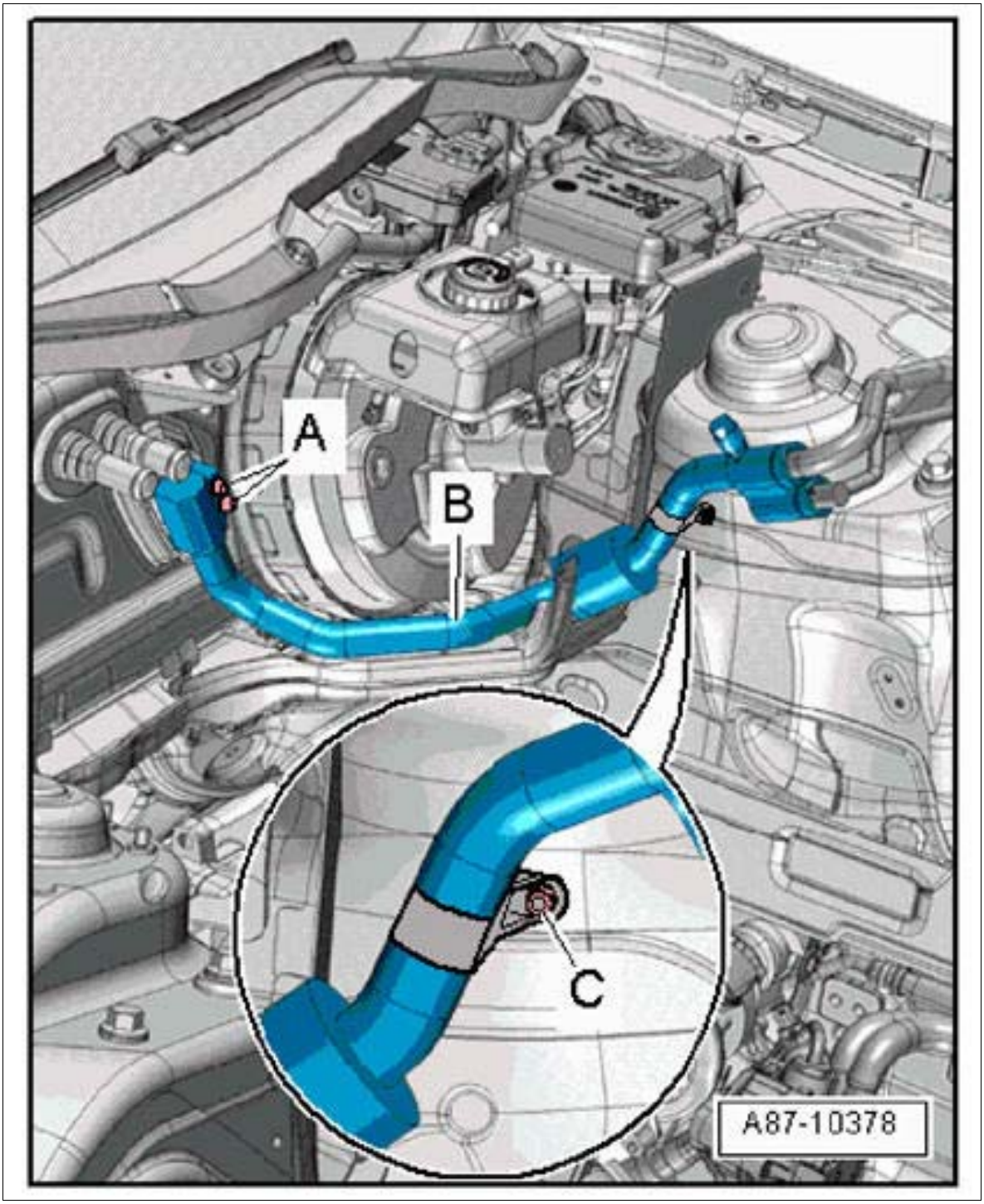

Courtesy of PORSCHE CARS NORTH AMERICA, INC.

5. Close off air-conditioning lines using suitable stoppers.

WM 874419 REMOVING AND INSTALLING CONDENSER-EVAPORATOR LINE (MACAN, MACAN S, MACAN TURBO) > REMOVING AND INSTALLING CONDENSER-EVAPORATOR LINE > INSTALLING CONDENSER-EVAPORATOR LINE

1. Replace O-rings on the lines.
2. Installation is performed in reverse order.

   Observe specified tightening torques:

   Air-conditioning line to condenser: **Tightening torque 9 Nm (6.5 ftlb.)**

   Air-conditioning line to expansion valve: **Tightening torque 12 Nm (9 ftlb.)**

   Air-conditioning lines to connection point in front left wheel housing: **Tightening torque 12 Nm (9 ftlb.)**

WM 874419 REMOVING AND INSTALLING CONDENSER-EVAPORATOR LINE (MACAN, MACAN S, MACAN TURBO) > SUBSEQUENT WORK

Condenser/wheel housing section:

1. Install front left carrier → INSTALLING FRONT CARRIER .
2. Install bumper → INSTALLING FRONT BUMPER .
3. Install cooling air flaps → INSTALLING COOLING-AIR FLAPS .
4. Install front air guide → INSTALLING AIR GUIDE .
5. Install control unit for distance measuring sensor, if installed → INSTALLING CONTROL UNIT FOR DISTANCE MEASURING SENSOR .
6. Install front apron → INSTALLING FRONT APRON .
7. Install cover for front underbody at the left → INSTALLING COVER FOR FRONT UNDERBODY .
8. Fill in refrigerant → 870317 DRAINING AND FILLING REFRIGERANT .

Section between wheel housing/line with inner heat exchanger:

9. Install reservoir → INSTALLING RESERVOIR .
10. Remove cover for front underbody at the left → 519219 REMOVING AND INSTALLING COVER FOR FRONT UNDERBODY .
11. Install wheel housing liner at the left → INSTALLING FRONT WHEEL HOUSING LINER .
12. Install air cleaner housing at the left, if installed → INSTALLING AIR CLEANER HOUSIN .
13. Fill in refrigerant → 870317 DRAINING AND FILLING REFRIGERANT .

Section of line with inner heat exchanger:

15. Install cross panel → INSTALLING CROSS PANEL .
16. Install reservoir → INSTALLING RESERVOIR .
17. Fill in refrigerant → 870317 DRAINING AND FILLING REFRIGERANT .

WM 874519 REMOVING AND INSTALLING COMPRESSOR/EVAPORATOR LINE (MACAN, MACAN S, MACAN TURBO) > TOOLS

Designation	Type	Number	Description	
release tool	VW tool	T40149		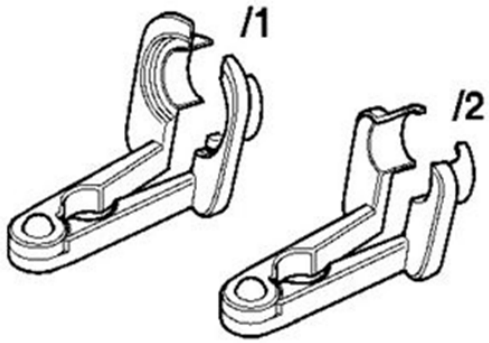

WM 874519 REMOVING AND INSTALLING COMPRESSOR/EVAPORATOR LINE (MACAN, MACAN S, MACAN TURBO) > TECHNICAL VALUES

Location	Description	Type	Basic value	Tolerance 1	Tolerance 2
Refrigerant lines to air-conditioning compressor		Tightening torque	20 Nm (15 ftlb.)		

WM 874519 REMOVING AND INSTALLING COMPRESSOR/EVAPORATOR LINE (MACAN, MACAN S, MACAN TURBO) > PRELIMINARY WORK

1. Drain refrigerant → 870317 DRAINING AND FILLING REFRIGERANT .

WM 874519 REMOVING AND INSTALLING COMPRESSOR/EVAPORATOR LINE (MACAN, MACAN S, MACAN TURBO) > REMOVING AND INSTALLING COMPRESSOR/EVAPORATOR LINE

The compressor-evaporator line is removed and installed together with the air-conditioning compressor → 873419 REMOVING AND INSTALLING AIR-CONDITIONING COMPRESSOR .

WM 874519 REMOVING AND INSTALLING COMPRESSOR/EVAPORATOR LINE (MACAN, MACAN S, MACAN TURBO) > REMOVING AND INSTALLING COMPRESSOR/EVAPORATOR LINE > REMOVING COMPRESSOR/EVAPORATOR

LINE

1. Release air-conditioning line from evaporator to compressor **-1-** using **release tool T40149 -2-** and pull it off.

    1. 1.1. Close off air-conditioning lines using suitable stoppers.

    Fig 1: Identifying Release Tool (T40149)

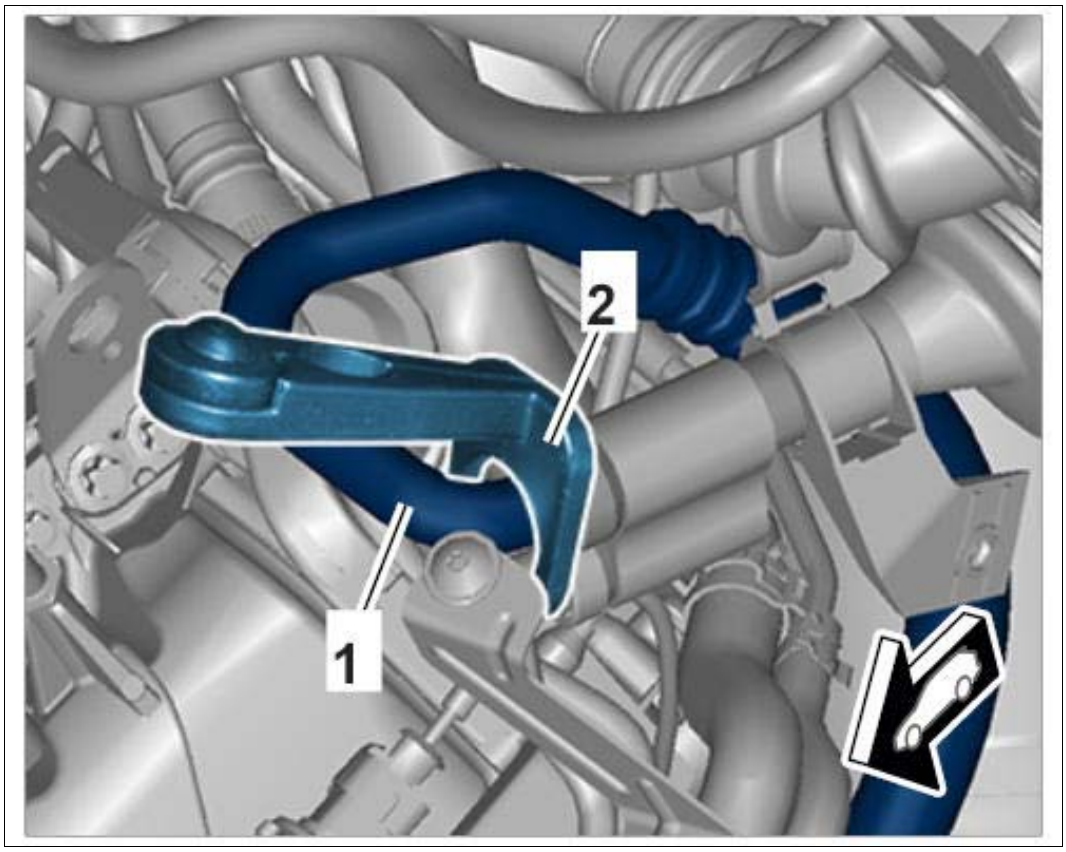

Courtesy of PORSCHE CARS NORTH AMERICA, INC.

2. Unscrew fastening screw **-3-** and pull off air-conditioning line to the evaporator from the air-conditioning compressor.

Fig 2: Identifying Air-Conditioning Compressor Lines Fastening Screw

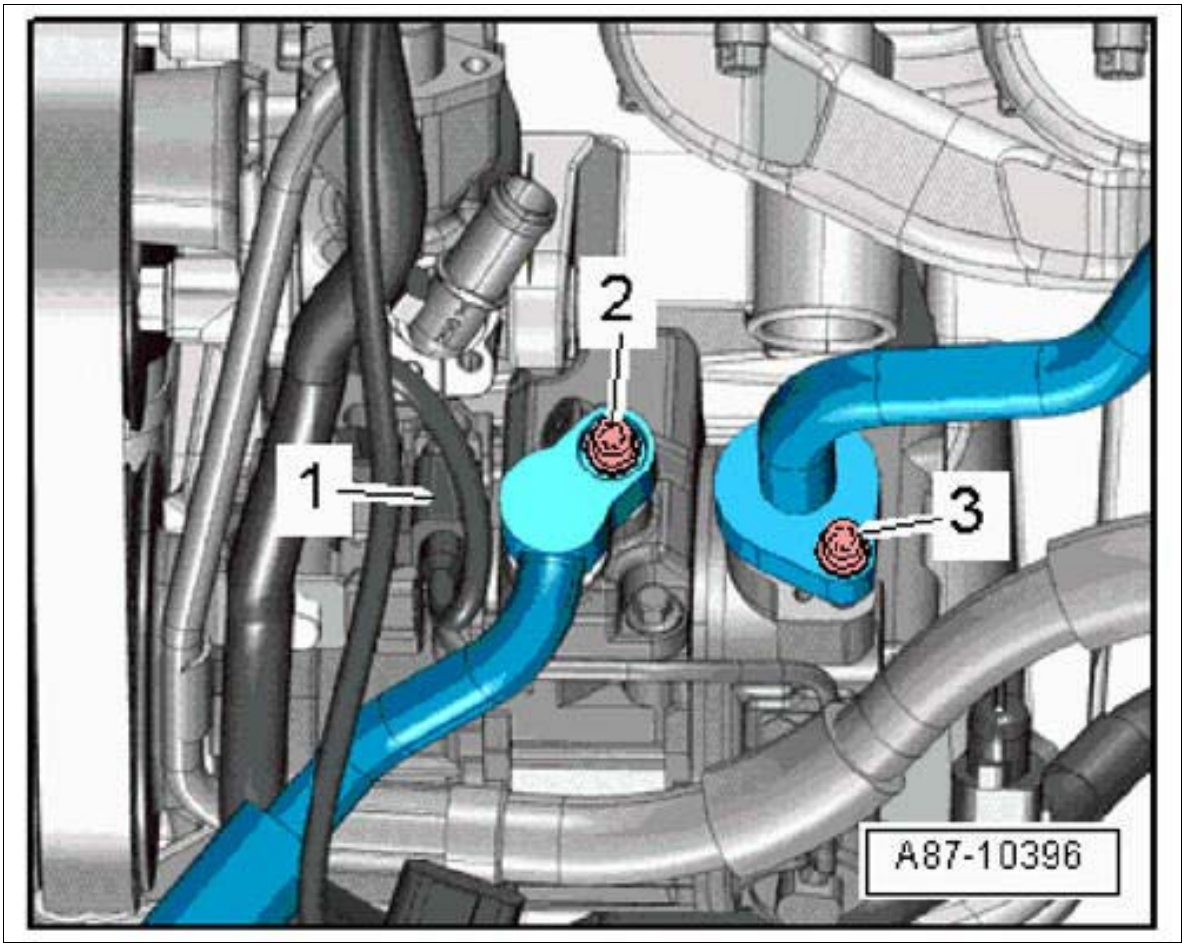

Courtesy of PORSCHE CARS NORTH AMERICA, INC.

3. Remove line from the vehicle.

WM 874519 REMOVING AND INSTALLING COMPRESSOR/EVAPORATOR LINE (MACAN, MACAN S, MACAN TURBO) > REMOVING AND INSTALLING COMPRESSOR/EVAPORATOR LINE > INSTALLING COMPRESSOR/EVAPORATOR LINE

1. Installation is performed in reverse order.

   Observe the specified tightening torque:

   Air-conditioning line to air-conditioning compressor: **Tightening torque 20 Nm (15 ftlb.)**

WM 874519 REMOVING AND INSTALLING COMPRESSOR/EVAPORATOR LINE (MACAN, MACAN S, MACAN TURBO) > SUBSEQUENT WORK

1. Fill in refrigerant → 870317 DRAINING AND FILLING REFRIGERANT .

WM 875019 REMOVING AND INSTALLING CONDENSER (MACAN, MACAN S, MACAN TURBO) > TECHNICAL VALUES

Location	Description	Type	Basic value	Tolerance 1	Tolerance 2
Refrigerant lines to condenser	M6 x 25 thread	Tightening torque	9 Nm (6.5 ftlb.)		

WM 875019 REMOVING AND INSTALLING CONDENSER (MACAN, MACAN S, MACAN TURBO) > PRELIMINARY WORK

1. Drain refrigerant → 870317 DRAINING AND FILLING REFRIGERANT .
2. Remove rear air guide → 192419 REMOVING AND INSTALLING AIR GUIDE .
3. Remove front carrier → 633319 REMOVING AND INSTALLING FRONT CARRIER .

WM 875019 REMOVING AND INSTALLING CONDENSER (MACAN, MACAN S, MACAN TURBO) > REMOVING AND INSTALLING CONDENSER > REMOVING CONDENSER

1. Unscrew fastening screws **-D-** .
2. Remove air-conditioning lines **-E and F-** from the condenser.

Fig 1: Locating Condenser Connection

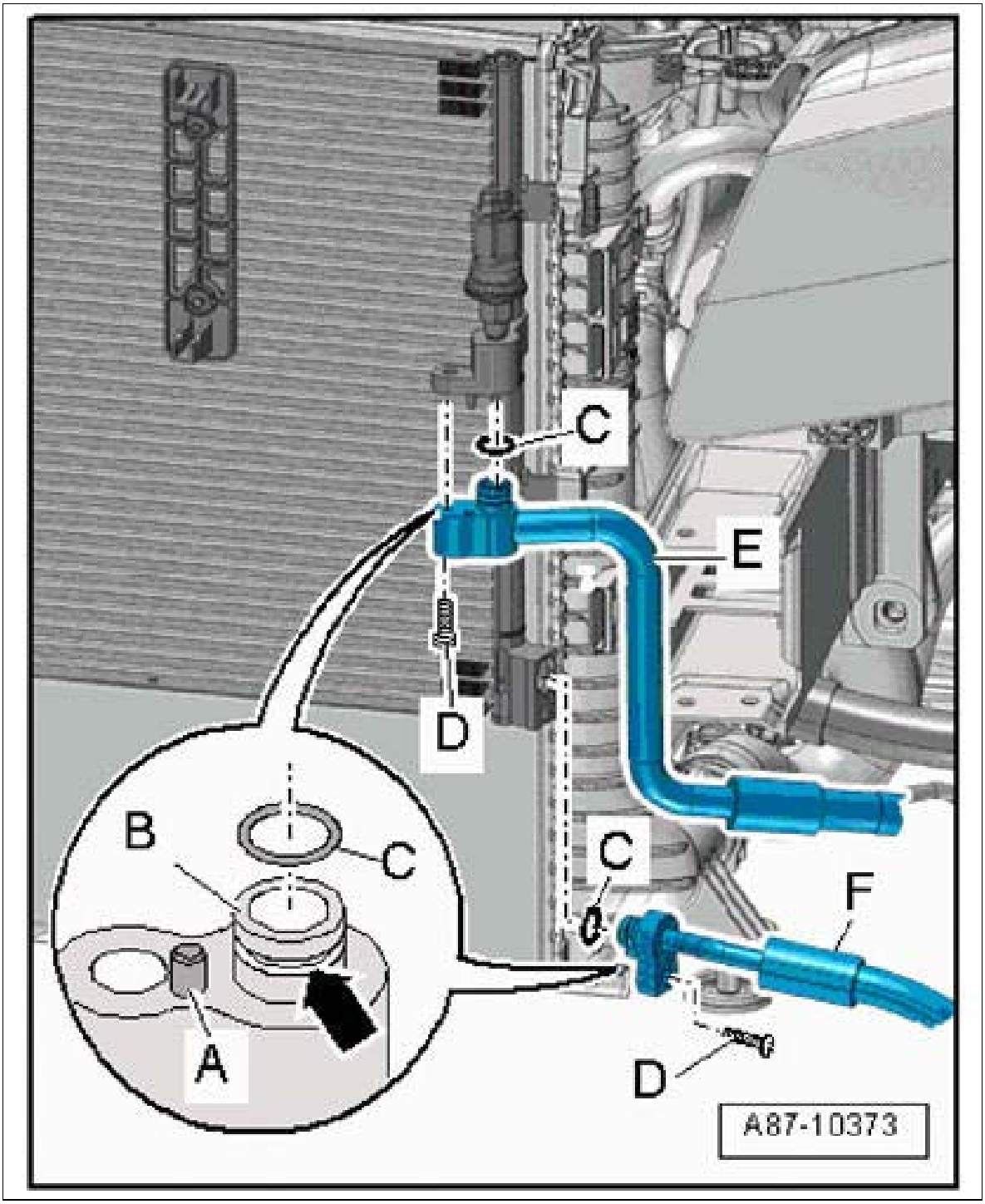

Courtesy of PORSCHE CARS NORTH AMERICA, INC.

3. Close off air-conditioning lines using suitable stoppers.

4. Release locks **-2-** and remove condenser **-1-** by pulling it upwards **-arrow-** .

Fig 2: Removing Condenser

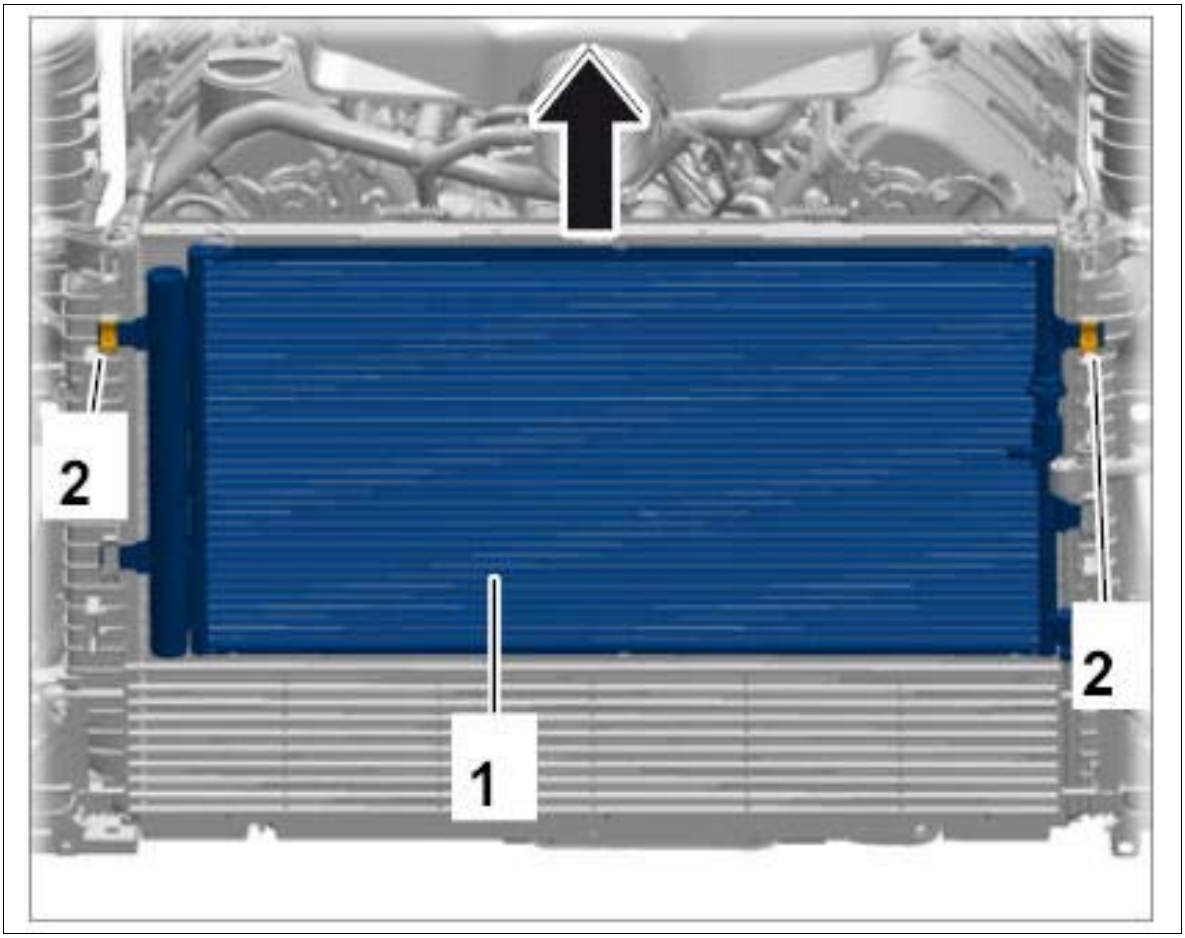

Courtesy of PORSCHE CARS NORTH AMERICA, INC.

5. If the condenser is replaced, convert the pressure switch → 878319 REMOVING AND INSTALLING PRESSURE SWITCH .

WM 875019 REMOVING AND INSTALLING CONDENSER (MACAN, MACAN S, MACAN TURBO) > REMOVING AND INSTALLING CONDENSER > INSTALLING CONDENSER

1. Replace O-rings on the lines.
2. Installation is performed in reverse order.

   Observe specified tightening torques:

   Air-conditioning lines to condenser: **Tightening torque 9 Nm (6.5 ftlb.)**

WM 875019 REMOVING AND INSTALLING CONDENSER (MACAN, MACAN S, MACAN TURBO) > SUBSEQUENT WORK

1. Install front carrier → INSTALLING FRONT CARRIER .

2. Install rear air guide → INSTALLING REAR AIR GUIDE .
3. Fill in refrigerant → 870317 DRAINING AND FILLING REFRIGERANT .

WM 875555 REPLACING DESICCATOR (MACAN, MACAN S, MACAN TURBO) > PRELIMINARY WORK

1. Drain refrigerant → 870317 DRAINING AND FILLING REFRIGERANT .
2. **Applies only to Macan Turbo:**

   Remove pedestrian protection → 697019 REMOVING AND INSTALLING PEDESTRIAN PROTECTION .

   Applies to all other vehicles:

   Remove charge-air cooler → 214319 REMOVING AND INSTALLING CHARGE-AIR COOLER .

WM 875555 REPLACING DESICCATOR (MACAN, MACAN S, MACAN TURBO) > REMOVING AND INSTALLING DESICCATOR > REMOVING DESICCATOR

1. Unscrew plastic plug **-A-** (with filter element **-C-**).

   Information

   1. To prevent dirt and moisture from getting in, re-seal open connection on the condenser using a plastic plug.

2. Pull desiccator cartridge **-D-** down out of the condenser.

Fig 1: Removing Desiccator

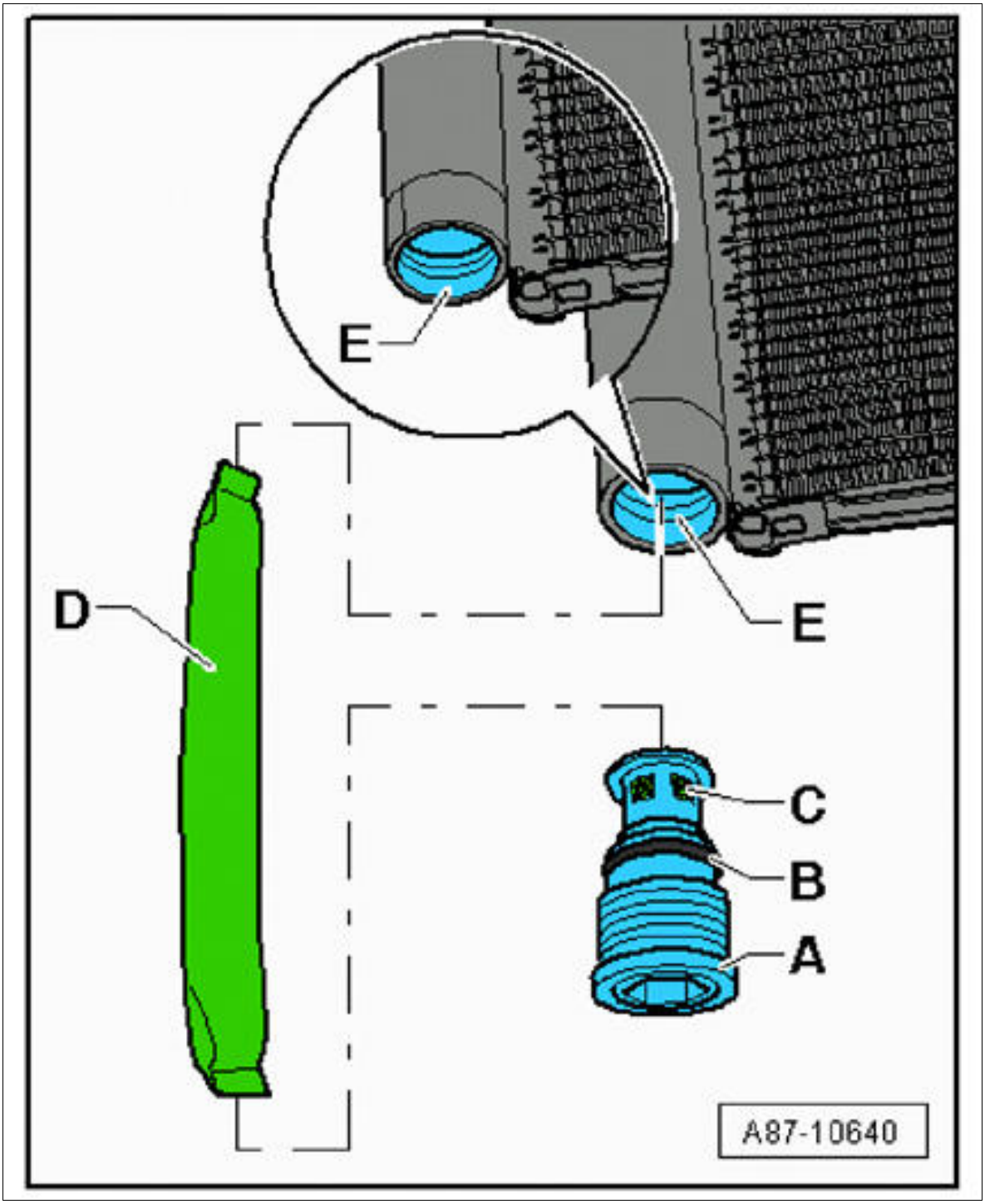

Courtesy of PORSCHE CARS NORTH AMERICA, INC.

WM 875555 REPLACING DESICCATOR (MACAN, MACAN S, MACAN TURBO) > REMOVING AND INSTALLING DESICCATOR > INSTALLING DESICCATOR

1. Replace plastic screw **-A-** (with filter element **-C-**), desiccator cartridge **-D-** and O-ring **-B-** .
2. Coat O-ring **-B-** lightly with refrigerant oil.

Fig 1: Removing Desiccator

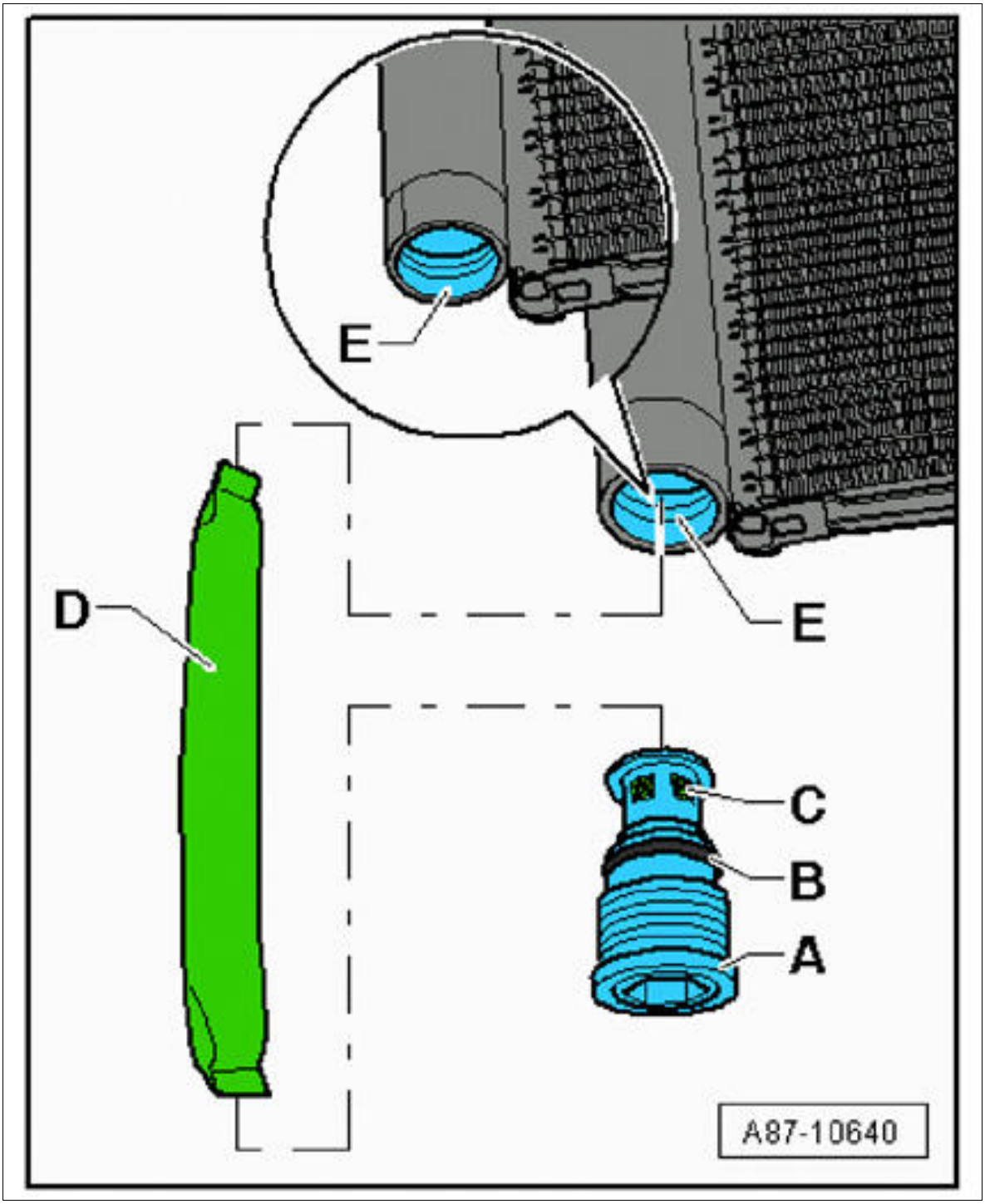

Courtesy of PORSCHE CARS NORTH AMERICA, INC.

Information

Do not open the stoppers for the lines and connections until shortly before installation.

3. Installation is performed in reverse order.

WM 875555 REPLACING DESICCATOR (MACAN, MACAN S, MACAN TURBO) > SUBSEQUENT WORK

1. **Applies only to Macan Turbo:**

   Install pedestrian protection → INSTALLING PEDESTRIAN PROTECTION .

   Applies to all other vehicles:

   Install charge-air cooler → INSTALLING CHARGE-AIR COOLER .

2. Fill in refrigerant → 870317 DRAINING AND FILLING REFRIGERANT .

WM 875819 REMOVING AND INSTALLING TEMPERATURE SENSOR (MACAN, MACAN S, MACAN TURBO) > PRELIMINARY WORK

1. **Applies to left temperature sensor:**

   Remove trim panel under dashboard at the left → 70191901 REMOVING AND INSTALLING TRIM PANEL UNDER DASHBOARD AT THE LEFT .

   Applies to left temperature sensor:

   Remove glove compartment → 681519 REMOVING AND INSTALLING GLOVE COMPARTMENT .

WM 875819 REMOVING AND INSTALLING TEMPERATURE SENSOR (MACAN, MACAN S, MACAN TURBO) > REMOVING AND INSTALLING TEMPERATURE SENSOR > REMOVING LEFT TEMPERATURE SENSOR

1. Disconnect connector **-A-** from the temperature sensor.
2. Turn the temperature sensor **-B-** by 90 degrees and pull it out of the mounting **-D-** in the air duct.

Fig 1: Turning Left Temperature Sensor

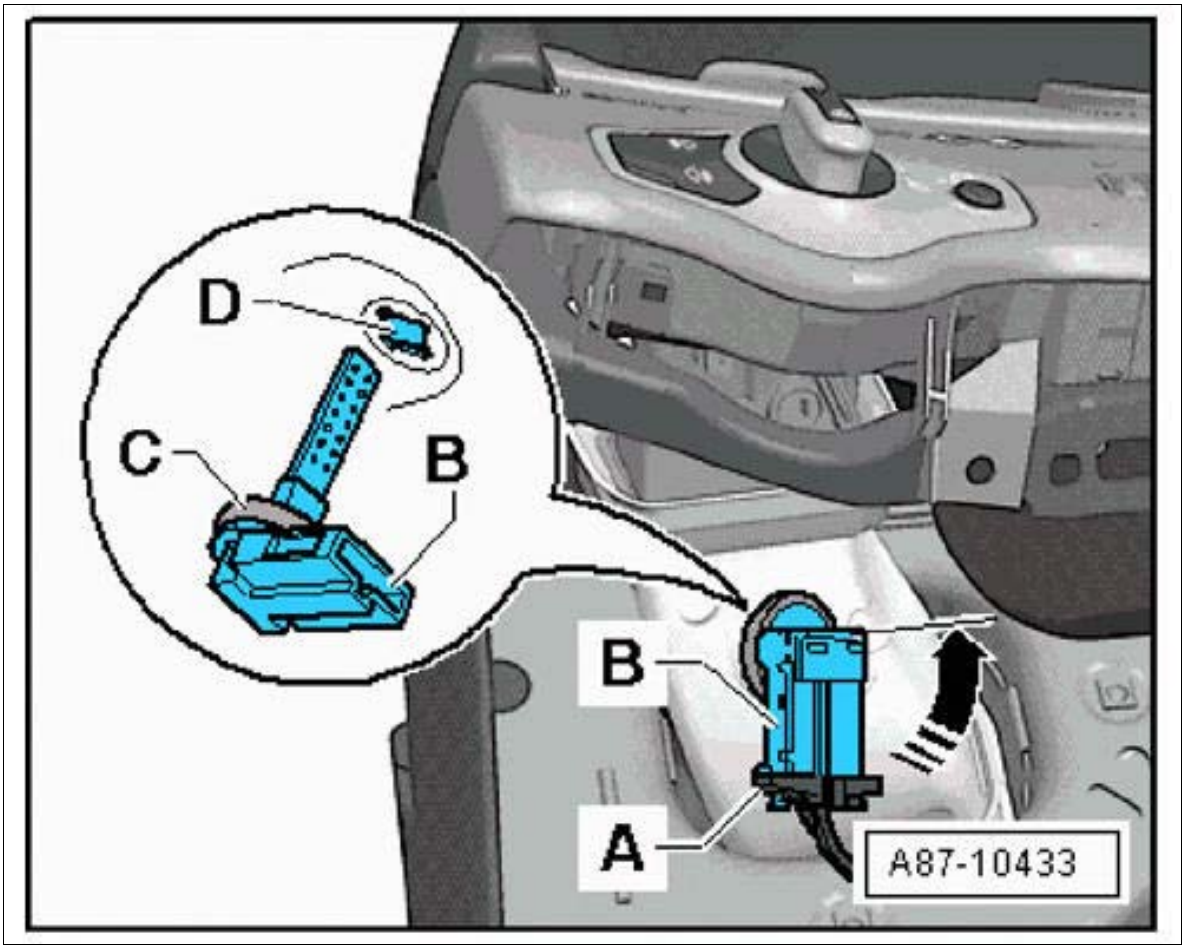

Courtesy of PORSCHE CARS NORTH AMERICA, INC.

WM 875819 REMOVING AND INSTALLING TEMPERATURE SENSOR (MACAN, MACAN S, MACAN TURBO) > REMOVING AND INSTALLING TEMPERATURE SENSOR > INSTALLING LEFT TEMPERATURE SENSOR

1. Check seal **-C-** for damage and check that it is fitted correctly.
2. Installation is performed in reverse order.

Fig 1: Turning Left Temperature Sensor

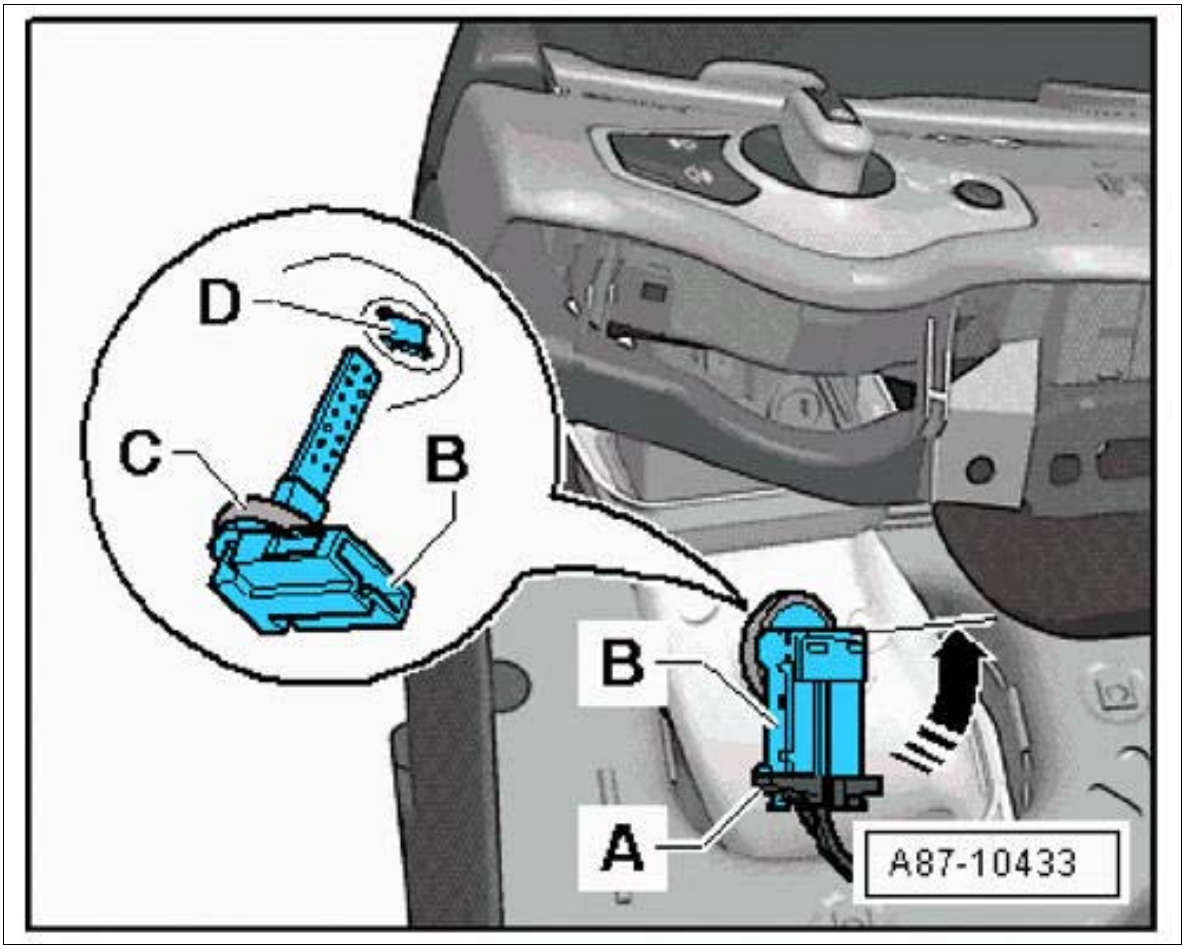

Courtesy of PORSCHE CARS NORTH AMERICA, INC.

WM 875819 REMOVING AND INSTALLING TEMPERATURE SENSOR (MACAN, MACAN S, MACAN TURBO) > REMOVING AND INSTALLING TEMPERATURE SENSOR > REMOVING RIGHT TEMPERATURE SENSOR

1. Disconnect connector **-A-** from the temperature sensor.
2. Turn the temperature sensor **-B-** by 90 degrees and pull it out of the mounting **-D-** in the air duct.

Fig 1: Turning Right Temperature Sensor

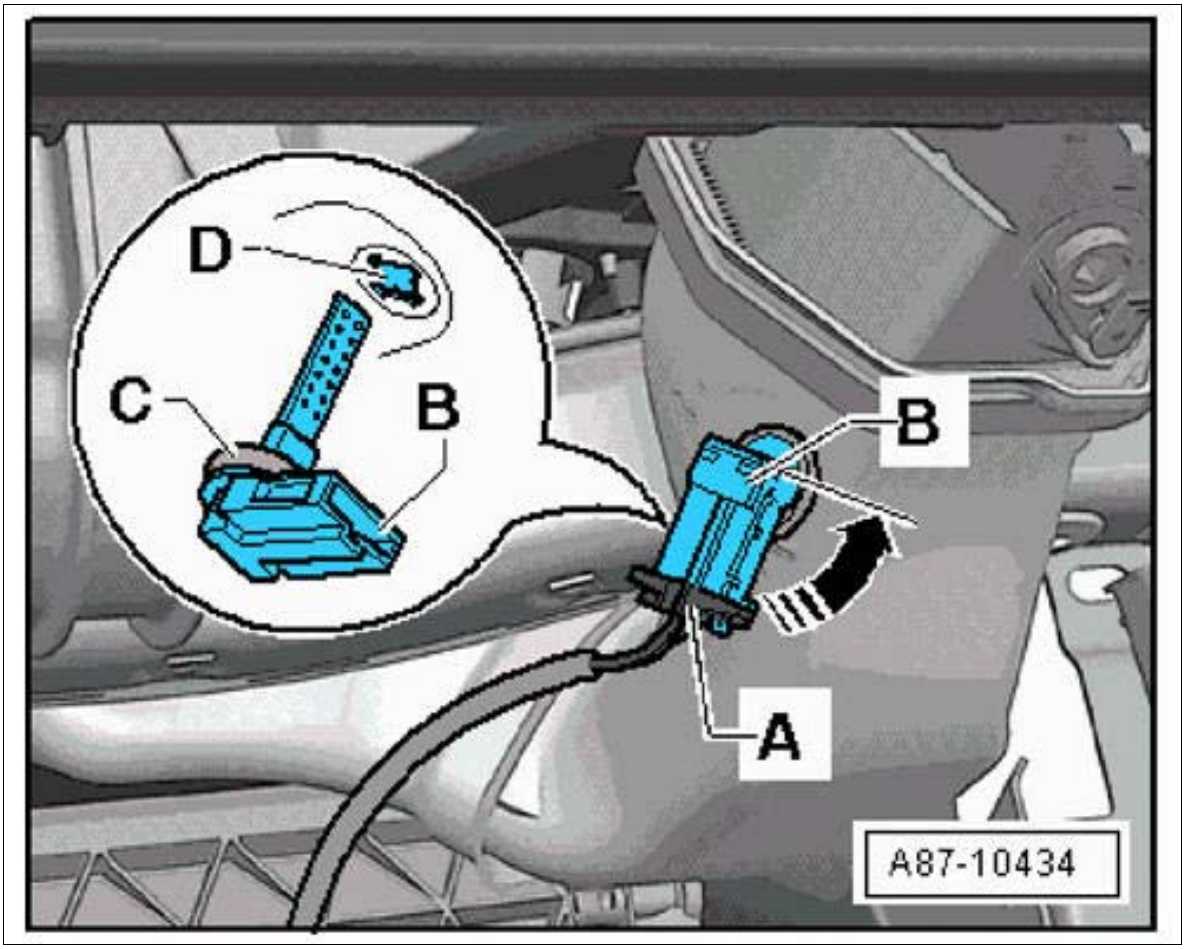

Courtesy of PORSCHE CARS NORTH AMERICA, INC.

WM 875819 REMOVING AND INSTALLING TEMPERATURE SENSOR (MACAN, MACAN S, MACAN TURBO) > REMOVING AND INSTALLING TEMPERATURE SENSOR > INSTALLING RIGHT TEMPERATURE SENSOR

1. Check seal **-C-** for damage and check that it is fitted correctly.
2. Installation is performed in reverse order.

Fig 1: Turning Right Temperature Sensor

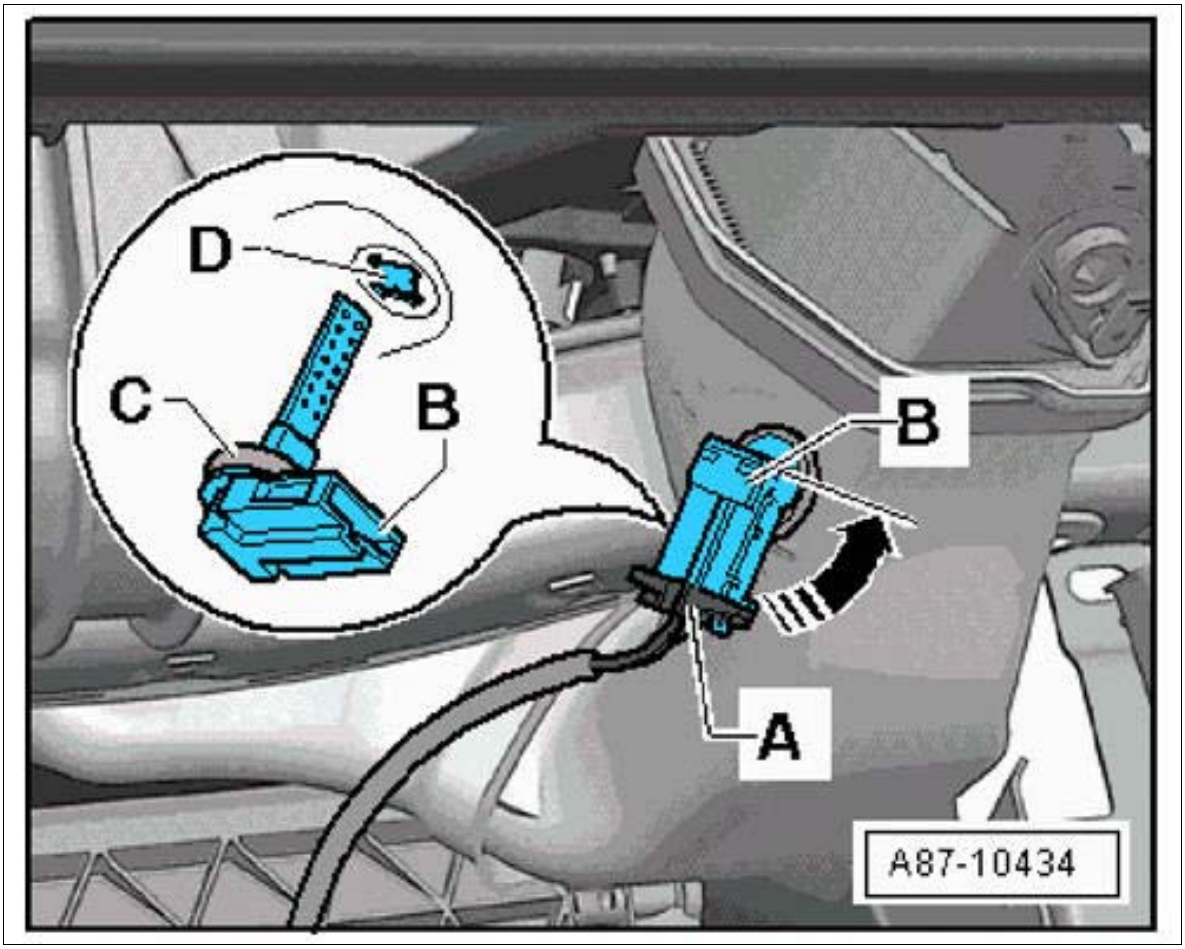

Courtesy of PORSCHE CARS NORTH AMERICA, INC.

WM 875819 REMOVING AND INSTALLING TEMPERATURE SENSOR (MACAN, MACAN S, MACAN TURBO) > SUBSEQUENT WORK

1. **Applies to left temperature sensor:**

   Install trim panel under dashboard at the left → INSTALLING TRIM PANEL UNDER DASHBOARD AT THE LEFT .

   Applies to left temperature sensor:

   Install glove compartment → INSTALLING GLOVE COMPARTMENT .

WM 877019 REMOVING AND INSTALLING EXPANSION VALVE (MACAN, MACAN S, MACAN TURBO) > TECHNICAL VALUES

Location	Description	Type	Basic value	Tolerance 1	Tolerance 2

Refrigerant line to expansion valve	M8 x 35 thread	Tightening torque	12 Nm (9 ftlb.)		
Expansion valve to air conditioner		Tightening torque	10 Nm (7.5 ftlb.)		

WM 877019 REMOVING AND INSTALLING EXPANSION VALVE (MACAN, MACAN S, MACAN TURBO) > PRELIMINARY WORK

1. Drain refrigerant → 870317 DRAINING AND FILLING REFRIGERANT .
2. Remove cowl panel cover → 508719 REMOVING AND INSTALLING COWL PANEL COVER .
3. Remove center plenum panel wall → 508119 REMOVING AND INSTALLING CROSS PANEL (DISASSEMBLING PLENUM PANEL) .

WM 877019 REMOVING AND INSTALLING EXPANSION VALVE (MACAN, MACAN S, MACAN TURBO) > REMOVING AND INSTALLING EXPANSION VALVE > REMOVING EXPANSION VALVE

WARNING: Refrigerant

- *Danger of freezing*

→ Avoid contact with refrigerant.

→ Wear personal protective gear.

→ Observe the safety regulations for working on air-conditioned vehicles and dealing with refrigerant.

→ Observe the safety regulations for extraction and filling systems.

→ Observe the instructions for repairing air conditioning systems and storing spare parts.

Information

Before re-installing the component, check the O-rings of the refrigerant lines for damage and replace them if necessary.

Wet the O-rings of the refrigerant lines with refrigerant oil.

Close off all lines and connections using suitable stoppers during removal.

Do not open the stoppers for the lines and connections until shortly before installation.

1. Unscrew fastening screws **-1-** on the air-conditioning lines **-2-** .
2. Disconnect air-conditioning line **-2-** from the expansion valve and carefully press it aside (to

facilitate access).

Fig 1: Identifying Air-Conditioning Line Fastening Screws

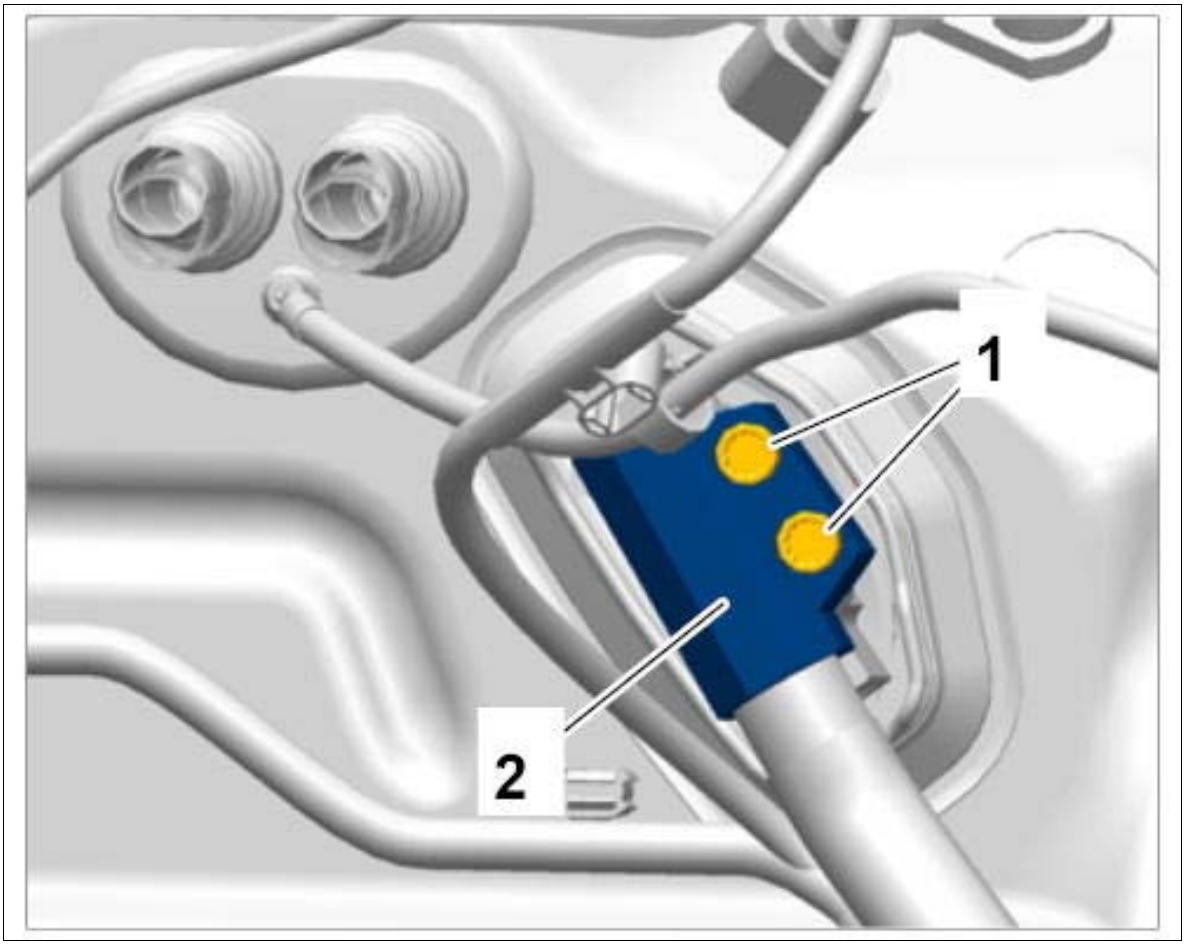

Courtesy of PORSCHE CARS NORTH AMERICA, INC.

3. Unscrew fastening screws **-1-** on the expansion valve **-2-** .
4. Disconnect expansion valve **-2-** from the connection pieces.

Fig 2: Identifying Expansion Valve Fastening Screws

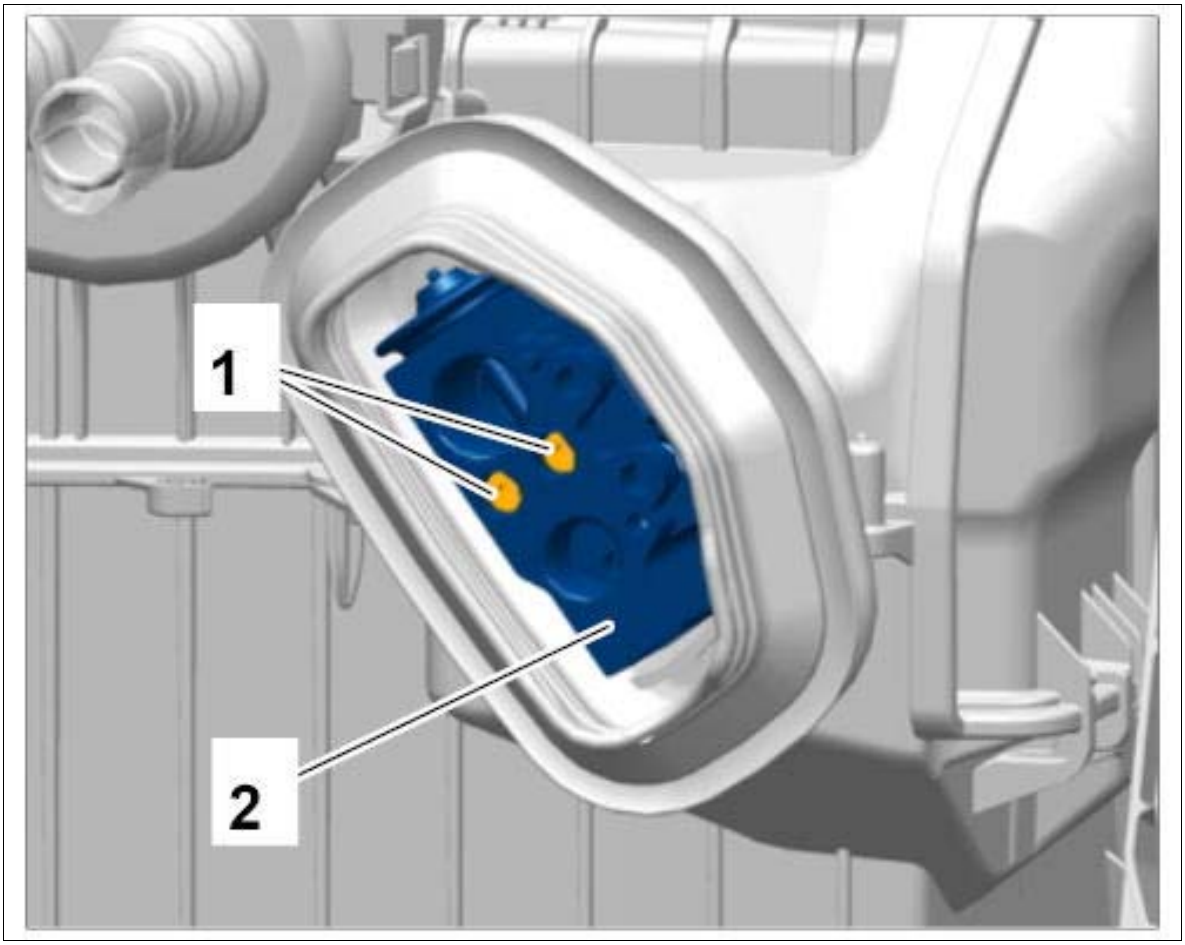

Courtesy of PORSCHE CARS NORTH AMERICA, INC.

WM 877019 REMOVING AND INSTALLING EXPANSION VALVE (MACAN, MACAN S, MACAN TURBO) > REMOVING AND INSTALLING EXPANSION VALVE > INSTALLING EXPANSION VALVE

WARNING: Refrigerant

- *Danger of freezing*

→ Avoid contact with refrigerant.

→ Wear personal protective gear.

→ Observe the safety regulations for working on air-conditioned vehicles and dealing with refrigerant.

→ Observe the safety regulations for extraction and filling systems.

→ Observe the instructions for repairing air conditioning systems and storing spare parts.

Information

- Before the expansion valve is re-installed, the O-rings of the refrigerant lines must be checked for damage and replaced if necessary.
- Wet the O-rings of the refrigerant lines with refrigerant oil.

1. Installation is performed in reverse order.

   Observe specified tightening torques:

   Expansion valve to air conditioner: **Tightening torque 10 Nm (7.5 ftlb.)**

   Air-conditioning line to expansion valve: **Tightening torque 12 Nm (9 ftlb.)**

WM 877019 REMOVING AND INSTALLING EXPANSION VALVE (MACAN, MACAN S, MACAN TURBO) > SUBSEQUENT WORK

1. Install center plenum panel wall → INSTALLING CROSS PANEL (DISASSEMBLING PLENUM PANEL).
2. Install cowl panel cover → INSTALLING COWL PANEL COVER .
3. Fill in refrigerant → 870317 DRAINING AND FILLING REFRIGERANT .

WM 877819 REMOVING AND INSTALLING FAN CONTROL (MACAN, MACAN S, MACAN TURBO) > PRELIMINARY WORK

1. Remove glove compartment → 681519 REMOVING AND INSTALLING GLOVE COMPARTMENT .

WM 877819 REMOVING AND INSTALLING FAN CONTROL (MACAN, MACAN S, MACAN TURBO) > REMOVING AND INSTALLING FAN CONTROL > REMOVING FAN CONTROL

1. Disconnect connectors **-A and B-** .
2. Unscrew fastening screws **-C-** .
3. Remove fan control **-D-** .

Fig 1: Locating Fan Control

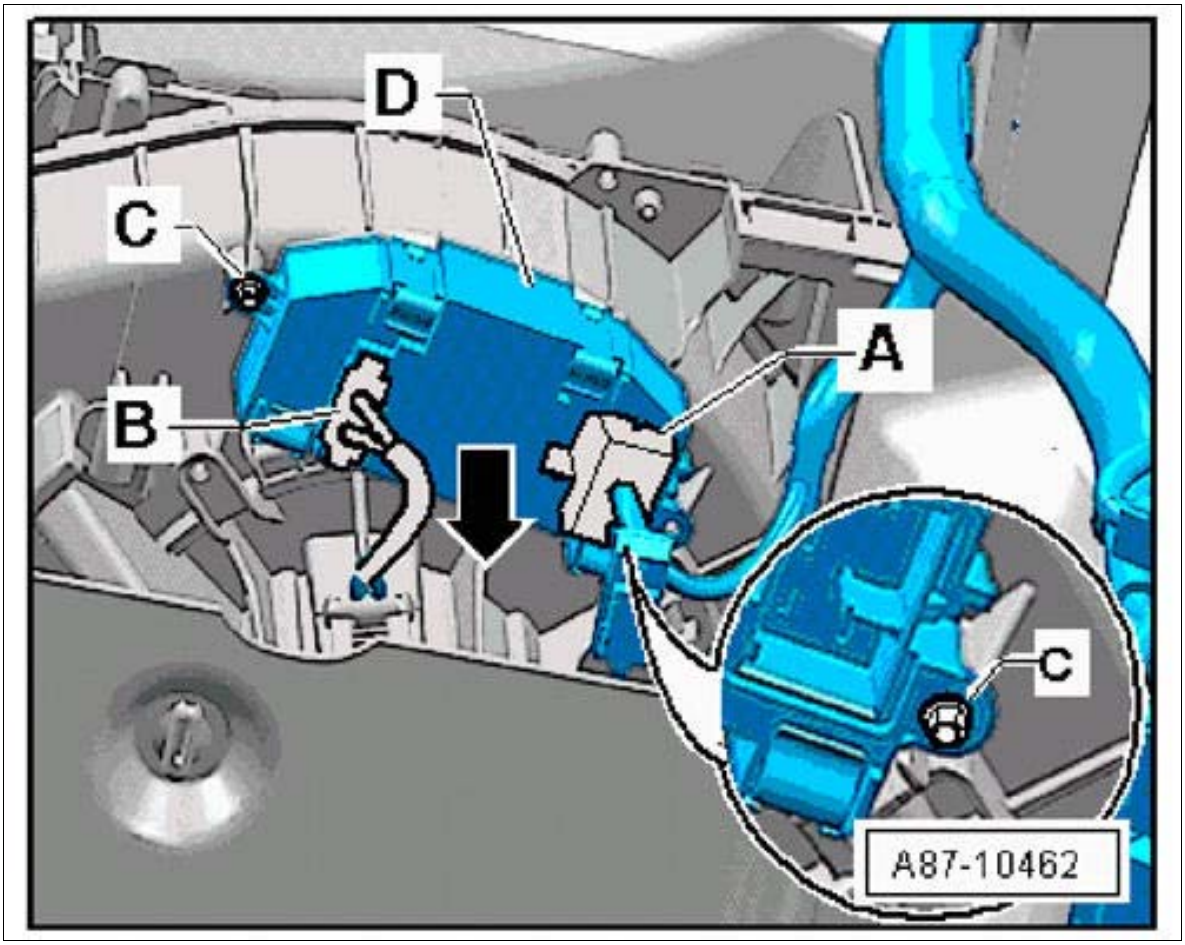

Courtesy of PORSCHE CARS NORTH AMERICA, INC.

WM 877819 REMOVING AND INSTALLING FAN CONTROL (MACAN, MACAN S, MACAN TURBO) > REMOVING AND INSTALLING FAN CONTROL > INSTALLING FAN CONTROL

1. Installation is performed in reverse order.

WM 877819 REMOVING AND INSTALLING FAN CONTROL (MACAN, MACAN S, MACAN TURBO) > SUBSEQUENT WORK

1. Remove glove compartment → 681519 REMOVING AND INSTALLING GLOVE COMPARTMENT .

WM 878319 REMOVING AND INSTALLING PRESSURE SWITCH (MACAN, MACAN S, MACAN TURBO) > PRELIMINARY WORK

1. Remove lower part of front lid lock at the left. → 551719 REMOVING AND INSTALLING LOWER PART OF FRONT LID LOCK

WM 878319 REMOVING AND INSTALLING PRESSURE SWITCH (MACAN, MACAN S, MACAN TURBO) > REMOVING AND INSTALLING PRESSURE SWITCH > REMOVING PRESSURE SWITCH

1. Disconnect connector **-A-** .

   Fig 1: Disconnecting Pressure Switch Connector

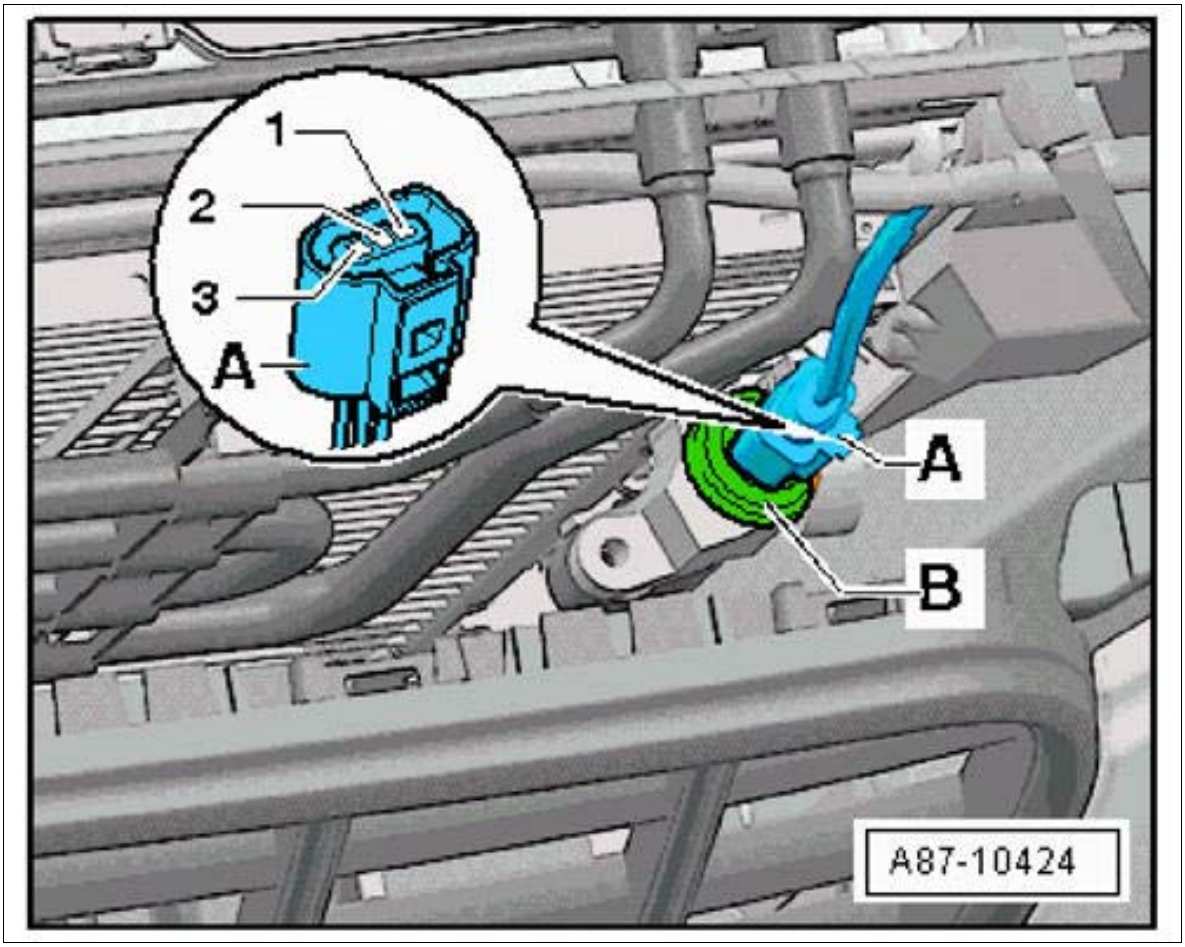

Courtesy of PORSCHE CARS NORTH AMERICA, INC.

2. Unscrew pressure switch **-A-** from the connection at the condenser **-C-** .

Fig 2: Removing/Installing Pressure Switch

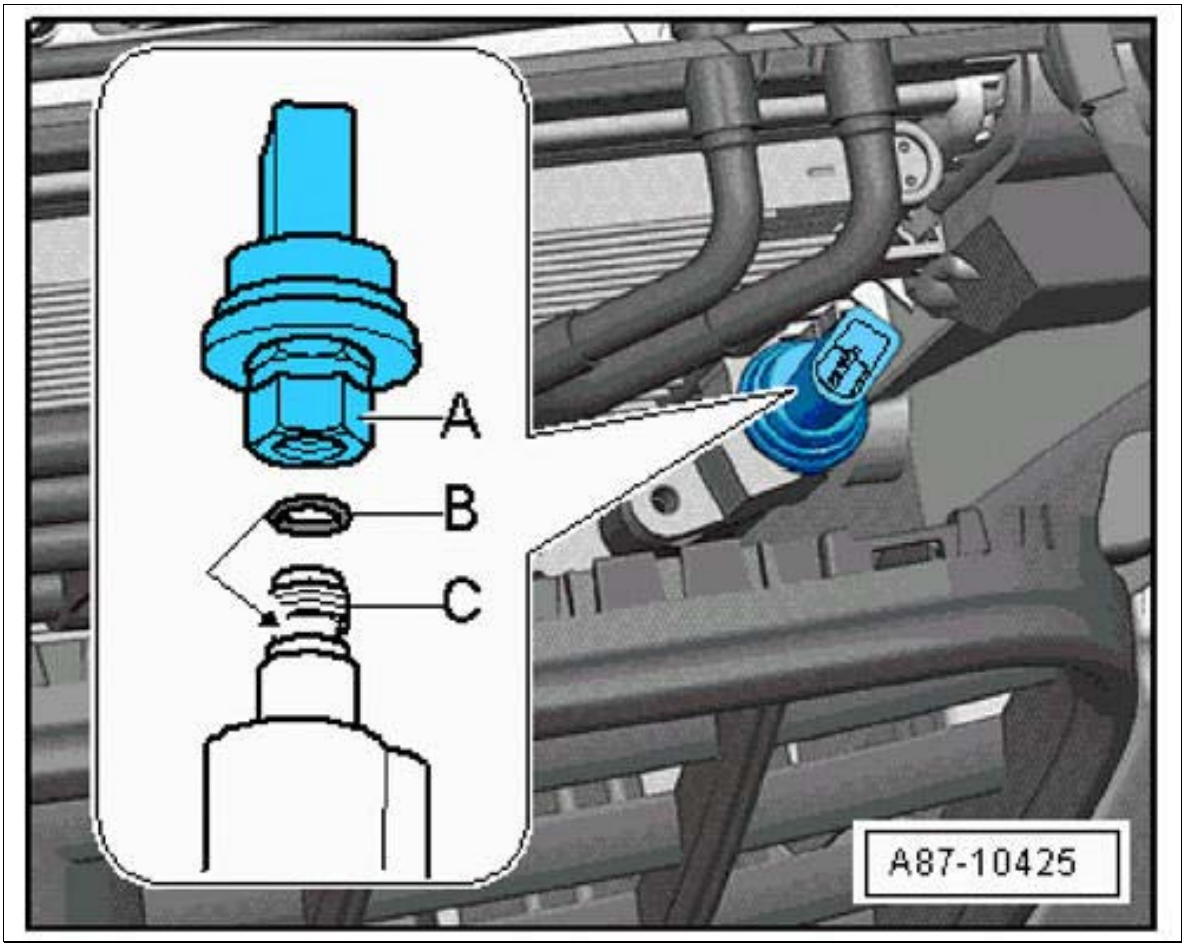

Courtesy of PORSCHE CARS NORTH AMERICA, INC.

WM 878319 REMOVING AND INSTALLING PRESSURE SWITCH (MACAN, MACAN S, MACAN TURBO) > REMOVING AND INSTALLING PRESSURE SWITCH > INSTALLING PRESSURE SWITCH

1. Replace O-ring **-B-** .
2. Installation is performed in reverse order.

Fig 1: Removing/Installing Pressure Switch

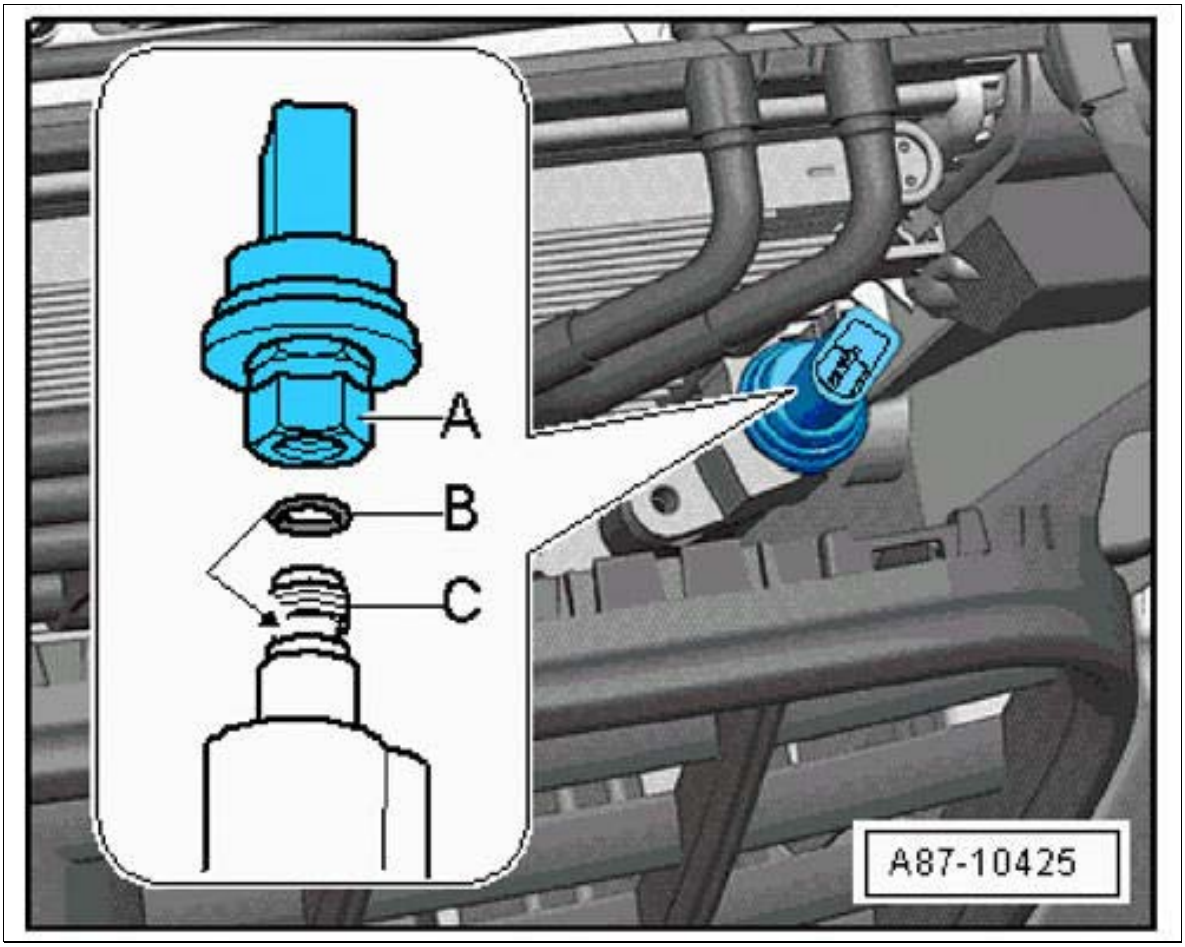

Courtesy of PORSCHE CARS NORTH AMERICA, INC.

WM 878319 REMOVING AND INSTALLING PRESSURE SWITCH (MACAN, MACAN S, MACAN TURBO) > SUBSEQUENT WORK

1. Install lower part of front lid lock at the left. → INSTALLING LOWER PART OF LID LOCK .

WM 8X00IN AIR CONDITIONING (ALL MODELS) > INFORMATION > DISTRIBUTION OF OIL QUANTITY IN REFRIGERANT CIRCUIT

Information

- Oil removed by suction must be returned to the system!
- Refrigerant oil removed from a previously run air-conditioning system may no longer be used (special-category waste)!
- After the refrigerant has been removed by suction and a component has been replaced, the oil quantity must be determined and topped up by the quantity remaining in the removed component!

When individual components listed in the following table are replaced, the measured oil quantity removed by suction from the refrigerant circuit and the quantity in the component must be returned to the refrigerant circuit.

In order to use a new compressor in a refrigerant circuit that is already functional, the oil quantity of the new compressor must be reduced by max. 47 cm^3. The compressor oil quantity is 110 cm^3 for a new compressor in as-delivered state.

WM 8X00IN AIR CONDITIONING (ALL MODELS) > INFORMATION > DISTRIBUTION OF OIL QUANTITY IN THE INDIVIDUAL AIR-CONDITIONING COMPONENTS

Component	Distribution of oil quantity in %	Oil quantity: low-pressure oil 8 in cm^3
Compressor	57	63
Condenser incl. desiccator	11	12
Refrigerant lines	11	12
Evaporator	21	23
Total compressor oil quantity	**for 100**	**110**

WM 8X00IN INSTRUCTIONS FOR CARRYING OUT GENERAL REPAIRS ON VEHICLES WITH AUXILIARY HEATING (ALL MODELS) > INFORMATION > INSTRUCTIONS FOR CARRYING OUT GENERAL REPAIRS ON VEHICLES WITH AUXILIARY HEATING

Information

- Perform on-board diagnosis of the auxiliary heating system using the vehicle diagnostic tester.
- If parts of the fuel system were removed or replaced, make sure that all components for extracting

fuel for the auxiliary heating system are installed properly.

- To avoid confusing the coolant hoses, mark them before removal.

Following repair work near the fuel line for the auxiliary heating system, check the following points:

- Check that the fuel lines are routed flush with the underbody and are protected from mechanical damage.
- Check that the fuel line for the auxiliary heating system is protected against high temperatures that could cause malfunctions.
- Check that the fuel line is not touching any hot components.

WM 8X00IN INSTRUCTIONS FOR REPAIRING AIR-CONDITIONING SYSTEMS AND STORING SPARE PARTS (ALL MODELS) > INSTRUCTIONS FOR REPAIRING AIR-CONDITIONING SYSTEMS AND STORING SPARE PARTS

Information

If you need to work on the refrigerant circuit, close off all openings immediately using commercially available rubber stoppers.

Store air-conditioning components in a dry and sealed-off area.

Blast air-conditioning components with nitrogen before refitting.

When fitting parts, do not remove stoppers until shortly before installation. Likewise, do not remove the protective foil from the desiccator until just before installation. The desiccator absorbs moisture from the air and is then useless.

Do not carry out repairs in the open during damp weather.

The desiccator should be replaced as soon as one component of the air conditioning system has been replaced or if the air conditioning system was open for > 20 minutes.

Moisture in the refrigerant circuit not only leads to poor cooling, but oversaturation can also cause the desiccator to disintegrate and contaminate the air-conditioning system from inside. This can result in expensive and complicated repairs.

Evacuate the refrigerant circuit according to instructions.

Use a pressure reducer when working with nitrogen.

WM 8X00IN NOMINAL VALUES FOR PRESSURES AND TEMPERATURES (ALL MODELS) > INFORMATION > GENERAL INFORMATION

Information

- The air outlet temperatures at the center vent on the dashboard and the high pressure in the air-conditioning system must not be higher or lower than the specified tolerance ranges after a

running time of 7 minutes (high-pressure measurement).

WM 8X00IN NOMINAL VALUES FOR PRESSURES AND TEMPERATURES (ALL MODELS) > INFORMATION > PROCEDURE AND GENERAL REQUIREMENTS FOR TESTING

Information

- The safety regulations must be observed during all work on the refrigerant system! → 8X00IN SAFETY REGULATIONS FOR WORKING ON AIR-CONDITIONED VEHICLES AND DEALING WITH REFRIGERANT R134A , → 8X00IN SAFETY REGULATIONS FOR EXTRACTION AND FILLING SYSTEMS .

Information

- If the specified nominal values are not reached, the air conditioning must be checked for leaks and repaired.

Information

- Check condensed water drain tubes: Must not be blocked by wax or underbody protection or otherwise dirty. Condensate must be able to drain away freely.
- Check fresh-air intake system: Water must not be allowed to run into the air conditioner. Must be completely dirt-free.
- Check that there is sufficient ventilation in the outside-temperature sensor area.
- Do not allow heat from the warm engine to build up near the outside-temperature sensor.
- Check particle filter: Must be dry and not excessively dirty.
- Condenser must be dirt-free.
- Make sure that all servo motors/flaps move to their end positions. ↓
- Switch on MONO mode or SYNC mode using the button on the front air conditioning control panel.

1. Connect air conditioning service unit. → 870317 DRAINING AND FILLING REFRIGERANT .
2. Measure outside temperature using a thermometer.
3. Open all air outlet vents on the dashboard/center console (direct the blower towards the test person if necessary).
4. **Insert sensor of the temperature measuring device approx. 4 cm into the middle of the left center vent.**
5. Check stopwatch and keep an eye on the relevant temperature and high pressure on the air conditioning service unit.
6. Switch on ignition.
7. Open driver's and passenger's side windows and close sliding roof.

8. Press A/C Max button.
9. Start the engine and leave it running at idle speed (do not rev engine unnecessarily after starting!).
10. Operate air conditioning for 5 minutes at idle speed.
11. **Increase engine speed** depending on engine type and **maintain a constant engine speed for 2 minutes.** Start the time measurement immediately.
    1. 11.1. **Increase engine speed on V6 petrol vehicles to 2, 000 RPM.**
    2. 11.2. **Increase engine speed on diesel vehicles to 1, 500 RPM.**
12. Note center vent temperature and pressure values after 2 minutes.
13. Compare values (center vent temperature and pressure values) with the specified tolerances.

WM 8X00IN NOMINAL VALUES FOR PRESSURES AND TEMPERATURES (ALL MODELS) > TECHNICAL VALUES > CENTRE VENT TEMPERATURE AS A FUNCTION OF OUTSIDE TEMPERATURE

Fig 1: Centre Vent Temperature Graph

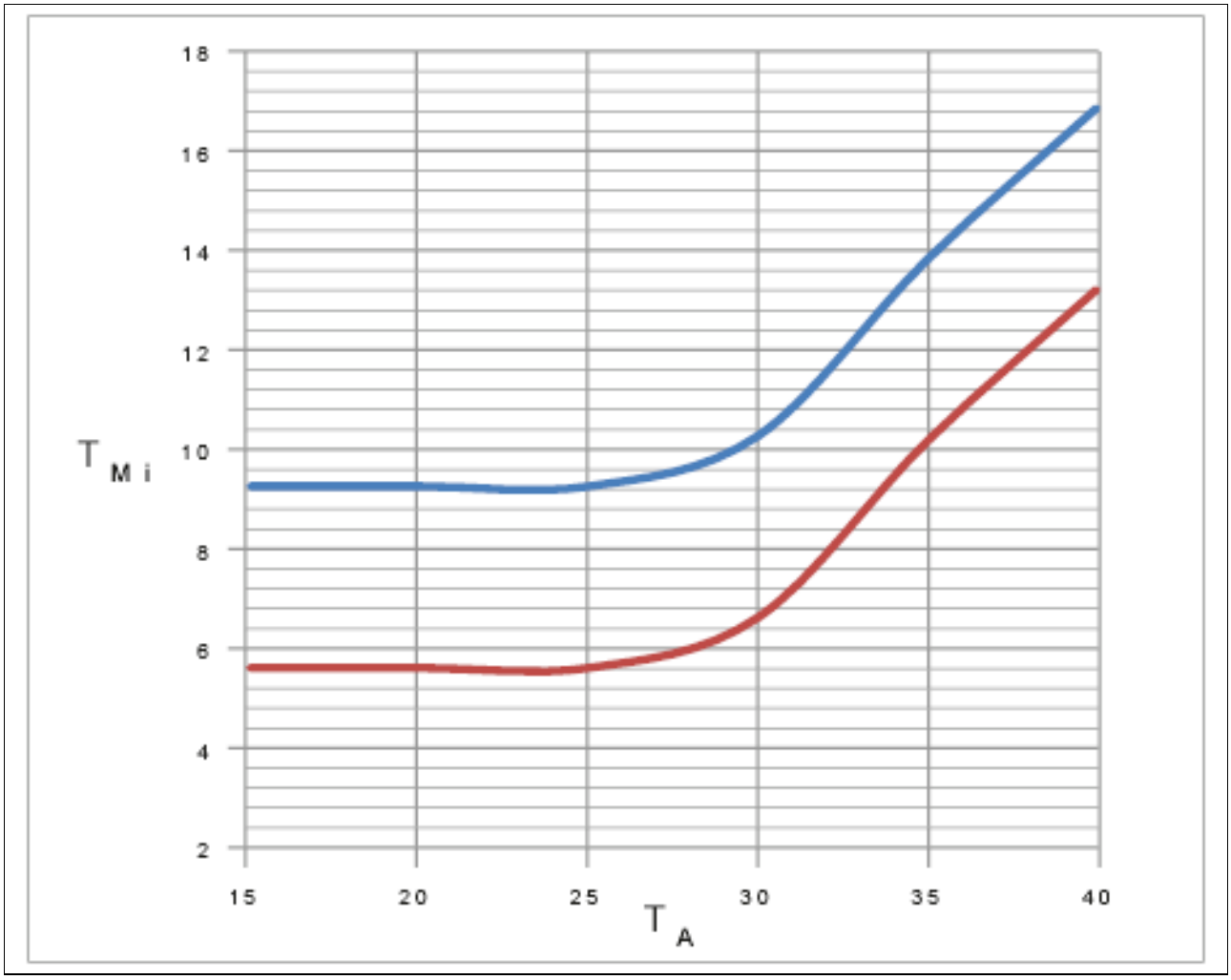

Courtesy of PORSCHE CARS NORTH AMERICA, INC.

blue - Upper limit

red - Lower limit

TA - Outside temperature (°C)

TMi - Centre vent temperature (°C)

WM 8X00IN NOMINAL VALUES FOR PRESSURES AND TEMPERATURES (ALL MODELS) > TECHNICAL VALUES > HIGH PRESSURE IN REFRIGERANT CIRCUIT AS A FUNCTION OF OUTSIDE TEMPERATURE

Fig 1: High Pressure In Refrigerant Circuit Temperature Graph

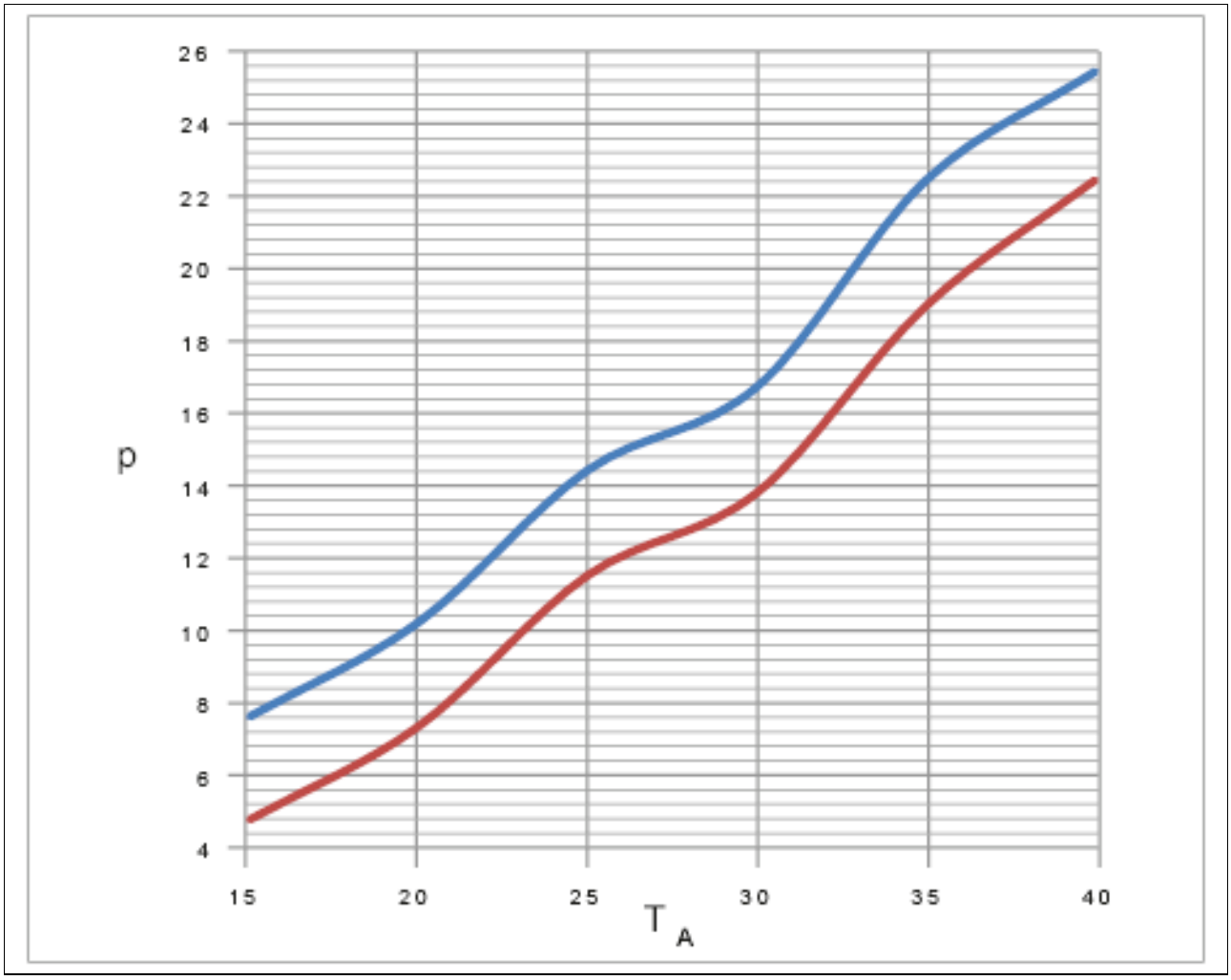

Courtesy of PORSCHE CARS NORTH AMERICA, INC.

blue - Upper limit

red - Lower limit

TA - Outside temperature (°C)

p - High pressure in refrigerant circuit (bar)

WM 8X00IN RULES RELATING TO CLEANLINESS FOR WORKING ON THE AUXILIARY HEATING SYSTEM AND FUEL SYSTEM (ALL MODELS) > INFORMATION > RULES RELATING TO CLEANLINESS FOR WORKING ON THE AUXILIARY HEATING SYSTEM AND FUEL SYSTEM

Information

- Thoroughly clean connection points and adjacent areas before loosening them.
- Place removed parts on a clean surface (use film or paper, no fibre-shedding cloths) and cover

them.

- If repair work will not be carried out immediately, the parts must be covered carefully or sealed.
- Only install clean parts.
- Do not take spare parts out of the packaging until just before installation.
- Do not use parts that have been left without packaging.

When the fuel system is open, do not:

- Use compressed air.
- Start the engine.
- Switch on auxiliary heating.

WM 8X00IN SAFETY MEASURES WHEN WORKING ON VEHICLES WITH AUXILIARY HEATING (ALL MODELS) > INFORMATION > SAFETY MEASURES WHEN WORKING ON VEHICLES WITH AUXILIARY HEATING

Information

- It is important to ensure that the auxiliary heating timer is deactivated during a workshop visit and while working on the vehicle in order to prevent the auxiliary heating system from coming on unintentionally.
- The preset timer must be activated again following repair work.
- The auxiliary heating system must not be on or switched on in areas in which there is a danger of fire and risk of explosion.
- The auxiliary heating system must not be on or switched on in enclosed spaces without an exhaust extraction system.
- Always comply with the applicable safety regulations when working on the fuel system.
- The engine must not be started if components of the fuel system (e.g. metering pump, fuel line, fuel supply indicator) are removed or open.
- Before starting repair work on the auxiliary heating system: Relieve overpressure in the cooling system by carefully opening the catch on the coolant reservoir.
- The function of the auxiliary heating system must be checked following repair work on the auxiliary heating system or fuel system.
- When repair work is complete, perform on-board diagnosis of the auxiliary heating system using the vehicle diagnostic tester.

WM 8X00IN SAFETY REGULATIONS FOR EXTRACTION AND FILLING SYSTEMS (ALL MODELS) > SAFETY REGULATIONS FOR EXTRACTION AND FILLING

SYSTEMS

> *WARNING: Improper handling of the filling system for the air conditioning.*
>
> - *Unnecessary damage to the environment due to emerging refrigerant.*

→ Before connecting the filling system to the air-conditioning, make sure that the manual shut-off valves are closed.

→ Before disconnecting the filling system from the air-conditioning, make sure that the process is complete so that no refrigerant can escape into the atmosphere.

→ After the purified refrigerant has been filled into an external compressed gas bottle from the filling system, the manual shut-off valves on the bottle and on the filling system should be closed.

→ Do not expose the filling system to moisture or use in a damp environment.

→ Shut off the power supply at the filling system before carrying out maintenance work.

→ An extension cable with cross-sectional area of at least 2.5 mm 2 should be used only when absolutely necessary.

→ In the case of fire, the external bottle should be removed.

→ Fill the oil extracted from the air-conditioning system into a suitable closable container (the refrigerant oil contains small quantities of refrigerant).

→ The filling system must be secured to prevent rolling.

WM 8X00IN SAFETY REGULATIONS FOR WORKING ON AIR-CONDITIONED VEHICLES AND HANDLING REFRIGERANT R134A (ALL MODELS) > GENERAL SAFETY REGULATIONS FOR REFRIGERANTS

> ⚠ *CAUTION: Extreme heating of air-conditioning system e.g. from sunlight shining into the vehicle or as a result of welding and soldering work.*
>
> - *Danger of fire due to excessive heating of air conditioning.*
> - *Danger of environmental pollution due to emerging refrigerant.*

→ When carrying out repairs on the air-conditioning system, the system must be emptied by suction and the refrigerant must be purified. Chlorine-free refrigerants must also not be allowed to escape into the atmosphere and must be disposed of correctly.

→ Due to their chemical composition, different refrigerants must not be mixed with each other! This also applies for smaller quantities.

→ No welding, soldering or hot-air heating may take place on parts of the filled air-conditioning system or

in its immediate vicinity.

→ While drying after painting work, the temperature burden on the vehicle must not exceed two hours at a maximum temperature of 80°C.

→ Whether or not the system is filled with refrigerant, the heating causes a very strong overpressure which can cause damage to the system or even lead to an explosion.

→ R 134a is completely non-toxic at normal temperatures, but it decomposes upon contact with a flame or at high temperatures.

→ Refrigerant bottles must not be thrown and must not be subjected to direct sunlight or other heat sources for an extended period when full.

→ The maximum permissible temperature of a filled refrigerant bottle must not exceed 45 °C.

→ Risk of injury! High temperatures from open flames or hot solids causes chemical breakdown of refrigerant gas. Inhalation of the resulting breakdown products leads to coughing and nausea.

WARNING: Caustic fluids

- *Danger of chemical burns*

→ Avoid contact with caustic fluid.

→ Wear personal protective gear.

→ Ensure that there is good ventilation.

→ If you do come into contact, wash off immediately with plenty of warm water and contact a doctor if necessary.

WARNING: Refrigerant

- *Danger of freezing*

→ Avoid contact with refrigerant.

→ Wear personal protective gear.

→ Observe the safety regulations for working on air-conditioned vehicles and dealing with refrigerant.

→ Observe the safety regulations for extraction and filling systems.

→ Observe the instructions for repairing air conditioning systems and storing spare parts.

Information

- The following safety measures should be followed for refrigerant R134a (additional regulations may apply in certain countries).

If repair work necessitates opening the refrigerant circuit, the refrigerant circuit must first be emptied.

Avoid all contact with liquid or gaseous refrigerants. If refrigerant should escape despite all safety measures having been taken, do not inhale the resulting refrigerant/air mixture. Switch on extraction systems, protect hands with rubber gloves and protect eyes with protective goggles.

If refrigerant gets onto any other body parts despite all safety measures having been taken, these should also be rinsed immediately and thoroughly with water for at least 15 minutes.

Although refrigerant R134a is non-flammable, smoking, welding, soldering and hard-soldering is prohibited in a room containing refrigerant.

WM 8X00IN SAFETY REGULATIONS FOR WORKING ON AIR-CONDITIONED VEHICLES AND HANDLING REFRIGERANT R134A (ALL MODELS) > EMPTYING THE REFRIGERANT CIRCUIT

Information

Refrigerant R134a contributes to the greenhouse effect as soon as it is released into the Earth's atmosphere.

Refrigerant should not be released into the environment but is to be extracted from the refrigerant circuit using an extraction or service station. The extracted refrigerant is then prepared again on-site or returned to the manufacturer for environmentally-friendly disposal (varying or additional regulations may apply in certain countries).

WM 8X00IN SAFETY REGULATIONS FOR WORKING ON AIR-CONDITIONED VEHICLES AND HANDLING REFRIGERANT R134A (ALL MODELS) > WORKING ON THE REFRIGERANT CIRCUIT

WARNING: Toxic substances

- *Danger of poisoning or suffocation*
- *Danger of burns to the eyes and skin*

→ Ventilate the work area well.

→ Never ingest or inhale.

→ Read specific information on the Hazard Sheet.

→ Do not smoke, eat or drink in the work area.

WM 8X00IN SAFETY REGULATIONS FOR WORKING ON AIR-CONDITIONED VEHICLES AND HANDLING REFRIGERANT R134A (ALL MODELS) > PAINTING

WORK ON VEHICLES WITH AIR CONDITIONING

WARNING: Painting work on vehicles with air-conditioning

- *Material damage due to the air-conditioning system bursting.*

→ When carrying out repairs involving painting work, object temperatures in the drying oven or its preheating zone should not exceed 80 °C.

WM 8X00IN SAFETY REGULATIONS FOR WORKING ON AIR-CONDITIONED VEHICLES AND HANDLING REFRIGERANT R134A (ALL MODELS) > NOTES ON GENERAL REPAIRS

The refrigerant circuit of the air-conditioning system may only be emptied and opened if this is necessary in order to comply with safety measures or if components of the refrigerant circuit have to be replaced.

The air-conditioning refrigerant circuit also remains closed during all other standard vehicle repair work.

Contact corrosion!

For this reason, the manufacturer only fits connecting elements with a special surface coating.

Contact corrosion can occur if unsuitable connecting elements (screws, nuts, washers, rivets, plugs, adhesives, etc.) are used.

Only use original Porsche parts!

WM 8X00IN TECHNICAL DATA FOR AIR-CONDITIONING SYSTEM (ALL MODELS) > TECHNICAL VALUES

Location	Description	Type	Basic value	Tolerance 1	Tolerance 2
Refrigerant quantity in system		134a	560 g		
Refrigerant oil in compressor			110 cm^3		
High-pressure cut-off	All		32 bar		
Low-pressure cut-off	All		1.4 bar		
Pressure relief valve for purge pressure	All		44±4 bar		

WM 8X00IN TECHNICAL DATA FOR AIR-CONDITIONING SYSTEM (ALL MODELS) > TECHNICAL DATA FOR AIR-CONDITIONING SYSTEM

- **Refrigerant quantity in system: → 134a: 560 g**
- **Refrigerant oil in compressor: →: 110 cm ^{3}**
- **High-pressure cut-off: →: 32 bar**
- **Low-pressure cut-off: →: 1.4 bar**
- **Pressure relief valve for purge pressure: →: 44±4 bar**

WM 8X00IN TECHNICAL VALUES - AIR CONDITIONING (ALL MODELS) > TECHNICAL VALUES

Location	Description	Type	Basic value	Tolerance 1	Tolerance 2
Heater holder to body	M6 x 30 thread	Tightening torque	20 Nm (15 ftlb.)		
Exhaust silencer pipe to underbody	Nut, M6	Tightening torque	9 Nm (6.5 ftlb.)		
Exhaust silencer holder to underbody	Nut, M6	Tightening torque	9 Nm (6.5 ftlb.)		
Solenoid valve holder to body	Nut, M6	Tightening torque	9 Nm (6.5 ftlb.)		
Auxiliary heater hose in wheel arch to body	Nut, M6	Tightening torque	9 Nm (6.5 ftlb.)		
Dashboard bracket to air conditioner	Tapping screw	Tightening torque	3.6 Nm (2.5 ftlb.)		
Compressor to engine	M8 x 90 thread	Tightening torque	25 Nm (19 ftlb.)		
Footwell outlet vent to air conditioner	M5 x 12 thread	Tightening torque	1.3 Nm (0.5 ftlb.)		
Left footwell outlet vent to body		Tightening torque	1.5 Nm (1 ftlb.)		
Air inlet housing cover to body	Hexagon nut	Tightening torque	3.5 Nm (2.5 ftlb.)		
Air inlet housing to body		Tightening torque	3.5 Nm (2.5 ftlb.)		

Expansion valve to air conditioner		Tightening torque	10 Nm (7.5 ftlb.)		
Refrigerant lines to air-conditioning compressor		Tightening torque	20 Nm (15 ftlb.)		
Refrigerant line to expansion valve	M8 x 35 thread	Tightening torque	12 Nm (9 ftlb.)		
Refrigerant lines to condenser	M6 x 25 thread	Tightening torque	9 Nm (6.5 ftlb.)		
Refrigerant lines to connection point in front left wheel housing	M8 x 28 thread	Tightening torque	12 Nm (9 ftlb.)		
Refrigerant line holder to engine	M6 thread/section of line from evaporator to compressor	Tightening torque	9 Nm (6.5 ftlb.)		
Refrigerant lines to condenser connection point	M6 x 25	Tightening torque	8 Nm (6 ftlb.)		
Refrigerant line holder to dual clip for refrigerant lines	Tapping screw	Tightening torque	4.5 Nm (3.5 ftlb.)		
Refrigerant line holder to lock carrier		Tightening torque	2.5 Nm (2 ftlb.)		

WM 8X00IN TECHNICAL VALUES - AIR CONDITIONING (ALL MODELS) > TECHNICAL VALUES - AUXILIARY HEATING > TIGHTENING TORQUES FOR HEATER

Location	Description	Type	Basic value	Tolerance 1	Tolerance 2
Heater holder to body	M6 x 30 thread	Tightening torque	20 Nm (15 ftlb.)		
Exhaust silencer pipe to underbody	Nut, M6	Tightening torque	9 Nm (6.5 ftlb.)		
Exhaust silencer holder to underbody	Nut, M6	Tightening torque	9 Nm (6.5 ftlb.)		
Solenoid valve holder to body	Nut, M6	Tightening torque	9 Nm (6.5 ftlb.)		

Auxiliary heater hose in wheel arch to body	Nut, M6	Tightening torque	9 Nm (6.5 ftlb.)		

WM 8X00IN TECHNICAL VALUES - AIR CONDITIONING (ALL MODELS) > TECHNICAL VALUES - AIR CONDITIONER/COMPRESSOR > TIGHTENING TORQUES FOR AIR CONDITIONER/COMPRESSOR

Location	Description	Type	Basic value	Tolerance 1	Tolerance 2
Dashboard bracket to air conditioner	Tapping screw	Tightening torque	3.6 Nm (2.5 ftlb.)		
Compressor to engine	M8 x 90 thread	Tightening torque	25 Nm (19 ftlb.)		
Footwell outlet vent to air conditioner	M5 x 12 thread	Tightening torque	1.3 Nm (0.5 ftlb.)		
Left footwell outlet vent to body		Tightening torque	1.5 Nm (1 ftlb.)		
Air inlet housing cover to body	Hexagon nut	Tightening torque	3.5 Nm (2.5 ftlb.)		
Air inlet housing to body		Tightening torque	3.5 Nm (2.5 ftlb.)		
Expansion valve to air conditioner		Tightening torque	10 Nm (7.5 ftlb.)		

WM 8X00IN TECHNICAL VALUES - AIR CONDITIONING (ALL MODELS) > TECHNICAL VALUES - REFRIGERANT LINES > TIGHTENING TORQUES FOR REFRIGERANT LINES

Location	Description	Type	Basic value	Tolerance 1	Tolerance 2
Refrigerant lines to air-conditioning compressor		Tightening torque	20 Nm (15 ftlb.)		
Refrigerant line to expansion valve	M8 x 35 thread	Tightening torque	12 Nm (9 ftlb.)		
Refrigerant lines to condenser	M6 x 25 thread	Tightening torque	9 Nm (6.5 ftlb.)		

Refrigerant lines to connection point in front left wheel housing	M8 x 28 thread	Tightening torque	12 Nm (9 ftlb.)		
Refrigerant line holder to engine	M6 thread/section of line from evaporator to compressor	Tightening torque	9 Nm (6.5 ftlb.)		
Refrigerant lines to condenser connection point	M6 x 25	Tightening torque	8 Nm (6 ftlb.)		
Refrigerant line holder to dual clip for refrigerant lines	Tapping screw	Tightening torque	4.5 Nm (3.5 ftlb.)		
Refrigerant line holder to lock carrier		Tightening torque	2.5 Nm (2 ftlb.)		

WM 030400 OIL CHANGE SERVICE (B MARKETS) (ALL MODELS) > OIL CHANGE SERVICE (B MARKETS)

Information

- Applies only to B markets → 0X0000 OVERVIEW OF A, B AND C MARKETS .
- Does not apply to China.
- As per fixed service reminder indicator.
- An oil change service must be carried out at the latest after 15, 000 km/10, 000 miles or 1 year.

Oil change service every 15, 000 km/10, 000 miles or every year	OK
Change engine oil and oil filter → 170117 DRAINING AND FILLING ENGINE OIL (CHANGING ENGINE OIL)	
Reset service interval → 033500 FAULT MEMORY FOR ON-BOARD DIAGNOSIS	

WM 030400 OIL CHANGE SERVICE (C MARKETS) (ALL MODELS) > OIL CHANGE SERVICE (C MARKETS)

Information

- Applies only to C markets → WM 0X00IN OVERVIEW OF A, B AND C MARKETS .
- Does not apply to China.
- As per fixed service reminder indicator.
- An oil change service must be carried out at the latest after 10, 000 km/6, 000 miles or 1 year.

Oil change service every 10, 000 km/6, 000 miles or every year	OK
Change engine oil and oil filter → 170117 DRAINING AND FILLING ENGINE OIL (CHANGING ENGINE OIL)	
Reset service interval → 033500 FAULT MEMORY FOR ON-BOARD DIAGNOSIS	

WM 031400 INTERMEDIATE MAINTENANCE (ALL MODELS) > INTERMEDIATE MAINTENANCE

Electrics	
Windscreen wiper/washer system, headlight cleaning system: check function	
Horn: check function	
Tires: check tire pressure (TPM)	
Diagnostic system: read out fault memory and transfer gear wear integrator; reset maintenance interval; read out soot mass in particle filter (Macan S Diesel only) → 033500 ON-BOARD DIAGNOSIS (OBD)	
Vehicle, interior	
Particle filter: replace filter element → 851819 REMOVING AND INSTALLING PARTICLE FILTER	
Vehicle, exterior	
Check wiper blades	
All headlights: check adjustment → WM 941516 ADJUSTING HEADLIGHTS AND FOG LIGHTS	
Brake system: visual inspection of the brake pads and brake discs for wear → 463602 CHECKING THICKNESS OF FRONT BRAKE PADS → 465002 CHECKING FRONT BRAKE DISCS (WEAR ASSESSMENT) → 463802 CHECKING THICKNESS OF REAR BRAKE PADS → 465302 CHECKING REAR BRAKE DISCS (WEAR ASSESSMENT)	
Radiators and air inlets: visual inspection for external contamination and blockage	
Check and add reducing agent AdBlue® (Macan S Diesel only)	
Tires and spare wheel: check condition	
Vehicle, underneath	
Drain engine oil, change oil filter (observe oil change service plan for the Macan/S Diesel) → DRAINING ENGINE OILCHANGING OIL FILTER	
Brake lines: visual inspection for damage, routing and corrosion	

→ WM 0X03IN RUNNING GEAR MAINTENANCE: VISUAL INSPECTION - BRAKE LINES/BRAKE PADS/BRAKE DISCS	
Brake hoses: visual inspection for damage	
Cardan shaft: visual inspection of the rubber bellows for damage	
Drive shafts: visual inspection of the boots for leaks and damage	
Engine compartment	
Coolant: check level and antifreeze → 190101 CHECKING THE COOLING SYSTEM	
Windscreen wiper/washer system: check fluid level; check window cleaner and antifreeze, depending on time of year; only use window cleaner approved by Porsche	
Fill in engine oil → FILLING ENGINE OIL	
Test drive:	
Remote control, front seats, electric parking brake and footbrake (also actuation travel), engine, clutch, steering, transmission, ParkAssist, cruise control, PSM switch, heating, sports exhaust system, air conditioning and instruments: check function → 0X03IN TEST DRIVE - MAINTENANCE	
Oils, fluids: visual inspection for leaks	

WM 031600 MAINTENANCE (ALL MODELS) > MAINTENANCE

Electrics	
Windscreen wiper/washer system, headlight cleaning system: check function	
Horn: check function	
Tires: check tire pressure (TPM)	
Diagnostic system: read out fault memory and transfer gear wear integrator; reset maintenance interval; read out soot mass in particle filter (Macan S Diesel only) → 033500 ON-BOARD DIAGNOSIS (OBD)	
Vehicle, interior	

Seat belts: check function and condition → CHECKING SEAT BELTS	
Particle filter: replace filter element → 851819 REMOVING AND INSTALLING PARTICLE FILTER	
Vehicle, exterior	
Check wiper blades	
All headlights: check adjustment → ADJUSTING HEADLIGHTS	
Trailer hitch: check function	
Tires and spare wheel: check condition	
Brake system: visual inspection of the brake pads and brake discs for wear → 463602 CHECKING THICKNESS OF FRONT BRAKE PADS → 465002 CHECKING FRONT BRAKE DISCS (WEAR ASSESSMENT) → 463802 CHECKING THICKNESS OF REAR BRAKE PADS → 465302 CHECKING REAR BRAKE DISCS (WEAR ASSESSMENT)	
Brake hoses: visual inspection for damage	
Radiators and air inlets: visual inspection for external contamination and blockage	
Check and add reducing agent AdBlue® (Macan S Diesel only)	
Vehicle, underneath	
Underbody panels: visual inspection for completeness, secure installation and damage	
Drain engine oil, change oil filter (observe oil change service plan for the Macan/S Diesel) → DRAINING ENGINE OILCHANGING OIL FILTER	
Visual inspection for leaks from underneath (oils and other fluids)	
Brake lines: visual inspection for damage, routing and corrosion → BRAKE SYSTEM: VISUAL INSPECTION OF BRAKE PADS AND BRAKE DISCS FOR WEAR	
Steering gear: visual inspection of the bellows for damage	
Tie rod joints: check play and dust bellows	
Drive shafts: visual inspection of the boots for leaks and damage	

Cardan shaft: visual inspection of the rubber bellows for damage	
Axle joints: check the play and visually inspect the dust bellows for damage	
Exhaust system: visual inspection for leaks and damage, check engine mount	
Replace fuel filter (Macan S Diesel only)	
Engine compartment	
Coolant: check level and antifreeze → 190101 CHECKING THE COOLING SYSTEM	
Windscreen wiper/washer system: check fluid level; check window cleaner and antifreeze, depending on time of year; only use window cleaner approved by Porsche	
Visual inspection for leaks from above (oils and other fluids)	
Fuel lines and connections: visual inspection	
Check drive belt (only if vehicle is used for off-road driving) → 137801 CHECKING DRIVE BELT	
Fill in engine oil → FILLING ENGINE OIL	
Test drive: Remote control, front seats, electric parking brake and footbrake (also actuation travel), engine, clutch, steering, transmission, ParkAssist, cruise control, PSM switch, heating, sports exhaust system, air conditioning and instruments: check function → 0X03IN TEST DRIVE - MAINTENANCE	
Oils, fluids: visual inspection for leaks	

WM 033500 FAULT MEMORY FOR ON-BOARD DIAGNOSIS (ALL MODELS) > TOOLS

Designation	Type	Number	Description	

PIWIS Tester II	Special tool	9818		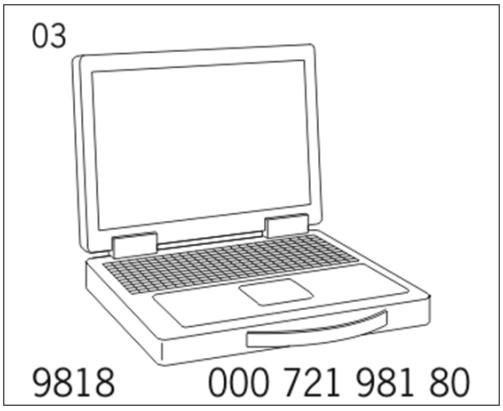

WM 033500 FAULT MEMORY FOR ON-BOARD DIAGNOSIS (ALL MODELS) > TECHNICAL VALUES

Location	Description	Type	Basic value	Tolerance 1	Tolerance 2
Current rating		Nominal value	40 A		

WM 033500 FAULT MEMORY FOR ON-BOARD DIAGNOSIS (ALL MODELS) > READING OUT AND ERASING FAULT MEMORIES

NOTE: Voltage drop

- *Risk of irreparable damage to control unit*
- *Risk of damage to control unit*
- *Fault entries in the control unit*
- *Coding in the control unit is aborted*
- *Malfunctions in control unit, even during programming*

→ Prior to disconnecting the control unit, switch off ignition and remove ignition key.

→ Ensure that the power supply is not interrupted during programming.

→ Connect a battery charger with a current rating of at least → **Nominal value: 40 A** to the vehicle battery.

The **PIWIS Tester II 9818** is connected to the vehicle via a diagnostic socket. The diagnostic socket is located inside the vehicle close to the driver's A-pillar below the instrument panel.

Fig 1: Locating Diagnostic Socket

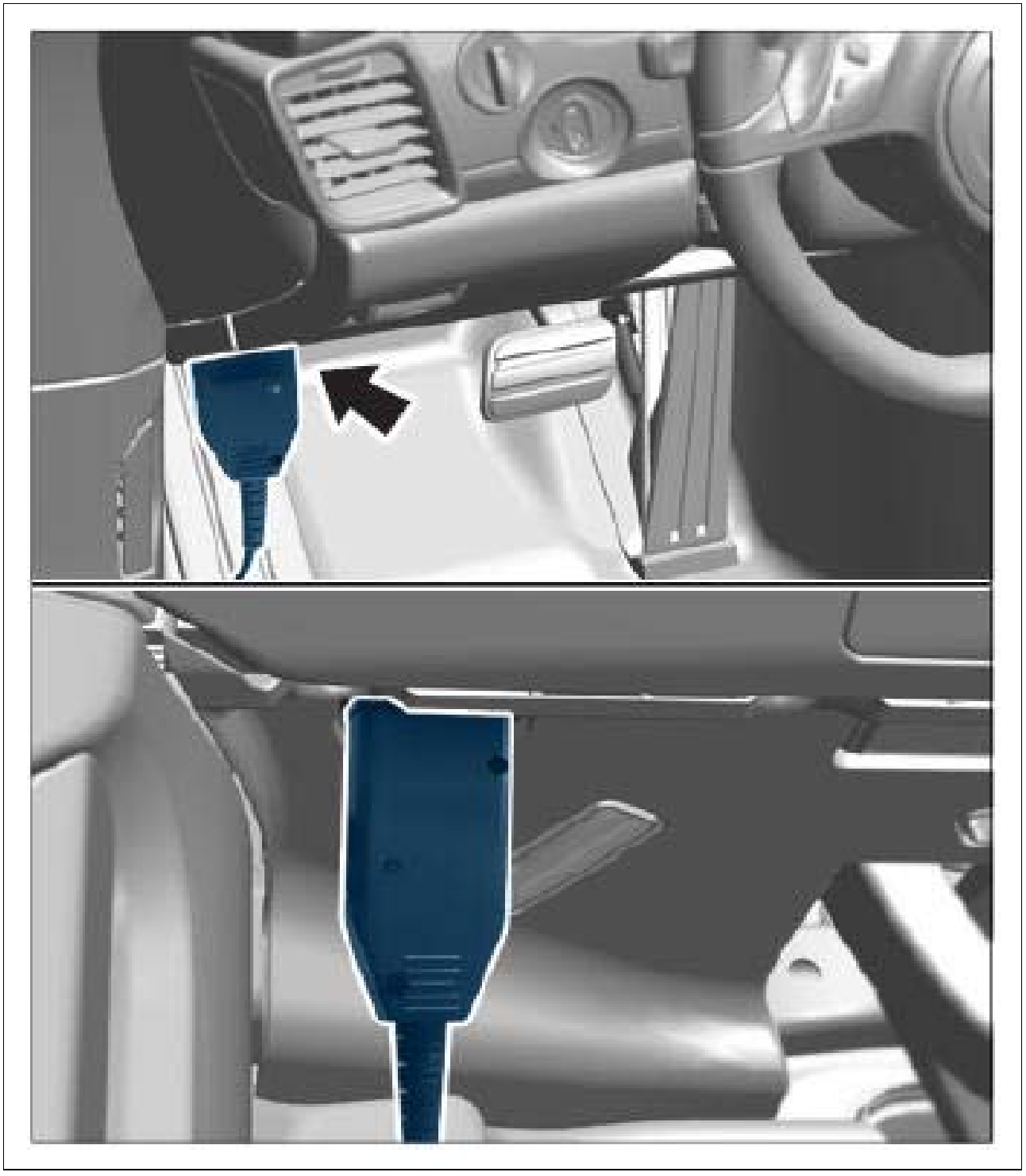

Courtesy of PORSCHE CARS NORTH AMERICA, INC.

1. Start the **PIWIS Tester II 9818** and follow the instructions on the Tester.
2. Select the vehicle type. The diagnostic application starts.
3. In the **Control unit overview** , press [F7] to continue.
4. Select the menu **Read out all fault memories and erase them if necessary** and press [F12] to continue.

5. Check existing faults and press [F8] to delete faults.
6. Delete faults by pressing [F12] (Yes) or press [F11] if you decide not to delete the faults.
7. Press [F11] to return to the selection.

WM 033500 FAULT MEMORY FOR ON-BOARD DIAGNOSIS (ALL MODELS) > READING OUT AND ERASING FAULT MEMORIES > RESETTING SERVICE INTERVAL

If the engine oil is replaced during maintenance work, the service interval must be reset.

1. Start the **PIWIS Tester II 9818** and follow the instructions on the Tester.
2. Select the vehicle type. The diagnostic application starts.
3. Select the **Instrument cluster** menu and press [F12].
4. Select the **Maintenance/repairs** menu.
5. Select the **Reset service interval** menu and press [F12].
6. Select the maintenance work that was carried out (tick the relevant boxes) and press [F12].
7. Select the engine variant and start the **Reset** function by pressing [F8]. Press [F12] to continue.
8. Exit the menu, shut down the PIWIS Tester and disconnect it from the vehicle.

WM 033500 FAULT MEMORY FOR ON-BOARD DIAGNOSIS (ALL MODELS) > READING OUT AND ERASING FAULT MEMORIES > READING OUT SOOT MASS IN PARTICLE FILTER

Information

The soot mass must be checked every 30, 000 km (18, 640 miles) on diesel vehicles.

If the particle filter is replaced, the soot mass value must be reset.

1. Start **PIWIS Tester II 9818** and follow the instructions on the Tester.
2. Select the vehicle type. The diagnostic application starts.
3. Select the **DME** menu and press [F12].
4. Select the **Actual values, input signals** menu.
5. Select the **Catalytic converter diesel particle filter** menu and press [F12].
6. **Select K100 diesel particle filter, bank 1, soot mass (soot level) calculated** and press [F12].
7. The value is now displayed in grams.

- If the value is greater than **40 g** , the message "Check DPF" appears in the instrument cluster. Release the diesel particle filter by performing a regeneration drive as described in the Driver's Manual. If the regeneration drive could not be completed successfully, carry out a service regeneration. → 033500 FAULT MEMORY FOR ON-BOARD DIAGNOSIS
- If the value is **44 g** , a service regeneration must be carried out. → 033500 FAULT MEMORY FOR ON-BOARD DIAGNOSIS
- If the value is greater than **68 g** , a service regeneration is no longer possible. The particle filter must be replaced.

WM 033500 FAULT MEMORY FOR ON-BOARD DIAGNOSIS (ALL MODELS) > READING OUT AND ERASING FAULT MEMORIES > CARRYING OUT SERVICE REGENERATION

1. Select the **DME** menu and press [F12].
2. Select the **Maintenance/repairs** menu.
3. Select the **Particle filter regeneration** menu and press [F12].
4. Follow the instructions and steps on the Tester.

WM 035100 ADDITIONAL MAINTENANCE EVERY 2 YEARS (ALL MODELS) > ADDITIONAL MAINTENANCE EVERY 2 YEARS

Additional maintenance every 2 years	OK
Change brake fluid	
Prepare condition report for long-life guarantee	
Tyre sealing compound: check use-by date and replace if necessary → 442655 REPLACING TYRE SEALING COMPOUND	

WM 037900 ADDITIONAL MAINTENANCE EVERY 60, 000 KM/36, 000 MILES OR EVERY 4 YEARS (C MARKETS) (ALL MODELS) > ADDITIONAL MAINTENANCE EVERY 60, 000 KM/36, 000 MILES OR EVERY 4 YEARS

Additional maintenance every 60, 000 km/40, 000 miles or every 4 years (C markets)	OK
Porsche Doppelkupplung (PDK): change oil and filter	

WM 037900 ADDITIONAL MAINTENANCE EVERY 60, 000 KM/40, 000 MILES OR EVERY 4 YEARS (B MARKETS) (ALL MODELS) > ADDITIONAL MAINTENANCE EVERY 60, 000 KM/40, 000 MILES OR EVERY 4 YEARS (B MARKETS)

Additional maintenance every 60, 000 km/40, 000 miles or every 4 years (B markets)	OK

WM 037900 ADDITIONAL MAINTENANCE EVERY 60, 000 KM/40, 000 MILES OR EVERY 6 YEARS (A MARKETS) (ALL MODELS) > ADDITIONAL MAINTENANCE EVERY 60, 000 KM/40, 000 MILES OR EVERY 6 YEARS (A MARKETS)

Additional maintenance every 60, 000 km/40, 000 miles or every 6 years (A markets)	OK
Porsche Doppelkupplung (PDK): change oil and filter	

WM 038500 ADDITIONAL MAINTENANCE EVERY 120, 000 KM/72, 000 MILES OR EVERY 4 YEARS (C MARKETS) (MACAN S, MACAN TURBO) > ADDITIONAL MAINTENANCE EVERY 120, 000 KM/72, 000 MILES OR EVERY 4 YEARS (C MARKETS)

Additional maintenance every 120, 000 km/72, 000 miles or every 4 years (C markets)	OK
Air cleaner: replace filter elements → 242419 REMOVING AND INSTALLING AIR-CLEANER ELEMENT	

WM 038500 ADDITIONAL MAINTENANCE EVERY 120, 000 KM/80, 000 MILES OR EVERY 4 YEARS (B MARKETS) (MACAN S, MACAN TURBO) > ADDITIONAL MAINTENANCE EVERY 120, 000 KM/80, 000 MILES OR EVERY 4 YEARS (B MARKETS)

Additional maintenance every 120, 000 km/80, 000 miles or every 4 years (B markets)	OK
Air cleaner: replace filter elements → 242419 REMOVING AND INSTALLING	

AIR-CLEANER ELEMENT	

WM 038500 ADDITIONAL MAINTENANCE EVERY 120, 000 KM/80, 000 MILES OR EVERY 6 YEARS (A MARKETS) (MACAN S, MACAN TURBO) > ADDITIONAL MAINTENANCE EVERY 120, 000 KM/80, 000 MILES OR EVERY 6 YEARS (A MARKETS)

Additional maintenance every 120, 000 km/80, 000 miles or every 6 years (A markets)	OK
Air cleaner: replace filter elements → 242419 REMOVING AND INSTALLING AIR-CLEANER ELEMENT	

WM 039500 ADDITIONAL MAINTENANCE EVERY 240, 000 KM/144, 000 MILES OR EVERY 16 YEARS (C MARKETS) (ALL MODELS) > ADDITIONAL MAINTENANCE EVERY 240, 000 KM/144, 000 MILES OR EVERY 16 YEARS

Additional maintenance every 240, 000 km/144, 000 miles or every 16 years	OK
All-wheel final drive: change oil → 399055 CHANGING OIL FOR ALL-WHEEL FINAL DRIVE	
Rear final drive: change oil → 399055 CHANGING OIL FOR FINAL DRIVE	

WM 039500 ADDITIONAL MAINTENANCE EVERY 240, 000 KM/160, 000 MILES OR EVERY 16 YEARS (A AND B MARKETS) (ALL MODELS) > ADDITIONAL MAINTENANCE EVERY 240, 000 KM/160, 000 MILES OR EVERY 16 YEARS

Additional maintenance every 240, 000 km/160, 000 miles or every 16 years	OK
All-wheel final drive: change oil → 399055 CHANGING OIL FOR ALL-WHEEL FINAL DRIVE	
Rear final drive: change oil → 399055 CHANGING OIL FOR FINAL DRIVE	

EMISSIONS MAINTENANCE REMINDER

NOTE: To determine the appropriate reset procedure, refer to OXYGEN SENSOR WARNING LIGHT RESET INDEX . Only vehicles listed in this index have an Oxygen Sensor Warning Light reset.

EMISSIONS MAINTENANCE REMINDER RESET INDEX

Model & Year	Reset Procedure
911	
1977-83	Emissions Maintenance Reminder Reset - Procedure 1
924	
1977-82	Emissions Maintenance Reminder Reset - Procedure 1
928	
1978-83	Emissions Maintenance Reminder Reset - Procedure 1

EMISSIONS MAINTENANCE REMINDER > EMISSIONS MAINTENANCE REMINDER RESET - PROCEDURE 1

Oxygen sensor (O2S) light will come on at 30,000 mile intervals as a reminder to replace sensor. After replacing sensor, reset warning light as follows:

1. On 911 models, disconnect battery ground cable and remove speedometer. Counter will be visible through speedometer mounting hole. Using a thick piece of wire or a thin rod, press White reset button all the way in against stop. Ensure warning light is out.
2. On 924 models, after replacing oxygen sensor and with vehicle still raised, locate mileage counter on left engine mount. Using a thick wire or thin metal rod, push in reset button all the way to stop. Ensure warning light is out.
3. On 928 and 928S with CIS system, counter is located to right of passenger seat floor (near door sill). Remove counter cover retaining screw and cover. Press reset button all the way in against stop. Ensure warning light is out.

MAINTENANCE SERVICE REMINDER

NOTE: To determine the appropriate reset procedure, refer to MAINTENANCE SERVICE

REMINDER RESET INDEX . Only vehicles listed in this index have a Service Reminder Indicator (SRI) reset.

MAINTENANCE SERVICE REMINDER RESET INDEX

Model & Year	Reset Procedure
911 (997)	
2005-16	Maintenance Service Reminder Reset - Procedure 1
911 (Carrera 991)	
2012-16	Maintenance Service Reminder Reset - Procedure 3
Boxster & Cayman (987)	
2005-12	Maintenance Service Reminder Reset - Procedure 1
Boxster & Cayman (981)	
2013-16	Maintenance Service Reminder Reset - Procedure 1
Cayenne (9PA & 92A)	
2003-12	Maintenance Service Reminder Reset - Procedure 2
Cayenne (92A)	
2013-16	Maintenance Service Reminder Reset - Procedure 1
Macan (95B)	
2015-16	Maintenance Service Reminder Reset - Procedure 1
Panamera (970)	
2010-16	Maintenance Service Reminder Reset - Procedure 3

MAINTENANCE SERVICE REMINDER > MAINTENANCE SERVICE REMINDER RESET - PROCEDURE 1

Tip: 2013 Boxster Oil Capacity and Reset

NOTE: A Porsche scan tool is required to perform this procedure. See appropriate tool procedure.

MAINTENANCE SERVICE REMINDER > MAINTENANCE SERVICE REMINDER RESET - PROCEDURE 1 > PIWIS TESTER 9718

NOTE: If the engine oil is replaced during maintenance work, the service interval must be reset.

1. Start the PIWIS Tester 9718 and follow the instructions on the Tester
2. Select vehicle type, press >> and start the automatic control unit search.
3. Select the Instrument Cluster menu and press >>.
4. Select the Special Functions menu and press >>.
5. Select the Reset Service Interval display menu and press >>.
6. The messages Resetting Service Interval and Function completed successfully appear on the Tester.
7. Quit the menu, shut down the PIWIS Tester and disconnect it from the vehicle.

MAINTENANCE SERVICE REMINDER > MAINTENANCE SERVICE REMINDER RESET - PROCEDURE 1 > PIWIS TESTER II 9818

NOTE: If the engine oil is replaced during maintenance work, the service interval must be reset.

1. Start the Tester and follow the instructions on the Tester
2. Select Vehicle Type, press F12, and start the automatic control unit search.
3. Select the menu Instrument Cluster, Maintenance/Repairs and press F12 to continue.
4. Select the Reset Service Interval menu and press F12.
5. Select the Model Year and press F12.
6. Select the Unit and press F12.
7. Select GT vehicle and press F12.
8. Check that -> 5. -> 6. and -> 7. are selected and press F12
9. The service interval is reset. Press F12 to exit.
10. Quit the menu, shut down the PIWIS Tester and disconnect it from the vehicle.

MAINTENANCE SERVICE REMINDER > MAINTENANCE SERVICE REMINDER RESET - PROCEDURE 2

If the engine oil is replaced during maintenance work, the service interval must be reset.

Standard Service Interval Reset:

1. In the PST2 (Porsche System Tester 2), select Instrument cluster, then press >>.
2. Select the Coding menu, then press >>.
3. Select Reset Service Interval Display menu, then press >>.

> *NOTE: Depending on the country, additional items are checked in the case of the V6 model. These items must be selected on a country-specific basis.*

4. Select Reset menu and confirm with F8.
5. Quit menu, shut down PST and disconnect from vehicle.

Maintenance Calculator Reset:

> *NOTE: All Cayenne V6 engines are factory filled with an engine oil of VW specification "50300". New vehicles produced have their maintenance calculator set for an oil change service interval of 10,000 miles (15,000 km) or 1 year. The maintenance calculator in the Cayenne (V6) determines the time of the engine oil change depending on the vehicle load and driving style, and requests for "Service" via the multi-function display.*

After changing the oil, the oil change service interval must be reset in the instrument cluster using the PST2 (Porsche System Tester 2). The country version for which the new vehicle was produced is stored in the control modules. The PST2 automatically detects this country version before resetting the maintenance calculator and depending on this, offers the following options for oil change service intervals:

1. The country version of the vehicle corresponds to one of the countries listed in Table 1. Depending on the engine oil used for the oil change, the following selection options for oil change service intervals are available in the selection menu of the PST2 for these vehicles, when resetting the maintenance calculator with the PST2:
    1. **1.1** If an engine oil in accordance with the VW specification "50300" was used: The oil change service interval is set in the maintenance calculator for an oil change service interval of up 30,000 km or 2 years, after selecting and confirming this oil quality in the PST2 menu => "Engine oil according to VW spec. "50300".
    2. **1.2** If an engine oil not in accordance with the VW specification "50300" was used: The oil change service interval is set in the maintenance calculator for a fixed oil change service interval of 10,000 miles (15,000 km) or 1 year, after selecting and confirming this oil quality in the PST2 menu => "Engine oil with general Porsche approval".
2. The country version of the vehicle "does not" correspond to one of the countries listed in Table 1. For vehicles having these country versions, all engine oils approved by Porsche may be used which are listed in this bulletin below and Cayenne Technical Information Bulletin, GROUP 1, NO. 4/04 . Even when an engine oil meeting the VW specification "50300" is used, the oil change service interval of 10,000 miles (15,000 km) or 1 year is to be observed.
    1. **2.1** If an engine oil approved by Porsche was used: The oil change service interval is

set for a fixed oil change service interval of 10,000 miles (15,000 km) or 1 year when resetting the maintenance calculator with the PST2.

For more information about the oil change interval for Cayenne V6 and how to reset the "Maintenance Calculator" in the instrument cluster, see CAYENNE (V6) - ENGINE OILS APPROVED BY PORSCHE - OIL CHANGE SERVICE INTERVAL technical service bulletin (GROUP 1, NO. 3/04).

MAINTENANCE SERVICE REMINDER > MAINTENANCE SERVICE REMINDER RESET - PROCEDURE 3

NOTE: If the engine oil is replaced during maintenance work, the service interval must be reset.

1. Start the PIWIS Tester II 9818 and follow the instructions on the Tester
2. Select vehicle type and start the PIDT.
3. Select the Instrument Cluster menu and press F12.
4. Select the Maintenance/Repairs menu.
5. Select the Reset Service Interval menu and press F12.
6. Select the maintenance work that was carried out (tick the relevant boxes) and press F12
7. Select the engine variant and start the Reset function by pressing F8. Press F12 to continue.
8. Quit the menu, shut down the PIWIS Tester and disconnect it from the vehicle.

TIMING BELT TENSION REMINDER

NOTE: To determine the appropriate reset procedure, refer to TIMING BELT TENSION REMINDER RESET INDEX . Only vehicles listed in this index have a Timing Belt Tension Indicator Lamp reset.

TIMING BELT TENSION REMINDER RESET INDEX

Model & Year	Reset Procedure
928	
1985-95	Timing Belt Tension Reminder Reset - Procedure 1

TIMING BELT TENSION REMINDER > TIMING BELT TENSION REMINDER RESET -

PROCEDURE 1

The engine is equipped with a timing belt tension switch. If the timing belt tension indicator lamp comes on, use Fig 1 as a guide to diagnosis. Lamp will turn off automatically when the correct timing belt tension is restored or electrical problem is corrected.

Fig 1: Diagnosing Timing Belt (Camshaft Drive Belt) Tension Indicator Lamp

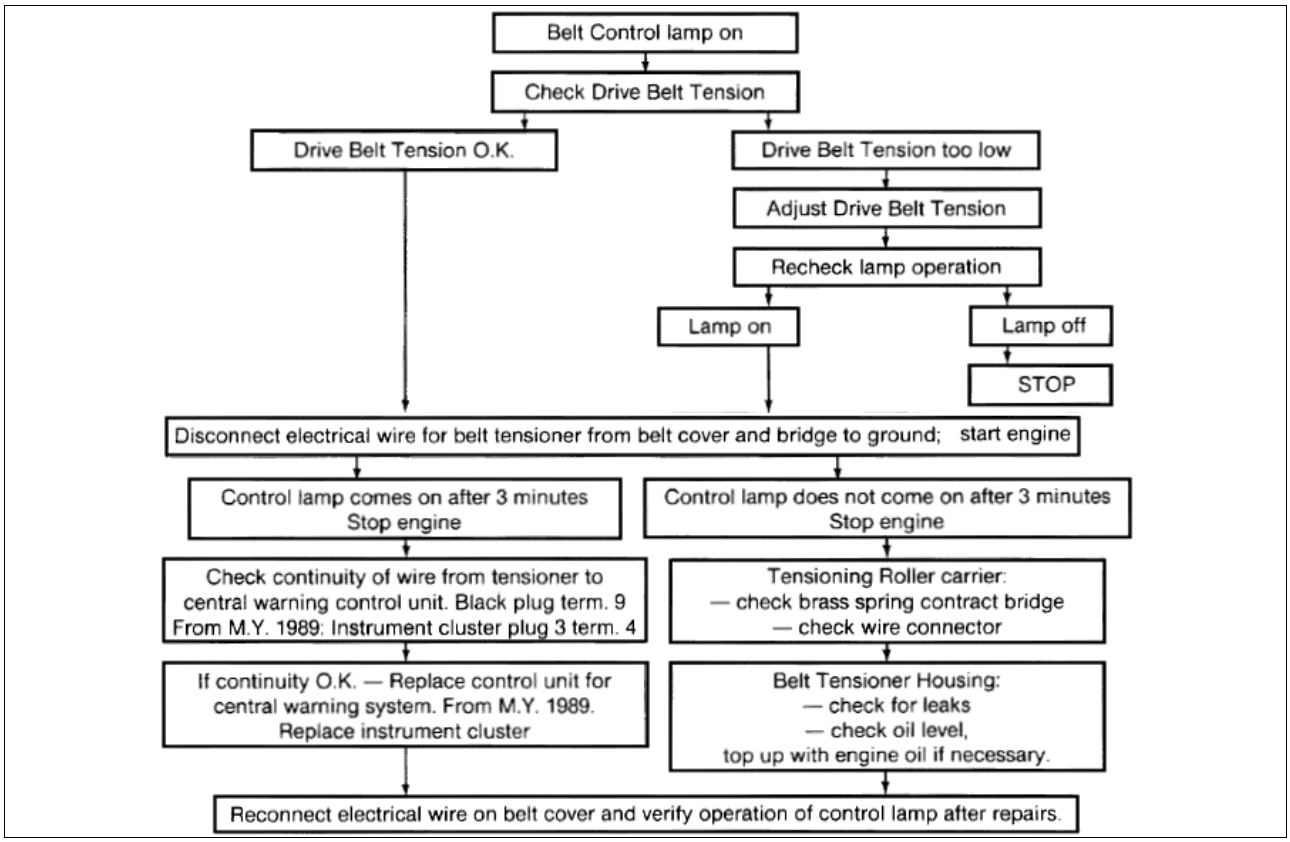

Courtesy of PORSCHE OF NORTH AMERICA, INC.

> *NOTE: This information comes from Porsche technical service bulletin No. 9010, Group 1. Publication date of April 12, 1990.*

TIRE PRESSURE MONITOR SYSTEM REMINDER

> *NOTE: To determine the appropriate reset procedure, refer to TPMS REMINDER RESET INDEX . Only vehicles listed in this index have a TPMS reset.*

> *CAUTION: 1st generation TPM wheel electronics are not compatible with 2nd generation TPM wheel electronics. 1st generation is **up to** 2008, and 2nd generation is 2009 and beyond.*

If wheels with wheel electronics from the 1st TPM generation are mounted on a vehicle with a 2nd generation TPM system (or vice versa), the wheel electronics will not be recognized by the TPM system. The TPM system is not active and a corresponding warning is displayed in the multi-function display of the instrument cluster. The wheel electronics will also be stored as defective in the fault memory of the TPM control unit.

Wheel electronics unit (sensor) part numbers are:

- ***2005-07:*** *997.606.021.00 (433 MHz)*
- ***2008:*** *997.606.021.01 (433 MHz)*
- ***2009-:*** *997.606.021.20 (433 MHz)*

TPMS REMINDER RESET INDEX

Model & Year	Reset Procedure
911	
2006-16	TPMS Reminder Reset - Procedure 3
Boxster	
2006-16	TPMS Reminder Reset - Procedure 3
Cayenne	
2005-10	TPMS Reminder Reset - Procedure 2
2011-16	TPMS Reminder Reset - Procedure 1
Cayman	
2007-16	TPMS Reminder Reset - Procedure 3
Panamera	
2010-16	TPMS Reminder Reset - Procedure 1

TIRE PRESSURE MONITOR SYSTEM REMINDER > TPMS REMINDER RESET - PROCEDURE 1

Tire Pressure Monitoring begins to "learn" the wheels after a wheel change, wheel transmitter replacement, a tire pressure adjustment (when a warning message has been displayed), once an update of the tire settings has been performed. During this process, Tire Pressure Monitoring recognizes the wheels and their locations. The message "No monitoring, system is learning" appears on the multi-purpose display. The wheel learning process takes place exclusively when the vehicle is being driven above 16 mph (25 km/h). Tire Pressure Monitoring requires a certain amount of time to learn the wheels.

NOTE: The tire type and size must be updated even if the settings for the new set of

wheels are the same as for the old wheels. If the tire settings are not updated, the message "TIRE CHANGE? UPDATE SETTINGS!" is displayed on the multi-purpose display.

Starting TPMS Learn:

1. Select menu "TIRE PRESSURE", then "ADJUST". Set tire type and tire size (both items must be set). See **Operating Multi-Purpose Display** .
2. The learning process is now started, and will be completed when vehicle is driven. The message "NO MONITORING - SYSTEM LEARNING" is displayed. The current tire pressure will be displayed once the learning phase is complete.

Operating Multi-Purpose Display:

With multi-function steering wheel:

- Selecting menu, function, setting option: Rotary knob (top right button).
- Confirming selection: Press rotary knob.
- Moving back one or several selection levels: Button below rotary knob (middle right button).

Without multi-function steering wheel: (Use the lower lever on the right of the steering column.)

- Selecting menu, function, setting option: Push the lever downwards or upwards.
- Confirming selection: Push the lever forward.
- Moving back one or several selection levels: Pull the lever back (toward rear of vehicle).

TIRE PRESSURE MONITOR SYSTEM REMINDER > TPMS REMINDER RESET - PROCEDURE 2

NOTE: If tires have been rotated, tire pressure changed, or a tire pressure sensor or wheel has been replaced, the TPM system must be reset. See Tire Pressure Monitor System Reset . When vehicle is stationary after a tire pressure warning, the display changes to "SELECTION AFTER WARNING" screen. See "Selection After Warning" Reset .

If tire pressures have been adjusted, without being prompted by a TPMS warning indicator, no reset procedure is required. If tire pressures have been adjusted after a TPMS warning indicator display, see "Selection After Warning" Reset .

TIRE PRESSURE MONITOR SYSTEM REMINDER > TPMS REMINDER RESET - PROCEDURE 2 > TIRE PRESSURE MONITOR SYSTEM RESET

1. Select menu "TYRE PRESSURE", "SETTINGS, then "TYRES". Set tire type and tire size (both items must be set).

NOTE: The tire type and size must be selected even if the settings for the new set of wheels are the same as for the old wheels.

2. The learning process is now started, and will be completed when vehicle is driven. The message "NO MONITORING - SYSTEM LEARNING" is displayed. The current tire pressure will not be displayed until the learning phase is complete.

TIRE PRESSURE MONITOR SYSTEM REMINDER > TPMS REMINDER RESET - PROCEDURE 2 > "SELECTION AFTER WARNING" RESET

When the vehicle is stationary after a tire pressure warning, the screen changes to "SELECTION AFTER WARNING". See Fig 1. Choose the appropriate procedure:

- If tire pressure was changed, see Adding Air .
- If a wheel was changed, see Wheel Change .
- If a flat is repaired using tire sealant, see Sealing Set .

NOTE: If a selection is made in the "SELECTION AFTER WARNING" display without performing the appropriate actions, the message "CAUTION - FLAT TYRE - CHECK TYRES" will be displayed.

Fig 1: Identifying TPM System "SELECTION AFTER WARNING" Screen

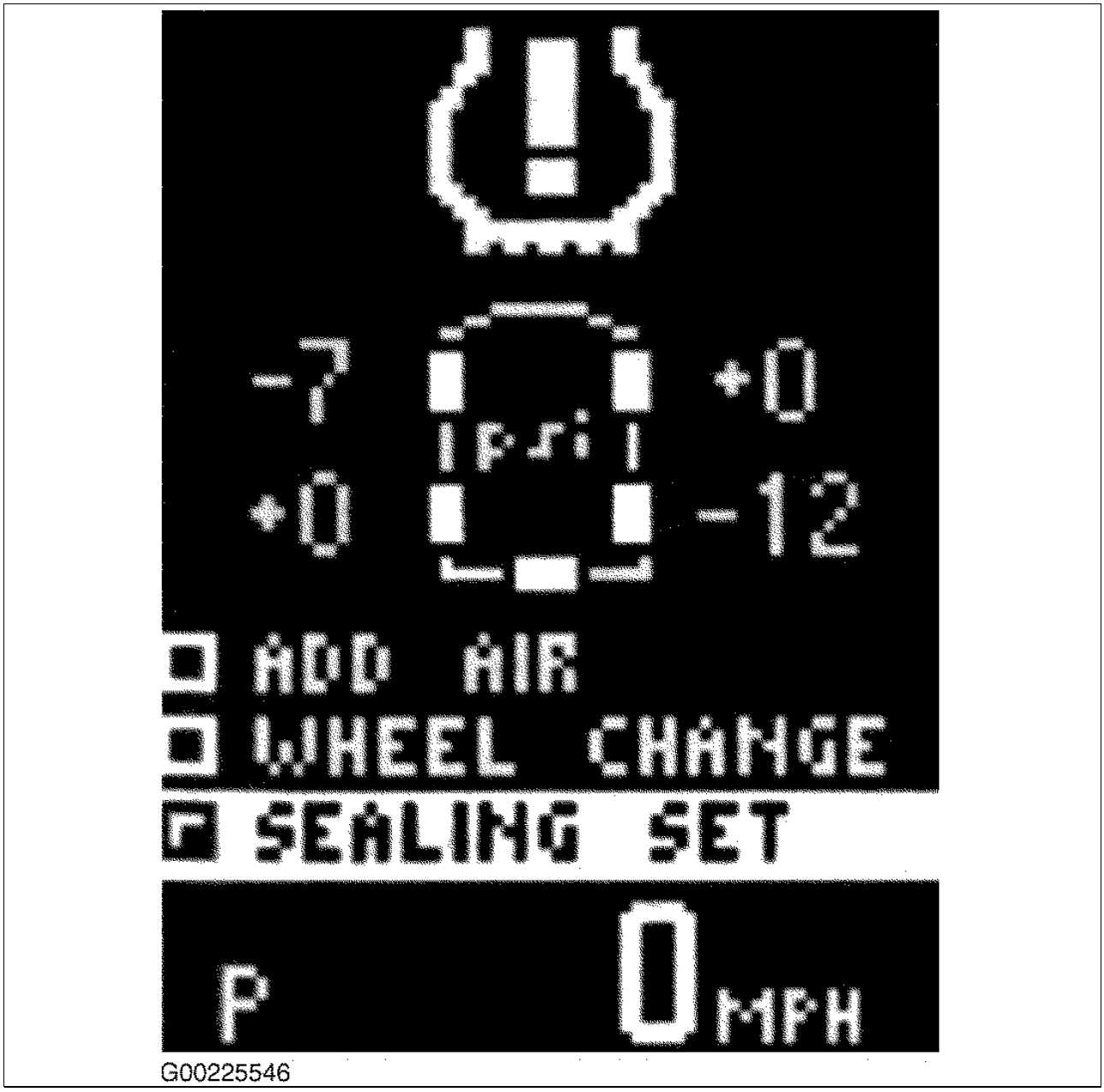

Courtesy of PORSCHE OF NORTH AMERICA, INC.

TIRE PRESSURE MONITOR SYSTEM REMINDER > TPMS REMINDER RESET - PROCEDURE 2 > "SELECTION AFTER WARNING" RESET > ADDING AIR

1. After inflating the wheel in question, select "ADD AIR" from "SELECTION AFTER WARNING" menu. The display will return to the basic screen after acknowledgement.
2. If vehicle is driven without selecting "ADD AIR", a "WHEN VEHICLE STOPS: HIT SELECTION" message will be displayed. When vehicle is stopped, perform previous step.

TIRE PRESSURE MONITOR SYSTEM REMINDER > TPMS REMINDER RESET - PROCEDURE 2 > "SELECTION AFTER WARNING" RESET > WHEEL CHANGE

1. Select "WHEEL CHANGE" from "SELECTION AFTER WARNING" menu. The display will return to "SPARE WHEEL" menu after acknowledgement. Select spare wheel type.
2. If the tire type and size of the new tires have not been set , a "WHEEL CHANGE? CHECK SETTINGS" message will be displayed. When vehicle is stopped, display will return to "SELECTION AFTER WARNING" menu. Perform previous step.

TIRE PRESSURE MONITOR SYSTEM REMINDER > TPMS REMINDER RESET - PROCEDURE 2 > "SELECTION AFTER WARNING" RESET > SEALING SET

After repairing flat tire with tire sealant, select "SEALING SET". The display will return to the basic screen after acknowledgement. A warning message will display if vehicle speed exceeds 50 mph (80 km/h).

TIRE PRESSURE MONITOR SYSTEM REMINDER > TPMS REMINDER RESET - PROCEDURE 3

NOTE: If tire pressures have been adjusted, no reset procedure is required.

NOTE: If tires have been rotated, or a tire pressure sensor or wheel has been replaced, the TPM system must be reset. See procedure below.

Tire Pressure Monitoring begins to "learn" new tire pressure sensors after a wheel change or sensor replacement after updating the tire specification settings. During the Learn process, the TPMS recognizes the wheels and their locations. A "No Monitoring" message appears on the multi-purpose display. The wheel learning process takes place exclusively when the vehicle is being driven above 16 mph (25 km/h). Tire Pressure Monitoring requires a certain amount of time to learn the wheels.

Updating Tire Specification Settings:

NOTE: The on-board computer is operated with the lower left lever on the steering column.

1. Push operating lever forward in order to switch on the selection field.
2. Select "TPC" with the operating lever.
3. Push operating lever forward. The display changes to the Tire pressure menu.
4. Select "Set" with the operating lever.

5. Push the operating lever forward. Select desired tire type: summer or winter.
6. Push operating lever forward. A display for confirming the selected type of tire appears.
7. Select "Continue" and push the operating lever forward.
8. Select the appropriate tire size (18 or 19 inch) and push operating lever forwards. A display for confirming the selected tire size appears.
9. If "Process complete" is displayed, learning mode will be initiated.
10. Drive vehicle above 16 mph (25 km/h) until correct tire pressures are displayed.

NOTE: The message "Process aborted" appears if the setting process is interrupted. All entries made up to this point are lost, and the original settings remain in effect. Only if the message "Process complete" appears after the settings have been made will the tire pressure monitoring re-learn the wheels.

WM 691119 REMOVING AND INSTALLING FRONT THREE-POINT BELT (MACAN, MACAN S, MACAN TURBO) > TECHNICAL VALUES

Location	Description	Type	Basic value	Tolerance 1	Tolerance 2
Fastening screw securing sash guide cover to adjustment fitting		Tightening torque	50 Nm (37 ftlb.)		
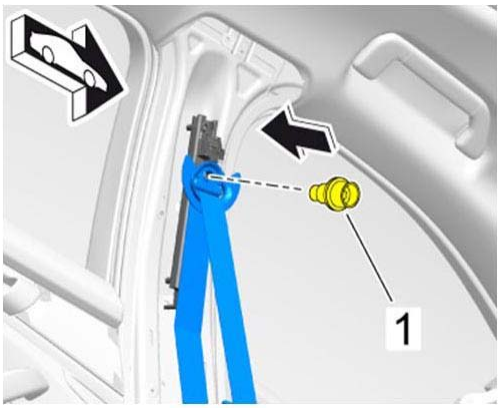 Sash guide cover on					
Fastening screw securing seat-belt pretensioner to B-pillar	Item 1	Tightening torque	50 Nm (37 ftlb.)		
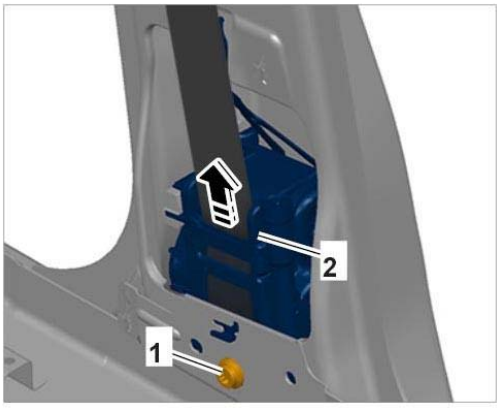 Removing seat-belt pretensioner					
Fastening screw securing belt guide to B-pillar	Item 1	Tightening torque	4.5 Nm (3 ftlb.)		

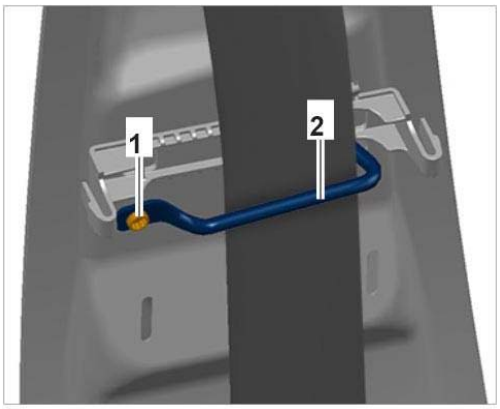

Removing belt guide

WM 691119 REMOVING AND INSTALLING FRONT THREE-POINT BELT (MACAN, MACAN S, MACAN TURBO) > COMPONENT INFORMATION > INSTALLATION POSITION OF FRONT THREE-POINT BELT

Fig 1: Locating Front Three-Point Belt Position

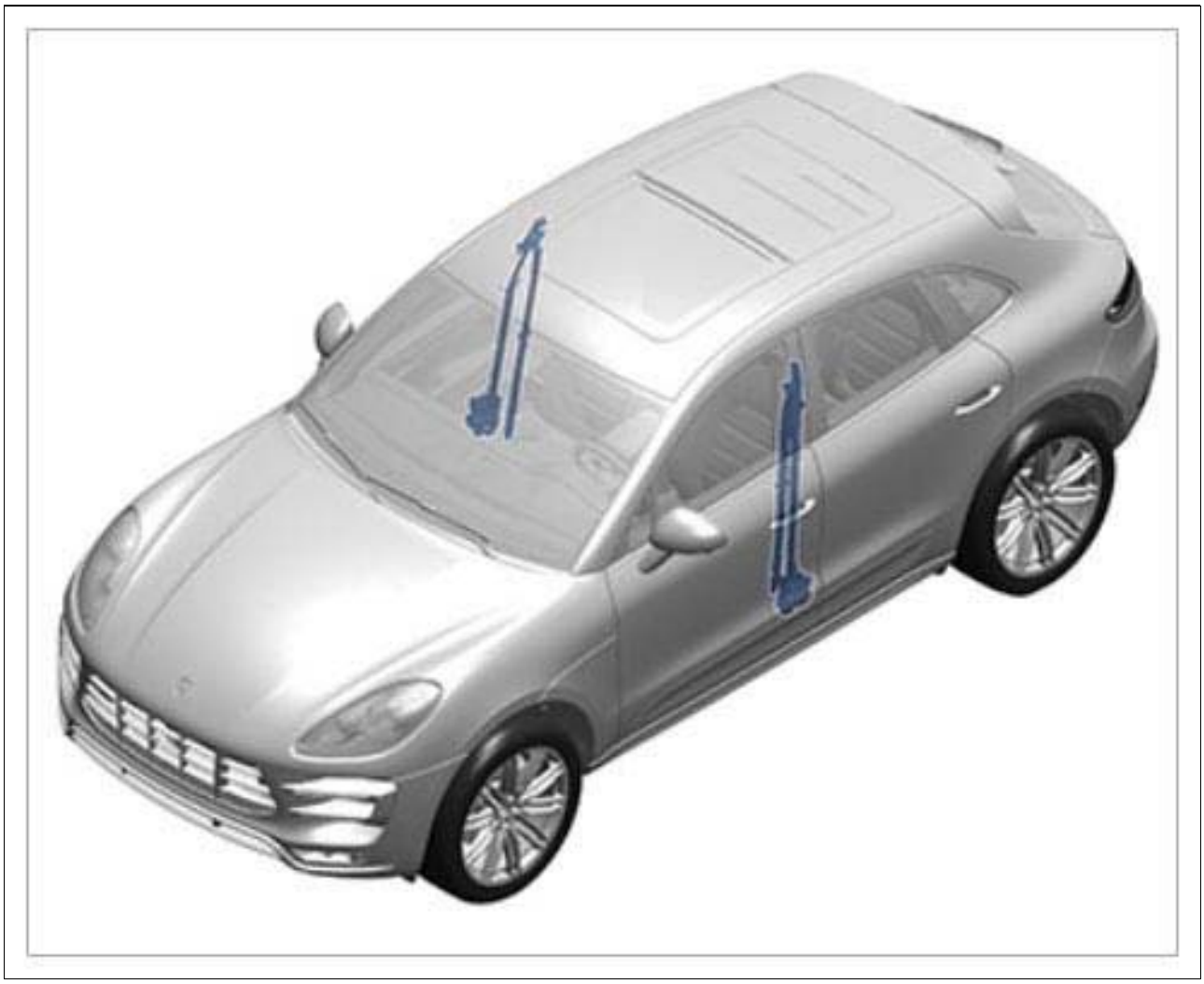

Courtesy of PORSCHE CARS NORTH AMERICA, INC.

WM 691119 REMOVING AND INSTALLING FRONT THREE-POINT BELT (MACAN, MACAN S, MACAN TURBO) > PRELIMINARY WORK

1. Move front seat forward.
2. Disconnect the battery. → 2X00IN GENERAL INFORMATION ON DISCONNECTING THE BATTERY
3. Remove B-pillar trim panel. → 706719 REMOVING AND INSTALLING B-PILLAR TRIM PANEL

WM 691119 REMOVING AND INSTALLING FRONT THREE-POINT BELT (MACAN, MACAN S, MACAN TURBO) > REMOVING FRONT THREE-POINT BELT

WARNING: Incorrect handling of seat-belt pretensioner unit

- *Triggering of seat-belt pretensioner unit*

→ Observe safety regulations for handling seat-belt pretensioner units.

→ Observe disposal regulations for seat-belt pretensioner units.

→ After disconnecting the battery, wait 1 minute before disconnecting the seat-belt pretensioner unit.

→ Remove ignition key and disconnect the battery. Route or insulate the ground strap so that all contact with a ground carrier is avoided. Read and follow work instructions after disconnecting the battery.

→ If removed for an extended period, the seat-belt pretensioner unit must be stored in a safe place.

→ Transport the seat-belt pretensioner unit in such a way that the seat belt can retract safely if it is actuated.

NOTE: Incorrect handling of spring plate on seat belt mount

- *The seat belt must be replaced.*

→ Only bend the spring plate up as far as required to allow you to push the seat belt mount off the mounting pin.

→ The spring plate must be touching the mounting pin during installation with preload.

Information

- Some of the repair illustrations show only one side of the vehicle.
- Naturally, some steps also have to be performed on the opposite side of the vehicle as well.

1. Remove seat belt mount.

    1. 1.1. Disengage cap **-1-** and slide it over the seat belt mount **-2-** .

       Fig 1: Identifying Seat Belt Mount On Front Seat

       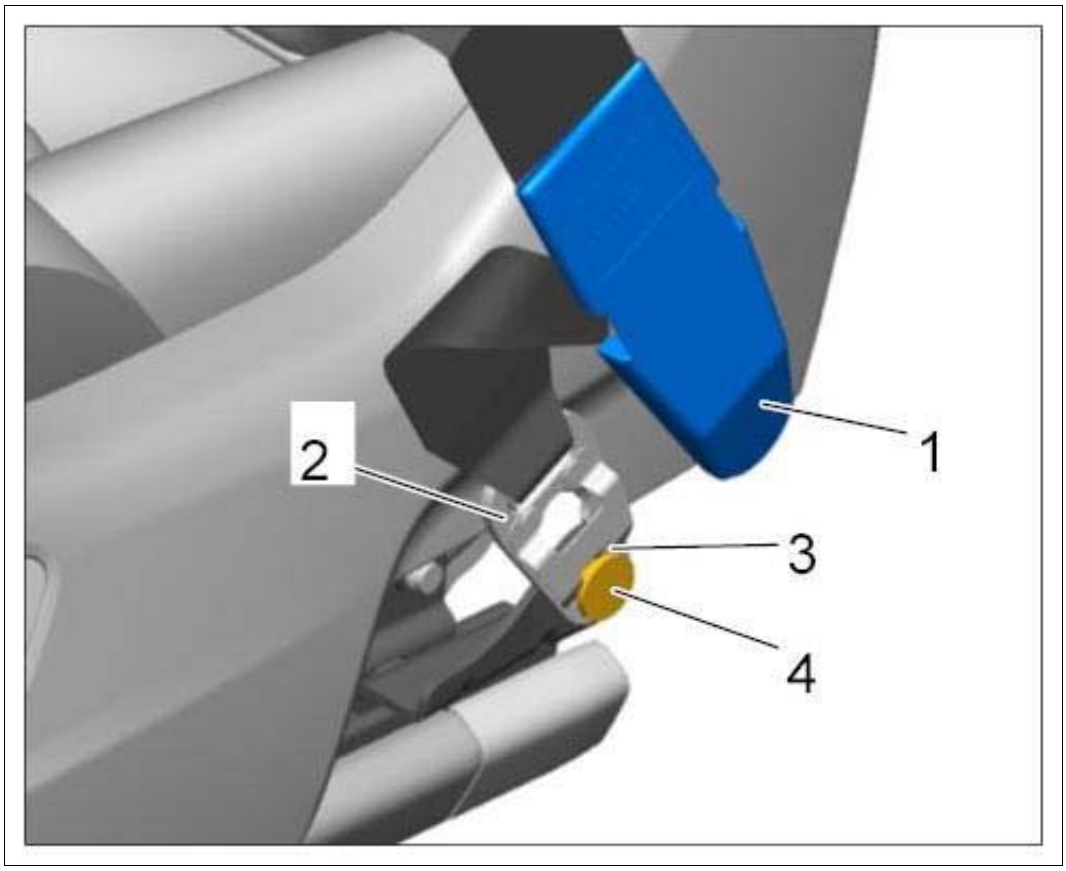

       Courtesy of PORSCHE CARS NORTH AMERICA, INC.

    2. 1.2. Release retaining clip **-3-** on the seat belt mount using a suitable screwdriver **-arrow A-** .

Fig 2: Releasing Seat Belt Mount

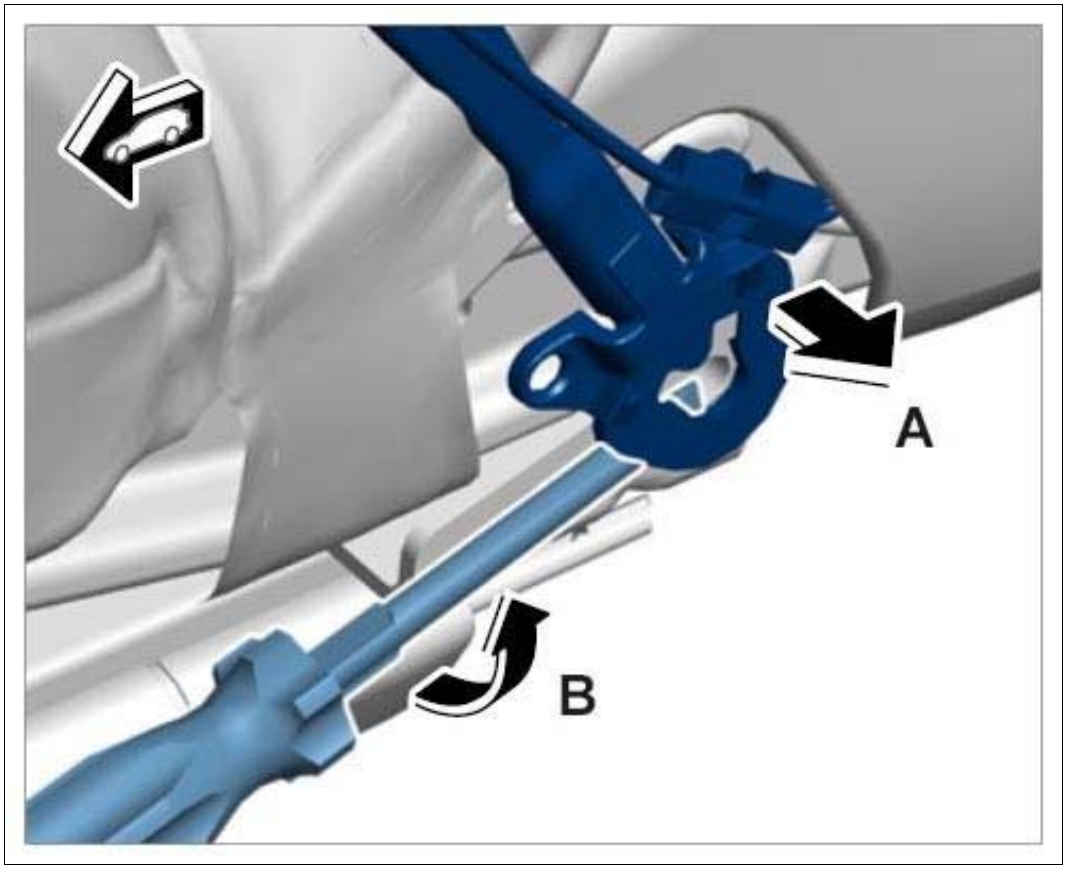

Courtesy of PORSCHE CARS NORTH AMERICA, INC.

3. 1.3. Push seat belt mount over the retaining pin **-arrow B-** until the lug under the retaining pin loosens the clip.
4. 1.4. Remove seat belt mount from the retaining pin.

2. Unscrew fastening screw **-1-** on the top belt fitting and remove it **-A-** .

Fig 3: Loosening Belt Fitting From Adjustment Fitting

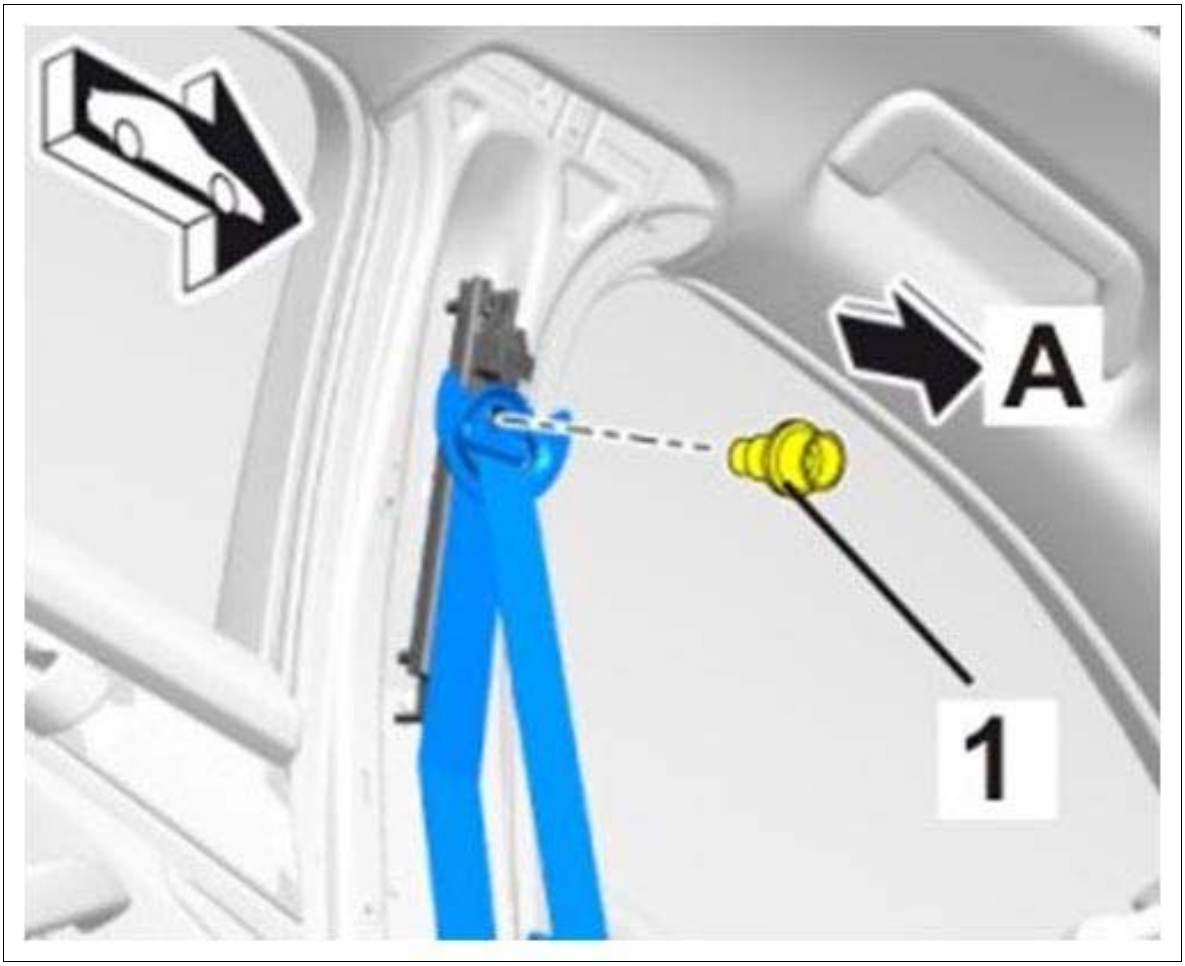

Courtesy of PORSCHE CARS NORTH AMERICA, INC.

3. Unscrew fastening screw **-1-** for the belt guide **-2-** from the B-pillar.

Fig 4: Removing Belt Guide

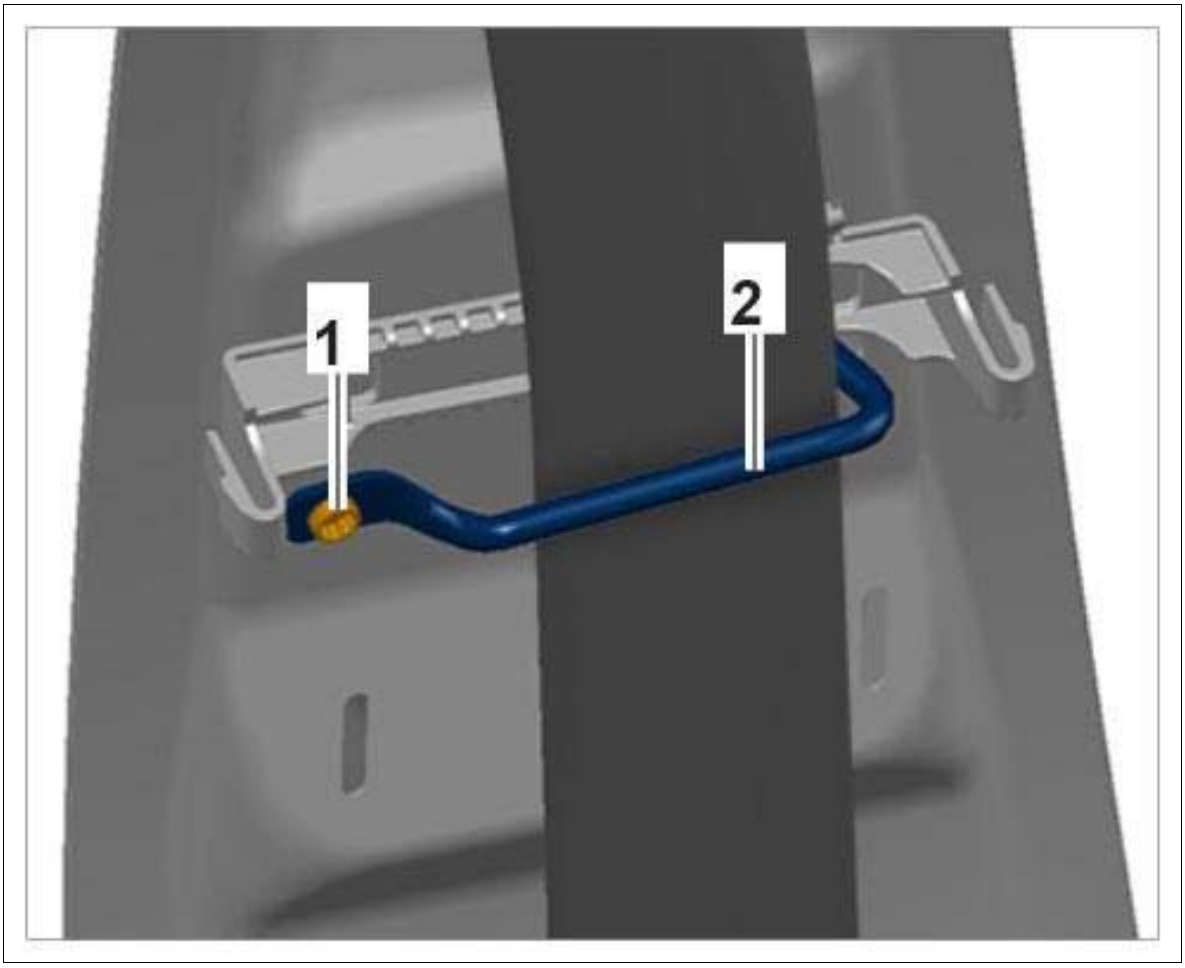

Courtesy of PORSCHE CARS NORTH AMERICA, INC.

4. Release and disconnect electric plug connection (RoW) **-1-** from seat-belt pretensioner **-arrow-** .

Fig 5: Disconnecting Electric Line From Seat-Belt Pretensioner

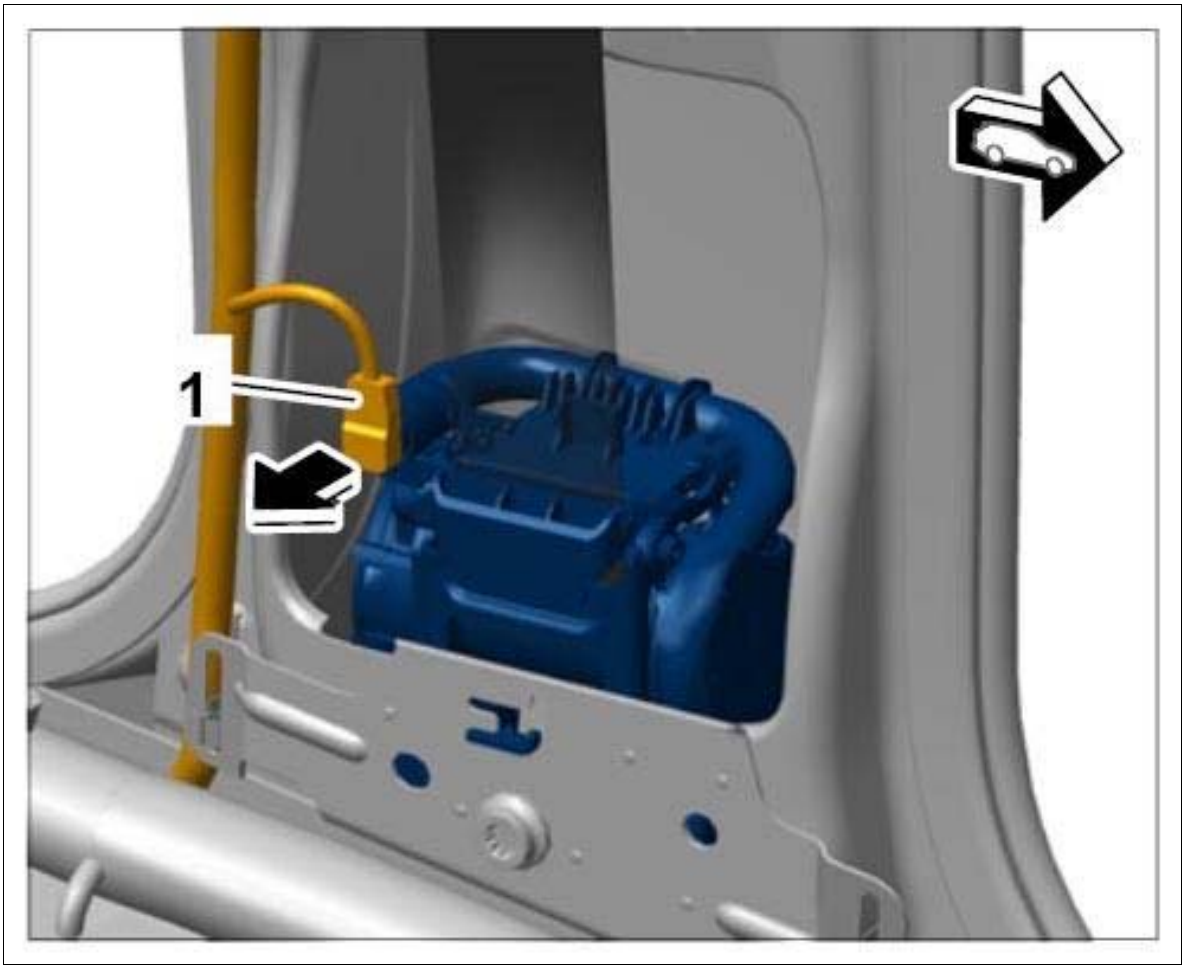

Courtesy of PORSCHE CARS NORTH AMERICA, INC.

5. Release and disconnect electric plug connections (USA) **-1 and 2-** from seat-belt pretensioner. Unclip line from fixing clip.

Fig 6: Disconnecting Electric Line From Seat-Belt Pretensioner (USA)

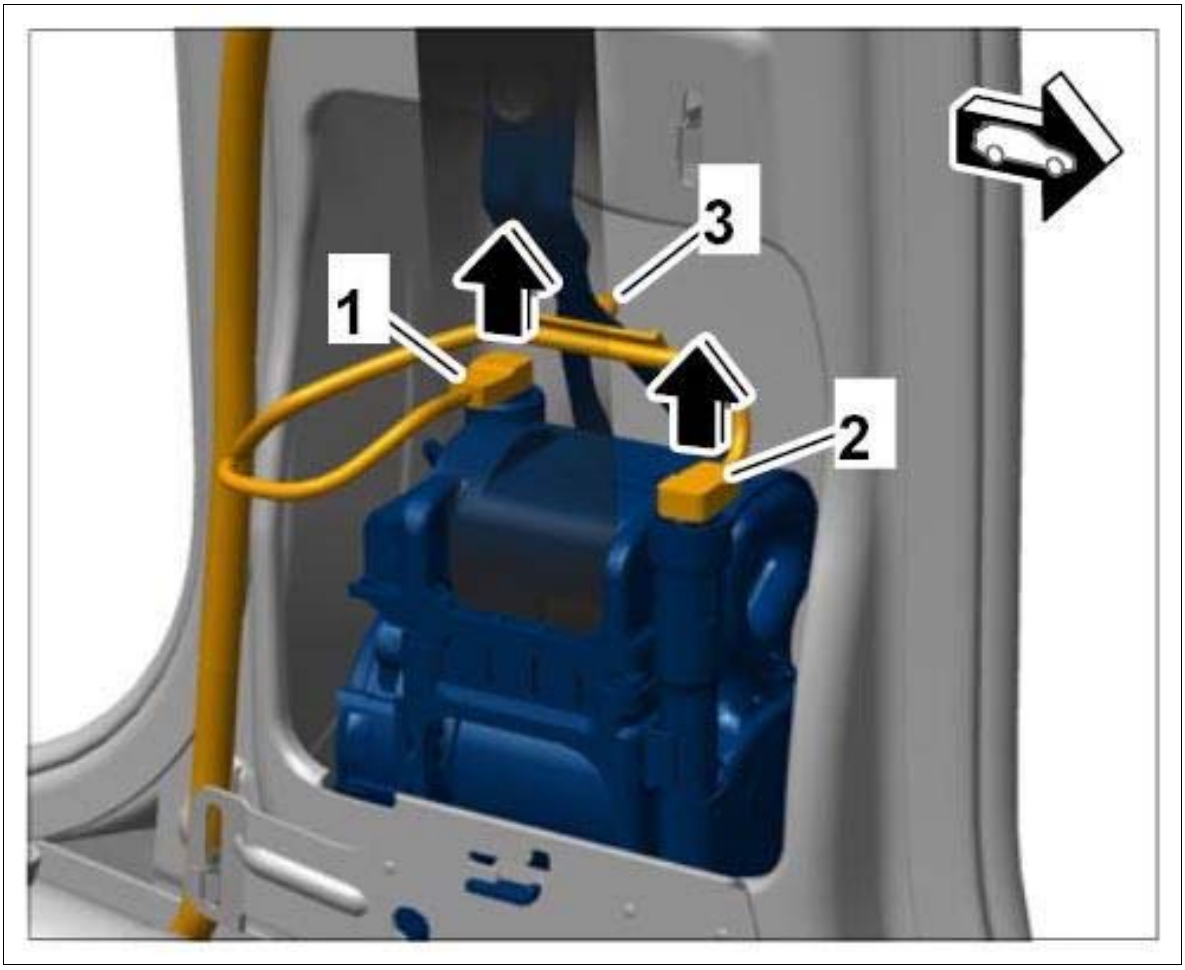

Courtesy of PORSCHE CARS NORTH AMERICA, INC.

6. Loosen fastening screw **-1-** and remove seat-belt pretensioner **-2-** in an upward direction **-arrow-** .

Fig 7: Removing Seat-Belt Pretensioner

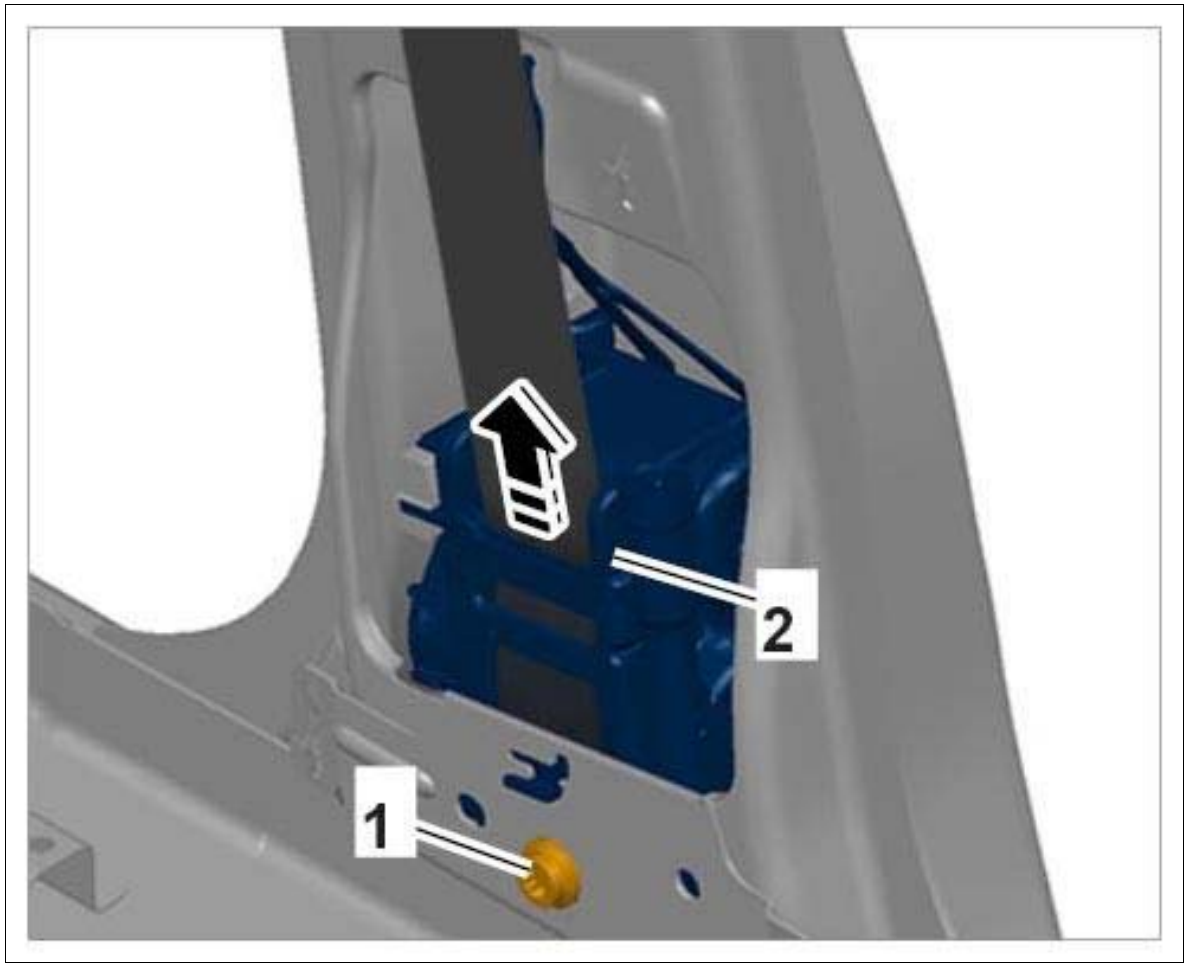

Courtesy of PORSCHE CARS NORTH AMERICA, INC.

WM 691119 REMOVING AND INSTALLING FRONT THREE-POINT BELT (MACAN, MACAN S, MACAN TURBO) > INSTALLING FRONT THREE-POINT BELT

1. Install seat-belt pretensioner.
    1. 1.1. Fit seat-belt pretensioner **-1- (-arrow-)** , making sure that the guide pin is fitted correctly **-2-** .

Fig 1: Installing Seat-Belt Pretensioner

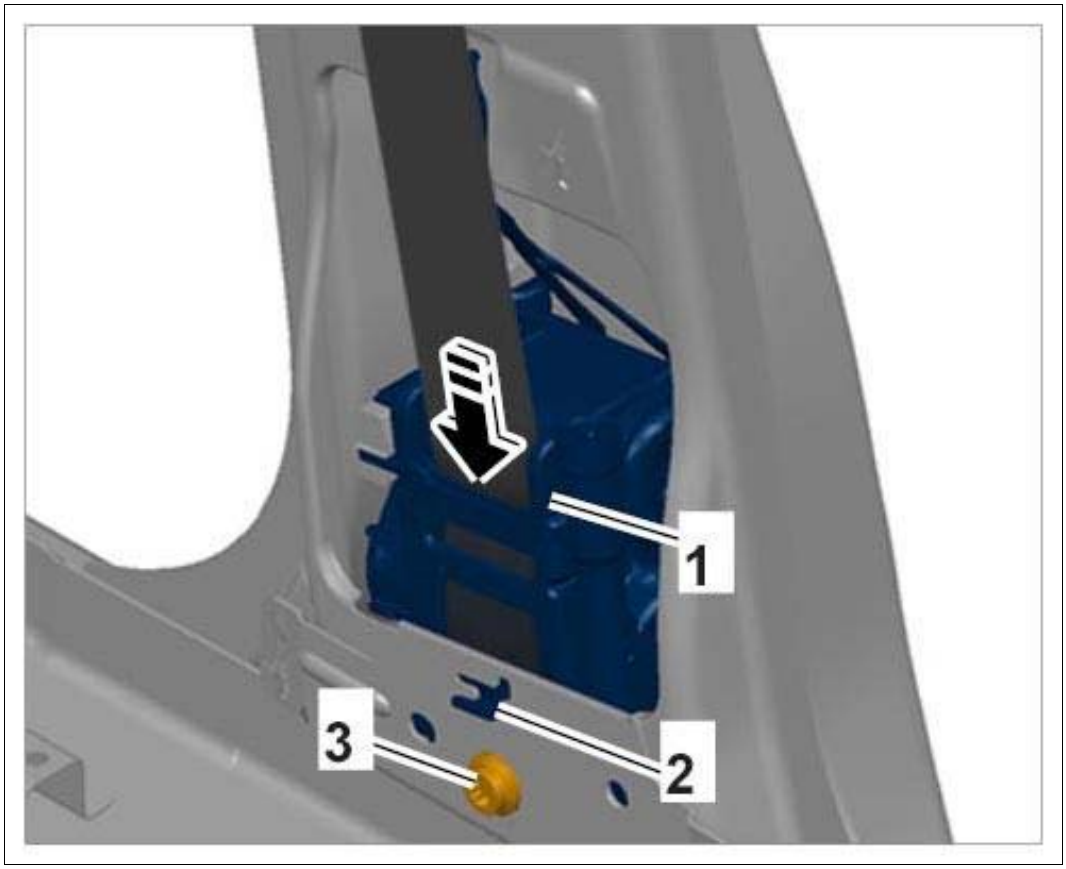

Courtesy of PORSCHE CARS NORTH AMERICA, INC.

2. 1.2. Tighten fastening screw **-3-** until secure **Tightening torque 50 Nm (37 ftlb.)** .

   Information

   Always replace the fastening screws on the three-point seat belt. The micro-self-locking screws must not be treated (e.g. greased) or loosened and then screwed on again.

   Information

   When routing the electric lines, make sure that they are not routed through the belt-coiling area.

3. 1.3. Plug in electric plug connection **-1- (-arrow-)** and close the locking mechanism.

Fig 2: Securing Electric Line On Seat-Belt Pretensioner

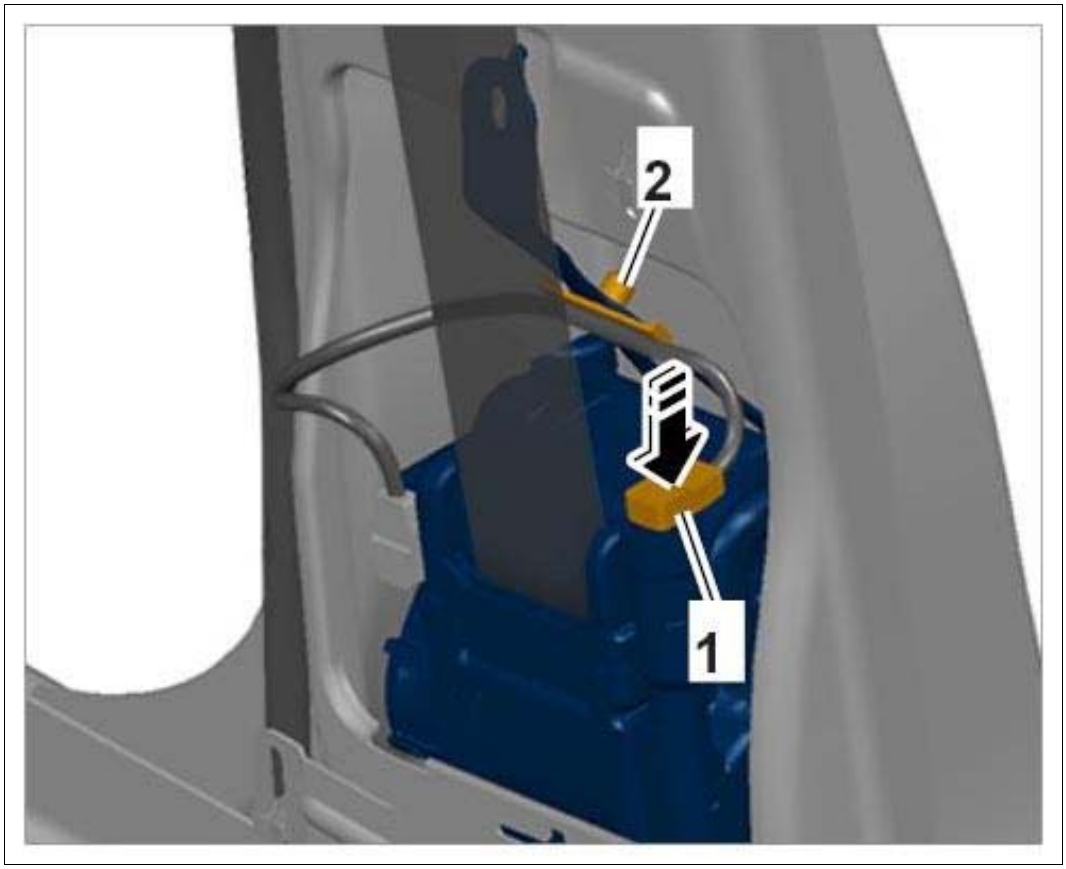

Courtesy of PORSCHE CARS NORTH AMERICA, INC.

4. 1.4. Secure electric line in the fixing clip **-2-** .

   Information

   Once the fastening screw has been tightened, the belt lug must level out on its own in a vertical position or in the relevant support direction.

2. Tighten fastening screw **-1-** for belt lug on the height adjuster **Tightening torque 50 Nm (37 ftlb.)** .

Fig 3: Securing Sash Guide Cover On Height Adjuster

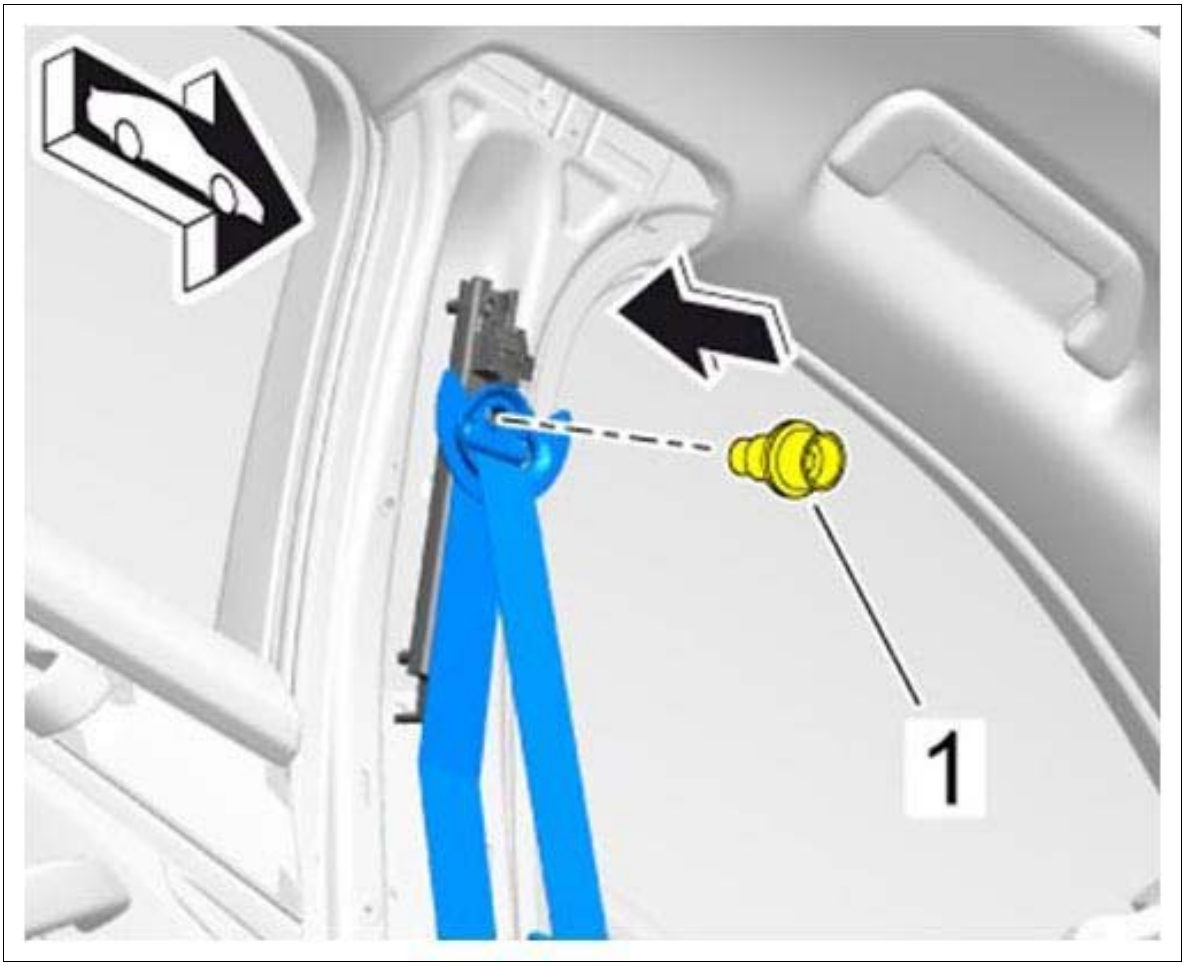

Courtesy of PORSCHE CARS NORTH AMERICA, INC.

Information

Do not twist the three-point belt during installation!

3. Tighten fastening screw **-1-** for the belt guide **-2-** at the B-pillar **Tightening torque 4.5 Nm (3 ftlb.)** .

Fig 4: Installing Belt Guide

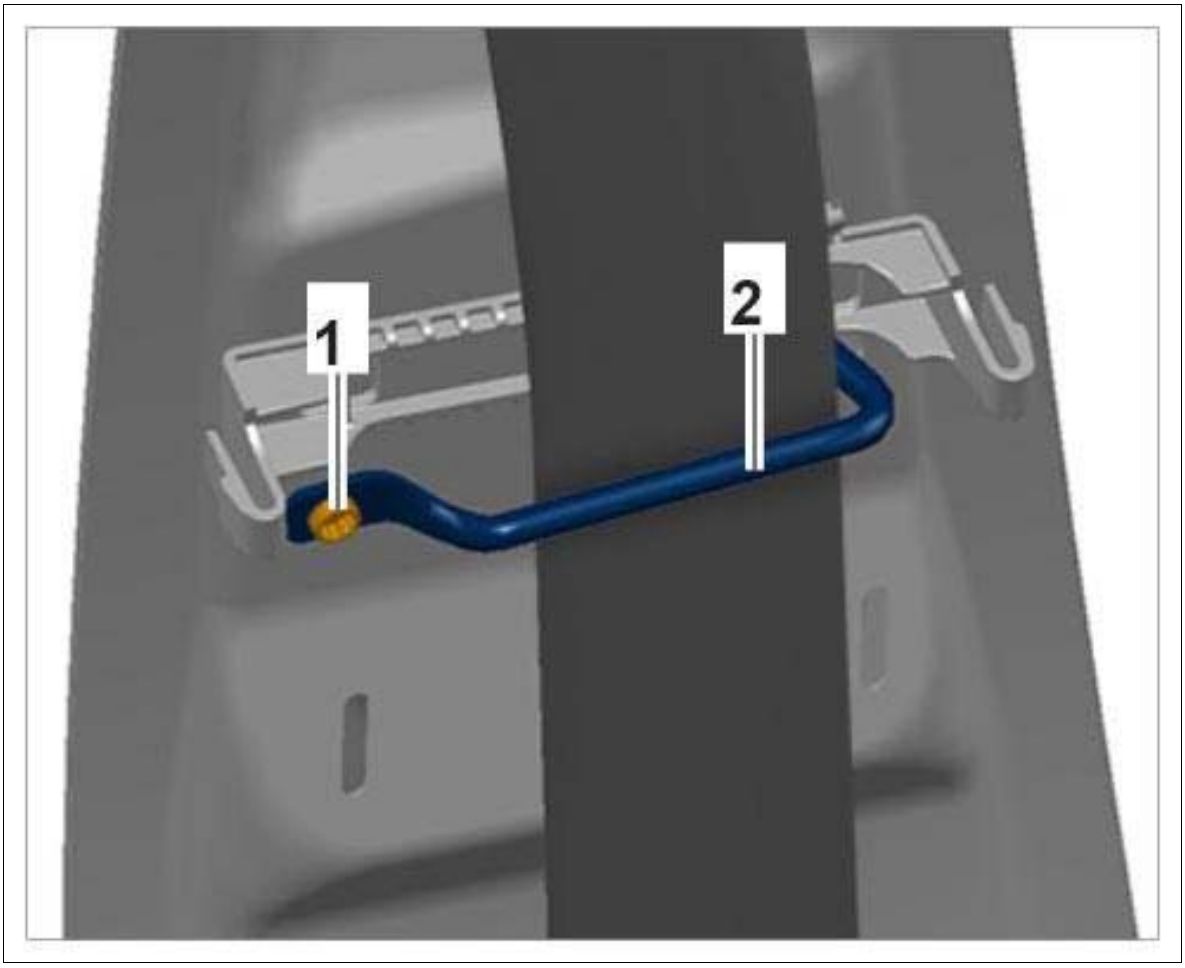

Courtesy of PORSCHE CARS NORTH AMERICA, INC.

Information

Do not twist the three-point belt during installation!

4. Install seat belt mount.

> *NOTE: Incorrect handling of spring plate on seat belt mount*
>
> *1. The seat belt must be replaced.*

→ Only bend the spring plate up as far as required to allow you to push the seat belt mount off the mounting pin.

→ The spring plate must be touching the mounting pin during installation with preload.

1. 4.1. Position seat belt mount **-2-** on the retaining pin **-4-** and pull upward until the retaining clip **-3-** locks with an audible click.

Fig 5: Identifying Seat Belt Mount On Front Seat

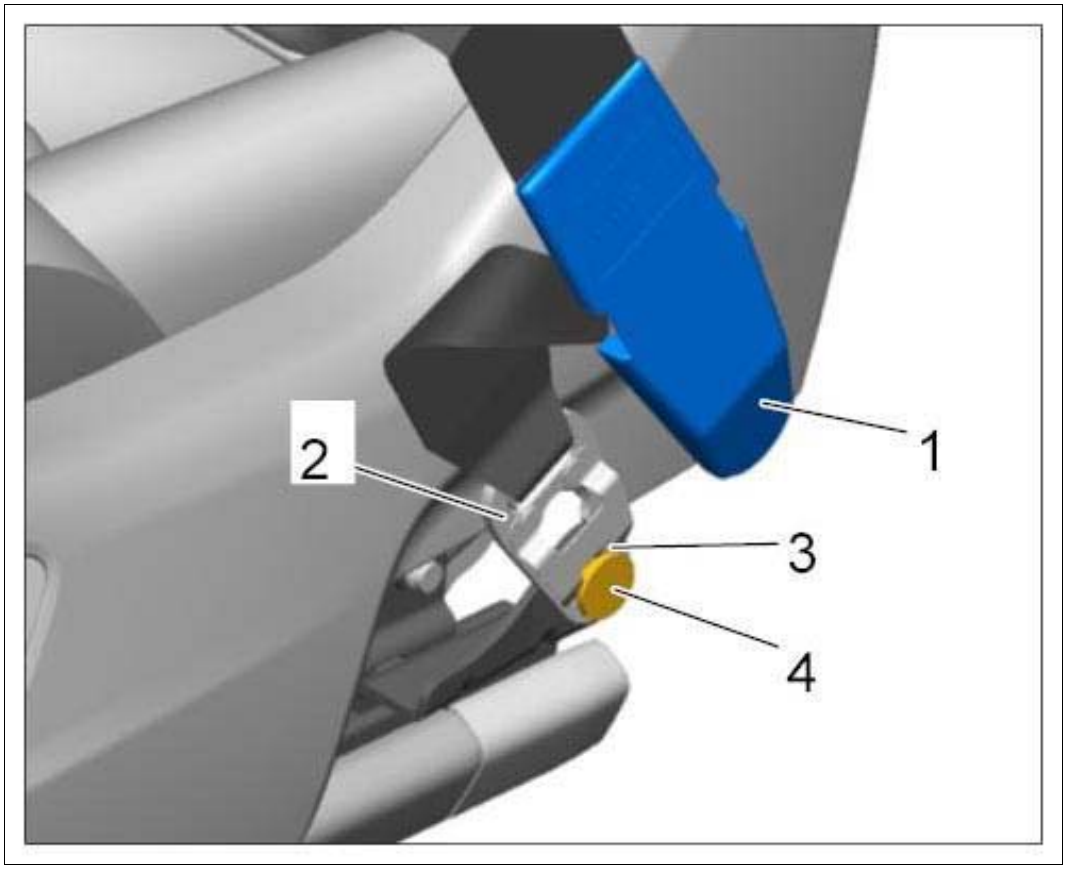

Courtesy of PORSCHE CARS NORTH AMERICA, INC.

2. 4.2. Pull on the belt strap. The retaining clip **-3-** must engage fully on the holder.
3. 4.3. Slide the cap **-1-** over the seat belt mount **-2-** and lock it. The label on the seat belt must be pushed into the cap when you slide the cover down.

WM 691119 REMOVING AND INSTALLING FRONT THREE-POINT BELT (MACAN, MACAN S, MACAN TURBO) > SUBSEQUENT WORK

1. Install B-pillar trim panel. → INSTALLING LOWER PART OF B-PILLAR TRIM PANEL .
2. Connect the battery. → 2X00IN GENERAL INFORMATION ON DISCONNECTING THE BATTERY
3. Perform a function test.
    1. The belt strap must be fully rolled up when the function test is started.
    2. Move the seat belt height adjustment to the highest position.
    3. Pull out belt strap completely as far as it will go.
    4. Roll up the belt strap again slowly. An audible clattering noise can be heard when you do this.

5. If the rolling-up process is interrupted, the belt strap cannot be pulled out again (permanent belt blockage).
6. The permanent belt blockage function must switch off at least 100 mm before the belt strap is rolled up fully, thereby ensuring that the belt strap can be pulled out again.

WM 691219 REMOVING AND INSTALLING REAR THREE-POINT BELT (MACAN, MACAN S, MACAN TURBO) > TECHNICAL VALUES

Location	Description	Type	Basic value	Tolerance 1	Tolerance 2
Fastening screw securing seat-belt pretensioner to bodyshell	Item 3	Tightening torque	50 Nm (37 ftlb.)		
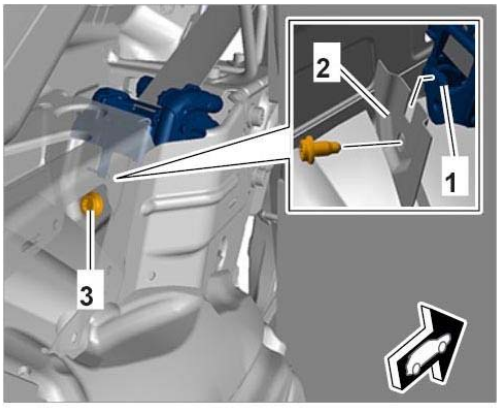 Installing seat-belt pretensioner					
Fastening screw securing seat belt mount to bodyshell		Tightening torque	50 Nm (37 ftlb.)		
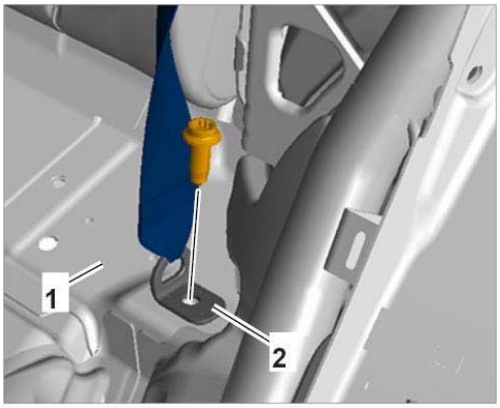 Securing seat belt mount					
Fastening screw securing center	Item 1	Tightening torque	50 Nm (37 ftlb.)		

rear seat belt mount to body					

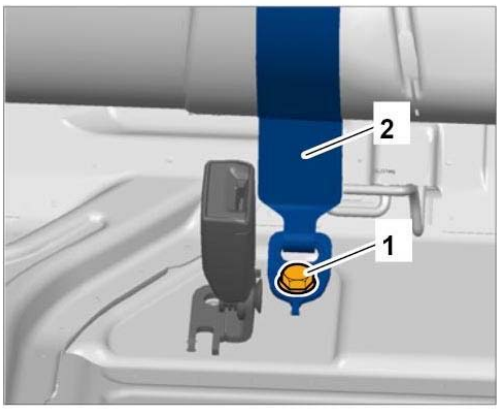

Loosening center seat belt mount from body

Fastening nut for center rear seat-belt pretensioner	Item 1	Tightening torque	50 Nm (37 ftlb.)		

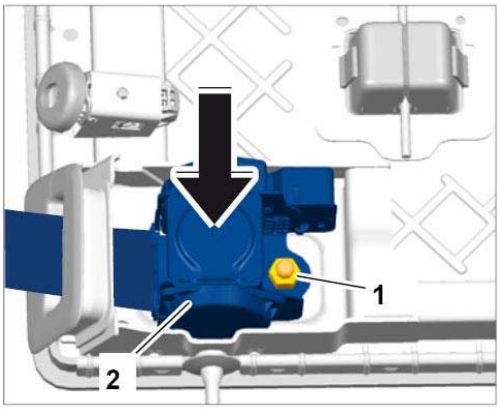

Installing seat-belt pretensioner

WM 691219 REMOVING AND INSTALLING REAR THREE-POINT BELT (MACAN, MACAN S, MACAN TURBO) > COMPONENT INFORMATION > INSTALLATION POSITION

Fig 1: Locating Rear Three-Point Belt Position

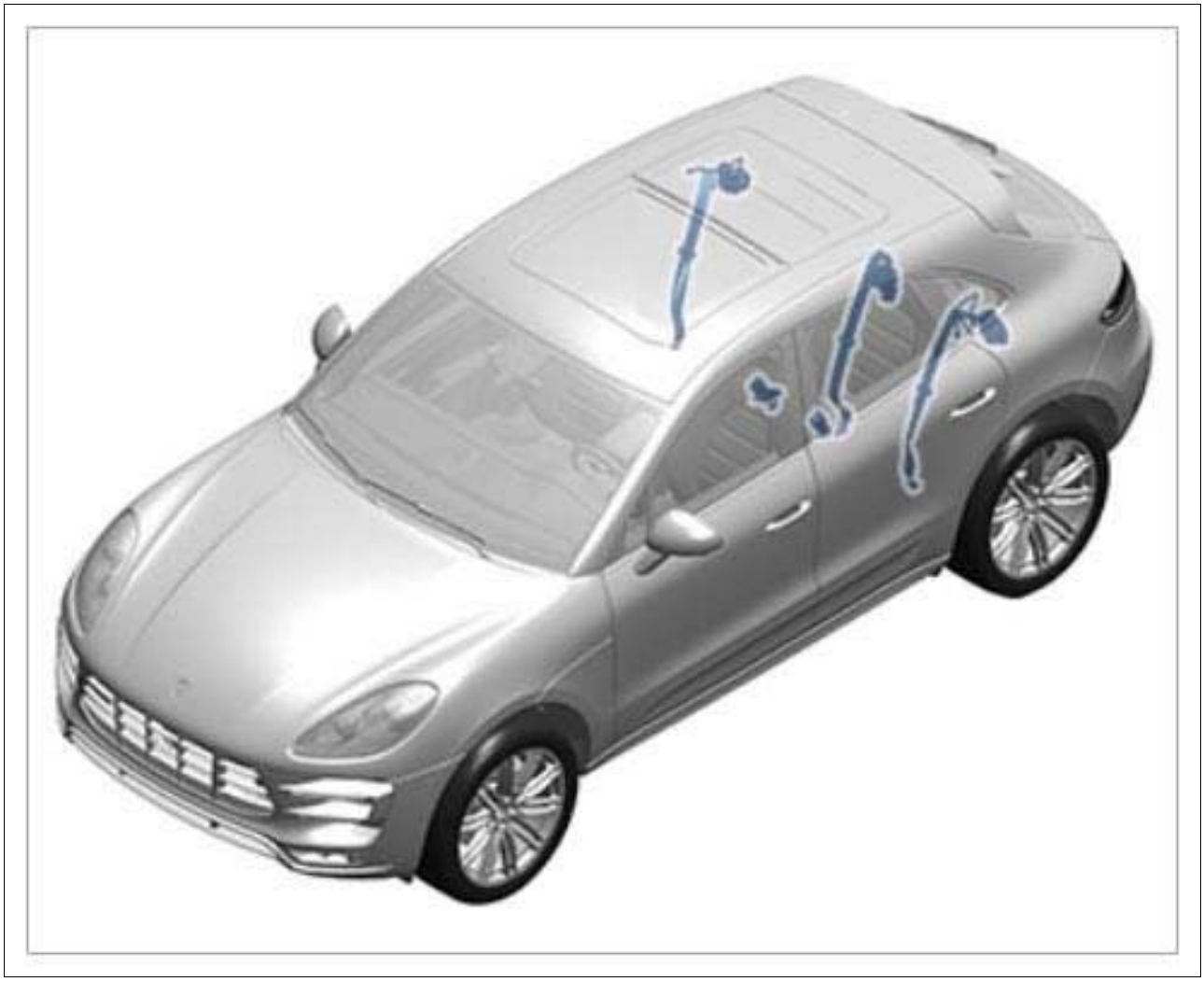

Courtesy of PORSCHE CARS NORTH AMERICA, INC.

WM 691219 REMOVING AND INSTALLING REAR THREE-POINT BELT (MACAN, MACAN S, MACAN TURBO) > PRELIMINARY WORK > PRELIMINARY WORK FOR REAR THREE-POINT BELT AT THE LEFT AND RIGHT

1. Disconnect the battery. → 2X00IN GENERAL INFORMATION ON DISCONNECTING THE BATTERY

2. Remove rear seat. → 724819 REMOVING AND INSTALLING REAR SEAT .

3. Remove side trim panel for rear luggage compartment. → 700319 REMOVING AND INSTALLING SIDE TRIM PANEL FOR REAR LUGGAGE COMPARTMENT .

   Step 4 must only be carried out for vehicles with the BOSE sound system:

4. To make it easier to reach the fastening screw for the seat-belt pretensioner, loosen the booster **-1- (-2-)** on the left-hand side of the luggage compartment, support it and leave it hanging.

Fig 1: Removing Sound Absorber

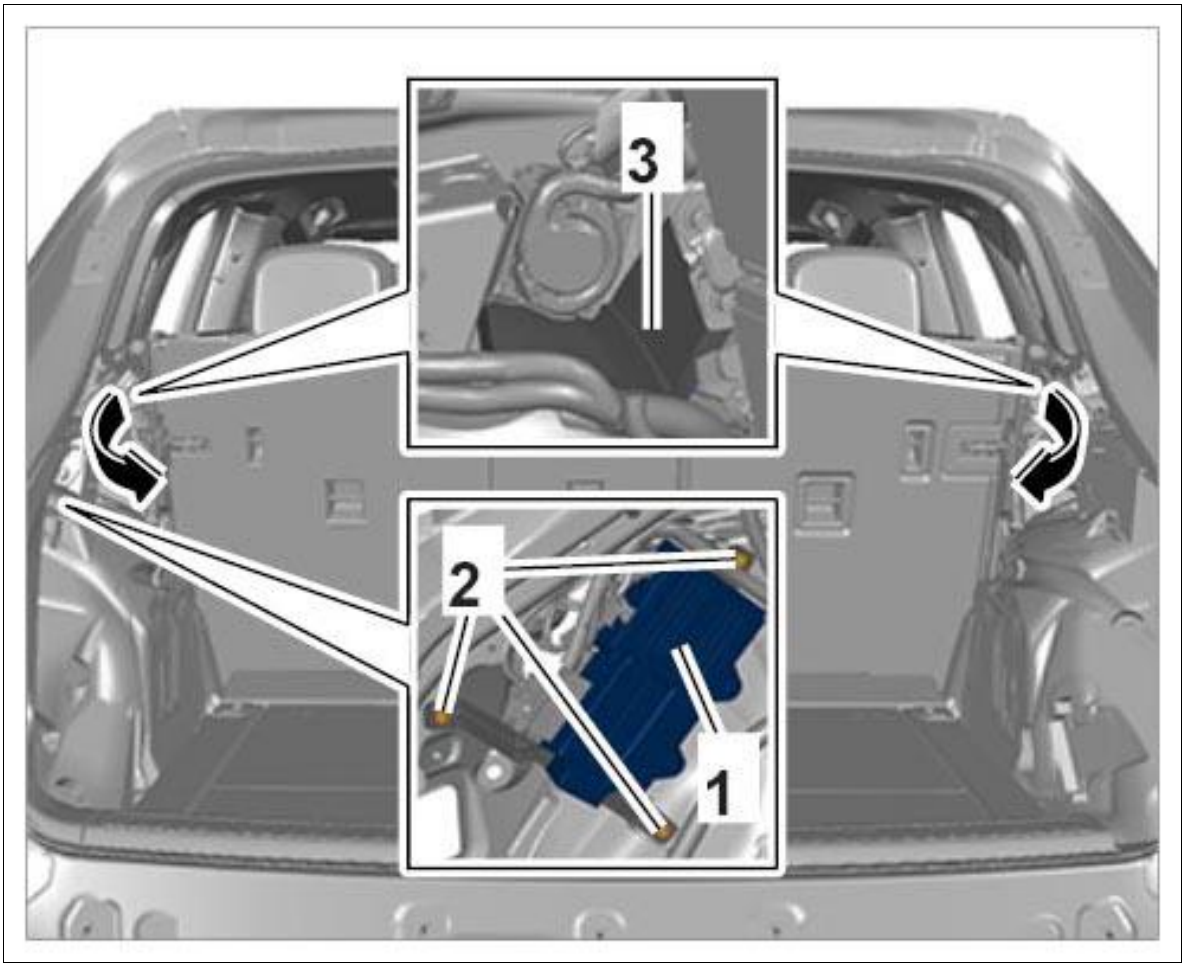

Courtesy of PORSCHE CARS NORTH AMERICA, INC.

5. Pull sound absorber at the left and right **-3-** out of the wheel housing to the rear **-arrows-** .

WM 691219 REMOVING AND INSTALLING REAR THREE-POINT BELT (MACAN, MACAN S, MACAN TURBO) > PRELIMINARY WORK > PRELIMINARY WORK FOR REAR THREE-POINT BELT AT THE CENTER

1. Disconnect the battery. → 2X00IN GENERAL INFORMATION ON DISCONNECTING THE BATTERY
2. Remove rear seat. → 724819 REMOVING AND INSTALLING REAR SEAT .
3. **Remove left padding** for rear backrest. → 745219 REMOVING AND INSTALLING PADDING FOR REAR BACKREST .

WM 691219 REMOVING AND INSTALLING REAR THREE-POINT BELT (MACAN, MACAN S, MACAN TURBO) > REMOVING REAR THREE-POINT BELT > REMOVING

REAR THREE-POINT BELT AT THE LEFT AND RIGHT

WARNING: Incorrect handling of seat-belt pretensioner unit

- *Triggering of seat-belt pretensioner unit*

→ Observe safety regulations for handling seat-belt pretensioner units.

→ Observe disposal regulations for seat-belt pretensioner units.

→ After disconnecting the battery, wait 1 minute before disconnecting the seat-belt pretensioner unit.

→ Remove ignition key and disconnect the battery. Route or insulate the ground strap so that all contact with a ground carrier is avoided. Read and follow work instructions after disconnecting the battery.

→ If removed for an extended period, the seat-belt pretensioner unit must be stored in a safe place.

→ Transport the seat-belt pretensioner unit in such a way that the seat belt can retract safely if it is actuated.

Information

- Some of the repair illustrations show only one side of the vehicle.
- Naturally, some steps also have to be performed on the opposite side of the vehicle as well.

1. Unscrew fastening screw **-1-** securing seat belt mount **-2-** to the body.

Fig 1: Loosening Seat Belt Mount From Body

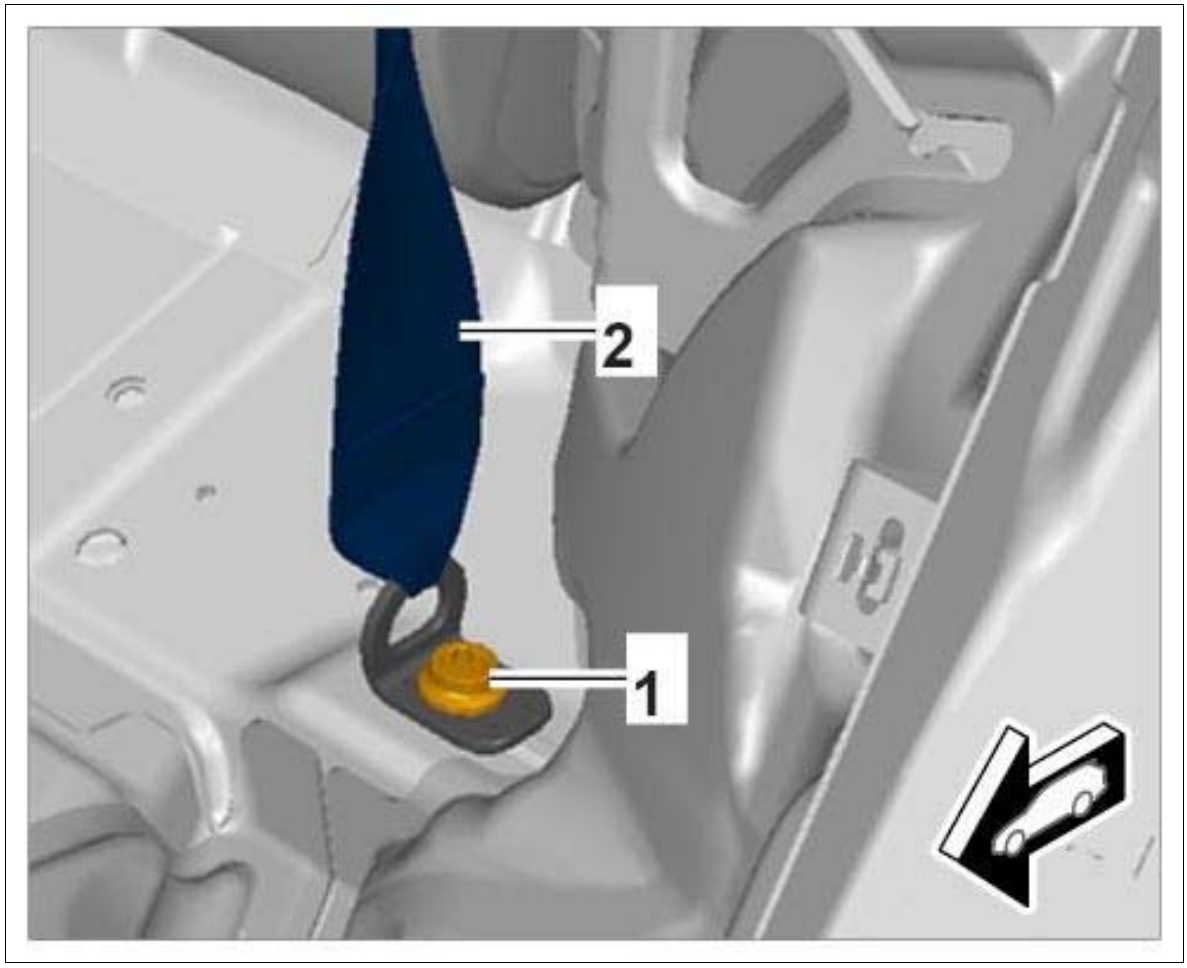

Courtesy of PORSCHE CARS NORTH AMERICA, INC.

2. Release and disconnect electric plug connection **-1-** on the seat-belt pretensioner **-2-** .

Fig 2: Disconnecting Electric Plug Connection

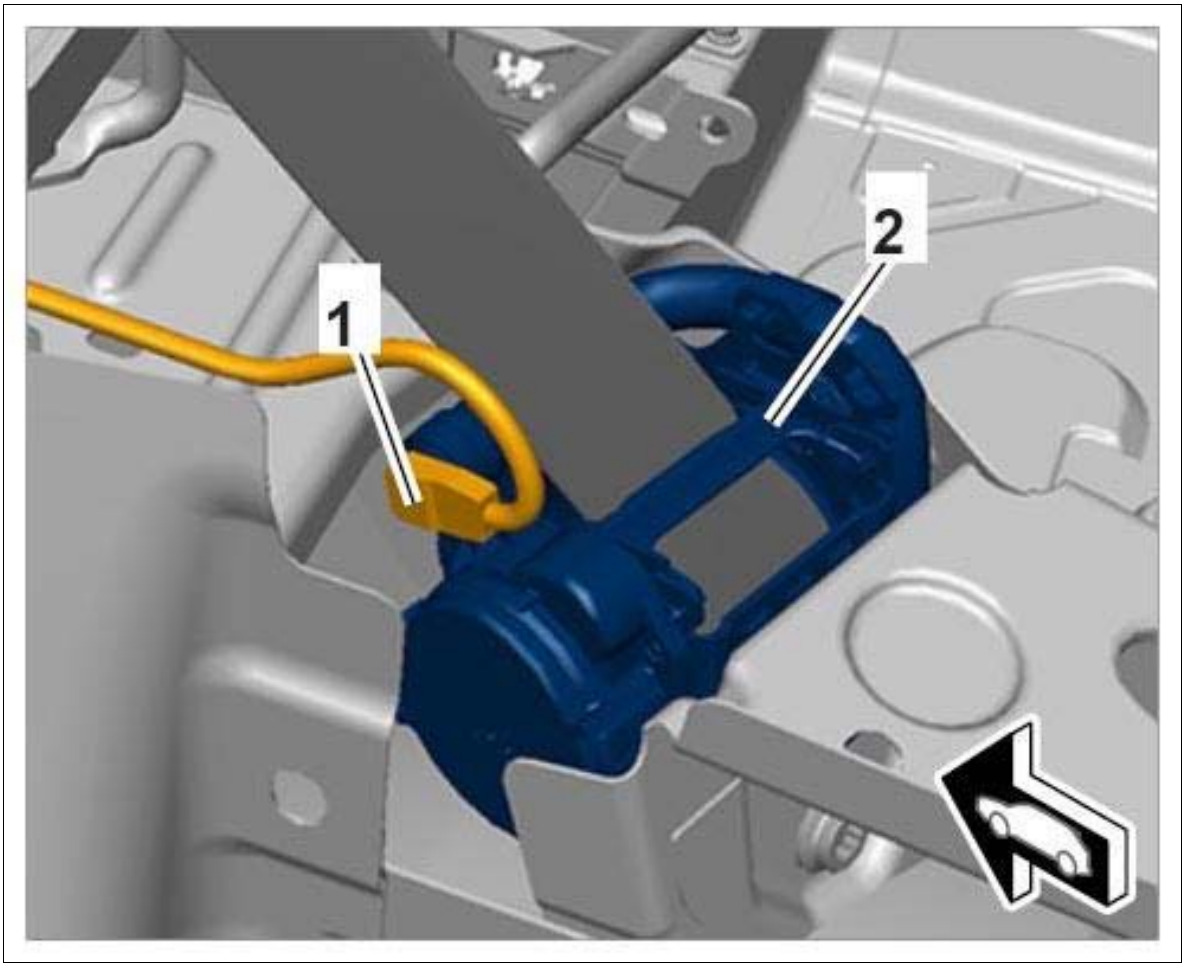

Courtesy of PORSCHE CARS NORTH AMERICA, INC.

3. Unscrew fastening screw **-1-** on the seat-belt pretensioner **-2-** from the luggage compartment.

Fig 3: Removing Seat-Belt Pretensioner

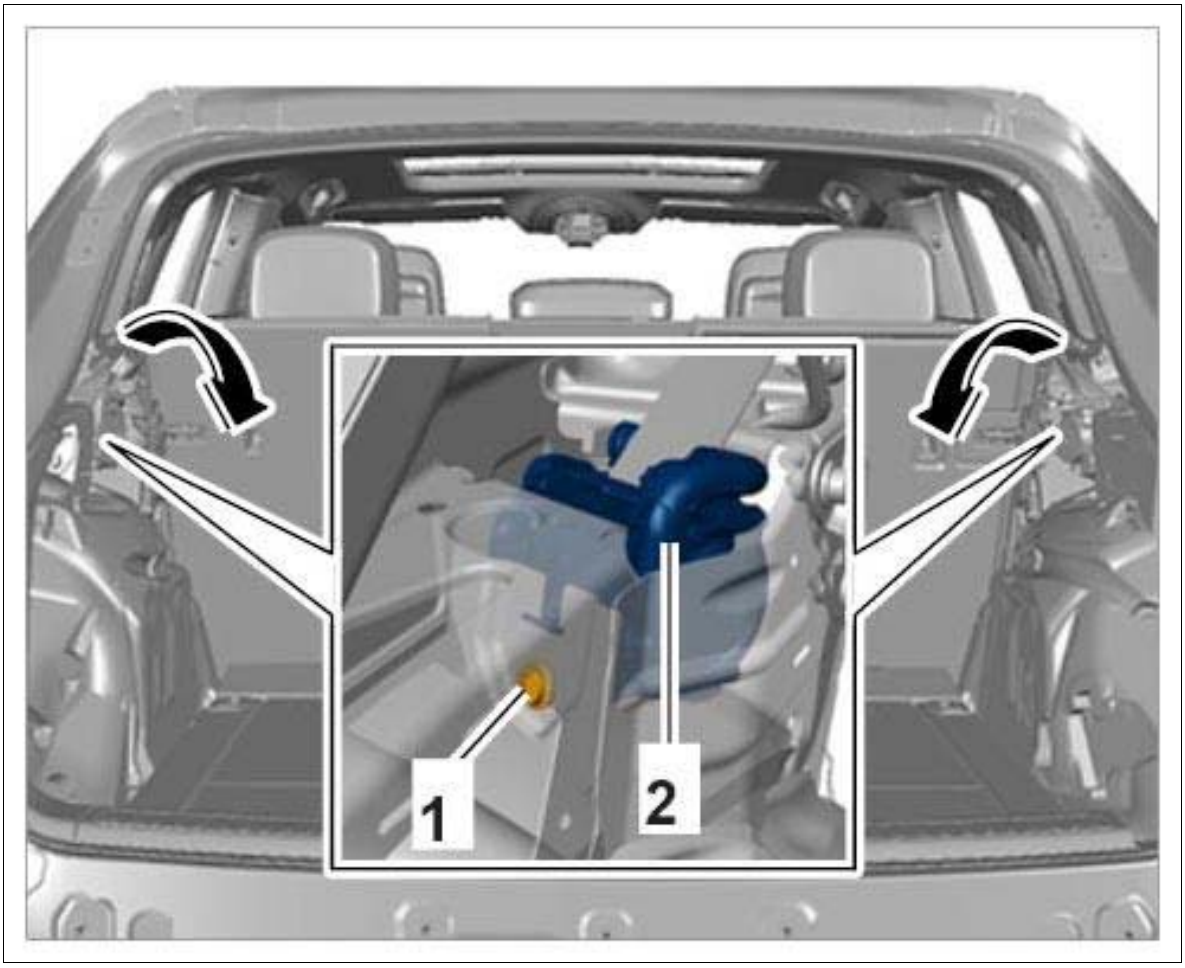

Courtesy of PORSCHE CARS NORTH AMERICA, INC.

4. Lift seat-belt pretensioner mount up out of the bracket in the bodyshell **-arrows-** .

WM 691219 REMOVING AND INSTALLING REAR THREE-POINT BELT (MACAN, MACAN S, MACAN TURBO) > REMOVING REAR THREE-POINT BELT > REMOVING REAR THREE-POINT BELT AT THE CENTER

1. Unscrew fastening screw **-1-** for the center seat belt mount **-2-** at the body.

Fig 1: Loosening Center Seat Belt Mount From Body

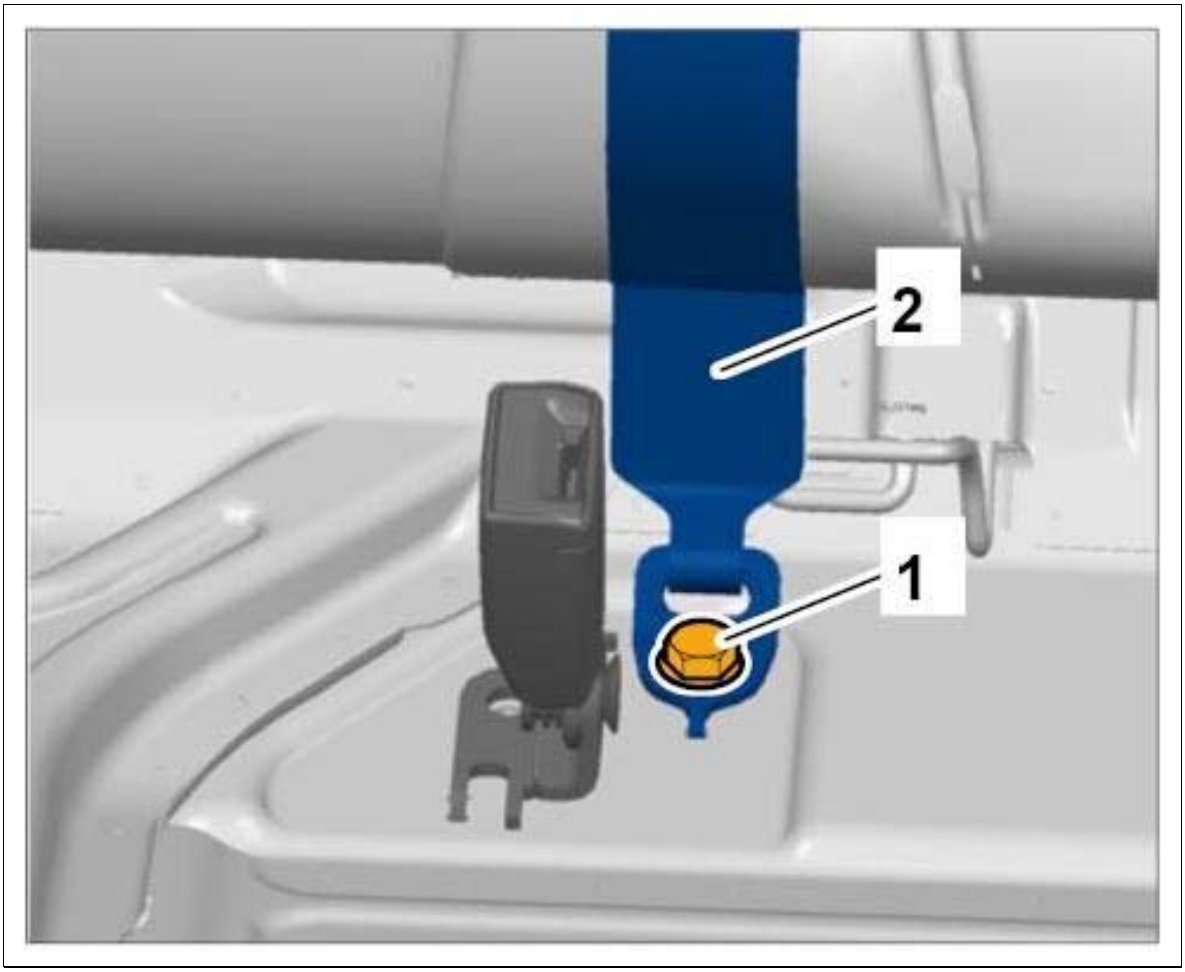

Courtesy of PORSCHE CARS NORTH AMERICA, INC.

2. Loosen fastening nut **-1-** for rear seat-belt pretensioner at the center **-2-** and remove it **-arrow-** .

Fig 2: Removing Seat-Belt Pretensioner

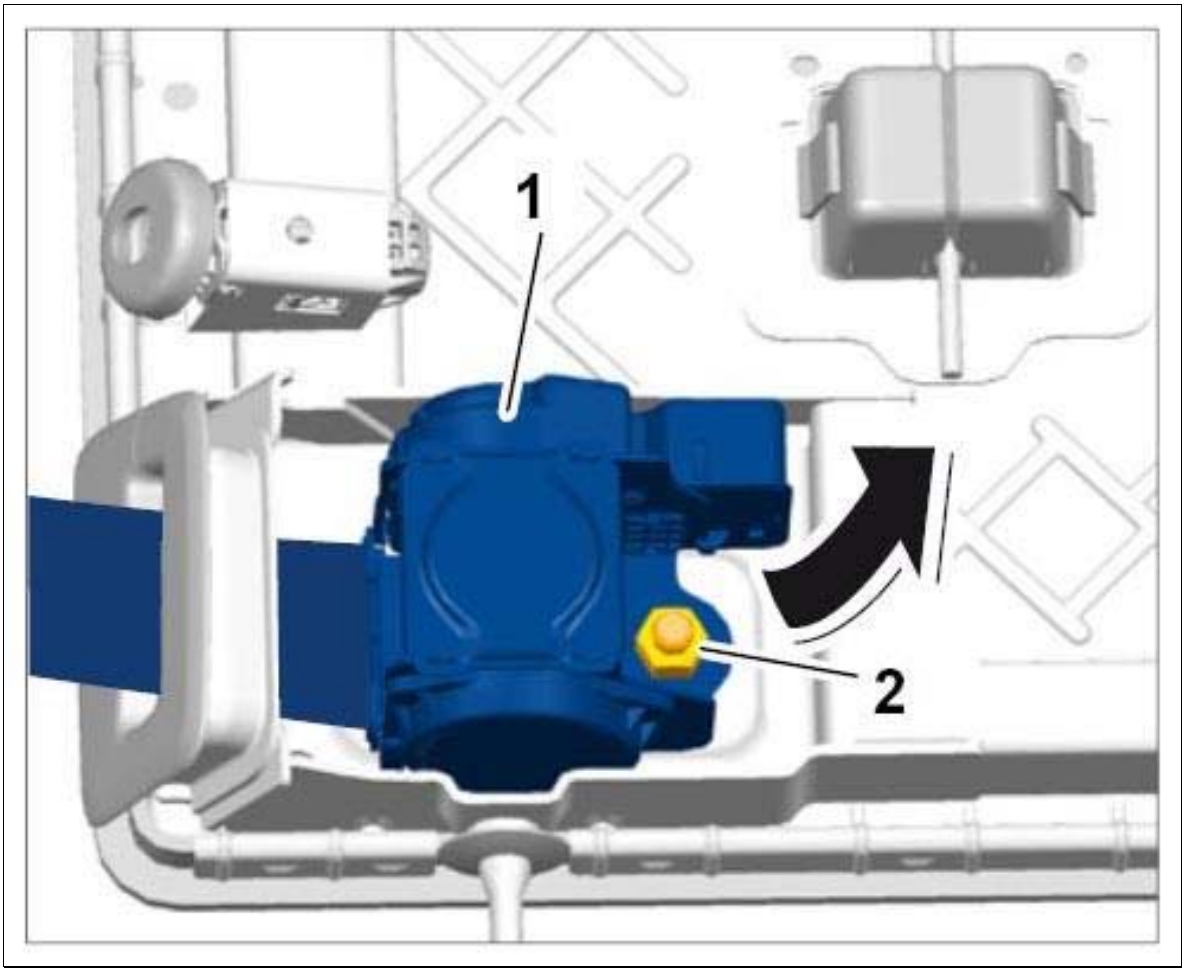

Courtesy of PORSCHE CARS NORTH AMERICA, INC.

WM 691219 REMOVING AND INSTALLING REAR THREE-POINT BELT (MACAN, MACAN S, MACAN TURBO) > INSTALLING REAR THREE-POINT BELT > INSTALLING REAR THREE-POINT BELT AT THE LEFT AND RIGHT

Information

- Replace fastening screws with new fastening screws before installation.
- Self-locking nuts and screws must always be replaced before installation.

1. Hook seat-belt pretensioner **-1-** into the bodyshell **-2-** and secure with the fastening screw **-3-** (**Tightening torque 50 Nm (37 ftlb.)**).

Fig 1: Installing Seat-Belt Pretensioner

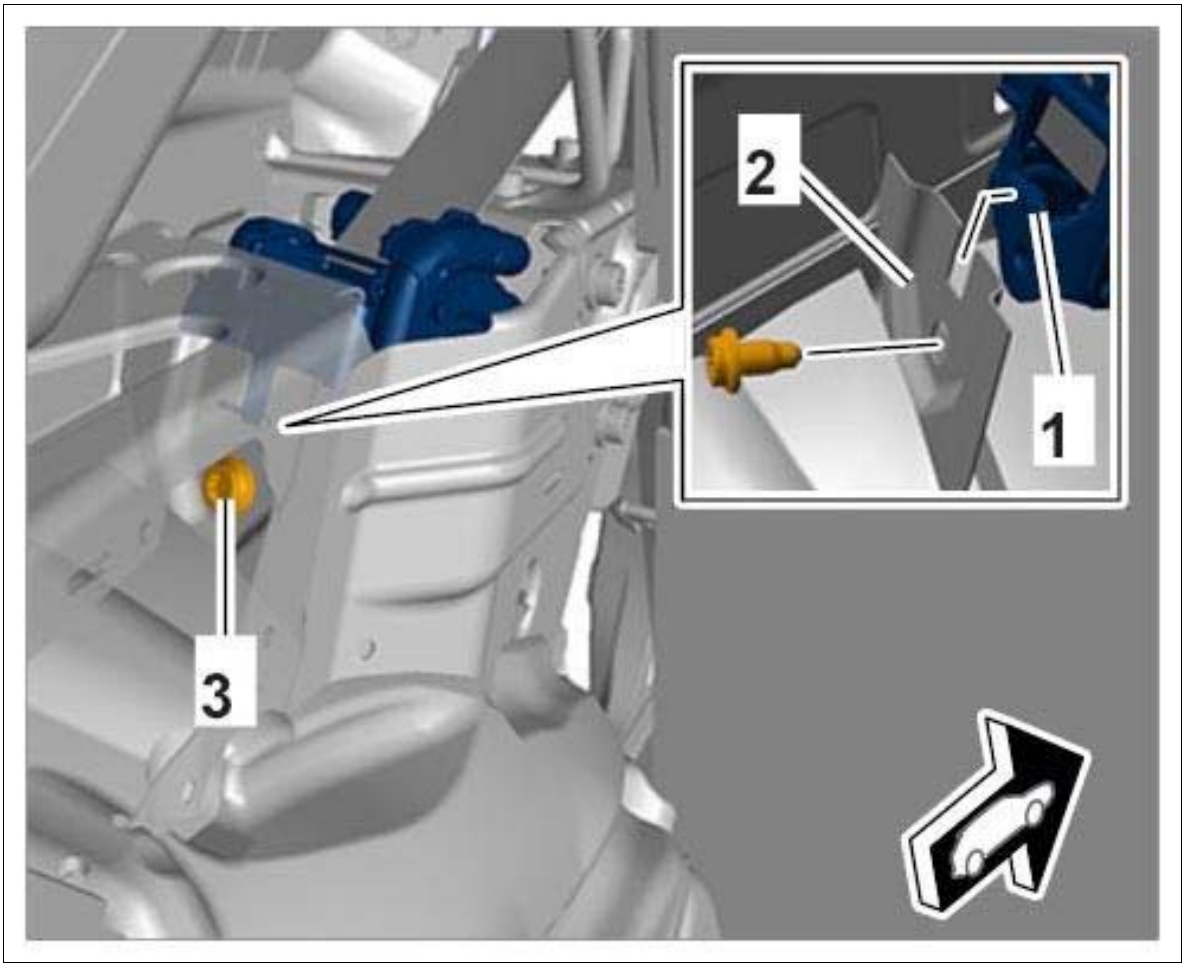

Courtesy of PORSCHE CARS NORTH AMERICA, INC.

2. Guide seat belt over the belt deflector and secure seat belt mount **-1-** to the body **-2-** (**Tightening torque 50 Nm (37 ftlb.)**).

   Information

   Observe correct installation position for seat belt mount:

   1. Do not install belt twisted.
   2. Twist lock must engage fully in the recess in the bodyshell before being screwed in.
   3. Belt must be facing the center of the vehicle.

Fig 2: Securing Seat Belt Mount

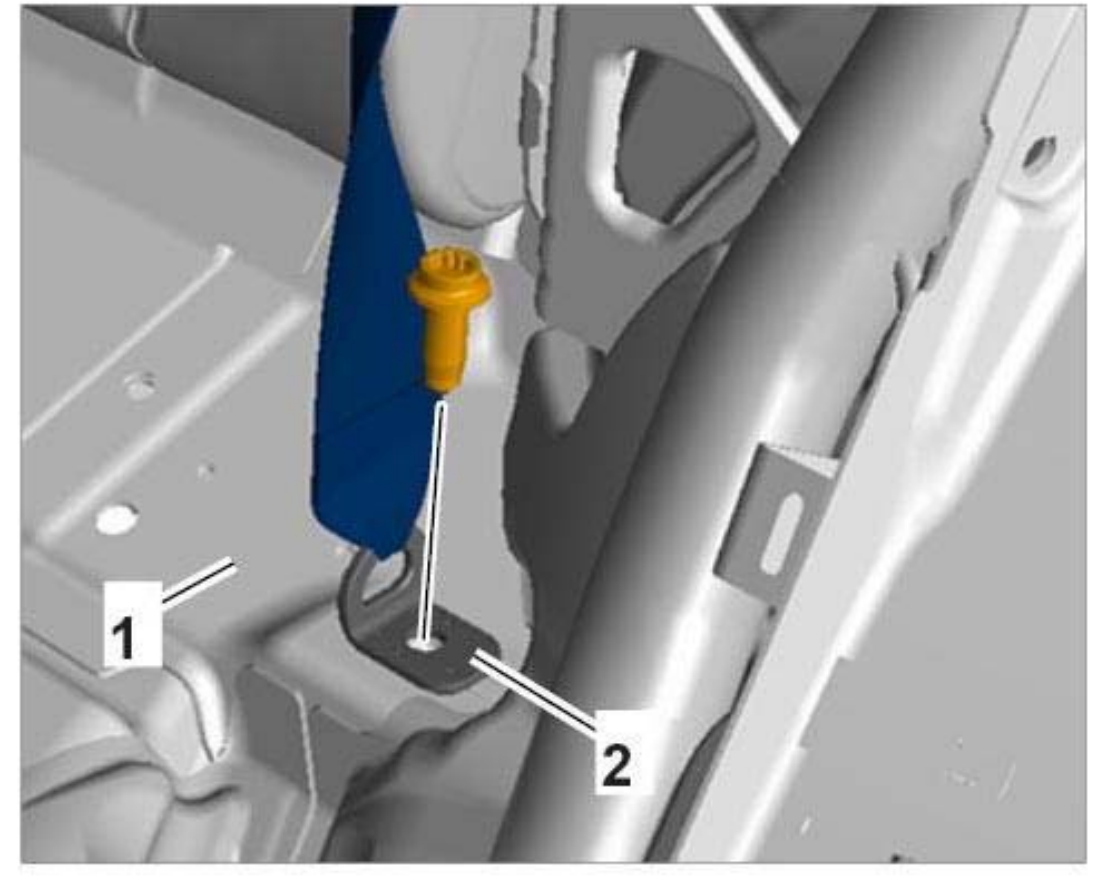

Courtesy of PORSCHE CARS NORTH AMERICA, INC.

3. Connect electric plug connection **-1-** to the seat-belt pretensioner **-2-** .

   Information

   Electric lines must not be routed in the belt roll-up and belt strap area.

Fig 3: Connecting Electric Plug Connection

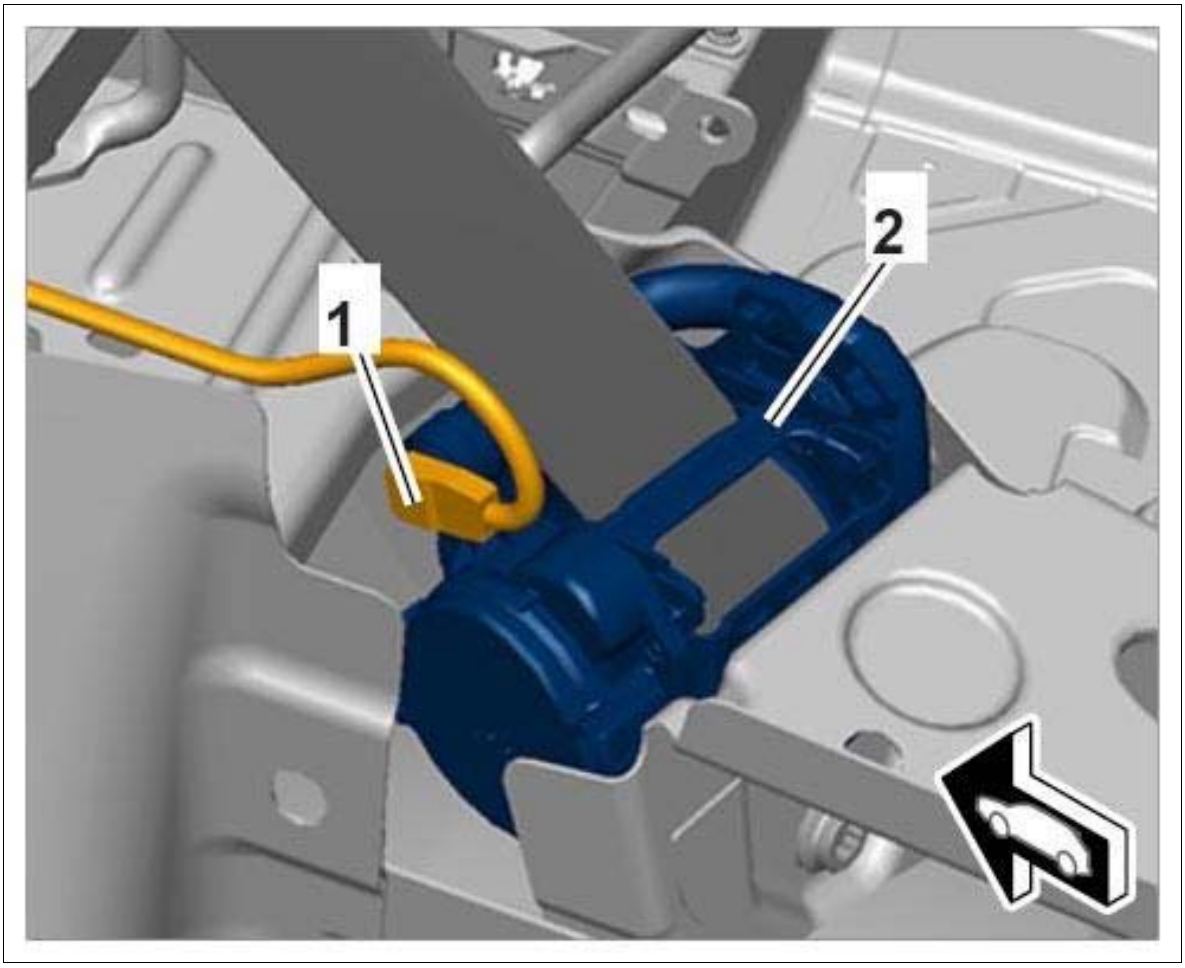

Courtesy of PORSCHE CARS NORTH AMERICA, INC.

WM 691219 REMOVING AND INSTALLING REAR THREE-POINT BELT (MACAN, MACAN S, MACAN TURBO) > INSTALLING REAR THREE-POINT BELT > INSTALLING REAR THREE-POINT BELT AT THE CENTER

1. Hook in seat-belt pretensioner **-1-** so that the fixing pin **-2-** is seated in the groove **-3-** .

Fig 1: Positioning Seat-Belt Pretensioner

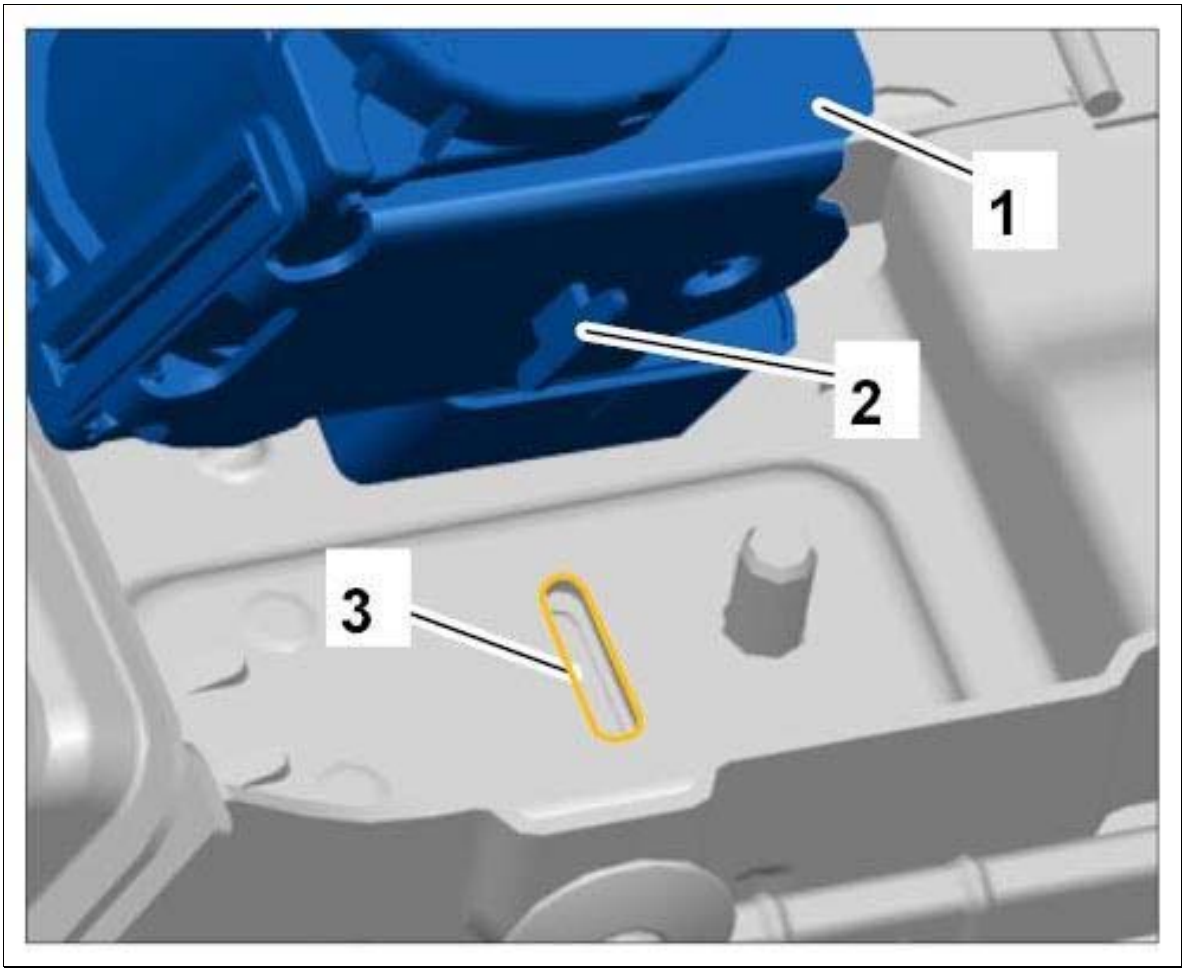

Courtesy of PORSCHE CARS NORTH AMERICA, INC.

2. Tighten fastening nut **-1-** for rear seat-belt pretensioner at the center **-2-** (**Tightening torque 50 Nm (37 ftlb.)**).

Fig 2: Installing Seat-Belt Pretensioner

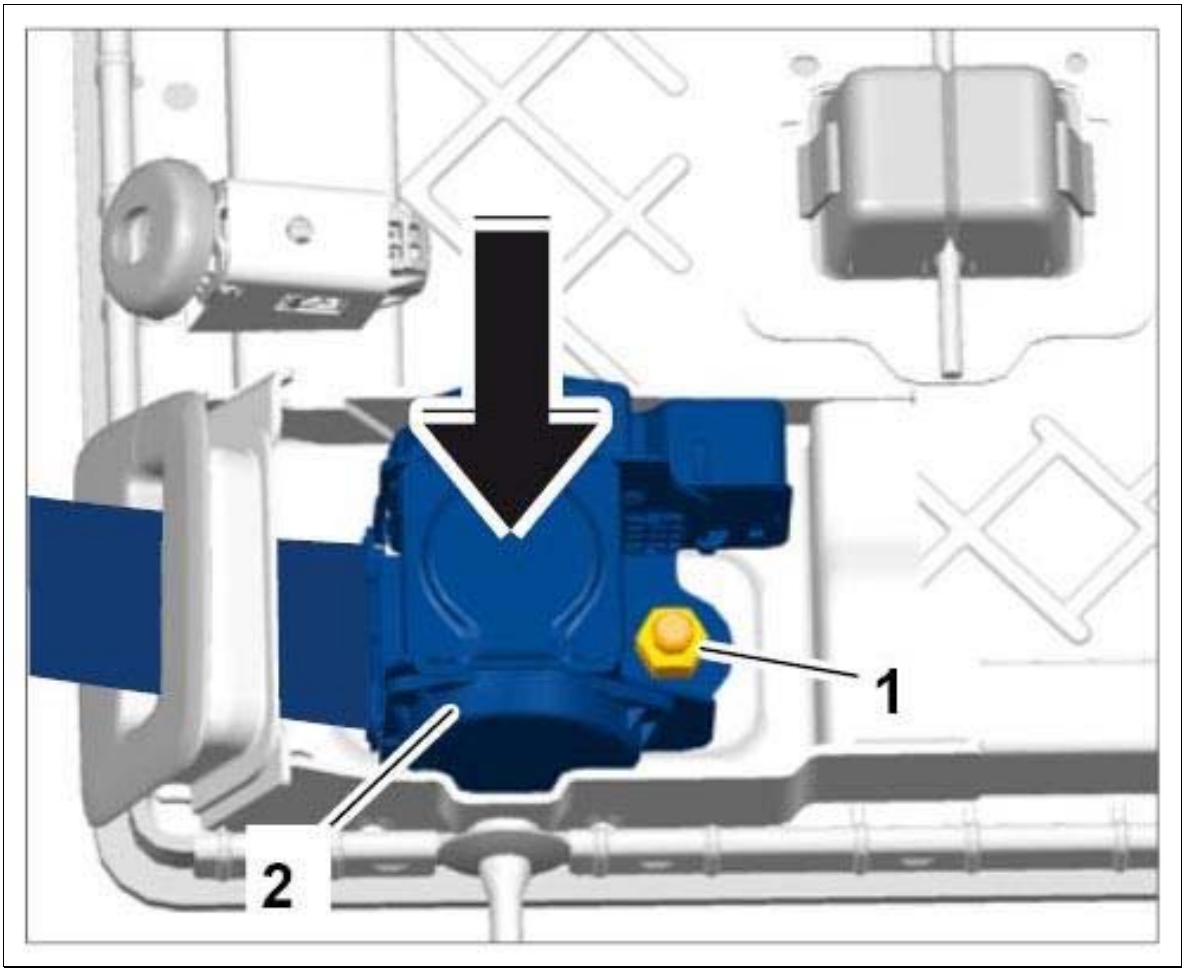

Courtesy of PORSCHE CARS NORTH AMERICA, INC.

3. Tighten fastening screw **-1-** for center seat belt mount **-2-** on the body **Tightening torque 50 Nm (37 ftlb.)** .

Fig 3: Securing Center Seat Belt Mount To Body

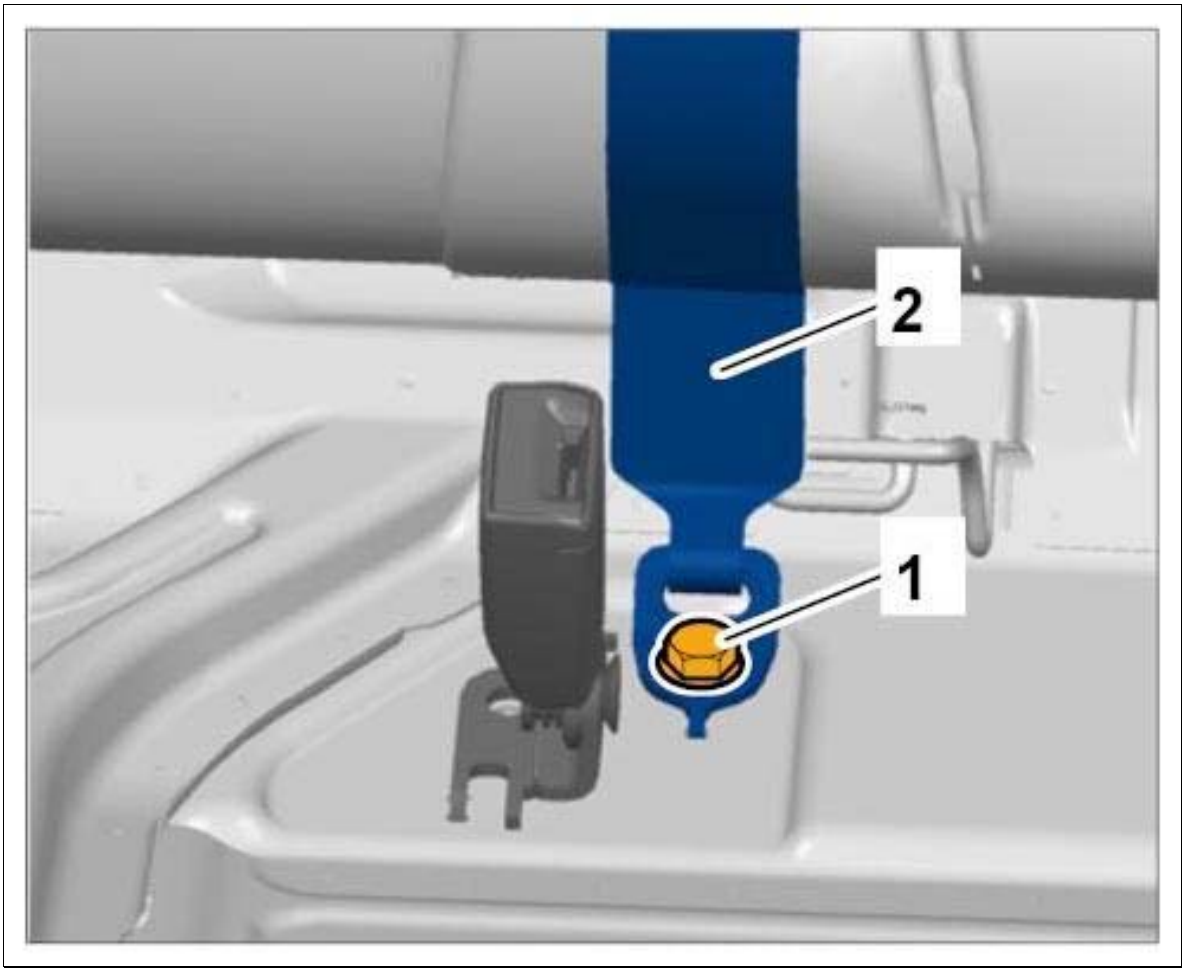

Courtesy of PORSCHE CARS NORTH AMERICA, INC.

WM 691219 REMOVING AND INSTALLING REAR THREE-POINT BELT (MACAN, MACAN S, MACAN TURBO) > SUBSEQUENT WORK > SUBSEQUENT WORK FOR REAR THREE-POINT BELT AT THE LEFT AND RIGHT

1. Insert sound absorber at the left and right into the wheel housing.
2. Secure the amplifier holder at the wheel housing.
3. Install side trim panel for rear luggage compartment. → INSTALLING SIDE TRIM PANEL FOR REAR LUGGAGE COMPARTMENT .
4. Install rear seat. → INSTALLING REAR SEAT .
5. Connect the battery. → 2X00IN GENERAL INFORMATION ON DISCONNECTING THE BATTERY
6. Carry out a function test:
    1. The belt strap must be fully rolled up when the function test is started.

2. Pull out belt strap completely as far as it will go.
3. Roll up the belt strap again slowly. An audible clattering noise can be heard when you do this.
4. If the rolling-up process is interrupted, the belt strap cannot be pulled out again (permanent belt blockage).
5. The permanent belt blockage function must switch off at least 100 mm before the belt strap is rolled up fully, thereby ensuring that the belt strap can be pulled out again.

WM 691219 REMOVING AND INSTALLING REAR THREE-POINT BELT (MACAN, MACAN S, MACAN TURBO) > SUBSEQUENT WORK > SUBSEQUENT WORK FOR REAR THREE-POINT BELT AT THE CENTER

1. Install left padding for rear backrest. → INSTALLING PADDING FOR REAR BACKREST .
2. Install rear seat. → INSTALLING REAR SEAT .
3. Connect the battery. → 2X00IN GENERAL INFORMATION ON DISCONNECTING THE BATTERY
4. Carry out a function test:
    1. The belt strap must be fully rolled up when the function test is started.
    2. Pull out belt strap completely as far as it will go.
    3. Roll up the belt strap again slowly. An audible clattering noise can be heard when you do this.
    4. If the rolling-up process is interrupted, the belt strap cannot be pulled out again (permanent belt blockage).
    5. The permanent belt blockage function must switch off at least 100 mm before the belt strap is rolled up fully, thereby ensuring that the belt strap can be pulled out again.

WM 691301 CHECKING SEAT BELTS (MACAN, MACAN S, MACAN TURBO) > GENERAL WARNING NOTES > WARNING NOTE FOR SEAT BELTS

WARNING: Road tests on public roads

- *Danger to other people on the roads*

→ Perform drive tests on a stretch of road with no traffic.

Information

After any accident, the seat belt system must be checked systematically for signs of damage. If damage

is found, the entire seat belt system must be replaced.

WM 691301 CHECKING SEAT BELTS (MACAN, MACAN S, MACAN TURBO) > CHECKING SEAT BELTS > PROCEDURE FOR CHECKING SEAT BELTS

Information

After any accident, the seat belt system must be checked systematically for proper function and damage. If damage is found according to the test points, the entire seat belt system must be replaced.

Information

In the case of damage which does not occur as the result of an accident, e.g. wear, only the damaged part needs to be replaced.

Information

The following requirements must be met when fitting the seat belt.

If one of the requirements listed below is not met, the seat belt or seat-belt buckle must be replaced.

WM 691301 CHECKING SEAT BELTS (MACAN, MACAN S, MACAN TURBO) > CHECKING SEAT BELTS > CHECKING BELT STRAP

- Pull the belt strap on the automatic belt device out fully.
- Check the belt strap for soiling. Clean it, if necessary, using mild soap suds. Avoid direct sunshine when drying.

1. **Damage type 1**

    1. 1.1. If one of the damage types shown below **-Damage type 1, 2-** is found on an vehicle involved in an accident, the seat belt and seat-belt buckle must be replaced.

Fig 1: Identifying Seat-Belt Damage Area (Type 1)

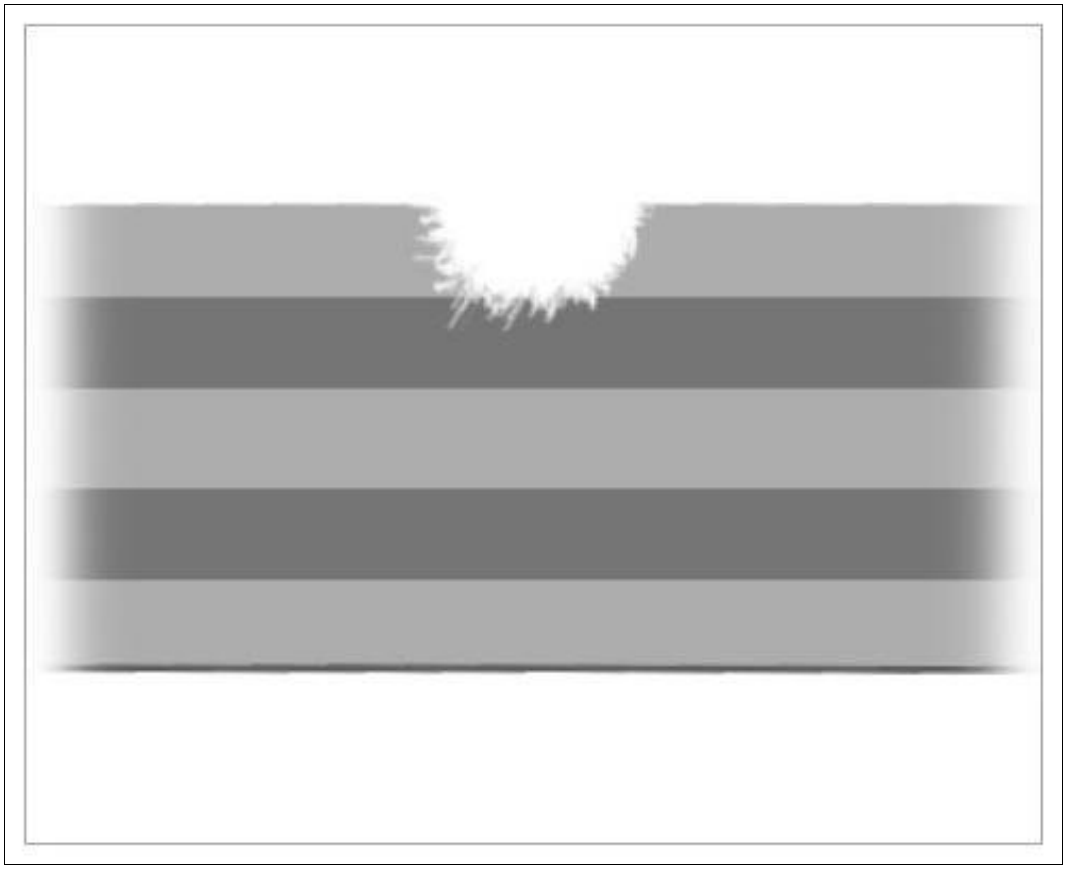

Courtesy of PORSCHE CARS NORTH AMERICA, INC.

2. **Damage type 2**

    1. 2.1. If damage such as damage type **-Damage type 1, 2, 3-** is found on a vehicle not involved in an accident, it is sufficient to replace the damaged seat belt.

Fig 2: Identifying Seat-Belt Damage Area (Type 2)



Courtesy of PORSCHE CARS NORTH AMERICA, INC.

3. **Damage type 3**

    1. 3.1. Burn hole from cigarettes, for example.

Fig 3: Identifying Seat-Belt Burn Hole Area (Type 3)

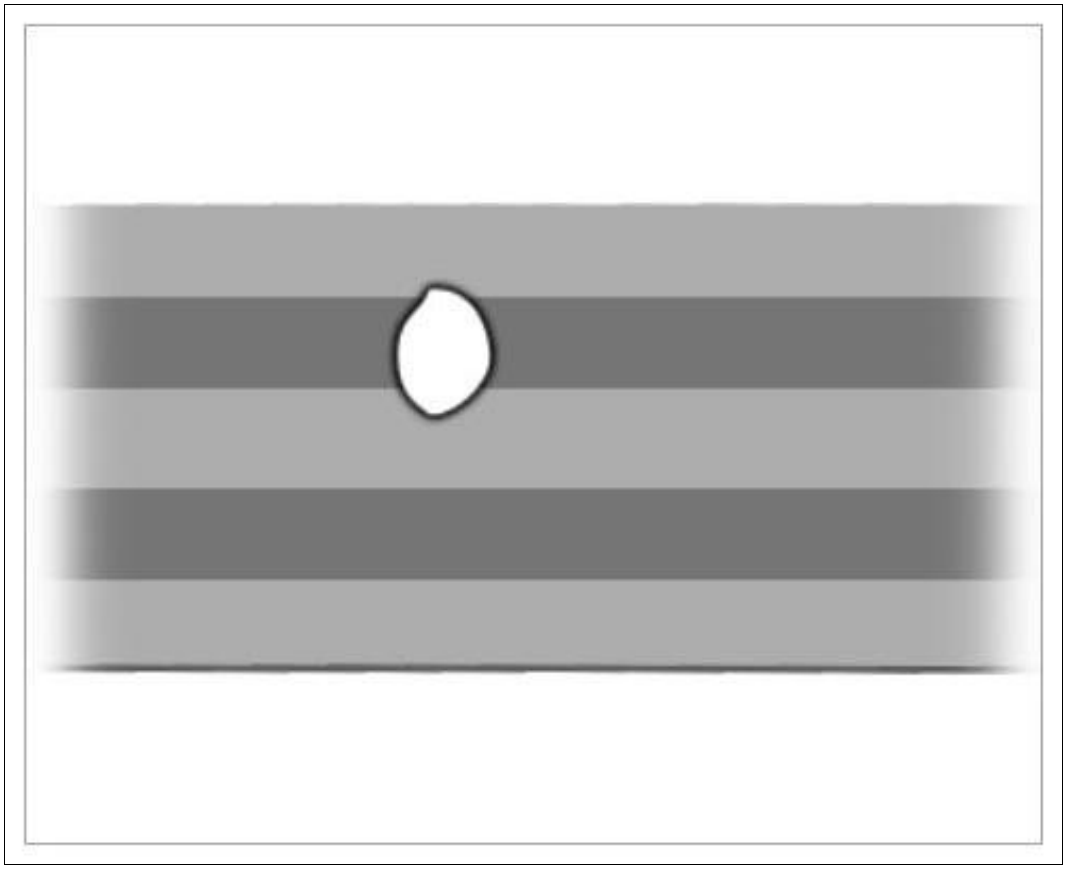

Courtesy of PORSCHE CARS NORTH AMERICA, INC.

4. **Damage type 4**

    1. 4.1. The seat-belt pretensioner must always be replaced if it has been triggered. The seat belt is damaged by the deflector **-Damage type 4-** .

Fig 4: Identifying Seat-Belt Damage Area (Type 4)

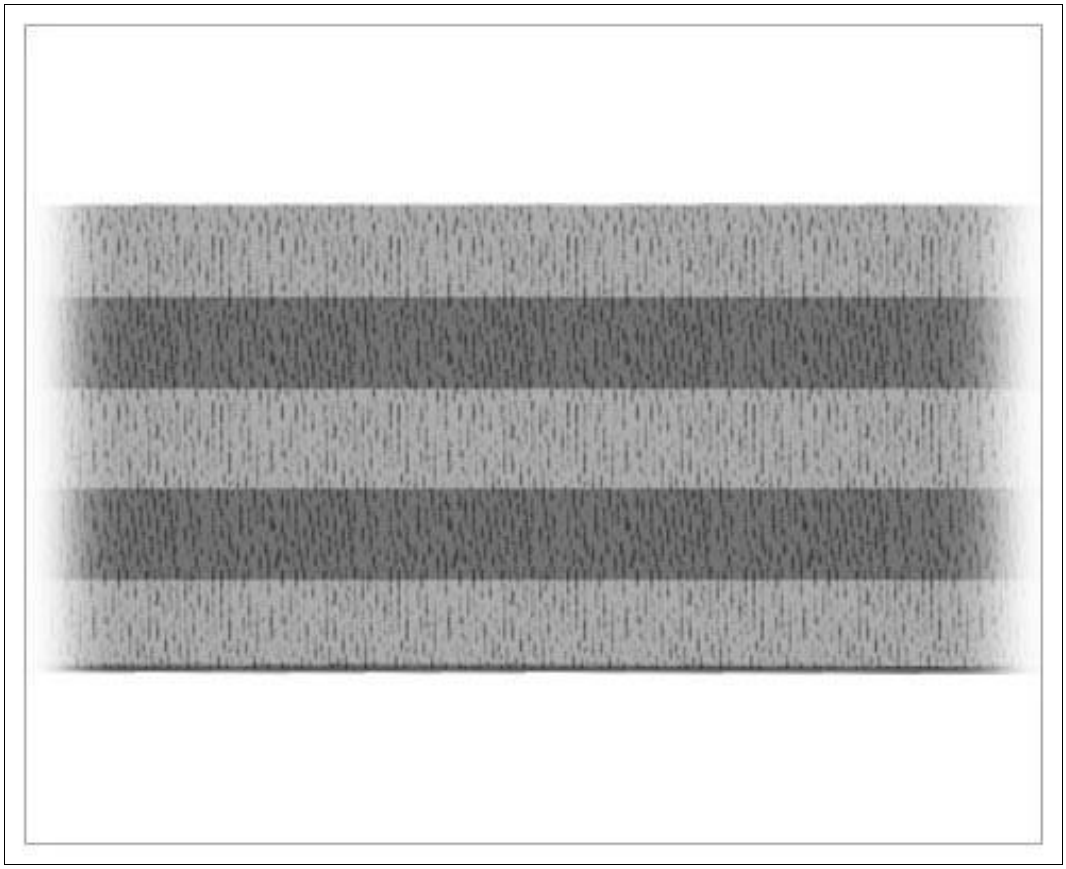

Courtesy of PORSCHE CARS NORTH AMERICA, INC.

WM 691301 CHECKING SEAT BELTS (MACAN, MACAN S, MACAN TURBO) > CHECKING SEAT BELTS > CHECKING AUTOMATIC BELT DEVICE (LOCKING EFFECT)

The automatic belt device has two locking functions

- The first locking function is triggered by pulling the seat belt out quickly (belt extension acceleration).

WM 691301 CHECKING SEAT BELTS (MACAN, MACAN S, MACAN TURBO) > CHECKING SEAT BELTS > CHECKING AUTOMATIC BELT DEVICE (LOCKING EFFECT) > CHECK

- Pull the belt strap out of the automatic belt device with a strong pull.

If no locking effect occurs, the entire seat belt and seat-belt buckle must be replaced.

In the case of faults in the extension or retraction of the seat belt, check whether the locking tab of the automatic belt device is engaged correctly in the sheetmetal bracket on the body.

- The second locking function is triggered by a change in the sequence of vehicle movement (vehicle-dependent locking function).

> *WARNING: Road tests on public roads*
>
> - *Danger to other people on the roads*

→ Perform drive tests on a stretch of road with no traffic.

- Fasten the seat belt.

> *WARNING: Road tests on public roads*
>
> - *Danger to other people on the roads*

→ Perform drive tests on a stretch of road with no traffic.

- Accelerate the vehicle to 20 km/h (12 mph) and then perform an emergency stop by pressing the footbrake.

If the belt is not locked by the blocking mechanism during the braking phase, the entire seat belt and seat-belt buckle must be replaced.

WM 691301 CHECKING SEAT BELTS (MACAN, MACAN S, MACAN TURBO) > CHECKING SEAT BELTS > CHECKING LOOK AND OPERATION OF SEAT-BELT BUCKLE

- Inspect the seat-belt buckle for crack formation and flaking.

In the case of damage, the entire seat belt and seat-belt buckle must be replaced.

WM 691301 CHECKING SEAT BELTS (MACAN, MACAN S, MACAN TURBO) > CHECKING SEAT BELTS > CHECKING LOOK AND OPERATION OF SEAT-BELT BUCKLE > CHECK SEAT-BELT BUCKLE

- Push the belt latch into the seat-belt buckle until it engages with an audible click. Check whether the lock mechanism has engaged by pulling strongly on the belt strap.

If the belt latch fails to lock in the seat-belt buckle even just once in at least 5 test procedures, the entire seat belt and seat-belt buckle must be replaced.

WM 691301 CHECKING SEAT BELTS (MACAN, MACAN S, MACAN TURBO) >

CHECKING SEAT BELTS > CHECKING LOOK AND OPERATION OF SEAT-BELT BUCKLE > CHECK SEAT-BELT BUCKLE RELEASE

- Release the seat belt by pressing your finger on the button on the seat-belt buckle.

Carry out the test procedure at least 5 times. If the belt latch fails to jump out even just once, the entire seat belt and seat-belt buckle must be replaced.

Information

Lubricants must never be used to eliminate noises or stiffness of the buttons on the seat-belt buckles.

WM 691301 CHECKING SEAT BELTS (MACAN, MACAN S, MACAN TURBO) > CHECKING SEAT BELTS > CHECKING SASH GUIDE COVERS

Plastic-coated covers show fine, parallel scores after the belt system has been subjected to stress (seat belt buckled during accident). On the other hand, wear caused by frequent use is indicated by a stripe-free, smooth surface.

- Check the sash guide covers for distortion, flaking and crack formation.

In the event of scoring and/or damage, the entire seat belt and seat-belt buckle must be replaced.

WM 691301 CHECKING SEAT BELTS (MACAN, MACAN S, MACAN TURBO) > CHECKING SEAT BELTS > CHECKING MOUNTING PARTS AND FASTENING POINTS

- Check the belt buckle strap for distortion.
- Check the function of the height adjuster.
- Check fastening points (seat, B-pillar, C-pillar, vehicle floor) for distortion or thread damage.

If the parts are damaged, the entire seat belt and seat-belt buckle must be replaced.

Replace damaged or distorted fastening points.

WM 692419 REMOVING AND INSTALLING FRONT BELT LOCK (MACAN, MACAN S, MACAN TURBO) > TECHNICAL VALUES

Location	Description	Type	Basic value	Tolerance 1	Tolerance 2
Fastening screw securing front belt lock to seat	Item 3	Tightening torque	50 Nm (37 ftlb.)		

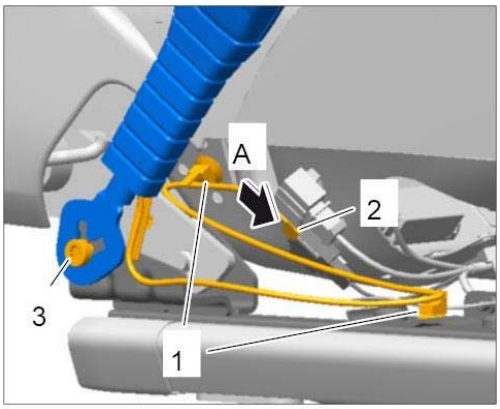

Installing seat-belt buckle

WM 692419 REMOVING AND INSTALLING FRONT BELT LOCK (MACAN, MACAN S, MACAN TURBO) > COMPONENT INFORMATION > INSTALLATION POSITION

Fig 1: Locating Front Belt Lock Position



Courtesy of PORSCHE CARS NORTH AMERICA, INC.

WM 692419 REMOVING AND INSTALLING FRONT BELT LOCK (MACAN, MACAN S, MACAN TURBO) > PRELIMINARY WORK

1. Move front seat to its highest position.
2. Remove front seat. → 720119 REMOVING AND INSTALLING FRONT SEAT .

WM 692419 REMOVING AND INSTALLING FRONT BELT LOCK (MACAN, MACAN S, MACAN TURBO) > REMOVING FRONT BELT LOCK

1. Loosen two fixing clips **-1-** .

   Fig 1: Removing Seat-Belt Buckle

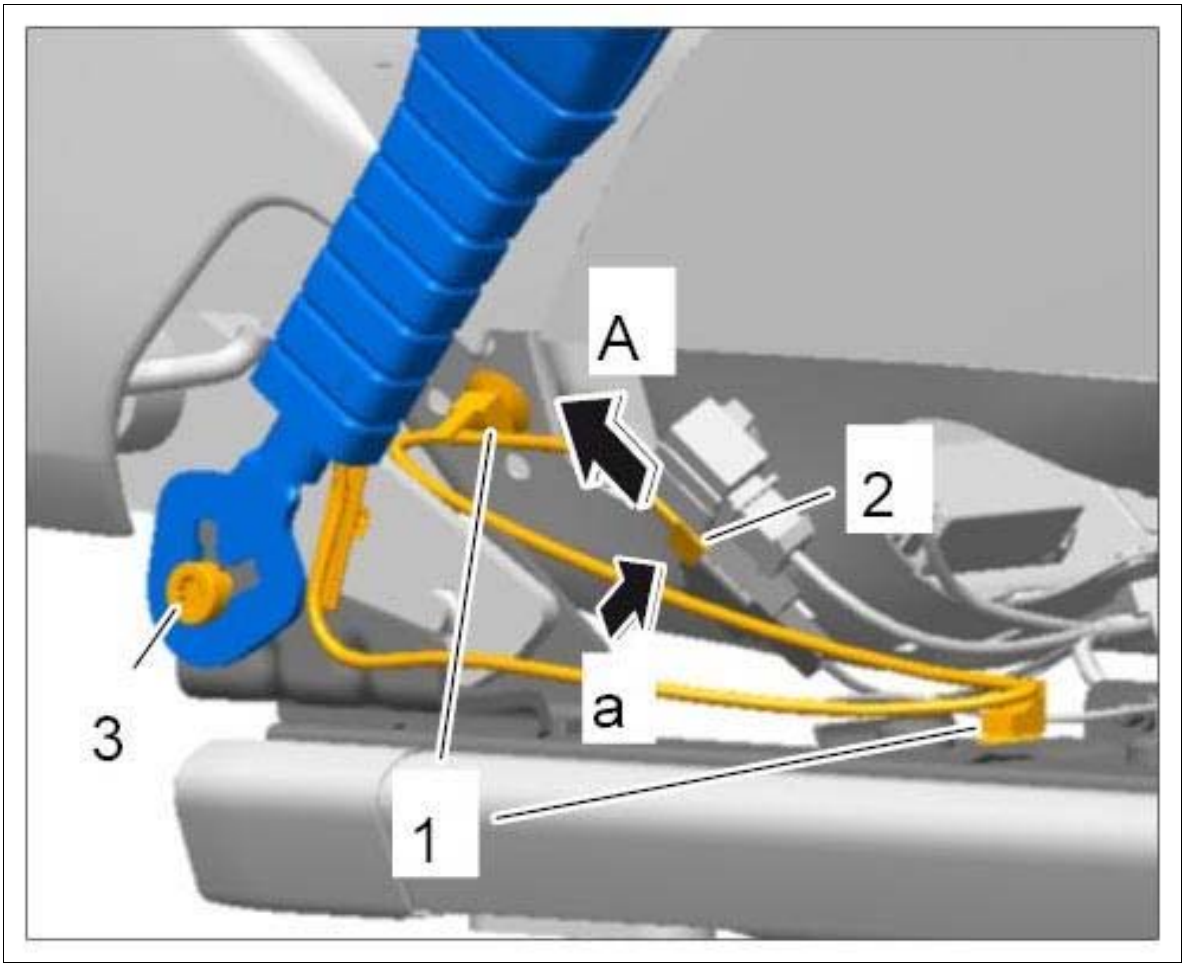

Courtesy of PORSCHE CARS NORTH AMERICA, INC.

2. Release electric plug connection **-2- (-a-)** and disconnect it **-A-** .
3. Unscrew fastening screw **-3-** on the seat-belt buckle.

WM 692419 REMOVING AND INSTALLING FRONT BELT LOCK (MACAN, MACAN S, MACAN TURBO) > INSTALLING FRONT BELT LOCK

Information

Always replace the fastening screws on the seat-belt buckle after customer service and reworking. The micro-self-locking screws must not be treated, greased or loosened and then screwed on again.

Information

When routing the wire harness for the front seat-belt buckle, ensure that it is routed without tension.

1. Tighten fastening screw **-3-** until secure **Tightening torque 50 Nm (37 ftlb.)** .

> *WARNING: Incorrect handling of safety bolts*
>
> *1. Danger of injury*
>
> *2. Loss of torque*

→ Always use new fastening screws and nuts following removal.

→ Observe specified tightening torques.

→ Carry out a visual inspection of all re-used parts.

Fig 1: Installing Seat-Belt Buckle

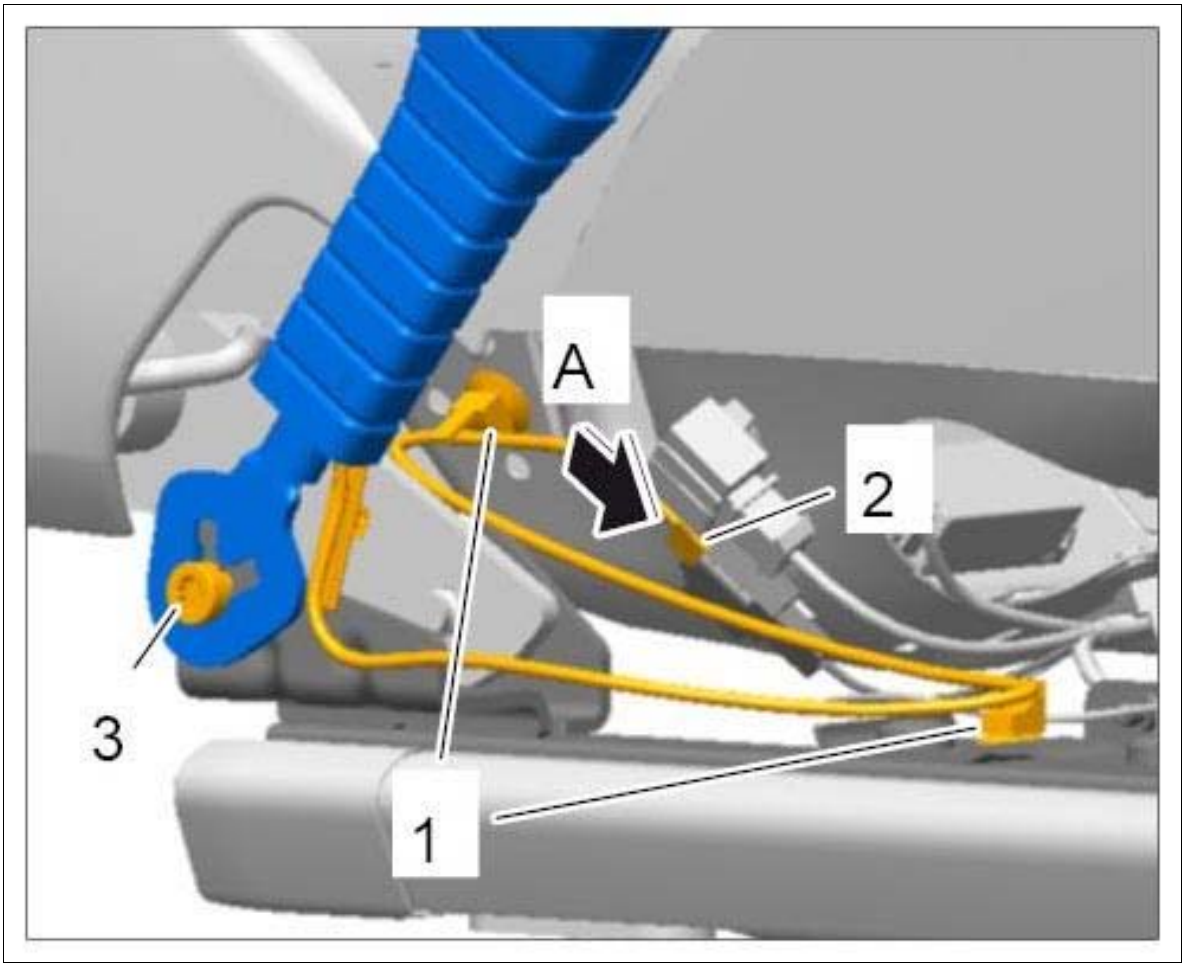

Courtesy of PORSCHE CARS NORTH AMERICA, INC.

2. Connect electric plug connection **-2- (-A-)** until the connector engages securely.
3. Fit two fixing clips **-1-** .

WM 692419 REMOVING AND INSTALLING FRONT BELT LOCK (MACAN, MACAN S, MACAN TURBO) > SUBSEQUENT WORK

1. Install front seat. → INSTALLING FRONT SEAT .

WM 692519 REMOVING AND INSTALLING REAR SEAT-BELT BUCKLE (MACAN, MACAN S, MACAN TURBO) > TECHNICAL VALUES

Location	Description	Type	Basic value	Tolerance 1	Tolerance 2
Fastening screw for rear belt lock		Tightening torque	50 Nm (37 ftlb.)		

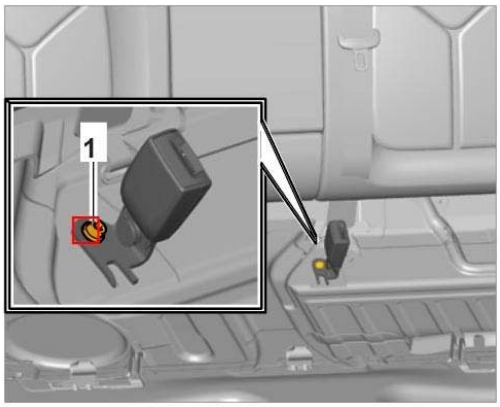

Loosening seat-belt buckle

WM 692519 REMOVING AND INSTALLING REAR SEAT-BELT BUCKLE (MACAN, MACAN S, MACAN TURBO) > COMPONENT INFORMATION > INSTALLATION POSITION

Fig 1: Locating Rear Seat-Belt Buckle Position



Courtesy of PORSCHE CARS NORTH AMERICA, INC.

1. Rear left seat-belt buckle
2. Rear seat-belt buckle at the center
3. Rear right seat-belt buckle

WM 692519 REMOVING AND INSTALLING REAR SEAT-BELT BUCKLE (MACAN, MACAN S, MACAN TURBO) > PRELIMINARY WORK

1. Remove rear seat. → 724819 REMOVING AND INSTALLING REAR SEAT .

WM 692519 REMOVING AND INSTALLING REAR SEAT-BELT BUCKLE (MACAN, MACAN S, MACAN TURBO) > REMOVING REAR SEAT-BELT BUCKLE

1. Unscrew and remove fastening screw **-1-** on rear left seat-belt buckle.

Fig 1: Identifying Rear Seat-Belt Buckle Position

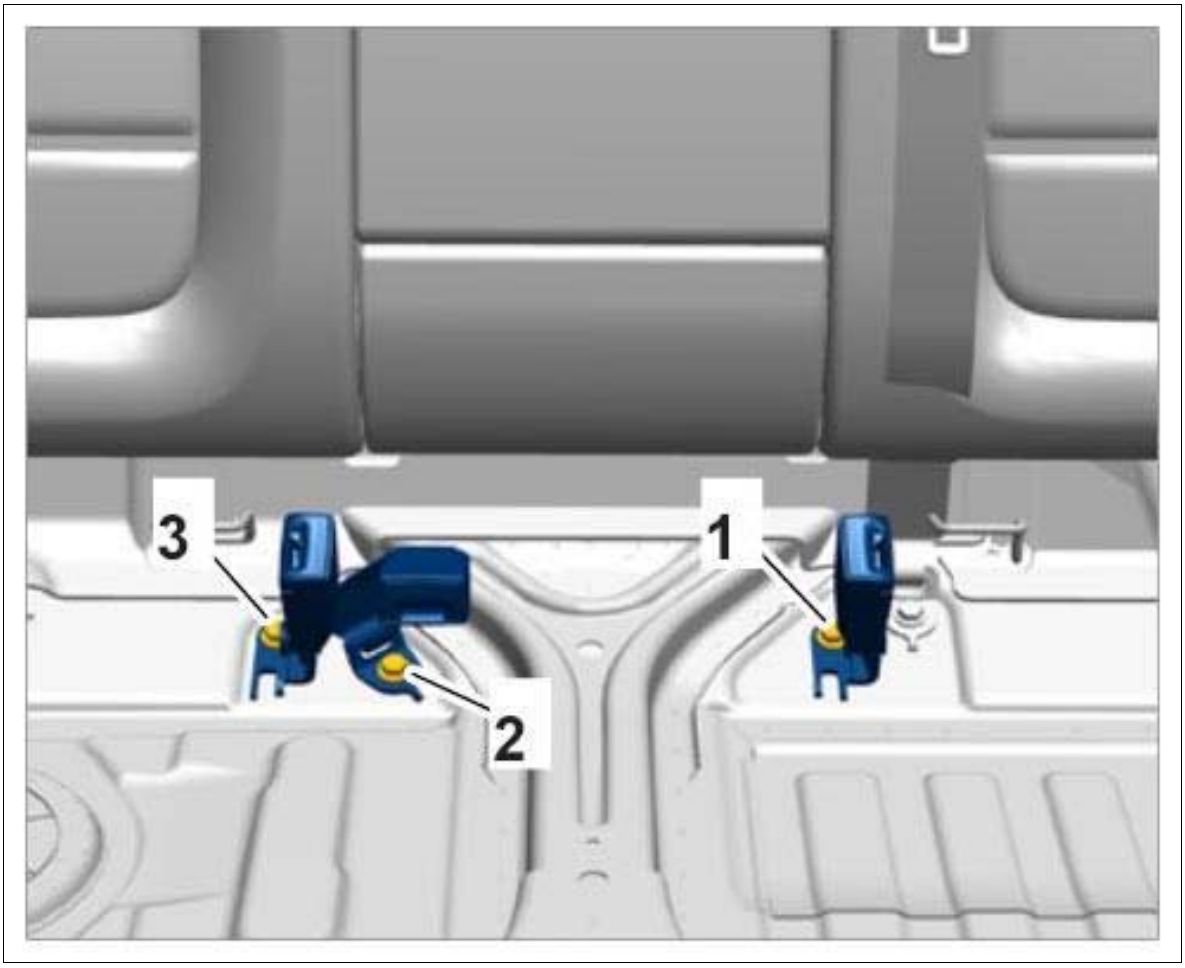

Courtesy of PORSCHE CARS NORTH AMERICA, INC.

2. Remove seat-belt buckle.

WM 692519 REMOVING AND INSTALLING REAR SEAT-BELT BUCKLE (MACAN, MACAN S, MACAN TURBO) > REMOVING REAR SEAT-BELT BUCKLE > REMOVING REAR SEAT-BELT BUCKLE AT THE CENTER

1. Unscrew and remove fastening screw **-2-** on rear seat-belt buckle at the center.

Fig 1: Removing Rear Seat-Belt Buckle

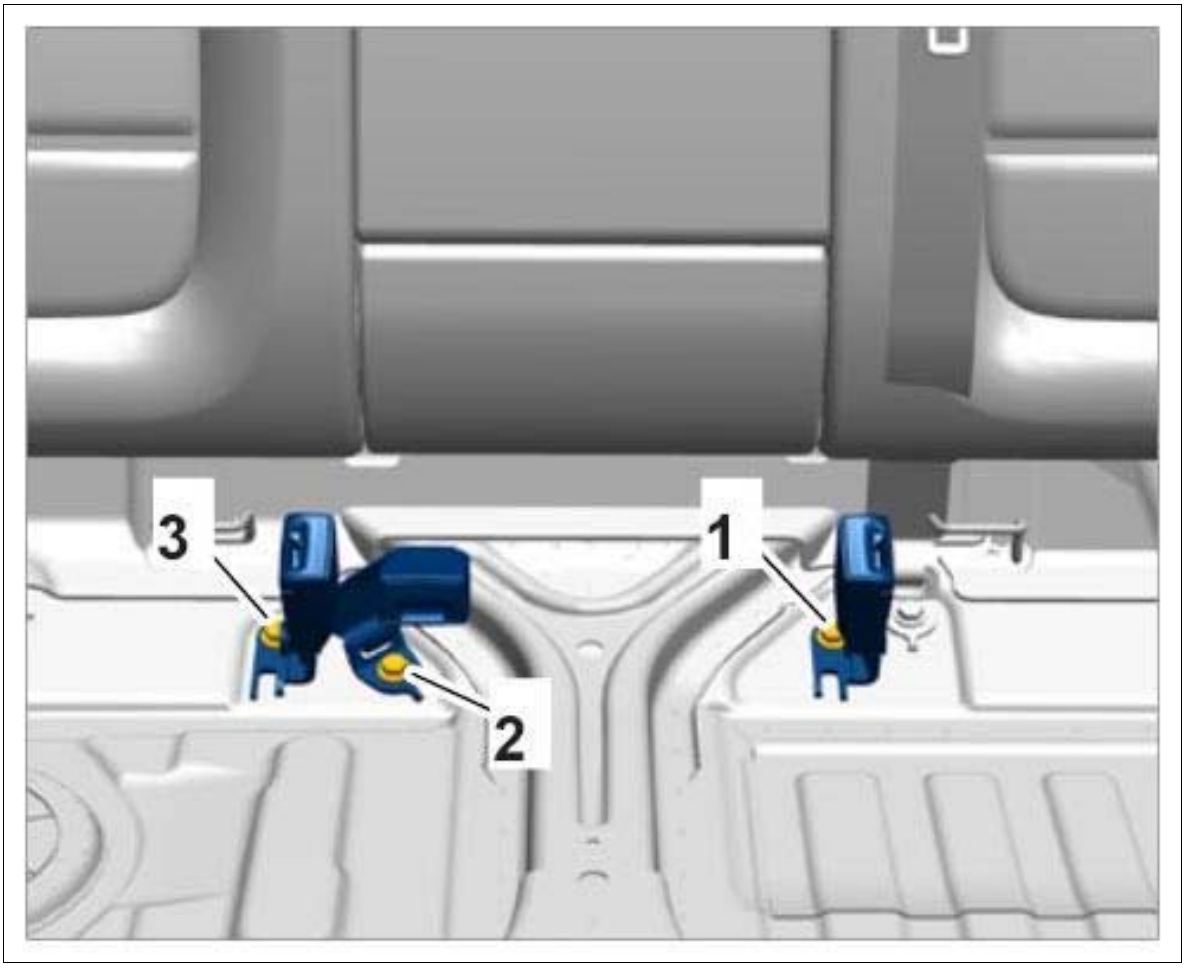

Courtesy of PORSCHE CARS NORTH AMERICA, INC.

2. Remove seat-belt buckle.

WM 692519 REMOVING AND INSTALLING REAR SEAT-BELT BUCKLE (MACAN, MACAN S, MACAN TURBO) > REMOVING REAR SEAT-BELT BUCKLE > REMOVING REAR RIGHT SEAT-BELT BUCKLE

1. Unscrew and remove fastening screw **-3-** on rear right seat-belt buckle.

Fig 1: Removing Rear Seat-Belt Buckle

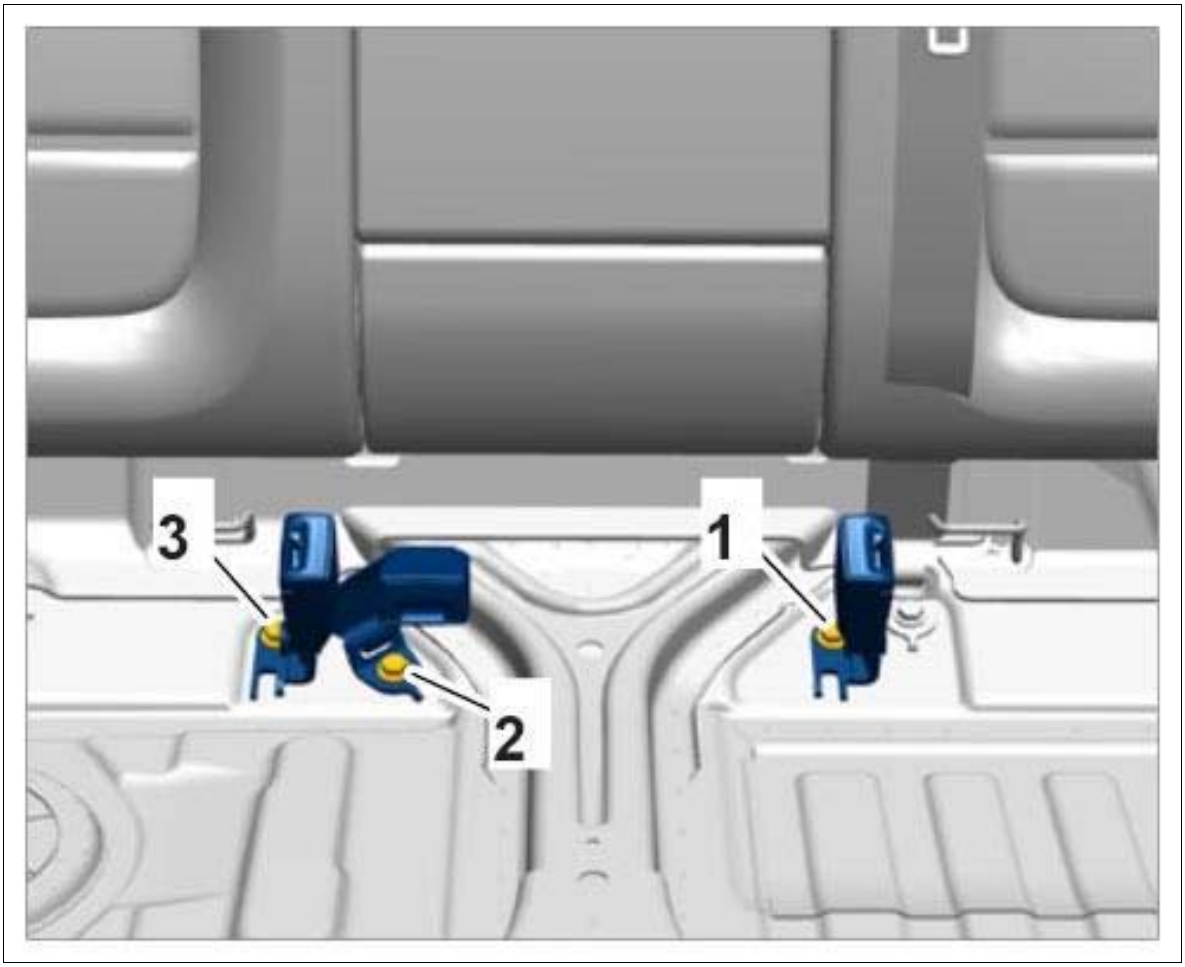

Courtesy of PORSCHE CARS NORTH AMERICA, INC.

2. Remove seat-belt buckle.

WM 692519 REMOVING AND INSTALLING REAR SEAT-BELT BUCKLE (MACAN, MACAN S, MACAN TURBO) > INSTALLING REAR SEAT-BELT BUCKLE > INSTALLING REAR LEFT SEAT-BELT BUCKLE

WARNING: Incorrect handling of safety bolts

- *Danger of injury*
- *Loss of torque*

→ Always use new fastening screws and nuts following removal.

→ Observe specified tightening torques.

→ Carry out a visual inspection of all re-used parts.

1. Place rear left seat-belt buckle **-1-** in installation position and secure it **Tightening torque 50 Nm (37 ftlb.)** .

Fig 1: Installing Rear Seat-Belt Buckle



Courtesy of PORSCHE CARS NORTH AMERICA, INC.

WM 692519 REMOVING AND INSTALLING REAR SEAT-BELT BUCKLE (MACAN, MACAN S, MACAN TURBO) > INSTALLING REAR SEAT-BELT BUCKLE > INSTALLING REAR SEAT-BELT BUCKLE AT THE CENTER

WARNING: Incorrect handling of safety bolts

- *Danger of injury*
- *Loss of torque*

→ Always use new fastening screws and nuts following removal.

→ Observe specified tightening torques.

→ Carry out a visual inspection of all re-used parts.

1. Place rear seat-belt buckle at the center **-2-** in installation position and secure it **Tightening torque 50 Nm (37 ftlb.)** .

Fig 1: Installing Rear Seat-Belt Buckle



Courtesy of PORSCHE CARS NORTH AMERICA, INC.

WM 692519 REMOVING AND INSTALLING REAR SEAT-BELT BUCKLE (MACAN, MACAN S, MACAN TURBO) > INSTALLING REAR SEAT-BELT BUCKLE > INSTALLING REAR RIGHT SEAT-BELT BUCKLE

WARNING: Incorrect handling of safety bolts

- *Danger of injury*
- *Loss of torque*

→ Always use new fastening screws and nuts following removal.

→ Observe specified tightening torques.

→ Carry out a visual inspection of all re-used parts.

1. Place rear right seat-belt buckle **-3-** in installation position and secure it **Tightening torque 50 Nm (37 ftlb.)** .

Fig 1: Installing Rear Seat-Belt Buckle



Courtesy of PORSCHE CARS NORTH AMERICA, INC.

WM 692519 REMOVING AND INSTALLING REAR SEAT-BELT BUCKLE (MACAN, MACAN S, MACAN TURBO) > SUBSEQUENT WORK

1. Install rear seat. → INSTALLING REAR SEAT .

WM 693619 REMOVING AND INSTALLING ADJUSTMENT FITTING (MACAN, MACAN S, MACAN TURBO) > TECHNICAL VALUES

Location	Description	Type	Basic value	Tolerance 1	Tolerance 2
Fastening screw securing sash guide cover to adjustment fitting		Tightening torque	50 Nm (37 ftlb.)		

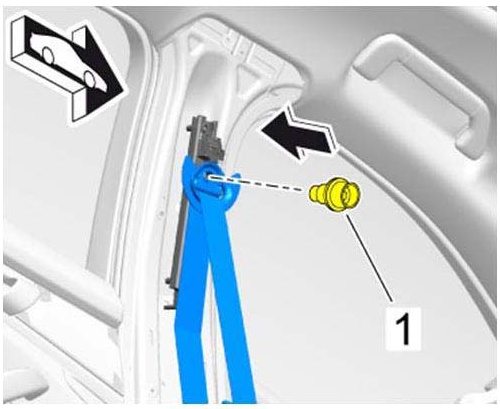

Sash guide cover on

Fastening screw securing adjustment fitting to B-pillar	Item 2	Tightening torque	20 Nm (15 ftlb.)		

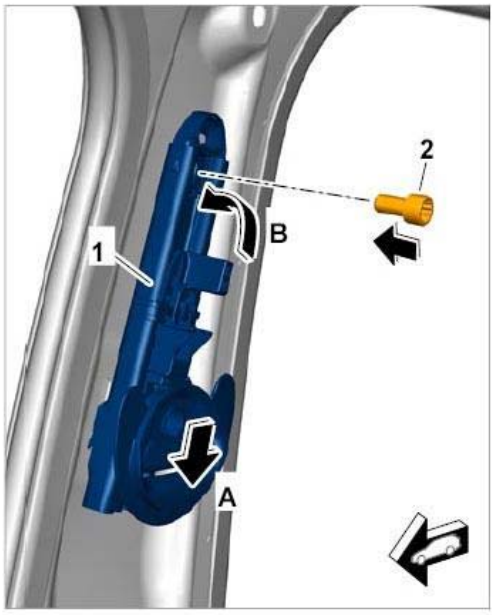

Installing adjustment fitting

WM 693619 REMOVING AND INSTALLING ADJUSTMENT FITTING (MACAN, MACAN S, MACAN TURBO) > COMPONENT INFORMATION > INSTALLATION POSITION

Fig 1: Identifying Adjustment Fitting Installation Position



Courtesy of PORSCHE CARS NORTH AMERICA, INC.

WM 693619 REMOVING AND INSTALLING ADJUSTMENT FITTING (MACAN, MACAN S, MACAN TURBO) > PRELIMINARY WORK

1. Remove upper part of B-pillar trim panel. → 706719 REMOVING AND INSTALLING UPPER PART OF B-PILLAR TRIM PANEL ..

WM 693619 REMOVING AND INSTALLING ADJUSTMENT FITTING (MACAN, MACAN S, MACAN TURBO) > REMOVING ADJUSTMENT FITTING

Information

After any accident, the seat belt system must be checked systematically for signs of damage. If damage is found, the entire seat belt system must be replaced.

Information

- Some of the repair illustrations show only one side of the vehicle.
- Naturally, some steps also have to be performed on the opposite side of the vehicle as well.

1. Unscrew fastening screw **-1-** on sash guide cover and remove sash guide cover **-A-** .

Fig 1: Removing Sash Guide Cover

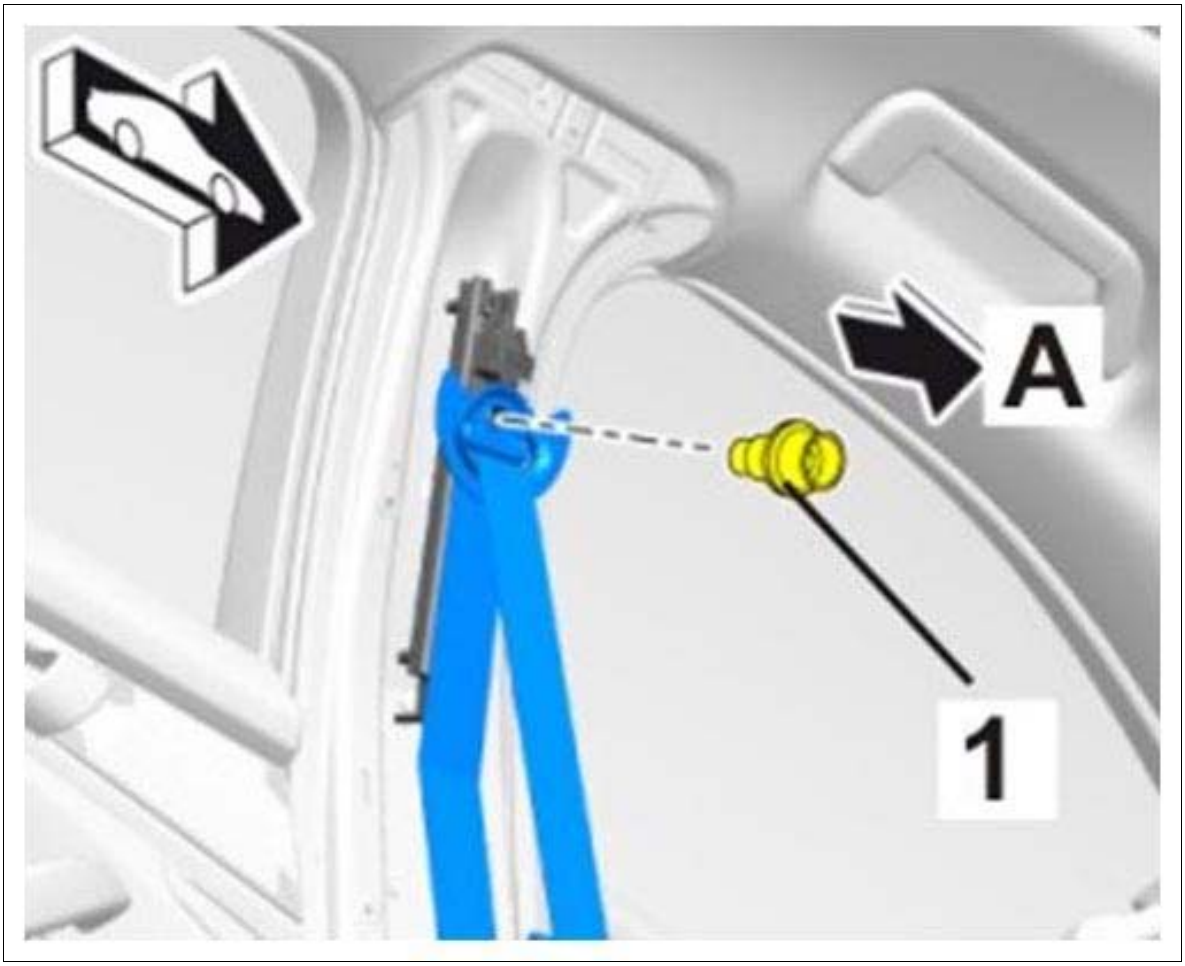

Courtesy of PORSCHE CARS NORTH AMERICA, INC.

2. Position adjustment fitting **-1-** so that the fastening screw **-2-** is accessible.

Fig 2: Removing Adjustment Fitting

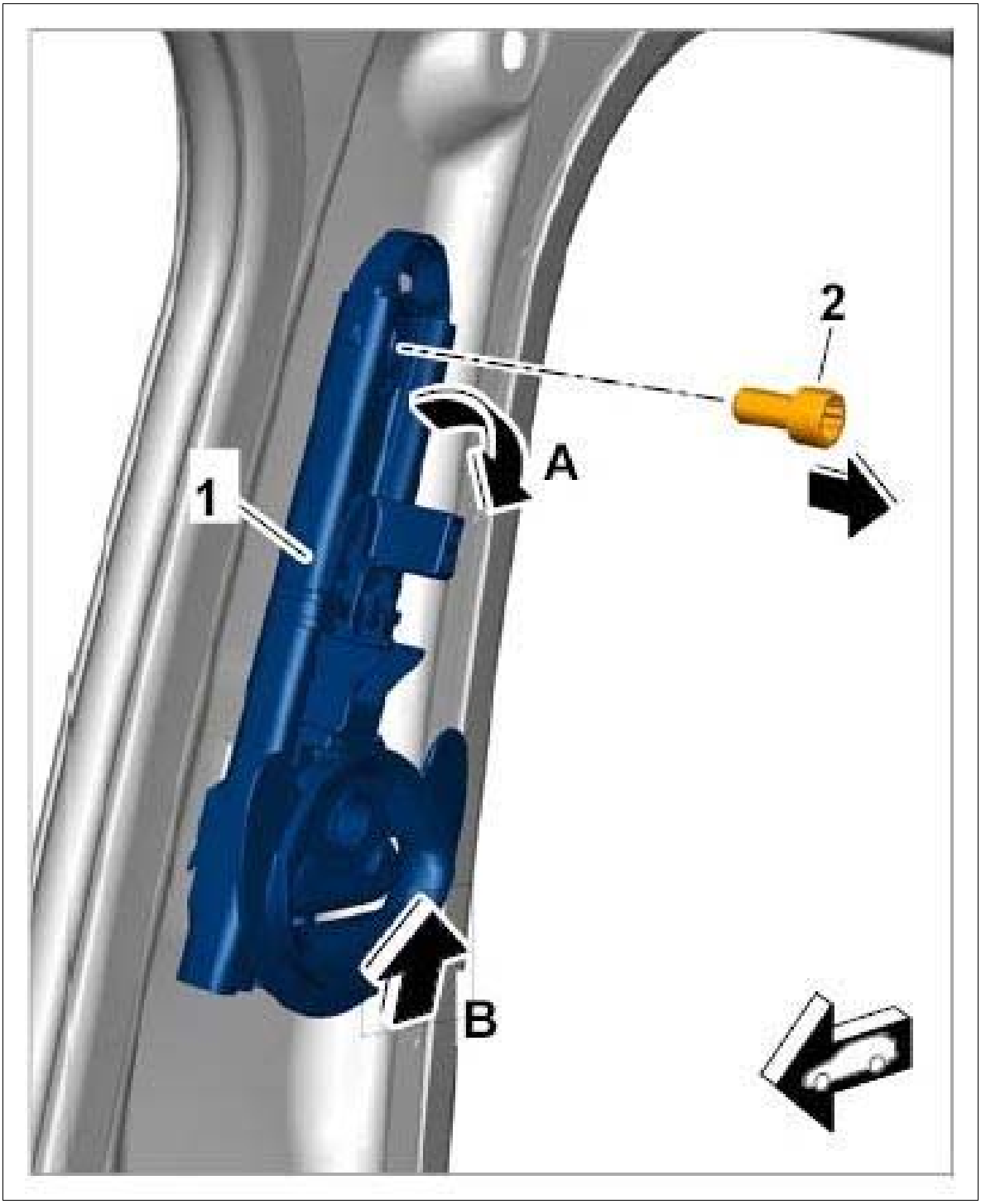

Courtesy of PORSCHE CARS NORTH AMERICA, INC.

3. Unscrew the fastening screw **-2-** .

4. Fold adjustment fitting inwards **-arrow A-** and remove by pulling it upwards **-arrow B-** .

WM 693619 REMOVING AND INSTALLING ADJUSTMENT FITTING (MACAN, MACAN

S, MACAN TURBO) > INSTALLING ADJUSTMENT FITTING

1. Engage adjustment fitting **-1-** at the bottom **-arrow A-** and fold it up towards the B-pillar **-arrow B-** .

   Fig 1: Installing Adjustment Fitting

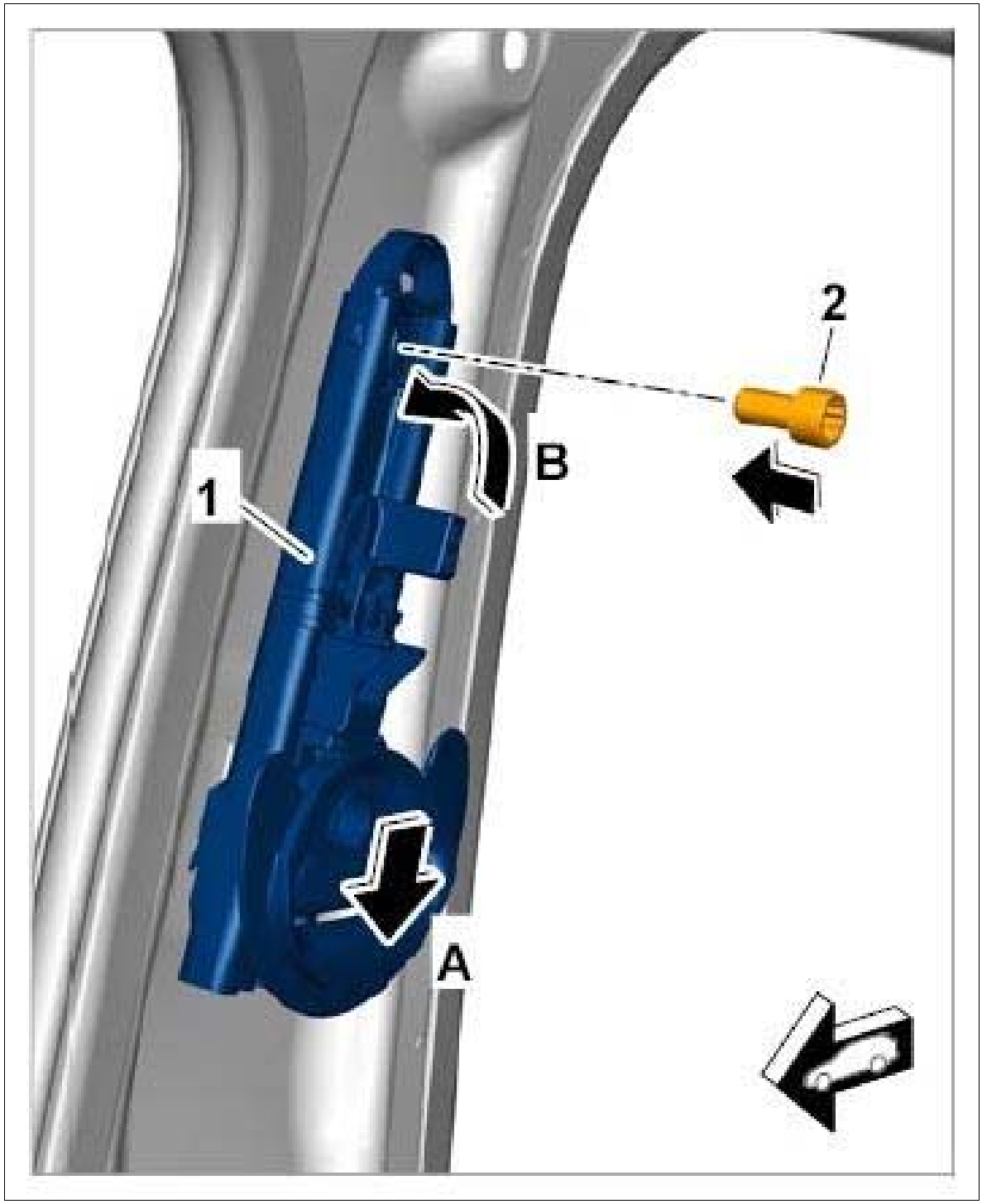

Courtesy of PORSCHE CARS NORTH AMERICA, INC.

2. Tighten fastening screw **-2-** until secure **Tightening torque 20 Nm (15 ftlb.)** .

   Information

Always replace the fastening screws on the three-point seat belt. The micro-self-locking screws must not be treated (e.g. greased) or loosened and then screwed on again.

3. Tightening fastening screw **-1-** on sash guide cover at the adjustment fitting **Tightening torque 50 Nm (37 ftlb.)** .

   Information

   Once the fastening screw has been tightened, the belt lug must level out on its own in a vertical position or in the relevant support direction.

Fig 2: Installing Sash Guide Cover

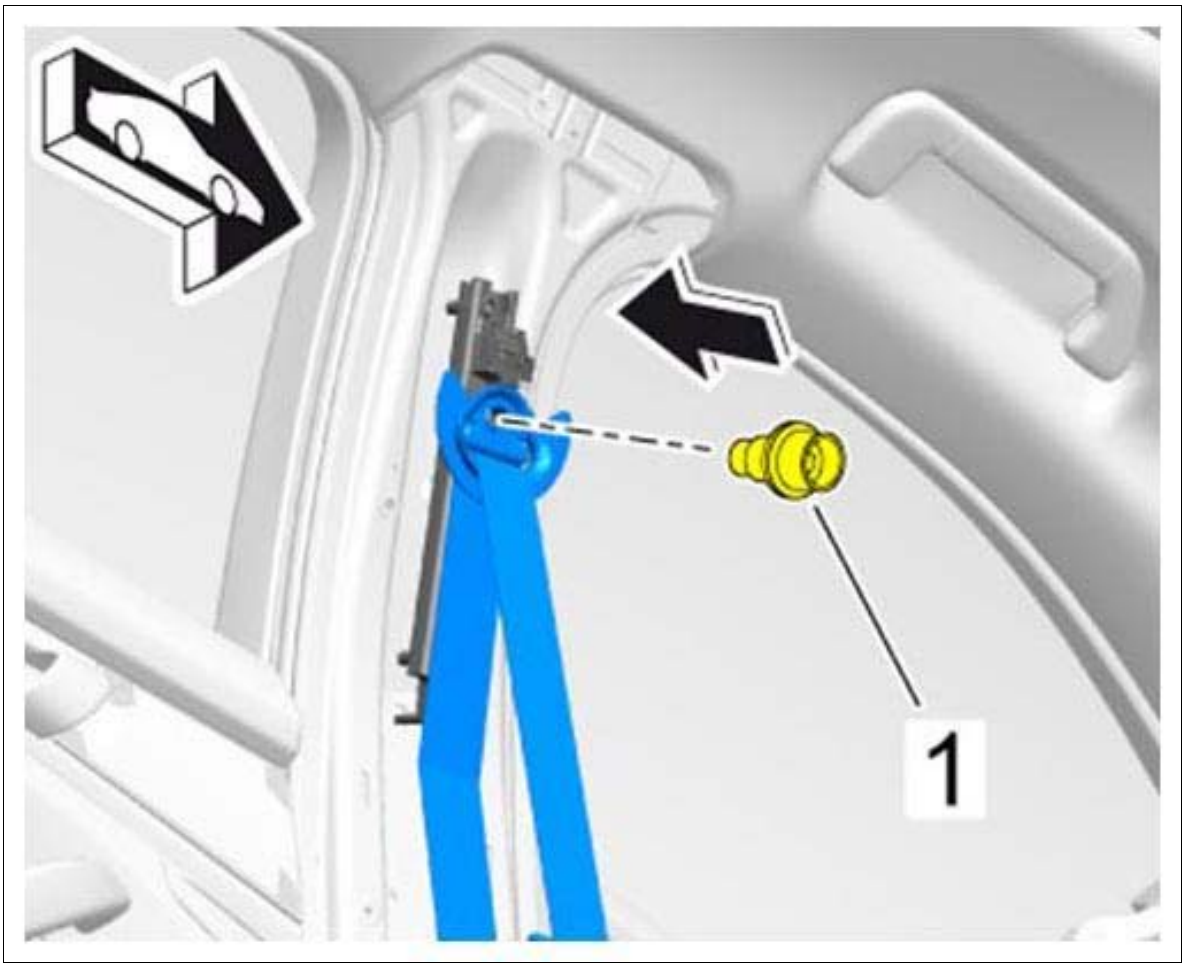

Courtesy of PORSCHE CARS NORTH AMERICA, INC.

WM 693619 REMOVING AND INSTALLING ADJUSTMENT FITTING (MACAN, MACAN S, MACAN TURBO) > SUBSEQUENT WORK

1. Install upper part of B-pillar trim panel. → INSTALLING UPPER PART OF B-PILLAR TRIM PANEL .

WM 695119 REMOVING AND INSTALLING AIRBAG SENSOR (MACAN, MACAN S, MACAN TURBO) > TECHNICAL VALUES

Location	Description	Type	Basic value	Tolerance 1	Tolerance 2
Fastening screw for front airbag sensor	M6 x 25	Tightening torque	9 Nm (6.5 ftlb.)		
Fastening screw for airbag sensor in rear inner wheel arch		Tightening torque	9 Nm (6.5 ftlb.)		

WM 695119 REMOVING AND INSTALLING AIRBAG SENSOR (MACAN, MACAN S, MACAN TURBO) > PRELIMINARY WORK > PRELIMINARY WORK FOR FRONT AIRBAG SENSOR

1. Disconnect the battery. → 2X00IN WORK INSTRUCTIONS AFTER DISCONNECTING THE BATTERY .
2. Remove front apron. → 631519 REMOVING AND INSTALLING FRONT APRON .

   For turbo engines only:

3. Disconnect the battery. → 2X00IN WORK INSTRUCTIONS AFTER DISCONNECTING THE BATTERY .
4. Remove air guide on charge-air cooler. → 214319 REMOVING AND INSTALLING CHARGE-AIR COOLER .

WM 695119 REMOVING AND INSTALLING AIRBAG SENSOR (MACAN, MACAN S, MACAN TURBO) > PRELIMINARY WORK > PRELIMINARY WORK FOR AIRBAG SENSOR IN REAR INNER WHEEL ARCH

1. Disconnect the battery. → 2X00IN WORK INSTRUCTIONS AFTER DISCONNECTING THE BATTERY .
2. Remove rear inner door sill trim. → 680519 REMOVING AND INSTALLING INNER DOOR SILL TRIM .

WM 695119 REMOVING AND INSTALLING AIRBAG SENSOR (MACAN, MACAN S, MACAN TURBO) > INFORMATION

Fig 1: Locating Airbag Sensor Position



Courtesy of PORSCHE CARS NORTH AMERICA, INC.

1. Front airbag sensor
2. Airbag sensor in rear inner wheel arch

WM 695119 REMOVING AND INSTALLING AIRBAG SENSOR (MACAN, MACAN S, MACAN TURBO) > REMOVING AIRBAG SENSOR > REMOVING FRONT AIRBAG SENSOR

WARNING: Incorrect handling of airbag units

- *Triggering of airbag unit.*
- *System faults can occur.*

→ Switch off ignition and remove ignition key or remote control (hand-held transmitter).

→ A power supply (e.g. battery charger) must not be connected to the external power supply/jump-lead starting terminals.

→ Disconnect the battery and insulate the ground strap so that all contact with a ground carrier is avoided.

→ Wait 1 minute after disconnecting the battery.

→ Only pull off connector on the triggering unit after the waiting time has elapsed.

→ Make sure that no foreign objects are located in front of the airbag unit during installation.

→ Replace damaged parts during removal.

→ Always position airbag units so that the blow-out opening is facing upwards, e.g. crest on driver's airbag.

→ Do not position anything on the airbag units.

→ If removed for an extended period, the airbag units must be stored in a safe place.

→ Airbag units must not come into contact with grease, oil, detergents, liquids, or similar substances.

→ Do not expose airbag units to temperatures above 90°.

→ Do not remove the short-circuit spring on the plug-in contacts.

→ Ignition and preparations may only be carried out by skilled staff, supervised by a second responsible person.

→ Before disposal, the airbag unit must be rendered harmless by electrical ignition performed in accordance with all precautionary measures, thereby preventing it from being used incorrectly.

NOTE: Voltage peaks

- *Risk of damage to electrical load or to the control unit*

Information

- Some of the repair illustrations show only one side of the vehicle.
- Naturally, some steps also have to be performed on the opposite side of the vehicle as well.

1. Unscrew fastening screw **-1-** and remove sensor **-B-** .
2. Guide airbag sensor out of the lock carrier.
3. Release electric plug connection **-a-** and disconnect it **-A-** .

Fig 1: Removing Airbag Sensor

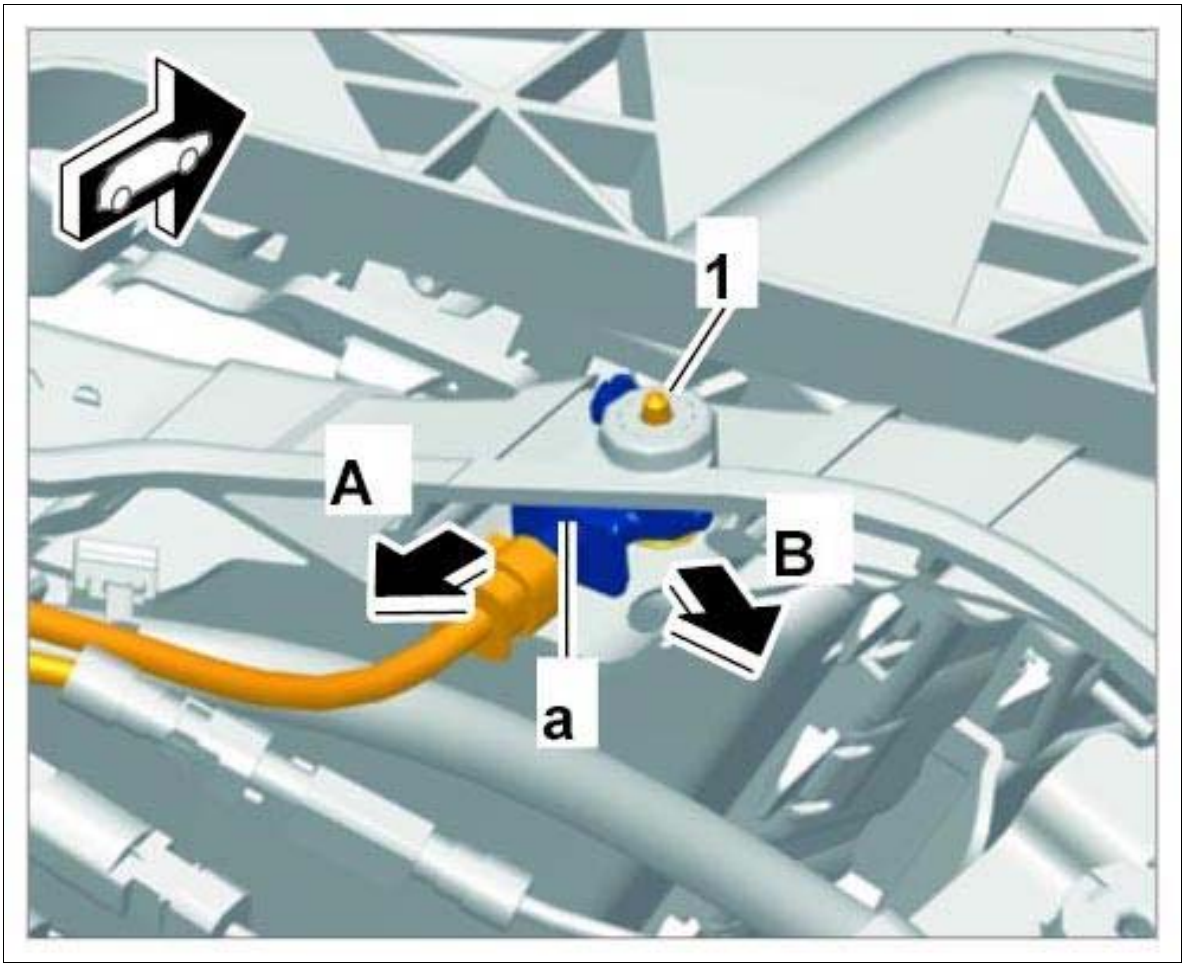

Courtesy of PORSCHE CARS NORTH AMERICA, INC.

WM 695119 REMOVING AND INSTALLING AIRBAG SENSOR (MACAN, MACAN S, MACAN TURBO) > REMOVING AIRBAG SENSOR > REMOVING AIRBAG SENSOR IN REAR INNER WHEEL ARCH

WARNING: Incorrect handling of airbag units

- *Triggering of airbag unit.*
- *System faults can occur.*

→ Switch off ignition and remove ignition key or remote control (hand-held transmitter).

→ A power supply (e.g. battery charger) must not be connected to the external power supply/jump-lead starting terminals.

→ Disconnect the battery and insulate the ground strap so that all contact with a ground carrier is avoided.

→ Wait 1 minute after disconnecting the battery.

→ Only pull off connector on the triggering unit after the waiting time has elapsed.

→ Make sure that no foreign objects are located in front of the airbag unit during installation.

→ Replace damaged parts during removal.

→ Always position airbag units so that the blow-out opening is facing upwards, e.g. crest on driver's airbag.

→ Do not position anything on the airbag units.

→ If removed for an extended period, the airbag units must be stored in a safe place.

→ Airbag units must not come into contact with grease, oil, detergents, liquids, or similar substances.

→ Do not expose airbag units to temperatures above 90°.

→ Do not remove the short-circuit spring on the plug-in contacts.

→ Ignition and preparations may only be carried out by skilled staff, supervised by a second responsible person.

→ Before disposal, the airbag unit must be rendered harmless by electrical ignition performed in accordance with all precautionary measures, thereby preventing it from being used incorrectly.

NOTE: Voltage peaks

- *Risk of damage to electrical load or to the control unit*

Information

- Some of the repair illustrations show only one side of the vehicle.
- Naturally, some steps also have to be performed on the opposite side of the vehicle as well.

1. Unscrew fastening screw **-1-** and remove sensor **-B-** .
2. Release electric plug connection **-a-** and disconnect it **-A-** .

Fig 1: Removing Airbag Sensor

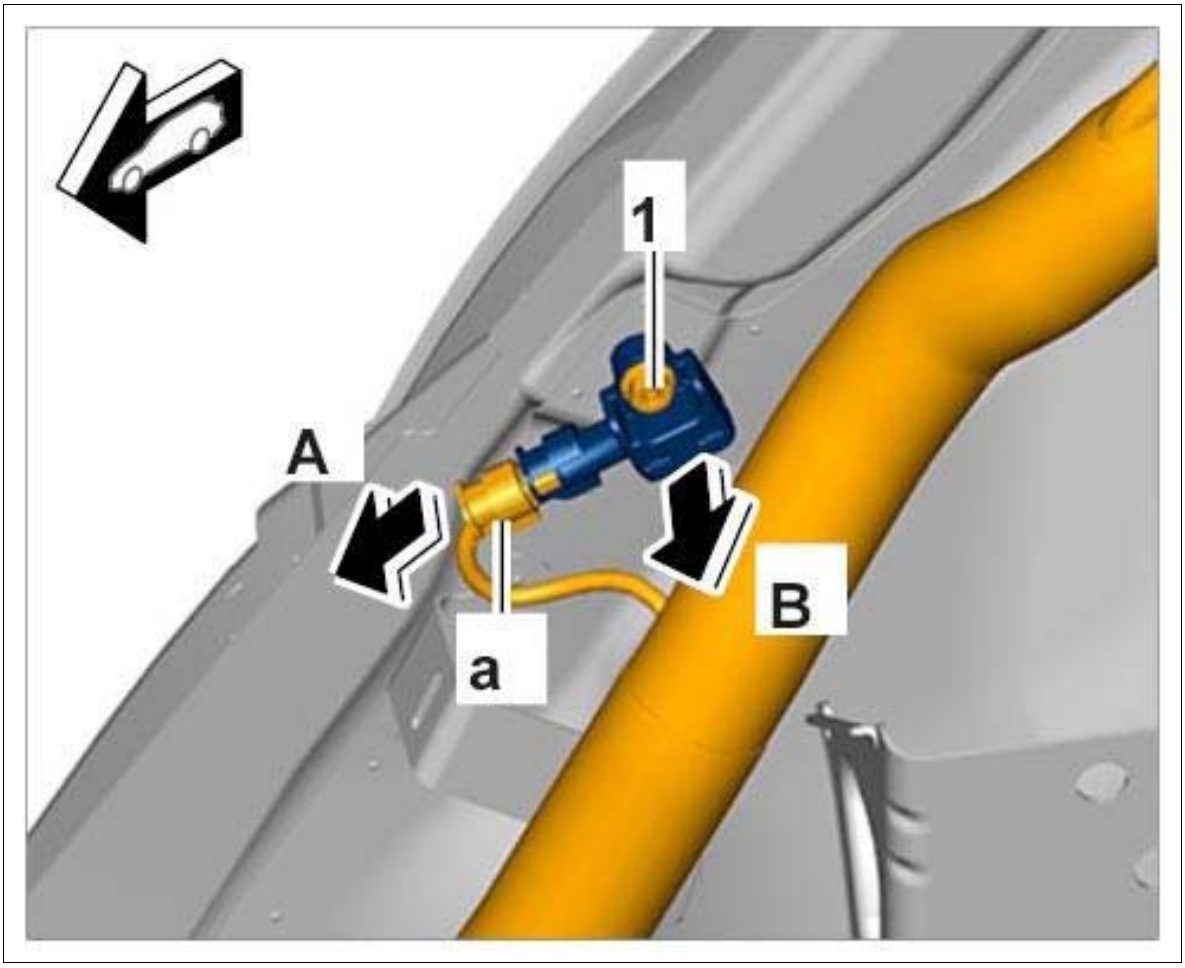

Courtesy of PORSCHE CARS NORTH AMERICA, INC.

WM 695119 REMOVING AND INSTALLING AIRBAG SENSOR (MACAN, MACAN S, MACAN TURBO) > INSTALLING AIRBAG SENSOR > INSTALLING FRONT AIRBAG SENSOR

WARNING: Incorrect handling of safety bolts

- *Danger of injury*
- *Loss of torque*

→ Always use new fastening screws and nuts following removal.

→ Observe specified tightening torques.

→ Carry out a visual inspection of all re-used parts.

Information

- Some of the repair illustrations show only one side of the vehicle.
- Naturally, some steps also have to be performed on the opposite side of the vehicle as well.

Information

- Make sure that the airbag sensor is positioned correctly.

1. Position the sensor **-B-** .

   Fig 1: Installing Airbag Sensor

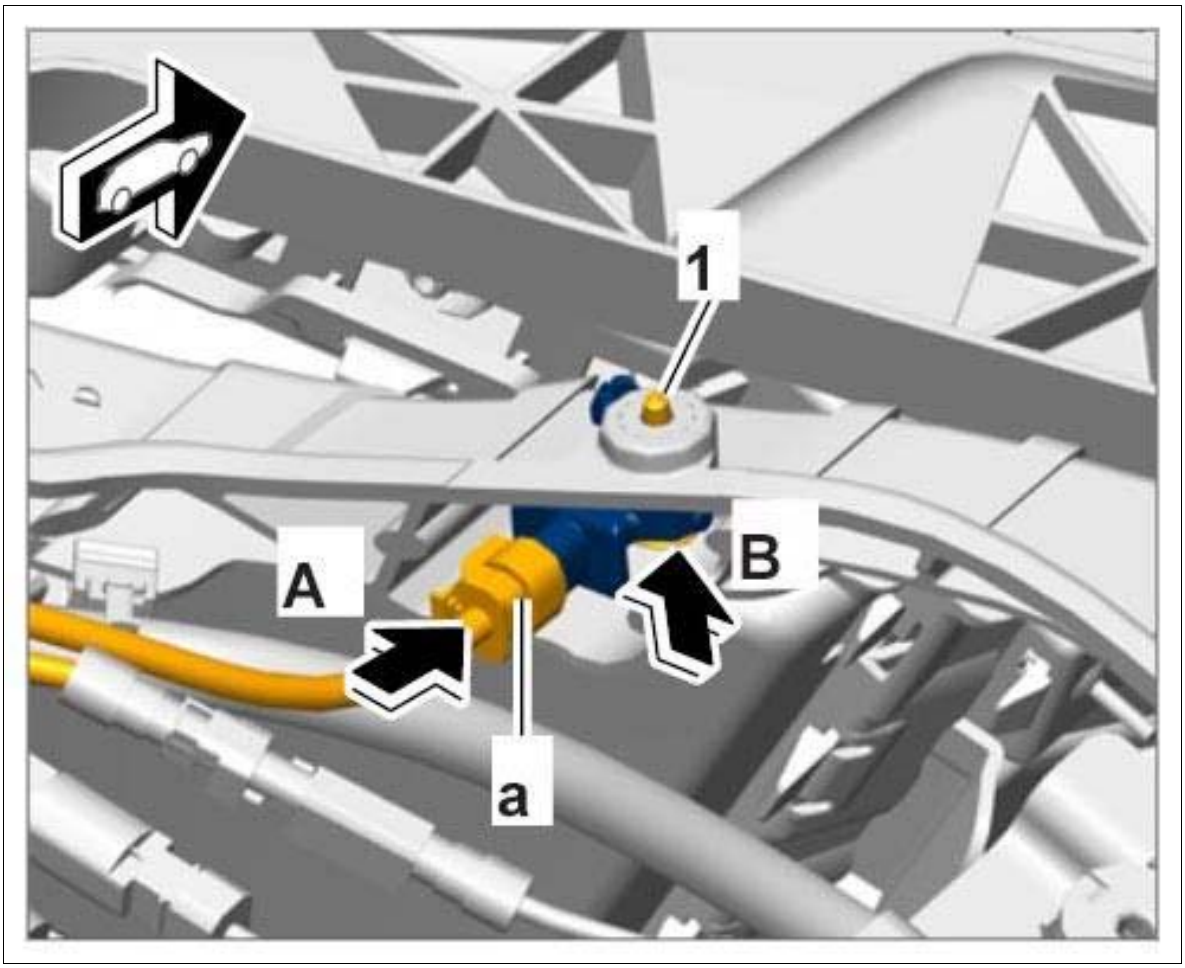

Courtesy of PORSCHE CARS NORTH AMERICA, INC.

Information

Always replace the fastening screws and nuts after customer service and reworking. The micro-self-locking screws must not be treated, greased or loosened and then screwed on again.

2. Tighten fastening screw **-1-** for front airbag sensor to → **Tightening torque: 9 Nm (6.5 ftlb.)** .

3. Plug in electric plug connection **-A-** and lock it **-a-** .

WM 695119 REMOVING AND INSTALLING AIRBAG SENSOR (MACAN, MACAN S,

MACAN TURBO) > INSTALLING AIRBAG SENSOR > INSTALLING AIRBAG SENSOR IN REAR INNER WHEEL ARCH

WARNING: Incorrect handling of safety bolts

- *Danger of injury*
- *Loss of torque*

→ Always use new fastening screws and nuts following removal.

→ Observe specified tightening torques.

→ Carry out a visual inspection of all re-used parts.

Information

- Some of the repair illustrations show only one side of the vehicle.
- Naturally, some steps also have to be performed on the opposite side of the vehicle as well.

Information

- Make sure that the airbag sensor is positioned correctly.

1. Position the sensor **-B-** .

Fig 1: Installing Airbag Sensor

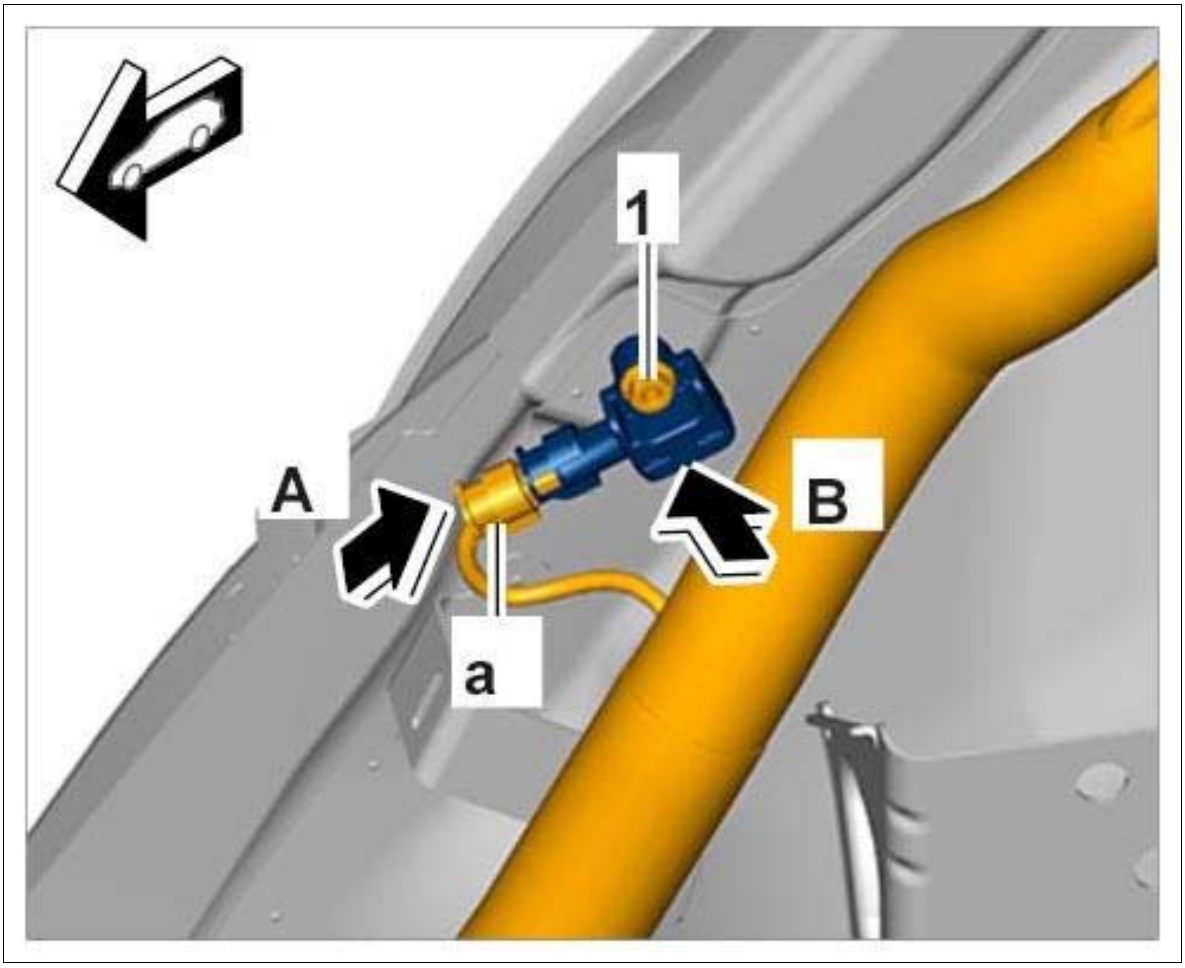

Courtesy of PORSCHE CARS NORTH AMERICA, INC.

Information

Always replace the fastening screws and nuts after customer service and reworking. The micro-self-locking screws must not be treated, greased or loosened and then screwed on again.

2. Tighten fastening screw **-1-** for airbag sensor in rear inner wheel arch to → **Tightening torque: 9 Nm (6.5 ftlb.).**
3. Plug in electric plug connection **-A-** and lock it **-a-** .

WM 695119 REMOVING AND INSTALLING AIRBAG SENSOR (MACAN, MACAN S, MACAN TURBO) > SUBSEQUENT WORK > SUBSEQUENT WORK FOR FRONT AIRBAG SENSOR

For naturally aspirated engines only:

1. Install front apron. → INSTALLING FRONT APRON .
2. Connect the battery. → 2X00IN WORK INSTRUCTIONS AFTER DISCONNECTING THE

BATTERY

For turbo engines only:

3. Install air guide for charge-air cooler. → INSTALLING CHARGE-AIR COOLER .
4. Connect the battery. → 2X00IN WORK INSTRUCTIONS AFTER DISCONNECTING THE BATTERY

WM 695119 REMOVING AND INSTALLING AIRBAG SENSOR (MACAN, MACAN S, MACAN TURBO) > SUBSEQUENT WORK > SUBSEQUENT WORK FOR AIRBAG SENSOR IN REAR INNER WHEEL ARCH

1. Install rear inner door sill trim. → INSTALLING FRONT INNER DOOR SILL TRIM .
2. Connect the battery. → 2X00IN WORK INSTRUCTIONS AFTER DISCONNECTING THE BATTERY

WM 695319 REMOVING AND INSTALLING AIRBAG TRIGGERING UNIT (MACAN, MACAN S, MACAN TURBO) > TOOLS

Designation	Type	Number	Description	
PIWIS Tester II	Special tool	9818		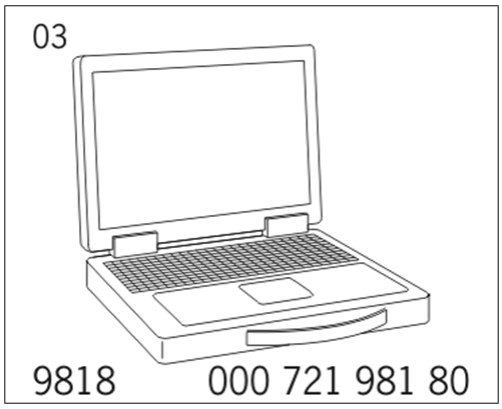

WM 695319 REMOVING AND INSTALLING AIRBAG TRIGGERING UNIT (MACAN, MACAN S, MACAN TURBO) > TECHNICAL VALUES

Location	Description	Type	Basic value	Tolerance 1	Tolerance 2
Fastening nuts for triggering unit	-1-	Tightening torque	9 Nm (6.5 ftlb.)	+10 %	-15 %

WM 695319 REMOVING AND INSTALLING AIRBAG TRIGGERING UNIT (MACAN, MACAN S, MACAN TURBO) > PRELIMINARY WORK > PRELIMINARY WORK FOR REMOVING AND INSTALLING TRIGGERING UNIT FOR AIRBAG

WARNING: Incorrect handling of airbag units

- *Triggering of airbag unit.*
- *System faults can occur.*

→ Switch off ignition and remove ignition key or remote control (hand-held transmitter).

→ A power supply (e.g. battery charger) must not be connected to the external power supply/jump-lead starting terminals.

→ Disconnect the battery and insulate the ground strap so that all contact with a ground carrier is avoided.

→ Wait 1 minute after disconnecting the battery.

→ Only pull off connector on the triggering unit after the waiting time has elapsed.

→ Make sure that no foreign objects are located in front of the airbag unit during installation.

→ Replace damaged parts during removal.

→ Always position airbag units so that the blow-out opening is facing upwards, e.g. crest on driver's airbag.

→ Do not position anything on the airbag units.

→ If removed for an extended period, the airbag units must be stored in a safe place.

→ Airbag units must not come into contact with grease, oil, detergents, liquids, or similar substances.

→ Do not expose airbag units to temperatures above 90°.

→ Do not remove the short-circuit spring on the plug-in contacts.

→ Ignition and preparations may only be carried out by skilled staff, supervised by a second responsible person.

→ Before disposal, the airbag unit must be rendered harmless by electrical ignition performed in accordance with all precautionary measures, thereby preventing it from being used incorrectly.

1. If the airbag triggering unit has to be replaced, the values must be read out of the **Maintenance of vehicle data** function prior to removal using **PIWIS Tester II 9818** . → 695355 REPLACING TRIGGERING UNIT FOR AIRBAG
2. Switch off ignition and remove remote control from the ignition lock.
3. Disconnect the battery. → 2X00IN WORK INSTRUCTIONS AFTER DISCONNECTING THE BATTERY .

4. Remove center console. → 681719 REMOVING AND INSTALLING CENTRE CONSOLE .

WM 695319 REMOVING AND INSTALLING AIRBAG TRIGGERING UNIT (MACAN, MACAN S, MACAN TURBO) > REMOVING AIRBAG TRIGGERING UNIT

Fig 1: Locating Airbag Triggering Unit Position

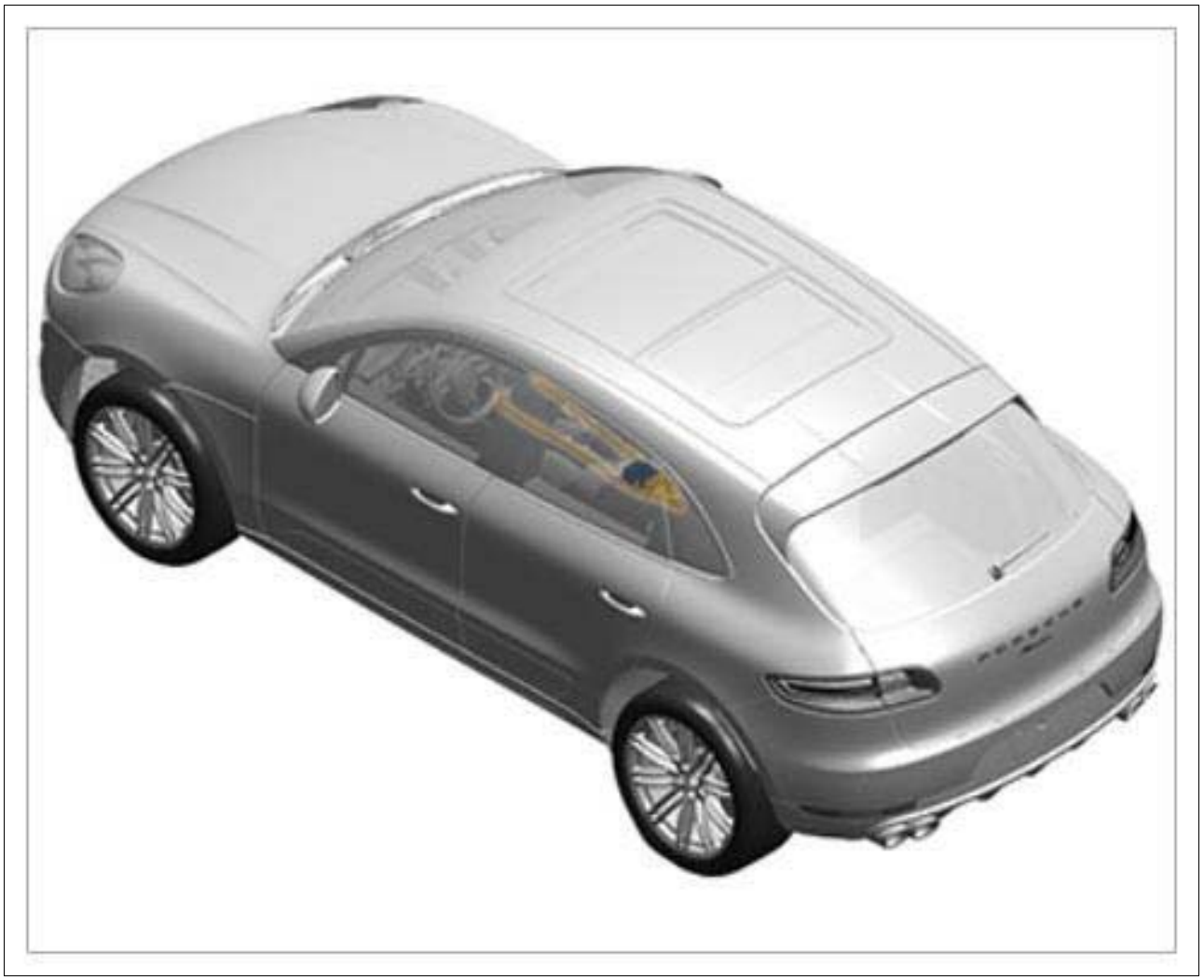

Courtesy of PORSCHE CARS NORTH AMERICA, INC.

1. Wait 1 minute after disconnecting the battery.
2. Screw off fastening nuts **-1-** on the airbag triggering unit and remove airbag triggering unit.

Fig 2: Removing Triggering Unit

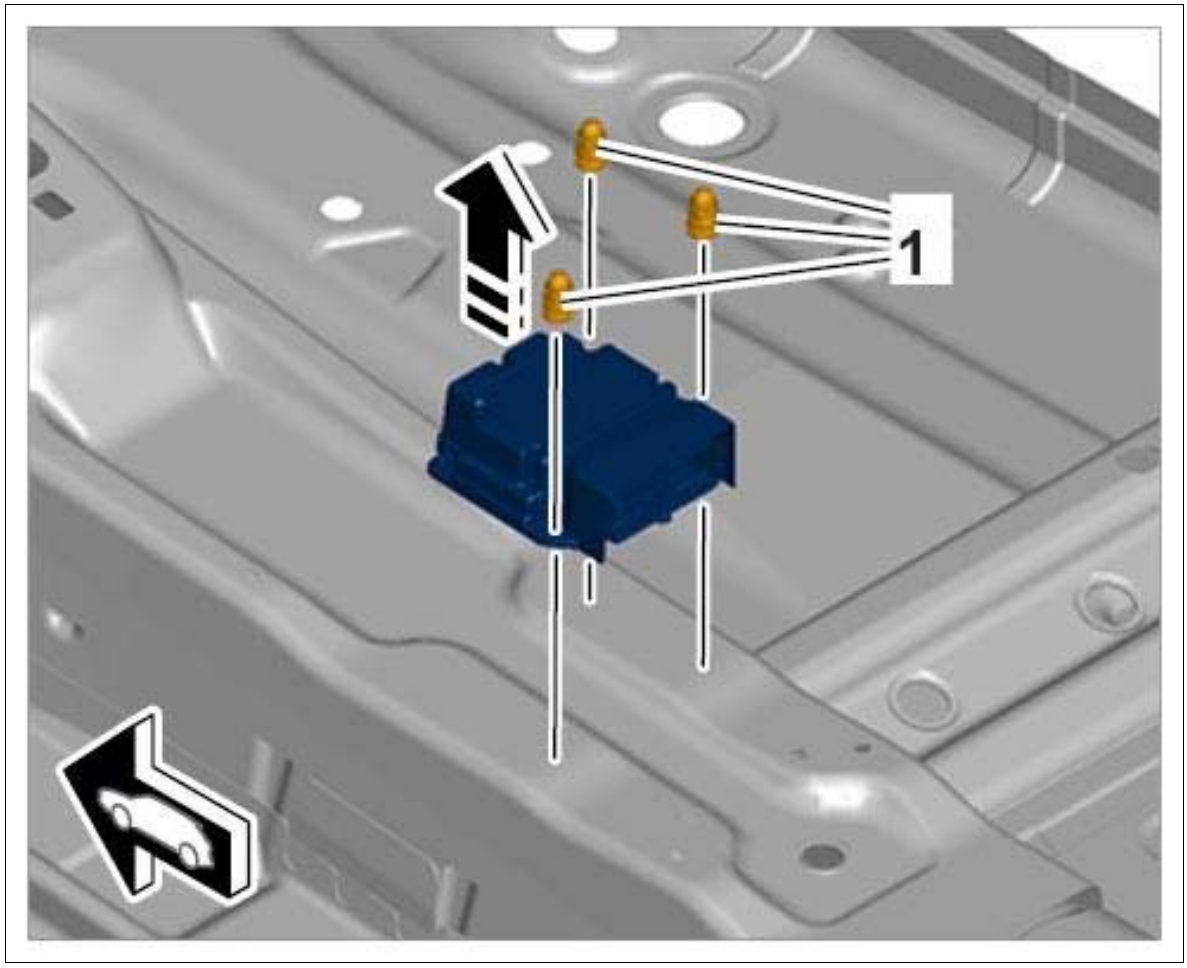

Courtesy of PORSCHE CARS NORTH AMERICA, INC.

3. Disconnect electric plug connection.
    1. 3.1. Release electric plug connection **-A-** .
    2. 3.2. Release locking clip **-B-** .
    3. 3.3. Open locking clip **-C-** and remove electric plug connection.

Fig 3: Disconnecting Electric Plug Connection

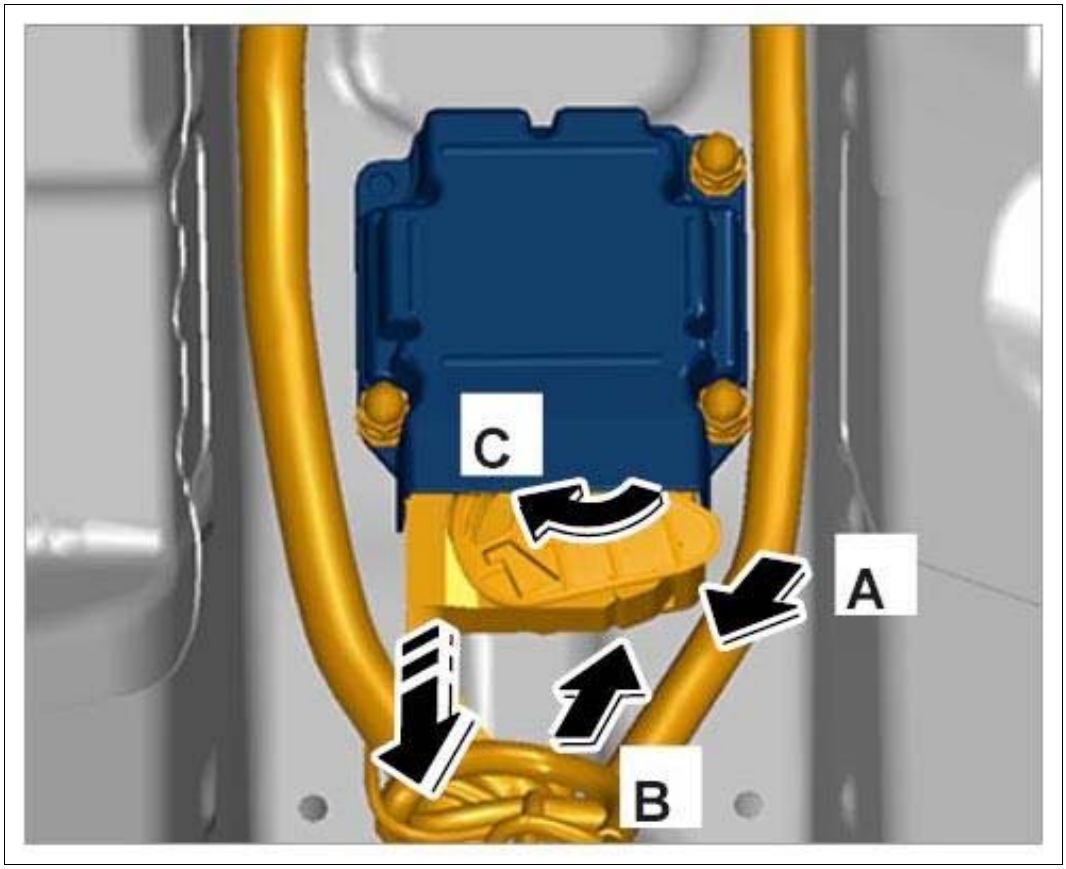

Courtesy of PORSCHE CARS NORTH AMERICA, INC.

WM 695319 REMOVING AND INSTALLING AIRBAG TRIGGERING UNIT (MACAN, MACAN S, MACAN TURBO) > INSTALLING AIRBAG TRIGGERING UNIT

1. Position airbag triggering unit on the center tunnel and secure with fastening nuts **-1-** . → **Tightening torque: 9 Nm (6.5 ftlb.)+10 %-15 %**

Fig 1: Installing Airbag Triggering Unit

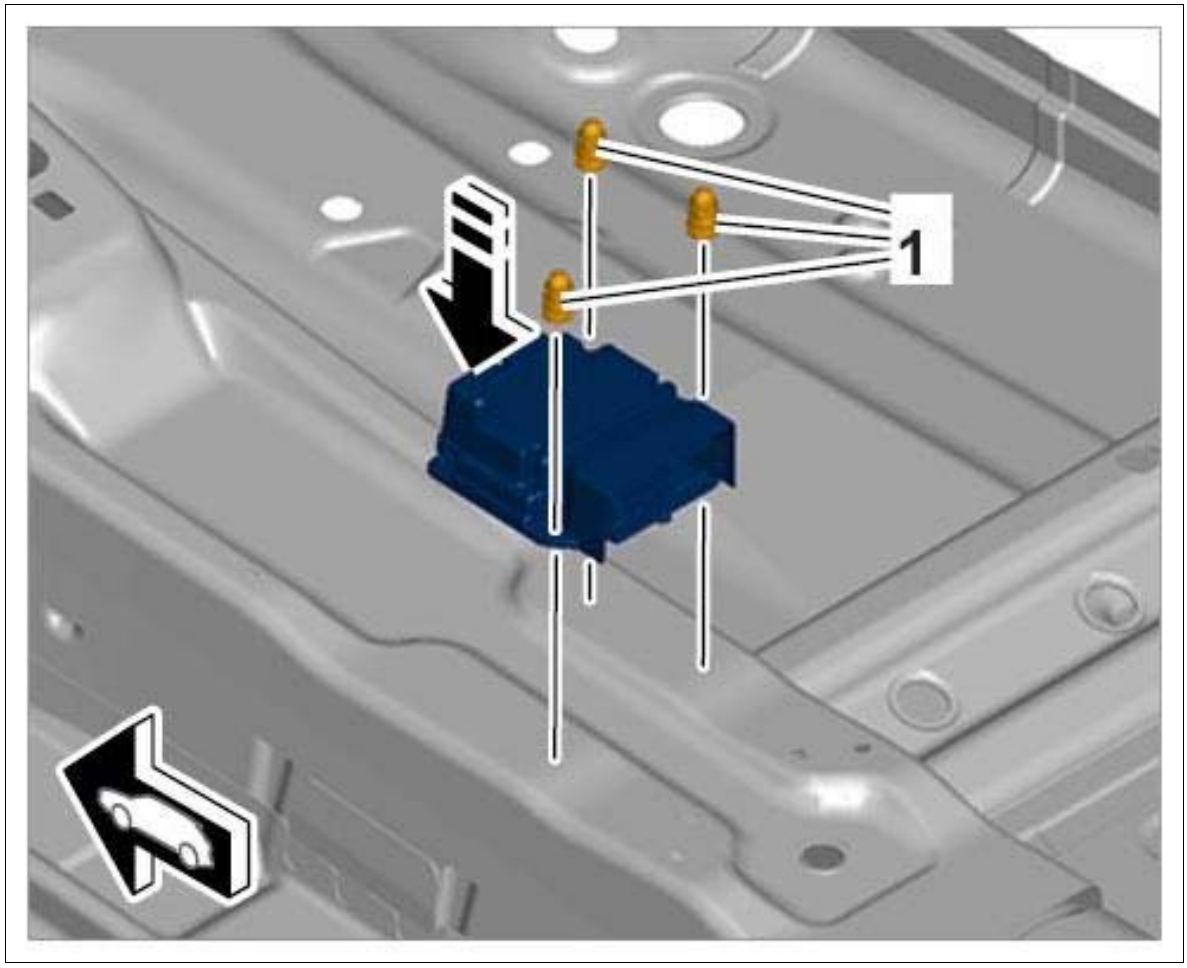

Courtesy of PORSCHE CARS NORTH AMERICA, INC.

2. Connect electric plug connection.
    1. 2.1. Connect electric plug connection **-A-** .
    2. 2.2. Lock locking clip on the connector as far as it will go **-B-** .
    3. 2.3. Close the lock on the connector **-C-** .

Fig 2: Connecting Electric Plug Connection

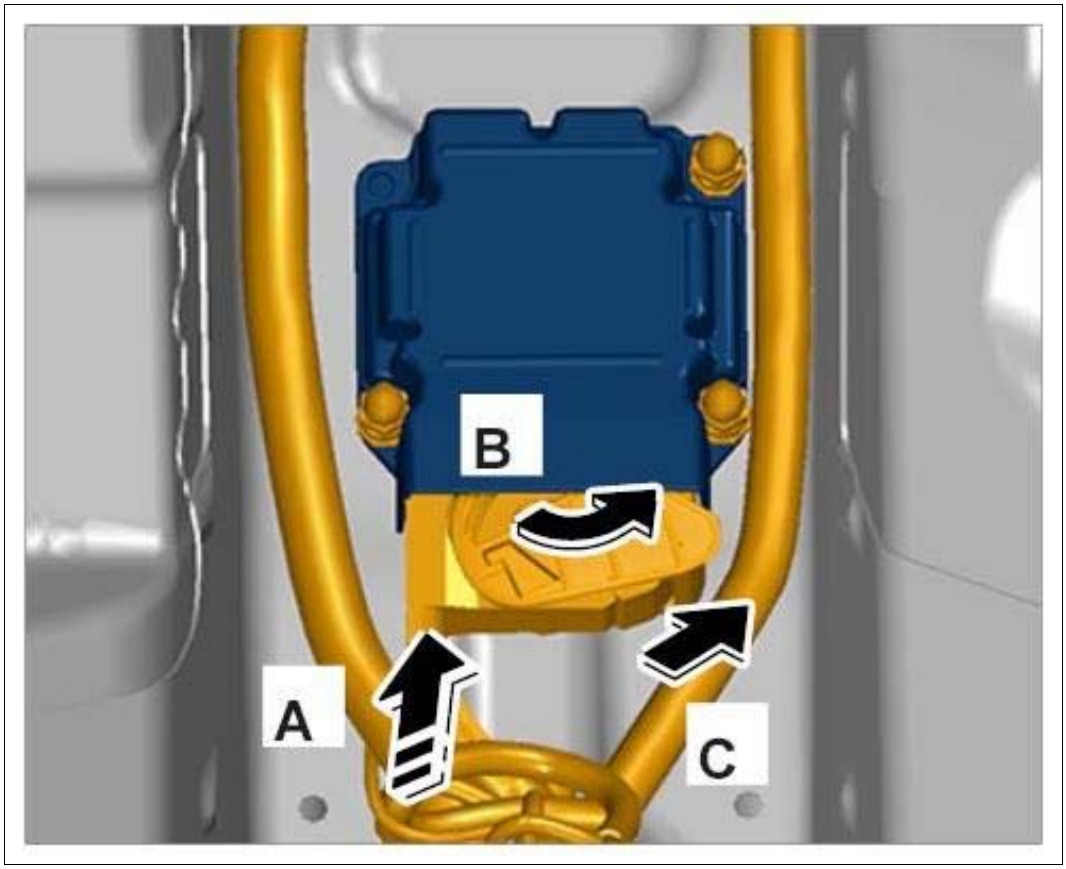

Courtesy of PORSCHE CARS NORTH AMERICA, INC.

WM 695319 REMOVING AND INSTALLING AIRBAG TRIGGERING UNIT (MACAN, MACAN S, MACAN TURBO) > SUBSEQUENT WORK > SUBSEQUENT WORK FOR REMOVING AND INSTALLING TRIGGERING UNIT FOR AIRBAG

1. Install center console. → INSTALLING CENTER CONSOLE .
2. Connect the battery and carry out instructions after connecting the battery. → 2X00IN WORK INSTRUCTIONS AFTER DISCONNECTING THE BATTERY .
3. If the airbag triggering unit was replaced:
    1. 3.1. The values in the Maintenance of vehicle data function must be compared and changed if necessary.
    2. 3.2. The airbag triggering unit must be locked.
    3. 3.3. The seat occupancy system must be calibrated on vehicles with country equipment C02 (USA, Canada, Mexico).
    4. 3.4. → 695355 REPLACING TRIGGERING UNIT FOR AIRBAG

WM 695355 REPLACING TRIGGERING UNIT FOR AIRBAG (MACAN, MACAN S, MACAN TURBO) > TOOLS

Designation	Type	Number	Description	
PIWIS Tester II	Special tool	9818		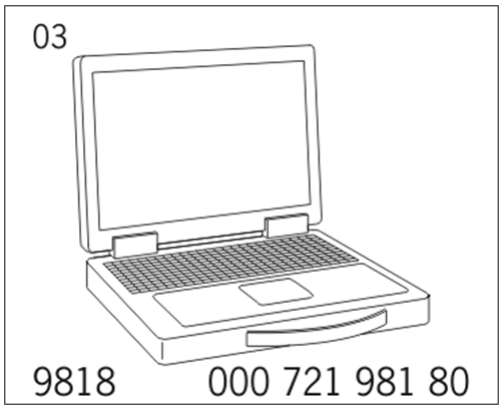

WM 695355 REPLACING TRIGGERING UNIT FOR AIRBAG (MACAN, MACAN S, MACAN TURBO) > TECHNICAL VALUES

Location	Description	Type	Basic value	Tolerance 1	Tolerance 2
Current rating		Nominal value	40 A		

WM 695355 REPLACING TRIGGERING UNIT FOR AIRBAG (MACAN, MACAN S, MACAN TURBO) > REPLACING TRIGGERING UNIT FOR AIRBAG

NOTE: Voltage drop

- *Risk of irreparable damage to control unit*
- *Risk of damage to control unit*
- *Fault entries in the control unit*
- *Coding in the control unit is aborted*
- *Malfunctions in control unit, even during programming*

→ Prior to disconnecting the control unit, switch off ignition and remove ignition key.

→ Ensure that the power supply is not interrupted during programming.

→ Connect a battery charger with a current rating of at least → **Nominal value: 40 A** to the vehicle battery.

Information

The **PIWIS Tester II 9818** instructions take precedence since the description may be different with later Tester releases.

The procedure described here has been structured in general terms. Different text or additional information may appear in **PIWIS Tester II 9818** .

1. Connect the PIWIS Tester to the vehicle and start the diagnostic application. Switch on ignition.
2. Select vehicle type.
3. When the **overview** is displayed, start the **control unit search** by pressing [F12].
4. Once the control unit search is complete, press [F7].
5. **Select Maintenance of vehicle data** and press [F12].
6. Compare the displayed data with the vehicle equipment and write it down if necessary.

> *WARNING: Incorrect handling of airbag units*
>
> 1. *Triggering of airbag unit.*
> 2. *System faults can occur.*

→ Switch off ignition and remove ignition key or remote control (hand-held transmitter).

→ A power supply (e.g. battery charger) must not be connected to the external power supply/jump-lead starting terminals.

→ Disconnect the battery and insulate the ground strap so that all contact with a ground carrier is avoided.

→ Wait 1 minute after disconnecting the battery.

→ Only pull off connector on the triggering unit after the waiting time has elapsed.

→ Make sure that no foreign objects are located in front of the airbag unit during installation.

→ Replace damaged parts during removal.

→ Always position airbag units so that the blow-out opening is facing upwards, e.g. crest on driver's airbag.

→ Do not position anything on the airbag units.

→ If removed for an extended period, the airbag units must be stored in a safe place.

→ Airbag units must not come into contact with grease, oil, detergents, liquids, or similar substances.

→ Do not expose airbag units to temperatures above 90°.

→ Do not remove the short-circuit spring on the plug-in contacts.

→ Ignition and preparations may only be carried out by skilled staff, supervised by a second responsible person.

→ Before disposal, the airbag unit must be rendered harmless by electrical ignition performed in accordance with all precautionary measures, thereby preventing it from being used incorrectly.

7. Switch off ignition and disconnect the charger from the power connection and the ground strap from the battery.
8. The airbag control unit can be replaced after a wait time of at least 1 minute. → 695319 REMOVING AND INSTALLING TRIGGERING UNIT FOR AIRBAG
9. Connect the ground strap for the battery and switch the charger on again.
10. Switch on ignition.
11. When the **overview** is displayed, start the **control unit search** by pressing [F12].
12. Once the control unit search is complete, press [F7].
13. **Select Maintenance of vehicle data** and press [F12].
14. Compare the vehicle data with the vehicle equipment and the data you read out earlier. Change the data if necessary.
15. Select the **Airbag** control unit in the **overview** and press [F12].
16. Select **Maintenance/repairs** and Lock and press [F12].
17. Read the warnings displayed on the Tester and proceed according to the instructions on the Tester.
18. Once you have locked the airbag control unit, the occupant detection control unit must be calibrated on vehicles with the country variant C02 (USA, Canada, Mexico).
    1. 18.1. Select the **Maintenance/repairs** menu. Then select **Calibrate occupant detection** and complete the calibration process according to the instructions on the Tester.
19. Switch off ignition and remove the remote control (hand-held transmitter) from the ignition lock.
20. Insert the remote control back into the ignition lock and switch on ignition.
21. Read out the fault memory and erase it if necessary.
22. Perform function test: Switch the ignition off and then on again. The airbag warning light in the instrument cluster comes on and must go off again after a few seconds.

WM 695355 REPLACING TRIGGERING UNIT FOR AIRBAG (MACAN, MACAN S, MACAN TURBO) > TOOLS

Designation	Type	Number	Description	

PIWIS Tester II	Special tool	9818		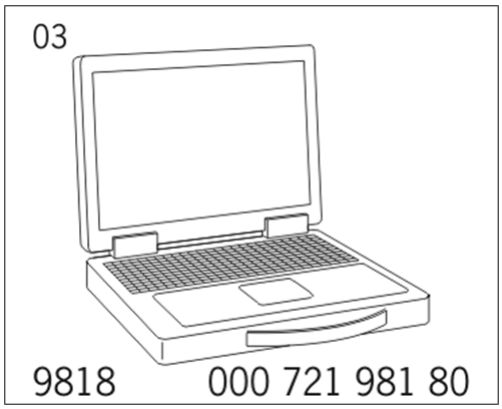

WM 695355 REPLACING TRIGGERING UNIT FOR AIRBAG (MACAN, MACAN S, MACAN TURBO) > TECHNICAL VALUES

Location	Description	Type	Basic value	Tolerance 1	Tolerance 2
Current rating		Nominal value	40 A		

WM 695355 REPLACING TRIGGERING UNIT FOR AIRBAG (MACAN, MACAN S, MACAN TURBO) > REPLACING TRIGGERING UNIT FOR AIRBAG

NOTE: Voltage drop

- *Risk of irreparable damage to control unit*
- *Risk of damage to control unit*
- *Fault entries in the control unit*
- *Coding in the control unit is aborted*
- *Malfunctions in control unit, even during programming*

→ Prior to disconnecting the control unit, switch off ignition and remove ignition key.

→ Ensure that the power supply is not interrupted during programming.

→ Connect a battery charger with a current rating of at least → **Nominal value: 40 A** to the vehicle battery.

Information

The **PIWIS Tester II 9818** instructions take precedence since the description may be different with later Tester releases.

The procedure described here has been structured in general terms. Different text or additional

information may appear in **PIWIS Tester II 9818** .

1. Connect the PIWIS Tester to the vehicle and start the Tester. Switch on ignition.
2. Select the vehicle type and start the diagnostic application.
3. When the **overview** is displayed, start the **control unit search** by pressing [F12].
4. Once the control unit search is complete, press [F7].
5. **Select Maintenance of vehicle data** and press [F12].
6. Compare the displayed values with the vehicle values and press [F4] to save. Then press [F11] to go back.

> *WARNING: Incorrect handling of airbag units*
>
> 1. *Triggering of airbag unit.*
> 2. *System faults can occur.*

→ Switch off ignition and remove ignition key or remote control (hand-held transmitter).

→ A power supply (e.g. battery charger) must not be connected to the external power supply/jump-lead starting terminals.

→ Disconnect the battery and insulate the ground strap so that all contact with a ground carrier is avoided.

→ Wait 1 minute after disconnecting the battery.

→ Only pull off connector on the triggering unit after the waiting time has elapsed.

→ Make sure that no foreign objects are located in front of the airbag unit during installation.

→ Replace damaged parts during removal.

→ Always position airbag units so that the blow-out opening is facing upwards, e.g. crest on driver's airbag.

→ Do not position anything on the airbag units.

→ If removed for an extended period, the airbag units must be stored in a safe place.

→ Airbag units must not come into contact with grease, oil, detergents, liquids, or similar substances.

→ Do not expose airbag units to temperatures above 90°.

→ Do not remove the short-circuit spring on the plug-in contacts.

→ Ignition and preparations may only be carried out by skilled staff, supervised by a second responsible person.

→ Before disposal, the airbag unit must be rendered harmless by electrical ignition performed in accordance with all precautionary measures, thereby preventing it from being used

incorrectly.

7. Switch off ignition, remove the battery charger from the power supply and disconnect the battery.
8. The airbag control unit can be replaced after a wait time of at least 1 minute. → 695319 REMOVING AND INSTALLING TRIGGERING UNIT FOR AIRBAG
9. Select the **Airbag** control unit in the overview and press [F12].
10. Select **Maintenance/repairs** and Lock and press [F12].
11. Read the warnings on the Tester.
12. Press [F8] to start programming and follow the instructions on the Tester.
13. Read out the fault memory and erase it if necessary.
14. Switch the ignition off and then on again. The airbag warning light in the instrument cluster comes on and must go off again after a few seconds.

WM 695419 REMOVING AND INSTALLING CONTACT UNIT FOR AIRBAG (MACAN, MACAN S, MACAN TURBO) > INFORMATION ON REMOVING AND INSTALLING CONTACT UNIT FOR AIRBAG

Information

The airbag contact unit is integrated in the steering-column switch and cannot therefore be replaced separately.

The procedure for removing and installing the airbag contact unit is described under Removing and installing steering-column switch.

→ 945019 REMOVING AND INSTALLING STEERING-COLUMN SWITCH

WM 695619 REMOVING AND INSTALLING SEAT OCCUPANCY DETECTION (MACAN, MACAN S, MACAN TURBO) > INFORMATION

The seat occupancy detection system cannot be replaced individually. It can only be replaced together with padding for front seat. → 741055 REPLACING PADDING FOR FRONT SEAT

WM 695819 REMOVING AND INSTALLING DRIVER'S AIRBAG UNIT (MACAN, MACAN S, MACAN TURBO) > INFORMATION > INSTALLATION POSITION OF DRIVER'S AIRBAG UNIT

Fig 1: Locating Driver Airbag Unit Position (Shown On Panamera)

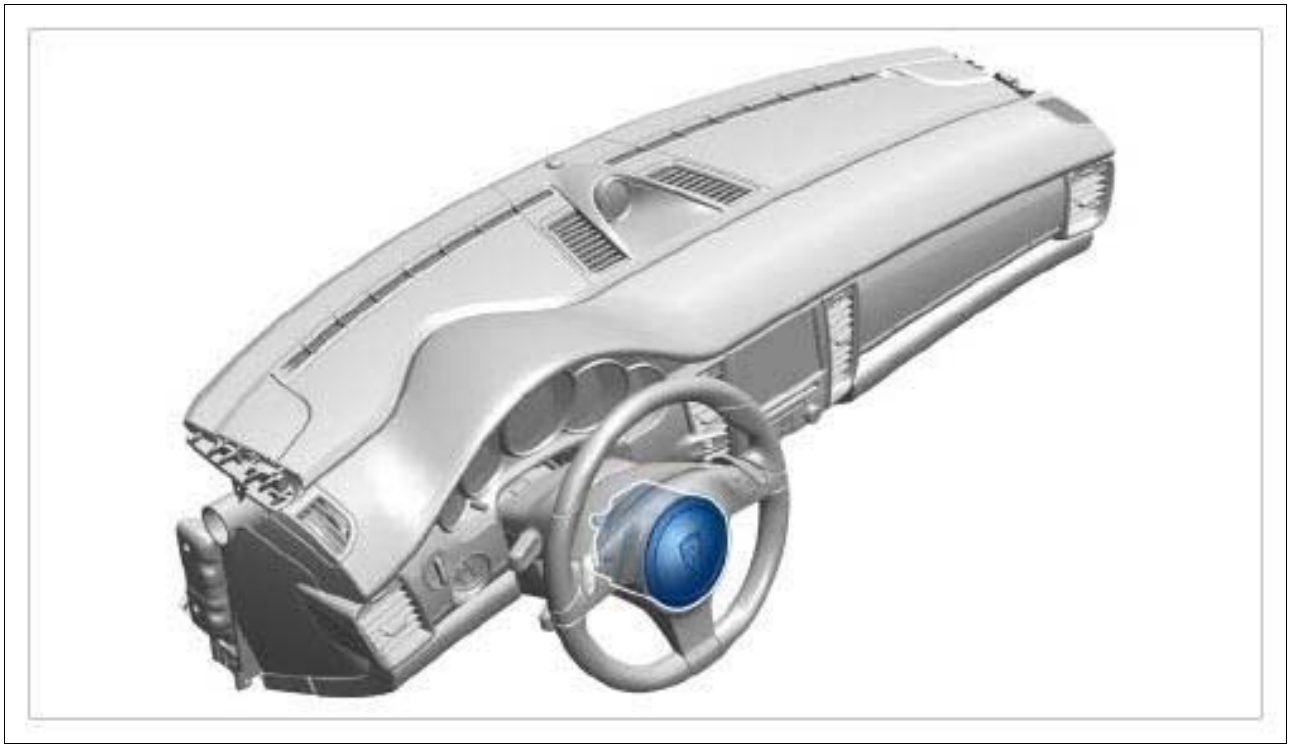

Courtesy of PORSCHE CARS NORTH AMERICA, INC.

WM 695819 REMOVING AND INSTALLING DRIVER'S AIRBAG UNIT (MACAN, MACAN S, MACAN TURBO) > PRELIMINARY WORK

Information

Steering wheel control with the battery disconnected. Before the battery can be disconnected, the following steps must be completed:

1. Insert ignition key into ignition and switch ignition on and off again.
2. Leave ignition key inserted.
3. Disconnect battery ground strap. → Removing and installing battery sensor → WM 270619 REMOVING AND INSTALLING BATTERY (ALL MODELS) .

WM 695819 REMOVING AND INSTALLING DRIVER'S AIRBAG UNIT (MACAN, MACAN S, MACAN TURBO) > REMOVING DRIVER'S AIRBAG UNIT

WARNING: Incorrect handling of airbag units

- *Triggering of airbag unit.*
- *System faults can occur.*

→ Switch off ignition and remove ignition key or remote control (hand-held transmitter).

→ A power supply (e.g. battery charger) must not be connected to the external power supply/jump-lead starting terminals.

→ Disconnect the battery and insulate the ground strap so that all contact with a ground carrier is avoided.

→ Wait 1 minute after disconnecting the battery.

→ Only pull off connector on the triggering unit after the waiting time has elapsed.

→ Make sure that no foreign objects are located in front of the airbag unit during installation.

→ Replace damaged parts during removal.

→ Always position airbag units so that the blow-out opening is facing upwards, e.g. crest on driver's airbag.

→ Do not position anything on the airbag units.

→ If removed for an extended period, the airbag units must be stored in a safe place.

→ Airbag units must not come into contact with grease, oil, detergents, liquids, or similar substances.

→ Do not expose airbag units to temperatures above 90°.

→ Do not remove the short-circuit spring on the plug-in contacts.

→ Ignition and preparations may only be carried out by skilled staff, supervised by a second responsible person.

→ Before disposal, the airbag unit must be rendered harmless by electrical ignition performed in accordance with all precautionary measures, thereby preventing it from being used incorrectly.

Information

Overview for positioning the release springs **-2-** . Use release tool **-1-** (a T25 Torx with handle or a medium screwdriver).

Fig 1: Releasing Driver Airbag Unit

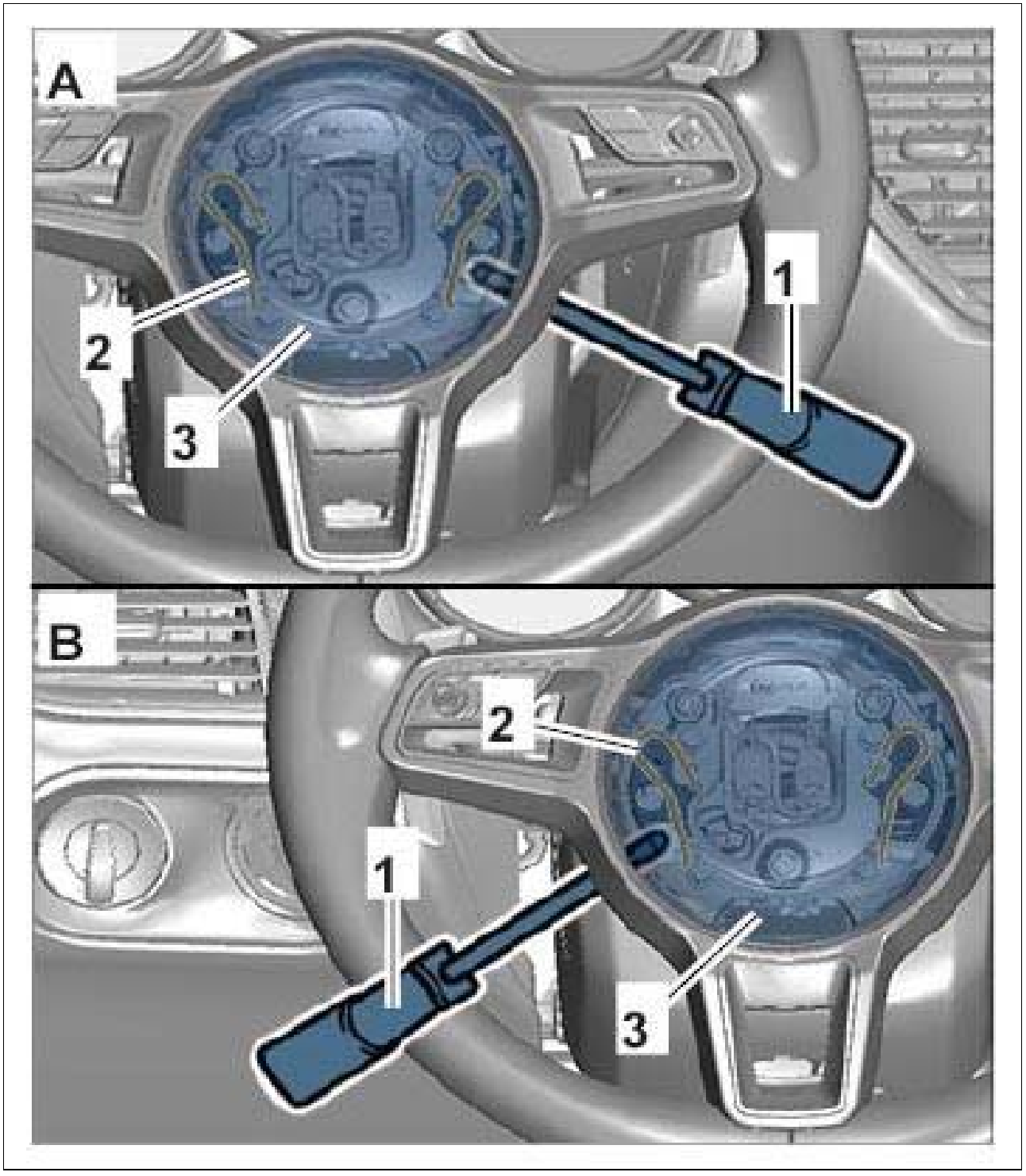

Courtesy of PORSCHE CARS NORTH AMERICA, INC.

1. Release airbag unit.

    1. 1.1. Push release tool **-1-** in parallel to the steering wheel until the spring can be felt.

        Information

        Make sure not to press the release tool too far towards the steering-column switch because if you do, the spring will not work.

2. 1.2. Press the spring in fully using the release tool and pull the airbag unit **-2-** out slightly **-arrow-** .
3. 1.3. Repeat the procedure on the other side of the steering wheel.

Fig 2: Releasing Driver Airbag Unit

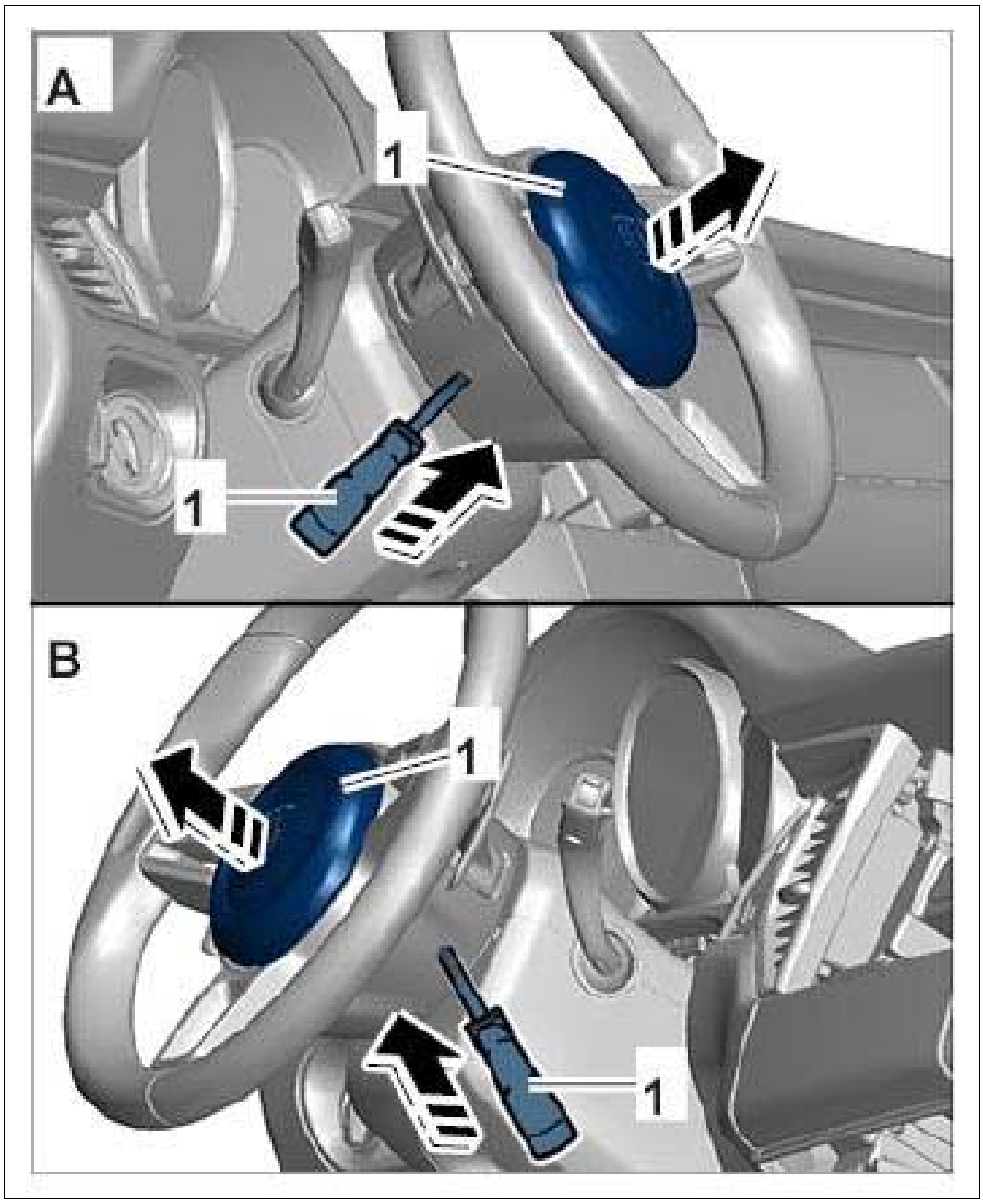

Courtesy of PORSCHE CARS NORTH AMERICA, INC.

2. Pull the airbag unit out of the steering wheel **-arrow-** .

Fig 3: Pulling Airbag Unit (Shown On Panamera)

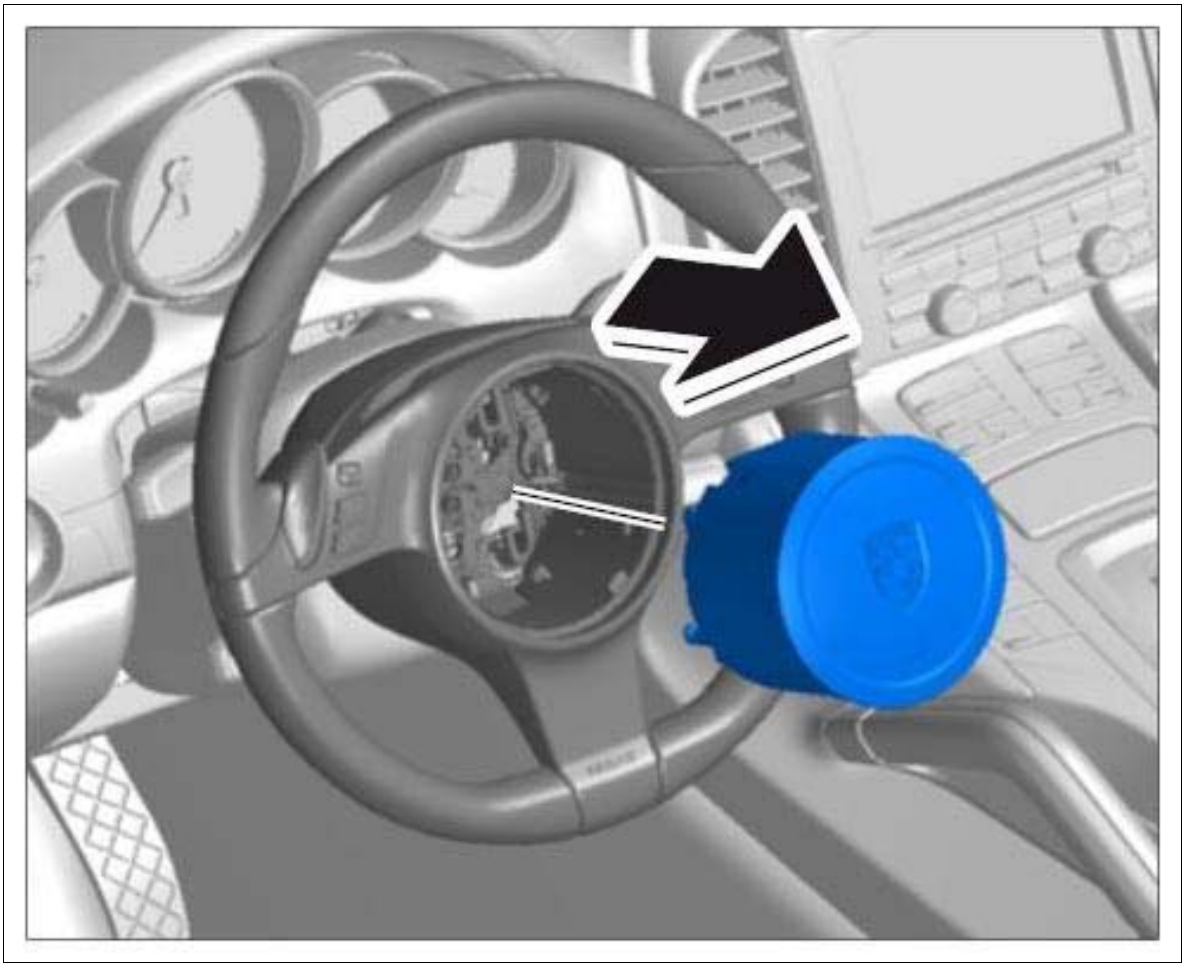

Courtesy of PORSCHE CARS NORTH AMERICA, INC.

3. Release electric plug connections -1, 2- in direction of arrow **-a-** and disconnect them **-A-** .

Fig 4: Disconnecting Airbag Unit Electric Plug Connections

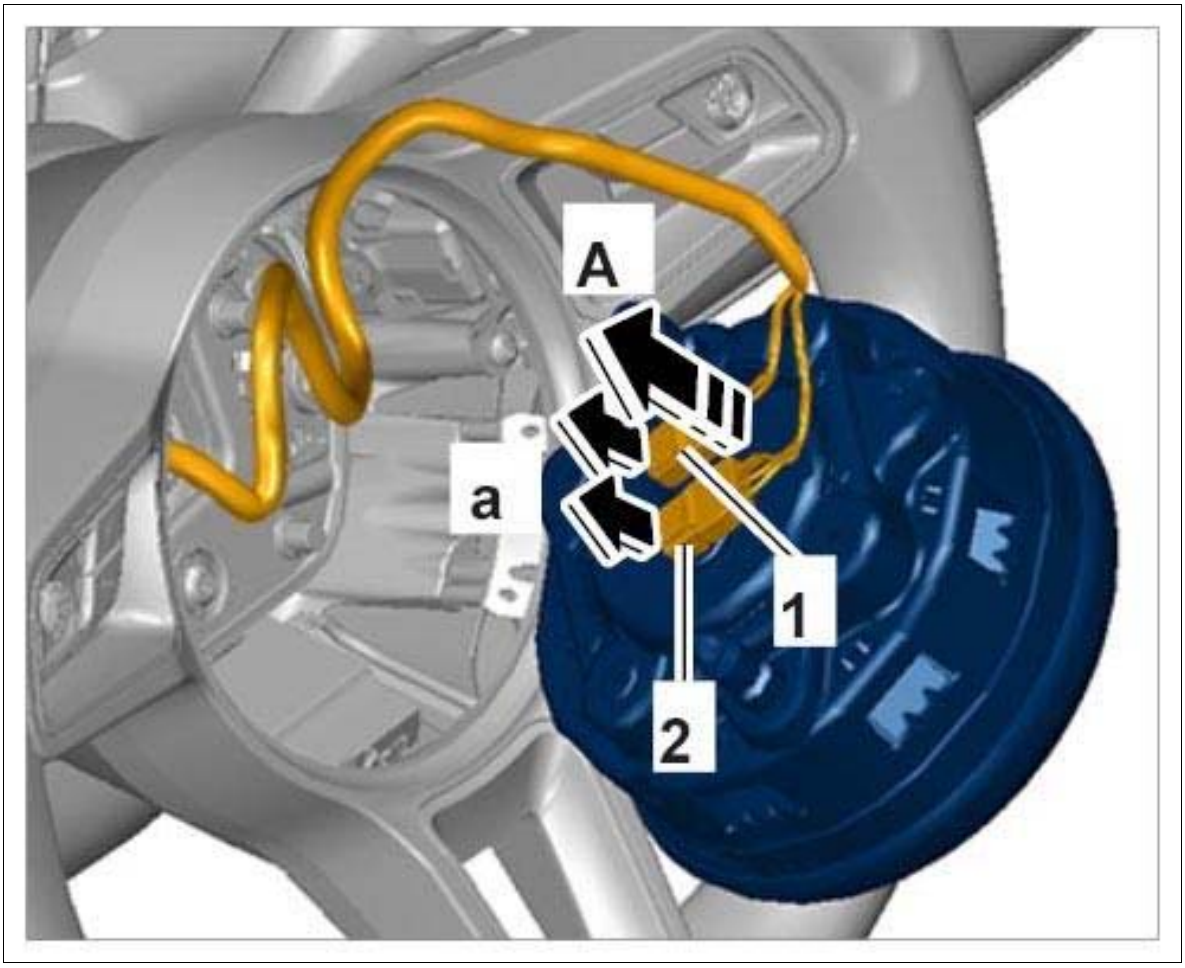

Courtesy of PORSCHE CARS NORTH AMERICA, INC.

WM 695819 REMOVING AND INSTALLING DRIVER'S AIRBAG UNIT (MACAN, MACAN S, MACAN TURBO) > INSTALLING DRIVER'S AIRBAG UNIT

WARNING: Incorrect handling of airbag units

- *Triggering of airbag unit.*
- *System faults can occur.*

→ Switch off ignition and remove ignition key or remote control (hand-held transmitter).

→ A power supply (e.g. battery charger) must not be connected to the external power supply/jump-lead starting terminals.

→ Disconnect the battery and insulate the ground strap so that all contact with a ground carrier is avoided.

→ Wait 1 minute after disconnecting the battery.

→ Only pull off connector on the triggering unit after the waiting time has elapsed.

→ Make sure that no foreign objects are located in front of the airbag unit during installation.

→ Replace damaged parts during removal.

→ Always position airbag units so that the blow-out opening is facing upwards, e.g. crest on driver's airbag.

→ Do not position anything on the airbag units.

→ If removed for an extended period, the airbag units must be stored in a safe place.

→ Airbag units must not come into contact with grease, oil, detergents, liquids, or similar substances.

→ Do not expose airbag units to temperatures above 90°.

→ Do not remove the short-circuit spring on the plug-in contacts.

→ Ignition and preparations may only be carried out by skilled staff, supervised by a second responsible person.

→ Before disposal, the airbag unit must be rendered harmless by electrical ignition performed in accordance with all precautionary measures, thereby preventing it from being used incorrectly.

Information

Before installing the airbag unit, check to see whether the locking clip, the airbag unit mounting and/or the metal stop on the steering wheel are bent. Replace the damaged component if it is deformed. Only fit an airbag unit that has a perfectly functioning locking clip at the correct position. The locking clip must not jam or become hooked.

1. Turn the airbag unit approx. 120-180° clockwise **-A-** to make it easier to plug the steering wheel wire harness into the airbag.

Fig 1: Turning Airbag Unit Electric Plug Connection

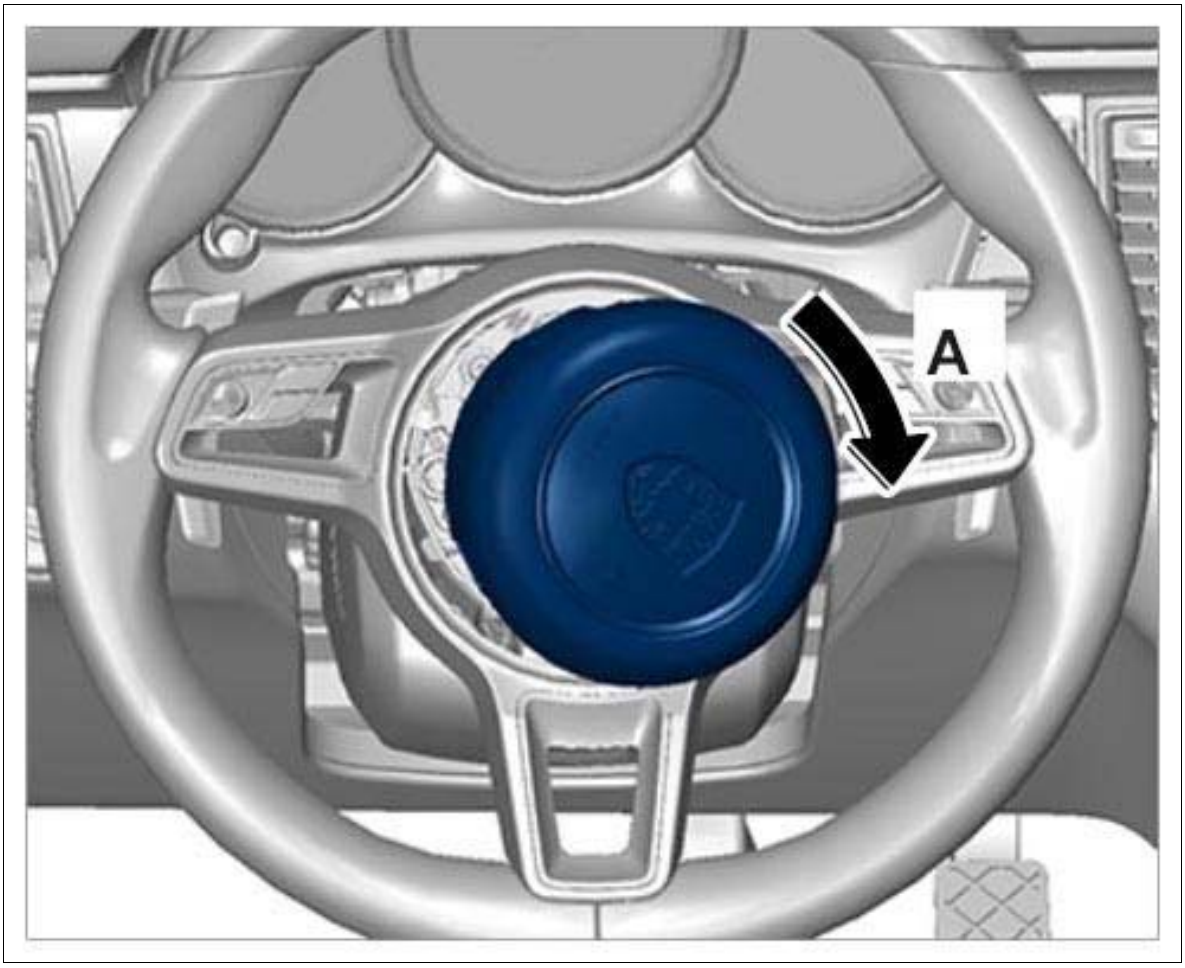

Courtesy of PORSCHE CARS NORTH AMERICA, INC.

2. Plug in electric plug connections **-1, 2- (-a-)** and lock them by turning the locking mechanism in direction of arrow **-A-** . Check color coding of the plug connections.

Fig 2: Installing Airbag Unit Electric Plug Connection

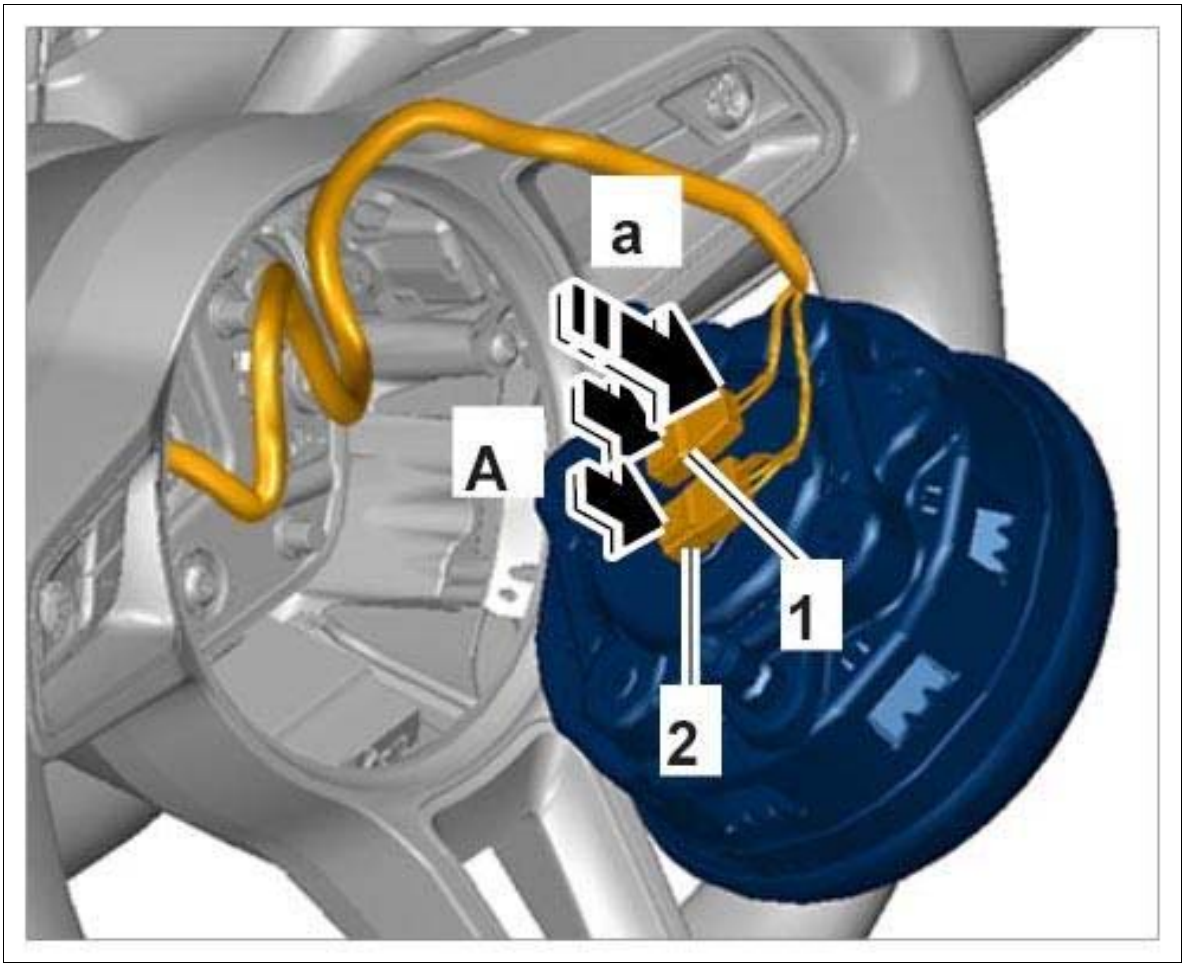

Courtesy of PORSCHE CARS NORTH AMERICA, INC.

3. Position the airbag unit at the correct position and engage it in the steering wheel using both hands and intermittent pressure **-arrow-** .

Fig 3: Installing Driver Airbag Unit

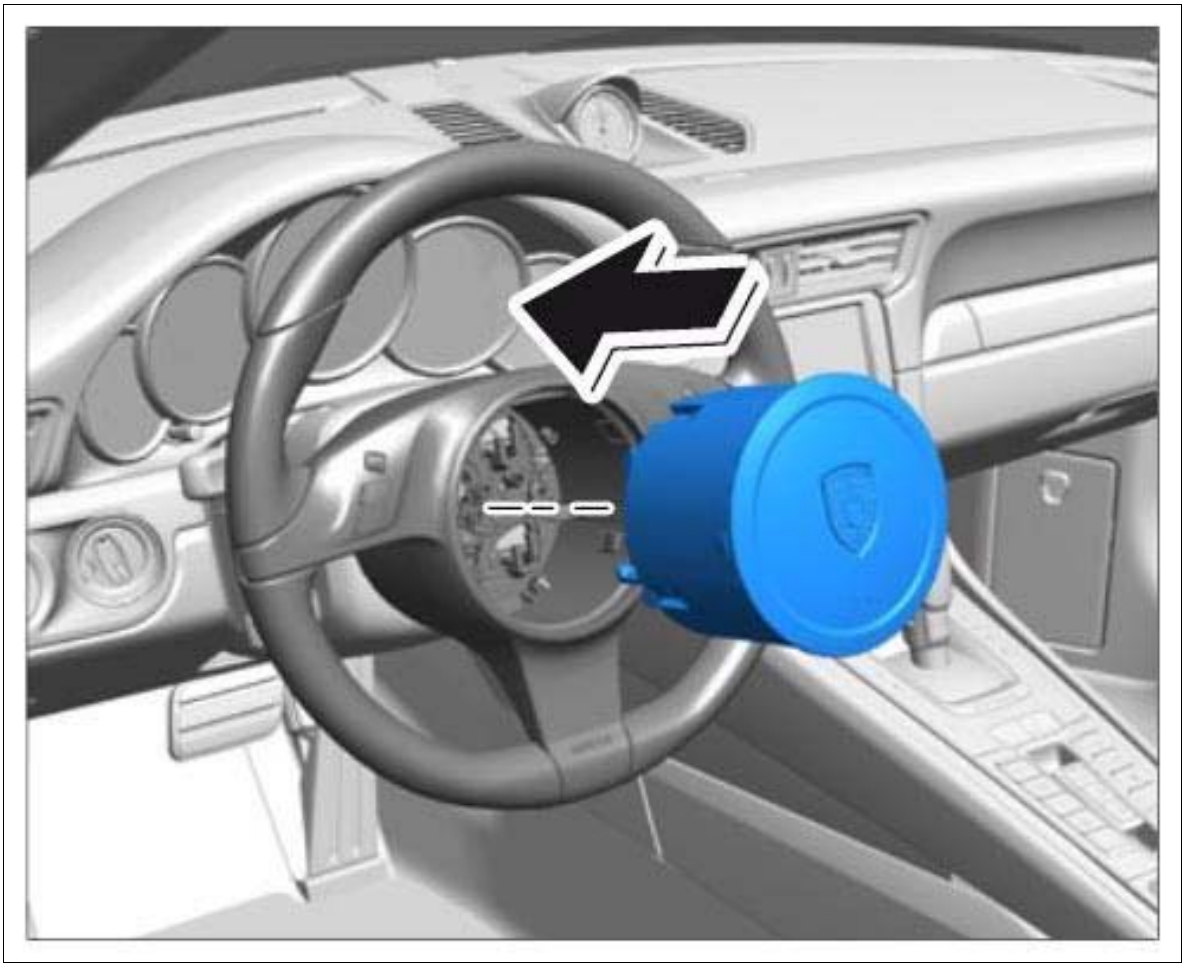

Courtesy of PORSCHE CARS NORTH AMERICA, INC.

4. Each time the airbag unit is fitted, it is important to check that it is installed correctly by tapping the steering wheel rim and performing a visual inspection (position of airbag unit on steering wheel).

WM 695819 REMOVING AND INSTALLING DRIVER'S AIRBAG UNIT (MACAN, MACAN S, MACAN TURBO) > SUBSEQUENT WORK > SUBSEQUENT WORK FOR DRIVER'S AIRBAG UNIT

Information

After replacing airbag components, proof of replacement must be documented in the Warranty and Maintenance booklet.

1. Connect battery ground strap and carry out work instructions after connecting the battery → 270619 REMOVING AND INSTALLING BATTERY

2. If the airbag unit was replaced, proof of replacement must be entered in the Warranty and Maintenance booklet.

WM 695919 REMOVING AND INSTALLING PASSENGER'S AIRBAG UNIT (MACAN, MACAN S, MACAN TURBO) > TECHNICAL VALUES

Location	Description	Type	Basic value	Tolerance 1	Tolerance 2
Fastening screws securing passenger's airbag unit to support frame	-Item 1-	Tightening torque	8 Nm (6 ftlb.)		
Fastening screw securing passenger's airbag unit to dashboard	-Item 2-	Tightening torque	8 Nm (6 ftlb.)		

WM 695919 REMOVING AND INSTALLING PASSENGER'S AIRBAG UNIT (MACAN, MACAN S, MACAN TURBO) > PRELIMINARY WORK

1. Disconnect the battery. → 2X00IN WORK INSTRUCTIONS AFTER DISCONNECTING THE BATTERY
2. Remove glove compartment. → 681519 REMOVING AND INSTALLING GLOVE COMPARTMENT .

WM 695919 REMOVING AND INSTALLING PASSENGER'S AIRBAG UNIT (MACAN, MACAN S, MACAN TURBO) > INFORMATION > SAFETY INSTRUCTIONS FOR PASSENGER'S AIRBAG UNIT

WARNING: Incorrect handling of airbag units

- *Triggering of airbag unit.*
- *System faults can occur.*

→ Switch off ignition and remove ignition key or remote control (hand-held transmitter).

→ A power supply (e.g. battery charger) must not be connected to the external power supply/jump-lead starting terminals.

→ Disconnect the battery and insulate the ground strap so that all contact with a ground carrier is avoided.

→ Wait 1 minute after disconnecting the battery.

→ Only pull off connector on the triggering unit after the waiting time has elapsed.

→ Make sure that no foreign objects are located in front of the airbag unit during installation.

→ Replace damaged parts during removal.

→ Always position airbag units so that the blow-out opening is facing upwards, e.g. crest on driver's airbag.

→ Do not position anything on the airbag units.

→ If removed for an extended period, the airbag units must be stored in a safe place.

→ Airbag units must not come into contact with grease, oil, detergents, liquids, or similar substances.

→ Do not expose airbag units to temperatures above 90°.

→ Do not remove the short-circuit spring on the plug-in contacts.

→ Ignition and preparations may only be carried out by skilled staff, supervised by a second responsible person.

→ Before disposal, the airbag unit must be rendered harmless by electrical ignition performed in accordance with all precautionary measures, thereby preventing it from being used incorrectly.

WARNING: Incorrect handling of safety bolts

- *Danger of injury*
- *Loss of torque*

→ Always use new fastening screws and nuts following removal.

→ Observe specified tightening torques.

→ Carry out a visual inspection of all re-used parts.

Information

Always replace the fastening screws on the airbag unit after customer service and reworking. The micro-self-locking screws must not be treated, greased or loosened and then screwed on again.

WM 695919 REMOVING AND INSTALLING PASSENGER'S AIRBAG UNIT (MACAN, MACAN S, MACAN TURBO) > REMOVING PASSENGER'S AIRBAG UNIT

Fig 1: Locating Passenger Airbag Unit Position

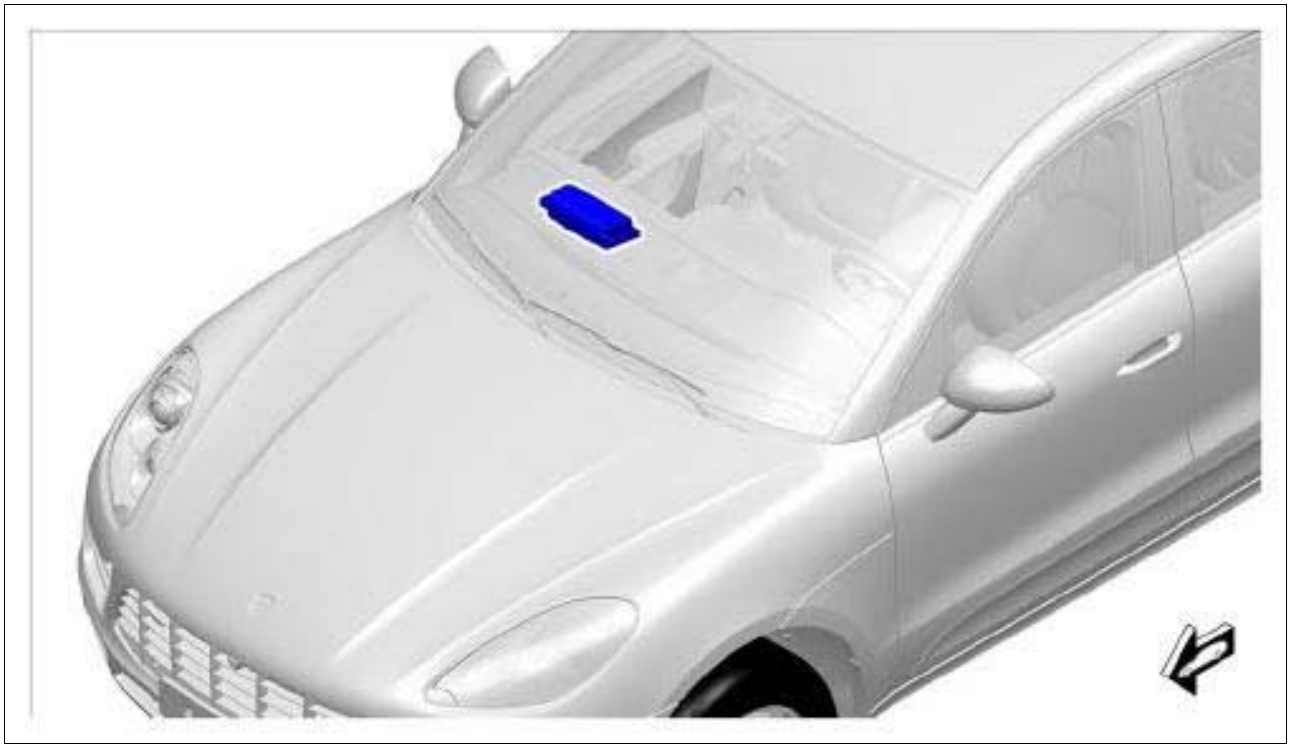

Courtesy of PORSCHE CARS NORTH AMERICA, INC.

1. Unscrew and remove fastening screws **-1-** for the passenger's airbag unit on the dashboard.

Fig 2: Loosening Passenger Airbag Unit

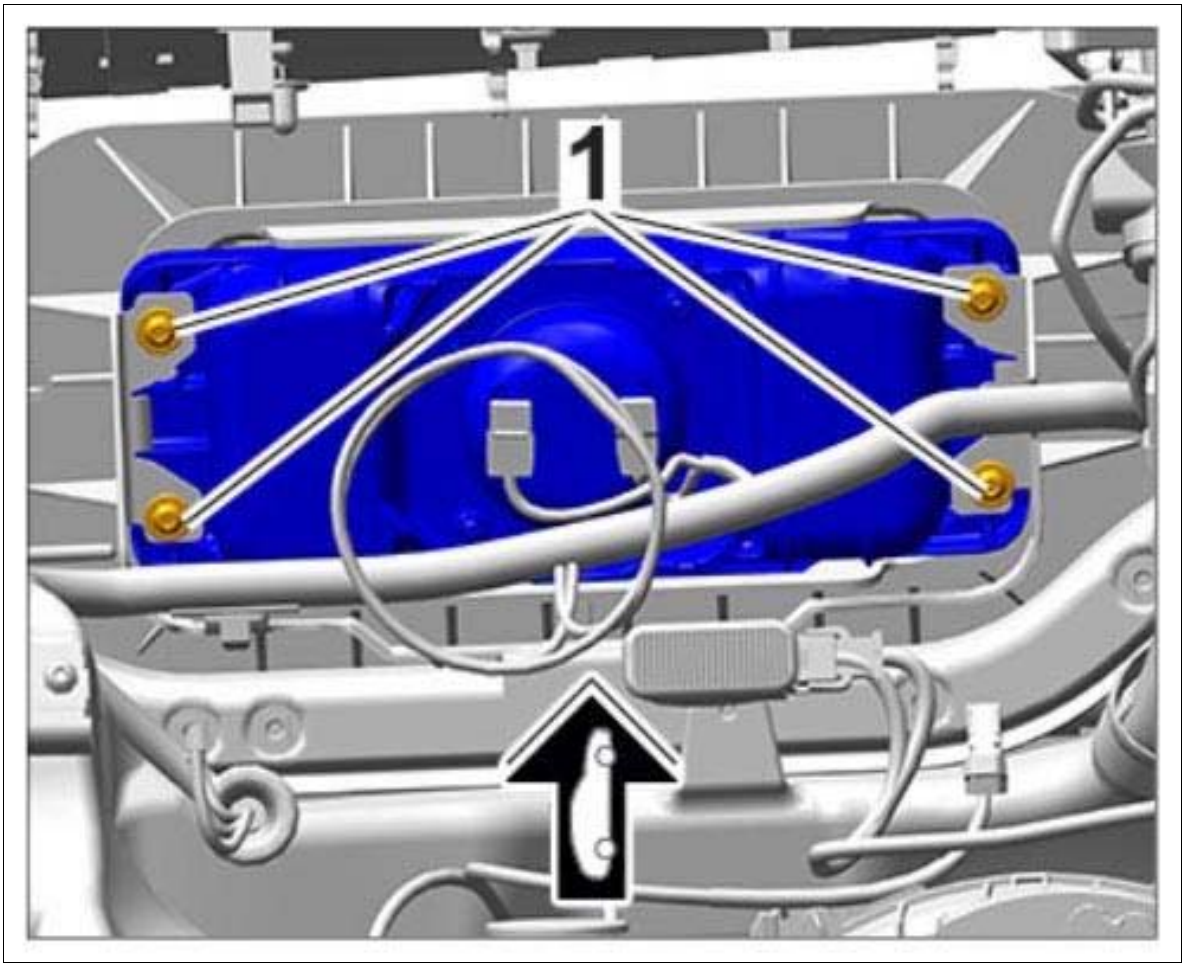

Courtesy of PORSCHE CARS NORTH AMERICA, INC.

2. Using a screwdriver, carefully lever off the locking mechanism on the electric plug connections and disconnect them from the passenger's airbag unit.

Fig 3: Disconnecting Electric Plug Connections

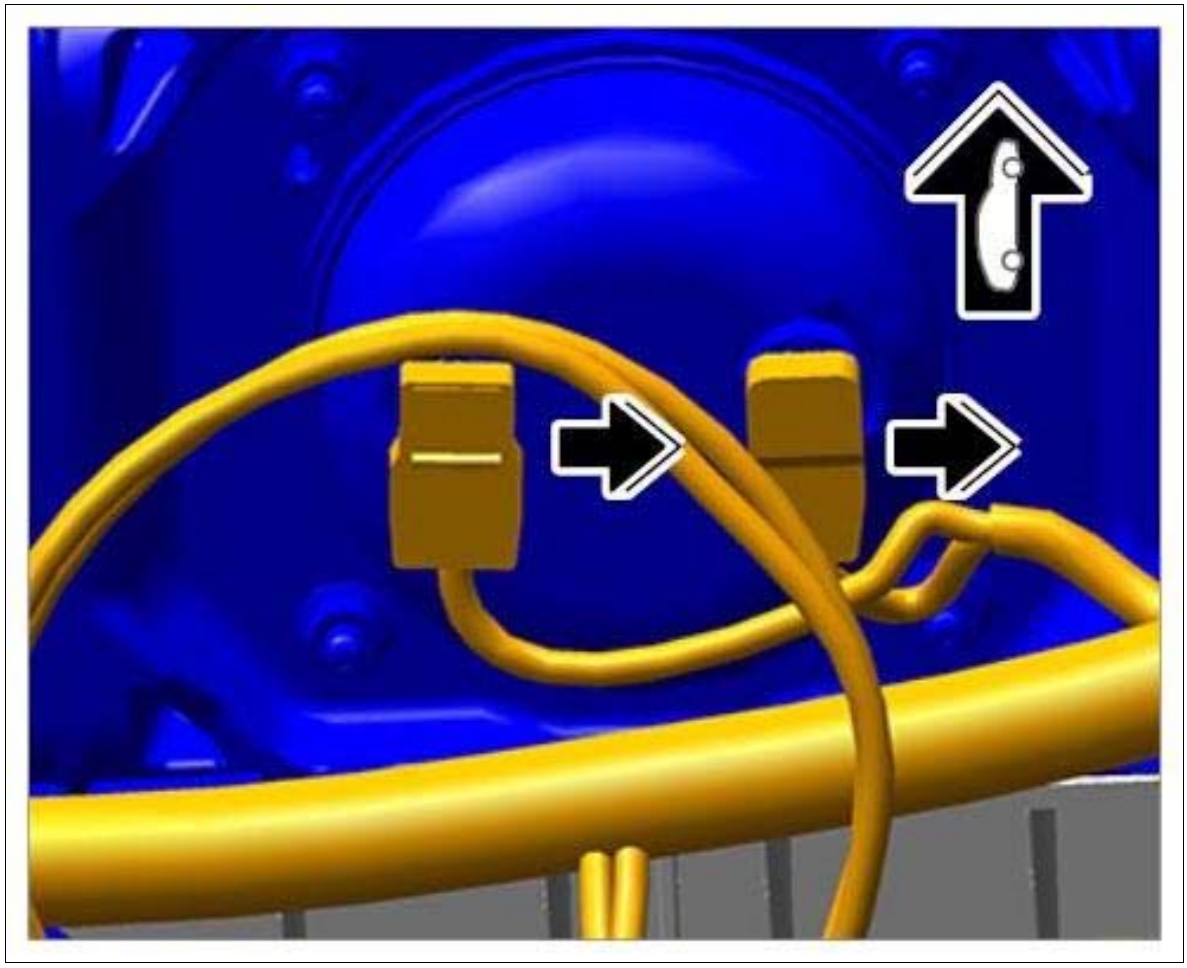

Courtesy of PORSCHE CARS NORTH AMERICA, INC.

3. Unscrew and remove fastening screw **-1-** from the L-bracket and carefully pull the airbag unit down a few centimeters out of the mounting by tilting it.

Fig 4: Loosening Passenger Airbag Unit

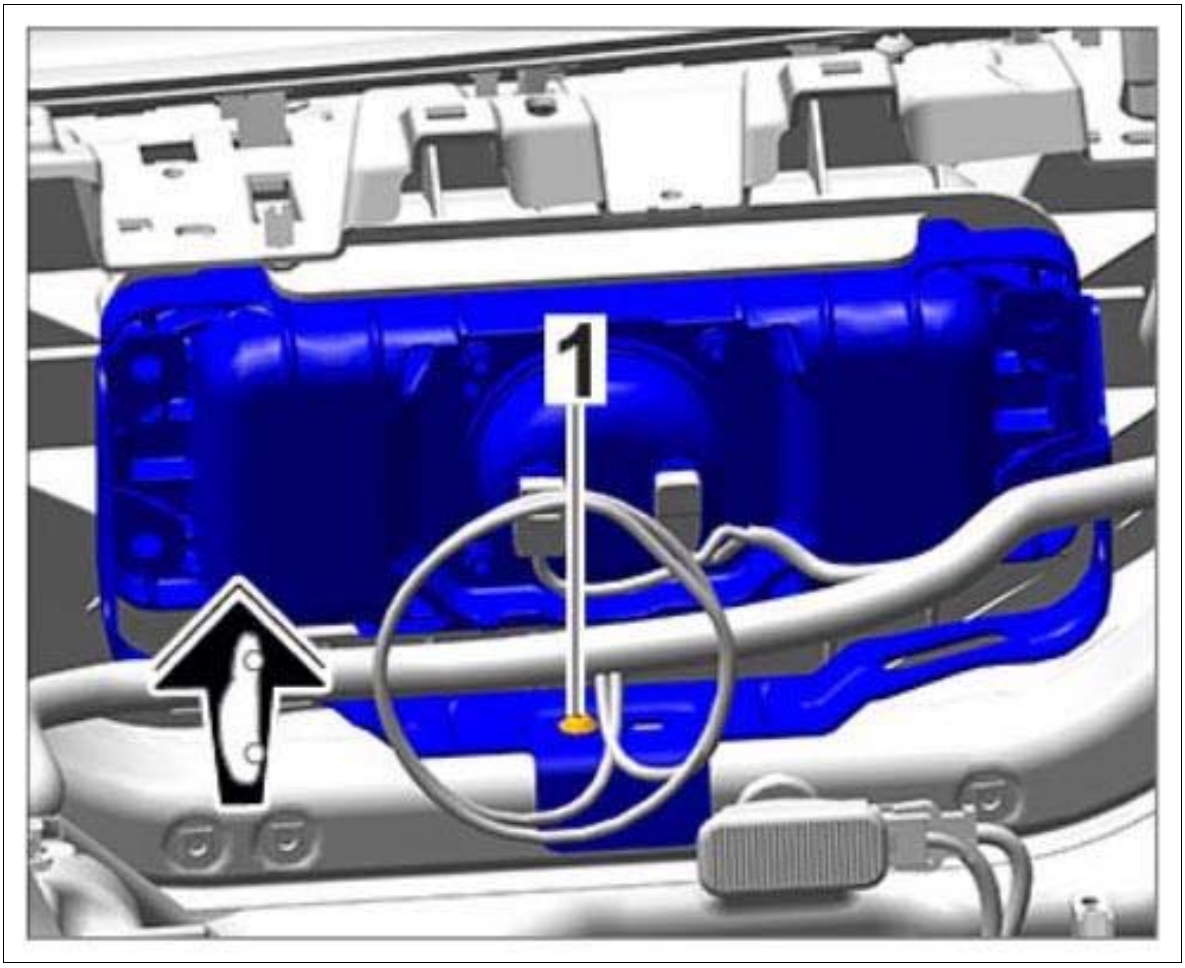

Courtesy of PORSCHE CARS NORTH AMERICA, INC.

4. Remove passenger's airbag unit in a downward direction and lay it to one side in the appropriate manner.

WM 695919 REMOVING AND INSTALLING PASSENGER'S AIRBAG UNIT (MACAN, MACAN S, MACAN TURBO) > INSTALLING PASSENGER'S AIRBAG UNIT

WARNING: Incorrect handling of airbag units

- *Triggering of airbag unit.*
- *System faults can occur.*

→ Switch off ignition and remove ignition key or remote control (hand-held transmitter).

→ A power supply (e.g. battery charger) must not be connected to the external power supply/jump-lead starting terminals.

→ Disconnect the battery and insulate the ground strap so that all contact with a ground carrier is avoided.

→ Wait 1 minute after disconnecting the battery.

→ Only pull off connector on the triggering unit after the waiting time has elapsed.

→ Make sure that no foreign objects are located in front of the airbag unit during installation.

→ Replace damaged parts during removal.

→ Always position airbag units so that the blow-out opening is facing upwards, e.g. crest on driver's airbag.

→ Do not position anything on the airbag units.

→ If removed for an extended period, the airbag units must be stored in a safe place.

→ Airbag units must not come into contact with grease, oil, detergents, liquids, or similar substances.

→ Do not expose airbag units to temperatures above 90°.

→ Do not remove the short-circuit spring on the plug-in contacts.

→ Ignition and preparations may only be carried out by skilled staff, supervised by a second responsible person.

→ Before disposal, the airbag unit must be rendered harmless by electrical ignition performed in accordance with all precautionary measures, thereby preventing it from being used incorrectly.

WARNING: Incorrect handling of safety bolts

- *Danger of injury*
- *Loss of torque*

→ Always use new fastening screws and nuts following removal.

→ Observe specified tightening torques.

→ Carry out a visual inspection of all re-used parts.

Information

Always replace the fastening screws on the airbag unit after customer service and reworking. The micro-self-locking screws must not be treated, greased or loosened and then screwed on again.

1. Lift passenger's airbag unit under the dashboard and position it.
2. Fit passenger's airbag unit using fastening screws **-1-** and tighten hand-tight.

Fig 1: Installing Passenger Airbag Unit

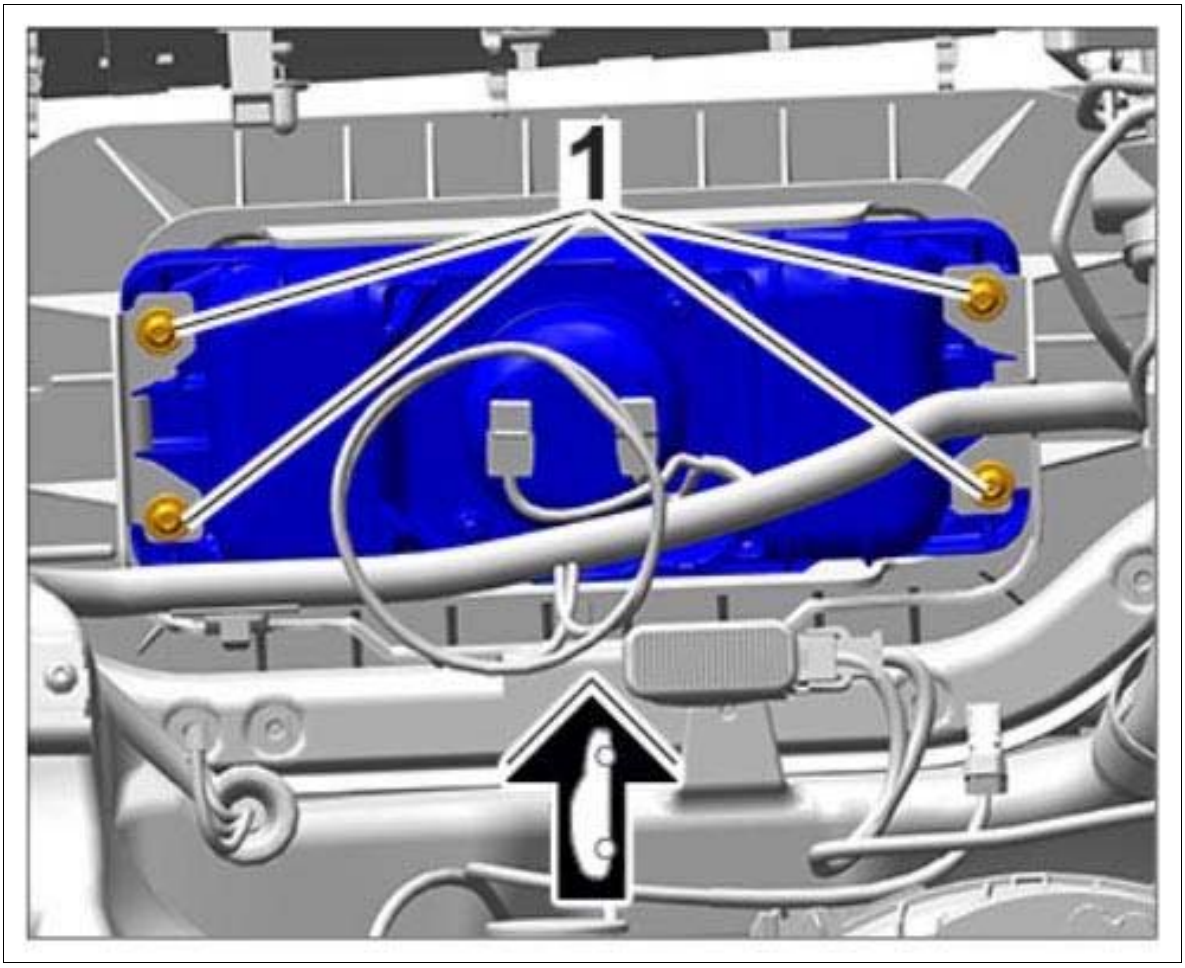

Courtesy of PORSCHE CARS NORTH AMERICA, INC.

3. Tighten fastening screw **-1-** for the L-bracket on the support frame to → **Tightening torque: 8 Nm (6 ftlb.)** .

Fig 2: Securing Passenger Airbag Unit

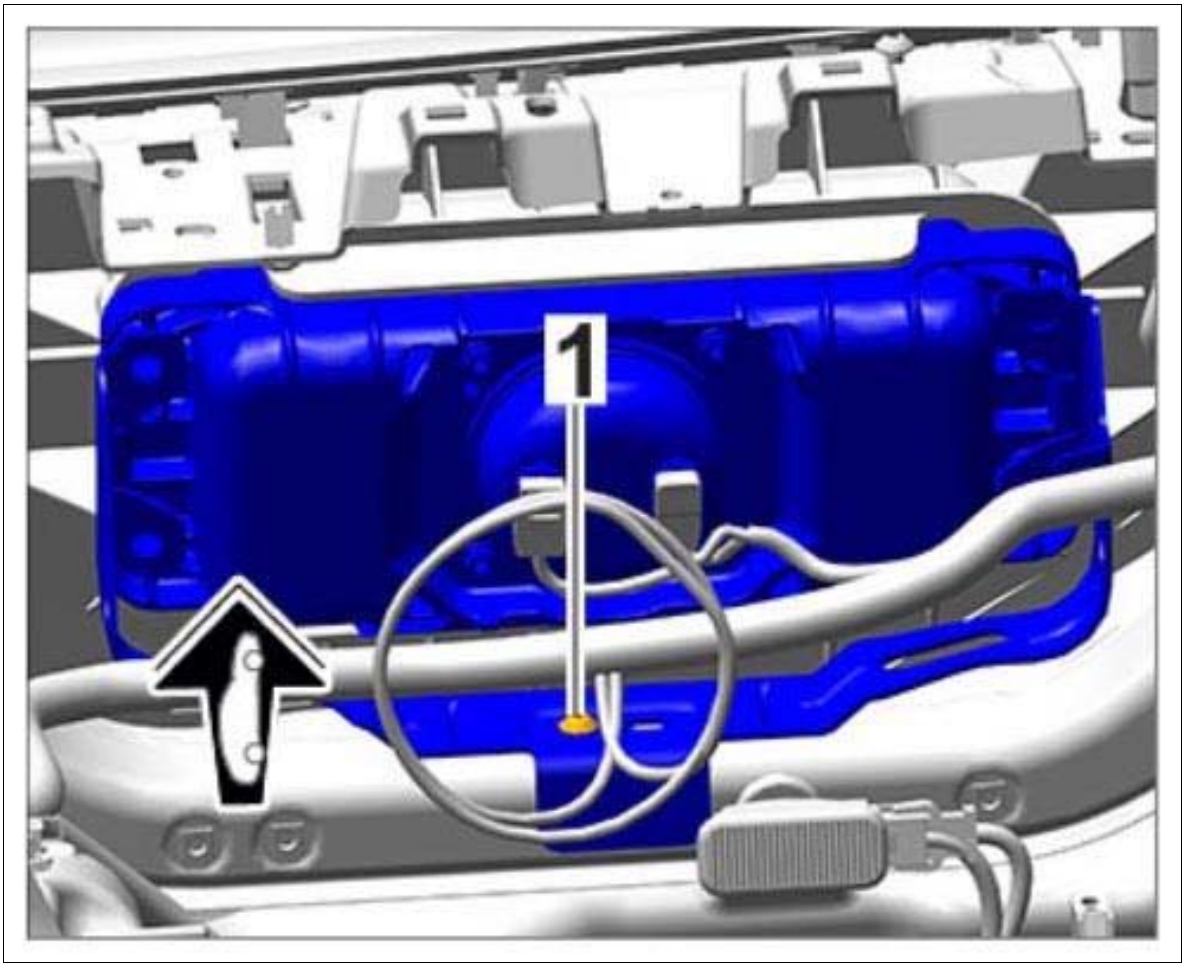

Courtesy of PORSCHE CARS NORTH AMERICA, INC.

4. Plug in and lock electric plug connections.

Fig 3: Installing Lock Electric Plug Connection

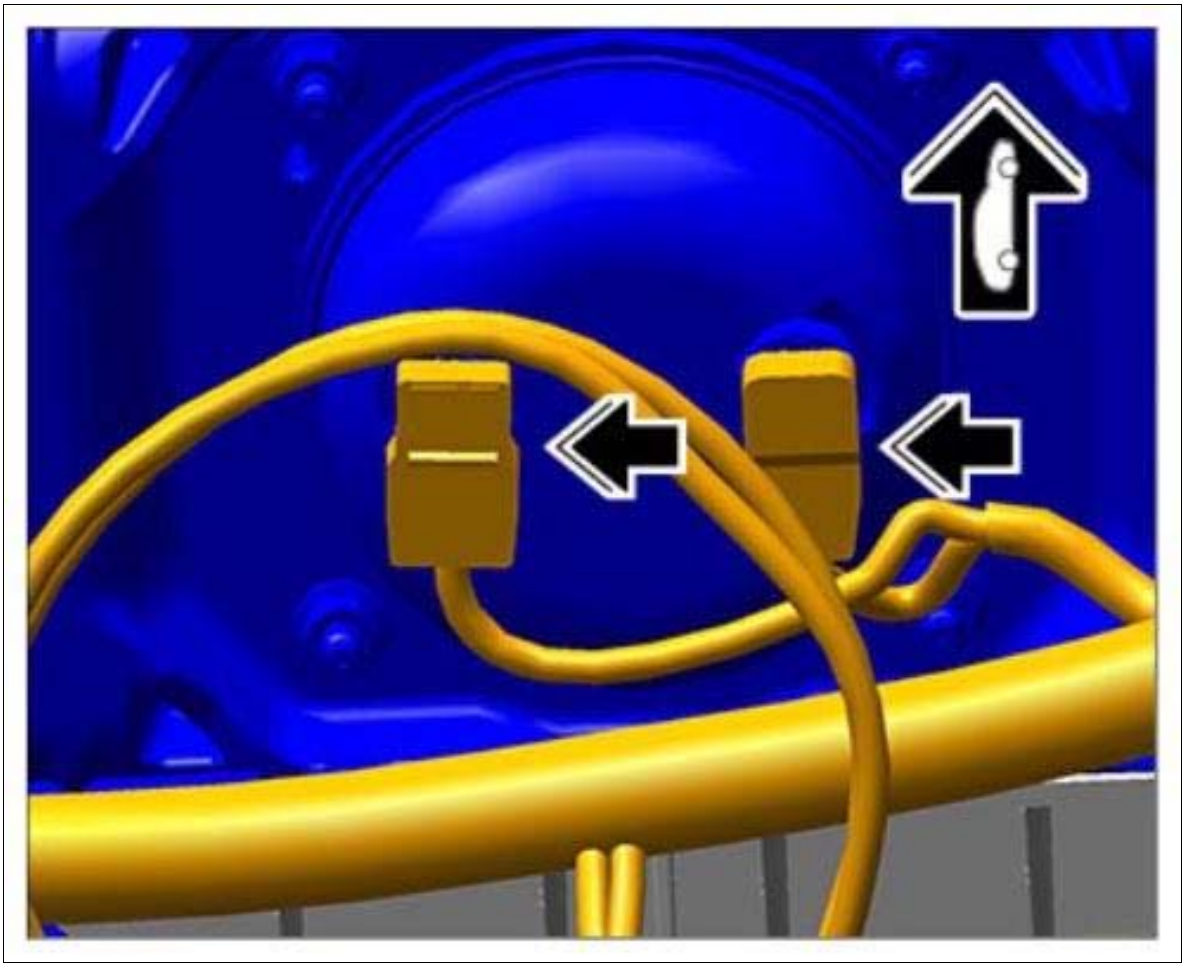

Courtesy of PORSCHE CARS NORTH AMERICA, INC.

5. Secure the airbag unit by tightening the fastening screws **-1-** on the dashboard to → **Tightening torque: 8 Nm (6 ftlb.).**

WM 695919 REMOVING AND INSTALLING PASSENGER'S AIRBAG UNIT (MACAN, MACAN S, MACAN TURBO) > SUBSEQUENT WORK

1. Install glove box. → INSTALLING GLOVE COMPARTMENT .
2. Connect the battery. → 2X00IN WORK INSTRUCTIONS AFTER DISCONNECTING THE BATTERY

WM 696319 REMOVING AND INSTALLING SIDE AIRBAG (MACAN, MACAN S, MACAN TURBO) > TECHNICAL VALUES

Location	Description	Type	Basic value	Tolerance 1	Tolerance 2

Side airbag to backrest frame		Tightening torque	9 Nm (6.5 ftlb.)		

WM 696319 REMOVING AND INSTALLING SIDE AIRBAG (MACAN, MACAN S, MACAN TURBO) > PRELIMINARY WORK

1. Disconnect the battery. → 2X00IN WORK INSTRUCTIONS AFTER DISCONNECTING THE BATTERY .
2. Remove front seat. → 720119 REMOVING AND INSTALLING FRONT SEAT .
3. Detach cover for front backrest at the outer side bolster. → 741919 REMOVING COVER FOR FRONT BACKREST

WM 696319 REMOVING AND INSTALLING SIDE AIRBAG (MACAN, MACAN S, MACAN TURBO) > REMOVING SIDE AIRBAG

WARNING: Incorrect handling of airbag units

- *Triggering of airbag unit.*
- *System faults can occur.*

→ Switch off ignition and remove ignition key or remote control (hand-held transmitter).

→ A power supply (e.g. battery charger) must not be connected to the external power supply/jump-lead starting terminals.

→ Disconnect the battery and insulate the ground strap so that all contact with a ground carrier is avoided.

→ Wait 1 minute after disconnecting the battery.

→ Only pull off connector on the triggering unit after the waiting time has elapsed.

→ Make sure that no foreign objects are located in front of the airbag unit during installation.

→ Replace damaged parts during removal.

→ Always position airbag units so that the blow-out opening is facing upwards, e.g. crest on driver's airbag.

→ Do not position anything on the airbag units.

→ If removed for an extended period, the airbag units must be stored in a safe place.

→ Airbag units must not come into contact with grease, oil, detergents, liquids, or similar substances.

→ Do not expose airbag units to temperatures above 90°.

→ Do not remove the short-circuit spring on the plug-in contacts.

→ Ignition and preparations may only be carried out by skilled staff, supervised by a second responsible person.

→ Before disposal, the airbag unit must be rendered harmless by electrical ignition performed in accordance with all precautionary measures, thereby preventing it from being used incorrectly.

Fig 1: Locating Side Airbag Position



Courtesy of PORSCHE CARS NORTH AMERICA, INC.

1. Fold away padding for front backrest at the outer side bolster. → 741719 REMOVING AND INSTALLING PADDING FOR FRONT BACKREST .
2. Unscrew fastening screw **-2-** on side airbag **-1-** .

Fig 2: Loosening Side Airbag

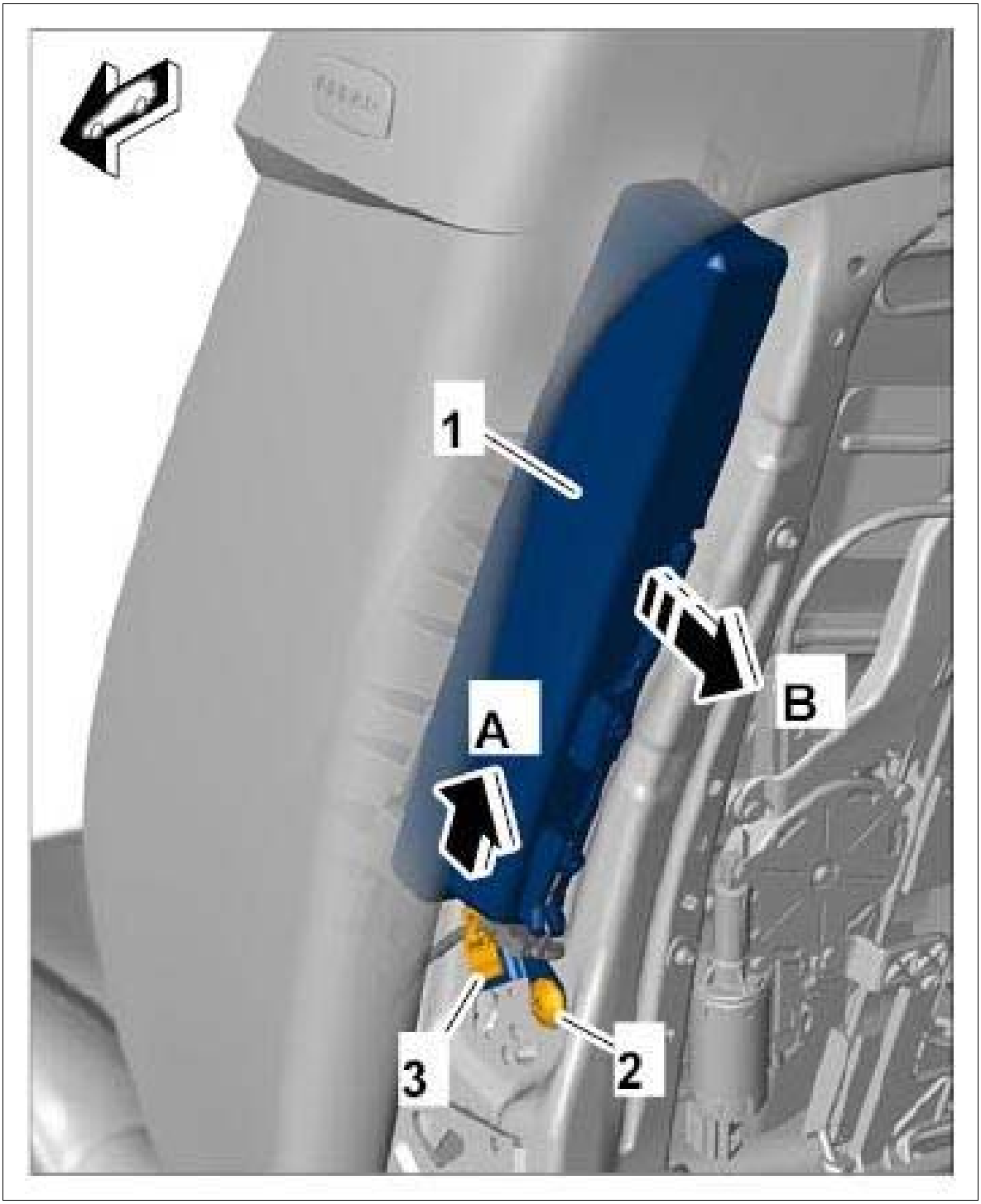

Courtesy of PORSCHE CARS NORTH AMERICA, INC.

3. Push side airbag **-1-** up out of the bracket **-A-** and pull side airbag out to the rear **-B-** .

4. Loosen fixing clip **-3-** .

5. Release electric plug connection **-1-** on the airbag **-a-** and disconnect it **-A-** .

Fig 3: Removing Side Airbag

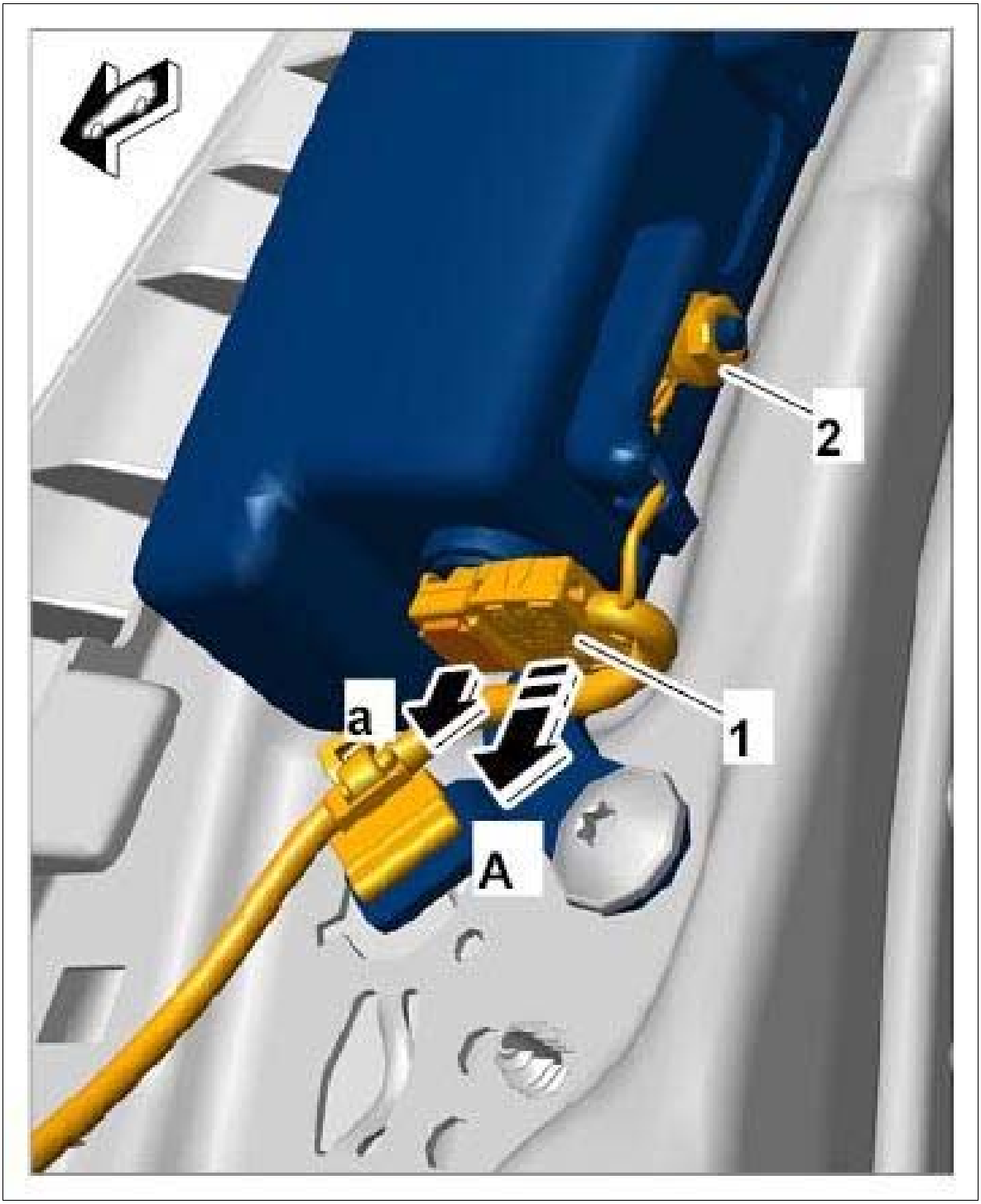

Courtesy of PORSCHE CARS NORTH AMERICA, INC.

6. Loosen fastening nut **-2-** and remove ground line.

WM 696319 REMOVING AND INSTALLING SIDE AIRBAG (MACAN, MACAN S, MACAN TURBO) > INSTALLING SIDE AIRBAG

1. Fit ground line and secure with fastening nut **-2-** .

Fig 1: Installing Side Airbag

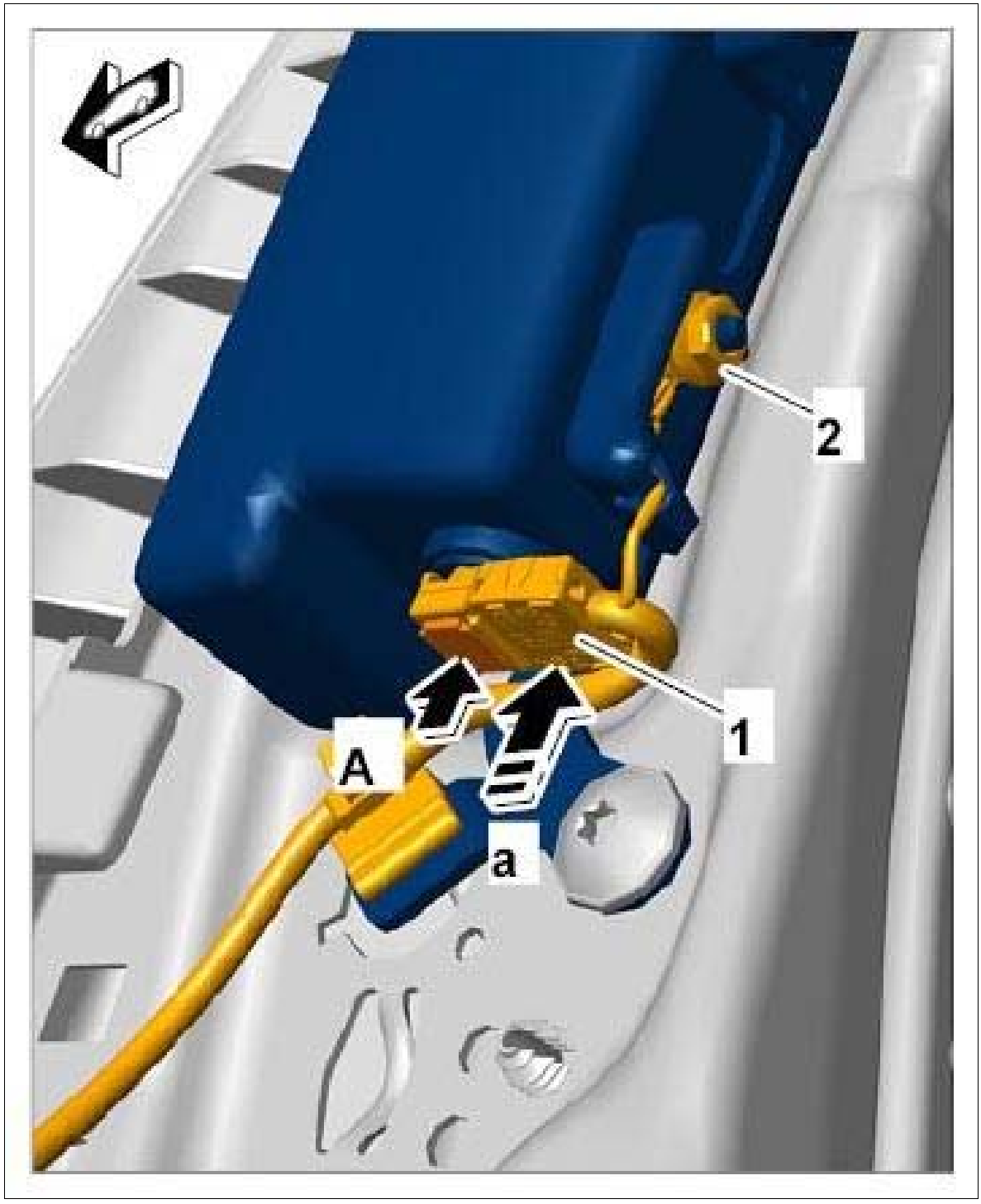

Courtesy of PORSCHE CARS NORTH AMERICA, INC.

2. Plug in electric plug connection **-1- (-a-)** and lock it **-A-** .

3. Secure fixing clip **-3-** .

Fig 2: Installing Side Airbag

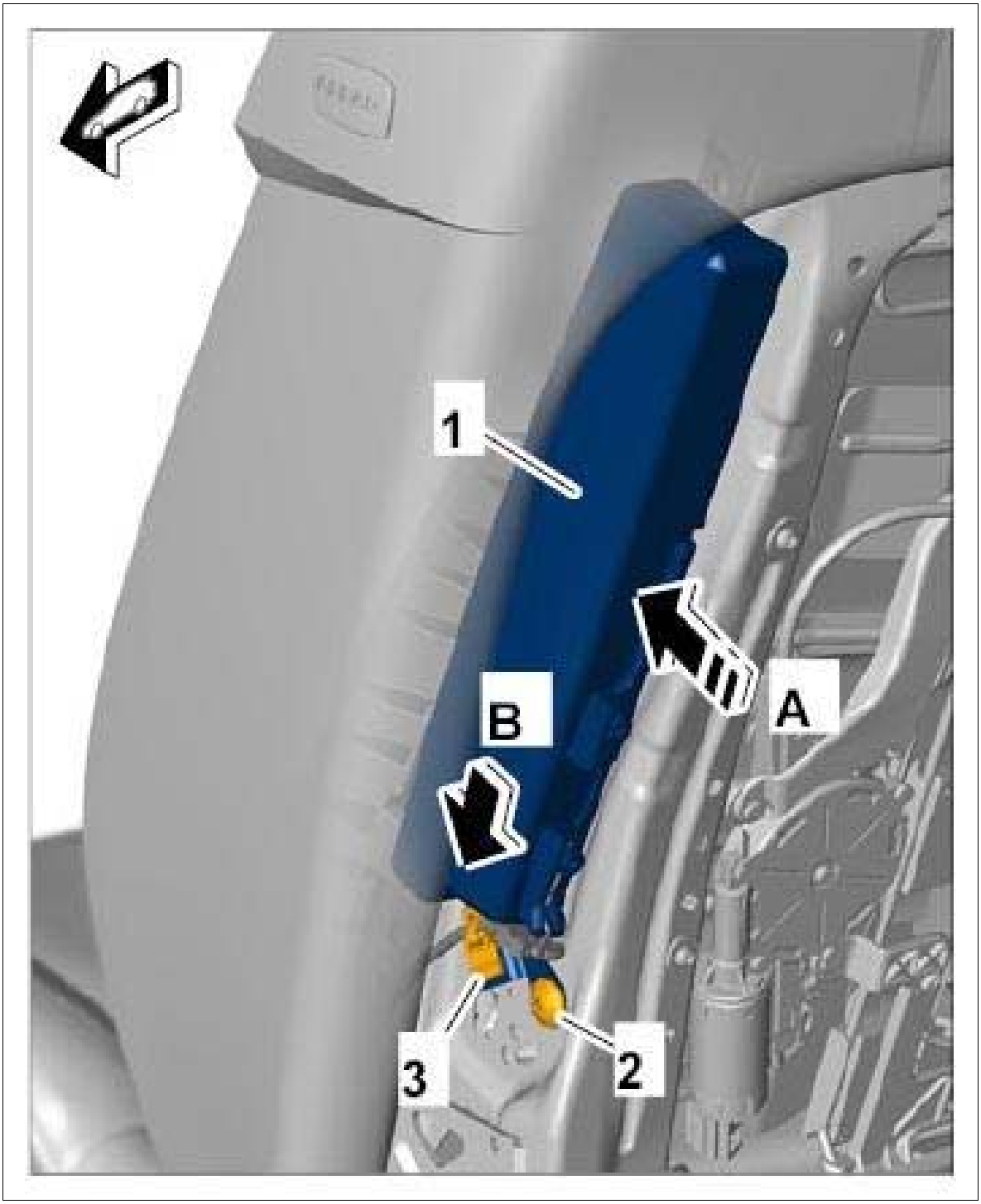

Courtesy of PORSCHE CARS NORTH AMERICA, INC.

4. Carefully position side airbag **-1-** in the side bolster padding **-A-** and push it into the bracket **-B-** .

5. Tighten fastening screw **-2-** on the side airbag **-1-** to → **Tightening torque: 9 Nm (6.5 ftlb.)** .

6. Fold back padding for front backrest at the outer side bolster. → 741719 REMOVING AND INSTALLING PADDING FOR FRONT BACKREST

WM 696319 REMOVING AND INSTALLING SIDE AIRBAG (MACAN, MACAN S, MACAN TURBO) > SUBSEQUENT WORK

1. Secure the front backrest cover at the inner side bolster. → INSTALLING COVER FOR FRONT BACKREST .
2. Connect the battery. → 2X00IN WORK INSTRUCTIONS AFTER DISCONNECTING THE BATTERY .

WM 696419 REMOVING AND INSTALLING REAR SIDE AIRBAG (MACAN, MACAN S, MACAN TURBO) > TECHNICAL VALUES

Location	Description	Type	Basic value	Tolerance 1	Tolerance 2
Fastening screw for airbag		Tightening torque	4.5 Nm (3.5 ftlb.)	+/-10 %	
Fastening screw for airbag		Tightening torque	4.5 Nm (3.5 ftlb.)	+/-10 %	

WM 696419 REMOVING AND INSTALLING REAR SIDE AIRBAG (MACAN, MACAN S, MACAN TURBO) > PRELIMINARY WORK

1. Disconnect the battery. → 2X00IN WORK INSTRUCTIONS AFTER DISCONNECTING THE BATTERY
2. Remove side trim panel for rear luggage compartment. → 700319 REMOVING AND INSTALLING SIDE TRIM PANEL FOR REAR LUGGAGE COMPARTMENT .

WM 696419 REMOVING AND INSTALLING REAR SIDE AIRBAG (MACAN, MACAN S, MACAN TURBO) > REMOVING REAR SIDE AIRBAG

WARNING: Incorrect handling of airbag units

- *Triggering of airbag unit.*
- *System faults can occur.*

→ Switch off ignition and remove ignition key or remote control (hand-held transmitter).

→ A power supply (e.g. battery charger) must not be connected to the external power supply/jump-lead starting terminals.

→ Disconnect the battery and insulate the ground strap so that all contact with a ground carrier is avoided.

→ Wait 1 minute after disconnecting the battery.

→ Only pull off connector on the triggering unit after the waiting time has elapsed.

→ Make sure that no foreign objects are located in front of the airbag unit during installation.

→ Replace damaged parts during removal.

→ Always position airbag units so that the blow-out opening is facing upwards, e.g. crest on driver's airbag.

→ Do not position anything on the airbag units.

→ If removed for an extended period, the airbag units must be stored in a safe place.

→ Airbag units must not come into contact with grease, oil, detergents, liquids, or similar substances.

→ Do not expose airbag units to temperatures above 90°.

→ Do not remove the short-circuit spring on the plug-in contacts.

→ Ignition and preparations may only be carried out by skilled staff, supervised by a second responsible person.

→ Before disposal, the airbag unit must be rendered harmless by electrical ignition performed in accordance with all precautionary measures, thereby preventing it from being used incorrectly.

Fig 1: Locating Rear Side Airbag Position

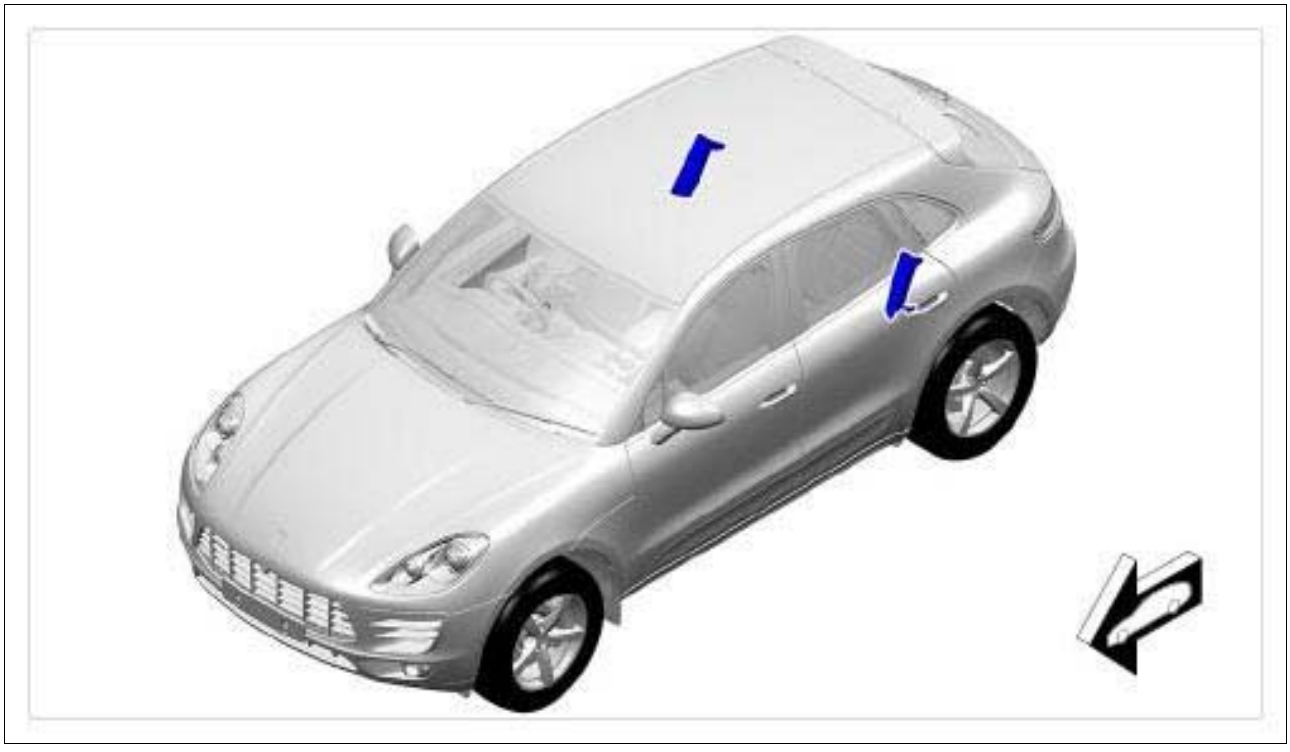

Courtesy of PORSCHE CARS NORTH AMERICA, INC.

1. Carefully unclip cover on airbag **-1-** using a plastic wedge.

Fig 2: Removing Cover On Airbag

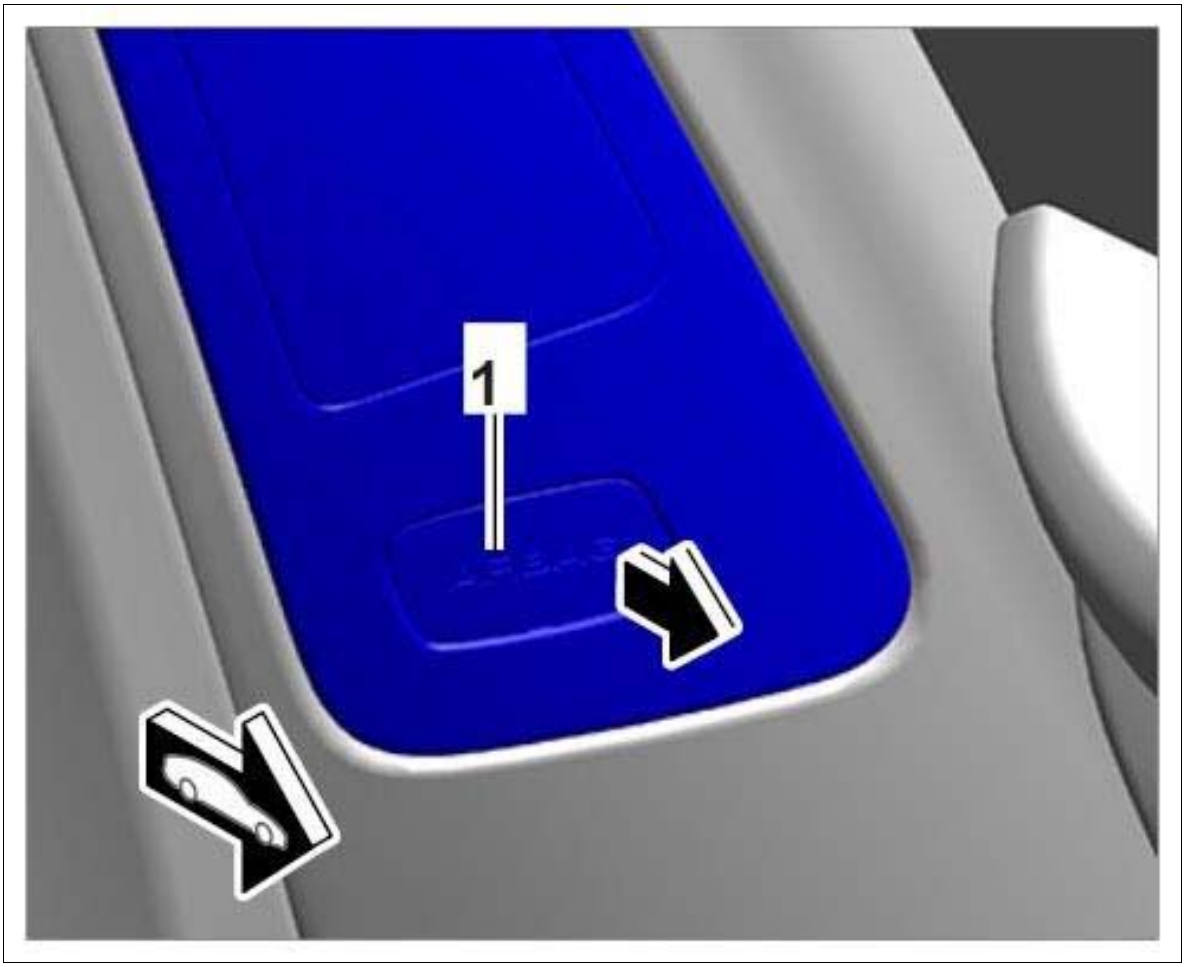

Courtesy of PORSCHE CARS NORTH AMERICA, INC.

2. Unscrew fastening screw **-2-** on the rear side airbag in the luggage compartment.

Fig 3: Removing Rear Side Airbag

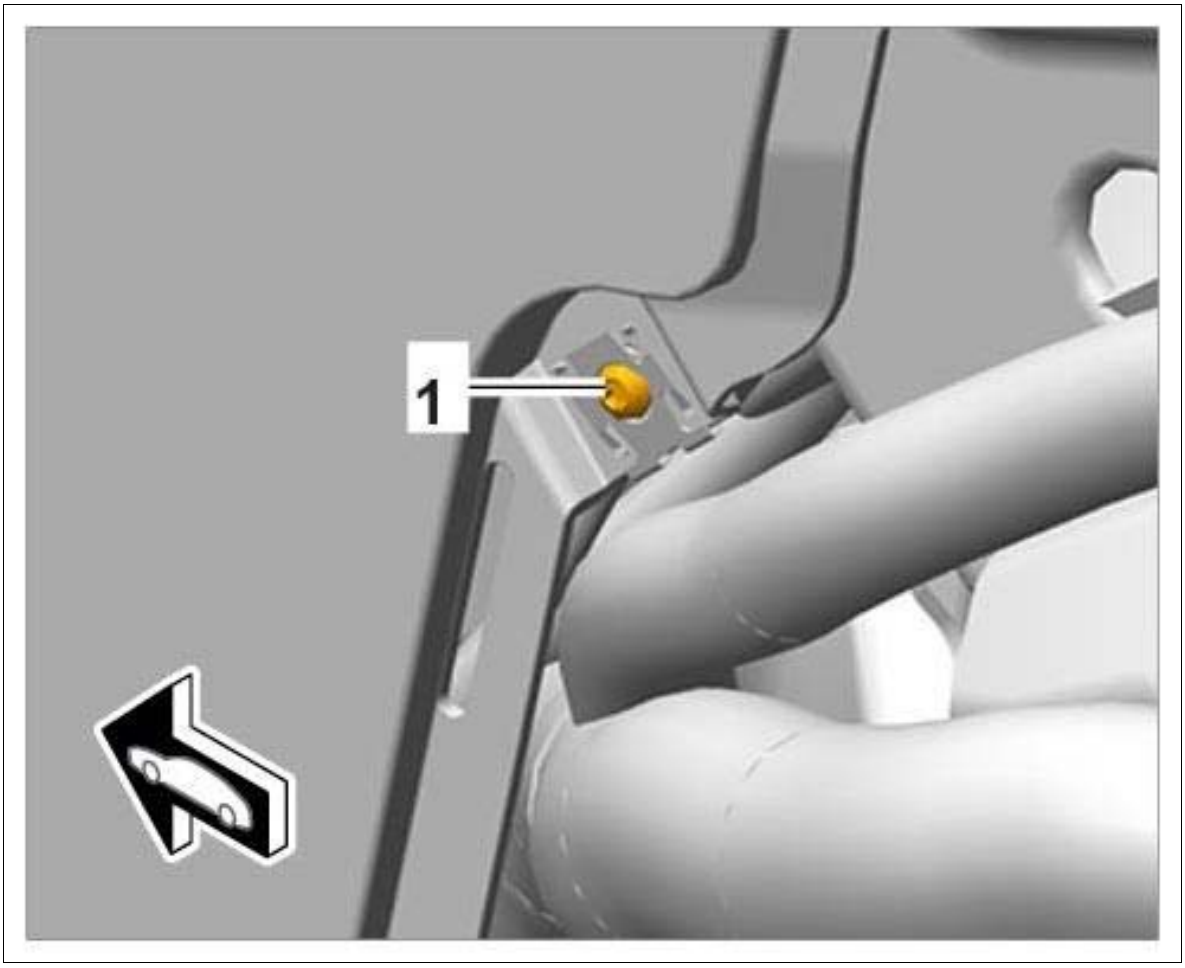

Courtesy of PORSCHE CARS NORTH AMERICA, INC.

3. Unscrew fastening screw **-1-** on the side airbag.

Fig 4: Removing Rear Side Airbag

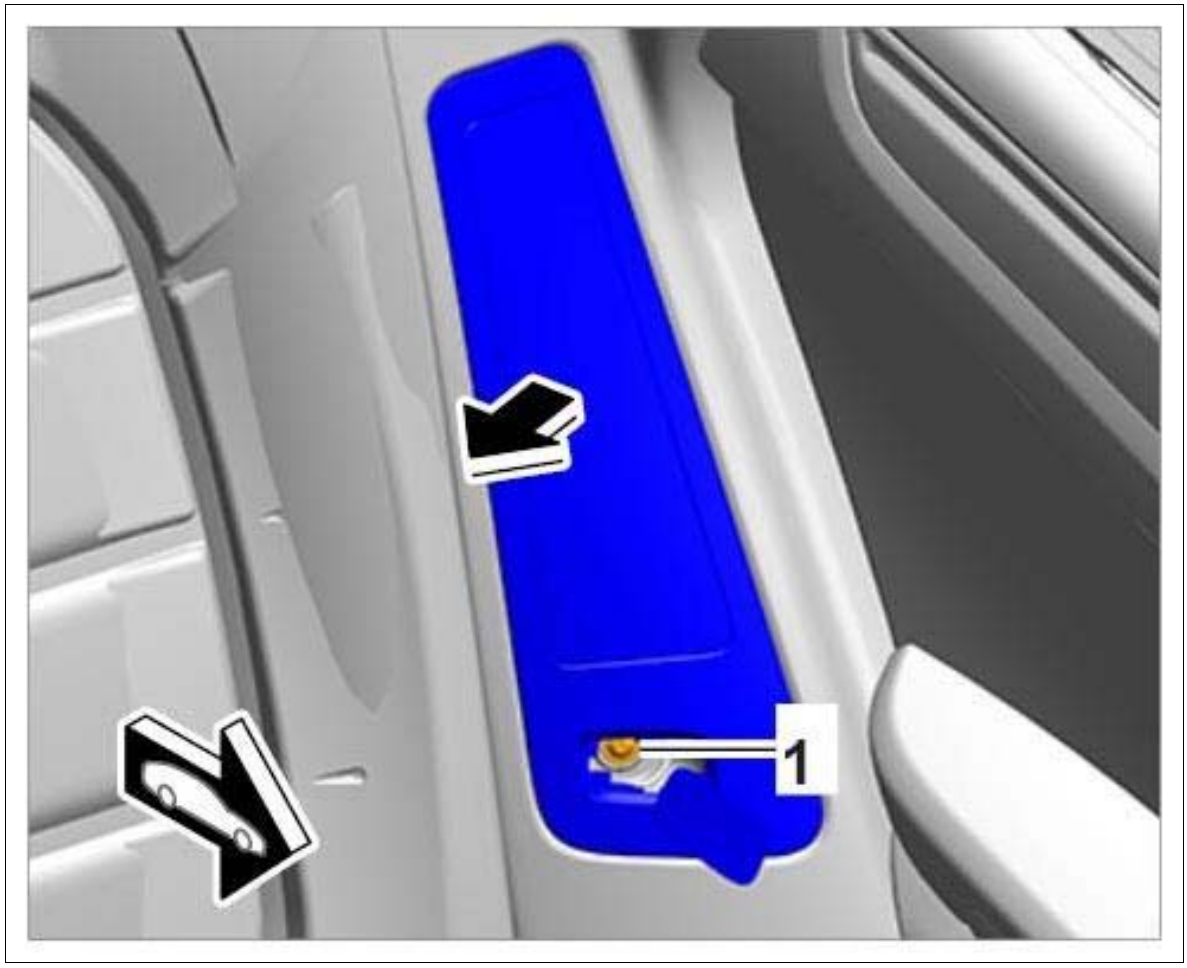

Courtesy of PORSCHE CARS NORTH AMERICA, INC.

4. Remove rear side airbag from rear inner door sill trim.
5. Release electric plug connection for rear side airbag **-a-** and disconnect it **-A-** .

Fig 5: Disconnecting Electric Plug Connection

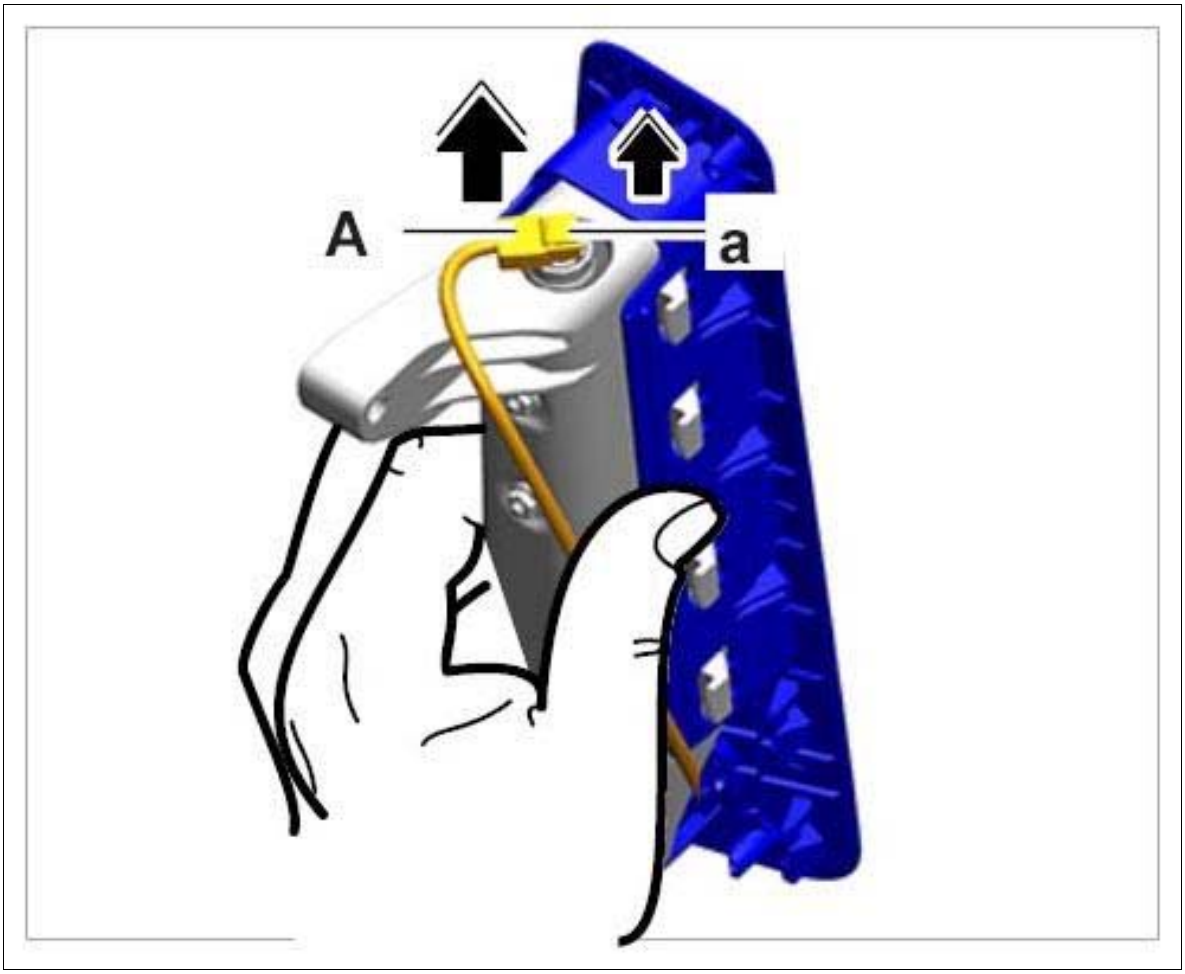

Courtesy of PORSCHE CARS NORTH AMERICA, INC.

WM 696419 REMOVING AND INSTALLING REAR SIDE AIRBAG (MACAN, MACAN S, MACAN TURBO) > INSTALLING REAR SIDE AIRBAG

1. Position rear side airbag and plug in **-a-** and lock **-A-** electric plug connection.

Fig 1: Connecting Electric Plug Connection

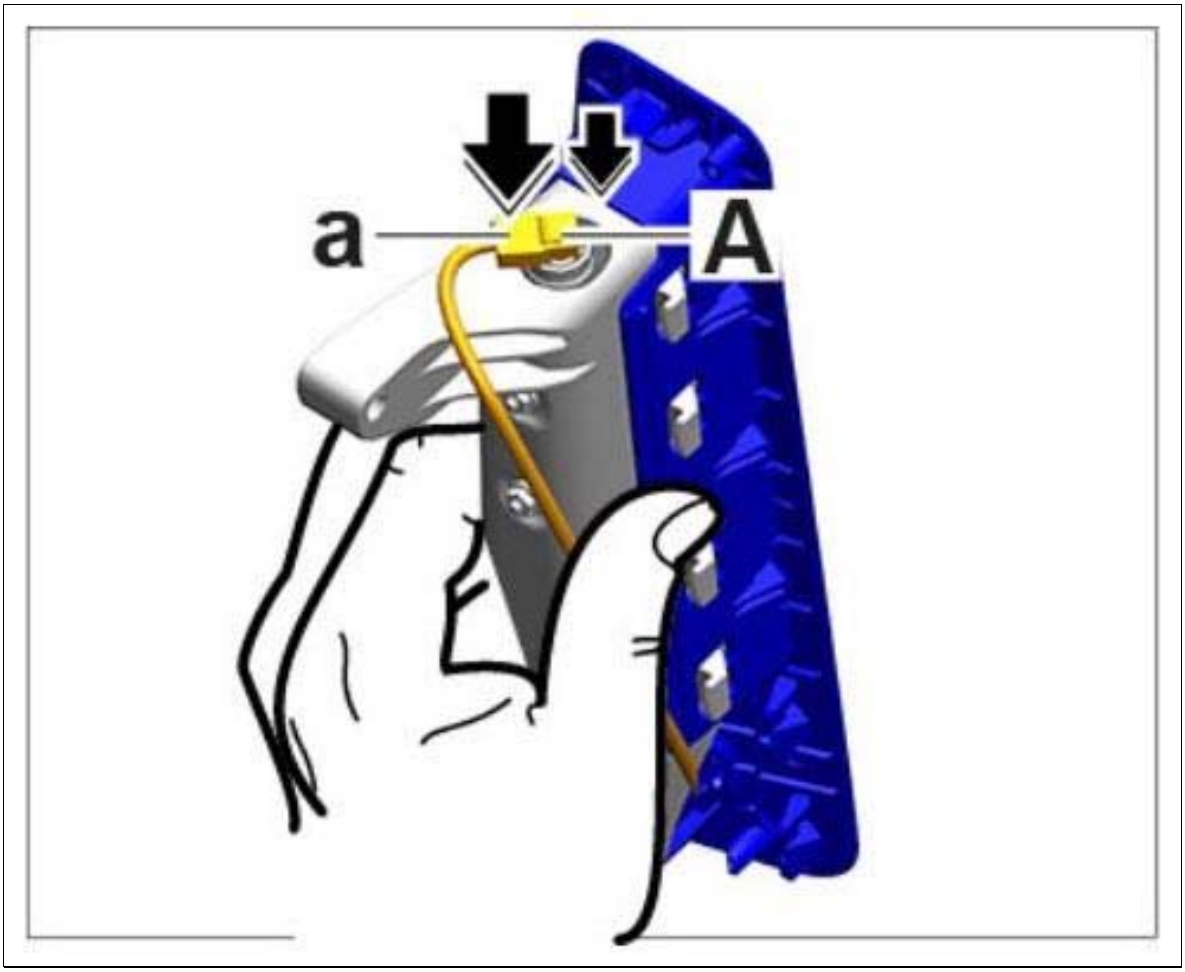

Courtesy of PORSCHE CARS NORTH AMERICA, INC.

2. Fit side airbag in inner rear door entry guard **-arrow-** and tighten fastening screw **-1-** to → **Tightening torque: 4.5 Nm (3.5 ftlb.)+/-10 %** .

Fig 2: Installing Rear Side Airbag



Courtesy of PORSCHE CARS NORTH AMERICA, INC.

3. Tighten fastening screw on side airbag at the rear of the luggage compartment **-2-** to → **Tightening torque: 4.5 Nm (3.5 ftlb.)+/-10 %.**

Fig 3: Installing Rear Side Airbag

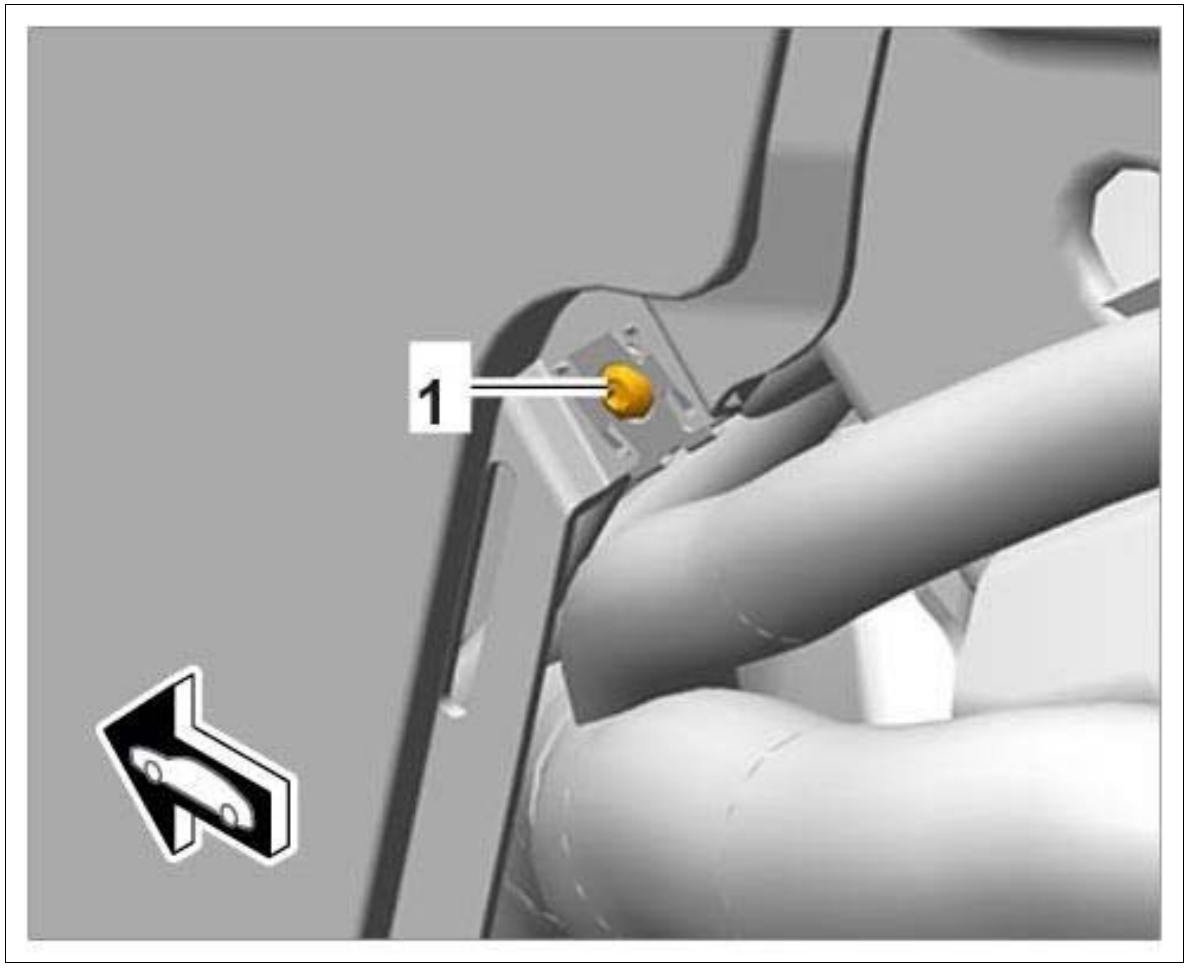

Courtesy of PORSCHE CARS NORTH AMERICA, INC.

4. Clip in cover **-1-** on rear side airbag.

Fig 4: Installing Cover On Rear Side Airbag



Courtesy of PORSCHE CARS NORTH AMERICA, INC.

WM 696419 REMOVING AND INSTALLING REAR SIDE AIRBAG (MACAN, MACAN S, MACAN TURBO) > SUBSEQUENT WORK

1. Install side trim panel for rear luggage compartment. → INSTALLING SIDE TRIM PANEL FOR REAR LUGGAGE COMPARTMENT .
2. Connect the battery. → 2X00IN WORK INSTRUCTIONS AFTER DISCONNECTING THE BATTERY

WM 696619 REMOVING AND INSTALLING HEAD AIRBAG UNIT (MACAN, MACAN S, MACAN TURBO) > TECHNICAL VALUES

Location	Description	Type	Basic value	Tolerance 1	Tolerance 2
Cap nut	Item 2	Tightening torque	9 Nm (6.5 ftlb.)		

WM 696619 REMOVING AND INSTALLING HEAD AIRBAG UNIT (MACAN, MACAN S, MACAN TURBO) > PRELIMINARY WORK

1. Disconnect the battery. → 2X00IN WORK INSTRUCTIONS AFTER DISCONNECTING THE BATTERY
2. Remove headliner. → 708419 REMOVING AND INSTALLING HEADLINER .
3. Detach side trim panel for rear luggage compartment. → 700319 REMOVING AND INSTALLING SIDE TRIM PANEL FOR REAR LUGGAGE COMPARTMENT .

WM 696619 REMOVING AND INSTALLING HEAD AIRBAG UNIT (MACAN, MACAN S, MACAN TURBO) > REMOVING HEAD AIRBAG UNIT

WARNING: Incorrect handling of airbag units

- *Triggering of airbag unit.*
- *System faults can occur.*

→ Switch off ignition and remove ignition key or remote control (hand-held transmitter).

→ A power supply (e.g. battery charger) must not be connected to the external power supply/jump-lead starting terminals.

→ Disconnect the battery and insulate the ground strap so that all contact with a ground carrier is avoided.

→ Wait 1 minute after disconnecting the battery.

→ Only pull off connector on the triggering unit after the waiting time has elapsed.

→ Make sure that no foreign objects are located in front of the airbag unit during installation.

→ Replace damaged parts during removal.

→ Always position airbag units so that the blow-out opening is facing upwards, e.g. crest on driver's airbag.

→ Do not position anything on the airbag units.

→ If removed for an extended period, the airbag units must be stored in a safe place.

→ Airbag units must not come into contact with grease, oil, detergents, liquids, or similar substances.

→ Do not expose airbag units to temperatures above 90°.

→ Do not remove the short-circuit spring on the plug-in contacts.

→ Ignition and preparations may only be carried out by skilled staff, supervised by a second responsible person.

→ Before disposal, the airbag unit must be rendered harmless by electrical ignition performed in accordance with all precautionary measures, thereby preventing it from being used incorrectly.

Information

- Some of the repair illustrations show only one side of the vehicle.
- Naturally, some steps also have to be performed on the opposite side of the vehicle as well .

Fig 1: Locating Head Airbag Unit Position (Shown On Cayenne)

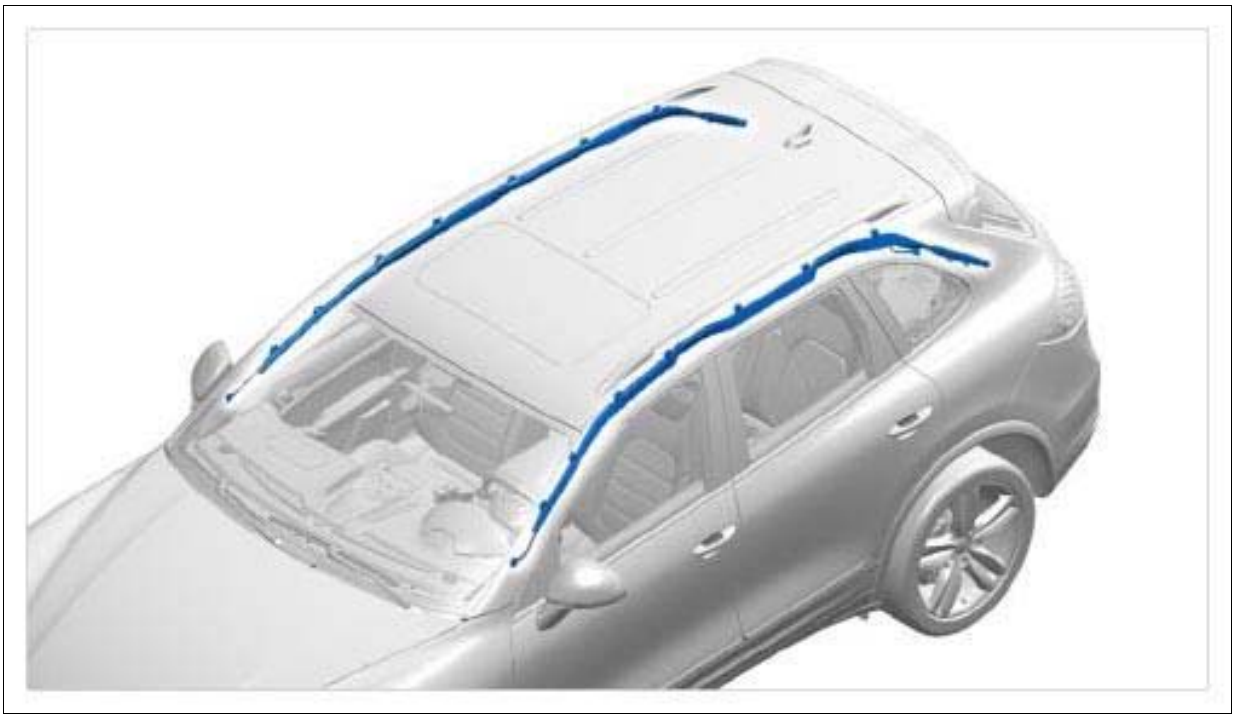

Courtesy of PORSCHE CARS NORTH AMERICA, INC.

1. Loosen main wire harness for roof on the body at the front. → 970909 LOOSENING AND SECURING MAIN WIRE HARNESS FOR ROOF .
2. Release electric plug connection **-a-** and disconnect it.

Fig 2: Disconnecting Electric Plug Connection

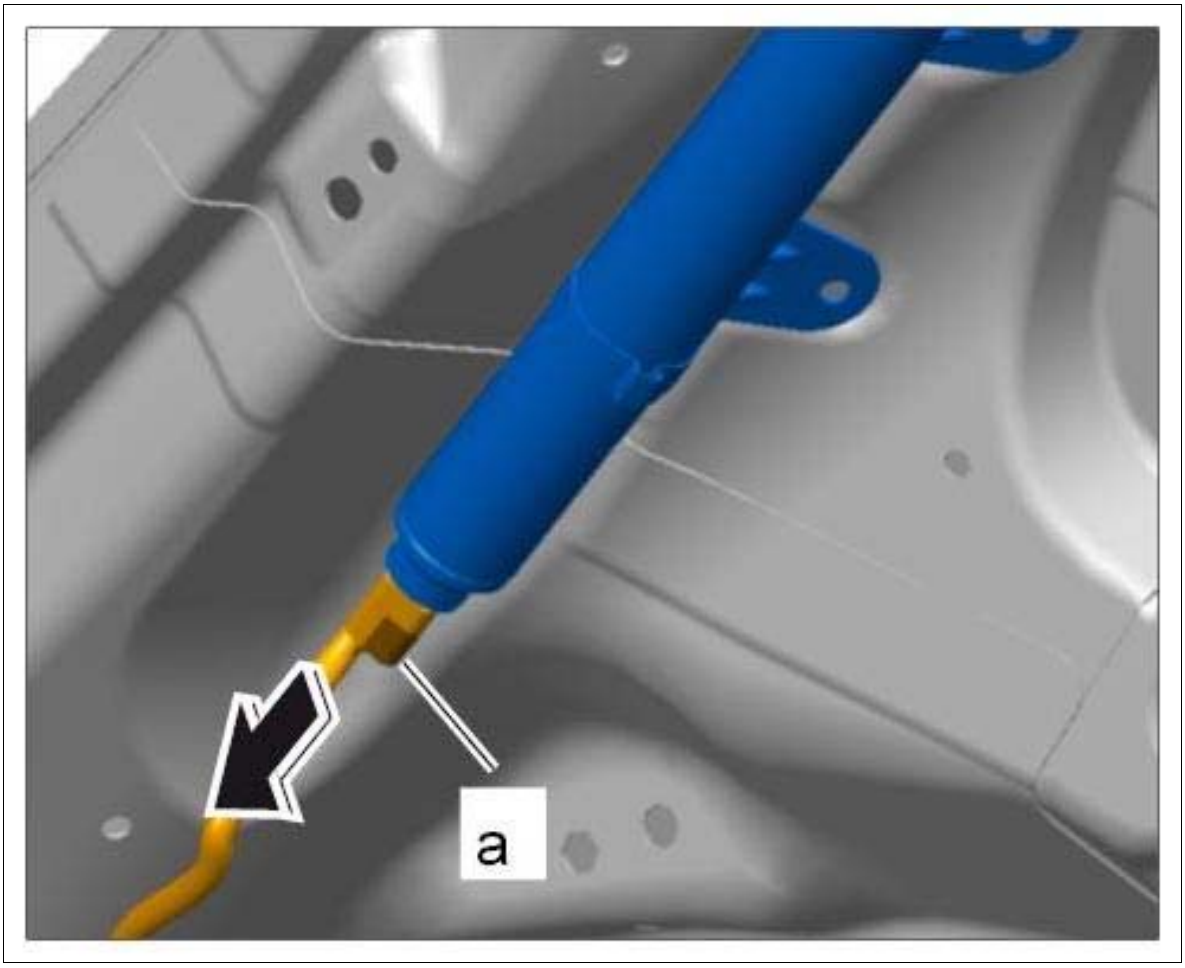

Courtesy of PORSCHE CARS NORTH AMERICA, INC.

3. Unscrew cap nuts **-2-** in the C-pillar area.

Fig 3: Removing Cap Nuts

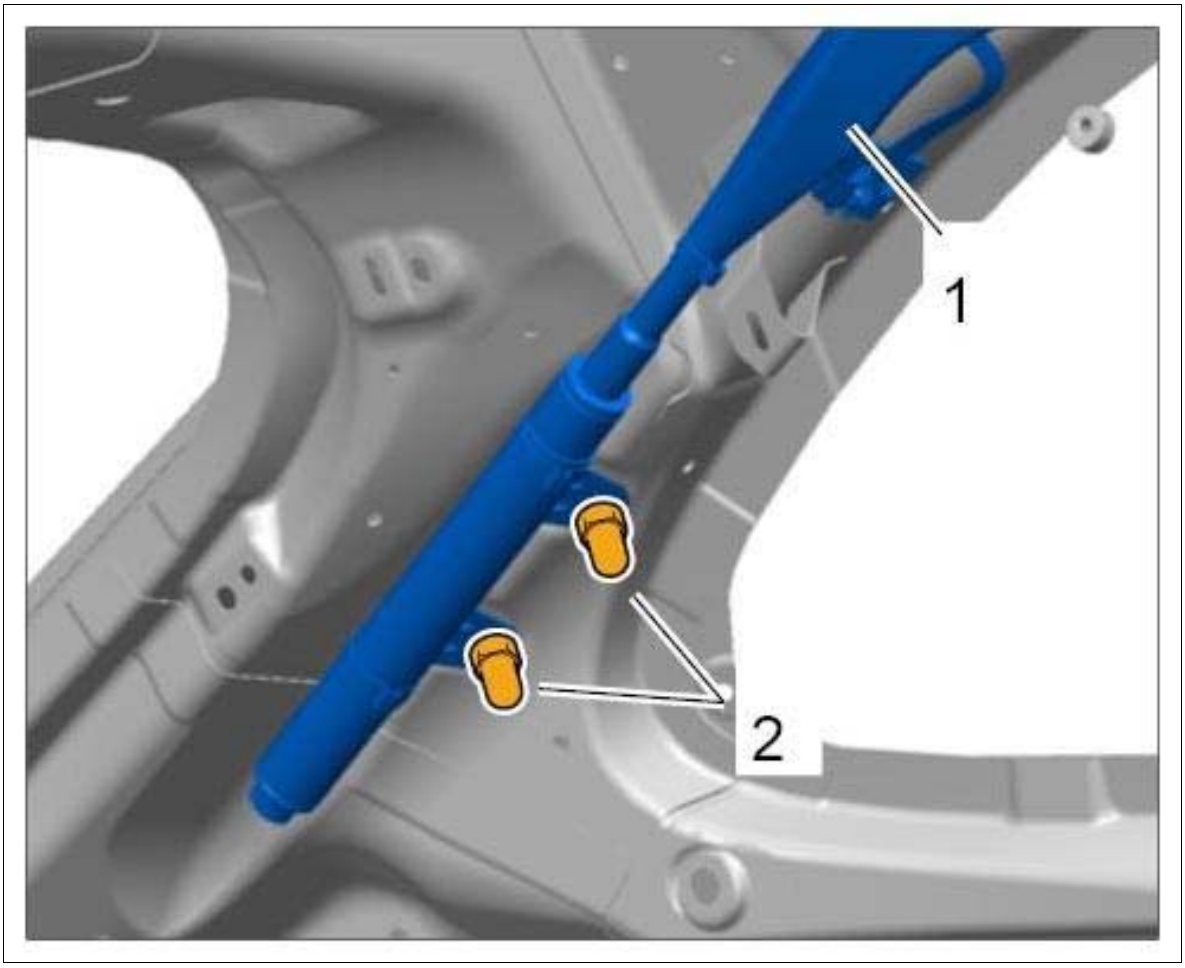

Courtesy of PORSCHE CARS NORTH AMERICA, INC.

Information

1. Make sure not to damage the fixing clips when removing the head airbag.

4. Unclip fixing clips **-3-** on the head airbag unit **-1-** .

Fig 4: Removing Fixing Clips

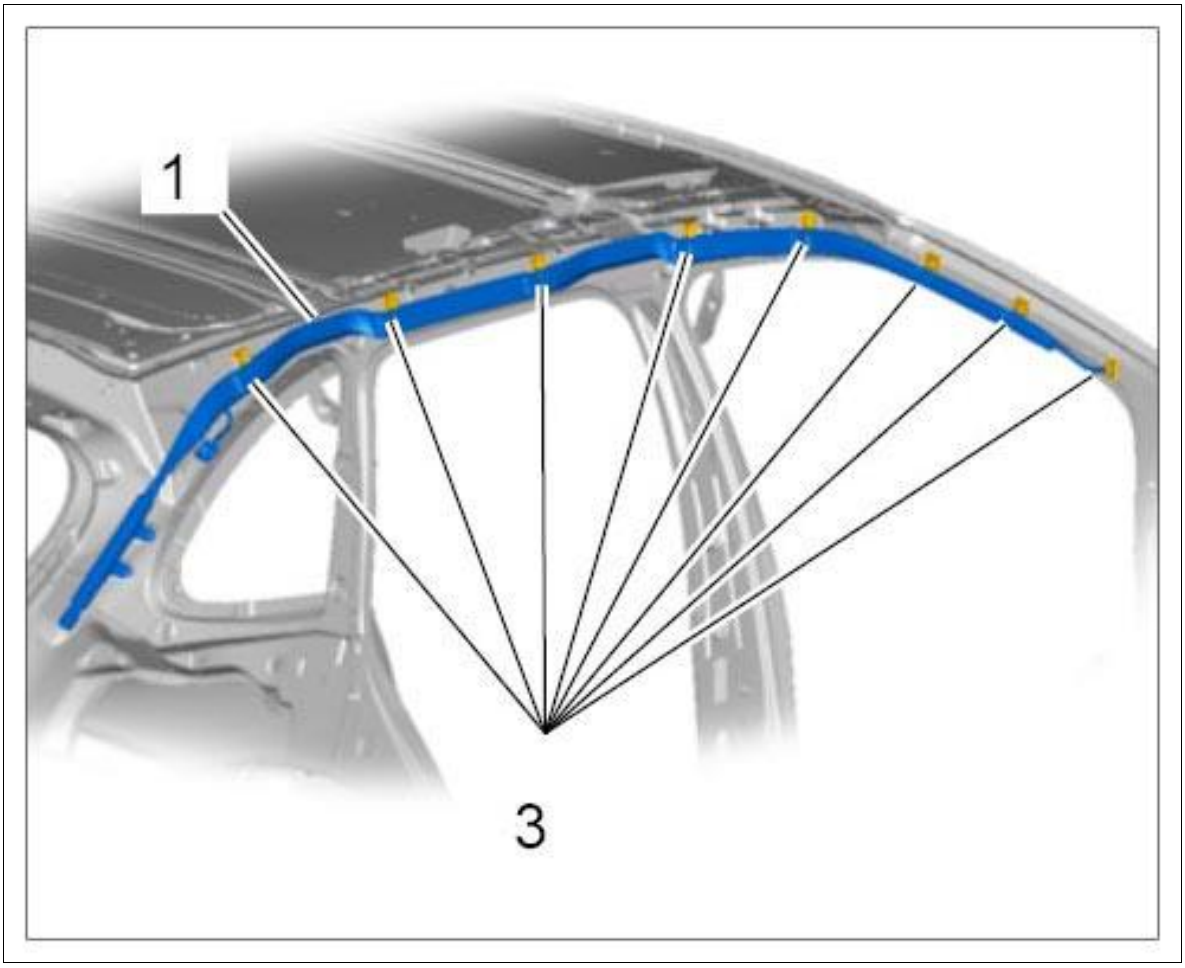

Courtesy of PORSCHE CARS NORTH AMERICA, INC.

5. Press fixing clips together at points **-a-** using a suitable tool (e.g. pointed-nose pliers) and unclip them.

Fig 5: Removing Fixing Clip

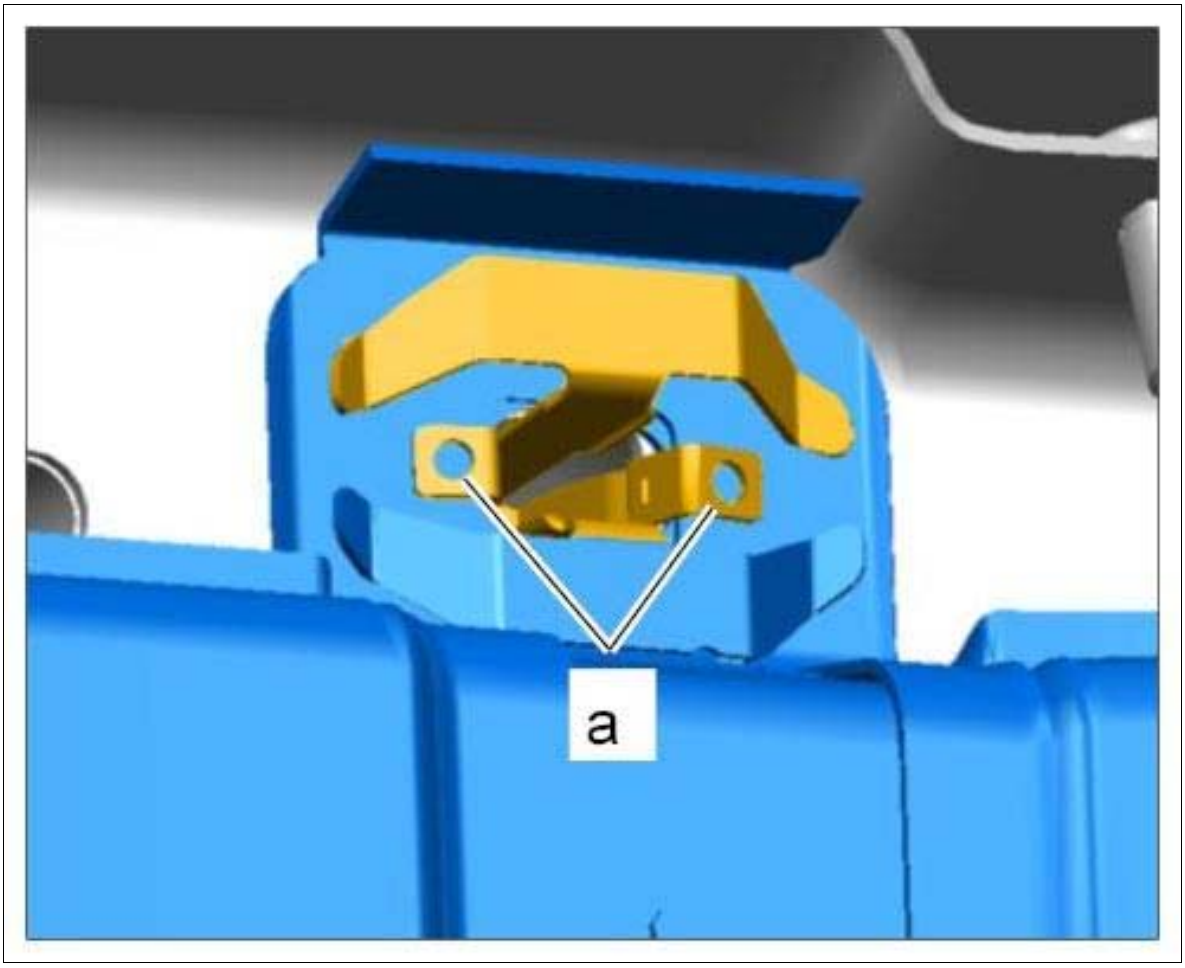

Courtesy of PORSCHE CARS NORTH AMERICA, INC.

6. Remove the complete head airbag unit by pulling it inwards.

WM 696619 REMOVING AND INSTALLING HEAD AIRBAG UNIT (MACAN, MACAN S, MACAN TURBO) > INSTALLING HEAD AIRBAG UNIT

WARNING: Incorrect handling of airbag units

- *Triggering of airbag unit.*
- *System faults can occur.*

→ Switch off ignition and remove ignition key or remote control (hand-held transmitter).

→ A power supply (e.g. battery charger) must not be connected to the external power supply/jump-lead starting terminals.

→ Disconnect the battery and insulate the ground strap so that all contact with a ground carrier is

avoided.

→ Wait 1 minute after disconnecting the battery.

→ Only pull off connector on the triggering unit after the waiting time has elapsed.

→ Make sure that no foreign objects are located in front of the airbag unit during installation.

→ Replace damaged parts during removal.

→ Always position airbag units so that the blow-out opening is facing upwards, e.g. crest on driver's airbag.

→ Do not position anything on the airbag units.

→ If removed for an extended period, the airbag units must be stored in a safe place.

→ Airbag units must not come into contact with grease, oil, detergents, liquids, or similar substances.

→ Do not expose airbag units to temperatures above 90°.

→ Do not remove the short-circuit spring on the plug-in contacts.

→ Ignition and preparations may only be carried out by skilled staff, supervised by a second responsible person.

→ Before disposal, the airbag unit must be rendered harmless by electrical ignition performed in accordance with all precautionary measures, thereby preventing it from being used incorrectly.

Information

- Some of the repair illustrations show only one side of the vehicle.
- Naturally, some steps also have to be performed on the opposite side of the vehicle as well.

Information

Always replace the fastening screws and nuts after customer service and reworking. The micro-self-locking screws must not be treated, greased or loosened and then screwed on again.

Information

- Make sure that the head airbag is not trapped.

1. Position the head airbag unit **-1-** and secure it with the cap nuts **-2-** .

Fig 1: Identifying Cap Nuts

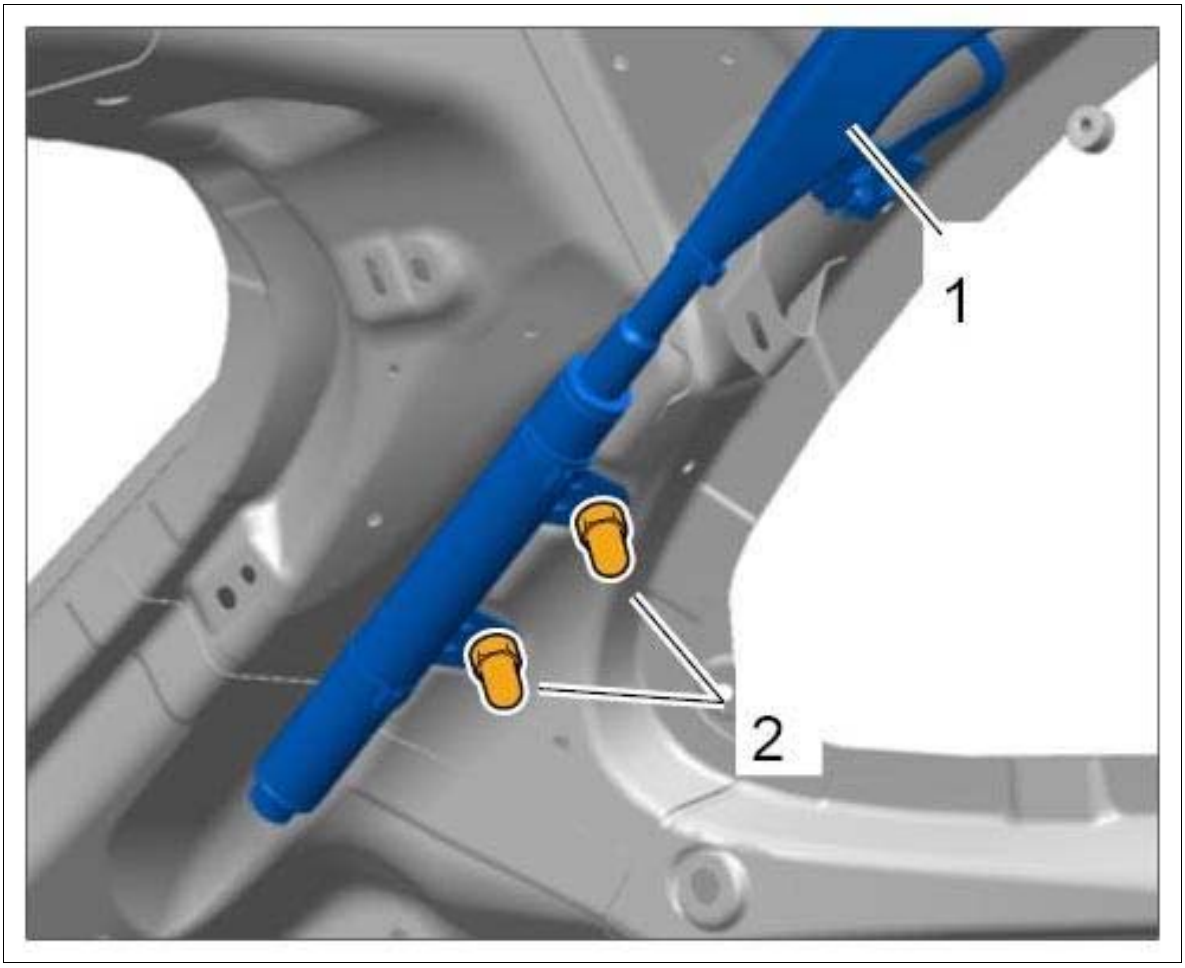

Courtesy of PORSCHE CARS NORTH AMERICA, INC.

2. Position fixing clips for the head airbag unit and clip them in.

Fig 2: Securing Fixing Clips In A-Pillar Area

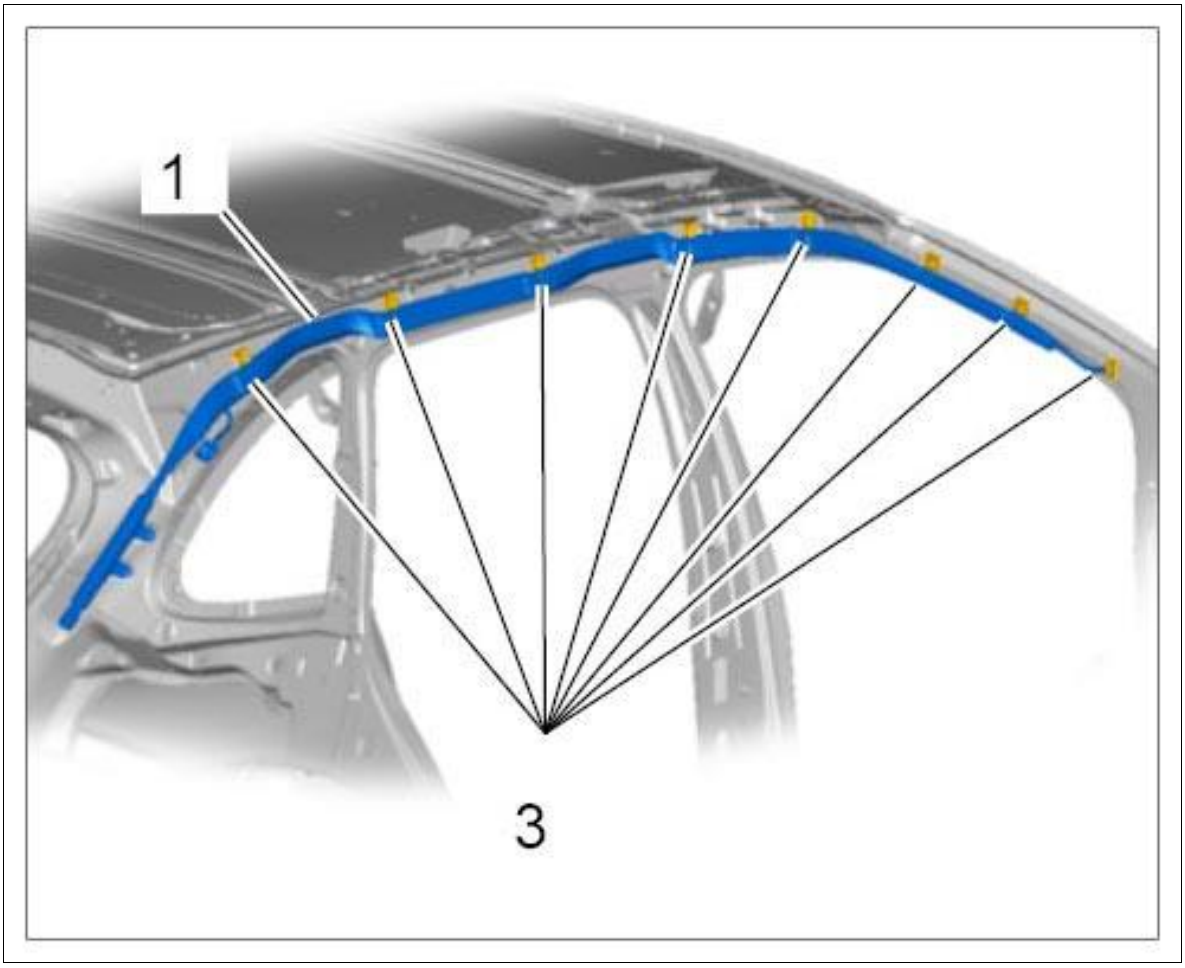

Courtesy of PORSCHE CARS NORTH AMERICA, INC.

3. Tighten cap nuts **-2-** to → **Tightening torque: 9 Nm (6.5 ftlb.)** .

Fig 3: Identifying Cap Nuts

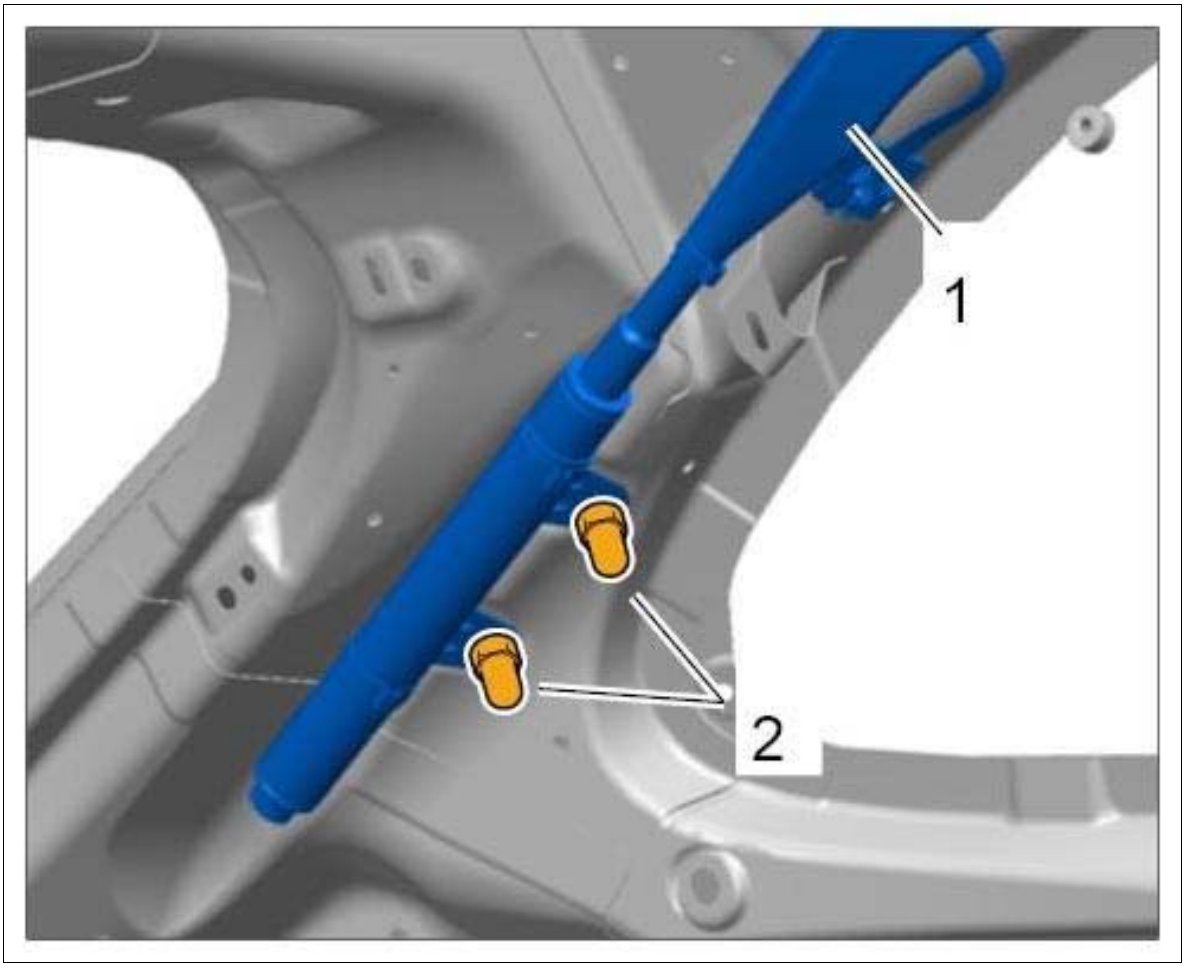

Courtesy of PORSCHE CARS NORTH AMERICA, INC.

4. Connect and lock electric plug connection **-a-** .

Fig 4: Connecting Electric Plug Connection

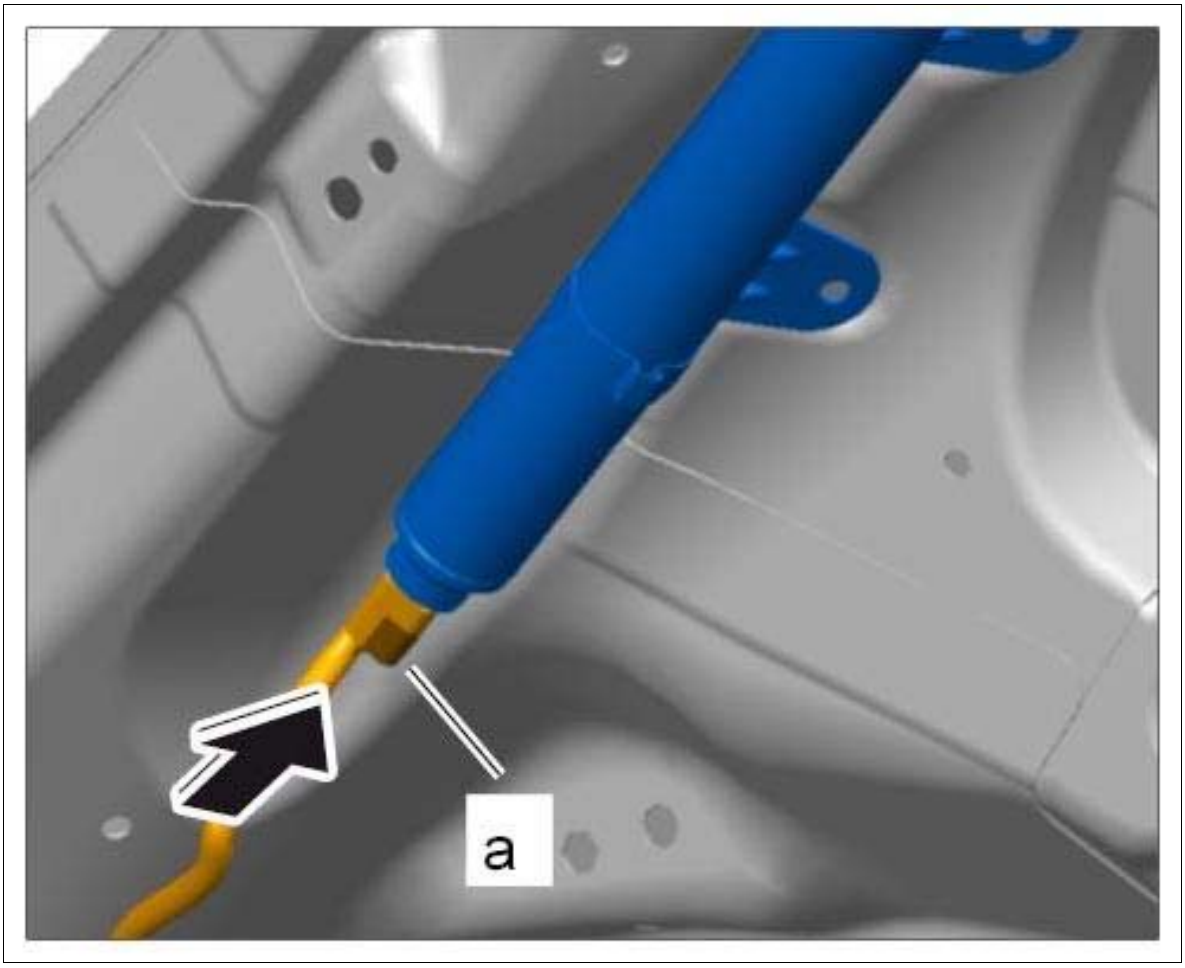

Courtesy of PORSCHE CARS NORTH AMERICA, INC.

WM 696619 REMOVING AND INSTALLING HEAD AIRBAG UNIT (MACAN, MACAN S, MACAN TURBO) > SUBSEQUENT WORK

1. Secure side trim panel for rear luggage compartment. → INSTALLING SIDE TRIM PANEL FOR REAR LUGGAGE COMPARTMENT .
2. Install headliner. → INSTALLING HEADLINER .
3. Connect the battery. → 2X00IN WORK INSTRUCTIONS AFTER DISCONNECTING THE BATTERY .

WM 696819 REMOVING AND INSTALLING OCCUPANT DETECTION CONTROL UNIT (MACAN, MACAN S, MACAN TURBO) > PRELIMINARY WORK

Information

If occupant detection components (installed for country equipment USA/Canada/Mexico) must be

replaced, the repair kit comprising padding, occupant detection control unit and pressure sensor mat **must** always **be replaced as a complete unit** .

The spare parts are grouped in a repair kit (comprising padding -1-, occupant detection control unit -2- and pressure sensor mat -3-), which must always be replaced as a complete unit.

1. Padding
2. Occupant detection control unit
3. Pressure sensor mat

Fig 1: Identifying Occupant Detection Repair Kit Contents

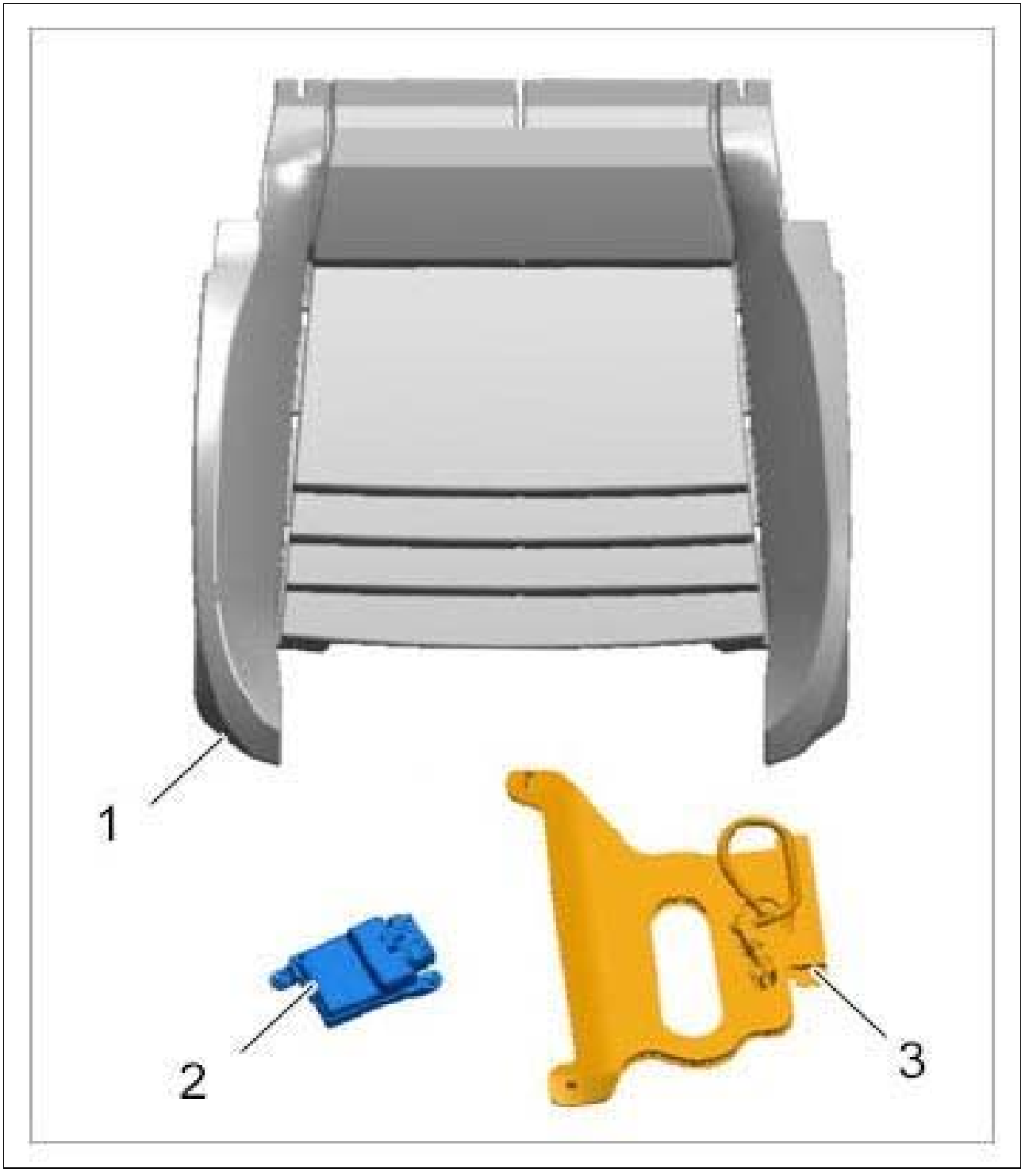

Courtesy of PORSCHE CARS NORTH AMERICA, INC.

A **mixed installation,** e.g. "old" pressure sensor mat and "new" control unit, is **not permitted** .

The padding, pressure sensor mat and occupant detection control unit are calibrated together by the manufacturer and must therefore only be replaced as a complete unit.

The occupant detection control unit does **not** have to be coded.

Information

The connector of the occupant detection control unit must be inserted straight as otherwise the seal will be damaged. The seating of the seal must then be checked.

1. Disconnect the battery. → 2X00IN WORK INSTRUCTIONS AFTER DISCONNECTING THE BATTERY
2. Remove right front seat. → 720119 REMOVING AND INSTALLING FRONT SEAT .
3. Remove control unit for memory seat adjustment. → 729319 REMOVING AND INSTALLING CONTROL UNIT FOR MEMORY SEAT ADJUSTMENT .

WM 696819 REMOVING AND INSTALLING OCCUPANT DETECTION CONTROL UNIT (MACAN, MACAN S, MACAN TURBO) > REMOVING OCCUPANT DETECTION CONTROL UNIT

Fig 1: Locating Occupant Detection Control Unit Position



Courtesy of PORSCHE CARS NORTH AMERICA, INC.

1. Release electric plug connection **-1-** on the occupant detection control unit **-a-** and disconnect it.

Fig 2: Removing Occupant Detection Control Unit

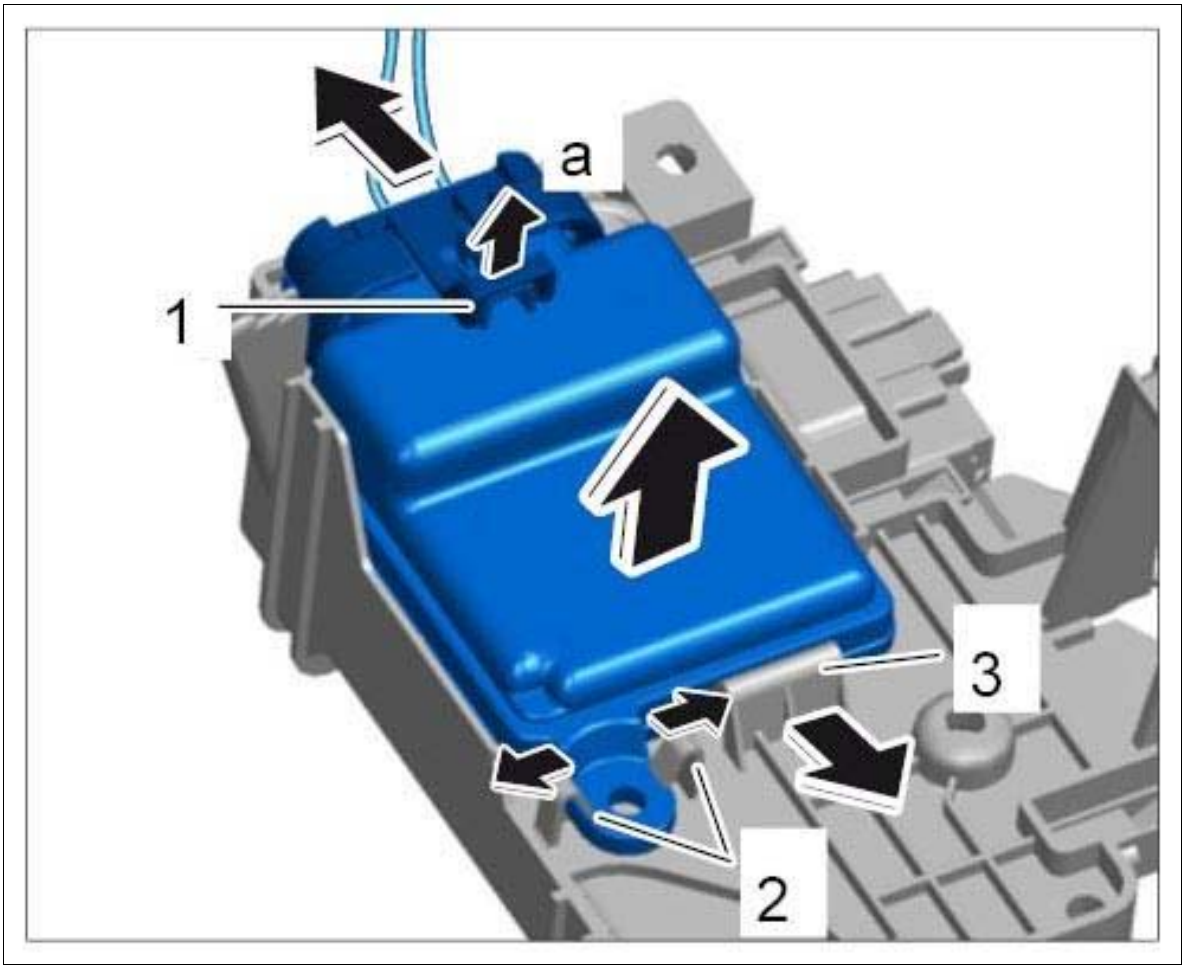

Courtesy of PORSCHE CARS NORTH AMERICA, INC.

2. Carefully unclip occupant detection control unit -2, 3- and remove control unit.
3. Remove padding for right seat. → 741055 REPLACING PADDING FOR FRONT SEAT .
4. Remove pressure sensor mat. → 695619 REMOVING AND INSTALLING SEAT OCCUPANCY DETECTION SYSTEM .

WM 696819 REMOVING AND INSTALLING OCCUPANT DETECTION CONTROL UNIT (MACAN, MACAN S, MACAN TURBO) > INSTALLING OCCUPANT DETECTION CONTROL UNIT

Information

If the occupant detection control unit (installed in the country equipment USA/Canada/Mexico) must be replaced, the repair kit compromising padding, occupant detection control unit and pressure sensor mat **must** always **be replaced as a complete unit.**

The spare parts are grouped in a repair kit (comprising padding -1-, occupant detection control unit -2- and pressure sensor mat -3-), which must always be replaced as a complete unit.

1. Padding
2. Occupant detection control unit
3. Pressure sensor mat

Fig 1: Identifying Occupant Detection Repair Kit Contents

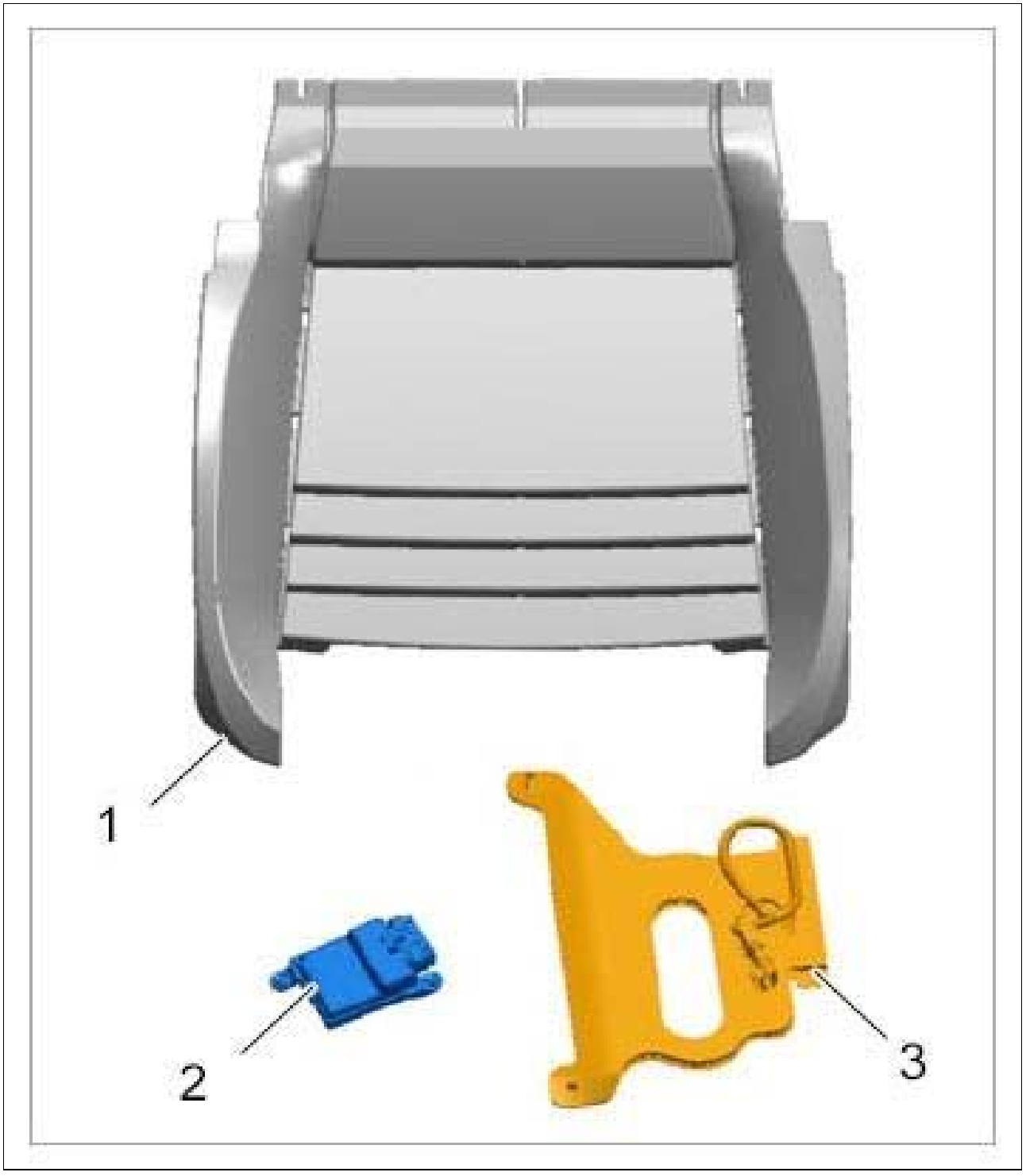

Courtesy of PORSCHE CARS NORTH AMERICA, INC.

A **mixed installation** , e.g. "old" pressure sensor mat and "new" control unit, is not **permitted** .

The padding, pressure sensor mat and occupant detection control unit are calibrated together by the manufacturer and must therefore only be replaced as a complete unit.

The occupant detection control unit must not be coded.

1. Check connector housing seal before fitting it to ensure that it is installed at the correct position.

   Information

   The connector of the occupant detection control unit must be inserted straight as otherwise the seal will be damaged. The seating of the seal must then be checked.

2. Connect electric plug connection to the occupant detection control unit until it engages securely.

   Fig 2: Installing Occupant Detection Control Unit

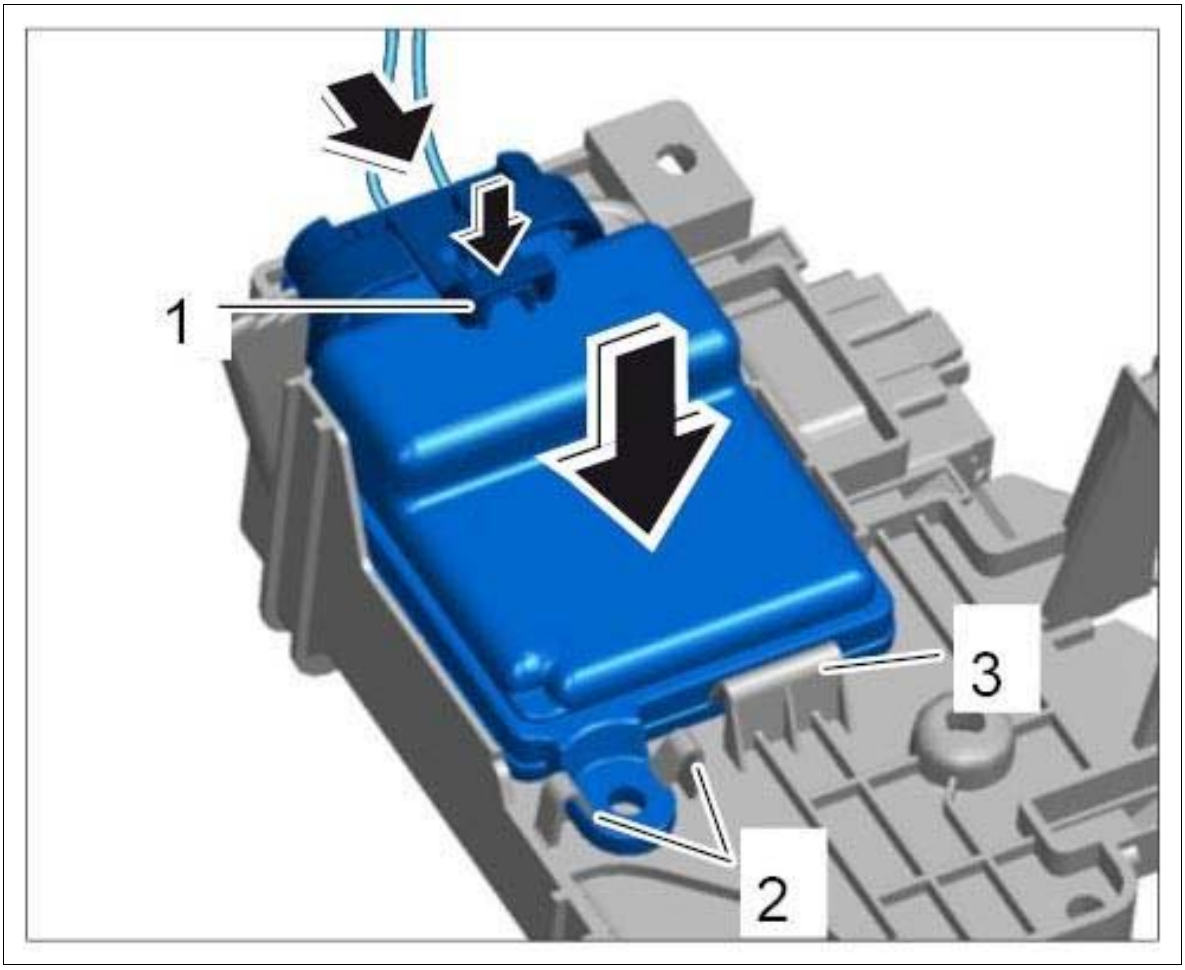

Courtesy of PORSCHE CARS NORTH AMERICA, INC.

3. Position occupant detection control unit on the holder and clip it in. Clips **-2, 3-** must engage securely.

WM 696819 REMOVING AND INSTALLING OCCUPANT DETECTION CONTROL UNIT (MACAN, MACAN S, MACAN TURBO) > SUBSEQUENT WORK

1. Install pressure sensor mat. → 695619 REMOVING AND INSTALLING SEAT OCCUPANCY DETECTION .
2. Install padding for right seat. → SECURING PADDING FOR FRONT SEAT .
3. Install control unit for memory seat adjustment. → INSTALLING CONTROL UNIT FOR MEMORY SEAT ADJUSTMENT
4. Install right front seat. → INSTALLING FRONT SEAT .
5. Connect the battery. Read and follow work instructions after disconnecting the battery. → 2X00IN WORK INSTRUCTIONS AFTER DISCONNECTING THE BATTERY - section on "Connecting"
6. If the occupant detection control unit was replaced, it must then be calibrated. → 696855 REPLACING OCCUPANT DETECTION CONTROL UNIT

WM 696855 REPLACING OCCUPANT DETECTION CONTROL UNIT (MACAN, MACAN S, MACAN TURBO) > TOOLS

Designation	Type	Number	Description	
PIWIS Tester II	Special tool	9818		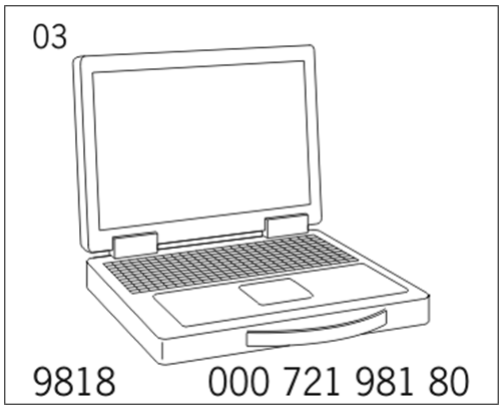

WM 696855 REPLACING OCCUPANT DETECTION CONTROL UNIT (MACAN, MACAN S, MACAN TURBO) > TECHNICAL VALUES

Location	Description	Type	Basic value	Tolerance 1	Tolerance 2
Current rating		Nominal value	40 A		

WM 696855 REPLACING OCCUPANT DETECTION CONTROL UNIT (MACAN, MACAN S, MACAN TURBO) > REPLACING OCCUPANT DETECTION CONTROL UNIT

NOTE: Voltage drop

- *Risk of irreparable damage to control unit*
- *Risk of damage to control unit*
- *Fault entries in the control unit*
- *Coding in the control unit is aborted*
- *Malfunctions in control unit, even during programming*

→ Prior to disconnecting the control unit, switch off ignition and remove ignition key.

→ Ensure that the power supply is not interrupted during programming.

→ Connect a battery charger with a current rating of at least → **Nominal value: 40 A** to the vehicle battery.

Information

If occupant detection components (installed for country equipment USA/Canada/Mexico) must be replaced, the repair kit comprising padding, occupant detection control unit and pressure sensor mat **must** always **be replaced as a complete unit** .

The spare parts are grouped in a repair kit (comprising padding -1-, occupant detection control unit -2- and pressure sensor mat -3-), which must always be replaced as a complete unit.

1. Padding
2. Occupant detection control unit
3. Pressure sensor mat

Fig 1: Identifying Occupant Detection Repair Kit Contents

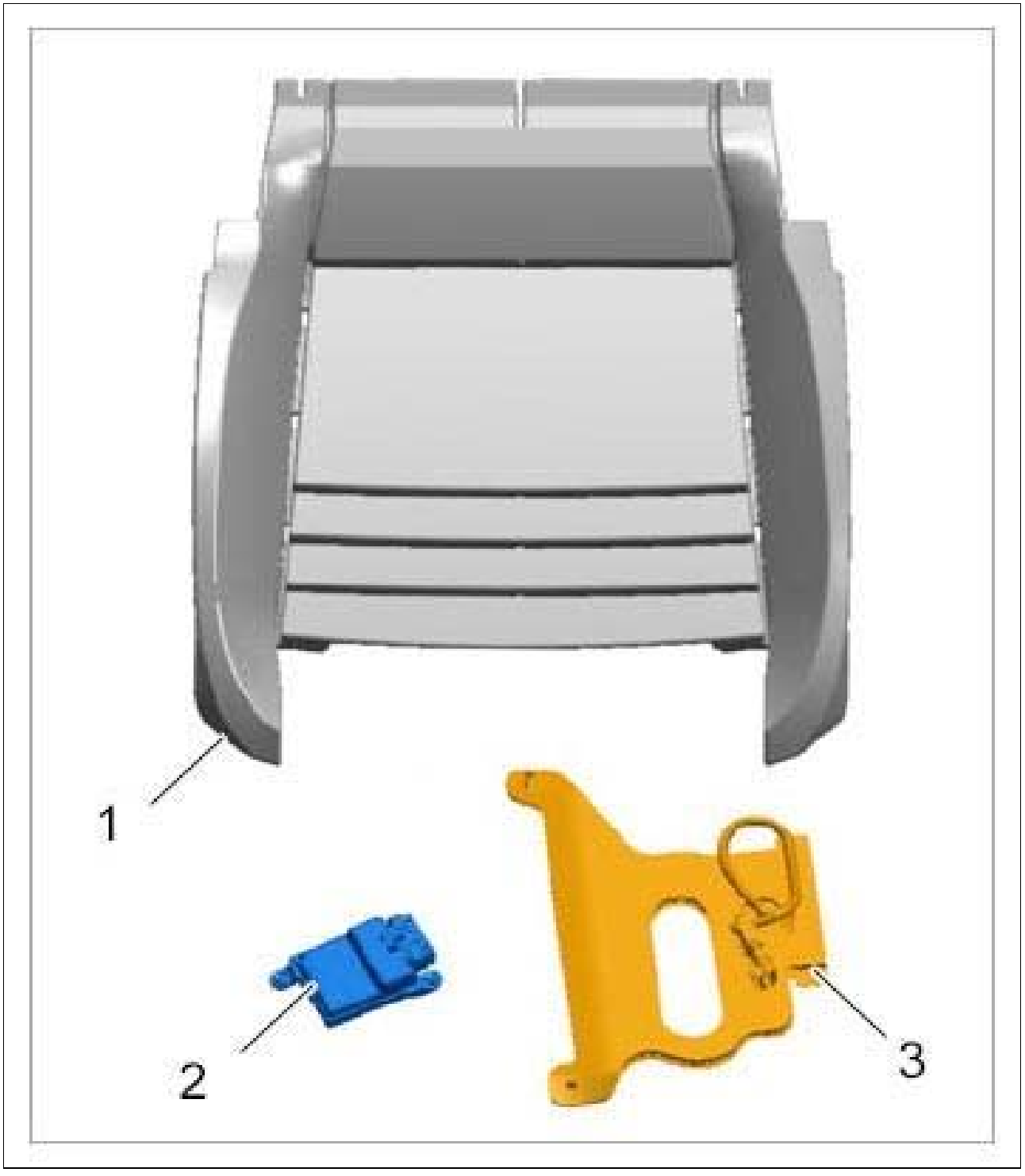

Courtesy of PORSCHE CARS NORTH AMERICA, INC.

A **mixed installation,** e.g. "old" pressure sensor mat and "new" control unit, is **not permitted.**

The padding, pressure sensor mat and occupant detection control unit are calibrated together by the manufacturer and must therefore only be replaced as a complete unit.

The occupant detection control unit does **not** have to be coded.

Information

The **PIWIS Tester II 9818** instructions take precedence since the description may be different with later Tester releases.

The procedure described here has been structured in general terms. Different text or additional information may appear in **PIWIS Tester II 9818** .

1. Switch off ignition and replace control unit → 696819 REMOVING AND INSTALLING OCCUPANT DETECTION CONTROL UNIT
2. Connect the PIWIS Tester to the vehicle and start the Tester. Switch on ignition.
3. Select the vehicle type under **Diagnostics.**
4. Select **Airbag** control unit in the **overview** .
5. **Maintenance and repairs** must now be selected.
6. **Select Calibrate occupant detection** and press [F12] to continue.
7. Follow the instructions on the Tester and press [F12] to continue.
8. **Start the function** by pressing [F8]
9. The message **"Function has been executed"** appears. Press [F11] to go back.
10. Read out the fault memory and erase it if necessary.
11. Perform function test: Switch the ignition off and then on again. The airbag warning light in the instrument cluster comes on and must go off again after a few seconds.

WM 697019 REMOVING AND INSTALLING PEDESTRIAN PROTECTION (MACAN, MACAN S, MACAN TURBO) > TECHNICAL VALUES

Location	Description	Type	Basic value	Tolerance 1	Tolerance 2
Pedestrian protection to lock carrier, upper	Tapping screw	Tightening torque	4.5 Nm (3.5 ftlb.)		
Pedestrian protection to lock carrier, lower	Tapping screw	Tightening torque	3 Nm (2 ftlb.)		

WM 697019 REMOVING AND INSTALLING PEDESTRIAN PROTECTION (MACAN, MACAN S, MACAN TURBO) > PRELIMINARY WORK

1. Remove front apron. → 631519 REMOVING AND INSTALLING FRONT APRON
2. Remove ventilation guides. → 661319 REMOVING AND INSTALLING VENTILATION GUIDE

WM 697019 REMOVING AND INSTALLING PEDESTRIAN PROTECTION (MACAN, MACAN S, MACAN TURBO) > REMOVING PEDESTRIAN PROTECTION

Information

- The number of fastening screws, fixing clips, plug connections, holders and trim panels can vary depending on equipment.
- The illustrations for removing and installing the drive mechanism are shown only on one equipment variant and may differ from the actual equipment variant.
- Some steps must be carried out automatically.
- Some of the repair illustrations show only one side of the vehicle.

1. Unclip wire harness **-2-** on pedestrian protection **-4-** .
2. Unscrew top fastening screws **-1-** .
3. Unscrew bottom fastening screws **-3-** .
4. Remove pedestrian protection **-4-** by pulling it forward.

Fig 1: Identifying Pedestrian Protection

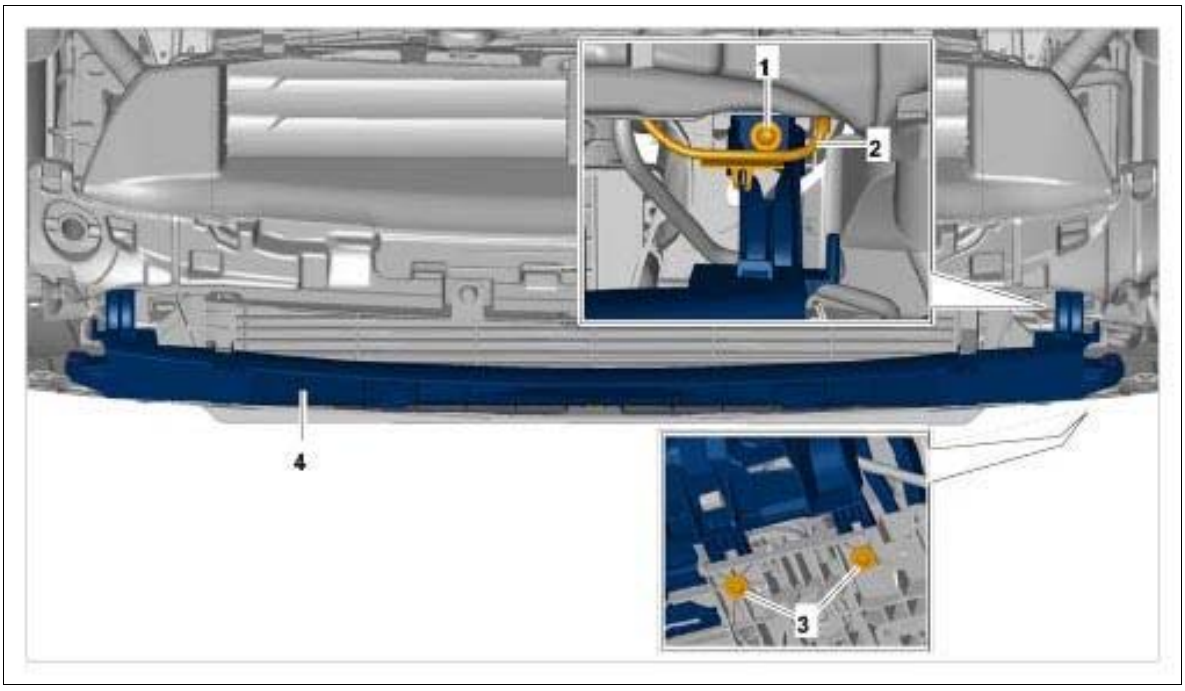

Courtesy of PORSCHE CARS NORTH AMERICA, INC.

WM 697019 REMOVING AND INSTALLING PEDESTRIAN PROTECTION (MACAN, MACAN S, MACAN TURBO) > INSTALLING PEDESTRIAN PROTECTION

Installation is performed in reverse order. Pay particular attention to the following:

1. Tighten top fastening screws to the specified torque. **Tightening torque 4.5 Nm (3.5 ftlb.)**
2. Tighten bottom fastening screws to the specified torque. **Tightening torque 3 Nm (2 ftlb.)**

WM 697019 REMOVING AND INSTALLING PEDESTRIAN PROTECTION (MACAN, MACAN S, MACAN TURBO) > SUBSEQUENT WORK

1. Install ventilation guides. → INSTALLING VENT GUIDE .
2. Install front apron. → INSTALLING FRONT APRON .

WM 697819 REMOVING AND INSTALLING KNEE AIRBAG ON DRIVER'S SIDE (MACAN, MACAN S, MACAN TURBO) > TECHNICAL VALUES

Location	Description	Type	Basic value	Tolerance 1	Tolerance 2
Knee airbag to trim panel under dashboard	Screw, M5 x 16	Tightening torque	4 Nm (3 ftlb.)		
Knee airbag to strut	Screw, M6 x 30	Tightening torque	15 Nm (11 ftlb.)		
Ground cable to knee airbag holder	Nut, M6	Tightening torque	8 Nm (6 ftlb.)		

WM 697819 REMOVING AND INSTALLING KNEE AIRBAG ON DRIVER'S SIDE (MACAN, MACAN S, MACAN TURBO) > INFORMATION > INSTALLATION POSITION OF KNEE AIRBAG ON DRIVER'S SIDE

Fig 1: Locating Driver Side Knee Airbag Position (Shown On Cayenne)



Courtesy of PORSCHE CARS NORTH AMERICA, INC.

WM 697819 REMOVING AND INSTALLING KNEE AIRBAG ON DRIVER'S SIDE (MACAN, MACAN S, MACAN TURBO) > PRELIMINARY WORK > PRELIMINARY WORK FOR KNEE AIRBAG ON DRIVER'S SIDE

WARNING: Incorrect handling of airbag units

- *Triggering of airbag unit.*
- *System faults can occur.*

→ Switch off ignition and remove ignition key or remote control (hand-held transmitter).

→ A power supply (e.g. battery charger) must not be connected to the external power supply/jump-lead starting terminals.

→ Disconnect the battery and insulate the ground strap so that all contact with a ground carrier is avoided.

→ Wait 1 minute after disconnecting the battery.

→ Only pull off connector on the triggering unit after the waiting time has elapsed.

→ Make sure that no foreign objects are located in front of the airbag unit during installation.

→ Replace damaged parts during removal.

→ Always position airbag units so that the blow-out opening is facing upwards, e.g. crest on driver's airbag.

→ Do not position anything on the airbag units.

→ If removed for an extended period, the airbag units must be stored in a safe place.

→ Airbag units must not come into contact with grease, oil, detergents, liquids, or similar substances.

→ Do not expose airbag units to temperatures above 90°.

→ Do not remove the short-circuit spring on the plug-in contacts.

→ Ignition and preparations may only be carried out by skilled staff, supervised by a second responsible person.

→ Before disposal, the airbag unit must be rendered harmless by electrical ignition performed in accordance with all precautionary measures, thereby preventing it from being used incorrectly.

1. Disconnect battery ground strap → Loosening and securing ground strap for battery. → WM 270619 REMOVING AND INSTALLING BATTERY (ALL MODELS) .
2. Remove cover under dashboard .
3. Loosen ground cable on knee airbag holder **-1-** .

Fig 1: Identifying Ground Cable On Retaining Bracket

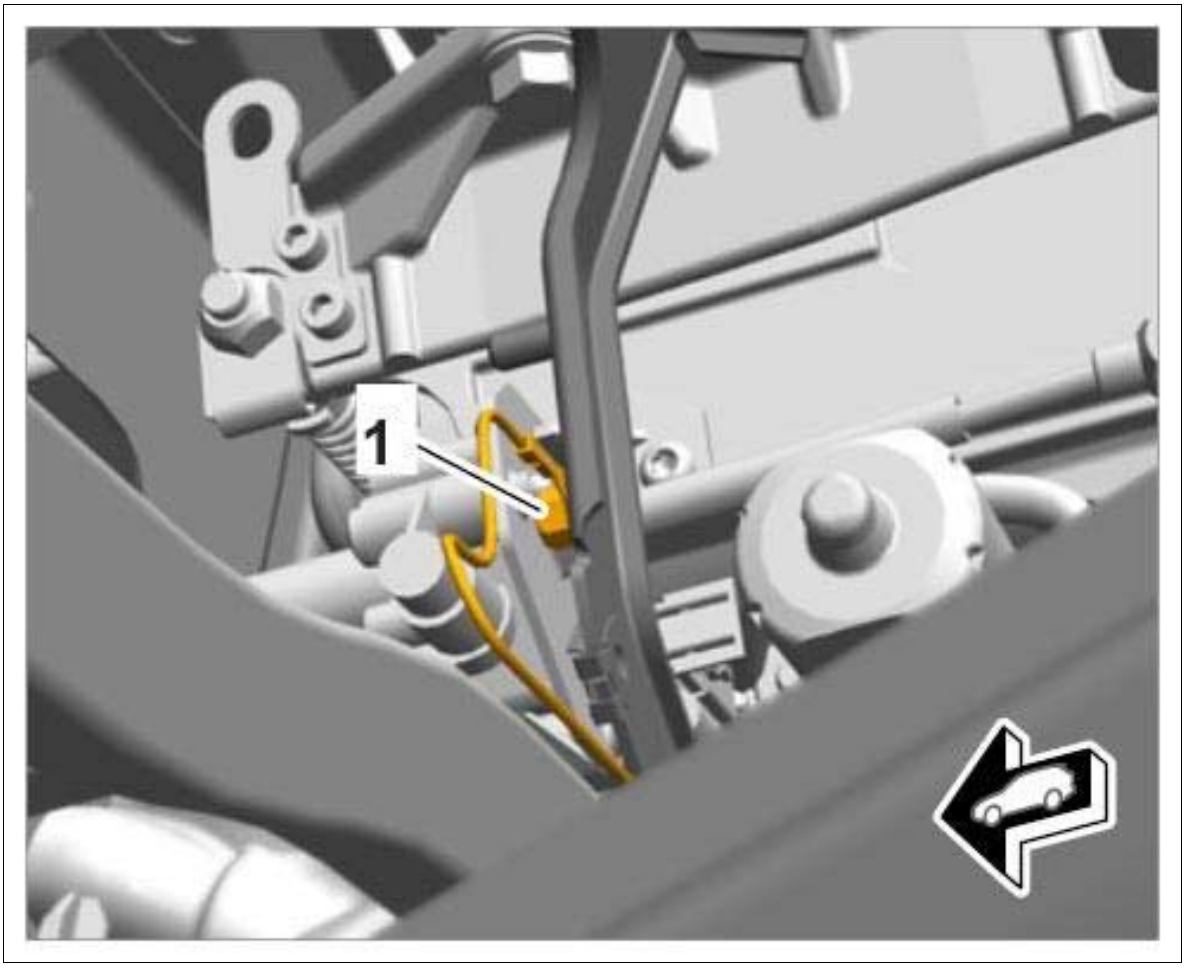

Courtesy of PORSCHE CARS NORTH AMERICA, INC.

4. Loosen fastening screws **-1-** from the knee airbag at the strut.

Fig 2: Identifying Knee Airbag To Strut Fastening Screws

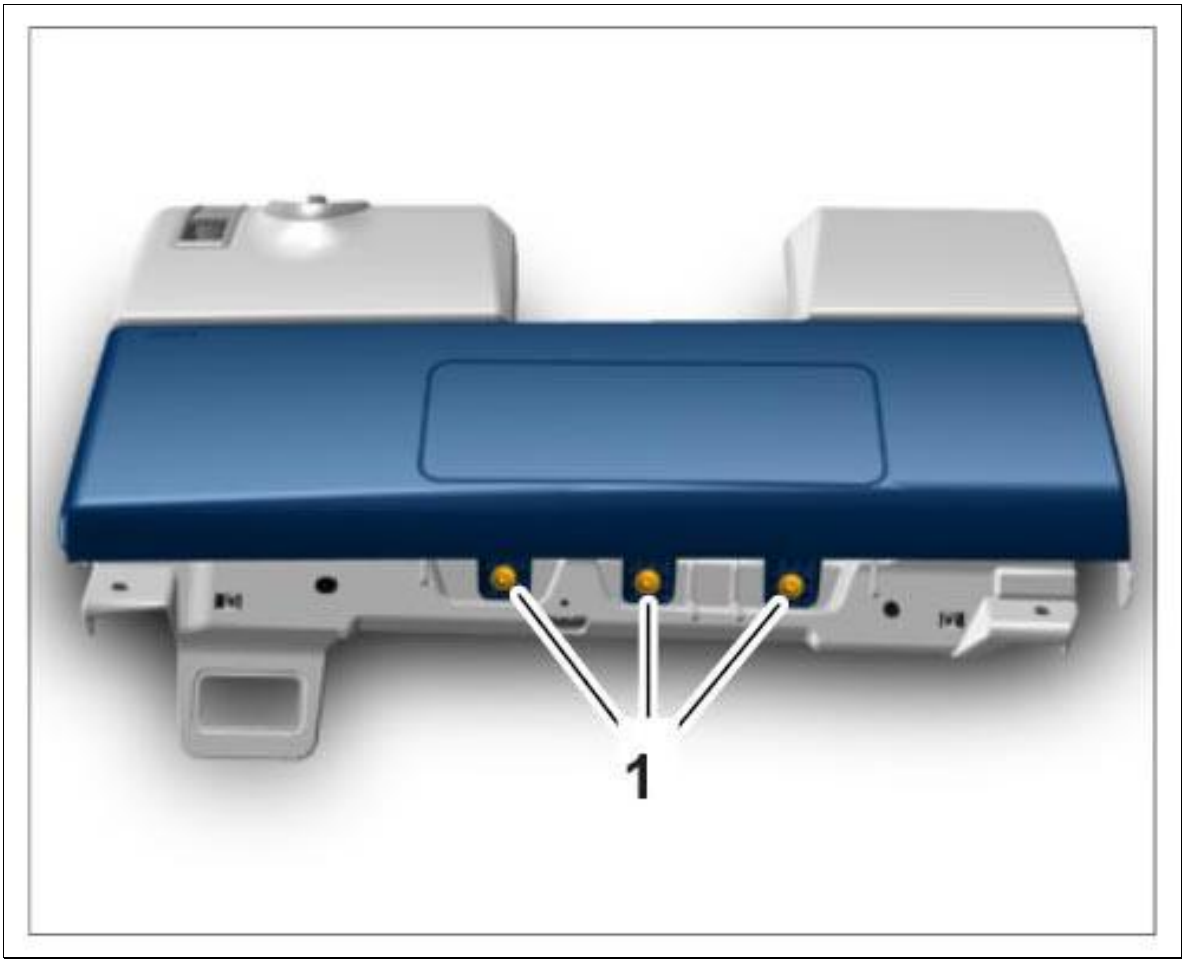

Courtesy of PORSCHE CARS NORTH AMERICA, INC.

5. Remove trim panel under dashboard → 701919 REMOVING AND INSTALLING TRIM PANEL UNDER DASHBOARD - section on "Removing and installing" and disconnect plug connection for knee airbag.

WM 697819 REMOVING AND INSTALLING KNEE AIRBAG ON DRIVER'S SIDE (MACAN, MACAN S, MACAN TURBO) > REMOVING KNEE AIRBAG ON DRIVER'S SIDE

WARNING: Incorrect handling of airbag units

- *Triggering of airbag unit.*
- *System faults can occur.*

→ Switch off ignition and remove ignition key or remote control (hand-held transmitter).

→ A power supply (e.g. battery charger) must not be connected to the external power supply/jump-lead

starting terminals.

→ Disconnect the battery and insulate the ground strap so that all contact with a ground carrier is avoided.

→ Wait 1 minute after disconnecting the battery.

→ Only pull off connector on the triggering unit after the waiting time has elapsed.

→ Make sure that no foreign objects are located in front of the airbag unit during installation.

→ Replace damaged parts during removal.

→ Always position airbag units so that the blow-out opening is facing upwards, e.g. crest on driver's airbag.

→ Do not position anything on the airbag units.

→ If removed for an extended period, the airbag units must be stored in a safe place.

→ Airbag units must not come into contact with grease, oil, detergents, liquids, or similar substances.

→ Do not expose airbag units to temperatures above 90°.

→ Do not remove the short-circuit spring on the plug-in contacts.

→ Ignition and preparations may only be carried out by skilled staff, supervised by a second responsible person.

→ Before disposal, the airbag unit must be rendered harmless by electrical ignition performed in accordance with all precautionary measures, thereby preventing it from being used incorrectly.

WARNING: Incorrect handling of safety bolts

- *Danger of injury*
- *Loss of torque*

→ Always use new fastening screws and nuts following removal.

→ Observe specified tightening torques.

→ Carry out a visual inspection of all re-used parts.

Information

Always replace the fastening screws on the airbag unit after customer service and reworking. The micro-self-locking screws must not be treated, greased or loosened and then screwed on again.

1. Loosen fastening screws **-1-** between the knee airbag and trim panel under the dashboard.

Fig 1: Loosening Upper Fastening Screws

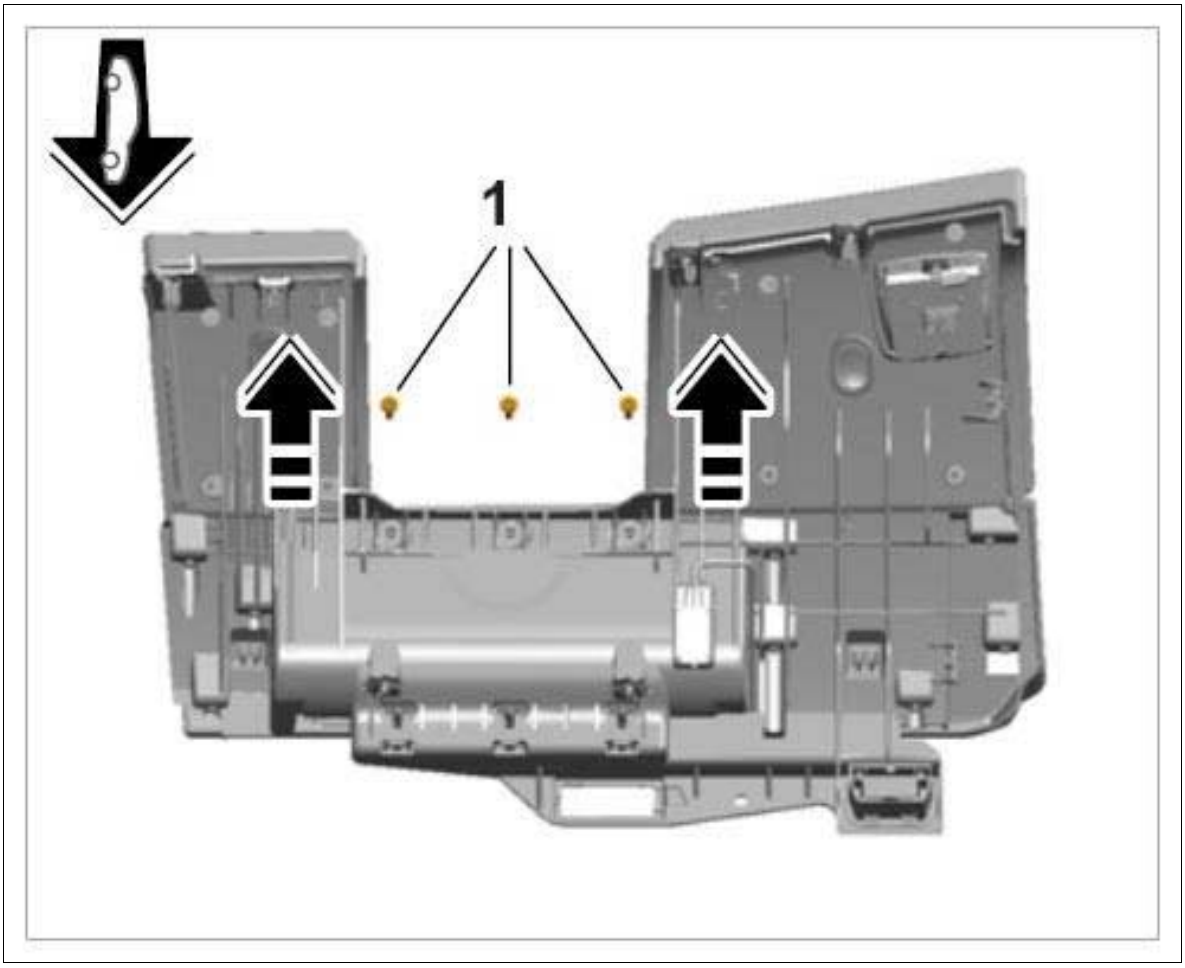

Courtesy of PORSCHE CARS NORTH AMERICA, INC.

2. Loosen fastening screws **-1-** on trim panel for knee airbag at the trim panel under the dashboard.

Fig 2: Identifying Knee Airbag On Trim Panel Under Dashboard

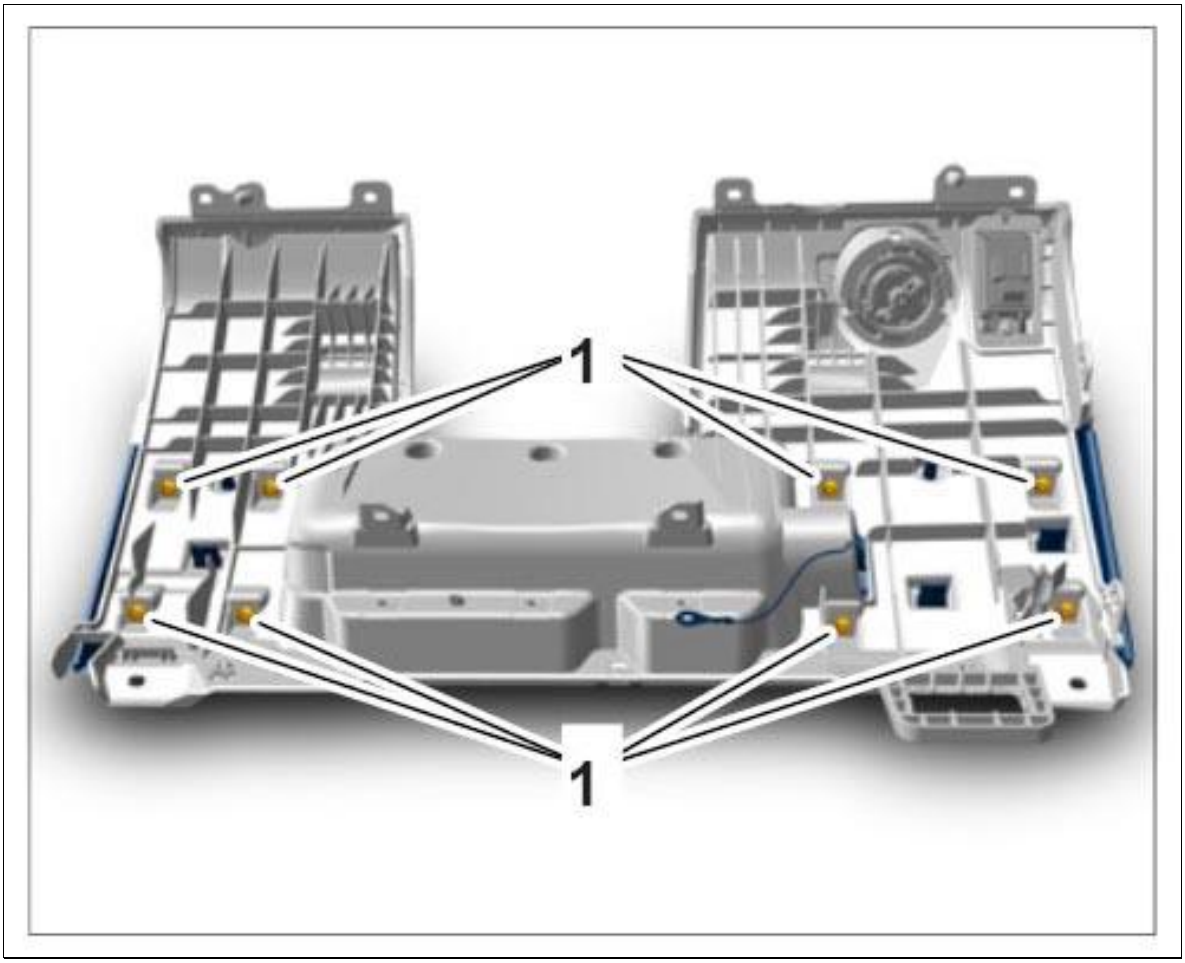

Courtesy of PORSCHE CARS NORTH AMERICA, INC.

3. Unclip three fixing clips **-1-** securing trim panel for knee airbag to trim panel under the dashboard.

Fig 3: Removing Knee Airbag

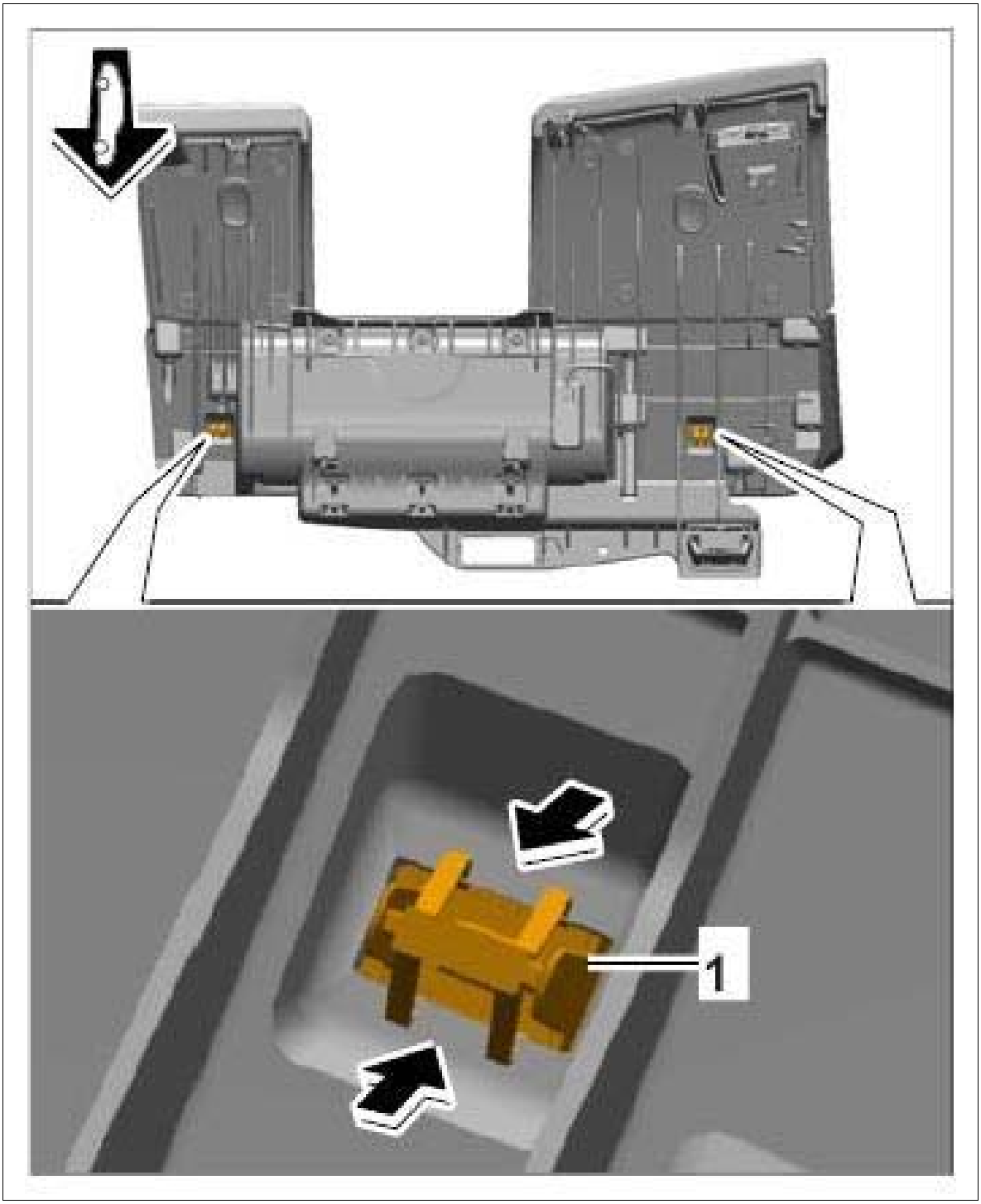

Courtesy of PORSCHE CARS NORTH AMERICA, INC.

4. Remove knee airbag and set it down in accordance with the relevant instructions.

WM 697819 REMOVING AND INSTALLING KNEE AIRBAG ON DRIVER'S SIDE (MACAN, MACAN S, MACAN TURBO) > INSTALLING KNEE AIRBAG ON DRIVER'S SIDE

WARNING: Incorrect handling of airbag units

- *Triggering of airbag unit.*
- *System faults can occur.*

→ Switch off ignition and remove ignition key or remote control (hand-held transmitter).

→ A power supply (e.g. battery charger) must not be connected to the external power supply/jump-lead starting terminals.

→ Disconnect the battery and insulate the ground strap so that all contact with a ground carrier is avoided.

→ Wait 1 minute after disconnecting the battery.

→ Only pull off connector on the triggering unit after the waiting time has elapsed.

→ Make sure that no foreign objects are located in front of the airbag unit during installation.

→ Replace damaged parts during removal.

→ Always position airbag units so that the blow-out opening is facing upwards, e.g. crest on driver's airbag.

→ Do not position anything on the airbag units.

→ If removed for an extended period, the airbag units must be stored in a safe place.

→ Airbag units must not come into contact with grease, oil, detergents, liquids, or similar substances.

→ Do not expose airbag units to temperatures above 90°.

→ Do not remove the short-circuit spring on the plug-in contacts.

→ Ignition and preparations may only be carried out by skilled staff, supervised by a second responsible person.

→ Before disposal, the airbag unit must be rendered harmless by electrical ignition performed in accordance with all precautionary measures, thereby preventing it from being used incorrectly.

1. Position knee airbag so that the three fixing clips **-1-** engage in the corresponding mounting on the trim panel.

Fig 1: Installing Knee Airbag

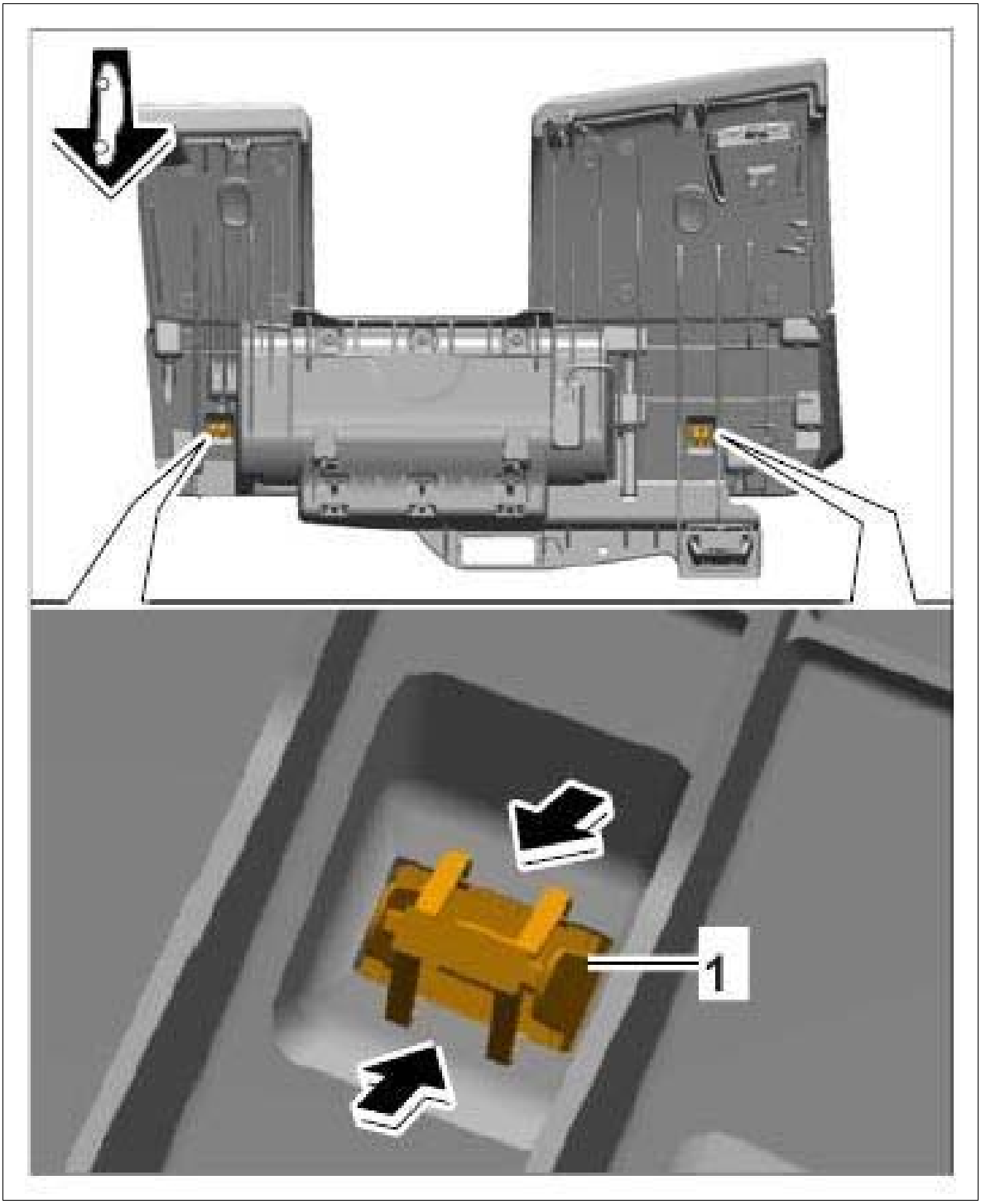

Courtesy of PORSCHE CARS NORTH AMERICA, INC.

2. Clip knee airbag into the trim panel.
3. Tighten fastening screws **-1-** on trim panel for knee airbag at the trim panel under the dashboard.

Fig 2: Identifying Knee Airbag On Trim Panel Under Dashboard

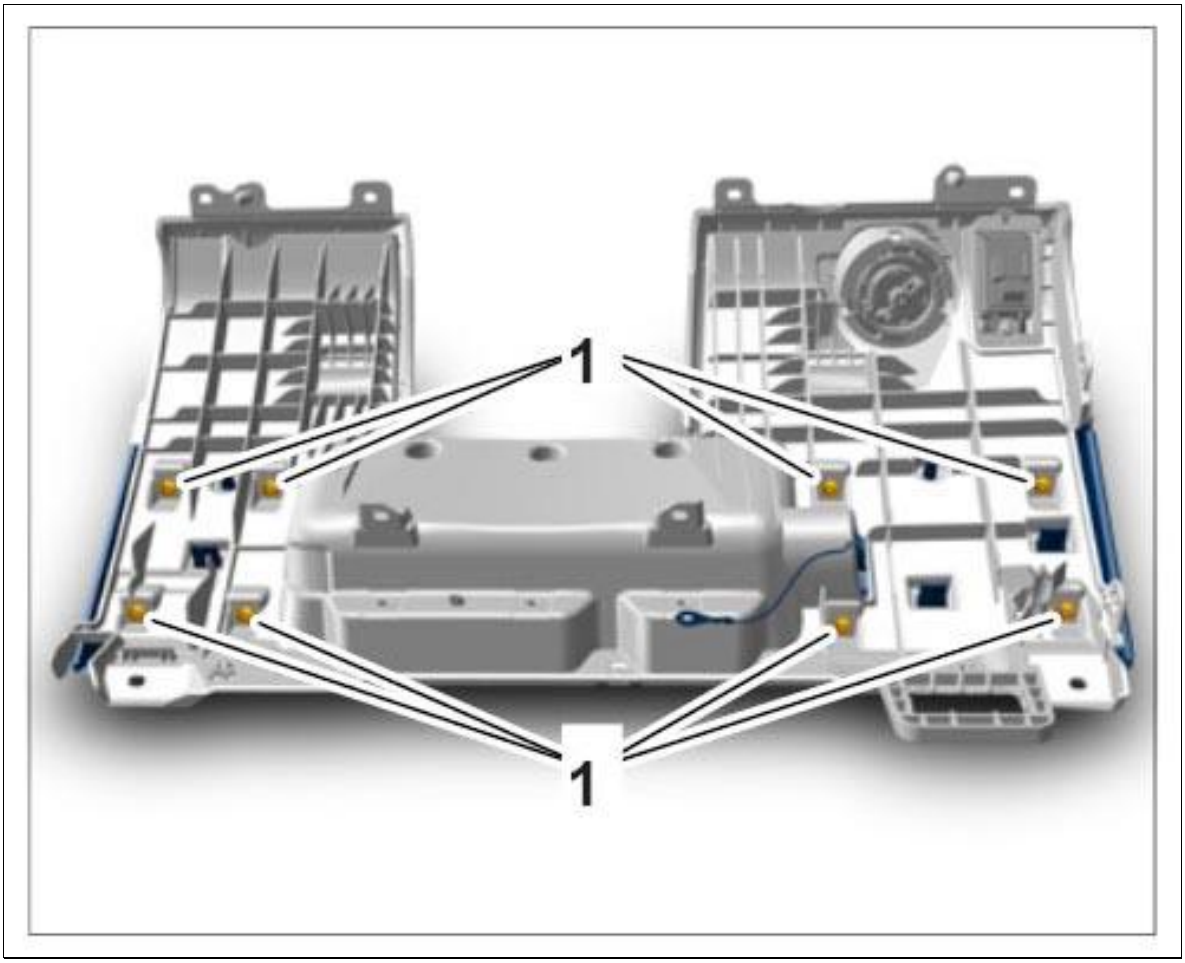

Courtesy of PORSCHE CARS NORTH AMERICA, INC.

4. Tighten fastening screws **-1-** between the knee airbag and trim panel under the dashboard to the prescribed tightening torque. → **Tightening torque: 4 Nm (3 ftlb.).**

Fig 3: Identifying Upper Fastening Screws

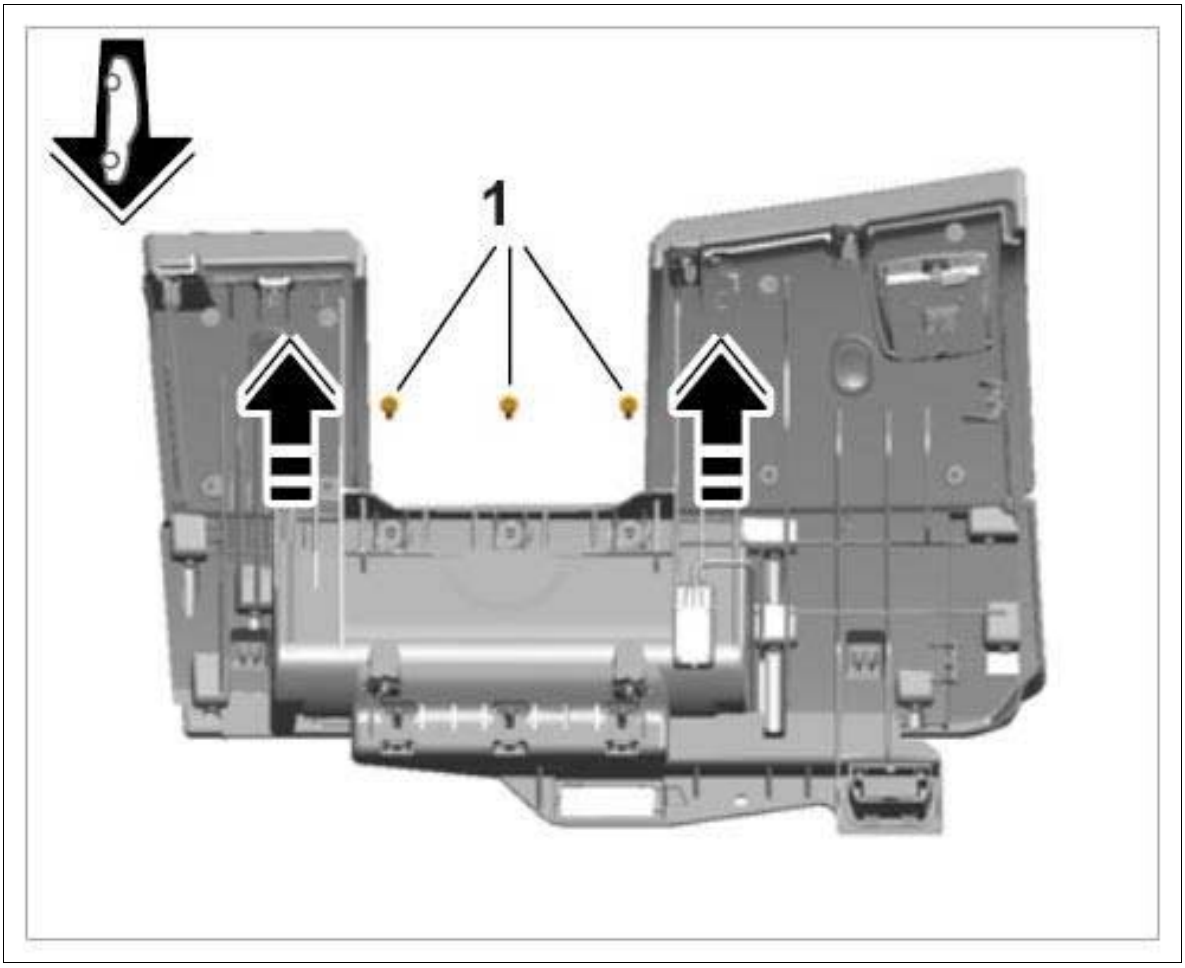

Courtesy of PORSCHE CARS NORTH AMERICA, INC.

WARNING: Incorrect handling of safety bolts

- *Danger of injury*
- *Loss of torque*

Triggering of airbag unit.

System faults can occur.

→ Always use new fastening screws and nuts following removal.

Information

Always replace the fastening screws on the airbag unit after customer service and reworking. The micro-self-locking screws must not be treated, greased or loosened and then screwed on again.

WM 697819 REMOVING AND INSTALLING KNEE AIRBAG ON DRIVER'S SIDE

(MACAN, MACAN S, MACAN TURBO) > SUBSEQUENT WORK > SUBSEQUENT WORK FOR KNEE AIRBAG ON DRIVER'S SIDE

WARNING: Incorrect handling of airbag units

- → *Observe specified tightening torques.*
- → *Carry out a visual inspection of all re-used parts.*

→ Switch off ignition and remove ignition key or remote control (hand-held transmitter).

→ A power supply (e.g. battery charger) must not be connected to the external power supply/jump-lead starting terminals.

→ Disconnect the battery and insulate the ground strap so that all contact with a ground carrier is avoided.

→ Wait 1 minute after disconnecting the battery.

→ Only pull off connector on the triggering unit after the waiting time has elapsed.

→ Make sure that no foreign objects are located in front of the airbag unit during installation.

→ Replace damaged parts during removal.

→ Always position airbag units so that the blow-out opening is facing upwards, e.g. crest on driver's airbag.

→ Do not position anything on the airbag units.

→ If removed for an extended period, the airbag units must be stored in a safe place.

→ Airbag units must not come into contact with grease, oil, detergents, liquids, or similar substances.

→ Do not expose airbag units to temperatures above 90°.

→ Do not remove the short-circuit spring on the plug-in contacts.

→ Ignition and preparations may only be carried out by skilled staff, supervised by a second responsible person.

→ Before disposal, the airbag unit must be rendered harmless by electrical ignition performed in accordance with all precautionary measures, thereby preventing it from being used incorrectly.

Information

After replacing airbag components, proof of replacement must be documented in the Warranty and Maintenance booklet.

1. Install trim panel under dashboard → INSTALLING TRIM PANEL UNDER DASHBOARD AT THE RIGHT .
2. Tighten fastening screws **-1-** securing knee airbag to strut to the prescribed tightening torque. → **Tightening torque: 15 Nm (11 ftlb.)**

Fig 1: Identifying Knee Airbag To Strut Fastening Screws

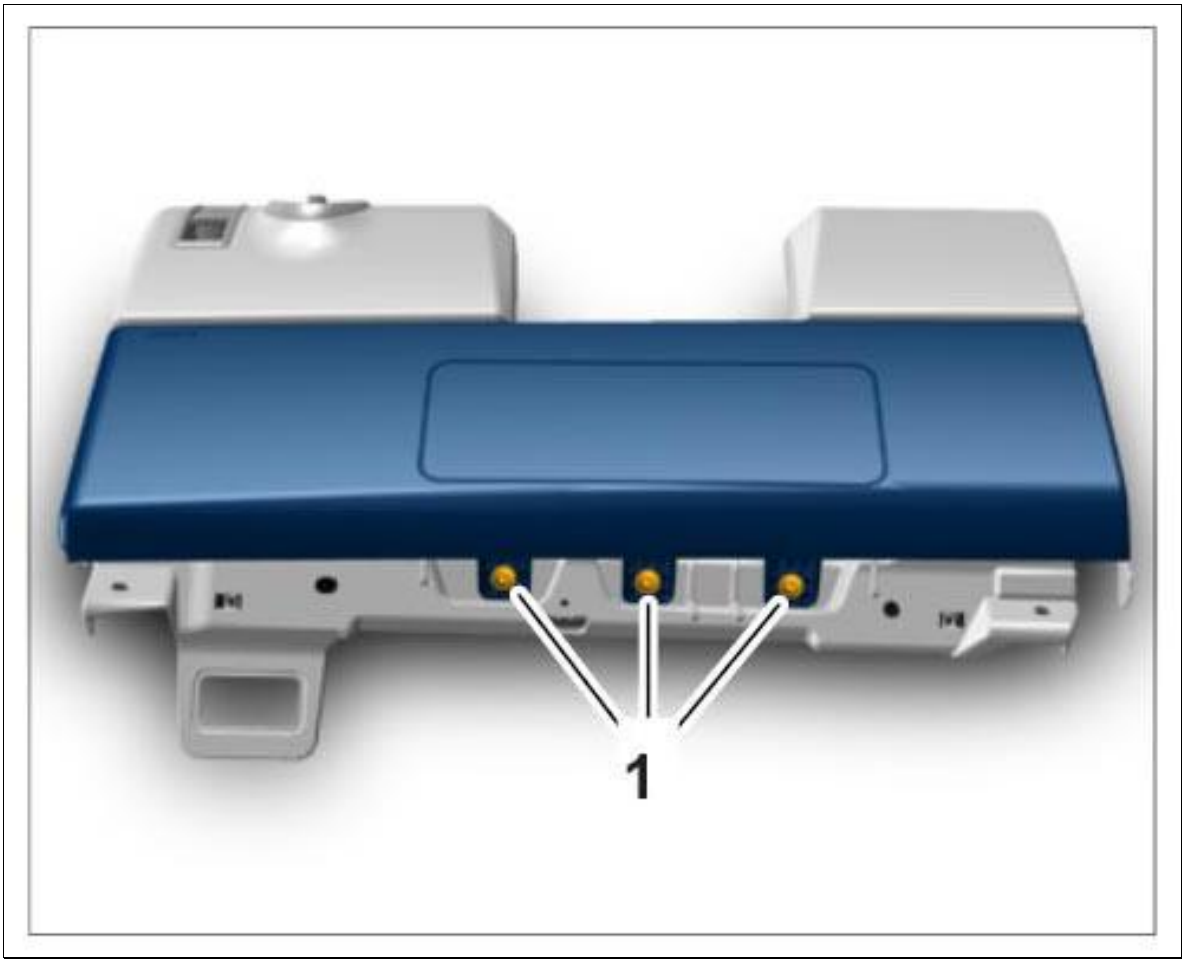

Courtesy of PORSCHE CARS NORTH AMERICA, INC.

3. Tighten ground cable on knee airbag holder to the prescribed tightening torque **-1-** . → **Tightening torque: 8 Nm (6 ftlb.)**

Fig 2: Identifying Ground Cable On Retaining Bracket

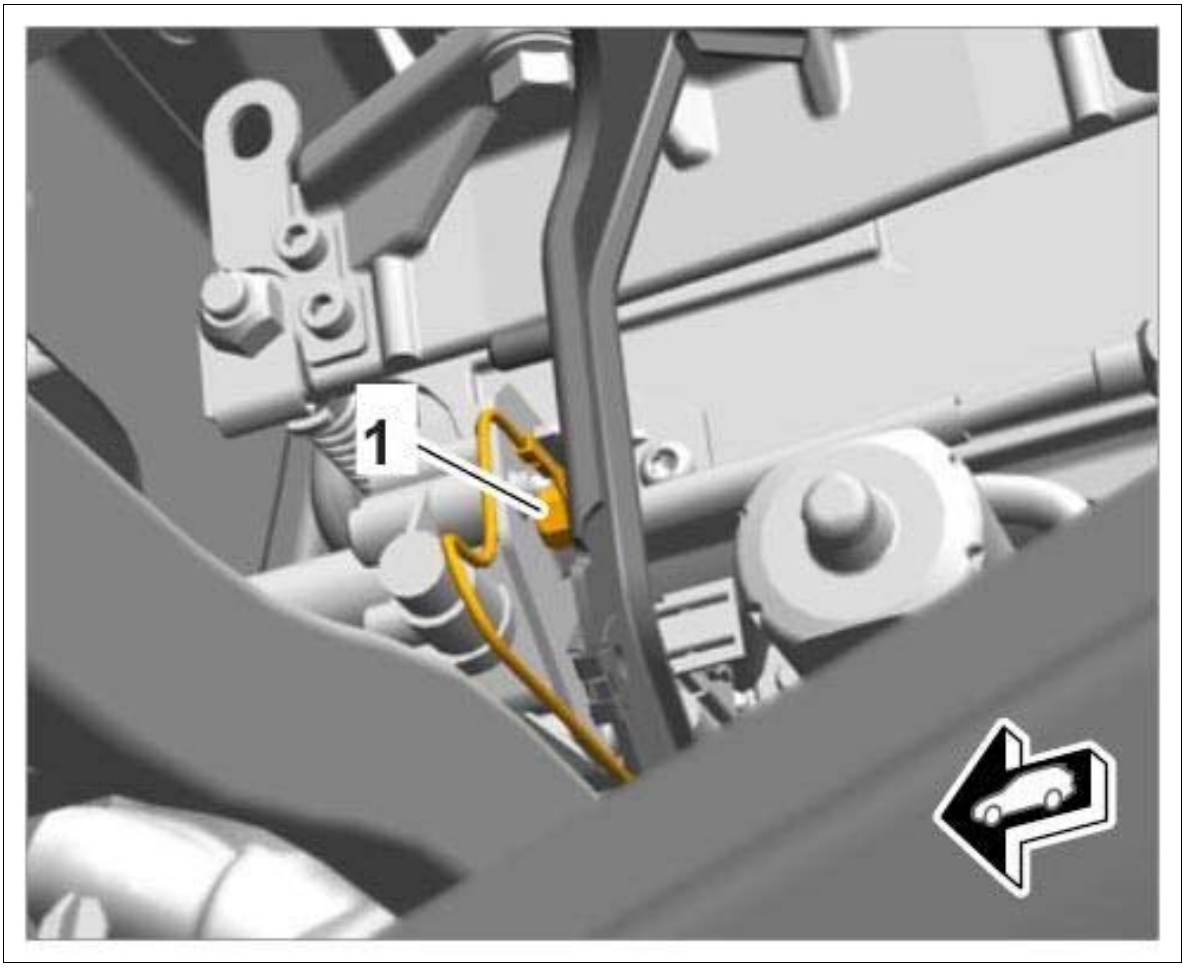

Courtesy of PORSCHE CARS NORTH AMERICA, INC.

4. Install cover under dashboard .
5. Connect battery ground strap and carry out work instructions after connecting the battery → Loosening and securing ground strap for battery. → WM 270619 REMOVING AND INSTALLING BATTERY (ALL MODELS) .
6. If the airbag unit was replaced, proof of replacement must be entered in the Warranty and Maintenance booklet.

WM 697919 REMOVING AND INSTALLING KNEE AIRBAG ON PASSENGER'S SIDE (MACAN, MACAN S, MACAN TURBO) > TECHNICAL VALUES

Location	Description	Type	Basic value	Tolerance 1	Tolerance 2
Screws securing knee airbag on passenger's side to glove compartment	-1-	Tightening torque	1.4 Nm (1 ftlb.)		

Upper screws securing knee airbag on passenger's side to glove compartment	-1-	Tightening torque	3.2 Nm (2 ftlb.)		

WM 697919 REMOVING AND INSTALLING KNEE AIRBAG ON PASSENGER'S SIDE (MACAN, MACAN S, MACAN TURBO) > INFORMATION > INSTALLATION POSITION OF KNEE AIRBAG ON PASSENGER'S SIDE

Fig 1: Locating Passenger Side Knee Airbag Position (Shown On Panamera)

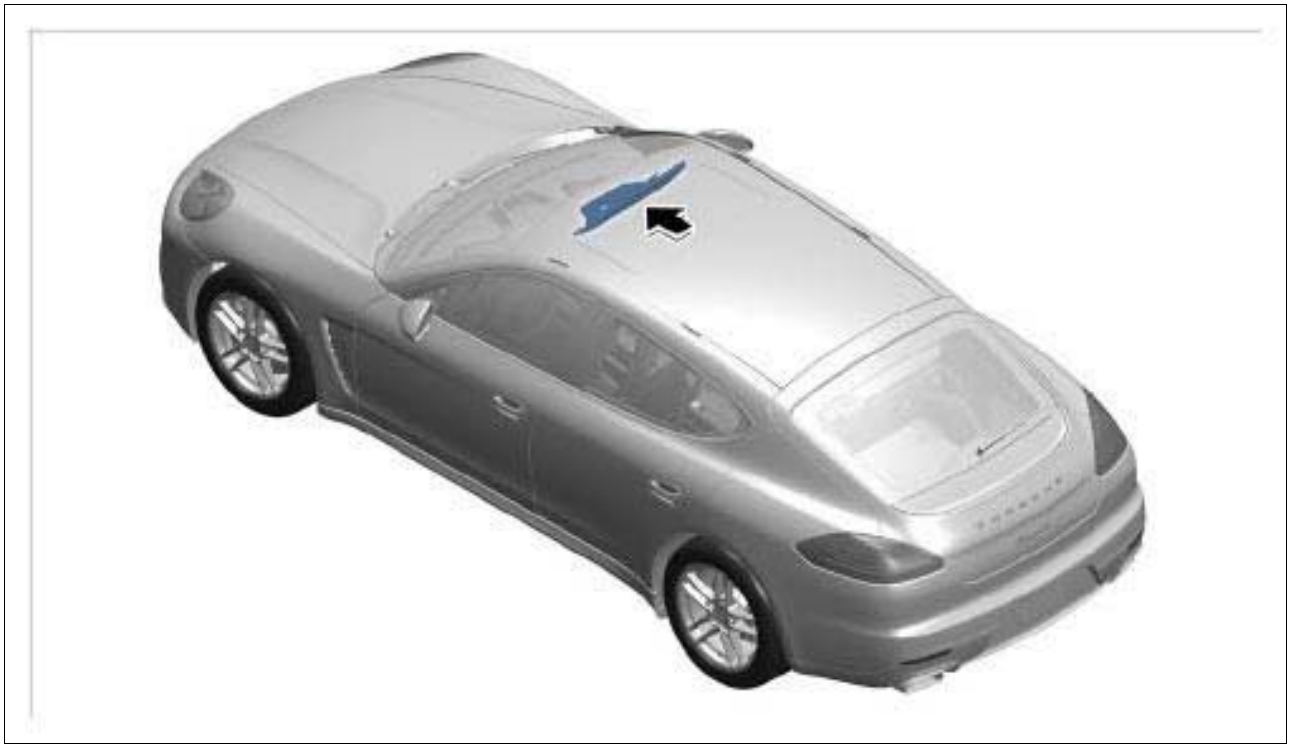

Courtesy of PORSCHE CARS NORTH AMERICA, INC.

WM 697919 REMOVING AND INSTALLING KNEE AIRBAG ON PASSENGER'S SIDE (MACAN, MACAN S, MACAN TURBO) > PRELIMINARY WORK > PRELIMINARY WORK FOR KNEE AIRBAG ON PASSENGER'S SIDE

1. Disconnect battery ground strap. → Removing and installing battery sensor →WM 270619 REMOVING AND INSTALLING BATTERY (ALL MODELS) .
2. Remove glove compartment → 681519 REMOVING AND INSTALLING GLOVE COMPARTMENT .

WM 697919 REMOVING AND INSTALLING KNEE AIRBAG ON PASSENGER'S SIDE (MACAN, MACAN S, MACAN TURBO) > REMOVING KNEE AIRBAG ON PASSENGER'S SIDE

WARNING: Incorrect handling of airbag units

- *Triggering of airbag unit.*
- *System faults can occur.*

→ Switch off ignition and remove ignition key or remote control (hand-held transmitter).

→ A power supply (e.g. battery charger) must not be connected to the external power supply/jump-lead starting terminals.

→ Disconnect the battery and insulate the ground strap so that all contact with a ground carrier is avoided.

→ Wait 1 minute after disconnecting the battery.

→ Only pull off connector on the triggering unit after the waiting time has elapsed.

→ Make sure that no foreign objects are located in front of the airbag unit during installation.

→ Replace damaged parts during removal.

→ Always position airbag units so that the blow-out opening is facing upwards, e.g. crest on driver's airbag.

→ Do not position anything on the airbag units.

→ If removed for an extended period, the airbag units must be stored in a safe place.

→ Airbag units must not come into contact with grease, oil, detergents, liquids, or similar substances.

→ Do not expose airbag units to temperatures above 90°.

→ Do not remove the short-circuit spring on the plug-in contacts.

→ Ignition and preparations may only be carried out by skilled staff, supervised by a second responsible person.

→ Before disposal, the airbag unit must be rendered harmless by electrical ignition performed in accordance with all precautionary measures, thereby preventing it from being used incorrectly.

WARNING: Incorrect handling of safety bolts

- *Danger of injury*
- *Loss of torque*

→ Always use new fastening screws and nuts following removal.

→ Observe specified tightening torques.

→ Carry out a visual inspection of all re-used parts.

Information

Always replace the fastening screws on the airbag unit after customer service and reworking. The micro-self-locking screws must not be treated, greased or loosened and then screwed on again.

1. Unclip base insert in glove compartment by lifting it up and remove it.

   Fig 1: Removing Glove Compartment Base Insert

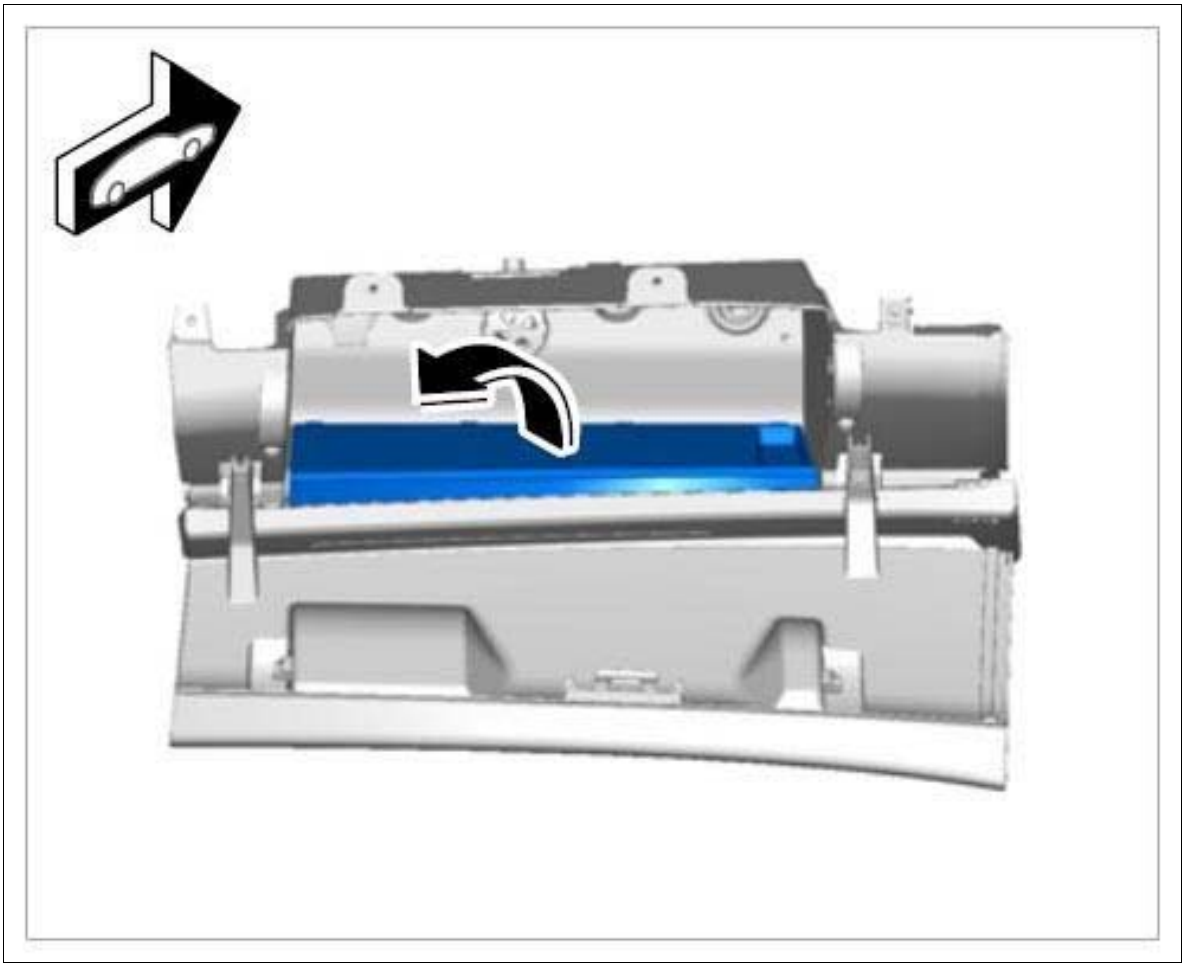

Courtesy of PORSCHE CARS NORTH AMERICA, INC.

2. Unscrew and remove fastening screws **-1-** in the glove compartment.

Fig 2: Removing Glove Compartment Screws

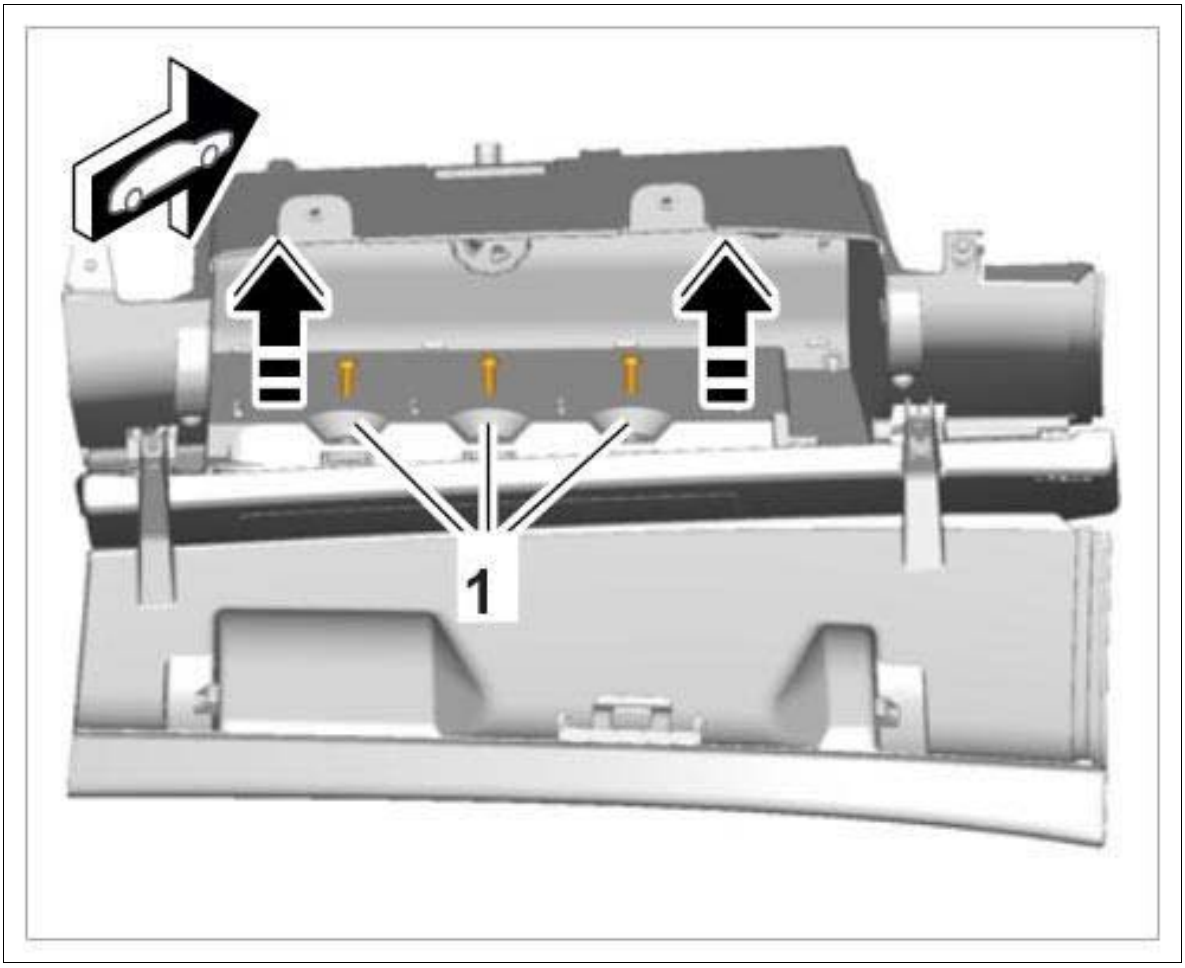

Courtesy of PORSCHE CARS NORTH AMERICA, INC.

3. Unscrew and remove fastening screws **-1-** between the airbag unit and glove compartment.

Fig 3: Removing Airbag Unit Screws

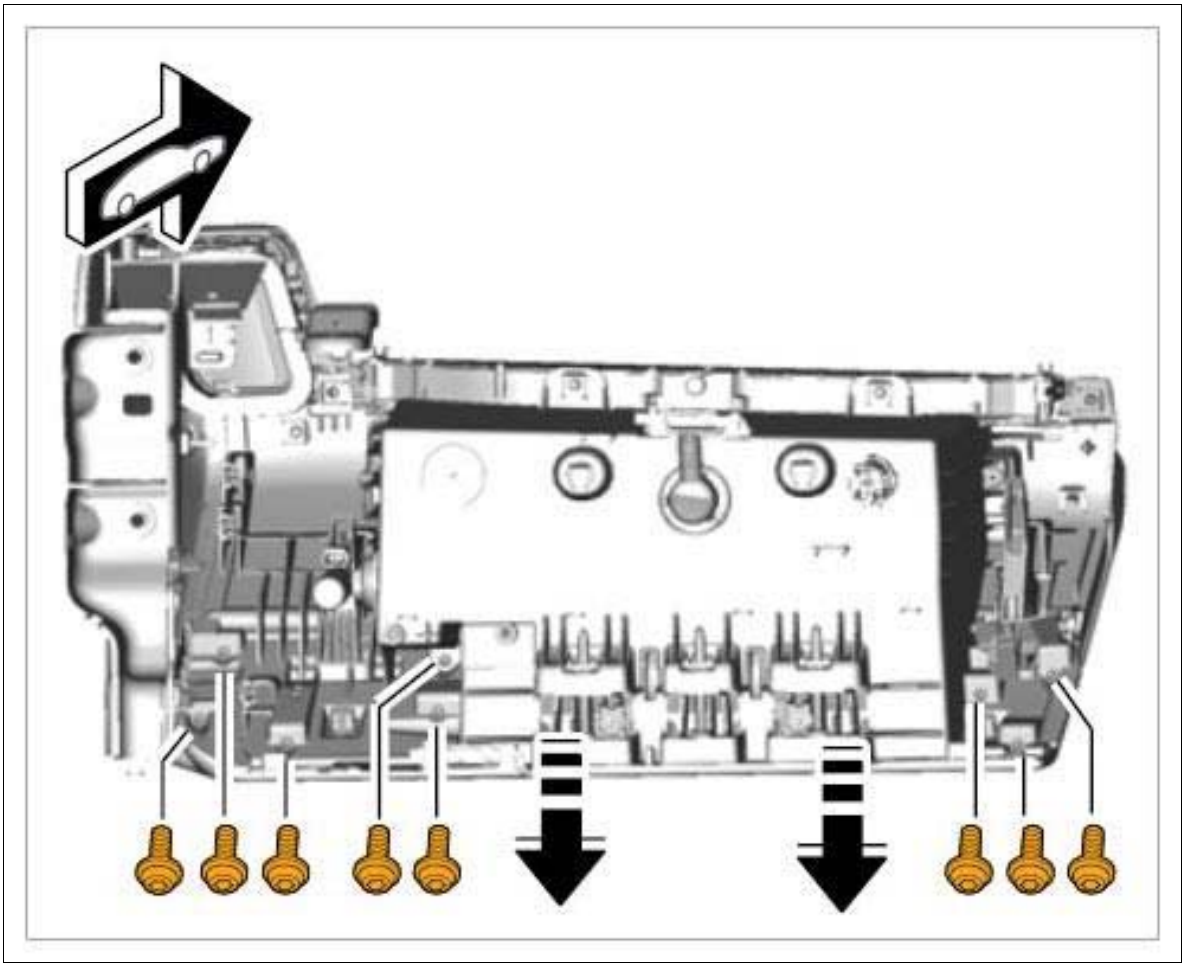

Courtesy of PORSCHE CARS NORTH AMERICA, INC.

4. Unclip fixing clips **-1-** .

Fig 4: Removing Fixing Clips Between Airbag And Glove Compartment

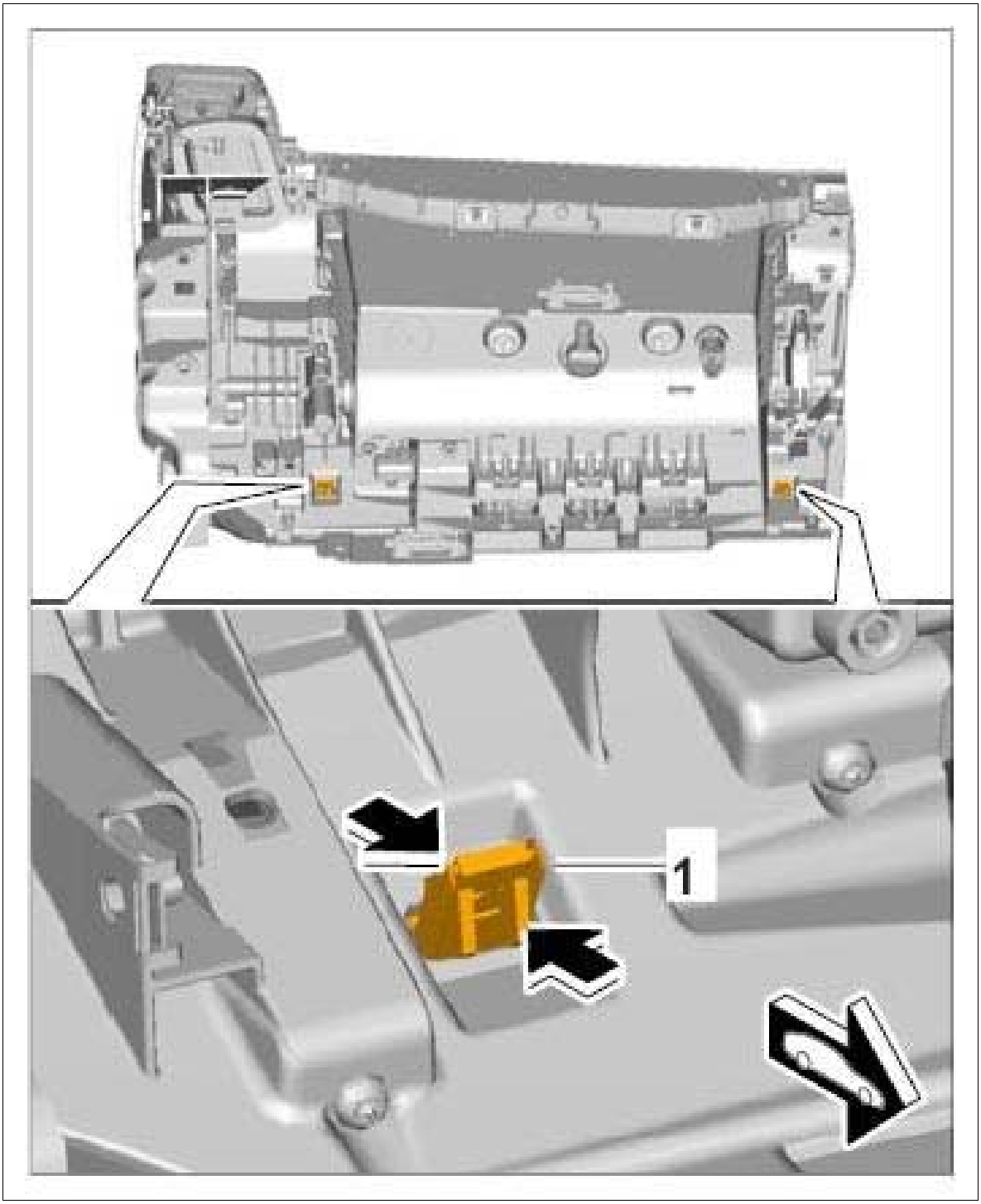

Courtesy of PORSCHE CARS NORTH AMERICA, INC.

5. Unclip knee airbag connector **-1-** .

Fig 5: Removing Knee Airbag Connector

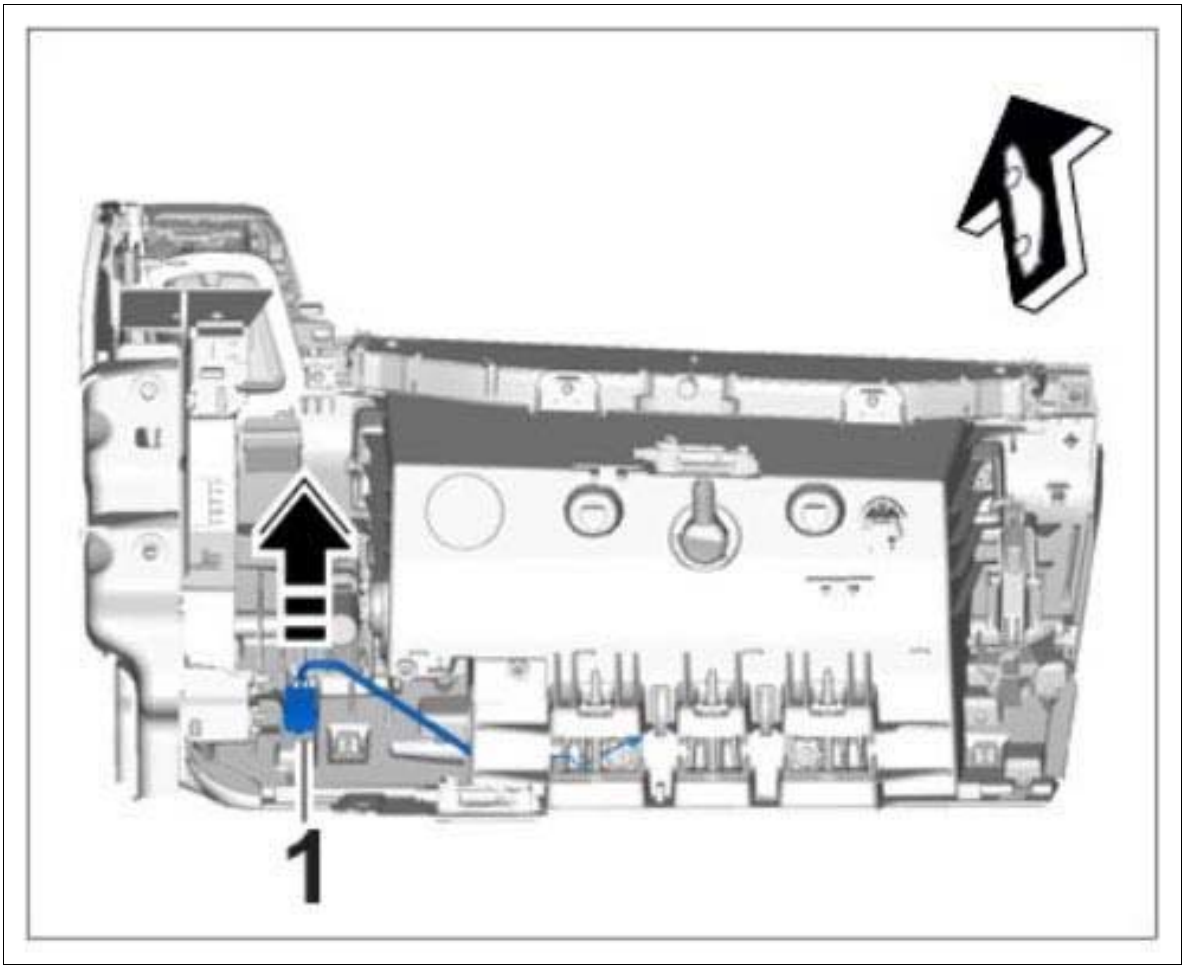

Courtesy of PORSCHE CARS NORTH AMERICA, INC.

6. Guide cable with knee airbag connector through opening in glove compartment.
7. Remove knee airbag on passenger's side and place it to one side in an appropriate manner.

WM 697919 REMOVING AND INSTALLING KNEE AIRBAG ON PASSENGER'S SIDE (MACAN, MACAN S, MACAN TURBO) > INSTALLING KNEE AIRBAG ON PASSENGER'S SIDE

WARNING: Incorrect handling of airbag units

- *Triggering of airbag unit.*
- *System faults can occur.*

→ Switch off ignition and remove ignition key or remote control (hand-held transmitter).

→ A power supply (e.g. battery charger) must not be connected to the external power supply/jump-lead

starting terminals.

→ Disconnect the battery and insulate the ground strap so that all contact with a ground carrier is avoided.

→ Wait 1 minute after disconnecting the battery.

→ Only pull off connector on the triggering unit after the waiting time has elapsed.

→ Make sure that no foreign objects are located in front of the airbag unit during installation.

→ Replace damaged parts during removal.

→ Always position airbag units so that the blow-out opening is facing upwards, e.g. crest on driver's airbag.

→ Do not position anything on the airbag units.

→ If removed for an extended period, the airbag units must be stored in a safe place.

→ Airbag units must not come into contact with grease, oil, detergents, liquids, or similar substances.

→ Do not expose airbag units to temperatures above 90°.

→ Do not remove the short-circuit spring on the plug-in contacts.

→ Ignition and preparations may only be carried out by skilled staff, supervised by a second responsible person.

→ Before disposal, the airbag unit must be rendered harmless by electrical ignition performed in accordance with all precautionary measures, thereby preventing it from being used incorrectly.

1. Guide cable with knee airbag connector through opening in glove compartment.
2. Clip fixing clips **-1-** for the knee airbag into the supports on the glove compartment.

Fig 1: Installing Airbag Into Glove Compartment

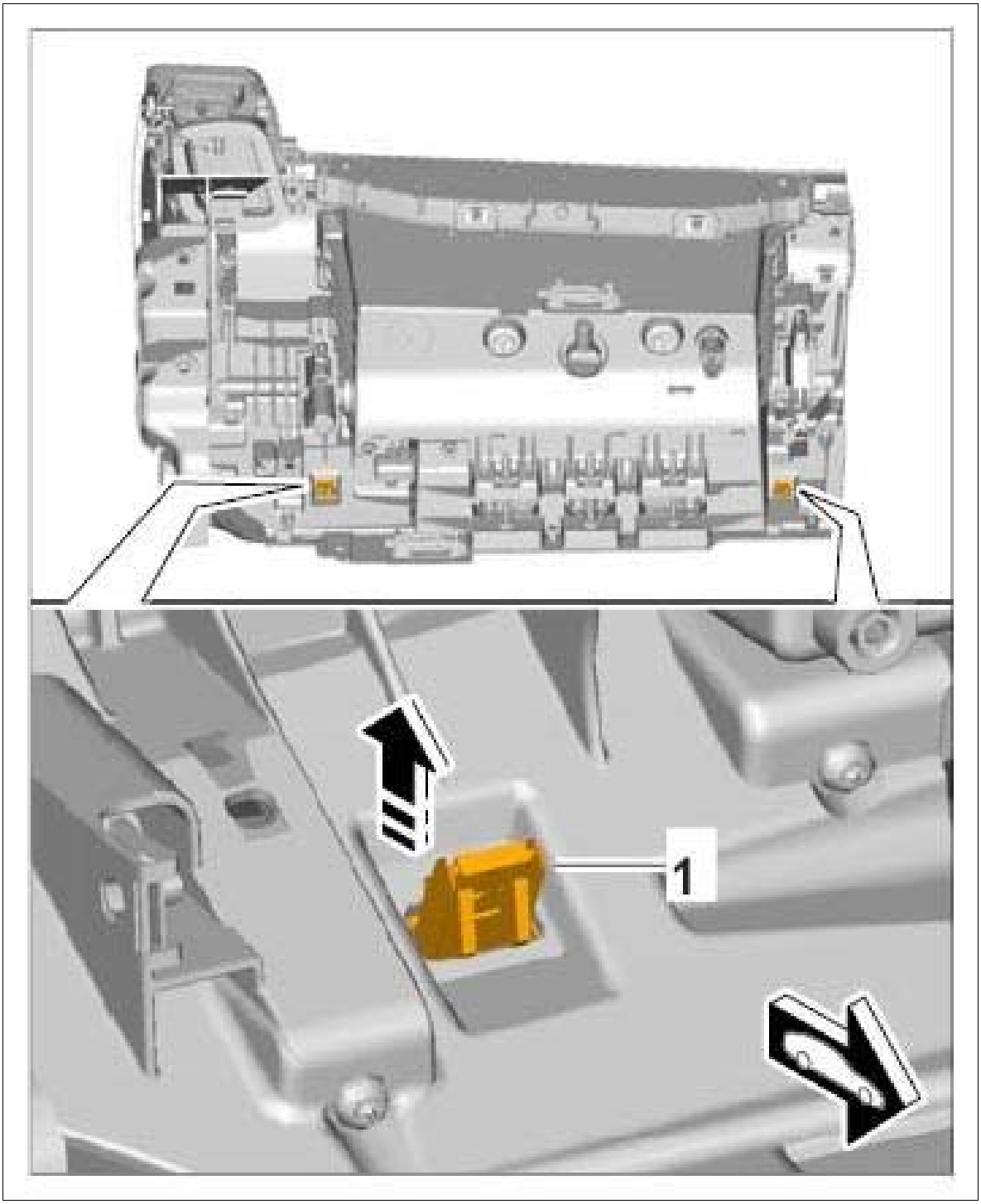

Courtesy of PORSCHE CARS NORTH AMERICA, INC.

3. Clip in knee airbag connector **-1-** .

Fig 2: Installing Knee Airbag Connector

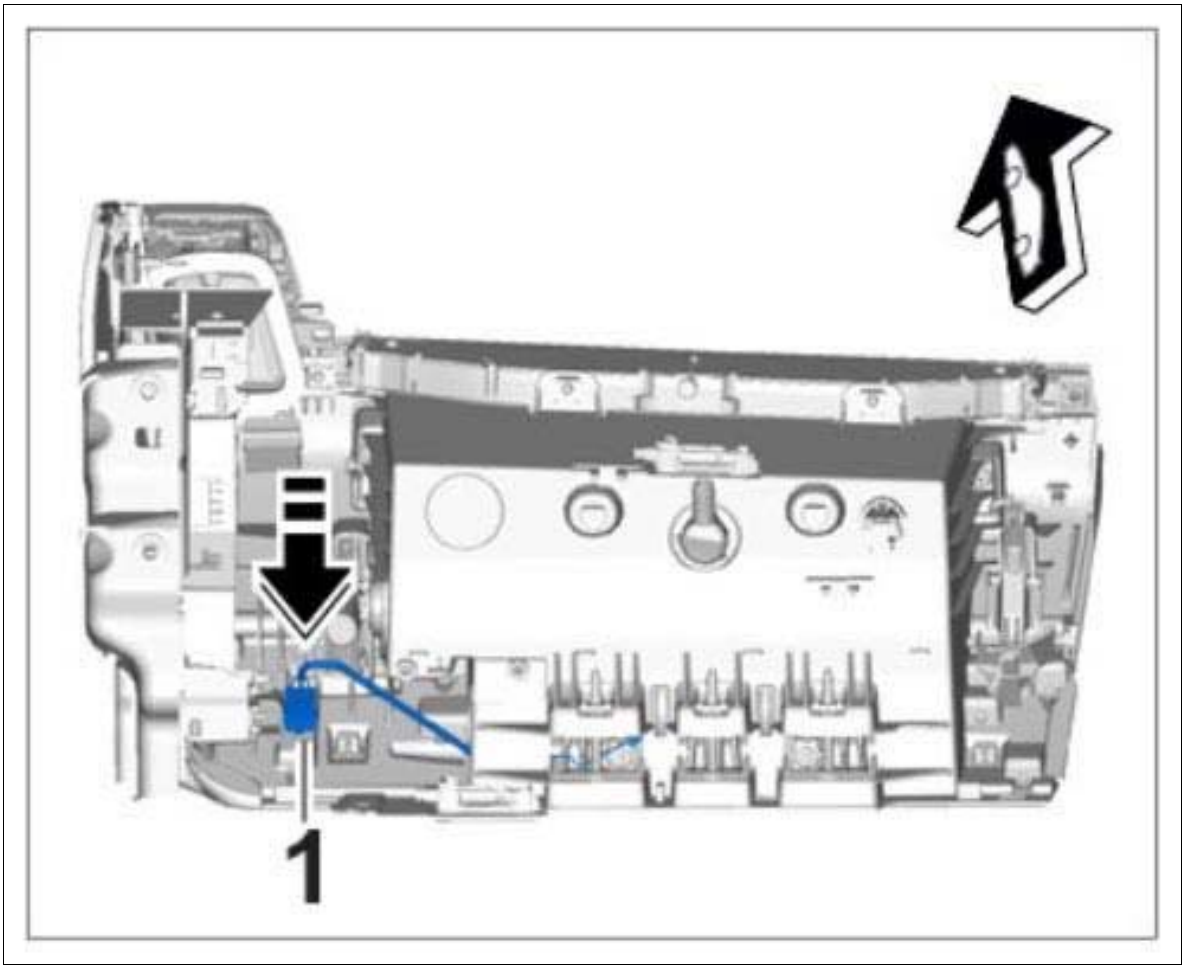

Courtesy of PORSCHE CARS NORTH AMERICA, INC.

WARNING: Incorrect handling of safety bolts

1. Danger of injury

2. Loss of torque

→ Always use new fastening screws and nuts following removal.

→ Observe specified tightening torques.

→ Carry out a visual inspection of all re-used parts.

Information

Always replace the fastening screws on the airbag unit after customer service and reworking. The micro-self-locking screws must not be treated, greased or loosened and then screwed on again.

4. Tighten fastening screws **-1-** between the airbag unit and glove compartment to the prescribed tightening torque. **Tightening torque 1.4 Nm (1 ftlb.)**

Fig 3: Securing Glove Compartment To Airbag Screws

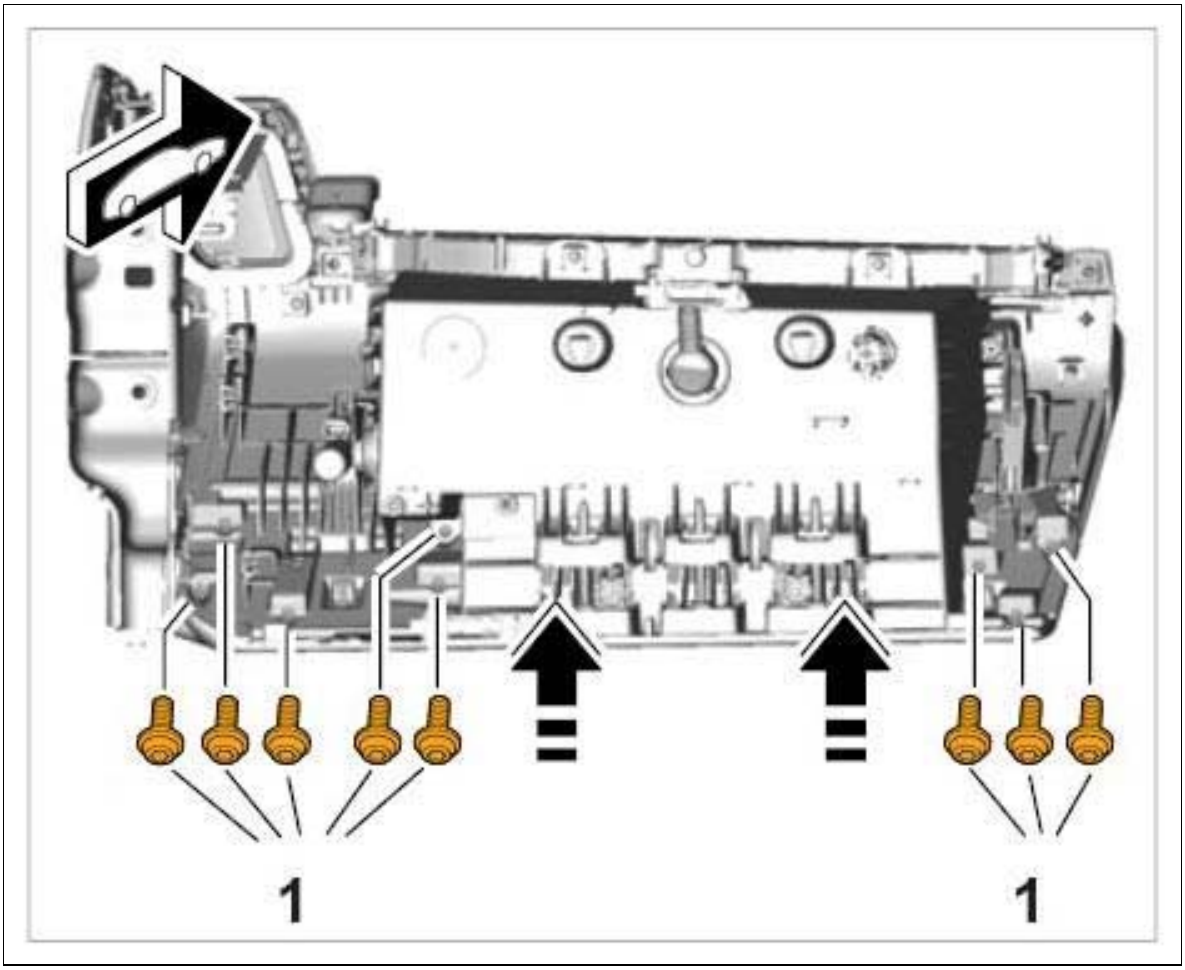

Courtesy of PORSCHE CARS NORTH AMERICA, INC.

5. Tighten fastening screws **-1-** between the airbag unit and top of glove compartment to the prescribed tightening torque. **Tightening torque 3.2 Nm (2 ftlb.)**

Fig 4: Installing Glove Compartment To Knee Airbag

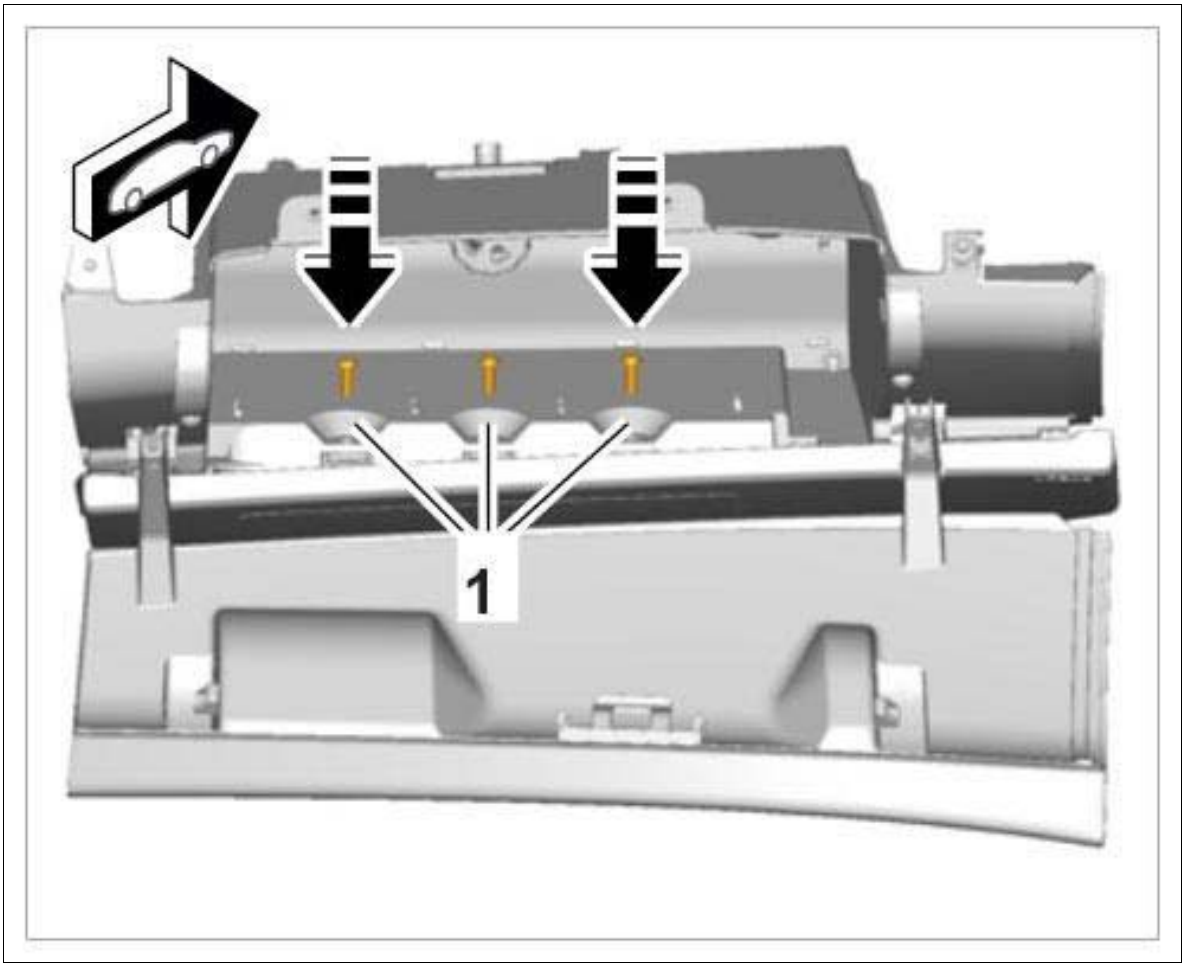

Courtesy of PORSCHE CARS NORTH AMERICA, INC.

6. Guide base insert into the glove compartment and clip it in.

Fig 5: Installing Base Insert In Glove Compartment

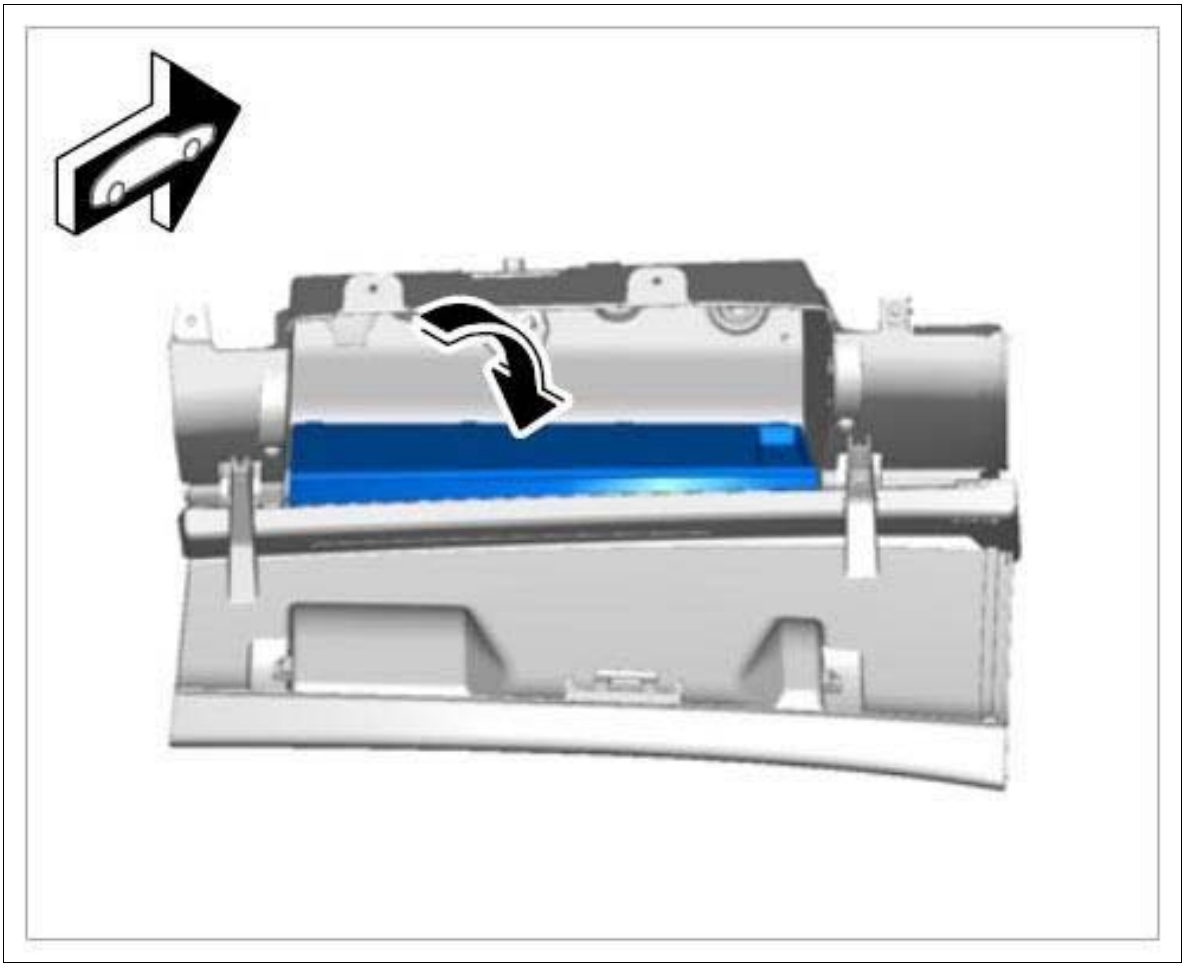

Courtesy of PORSCHE CARS NORTH AMERICA, INC.

WM 697919 REMOVING AND INSTALLING KNEE AIRBAG ON PASSENGER'S SIDE (MACAN, MACAN S, MACAN TURBO) > SUBSEQUENT WORK > SUBSEQUENT WORK FOR KNEE AIRBAG ON PASSENGER'S SIDE

Information

After replacing airbag components, proof of replacement must be documented in the Warranty and Maintenance booklet.

1. Install glove compartment → INSTALLING GLOVE COMPARTMENT .
2. Connect battery ground strap and carry out work instructions after connecting the battery. → Removing and installing battery sensor →WM 270619 REMOVING AND INSTALLING BATTERY (ALL MODELS) and 2X00IN WORK INSTRUCTIONS AFTER DISCONNECTING THE BATTERY .
3. If the knee airbag on the passenger's side was replaced, proof of replacement must be entered in the Warranty and Maintenance booklet.

Service Manual: 48 - STEERING -- (95B) - MACAN

WM 480819 REMOVING AND INSTALLING CONTROL UNIT FOR ELECTRIC STEERING COLUMN LOCK (ELV) (MACAN, MACAN S, MACAN TURBO) > TOOLS

Designation	Type	Number	Description	
PIWIS Tester II	Special tool	9818		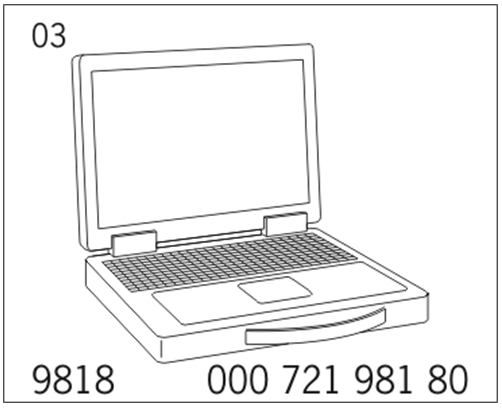

WM 480819 REMOVING AND INSTALLING CONTROL UNIT FOR ELECTRIC STEERING COLUMN LOCK (ELV) (MACAN, MACAN S, MACAN TURBO) > PRELIMINARY WORK

1. Remove steering column. → 481519 REMOVING AND INSTALLING STEERING COLUMN .

WM 480819 REMOVING AND INSTALLING CONTROL UNIT FOR ELECTRIC STEERING COLUMN LOCK (ELV) (MACAN, MACAN S, MACAN TURBO) > REMOVING AND INSTALLING CONTROL UNIT FOR ELECTRIC STEERING COLUMN LOCK (ELV) > REMOVING CONTROL UNIT FOR ELECTRIC STEERING COLUMN LOCK (ELV)

NOTE: Voltage peaks

- *Risk of damage to load or to the control unit*

→ Remove the ignition key and switch off load before disconnecting or removing load.

1. Release and disconnect connector **-2-** .
2. Unscrew and remove fastening screw **-1-** .

Fig 1: Removing ELV Control Unit

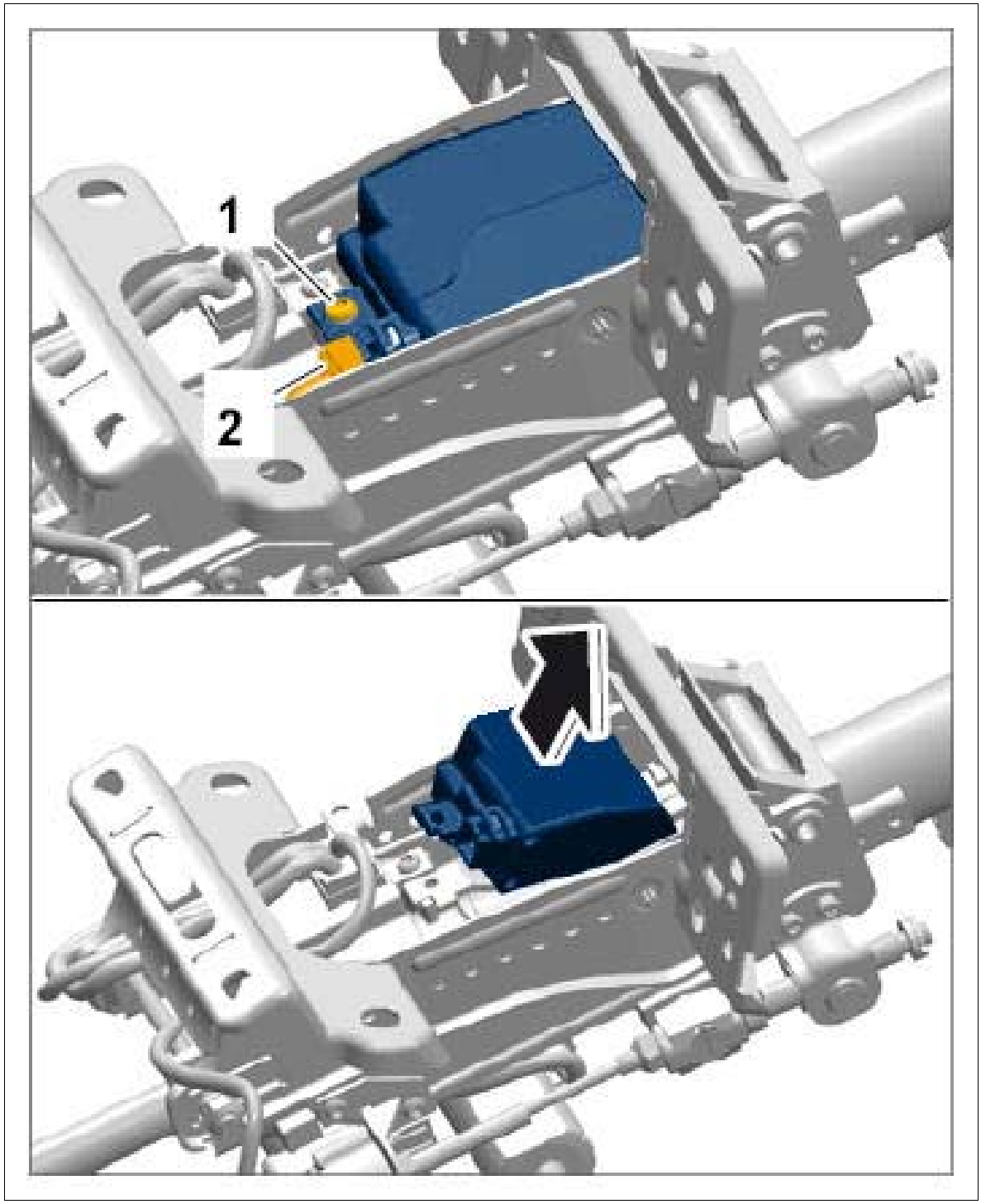

Courtesy of PORSCHE CARS NORTH AMERICA, INC.

3. Lift the ELV control unit and pull it out of the steering column **-arrow-** .

WM 480819 REMOVING AND INSTALLING CONTROL UNIT FOR ELECTRIC STEERING COLUMN LOCK (ELV) (MACAN, MACAN S, MACAN TURBO) > REMOVING AND INSTALLING CONTROL UNIT FOR ELECTRIC STEERING COLUMN LOCK (ELV)

> INSTALLING CONTROL UNIT FOR ELECTRIC STEERING COLUMN LOCK (ELV)

1. Installation is performed in reverse order.

WM 480819 REMOVING AND INSTALLING CONTROL UNIT FOR ELECTRIC STEERING COLUMN LOCK (ELV) (MACAN, MACAN S, MACAN TURBO) > SUBSEQUENT WORK

1. Install steering column → INSTALLING STEERING COLUMN .
2. If the control unit was replaced, the "new" control unit must be adapted to suit the vehicle using **PIWIS Tester II 9818** . → 480855 REPLACING ELV CONTROL UNIT .

WM 480855 REPLACING ELV CONTROL UNIT (MACAN, MACAN S, MACAN TURBO) > TOOLS

Designation	Type	Number	Description	
PIWIS Tester II	Special tool	9818		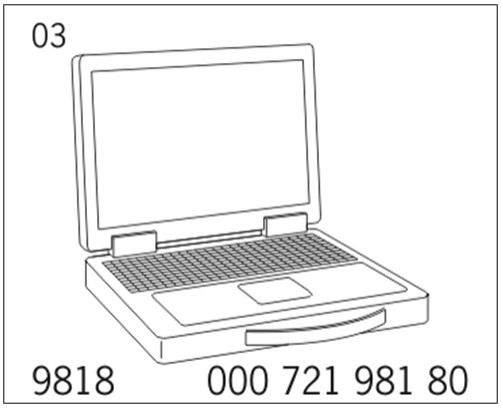

WM 480855 REPLACING ELV CONTROL UNIT (MACAN, MACAN S, MACAN TURBO) > TECHNICAL VALUES

Location	Description	Type	Basic value	Tolerance 1	Tolerance 2
Current rating		Nominal value	40 A		

WM 480855 REPLACING ELV CONTROL UNIT (MACAN, MACAN S, MACAN TURBO) > PRELIMINARY WORK

1. Switch off ignition and replace the ELV control unit. → 480819 REMOVING AND INSTALLING ELV CONTROL UNIT .

WM 480855 REPLACING ELV CONTROL UNIT (MACAN, MACAN S, MACAN TURBO) > TEACHING ELV CONTROL UNIT

NOTE: Voltage drop

- *Risk of irreparable damage to control unit*
- *Risk of damage to control unit*
- *Fault entries in the control unit*
- *Coding in the control unit is aborted*
- *Malfunctions in control unit, even during programming*

→ Prior to disconnecting the control unit, switch off ignition and remove ignition key.

→ Ensure that the power supply is not interrupted during programming.

→ Connect a battery charger with a current rating of at least → **Nominal value: 40 A** to the vehicle battery.

Information

The **PIWIS Tester II 9818** instructions take precedence since the description may be different with later Tester releases.

The procedure described here has been structured in general terms; different text or additions may appear in **PIWIS Tester II 9818** .

Information

All remote controls (keys) are required for teaching a DME, front-end electronics (front BCM), rear-end electronics (rear BCM), electronic steering lock (ELV) control unit or remote controls (keys) for example.

Remote controls (keys) that are not taught during this teaching procedure will no longer be recognized by the vehicle.

1. **PIWIS Tester II 9818** must be connected to the vehicle before starting the Tester. Switch on ignition using original remote control.
2. Select the menu **Diagnostics --> Online teaching function --> Engine immobilizer** on the Start page.
3. **Vehicle** must now be selected. Then press [F12] to continue. Vehicle data will be read out.
4. Follow the instructions on the Tester.
5. The vehicle identification number (VIN) is displayed. Change the vehicle identification number if necessary.
6. Enter the repair order number and press [F12] to continue.

7. Enter the PPN user name and password and press [F12] to continue.
8. Login is performed.
9. The Tester displays the message **Login successful** . Press [F12] to continue.
10. Follow the instructions on the Tester to select the required menu.
11. Once the teaching process is completed successfully, the Tester shows the following status, for example:

    2 keys taught

    Front BCM: taught

    ELV: taught

    Rear BCM: taught

    DME: taught

    Overall vehicle status: taught. Continue with [F12]
12. Press [ESC] to exit the **Online teaching function** and select the **vehicle type** on the Start page.
13. Read out the fault memory and delete faults if necessary.
14. Lock, open and start the vehicle using all remote controls (hand-held transmitters).
15. Read out the fault memory again.

WM 481019 REMOVING AND INSTALLING STEERING WHEEL (MACAN, MACAN S, MACAN TURBO) > TOOLS

Designation	Type	Number	Description	
multiple-tooth socket-wrench insert	Commercially available tool	Nr.32		

WM 481019 REMOVING AND INSTALLING STEERING WHEEL (MACAN, MACAN S,

MACAN TURBO) > TECHNICAL VALUES

Location	Description	Type	Basic value	Tolerance 1	Tolerance 2
Steering wheel to steering column	Internal serration screw, M18 x 1.5 x 26. Always replace following removal! (microencapsulated thread)	Initial tightening	30 Nm (22 ftlb.)		
Steering wheel to steering column	Internal serration screw, M18 x 1.5 x 26. Always replace following removal! (microencapsulated thread)	Final tightening	+90°		

WM 481019 REMOVING AND INSTALLING STEERING WHEEL (MACAN, MACAN S, MACAN TURBO) > PRELIMINARY WORK

1. Disconnect the battery → WM 2X00IN WORK INSTRUCTIONS AFTER DISCONNECTING THE BATTERY .

> *WARNING: Incorrect handling of airbag units*
>
> 1. *Triggering of airbag unit.*
> 2. *System faults can occur.*

→ Switch off ignition and remove ignition key or remote control (hand-held transmitter).

→ A power supply (e.g. battery charger) must not be connected to the external power supply/jump-lead starting terminals.

→ Disconnect the battery and insulate the ground strap so that all contact with a ground carrier is avoided.

→ Wait 1 minute after disconnecting the battery.

→ Only pull off connector on the triggering unit after the waiting time has elapsed.

→ Make sure that no foreign objects are located in front of the airbag unit during installation.

→ Replace damaged parts during removal.

→ Always position airbag units so that the blow-out opening is facing upwards, e.g. crest on driver's airbag.

→ Do not position anything on the airbag units.

→ If removed for an extended period, the airbag units must be stored in a safe place.

→ Airbag units must not come into contact with grease, oil, detergents, liquids, or similar substances.

→ Do not expose airbag units to temperatures above 90°.

→ Do not remove the short-circuit spring on the plug-in contacts.

→ Ignition and preparations may only be carried out by skilled staff, supervised by a second responsible person.

→ Before disposal, the airbag unit must be rendered harmless by electrical ignition performed in accordance with all precautionary measures, thereby preventing it from being used incorrectly.

2. Remove driver's airbag unit → 695819 REMOVING AND INSTALLING DRIVER'S AIRBAG UNIT .

WM 481019 REMOVING AND INSTALLING STEERING WHEEL (MACAN, MACAN S, MACAN TURBO) > REMOVING AND INSTALLING STEERING WHEEL > REMOVING STEERING WHEEL

1. Turn wheels to straight-ahead position.

   Information

   1. Always release and disconnect the plug connections for steering wheel heater cables and airbag cables before removing the steering wheel.

2. Release plug connection for airbag wire harness **-1-** and disconnect it.

3. If the vehicle has a heated steering wheel: release and disconnect plug connection for steering wheel heating **-2-** .

Fig 1: Identifying Plug Connections

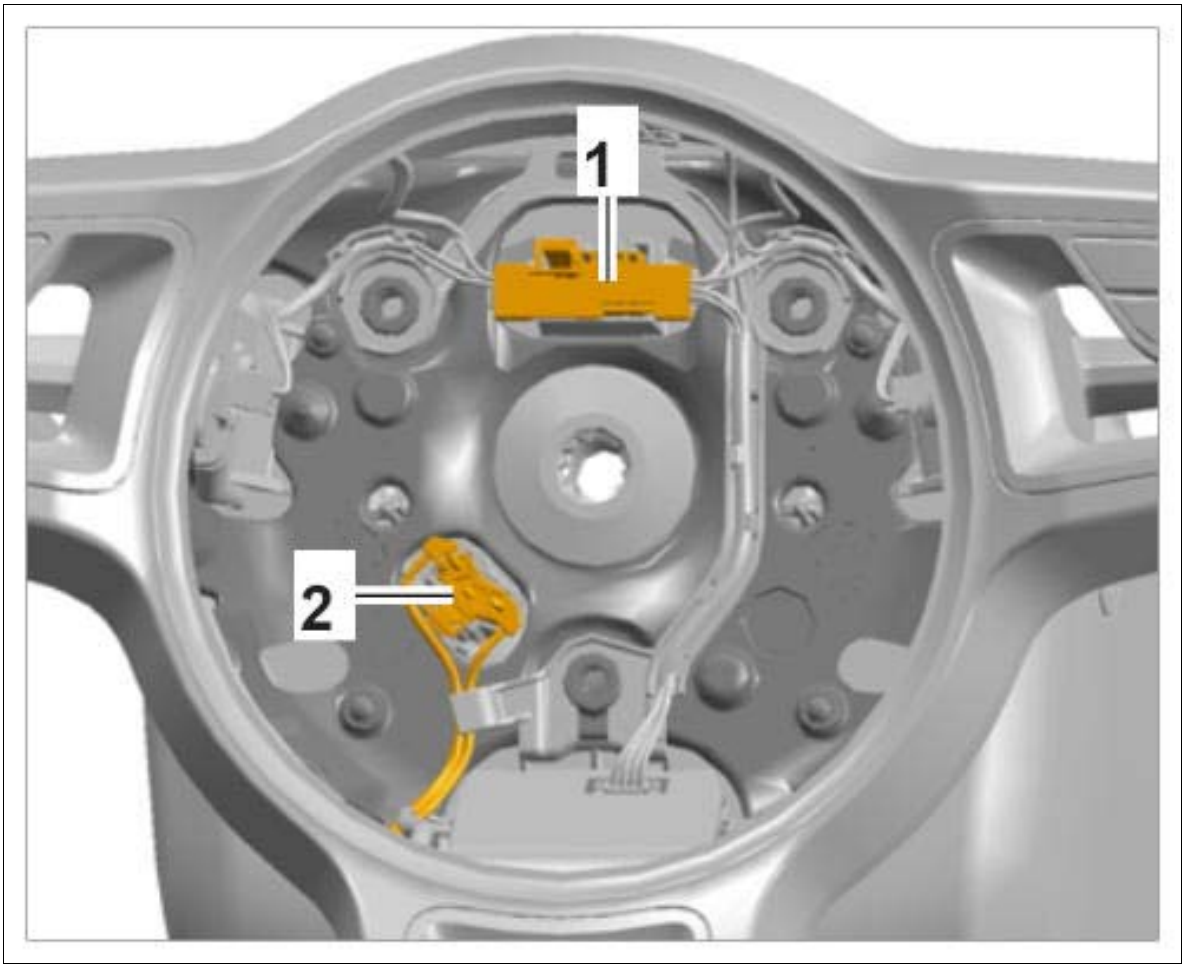

Courtesy of PORSCHE CARS NORTH AMERICA, INC.

Information

Immediately after unscrewing the screw and **before** removing the steering wheel, always mark the position of the steering wheel between the steering wheel and steering column **-2-** .

Fig 2: Identifying Steering Column Mark

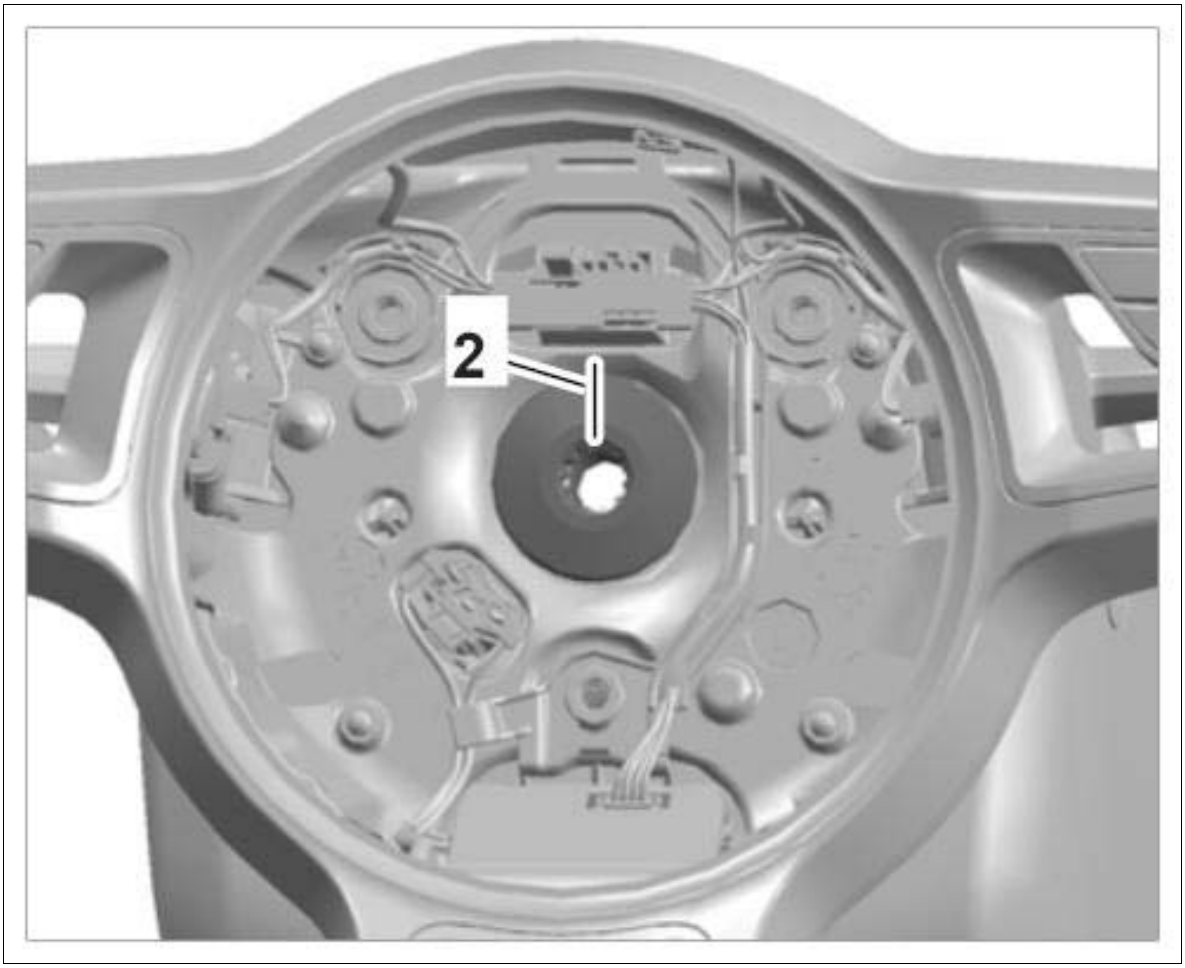

Courtesy of PORSCHE CARS NORTH AMERICA, INC.

This ensures that the steering wheel will be fitted at the same position on the steering column again during re-installation.

4. Unscrew and remove fastening screw **-1-** using **multiple-tooth socket-wrench insert Nr.32** .

Fig 3: Identifying Screw

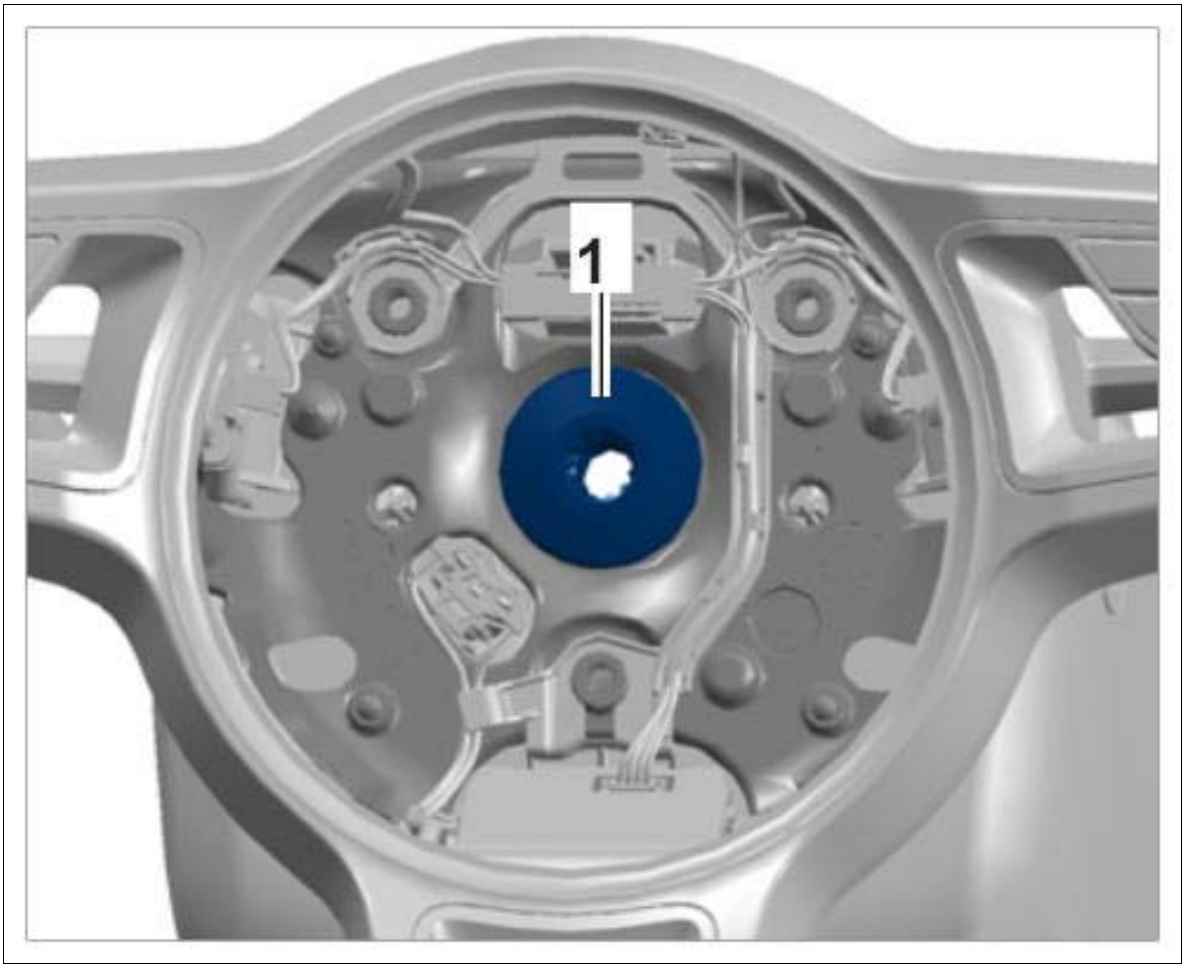

Courtesy of PORSCHE CARS NORTH AMERICA, INC.

5. Mark the position of the steering wheel.
6. Remove steering wheel.

WM 481019 REMOVING AND INSTALLING STEERING WHEEL (MACAN, MACAN S, MACAN TURBO) > REMOVING AND INSTALLING STEERING WHEEL > INSTALLING STEERING WHEEL

Information

- Turn wheels to straight-ahead position and observe the markings you applied earlier!
- Always replace the multiple-tooth screw!

1. Installation is performed in reverse order.

   Steering wheel to steering column: **Initial tightening 30 Nm (22 ftlb.) Final tightening +90°**

2. When fitting the steering wheel, make sure that the marking **-2-** between the steering wheel and steering column is aligned.

Fig 1: Identifying Steering Column Mark

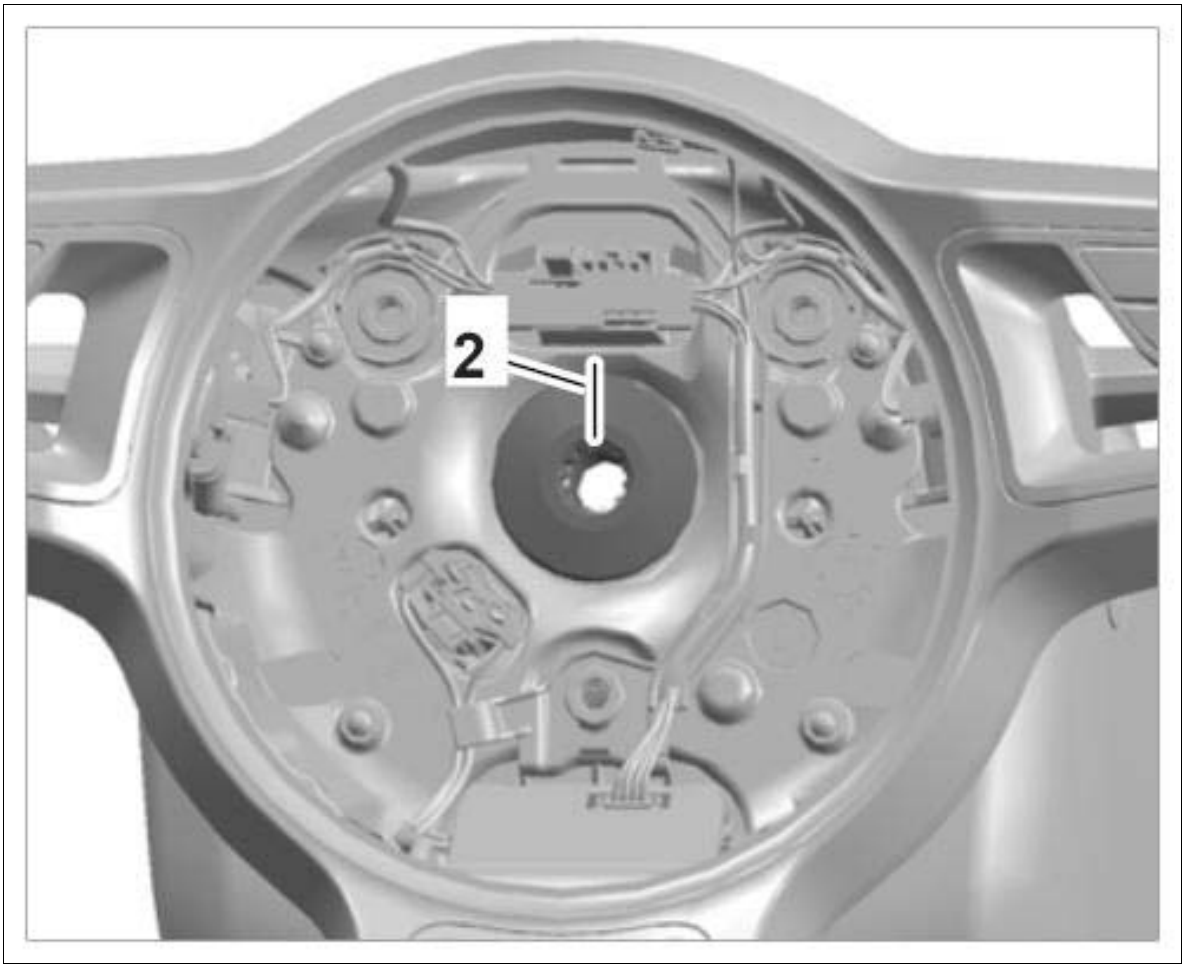

Courtesy of PORSCHE CARS NORTH AMERICA, INC.

WM 481019 REMOVING AND INSTALLING STEERING WHEEL (MACAN, MACAN S, MACAN TURBO) > SUBSEQUENT WORK

1. Install driver's airbag unit → INSTALLING DRIVER'S AIRBAG UNIT .
2. Connect the battery → WM 2X00IN WORK INSTRUCTIONS AFTER DISCONNECTING THE BATTERY .

WM 481037 DISASSEMBLING AND ASSEMBLING STEERING WHEEL (MACAN, MACAN S, MACAN TURBO) > TECHNICAL VALUES

Location	Description	Type	Basic value	Tolerance 1	Tolerance 2
Contact bridge to steering wheel skeleton		Tightening torque	6 Nm (4.5 ftlb.)		

Multi-functional switch and front trim to main cover		Tightening torque	0.45 Nm (0.25 ftlb.)		
Steering wheel skeleton to main cover		Tightening torque	2 Nm (1.5 ftlb.)		
Paddles to steering wheel skeleton		Tightening torque	2.5 Nm (2 ftlb.)		
Back cover to steering wheel skeleton		Tightening torque	2.7 Nm (2 ftlb.)		

WM 481037 DISASSEMBLING AND ASSEMBLING STEERING WHEEL (MACAN, MACAN S, MACAN TURBO) > PRELIMINARY WORK

1. Remove steering wheel → 481019 REMOVING AND INSTALLING STEERING WHEEL .

WM 481037 DISASSEMBLING AND ASSEMBLING STEERING WHEEL (MACAN, MACAN S, MACAN TURBO) > DISASSEMBLING AND ASSEMBLING STEERING WHEEL > DISASSEMBLING STEERING WHEEL

1. Unscrew fastening screws **-1-** on rear cover **-2-** .

Fig 1: Identifying Screws Of Rear Cover

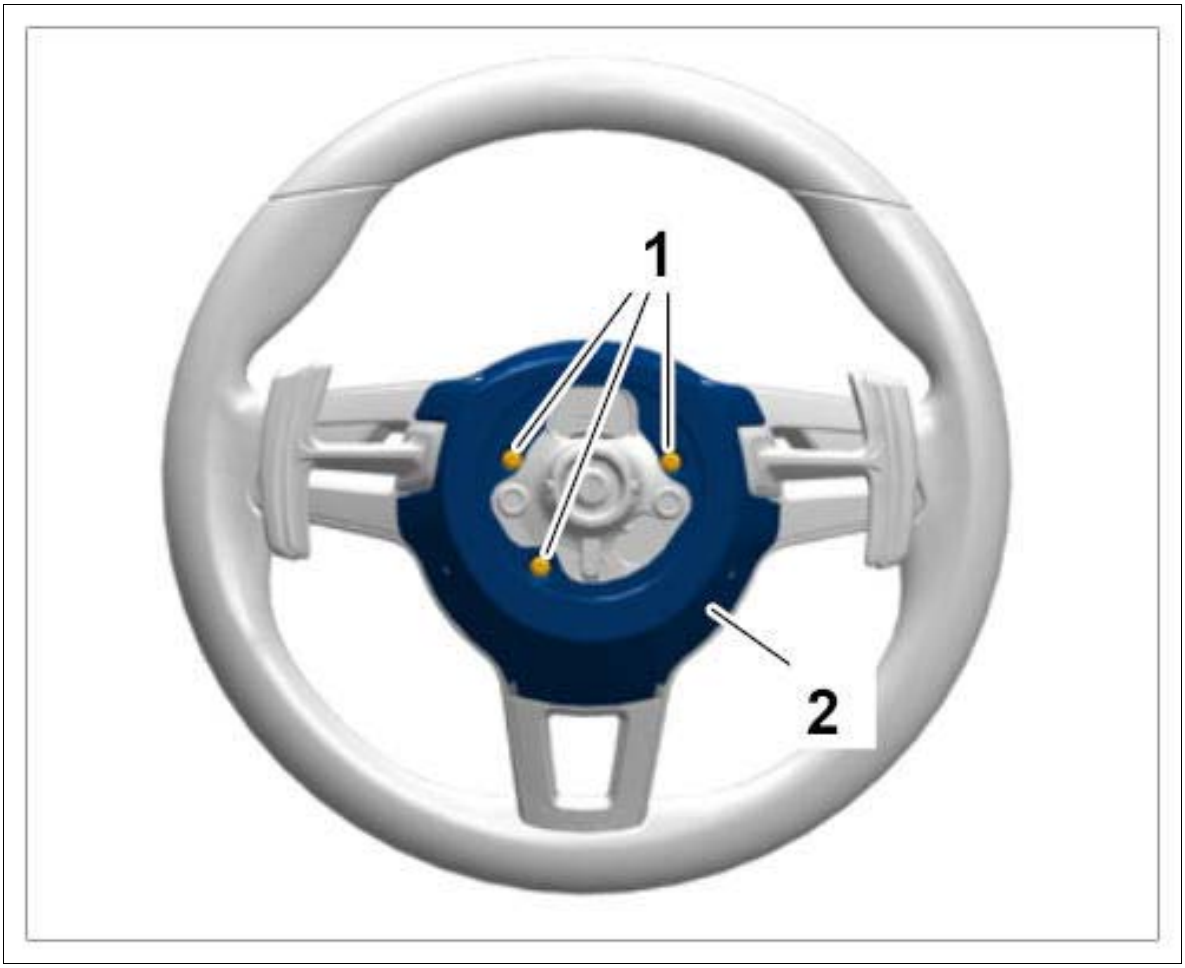

Courtesy of PORSCHE CARS NORTH AMERICA, INC.

2. Release control unit **-1-** at position **-arrow-** and pull it forward slightly.

Fig 2: Removing Control Unit

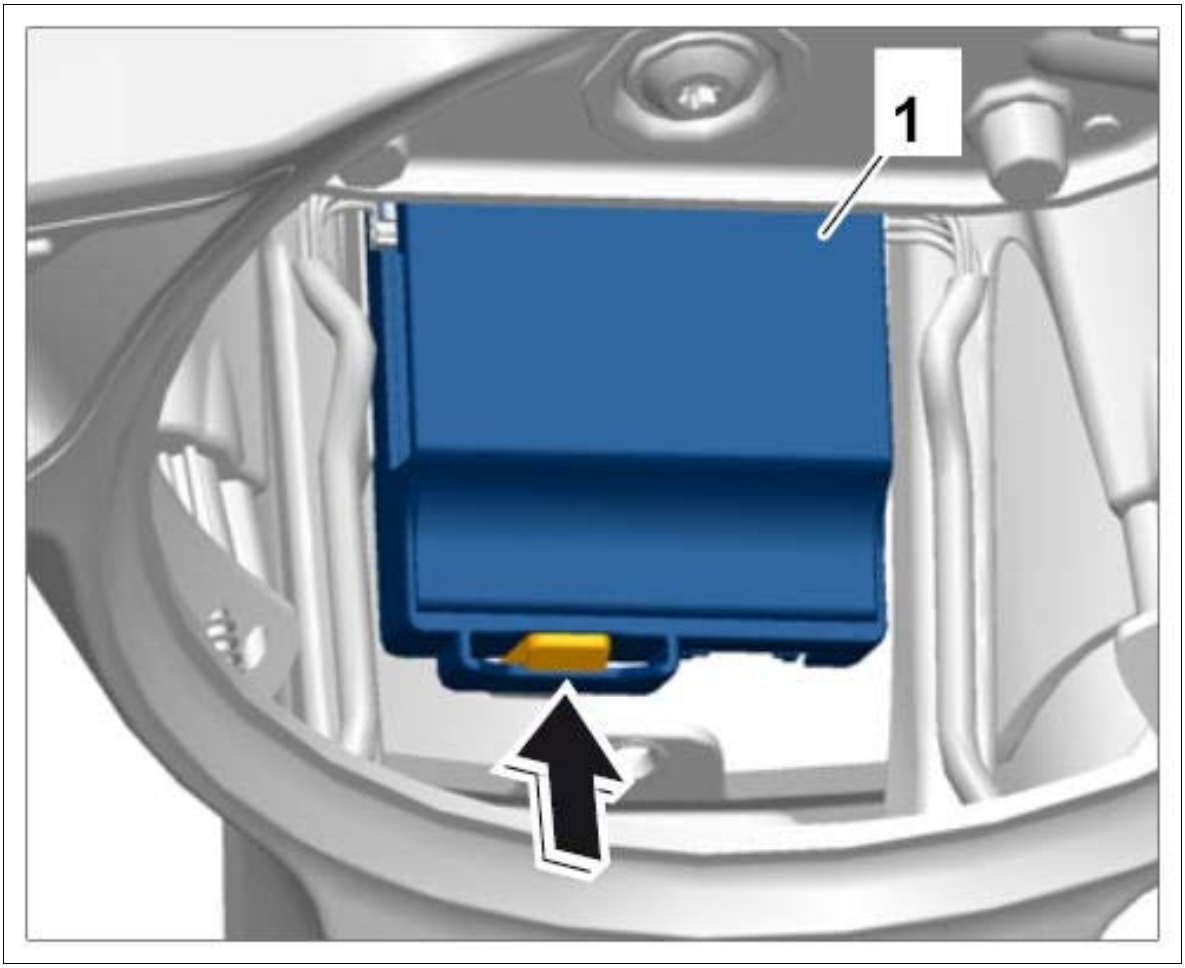

Courtesy of PORSCHE CARS NORTH AMERICA, INC.

3. Remove rear cover **-2-** .

Fig 3: Identifying Rear Cover

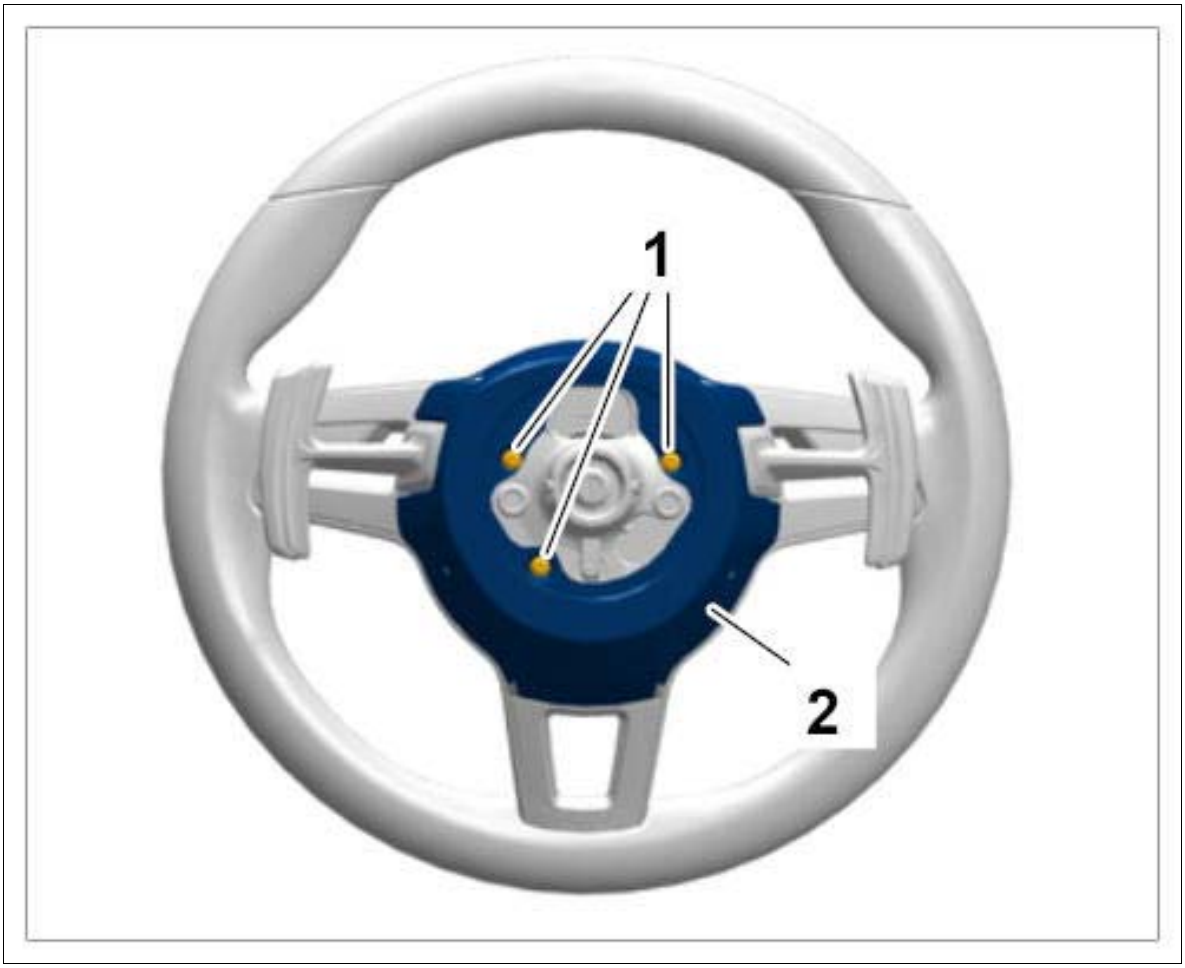

Courtesy of PORSCHE CARS NORTH AMERICA, INC.

4. Unscrew fastening screws **-1-** for the paddles **-2-** .

Fig 4: Identifying Paddles And Screws

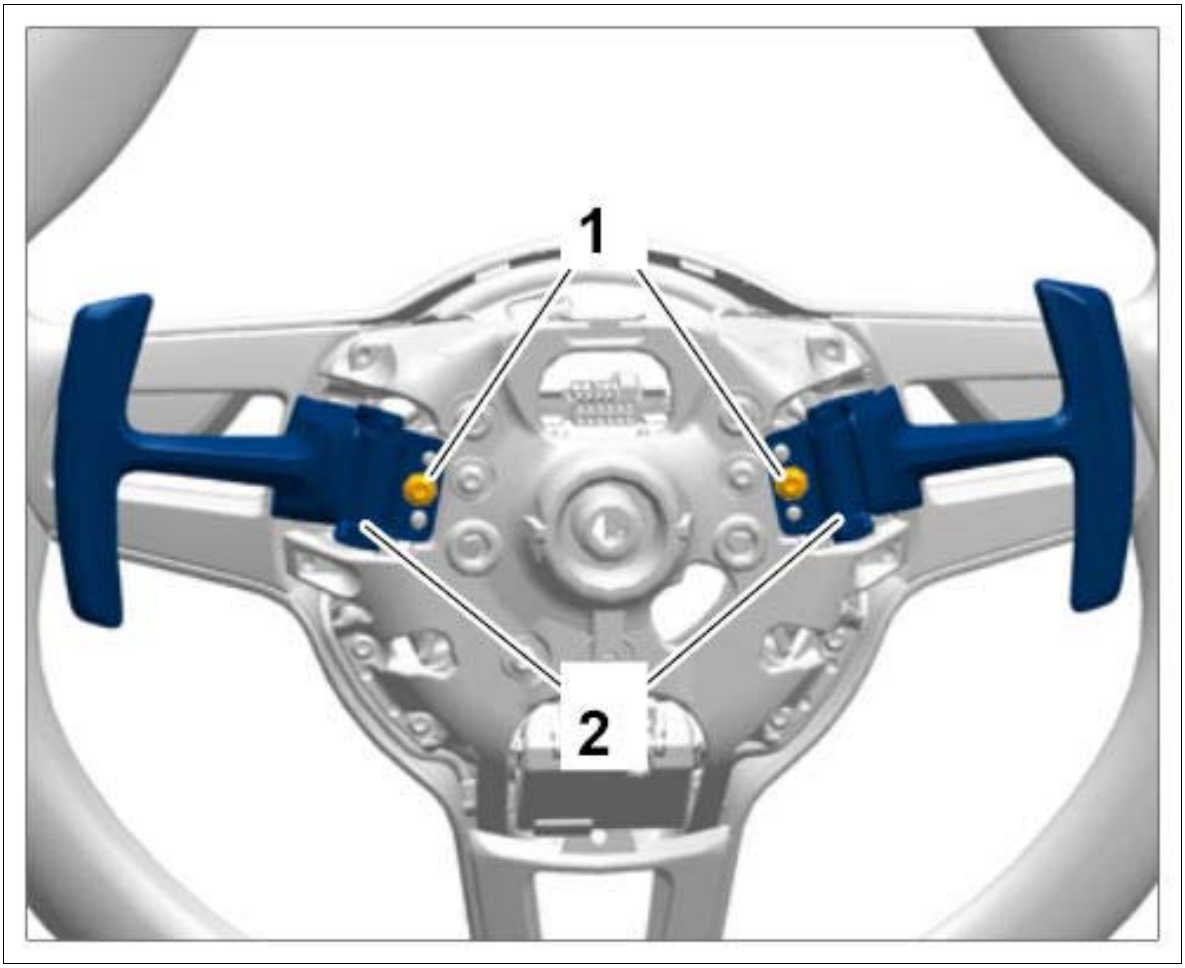

Courtesy of PORSCHE CARS NORTH AMERICA, INC.

5. Release and disconnect electric plug connection **-1-** for the paddles.

Fig 5: Identifying Electric Plug Connection

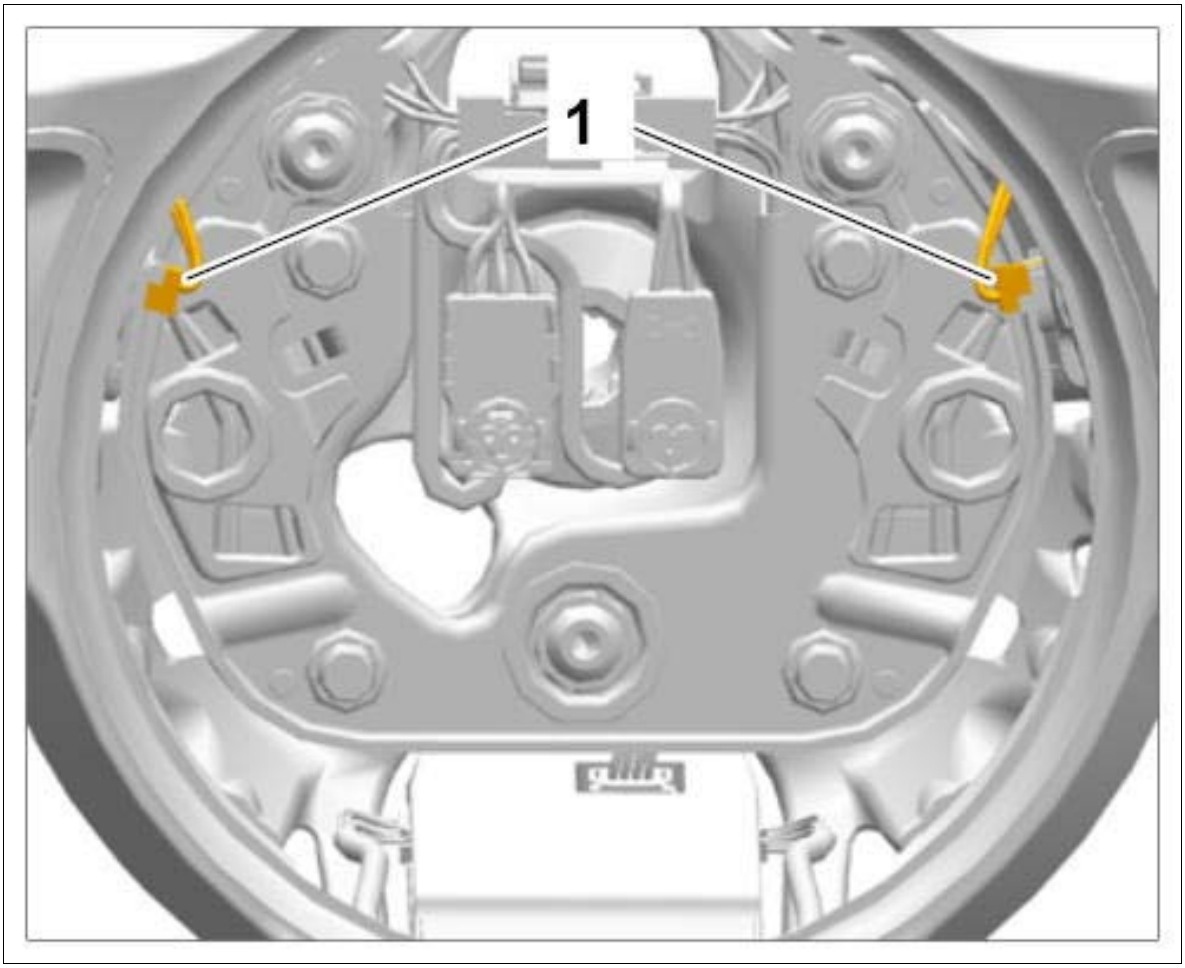

Courtesy of PORSCHE CARS NORTH AMERICA, INC.

6. Lift paddles **-2-** up and off.

Fig 6: Identifying Paddles

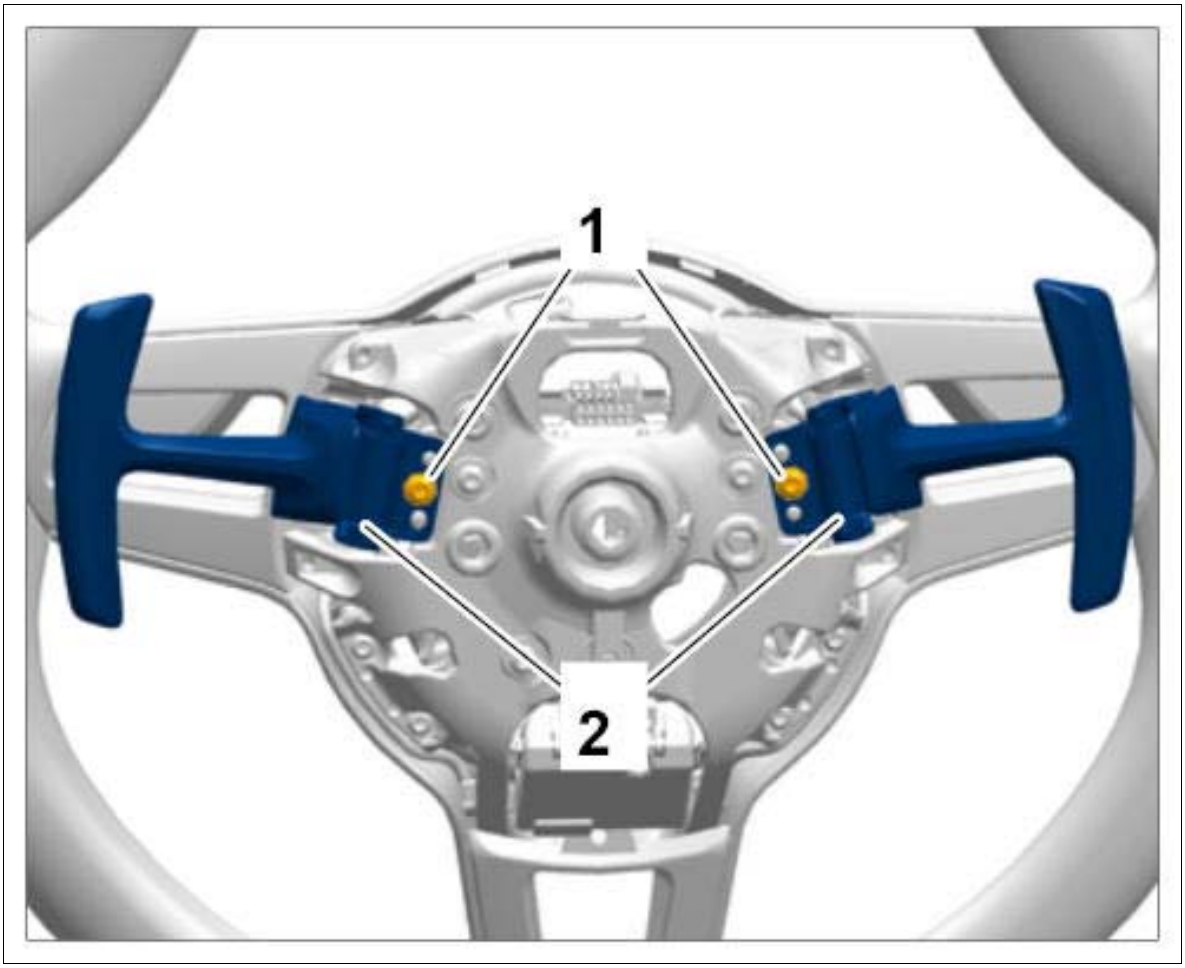

Courtesy of PORSCHE CARS NORTH AMERICA, INC.

7. Unclip rear trims at positions **-arrows-** using a suitable thin tool (e.g. feeler gauge).

Fig 7: Removing Rear Trims



Courtesy of PORSCHE CARS NORTH AMERICA, INC.

8. **Only for heated steering wheel:** Release electric plug connection **-1-** from the rear trim at the 6 o'clock position **-2-** and disconnect it.

Fig 8: Identifying Connector For Heated Steering Wheel Switch



Courtesy of PORSCHE CARS NORTH AMERICA, INC.

9. Unscrew fastening screws **-1-** on the main trim.

Fig 9: Identifying Screws For Main Trim

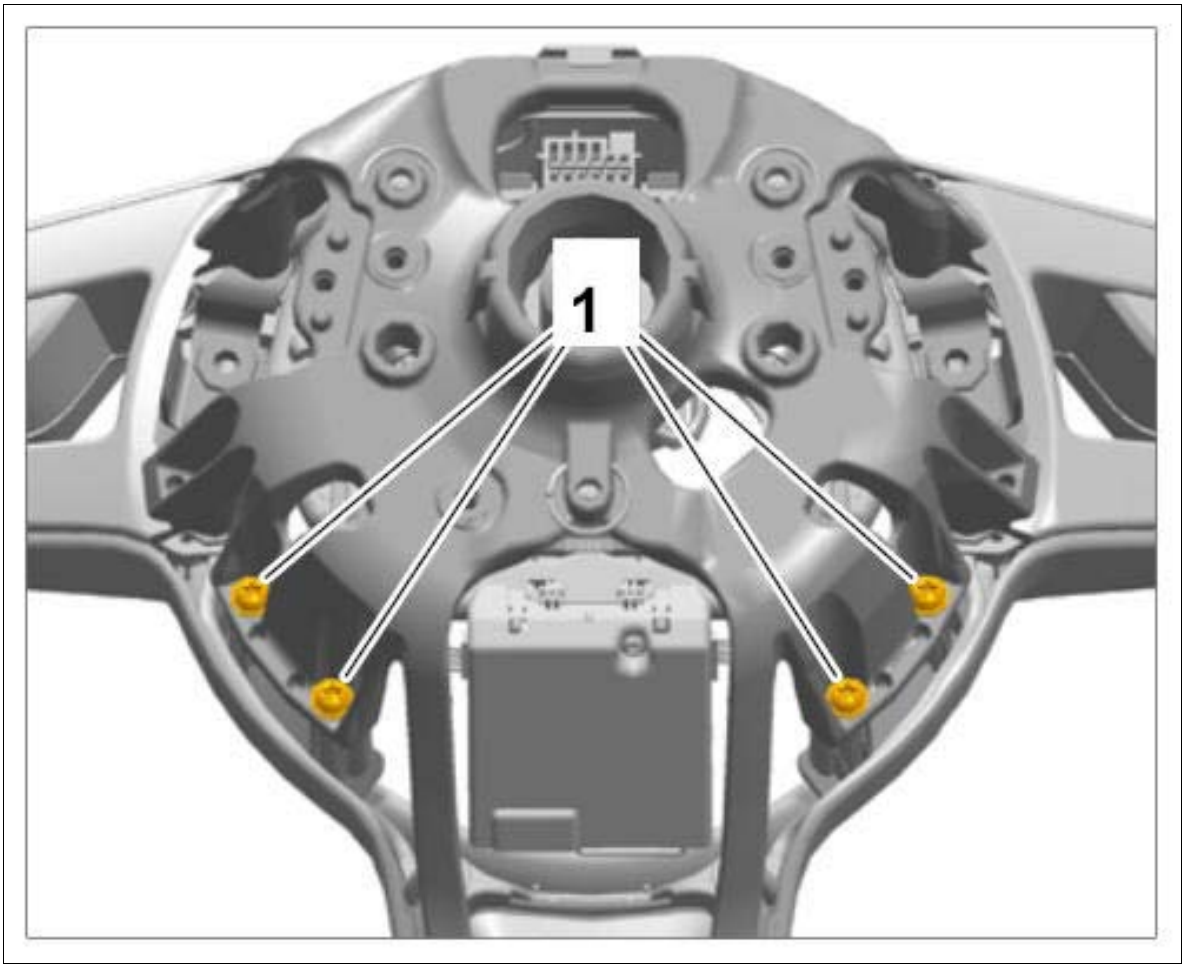

Courtesy of PORSCHE CARS NORTH AMERICA, INC.

10. Lift main trim **-1-** straight up.

Fig 10: Identifying Main Trim

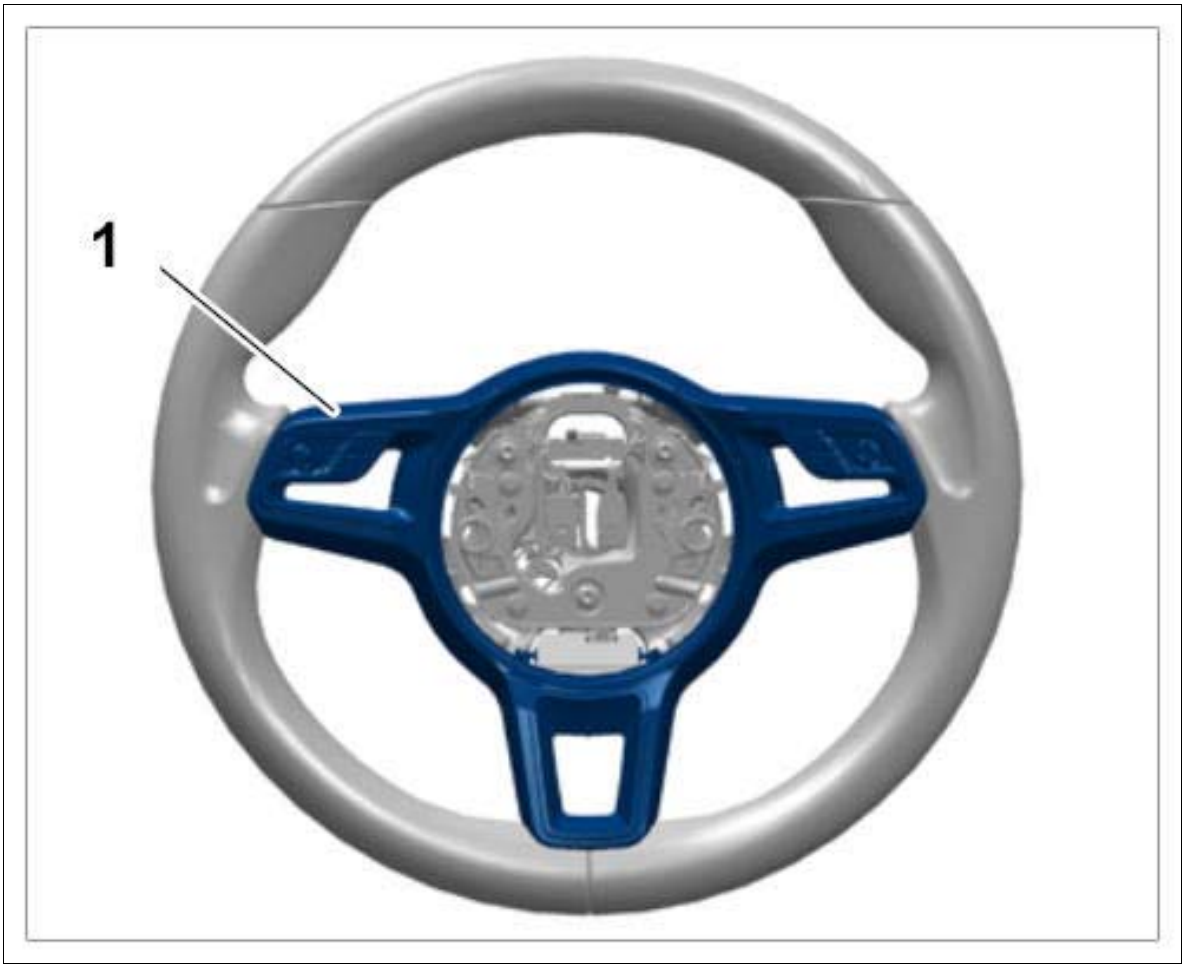

Courtesy of PORSCHE CARS NORTH AMERICA, INC.

11. Release and disconnect electric plug connections **-1-** and remove main trim **-2-** .

Fig 11: Identifying Connector For Multi-Functional Switch On Control Unit

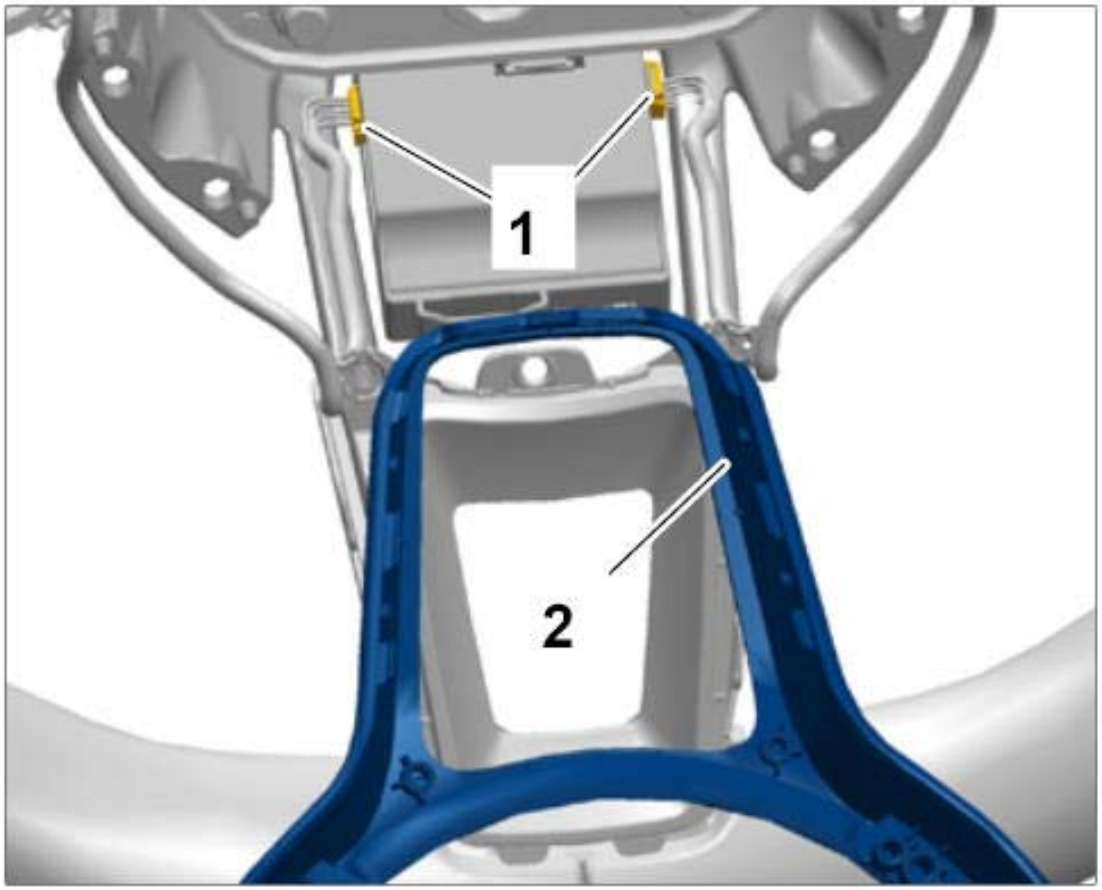

Courtesy of PORSCHE CARS NORTH AMERICA, INC.

12. Unscrew fastening screws **-1-** for the multi-functional switch **-2-** and front trim **-3-** .

Fig 12: Identifying Multi-Functional Switch And Front Trim On Main Trim

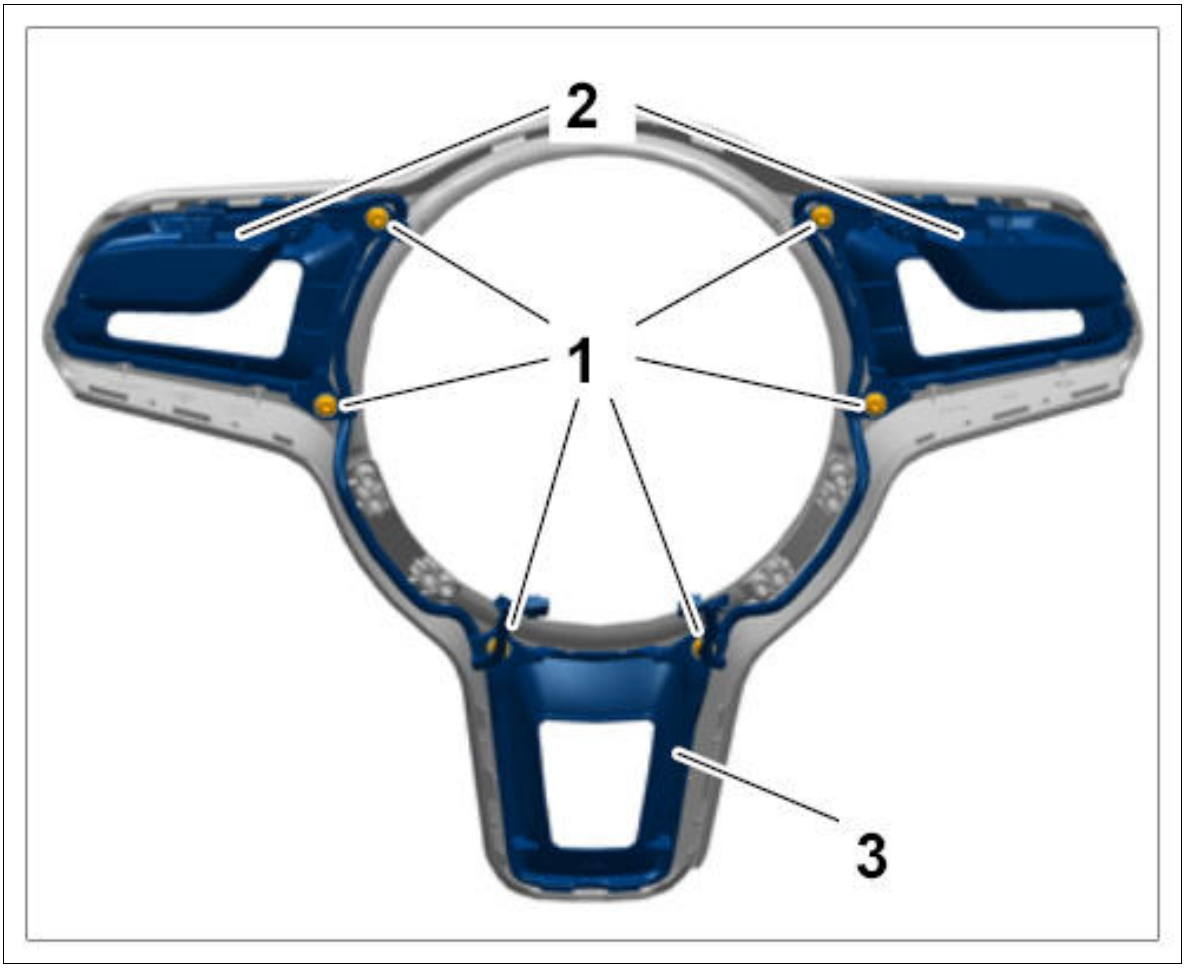

Courtesy of PORSCHE CARS NORTH AMERICA, INC.

13. Remove multi-functional switch **-2-** with cables and front trim **-3-** .
14. Disconnect connector **-1-** from connector lugs.

Fig 13: Identifying Connector

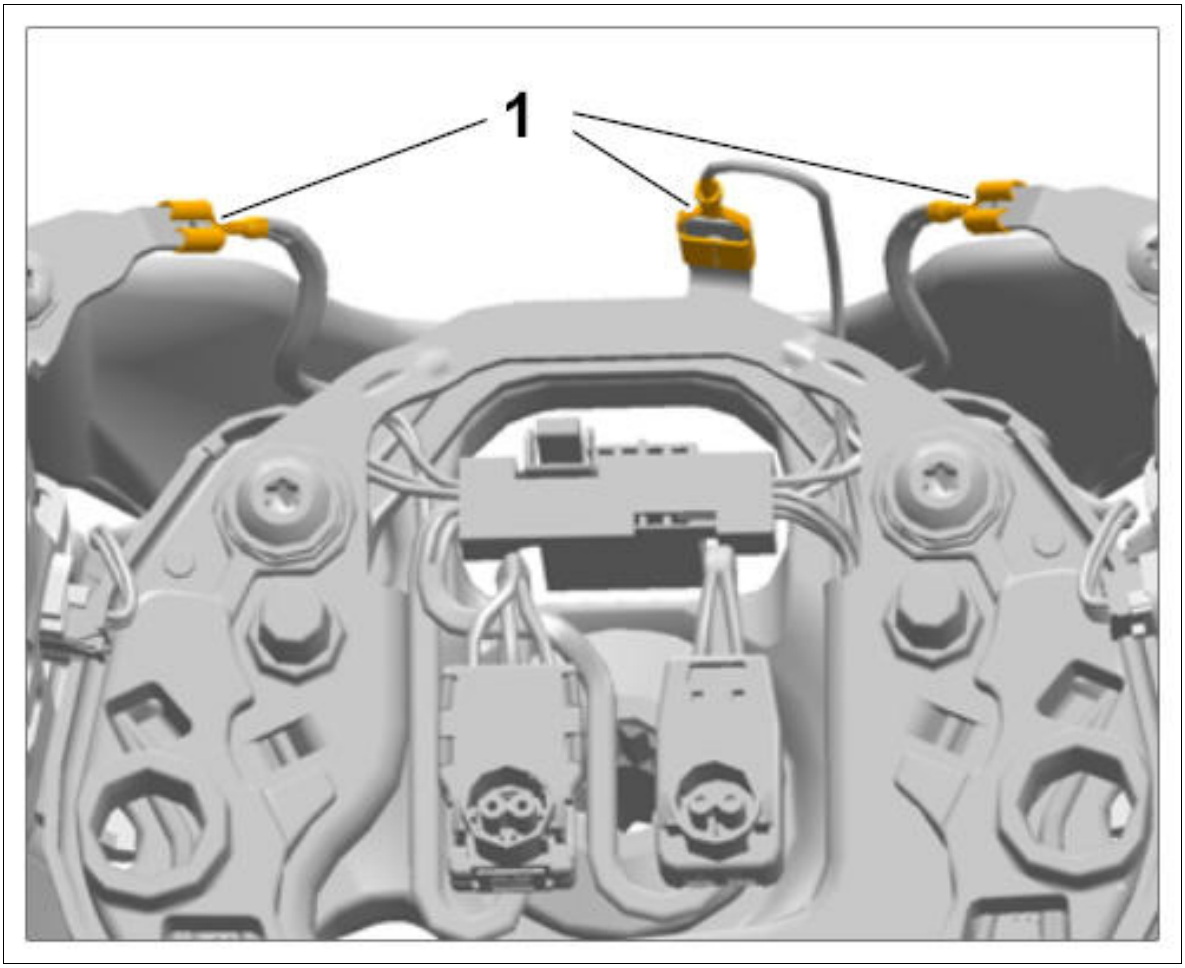

Courtesy of PORSCHE CARS NORTH AMERICA, INC.

15. Unscrew fastening screws **-1-** on the contact bridge **-2-** and remove contact bridge.

Fig 14: Identifying Contact Bridge

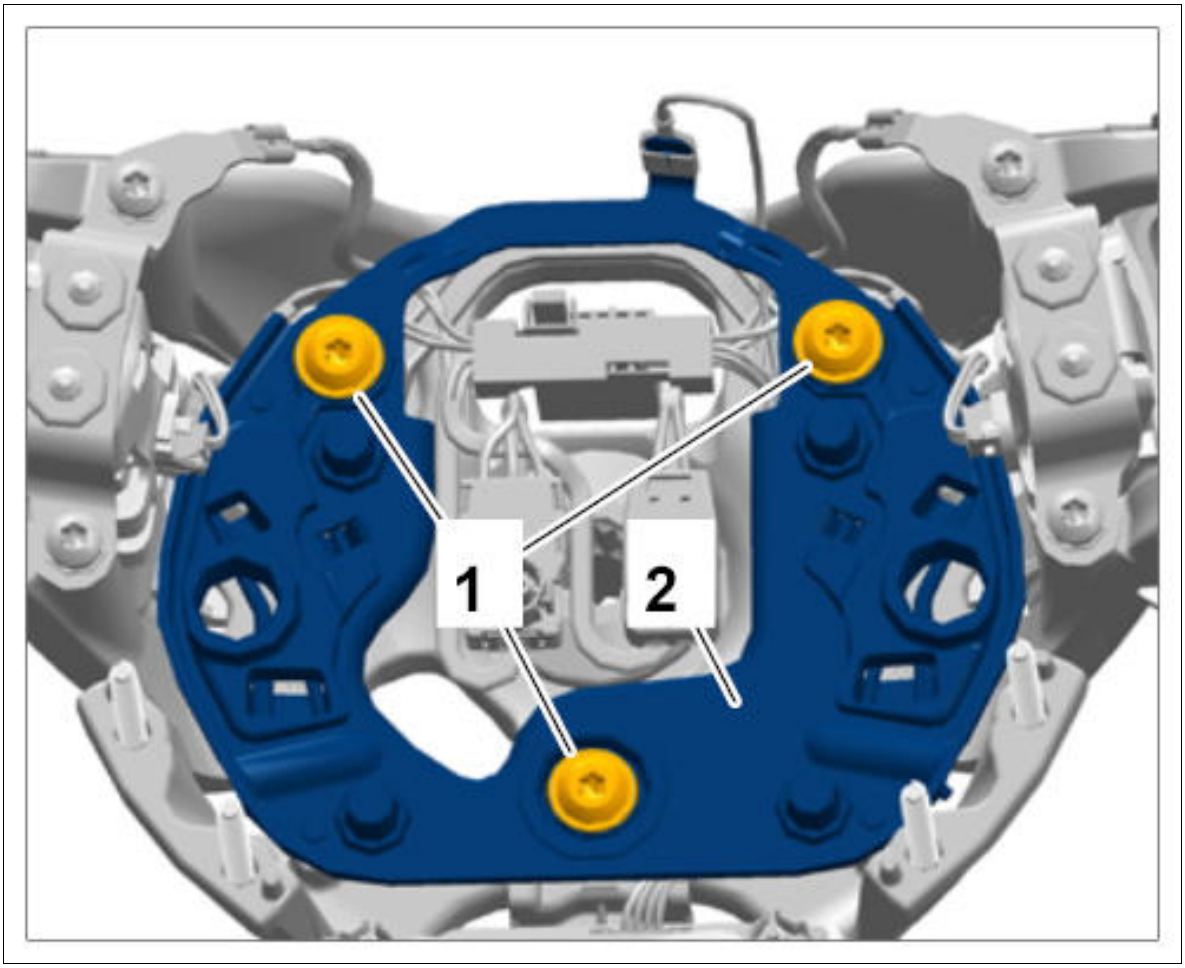

Courtesy of PORSCHE CARS NORTH AMERICA, INC.

16. Release electric plug connection **-1-** for wire harness **-2-** from the control unit **-3-** and disconnect it. On vehicles with heated steering wheel, the electric plug connection for the heated steering wheel must also be loosened at the control unit.

Fig 15: Identifying Connector For Wire Harness On Control Unit

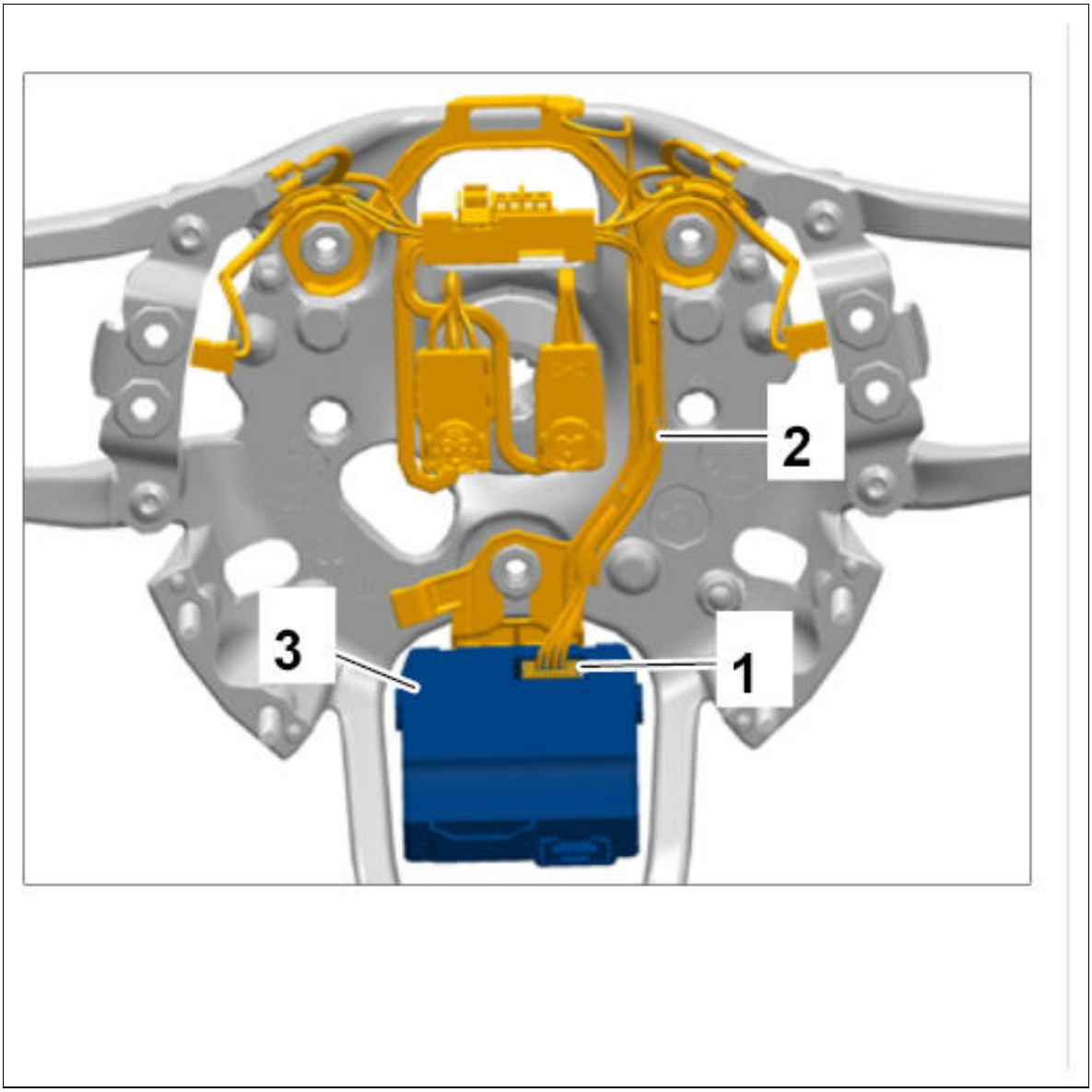

Courtesy of PORSCHE CARS NORTH AMERICA, INC.

17. Release wire harness **-1-** at positions **-arrows-** from the steering wheel skeleton **-2-** and remove it.

Fig 16: Locating Wire Harness

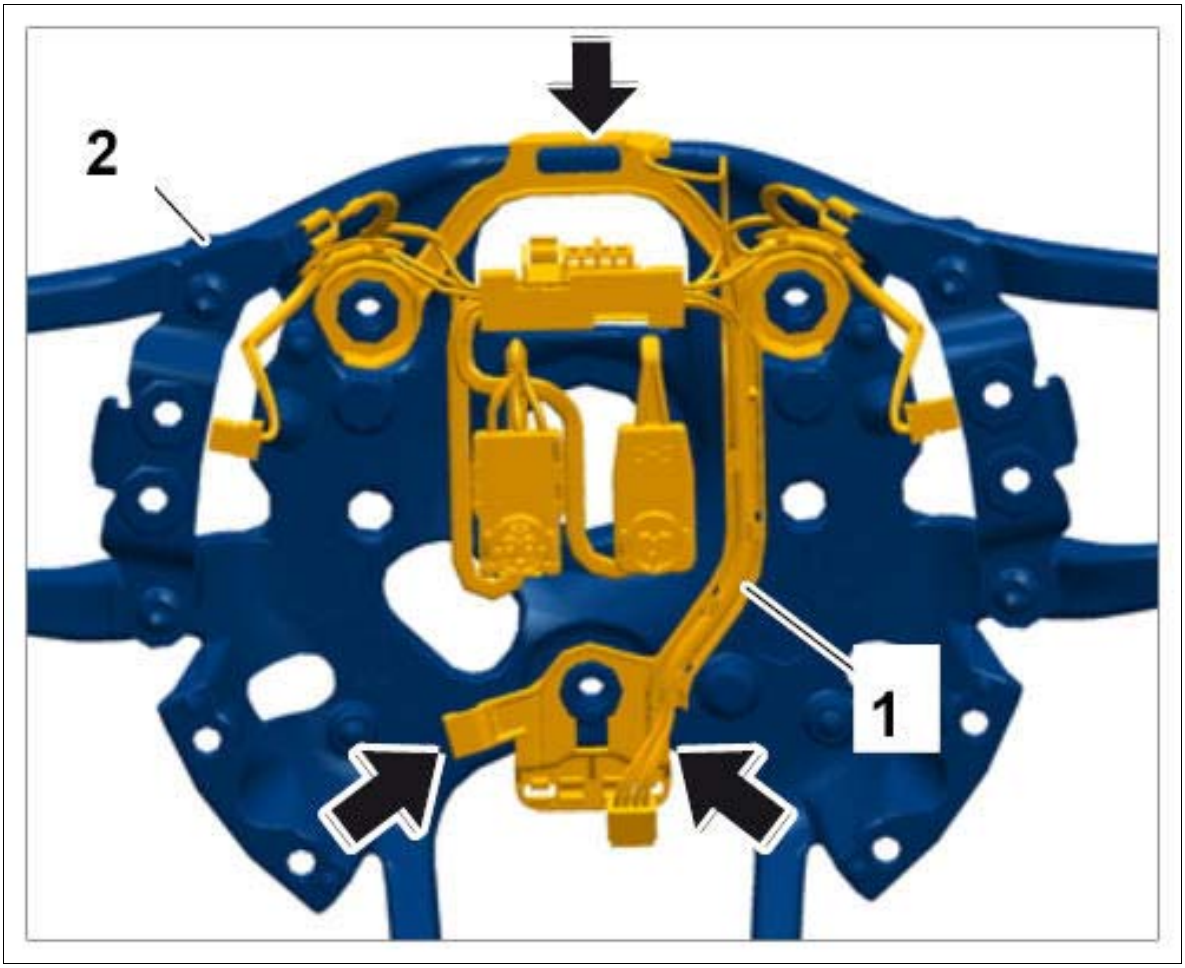

Courtesy of PORSCHE CARS NORTH AMERICA, INC.

WM 481037 DISASSEMBLING AND ASSEMBLING STEERING WHEEL (MACAN, MACAN S, MACAN TURBO) > DISASSEMBLING AND ASSEMBLING STEERING WHEEL > ASSEMBLING STEERING WHEEL

The steering wheel is assembled in reverse order to disassembly. Pay particular attention to the following:

1. Tighten fastening screws **-1-** on the contact bridge **-2-** . **Tightening torque 6 Nm (4.5 ftlb.)**

   Check that the springs are fitted between the contact bridge and steering wheel skeleton and check that they are seated correctly.

Fig 1: Identifying Screws For Contact Bridge

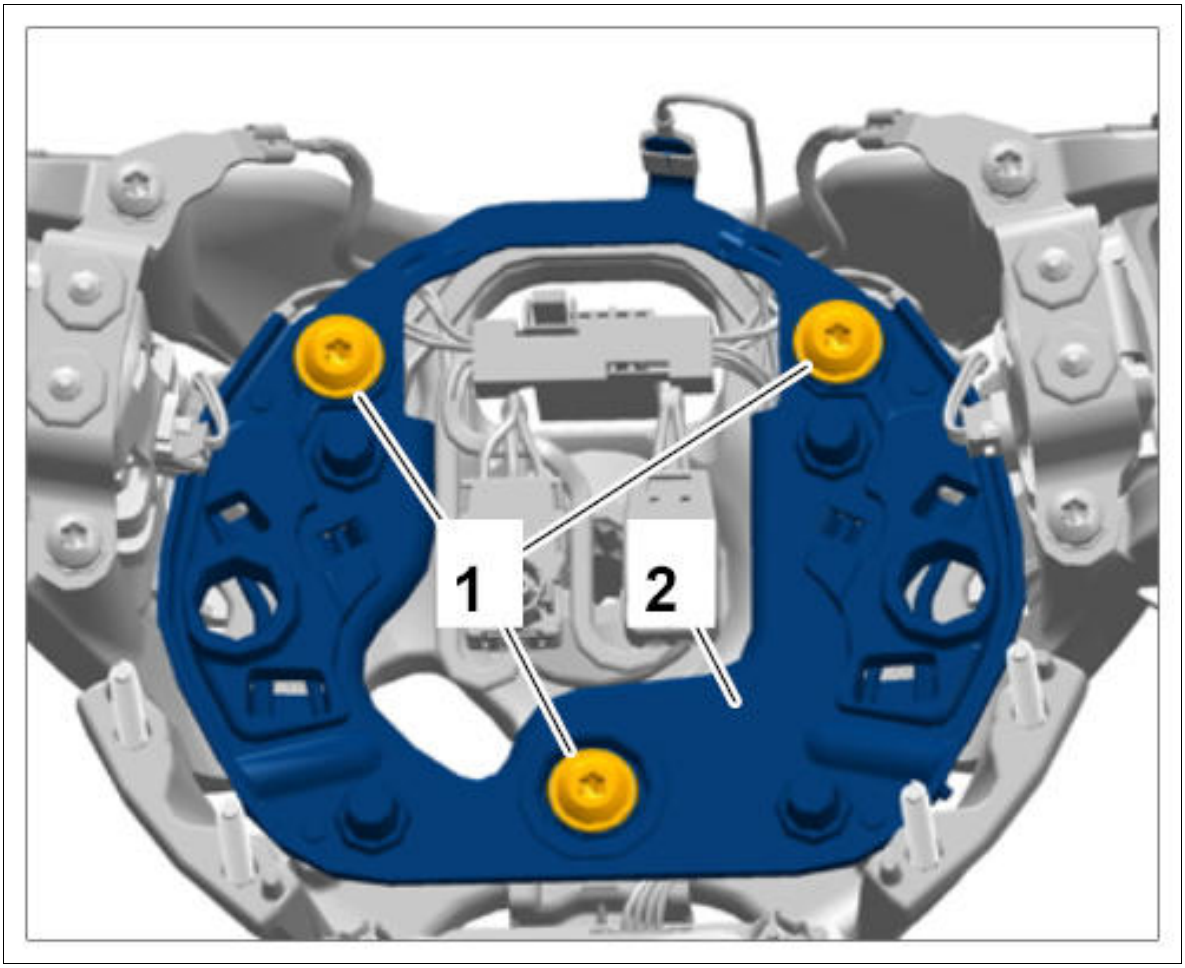

Courtesy of PORSCHE CARS NORTH AMERICA, INC.

Information

Multi-functional switches can be used immediately after installation. They do not need to be coded.

2. Fit multi-functional switch **-2-** with cables and front trim **-3-** into the main cover.

Fig 2: Identifying Multi-Functional Switch And Front Trim On Main Trim

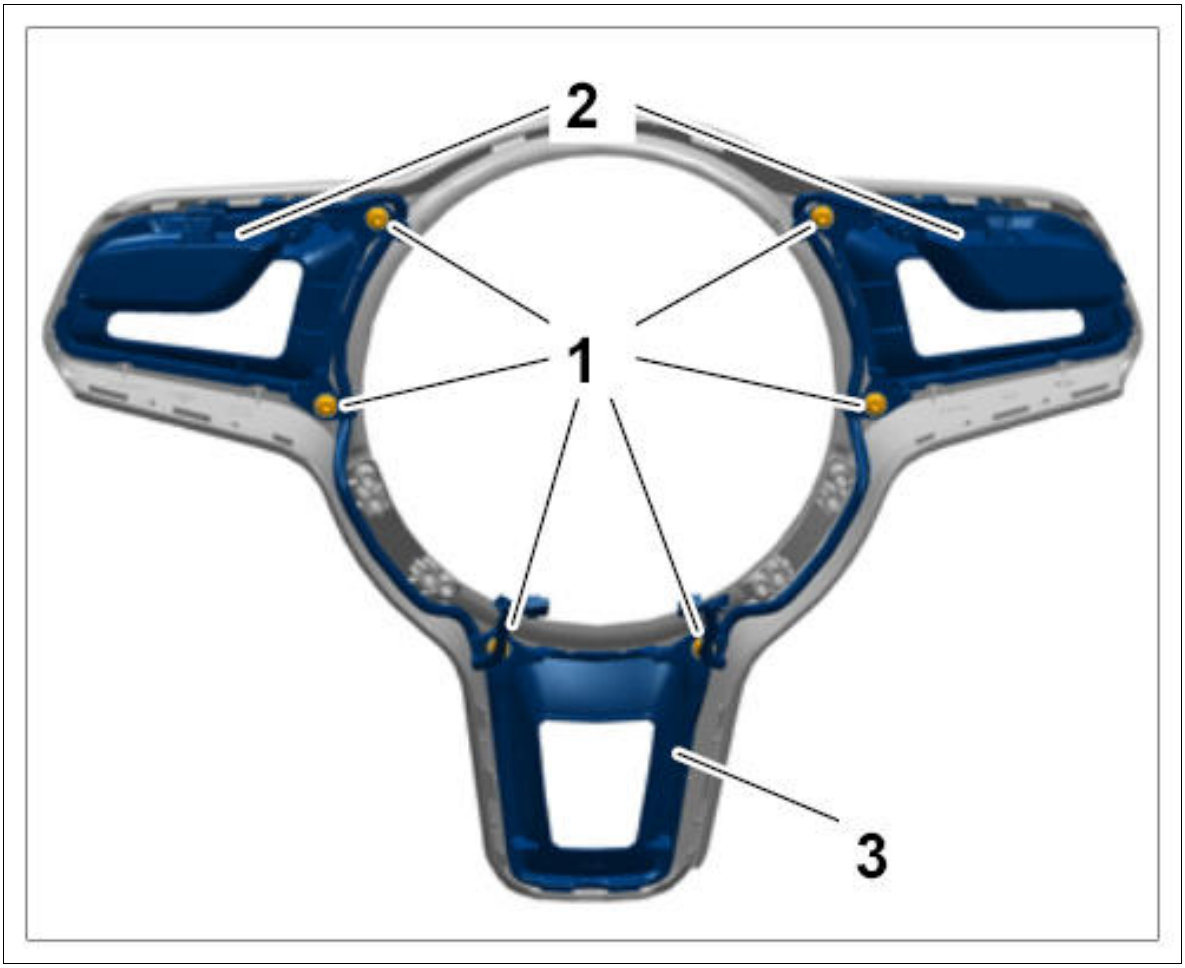

Courtesy of PORSCHE CARS NORTH AMERICA, INC.

Check cable routing! Route cables under the plastic lugs, see marked positions. → Cable routing for multi-functional switch in main trim

Fig 3: Identifying Cable Routing For Multi-Functional Switch In Main Trim

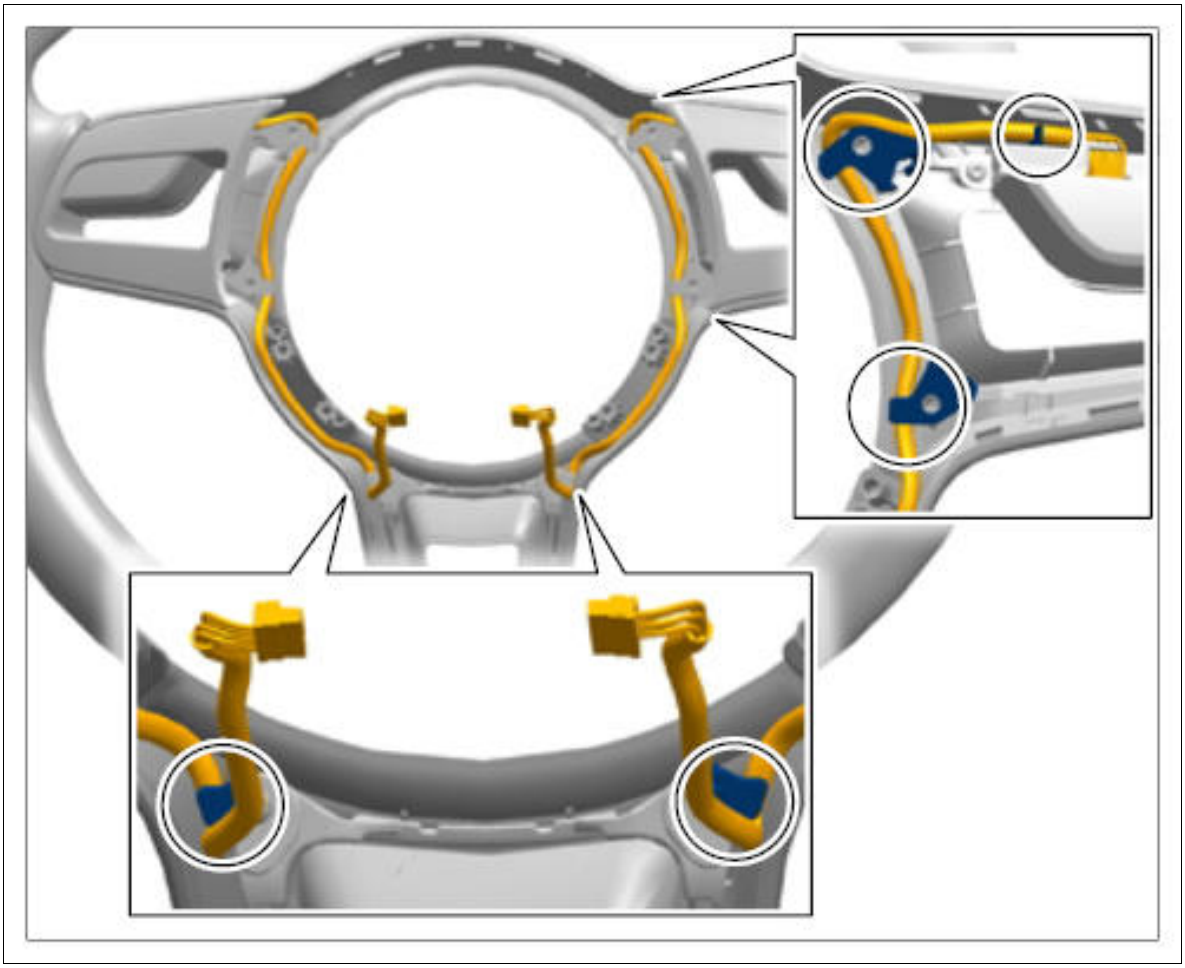

Courtesy of PORSCHE CARS NORTH AMERICA, INC.

3. Tighten fastening screws **-1-** for the multi-functional switch **-2-** and front trim **-3-** . **Tightening torque 0.45 Nm (0.25 ftlb.)**

Fig 4: Identifying Multi-Functional Switch And Front Trim On Main Trim

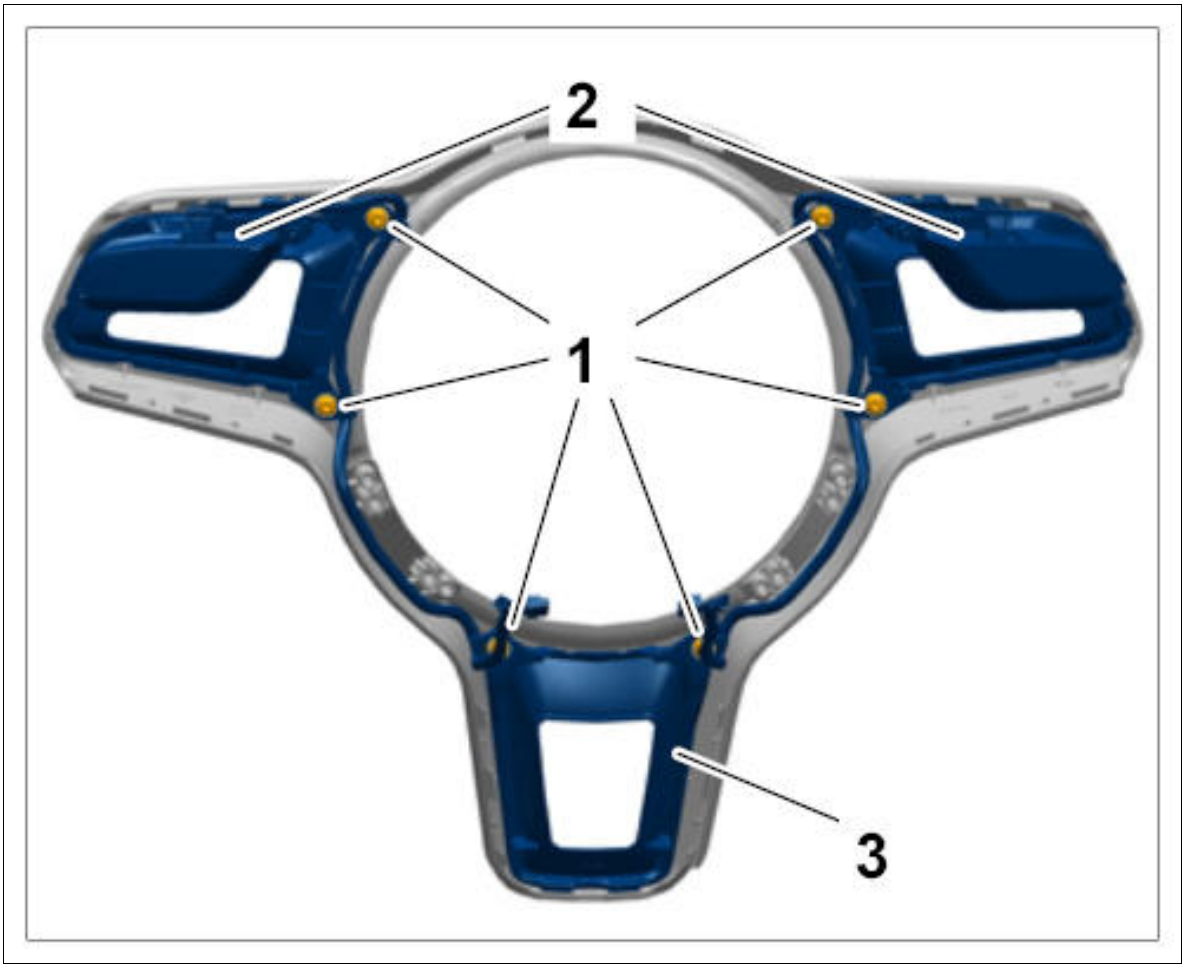

Courtesy of PORSCHE CARS NORTH AMERICA, INC.

4. Tighten fastening screws **-1-** for main trim. **Tightening torque 2 Nm (1.5 ftlb.)**

Fig 5: Identifying Main Trim

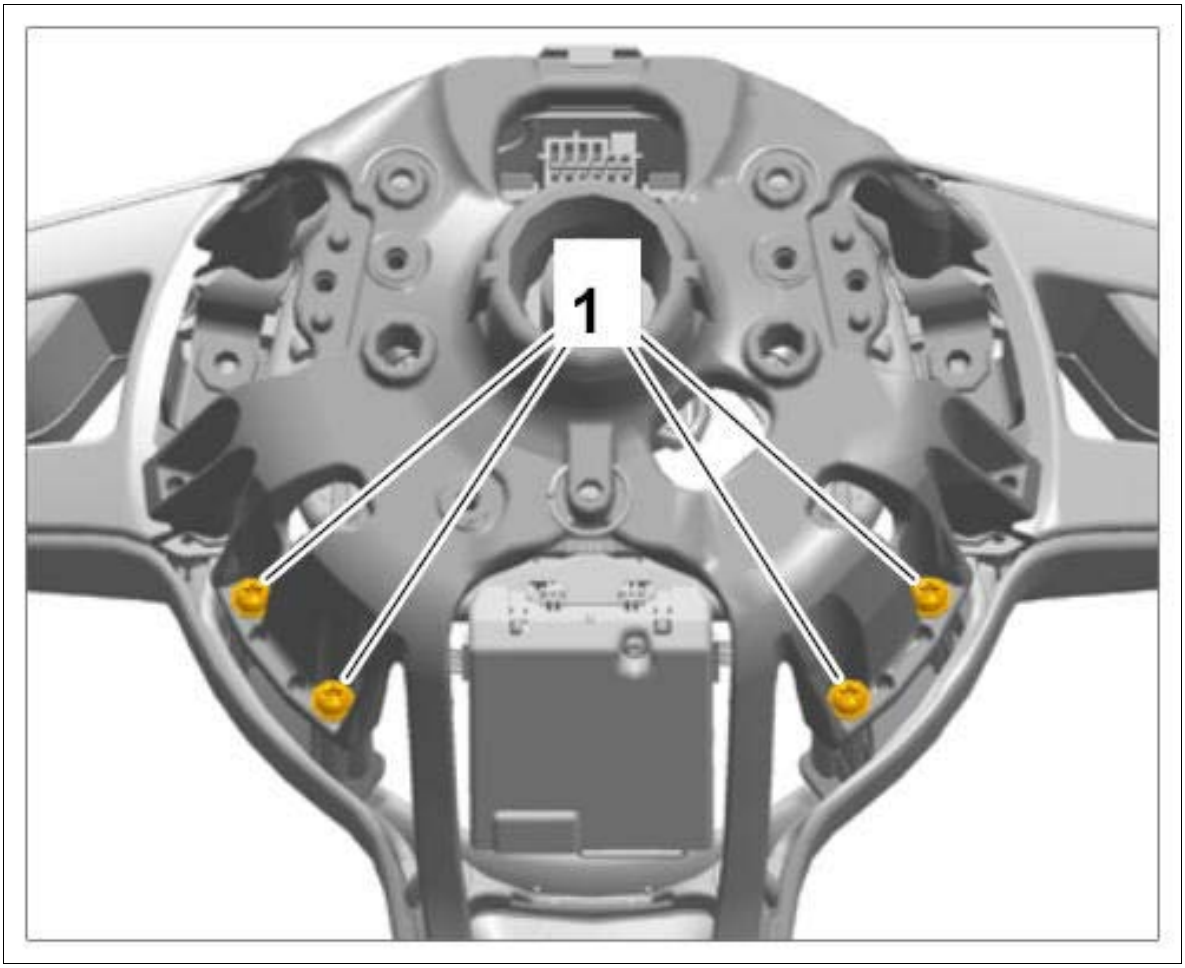

Courtesy of PORSCHE CARS NORTH AMERICA, INC.

5. Insert paddles into guides **-1-** and **-2-** .

Fig 6: Identifying Guides For Paddles

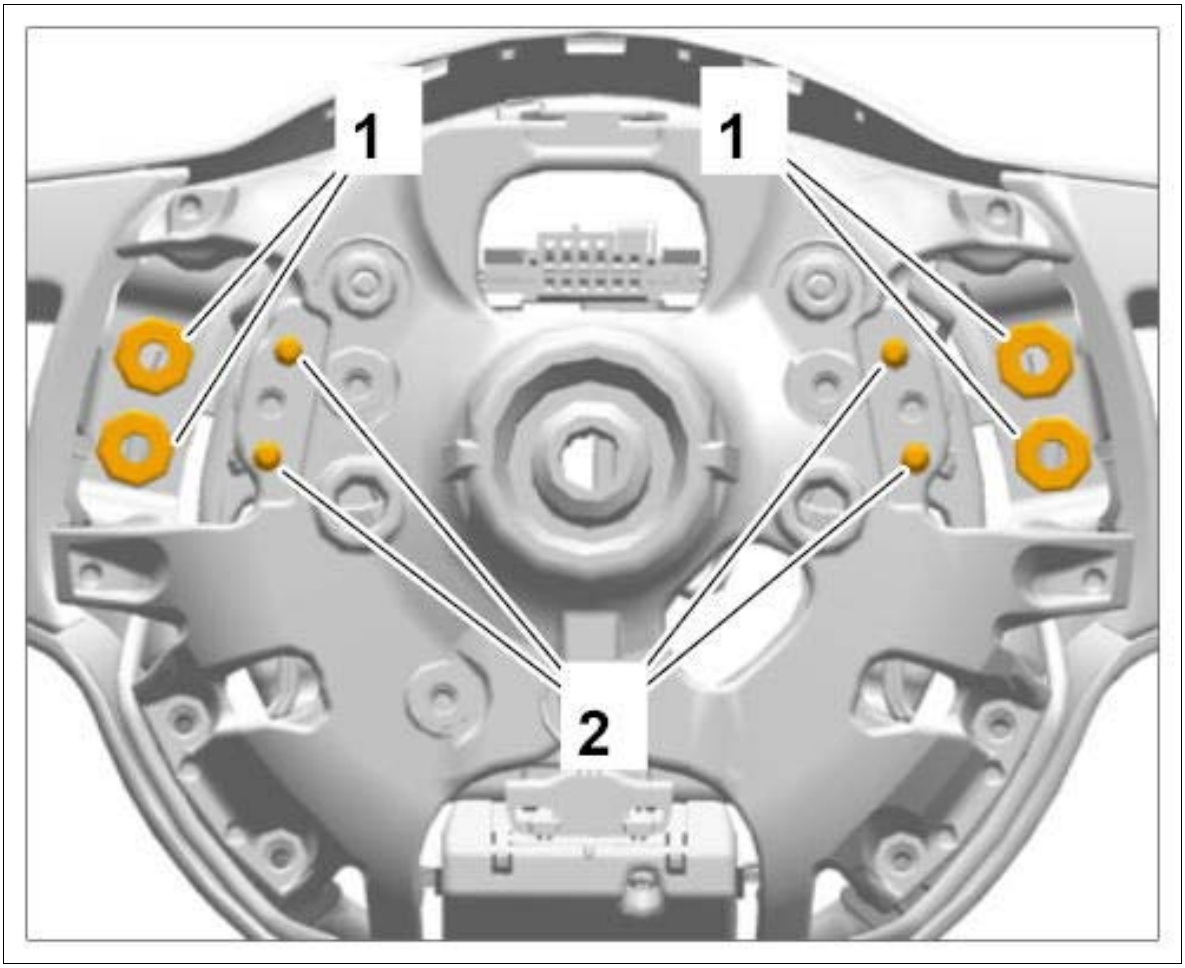

Courtesy of PORSCHE CARS NORTH AMERICA, INC.

6. Tighten fastening screws **-1-** for the paddles **-2-** . **Tightening torque 2.5 Nm (2 ftlb.)**

Fig 7: Identifying Screws For Paddles

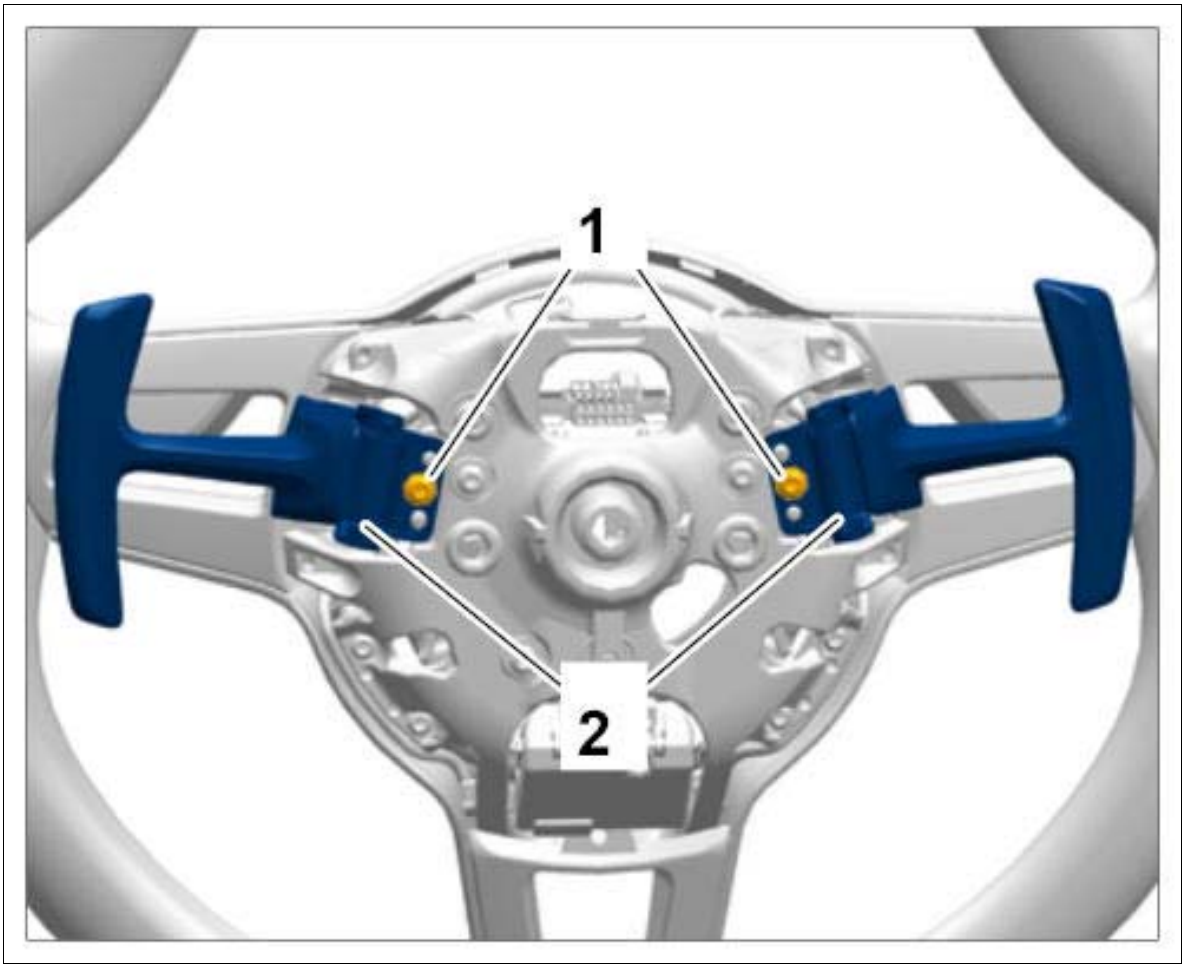

Courtesy of PORSCHE CARS NORTH AMERICA, INC.

7. Insert control unit **-1-** at the rear in the steering wheel and lock it.

   Then lock the control unit at the front in the steering wheel at position **-arrow-** .

Fig 8: Inserting Control Unit

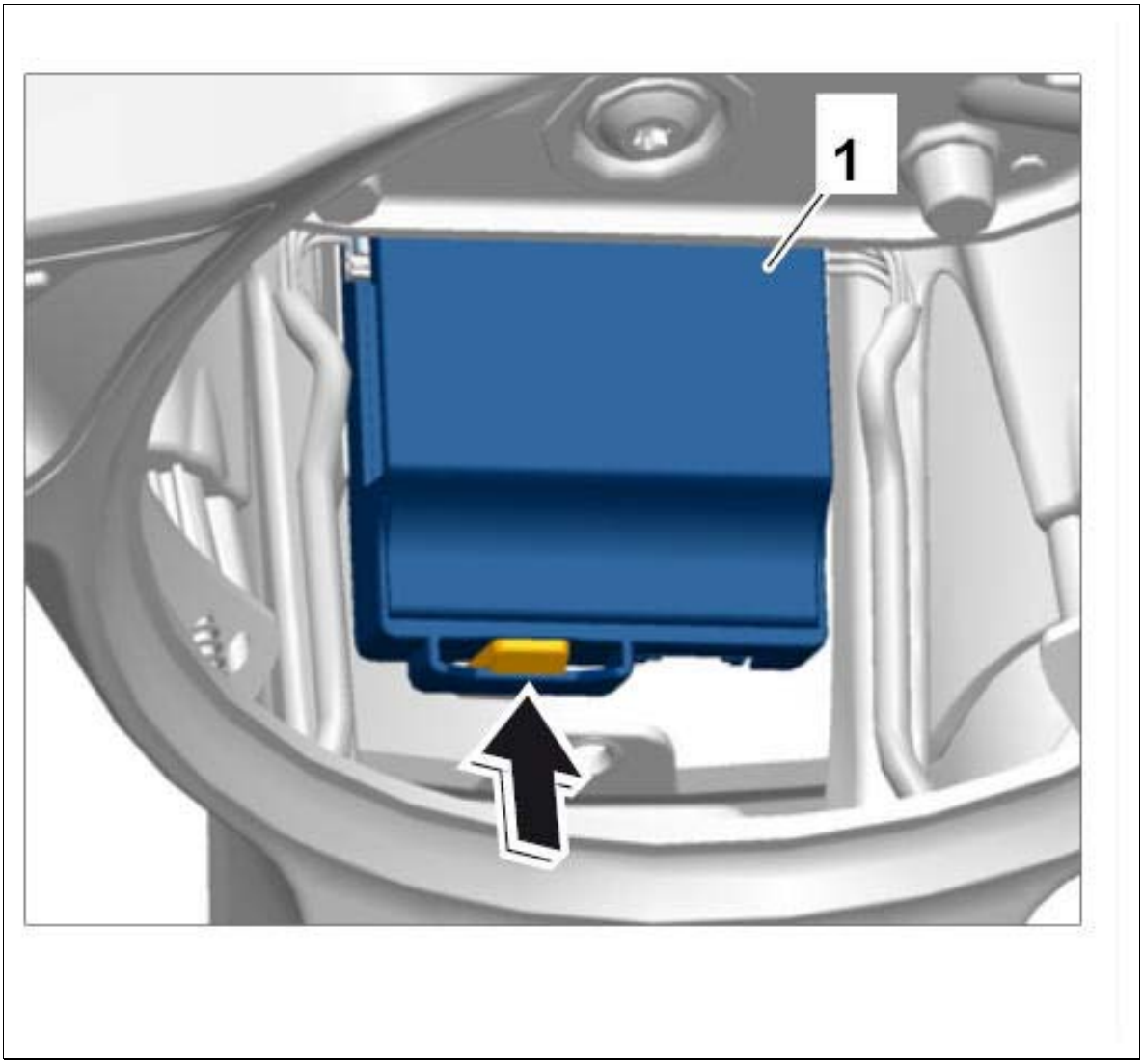

Courtesy of PORSCHE CARS NORTH AMERICA, INC.

8. Tighten fastening screws **-1-** on rear cover **-2-** . **Tightening torque 2.7 Nm (2 ftlb.)**

Fig 9: Identifying Screws On Back Cover

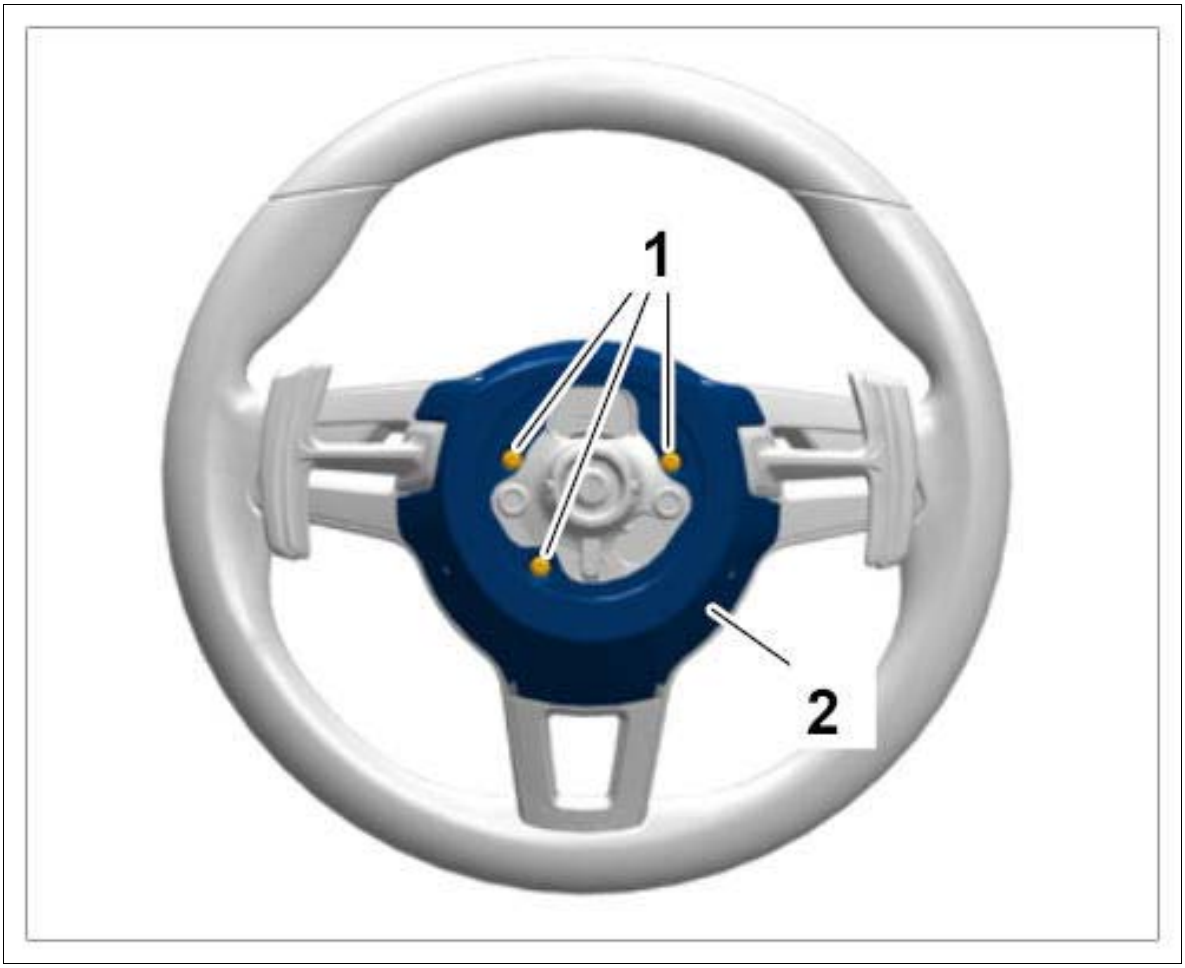

Courtesy of PORSCHE CARS NORTH AMERICA, INC.

WM 481037 DISASSEMBLING AND ASSEMBLING STEERING WHEEL (MACAN, MACAN S, MACAN TURBO) > SUBSEQUENT WORK

1. Install steering wheel → INSTALLING STEERING WHEEL .

WM 481319 REMOVING AND INSTALLING STEERING COLUMN CASING (MACAN, MACAN S, MACAN TURBO) > TECHNICAL VALUES

Location	Description	Type	Basic value	Tolerance 1	Tolerance 2
Lower part of casing to steering column		Tightening torque	1.5 Nm (1 ftlb.)		

WM 481319 REMOVING AND INSTALLING STEERING COLUMN CASING (MACAN, MACAN S, MACAN TURBO) > PRELIMINARY WORK

1. **Only for electric steering-wheel adjustment:** Remove switch for height and fore-and-aft adjustment → 482919 REMOVING AND INSTALLING SWITCH FOR HEIGHT AND FORE-AND-AFT ADJUSTMENT .

WM 481319 REMOVING AND INSTALLING STEERING COLUMN CASING (MACAN, MACAN S, MACAN TURBO) > REMOVING STEERING COLUMN CASING

1. Adjust steering wheel to its lower position.
2. Unclip upper part of casing.
    1. 2.1. Turn steering wheel in such a way that the openings on the front are accessible.
    2. 2.2. Unclip upper part of casing **-1-** through the openings on the front **-2-** using a suitable screwdriver.

    Fig 1: Removing Upper Part Of Casing

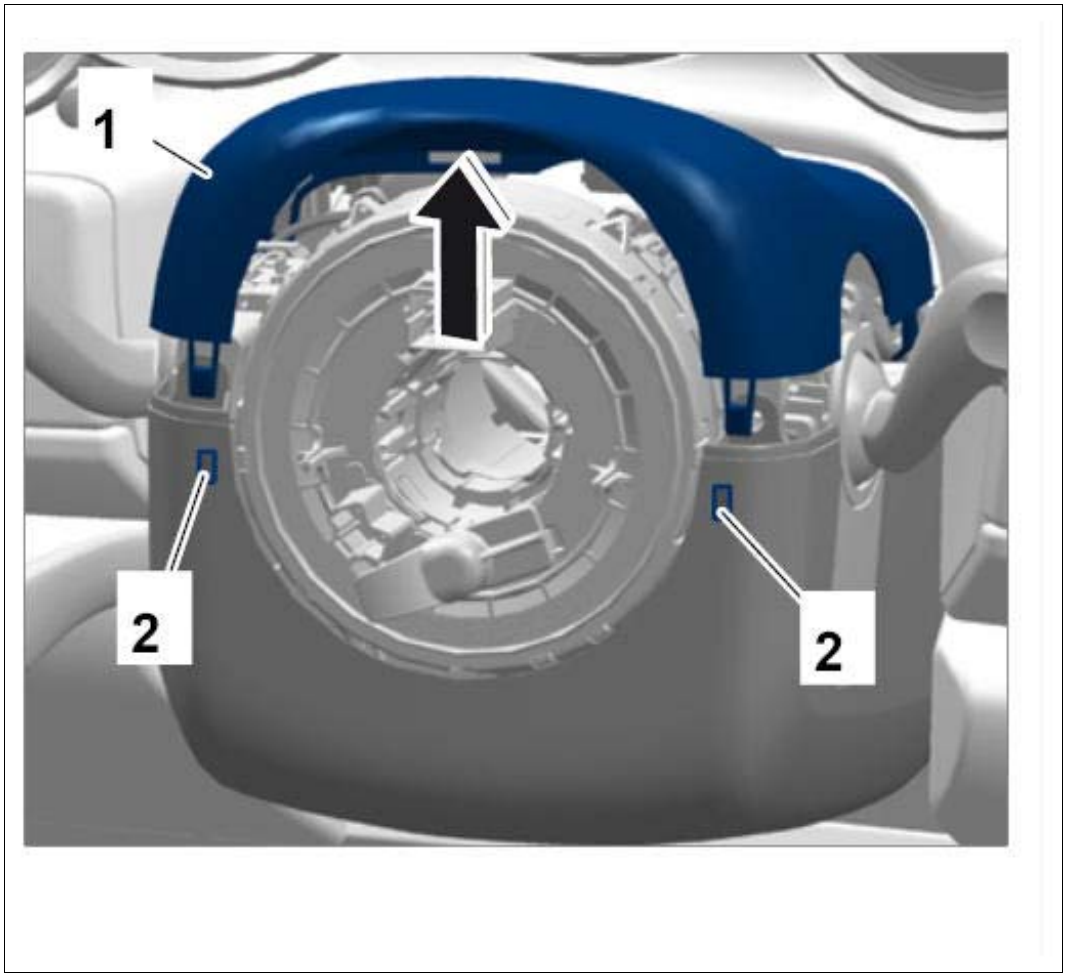

Courtesy of PORSCHE CARS NORTH AMERICA, INC.

3. Unhook dust boot **-1-** on upper part of casing **-2-** and push it back.

Fig 2: Removing Dust Boot

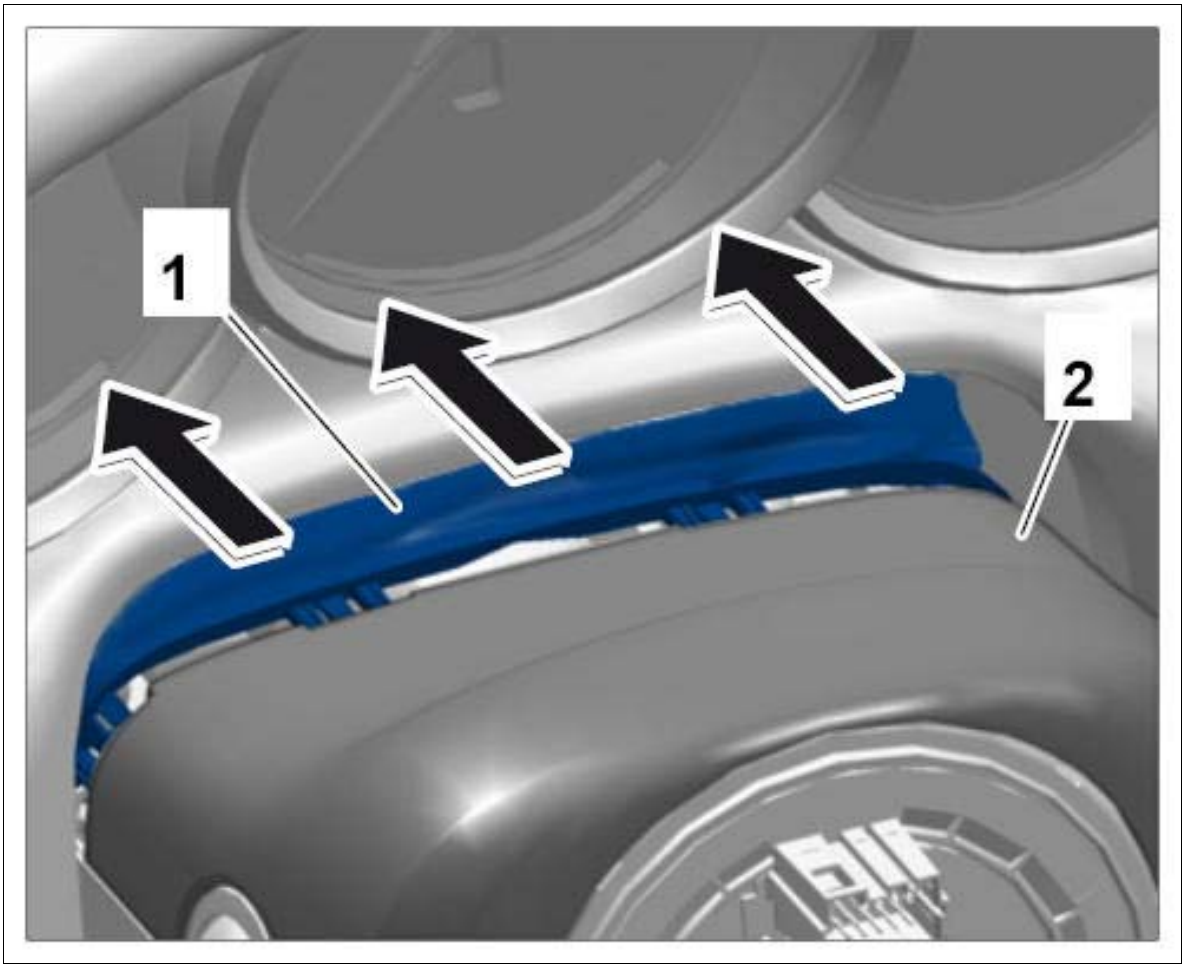

Courtesy of PORSCHE CARS NORTH AMERICA, INC.

4. Remove upper part of casing.
5. Release lower part of casing.

   Only for manual steering-wheel adjustment:

   Unscrew fastening screw **-1-** on lower part of casing **-2-** .

Fig 3: Identifying Screw On Lower Part (Manual Steering-Wheel Adjustment)

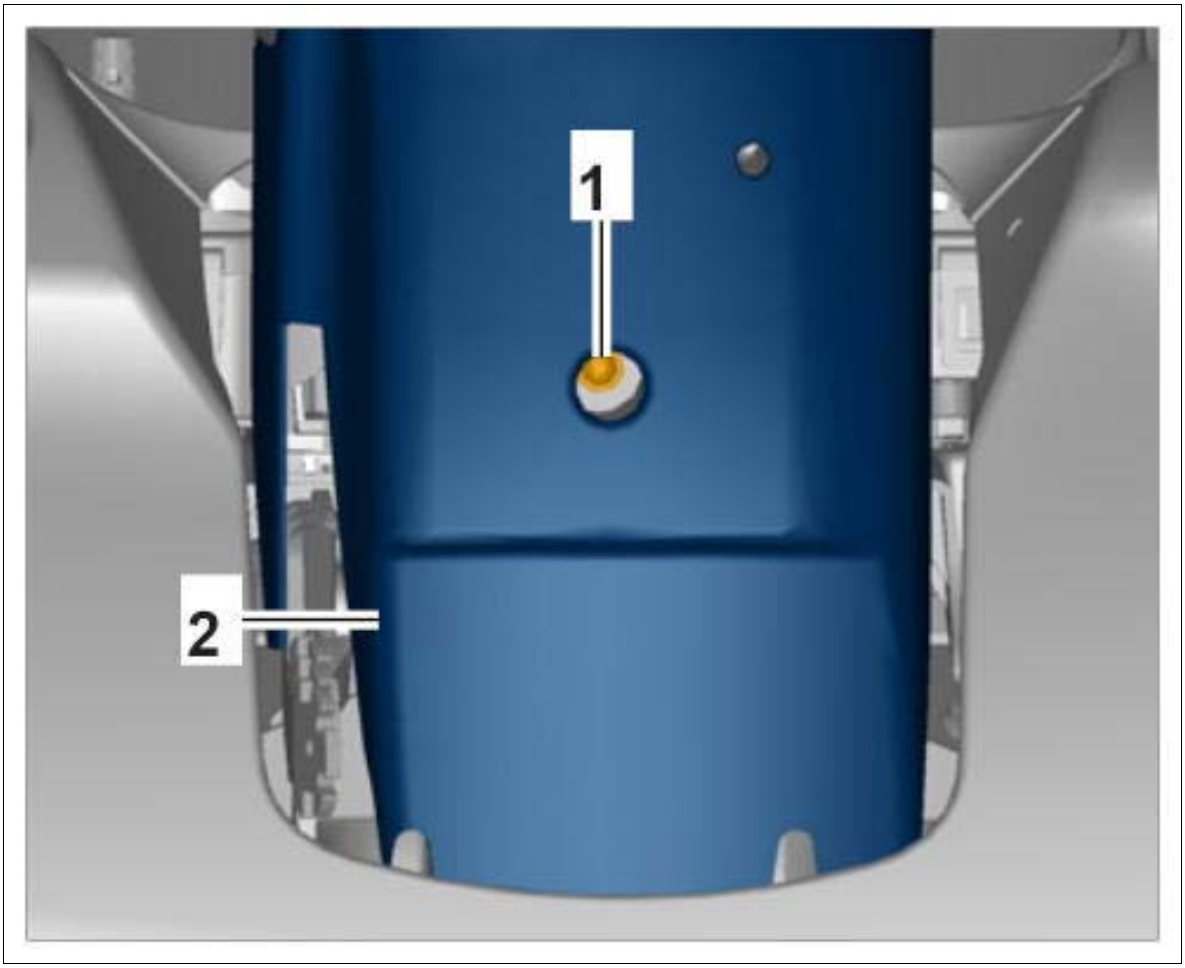

Courtesy of PORSCHE CARS NORTH AMERICA, INC.

Only for electric steering-wheel adjustment:

Unscrew fastening screw **-1-** in recess on lower part of casing **-2-** .

Fig 4: Identifying Screw On Lower Part (Electric Steering-Wheel Adjustment)

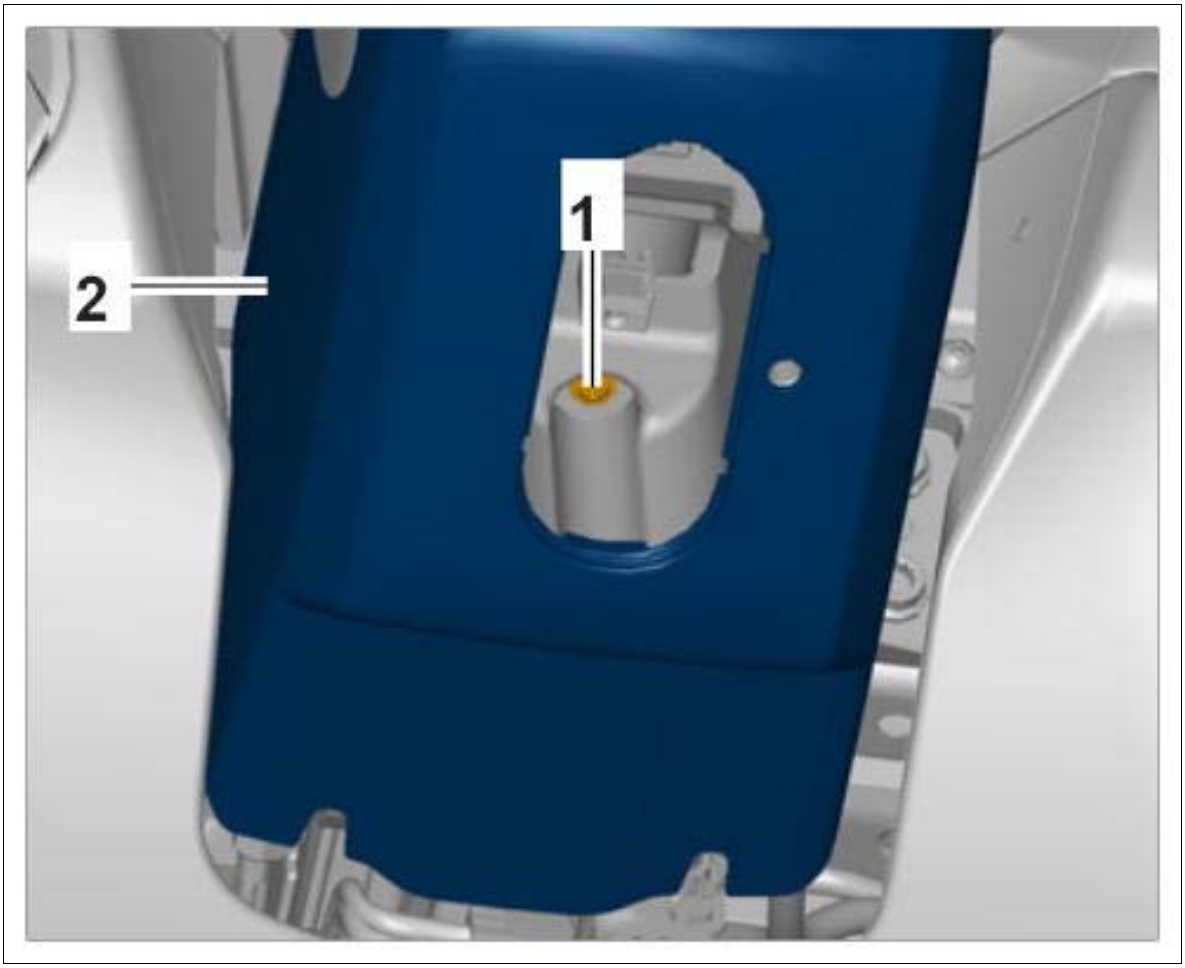

Courtesy of PORSCHE CARS NORTH AMERICA, INC.

1. 5.1. Turn the steering wheel in such a way that the fastening screws **-1-** on the front are accessible.

Fig 5: Removing Screws On Lower Part (Front)

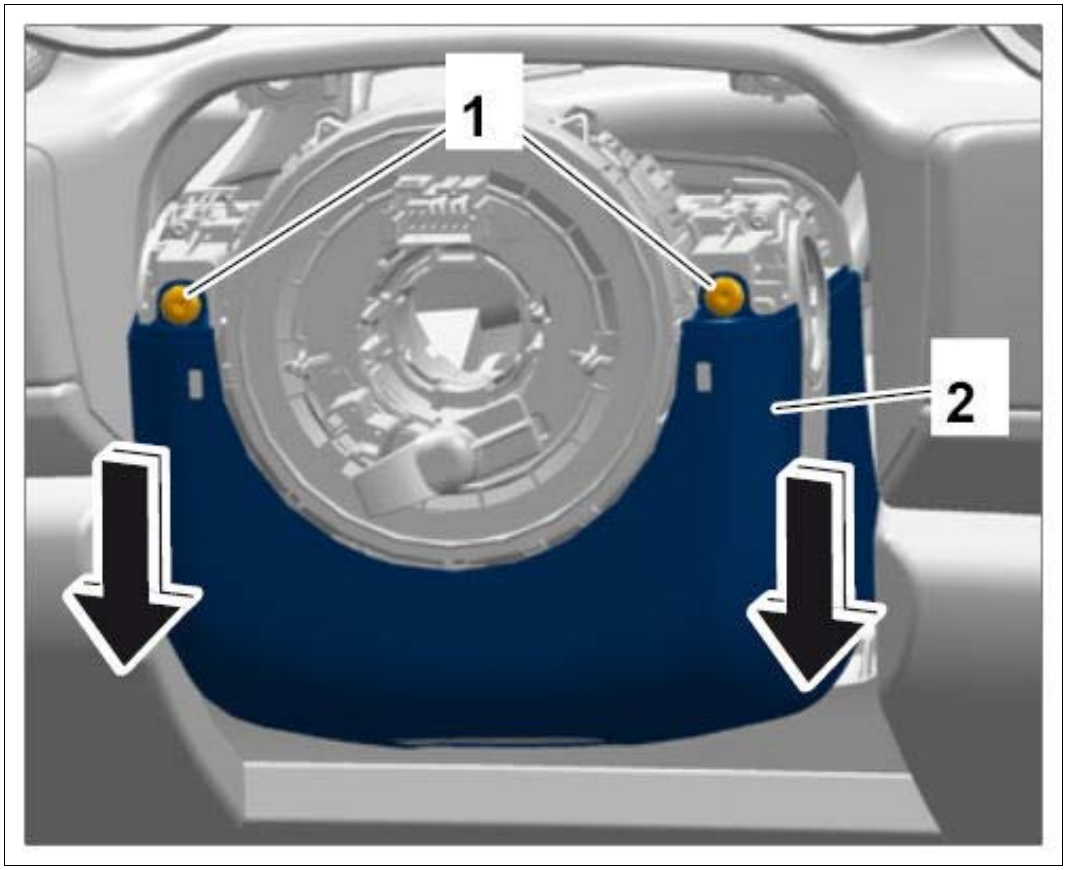

Courtesy of PORSCHE CARS NORTH AMERICA, INC.

2. 5.2. Unscrew fastening screws **-1-** on the front of the lower part of casing **-2-** .

3. 5.3. Fold lower part of casing **-2-** down out of the way **-arrows-** .

6. Unclip wiring harness **-2-** from lower part of casing **-3-** at the positions **-1-** .

Fig 6: Removing Lower Part

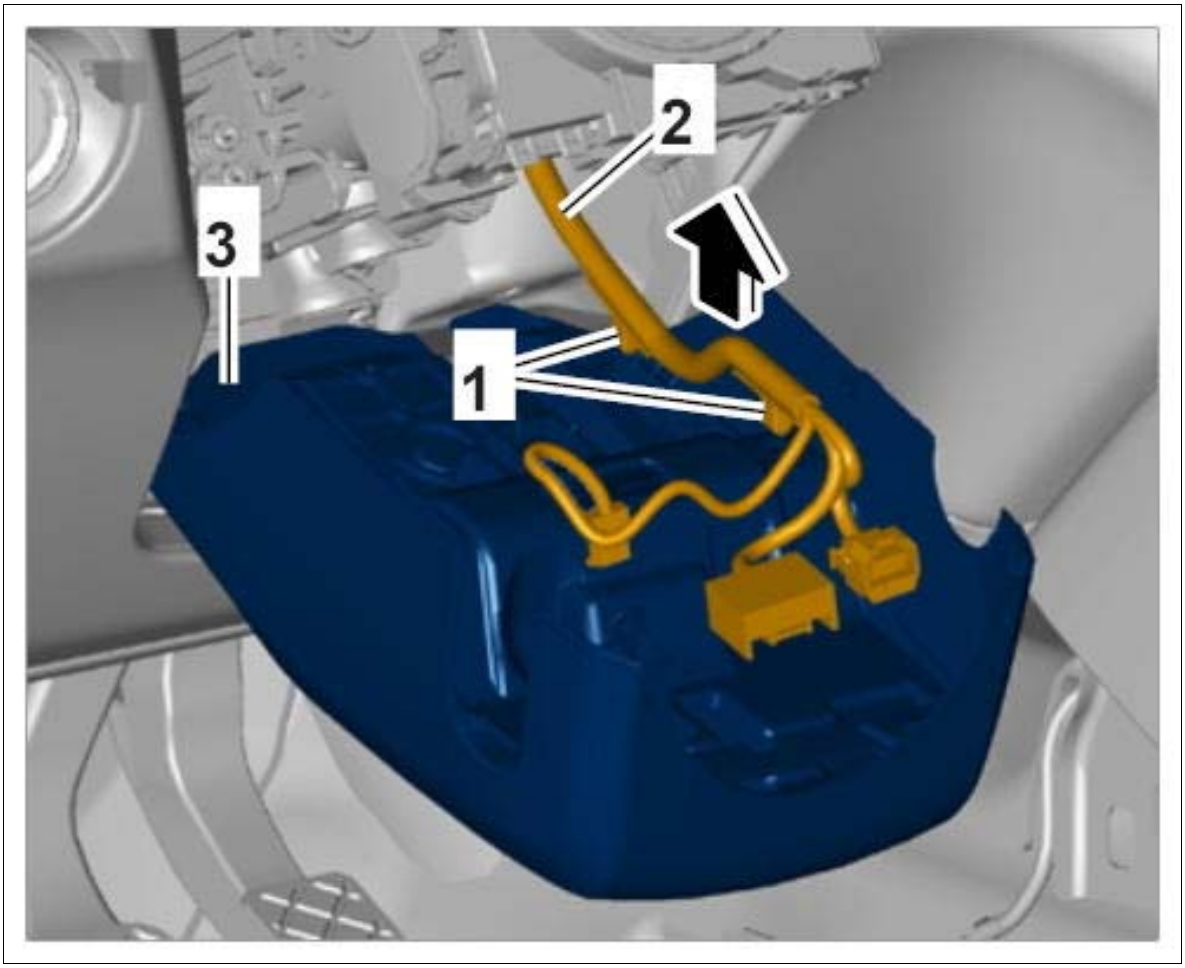

Courtesy of PORSCHE CARS NORTH AMERICA, INC.

7. Remove lower part of casing **-3-** .

WM 481319 REMOVING AND INSTALLING STEERING COLUMN CASING (MACAN, MACAN S, MACAN TURBO) > INSTALLING STEERING COLUMN CASING

1. Installation is performed in reverse order to removal.

   Observe the specified tightening torque when tightening fastening screws on lower part of casing. **Tightening torque 1.5 Nm (1 ftlb.)**

WM 481319 REMOVING AND INSTALLING STEERING COLUMN CASING (MACAN, MACAN S, MACAN TURBO) > SUBSEQUENT WORK

1. **Only for electric steering-wheel adjustment:** Install switch for height and fore-and-aft adjustment → 482919 REMOVING AND INSTALLING SWITCH FOR HEIGHT AND FORE-AND-AFT ADJUSTMENT .

WM 481519 REMOVING AND INSTALLING STEERING COLUMN (MACAN, MACAN S, MACAN TURBO) > TECHNICAL VALUES

Location	Description	Type	Basic value	Tolerance 1	Tolerance 2
Steering column to retaining frame/module cross member	M8 x 30 thread	Tightening torque	20 Nm (15 ftlb.)		
Steering column to mounting saddle	M8 x 22 thread	Tightening torque	20 Nm (15 ftlb.)		
Steering column to intermediate steering shaft (universal joint)	M8 x 30 thread/always use new screw or bolt following removal	Tightening torque	30 Nm (22 ftlb.)		

WM 481519 REMOVING AND INSTALLING STEERING COLUMN (MACAN, MACAN S, MACAN TURBO) > PRELIMINARY WORK

Information

- The fore-and-aft adjustment must be brought to the fully extended position for the electrically adjustable steering column. The vertical adjustment must be moved to the center position. This will improve access to the fastening screws on the mounting bracket.

1. Remove steering-column switch → 945019 REMOVING AND INSTALLING STEERING-COLUMN SWITCH .
2. Remove trim panel under dashboard → 701919 REMOVING AND INSTALLING TRIM PANEL UNDER DASHBOARD .
3. Remove front footwell outlet vent on the driver's side → 805519 REMOVING AND INSTALLING FRONT FOOTWELL OUTLET VENT .

WM 481519 REMOVING AND INSTALLING STEERING COLUMN (MACAN, MACAN S, MACAN TURBO) > REMOVING AND INSTALLING STEERING COLUMN > REMOVING STEERING COLUMN

Fig 1: Locating Steering Column Position



Courtesy of PORSCHE CARS NORTH AMERICA, INC.

1. Disconnect steering column from intermediate steering shaft.
    1. 1.1. Unscrew fastening screw **-2-** on universal joint.

Fig 2: Identifying Steering Column On Intermediate Steering Shaft

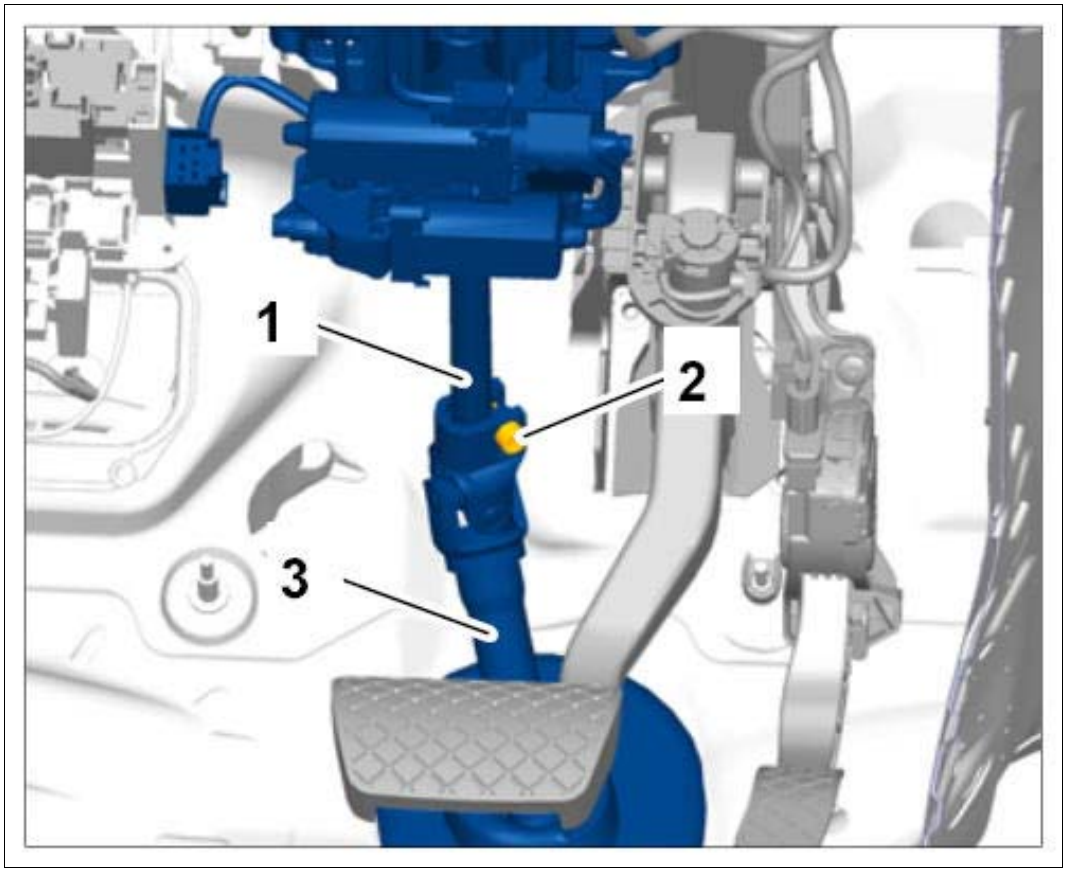

Courtesy of PORSCHE CARS NORTH AMERICA, INC.

2. 1.2. Pull intermediate steering shaft **-3-** off the steering column **-1-** .

2. Release and disconnect electric plug connection **-1-** .

Fig 3: Identifying Plug Connection For Steering Column

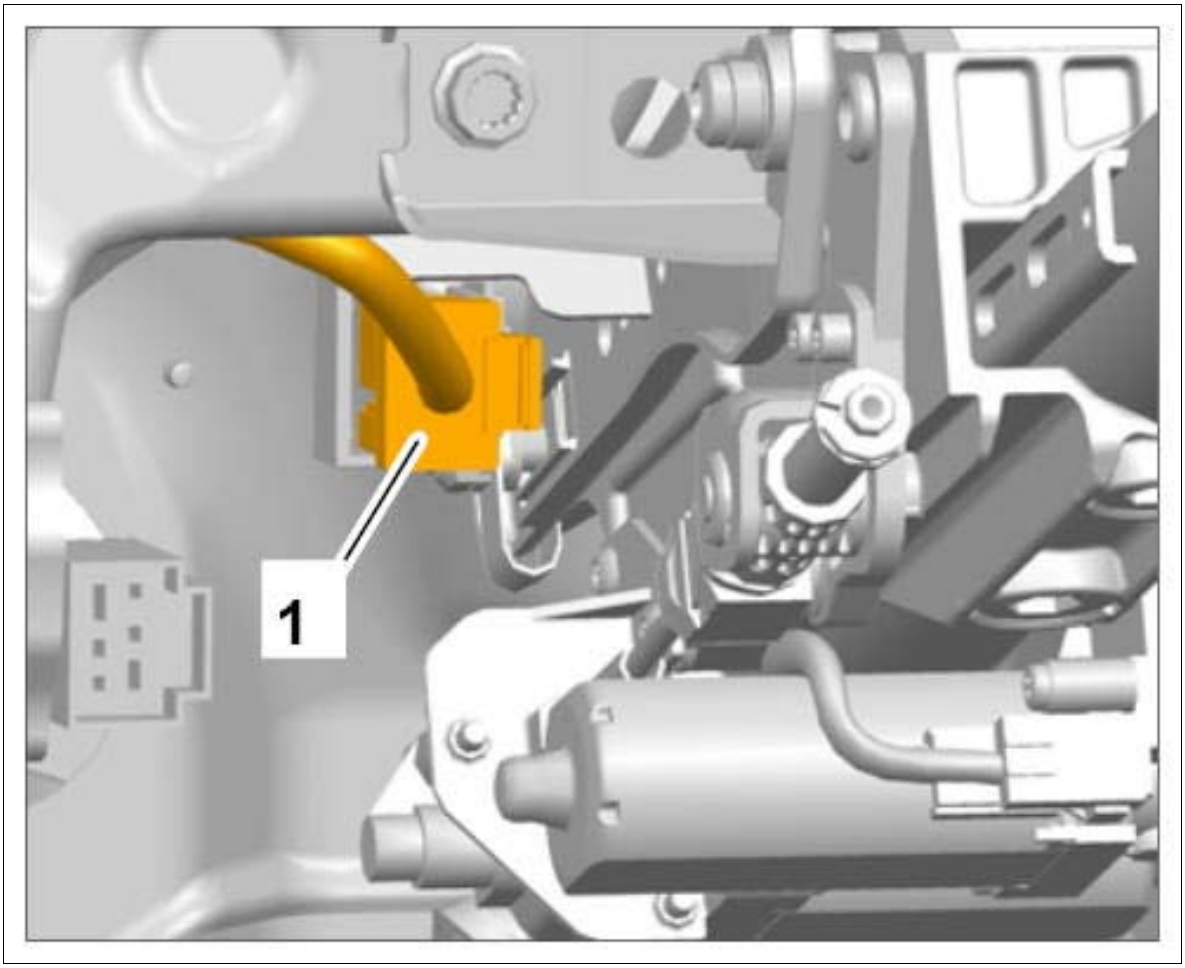

Courtesy of PORSCHE CARS NORTH AMERICA, INC.

3. Remove steering column.

    1. 3.1. Unscrew fastening screws **-1-** for the steering column **-2-** at the bottom of the mounting saddle.

Fig 4: Identifying Steering Column Screws

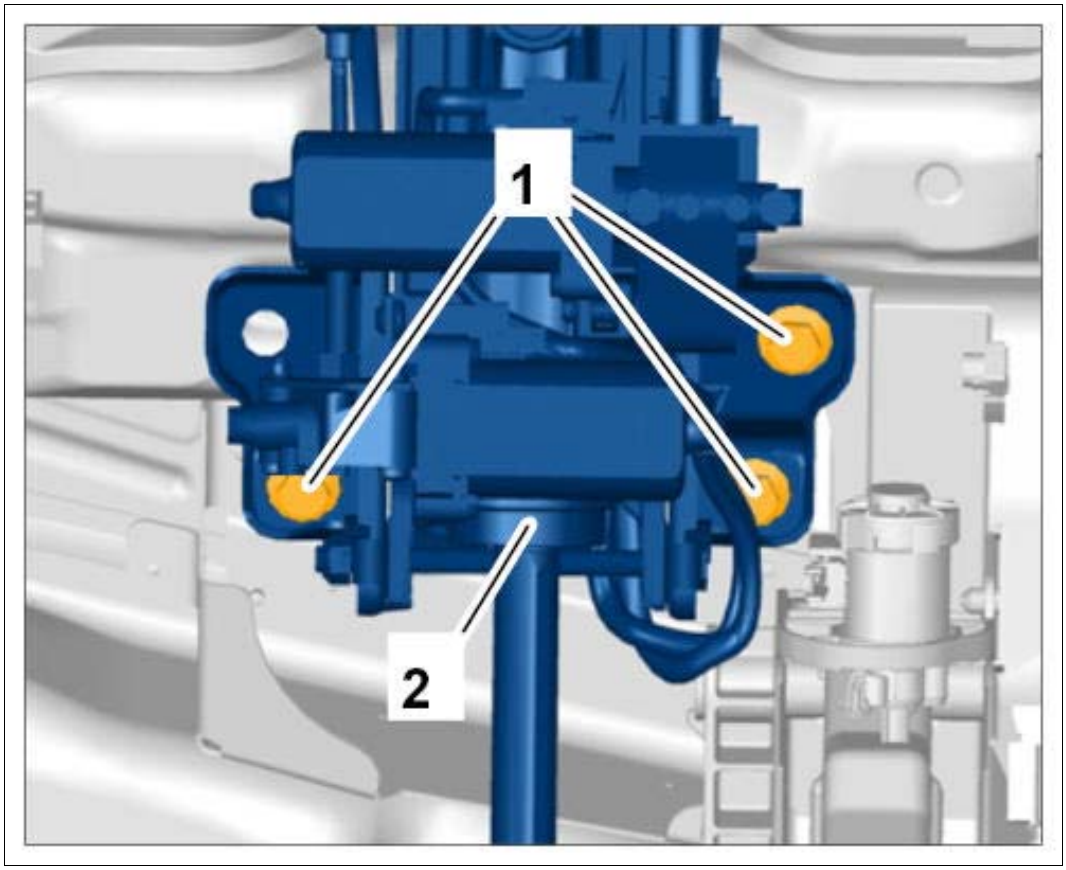

Courtesy of PORSCHE CARS NORTH AMERICA, INC.

2. 3.2. Unscrew fastening screws **-1-** and **-2-** for the steering column at the top of the retaining frame. Support the steering column from below with your hand.

Fig 5: Identifying Steering Column Screws (Top)

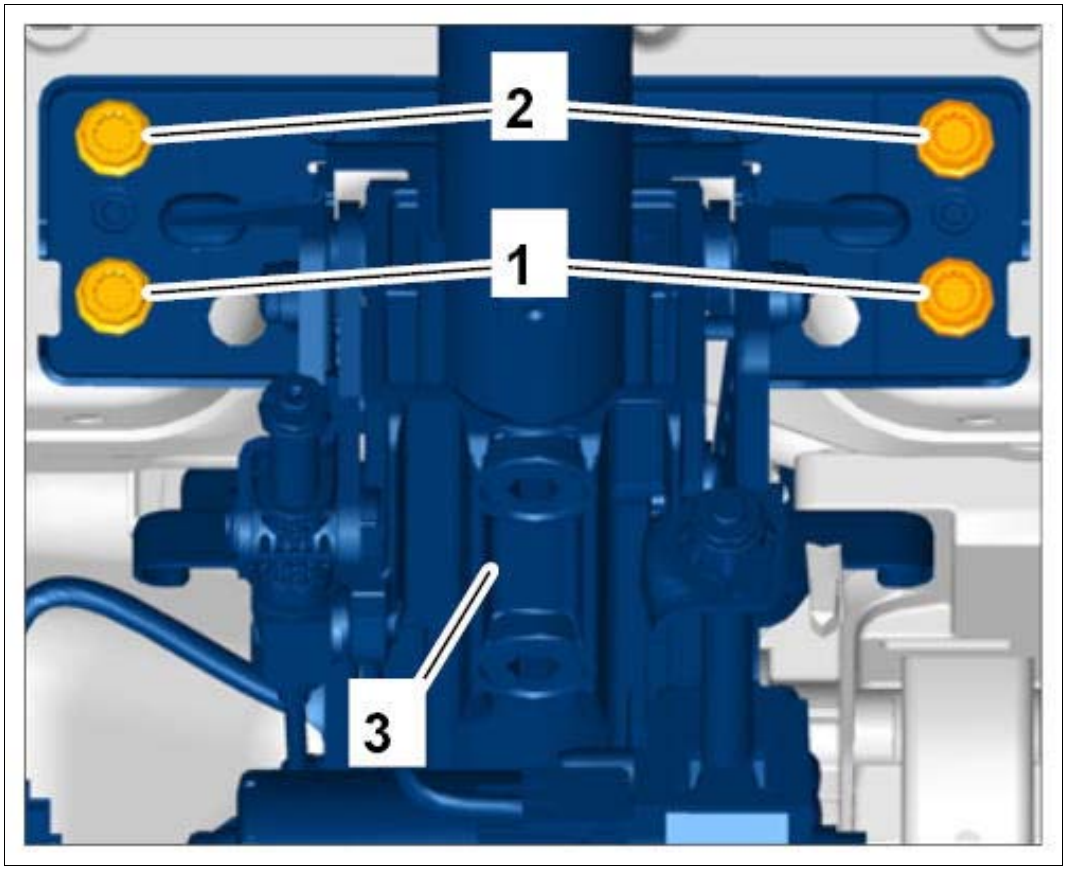

Courtesy of PORSCHE CARS NORTH AMERICA, INC.

3. 3.3. Pull steering column back slightly, lower it and remove it.

WM 481519 REMOVING AND INSTALLING STEERING COLUMN (MACAN, MACAN S, MACAN TURBO) > REMOVING AND INSTALLING STEERING COLUMN > INSTALLING STEERING COLUMN

Installation is performed in reverse order to removal. Pay particular attention to the following:

1. Position steering column.
2. Screw in all seven fastening screws on the steering column. Do not tighten!
    1. 2.1. Screw in fastening screws **-1-** and **-2-** at the top of the retaining frame. Do not tighten!

Fig 1: Identifying Steering Column Screws (Top)

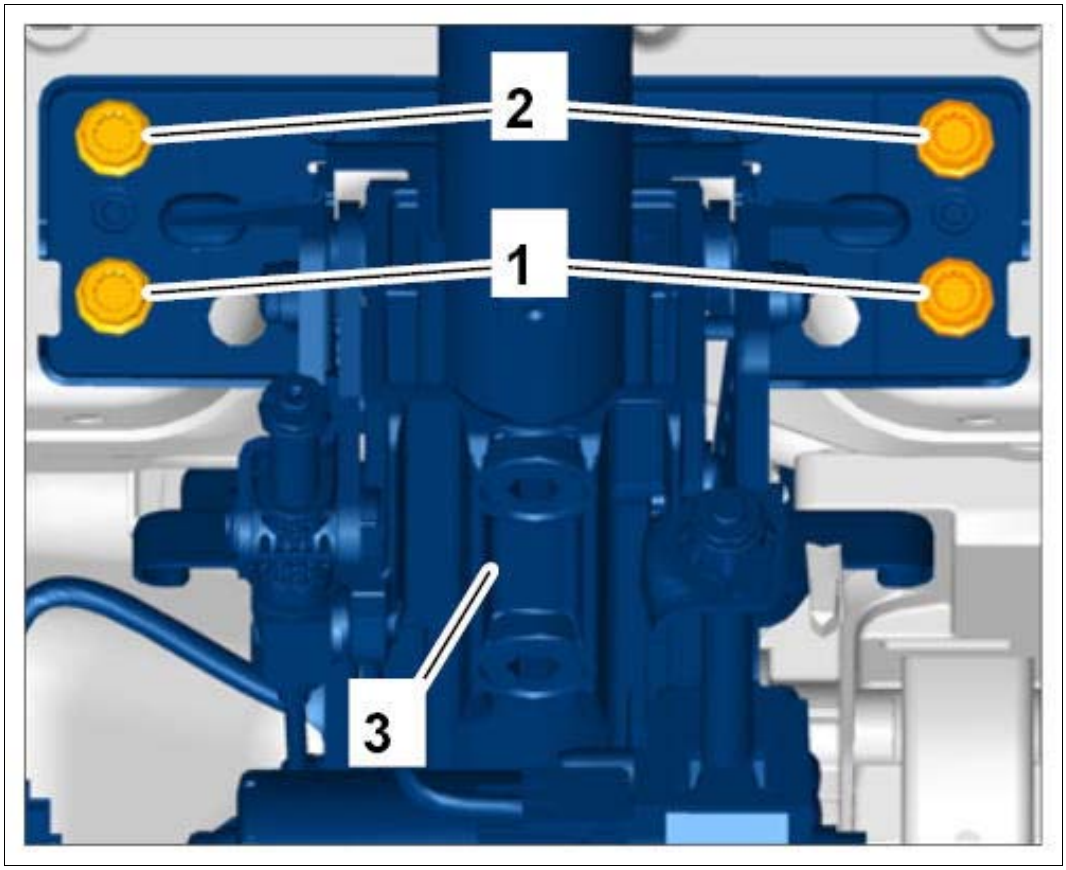

Courtesy of PORSCHE CARS NORTH AMERICA, INC.

2. 2.2. Screw in fastening screws **-1-** at the bottom of the mounting saddle. Do not tighten!

Fig 2: Identifying Steering Column Screws (Bottom)

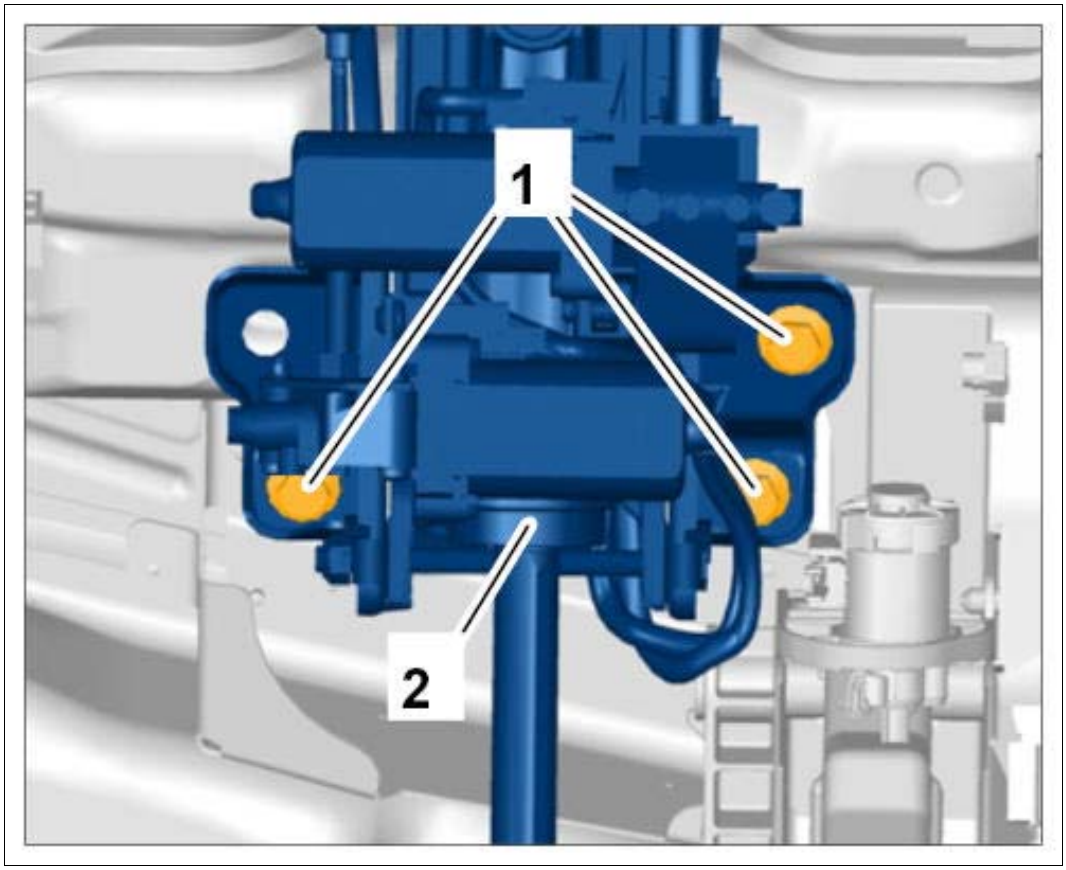

Courtesy of PORSCHE CARS NORTH AMERICA, INC.

3. Tighten fastening screws in the following sequence:

    1. 3.1. Tighten fastening screws **-1-** at the top of the retaining frame. **Tightening torque 20 Nm (15 ftlb.)**

Fig 3: Identifying Steering Column Screws (Top)

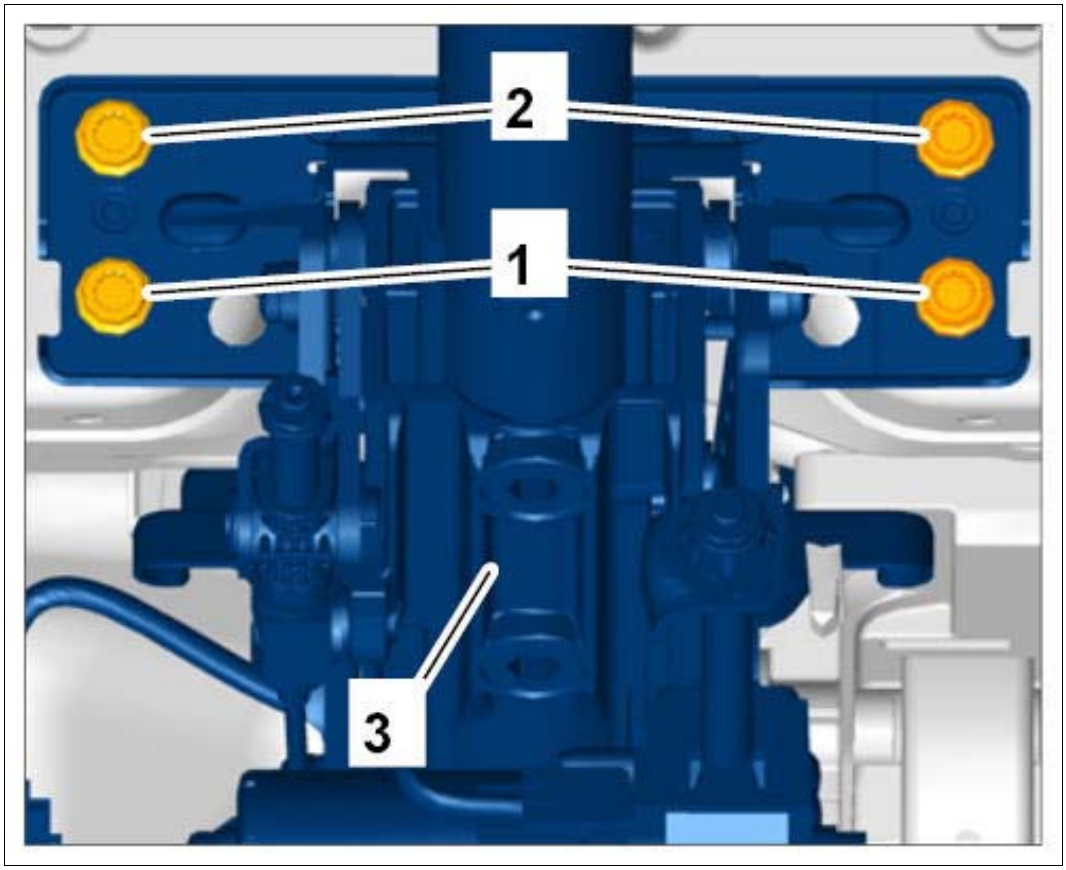

Courtesy of PORSCHE CARS NORTH AMERICA, INC.

2. 3.2. Tighten fastening screws **-2-** at the top of the retaining frame. **Tightening torque 20 Nm (15 ftlb.)**
3. 3.3. Tighten fastening screws **-1-** at the bottom of the mounting saddle. **Tightening torque 20 Nm (15 ftlb.)**

Fig 4: Identifying Steering Column Screws (Bottom)

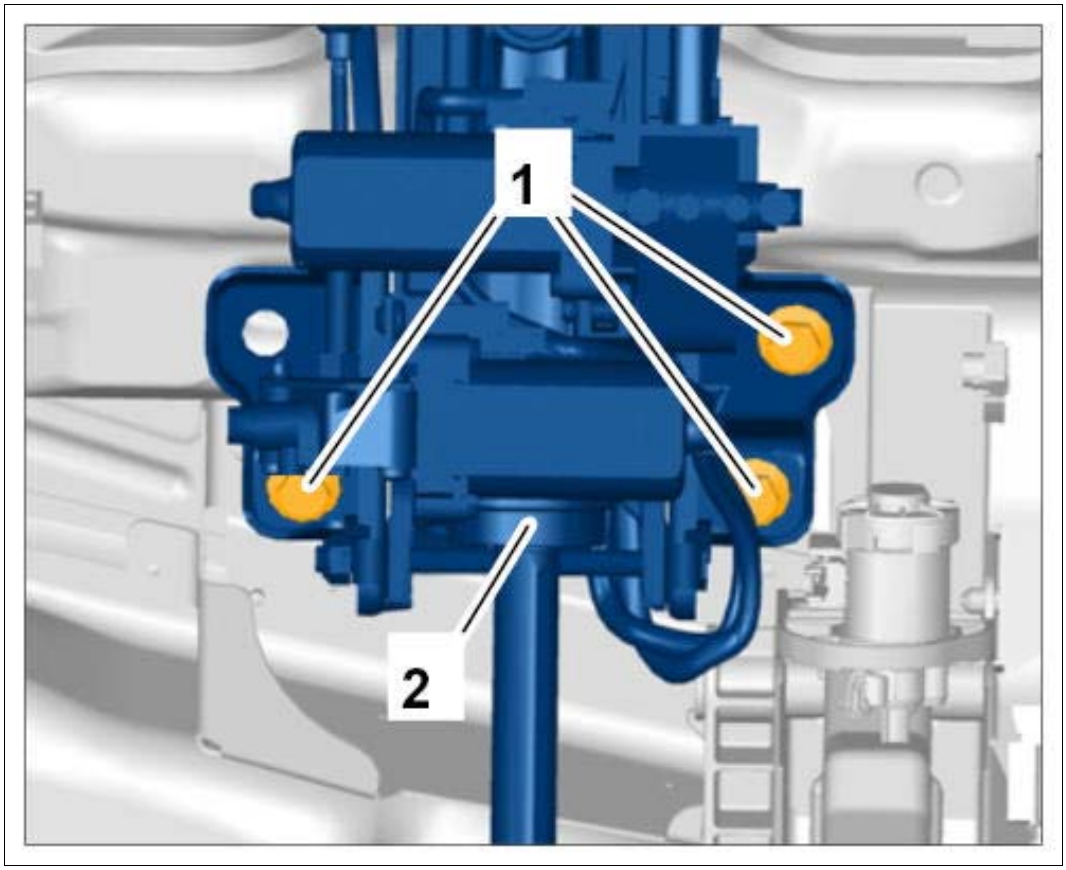

Courtesy of PORSCHE CARS NORTH AMERICA, INC.

4. Connect electric plug connection **-1-** until it locks securely.

Fig 5: Identifying Plug Connection For Steering Column

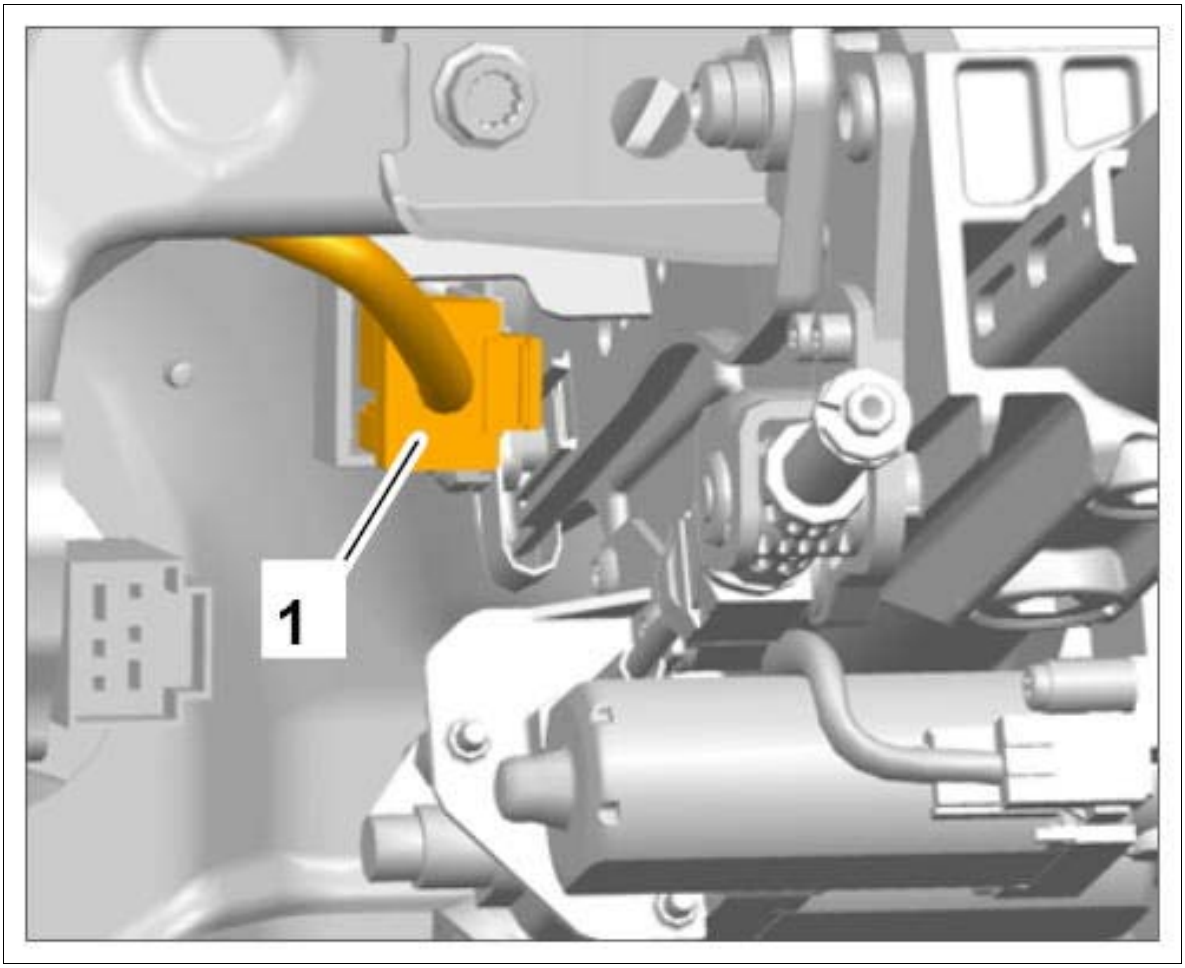

Courtesy of PORSCHE CARS NORTH AMERICA, INC.

Information

Always replace the clamping screw on the universal joint.

5. Fit intermediate steering shaft **-3-** onto the steering column **-1-** as far as it will go.

   Tighten fastening screw **-2-** on universal joint. **Tightening torque 30 Nm (22 ftlb.)**

Fig 6: Identifying Steering Column On Intermediate Steering Shaft

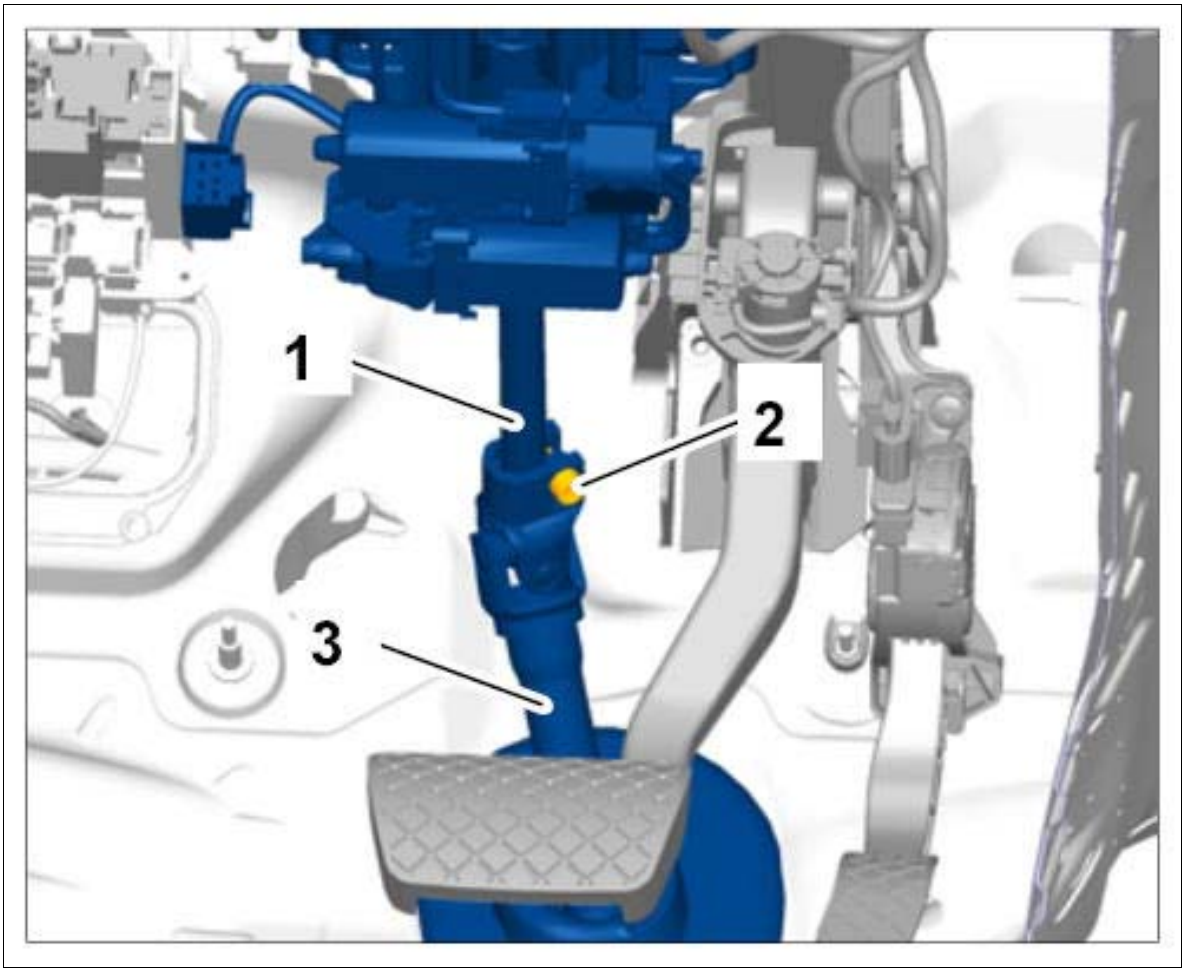

Courtesy of PORSCHE CARS NORTH AMERICA, INC.

WM 481519 REMOVING AND INSTALLING STEERING COLUMN (MACAN, MACAN S, MACAN TURBO) > SUBSEQUENT WORK

1. Install front footwell outlet vent on the driver's side → INSTALLING FRONT LEFT FOOTWELL OUTLET VENT .
2. Install trim panel under dashboard → INSTALLING TRIM PANEL UNDER DASHBOARD AT THE RIGHT .
3. Install steering-column switch → INSTALLING STEERING-COLUMN SWITCH .
4. Calibrate steering-angle sensor → 456005 INITIALIZING AND CALIBRATING STEERING-ANGLE SENSOR .

WM 481555 REPLACING STEERING COLUMN (MACAN, MACAN S, MACAN TURBO) > PRELIMINARY WORK

1. Remove steering column → 481519 REMOVING AND INSTALLING STEERING COLUMN .

WM 481555 REPLACING STEERING COLUMN (MACAN, MACAN S, MACAN TURBO) > REPLACING STEERING COLUMN

1. Change the control units for steering column adjustment and electronic steering column lock (ELV).

   → 483019 REMOVING AND INSTALLING CONTROL UNIT FOR HEIGHT ADJUSTMENT

   → 480819 REMOVING AND INSTALLING CONTROL UNIT FOR ELV

WM 481555 REPLACING STEERING COLUMN (MACAN, MACAN S, MACAN TURBO) > SUBSEQUENT WORK

1. Install steering column → INSTALLING STEERING COLUMN .

WM 4815IN ASSESSMENT OF STEERING COLUMN AFTER ACCIDENT DAMAGE (MACAN, MACAN S, MACAN TURBO) > INFORMATION > FUNDAMENTALS

Various kinds of damage can be caused to steering columns in the event of accidents or driving conditions similar to accidents. In cases where the steering column shows no external damage it can be difficult to detect damage. This damage represents an unacceptable risk for the vehicle, since it could lead to failure of the steering system.

To decide whether the steering column of a vehicle involved in an accident must be replaced or may continue to be used, the following guidelines are helpful.

WM 4815IN ASSESSMENT OF STEERING COLUMN AFTER ACCIDENT DAMAGE (MACAN, MACAN S, MACAN TURBO) > INFORMATION > ASSESSMENT OF THE STEERING COLUMN OF A VEHICLE INVOLVED IN AN ACCIDENT

The steering column may remain in the vehicle if all the following conditions are met:

No visible damage (breakage, cracks, deformation) to such front-axle parts as steering arms, steering gear, steering column mountings, steering wheel and airbag unit, wheel rims, wheel bearing housing (wheel carriers), tie rods, steering shaft or to the points on the body where wheel suspension parts are bolted on.

No unacceptable rise in torque and no jamming or catching when the steering gear is turned from stop to stop. The front wheels must be free (front axle raised) when turning and the ignition must be switched off (no power assistance).

The steering column does not catch/jam when turned separately without steering gear.

No axial play in the steering column.

The steering column must be replaced by a new or replacement unit if one of the following points applies:

Impact is felt by occupants.

Airbag has been triggered.

Visible or perceptible damage to the steering column.

Play in steering shaft line.

Fire damage.

In addition, for vehicles with electrically adjustable steering columns, if the adjustment does not function perfectly (the axial and/or vertical adjustment time from stop to stop is too long, unusual noises are heard in this area).

The steering intermediate shaft and/or a universal joint is touching another component or has clearance of less than 5 mm.

The steering wheel is more than 10° out of line when the marking for steering center position overlaps → 449503 SUSPENSION ALIGNMENT, COMPLETE refer to "Adjusting toe".

If permanent deformation, breakage, cracks or play have been detected in:

steering gear,

steering column mountings,

tie rods,

steering arms,

spring struts,

wheel carriers,

control arms,

front-axle carrier (chassis subframe)

then the steering column must be checked according to the criteria listed above.

WM 482819 REMOVING AND INSTALLING INTERMEDIATE STEERING SHAFT (MACAN, MACAN S, MACAN TURBO) > TECHNICAL VALUES

Location	Description	Type	Basic value	Tolerance 1	Tolerance 2
Steering column to intermediate steering shaft (universal joint)	M8 x 30 thread/always use new screw or bolt following removal	Tightening torque	30 Nm (22 ftlb.)		

Intermediate steering shaft to steering gear (universal joint)	M8 x 30 thread/always use new screw or bolt following removal	Tightening torque	30 Nm (22 ftlb.)		

WM 482819 REMOVING AND INSTALLING INTERMEDIATE STEERING SHAFT (MACAN, MACAN S, MACAN TURBO) > PRELIMINARY WORK

1. Turn wheels to straight-ahead position (steering wheel in center position).
2. Move steering wheel all the way back.
3. Remove front underbody panelling → 519219 REMOVING AND INSTALLING COVER FOR FRONT UNDERBODY .
4. Remove front-axle support → 400819 REMOVING AND INSTALLING FRONT-AXLE SUPPORT .

WM 482819 REMOVING AND INSTALLING INTERMEDIATE STEERING SHAFT (MACAN, MACAN S, MACAN TURBO) > REMOVING AND INSTALLING INTERMEDIATE STEERING SHAFT > REMOVING INTERMEDIATE STEERING SHAFT

Information

- The sealing bellows and intermediate steering shaft are one unit.
- The sealing bellows cannot be removed from the intermediate steering shaft.
- Do not try to remove the sealing bellows from the intermediate steering shaft!

Fig 1: Locating Intermediate Steering Shaft Position



Courtesy of PORSCHE CARS NORTH AMERICA, INC.

1. Unscrew fastening screw **-2-** on universal joint.

   Pull intermediate steering shaft **-3-** off the steering column **-1-** .

Fig 2: Identifying Steering Column On Intermediate Steering Shaft

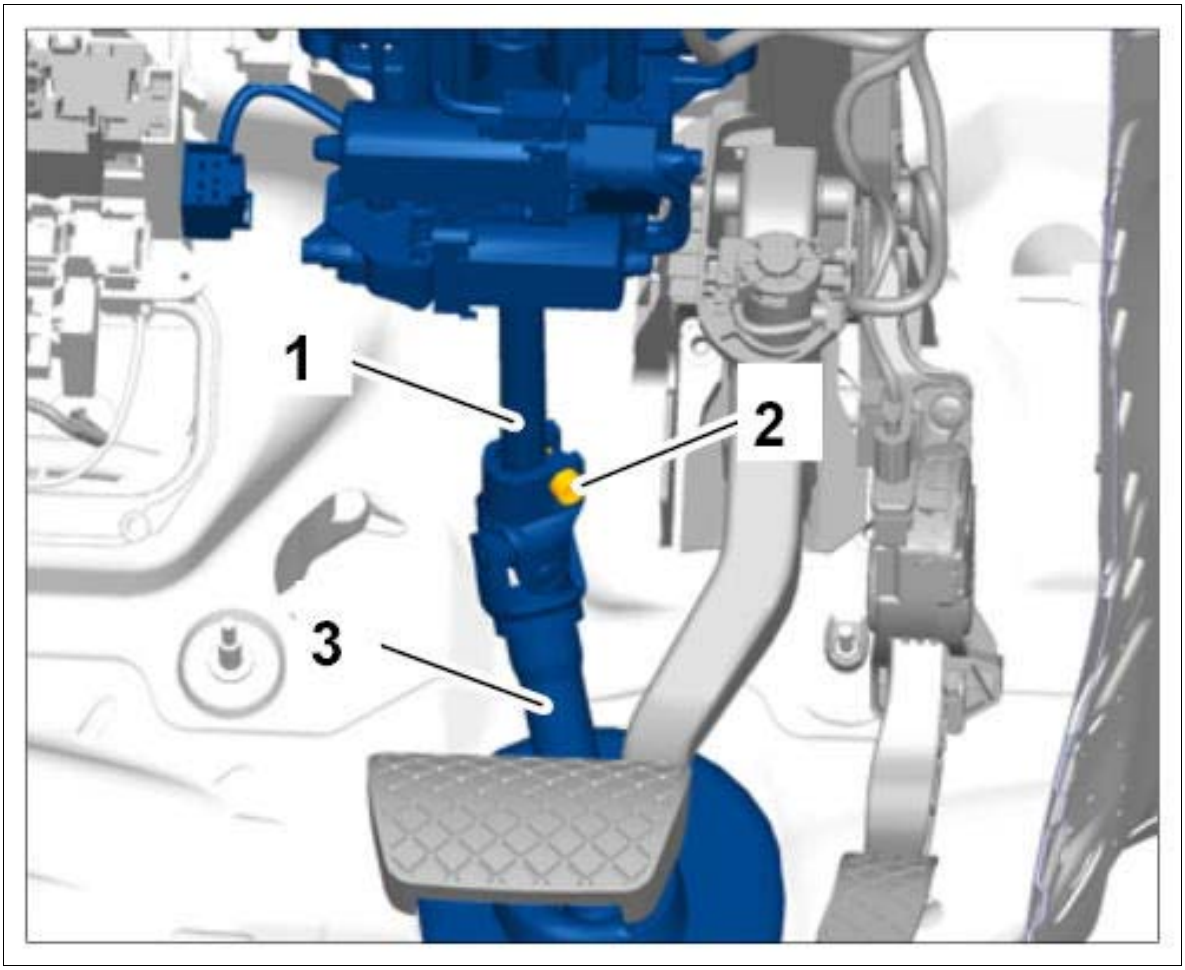

Courtesy of PORSCHE CARS NORTH AMERICA, INC.

2. Unscrew fastening screw **-2-** on universal joint.

   Pull intermediate steering shaft **-1-** off the steering gear **-3-** .

Fig 3: Removing Intermediate Steering Shaft On Steering Gear

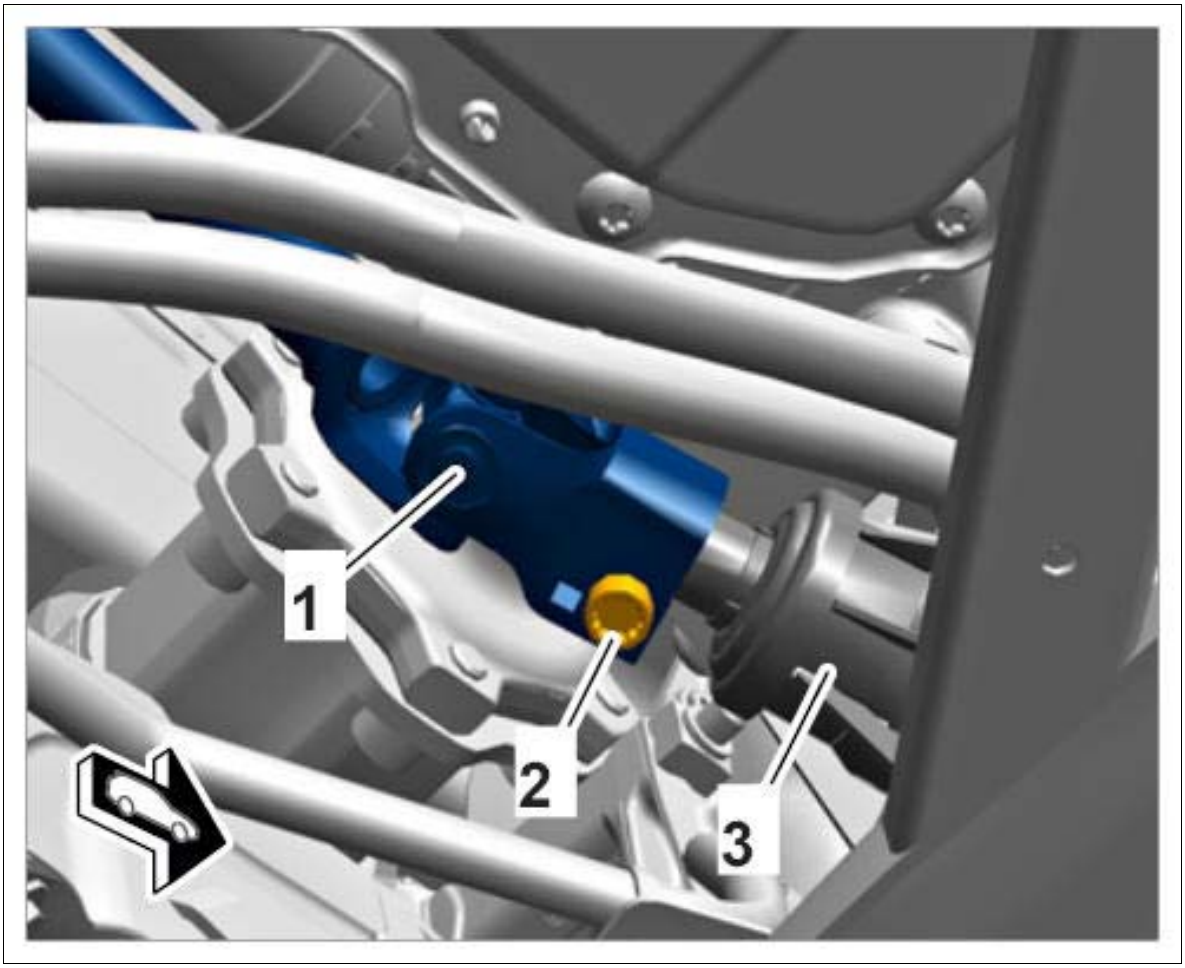

Courtesy of PORSCHE CARS NORTH AMERICA, INC.

3. Press sealing bellows **-1-** together on the tabs **-arrows-** and press into the interior of the vehicle.

Fig 4: Pressing Sealing Bellows On Body (Underside)

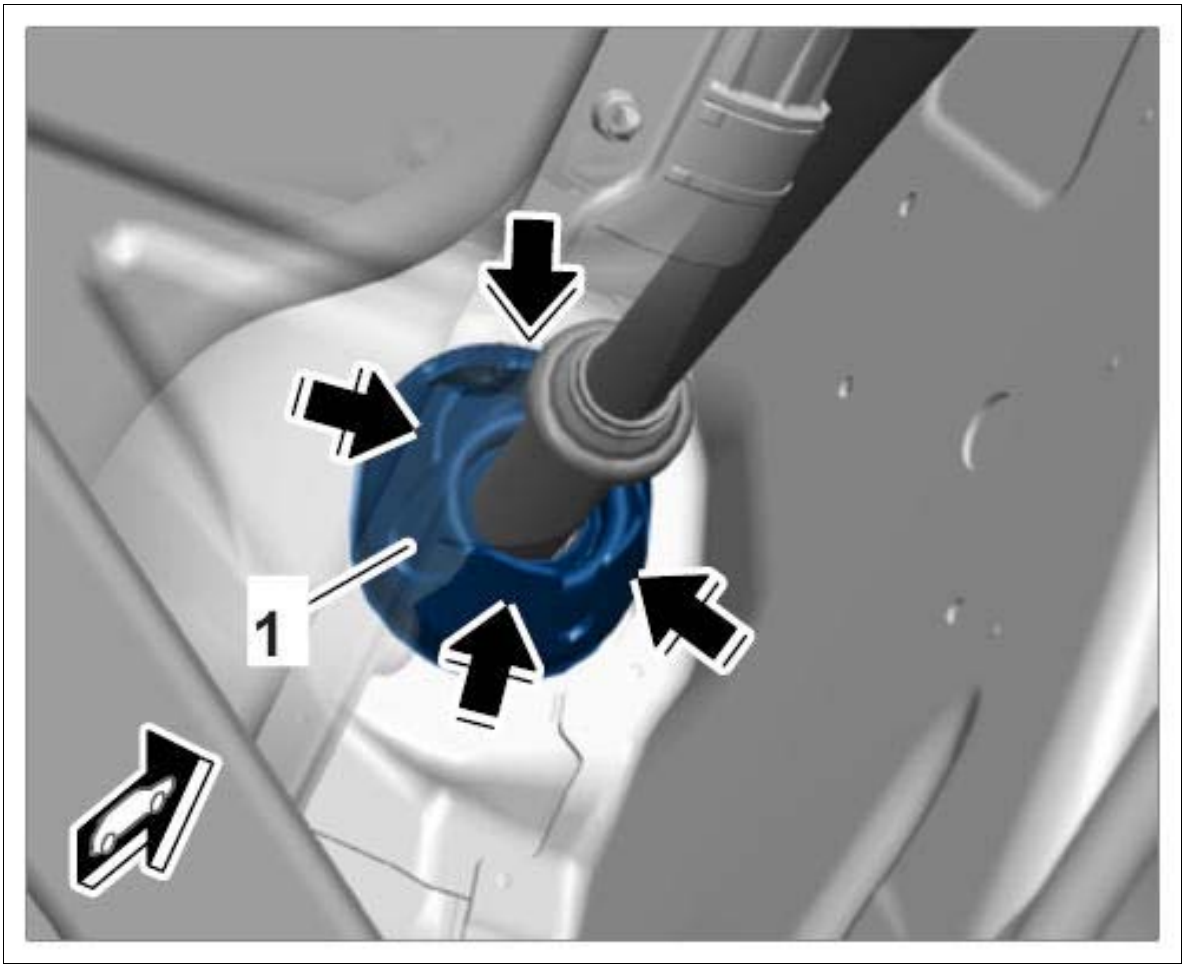

Courtesy of PORSCHE CARS NORTH AMERICA, INC.

4. Remove intermediate steering shaft **-1-** by pulling it towards the passenger compartment **-arrow-** .

Fig 5: Removing Intermediate Steering Shaft

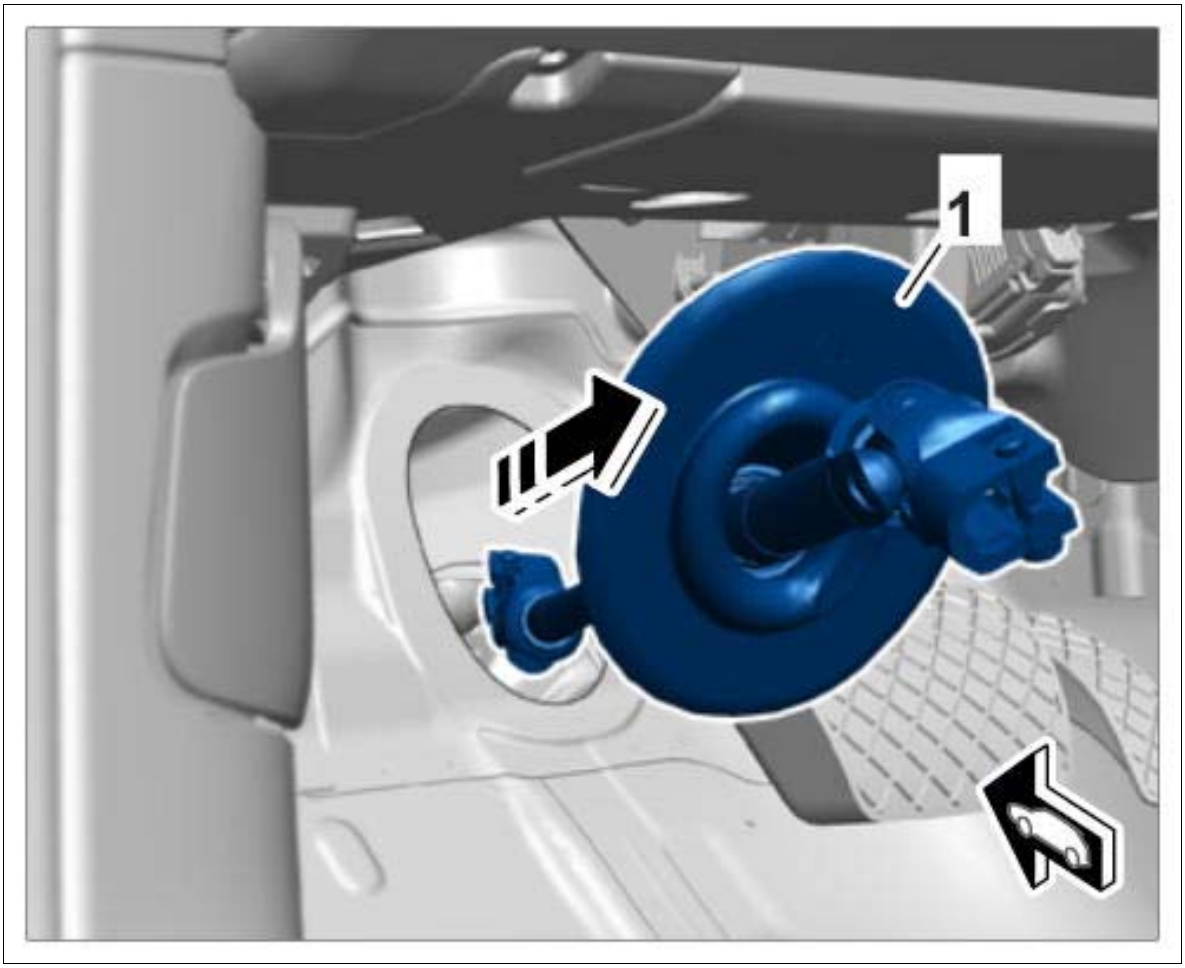

Courtesy of PORSCHE CARS NORTH AMERICA, INC.

WM 482819 REMOVING AND INSTALLING INTERMEDIATE STEERING SHAFT (MACAN, MACAN S, MACAN TURBO) > REMOVING AND INSTALLING INTERMEDIATE STEERING SHAFT > INSTALLING INTERMEDIATE STEERING SHAFT

1. Position intermediate steering shaft **-1-** from within the passenger compartment **-arrow-** .

Fig 1: Positioning Intermediate Steering Shaft

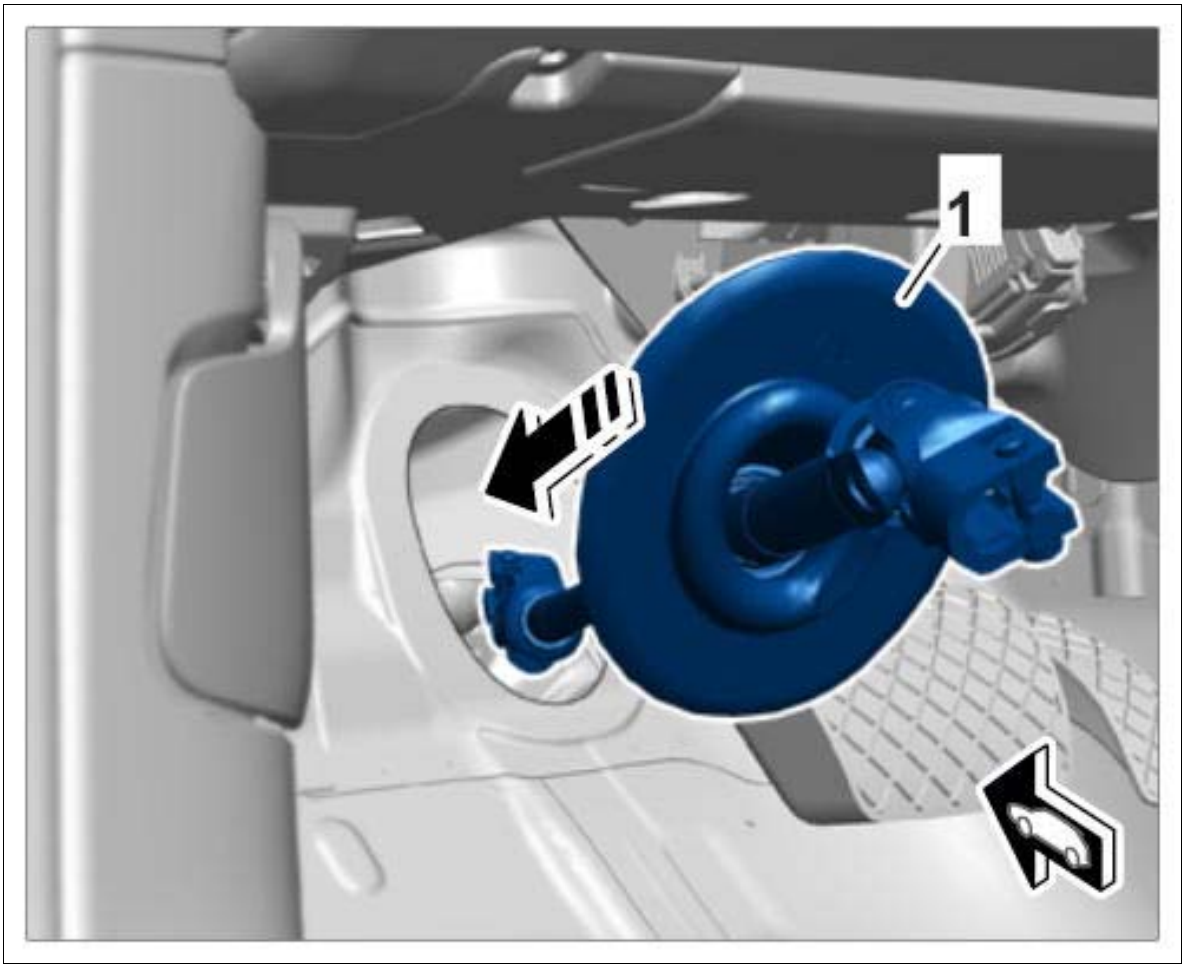

Courtesy of PORSCHE CARS NORTH AMERICA, INC.

2. Fit intermediate steering shaft **-3-** as far as it will go onto the steering column **-1-** .

   Information

   Always replace the clamping screw on the universal joint.

   Tighten fastening screw **-2-** . **Tightening torque 30 Nm (22 ftlb.)**

Fig 2: Identifying Steering Column On Intermediate Steering Shaft

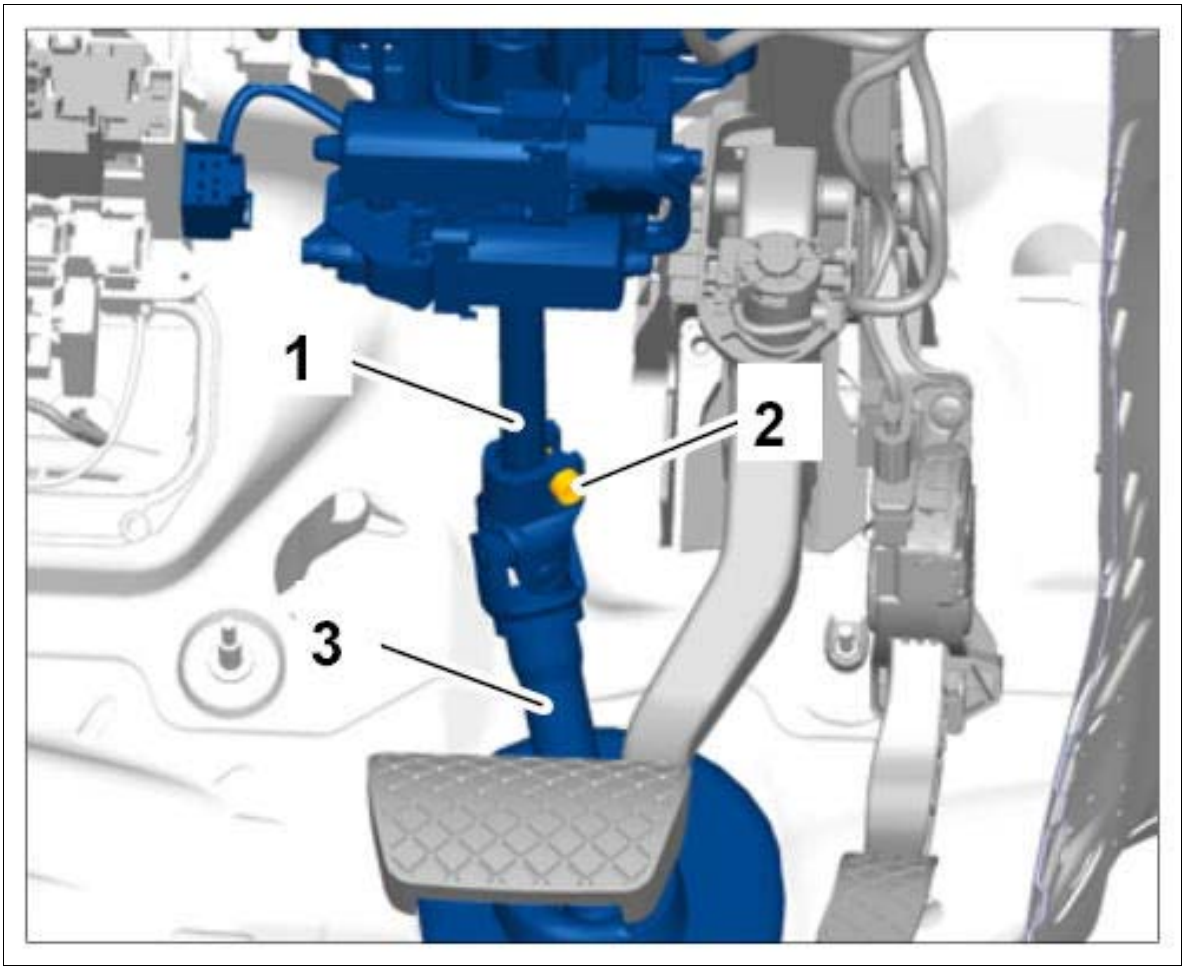

Courtesy of PORSCHE CARS NORTH AMERICA, INC.

3. Insert sealing bellows **-1-** as far as possible from within the passenger compartment.

   Make sure that the two arrows **-1-** are pointing upwards.

Fig 3: Positioning Sealing Bellows In Passenger Compartment

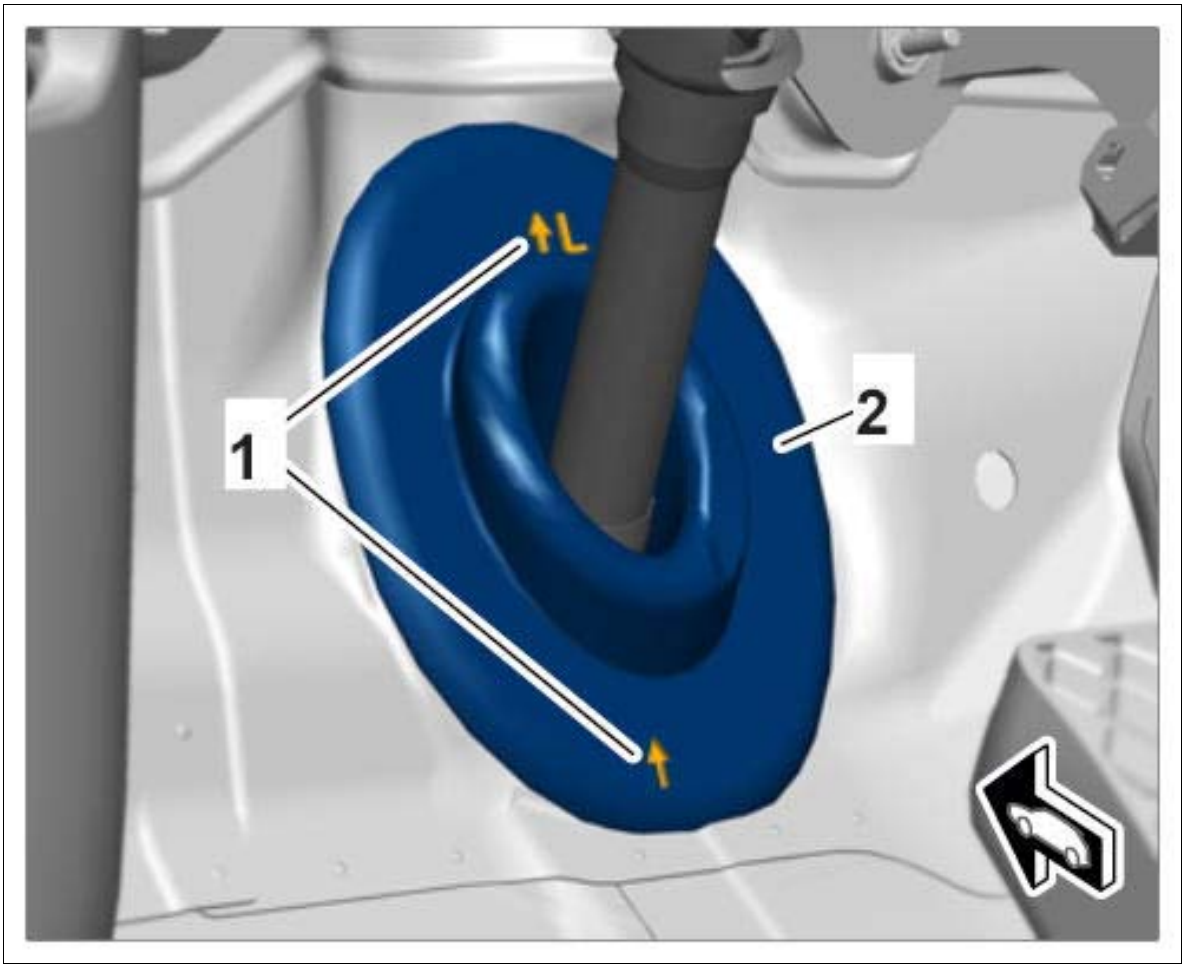

Courtesy of PORSCHE CARS NORTH AMERICA, INC.

4. Secure the sealing bellows on the underside of the vehicle.

    1. 4.1. Pull sealing bellows **-1-** in through the opening.
    2. 4.2. Fit the sealing bellows **-1-** onto the collar **-2-** of the body completely using the tabs without turning the sealing bellows.
    3. 4.3. Then check the installation position of the sealing bellows in the passenger compartment using the arrows. The arrows must be pointing straight up.

       Loosen the sealing bellows, turn it to the correct installation position and fit it again if necessary.

Fig 4: Fitting Sealing Bellows On Body (Underside)

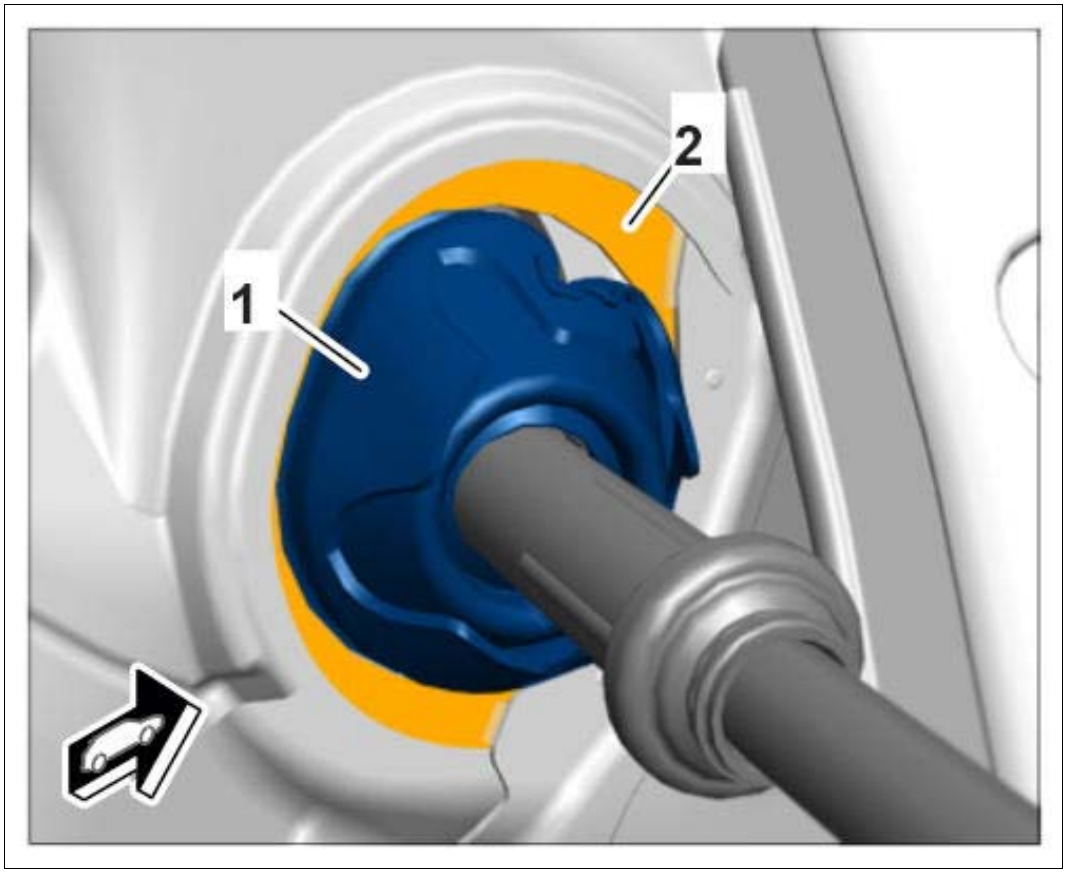

Courtesy of PORSCHE CARS NORTH AMERICA, INC.

5. Fit intermediate steering shaft **-1-** as far as it will go onto the steering gear **-3-** .

   Information

   Always replace the clamping screw on the universal joint.

   Tighten fastening screw **-2-** . **Tightening torque 30 Nm (22 ftlb.)**

Fig 5: Fitting Intermediate Steering Shaft On Steering Gear

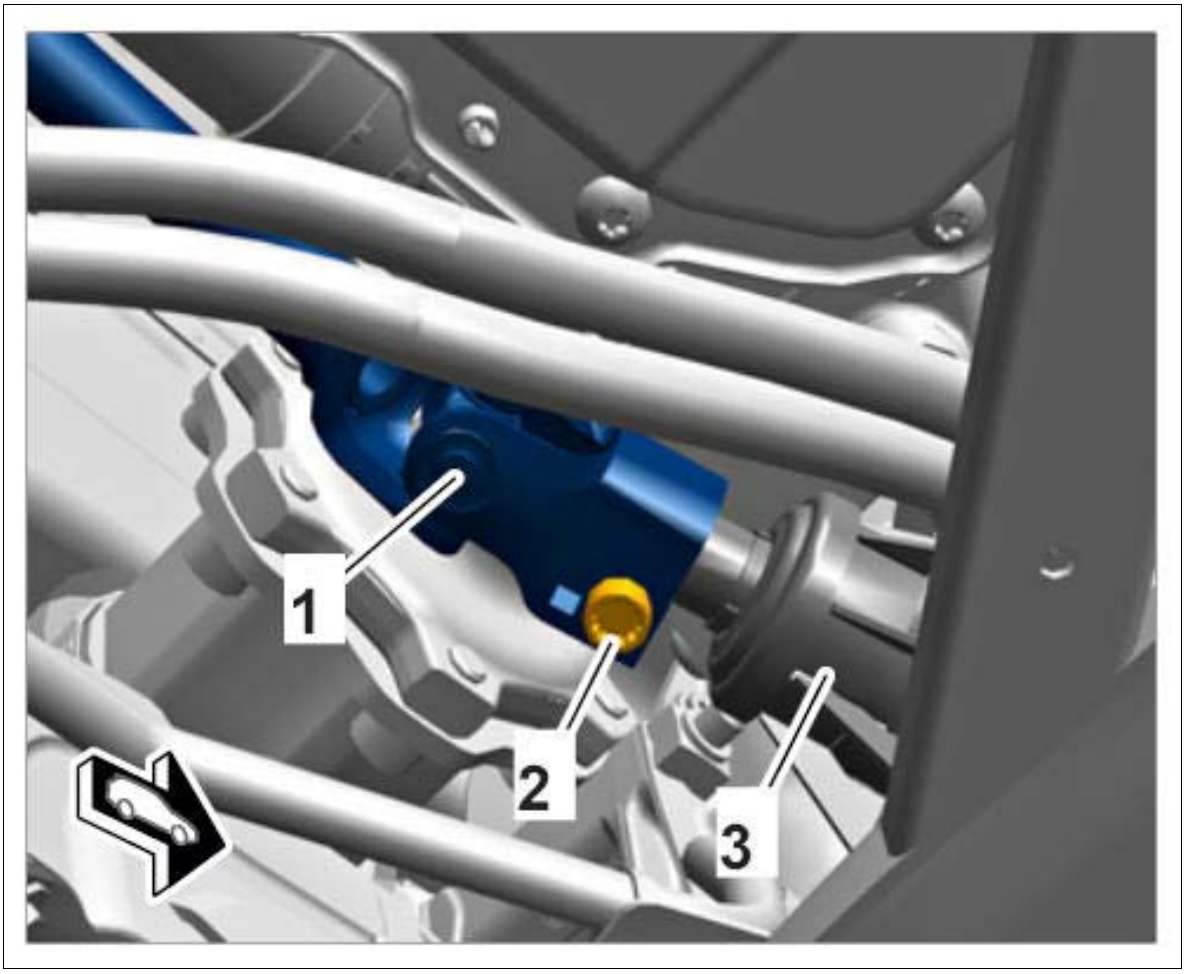

Courtesy of PORSCHE CARS NORTH AMERICA, INC.

WM 482819 REMOVING AND INSTALLING INTERMEDIATE STEERING SHAFT (MACAN, MACAN S, MACAN TURBO) > SUBSEQUENT WORK

1. Install front-axle support → INSTALLING FRONT-AXLE SUPPORT .
2. Install front underbody panelling → INSTALLING COVER FOR FRONT UNDERBODY .

WM 482919 REMOVING AND INSTALLING SWITCH FOR HEIGHT AND FORE-AND-AFT ADJUSTMENT (MACAN, MACAN S, MACAN TURBO) > REMOVING AND INSTALLING SWITCH FOR HEIGHT AND FORE-AND-AFT ADJUSTMENT > REMOVING SWITCH FOR HEIGHT AND FORE-AND-AFT ADJUSTMENT

Information

The switch for height and fore-and-aft adjustment is located on the underside of the steering column casing.

1. Insert a suitable flat screwdriver into the slit **-1-** .
2. Press the clip back using a flat screwdriver.
3. Pull the switch **-2-** down out of the way.

Fig 1: Pulling Switch From Steering Column Casing

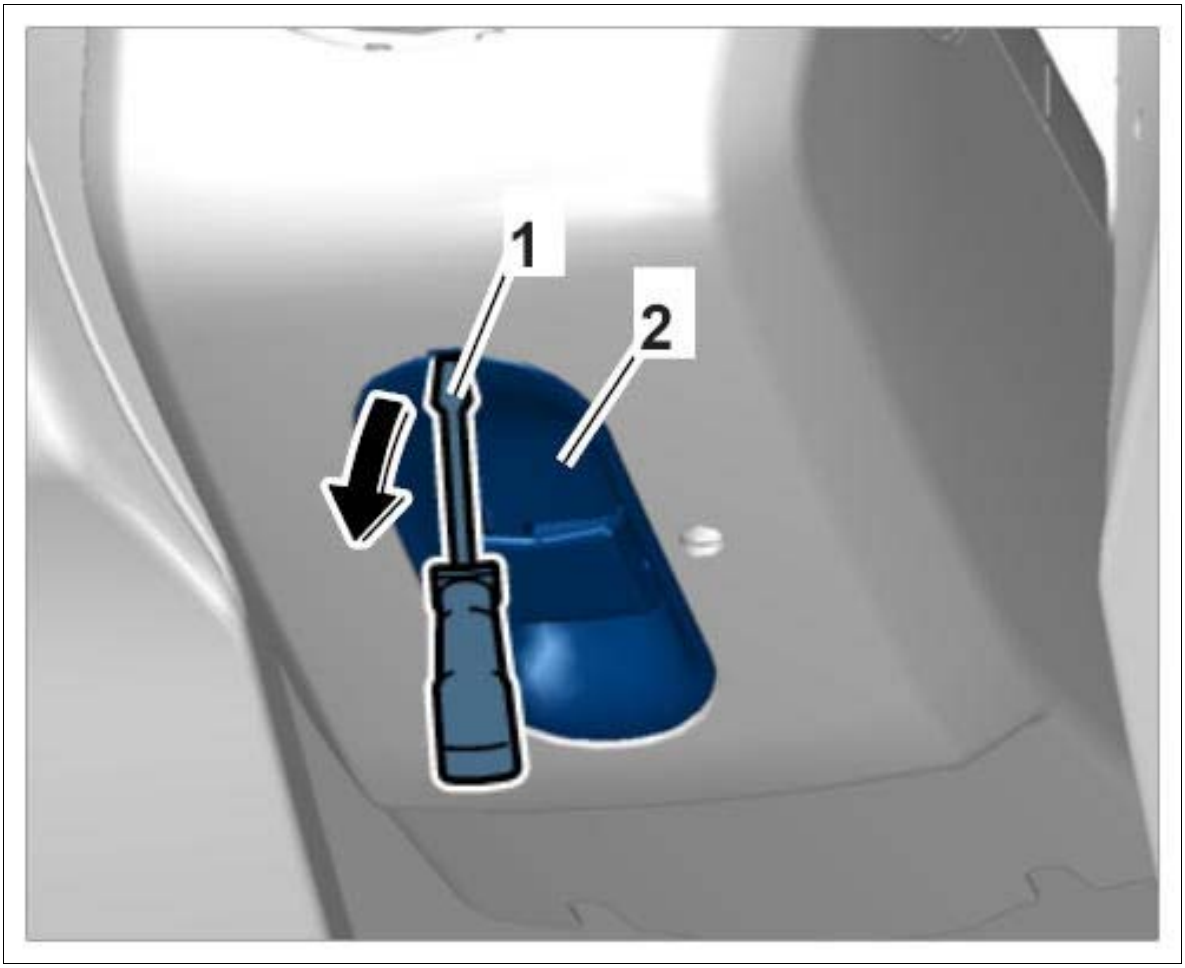

Courtesy of PORSCHE CARS NORTH AMERICA, INC.

4. Disconnect electric plug connection **-1-** .

Fig 2: Disconnecting Switch Connector

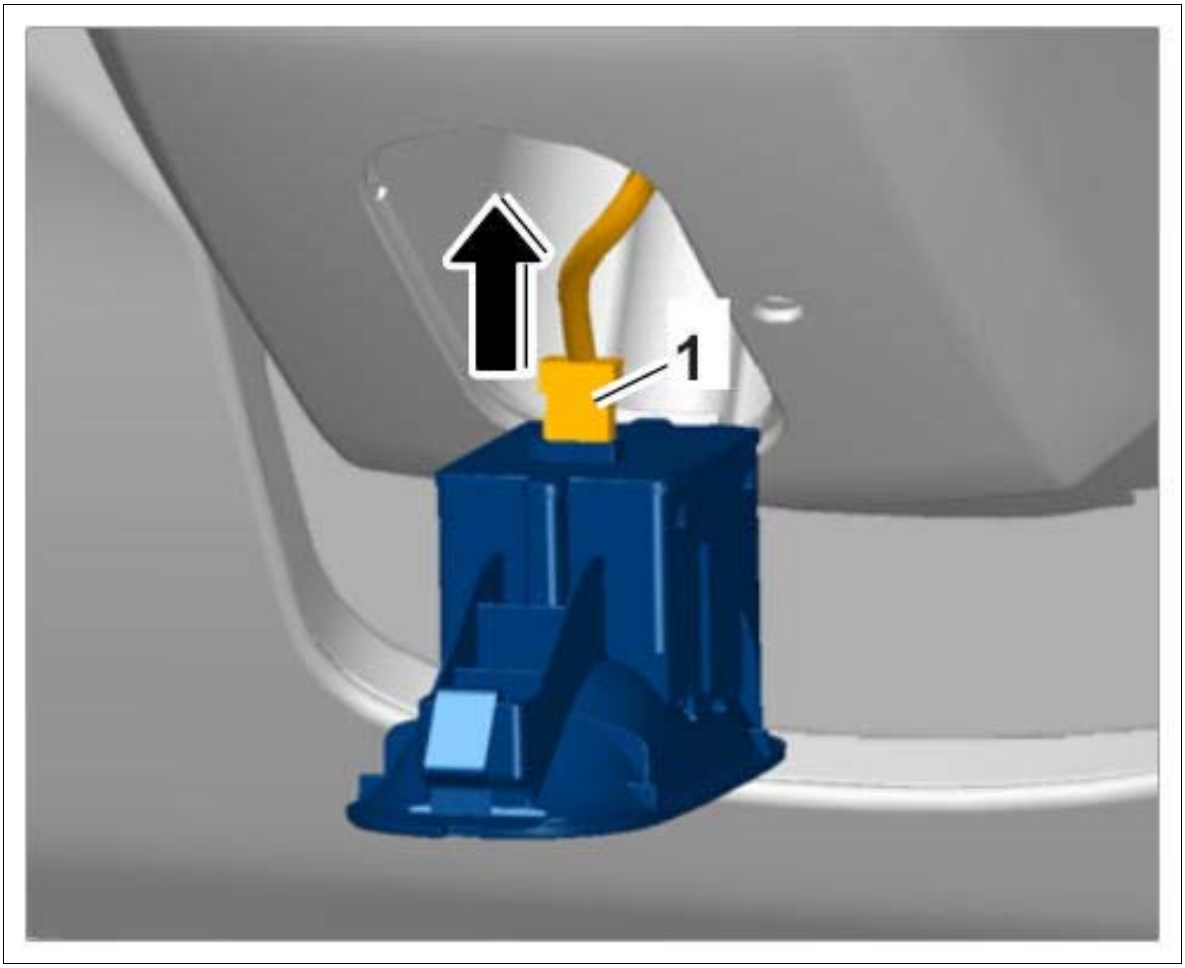

Courtesy of PORSCHE CARS NORTH AMERICA, INC.

WM 482919 REMOVING AND INSTALLING SWITCH FOR HEIGHT AND FORE-AND-AFT ADJUSTMENT (MACAN, MACAN S, MACAN TURBO) > REMOVING AND INSTALLING SWITCH FOR HEIGHT AND FORE-AND-AFT ADJUSTMENT > INSTALLING SWITCH FOR HEIGHT AND FORE-AND-AFT ADJUSTMENT

1. Connect electric plug connection **-1-** .

Fig 1: Connecting Electric Plug Connection

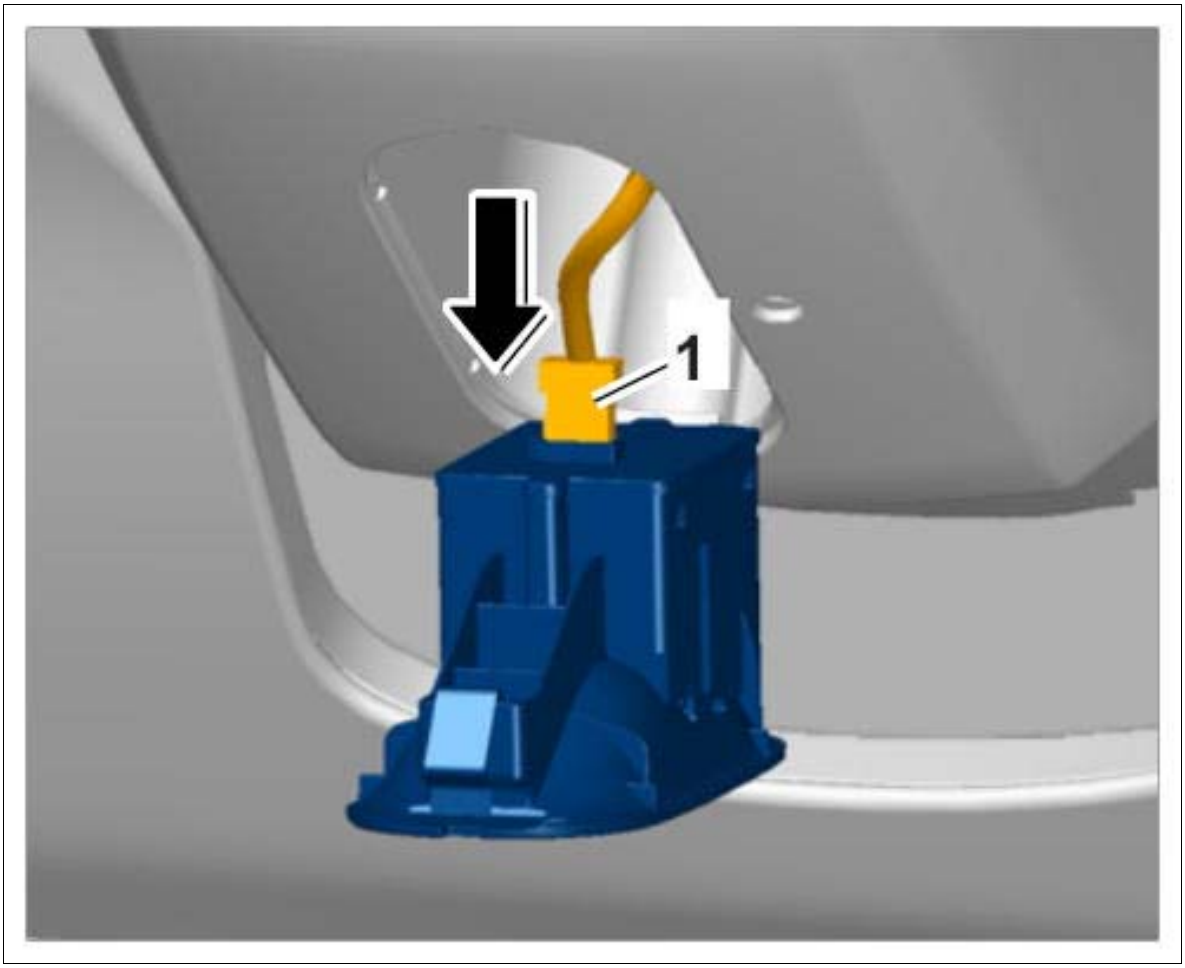

Courtesy of PORSCHE CARS NORTH AMERICA, INC.

2. Press the switch **-2-** into the trim panel until the clip **-1-** engages securely.

Fig 2: Pressing Switch Into Steering Column Casing

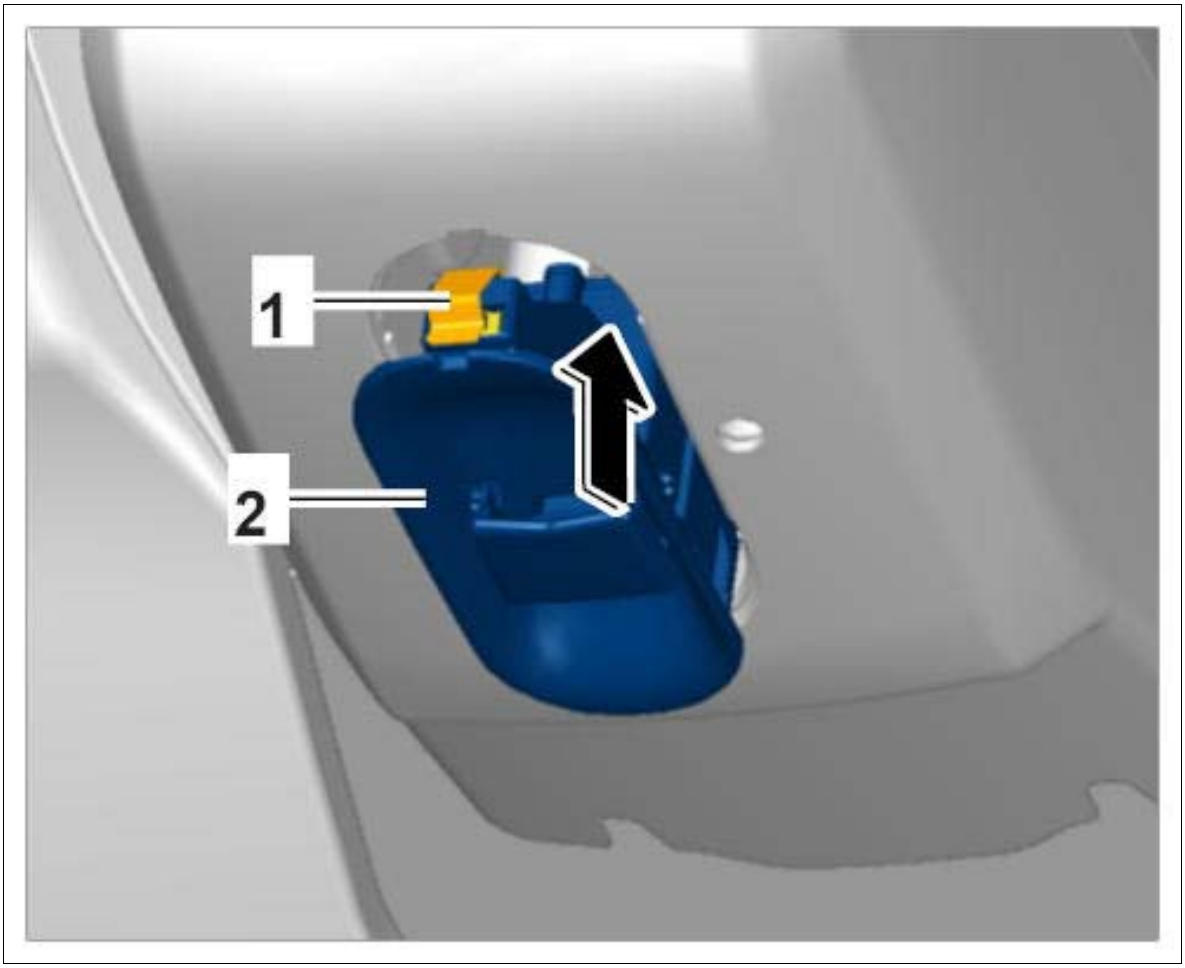

Courtesy of PORSCHE CARS NORTH AMERICA, INC.

WM 483019 REMOVING AND INSTALLING CONTROL UNIT FOR HEIGHT ADJUSTMENT (MACAN, MACAN S, MACAN TURBO) > TOOLS

Designation	Type	Number	Description	
PIWIS Tester II	Special tool	9818		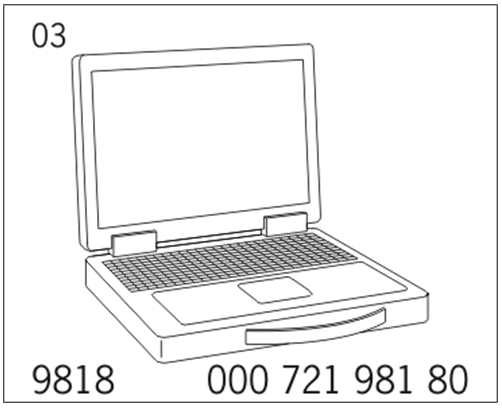

WM 483019 REMOVING AND INSTALLING CONTROL UNIT FOR HEIGHT ADJUSTMENT (MACAN, MACAN S, MACAN TURBO) > PRELIMINARY WORK

Remove steering column → 481519 REMOVING AND INSTALLING STEERING COLUMN .

WM 483019 REMOVING AND INSTALLING CONTROL UNIT FOR HEIGHT ADJUSTMENT (MACAN, MACAN S, MACAN TURBO) > REMOVING AND INSTALLING CONTROL UNIT FOR HEIGHT ADJUSTMENT > REMOVING CONTROL UNIT FOR HEIGHT ADJUSTMENT

NOTE: Voltage peaks

- *Risk of damage to load or to the control unit*

→ Remove the ignition key and switch off load before disconnecting or removing load.

1. Release electric plug connection on height adjustment control unit **-a-** and disconnect it **-A-** .
    1. 1.1. Unscrew and remove fastening screw **-1-** .
    2. 1.2. Lift up height adjustment control unit **-2-** and remove it.

Fig 1: Lifting Up Height Adjustment Control Unit

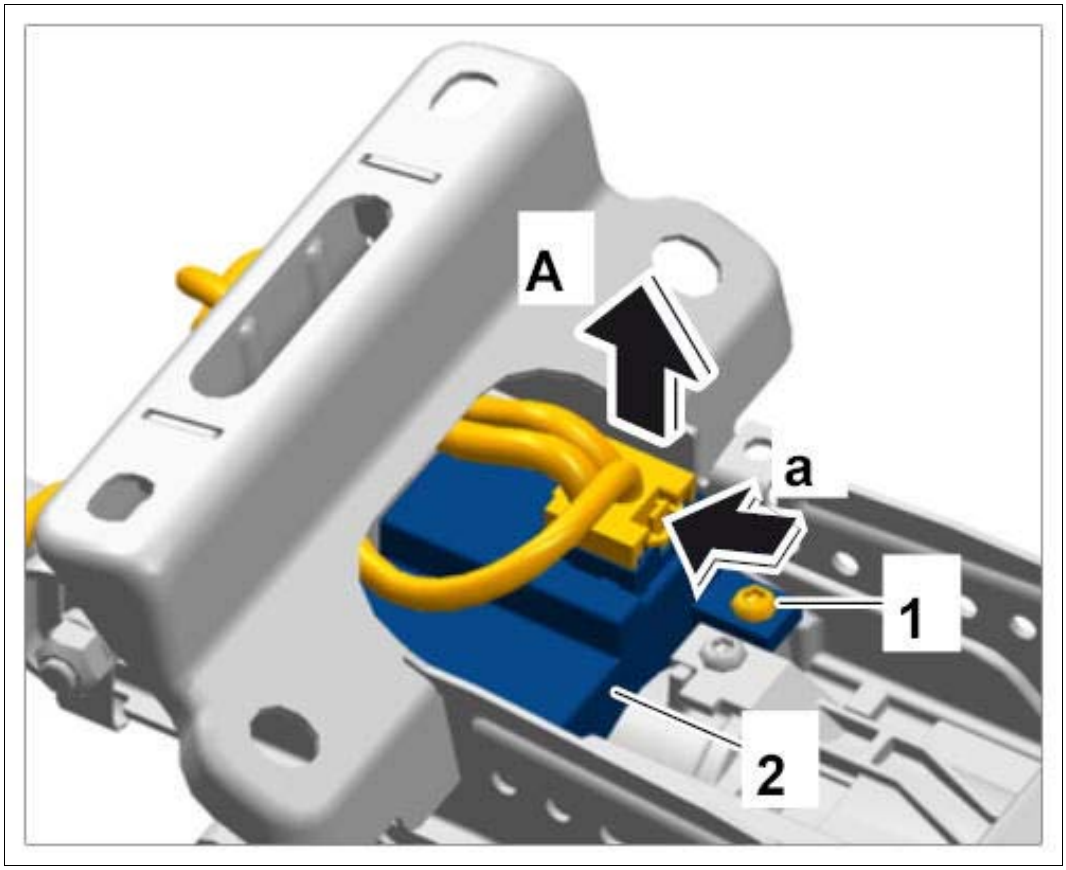

Courtesy of PORSCHE CARS NORTH AMERICA, INC.

WM 483019 REMOVING AND INSTALLING CONTROL UNIT FOR HEIGHT ADJUSTMENT (MACAN, MACAN S, MACAN TURBO) > REMOVING AND INSTALLING CONTROL UNIT FOR HEIGHT ADJUSTMENT > INSTALLING CONTROL UNIT FOR HEIGHT ADJUSTMENT

1. Installation is performed in reverse order.

WM 483019 REMOVING AND INSTALLING CONTROL UNIT FOR HEIGHT ADJUSTMENT (MACAN, MACAN S, MACAN TURBO) > SUBSEQUENT WORK

1. Install steering column. → INSTALLING STEERING COLUMN .
2. If the control unit was replaced, the "new" control unit must be adapted to suit the vehicle using **PIWIS Tester II 9818** . → WM 483055 REPLACING CONTROL UNIT FOR HEIGHT ADJUSTMENT (MACAN, MACAN S, MACAN TURBO) .

WM 483055 REPLACING CONTROL UNIT FOR HEIGHT ADJUSTMENT (MACAN,

MACAN S, MACAN TURBO) > TOOLS

Designation	Type	Number	Description	
PIWIS Tester II	Special tool	9818		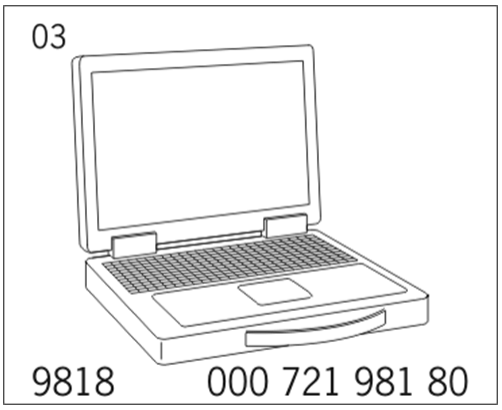

WM 483055 REPLACING CONTROL UNIT FOR HEIGHT ADJUSTMENT (MACAN, MACAN S, MACAN TURBO) > TECHNICAL VALUES

Location	Description	Type	Basic value	Tolerance 1	Tolerance 2
Current rating		Nominal value	40 A		

WM 483055 REPLACING CONTROL UNIT FOR HEIGHT ADJUSTMENT (MACAN, MACAN S, MACAN TURBO) > PRELIMINARY WORK

1. Switch off ignition and replace control unit. → 483019 REMOVING AND INSTALLING CONTROL UNIT FOR HEIGHT ADJUSTMENT .

WM 483055 REPLACING CONTROL UNIT FOR HEIGHT ADJUSTMENT (MACAN, MACAN S, MACAN TURBO) > REPLACING CONTROL UNIT FOR HEIGHT ADJUSTMENT

NOTE: Voltage drop

- *Risk of irreparable damage to control unit*
- *Risk of damage to control unit*
- *Fault entries in the control unit*
- *Coding in the control unit is aborted*
- *Malfunctions in control unit, even during programming*

→ Prior to disconnecting the control unit, switch off ignition and remove ignition key.

→ Ensure that the power supply is not interrupted during programming.

→ Connect a battery charger with a current rating of at least → **Nominal value: 40 A** to the vehicle battery.

Information

The **PIWIS Tester II 9818** instructions take precedence since the description may be different with later Tester releases.

The procedure described here has been structured in general terms. Different text or additional information may appear in **PIWIS Tester II 9818** .

1. Connect the PIWIS Tester to the vehicle and start the Tester. Switch on ignition.
2. Select the vehicle type and start the diagnostic application.
3. **Extended identifications** must now be selected.
4. **Enter the vehicle identification number** and press [Enter] to confirm your entry.
5. Select the **Front-end electronics** control unit in the **overview** .
6. **Maintenance/repairs** must then be selected.
7. Select **Steering column adjustment normalizing run** and press [F12] to continue.
8. Follow the instructions on the Tester.
9. Start the **Steering column adjustment normalizing run** by pressing [F8].
10. The normalizing run ends once all end stops have been set.
11. Once the **procedure has been completed successfully** , press [F12] to continue.
12. Read out the fault memory and erase it if necessary.
13. Carry out a function test.

WM 485319 REMOVING AND INSTALLING BELLOWS FOR STEERING-GEAR HOUSING (JOINT BOOT) (MACAN, MACAN S, MACAN TURBO) > TOOLS

Designation	Type	Number	Description	
clamp tensioner	Workshop equipment	WE 1614		
assembly tools for spring band clamps	Commercially available tool	Nr.72		

WM 485319 REMOVING AND INSTALLING BELLOWS FOR STEERING-GEAR HOUSING (JOINT BOOT) (MACAN, MACAN S, MACAN TURBO) > TECHNICAL VALUES

Location	Description	Type	Basic value	Tolerance 1	Tolerance 2
Inner clamp on bellows on passenger's side (diameter: 85 mm)	Fit using clamp tensioner V.A.G 1682 A	Tightening torque	7 Nm (5 ftlb.)		
Inner clamp on bellows on driver's side (diameter: 59 mm)	Fit using clamp tensioner V.A.G 1682 A	Tightening torque	10 Nm (7.5 ftlb.)		

WM 485319 REMOVING AND INSTALLING BELLOWS FOR STEERING-GEAR HOUSING (JOINT BOOT) (MACAN, MACAN S, MACAN TURBO) > PRELIMINARY WORK

1. Remove tie-rod ball → REMOVING AND INSTALLING TIE-ROD BALL 488119 REMOVING AND INSTALLING TIE-ROD BALL .
2. Remove front underbody panelling → 519219 REMOVING AND INSTALLING COVER FOR FRONT UNDERBODY .

WM 485319 REMOVING AND INSTALLING BELLOWS FOR STEERING-GEAR

HOUSING (JOINT BOOT) (MACAN, MACAN S, MACAN TURBO) > REMOVING AND INSTALLING BELLOWS FOR STEERING-GEAR HOUSING (JOINT BOOT) > REMOVING BELLOWS FOR STEERING-GEAR HOUSING (JOINT BOOT)

Information

- Mark the position of the tie-rod ball on the thread before unscrewing it.
- Count the number of turns when unscrewing the tie-rod ball.
- It will then be possible to install the tie-rod ball back in the same position and retain the basic setting of the steering trapeze.
- However, this does not replace the suspension alignment.

Information

- Make sure that no dirt gets into the power-steering gear and bellows when removing and installing the bellows.

Fig 1: Loosening Outer Clamp On Bellows

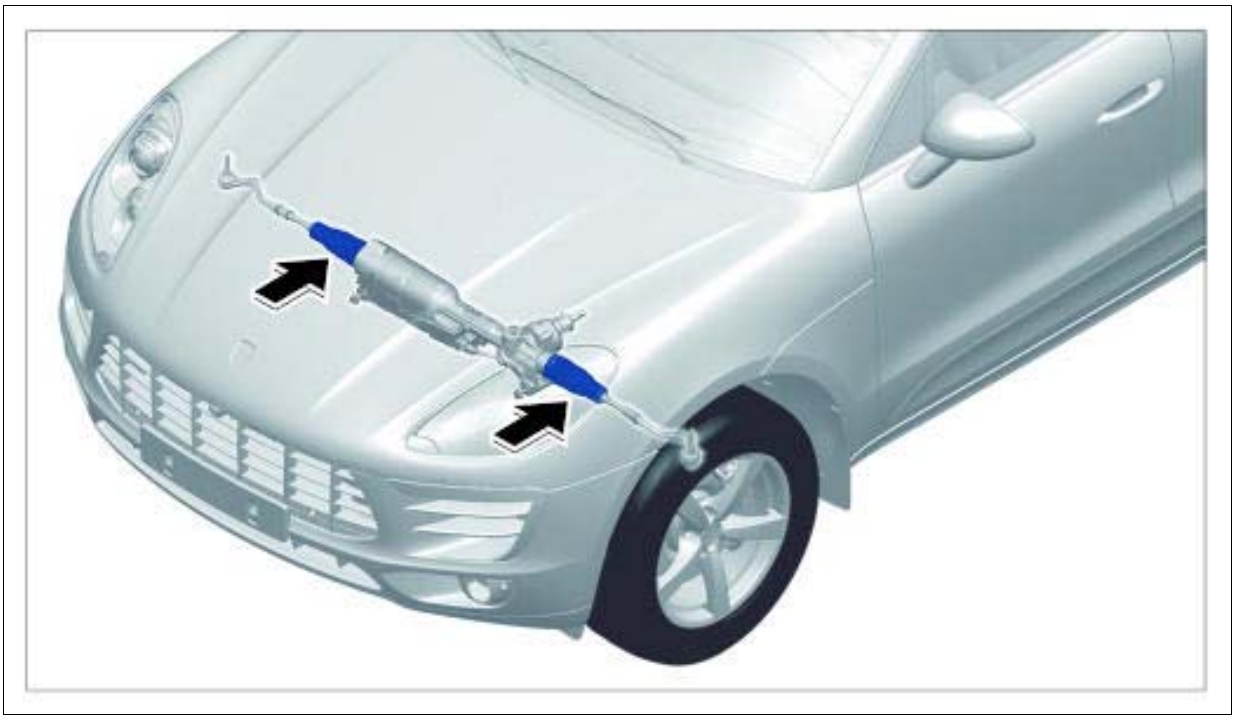

Courtesy of PORSCHE CARS NORTH AMERICA, INC.

1. Loosen the outer clamp **-arrow-** on the bellows using **assembly tools for spring band clamps Nr.72.**

Fig 2: Locating Outer Clamp

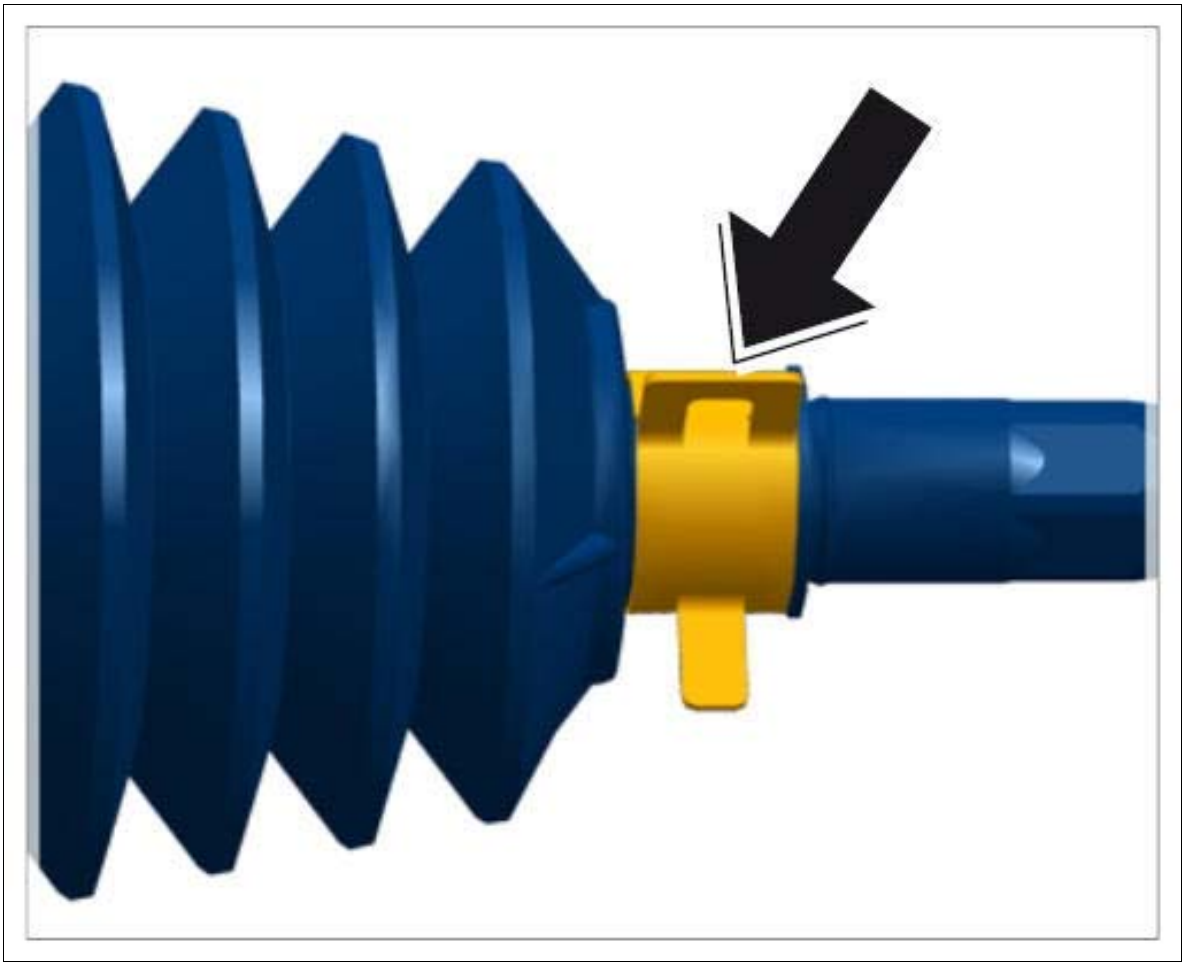

Courtesy of PORSCHE CARS NORTH AMERICA, INC.

2. Loosen the inner clamp **-1-** on the bellows using suitable pliers.

Fig 3: Loosening Inner Clamp

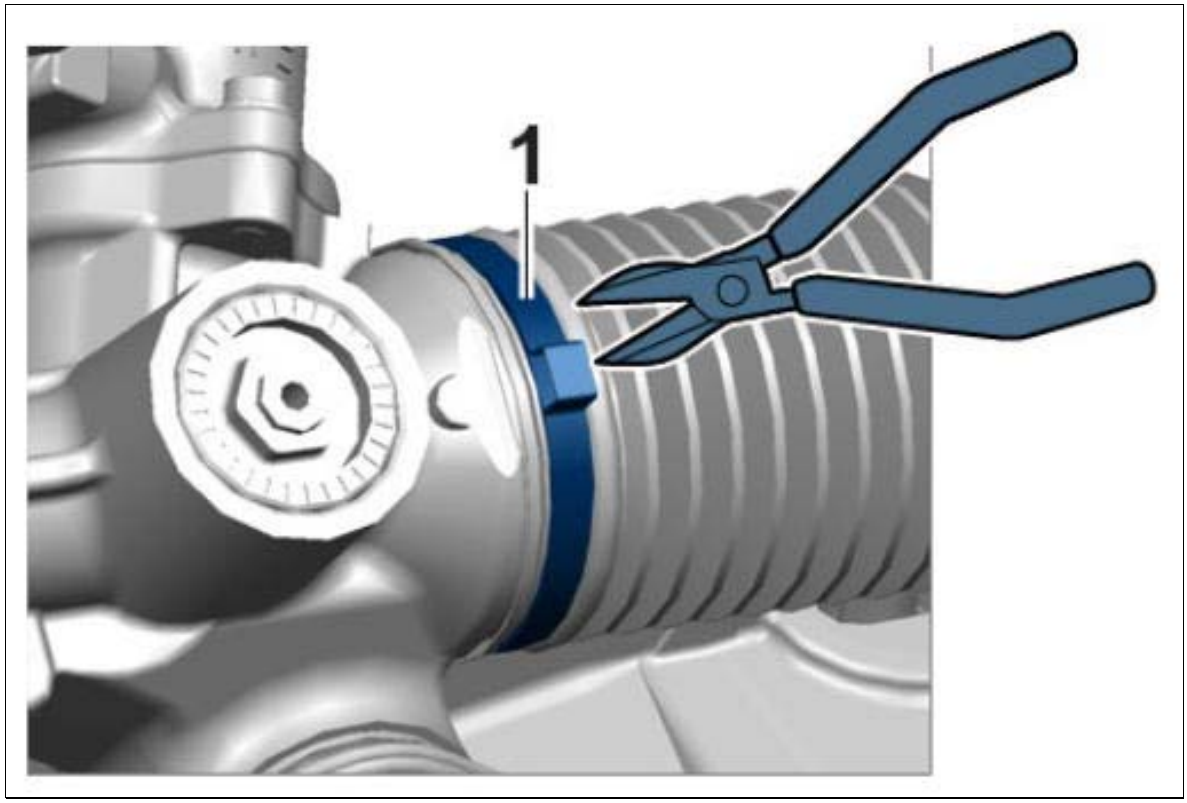

Courtesy of PORSCHE CARS NORTH AMERICA, INC.

3. Unscrew lock nut from tie rod.
4. Pull bellows **-3-** together with clamp **-1-** off the tie rod **-2-** .

Fig 4: Pulling Off Bellows

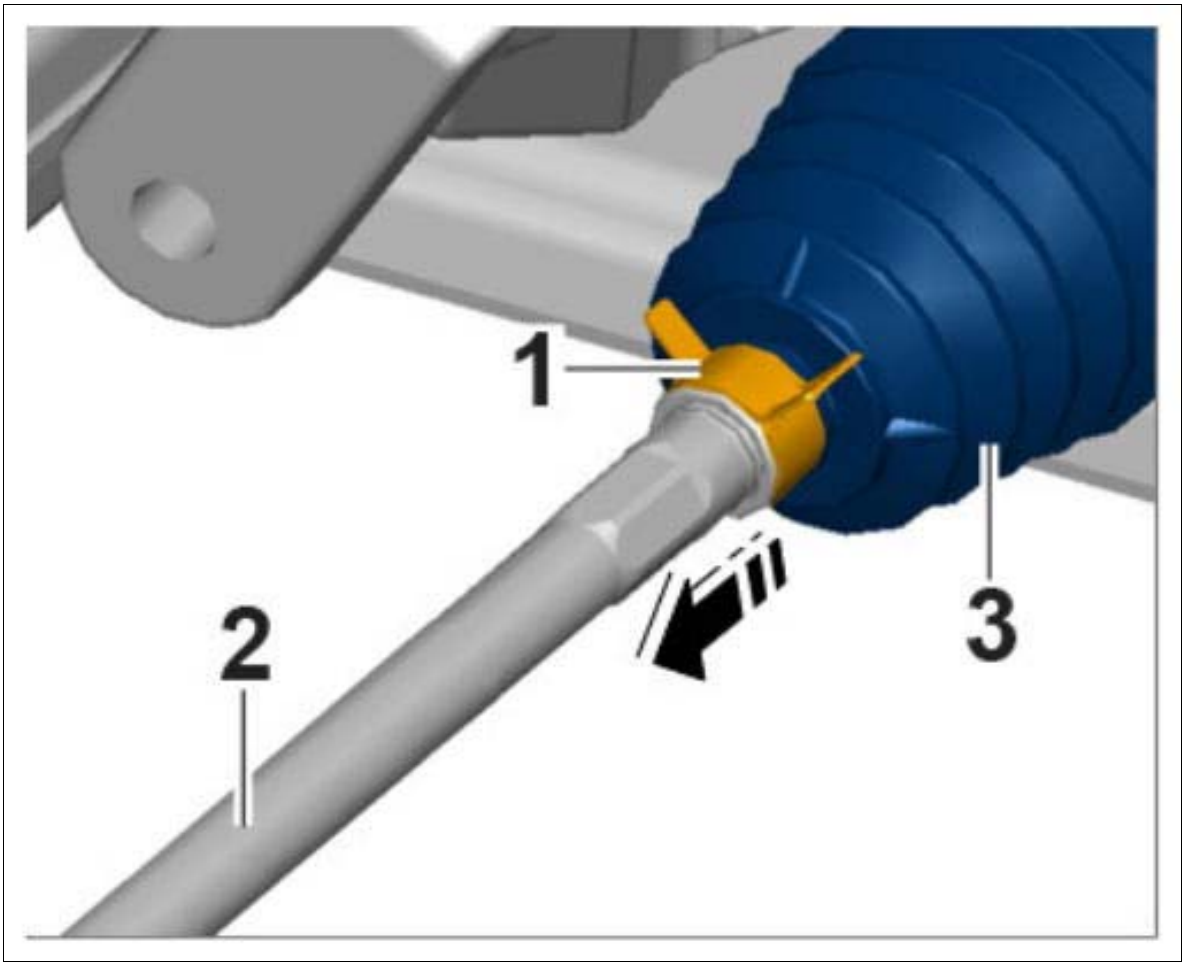

Courtesy of PORSCHE CARS NORTH AMERICA, INC.

WM 485319 REMOVING AND INSTALLING BELLOWS FOR STEERING-GEAR HOUSING (JOINT BOOT) (MACAN, MACAN S, MACAN TURBO) > REMOVING AND INSTALLING BELLOWS FOR STEERING-GEAR HOUSING (JOINT BOOT) > INSTALLING BELLOWS FOR STEERING-GEAR HOUSING (JOINT BOOT)

NOTE: Water can leak in if sealing elements are damaged.

- *Component can become damaged or may not function.*

→ Replace damaged sealing elements.

→ Check that sealing elements are fitted correctly.

Information

- New bellows must always be used following removal.

Information

- There is no guarantee that re-used clamps will secure the component properly.
- Removed clamps must be replaced.
- Always use new clamps during installation.

1. Fit new bellows and secure with new clamps. Make sure it fits perfectly both on the steering-gear housing and on the tie rod.

    1. 1.1. Push on bellows until you hear and feel it engaging securely on the tie rod.

        Dimension **-a-** must be 2 mm.

        Fig 1: Fitting Bellows

        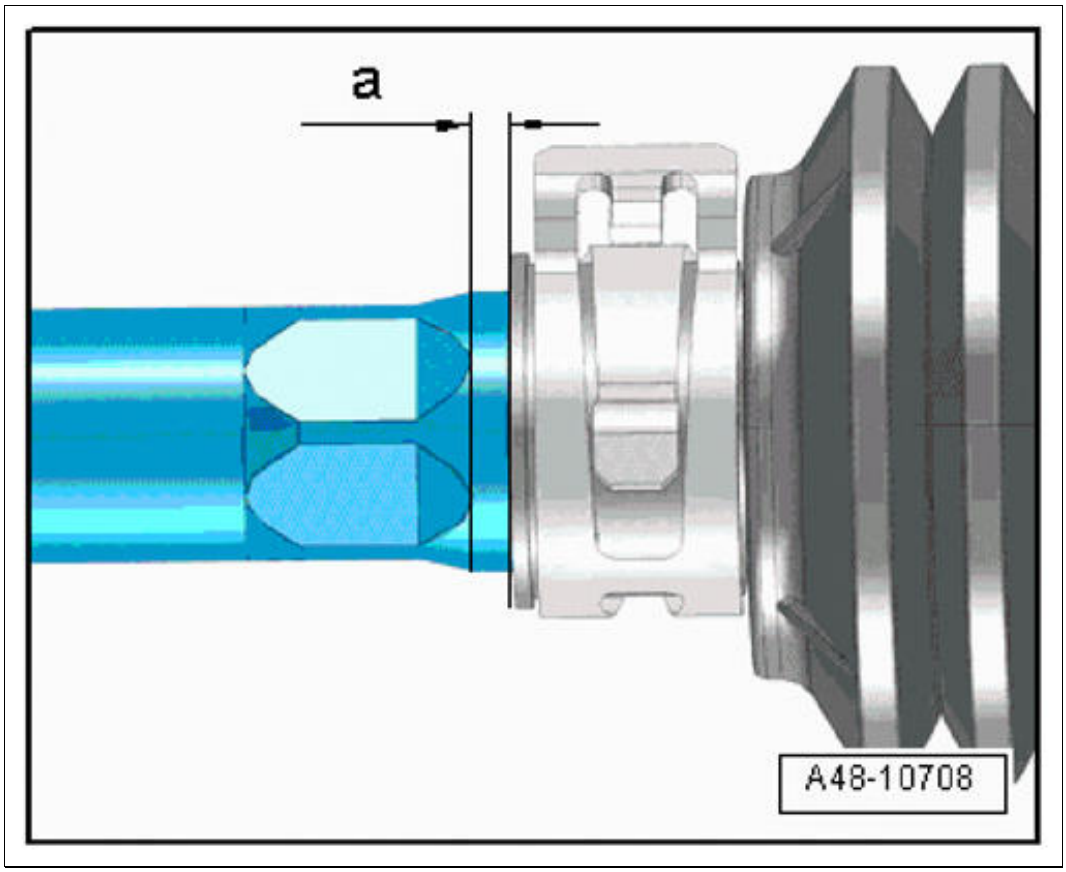

        Courtesy of PORSCHE CARS NORTH AMERICA, INC.

    2. 1.2. Fit new outer clamp **-arrow-** using **assembly tools for spring band clamps Nr.72.**

Fig 2: Locating Outer Clamp

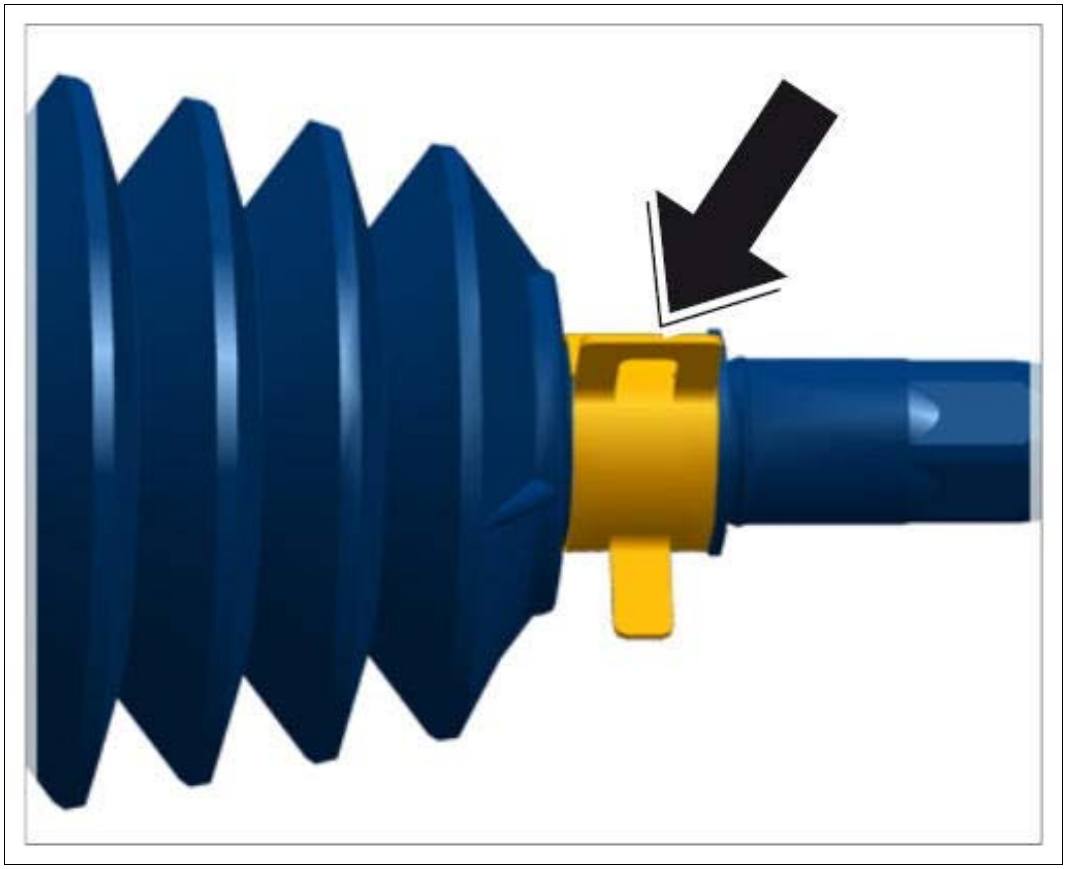

Courtesy of PORSCHE CARS NORTH AMERICA, INC.

3. 1.3. Fit new inner clamp using **clamp tensioner WE 1614** .

   During fitting, make sure that the bellows is not twisted and that the clamp lug **-arrow-** is easy to reach.

Fig 3: Locating Inner Clamp

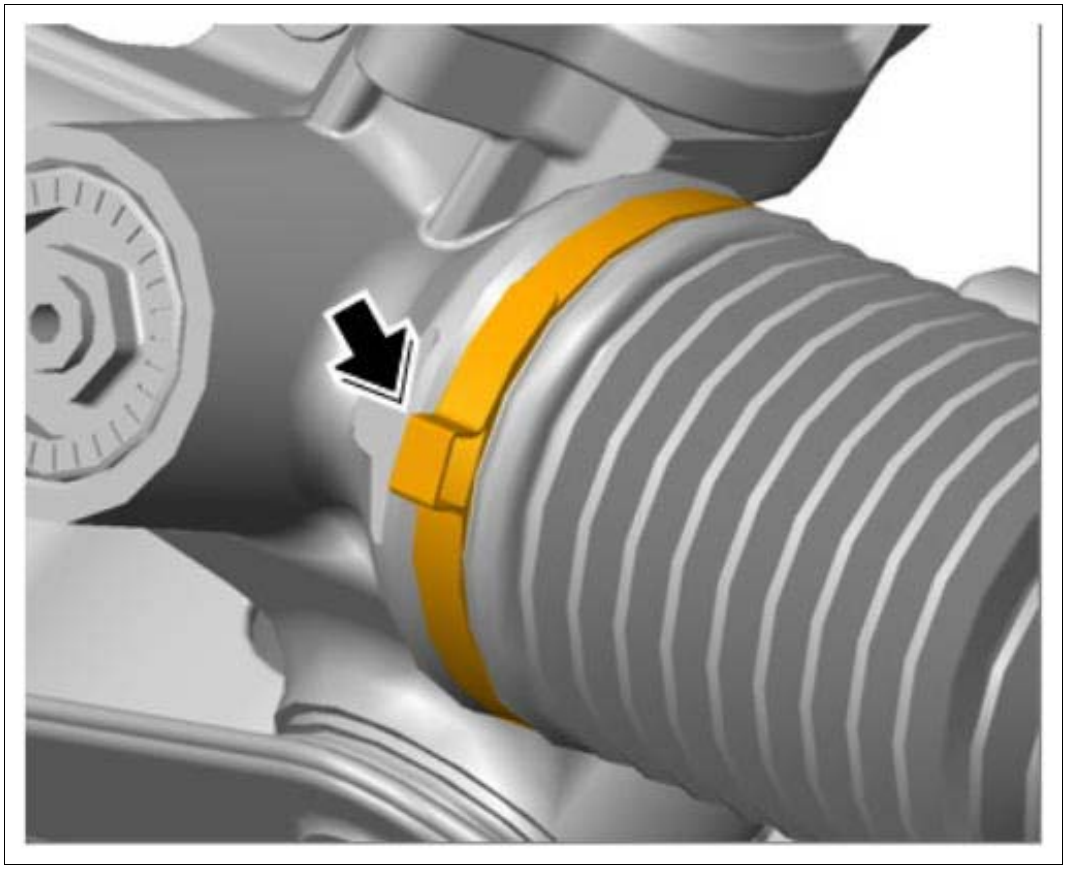

Courtesy of PORSCHE CARS NORTH AMERICA, INC.

1. 1.3.1. Fit clamp tensioner **-1-** as shown. Make sure that the blades of the tensioner are positioned in the corners **-arrows-** of the clamp.

   Tighten clamp by turning the spindle using a torque wrench **-2-** . Do not tilt the tensioner while doing this.

   Make sure that the thread of the spindle on the clamp tensioner **-1-** can move freely. Lubricate with MoS2 lubricant if necessary.

   If it is stiff, e.g. due to dirt on the thread, the required clamping force of the clamp will not be achieved.

   Observe the specified tightening torque:

Fig 4: Tightening Inner Clamp

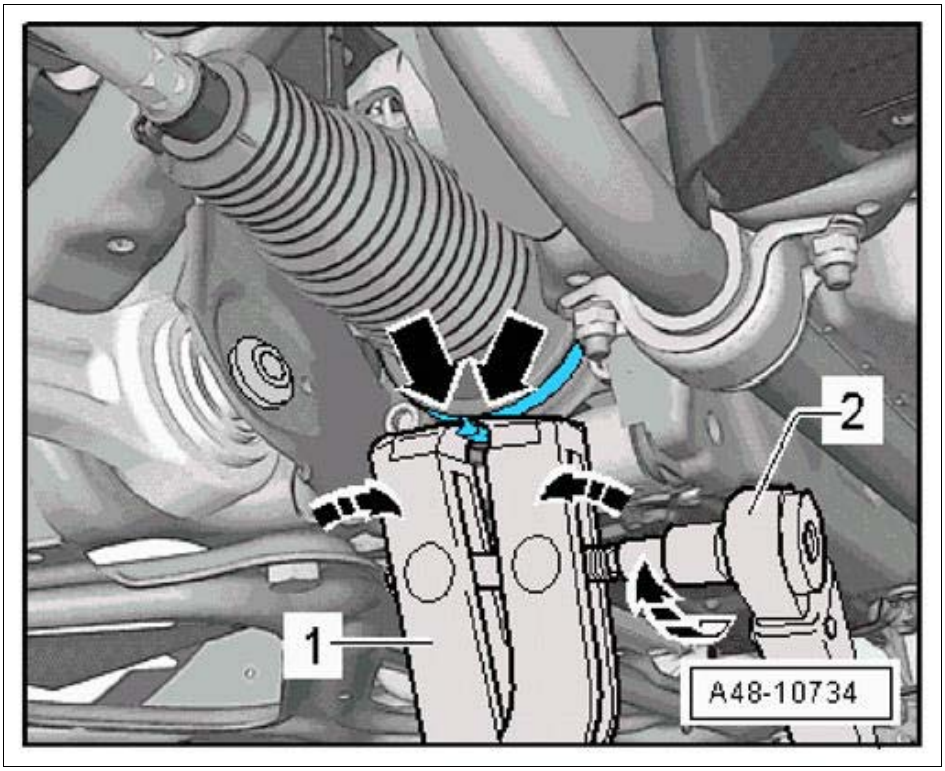

Courtesy of PORSCHE CARS NORTH AMERICA, INC.

Type of clamp	Clamp tensioner V.A.G 1682 A (Hazet) with adapter V.A.G 1682 A/1
Clamp on passenger's side (diameter: 85 mm)	**Tightening torque 7 Nm (5 ftlb.)**
Clamp on driver's side (diameter: 59 mm)	**Tightening torque 10 Nm (7.5 ftlb.)**

WM 485319 REMOVING AND INSTALLING BELLOWS FOR STEERING-GEAR HOUSING (JOINT BOOT) (MACAN, MACAN S, MACAN TURBO) > SUBSEQUENT WORK

1. Install tie-rod ball → INSTALLING TIE-ROD BALL .
2. Install front underbody panelling → INSTALLING COVER FOR FRONT UNDERBODY .
3. Perform suspension alignment and make adjustments if necessary → 449503 SUSPENSION ALIGNMENT, COMPLETE .

WM 487919 REMOVING AND INSTALLING TIE ROD (MACAN, MACAN S, MACAN TURBO) > TOOLS

Designation	Type	Number	Description	
assembly tools for spring band clamps	Commercially available tool	Nr.72		PORSCHE siehe Handbuch Werkstattausrüstung Voir le Manuel Equipement d´atelier Refer to the Workshop Equipment manual Vease Manual de Equipamiento de Taller Vedere il Manuale dell´attrezzatura d´officina ワークショップ・イクイップメント・マニュアルを参照
V.A.G 1923 open-jawed wrench insert	Commercially available tool	Nr.95-2		

WM 487919 REMOVING AND INSTALLING TIE ROD (MACAN, MACAN S, MACAN TURBO) > TECHNICAL VALUES

Location	Description	Type	Basic value	Tolerance 1	Tolerance 2
Tie rod to rack-and-pinion (axial joint)		Tightening torque	100 Nm (74 ftlb.)		
Inner clamp on bellows on passenger's side (diameter: 85 mm)	Fit using clamp tensioner V.A.G 1682 A	Tightening torque	7 Nm (5 ftlb.)		
Inner clamp on bellows on driver's side (diameter: 59 mm)	Fit using clamp tensioner V.A.G 1682 A	Tightening torque	10 Nm (7.5 ftlb.)		

WM 487919 REMOVING AND INSTALLING TIE ROD (MACAN, MACAN S, MACAN TURBO) > PRELIMINARY WORK

Information

Before removing the tie rod, always check the tie rod joints on both sides. If a joint does not meet the test conditions, it must be replaced.

Only if there is no play in the steering can it be set correctly and the operating reliability of the vehicle can thus be guaranteed.

1. Check tie rod joint.

   Test conditions: The vehicle must be standing on its wheels in order to check the tie rod joints; vehicles with air suspension must be adjusted to maximum ground clearance.

   Fig 1: Checking Tie Rod Joint

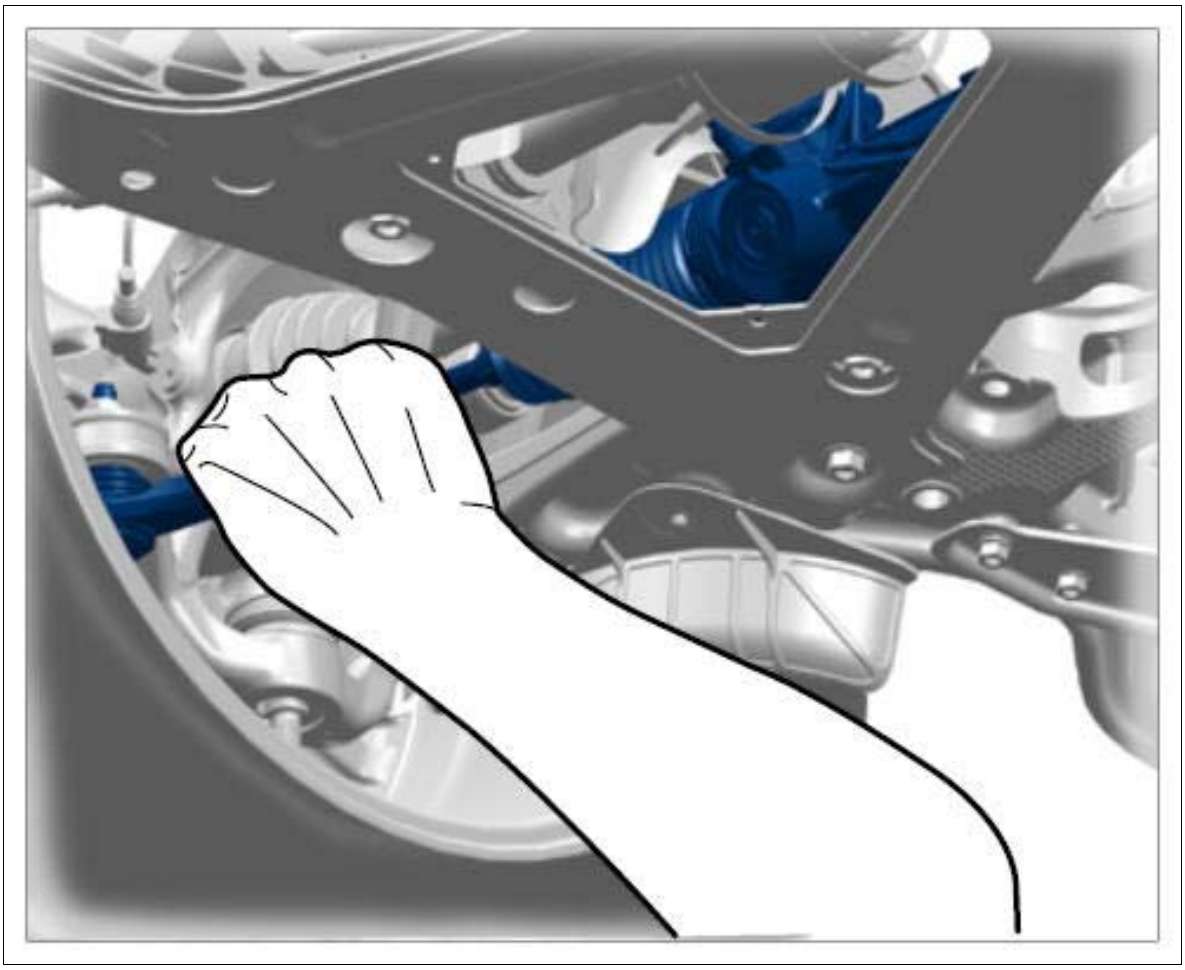

Courtesy of PORSCHE CARS NORTH AMERICA, INC.

1. 1.1. Check that the dust boots, bellows and joints are working perfectly and have no leaks.
2. 1.2. Check the left tie rod joint.

   Turn the wheels to the right and take hold of the tie-rod ball **-1-** . Get a second mechanic to turn the steering by moving the steering wheel back and forth slightly.

   There must be no play on the joint.

   If you detect a certain amount of play that is not caused by the tie rod joint, the axial joint between the steering gear and tie rod is worn.

3. 1.3. Check the right tie rod joint.

   Turn the wheels to the left and take hold of the tie-rod ball **-1-** . Get a second mechanic to turn the steering by moving the steering wheel back and forth slightly.

   There must be no play on the joint.

   If you detect a certain amount of play that is not caused by the tie rod joint, the axial joint between the steering gear and tie rod is worn.

2. Remove tie-rod ball → REMOVING AND INSTALLING TIE-ROD BALL .
3. Remove front underbody panelling → 519219 REMOVING AND INSTALLING COVER FOR FRONT UNDERBODY .

WM 487919 REMOVING AND INSTALLING TIE ROD (MACAN, MACAN S, MACAN TURBO) > REMOVING AND INSTALLING TIE ROD > REMOVING TIE ROD

Information

Mark the position of the tie-rod ball on the thread before unscrewing it from the tie rod.

Count the number of turns when unscrewing it (turns of tie-rod ball).

This avoids the need to perform an approximate adjustment of the steering trapeze when reassembling.

This is **not** a substitute for the suspension alignment.

Information

After removing the tie rod, the steering track must be adjusted.

Fig 1: Locating Tie Rod Position

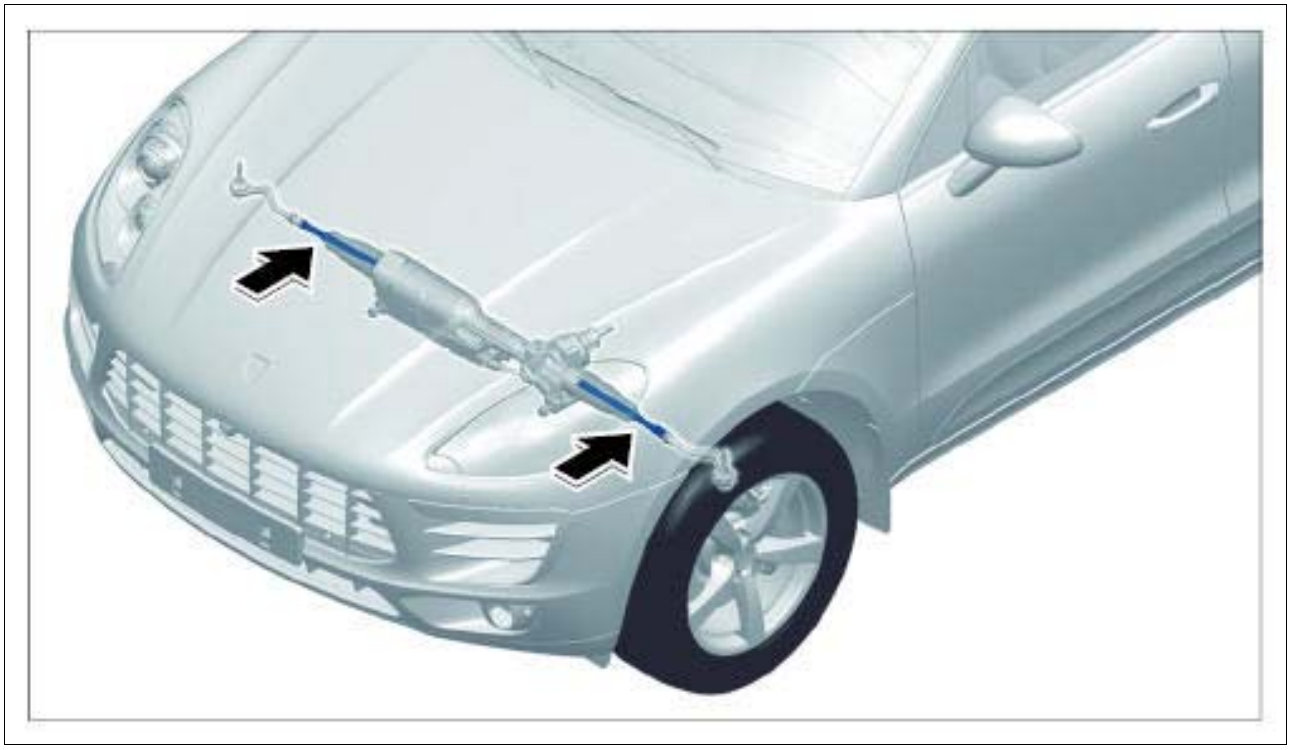

Courtesy of PORSCHE CARS NORTH AMERICA, INC.

1. Loosen the outer clamp **-arrow-** on the bellows using **assembly tools for spring band clamps Nr.72.**

Fig 2: Locating Outer Clamp

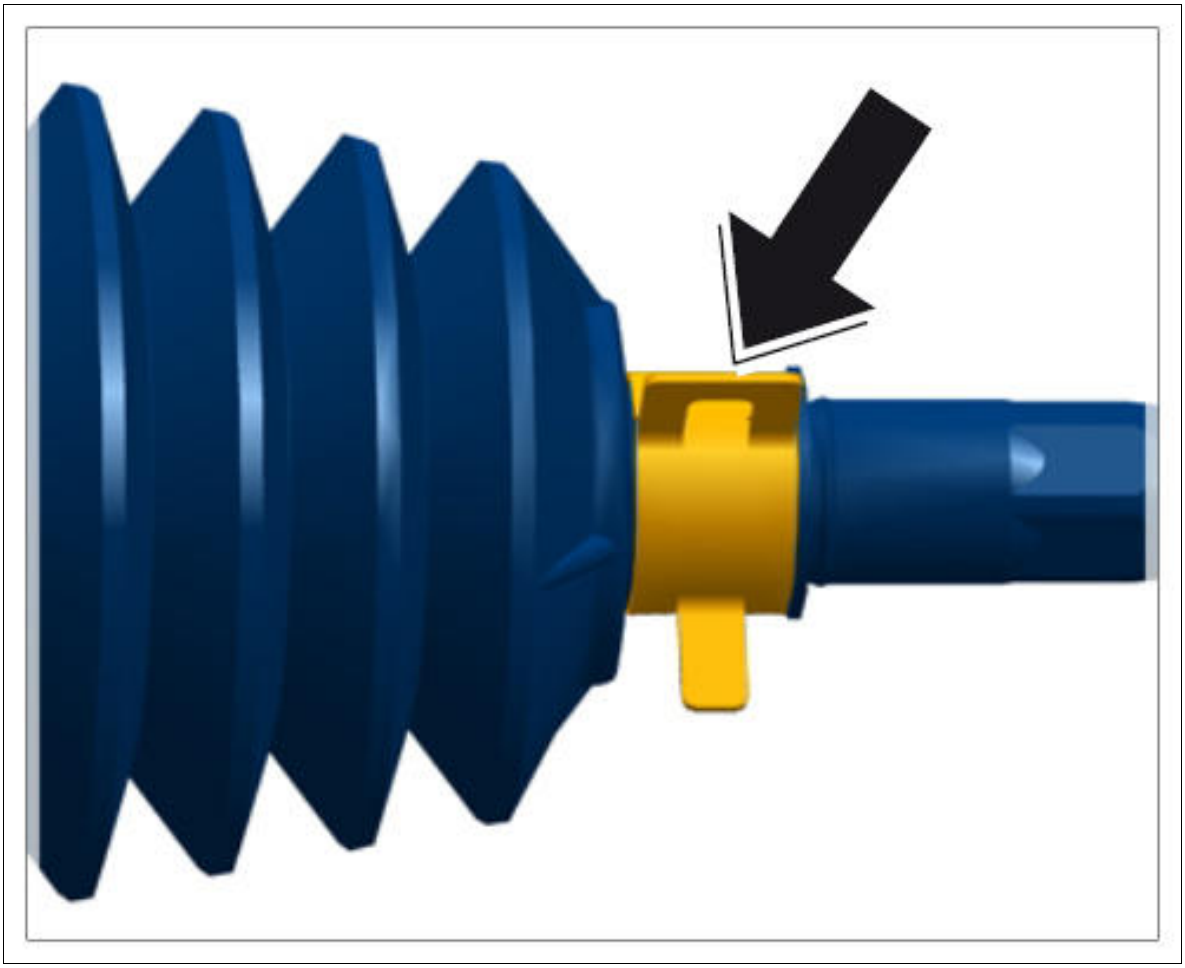

Courtesy of PORSCHE CARS NORTH AMERICA, INC.

2. Loosen the inner clamp **-1-** on the bellows using suitable pliers.

Fig 3: Loosening Inner Clamp

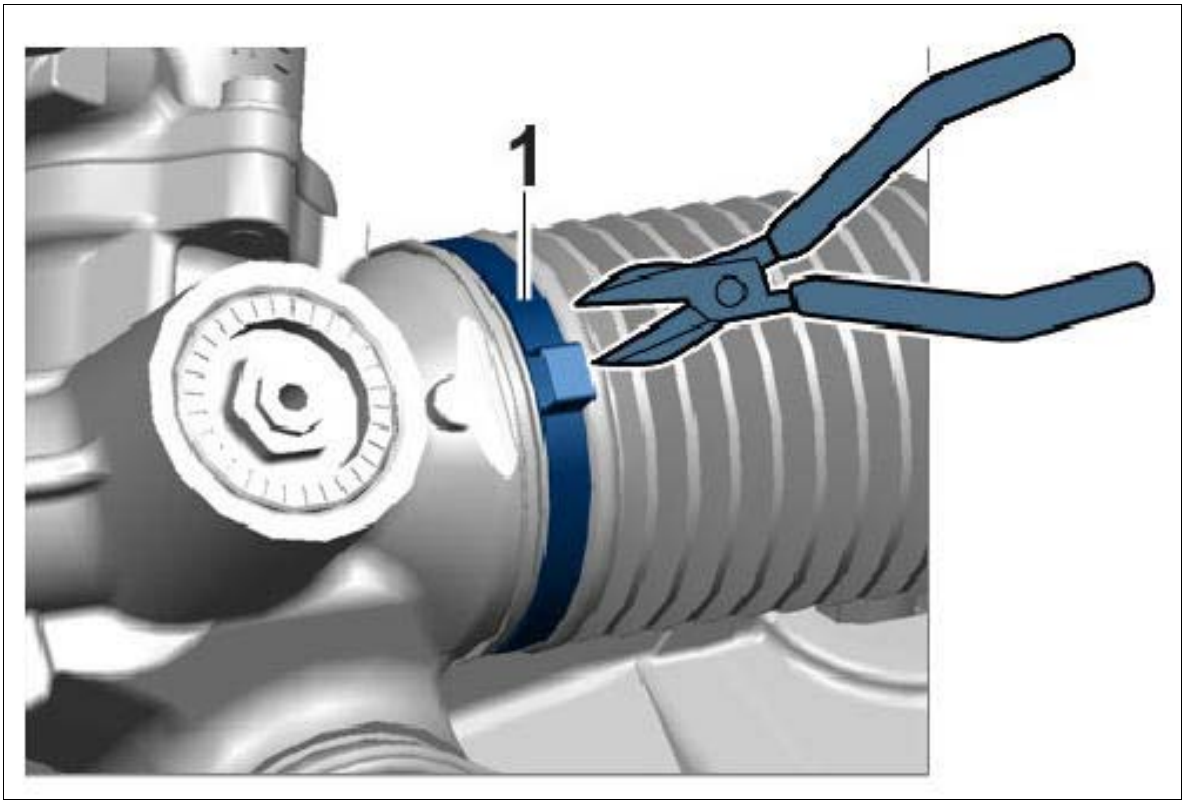

Courtesy of PORSCHE CARS NORTH AMERICA, INC.

3. Carefully pull the bellows outwards until the axial joint is accessible. → Pulling out bellows (example)

Fig 4: Pulling Out Bellows

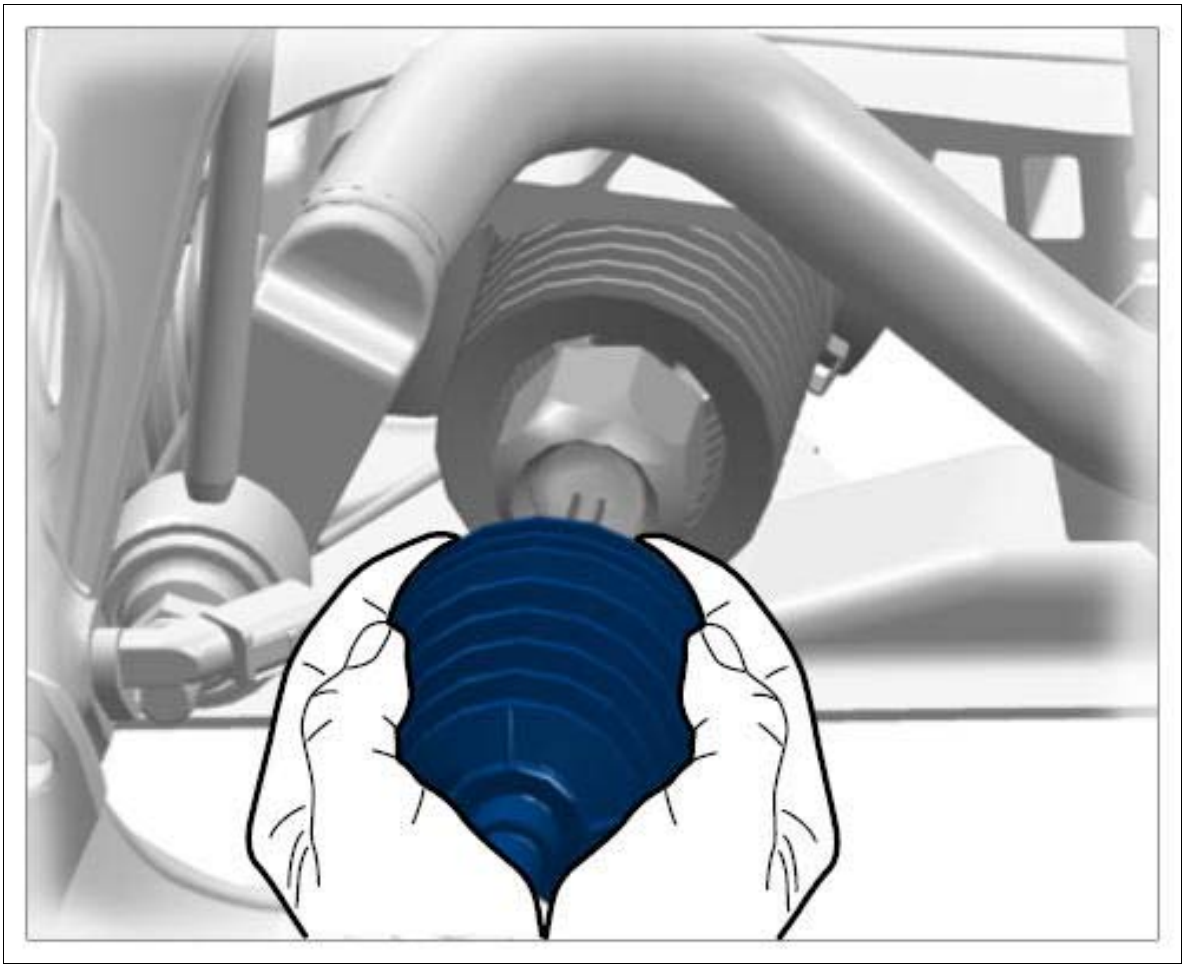

Courtesy of PORSCHE CARS NORTH AMERICA, INC.

4. Unscrew octagon **-1-** on the ball joint of the tie rod **-2-** from the rack-and-pinion using **V.A.G 1923 open-jawed wrench insert Nr.95-2.**

Fig 5: Loosening Ball Joint

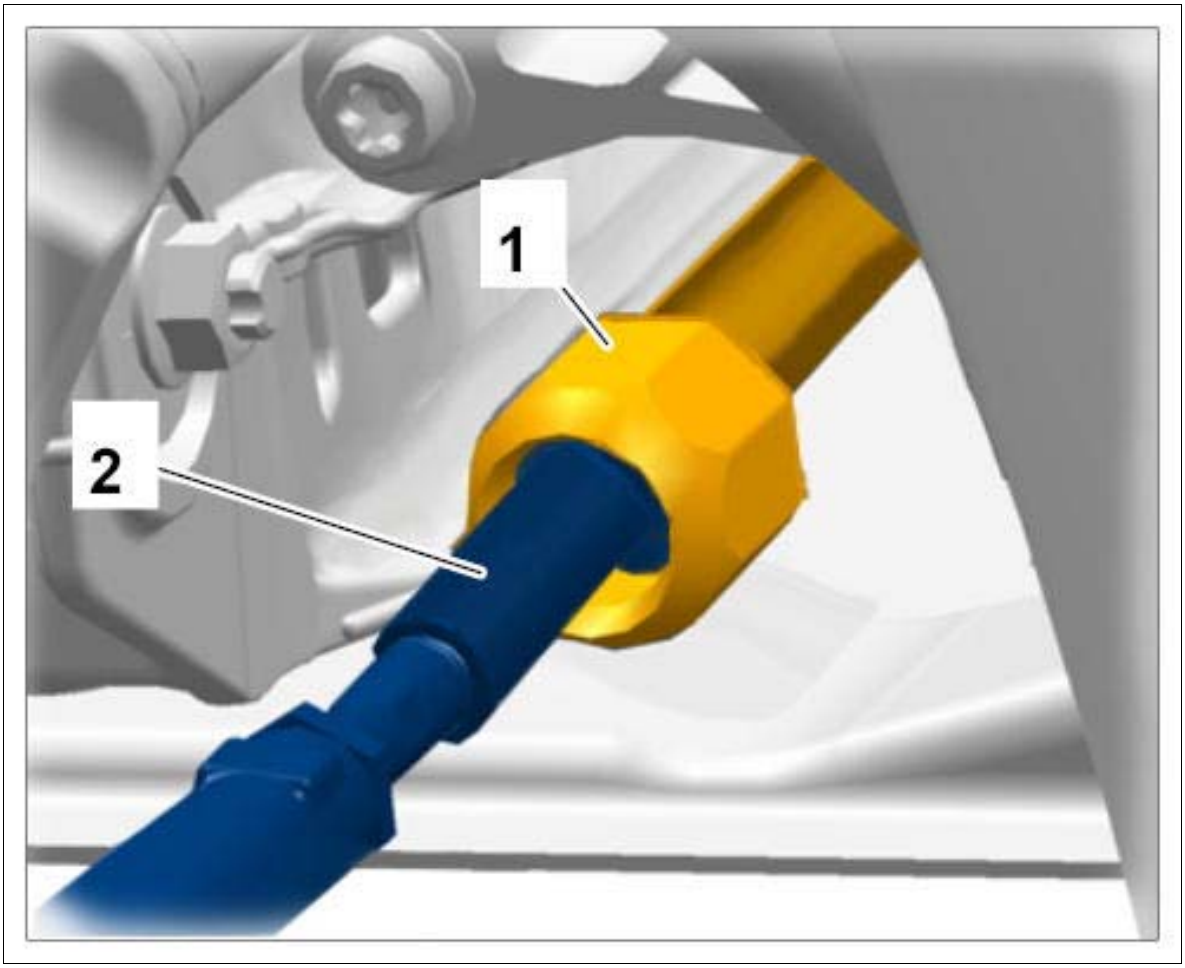

Courtesy of PORSCHE CARS NORTH AMERICA, INC.

5. Remove tie rod. If the tie rod is replaced, the marking for the old tie rod on the wheel side must be copied to the new tie rod.

WM 487919 REMOVING AND INSTALLING TIE ROD (MACAN, MACAN S, MACAN TURBO) > REMOVING AND INSTALLING TIE ROD > INSTALLING TIE ROD

NOTE: Water can leak in if sealing elements are damaged.

- *Component can become damaged or may not function.*

→ Replace damaged sealing elements.

→ Check that sealing elements are fitted correctly.

Information

Carry out a close visual inspection of all parts.

The inner clamp must be replaced.

When fitting the ball joints, ensure that the bevel pinions are clean. Remove dirt or grease on bevel pinions, e.g. with a lint-free cloth. Do not use cleaning agent/solvent.

Information

- New bellows must always be used following removal.

Information

- There is no guarantee that re-used clamps will secure the component properly.
- Removed clamps must be replaced.
- Always use new clamps during installation.

1. Fit tie rod **-2-** on the rack-and-pinion by tightening the octagon **-1-** . **Tightening torque 100 Nm (74 ftlb.)**

   Make sure that no damage (scoring or similar damage) is caused to the rack-and-pinion.

   Fig 1: Loosening Ball Joint

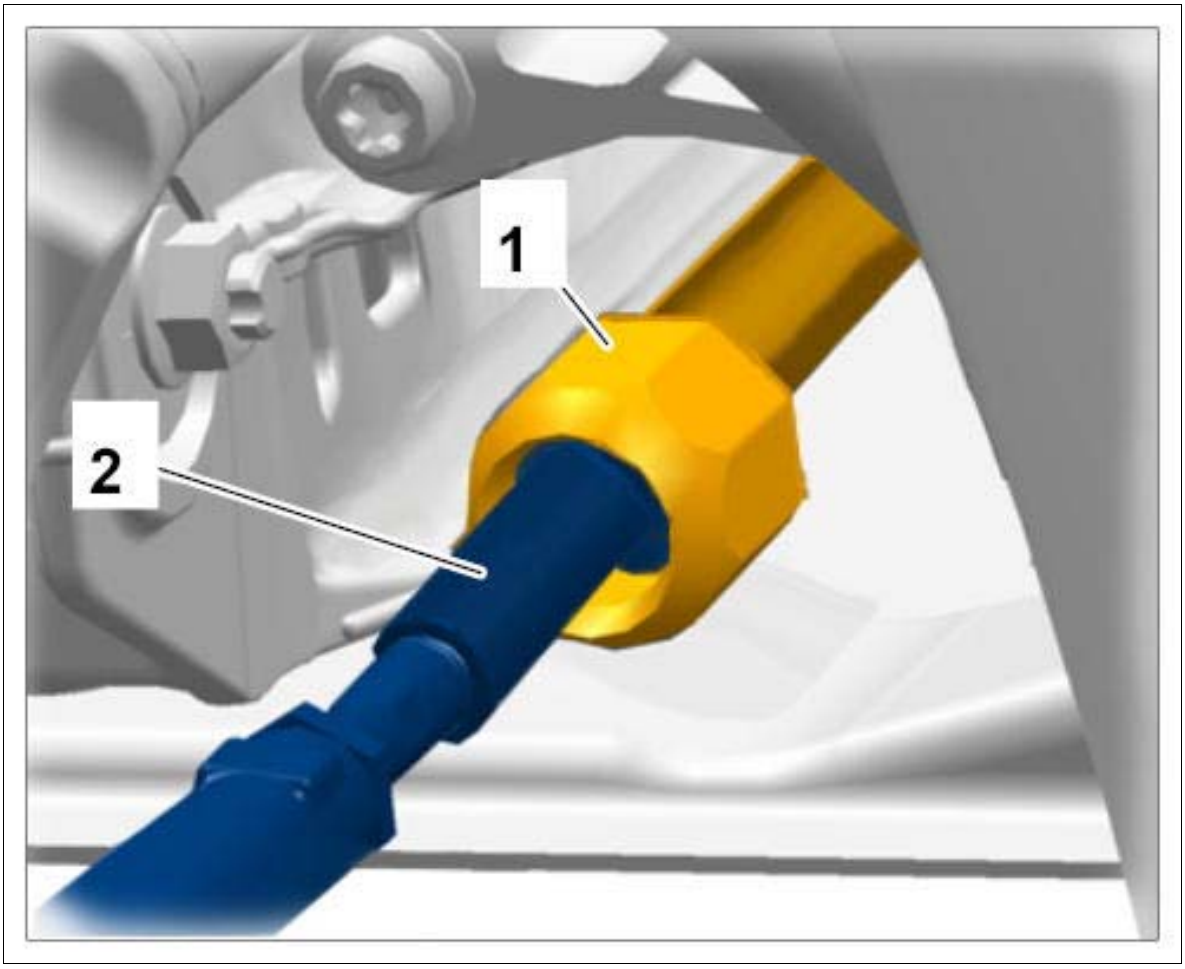

Courtesy of PORSCHE CARS NORTH AMERICA, INC.

2. Fit new bellows and secure with new clamps.

Make sure it fits perfectly both on the steering-gear housing and on the tie rod.

1. 2.1. Push on bellows until you hear and feel it engaging securely on the tie rod.

   Dimension **-a-** must be 2 mm.

   Fig 2: Fitting Bellows

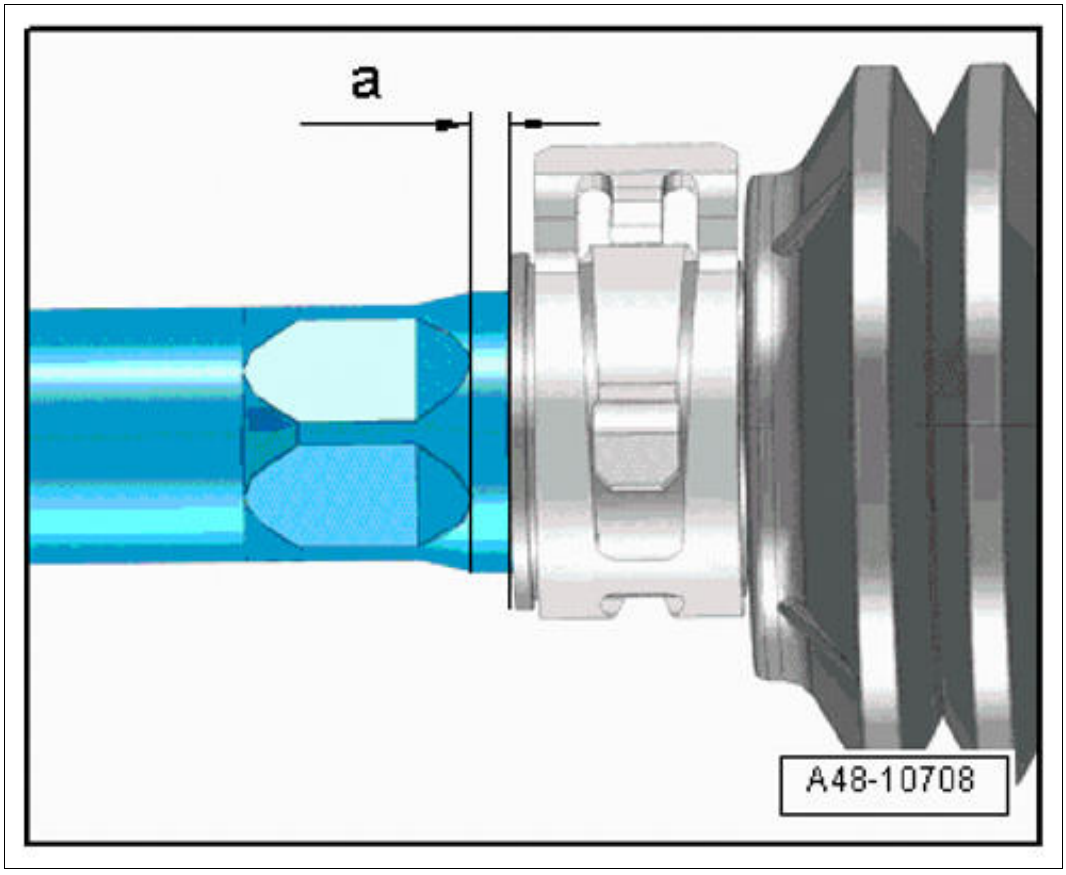

Courtesy of PORSCHE CARS NORTH AMERICA, INC.

2. 2.2. Fit new outer clamp **-arrow-** using **assembly tools for spring band clamps Nr.72.**

Fig 3: Locating Outer Clamp

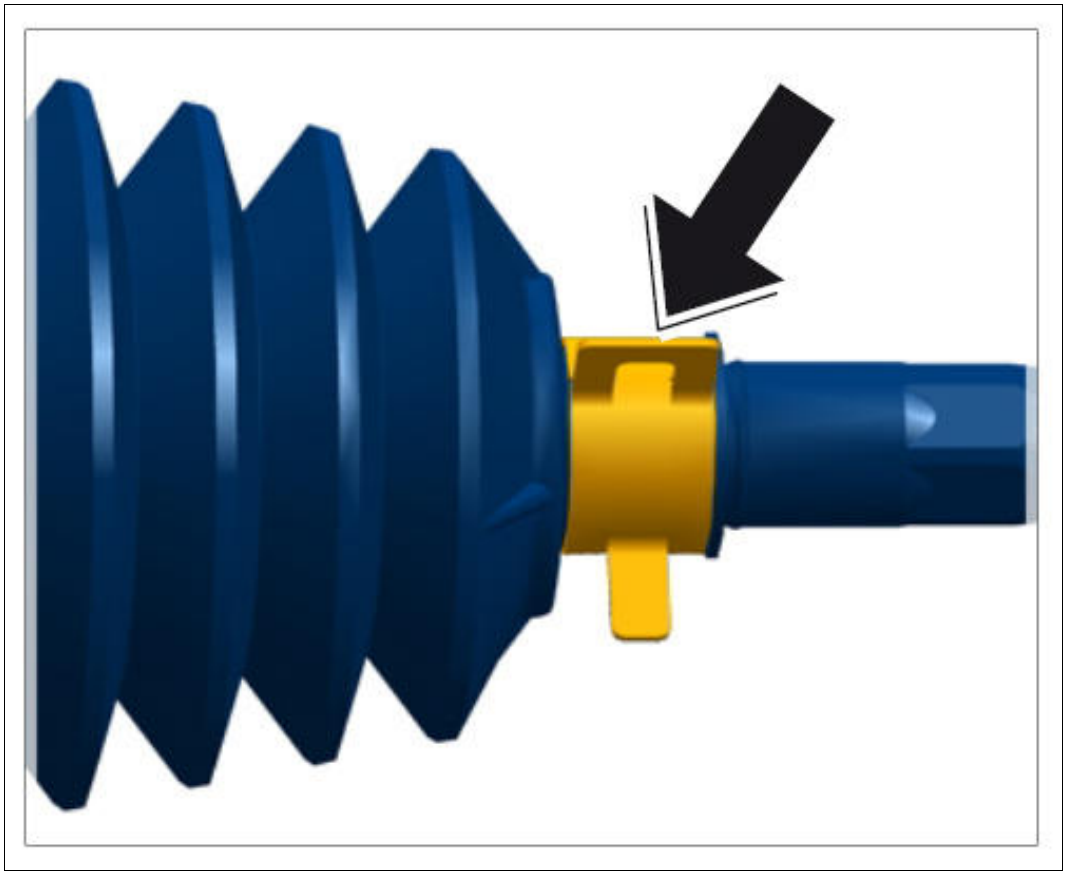

Courtesy of PORSCHE CARS NORTH AMERICA, INC.

3. 2.3. Fit new inner clamp using tool V.A.G 1682 A clamp tensioner. **(Tool not found!)**

   During fitting, make sure that the bellows is not twisted and that the clamp lug **-arrow-** is easy to reach.

Fig 4: Locating Inner Clamp

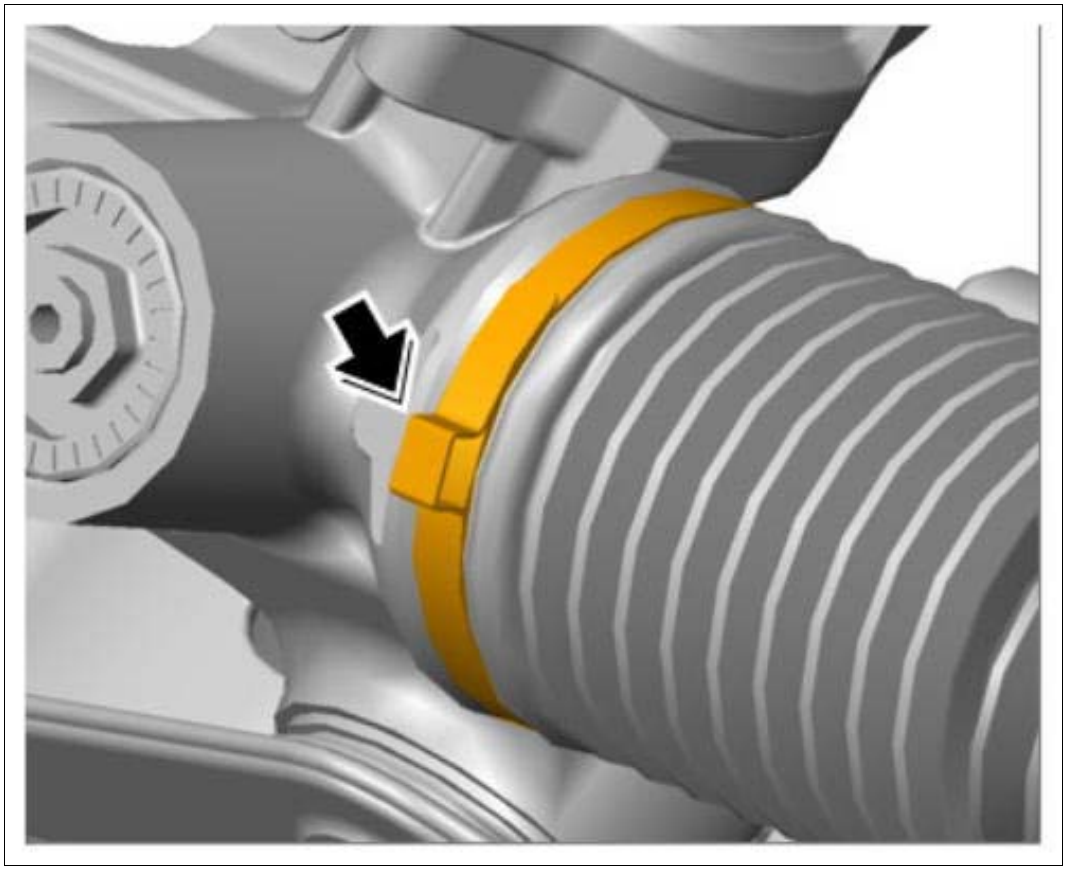

Courtesy of PORSCHE CARS NORTH AMERICA, INC.

1. 2.3.1. Fit clamp tensioner **-1-** as shown. Make sure that the blades of the tensioner are positioned in the corners **-arrows-** of the clamp.

   Tighten clamp by turning the spindle using a torque wrench **-2-** . Do not tilt the tensioner while doing this.

   Make sure that the thread of the spindle on the clamp tensioner **-1-** can move freely. Lubricate with MoS2 lubricant if necessary.

   If it is stiff, e.g. due to dirt on the thread, the required clamping force of the clamp will not be achieved.

   Observe the specified tightening torque:

Fig 5: Tightening Inner Clamp

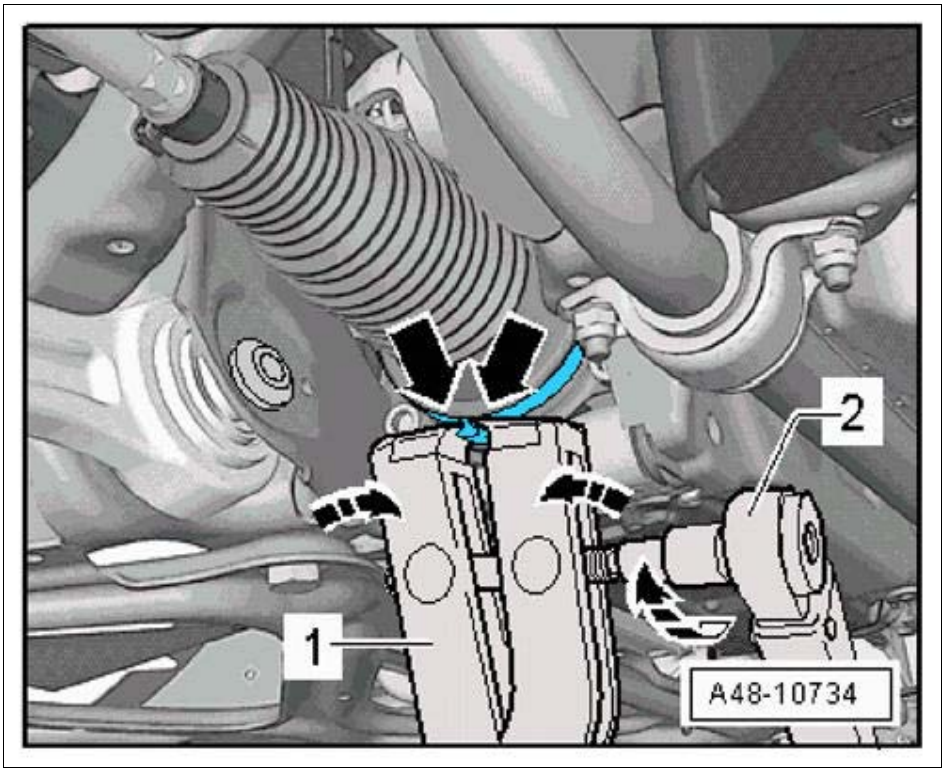

Courtesy of PORSCHE CARS NORTH AMERICA, INC.

Type of clamp	Clamp tensioner V.A.G 1682 A (Hazet) with adapter V.A.G 1682 A/1
Clamp on passenger's side (diameter: 85 mm)	**Tightening torque 7 Nm (5 ftlb.)**
Clamp on driver's side (diameter: 59 mm)	**Tightening torque 10 Nm (7.5 ftlb.)**

WM 487919 REMOVING AND INSTALLING TIE ROD (MACAN, MACAN S, MACAN TURBO) > SUBSEQUENT WORK

1. Install tie-rod ball → INSTALLING TIE-ROD BALL .
2. Install front underbody panelling → INSTALLING COVER FOR FRONT UNDERBODY .
3. Perform complete suspension alignment and make adjustments if necessary → 449503 SUSPENSION ALIGNMENT, COMPLETE .

WM 488119 REMOVING AND INSTALLING TIE-ROD BALL (MACAN, MACAN S, MACAN TURBO) > TOOLS

Designation	Type	Number	Description

ball joint puller	VW tool	T40010		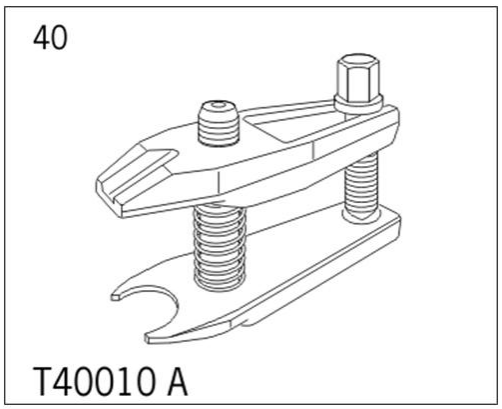

WM 488119 REMOVING AND INSTALLING TIE-ROD BALL (MACAN, MACAN S, MACAN TURBO) > TECHNICAL VALUES

Location	Description	Type	Basic value	Tolerance 1	Tolerance 2
Tie-rod ball to tie rod	Counter when loosening and tightening the lock nut on the outer joint	Tightening torque	90 Nm (67 ftlb.)		
Tie-rod ball to wheel carrier cone	M12 x 1.5 thread/always use new nut following removal	Tightening torque	100 Nm (74 ftlb.)		

WM 488119 REMOVING AND INSTALLING TIE-ROD BALL (MACAN, MACAN S, MACAN TURBO) > PRELIMINARY WORK

1. Raise the vehicle → 4X00IN LIFTING THE VEHICLE .
2. Remove wheel → 440519 REMOVING AND INSTALLING WHEEL .
3. Remove air-guide element from tie rod, if fitted.

Fig 1: Locating Air-Guide Element On Tie Rod

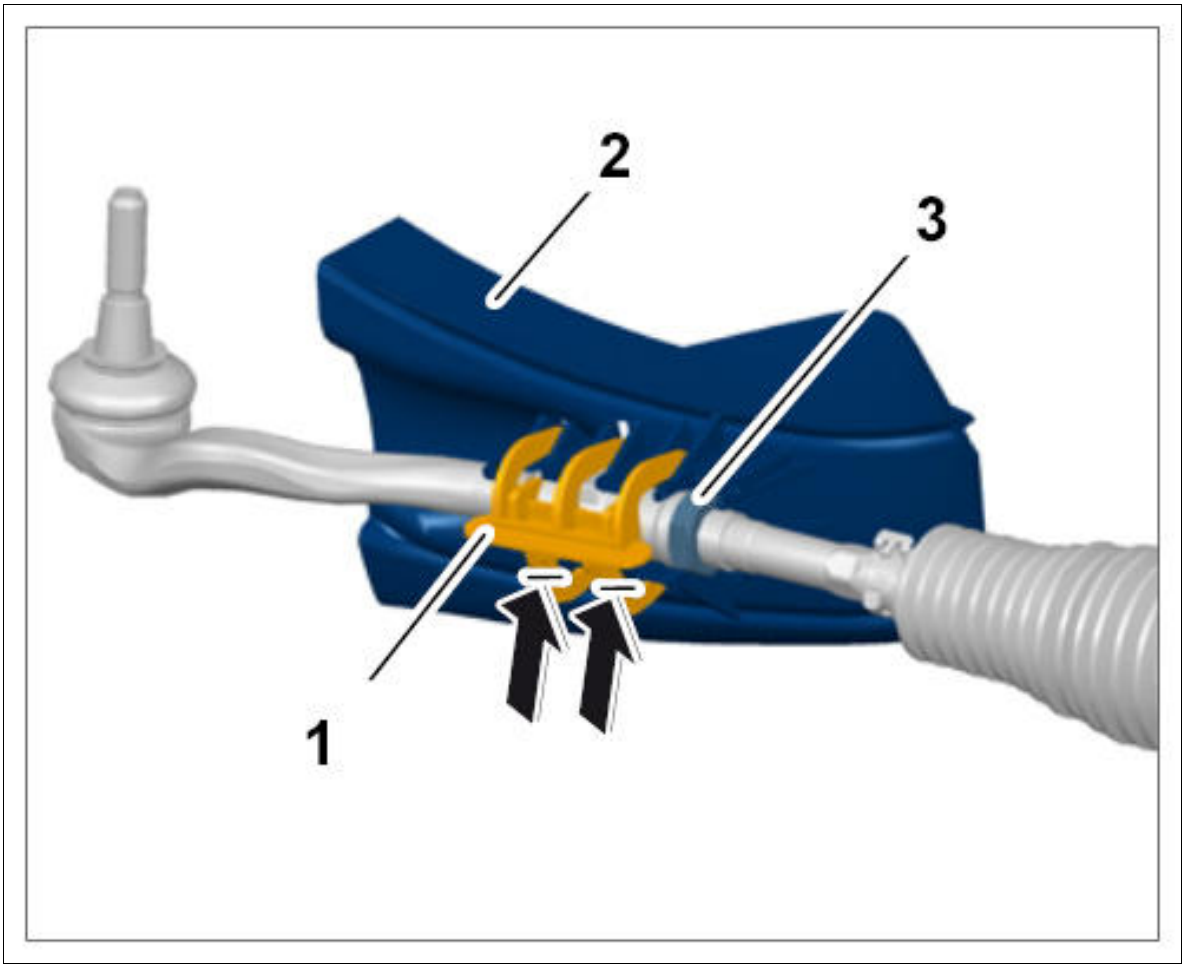

Courtesy of PORSCHE CARS NORTH AMERICA, INC.

1. 3.1. Cut through the lower arms of the clamp **-1-** at the marked positions **-arrows-** using a suitable tool.
2. 3.2. Remove air-guide element **-2-** .

WM 488119 REMOVING AND INSTALLING TIE-ROD BALL (MACAN, MACAN S, MACAN TURBO) > REMOVING AND INSTALLING TIE-ROD BALL > REMOVING TIE-ROD BALL

Fig 1: Locating Tie-Rod Ball Position

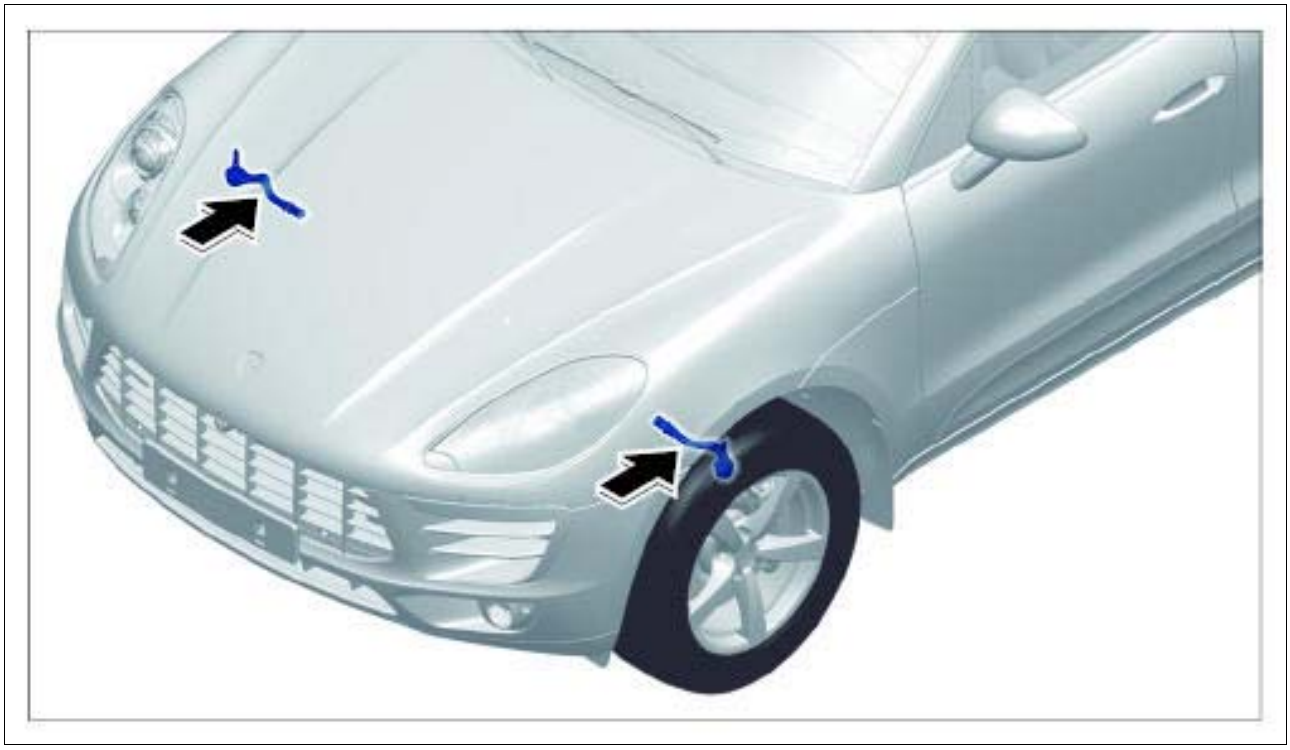

Courtesy of PORSCHE CARS NORTH AMERICA, INC.

1. To make it easier to remove the tie-rod ball, swivel the relevant wheel bearing housing so that the tie rod is fully extended.

   Information

   Mark the position of the tie-rod ball on the thread before unscrewing it from the tie rod.

   Count the number of turns when unscrewing it (turns of tie-rod ball).

   This avoids the need to perform an approximate adjustment of the steering trapeze when reassembling.

   This is **not** a substitute for the suspension alignment.

2. Detach tie-rod ball **-1-** from tie rod.

   1. 2.1. Counter the tie-rod ball **-1-** at the flattened areas **-arrows-** using a suitable open-ended wrench.

   2. 2.2. Loosen lock nut **-2-** .

Fig 2: Detaching Tie-Rod Ball

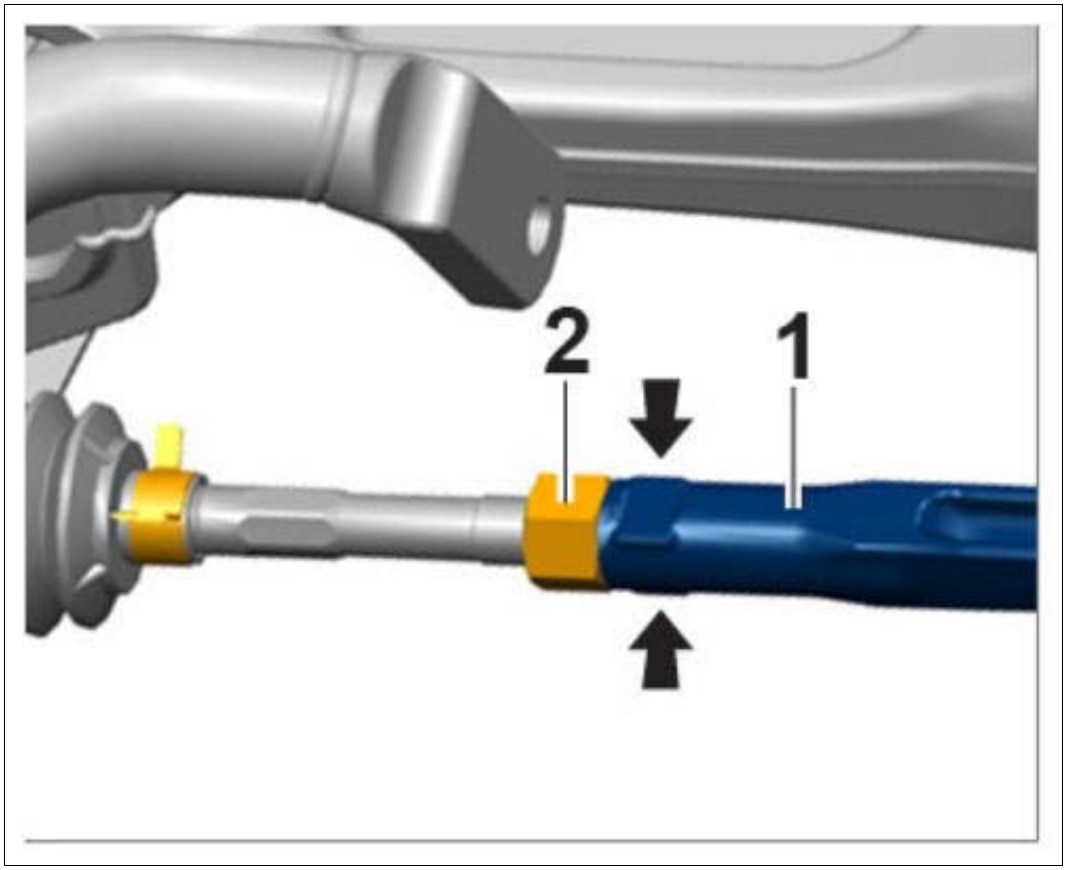

Courtesy of PORSCHE CARS NORTH AMERICA, INC.

3. Unscrew fastening nut **-1-** on the joint pin for the tie-rod ball **-2-** until it is flush with the thread of the joint pin.

Fig 3: Identifying Tie-Rod Ball On Wheel Bearing Housing

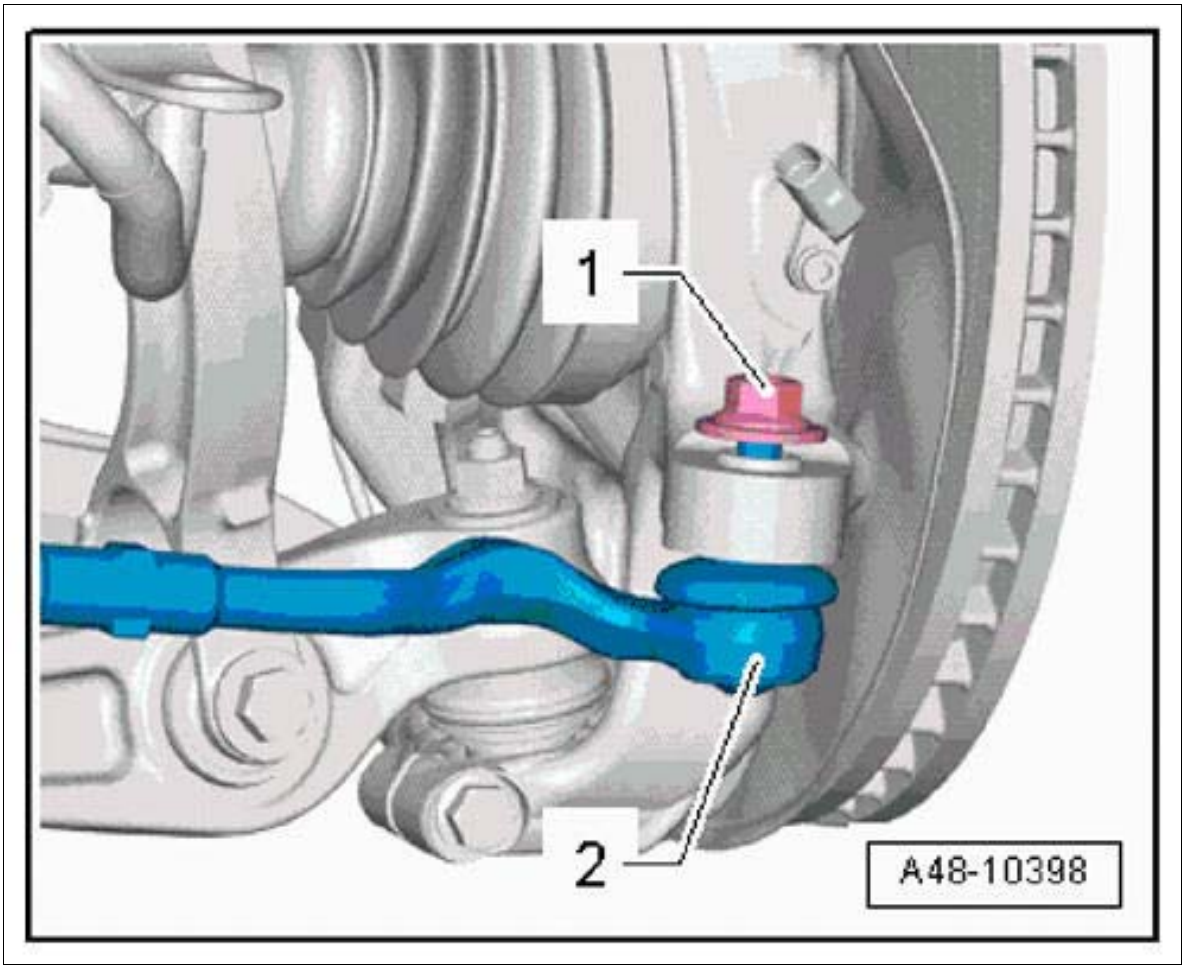

Courtesy of PORSCHE CARS NORTH AMERICA, INC.

4. Loosen tie-rod ball from the wheel bearing housing. When doing so, make sure not to damage the speed sensor.

    1. 4.1. Position **ball joint puller T40010** over the joint pin and fit it on the fastening nut.
    2. 4.2. Press tie-rod ball off the tapered end of the wheel carrier using **ball joint puller T40010.**

        Screw in hexagon on the **ball joint puller T40010** until the tie-rod ball becomes detached from the tapered end of the wheel carrier.

        Make sure that the lever arms of the ball joint puller are parallel to each other when the greatest amount of force is applied. Readjust if necessary. → Pressing off tie-rod ball

Fig 4: Pressing Off Tie-Rod Ball

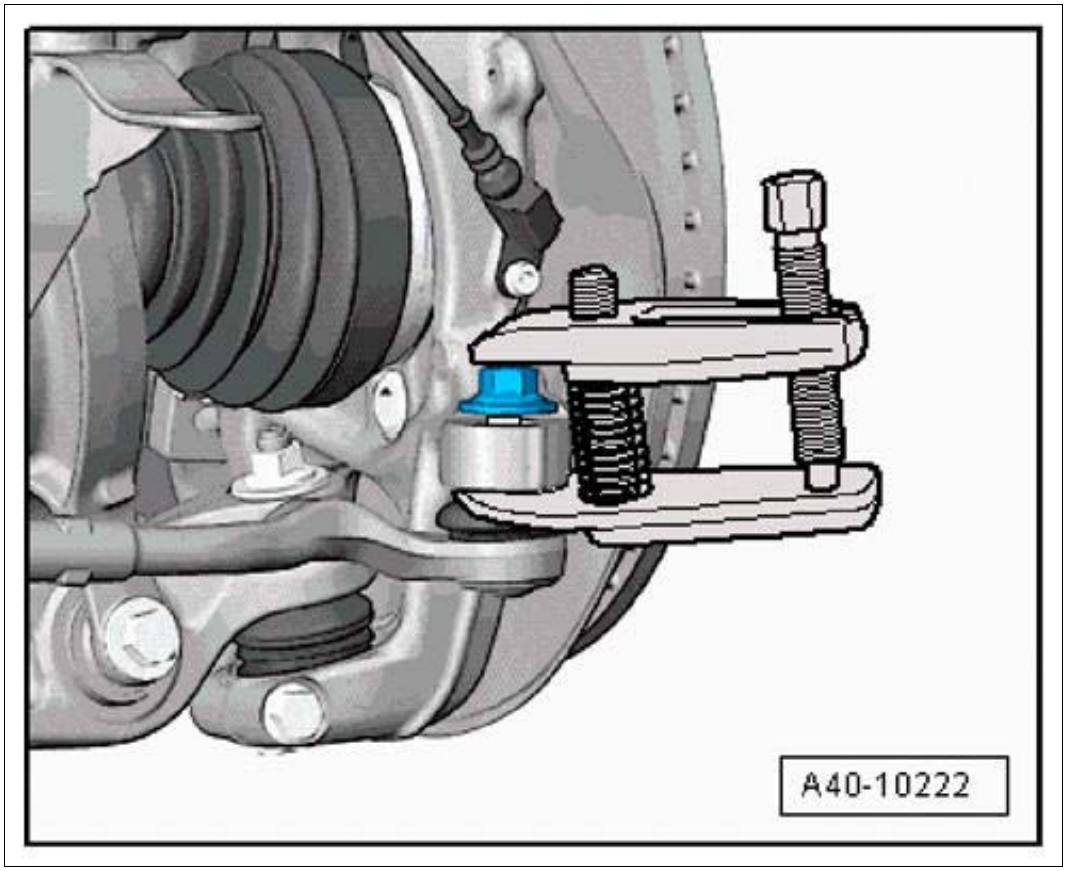

Courtesy of PORSCHE CARS NORTH AMERICA, INC.

5. Loosen fastening nut **-1-** from the joint pin on the tie-rod ball **-2-** .

Fig 5: Identifying Tie-Rod Ball On Wheel Bearing Housing

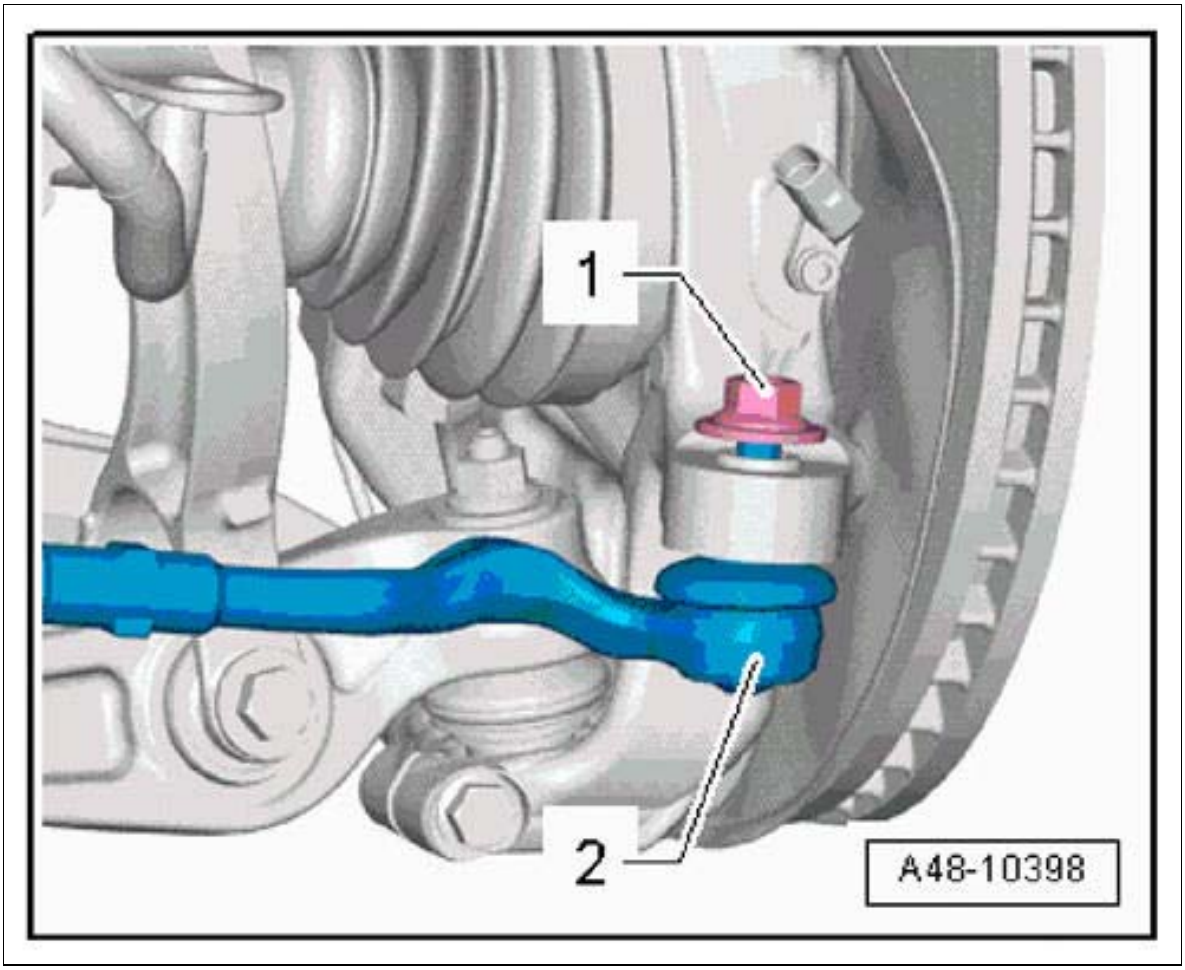

Courtesy of PORSCHE CARS NORTH AMERICA, INC.

6. Unscrew tie-rod ball **-3-** from tie rod **-1-** and remove it.

Fig 6: Identifying Tie-Rod Ball

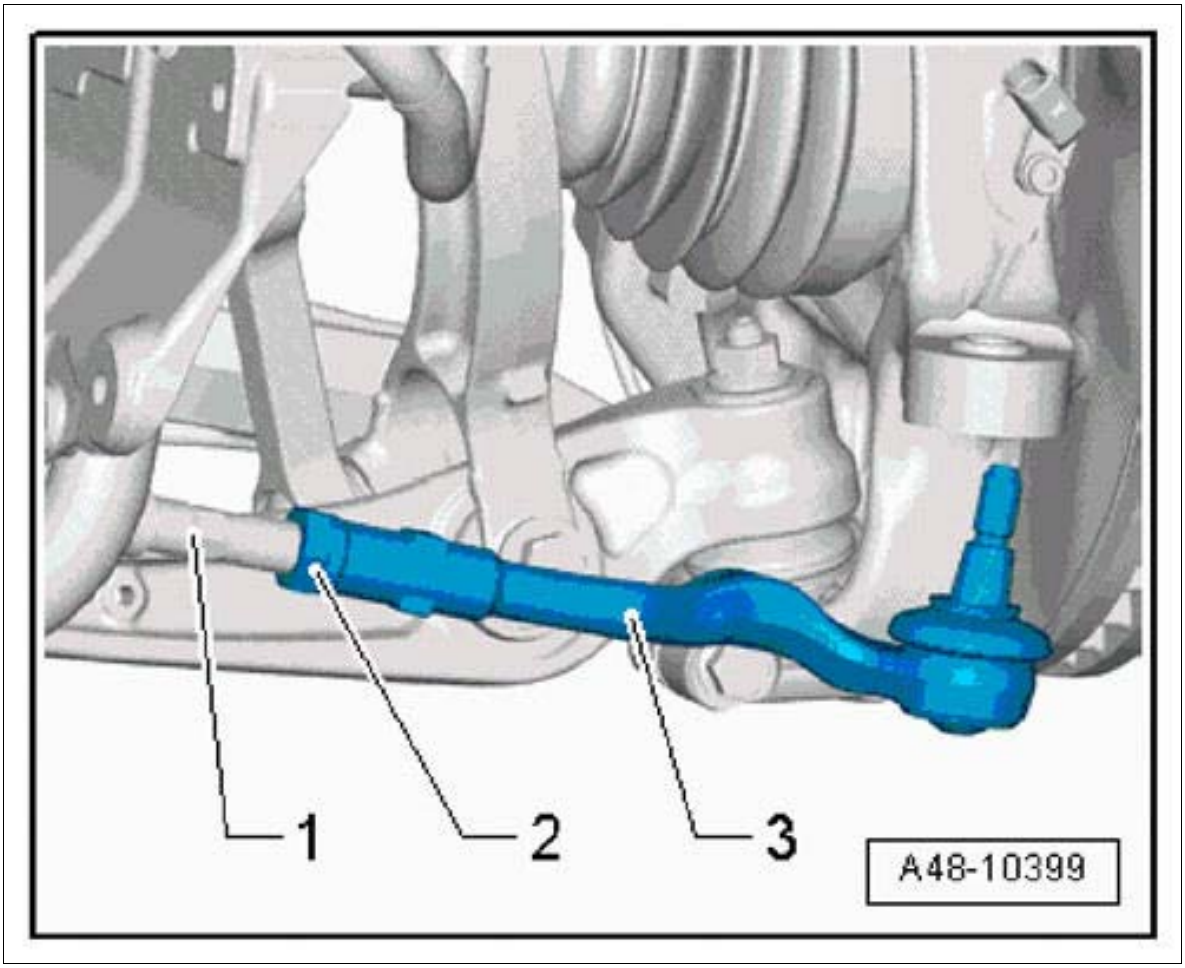

Courtesy of PORSCHE CARS NORTH AMERICA, INC.

WM 488119 REMOVING AND INSTALLING TIE-ROD BALL (MACAN, MACAN S, MACAN TURBO) > REMOVING AND INSTALLING TIE-ROD BALL > INSTALLING TIE-ROD BALL

Information

Clean the thread of the tie-rod ball before screwing the tie-rod ball onto the tie rod.

To prevent any damage when screwing the tie-rod ball onto the tie rod, make sure in particular that the thread engages uniformly.

Screw on the tie-rod ball by the number of turns you wrote down during removal. Then turn it as far as the marking.

This is **not** a substitute for a later suspension alignment, but merely avoids the need for an approximate adjustment of the steering trapeze.

1. Installation is performed in reverse order to removal. Pay particular attention to the following:

   Fastening nut **-1-** securing tie-rod ball to tapered end of wheel carrier: **Tightening torque 100**

Nm (74 ftlb.)

Always use a new nut following removal.

Fig 1: Identifying Tie-Rod Ball On Wheel Bearing Housing

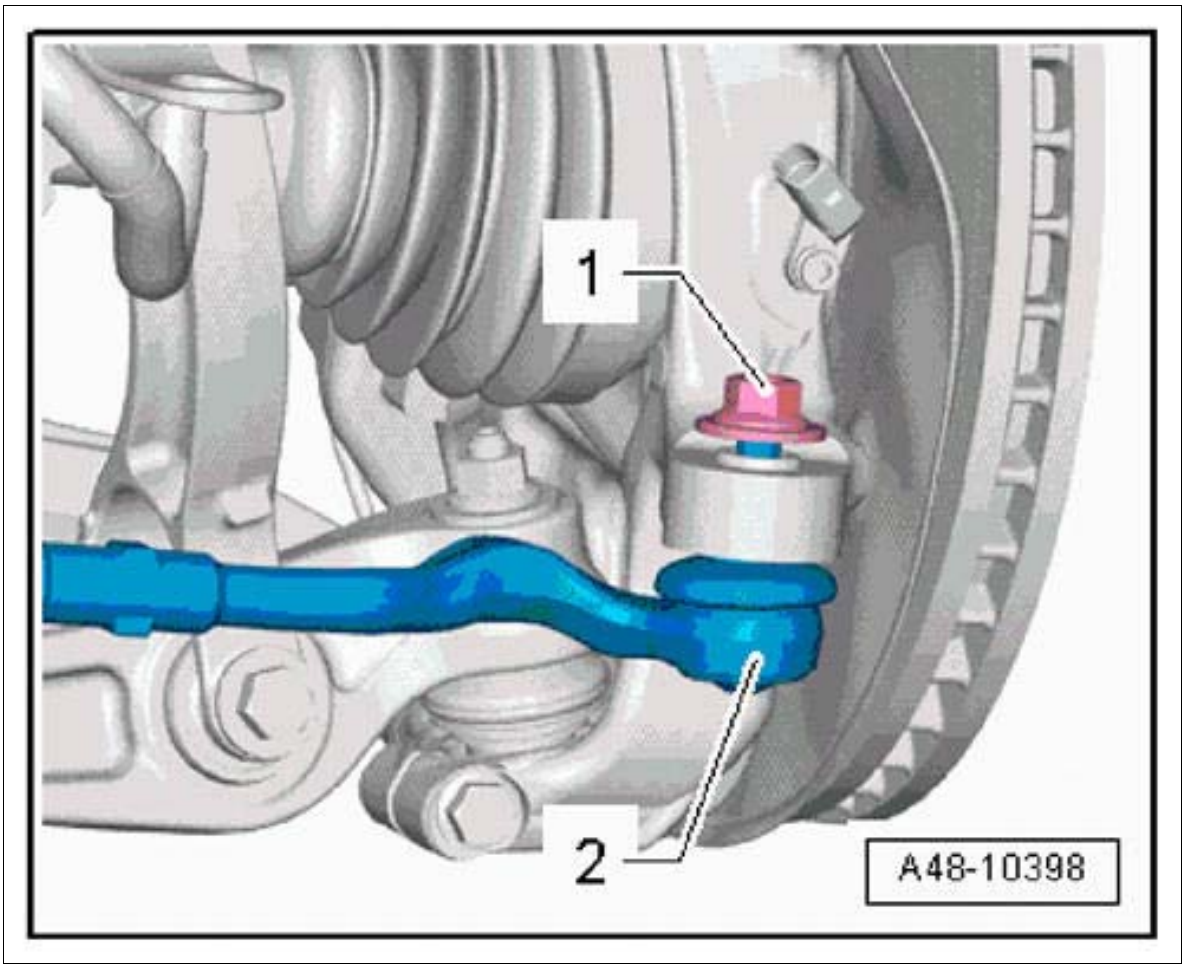

Courtesy of PORSCHE CARS NORTH AMERICA, INC.

Lock nut **-2-** securing tie-rod ball to tie rod: **Tightening torque 90 Nm (67 ftlb.)**

Fig 2: Identifying Tie-Rod Ball

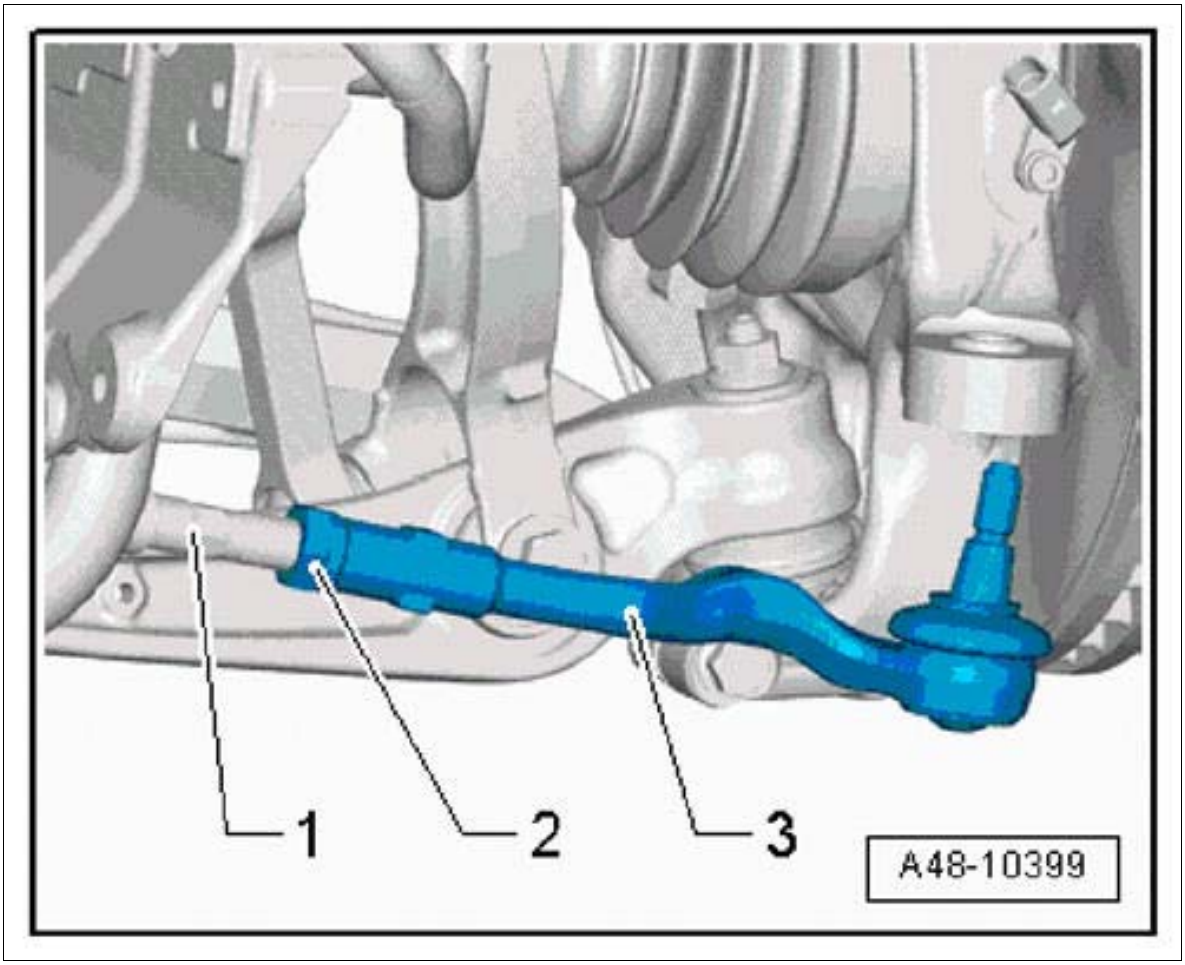

Courtesy of PORSCHE CARS NORTH AMERICA, INC.

WM 488119 REMOVING AND INSTALLING TIE-ROD BALL (MACAN, MACAN S, MACAN TURBO) > SUBSEQUENT WORK

1. Fit wheel → 440519 REMOVING AND INSTALLING WHEEL .
2. Perform suspension alignment and make adjustments if necessary → 449503 SUSPENSION ALIGNMENT, COMPLETE .
3. If installed on the vehicle: Attach new air-guide element to the tie rod.

Fig 1: Locating Air-Guide Element On Tie Rod

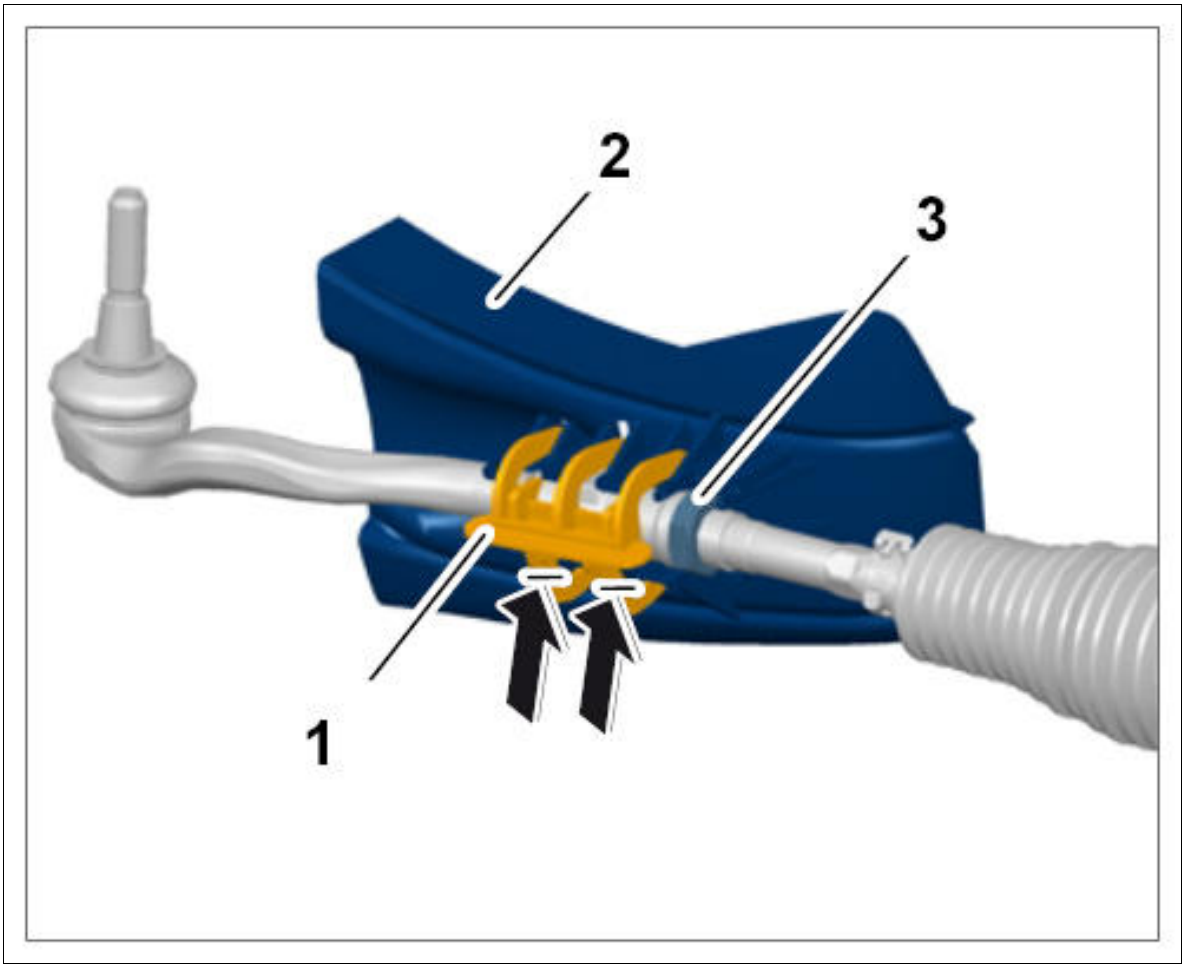

Courtesy of PORSCHE CARS NORTH AMERICA, INC.

1. 3.1. Push air-guide element **-2-** onto the tie-rod ball from the front.

   Check the position of the lock nut **-3-** in the cut-out on the air-guide element **-2-** .

2. 3.2. Secure the air-guide element with a new clamp.

   Check that the clamp locks correctly.

   Check that the clamp has locked correctly through the test lugs **-1-** in the air-guide element **-2-** .

Fig 2: Identifying Test Lugs And Air-Guide Element

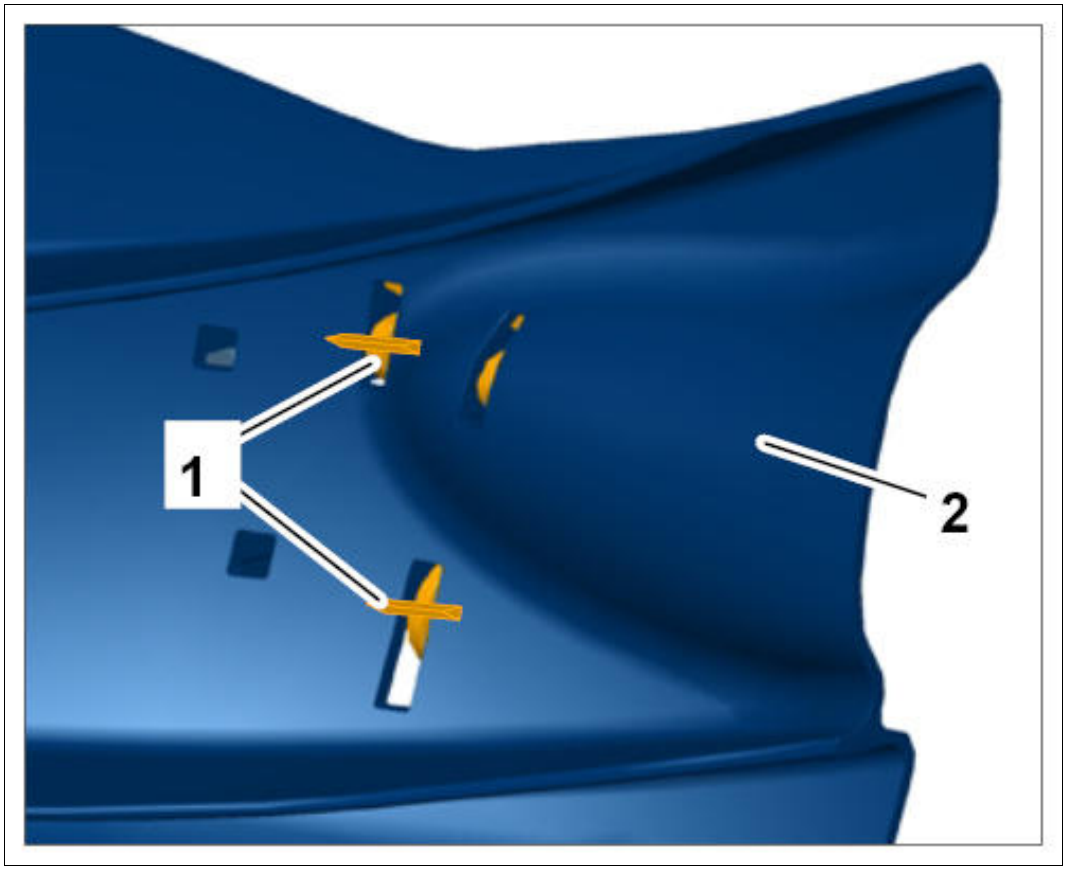

Courtesy of PORSCHE CARS NORTH AMERICA, INC.

WM 489025 POWER-STEERING GEAR: TEACHING STEERING LOCK SETTINGS (MACAN, MACAN S, MACAN TURBO) > TOOLS

Designation	Type	Number	Description	
PIWIS Tester II	Special tool	9818		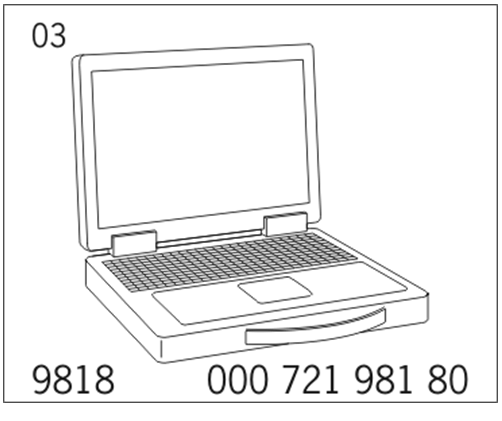

WM 489025 POWER-STEERING GEAR: TEACHING STEERING LOCK SETTINGS

(MACAN, MACAN S, MACAN TURBO) > POWER-STEERING GEAR: TEACHING STEERING LOCK SETTINGS

Information

- If the steering gear is replaced, the steering lock settings must be taught.
- The steering lock settings are cleared after calibrating the steering-angle sensor and must be re-taught.

1. Calibrate the steering-angle sensor. (This will clear the limit stops.) → 456005 INITIALIZING AND CALIBRATING STEERING-ANGLE SENSOR
2. Teach steering lock settings.

   To do this, select >>Power steering<< in the control unit overview on **PIWIS Tester II 9818** , then select >>Calibrate<< in the >>Maintenance/repairs<< menu and press [F12] to start.

WM 489055 REPLACING POWER-STEERING GEAR (MACAN, MACAN S, MACAN TURBO) > TOOLS

Designation	Type	Number	Description	
ball joint puller	VW tool	T40010		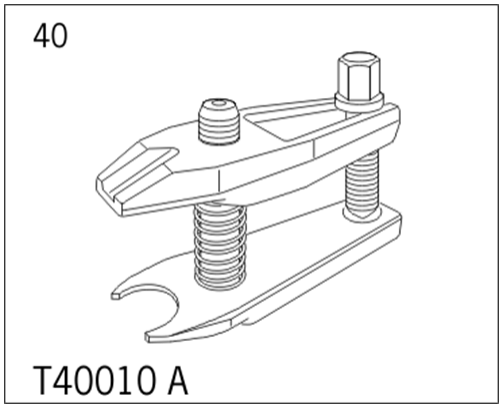

WM 489055 REPLACING POWER-STEERING GEAR (MACAN, MACAN S, MACAN TURBO) > TECHNICAL VALUES

Location	Description	Type	Basic value	Tolerance 1	Tolerance 2
Steering gear to front-axle carrier	M12 x 1.5 x 153 thread/always use new screws and nuts following removal	Initial tightening	80 Nm (59 ftlb.)		
Steering gear to front-axle carrier	M12 x 1.5 x 153 thread/always use new	Final tightening	+180°		

	screws and nuts following removal				
Intermediate steering shaft to steering gear (universal joint)	M8 x 30 thread/always use new screw or bolt following removal	Tightening torque	30 Nm (22 ftlb.)		

WM 489055 REPLACING POWER-STEERING GEAR (MACAN, MACAN S, MACAN TURBO) > INFORMATION

The power-steering gear is purely electrically-assisted. There is no hydraulic assistance.

WM 489055 REPLACING POWER-STEERING GEAR (MACAN, MACAN S, MACAN TURBO) > PRELIMINARY WORK

1. Raise the vehicle → 4X00IN LIFTING THE VEHICLE .
2. Remove front wheels → 440519 REMOVING AND INSTALLING WHEEL .
3. Remove front underbody panelling → 519219 REMOVING AND INSTALLING COVER FOR FRONT UNDERBODY .
4. Remove front-axle support → 400819 REMOVING AND INSTALLING FRONT-AXLE SUPPORT .

WM 489055 REPLACING POWER-STEERING GEAR (MACAN, MACAN S, MACAN TURBO) > REMOVING AND INSTALLING POWER-STEERING GEAR > REMOVING POWER-STEERING GEAR

Information

- Secure steering wheel with wheels in straight-ahead position (engage steering column lock or clamp steering wheel in center position with steering-wheel holder). If this is not done, the airbag contact unit will have to be put in center position after installation of the steering gear.

1. Detach universal joint **-1-** .
    1. 1.1. Unscrew and remove fastening screw **-arrow-** on universal joint **-1-** .
    2. 1.2. Remove universal joint **-1-** from the steering gear **-2-** .

Fig 1: Locating Universal Joint On Steering Gear

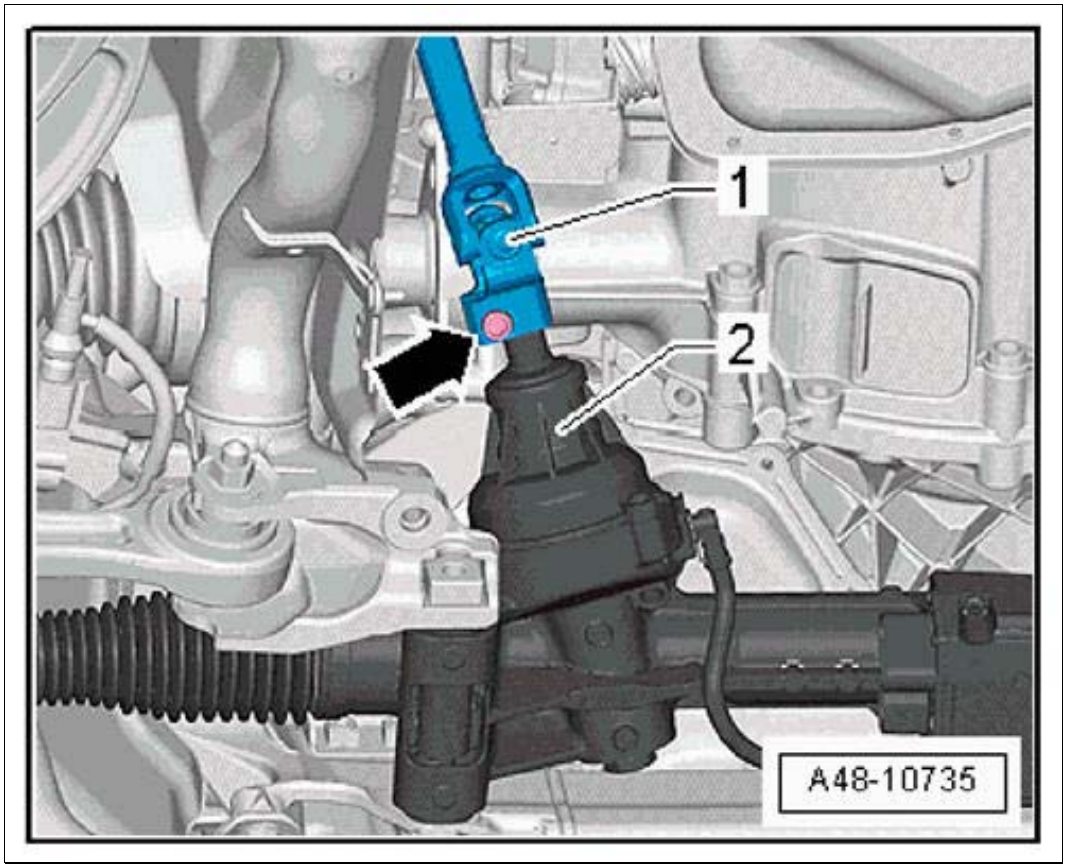

Courtesy of PORSCHE CARS NORTH AMERICA, INC.

2. Detach tie-rod ball from tie rod.

    1. 2.1. Counter the tie-rod ball **-1-** at the flattened areas **-arrows-** using a suitable open-ended wrench.

    2. 2.2. Loosen lock nut **-2-** .

Fig 2: Detaching Tie-Rod Ball

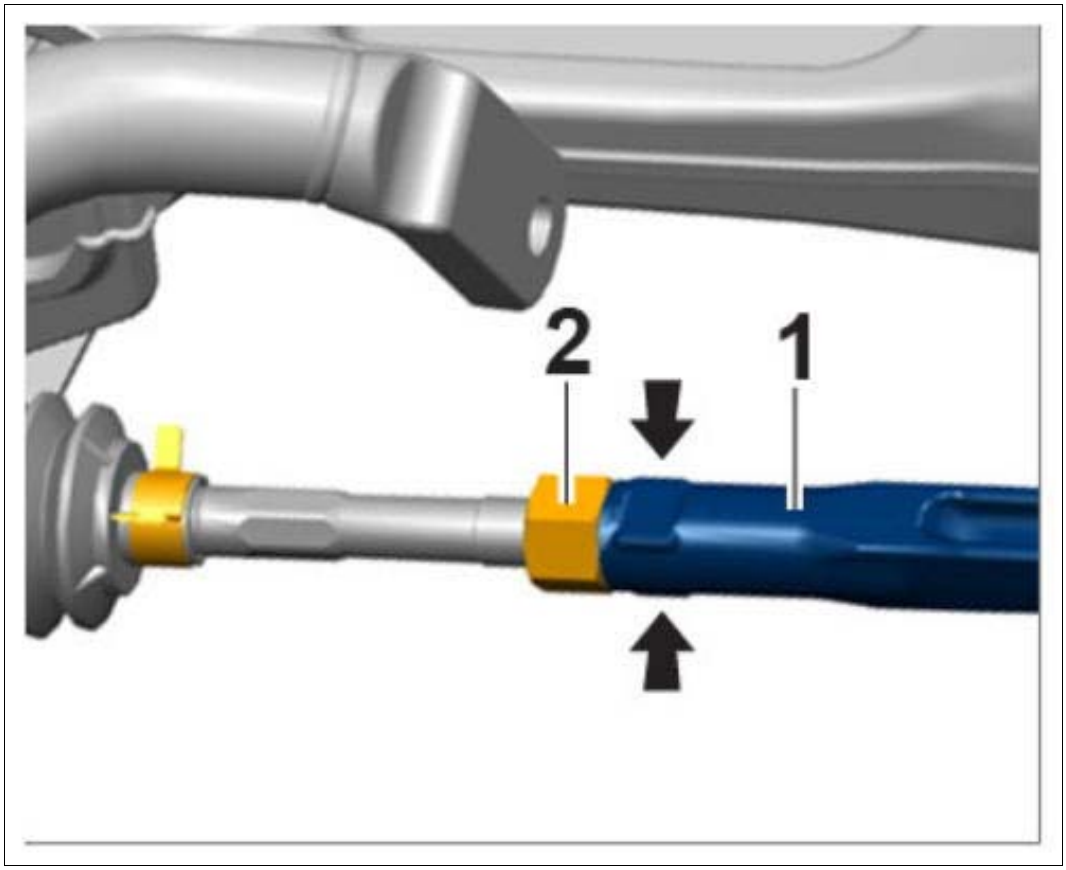

Courtesy of PORSCHE CARS NORTH AMERICA, INC.

3. Unscrew fastening nut **-1-** on the joint pin for the tie-rod ball **-2-** until it is flush with the thread of the joint pin.

Fig 3: Identifying Tie-Rod Ball On Wheel Bearing Housing

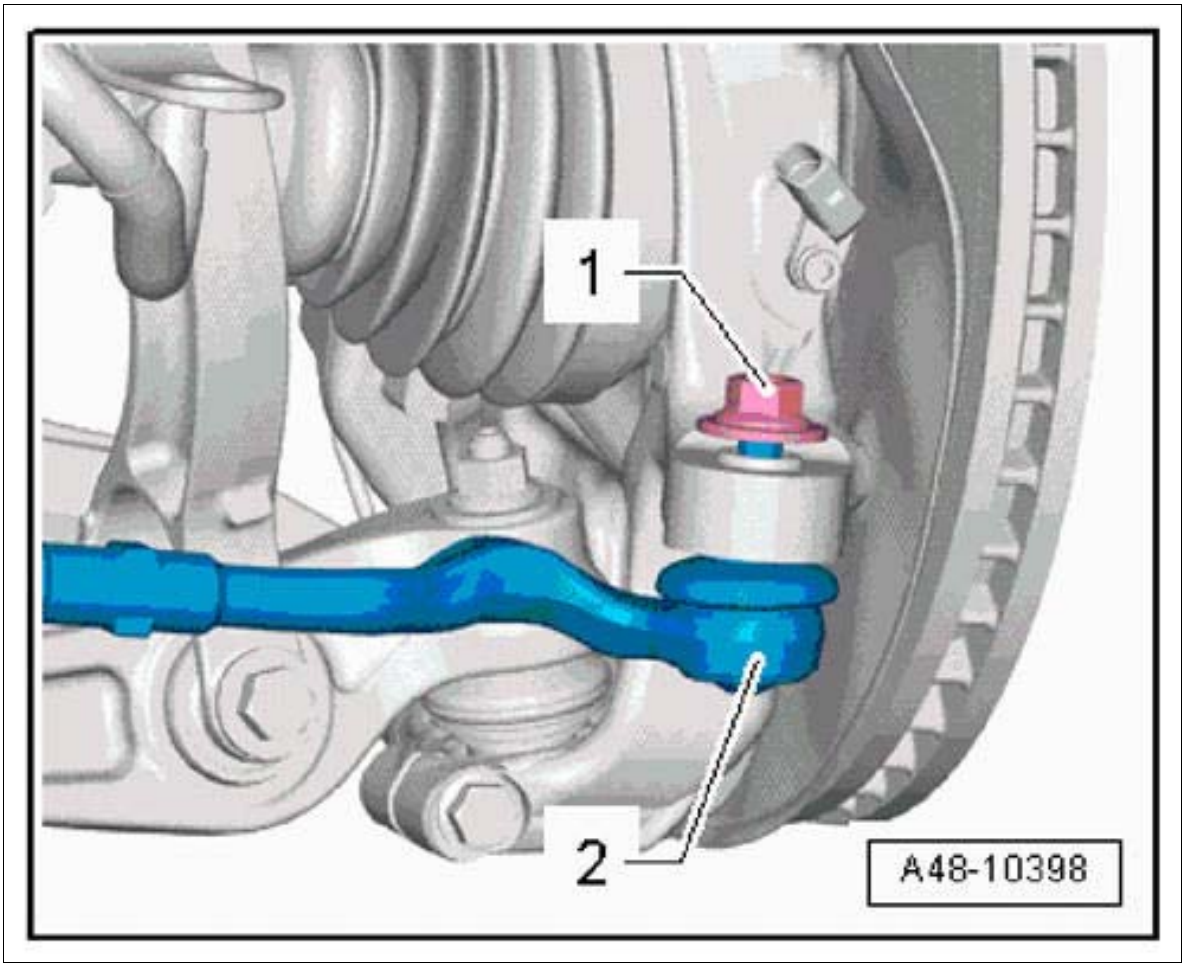

Courtesy of PORSCHE CARS NORTH AMERICA, INC.

4. Loosen tie-rod ball from the wheel bearing housing. Make sure not to damage the speed sensor.

    1. 4.1. Position **ball joint puller T40010** over the tie-rod ball and fit on the fastening nut.

    2. 4.2. Press tie-rod ball off the wheel bearing housing using **ball joint puller T40010.**

        Screw in hexagon on the **ball joint puller T40010** until the tie-rod ball becomes detached from the wheel bearing housing.

        Make sure that the lever arms of the ball joint puller are parallel to each other when the greatest amount of force is applied. Readjust if necessary. → Pressing off tie-rod ball

Fig 4: Pressing Off Tie-Rod Ball

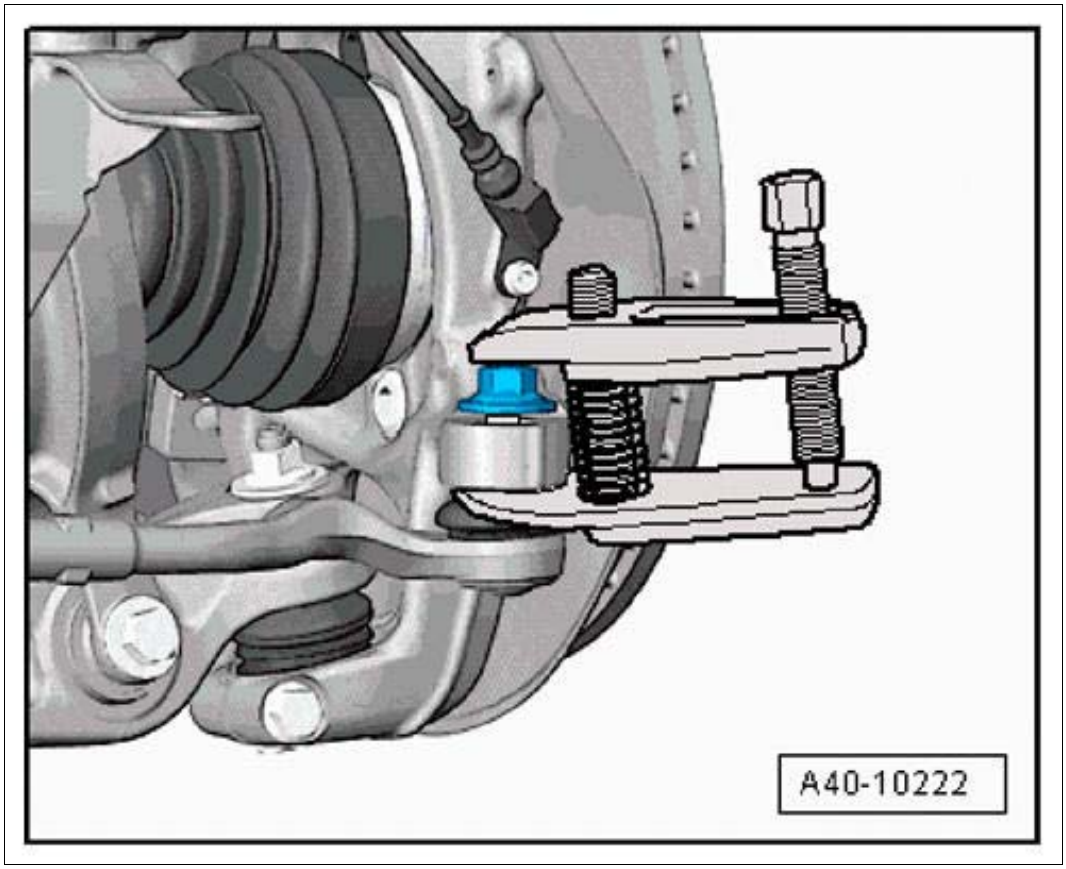

Courtesy of PORSCHE CARS NORTH AMERICA, INC.

5. Loosen fastening nut **-1-** from the joint pin on the tie-rod ball **-2-** .

Fig 5: Identifying Tie-Rod Ball On Wheel Bearing Housing

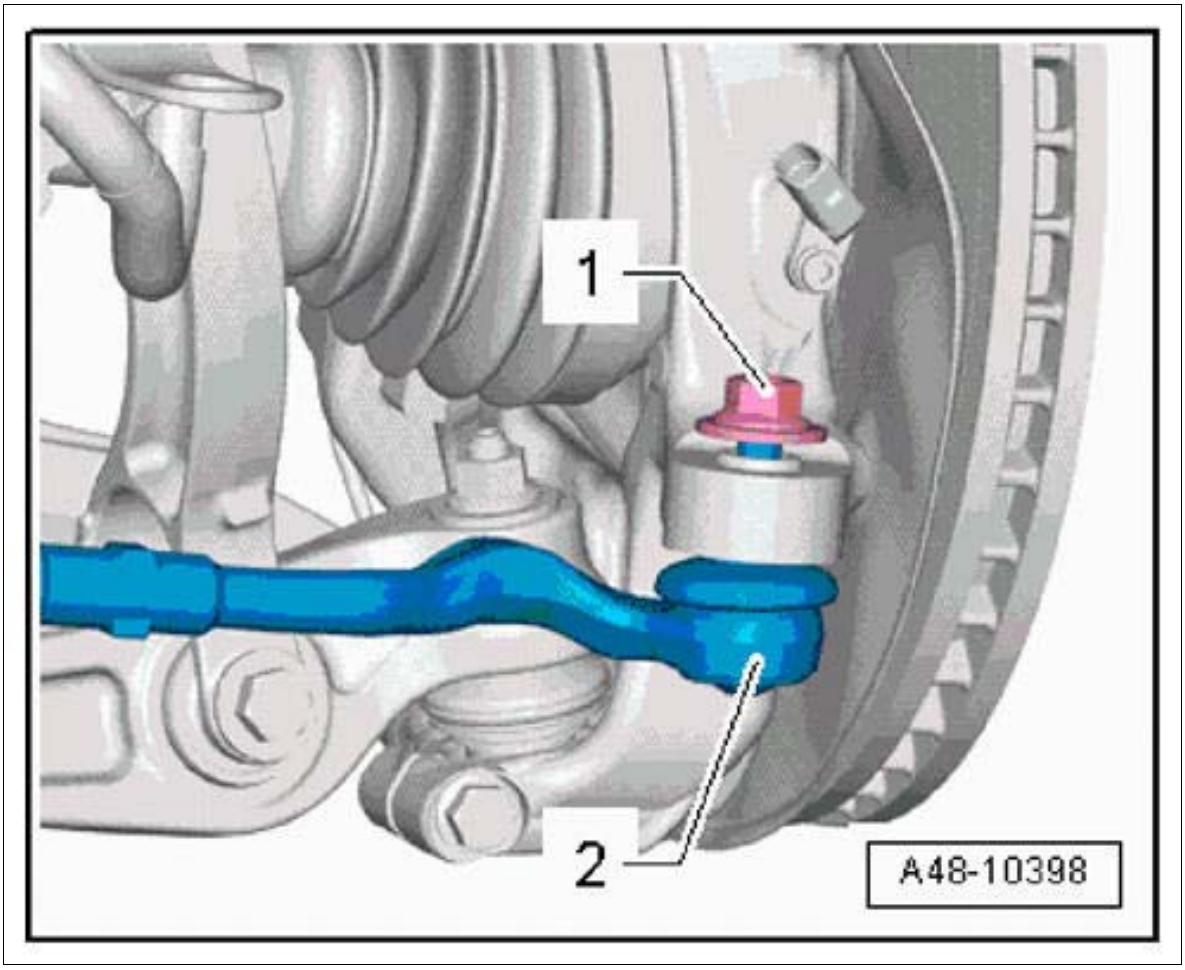

Courtesy of PORSCHE CARS NORTH AMERICA, INC.

6. Lower the anti-roll bar.
    1. 6.1. Unscrew fastening nuts **-arrows-** and lower the anti-roll bar.

Fig 6: Locating Nuts Of Front Anti-Roll Bar

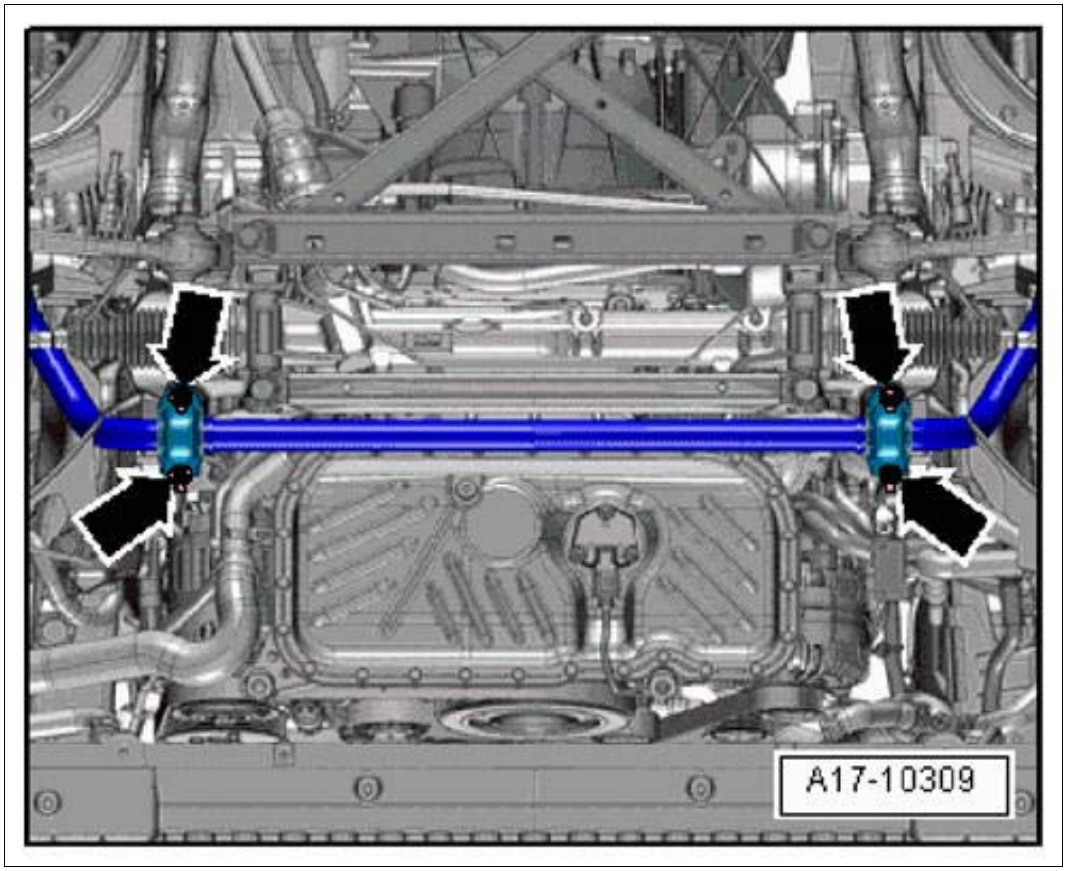

Courtesy of PORSCHE CARS NORTH AMERICA, INC.

7. Release and disconnect connectors for vehicle signals **-1-** and power supply **-2-** .

Fig 7: Removing Connectors For Steering Gear

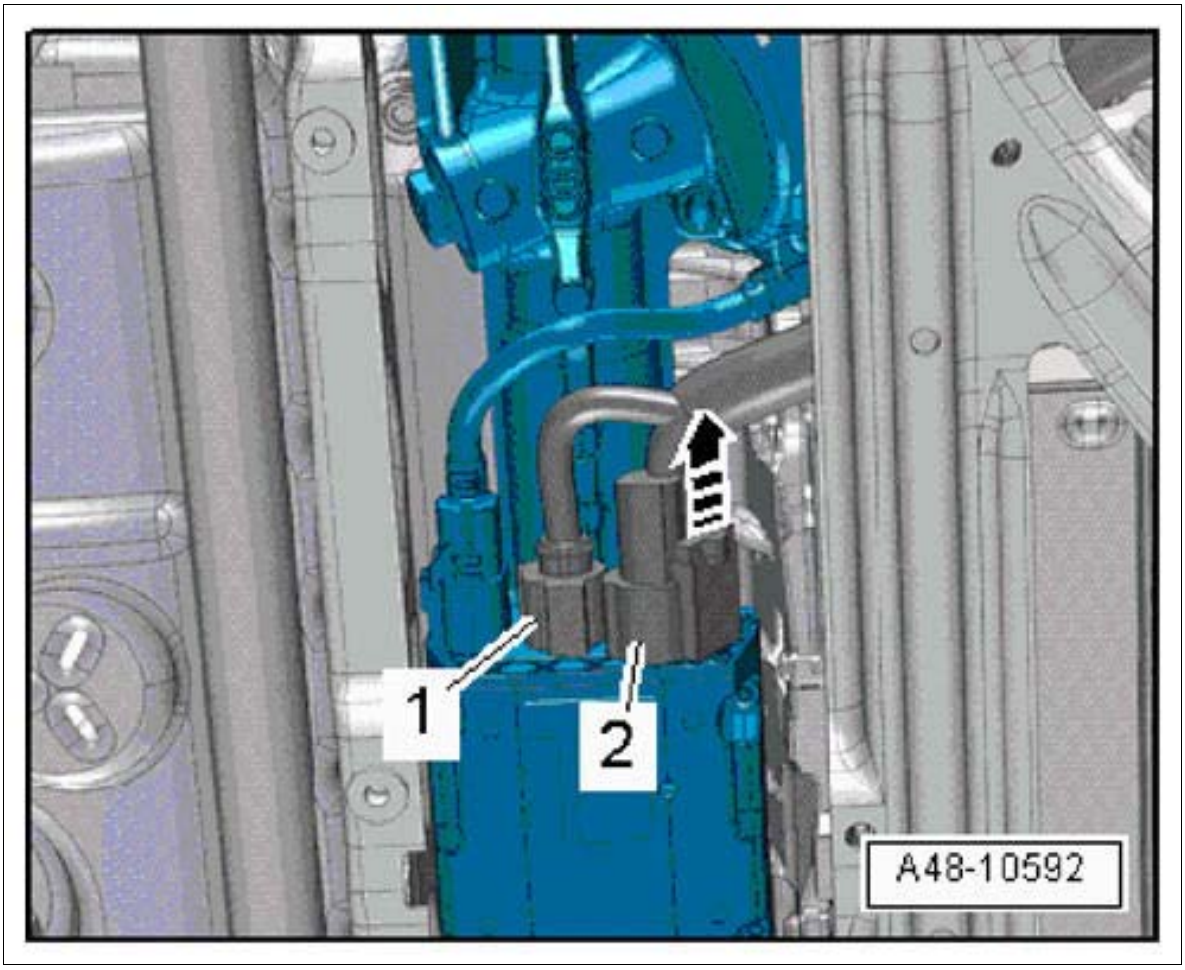

Courtesy of PORSCHE CARS NORTH AMERICA, INC.

8. Remove steering gear.

> *WARNING: Danger of objects or loads falling down*
>
> *1. Risk of squashing or crushing*

→ Secure components to prevent them from falling down.

1. 8.1. Unscrew and remove fastening screws **-1-** and **-2-** on the steering gear.
2. 8.2. Press steering gear aside slightly **-arrow A-** and remove it by pulling it downwards **-arrow B-** .

Fig 8: Pressing Steering Gear

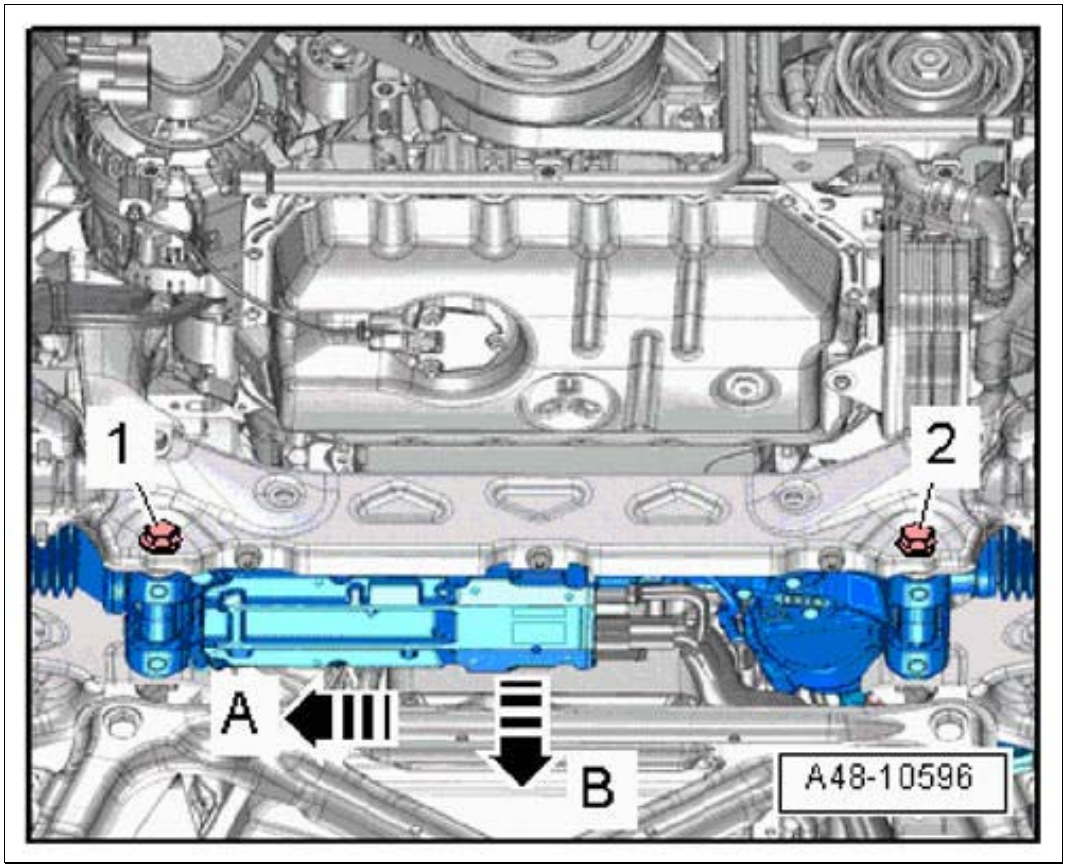

Courtesy of PORSCHE CARS NORTH AMERICA, INC.

WM 489055 REPLACING POWER-STEERING GEAR (MACAN, MACAN S, MACAN TURBO) > REPLACING POWER-STEERING GEAR

Information

- The new steering gear comes as an assembly - it is simply a matter of taking the existing tie-rod balls and lock nuts from the old steering gear and fitting them on the new one.
- Check tie-rod balls for wear and replace them if necessary.
- Check that the bellows are seated correctly to prevent water from leaking in.

1. Remove steering gear → 489055 REPLACING POWER-STEERING GEAR .
2. Loosen the two tie-rod balls **-1-** from the tie rods on the removed steering gear.
    1. 2.1. Counter the tie-rod ball **-1-** at the flattened areas **-arrows-** using a suitable open-ended wrench.
    2. 2.2. Loosen lock nut **-2-** .

Fig 1: Detaching Tie-Rod Ball

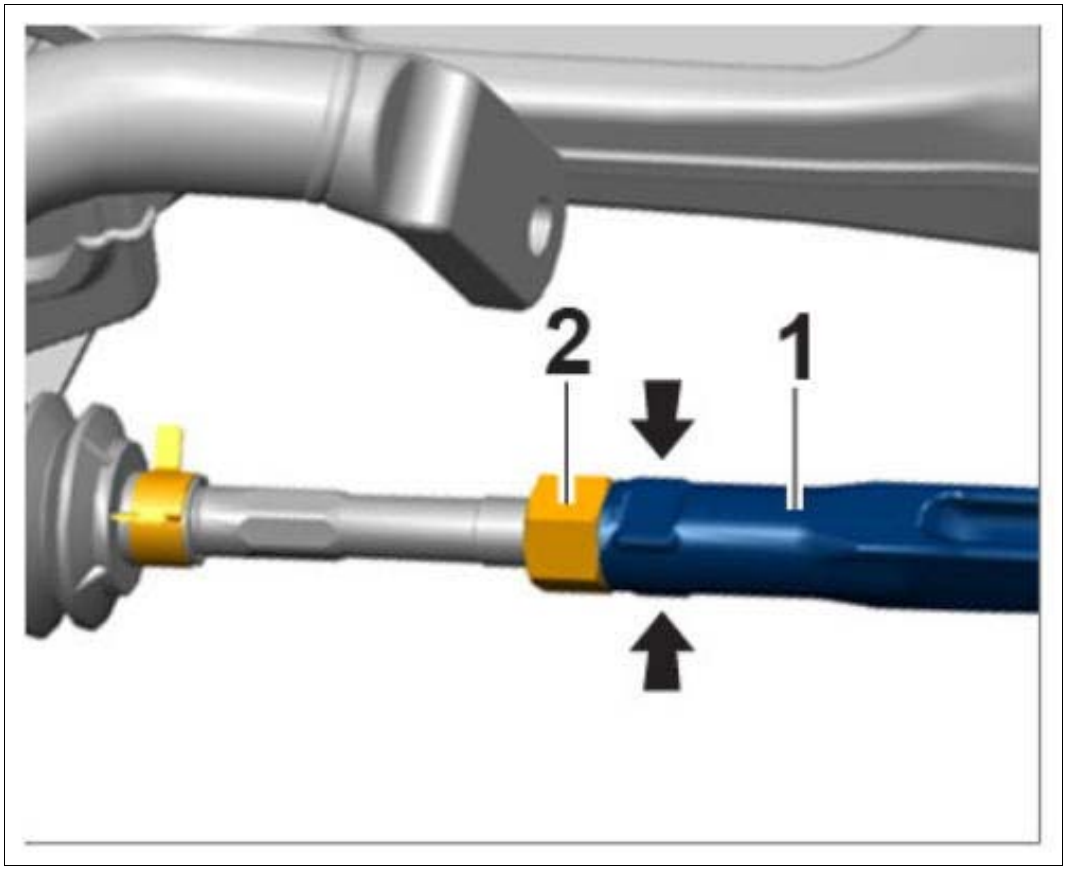

Courtesy of PORSCHE CARS NORTH AMERICA, INC.

3. Unscrew and remove tie-rod ball **-3-** and lock nut **-2-** from the tie rod **-1-** .

Fig 2: Identifying Tie-Rod Ball

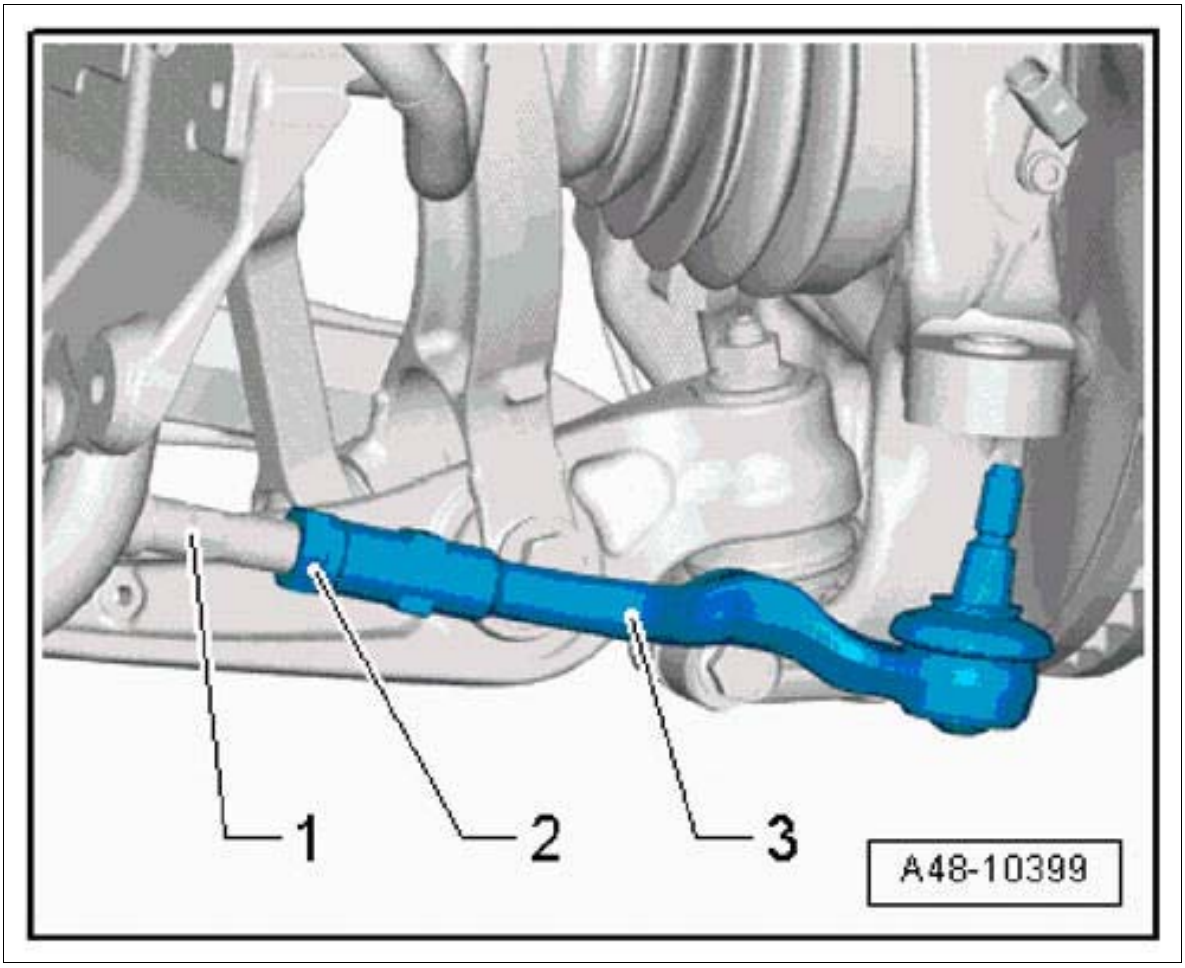

Courtesy of PORSCHE CARS NORTH AMERICA, INC.

4. Screw lock nut **-2-** and tie-rod ball **-3-** onto the new steering gear.
5. Install steering gear → REPLACING POWER-STEERING GEAR .

WM 489055 REPLACING POWER-STEERING GEAR (MACAN, MACAN S, MACAN TURBO) > INSTALLING POWER-STEERING GEAR

NOTE: Water can leak in if sealing elements are damaged.

- *Component can become damaged or may not function.*

→ Replace damaged sealing elements.

→ Check that sealing elements are fitted correctly.

Information

- Make sure that the pre-fitted intermediate wire harness and the torque sensor connector are not

damaged during installation. If one of these components is damaged, the complete steering gear must be replaced.

Installation is performed in reverse order.

Pay particular attention to the following:

- Always use new steering gear fastening screws and a new clamping screw on the universal joint following removal. Clean screw threads and make sure that they remain clean and free of grease.
- Always check the bellows and clamps for damage and make sure they are seated securely to prevent water from leaking in.
- Connectors must lock with an audible click.
- **Replace fastening screws that are tightened to a torque angle!**
- **Replace nuts for the steering gear fastening screws!**
- Observe specified tightening torques and torque angle.

1. Move steering gear into installation position.

1. 1.1. Screw in fastening screws **-1-** and **-2-** for the steering gear, but do not tighten them!

Fig 1: Pressing Steering Gear

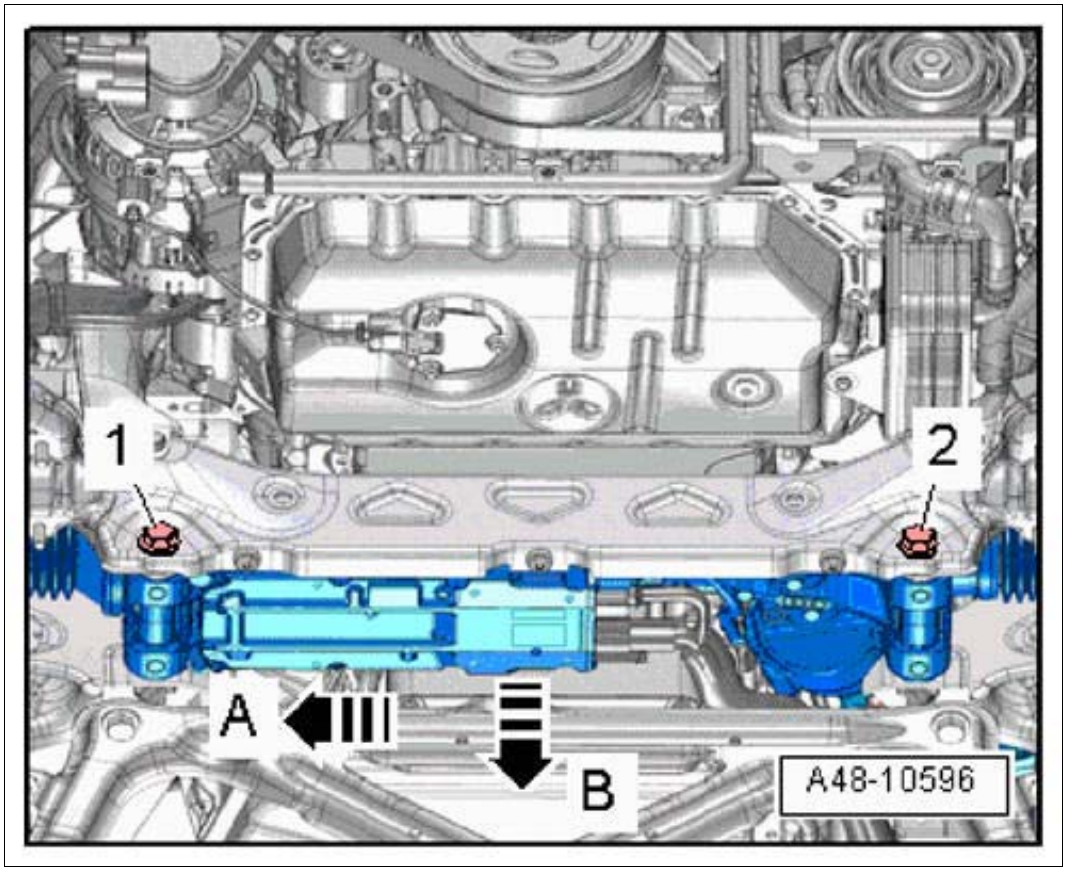

Courtesy of PORSCHE CARS NORTH AMERICA, INC.

2. Fit universal joint.

1. 2.1. Grease the journal of the input shaft for the steering gear using a non-water-soluble lubricant (e.g. lithium-saponified grease).
2. 2.2. Slide the universal joint **-1-** to the correct position in the center.

   Fig 2: Locating Universal Joint On Steering Gear

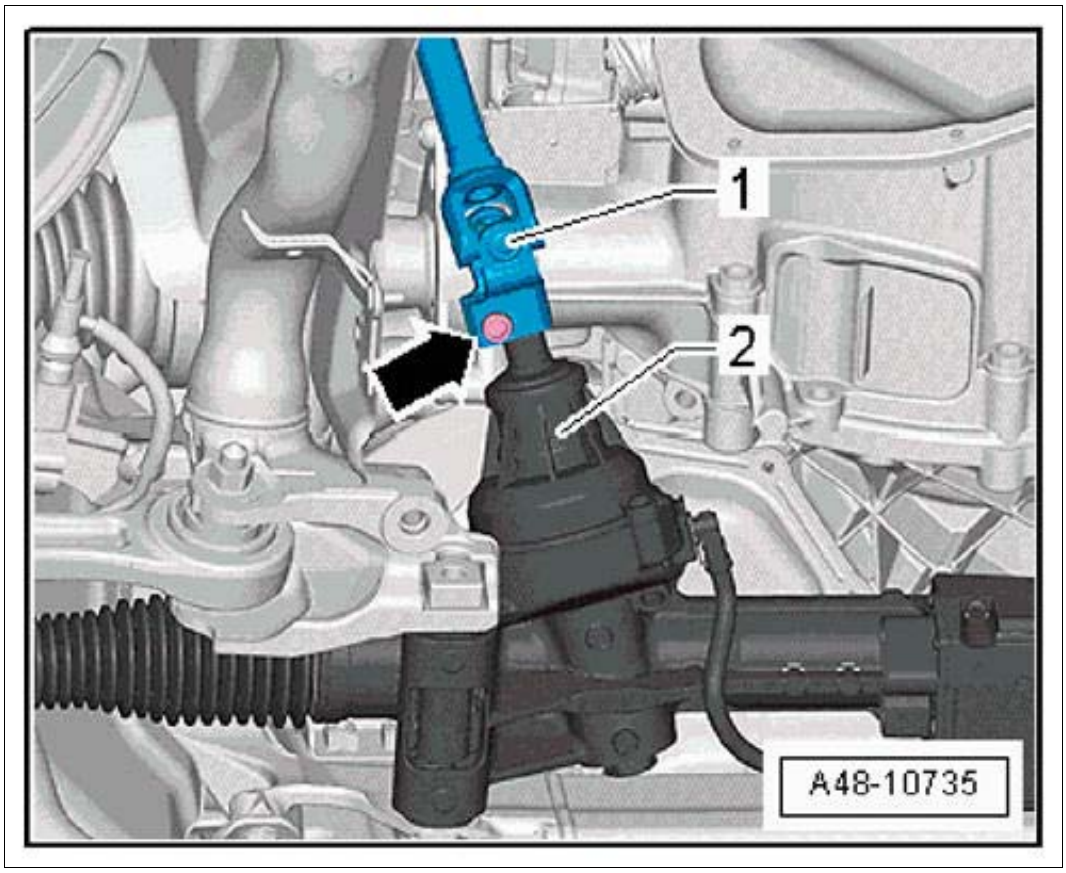

Courtesy of PORSCHE CARS NORTH AMERICA, INC.

3. 2.3. Tighten fastening screws **-1-** and **-2-** on the steering gear. **Initial tightening 80 Nm (59 ftlb.) Final tightening +180°**

Fig 3: Tightening Screws Of Steering Gear

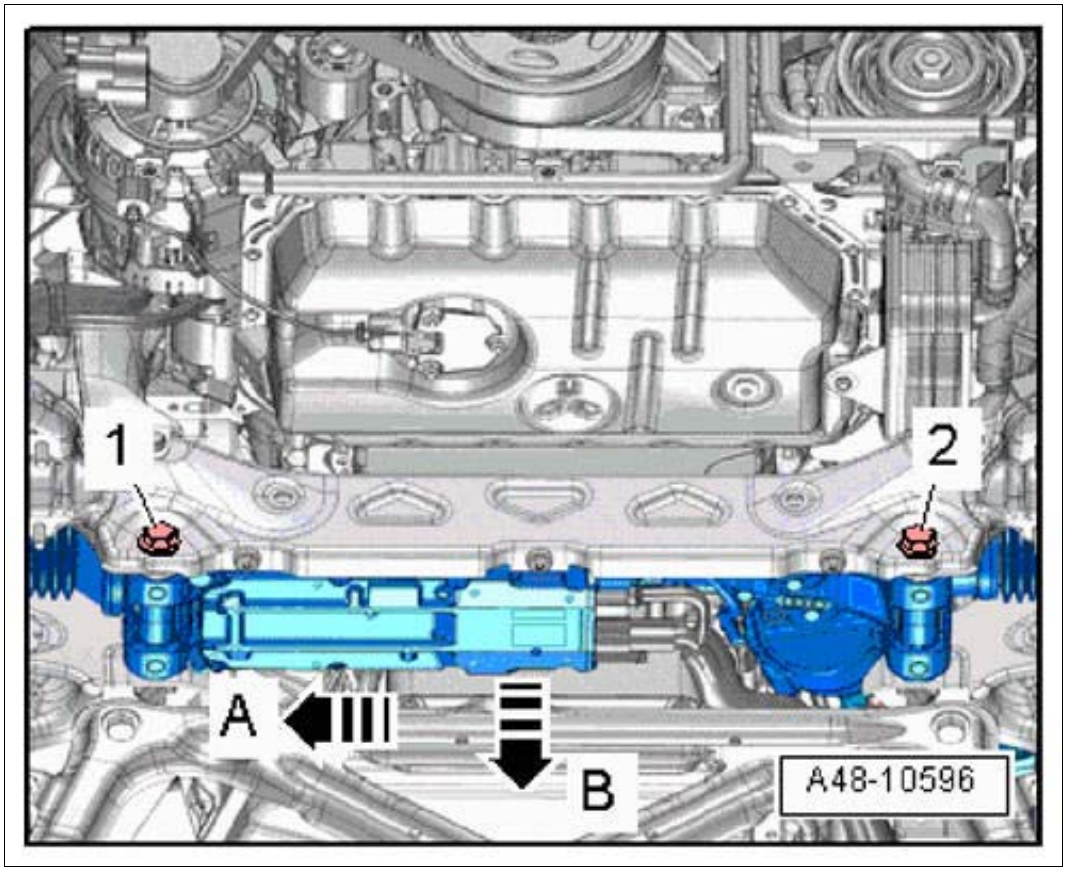

Courtesy of PORSCHE CARS NORTH AMERICA, INC.

Information

Always replace the clamping screw on the universal joint.

4. 2.4. Tighten clamping screw **-arrow-** on the universal joint **-1-** . **Tightening torque 30 Nm (22 ftlb.)**

Fig 4: Locating Universal Joint On Steering Gear

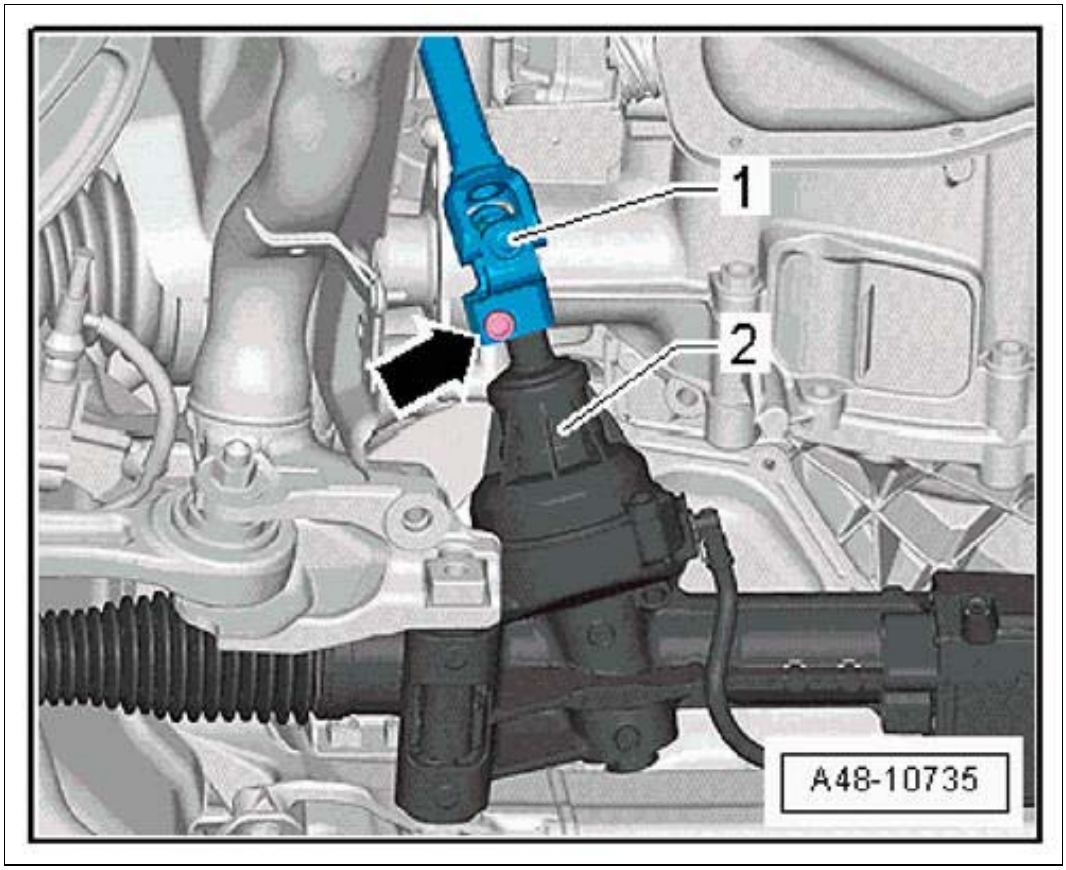

Courtesy of PORSCHE CARS NORTH AMERICA, INC.

3. Connect connectors for vehicle signals **-1-** and power supply **-2-** . Connectors must lock with an audible click.

Fig 5: Removing Connectors For Steering Gear

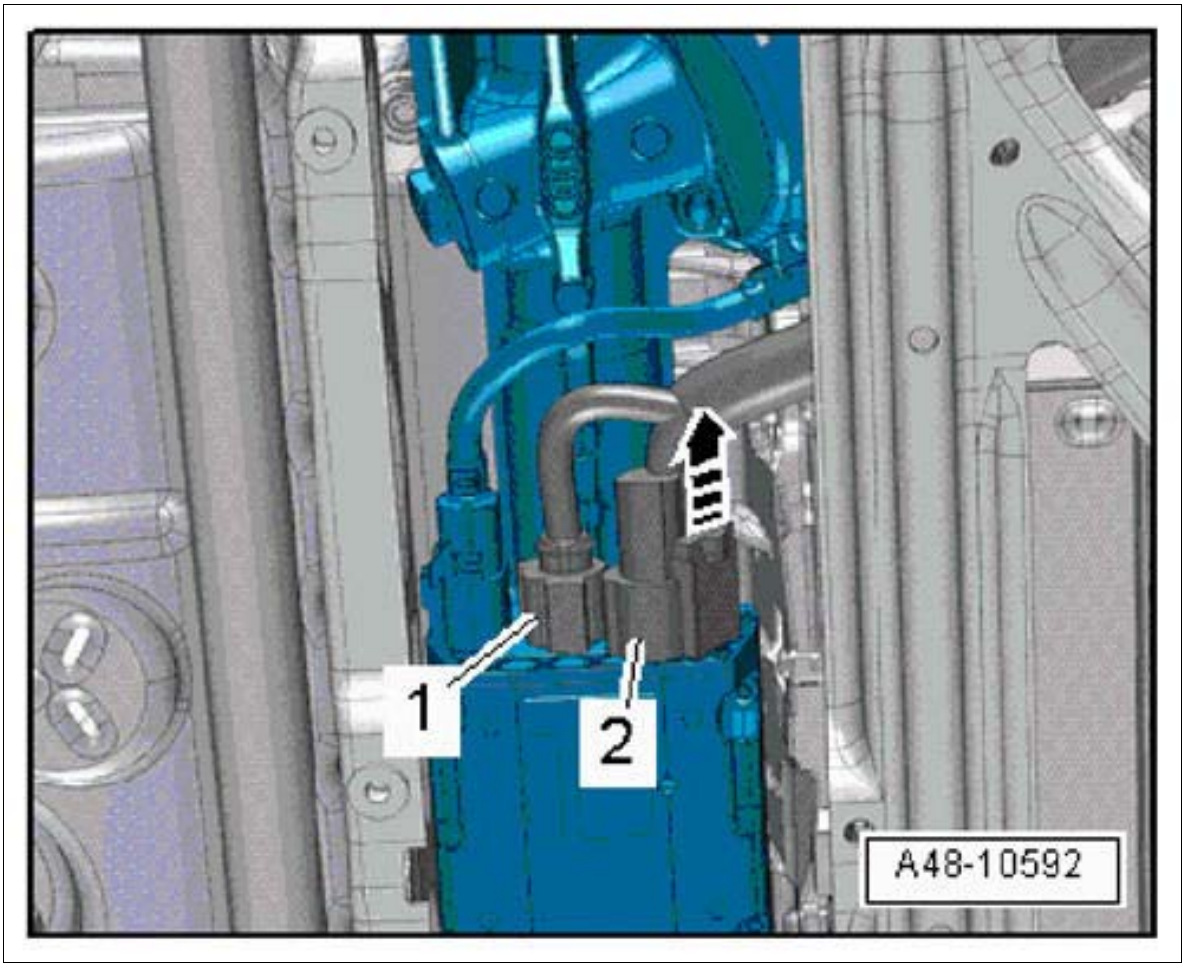

Courtesy of PORSCHE CARS NORTH AMERICA, INC.

4. Install anti-roll bar → INSTALLING FRONT ANTI-ROLL BAR .
5. Install tie-rod ball → INSTALLING TIE-ROD BALL .

WM 489055 REPLACING POWER-STEERING GEAR (MACAN, MACAN S, MACAN TURBO) > SUBSEQUENT WORK

1. Install front-axle support → INSTALLING FRONT-AXLE SUPPORT .
2. Install front underbody panelling → INSTALLING COVER FOR FRONT UNDERBODY .
3. Install front wheels → INSTALLING WHEEL .
4. Perform suspension alignment → 449503 SUSPENSION ALIGNMENT, COMPLETE .
5. Calibrate steering-angle sensor → 456005 INITIALIZING AND CALIBRATING STEERING ANGLE SENSOR .

WM 4890IN ASSESSMENT OF STEERING GEAR AFTER ACCIDENT DAMAGE (MACAN, MACAN S, MACAN TURBO) > INFORMATION > FUNDAMENTALS

Various kinds of damage can occur to the steering gear in the event of accidents or driving conditions similar to accidents. In cases where the steering gear shows no external damage it can sometimes be difficult and costly to detect damage. Nevertheless, this damage represents an unacceptable risk for the vehicle, since it could lead to failure of the steering system.

A comprehensive check on all individual parts of the steering gear is not usually feasible due to the relatively high cost and is not possible using ordinary workshop resources. Instead, consideration must be given to the condition of other components that are easier to check.

To decide whether the steering gear of a vehicle involved in an accident must be replaced or may continue to be used, the following guidelines are helpful.

WM 4890IN ASSESSMENT OF STEERING GEAR AFTER ACCIDENT DAMAGE (MACAN, MACAN S, MACAN TURBO) > INFORMATION > ASSESSMENT OF THE STEERING OF A VEHICLE INVOLVED IN AN ACCIDENT

The steering gear may remain in the vehicle if all the following conditions are met:

No visible damage to such front-axle parts as wheel rims, spring struts, wheel carriers, control arms, steering arms, tie rods, chassis subframe, the steering shaft or to the points on the body where wheel suspension parts are bolted on.

No impermissible rise in torque and no jamming or catching when the steering gear is turned from stop to stop. The front wheels must be free (front axle raised) when turning and the ignition must be switched off (no power assistance).

The permissible tolerances for wheel alignment must not be exceeded.

The steering gear must be replaced by a new or exchange unit if one of the following points applies:

Visible or perceptible damage to the steering gear.

Fire damage (e.g. steering bellows burnt).

Permanent deformation or breakage of:

Steering-gear mountings

Tie-rod ball

Tie rods

Control dimension for tie-rod ball: If a control dimension is < 188 mm, the complete steering gear with tie rod and tie-rod ball must be replaced.

Fig 1: Identifying Tie-Rod Ball Control Dimension

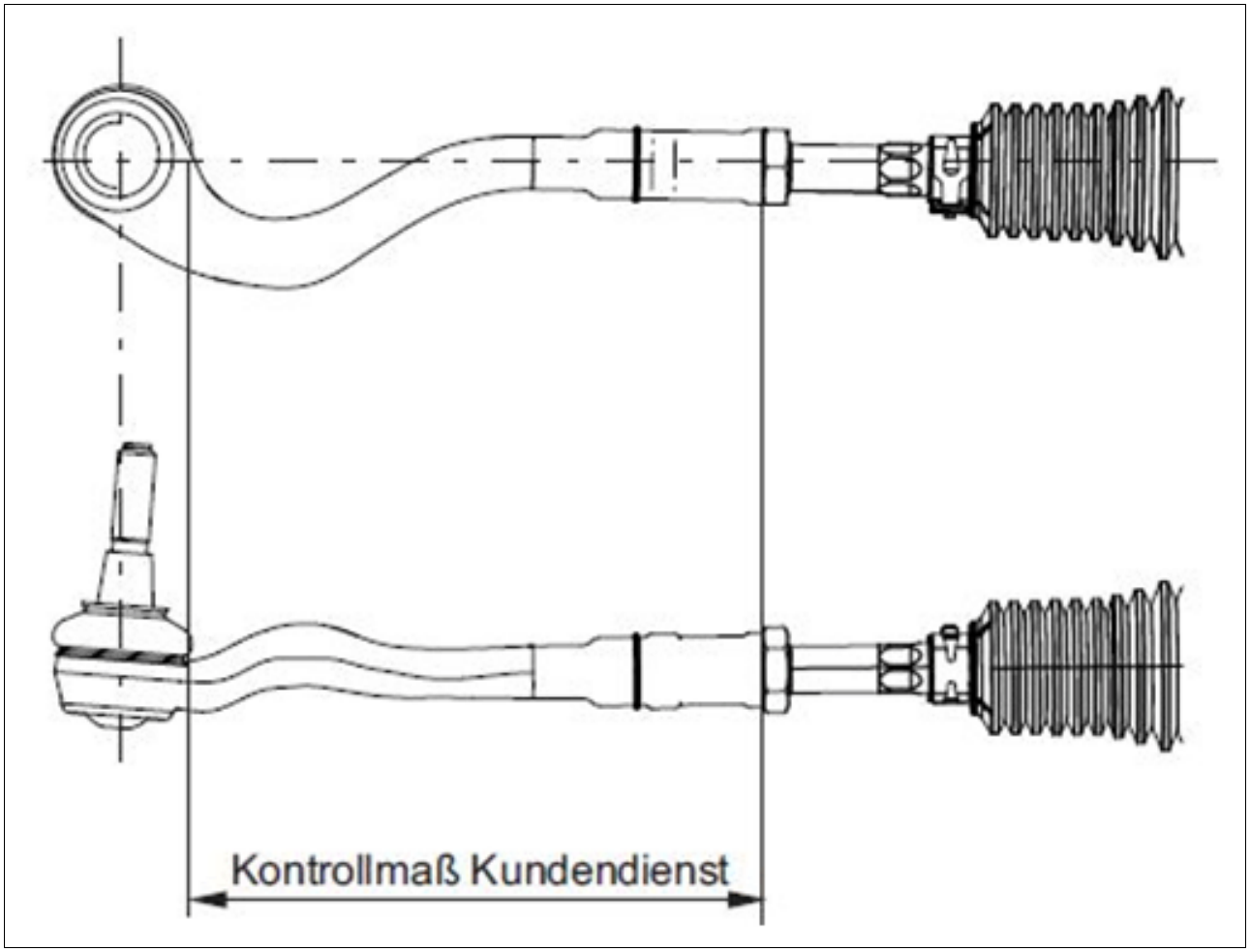

Courtesy of PORSCHE CARS NORTH AMERICA, INC.

Steering arms

Spring struts

Wheel carriers

Control arms

Chassis subframe

If the listed criteria are insufficient for a decision, we recommend that the steering gear be replaced with a new or exchange unit.

WM 4890IN ASSESSMENT OF STEERING GEAR AFTER ACCIDENT DAMAGE (MACAN, MACAN S, MACAN TURBO) > INFORMATION > EXCEPTIONAL REGULATION/ORDER HANDLING

If a workshop's intended exchange of steering gear is refused by a customer or insurer for reasons of costs, an expert or - if this is impossible abroad, the importer - should be called in at the cost of the

refusing party. If the decision contradicts the guideline, we recommend that a memorandum be drawn up on the point and that it be countersigned by the expert.

Service Manual: 4X - CHASSIS - GENERAL -- (95B) - MACAN

WM 4X00IN BRAKE DISC MEASUREMENT SHEET (ALL MODELS) > INFORMATION > BRAKE DISC MEASUREMENT SHEET

Information

Notes on checking and measurement points can be found in:

- Technical data relating to the tests. → 4650TW TECHNICAL DATA/BRAKE WEAR LIMIT
- Description of Tests 1-3, front. → 465002 CHECKING FRONT BRAKE DISCS (WEAR ASSESSMENT)
- Description of Tests 1-3, rear. → 465302 CHECKING REAR BRAKE DISCS (WEAR ASSESSMENT)

A copy or print-out of the data card shown here can be used to document the measured result. The data cards cannot be ordered.

1. Make a copy or print-out of the data card shown here.

   Information

   1. Actual values that are identical in all versions are already entered!
   2. These values may change in the course of further development . Check them if necessary and add the new values as required. → 4650TW TECHNICAL DATA/BRAKE WEAR LIMIT

2. Before taking measurements (Test 1 to Test 3), enter the general data, vehicle type and the missing nominal values (new brake disc thickness/brake disc wear limit) in the data card.
3. Carry out measurements (actual status) and enter the values in the data card.
4. If brake discs are to be replaced, carry out Test 2 with the new discs again and enter the latest values in a new data card.

Brake disc measurement		
Customer:	Rep. Order No.:	
Street:	Porsche VIN:	
City:	Reg. number:	
Telephone:	Date of first registration:	
Vehicle type:	Odometer reading [km/miles]:	
Checker:	Date/Signature	
Nominal values		
Test 1 = Brake disc thickness		
- Brake disc thickness, new [mm]:	Front:	Rear:

- Wear limit [mm]:			Front:	Rear:
Test 2 = Lateral runout				
- Brake disc installed [mm]			max.:	
- Wheel hub			max.: 0, 02	
- Brake disc removed [mm]			max.: 0, 03	
Test 3 = Thickness tolerance of brake disc				
Thickness tolerance of brake disc [mm]			max.:	
Measured values (actual values) [mm]	front left	front right	rear left	rear right
Test 1 = Brake disc thickness (measured at 3 points, each offset by 120°)				
Measurement point A				
Measurement point B				
Measurement point C				
Test 2 = Lateral runout				
- Brake disc installed				
- Wheel hub				
- Brake disc removed (difference wheel hub/brake disc installed)				
Test 3 = Thickness tolerance of brake disc (1)				
Thickness tolerance (1)				

(1)	Test 3: Do not enter the eight measured values for each brake disc in the data sheet, just comment on the measured result for each brake disc (i.e. OK or not OK)

WM 4X00IN GENERAL INFORMATION ON TYRE PRESSURE MONITORING (TPM) (ALL MODELS) > TOOLS

Designation	Type	Number	Description	

PIWIS Tester II	Special tool	9818		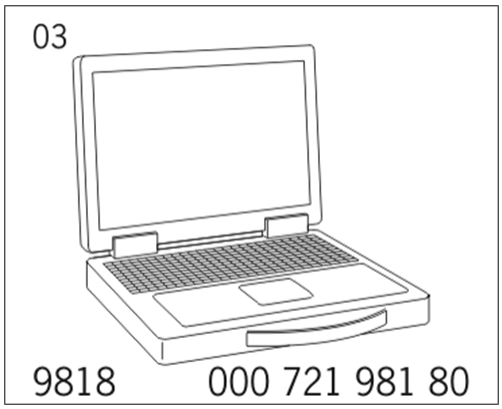

WM 4X00IN GENERAL INFORMATION ON TYRE PRESSURE MONITORING (TPM) (ALL MODELS) > GENERAL INFORMATION ON TYRE PRESSURE MONITORING (TPM) > DESIGN AND OPERATING PRINCIPLE > DESIGN

Fig 1: Identifying 3RD Generation TPM System Design

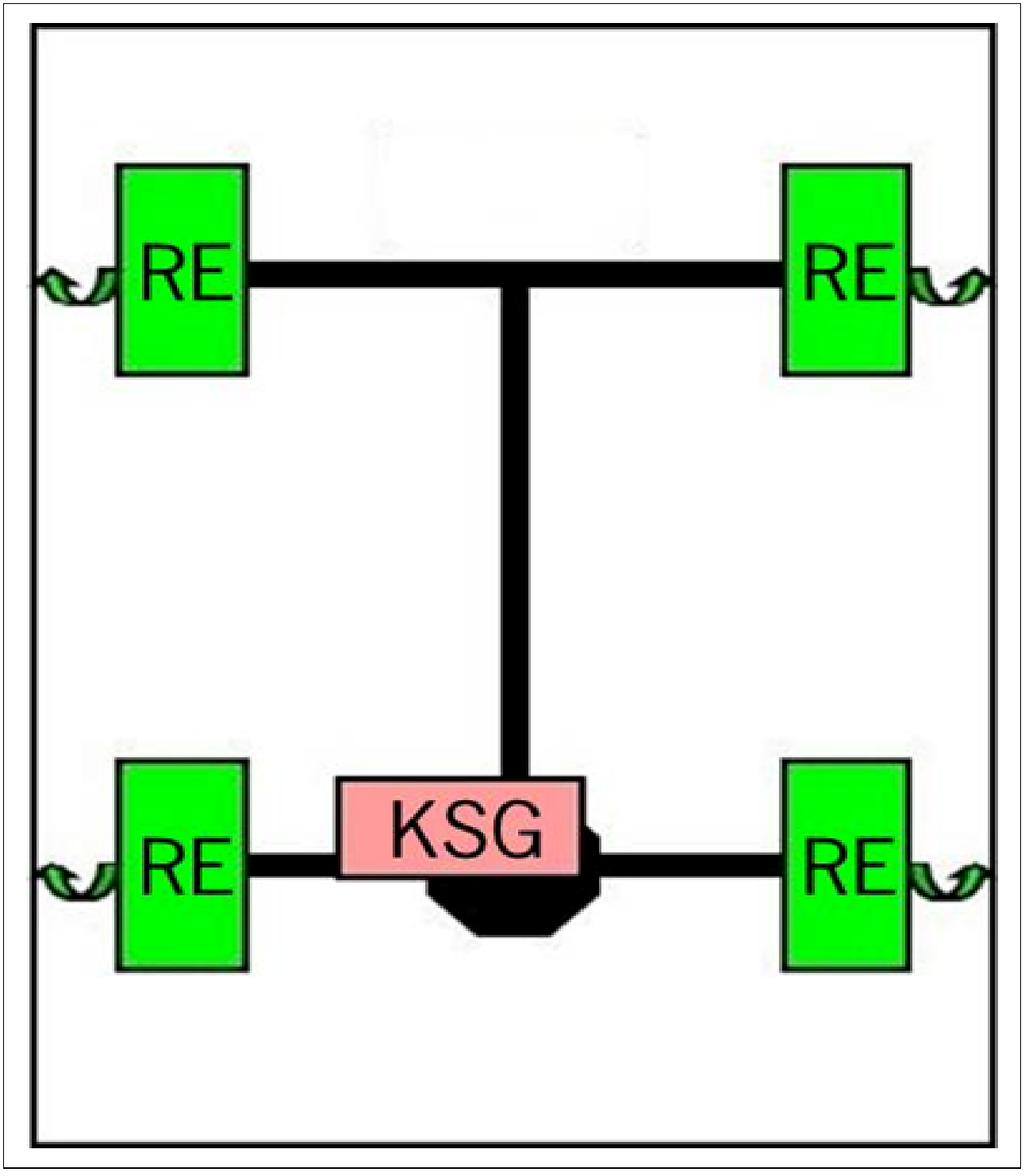

Courtesy of PORSCHE CARS NORTH AMERICA, INC.

The 3rd generation TPM system consists of:

- 4 wheel electronics units screwed onto the wheels
- 4 TPM valves and
- 1 TPM control unit (KSG) with integrated central antenna (installed on the rear axle)

WM 4X00IN GENERAL INFORMATION ON TYRE PRESSURE MONITORING (TPM) (ALL MODELS) > GENERAL INFORMATION ON TYRE PRESSURE MONITORING (TPM) > DESIGN AND OPERATING PRINCIPLE > OPERATING PRINCIPLE

The 3rd generation TPM system operates on the principle of unidirectional communication between the wheel electronics and control unit. This means that the wheel electronics can communicate with the control unit, but the control unit cannot communicate with the wheel electronics.

The wheel electronics units send the currently measured tire pressure, the direction of rotation, the temperature of the air in the tire and the remaining service life (of the battery) as well as a specific ID from the wheel that is currently turning at specified intervals.

The wheel position is learned automatically from the side and axle specifications. The direction of rotation of a wheel is detected by acceleration sensors in the wheel electronics (left/right detection). Axle sensing (front axle/rear axle detection) is performed based on differentiated sound levels between the front and rear axle, where the central antenna is fitted close to one axle (high level). The levels received from the other axle are correspondingly low.

WM 4X00IN GENERAL INFORMATION ON TYRE PRESSURE MONITORING (TPM) (ALL MODELS) > GENERAL INFORMATION ON TYRE PRESSURE MONITORING (TPM) > DESIGN AND OPERATING PRINCIPLE > TRANSMISSION MODES

The wheel electronics units communicate with the control unit in various modes. Depending on the current mode of a wheel electronics unit, it sends telegrams to the control unit at defined intervals.

- **Normal mode:** Normal mode is active while the vehicle is driving (after Burst mode has ended).
- **Sleep mode:** Sleep mode is activated as soon as the vehicle remains stationary for longer than 5 minutes. The wheel electronics then send no more telegrams. If the ignition is switched on while the wheel electronics units are in Sleep mode, no tire pressures are displayed (display in instrument cluster: "-.-"). Tire pressures are only displayed again when the vehicle is driving (see Burst mode).
- **Burst mode:** If the wheel electronics units are in Sleep mode and the vehicle is accelerated to over 25 km/h (15 mph) from stationary, the wheel electronics units switch to Burst mode. The wheel electronics units send their telegrams for 60 seconds at fast intervals.

WM 4X00IN GENERAL INFORMATION ON TYRE PRESSURE MONITORING (TPM) (ALL MODELS) > TEACHING TYRE PRESSURE MONITORING (TPM) > GENERAL INFORMATION

If a new set of wheels is used or wheel electronics units were replaced, the TPM system must be taught. When teaching the TPM system, the control unit stores the wheel IDs of the wheel electronics units and assigns a position to them.

New wheel electronics units can be taught by selecting a new set of wheels in the instrument cluster.

The system is then in learning mode and re-assigns the wheel IDs that are received.

But the system also detects a wheel change if the stored information does not correspond to the information received. The control unit then displays a message on the instrument cluster prompting you to select the newly fitted set of wheels.

The wheel electronics units can be taught while the vehicle is driving and while it is stationary. Teaching while driving is recommended.

WM 4X00IN GENERAL INFORMATION ON TYRE PRESSURE MONITORING (TPM) (ALL MODELS) > TEACHING TYRE PRESSURE MONITORING (TPM) > TEACHING WHILE DRIVING

A procedure in **PIWIS Tester II 9818** can be used to teach the wheel IDs while driving: >>Tyre Pressure Monitoring (TPM) system << >>Maintenance/repairs<< >>Teach wheel IDs<< >>Teach wheel IDs while driving<<.

The wheel IDs can also be taught without using the System Tester.

The following points must always be observed:

- Allow an idle time of at least 5 minutes before teaching the wheel IDs (wheel electronics units are then in Sleep mode).
- Briefly accelerate the vehicle to over 25 km/h (15 mph) in order to teach the wheel IDs (wheel electronics units are then in Burst mode).
- Then continue driving at any speed (even < 25 km/h or 15 mph) for max. 10 minutes.
- Teaching was successful if a pressure reading is displayed in the instrument cluster for all wheel positions.

WM 4X00IN GENERAL INFORMATION ON TYRE PRESSURE MONITORING (TPM) (ALL MODELS) > TEACHING TYRE PRESSURE MONITORING (TPM) > TEACHING WHILE STATIONARY

Information

If the TPM system is to be taught while the vehicle is stationary, it is advisable to take note of the wheel IDs and the position of all wheels and store the information together with the wheels. This can significantly reduce the teaching time for the next wheel change.

The wheel IDs and position can be read out using **PIWIS Tester II 9818** if this information is already stored in the control unit. >>Tyre Pressure Monitoring (TPM) system<< >>Actual values and input signals<<

WM 4X00IN GENERAL INFORMATION ON TYRE PRESSURE MONITORING (TPM) (ALL MODELS) > TEACHING TYRE PRESSURE MONITORING (TPM) > TEACHING

WHILE STATIONARY > IF WHEEL IDS ARE KNOWN

Allocation of wheel electronics units using the **PIWIS Tester II 9818:** >>Tyre Pressure Monitoring (TPM) system<< >>Maintenance/repairs<< >>Teach wheel IDs<< >>Teach wheel IDs while vehicle is stationary<< >>Wheel IDs known<<.

WM 4X00IN GENERAL INFORMATION ON TYRE PRESSURE MONITORING (TPM) (ALL MODELS) > TEACHING TYRE PRESSURE MONITORING (TPM) > TEACHING WHILE STATIONARY > IF WHEEL IDS ARE UNKNOWN

Allocation of wheel electronics units using the **PIWIS Tester II 9818:** >>Tyre Pressure Monitoring (TPM) system<< >>Maintenance/repairs<< >>Teach wheel IDs<< >>Teach wheel IDs while vehicle is stationary<< >>Wheel IDs unknown<<.

Always observe the following procedure (instructions on the System Tester always take precedence!):

- Allow an idle time of at least 5 minutes before teaching the wheel IDs (wheel electronics units are then in Sleep mode).
- As per instructions on the System Tester, pressure (at least 0.2 bar and approx. 5 seconds) at the wheels must be reduced.
- The wheel electronics registers the pressure difference (after 2 minutes at the latest) and switches to Burst mode.
- The control unit receives the telegrams from the activated wheel electronics unit and writes its wheel ID to the specified position.

WM 4X00IN INFORMATION ON PSM (ALL MODELS) > INFORMATION ON PSM

PSM is an active control system for stabilizing the vehicle at the limit of driving dynamics. Sensors continuously determine:

- Vehicle speed
- Direction of travel (steering angle)
- Lateral acceleration
- Longitudinal acceleration
- Rotation rate

Information

- The PSM (Porsche Stability Management) is automatically ready/switched on after each engine start.

WM 4X00IN INFORMATION ON PSM (ALL MODELS) > INFORMATION ON PSM >

INFORMATION ON PSM

The vehicles are equipped with a new PSM generation with enhanced functions, which considerably improve active safety.

- Enhanced braking readiness
- Brake assist function
- Enhanced Trailer Stability Management
- New ABS tuning for braking on loose surfaces

With enhanced braking readiness, the brake system builds up slight pressure when the accelerator is released quickly and places the brake pads lightly on the brake discs. If the driver now presses the brake, braking power can be achieved more quickly. This results in a shorter stopping distance. Enhanced braking readiness always remains active, irrespective of whether PSM is on or off.

On identifying full braking - when a defined pedal pressure is exceeded - brake assist supplies the required pressure for maximum deceleration via the PSM hydraulic unit. Brake assist can be deactivated by switching off PSM.

Enhanced Trailer Stability Management is a support function of PSM for driving with a trailer. The system detects swaying movements of the trailer and tries to minimize these through targeted braking. Trailer Stability Management can be switched off by switching off PSM. When the driver presses the brake pedal, Trailer Stability Management is activated even if PSM is switched off.

The ABS control strategy has been modified for braking on loose surfaces. A brake barrier, which helps to reduce braking distance on gravel or snow for example, is created in front of the tires by blocking the wheels short.

WM 4X00IN INFORMATION ON PSM (ALL MODELS) > INFORMATION ON PSM > SWITCHING OFF PSM

Press the PSM button. PSM switches off after a short delay.

When PSM is off, the PSM OFF warning light in the instrument panel and the indicator light in the switch light up.

- When braking, the vehicle is also stabilized when PSM is switched off!
- One-sided wheel spin is also prevented when PSM is switched off!

PSM should always be switched on for normal driving.

In the following exceptional cases, it can be advantageous to switch off the PSM temporarily:

- On a loose surface and in deep snow
- When rocking the vehicle free
- When using snow chains
- On extremely rough ground (if one or more wheels have little or no road grip - engine performance

is reduced)

WM 4X00IN INFORMATION ON PSM (ALL MODELS) > INFORMATION ON PSM > SWITCHING PSM BACK ON

Press the PSM button. PSM switches on after a short delay.

WM 4X00IN LIFTING THE VEHICLE (ALL MODELS) > TOOLS

Designation	Type	Number	Description	
PIWIS Tester II	Special tool	9818		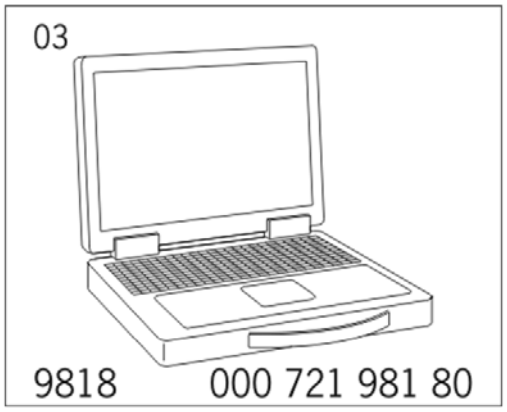

WM 4X00IN LIFTING THE VEHICLE (ALL MODELS) > TECHNICAL VALUES

Location	Description	Type	Basic value	Tolerance 1	Tolerance 2
Switching on the levelling system	Speed > 7 km/h (4 mph), the levelling system switches on automatically.	Speed greater than	+7 km/h (4 mph)		

WM 4X00IN LIFTING THE VEHICLE (ALL MODELS) > LIFTING THE VEHICLE > GENERAL INFORMATION

NOTE: Air springs can become kinked/fall out

- *Risk of damage to air springs*

→ Switch off the levelling system (press and hold the levelling system button for at least 10 seconds).

→ Check the bellows before lowering the vehicle.

Information

Always pay particular attention to the following before raising the vehicle:

- Deactivate the levelling system before raising the vehicle (press and hold the levelling system button for at least 10 seconds).
- If a transmission range is engaged while the vehicle is raised, the levelling system must first be deactivated using PIWIS Tester II 9818. To do this, select >>Levelling system/PASM<< >>Drive links/checks<< >>Activate/deactivate vehicle<< in the control unit overview. Select the value "Deactivate levelling system (permanently)" and press "Start" [F8] to execute the function. Re-activate the levelling system when the work is complete. To do this, select the value "Activate levelling system" in the same menu item and press "Start" [F8] to execute the function.

WM 4X00IN LIFTING THE VEHICLE (ALL MODELS) > LIFTING THE VEHICLE > LIFTING THE VEHICLE

1. Drive vehicle onto the lifting platform. Pay particular attention to the following:
    1. When driving onto a lifting platform, ensure that there is sufficient distance between the lifting platform and the vehicle.
    2. If work has to be done in the front footwell, the vehicle should be positioned in such a way that the doors can be opened far enough.
2. On vehicles with air suspension/levelling system: Switch off the levelling system.
    1. 2.1. Switch on ignition.
    2. 2.2. Press and hold the levelling system button until the message >>Levelling system switched off<< appears on the instrument cluster.

Fig 1: Identifying Levelling System Button



Courtesy of PORSCHE CARS NORTH AMERICA, INC.

WARNING: Vehicle can fall down

1. Risk of squashing or crushing

2. Risk of damage to the vehicle

→ Do not place any solid objects under the raised vehicle.

→ Ensure that the lifting platform is prevented from lowering.

→ Remove solid objects before lowering the vehicle.

→ Raise the vehicle only at the take-up points provided.

3. Raise the vehicle at the four jacking points **-1-** .

Fig 2: Identifying Vehicle Jacking Points

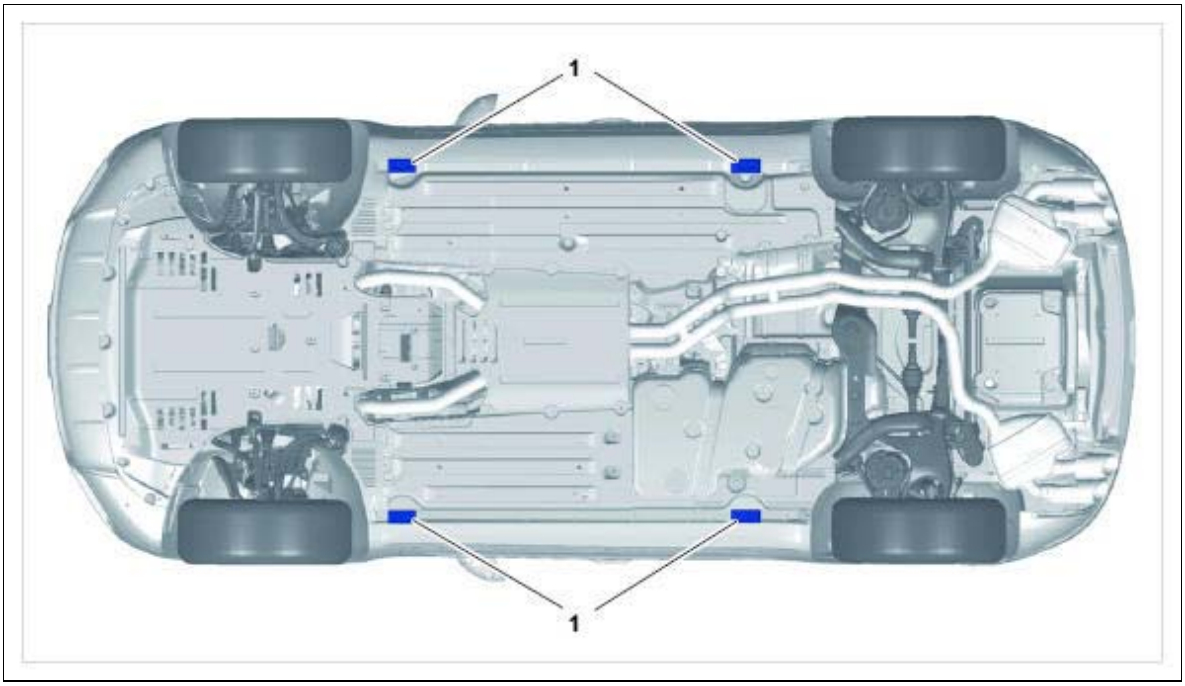

Courtesy of PORSCHE CARS NORTH AMERICA, INC.

WM 4X00IN LIFTING THE VEHICLE (ALL MODELS) > SUBSEQUENT WORK > SWITCHING ON THE LEVELLING SYSTEM

1. Lower the vehicle.
2. Switch on ignition.
3. Press and hold the levelling system button until the message >>Levelling system switched on<< appears on the instrument cluster.

   Alternatively, the levelling system will switch on automatically while driving **(→ Speed greater than: +7 km/h (4 mph))** .

Fig 1: Identifying Levelling System Button



Courtesy of PORSCHE CARS NORTH AMERICA, INC.

WM 4X00IN SAFETY INSTRUCTIONS AND INFORMATION FOR CARRYING OUT REPAIRS ON THE CHASSIS (ALL MODELS) > TOOLS

Designation	Type	Number	Description	
PIWIS Tester II	Special tool	9818		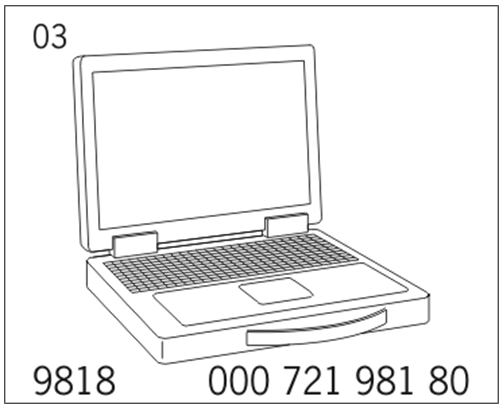

WM 4X00IN SAFETY INSTRUCTIONS AND INFORMATION FOR CARRYING OUT REPAIRS ON THE CHASSIS (ALL MODELS) > GENERAL WARNING NOTES > FITTING CHASSIS COMPONENTS

WARNING: Incorrect handling of safety bolts

- *Danger of injury*
- *Loss of torque*

→ Always use new fastening screws and nuts following removal.

→ Observe specified tightening torques.

→ Carry out a visual inspection of all re-used parts.

WM 4X00IN SAFETY INSTRUCTIONS AND INFORMATION FOR CARRYING OUT REPAIRS ON THE CHASSIS (ALL MODELS) > GENERAL WARNING NOTES > SPRING STRUTS/COIL SPRINGS

WARNING: Installation of incorrect or damaged coil springs

- *Different vehicle handling*
- *Coil springs can break*

→ Examine the components carefully before installation.

→ When installing new coil springs/spring struts, make sure they are assigned correctly.

→ Only use a suitable tool for removing and installing coil springs.

→ Do not weld or grind, or use a hammer close to the spring struts.

→ Do not apply color markings to the coil springs.

WM 4X00IN SAFETY INSTRUCTIONS AND INFORMATION FOR CARRYING OUT REPAIRS ON THE CHASSIS (ALL MODELS) > GENERAL WARNING NOTES > WHEELS AND TIRES

WARNING: High tire seating pressure

- *Risk of squashing or bruising*

→ Use a tire filling cage.

Information

- Newly mounted tires require a bedding-in period to remove the vulcanization layer.
- Customers must be informed that the full performance of new tires is achieved only after a distance of 100 to 200 km (60 to 120 miles) has been driven. Avoid extreme driving maneuvers (acceleration, braking) during this time.

WM 4X00IN SAFETY INSTRUCTIONS AND INFORMATION FOR CARRYING OUT REPAIRS ON THE CHASSIS (ALL MODELS) > GENERAL WARNING NOTES > WORKING ON VEHICLES WITH PSM

WARNING: Steering-angle sensor not calibrated or calibrated incorrectly

- *Unexpected vehicle handling*
- *Steering-angle sensor does not function*
- *Malfunction in steering-angle sensor*

→ After working on wheel suspension parts, when replacing the steering-angle sensor and after changing the wheel alignment values, calibrate the steering-angle sensor using **PIWIS Tester II 9818** .

→ Keep the front wheels in straight-ahead position on the measuring platform during calibration.

→ On vehicles with electromechanical steering, also re-teach the electric steering lock settings.

WM 4X00IN SAFETY INSTRUCTIONS AND INFORMATION FOR CARRYING OUT REPAIRS ON THE CHASSIS (ALL MODELS) > GENERAL WARNING NOTES > BRAKE SYSTEM

WARNING: Installation of brake pads with the wrong brake pad quality

- *Longer braking distance*
- *More wear on brake pads*

→ Only use the type-specific brake pads.

→ Replace the brake pads when the brake pad wear indicator light comes on, but no later than when

there is a residual pad thickness of 2 mm on each axle.

→ Replace the brake discs on each axle as soon as the brake pad wear limit is reached.

Information

- Observe brake fluid quality. Use only new DOT 4 brake fluid.
- The brake-fluid change interval using Super DOT4 brake fluid is two years.
- This brake fluid is available under the following part numbers: Container quantity: 1 liter = 000.043.203.66. 30 liters = 000.043.203.67.

WM 4X00IN SAFETY INSTRUCTIONS AND INFORMATION FOR CARRYING OUT REPAIRS ON THE CHASSIS (ALL MODELS) > GENERAL WARNING NOTES > HANDLING AIRBAG SYSTEMS

WARNING: Incorrect handling of airbag units

- *Triggering of airbag unit.*
- *System faults can occur.*

→ Switch off ignition and remove ignition key or remote control (hand-held transmitter).

→ A power supply (e.g. battery charger) must not be connected to the external power supply/jump-lead starting terminals.

→ Disconnect the battery and insulate the ground strap so that all contact with a ground carrier is avoided.

→ Wait 1 minute after disconnecting the battery.

→ Only pull off connector on the triggering unit after the waiting time has elapsed.

→ Make sure that no foreign objects are located in front of the airbag unit during installation.

→ Replace damaged parts during removal.

→ Always position airbag units so that the blow-out opening is facing upwards, e.g. crest on driver's airbag.

→ Do not position anything on the airbag units.

→ If removed for an extended period, the airbag units must be stored in a safe place.

→ Airbag units must not come into contact with grease, oil, detergents, liquids, or similar substances.

→ Do not expose airbag units to temperatures above 90°.

→ Do not remove the short-circuit spring on the plug-in contacts.

→ Ignition and preparations may only be carried out by skilled staff, supervised by a second responsible person.

→ Before disposal, the airbag unit must be rendered harmless by electrical ignition performed in accordance with all precautionary measures, thereby preventing it from being used incorrectly.

WM 4X00IN TIGHTENING TORQUES FOR BRAKE HYDRAULIC SYSTEM (MACAN S, MACAN TURBO) > TECHNICAL VALUES

Location	Description	Type	Basic value	Tolerance 1	Tolerance 2
Brake line to brake master cylinder (left-hand drive)	Union nut	Tightening torque	14 Nm (10.5 ftlb.)		
Brake line to brake master cylinder (right-hand drive)	Union nut	Tightening torque	18 Nm (13 ftlb.)		
Brake line to hydraulic unit (left-hand drive)	All lines on hydraulic unit	Tightening torque	14 Nm (10.5 ftlb.)		
Brake line to hydraulic unit (right-hand drive)	Line: Brake calliper - hydraulic unit	Tightening torque	14 Nm (10.5 ftlb.)		
Brake line to hydraulic unit (right-hand drive)	Line: Brake master cylinder - hydraulic unit	Tightening torque	18 Nm (13 ftlb.)		
Pedals to body	Hexagon nut	Tightening torque	9 Nm (6.5 ftlb.)		
Brake booster to pedals	12 point socket	Tightening torque	25 Nm (19 ftlb.)		
Brake master cylinder to brake booster	Hexagon nut/always use new nuts following removal	Tightening torque	49 Nm (36 ftlb.)		
Brake fluid reservoir to brake master cylinder		Tightening torque	5 Nm (3.5 ftlb.)		
Vacuum pump to engine		Tightening torque	9 Nm (6.5 ftlb.)		

Bleeder screw on front brake calliper	M10 x 1 thread	Tightening torque	14 Nm (10.5 ftlb.)		
Bleeder screw on rear brake calliper		Tightening torque	10 Nm (7.5 ftlb.)		

WM 4X00IN TIGHTENING TORQUES FOR BRAKE HYDRAULIC SYSTEM (MACAN S, MACAN TURBO) > TIGHTENING TORQUES FOR BRAKE HYDRAULIC SYSTEM

Location	Description	Type	Basic value	Tolerance 1	Tolerance 2
Brake line to brake master cylinder (left-hand drive)	Union nut	Tightening torque	14 Nm (10.5 ftlb.)		
Brake line to brake master cylinder (right-hand drive)	Union nut	Tightening torque	18 Nm (13 ftlb.)		
Brake line to hydraulic unit (left-hand drive)	All lines on hydraulic unit	Tightening torque	14 Nm (10.5 ftlb.)		
Brake line to hydraulic unit (right-hand drive)	Line: Brake calliper - hydraulic unit	Tightening torque	14 Nm (10.5 ftlb.)		
Brake line to hydraulic unit (right-hand drive)	Line: Brake master cylinder - hydraulic unit	Tightening torque	18 Nm (13 ftlb.)		
Pedals to body	Hexagon nut	Tightening torque	9 Nm (6.5 ftlb.)		
Brake booster to pedals	12 point socket	Tightening torque	25 Nm (19 ftlb.)		
Brake master cylinder to brake booster	Hexagon nut/always use new nuts following removal	Tightening torque	49 Nm (36 ftlb.)		
Brake fluid reservoir to brake master cylinder		Tightening torque	5 Nm (3.5 ftlb.)		

Vacuum pump to engine		Tightening torque	9 Nm (6.5 ftlb.)		
Bleeder screw on front brake calliper	M10 x 1 thread	Tightening torque	14 Nm (10.5 ftlb.)		
Bleeder screw on rear brake calliper		Tightening torque	10 Nm (7.5 ftlb.)		

WM 4X00IN TIGHTENING TORQUES FOR BRAKE MECHANISM (ALL MODELS) > TECHNICAL VALUES

Location	Description	Type	Basic value	Tolerance 1	Tolerance 2
Brake calliper (18-inch - red/silver) to wheel carrier	M14 x 1.5 x 114 thread/always use new screws following removal	Initial tightening	30 Nm (22 ftlb.)		
Brake calliper (18-inch - red/silver) to wheel carrier	M14 x 1.5 x 114 thread/always use new screws following removal	Final tightening	+90°		
Brake calliper (17-inch - black) to wheel carrier	M14 x 1.5 x 48 thread/always use new screws following removal	Tightening torque	196 Nm (145 ftlb.)		
Brake calliper (PCCB) to wheel carrier	M14 x 1.5 x 135 thread/always use new screws following removal	Initial tightening	30 Nm (22 ftlb.)		
Brake calliper (PCCB) to wheel carrier	M14 x 1.5 x 135 thread/always use new screws following removal	Final tightening	+90°		
Brake hose bracket to wheel carrier	M6 x 16 thread	Tightening torque	10 Nm (7.5 ftlb.)		
Brake hose to brake calliper		Tightening torque	20 Nm (15 ftlb.)		
Brake cover panel to wheel carrier	M6 x 14 thread	Tightening torque	10 Nm (7.5 ftlb.)		
Brake disc to wheel hub	M6 x 16 thread	Tightening torque	10 Nm (7.5 ftlb.)		

Brake hose to brake line in wheel housing		Tightening torque	14 Nm (10.5 ftlb.)		
Brake calliper to wheel bearing housing	M12/always use new screws or bolts following removal	Initial tightening	100 Nm (74 ftlb.)		
Brake calliper to wheel bearing housing	M12/always use new screws or bolts following removal	Final tightening	+90°		
Brake calliper to brake carrier	Always use new screws following removal	Tightening torque	35 Nm (26 ftlb.)		
Brake hose bracket to wheel bearing housing M6 x 16 thread		Tightening torque	9 Nm (6.5 ftlb.)		
Brake hose to brake calliper		Tightening torque	20 Nm (15 ftlb.)		
Brake cover panel to wheel bearing housing	M6 x 14 thread	Tightening torque	10 Nm (7.5 ftlb.)		
Brake disc to wheel hub	M6 x 16 thread	Tightening torque	10 Nm (7.5 ftlb.)		
EPB actuator to brake calliper	Always use new screws following removal	Tightening torque	11 Nm (8 ftlb.)		
Brake hose to brake line in wheel housing		Tightening torque	14 Nm (10.5 ftlb.)		

WM 4X00IN TIGHTENING TORQUES FOR BRAKE MECHANISM (ALL MODELS) > TIGHTENING TORQUES FOR BRAKE MECHANISM > FRONT AXLE

Location	Description	Type	Basic value	Tolerance 1	Tolerance 2
Brake calliper (18-inch - red/silver) to wheel carrier	M14 x 1.5 x 114 thread/always use new screws following removal	Initial tightening	30 Nm (22 ftlb.)		

Brake calliper (18-inch - red/silver) to wheel carrier	M14 x 1.5 x 114 thread/always use new screws following removal	Final tightening	+90°		
Brake calliper (17-inch - black) to wheel carrier	M14 x 1.5 x 48 thread/always use new screws following removal	Tightening torque	196 Nm (145 ftlb.)		
Brake calliper (PCCB) to wheel carrier	M14 x 1.5 x 135 thread/always use new screws following removal	Initial tightening	30 Nm (22 ftlb.)		
Brake calliper (PCCB) to wheel carrier	M14 x 1.5 x 135 thread/always use new screws following removal	Final tightening	+90°		
Brake hose bracket to wheel carrier	M6 x 16 thread	Tightening torque	10 Nm (7.5 ftlb.)		
Brake hose to brake calliper		Tightening torque	20 Nm (15 ftlb.)		
Brake cover panel to wheel carrier	M6 x 14 thread	Tightening torque	10 Nm (7.5 ftlb.)		
Brake disc to wheel hub	M6 x 16 thread	Tightening torque	10 Nm (7.5 ftlb.)		
Brake hose to brake line in wheel housing		Tightening torque	14 Nm (10.5 ftlb.)		

WM 4X00IN TIGHTENING TORQUES FOR BRAKE MECHANISM (ALL MODELS) > TIGHTENING TORQUES FOR BRAKE MECHANISM > REAR AXLE

Location	Description	Type	Basic value	Tolerance 1	Tolerance 2
Brake calliper to wheel bearing housing	M12/always use new screws or bolts following removal	Initial tightening	100 Nm (74 ftlb.)		
Brake calliper to wheel bearing housing	M12/always use new screws or bolts following removal	Final tightening	+90°		

Brake calliper to brake carrier	Always use new screws following removal	Tightening torque	35 Nm (26 ftlb.)		
Brake hose bracket to wheel bearing housing	M6 x 16 thread	Tightening torque	9 Nm (6.5 ftlb.)		
Brake hose to brake calliper		Tightening torque	20 Nm (15 ftlb.)		
Brake cover panel to wheel bearing housing	M6 x 14 thread	Tightening torque	10 Nm (7.5 ftlb.)		
Brake disc to wheel hub	M6 x 16 thread	Tightening torque	10 Nm (7.5 ftlb.)		
EPB actuator to brake calliper	Always use new screws following removal	Tightening torque	11 Nm (8 ftlb.)		
Brake hose to brake line in wheel housing		Tightening torque	14 Nm (10.5 ftlb.)		

WM 4X00IN TIGHTENING TORQUES FOR FRONT AXLE (ALL MODELS) > TECHNICAL VALUES

Location	Description	Type	Basic value	Tolerance 1	Tolerance 2
Fastening screws	Heat shield to front-axle carrier	Tightening torque	9 Nm (6.5 ftlb.)		
Fastening screw	Heat shield to front-axle carrier	Tightening torque	20 Nm (15 ftlb.)		
Fastening screws	Heat shield over engine mount	Tightening torque	20 Nm (15 ftlb.)		
Fastening screws	Heat shield to front-axle carrier	Tightening torque	9 Nm (6.5 ftlb.)		
Fastening screw	Heat shield to front-axle carrier	Tightening torque	20 Nm (15 ftlb.)		
Fastening screws	Heat shield over engine mount	Tightening torque	20 Nm (15 ftlb.)		
Fastening screws	Retainer plate to front-axle carrier	Tightening torque	30 Nm (22 ftlb.)		
Fastening screw	Step 1, engine mount	Initial tightening	90 Nm (67 ftlb.)		

Fastening screw	Step 2, engine mount	Final tightening	+90°		
Fastening screw	Step 1, front-axle carrier to body	Initial tightening	115 Nm (85 ftlb.)		
Fastening screw	Step 2, front-axle carrier to body	Final tightening	+90°		
Fastening screw	Step 1, front-axle carrier to body	Initial tightening	115 Nm (85 ftlb.)		
Fastening screw	Step 2, front-axle carrier to body	Final tightening	+90°		
Fastening screws	Engine mount to front-axle carrier	Tightening torque	55 Nm (41 ftlb.)		
Fastening screws	Step 1, cross-strut to front-axle carrier	Initial tightening	90 Nm (67 ftlb.)		
Fastening screws	Step 2, cross-strut to front-axle carrier	Final tightening	+135°		
Front fastening screw	Step 1, cross-strut to front-axle carrier	Initial tightening	90 Nm (67 ftlb.)		
Fastening screw	Step 2, Cross-strut to front-axle carrier	Final tightening	+90°		
Fastening screw	Step 1, fastening screw for connecting link	Initial tightening	40 Nm (30 ftlb.)		
Fastening screw	Step 2, fastening screw for connecting link	Final tightening	+90°		
Fastening screw	Step 1, fastening screw for connecting link	Initial tightening	40 Nm (30 ftlb.)		
Fastening screw	Step 2, fastening screw for connecting link	Final tightening	+90°		
Fastening nut		Tightening torque	25 Nm (19 ftlb.)		
Fastening screw	Protective plate	Tightening torque	20 Nm (15 ftlb.)		
Dome strut to body		Tightening torque	20 Nm (15 ftlb.)		
Additional reinforcement to body		Tightening torque	20 Nm (15 ftlb.)		

Dome strut to cross panel		Tightening torque	2 Nm (1.5 ftlb.)		
Additional reinforcement to dome strut		Tightening torque	20 Nm (15 ftlb.)		
Clamp for axle joint (connection for lower trailing arm)	BM10 x 65 thread/always use new screws or bolts following removal	Tightening torque	40 Nm (30 ftlb.)		
Lower trailing arm to wheel bearing housing	M14 thread/always use new nuts following removal	Tightening torque	140 Nm (104 ftlb.)		
Lower control arm to wheel bearing housing	M14 thread/always use new nuts following removal	Tightening torque	140 Nm (104 ftlb.)		
Upper trailing arm to wheel bearing housing	M10 thread	Tightening torque	45 Nm (33 ftlb.)		
Wheel bearing to wheel bearing housing	M12 x 1.5 x 45 thread/observe installation sequence!/always use new screws or bolts following removal	Initial tightening	80 Nm (59 ftlb.)		
Wheel bearing to wheel bearing housing	M12 x 1.5 x 45 thread/observe installation sequence!/always use new screws or bolts following removal	Final tightening	+90°		
Brake disc to wheel hub	M6 x 16 thread	Tightening torque	10 Nm (7.5 ftlb.)		
Brake cover plate to wheel bearing housing	M6 x 14 thread	Tightening torque	10 Nm (7.5 ftlb.)		
Speed sensor to wheel bearing housing	M6 x 16 thread	Tightening torque	8 Nm (6 ftlb.)		
Holder to wheel bearing housing	M6 x 16 thread	Tightening torque	10 Nm (7.5 ftlb.)		
Lower trailing arm to wheel bearing housing	M14 thread/always use new nuts following removal	Tightening torque	140 Nm (104 ftlb.)		

Lower trailing arm to front-axle carrier	M12 thread/always use new screws or bolts and nuts following removal	Initial tightening	70 Nm (52 ftlb.)		
Lower trailing arm to front-axle carrier	M12 thread/always use new screws or bolts and nuts following removal	Final tightening	+180°		
Level sensor to lower trailing arm	M6 thread	Tightening torque	9 Nm (6.5 ftlb.)		
Spring strut to lower trailing arm	M12 thread/always use new screws or bolts and nuts following removal	Initial tightening	90 Nm (67 ftlb.)		
Spring strut to lower trailing arm	M12 thread/always use new screws or bolts and nuts following removal	Final tightening	+90°		
Upper trailing arm to wheel bearing housing	M10 thread	Tightening torque	45 Nm (33 ftlb.)		
Upper trailing arm to mounting saddle	M10 thread/always use new screws or bolts and nuts following removal	Initial tightening	50 Nm (37 ftlb.)		
Upper trailing arm to mounting saddle	M10 thread/always use new screws or bolts and nuts following removal	Final tightening	+90°		
Lower control arm to front-axle carrier	M12 thread/always use new screws or bolts and nuts following removal	Initial tightening	70 Nm (52 ftlb.)		
Lower control arm to front-axle carrier	M12 thread/always use new screws or bolts and nuts following removal	Final tightening	+180°		
Lower control arm to wheel bearing housing	M14 thread/always use new nuts following removal	Tightening torque	140 Nm (104 ftlb.)		
Connecting link to anti-roll bar	AM10 thread/always use new screws and nuts following removal	Initial tightening	40 Nm (30 ftlb.)		

Connecting link to anti-roll bar	AM10 thread/always use new screws and nuts following removal	Final tightening	+90°		
Connecting link to spring strut	M10 x 45 thread/always use new screws or bolts following removal	Initial tightening	40 Nm (30 ftlb.)		
Connecting link to spring strut	M10 x 45 thread/always use new screws or bolts following removal	Final tightening	+90°		
Anti-roll bar clamp to front-axle carrier	M8 thread/always use new nut following removal	Tightening torque	30 Nm (22 ftlb.)		
Mounting saddle to piston rod (conventional)	M10 thread	Tightening torque	50 Nm (37 ftlb.)		
Spring-strut supporting mount to piston rod (PASM)	M12 thread	Tightening torque	50 Nm (37 ftlb.)		
Mounting saddle to spring strut (PASM only)	M8 thread	Tightening torque	30 Nm (22 ftlb.)		
Mounting saddle to body	M10 x 35 thread/observe tightening sequence/always use new screws or bolts following removal	Initial tightening	40 Nm (30 ftlb.)		
Mounting saddle to body	M10 x 35 thread/observe tightening sequence/always use new screws or bolts following removal	Final tightening	+90°		
Damper fork to damper	M12 thread/always use new screws or bolts and nuts following removal	Initial tightening	40 Nm (30 ftlb.)		
Damper fork to damper	M12 thread/always use new screws or	Final tightening	+180°		

	bolts and nuts following removal				
Spring strut to lower trailing arm	M12 thread/always use new screws or bolts and nuts following removal	Initial tightening	90 Nm (67 ftlb.)		
Spring strut to lower trailing arm	M12 thread/always use new screws or bolts and nuts following removal	Final tightening	+90°		
Connecting link to spring strut	M10 x 45 thread/always use new screws or bolts following removal	Initial tightening	40 Nm (30 ftlb.)		
Connecting link to spring strut	M10 x 45 thread/always use new screws or bolts following removal	Final tightening	+90°		
Air line to air-spring strut		Tightening torque	3 Nm (2 ftlb.)		
Pressure control valve to air-spring strut		Tightening torque	8 Nm (6 ftlb.)		
Drive shaft to wheel hub	Step 1 (wheels suspended in the air, press brakes while tightening)/M16 x 72 thread/always use new screws or bolts following removal	Tightening torque	200 Nm (148 ftlb.)		
Drive shaft to wheel hub	Step 2 (wheels on the ground)/M16 x 72 thread/always use new screws or bolts following removal	Torque angle	180°		
Drive shaft to transmission	M10 x 20 thread/always use new screws or bolts following removal	Initial tightening	30 Nm (22 ftlb.)		
Drive shaft to transmission	M10 x 20 thread/always use new screws or bolts following removal	Final tightening	+90°		

Heat shield to transmission	M8 x 22 thread	Tightening torque	23 Nm (17 ftlb.)		
Wheel to wheel hub		Tightening torque	160 Nm (118 ftlb.)		

WM 4X00IN TIGHTENING TORQUES FOR FRONT AXLE (ALL MODELS) > TIGHTENING TORQUES FOR FRONT AXLE > FRONT-AXLE CARRIER

Fig 1: Identifying Front-Axle Carrier Components

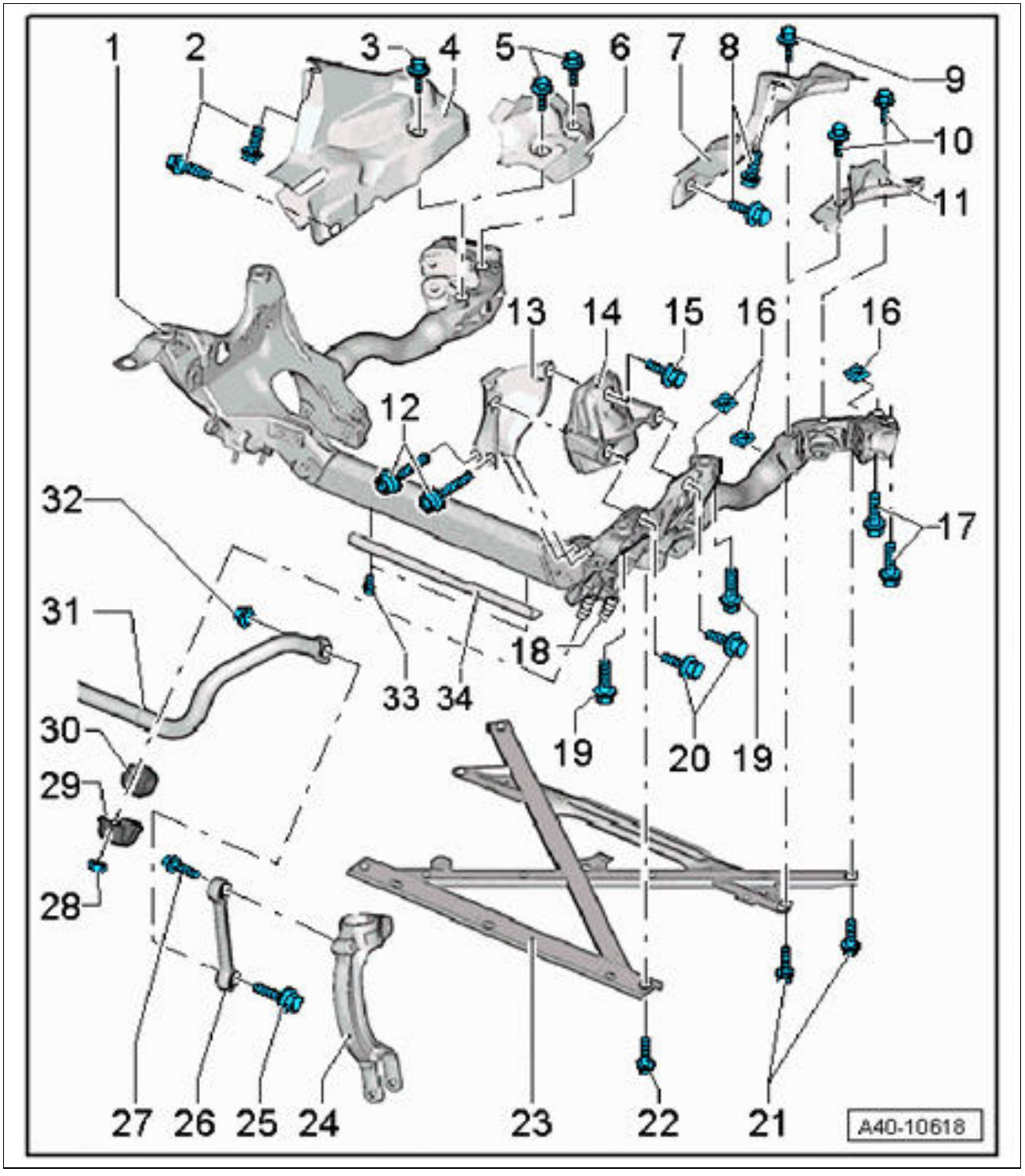

Courtesy of PORSCHE CARS NORTH AMERICA, INC.

1. Front-axle carrier
2. Fastening screws → **Tightening torque: 9 Nm (6.5 ftlb.)**
3. Fastening screw → **Tightening torque: 20 Nm (15 ftlb.)**
4. Right heat shield on front-axle carrier

5. Fastening screws → **Tightening torque: 20 Nm (15 ftlb.)**
6. Right heat shield over engine mount
7. Left heat shield on front-axle carrier
8. Fastening screws → **Tightening torque: 9 Nm (6.5 ftlb.)**
9. Fastening screw → **Tightening torque: 20 Nm (15 ftlb.)**
10. Fastening screws → **Tightening torque: 20 Nm (15 ftlb.)**
11. Left heat shield on engine mount
12. Fastening screws/replace → **Tightening torque: 30 Nm (22 ftlb.)**
13. Retainer plate for engine mount
14. Engine mount
15. Fastening screw/replace → **Initial tightening: 90 Nm (67 ftlb.)** → **Final tightening: +90°**
16. Square nut/**replace**
17. Fastening screws/replace → **Initial tightening: 115 Nm (85 ftlb.)** → **Final tightening: +90°**
18. Stud/replace if damaged
19. Fastening screw/replace → **Initial tightening: 115 Nm (85 ftlb.)** → **Final tightening: +90°**
20. Fastening screws → **Tightening torque: 55 Nm (41 ftlb.)**
21. Rear fastening screws to cross-strut/replace → **Initial tightening: 90 Nm (67 ftlb.)** → **Final tightening: +135°**
22. Front fastening screw to cross-strut/replace → **Initial tightening: 90 Nm (67 ftlb.)** → **Final tightening: +90°**
23. Cross-strut for front-axle carrier
24. Shock absorber fork
25. Fastening screw/replace → **Initial tightening: 40 Nm (30 ftlb.)** → **Final tightening: +90°**
    1. Must be tightened at empty weight position
26. Connecting link
27. 27 - Fastening screw/replace → **Initial tightening: 40 Nm (30 ftlb.)** → **Final tightening: +90°**
    1. Must be tightened at empty weight position
28. Fastening nut/replace → **Tightening torque: 25 Nm (19 ftlb.)**
29. Clip
30. Rubber mounting
    1. Opening in the rubber mounting must be facing the front-axle carrier during installation.

2. The anti-roll bar and rubber mounting be free of grease during assembly.

31. Anti-roll bar

32. Fastening nut

33. Fastening screw for protective plate → **Tightening torque: 20 Nm (15 ftlb.)**

34. Protective plate

WM 4X00IN TIGHTENING TORQUES FOR FRONT AXLE (ALL MODELS) > TIGHTENING TORQUES FOR FRONT AXLE > FRONT-AXLE CARRIER > TIGHTENING SEQUENCE FOR FRONT-AXLE CARRIER

Fig 1: Identifying Front-Axle Carrier Installation Position Mark

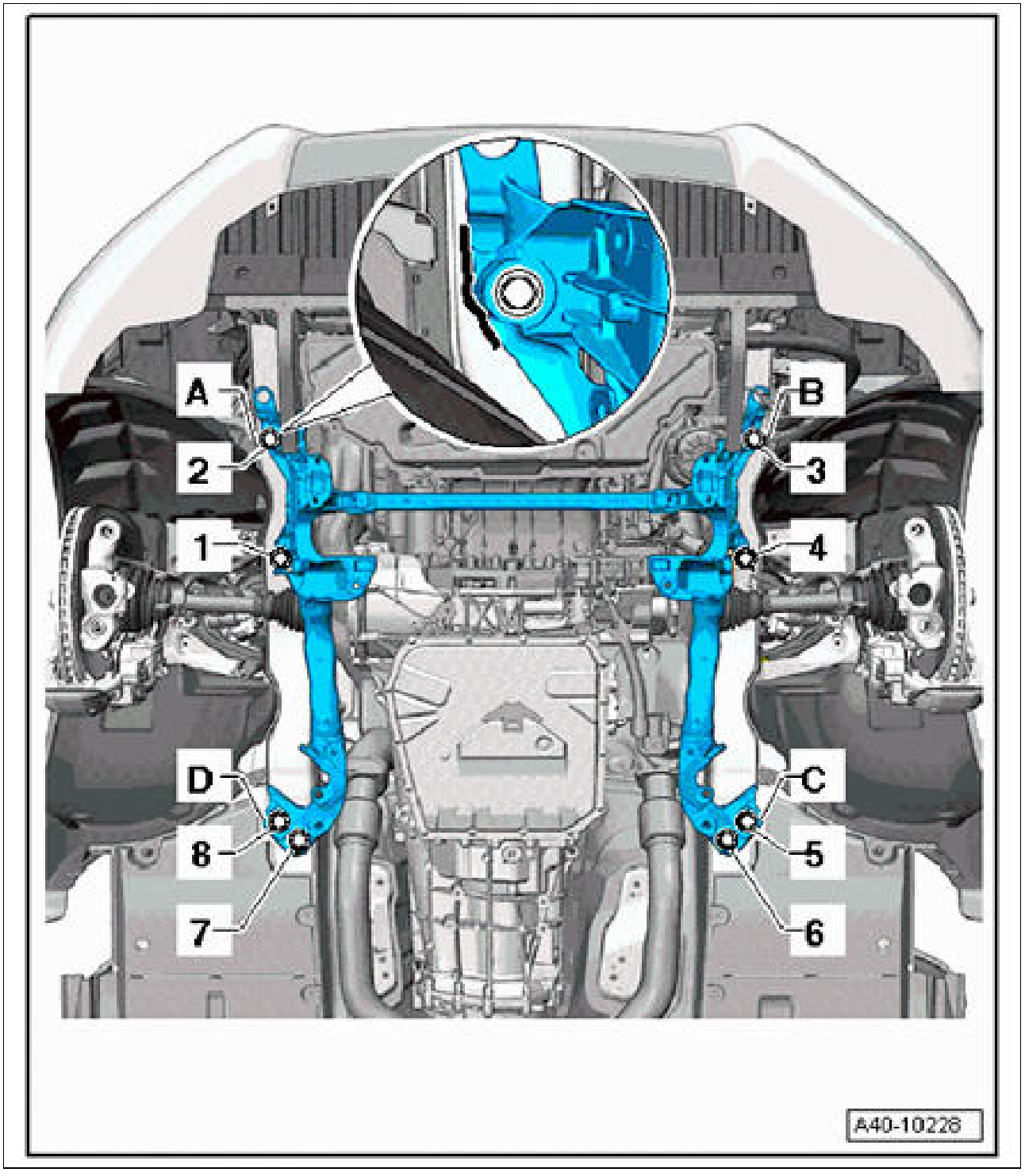

Courtesy of PORSCHE CARS NORTH AMERICA, INC.

A - D - Mark installation position before removal

1 to 8 - Fastening screws on front-axle carrier

WM 4X00IN TIGHTENING TORQUES FOR FRONT AXLE (ALL MODELS) >

TIGHTENING TORQUES FOR FRONT AXLE > FRONT-AXLE CARRIER > DOME STRUT

Fig 1: Identifying Dome Strut With Additional Reinforcement Mounting



Courtesy of PORSCHE CARS NORTH AMERICA, INC.

1. Dome strut
2. Fastening nut → **Tightening torque: 20 Nm (15 ftlb.)**
3. Fastening nut → **Tightening torque: 20 Nm (15 ftlb.)**
4. Additional reinforcement, left
5. Fastening nut → **Tightening torque: 2 Nm (1.5 ftlb.)**
6. Fastening screw → **Tightening torque: 20 Nm (15 ftlb.)**
7. Additional reinforcement, right

WM 4X00IN TIGHTENING TORQUES FOR FRONT AXLE (ALL MODELS) > TIGHTENING TORQUES FOR FRONT AXLE > FRONT-AXLE CARRIER > WHEEL BEARING HOUSING

Location	Description	Type	Basic value	Tolerance 1	Tolerance 2
Clamp for axle joint (connection	BM10 x 65 thread/always use	Tightening torque	40 Nm (30 ftlb.)		

for lower trailing arm)	new screws or bolts following removal				
Lower trailing arm to wheel bearing housing	M14 thread/always use new nuts following removal	Tightening torque	140 Nm (104 ftlb.)		
Lower control arm to wheel bearing housing	M14 thread/always use new nuts following removal	Tightening torque	140 Nm (104 ftlb.)		
Upper trailing arm to wheel bearing housing	M10 thread	Tightening torque	45 Nm (33 ftlb.)		
Wheel bearing to wheel bearing housing	M12 x 1.5 x 45 thread/observe installation sequence!/always use new screws or bolts following removal	Initial tightening	80 Nm (59 ftlb.)		
Wheel bearing to wheel bearing housing	M12 x 1.5 x 45 thread/observe installation sequence!/always use new screws or bolts following removal	Final tightening	+90°		
Brake disc to wheel hub	M6 x 16 thread	Tightening torque	10 Nm (7.5 ftlb.)		
Brake cover plate to wheel bearing housing	M6 x 14 thread	Tightening torque	10 Nm (7.5 ftlb.)		
Speed sensor to wheel bearing housing	M6 x 16 thread	Tightening torque	8 Nm (6 ftlb.)		
Holder to wheel bearing housing	M6 x 16 thread	Tightening torque	10 Nm (7.5 ftlb.)		

WM 4X00IN TIGHTENING TORQUES FOR FRONT AXLE (ALL MODELS) > TIGHTENING TORQUES FOR FRONT AXLE > FRONT-AXLE CARRIER > TRAILING ARM

Location	Description	Type	Basic value	Tolerance 1	Tolerance 2
Lower trailing arm to wheel	M14 thread/always	Tightening torque	140 Nm (104 ftlb.)		

bearing housing	use new nuts following removal				
Lower trailing arm to front-axle carrier	M12 thread/always use new screws or bolts and nuts following removal	Initial tightening	70 Nm (52 ftlb.)		
Lower trailing arm to front-axle carrier	M12 thread/always use new screws or bolts and nuts following removal	Final tightening	+180°		
Level sensor to lower trailing arm	M6 thread	Tightening torque	9 Nm (6.5 ftlb.)		
Spring strut to lower trailing arm	M12 thread/always use new screws or bolts and nuts following removal	Initial tightening	90 Nm (67 ftlb.)		
Spring strut to lower trailing arm	M12 thread/always use new screws or bolts and nuts following removal	Final tightening	+90°		
Upper trailing arm to wheel bearing housing	M10 thread	Tightening torque	45 Nm (33 ftlb.)		
Upper trailing arm to mounting saddle	M10 thread/always use new screws or bolts and nuts following removal	Initial tightening	50 Nm (37 ftlb.)		
Upper trailing arm to mounting saddle	M10 thread/always use new screws or bolts and nuts following removal	Final tightening	+90°		
Lower control arm to front-axle carrier	M12 thread/always use new screws or bolts and nuts following removal	Initial tightening	70 Nm (52 ftlb.)		
Lower control arm to front-axle	M12 thread/always use new screws	Final tightening	+180°		

carrier	or bolts and nuts following removal				
Lower control arm to wheel bearing housing	M14 thread/always use new nuts following removal	Tightening torque	140 Nm (104 ftlb.)		

WM 4X00IN TIGHTENING TORQUES FOR FRONT AXLE (ALL MODELS) > TIGHTENING TORQUES FOR FRONT AXLE > FRONT-AXLE CARRIER > ANTI-ROLL BAR AND CONNECTING LINK

Location	Description	Type	Basic value	Tolerance 1	Tolerance 2
Connecting link to anti-roll bar	AM10 thread/always use new screws and nuts following removal	Initial tightening	40 Nm (30 ftlb.)		
Connecting link to anti-roll bar	AM10 thread/always use new screws and nuts following removal	Final tightening	+90°		
Connecting link to spring strut	M10 x 45 thread/always use new screws or bolts following removal	Initial tightening	40 Nm (30 ftlb.)		
Connecting link to spring strut	M10 x 45 thread/always use new screws or bolts following removal	Final tightening	+90°		
Anti-roll bar clamp to front-axle carrier	M8 thread/always use new nut following removal	Tightening torque	30 Nm (22 ftlb.)		

WM 4X00IN TIGHTENING TORQUES FOR FRONT AXLE (ALL MODELS) > TIGHTENING TORQUES FOR FRONT AXLE > FRONT-AXLE CARRIER > SPRING STRUT

Location	Description	Type	Basic value	Tolerance 1	Tolerance 2
Mounting saddle	M10 thread	Tightening	50 Nm (37		

to piston rod (conventional)		torque	ftlb.)		
Spring-strut supporting mount to piston rod (PASM)	M12 thread	Tightening torque	50 Nm (37 ftlb.)		
Mounting saddle to spring strut (PASM only)	M8 thread	Tightening torque	30 Nm (22 ftlb.)		
Mounting saddle to body	M10 x 35 thread/observe tightening sequence/always use new screws or bolts following removal	Initial tightening	40 Nm (30 ftlb.)		
Mounting saddle to body	M10 x 35 thread/observe tightening sequence/always use new screws or bolts following removal	Final tightening	+90°		
Damper fork to damper	M12 thread/always use new screws or bolts and nuts following removal	Initial tightening	40 Nm (30 ftlb.)		
Damper fork to damper	M12 thread/always use new screws or bolts and nuts following removal	Final tightening	+180°		
Spring strut to lower trailing arm	M12 thread/always use new screws or bolts and nuts following removal	Initial tightening	90 Nm (67 ftlb.)		
Spring strut to lower trailing arm	M12 thread/always use new screws or bolts and nuts following removal	Final tightening	+90°		
Connecting link to spring strut	M10 x 45 thread/always use new screws or bolts following removal	Initial tightening	40 Nm (30 ftlb.)		
Connecting link to spring strut	M10 x 45 thread/always use	Final tightening	+90°		

	new screws or bolts following removal				
Air line to air-spring strut		Tightening torque	3 Nm (2 ftlb.)		
Pressure control valve to air-spring strut		Tightening torque	8 Nm (6 ftlb.)		

WM 4X00IN TIGHTENING TORQUES FOR FRONT AXLE (ALL MODELS) > TIGHTENING TORQUES FOR FRONT AXLE > FRONT-AXLE CARRIER > DRIVE SHAFT

Location	Description	Type	Basic value	Tolerance 1	Tolerance 2
Drive shaft to wheel hub	Step 1 (wheels suspended in the air, press brakes while tightening)/M16 x 72 thread/always use new screws or bolts following removal	Tightening torque	200 Nm (148 ftlb.)		
Drive shaft to wheel hub	Step 2 (wheels on the ground)/M16 x 72 thread/always use new screws or bolts following removal	Torque angle	180°		
Drive shaft to transmission	M10 x 20 thread/always use new screws or bolts following removal	Initial tightening	30 Nm (22 ftlb.)		
Drive shaft to transmission	M10 x 20 thread/always use new screws or bolts following removal	Final tightening	+90°		
Heat shield to transmission	M8 x 22 thread	Tightening torque	23 Nm (17 ftlb.)		

WM 4X00IN TIGHTENING TORQUES FOR FRONT AXLE (ALL MODELS) >

TIGHTENING TORQUES FOR FRONT AXLE > FRONT-AXLE CARRIER > WHEEL MOUNTING

Location	Description	Type	Basic value	Tolerance 1	Tolerance 2
Wheel to wheel hub		Tightening torque	160 Nm (118 ftlb.)		

WM 4X00IN TIGHTENING TORQUES FOR LEVELLING SYSTEM (ALL MODELS) > TECHNICAL VALUES

Location	Description	Type	Basic value	Tolerance 1	Tolerance 2
Compressor to holder	M6 thread	Tightening torque	8 Nm (6 ftlb.)		
Valve unit to holder	M6 thread	Tightening torque	4.5 Nm (3 ftlb.)		
Compressor/valve unit holder to underbody	M8 thread	Tightening torque	20 Nm (15 ftlb.)		
Pressure lines to valve block	Union nuts	Tightening torque	3.5 Nm (2.5 ftlb.)		
Pressure line to compressor	Union nut	Tightening torque	3.5 Nm (2.5 ftlb.)		
Pressure accumulator to body		Tightening torque	20 Nm (15 ftlb.)		
Pressure line to pressure accumulator	Union nut	Tightening torque	3.5 Nm (2.5 ftlb.)		
Rear level sensor to holder		Tightening torque	5 Nm (3.5 ftlb.)		
Front level sensor to front-axle carrier	M8 thread	Tightening torque	20 Nm (15 ftlb.)		

WM 4X00IN TIGHTENING TORQUES FOR LEVELLING SYSTEM (ALL MODELS) > TIGHTENING TORQUES FOR LEVELLING SYSTEM > COMPRESSOR/VALVE BLOCK/PRESSURE ACCUMULATOR

Location	Description	Type	Basic value	Tolerance 1	Tolerance 2
Compressor to	M6 thread	Tightening	8 Nm (6 ftlb.)		

holder		torque			
Valve unit to holder	M6 thread	Tightening torque	4.5 Nm (3 ftlb.)		
Compressor/valve unit holder to underbody	M8 thread	Tightening torque	20 Nm (15 ftlb.)		
Pressure lines to valve block	Union nuts	Tightening torque	3.5 Nm (2.5 ftlb.)		
Pressure line to compressor	Union nut	Tightening torque	3.5 Nm (2.5 ftlb.)		
Pressure accumulator to body		Tightening torque	20 Nm (15 ftlb.)		
Pressure line to pressure accumulator	Union nut	Tightening torque	3.5 Nm (2.5 ftlb.)		

WM 4X00IN TIGHTENING TORQUES FOR LEVELLING SYSTEM (ALL MODELS) > TIGHTENING TORQUES FOR LEVELLING SYSTEM > LEVEL SENSORS

Location	Description	Type	Basic value	Tolerance 1	Tolerance 2
Rear level sensor to holder		Tightening torque	5 Nm (3.5 ftlb.)		
Front level sensor to front-axle carrier	M8 thread	Tightening torque	20 Nm (15 ftlb.)		

WM 4X00IN TIGHTENING TORQUES FOR REAR AXLE (ALL MODELS) > TECHNICAL VALUES

Location	Description	Type	Basic value	Tolerance 1	Tolerance 2
Rear axle housing, front to body	M14 x 1.5 x 135 thread/always replace screws following removal	Initial tightening	115 Nm (85 ftlb.)		
Rear axle housing, front to body	M14 x 1.5 x 135 thread/always replace screws following removal	Final tightening	+90°		

Rear axle housing, rear to body	M12 x 1.5 x 145 thread/always replace screws following removal	Initial tightening	115 Nm (85 ftlb.)		
Rear axle housing, rear to body	M12 x 1.5 x 145 thread/always replace screws following removal	Final tightening	+90°		
Wheel bearing to wheel bearing housing	M12 x 1.5 x 45 thread/observe installation sequence!/always use new screws or bolts following removal	Initial tightening	80 Nm (59 ftlb.)		
Wheel bearing to wheel bearing housing	M12 x 1.5 x 45 thread/observe installation sequence!/always use new screws or bolts following removal	Final tightening	+90°		
Speed sensor to wheel bearing housing	M6 x 16 thread	Tightening torque	8 Nm (6 ftlb.)		
Brake calliper to wheel bearing housing	M12 thread/always use new screws or bolts following removal	Initial tightening	100 Nm (74 ftlb.)		
Brake calliper to wheel bearing housing	M12 thread/always use new screws or bolts following removal	Tightening torque	+90°		
Brake disc to wheel hub	M6 x 16 thread	Tightening torque	10 Nm (7.5 ftlb.)		
Brake cover plate to wheel bearing housing	M6 x 14 thread	Tightening torque	10 Nm (7.5 ftlb.)		
Spring strut to lower trailing arm	M12 thread/always use new screws or bolts and nuts following removal	Initial tightening	90 Nm (67 ftlb.)		
Spring strut to lower trailing arm	M12 thread/always use new screws or bolts and nuts following removal	Final tightening	+90°		

Holder to wheel bearing housing	M6 x 16 thread	Tightening torque	9 Nm (6.5 ftlb.)		
Drive shaft to wheel hub	Step 1 (wheels suspended in mid-air, operate brakes while tightening)/M16 x 72 thread/always use new screws or bolts following removal	Initial tightening	200 Nm (148 ftlb.)		
Drive shaft to wheel hub	Step 2 (wheels on the ground)/M16 x 72 thread/always use new screws or bolts following removal	Final tightening	180°		
Heat shield for drive shaft to rear axle	M8 x 22 thread	Tightening torque	23 Nm (17 ftlb.)		
Air line to air spring		Tightening torque	3 Nm (2 ftlb.)		
Lower trailing arm to rear axle housing	M12 thread/always use new screws or bolts and nuts following removal	Initial tightening	70 Nm (52 ftlb.)		
Lower trailing arm to rear axle housing	M12 thread/always use new screws or bolts and nuts following removal	Final tightening	+180°		
Lower trailing arm to wheel bearing housing	M14 thread/always use new screws or bolts and nuts following removal	Initial tightening	120 Nm (89 ftlb.)		
Lower trailing arm to wheel bearing housing	M14 thread/always use new screws or bolts and nuts following removal	Final tightening	+360°		
Level sensor to lower trailing arm	M6 x 16 thread	Tightening torque	9 Nm (6.5 ftlb.)		
Connecting link to lower trailing arm	M10 x 65 thread/always use new screws or bolts following removal	Initial tightening	40 Nm (30 ftlb.)		

Connecting link to lower trailing arm	M10 x 65 thread/always use new screws or bolts following removal	Final tightening	+90°		
Upper control arm to rear axle housing	M12 thread/always use new screws or bolts and nuts following removal	Initial tightening	70 Nm (52 ftlb.)		
Upper control arm to rear axle housing	M12 thread/always use new screws or bolts and nuts following removal	Final tightening	+180°		
Upper control arm to wheel bearing housing	M12 thread	Tightening torque	95 Nm (70 ftlb.)		
Tie rod to rear axle housing	M12 thread/always use new screws or bolts and nuts following removal	Tightening torque	95 Nm (70 ftlb.)		
Tie rod to wheel bearing housing	M12 x 1.5 x 80.8 thread/always use new screws or bolts following removal	Initial tightening	90 Nm (67 ftlb.)		
Tie rod to wheel bearing housing	M12 x 1.5 x 80.8 thread/always use new screws or bolts following removal	Final tightening	+90°		
Connecting link to anti-roll bar	M10 x 65 thread/always use new screws and nuts following removal	Initial tightening	40 Nm (30 ftlb.)		
Connecting link to anti-roll bar	M10 x 65 thread/always use new screws and nuts following removal	Final tightening	+90°		
Connecting link to lower trailing arm	M10 x 65 thread/always use new screws or bolts following removal	Initial tightening	40 Nm (30 ftlb.)		
Connecting link to lower trailing arm	M10 x 65 thread/always use new screws or bolts following removal	Final tightening	+90°		

Anti-roll bar clamp to rear axle carrier	M8 x 65 thread/always use new screws following removal	Initial tightening	20 Nm (15 ftlb.)		
Anti-roll bar clamp to rear axle carrier	M8 x 65 thread/always use new screws following removal	Final tightening	+180°		
Supporting mount to piston rod (conventional)	M10 thread	Tightening torque	35 Nm (26 ftlb.)		
Supporting mount to piston rod (PASM)	M12 thread	Tightening torque	35 Nm (26 ftlb.)		
Shock absorber to wheel bearing housing	M14 x 1.5 x 90 thread/always use new screw or bolt following removal	Initial tightening	150 Nm (111 ftlb.)		
Shock absorber to wheel bearing housing	M14 x 1.5 x 90 thread/always use new screw or bolt following removal	Final tightening	+180°		
Shock absorber to body	AM10 x 35 thread/always use new screws or bolts following removal	Initial tightening	50 Nm (37 ftlb.)		
Shock absorber to body	AM10 x 35 thread/always use new screws or bolts following removal	Final tightening	+90°		
Wheel to wheel hub		Tightening torque	160 Nm (118 ftlb.)		

WM 4X00IN TIGHTENING TORQUES FOR REAR AXLE (ALL MODELS) > TIGHTENING TORQUES FOR REAR AXLE > REAR AXLE HOUSING

Location	Description	Type	Basic value	Tolerance 1	Tolerance 2
Rear axle housing, front to body	M14 x 1.5 x 135 thread/always replace screws following removal	Initial tightening	115 Nm (85 ftlb.)		
Rear axle housing, front to	M14 x 1.5 x 135 thread/always	Final tightening	+90°		

body	replace screws following removal				
Rear axle housing, rear to body	M12 x 1.5 x 145 thread/always replace screws following removal	Initial tightening	115 Nm (85 ftlb.)		
Rear axle housing, rear to body	M12 x 1.5 x 145 thread/always replace screws following removal	Final tightening	+90°		

WM 4X00IN TIGHTENING TORQUES FOR REAR AXLE (ALL MODELS) > TIGHTENING TORQUES FOR REAR AXLE > WHEEL BEARING HOUSING

Location	Description	Type	Basic value	Tolerance 1	Tolerance 2
Wheel bearing to wheel bearing housing	M12 x 1.5 x 45 thread/observe installation sequence!/always use new screws or bolts following removal	Initial tightening	80 Nm (59 ftlb.)		
Wheel bearing to wheel bearing housing	M12 x 1.5 x 45 thread/observe installation sequence!/always use new screws or bolts following removal	Final tightening	+90°		
Speed sensor to wheel bearing housing	M6 x 16 thread	Tightening torque	8 Nm (6 ftlb.)		
Brake calliper to wheel bearing housing	M12 thread/always use new screws or bolts following removal	Initial tightening	100 Nm (74 ftlb.)		
Brake calliper to wheel bearing housing	M12 thread/always use new screws or bolts following removal	Tightening torque	+90°		
Brake disc to wheel hub	M6 x 16 thread	Tightening torque	10 Nm (7.5 ftlb.)		
Brake cover plate to wheel	M6 x 14 thread	Tightening torque	10 Nm (7.5 ftlb.)		

bearing housing					
Spring strut to lower trailing arm	M12 thread/always use new screws or bolts and nuts following removal	Initial tightening	90 Nm (67 ftlb.)		
Spring strut to lower trailing arm	M12 thread/always use new screws or bolts and nuts following removal	Final tightening	+90°		
Holder to wheel bearing housing	M6 x 16 thread	Tightening torque	9 Nm (6.5 ftlb.)		
Drive shaft to wheel hub	Step 1 (wheels suspended in mid-air, operate brakes while tightening)/M16 x 72 thread/always use new screws or bolts following removal	Initial tightening	200 Nm (148 ftlb.)		
Drive shaft to wheel hub	Step 2 (wheels on the ground)/M16 x 72 thread/always use new screws or bolts following removal	Final tightening	180°		
Heat shield for drive shaft to rear axle	M8 x 22 thread	Tightening torque	23 Nm (17 ftlb.)		
Air line to air spring		Tightening torque	3 Nm (2 ftlb.)		

WM 4X00IN TIGHTENING TORQUES FOR REAR AXLE (ALL MODELS) > TIGHTENING TORQUES FOR REAR AXLE > TRAILING ARM

Location	Description	Type	Basic value	Tolerance 1	Tolerance 2
Lower trailing arm to rear axle housing	M12 thread/always use new screws or bolts and nuts following removal	Initial tightening	70 Nm (52 ftlb.)		
Lower trailing arm to rear axle housing	M12 thread/always use new screws	Final tightening	+180°		

	or bolts and nuts following removal				
Lower trailing arm to wheel bearing housing	M14 thread/always use new screws or bolts and nuts following removal	Initial tightening	120 Nm (89 ftlb.)		
Lower trailing arm to wheel bearing housing	M14 thread/always use new screws or bolts and nuts following removal	Final tightening	+360°		
Level sensor to lower trailing arm	M6 x 16 thread	Tightening torque	9 Nm (6.5 ftlb.)		
Connecting link to lower trailing arm	M10 x 65 thread/always use new screws or bolts following removal	Initial tightening	40 Nm (30 ftlb.)		
Connecting link to lower trailing arm	M10 x 65 thread/always use new screws or bolts following removal	Final tightening	+90°		
Upper control arm to rear axle housing	M12 thread/always use new screws or bolts and nuts following removal	Initial tightening	70 Nm (52 ftlb.)		
Upper control arm to rear axle housing	M12 thread/always use new screws or bolts and nuts following removal	Final tightening	+180°		
Upper control arm to wheel bearing housing	M12 thread	Tightening torque	95 Nm (70 ftlb.)		
Tie rod to rear axle housing	M12 thread/always use new screws or bolts and nuts following removal	Tightening torque	95 Nm (70 ftlb.)		
Tie rod to wheel bearing housing	M12 x 1.5 x 80.8 thread/always use new screws	Initial tightening	90 Nm (67 ftlb.)		

	or bolts following removal				
Tie rod to wheel bearing housing	M12 x 1.5 x 80.8 thread/always use new screws or bolts following removal	Final tightening	+90°		

WM 4X00IN TIGHTENING TORQUES FOR REAR AXLE (ALL MODELS) > TIGHTENING TORQUES FOR REAR AXLE > ANTI-ROLL BAR AND CONNECTING LINK

Location	Description	Type	Basic value	Tolerance 1	Tolerance 2
Connecting link to anti-roll bar	M10 x 65 thread/always use new screws and nuts following removal	Initial tightening	40 Nm (30 ftlb.)		
Connecting link to anti-roll bar	M10 x 65 thread/always use new screws and nuts following removal	Final tightening	+90°		
Connecting link to lower trailing arm	M10 x 65 thread/always use new screws or bolts following removal	Initial tightening	40 Nm (30 ftlb.)		
Connecting link to lower trailing arm	M10 x 65 thread/always use new screws or bolts following removal	Final tightening	+90°		
Anti-roll bar clamp to rear axle carrier	M8 x 65 thread/always use new screws following removal	Initial tightening	20 Nm (15 ftlb.)		
Anti-roll bar clamp to rear axle carrier	M8 x 65 thread/always use new screws following removal	Final tightening	+180°		

WM 4X00IN TIGHTENING TORQUES FOR REAR AXLE (ALL MODELS) > TIGHTENING TORQUES FOR REAR AXLE > SHOCK ABSORBER

Location	Description	Type	Basic value	Tolerance 1	Tolerance 2
Supporting mount to piston rod (conventional)	M10 thread	Tightening torque	35 Nm (26 ftlb.)		
Supporting mount to piston rod (PASM)	M12 thread	Tightening torque	35 Nm (26 ftlb.)		
Shock absorber to wheel bearing housing	M14 x 1.5 x 90 thread/always use new screw or bolt following removal	Initial tightening	150 Nm (111 ftlb.)		
Shock absorber to wheel bearing housing	M14 x 1.5 x 90 thread/always use new screw or bolt following removal	Final tightening	+180°		
Shock absorber to body	AM10 x 35 thread/always use new screws or bolts following removal	Initial tightening	50 Nm (37 ftlb.)		
Shock absorber to body	AM10 x 35 thread/always use new screws or bolts following removal	Final tightening	+90°		

WM 4X00IN TIGHTENING TORQUES FOR REAR AXLE (ALL MODELS) > TIGHTENING TORQUES FOR REAR AXLE > WHEEL MOUNTING

Location	Description	Type	Basic value	Tolerance 1	Tolerance 2
Wheel to wheel hub		Tightening torque	160 Nm (118 ftlb.)		

WM 4X00IN TIGHTENING TORQUES FOR STEERING (ALL MODELS) > TECHNICAL VALUES

Location	Description	Type	Basic value	Tolerance 1	Tolerance 2
Steering gear to front-axle carrier	M12 x 1.5 x 153 thread/always use	Initial tightening	80 Nm (59 ftlb.)		

	new screws and nuts following removal				
Steering gear to front-axle carrier	M12 x 1.5 x 153 thread/always use new screws and nuts following removal	Final tightening	+180°		
Tie rod to rack-and-pinion (axial joint)		Tightening torque	100 Nm (74 ftlb.)		
Tie-rod ball to tie rod	Counter when loosening and tightening the lock nut on the outer joint	Tightening torque	90 Nm (67 ftlb.)		
Tie-rod ball to wheel carrier cone	M12 x 1.5 thread/always use new nut following removal	Tightening torque	100 Nm (74 ftlb.)		
Intermediate steering shaft to steering gear (universal joint)	M8 x 30 thread/always use new screw or bolt following removal	Tightening torque	30 Nm (22 ftlb.)		
Inner clamp on bellows on passenger's side (diameter: 85 mm)	Fit using clamp tensioner V.A.G 1682 A	Tightening torque	7 Nm (5 ftlb.)		
Inner clamp on bellows on driver's side (diameter: 59 mm)	Fit using clamp tensioner V.A.G 1682 A	Tightening torque	10 Nm (7.5 ftlb.)		
Steering column to retaining frame/module cross member	M8 x 30 thread	Tightening torque	20 Nm (15 ftlb.)		
Steering column to mounting saddle	M8 x 22 thread	Tightening torque	20 Nm (15 ftlb.)		
Steering wheel to steering column	Internal serration screw, M18 x 1.5 x 26. Always replace following removal! (microencapsulated thread)	Initial tightening	30 Nm (22 ftlb.)		

Steering wheel to steering column	Internal serration screw, M18 x 1.5 x 26. Always replace following removal! (microencapsulated thread)	Final tightening	+90°		
Steering column to intermediate steering shaft (universal joint)	M8 x 30 thread/always use new screw or bolt following removal	Tightening torque	30 Nm (22 ftlb.)		
Intermediate steering shaft to steering gear (universal joint)	M8 x 30 thread/always use new screw or bolt following removal	Tightening torque	30 Nm (22 ftlb.)		
Lower part of casing to steering column		Tightening torque	1.5 Nm (1 ftlb.)		
Handle to control lever		Tightening torque	3 Nm (2 ftlb.)		
Contact bridge to steering wheel skeleton		Tightening torque	6 Nm (4.5 ftlb.)		
Multi-functional switch and front trim to main cover		Tightening torque	0.45 Nm (0.25 ftlb.)		
Steering wheel skeleton to main cover		Tightening torque	2 Nm (1.5 ftlb.)		
Paddles to steering wheel skeleton		Tightening torque	2.5 Nm (2 ftlb.)		
Back cover to steering wheel skeleton		Tightening torque	2.7 Nm (2 ftlb.)		

WM 4X00IN TIGHTENING TORQUES FOR STEERING (ALL MODELS) > TIGHTENING TORQUES FOR STEERING > STEERING GEAR

Location	Description	Type	Basic value	Tolerance 1	Tolerance 2
Steering gear to front-axle carrier	M12 x 1.5 x 153 thread/always use new screws	Initial tightening	80 Nm (59 ftlb.)		

	and nuts following removal				
Steering gear to front-axle carrier	M12 x 1.5 x 153 thread/always use new screws and nuts following removal	Final tightening	+180°		
Tie rod to rack-and-pinion (axial joint)		Tightening torque	100 Nm (74 ftlb.)		
Tie-rod ball to tie rod	Counter when loosening and tightening the lock nut on the outer joint	Tightening torque	90 Nm (67 ftlb.)		
Tie-rod ball to wheel carrier cone	M12 x 1.5 thread/always use new nut following removal	Tightening torque	100 Nm (74 ftlb.)		
Intermediate steering shaft to steering gear (universal joint)	M8 x 30 thread/always use new screw or bolt following removal	Tightening torque	30 Nm (22 ftlb.)		
Inner clamp on bellows on passenger's side (diameter: 85 mm)	Fit using clamp tensioner V.A.G 1682 A	Tightening torque	7 Nm (5 ftlb.)		
Inner clamp on bellows on driver's side (diameter: 59 mm)	Fit using clamp tensioner V.A.G 1682 A	Tightening torque	10 Nm (7.5 ftlb.)		

WM 4X00IN TIGHTENING TORQUES FOR STEERING (ALL MODELS) > TIGHTENING TORQUES FOR STEERING > STEERING WHEEL/STEERING COLUMN

Location	Description	Type	Basic value	Tolerance 1	Tolerance 2
Steering column to retaining frame/module cross member	M8 x 30 thread	Tightening torque	20 Nm (15 ftlb.)		

Steering column to mounting saddle	M8 x 22 thread	Tightening torque	20 Nm (15 ftlb.)		
Steering wheel to steering column	Internal serration screw, M18 x 1.5 x 26. Always replace following removal! (microencapsulated thread)	Initial tightening	30 Nm (22 ftlb.)		
Steering wheel to steering column	Internal serration screw, M18 x 1.5 x 26. Always replace following removal! (microencapsulated thread)	Final tightening	+90°		
Steering column to intermediate steering shaft (universal joint)	M8 x 30 thread/always use new screw or bolt following removal	Tightening torque	30 Nm (22 ftlb.)		
Intermediate steering shaft to steering gear (universal joint)	M8 x 30 thread/always use new screw or bolt following removal	Tightening torque	30 Nm (22 ftlb.)		
Lower part of casing to steering column		Tightening torque	1.5 Nm (1 ftlb.)		
Handle to control lever		Tightening torque	3 Nm (2 ftlb.)		
Contact bridge to steering wheel skeleton		Tightening torque	6 Nm (4.5 ftlb.)		
Multi-functional switch and front trim to main cover		Tightening torque	0.45 Nm (0.25 ftlb.)		
Steering wheel skeleton to main cover		Tightening torque	2 Nm (1.5 ftlb.)		
Paddles to steering wheel skeleton		Tightening torque	2.5 Nm (2 ftlb.)		
Back cover to steering wheel skeleton		Tightening torque	2.7 Nm (2 ftlb.)		

WM 4X00IN WHEEL RIM PAINT COLORS (ALL MODELS) > WHEEL RIM PAINT COLORS - MACAN

18-inch Macan

Fig 1: Identifying Wheel Rim (Macan - 18 Inch)



Courtesy of PORSCHE CARS NORTH AMERICA, INC.

Color code/option	Designation	Note	Order No.
8Z8	Brilliant Silver		C7N

18-inch Macan S

Fig 2: Identifying Wheel Rim (Macan S - 18 Inch)



Courtesy of PORSCHE CARS NORTH AMERICA, INC.

Color code/option	Designation	Note	Order No.
8Z8	Brilliant Silver		C5F

19-inch Macan Turbo

Fig 3: Identifying Wheel Rim (Macan Turbo - 19 Inch)



Courtesy of PORSCHE CARS NORTH AMERICA, INC.

Color code/option	Designation	Note	Order No.
88Z	Brilliant Chrome		C6P

19-inch Macan Design II

Fig 4: Identifying Wheel Rim (Macan Design II - 19 Inch)



Courtesy of PORSCHE CARS NORTH AMERICA, INC.

Color code/option	Designation	Note	Order No.
88Z	Brilliant Chrome		C6X

20-inch Macan RS Spyder Design

Fig 5: Identifying Wheel Rim (Macan RS Spyder Design - 20 Inch)



Courtesy of PORSCHE CARS NORTH AMERICA, INC.

Color code/option	Designation	Note	Order No.
OC6	Dark Titanium	High-gloss turned finish	CY3

20-inch Macan Sport Design II

Fig 6: Identifying Wheel Rim (Macan Sport Design II - 20 Inch)



Courtesy of PORSCHE CARS NORTH AMERICA, INC.

Color code/option	Designation	Note	Order No.
88Z	Brilliant Chrome		CY4

21-inch Macan Turbo Design

Fig 7: Identifying Wheel Rim (Macan Turbo Design - 21 Inch)



Courtesy of PORSCHE CARS NORTH AMERICA, INC.

Color code/option	Designation	Note	Order No.
OC6	Dark Titanium	High-gloss turned and polished finish	C7T

WM 400619 REMOVING AND INSTALLING FRONT-AXLE CARRIER (ALL MODELS) > TOOLS

Designation	Type	Number	Description	
Master Gear unit elevating platform	Workshop equipment	WE 1206		
Assembly fixture - Macan	Workshop equipment	WE 1612		
strapping belts	Special tool	9454		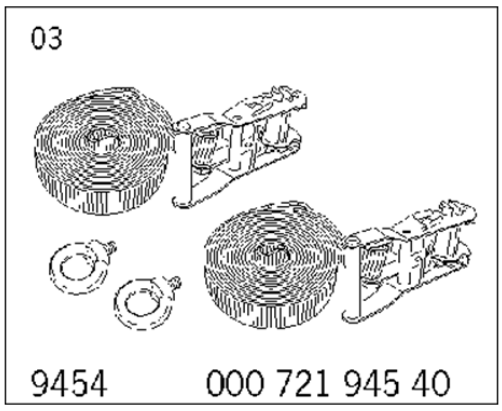

WM 400619 REMOVING AND INSTALLING FRONT-AXLE CARRIER (ALL MODELS) > TECHNICAL VALUES

Location	Description	Type	Basic value	Tolerance 1	Tolerance 2
Lower control arm to front-axle carrier	M12 thread/always use new screws or bolts and nuts following removal	Final tightening	+180°		
Lower control arm to wheel bearing housing	M14 thread/always use new nuts following removal	Tightening torque	140 Nm (104 ftlb.)		
Fastening screw	Retaining bracket for engine mount	Tightening torque	30 Nm (22 ftlb.)		
Fastening screws	Heat shield to front-axle carrier	Tightening torque	9 Nm (6.5 ftlb.)		

Fastening screw	Heat shield to front-axle carrier	Tightening torque	20 Nm (15 ftlb.)		
Fastening screw	Step 1, front-axle carrier to body	Initial tightening	115 Nm (85 ftlb.)		
Fastening screw	Step 2, front-axle carrier to body	Final tightening	+90°		
Fastening screw	Step 1, front-axle carrier to body	Initial tightening	115 Nm (85 ftlb.)		
Fastening screw	Step 2, front-axle carrier to body	Final tightening	+90°		
Fastening screws	Engine mount to front-axle carrier	Tightening torque	55 Nm (41 ftlb.)		
Support to lock carrier		Tightening torque	5 Nm (3.5 ftlb.)		
Support to suspension subframe		Tightening torque	23 Nm (17 ftlb.)		
Fastening screw securing engine mount to front-axle carrier	Observe specified sequence!	Tightening torque	30 Nm (22 ftlb.)		

WM 400619 REMOVING AND INSTALLING FRONT-AXLE CARRIER (ALL MODELS) > PRELIMINARY WORK

1. Raise the vehicle → 4X00IN LIFTING THE VEHICLE .
2. Remove front wheels → 440519 REMOVING AND INSTALLING WHEEL .
3. Remove wheel housing liner on both sides of the vehicle → 505619 REMOVING AND INSTALLING FRONT WHEEL HOUSING LINER .
4. Remove front underbody panelling → 519219 REMOVING AND INSTALLING COVER FOR FRONT UNDERBODY .
5. Remove front-axle support → 400819 REMOVING AND INSTALLING FRONT-AXLE SUPPORT .
6. Unscrew fastening screws **-1 and 2-** and remove heat shields at the left and right.

Fig 1: Identifying Front-Axle Carrier Heat Shield

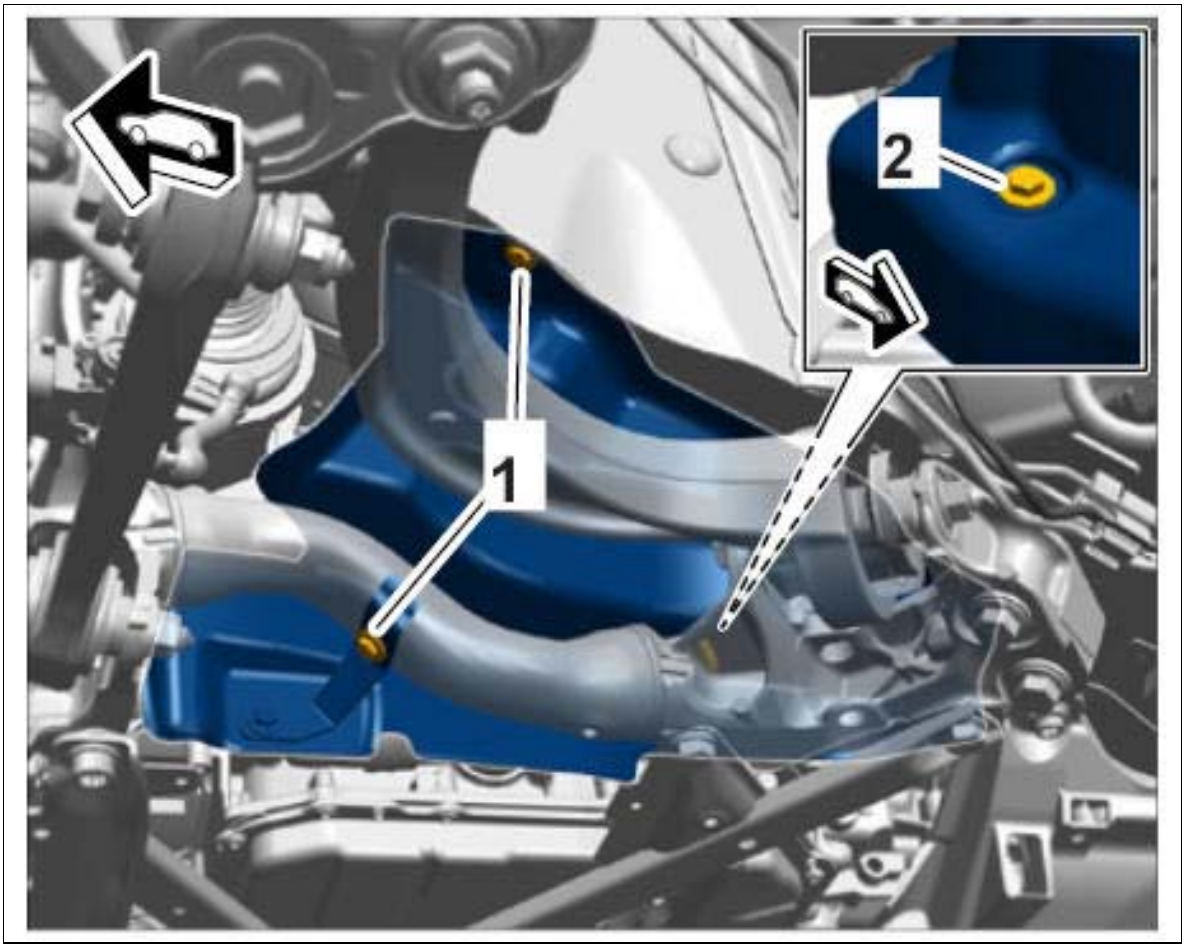

Courtesy of PORSCHE CARS NORTH AMERICA, INC.

7. Remove anti-roll bar → 407719 REMOVING AND INSTALLING FRONT ANTI-ROLL BAR .
8. Remove power-steering gear → 489055 REPLACING POWER-STEERING GEAR .
9. Remove front level sensors → 431855 REPLACING FRONT LEVEL SENSOR .
10. Tie up wheel bearing housing on both sides of the vehicle with tension straps (e.g. **strapping belts 9454**) at the mounting saddle. → Tying up wheel bearing housing

Fig 2: Identifying Tension Straps

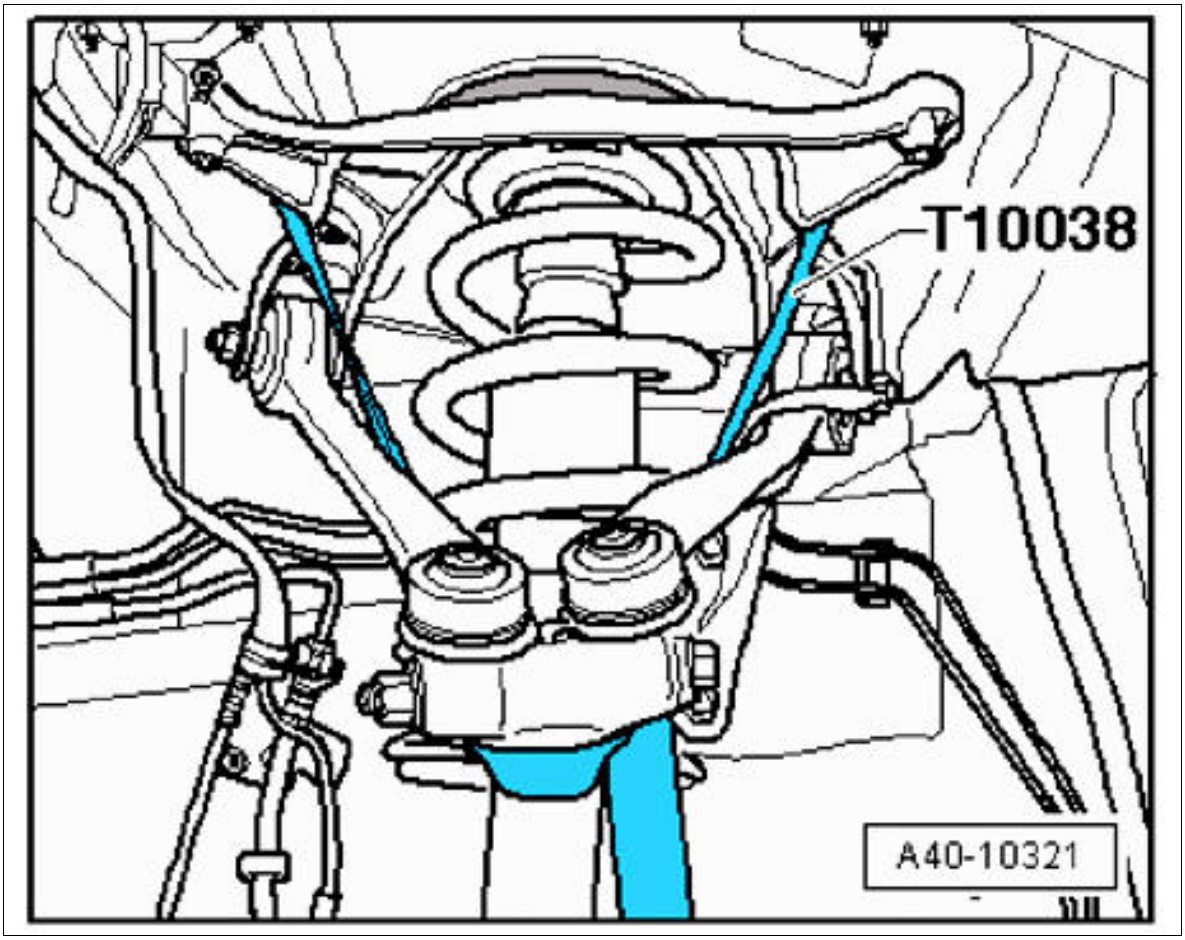

Courtesy of PORSCHE CARS NORTH AMERICA, INC.

11. Remove lower trailing arm on both sides of the vehicle → 401719 REMOVING AND INSTALLING LOWER TRAILING ARM .
12. Support engine on the body → 1001IN SUPPORTING ENGINE ON THE BODY (ENGINE SAFETY DEVICE) .

WM 400619 REMOVING AND INSTALLING FRONT-AXLE CARRIER (ALL MODELS) > REMOVING AND INSTALLING FRONT-AXLE CARRIER > REMOVING FRONT-AXLE CARRIER

1. Separate threaded joint **-1-** .
2. Swivel out control arm and secure on the body (e.g. using welding wire).

Fig 1: Identifying Lower Control Arm

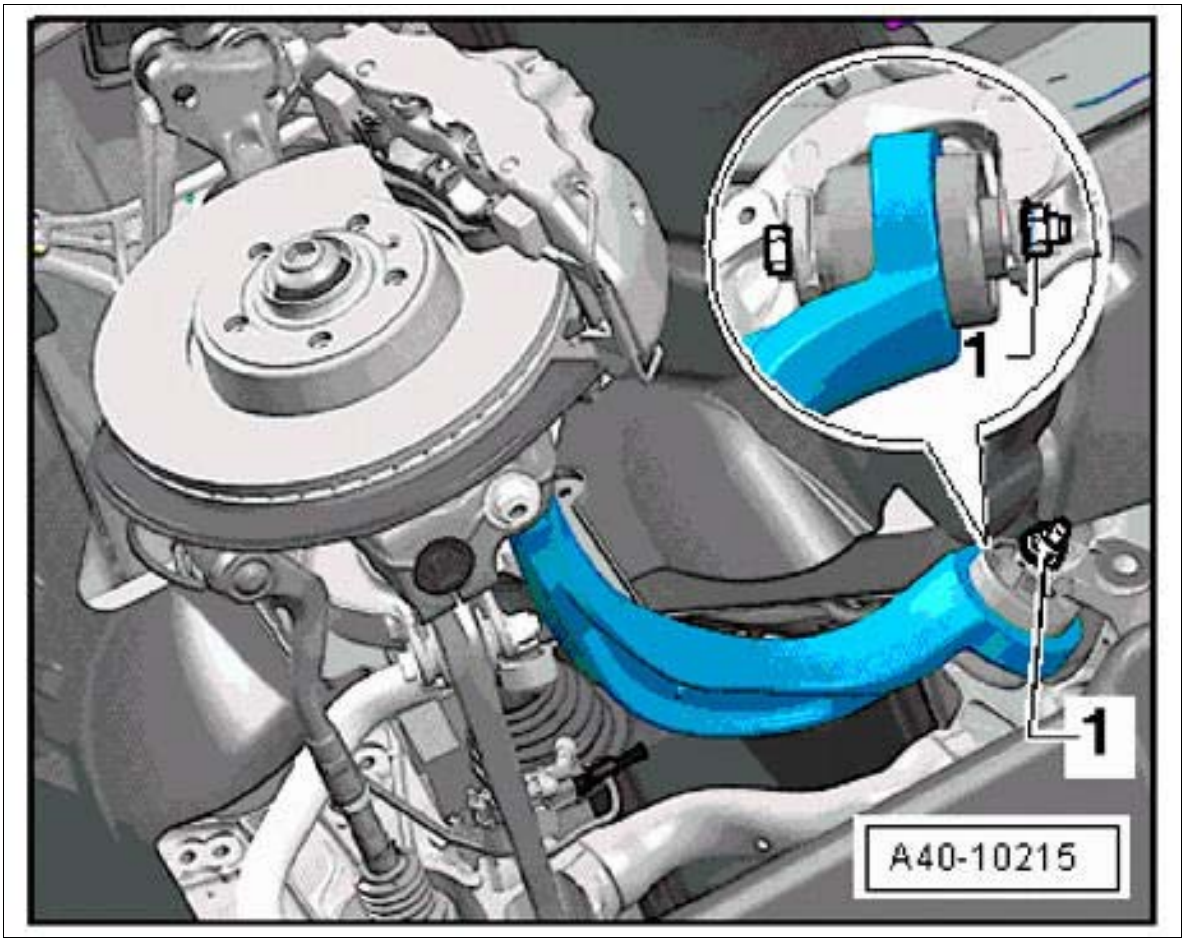

Courtesy of PORSCHE CARS NORTH AMERICA, INC.

3. Remove strut **-2-** at the lower lock carrier on both sides.
    1. 3.1. Unscrew fastening nut **-3-** .
    2. 3.2. Unscrew fastening screw **-1-** .

Fig 2: Identifying Lower Strut Fastening Nut And Screws

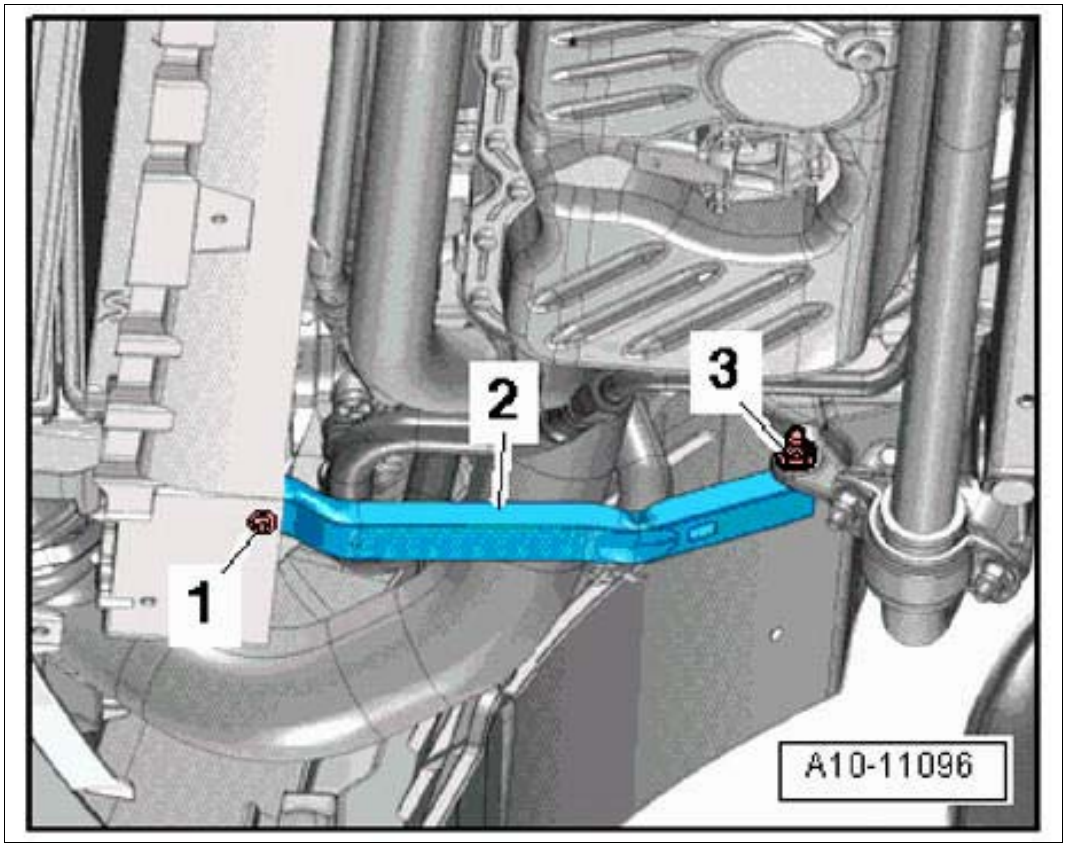

Courtesy of PORSCHE CARS NORTH AMERICA, INC.

3. 3.3. Remove strut **-2-** on both sides.

4. Open locking lug **-1-** with a screwdriver, open housing cover **-2-** on the right longitudinal member and remove it.

Fig 3: Identifying Housing Cover And Locking Lug

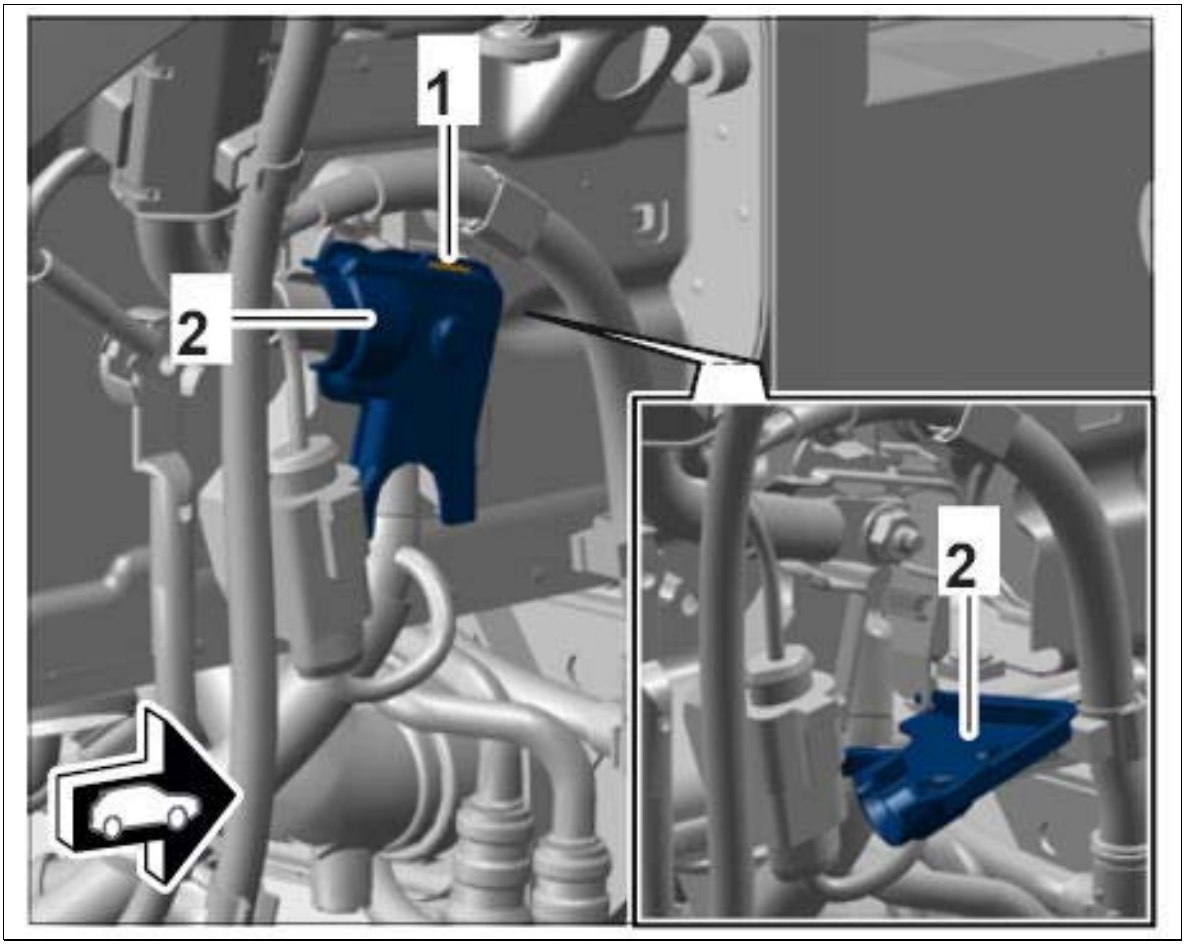

Courtesy of PORSCHE CARS NORTH AMERICA, INC.

5. Disconnect electric lines on the right longitudinal member.
    1. 5.1. Unclip headlight vent line **-8-** at the clip **-7-** and set it aside.
    2. 5.2. Unscrew fastening nut **-2-** and move ground lines **-1 and 6-** aside.
    3. 5.3. Disconnect electric plug connection **-5-** and pull it out of the clip.
    4. 5.4. Unscrew fastening nut **-4-** , remove ground line **-3-** and set it aside.

Fig 4: Identifying Longitudinal Member Electric Lines

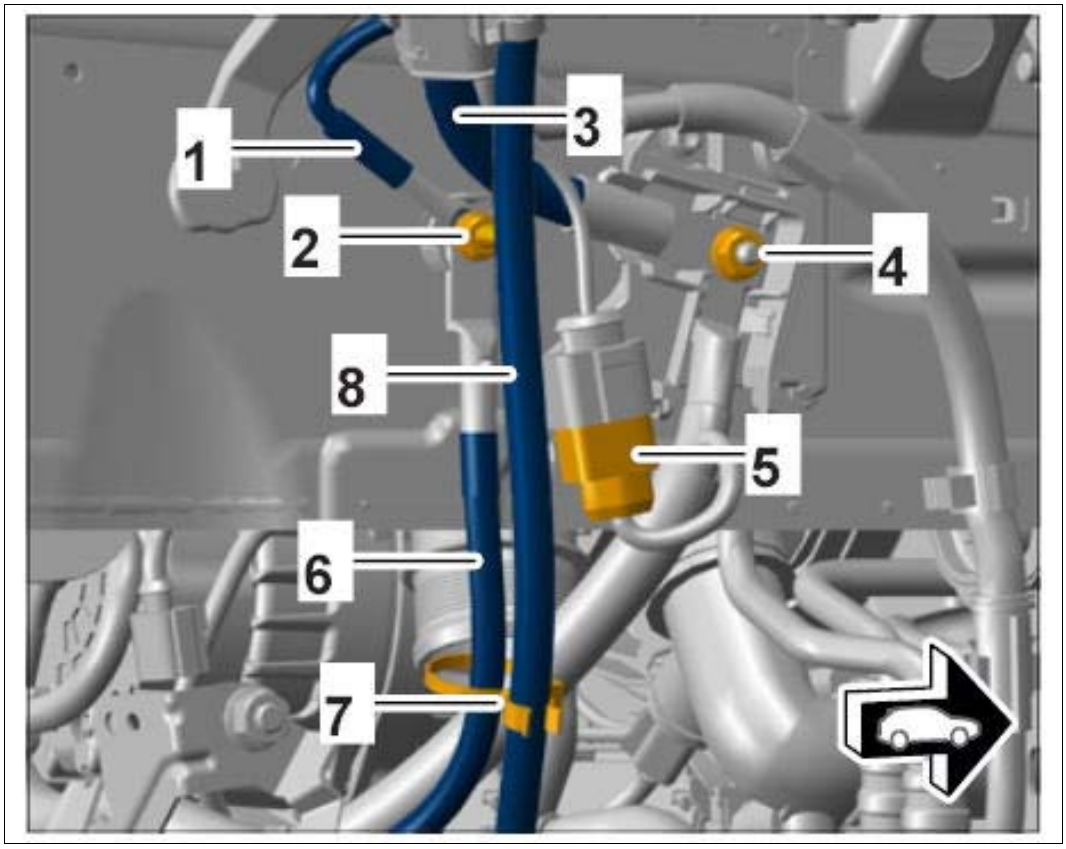

Courtesy of PORSCHE CARS NORTH AMERICA, INC.

6. Press in locking lugs **-1-** , pull out ground line **-2-** in **-direction of arrow -** and set it aside.

Fig 5: Identifying Ground Line

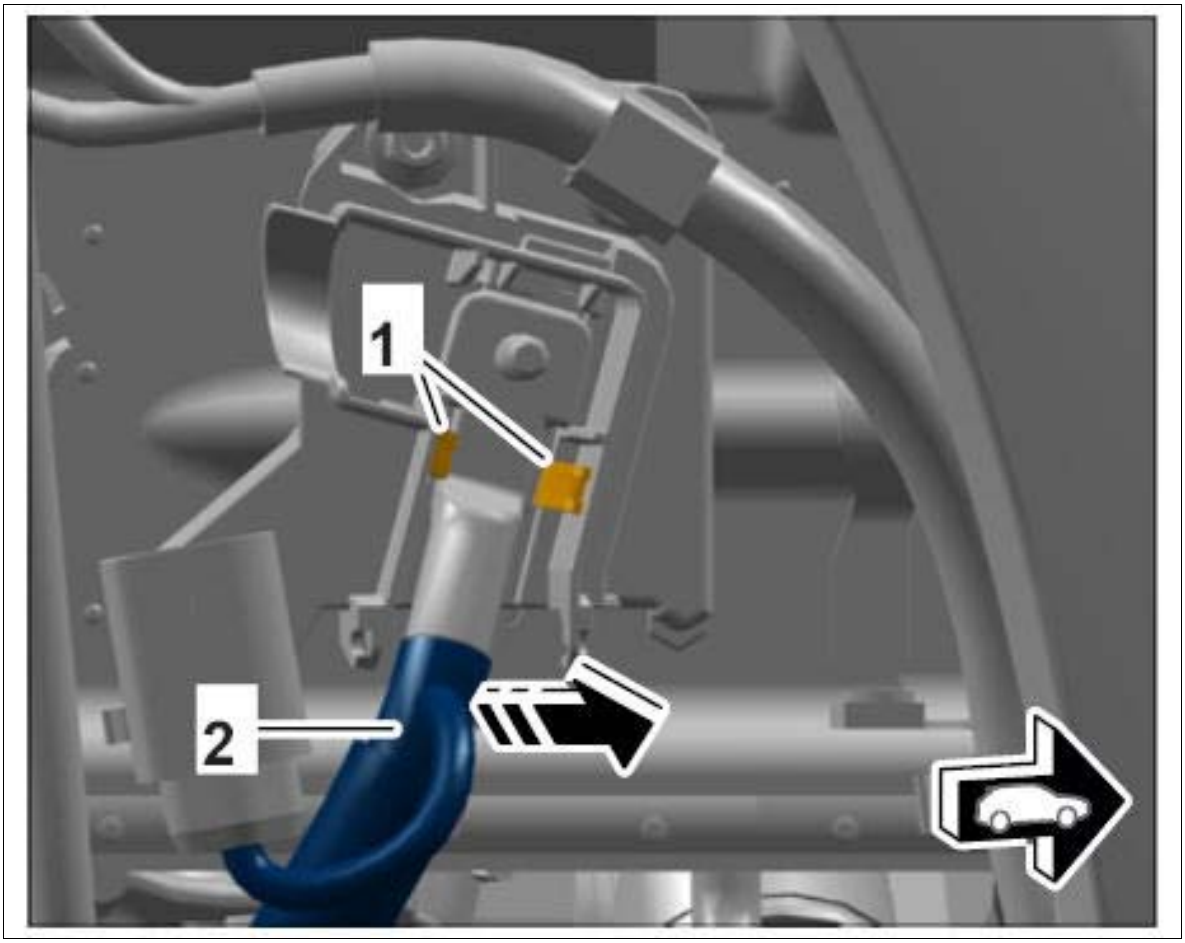

Courtesy of PORSCHE CARS NORTH AMERICA, INC.

7. Loosen screw-type clamp securing pressure hose -arrow - to pressure pipe and pull pressure hose off the pressure pipe.

Fig 6: Locating Pressure Hose Clamp

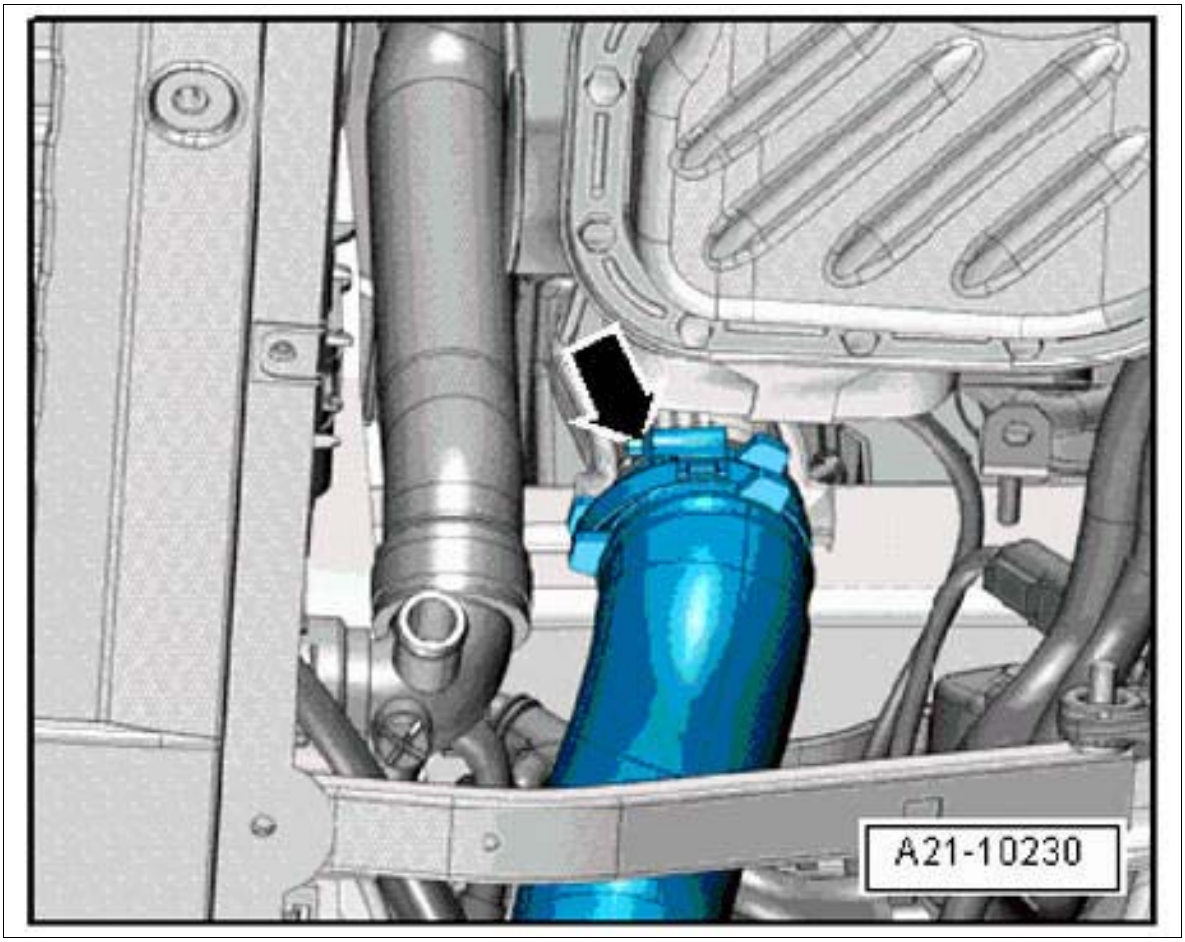

Courtesy of PORSCHE CARS NORTH AMERICA, INC.

8. Expose electric wire harness on both sides of the vehicle.
    1. 8.1. Disconnect electric plug connection **-arrow-** and move it aside.
    2. 8.2. Unscrew fastening nut **-2-** and press electric wiring harness aside.

Fig 7: Identifying Electric Plug Connector & Fastening Nut

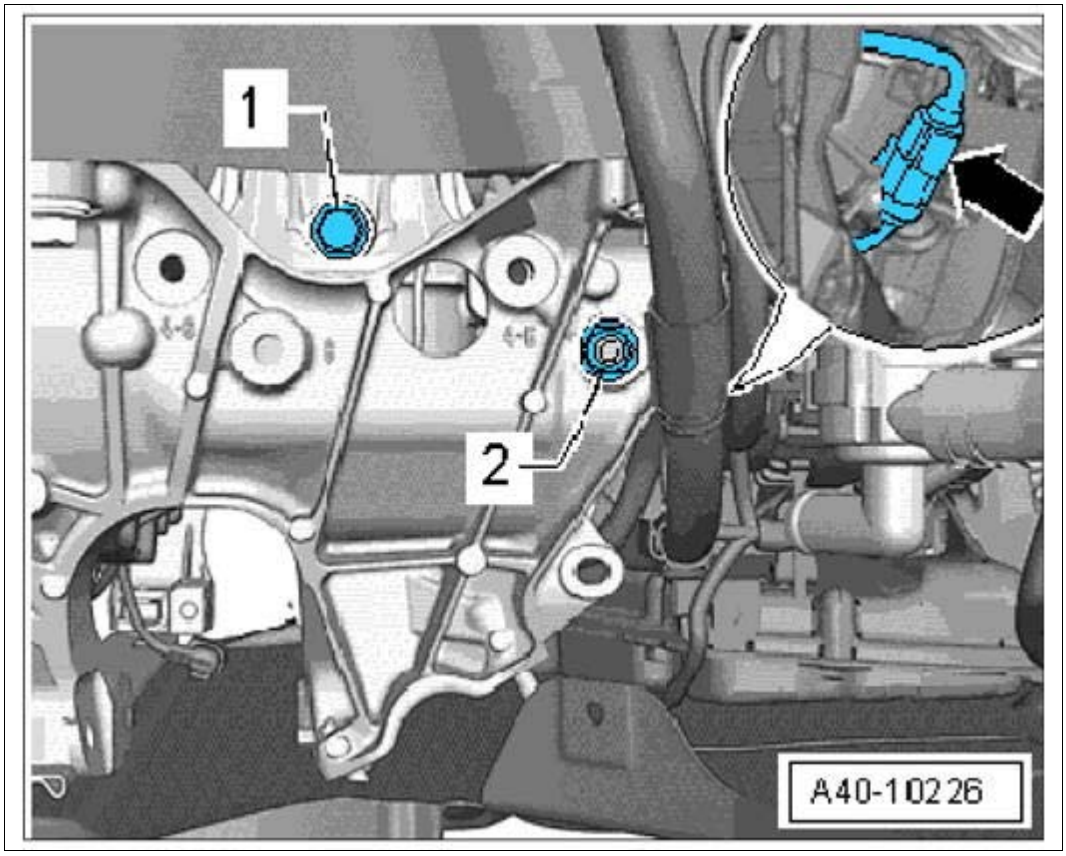

Courtesy of PORSCHE CARS NORTH AMERICA, INC.

9. Expose engine mount.

    1. 9.1. Unscrew fastening screws **-1-** .
    2. 9.2. **Not for V6 bi-turbo engines:** Unscrew fastening screws **-4-** .

Fig 8: Identifying Engine Mount Fastening Nut

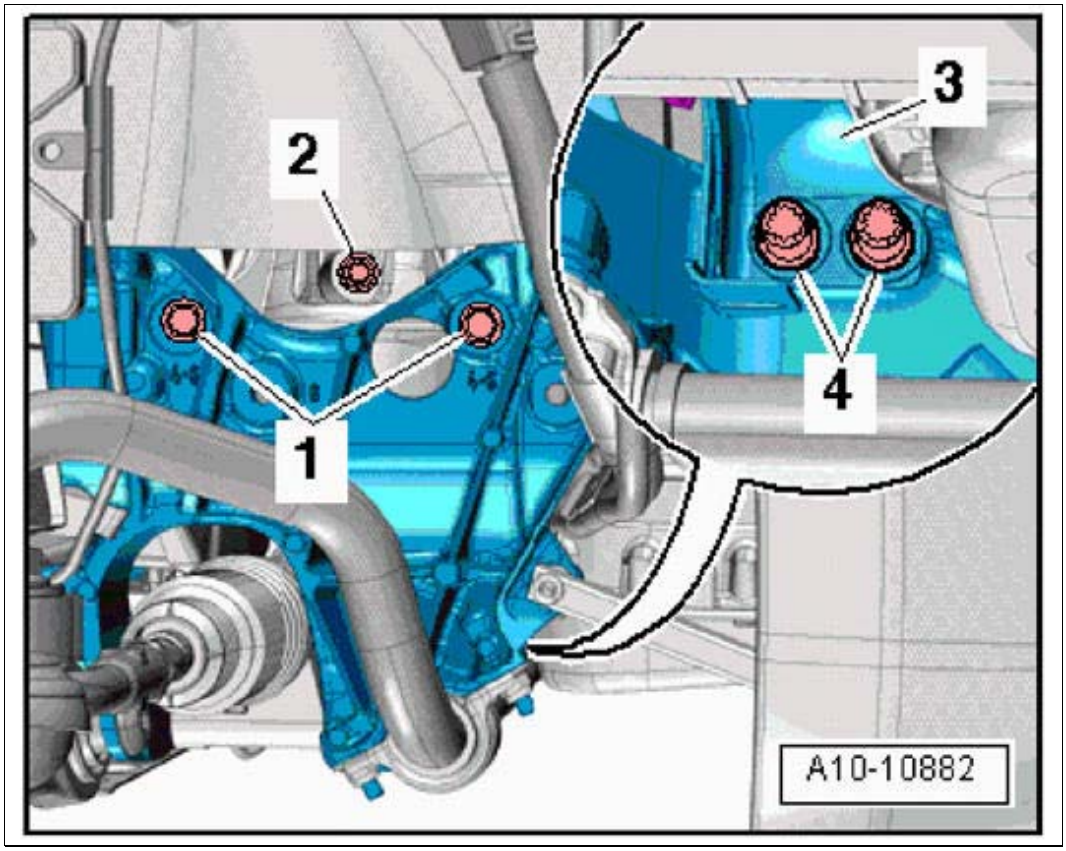

Courtesy of PORSCHE CARS NORTH AMERICA, INC.

10. **Only for V6 bi-turbo engines:** Unscrew fastening screws **-1, 2 and 3-** at the engine mount.

Fig 9: Identifying Engine Mount Fastening Screws

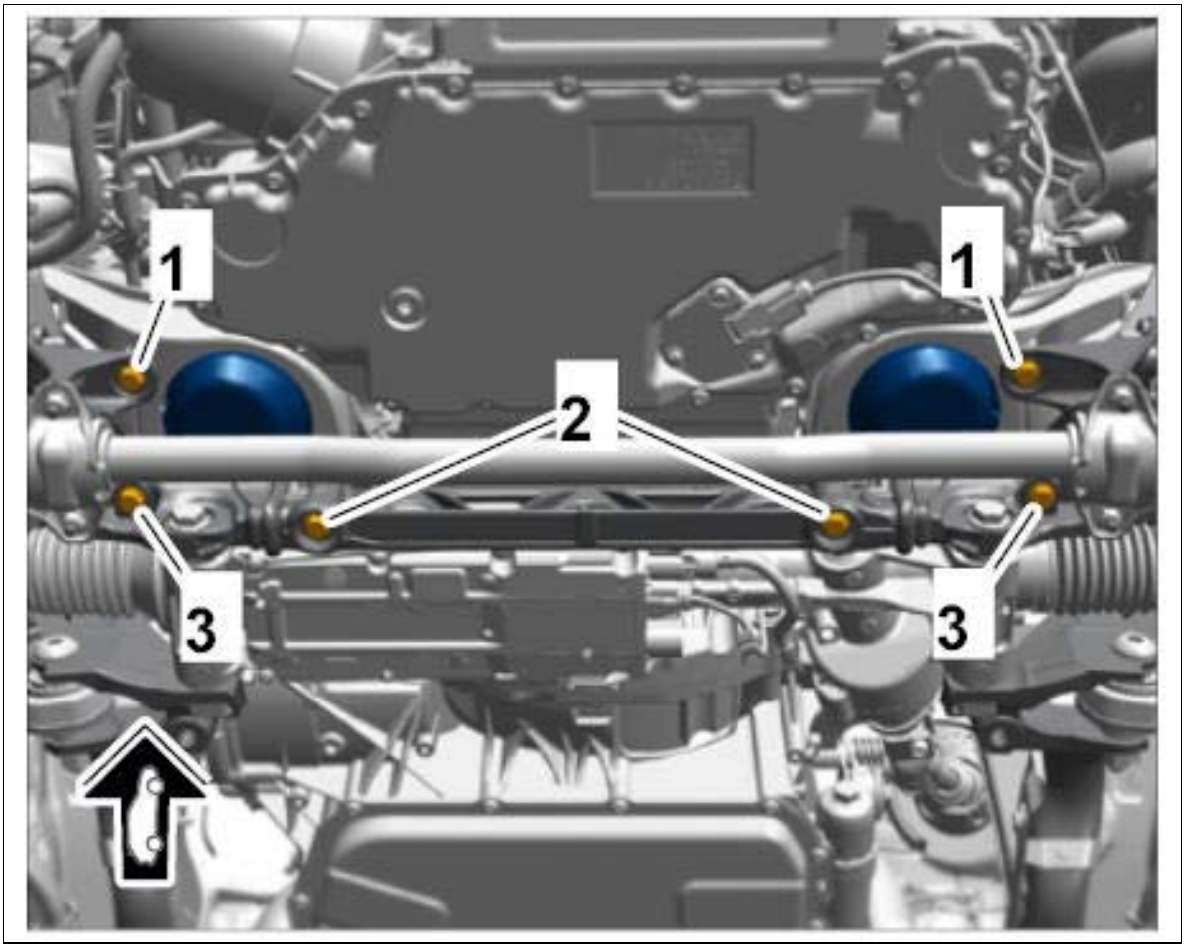

Courtesy of PORSCHE CARS NORTH AMERICA, INC.

11. Prepare unit elevating platform **Master Gear unit elevating platform WE 1206** with the assembly fixture **Assembly fixture - Macan WE 1612.**

12. Raise the elevating platform and guide front locating pins **-1-** into the jacking points provided for this purpose on the body.

    Locating pins are only for guiding the assembly fixture and must not be fitted.

    Only for V6 bi-turbo engines: Do not use locating pin at the front left in direction of travel (due to accessibility of jacking point).

Fig 10: Identifying Elevating Platform

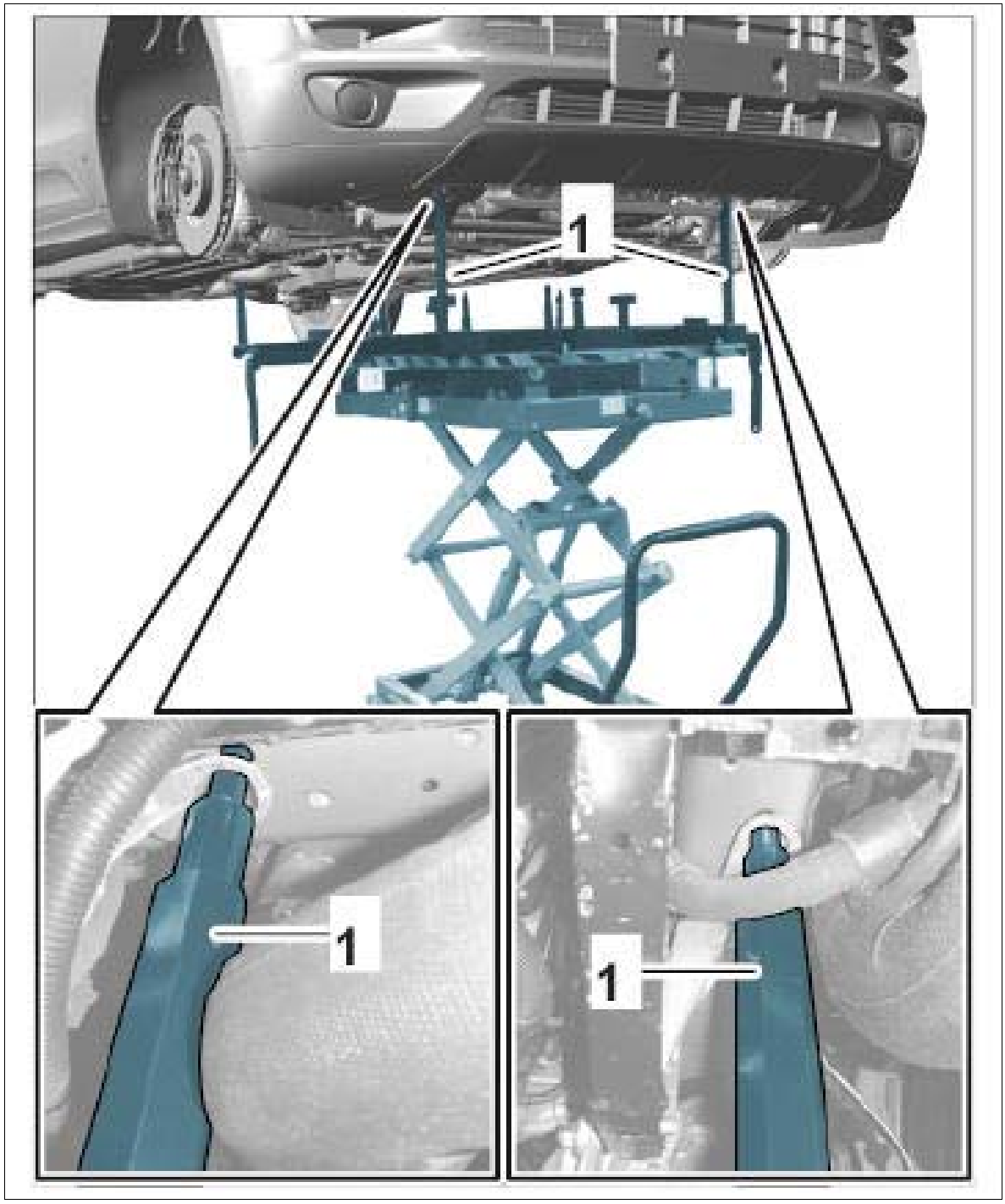

Courtesy of PORSCHE CARS NORTH AMERICA, INC.

13. Guide rear assembly driver **-1-** into the jacking points provided for this purpose on the body.

Fig 11: Identifying Rear Assembly Driver

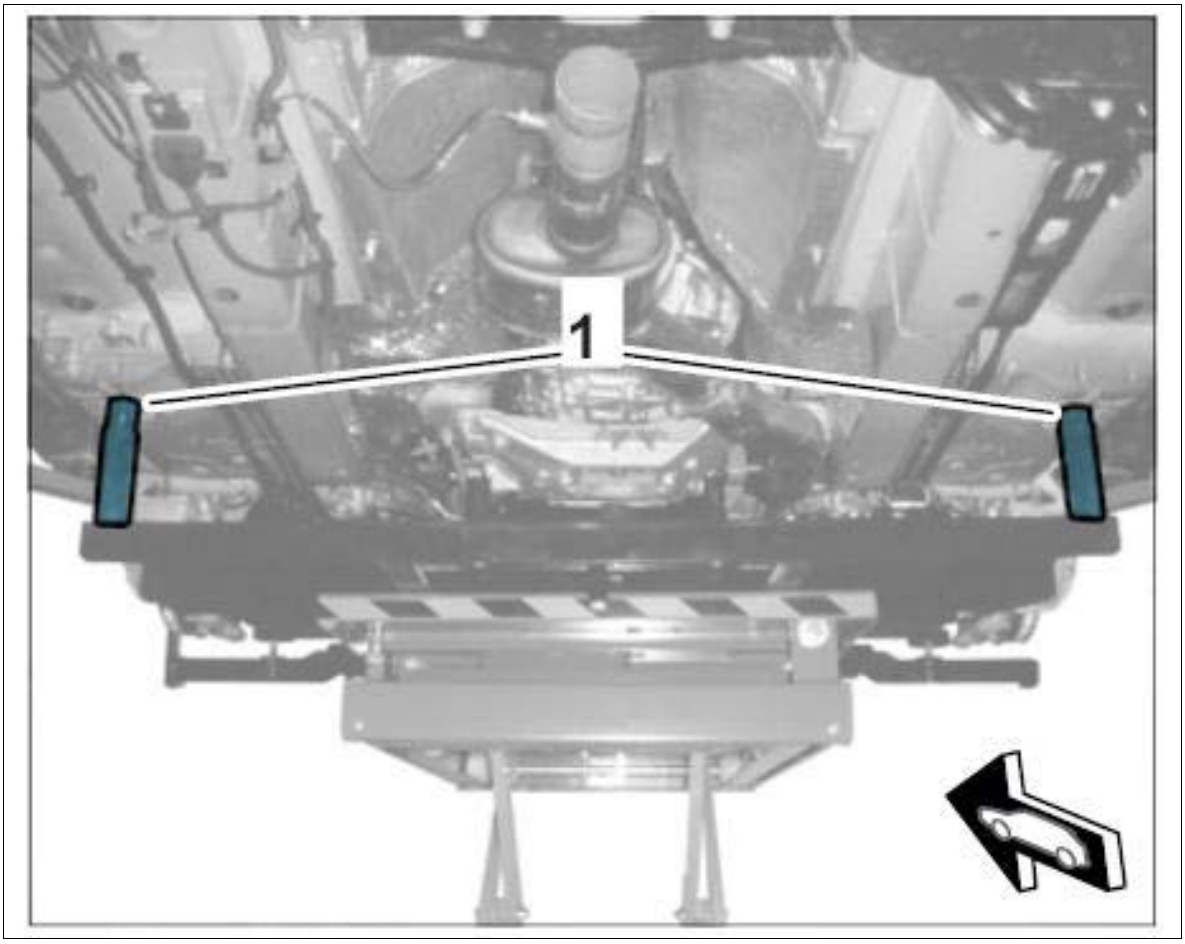

Courtesy of PORSCHE CARS NORTH AMERICA, INC.

14. Loosen front-axle carrier.

Fig 12: Identifying Front-Axle Carrier Mounting

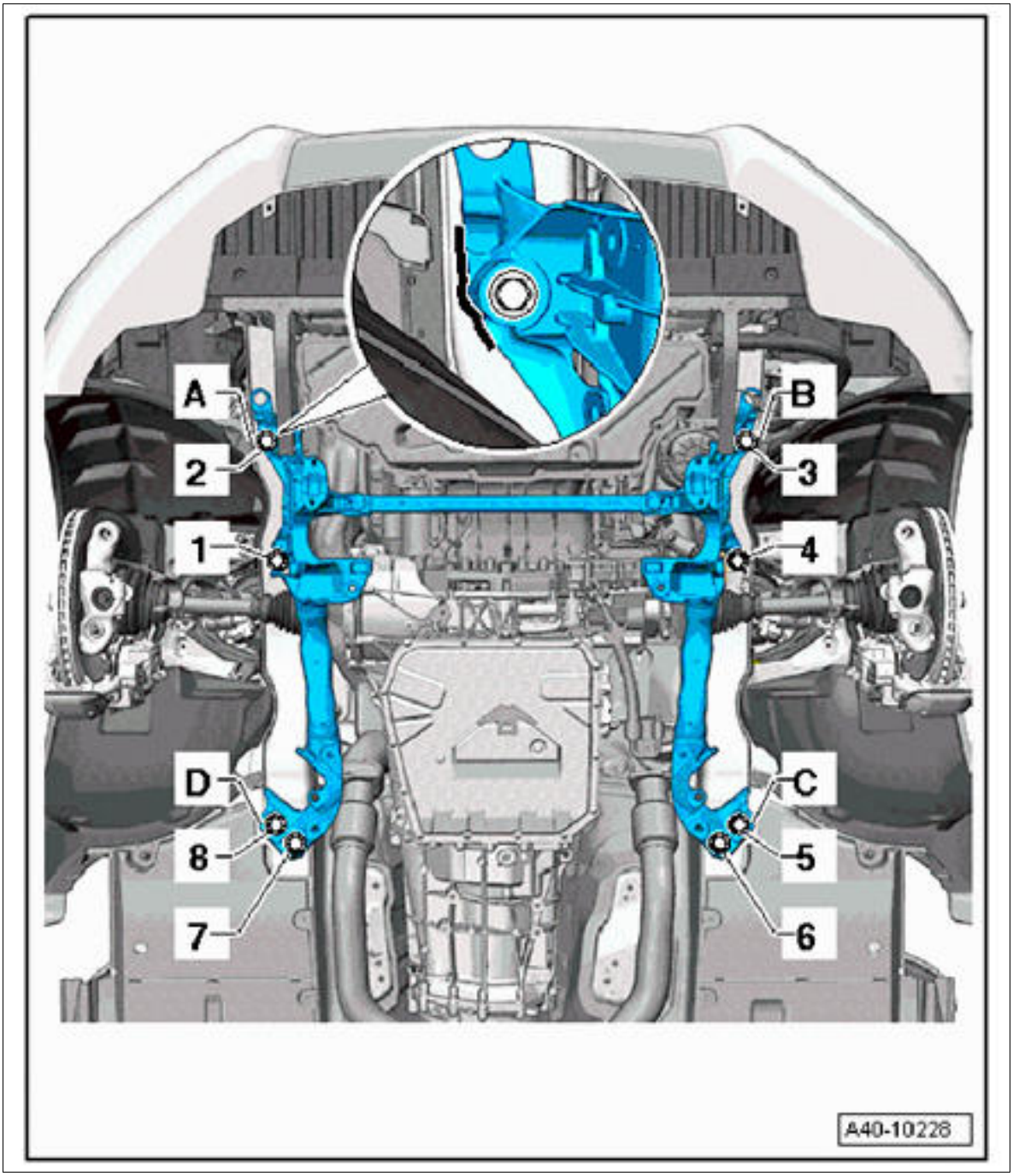

Courtesy of PORSCHE CARS NORTH AMERICA, INC.

1. 14.1. Mark installation position of front-axle carrier **-a to d-** using a felt-tip pen.
2. 14.2. Unscrew fastening screws **-1 to 8-** on the front-axle carrier.

WM 400619 REMOVING AND INSTALLING FRONT-AXLE CARRIER (ALL MODELS) > REMOVING AND INSTALLING FRONT-AXLE CARRIER > INSTALLING FRONT-AXLE CARRIER

⚠ *CAUTION: Wheel carrier raised incorrectly*

- *Risk of squashing*
- *Risk of damage to components*

→ Wear personal protective gear.

→ Do not raise the wheel suspension higher than the normal vehicle position (vehicle resting on wheels).

Information

- All screws and threaded joints on the axle must be tightened in vehicle position. Vehicle position means: vehicle standing on its wheels, or the wheel suspension is raised with a universal vehicle lift. Dimension -1- , from lower edge of wing to center of axle corresponds to vehicle position. The current height can be found in → 4495TW ADJUSTMENT VALUES FOR SUSPENSION ALIGNMENT. ALWAYS OBSERVE THE FOLLOWING POINTS!

  Fig 1: Identifying Wheel To Wing Lower Edge Dimension (Rear Axle)

  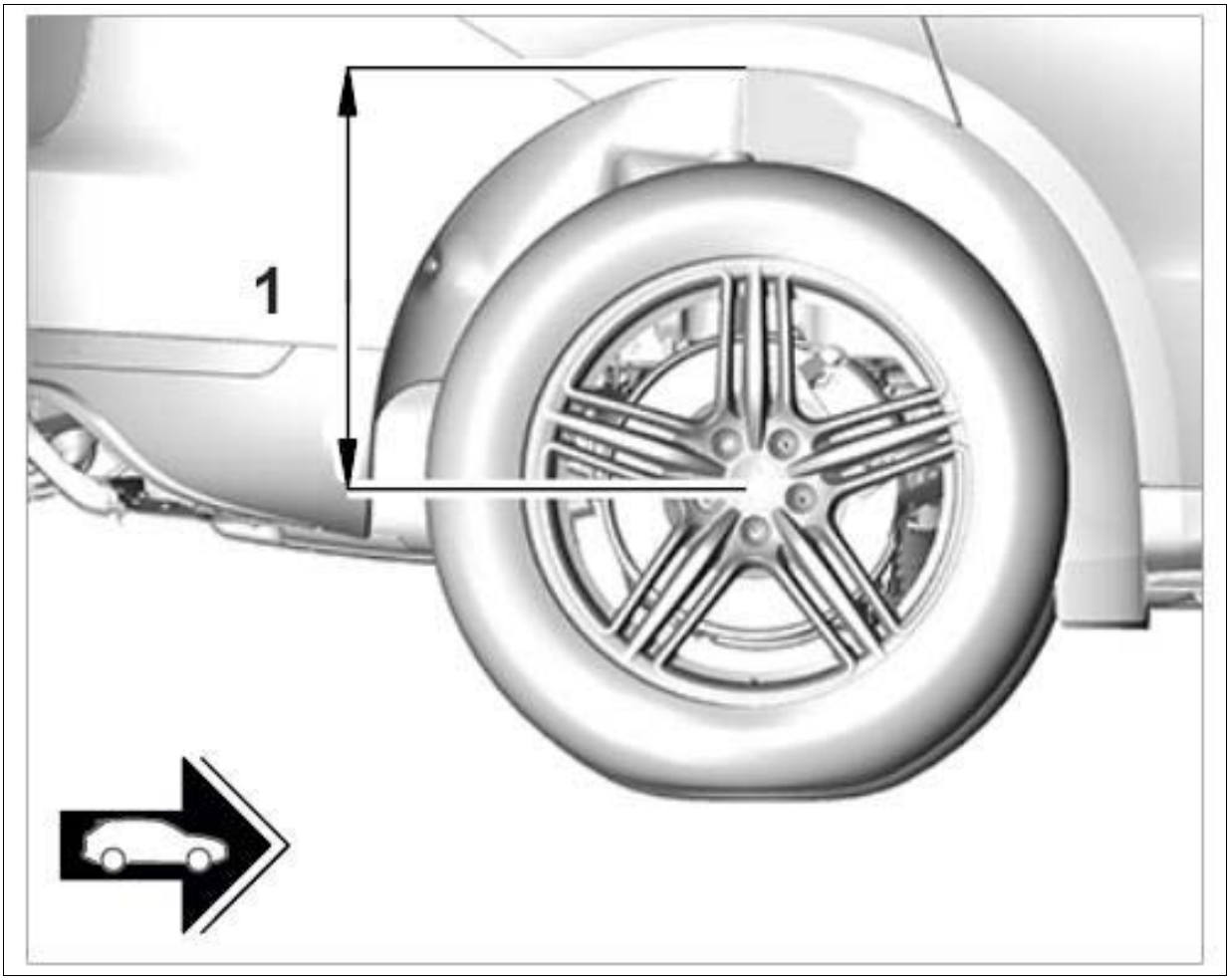

  Courtesy of PORSCHE CARS NORTH AMERICA, INC.

- On vehicles with air springs, the respective air spring must be bled using the Porsche System

Tester . → 4301IN BLEEDING AND FILLING THE LEVELLING SYSTEM

- Screws and nuts are Geomet-coated and must not be greased.

1. Installation is performed in reverse order. Check the following while doing this:
    1. Screw in and tighten new fastening screws **-1 and 4-** one after the other.

       Initial tightening 115 Nm (85 ftlb.) Final tightening +90°
    2. Screw in and tighten new fastening screws **-2 and 3-** one after the other.

       Initial tightening 115 Nm (85 ftlb.) Final tightening +90°
    3. Screw in and tighten new fastening screws **-5 and 8-** one after the other.

       Initial tightening 115 Nm (85 ftlb.) Final tightening +90°
    4. Screw in and tighten new fastening screws **-6 and 7-** one after the other.

       Initial tightening 115 Nm (85 ftlb.) Final tightening +90°

Fig 2: Identifying Front-Axle Carrier Mounting

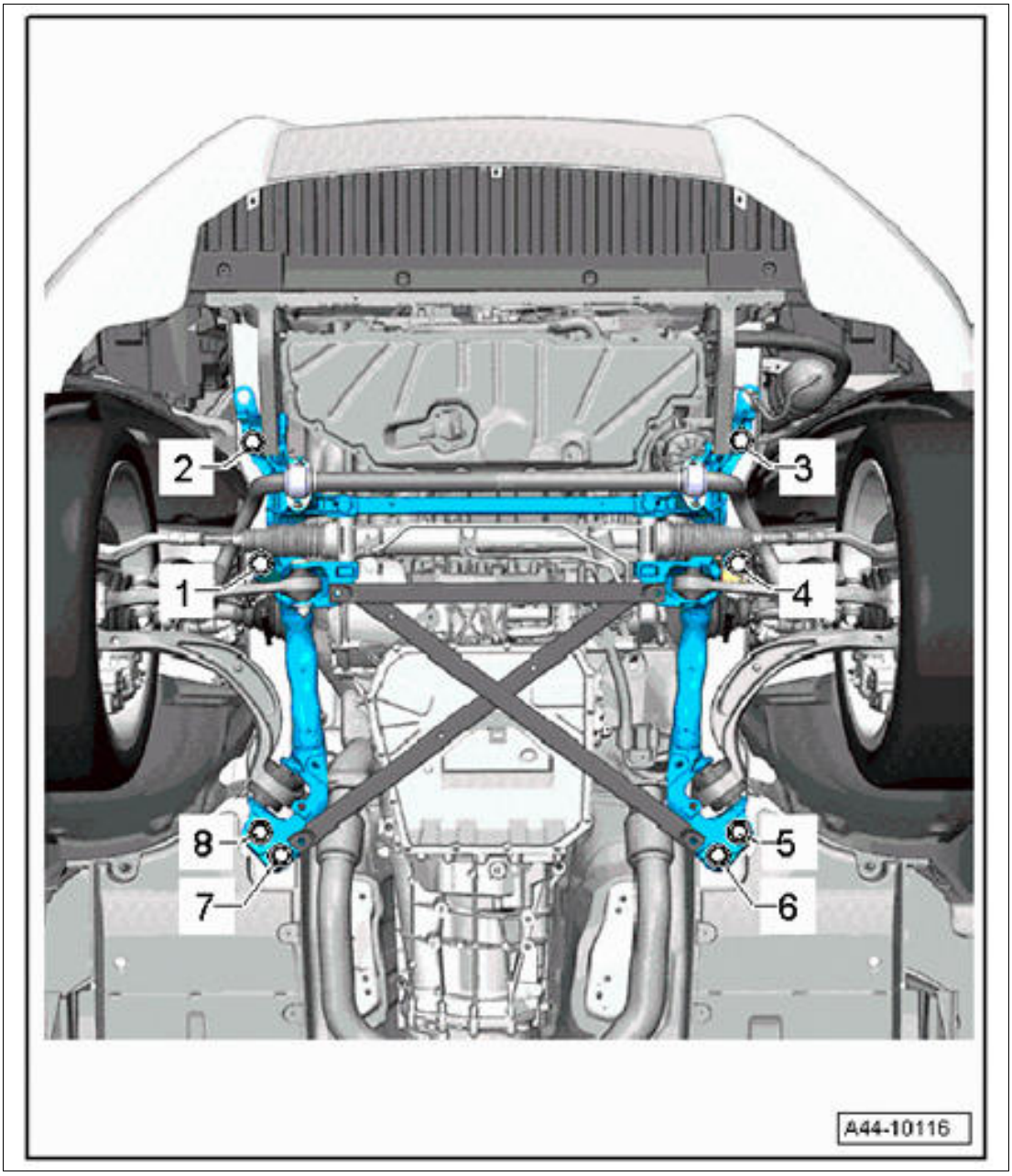

Courtesy of PORSCHE CARS NORTH AMERICA, INC.

5. Fastening screw securing engine mount to front-axle carrier **-1-** : **Tightening torque 55 Nm (41 ftlb.)** .

6. **Not for V6 bi-turbo engines:** Fastening screw securing retaining bracket for engine mount **-4-** : **Tightening torque 30 Nm (22 ftlb.)** .

Fig 3: Identifying Engine Mount Fastening Screws

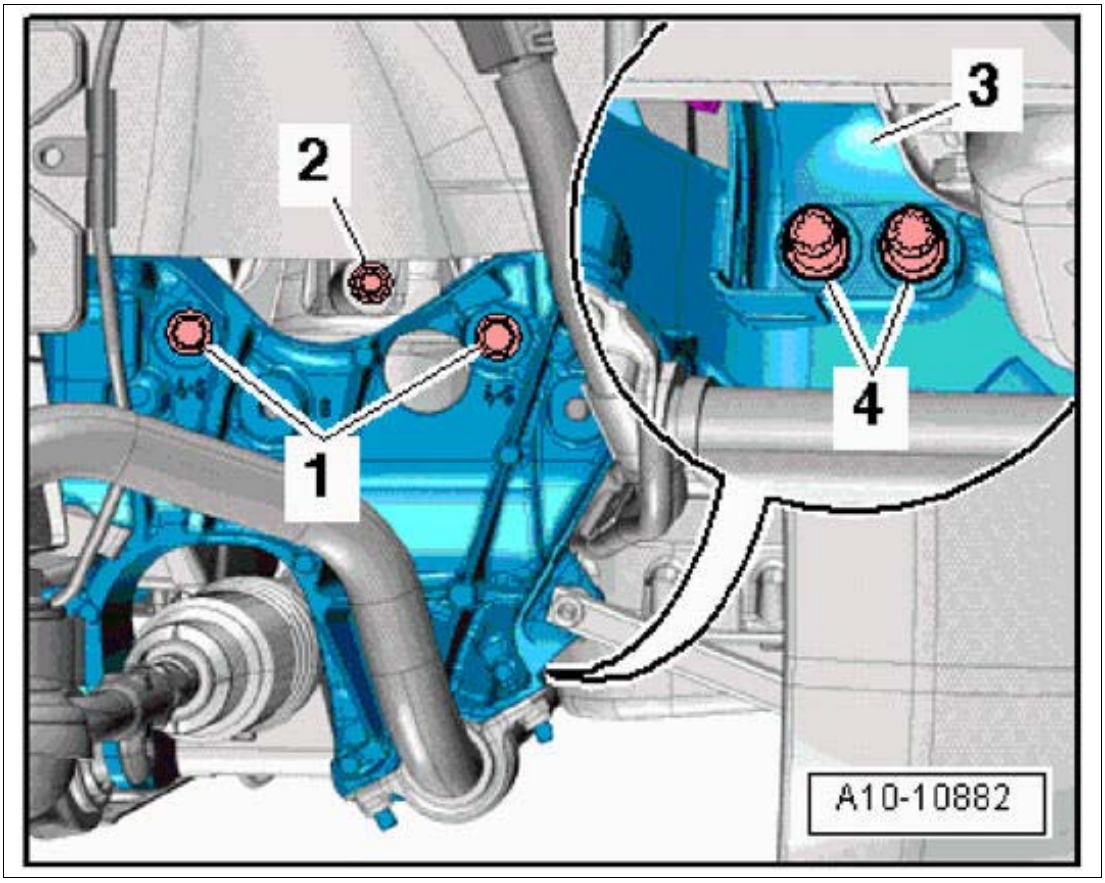

Courtesy of PORSCHE CARS NORTH AMERICA, INC.

2. **Only for V6 bi-turbo engines:** Fit fastening screws **-1, 2 and 3-** on the engine mount.
    1. 2.1. Tighten fastening screws **-1-** . **Tightening torque 30 Nm (22 ftlb.)**
    2. 2.2. Tighten fastening screws **-2-** . **Tightening torque 30 Nm (22 ftlb.)**
    3. 2.3. Tighten fastening screws **-3-** . **Tightening torque 30 Nm (22 ftlb.)**

Fig 4: Identifying Engine Mount Fastening Screws

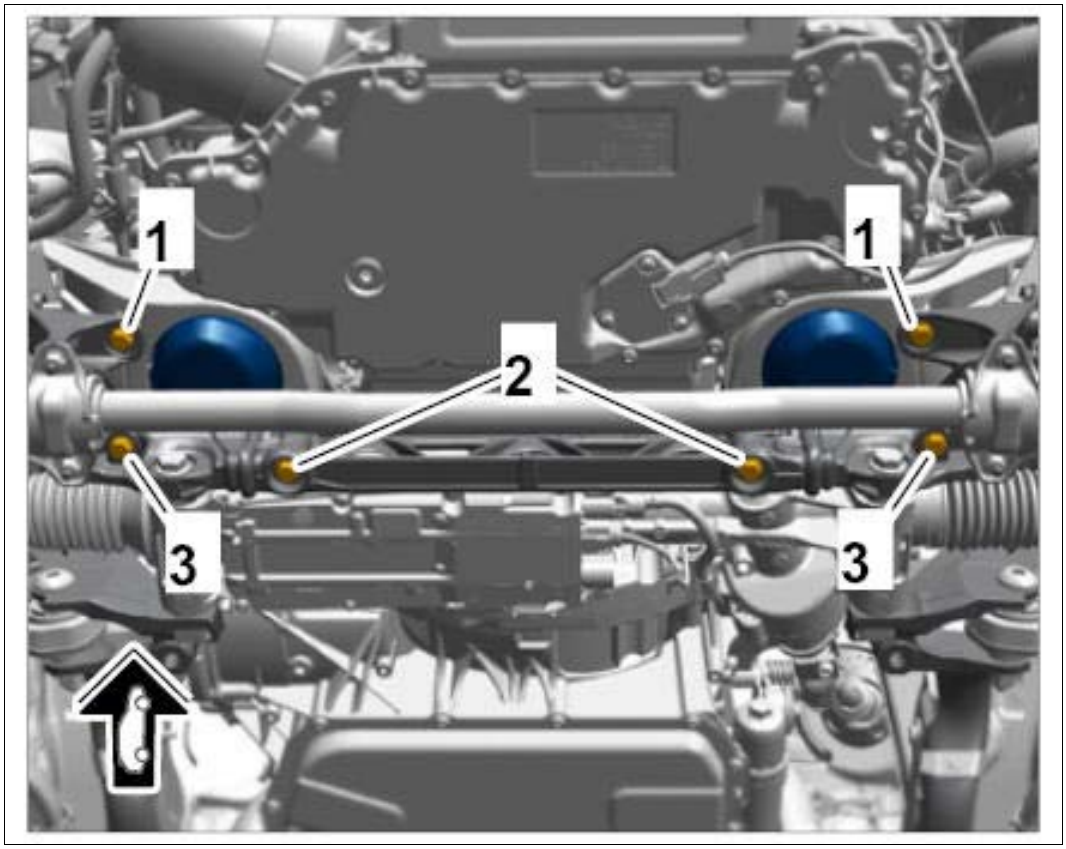

Courtesy of PORSCHE CARS NORTH AMERICA, INC.

3. Support to lock carrier **-1-** : **Tightening torque 5 Nm (3.5 ftlb.)**

   Support to front-axle carrier **-2-** : **Tightening torque 23 Nm (17 ftlb.)**

Fig 5: Identifying Lower Strut

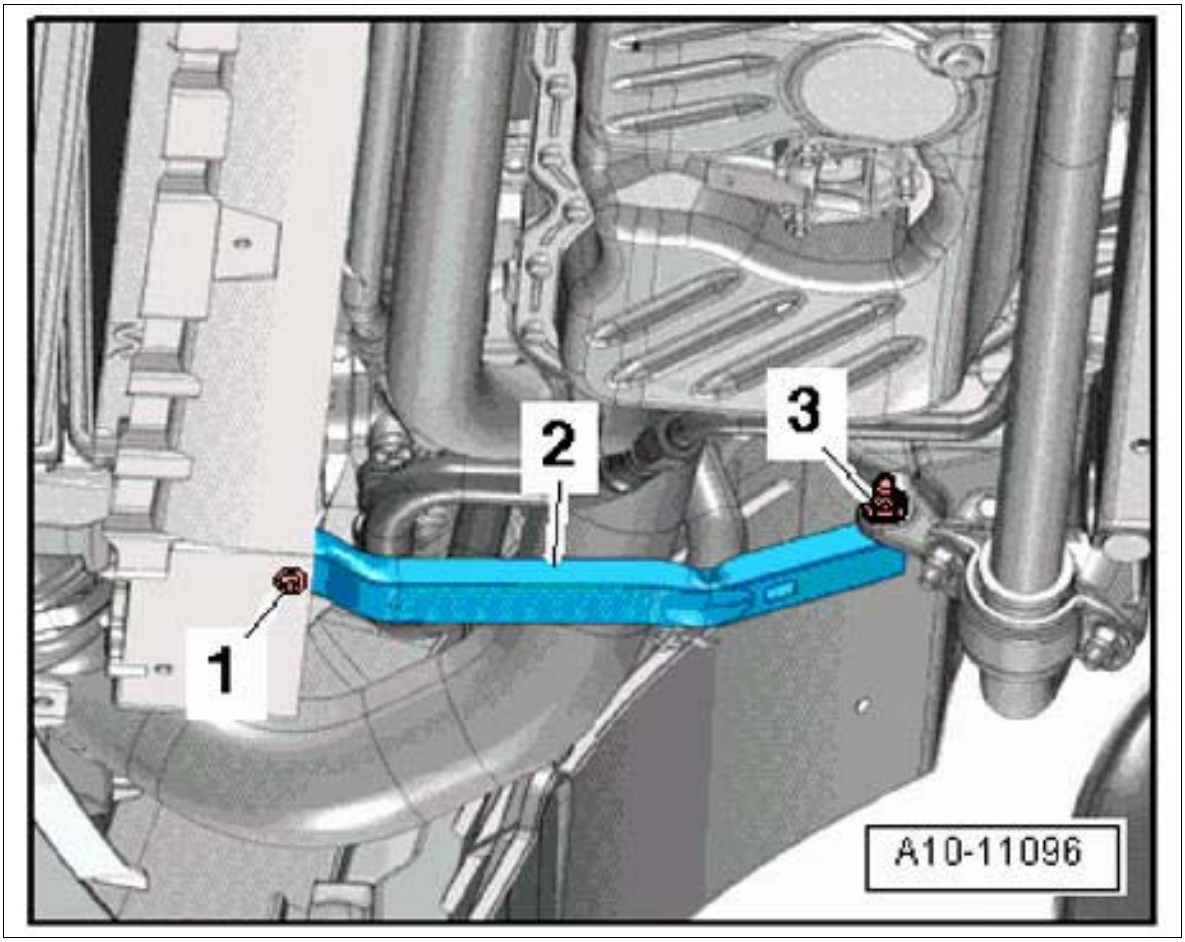

Courtesy of PORSCHE CARS NORTH AMERICA, INC.

1. Lower control arm to front-axle carrier: **Tightening torque 140 Nm (104 ftlb.) Final tightening +180°**

WM 400619 REMOVING AND INSTALLING FRONT-AXLE CARRIER (ALL MODELS) > SUBSEQUENT WORK

1. Remove support bracket → 1001IN SUPPORTING ENGINE ON THE BODY (ENGINE SAFETY DEVICE) .
2. Install lower trailing arm on both sides of the vehicle → Installing Lower Trailing Arm .
3. Remove tension straps → Tying up wheel bearing housing .

Fig 1: Identifying Tension Straps

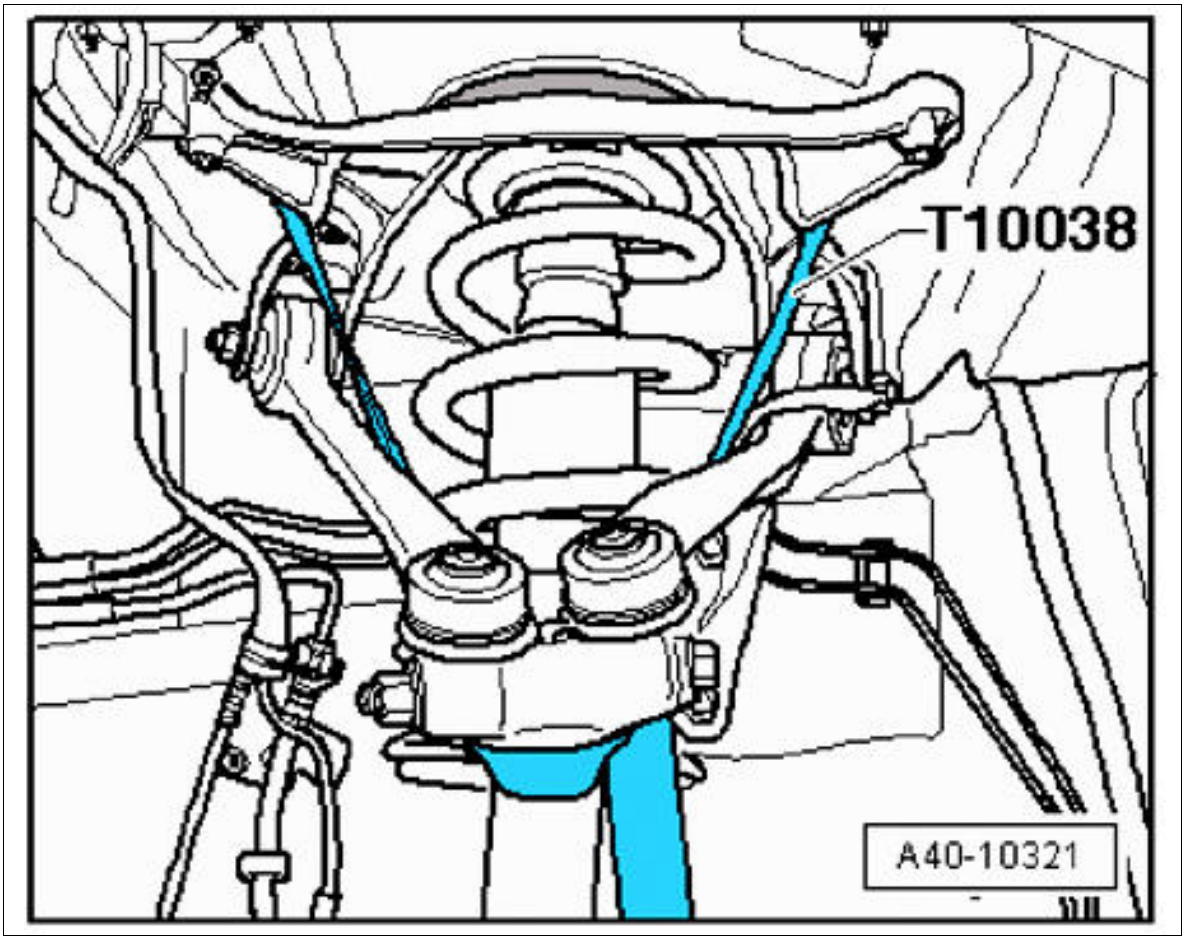

Courtesy of PORSCHE CARS NORTH AMERICA, INC.

4. Install front level sensors → 431855 REPLACING FRONT LEVEL SENSOR .
5. Install power-steering gear → Installing Power-Steering Gear .
6. Install anti-roll bar → 407719 REMOVING AND INSTALLING FRONT ANTI-ROLL BAR .
7. Install heat shields at the left and right and tighten fastening screws **-1 and 2-** .

   Fastening screws **-1-** : **Tightening torque 9 Nm (6.5 ftlb.)**

   Fastening screw **-2-** : **Tightening torque 20 Nm (15 ftlb.)**

Fig 2: Identifying Front-Axle Carrier Heat Shield Fastening Screws



Courtesy of PORSCHE CARS NORTH AMERICA, INC.

8. Install front-axle support → 400819 REMOVING AND INSTALLING FRONT-AXLE SUPPORT .
9. Install front underbody panelling → 519219 REMOVING AND INSTALLING COVER FOR FRONT UNDERBODY .
10. Install wheel housing liner on both sides of the vehicle → 505619 REMOVING AND INSTALLING FRONT WHEEL HOUSING LINER .
11. Fit front wheels → 440519 REMOVING AND INSTALLING WHEEL .
12. Perform suspension alignment → 449503 SUSPENSION ALIGNMENT, COMPLETE .

WM 400819 REMOVING AND INSTALLING FRONT-AXLE SUPPORT (ALL MODELS) > TECHNICAL VALUES

Location	Description	Type	Basic value	Tolerance 1	Tolerance 2
Fastening screws	Step 1, cross-strut to front-axle carrier	Initial tightening	90 Nm (67 ftlb.)		

Fastening screws	Step 2, cross-strut to front-axle carrier	Final tightening	+135°		
Front fastening screw	Step 1, cross-strut to front-axle carrier	Initial tightening	90 Nm (67 ftlb.)		
Fastening screw	Step 2, Cross-strut to front-axle carrier	Final tightening	+90°		

WM 400819 REMOVING AND INSTALLING FRONT-AXLE SUPPORT (ALL MODELS) > PRELIMINARY WORK

1. Remove cover for front underbody → 519219 REMOVING AND INSTALLING COVER FOR FRONT UNDERBODY .

WM 400819 REMOVING AND INSTALLING FRONT-AXLE SUPPORT (ALL MODELS) > REMOVING AND INSTALLING FRONT-AXLE SUPPORT > REMOVING FRONT-AXLE SUPPORT

1. Unclip electric line at the marked positions **-1 and 2-** .
2. Unscrew fastening screws **-arrows-** .
3. Remove front-axle support.

Fig 1: Locating Front-Axle Support Mounting Screws

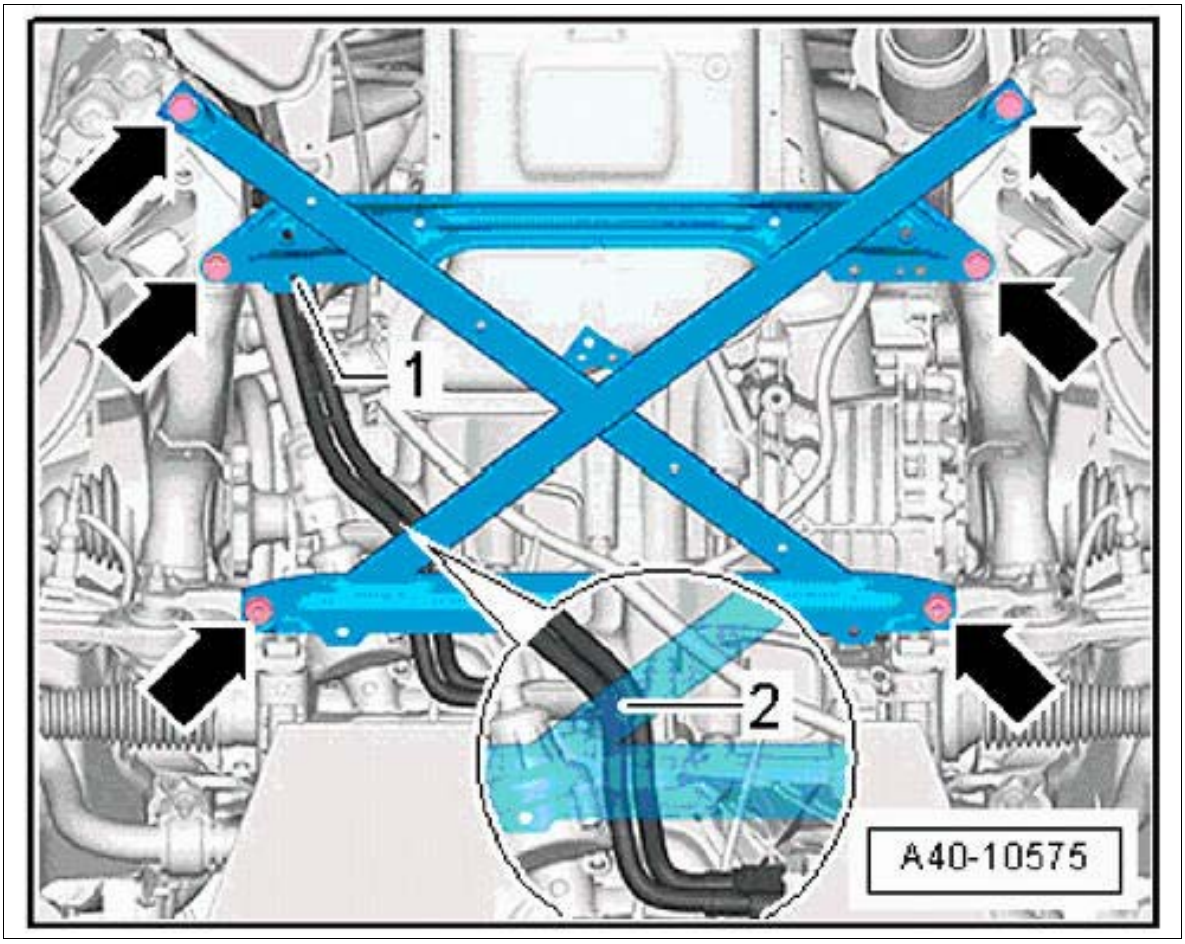

Courtesy of PORSCHE CARS NORTH AMERICA, INC.

4. Remove square nuts **-arrows-** from the cast recesses.

Fig 2: Locating Front-Axle Carrier Square Nuts

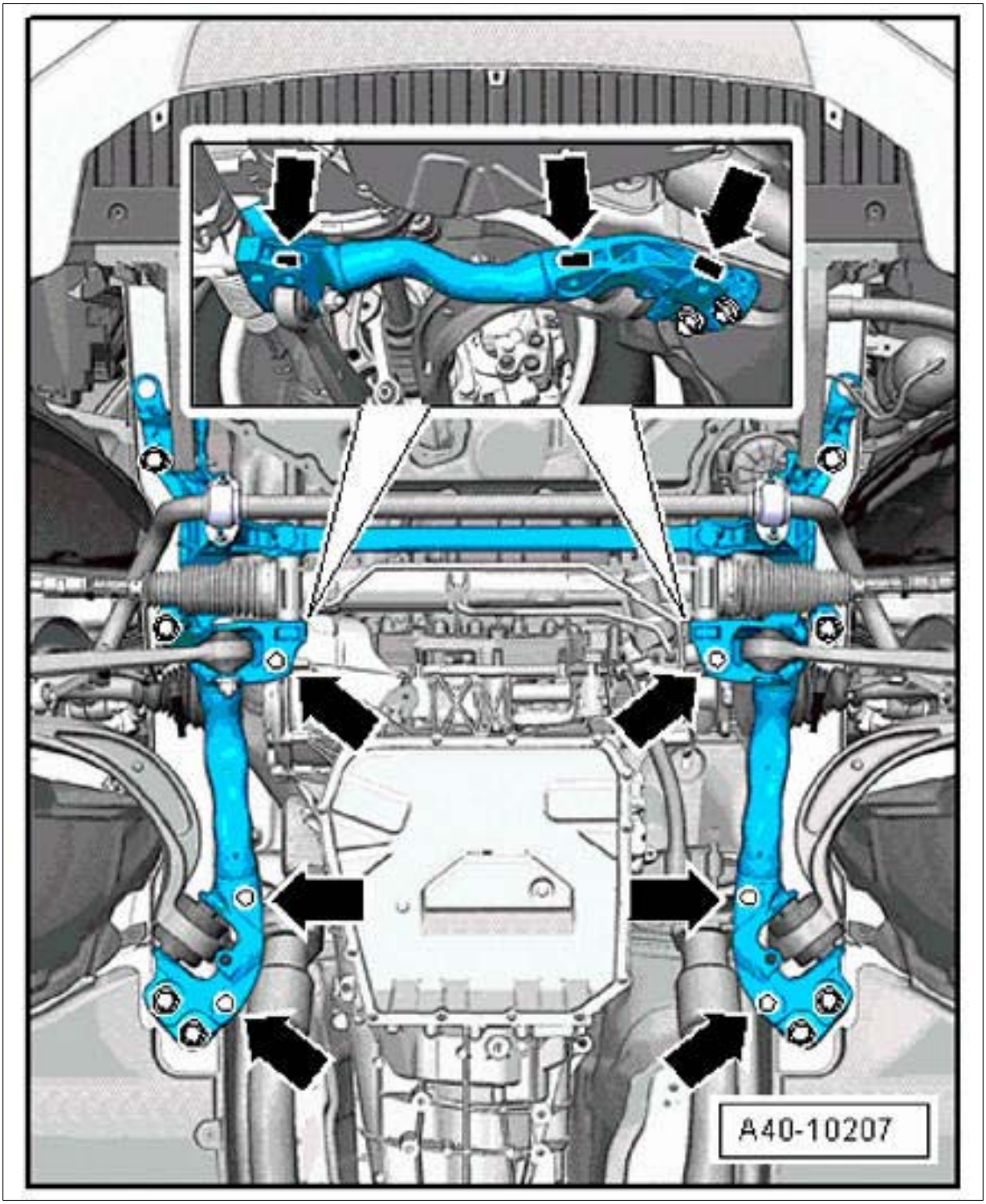

Courtesy of PORSCHE CARS NORTH AMERICA, INC.

WM 400819 REMOVING AND INSTALLING FRONT-AXLE SUPPORT (ALL MODELS) > REMOVING AND INSTALLING FRONT-AXLE SUPPORT > INSTALLING FRONT-AXLE SUPPORT

Information

Risk of damage to chassis components

- If the front-axle carrier, steering gear or front-axle support is not fitted correctly, never lower the vehicle onto its wheels!
- Supporting the vehicle on the front-axle carrier or on the front-axle support (e.g. using a jack) is not permitted!
- If the vehicle needs to be moved, the front-axle support must be installed using the old bolts and square nuts and must then be tightened to the specified torque without additional torque angle.

1. Installation is performed in reverse order.

   Observe the specified **tightening torques (replace fastening screws!):**

   Front-axle support to front-axle carrier:

   Step 1 **Initial tightening 90 Nm (67 ftlb.)**

   Step 2 **Final tightening +90°**

   Front-axle support to front-axle carrier, middle and rear:

   Step 1 **Initial tightening 90 Nm (67 ftlb.)**

   Step 2 **Final tightening +135°**

WM 400819 REMOVING AND INSTALLING FRONT-AXLE SUPPORT (ALL MODELS) > SUBSEQUENT WORK

1. Install cover for front underbody → 519219 REMOVING AND INSTALLING COVER FOR FRONT UNDERBODY .

WM 401519 REMOVING AND INSTALLING UPPER TRAILING ARM (ALL MODELS) > TOOLS

Designation	Type	Number	Description	
transmission jack	Workshop equipment	WE 1082		

Support	VW tool	T10149		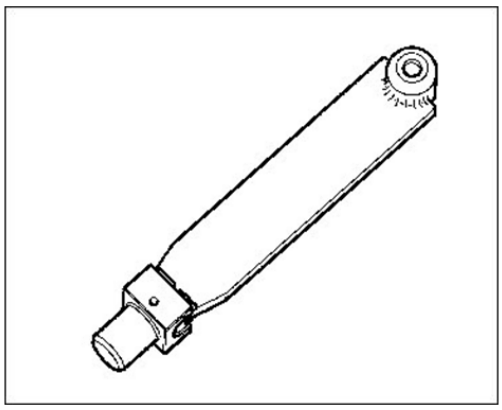

WM 401519 REMOVING AND INSTALLING UPPER TRAILING ARM (ALL MODELS) > TECHNICAL VALUES

Location	Description	Type	Basic value	Tolerance 1	Tolerance 2
Upper trailing arm to wheel bearing housing	M10 thread	Tightening torque	45 Nm (33 ftlb.)		
Upper trailing arm to mounting saddle	M10 thread/always use new screws or bolts and nuts following removal	Initial tightening	50 Nm (37 ftlb.)		
Upper trailing arm to mounting saddle	M10 thread/always use new screws or bolts and nuts following removal	Final tightening	+90°		

WM 401519 REMOVING AND INSTALLING UPPER TRAILING ARM (ALL MODELS) > PRELIMINARY WORK

1. Remove wheel → 440519 REMOVING AND INSTALLING WHEEL .

WM 401519 REMOVING AND INSTALLING UPPER TRAILING ARM (ALL MODELS) > REMOVING AND INSTALLING UPPER TRAILING ARM > REMOVING UPPER TRAILING ARM

1. Lift the wheel bearing housing.

Fig 1: Locating Support (T10149) Mounting Nut

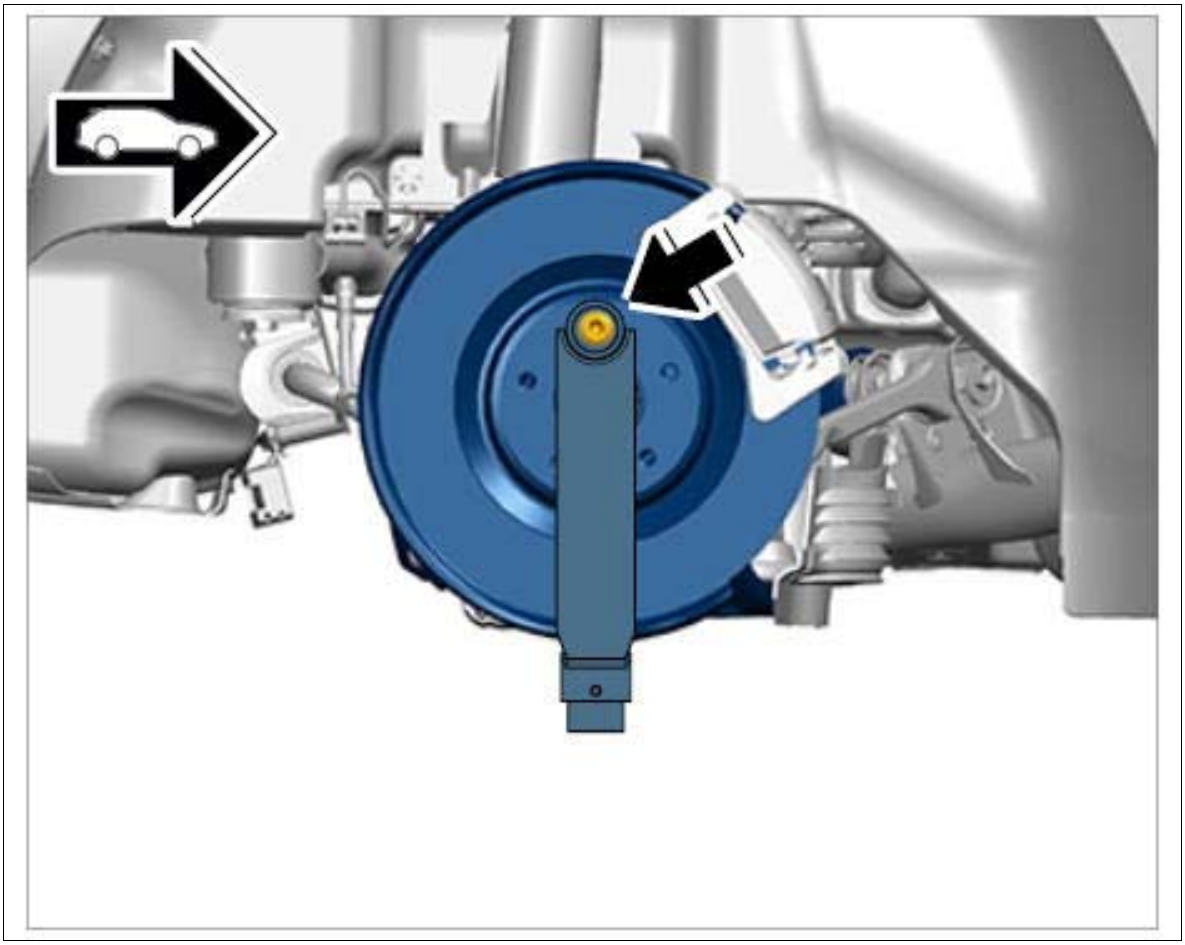

Courtesy of PORSCHE CARS NORTH AMERICA, INC.

1. 1.1. Turn the wheel hub in such a way that a bore for a wheel bolt is at the top.
2. 1.2. **Support T10149** must be secured to the wheel hub with a wheel bolt **-arrow-**
3. 1.3. **Support T10149** must now be fitted into the **transmission jack WE 1082.**
4. 1.4. Lift the wheel bearing housing.

2. Separate threaded joint **-1-** .

   Information

   The slots in the wheel bearing housing must not be widened using a chisel or similar tool!

3. Pull the two pins for the upper trailing arm **-2-** out of the wheel bearing housing.

   Information

   Do not lower the wheel bearing housing any lower than required.

4. Unscrew nuts **-3 and 6-** .
5. Pull out screws **-4 and 5-** .

6. Remove upper trailing arm.

Fig 2: Identifying Upper Trailing Arm Mounting Screws

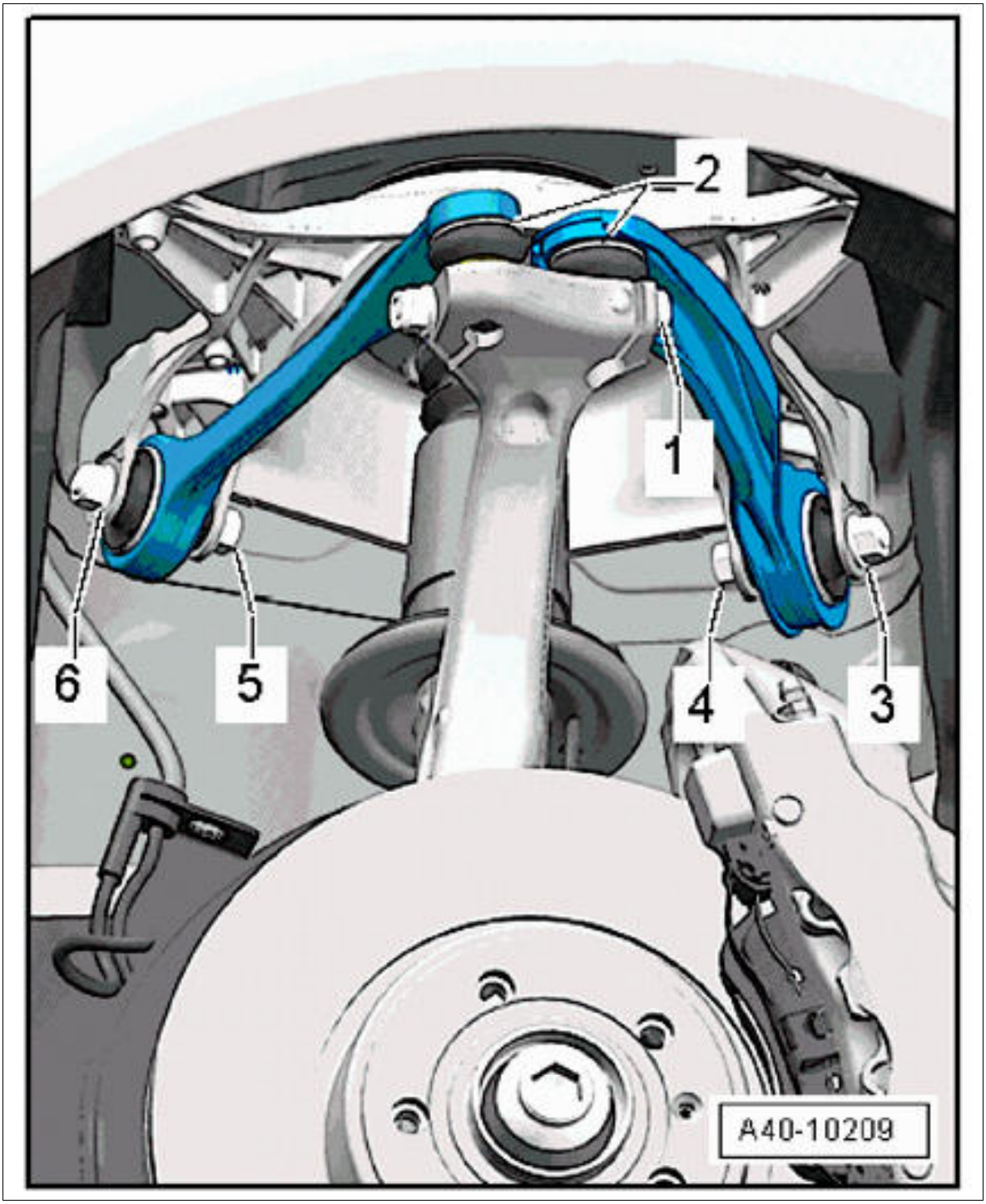

Courtesy of PORSCHE CARS NORTH AMERICA, INC.

WM 401519 REMOVING AND INSTALLING UPPER TRAILING ARM (ALL MODELS) > REMOVING AND INSTALLING UPPER TRAILING ARM > INSTALLING UPPER TRAILING ARM

WARNING: Wheel bearing housing raised incorrectly

- *Risk of squashing*
- *Risk of damage to components*

→ Wear personal protective gear.

→ Do not raise the wheel suspension higher than the normal vehicle position (vehicle resting on wheels).

Information

- All screws and threaded joints on the axle must be tightened in vehicle position. Vehicle position means: vehicle standing on its wheels, or the wheel suspension is raised with a universal vehicle lift. Dimension -1- , from lower edge of wing to center of axle corresponds to vehicle position. The current height can be found in → 4495TW ADJUSTMENT VALUES FOR SUSPENSION ALIGNMENT . Always observe the following points!

  Fig 1: Identifying Wheel To Wing Lower Edge Dimension (Rear Axle)

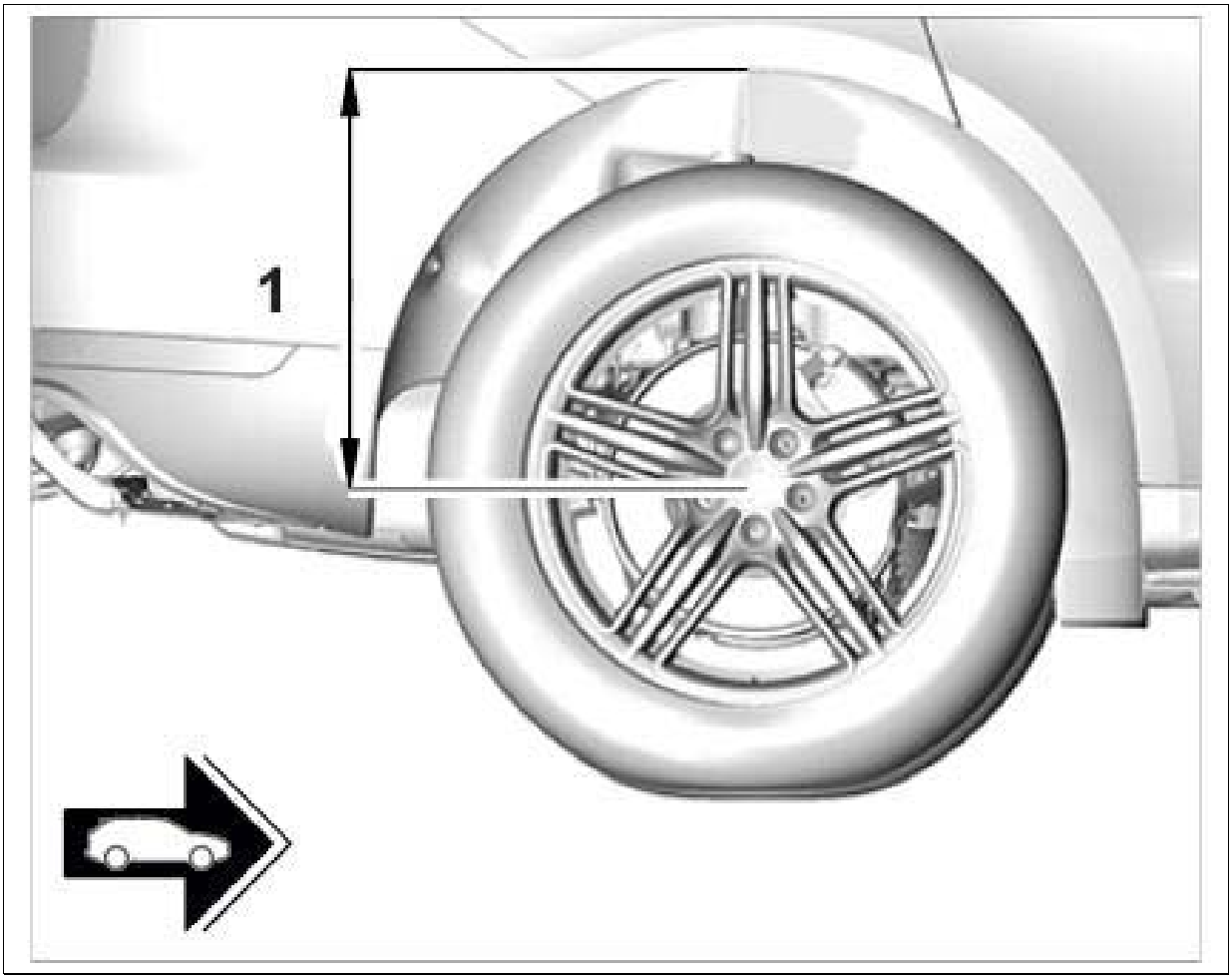

Courtesy of PORSCHE CARS NORTH AMERICA, INC.

- On vehicles with air springs, the respective air spring must be bled using the Porsche System

Tester . → 4301IN BLEEDING AND FILLING THE LEVELLING SYSTEM

- Screws and nuts are Geomet-coated and must not be greased.

1. Installation is performed in reverse order.

   Observe specified tightening torques:

   Upper trailing arm to wheel bearing housing: **Tightening torque 45 Nm (33 ftlb.)**

   Upper trailing arm to mounting saddle: **Initial tightening 50 Nm (37 ftlb.) Final tightening +90°**

WM 401519 REMOVING AND INSTALLING UPPER TRAILING ARM (ALL MODELS) > SUBSEQUENT WORK

1. Fit wheel → 440519 REMOVING AND INSTALLING WHEEL .
2. Perform suspension alignment → 449503 SUSPENSION ALIGNMENT, COMPLETE .

WM 401719 REMOVING AND INSTALLING LOWER TRAILING ARM (ALL MODELS) > TOOLS

Designation	Type	Number	Description	
transmission jack	Workshop equipment	WE 1082		
press-out tool	VW tool	T40010		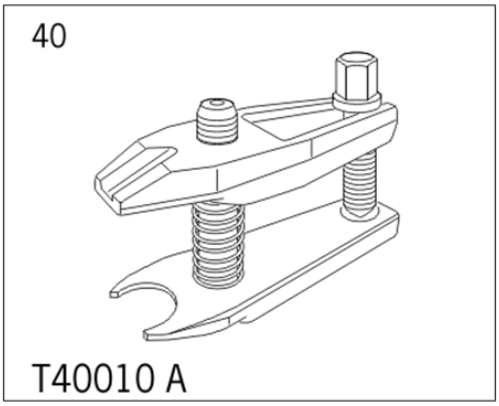

WM 401719 REMOVING AND INSTALLING LOWER TRAILING ARM (ALL MODELS) > TECHNICAL VALUES

Location	Description	Type	Basic value	Tolerance 1	Tolerance 2
Lower trailing arm to wheel	M14 thread/always	Tightening torque	140 Nm (104 ftlb.)		

bearing housing	use new nuts following removal				
Lower trailing arm to front-axle carrier	M12 thread/always use new screws or bolts and nuts following removal	Initial tightening	70 Nm (52 ftlb.)		
Lower trailing arm to front-axle carrier	M12 thread/always use new screws or bolts and nuts following removal	Final tightening	+180°		
Level sensor to lower trailing arm	M6 thread	Tightening torque	9 Nm (6.5 ftlb.)		
Spring strut to lower trailing arm	M12 thread/always use new screws or bolts and nuts following removal	Initial tightening	90 Nm (67 ftlb.)		
Spring strut to lower trailing arm	M12 thread/always use new screws or bolts and nuts following removal	Final tightening	+90°		
Tie-rod ball to wheel carrier cone	M12 x 1.5 thread/always use new nut following removal	Tightening torque	100 Nm (74 ftlb.)		

WM 401719 REMOVING AND INSTALLING LOWER TRAILING ARM (ALL MODELS) > PRELIMINARY WORK

1. Remove wheel → 440519 REMOVING AND INSTALLING WHEEL .
2. Remove cover for front underbody → 519219 REMOVING AND INSTALLING COVER FOR FRONT UNDERBODY .

WM 401719 REMOVING AND INSTALLING LOWER TRAILING ARM (ALL MODELS) > REMOVING AND INSTALLING LOWER TRAILING ARM > REMOVING LOWER TRAILING ARM

1. If installed: Screw off nut **-2-** on level sensor.
2. Separate the threaded joint for spring strut **-3-** .

Fig 1: Identifying Lower Trailing Arm Mounting Screws

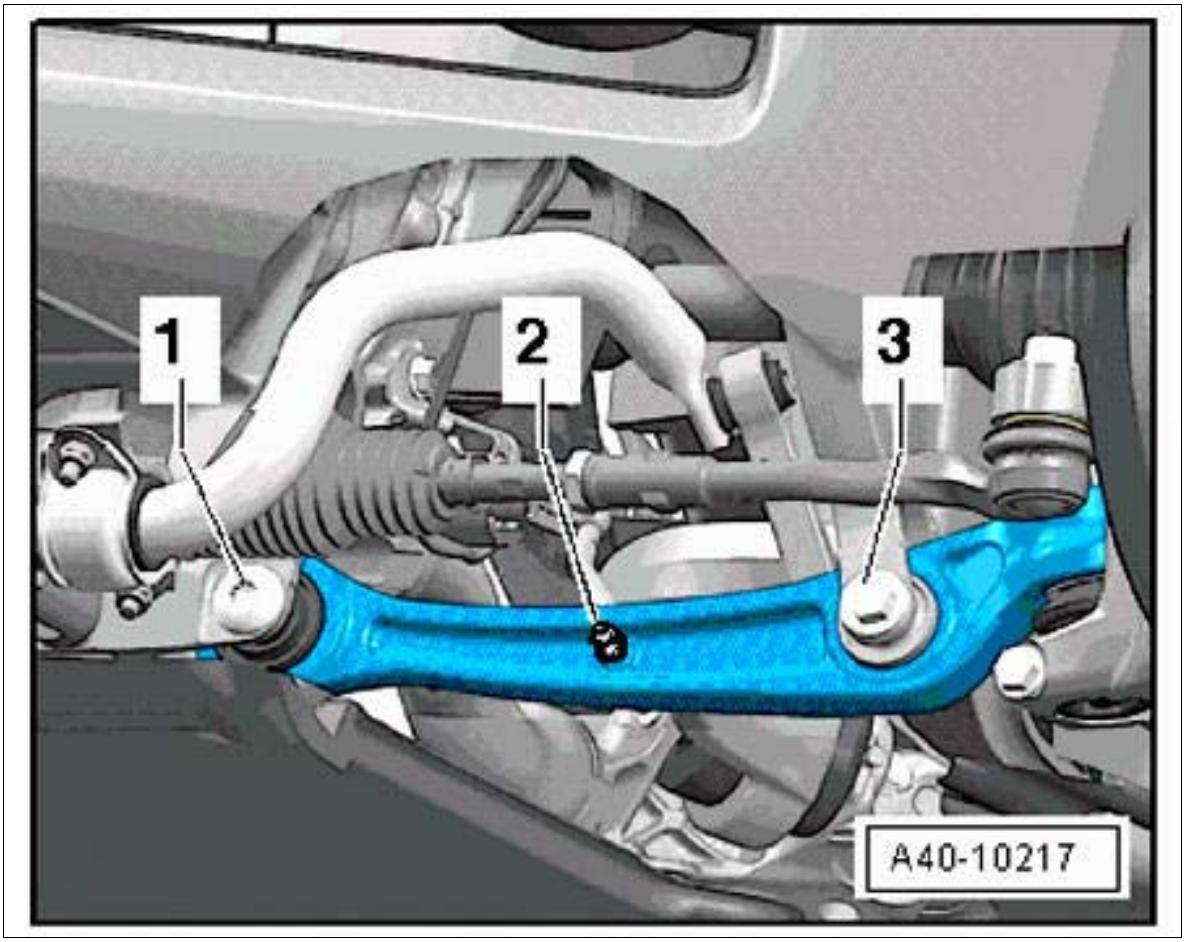

Courtesy of PORSCHE CARS NORTH AMERICA, INC.

3. Remove tie-rod ball at the wheel carrier.

    1. 3.1. Screw off nut **-1-** on the joint pin **-2-** for the tie-rod ball until it is flush with the thread of the joint pin. Counter while loosening the nut if necessary.

Fig 2: Identifying Tie-Rod Ball Nut

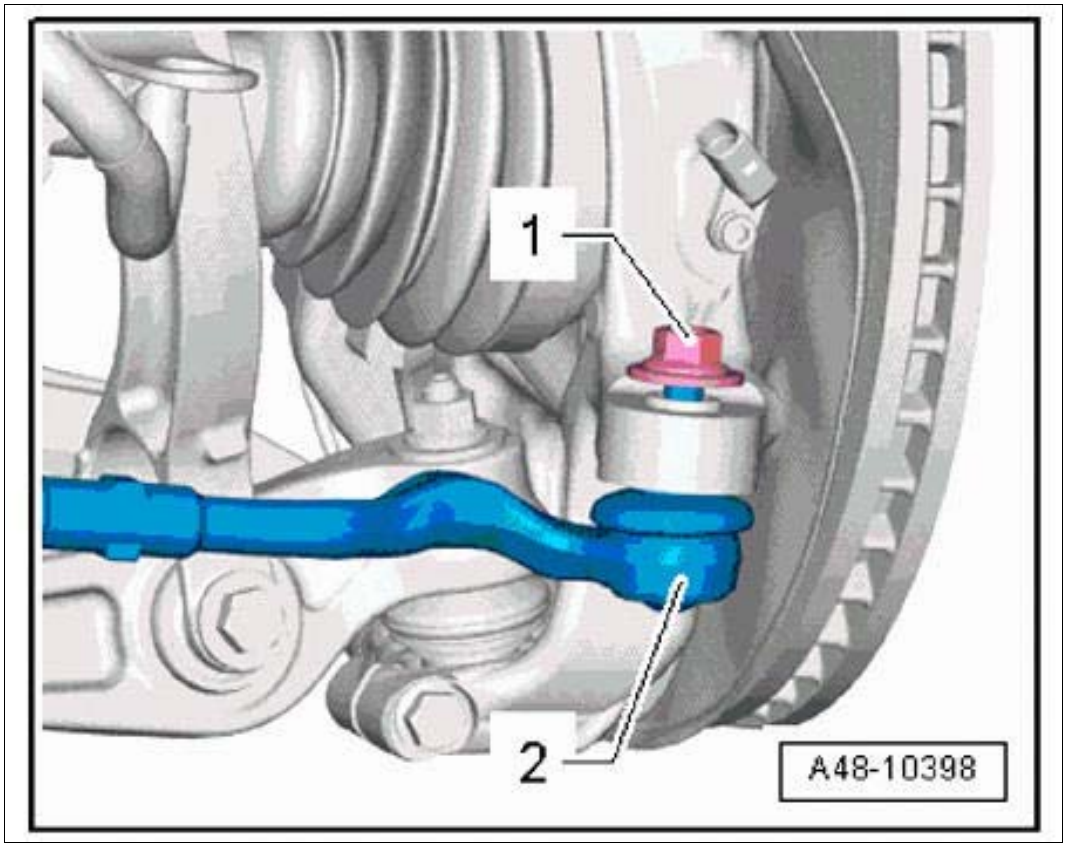

Courtesy of PORSCHE CARS NORTH AMERICA, INC.

2. 3.2. Press tie-rod ball off the wheel bearing housing using ball-joint extractor **press-out tool T40010.** → Pressing off tie-rod ball

Fig 3: Identifying Tie-Rod End & Tool

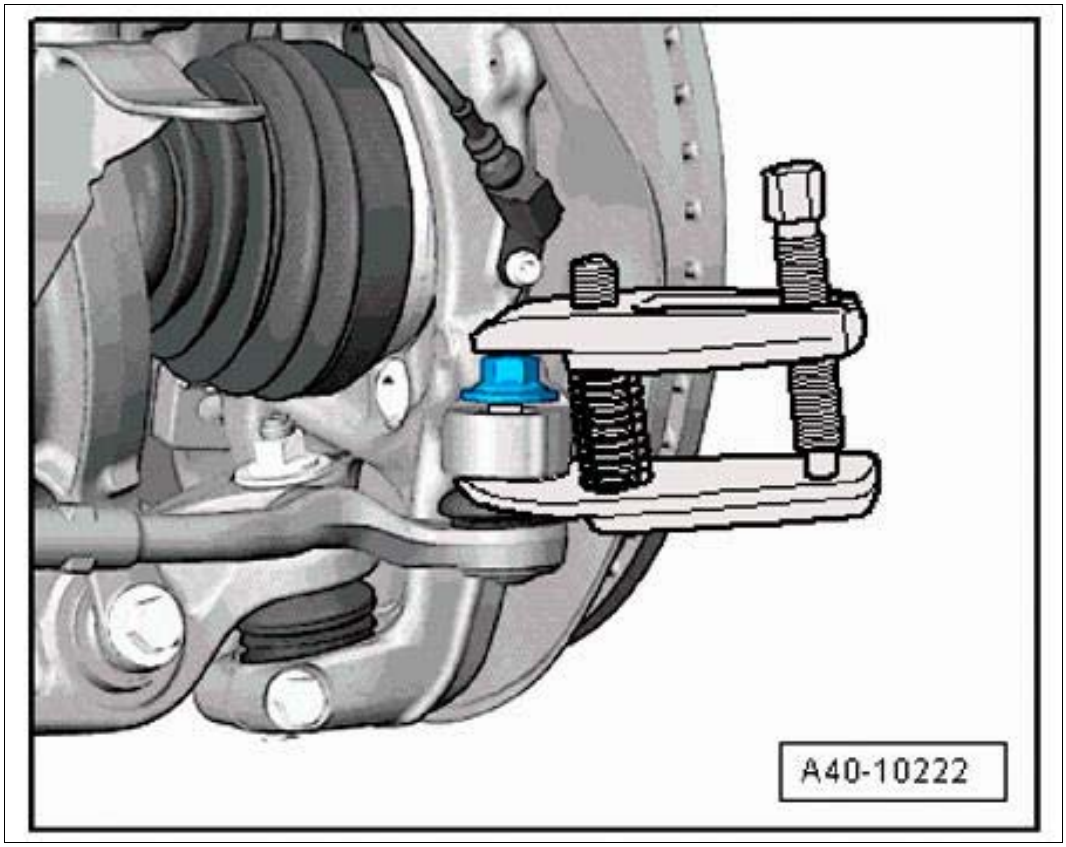

Courtesy of PORSCHE CARS NORTH AMERICA, INC.

3. 3.3. Unscrew nut.

4. Separate the threaded joint **-1-** for the trailing arm on the front-axle carrier.
    1. 4.1. Press tie rod aside slightly so that the fastening screw is accessible.
    2. 4.2. Unscrew nut and remove fastening screw.
    3. 4.3. Guide lower trailing arm out of the front-axle carrier and swivel it out to the rear.

    Information

    1. Make sure not to damage the bellows on the drive shaft
    2. To ensure that the upper trailing arm joints are not damaged, support the wheel bearing housing to prevent it from springing out too much using transmission jack WE 1082 for example.

5. Press lower trailing arm off the wheel bearing housing.

Fig 4: Pressing Off Trailing Arm

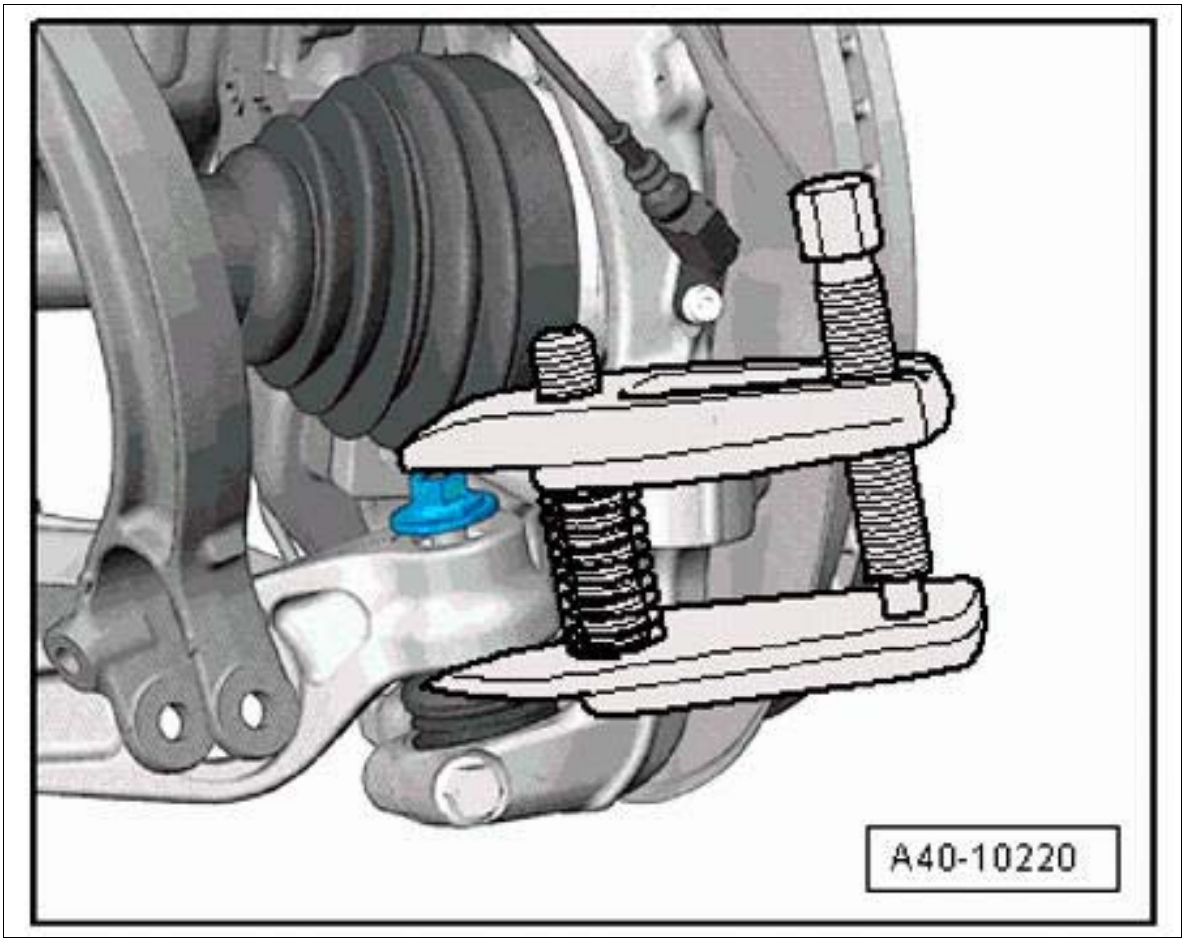

Courtesy of PORSCHE CARS NORTH AMERICA, INC.

1. 5.1. Screw off nut on joint pin for the axle joint until it is flush with the thread of the joint pin (counter while loosening the nut).
2. 5.2. Press off joint pin on the trailing arm using a ball-joint extractor **press-out tool T40010.**
3. 5.3. Screw off nut on joint pin for the axle joint.

6. Remove lower trailing arm.

WM 401719 REMOVING AND INSTALLING LOWER TRAILING ARM (ALL MODELS) > REMOVING AND INSTALLING LOWER TRAILING ARM > INSTALLING LOWER TRAILING ARM

Information

- All screws and threaded joints on the axle must be tightened in vehicle position. Vehicle position means: vehicle standing on its wheels, or the wheel suspension is raised with a universal vehicle lift. Dimension -1- , from lower edge of wing to center of axle corresponds to vehicle position. The current height can be found in → 4495TW ADJUSTMENT VALUES FOR SUSPENSION

ALIGNMENT . Always observe the following points!

Fig 1: Identifying Wheel To Wing Lower Edge Dimension (Rear Axle)

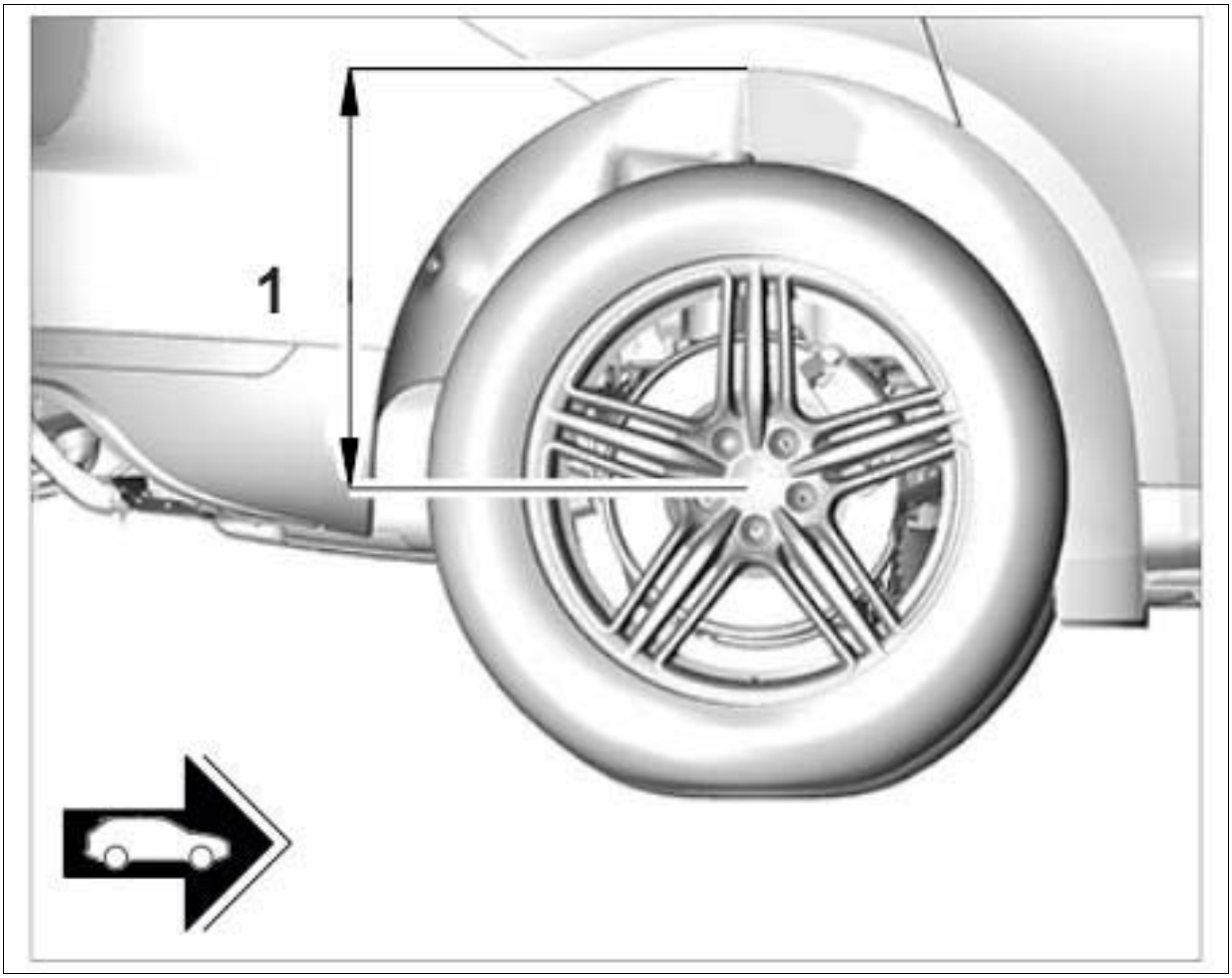

Courtesy of PORSCHE CARS NORTH AMERICA, INC.

- On vehicles with air springs, the respective air spring must be bled using the Porsche System Tester . → 4301IN BLEEDING AND FILLING THE LEVELLING SYSTEM
- Screws and nuts are Geomet-coated and must not be greased.

1. Installation is performed in reverse order.

   Observe specified tightening torques:

   Lower trailing arm to front-axle carrier: **Initial tightening 70 Nm (52 ftlb.) Final tightening +180°**

   Lower trailing arm to wheel bearing housing: **Tightening torque 140 Nm (104 ftlb.)**

   Spring strut to lower trailing arm: **Initial tightening 90 Nm (67 ftlb.) Final tightening +90°**

   Tie-rod ball to wheel bearing housing: **Tightening torque 100 Nm (74 ftlb.)**

   Level sensor to lower trailing arm: **Tightening torque 9 Nm (6.5 ftlb.)**

WM 401719 REMOVING AND INSTALLING LOWER TRAILING ARM (ALL MODELS) > SUBSEQUENT WORK

1. Remove cover for front underbody → 519219 REMOVING AND INSTALLING COVER FOR FRONT UNDERBODY .
2. Fit wheel → 440519 REMOVING AND INSTALLING WHEEL .
3. Perform suspension alignment → 449503 SUSPENSION ALIGNMENT, COMPLETE .

WM 404119 REMOVING AND INSTALLING FRONT DRIVE SHAFT (ALL MODELS) > TOOLS

Designation	Type	Number	Description	
puller hook	Special tool	9229/		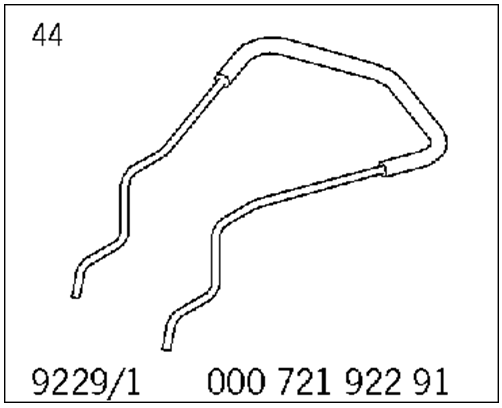

WM 404119 REMOVING AND INSTALLING FRONT DRIVE SHAFT (ALL MODELS) > TECHNICAL VALUES

Location	Description	Type	Basic value	Tolerance 1	Tolerance 2
Drive shaft to wheel hub	Step 1 (wheels suspended in the air, press brakes while tightening)/M16 x 72 thread/always use new screws or bolts following removal	Tightening torque	200 Nm (148 ftlb.)		
Drive shaft to wheel hub	Step 2 (wheels on the ground)/M16 x 72 thread/always use new screws or bolts following removal	Torque angle	180°		

Drive shaft to transmission	M10 x 20 thread/always use new screws or bolts following removal	Initial tightening	30 Nm (22 ftlb.)		
Drive shaft to transmission	M10 x 20 thread/always use new screws or bolts following removal	Final tightening	+90°		

WM 404119 REMOVING AND INSTALLING FRONT DRIVE SHAFT (ALL MODELS) > PRELIMINARY WORK

1. Remove the relevant hub cap using **puller hook 9229/1** and loosen axle bolt **-1-** before raising the vehicle. Operate the brake while doing this (2 mechanics required).

   Fig 1: Identifying Axle Bolt

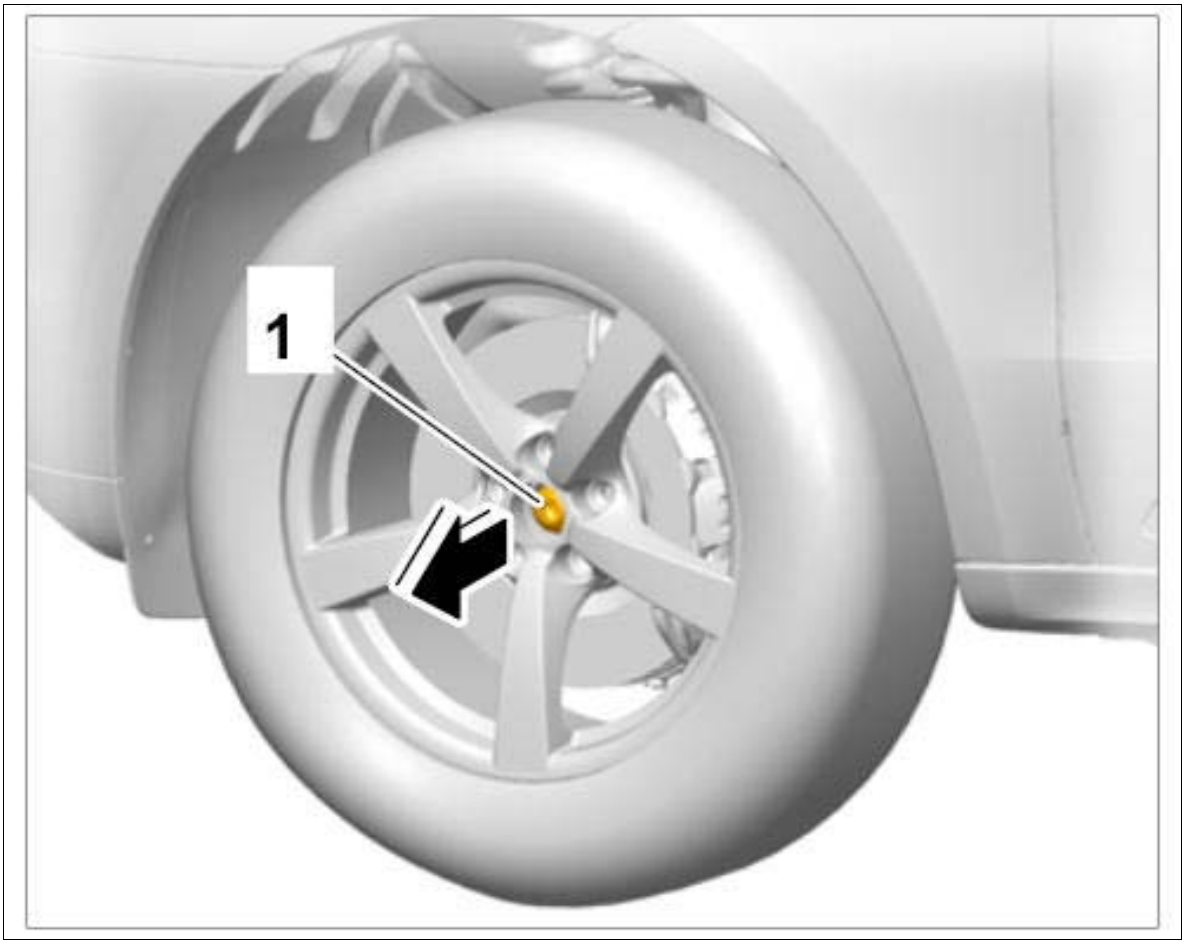

Courtesy of PORSCHE CARS NORTH AMERICA, INC.

2. Raise the vehicle → 4X00IN LIFTING THE VEHICLE .
3. Remove wheel → 440519 REMOVING AND INSTALLING WHEEL .

WM 404119 REMOVING AND INSTALLING FRONT DRIVE SHAFT (ALL MODELS) > REMOVING AND INSTALLING FRONT DRIVE SHAFT > REMOVING FRONT DRIVE SHAFT

1. Unscrew fastening screws for the drive shaft on the transmission.

   Fig 1: Identifying Drive Shaft Mounting Bolts

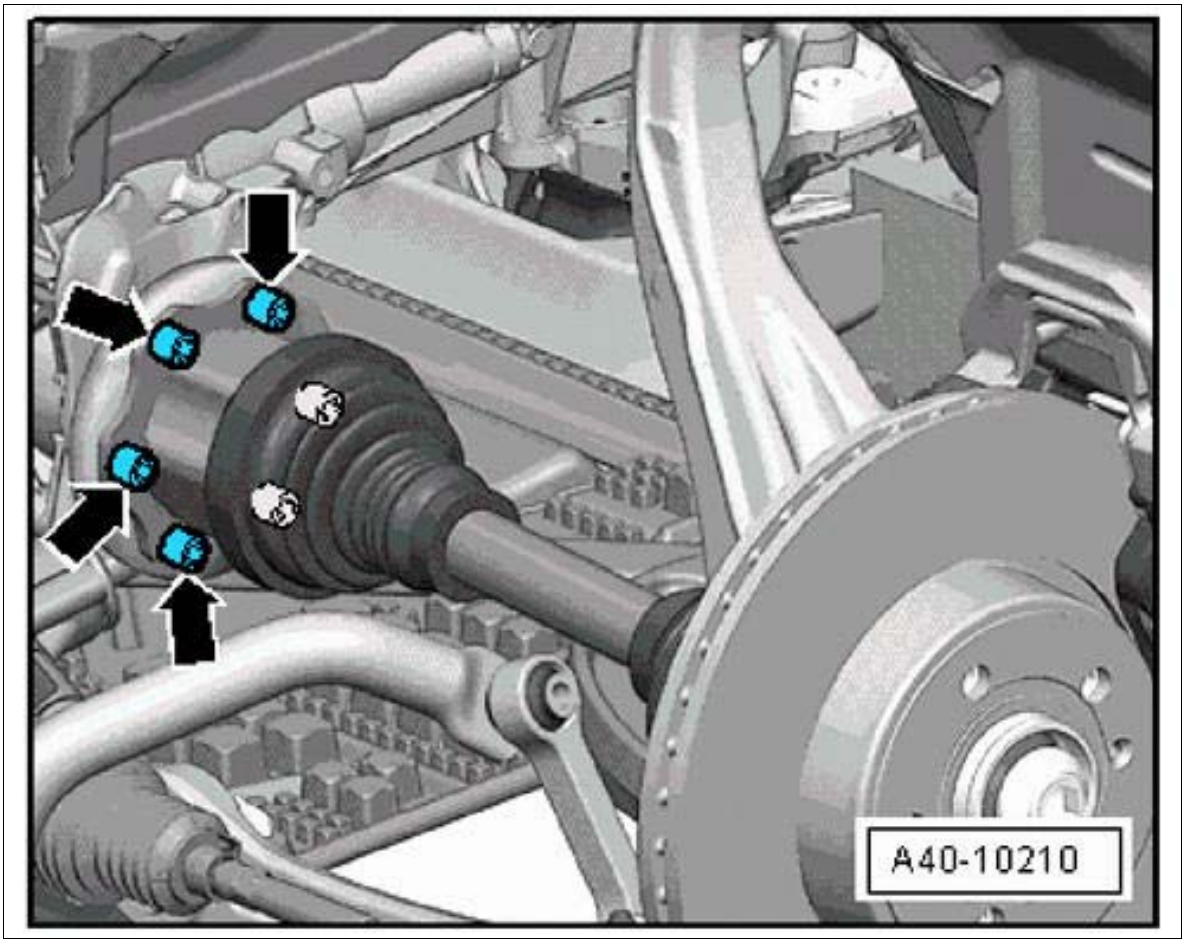

Courtesy of PORSCHE CARS NORTH AMERICA, INC.

2. Loosen holder **-1-** for brake line, wear indicator and speed sensor on the wheel bearing housing.

Fig 2: Identifying Brake Line Holder

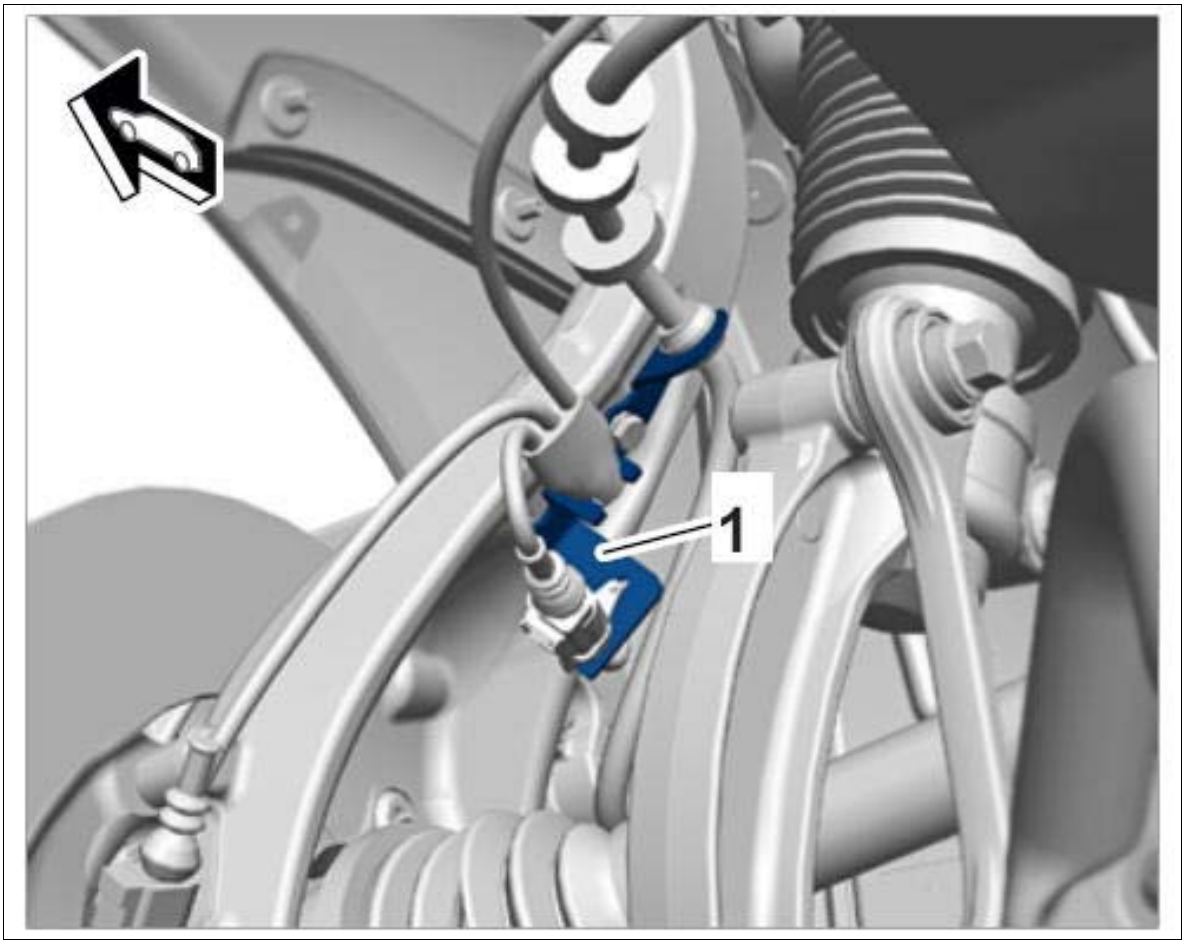

Courtesy of PORSCHE CARS NORTH AMERICA, INC.

Information

When loosening the upper trailing arms, the wheel bearing housing must be held by a second mechanic in ordering to prevent the wheel bearing housing from tilting.

3. Unscrew fastening screw on the top of the wheel bearing housing **-1-** and pull both trailing arms **-2-** up and out.

   A second mechanic must hold the wheel bearing housing to prevent it from tilting out of position. The cable and brake line must not be tensioned.

Fig 3: Identifying Trailing Arms Mountings

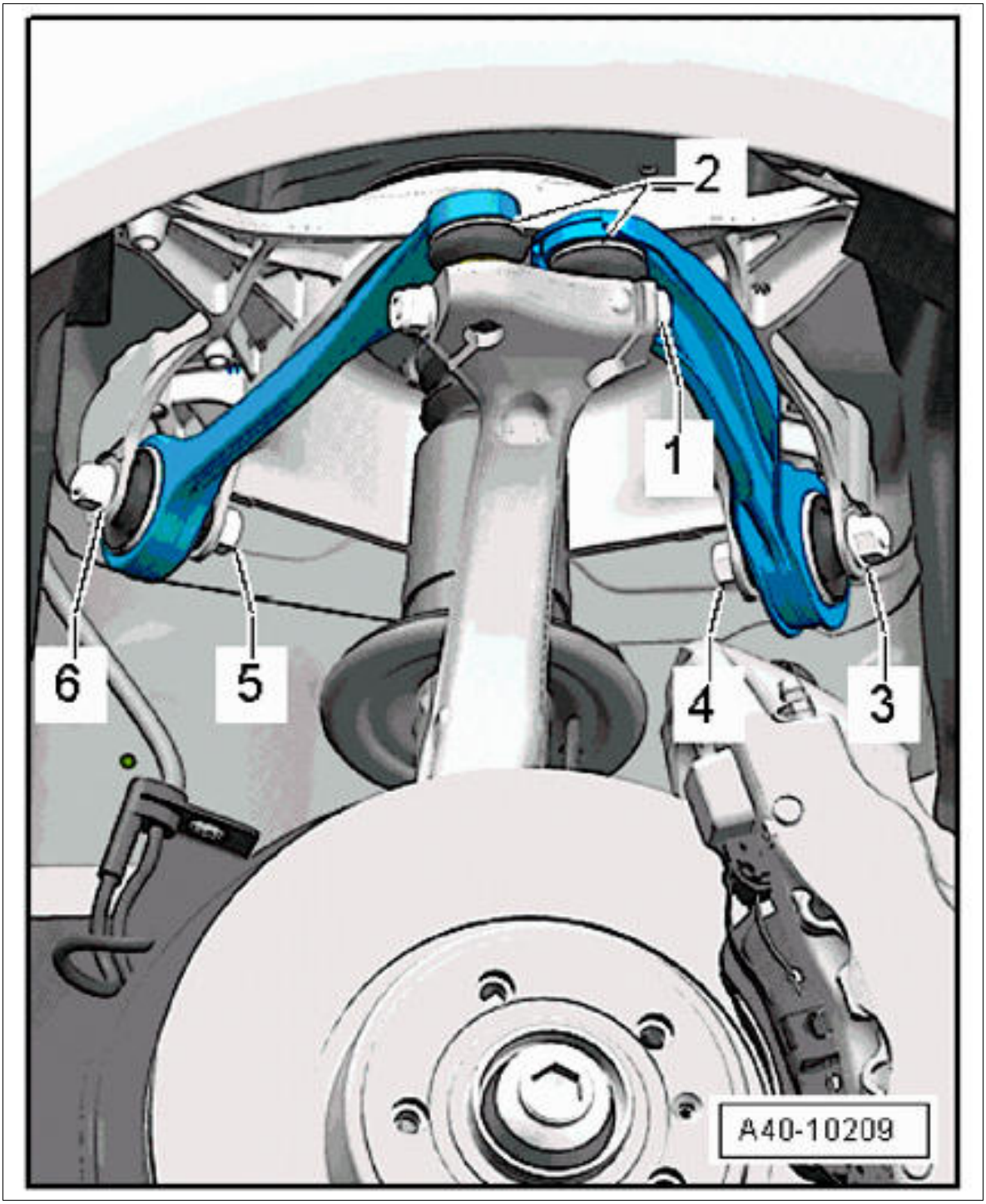

Courtesy of PORSCHE CARS NORTH AMERICA, INC.

4. Swivel the wheel bearing housing out sideways and pull drive shaft journals out of the wheel hub (2nd mechanic required).
5. Remove drive shaft.

WM 404119 REMOVING AND INSTALLING FRONT DRIVE SHAFT (ALL MODELS) >

REMOVING AND INSTALLING FRONT DRIVE SHAFT > INSTALLING FRONT DRIVE SHAFT

⚠ *CAUTION: Wheel carrier raised incorrectly*

- *Risk of squashing*
- *Risk of damage to components*

→ Wear personal protective gear.

→ Do not raise the wheel suspension higher than the normal vehicle position (vehicle resting on wheels).

Information

- All screws and threaded joints on the axle must be tightened in vehicle position. Vehicle position means: vehicle standing on its wheels, or the wheel suspension is raised with a universal vehicle lift. Dimension -1- , from lower edge of wing to center of axle corresponds to vehicle position. The current height can be found in → 4495TW ADJUSTMENT VALUES FOR SUSPENSION ALIGNMENT . Always observe the following points!

Fig 1: Identifying Wheel To Wing Lower Edge Dimension (Rear Axle)

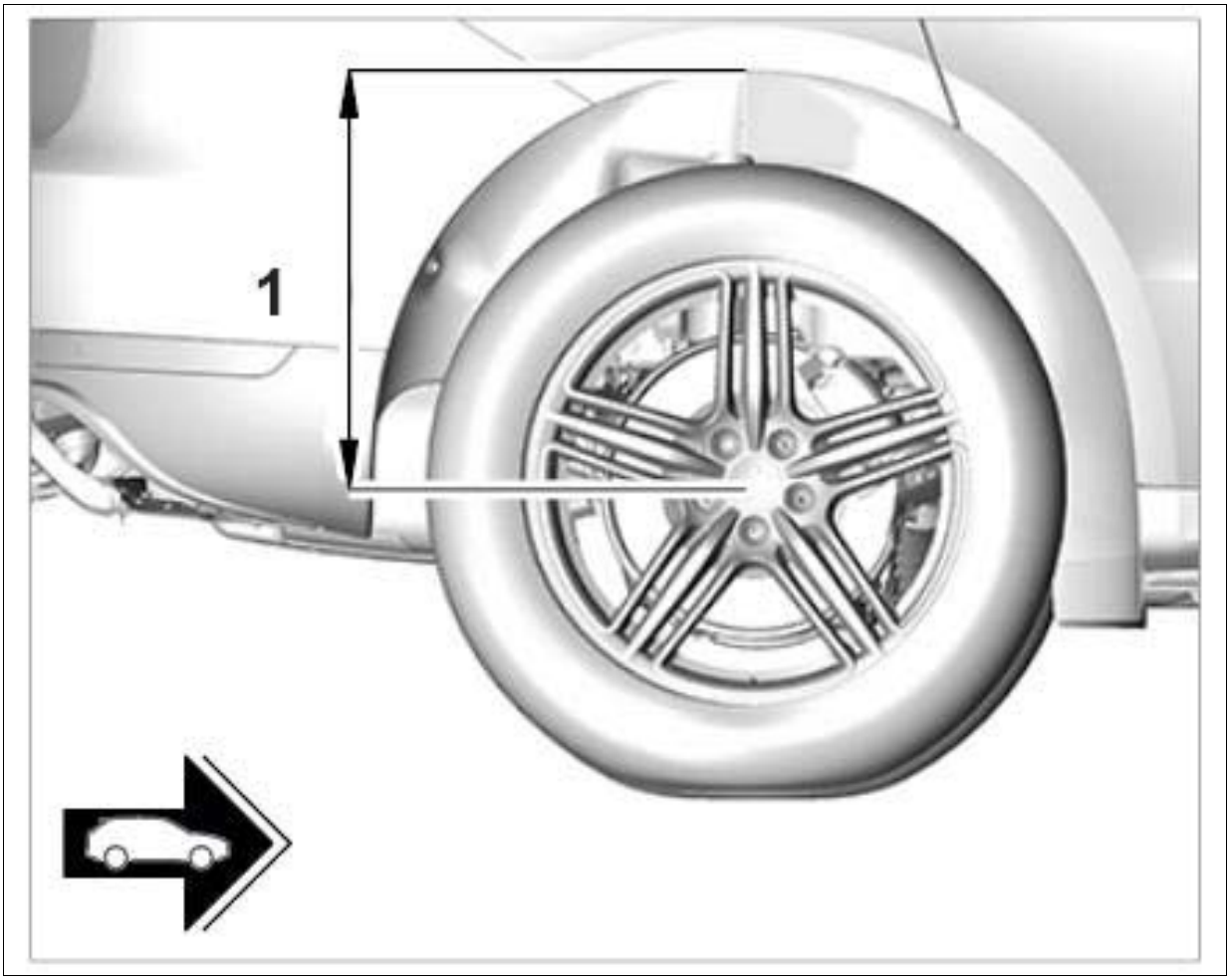

Courtesy of PORSCHE CARS NORTH AMERICA, INC.

- On vehicles with air springs, the respective air spring must be bled using the Porsche System Tester . → 4301IN BLEEDING AND FILLING THE LEVELLING SYSTEM
- Screws and nuts are Geomet-coated and must not be greased.

1. Grease splines with a little Optimoly TA aluminum paste and insert drive shaft. When doing this, press the inner joint together fully.
2. Installation is performed in reverse order.

   Observe specified tightening torques:

   Drive shaft to transmission: **Initial tightening 30 Nm (22 ftlb.) Final tightening +90°**

   Drive shaft to wheel hub (Step 1: Wheels suspended in mid-air, operate brake while tightening): **Tightening torque 200 Nm (148 ftlb.)**

   Drive shaft to wheel hub (Step 2: Wheels on the ground): **Torque angle 180°**

WM 404119 REMOVING AND INSTALLING FRONT DRIVE SHAFT (ALL MODELS) >

SUBSEQUENT WORK

1. Fit wheel → 440519 REMOVING AND INSTALLING WHEEL .
2. Fit hub cap.

WM 404137 DISASSEMBLING AND ASSEMBLING FRONT DRIVE SHAFT (ALL MODELS) > TOOLS

Designation	Type	Number	Description	
pliers	Commercially available tool	Nr.74		

WM 404137 DISASSEMBLING AND ASSEMBLING FRONT DRIVE SHAFT (ALL MODELS) > PRELIMINARY WORK

1. Remove front drive shaft → 404119 REMOVING AND INSTALLING FRONT DRIVE SHAFT .

WM 404137 DISASSEMBLING AND ASSEMBLING FRONT DRIVE SHAFT (ALL MODELS) > DISASSEMBLING AND ASSEMBLING FRONT DRIVE SHAFT > DISASSEMBLING FRONT DRIVE SHAFT

WARNING: Danger of objects or loads falling down

- *Risk of squashing or crushing*

→ Secure components to prevent them from falling down.

The joint on the transmission side and the joint pin on the wheel side of the front axle can be replaced. The entire drive shaft must be replaced if the profile shaft of the joint pin is defective.

1. Remove the outer flat joiner on the inner drive shaft boot using **pliers Nr.74** and use a slotted screwdriver for support if necessary.

Fig 1: Removing Tripod Flat Joiner

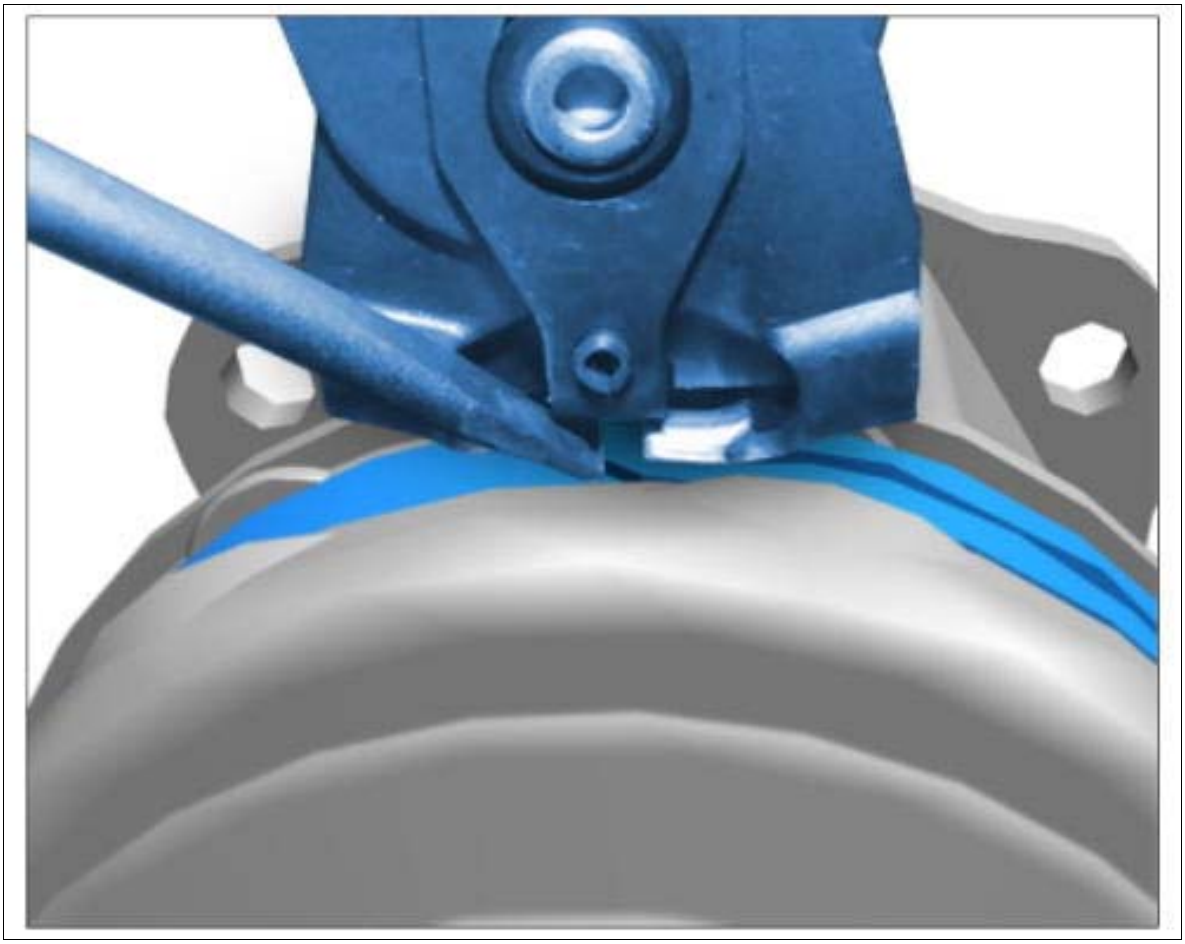

Courtesy of PORSCHE CARS NORTH AMERICA, INC.

2. Remove inner flat joiner on the inner drive shaft boot.

Fig 2: Locating Flat Joiner For Tripod

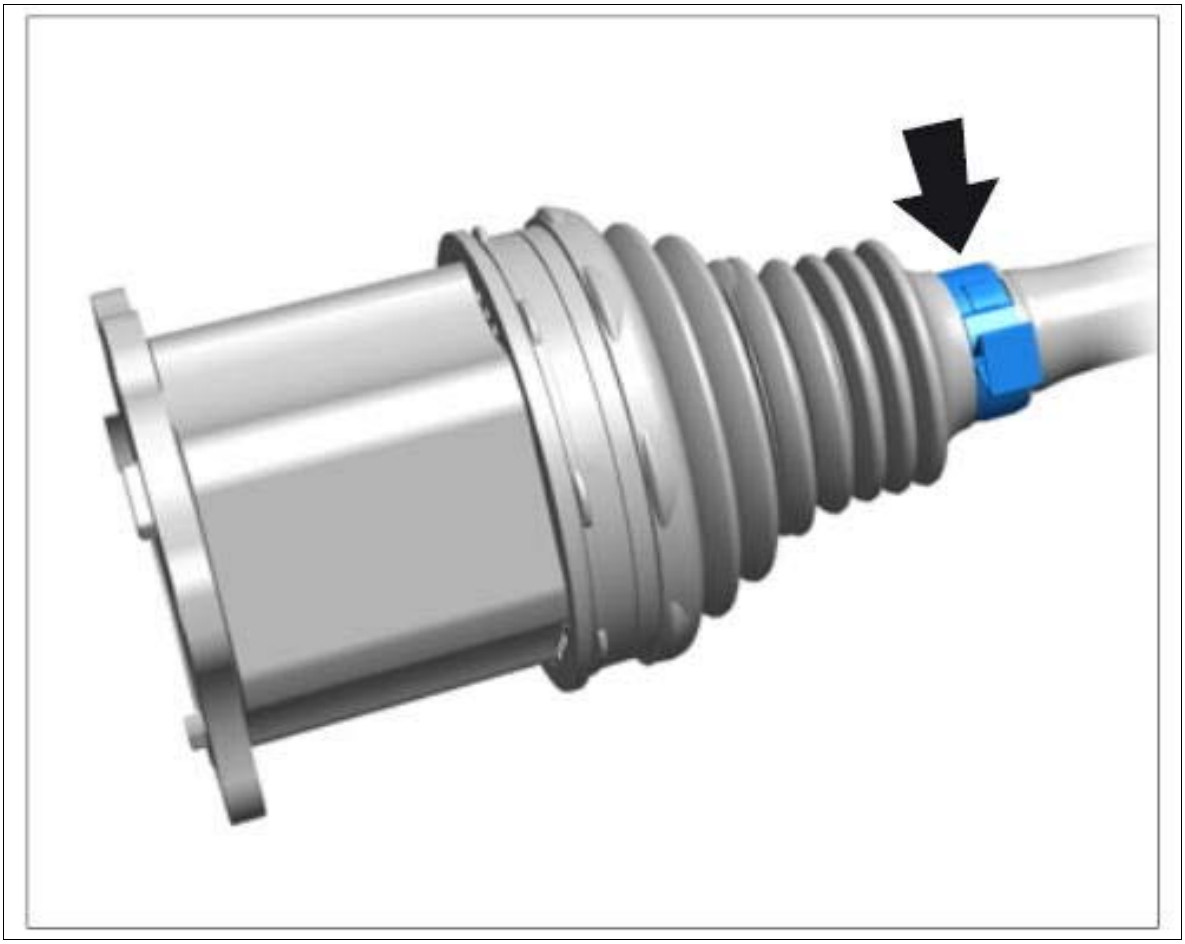

Courtesy of PORSCHE CARS NORTH AMERICA, INC.

3. Push the inner drive shaft boot back.

Fig 3: Pushing Inner Drive Shaft Boot

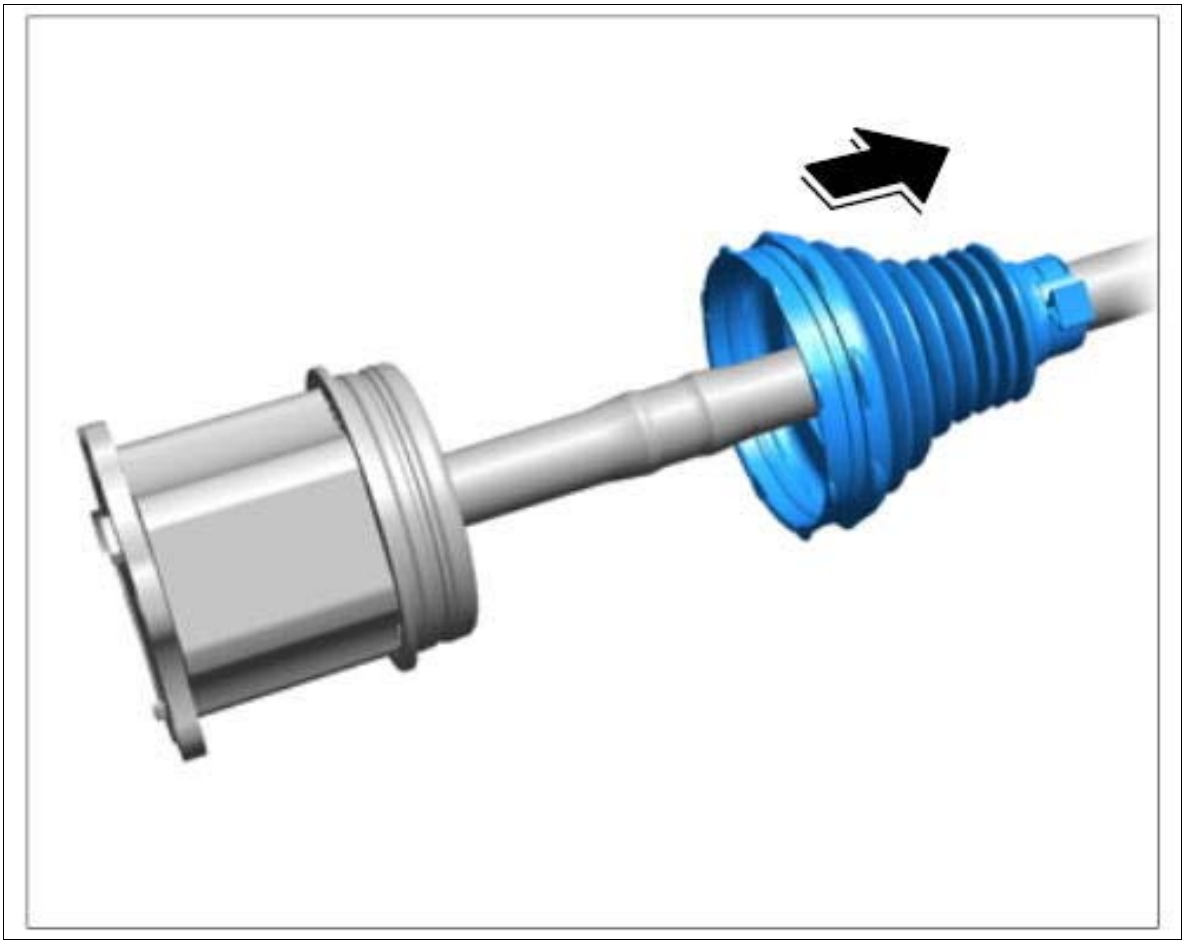

Courtesy of PORSCHE CARS NORTH AMERICA, INC.

4. Remove drive shaft from the tripod bell.

Fig 4: Removing Drive Shaft

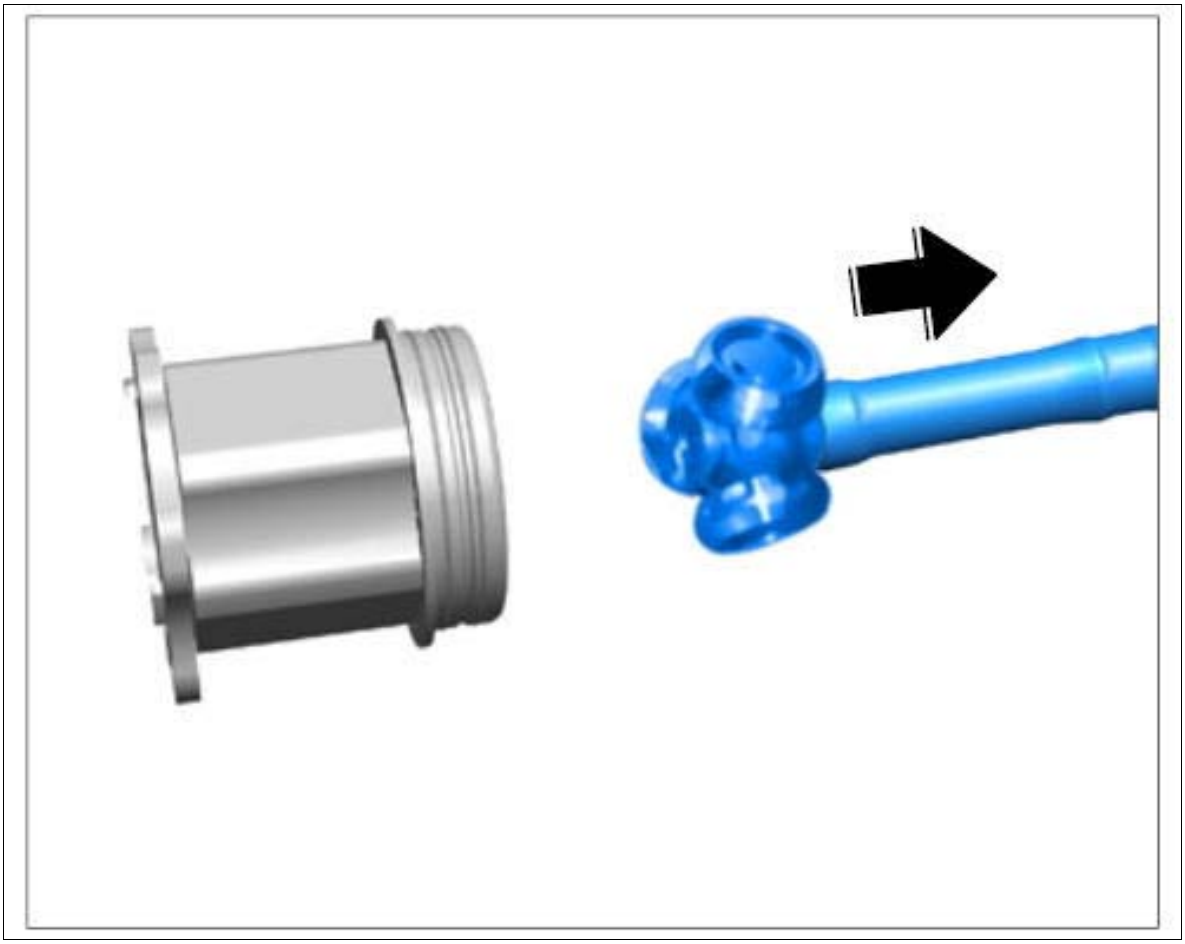

Courtesy of PORSCHE CARS NORTH AMERICA, INC.

5. Remove the outer/inner flat joiners from the outer drive shaft boot.
    1. 5.1. Pull outer drive shaft boot off the joint pin.

Fig 5: Removing Bellows

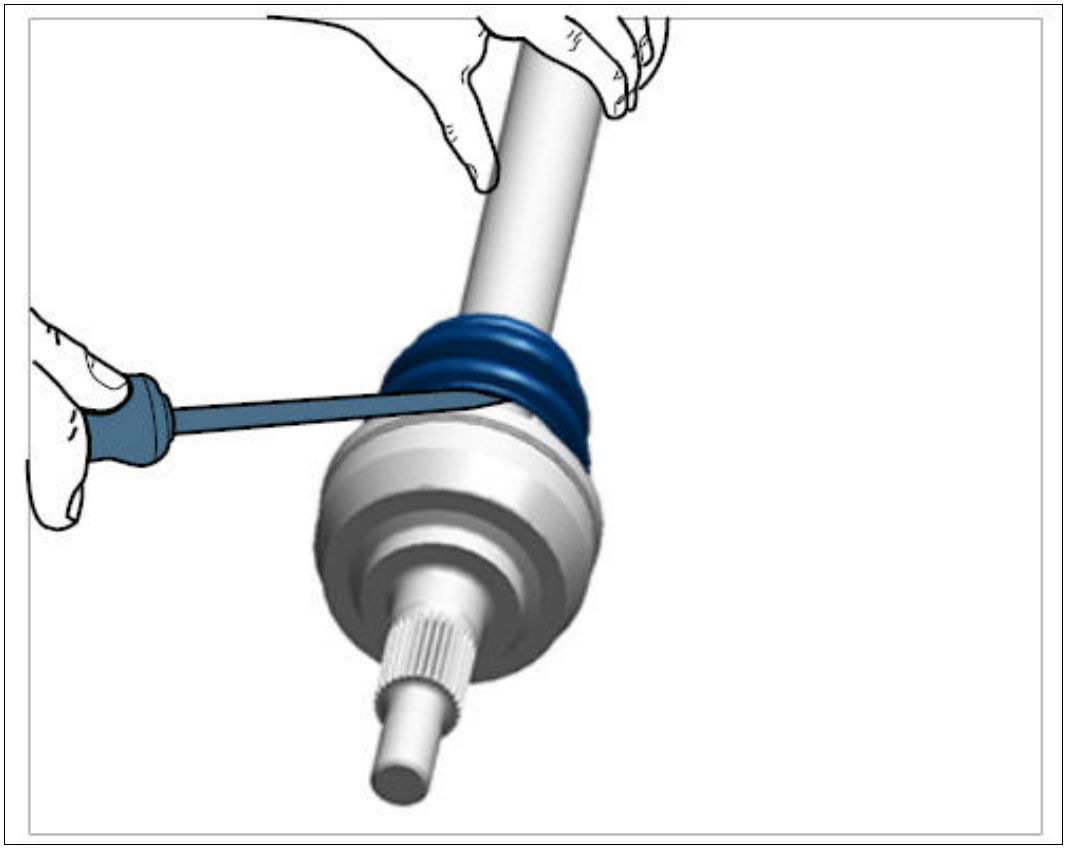

Courtesy of PORSCHE CARS NORTH AMERICA, INC.

6. Clamp the drive shaft (use aluminum protective jaws). Position an aluminum mandrel on the ball hub of the joint pin (star-shaped inner ring) **-arrow-** and remove the joint pin (outer joint) by hitting it several times with a hammer.

Fig 6: Removing Joint (Wheel Side)

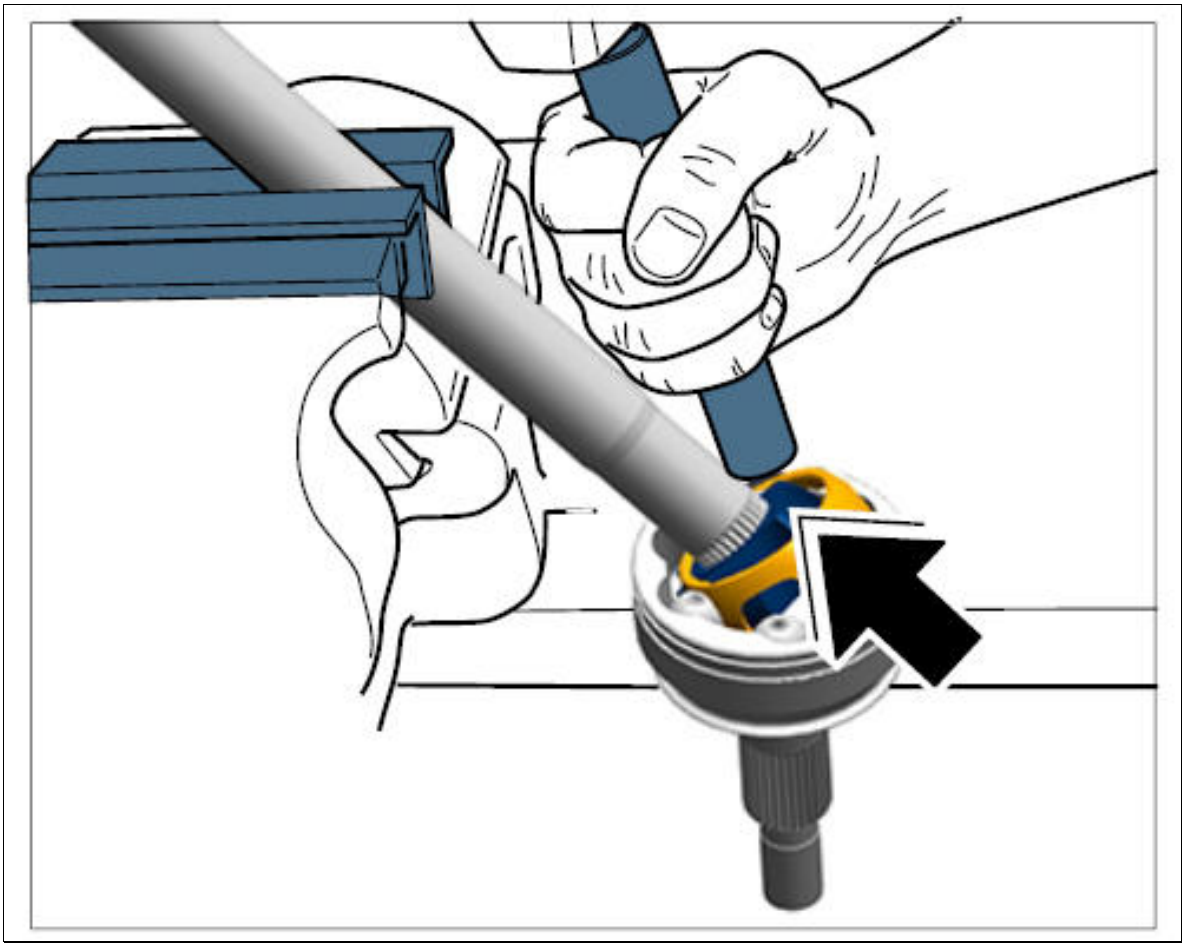

Courtesy of PORSCHE CARS NORTH AMERICA, INC.

WM 404137 DISASSEMBLING AND ASSEMBLING FRONT DRIVE SHAFT (ALL MODELS) > DISASSEMBLING AND ASSEMBLING FRONT DRIVE SHAFT > ASSEMBLING DRIVE SHAFT

WARNING: Danger of objects or loads falling down

- *Risk of squashing or crushing*

→ Secure components to prevent them from falling down.

Visually check all parts to be re-used carefully.

Before fitting the joint, slide all drive shaft boots and flat joiners onto the drive shaft.

Do not confuse the drive shaft boots. They are not identical parts.

Use a new circlip and check that it is seated correctly.

1. Fit both drive shaft boots onto the drive shaft.
2. Clamp the drive shaft (use aluminum protective jaws). Position the joint pin flush on the drive shaft.

   Fig 1: Positioning Joint Pin

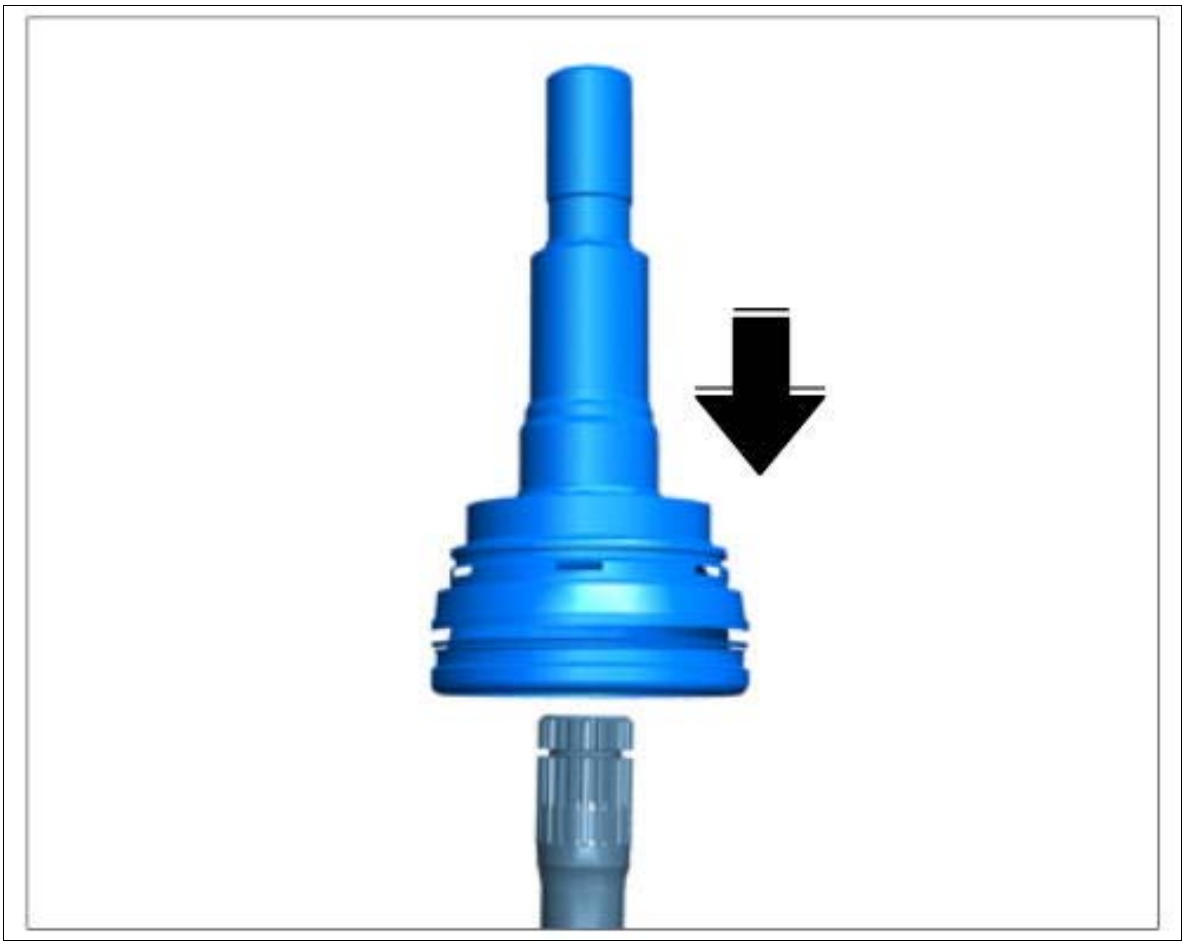

Courtesy of PORSCHE CARS NORTH AMERICA, INC.

3. Fit the joint pin as far as it will go onto the drive shaft using a rubber hammer.

   Information

   1. Do not use cleaning agents on the joints (grease thinners!).
   2. Always replace the removed joint at least during assembly.
   3. Press the grease with a sufficient amount of force into the ball tracks of the joint.
   4. Make sure that only a small amount of grease gets into the drive shaft boots.

   Re-grease joints:

   Re-grease the joints using special grease .

4. Re-grease tripod joint. The joint pin is supplied ex-works with 128 grams of grease at the outside and 130 grams at the inside. Remove excess grease with a lint-free cloth. Push the required amount of grease through the joint to the outside. Then grease the inside of the joint.

5. Re-grease joint pin.

Fig 2: Applying Grease To Outer Drive Shaft

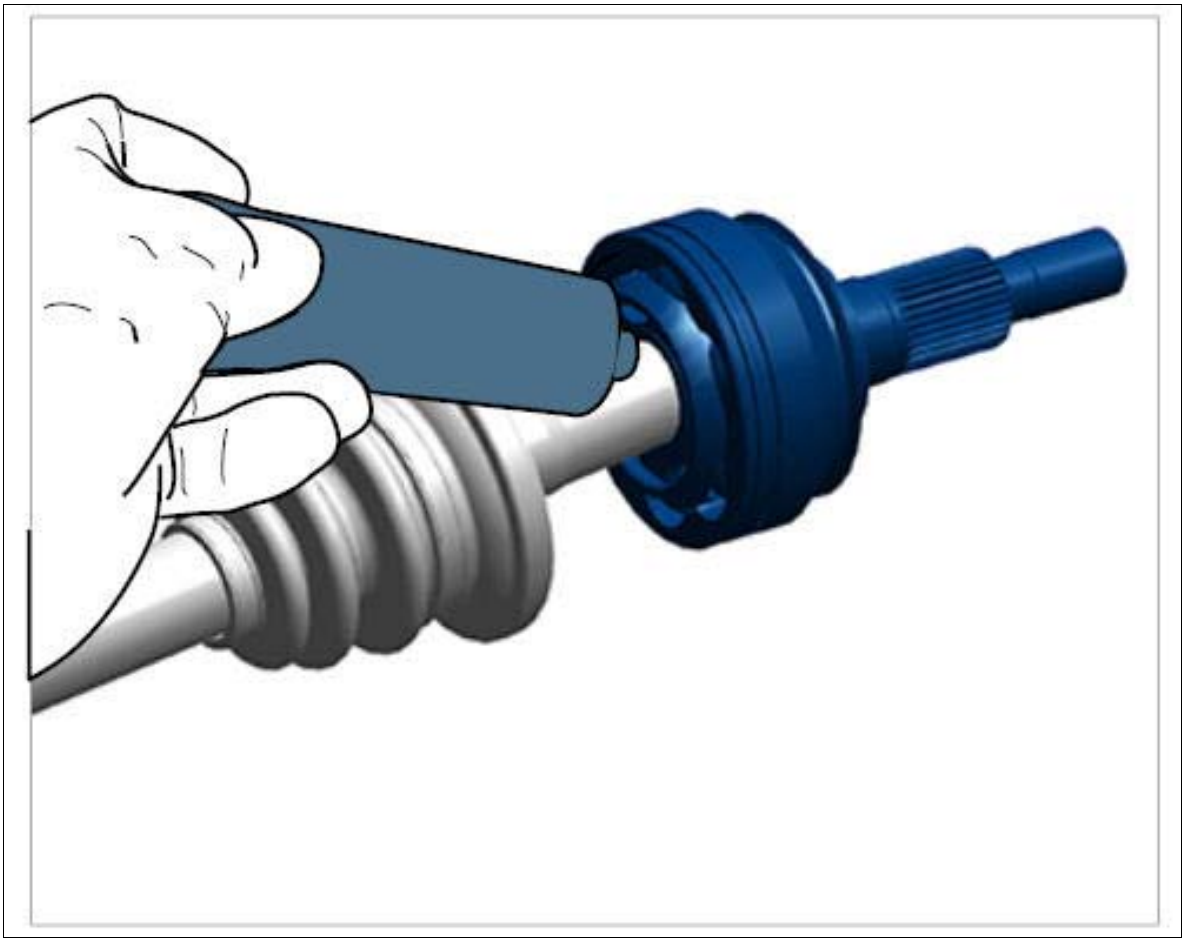

Courtesy of PORSCHE CARS NORTH AMERICA, INC.

6. Fit the small flat joiners for the two boots between the grooves. If the boots are fitted correctly, the groove **-1-** will be visible.

Fig 3: Identifying Drive Shaft Grooves

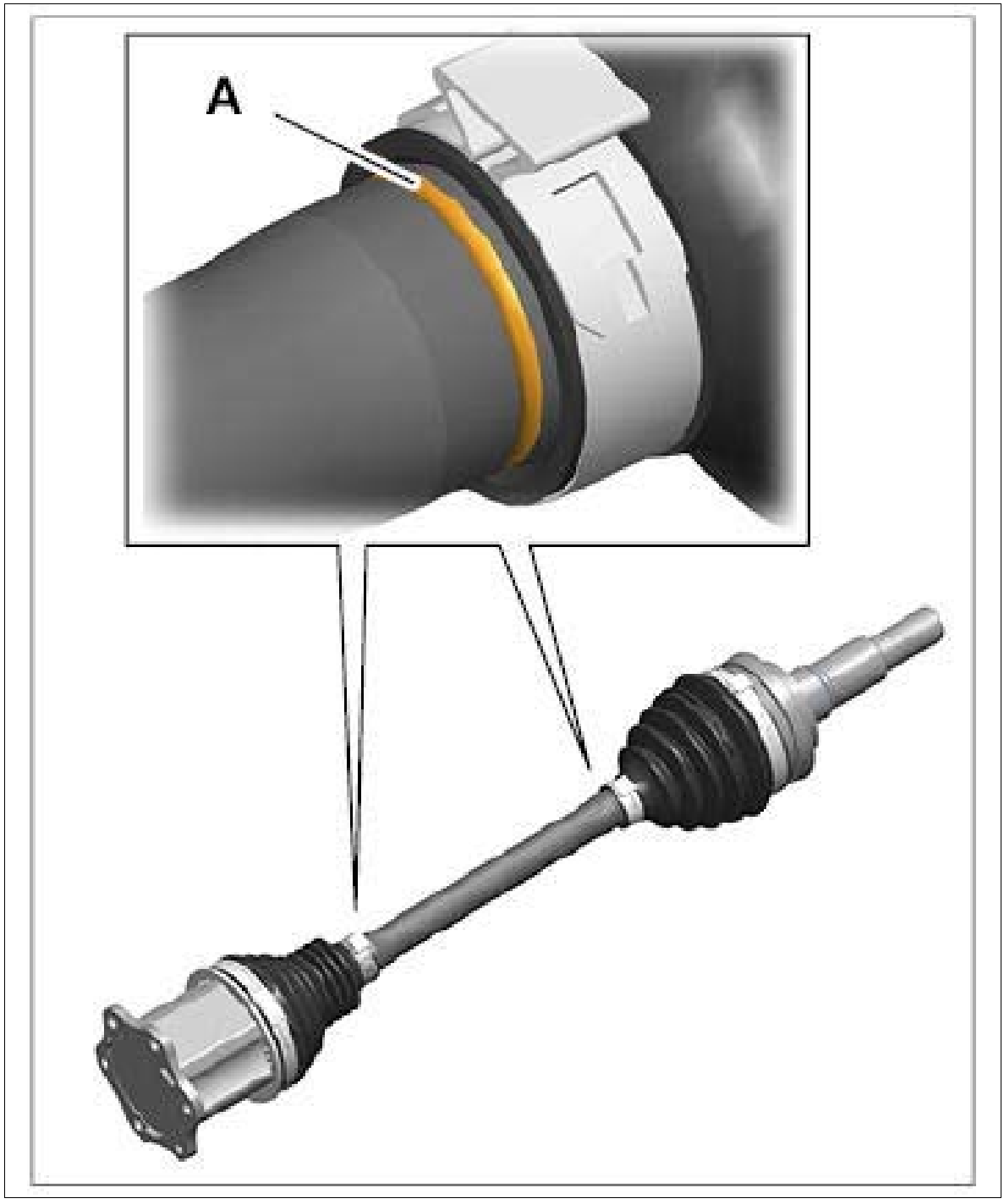

Courtesy of PORSCHE CARS NORTH AMERICA, INC.

7. Assemble tripod joint.
    1. 7.1. Clamp the drive shaft vertically in the vice. The tripod joint is facing upwards.
    2. 7.2. Position the tripod bearings flush with the pins with your hand.

Fig 4: Locating Needle-Roller Bearing Tripod Joint

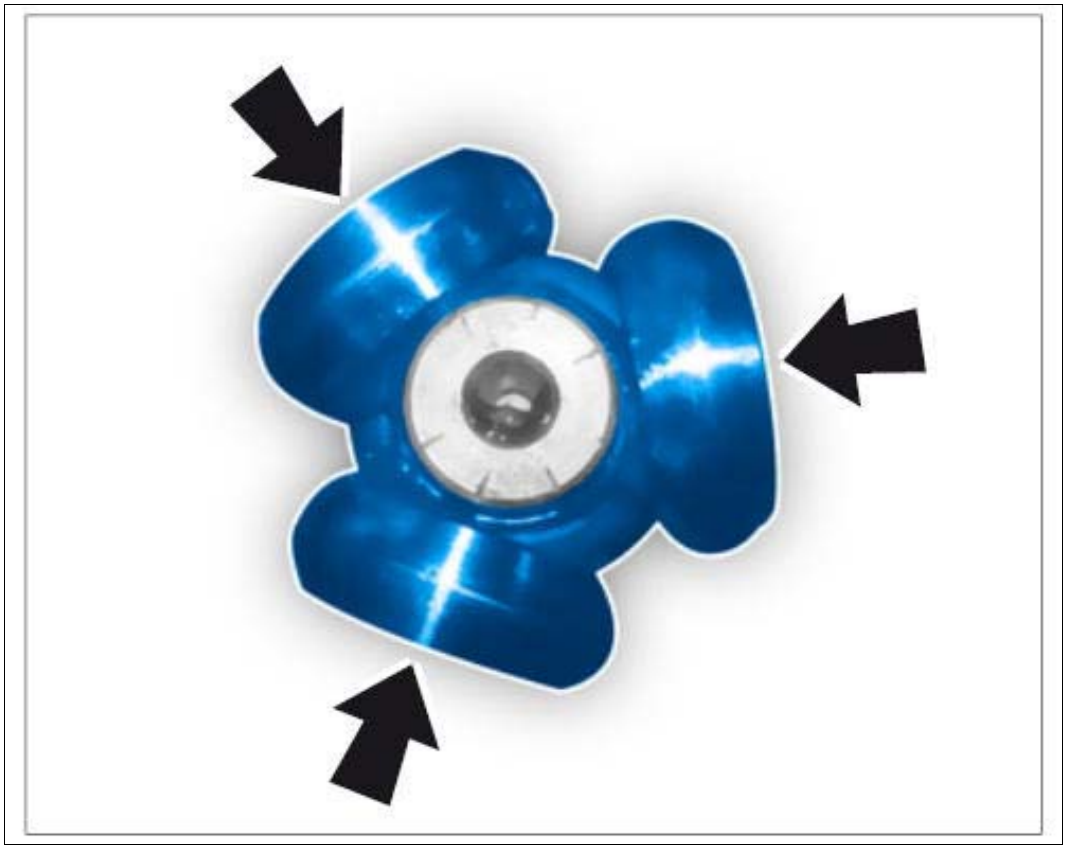

Courtesy of PORSCHE CARS NORTH AMERICA, INC.

3. 7.3. Fit/slide on the tripod bell.

8. Fit inner drive shaft boot.

    1. 8.1. Make sure that the inner drive shaft boot is seated correctly in the groove of the plastic ring.

    2. 8.2. Fit outer flat joiners for the two drive shaft boots using pliers Nr.74.

WM 404137 DISASSEMBLING AND ASSEMBLING FRONT DRIVE SHAFT (ALL MODELS) > SUBSEQUENT WORK

1. Install front drive shaft → 404119 REMOVING AND INSTALLING FRONT DRIVE SHAFT .

WM 405019 REMOVING AND INSTALLING FRONT WHEEL BEARING HOUSING (ALL MODELS) > TOOLS

Designation	Type	Number	Description	
transmission	Workshop	WE 1082		

jack	equipment			
puller hook	Special tool	9229/1		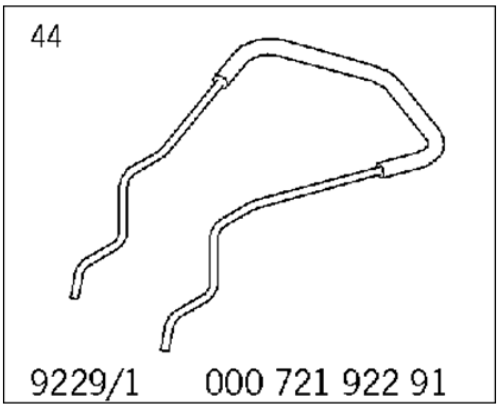
Support	VW tool	T10149		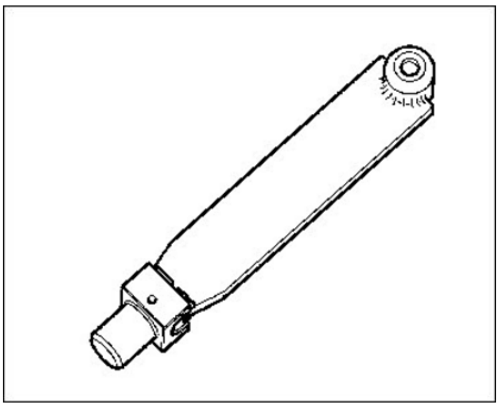
press-out tool	VW tool	T40010		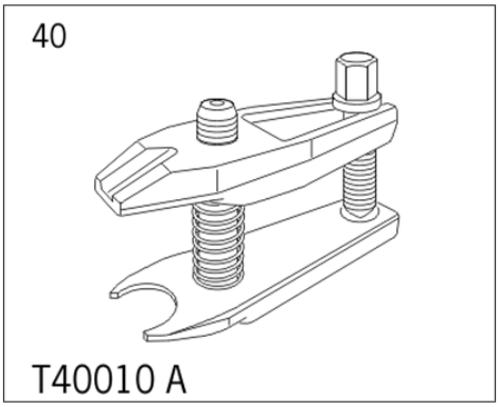

WM 405019 REMOVING AND INSTALLING FRONT WHEEL BEARING HOUSING (ALL MODELS) > TECHNICAL VALUES

Location	Description	Type	Basic value	Tolerance 1	Tolerance 2
Lower control arm to wheel bearing housing	M14 thread/always use new nuts following removal	Tightening torque	140 Nm (104 ftlb.)		
Upper trailing arm to wheel	M10 thread	Tightening torque	45 Nm (33 ftlb.)		

bearing housing					
Brake cover plate to wheel bearing housing	M6 x 14 thread	Tightening torque	10 Nm (7.5 ftlb.)		
Holder to wheel bearing housing	M6 x 16 thread	Tightening torque	10 Nm (7.5 ftlb.)		
Drive shaft to wheel hub	Step 1 (wheels suspended in the air, press brakes while tightening)/M16 x 72 thread/always use new screws or bolts following removal	Tightening torque	200 Nm (148 ftlb.)		
Drive shaft to wheel hub	Step 2 (wheels on the ground)/M16 x 72 thread/always use new screws or bolts following removal	Torque angle	180°		

WM 405019 REMOVING AND INSTALLING FRONT WHEEL BEARING HOUSING (ALL MODELS) > PRELIMINARY WORK

1. Remove the relevant hub cap using **puller hook 9229/1** and loosen axle bolt **-1-** before raising the vehicle. Operate the brake while doing this (2 mechanics required).

Fig 1: Identifying Axle Bolt

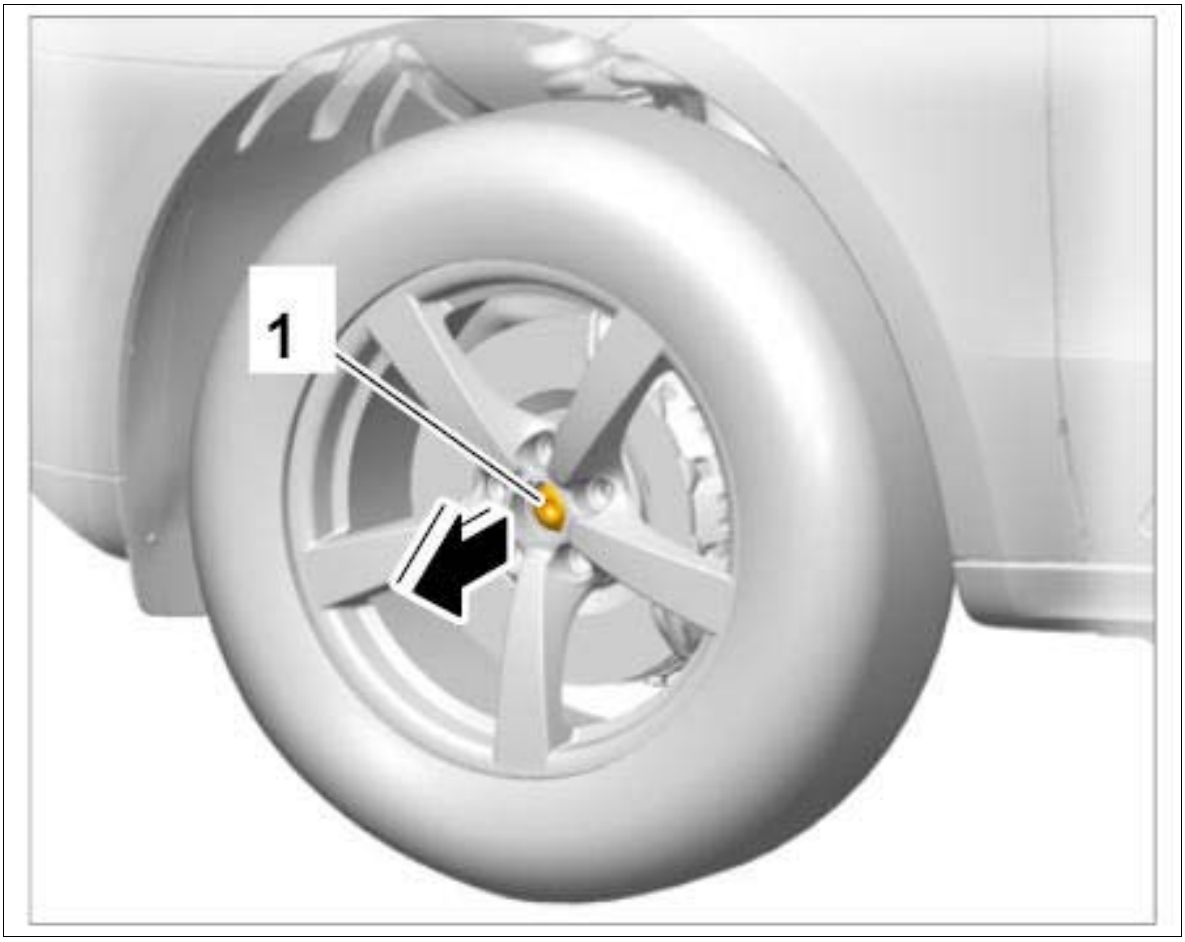

Courtesy of PORSCHE CARS NORTH AMERICA, INC.

2. Raise the vehicle → 4X00IN LIFTING THE VEHICLE .
3. Remove wheel → 440519 REMOVING AND INSTALLING WHEEL .
4. Support wheel bearing housing (in order to avoid damage to the joints on the upper trailing arms).

Fig 2: Locating Support (T10149) On Mounting Nut

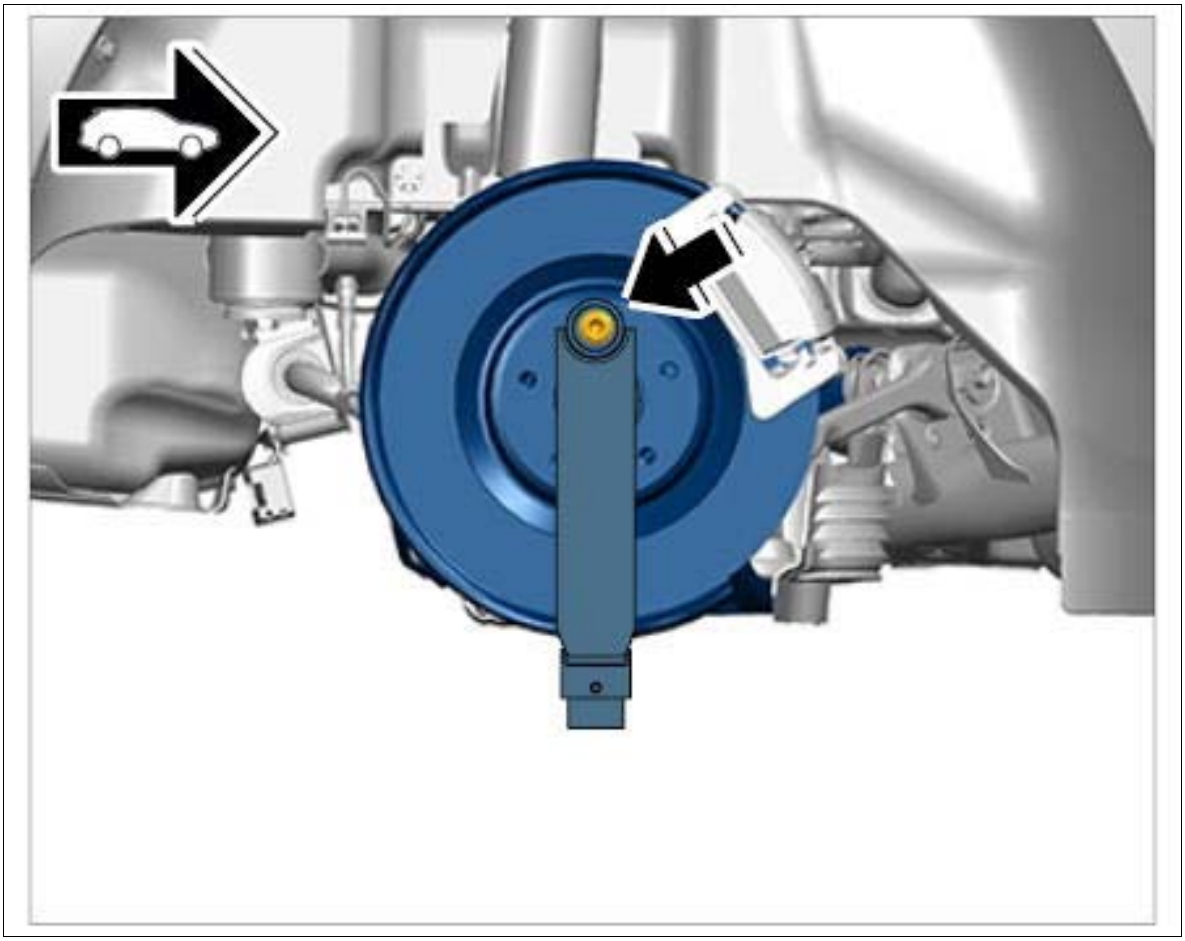

Courtesy of PORSCHE CARS NORTH AMERICA, INC.

1. 4.1. Turn the wheel hub in such a way that a bore for a wheel bolt is at the top.
2. 4.2. **Support T10149** must be secured to the wheel hub with a wheel bolt **-arrow-**
3. 4.3. **Support T10149** must now be fitted into the **transmission jack WE 1082.**

5. Remove lower trailing arm → 401719 REMOVING AND INSTALLING LOWER TRAILING ARM .
6. Loosen holder **-1-** for brake line, wear indicator and speed sensor on the wheel bearing housing.

Fig 3: Identifying Brake Line Holder

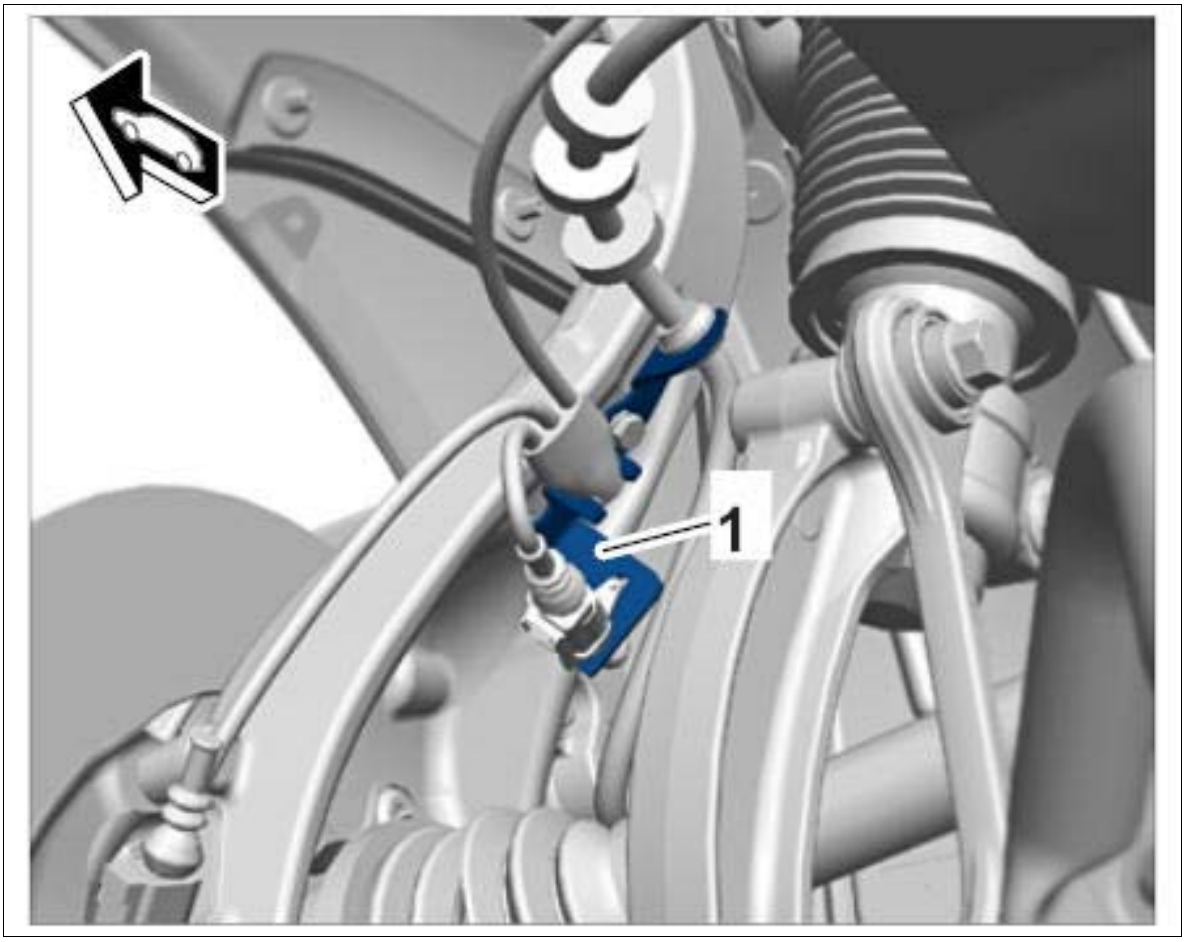

Courtesy of PORSCHE CARS NORTH AMERICA, INC.

7. Remove front speed sensor → 451155 REPLACING FRONT SPEED SENSOR .
8. Remove brake calliper and suspend it at a suitable position in the wheel housing (do not open the brake hydraulic system!) → 473919 REMOVING AND INSTALLING FRONT BRAKE CALLIPER .
9. Remove brake disc → 465019 REMOVING AND INSTALLING FRONT BRAKE DISC .

WM 405019 REMOVING AND INSTALLING FRONT WHEEL BEARING HOUSING (ALL MODELS) > REMOVING AND INSTALLING FRONT WHEEL BEARING HOUSING > REMOVING FRONT WHEEL BEARING HOUSING

1. Unscrew fastening screws **-arrows-** and remove brake cover plate **-1-** .

Fig 1: Locating Brake Cover Plate Mounting Screws

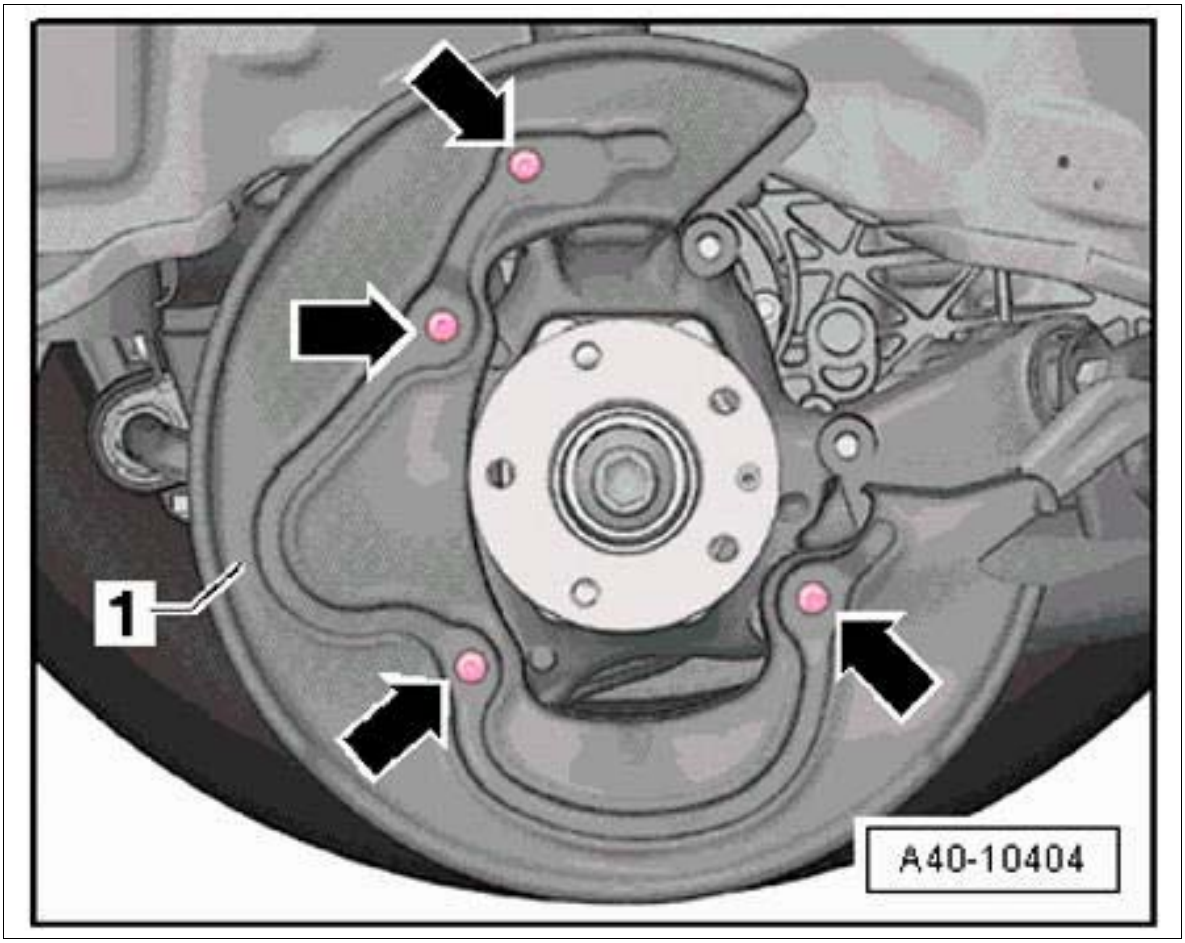

Courtesy of PORSCHE CARS NORTH AMERICA, INC.

2. Press lower control arm off the wheel bearing housing.

Fig 2: Pressing Lower Control Arm

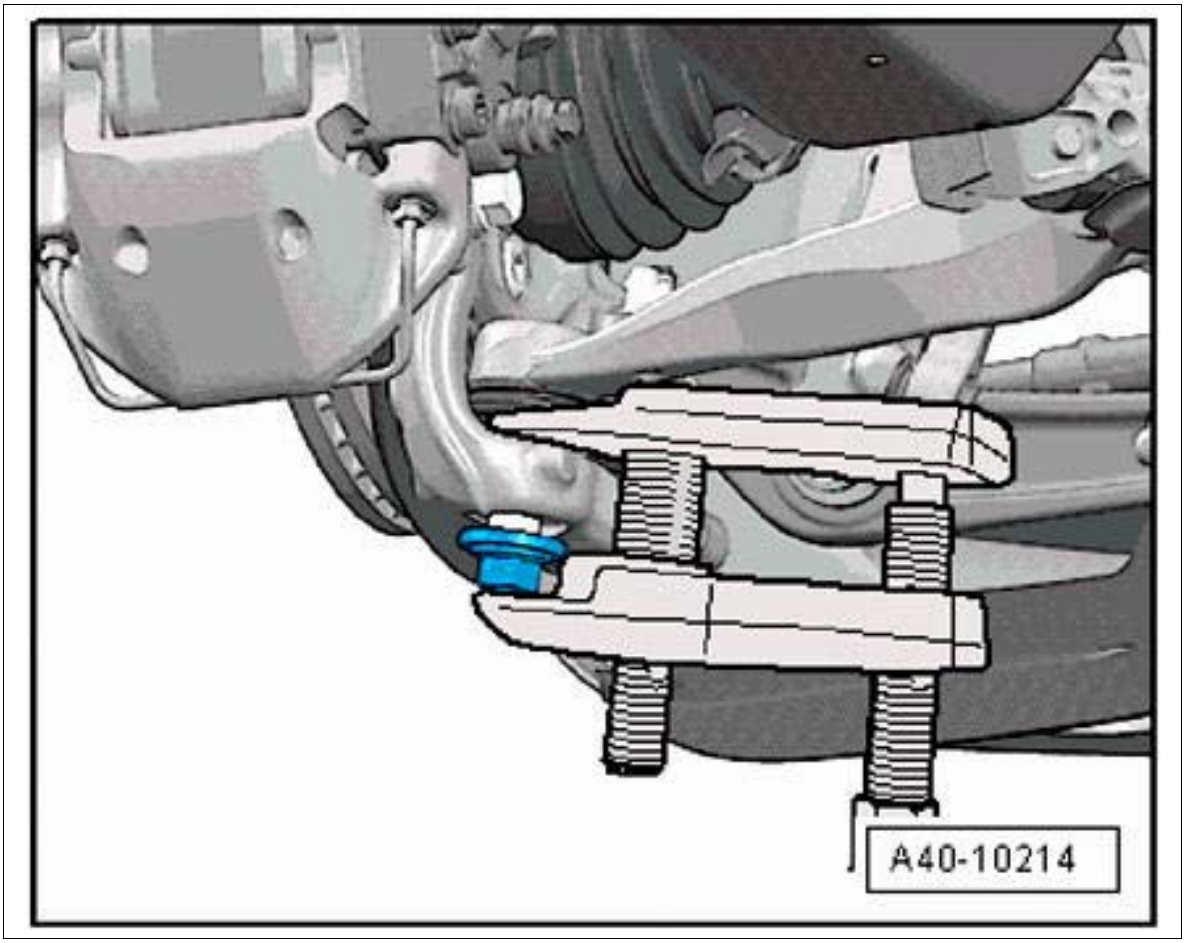

Courtesy of PORSCHE CARS NORTH AMERICA, INC.

1. 2.1. Screw off nut on joint pin for the control arm until it is flush with the thread of the joint pin (counter while loosening the nut).
2. 2.2. Press off joint pin on the control arm using a ball-joint extractor **press-out tool T40010** .
3. 2.3. Screw off nut on joint pin for the axle joint.

   Information

   The slots in the wheel bearing housing must not be widened using a chisel or similar tool!

3. Unscrew fastening screw on the top of the wheel bearing housing **-1-** and pull both trailing arms **-2-** up and out.

Fig 3: Identifying Trailing Arm Mountings

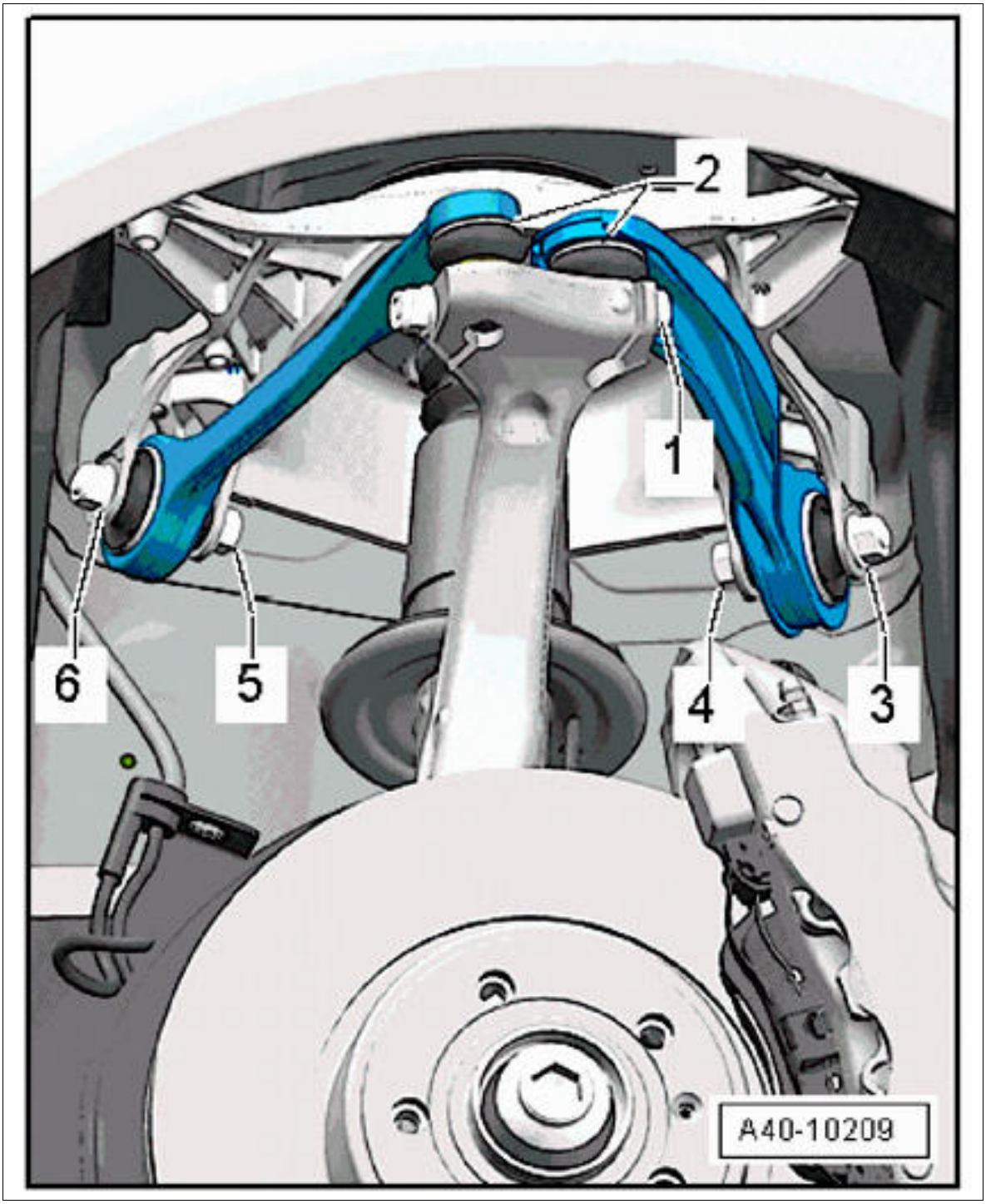

Courtesy of PORSCHE CARS NORTH AMERICA, INC.

Information

Drive shafts must not be left hanging from the joint stop! Hold the drive shaft or tie it up if necessary.

4. Pull wheel bearing housing out of the drive shaft toothing and remove wheel bearing housing.

WM 405019 REMOVING AND INSTALLING FRONT WHEEL BEARING HOUSING (ALL MODELS) > REMOVING AND INSTALLING FRONT WHEEL BEARING HOUSING > INSTALLING FRONT WHEEL BEARING HOUSING

⚠ *CAUTION: Wheel carrier raised incorrectly*

- *Risk of squashing*
- *Risk of damage to components*

→ Wear personal protective gear.

→ Do not raise the wheel suspension higher than the normal vehicle position (vehicle resting on wheels).

Information

- All screws and threaded joints on the axle must be tightened in vehicle position. Vehicle position means: vehicle standing on its wheels, or the wheel suspension is raised with a universal vehicle lift. Dimension -1- , from lower edge of wing to center of axle corresponds to vehicle position. The current height can be found in → 4495TW ADJUSTMENT VALUES FOR SUSPENSION ALIGNMENT . Always observe the following points!

Fig 1: Identifying Wheel To Wing Lower Edge Dimension (Rear Axle)

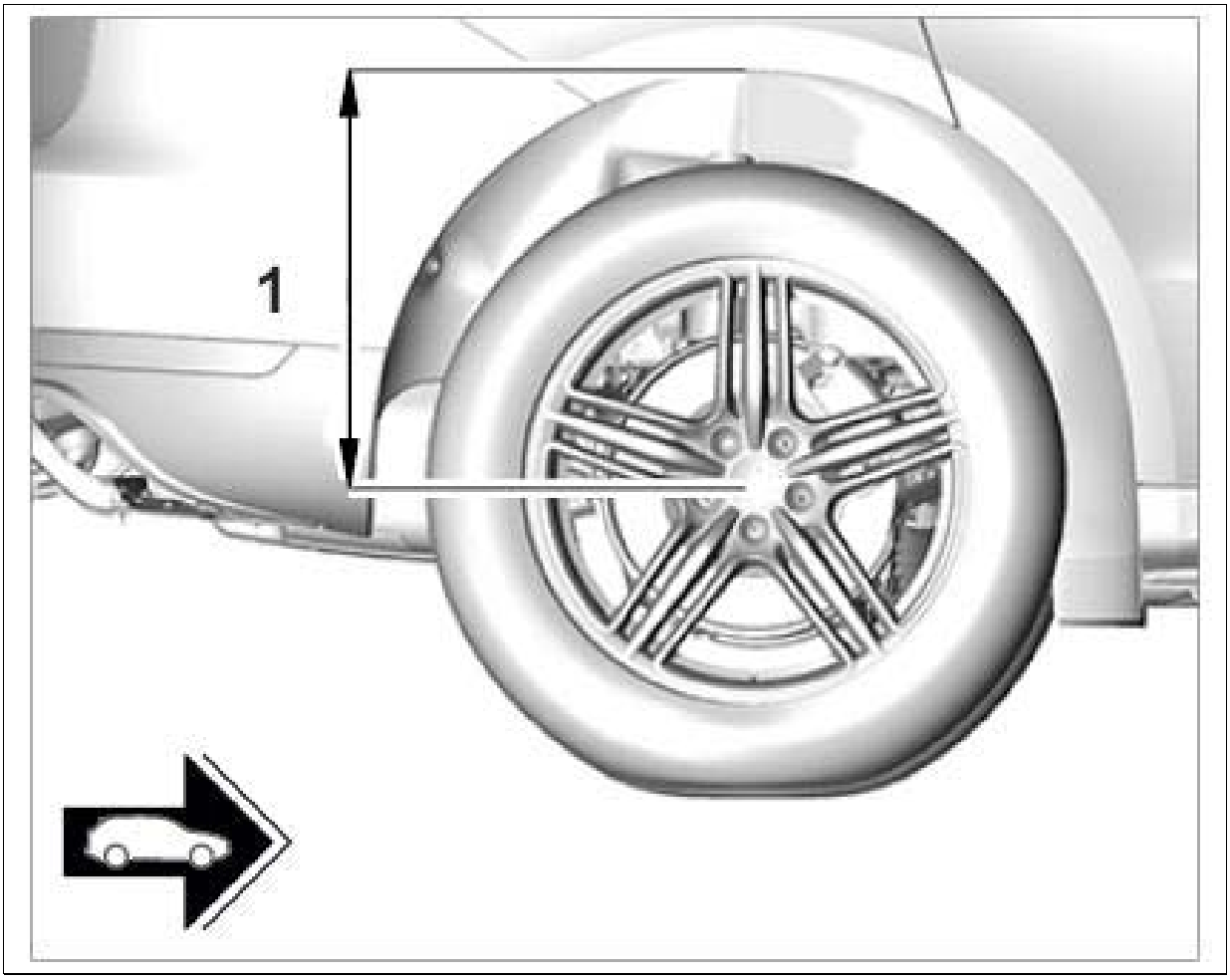

Courtesy of PORSCHE CARS NORTH AMERICA, INC.

- On vehicles with air springs, the respective air spring must be bled using the Porsche System Tester . → 4301IN BLEEDING AND FILLING THE LEVELLING SYSTEM
- Screws and nuts are Geomet-coated and must not be greased.

1. Installation is performed in reverse order.

   Observe specified tightening torques:

   Upper trailing arm to wheel bearing housing: **Tightening torque 45 Nm (33 ftlb.)**

   Lower control arm to wheel bearing housing: **Tightening torque 140 Nm (104 ftlb.)**

   Brake cover plate to wheel bearing housing: **Tightening torque 10 Nm (7.5 ftlb.)**

   Drive shaft to wheel hub (Step 1: Wheels suspended in mid-air, operate brake while tightening): **Tightening torque 200 Nm (148 ftlb.)**

   Drive shaft to wheel hub (Step 2: Wheels on the ground): **Torque angle 180°**

WM 405019 REMOVING AND INSTALLING FRONT WHEEL BEARING HOUSING (ALL MODELS) > SUBSEQUENT WORK

1. Install brake disc → 465019 REMOVING AND INSTALLING FRONT BRAKE DISC .
2. Install brake calliper → Installing Front Brake Calliper .
3. Install front speed sensor → 451155 REPLACING FRONT SPEED SENSOR .
4. Secure holder **-1-** for brake line, wear indicator and speed sensor on the wheel bearing housing. **Tightening torque 10 Nm (7.5 ftlb.)**

   Fig 1: Identifying Brake Line Holder

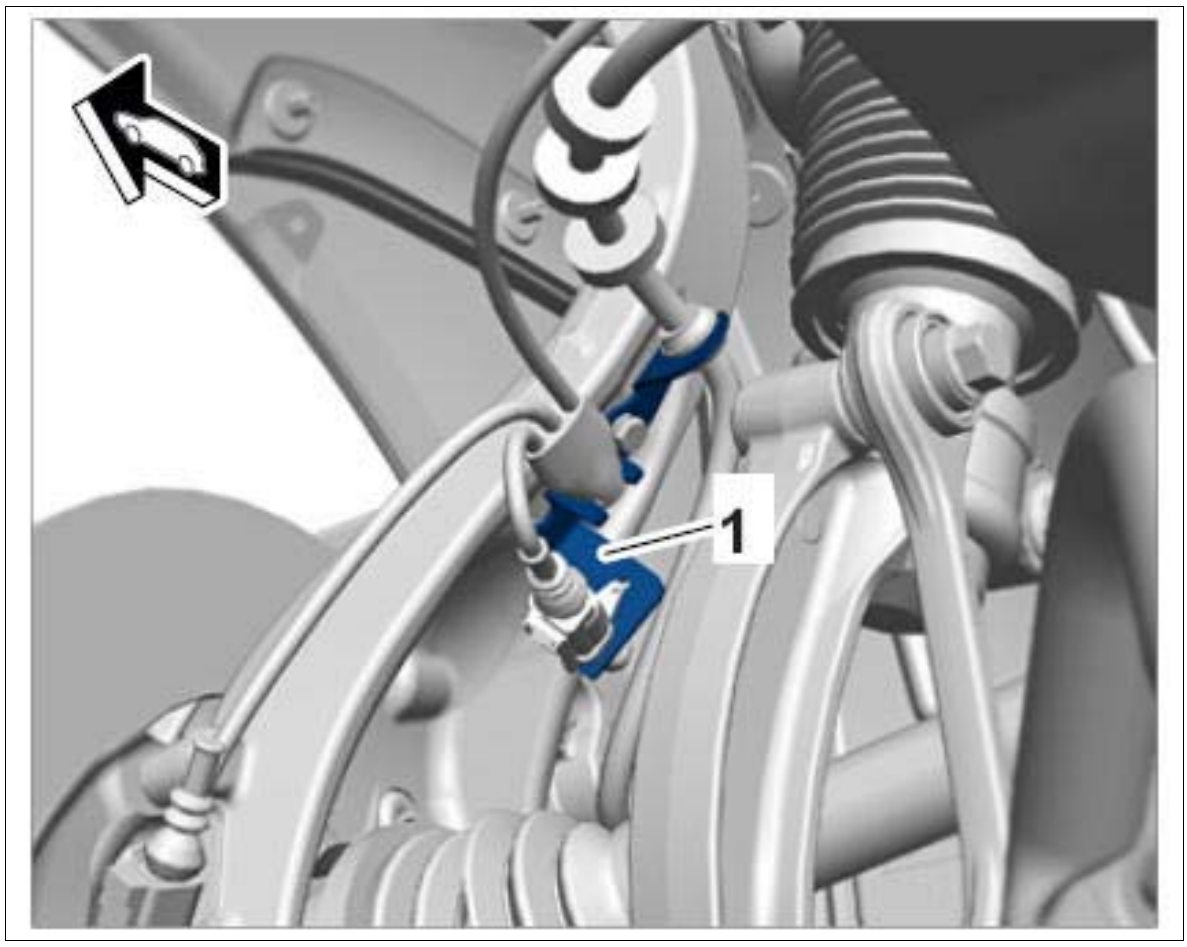

Courtesy of PORSCHE CARS NORTH AMERICA, INC.

5. Install lower trailing arm → 401719 REMOVING AND INSTALLING LOWER TRAILING ARM .
6. Fit wheel → 440519 REMOVING AND INSTALLING WHEEL .
7. Perform suspension alignment → 449503 SUSPENSION ALIGNMENT, COMPLETE .

WM 405041 REPAIRING FRONT WHEEL BEARING HOUSING THREAD (ALL MODELS) > TOOLS

Designation	Type	Number	Description	
Brake calliper repair set VAS 6627	Workshop equipment	WE 1376		
Time-Sert thread repair set	Commercially available tool	Nr.122-1 Pos.5		

WM 405041 REPAIRING FRONT WHEEL BEARING HOUSING THREAD (ALL MODELS) > TECHNICAL VALUES

Location	Description	Type	Basic value	Tolerance 1	Tolerance 2
Bore hole - threaded bush	The threaded bush must be sitting at least 0.2 mm under the collar of the wheel bearing housing!	Length	0.2 mm		

WM 405041 REPAIRING FRONT WHEEL BEARING HOUSING THREAD (ALL MODELS) > PRELIMINARY WORK

1. Remove front brake disc → 465019 REMOVING AND INSTALLING FRONT BRAKE DISC .

WM 405041 REPAIRING FRONT WHEEL BEARING HOUSING THREAD (ALL MODELS) > PRELIMINARY WORK > REPAIRING FRONT WHEEL BEARING HOUSING THREAD

Information

All tasks required during thread repairs must be done manually.

Use cutting oil for thread repairs.

- Do not use a power drill.
- Do not use an impact bolter.
- Do not use tools to secure the assembly aid. Tighten fastening screw by hand.

Information

The wheel bearing housing shown may differ from the original part.

Overview of tools: **Brake calliper repair set VAS 6627 WE 1376**

Fig 1: Overview Of Brake Calliper Repair Set VAS 6627 WE 1376

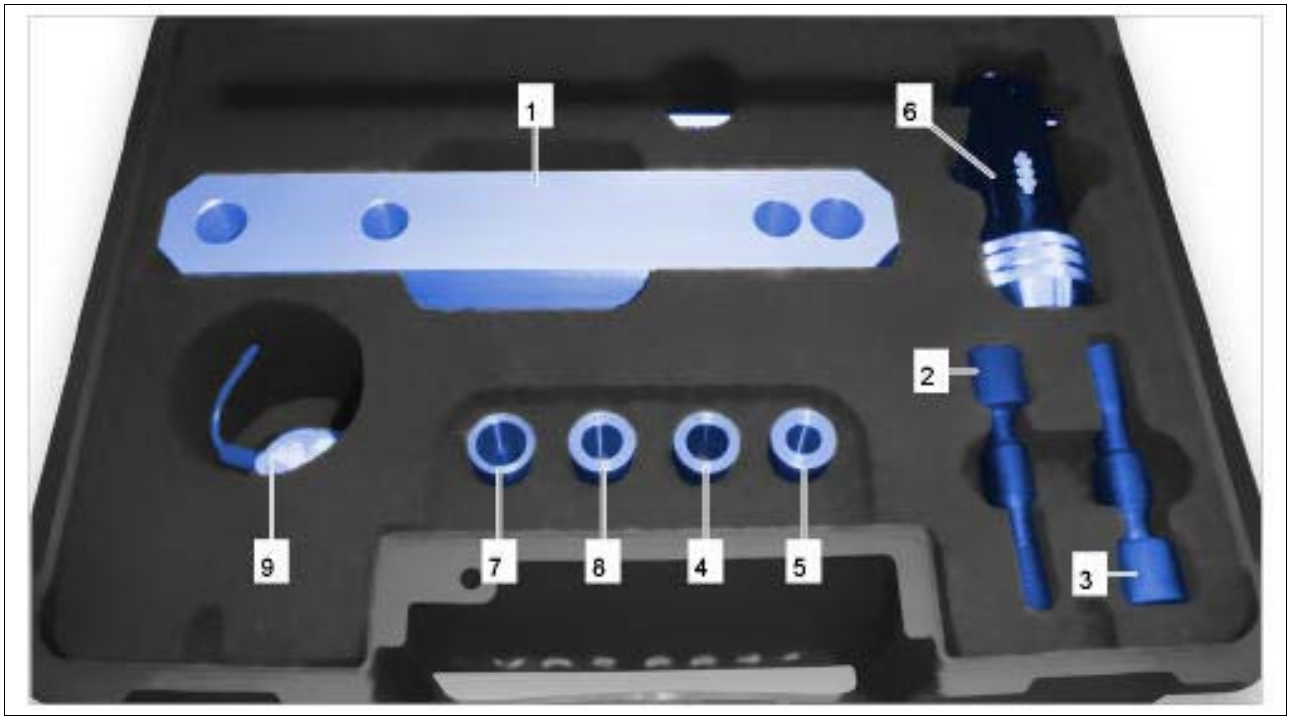

Courtesy of PORSCHE CARS NORTH AMERICA, INC.

1. Assembly aid
2. Fastening screw, M12
3. Fastening screw, M14
4. Guide sleeve, M12 - internal diameter: 12.25 mm

5. Guide sleeve, M12 - internal diameter: 10.00 mm
6. Threading die holder
7. Guide sleeve, M14 - internal diameter: 14.50 mm
8. Guide sleeve, M14 - internal diameter: 12.20 mm
9. Cutting oil

Overview of tools: **Time-Sert thread repair set Nr.122-1 Pos.5**

Fig 2: Overview Of Time-Sert Additional Set Tools



Courtesy of PORSCHE CARS NORTH AMERICA, INC.

1. Drill bit
2. Seat miller
3. Tap
4. Screw-in tool
5. Threaded bush, M14

Information

The wheel bearing housing can remain installed during thread repairs.

- The numbers shown in the illustration have the same end numbers as in the tool sets.
- For clarity, some of the repair steps are shown on the removed wheel bearing housing.

1. Fit the assembly aid on the intact thread with a fastening screw **-3-** . You will be working on

the other side with the defective thread.

Fig 3: Installing Assembly Aid

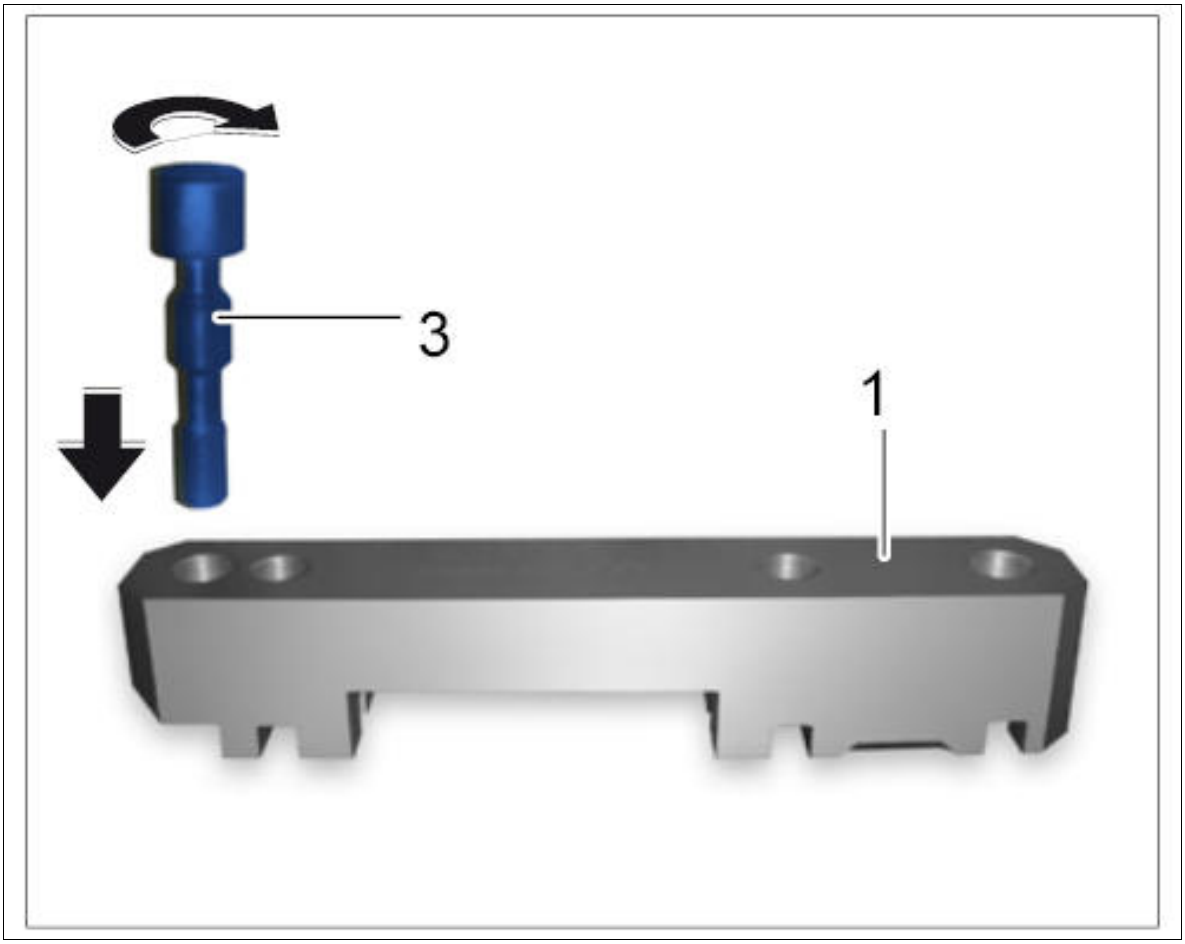

Courtesy of PORSCHE CARS NORTH AMERICA, INC.

2. Drill out the defective thread.

    1. 2.1. Installation sequence for drilling out the thread.

        1. **1** - Drill bit, Time-Sert thread repair set No. 122-1 Item 5
        2. **7** - Guide sleeve, M14, internal diameter: 14.5 mm, Brake calliper repair set VAS 6627
        3. **6** - Threading die holder, Brake calliper repair set VAS 6627

Fig 4: Identifying Tools For Drilling Out Thread

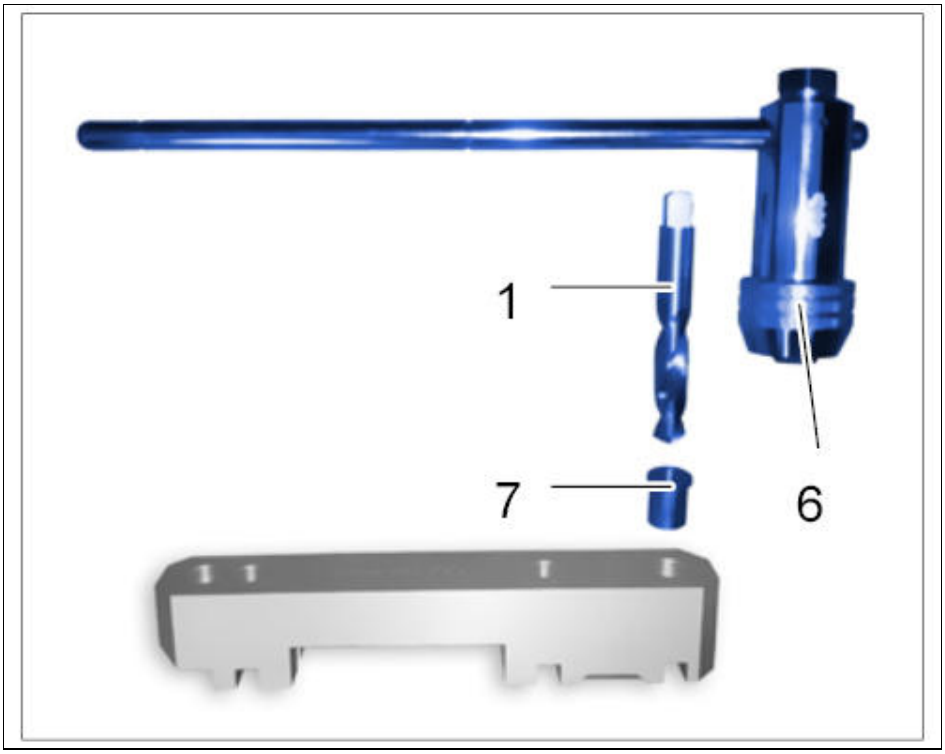

Courtesy of PORSCHE CARS NORTH AMERICA, INC.

2. 2.2. Fit guide sleeve into assembly aid. Drill out the thread as far as the stop using the threading die holder and drill bit.

3. 2.3. Remove assembly aid. Carefully blow the chips out of the bore hole. Wear protective goggles.

3. Countersink the bore hole.

1. 3.1. Using the seat miller, countersink the bore until it is sufficiently deep to allow the stop of the seat miller to sit on the wheel bearing housing (as far as the stop). **-2-**

Fig 5: Countersinking Bore Hole

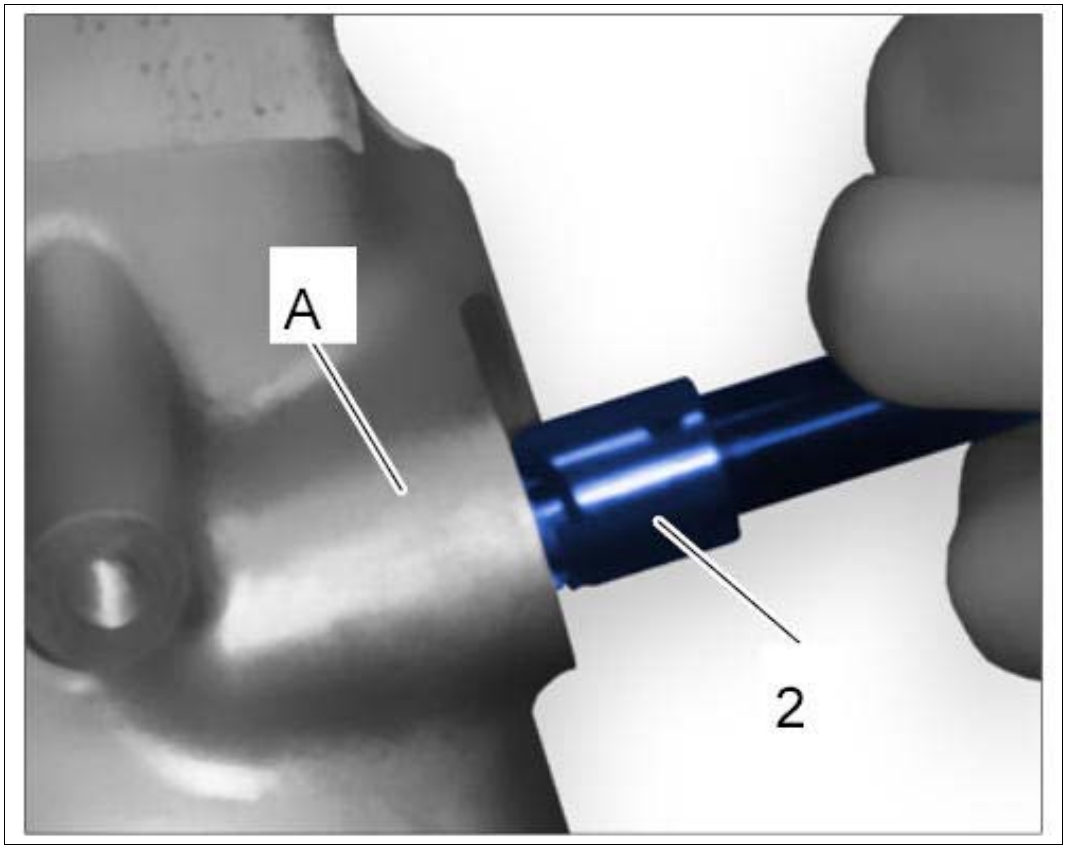

Courtesy of PORSCHE CARS NORTH AMERICA, INC.

2. 3.2. Bore hole countersunk. **-A-**

Fig 6: Locating Bore Hole

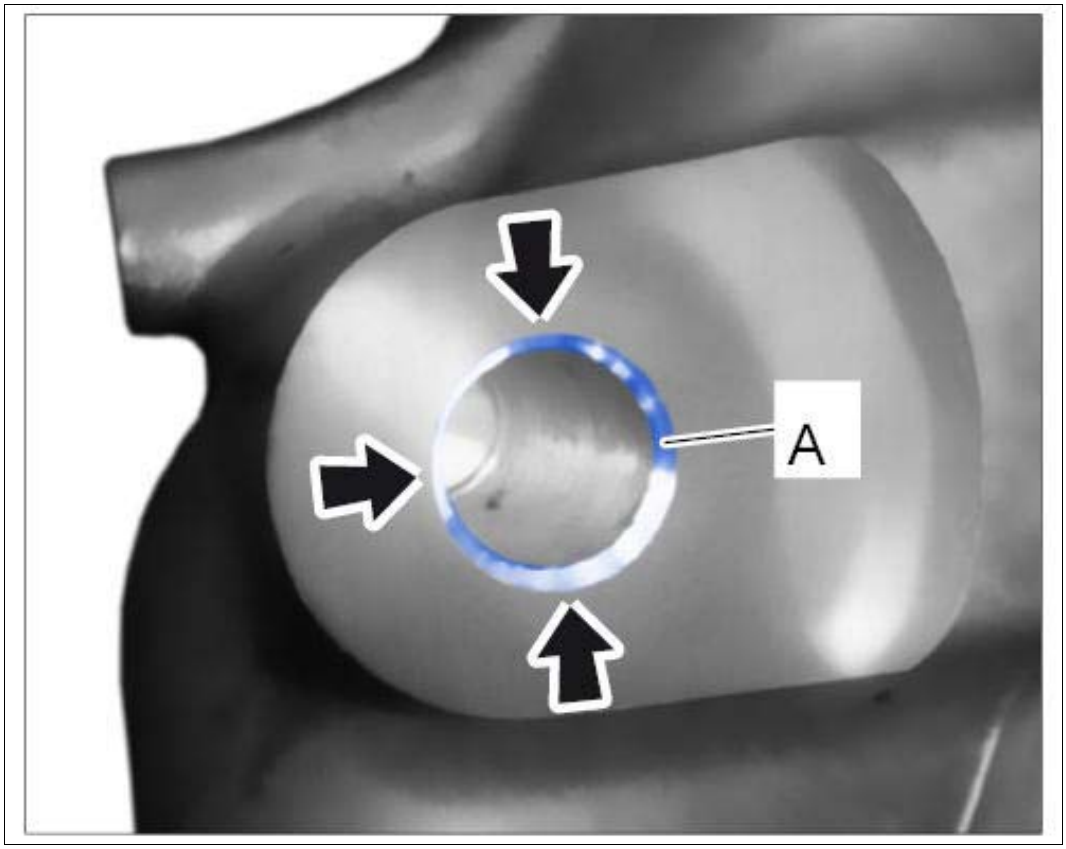

Courtesy of PORSCHE CARS NORTH AMERICA, INC.

3. 3.3. Check the countersink depth of the bore hole

   Fit the M14 threaded bush into the bore hole against the screw-in direction. **-5-**

Fig 7: Checking Countersink Depth

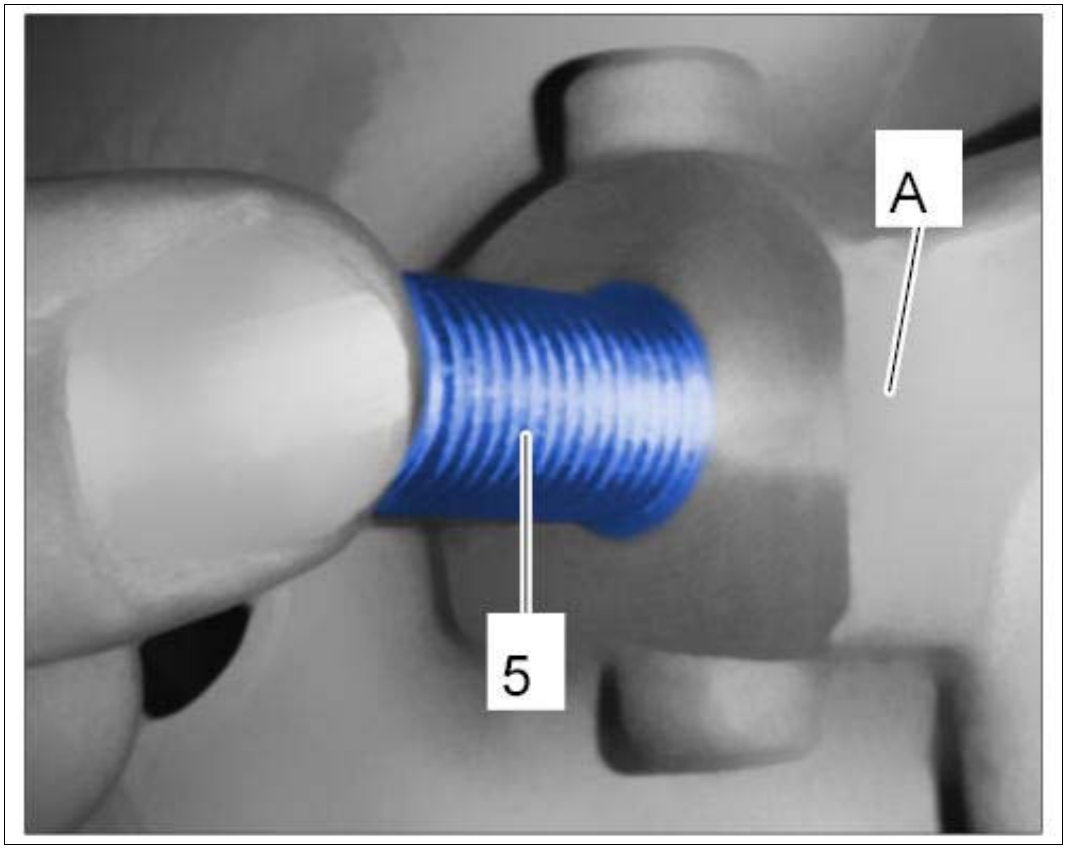

Courtesy of PORSCHE CARS NORTH AMERICA, INC.

4. 3.4. The collar of the M14 threaded bush must be sitting in the recess up to the first thread. **-5-**

Fig 8: Checking Countersink Depth

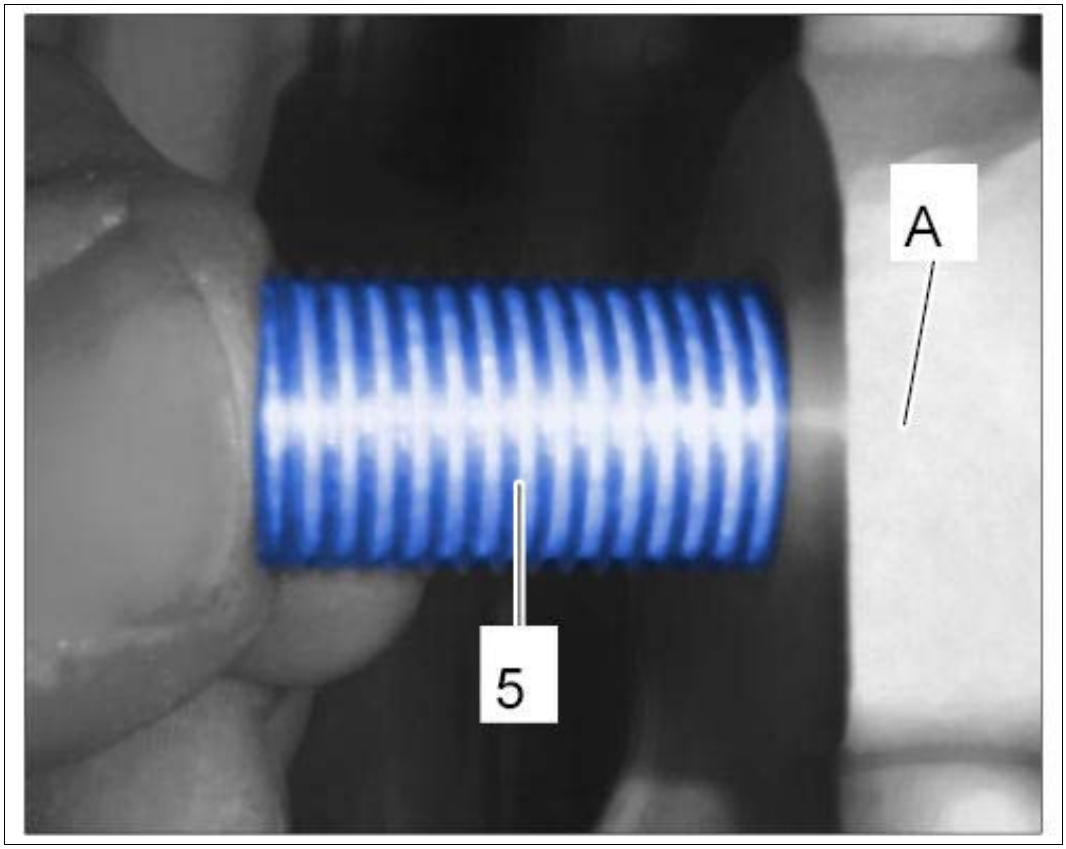

Courtesy of PORSCHE CARS NORTH AMERICA, INC.

4. Fit the assembly aid with a fastening screw. **-3-** .

Fig 9: Installing Assembly Aid

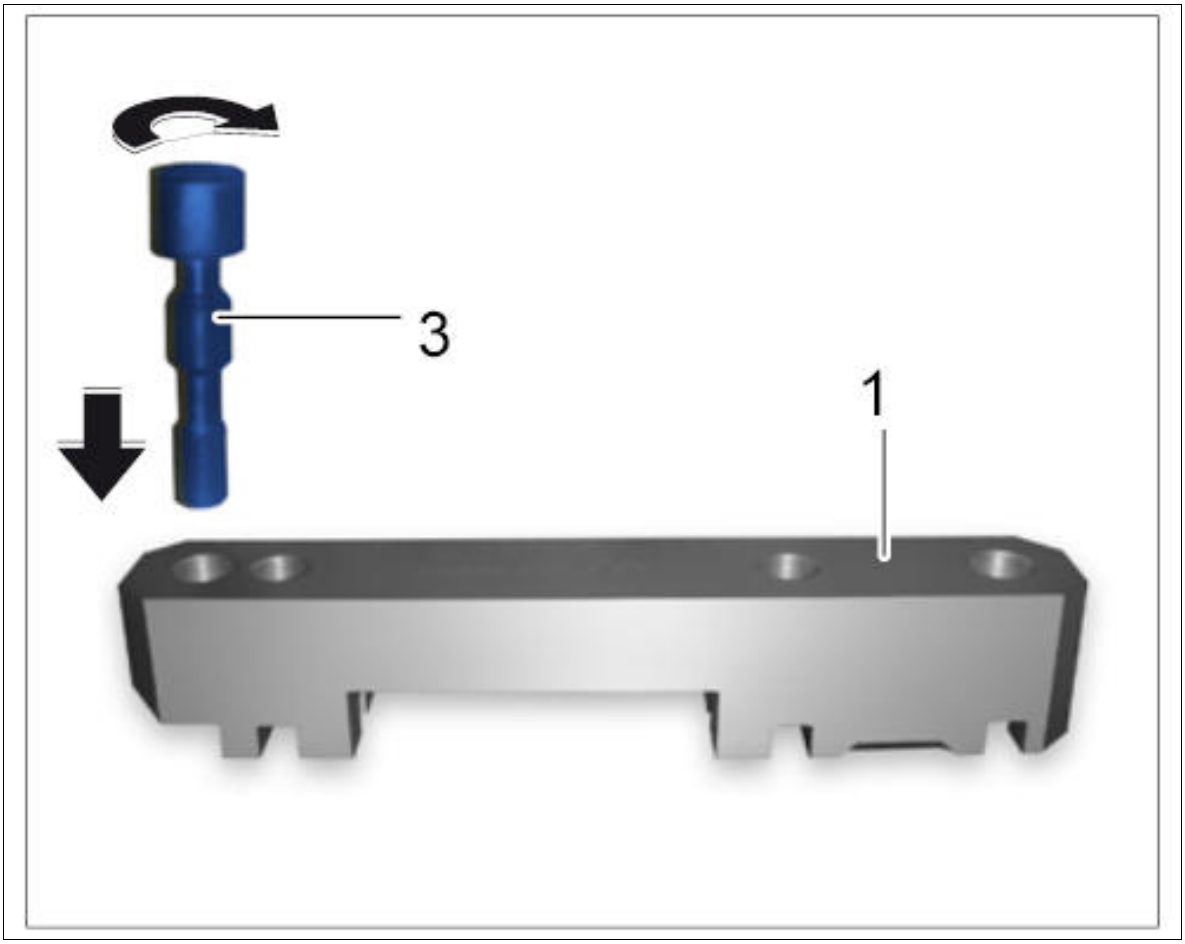

Courtesy of PORSCHE CARS NORTH AMERICA, INC.

5. Cut thread.

    1. 5.1. Installation sequence for cutting the thread.

        1. **1** - Assembly aid, Brake calliper repair set VAS 6627
        2. **3** - Tap, Time-Sert thread repair set No. 122-1 Item 5
        3. **8** - Guide sleeve, M14, internal diameter: 12 mm, Brake calliper repair set VAS 6627
        4. **6** - Threading die holder, Brake calliper repair set VAS 6627

Fig 10: Identifying Thread Cutting Tools

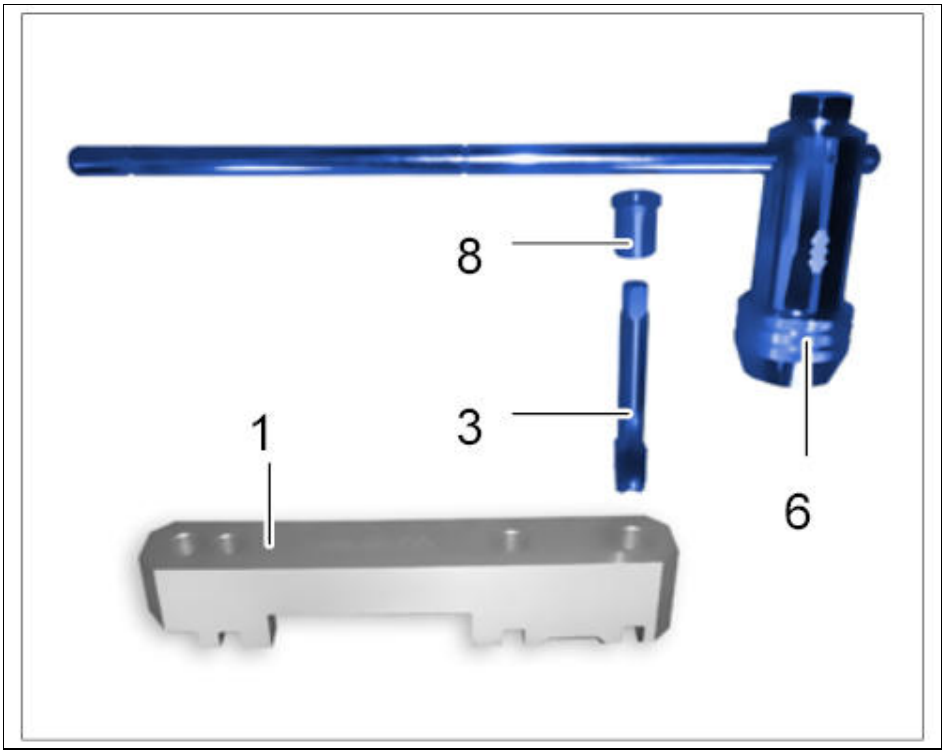

Courtesy of PORSCHE CARS NORTH AMERICA, INC.

2. 5.2. Oil the tap. **-3-**

Fig 11: Applying Oiling To Tap

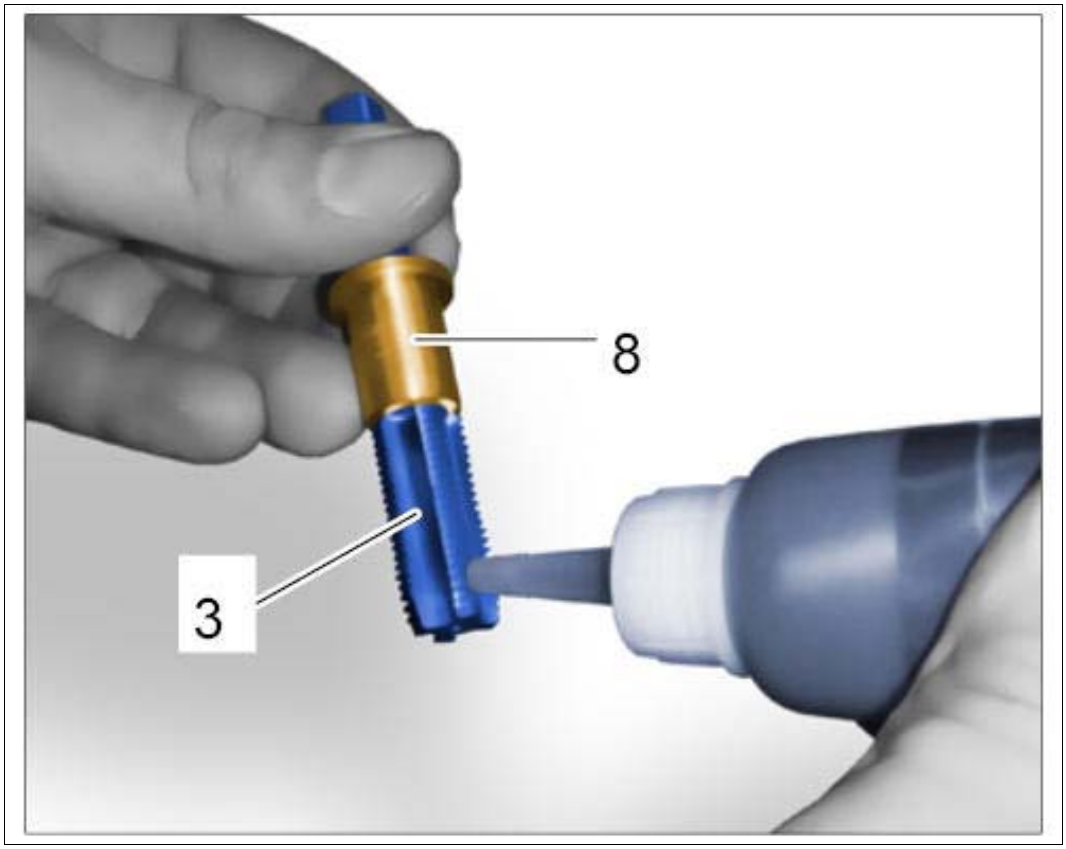

Courtesy of PORSCHE CARS NORTH AMERICA, INC.

3. 5.3. Insert the tap into the assembly aid. The guide sleeve is projecting slightly out of the assembly aid. But it has made contact. The guide sleeve will drop during the cutting process using the threading die holder.

    1. **1** - Assembly aid, Brake calliper repair set VAS 6627
    2. **3** - Tap, Time-Sert thread repair set No. 122-1 Item 5
    3. **8** - Guide sleeve, M14, internal diameter: 12 mm, Brake calliper repair set VAS 6627

Fig 12: Inserting Tap

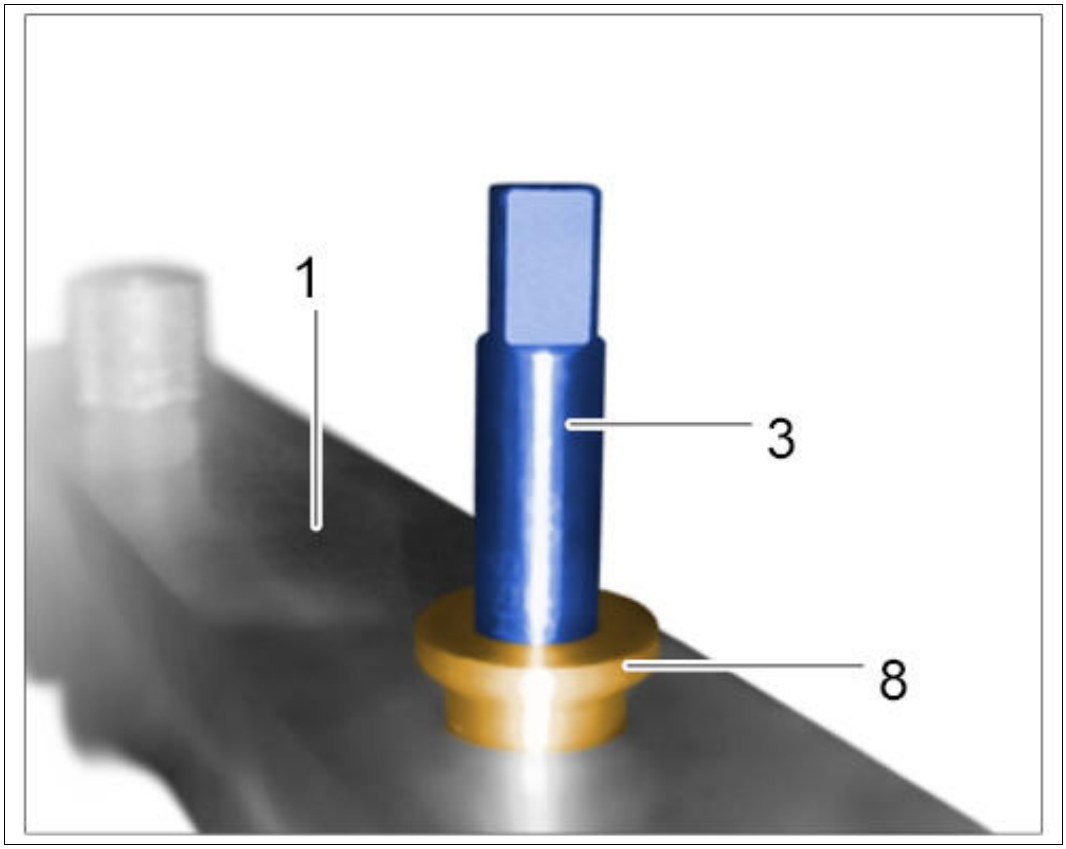

Courtesy of PORSCHE CARS NORTH AMERICA, INC.

4. 5.4. Carefully cut the thread as far as the end of the bore hole (as far as the stop) using the tap.

    1. **1** - Assembly aid, Brake calliper repair set VAS 6627
    2. **8** - Guide sleeve, M14, internal diameter: 12 mm, Brake calliper repair set VAS 6627
    3. **6** - Threading die holder, Brake calliper repair set VAS 6627

Fig 13: Cutting Threads

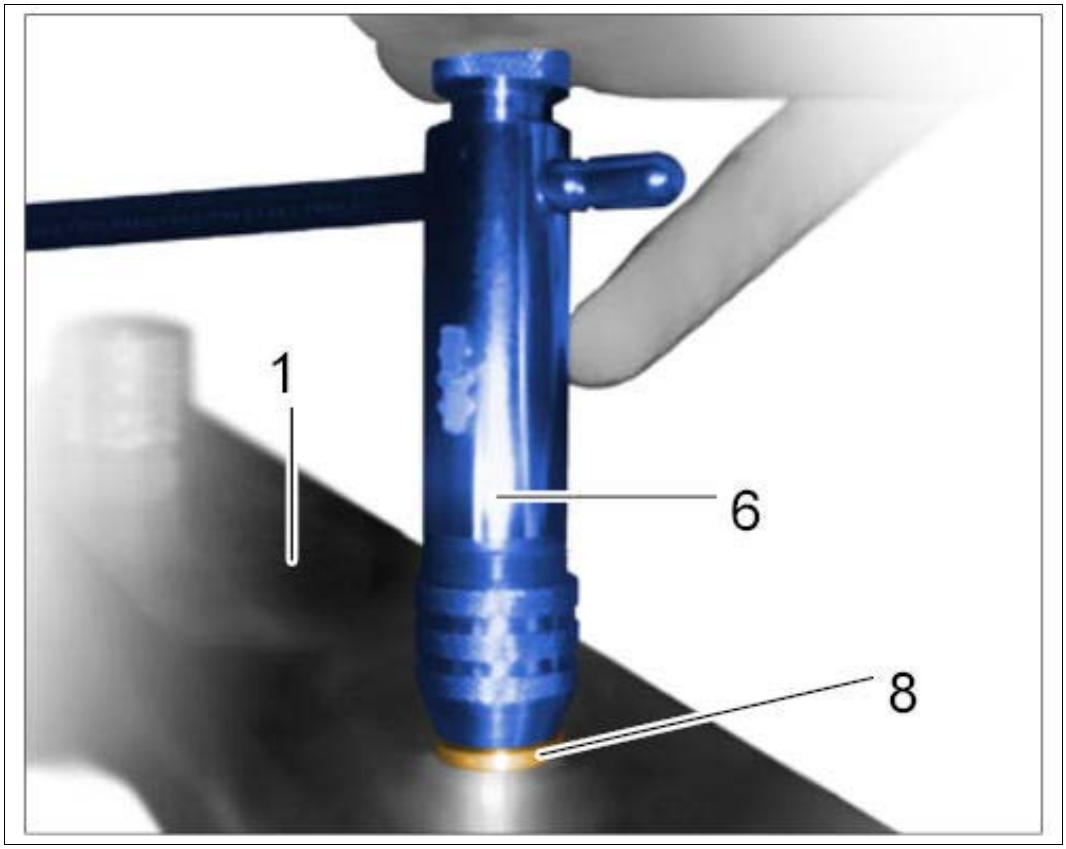

Courtesy of PORSCHE CARS NORTH AMERICA, INC.

6. Re-mill the bore hole.

Information

Mill in/countersink the bore hole.

1. The collar of the threaded bush must be sitting at least → Length: 0.2 mm in the bore hole under the collar of the wheel bearing housing.
2. The collar of the threaded bush must not be projecting out.
    1. 6.1. Using the seat miller, countersink the bore again until it is sufficiently deep to allow the stop of the seat miller to sit on the wheel bearing housing (as far as the stop). **-2-**

Fig 14: Countersinking Bore Hole

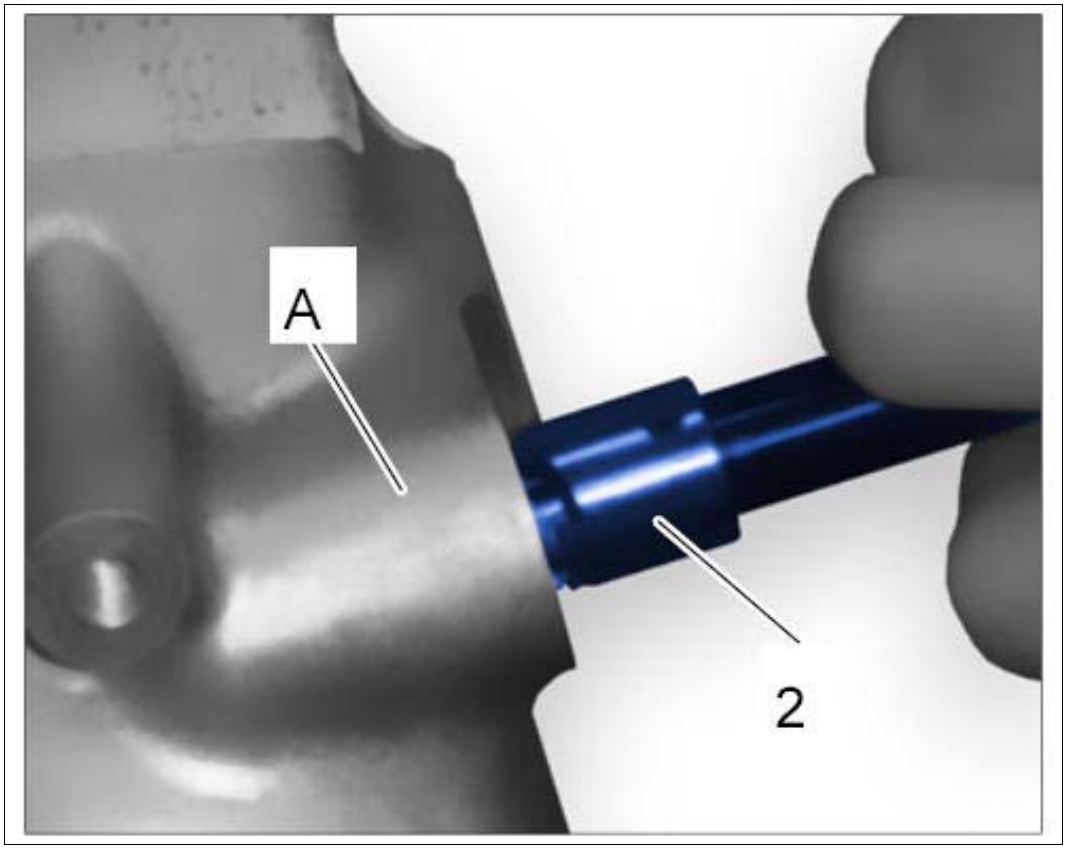

Courtesy of PORSCHE CARS NORTH AMERICA, INC.

2. 6.2. Carefully cut the thread again as far as the end of the bore hole (as far as the stop) using the tap. This removes the remaining milling burrs. The tap must screw out without catching!

3. 6.3. Check again to make sure that the collar of the threaded bush has disappeared in the recess. **If it has not disappeared, repeat the milling process! -5-**

Fig 15: Checking Countersink Depth

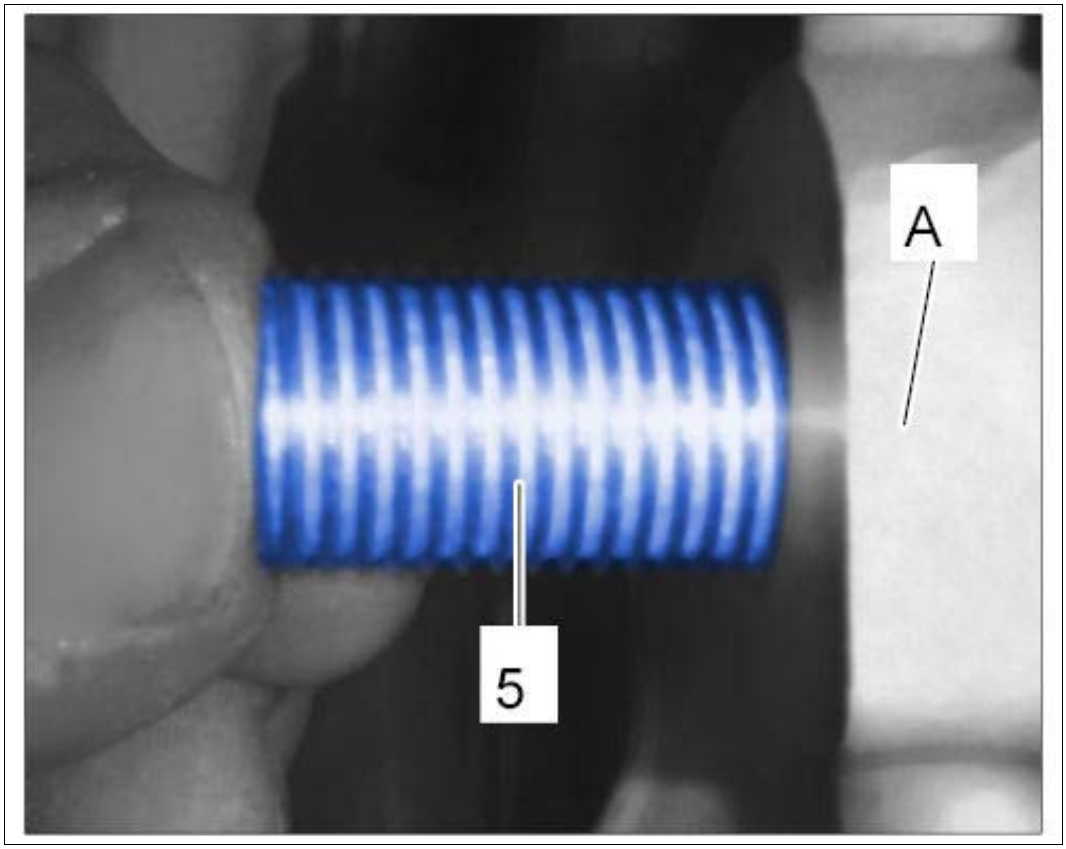

Courtesy of PORSCHE CARS NORTH AMERICA, INC.

7. **Clean the thread** (using brake cleaner for example) and carefully blow the chips out of the bore hole. Wear protective goggles.

8. Insert the M14 threaded bush.

    1. 8.1. Screw in the M14 threaded bush as far as possible by hand.

    2. 8.2. Only oil the screw-in tool! Screw in the screw-in tool as far as possible by hand. Continue screwing until the threaded bush is sitting slightly deeper in the bore hole on the wheel bearing housing.

Fig 16: Inserting Threaded Bush

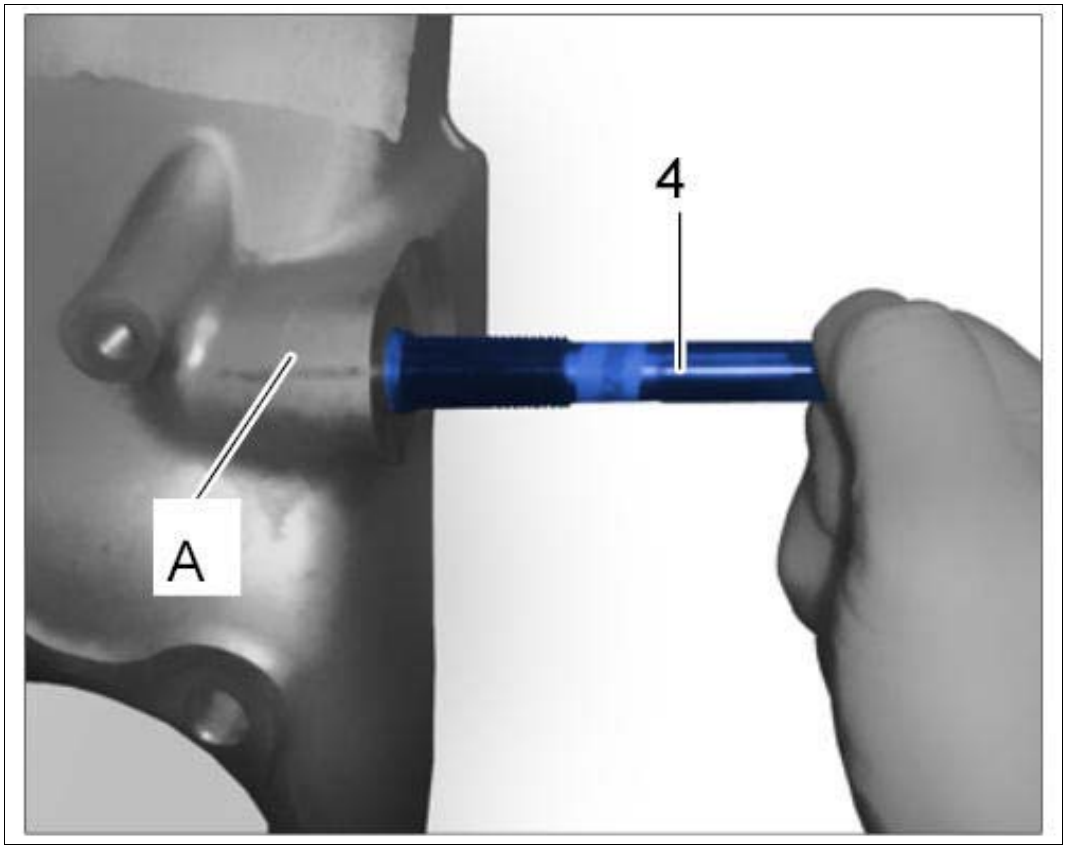

Courtesy of PORSCHE CARS NORTH AMERICA, INC.

3. 8.3. Then, screw the threaded bush in further using the threading die holder and the screw-in tool. **-4-**

   Information

   Mill in/countersink the bore hole.

   1. The collar of the threaded bush must be sitting at least → Length: 0.2 mm in the bore hole under the collar of the wheel bearing housing.
   2. The collar of the threaded bush must not be projecting out.

4. 8.4. Once the M14 threaded bush is screwed in so that it is sitting slightly deeper in the bore hole on the wheel bearing housing, you will feel the increased resistance. Continue screwing carefully until there is less resistance again.
5. 8.5. The screw-in tool must screw out without catching! **-4-**

9. Check that the M14 threaded bush is seated correctly.

> *WARNING: Threaded bush sticking out of wheel bearing housing.*
>
> *1. Brake calliper can become loose.*

→ The contact surface of the brake calliper must be flush with the contact surface of the wheel

bearing housing.

→ The brake calliper must not be supported on the threaded bush.

→ There must be NO gap between the brake calliper and wheel bearing housing.

1. 9.1. The M14 threaded bush **-5-** is inserted at the correct position if the collar of the M14 threaded bush is below the contact surface of the brake calliper **-A-** ! The M14 threaded bush must not be projecting out.

   Fig 17: Locating Threaded Bush

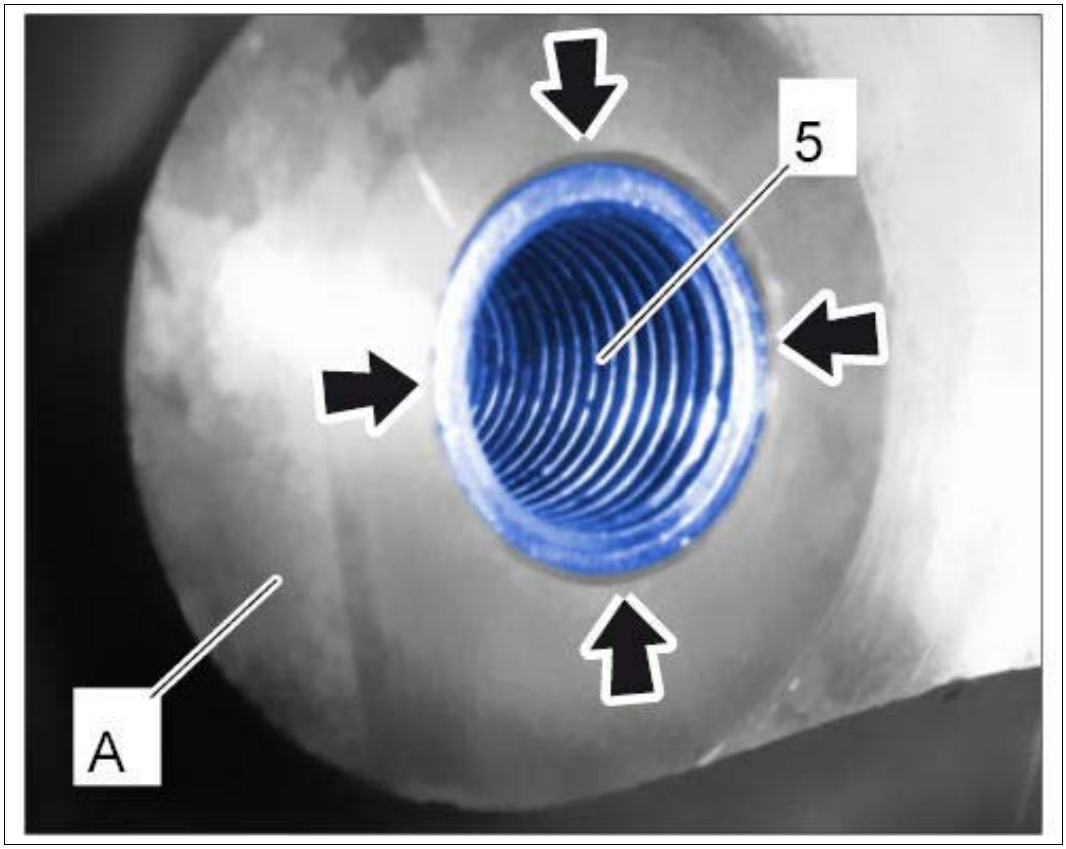

Courtesy of PORSCHE CARS NORTH AMERICA, INC.

2. 9.2. The M14 threaded bush is at the correct position if it is sitting slightly deeper in the bore hole. **-arrows-**

10. Clean the thread with brake cleaner after you have completed the repair work. **The thread must be free of grease and chips.**

WM 405041 REPAIRING FRONT WHEEL BEARING HOUSING THREAD (ALL MODELS) > SUBSEQUENT WORK

1. Install front brake disc → 465019 REMOVING AND INSTALLING FRONT BRAKE DISC .

WM 405755 REPLACING FRONT WHEEL BEARING (ALL MODELS) > TOOLS

Designation	Type	Number	Description	
Separating device	Commercially available tool	Nr.112-2		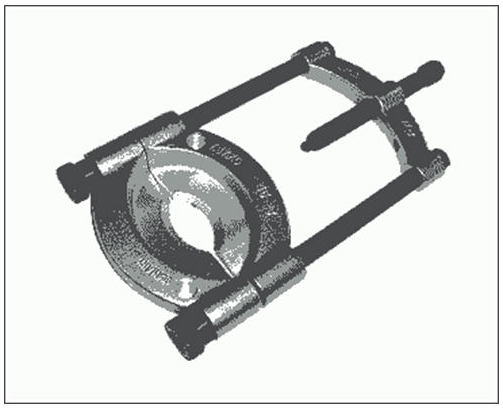
assembly tool	VW tool	T10230		34 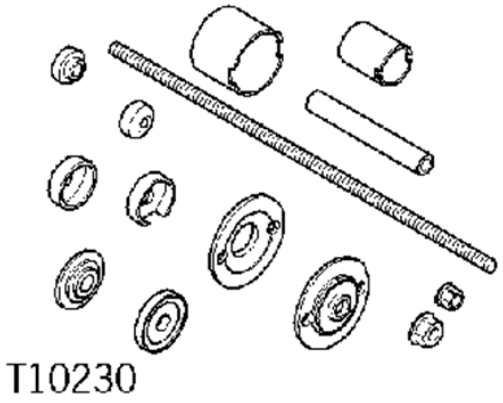 T10230
Pressure plate	VW 401	VW 401		35 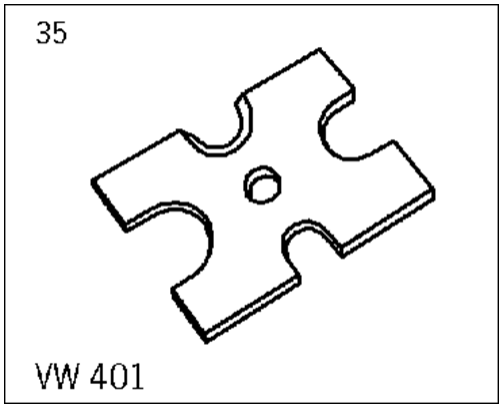 VW 401
Pressure plate	VW tool	VW 402		35 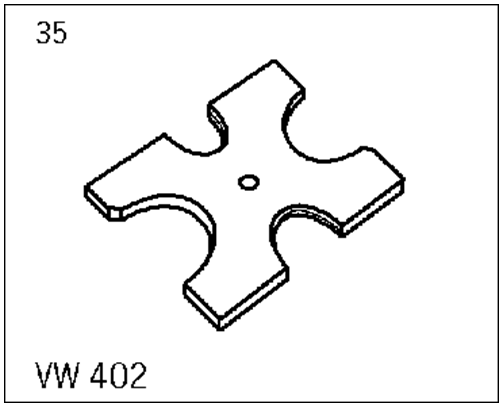 VW 402

WM 405755 REPLACING FRONT WHEEL BEARING (ALL MODELS) > TECHNICAL VALUES

Location	Description	Type	Basic value	Tolerance 1	Tolerance 2
Wheel bearing to wheel bearing housing	M12 x 1.5 x 45 thread/observe installation sequence!/always use new screws or bolts following removal	Initial tightening	80 Nm (59 ftlb.)		
Wheel bearing to wheel bearing housing	M12 x 1.5 x 45 thread/observe installation sequence!/always use new screws or bolts following removal	Final tightening	+90°		

WM 405755 REPLACING FRONT WHEEL BEARING (ALL MODELS) > PRELIMINARY WORK

1. Remove front drive shaft → 404119 REMOVING AND INSTALLING FRONT DRIVE SHAFT .
2. Insert both joint pins for the upper trailing arms **-2-** in the wheel bearing housing and fit screw **-1-** . This is necessary in order to prevent damage to chassis components when loosening and tightening the fastening screws on the wheel bearing unit.

Fig 1: Identifying Trailing Arm Mountings

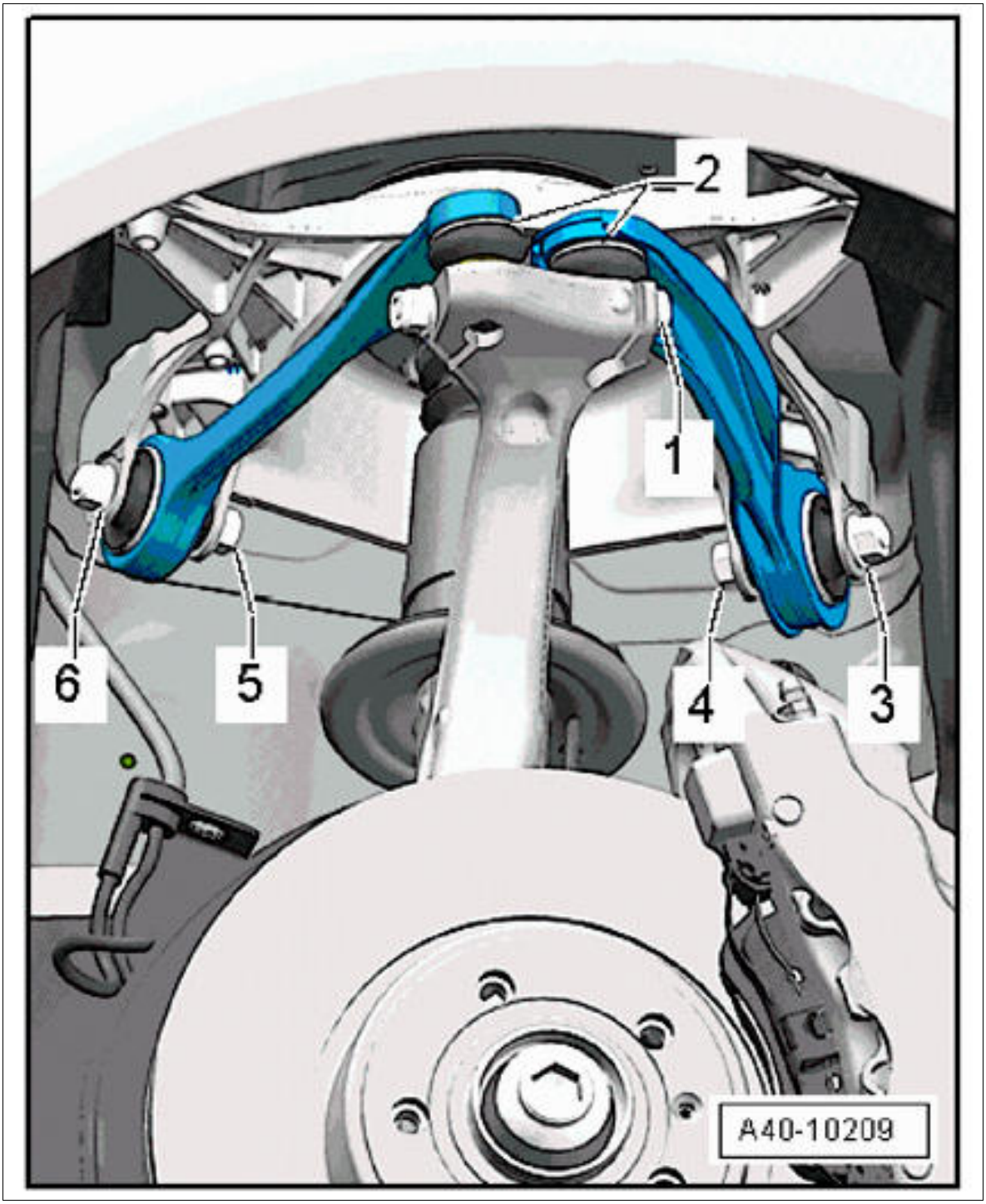

Courtesy of PORSCHE CARS NORTH AMERICA, INC.

3. Remove brake disc → 465019 REMOVING AND INSTALLING FRONT BRAKE DISC .
4. Remove front speed sensor → 451155 REPLACING FRONT SPEED SENSOR .

WM 405755 REPLACING FRONT WHEEL BEARING (ALL MODELS) > REPLACING FRONT WHEEL BEARING

1. Unscrew fastening screws **-arrows-** on the wheel bearing unit.

Fig 1: Locating Wheel Bearing Unit Mounting Fastening Screws

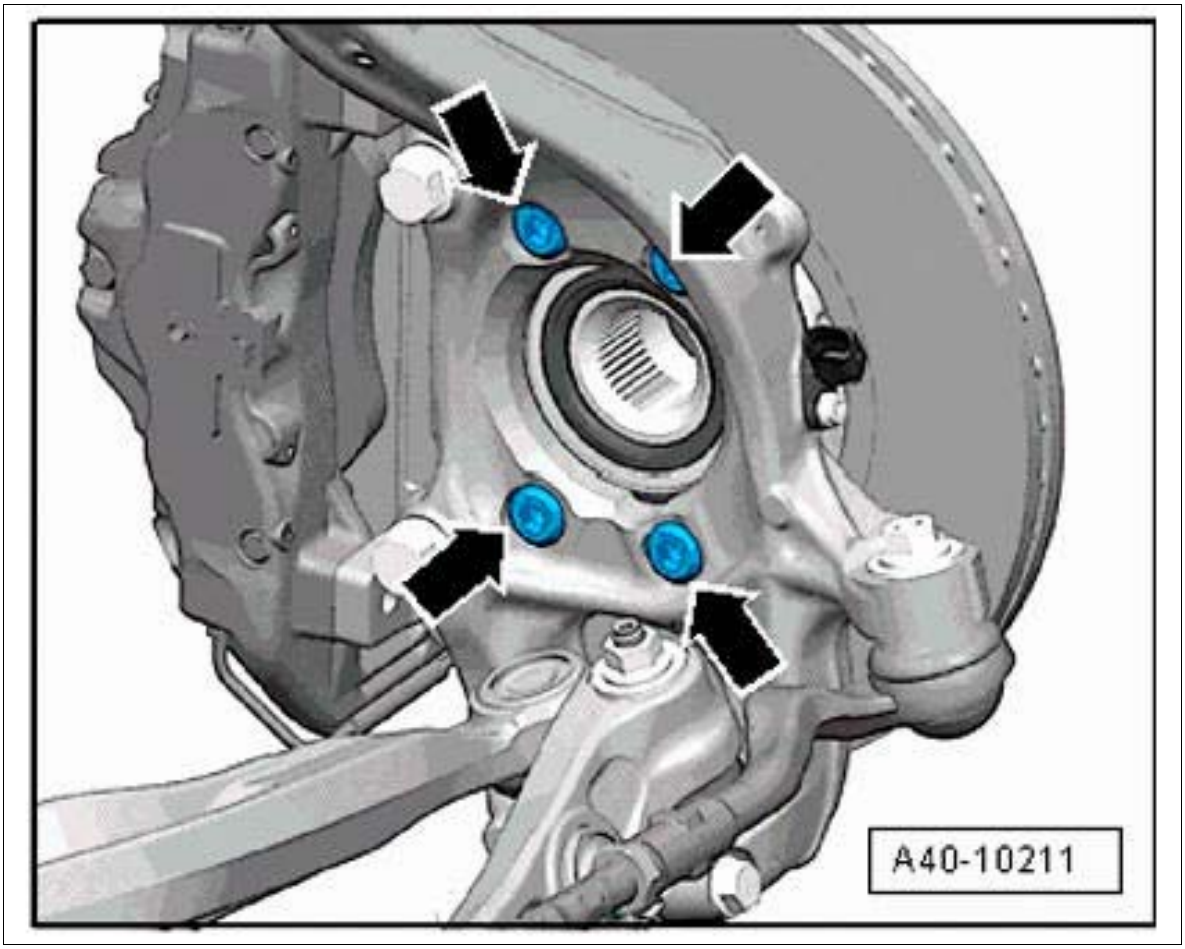

Courtesy of PORSCHE CARS NORTH AMERICA, INC.

Information

1. The wheel bearing has a magnetized multipole seal, which acts as a pulse sender for the wheel speed sensor.
2. The multiple-pole seal -1- must always face upwards when the wheel bearing is set down (this does not apply when pressing the wheel hub into the wheel bearing). Do not damage the multipole seal and do not come into contact with magnetic objects (e.g. magnetized screwdriver, magnet).

Fig 2: Identifying Wheel Bearing Unit Seal Position

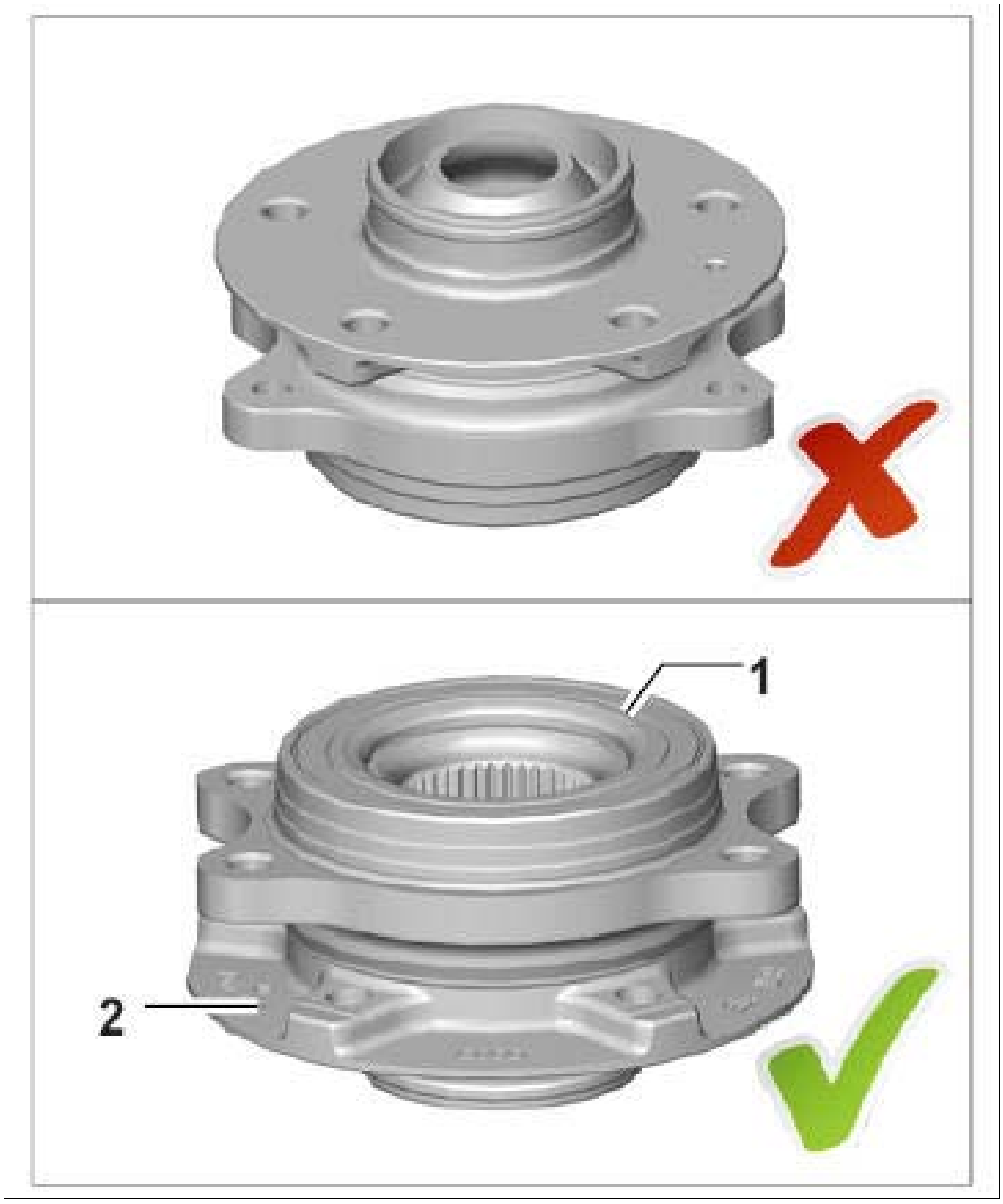

Courtesy of PORSCHE CARS NORTH AMERICA, INC.

2. Remove wheel bearing unit from the wheel bearing housing.
3. Press wheel hub out of the wheel bearing.
    1. Press tool
    2. Sleeve T10230/3 from **assembly tool T10230**
    3. Pressure piece T10230/8 from **assembly tool T10230**
    4. Wheel bearing unit

5. **Pressure plate VW 402**
6. **Pressure plate VW 401**

Fig 3: Pressing Wheel Hub

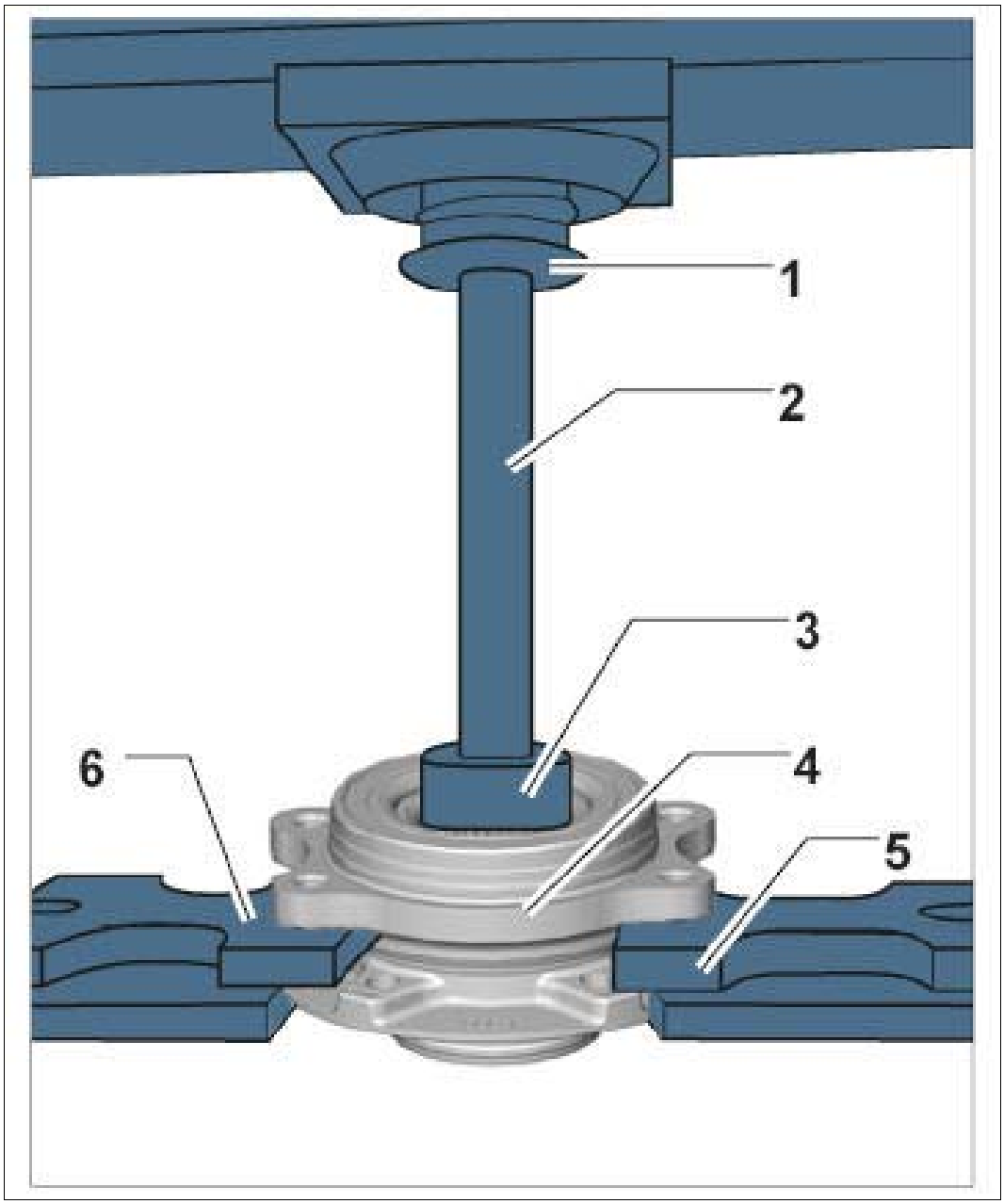

Courtesy of PORSCHE CARS NORTH AMERICA, INC.

1. 3.1. Fit special tools as shown in → Pressing wheel hub out of wheel bearing .
2. 3.2. Press wheel hub out of the wheel bearing.

4. Press inner bearing ring off the wheel hub.

1. 4.1. **Separating device Nr.112-2** must be inserted between the inner bearing ring **-1-** and wheel hub **-2-** . Then pre-tension with the spindle.

Fig 4: Pressing Inner Bearing Ring Off The Wheel Hub

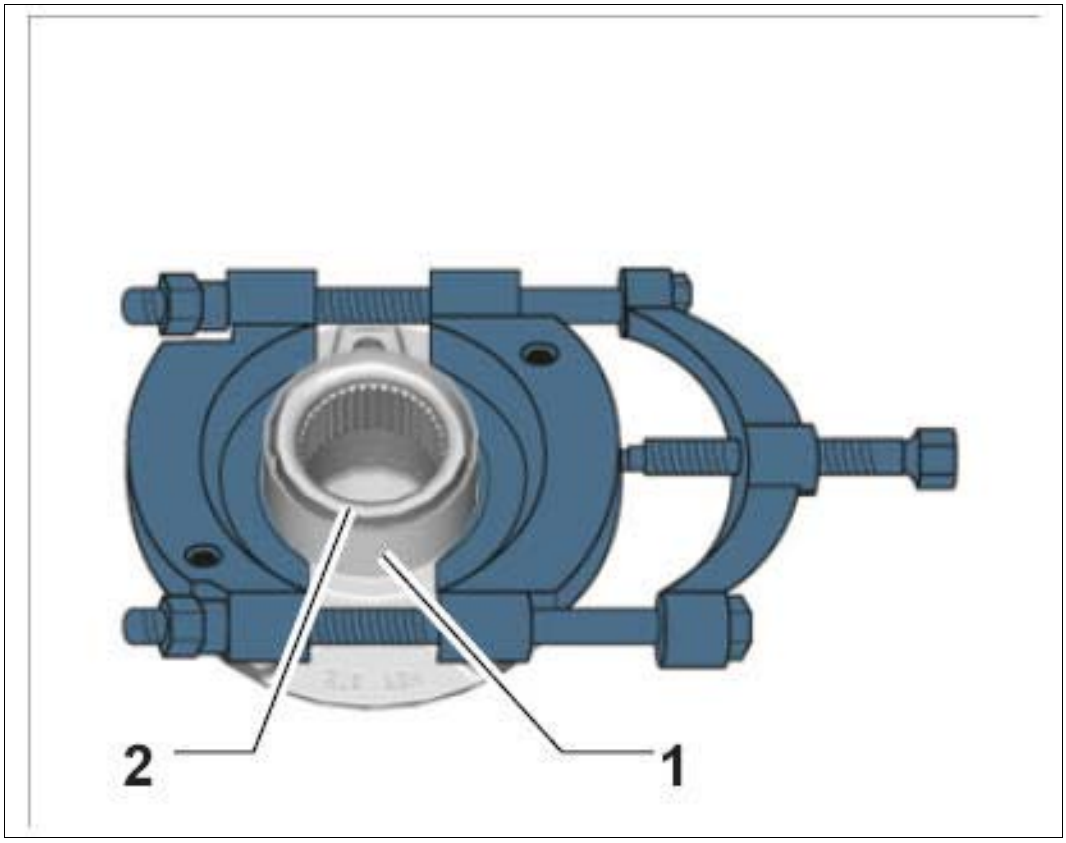

Courtesy of PORSCHE CARS NORTH AMERICA, INC.

2. 4.2. Fit special tools as shown in → Pressing inner bearing ring off the wheel hub .
    1. Press tool
    2. Sleeve T10230/3 from **assembly tool T10230**
    3. Pressure piece T10230/8 from **assembly tool T10230**
    4. **Separating device Nr.112-2**

Fig 5: Pressing Inner Bearing Ring

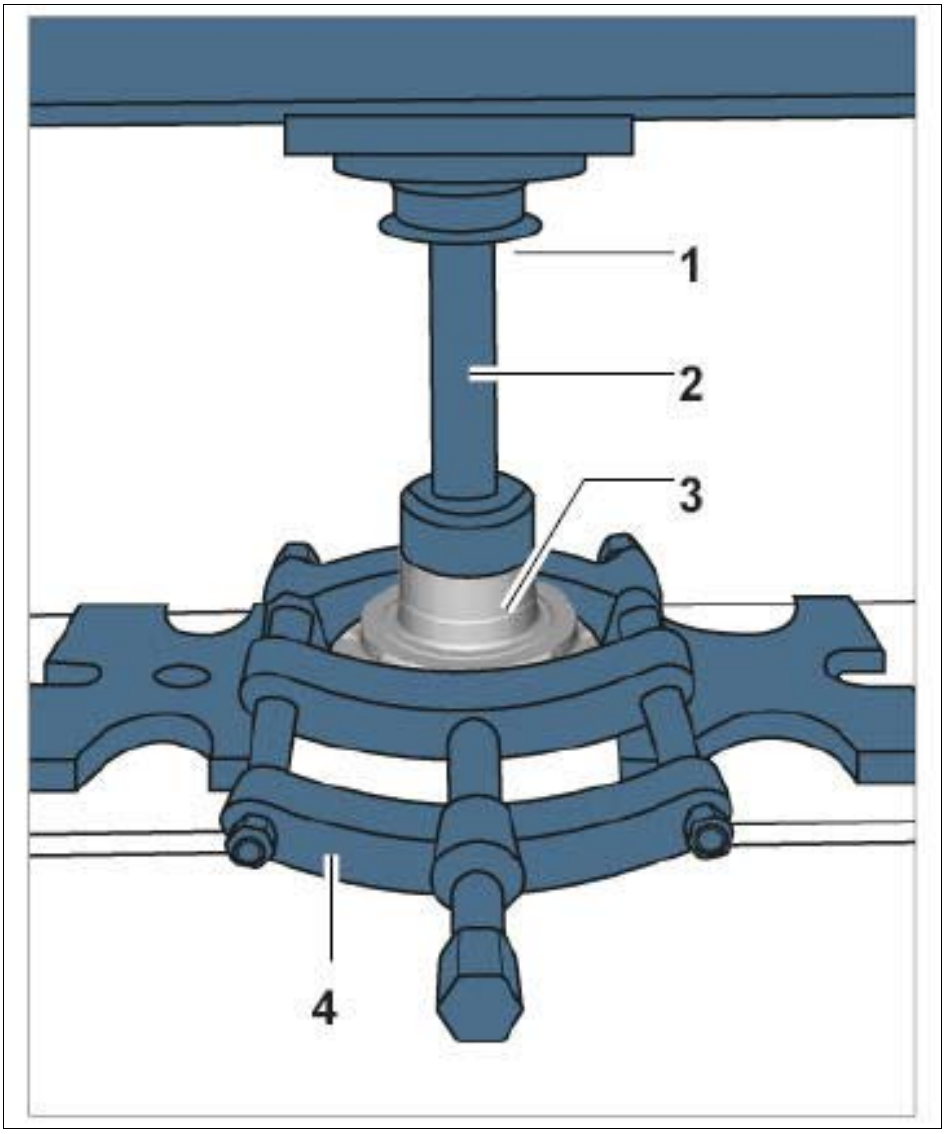

Courtesy of PORSCHE CARS NORTH AMERICA, INC.

3. 4.3. Press inner bearing ring off the wheel hub.

WM 405755 REPLACING FRONT WHEEL BEARING (ALL MODELS) > REPLACING FRONT WHEEL BEARING > INSTALLING FRONT WHEEL BEARING

Information

- The wheel bearing has a magnetized multipole seal, which acts as a pulse sender for the wheel speed sensor.
- The multiple-pole seal -1- must always face upwards when the wheel bearing is set down (this does not apply when pressing the wheel hub into the wheel bearing). Do not damage the multipole seal and do not come into contact with magnetic objects (e.g. magnetized screwdriver, magnet).

Fig 1: Identifying Wheel Bearing Unit Seal

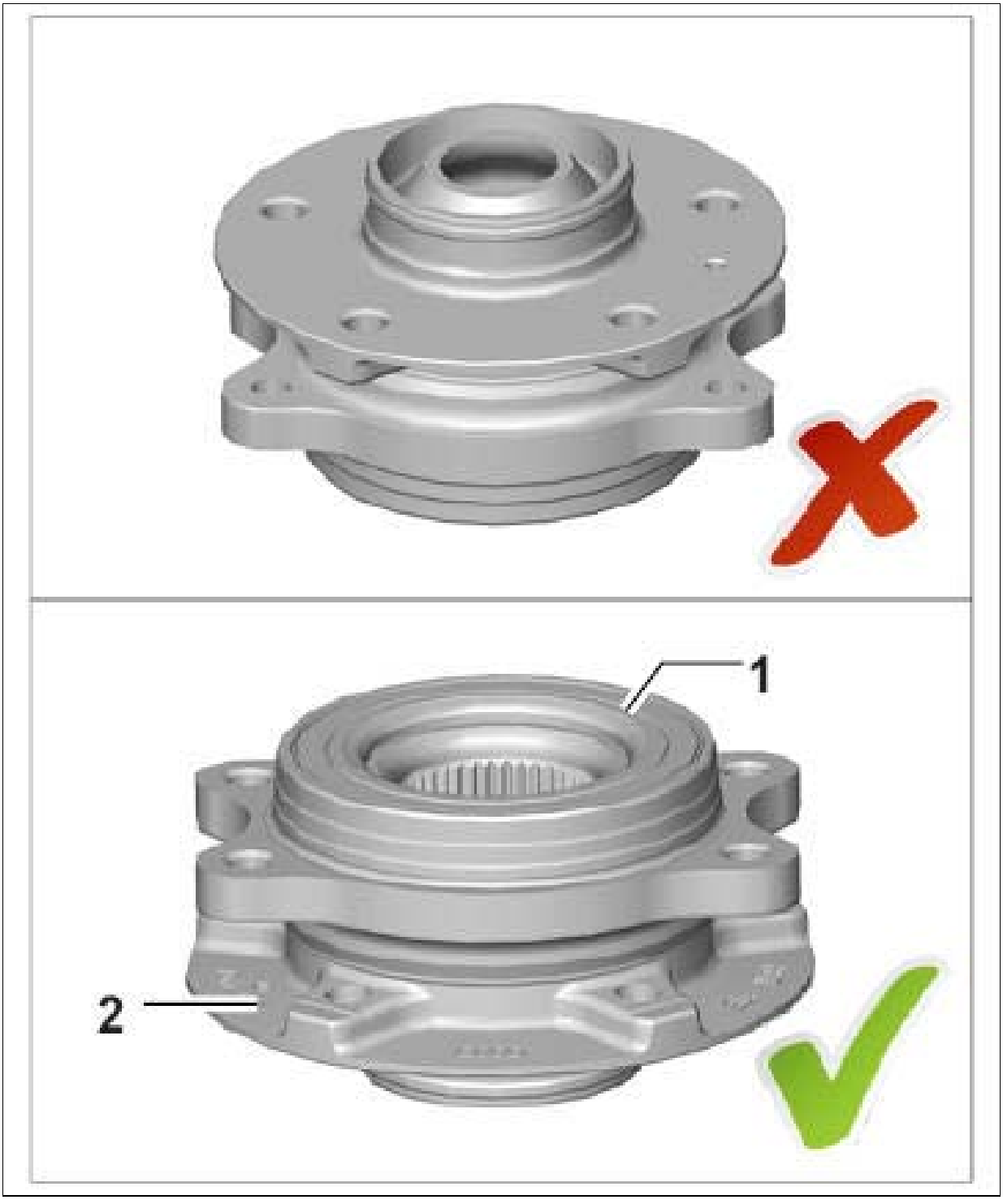

Courtesy of PORSCHE CARS NORTH AMERICA, INC.

1. Press wheel hub into the wheel bearing.
    1. Press tool
    2. **Pressure plate VW 402**
    3. Wheel hub

4. Wheel bearing
5. **Pressure plate VW 401**

Fig 2: Pressing Wheel Hub Into Wheel Bearing

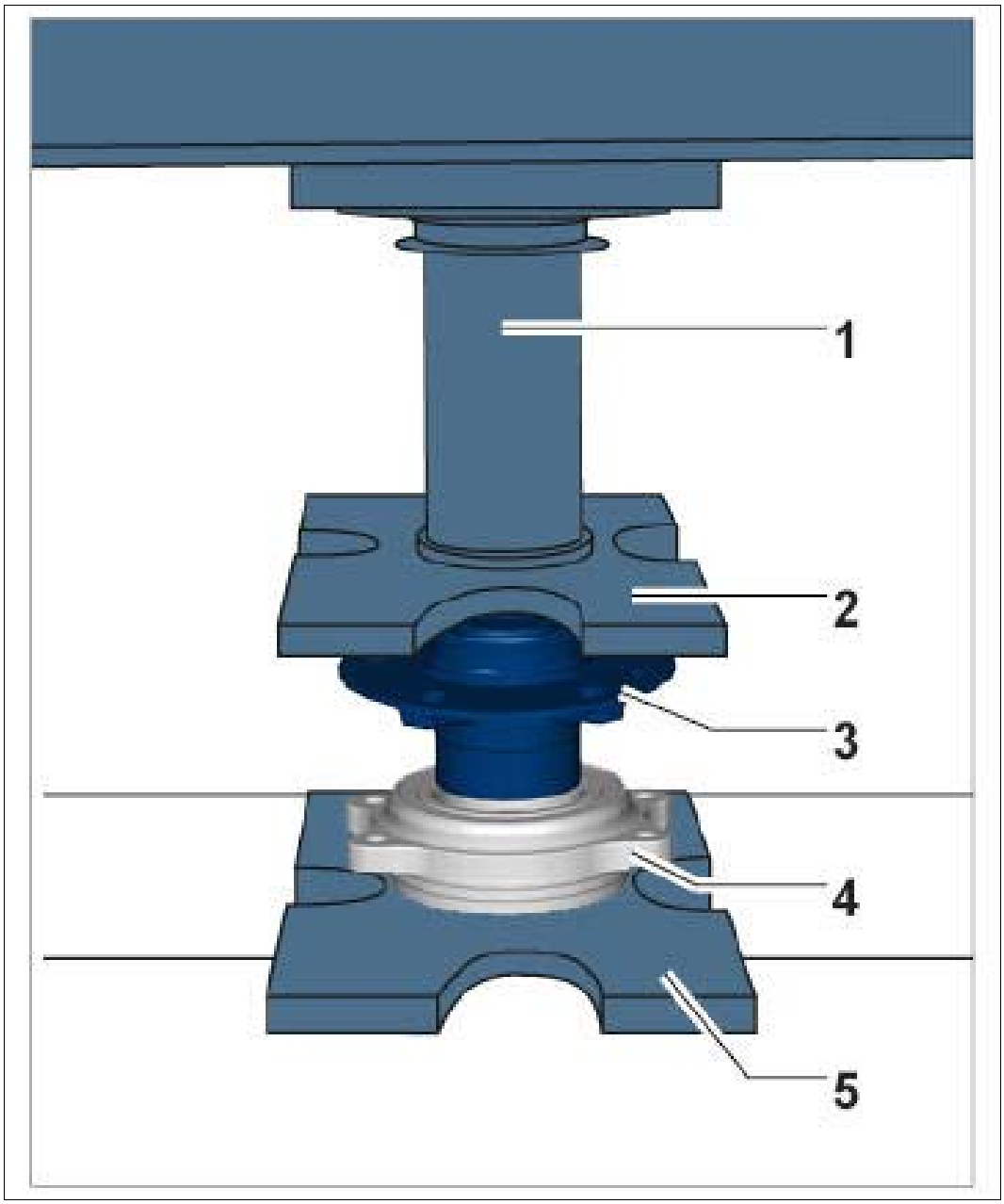

Courtesy of PORSCHE CARS NORTH AMERICA, INC.

1. 1.1. Fit special tools as shown in → Pressing wheel hub into wheel bearing .
2. 1.2. Press wheel hub into the wheel bearing.

2. Insert wheel bearing unit into the wheel bearing housing.
3. Tighten fastening screws on the wheel bearing unit.
    1. 3.1. Always observe the specified tightening sequence **-1 - 4-** !

       Observe specified tightening torques:

Wheel bearing unit to wheel bearing housing: **Initial tightening 80 Nm (59 ftlb.)**
Final tightening +90°

Fig 3: Wheel Bearing Unit Screws Tightening Sequence

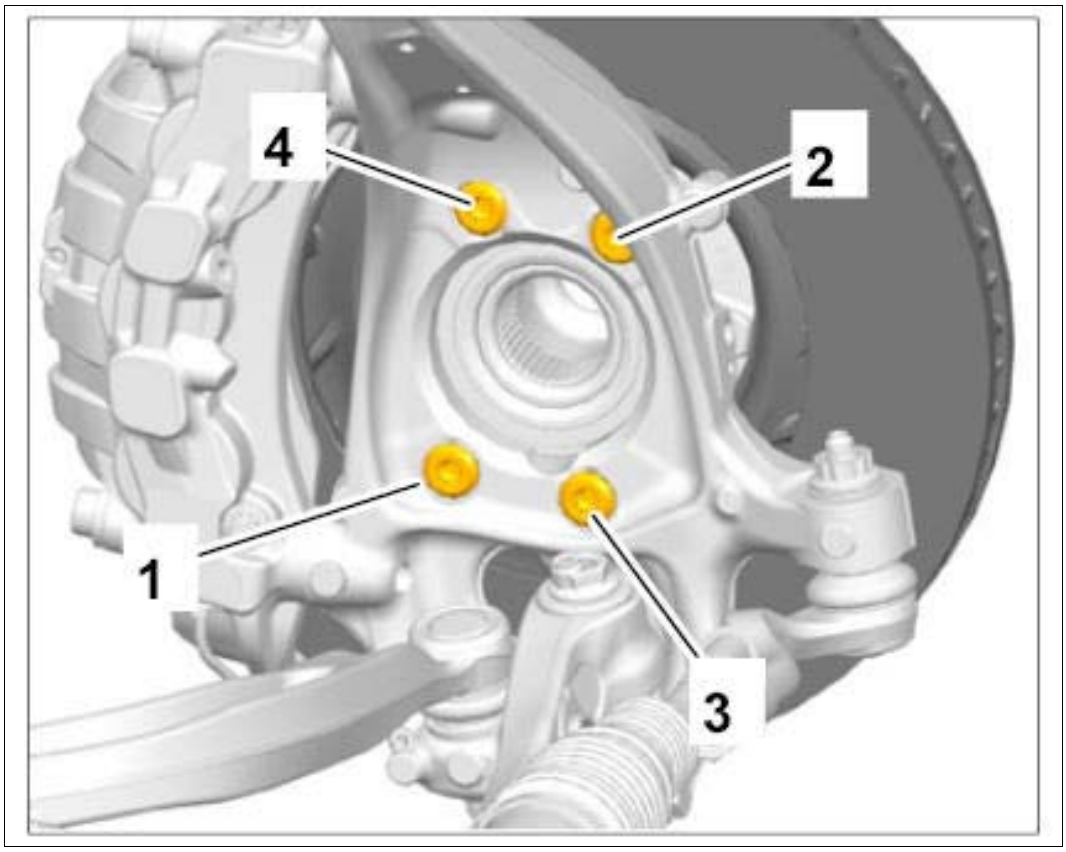

Courtesy of PORSCHE CARS NORTH AMERICA, INC.

WM 405755 REPLACING FRONT WHEEL BEARING (ALL MODELS) > SUBSEQUENT WORK

1. Install front speed sensor → 451155 REPLACING FRONT SPEED SENSOR .
2. Install brake disc → 465019 REMOVING AND INSTALLING FRONT BRAKE DISC .
3. Install front drive shaft → 404119 REMOVING AND INSTALLING FRONT DRIVE SHAFT .

WM 407719 REMOVING AND INSTALLING FRONT ANTI-ROLL BAR (ALL MODELS) > TECHNICAL VALUES

Location	Description	Type	Basic value	Tolerance 1	Tolerance 2
Connecting link to anti-roll bar	AM10 thread/always use new screws	Initial tightening	40 Nm (30 ftlb.)		

	and nuts following removal				
Connecting link to anti-roll bar	AM10 thread/always use new screws and nuts following removal	Final tightening	+90°		
Anti-roll bar clamp to front-axle carrier	M8 thread/always use new nut following removal	Tightening torque	30 Nm (22 ftlb.)		

WM 407719 REMOVING AND INSTALLING FRONT ANTI-ROLL BAR (ALL MODELS) > PRELIMINARY WORK

1. Remove front underbody panelling → 519219 REMOVING AND INSTALLING COVER FOR FRONT UNDERBODY .

WM 407719 REMOVING AND INSTALLING FRONT ANTI-ROLL BAR (ALL MODELS) > REMOVING AND INSTALLING FRONT ANTI-ROLL BAR > REMOVING FRONT ANTI-ROLL BAR

WARNING: Danger of objects or loads falling down

- *Risk of squashing or crushing*

→ Secure components to prevent them from falling down.

Information

- The illustrations for removing and installing are shown only on one equipment variant and may differ from the actual equipment variant.
- Some of the repair illustrations show only one side of the vehicle.

Fig 1: Overview Of Anti-Roll Bar

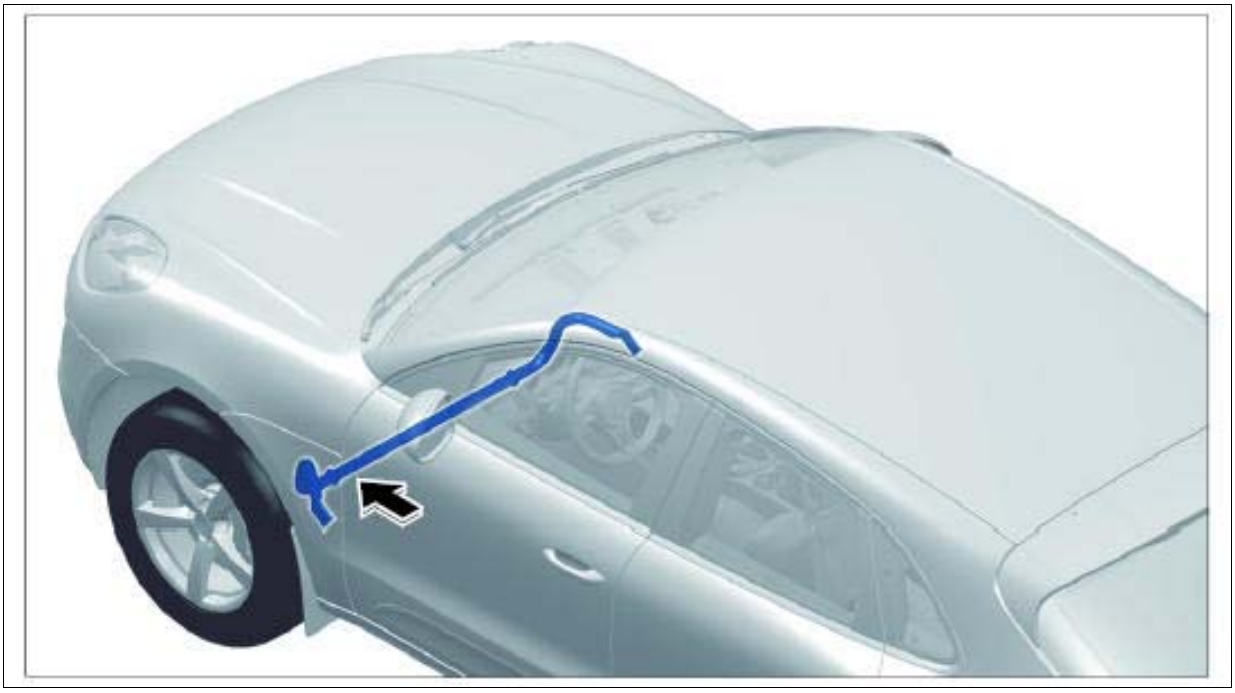

Courtesy of PORSCHE CARS NORTH AMERICA, INC.

1. Unscrew fastening screw **-2-** at the left and right.

Fig 2: Identifying Front Anti-Roll-Bar Mounting Screws

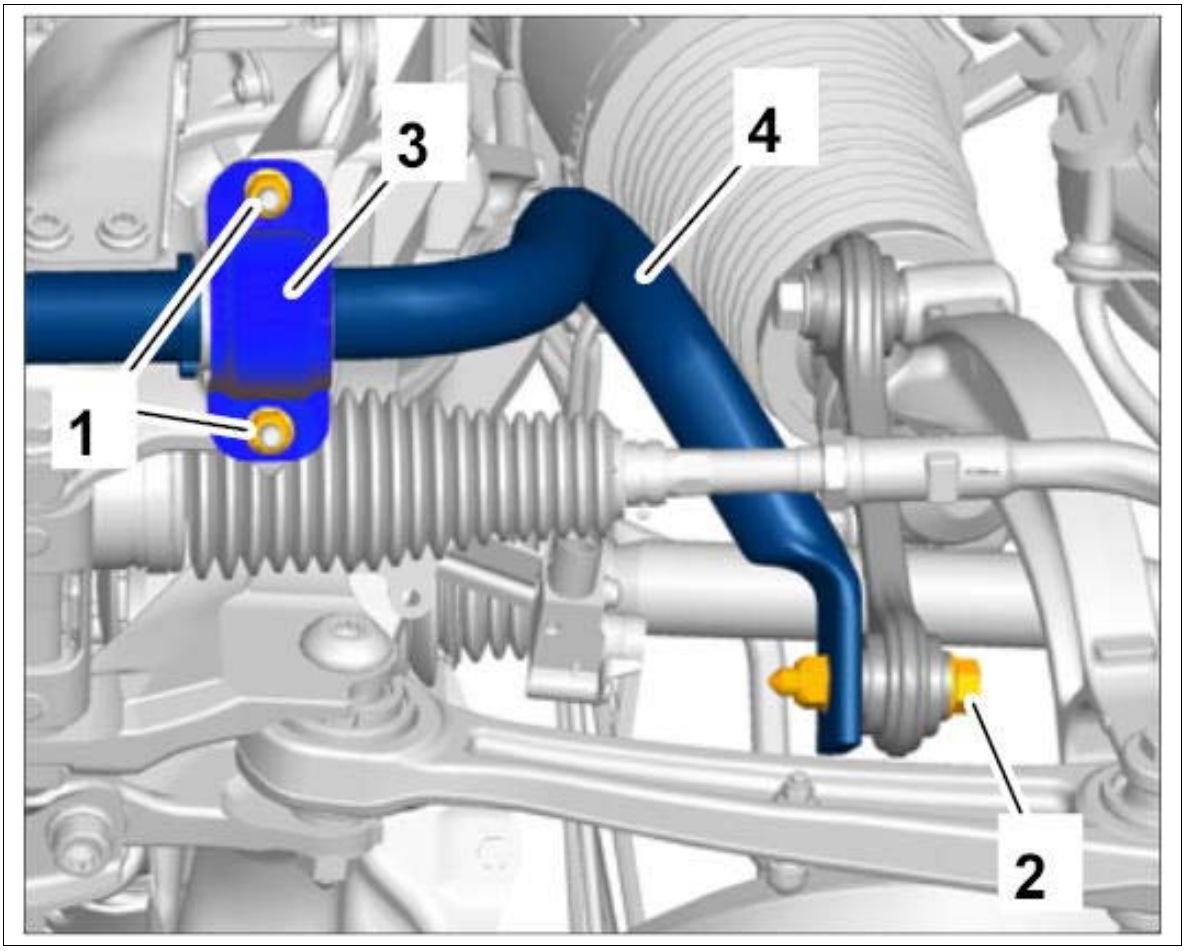

Courtesy of PORSCHE CARS NORTH AMERICA, INC.

2. Unscrew fastening nuts **-1-** and remove anti-roll bar clamp **-3-** at the left and right.
3. Remove anti-roll bar **-4-** .

WM 407719 REMOVING AND INSTALLING FRONT ANTI-ROLL BAR (ALL MODELS) > REMOVING AND INSTALLING FRONT ANTI-ROLL BAR > INSTALLING FRONT ANTI-ROLL BAR

WARNING: Wheel bearing housing raised incorrectly

- *Risk of squashing*
- *Risk of damage to components*

→ Wear personal protective gear.

→ Do not raise the wheel suspension higher than the normal vehicle position (vehicle resting on

wheels).

Information

- All screws and threaded joints on the axle must be tightened in vehicle position. Vehicle position means: vehicle standing on its wheels, or the wheel suspension is raised with a universal vehicle lift. Dimension -1- , from lower edge of wing to center of axle corresponds to vehicle position. The current height can be found in → 4495TW ADJUSTMENT VALUES FOR SUSPENSION ALIGNMENT . Always observe the following points!

  Fig 1: Identifying Wheel To Wing Lower Edge Dimension (Rear Axle)

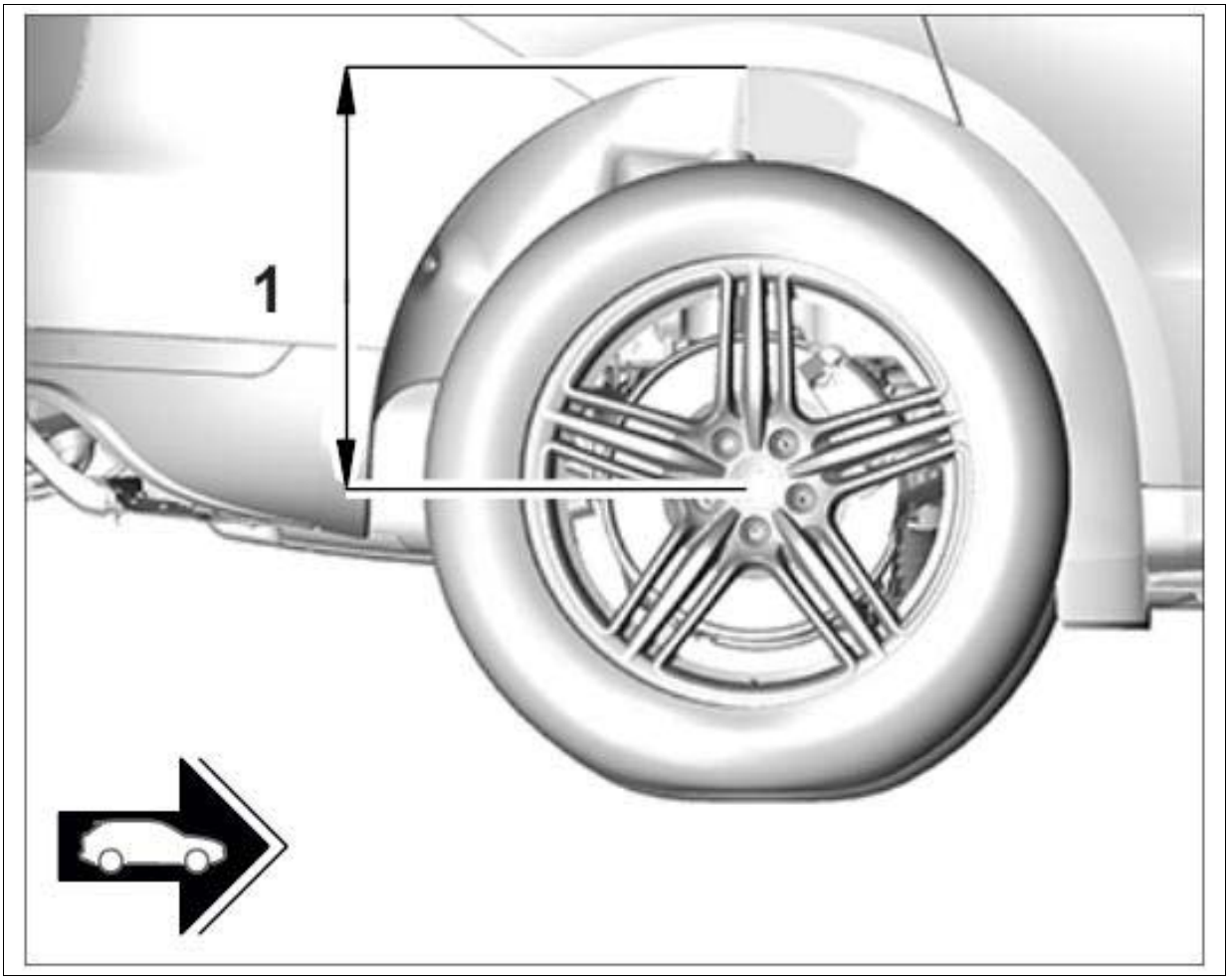

Courtesy of PORSCHE CARS NORTH AMERICA, INC.

- On vehicles with air springs, the respective air spring must be bled using the Porsche System Tester . → 4301IN BLEEDING AND FILLING THE LEVELLING SYSTEM
- Screws and nuts are Geomet-coated and must not be greased.

Installation is performed in reverse order to removal. Pay particular attention to the following:

1. Position anti-roll bar in installation position.

   For Macan Basis and Macan Diesel: Make sure that the gap in the rubber mounting in the right bracket is touching the contact surface of the clip.

   For Macan S and Macan Turbo: The rubber mounting is in two parts with a special precisely

fitted clip. The gap in the rubber mounting must be parallel to the contact surface of the clip.

2. Tighten fastening nuts **-1-** on the anti-roll bar clamps **-3-** on both sides of the vehicle. **Tightening torque 30 Nm (22 ftlb.)**

   Fig 2: Identifying Front Anti-Roll-Bar Mounting Nuts

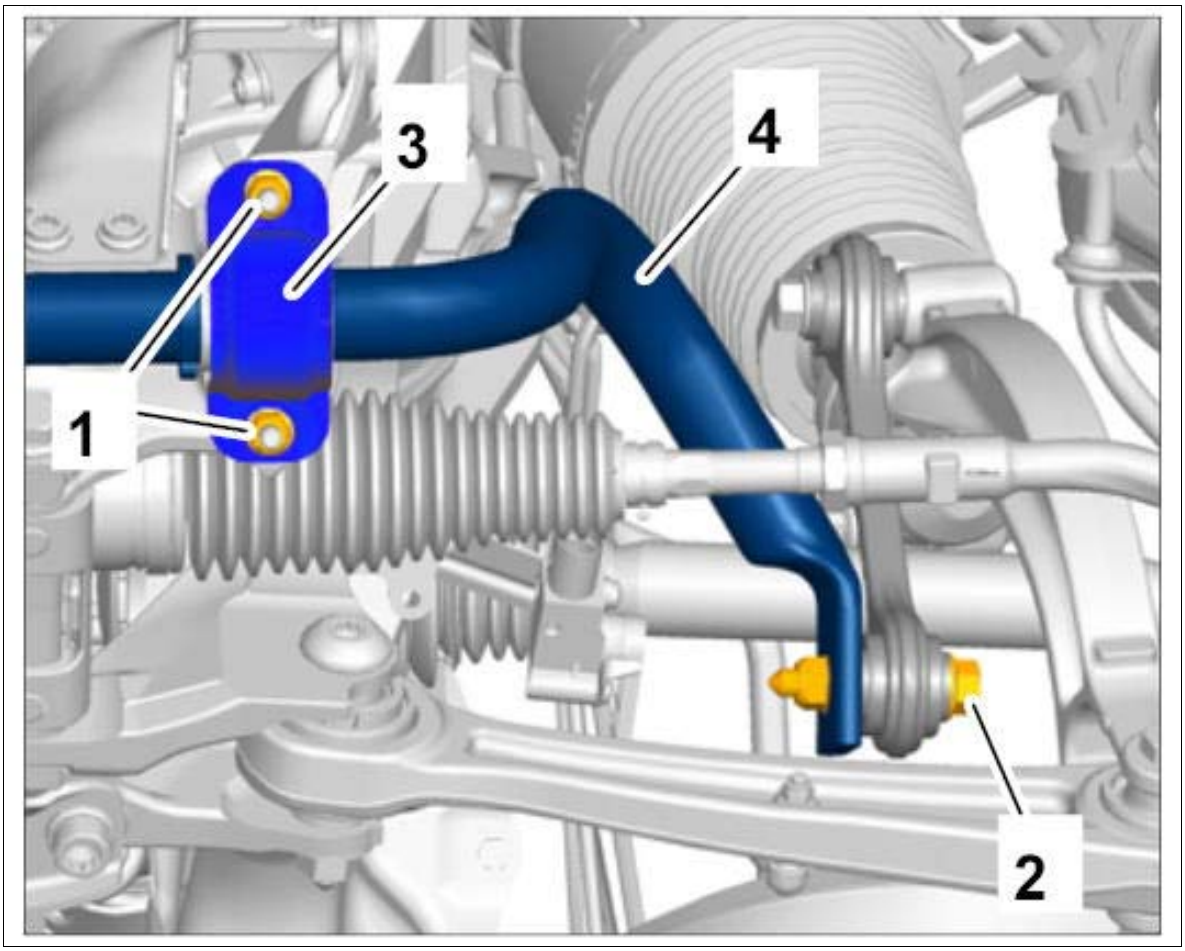

Courtesy of PORSCHE CARS NORTH AMERICA, INC.

3. Tighten fastening screw **-2-** on both sides of the vehicle. **Initial tightening 40 Nm (30 ftlb.) Final tightening +90°**

WM 407719 REMOVING AND INSTALLING FRONT ANTI-ROLL BAR (ALL MODELS) > SUBSEQUENT WORK

1. Install front underbody panelling → 519219 REMOVING AND INSTALLING COVER FOR FRONT UNDERBODY

WM 407819 REMOVING AND INSTALLING FRONT CONNECTING LINK (SUSPENSION/STABILIZER) (ALL MODELS) > TECHNICAL VALUES

Location	Description	Type	Basic value	Tolerance 1	Tolerance 2

Connecting link to anti-roll bar	AM10 thread/always use new screws and nuts following removal	Initial tightening	40 Nm (30 ftlb.)		
Connecting link to anti-roll bar	AM10 thread/always use new screws and nuts following removal	Final tightening	+90°		
Connecting link to spring strut	M10 x 45 thread/always use new screws or bolts following removal	Initial tightening	40 Nm (30 ftlb.)		
Connecting link to spring strut	M10 x 45 thread/always use new screws or bolts following removal	Final tightening	+90°		

WM 407819 REMOVING AND INSTALLING FRONT CONNECTING LINK (SUSPENSION/STABILIZER) (ALL MODELS) > REMOVING AND INSTALLING FRONT CONNECTING LINK (SUSPENSION/STABILIZER) > REMOVING FRONT CONNECTING LINK (SUSPENSION/STABILIZER)

Information

- The illustrations for removing and installing are shown only on one equipment variant and may differ from the actual equipment variant.
- Some of the repair illustrations show only one side of the vehicle.

Fig 1: Overview Of Front Connecting Link



Courtesy of PORSCHE CARS NORTH AMERICA, INC.

1. Unscrew fastening screw **-3-** .

Fig 2: Identifying Connecting Link Mounting Fastening Screws

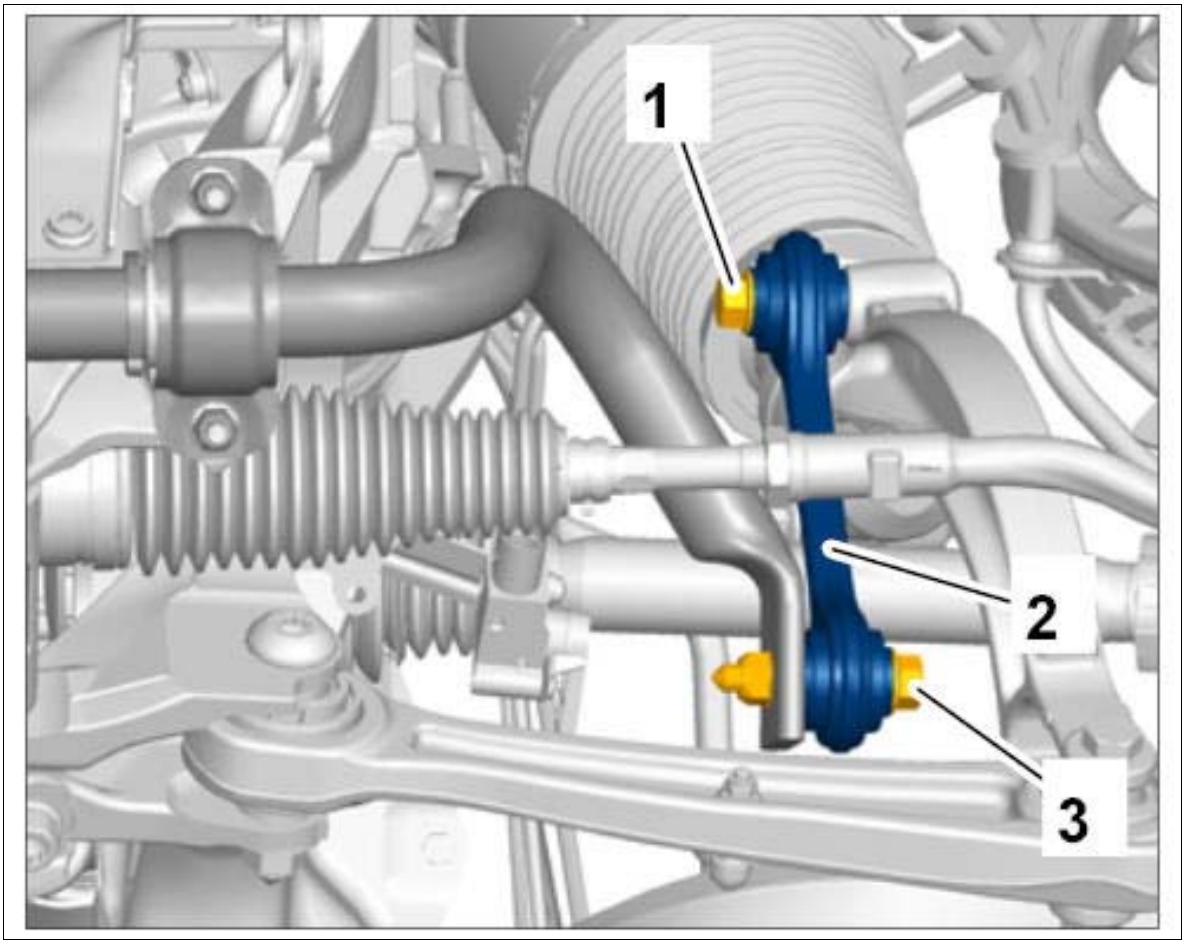

Courtesy of PORSCHE CARS NORTH AMERICA, INC.

2. Unscrew fastening screw **-1-** .
3. Remove connecting link **-2-** .

WM 407819 REMOVING AND INSTALLING FRONT CONNECTING LINK (SUSPENSION/STABILIZER) (ALL MODELS) > REMOVING AND INSTALLING FRONT CONNECTING LINK (SUSPENSION/STABILIZER) > INSTALLING FRONT CONNECTING LINK (SUSPENSION/STABILIZER)

WARNING: Wheel bearing housing raised incorrectly

- *Risk of squashing*
- *Risk of damage to components*

→ Wear personal protective gear.

→ Do not raise the wheel suspension higher than the normal vehicle position (vehicle resting on wheels).

Information

- All screws and threaded joints on the axle must be tightened in vehicle position. Vehicle position means: vehicle standing on its wheels, or the wheel suspension is raised with a universal vehicle lift. Dimension -1- , from lower edge of wing to center of axle corresponds to vehicle position. The current height can be found in → 4495TW ADJUSTMENT VALUES FOR SUSPENSION ALIGNMENT . Always observe the following points!

  Fig 1: Identifying Wheel To Wing Lower Edge Dimension (Rear Axle)

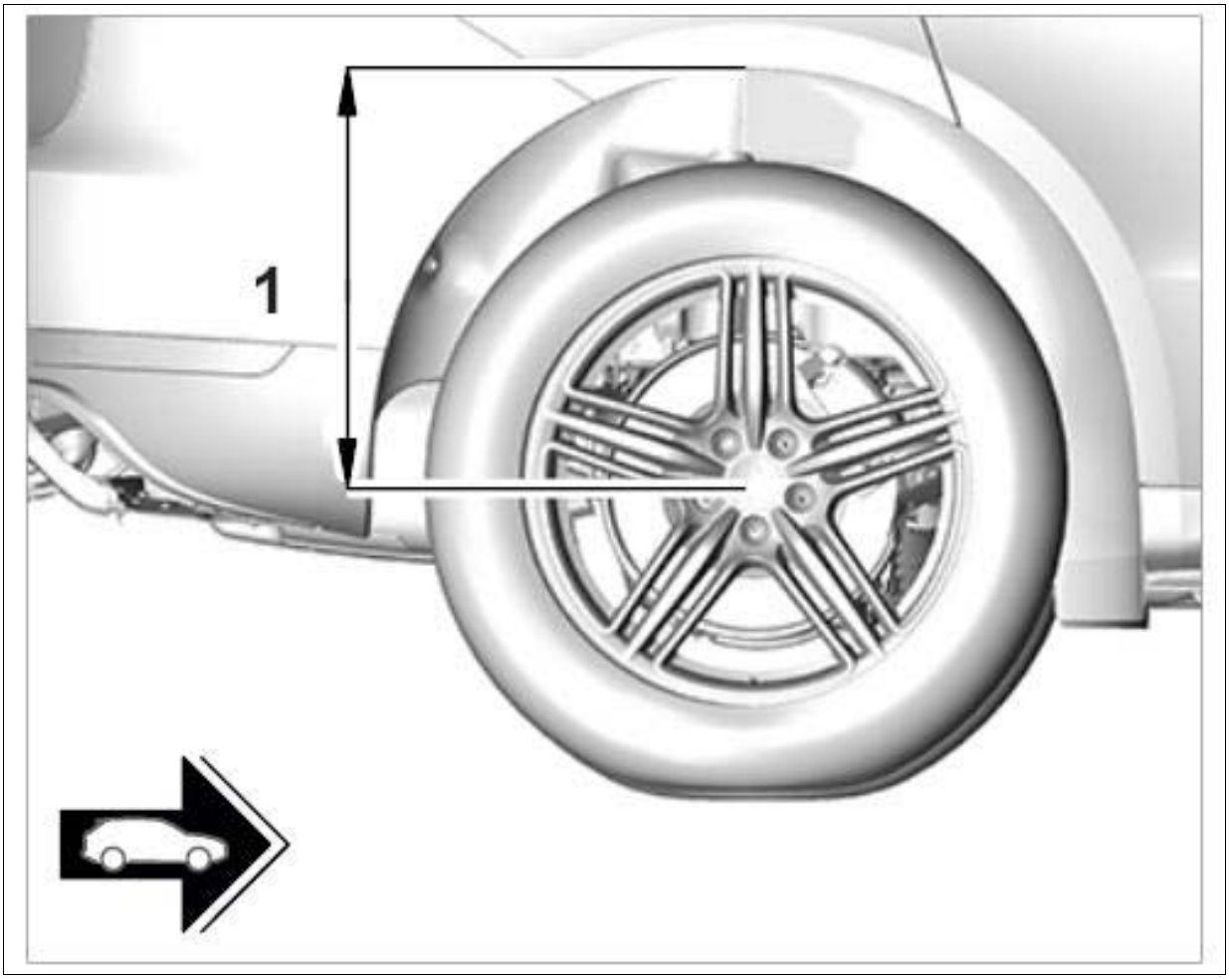

Courtesy of PORSCHE CARS NORTH AMERICA, INC.

- On vehicles with air springs, the respective air spring must be bled using the Porsche System Tester . → 4301IN BLEEDING AND FILLING THE LEVELLING SYSTEM
- Screws and nuts are Geomet-coated and must not be greased.

Installation is performed in reverse order to removal. Pay particular attention to the following:

1. Tighten fastening screw **-1-** . **Initial tightening 40 Nm (30 ftlb.) Final tightening +90°**

Fig 2: Identifying Connecting Link Mounting Screws

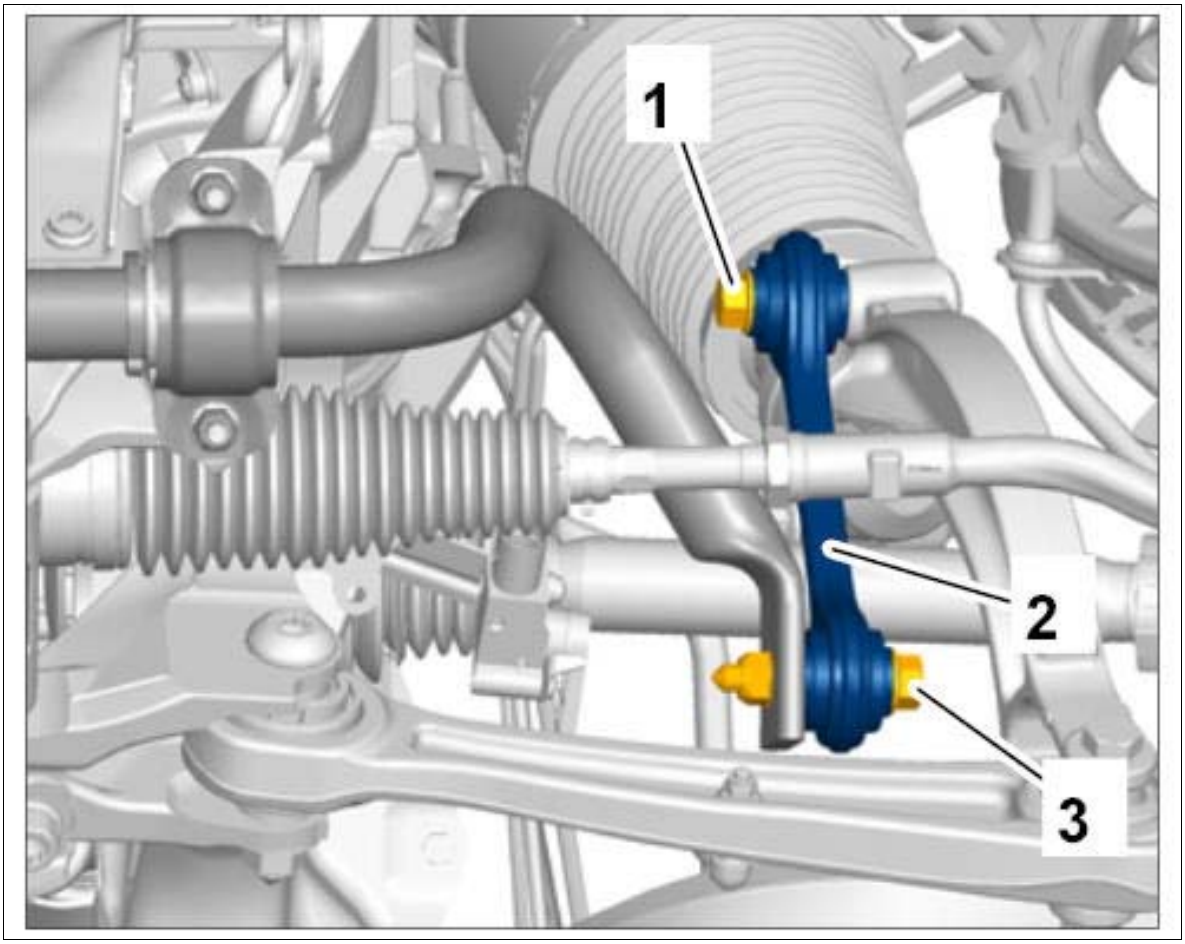

Courtesy of PORSCHE CARS NORTH AMERICA, INC.

2. Tighten fastening screw **-3-** . **Initial tightening 40 Nm (30 ftlb.) Final tightening +90°**

WM 408519 REMOVING AND INSTALLING FRONT SPRING STRUT (ALL MODELS) > TOOLS

Designation	Type	Number	Description	
transmission jack	Workshop equipment	WE 1082		

Support	VW tool	T10149		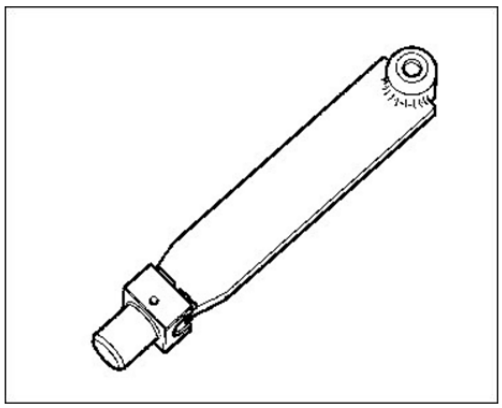

WM 408519 REMOVING AND INSTALLING FRONT SPRING STRUT (ALL MODELS) > TECHNICAL VALUES

Location	Description	Type	Basic value	Tolerance 1	Tolerance 2
Upper trailing arm to wheel bearing housing	M10 thread	Tightening torque	45 Nm (33 ftlb.)		

WM 408519 REMOVING AND INSTALLING FRONT SPRING STRUT (ALL MODELS) > PRELIMINARY WORK

1. Remove wheel → 440519 REMOVING AND INSTALLING WHEEL .
2. Remove cowl panel cover → 508719 REMOVING AND INSTALLING COWL PANEL COVER .
3. Unscrew fastening screws **-1-** and remove air inlet housing cover **-2-** .

Fig 1: Identifying Air Inlet Housing Cover & Screws

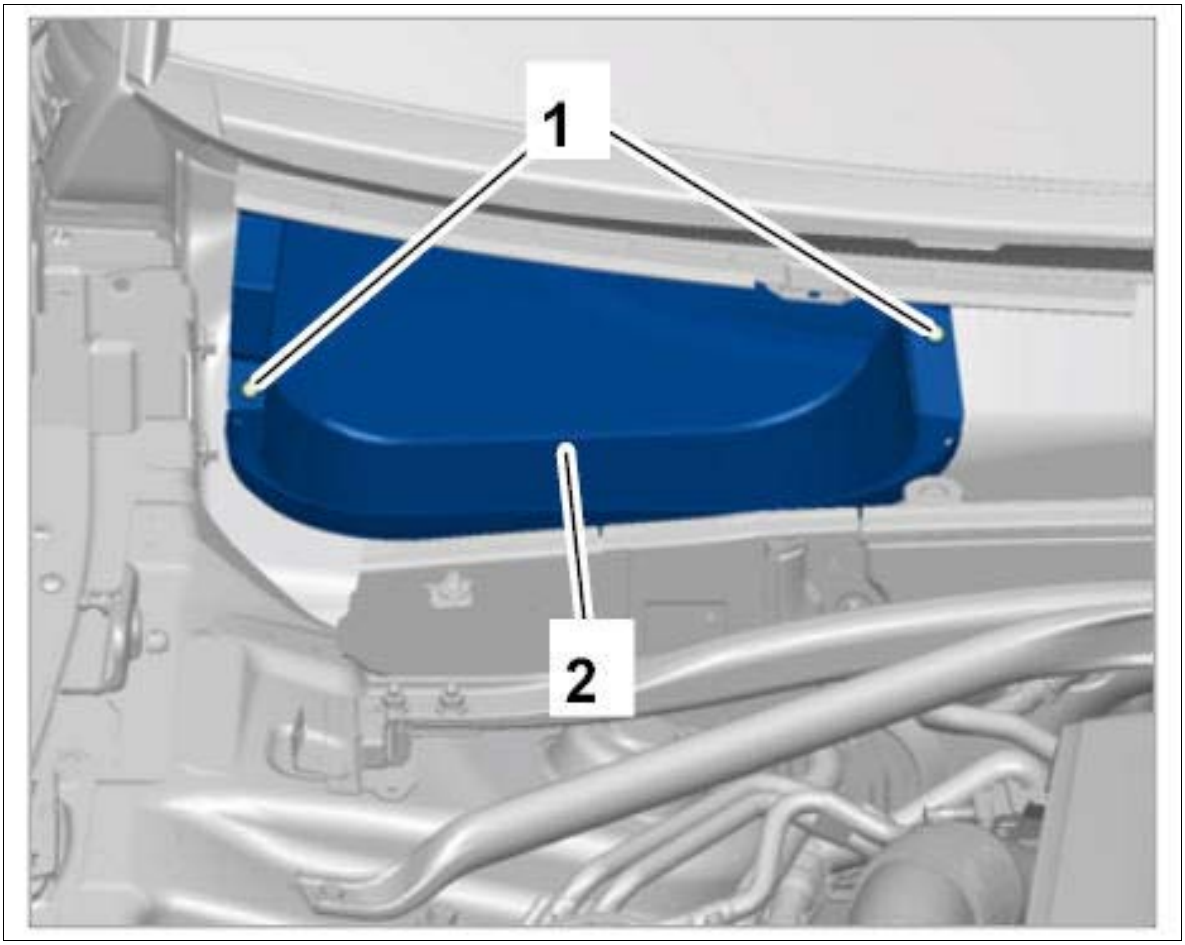

Courtesy of PORSCHE CARS NORTH AMERICA, INC.

4. Remove front trim panel → 700219 REMOVING AND INSTALLING FRONT TRIM PANEL .
5. Remove additional reinforcement on dome strut → 408619 REMOVING AND INSTALLING FRONT STRUT (DOME STRUT) .
6. Remove shock absorber fork. → 408919 REMOVING AND INSTALLING SHOCK ABSORBER FORKS

WM 408519 REMOVING AND INSTALLING FRONT SPRING STRUT (ALL MODELS) > REMOVING AND INSTALLING FRONT SPRING STRUT > REMOVING FRONT SPRING STRUT

1. **Vehicles with PASM:** Remove PASM connector.

Fig 1: Identifying PASM Connector

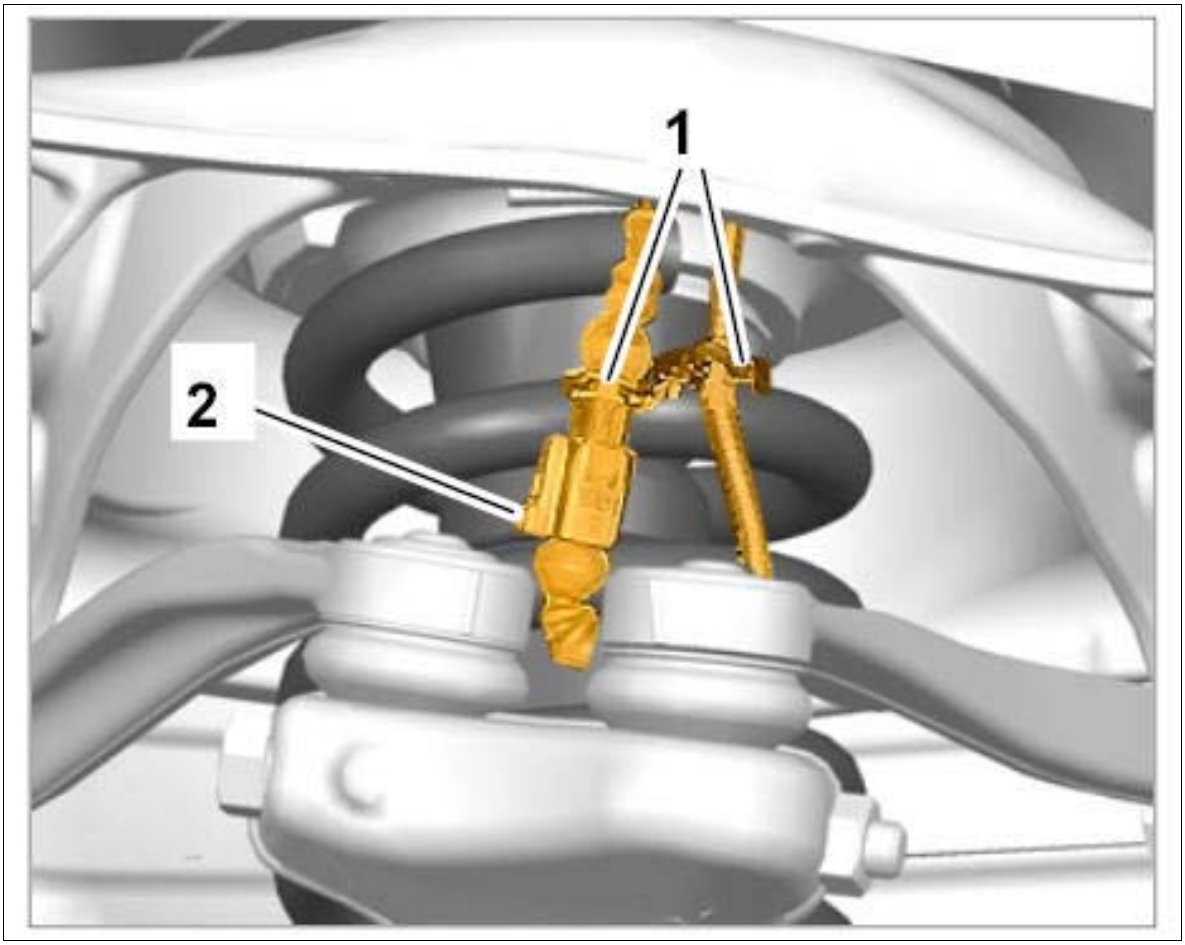

Courtesy of PORSCHE CARS NORTH AMERICA, INC.

1. 1.1. Loosen connector and release line from the holder **-1-** .
2. 1.2. Release and disconnect connector **-2-** .

2. Support the wheel bearing housing to prevent the wheel bearing housing from tilting.

Fig 2: Locating Support (T10149) Mounting Nut

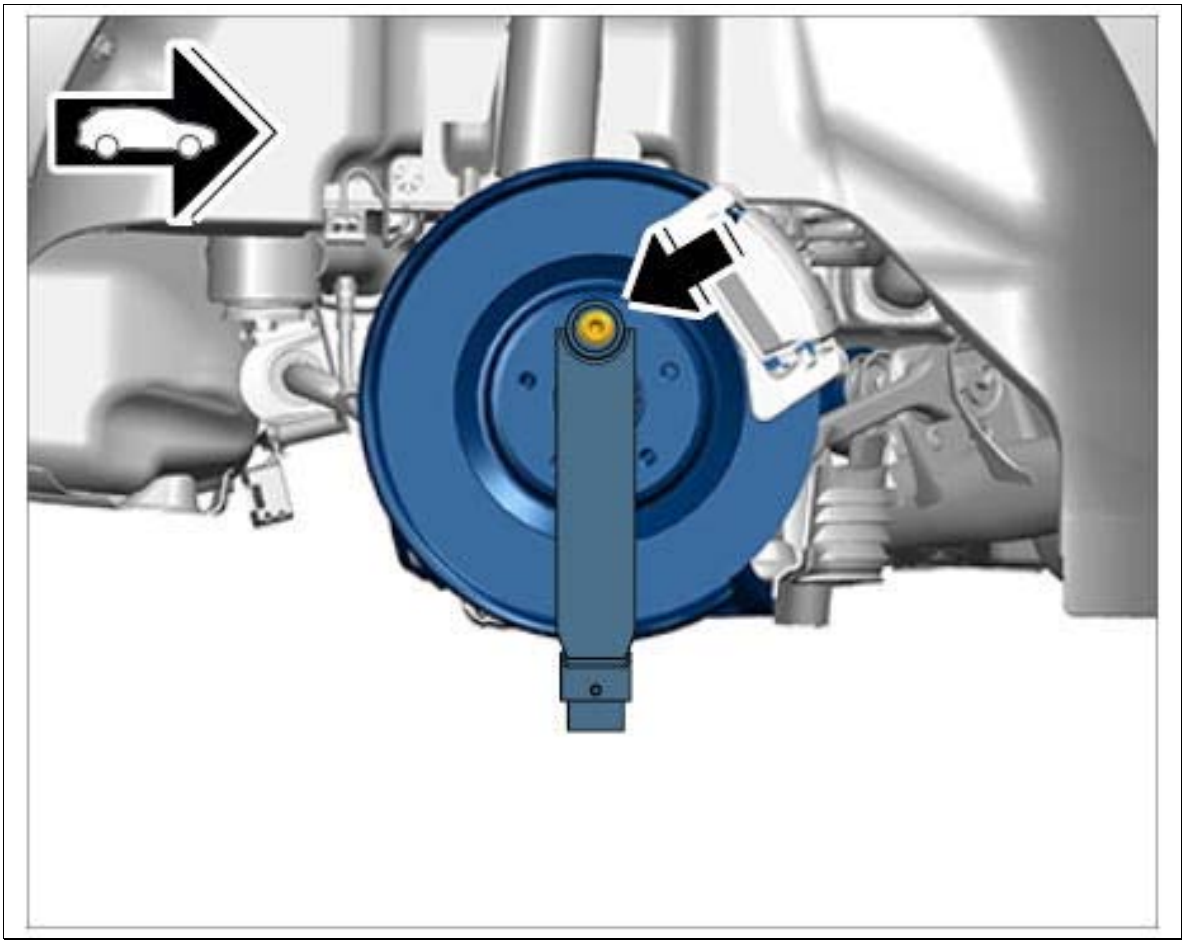

Courtesy of PORSCHE CARS NORTH AMERICA, INC.

1. 2.1. Turn the wheel hub in such a way that a bore for a wheel bolt is at the top.
2. 2.2. **Support T10149** must be secured to the wheel hub with a wheel bolt **-arrow-**
3. 2.3. **Support T10149** must now be fitted into the **transmission jack WE 1082** .

3. Separate threaded joint **-1-** on the wheel bearing housing at the top.

   Information

   The slots in the wheel bearing housing must not be widened using a chisel or similar tool!

4. Pull the two pins for the upper trailing arm **-2-** out of the wheel bearing housing.

Fig 3: Identifying Upper Trailing Arm Mountings

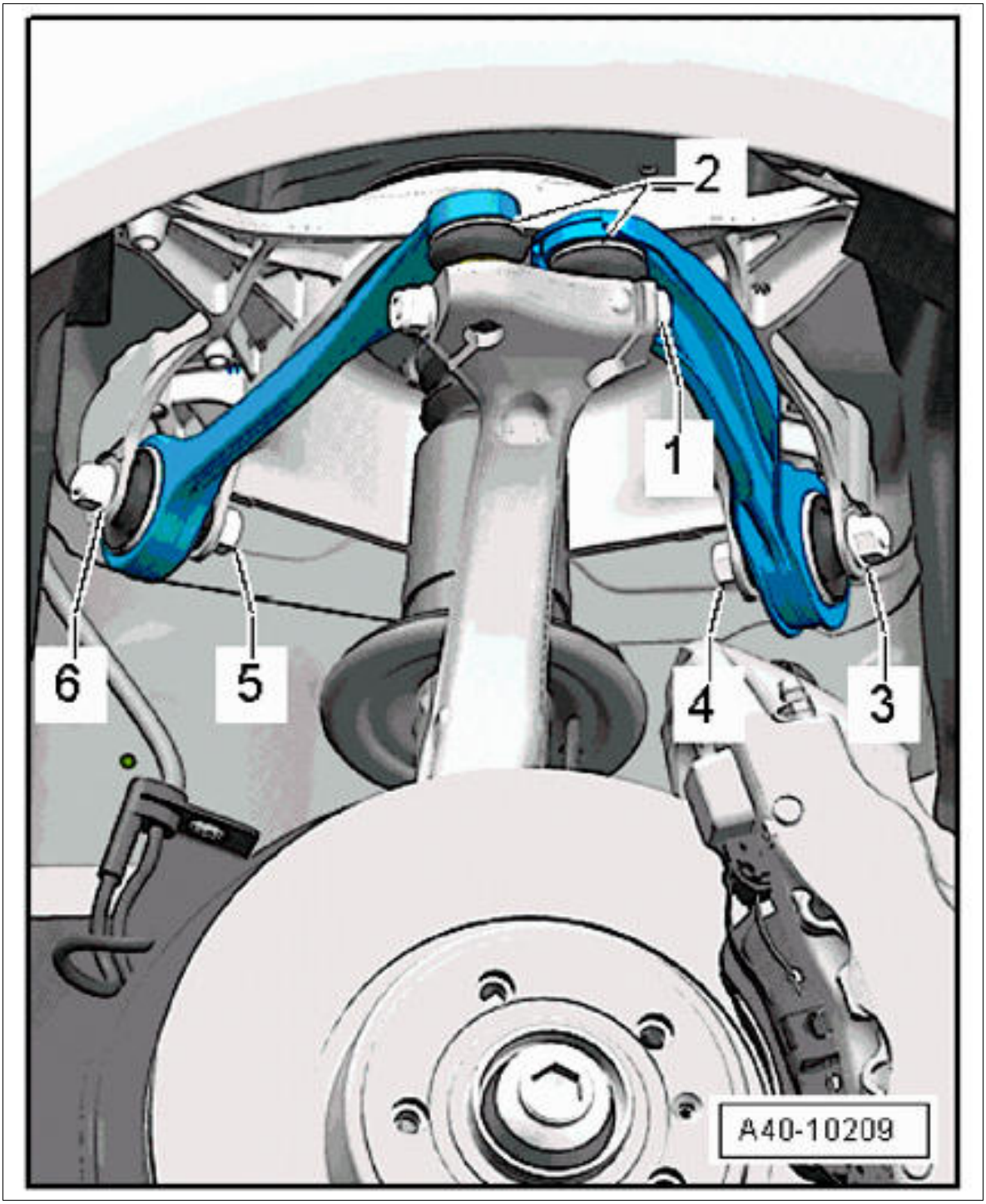

Courtesy of PORSCHE CARS NORTH AMERICA, INC.

5. Unscrew fastening screws **-1 to 4-** on the mounting saddle at the top.

Fig 4: Identifying Upper Spring-Strut Mount Fastening Screws

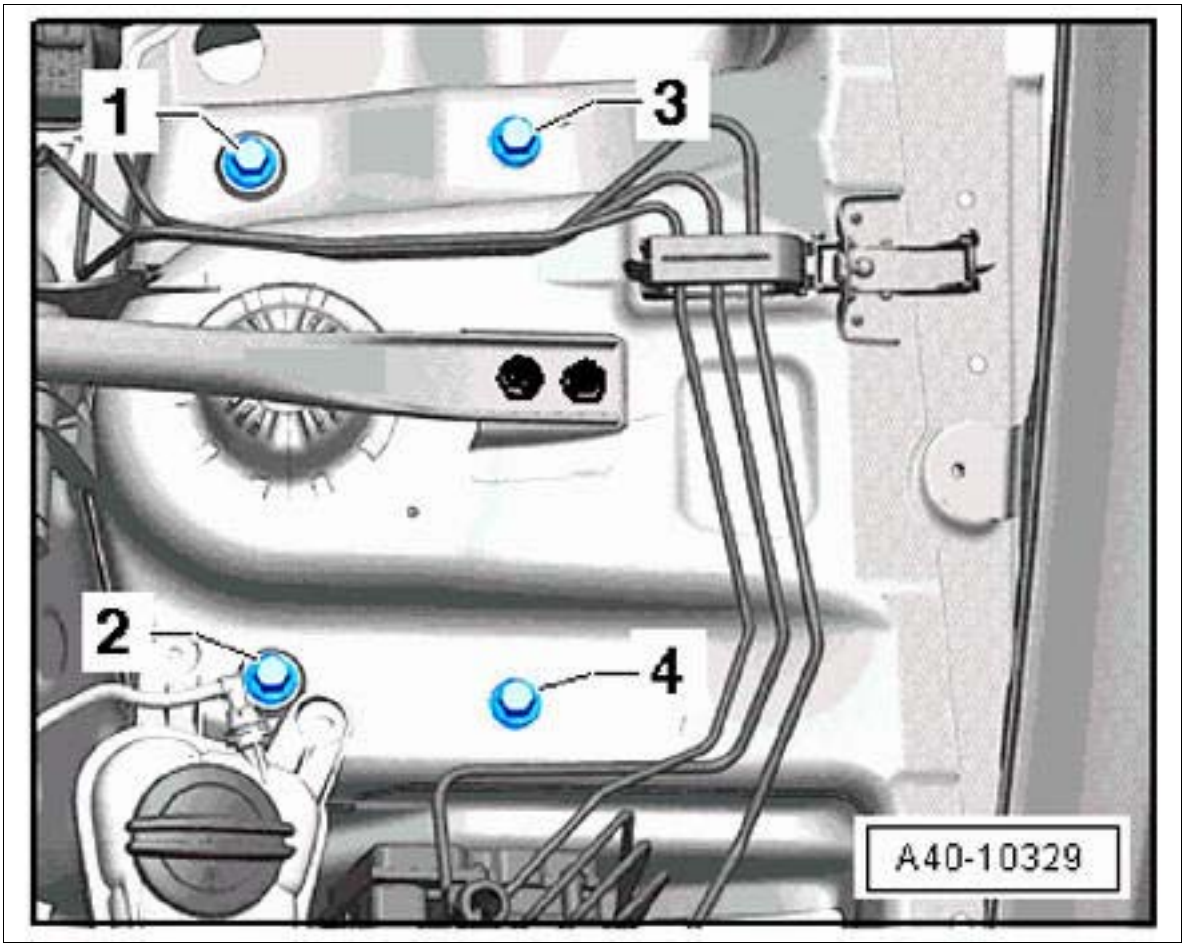

Courtesy of PORSCHE CARS NORTH AMERICA, INC.

6. **Vehicles with PASM:** Unscrew fastening screws **-1-** and remove mounting saddle **-2-** from the spring strut **-3-** .

Fig 5: Identifying Mounting Saddle And Upper Trailing Arm

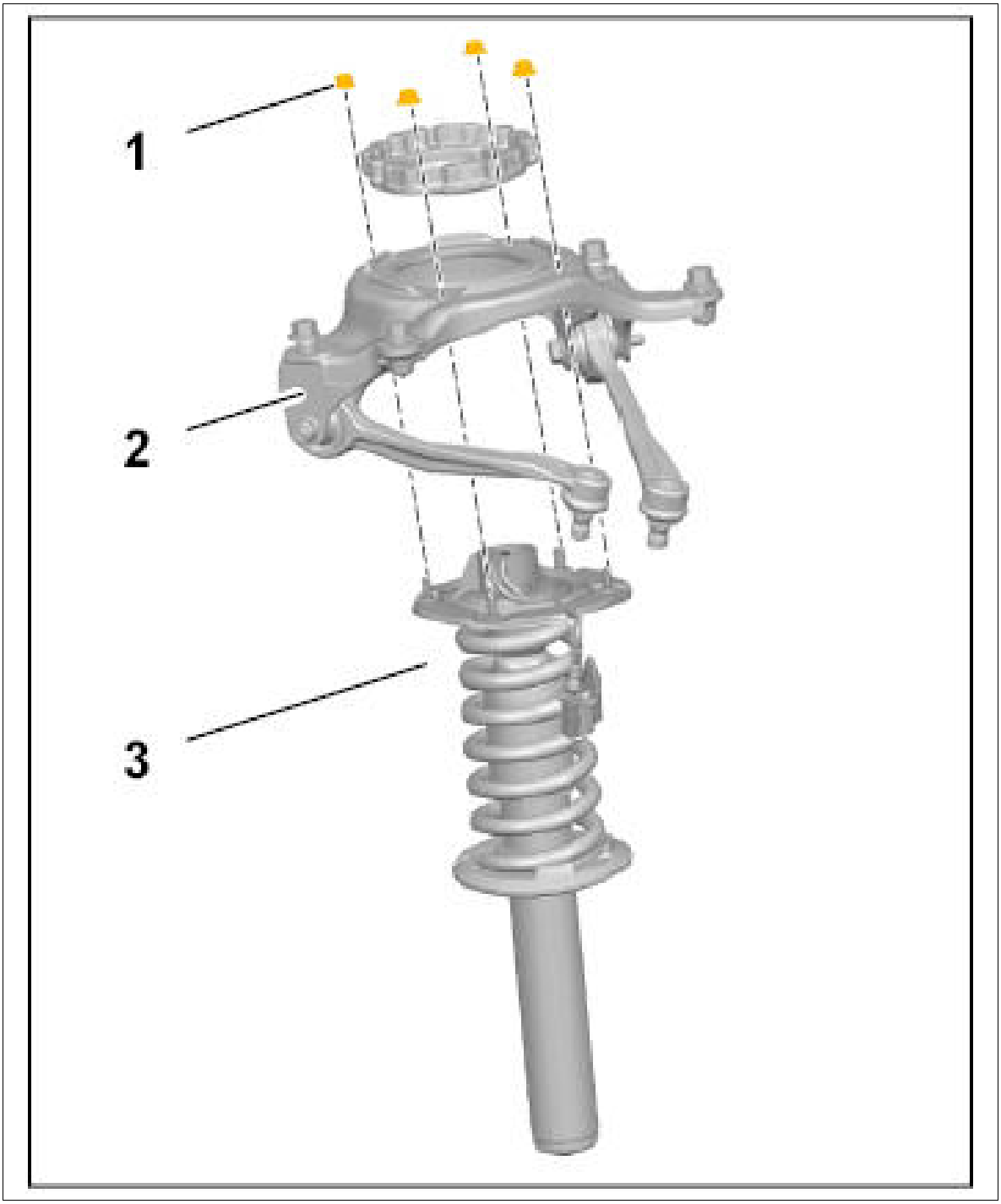

Courtesy of PORSCHE CARS NORTH AMERICA, INC.

WM 408519 REMOVING AND INSTALLING FRONT SPRING STRUT (ALL MODELS) > REMOVING AND INSTALLING FRONT SPRING STRUT > INSTALLING FRONT SPRING STRUT

1. Installation is performed in reverse order.

Observe specified tightening torques:

Mounting saddle to spring strut (PASM only):

Mounting saddle to body:

Observe the tightening sequence **-1 to 4-** !

Upper trailing arm to wheel bearing housing: **Tightening torque 45 Nm (33 ftlb.)**

Fig 1: Body Mounting Saddle Screws Tightening Sequence

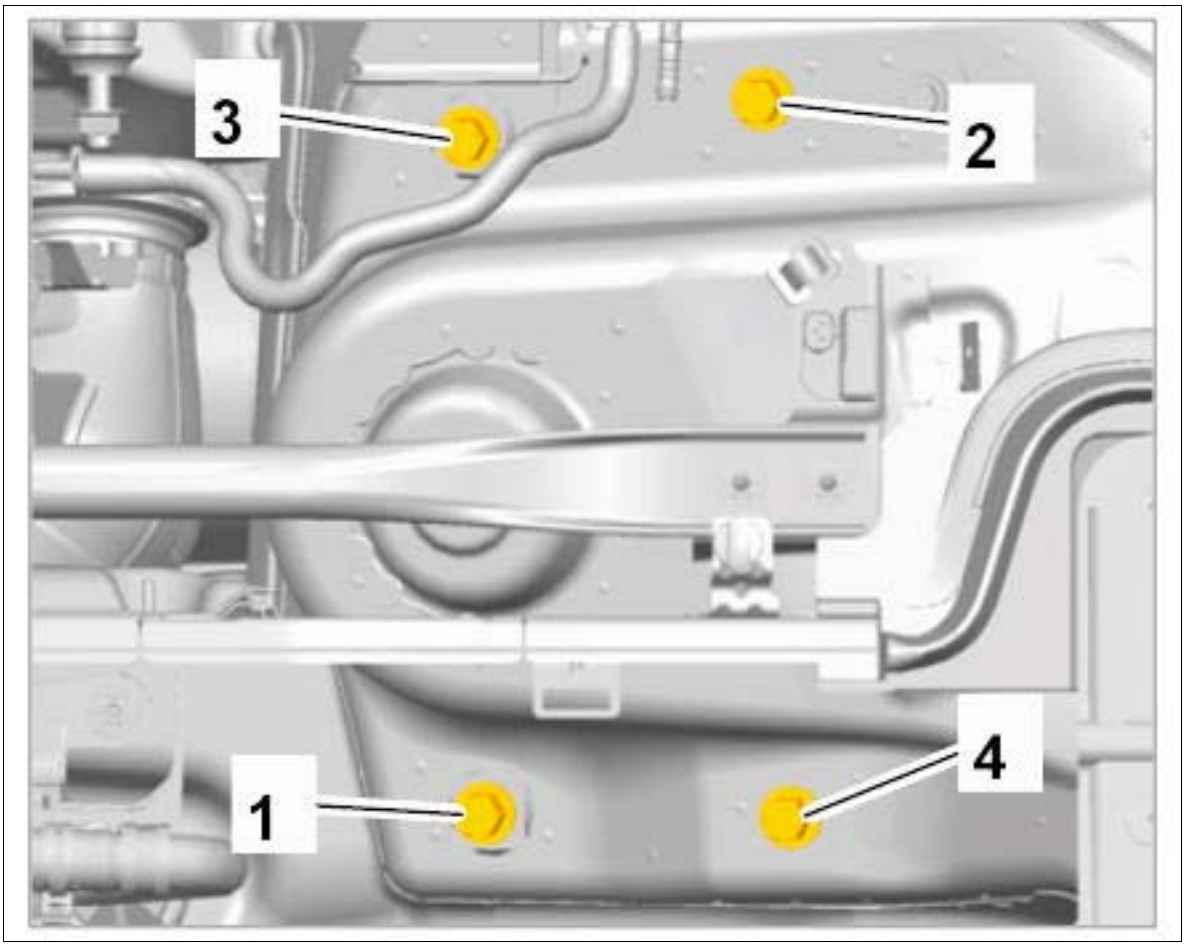

Courtesy of PORSCHE CARS NORTH AMERICA, INC.

WM 408519 REMOVING AND INSTALLING FRONT SPRING STRUT (ALL MODELS) > SUBSEQUENT WORK

1. Install shock absorber fork. → Installing Shock Absorber Fork .
2. Install additional reinforcement on dome strut → 408619 REMOVING AND INSTALLING FRONT STRUT (DOME STRUT) .
3. Install front trim panel → 700219 REMOVING AND INSTALLING FRONT TRIM PANEL .
4. Fit air inlet housing cover **-2-** and tighten fastening screws **-1-** .

Fig 1: Identifying Air Inlet Housing Cover Mounting

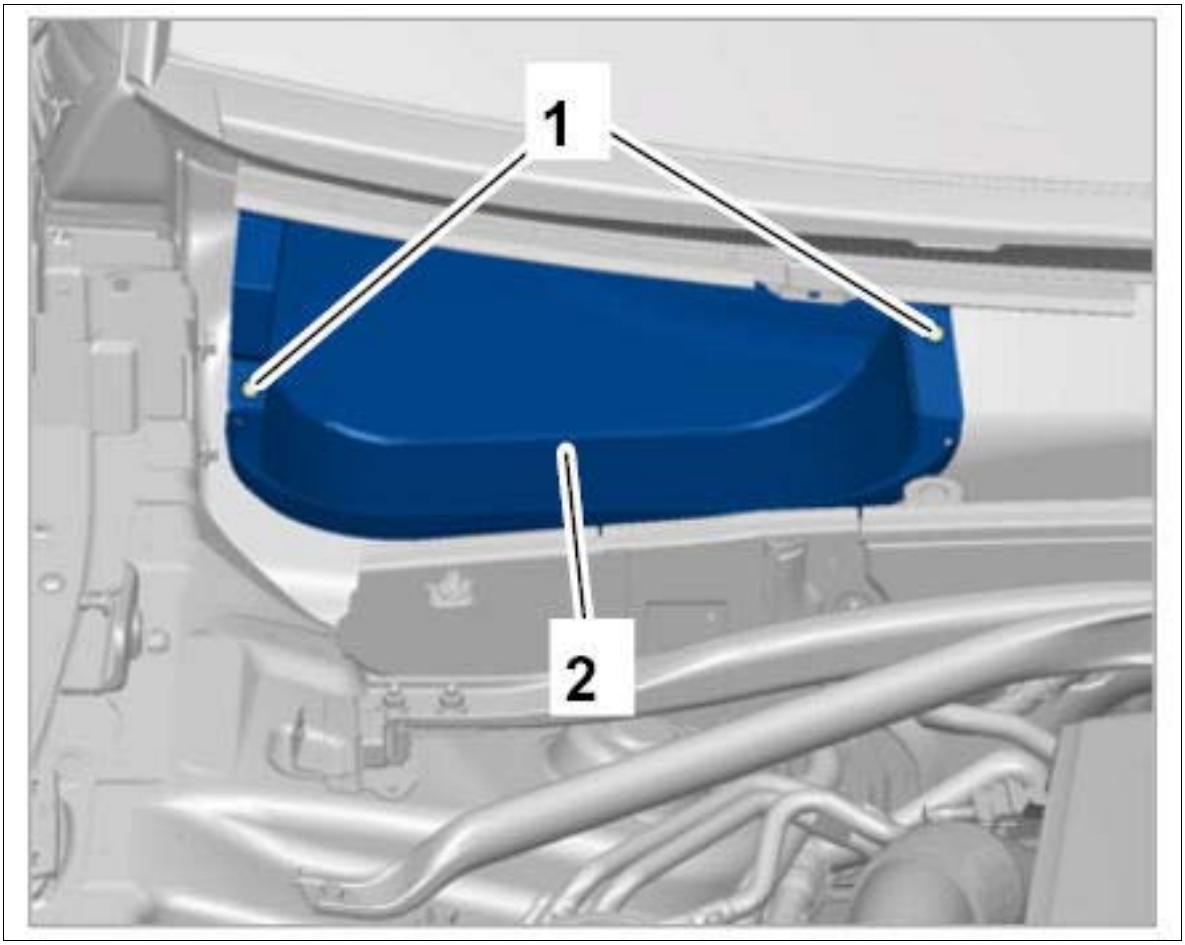

Courtesy of PORSCHE CARS NORTH AMERICA, INC.

5. Install cowl panel cover → 508719 REMOVING AND INSTALLING COWL PANEL COVER .
6. Fit wheel → 440519 REMOVING AND INSTALLING WHEEL .
7. Perform suspension alignment. → 449503 SUSPENSION ALIGNMENT, COMPLETE .

WM 408537 DISASSEMBLING AND ASSEMBLING FRONT SPRING STRUT (ALL MODELS) > TOOLS

Designation	Type	Number	Description	
stationary spring tensioning device	Workshop equipment	WE 1610		

socket-wrench insert	VW tool	3353		40, 42 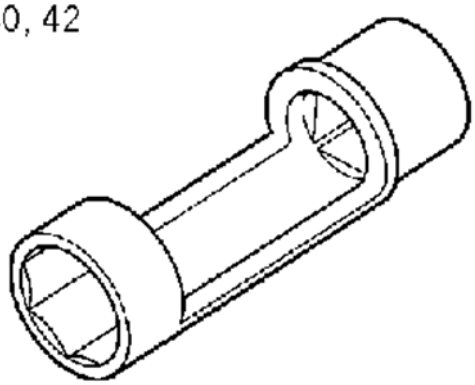 3353

WM 408537 DISASSEMBLING AND ASSEMBLING FRONT SPRING STRUT (ALL MODELS) > PRELIMINARY WORK

1. Remove front spring strut → 408519 REMOVING AND INSTALLING FRONT SPRING STRUT .

WM 408537 DISASSEMBLING AND ASSEMBLING FRONT SPRING STRUT (ALL MODELS) > DISASSEMBLING AND ASSEMBLING FRONT SPRING STRUT > DISASSEMBLING FRONT SPRING STRUT

WARNING: Preloaded or pressurized components

- *Risk of squashing or bruising*

→ Do not reach into the danger area.

→ Relieve the tension on components before starting work.

→ Secure components to prevent them from loosening suddenly.

Information

- Observe the correct allocation (engine variant/chassis variant) when installing new coil springs and/or shock absorbers.
- Springs must only be replaced in pairs.

Fig 1: Overview Of Spring Struts

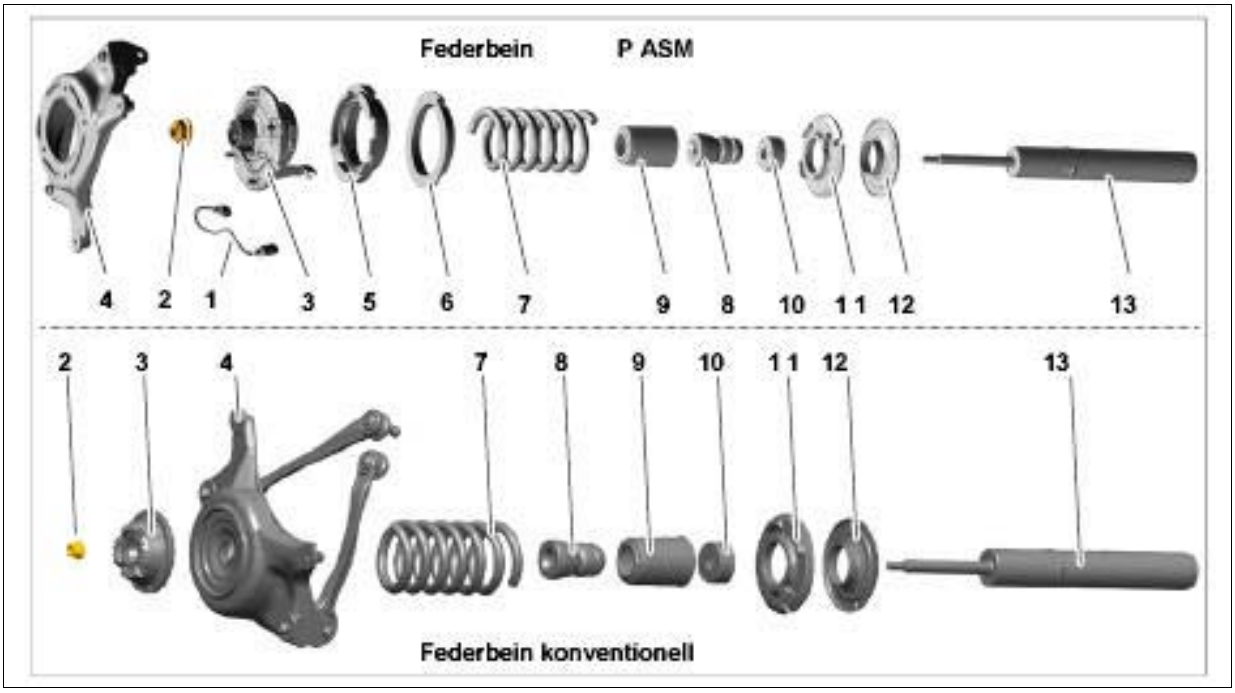

Courtesy of PORSCHE CARS NORTH AMERICA, INC.

1. PASM line (PASM only)
2. Hexagon nut
3. Spring-strut mount
4. Mounting saddle (on conventional spring struts, the mounting saddle is integrated in the spring strut, while on spring struts with PASM, the mounting saddle is screwed to the bearing **(3)**
5. Insert
6. Upper concave support
7. Coil spring
8. Rubber stop
9. Boot
10. Damper cap
11. Lower concave support
12. Spring washer
13. Vibration damper

Information

The front spring strut is disassembled and assembled using the tool **stationary spring tensioning device WE 1610** .

Before inserting the spring strut, the tool **stationary spring tensioning device WE 1610** must be set up and adjusted in accordance with the operating instructions provided by the manufacturer.

1. Insert spring strut in the **stationary spring tensioning device WE 1610.** → Spring strut in spring tensioning device (conventional spring strut shown)

   Fig 2: Compressing Spring Strut In Spring Tensioning Device



Courtesy of PORSCHE CARS NORTH AMERICA, INC.

2. **Applies only to conventional spring strut:**

   Align mounting saddle chamfer concentrically with respect to the mounting plate.

Applies only to PASM spring strut:

Fig 3: Identifying Spring Strut Alignment Position (Conventional)

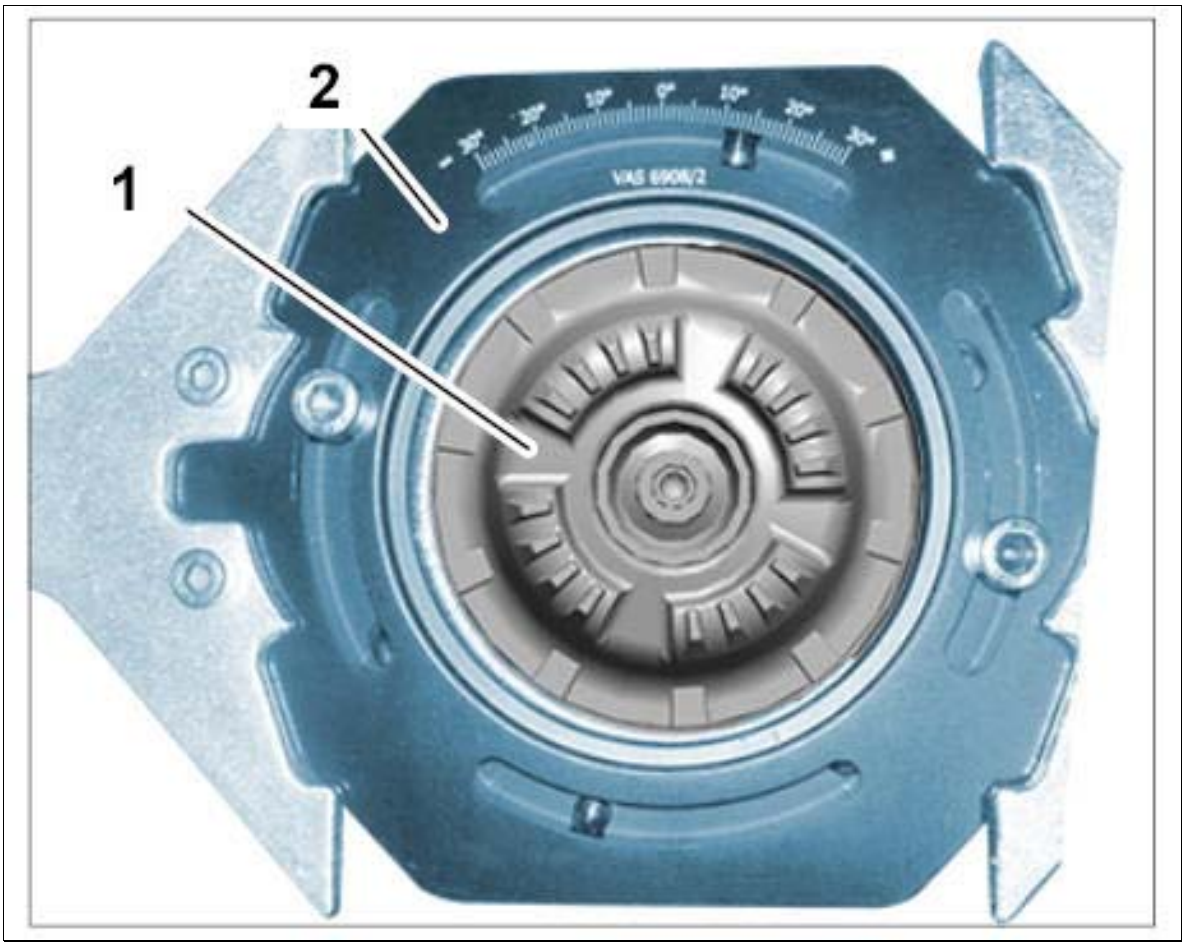

Courtesy of PORSCHE CARS NORTH AMERICA, INC.

Insert threaded bolts **-1-** of the spring strut into the bores **-2-** on the mounting plate.

Fig 4: Identifying Spring Strut Alignment Bolts (PASM)

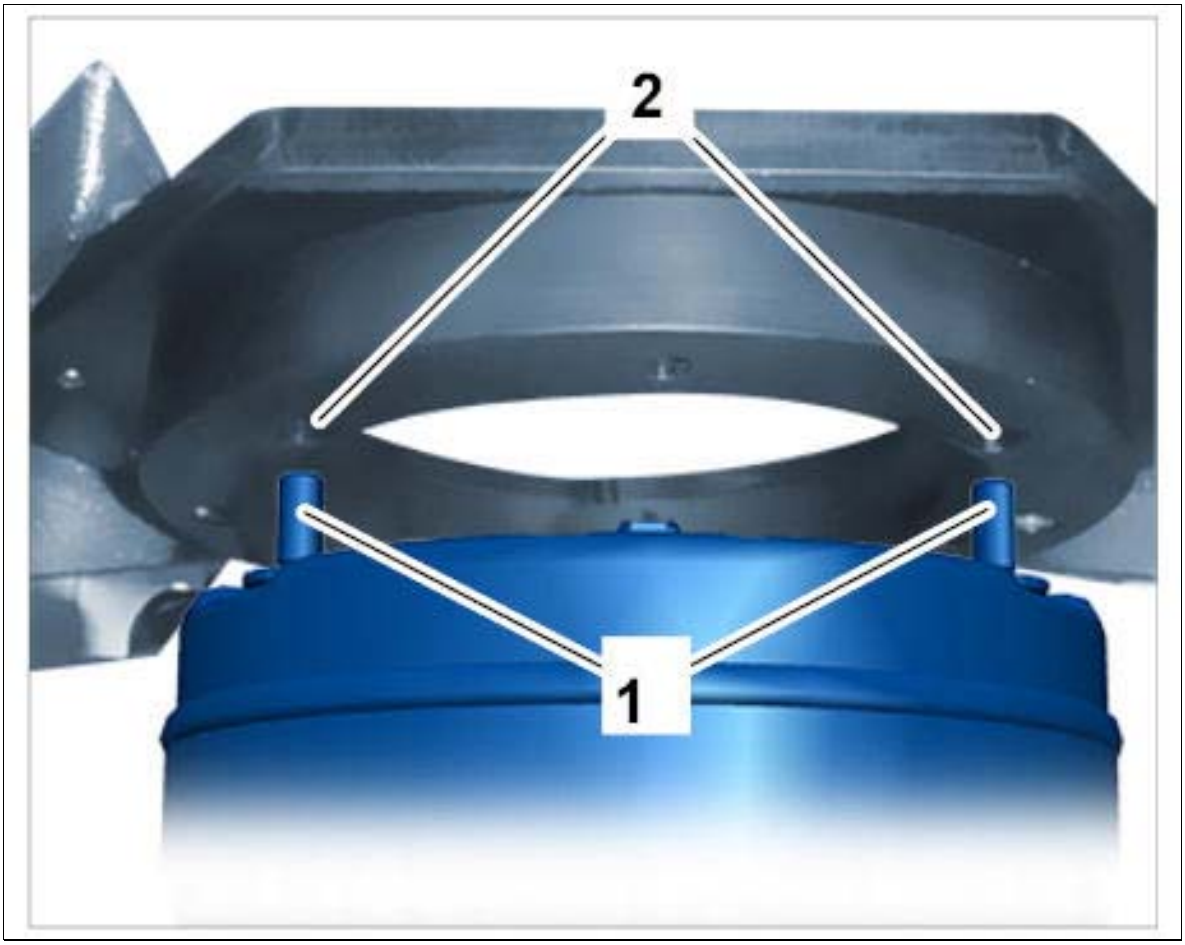

Courtesy of PORSCHE CARS NORTH AMERICA, INC.

3. Pre-tension spring strut using drive nut **-1-** until the tension on the piston rod is relieved.

Fig 5: Identifying Tensioning Spring Strut

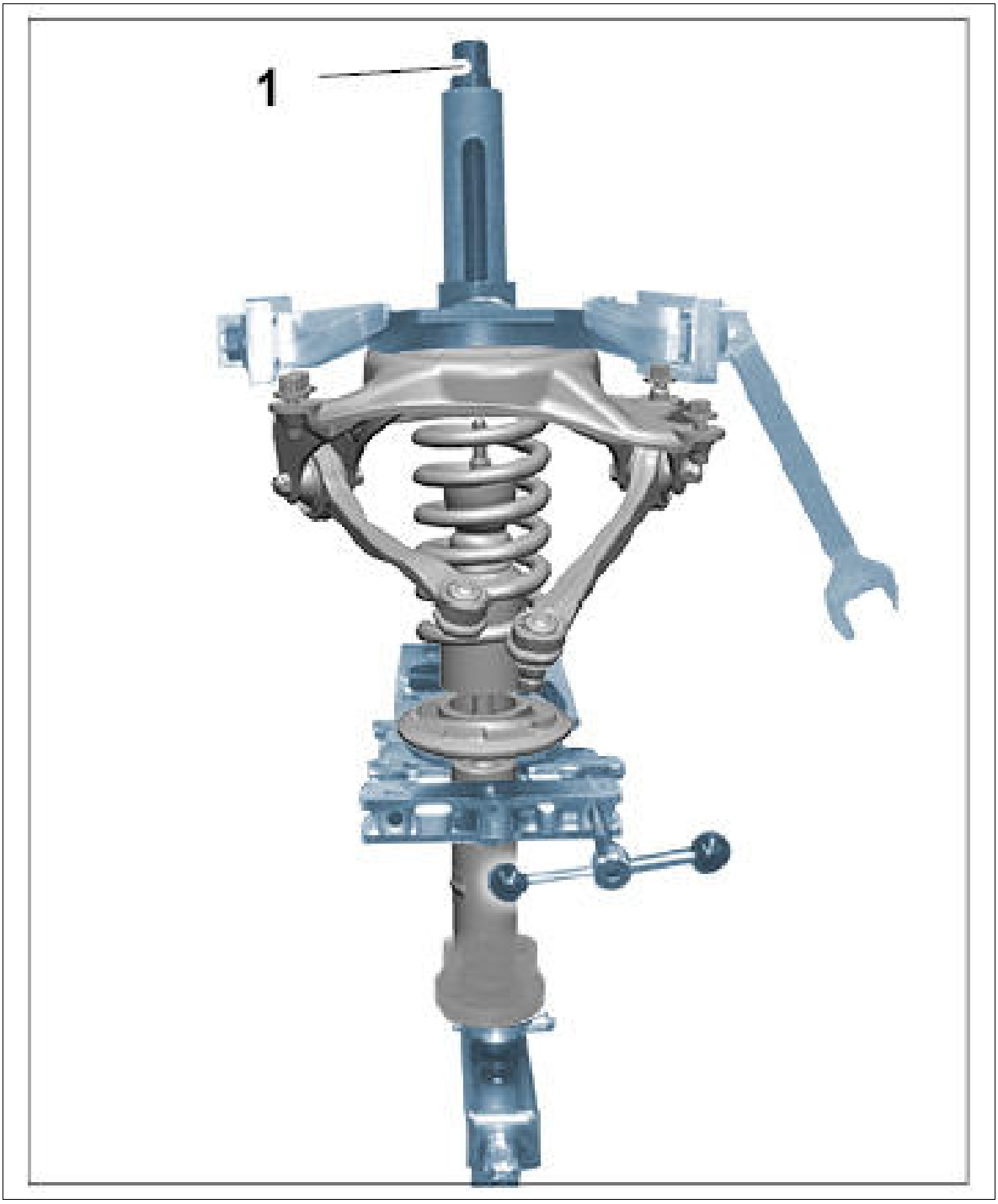

Courtesy of PORSCHE CARS NORTH AMERICA, INC.

4. Unscrew nut on piston rod → Unscrewing nut on piston rod . Use socket-wrench insert 3353 on PASM spring struts.

Fig 6: Removing Piston Rod Nut

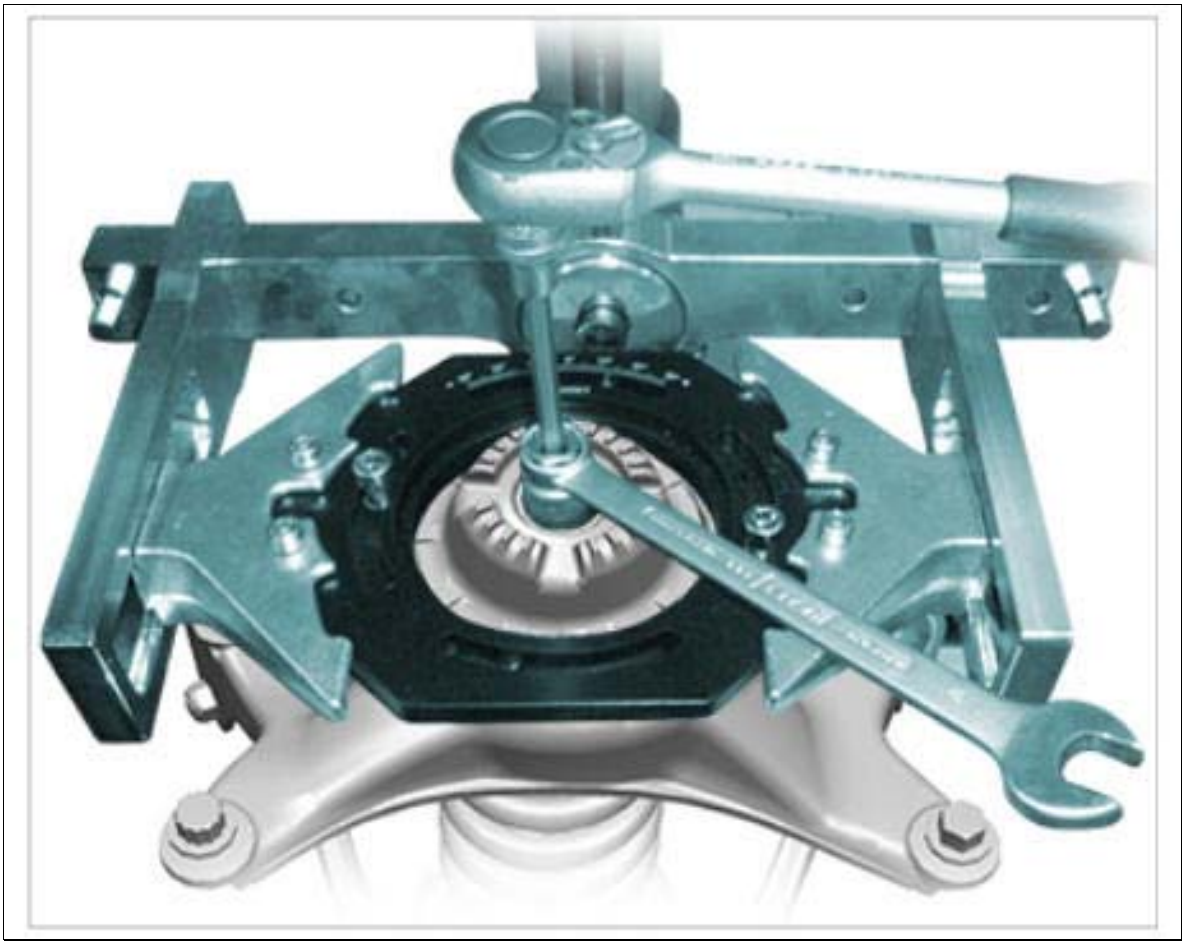

Courtesy of PORSCHE CARS NORTH AMERICA, INC.

5. Relieve all tension on the spring strut using drive nut **-1-** (there must be no tension on the coil spring!).
6. Remove all components from the piston rod.

WM 408537 DISASSEMBLING AND ASSEMBLING FRONT SPRING STRUT (ALL MODELS) > DISASSEMBLING AND ASSEMBLING FRONT SPRING STRUT > ASSEMBLING FRONT SPRING STRUT

Information

During installation, make sure that the ends of the spring are touching the limit stops of the spring plate in the spring-strut mount (PASM)/mounting saddle (conventional) and in the lower concave support (permissible gap dimension: 2 mm).

1. Installation is performed in reverse order.

   Observe specified tightening torques:

   Mounting saddle to piston rod (conventional):

Spring-strut mount to piston rod (PASM):

WM 408537 DISASSEMBLING AND ASSEMBLING FRONT SPRING STRUT (ALL MODELS) > SUBSEQUENT WORK

1. Remove front spring strut → 408519 REMOVING AND INSTALLING FRONT SPRING STRUT .
2. Perform suspension alignment. → 449503 SUSPENSION ALIGNMENT, COMPLETE .

WM 408919 REMOVING AND INSTALLING SHOCK ABSORBER FORKS (ALL MODELS) > TOOLS

Designation	Type	Number	Description	
Spreader	VW tool	3424		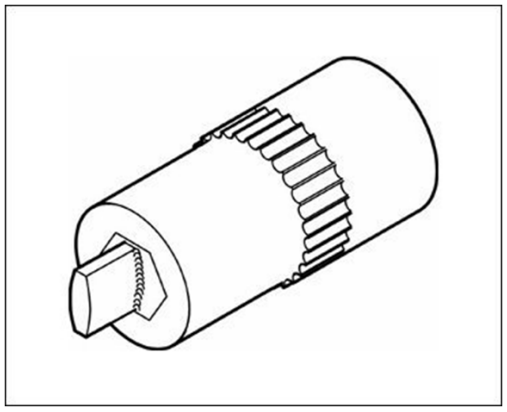
press-out tool	VW tool	T40010		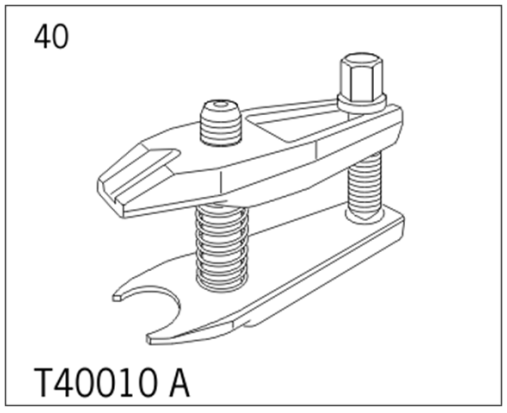

WM 408919 REMOVING AND INSTALLING SHOCK ABSORBER FORKS (ALL MODELS) > TECHNICAL VALUES

Location	Description	Type	Basic value	Tolerance 1	Tolerance 2
Tie-rod ball to wheel carrier	M12 x 1.5 thread/always	Tightening torque	100 Nm (74 ftlb.)		

cone	use new nut following removal				
Lower trailing arm to front-axle carrier	M12 thread/always use new screws or bolts and nuts following removal	Initial tightening	70 Nm (52 ftlb.)		
Lower trailing arm to front-axle carrier	M12 thread/always use new screws or bolts and nuts following removal	Final tightening	+180°		
Level sensor to lower trailing arm	M6 thread	Tightening torque	9 Nm (6.5 ftlb.)		
Spring strut to lower trailing arm	M12 thread/always use new screws or bolts and nuts following removal	Initial tightening	90 Nm (67 ftlb.)		
Spring strut to lower trailing arm	M12 thread/always use new screws or bolts and nuts following removal	Final tightening	+90°		
Damper fork to damper	M12 thread/always use new screws or bolts and nuts following removal	Initial tightening	40 Nm (30ftlb.)		
Damper fork to damper	M12 thread/always use new screws or bolts and nuts following removal	Final Tighting	+180°		

WM 408919 REMOVING AND INSTALLING SHOCK ABSORBER FORKS (ALL MODELS) > PRELIMINARY WORK

1. Remove wheel → 440519 REMOVING AND INSTALLING WHEEL .
2. Remove cover for front underbody → 519219 REMOVING AND INSTALLING COVER FOR FRONT UNDERBODY .
3. 3. Remove connecting link → 407819 REMOVING AND INSTALLING FRONT CONNECTING LINK (SUSPENSION/STABILIZER).

WM 408919 REMOVING AND INSTALLING SHOCK ABSORBER FORKS (ALL MODELS) > REMOVING AND INSTALLING SHOCK ABSORBER FORKS

1. Unscrew nut -2- on level sensor, if installed.
2. 2. Separate threaded joint for spring strut - 3- .

   Fig 1: Identifying Lower Trailing Arm Mounting

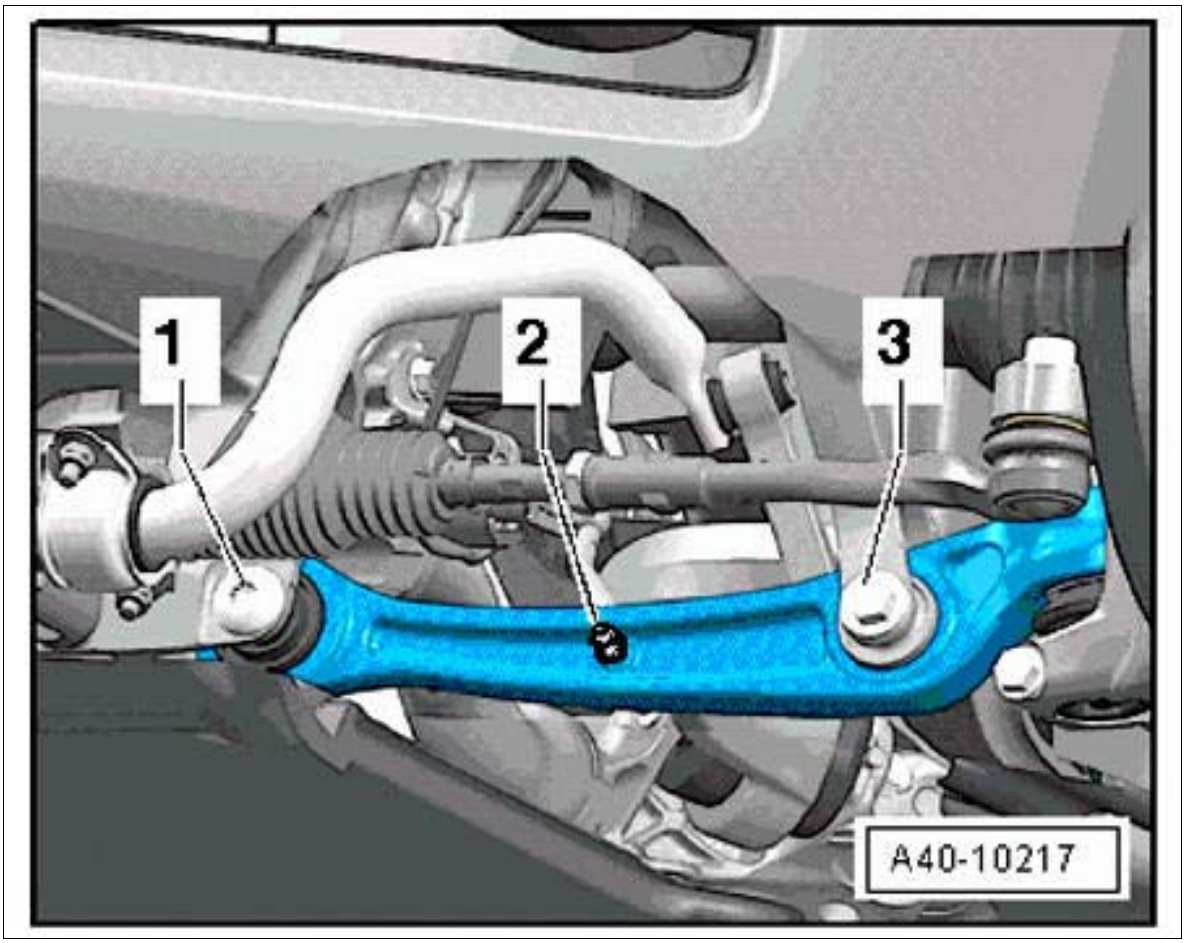

Courtesy of PORSCHE CARS NORTH AMERICA, INC.

3. Remove tie-rod ball at the wheel carrier.
   1. 3.1. Screw off nut -1- on the joint pin -2- for the tie-rod ball until it is flush with the thread of the joint pin. Counter while loosening the nut if necessary.

Fig 2: Identifying Tie-Rod Ball Nut

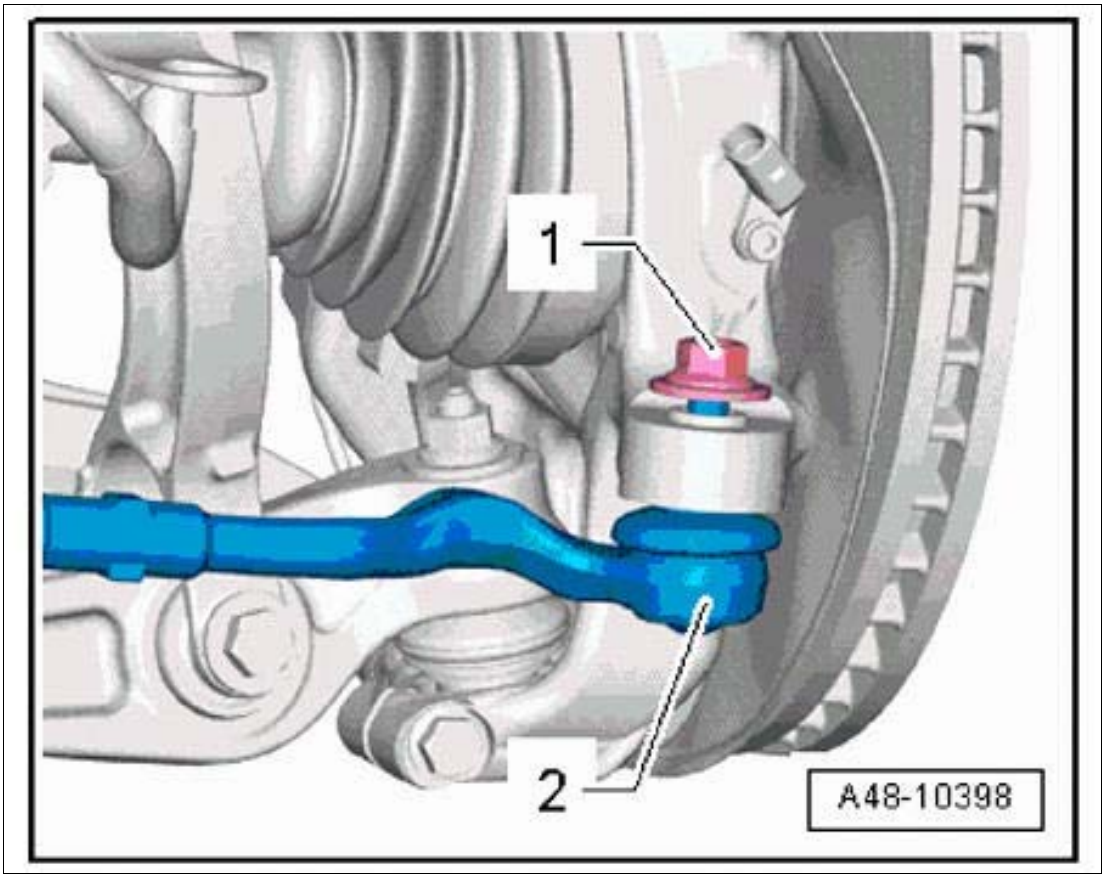

Courtesy of PORSCHE CARS NORTH AMERICA, INC.

2. 3.2. Press tie-rod ball off the wheel bearing housing using ball-joint extractor press-out tool **T40010** . → Pressing off tie-rod ball

Fig 3: Pressing Tie-Rod Ball

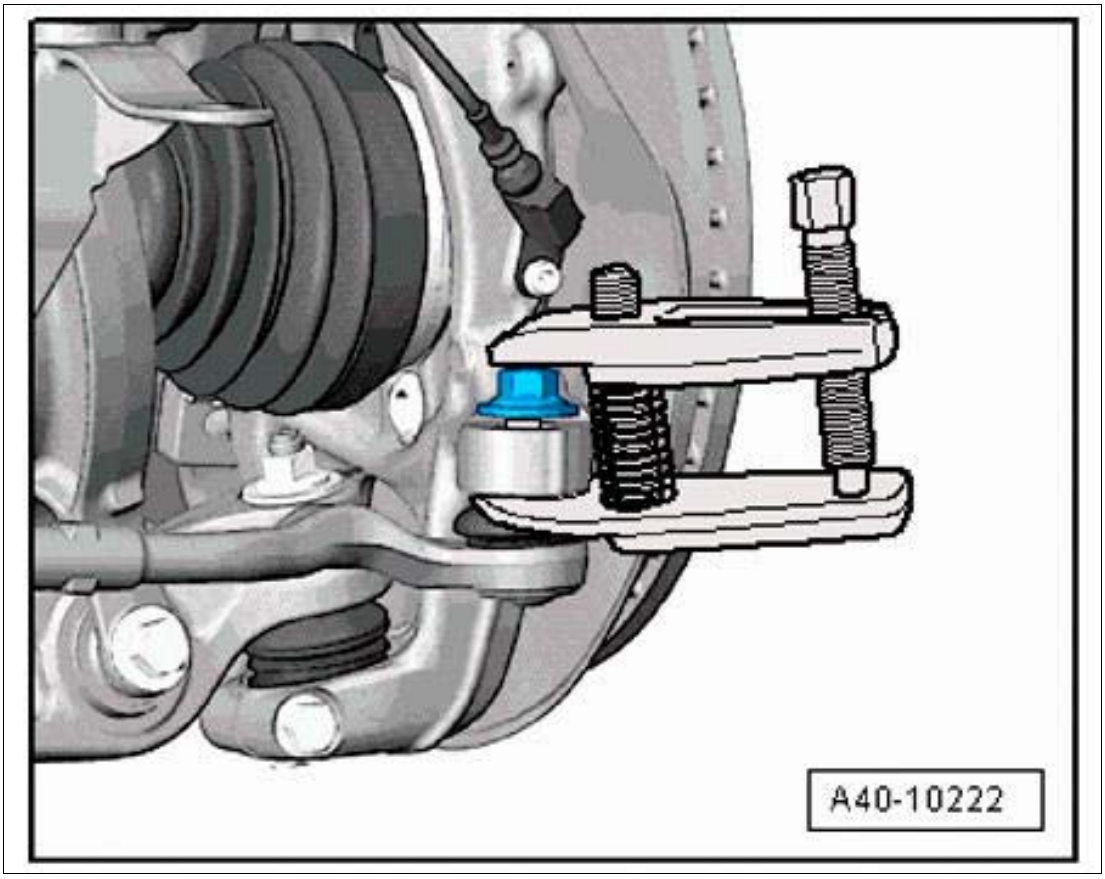

Courtesy of PORSCHE CARS NORTH AMERICA, INC.

3. 3.3. Unscrew nut.

4. Separate the threaded joint **-1-** for the trailing arm on the front-axle carrier.
    1. 4.1. Press tie rod aside slightly so that the fastening screw is accessible.
    2. 4.2. Unscrew nut and remove fastening screw.
    3. 4.3. Guide lower trailing arm out of the front-axle carrier and swivel it out to the rear.
5. Loosen shock absorber fork on the spring strut.
    1. 5.1. Separate threaded joint **-1-** .

Fig 4: Identifying Spring Strut Mounting

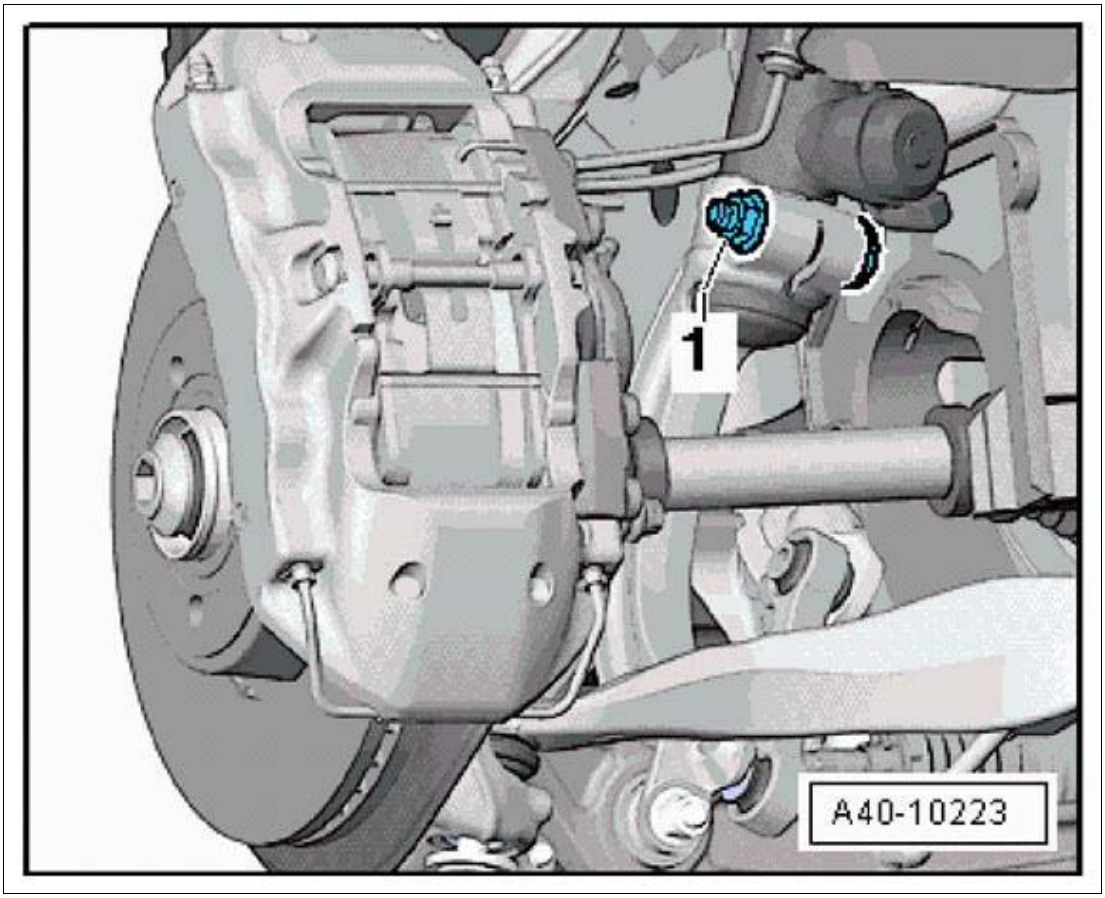

Courtesy of PORSCHE CARS NORTH AMERICA, INC.

2. 5.2. Insert spreader **Spreader 3424** into the slot on the shock absorber fork.

Fig 5: Locating Spreader (3424)

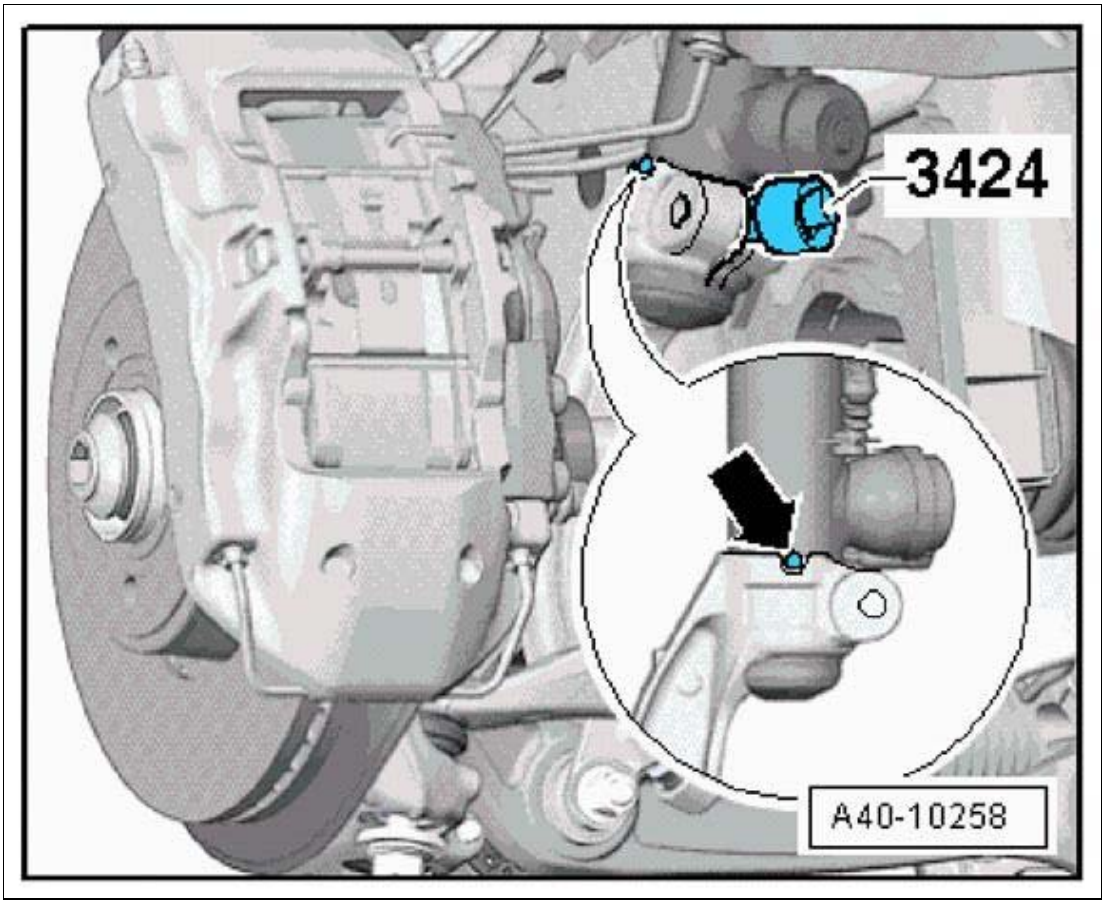

Courtesy of PORSCHE CARS NORTH AMERICA, INC.

3. 5.3. Turn the spreader 90 degrees.
4. 5.4. Pull shock absorber fork down off the spring strut.

WM 408919 REMOVING AND INSTALLING SHOCK ABSORBER FORKS (ALL MODELS) > INSTALLING SHOCK ABSORBER FORK

WARNING: Wheel bearing housing raised incorrectly

- *Risk of squashing*
- *Risk of damage to components*

Wear personal protective gear.

→ Do not raise the wheel suspension higher than the normal vehicle position (vehicle resting on wheels).

Information

- All screws and threaded joints on the axle must be tightened in vehicle position. Vehicle position means: vehicle standing on its wheels, or the wheel suspension is raised with a universal vehicle lift. Dimension -1-, from lower edge of wing to center of axle corresponds to vehicle position. The current height can be found in → 4495TW ADJUSTMENT VALUES FOR SUSPENSION ALIGNMENT . Always observe the following points!

  Fig 1: Identifying Wheel To Wing Lower Edge Dimension (Rear Axle)

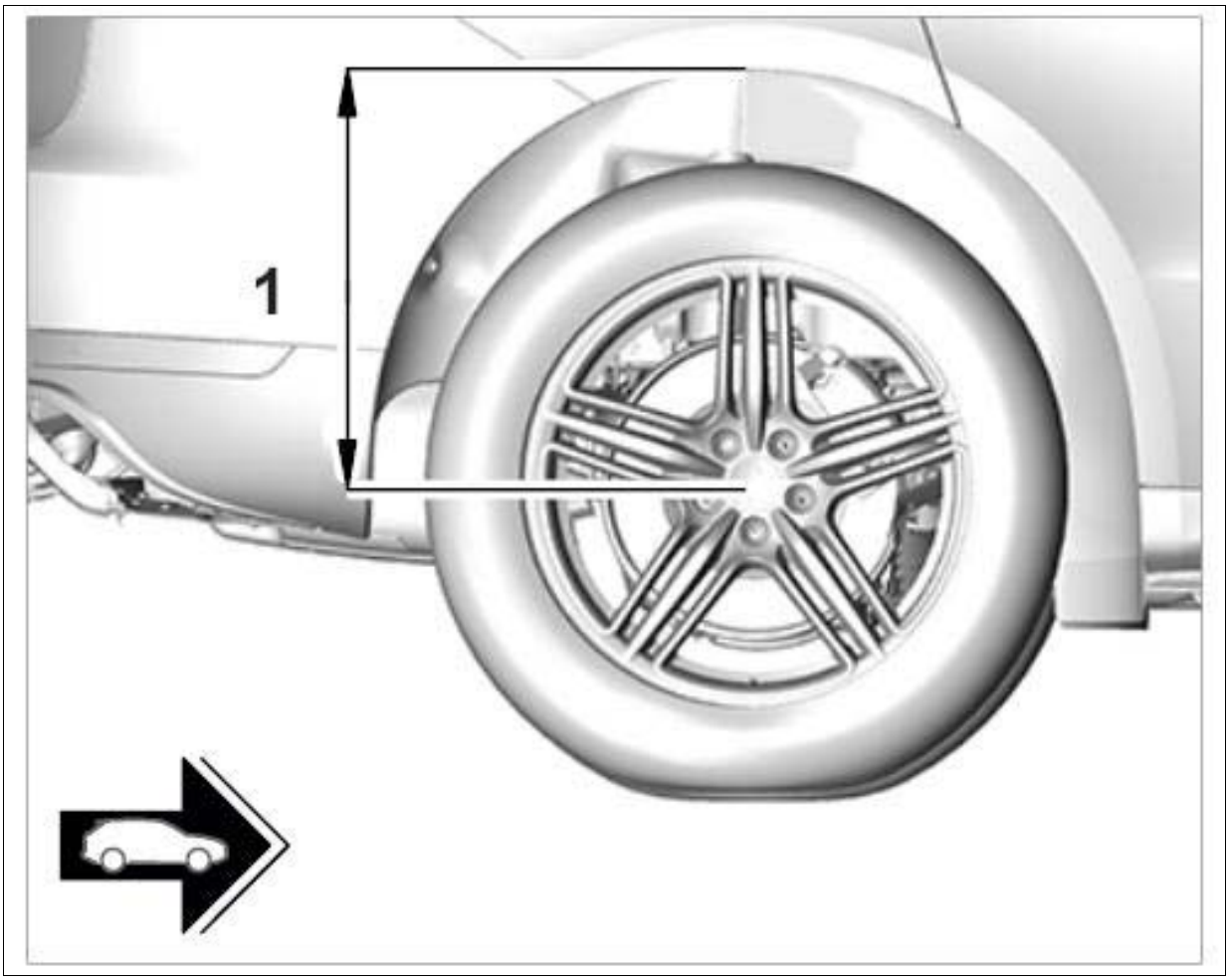

Courtesy of PORSCHE CARS NORTH AMERICA, INC.

- On vehicles with air springs, the respective air spring must be bled using the Porsche System Tester . → 4301IN BLEEDING AND FILLING THE LEVELLING SYSTEM
- Screw and nuts are Geomet-coated and must not be greased

Information

- When fitting the shock absorber fork on the spring strut on vehicles with air springs, make sure that the T-bolt **-arrow-** engages in the groove on the shock absorber fork.
- Do not install spring strut too tightly!

Fig 2: Locating T-Bolt

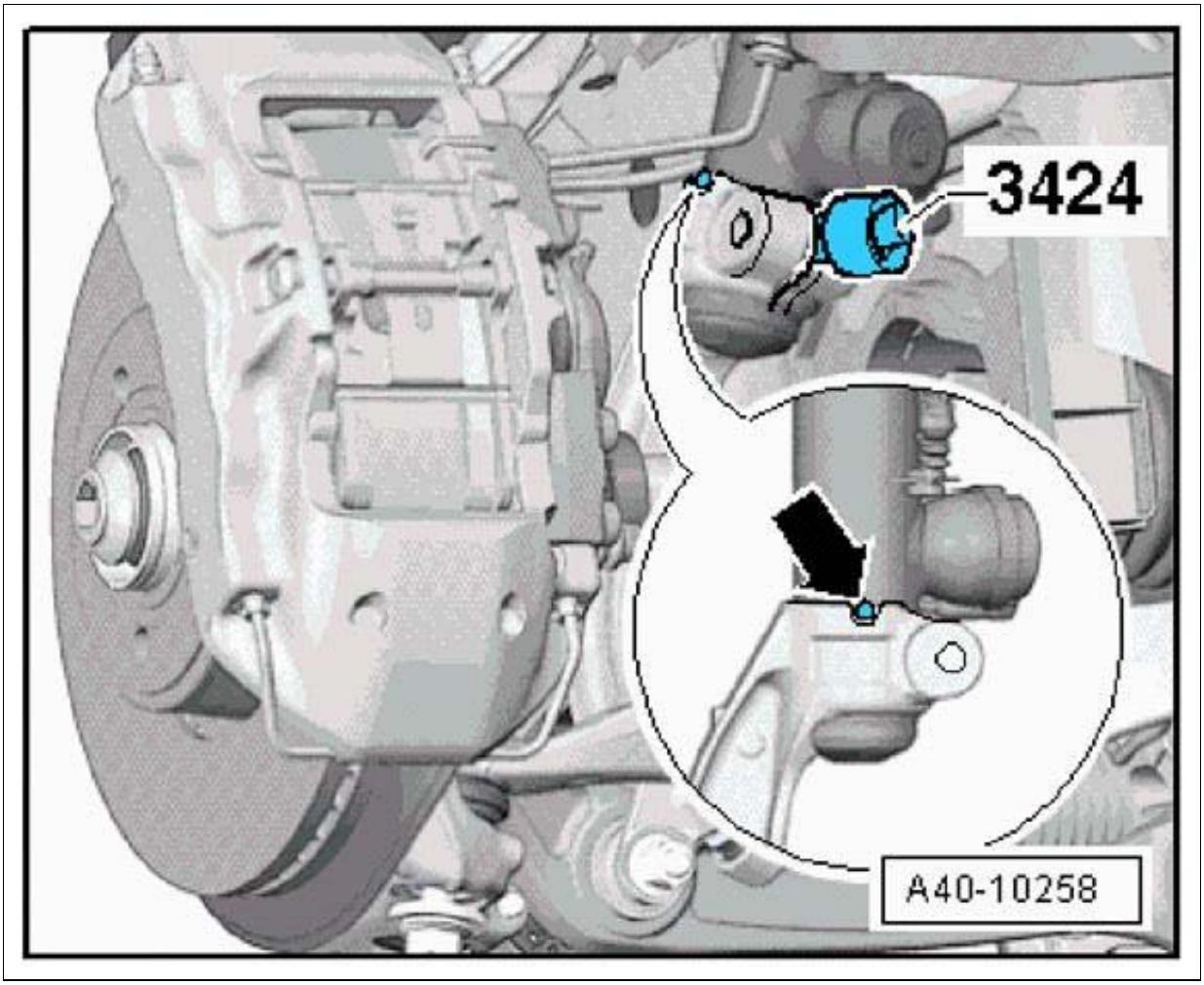

Courtesy of PORSCHE CARS NORTH AMERICA, INC.

1. Installation is performed in reverse order.

   Observe specified tightening torques:

   Shock absorber fork to spring strut: **Initial tightening 40 Nm (30 ftlb.) Final tightening +180°**

   Lower trailing arm to front-axle carrier: **Initial tightening 70 Nm (52 ftlb.) Final tightening +180°**

   Spring strut to lower trailing arm: **Initial tightening 90 Nm (67 ftlb.) Final tightening +90°**

   Tie-rod ball to wheel bearing housing: **Tightening torque 100 Nm (74 ftlb.)**

   Level sensor to lower trailing arm: **Tightening torque 9 Nm (6.5 ftlb.)**

WM 408919 REMOVING AND INSTALLING SHOCK ABSORBER FORKS (ALL MODELS) > SUBSEQUENT WORK

1. Install connecting link → 407819 REMOVING AND INSTALLING FRONT CONNECTING LINK

(SUSPENSION/STABILIZER) .

2. Install cover for front underbody → 519219 REMOVING AND INSTALLING COVER FOR FRONT UNDERBODY .
3. Fit wheel → 440519 REMOVING AND INSTALLING WHEEL .
4. Perform suspension alignment → 449503 SUSPENSION ALIGNMENT, COMPLETE .

WM 408619 REMOVING AND INSTALLING FRONT STRUT (DOME STRUT) (MACAN S, MACAN TURBO) > TECHNICAL VALUES

Location	Description	Type	Basic value	Tolerance 1	Tolerance 2
Dome strut to body		Tightening torque	20 Nm (15 ftlb.)		
Additional reinforcement to body		Tightening torque	20 Nm (15 ftlb.)		
Dome strut to cross panel		Tightening torque	2 Nm (1.5 ftlb.)		
Additional reinforcement to dome strut		Tightening torque	20 Nm (15 ftlb.)		

WM 408619 REMOVING AND INSTALLING FRONT STRUT (DOME STRUT) (MACAN S, MACAN TURBO) > PRELIMINARY WORK

1. Remove front trim panel → 700219 REMOVING AND INSTALLING FRONT TRIM PANEL .

WM 408619 REMOVING AND INSTALLING FRONT STRUT (DOME STRUT) (MACAN S, MACAN TURBO) > REMOVING AND INSTALLING FRONT STRUT > REMOVING FRONT STRUT

Fig 1: Identifying Dome Strut With Additional Reinforcement Mounting

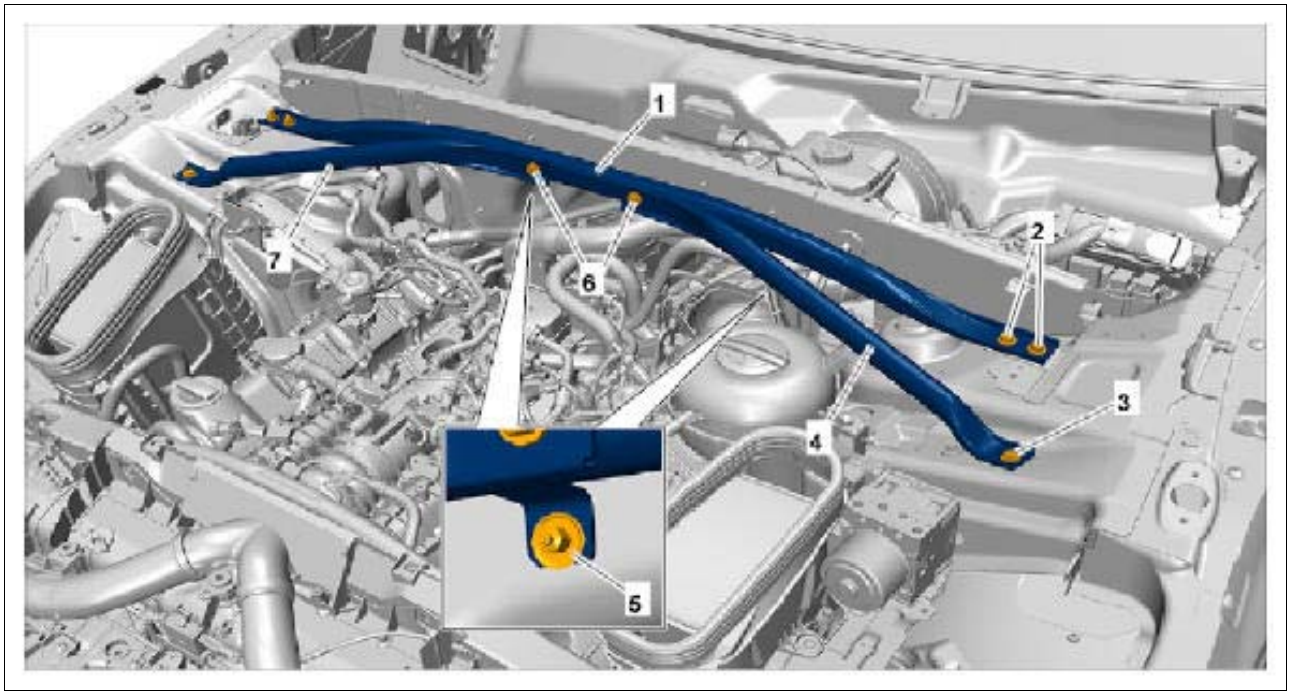

Courtesy of PORSCHE CARS NORTH AMERICA, INC.

1. Remove dome strut **-1-** with additional reinforcements **-4 and 7-** .
    1. 1.1. Unscrew nuts **-2 and 5-** and fastening screw **-3-** at the left and right.
    2. 1.2. Remove dome strut **-1-** .
2. Remove additional reinforcements at the right **-7-** and left **-4-** .
    1. 2.1. Unscrew fastening screws **-3 and 6-** on the relevant additional reinforcement.
    2. 2.2. Remove additional reinforcement **-4 or 7-** .

WM 408619 REMOVING AND INSTALLING FRONT STRUT (DOME STRUT) (MACAN S, MACAN TURBO) > REMOVING AND INSTALLING FRONT STRUT > INSTALLING FRONT STRUT

1. Installation is performed in reverse order.

    Observe specified tightening torques:

    Dome strut to body: **Tightening torque 20 Nm (15 ftlb.)**

    Dome strut to cross panel: **Tightening torque 2 Nm (1.5 ftlb.)**

    Additional reinforcement to body: **Tightening torque 20 Nm (15 ftlb.)**

    Additional reinforcement to dome strut: **Tightening torque 20 Nm (15 ftlb.)**

WM 408619 REMOVING AND INSTALLING FRONT STRUT (DOME STRUT) (MACAN S, MACAN TURBO) > SUBSEQUENT WORK

1. Install front trim panel → 700219 REMOVING AND INSTALLING FRONT TRIM PANEL .

WM 408919 REMOVING AND INSTALLING SHOCK ABSORBER FORKS (ALL MODELS) > TOOLS

Designation	Type	Number	Description	
Spreader	VW tool	3424		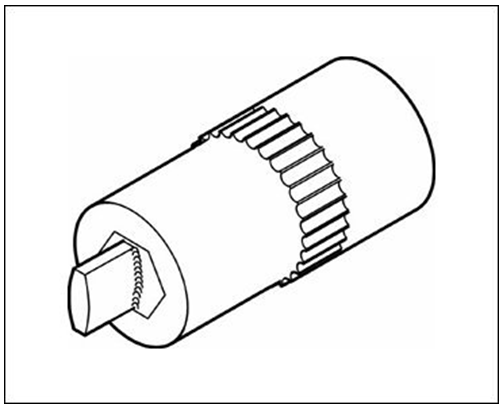
press-out tool	VW tool	T40010		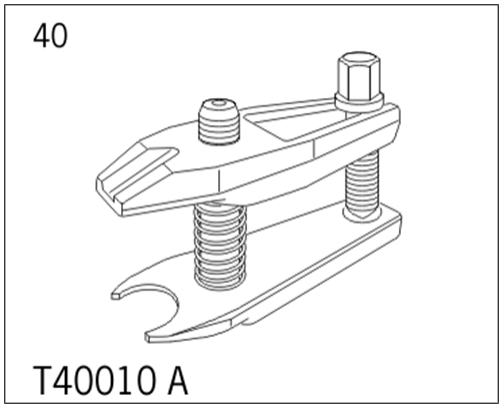

WM 408919 REMOVING AND INSTALLING SHOCK ABSORBER FORKS (ALL MODELS) > TECHNICAL VALUES

Location	Description	Type	Basic value	Tolerance 1	Tolerance 2
Tie-rod ball to wheel carrier cone	M12 x 1.5 thread/always use new nut following removal	Tightening torque	100 Nm (74 ftlb.)		
Lower trailing arm to	M12 thread/always	Initial tightening	70 Nm (52 ftlb.)		

front-axle carrier	use new screws or bolts and nuts following removal				
Lower trailing arm to front-axle carrier	M12 thread/always use new screws or bolts and nuts following removal	Final tightening	+180°		
Level sensor to lower trailing arm	M6 thread	Tightening torque	9 Nm (6.5 ftlb.)		
Spring strut to lower trailing arm	M12 thread/always use new screws or bolts and nuts following removal	Initial tightening	90 Nm (67 ftlb.)		
Spring strut to lower trailing arm	M12 thread/always use new screws or bolts and nuts following removal	Final tightening	+90°		
Damper fork to damper	M12 thread/always use new screws or bolts and nuts following removal	Initial tightening	40 Nm (30 ftlb.)		
Damper fork to damper	M12 thread/always use new screws or bolts and nuts following removal	Final tightening	+180°		

WM 408919 REMOVING AND INSTALLING SHOCK ABSORBER FORKS (ALL MODELS) > PRELIMINARY WORK

1. Remove wheel → 440519 REMOVING AND INSTALLING WHEEL .
2. Remove cover for front underbody → 519219 REMOVING AND INSTALLING COVER FOR FRONT UNDERBODY .
3. Remove connecting link → 407819 REMOVING AND INSTALLING FRONT CONNECTING LINK (SUSPENSION/STABILIZER) .

WM 408919 REMOVING AND INSTALLING SHOCK ABSORBER FORKS (ALL MODELS) > REMOVING AND INSTALLING SHOCK ABSORBER FORKS > REMOVING

SHOCK ABSORBER FORK

1. Unscrew nut **-2-** on level sensor, if installed.
2. Separate threaded joint for spring strut **-3-** .

Fig 1: Identifying Lower Trailing Arm Mounting

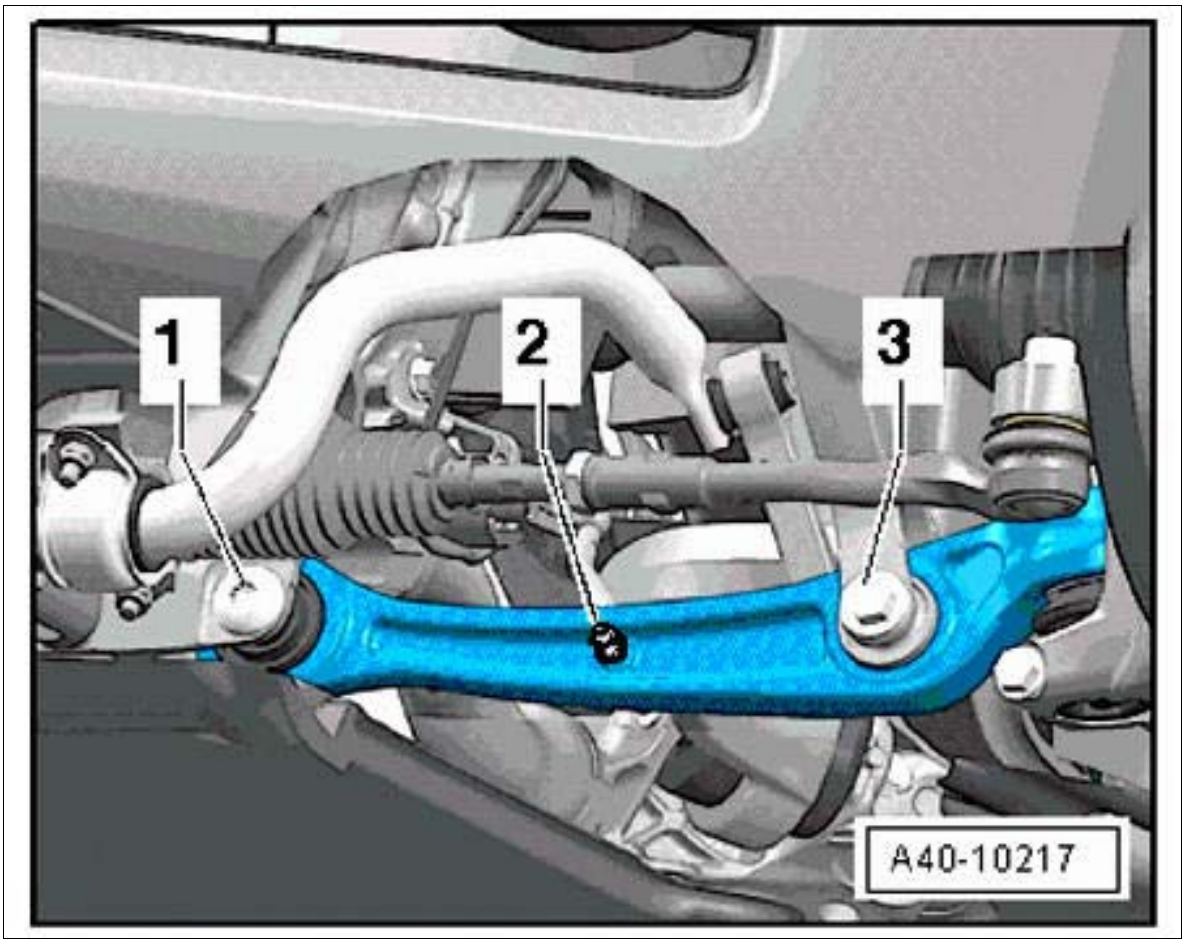

Courtesy of PORSCHE CARS NORTH AMERICA, INC.

3. Remove tie-rod ball at the wheel carrier.
    1. 3.1. Screw off nut **-1-** on the joint pin **-2-** for the tie-rod ball until it is flush with the thread of the joint pin. Counter while loosening the nut if necessary.

Fig 2: Identifying Tie-Rod Ball Nut

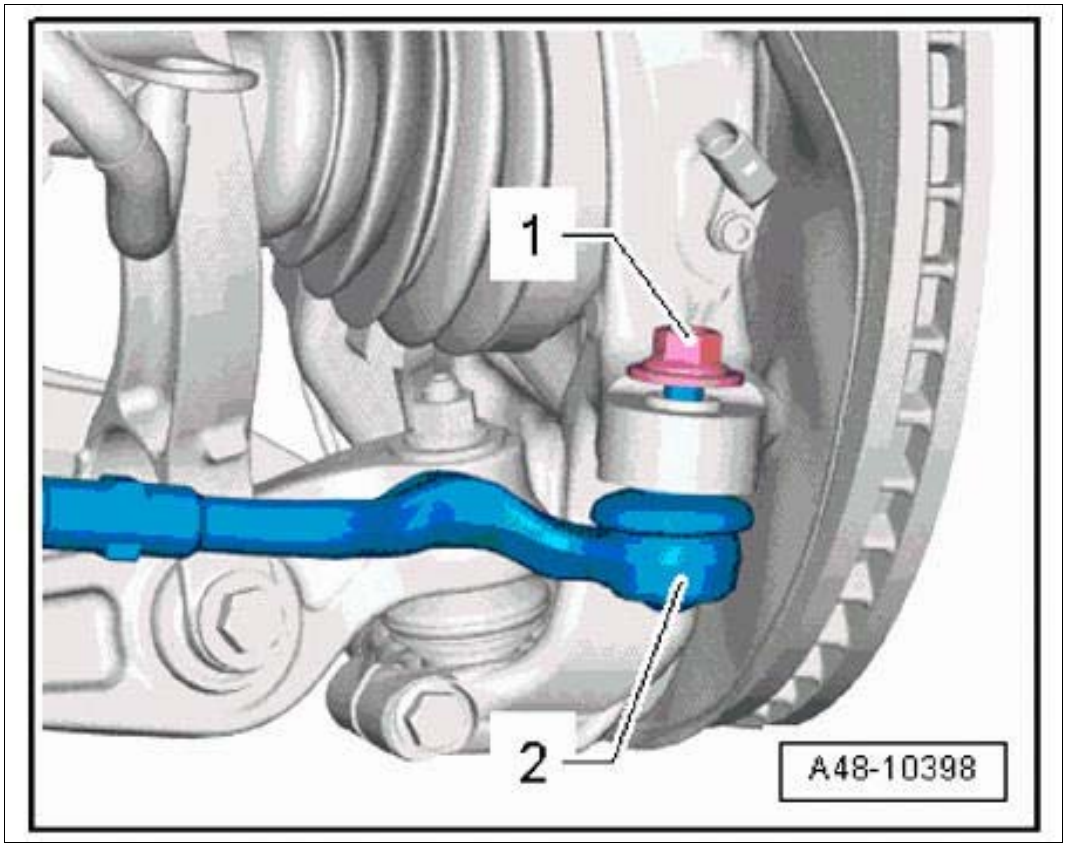

Courtesy of PORSCHE CARS NORTH AMERICA, INC.

2. 3.2. Press tie-rod ball off the wheel bearing housing using ball-joint extractor **press-out tool T40010.** → Pressing off tie-rod ball

Fig 3: Pressing Tie-Rod Ball

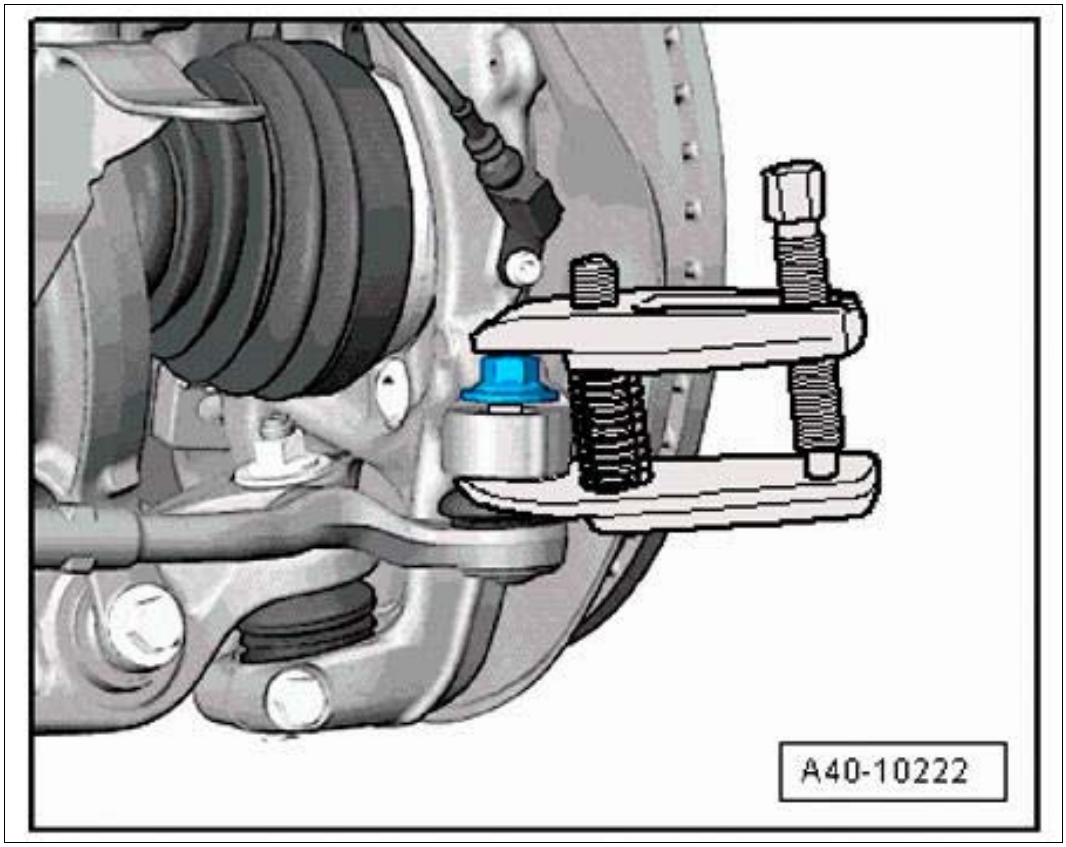

Courtesy of PORSCHE CARS NORTH AMERICA, INC.

3. 3.3. Unscrew nut.

4. Separate the threaded joint **-1-** for the trailing arm on the front-axle carrier.
    1. 4.1. Press tie rod aside slightly so that the fastening screw is accessible.
    2. 4.2. Unscrew nut and remove fastening screw.
    3. 4.3. Guide lower trailing arm out of the front-axle carrier and swivel it out to the rear.
5. Loosen shock absorber fork on the spring strut.
    1. 5.1. Separate threaded joint **-1-** .

Fig 4: Identifying Spring Strut Mounting

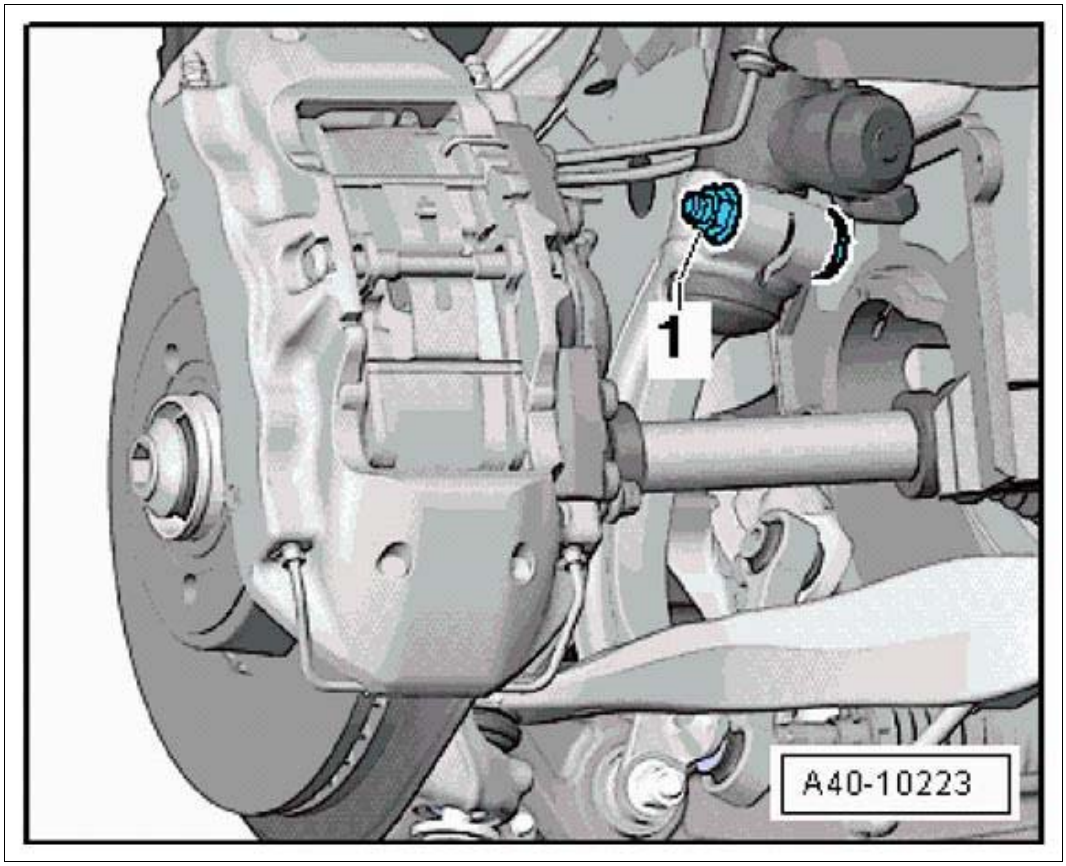

Courtesy of PORSCHE CARS NORTH AMERICA, INC.

2. 5.2. Insert spreader **Spreader 3424** into the slot on the shock absorber fork.

Fig 5: Locating Spreader (3424)

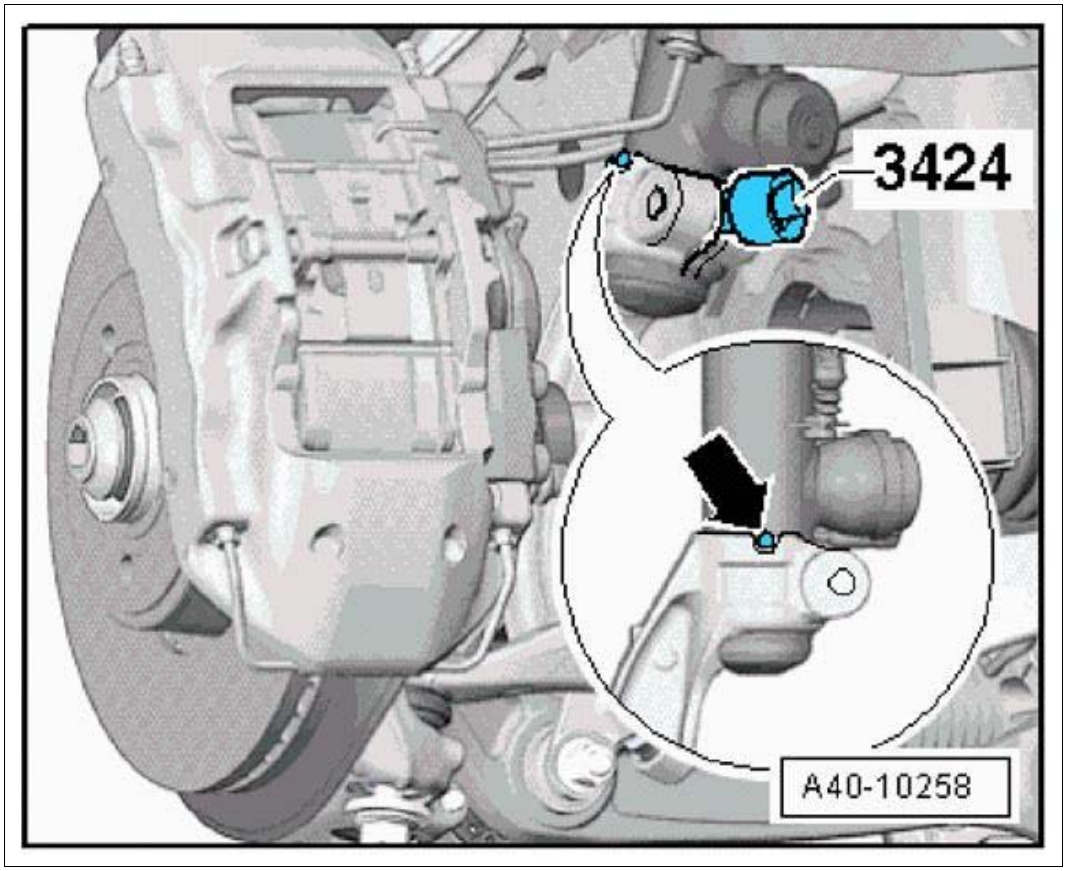

Courtesy of PORSCHE CARS NORTH AMERICA, INC.

3. 5.3. Turn the spreader 90 degrees.
4. 5.4. Pull shock absorber fork down off the spring strut.

WM 408919 REMOVING AND INSTALLING SHOCK ABSORBER FORKS (ALL MODELS) > REMOVING AND INSTALLING SHOCK ABSORBER FORKS > INSTALLING SHOCK ABSORBER FORK

WARNING: Wheel bearing housing raised incorrectly

- *Risk of squashing*
- *Risk of damage to components*

→ Wear personal protective gear.

→ Do not raise the wheel suspension higher than the normal vehicle position (vehicle resting on wheels).

Information

- All screws and threaded joints on the axle must be tightened in vehicle position. Vehicle position means: vehicle standing on its wheels, or the wheel suspension is raised with a universal vehicle lift. Dimension -1- , from lower edge of wing to center of axle corresponds to vehicle position. The current height can be found in → 4495TW ADJUSTMENT VALUES FOR SUSPENSION ALIGNMENT . Always observe the following points!

  Fig 1: Identifying Wheel To Wing Lower Edge Dimension (Rear Axle)

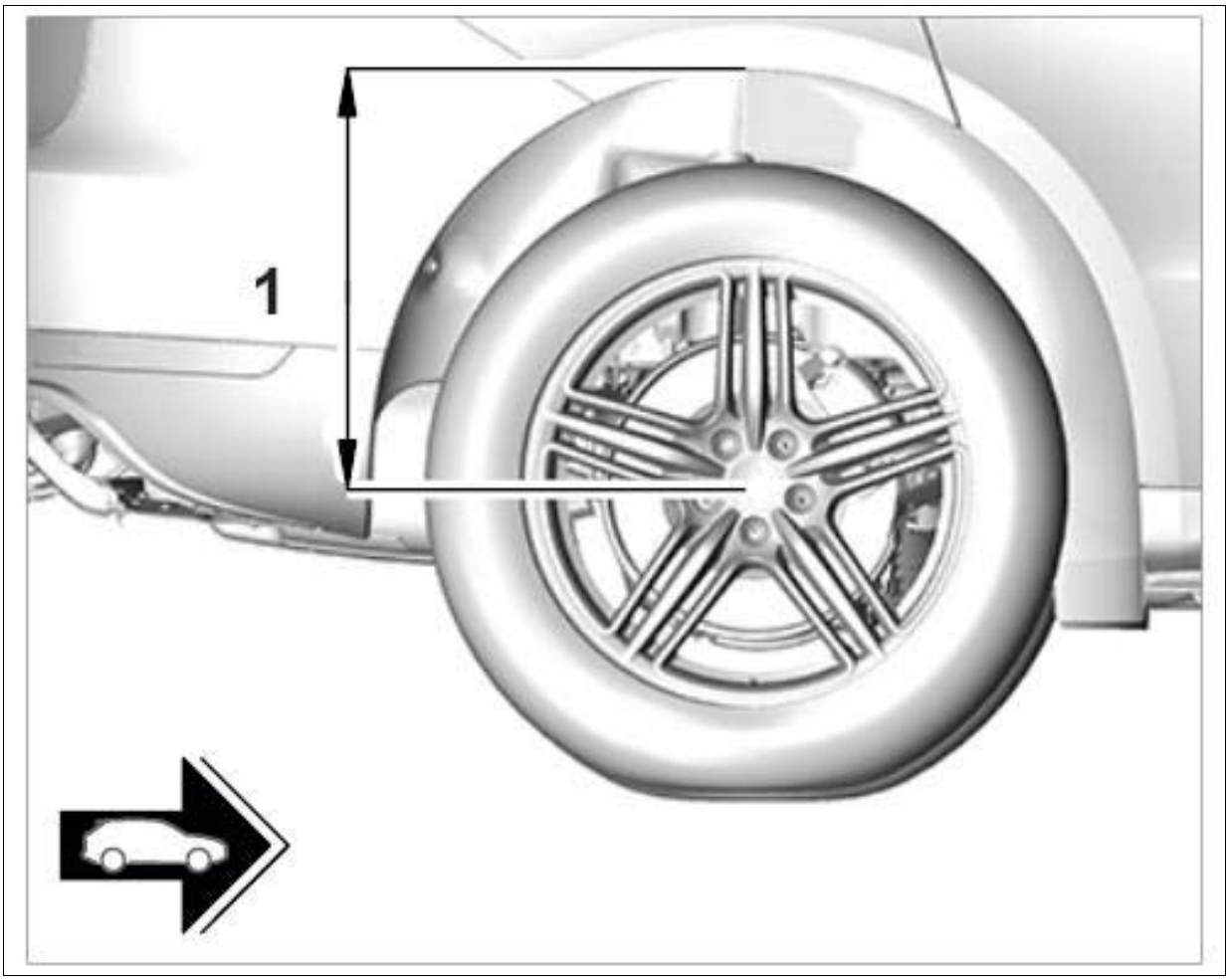

Courtesy of PORSCHE CARS NORTH AMERICA, INC.

- On vehicles with air springs, the respective air spring must be bled using the Porsche System Tester . → 4301IN BLEEDING AND FILLING THE LEVELLING SYSTEM
- Screws and nuts are Geomet-coated and must not be greased.

Information

- When fitting the shock absorber fork on the spring strut on vehicles with air springs, make sure that the T-bolt -arrow- engages in the groove on the shock absorber fork.
- Do not install spring strut too tightly!

Fig 2: Locating T-Bolt

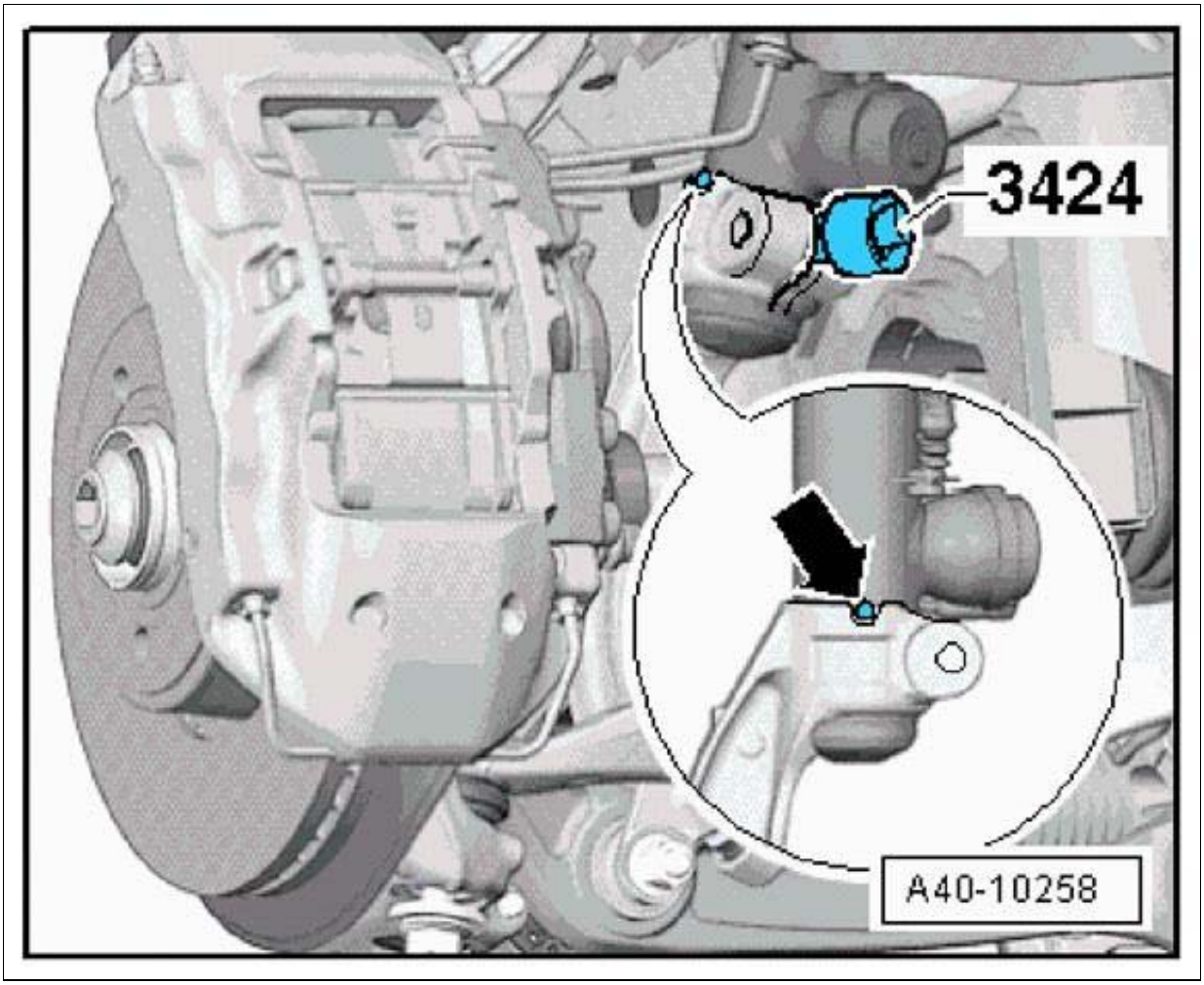

Courtesy of PORSCHE CARS NORTH AMERICA, INC.

1. Installation is performed in reverse order.

   Observe specified tightening torques:

   Shock absorber fork to spring strut: **Initial tightening 40 Nm (30 ftlb.) Final tightening +180°**

   Lower trailing arm to front-axle carrier: **Initial tightening 70 Nm (52 ftlb.) Final tightening +180°**

   Spring strut to lower trailing arm: **Initial tightening 90 Nm (67 ftlb.) Final tightening +90°**

   Tie-rod ball to wheel bearing housing: **Tightening torque 100 Nm (74 ftlb.)**

   Level sensor to lower trailing arm: **Tightening torque 9 Nm (6.5 ftlb.)**

WM 408919 REMOVING AND INSTALLING SHOCK ABSORBER FORKS (ALL MODELS) > SUBSEQUENT WORK

1. Install connecting link → 407819 REMOVING AND INSTALLING FRONT CONNECTING LINK

(SUSPENSION/STABILIZER) .

2. Install cover for front underbody → 519219 REMOVING AND INSTALLING COVER FOR FRONT UNDERBODY .

3. Fit wheel → 440519 REMOVING AND INSTALLING WHEEL .

4. Perform suspension alignment → 449503 SUSPENSION ALIGNMENT, COMPLETE .

WM 420519 REMOVING AND INSTALLING REAR AXLE HOUSING (MACAN, MACAN S, MACAN TURBO) > TOOLS

Designation	Type	Number	Description	
Transmission jack	Workshop equipment	WE 1082		
strapping belts	Special tool	9454		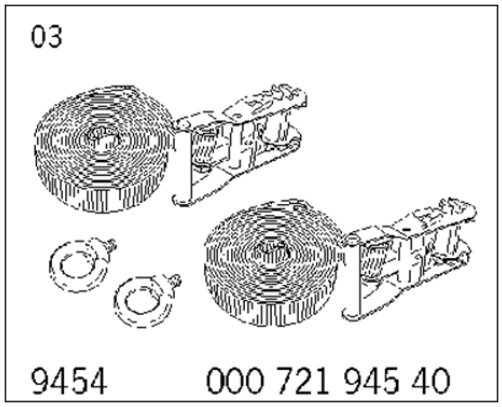

WM 420519 REMOVING AND INSTALLING REAR AXLE HOUSING (MACAN, MACAN S, MACAN TURBO) > TECHNICAL VALUES

Location	Description	Type	Basic value	Tolerance 1	Tolerance 2
Rear axle housing, front to body	M14 x 1.5 x 135 thread/always replace screws following removal	Initial tightening	115 Nm (85 ftlb.)		
Rear axle housing, front to body	M14 x 1.5 x 135 thread/always replace screws following removal	Final tightening	+90°		
Rear axle housing, rear to body	M12 x 1.5 x 145 thread/always replace screws following removal	Initial tightening	115 Nm (85 ftlb.)		
Rear axle housing, rear to body	M12 x 1.5 x 145 thread/always replace screws following removal	Final tightening	+90°		

Shock absorber to wheel bearing housing	M14 x 1.5 x 90 thread/always use new screw or bolt following removal	Initial tightening	150 Nm (111 ftlb.)		
Shock absorber to wheel bearing housing	M14 x 1.5 x 90 thread/always use new screw or bolt following removal	Final tightening	+180°		

WM 420519 REMOVING AND INSTALLING REAR AXLE HOUSING (MACAN, MACAN S, MACAN TURBO) > PRELIMINARY WORK

1. Raise the vehicle → 4X00IN LIFTING THE VEHICLE .
2. Remove wheels → 440519 REMOVING AND INSTALLING WHEEL .
3. Remove cover for underbody at the sides → 519319 REMOVING AND INSTALLING COVER FOR CENTER UNDERBODY .
4. Remove brake calliper on both sides of the vehicle and suspend it at a suitable position in the wheel housing (do not open the brake hydraulic system!) → 474119 REMOVING AND INSTALLING REAR BRAKE CALLIPER .
5. Remove coil springs/air springs on both sides of the vehicle → 427219 REMOVING AND INSTALLING REAR COIL SPRING → 434319 REMOVING AND INSTALLING REAR AIR SPRING .
6. Remove rear silencer → 260119 REMOVING AND INSTALLING EXHAUST SYSTEM .
7. Loosen cardan shaft from rear final drive and secure to the body with a piece of wire → 393519 REMOVING AND INSTALLING REAR CARDAN SHAFT .
8. Release final drive from all lines → 390119 REMOVING AND INSTALLING REAR FINAL DRIVE .

WM 420519 REMOVING AND INSTALLING REAR AXLE HOUSING (MACAN, MACAN S, MACAN TURBO) > REMOVING AND INSTALLING REAR AXLE HOUSING > REMOVING REAR AXLE HOUSING

1. Press electric connector **-2-** for level sensor on both sides of the vehicle together and disconnect it.

Fig 1: Identifying Rear Axle Housing Level Sensor Mounting

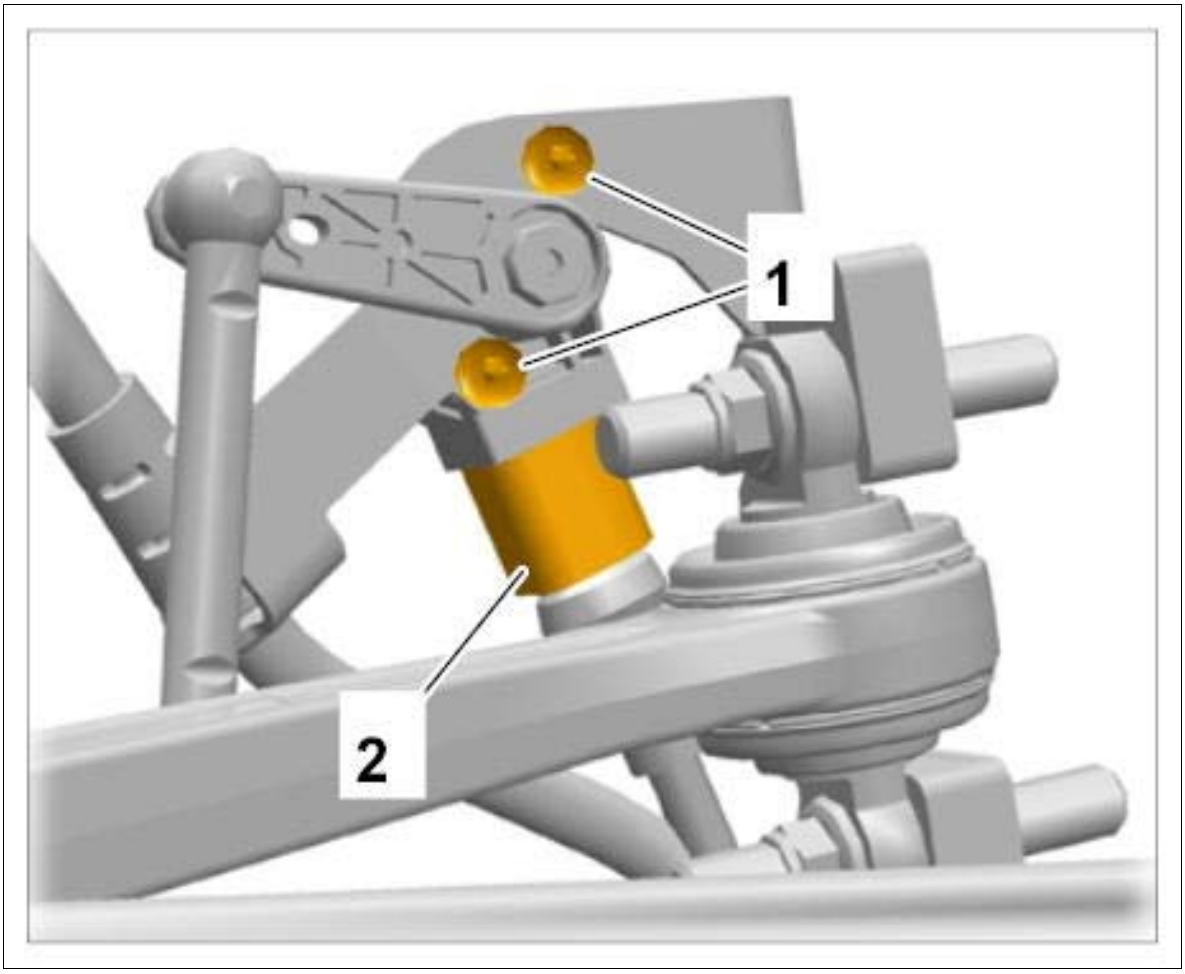

Courtesy of PORSCHE CARS NORTH AMERICA, INC.

2. **Only for vehicles with PASM:**

   Release and pull off connector **-2-** on both sides of the vehicle.

Fig 2: Identifying PASM Connector

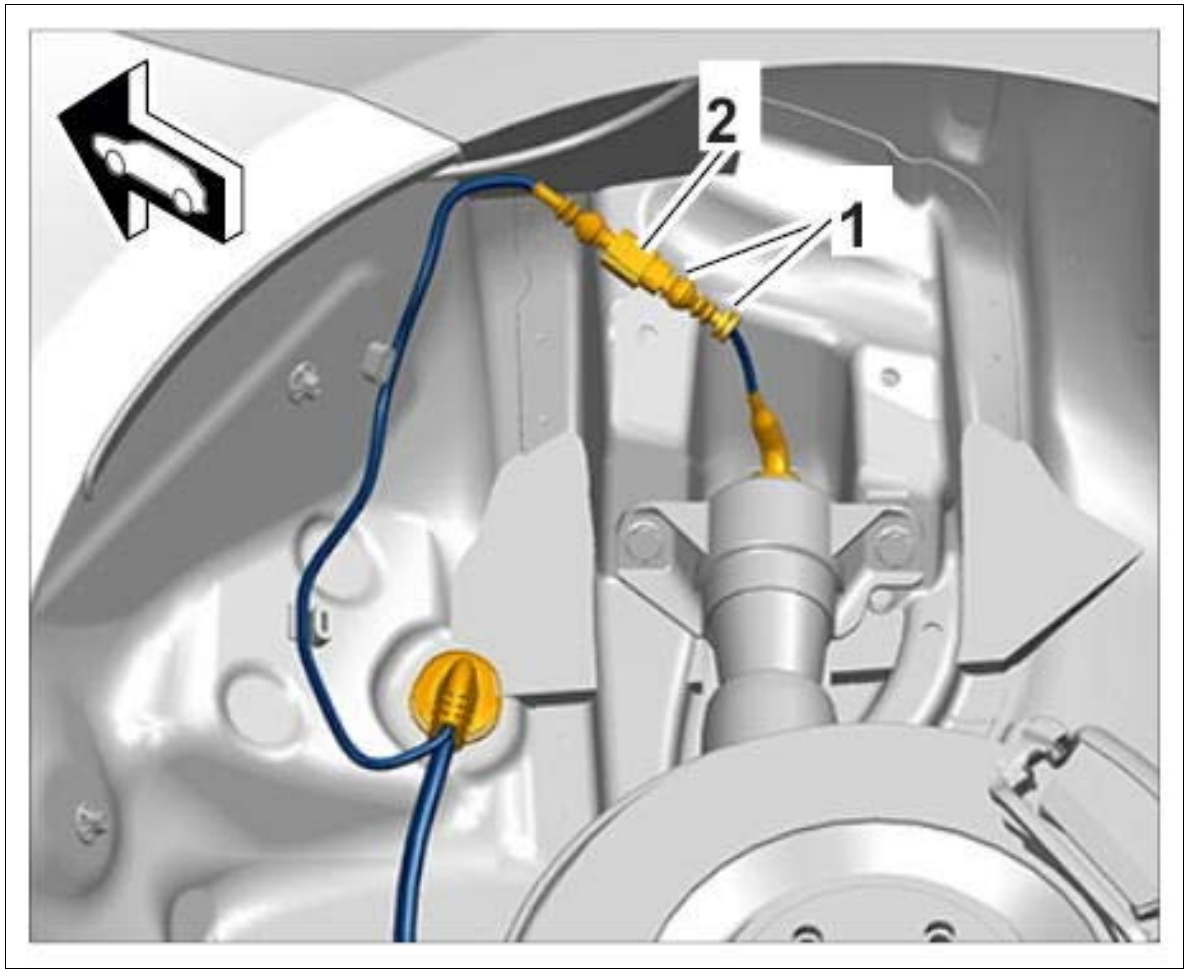

Courtesy of PORSCHE CARS NORTH AMERICA, INC.

3. Release locking lugs **-1-** and remove stone guard **-2-** .

Fig 3: Identifying Stone Guard And Locking Lugs

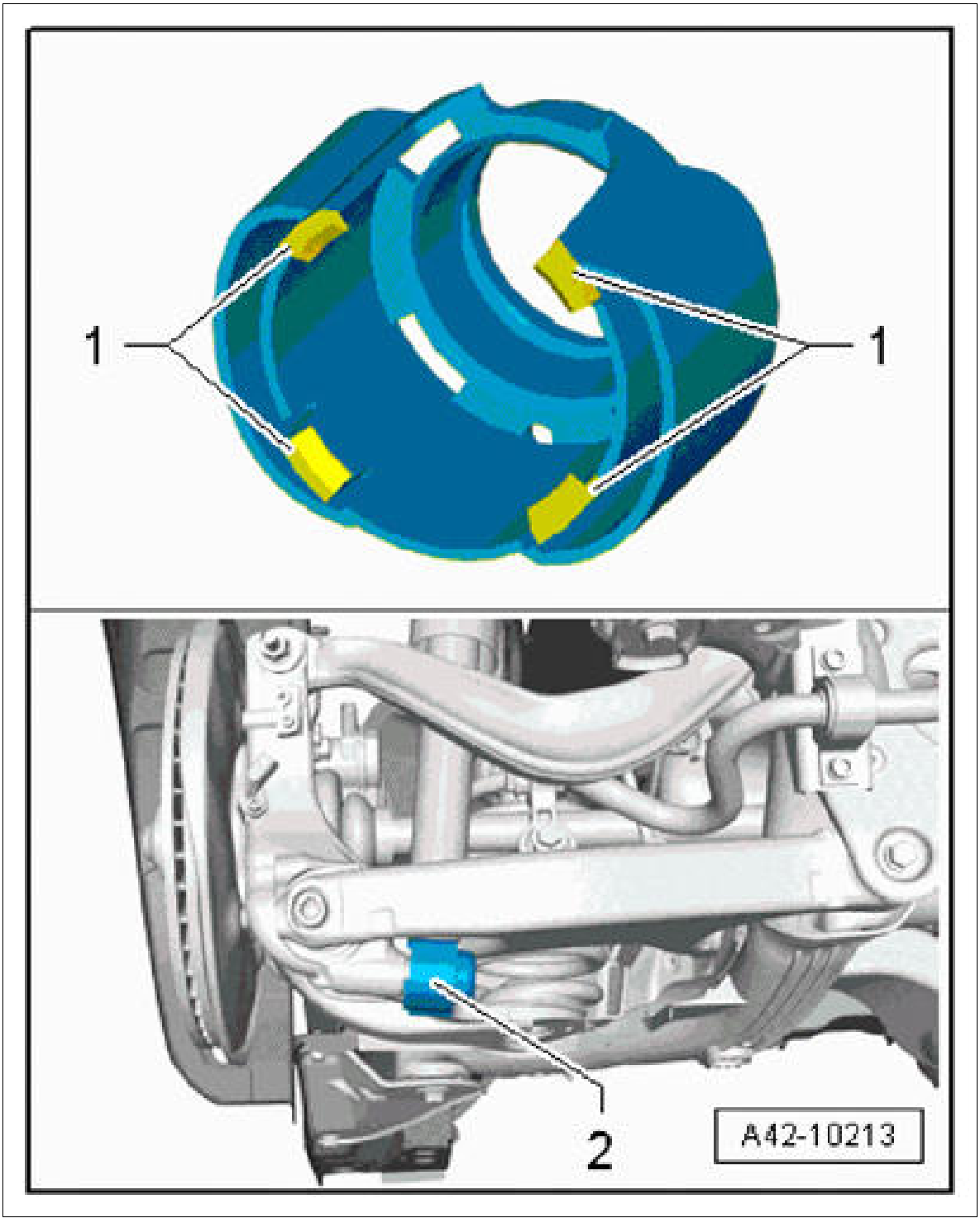

Courtesy of PORSCHE CARS NORTH AMERICA, INC.

4. Unscrew fastening screw **-2-** and remove washer **-1-** .

Fig 4: Identifying Lower Shock-Absorber Mount And Washer

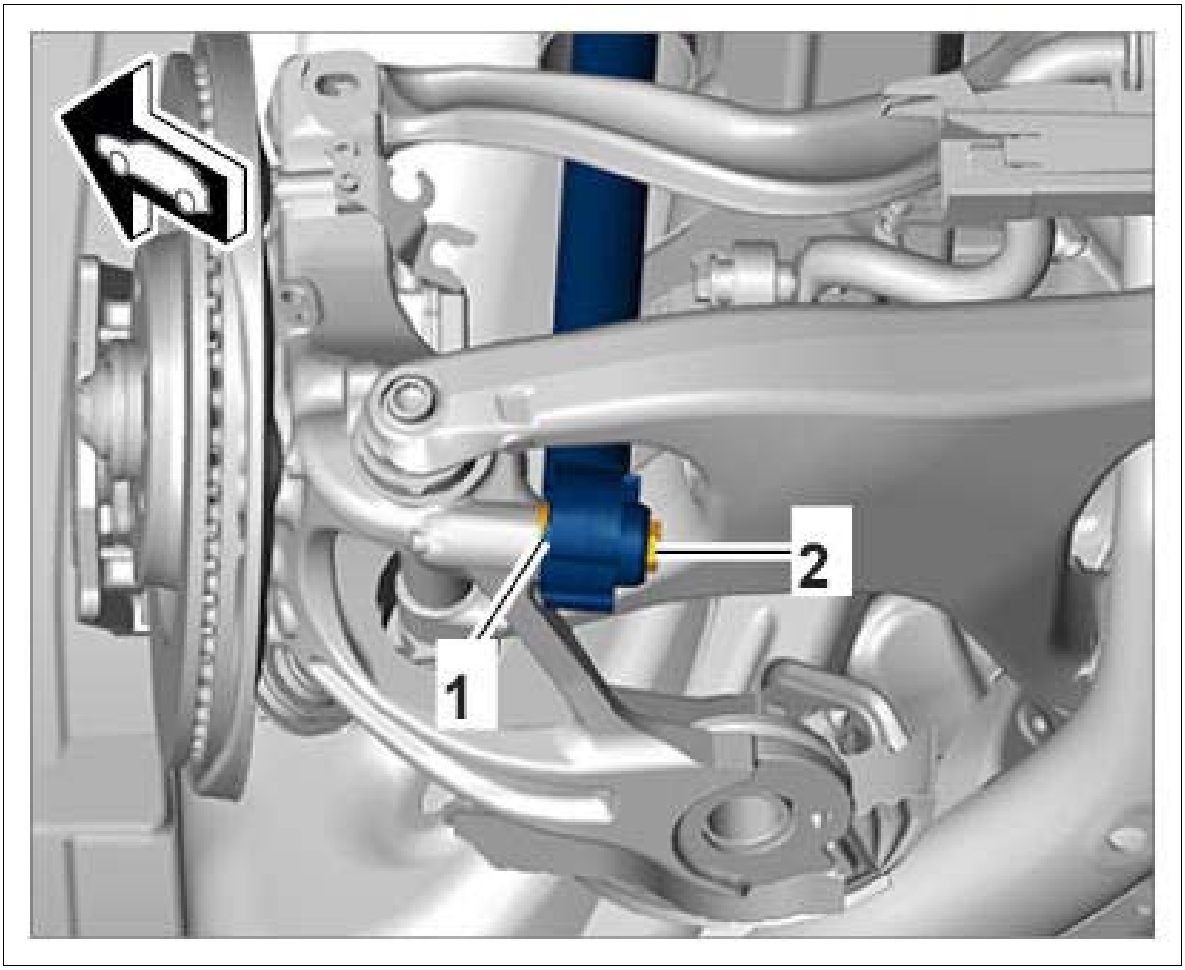

Courtesy of PORSCHE CARS NORTH AMERICA, INC.

5. Remove stone guard **-1, 2, 3-** if fitted.

Fig 5: Identifying Stone Guard

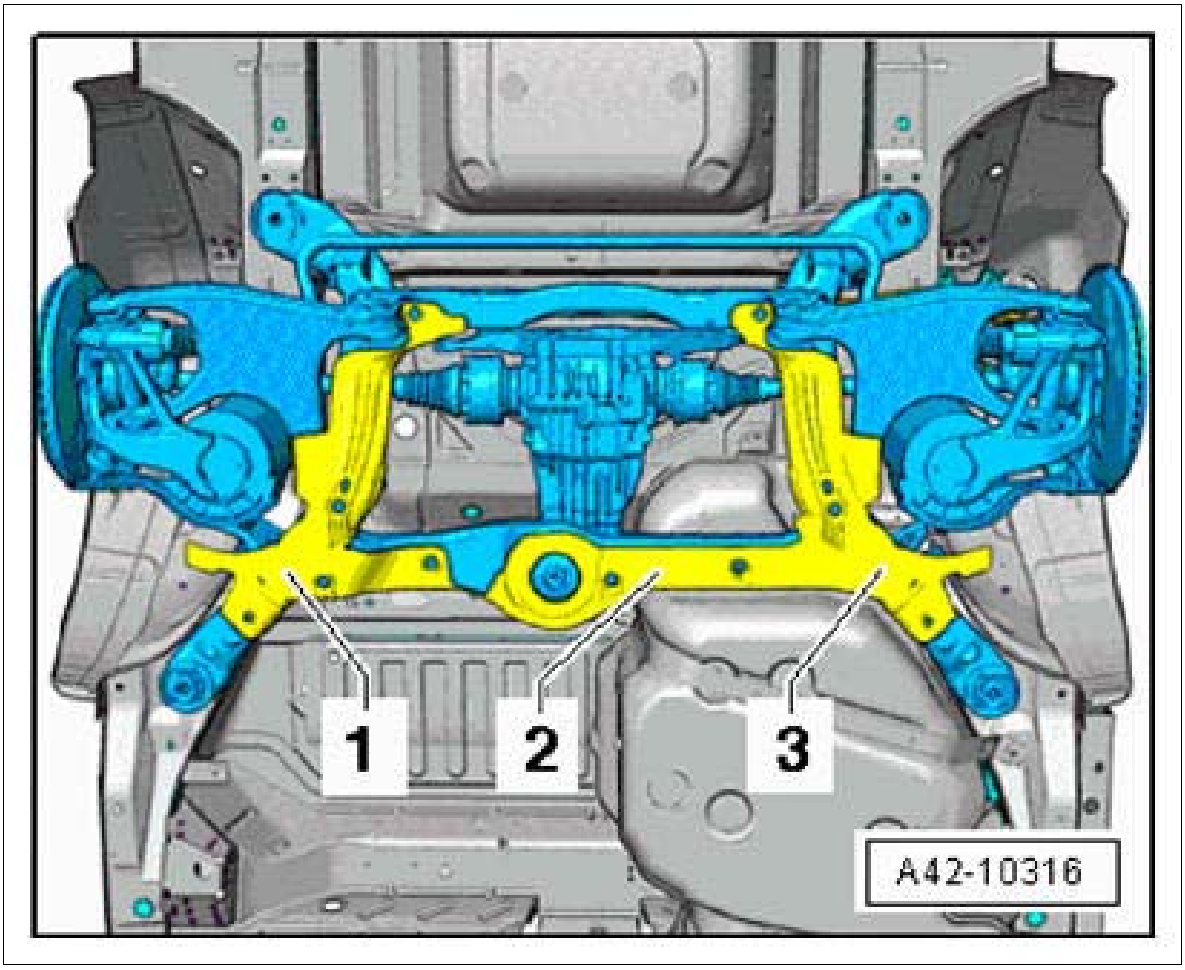

Courtesy of PORSCHE CARS NORTH AMERICA, INC.

1. **Transmission jack WE 1082** must be positioned under the rear axle housing **-1-** with a suitable piece of wood **-2-** underneath. Also secure rear axle housing with **strapping belts 9454.**

Fig 6: Supporting Rear Axle Housing

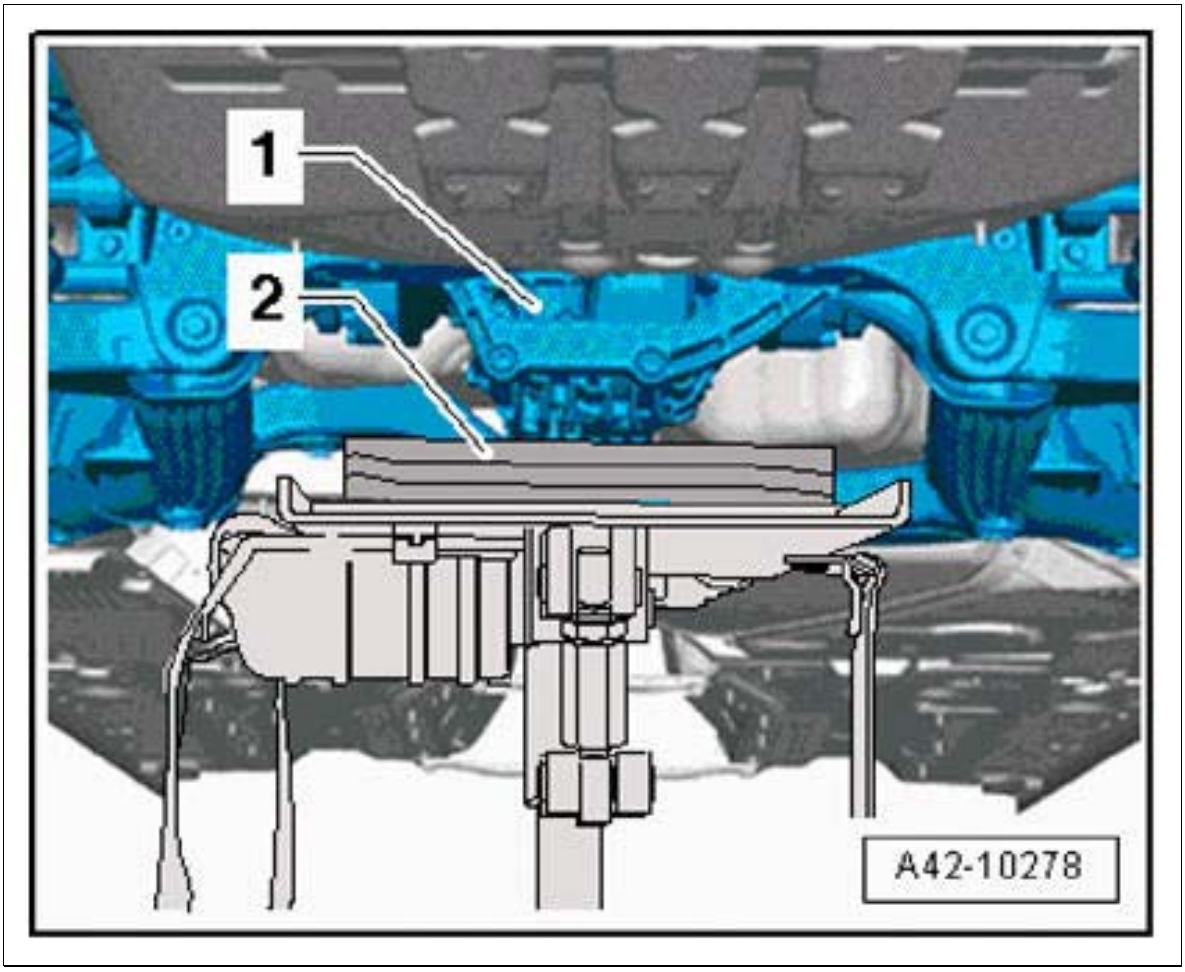

Courtesy of PORSCHE CARS NORTH AMERICA, INC.

2. Unscrew front fastening screws **-1-** on both sides of the vehicle.

Fig 7: Identifying Rear Axle Housing Mounting Screws - Front

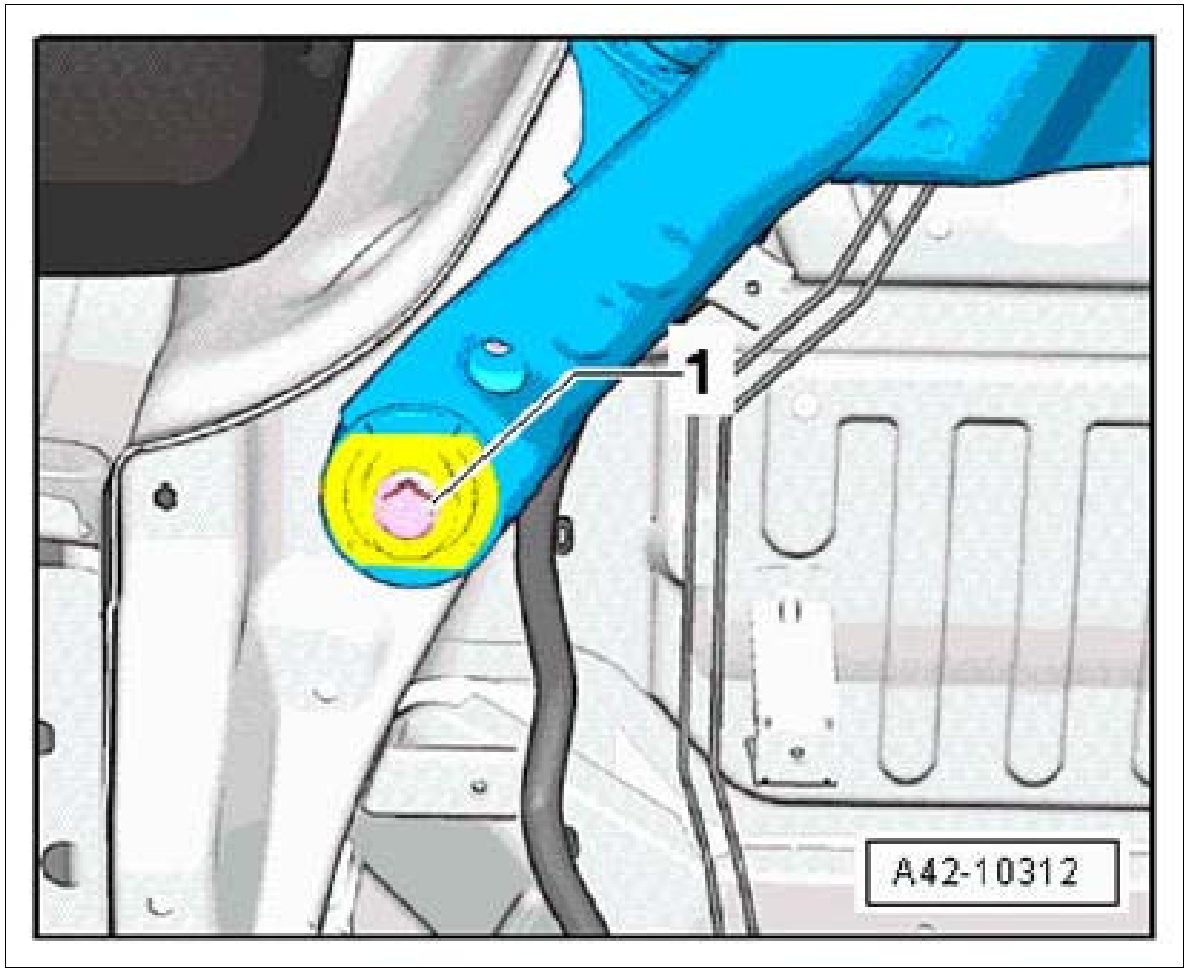

Courtesy of PORSCHE CARS NORTH AMERICA, INC.

3. Unscrew rear fastening screws **-arrows-** .

Fig 8: Locating Rear Axle Housing Mounting Screws - Rear

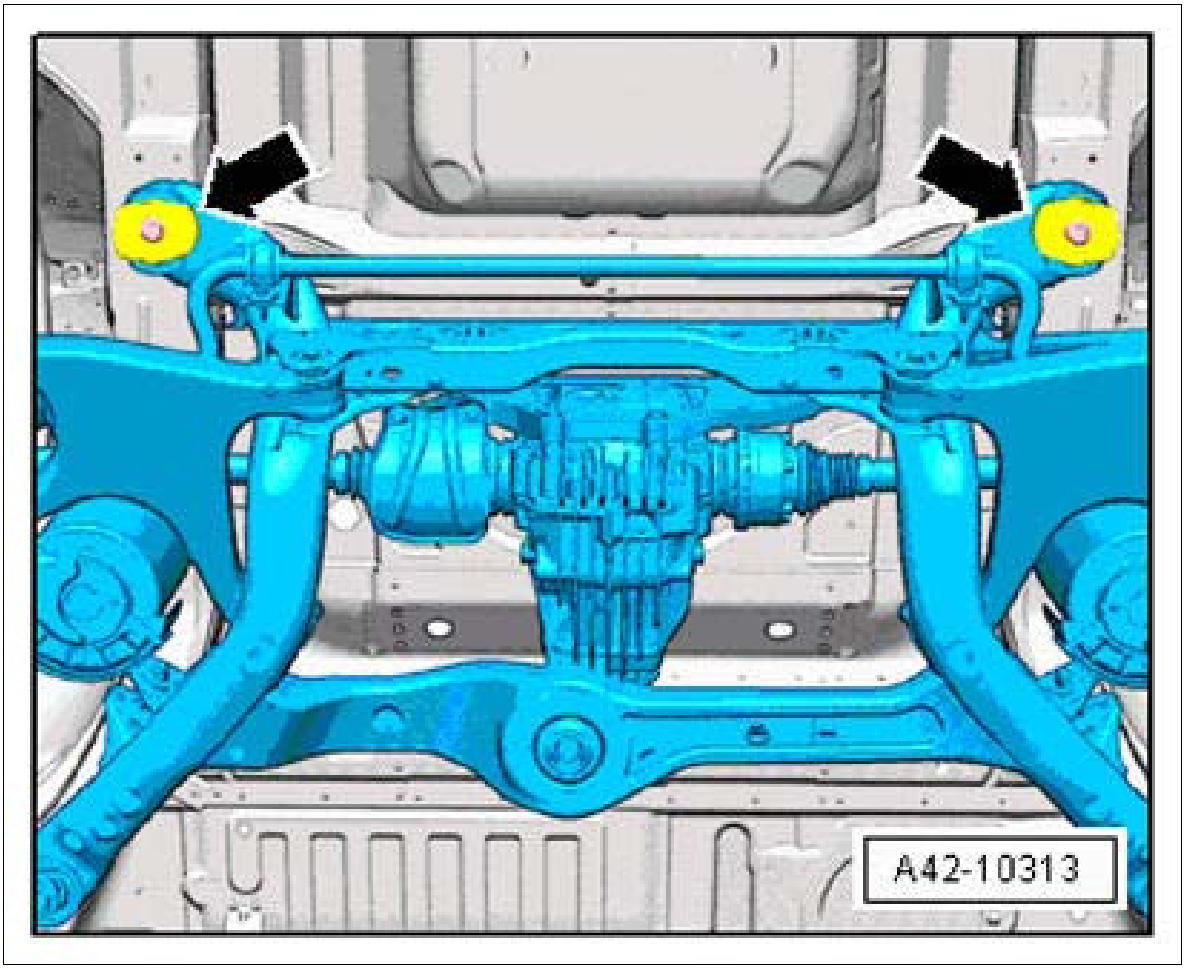

Courtesy of PORSCHE CARS NORTH AMERICA, INC.

Information

When lowering the rear axle housing, always check that all electric lines are disconnected.

4. Carefully lower the rear axle housing with accessories. Be careful of the brake callipers and lines while doing so.

WM 420519 REMOVING AND INSTALLING REAR AXLE HOUSING (MACAN, MACAN S, MACAN TURBO) > REMOVING AND INSTALLING REAR AXLE HOUSING > INSTALLING REAR AXLE HOUSING

Information

- All screws and threaded joints on the axle must be tightened in vehicle position. Vehicle position means: vehicle standing on its wheels, or the wheel suspension is raised with a universal vehicle lift. Dimension -1- , from lower edge of wing to center of axle corresponds to vehicle position. The current height can be found in → 4495TW ADJUSTMENT VALUES FOR SUSPENSION ALIGNMENT . Always observe the following points!

Fig 1: Identifying Wheel To Wing Lower Edge Dimension (Rear Axle)

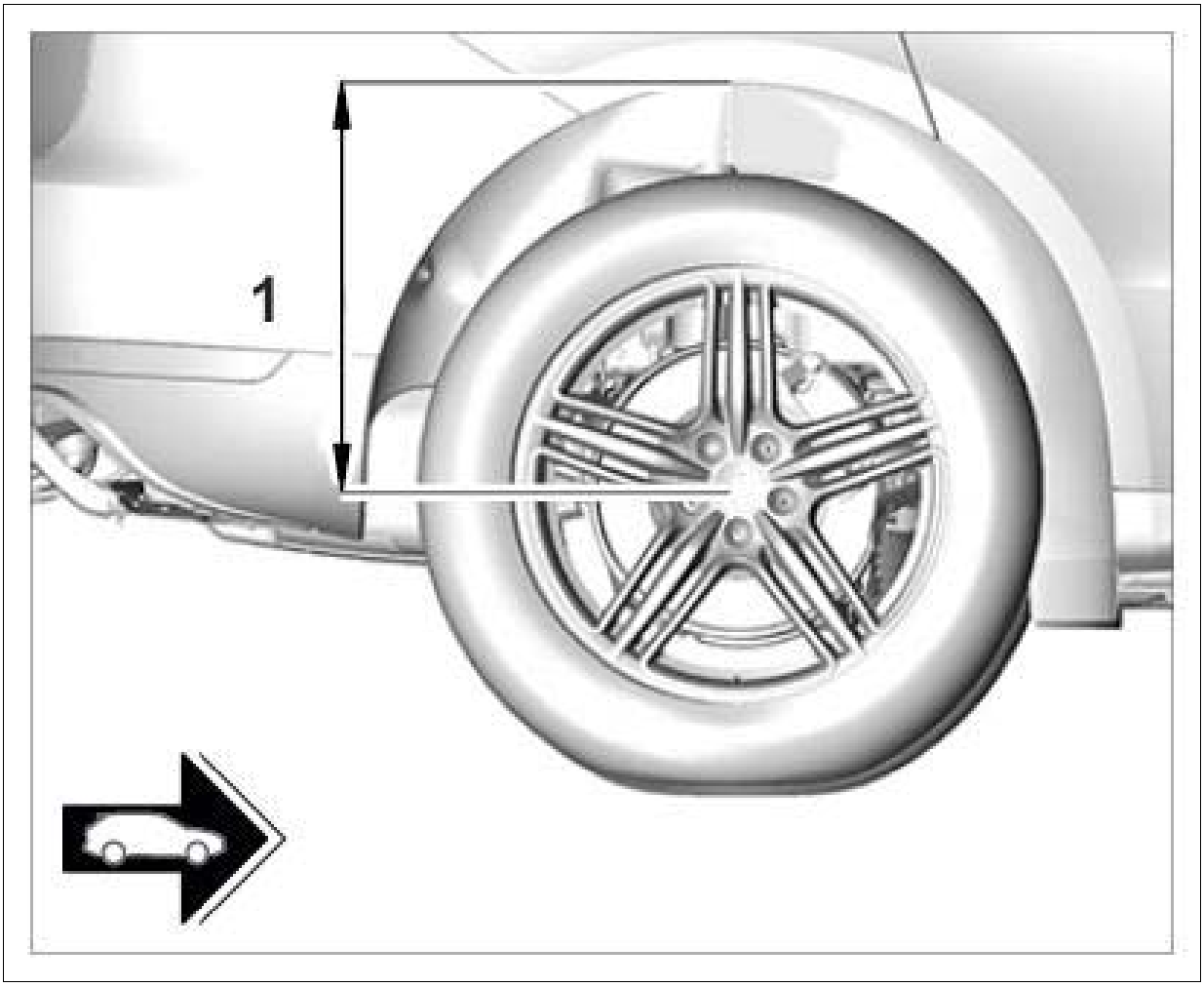

Courtesy of PORSCHE CARS NORTH AMERICA, INC.

- On vehicles with air springs, the respective air spring must be bled using the Porsche System Tester . → 4301IN BLEEDING AND FILLING THE LEVELLING SYSTEM
- Screws and nuts are Geomet-coated and must not be greased.

1. Installation is performed in reverse order.

   Observe specified tightening torques:

   Rear axle housing to body, front: **Initial tightening 115 Nm (85 ftlb.) Final tightening +90°**

   Rear axle housing to body, rear: **Initial tightening 115 Nm (85 ftlb.) Final tightening +90°**

   Shock absorber to wheel bearing housing: **Initial tightening 150 Nm (111 ftlb.) Final tightening +180°**

WM 420519 REMOVING AND INSTALLING REAR AXLE HOUSING (MACAN, MACAN S, MACAN TURBO) > SUBSEQUENT WORK

1. Connect lines for final drive → INSTALLING REAR FINAL DRIVE .

   Secure cardan shaft to the final drive → INSTALLING REAR CARDAN SHAFT .

2. Install rear silencer → INSTALLING EXHAUST SYSTEM .

3. Install coil springs/air springs on both sides of the vehicle → INSTALLING REAR COIL SPRING → REMOVING AND INSTALLING REAR AIR SPRING .

4. Install brake callipers on both sides of the vehicle → REMOVING AND INSTALLING REAR BRAKE CALLIPER .

5. Install cover for underbody at the sides → INSTALLING COVER FOR CENTER UNDERBODY .

6. Fit wheels → INSTALLING WHEEL .

7. Perform suspension alignment → 449503 SUSPENSION ALIGNMENT, COMPLETE .

WM 420855 REPLACING REAR-AXLE BEARINGS (MACAN S, MACAN TURBO) > TOOLS

Designation	Type	Number	Description	
Transmission jack	Workshop equipment	WE 1082		
Hydraulic cylinder	Workshop equipment	WE 1284		
Assembly fixture	VW tool	3301		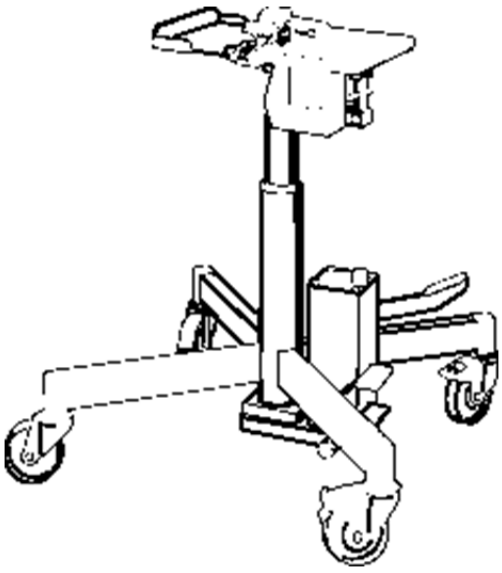
Assembly fixture	VW tool	3346		
Assembly fixture	VW tool	T10263		

Assembly fixture	VW tool	T40033		
Assembly fixture	VW tool	T40185		

WM 420855 REPLACING REAR-AXLE BEARINGS (MACAN S, MACAN TURBO) > TECHNICAL VALUES

Location	Description	Type	Basic value	Tolerance 1	Tolerance 2
Rear axle housing, front to body	M14 x 1.5 x 135 thread/always replace screws following removal	Initial tightening	115 Nm (85 ftlb.)		
Rear axle housing, front to body	M14 x 1.5 x 135 thread/always replace screws following removal	Final tightening	+90°		
Rear axle housing, rear to body	M12 x 1.5 x 145 thread/always replace screws following removal	Initial tightening	115 Nm (85 ftlb.)		
Rear axle housing, rear to body	M12 x 1.5 x 145 thread/always replace screws following removal	Final tightening	+90°		

WM 420855 REPLACING REAR-AXLE BEARINGS (MACAN S, MACAN TURBO) > GENERAL INFORMATION

Information

- If a rubber/metal mount is defective, the rubber-metal mount on the opposite side must also be replaced.
- Check the other bearings before replacing a defective rubber/metal mount.
- If you see cracks, oil leaks or other damage, these rubber-metal mounts must also be replaced.

WM 420855 REPLACING REAR-AXLE BEARINGS (MACAN S, MACAN TURBO) > PRELIMINARY WORK

1. Raise the vehicle → 4X00IN LIFTING THE VEHICLE .

2. Remove wheels → 440519 REMOVING AND INSTALLING WHEEL .
3. Remove cover for underbody at the sides → 519319 REMOVING AND INSTALLING COVER FOR CENTER UNDERBODY .
4. Remove rear coil springs/air springs → 427219 REMOVING AND INSTALLING REAR COIL SPRING → 434319 REMOVING AND INSTALLING REAR AIR SPRING .

WM 420855 REPLACING REAR-AXLE BEARINGS (MACAN S, MACAN TURBO) > REPLACING REAR-AXLE BEARINGS

WARNING: Preloaded or pressurized components

- *Risk of squashing or bruising*

→ Do not reach into the danger area.

→ Relieve the tension on components before starting work.

→ Secure components to prevent them from loosening suddenly.

CAUTION: Heavy components

- *Risk of squashing*

→ Wear personal protective gear.

→ Get someone to help if necessary.

Information

- To replace the rubber-metal mounts, the rear axle housing must be lowered at the front or rear. There is no need to remove the rear axle housing.
- Lower the rear axle housing alternately at the front or rear. This can eliminate the need for wheel alignment.
- The rear axle housing must not be lowered by more than 4 cm.
- Before removing the rubber-metal mounts, mark their installation position with respect to the rear axle housing.

Replacing front bearing:

Information

The following tools are required for replacing the front bearing:

- Assembly fixture T10263

- Assembly fixture T40185
- Assembly fixture T40033
- Hydraulic cylinder WE 1284

1. **Transmission jack WE 1082** must be positioned under the rear axle housing **-1-** with a suitable piece of wood **-2-** underneath.

   Fig 1: Supporting Rear Axle Housing

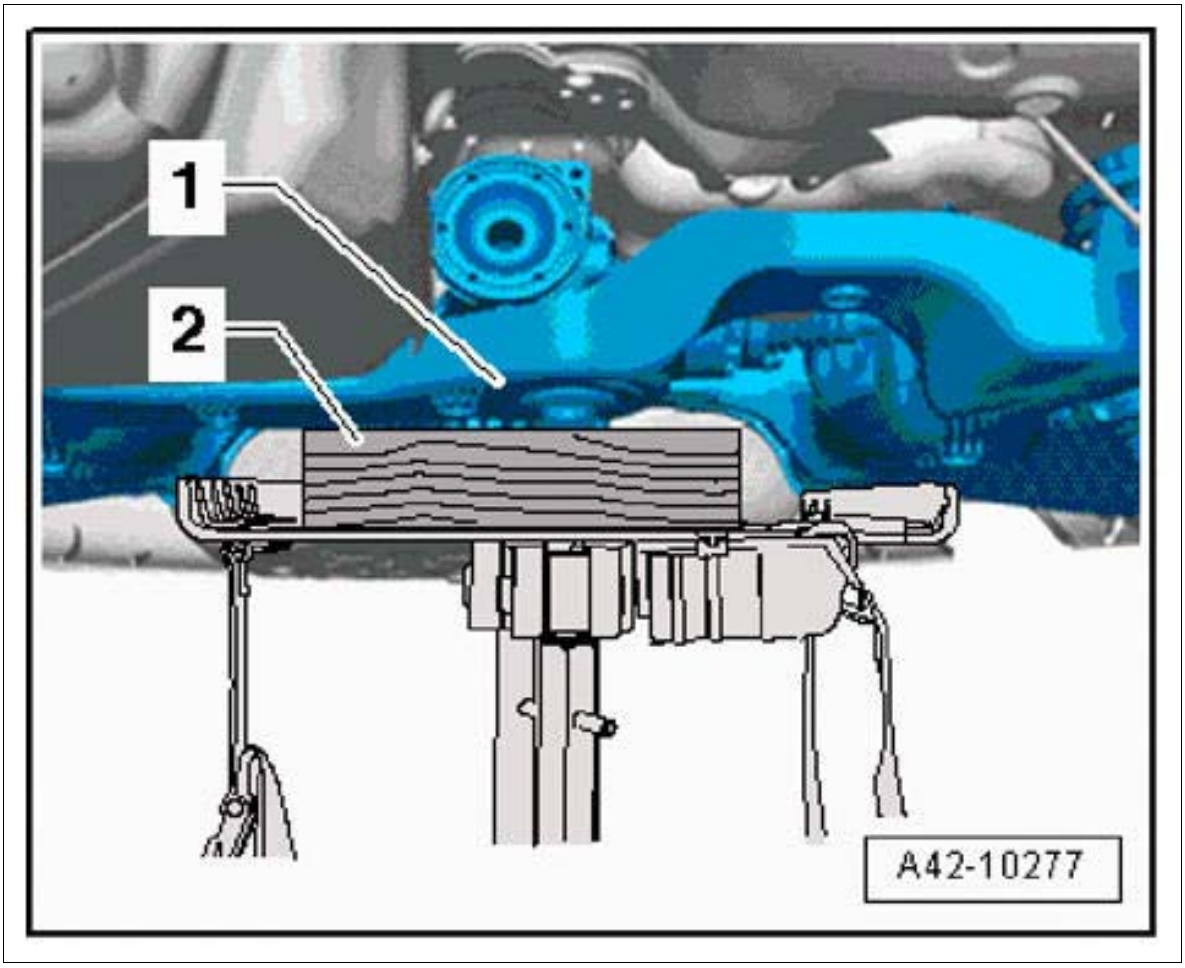

Courtesy of PORSCHE CARS NORTH AMERICA, INC.

2. Unscrew fastening screws **-1-** on both sides of the vehicle.

Fig 2: Identifying Rear Axle Housing Mounting Screws - Front

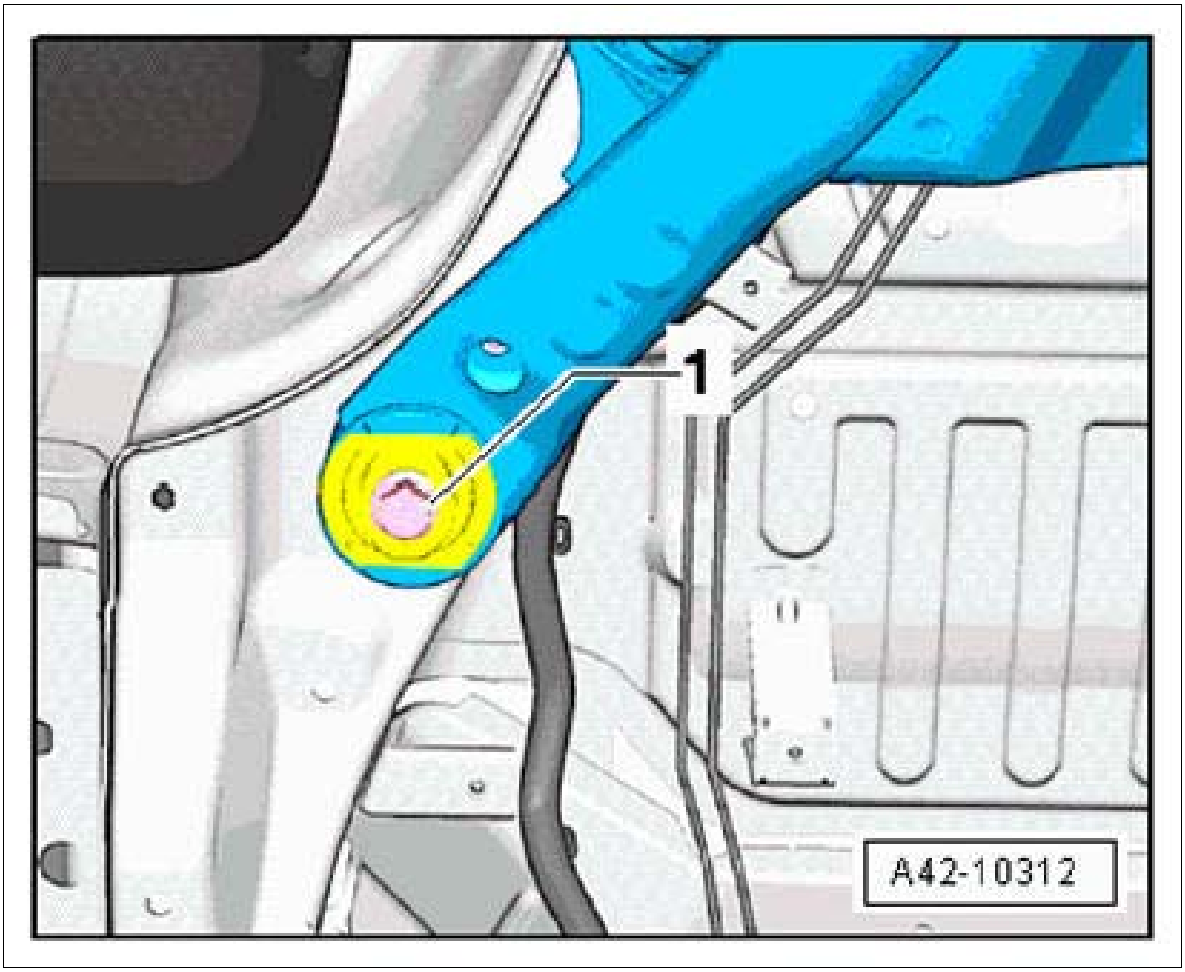

Courtesy of PORSCHE CARS NORTH AMERICA, INC.

Information

Screw in fastening screw until dimension a = → **Control value: 4 cm** is reached.

3. Screw the fastening screw **-1-** you removed earlier into the body on the opposite side of the bearing to be replaced.

Fig 3: Identifying Rear Axle Housing Mounting Screw At Dimension -A-

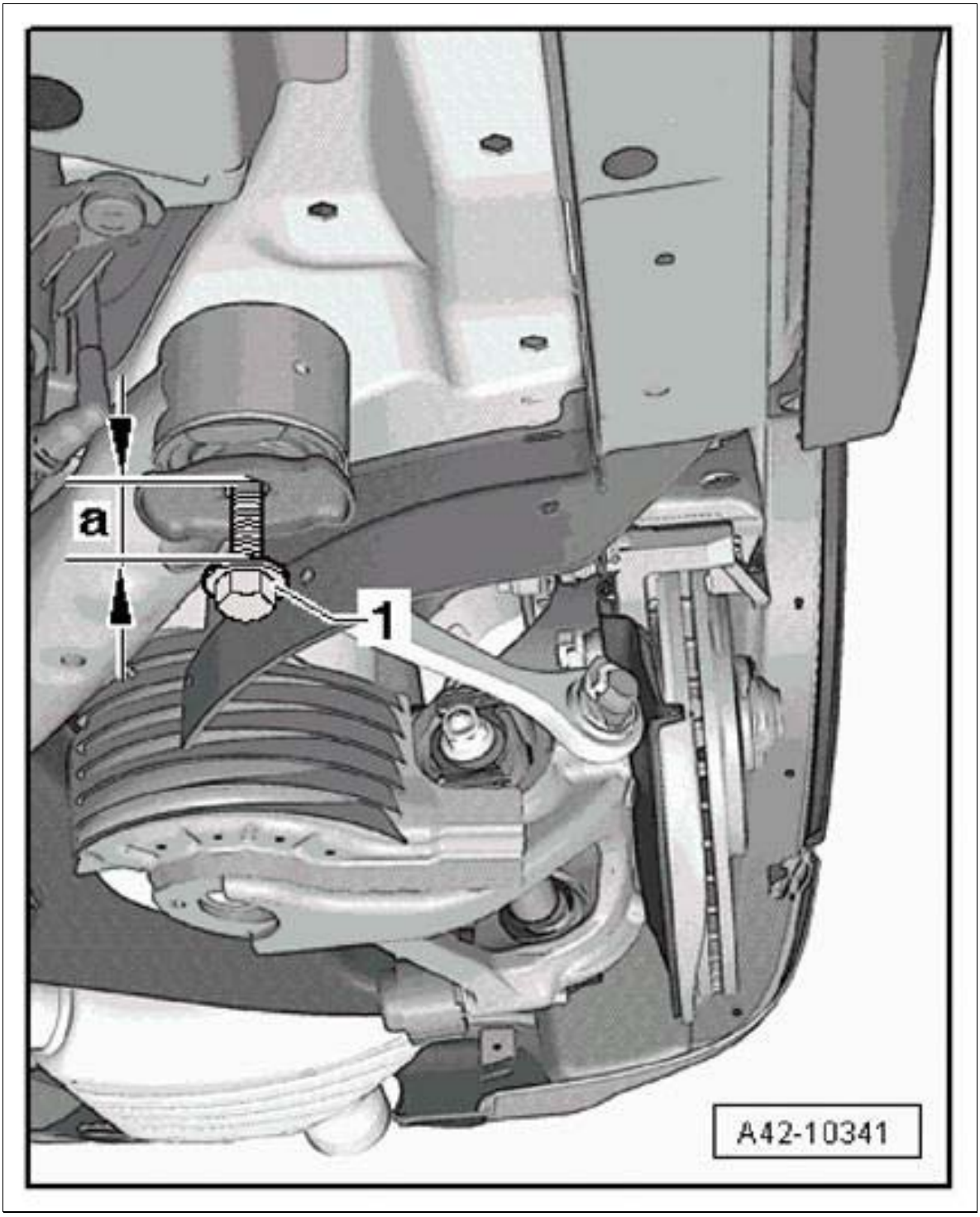

Courtesy of PORSCHE CARS NORTH AMERICA, INC.

4. Lower the rear axle housing.
5. Lever off the twist lock **-1-** close to the retaining lugs alternately on both sides of the bearing using a screwdriver.

Fig 4: Removing Rear Axle Housing Twist Lock

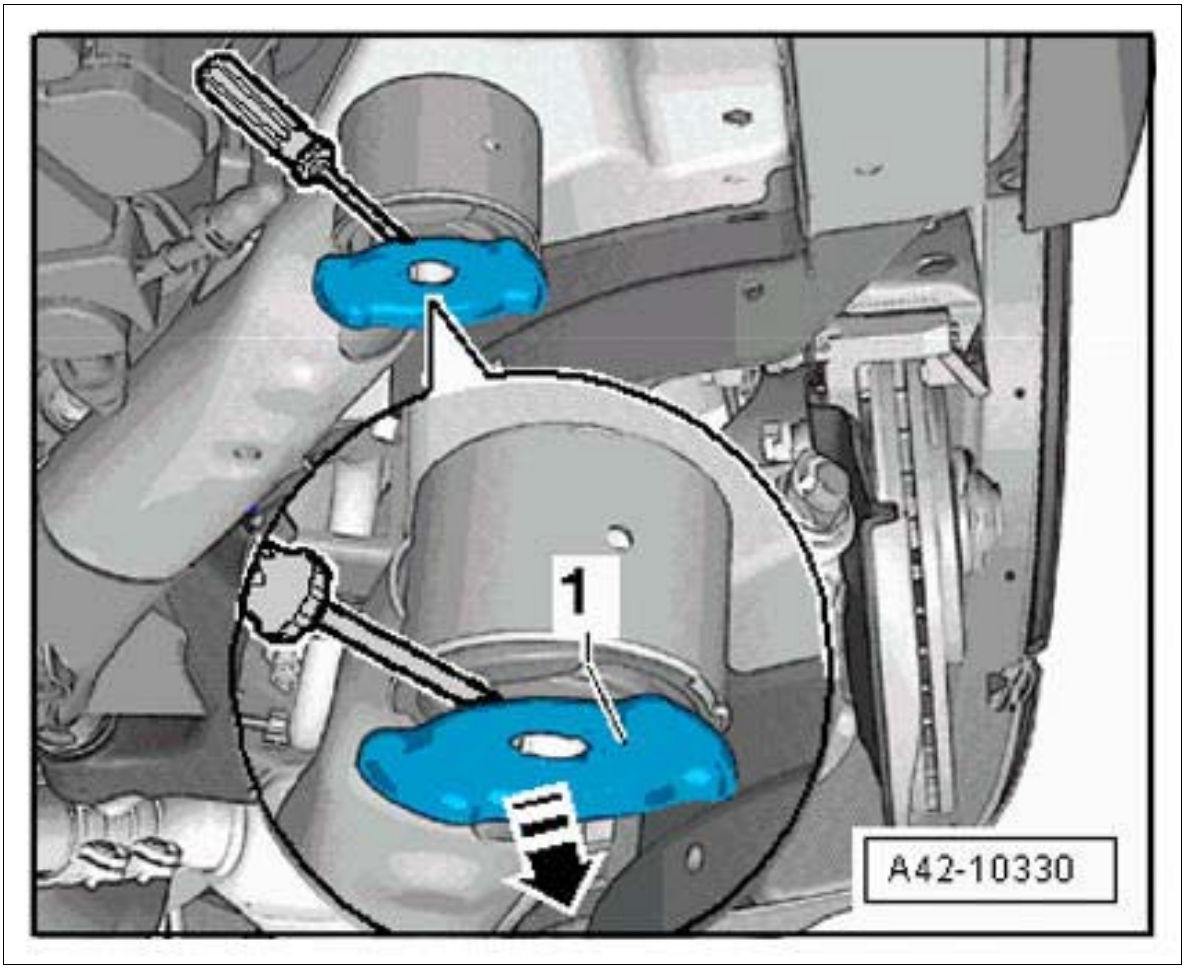

Courtesy of PORSCHE CARS NORTH AMERICA, INC.

6. Mark the installation position of the bearing with respect to the rear axle housing **-arrows-** . Use the ends of the rubber bead on the bearing as a guide.

Fig 5: Locating Bearing Installation Position Mark

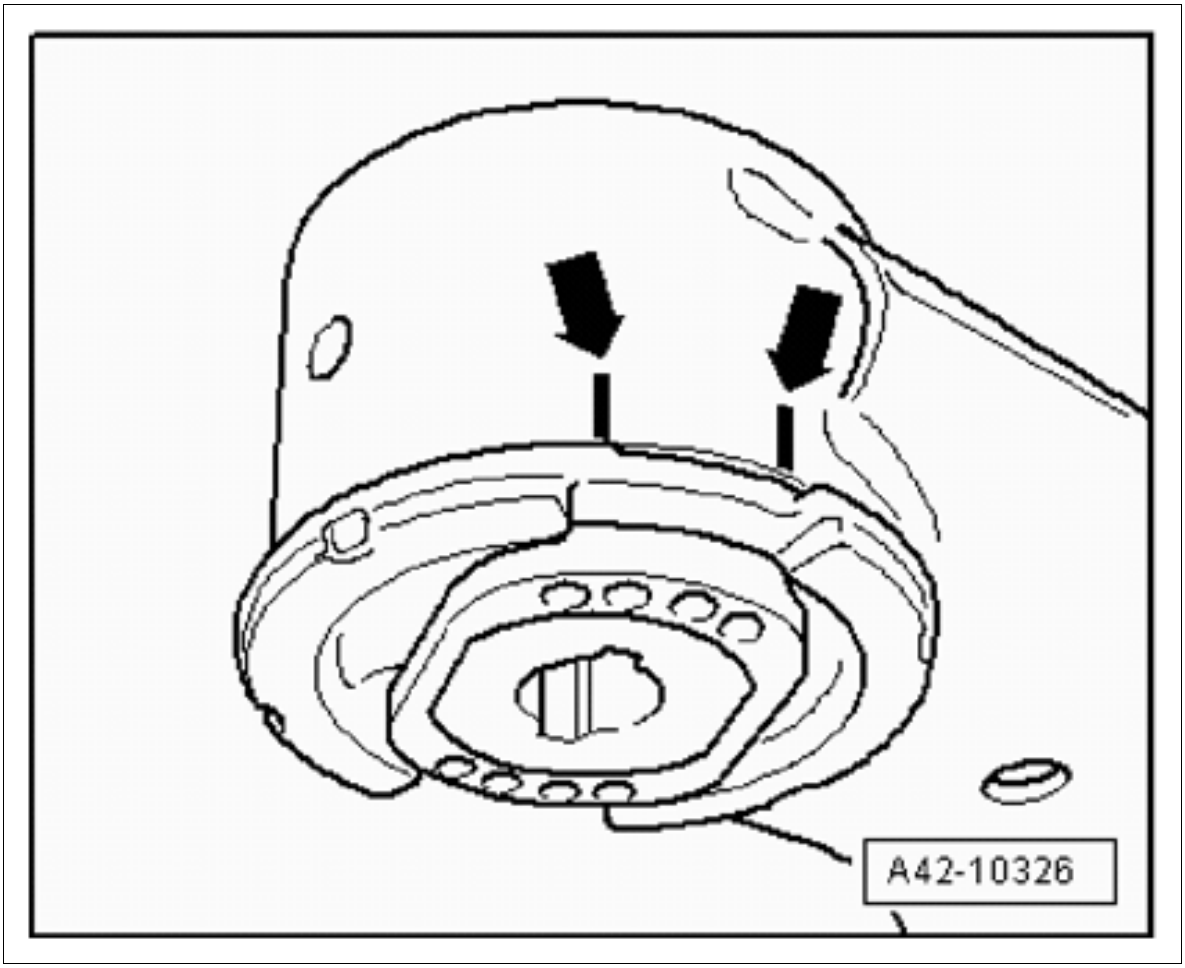

Courtesy of PORSCHE CARS NORTH AMERICA, INC.

Information

As soon as the bearing is pressed out, the device falls down.

A second person must therefore hold the device tightly while pressing out bearings on the hydraulic cylinder.

7. Press out front bearing.

   To do this, fit tools on the bearing as shown → Arrangement of tools for pressing out front bearing .

   1. Nut **T10263/5**
   2. Pressure piece **T40185/5** (cut-out is facing the bearing)
   3. Rear axle housing
   4. Support ring **T40185/6** (conical side is facing upwards, bars must engage in the cut-outs on the bearing)
   5. Pipe **T40033/3**

6. Pressure piece **T40033/4**

7. Hydraulic cylinder **VAS 6178**

8. Nut **T10263/5**

9. Spindle **T10263/4** (pin of the spindle pointing downwards)

Fig 6: Pressing Front Bearing

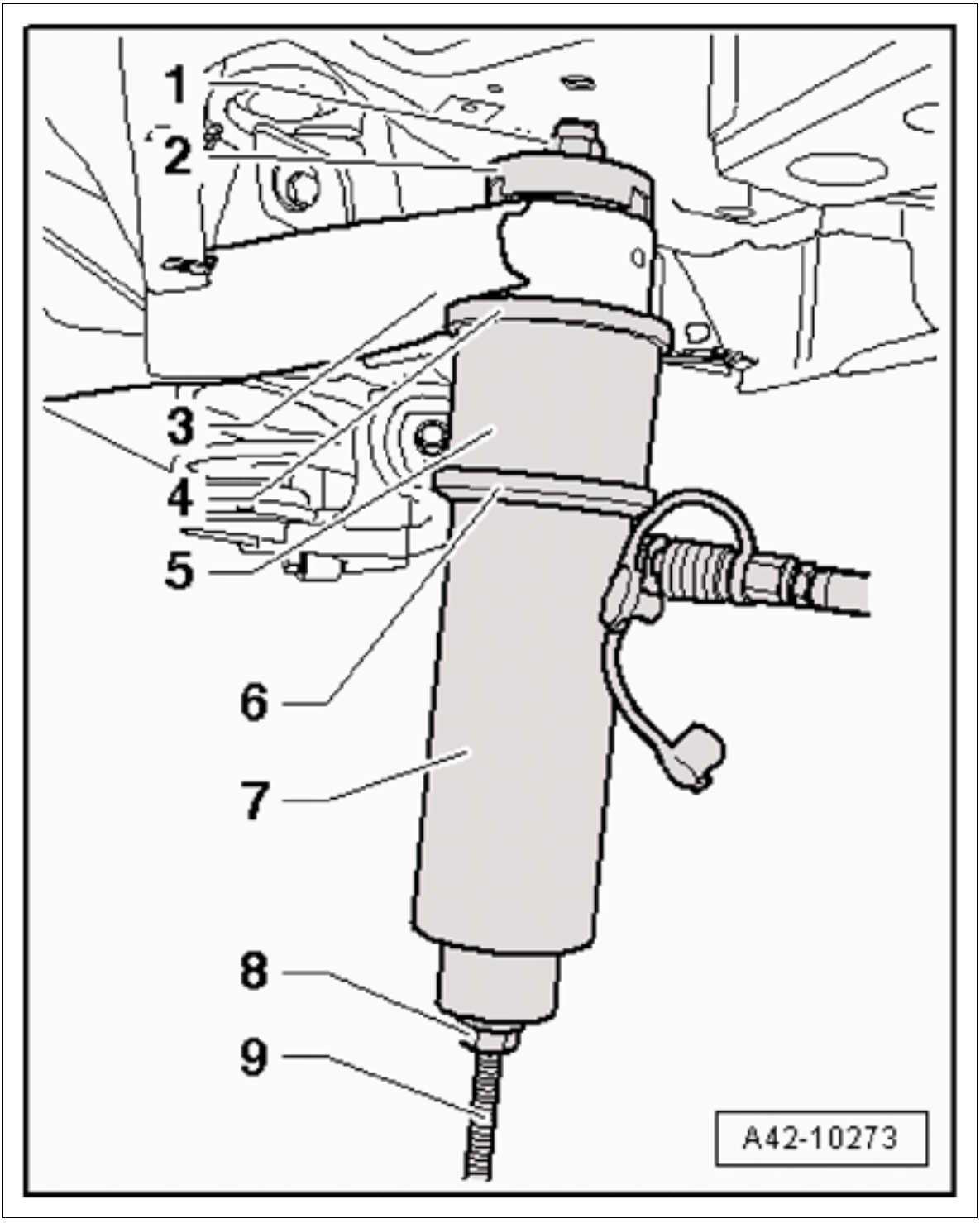

Courtesy of PORSCHE CARS NORTH AMERICA, INC.

8. Lever off the twist lock **-1-** close to the retaining lugs **-arrows-** alternately on both sides of the

bearing using a screwdriver.

Fig 7: Removing Twist Lock

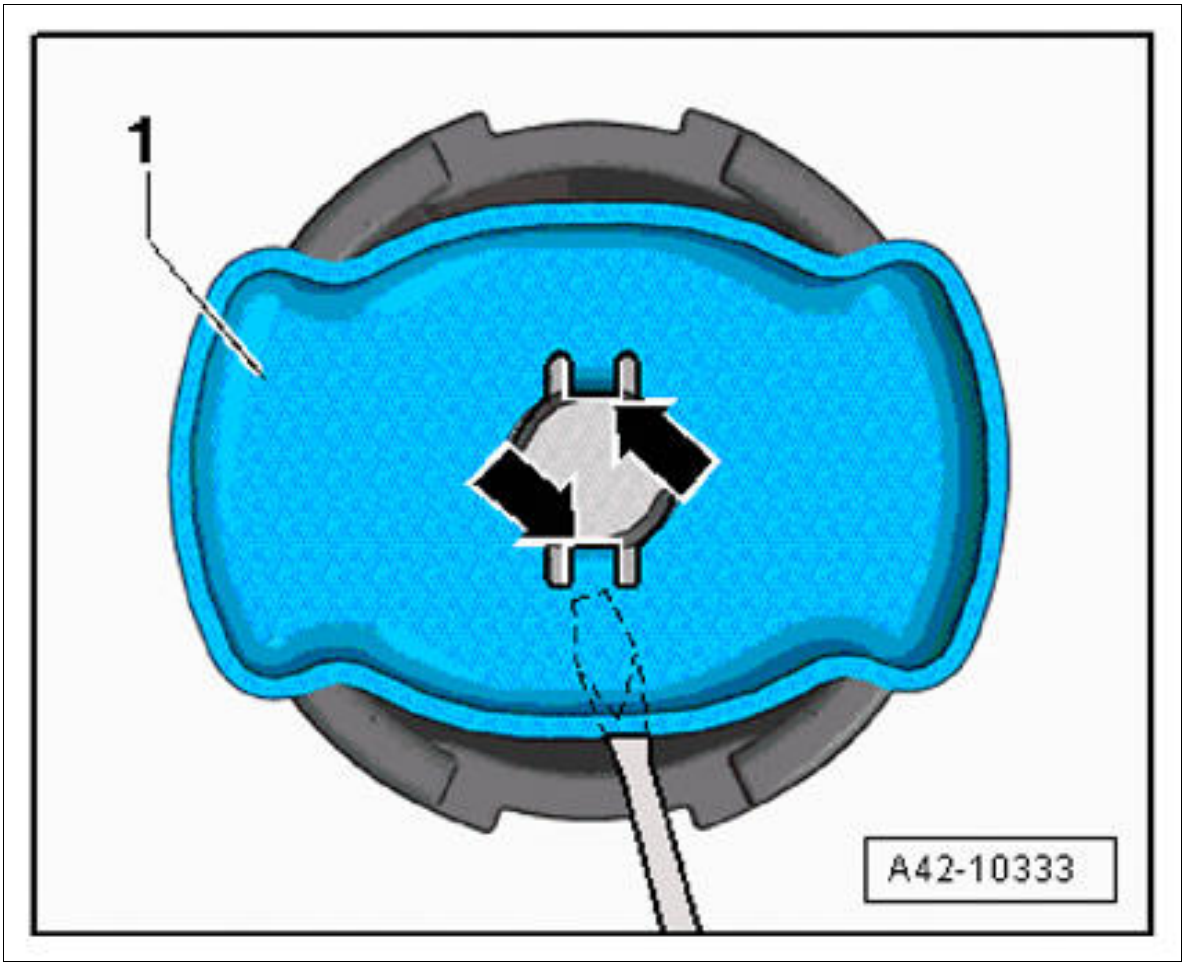

Courtesy of PORSCHE CARS NORTH AMERICA, INC.

Information

Installation position of front bearing

Twist lock **-1-** is at an angle to the direction of travel. **-arrow-** indicates direction of travel.

Fig 8: Aligning Twist Lock

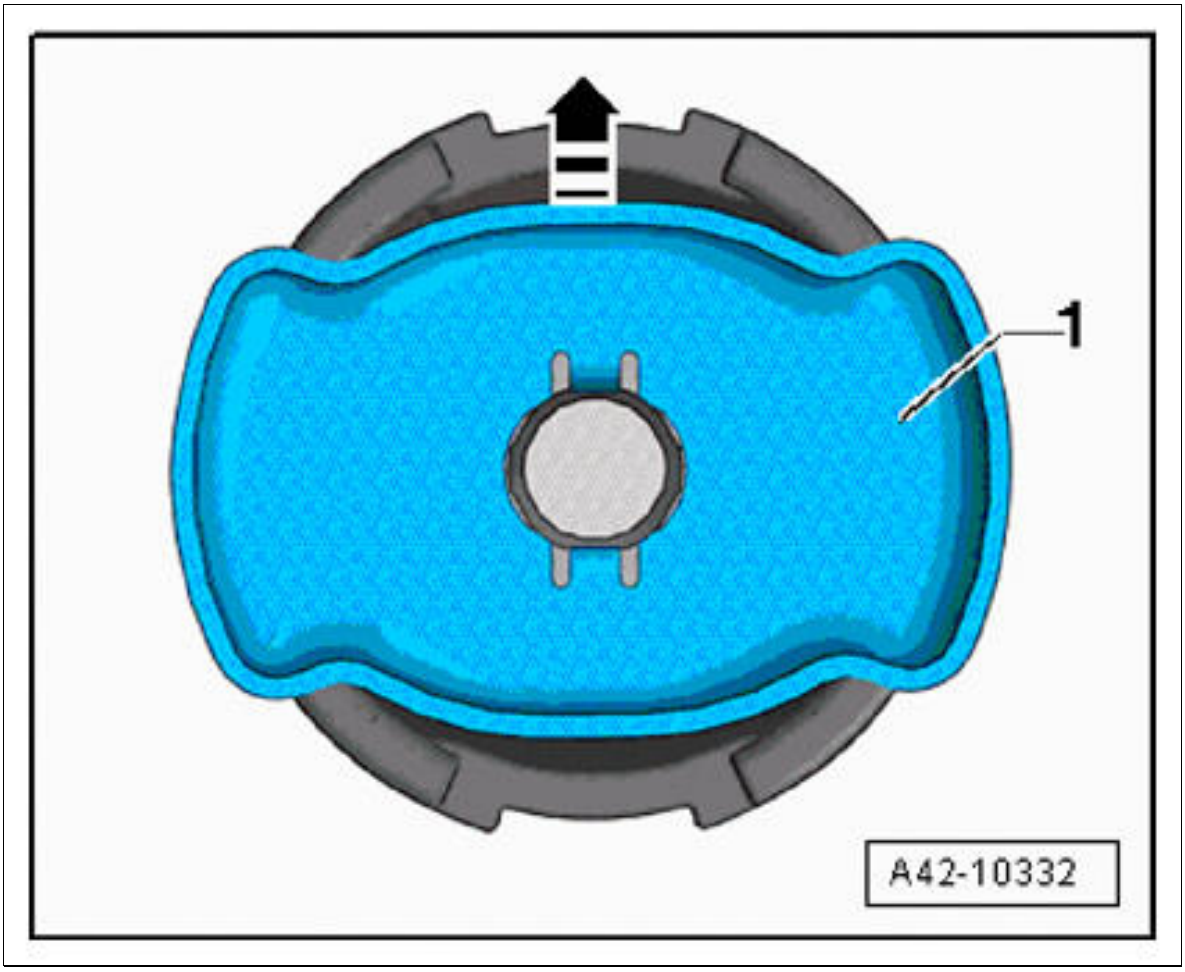

Courtesy of PORSCHE CARS NORTH AMERICA, INC.

The following must also be observed:

1. Align bearing with the applied markings before pressing it in.
2. Press bearing in until the collar is positioned loosely at the bush of the rear axle housing.
3. The ends of the rubber beads on the bearing must match the markings on the rear axle housing.

Information

Align the pressure piece **T40185/3** on the bearing as shown **-Illustration-** .

Fig 9: Identifying Pressure Piece (T40185/3)



Courtesy of PORSCHE CARS NORTH AMERICA, INC.

9. Press in front bearing.

   To do this, fit tools on the bearing as shown → Arrangement of tools for pressing in front bearing .

   1. Nut **T10263/5**
   2. Pressure piece **T40185/4**
   3. Rear axle housing
   4. Bearing
   5. Pressure piece **T40185/3**
   6. Hydraulic cylinder **VAS 6178**
   7. Nut **T10263/5**
   8. Spindle **T10263/4** (pin of the spindle pointing downwards)

Fig 10: Pressing Front Bearing

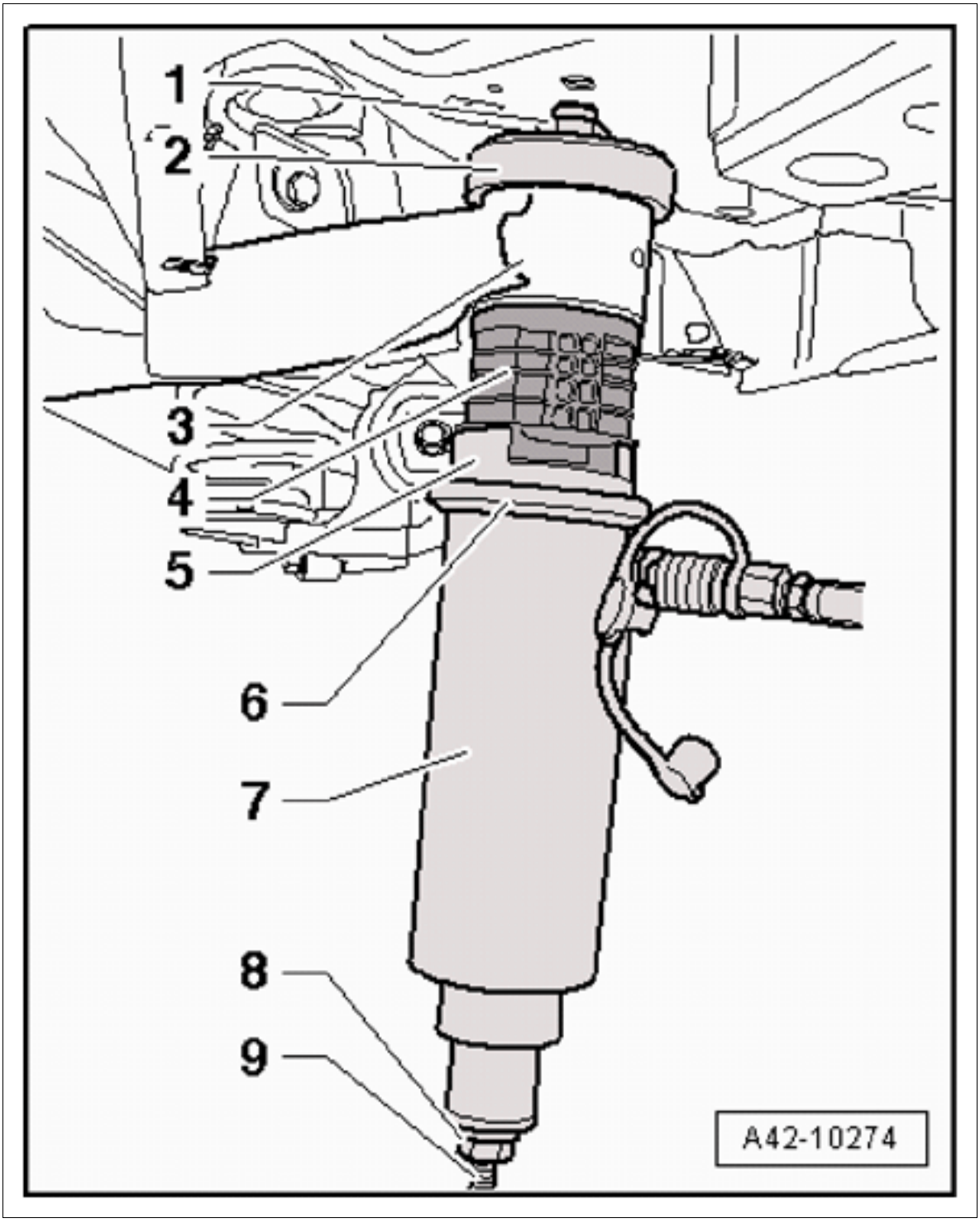

Courtesy of PORSCHE CARS NORTH AMERICA, INC.

10. Fit twist lock on the bearing.
11. Further installation is performed in reverse order.

    Tightening torque for rear axle housing at front to body: **Initial tightening 115 Nm (85 ftlb.) Final tightening +90°**

Replacing rear bearing:

Information

The following tools are required for replacing the rear bearing:

- Assembly fixture T10263
- Assembly fixture T40185
- Assembly fixture T40033
- Hydraulic cylinder WE 1284
- Assembly fixture 3301
- Assembly fixture 3346

1. **Transmission jack WE 1082** must be positioned under the rear axle housing **-1-** with a suitable piece of wood **-2-** underneath.

   Fig 11: Supporting Rear Axle Housing

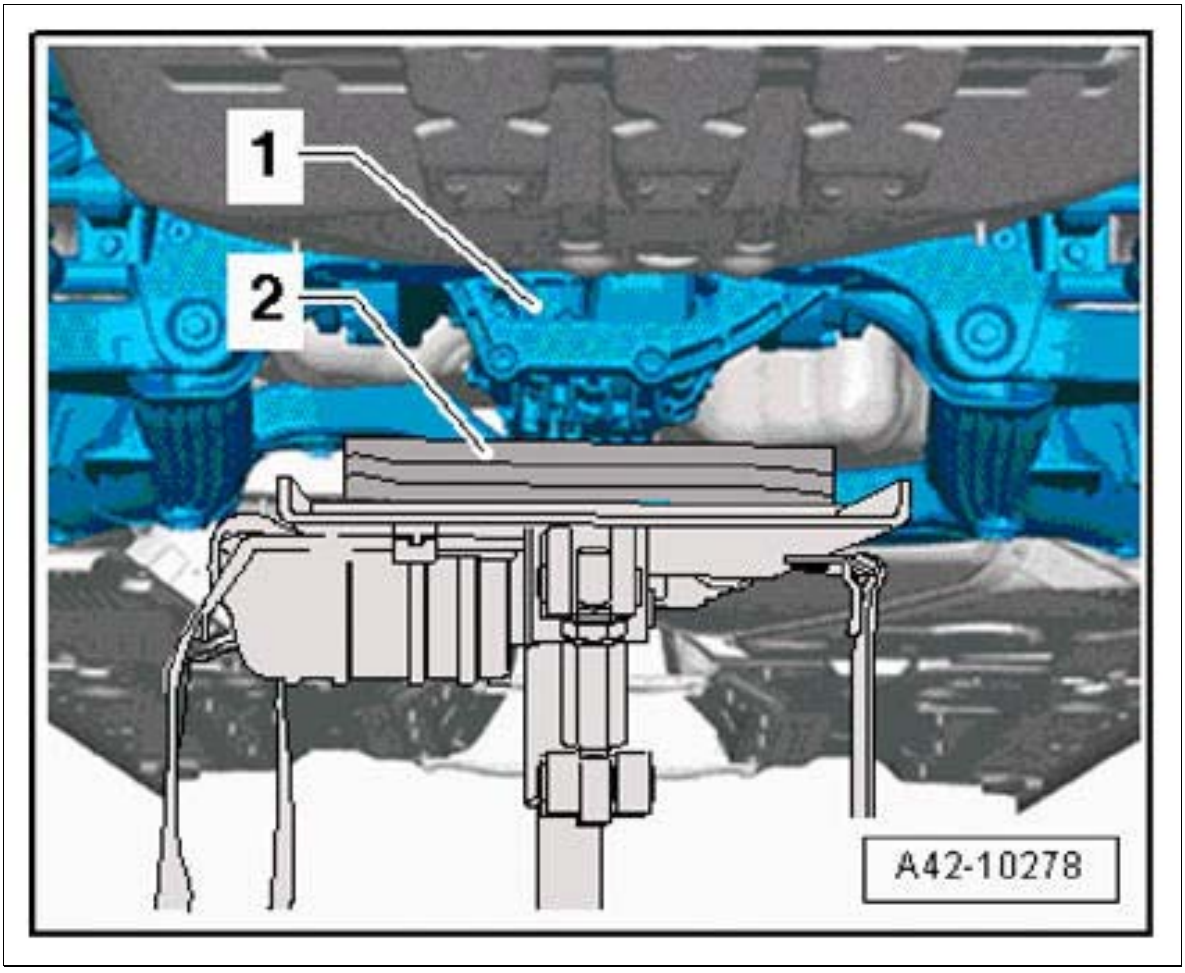

Courtesy of PORSCHE CARS NORTH AMERICA, INC.

2. Unscrew fastening screws at the rear of the rear axle housing.
3. Screw spindle **3346/2** with assembly tool **3301** and nut **3346/3** on the opposite side of the bearing to be replaced approx. 1.5 cm into the body.

1. Assembly tool **3301**
2. Nut **3346/3**
3. Spindle **3346/2**

Fig 12: Identifying Assembly Tool Dimension

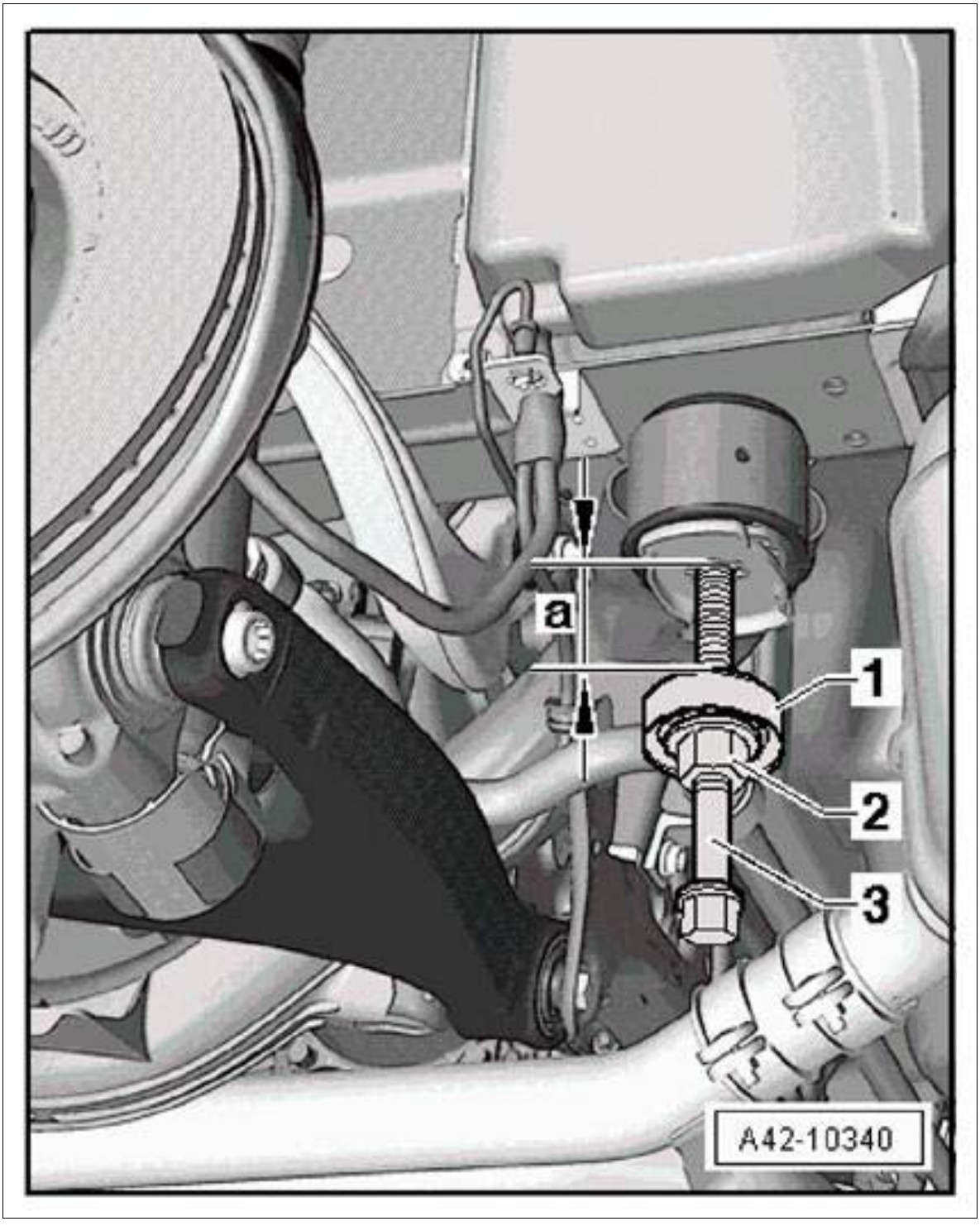

Courtesy of PORSCHE CARS NORTH AMERICA, INC.

Information

Screw nut **3346/3** onto the spindle **3346/2** until dimension **a = → Control value: 4 cm** is

reached.

4. Lower the rear axle housing.
5. Lever off the twist lock **-1-** close to the retaining lugs alternately on both sides of the bearing using a screwdriver.

   Fig 13: Removing Rear Axle Housing Twist Lock

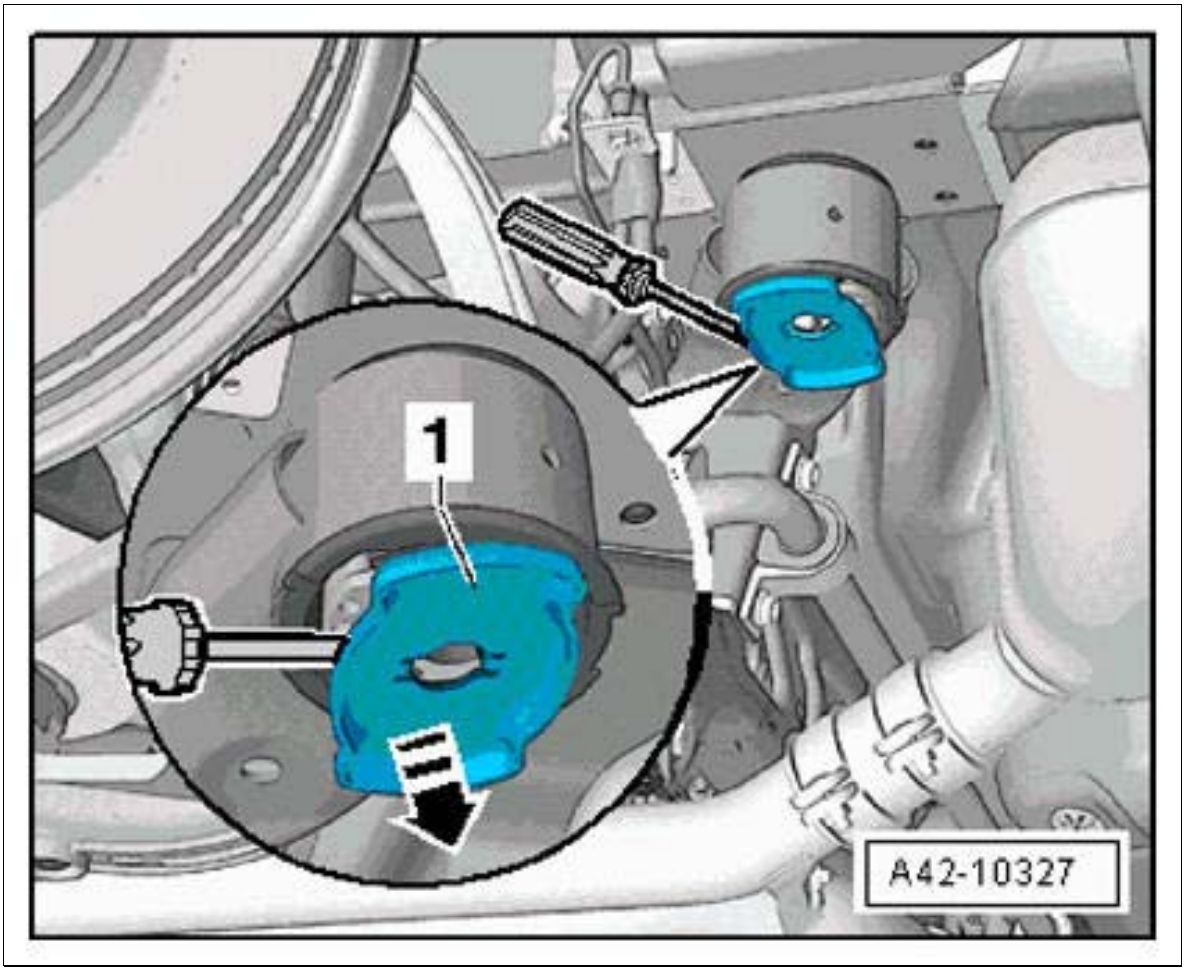

Courtesy of PORSCHE CARS NORTH AMERICA, INC.

6. Pull plastic insert **-1-** up and out.

Fig 14: Pulling Plastic Insert

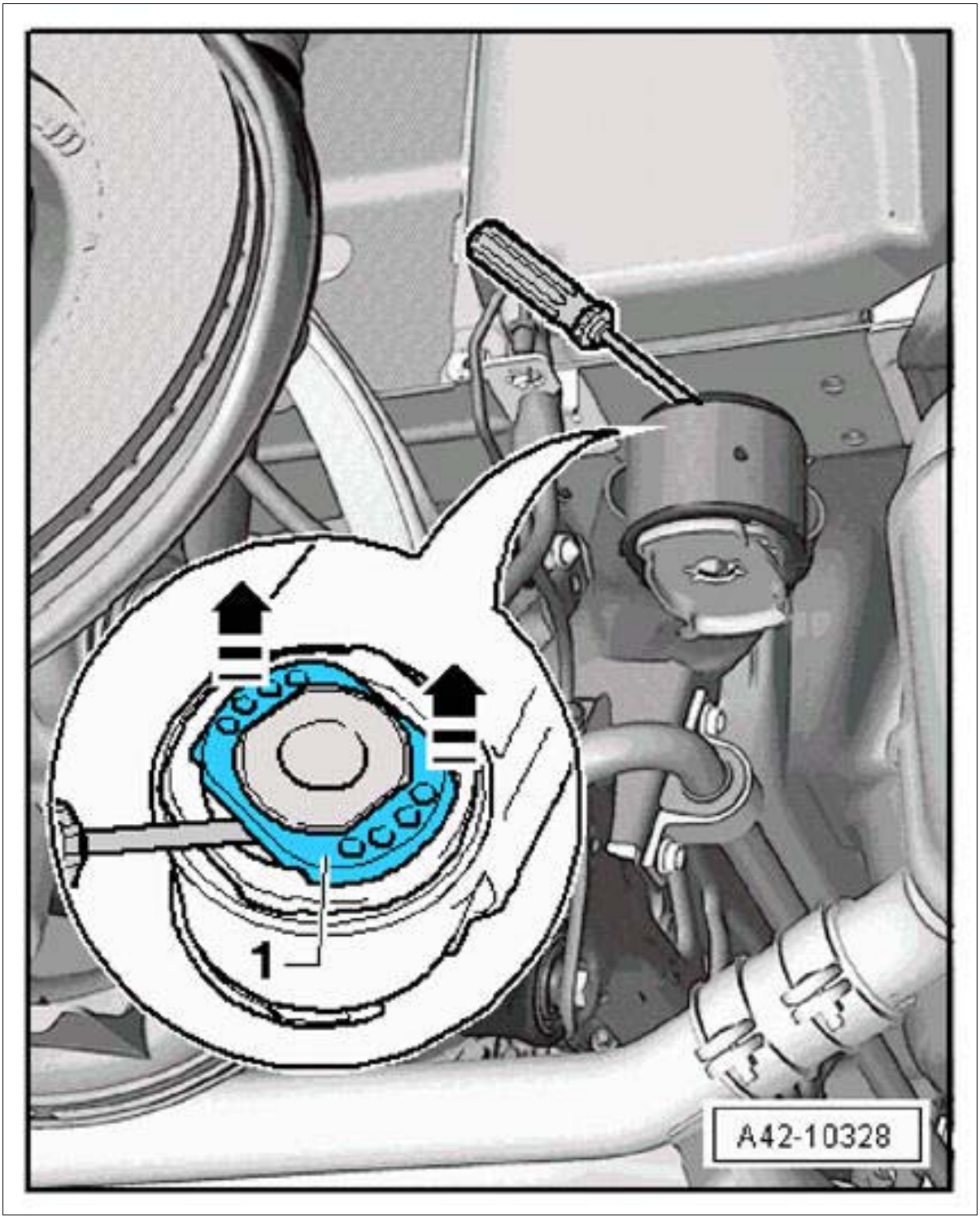

Courtesy of PORSCHE CARS NORTH AMERICA, INC.

7. Mark the installation position of the bearing with respect to the rear axle housing **-arrows-** . Use the ends of the rubber bead on the bearing as a guide.

Fig 15: Locating Rear Axle Housing Installation Position Mark

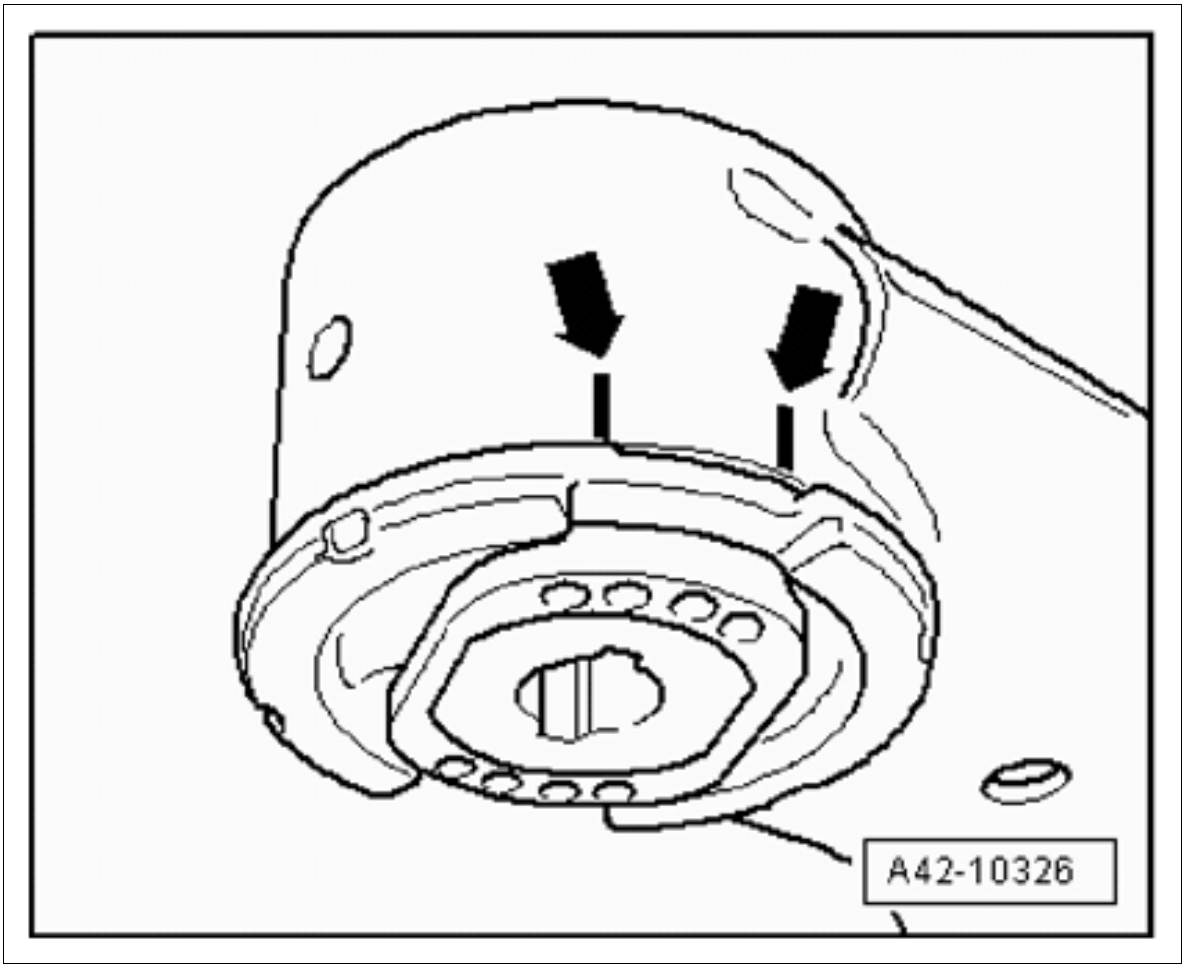

Courtesy of PORSCHE CARS NORTH AMERICA, INC.

Information

As soon as the bearing is pressed out, the device falls down.

A second person must therefore hold the device tightly while pressing out bearings on the hydraulic cylinder.

8. Press out rear bearing.

   To do this, fit tools on the bearing as shown → Arrangement of tools for pressing out rear bearing .

   1. Nut **T10263/5**
   2. Pressure piece **T40185/5** (cut-out is facing the bearing)
   3. Rear axle housing
   4. Support ring **T40185/6** (conical side is facing upwards, bars must engage in the cut-outs on the bearing)
   5. Pipe **T40033/3**

6. Pressure piece **T40033/4**
7. Hydraulic cylinder **VAS 6178**
8. Nut **T10263/5**
9. Spindle **T10263/4** (pin of the spindle pointing downwards)

Fig 16: Pressing Out Rear Bearing

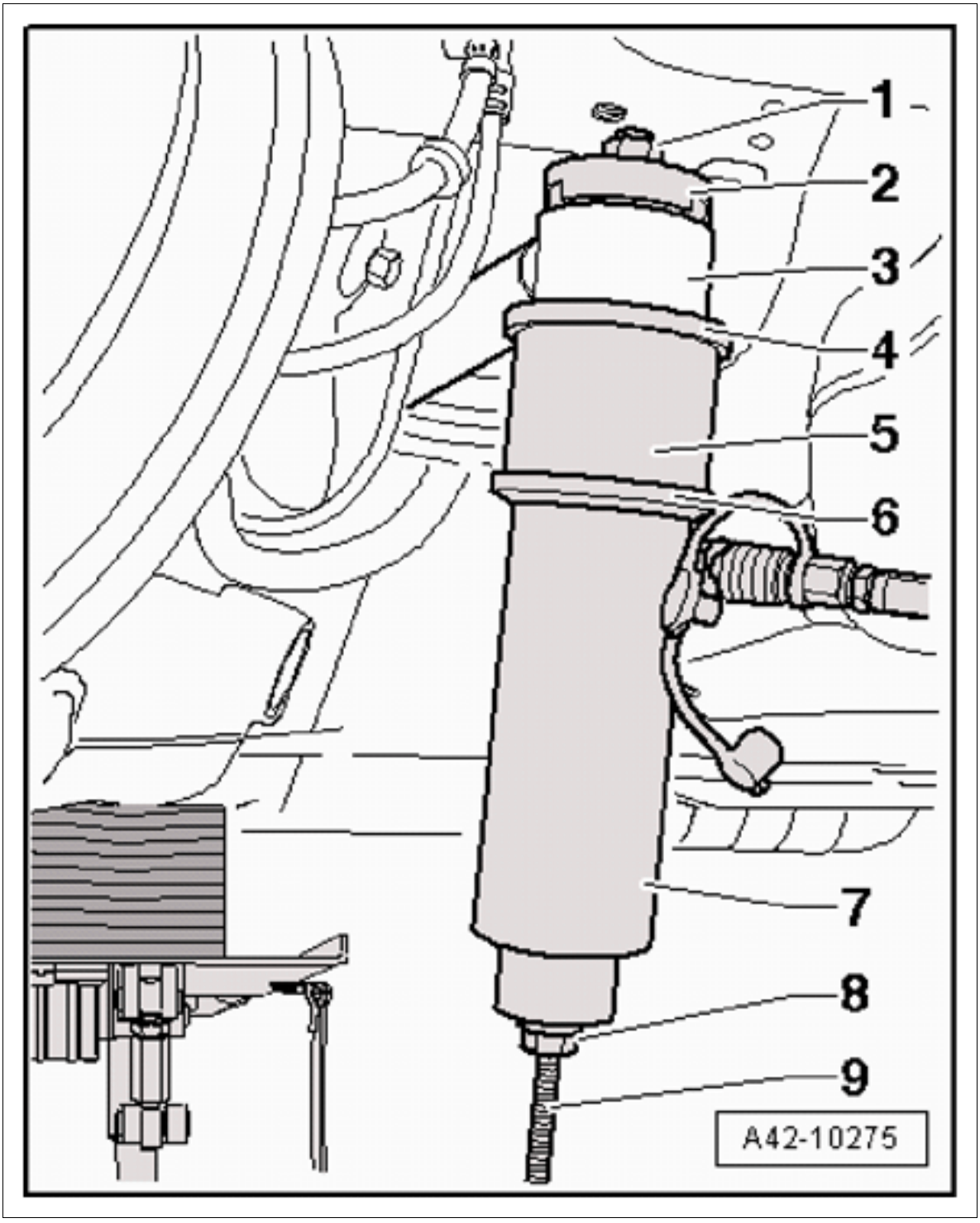

Courtesy of PORSCHE CARS NORTH AMERICA, INC.

9. Lever off the twist lock **-1-** close to the retaining lugs **-arrows-** alternately on both sides of the

bearing using a screwdriver.

Fig 17: Removing Twist Lock

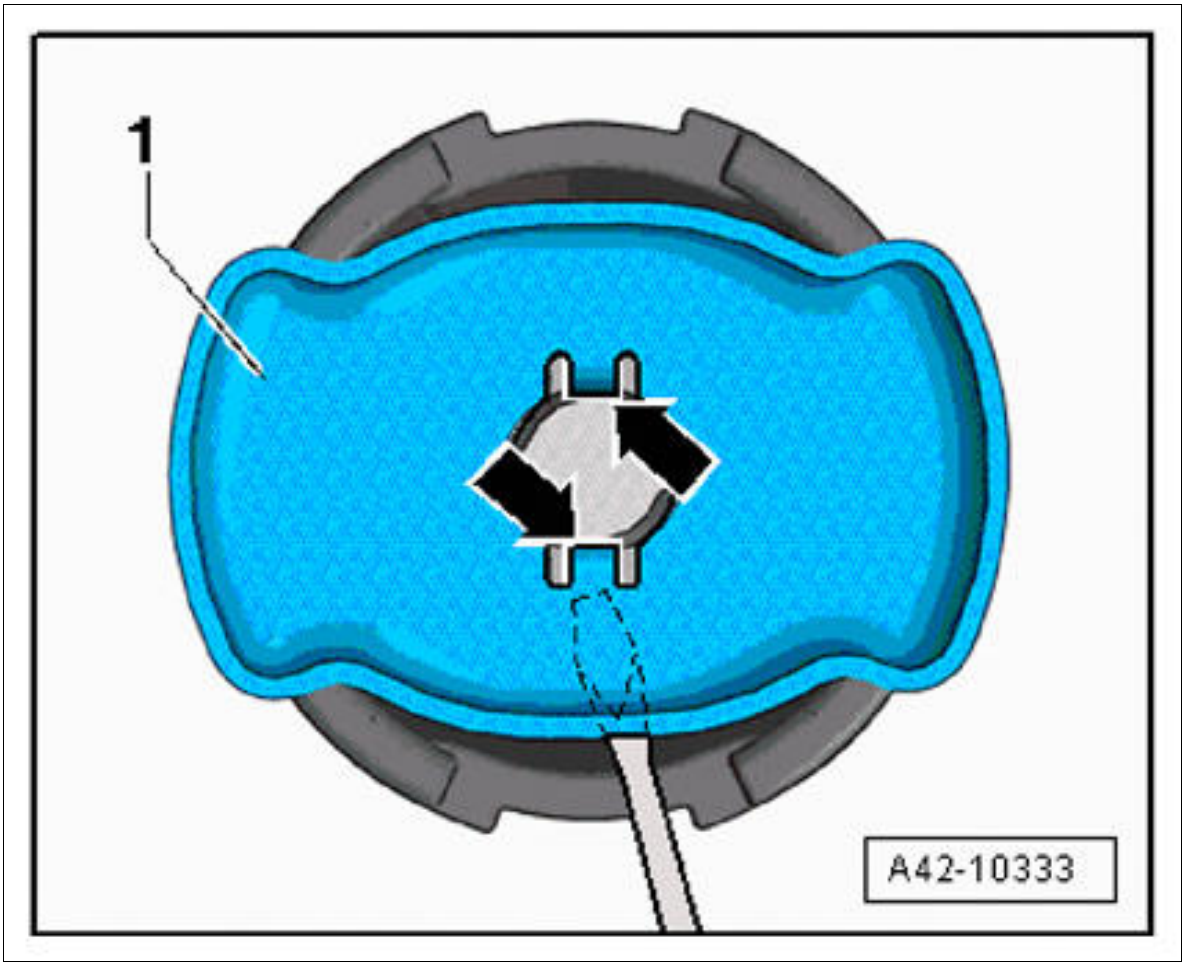

Courtesy of PORSCHE CARS NORTH AMERICA, INC.

Information

Installation position of front bearing

Twist lock **-1-** is at an angle to the direction of travel. **-arrow-** indicates direction of travel.

Fig 18: Aligning Twist Lock

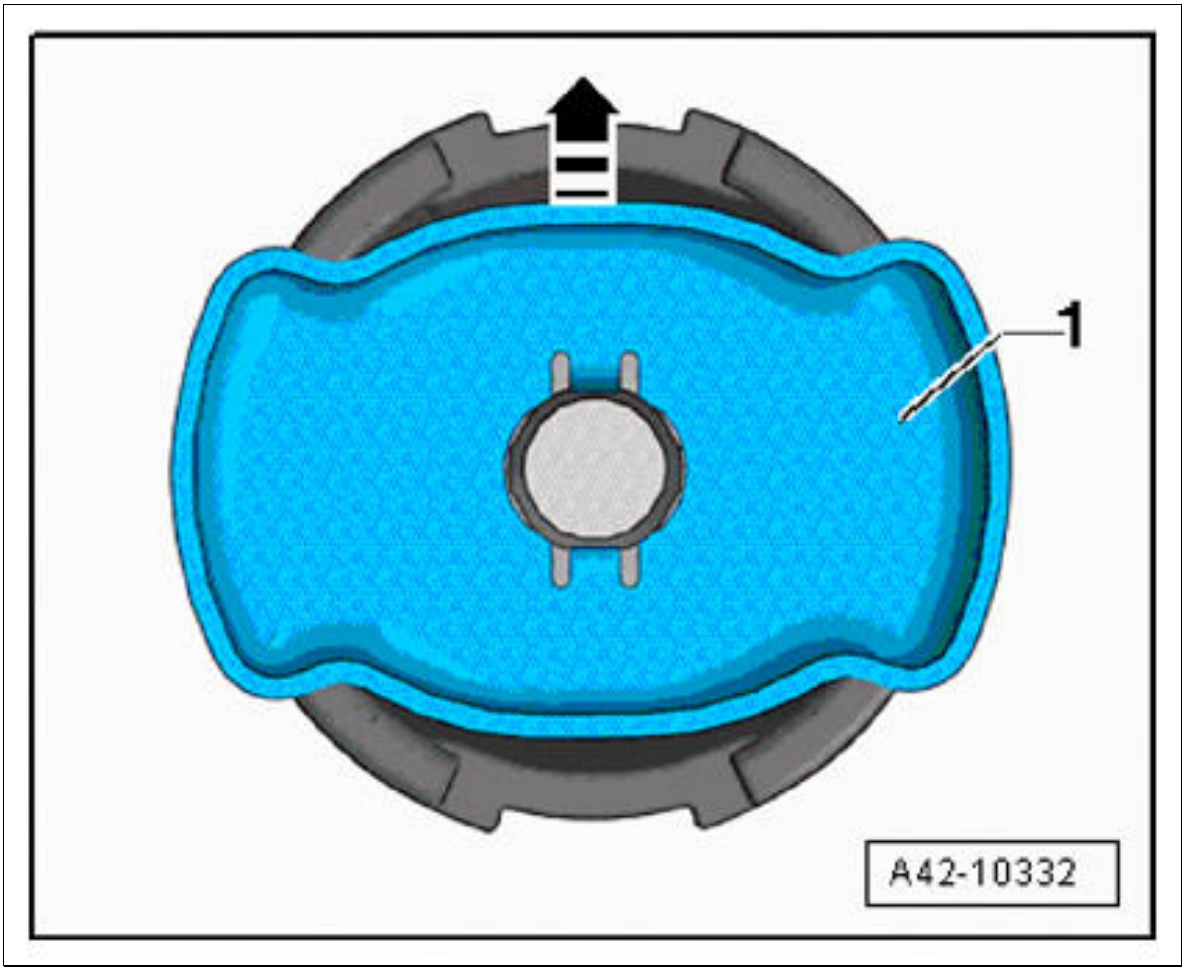

Courtesy of PORSCHE CARS NORTH AMERICA, INC.

The following must also be observed:

1. Align bearing with the applied markings before pressing it in.
2. Press bearing in until the collar is positioned loosely at the bush of the rear axle housing.
3. The ends of the rubber beads on the bearing must match the markings on the rear axle housing.

Information

Align the pressure piece **T40185/3** on the bearing as shown **-Illustration-** .

Fig 19: Identifying Pressure Piece (T40185/3)



Courtesy of PORSCHE CARS NORTH AMERICA, INC.

10. Press in rear bearing.

    To do this, fit tools on the bearing as shown → Arrangement of tools for pressing in rear bearing .

    1. Nut **T10263/5**
    2. Pressure piece **T40185/4**
    3. Rear axle housing
    4. Bearing
    5. Pressure piece **T40185/3**
    6. Hydraulic cylinder **VAS 6178**
    7. Nut **T10263/5**
    8. Spindle **T10263/4** (pin of the spindle pointing downwards)

Fig 20: Pressing Rear Bearing

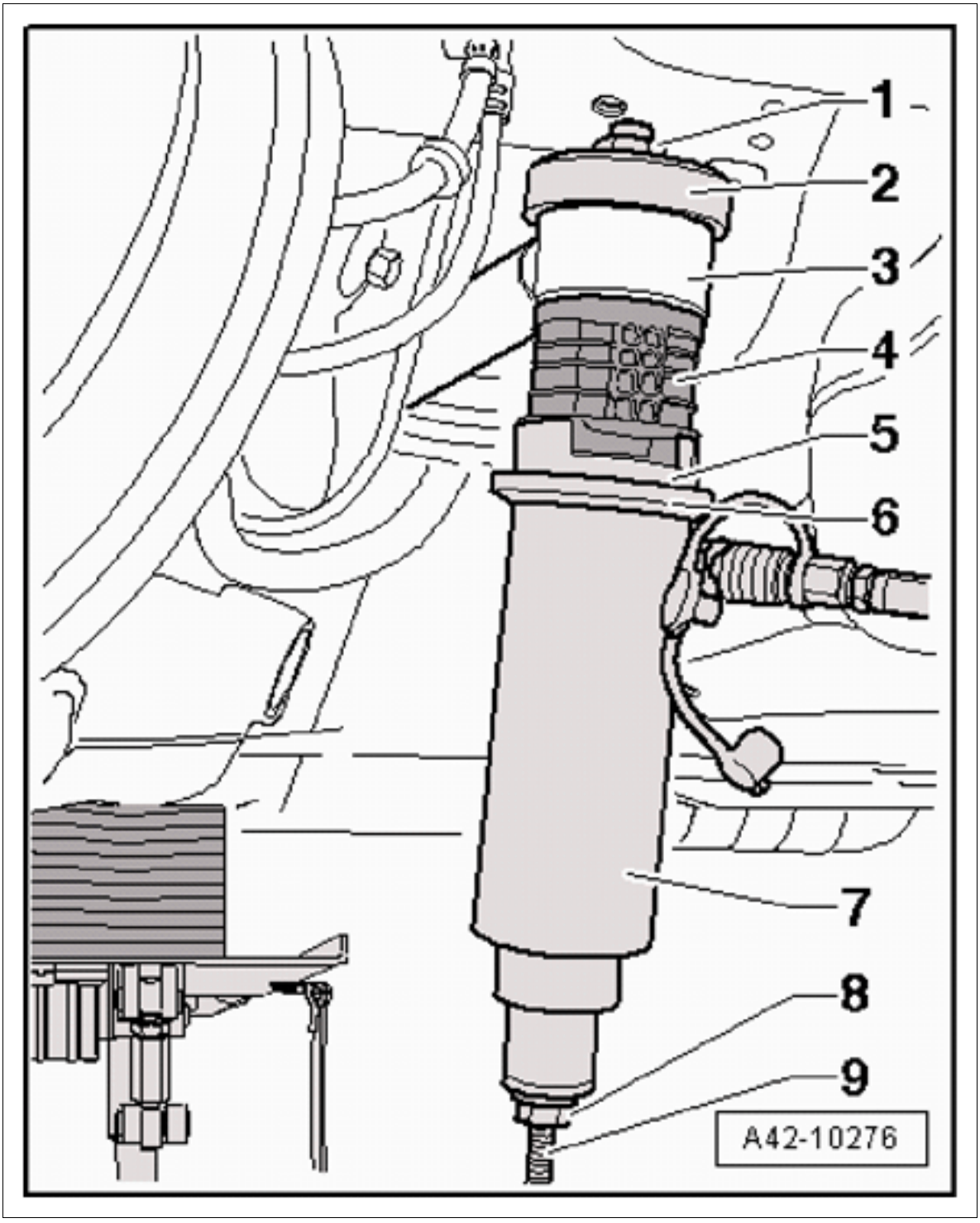

Courtesy of PORSCHE CARS NORTH AMERICA, INC.

11. Fit twist lock on the bearing.
12. Further installation is performed in reverse order.

    Tightening torque for rear axle housing at the rear to body: **Initial tightening 115 Nm (85 ftlb.) Final tightening +90°**

WM 420855 REPLACING REAR-AXLE BEARINGS (MACAN S, MACAN TURBO) > SUBSEQUENT WORK

1. Install rear coil springs/air springs → INSTALLING REAR COIL SPRING → 434319 REMOVING AND INSTALLING REAR AIR SPRING .
2. Install cover for underbody at the sides → INSTALLING COVER FOR CENTER UNDERBODY .
3. Fit wheels → INSTALLING WHEEL .

WM 420919 REMOVING AND INSTALLING REAR TIE ROD (MACAN, MACAN S, MACAN TURBO) > TOOLS

Designation	Type	Number	Description	
interchangeable head	VW tool	T40183		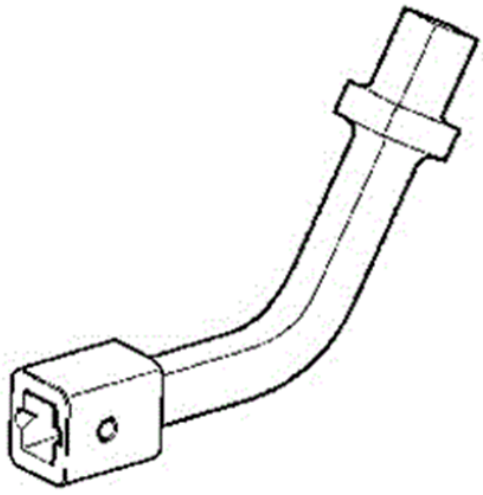

WM 420919 REMOVING AND INSTALLING REAR TIE ROD (MACAN, MACAN S, MACAN TURBO) > TECHNICAL VALUES

Location	Description	Type	Basic value	Tolerance 1	Tolerance 2
Tie rod to rear axle housing	M12 thread/always use new screws or bolts and nuts following removal	Tightening torque	95 Nm (70 ftlb.)		
Tie rod to wheel bearing housing	M12 x 1.5 x 80.8 thread/always use new screws or bolts following removal	Initial tightening	90 Nm (67 ftlb.)		

Tie rod to wheel bearing housing	M12 x 1.5 x 80.8 thread/always use new screws or bolts following removal	Final tightening	+90°		

WM 420919 REMOVING AND INSTALLING REAR TIE ROD (MACAN, MACAN S, MACAN TURBO) > PRELIMINARY WORK

1. Raise the vehicle. → 4X00IN LIFTING THE VEHICLE
2. Remove wheel → 440519 REMOVING AND INSTALLING WHEEL .

WM 420919 REMOVING AND INSTALLING REAR TIE ROD (MACAN, MACAN S, MACAN TURBO) > REMOVING AND INSTALLING REAR TIE ROD > REMOVING TIE ROD

Fig 1: Identifying Rear Tie Rod

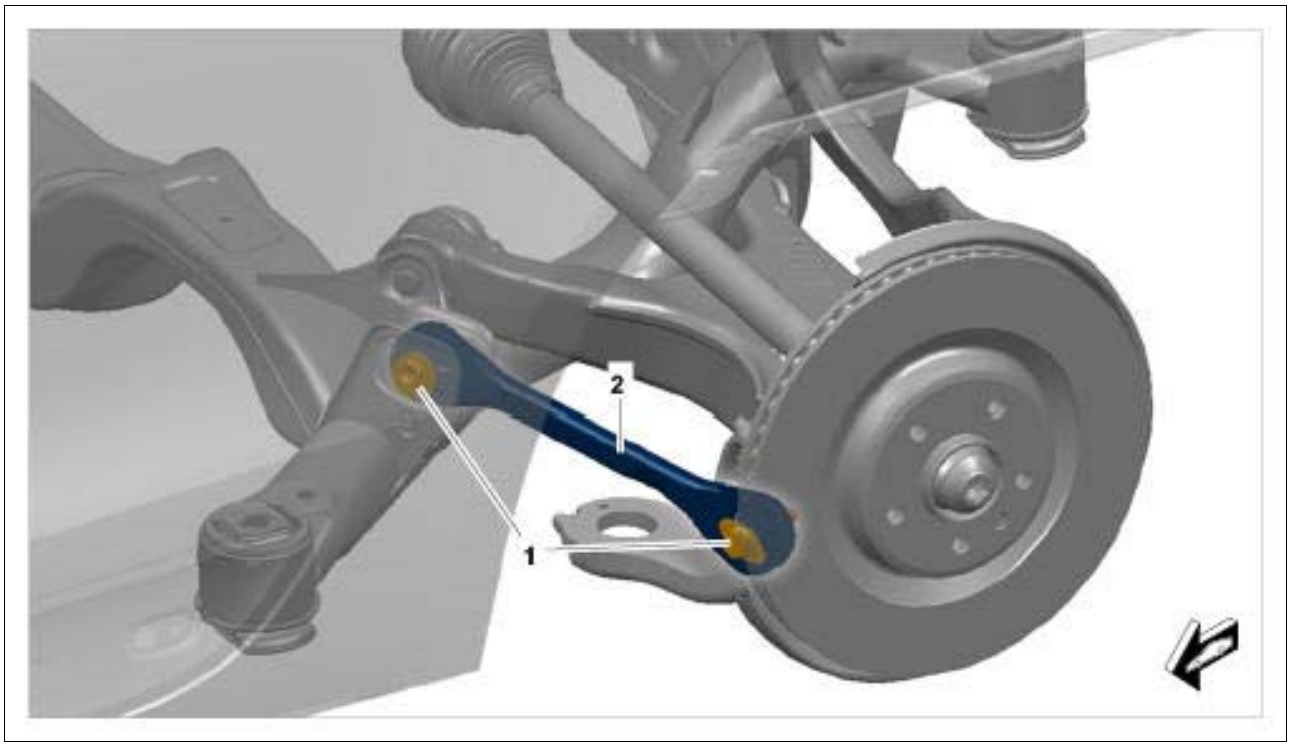

Courtesy of PORSCHE CARS NORTH AMERICA, INC.

1. Mark the position of the toe eccentric adjuster with respect to the chassis subframe for reinstallation.
2. Unscrew fastening screws **-1-** for the tie rod **-2-** at the chassis subframe (eccentric screw) and at the wheel bearing housing.

1. 2.1. Use **interchangeable head T40183** for fastening screw on the chassis subframe.

3. Remove tie rod.

WM 420919 REMOVING AND INSTALLING REAR TIE ROD (MACAN, MACAN S, MACAN TURBO) > REMOVING AND INSTALLING REAR TIE ROD > INSTALLING REAR TIE ROD

WARNING: Wheel bearing housing raised incorrectly

- *Risk of squashing*
- *Risk of damage to components*

→ Wear personal protective gear.

→ Do not raise the wheel suspension higher than the normal vehicle position (vehicle resting on wheels).

Information

- All screws and threaded joints on the axle must be tightened in vehicle position. Vehicle position means: vehicle standing on its wheels, or the wheel suspension is raised with a universal vehicle lift. Dimension -1- , from lower edge of wing to center of axle corresponds to vehicle position. The current height can be found in → 4495TW ADJUSTMENT VALUES FOR SUSPENSION ALIGNMENT . Always observe the following points!

Fig 1: Identifying Wheel To Wing Lower Edge Dimension (Rear Axle)

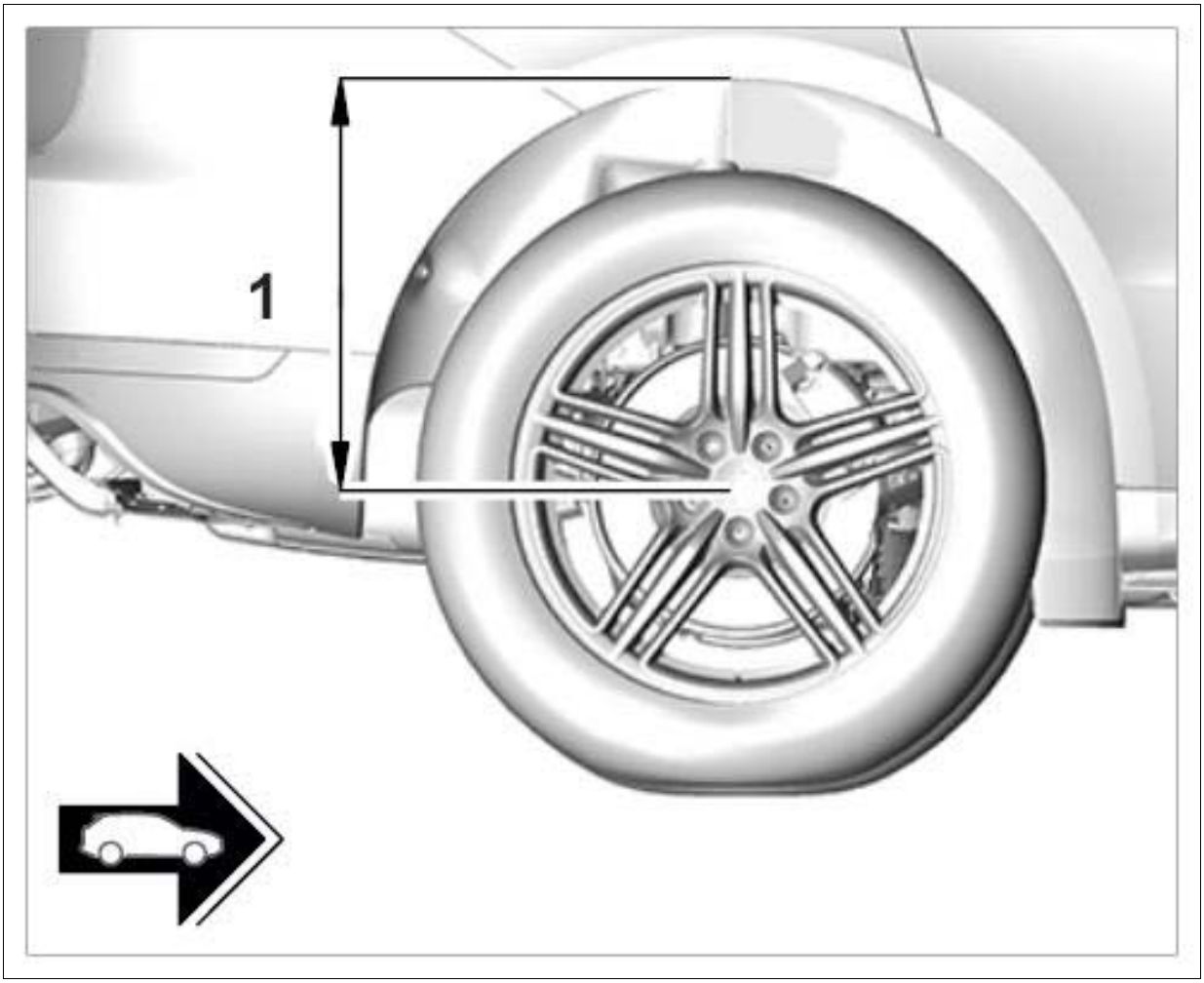

Courtesy of PORSCHE CARS NORTH AMERICA, INC.

- On vehicles with air springs, the respective air spring must be bled using the Porsche System Tester . → 4301IN BLEEDING AND FILLING THE LEVELLING SYSTEM
- Screws and nuts are Geomet-coated and must not be greased.

1. Installation is performed in reverse order.

   Observe specified tightening torques:

   Tie rod to wheel bearing housing: **Initial tightening 90 Nm (67 ftlb.) Final tightening +90°**

   Tie rod to rear axle housing: **Tightening torque 95 Nm (70 ftlb.)**

WM 420919 REMOVING AND INSTALLING REAR TIE ROD (MACAN, MACAN S, MACAN TURBO) > SUBSEQUENT WORK

1. Fit wheel → INSTALLING WHEEL .
2. Perform suspension alignment → 449503 SUSPENSION ALIGNMENT, COMPLETE .

WM 421119 REMOVING AND INSTALLING LOWER TRAILING ARM (MACAN, MACAN S, MACAN TURBO) > TOOLS

Designation	Type	Number	Description	
spring tensioning system	Workshop equipment	WE 1609		
PIWIS Tester II	Special tool	9818		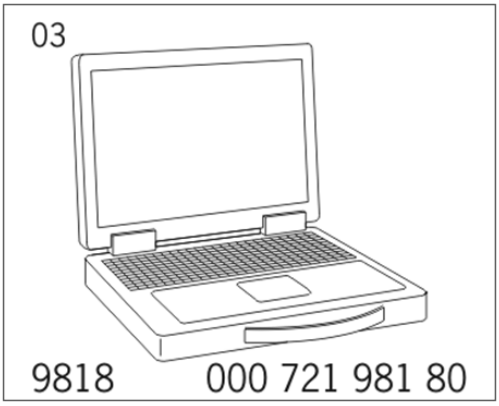

WM 421119 REMOVING AND INSTALLING LOWER TRAILING ARM (MACAN, MACAN S, MACAN TURBO) > TECHNICAL VALUES

Location	Description	Type	Basic value	Tolerance 1	Tolerance 2
Lower trailing arm to rear axle housing	M12 thread/always use new screws or bolts and nuts following removal	Initial tightening	70 Nm (52 ftlb.)		
Lower trailing arm to rear axle housing	M12 thread/always use new screws or bolts and nuts following removal	Final tightening	+180°		
Lower trailing arm to wheel bearing housing	M14 thread/always use new screws or bolts and nuts following removal	Initial tightening	120 Nm (89 ftlb.)		
Lower trailing arm to wheel bearing housing	M14 thread/always use new screws or bolts and nuts	Final tightening	+360°		

	following removal				
Level sensor to lower trailing arm	M6 x 16 thread	Tightening torque	9 Nm (6.5 ftlb.)		
Connecting link to lower trailing arm	M10 x 65 thread/always use new screws or bolts following removal	Initial tightening	40 Nm (30 ftlb.)		
Connecting link to lower trailing arm	M10 x 65 thread/always use new screws or bolts following removal	Final tightening	+90°		

WM 421119 REMOVING AND INSTALLING LOWER TRAILING ARM (MACAN, MACAN S, MACAN TURBO) > PRELIMINARY WORK

1. Raise the vehicle. → 4X00IN LIFTING THE VEHICLE
2. Remove wheel. → 440519 REMOVING AND INSTALLING WHEEL

   Air suspension

3. On vehicles with air suspension, bleed the corresponding air spring using **PIWIS Tester II 9818.** → 4301IN BLEEDING AND FILLING THE LEVELLING SYSTEM

   Steel springs

4. On vehicles with steel springs, tension the corresponding steel spring using the **spring tensioning system WE 1609.** → 427219 REMOVING AND INSTALLING REAR COIL SPRING

WM 421119 REMOVING AND INSTALLING LOWER TRAILING ARM (MACAN, MACAN S, MACAN TURBO) > REMOVING AND INSTALLING LOWER TRAILING ARM > REMOVING LOWER TRAILING ARM

Fig 1: Identifying Lower Trailing Arm

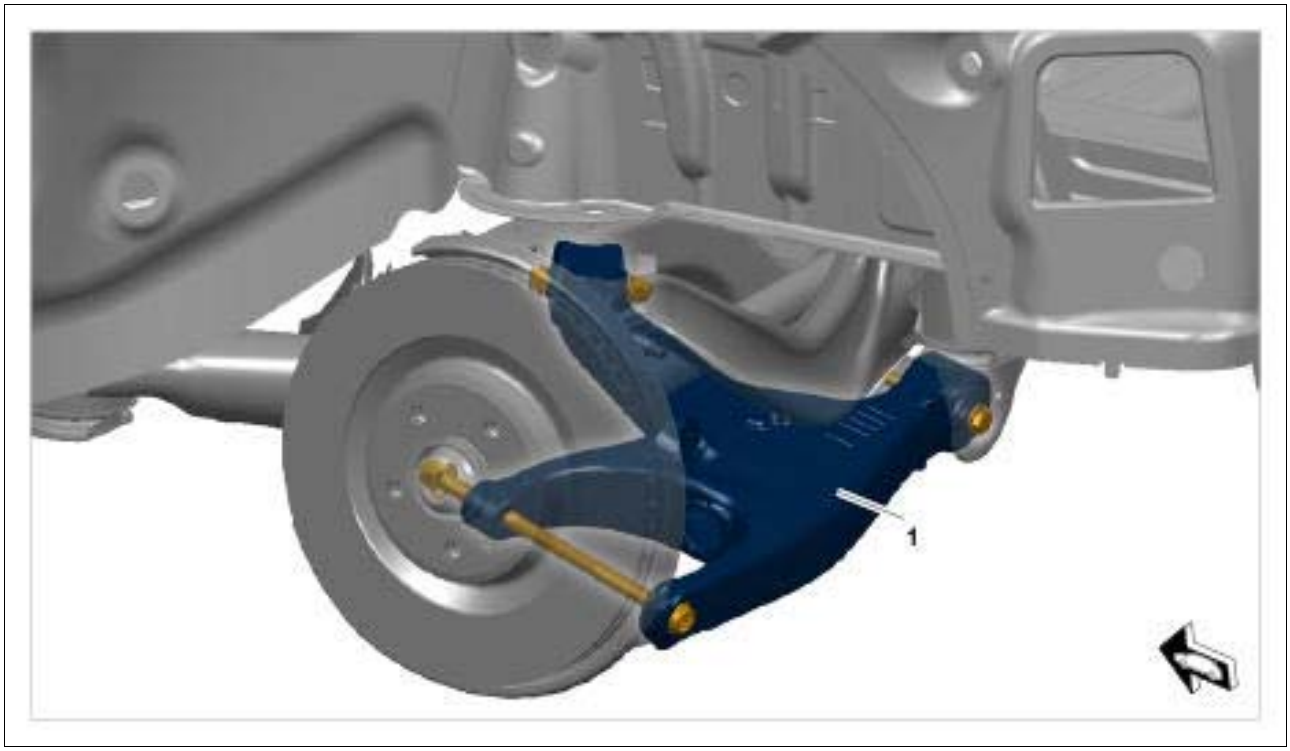

Courtesy of PORSCHE CARS NORTH AMERICA, INC.

1. Unscrew and remove fastening screw **-2-** on the level sensor **-1-** .

Fig 2: Identifying Trailing Arm Level Sensor Mounting

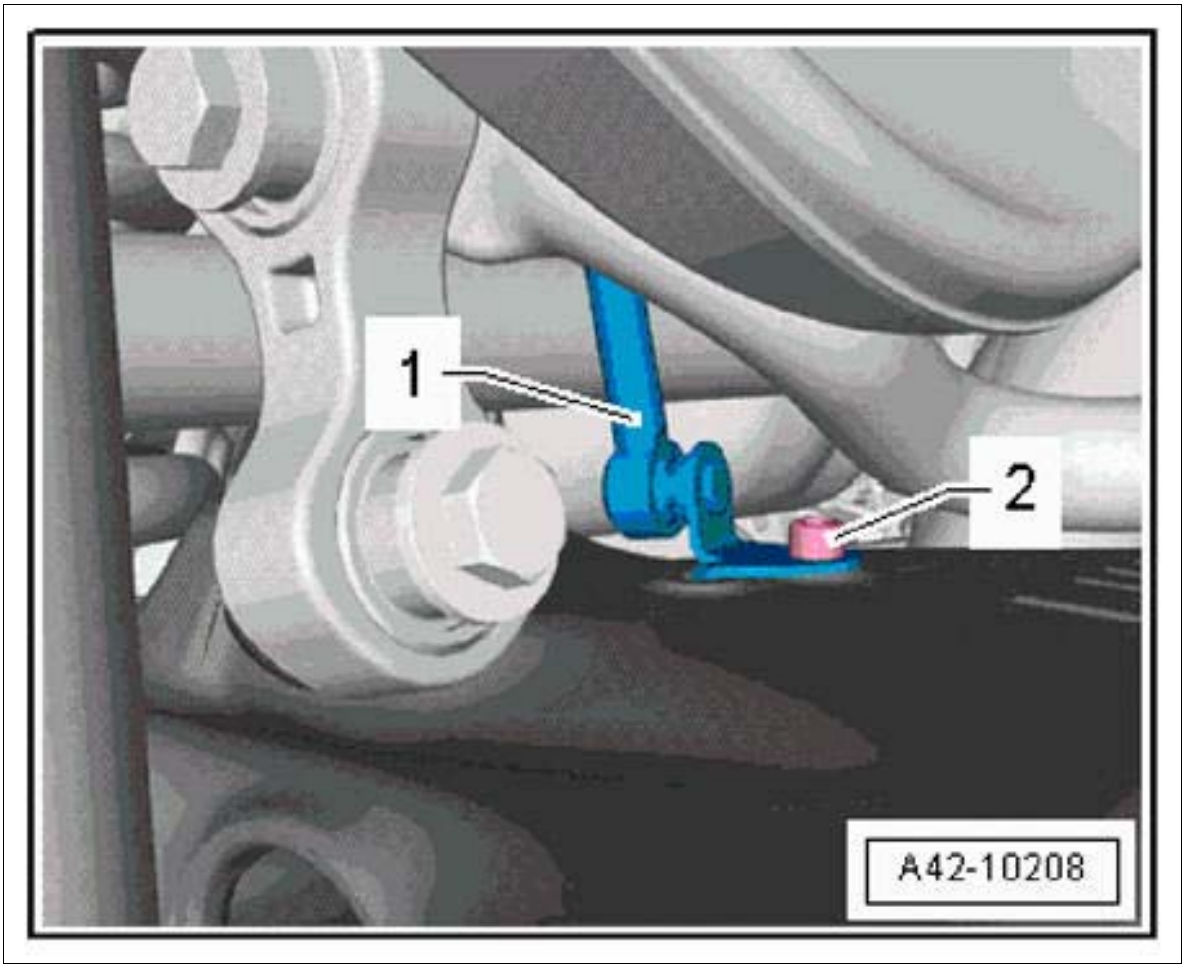

Courtesy of PORSCHE CARS NORTH AMERICA, INC.

2. Unscrew and remove fastening screw **-4-** on the connecting link.

Fig 3: Identifying Connecting Link Mounting Fastening Screws

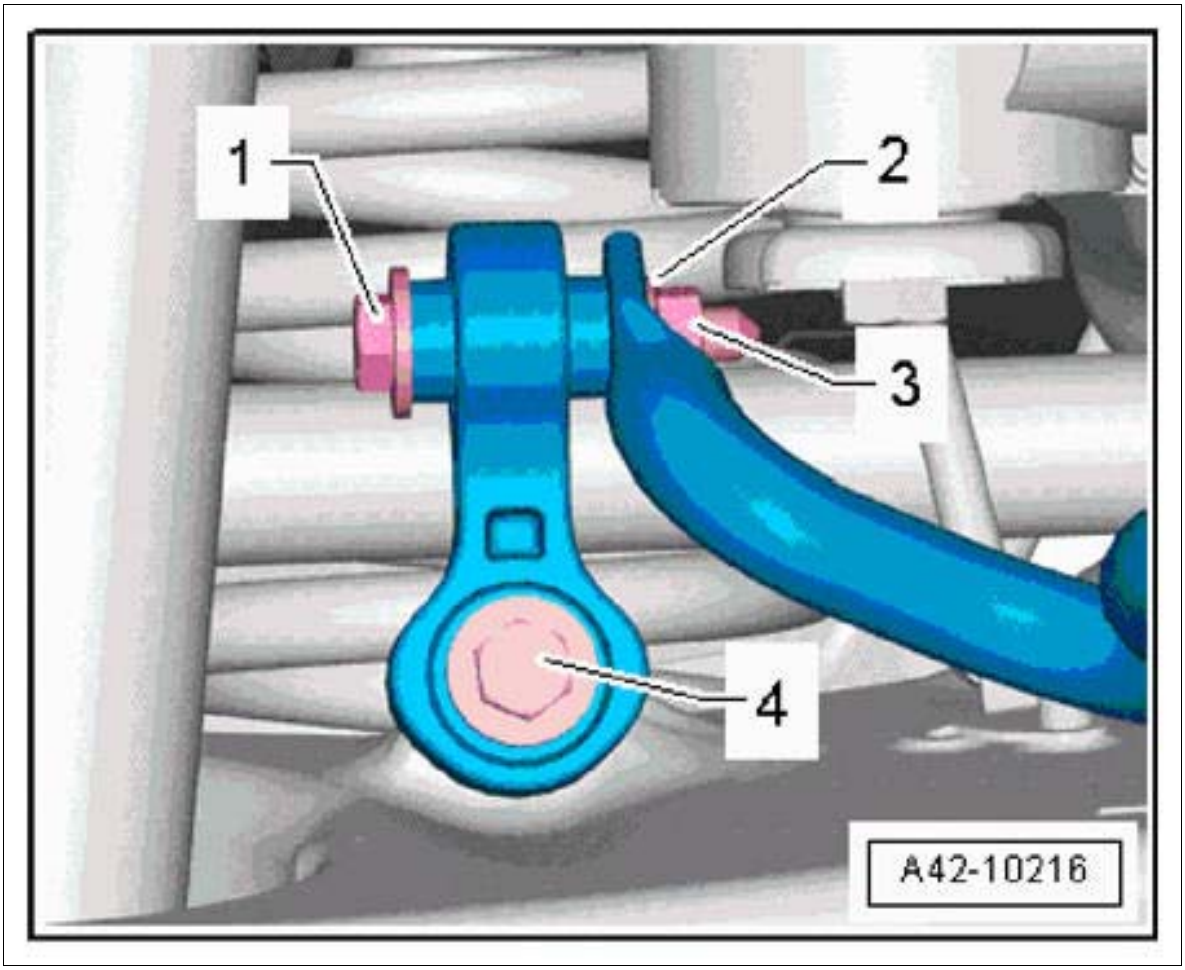

Courtesy of PORSCHE CARS NORTH AMERICA, INC.

3. Loosen lower trailing arm on the wheel bearing housing.

Fig 4: Identifying Wheel Bearing Housing Trailing Arm Mounting

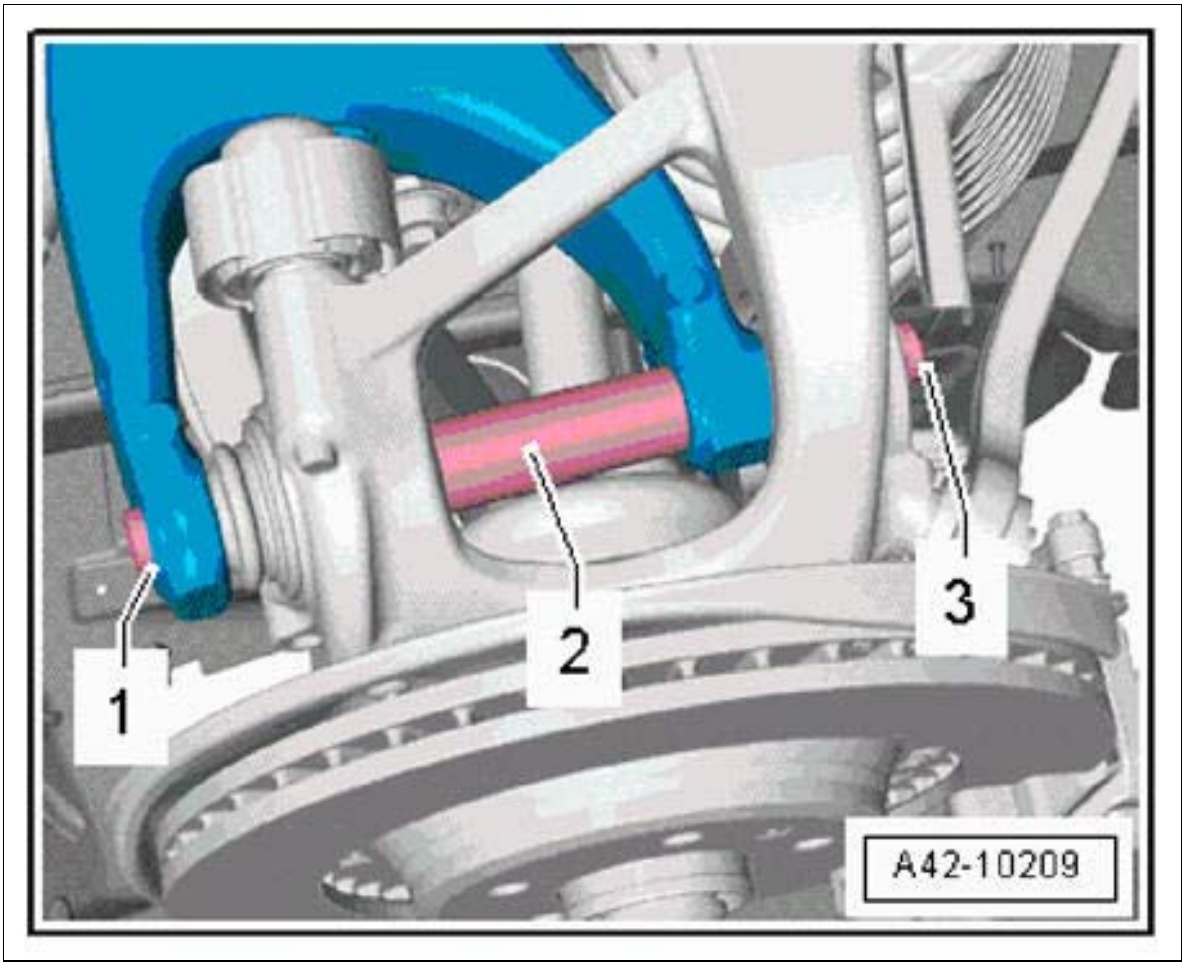

Courtesy of PORSCHE CARS NORTH AMERICA, INC.

1. 3.1. Screw off nut **-3-** .
2. 3.2. Remove fastening screw **-1-** .
3. 3.3. Remove spacer tube **-2-** .

4. Loosen lower trailing arm on the chassis subframe.

Fig 5: Identifying Chassis Subframe Trailing Arm Mounting

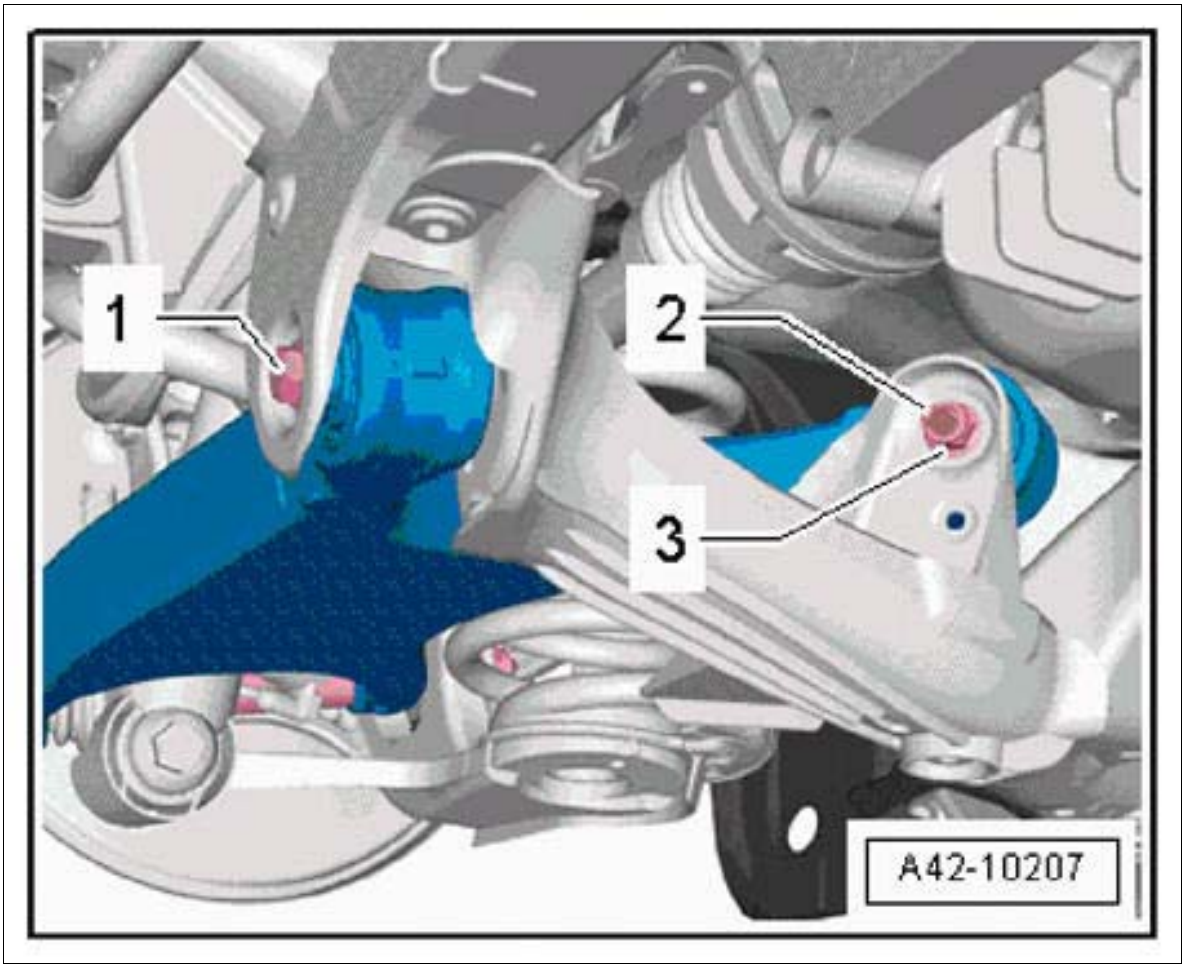

Courtesy of PORSCHE CARS NORTH AMERICA, INC.

1. 4.1. Unscrew and remove fastening screw **-1-** .
2. 4.2. Unscrew nut **-3-** and remove fastening screw **-2-** .

5. Remove lower trailing arm.

WM 421119 REMOVING AND INSTALLING LOWER TRAILING ARM (MACAN, MACAN S, MACAN TURBO) > REMOVING AND INSTALLING LOWER TRAILING ARM > INSTALLING LOWER TRAILING ARM

WARNING: Wheel bearing housing raised incorrectly

- *Risk of squashing*
- *Risk of damage to components*

→ Wear personal protective gear.

→ Do not raise the wheel suspension higher than the normal vehicle position (vehicle resting on wheels).

Information

- All screws and threaded joints on the axle must be tightened in vehicle position. Vehicle position means: vehicle standing on its wheels, or the wheel suspension is raised with a universal vehicle lift. Dimension -1- , from lower edge of wing to center of axle corresponds to vehicle position. The current height can be found in → 4495TW ADJUSTMENT VALUES FOR SUSPENSION ALIGNMENT . Always observe the following points! .

  Fig 1: Identifying Wheel To Wing Lower Edge Dimension (Rear Axle)

  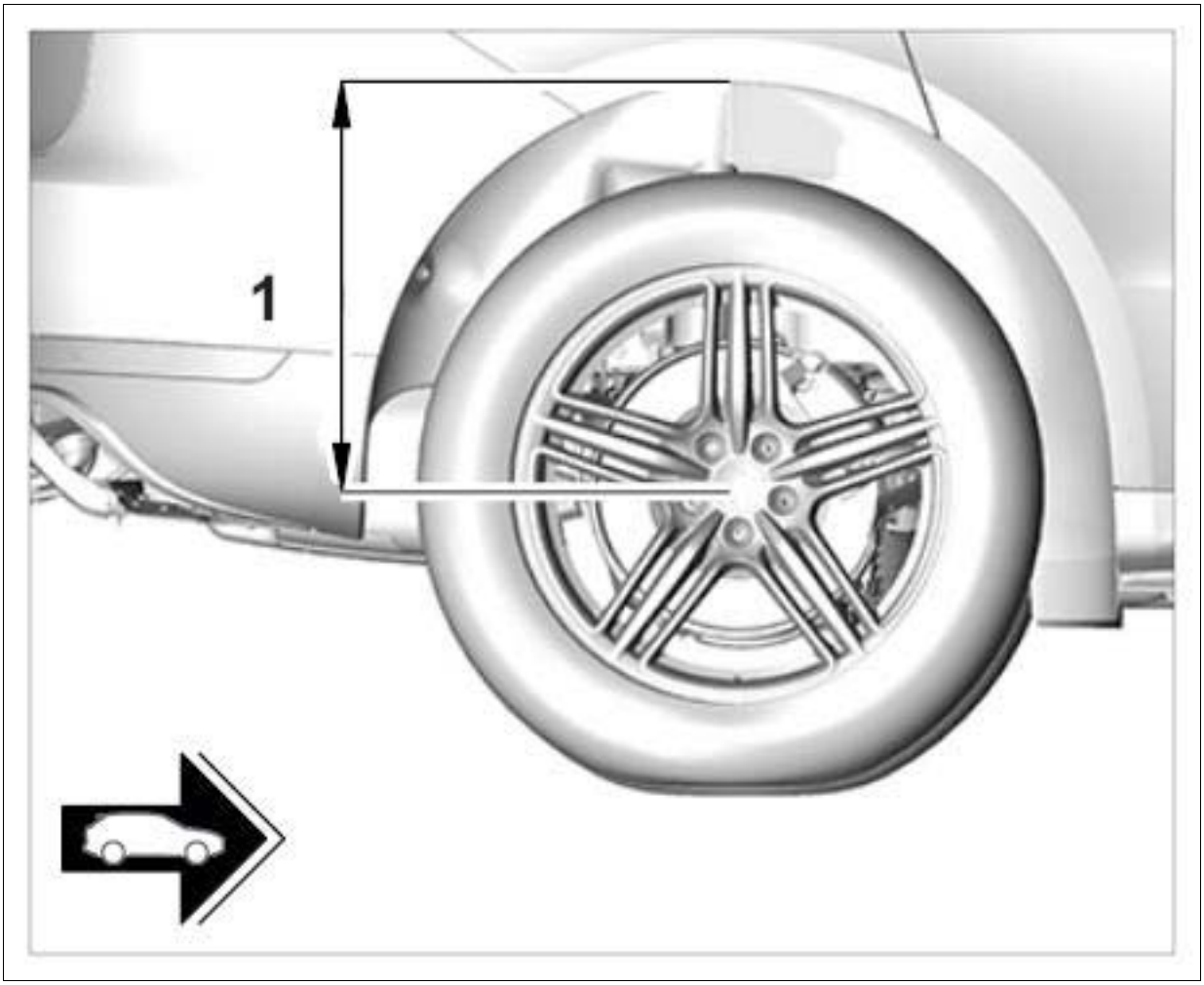

  Courtesy of PORSCHE CARS NORTH AMERICA, INC.

- On vehicles with air springs, the respective air spring must be bled using the Porsche System Tester . → 4301IN BLEEDING AND FILLING THE LEVELLING SYSTEM .
- Screws and nuts are Geomet-coated and must not be greased.

Information

Tighten the threaded joint on the wheel bearing housing only at the fastening screw **-1-** . Counter at the nut **-3-** while doing so.

Fig 2: Identifying Wheel Bearing Housing Trailing Arm Mounting

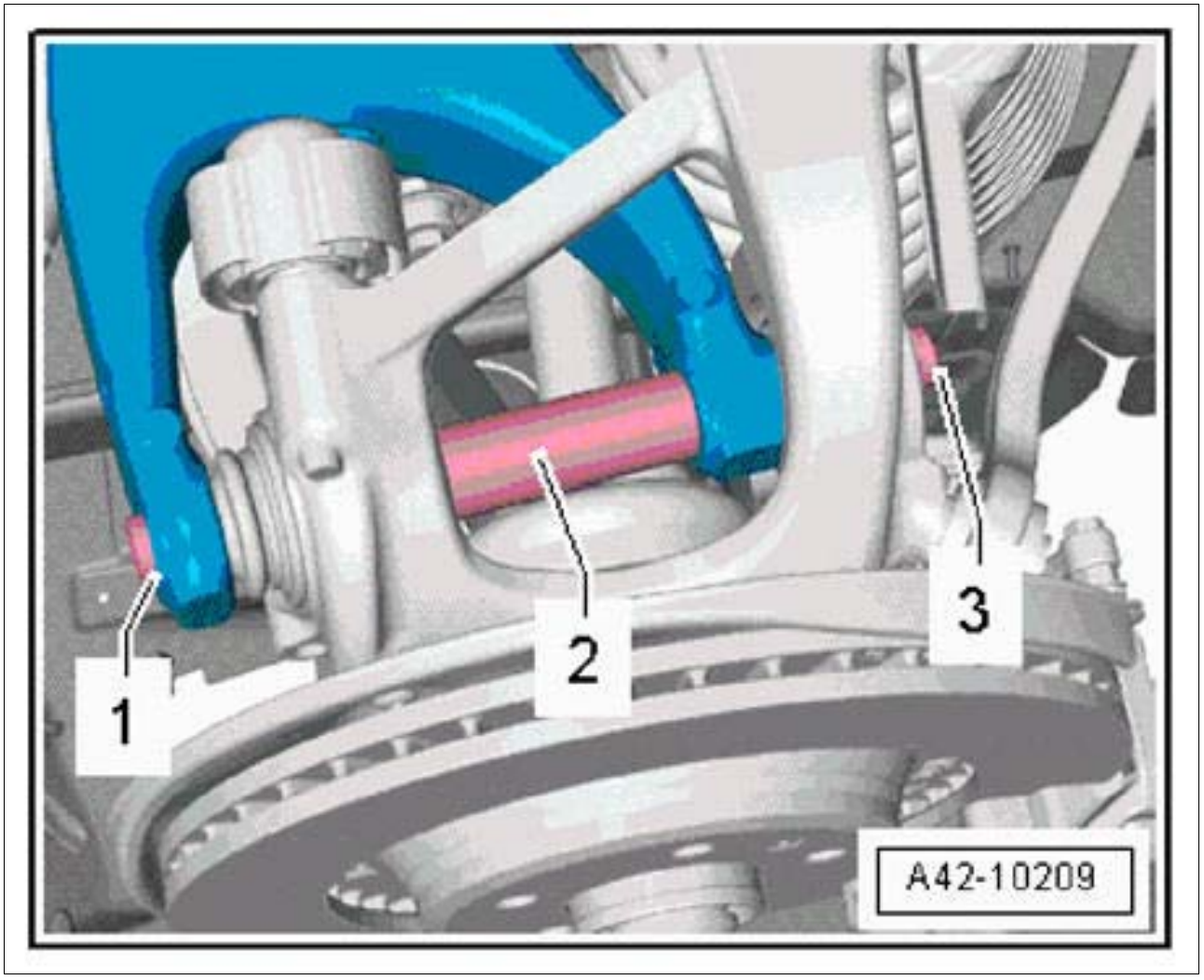

Courtesy of PORSCHE CARS NORTH AMERICA, INC.

1. Installation is performed in reverse order.

   Observe specified tightening torques:

   Lower trailing arm to rear axle housing: **Initial tightening 70 Nm (52 ftlb.) Final tightening +180°**

   Lower trailing arm to wheel bearing housing: **Initial tightening 120 Nm (89 ftlb.) Final tightening +360°**

   Connecting link to lower trailing arm: **Initial tightening 40 Nm (30 ftlb.) Final tightening +90°**

   Level sensor to lower trailing arm: **Tightening torque 9 Nm (6.5 ftlb.)**

WM 421119 REMOVING AND INSTALLING LOWER TRAILING ARM (MACAN, MACAN S, MACAN TURBO) > SUBSEQUENT WORK

Air suspension

1. On vehicles with air suspension, fill the relevant air spring using **PIWIS Tester II 9818.** → 4301IN BLEEDING AND FILLING THE LEVELLING SYSTEM

   Steel springs

2. On vehicles with steel springs, relieve tension on the relevant steel spring. → 427219 REMOVING AND INSTALLING REAR COIL SPRING

3. Fit wheel. → INSTALLING WHEEL .

4. Perform suspension alignment. → 449503 SUSPENSION ALIGNMENT, COMPLETE

WM 421755 REPLACING BEARING FOR TRAILING ARM (ON WHEEL BEARING HOUSING) (MACAN, MACAN S, MACAN TURBO) > TOOLS

Designation	Type	Number	Description	
assembly tool	VW tool	T40184		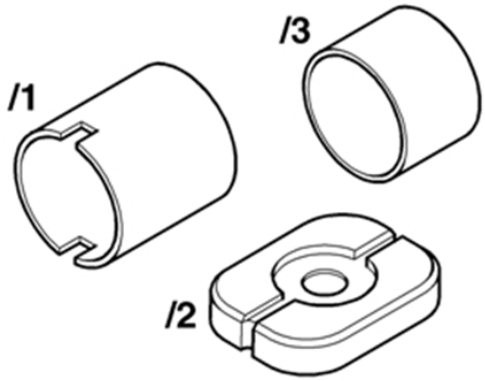
pressure plate	VW tool	VW 401		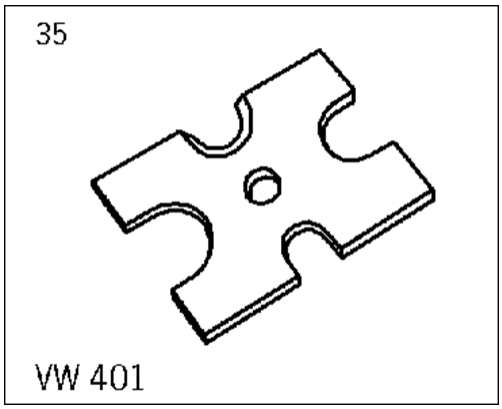

pressure plate	VW tool	VW 402		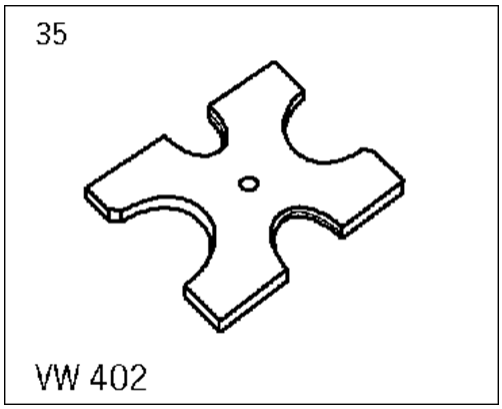

WM 421755 REPLACING BEARING FOR TRAILING ARM (ON WHEEL BEARING HOUSING) (MACAN, MACAN S, MACAN TURBO) > TECHNICAL VALUES

Location	Description	Type	Basic value	Tolerance 1	Tolerance 2
Speed sensor to wheel bearing housing	M6 x 16 thread	Tightening torque	8 Nm (6 ftlb.)		
Brake cover plate to wheel bearing housing	M6 x 14 thread	Tightening torque	10 Nm (7.5 ftlb.)		

WM 421755 REPLACING BEARING FOR TRAILING ARM (ON WHEEL BEARING HOUSING) (MACAN, MACAN S, MACAN TURBO) > PRELIMINARY WORK

1. Remove wheel bearing housing. → 425219 REMOVING AND INSTALLING REAR WHEEL BEARING HOUSING
2. Unscrew fastening screws **-1-** and remove cover plate for brake disc **-2-** .

Fig 1: Identifying Brake Cover Plate Mounting Fastening Screws

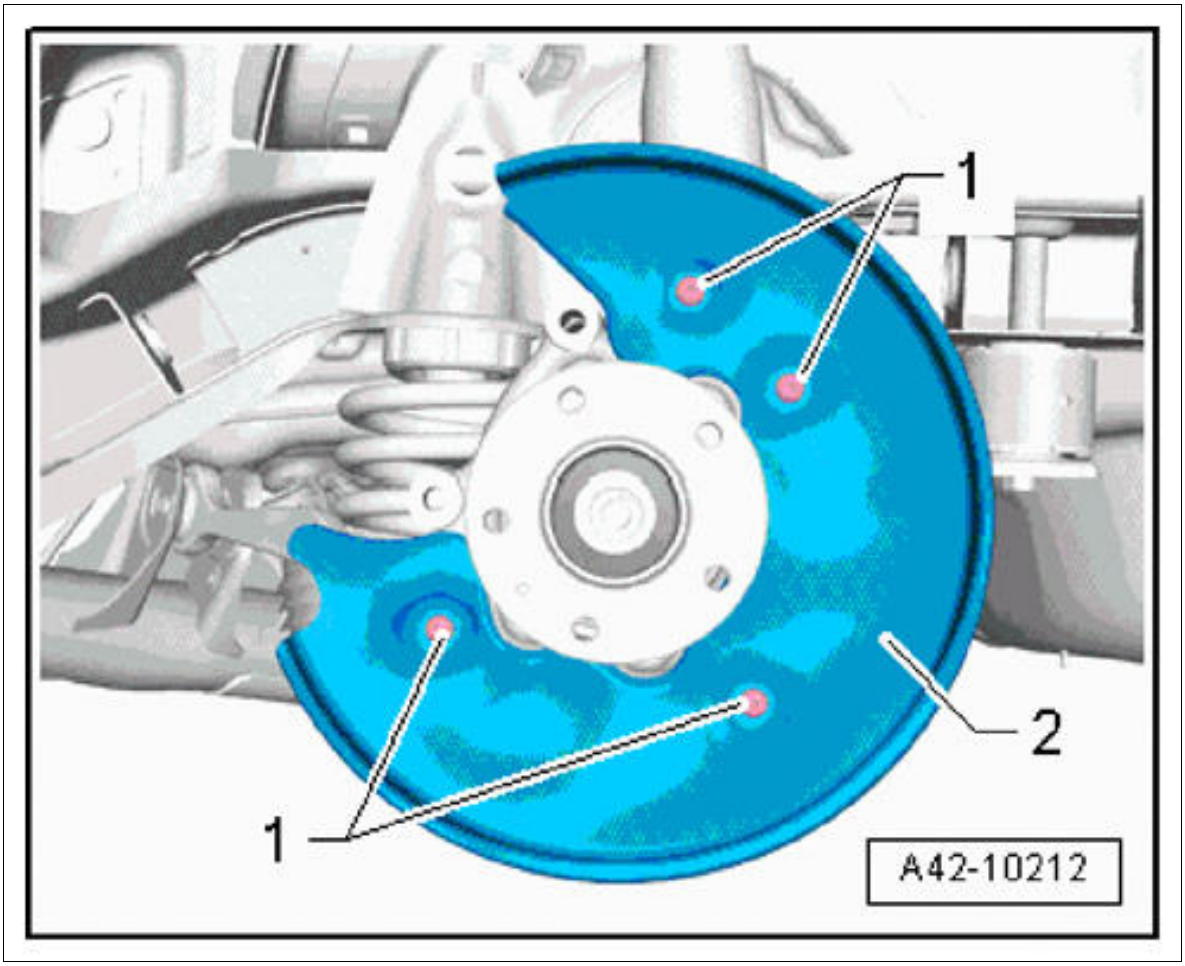

Courtesy of PORSCHE CARS NORTH AMERICA, INC.

3. Unscrew fastening screw **-1-** and remove speed sensor **-2-** .

Fig 2: Identifying Speed Sensor Mounting Screws

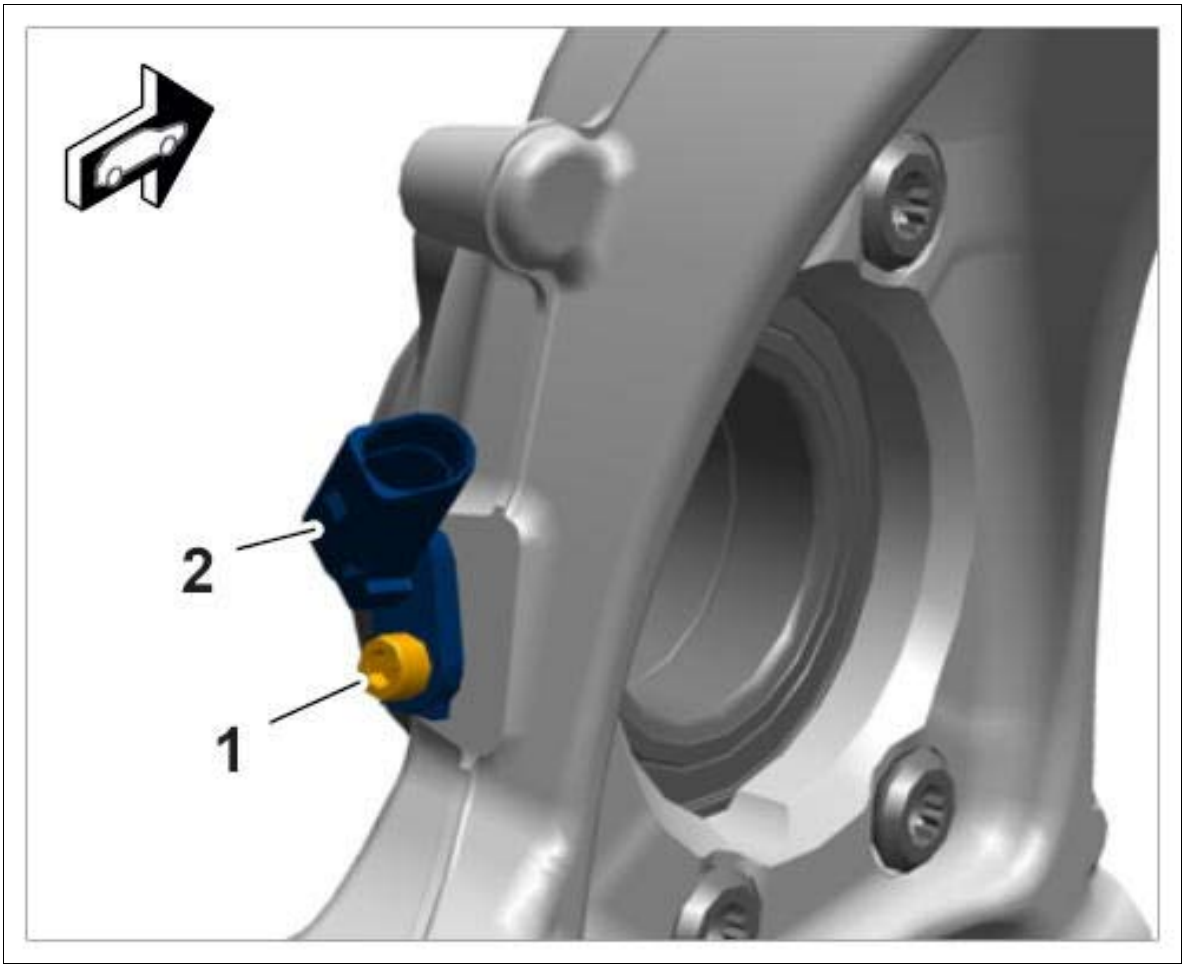

Courtesy of PORSCHE CARS NORTH AMERICA, INC.

WM 421755 REPLACING BEARING FOR TRAILING ARM (ON WHEEL BEARING HOUSING) (MACAN, MACAN S, MACAN TURBO) > REPLACING BEARING FOR TRAILING ARM (ON WHEEL BEARING HOUSING) > REPLACING TRAILING-ARM BEARING

WARNING: Mechanical, hydraulic or pneumatic press

- *Risk of squashing*

→ Read specific safety information for the press.

→ Check that the press is working perfectly before use, particularly the safety components.

The **assembly tool T40184** as well as the **pressure plate VW 401** and **pressure plate VW 402** are required in order to replace the bearing.

1. Bearing can be replaced.

2. Bearing cannot be replaced. Replace the wheel bearing housing if it is damaged → 425219 REMOVING AND INSTALLING REAR WHEEL BEARING HOUSING .

Fig 1: Identifying Rear Wheel Bearing Housing

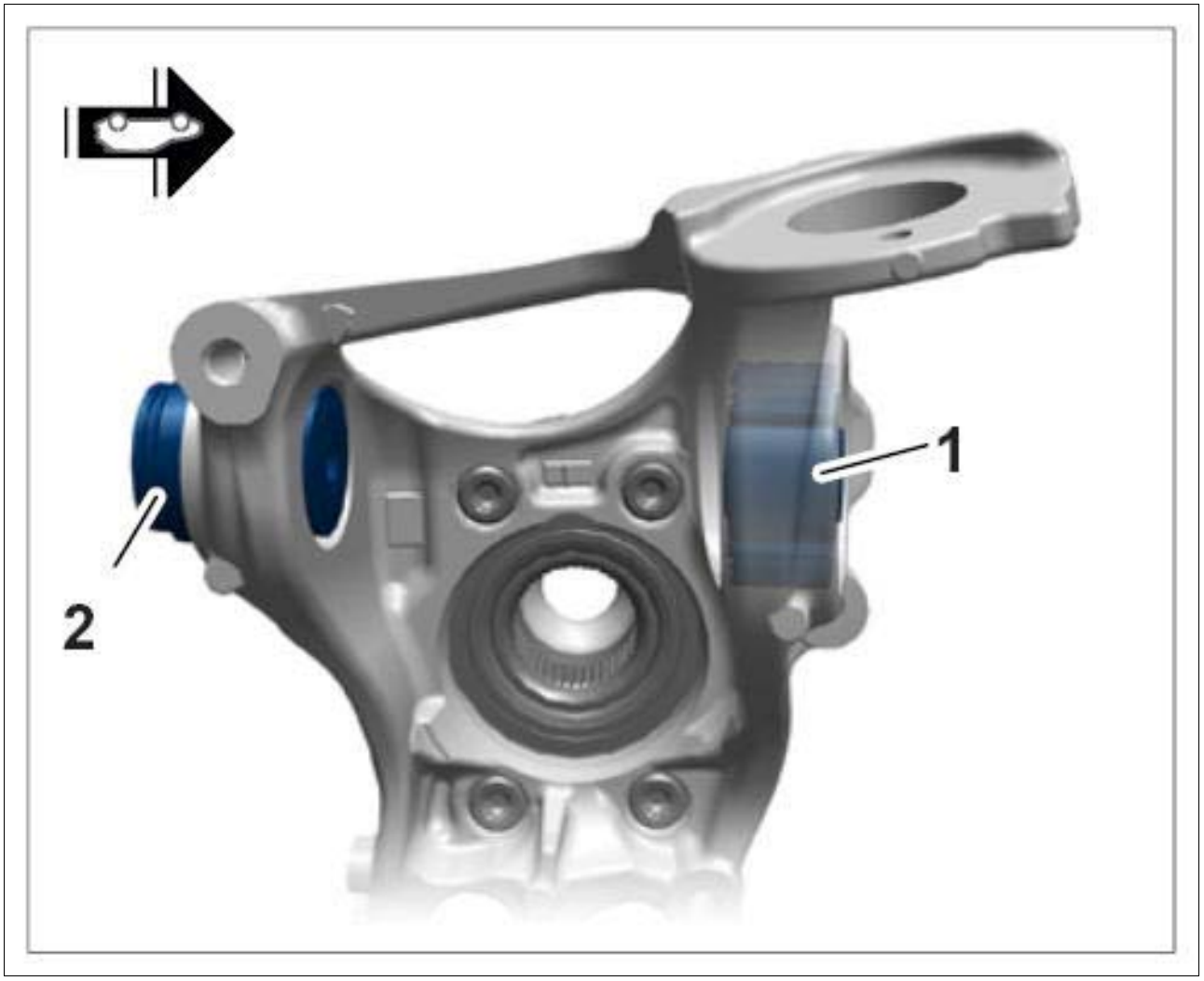

Courtesy of PORSCHE CARS NORTH AMERICA, INC.

1. Press out bearing **-1-** .

    1. 1.1. Fit pressure plate **T40184/2** on the bearing in such a way that the nubs **-1-** engage in the grooves **-2-** .

Fig 2: Identifying Pressure Plate And Groove

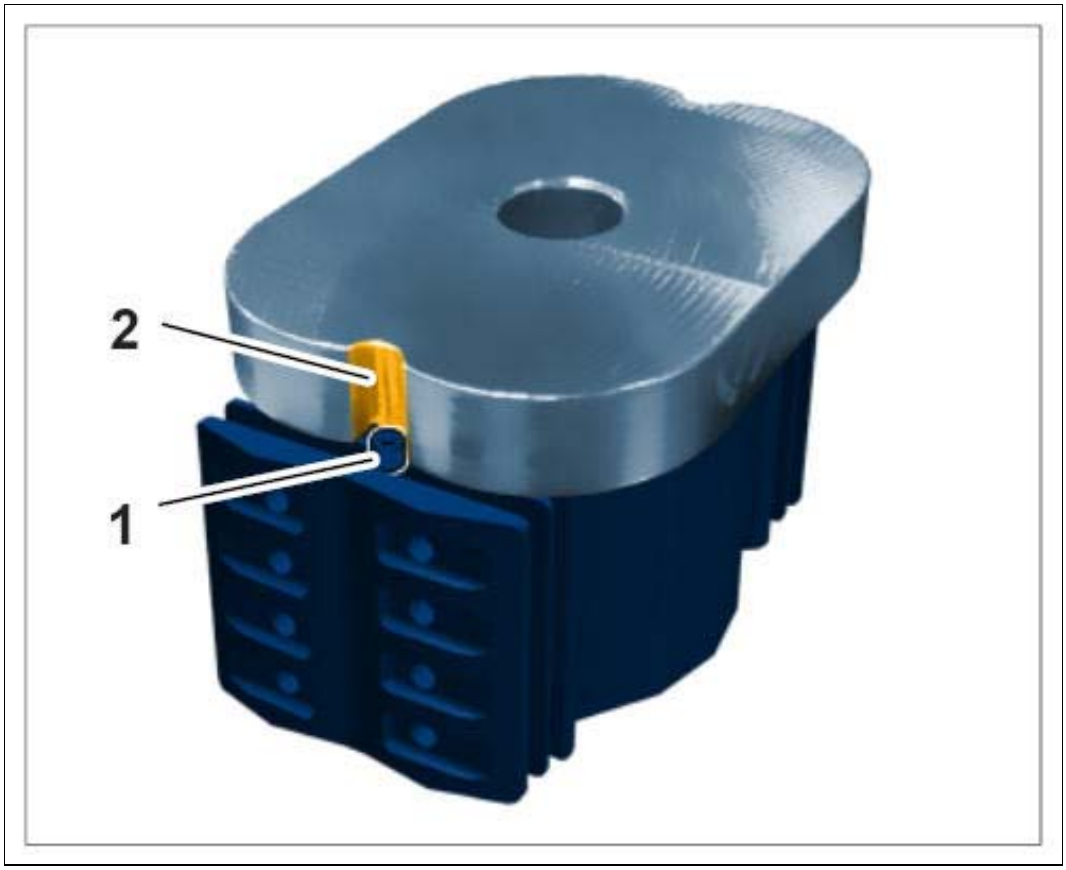

Courtesy of PORSCHE CARS NORTH AMERICA, INC.

2. 1.2. Use pressure pieces as follows → Arrangement of tools for pressing out bearings .

> *IMPORTANT: Bearing is tensioned when pressing it off!*

Fig 3: Pressing Bearings Into Housing

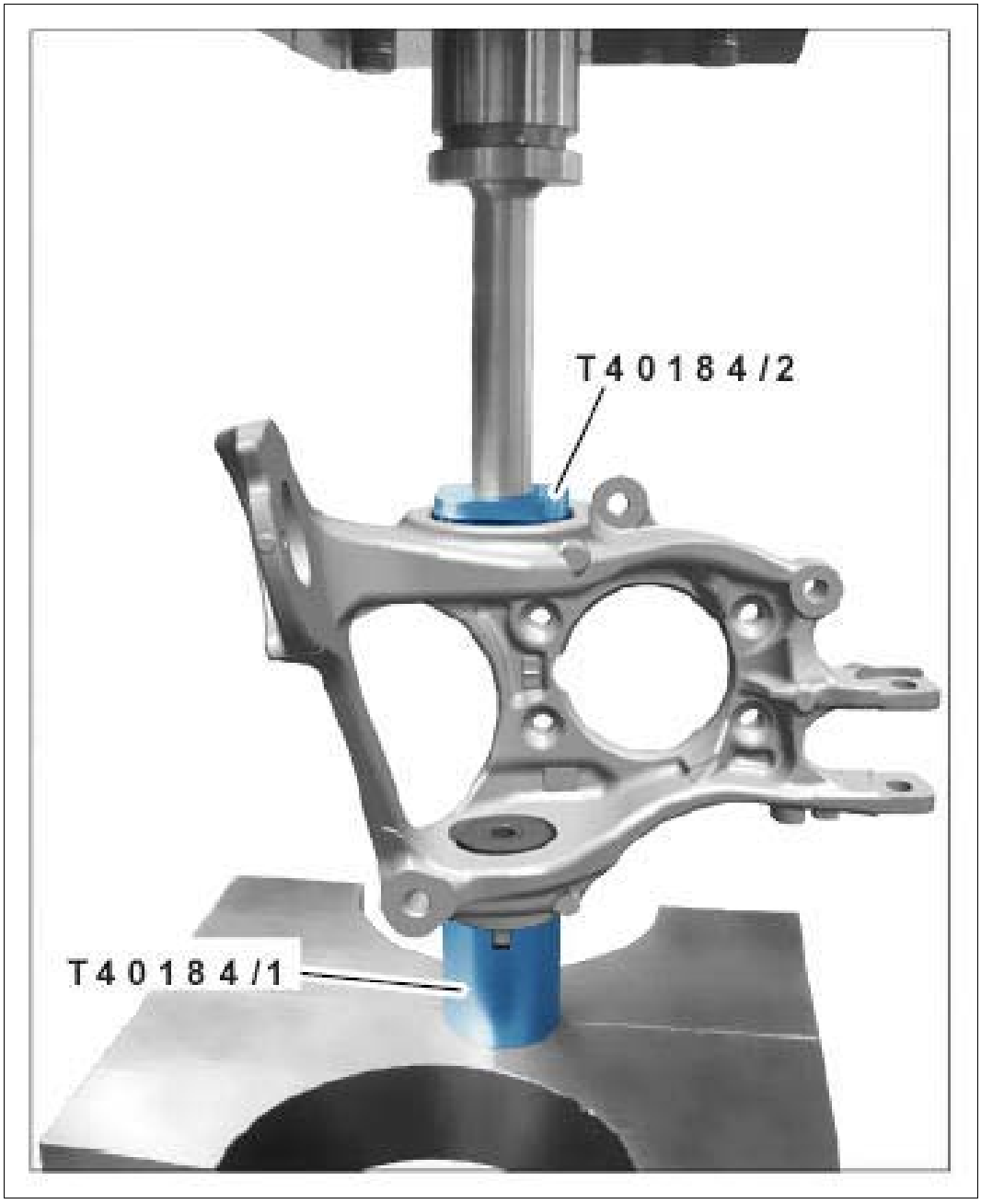

Courtesy of PORSCHE CARS NORTH AMERICA, INC.

2. Press in new bearing **-1-** .

Information

The bearing is pre-tensioned by pressing in the pressure piece **T40184/3** (inner wall of the pressure piece is conical). This is necessary so that the bearing can be pressed into the bearing sleeve.

1. 2.1. Press bearing into pressure piece **T40184/3** .

IMPORTANT: The nubs of the bearing and the thin collar of the

pressure piece must be facing upwards when pushing in the bearing!

Use pressure pieces as follows → Pressing bearing into pressure piece .

Press in the bearing until it protrudes by approx. 5 mm on the other side of the pressure piece → Dimension for pressing in bearing .

Fig 4: Pressing Bearing Into Pressure Piece

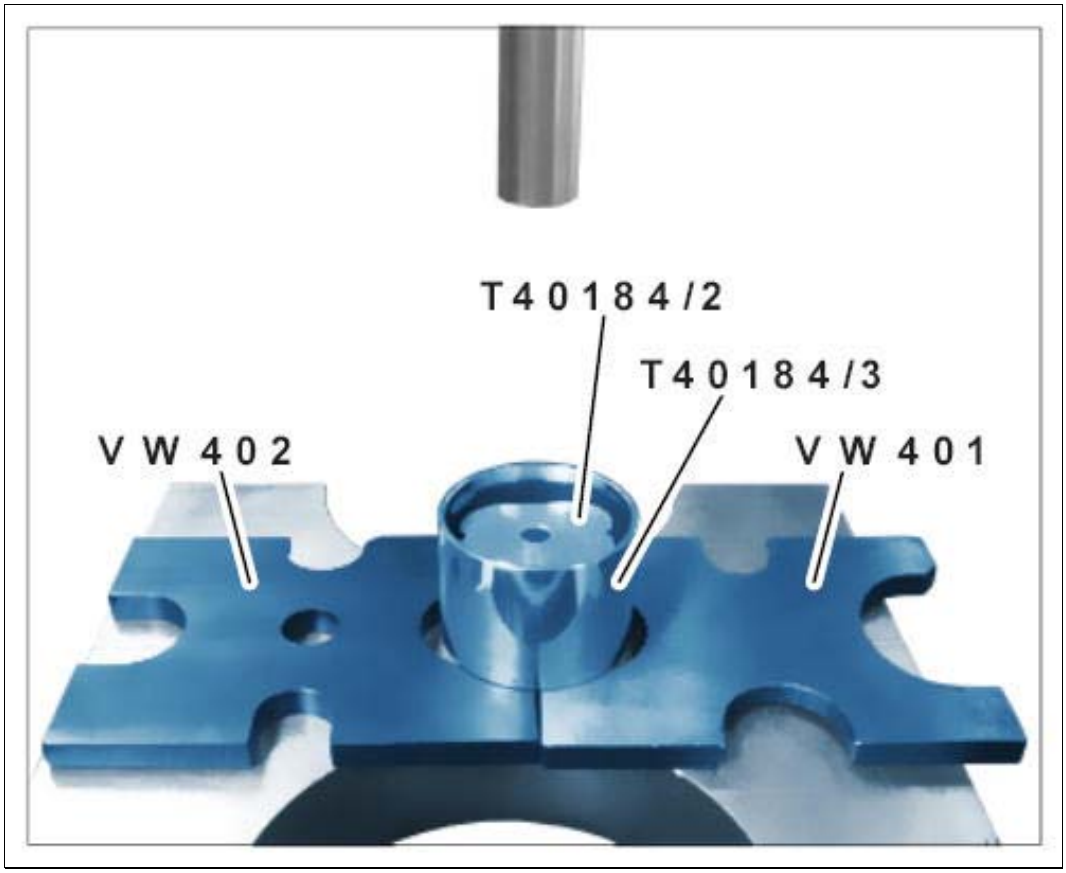

Courtesy of PORSCHE CARS NORTH AMERICA, INC.

Fig 5: Identifying Bearing Dimension

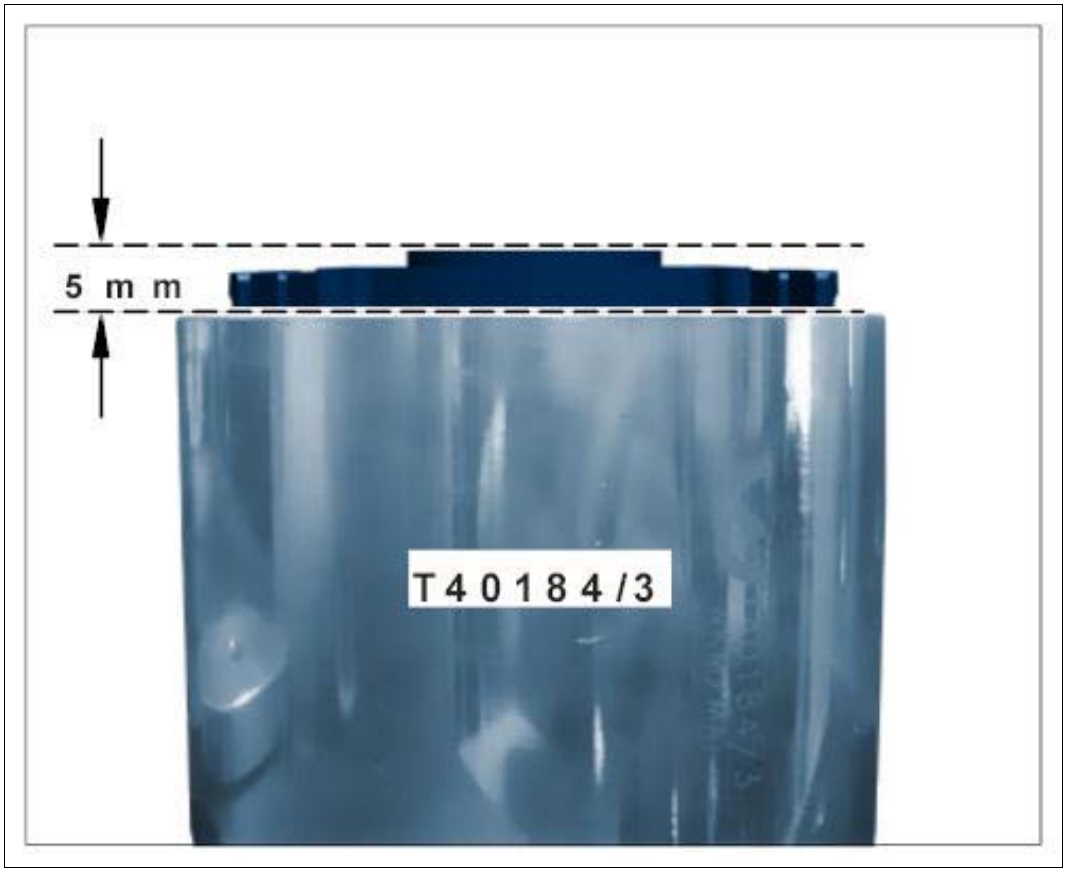

Courtesy of PORSCHE CARS NORTH AMERICA, INC.

2. 2.2. Fit bearing on the wheel bearing housing using pressure piece **T40184/3** (bearing is facing downwards). Check installation position of the bearing.

   Use pressure pieces as follows: (Pressure piece **T40184/2** is not visible here) → Arrangement of tools for pressing in bearings

Fig 6: Pressing Bearings

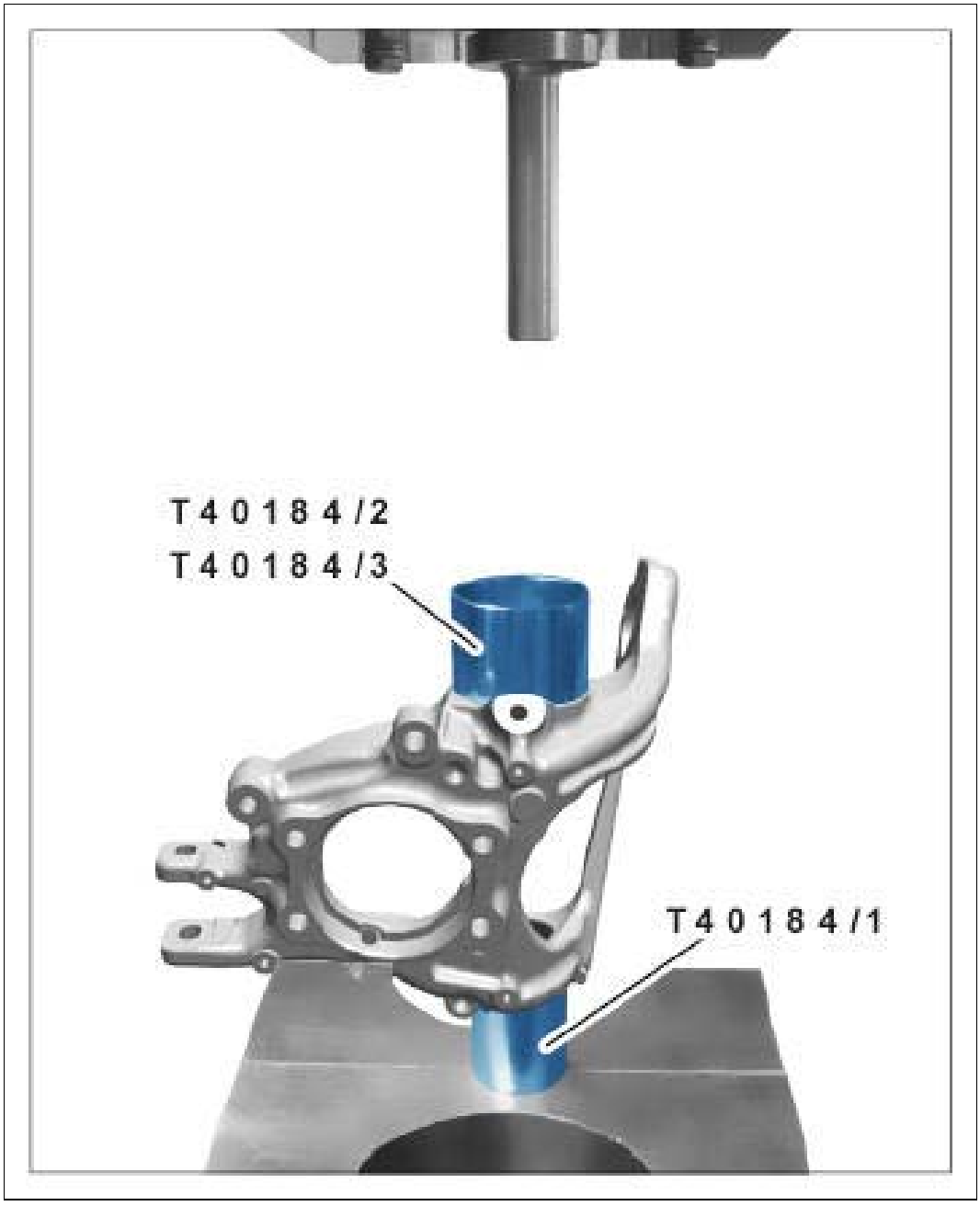

Courtesy of PORSCHE CARS NORTH AMERICA, INC.

Press in bearing until it is flush with the edge **-arrow-** .

Fig 7: Locating Bearing Installation Position

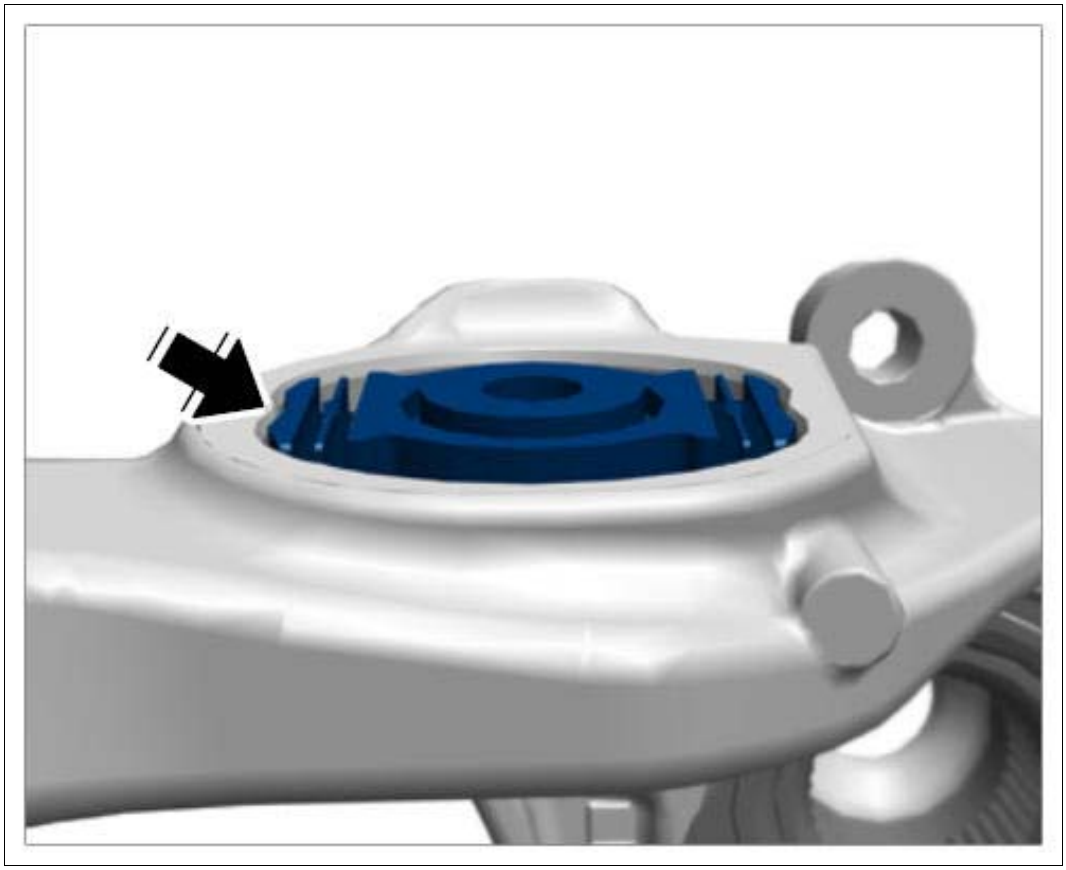

Courtesy of PORSCHE CARS NORTH AMERICA, INC.

WM 421755 REPLACING BEARING FOR TRAILING ARM (ON WHEEL BEARING HOUSING) (MACAN, MACAN S, MACAN TURBO) > SUBSEQUENT WORK

Information

- The speed sensor must be inserted using Optitemp (Optitemp LG2, 25-ml spray can available under Part No. 000.043.204.21).
- The bore for mounting the speed sensor must be free of dirt.
- Observe correct tightening torques.

1. Insert speed sensor **-2-** and tighten fastening screw **-1-** . **Tightening torque 8 Nm (6 ftlb.)**

Fig 1: Identifying Speed Sensor Mounting

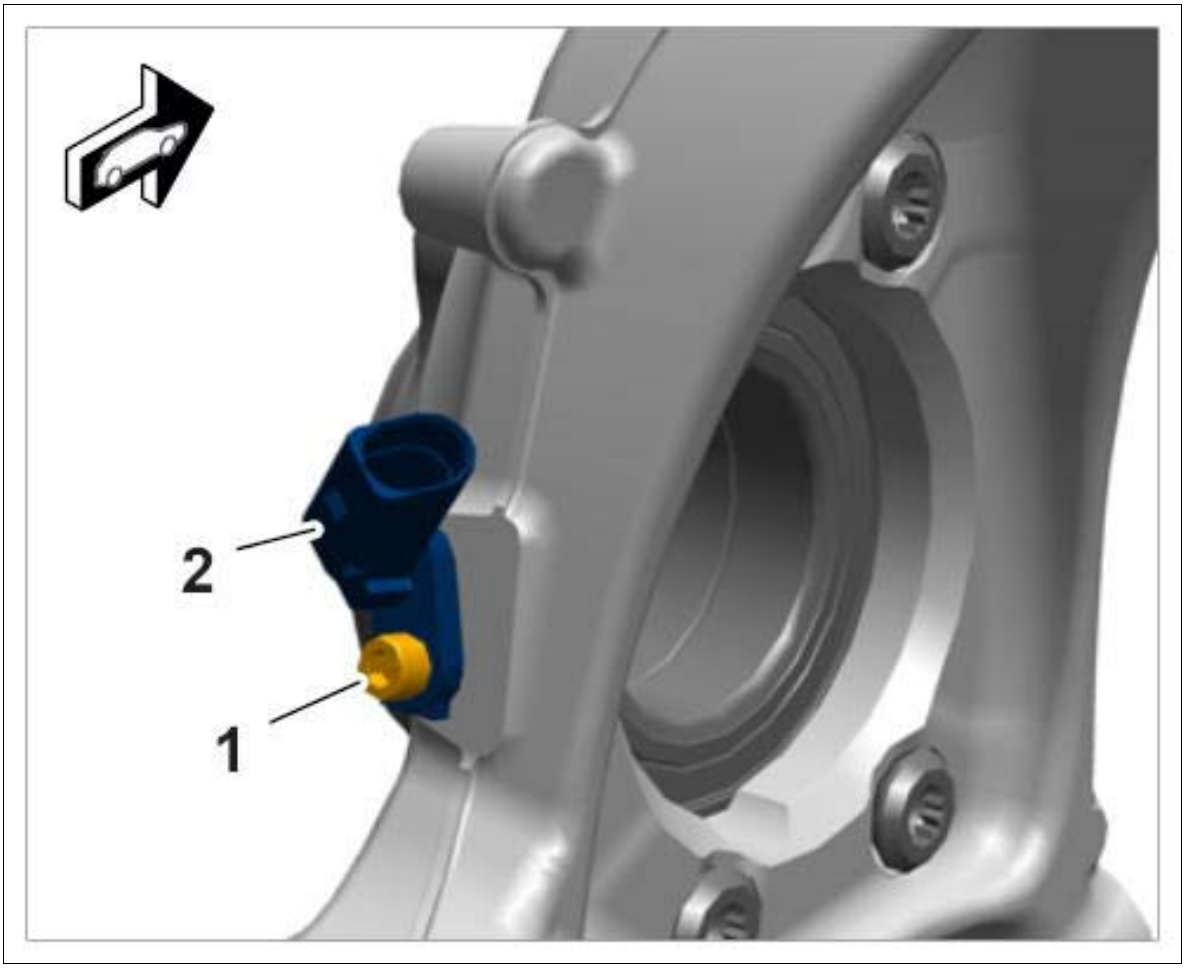

Courtesy of PORSCHE CARS NORTH AMERICA, INC.

2. Position cover plate for brake disc **-2-** and tighten fastening screws **-1-** . **Tightening torque 10 Nm (7.5 ftlb.)**

Fig 2: Identifying Brake Cover Plate Mounting

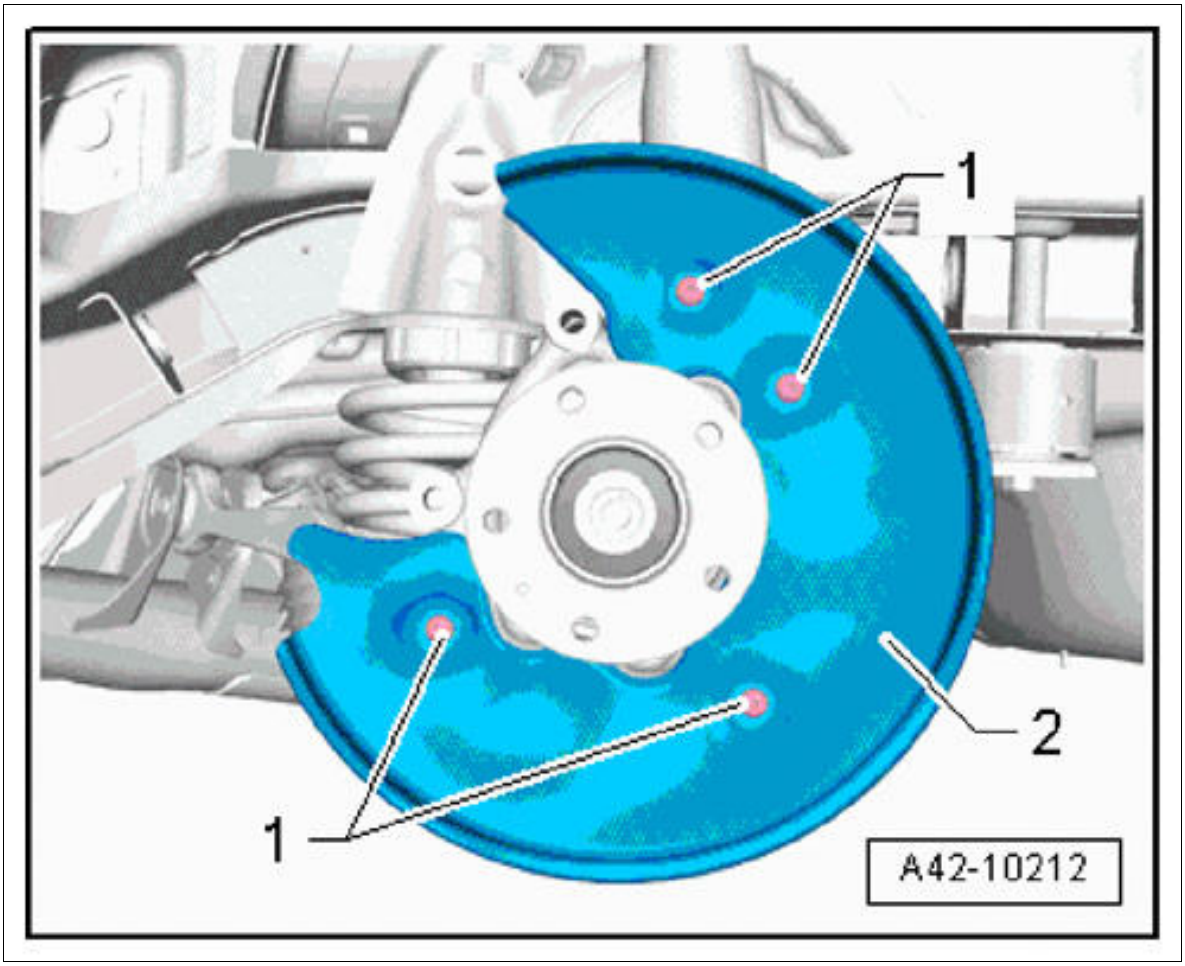

Courtesy of PORSCHE CARS NORTH AMERICA, INC.

3. Install wheel bearing housing. → INSTALLING REAR WHEEL BEARING HOUSING

WM 422119 REMOVING AND INSTALLING REAR DRIVE SHAFT (MACAN, MACAN S, MACAN TURBO) > TOOLS

Designation	Type	Number	Description	
puller hook	Special tool	9229/1		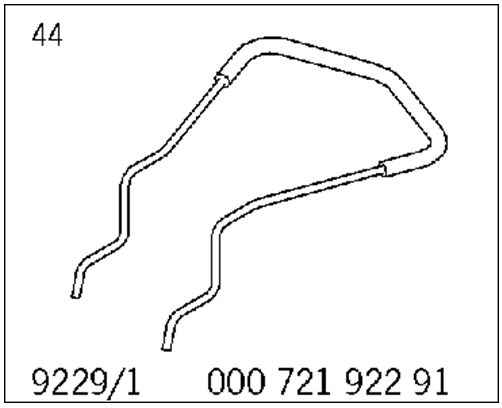

WM 422119 REMOVING AND INSTALLING REAR DRIVE SHAFT (MACAN, MACAN S, MACAN TURBO) > TECHNICAL VALUES

Location	Description	Type	Basic value	Tolerance 1	Tolerance 2
Drive shaft to wheel hub	Step 1 (wheels suspended in mid-air, operate brakes while tightening)/M16 x 72 thread/always use new screws or bolts following removal	Initial tightening	200 Nm (148 ftlb.)		
Drive shaft to wheel hub	Step 2 (wheels on the ground)/M16 x 72 thread/always use new screws or bolts following removal	Final tightening	180°		

WM 422119 REMOVING AND INSTALLING REAR DRIVE SHAFT (MACAN, MACAN S, MACAN TURBO) > PRELIMINARY WORK

1. Remove the relevant hub cap using **puller hook 9229/1** and loosen axle bolt **-1-** before raising the vehicle. Operate the brake while doing this (2 mechanics required).

Fig 1: Removing Axle Bolt

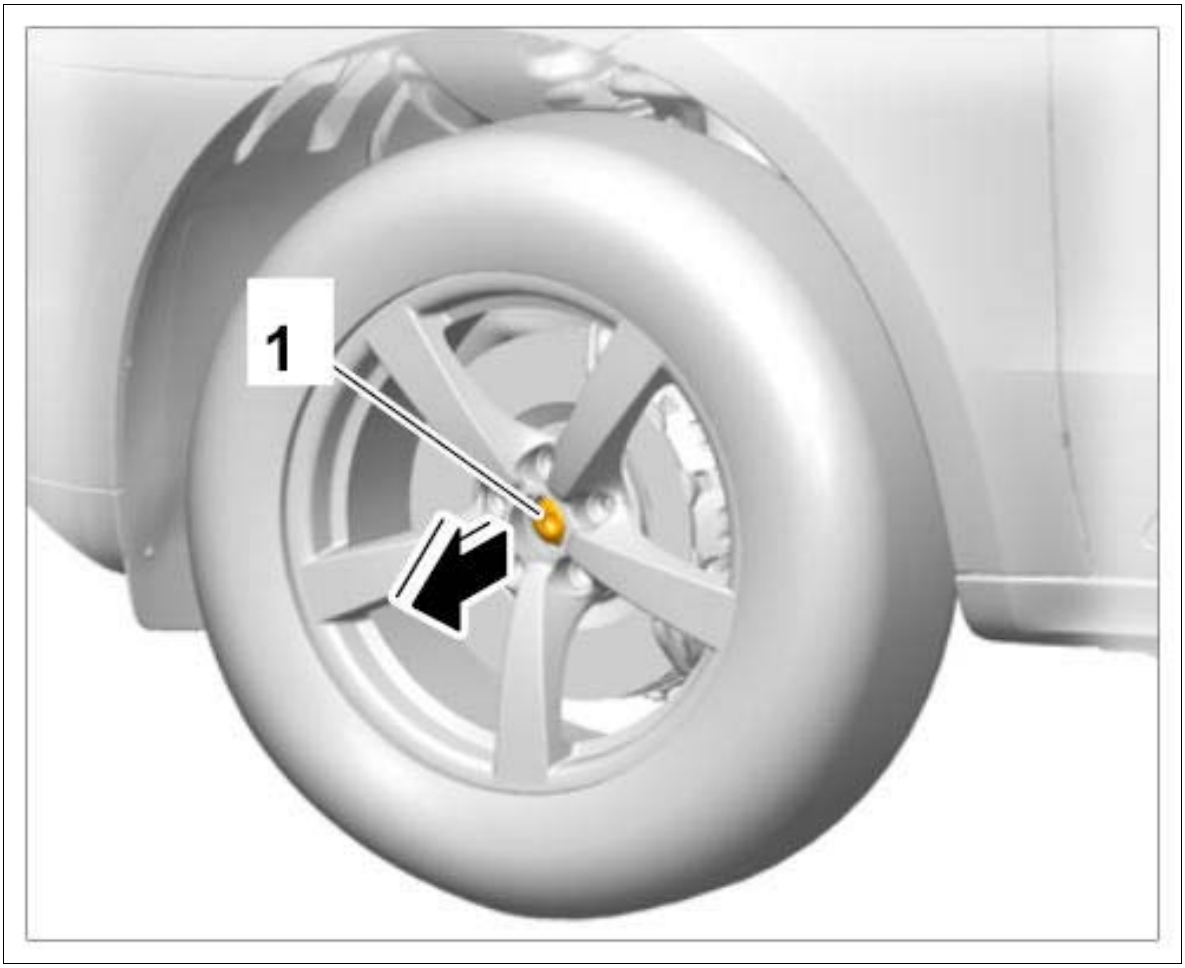

Courtesy of PORSCHE CARS NORTH AMERICA, INC.

2. Raise the vehicle → 4X00IN LIFTING THE VEHICLE .
3. Remove wheel → 440519 REMOVING AND INSTALLING WHEEL .
4. Disconnect all threaded connections on the wheel bearing housing as described in → 425219 REMOVING AND INSTALLING REAR WHEEL BEARING HOUSING .

   Only loosen nut **-3-** on the threaded joint from the lower trailing arm to the wheel bearing housing, do not unscrew fully.

Fig 2: Identifying Wheel Bearing Housing Trailing Arm Mounting

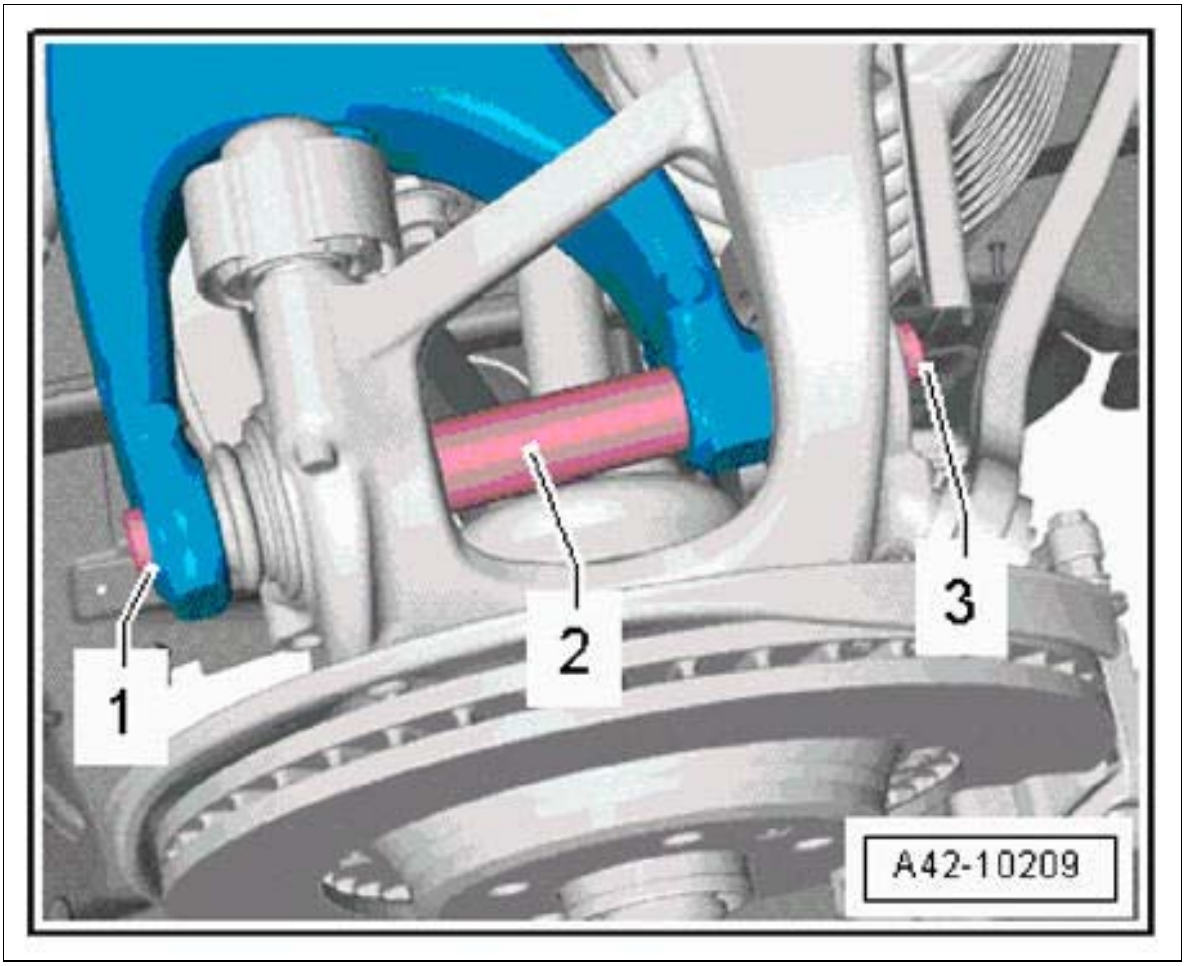

Courtesy of PORSCHE CARS NORTH AMERICA, INC.

WM 422119 REMOVING AND INSTALLING REAR DRIVE SHAFT (MACAN, MACAN S, MACAN TURBO) > REMOVING AND INSTALLING REAR DRIVE SHAFT > REMOVING REAR DRIVE SHAFT

Information

Drive shafts must not be left hanging from the joint stop! Hold the drive shaft or tie it up if necessary.

1. Tilt wheel bearing housing **-1-** down slightly. A second mechanic must guide the drive shaft **-2-** carefully out of the wheel bearing housing.

Fig 1: Identifying Drive Shaft On Wheel Bearing Housing Side

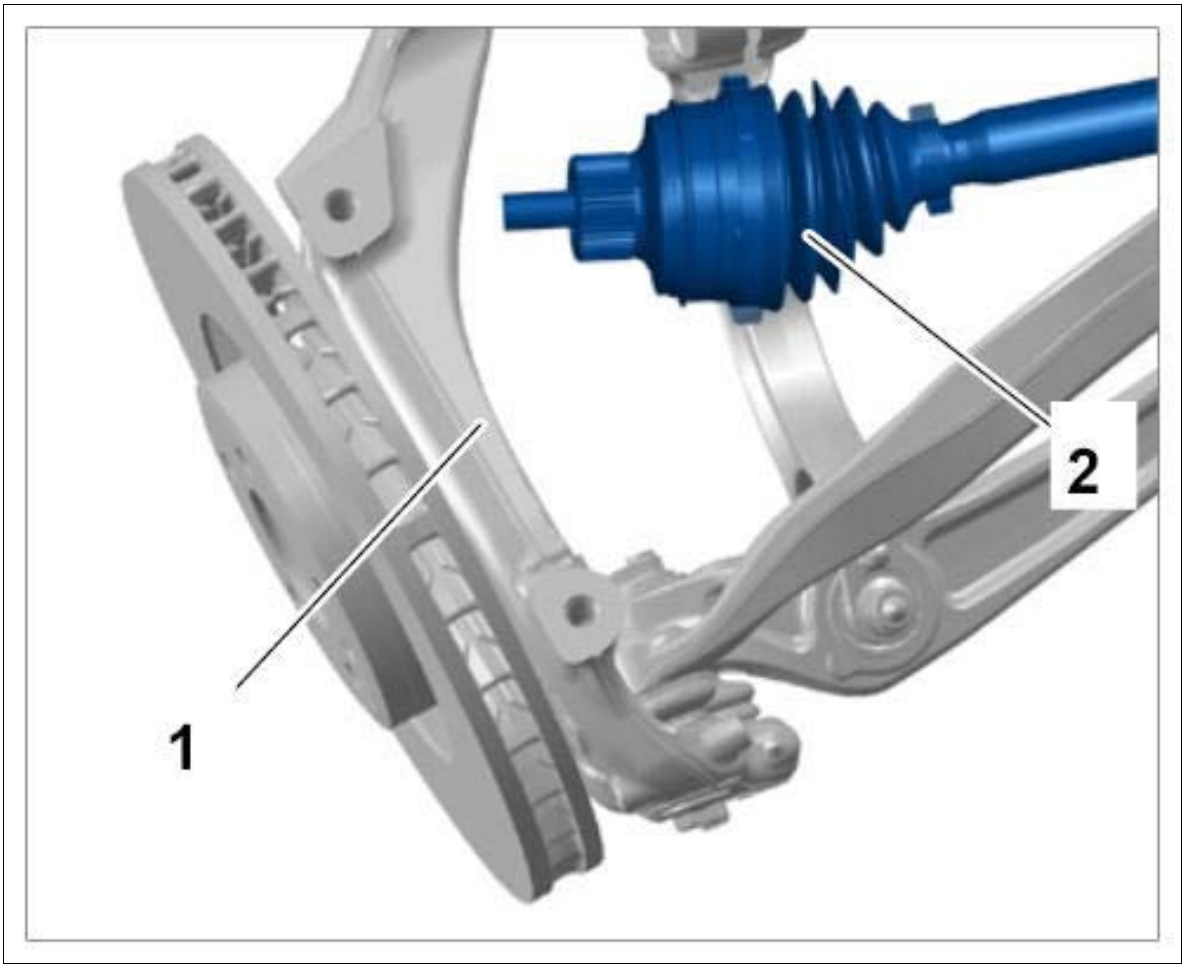

Courtesy of PORSCHE CARS NORTH AMERICA, INC.

2. Lever out the drive shaft **-1-** using a suitable tool (e.g using 2 mounting levers) and carefully remove it from the rear-axle transmission housing.

> *IMPORTANT:* ***Hold the drive shaft!*** *In the event of unfavorable tolerances, the drive shaft might slip out.*

Fig 2: Removing Drive Shaft On Transmission Side

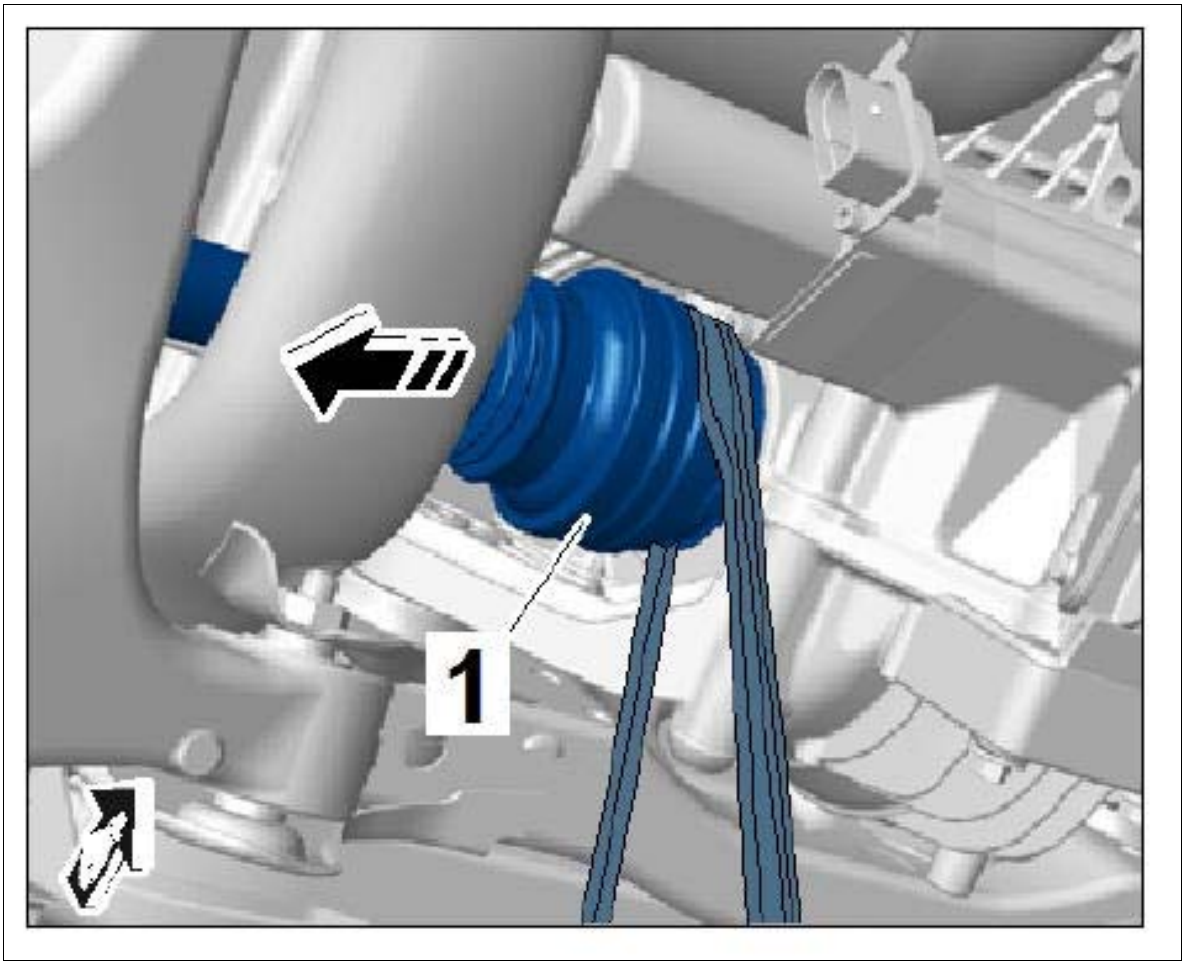

Courtesy of PORSCHE CARS NORTH AMERICA, INC.

WM 422119 REMOVING AND INSTALLING REAR DRIVE SHAFT (MACAN, MACAN S, MACAN TURBO) > REMOVING AND INSTALLING REAR DRIVE SHAFT > INSTALLING REAR DRIVE SHAFT

⚠ *CAUTION: Wheel carrier raised incorrectly*

- *Risk of squashing*
- *Risk of damage to components*

→ Wear personal protective gear.

→ Do not raise the wheel suspension higher than the normal vehicle position (vehicle resting on wheels).

Information

- All screws and threaded joints on the axle must be tightened in vehicle position. Vehicle position means: vehicle standing on its wheels, or the wheel suspension is raised with a universal vehicle lift. Dimension -1- , from lower edge of wing to center of axle corresponds to vehicle position. The current height can be found in → 4495TW ADJUSTMENT VALUES FOR SUSPENSION ALIGNMENT . Always observe the following points!

  Fig 1: Identifying Wheel To Wing Lower Edge Dimension (Rear Axle)

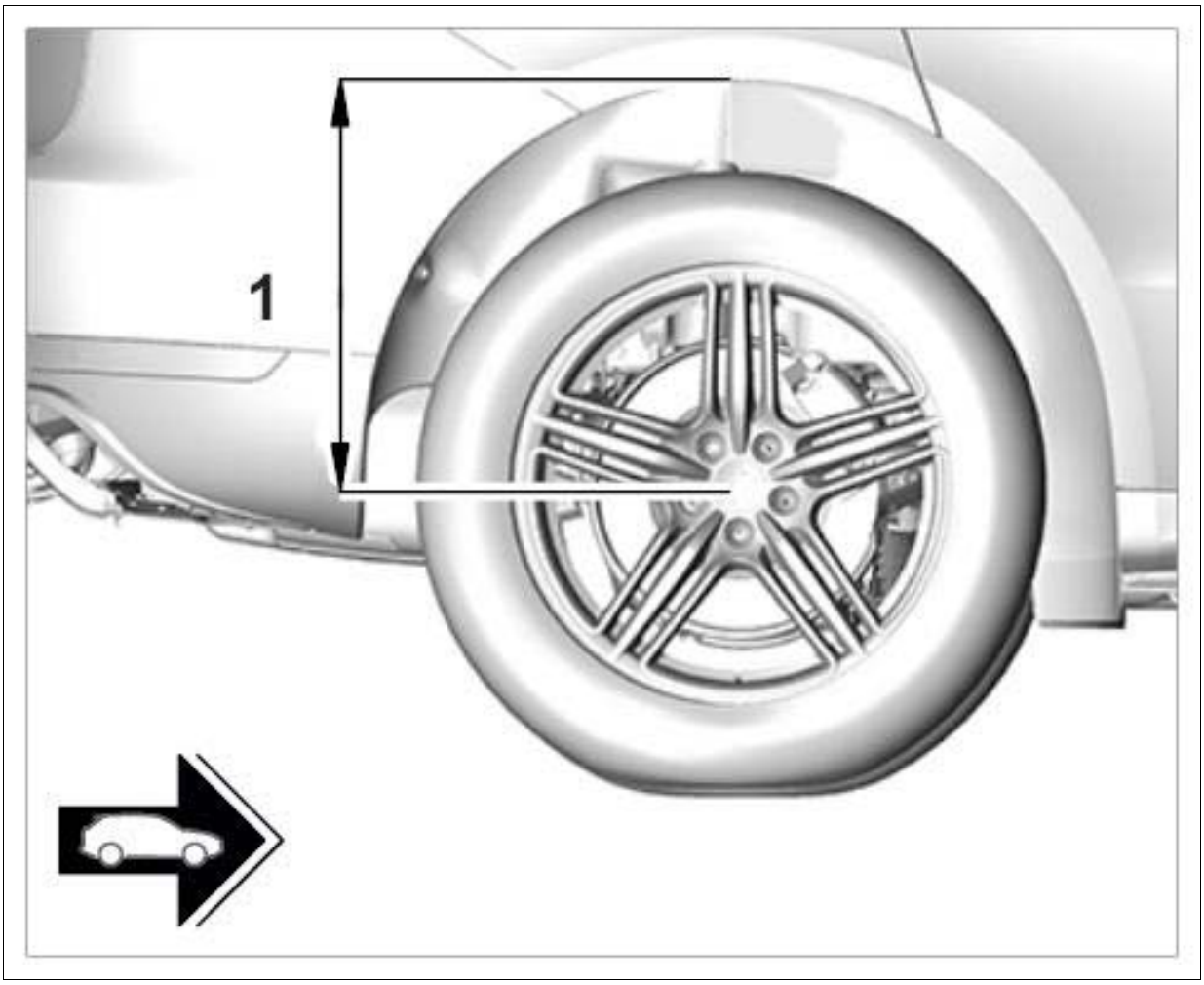

Courtesy of PORSCHE CARS NORTH AMERICA, INC.

- On vehicles with air springs, the respective air spring must be bled using the Porsche System Tester . → 4301IN BLEEDING AND FILLING THE LEVELLING SYSTEM
- Screws and nuts are Geomet-coated and must not be greased.

Information

Before installing the shaft, replace the lock ring (circlip) on the shaft as well as the shaft sealing ring in the final drive. Removing and installing sealing ring for output flange.

Make sure not to damage the sealing ring when guiding the shaft into the final drive.

- The inner end of the drive shaft must be held with both hands at the joint and inserted into the rear axle differential with a quick jerk. The outer joint must be held by a second mechanic in order to prevent damage.

- Check that the joint is seated correctly in the rear axle differential: Hold the joint with both hands and pull outwards.
- Visually check that the plastic protective rings are flush on the rear axle differential.

1. Grease splines with a little Optimoly TA aluminum paste and insert drive shaft. When doing this, press the inner joint together fully.
2. Installation is performed in reverse order.

   Observe specified tightening torques:

   Drive shaft to wheel hub (Step 1: Wheels suspended in mid-air, operate brake while tightening): **Initial tightening 200 Nm (148 ftlb.)**

   Drive shaft to wheel hub (Step 2: Wheels on the ground): **Final tightening 180°**

WM 422119 REMOVING AND INSTALLING REAR DRIVE SHAFT (MACAN, MACAN S, MACAN TURBO) > SUBSEQUENT WORK

1. Fit wheel bearing housing → INSTALLING REAR WHEEL BEARING HOUSING .

   Fig 1: Identifying Wheel Bearing Housing Trailing Arm Mounting

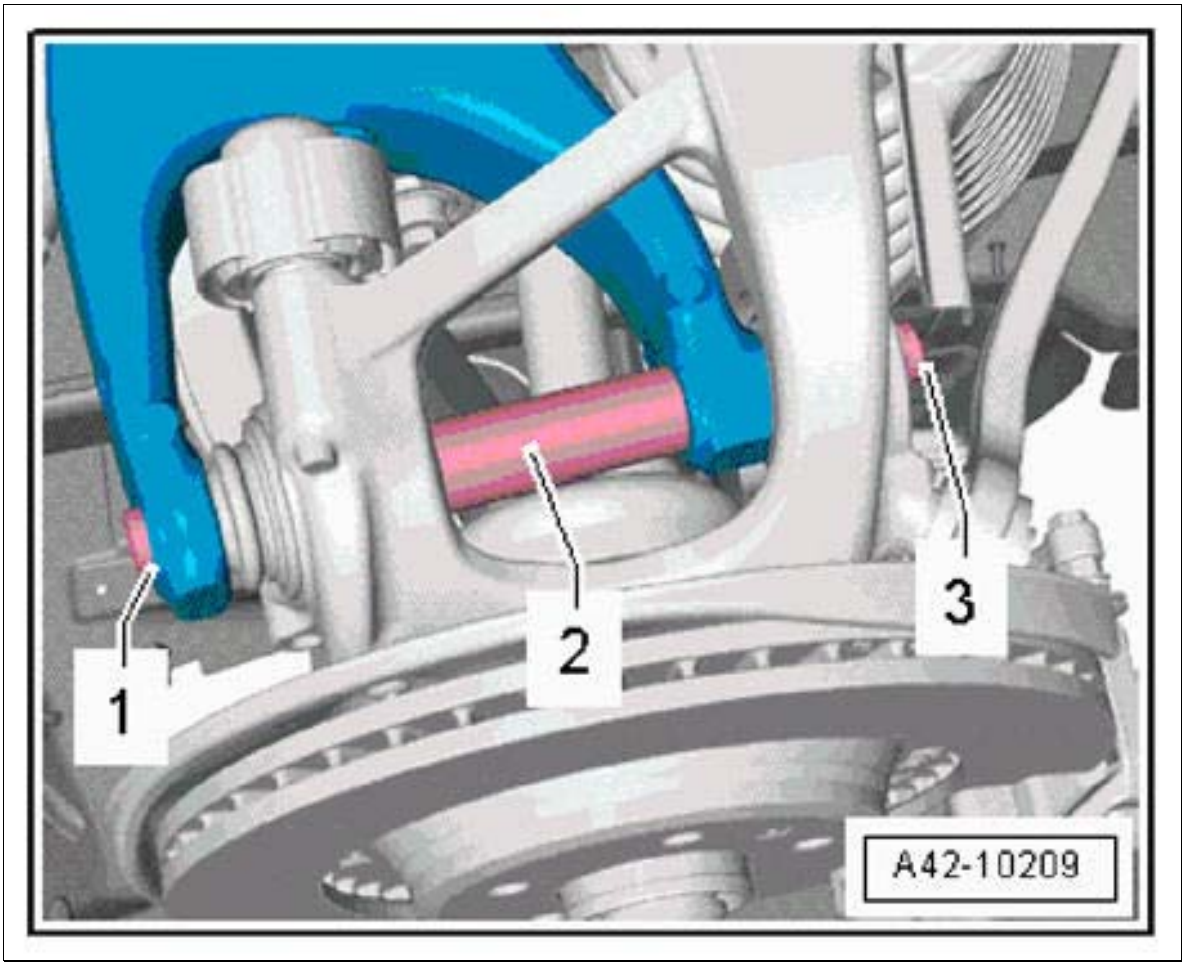

Courtesy of PORSCHE CARS NORTH AMERICA, INC.

2. Fit wheel → INSTALLING WHEEL .

3. Fit the required hub cap.

WM 422137 DISASSEMBLING AND ASSEMBLING REAR DRIVE SHAFT (MACAN, MACAN S, MACAN TURBO) > TOOLS

Designation	Type	Number	Description	
circlip pliers	Commercially available tool	Nr.68		

WM 422137 DISASSEMBLING AND ASSEMBLING REAR DRIVE SHAFT (MACAN, MACAN S, MACAN TURBO) > TECHNICAL VALUES

Location	Description	Type	Basic value	Tolerance 1	Tolerance 2
Drive shaft	Maximum force for pressing in joints	Contact force	+20 kN		
Drive shaft	Positioning bellows	Dimension **-X-**	+90 mm	+3 mm	

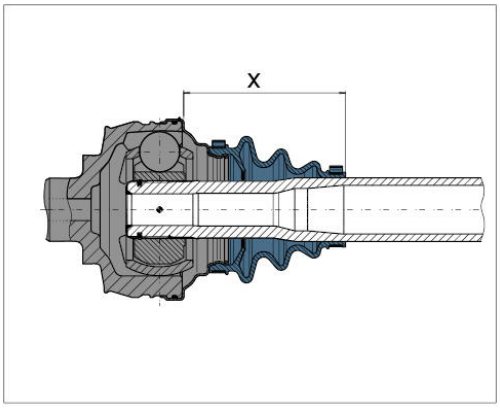

Positioning bellows at dimension -X-

WM 422137 DISASSEMBLING AND ASSEMBLING REAR DRIVE SHAFT (MACAN, MACAN S, MACAN TURBO) > INFORMATION > COMPONENT OVERVIEW

Fig 1: Overview Of Single Drive Shaft

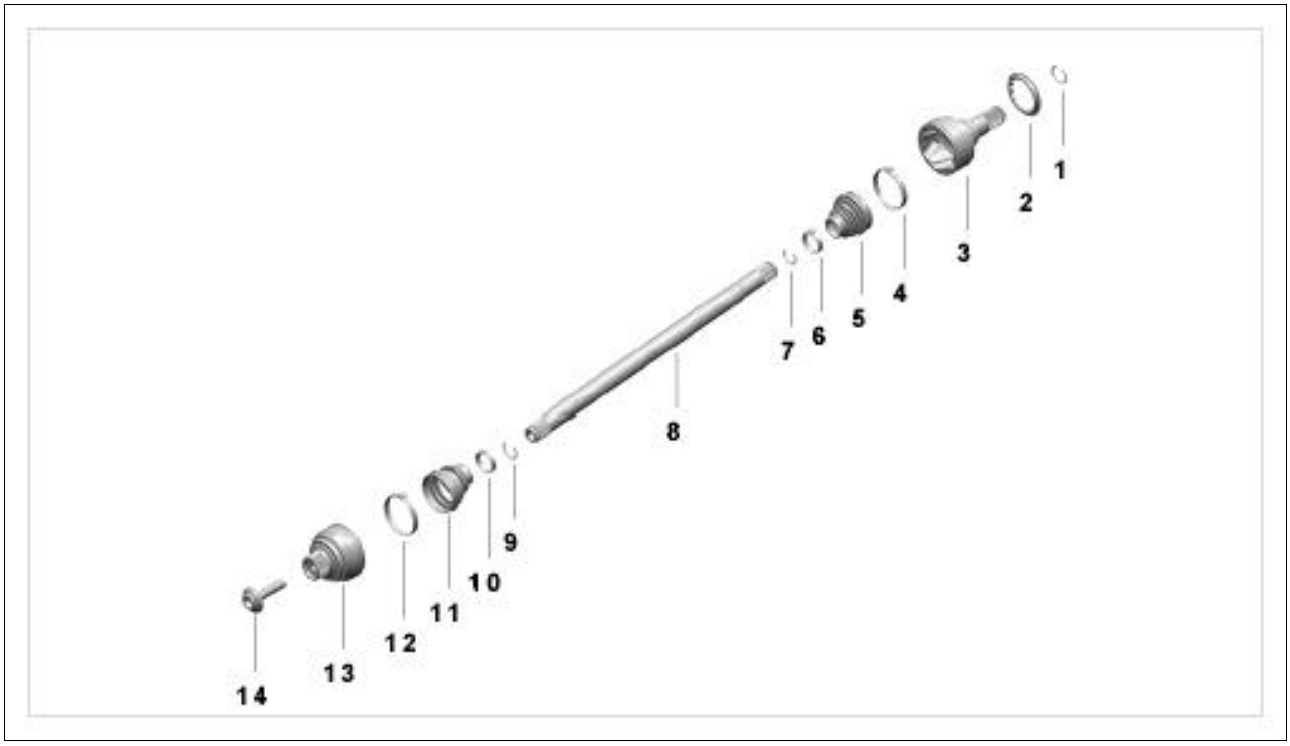

Courtesy of PORSCHE CARS NORTH AMERICA, INC.

No.	Designation	Qty.	Removal	Installation
1	Circlip	1	Remove circlip.	Do not confuse circlip no. 1 with circlip no. 9 on the inner joint. The two parts are not identical. Carefully slide the circlip onto the joint pin from above. Check that the circlip is fitted correctly. The circlip is pre-fitted when a new joint is installed!
2	Protective ring (transmission side only)	1	Left side only: Break (carefully) during removal in order to lever the drive shaft out of the transmission.	Replace protective ring.
3	Inner joint			

4	Large clamp	1	Remove clamp.	For securing the bellows.
5	Bellows	1	Remove bellows from the profile shaft.	
6	Small clamp	1	Remove clamp.	For securing the bellows.
7	Circlip	1	Remove circlip carefully with a pliers.	Do not confuse circlip no. 9 with circlip no. 1 on the inner joint. The two parts are not identical. Carefully slide the circlip into the groove on the profile shaft from the side. Check that the circlip is fitted correctly.
8	Drive shaft	1	Remove the joint from the profile shaft using an aluminum mandrel and by hitting the ball hub (star-shaped inner ring) hard several times with a hammer.	Always use a new joint during installation! Position the joint on the profile shaft. Press circlip no. 9 together as required so that the joint slides over it easily when you tap it with a rubber hammer. Grease the new joint!
9	Circlip	1	Remove circlip carefully with a pliers.	Do not confuse circlip no. 9 with circlip no. 1 on the inner joint. The two parts are not identical. Carefully slide the circlip into the groove on the profile shaft from the side. Check that the circlip is fitted correctly.
10	Small clamp	1	Remove clamp.	For securing the bellows.
11	Bellows	1	Remove bellows from the profile shaft.	

12	Large clamp	1	Remove clamp.	For securing the bellows.
13	Outer joint			

WM 422137 DISASSEMBLING AND ASSEMBLING REAR DRIVE SHAFT (MACAN, MACAN S, MACAN TURBO) > PRELIMINARY WORK

1. Remove rear drive shaft → 422119 REMOVING AND INSTALLING REAR DRIVE SHAFT .

WM 422137 DISASSEMBLING AND ASSEMBLING REAR DRIVE SHAFT (MACAN, MACAN S, MACAN TURBO) > DISASSEMBLING AND ASSEMBLING REAR DRIVE SHAFT > DISASSEMBLING REAR DRIVE SHAFT

WARNING: Danger of objects or loads falling down

- *Risk of squashing or crushing*

→ Secure components to prevent them from falling down.

The joint on the transmission side and the joint pin on the wheel side of the rear axle can be replaced. The entire drive shaft must be replaced if the profile shaft is defective.

Inner joint (transmission side)

Information

Before removing the bellows, mark the position of the bellows on the drive shaft with a colored pen .

1. Remove the circlip (on transmission side) using **circlip pliers Nr.68.**
2. Remove the bellows from the inner joint and slide it back. → Removing bellows

Fig 1: Removing Inner Joint Bellow

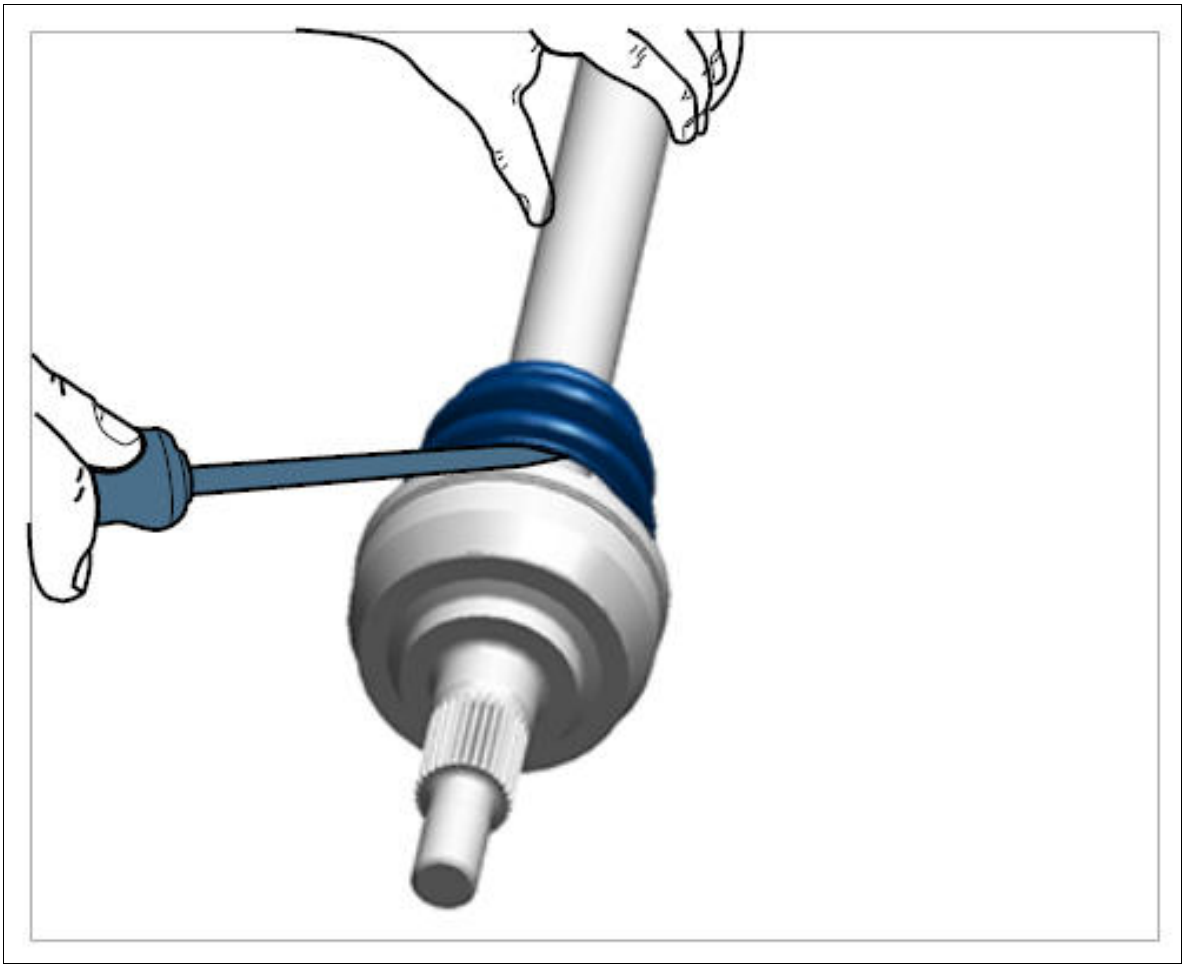

Courtesy of PORSCHE CARS NORTH AMERICA, INC.

3. Clamp the drive shaft (use aluminum protective jaws). Fit an aluminum mandrel on the ball hub (star-shaped inner ring) **-arrow-** and remove the joint pin (inner joint) by hitting it several times with a hammer.

Fig 2: Removing Joint (Transmission Side)

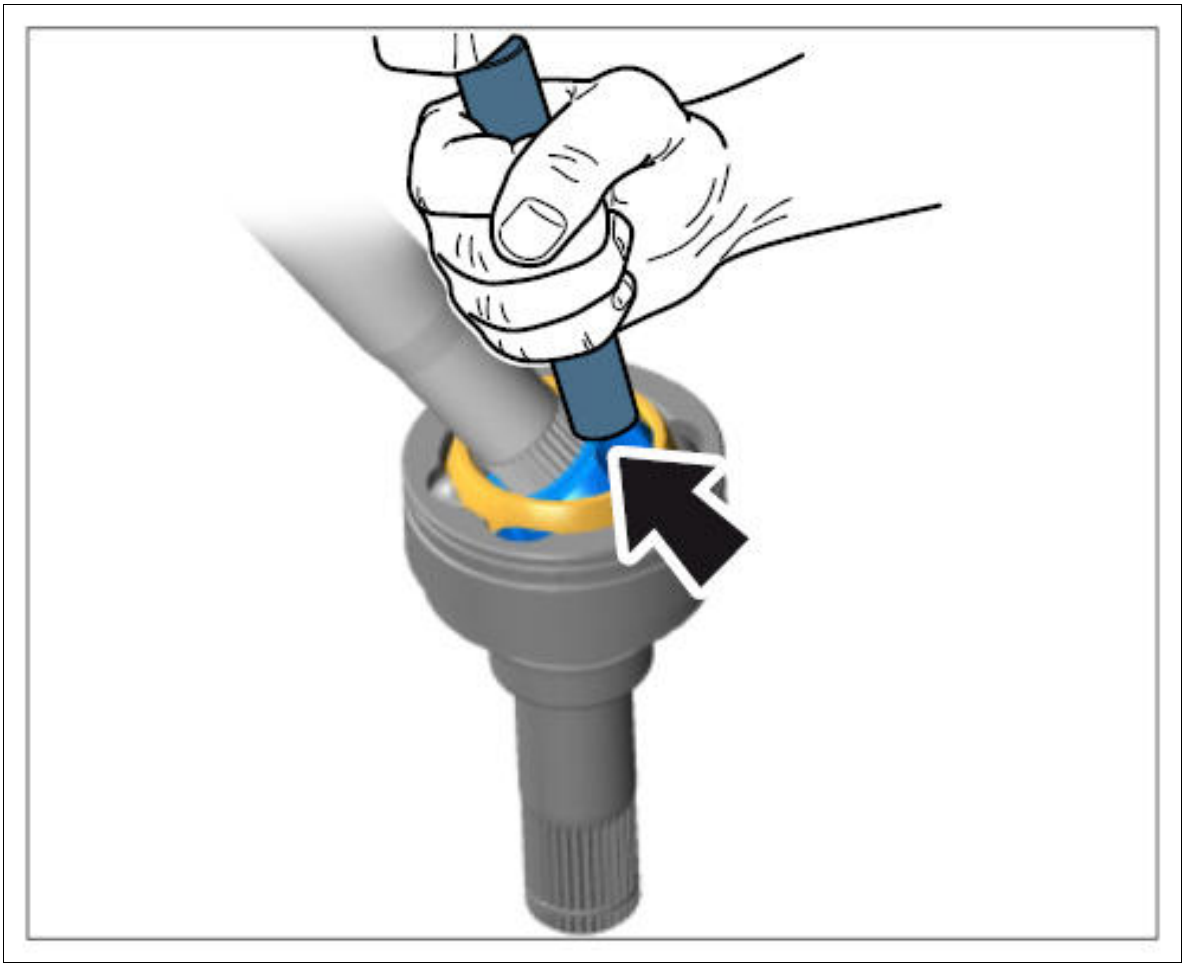

Courtesy of PORSCHE CARS NORTH AMERICA, INC.

4. Remove the hose clamps and bellows and take them off the profile shaft.

   Outer joint (on wheel side)

5. Clamp the drive shaft (use aluminum protective jaws). Fit an aluminum mandrel on the ball hub (star-shaped inner ring) **-arrow-** and remove the joint pin (outer joint) by hitting it several times with a hammer.

Fig 3: Removing Joint (Wheel Side)

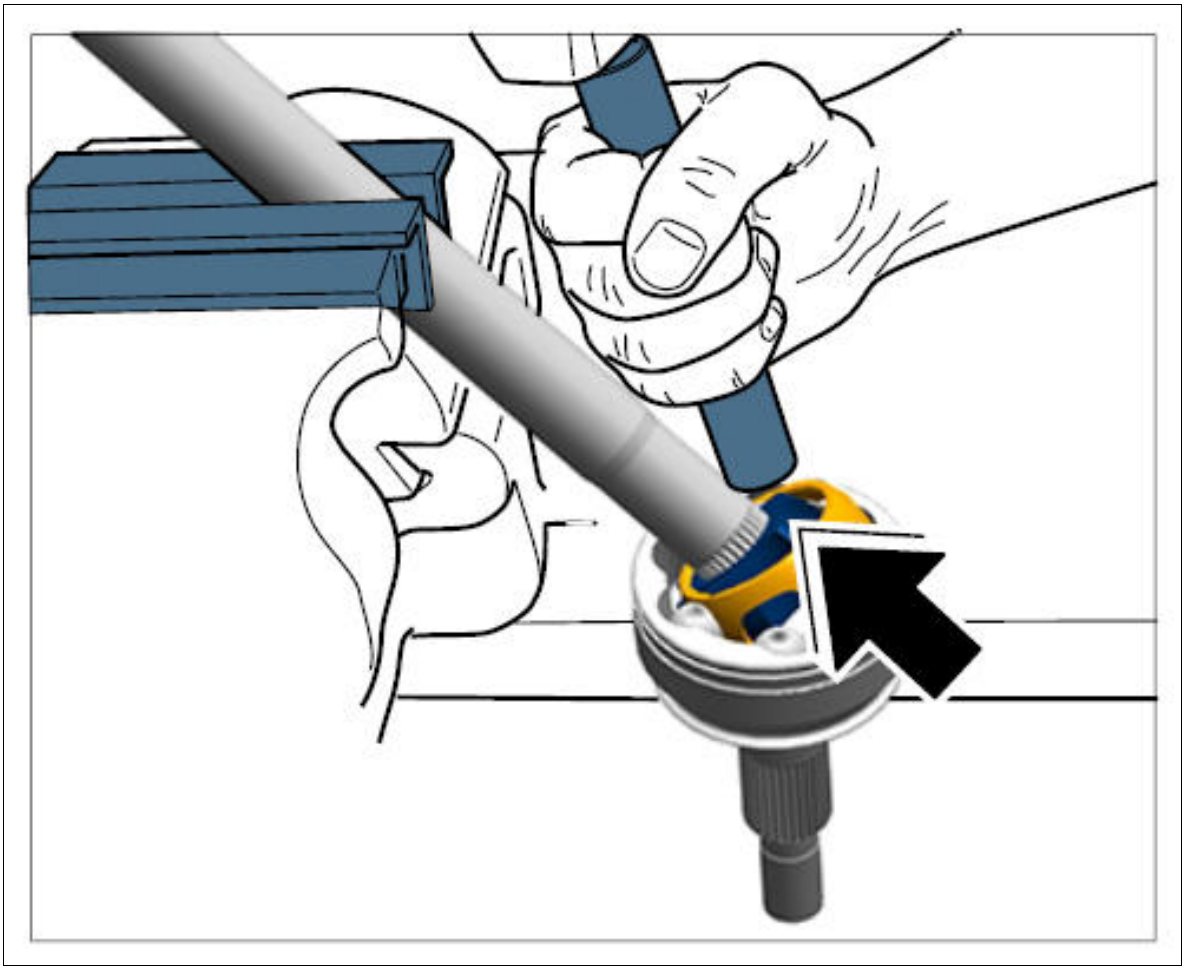

Courtesy of PORSCHE CARS NORTH AMERICA, INC.

WM 422137 DISASSEMBLING AND ASSEMBLING REAR DRIVE SHAFT (MACAN, MACAN S, MACAN TURBO) > DISASSEMBLING AND ASSEMBLING REAR DRIVE SHAFT > ASSEMBLING REAR DRIVE SHAFT

WARNING: Danger of objects or loads falling down

- *Risk of squashing or crushing*

→ Secure components to prevent them from falling down.

The drive shaft is assembled in reverse order.

Check all parts to be re-used carefully.

Before fitting the joint, slide all bellows, hose clamps and other clamps onto the drive shaft.

Use new circlips and ensure that they are seated correctly.

Use a new protective ring (on transmission side). Check that it is fitted correctly.

1. Clamp the joint (use aluminum protective jaws). Carefully slide the new circlip onto the shaft from above.

2. Press the circlip together as required so that the joint slides over it easily when you tap it with a rubber hammer. Hold the drive shaft and joint pin with both hands and fit the joint pin onto the drive shaft under the workshop press until the pressure increases (this is as far as it can go). Check the pressure gauge! → **Contact force: +20 kN** Do not exceed the maximum force for pressing in joints (20 kilonewtons/2 tons)!

   The procedure for fitting both joints is identical.

   Information

   1. Do not use cleaning agents on the joints (grease thinners!).

   2. Always replace the removed joint at least during assembly.

   3. Press the grease with a sufficient amount of force into the ball tracks of the joint.

   4. Make sure that only a small amount of grease gets into the drive shaft boots.

   Greasing joints:

   Grease the joints with special grease . The original grease quantities for the individual joints are specified in the following table.

Vehicle	Joint, inner (gram)	Joint pin, outer (gram)
Without rear differential lock (Macan, basic Macan S)	70	70
Without rear differential lock (Macan diesel, Macan Turbo)	80	85
With rear differential lock	80	85

   Joint on transmission side: Grease the joint using the quantities of grease specified in the table. The complete drive shaft is supplied ex-works with the quantities of grease specified in the table. Before sliding on the bellows, remove excess grease using a lint-free cloth. Push the required amount of grease through the joint to the outside. Then grease the inside of the joint.

Fig 1: Applying Grease To Drive Shaft Joint

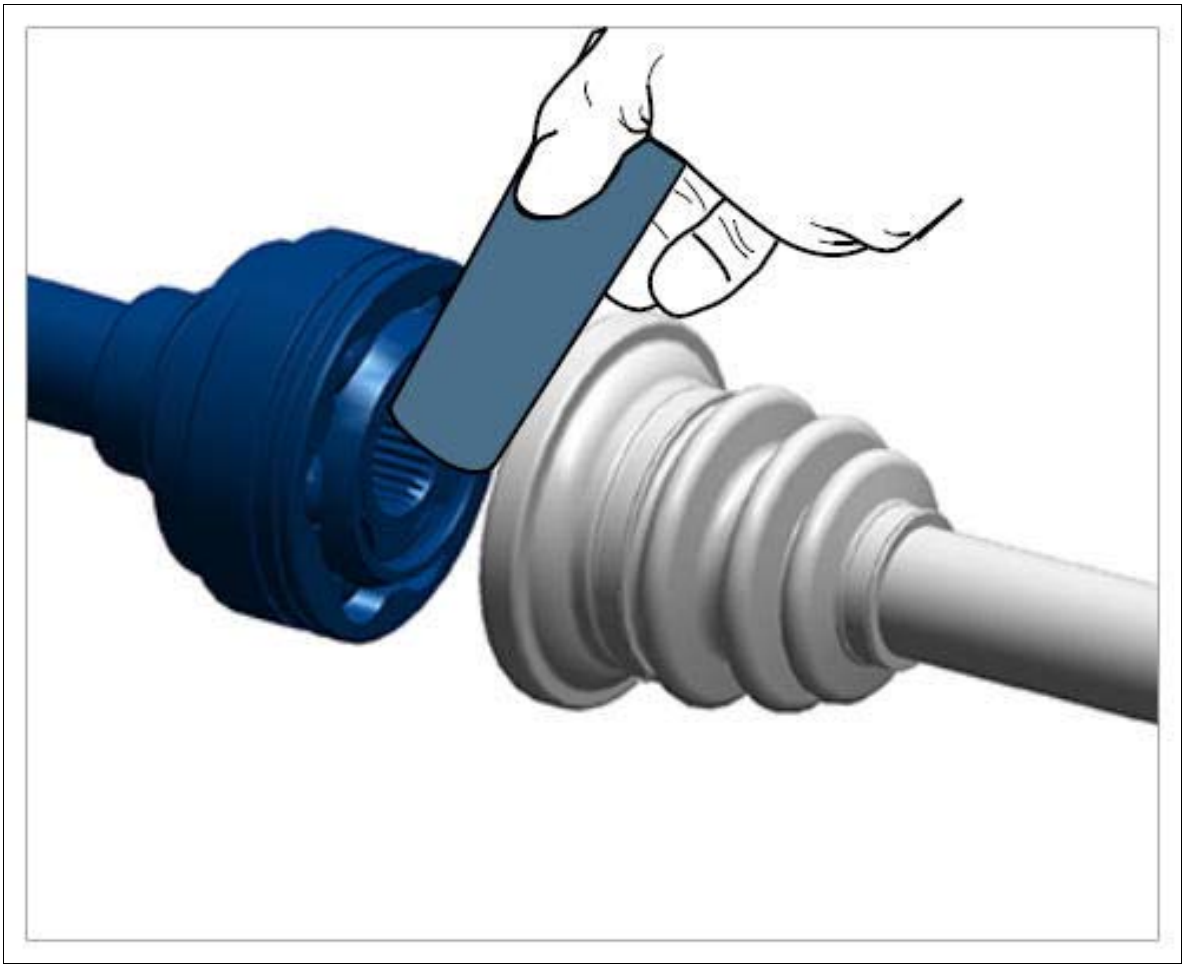

Courtesy of PORSCHE CARS NORTH AMERICA, INC.

Joint pin on wheel side: Grease the joint using the quantities of grease specified in the table. The complete drive shaft is supplied ex-works with the quantities of grease specified in the table. Before sliding on the bellows, remove excess grease using a lint-free cloth. Push the required amount of grease through the joint to the outside. Then grease the inside of the joint.

Fig 2: Applying Grease To Inside Of Joint

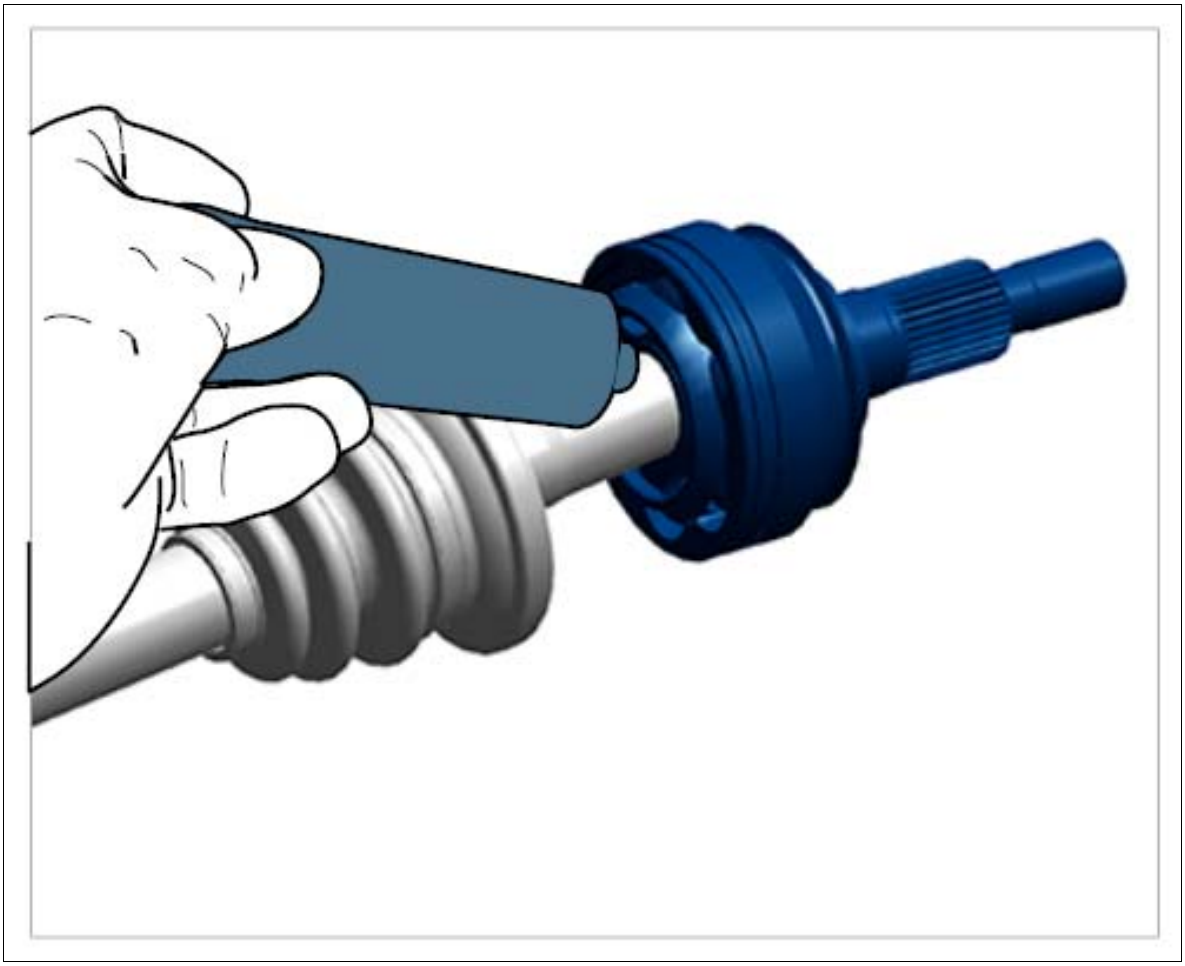

Courtesy of PORSCHE CARS NORTH AMERICA, INC.

Information

Position the new bellows

1. At the marking you made earlier on the drive shaft .
2. Always comply with the specified dimension.

3. Fit the small clamps for the bellows.
    1. 3.1. To do this, slide the joint from stop to stop and determine → **Dimension -X-: +90 mm+3 mm**

Fig 3: Identifying Dimension -X-

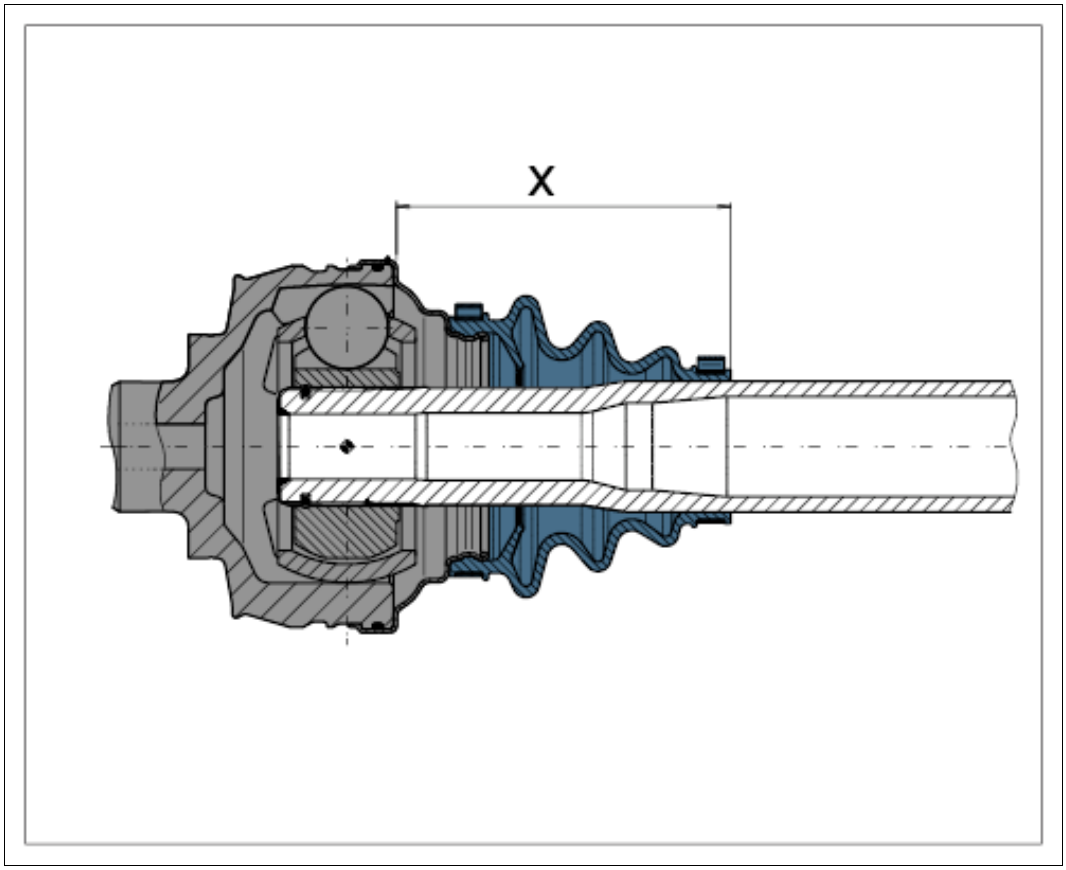

Courtesy of PORSCHE CARS NORTH AMERICA, INC.

WM 422137 DISASSEMBLING AND ASSEMBLING REAR DRIVE SHAFT (MACAN, MACAN S, MACAN TURBO) > SUBSEQUENT WORK

1. Install rear drive shaft → 422119 REMOVING AND INSTALLING REAR DRIVE SHAFT .

WM 423555 REPLACING UPPER CONTROL ARM (MACAN, MACAN S, MACAN TURBO) > TECHNICAL VALUES

Location	Description	Type	Basic value	Tolerance 1	Tolerance 2
Upper control arm to rear axle housing	M12 thread/always use new screws or bolts and nuts following removal	Initial tightening	70 Nm (52 ftlb.)		
Upper control arm to rear axle housing	M12 thread/always use new screws	Final tightening	+180°		

	or bolts and nuts following removal				
Upper control arm to wheel bearing housing	M12 thread	Tightening torque	95 Nm (70 ftlb.)		

WM 423555 REPLACING UPPER CONTROL ARM (MACAN, MACAN S, MACAN TURBO) > PRELIMINARY WORK

1. Raise the vehicle. → 4X00IN LIFTING THE VEHICLE
2. Remove wheel → 440519 REMOVING AND INSTALLING WHEEL .

WM 423555 REPLACING UPPER CONTROL ARM (MACAN, MACAN S, MACAN TURBO) > REPLACING UPPER CONTROL ARM

Fig 1: Identifying Upper Control Arm

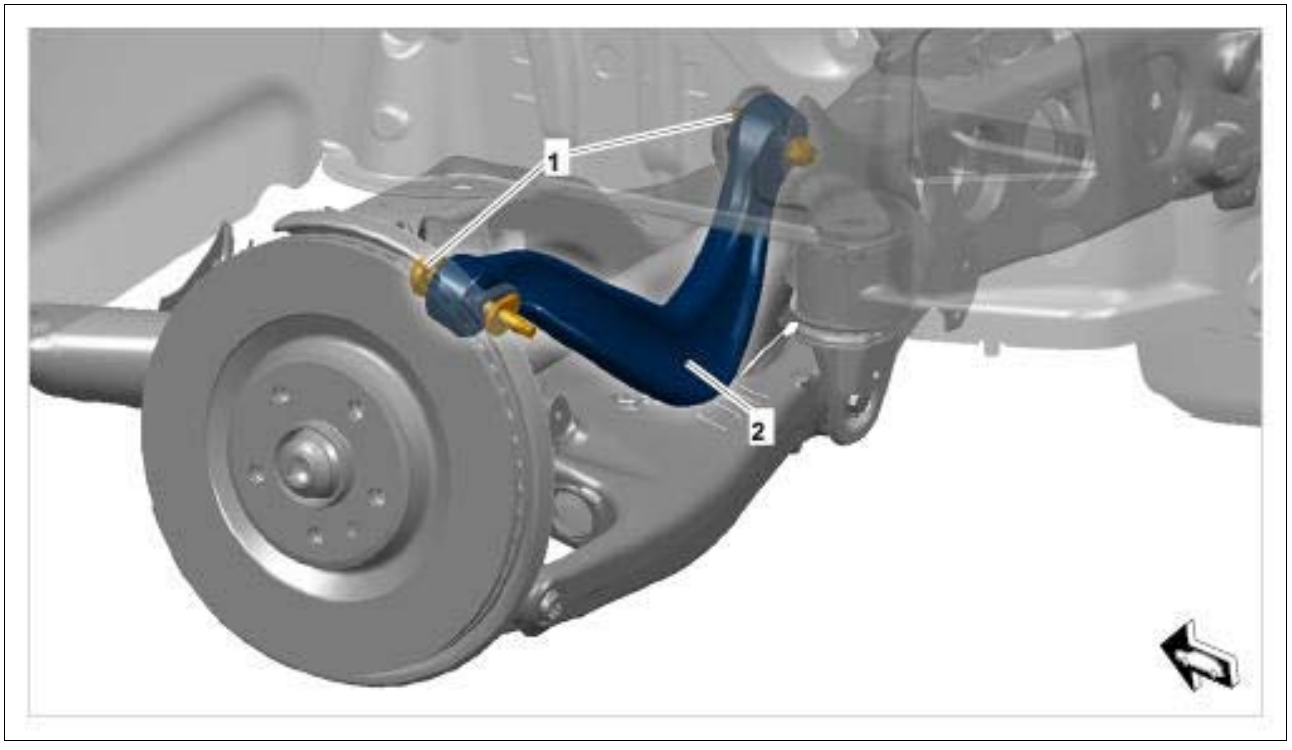

Courtesy of PORSCHE CARS NORTH AMERICA, INC.

1. Mark the position of the eccentric screw with respect to the wheel bearing housing for reinstallation.
2. Unscrew fastening screws for the control arm **-2-** at the chassis subframe and at the wheel bearing housing (eccentric screw) **-1-** .
3. Remove control arm.

WM 423555 REPLACING UPPER CONTROL ARM (MACAN, MACAN S, MACAN TURBO) > REPLACING UPPER CONTROL ARM > INSTALLING UPPER CONTROL ARM

WARNING: Wheel bearing housing raised incorrectly

- *Risk of squashing*
- *Risk of damage to components*

→ Wear personal protective gear.

→ Do not raise the wheel suspension higher than the normal vehicle position (vehicle resting on wheels).

Information

- All screws and threaded joints on the axle must be tightened in vehicle position. Vehicle position means: vehicle standing on its wheels, or the wheel suspension is raised with a universal vehicle lift. Dimension -1- , from lower edge of wing to center of axle corresponds to vehicle position. The current height can be found in → 4495TW ADJUSTMENT VALUES FOR SUSPENSION ALIGNMENT . Always observe the following points!

Fig 1: Identifying Wheel To Wing Lower Edge Dimension (Rear Axle)

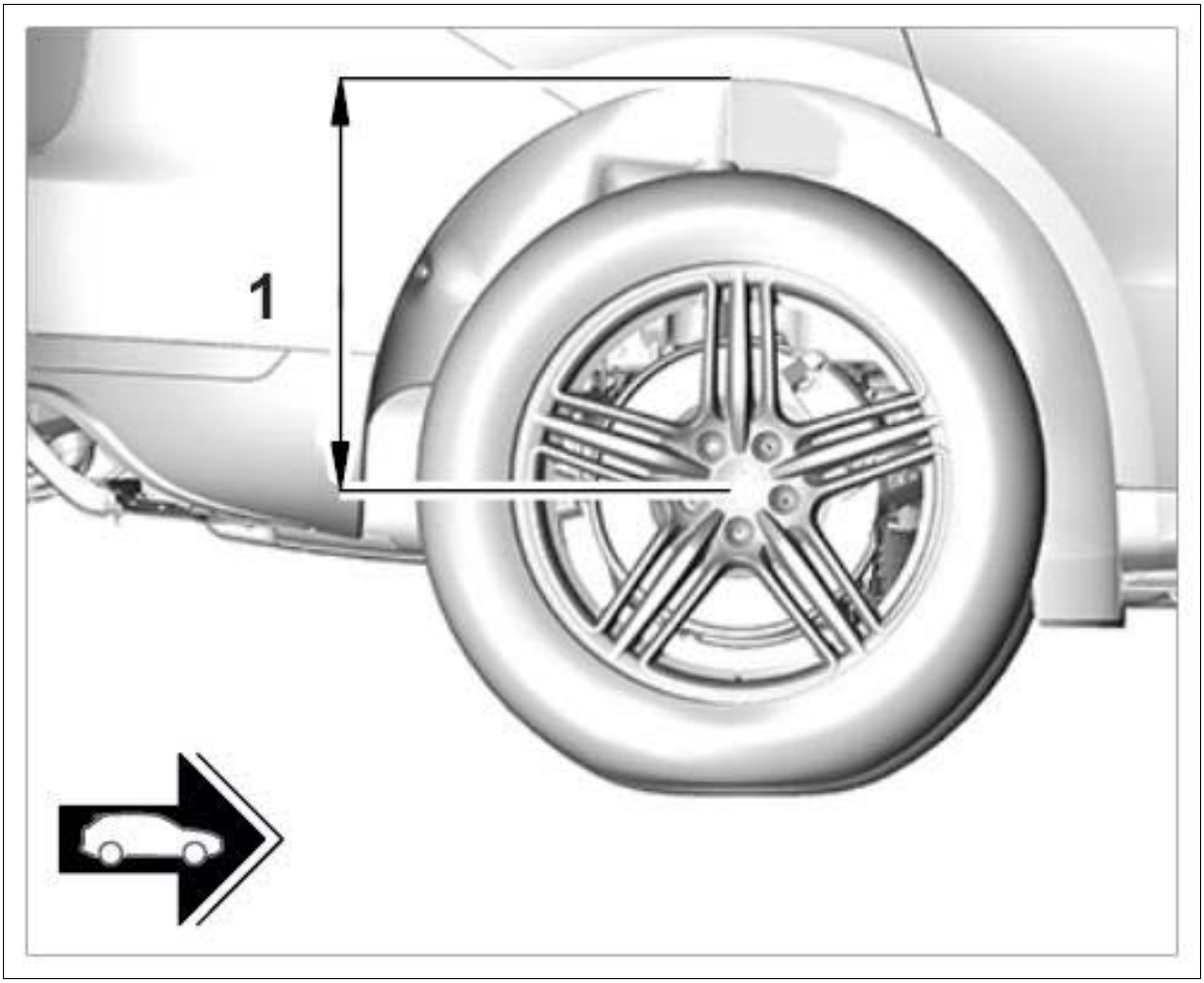

Courtesy of PORSCHE CARS NORTH AMERICA, INC.

- On vehicles with air springs, the respective air spring must be bled using the Porsche System Tester . → 4301IN BLEEDING AND FILLING THE LEVELLING SYSTEM
- Screws and nuts are Geomet-coated and must not be greased.

1. Installation is performed in reverse order.

   Observe specified tightening torques:

   Upper control arm to rear axle housing: **Initial tightening 70 Nm (52 ftlb.) Final tightening +180°**

   Upper control arm to wheel bearing housing: **Tightening torque 95 Nm (70 ftlb.)**

WM 423555 REPLACING UPPER CONTROL ARM (MACAN, MACAN S, MACAN TURBO) > SUBSEQUENT WORK

1. Fit wheel → INSTALLING WHEEL .

2. Perform suspension alignment → 449503 SUSPENSION ALIGNMENT, COMPLETE .

WM 425219 REMOVING AND INSTALLING REAR WHEEL BEARING HOUSING (MACAN, MACAN S, MACAN TURBO) > TOOLS

Designation	Type	Number	Description	
puller hook	Special tool	9229/1		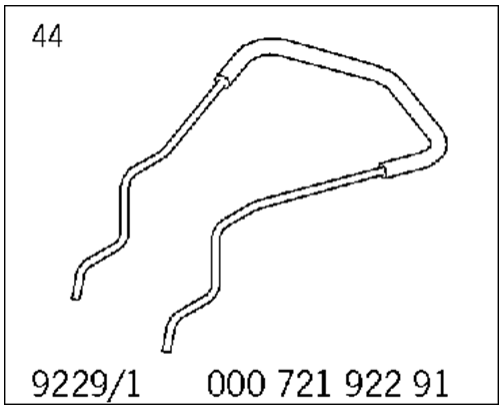

WM 425219 REMOVING AND INSTALLING REAR WHEEL BEARING HOUSING (MACAN, MACAN S, MACAN TURBO) > TECHNICAL VALUES

Location	Description	Type	Basic value	Tolerance 1	Tolerance 2
Wheel bearing to wheel bearing housing	M12 x 1.5 x 45 thread/observe installation sequence!/always use new screws or bolts following removal	Initial tightening	80 Nm (59 ftlb.)		
Wheel bearing to wheel bearing housing	M12 x 1.5 x 45 thread/observe installation sequence!/always use new screws or bolts following removal	Final tightening	+90°		
Speed sensor to wheel bearing housing	M6 x 16 thread	Tightening torque	8 Nm (6 ftlb.)		
Brake cover plate to wheel bearing housing	M6 x 14 thread	Tightening torque	10 Nm (7.5 ftlb.)		

Holder to wheel bearing housing	M6 x 16 thread	Tightening torque	9 Nm (6.5 ftlb.)		
Drive shaft to wheel hub	Step 1 (wheels suspended in mid-air, operate brakes while tightening)/M16 x 72 thread/always use new screws or bolts following removal	Initial tightening	200 Nm (148 ftlb.)		
Drive shaft to wheel hub	Step 2 (wheels on the ground)/M16 x 72 thread/always use new screws or bolts following removal	Final tightening	180°		
Lower trailing arm to wheel bearing housing	M14 thread/always use new screws or bolts and nuts following removal	Initial tightening	120 Nm (89 ftlb.)		
Lower trailing arm to wheel bearing housing	M14 thread/always use new screws or bolts and nuts following removal	Final tightening	+360°		
Upper control arm to wheel bearing housing	M12 thread	Tightening torque	95 Nm (70 ftlb.)		
Tie rod to wheel bearing housing	M12 x 1.5 x 80.8 thread/always use new screws or bolts following removal	Initial tightening	90 Nm (67 ftlb.)		
Tie rod to wheel bearing housing	M12 x 1.5 x 80.8 thread/always use new screws or bolts following removal	Final tightening	+90°		
Shock absorber to wheel bearing housing	M14 x 1.5 x 90 thread/always use new screw or bolt following removal	Initial tightening	150 Nm (111 ftlb.)		
Shock absorber to wheel bearing housing	M14 x 1.5 x 90 thread/always use new screw or bolt following removal	Final tightening	+180°		

WM 425219 REMOVING AND INSTALLING REAR WHEEL BEARING HOUSING (MACAN, MACAN S, MACAN TURBO) > PRELIMINARY WORK

1. Remove the relevant hub cap using **puller hook 9229/1** and loosen axle bolt **-1-** before raising the vehicle. Operate the brake while doing this (2 mechanics required).

   Fig 1: Removing Axle Bolt

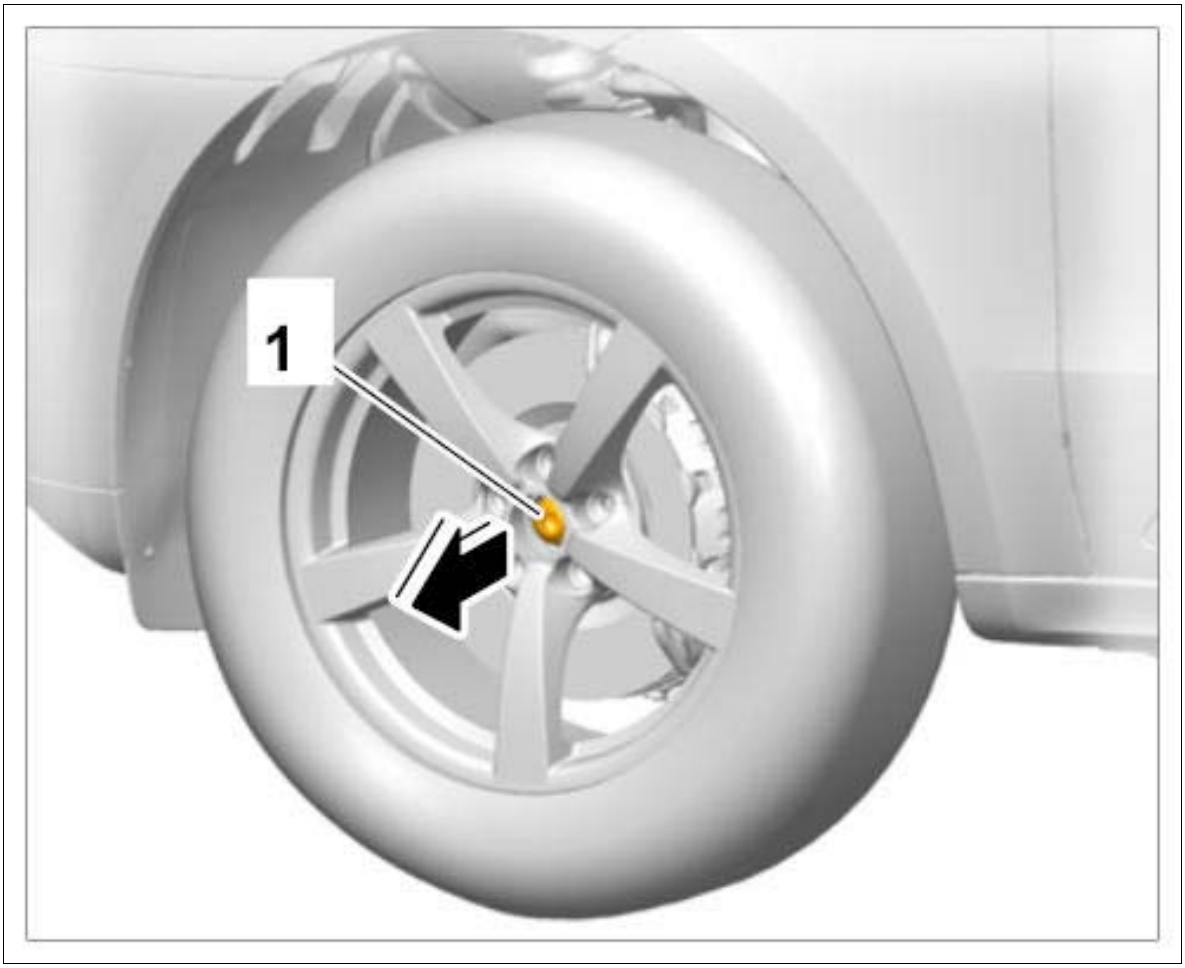

Courtesy of PORSCHE CARS NORTH AMERICA, INC.

2. Raise the vehicle → 4X00IN LIFTING THE VEHICLE .
3. Remove wheel → 440519 REMOVING AND INSTALLING WHEEL .
4. Loosen fastening screw **-1-** and remove holder **-2-** .

Fig 2: Identifying Wheel Bearing Housing Holder

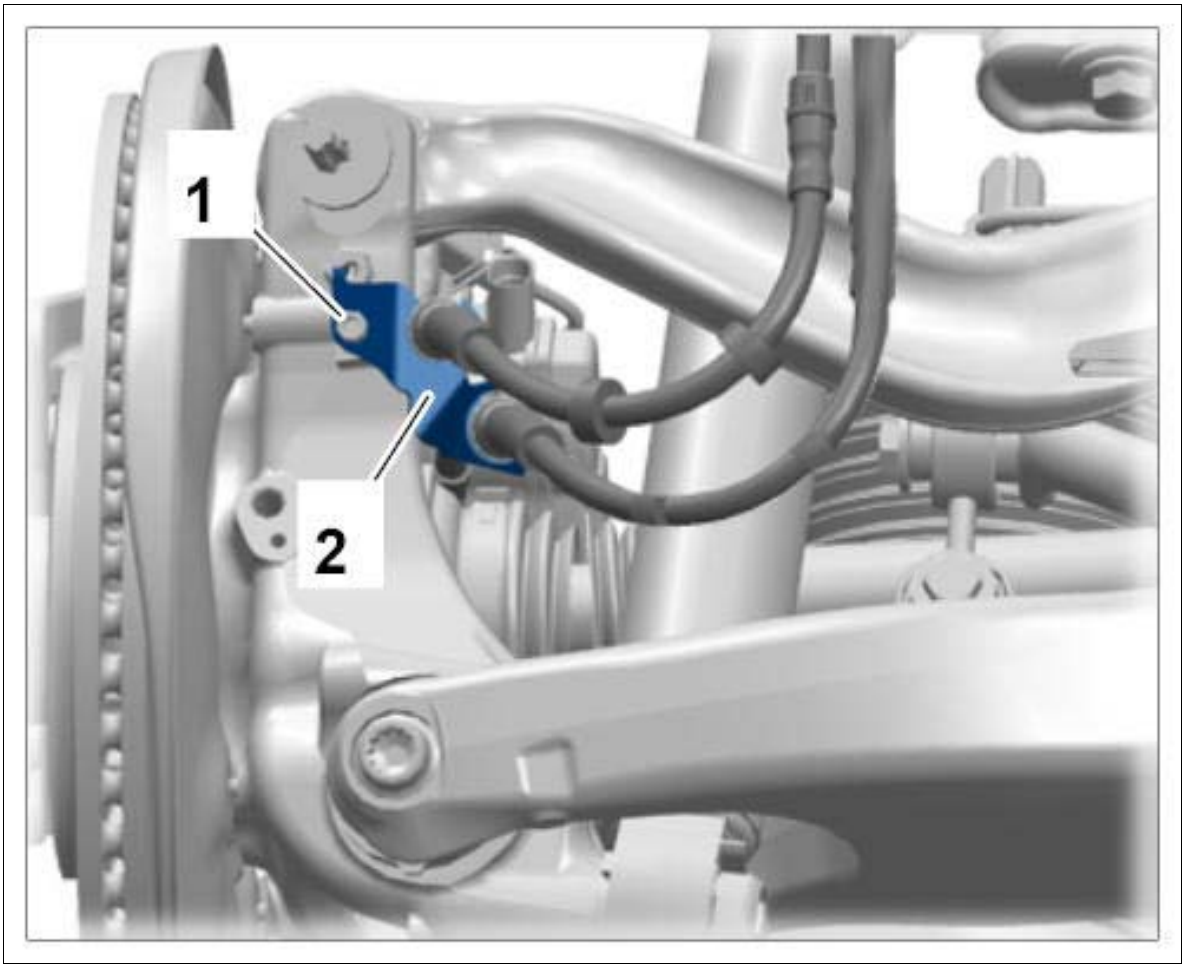

Courtesy of PORSCHE CARS NORTH AMERICA, INC.

5. Remove rear brake calliper and suspend it at a suitable position in the wheel housing (do not open the brake hydraulic system!) → 474119 REMOVING AND INSTALLING REAR BRAKE CALLIPER .
6. Remove rear brake disc → 465319 REMOVING AND INSTALLING REAR BRAKE DISC → 465419 REMOVING AND INSTALLING REAR BRAKE DISC (PCCB) .
7. Remove rear coil spring → 427219 REMOVING AND INSTALLING REAR COIL SPRING .

WM 425219 REMOVING AND INSTALLING REAR WHEEL BEARING HOUSING (MACAN, MACAN S, MACAN TURBO) > REMOVING AND INSTALLING REAR WHEEL BEARING HOUSING > REMOVING REAR WHEEL BEARING HOUSING

1. Disconnect connector **-1-** from speed sensor.

Fig 1: Identifying Rear Speed Sensor Connector

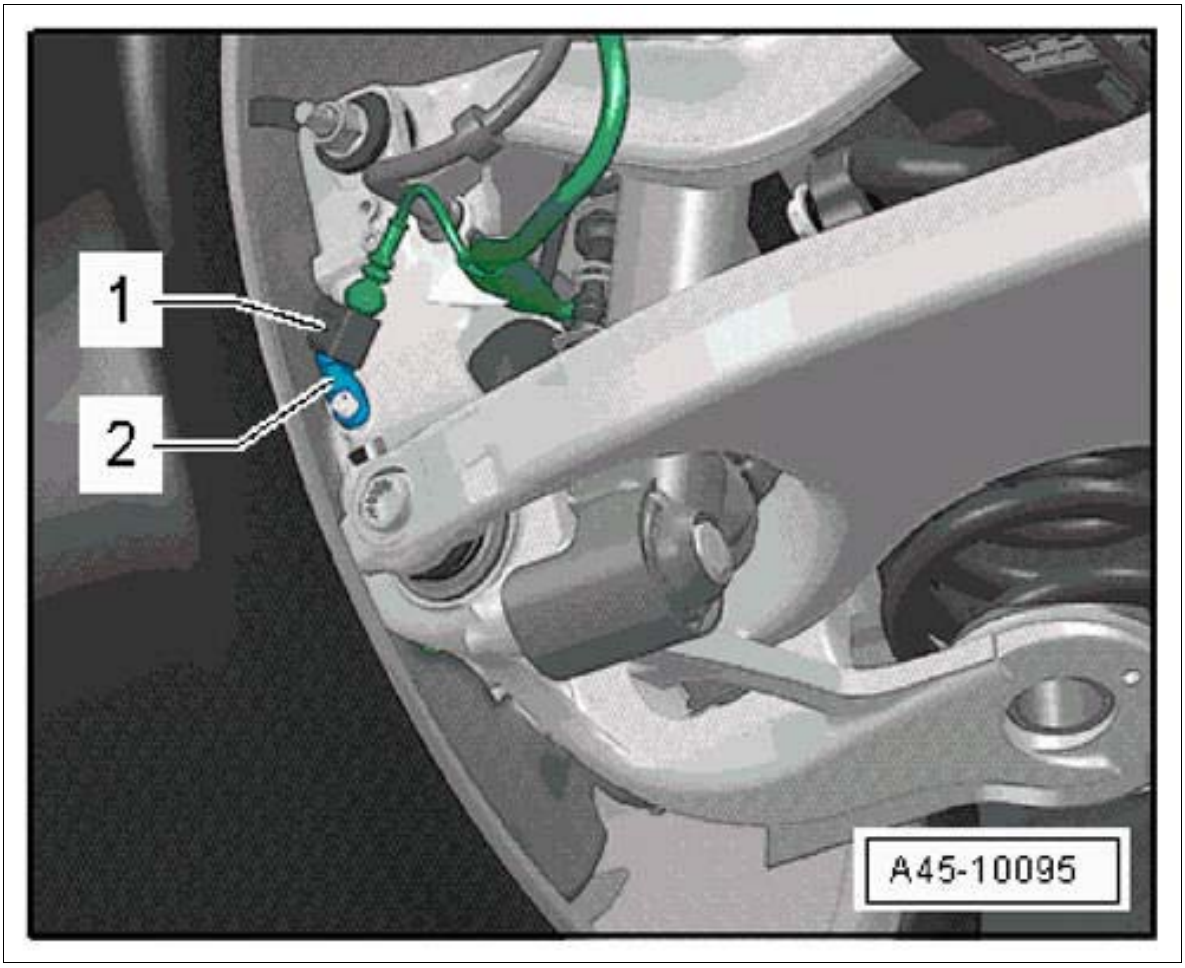

Courtesy of PORSCHE CARS NORTH AMERICA, INC.

2. Loosen upper control arm from the wheel bearing housing.

Fig 2: Identifying Wheel Bearing Housing Upper Control Arm Mounting

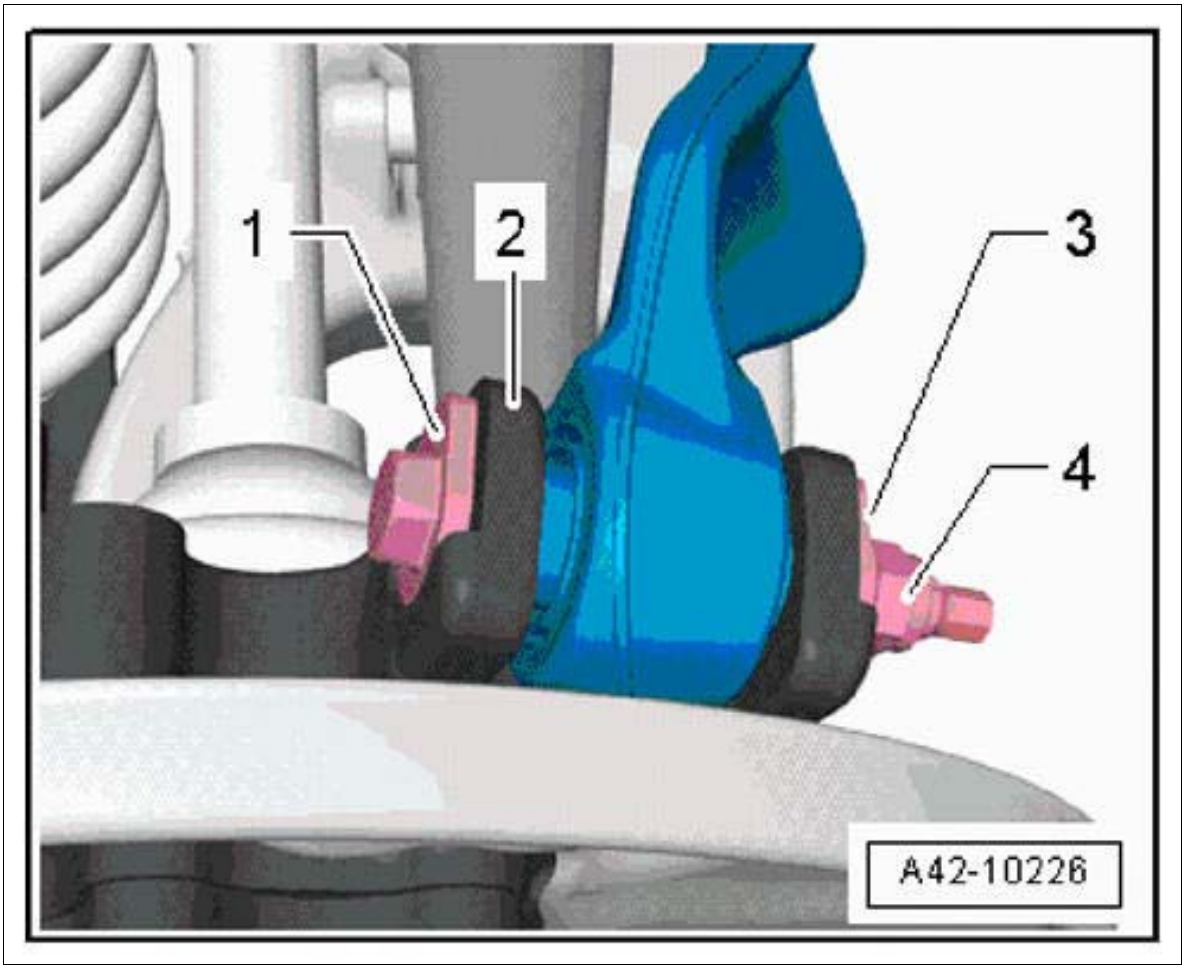

Courtesy of PORSCHE CARS NORTH AMERICA, INC.

1. 2.1. Mark the position of the eccentric screw **-1-** with respect to the wheel bearing housing.
2. 2.2. Screw off nut **-4-** and remove eccentric washer **-3-** .
3. 2.3. Pull out screw **-1-** .

3. Unscrew fastening screw **-4-** .

Fig 3: Identifying Wheel Bearing Housing Tie Rod Mounting

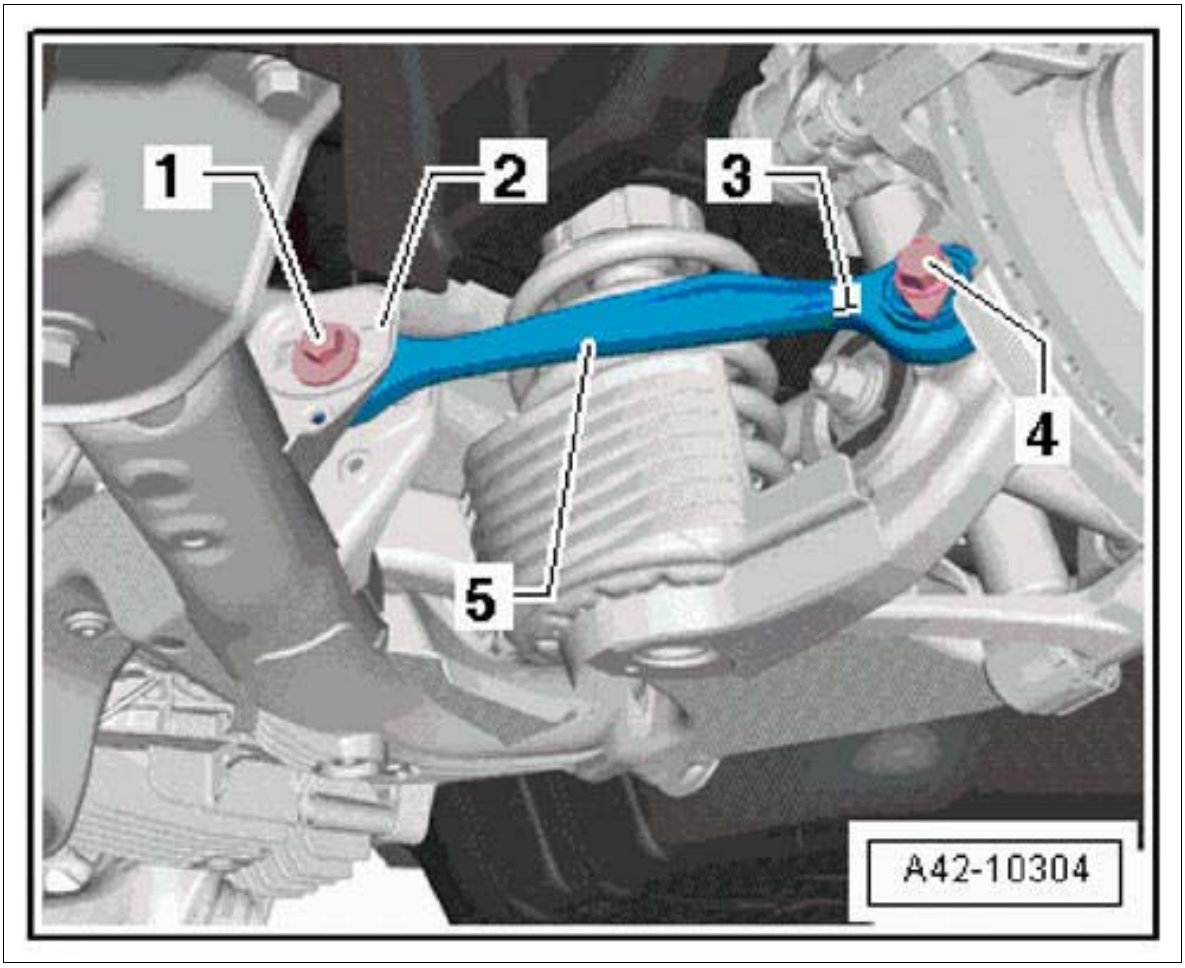

Courtesy of PORSCHE CARS NORTH AMERICA, INC.

4. Release locking lugs **-1-** and remove stone guard **-2-** .

Fig 4: Identifying Stone Guard And Locking Lugs

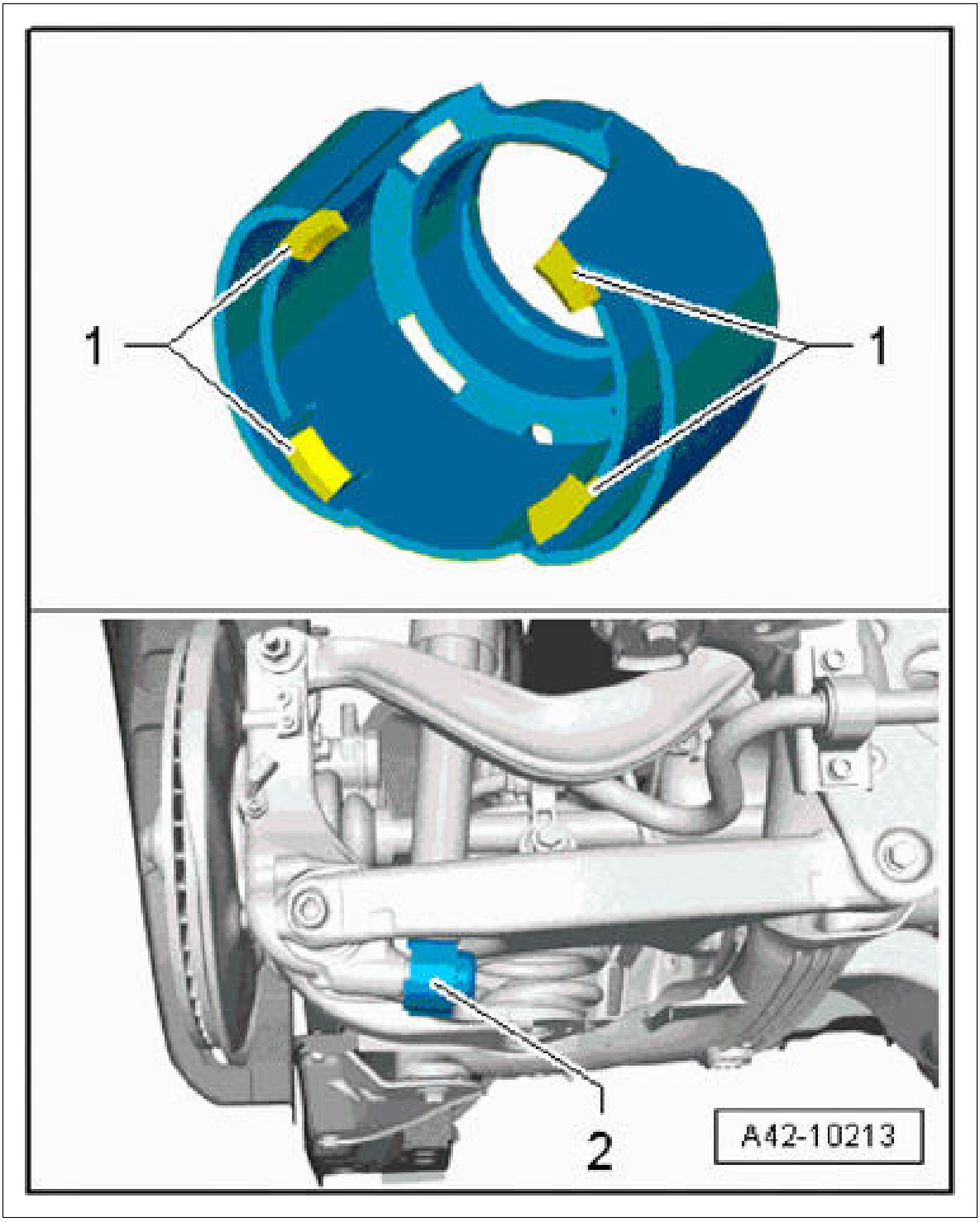

Courtesy of PORSCHE CARS NORTH AMERICA, INC.

5. Unscrew fastening screw **-2-** and remove washer **-1-** .

Fig 5: Identifying Lower Shock-Absorber Mount

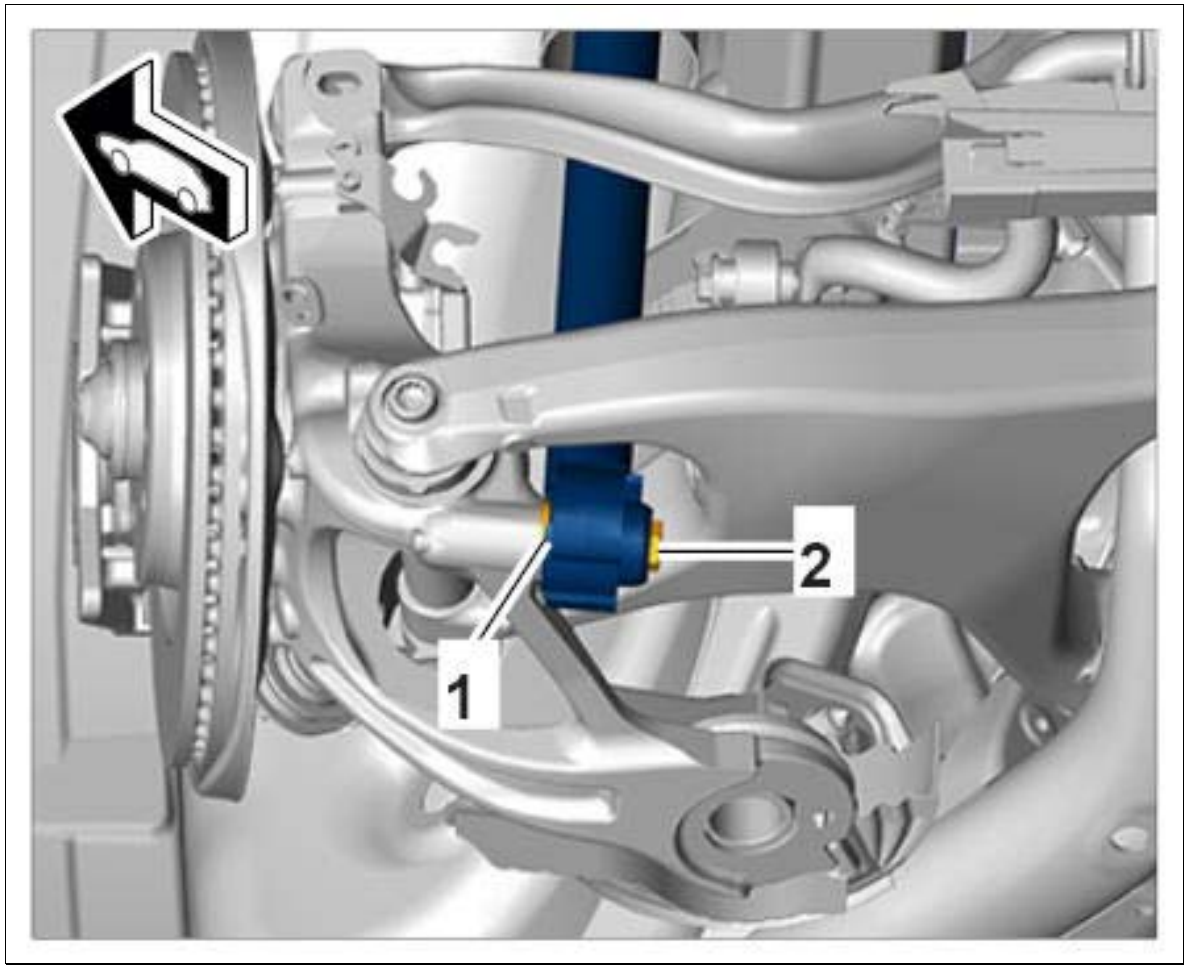

Courtesy of PORSCHE CARS NORTH AMERICA, INC.

6. Loosen lower trailing arm on the wheel bearing housing. Drive shafts must not be left hanging from the joint stop! Hold the drive shaft or tie it up if necessary.

Fig 6: Identifying Wheel Bearing Housing Trailing Arm Mounting

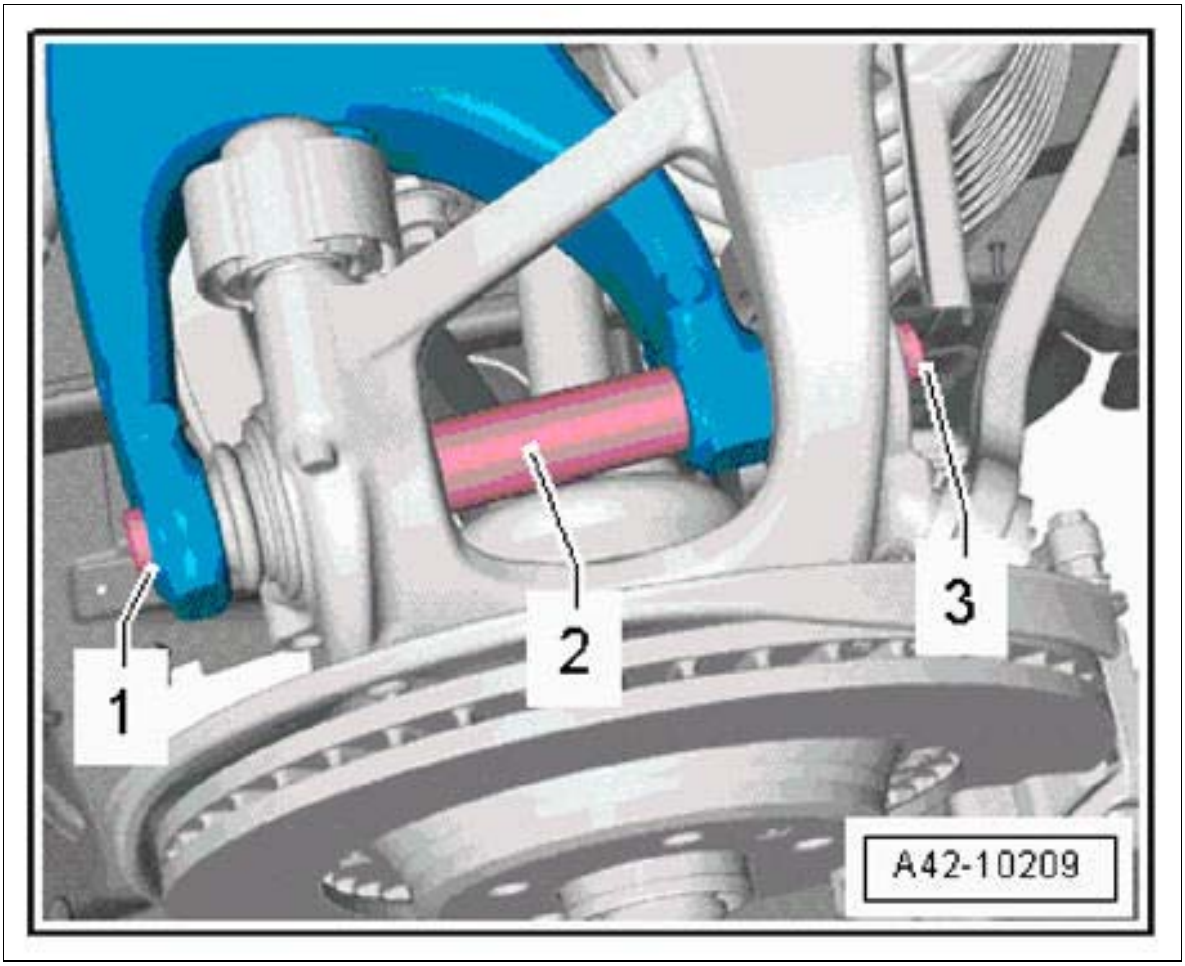

Courtesy of PORSCHE CARS NORTH AMERICA, INC.

1. 6.1. Screw off nut **-3-** .
2. 6.2. Unscrew screw **-1-** and remove spacer tube **-2-** .

   Information

   Mounting for trailing arm on wheel bearing housing

7. Swivel wheel bearing housing aside and pull drive shaft out of the wheel bearing housing.
8. **If the wheel bearing housing will be replaced, perform the following tasks:**
   1. 8.1. Unscrew fastening screws **-1-** and remove cover plate for brake disc **-2-** .

Fig 7: Identifying Brake Cover Plate Mounting

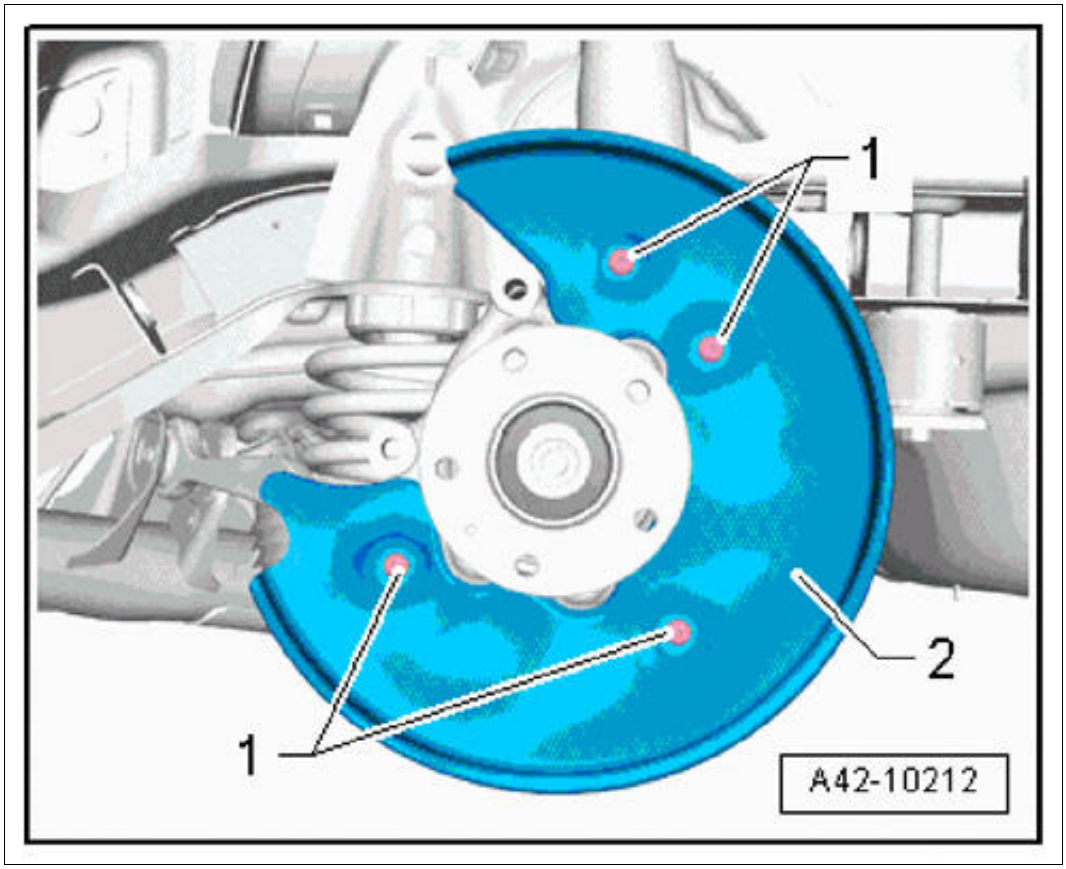

Courtesy of PORSCHE CARS NORTH AMERICA, INC.

2. 8.2. Unscrew fastening screw **-1-** and remove speed sensor **-2-** .

Fig 8: Identifying Speed Sensor Mounting

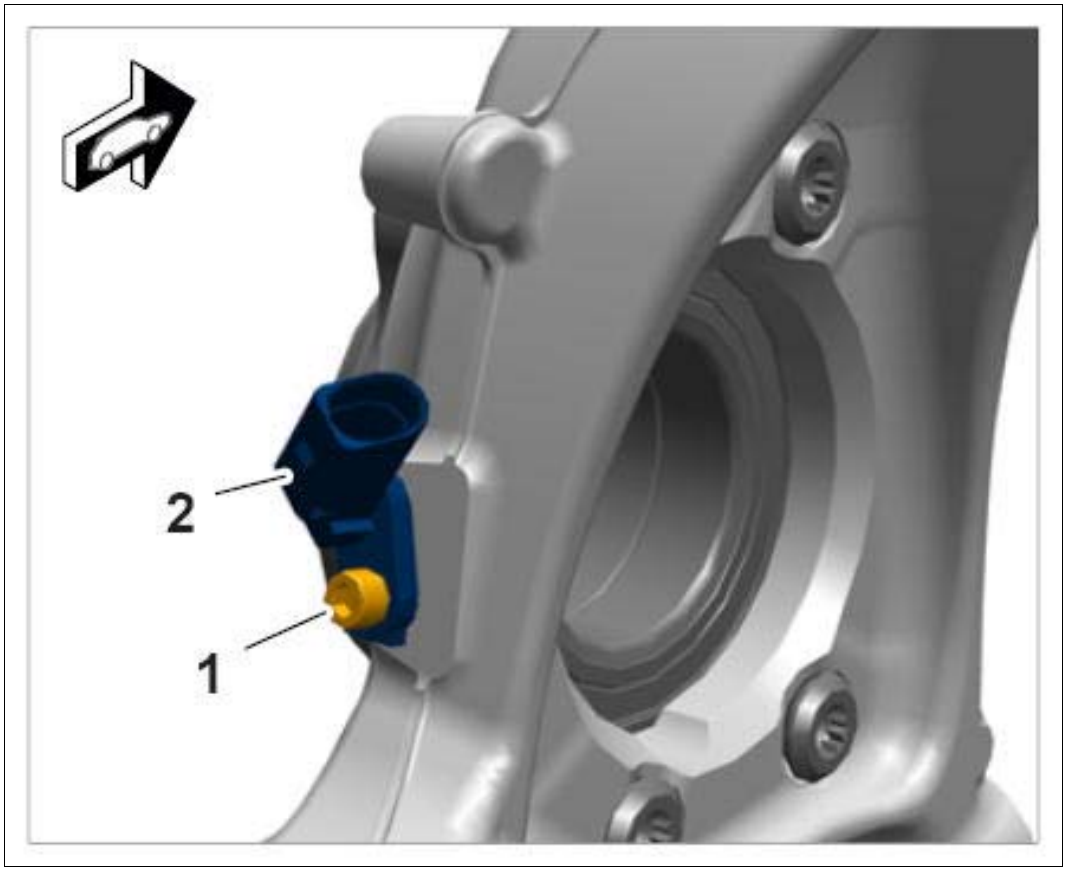

Courtesy of PORSCHE CARS NORTH AMERICA, INC.

3. 8.3. Clamp the wheel bearing housing in a vice with aluminum protective jaws.
4. 8.4. Unscrew fastening screws **-1-** and remove wheel bearing unit **-2-** .

Fig 9: Identifying Wheel Bearing Unit Mounting

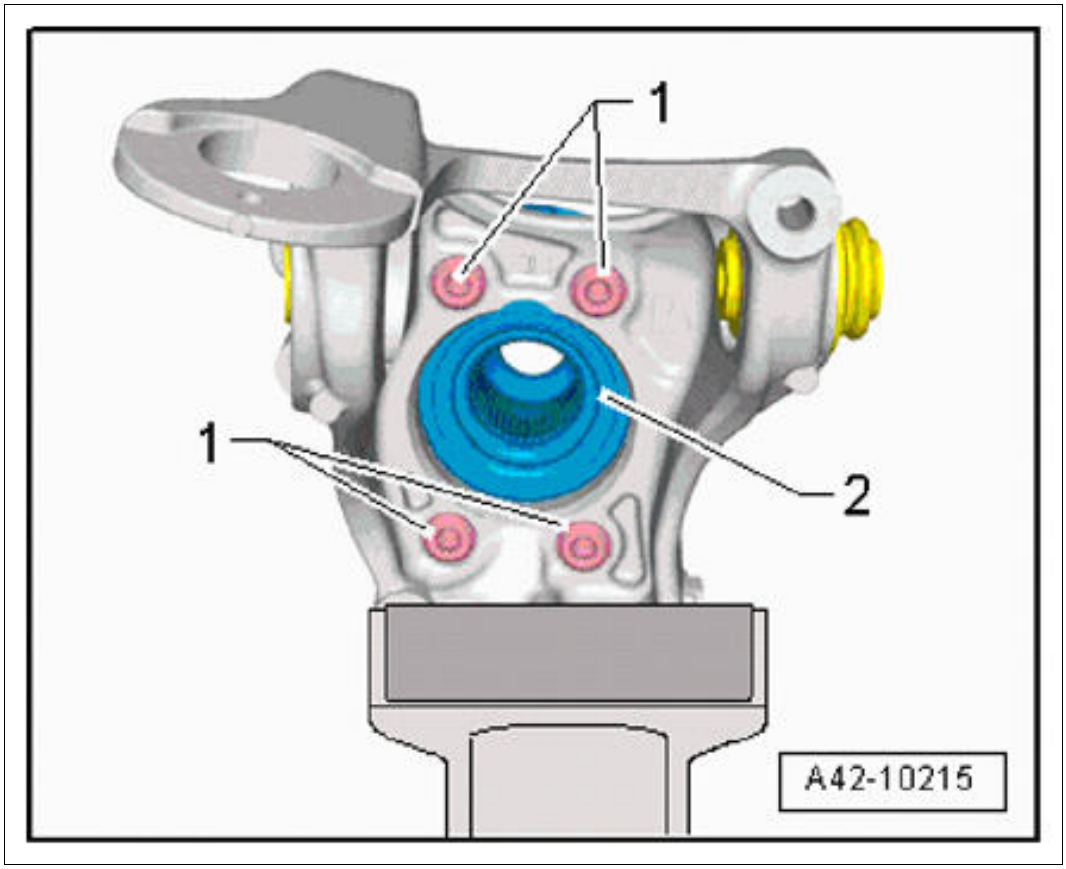

Courtesy of PORSCHE CARS NORTH AMERICA, INC.

WM 425219 REMOVING AND INSTALLING REAR WHEEL BEARING HOUSING (MACAN, MACAN S, MACAN TURBO) > REMOVING AND INSTALLING REAR WHEEL BEARING HOUSING > INSTALLING REAR WHEEL BEARING HOUSING

WARNING: Wheel bearing housing raised incorrectly

- *Risk of squashing*
- *Risk of damage to components*

→ Wear personal protective gear.

→ Do not raise the wheel suspension higher than the normal vehicle position (vehicle resting on wheels).

Information

- All screws and threaded joints on the axle must be tightened in vehicle position. Vehicle position means: vehicle standing on its wheels, or the wheel suspension is raised with a universal vehicle lift. Dimension -1- , from lower edge of wing to center of axle corresponds to vehicle position. The

current height can be found in → 4495TW ADJUSTMENT VALUES FOR SUSPENSION ALIGNMENT . Always observe the following points!

Fig 1: Identifying Wheel To Wing Lower Edge Dimension (Rear Axle)

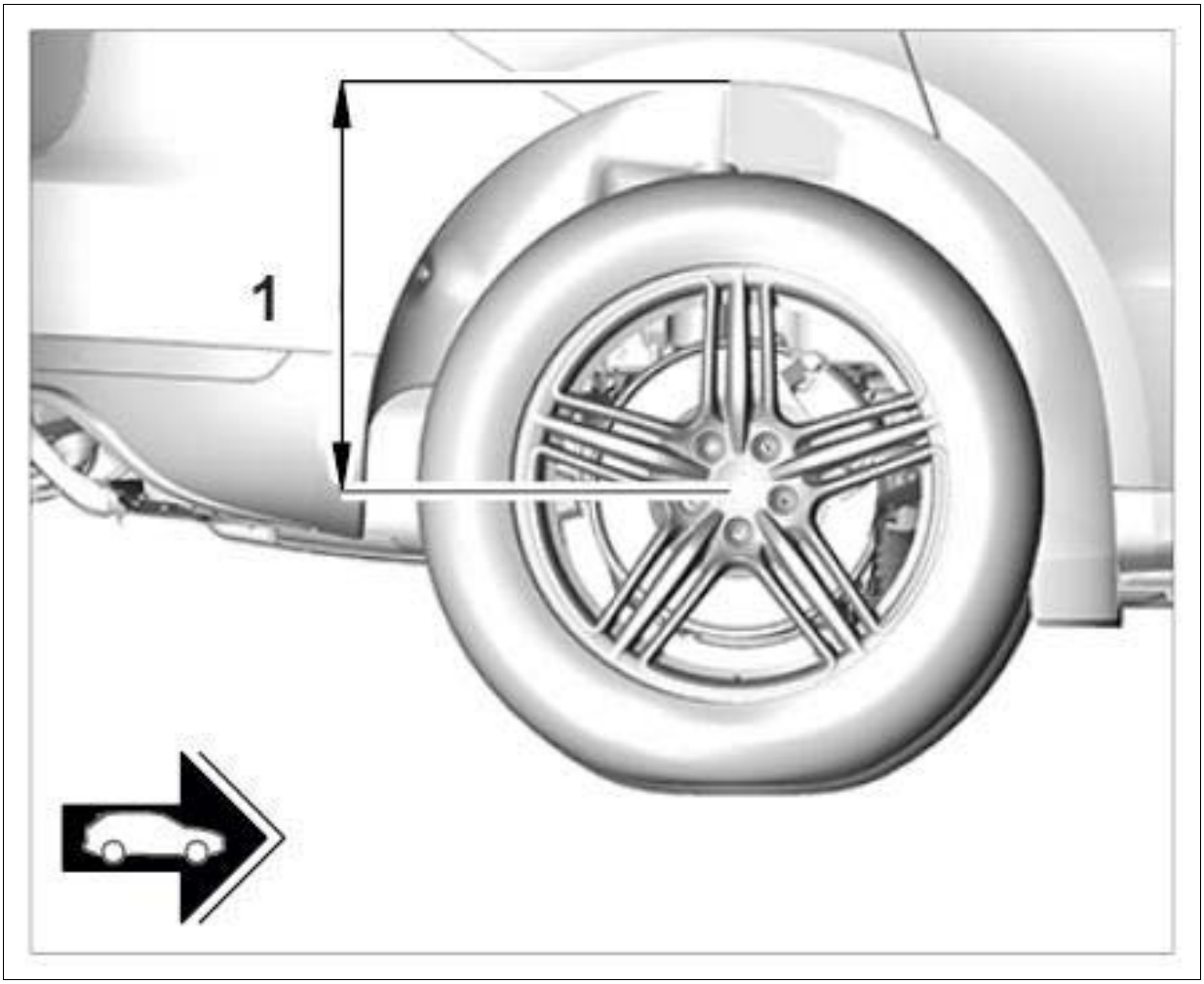

Courtesy of PORSCHE CARS NORTH AMERICA, INC.

- On vehicles with air springs, the respective air spring must be bled using the Porsche System Tester . → 4301IN BLEEDING AND FILLING THE LEVELLING SYSTEM
- Screws and nuts are Geomet-coated and must not be greased.

1. **If the wheel bearing housing was replaced, perform the following tasks:**
    1. 1.1. Clamp the wheel bearing housing in a vice with aluminum protective jaws.
    2. 1.2. Insert wheel bearing unit into the wheel bearing housing and tighten fastening screws.

Fig 2: Wheel Bearing Unit Screws Tightening Sequence

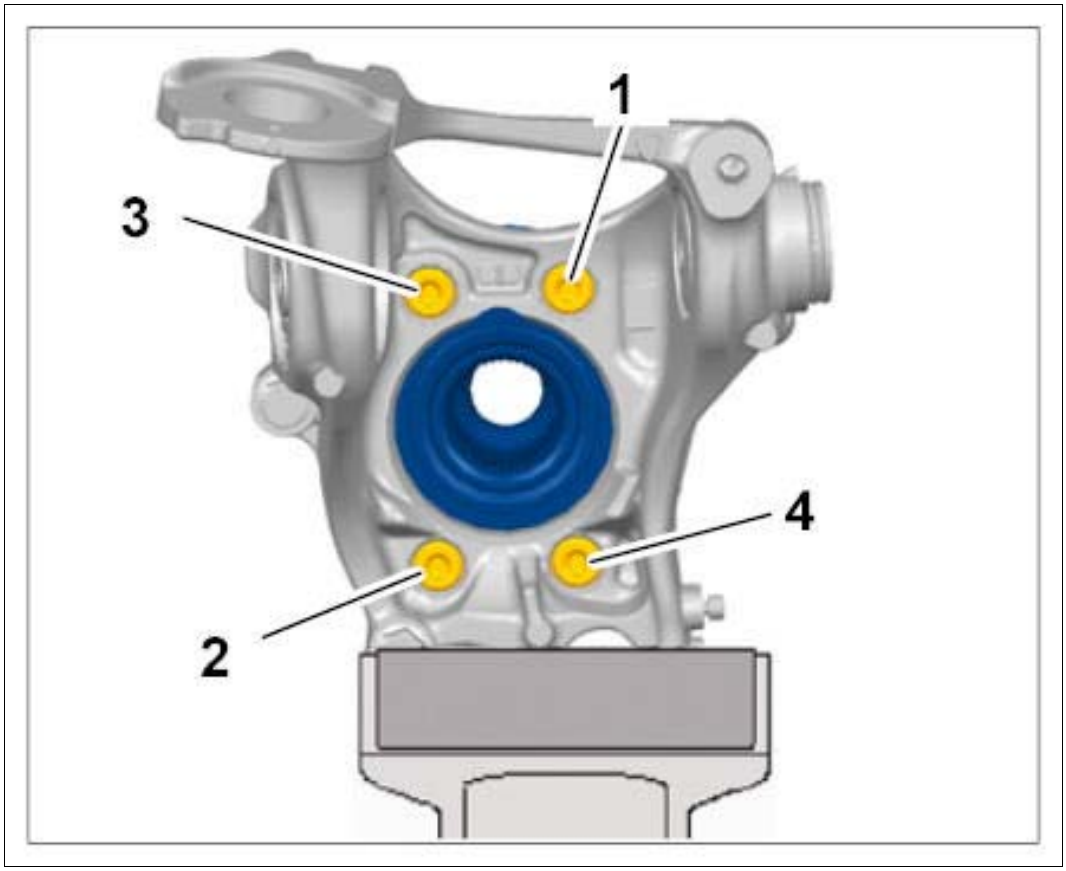

Courtesy of PORSCHE CARS NORTH AMERICA, INC.

1. 1.2.1. Always observe the specified tightening sequence **-1 - 4-** !

   Observe specified tightening torques:

   Wheel bearing unit to wheel bearing housing: **Initial tightening 80 Nm (59 ftlb.) Final tightening +90°**

   Information

   1. The speed sensor must be inserted using Optitemp (Optitemp LG2, 25-ml spray can available under Part No. 000.043.204.21).
   2. The bore for mounting the speed sensor must be free of dirt.
   3. Observe correct tightening torques.

3. 1.3. Insert speed sensor **-2-** and tighten fastening screw **-1-** . **Tightening torque 8 Nm (6 ftlb.)**

Fig 3: Identifying Speed Sensor Mounting

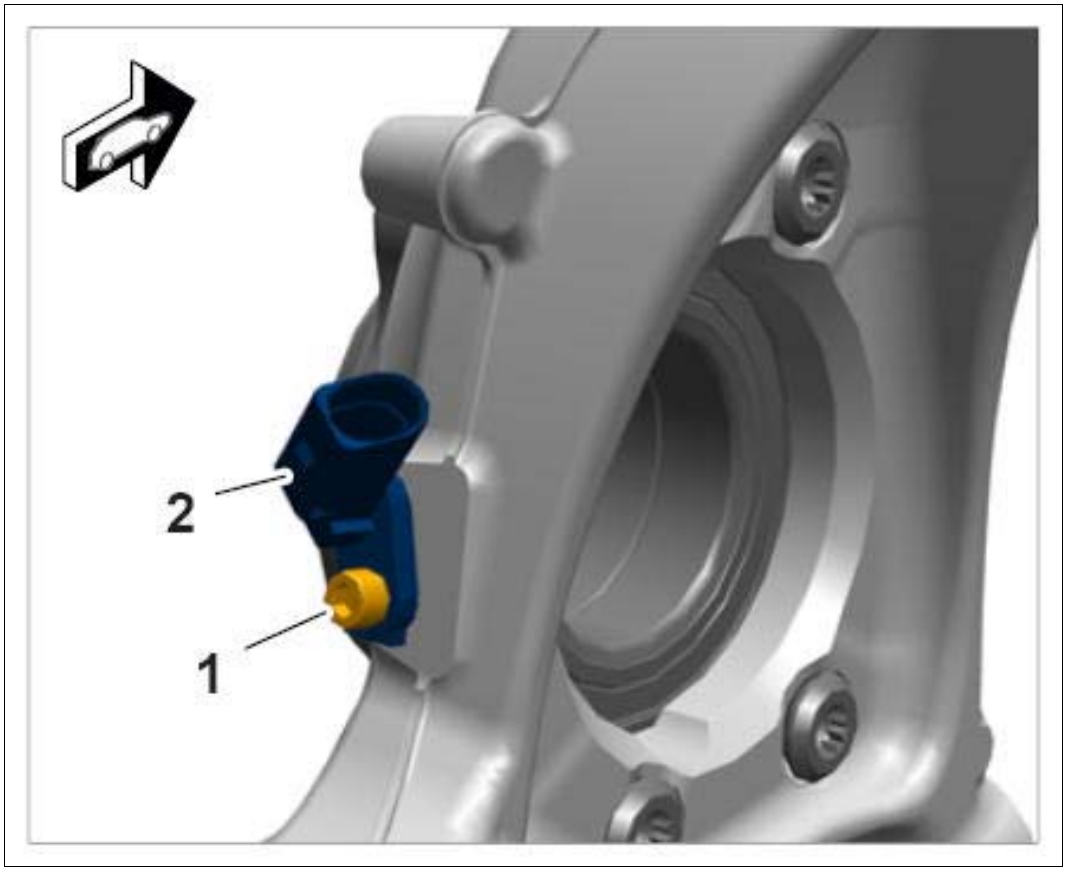

Courtesy of PORSCHE CARS NORTH AMERICA, INC.

4. 1.4. Position cover plate for brake disc **-2-** and tighten fastening screws **-1-** .
   Tightening torque 10 Nm (7.5 ftlb.)

Fig 4: Identifying Brake Cover Plate Mounting

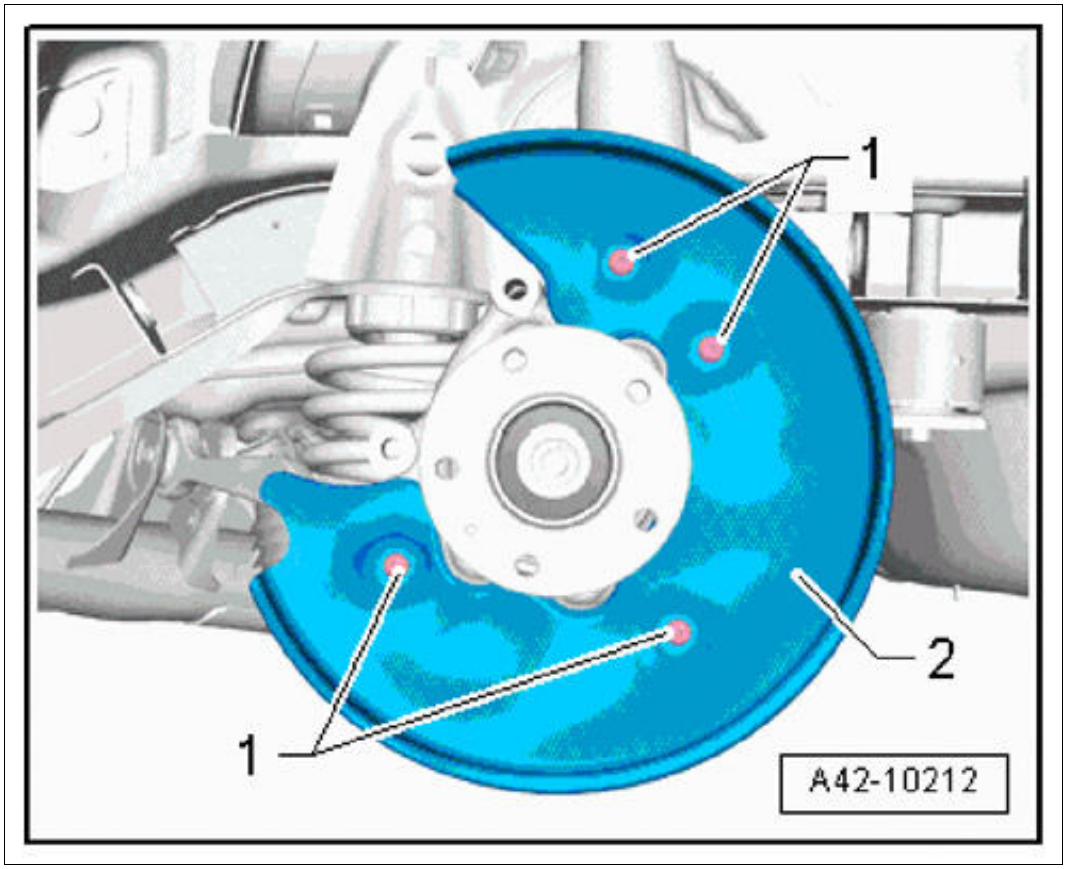

Courtesy of PORSCHE CARS NORTH AMERICA, INC.

2. Installation is performed in reverse order.

   Observe specified tightening torques:

   Information

   Tighten the threaded joint on the wheel bearing housing only at the fastening screw **-1-** . Counter at the nut **-3-** while doing so.

Fig 5: Identifying Wheel Bearing Housing Trailing Arm Mounting

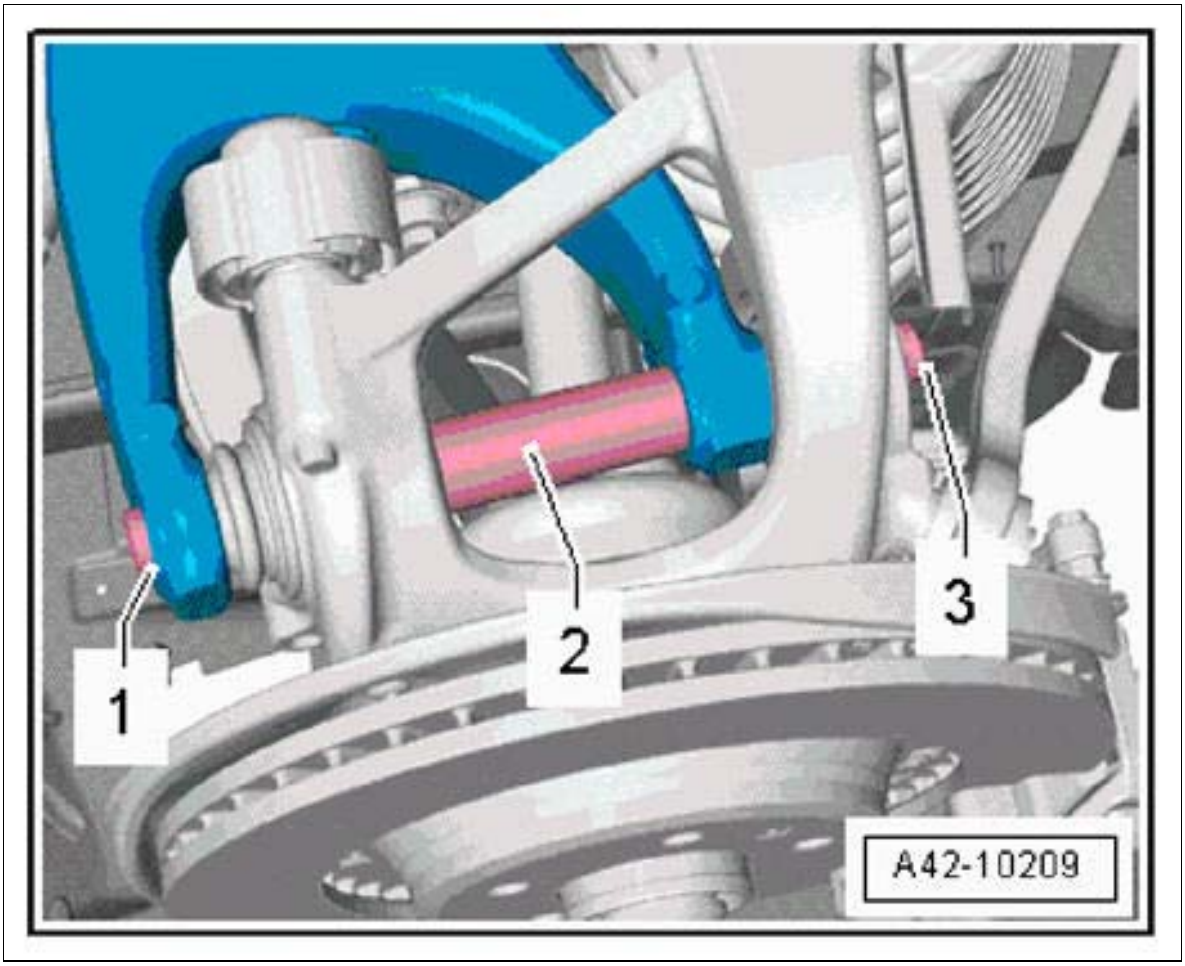

Courtesy of PORSCHE CARS NORTH AMERICA, INC.

Lower trailing arm to wheel bearing housing: **Initial tightening 120 Nm (89 ftlb.) Final tightening +360°**

Shock absorber to wheel bearing housing: **Initial tightening 150 Nm (111 ftlb.) Final tightening +180°**

Tie rod to wheel bearing housing: **Initial tightening 90 Nm (67 ftlb.) Final tightening +90°**

Upper control arm to wheel bearing housing: **Tightening torque 95 Nm (70 ftlb.)**

Drive shaft to wheel hub (Step 1: Wheels suspended in mid-air, operate brake while tightening): **Initial tightening 200 Nm (148 ftlb.)**

Drive shaft to wheel hub (Step 2: Wheels on the ground): **Final tightening 180°**

WM 425219 REMOVING AND INSTALLING REAR WHEEL BEARING HOUSING (MACAN, MACAN S, MACAN TURBO) > SUBSEQUENT WORK

1. Install rear coil spring → INSTALLING REAR COIL SPRING .

2. Fit rear brake disc → INSTALLING REAR BRAKE DISC → 465419 REMOVING AND INSTALLING REAR BRAKE DISC (PCCB) .
3. Install rear brake calliper → INSTALLING REAR BRAKE CALLIPER .
4. Fit holder **-2-** and screw in and tighten fastening screw **-1-** . **Tightening torque 9 Nm (6.5 ftlb.)**

   Fig 1: Identifying Wheel Bearing Housing Holder

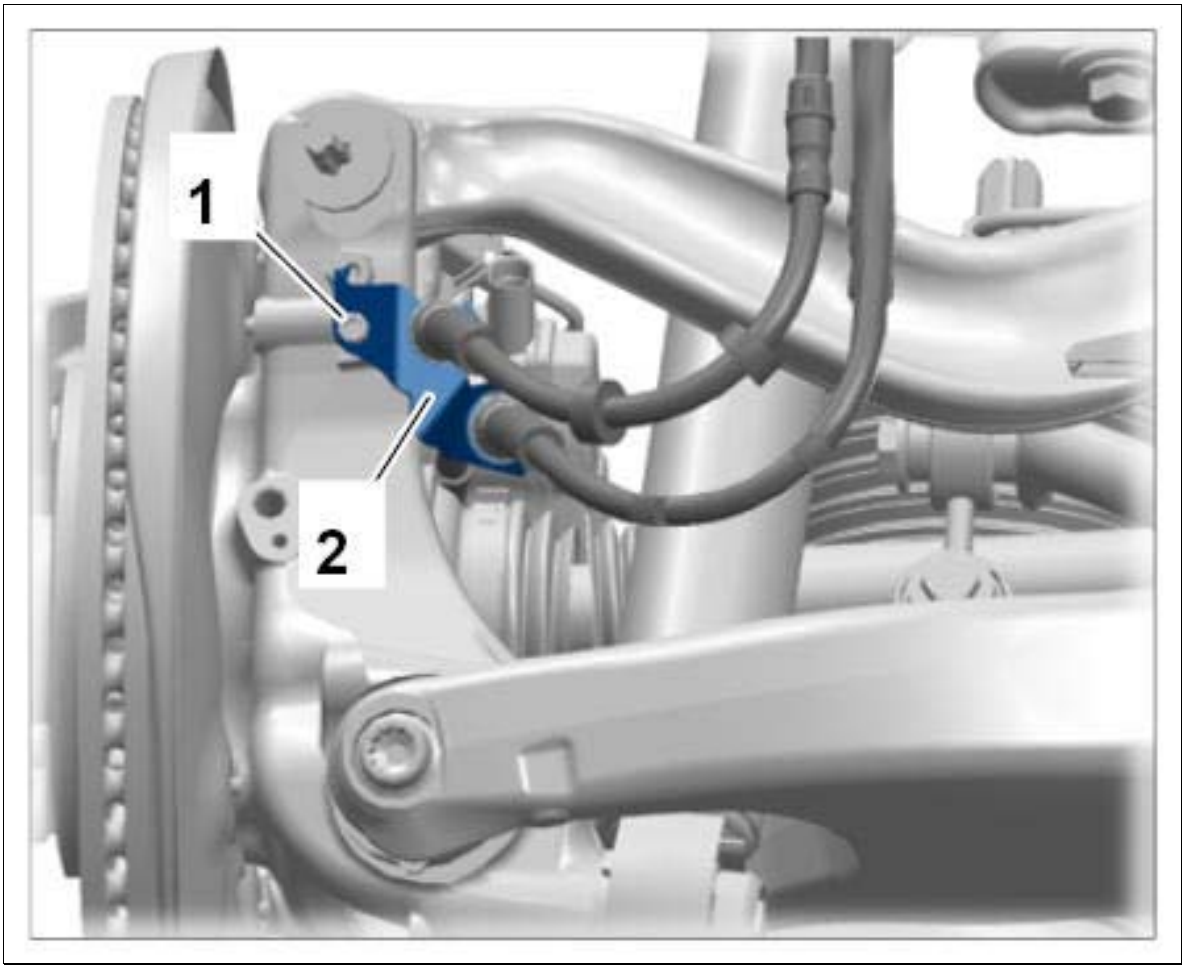

Courtesy of PORSCHE CARS NORTH AMERICA, INC.

5. Fit wheel → INSTALLING WHEEL .
6. Perform suspension alignment → 449503 SUSPENSION ALIGNMENT, COMPLETE .

WM 425855 REPLACING REAR WHEEL BEARING (MACAN, MACAN S, MACAN TURBO) > TOOLS

Designation	Type	Number	Description	

Separating device	Commercially available tool	Nr.112-2		
assembly tool	VW tool	T10230		34 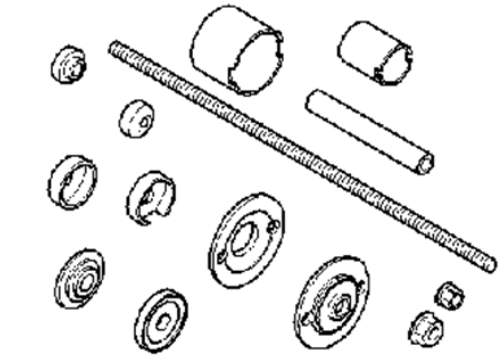 T10230
Pressure plate	VW 401	VW 401		35 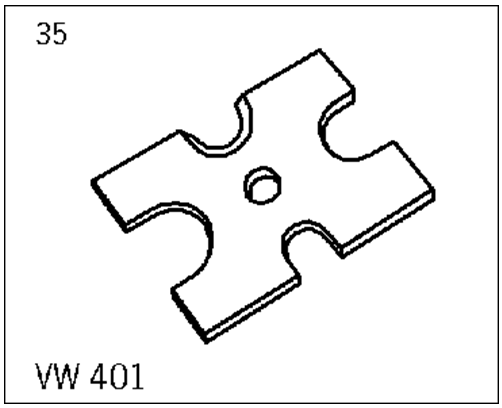 VW 401
Pressure plate	VW tool	VW 402		35 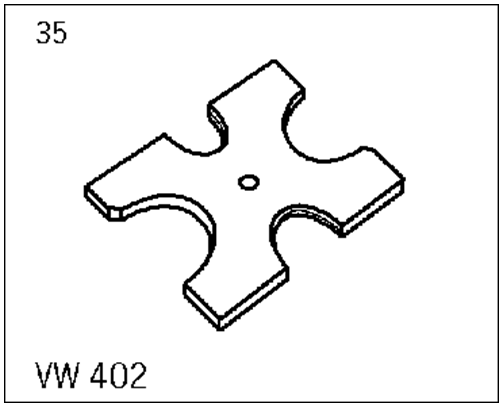 VW 402

WM 425855 REPLACING REAR WHEEL BEARING (MACAN, MACAN S, MACAN TURBO) > TECHNICAL VALUES

Location	Description	Type	Basic value	Tolerance 1	Tolerance 2
Wheel bearing to wheel bearing housing	M12 x 1.5 x 45 thread/observe installation sequence!/always use new screws or bolts following removal	Initial tightening	80 Nm (59 ftlb.)		
Wheel bearing to wheel bearing housing	M12 x 1.5 x 45 thread/observe installation sequence!/always use new screws or bolts following removal	Final tightening	+90°		

WM 425855 REPLACING REAR WHEEL BEARING (MACAN, MACAN S, MACAN TURBO) > PRELIMINARY WORK

1. Remove wheel bearing housing. → 425219 REMOVING AND INSTALLING REAR WHEEL BEARING HOUSING .

WM 425855 REPLACING REAR WHEEL BEARING (MACAN, MACAN S, MACAN TURBO) > REPLACING REAR WHEEL BEARING

Information

- The wheel bearing has a magnetized multipole seal, which acts as a pulse sender for the wheel speed sensor.
- The multiple-pole seal -1- must always face upwards when the wheel bearing is set down (this does not apply when pressing the wheel hub into the wheel bearing). Do not damage the multipole seal and do not come into contact with magnetic objects (e.g. magnetized screwdriver, magnet).

Fig 1: Identifying Wheel Bearing Unit Multiple-Pole Seal Facing Up

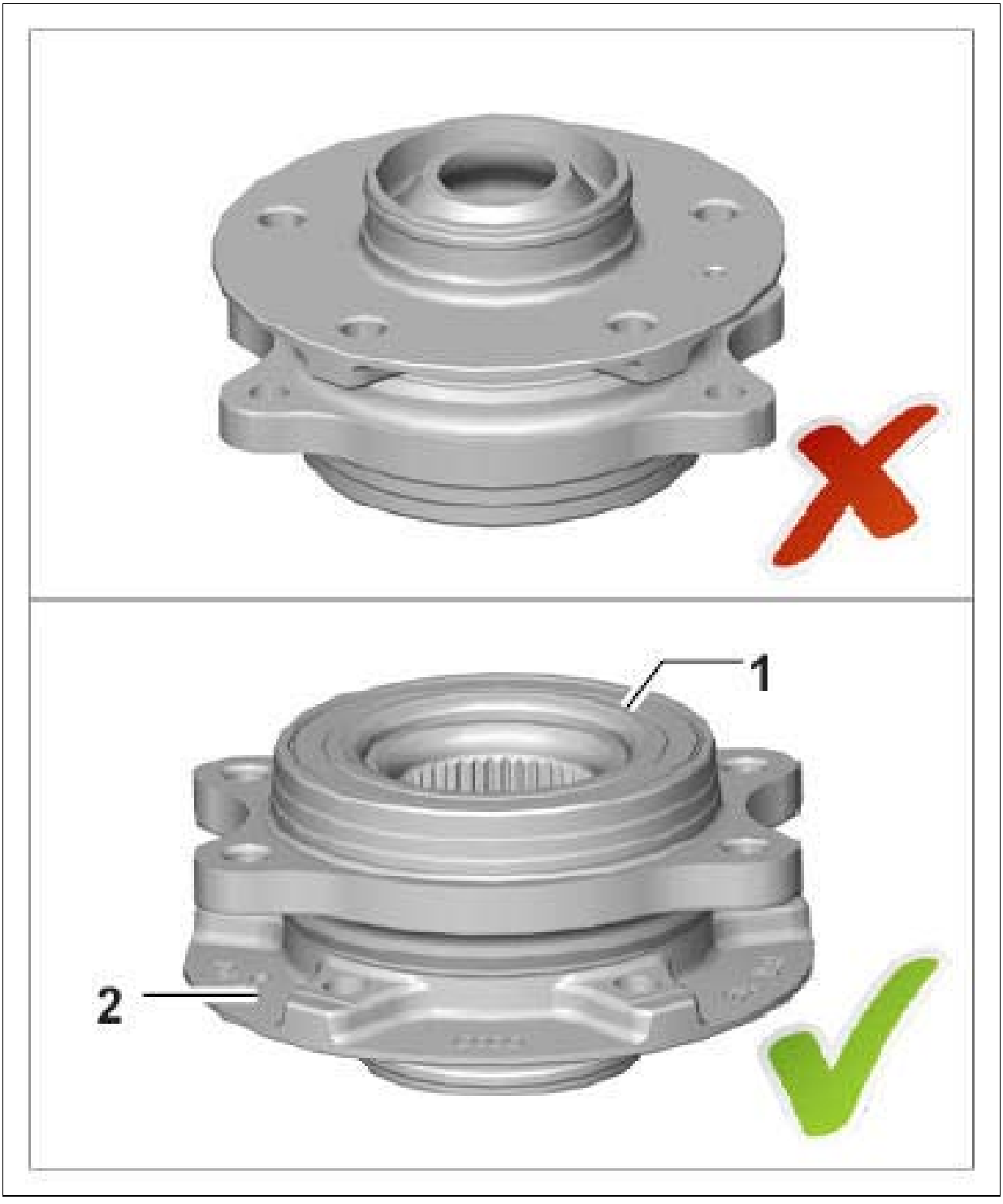

Courtesy of PORSCHE CARS NORTH AMERICA, INC.

1. Clamp the wheel bearing housing in a vice with aluminum protective jaws.
2. Unscrew fastening screws **-1-** and remove wheel bearing unit **-2-** .

Fig 2: Identifying Wheel Bearing Unit Mounting

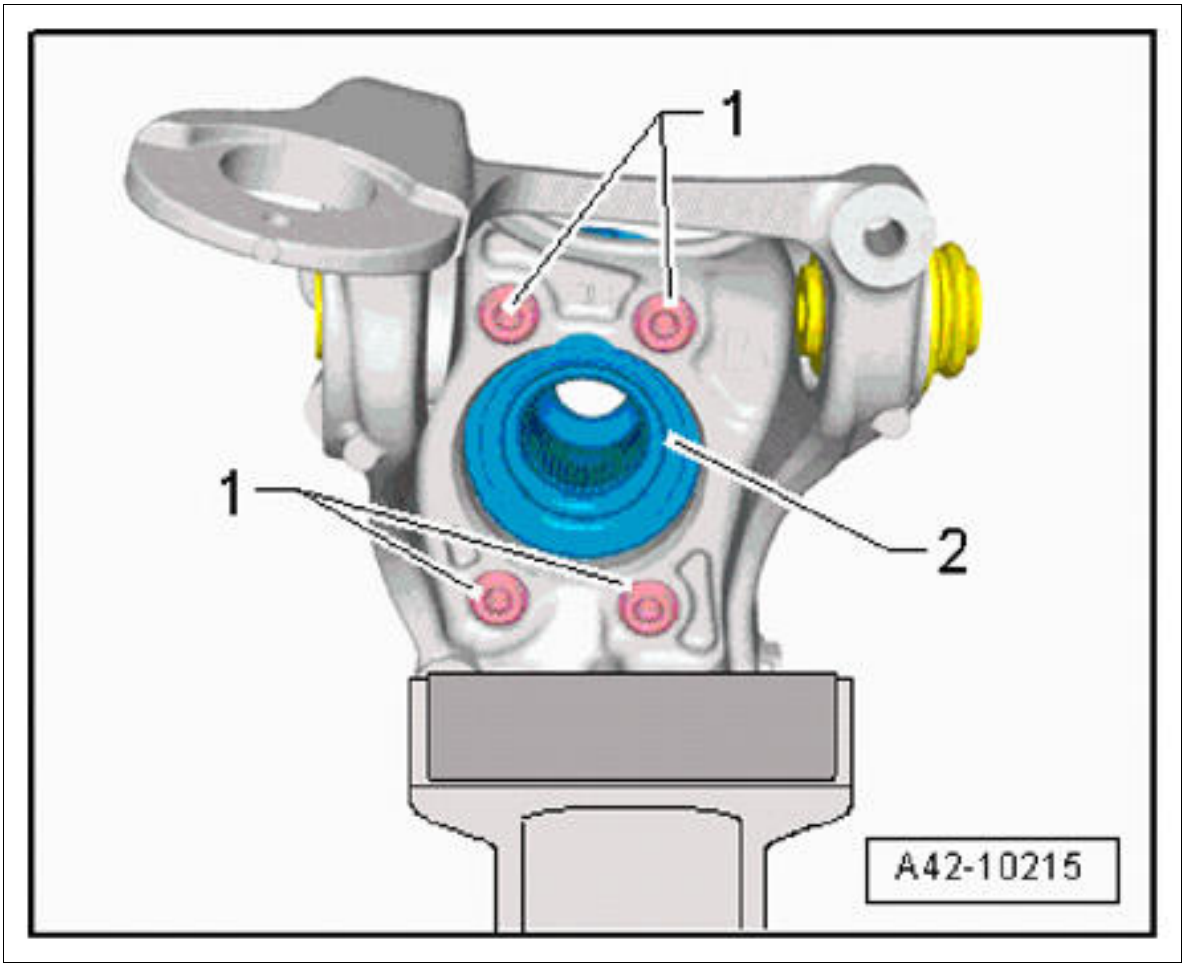

Courtesy of PORSCHE CARS NORTH AMERICA, INC.

3. Press wheel hub out of the wheel bearing.
    1. Press tool
    2. Sleeve T10230/3 from **assembly tool T10230**
    3. Pressure piece T10230/8 from **assembly tool T10230**
    4. Wheel bearing unit
    5. **Pressure plate VW 402**
    6. **Pressure plate VW 401**

Fig 3: Pressing Wheel Hub Out Of Wheel Bearing

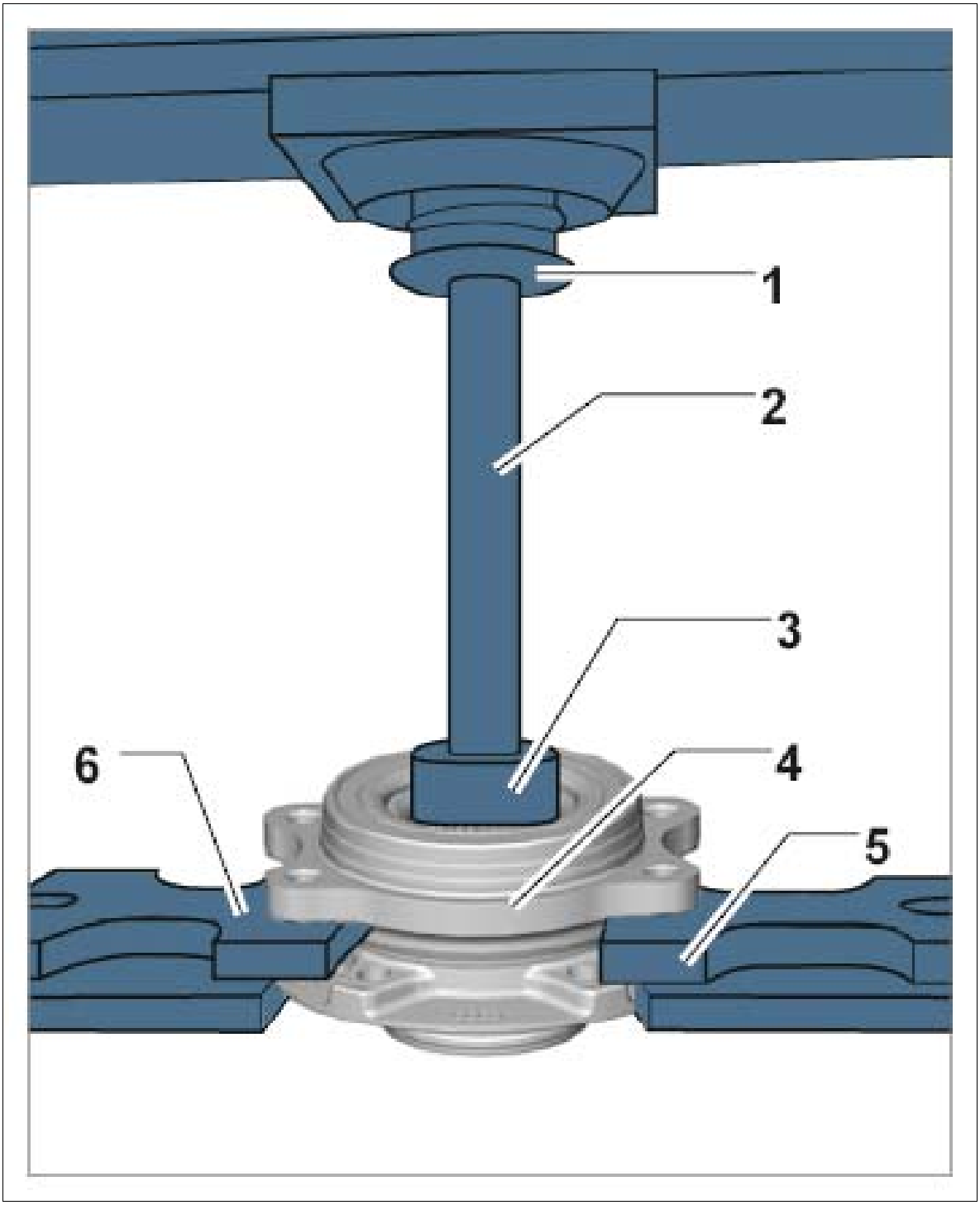

Courtesy of PORSCHE CARS NORTH AMERICA, INC.

1. 3.1. Fit special tools as shown in → Pressing wheel hub out of wheel bearing .
2. 3.2. Press wheel hub out of the wheel bearing.

4. Press inner bearing ring off the wheel hub.

    1. 4.1. **Separating device Nr.112-2** must be inserted between the inner bearing ring and wheel hub. Then pretension with the spindle.

Fig 4: Identifying Separating Device

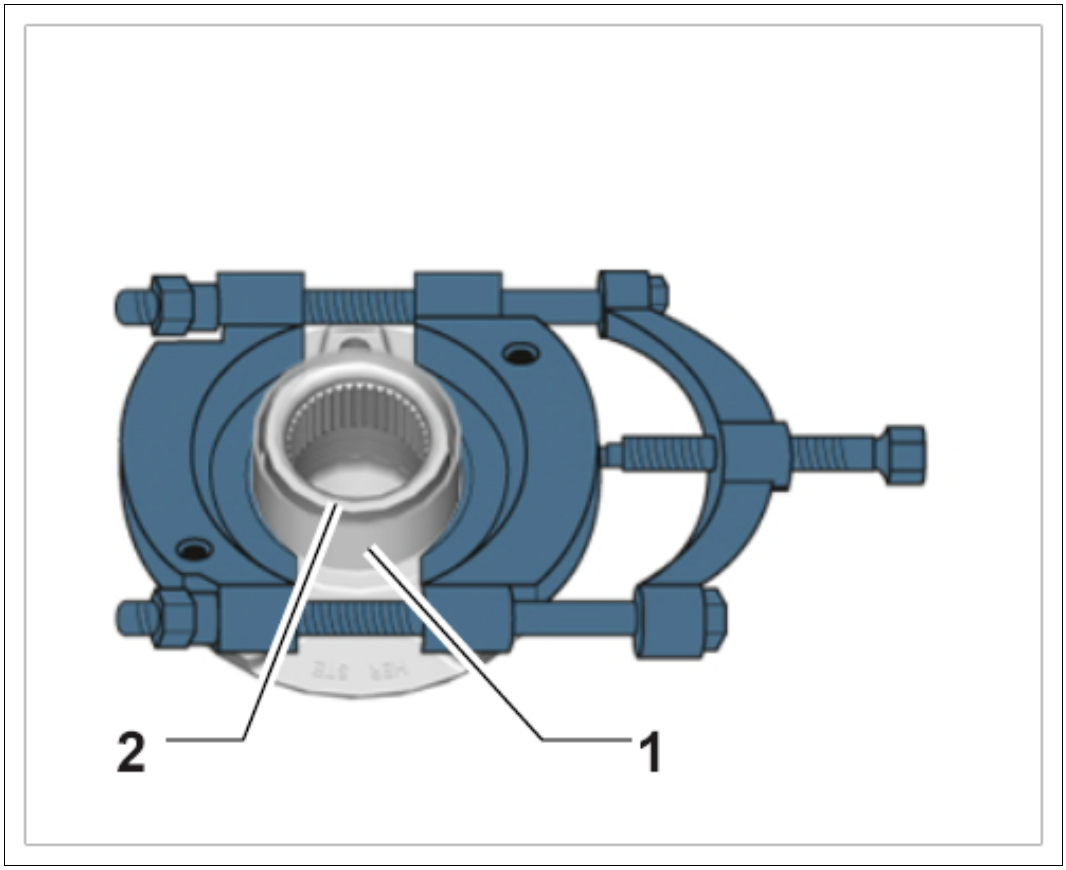

Courtesy of PORSCHE CARS NORTH AMERICA, INC.

2. 4.2. Fit special tools as shown in → Pressing inner bearing ring off the wheel hub .
    1. Press tool
    2. Sleeve T10230/3 from **assembly tool T10230**
    3. Pressure piece T10230/8 from **assembly tool T10230**
    4. **Separating device Nr.112-2**

Fig 5: Pressing Inner Bearing Ring Off Wheel Hub

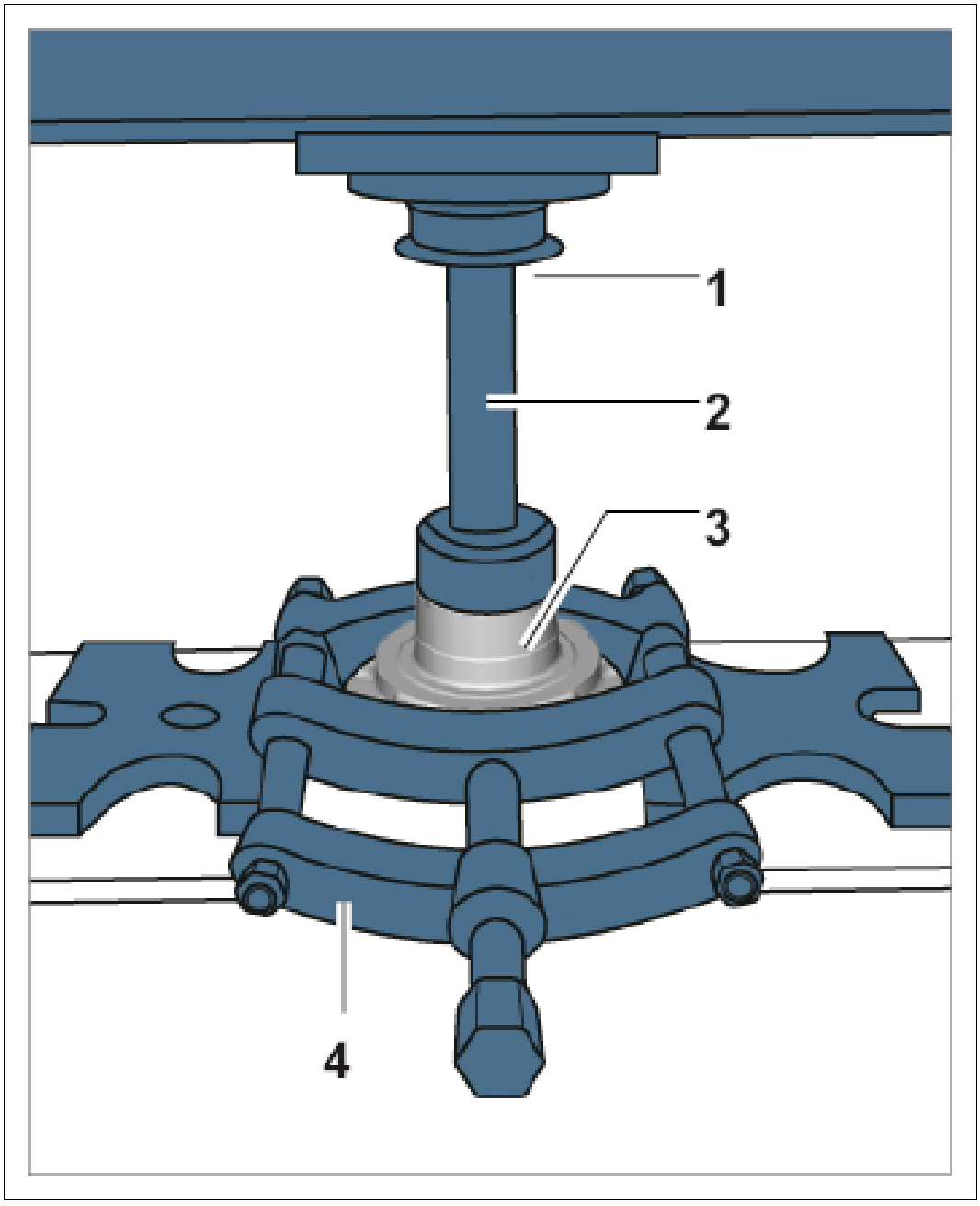

Courtesy of PORSCHE CARS NORTH AMERICA, INC.

3. 4.3. Press inner bearing ring off the wheel hub.

WM 425855 REPLACING REAR WHEEL BEARING (MACAN, MACAN S, MACAN TURBO) > REPLACING REAR WHEEL BEARING > INSTALLING WHEEL BEARING

Information

- The wheel bearing has a magnetized multipole seal, which acts as a pulse sender for the wheel speed sensor.

- The multiple-pole seal -1- must always face upwards when the wheel bearing is set down (this does not apply when pressing the wheel hub into the wheel bearing). Do not damage the multipole seal and do not come into contact with magnetic objects (e.g. magnetized screwdriver, magnet).

Fig 1: Identifying Wheel Bearing Unit Multiple-Pole Seal Facing Up

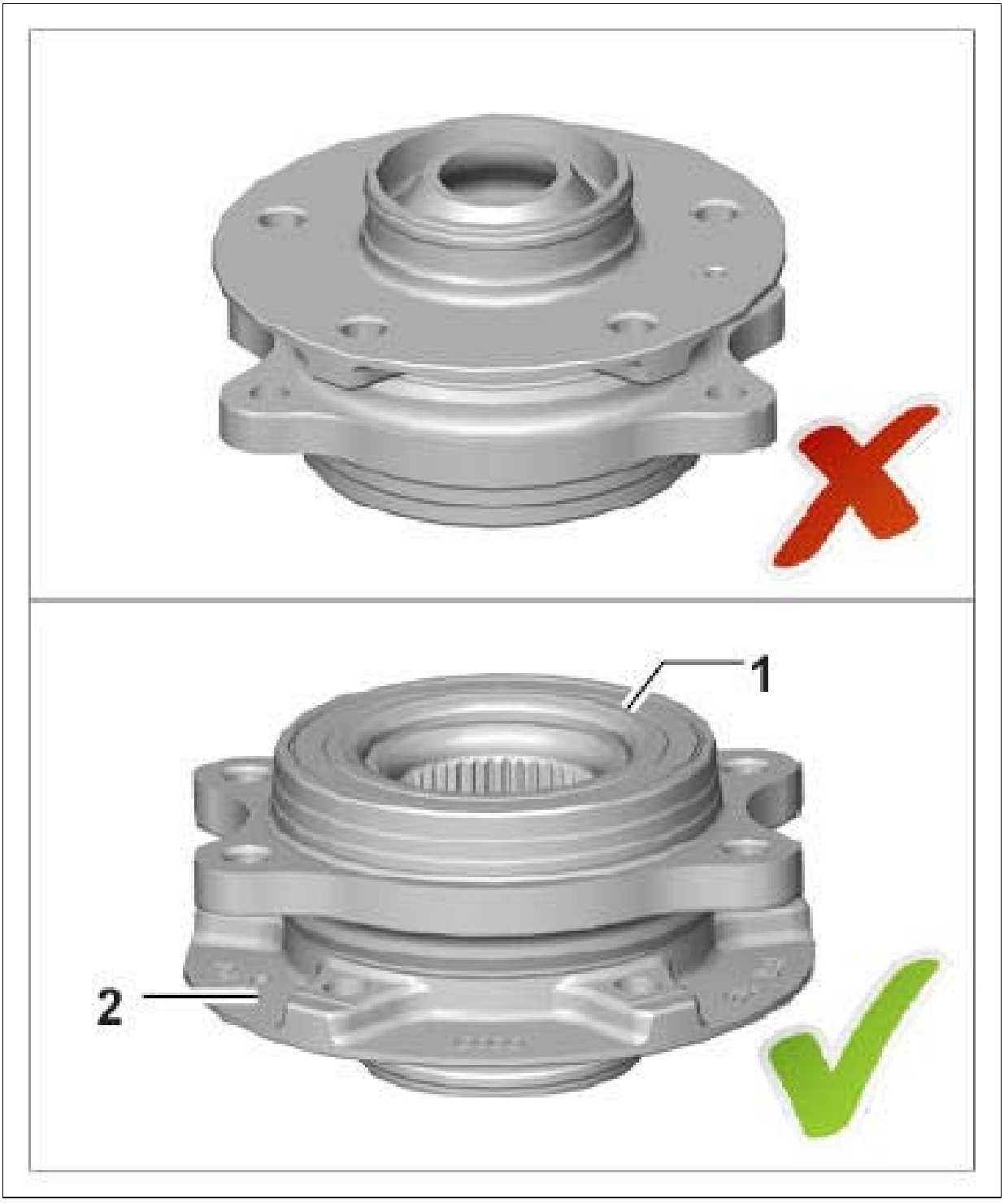

Courtesy of PORSCHE CARS NORTH AMERICA, INC.

1. Press wheel hub into the wheel bearing.
    1. Press tool

2. **Pressure plate VW 402**
3. Wheel hub
4. Wheel bearing
5. **Pressure plate VW 401**

Fig 2: Pressing Wheel Hub Into Wheel Bearing

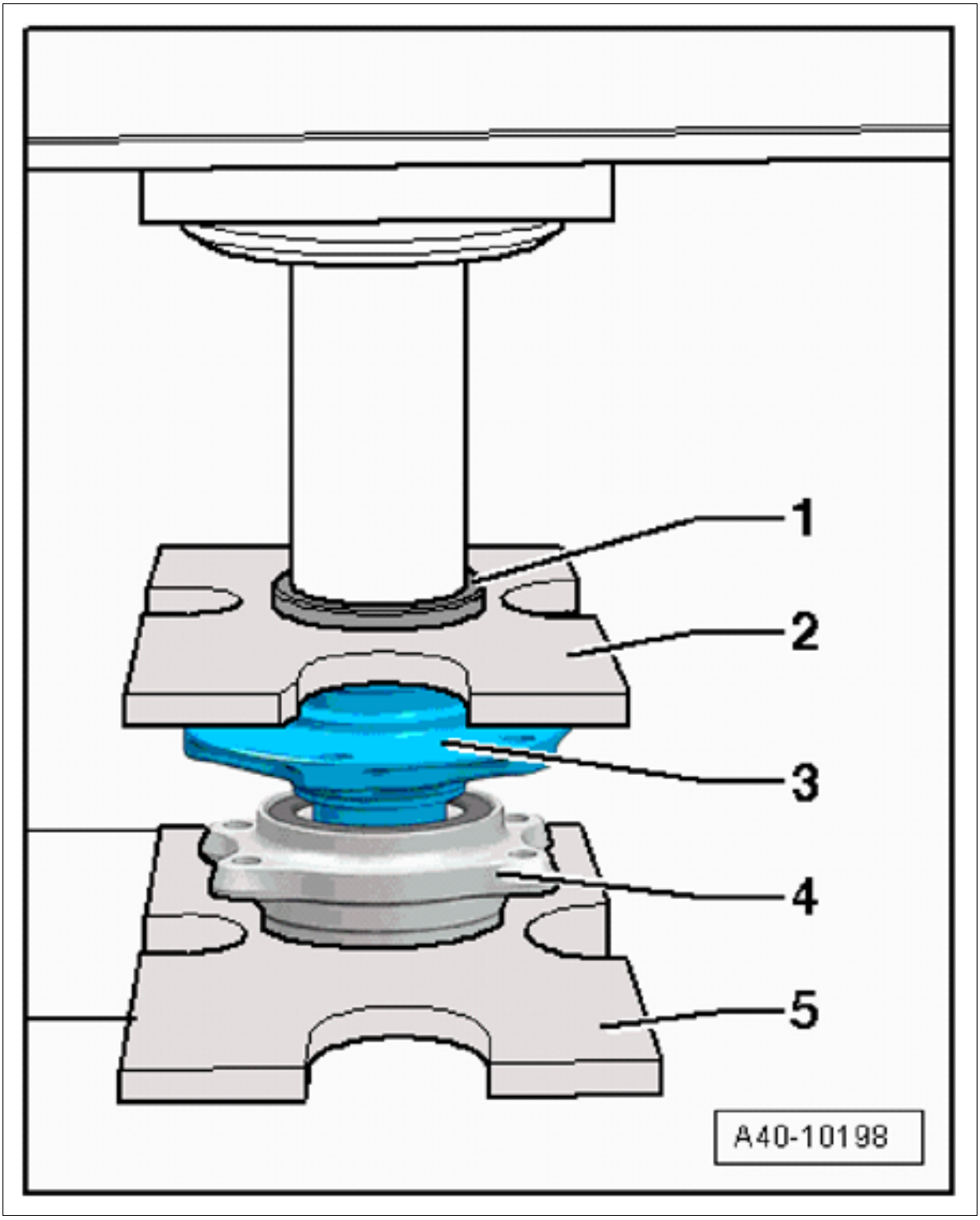

Courtesy of PORSCHE CARS NORTH AMERICA, INC.

1. 1.1. Fit special tools as shown in → Pressing wheel hub into wheel bearing .

2. 1.2. Press wheel hub into the wheel bearing.

2. Clamp the wheel bearing housing in a vice with aluminum protective jaws.

3. Insert wheel bearing unit into the wheel bearing housing and tighten fastening screws.

Fig 3: Wheel Bearing Unit Screws Tightening Sequence

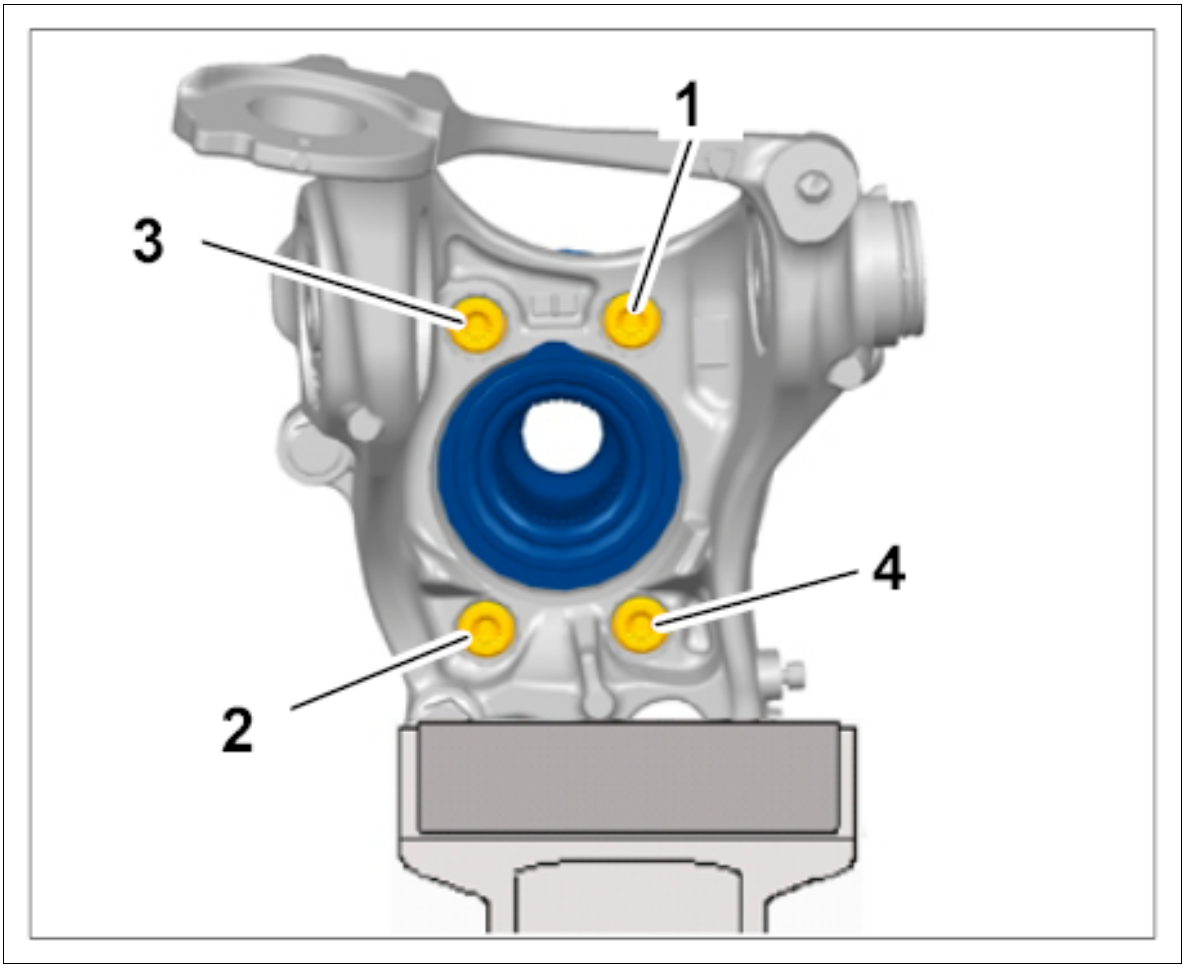

Courtesy of PORSCHE CARS NORTH AMERICA, INC.

1. 3.1. Always observe the specified tightening sequence **1 - 4** !

Observe specified tightening torques:

Wheel bearing unit to wheel bearing housing: **Initial tightening 80 Nm (59 ftlb.)**
Final tightening +90°

WM 425855 REPLACING REAR WHEEL BEARING (MACAN, MACAN S, MACAN TURBO) > SUBSEQUENT WORK

1. Install wheel bearing housing. → INSTALLING REAR WHEEL BEARING HOUSING .

WM 427219 REMOVING AND INSTALLING REAR COIL SPRING (MACAN, MACAN S,

MACAN TURBO) > TOOLS

Designation	Type	Number	Description	
foot pump	Workshop equipment	WE 1283		
spring tensioning system	Workshop equipment	WE 1609		

WM 427219 REMOVING AND INSTALLING REAR COIL SPRING (MACAN, MACAN S, MACAN TURBO) > PRELIMINARY WORK

1. Raise the vehicle. → 4X00IN LIFTING THE VEHICLE
2. Remove wheel. → 440519 REMOVING AND INSTALLING WHEEL

WM 427219 REMOVING AND INSTALLING REAR COIL SPRING (MACAN, MACAN S, MACAN TURBO) > REMOVING AND INSTALLING REAR COIL SPRING > REMOVING REAR COIL SPRING

WARNING: Preloaded or pressurized components

- *Risk of squashing or bruising*

→ Do not reach into the danger area.

→ Relieve the tension on components before starting work.

→ Secure components to prevent them from loosening suddenly.

Information

Coil springs

- Do not press coil springs together onto the block.
- Do not damage the surface of the coil springs (corrosion protection).
- Do not use solvents to clean the coil springs.

The **spring tensioning system WE 1609** is required for removing and installing the coil springs.

1. Pressure plate with locking mechanism
2. Pressure plate with pivot bearing
3. Spindle

4. Plunger
5. Socket wrench
6. T-bar wrench
7. Holding wrench
8. Spreader device
9. Hydraulic tensioning device

Fig 1: Identifying Spring Tensioning System VAS 6907

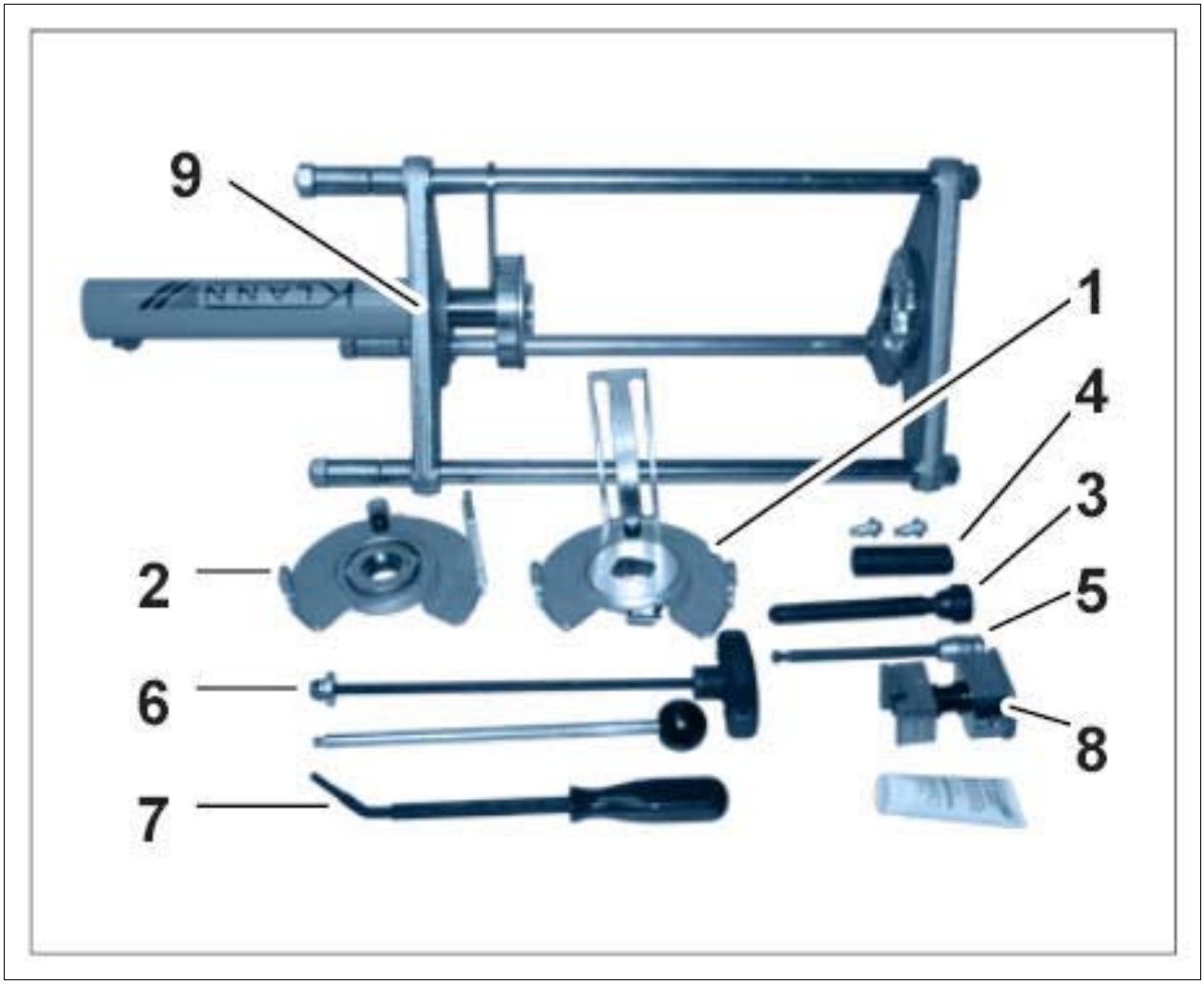

Courtesy of PORSCHE CARS NORTH AMERICA, INC.

Information

The spreader device **VAS 6907/8** makes it easier to remove and install coil springs.

When the spreader device is inserted, it prevents the axle from moving upwards when tightening the coil spring.

- With the coil spring installed, insert spreader device -1- between the upper trailing arm -2- and body -3- .

- Adjust the height of the spreader device at the hexagon until it is fitted securely.
- Always remove the spreader device from the vehicle after installing the coil spring.

Fig 2: Installing Spreader Device VAS 6907/8

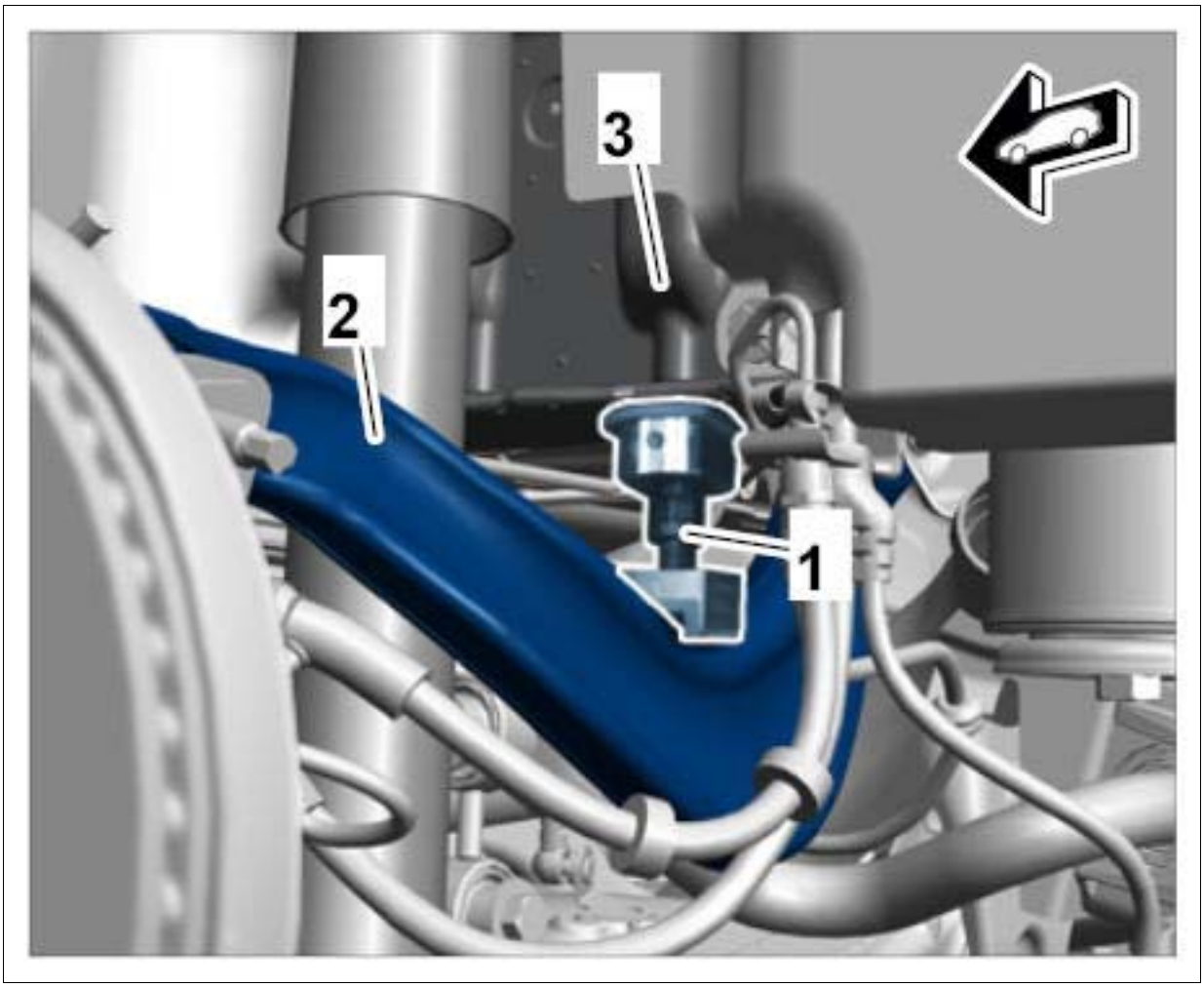

Courtesy of PORSCHE CARS NORTH AMERICA, INC.

1. Insert pressure plate with pivot bearing **VAS 6907/2** down as far as possible from the outside. Press the stone guard aside slightly if necessary. → Pressure plate at the bottom

Fig 3: Identifying Pressure Plate (Bottom)

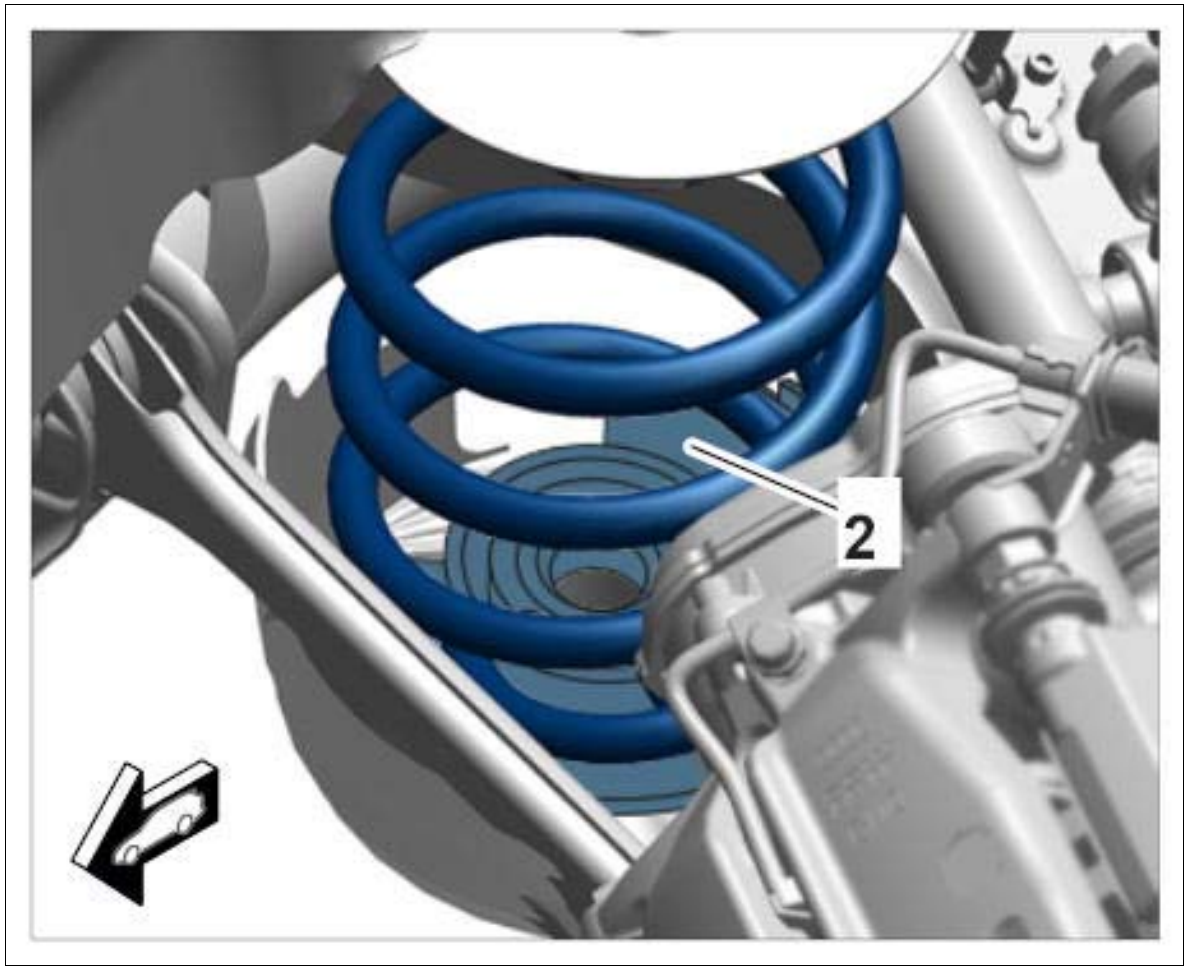

Courtesy of PORSCHE CARS NORTH AMERICA, INC.

2. Insert pressure plate with locking mechanism **VAS 6907/1** up as far as possible from the outside. → Pressure plate at the top

Fig 4: Identifying Pressure Plate (Top)

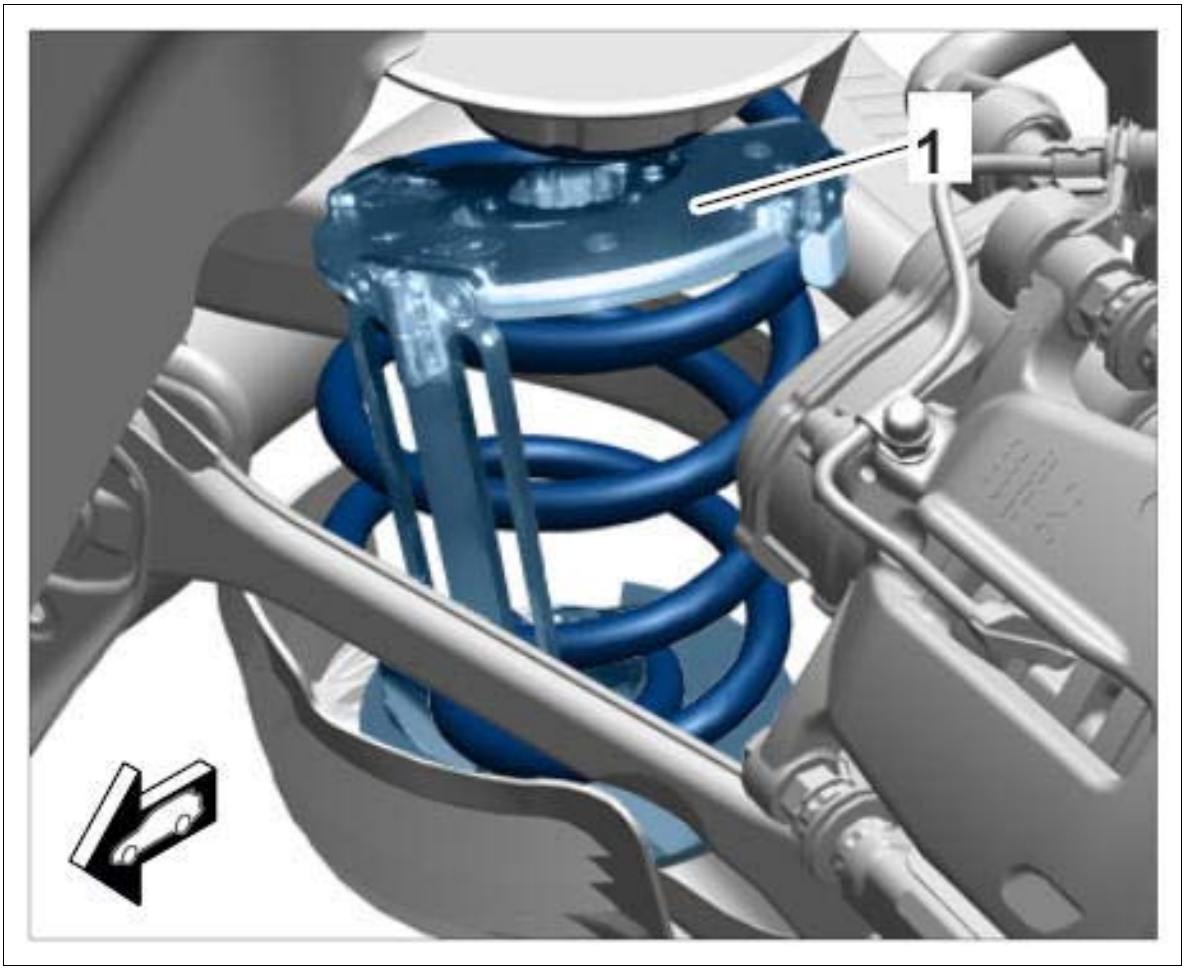

Courtesy of PORSCHE CARS NORTH AMERICA, INC.

3. Insert plunger **VAS 6907/4** into pressure plate with locking mechanism using T-bar wrench **VAS 4907/6** .

    1. 3.1. Press locking lever in **-direction of arrow-** to secure the plunger.

Fig 5: Locating Pressure Plate Locking Lever

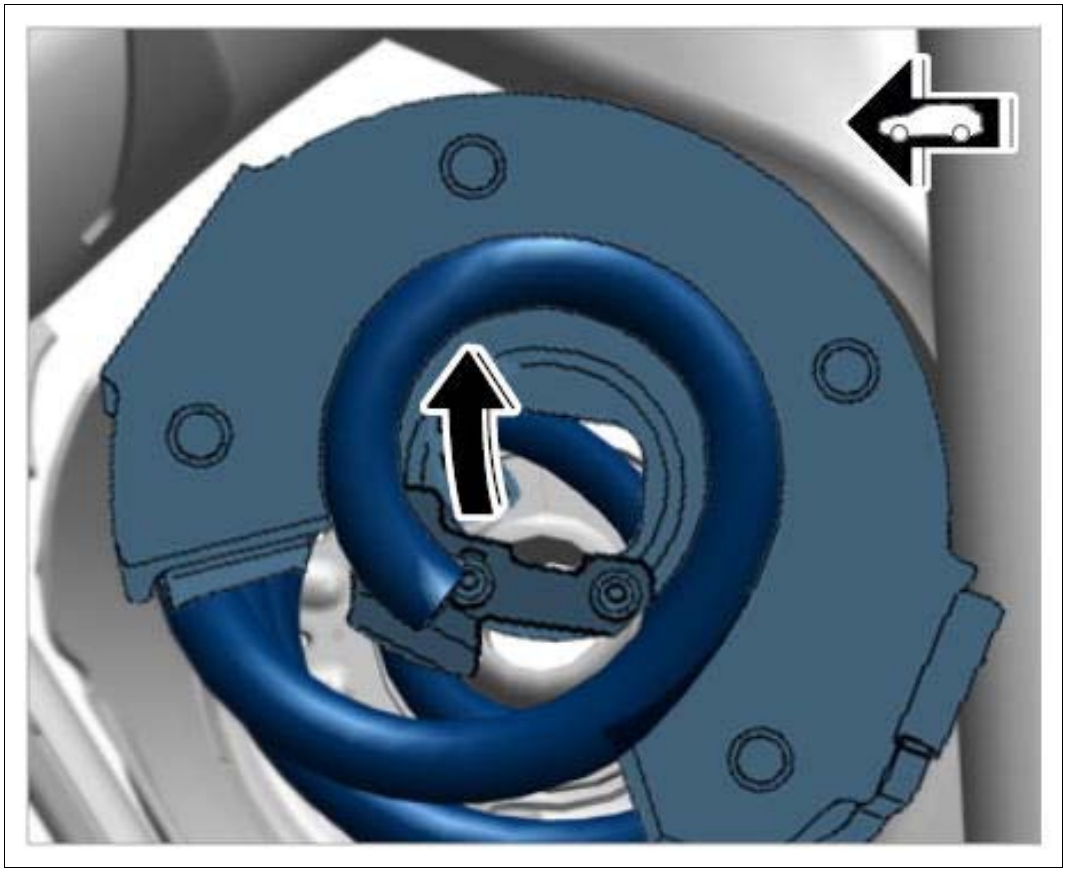

Courtesy of PORSCHE CARS NORTH AMERICA, INC.

4. Screw both pressure plates up/down as far as required until they have three windings enclosed.
5. Screw twist lock holders **-1 and 2-** of the two pressure plates together.

Fig 6: Identifying Lock Holders

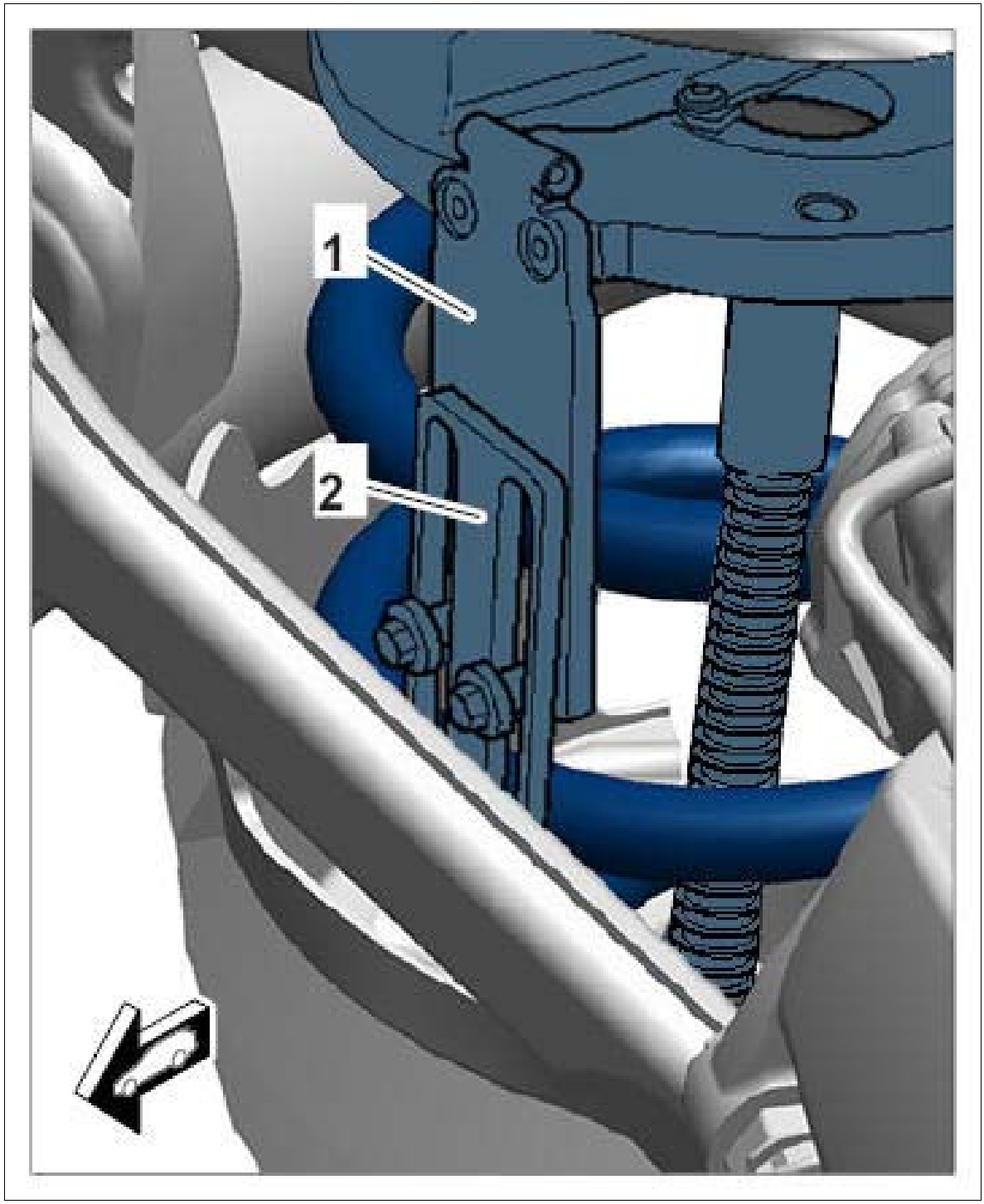

Courtesy of PORSCHE CARS NORTH AMERICA, INC.

Information

1. Before removing and installing each spring, the spindle -2- at the front must always be greased lightly using the supplied grease -1- .
2. Only use the grease provided to grease the spindle. Other types of grease will damage the spindle.

Fig 7: Identifying Spindle Grease Applying Area

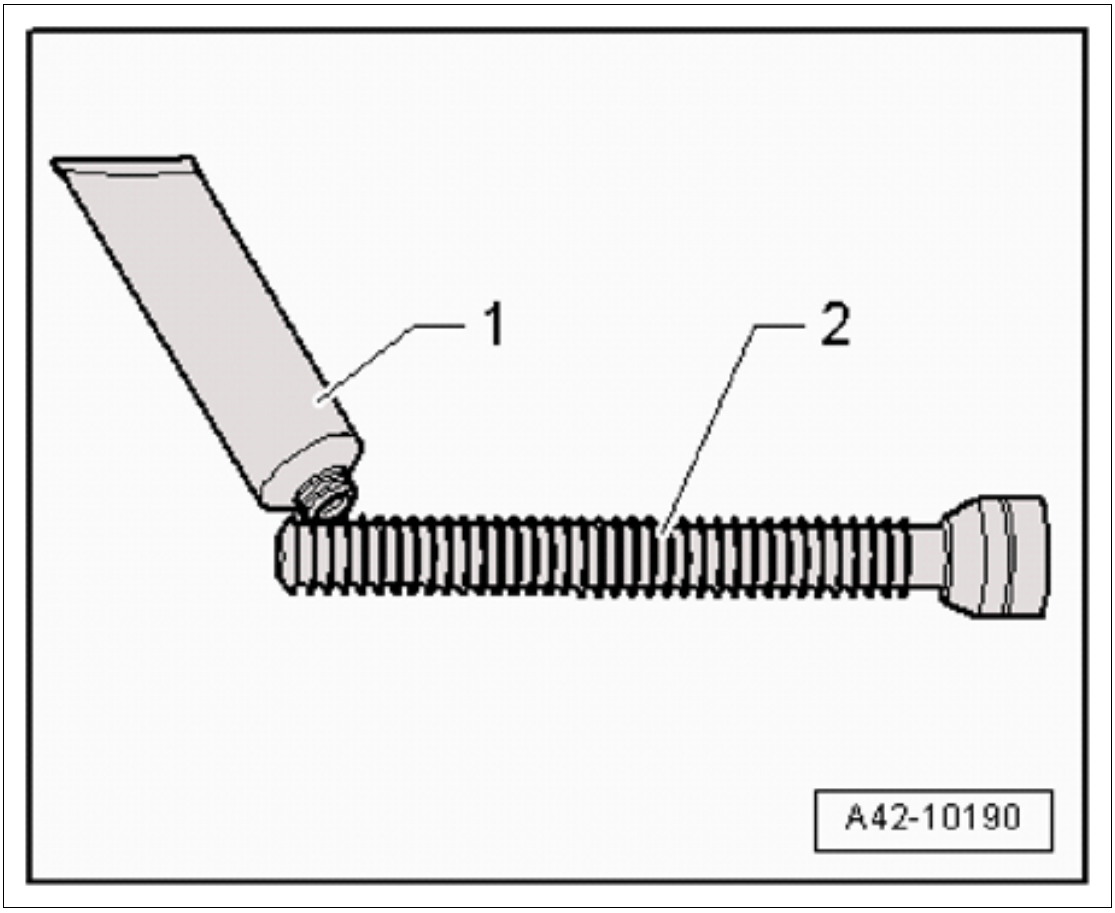

Courtesy of PORSCHE CARS NORTH AMERICA, INC.

6. Screw the spindle **VAS 6907/3** into the plunger **VAS 6907/4** using socket wrench **VAS 6907/5**

Fig 8: Tightening Coil Springs

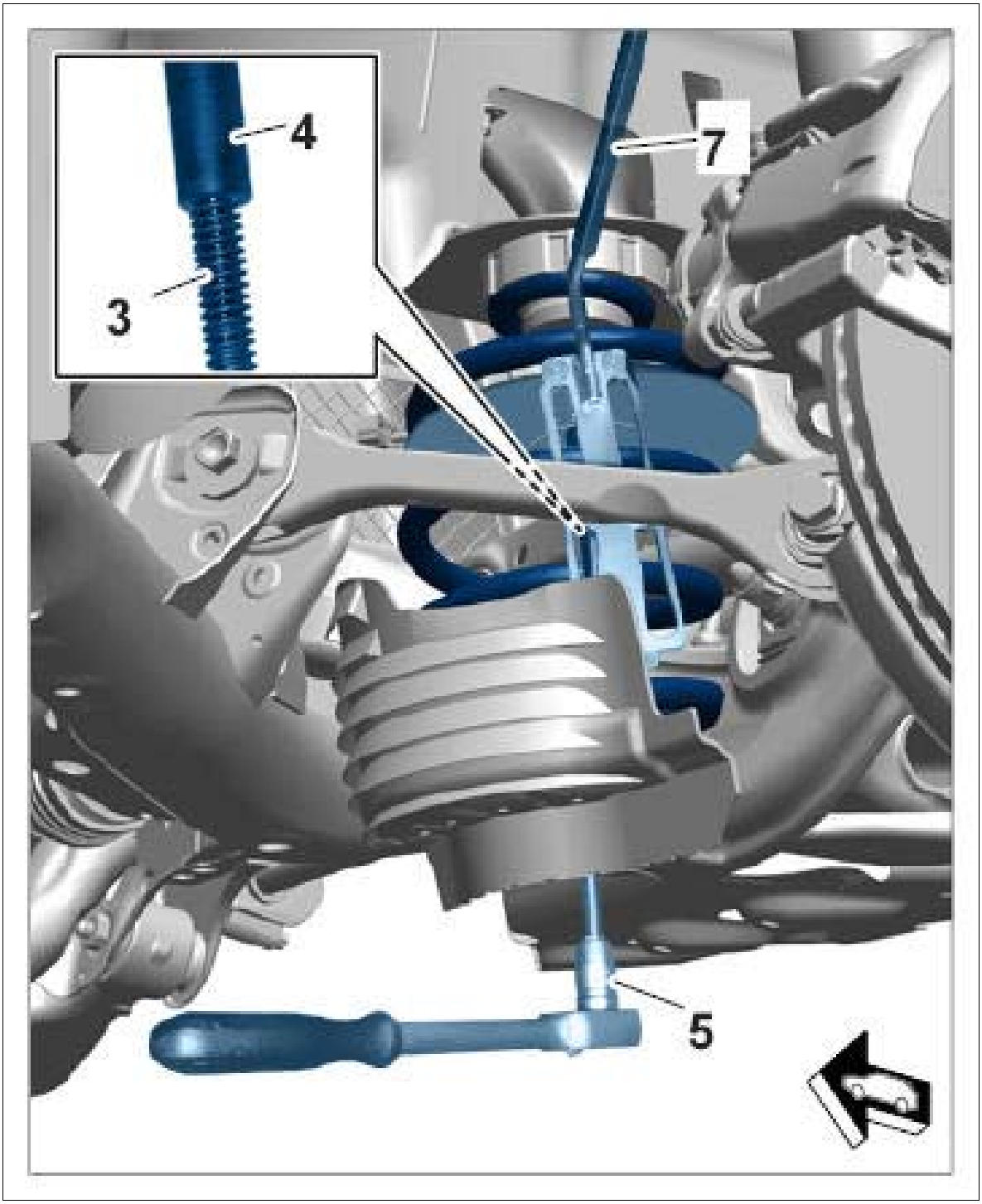

Courtesy of PORSCHE CARS NORTH AMERICA, INC.

1. 6.1. Insert holding wrench **VAS 6907/7** into the bracket **-arrow-** to counter the movement.
2. 6.2. Pretension pressure plates slightly using the spindle
3. 6.3. Check that the coil spring is seated correctly in the pressure plates.

7. Tension the coil spring using a socket wrench until the stone guard and upper and lower spring

plates can be removed.

8. Remove coil spring by pulling it forward at the bottom. → Removing coil spring

   Fig 9: Removing Coil Spring

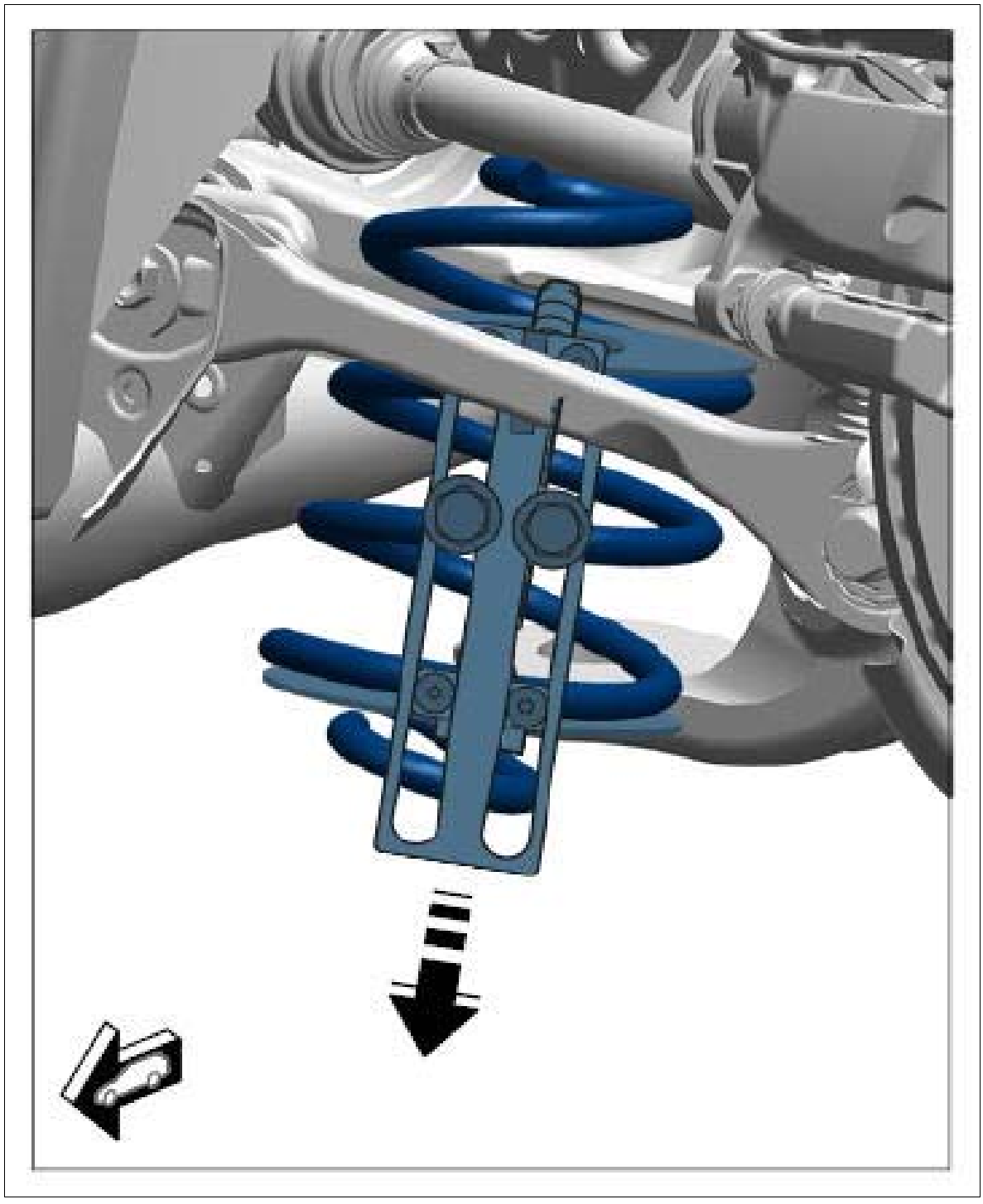

Courtesy of PORSCHE CARS NORTH AMERICA, INC.

9. Screw the spindle back slightly if necessary (do not unscrew fully, risk of injury!) so that the spindle projects out over the end of the coil spring.
10. Insert pre-tensioned spring into the hydraulic tensioning device **VAS 6907/9.**

Fig 10: Identifying Hydraulic Tensioning Device

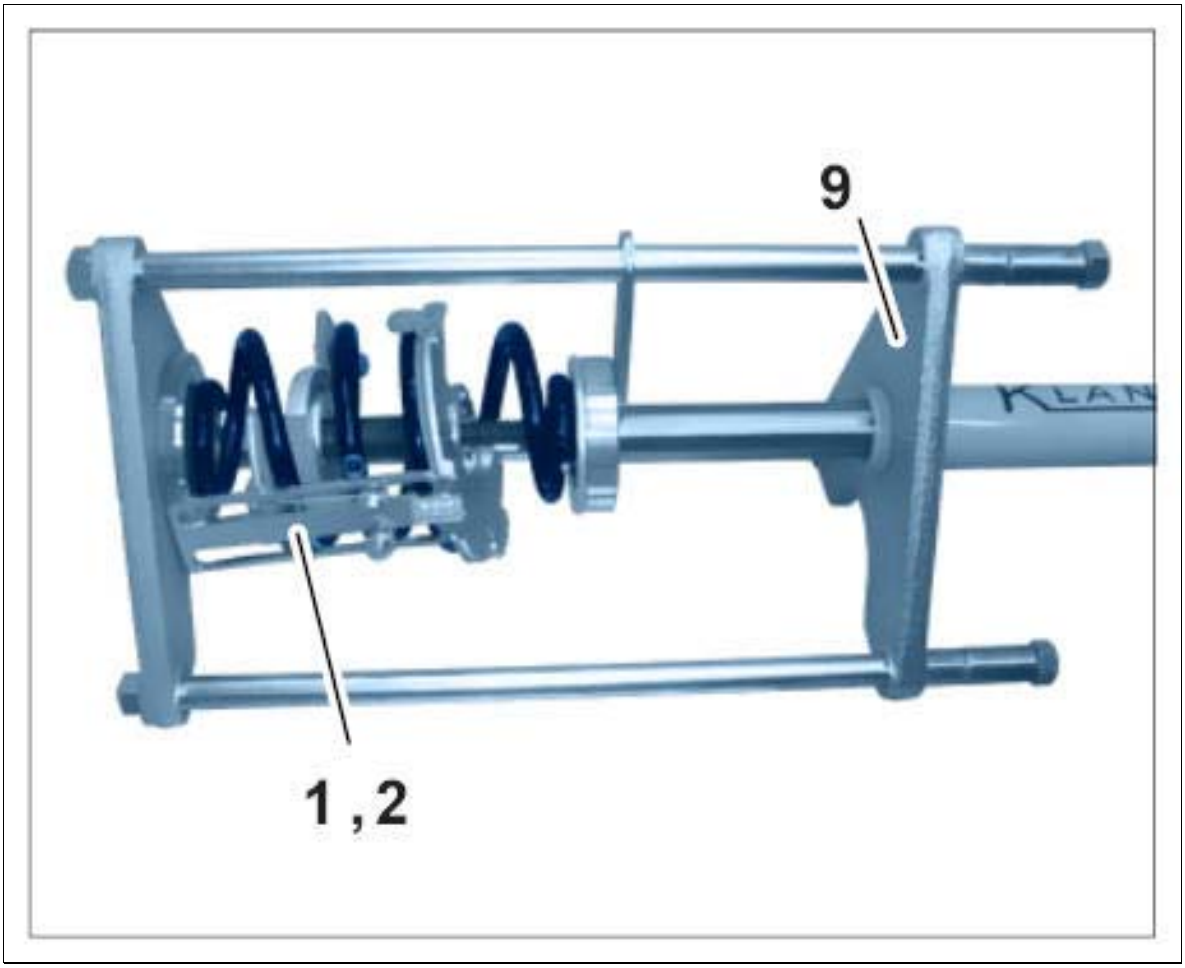

Courtesy of PORSCHE CARS NORTH AMERICA, INC.

1. 10.1. **Left coil spring:**

   Fit underside of end of spring in the spring tensioning system at marking "L".

   Right coil spring:

   Fit underside of end of spring in the spring tensioning system at marking "R".

Fig 11: Locating Coil Spring Marking (Left)

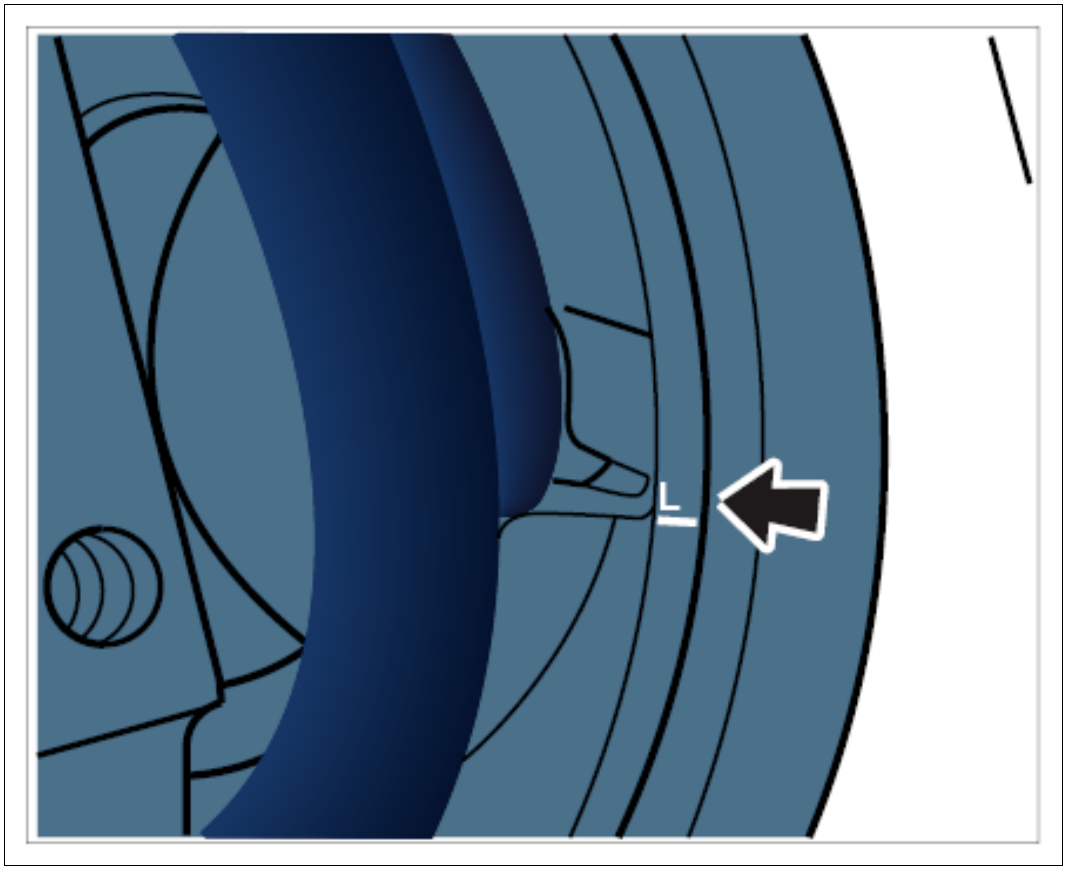

Courtesy of PORSCHE CARS NORTH AMERICA, INC.

2. 10.2. Use the **foot pump WE 1283** to tension the coil spring in the hydraulic tensioning device **-9-** until the tension on the pressure plates **-1, 2-** is relieved.

11. Unscrew spindle using socket wrench **VAS 6907/5** . → Unscrewing spindle

Fig 12: Tensioning Coil Spring

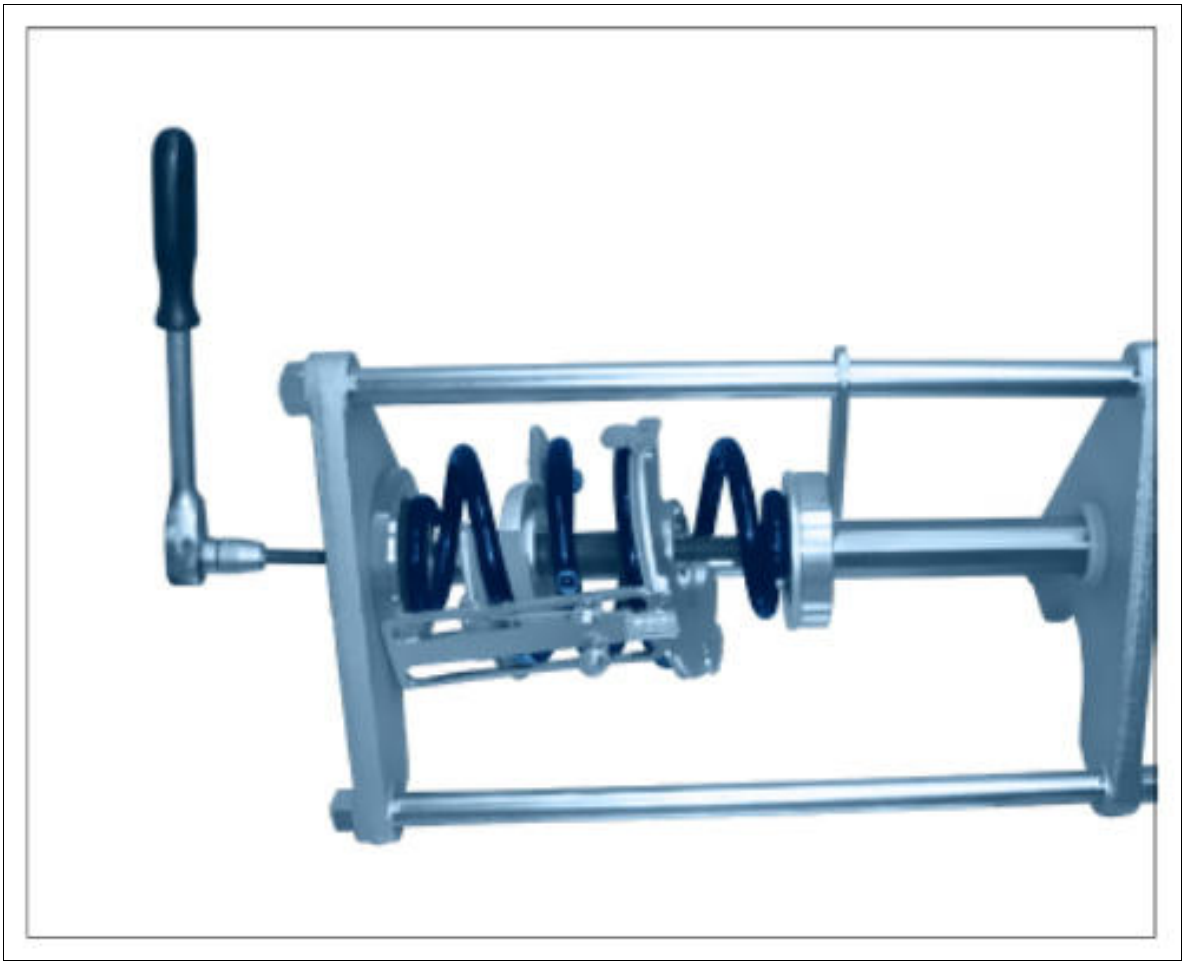

Courtesy of PORSCHE CARS NORTH AMERICA, INC.

12. Unscrew screws for the twist lock holders and remove pressure plates.
13. Relieve all tension on the coil spring.

WM 427219 REMOVING AND INSTALLING REAR COIL SPRING (MACAN, MACAN S, MACAN TURBO) > REMOVING AND INSTALLING REAR COIL SPRING > INSTALLING REAR COIL SPRING

Please note the following:

- Always replace coil springs in pairs.

1. Insert coil spring into the hydraulic tensioning device **VAS 6907/9** .

    1. 1.1. **Left coil spring:**

        Fit underside of end of spring in the spring tensioning system at marking "L".

        Right coil spring:

Fit underside of end of spring in the spring tensioning system at marking "R".

Fig 1: Locating Coil Spring Marking (Left)

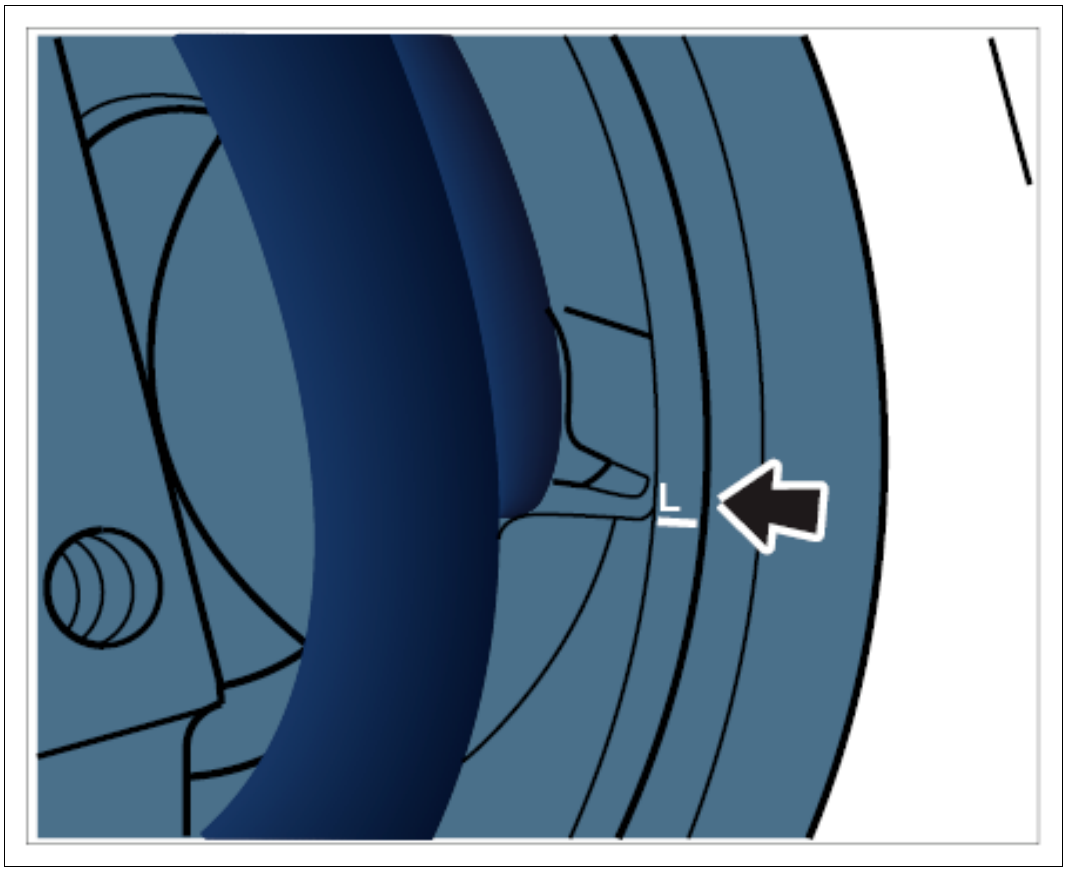

Courtesy of PORSCHE CARS NORTH AMERICA, INC.

2. 1.2. Use the **foot pump WE 1283** to tension the coil spring in the hydraulic tensioning device so that the pressure plates can be inserted.

2. Tension the coil spring using pressure plates.

Fig 2: Compressing Coil Spring Using Pressure Plates

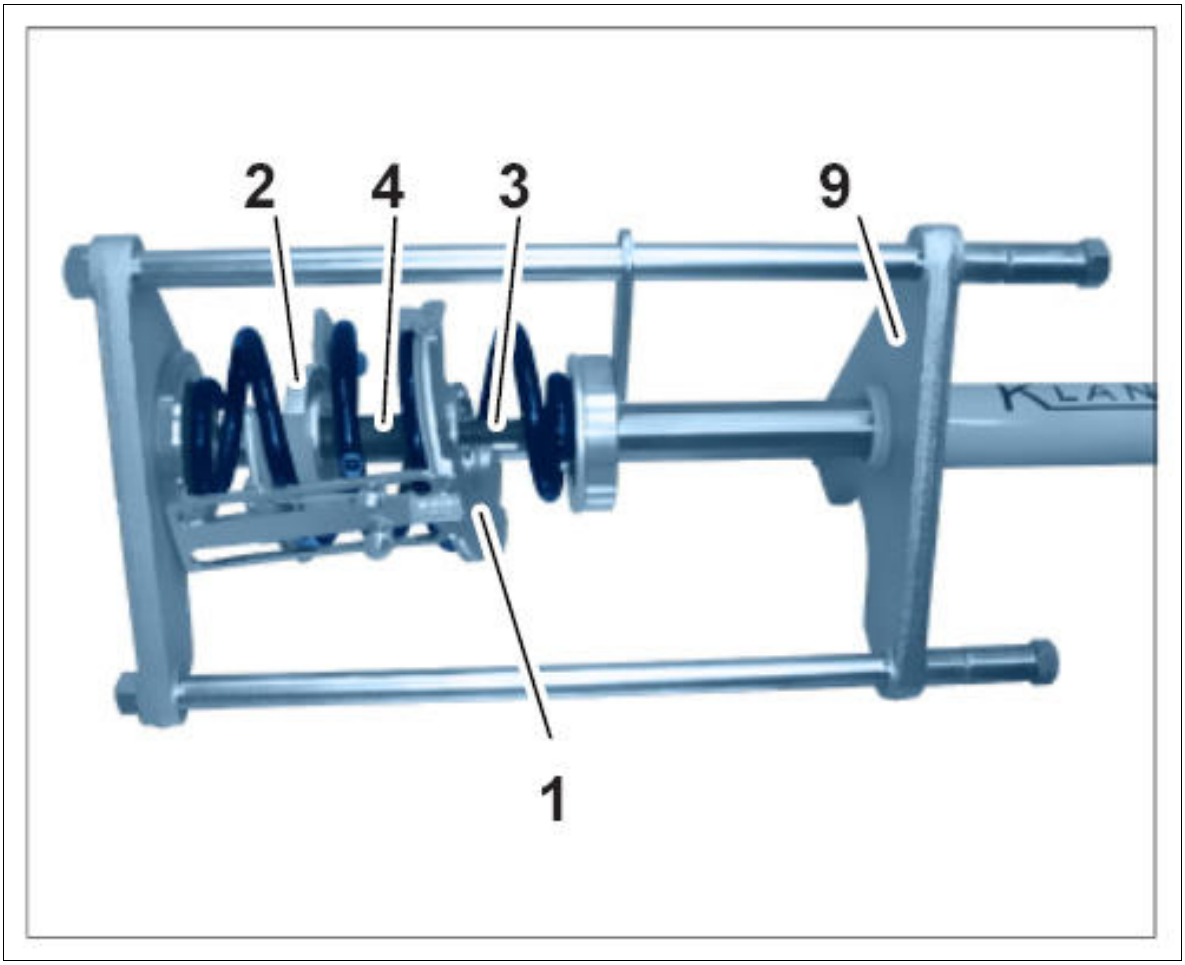

Courtesy of PORSCHE CARS NORTH AMERICA, INC.

1. 2.1. Insert pressure plate with locking mechanism **-1-** and pressure plate with pivot bearing **-2-** into the coil spring in such a way that three windings are enclosed.
2. 2.2. Insert plunger **-4-** into pressure plate with locking mechanism **-1-** . Use T-bar wrench **VAS 6907/6** as an aid if necessary.
3. 2.3. Press locking lever in **-direction of arrow-** to secure the plunger.

Fig 3: Closing Locking Lever

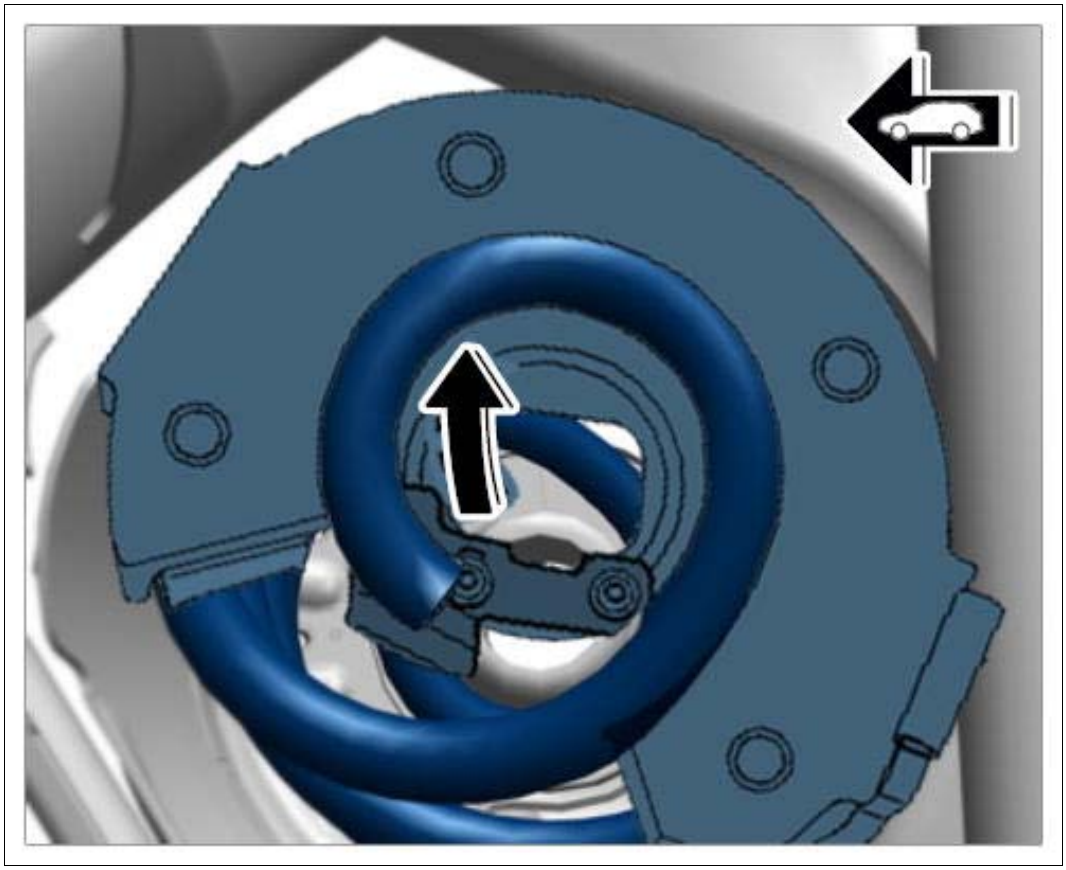

Courtesy of PORSCHE CARS NORTH AMERICA, INC.

4. 2.4. Insert spindle **-3-** .
5. 2.5. Screw pressure plates **-1, 2-** together.
6. 2.6. Tension coil spring using socket wrench **VAS6907/5** .

3. Relieve tension on the hydraulic tensioning device **VAS6907/9** and remove coil spring with tensioning device.

   Information

   The spindle must only protrude so far over the coil spring that the upper spring plate can still be fitted fully on the coil spring.

4. Insert coil spring with stone guard and upper and lower spring plates.

   1. 4.1. Insert lower spring plate with pin **-A-** into bore **-B-** on the wheel bearing housing.

Fig 4: Locating Lower Spring Plate

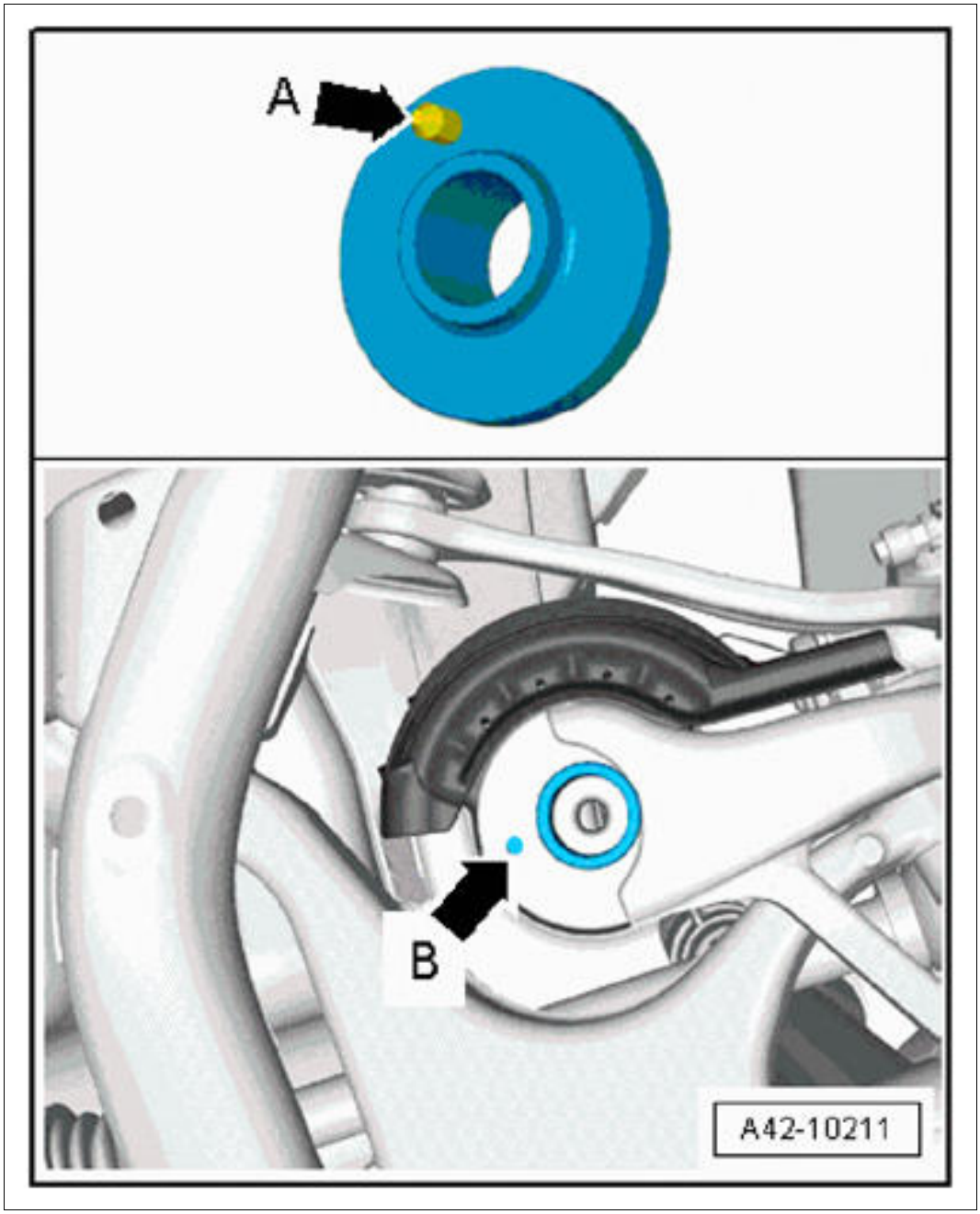

Courtesy of PORSCHE CARS NORTH AMERICA, INC.

5. Screw coil spring **-1-** as far as it will go into the lower spring plate **-2-** .

Fig 5: Identifying Coil Springs And Spring Plate

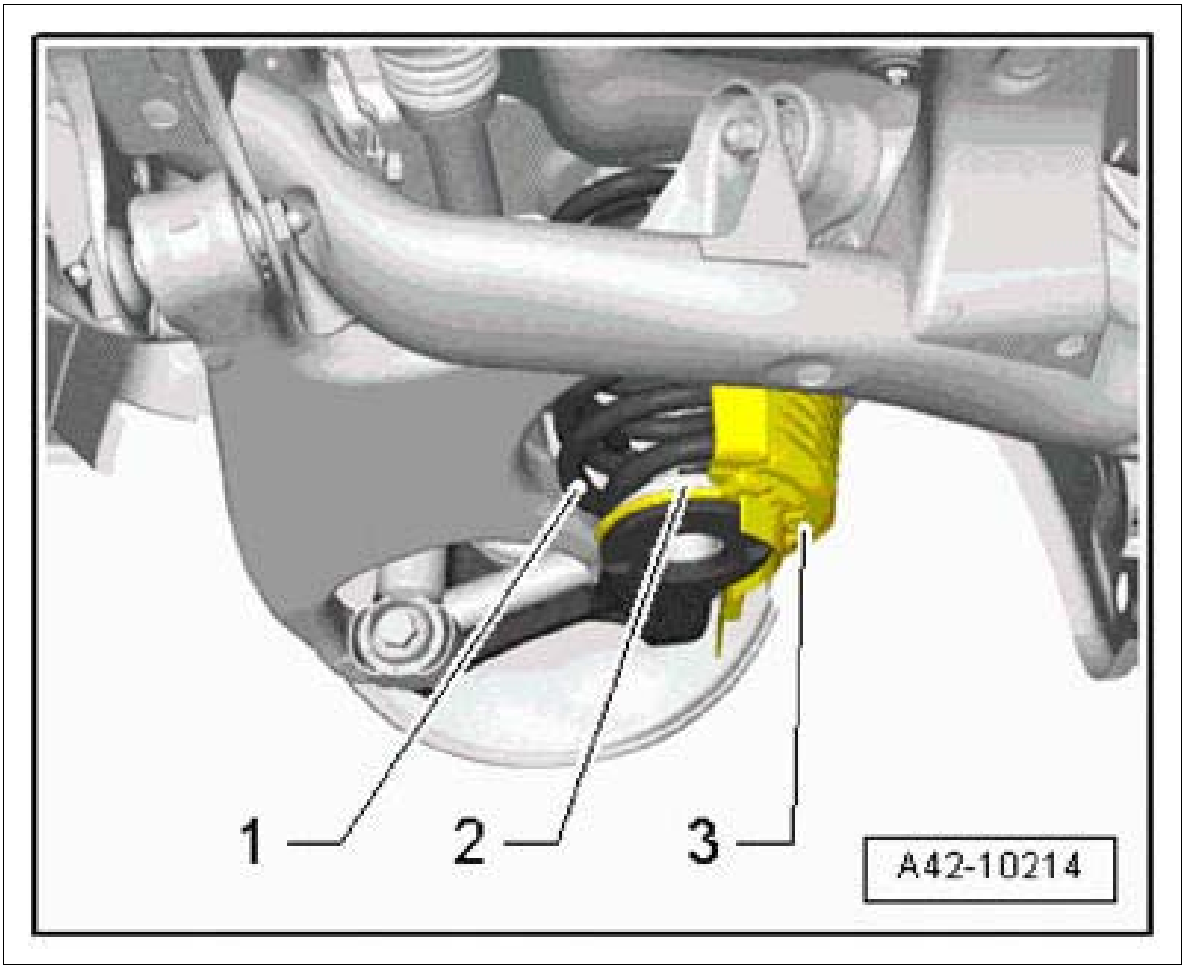

Courtesy of PORSCHE CARS NORTH AMERICA, INC.

6. Relieve tension on the coil spring and remove pressure plates.

WM 427219 REMOVING AND INSTALLING REAR COIL SPRING (MACAN, MACAN S, MACAN TURBO) > SUBSEQUENT WORK

1. Fit wheel. → INSTALLING WHEEL .
2. The vehicle will need to be aligned if new coil springs have been installed. → 449503 SUSPENSION ALIGNMENT, COMPLETE

WM 429019 REMOVING AND INSTALLING REAR ANTI-ROLL BAR (MACAN, MACAN S, MACAN TURBO) > TECHNICAL VALUES

Location	Description	Type	Basic value	Tolerance 1	Tolerance 2
Connecting link	M10 x 65	Initial tightening	40 Nm (30		

to anti-roll bar	thread/always use new screws and nuts following removal		ftlb.)		
Connecting link to anti-roll bar	M10 x 65 thread/always use new screws and nuts following removal	Final tightening	+90°		
Connecting link to lower trailing arm	M10 x 65 thread/always use new screws or bolts following removal	Initial tightening	40 Nm (30 ftlb.)		
Anti-roll bar clamp to rear axle carrier	M8 x 65 thread/always use new screws following removal	Initial tightening	20 Nm (15 ftlb.)		
Anti-roll bar clamp to rear axle carrier	M8 x 65 thread/always use new screws following removal	Final tightening	+180°		
Heat shield for drive shaft to rear axle	M8 x 22 thread	Tightening torque	23 Nm (17 ftlb.)		
Level sensor to lower trailing arm	M6 x 16 thread	Tightening torque	9 Nm (6.5 ftlb.)		
Connecting link to lower trailing arm	M10 x 65 thread/always use new screws or bolts following removal	Final tightening	+90°		

WM 429019 REMOVING AND INSTALLING REAR ANTI-ROLL BAR (MACAN, MACAN S, MACAN TURBO) > PRELIMINARY WORK

1. Raise the vehicle → 4X00IN LIFTING THE VEHICLE .
2. Remove rear wheels → 440519 REMOVING AND INSTALLING WHEEL .
3. Remove exhaust system → 260119 REMOVING AND INSTALLING EXHAUST SYSTEM .
4. Remove cover for rear underbody → 519419 REMOVING AND INSTALLING COVER FOR REAR UNDERBODY .

WM 429019 REMOVING AND INSTALLING REAR ANTI-ROLL BAR (MACAN, MACAN S, MACAN TURBO) > REMOVING AND INSTALLING REAR ANTI-ROLL BAR > REMOVING REAR ANTI-ROLL BAR

WARNING: Danger of objects or loads falling down

- *Risk of squashing or crushing*

→ Secure components to prevent them from falling down.

Information

- The illustrations for removing and installing are shown only on one equipment variant and may differ from the actual equipment variant.
- Some of the repair illustrations show only one side of the vehicle.

Information

- The anti-roll bar can only be removed together with connecting links.

Fig 1: Locating Rear Anti-Roll Bar

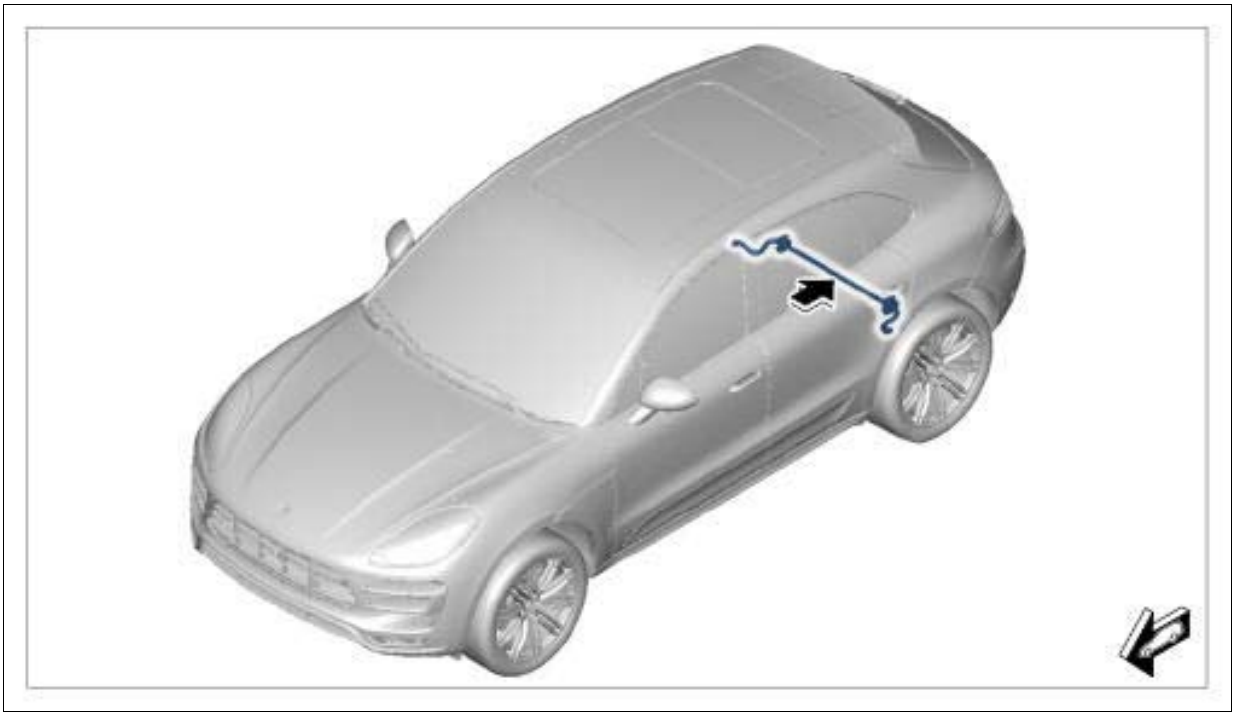

Courtesy of PORSCHE CARS NORTH AMERICA, INC.

1. Remove control unit for Tire Pressure Monitoring (TPM) **-1-** from the holder **-2-** on the left anti-roll bar clamp and hang it at a suitable position.

Fig 2: Identifying Tire Pressure Monitoring Control Unit Mounting

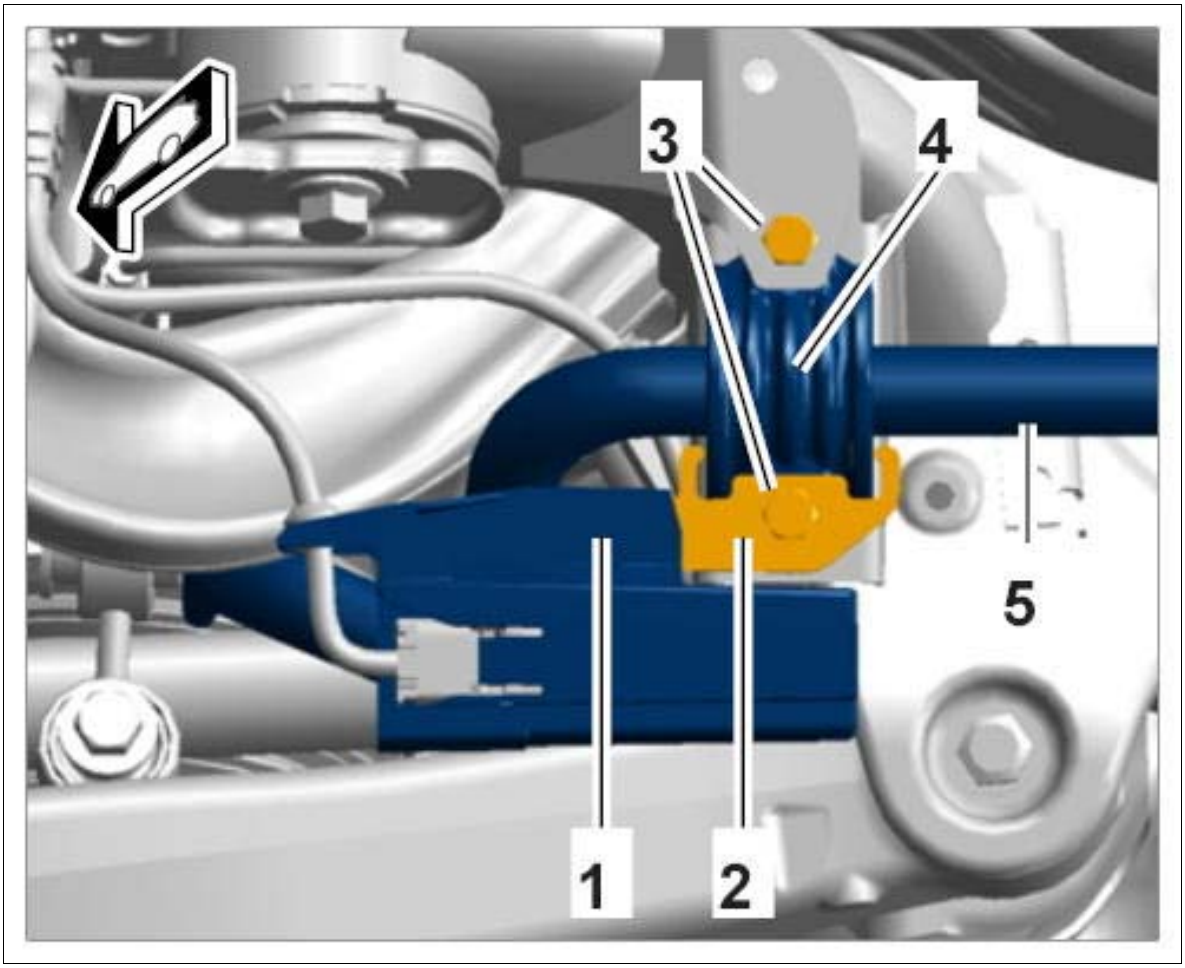

Courtesy of PORSCHE CARS NORTH AMERICA, INC.

2. Unscrew fastening screw **-1-** for the level sensor **-2-** on both sides of the vehicle at the lower trailing arm **-3-** .

Fig 3: Identifying Wishbone Level Sensor Mounting

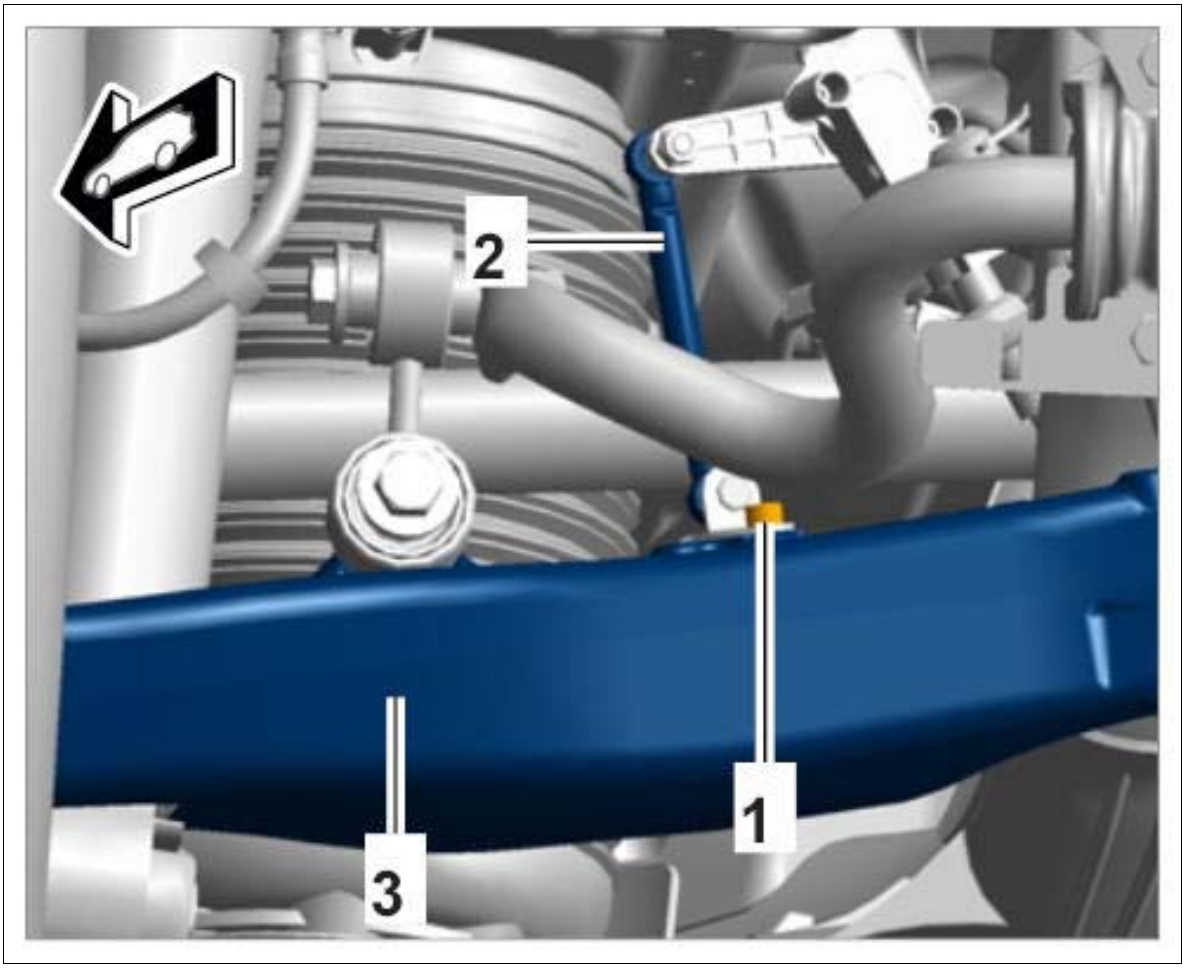

Courtesy of PORSCHE CARS NORTH AMERICA, INC.

3. Unscrew fastening screws **-1-** from the heat shield on the drive shaft **-2-** and remove heat shield.

Fig 4: Identifying Drive Shaft Heat Shield Mounting

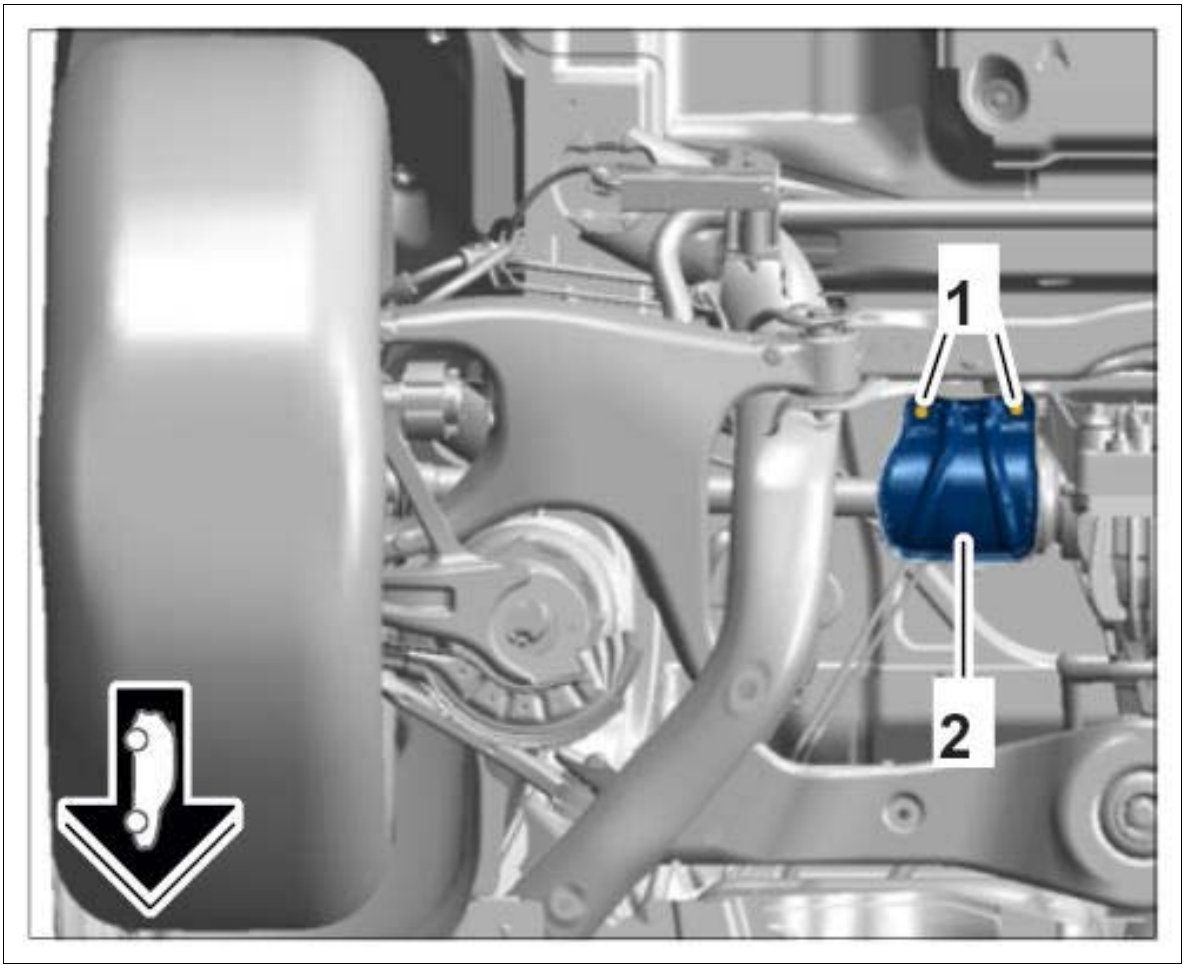

Courtesy of PORSCHE CARS NORTH AMERICA, INC.

4. Unscrew fastening screw **-4-** for the connecting link **-2-** on both sides of the vehicle.
5. Loosen fastening nut **-3-** from the inside **-arrow-** , but do not unscrew it.

   Counter at the fastening screw **-1-** .

   Make sure not to damage the drive shaft while doing so.

Fig 5: Identifying Rear Anti-Roll Bar Connecting Link

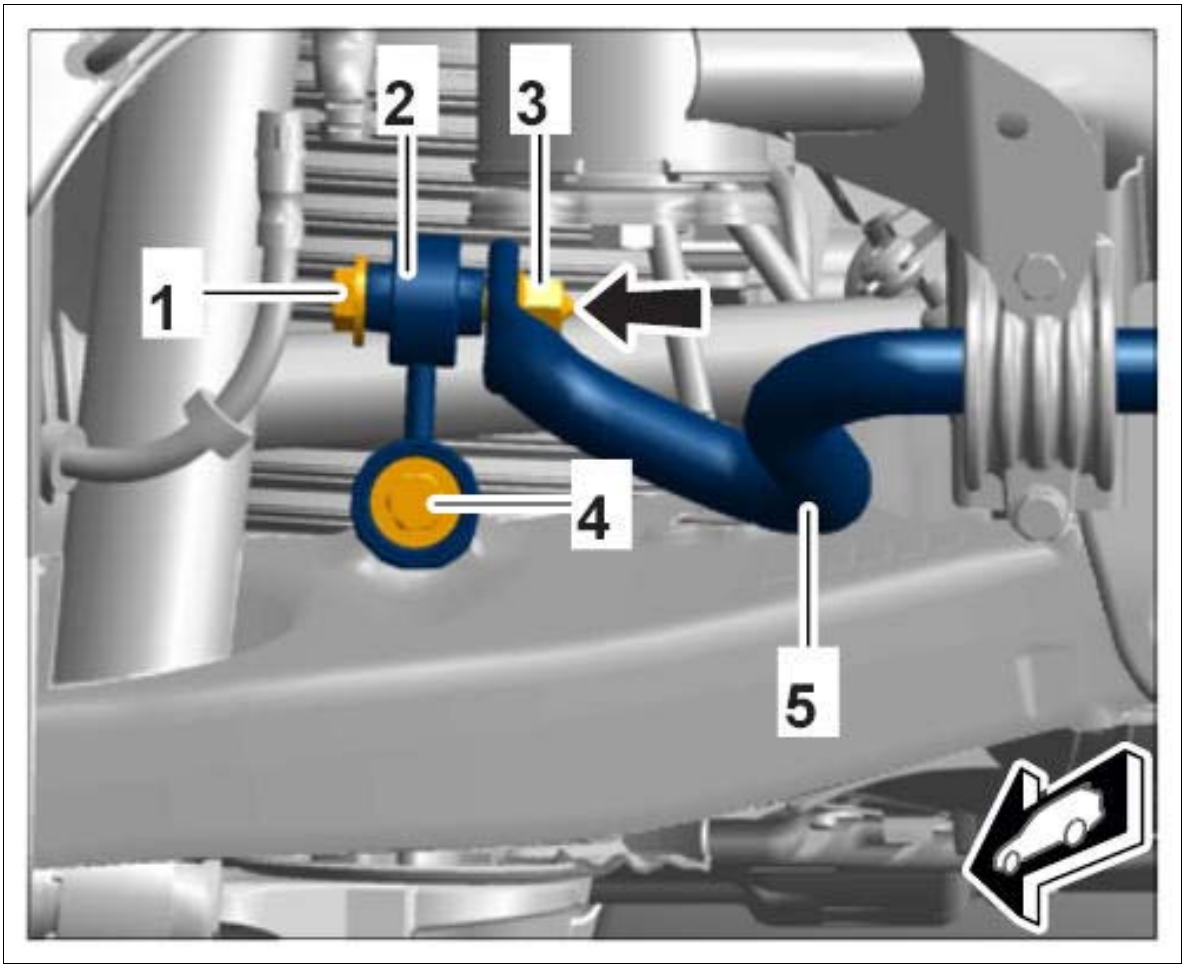

Courtesy of PORSCHE CARS NORTH AMERICA, INC.

6. Remove anti-roll bar clamps.

Fig 6: Identifying Tire Pressure Monitoring Control Unit Mounting

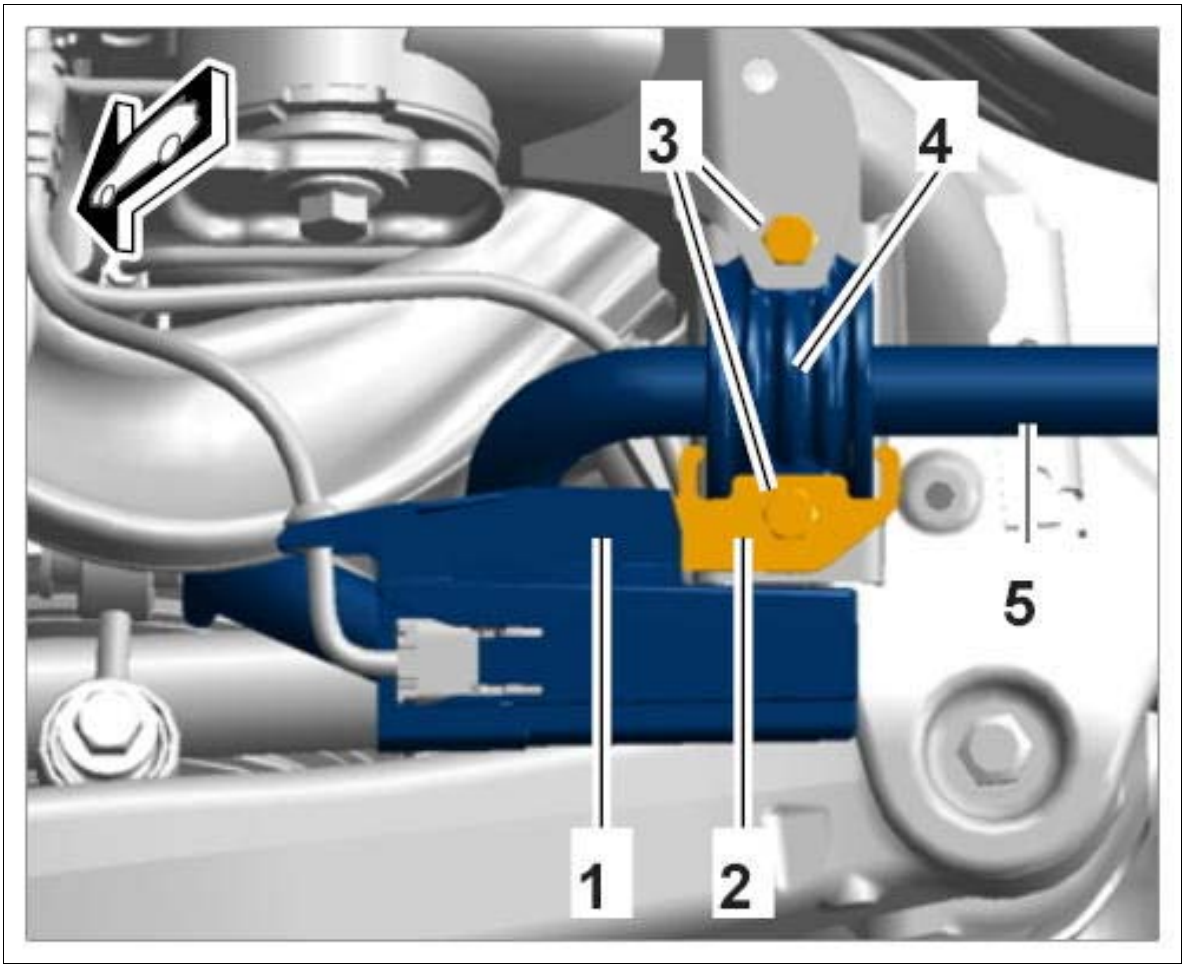

Courtesy of PORSCHE CARS NORTH AMERICA, INC.

1. 6.1. Unscrew fastening screws **-3-** for the anti-roll bar clamps **-4-** on both sides of the vehicle.
2. 6.2. Remove holder **-2-** on the left anti-roll bar clamp **-4-** .

   Information

   Do not damage the paint work on the anti-roll bar during removal and installation.

7. Guide the anti-roll bar out.
   1. 7.1. Wrap a cloth around the lower trailing arm **-3-** on both sides of the vehicle to prevent damage to the paint work on the anti-roll bar.

Fig 7: Identifying Wishbone Level Sensor Mounting

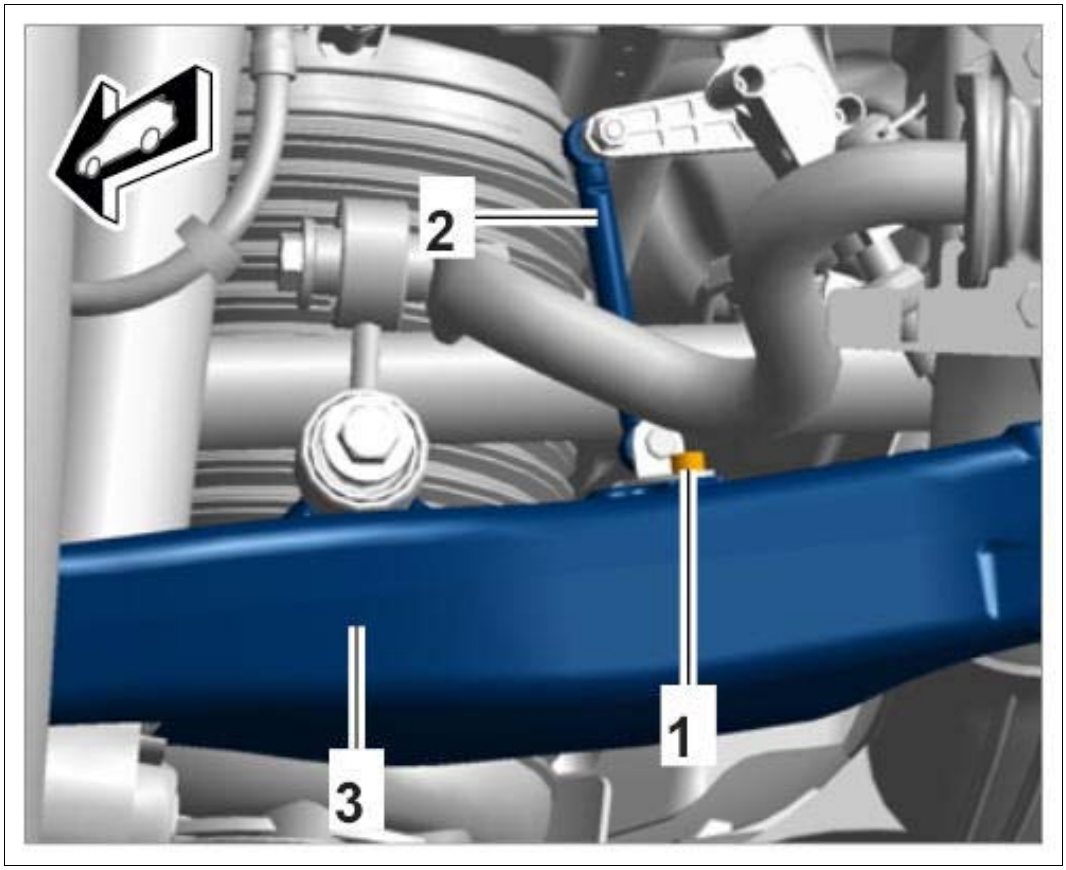

Courtesy of PORSCHE CARS NORTH AMERICA, INC.

2. 7.2. Move the anti-roll bar **-1-** to the right and guide it out carefully together with the connecting links **-2-** .

Fig 8: Removing Rear Anti-Roll Bar

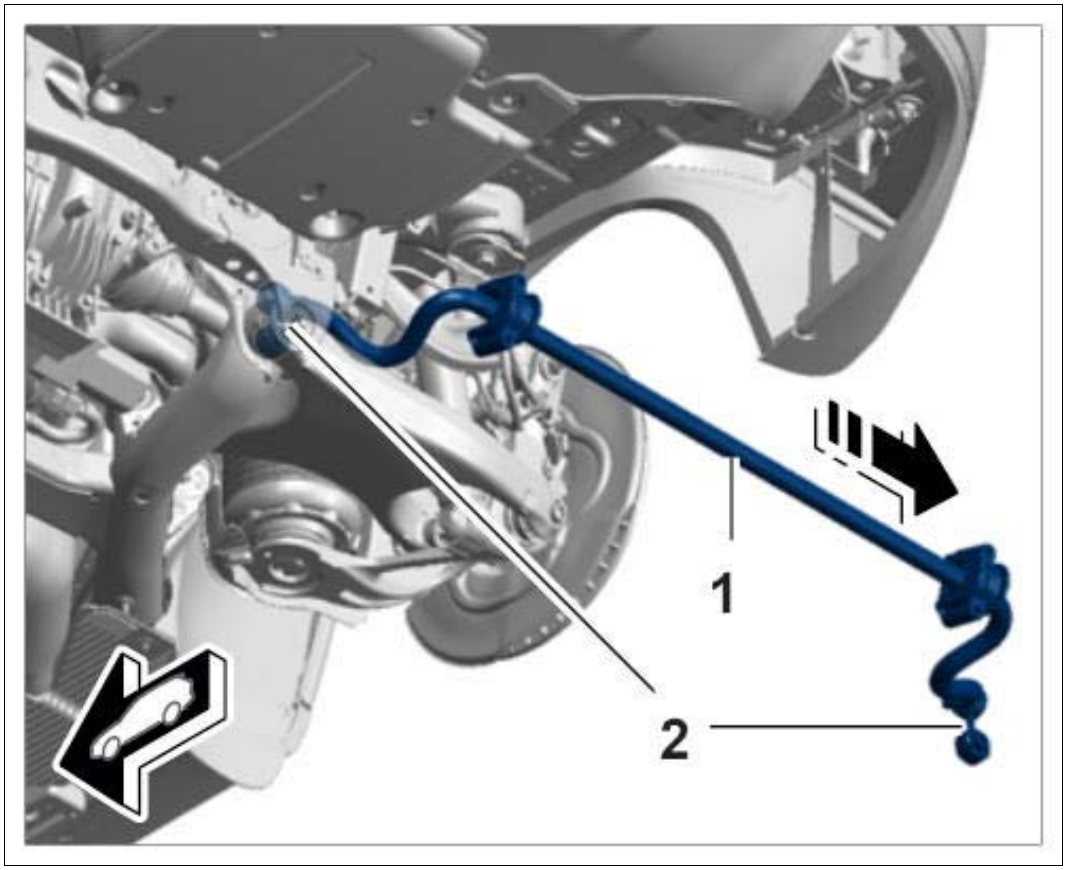

Courtesy of PORSCHE CARS NORTH AMERICA, INC.

8. Unscrew fastening screws **-1-** for the connecting links **-2-** on the removed anti-roll bar **-3-** and take off the anti-roll bar.

Fig 9: Identifying Rear Anti-Roll Bar Connecting Link

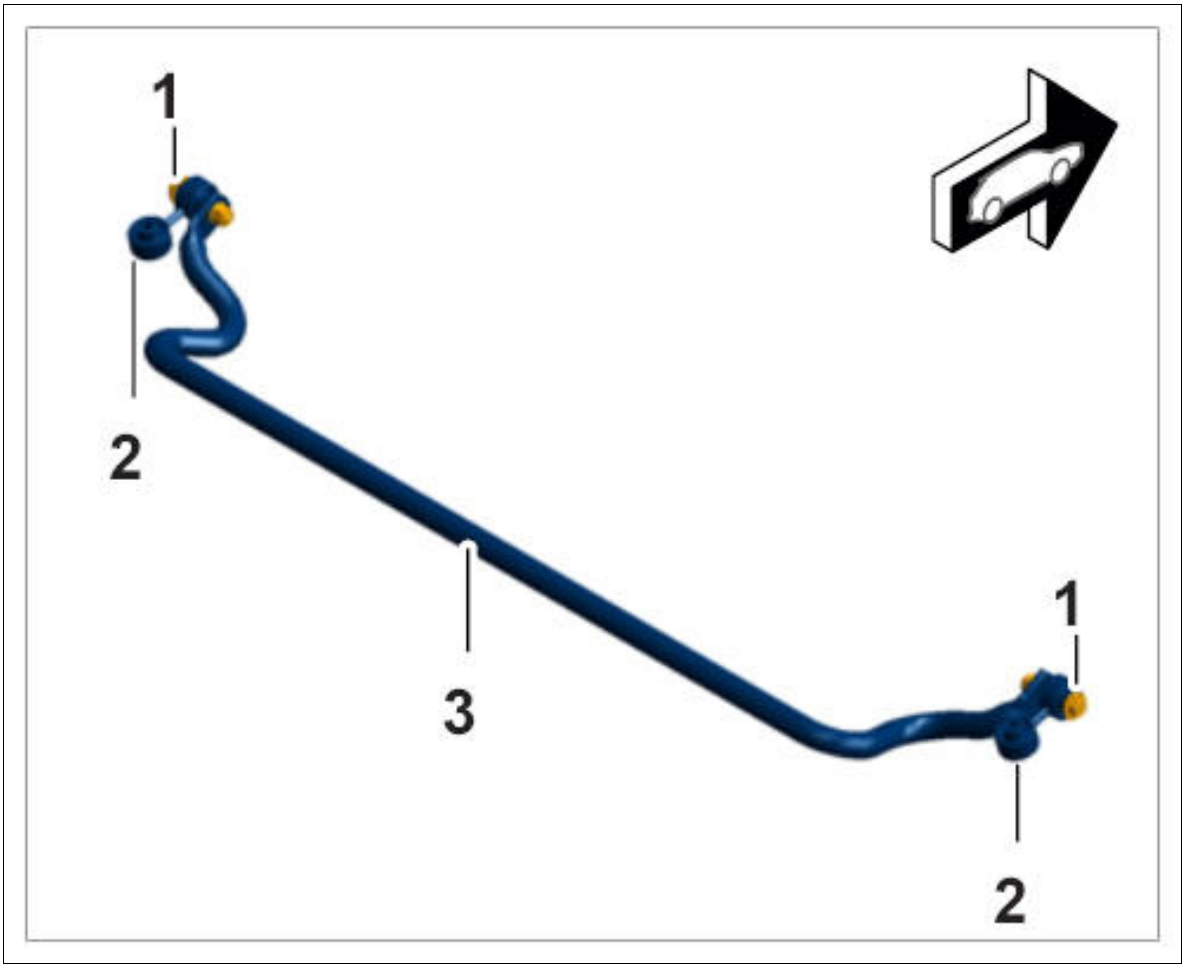

Courtesy of PORSCHE CARS NORTH AMERICA, INC.

WM 429019 REMOVING AND INSTALLING REAR ANTI-ROLL BAR (MACAN, MACAN S, MACAN TURBO) > REMOVING AND INSTALLING REAR ANTI-ROLL BAR > INSTALLING REAR ANTI-ROLL BAR

WARNING: Wheel bearing housing raised incorrectly

- *Risk of squashing*
- *Risk of damage to components*

→ Wear personal protective gear.

→ Do not raise the wheel suspension higher than the normal vehicle position (vehicle resting on wheels).

Information

- All screws and threaded joints on the axle must be tightened in vehicle position. Vehicle position means: vehicle standing on its wheels, or the wheel suspension is raised with a universal vehicle lift. Dimension -1- , from lower edge of wing to center of axle corresponds to vehicle position. The current height can be found in → 4495TW ADJUSTMENT VALUES FOR SUSPENSION ALIGNMENT . Always observe the following points!

  Fig 1: Identifying Wheel To Wing Lower Edge Dimension (Rear Axle)

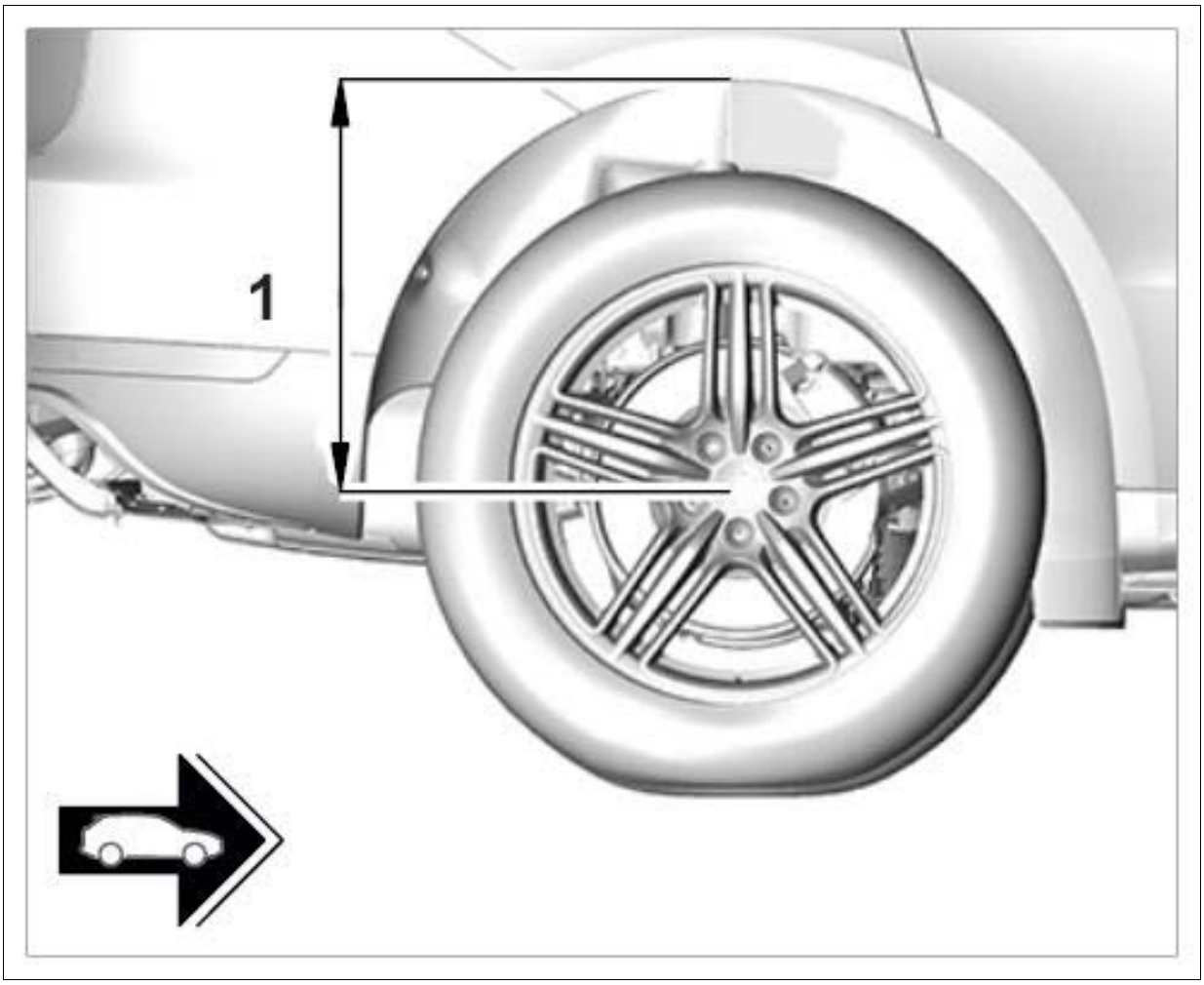

Courtesy of PORSCHE CARS NORTH AMERICA, INC.

- On vehicles with air springs, the respective air spring must be bled using the Porsche System Tester . → 4301IN BLEEDING AND FILLING THE LEVELLING SYSTEM
- Screws and nuts are Geomet-coated and must not be greased.

Installation is performed in reverse order to removal. Pay particular attention to the following:

1. Position connecting links **-2-** on the removed anti-roll bar **-3-** .
2. Screw fastening screws **-1-** into nuts, but do not tighten, so that the connecting links **-2-** can still move.

Fig 2: Identifying Rear Anti-Roll Bar And Connecting Links

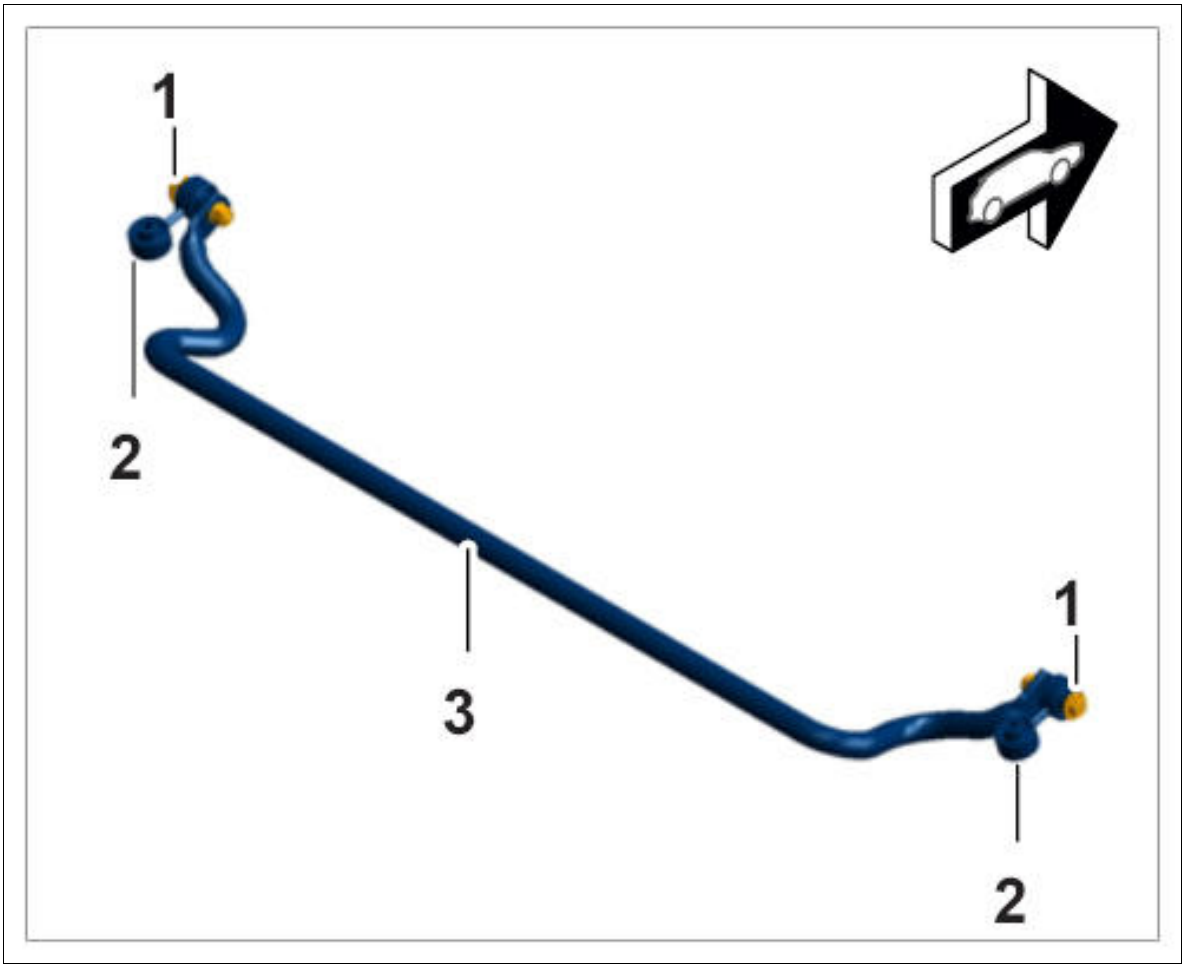

Courtesy of PORSCHE CARS NORTH AMERICA, INC.

3. Guide in and position anti-roll bar with connecting links.
4. Screw in fastening screw **-4-** for the connecting link **-2-** on both sides of the vehicle. Do not tighten!

Fig 3: Identifying Connecting Link Mounting

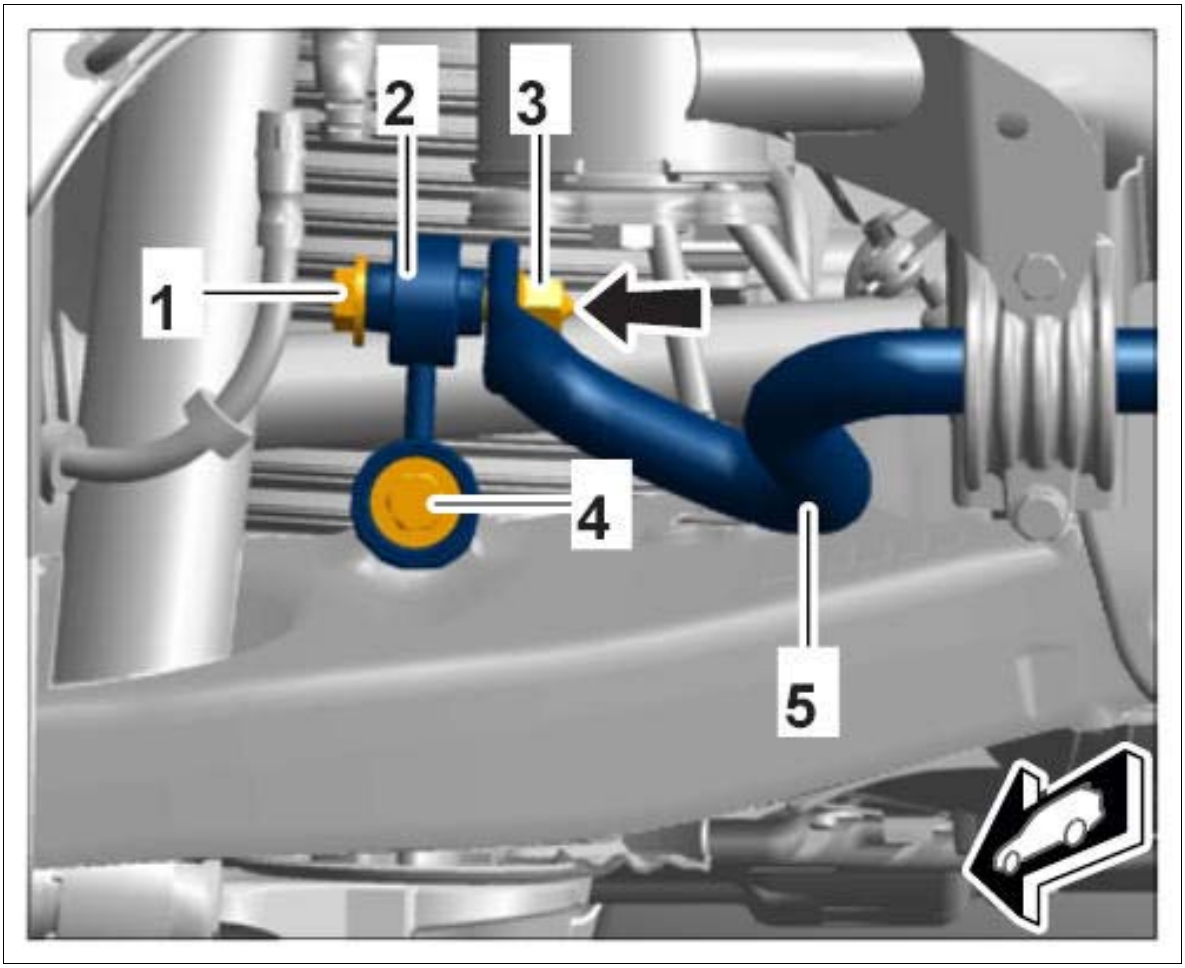

Courtesy of PORSCHE CARS NORTH AMERICA, INC.

5. Position holder **-2-** on the left anti-roll bar clamp **-3-** .

Fig 4: Identifying Tire Pressure Monitoring Control Unit Mounting

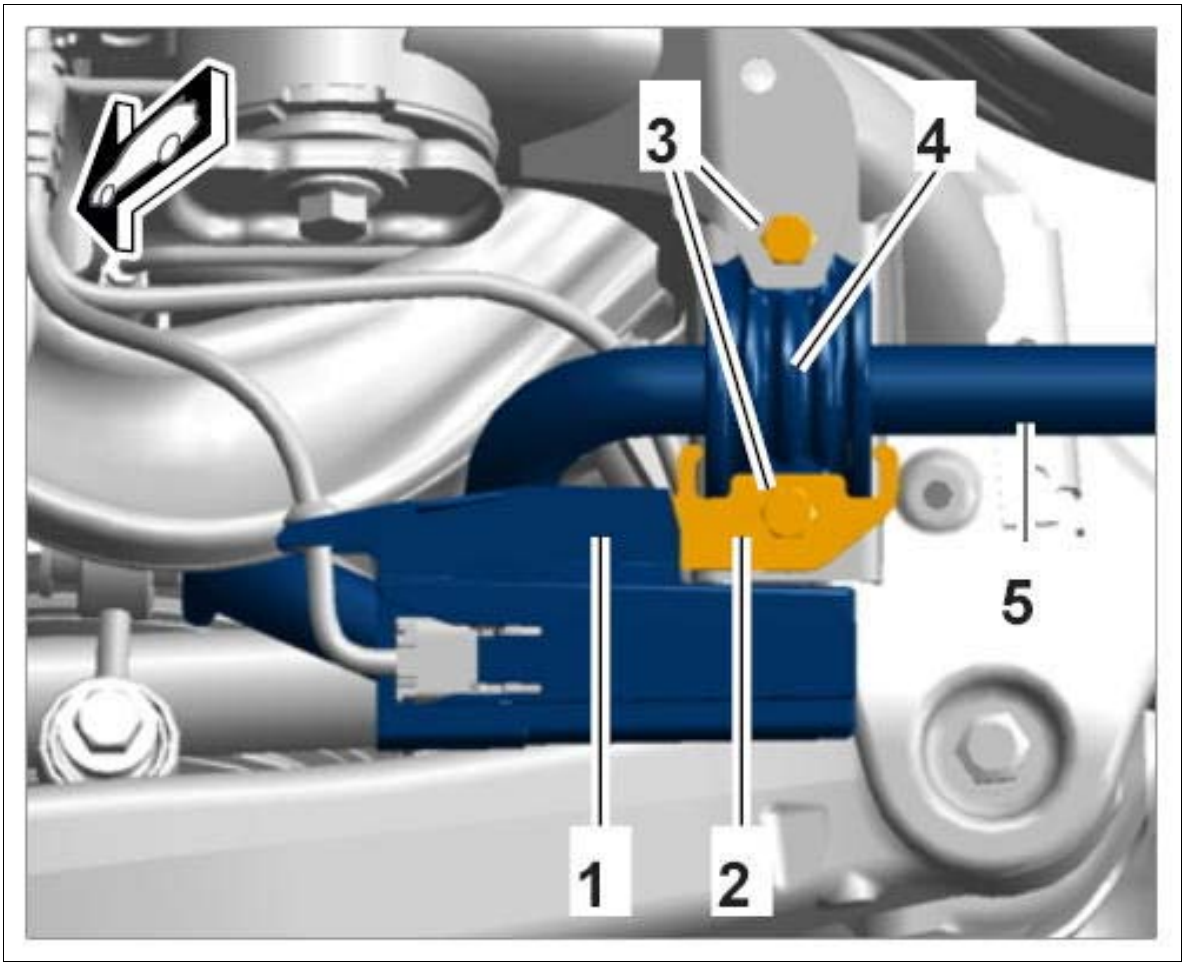

Courtesy of PORSCHE CARS NORTH AMERICA, INC.

6. Screw in fastening screws **-3-** for the anti-roll bar clamps on both sides of the vehicle. Do not tighten!

7. Tighten fastening screws **-3-** for the anti-roll bar clamps on both sides of the vehicle. **Initial tightening 20 Nm (15 ftlb.) Final tightening +180°**

Fig 5: Identifying Tire Pressure Monitoring Control Unit Mounting

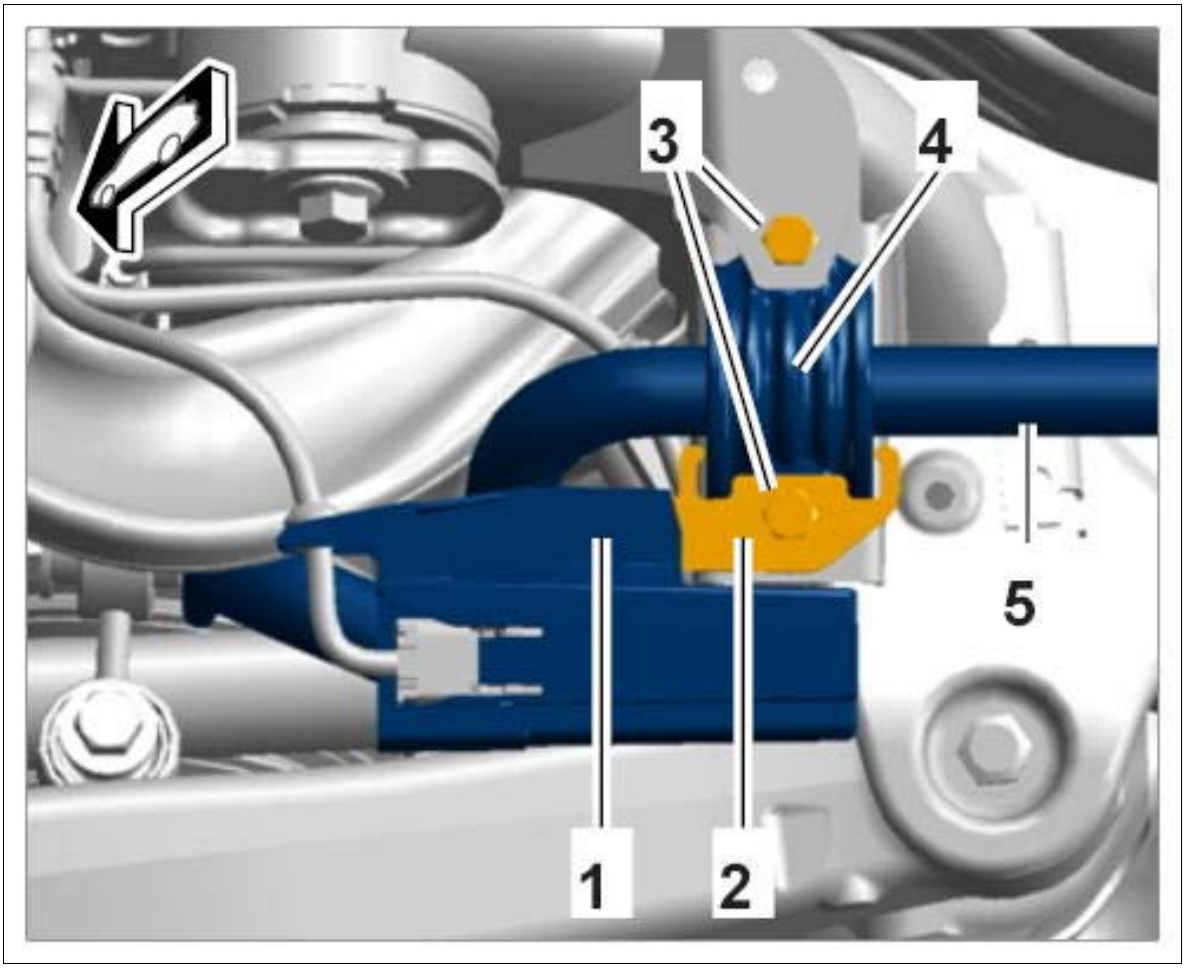

Courtesy of PORSCHE CARS NORTH AMERICA, INC.

8. Tighten fastening nut **-3-** for the connecting link **-2-** from the inside **-arrow-** . **Initial tightening 40 Nm (30 ftlb.) Final tightening +90°**

   Counter at the fastening screw **-1-** .

   Make sure not to damage the drive shaft while doing so.

9. Tighten fastening screw **-4-** for the connecting link **-2-** at the left and right. **Initial tightening 40 Nm (30 ftlb.) Final tightening +90°**

Fig 6: Installing Connecting Link

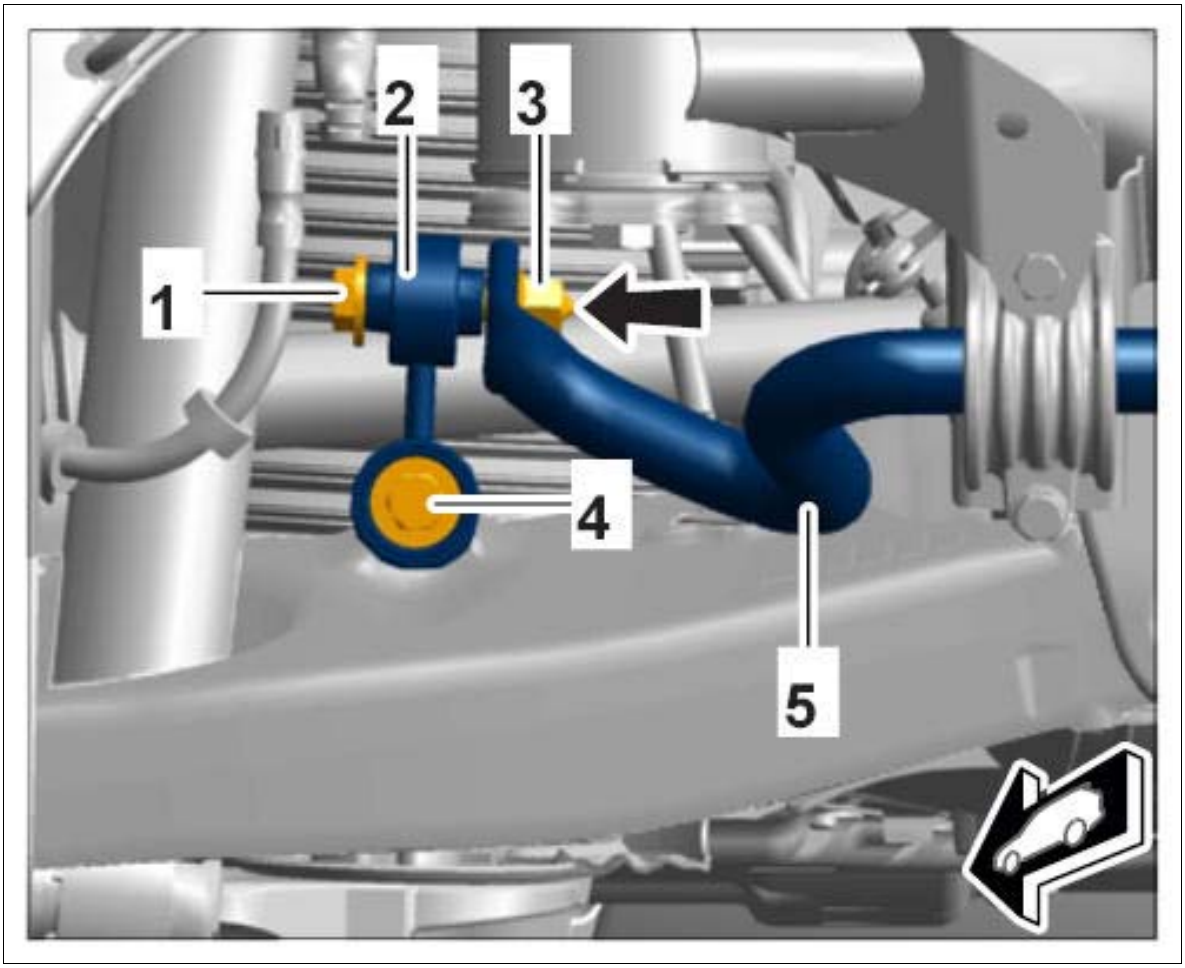

Courtesy of PORSCHE CARS NORTH AMERICA, INC.

10. Position heat shield **-2-** and fit and tighten fastening screws **-1-** . **Tightening torque 23 Nm (17 ftlb.)**

Fig 7: Identifying Drive Shaft Heat Shield Mounting

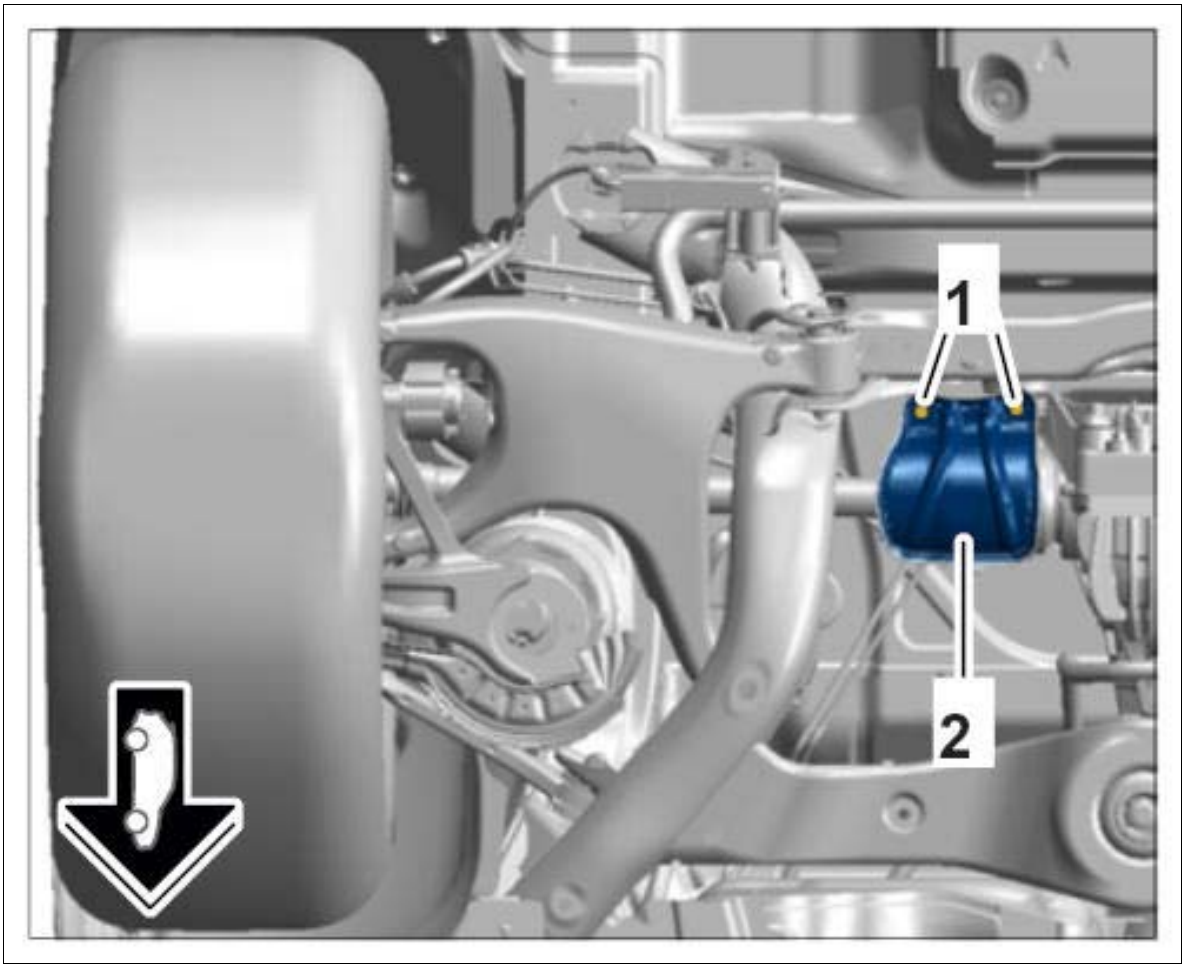

Courtesy of PORSCHE CARS NORTH AMERICA, INC.

11. Tighten fastening screw **-1-** on the level sensor **-2-** . **Tightening torque 9 Nm (6.5 ftlb.)**

Fig 8: Identifying Wishbone Level Sensor Mounting

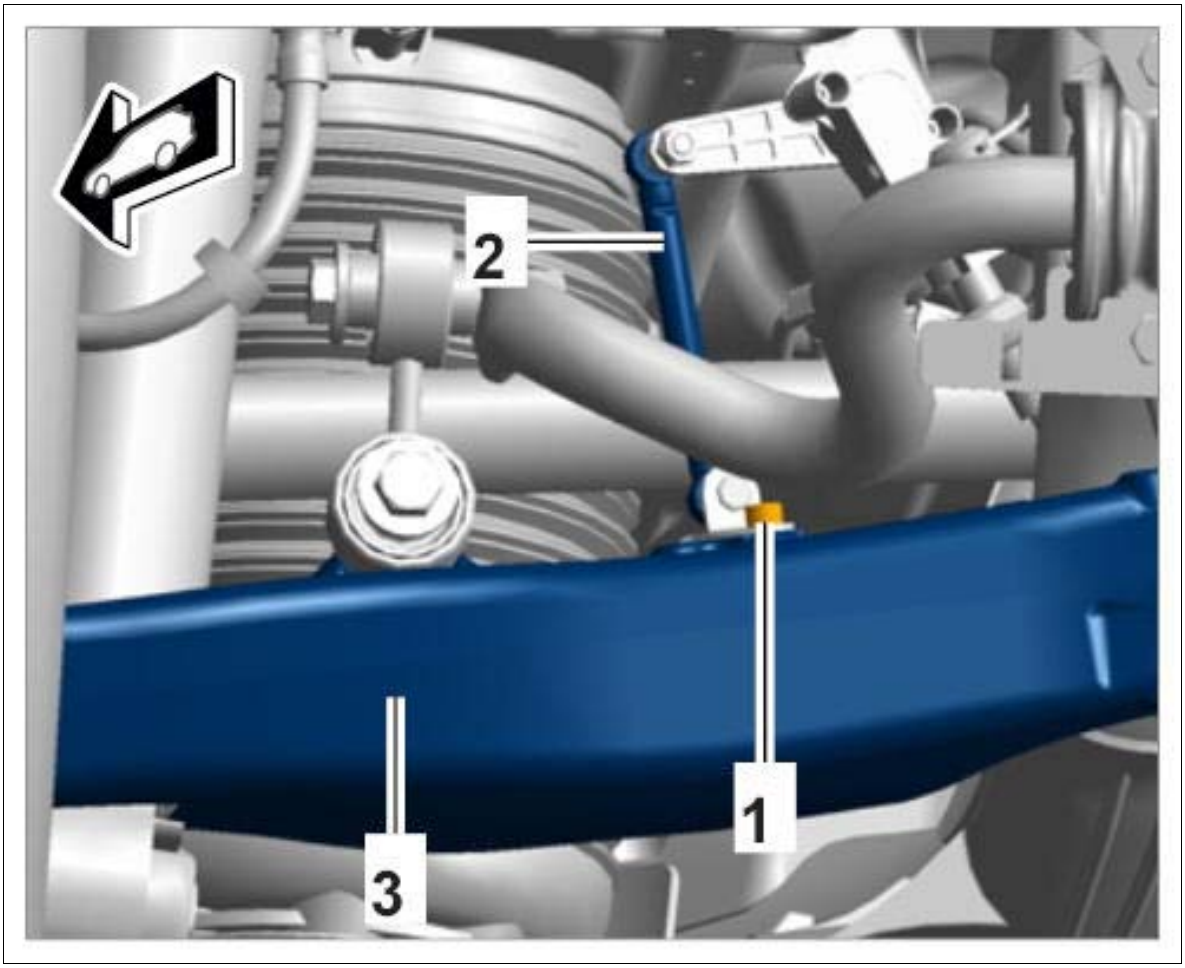

Courtesy of PORSCHE CARS NORTH AMERICA, INC.

12. Push control unit for Tire Pressure Monitoring (TPM) **-1-** onto the holder **-2-** on the left anti-roll bar clamp.

Fig 9: Identifying Tire Pressure Monitoring Control Unit Mounting

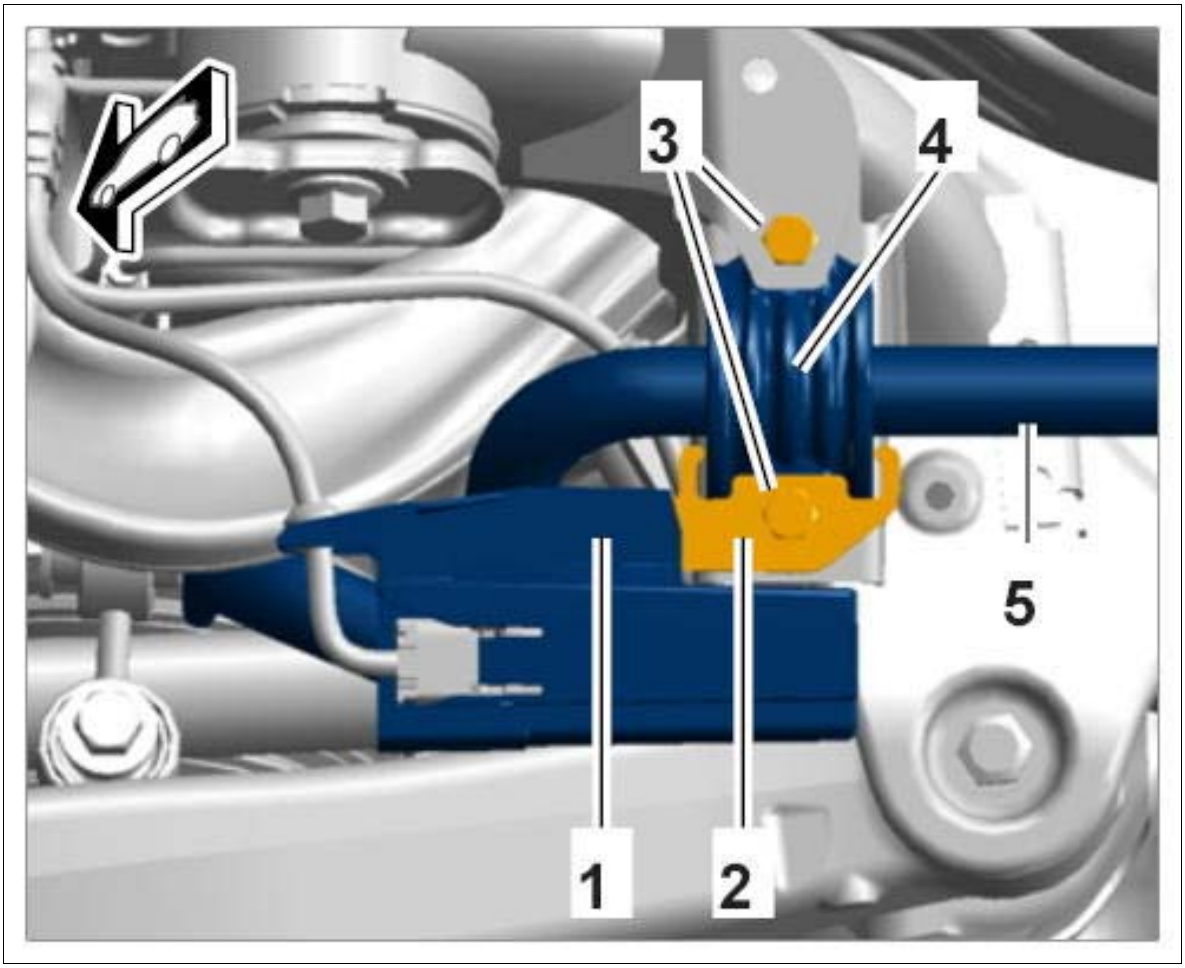

Courtesy of PORSCHE CARS NORTH AMERICA, INC.

WM 429019 REMOVING AND INSTALLING REAR ANTI-ROLL BAR (MACAN, MACAN S, MACAN TURBO) > SUBSEQUENT WORK

1. Install rear underbody cover → INSTALLING COVER FOR REAR UNDERBODY .
2. Install exhaust system → INSTALLING EXHAUST SYSTEM .
3. Install rear wheels → INSTALLING WHEEL .
4. Perform suspension alignment → 449503 SUSPENSION ALIGNMENT, COMPLETE .

WM 429119 REMOVING AND INSTALLING REAR CONNECTING LINK (SUSPENSION/STABILIZER) (MACAN, MACAN S, MACAN TURBO) > PRELIMINARY WORK

1. Remove rear anti-roll bar → 429019 REMOVING AND INSTALLING REAR ANTI-ROLL BAR .

WM 429119 REMOVING AND INSTALLING REAR CONNECTING LINK (SUSPENSION/STABILIZER) (MACAN, MACAN S, MACAN TURBO) > REMOVING AND INSTALLING CONNECTING LINK > REMOVING CONNECTING LINK

Fig 1: Overview Of Connecting Link

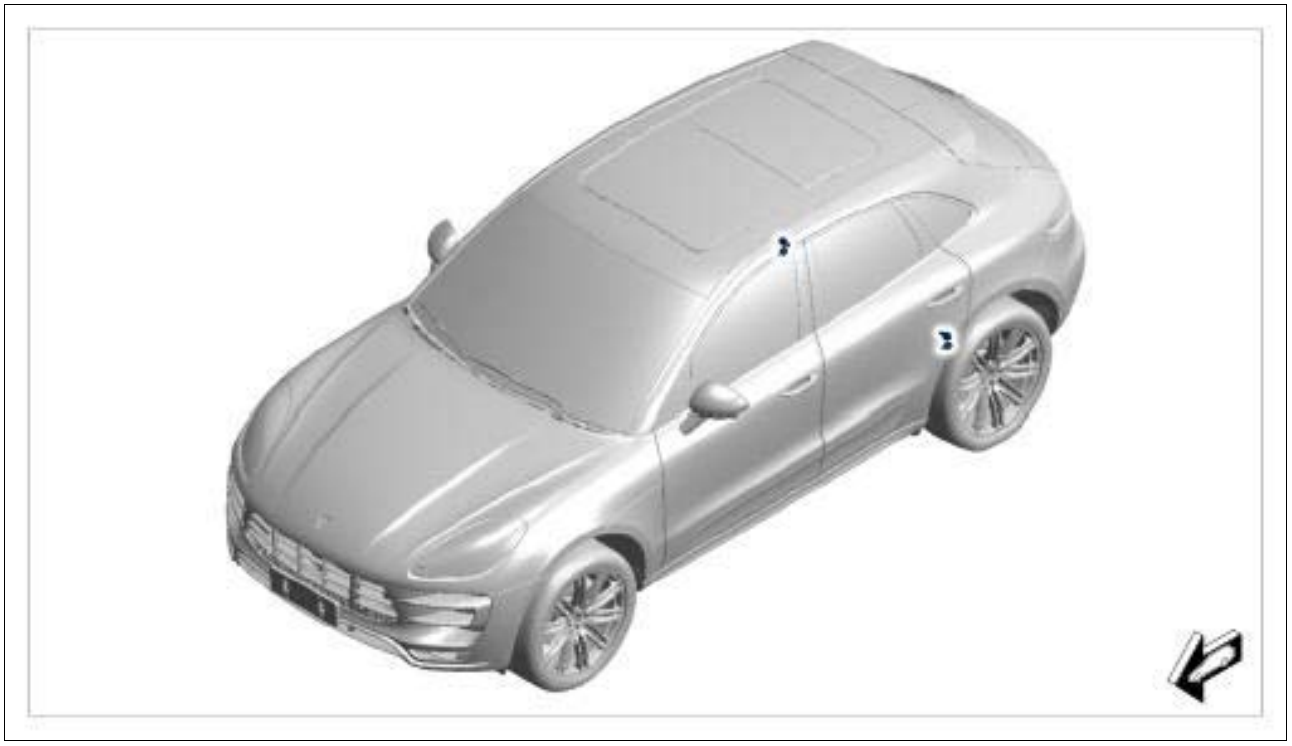

Courtesy of PORSCHE CARS NORTH AMERICA, INC.

1. Unscrew fastening screw **-1-** for the connecting link **-2-** on the removed anti-roll bar **-3-** and take off the connecting link **-2-** .

Fig 2: Identifying Anti-Roll Bar Connecting Link

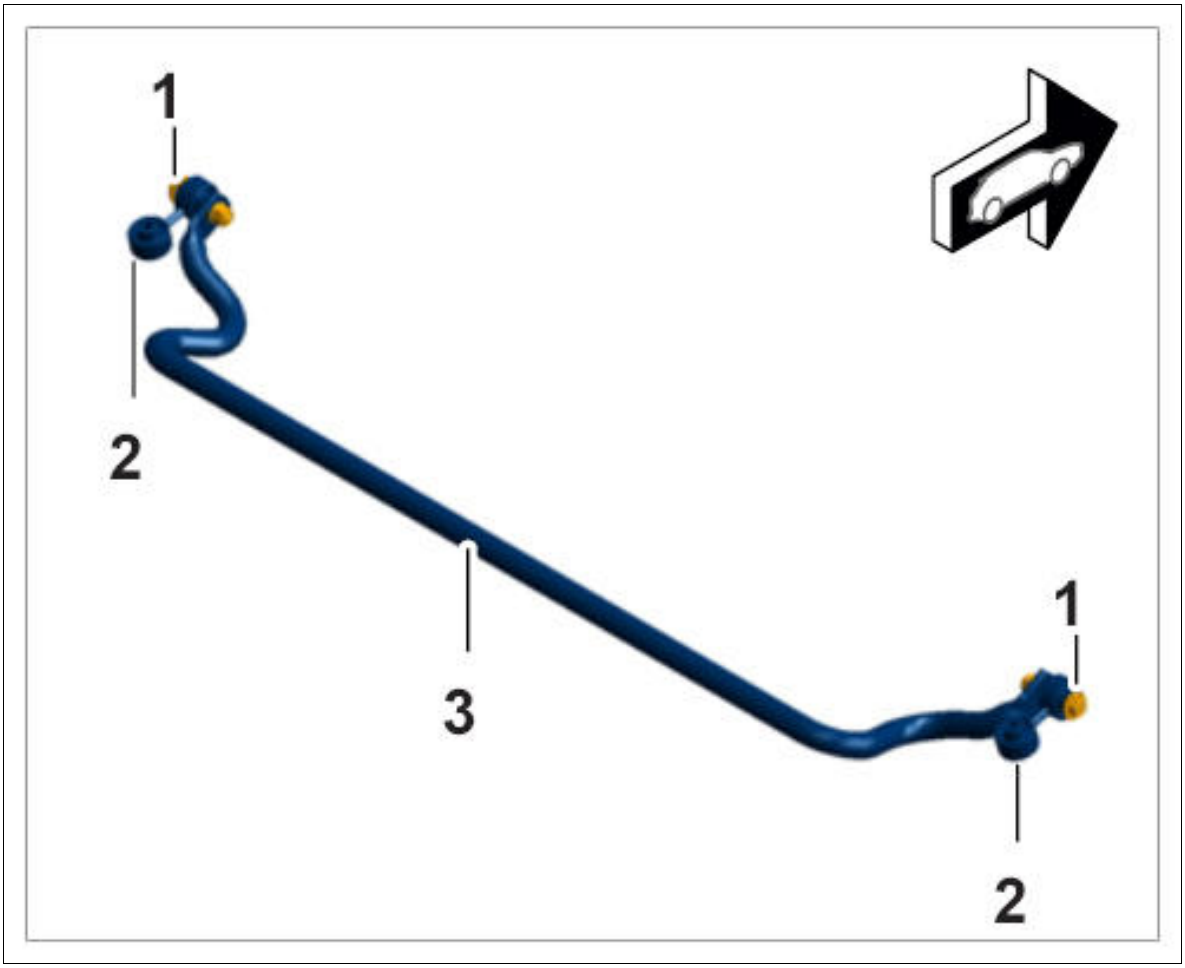

Courtesy of PORSCHE CARS NORTH AMERICA, INC.

WM 429119 REMOVING AND INSTALLING REAR CONNECTING LINK (SUSPENSION/STABILIZER) (MACAN, MACAN S, MACAN TURBO) > REMOVING AND INSTALLING CONNECTING LINK > INSTALLING CONNECTING LINK

1. Position connecting link **-2-** on the removed anti-roll bar **-3-** .

Fig 1: Identifying Anti-Roll Bar Connecting Link

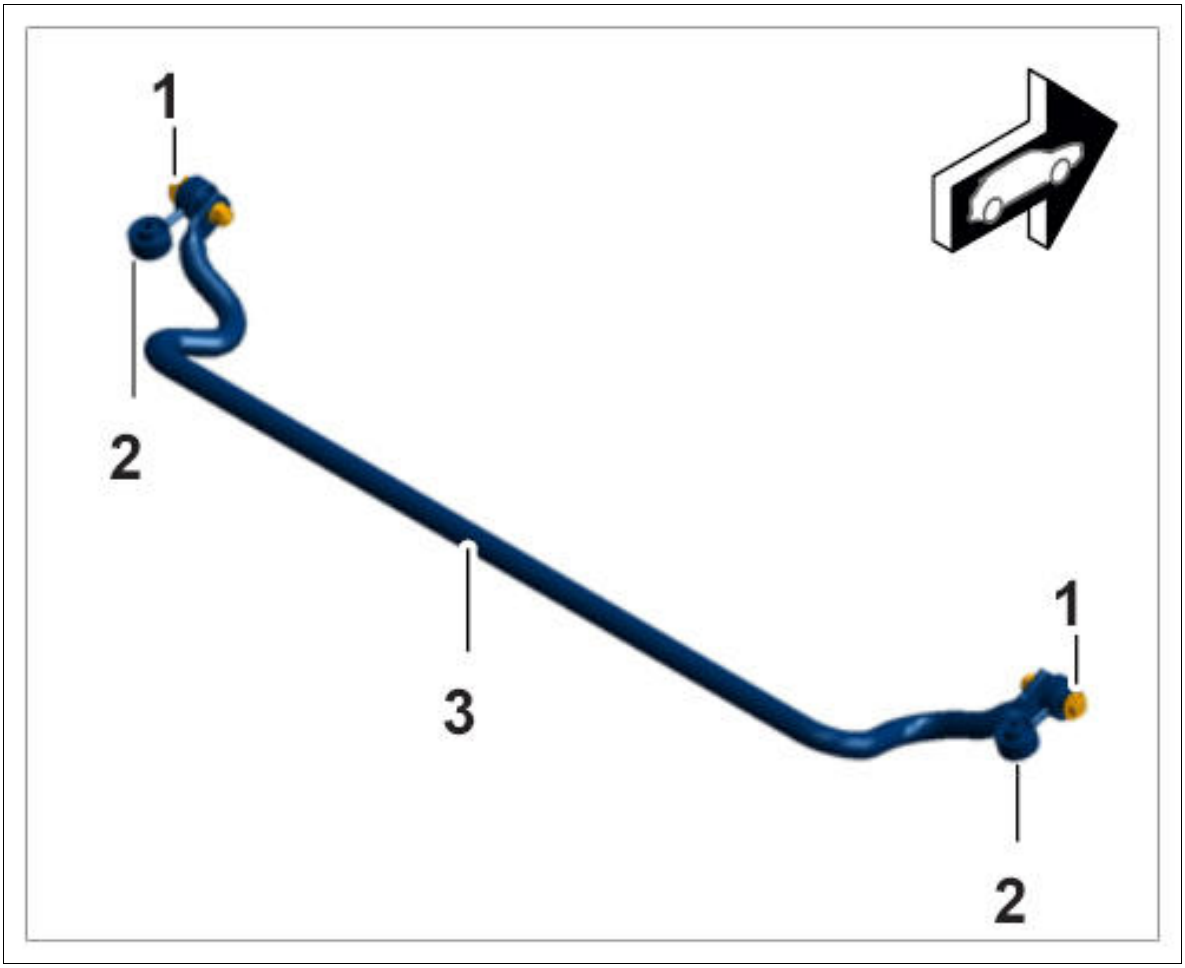

Courtesy of PORSCHE CARS NORTH AMERICA, INC.

2. Screw fastening screw **-1-** into the nut, but do not tighten it, so that the connecting link **-2-** can still move.

WM 429119 REMOVING AND INSTALLING REAR CONNECTING LINK (SUSPENSION/STABILIZER) (MACAN, MACAN S, MACAN TURBO) > SUBSEQUENT WORK

1. Install rear anti-roll bar → INSTALLING REAR ANTI-ROLL BAR .

WM 429319 REMOVING AND INSTALLING REAR SHOCK ABSORBER (MACAN, MACAN S, MACAN TURBO) > TOOLS

Designation	Type	Number	Description	
transmission jack	Workshop equipment	WE 1082		

PIWIS Tester II	Special tool	9818		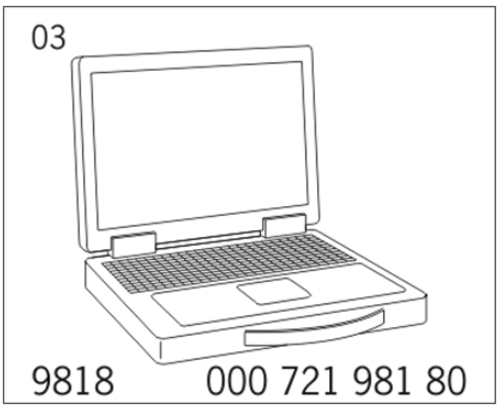
Support	VW tool	T10149		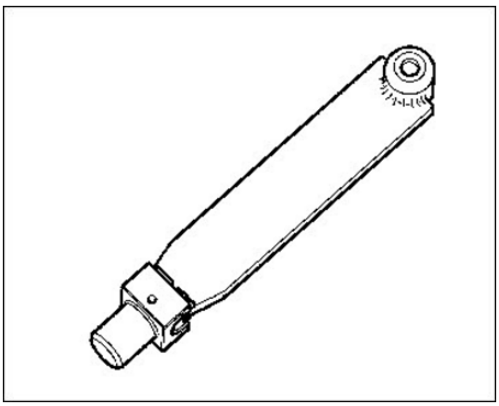

WM 429319 REMOVING AND INSTALLING REAR SHOCK ABSORBER (MACAN, MACAN S, MACAN TURBO) > TECHNICAL VALUES

Location	Description	Type	Basic value	Tolerance 1	Tolerance 2
Shock absorber to wheel bearing housing	M14 x 1.5 x 90 thread/always use new screw or bolt following removal	Initial tightening	150 Nm (111 ftlb.)		
Shock absorber to wheel bearing housing	M14 x 1.5 x 90 thread/always use new screw or bolt following removal	Final tightening	+180°		
Shock absorber to body	AM10 x 35 thread/always use new screws or bolts following removal	Initial tightening	50 Nm (37 ftlb.)		
Shock absorber to body	AM10 x 35 thread/always use new screws	Final tightening	+90°		

	or bolts following removal				

WM 429319 REMOVING AND INSTALLING REAR SHOCK ABSORBER (MACAN, MACAN S, MACAN TURBO) > PRELIMINARY WORK

1. Raise the vehicle. → 4X00IN LIFTING THE VEHICLE
2. Remove wheel. → 440519 REMOVING AND INSTALLING WHEEL
3. Remove rear wheel housing liner → 536919 REMOVING AND INSTALLING REAR WHEEL HOUSING LINER .
4. On vehicles with air suspension, bleed the corresponding air spring using **PIWIS Tester II 9818.** → 4301IN BLEEDING AND FILLING THE LEVELLING SYSTEM

   Steel springs
5. On vehicles with steel springs, pretension the relevant steel springs. → 427219 REMOVING AND INSTALLING REAR COIL SPRING .

WM 429319 REMOVING AND INSTALLING REAR SHOCK ABSORBER (MACAN, MACAN S, MACAN TURBO) > REMOVING AND INSTALLING REAR SHOCK ABSORBER > REMOVING REAR SHOCK ABSORBER

⚠ *CAUTION: Wheel carrier raised incorrectly*

- *Risk of squashing*
- *Risk of damage to components*

→ Wear personal protective gear.

→ Do not raise the wheel suspension higher than the normal vehicle position (vehicle resting on wheels).

1. Lift up the wheel bearing housing.

Fig 1: Locating Support (T10149) Mounting Nut

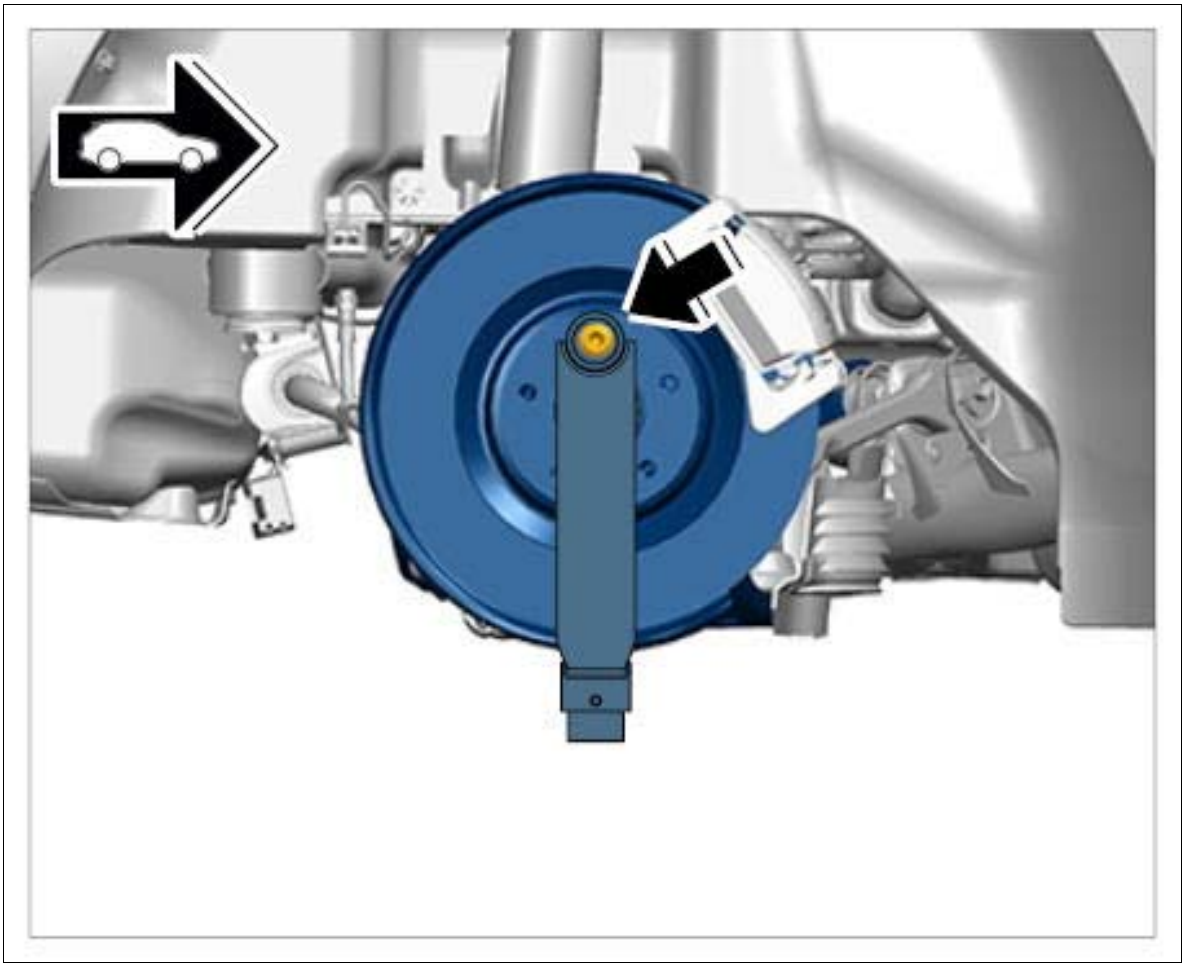

Courtesy of PORSCHE CARS NORTH AMERICA, INC.

1. 1.1. Turn the wheel hub in such a way that a bore for a wheel bolt is at the top.
2. 1.2. **Support T10149** must be secured to the wheel hub with a wheel bolt **-arrow-**
3. 1.3. **Support T10149** must now be fitted into the **transmission jack WE 1082.**
4. 1.4. Lift up the wheel bearing housing.

2. Unscrew fastening screws **-1-** at the top of the shock absorber.

Fig 2: Identifying Upper Shock-Absorber Mount

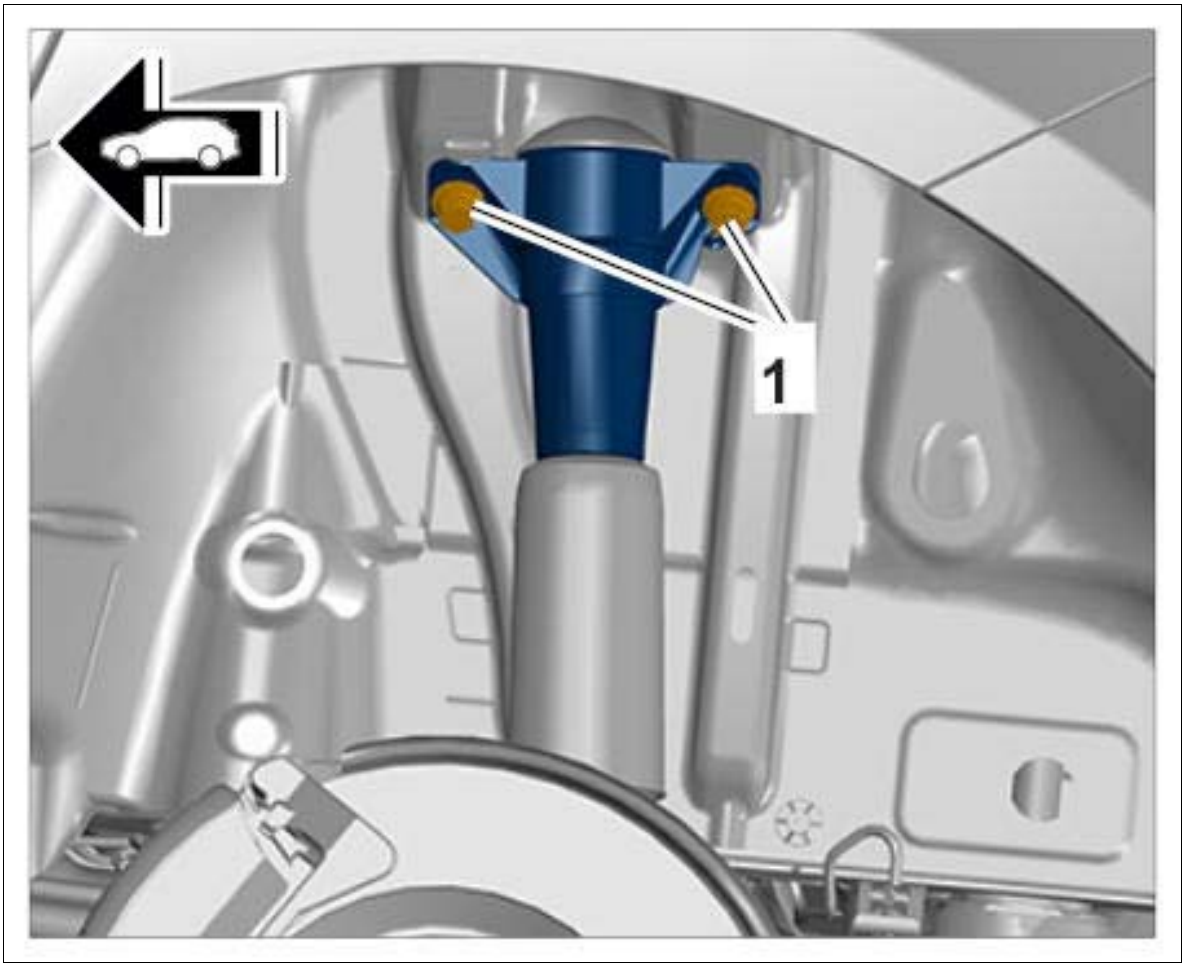

Courtesy of PORSCHE CARS NORTH AMERICA, INC.

3. **Only for vehicles with PASM:**

   Loosen PASM line from the bracket **-1-** and release and disconnect connector **-2-** .

Fig 3: Identifying PASM Connector

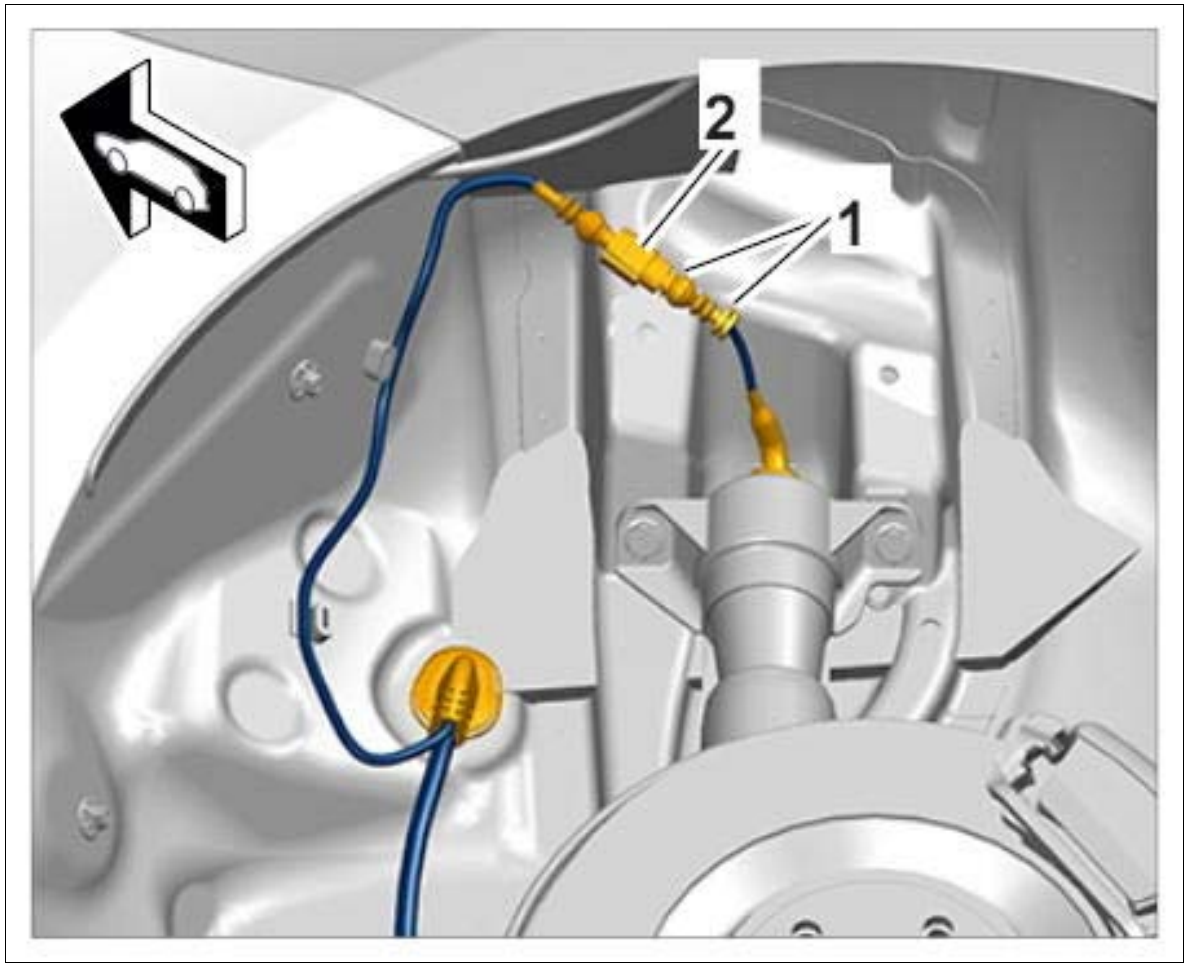

Courtesy of PORSCHE CARS NORTH AMERICA, INC.

4. Release locking lugs **-1-** and remove stone guard **-2-** .

Fig 4: Identifying Stone Guard Locking Lugs

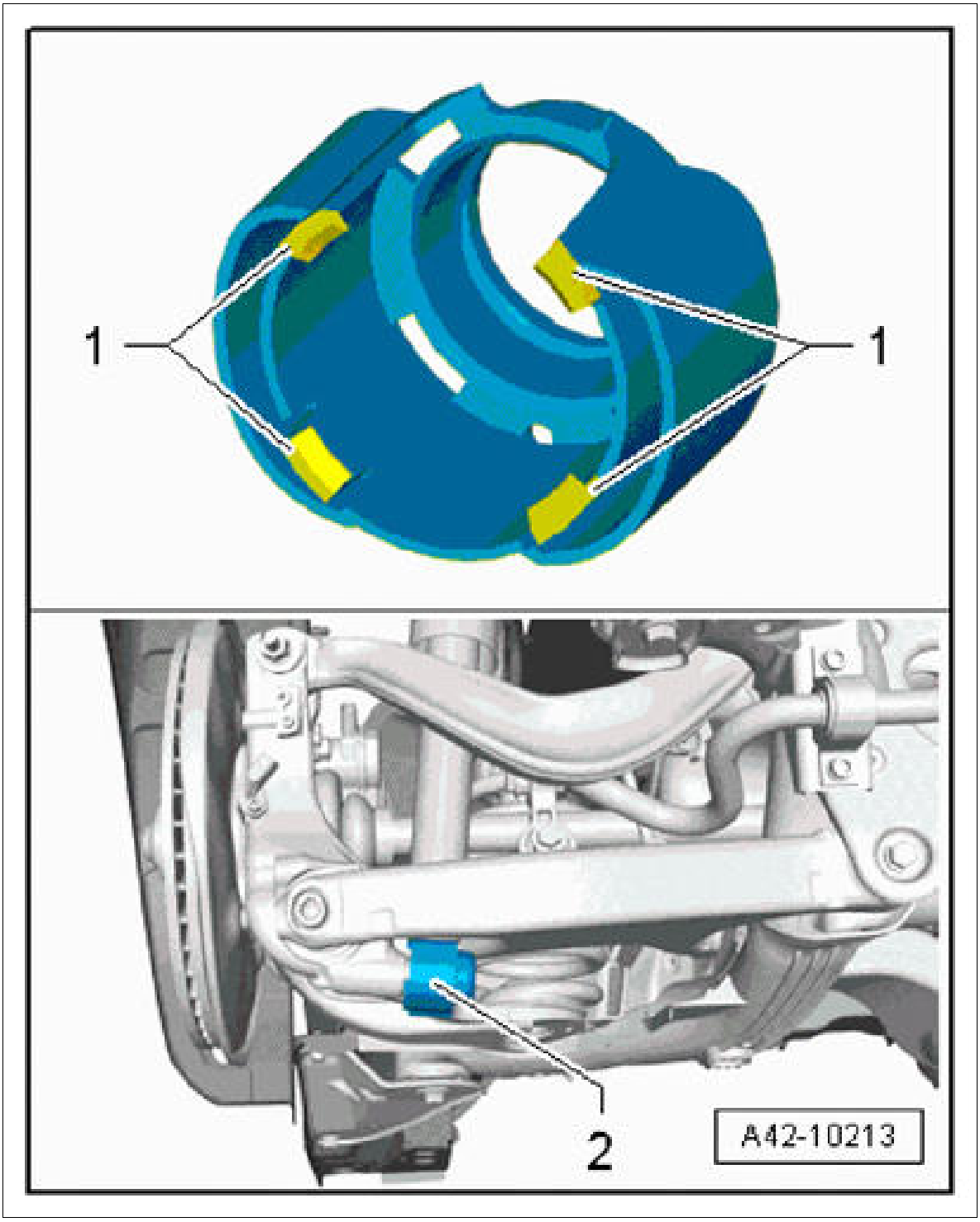

Courtesy of PORSCHE CARS NORTH AMERICA, INC.

5. Unscrew fastening screw **-2-** and remove washer **-1-** .

Fig 5: Identifying Lower Shock-Absorber Mount And Washer

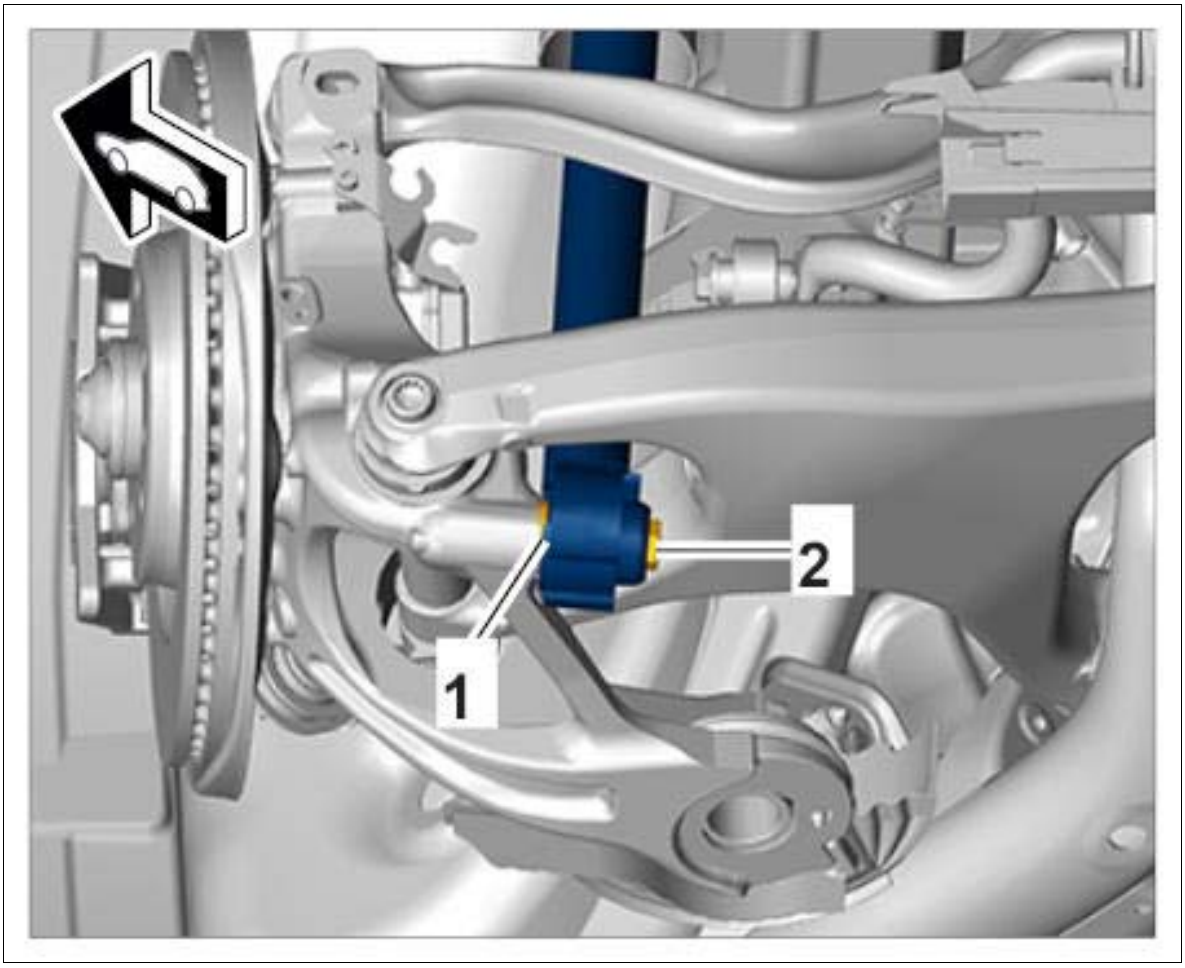

Courtesy of PORSCHE CARS NORTH AMERICA, INC.

6. Remove shock absorber by pulling it downwards.

WM 429319 REMOVING AND INSTALLING REAR SHOCK ABSORBER (MACAN, MACAN S, MACAN TURBO) > REMOVING AND INSTALLING REAR SHOCK ABSORBER > INSTALLING REAR SHOCK ABSORBER

Information

- All screws and threaded joints on the axle must be tightened in vehicle position. Vehicle position means: vehicle standing on its wheels, or the wheel suspension is raised with a universal vehicle lift. Dimension -1- , from lower edge of wing to center of axle corresponds to vehicle position. The current height can be found in → 4495TW ADJUSTMENT VALUES FOR SUSPENSION ALIGNMENT . Always observe the following points!

Fig 1: Identifying Wheel To Wing Lower Edge Dimension (Rear Axle)

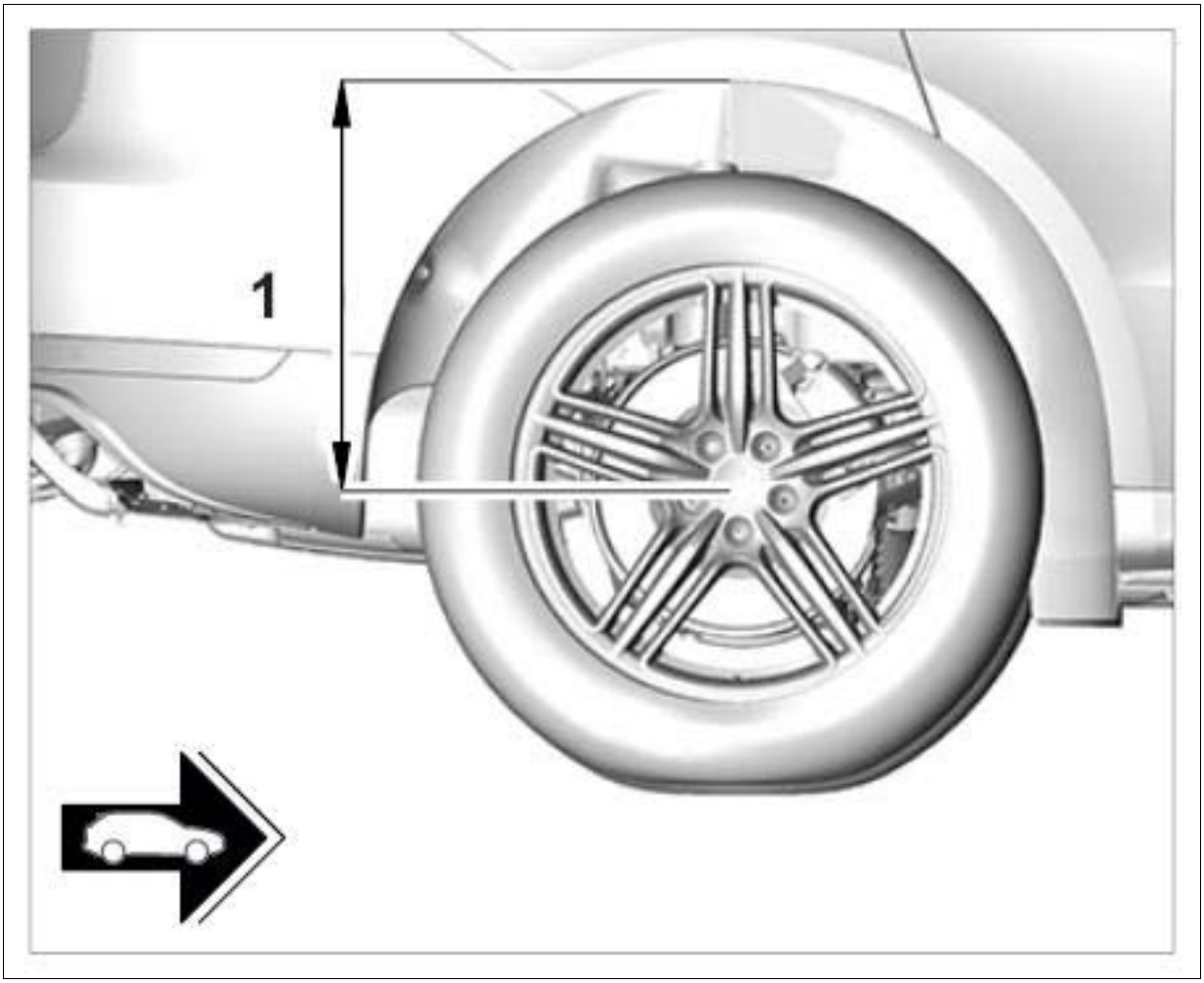

Courtesy of PORSCHE CARS NORTH AMERICA, INC.

- On vehicles with air springs, the respective air spring must be bled using the Porsche System Tester . → 4301IN BLEEDING AND FILLING THE LEVELLING SYSTEM
- Screws and nuts are Geomet-coated and must not be greased.

1. Installation is performed in reverse order.

   Observe specified tightening torques:

   Shock absorber to wheel bearing housing: **Initial tightening 150 Nm (111 ftlb.) Final tightening +180°**

   Shock absorber to body: **Initial tightening 50 Nm (37 ftlb.) Final tightening +90°**

WM 429319 REMOVING AND INSTALLING REAR SHOCK ABSORBER (MACAN, MACAN S, MACAN TURBO) > SUBSEQUENT WORK

1. On vehicles with air suspension, fill the corresponding air spring using **PIWIS Tester II 9818** → 4301IN BLEEDING AND FILLING THE LEVELLING SYSTEM .

Steel springs

2. On vehicles with steel springs, relieve tension on the relevant steel springs. → 427219 REMOVING AND INSTALLING REAR COIL SPRING

3. Install rear wheel housing liner → INSTALLING REAR WHEEL HOUSING LINER .

4. Fit wheel. → INSTALLING WHEEL .

WM 430115 CALIBRATING THE LEVELLING SYSTEM (MACAN, MACAN S, MACAN TURBO) > TOOLS

Designation	Type	Number	Description	
Quick clamping device	Workshop equipment	WE 1621		
PIWIS Tester II	Special tool	9818		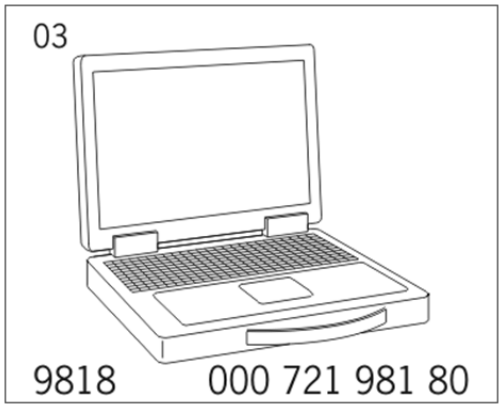

WM 430115 CALIBRATING THE LEVELLING SYSTEM (MACAN, MACAN S, MACAN TURBO) > TECHNICAL VALUES

Location	Description	Type	Basic value	Tolerance 1	Tolerance 2
Current rating		Nominal value	40 A		

WM 430115 CALIBRATING THE LEVELLING SYSTEM (MACAN, MACAN S, MACAN TURBO) > CALIBRATING THE LEVELLING SYSTEM > CHECKING

Calibration must be performed if one or more of the following situations apply:

- Control unit was replaced.
- Level sensors were replaced.
- Vehicle lies to one side after being raised. If lifting platform mode is activated, carry out a test drive (lifting platform mode switches off and the vehicle corrects itself). If this does not work, check the system for faults → 430149 TROUBLESHOOTING THE LEVELLING SYSTEM and then calibrate the system.

Level sensors are calibrated by determining a correction value (corresponding to the actual height of the vehicle) and storing it permanently in the control unit.

WM 430115 CALIBRATING THE LEVELLING SYSTEM (MACAN, MACAN S, MACAN TURBO) > CALIBRATING THE LEVELLING SYSTEM > NOTES ON CALIBRATION

The nominal values for the nominal heights of the level sensors are stored in the control unit. The actual values of the respective axle heights, front left, front right, rear left, rear right, have to be measured manually and then entered using the Porsche System Tester. The actual values must be measured on the front and rear axle, both on the left and right. → Height Measurement Point On Rear Axle ; - Height Measurement Point On Front Axle .

See also: → Conditions For Carrying Out Calibration .

WM 430115 CALIBRATING THE LEVELLING SYSTEM (MACAN, MACAN S, MACAN TURBO) > CALIBRATING THE LEVELLING SYSTEM > HEIGHT MEASUREMENT POINT ON REAR AXLE

The distance between the lower edge of the wing and upper edge of the measured-value pickup **-X-** is measured.

Fig 1: Identifying Rear Axle Point Height



Courtesy of PORSCHE CARS NORTH AMERICA, INC.

WM 430115 CALIBRATING THE LEVELLING SYSTEM (MACAN, MACAN S, MACAN TURBO) > CALIBRATING THE LEVELLING SYSTEM > HEIGHT MEASUREMENT POINT ON FRONT AXLE

Information

Check the following at the height measuring point on the front axle:

- Lower edge of the wing is covered by the front lid.
- Only measure the height on the front axle when the front lid is open.

The distance between the lower edge of the wing and upper edge of the measured-value pickup **-X-** is measured.

Fig 1: Identifying Front Axle Point Height



Courtesy of PORSCHE CARS NORTH AMERICA, INC.

WM 430115 CALIBRATING THE LEVELLING SYSTEM (MACAN, MACAN S, MACAN TURBO) > CALIBRATING THE LEVELLING SYSTEM > CONDITIONS FOR CARRYING OUT CALIBRATION

Information

- Calibration can only be carried out while the vehicle is stationary.
- The vehicle must stand "floating" on the measuring platform to avoid straining the axles.
- Calibration is also required for the variants with "steel springs - PASM". The headlight beam adjustment (HBA) sensors are also calibrated.
- Before calibration is performed, the vehicle must be adjusted to Normal level and the Height sensor system component test must be carried out!
- Ensure that tire pressures have been adjusted to the respective tire specifications. (WM 4405IN WHEELS AND TIRES (ALL MODELS))
- The vehicle is raised and lowered during the height sensor system component test and then adjusts to the correct level!
- The measured values for the vehicle height must correspond approximately to the values specified under Adjustment values for suspension alignment . An implausible value will not be accepted. For the current comparative values for the vehicle height, please refer to the adjustment values for suspension alignment → 4495TW ADJUSTMENT VALUES FOR SUSPENSION ALIGNMENT
- Do not cancel calibration! If calibration is interrupted, the fault code 000286 "Customer service mode not complete" remains stored and is active! A warning appears in the instrument cluster. Select >>Drive links/checks<< in the menu. Delete the fault memory and perform calibration again!

WM 430115 CALIBRATING THE LEVELLING SYSTEM (MACAN, MACAN S, MACAN TURBO) > CALIBRATING THE LEVELLING SYSTEM > CALIBRATION PROCEDURE

NOTE: Voltage drop

- *Risk of irreparable damage to control unit*
- *Risk of damage to control unit*
- *Fault entries in the control unit*
- *Coding in the control unit is aborted*
- *Malfunctions in control unit, even during programming*

→ Prior to disconnecting the control unit, switch off ignition and remove ignition key.

→ Ensure that the power supply is not interrupted during programming.

→ Connect a battery charger with a current rating of at least → **Nominal value: 40 A** to the vehicle battery.

Adhere strictly to the information provided under "Conditions for carrying out calibration"!

Always carry out the "Calibration procedure" **step-by-step** until calibration is complete!

1. Fit measured-value pickup **Quick clamping device WE 1621** on the relevant wheel.
2. **PIWIS Tester II 9818** must be connected to the vehicle before starting the Tester. Switch on ignition using original remote control (hand-held transmitter).
3. Apply electric parking brake.
4. Close the doors and tailgate.
5. **Erase the fault memory.**

   To do this, connect the Porsche System Tester. Select >>Levelling system/PASM<< >>Fault memory<< >>Erase fault memory<< in the control unit overview.

   Follow the instructions on the Porsche System Tester.
6. **Perform Height sensor system component test.**

   Select >>Maintenance/repairs<< >>Height sensor system component test<< in the menu.

   Follow the instructions on the Porsche System Tester.
7. **Perform height sensor calibration.**

   Select >>Maintenance/repairs<< >>Height sensor calibration<< in the menu.

   Follow the instructions on the Porsche System Tester.

   Information

   Check the following at the height measuring point on the front axle:

   1. Lower edge of the wing is covered by the front lid.
   2. Only measure the height on the front axle when the front lid is open.

      1. 7.1. Determine the actual value for the height of the vehicle body at the measuring points.

         1. 7.1.1. When determining the height of the vehicle body, the height is measured from the lower edge of the wing to the upper edge of the measured-value pickup, dimension **X** .
         2. 7.1.2. Then add the **radius** of the measured-value pickup **32.5 mm** to this measured dimension X.

            Sample calculation:

            Measured dimension X = 430 mm; measured-value pickup radius = 32.5 mm

            X + measured-value pickup radius = height of vehicle body

            430 mm + 32.5 mm = 462.5 mm

      2. 7.2. Enter the determined values in the Porsche System Tester.

         If an implausible value is entered (actual value is not accepted by Porsche System

Tester), please refer to the information under: "Procedure: Measured actual value is not accepted".

8. **Complete the diagnostic session (only for steel springs)**

   Select >>Drive links/checks<< >>Completion of height sensor calibration<< in the menu.

   Follow the instructions on the Porsche System Tester.

   When calibration is completed successfully, >>**Result** << >>**Function completed** << is displayed!

When calibration is complete, the vehicle does not adjust automatically to Normal Level. The height values can only be checked after test-driving the vehicle.

WM 430115 CALIBRATING THE LEVELLING SYSTEM (MACAN, MACAN S, MACAN TURBO) > CALIBRATING THE LEVELLING SYSTEM > PROCEDURE: MEASURED ACTUAL VALUE IS NOT ACCEPTED

Information

During height sensor calibration, a height value that is entered may not be accepted by the Porsche System Tester.

In this case, at least one value is implausible, i.e. the value is not within the tolerance range for the vehicle height stored in the control unit.

The reason for this may be as follows:

- An incorrect calibration was carried out previously (e.g. by entering an incorrect measured value).
- A level sensor is faulty (e.g. due to a bent level sensor linkage or holder).

1. Measure the vehicle body height again.
2. If the measured values are identical to the values measured previously, check the front and rear level sensors for damage. Check, in particular, that the level sensor linkage or holders are not bent.

   If the level sensors are damaged, these must be replaced and the calibration must be repeated.

   → 431855 REPLACING FRONT LEVEL SENSOR

   → 431955 REPLACING REAR LEVEL SENSOR

3. If level sensors are intact, the specified vehicle level (required value: → 4495TW ADJUSTMENT VALUES FOR SUSPENSION ALIGNMENT) must be set step-by-step.

   Information

   The Porsche System Tester accepts height values with a required value tolerance of +/- 25 mm.

   If the determined mean value is not within this tolerance range during the step-by-step

procedure for setting the vehicle level, the closest tolerance range limit value must be entered as the actual value in the Porsche System Tester.

1. 3.1. Enter the mean value determined from the actual/required value at the affected vehicle position (front left, front right, rear left or rear right) instead of the unaccepted actual value.

   Example:

   The height measurement shows that front left vehicle height is 430 mm and the measured value is not accepted during height sensor calibration.

   Actual value: 430 mm; required value: 464 mm

   (Actual value + required value)/2 = mean value

   (430 mm + 464 mm)/2 = 447 mm

   Now enter the value 447 mm for the front left height in the Porsche System Tester.

2. 3.2. **Perform Height sensor system component test** (vehicle is adjusted to the required value on the affected side of the vehicle).

   Select >>Maintenance/repairs<< >>Height sensor system component test<< in the menu.

   Follow the instructions on the Porsche System Tester.

3. 3.3. **Perform height sensor calibration.**

   Select >>Maintenance/repairs<< >>Height sensor calibration<< in the menu.

   Follow the instructions on the Porsche System Tester.

   1. 3.3.1. Determine the actual value for the height of the vehicle body at the measuring points.

   2. 3.3.2. Enter the determined values in the Porsche System Tester.

4. 3.4. **Perform Height sensor system component test** again (vehicle is now at the required level).

   Select >>Maintenance/repairs<< >>Height sensor system component test<< in the menu.

   Follow the instructions on the Porsche System Tester.

WM 430149 TROUBLESHOOTING THE LEVELLING SYSTEM (MACAN, MACAN S, MACAN TURBO) (MACAN, MACAN S, MACAN TURBO) > TOOLS

Designation	Type	Number	Description	
Quick clamping device	Workshop equipment	WE 1621		

PIWIS Tester II	Special tool	9818		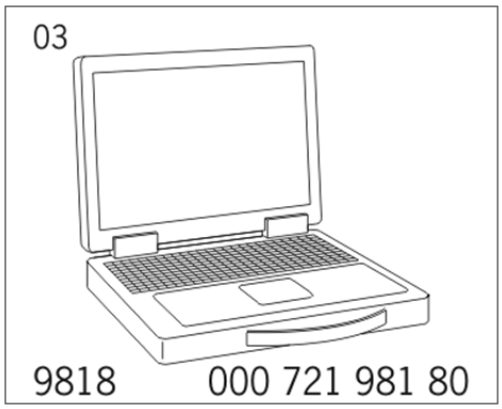

WM 430149 TROUBLESHOOTING THE LEVELLING SYSTEM (MACAN, MACAN S, MACAN TURBO) (MACAN, MACAN S, MACAN TURBO) > GENERAL WARNING NOTES > SAFETY INSTRUCTIONS AND INFORMATION FOR REPAIRING THE CHASSIS

Safety instructions and information for repairing the chassis → 4X00IN SAFETY INSTRUCTIONS AND INFORMATION FOR REPAIRING THE CHASSIS

WM 430149 TROUBLESHOOTING THE LEVELLING SYSTEM (MACAN, MACAN S, MACAN TURBO) (MACAN, MACAN S, MACAN TURBO) > INFORMATION > GUIDED FAULT FINDING

Symptom	Fault detection	Possible causes	Solution
Gradual loss of pressure ○ Vehicle lying to one side after a long time ○ Longer than average regulating times ○ No reaction to driver's request	Observe vehicle height over a long period of time and try to find the leak using commercially available leak detection spray	Leak in air-spring strut/air spring	Replace air-spring strut/air spring → 433019 REMOVING AND INSTALLING FRONT AIR-SPRING STRUT → 434319 REMOVING AND INSTALLING REAR AIR SPRING or carry out repairs
		Leak in air lines or valve unit	Check tightening torques for air line connections, check insertion depth of air lines (color marking), replace air line

Symptom	Fault detection	Possible causes	Solution
Vehicle lying to one side	1.) Check that the air	Air line on front axle not	Insert air line on front

○ No leaks in the system	line is fitted correctly on the front air springs	inserted far enough (fault code 284)	axle as far as it will go; only one marking should be visible. To check that the air line is fitted correctly, pull it briefly against the insertion direction. If it cannot be pulled out or can only be pulled out with considerable effort, the air line is fitted correctly.
	2.) Carry out Guided Fault Finding using the Porsche System Tester	Vehicle level sensor faulty	Replace vehicle level sensor → 431855 REPLACING FRONT LEVEL SENSOR → 431955 REPLACING REAR LEVEL SENSOR
		Linkage or holder for vehicle level sensor is bent	

Symptom	Fault detection	Possible causes	Solution
Vehicle is too high ○ Vehicle cannot be lowered	1.) Check that the vehicle has sufficient ground clearance	Vehicle position is raised	Look for signs of damage and check clearance around the air-spring struts/air springs and anti-roll bars
	2.) Check air line and line routing	Air line blocked, kinked or frozen Air line on front axle not inserted far enough (fault code 284)	Replace kinked air lines; carefully blow out frozen and blocked air lines using compressed air Insert air line on front axle as far as it will go; only one marking should be visible. To check that the air line is fitted correctly, pull it briefly against the insertion direction. If it cannot be pulled out or can only be pulled out with considerable effort, the air line is fitted correctly.
	3.) Levelling system: Upper/lower limit value exceeded	Compressor fuse faulty Air line on front axle not inserted far enough (fault code 284)	Replace compressor → 431519 REMOVING AND INSTALLING COMPRESSOR FOR LEVELLING SYSTEM Insert air line on front axle as far as it will go; only one marking should be visible. To check that

			the air line is fitted correctly, pull it briefly against the insertion direction. If it cannot be pulled out or can only be pulled out with considerable effort, the air line is fitted correctly.
	4.) Vehicle cannot be lowered despite having reconnected the air line on the front axle	Valve on the air-spring strut does not open.	Replace pressure retaining valve on the affected air-spring strut → 433655 REPLACING FRONT VALVE (PRESSURE RETAINING VALVE)
	5.) Carry out Guided Fault Finding using the Porsche System Tester	Check relays, plug contacts, wire harness and fuses in the vehicle electrical system Drain valve in the compressor faulty/leaking/open	Replace compressor → REMOVING AND INSTALLING COMPRESSOR FOR LEVELLING SYSTEM
		Drain valve in compressor or control valves in valve block do not work Valve unit does not work	Replace compressor → REMOVING AND INSTALLING COMPRESSOR FOR LEVELLING SYSTEM
	6.) Valve unit blocked	Dirt in valve unit	Replace valve unit → 432355 REPLACING VALVE UNIT (LEVELLING SYSTEM)
	7.) Compressor/valve block blocked	Dirt in compressor/valve block	Replace compressor → REMOVING AND INSTALLING COMPRESSOR FOR LEVELLING SYSTEM
	8.) If no faults were found after carrying out Step 6.), the compressor is faulty	Compressor faulty	Replace compressor → REMOVING AND INSTALLING COMPRESSOR FOR LEVELLING SYSTEM

Symptom	Fault detection	Possible causes	Solution
Vehicle is too low ○ Vehicle cannot be raised or can	1.) Check air line and line routing	Air line blocked, kinked or frozen	Replace kinked air lines; carefully blow out frozen and blocked air lines using compressed air

only be raised very slowly	2.) Valve unit blocked	Dirt in valve unit	Replace valve unit → 432355 REPLACING VALVE UNIT (LEVELLING SYSTEM)
	3.) Compressor/valve block blocked	Dirt in compressor/valve block	Replace compressor → REMOVING AND INSTALLING COMPRESSOR FOR LEVELLING SYSTEM
	4.) Carry out Guided Fault Finding using the Porsche System Tester	Check relays, plug contacts, wire harness and fuses in the vehicle electrical system Drain valve in the compressor faulty/leaking/open	Replace compressor → REMOVING AND INSTALLING COMPRESSOR FOR LEVELLING SYSTEM
		Drain valve in compressor or control valves in valve block do not work	Replace compressor → REMOVING AND INSTALLING COMPRESSOR FOR LEVELLING SYSTEM
	5.) If no faults were found after carrying out Step 4.), the compressor is faulty	Compressor faulty	Replace compressor → REMOVING AND INSTALLING COMPRESSOR FOR LEVELLING SYSTEM

Symptom	Fault detection	Possible causes	Solution
Rapid loss of pressure	Vehicle lying to the left or right; when you try to switch to a different level, you can hear air coming from the faulty air spring	Air-spring strut/air spring is faulty	Replace air-spring strut/air spring → 433019 REMOVING AND INSTALLING FRONT AIR-SPRING STRUT → 434319 REMOVING AND INSTALLING REAR AIR SPRING or carry out repairs → 4301IN BLEEDING AND FILLING THE LEVELLING SYSTEM
		Air line torn off	Replace air line → 4301IN BLEEDING AND FILLING THE LEVELLING SYSTEM

Symptom	Fault detection	Possible causes	Solution

Insufficient damping	Test drive: Adjust the damping level while the vehicle is in motion. You should feel a significant change in the damping effect when driving on uneven road surfaces. Also listen for "rumbling noises"	Damping adjustment valve faulty	Replace air-spring strut → 433019 REMOVING AND INSTALLING FRONT AIR-SPRING STRUT or replace rear shock absorber → 429319 REMOVING AND INSTALLING REAR SHOCK ABSORBER
		Vibration damper worn	Replace air-spring strut → 433019 REMOVING AND INSTALLING FRONT AIR-SPRING STRUT ; clean the air line system → **2.** Cleaning air line system or replace rear shock absorber → 429319 REMOVING AND INSTALLING REAR SHOCK ABSORBER
Error message "PASM failure" with significant inward/outward spring motion. The error message is gone after switching the ignition off and on again.	Fault code 322, 323, 324 or 325 stored in the fault memory.	Front level sensor holder bent.	Replace front level sensor → 431855 REPLACING FRONT LEVEL SENSOR .

WM 430149 TROUBLESHOOTING THE LEVELLING SYSTEM (MACAN, MACAN S, MACAN TURBO) (MACAN, MACAN S, MACAN TURBO) > INFORMATION > PROCEDURE FOR CHECKING THE LEVELLING SYSTEM

1. Perform the following check under these conditions:
    1. The vehicle must be standing on a level surface.
    2. The vehicle must be cold and must not be moved during the check.
    3. The room temperature should be between 10 °C and 30 °C and must not fluctuate to any great extent.
        1. 1.1. Adjust the vehicle to Normal Level.
            1. 1.1.1. Stop the engine and move selector lever to position P.
            2. 1.1.2. **PIWIS Tester II 9818** must now be connected.

                Do not get into or out of the vehicle while adjusting the vehicle to normal level and after adjusting it to normal level. This can give false

alignment results.

3. 1.1.3. Select >>Levelling system/PASM<< >>Drive links/checks<< >>Adjust vehicle level<< in the control unit overview.

4. 1.1.4. Select the value **Low level 1** and press [F8] to start. Vehicle adjusts to Low Level.

5. 1.1.5. Once Low Level has been reached, select **Normal Level** and press [F8] to start. Vehicle now adjusts to Normal Level.

2. 1.2. Switch off the levelling system (switch it back on again when work is complete).

    1. 1.2.1. Use **PIWIS Tester II 9818** to select >>Levelling system/PASM<< >>Drive links/checks<< >>Activate/deactivate vehicle<< in the control unit overview.

    2. 1.2.2. Select the value **Deactivate levelling system (permanently)** and press [F8] to start. The levelling system is now switched off.

3. 1.3. Compress vehicle at front and rear axles by approximately 25 mm 2-3 times and allow it to spring back freely.

4. 1.4. Open the bonnet.

5. 1.5. Fit measured-value pickup **Quick clamping device WE 1621** on the relevant wheel.

    Information

    Check the following at the height measuring point on the front axle:

    1. Lower edge of the wing is covered by the front lid.

    2. Only measure the height on the front axle when the front lid is open.

6. 1.6. Determine the actual value for the height of the vehicle body at the measuring points.

Fig 1: Identifying Front Axle Height



Courtesy of PORSCHE CARS NORTH AMERICA, INC.

1. 1.6.1. When determining the height of the vehicle body, the height is measured from the lower edge of the wing to the upper edge of the measured-value pickup, dimension **X** .

2. 1.6.2. Then add the **radius** of the measured-value pickup **32.5 mm** to this measured dimension **X** .

   Sample calculation:

   Measured dimension X = 430 mm; measured-value pickup radius = 32.5 mm

   X + measured-value pickup radius = height of vehicle body

430 mm + 32.5 mm = 462.5 mm

7. 1.7. Measure the vehicle height (→ **1.6.**) again after two hours and compare it with the first measurement.

   Dimensions and tolerances can be taken from the prescribed vehicle height for vehicles with air suspension. → 4495TW ADJUSTMENT VALUES FOR SUSPENSION ALIGNMENT

If the vehicle is lying at an angle, there is a leak at the wheel suspension with the greatest difference between the first and second measurement.

Use commercially available leak detection spray to check the affected air-spring strut/air spring and the relevant air line one after the other.

If there is no difference after two hours, the vehicle height must be measured again after 24 hours.

The following components must also be checked:

1. Air line connections
2. Air-spring strut/air spring
3. Valve unit

If the vibration dampers are faulty, oil from the vibration damper may have entered the air supply system. To ensure that the air spring system works perfectly, it is absolutely essential that you clean the system after a fault is found and replace other components.

2. Procedure for repairing the air spring system after a fault is found on the vibration dampers:
   1. Screw off the affected line on the air-spring strut/air spring and solenoid valve block.
   2. Blow out the line several times until it is clean using compressed air by introducing the compressed air at the end of the line at the solenoid valve block.
   3. Check for traces of vibration damper oil in the solenoid valve block.
   4. If vibration damper oil has contaminated the valve unit, it must be replaced.
   5. Check the internal line from the compressor to the solenoid valve block.
   6. If there is oil in the line between the compressor and the pressure accumulator, the line and the pressure accumulator must be replaced.

      If there is oil in the internal line, the compressor must be replaced.

WM 4301IN BLEEDING AND FILLING THE LEVELLING SYSTEM (MACAN, MACAN S, MACAN TURBO) > TOOLS

Designation	Type	Number	Description	

pressure reducer	Workshop equipment	WE 1409		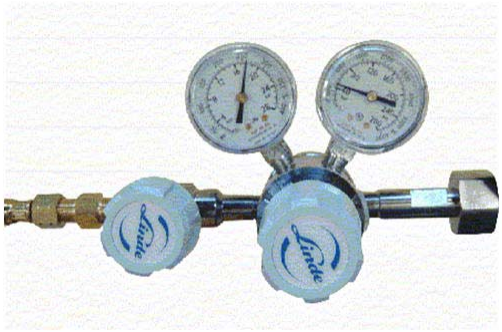
adapter	Special tool	9825	For connecting to the air spring line	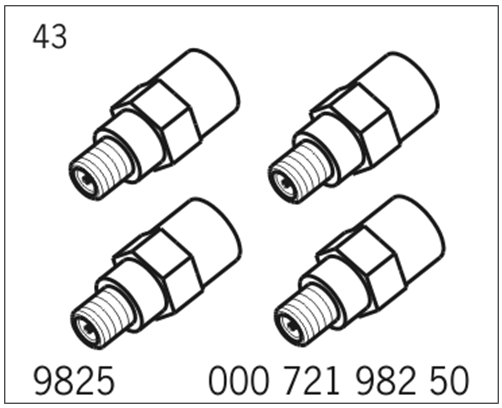
connecting line	Special tool	9825/1	For connecting to the compressed gas bottle of nitrogen	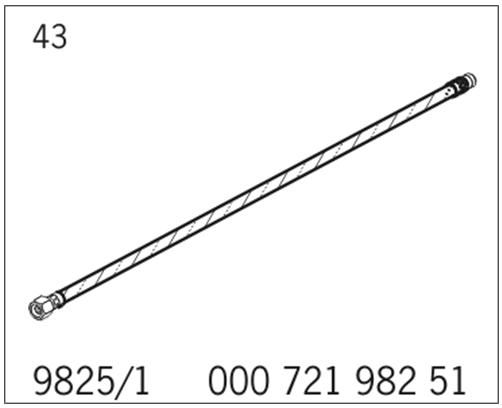
valve screwdriver	Commercially available tool	Nr.164 Pos.5		

WM 4301IN BLEEDING AND FILLING THE LEVELLING SYSTEM (MACAN, MACAN S, MACAN TURBO) > BLEEDING AND FILLING THE LEVELLING SYSTEM >

INSTRUCTIONS FOR WORKING ON VEHICLES WITH AN EMPTY AIR SUSPENSION SYSTEM IN THE WORKSHOP

Information

Vehicles That Have Been Raised With The Air Suspension System Empty Must Not Be Set Back Down On Their Wheels Or Driven.

- Raising A Vehicle With Empty Air-Spring Struts Creates A Vacuum In The Air Springs. The Air-Spring Strut Bellows May Develop Creases After The Vehicle Has Been Set Back Down On The Floor. This Results In The Premature Failure Of The Air-Spring Struts.
- If The Vehicle Has Been "Driven" With One Or More Empty Air Springs, These Air Springs Must Be Replaced.
- Absolute Cleanliness Is Essential When Working On Air Suspension Systems.

Maneuvering A Vehicle With An Empty Air Suspension System Is Not Permitted Because This Will Damage The Air Springs!

WM 4301IN BLEEDING AND FILLING THE LEVELLING SYSTEM (MACAN, MACAN S, MACAN TURBO) > BLEEDING AND FILLING THE LEVELLING SYSTEM > BLEEDING AND FILLING AN AIR SPRING > BLEEDING AN AIR SPRING WITHOUT ANY LOSS OF SYSTEM AIR

This function is used for bleeding when working on an air spring or the lines for an air spring. The air from up to two air-spring struts can be stored in the pressure accumulator.

1. Switch off the levelling system
    1. 1.1. Switch on ignition.
    2. 1.2. Press the levelling system button for at least → **Time: +10 s** .
2. Raise the vehicle (wheels must be suspended freely). → 4X00IN LIFTING THE VEHICLE
3. Select >>Levelling system/PASM<< >>Maintenance/repairs<< >>Replacement of an air spring<< in the control unit overview. Select the relevant air spring and then select >>Bleed<<. Follow the instructions on the Porsche System Tester.
4. After completing repair work, select >>Levelling system/PASM<< >>Maintenance/repairs<< >>Replacement of an air spring<< in the control unit overview and then select >>Fill<<. Follow the instructions on the Porsche System Tester.

WM 4301IN BLEEDING AND FILLING THE LEVELLING SYSTEM (MACAN, MACAN S, MACAN TURBO) > BLEEDING AND FILLING THE LEVELLING SYSTEM > BLEEDING AND FILLING MULTIPLE COMPONENTS AND/OR THE PRESSURE ACCUMULATOR > BLEEDING MULTIPLE COMPONENTS AND/OR THE PRESSURE ACCUMULATOR WITH PARTIAL LOSS OF SYSTEM AIR

This function is used for bleeding when working on the system and/or the pressure accumulator. Some of the system air is lost in the process.

1. Select >>Levelling system/PASM<< >>Maintenance/repairs<< >>Replacement of several components or replacement of the pressure accumulator<< in the control unit overview and then select >>Bleed<<. Follow the instructions on the Porsche System Tester.
2. After completing repair work, select >>Levelling system/PASM<< >>Maintenance/repairs<< >>Replacement of several components or replacement of the pressure accumulator<< in the control unit overview and then select >>Fill<<. Follow the instructions on the Porsche System Tester. Refer to "FILLING " .

WM 4301IN BLEEDING AND FILLING THE LEVELLING SYSTEM (MACAN, MACAN S, MACAN TURBO) > INFORMATION > FILLING

Information

Only nitrogen 5.0 may be used for filling the air suspension system.

- Use a compressed gas bottle with a corresponding pressure reducer unit and pressure gauge.
- Fill the air suspension system to at least → Pressure: +16 bar.
- Fill the air suspension system to max. → Pressure: +17 bar
- Wheels must be suspended freely.
- Switch on ignition.

The air suspension system is filled from the front right air line. After filling the system using the compressed gas bottle of nitrogen, the front right air-spring strut is filled from the pressure accumulator.

1. Raise the vehicle. → 4X00IN LIFTING THE VEHICLE
2. Disconnect air-spring strut line **-3-** at the front right.

Fig 1: Identifying Line Connections For Air-Spring Strut

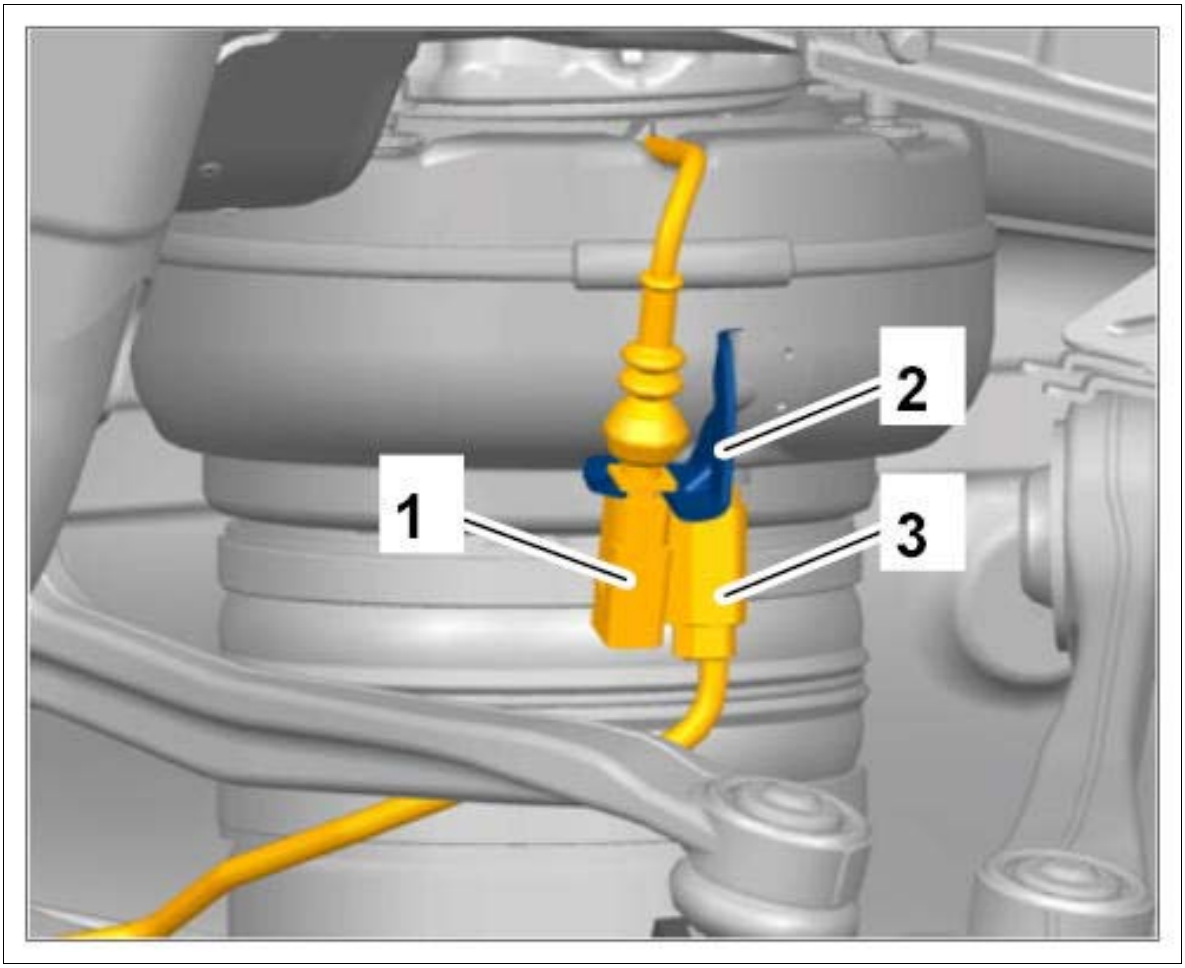

Courtesy of PORSCHE CARS NORTH AMERICA, INC.

1. 2.1. Remove valve pin **-1-** using **valve screwdriver Nr.164 Pos.5** from **adapter 9825 -2-** .

Fig 2: Removing Valve Pin

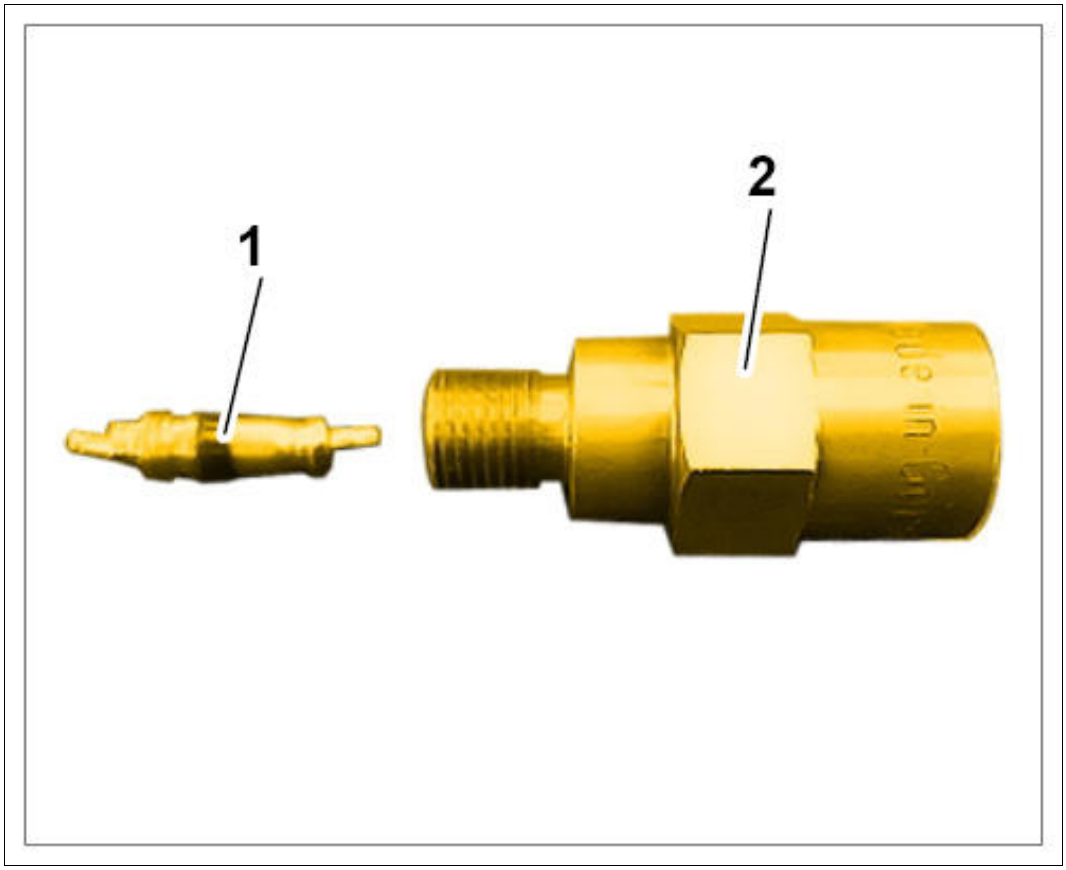

Courtesy of PORSCHE CARS NORTH AMERICA, INC.

2. 2.2. **Adapter 9825 -1-** and **connecting line 9825/1 -2-** must be connected to the compressed gas bottle of nitrogen and **pressure reducer WE 1409.**

Fig 3: Connecting Adapter And Compressed Gas Bottle

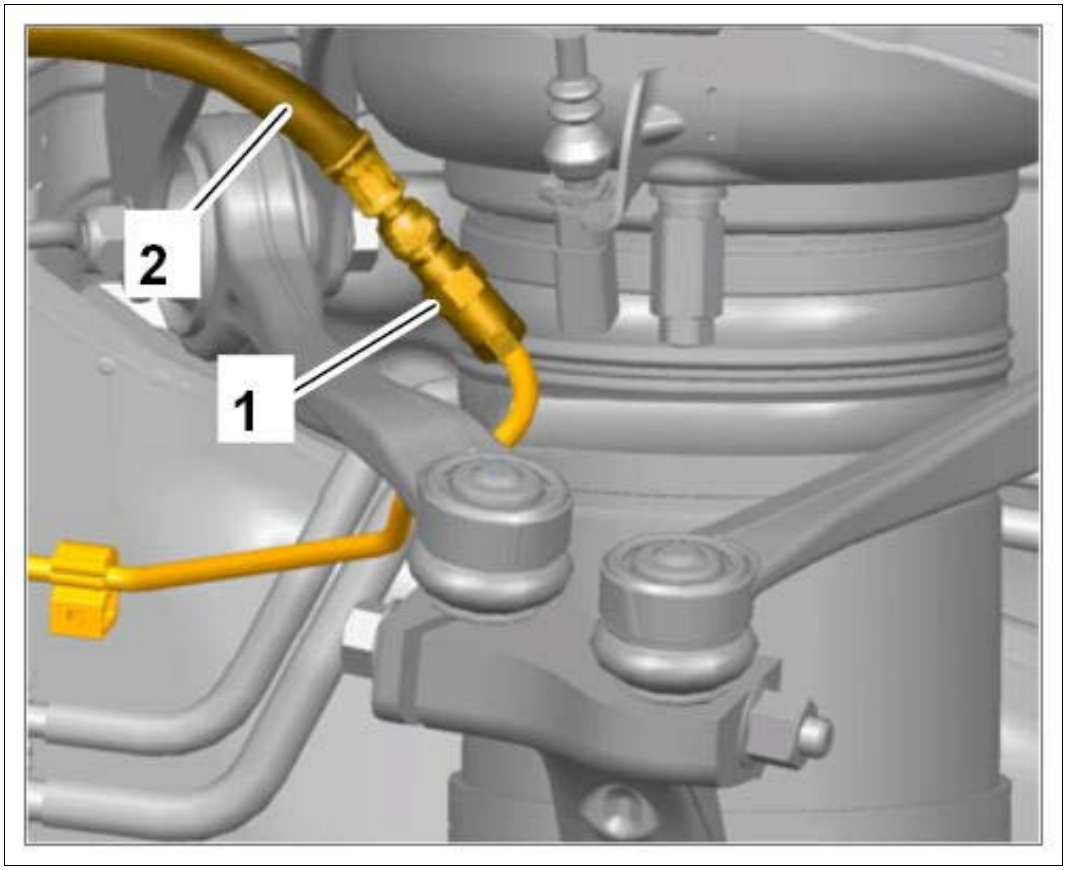

Courtesy of PORSCHE CARS NORTH AMERICA, INC.

3. 2.3. Open the compressed gas bottle and set the → **Pressure: +17 bar** max. (shown as an example!)

Fig 4: Checking Gas Bottle Pressure

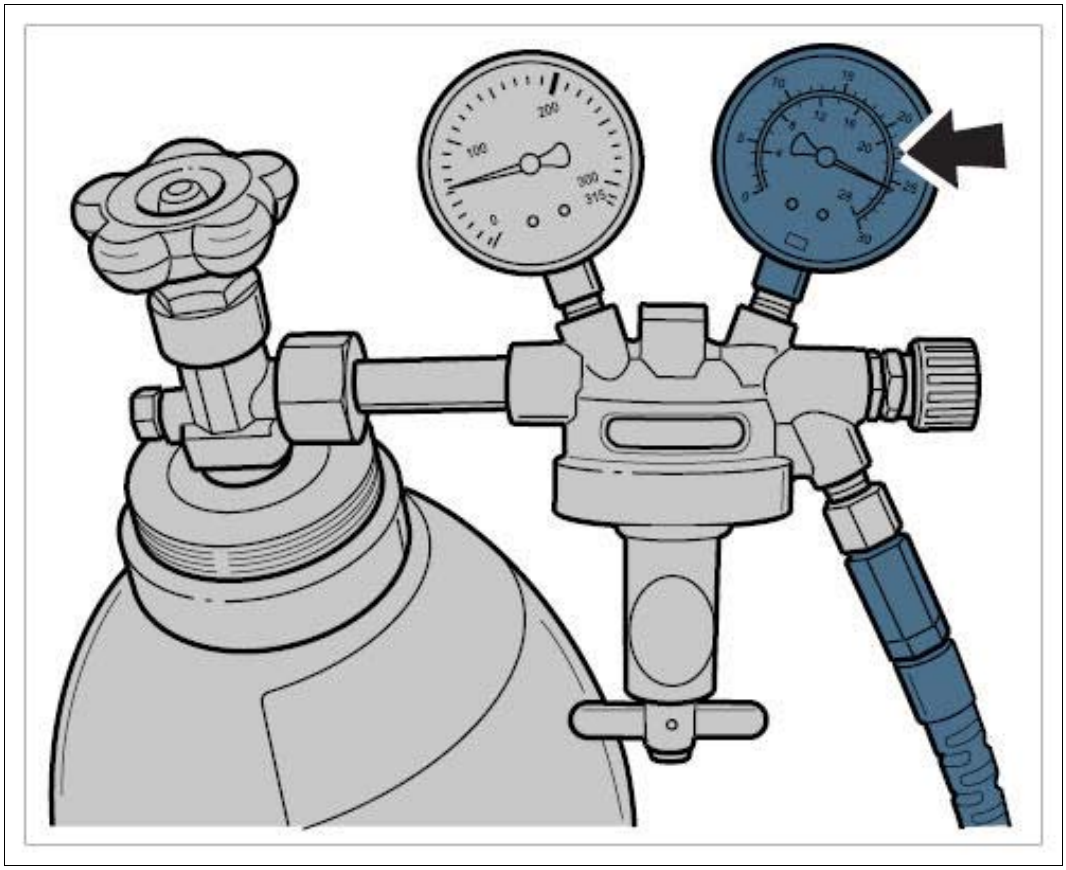

Courtesy of PORSCHE CARS NORTH AMERICA, INC.

3. Connect the Porsche System Tester and select >>Levelling system/PASM<< >>Maintenance/repairs<< >>Replacement of several components or replacement of the pressure accumulator<< in the control unit overview and then select >>Fill<<. Follow the instructions on the Porsche System Tester.

4. Fit air line at the front right.

5. Complete the >>Fill<< process. Follow the instructions on the Porsche System Tester.

WM 4301IN COMPONENT ARRANGEMENT - AIR SUSPENSION (MACAN, MACAN S, MACAN TURBO) > COMPONENT ARRANGEMENT - AIR SUSPENSION > COMPONENT ARRANGEMENT - AIR SUSPENSION

The Macan models feature an optional levelling system with fully supporting air suspension on both axles and an electronically controlled damping system Porsche Active Suspension Management (PASM).

The air suspension with level control makes it possible to actively adapt the ground clearance of the Macan to the current driving situation or to the vehicle load.

Depending on the load, various vehicle ride heights with various suspension characteristics can be achieved by increasing or decreasing the air volume. The amount of air needed for each air-spring strut is determined by means of a control unit and provided via an air supply consisting of a compressor, a

solenoid valve unit and pressure accumulator.

Fig 1: Identifying Air Suspension Components

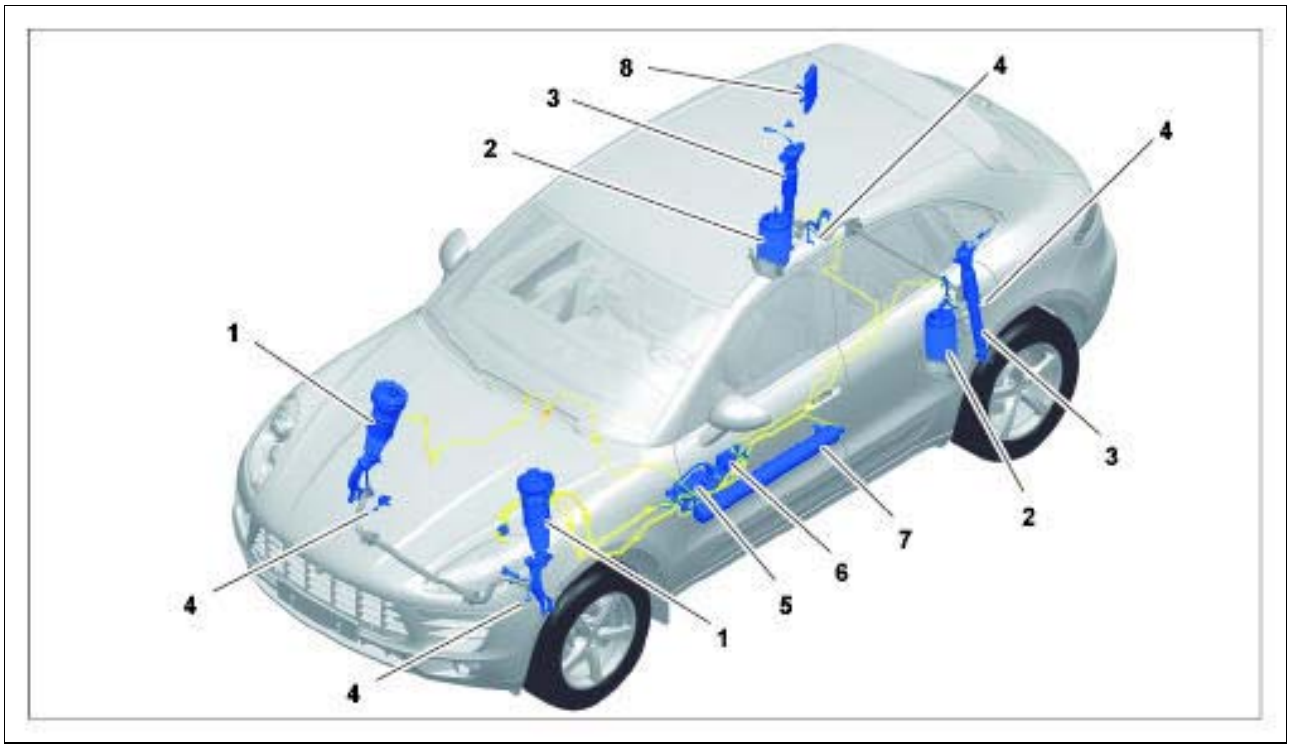

Courtesy of PORSCHE CARS NORTH AMERICA, INC.

No.	Description of component	Qty.	Position
-1-	Air-spring strut, front axle	2	Wheel housing/lower trailing arm
-2-	Air spring, rear axle	2	Air spring mounting on wheel bearing housing
-3-	Vibration damper, rear axle	2	Vibration damper mounting on wheel bearing housing
-4-	Level sensors	4	Lower trailing arm/front axle Lower trailing arm/rear axle
-5-	Compressor	1	Driver's side, lower
-6-	Valve unit	1	Driver's side, lower
-7-	Pressure accumulator	1	Driver's side, lower
-8-	Levelling system control unit/PASM	1	Luggage compartment, right

WM 431519 REMOVING AND INSTALLING COMPRESSOR FOR LEVELLING SYSTEM (MACAN, MACAN S, MACAN TURBO) > TECHNICAL VALUES

Location	Description	Type	Basic value	Tolerance 1	Tolerance 2
Compressor to holder	M6 thread	Tightening torque	8 Nm (6 ftlb.)		
Compressor/valve unit holder to underbody	M8 thread	Tightening torque	20 Nm (15 ftlb.)		
Pressure lines to valve block	Union nuts	Tightening torque	3.5 Nm (2.5 ftlb.)		

WM 431519 REMOVING AND INSTALLING COMPRESSOR FOR LEVELLING SYSTEM (MACAN, MACAN S, MACAN TURBO) > PRELIMINARY WORK

1. Raise the vehicle. → 4X00IN LIFTING THE VEHICLE .
2. Bleed the levelling system. → BLEEDING AND FILLING THE LEVELLING SYSTEM .
3. Remove center underbody panelling (left cover). → 519319 REMOVING AND INSTALLING COVER FOR CENTER UNDERBODY .

WM 431519 REMOVING AND INSTALLING COMPRESSOR FOR LEVELLING SYSTEM (MACAN, MACAN S, MACAN TURBO) > REMOVING AND INSTALLING COMPRESSOR FOR LEVELLING SYSTEM > REMOVING COMPRESSOR FOR LEVELLING SYSTEM

WARNING: Danger of objects or loads falling down

- *Risk of squashing or crushing*

→ Secure components to prevent them from falling down.

CAUTION: Escaping residual air

- *Risk of eye injuries*

→ Wear protective goggles.

Information

The instructions for removing and installing relate to the entire compressor unit with holder and valve unit.

Fig 1: Identifying Compressor Unit With Holder And Valve Unit

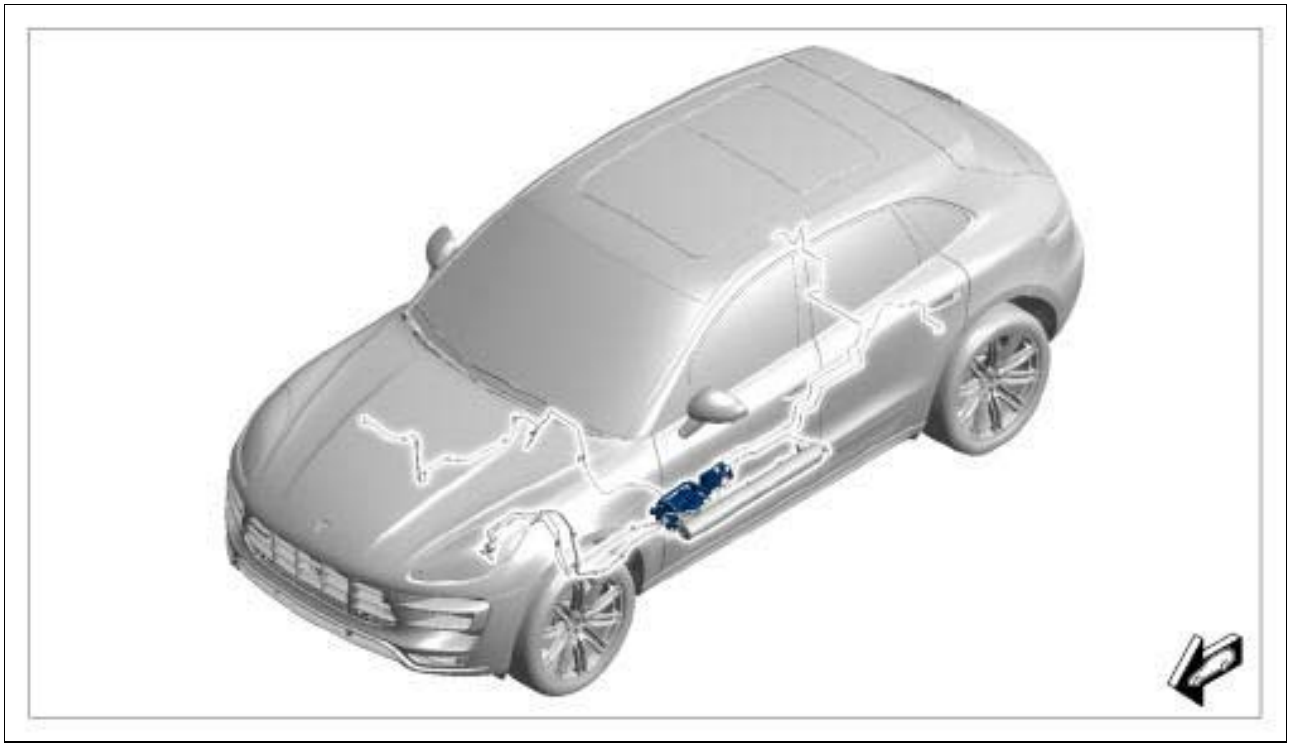

Courtesy of PORSCHE CARS NORTH AMERICA, INC.

1. Release and disconnect electric plug connections **-1-** .
2. Unclip pressure line **-2-** (black) from the holder **-3-** .
3. Unclip wiring harness **-4-** from the underside of the compressor **-arrow-** .

Fig 2: Locating Compressor Pressure Line

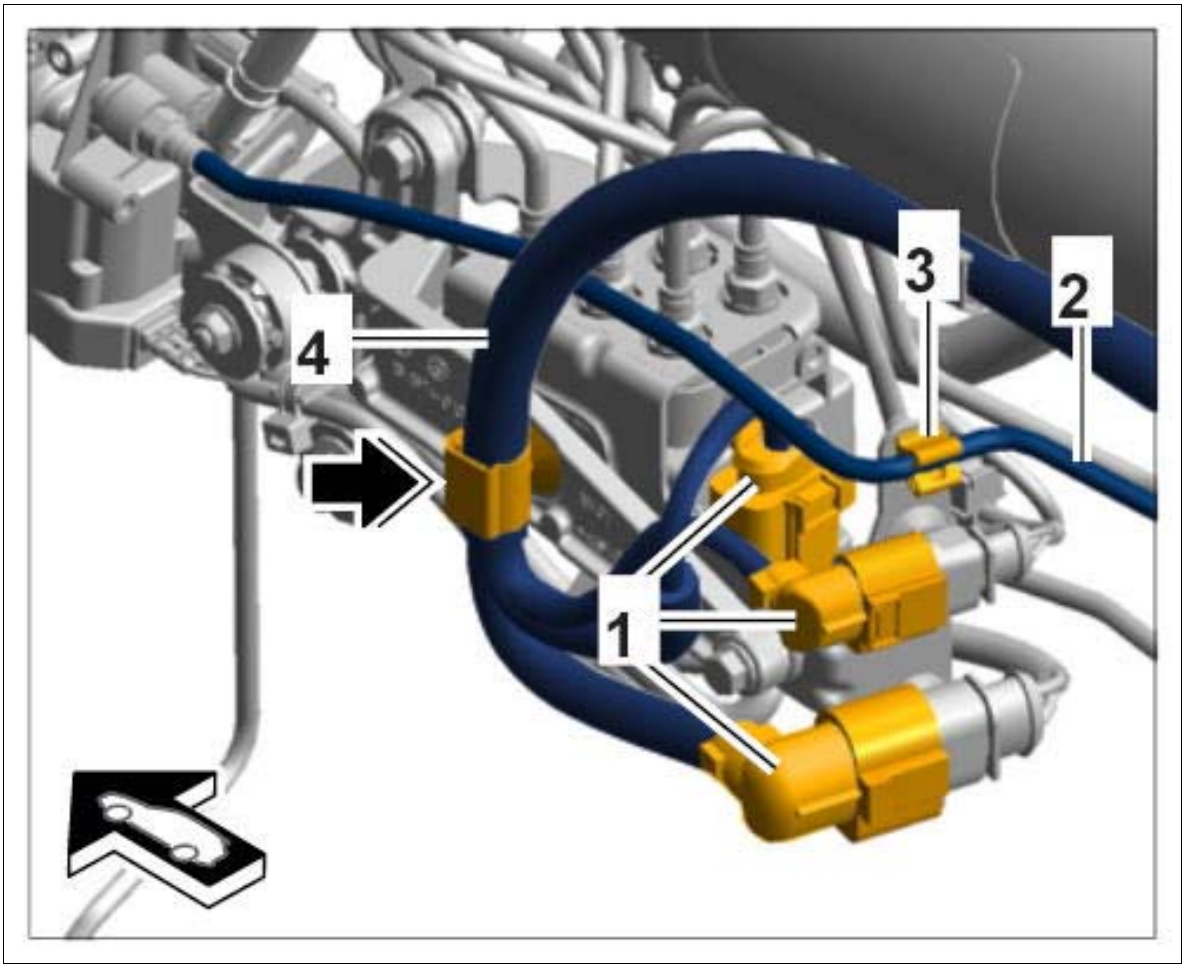

Courtesy of PORSCHE CARS NORTH AMERICA, INC.

4. Remove pressure lines **-2-** on the valve block.
    1. 4.1. Unscrew union nuts **-1-** .
    2. 4.2. Remove pressure lines **-2-** .

Fig 3: Identifying Pressure Lines Union Nuts

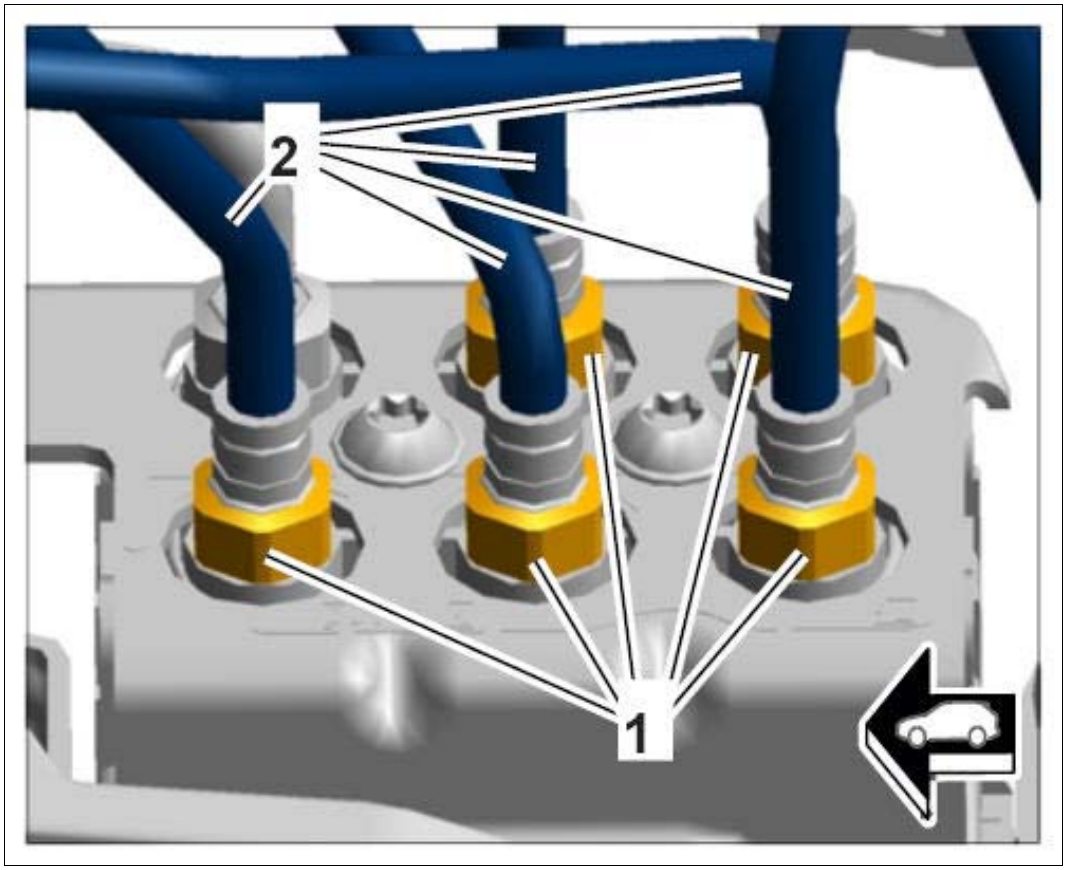

Courtesy of PORSCHE CARS NORTH AMERICA, INC.

5. Remove pressure line and suction line from the compressor.

    1. 5.1. Unscrew union nut **-2-** on the pressure line **-1-** (black).
    2. 5.2. Remove pressure line **-1-** (black).
    3. 5.3. Carefully release sleeve **-4-** on the suction line **-3-** using a screwdriver.
    4. 5.4. Carefully disconnect suction line **-3-** .

Fig 4: Identifying Compressor Lines

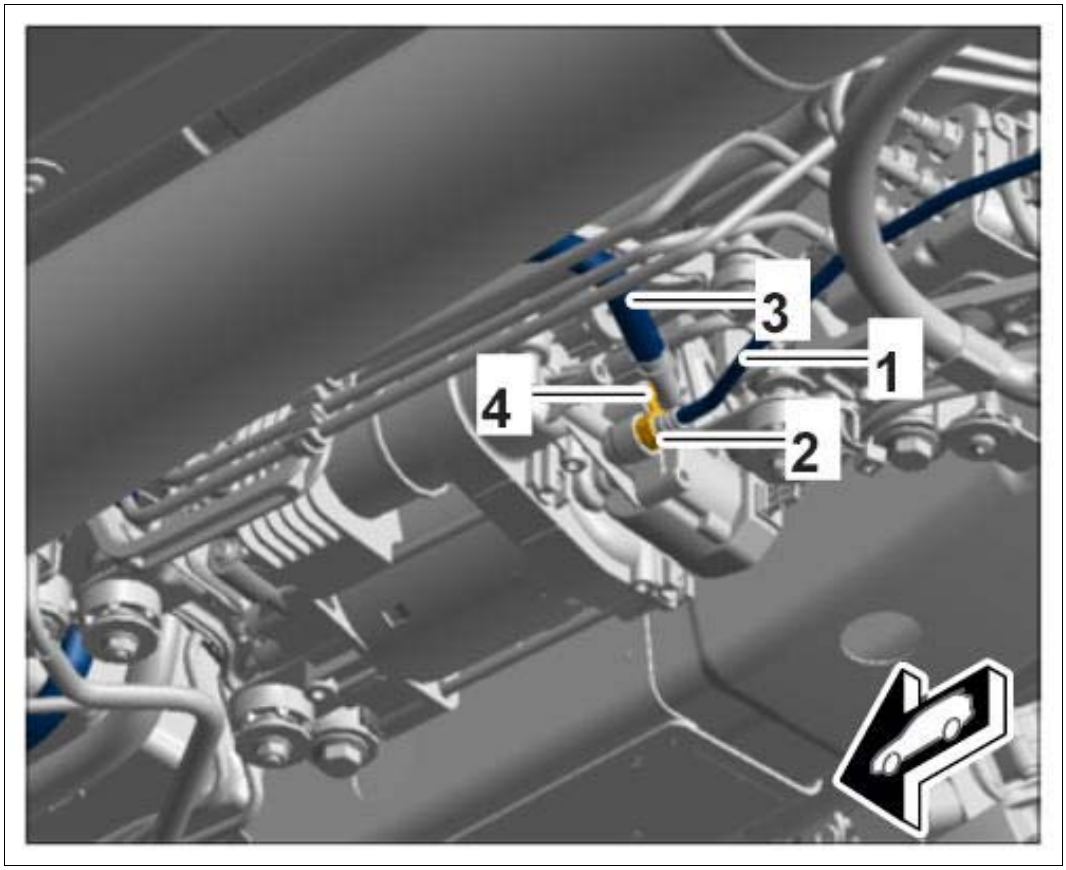

Courtesy of PORSCHE CARS NORTH AMERICA, INC.

6. Unclip pressure lines **-1-** (black and violet) at the holder **-arrow-** .

Fig 5: Locating Pressure Lines Holder

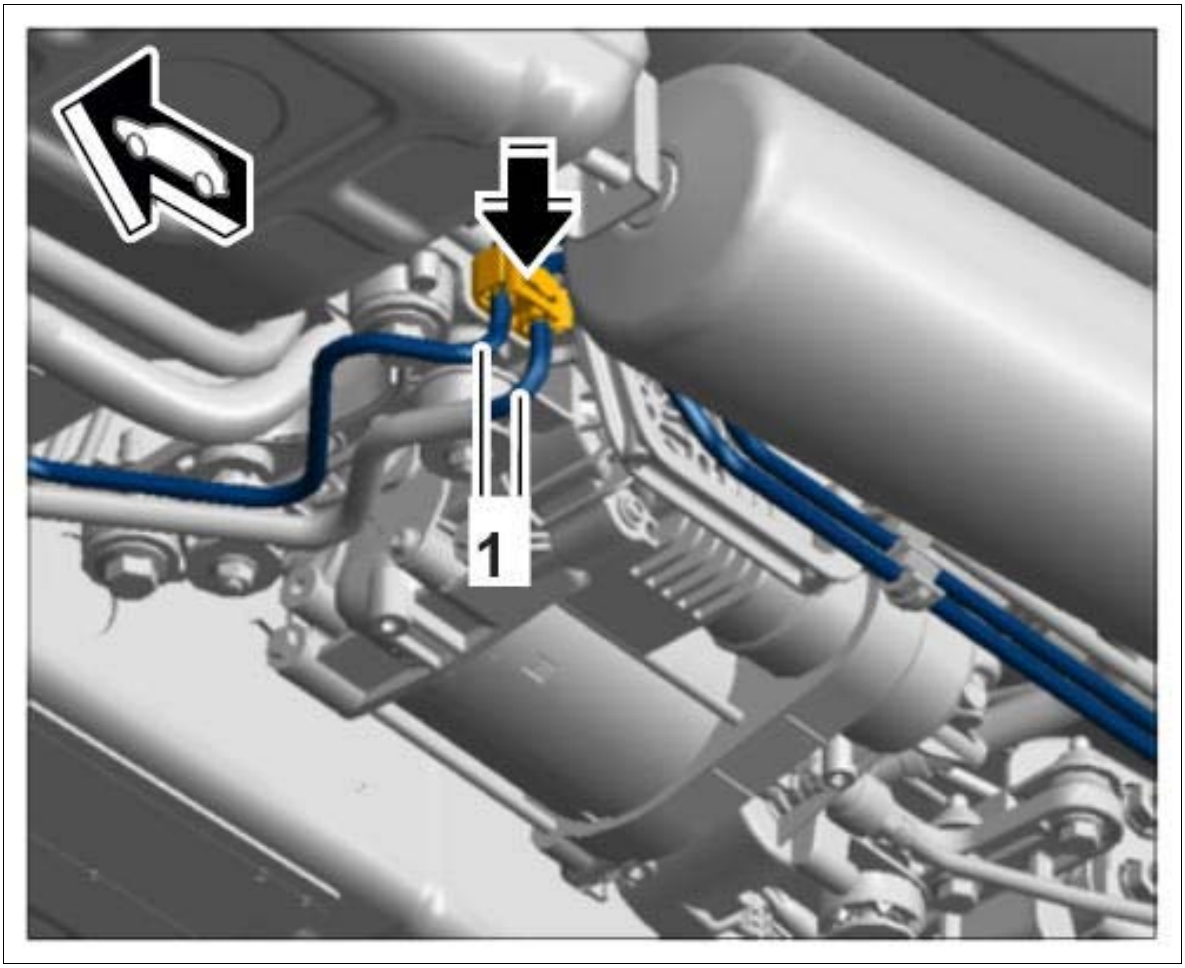

Courtesy of PORSCHE CARS NORTH AMERICA, INC.

7. Unclip pressure lines **-1-** (black, violet and green) and suction line **-2-** from the holder **-arrow-**.

Fig 6: Locating Suction And Pressure Lines Holder

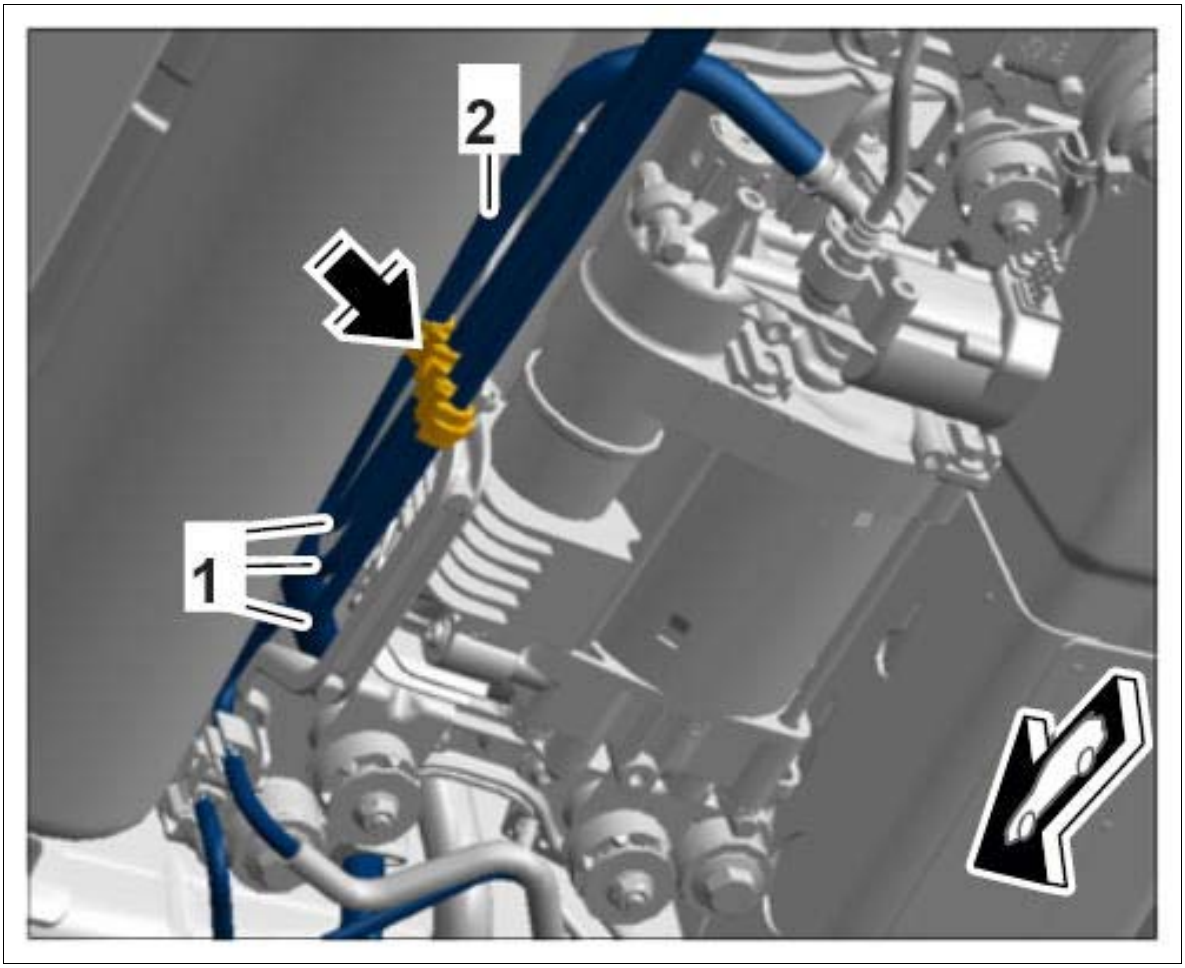

Courtesy of PORSCHE CARS NORTH AMERICA, INC.

8. Unscrew fastening screws **-1-** on the compressor unit **-2-** and remove compressor unit.

Fig 7: Identifying Compressor Holder And Valve Unit Mounting

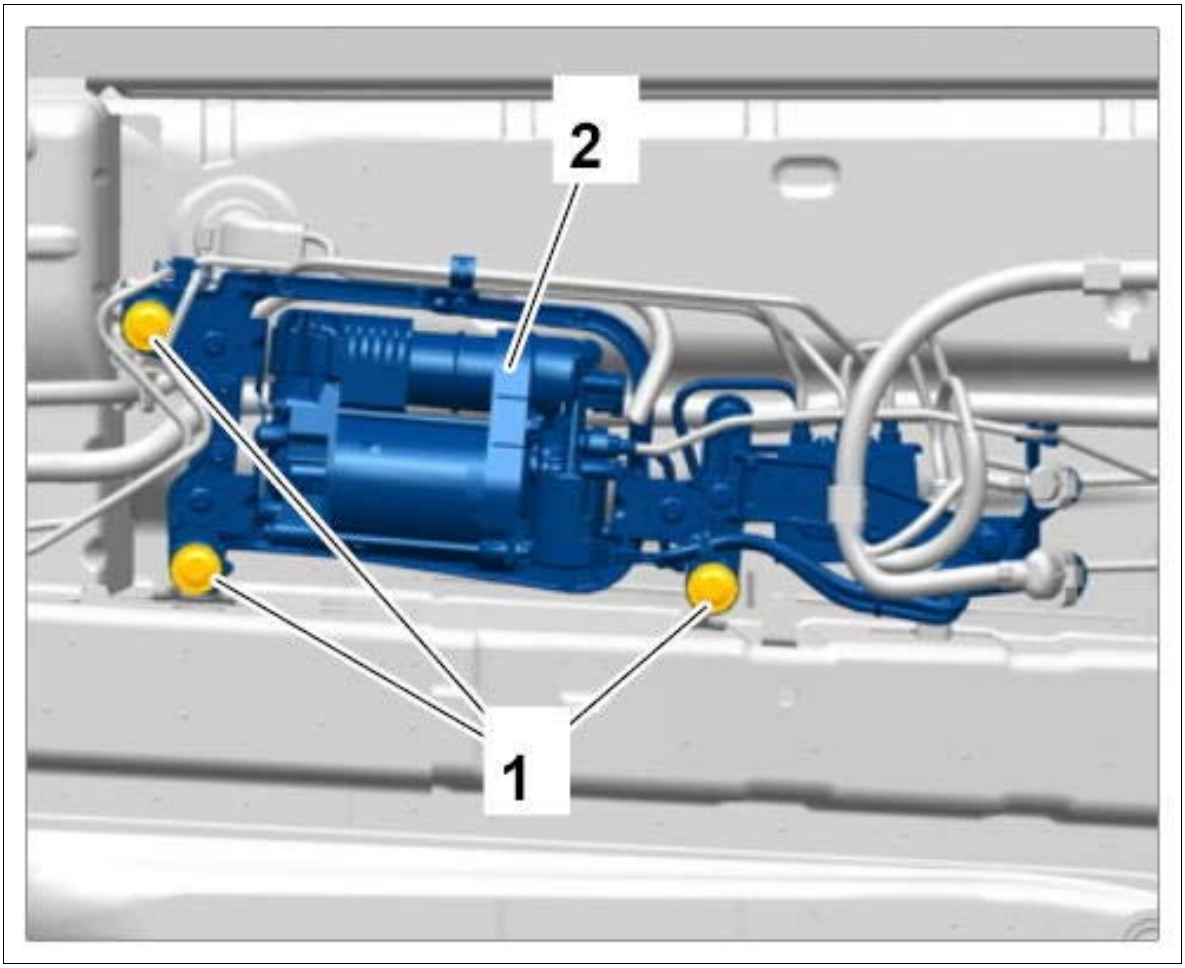

Courtesy of PORSCHE CARS NORTH AMERICA, INC.

WM 431519 REMOVING AND INSTALLING COMPRESSOR FOR LEVELLING SYSTEM (MACAN, MACAN S, MACAN TURBO) > REMOVING AND INSTALLING COMPRESSOR FOR LEVELLING SYSTEM > REPLACING COMPRESSOR FOR LEVELLING SYSTEM

1. Loosen connecting line from the compressor to the valve block (blue) **-1-** at the compressor.
2. Loosen the threaded joint **-2-** for the compressor.
3. Remove compressor **-3-** .

Fig 1: Identifying Compressor Mounting Joint

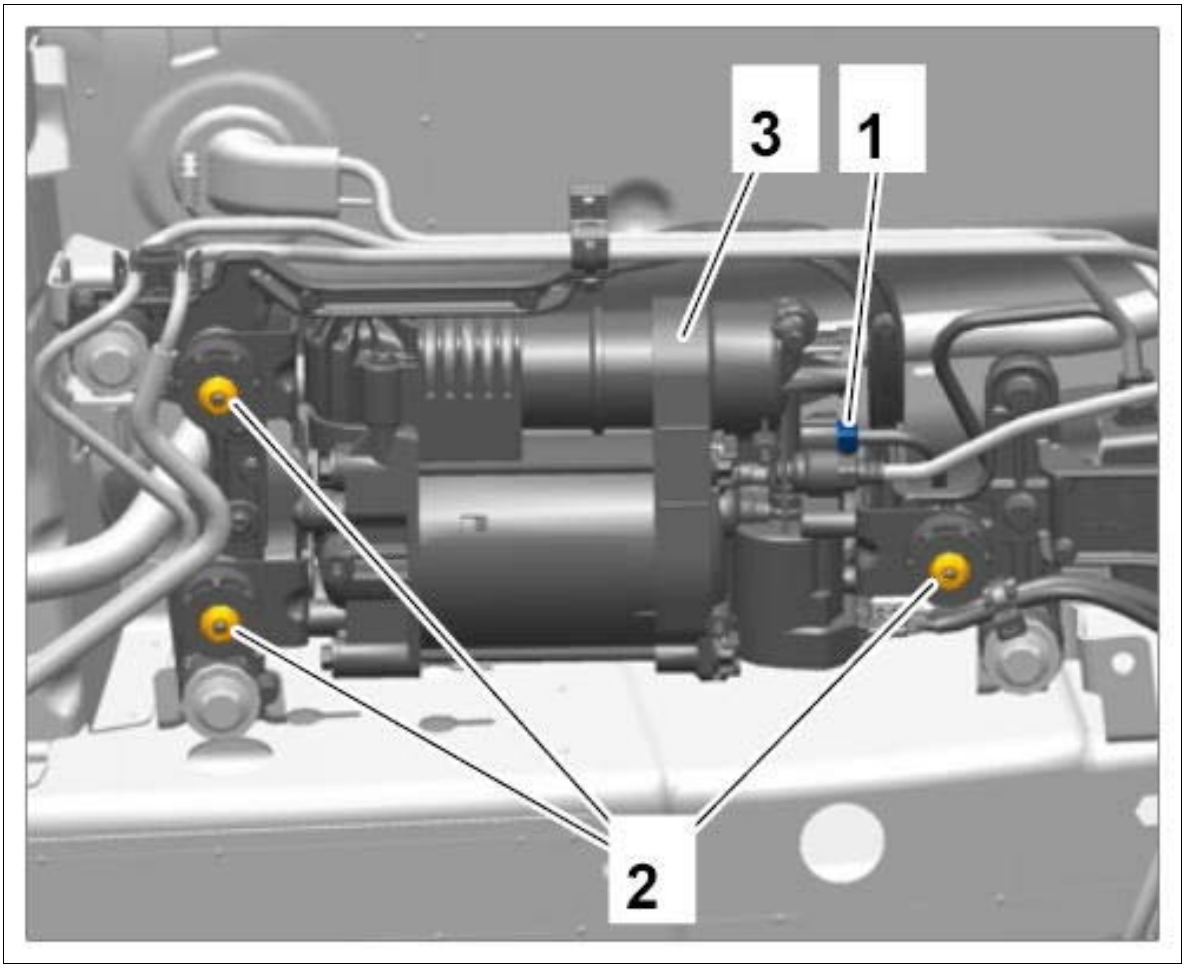

Courtesy of PORSCHE CARS NORTH AMERICA, INC.

WM 431519 REMOVING AND INSTALLING COMPRESSOR FOR LEVELLING SYSTEM (MACAN, MACAN S, MACAN TURBO) > REMOVING AND INSTALLING COMPRESSOR FOR LEVELLING SYSTEM > INSTALLING COMPRESSOR FOR LEVELLING SYSTEM

Installation is performed in reverse order.

Observe specified tightening torques:

Compressor to holder: **Tightening torque 8 Nm (6 ftlb.)**

Holder to body: **Tightening torque 20 Nm (15 ftlb.)**

Air lines to compressor/valve unit: **Tightening torque 3.5 Nm (2.5 ftlb.)**

WM 431519 REMOVING AND INSTALLING COMPRESSOR FOR LEVELLING SYSTEM (MACAN, MACAN S, MACAN TURBO) > SUBSEQUENT WORK

1. Install center underbody panelling (left cover). → INSTALLING COVER FOR CENTER UNDERBODY .
2. Fill the levelling system. → BLEEDING AND FILLING THE LEVELLING SYSTEM .

WM 431619 REMOVING AND INSTALLING PASM CONTROL UNIT (MACAN, MACAN S, MACAN TURBO) > TOOLS

Designation	Type	Number	Description	
PIWIS Tester II	Special tool	9818		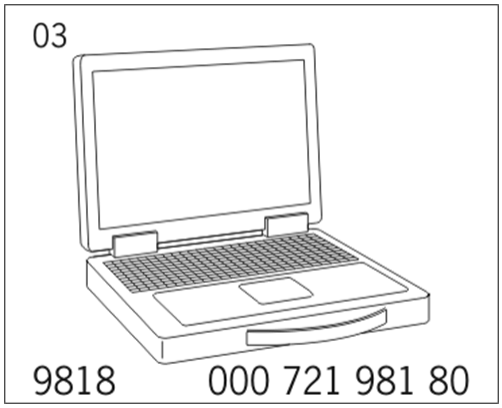

WM 431619 REMOVING AND INSTALLING PASM CONTROL UNIT (MACAN, MACAN S, MACAN TURBO) > PRELIMINARY WORK

1. Remove side trim panel for rear luggage compartment. → 700319 REMOVING AND INSTALLING SIDE TRIM PANEL FOR REAR LUGGAGE COMPARTMENT

WM 431619 REMOVING AND INSTALLING PASM CONTROL UNIT (MACAN, MACAN S, MACAN TURBO) > REMOVING AND INSTALLING PASM CONTROL UNIT > REMOVING PASM CONTROL UNIT

NOTE: Voltage peaks

- *Risk of damage to load or to the control unit*

→ Remove the ignition key and switch off load before disconnecting or removing load.

Installation position: → 4301IN POSITION OF AIR SUSPENSION COMPONENTS

1. Release connector **-1-** and disconnect it **-arrows-** .
2. Unscrew nuts **-2-** .

3. Remove PASM control unit **-3-** from the holder.

Fig 1: Locating PASM Control Unit Nut

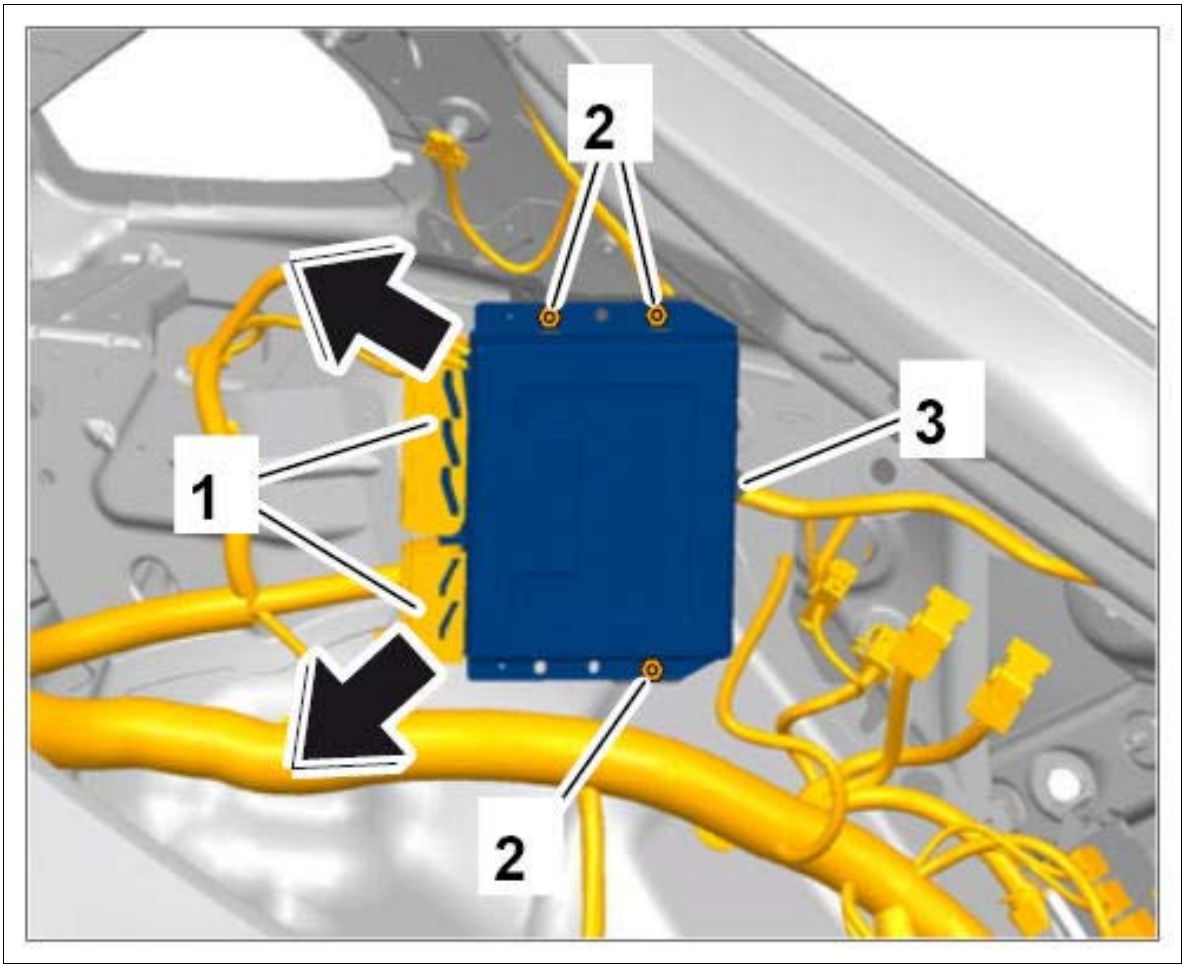

Courtesy of PORSCHE CARS NORTH AMERICA, INC.

WM 431619 REMOVING AND INSTALLING PASM CONTROL UNIT (MACAN, MACAN S, MACAN TURBO) > REMOVING AND INSTALLING PASM CONTROL UNIT > INSTALLING PASM CONTROL UNIT

Installation is performed in reverse order.

WM 431619 REMOVING AND INSTALLING PASM CONTROL UNIT (MACAN, MACAN S, MACAN TURBO) > SUBSEQUENT WORK

1. Install side trim panel for rear luggage compartment. → INSTALLING SIDE TRIM PANEL FOR REAR LUGGAGE COMPARTMENT .
2. If the control unit was replaced, the "new" control unit must be adapted to suit the vehicle using **PIWIS Tester II 9818.** → 431655 REPLACING PASM CONTROL UNIT .

WM 431655 REPLACING PASM CONTROL UNIT (MACAN, MACAN S, MACAN TURBO) > TOOLS

Designation	Type	Number	Description	
PIWIS Tester II	Special tool	9818		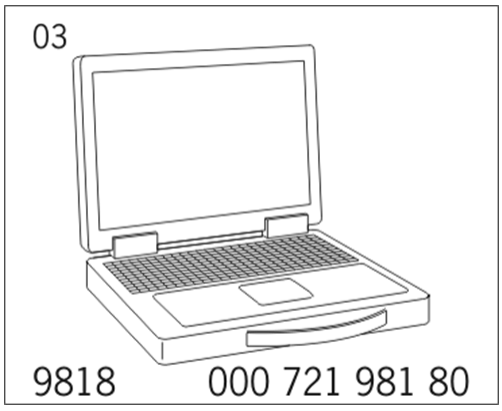

WM 431655 REPLACING PASM CONTROL UNIT (MACAN, MACAN S, MACAN TURBO) > TECHNICAL VALUES

Location	Description	Type	Basic value	Tolerance 1	Tolerance 2
Current rating		Nominal value	40 A		

WM 431655 REPLACING PASM CONTROL UNIT (MACAN, MACAN S, MACAN TURBO) > PRELIMINARY WORK

1. Switch off ignition and replace control unit. → 431619 REMOVING AND INSTALLING PASM CONTROL UNIT .

WM 431655 REPLACING PASM CONTROL UNIT (MACAN, MACAN S, MACAN TURBO) > CODING PASM CONTROL UNIT

NOTE: Voltage drop

- *Risk of irreparable damage to control unit*
- *Risk of damage to control unit*
- *Fault entries in the control unit*
- *Coding in the control unit is aborted*

- *Malfunctions in control unit, even during programming*

→ Prior to disconnecting the control unit, switch off ignition and remove ignition key.

→ Ensure that the power supply is not interrupted during programming.

→ Connect a battery charger with a current rating of at least → **Nominal value: 40 A** to the vehicle battery.

Information

The **PIWIS Tester II 9818** instructions take precedence since the description may be different with later Tester releases.

The procedure described here has been structured in general terms. Different text or additional information may appear in **PIWIS Tester II 9818** .

1. Connect the PIWIS Tester to the vehicle and start the Tester. Switch on ignition and press [F12] to continue.
2. Select the vehicle type and start the diagnostic application.
3. Select the required control unit **PASM** in the **overview** .
4. **Extended identifications** must now be selected.
5. **Enter the vehicle identification number** and press [Enter] to confirm your entry.
6. **Maintenance/repairs** must then be selected.
7. **Control unit replacement** must now be selected. Then press [F12] to continue.
8. **Select Write data,** press [F12] and then press [F8] to start. Data is installed.
9. The Tester confirms that **Coding has been written successfully.** Press [F12] to continue.
10. Read out the fault memory and erase it if necessary.
11. Check the PASM function during the test drive.

WM 431855 REPLACING FRONT LEVEL SENSOR (MACAN, MACAN S, MACAN TURBO) > TECHNICAL VALUES

Location	Description	Type	Basic value	Tolerance 1	Tolerance 2
Front level sensor to front-axle carrier	M8 thread	Tightening torque	20 Nm (15 ftlb.)		
Level sensor to lower trailing arm	M6 thread	Tightening torque	9 Nm (6.5 ftlb.)		

WM 431855 REPLACING FRONT LEVEL SENSOR (MACAN, MACAN S, MACAN TURBO) > PRELIMINARY WORK

1. Raise the vehicle. → 4X00IN LIFTING THE VEHICLE

WM 431855 REPLACING FRONT LEVEL SENSOR (MACAN, MACAN S, MACAN TURBO) > REPLACING FRONT LEVEL SENSOR

Information

Either two or four level sensors are installed on the vehicle, depending on equipment variant:

- Steel springs without PASM: only left side of the vehicle (front and rear axle)
- Air springs and steel springs with PASM: left and right side of the vehicle (front and rear axle)

1. Press electric connector **-1-** together and disconnect it.

Fig 1: Identifying Level Sensor Connector

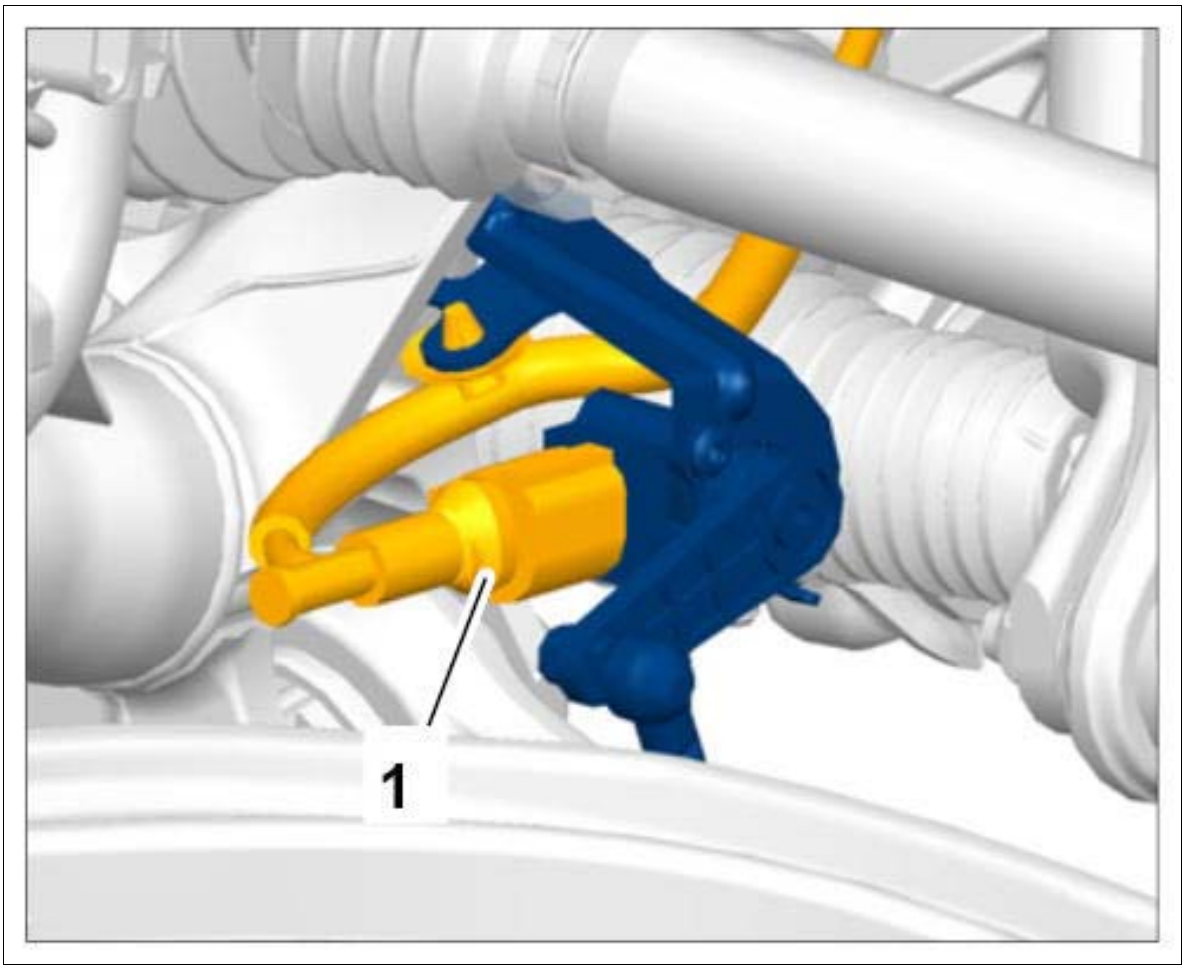

Courtesy of PORSCHE CARS NORTH AMERICA, INC.

2. Unscrew nut **-2-** for the level sensor on the lower trailing arm.

Fig 2: Identifying Lower Trailing Arm Mounting

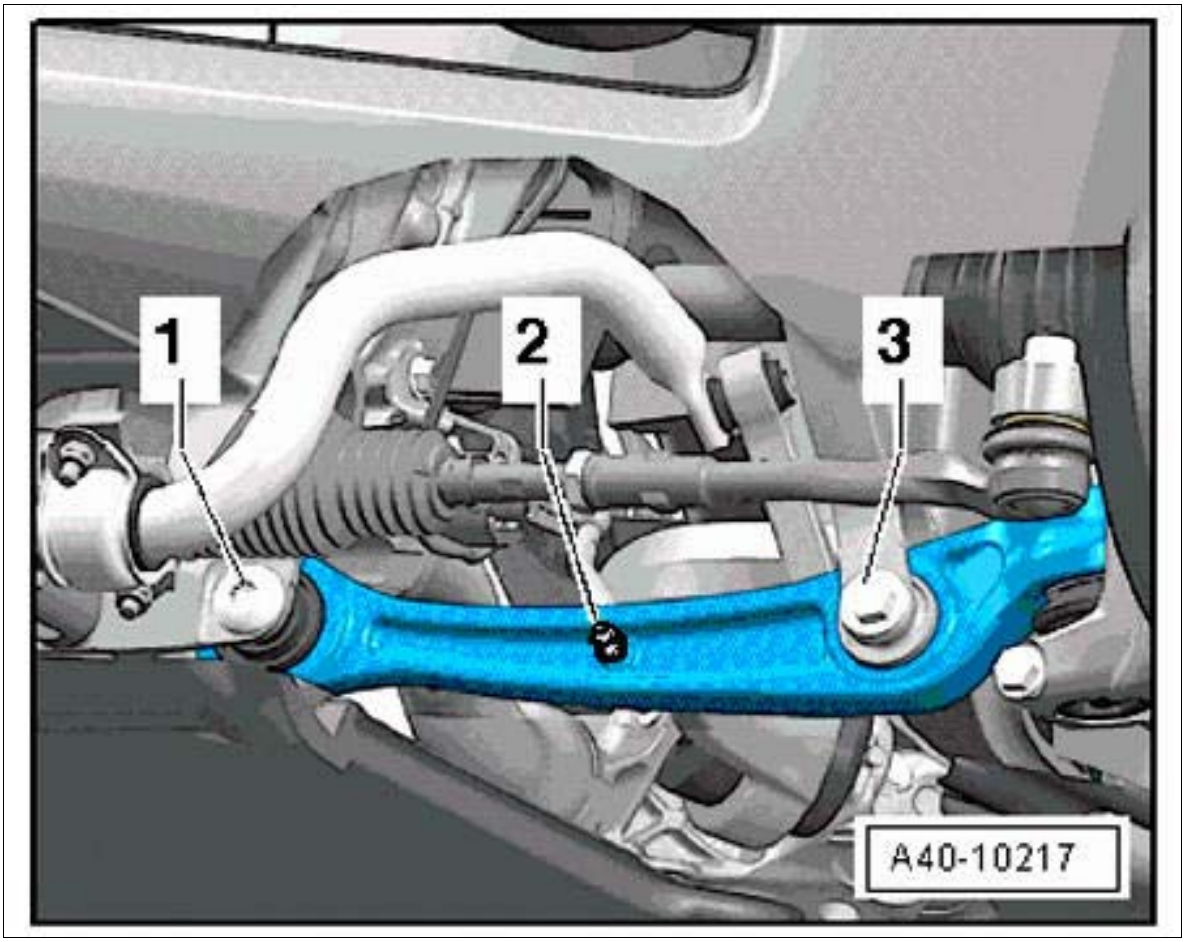

Courtesy of PORSCHE CARS NORTH AMERICA, INC.

3. Loosen nut **-3-** and remove level sensor.

Fig 3: Identifying Level Sensor Mounting

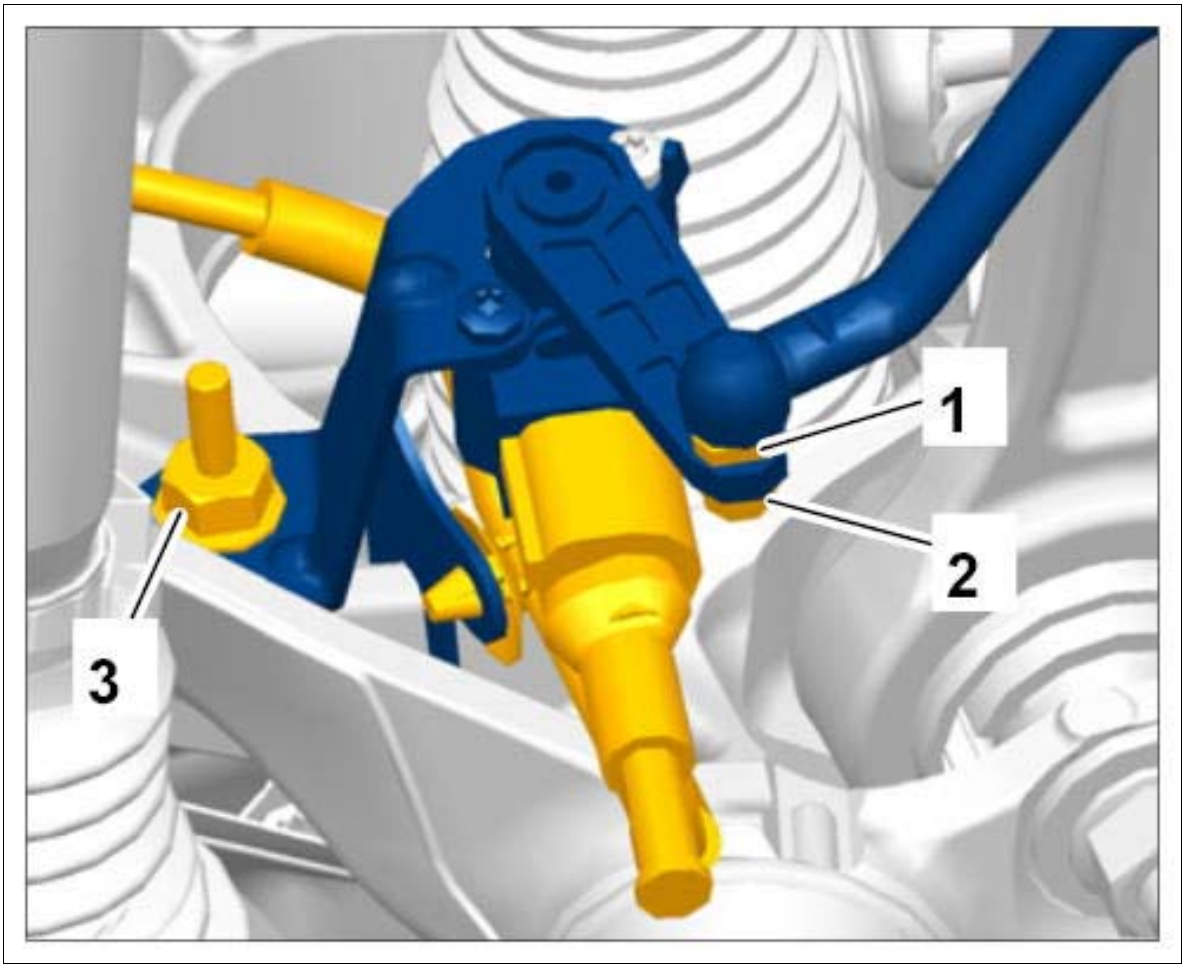

Courtesy of PORSCHE CARS NORTH AMERICA, INC.

WM 431855 REPLACING FRONT LEVEL SENSOR (MACAN, MACAN S, MACAN TURBO) > REPLACING FRONT LEVEL SENSOR > INSTALLING FRONT LEVEL SENSOR

1. Installation is performed in reverse order.

   Observe specified tightening torques:

   Level sensor to front-axle carrier: **Tightening torque 20 Nm (15 ftlb.)**

   Level sensor to lower trailing arm: **Tightening torque 9 Nm (6.5 ftlb.)**

2. Calibrate level sensor.

   Information, measuring points, procedure and conditions for calibration: → 430115 CALIBRATING THE LEVELLING SYSTEM

   1. 2.1. Connect the Porsche System Tester to the vehicle and start the System Tester. Switch on ignition.

2. 2.2. Select vehicle type.
3. 2.3. Select Levelling system/PASM.
4. 2.4. Select the Maintenance/repairs menu and run the Calibrate level sensor function.

WM 431955 REPLACING REAR LEVEL SENSOR (MACAN, MACAN S, MACAN TURBO) > TECHNICAL VALUES

Location	Description	Type	Basic value	Tolerance 1	Tolerance 2
Level sensor to lower trailing arm	M6 x 16 thread	Tightening torque	9 Nm (6.5 ftlb.)		
Upper control arm to rear axle housing	M12 thread/always use new screws or bolts and nuts following removal	Initial tightening	70 Nm (52 ftlb.)		

WM 431955 REPLACING REAR LEVEL SENSOR (MACAN, MACAN S, MACAN TURBO) > PRELIMINARY WORK

1. Raise the vehicle. → 4X00IN LIFTING THE VEHICLE

WM 431955 REPLACING REAR LEVEL SENSOR (MACAN, MACAN S, MACAN TURBO) > REPLACING REAR LEVEL SENSOR

Information

Either two or four level sensors are installed on the vehicle, depending on equipment variant:

- Steel springs without PASM: only left side of the vehicle (front and rear axle)
- Air springs and steel springs with PASM: left and right side of the vehicle (front and rear axle)

1. Release and disconnect electric connector **-1-** .
2. Unscrew fastening screw **-2-** on the lower trailing arm.
3. Unscrew fastening screw **-3-** on the rear axle housing.
4. Remove level sensor.

Fig 1: Identifying Rear Level Sensor Mounting Screws

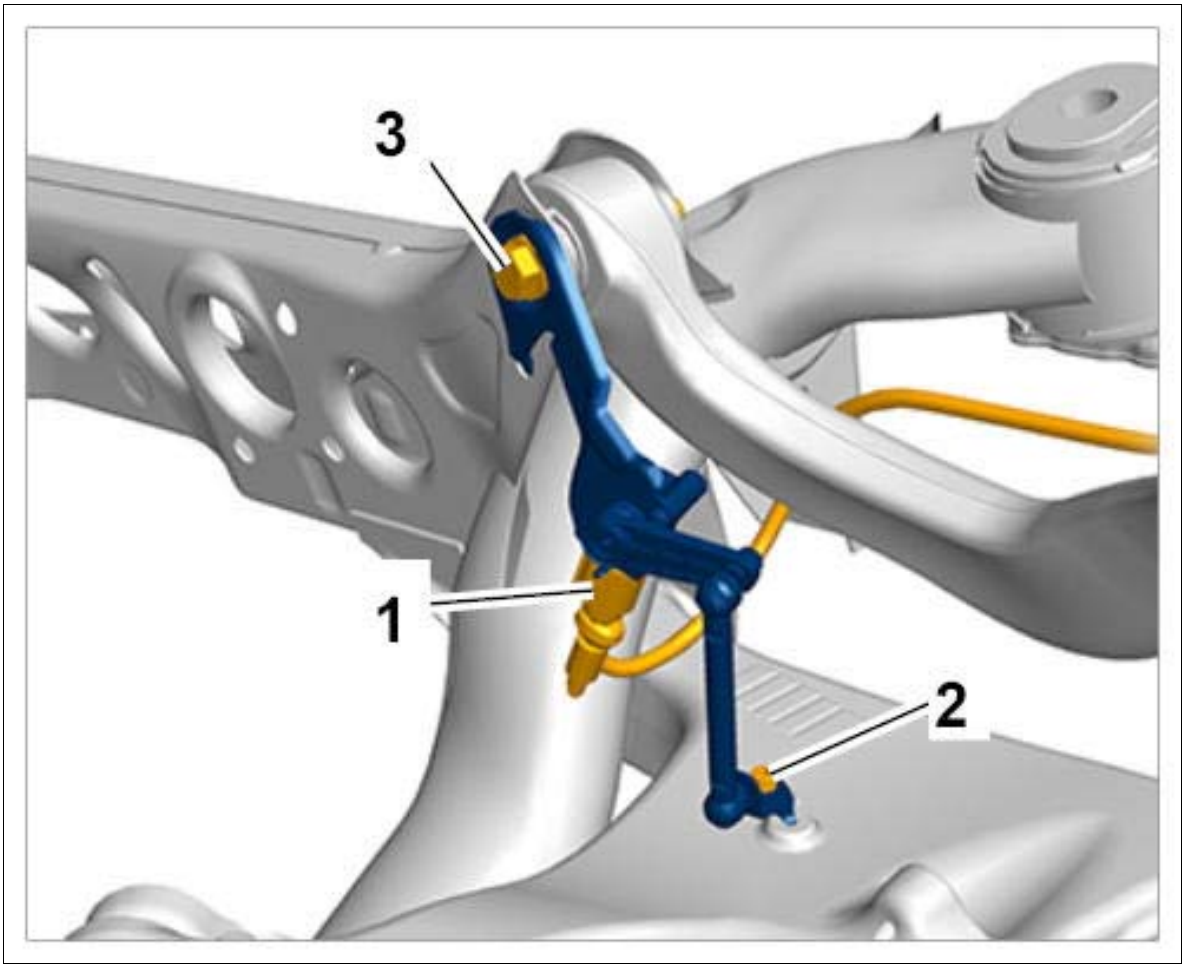

Courtesy of PORSCHE CARS NORTH AMERICA, INC.

WM 431955 REPLACING REAR LEVEL SENSOR (MACAN, MACAN S, MACAN TURBO) > REPLACING REAR LEVEL SENSOR > INSTALLING REAR LEVEL SENSOR

1. Installation is performed in reverse order.

   Observe the specified tightening torque:

   Level sensor with upper control arm to rear axle housing: **Initial tightening 70 Nm (52 ftlb.)**

   Level sensor to lower trailing arm: **Tightening torque 9 Nm (6.5 ftlb.)**

2. Calibrate level sensor.

   Information, measuring points, procedure and conditions for calibration: → 430115 CALIBRATING THE LEVELLING SYSTEM

   1. 2.1. Connect the Porsche System Tester to the vehicle and start the System Tester. Switch on ignition.

   2. 2.2. Select vehicle type.

3. 2.3. Select Levelling system/PASM.
4. 2.4. Select the Maintenance/repairs menu and run the Calibrate level sensor function.

WM 432355 REPLACING VALVE UNIT (LEVELLING SYSTEM) (MACAN, MACAN S, MACAN TURBO) > TECHNICAL VALUES

Location	Description	Type	Basic value	Tolerance 1	Tolerance 2
Valve unit to holder	M6 thread	Tightening torque	4.5 Nm (3 ftlb.)		
Pressure lines to valve block	Union nuts	Tightening torque	3.5 Nm (2.5 ftlb.)		

WM 432355 REPLACING VALVE UNIT (LEVELLING SYSTEM) (MACAN, MACAN S, MACAN TURBO) > PRELIMINARY WORK

1. Raise the vehicle. → 4X00IN LIFTING THE VEHICLE
2. Bleed the levelling system. → BLEEDING AND FILLING THE LEVELLING SYSTEM
3. Remove center underbody panelling (left cover). → 519319 REMOVING AND INSTALLING COVER FOR CENTER UNDERBODY
4. Remove compressor for levelling system. → 431519 REMOVING AND INSTALLING COMPRESSOR FOR LEVELLING SYSTEM

WM 432355 REPLACING VALVE UNIT (LEVELLING SYSTEM) (MACAN, MACAN S, MACAN TURBO) > REPLACING VALVE UNIT (LEVELLING SYSTEM)

1. Disconnect connecting line from the compressor to the valve unit (blue) **-1-** at the valve unit.
2. Unscrew fastening screws **-2-** from the valve unit
3. Remove valve unit **-3-** .

Fig 1: Identifying Valve Unit Mounting

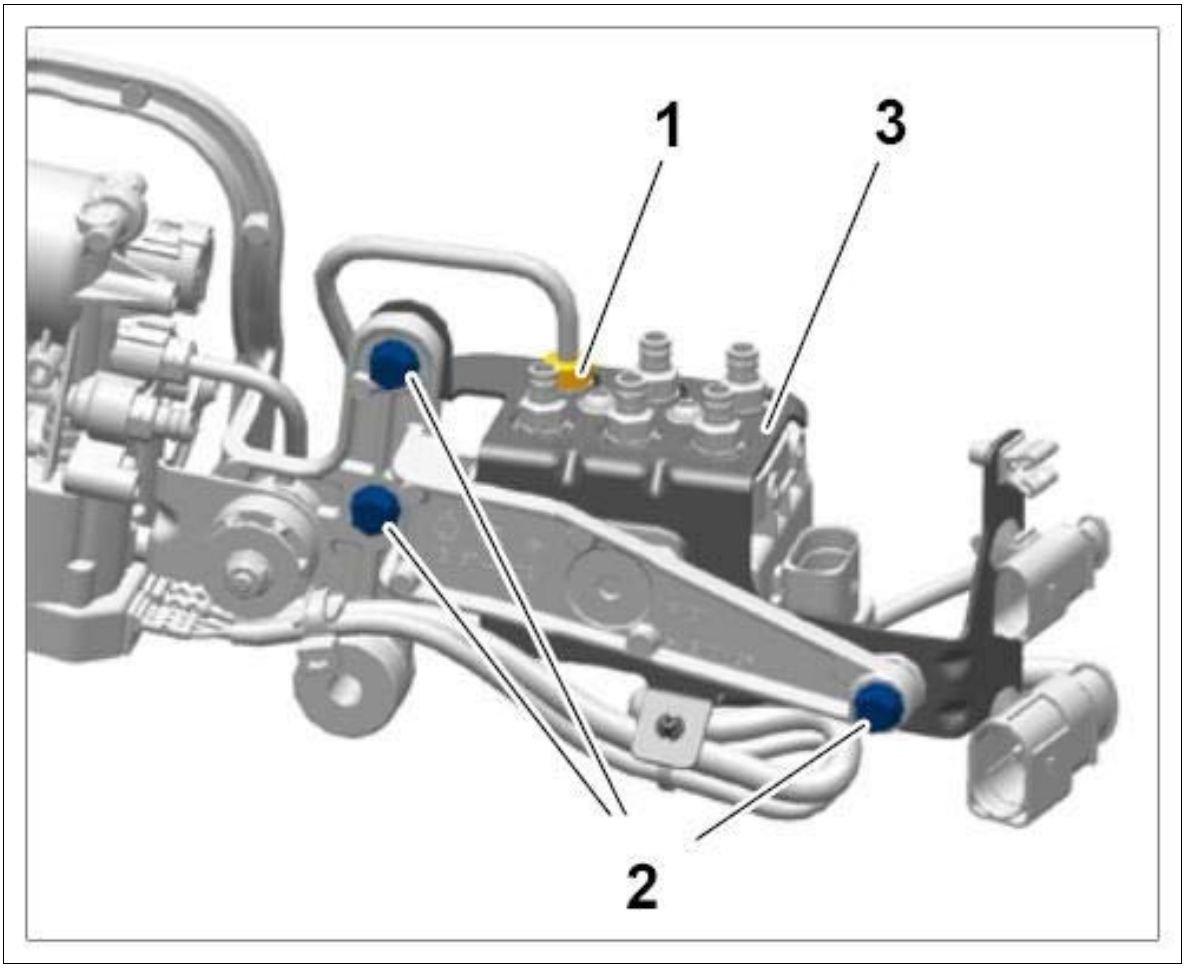

Courtesy of PORSCHE CARS NORTH AMERICA, INC.

WM 432355 REPLACING VALVE UNIT (LEVELLING SYSTEM) (MACAN, MACAN S, MACAN TURBO) > REPLACING VALVE UNIT (LEVELLING SYSTEM) > INSTALLING VALVE UNIT (LEVELLING SYSTEM)

Installation is performed in reverse order.

Observe specified tightening torques:

Valve unit to holder: **Tightening torque 4.5 Nm (3 ftlb.)**

Air lines to valve unit: **Tightening torque 3.5 Nm (2.5 ftlb.)**

WM 432355 REPLACING VALVE UNIT (LEVELLING SYSTEM) (MACAN, MACAN S, MACAN TURBO) > SUBSEQUENT WORK

1. Install compressor for levelling system → INSTALLING COMPRESSOR FOR LEVELLING SYSTEM .

2. Install center underbody panelling (left cover). → INSTALLING COVER FOR CENTER UNDERBODY .

3. Fill the levelling system. → BLEEDING AND FILLING THE LEVELLING SYSTEM .

WM 433019 REMOVING AND INSTALLING FRONT AIR-SPRING STRUT (MACAN, MACAN S, MACAN TURBO) > TOOLS

Designation	Type	Number	Description	
transmission jack	Workshop equipment	WE 1082		
Support	VW tool	T10149		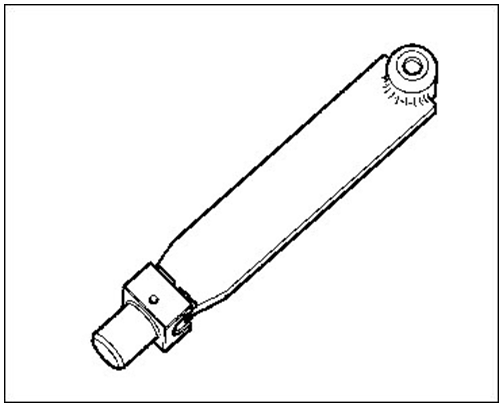

WM 433019 REMOVING AND INSTALLING FRONT AIR-SPRING STRUT (MACAN, MACAN S, MACAN TURBO) > TECHNICAL VALUES

Location	Description	Type	Basic value	Tolerance 1	Tolerance 2
Upper trailing arm to wheel bearing housing	M10 thread	Tightening torque	45 Nm (33 ftlb.)		
Mounting saddle to spring strut (PASM only)	M8 thread	Tightening torque	30 Nm (22 ftlb.)		
Mounting saddle to body	M10 x 35 thread/observe tightening sequence/always use new screws or bolts following removal	Initial tightening	40 Nm (30 ftlb.)		

Mounting saddle to body	M10 x 35 thread/observe tightening sequence/always use new screws or bolts following removal	Final tightening	+90°		
Air line to air-spring strut		Tightening torque	3 Nm (2 ftlb.)		
Level sensor to lower trailing arm	M6 thread	Tightening torque	9 Nm (6.5 ftlb.)		

WM 433019 REMOVING AND INSTALLING FRONT AIR-SPRING STRUT (MACAN, MACAN S, MACAN TURBO) > PRELIMINARY WORK

1. Raise the vehicle → 4X00IN LIFTING THE VEHICLE .
2. Bleed the levelling system → BLEEDING AND FILLING THE LEVELLING SYSTEM .
3. Remove wheel → 440519 REMOVING AND INSTALLING WHEEL .
4. Remove cowl panel cover → 508719 REMOVING AND INSTALLING COWL PANEL COVER .
5. Unscrew fastening screws **-1-** and remove air inlet housing cover **-2-** .

Fig 1: Identifying Air Inlet Housing Cover Mounting Screws

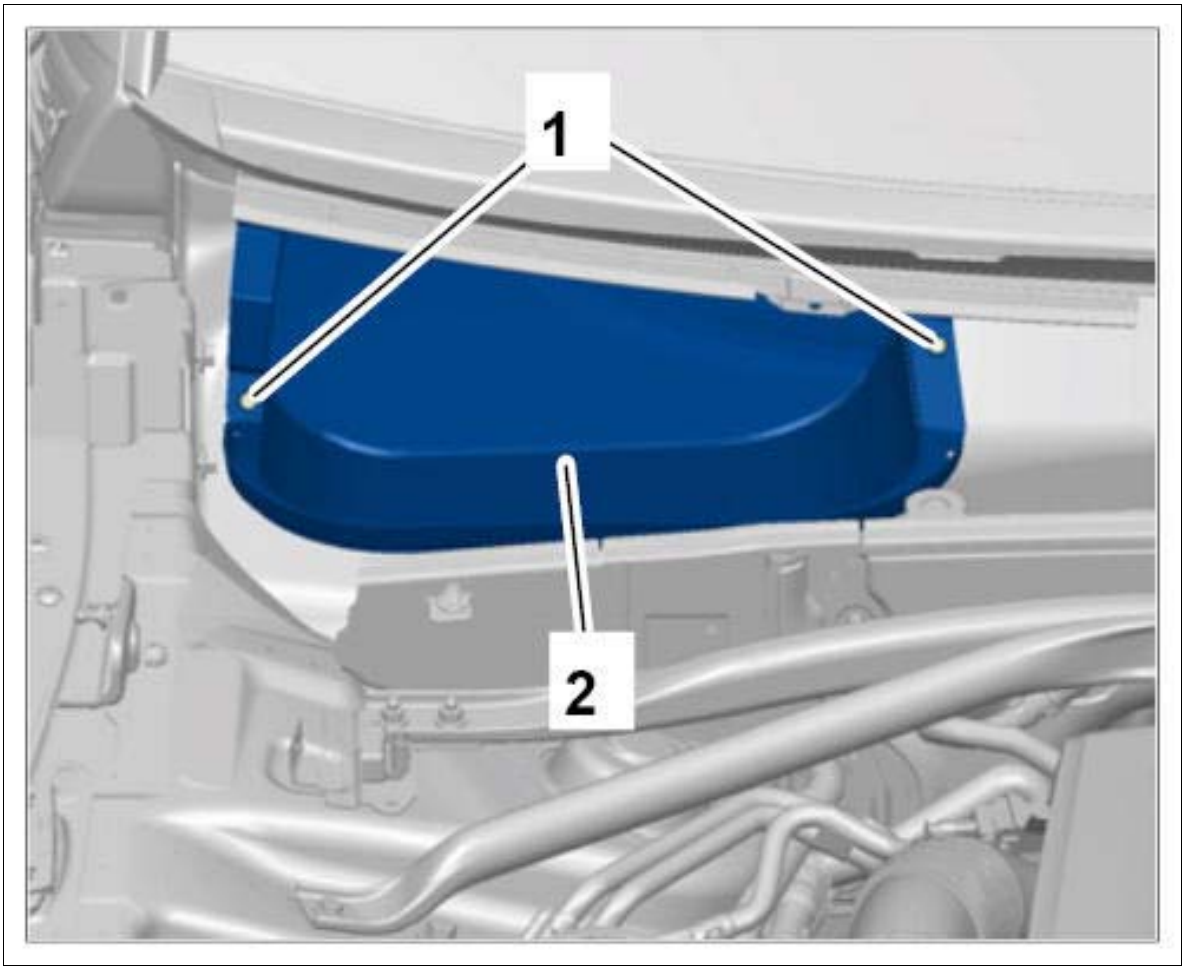

Courtesy of PORSCHE CARS NORTH AMERICA, INC.

6. Remove front trim panel → 700219 REMOVING AND INSTALLING FRONT TRIM PANEL .
7. Remove additional reinforcement on dome strut → 408619 REMOVING AND INSTALLING FRONT STRUT (DOME STRUT) .

   Information

   If the level sensor remains fitted, this can bend the level sensor holder.

   This causes a malfunction in the levelling system!

8. Screw off nut **-2-** on the level sensor.

Fig 2: Identifying Lower Trailing Arm Mounting

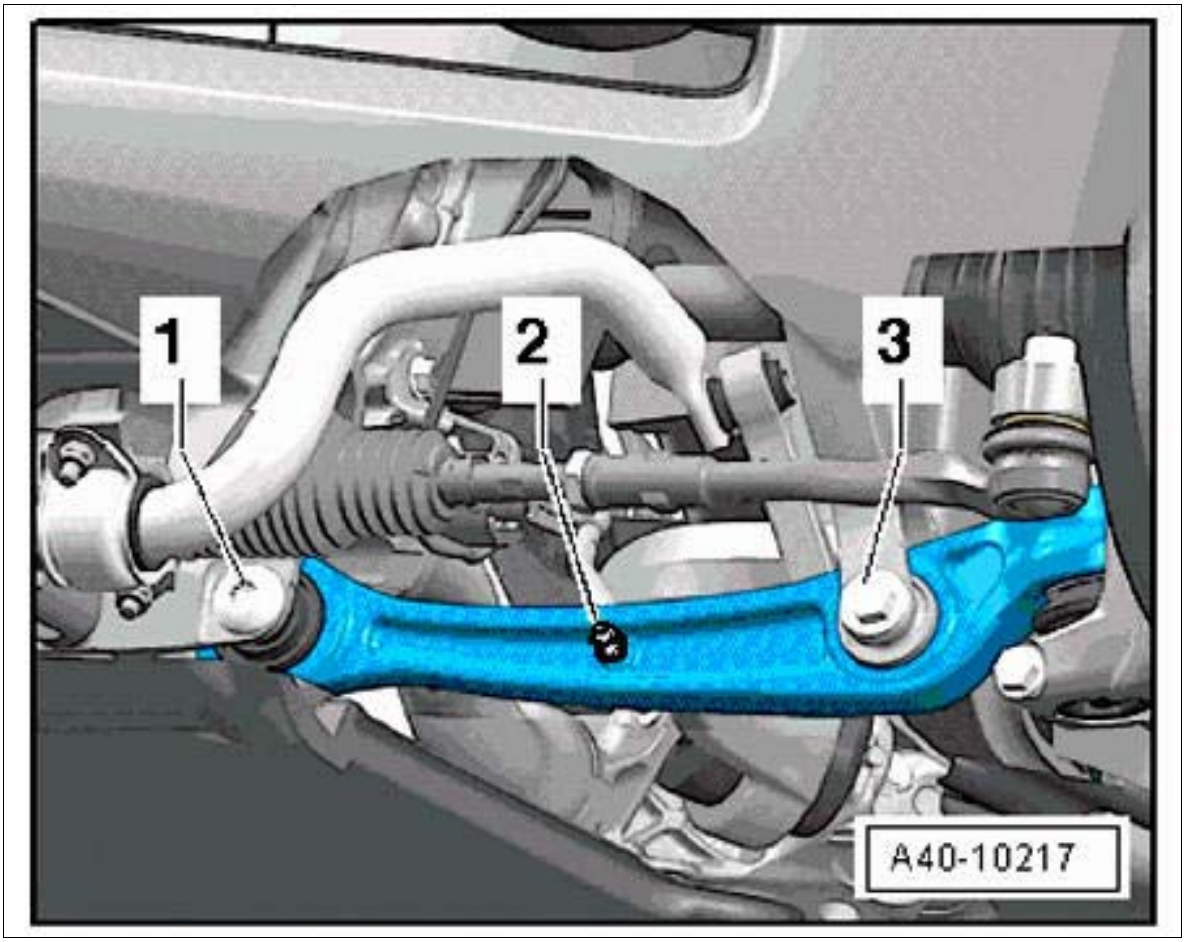

Courtesy of PORSCHE CARS NORTH AMERICA, INC.

9. Remove shock absorber fork. → 408919 REMOVING AND INSTALLING SHOCK ABSORBER FORKS

WM 433019 REMOVING AND INSTALLING FRONT AIR-SPRING STRUT (MACAN, MACAN S, MACAN TURBO) > REMOVING AND INSTALLING FRONT AIR-SPRING STRUT > REMOVING FRONT AIR-SPRING STRUT

Information

To prevent damage to the air springs, pay particular attention to the following points when handling air springs:

- Never empty air springs completely. This applies to both installed and removed air springs . Air springs must only be bled as described under → 4301IN DRAINING AND FILLING THE LEVELLING SYSTEM .
- Never lower a vehicle with empty air springs

1. Remove PASM connector.

1. 1.1. Loosen connector and release line from the holder **-1-** .
2. 1.2. Release connector **-2-** and disconnect it.

2. Loosen the air line **-3-** on the air-spring strut **quickly (only a small amount of air should escape)** and counter at the pressure-retaining valve while doing this (the pressure-retaining valve must not loosen!).

Fig 1: Identifying Line Connections For Air-Spring Strut

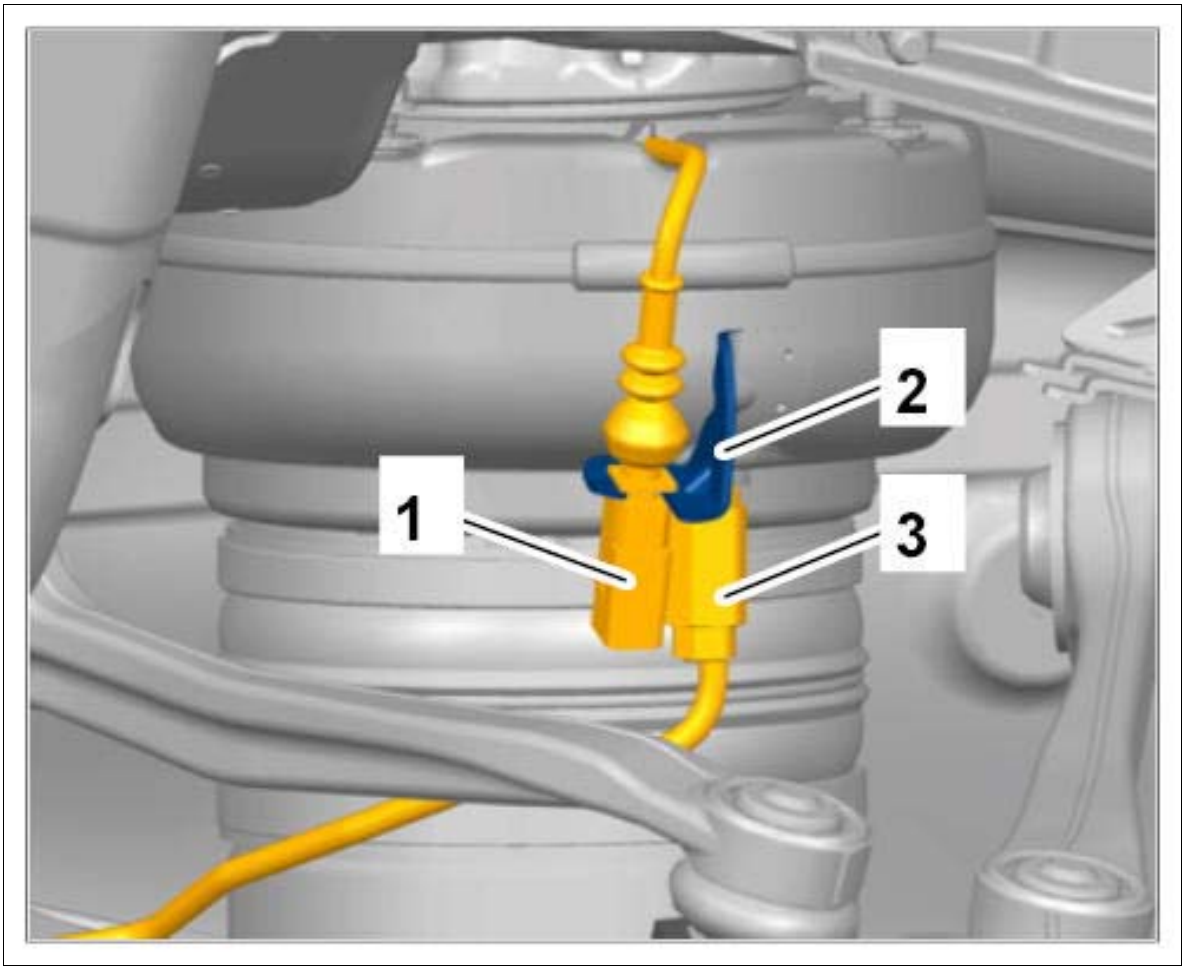

Courtesy of PORSCHE CARS NORTH AMERICA, INC.

3. Support the wheel bearing housing to prevent the wheel bearing housing from tilting.

Fig 2: Locating Support (T10149) Mounting

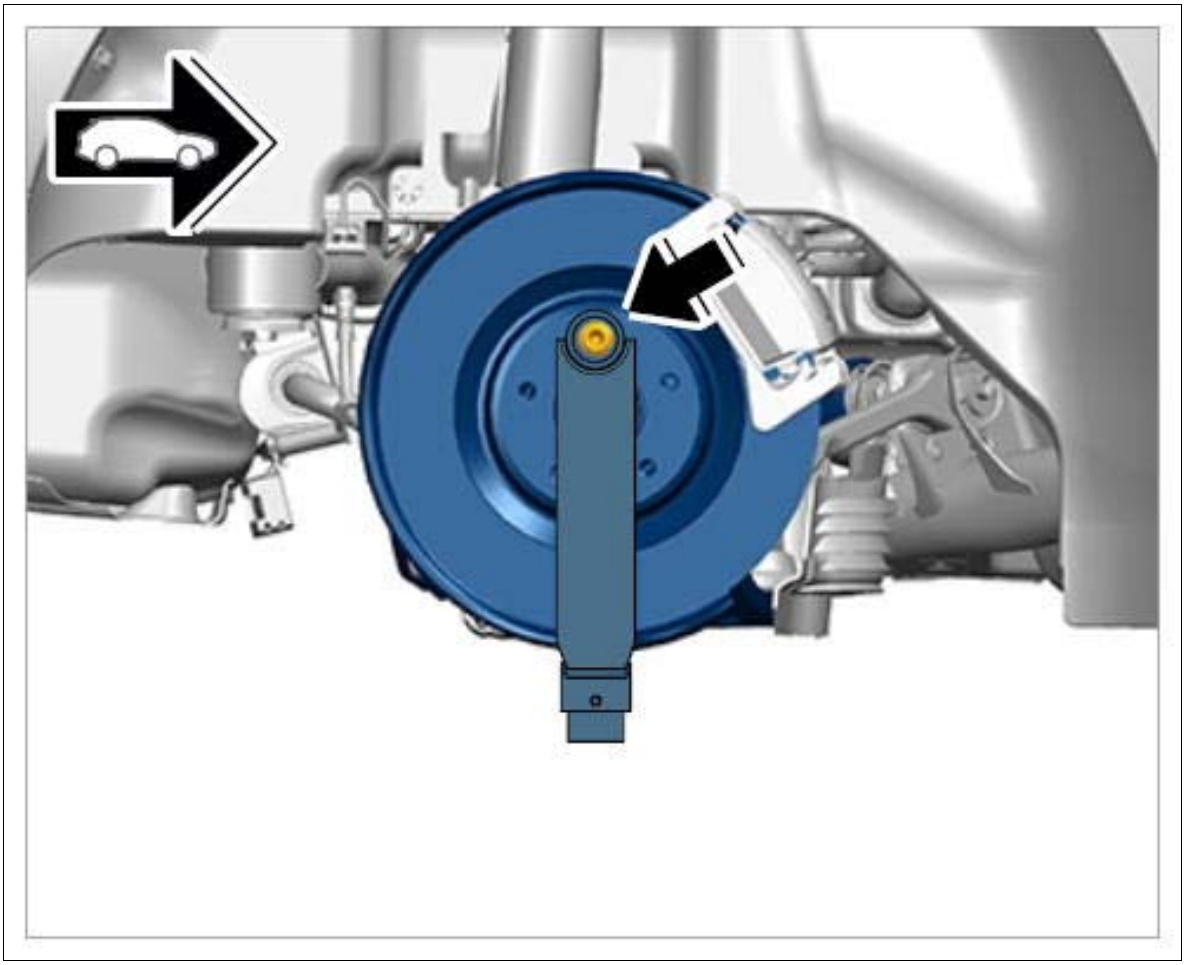

Courtesy of PORSCHE CARS NORTH AMERICA, INC.

1. 3.1. Turn the wheel hub in such a way that a bore for a wheel bolt is at the top.
2. 3.2. **Support T10149** must be secured to the wheel hub with a wheel bolt **-arrow-**
3. 3.3. **Support T10149** must now be fitted into the **transmission jack WE 1082.**

4. Separate threaded joint **-1-** on the wheel bearing housing at the top.

   Information

   The slots in the wheel bearing housing must not be widened using a chisel or similar tool!

5. Pull the two pins for the upper trailing arm **-2-** out of the wheel bearing housing. (Upper trailing arms remain fitted on the mounting saddle **-3 to 6-**)

Fig 3: Identifying Upper Trailing Arm Mounting

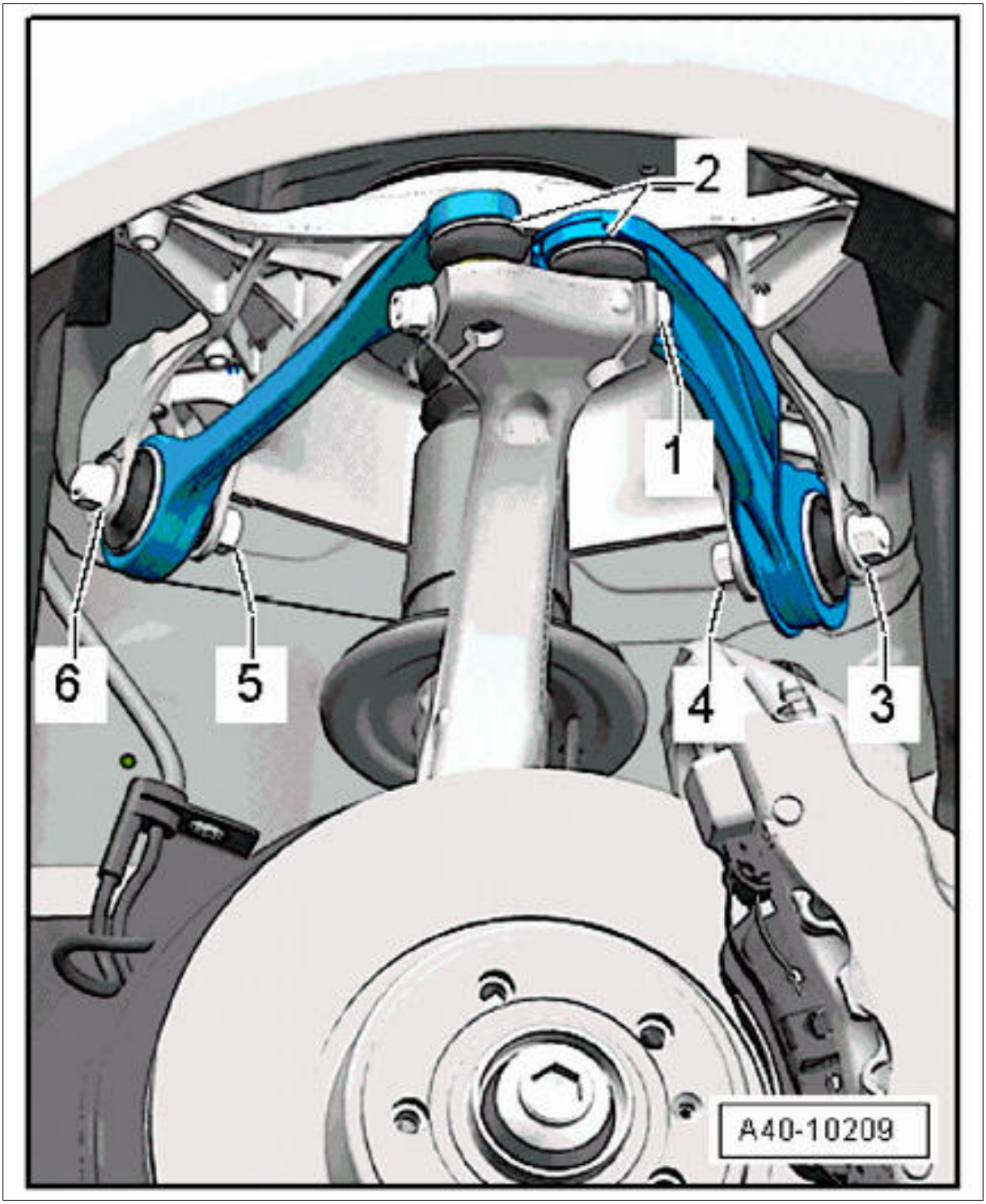

Courtesy of PORSCHE CARS NORTH AMERICA, INC.

6. Unscrew fastening screws **-1 to 4-** at the top of the spring strut.

Fig 4: Identifying Upper Spring-Strut Mount

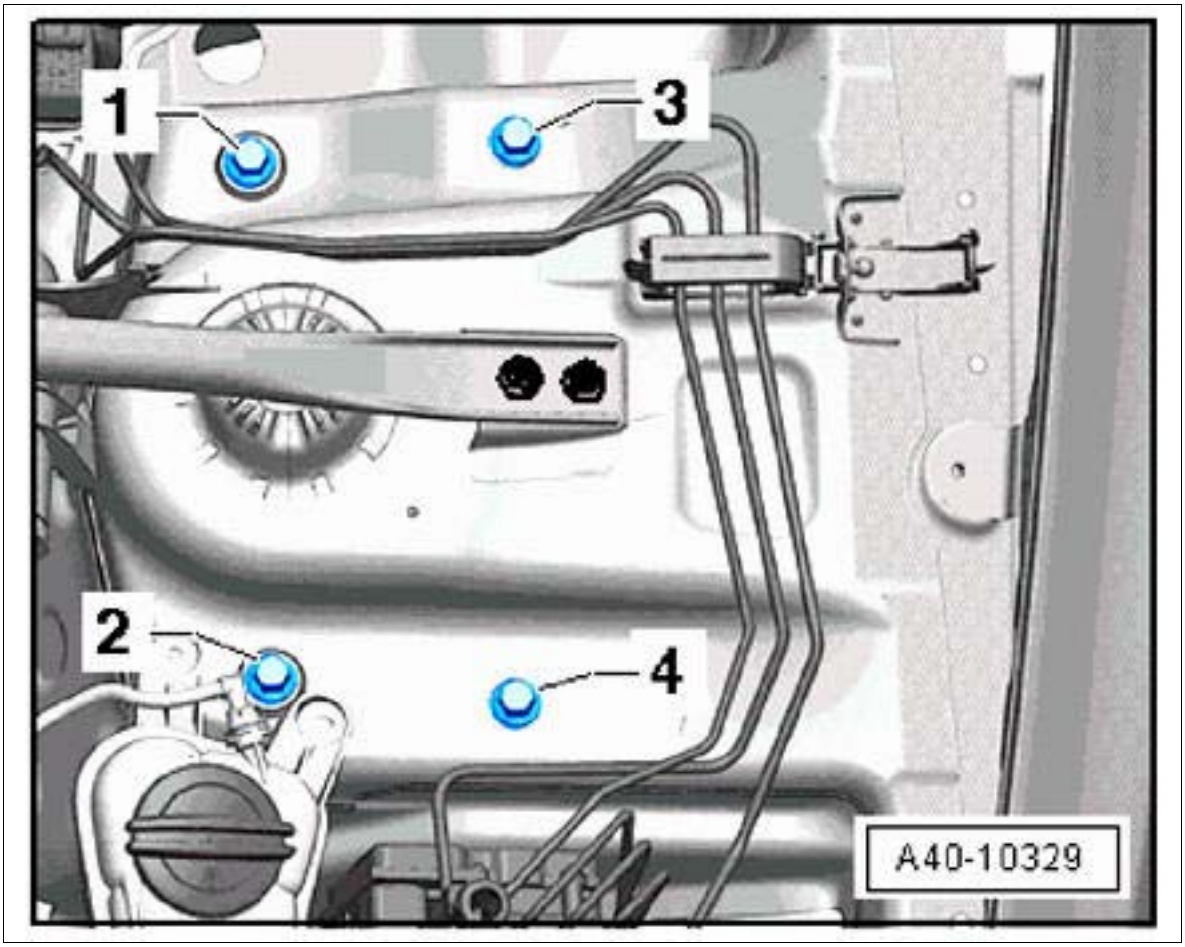

Courtesy of PORSCHE CARS NORTH AMERICA, INC.

7. Remove air-spring strut.
8. Unscrew fastening screws **-1-** and remove mounting saddle **-2-** from the air-spring strut **-3-** .

Fig 5: Identifying Mounting Saddle Mounting

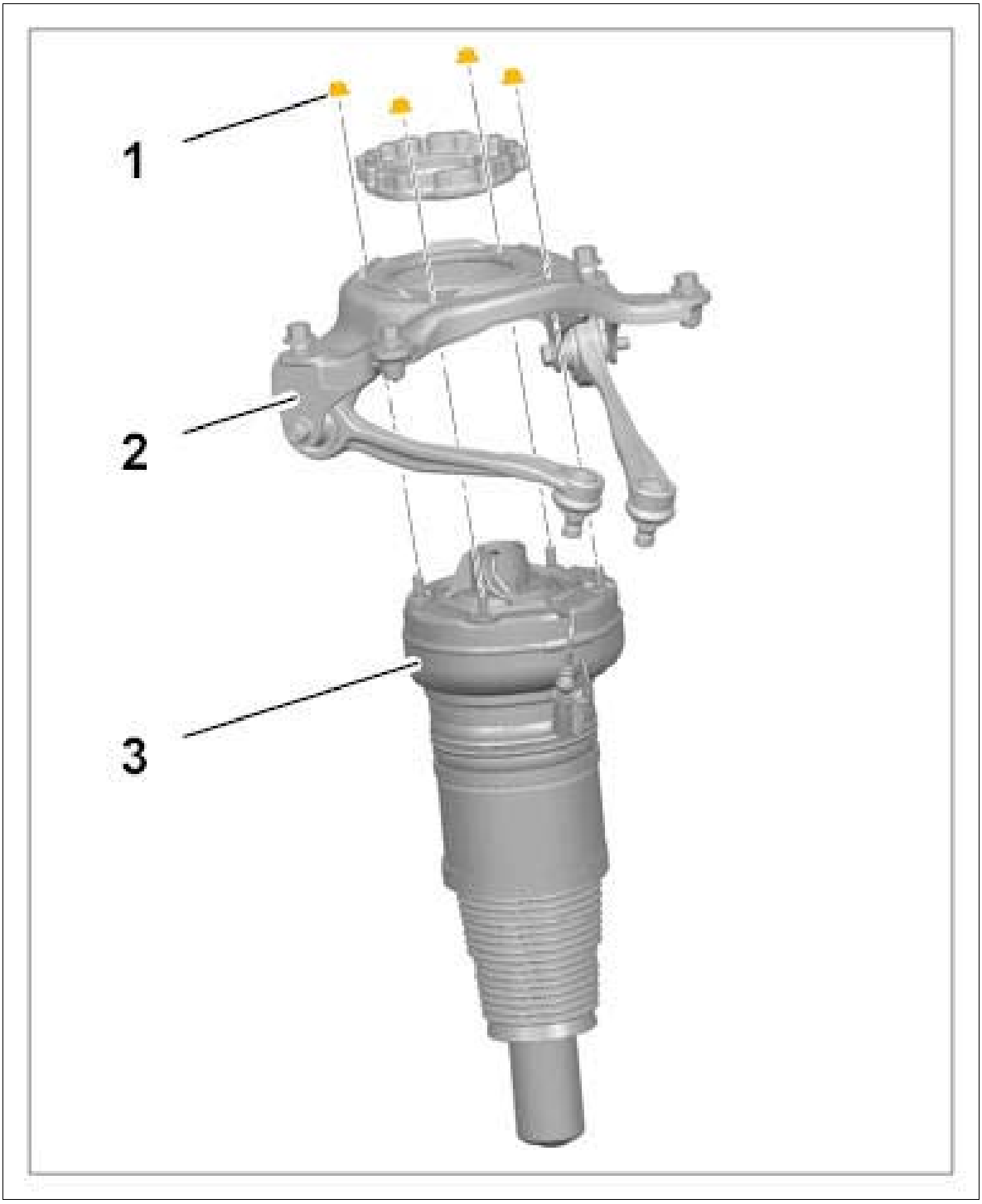

Courtesy of PORSCHE CARS NORTH AMERICA, INC.

WM 433019 REMOVING AND INSTALLING FRONT AIR-SPRING STRUT (MACAN, MACAN S, MACAN TURBO) > REMOVING AND INSTALLING FRONT AIR-SPRING STRUT > INSTALLING FRONT AIR-SPRING STRUT

⚠ *CAUTION: Wheel carrier raised incorrectly*

- *Risk of squashing*
- *Risk of damage to components*

→ Wear personal protective gear.

→ Do not raise the wheel suspension higher than the normal vehicle position (vehicle resting on wheels).

Information

- All screws and threaded joints on the axle must be tightened in vehicle position. Vehicle position means: vehicle standing on its wheels or the wheel suspension is raised with a universal vehicle lift. Dimension -1- , from lower edge of wing to center of axle corresponds to vehicle position. The current height can be found in → 4495TW ADJUSTMENT VALUES FOR SUSPENSION ALIGNMENT . Always observe the following points!

  Fig 1: Identifying Wheel To Wing Lower Edge Dimension (Rear Axle)

  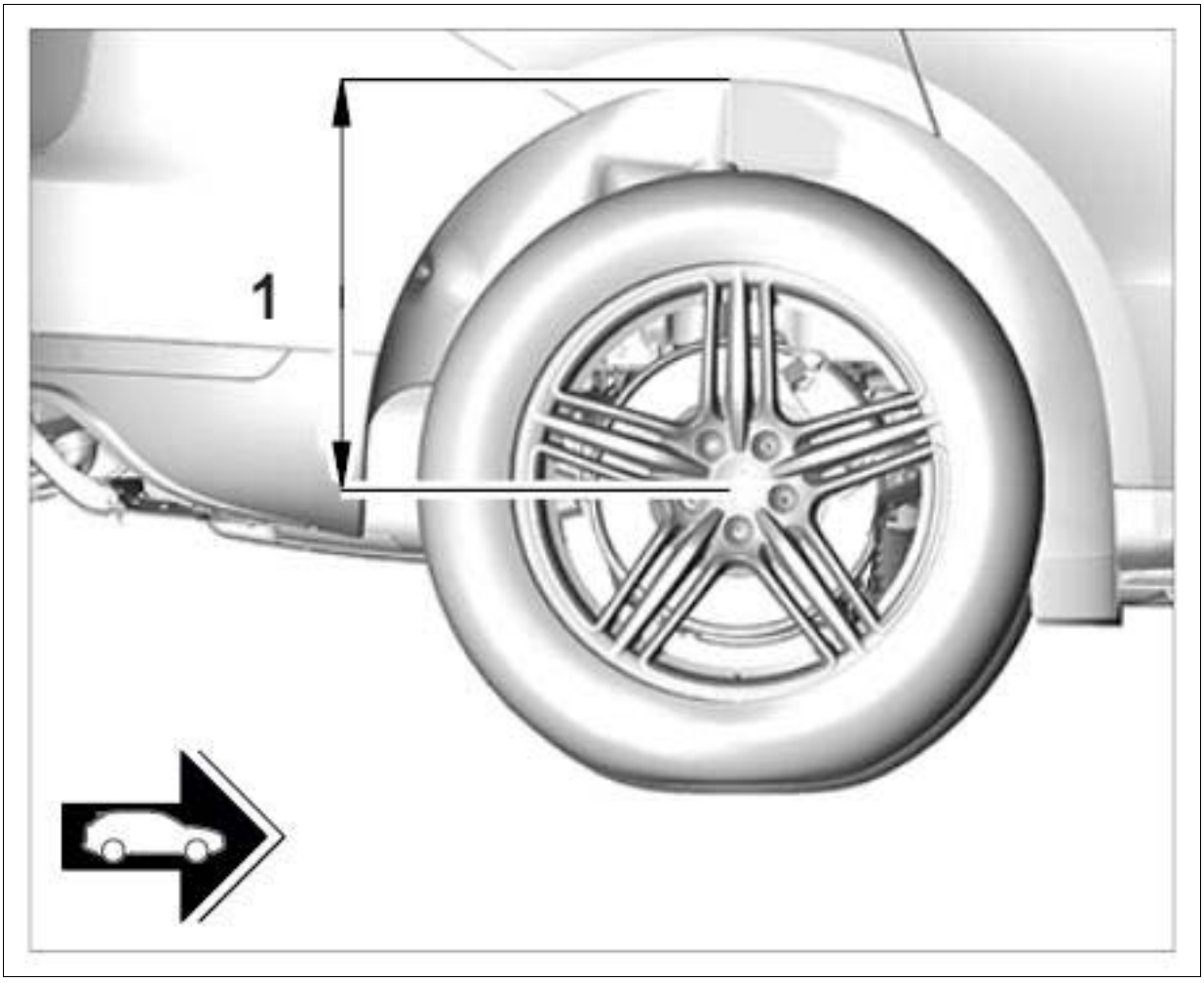

  Courtesy of PORSCHE CARS NORTH AMERICA, INC.

- Screws and nuts are Geomet-coated and must not be greased.

1. Installation is performed in reverse order.

   Observe specified tightening torques:

   Mounting saddle to air-spring strut: **Tightening torque 30 Nm (22 ftlb.)**

   Upper air-spring strut to body: **Initial tightening 40 Nm (30 ftlb.) Final tightening +90°**

   Observe the tightening sequence **-1 to 4-** !

   Upper trailing arm to wheel bearing housing: **Tightening torque 45 Nm (33 ftlb.)**

   Air line to air spring: **Tightening torque 3 Nm (2 ftlb.)**

   Fig 2: Saddle Body Screws Tightening Sequence

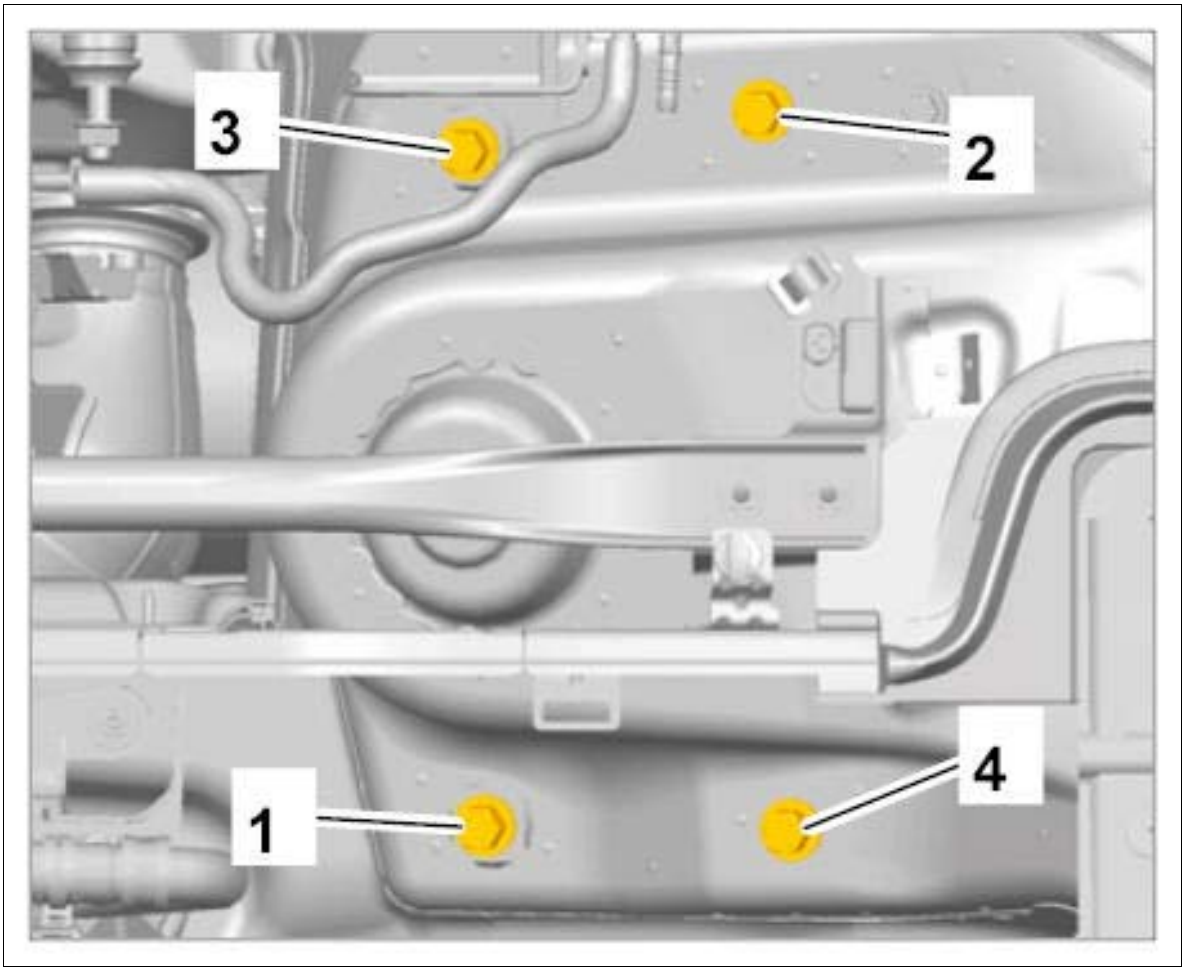

Courtesy of PORSCHE CARS NORTH AMERICA, INC.

WM 433019 REMOVING AND INSTALLING FRONT AIR-SPRING STRUT (MACAN, MACAN S, MACAN TURBO) > SUBSEQUENT WORK

1. Install shock absorber fork. → INSTALLING SHOCK ABSORBER FORK .
2. Tighten nut **-2-** on level sensor. **Tightening torque 9 Nm (6.5 ftlb.)**

Fig 1: Identifying Lower Trailing Arm Mounting

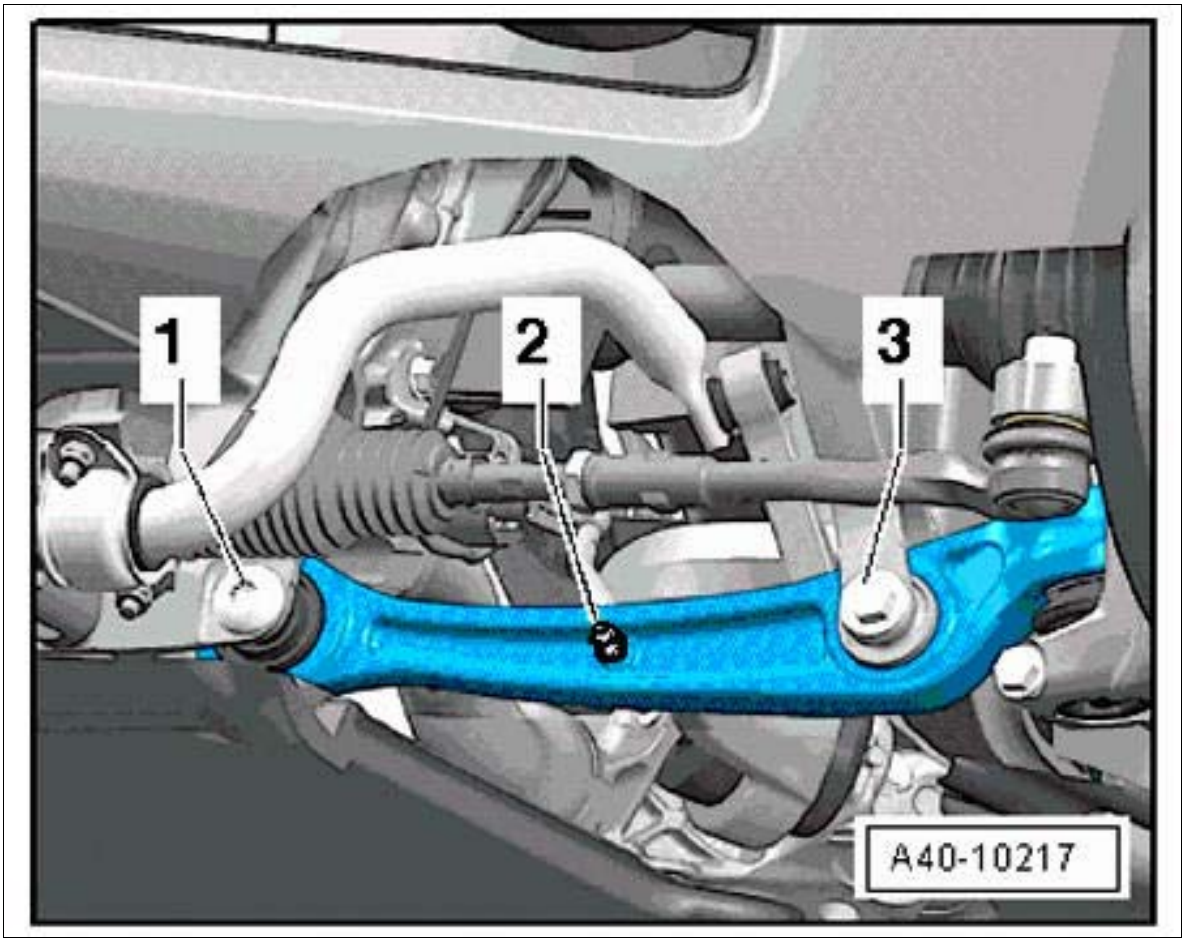

Courtesy of PORSCHE CARS NORTH AMERICA, INC.

3. Install additional reinforcement on dome strut → INSTALLING FRONT STRUT .
4. Install front trim panel → INSTALLING FRONT TRIM PANEL .
5. Install air inlet housing cover **-2-** and tighten fastening screws **-1-** .

Fig 2: Identifying Air Inlet Housing Cover Mounting

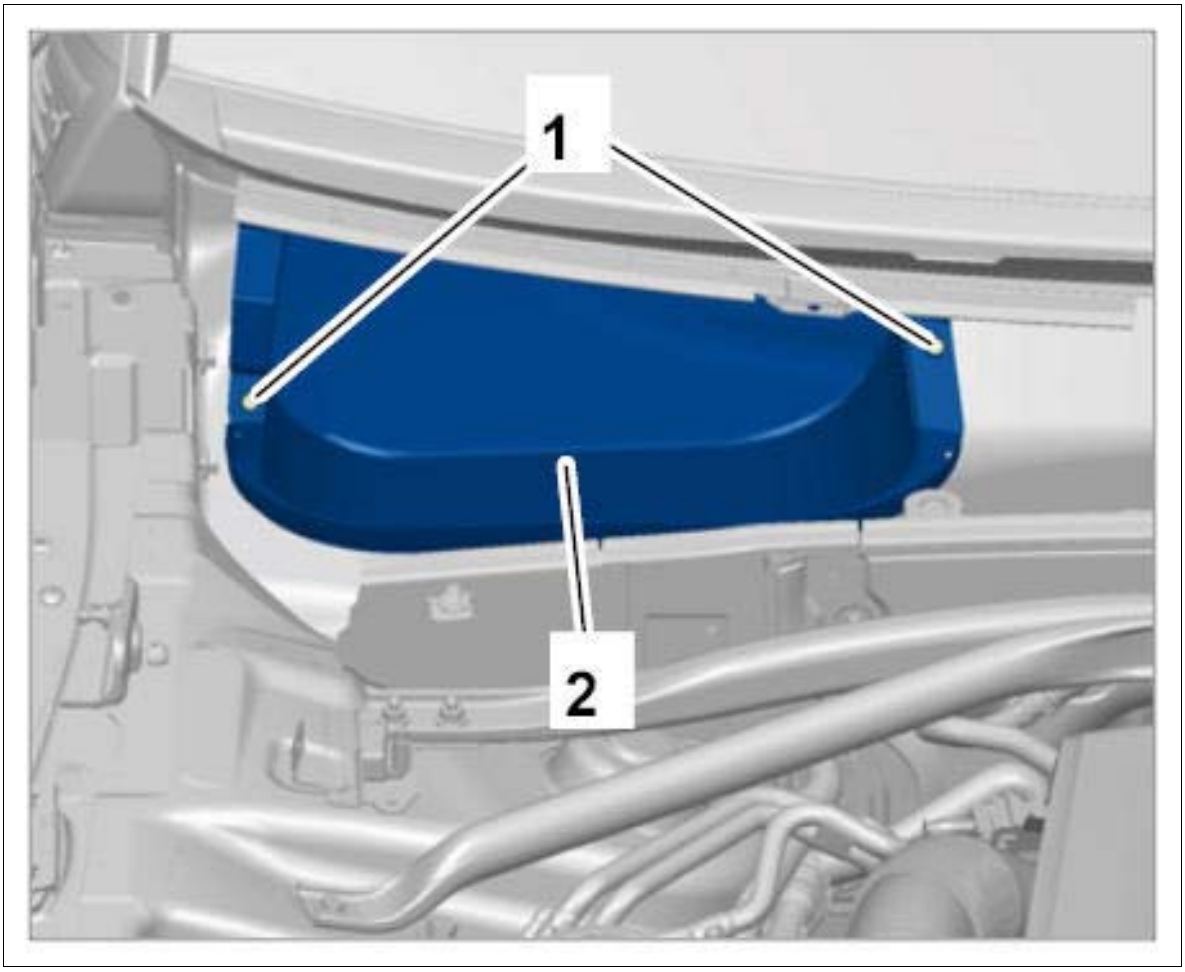

Courtesy of PORSCHE CARS NORTH AMERICA, INC.

6. Install cowl panel cover. → INSTALLING COWL PANEL COVER
7. Fill the levelling system. → BLEEDING AND FILLING THE LEVELLING SYSTEM .
8. Fit wheel → INSTALLING WHEEL .

WM 433655 REPLACING FRONT VALVE (PRESSURE CONTROL VALVE) (MACAN, MACAN S, MACAN TURBO) > TECHNICAL VALUES

Location	Description	Type	Basic value	Tolerance 1	Tolerance 2
Air line to air-spring strut		Tightening torque	3 Nm (2 ftlb.)		
Pressure control valve to air-spring strut		Tightening torque	8 Nm (6 ftlb.)		

WM 433655 REPLACING FRONT VALVE (PRESSURE CONTROL VALVE) (MACAN, MACAN S, MACAN TURBO) > PRELIMINARY WORK

1. Raise the vehicle → 4X00IN LIFTING THE VEHICLE .
2. Remove wheel → 440519 REMOVING AND INSTALLING WHEEL .

WM 433655 REPLACING FRONT VALVE (PRESSURE CONTROL VALVE) (MACAN, MACAN S, MACAN TURBO) > REPLACING FRONT VALVE (PRESSURE CONTROL VALVE)

WARNING: Vehicle is lowered when air line is loosened

- *Risk of squashing*

→ When loosening the pressure control valve, raise the vehicle on a lifting platform.

→ Only leave the vehicle on the lifting platform until a new pressure control valve is installed and the air-spring strut is filled.

Information

The pressure control valve can only be replaced if:

- it was damaged during removal and installation ,
- the sealing ring in the pressure control valve is defective ,
- it no longer lets air out (valve jammed/vehicle cannot be lowered).

Never lower a vehicle with empty air springs.

Fig 1: Identifying Pressure Control Valve Components

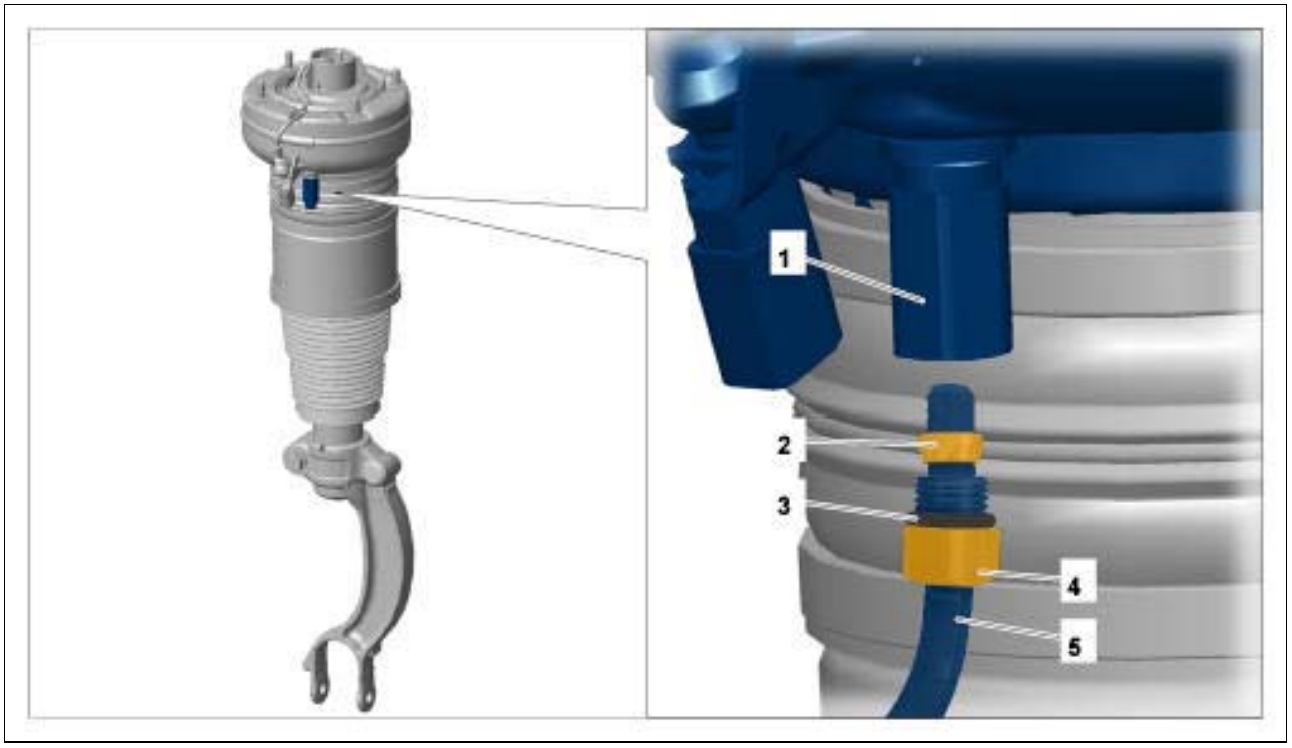

Courtesy of PORSCHE CARS NORTH AMERICA, INC.

1. Pressure control valve
2. Cutting ring
3. Sealing ring (always replace sealing ring)
4. VOSS threaded joint
5. Air line

1. To prevent dirt from getting into the threaded bore on the air-spring strut, clean the pressure control valve area thoroughly with a lint-free cloth.
2. Unscrew VOSS threaded joint (with air line) from the pressure control valve. Counter at the pressure control valve at the same time.

> *NOTE: Escaping residual air*
>
> *1. Risk of eye injuries*

→ Wear protective goggles.

3. Carefully bleed the air-spring strut by hand. To do this, push the valve lifter open slightly using a 5-mm Allen key.
4. Unscrew pressure control valve at the air-spring strut.

WM 433655 REPLACING FRONT VALVE (PRESSURE CONTROL VALVE) (MACAN, MACAN S, MACAN TURBO) > REPLACING FRONT VALVE (PRESSURE CONTROL VALVE) > INSTALLING FRONT VALVE (PRESSURE CONTROL VALVE)

Depending on the condition of the VOSS threaded joint and air line fitted on the vehicle, the VOSS threaded joint and air line can either be used again or replaced.

Using the same VOSS threaded joint on the vehicle:

Information

If you intend to re-use the VOSS threaded joint fitted on the vehicle, the VOSS threaded joint (including stopper and cutting ring) that comes pre-fitted on the new pressure control valve must first be removed.

1. Pull stopper **-1-** out of the new pressure control valve **-3-** .
2. Unscrew VOSS threaded joint **-2-** on the new pressure control valve **-3-** .

Fig 1: Identifying Pressure Control Valve And Stopper

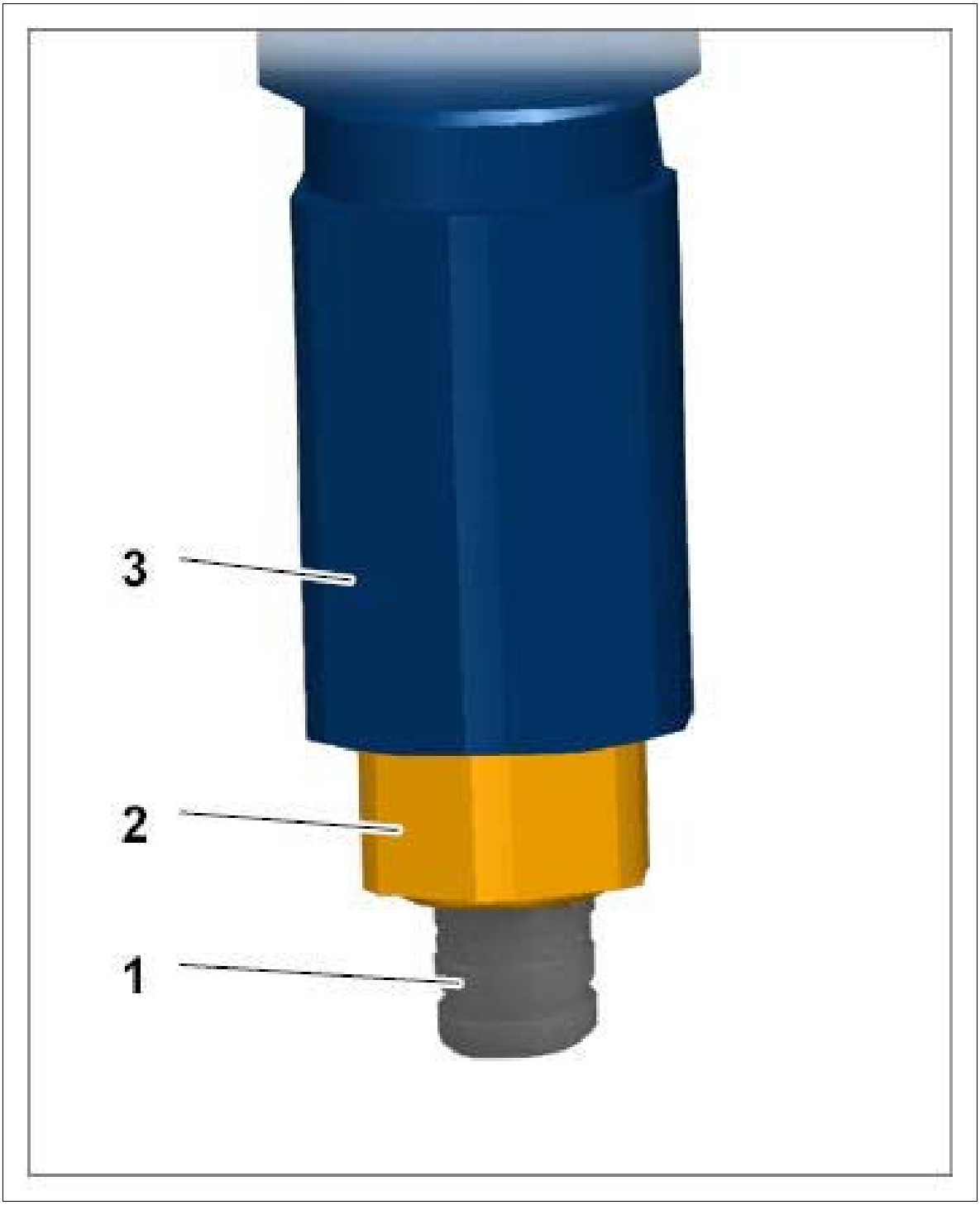

Courtesy of PORSCHE CARS NORTH AMERICA, INC.

3. Remove cutting ring **-1-** .

Fig 2: Identifying Pressure Valve Cutting Ring

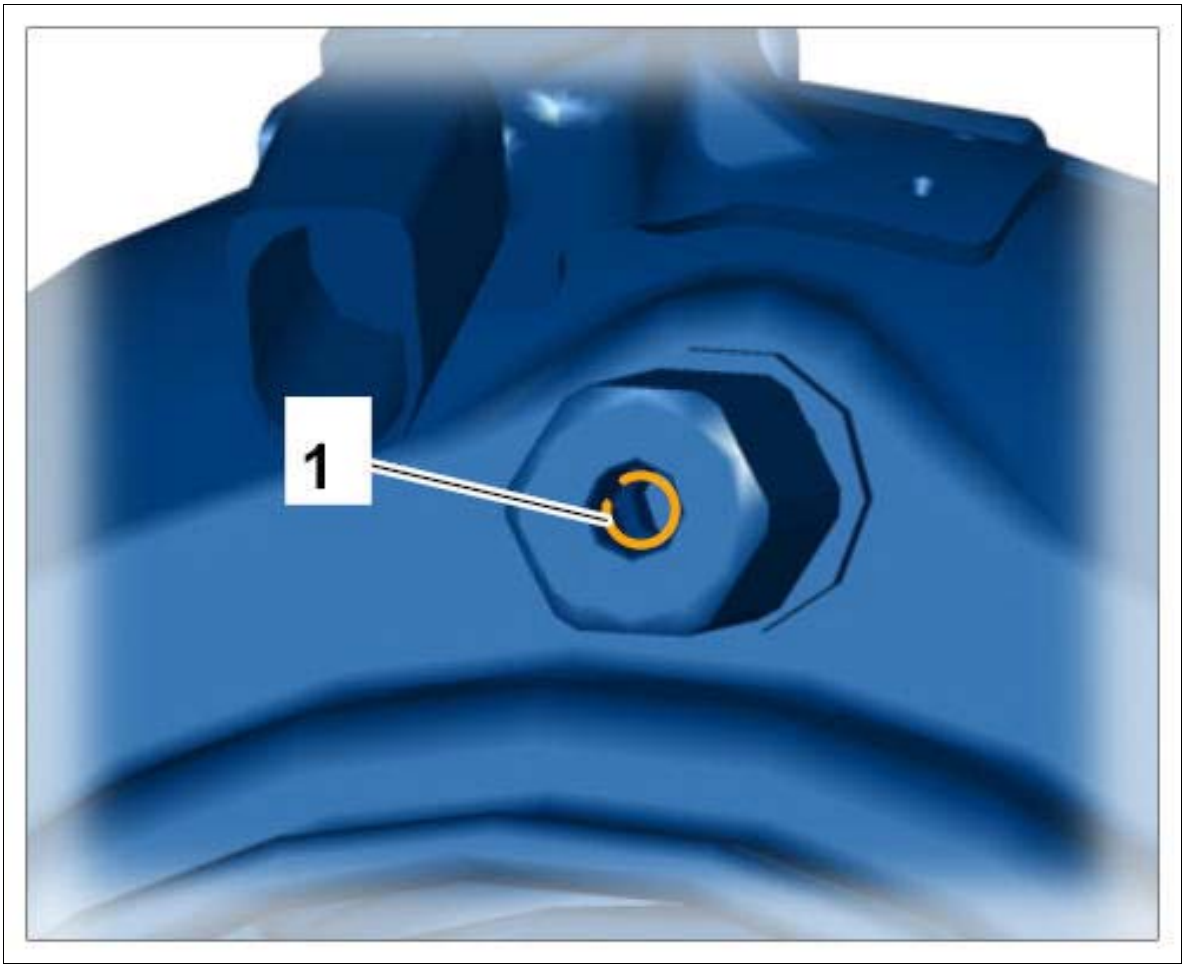

Courtesy of PORSCHE CARS NORTH AMERICA, INC.

4. Screw new pressure control valve into the air-spring strut. **Tightening torque 8 Nm (6 ftlb.)**
5. Fit VOSS threaded joint on pressure control valve. **Tightening torque 3 Nm (2 ftlb.)**

Replacing VOSS threaded joint on the vehicle:

1. Loosen the cutting ring **-1-** on the air line **-3-** using a suitable tool.
2. Pull VOSS threaded joint **-2-** off the air line **-3-** .

Fig 3: Identifying Valve Cutting Ring And VOSS Threaded Joint

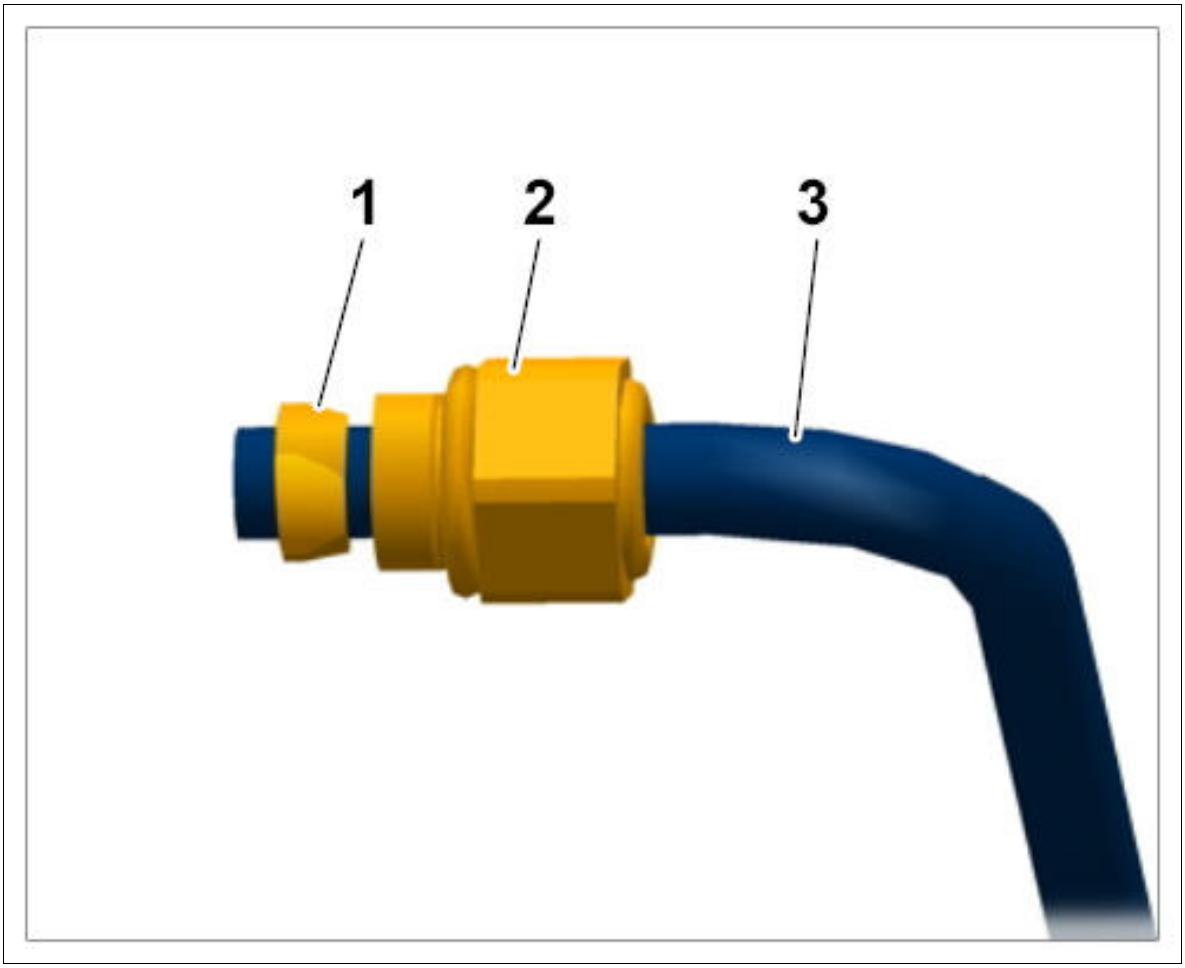

Courtesy of PORSCHE CARS NORTH AMERICA, INC.

Information

Sharp edges at the end of the air line or at the point where the cutting ring is fitted can damage the newly fitted O-ring.

For this reason, always de-burr the end of the air line.

If there is also a sharp edge at the point where the cutting ring is fitted, the air line must be repaired. → 438541 REPAIRING AIR LINE

3. Check air line for damage/leaks.

   Repair the air line if it is damaged → 438541 REPAIRING AIR LINE .

4. Pull stopper **-1-** out of the new pressure control valve.

Fig 4: Identifying Pressure Control Valve And Stopper

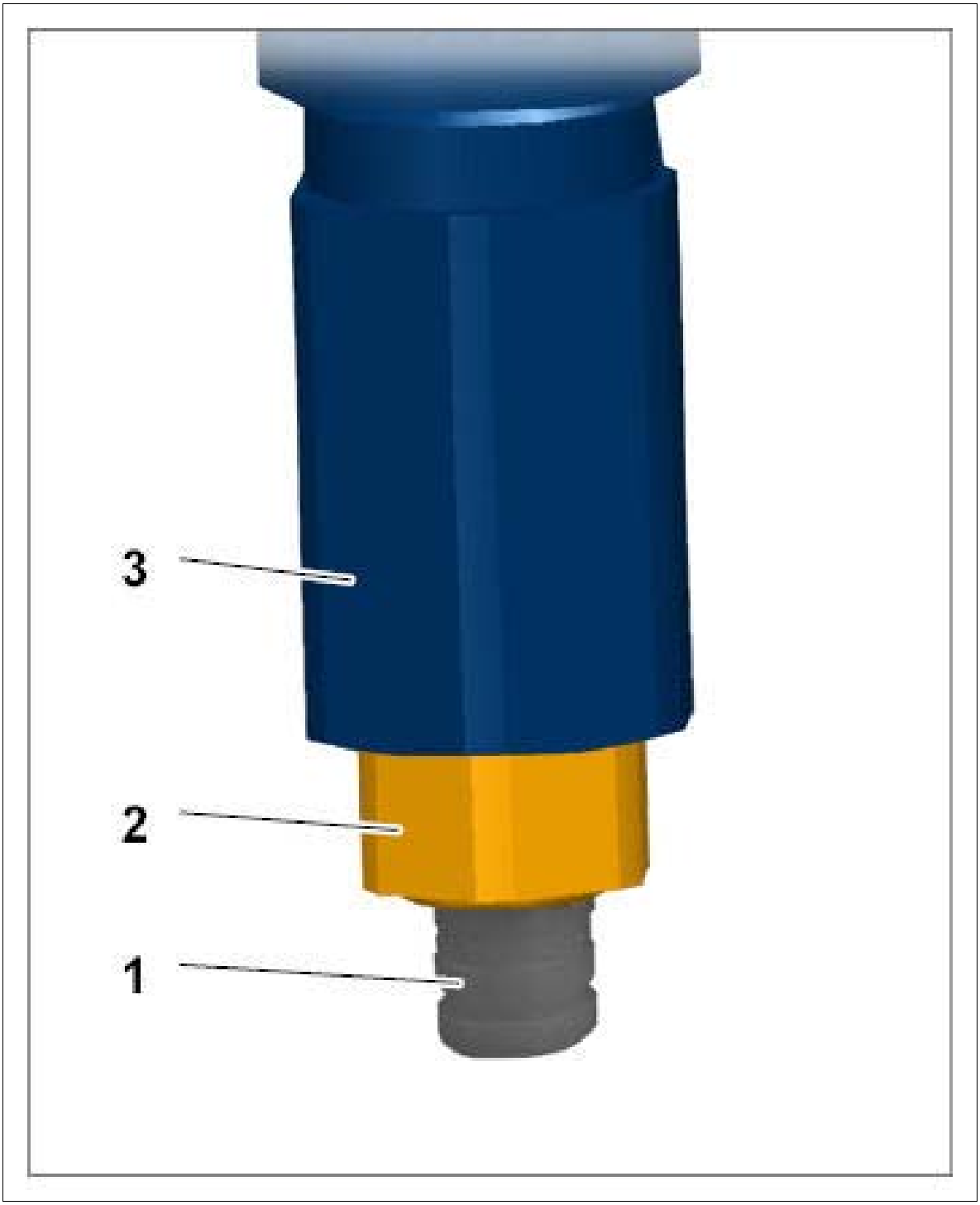

Courtesy of PORSCHE CARS NORTH AMERICA, INC.

5. Screw new pressure control valve into the air-spring strut. **Tightening torque 8 Nm (6 ftlb.)**

Information

Before installation, the following parts must be pre-fitted on the pressure control valve:

1. Cutting ring -1-

2. VOSS threaded joint -2-

Fig 5: Identifying Pressure Control Valve Ring And Threaded Joint

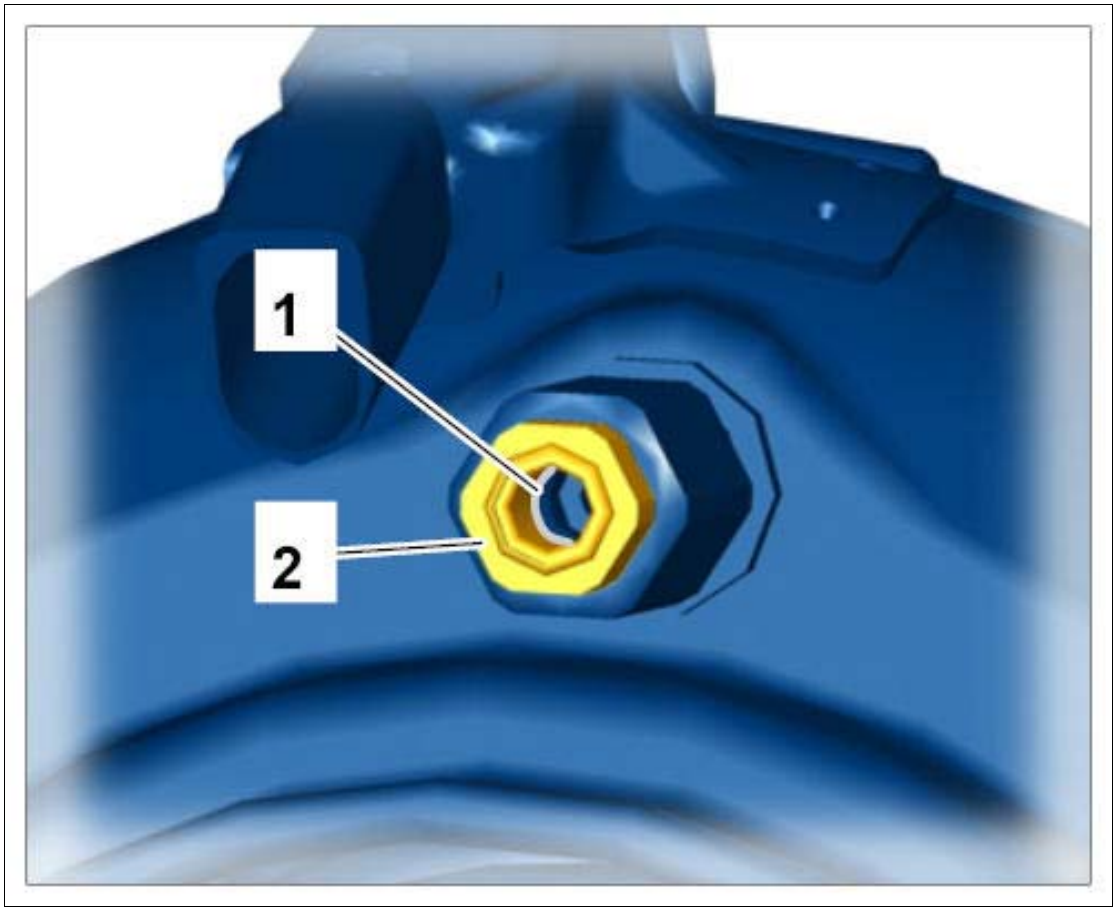

Courtesy of PORSCHE CARS NORTH AMERICA, INC.

6. Insert air line as far as it will go into the VOSS threaded joint on the pressure control valve.
7. Check that the air line is fitted correctly:
    1. Only one marking on the air line should be visible.
    2. Pull the air line briefly against the insertion direction. If it cannot be pulled out, the air line is fitted correctly.

WM 433655 REPLACING FRONT VALVE (PRESSURE CONTROL VALVE) (MACAN, MACAN S, MACAN TURBO) > SUBSEQUENT WORK

1. Fit wheel → INSTALLING WHEEL .
2. Fill the air spring → 4301IN BLEEDING AND FILLING THE LEVELLING SYSTEM .

WM 434319 REMOVING AND INSTALLING REAR AIR SPRING (MACAN, MACAN S, MACAN TURBO) > TOOLS

Designation	Type	Number	Description	
transmission jack	Workshop equipment	WE 1082		
PIWIS Tester II	Special tool	9818		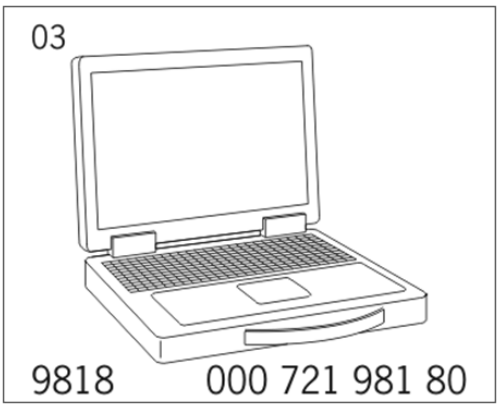
Support	VW tool	T10149		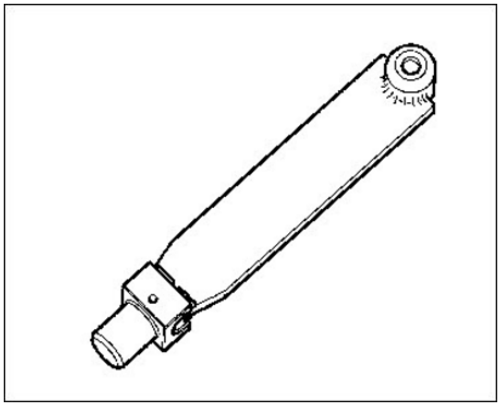

WM 434319 REMOVING AND INSTALLING REAR AIR SPRING (MACAN, MACAN S, MACAN TURBO) > TECHNICAL VALUES

Location	Description	Type	Basic value	Tolerance 1	Tolerance 2
Air line to air spring		Tightening torque	3 Nm (2 ftlb.)		

WM 434319 REMOVING AND INSTALLING REAR AIR SPRING (MACAN, MACAN S, MACAN TURBO) > PRELIMINARY WORK

1. Raise the vehicle → 4X00IN LIFTING THE VEHICLE .
2. Bleed the relevant air spring using **PIWIS Tester II 9818.** → 4301IN BLEEDING AND FILLING THE LEVELLING SYSTEM .

WM 434319 REMOVING AND INSTALLING REAR AIR SPRING (MACAN, MACAN S, MACAN TURBO) > REMOVING AND INSTALLING REAR AIR SPRING > REMOVING REAR AIR SPRING

NOTE: Air springs can become kinked/fall out

- *Risk of damage to air springs*

→ Switch off the levelling system (press and hold the levelling system button for at least 10 seconds).

→ Check the bellows before lowering the vehicle.

Information

To prevent damage to the air springs, pay particular attention to the following points when handling air springs:

- Do not pull the air spring apart.
- Do not bend the air spring.
- Do not carry the air spring at the insertion pin.
- The length must not be less than 220 mm.
- Never lower a vehicle with empty air springs.

1. Raise the wheel bearing housing until an air spring length of < 290 mm is reached (the length must not be less than 220 mm!).

Fig 1: Identifying Air Spring Length

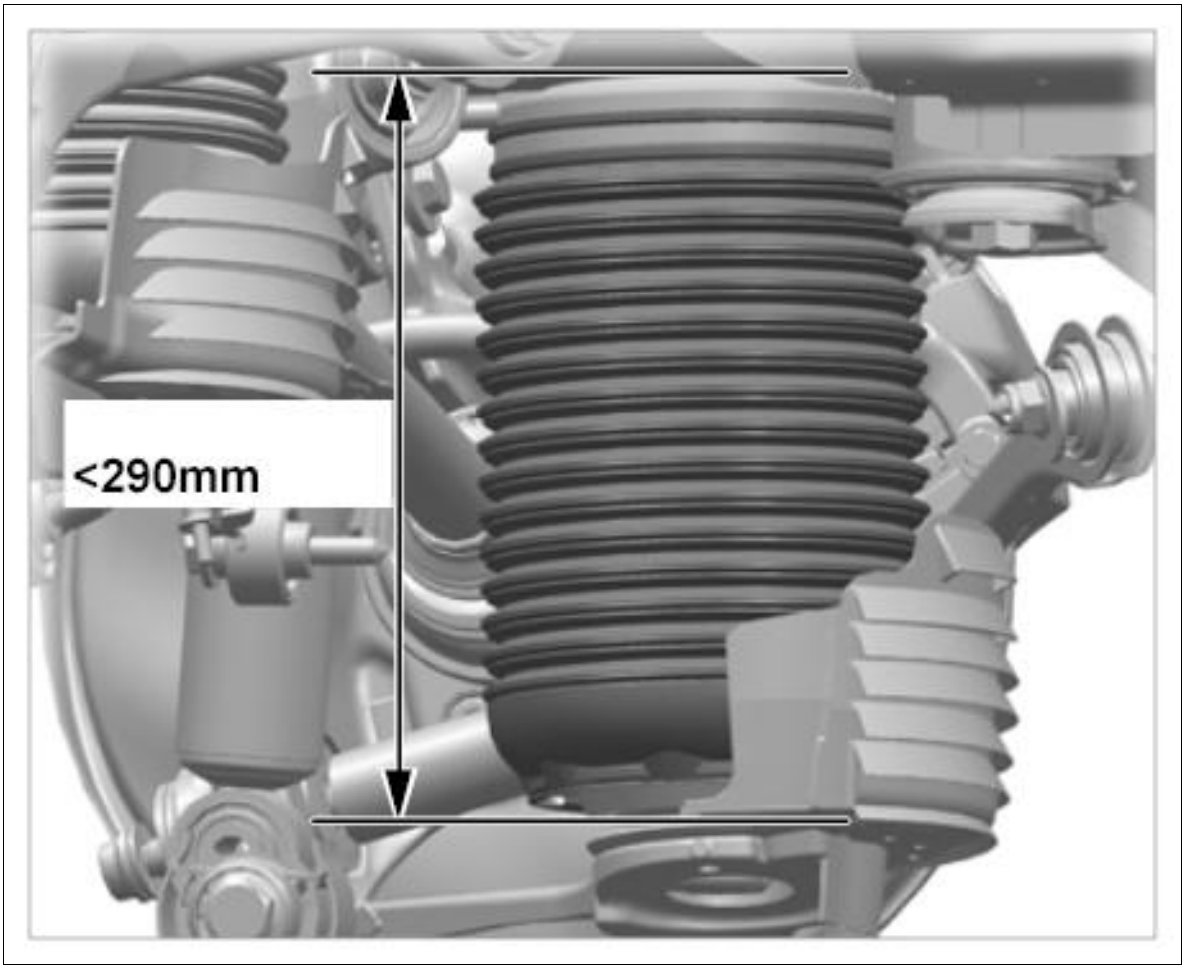

Courtesy of PORSCHE CARS NORTH AMERICA, INC.

Fig 2: Locating Support (T10149) Mounting

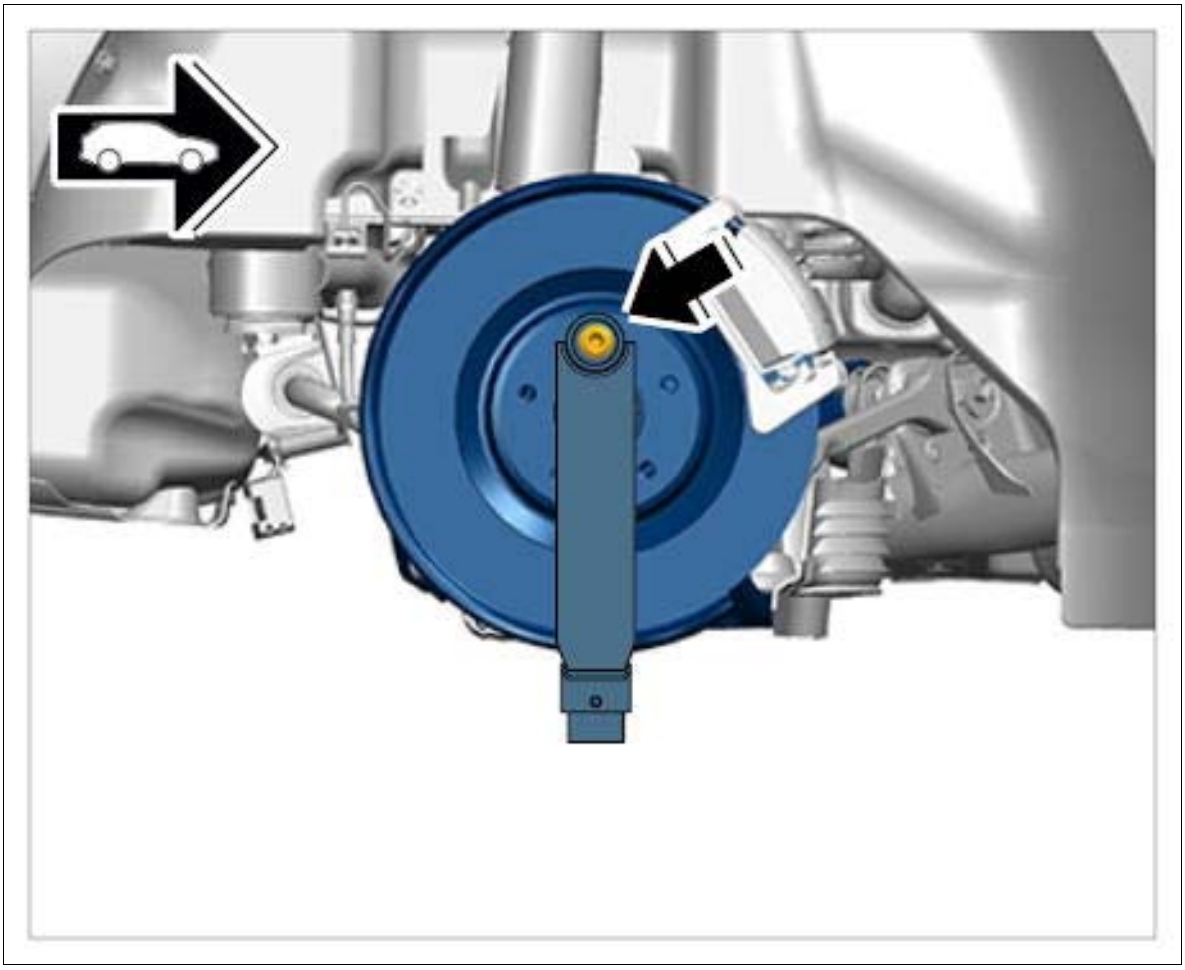

Courtesy of PORSCHE CARS NORTH AMERICA, INC.

1. 1.1. Turn the wheel hub in such a way that a bore for a wheel bolt is at the top.
2. 1.2. **Support T10149** must be secured to the wheel hub with a wheel bolt **-arrow-**
3. 1.3. **Support T10149** must now be fitted into the **transmission jack WE 1082** .

2. Unscrew union nut **-1-** and pull off air line **-2-** .

Fig 3: Identifying Air Line Connection And Union Nut

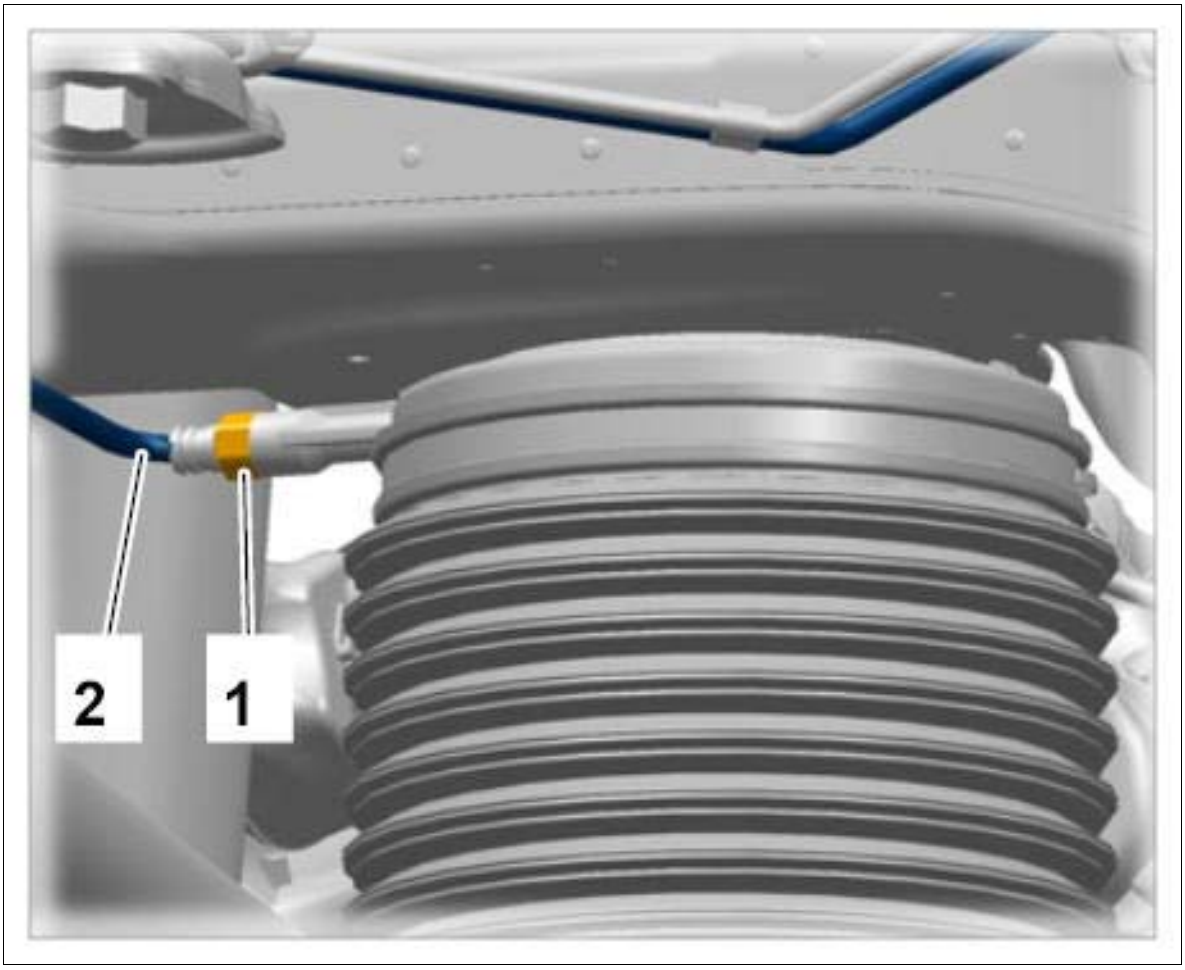

Courtesy of PORSCHE CARS NORTH AMERICA, INC.

3. Lower the transmission jack.
4. Press clips **-1-** on the lower air spring together and press the air spring upwards **-arrow-** .
5. Remove stone guard **-2-** .

Fig 4: Pressing Air Spring

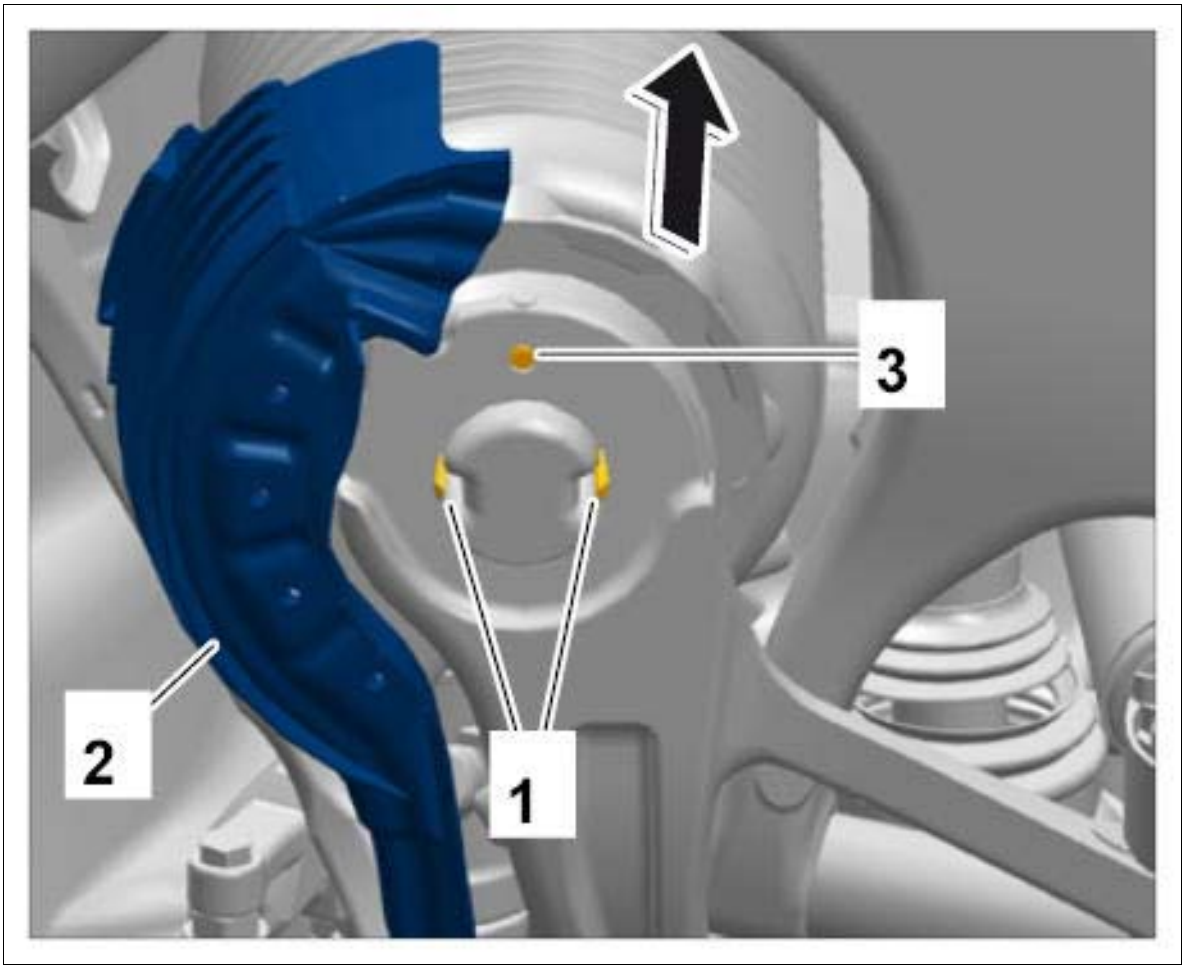

Courtesy of PORSCHE CARS NORTH AMERICA, INC.

6. Carefully remove the air spring by pulling it downwards. → Removing air spring

   Do not pull air spring apart!

Fig 5: Removing Air Spring

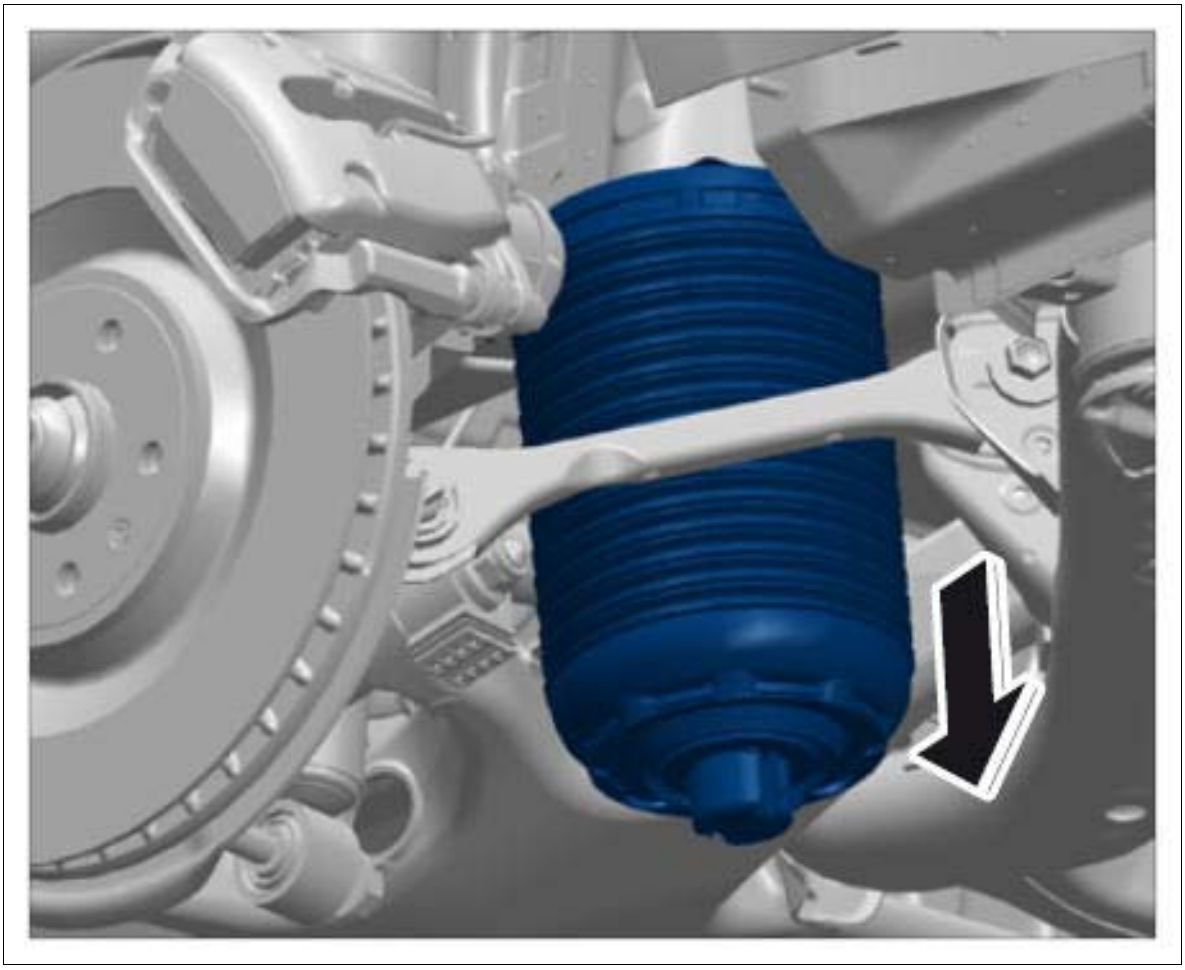

Courtesy of PORSCHE CARS NORTH AMERICA, INC.

WM 434319 REMOVING AND INSTALLING REAR AIR SPRING (MACAN, MACAN S, MACAN TURBO) > REMOVING AND INSTALLING REAR AIR SPRING > REPLACING REAR AIR SPRING

If the rear air spring is replaced, pay particular attention to the following points:

Depending on the condition of the VOSS threaded joint (air line connection to air spring) fitted on the vehicle, the VOSS threaded joint can either be used again or replaced.

Using the same VOSS threaded joint on the vehicle:

Information

If you intend to re-use the VOSS threaded joint fitted on the vehicle, the VOSS threaded joint (including stopper and cutting ring) that comes pre-fitted on the new air spring must first be removed.

1. Pull stopper **-1-** out of the new air spring.
2. Unscrew VOSS threaded joint **-2-** on the new air spring.

Fig 1: Identifying Air Spring And Stopper

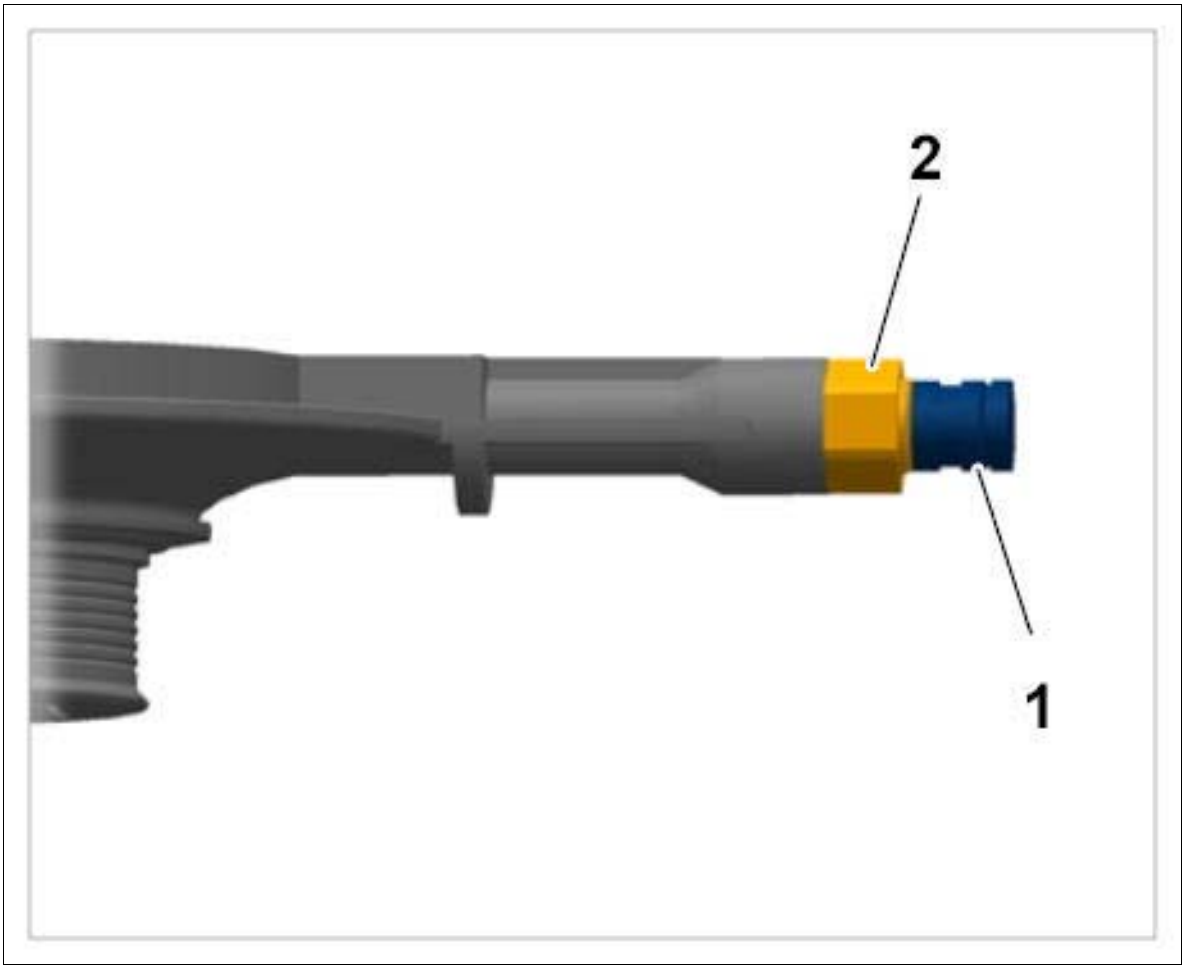

Courtesy of PORSCHE CARS NORTH AMERICA, INC.

3. Remove cutting ring **-1-** .

Fig 2: Identifying Rear Air Spring Cutting Ring

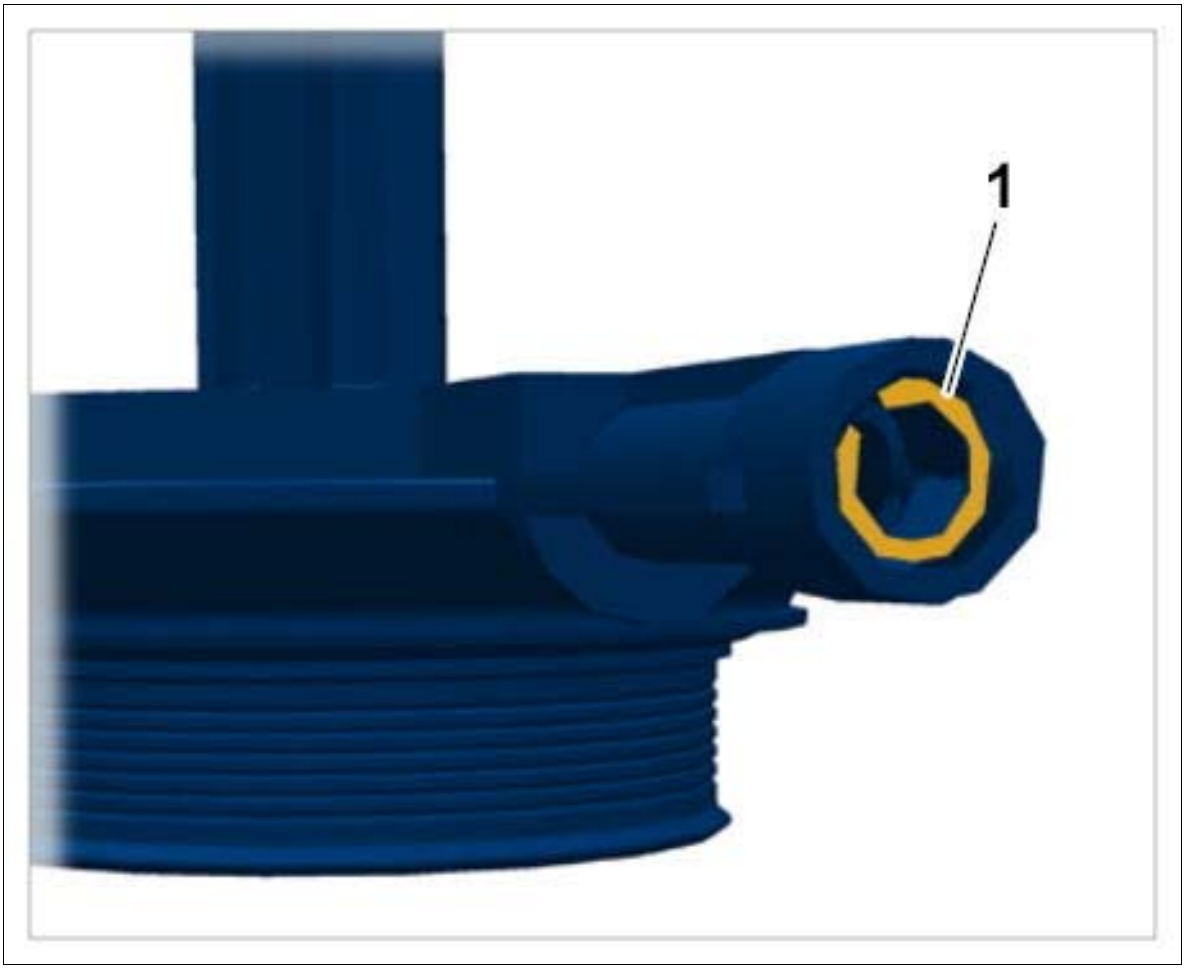

Courtesy of PORSCHE CARS NORTH AMERICA, INC.

4. Install new rear air spring (see "INSTALLING REAR AIR SPRING ").

Replacing VOSS threaded joint on the vehicle:

1. Loosen the cutting ring **-1-** on the air line **-3-** using a suitable tool.
2. Pull VOSS threaded joint **-2-** off the air line **-3-** .

Fig 3: Identifying Rear Air Spring Cutting Ring And VOSS Threaded Joint

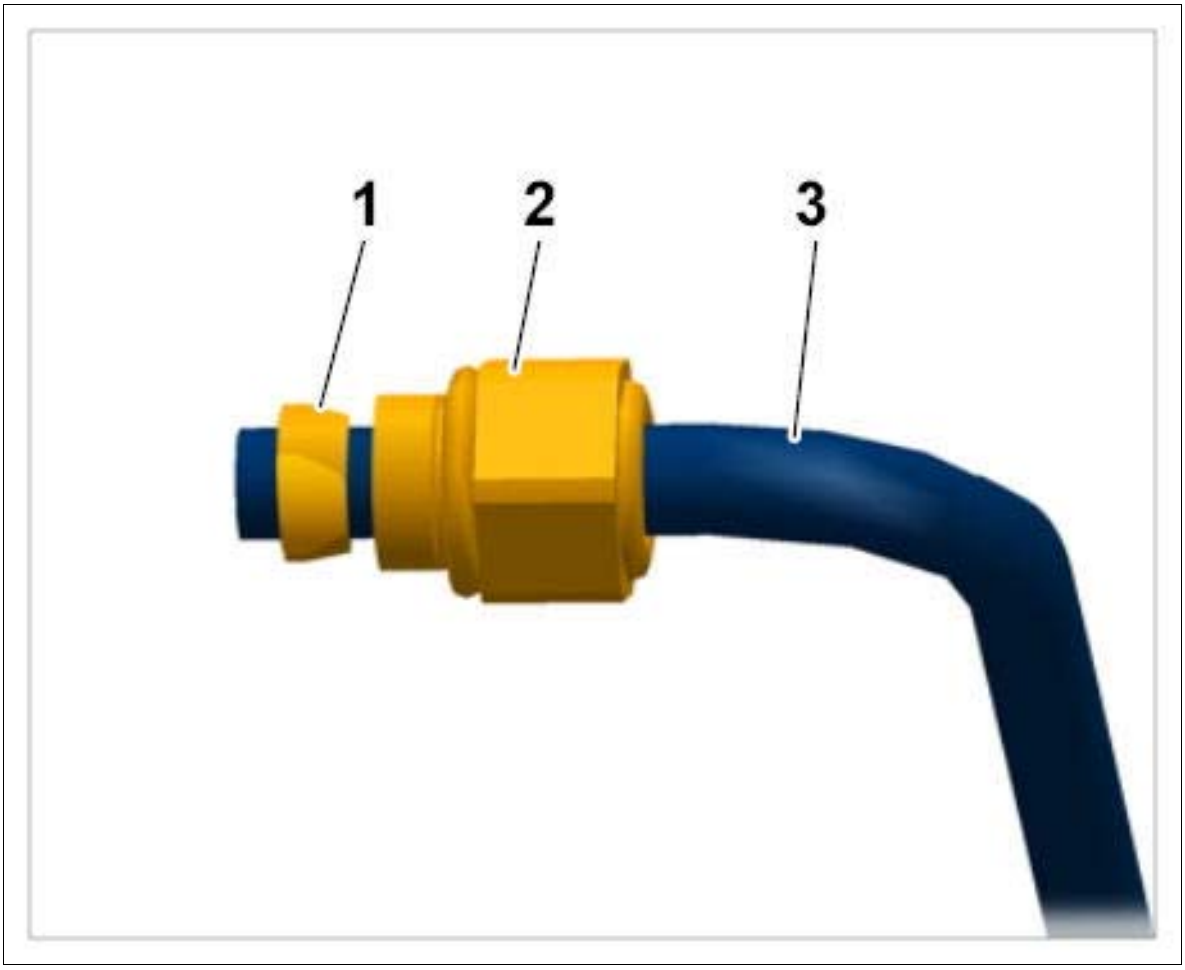

Courtesy of PORSCHE CARS NORTH AMERICA, INC.

Information

Sharp edges at the end of the air line or at the point where the cutting ring is fitted can damage the newly fitted O-ring.

For this reason, always de-burr the end of the air line.

If there is also a sharp edge at the point where the cutting ring is fitted, the air line must be repaired. → 438541 REPAIRING AIR LINE

3. Check air line for damage/leaks.

   Repair the air line if it is damaged → 438541 REPAIRING AIR LINE .

4. Pull stopper **-1-** out of the new air spring.

Fig 4: Identifying Air Spring Stopper

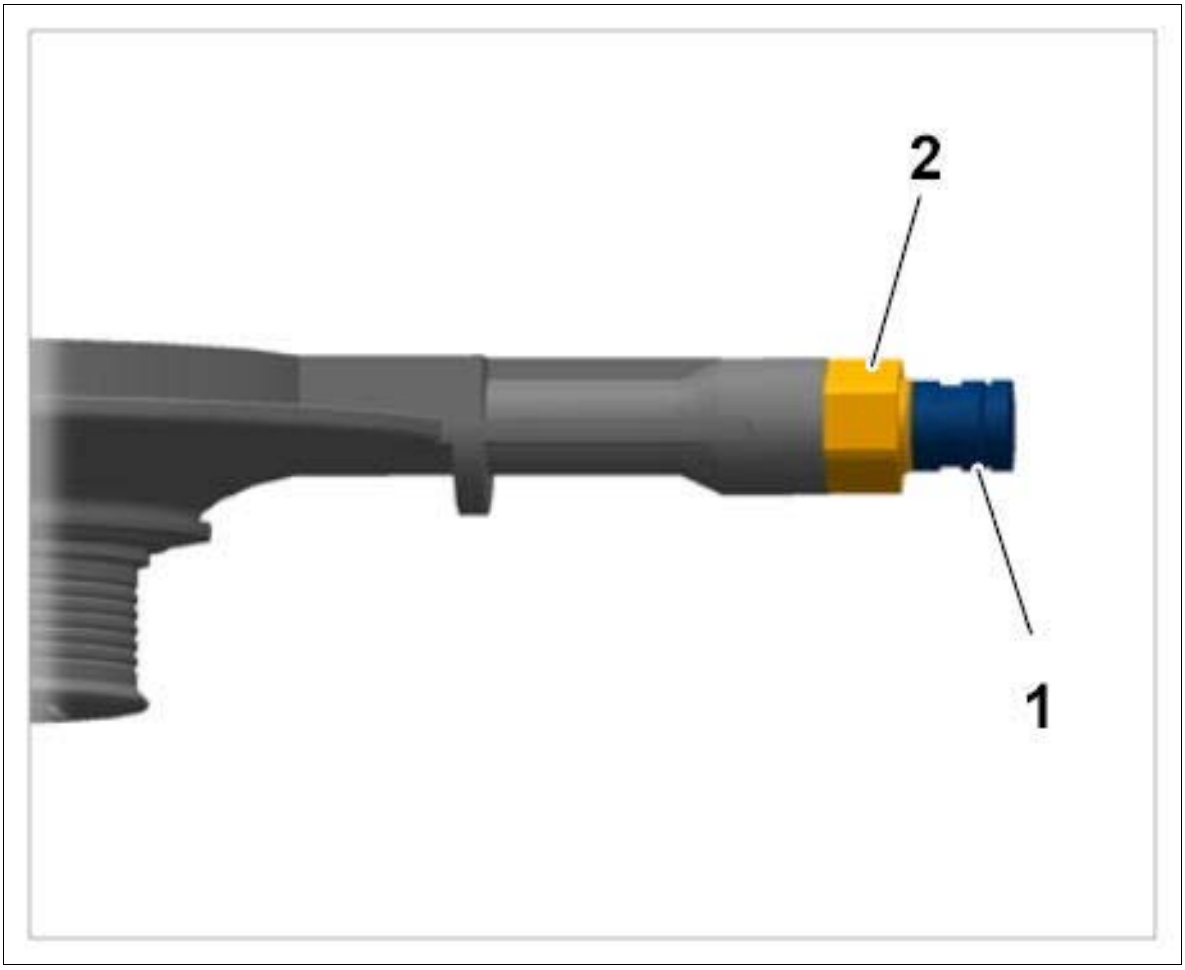

Courtesy of PORSCHE CARS NORTH AMERICA, INC.

Information

Before installation, the following parts must be pre-fitted on the air connection of the new air spring:

1. Cutting ring -1-
2. VOSS threaded joint -2-

Fig 5: Identifying Air Connection Cutting Ring And Threaded Joint

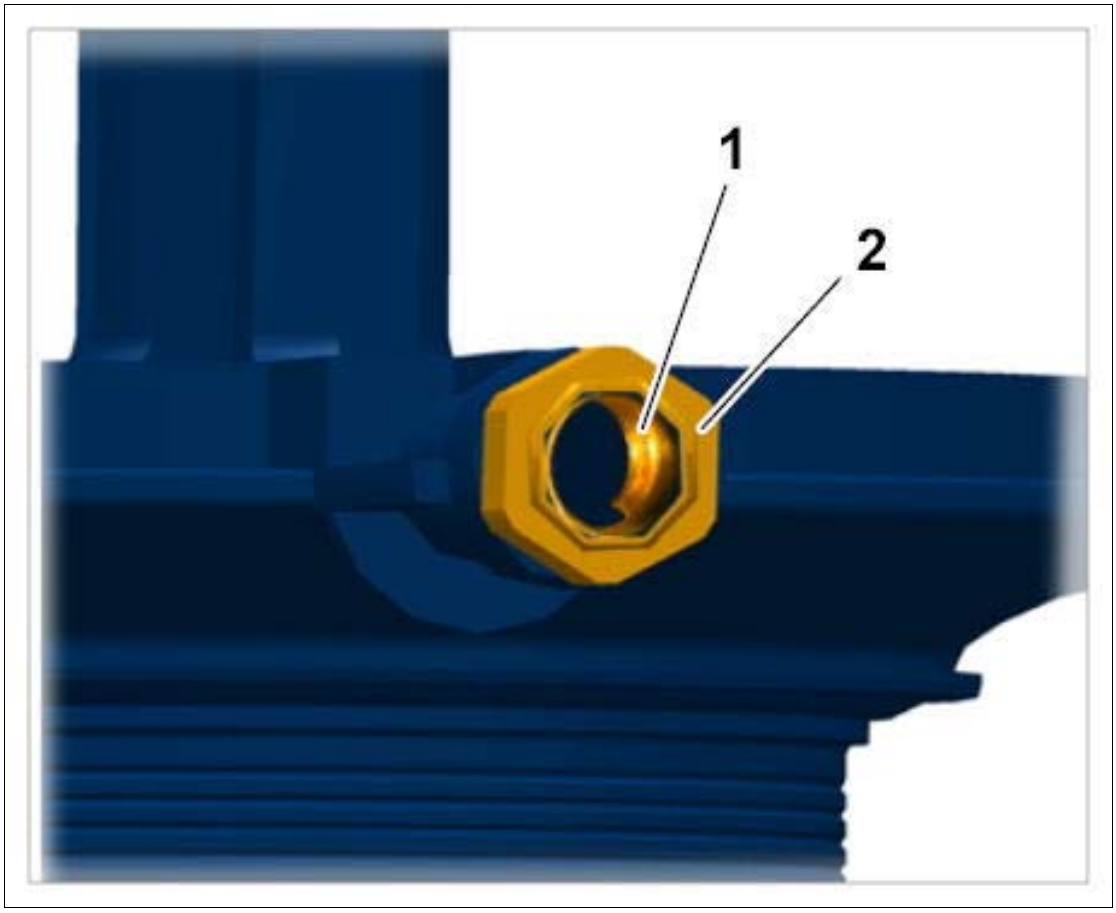

Courtesy of PORSCHE CARS NORTH AMERICA, INC.

5. Install new rear air spring (see "INSTALLING REAR AIR SPRING ").

   Pay particular attention to the following when fitting the air line on the air spring:

   1. Insert air line as far as it will go.
   2. To check that the air line is fitted correctly, pull it briefly against the insertion direction. If it cannot be pulled out or can only be pulled out with considerable effort, the air line is fitted correctly.

WM 434319 REMOVING AND INSTALLING REAR AIR SPRING (MACAN, MACAN S, MACAN TURBO) > REMOVING AND INSTALLING REAR AIR SPRING > INSTALLING REAR AIR SPRING

1. Installation is performed in reverse order. Pay particular attention to the following:

   The length of the air spring must not exceed max. 290 mm! Otherwise, there is a danger that the air spring will be damaged.

2. Align the air spring in such a way that the pin of the lower air spring is seated in the bore on the support **-3-** at the bottom.

Observe specified tightening torques:

Air line to air spring: **Tightening torque 3 Nm (2 ftlb.)**

Fig 1: Installing Air Spring

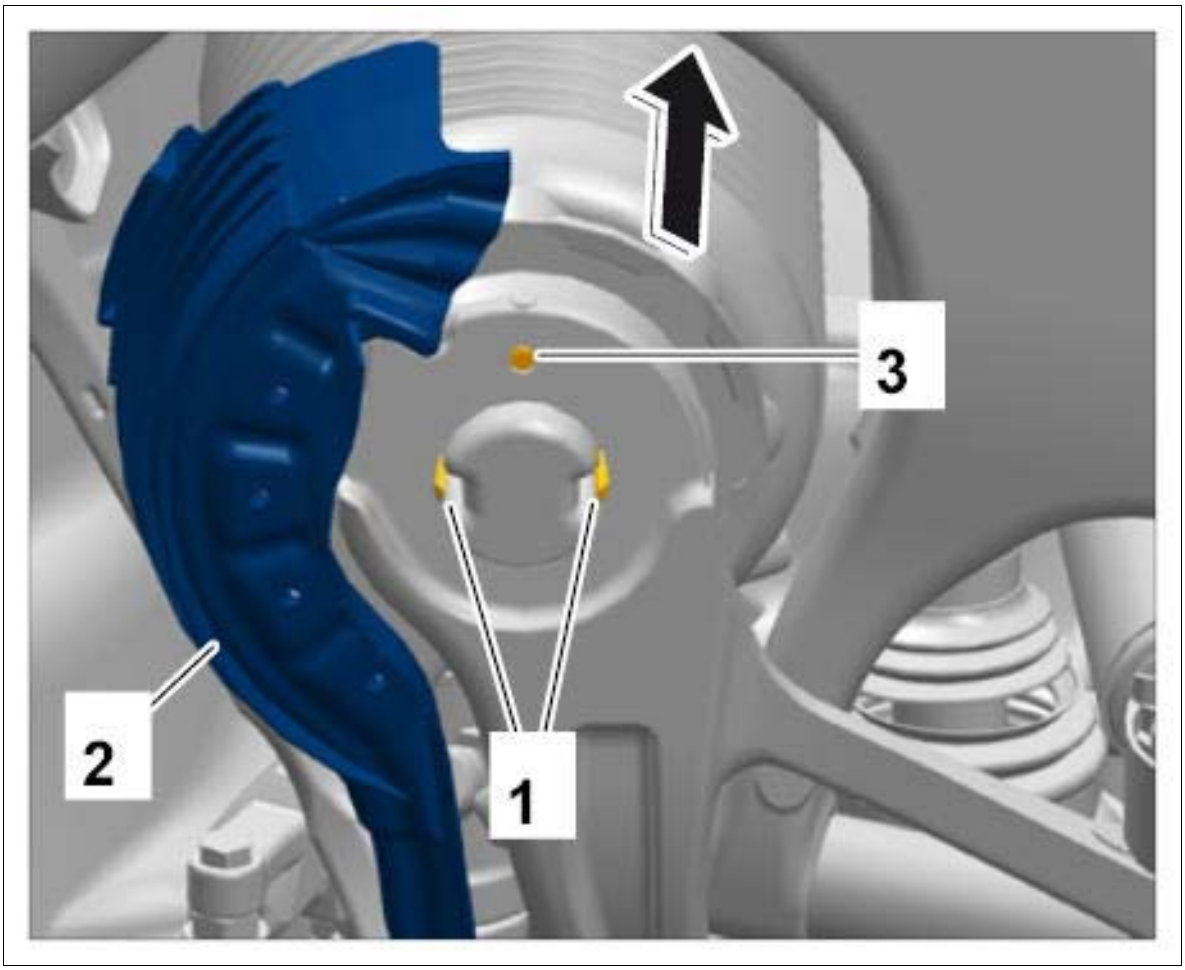

Courtesy of PORSCHE CARS NORTH AMERICA, INC.

WM 434319 REMOVING AND INSTALLING REAR AIR SPRING (MACAN, MACAN S, MACAN TURBO) > SUBSEQUENT WORK

WARNING: Sudden filling of the air spring

- *Risk of squashing*

→ Do not reach into the danger area.

→ Keep third parties away from the danger area.

→ Remove tools from the danger area.

1. Fill the relevant air spring using **PIWIS Tester II 9818.** → 4301IN BLEEDING AND FILLING THE LEVELLING SYSTEM .

2. Perform a visual test and touch test on the rear air springs.

   Air springs must be adequately filled and rolling creases in the protective boot must be removed correctly (no kinks)! → Rolling creases on air spring

   Fig 1: Identifying Air Spring Rolling Creases



Courtesy of PORSCHE CARS NORTH AMERICA, INC.

WM 438219 REMOVING AND INSTALLING PRESSURE ACCUMULATOR FOR LEVELLING SYSTEM (MACAN, MACAN S, MACAN TURBO) > TECHNICAL VALUES

Location	Description	Type	Basic value	Tolerance 1	Tolerance 2
Pressure accumulator to body		Tightening torque	20 Nm (15 ftlb.)		
Pressure line to pressure	Union nut	Tightening torque	3.5 Nm (2.5 ftlb.)		

accumulator					

WM 438219 REMOVING AND INSTALLING PRESSURE ACCUMULATOR FOR LEVELLING SYSTEM (MACAN, MACAN S, MACAN TURBO) > PRELIMINARY WORK

1. Bleed the pressure accumulator. → 4301IN BLEEDING AND FILLING THE LEVELLING SYSTEM
2. Raise the vehicle. → 4X00IN LIFTING THE VEHICLE
3. Remove center underbody (left cover). → 519319 REMOVING AND INSTALLING COVER FOR CENTER UNDERBODY

WM 438219 REMOVING AND INSTALLING PRESSURE ACCUMULATOR FOR LEVELLING SYSTEM (MACAN, MACAN S, MACAN TURBO) > REMOVING AND INSTALLING PRESSURE ACCUMULATOR FOR LEVELLING SYSTEM > REMOVING PRESSURE ACCUMULATOR FOR LEVELLING SYSTEM

1. Disconnect air line on the pressure accumulator.
2. Unscrew fastening screw **-1-** on the pressure accumulator **-2-** .

Fig 1: Identifying Pressure Accumulator Mounting

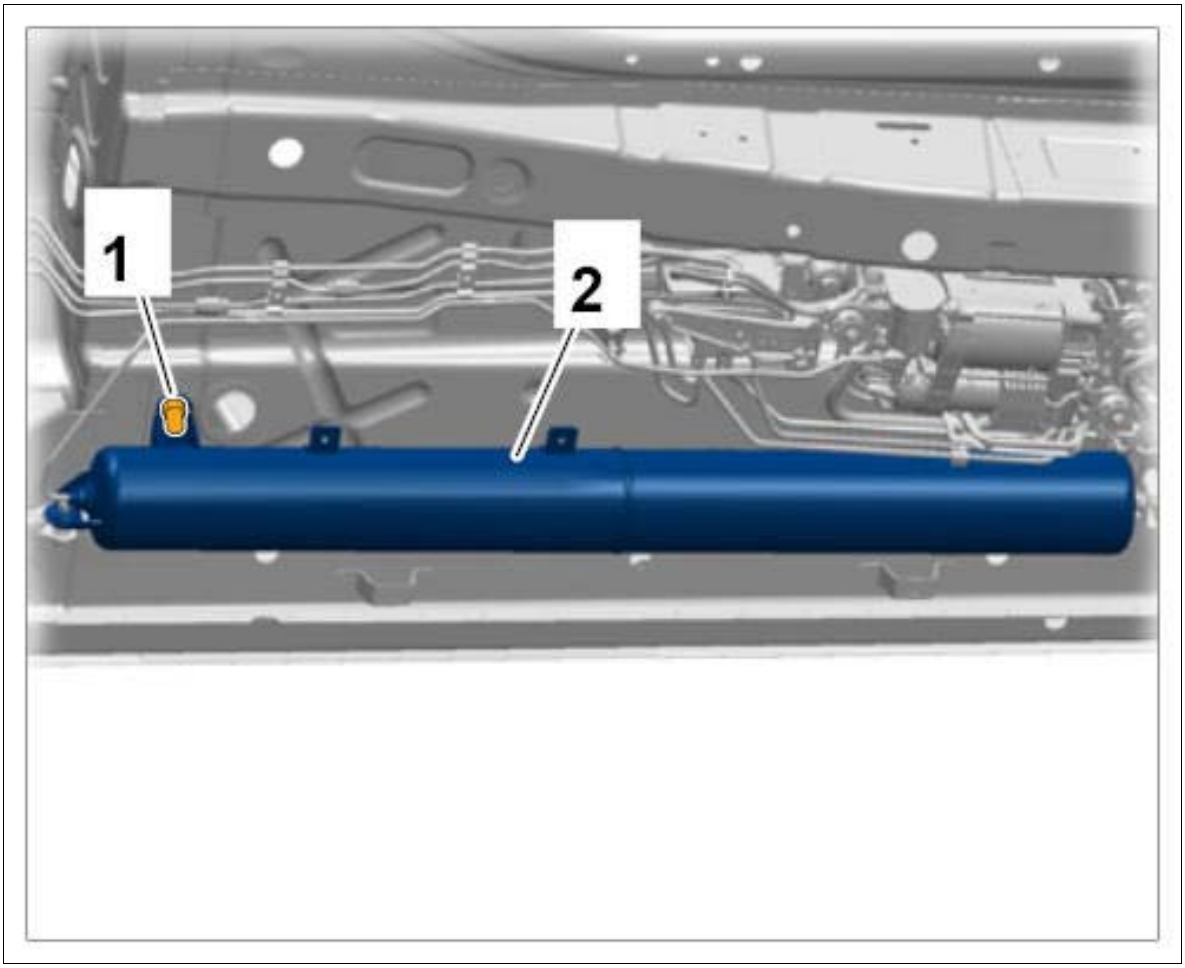

Courtesy of PORSCHE CARS NORTH AMERICA, INC.

3. Tilt the pressure accumulator down slightly **-direction arrow A-** and remove it by pulling it to the side **-direction arrow B-** .

Fig 2: Removing Pressure Accumulator

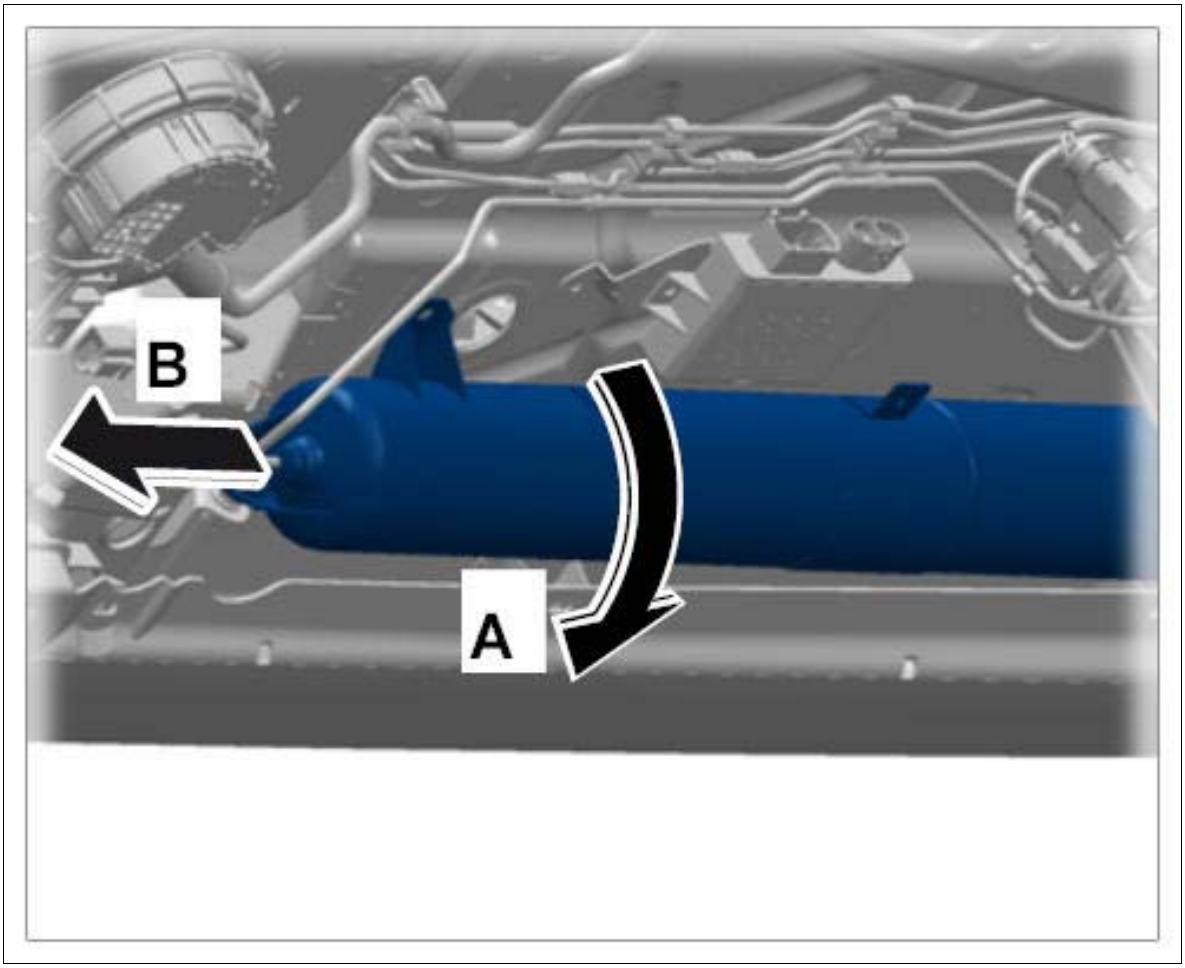

Courtesy of PORSCHE CARS NORTH AMERICA, INC.

WM 438219 REMOVING AND INSTALLING PRESSURE ACCUMULATOR FOR LEVELLING SYSTEM (MACAN, MACAN S, MACAN TURBO) > REMOVING AND INSTALLING PRESSURE ACCUMULATOR FOR LEVELLING SYSTEM > INSTALLING PRESSURE ACCUMULATOR FOR LEVELLING SYSTEM

1. Installation is performed in reverse order.

   Observe specified tightening torques:

   Pressure accumulator to body: **Tightening torque 20 Nm (15 ftlb.)**

   Air line to pressure accumulator: **Tightening torque 3.5 Nm (2.5 ftlb.)**

WM 438219 REMOVING AND INSTALLING PRESSURE ACCUMULATOR FOR LEVELLING SYSTEM (MACAN, MACAN S, MACAN TURBO) > SUBSEQUENT WORK

1. Install center underbody (left cover). → INSTALLING COVER FOR CENTER UNDERBODY .
2. Fill the levelling system. → BLEEDING AND FILLING THE LEVELLING SYSTEM .

WM 438541 REPAIRING AIR LINE (MACAN, MACAN S, MACAN TURBO) > TOOLS

Designation	Type	Number	Description	
cutting pliers	Workshop equipment	WE 1506		
PIWIS Tester II	Special tool	9818		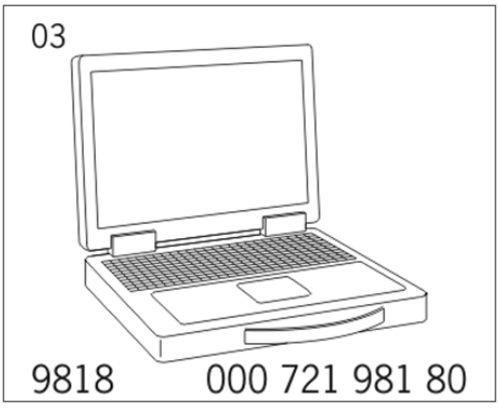

WM 438541 REPAIRING AIR LINE (MACAN, MACAN S, MACAN TURBO) > REPAIRING AIR LINE

Information

If a new air spring/new pressure control valve is to be installed, the VOSS threaded joint is already pre-fitted.

1. Raise the vehicle. → 4X00IN LIFTING THE VEHICLE
2. Bleed the relevant section using **PIWIS Tester II 9818.** → 4301IN BLEEDING AND FILLING THE LEVELLING SYSTEM .
3. Loosen VOSS threaded joint **-1-** on the defective air line **-2-** from the relevant component (e.g. air spring/compressor).

Fig 1: Identifying Air Line Connection

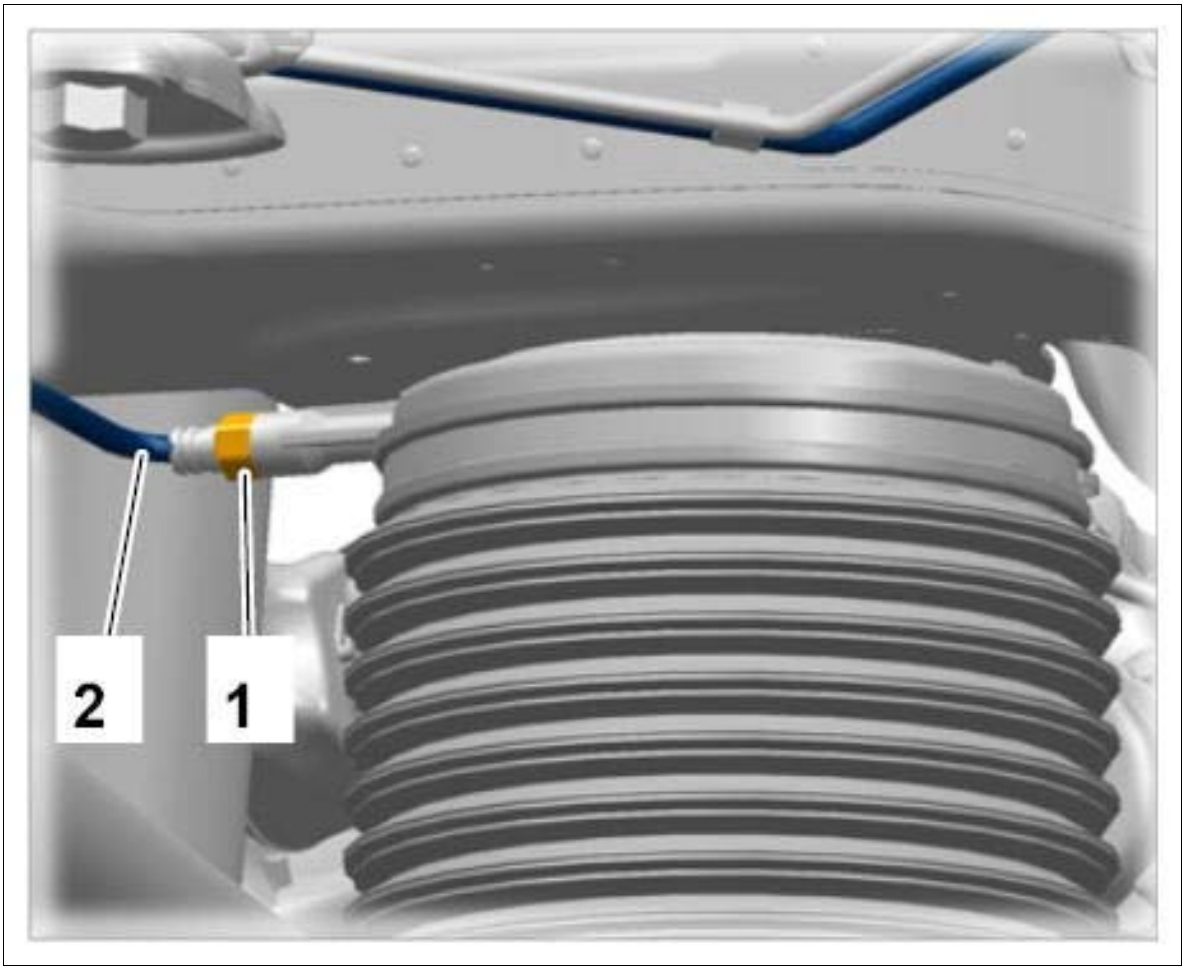

Courtesy of PORSCHE CARS NORTH AMERICA, INC.

4. Loosen the cutting ring **-1-** on the air line **-3-** using a suitable tool.
5. Pull VOSS threaded joint **-2-** off the air line **-3-** .

Fig 2: Identifying Air Line Cutting Ring And VOSS Threaded Joint

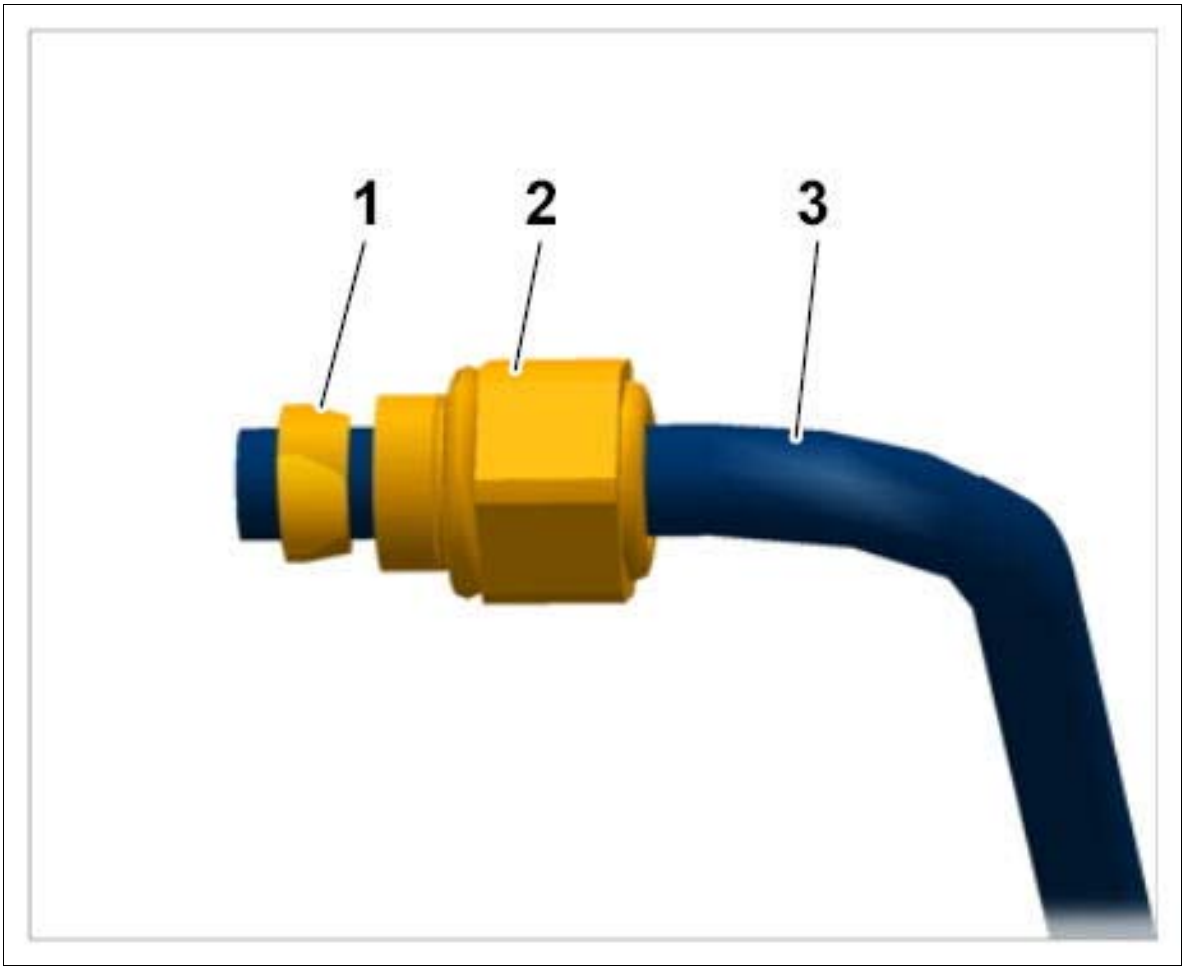

Courtesy of PORSCHE CARS NORTH AMERICA, INC.

Information

Pay particular attention to the following points when choosing the repair point:

1. The repair point must be in an area protected from water spray.
2. Only straight line sections should be chosen for repairs. If a bent section of line is selected, this can result in leaks in the push-on connector.

6. Cut off defective section of the air line with a straight cut using **cutting pliers WE 1506.**

Fig 3: Identifying Pliers VAS 6228

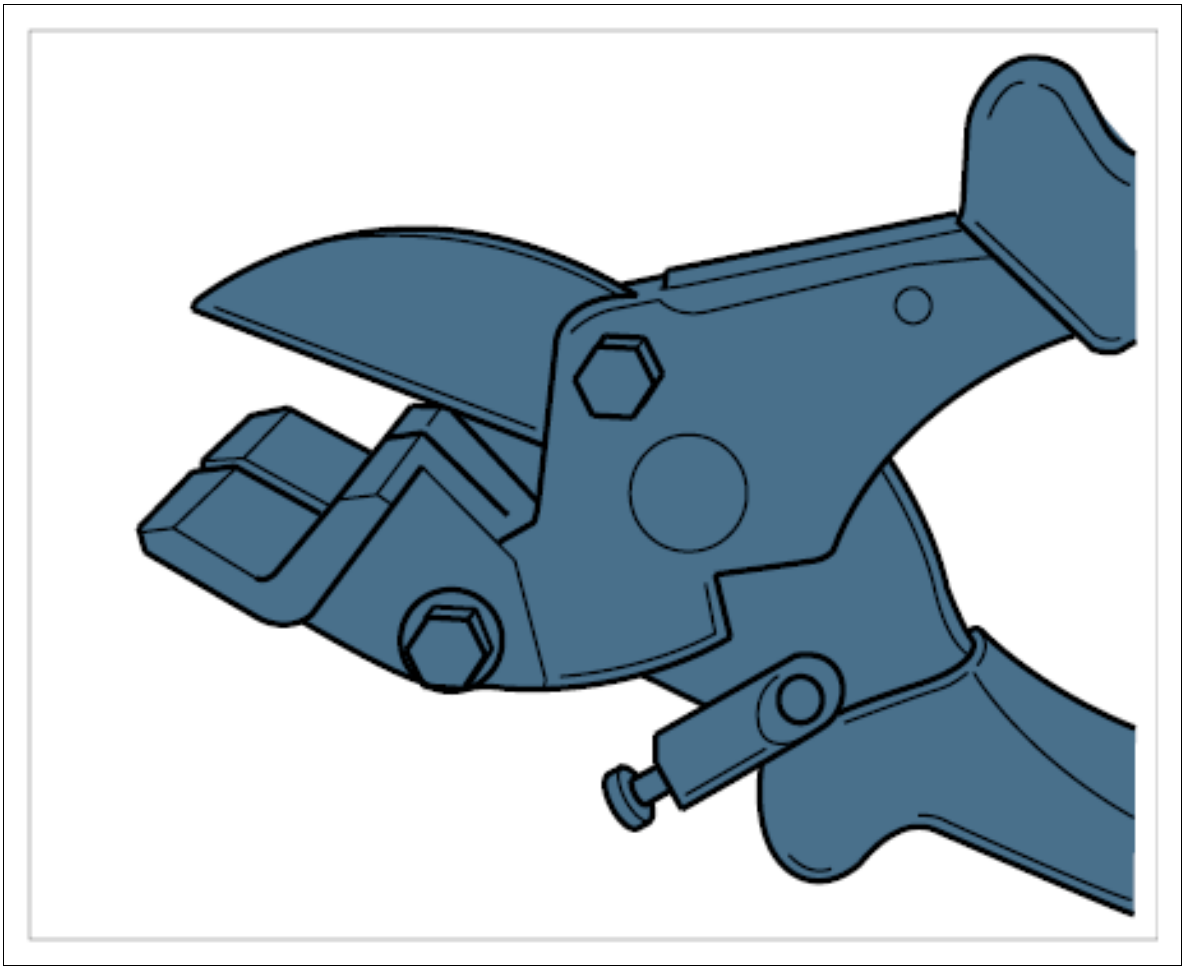

Courtesy of PORSCHE CARS NORTH AMERICA, INC.

Information

Sharp edges at the end of the air line or at the point where the cutting ring is fitted can damage the newly fitted O-ring.

For this reason, always de-burr the end of the air line.

7. De-burr the end of the new air line section using a suitable tool → De-burring air line .

Fig 4: Identifying De-Burring Air Line

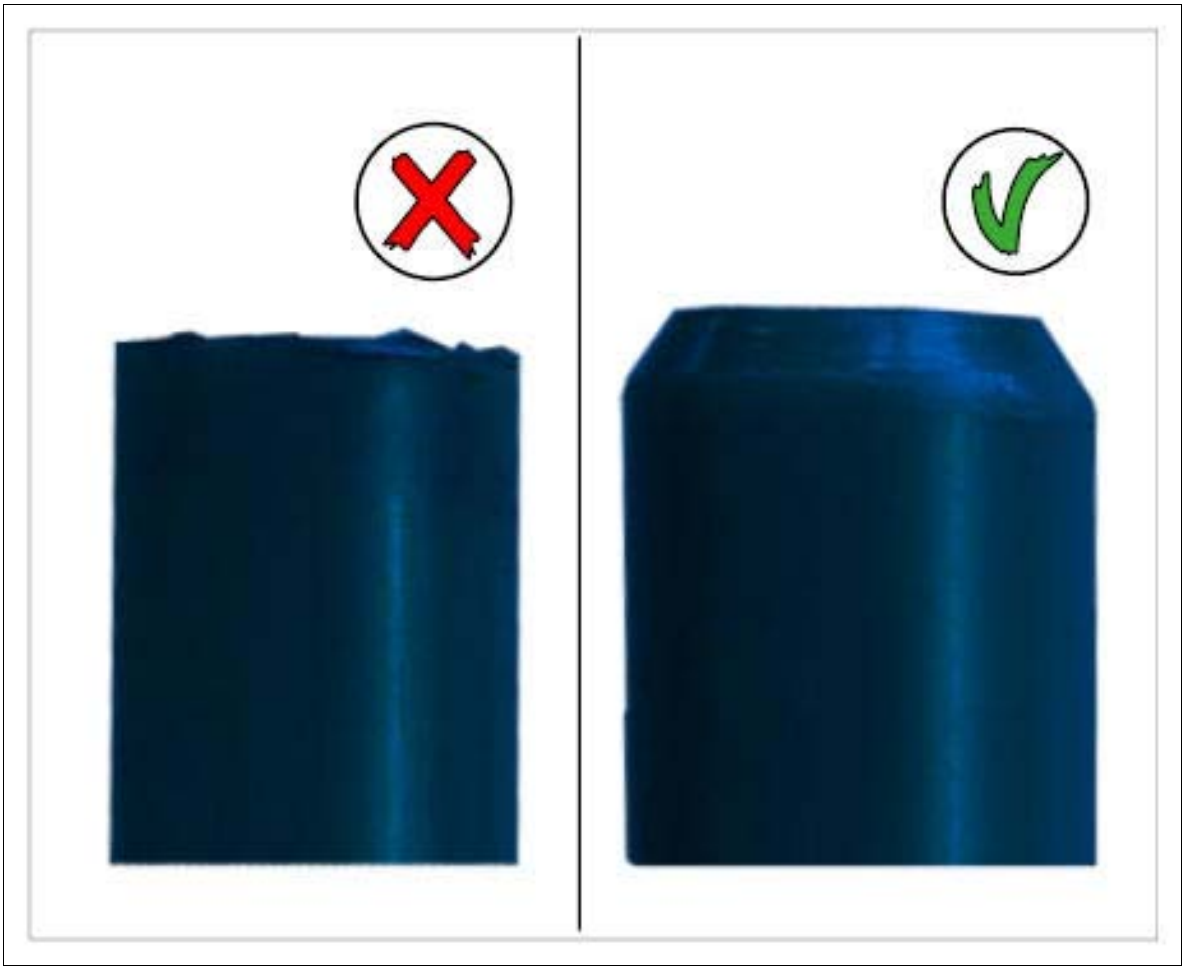

Courtesy of PORSCHE CARS NORTH AMERICA, INC.

8. Mark the new air line with a colored marking (e.g. using a water-resistant marker).

   Applies to end of hose on valve block: Measured from the end of the hose, make two colored markings at 17 mm and 22 mm respectively **-arrows-** .

Fig 5: Locating Air Line Mark (Valve Block Side)

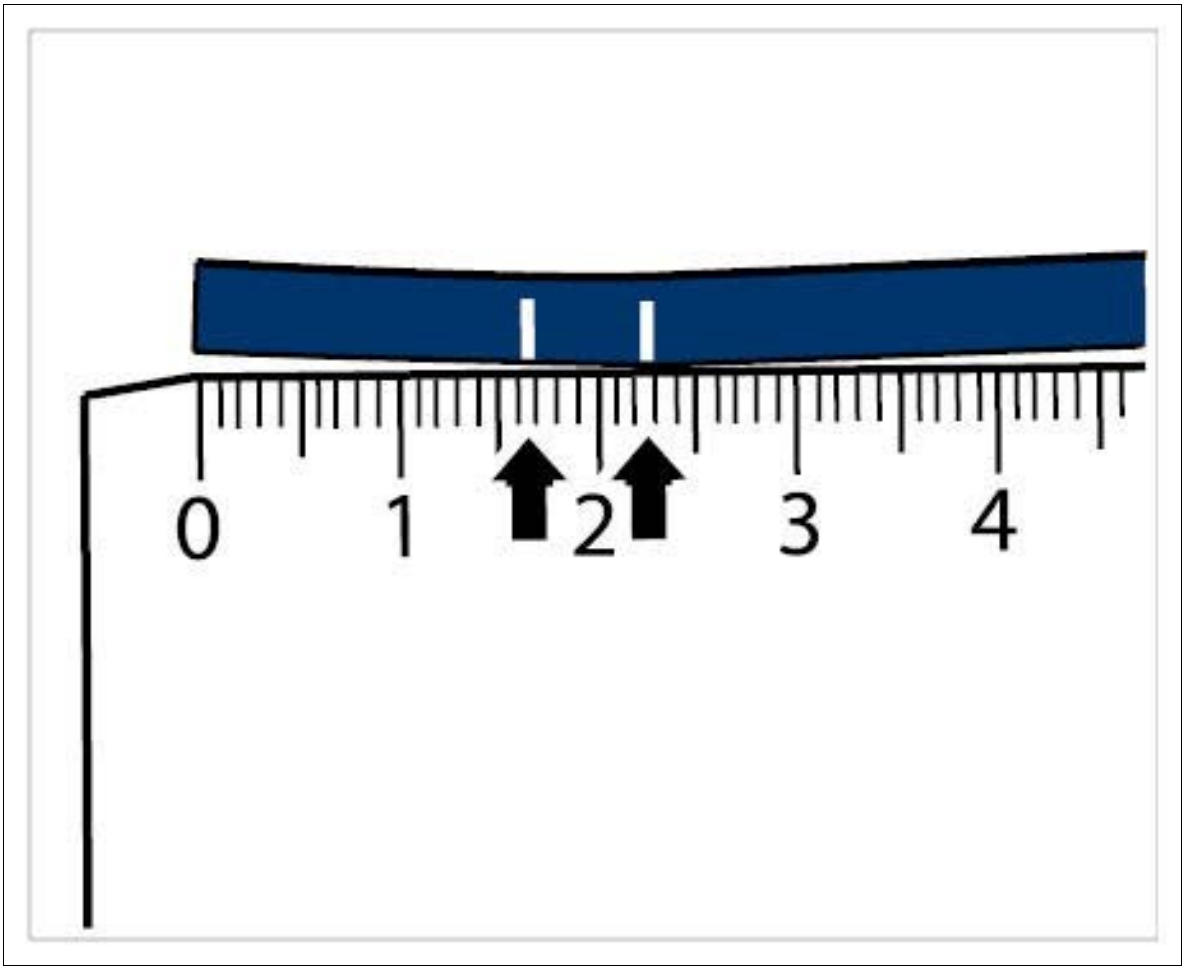

Courtesy of PORSCHE CARS NORTH AMERICA, INC.

Applies to end of hose on air spring: Measured from the end of the hose, make two colored markings at 21 mm and 24 mm respectively **-arrows-** .

Fig 6: Locating Air Line Mark (Air Spring Side)

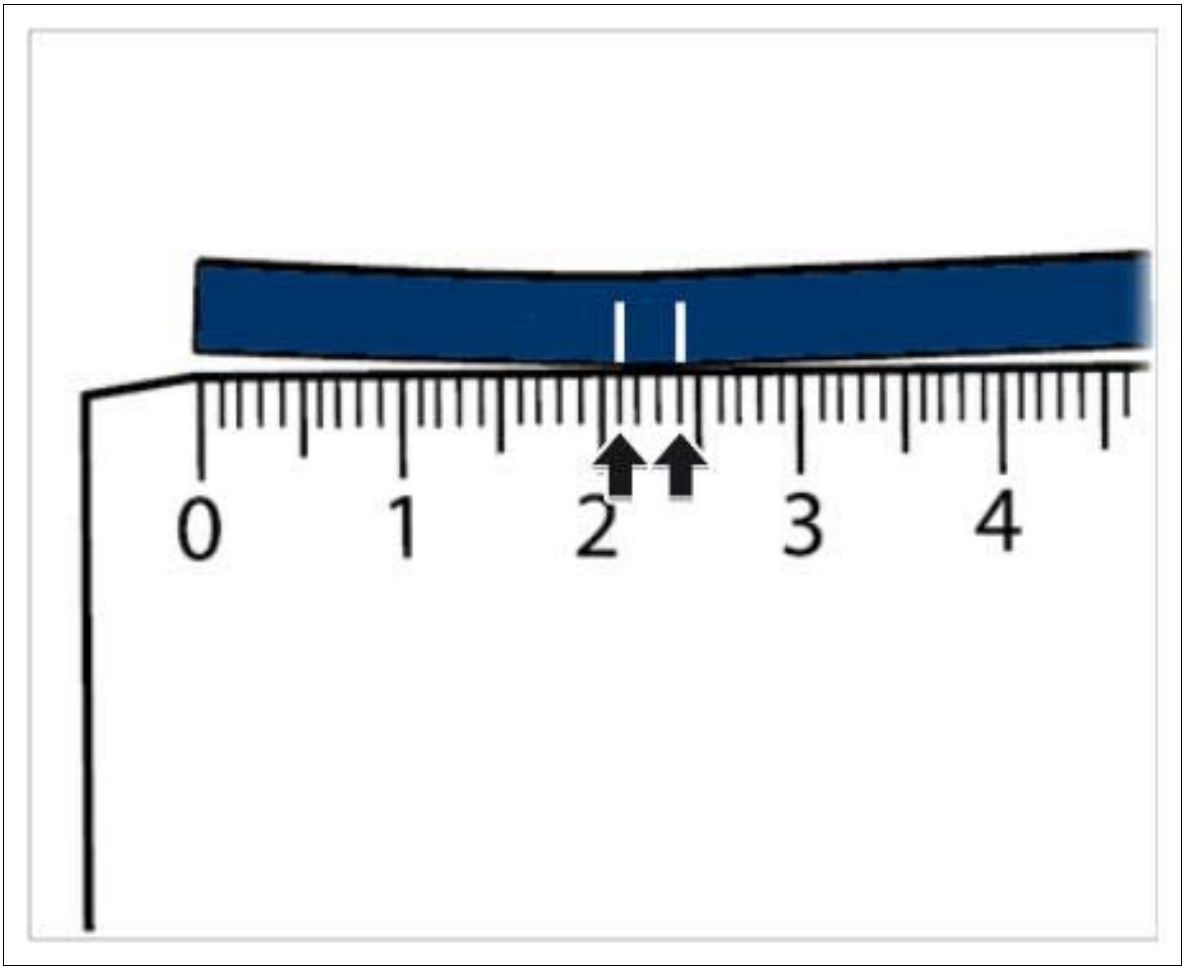

Courtesy of PORSCHE CARS NORTH AMERICA, INC.

9. Check air line for soiling (e.g. dust particles) and clean it if necessary.

   Information

   Insert air lines as far as they will go into the push-on connector.

10. Connect new air line section **-1-** using the push-on connector **-2-** to the air line installed in the vehicle **-3-** .

Fig 7: Connecting Air Lines

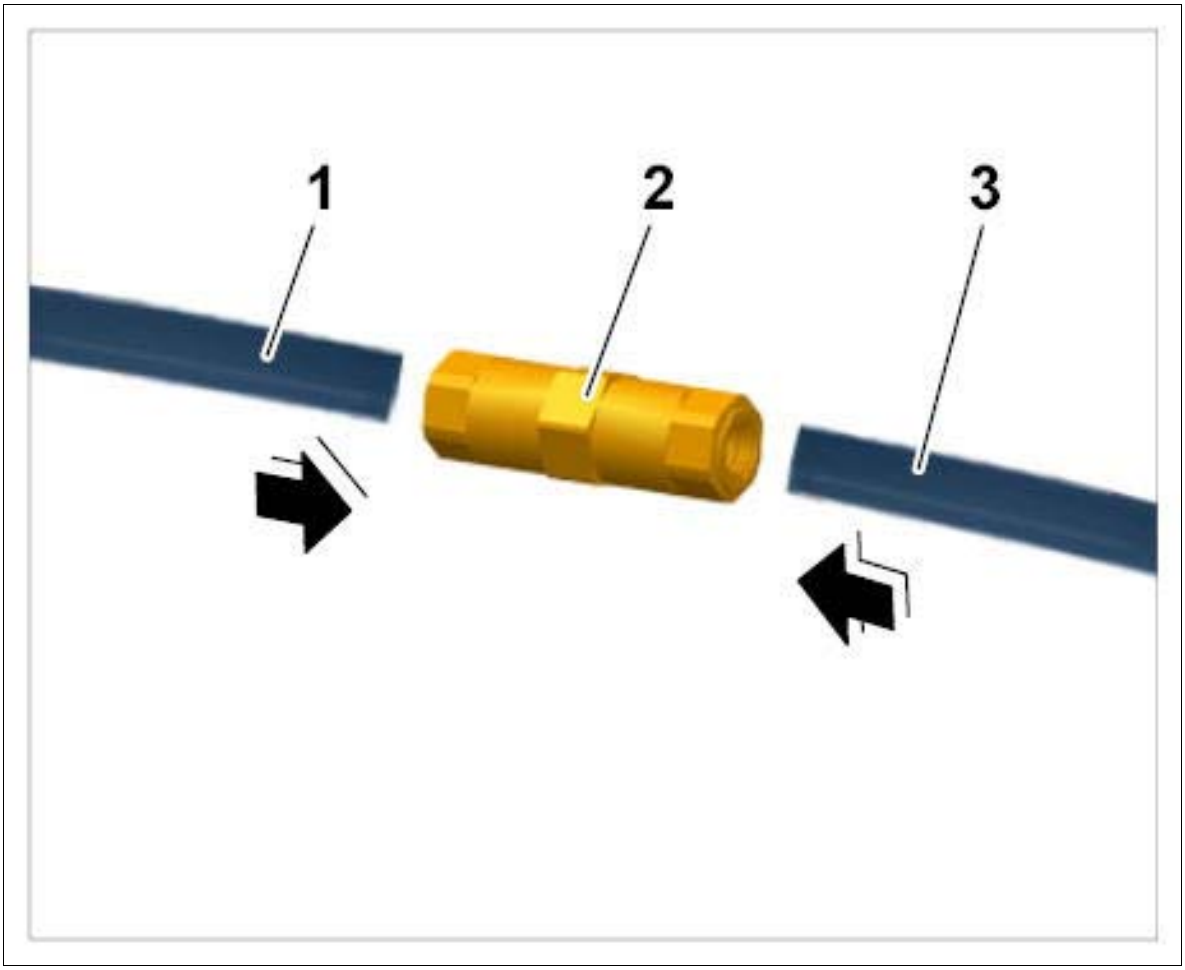

Courtesy of PORSCHE CARS NORTH AMERICA, INC.

11. Insert air line **-3-** as far as it will go into the VOSS threaded joint **-2-** on the air spring/valve block **-1-** .

Fig 8: Identifying Air Line And VOSS Threaded Joint (Rear Air Spring)

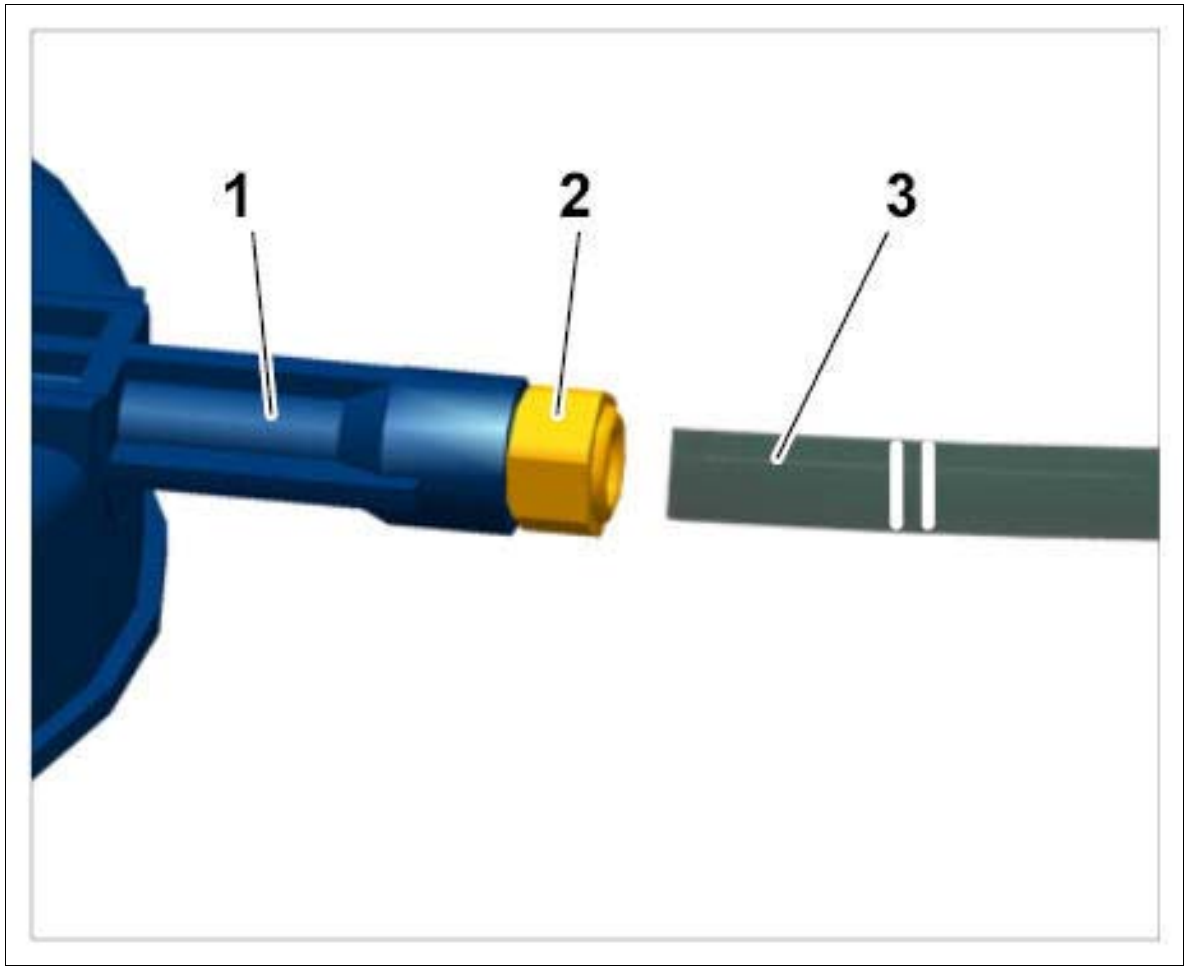

Courtesy of PORSCHE CARS NORTH AMERICA, INC.

12. Check that the air line is fitted correctly:
    1. Only one marking on the air line should be visible.
    2. Pull the air line briefly against the insertion direction. If it cannot be pulled out, the air line is fitted correctly.
13. Fill the relevant section using **PIWIS Tester II 9818.** → 4301IN BLEEDING AND FILLING THE LEVELLING SYSTEM .

WM 440519 REMOVING AND INSTALLING WHEEL (ALL MODELS) > TECHNICAL VALUES

Location	Description	Type	Basic value	Tolerance 1	Tolerance 2
Wheel to wheel hub		Tightening torque	160 Nm (118 ftlb.)		

WM 440519 REMOVING AND INSTALLING WHEEL (ALL MODELS) > INFORMATION ON WHEEL BOLTS

- Use a suitable commercially available tool (a/f 19 mm). Never use an impact bolter to loosen and tighten the wheel bolts.
- Use original Macan wheel bolts only.
- Wheel bolts must never be reworked.
- Replace damaged wheel bolts. This damage includes mechanical damage to the thread, the spherical cap and damage resulting from seizure of the bolt head bearing surface and spherical cap ring. It must be possible to rotate the spherical cap ring on the bolt shank and move it in axial direction.
- Never grease the wheel bolts and security wheel bolts.

1. Spherical cap ring (permanently connected to the wheel bolt)
2. Spherical cap bearing surface facing the rim. Do not grease.
3. Thread. Do not grease.

arrows - Contact surfaces between the bolt head and spherical cap ring. Do not grease.

Fig 1: Identifying Wheel Bolt

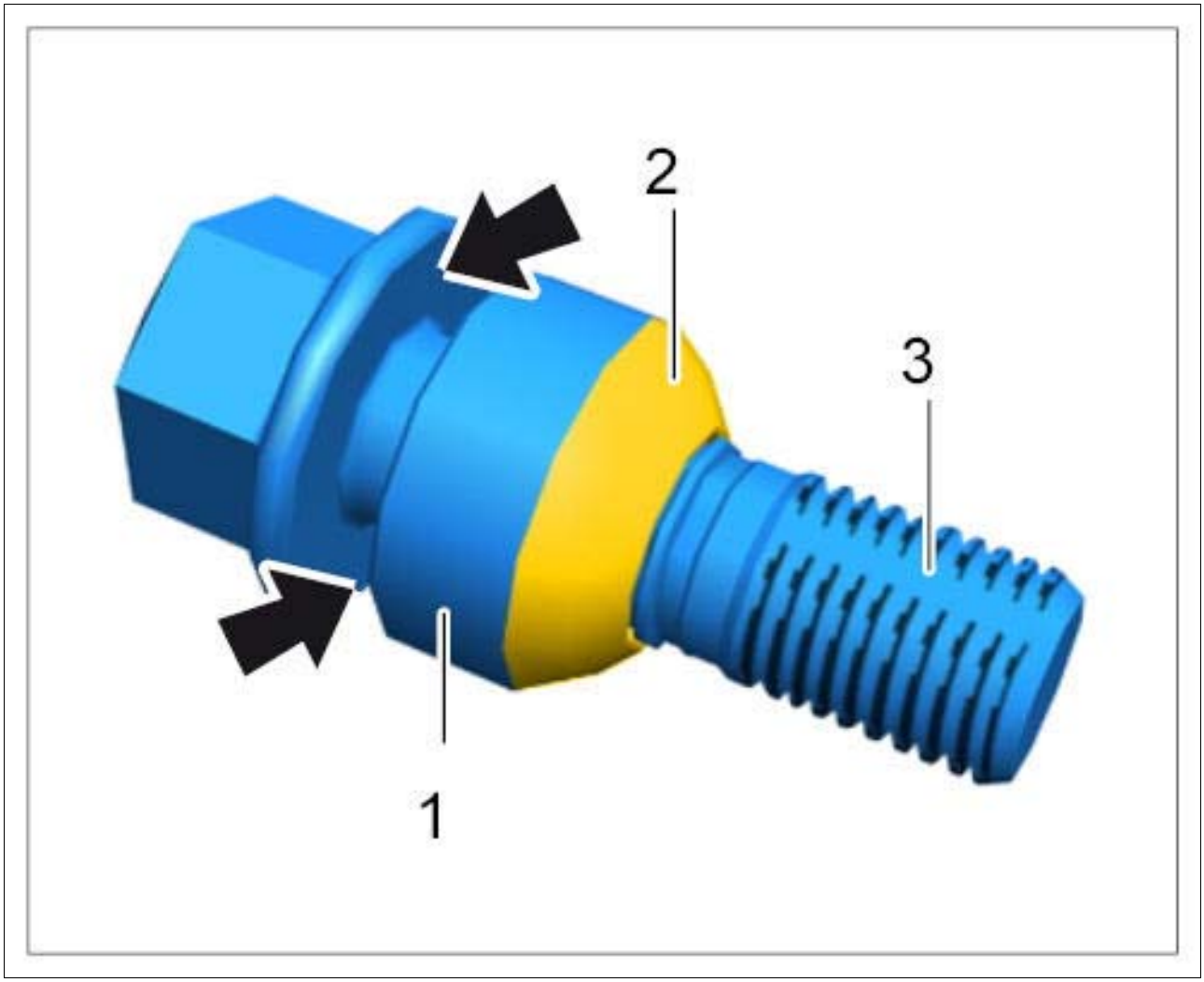

Courtesy of PORSCHE CARS NORTH AMERICA, INC.

WM 440519 REMOVING AND INSTALLING WHEEL (ALL MODELS) > REMOVING AND INSTALLING WHEEL > REMOVING WHEEL

Information

- On vehicles with PCCB, use two assembly aids (threaded pins for fitting wheel) in order to rule out any possibility of heavy contact of the wheel with the brake disc!
- The assembly aids should be obtained from the Porsche Parts Service (Part No. 999.571.074.30)!
- Vehicles with Tire Pressure Monitoring system (TPM): Every new set of wheels or wheel change must be communicated to the control unit (even if the new wheels have the same specifications as the old ones). To do this, select >>Tire pressure, Settings, Tire type and Tire size<< in the main menu on the instrument cluster and confirm your selection. The control unit then stores these values while the vehicle is driving (at more than 25 km/h (16 mph)). The current tire pressure is not available during this time.

- For information on teaching the TPM system, see → 4X00IN GENERAL INFORMATION ON THE TIRE PRESSURE MONITORING SYSTEM (TPM).
- The wheel mounting trolley can be used to make mounting easier

> *NOTE: Removing/fitting wheels*
>
> - *Risk of damage to (ceramic) brake discs*

→ Use two assembly pins when removing and fitting the wheel.

→ Carefully guide the wheel towards the wheel hub, thereby preventing any heavy impact on the (ceramic) brake disc.

1. Remove wheel. **Never use an impact bolter to loosen the wheel bolts!**

   Fig 1: Identifying Assembly Aids



Courtesy of PORSCHE CARS NORTH AMERICA, INC.

   1. 1.1. On vehicles with PCCB (ceramic brake discs), unscrew and remove two wheel bolts that are not next to each other.
   2. 1.2. Replace the two removed wheel bolts with assembly aids **-1-** .

3. 1.3. Unscrew and remove the remaining wheel bolts.
4. 1.4. Carefully remove the wheel.

WM 440519 REMOVING AND INSTALLING WHEEL (ALL MODELS) > REMOVING AND INSTALLING WHEEL > INSTALLING WHEEL

1. In the event of heavy soiling, clean the wheel bolts and concavities in the rim with a lint-free cloth.

   The wheel bolts/security wheel bolts (thread and all surfaces) must not be greased.

   Fig 1: Identifying Wheel Bolt

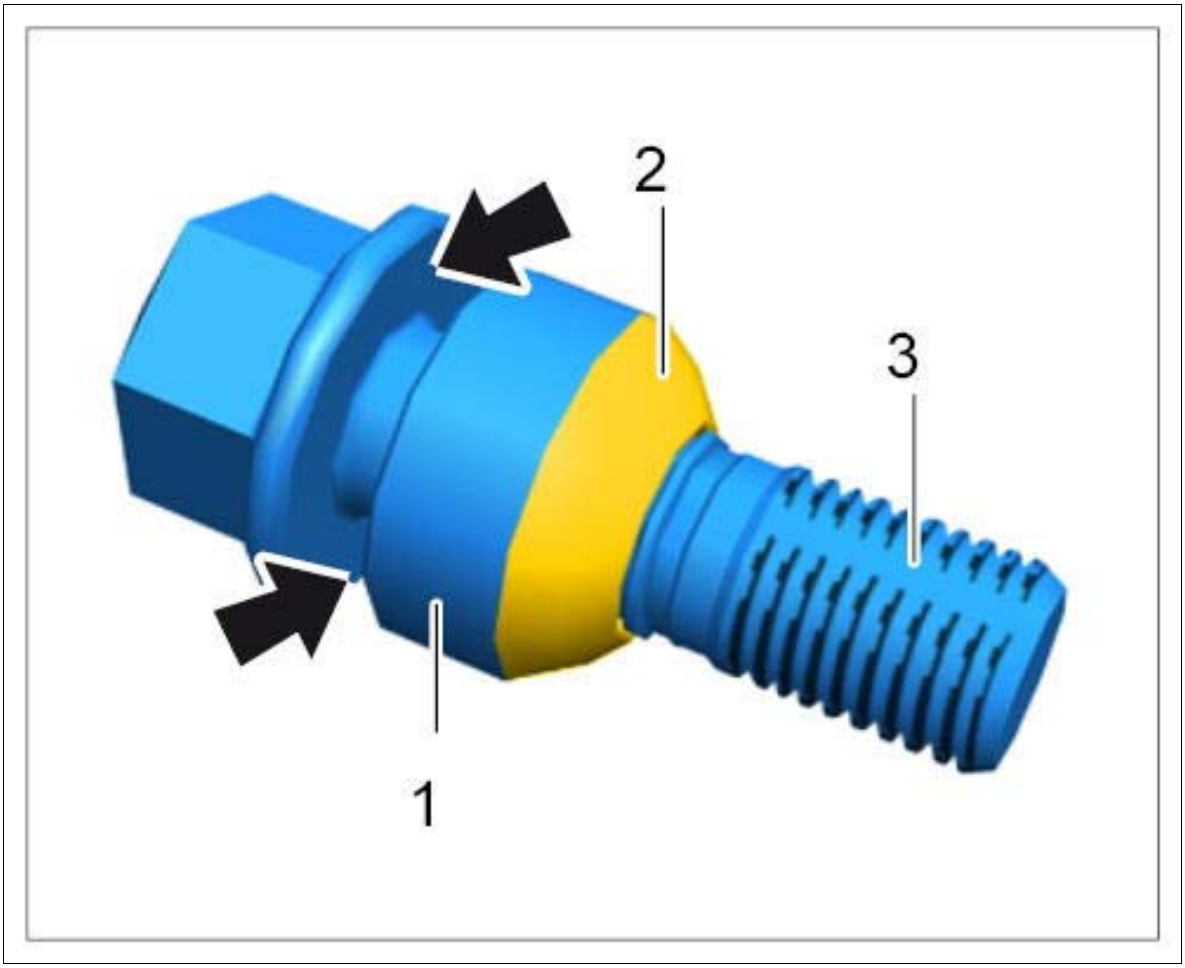

Courtesy of PORSCHE CARS NORTH AMERICA, INC.

2. The contact surfaces of the wheel on the wheel hub and brake disc must be clean. Clean them if necessary.

   Re-grease or grease the wheel centering surface on the wheel hub (blue area) **-arrows-** with a very thin coat of Optimoly TA (aluminum paste).

   The wheel contact surface on the brake disc (red area) **-1-** and on the wheel itself must not be greased (greasing is not permitted).

ONLY the area marked in blue **-arrows-** may be greased.

Fig 2: Locating Wheel Centering Surface

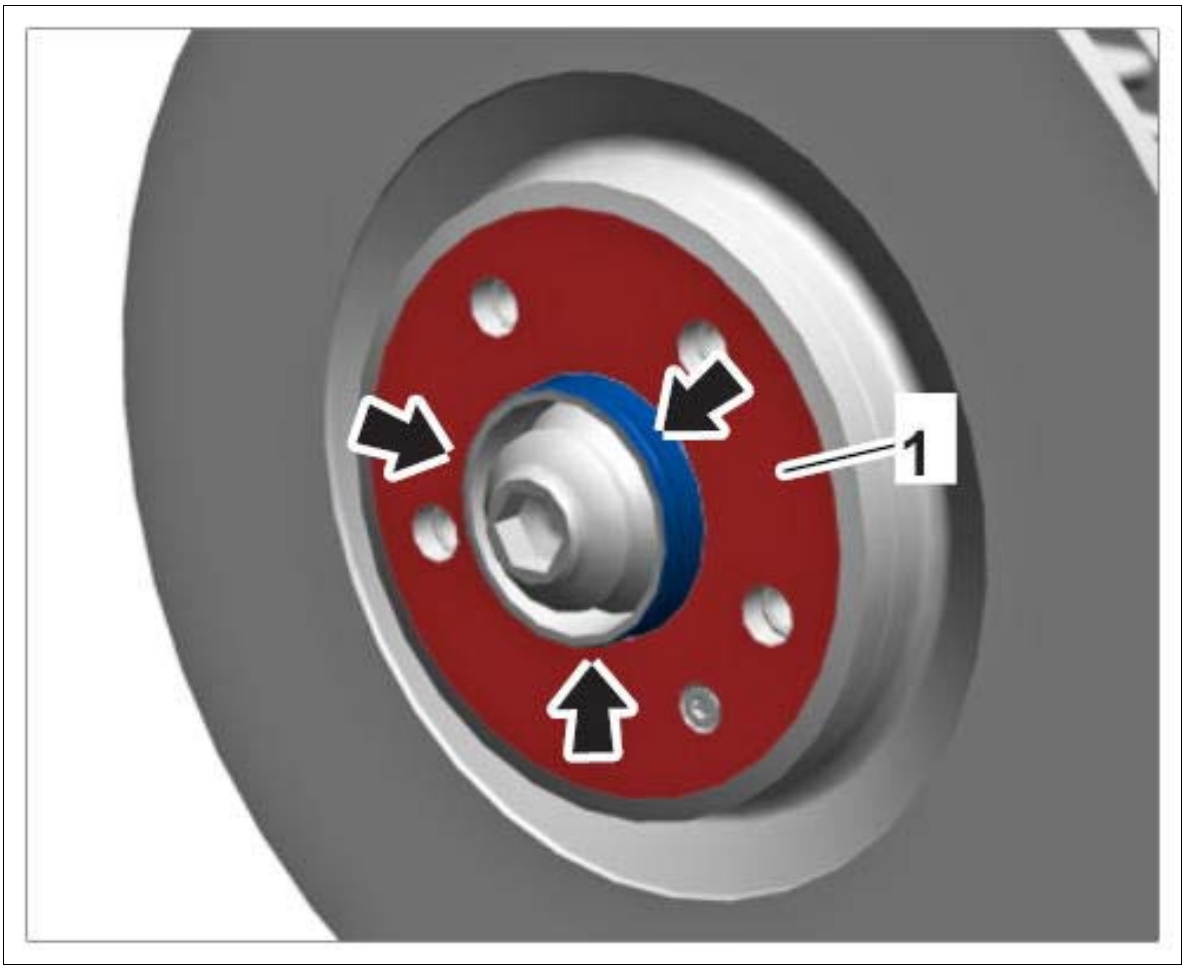

Courtesy of PORSCHE CARS NORTH AMERICA, INC.

3. Fit wheel.

Never use an impact bolter to tighten the wheel bolts!

Fig 3: Identifying Assembly Aids (Wheel Threaded Bolts)



Courtesy of PORSCHE CARS NORTH AMERICA, INC.

1. 3.1. On vehicles with PCCB, screw the assembly aids **-1-** into two threaded holes that are not next to each other before fitting the wheel.
2. 3.2. Carefully push the wheel over the assembly aids **-1-** .
3. 3.3. Screw the other wheel fastening bolts into the remaining threaded holes.
4. 3.4. Replace the assembly aids **-1-** with wheel fastening bolts.
5. 3.5. Fit wheel fastening bolts and tighten them evenly at the same time. Start at the top when tightening.

4. Tighten the wheel fastening bolts to the specified tightening torque. **Tightening torque 160 Nm (118 ftlb.)**

WM 440593 BALANCING/OPTIMIZING WHEELS (ALL MODELS) > TOOLS

Designation	Type	Number	Description	

measuring gauge	Commercially available tool	Nr.136		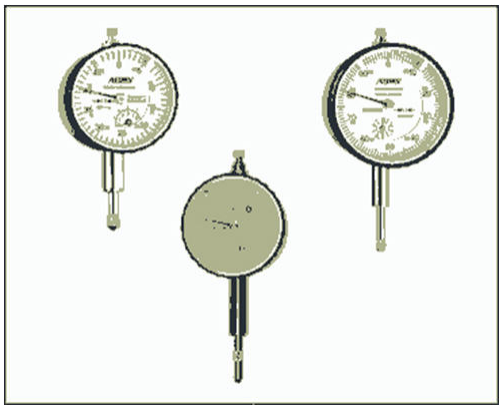

WM 440593 BALANCING/OPTIMIZING WHEELS (ALL MODELS) > BALANCING/OPTIMIZING WHEELS > GENERAL INFORMATION ON BALANCING/OPTIMIZING WHEELS

Excessive rough running of the wheels, caused by wheel imbalance, flat spots and securing the wheel on the vehicle, causes vibrations and shaking in the steering wheel. This in turn leads to increased wear on various parts of the chassis.

Even if wheels are correctly balanced, rolling and steering imbalance can still occur. E.g.:

- excessive geometric errors (radial and lateral runout),
- radial force variations (softer and more rigid areas in the tire).

Information

- Achieving a good result requires utmost care, observance of the instructions and procedure, and attempting to eliminate even the very last gram of imbalance.

Recommendations/prerequisites:

Wheel suspension elements must be in good working order.

The wheels must be clean with no foreign objects in the tire.

Use a tire measuring gauge, e.g. **measuring gauge Nr.136** to check radial and lateral runout values on wheels without flat spots. Values of less than 1 mm are desirable - around 0.5 mm would be better.

To limit the number of radial runout errors and to optimize rolling smoothness, it is a good idea - and even necessary in some cases - to match the tire (i.e. to fit it at a favorable position with respect to the rim). Follow tips and fitting instructions as well as information on tire mounting paste for tires.

If the disc wheels (wheels without tires) are perfect but the complete wheels have large radial and lateral runout values (due to ply breakage or other damage), it may be necessary to replace the tire.

Balance used wheels only after they have been warmed up by driving, otherwise flat spots will simulate imbalance. Never perform matching on wheels with flat spots. In the event of flat spots, wheels must be warmed up by driving 25 - 30 km (16 - 20 miles) on a motorway. Lift up the vehicle immediately on return. This prevents new flat spots from forming.

Correct tire pressure is an important prerequisite.

Place the balancing weights at the prescribed position.

WM 440593 BALANCING/OPTIMIZING WHEELS (ALL MODELS) > BALANCING/OPTIMIZING WHEELS > EXPLANATION OF TERMS > GEOMETRIC ERROR (RADIAL AND LATERAL RUNOUT)

Radial and lateral runout of the rim and/or rim/tire assembly.

WM 440593 BALANCING/OPTIMIZING WHEELS (ALL MODELS) > BALANCING/OPTIMIZING WHEELS > EXPLANATION OF TERMS > FLAT SPOTS

Flat spots can occur on the tires if the vehicle is idle for extended periods.

WM 440593 BALANCING/OPTIMIZING WHEELS (ALL MODELS) > BALANCING/OPTIMIZING WHEELS > EXPLANATION OF TERMS > RADIAL FORCE VARIATIONS

Fig 1: Identifying Rim/Tire Assembly Radial And Lateral Runout

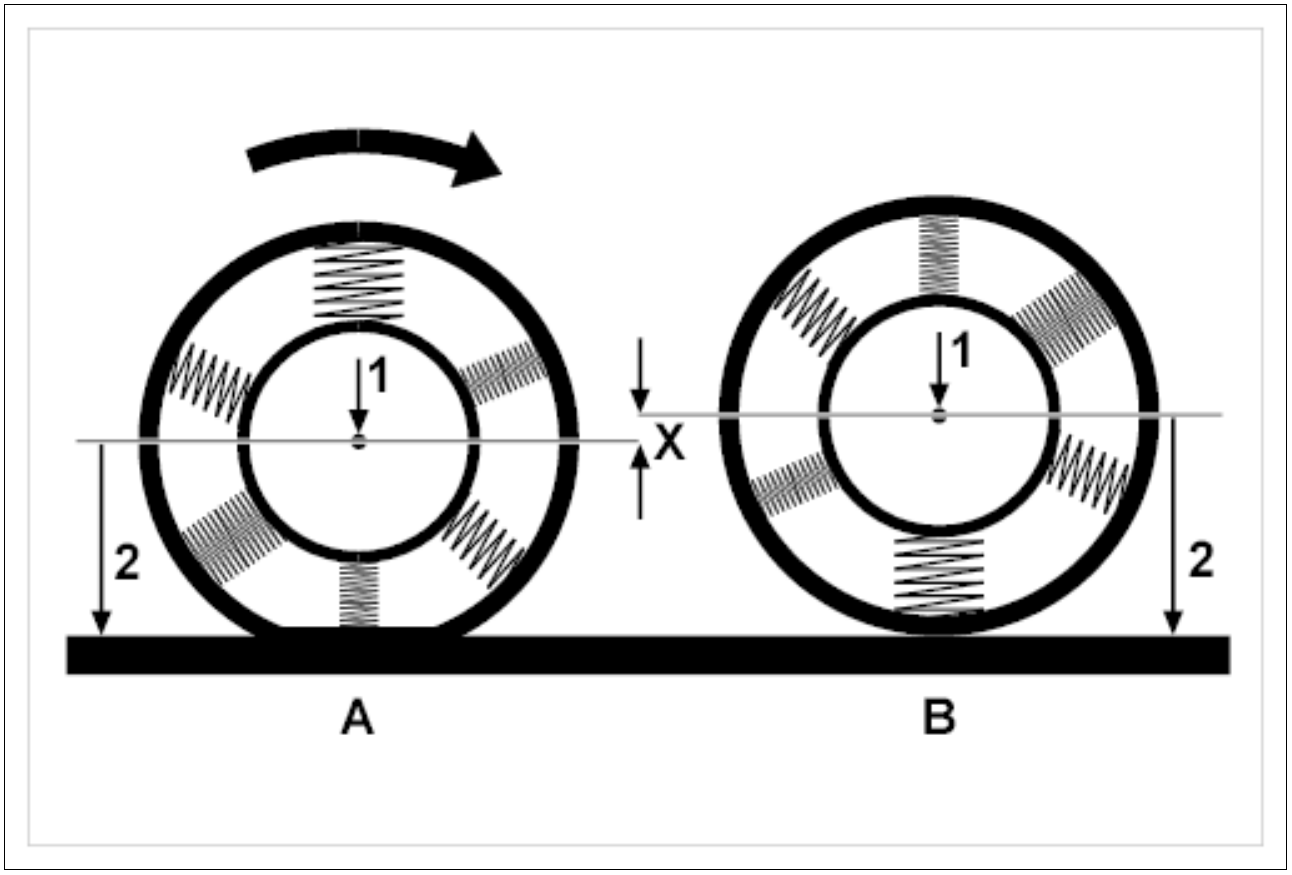

Courtesy of PORSCHE CARS NORTH AMERICA, INC.

The radial force is a force that compresses a tire. Based on its size, a tire has softer (**-item A-**) and more rigid zones (**-item B-**) due to constructive and production-related factors. Given this, the tire compresses to various extents at a constant wheel load (**-arrow 1-**) and a constant tire pressure (**-arrows 2-**). This varying spring action (**-X-**) in the tire can cause vibrations in the chassis on even road surfaces and the driver may notice this as shaking in the steering wheel, for example. Measuring the radial force variation involves running the tire on a wheel balancer that measures radial force variation while applying a constant load to the tire. This simulates the rolling of the tire on a driving surface. Variations in radial force occur independently of the direction of rotation of the tire and are measured as the difference between the maximum and minimum radial force ("peak-to-peak" value).

WM 440593 BALANCING/OPTIMIZING WHEELS (ALL MODELS) > BALANCING/OPTIMIZING WHEELS > EXPLANATION OF TERMS > 1. HARMONIC

The changes in radial force variation can be broken down mathematically into individual variations. Porsche uses the value of the 1st Harmonic Variation (basic variation) to assess the tire from the point of view of rigidity. The 1st Harmonic Variation relates to the changes in radial force that cause the strongest vibrations. Changes in radial force can also result in further harmonic variations (2nd-4th Harmonic). These relate to the changes in radial force that cause weaker vibrations.

WM 440593 BALANCING/OPTIMIZING WHEELS (ALL MODELS) > BALANCING/OPTIMIZING WHEELS > EXPLANATION OF TERMS > UNCONTROLLED MATCHING

Turn the tire on the wheel by 90° or 180° if necessary in order to achieve an acceptable value with regard to rolling smoothness (true running, imbalance and distribution of balance weights).

WM 440593 BALANCING/OPTIMIZING WHEELS (ALL MODELS) > BALANCING/OPTIMIZING WHEELS > EXPLANATION OF TERMS > CONTROLLED MATCHING

With a balancing machine with matching program. In most cases, this produces an even better result with regard to the rolling smoothness (true running, imbalance and distribution of the balance weights) than can be achieved with uncontrolled matching.

WM 440593 BALANCING/OPTIMIZING WHEELS (ALL MODELS) > BALANCING/OPTIMIZING WHEELS > EXPLANATION OF TERMS > TIRE SEATING PRESSURE

This is the filling pressure after the tire has been fitted on the rim at which the tire bead, coming out of the deep bed, must pop over the hump of the rim bead. This seating pressure must not exceed 4 bar.

WM 440593 BALANCING/OPTIMIZING WHEELS (ALL MODELS) > BALANCING/OPTIMIZING WHEELS > BALANCING/OPTIMIZING WHEELS

In certain cases, it may be necessary to measure radial force variations. This should be done before normal balancing is performed.

The entire process is subdivided into several operations:

1. Fitting the tire on the rim.
2. 2.
    A. Measuring radial force variations and optimizing the wheels if necessary. Then balancing the wheels.
    B. As an alternative to item 2 A, if there is no device available to measure radial force variations: Stationary balancing of the wheel (eliminating static and dynamic imbalance) with optimization of rolling smoothness.
3. Fitting the wheel on the vehicle.

WM 440593 BALANCING/OPTIMIZING WHEELS (ALL MODELS) >

BALANCING/OPTIMIZING WHEELS > FURTHER TO 1: FITTING THE TIRE ON THE RIM

- Remove rubber residues and dried-on tire paste from the rim, especially from the rim bead and the hump.
- Check rim for damage; remove old balancing weights.
- Use the specified tire mounting pastes Remaxx Sport mounting paste (from Rema Tip Top/Item No. 593 0577) or Bead Lubricant (from Rema Tip Top/Item No. 514 4985) or Gleitmittel VA sliding compound (from Azett/Item No. 5000-021-220) so that the tire does not turn on the rim - undoing all your careful work - the first time you drive the vehicle. If the tire turns by as little as 20 mm with respect to the rim, this can worsen an optimum balancing result.
- Fit tire on the rim. When doing so, it is a good idea - and even necessary in some cases - to fit the tire at a favorable position with respect to the rim (matching). Compare Controlled and Uncontrolled matching below.

WARNING: High tire seating pressure

- *Risk of squashing or bruising*

→ Use a tire filling cage.

Fig 1: Identifying Tire Filling Cage

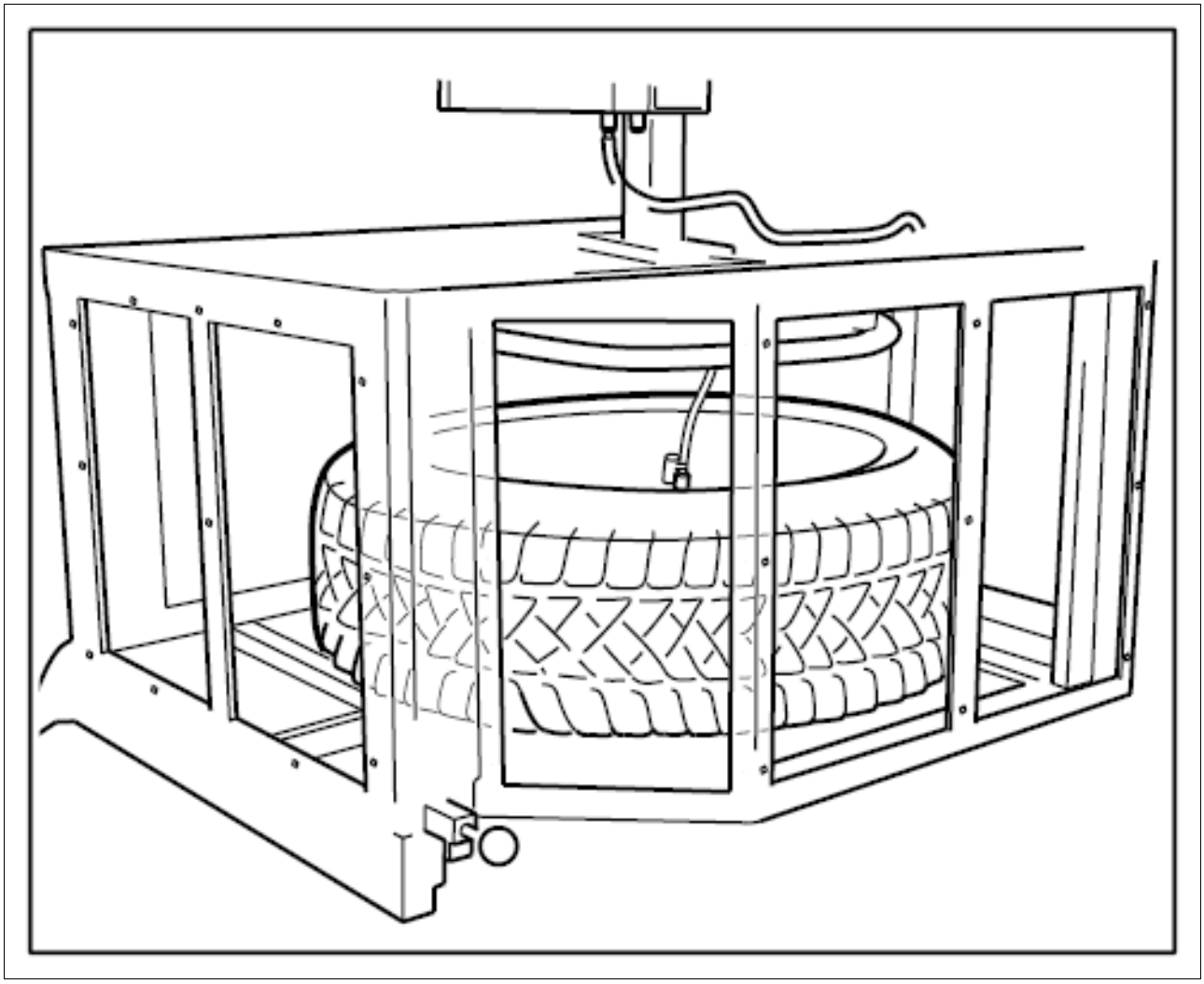

Courtesy of PORSCHE CARS NORTH AMERICA, INC.

- Fill the tire to a maximum pressure of 4.0 bar. By the time the pressure reaches 4.0 bar, at the latest, the tire beads must pop out of the deep bed and over the hump of the rim bead in order to avoid fractures of the bead core. If necessary, interrupt the process and generously coat all necessary surfaces with sliding compound (tire mounting paste). Then repeat the process.
- Uncontrolled matching: Turn the tire on the wheel by 90° or 180° if necessary in order to achieve an acceptable value with regard to rolling smoothness (true running, imbalance and distribution of balance weights).
- Controlled matching: With a balancing machine with matching program. In most cases, this produces an even better result with regard to the rolling smoothness (true running, imbalance and distribution of the balance weights) than can be achieved with uncontrolled matching.
- Check the fit of the tire on the rim using the bead centering line.
- Set the prescribed tire pressure.

WM 440593 BALANCING/OPTIMIZING WHEELS (ALL MODELS) >

BALANCING/OPTIMIZING WHEELS > FURTHER TO 2A: MEASURING RADIAL FORCE VARIATIONS

- Tension wheel on balancing machine with radial force variation measurement (vibration monitoring system).
- Observe the operating instructions of the balancing machine (adjust the machine from time to time).
- The contact surface of the wheel on the balancing flange (flat surface) and the centering surface must be clean.
- The display disabling function must be switched off.
- Adjust tire pressure to 2.7 bar (best test pressure) when balancing and measuring radial force variations.
- Particular attention must be paid to the wheel mounting when measuring radial force variations and when balancing. Using the special pressure pieces provided by the manufacturer of the balancing machine will ensure that wheels are balanced accurately and there is the highest possible repeat accuracy. Read the operating instructions.

Maximum deviations permitted in radial force variation results:

Radial force variation (peak-to-peak vibrations)	170 N
Radial force variation 1st Harmonic (variation)	109 N

If these values are exceeded, the tire must be matched on the rim.

If these values are not reached, the wheel must be balanced.

Information

A new tire must be fitted if the radial force variation cannot be reduced to the values listed in the table.

WM 440593 BALANCING/OPTIMIZING WHEELS (ALL MODELS) > BALANCING/OPTIMIZING WHEELS > FURTHER TO 2B: STATIONARY BALANCING WITH OPTIMIZATION OF ROLLING SMOOTHNESS

- Clamp wheel on stationary balancing machine.
- Read the operating instructions for the balancing machine; adjust the machine from time to time, if necessary.
- The contact surface of the wheel on the balancing flange (flat surface) and the centering surface must be clean.
- Centre (clamp) the wheel from the inside using centering clamping device . This centering clamping device fits all wheel-balancing machines approved by Porsche.
- Set required tire pressure (tire-pressure plate).

- Centre (clamp) the wheel from the inside using centering clamping device . This centering clamping device fits all wheel-balancing machines approved by Porsche.

Check radial and lateral runout during the first measuring run. Values of less than 1.0 mm are desirable - around 0.5 mm would be better.

Consider the size of the measured balancing weights and their distribution on the inner and outer planes (inner and outer rim flanges) critically.

A uniform distribution with low values (e.g. 35g/40g) means that the tire was fitted correctly and the quality of the tire and rim is good.

A value of 70g/90g (70g/90g with tire Pressure Monitoring) should not be exceeded with interior balancing behind the wheel center. A considerably different distribution, e.g. 40g/90g is not good; this usually indicates incorrect fitting. Problem wheels of this kind often have pronounced radial and lateral runout values.

This can be remedied by matching (use correct mounting paste). This can be improved with uncontrolled matching (manual); significant improvement is possible in almost all cases using the rolling smoothness optimization program (controlled matching).

tire pressure during balancing at required pressure.

Permissible residual imbalance of max. 8g on the rim flange. **Panamera: Permissible residual imbalance of less than 3g, or max. 3g per plane** .

WM 440593 BALANCING/OPTIMIZING WHEELS (ALL MODELS) > BALANCING/OPTIMIZING WHEELS > FURTHER TO 3: FITTING THE WHEEL ON THE VEHICLE

Information

- Never use an impact bolter.
- Observe the description on wheel removal and installation (fitting wheel on vehicle) → 440519 REMOVING AND INSTALLING WHEEL .
- Fit the wheels with the lowest residual imbalance values on the front axle. Observe the rolling direction of the wheels.
  - Fit wheel using a suitable commercially available tool.
  - Screw in wheel bolts by hand and then tighten evenly. Start at the top when tightening. Always observe the specified tightening torque of 160 Nm (118 ftlb.)
  - Set required tire pressure (tire-pressure plate).

WM 440593 BALANCING/OPTIMIZING WHEELS (ALL MODELS) > BALANCING/OPTIMIZING WHEELS > BALANCING WEIGHTS

Balancing weights: For balance stick-on weights .

Attach both weights to the inner side.

Fig 1: Locating Wheels Balancing Weights

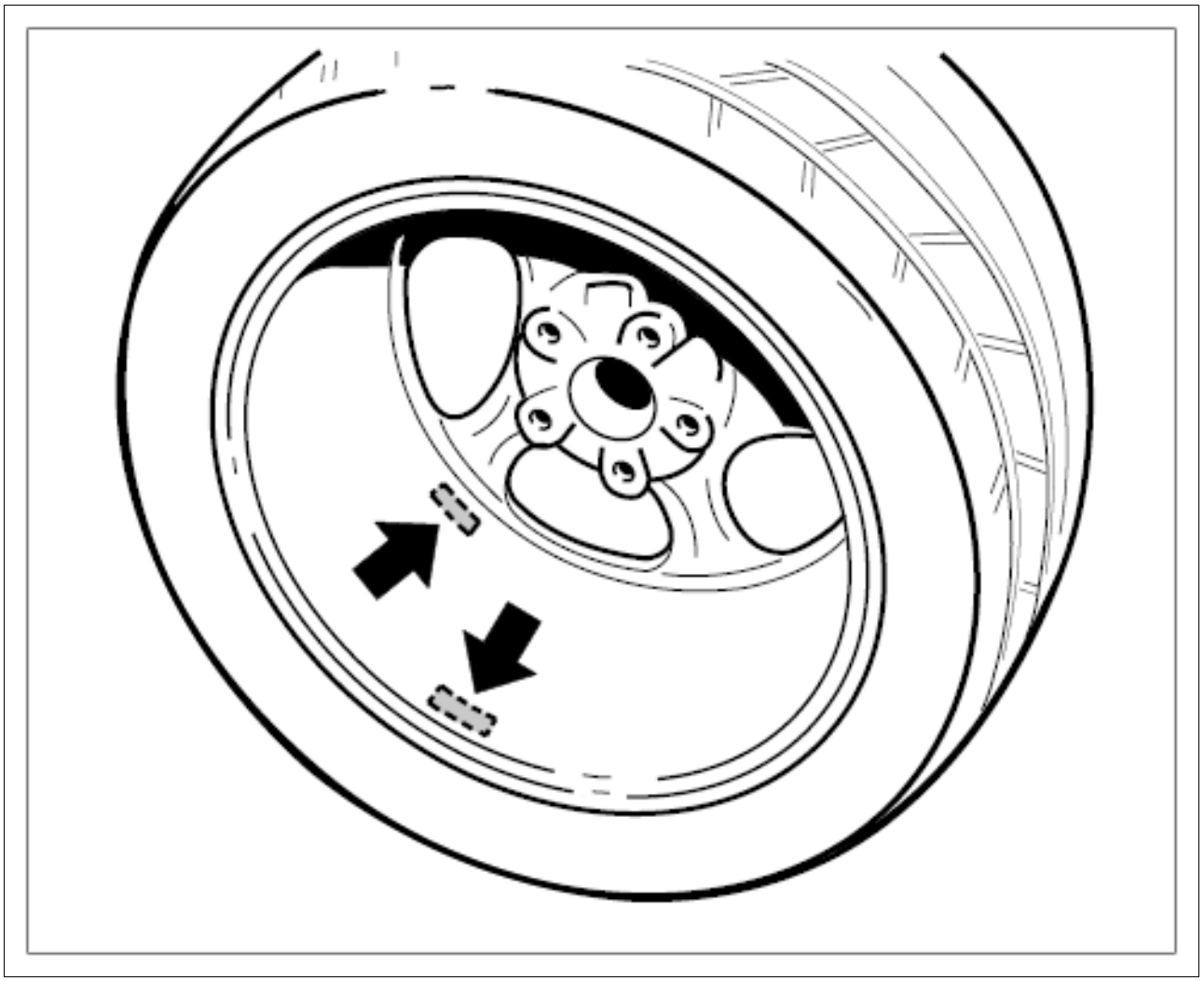

Courtesy of PORSCHE CARS NORTH AMERICA, INC.

Information

- Observe program selection and operating instructions of the balancing machine.

WM 440593 BALANCING/OPTIMIZING WHEELS (ALL MODELS) > BALANCING/OPTIMIZING WHEELS > ATTACHING BALANCE STICK-ON WEIGHTS

Information

- Remove the protective film just before sticking on the weight, as prolonged exposure to the air will reduce the bonding strength.
- Pay attention to cleanliness.
  - Determine exact position of the balancing weights (if necessary, temporarily stick on the balancing weights with a strip of adhesive tape until the correct position is determined).

- Prepare bonding surface on the rim. The bonding surface must be perfectly clean and free of grease.
- Remove protective paper from the bonding surface of the weight and press the weight firmly into place.
- The balance stick-on weight must be in uniform contact over the entire surface.
- Check that the balancing weight is seated securely. A freshly affixed weight must not become detached from the rim when a shear load is applied at right angles to its longitudinal axis.

WM 4405IN WHEELS AND TIRES (ALL MODELS) > CHECKING > CHECKING CONDITION

Tires are a safety element that meet the demands placed on them only if they have the correct air pressure and sufficient tread depth.

Information

The >> Tire pressure << display is for information purposes only.

- tire pressure settings can only be entered according to the values in >> Filling information<<.

1. Check condition and tire pressures.

   Valve caps protect the valve from dust and dirt and therefore from damage.

2. Always screw on valve caps tightly and replace missing valve caps.

For vehicles with Tire Pressure Monitoring (TPM), which can be identified by aluminum valves, the tire pressure must be adjusted according to the >> Filling information << on the multi-function display. To do this, select >> Main menu >> TPM >> Filling information <<. Adjust the deviation values so that they range from 0.0 bar to +0.1 bar. Fill the tires according to the display using the tire-inflating device. Example: If the tire pressure display >> Filling information << shows - 0.2 bar, 0.2 bar pressure must be added.

Fig 1: Display - Filling Information Screen



Courtesy of PORSCHE CARS NORTH AMERICA, INC.

Information

The >> tire pressure << display is for information purposes only.

- tire pressure settings can only be entered according to the values in >> Filling information <<.

Due to the pressure and temperature relationship (approx. 0.1 bar/10° C), the actual pressure values displayed under >> tire pressure << on the multi-function display, or on the pressure gauge of the tire-inflating device, can deviate from the required pressure specified at 20° C on the tire pressure plate if the air temperature in the tire is significantly above (higher values) or significantly below 20° C (lower values). Changes in tire pressure are displayed after max. 1 minute under >> Filling information << after switching on the ignition. A series of dashes (-.-) will appear instead of the tire pressure during this time.

Fig 2: Display - tire Pressure Screen



Courtesy of PORSCHE CARS NORTH AMERICA, INC.

For vehicles with tire Pressure Monitoring (TPM), always use plastic valve caps. Plastic valve caps protect against dust, dirt and humidity, and therefore against damage (corrosion).

Tires are a safety element that meet the demands placed on them only if they have the correct air pressure and sufficient tread depth.

> *WARNING: Risk of accidents if the air pressure in the tires falls below the minimum pressure, if the tread depth is insufficient or if there are foreign bodies, pricks, cracks and bulges in the sidewall (ply breakage).*
>
> - *Modified handling behavior can cause accidents and significant material damage.*

→ The tire pressure must never fall below the values specified (these are minimum pressures).

→ The tread depth must never fall below the minimum value.

→ A visual inspection of the tires (for cracks, pricks, bulges in the sidewall and/or foreign bodies) must

be carried out.

WM 4405IN WHEELS AND TIRES (ALL MODELS) > INSTRUCTIONS > TIRE PRESSURE FOR COLD TIRES (APPROX. 20 °C)

Information

The currently applicable air pressure values and comfort tire pressure values in the individual countries can be found in the Manufacturer Approval >>Approved wheels and tires<< in the >>Manufacturer Approvals<<, Group 4.

tire pressures apply to all-season, winter and summer tires. They also apply only to tires approved by Porsche.

Part load: Payload < 260 kg

Full load: Payload > 260 kg

The collapsible spare wheel is an optional extra (tire sealing compound comes as standard).

WM 4405IN WHEELS AND TIRES (ALL MODELS) > INSTRUCTIONS > OVERVIEW OF TIRES AND WHEELS (STANDARD)

- The chart of tires and wheels for summer and winter can be found in the Manufacturer's Certificate >>Approved wheels and tires<< in the information medium >>Manufacturer's Certificates<<, Group 4.
- When replacing summer tires, pay close attention to the tire specification number. The specification codes N1, N2, N3 and N0 distinguish the summer tires specially approved by Porsche from other versions of the same tire type and size.

Information

- Observe the mounting specifications for the wheel nuts when fitting the wheel on the vehicle.

→ 440519 REMOVING AND INSTALLING WHEEL

WM 4405IN WHEELS AND TIRES (ALL MODELS) > INSTRUCTIONS > NOTES ON MOUNTING TIRES

- When fitting tires, the direction of rotation and the inner and outer sides should be noted.

WM 441202 CHECKING DISC WHEELS (ALL MODELS) > CHECKING DISC WHEELS

Information

- Straightening and welding work cannot be performed on light alloy wheels.

- The work is carried out initially with the wheel mounted on the vehicle.
- To measure wheels with tires and wheels without tires, use a tire measuring gauge , e.g. VAG. 1435 .

  Fig 1: Identifying tire Gauge

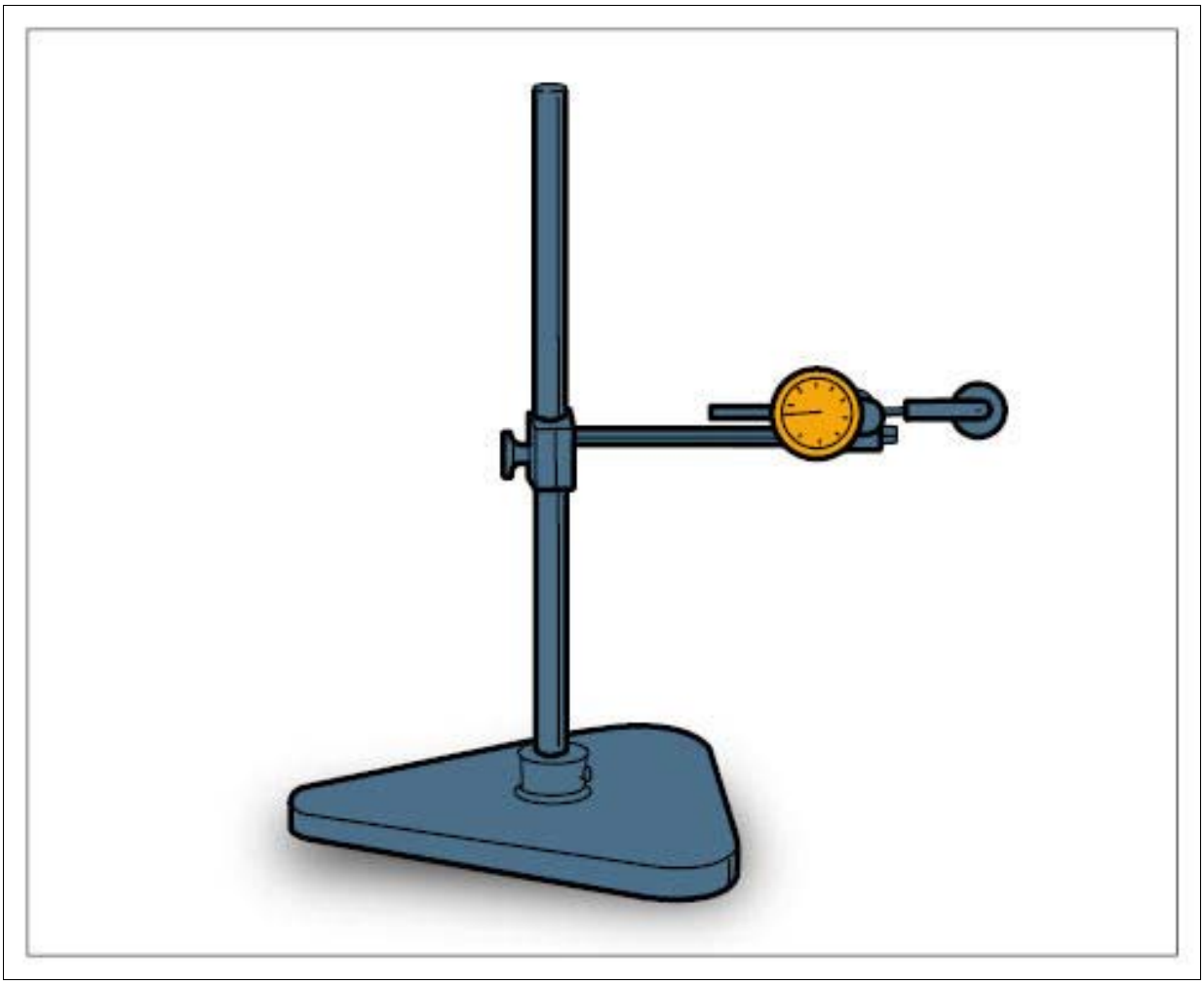

Courtesy of PORSCHE CARS NORTH AMERICA, INC.

Maximum permissible radial runout and lateral runout of the wheel with tire = 1.25 mm. Values less than 1.0 mm - around 0.5 mm would be better - are desirable. For this purpose, match the tire (turn the tire on the rim if necessary).

Maximum permissible radial runout and lateral runout **-a-** of alloy wheels = 0.7 mm.

Fig 2: Identifying Wheel Runout Dimension

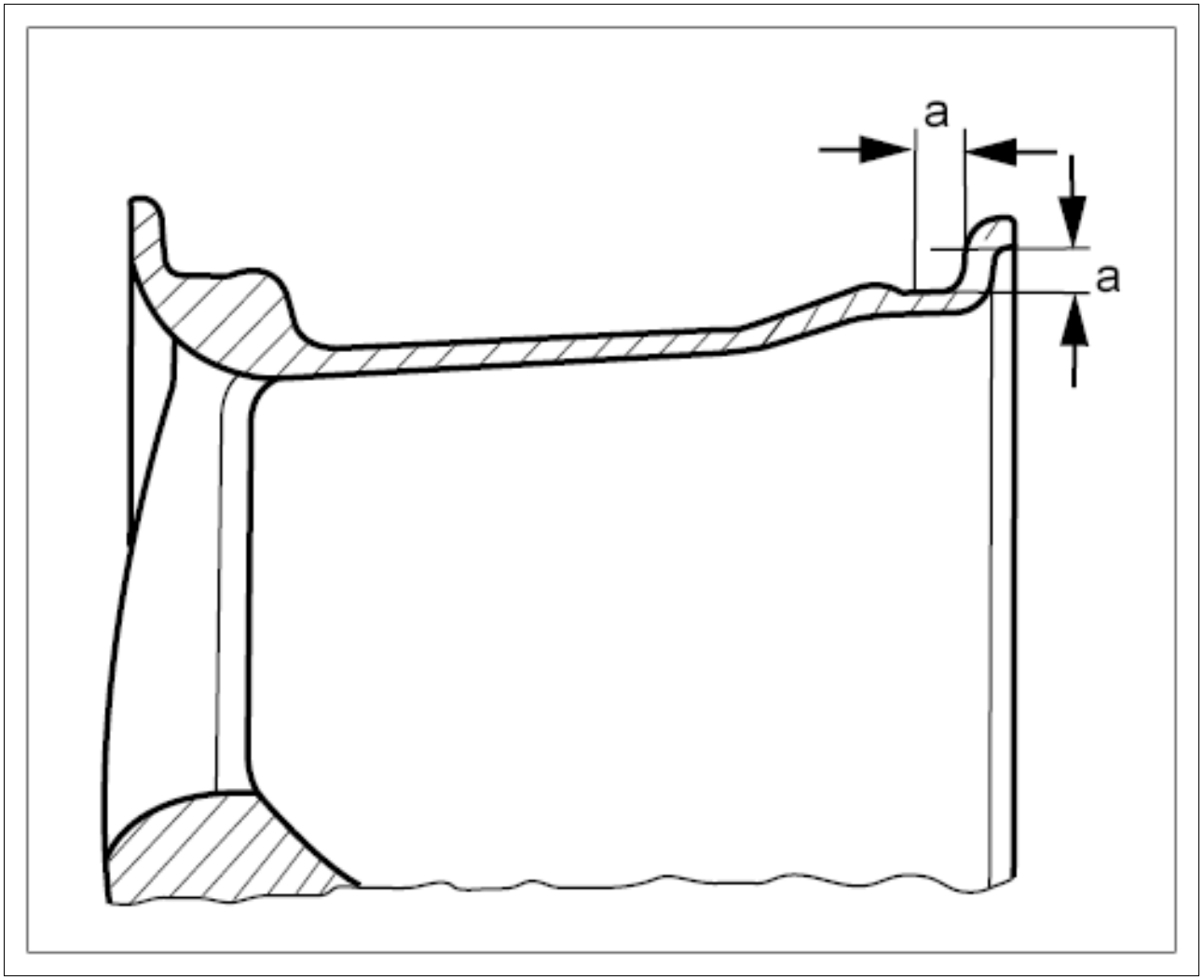

Courtesy of PORSCHE CARS NORTH AMERICA, INC.

If in isolated cases further measurements are necessary, carry out the following procedure.

1. To measure wheels without tires, remove the wheel from the vehicle. → 440519 REMOVING AND INSTALLING WHEEL
2. Remove the tire from the alloy wheel. → 444019 MOUNTING TIRES (REMOVING AND INSTALLING TIRES)
3. Clamp the wheel on the balancing machine and take measurements at the points **-a-** .

WM 442655 REPLACING TIRE SEALING COMPOUND (ALL MODELS) > INFORMATION ON TIRE SEALING COMPOUND

The intended position for the tire sealing compound should be taken from the Driver's Manual (index: tire sealing compound/sealant set for defective tires).

The use-by date of the tire sealing compound must be checked every 2 years.

If the tire sealing compound is out of date (or will be out of date by the next maintenance event), the tire sealing compound must be replaced.

The expiry date can be found on the packaging of the tire sealing compound/sealant set.

The Driver's Manual for the vehicle describes its use in detail (sealing of tire in the event of minor slashing damage). The tire sealing compound/sealant set is also supplied with instructions.

The tire sealing compound is extremely flammable and hazardous to health. Warnings to this effect are printed on the bottle and given in the Driver's Manual.

WM 442655 REPLACING TIRE SEALING COMPOUND (ALL MODELS) > REPLACING TIRE SEALING COMPOUND

1. If the expiry date of the tire sealing compound/sealant set has lapsed, get a new compressed air bottle from stock and place it in the storage space provided.

   The part number of the compressed air bottle can be found in the Porsche Electronic Parts Catalogue (PET) (Main Group 6/Sub-group Wheels).

2. The compressed air bottle that has passed its expiry date must be disposed of in accordance with country-specific regulations.

WM 443219 REMOVING AND INSTALLING WHEEL ELECTRONICS (ALL MODELS) > TECHNICAL VALUES

Location	Description	Type	Basic value	Tolerance 1	Tolerance 2
Wheel electronics unit to valve		Tightening torque	4 Nm (3 ftlb.)		

WM 443219 REMOVING AND INSTALLING WHEEL ELECTRONICS (ALL MODELS) > GENERAL INFORMATION ON WHEEL ELECTRONICS

The tire Pressure Monitoring (TPM) system is designed to constantly monitor the tire pressure when the vehicle is moving. One set of wheel electronics **-8-** per wheel is mounted in the rim well base. These measure tire pressure and temperature at regular intervals and transfer the values to a central control unit via a high-frequency route. The control unit evaluates the information and transfers the data to the instrument cluster if required. In this way, the driver is warned and informed if the tire pressure needs to be adjusted.

There are different types of wheel electronics **-8-** . Wheel electronics units with amplified transmitting power are used on the Macan. These transmit in the high-frequency range of:

- 433 MHz or 315 MHz.

The following points can be used as distinguishing features:

- The labelling - 433 MHz or 315 MHz.
- The color (dark grey - 433 MHz; light grey - 315 MHz).
- The part number.
- No stars on the left and right of the slot.

Valve must be replaced complete with screw -1, 3, 4- if:

- The wheel electronics unit is removed
- The self-locking fastening screw **-1-** is loose
- The valve body **-5-** is bent
- The union nut **-7-** is loose.

The wheel electronics unit -2- must be replaced if:

- The housing is visibly deformed
- The filter surface (round, porous section on back of wheel electronics) is so badly soiled that it can no longer be cleaned by wiping
- tire sealing compound (tire sealing liquid) has been used
- The service life of the battery is exceeded
- There is a fault inside the wheel electronics unit.

Fig 1: Identifying 3RD Generation Wheel Electronics Components

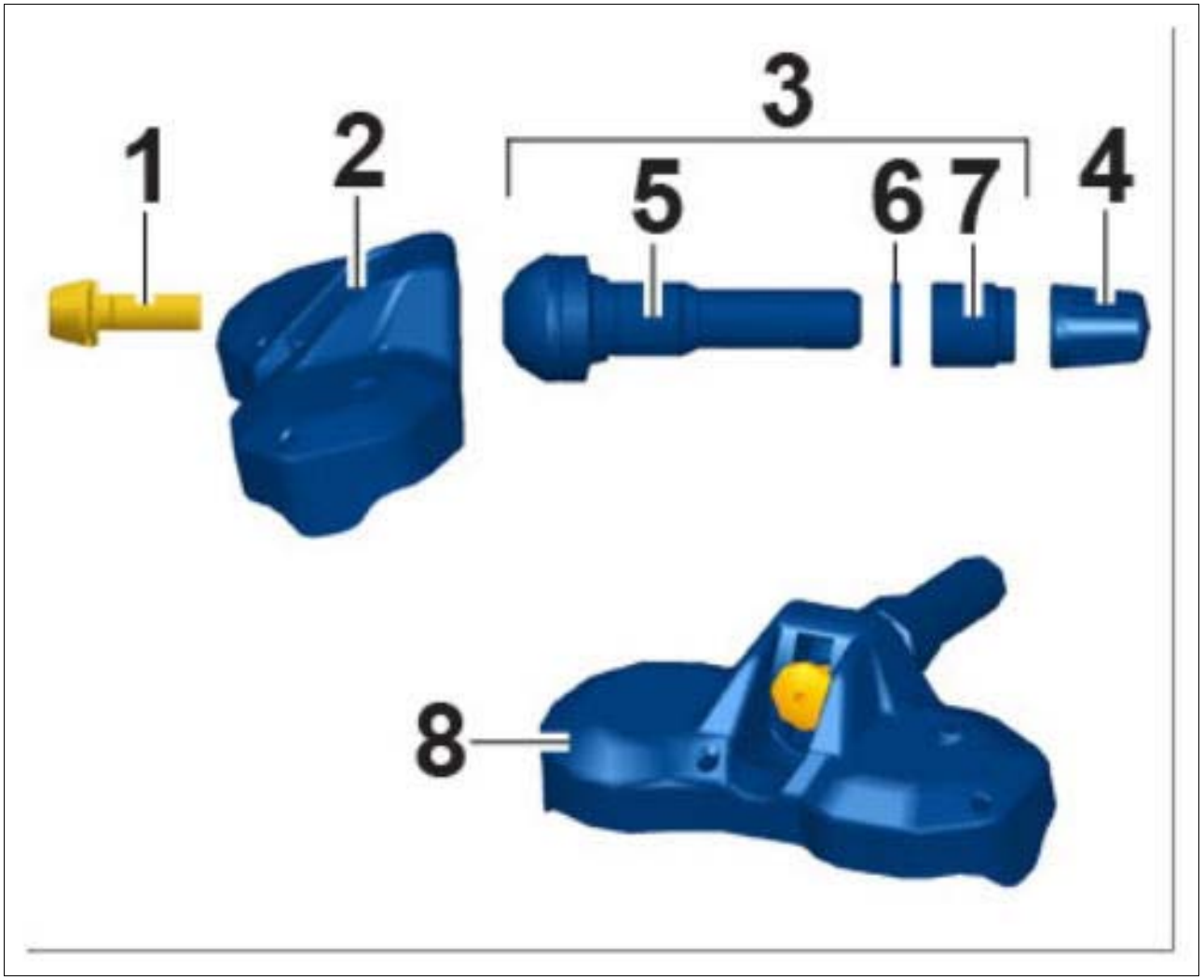

Courtesy of PORSCHE CARS NORTH AMERICA, INC.

1. Self-locking (Torx) fastening screw
2. Wheel electronics
3. Valve complete (No. 5 to No. 7)
4. Valve cap
5. Valve body with valve insert
6. Double chamfered washer
7. Union nut
8. Wheel electronics assembled

WM 443219 REMOVING AND INSTALLING WHEEL ELECTRONICS (ALL MODELS) > PRELIMINARY WORK

1. Remove tires → 444019 FITTING TIRES (REMOVING AND INSTALLING TIRES) .

WM 443219 REMOVING AND INSTALLING WHEEL ELECTRONICS (ALL MODELS) > REMOVING AND INSTALLING WHEEL ELECTRONICS > REMOVING WHEEL ELECTRONICS

The wheel electronics unit is located on the valve in the outer rim base.

Fig 1: Removing Wheel Electronics



Courtesy of PORSCHE CARS NORTH AMERICA, INC.

1. Loosen fastening screw **-1-** on the wheel electronics unit. If necessary counter in the bore at the valve foot using a suitable assembly pin, e.g. steel pin Ø approx. 1.8 mm.

Fig 2: Removing Wheel Electronics Mounting

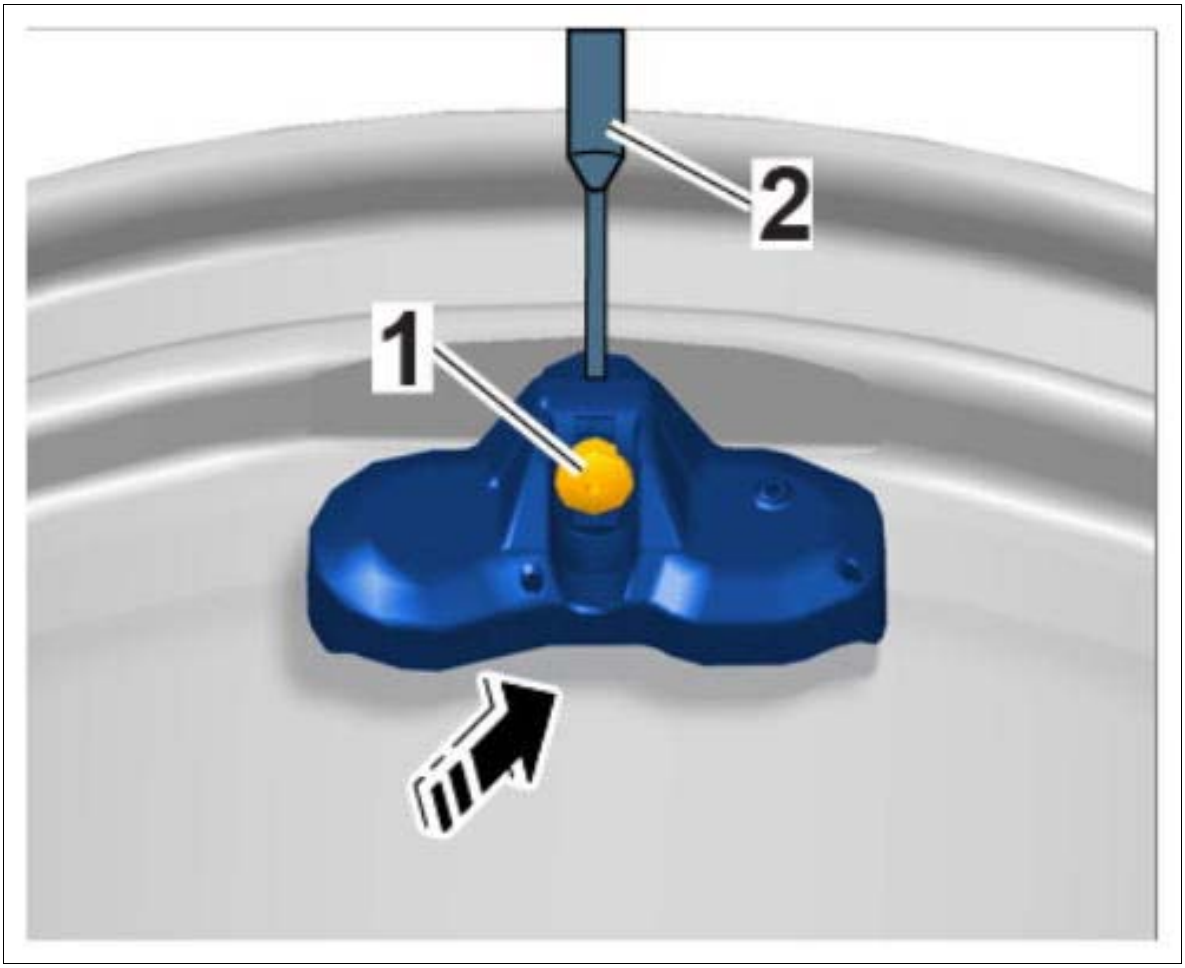

Courtesy of PORSCHE CARS NORTH AMERICA, INC.

2. Loosen the union nut and remove the valve.

WM 443219 REMOVING AND INSTALLING WHEEL ELECTRONICS (ALL MODELS) > REMOVING AND INSTALLING WHEEL ELECTRONICS > INSTALLING WHEEL ELECTRONICS

Every set of wheels or wheel change must be communicated to the control unit. In particular, this is necessary when wheel positions have been interchanged. For this purpose, always select the tire type and tire size under Main menu > Tire pressure > Tire type in the instrument cluster. The control unit then learns the wheel positions again while the vehicle is driving.

1. **Clean the valve bore very carefully (visual inspection).**

   Information

   When replacing the wheel electronics -

   1. Always use a completely new valve.
   2. Always use a new fastening screw.

2. Fit the wheel electronics unit loosely at the valve (do not tighten) and position it in the valve bore together with the new valve.

   Information

   Counter the new valve with an assembly pin (supplied with the new valve).

   1. The valve-stem seal may become twisted and can cause damage.

3. Fit the washer, chamfered on both sides, from outside and screw on the union nut until it is seated correctly. Visibly screw in the bore at the valve foot and block it using the supplied assembly pin.

   Fig 1: Installing Wheel Electronics Mounting

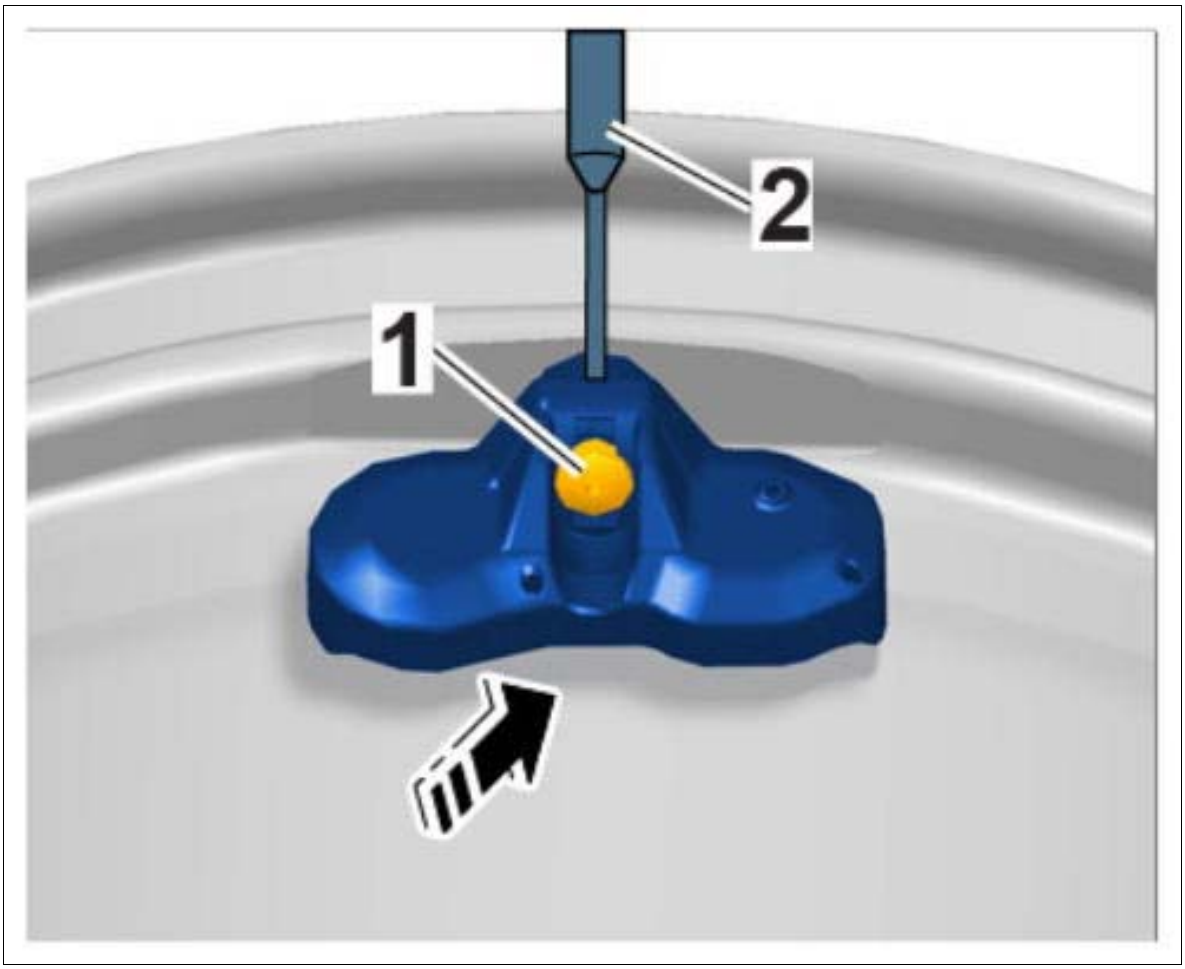

Courtesy of PORSCHE CARS NORTH AMERICA, INC.

4. Push wheel electronics **-1-** slightly into the rim base (this adjusts the angle of inclination of valve to wheel electronics).

Fig 2: Identifying Wheel Electronics



Courtesy of PORSCHE CARS NORTH AMERICA, INC.

Information

When tightening the wheel electronics unit/valve, tighten to the specified tightening torque evenly and in one movement. The tightening process must not be interrupted.

1. Remove the assembly pin after tightening the components.

5. Tighten self-locking (Torx) fastening screw to the specified tightening torque → **Tightening torque: 4 Nm (3 ftlb.).** The wheel electronics unit should now be lying evenly against the rim.

Information

The wheel electronics must not come into contact with the tire mounting paste or solvent.

When mounting tires, ensure absolute cleanliness around the wheel electronics unit.

WM 443219 REMOVING AND INSTALLING WHEEL ELECTRONICS (ALL MODELS) > SUBSEQUENT WORK

1. Fit tires → Mounting Tires .

WM 443419 REMOVING AND INSTALLING TPM CONTROL UNIT (ALL MODELS) > TOOLS

Designation	Type	Number	Description	
PIWIS Tester II	Special tool	9818		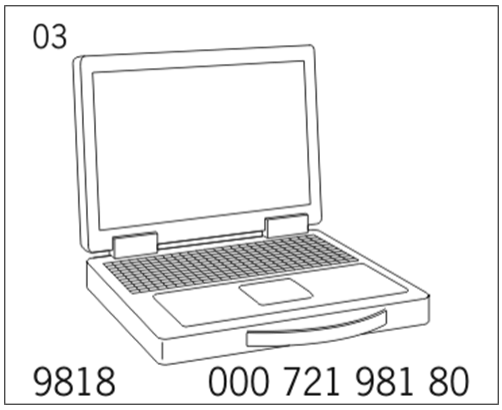

WM 443419 REMOVING AND INSTALLING TPM CONTROL UNIT (ALL MODELS) > REMOVING AND INSTALLING TPM CONTROL UNIT > REMOVING CONTROL UNIT FOR TIRE PRESSURE MONITORING (TPM)

NOTE: Voltage peaks

- *Risk of damage to load or to the control unit*

→ Remove the ignition key and switch off load before disconnecting or removing load.

The TPM control unit is located on the rear axle on the left anti-roll-bar mount.

The antenna is integrated in the TPM control unit. For more information, see → 4X00IN GENERAL INFORMATION ON THE tire PRESSURE MONITORING SYSTEM (TPM) .

1. Disconnect electric line at the holder **-1-** .
2. Release and disconnect connector **-2-** .
3. Unclip TPM control unit with holder **-4-** on the back of the holder **-3-** and disconnect it **-arrow-** .

Fig 1: Removing TPM Mounting

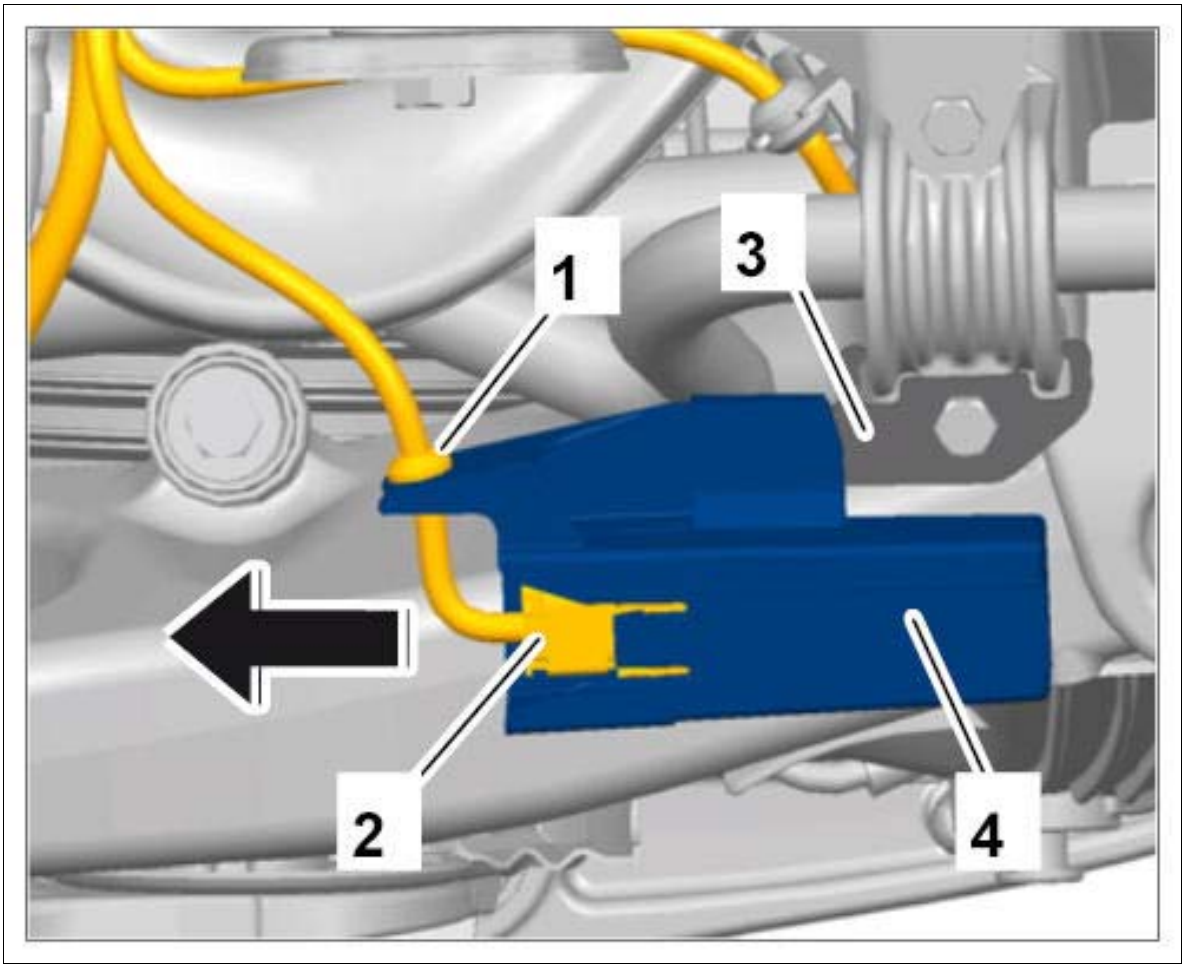

Courtesy of PORSCHE CARS NORTH AMERICA, INC.

4. Take TPM control unit **-1-** out of the holder **-2-** (**-arrow-**).

Fig 2: Removing TPM Control Unit With Support

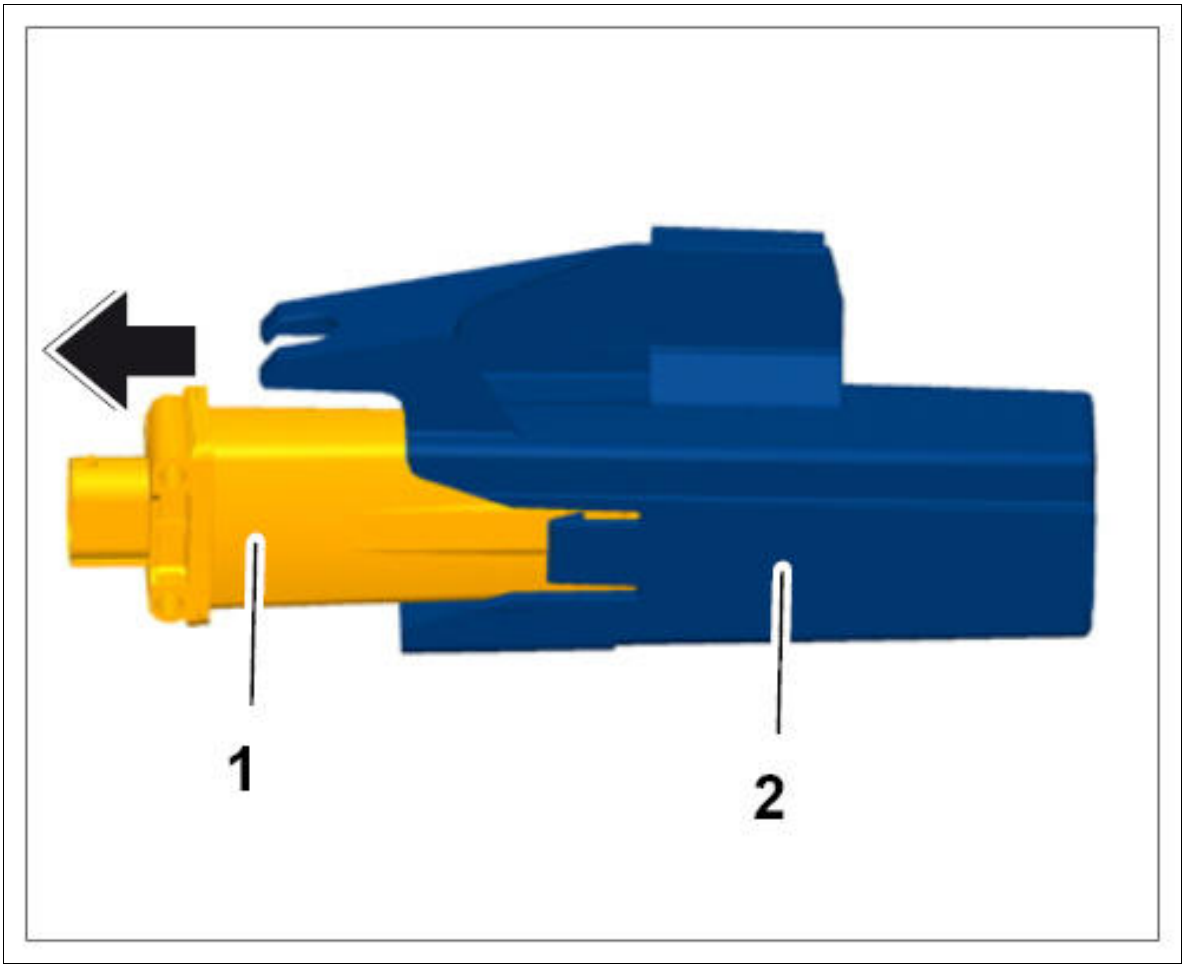

Courtesy of PORSCHE CARS NORTH AMERICA, INC.

WM 443419 REMOVING AND INSTALLING TPM CONTROL UNIT (ALL MODELS) > REMOVING AND INSTALLING TPM CONTROL UNIT > INSTALLING CONTROL UNIT FOR TIRE PRESSURE MONITORING (TPM)

1. Installation is performed in reverse order.

WM 443419 REMOVING AND INSTALLING TPM CONTROL UNIT (ALL MODELS) > SUBSEQUENT WORK

1. If the control unit was replaced, the "new" control unit must be adapted to suit the vehicle using **PIWIS Tester II 9818.** → 443455 REPLACING CONTROL UNIT FOR tire PRESSURE MONITORING (TPM) .

WM 443455 REPLACING TPM CONTROL UNIT (ALL MODELS) > TOOLS

Designation	Type	Number	Description	
PIWIS Tester II	Special tool	9818		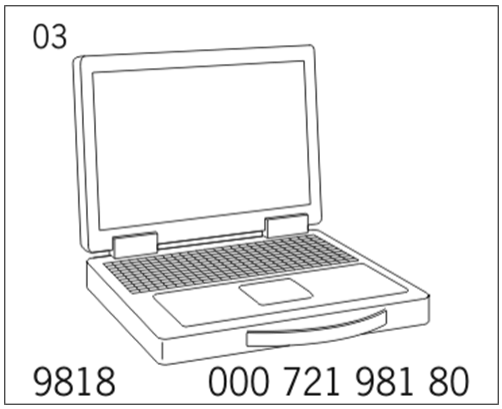

WM 443455 REPLACING TPM CONTROL UNIT (ALL MODELS) > TECHNICAL VALUES

Location	Description	Type	Basic value	Tolerance 1	Tolerance 2
Current rating		Nominal value	40 A		

WM 443455 REPLACING TPM CONTROL UNIT (ALL MODELS) > PRELIMINARY WORK

1. Switch off ignition and replace control unit. → 443419 REMOVING AND INSTALLING TPM CONTROL UNIT .

WM 443455 REPLACING TPM CONTROL UNIT (ALL MODELS) > REPLACING TPM CONTROL UNIT > CODING CONTROL UNIT

NOTE: Voltage drop

- *Risk of irreparable damage to control unit*
- *Risk of damage to control unit*
- *Fault entries in the control unit*
- *Coding in the control unit is aborted*
- *Malfunctions in control unit, even during programming*

→ Prior to disconnecting the control unit, switch off ignition and remove ignition key.

→ Ensure that the power supply is not interrupted during programming.

→ Connect a battery charger with a current rating of at least → Nominal value: 40 A to the vehicle battery.

Information

The **PIWIS Tester II 9818** instructions take precedence since the description may be different with later Tester releases.

The procedure described here has been structured in general terms. Different text or additional information may appear in **PIWIS Tester II 9818** .

1. Connect the PIWIS Tester to the vehicle and start the Tester. Switch on ignition.
2. Select the vehicle type and start the diagnostic application.
3. Select the required control unit, e.g. **tire Pressure Monitoring system in the overview.**
4. **Extended identifications** must now be selected.
5. **Enter the vehicle identification number** and press [Enter] to confirm your entry.
6. **Maintenance/repairs** must then be selected.
7. **Control unit replacement** must now be selected. Then press [F12] to continue.
8. Follow the instructions on the Tester.
9. The Tester displays the message **Coding has been completed successfully.** Press [F12] to continue.
10. **Teach wheel IDs** must now be selected. Then press [F12] to continue.
11. Select the desired teaching process, then press [F12].
12. Follow the instructions on the Tester and press [F12] to continue.
13. **Read out the fault memory** and erase it if necessary.
14. Check the TPM function during the test drive.

WM 444019 MOUNTING TIRES (REMOVING AND INSTALLING TIRES) (ALL MODELS) > INFORMATION > TOOLS > TIRE REMOVAL/MOUNTING MACHINE

Only use recommended tire removal/mounting machine and auxiliary equipment (special mounting lever, bead holding-down device).

Search criteria in PIWIS (PPN):

- Information media
- HBW .
- Main group: 4 - Running gear/Tool type: Workshop Equipment/Dealer Classification: All

Fig 1: Identifying WE 1084 tire Removal/Mounting Machine

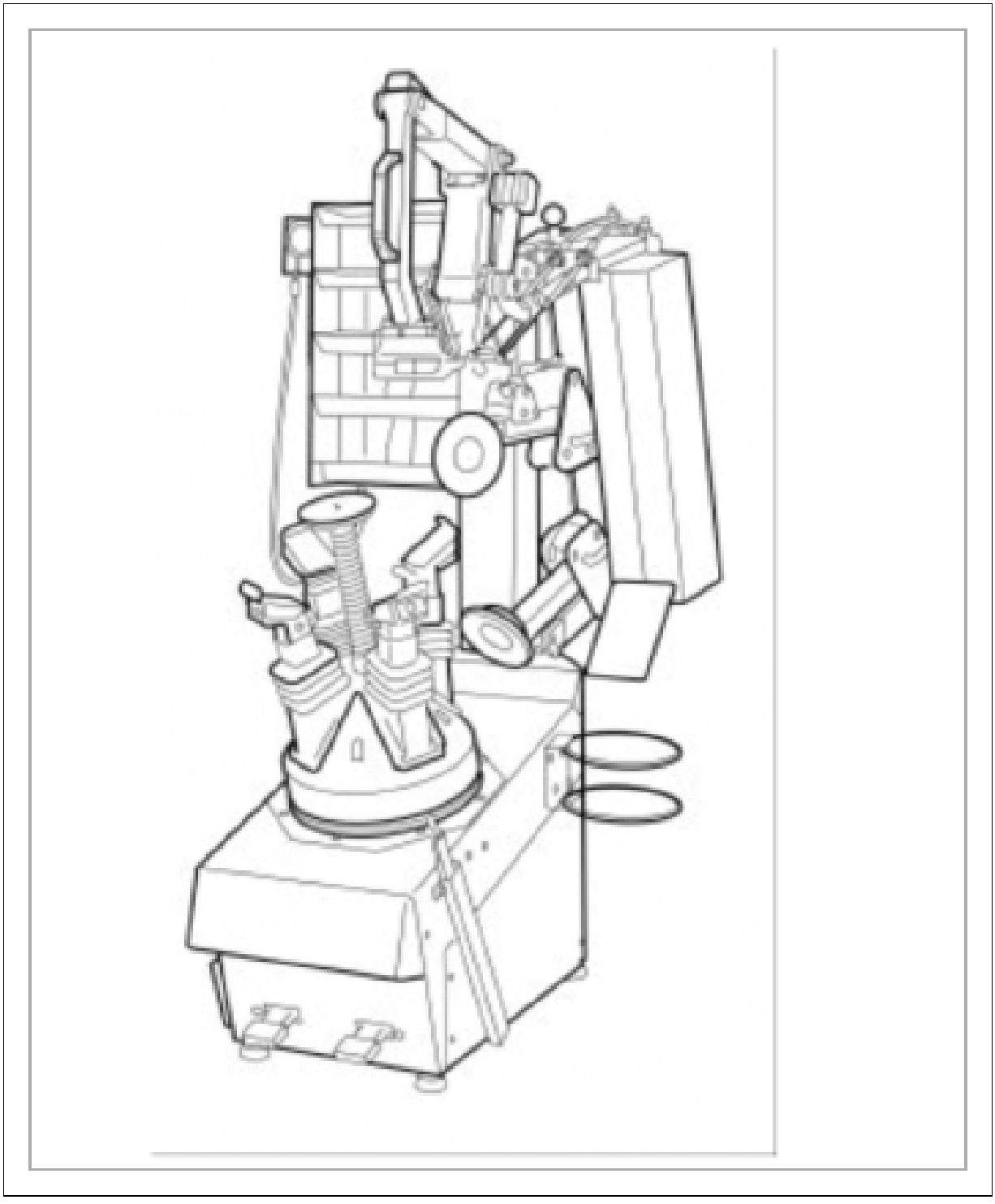

Courtesy of PORSCHE CARS NORTH AMERICA, INC.

WM 444019 MOUNTING TIRES (REMOVING AND INSTALLING TIRES) (ALL MODELS) > INFORMATION > TOOLS > AUXILIARY EQUIPMENT

Fig 1: Identifying Auxiliary Equipment

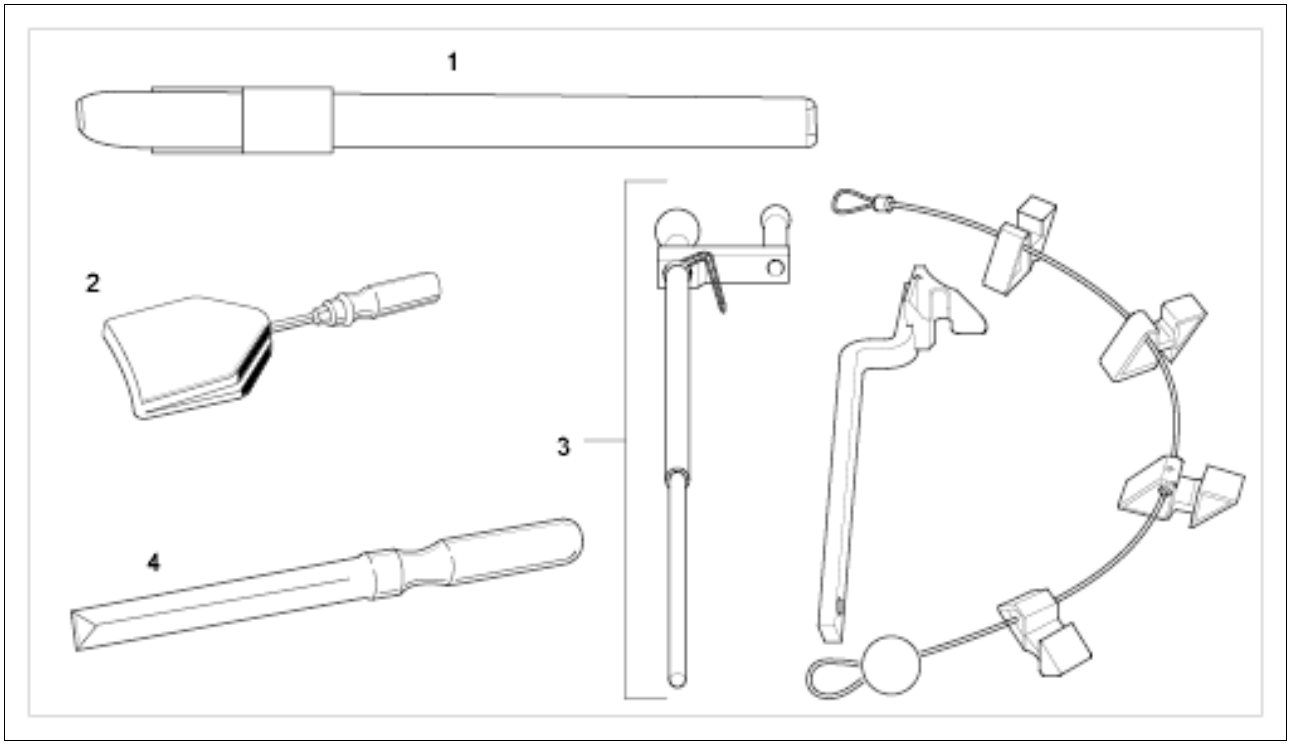

Courtesy of PORSCHE CARS NORTH AMERICA, INC.

1. Special mounting lever with plastic protection.
2. Holding-down device 9539 - for holding down the tire bead.
3. Wulstboy - for holding down the tire bead (alternative to holding-down device 9539/item 2)
4. Balance stick-on weight remover - commercially available

WM 444019 MOUNTING TIRES (REMOVING AND INSTALLING TIRES) (ALL MODELS) > INFORMATION > REQUIREMENTS/INFORMATION ON REMOVING/MOUNTING TIRES

Information

- tire temperature during removal/mounting must be approx. 20 °C (at least 15 °C). Allow enough time to heat the vehicle/tires in a suitable environment if necessary (at room temperature of more than 15 °C). Example: If the room temperature of the workshop is approx. 20 °C and the tire temperature is approx. - 15 °C, approx. 3 hours are required to heat the tires to the required temperature.
- Before removal/mounting, it is important to establish whether a tire Pressure Monitoring system (TPM) is fitted! The tire valve serves as the distinguishing feature. Without TPM: rubber valve. With TPM: aluminum valve. If a TPM system is fitted, read the special information on the tire Pressure Monitoring system .
- Vehicles with TPM: Before changing a tire, read out the remaining life span of the wheel electronics

unit (battery capacity) using the PIWIS Tester. The value you read out gives an indication as to whether or not it needs to be replaced (not a 100% value). If the values are considerably lower than expected for the next tire change, talk to the customer and determine whether he/she is happy to have the wheel electronics unit(s) replaced at this time.

- Use only TIP TOP Universal, Order No. 593 0601 (3.5 kg bucket) or Contifix as the removal/mounting paste (sliding compound). Use sufficient sliding compound.
- No large point load for wheel (rim) and tire during removal/mounting. If this is not observed, damage will occur that will render a tire unusable (ready for disposal) and/or require a new rim.
- Before removal/mounting, check the mounting head (of the mounting machine) for damage (scoring, soiling). Clean or replace the mounting head if necessary to prevent paint damage and pressure marks on the rim flange.
- All parts that touch the disc wheel and tire are made of plastic to prevent damage to paintwork during removal/mounting. Protect the rim flange with adhesive tape if necessary. The mounting lever can also be covered with adhesive tape in order to avoid damaging the area around the spokes (during removal).
- If you do not have a mounting lever with plastic protection, use a rim flange protector (assembly aid) and avoid letting it slip on to the rim flange.
- Check the disc wheel for damage (sealing face between tire/rim, true running, superficial damage and deformation).
- If you intend to continue using the tire, check it for damage (sealing face between tire/rim, ply damage, tire beads, sidewalls and tread depth).
- The rubber valve must generally be replaced when a tire change is necessary. In vehicles with TPM (aluminum valve), the valve only needs to be replaced in exceptional cases. This is elaborated further in: "Special information on TPM" (module in this service information).
- When mounting tires, pay particular attention to the direction of rotation and the inside/outside.
- When replacing only one tire on an axle, make sure that the tread depth of the new tire does not differ from that of the other tire by more than 30%!

WM 444019 MOUNTING TIRES (REMOVING AND INSTALLING TIRES) (ALL MODELS) > INFORMATION > SPECIAL NOTES FOR TIRE PRESSURE MONITORING (TPM)

NOTE: Wheel electronics

- *Wheel electronics unit and valve may have been fitted incorrectly.*
- *Wheel electronics units may not have been assigned correctly.*

→ Read and follow the installation instructions for the wheel electronics units. → 443219 REMOVING AND INSTALLING WHEEL ELECTRONICS

→ Check that the wheel electronics units are assigned correctly.

Information

- If the old wheels are still in the vicinity after assembly work (for example changing winter tires and/or wheels from another vehicle with TPM), these will still be detected by the system. If one or more of these wheels has a minimum pressure of more than 0.5 bar (7 psi) below the required pressure, this can trigger a warning in the instrument cluster. In this case, remove the wheels or use the PIWIS Tester to adjust the vehicle outside the radio range of these wheels.
- Before changing a tire, read out the remaining life span of the wheel electronics unit (battery capacity) using the PIWIS Tester.
- For vehicles with tire Pressure Monitoring (TPM), the valve and wheel electronics -arrow- are only replaced in exceptional cases. The following points can make replacement necessary.

Fig 1: Identifying Wheel Electronics



Courtesy of PORSCHE CARS NORTH AMERICA, INC.

Fig 2: Identifying 3RD Generation Wheel Electronics

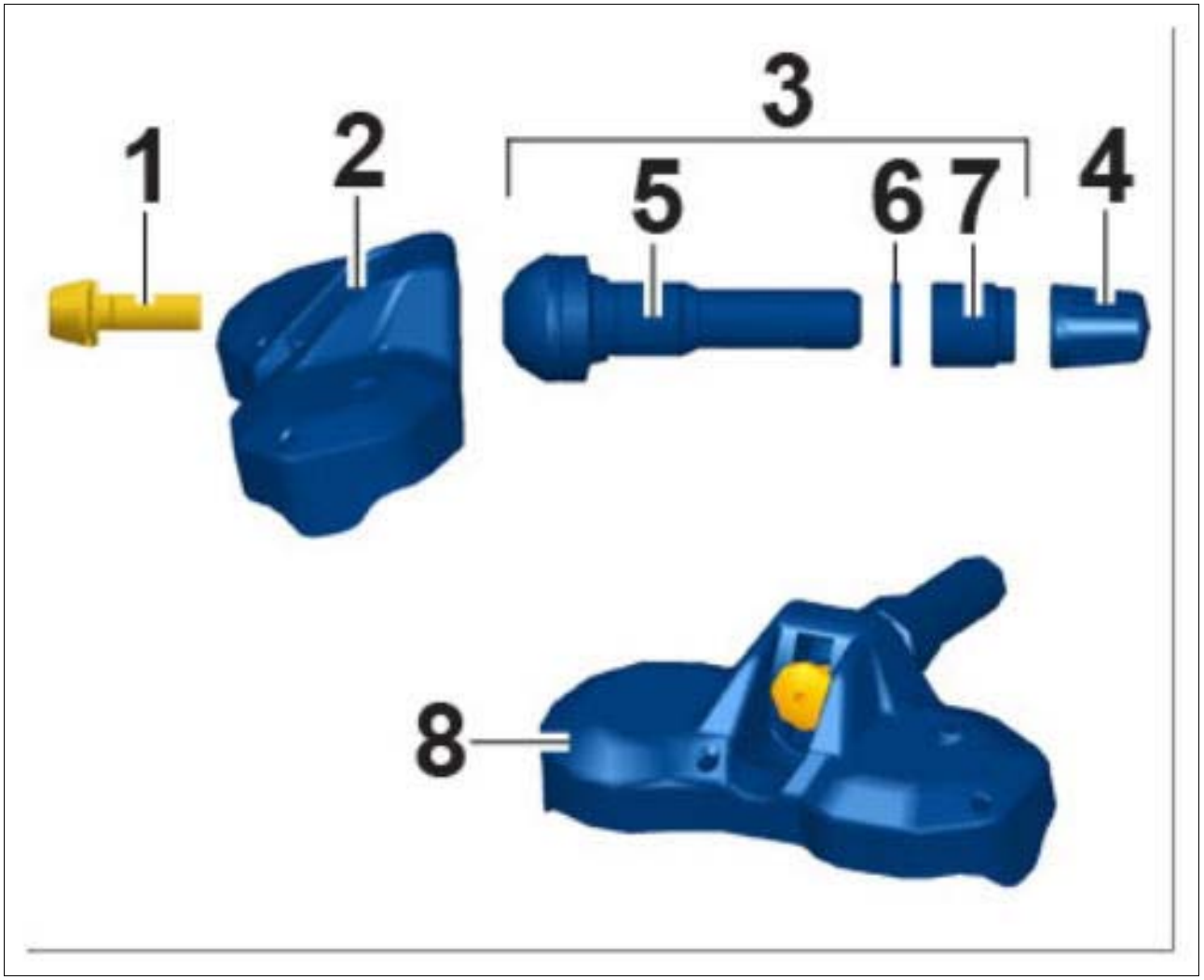

Courtesy of PORSCHE CARS NORTH AMERICA, INC.

1. Self-locking (Torx) fastening screw
2. Wheel electronics
3. Valve complete (No. 5 to No. 7)
4. Valve cap
5. Valve body with valve insert
6. Double chamfered washer
7. Union nut
8. Wheel electronics assembled

Valve must be replaced complete with screw -1, 2, 3- if:

- The wheel electronics unit is removed
- The self-locking fastening screw **-1-** is loose

- The valve body **-5-** is bent
- The union nut **-7-** is loose.

The wheel electronics unit -2- must be replaced if:

- The housing is visibly deformed
- The filter surface (round, porous section on back of wheel electronics) is so badly soiled that it can no longer be cleaned by wiping
- tire sealing compound (tire sealing liquid) has been used
- The service life of the battery is exceeded
- There is a fault inside the wheel electronics unit.

WM 444019 MOUNTING TIRES (REMOVING AND INSTALLING TIRES) (ALL MODELS) > REMOVING/MOUNTING TIRES (REMOVING AND INSTALLING TIRES) > REMOVING TIRES

For correct tire removal/mounting, follow the instructions provided for the tire removal/mounting machine.

See REQUIREMENTS/INFORMATION ON REMOVING/MOUNTING TIRES !

1. Fit and clamp a clean disc wheel on the tire removal/mounting machine.

   Check that the tire is seated securely and without damage (as described in the instructions provided for the tire removal/mounting machine).

2. Unscrew the valve insert and release the air so that the tire is depressurized.

3. Set the tire bead press-off tool (in accordance with the tire size).

Fig 1: Identifying Tire Press-Off Tool

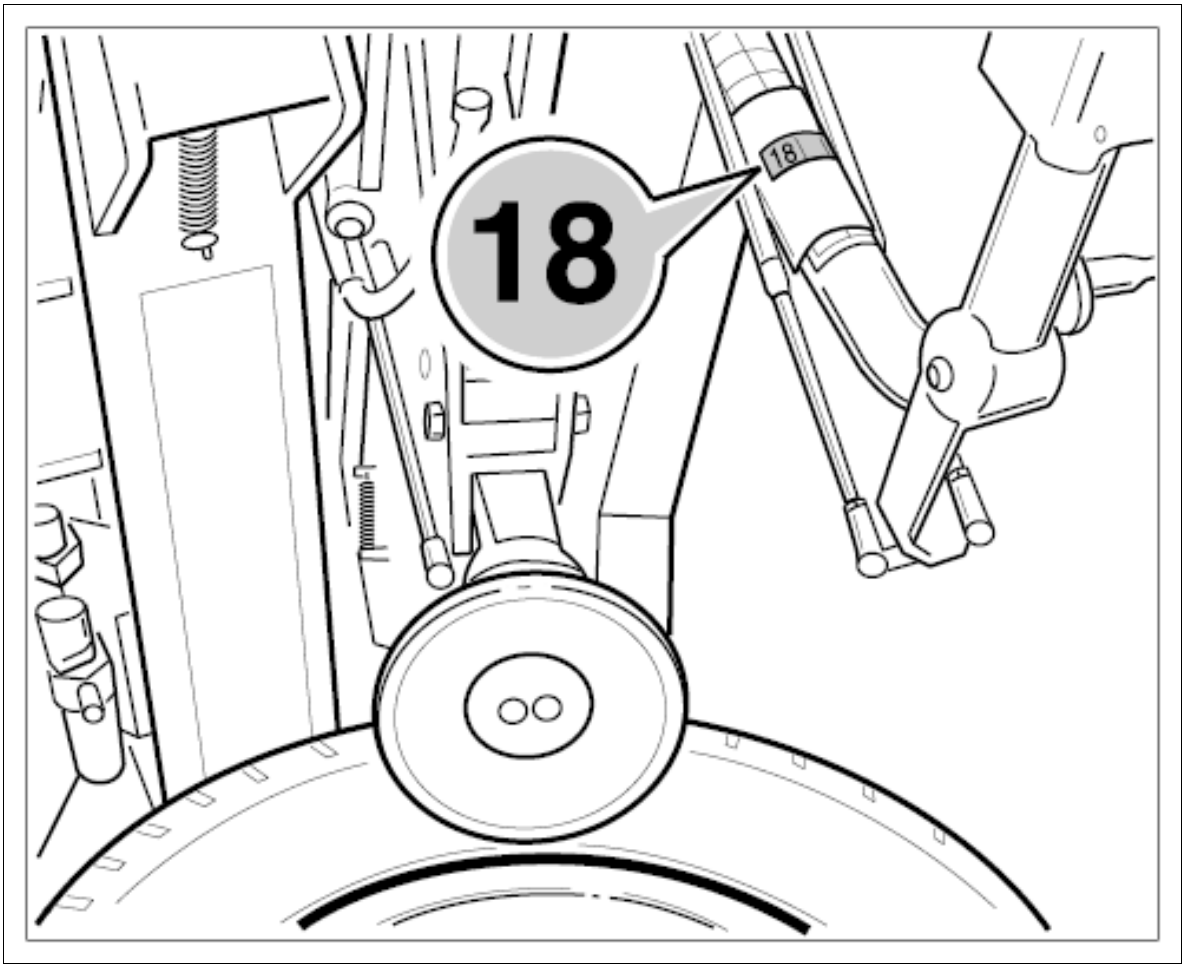

Courtesy of PORSCHE CARS NORTH AMERICA, INC.

1. 3.1. Set the tire bead press-off tool to the inch graduation (rough setting in accordance with the tire size).
2. 3.2. Then adjust the setting precisely (the press-off roller must not touch the rim when positioned on the tire). If this is not the case, the rim flange may be damaged by the press-off rollers.

4. Loosen the lower and upper tire bead (press the tire off the rim).

    1. 4.1. The wheel must be turned anti-clockwise (anti-clockwise rotation of the mounting table) when pressing the tire off the rim (loosening the tire bead). Otherwise, excessive forces occur on the fastening bolts of the machine which can break the bolts.

        First press off the lower tire bead and then the upper tire bead (to ensure that the wheel remains seated securely on the machine).

        Coat the tire beads with mounting paste even at this stage of the procedure to make it easier to press the tire bead off.
    2. 4.2. Loosen the two bead press-off tools again (by moving them back to their original position).

5. Before removing the tire, coat the tire beads with mounting paste again if necessary to facilitate removal.

   Information

   1. Always use a bead holding-down device for removing the upper tire bead (second tire bead).

   2. Use the Wulstboy bead holding-down device (type 2 in section 6.2) for tire/wheel combinations that are difficult to remove.

6. **Removal**

   1. 6.1. **Removing upper tire bead - type 1**

      Valve/wheel electronics unit at 12 o'clock position.

      Fit the mounting head on the rim flange.

      The mounting lever (with plastic protection) is pushed into the deep bed underneath the upper tire bead, and then guided over the mounting shoe and pushed down.

      Lift the tire bead out of the rim bed by turning the wheel clockwise. Check the following while doing this:

      1. Check that the bead lip is facing outwards and is fully visible. Otherwise, the tire bead can become jammed and be damaged irreparably.

      2. The mounting lever must be the same distance from the inside of the tire and the valve during the entire removal procedure.

      3. Constantly check that the plastic protection (on the mounting lever) is positioned correctly in order to protect the rim.

      4. The lower (second) tire bead must be in the deep bed during removal.

      5. The tire bead must not be pressing against the wheel electronics unit.

   2. 6.2. **Removing upper tire bead using bead holding-down device type 2 = Wulstboy**

      Valve/wheel electronics unit at approx. 12 o'clock position.

      Use the upper plastic press-off roller on the mounting machine to press the upper tire bead approx. 4 to 5 cm below the rim flange (max. 5 cm/the belt edge of the tire must not be deformed by the plastic press-off roller). This makes space for the bead holding-down device blocks.

      Fit the bead holding-down device (Wulstboy) into the middle of the "wheel/rotary plate". Move the arm of the bead holding-down device to the 1 o'clock position.

      Turn the wheel slowly in a clockwise direction (clockwise rotation) and insert the blocks of the bead holding-down device.

      Remove the upper press-off roller on the mounting machine from the tire and fit the mounting head on the rim flange. Insert the mounting lever (with plastic protection) **-1-** and lever the upper tire bead over the mounting head.

Continue turning the disc wheel slowly (clockwise rotation) until the bead holding-down device (Wulstboy) is just in front of the mounting head. Remove the Wulstboy using holding-down device 9539. Continue turning the disc wheel slowly (clockwise rotation) until the upper bead is completely removed.

Fig 2: Removing tire Using Wulstboy

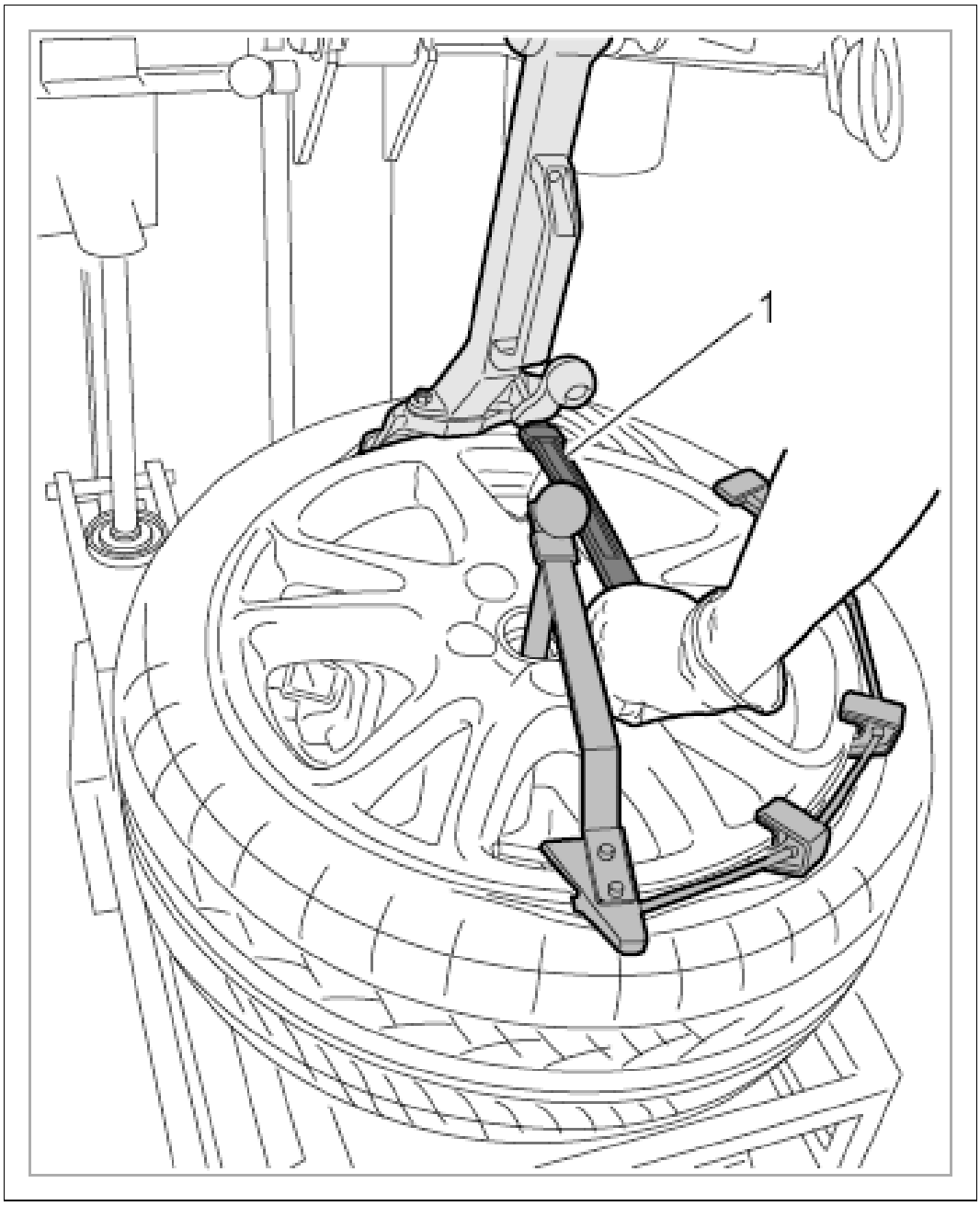

Courtesy of PORSCHE CARS NORTH AMERICA, INC.

7. **Removing lower tire bead:**

Valve/wheel electronics unit at 12 o'clock position.

Pull the tire upwards and push it into the rim bed underneath the second tire bead using the mounting lever (plastic protection). Make sure that the valve/wheel electronics unit is not damaged.

Check the position of the mounting lever. The mounting lever must be the same distance from the inside of the tire and the valve during the entire removal procedure. Constantly check that the plastic protection (on the mounting lever) is positioned correctly in order to protect the rim.

Turn the wheel slowly clockwise until the tire is removed.

Fig 3: Removing tire

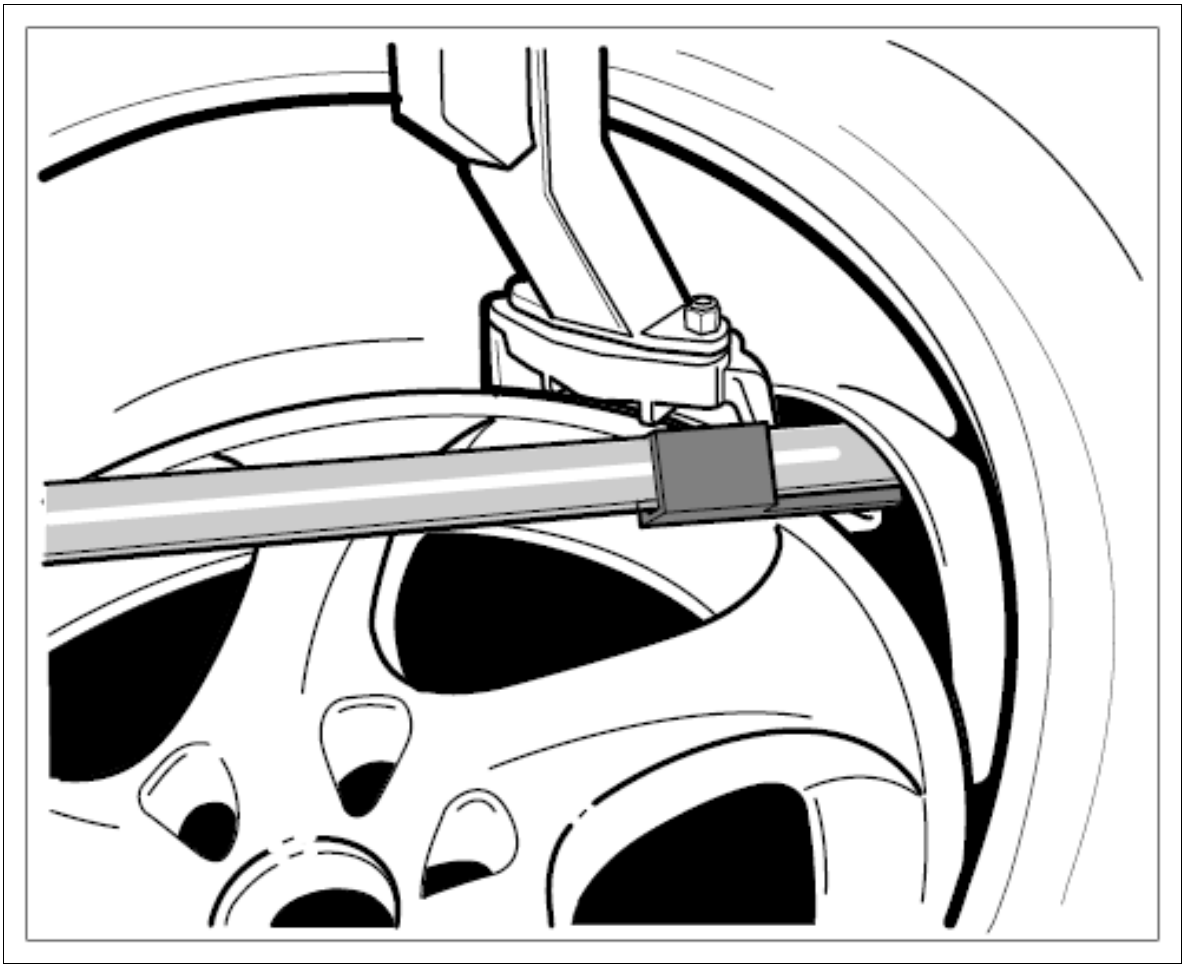

Courtesy of PORSCHE CARS NORTH AMERICA, INC.

8. Set the mounting lever and tire aside (in a safe/clean place).

   Detach the disc wheel from the machine, remove it and lay it carefully aside (store in a safe place).

WM 444019 MOUNTING TIRES (REMOVING AND INSTALLING TIRES) (ALL MODELS) > REMOVING/MOUNTING TIRES (REMOVING AND INSTALLING TIRES) > MOUNTING TIRES

NOTE: Wheel electronics

- *Wheel electronics unit and valve may have been fitted incorrectly.*

- *Wheel electronics units may not have been assigned correctly.*

→ Read and follow the installation instructions for the wheel electronics units. → 443219 REMOVING AND INSTALLING WHEEL ELECTRONICS

→ Check that the wheel electronics units are assigned correctly.

Information

- For correct tire mounting, follow the instructions provided for the tire removal/mounting machine.
- Always use approved tires and tire sizes (specification code/speed index/load capacity). This data can be found in the applicable/current Technical Information.
- tire temperature during removal/mounting must be approx. 20 °C (at least 15 °C). Allow enough time to heat the vehicle/tires in a suitable environment if necessary (at room temperature of more than 15 °C). Example: If the room temperature of the workshop is approx. 20 °C and the tire temperature is approx. - 15 °C, approx. 3 hours are required to heat the tires to the required temperature.
- The wheel electronics must not be treated with compressed air, tire mounting paste, cleaning agents or any other solvents.
- Disc wheels with wheel electronics must not be cleaned with a high-pressure power cleaner before tires have been fitted.
- Do not expose filter surface of wheel electronics. Remove soiling with a lint-free cloth. Do not apply tire mounting paste to the wheel electronics unit. All traces of tire mounting paste must be removed from the wheel electronics unit.
- During fitting, ensure that the tire bead is not pressed against the wheel electronics unit.
- Huge tension can be transferred to the tire bead when the mounting paste dries quickly. It is therefore absolutely essential to mount the upper and lower tire bead quickly and without delay.

1. **Complete preparatory steps for mounting tires:**
    1. Remove abraded rubber particles from the disc wheel and check for damage. → 441202 CHECKING DISC WHEELS .
    2. Fit and clamp the clean wheel as described in the instructions provided for the tire removal/mounting machine.
    3. On vehicles with TPM, check the valve and wheel electronics unit for damage. Replace these components if they are damaged or if they do not comply with specifications (special information on TPM).
    4. Always replace the rubber valve (on vehicles without TPM). Use a commercially available insertion tool and tire mounting paste.
    5. If you intend to continue using the tire, check it for damage (sealing face between tire/rim, ply damage, tire beads, sidewalls and tread depth).
    6. As a general rule, check the bead area (mounting and sealing face) for damage before mounting tires (even new tires). Ensure that this area is perfectly clean to prevent any

slow air leaks (loss of tire pressure) in this area (after mounting the tire). A loss of tire pressure often goes unnoticed on vehicles without TPM. **Serious consequence: Reduced driving dynamics and the tire can be damaged irreparably as a result of increased kneading action (overheating).**

2. **Coat the rim and tire (both bead areas) with a sufficient amount of tire mounting paste TIP TOP Universal, Order No. 593 0601 or Contifix.** Absolute cleanliness is essential (clean brush/clean tire mounting paste). Make sure that there are no traces of tire mounting paste on the wheel electronics unit.

3. **Fitting lower tire bead (first tire bead).**

   Place the tire at the correct position on the disc wheel (check direction of rotation and inside/outside position).

   Push in mounting arm and position on top of the rim flange. The mounting head must be offset by 180° with respect to the valve.

   Fig 1: Installing tire

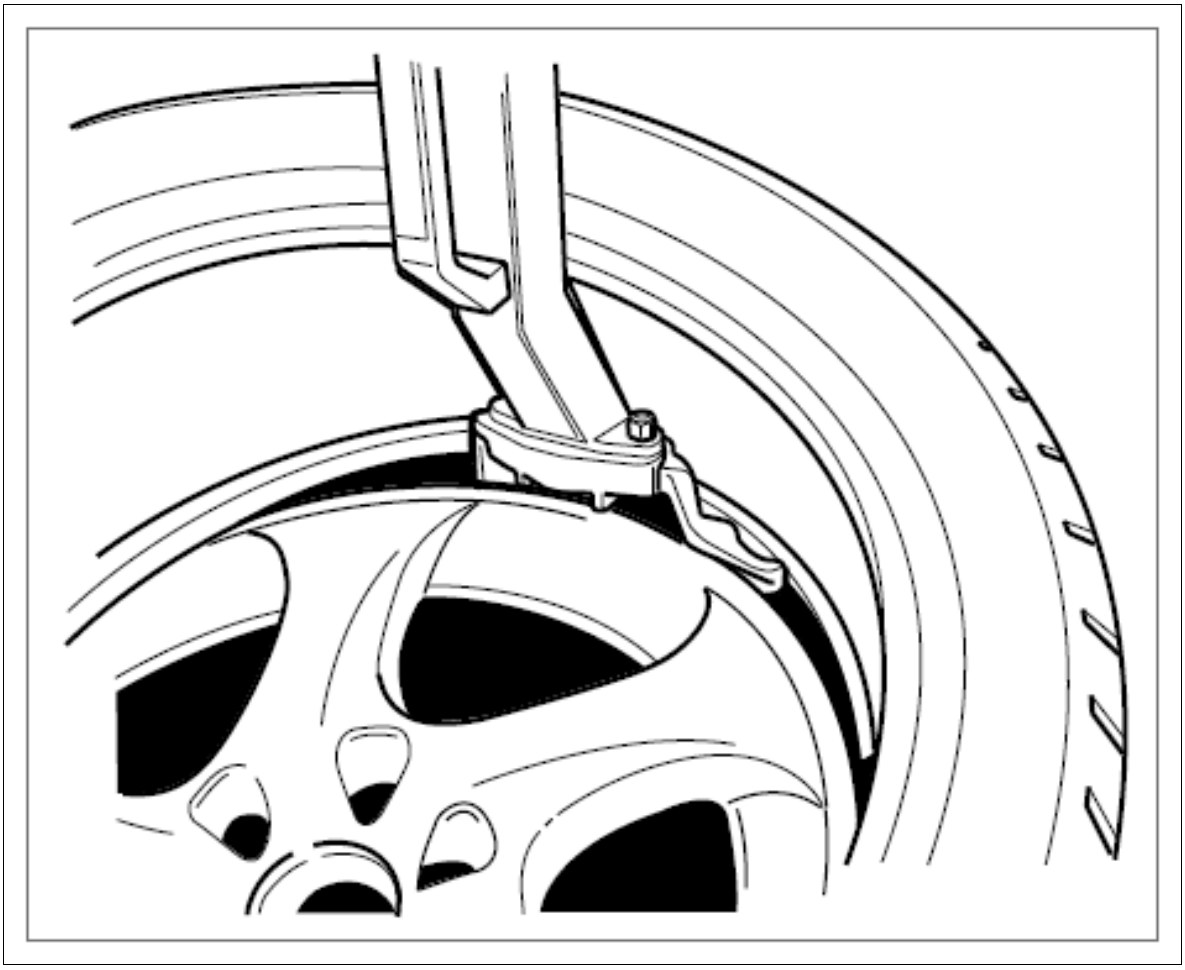

Courtesy of PORSCHE CARS NORTH AMERICA, INC.

Push the lower tire bead (first tire bead) partly over the rim flange and guide it through the mounting head → Mounting tire, lower tire bead, Figure 2Fig 2. Turn the disc wheel slowly in a clockwise direction (clockwise rotation of mounting table) until the lower tire bead is completely fitted.

Fig 2: Installing tire

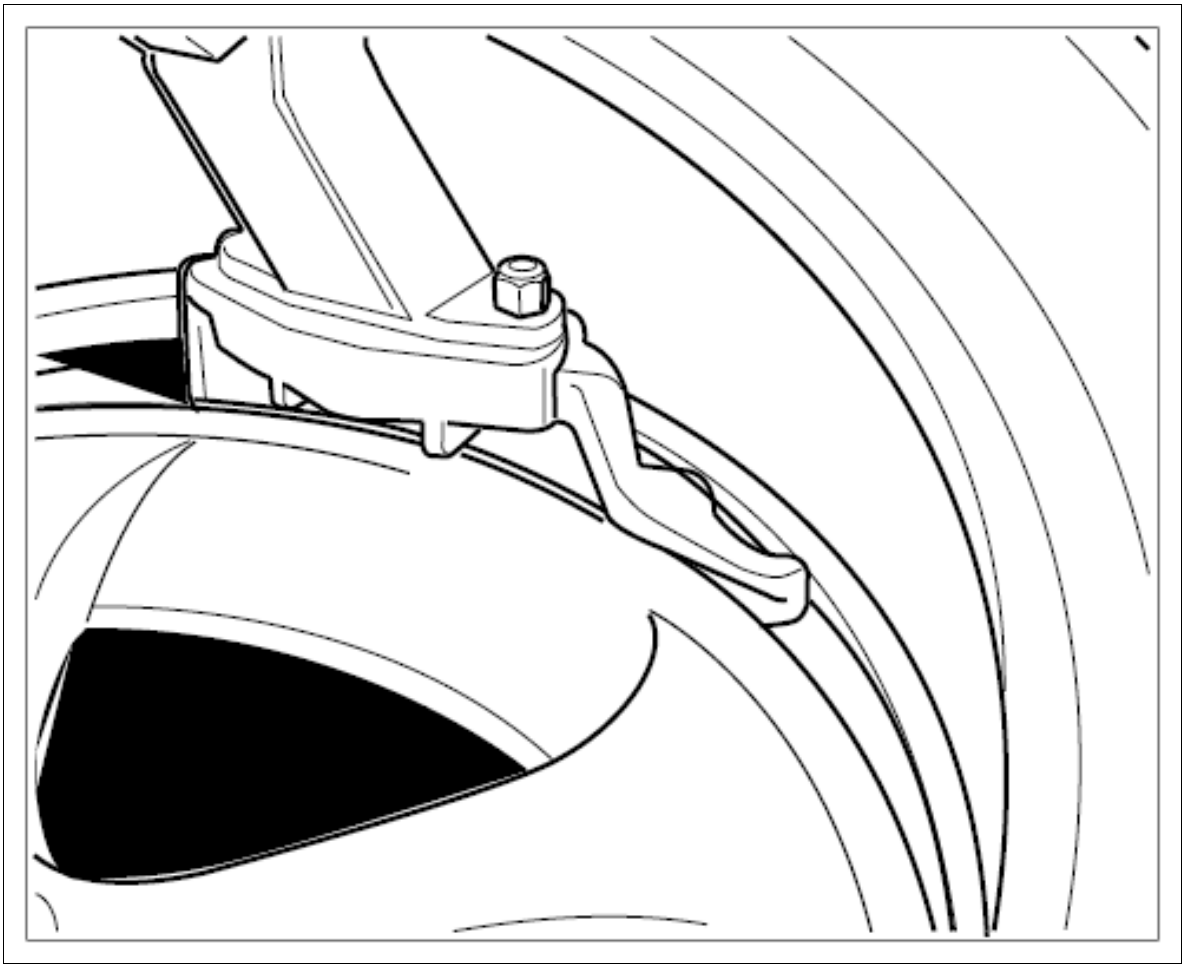

Courtesy of PORSCHE CARS NORTH AMERICA, INC.

4. Fitting upper tire bead (second tire bead) using bead holding-down device. This presses the tire bead into the deep bed.

   Information

   1. Always use a bead holding-down device for mounting the upper tire bead (second tire bead).
   2. There are two types of bead holding-down devices. These are described in sections 4.1 and 4.2 below.
   3. Use the Wulstboy bead holding-down device (type 2 in section 4.2) for tire/wheel combinations that are difficult to mount.

      1. 4.1. **Fitting upper tire bead (second tire bead) using bead holding-down device type 1 = special tool 9539**

         Position the mounting head **-1-** approx. 15 cm to the right of the valve **-2-** .

         Hold the upper tire bead (second tire bead) in the deep bed using the bead holding-down device 9539 and turn the disc wheel slowly at the same time (clockwise rotation of mounting table) until the upper tire bead is completely fitted.

Fig 3: Installing tire Using Holding-Down Device 9539

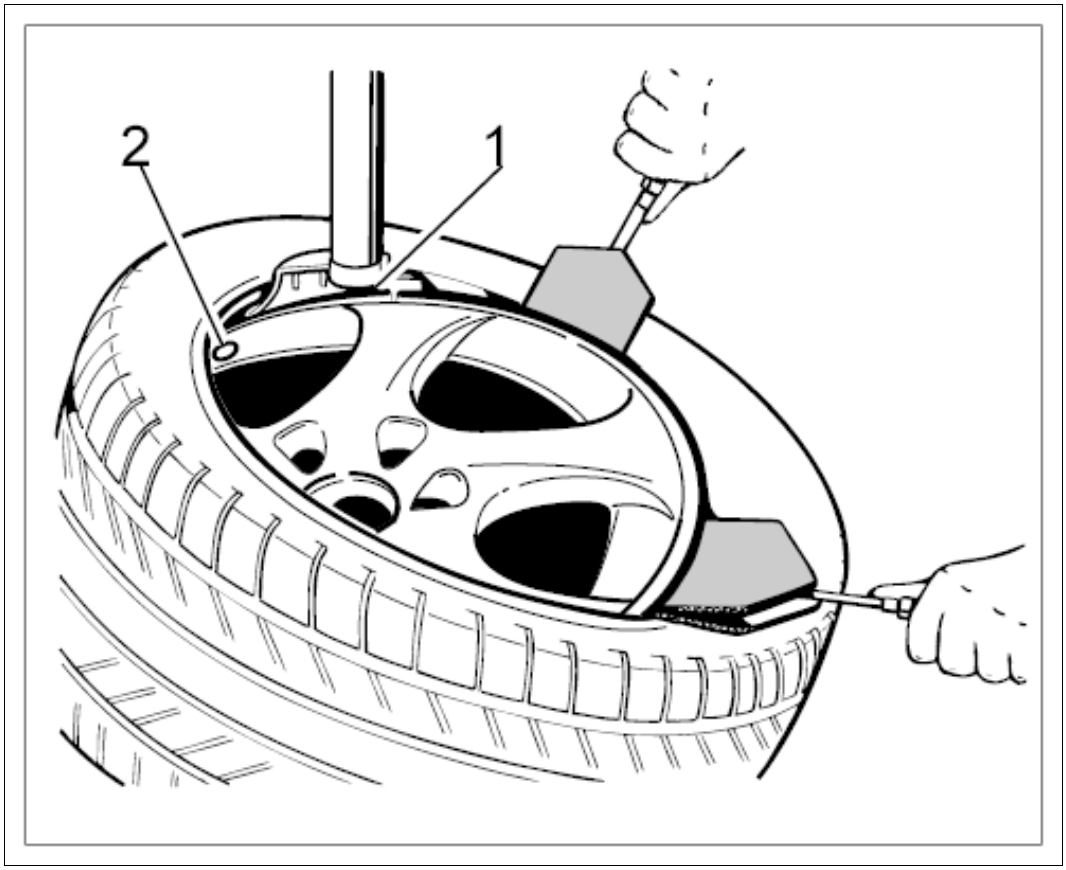

Courtesy of PORSCHE CARS NORTH AMERICA, INC.

2. 4.2. **Fitting upper tire bead (second tire bead) using bead holding-down device type 2 = Wulstboy**

   Position the mounting head approx. 15 cm to the right of the valve.

   Use the upper plastic press-off roller (on the mounting machine) to press the upper tire bead approx. 4 to 5 cm below the rim flange (max. 5 cm/the belt edge of the tire must not be deformed by the plastic press-off roller). This makes space for the bead holding-down device blocks.

   Fit the bead holding-down device (Wulstboy) into the middle of the "wheel/rotary plate" **-1-** . Move the arm **-2-** of the bead holding-down device to the 1 o'clock position.

   Turn the wheel slowly in a clockwise direction (clockwise rotation) and insert the blocks **-3-** of the bead holding-down device.

   Continue turning the disc wheel slowly (clockwise rotation) until the upper bead is completely fitted.

   After fitting the upper tire bead, loosen the bead holding-down device by turning the disc wheel anti-clockwise (anti-clockwise rotation) and remove the blocks using the upper press-off roller.

Fig 4: Identifying Wulstboy Blocks

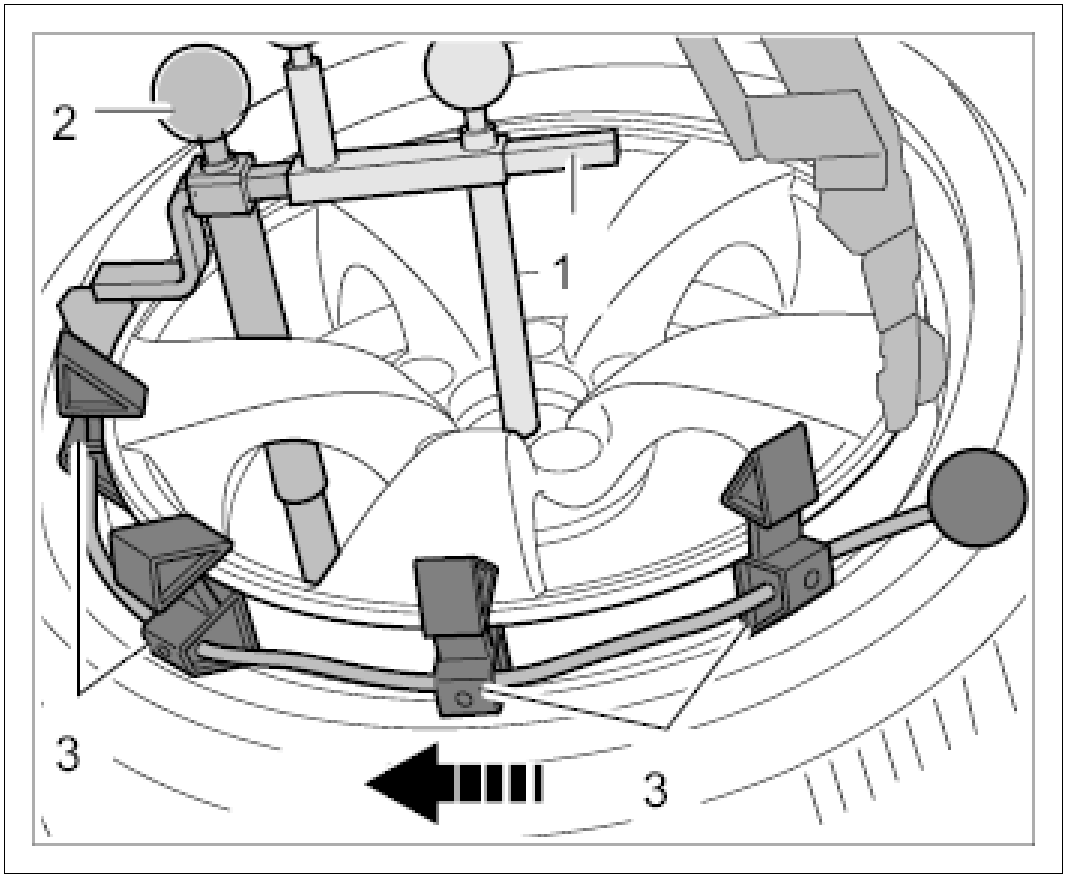

Courtesy of PORSCHE CARS NORTH AMERICA, INC.

5. **Filling/setting tires.**

    1. 5.1. Remove entire wheel from tire fitting unit.

    > *WARNING: High tire seating pressure*
    >
    > *1. Risk of squashing or bruising*

    → Use a tire filling cage.

    2. 5.2. Fill the tire (without the valve insert) with air immediately **in the tire filling cage** (while the tire mounting paste is still fully effective). Continue filling the tire until the tire beads slide/jump over the humps (max. 3.3 bar/48 psi).

    If the tire is not seated correctly when the maximum permitted tire seating pressure (max. 3.3 bar/48 psi) is applied, coat the wheel and tire again with tire mounting paste TIP TOP Universal or Contifix and repeat the procedure.

Fig 5: Identifying tire Filling Cage

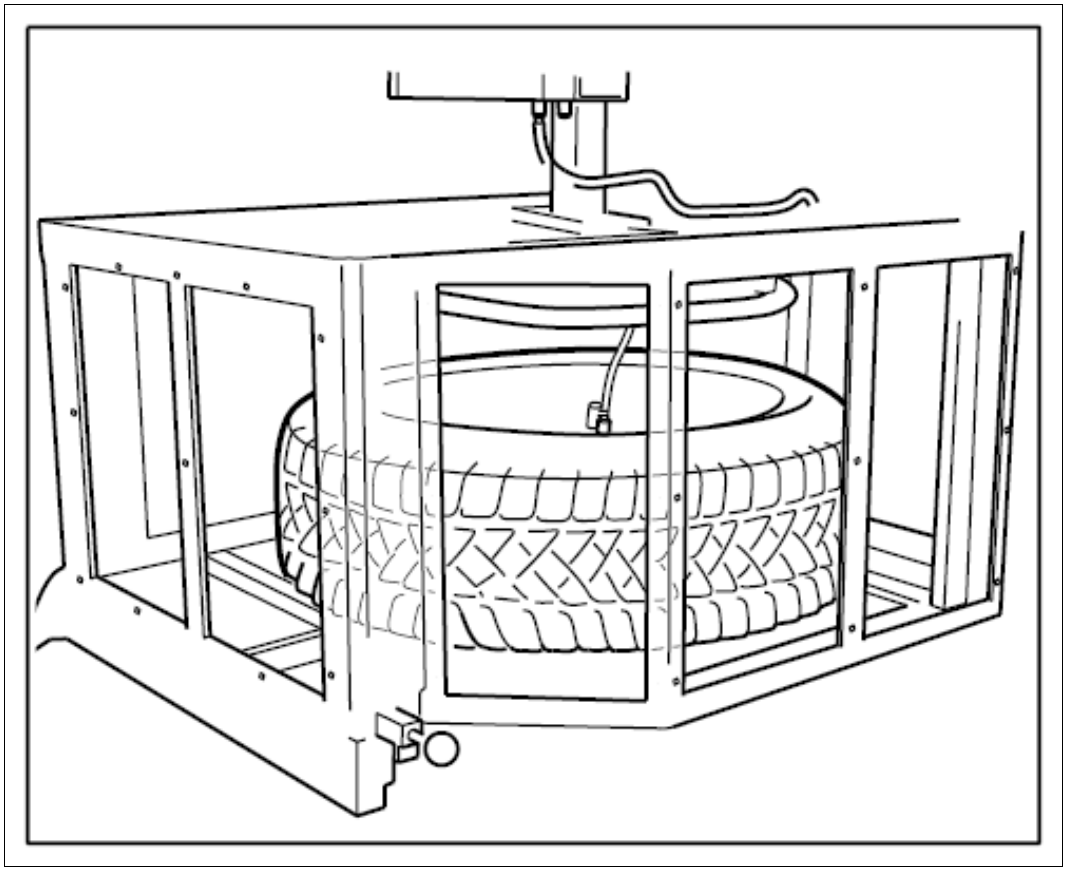

Courtesy of PORSCHE CARS NORTH AMERICA, INC.

3. 5.3. Screw in new valve insert. Counter at the valve body when tightening. Required tightening torque is 0.2 Nm/0.1 ftlb to 0.35 Nm/0.2 ftlb. (20 to 35 Ncm/1.6 to 3 inlb.). A safety valve screw-on tool with tightening control (e.g. from Butler) is ideal for this.

   Fill tire to the setting pressure of 4.0 bar (58 psi). Check that the tire bead is seated correctly. The tire must be lying evenly against the rim all the way around.

   Set the prescribed tire pressure. → 4405IN WHEELS AND TIRES/tire PRESSURE . Screw on valve cap.

6. **Balance the wheel** → 440593 BALANCING/OPTIMIZING WHEELS

7. **Perform a test drive.** Avoid extreme driving maneuvers (acceleration, braking) during the test drive to prevent the tire from turning on the rim.

   This can happen if the tire mounting paste is not completely dry. Optimum balancing will be impaired as a result.

   Observe the following criteria during the test drive:

   1. 7.1. TPM function (tire Pressure Monitoring system).

      Before starting the test drive (with "ignition on"), select the mounted set of wheels under Main menu > tire pressure > Settings in the instrument cluster. The control unit then learns the wheel positions again while the vehicle is driving.

The system starts learning as soon as you accelerate above 25 km/h (16 mph). The learning time is normally about 30 seconds, but can take several minutes when the vehicle is driven in a metallic environment (e.g. multi-storey car park, bridge and other concrete, highly metallic surfaces).

2. 7.2. Rough running performance and vibrations
3. 7.3. Vehicle handling.

WM 4440IN INFORMATION ON TIRES/MOUNTING TIRES (ALL MODELS) > INFORMATION > TIRES > TIRE DAMAGE - CAUSED WHILE DRIVING

If a tire is damaged and it cannot be determined with absolute certainty that there is no ply damage - with all of its consequences - or if the tire was thermally or mechanically overloaded due to a loss of pressure or other prior damage, we recommend replacement of the tire in question for safety reasons.

WM 4440IN INFORMATION ON TIRES/MOUNTING TIRES (ALL MODELS) > INFORMATION > TIRES > TIRE DAMAGE - CAUSED WHILE REMOVING/MOUNTING TIRES

When mounting tubeless tires, check the sealing face of the tire and the disc wheel for cleanliness and any signs of damage. Bear in mind here that the bead base performs the sealing function on tubeless tires. When mounting the tire beads, use only the specified tire mounting pastes. The following can occur if an unsuitable mounting paste is used:

- Twisting of the tire on the rim.
- Fracture of the bead bundle during mounting and if the seating pressure is too high.
- Damage to the tire bead.
- Damage to the rim surface by aggressive substances.

WM 4440IN INFORMATION ON TIRES/MOUNTING TIRES (ALL MODELS) > INFORMATION > TIRES > REPLACING TIRES

Tires should not be more than 6 years old!

Repairs to the tires are not permitted nor is the use of inner tubes in tubeless tires.

When replacing a tire on an axle, make sure that the tread depth of the new tire does not differ from that of the other tire by more than 30%.

If new tires are mounted or the tires of one axle are replaced, tires of the same make and with the same specification code must always be used on each of the two axles.

If tires are replaced on one axle only, the different tread depth in relation to the other axle can cause a noticeable change in the handling the driver has become accustomed to. This is especially true if new

tires are mounted on the rear axle. This effect decreases with increasing tire mileage.

The overview of summer and winter tires is included in Technical Information (TI), Group 4. When replacing summer tires, pay close attention to the tire specification number for the same make of tire. The specification code (for example N0) distinguishes the summer tires specially authorized by Porsche from other models of the same tire type and size.

Customers should be informed that the full performance of new or newly mounted tires is achieved only after driving the vehicle for a distance of 100 to 200 km (60 to 120 miles). Extreme driving maneuvers (acceleration, braking) should be avoided.

WM 4440IN INFORMATION ON TIRES/MOUNTING TIRES (ALL MODELS) > INFORMATION > TIRES > TIRE STORAGE

Tires must be stored in a cool, dry and dark room with adequate ventilation. They must never come into contact with fuel, oil, grease or chemicals. Complete wheels can be stacked for storage. It is advisable to increase the tire pressure by 0.4 bar (6 psi).

If the tires are not mounted on wheels, store them in the vertical position. Tires stored in vertical position should be turned every two weeks in order to prevent excessive flat spots. If the tires are stacked in horizontal position, they will become severely deformed and cannot be seated in the rim flange easily when mounted.

Tires age due to physical and chemical processes, which can impair their function. If they are stored for an extended period, they will harden and become brittle faster than tires that are in continual use. Hairline ageing cracks can occur on older tires. If tires are in use, the kneading action activates the plasticizer in the rubber and thereby prevents hardening and cracking.

WM 4440IN INFORMATION ON TIRES/MOUNTING TIRES (ALL MODELS) > INFORMATION > TIRES > TIRE IDENTIFICATION (SPEED CLASSES/TIRE AGE)

Tires should not be more than 6 years old!

The age of the tire can be determined from the manufacturer's code, which is shown behind the DOT code on the tire sidewall! The date of manufacture (the last four digits) is shown at the end of the code!

Example

DOT DM CP 05 Y 2200	22 = production week
	00 = production year 2000

WM 4440IN TIRES (ALL MODELS) > GENERAL MOUNTING INSTRUCTIONS > GENERAL

Information

- Always use new rubber valves when changing tires.

- The metal valve only needs to be replaced in certain cases. → 443219 REMOVING AND INSTALLING WHEEL ELECTRONICS
- When fitting tires, the direction of rotation and the inner and outer sides should be noted.
- Only use TIP TOP Universal or Contifix tire fitting paste.

Before mounting the tires on the wheels, check for damage (cracks, dents, etc.) as well as radial and lateral runout. Maximum permissible radial runout and lateral runout of alloy wheels = 0.7 mm. Maximum permissible radial runout and lateral runout of the wheel with tire = 1.25 mm. Try to keep the values at less than 1.0 mm - around 0.5 mm is better.

When mounting tubeless tires, check the sealing face of the tire and the disc wheel for cleanliness and any signs of damage. Bear in mind here that the bead base performs the sealing function on tubeless tires. When mounting the tire beads, use only the specified tire mounting pastes. The following can occur if an unsuitable mounting paste is used:

- Twisting of the tire on the rim
- Fracture of the bead core during mounting if the seating pressure is too high
- Damage to the tire bead
- Damage to the rim surface by aggressive substances.

If Contifix is used, apply sparingly to the tire beads (due to risk of the tire turning on the rim). If possible, the vehicle should not be driven for 24 hours after tire mounting or matching.

Information

- Customers should be informed that the full performance of new or newly mounted tires is achieved only after a distance of 100 to 200 km (60 to 120 miles) has been driven. Extreme driving maneuvers (acceleration, braking) should be avoided.
- The absolute limit on how far the tire can turn on the wheel must be regarded as 20 mm. Furthermore, this will worsen the result of optimum balancing.
- Mark the relative positions of the tire and wheel for reference.

In order to optimize rolling smoothness, it is important - and necessary in some cases - to mount the tire at a good position with respect to the rim (matching).

WM 4440IN TIRES (ALL MODELS) > GENERAL MOUNTING INSTRUCTIONS > UNCONTROLLED MATCHING

Turn the tire on the wheel by 90° or 180° if necessary in order to achieve an acceptable value with regard to rolling smoothness (true running, imbalance and distribution of balance weights).

WM 4440IN TIRES (ALL MODELS) > GENERAL MOUNTING INSTRUCTIONS > CONTROLLED MATCHING

With a balancing machine with matching program. In most cases, this produces an even better result

with regard to the rolling smoothness (true running, imbalance and distribution of the balance weights) than can be achieved with uncontrolled matching.

WM 4440IN TIRES (ALL MODELS) > GENERAL MOUNTING INSTRUCTIONS > MOUNTING TIRES

WARNING: High tire seating pressure

- *Risk of squashing or bruising*

→ Use a tire filling cage.

Fig 1: Identifying Tire Filling Cage

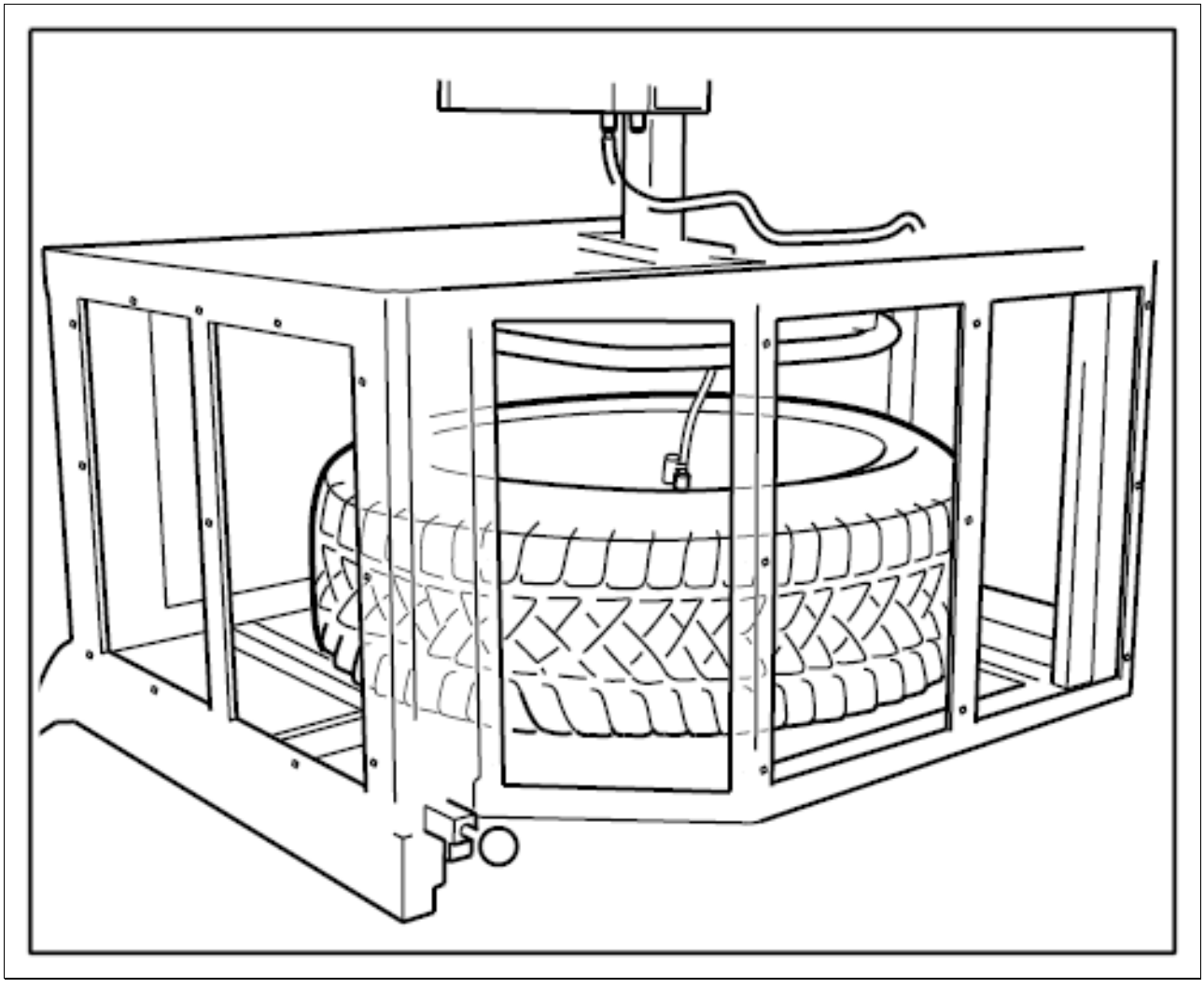

Courtesy of PORSCHE CARS NORTH AMERICA, INC.

- After mounting the tubeless tires, inflate them without valve insert to max. 4.0 bar (58 psi) gauge pressure to ensure they are seated properly on the rim. By the time the pressure reaches 4.0 bar

(58 psi), at the latest, the tire beads must pop out of the deep bed and over the hump of the rim bead in order to avoid fractures of the bead core. Interrupt the process if necessary and generously coat all necessary surfaces with sliding compound (tire mounting paste) again. Then repeat the process. Screw in the valve insert and set the specified tire pressure.

If new tires are to be mounted or the tires of one axle are to be replaced, tires of the same make and with the same specification code must always be used on each of the two axles. If tires are replaced on one axle only, the different tread depth in relation to the other axle can cause a noticeable change in the handling the driver has become accustomed to. This is especially true if new tires are mounted on the rear axle. This effect decreases with increasing tire mileage.

Information

- If a tire is damaged and it cannot be determined with absolute certainty that there is no ply damage - with all of its consequences - or if the tire was thermally or mechanically overloaded due to a loss of pressure or other prior damage, we recommend replacement of the tire in question for safety reasons.
- When replacing a tire on an axle, make sure that the tread depth of the new tire does not differ from that of the other tire by more than 30 %.
- Repairs to the tires are not permitted nor is the use of inner tubes in tubeless tires.
- When replacing summer tires, pay close attention to the tire specification number.

The overview of summer and winter tires is included in Technical Information (TI), Group 4. When replacing summer tires, pay close attention to the tire specification number for the same make of tire. The specification characters (for example N0) distinguish the summer tires specially authorized by Porsche from other models of the same tire type and size.

WM 4440IN TIRES (ALL MODELS) > GENERAL MOUNTING INSTRUCTIONS > BALANCING WEIGHTS

Type of balancing weights: Adhesive weights as used previously (no special version necessary).

Attach both weights to the inner side **-arrows-** .

Fig 1: Locating Balancing Weights

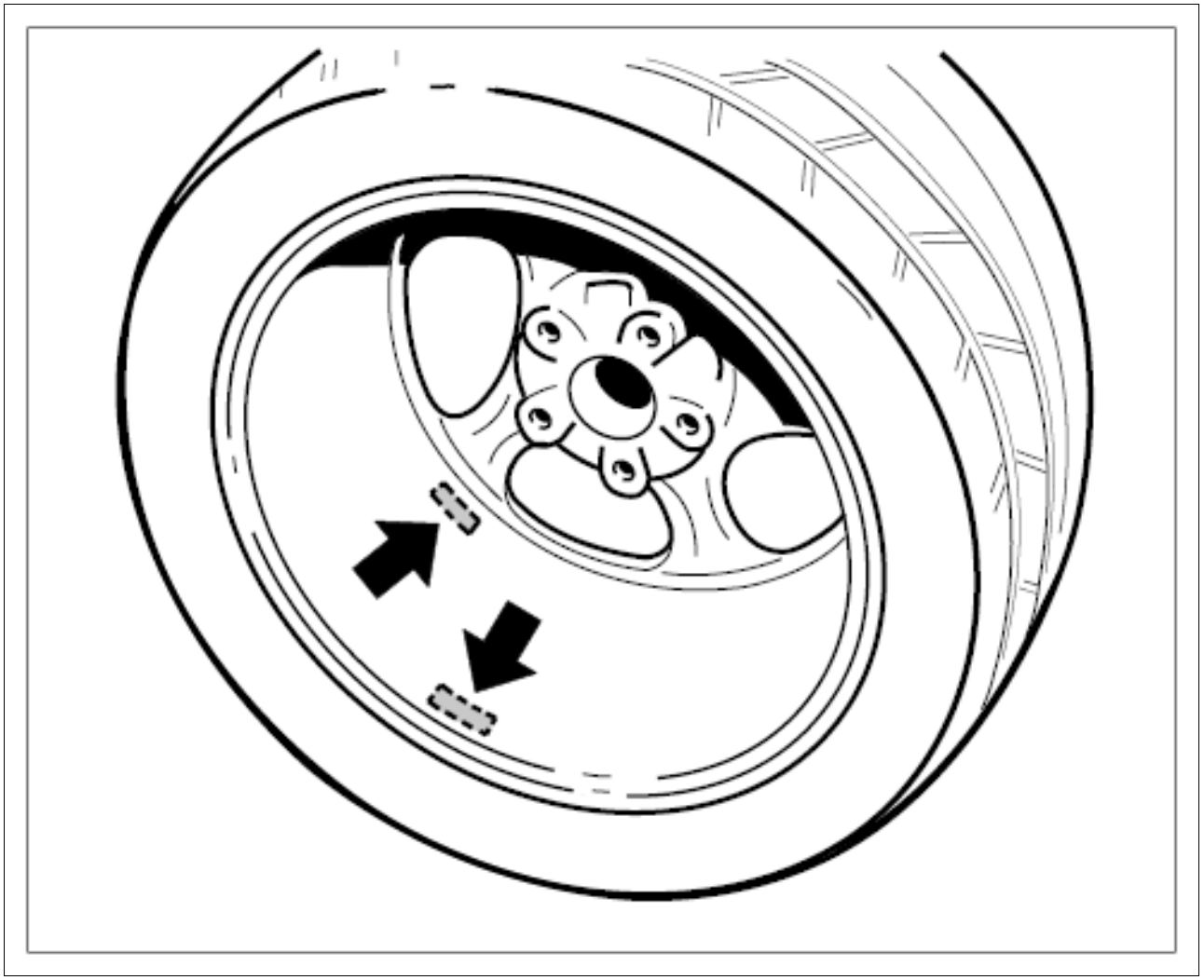

Courtesy of PORSCHE CARS NORTH AMERICA, INC.

Information

- Observe program selection and operating instructions of the balancing machine.

WM 4440IN TIRES (ALL MODELS) > GENERAL MOUNTING INSTRUCTIONS > TIRE STORAGE

Tires must be stored in a cool, dry and dark room with adequate ventilation. They must never come into contact with fuel, oil, grease or chemicals. Complete wheels can be stacked for storage. It is advisable to increase the tire pressure by 0.4 bar (6 psi).

If the tires are not mounted on wheels, store them in the vertical position. Tires stored in vertical position should be turned every two weeks in order to prevent excessive flat spots. If the tires are stacked in horizontal position, they will become severely deformed and cannot be seated in the rim flange easily when mounted.

Tires age due to physical and chemical processes, which can impair their function. If they are stored for

an extended period, they will harden and become brittle faster than tires that are in continual use. Hairline ageing cracks can occur on older tires. If tires are in use, the kneading action activates the plasticizer in the rubber and thereby prevents hardening and cracking.

WM 4440IN TIRES (ALL MODELS) > GENERAL MOUNTING INSTRUCTIONS > TIRE AGE

Information

- Tires should not be older than 6 years! Not even the emergency spare wheel!

The age of the tire can be determined from the manufacturer's code, which is shown behind the DOT code on the tire sidewall! The date of manufacture (the last four digits) can be found at the end of the code!

Example

DOT DM CP 05 Y 2200	22 = production week
	00 = production year 2000

WM 449503 SUSPENSION ALIGNMENT, COMPLETE (ALL MODELS) > TOOLS

Designation	Type	Number	Description	
steering wheel alignment gauge	Workshop equipment	WE 1343		
quick-clamping unit	Workshop equipment	WE 1621		
puller hook	Special tool	9229/1		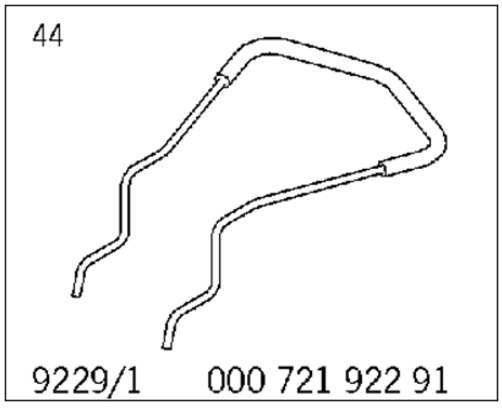

PIWIS Tester II	Special tool	9818		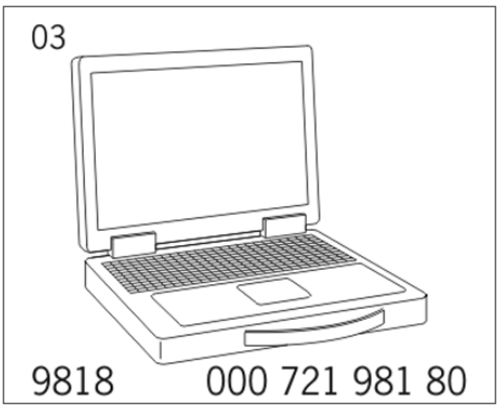
interchangeable head	VW tool	T40183		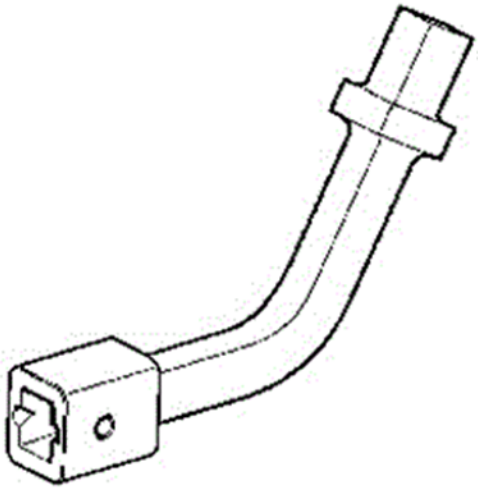

WM 449503 SUSPENSION ALIGNMENT, COMPLETE (ALL MODELS) > TECHNICAL VALUES

Location	Description	Type	Basic value	Tolerance 1	Tolerance 2
Upper control arm to wheel bearing housing	M12 thread	Tightening torque	95 Nm (70 ftlb.)		
Tie rod to rear axle housing	M12 thread/always use new screws or bolts and nuts following removal	Tightening torque	95 Nm (70 ftlb.)		
Tie-rod ball to tie rod	Counter when loosening and tightening the lock nut on the outer joint	Tightening torque	90 Nm (67 ftlb.)		
Fastening screws	Heat shield to front-axle carrier	Tightening torque	9 Nm (6.5 ftlb.)		

Fastening screw	Heat shield to front-axle carrier	Tightening torque	20 Nm (15 ftlb.)		
Fastening screw	Step 1, front-axle carrier to body	Initial tightening	115 Nm (85 ftlb.)		
Fastening screw	Step 2, front-axle carrier to body	Final tightening	+90°		
Fastening screw	Step 1, front-axle carrier to body	Initial tightening	115 Nm (85 ftlb.)		
Fastening screw	Step 2, front-axle carrier to body	Final tightening	+90°		
Fastening screw	Fastening screw on transmission support	Tightening torque	70 Nm (52 ftlb.)		

WM 449503 SUSPENSION ALIGNMENT, COMPLETE (ALL MODELS) > INFORMATION > GENERAL PROCEDURE FOR SUSPENSION ALIGNMENT

Perform suspension alignment using an electronic wheel-alignment analyzer. Measurement procedures are described in the operating instructions for the wheel-alignment analyzer used.

For nominal value for front and rear axles, refer to the Technical data. → 4495TW ADJUSTMENT VALUES FOR SUSPENSION ALIGNMENT .

In order to exclude erroneous measurements, the following preconditions must be met before alignment and the following points should be given special attention:

Empty weight of vehicle according to DIN 70020, i.e. vehicle in ready-to-drive condition with full tank and including tools but without driver or additional weights.

Joint and wheel-bearing play OK (wheel-bearing play cannot be adjusted).

tire pressure in accordance with regulations, fairly uniform tire tread.

Use **puller hook 9229/1** to pull off the hub caps (in order to fit the quick-clamping holders).

Quick-clamping holder with adapter (for the measured-value pickups/measuring reflectors) correctly secured to the wheels.

Use **quick-clamping unit WE 1621** → Self-centering quick-clamping holder (example) to secure the measured-value pickups/measuring reflectors to the wheels.

The self-centering quick-clamping holders are positioned centrally (with the claws first) in the center of the rim and are tautened in the rim by turning the straining ring (clockwise).

Fig 1: Identifying Self-Centering Quick-Clamping Holder

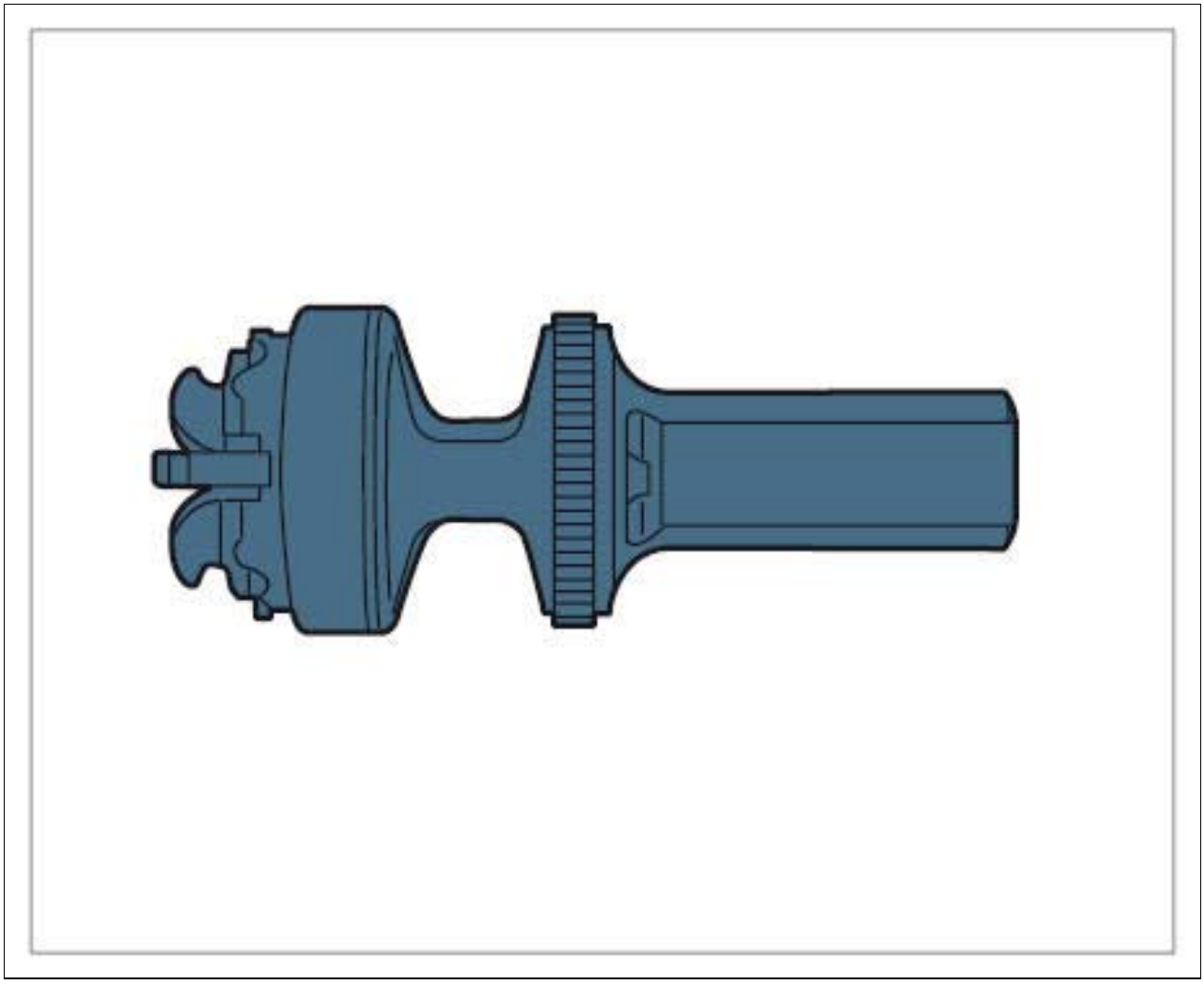

Courtesy of PORSCHE CARS NORTH AMERICA, INC.

Receiving surfaces for the quick-clamping holders on the wheels and the adapter surfaces must be clean and flat. Always check the levelling surface on the wheels precisely in particular before fitting the quick-clamping holders.

Strictly comply with maintenance intervals for measuring equipment and measuring platform. If the levelling of the measuring platform or measuring station is done in-house, levelling equipment is required. A spirit level is not adequate.

Skilled handling of measuring equipment and measuring platform.

Sliding plates with transverse motion (rotary motion) at the rear axle are advisable.

Refer to the Technical Literature provided the manufacturer of the measuring equipment and the manufacturer of the measuring platform.

Do not treat measured values as a whole, but very critically with regard to driving dynamics, high-speed strength of the tires, tire wear and cost/benefit effects (time required for correction of insubstantial deviations). The toe values are of decisive significance for driving dynamics and tire wear.

Perform suspension alignment only in the sequence specified in the service information. The camber

values at the front axle are valid if the wheels are in the straight-ahead position. Steering wheel and steering gear in center position when toe is being adjusted.

Before wheel alignment values are adjusted at front and rear axles, it is recommended that the vehicle height be checked at the DIN empty weight. Conclusions can then be drawn about wheel alignment values in the event of any suspension alignment that becomes necessary later.

WM 449503 SUSPENSION ALIGNMENT, COMPLETE (ALL MODELS) > HEIGHT CHECK > SPECIAL NOTES FOR VEHICLES WITH AIR SUSPENSION

On vehicles with air suspension, the vehicle must be set to normal level. The vehicle may be aligned and adjusted in this position only.

If the control unit or one of the level sensors was replaced, calibration must be carried out using the Porsche System Tester. → 430115 CALIBRATING THE LEVELLING SYSTEM

Adjust vehicle to normal level:

1. Drive vehicle onto the wheel-alignment platform, switch off engine and move selector lever to position P.
2. **PIWIS Tester II 9818** must now be connected.

   Do not get into or out of the vehicle while adjusting the vehicle to normal level and after adjusting it to normal level for suspension alignment. This can give false alignment results.
3. Select >>Levelling system/PASM<< >>Drive links/checks<< >>Adjust vehicle level<< in the control unit overview.
4. Select the value **Low level 1** and press [F8] to start. The vehicle adjusts to Low Level.
5. Once Low Level has been reached, select **Normal Level** and press [F8] to start. The vehicle now adjusts to Normal Level.

WM 449503 SUSPENSION ALIGNMENT, COMPLETE (ALL MODELS) > HEIGHT CHECK > CHECKING VEHICLE HEIGHT

1. To check the height, position ready-to-drive vehicle (fully tanked with tire repair kit or spare wheel and tools) on a flat surface or on the measuring station. The normal vehicle level must be set for vehicles with air suspension. Please read the section: **Special notes for vehicles with air suspension**
2. On vehicles with air suspension/levelling system, switch off the levelling system (and switch it back on again when work is complete).
    1. 2.1. Use **PIWIS Tester II 9818** to select >>Levelling system/PASM<< >>Drive links/checks<< >>Activate/deactivate vehicle<< in the control unit overview.
    2. 2.2. Select the value **Deactivate levelling system (permanently)** and press [F8] to start. The levelling system is now switched off.

3. Compress vehicle at front and rear axles by approximately 25 mm 2-3 times and allow it to spring back freely.
4. Open the bonnet.
5. Measure the vehicle height **-dimension 1-** at all four wheels on the vehicle.

Fig 1: Identifying Wheel To Wing Lower Edge Dimension (Rear Axle)

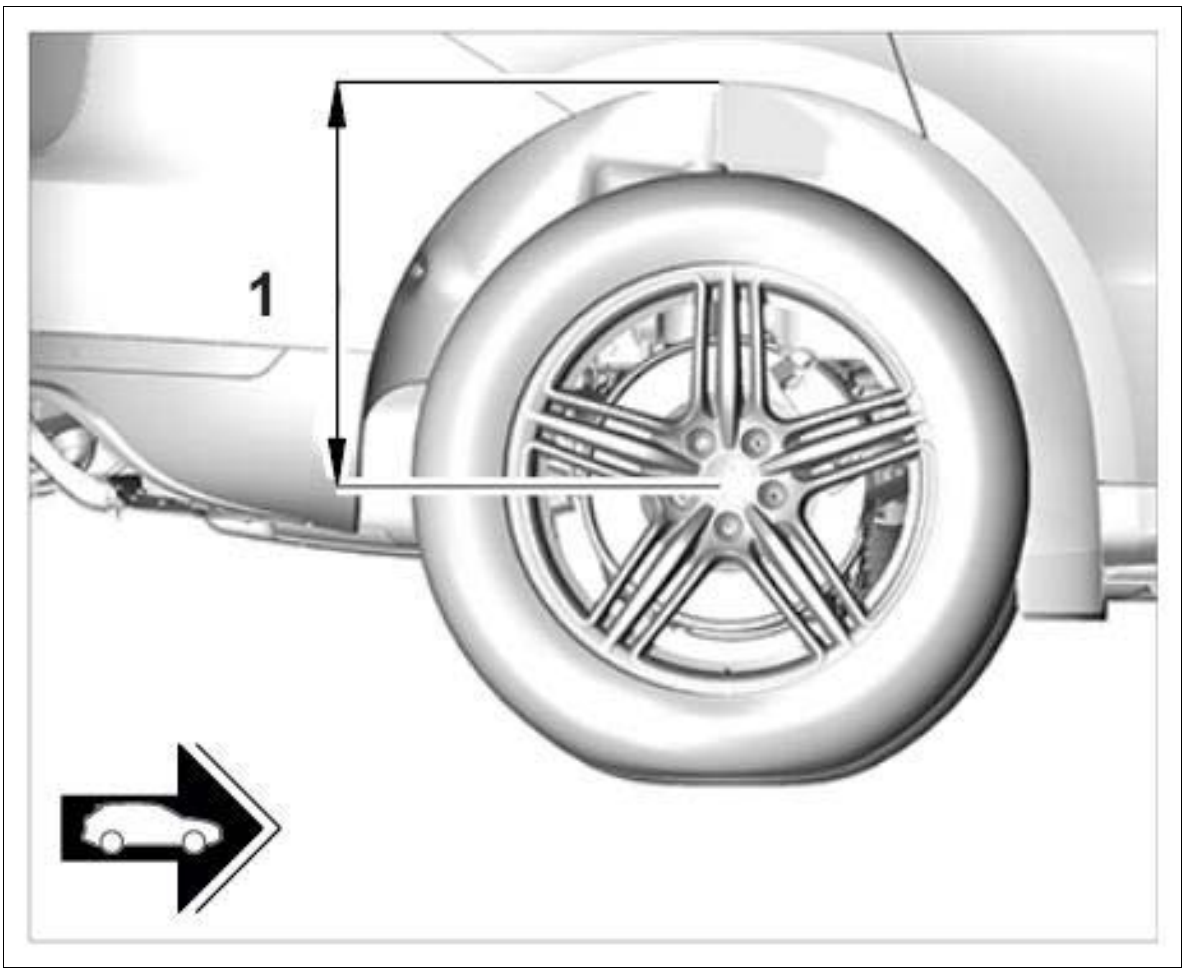

Courtesy of PORSCHE CARS NORTH AMERICA, INC.

WM 449503 SUSPENSION ALIGNMENT, COMPLETE (ALL MODELS) > REAR-AXLE AND FRONT-AXLE WHEEL ALIGNMENT > CHECKING/ADJUSTING WHEEL ALIGNMENT

Information

Special points relating to vehicle adjustment:

- Toe difference angle and caster cannot be adjusted.
- Camber at the front axle cannot be adjusted. But camber can be centered evenly within the tolerance range by moving the front-axle carrier.

1. Prepare vehicle for checking and/or adjusting wheel alignment values. Place front wheels on

turntable and rear wheels on rotary/sliding plates.

2. Compress vehicle as far as possible (by a few mm) at front and rear axles twice or three times and allow it to spring back freely.

WM 449503 SUSPENSION ALIGNMENT, COMPLETE (ALL MODELS) > REAR-AXLE AND FRONT-AXLE WHEEL ALIGNMENT > CENTERING CAMBER ON THE FRONT AXLE

Information

Camber at the front axle cannot be adjusted. But camber can be centered evenly within the tolerance range by moving the front-axle carrier.

All axle adjustment values must be checked whenever the camber is adjusted!

1. Remove front underbody panelling → 519219 REMOVING AND INSTALLING COVER FOR FRONT UNDERBODY .

2. Unscrew fastening screws **-1 and 2-** and remove heat shields at the left and right.

Fig 1: Identifying Front-Axle Carrier Heat Shield



Courtesy of PORSCHE CARS NORTH AMERICA, INC.

3. Loosen fastening screws **-1 and 3-** on the transmission support **-2-** . This ensures that the transmission mount is not strained.

Fig 2: Identifying Transmission Support Screws

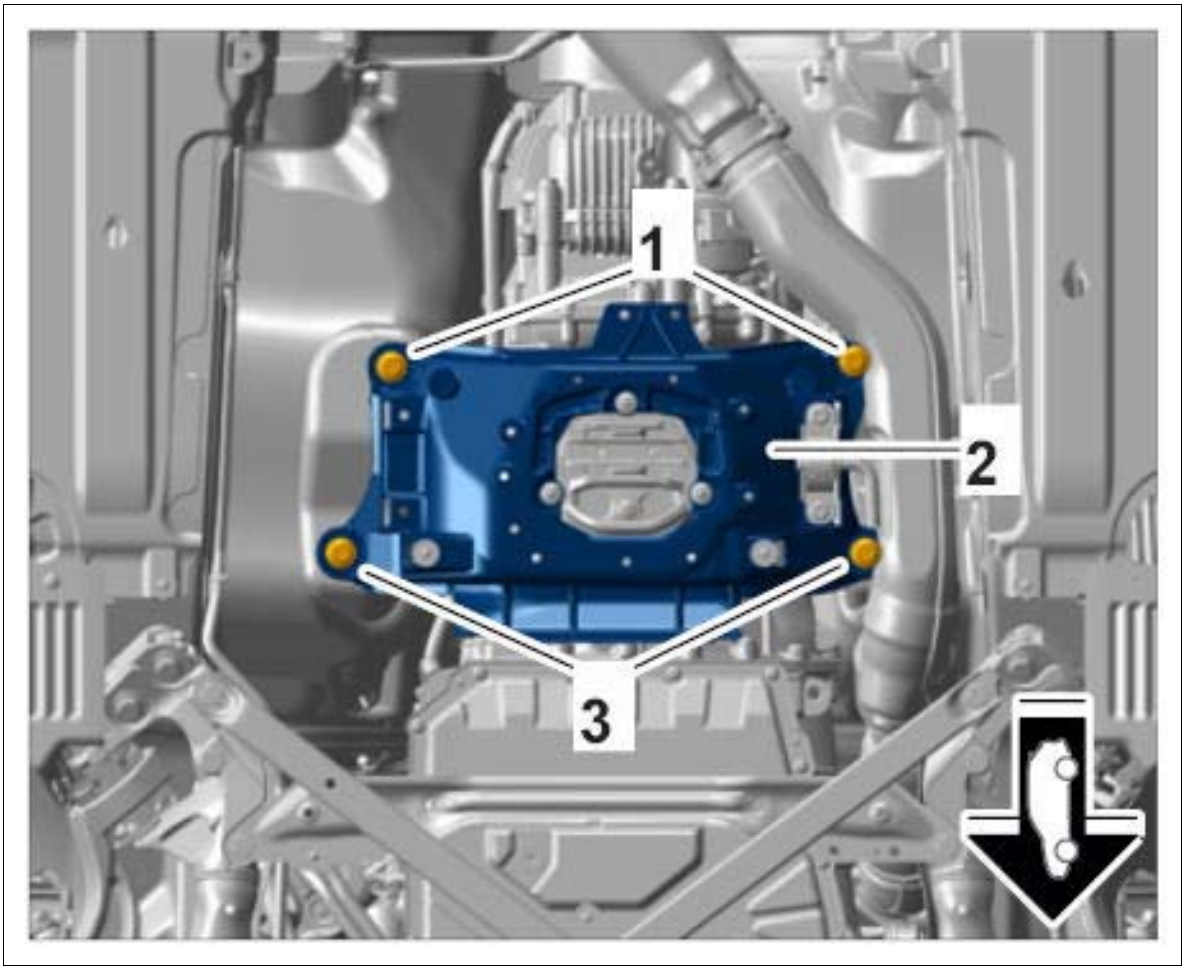

Courtesy of PORSCHE CARS NORTH AMERICA, INC.

4. Loosen fastening screws **-1 to 8-** on the front-axle carrier.

Fig 3: Identifying Front-Axle Carrier Mounting

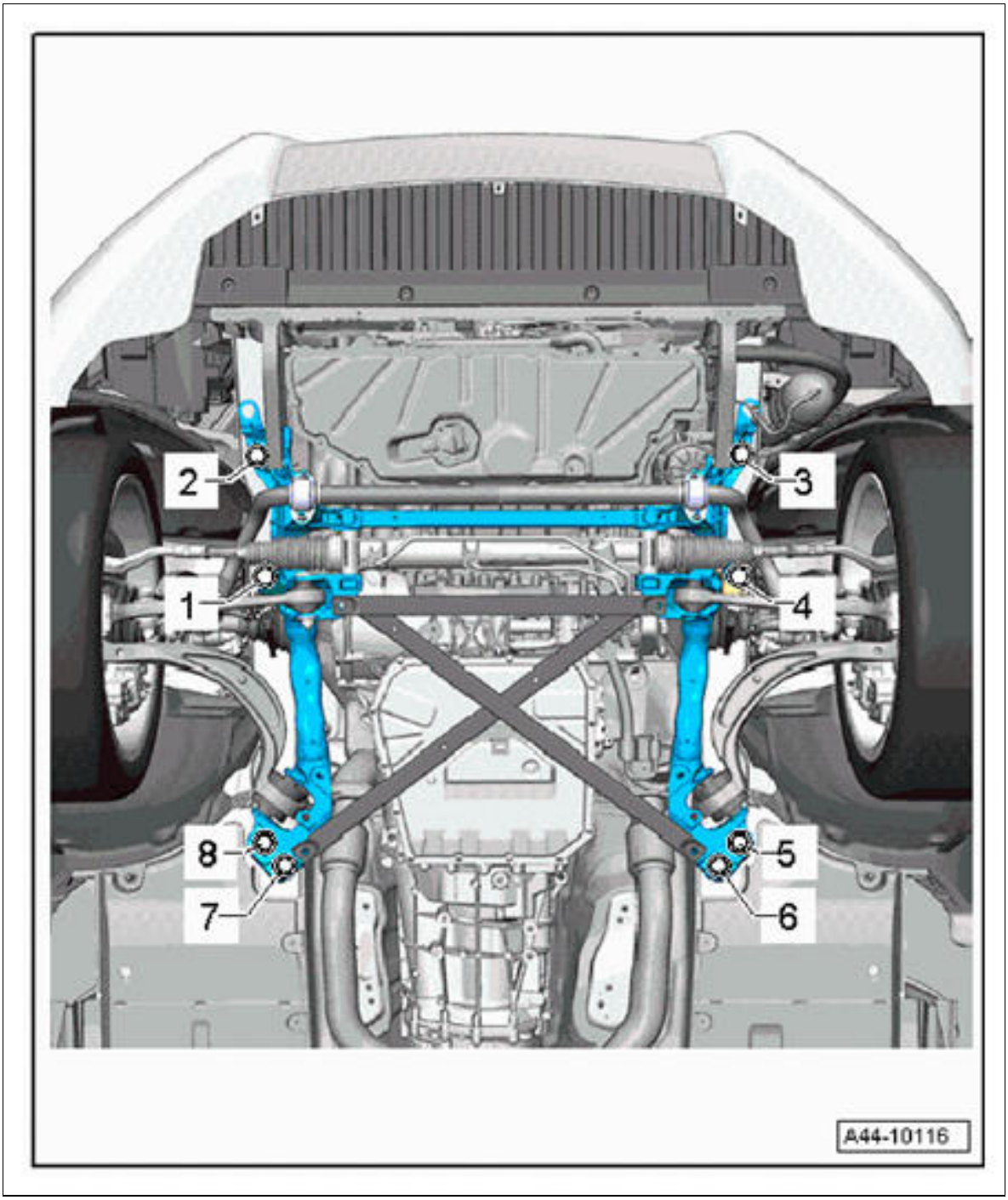

Courtesy of PORSCHE CARS NORTH AMERICA, INC.

5. Raise the front of the vehicle at the lifting platform jacking points using an axle lift.
6. Move the front-axle carrier with engine mount and anti-roll bar to the required position using a plastic-coated tire iron → Moving front-axle carrier .

   Before checking the camber values, compress the vehicle at the front axle several times.

Fig 4: Moving Front-Axle Carrier

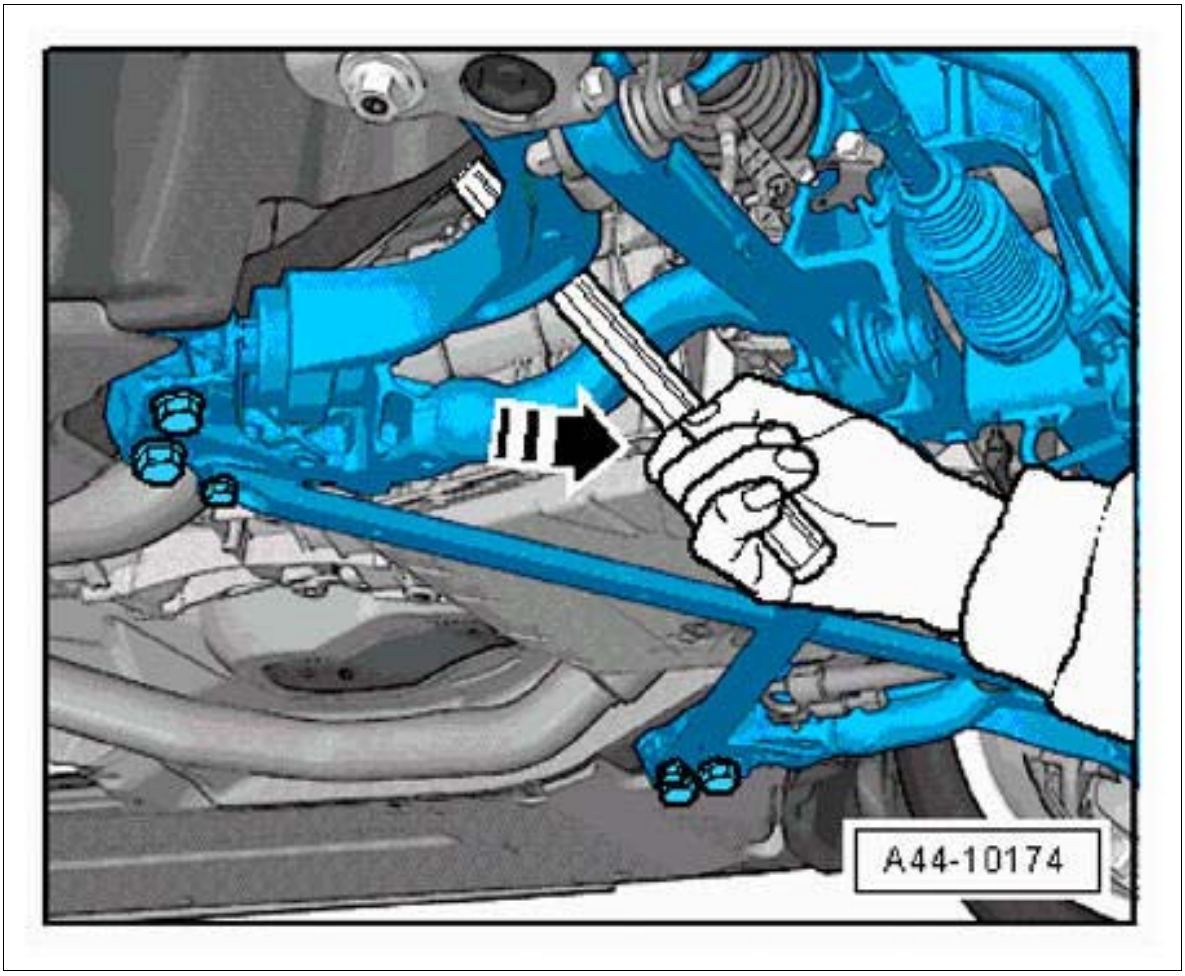

Courtesy of PORSCHE CARS NORTH AMERICA, INC.

7. Screw in and tighten new fastening screws **-1 and 4-** one after the other.

   Step 1: **Initial tightening 115 Nm (85 ftlb.)**

   Step 2: **Final tightening +90°**

8. Screw in and tighten new fastening screws **-2 and 3-** one after the other.

   Step 1: **Initial tightening 115 Nm (85 ftlb.)**

   Step 2: **Final tightening +90°**

9. Screw in and tighten new fastening screws **-5 and 8-** one after the other.

   Step 1: **Initial tightening 115 Nm (85 ftlb.)**

   Step 2: **Final tightening +90°**

10. Screw in and tighten new fastening screws **-6 and 7-** one after the other.

    Step 1: **Initial tightening 115 Nm (85 ftlb.)**

    Step 2: **Final tightening +90°**

Fig 5: Identifying Front-Axle Carrier Mounting

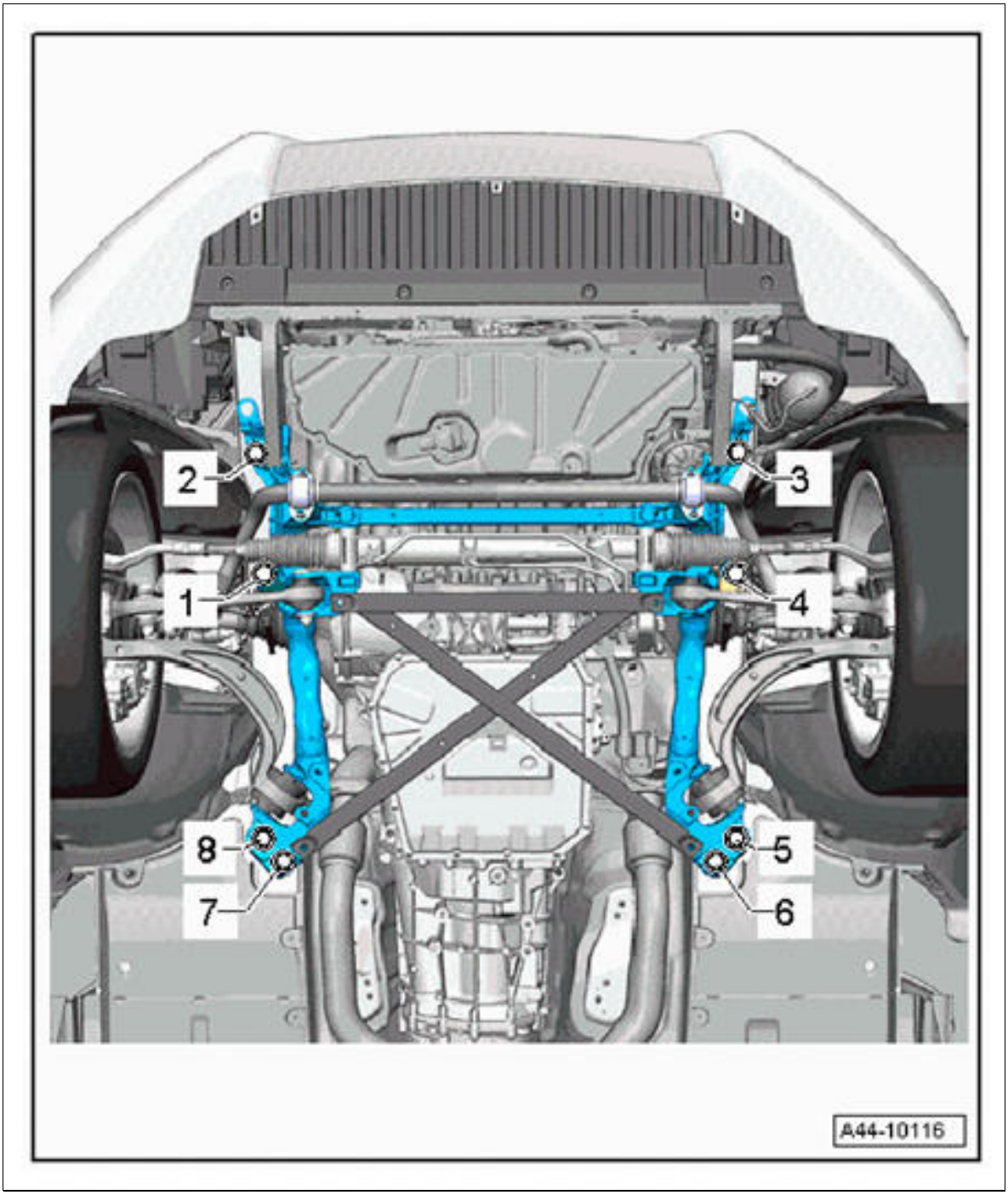

Courtesy of PORSCHE CARS NORTH AMERICA, INC.

11. Tighten fastening screws **-1 and 3-** on the transmission support **-2-** . **Tightening torque 70 Nm (52 ftlb.)**

Fig 6: Identifying Transmission Support Screws

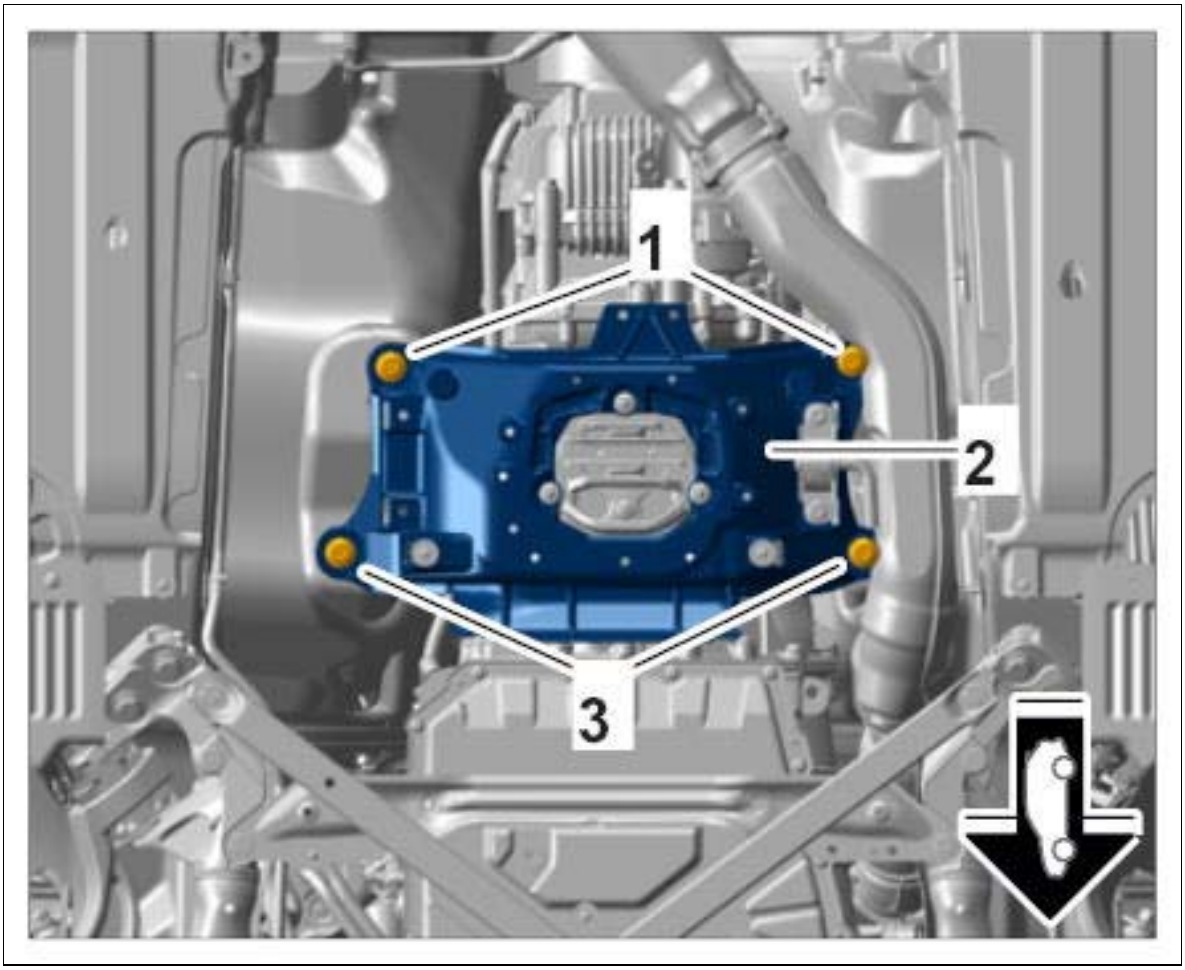

Courtesy of PORSCHE CARS NORTH AMERICA, INC.

12. Check the camber value again.
13. Install heat shields at the left and right and tighten fastening screws **-1 and 2-** .

    Fastening screws **-1-** : **Tightening torque 9 Nm (6.5 ftlb.)**

    Fastening screw **-2-** : **Tightening torque 20 Nm (15 ftlb.)**

Fig 7: Identifying Front-Axle Carrier Heat Shield



Courtesy of PORSCHE CARS NORTH AMERICA, INC.

14. Install front underbody panelling → 519219 REMOVING AND INSTALLING COVER FOR FRONT UNDERBODY .

WM 449503 SUSPENSION ALIGNMENT, COMPLETE (ALL MODELS) > REAR-AXLE AND FRONT-AXLE WHEEL ALIGNMENT > ADJUSTING REAR-AXLE CAMBER

1. Turn the camber eccentric **-B-** as required after loosening the lock nut **-A-** .

   Then tighten the lock nut **-A-** on the camber eccentric **-B-** . **Tightening torque 95 Nm (70 ftlb.)**

Fig 1: Identifying Rear-Axle Camber

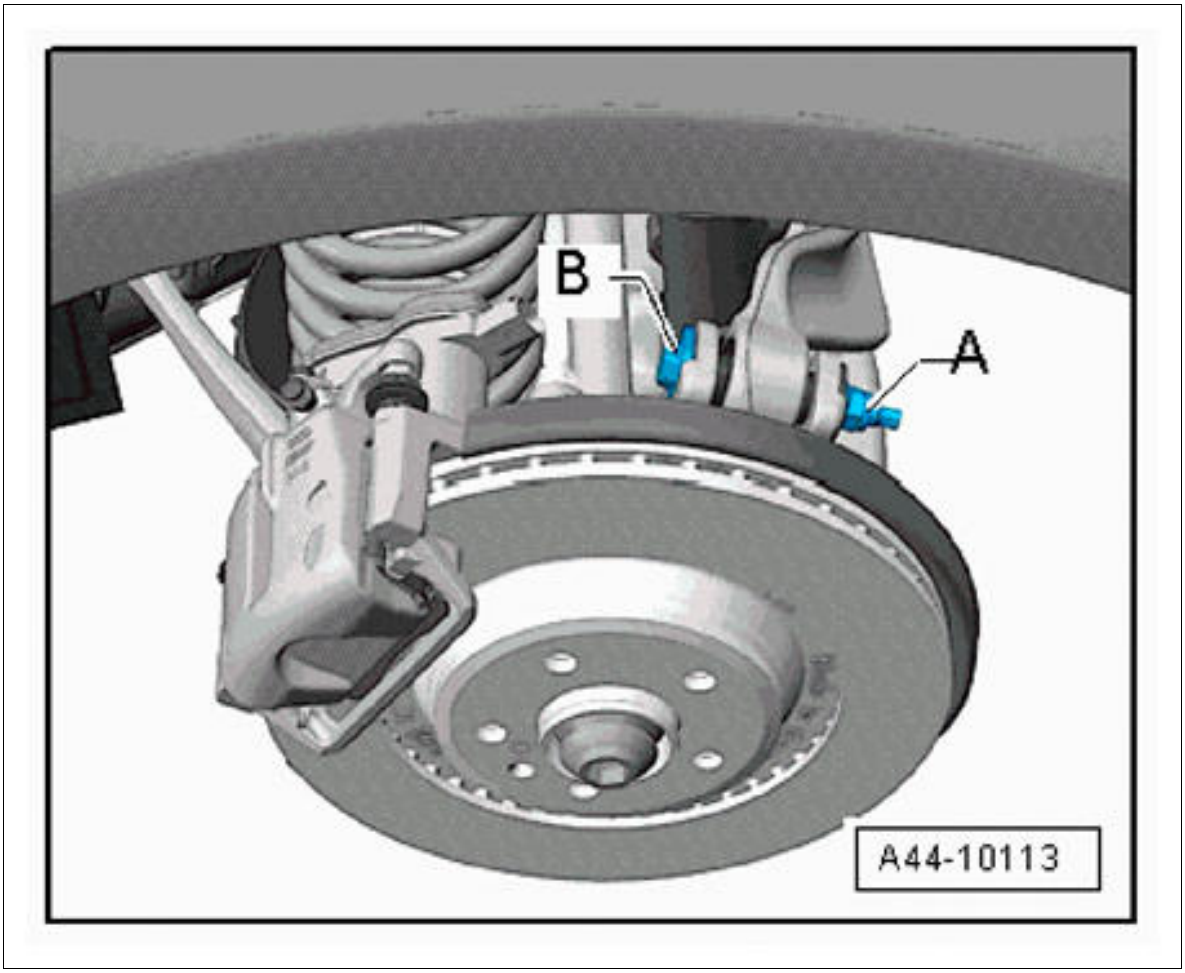

Courtesy of PORSCHE CARS NORTH AMERICA, INC.

WM 449503 SUSPENSION ALIGNMENT, COMPLETE (ALL MODELS) > REAR-AXLE AND FRONT-AXLE WHEEL ALIGNMENT > ADJUSTING REAR-AXLE TOE

1. Turn the toe eccentric adjuster **-B-** as required after loosening the lock nut **-A-** .

   Then tighten lock nut **-A-** using **interchangeable head T40183** on the toe eccentric adjuster **-B-** . **Tightening torque 95 Nm (70 ftlb.)**

Fig 1: Identifying Rear-Axle Toe Eccentric Adjuster

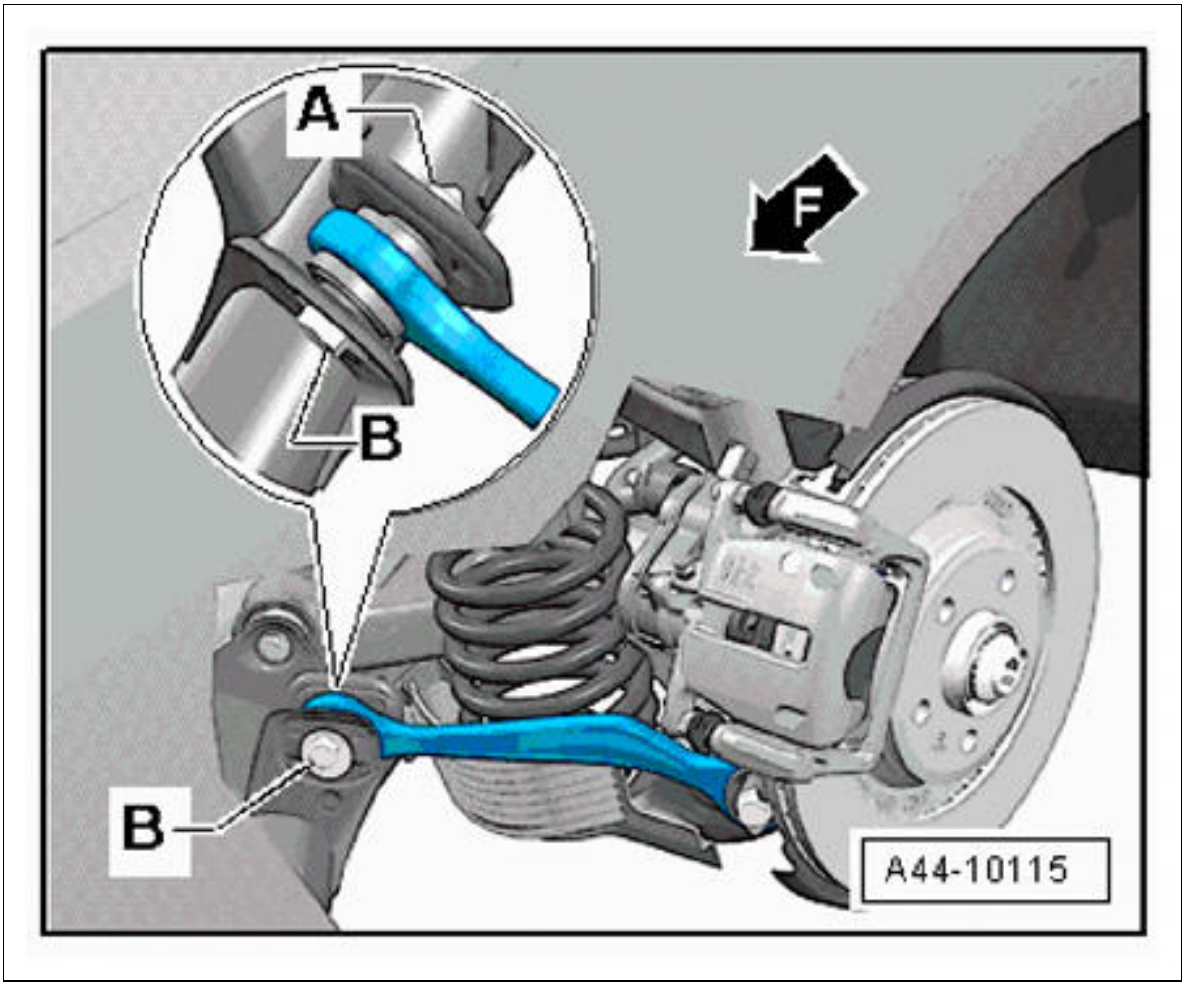

Courtesy of PORSCHE CARS NORTH AMERICA, INC.

WM 449503 SUSPENSION ALIGNMENT, COMPLETE (ALL MODELS) > REAR-AXLE AND FRONT-AXLE WHEEL ALIGNMENT > ADJUSTING FRONT-AXLE TOE

1. Clamp steering wheel in center position using steering-wheel holder **-A-** . Use only steering-wheel holders that do not project into the area of the airbag unit **-B-** . If necessary, shorten the guide rod on the steering-wheel holder at the top **-arrow-** .

Fig 1: Locating Steering-Wheel Holder



Courtesy of PORSCHE CARS NORTH AMERICA, INC.

For fast and reliable steering wheel alignment in center position, use a **steering wheel alignment gauge WE 1343** (with integrated angle measurement box).

Fig 2: Identifying Steering Wheel Alignment Gauge



Courtesy of PORSCHE CARS NORTH AMERICA, INC.

2. Measure dimension **-a-** between the tie-rod ball **-1-** and tie rod **-2-** at the left and right and take note of the value. Dimension **-a-** should be the same before and after alignment at the left and right (maximum difference between left and right < 2.5 mm).

Fig 3: Identifying Tie Rod Dimension

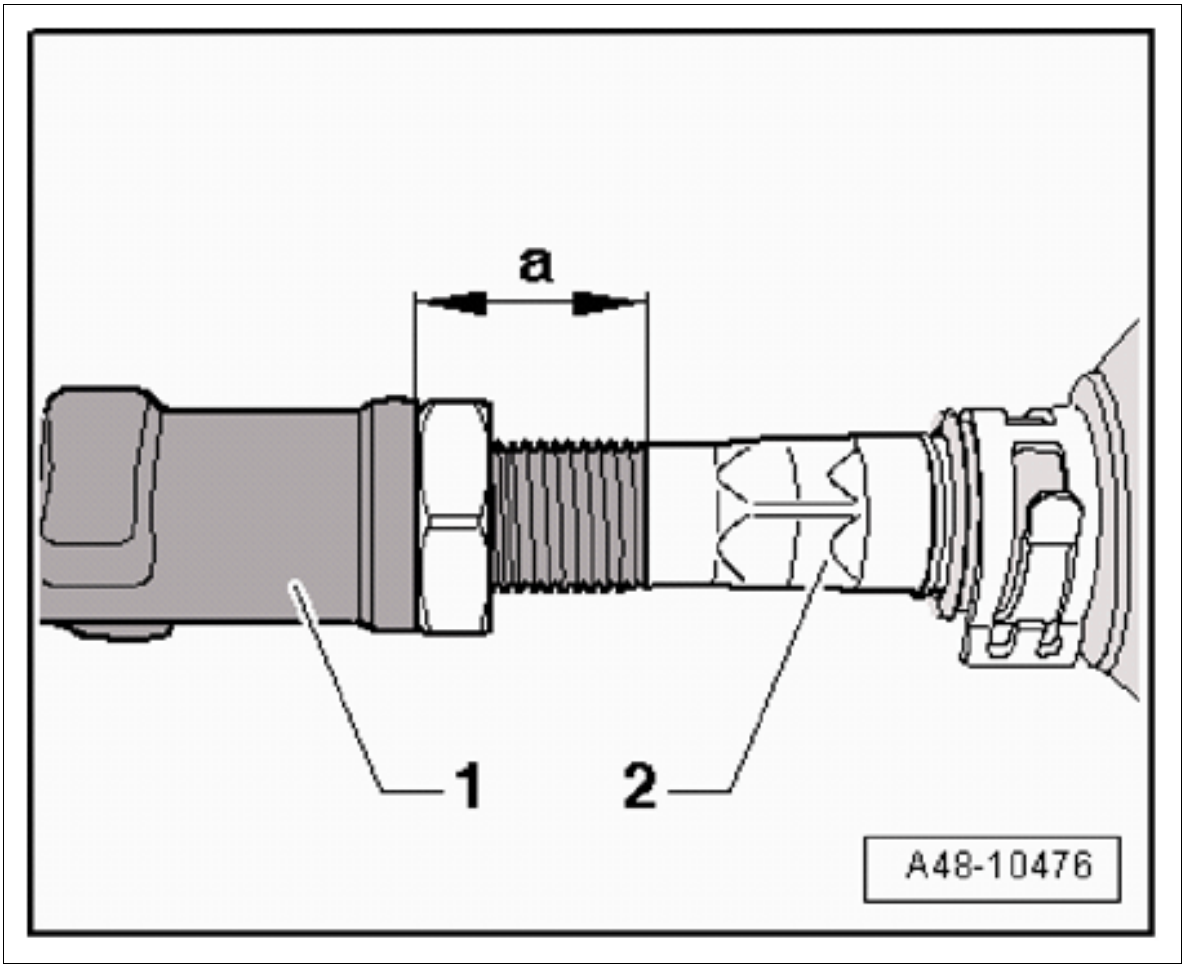

Courtesy of PORSCHE CARS NORTH AMERICA, INC.

3. Loosen lock nut **-B-** . Counter at the tie-rod ball **-c-** while doing this.

   Information

   Make sure that the bellows are not twisted after turning the tie rods!

4. Adjust the toe at the left and right wheel using hexagon **-A-** .

Fig 4: Identifying Front-Axle Toe Lock Nut And Tie Rod Ball

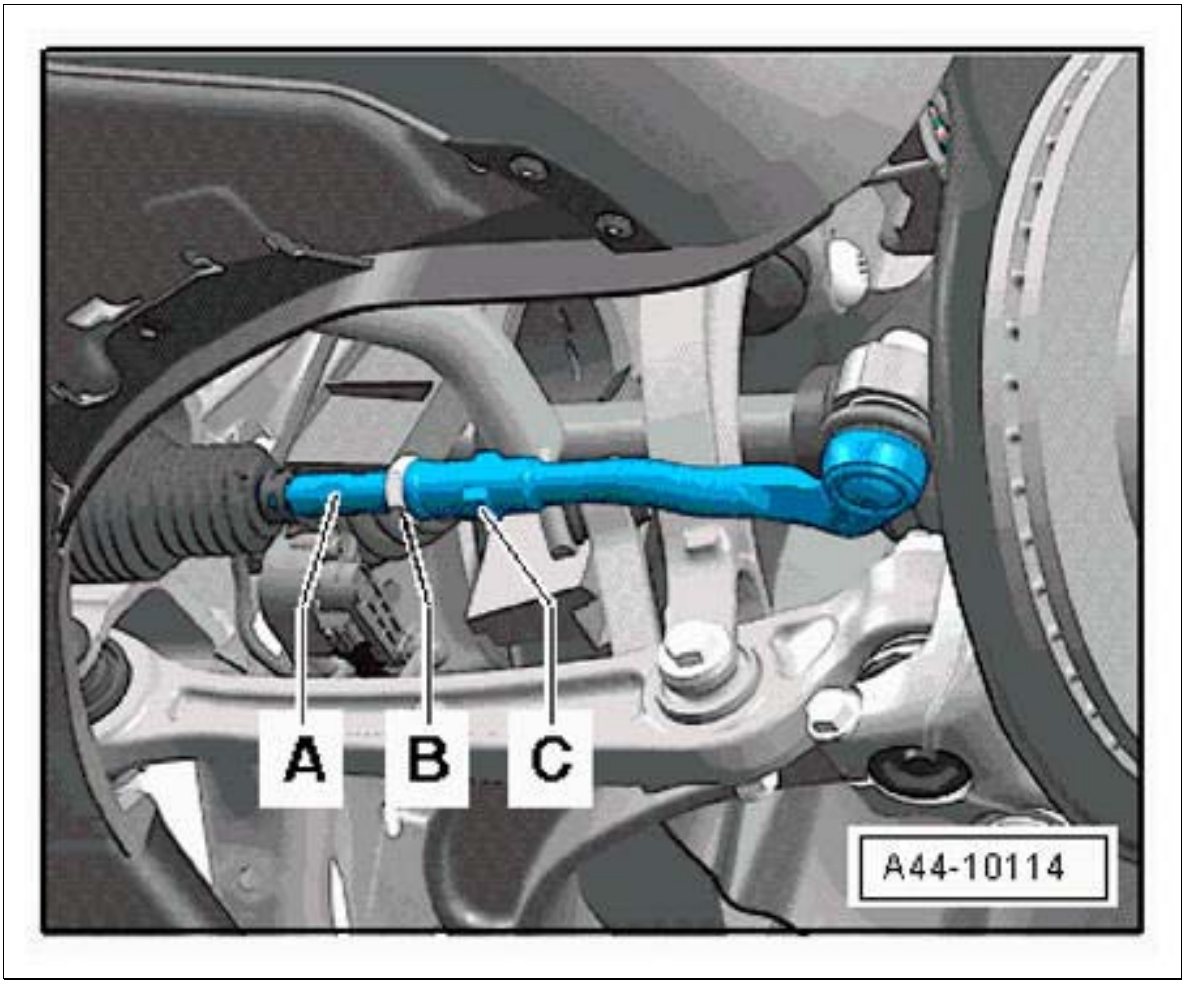

Courtesy of PORSCHE CARS NORTH AMERICA, INC.

5. Tighten lock nut **-B-** and check the toe value again. **Tightening torque 90 Nm (67 ftlb.)**

WM 449503 SUSPENSION ALIGNMENT, COMPLETE (ALL MODELS) > REAR-AXLE AND FRONT-AXLE WHEEL ALIGNMENT > SUBSEQUENT WORK

WARNING: Steering-angle sensor not calibrated or calibrated incorrectly

- *Unexpected vehicle handling*
- *Steering-angle sensor does not function*
- *Malfunction in steering-angle sensor*

→ After working on wheel suspension parts, when replacing the steering-angle sensor and after changing the wheel alignment values, calibrate the steering-angle sensor using **PIWIS Tester II 9818** .

→ Keep the front wheels in straight-ahead position on the measuring platform during calibration.

→ On vehicles with electromechanical steering, also re-teach the electric steering lock settings.

1. The steering-angle sensor must be calibrated if the previous wheel alignment values (on rear and/or front axle) have been changed.

   → 456005 INITIALIZING AND CALIBRATING STEERING-ANGLE SENSOR .

   In addition, calibrate the distance measuring sensor (ACC sensor) control unit and front camera (if fitted).

   → 278515 ADJUSTING CONTROL UNIT FOR DISTANCE MEASURING SENSOR

   → 9638K2 CALIBRATING FRONT CAMERA .

2. Once you have calibrated the steering-angle sensor, re-teach the electric steering lock settings with the engine running.

   In each phase, turn the steering wheel fully to the right and then to the left and hold it at full lock for a short time (follow instructions on the Tester).

WM 4495IN ALIGNMENT CARD (ALL MODELS) > ALIGNMENT CARD - MACAN

Porsche suspension alignment				
Customer:		Rep. Order No.:		
Street:		Vehicle Ident No.:		
City:		Reg. number:		
Telephone:		Date of first registration:		
		Odometer reading:	km/miles	
Measurement carried out by:		Date/signature:		
Vehicle:		Version:		
Measuring prerequisite (vehicle weight):		Empty weight as per DIN 70020.		
This means: full fuel tank, vehicle with spare wheel and tools.				
Reason for alignment:				
tire make:	Size/version at front:		Rear:	
	Front left	Front right	Rear left	Rear right
tire pressure of cold tires (bar)				
tire/wheel (possible damage) tire tread depth (mm)				
	Incoming measurement	Nominal values max. difference left/right		Outgoing measurement
Vehicle height:				

Front (mm)	Left/right			
Rear (mm)	Left/right			
Rear axle:				
Camber	Left/right			
Toe	Left/right			
	Total			
Drive-axle angle				
Front axle:				
Caster	Left/right			
Toe difference angle	Left			
	Right			
Camber	Left/right			
Toe	Left/right			
	Total			

WM 4495TW ADJUSTMENT VALUES FOR SUSPENSION ALIGNMENT (ALL MODELS) > TOOLS

Designation	Type	Number	Description	
PIWIS Tester II	Special tool	9818		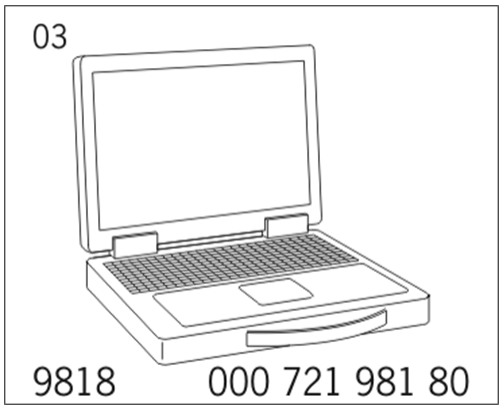

WM 4495TW ADJUSTMENT VALUES FOR SUSPENSION ALIGNMENT (ALL MODELS) > VEHICLE HEIGHT > VEHICLE HEIGHT WITH STEEL SPRINGS

Information

- The following values relate to the empty weight, i.e. full fuel tank, vehicle with tire repair kit (or spare wheel, collapsible wheel) and tools, but without driver and without additional weights.

- tire pressure in accordance with specifications.
- If the control unit or one of the self-levelling sensors has been replaced, calibration must be carried out using the Porsche System Tester.

Vehicle height	Steel springs
Front-axle height	
with 18, 19, 20, 21-inch wheels [mm]	479, 2 ±10
From outer wheel center to bottom edge of wing	
Rear-axle height	
with 18, 19, 20, 21-inch wheels [mm]	472, 6 ±10
From outer wheel center to bottom edge of wing	
Max. difference in height between left and right: 10 mm	

WM 4495TW ADJUSTMENT VALUES FOR SUSPENSION ALIGNMENT (ALL MODELS) > VEHICLE HEIGHT > VEHICLE HEIGHT WITH AIR SPRINGS

Information

- The following values relate to the empty weight, i.e. full fuel tank, vehicle with tire repair kit (or spare wheel, collapsible wheel) and tools, but without driver and without additional weights.
- tire pressure in accordance with specifications.
- Adjust the vehicle to normal level beforehand. The vehicle may be aligned and adjusted in this position only. → 4X00IN LIFTING THE VEHICLE
- If the control unit or one of the self-levelling sensors has been replaced, calibration must be carried out using the Porsche System Tester.

Vehicle height	Air spring
Front-axle height	
with 18, 19, 20, 21-inch wheels [mm]	464 ±10
From outer wheel center to bottom edge of wing	
Rear-axle height	
with 18, 19, 20, 21-inch wheels [mm]	457 ±10
From outer wheel center to bottom edge of wing	
Max. difference in height between left and right: 10 mm	

WM 4495TW ADJUSTMENT VALUES FOR SUSPENSION ALIGNMENT (ALL MODELS)

> VEHICLE HEIGHT > WHEEL ALIGNMENT VALUES, STEEL SPRINGS

Information

Adjusting the front axle

The front axle of the Macan can be adjusted as follows:

- Toe : Adjustment using the tie rod
- Camber : Adjustment by moving the front-axle carrier (necessary if max. difference from left to right is exceeded)
- Caster: Cannot be adjusted!

For a detailed description, see → 449503 SUSPENSION ALIGNMENT, COMPLETE .

WARNING: Steering-angle sensor not calibrated or calibrated incorrectly

- *Unexpected vehicle handling*
- *Steering-angle sensor does not function*
- *Malfunction in steering-angle sensor*

→ After working on wheel suspension parts, when replacing the steering-angle sensor and after changing the wheel alignment values, calibrate the steering-angle sensor using **PIWIS Tester II 9818** .

→ Keep the front wheels in straight-ahead position on the measuring platform during calibration.

→ On vehicles with electromechanical steering, also re-teach the electric steering lock settings.

Information

- The following values relate to the empty weight, i.e. full fuel tank, vehicle with spare wheel (collapsible wheel) and tools, but without driver and without additional weights.
- tire pressure in accordance with specifications.
- The toe-difference angle value is also influenced by the vehicle height. For this reason the measured result must be evaluated accordingly. No action is necessary in the case of small deviations from the toe-difference angle's required value as long as the value to the right and left is almost the same.

Wheel alignment values	Steel springs
Front axle	
Toe unpressed (per wheel)	+ 0°05' ±5'
Toe unpressed (total)	+ 0°10' ±10'
Max. difference, left to right	0°05'

Camber (with wheels in straight-ahead position) Can be adjusted by moving the front-axle carrier	- 0°30' ±20'
Max. difference, left to right	0°20'
Toe difference angle at 20° steering angle	1°48' ±30'
Caster (cannot be adjusted!)	+ 3°48' ±30'
Max. difference, left to right	0°20'
Rear axle	
Toe unpressed (per wheel) Adjustment value	+ 0°10' ±5'
Toe unpressed (total) Adjustment value	+ 0°20' ±10'
Max. difference, left to right	0°07'
Camber	- 1°25' ±20'
Max. difference, left to right	0°20'

WM 4495TW ADJUSTMENT VALUES FOR SUSPENSION ALIGNMENT (ALL MODELS) > VEHICLE HEIGHT > WHEEL ALIGNMENT VALUES, AIR SPRINGS

Information

WM 4495TW ADJUSTMENT VALUES FOR SUSPENSION ALIGNMENT (ALL MODELS) > VEHICLE HEIGHT > WHEEL ALIGNMENT VALUES, AIR SPRINGS > ADJUSTING THE FRONT AXLE

The front axle of the Macan can be adjusted as follows:

- Toe: Adjustment using the tie rod
- Camber: Adjustment by moving the front-axle carrier (necessary if max. difference from left to right is exceeded)
- Caster: Cannot be adjusted!

For a detailed description, see → 449503 SUSPENSION ALIGNMENT, COMPLETE .

WARNING: Steering-angle sensor not calibrated or calibrated incorrectly

- *Unexpected vehicle handling*
- *Steering-angle sensor does not function*
- *Malfunction in steering-angle sensor*

→ After working on wheel suspension parts, when replacing the steering-angle sensor and after changing the wheel alignment values, calibrate the steering-angle sensor using **PIWIS Tester II 9818** .

→ Keep the front wheels in straight-ahead position on the measuring platform during calibration.

→ On vehicles with electromechanical steering, also re-teach the electric steering lock settings.

Information

- The following values relate to the empty weight, i.e. full fuel tank, vehicle with spare wheel (collapsible wheel) and tools, but without driver and without additional weights.
- Tire pressure in accordance with specifications.
- The toe-difference angle value is also influenced by the vehicle height. For this reason the measured result must be evaluated accordingly. No action is necessary in the case of small deviations from the toe-difference angle's required value as long as the value to the right and left is almost the same.

Wheel alignment values	Air spring
Front axle	
Toe unpressed (per wheel)	+ 0°05' ±5'
Toe unpressed (total)	+ 0°10' ±10'
Max. difference, left to right	0°05'
Camber (with wheels in straight-ahead position) Can be adjusted by moving the front-axle carrier	- 0°44' ±20'
Max. difference, left to right	0°20'
Toe difference angle at 20° steering angle	1°48' ±30'
Caster (cannot be adjusted!)	+ 4°12' ±30'
Max. difference, left to right	0°20'
Rear axle	
Toe unpressed (per wheel)	+ 0°10' ±5'
Toe unpressed (total)	+ 0°20' ±10'
Max. difference, left to right	0°07'
Camber	- 1°35' ±20'
Max. difference, left to right	0°20'

WM 4495TW CONVERSION TABLE FOR WHEEL ALIGNMENT VALUES (ALL MODELS) > MINUTES TO DECIMAL DEGREES

Information

- The wheel alignment values are specified in degrees and minutes in the Technical Manual (division in 60 units).
- In countries in which the decimal degree is widely used, the electronic wheel alignment testers can be converted from degrees/minutes (division in 60 units) to decimal degrees (division in 100 units) by pressing a key (special function). This function is standard for the electronic wheel alignment testers approved by Porsche.
- Minutes (') can be converted into decimal degrees and decimal degrees into minutes (') using the conversion table. To do this, read out the required values from the table using the co-ordinates.

min (')	0	1	2	3	4	5	6	7	8	9
degrees (°)										
0	--	0.017	0.033	0.050	0.067	0.083	0.100	0.117	0.133	0.150
10	0.167	0.183	0.200	0.217	0.233	0.250	0.267	0.283	0.300	0.317
20	0.333	0.350	0.367	0.383	0.400	0.417	0.433	0.450	0.467	0.483
30	0.500	0.517	0.533	0.550	0.567	0.583	0.600	0.617	0.633	0.650
40	0.667	0.683	0.700	0.717	0.733	0.750	0.767	0.783	0.800	0.817
50	0.833	0.850	0.867	0.883	0.900	0.917	0.933	0.950	0.967	0.983
60	1.000									

WM 4495TW CONVERSION TABLE FOR WHEEL ALIGNMENT VALUES (ALL MODELS) > MINUTES TO DECIMAL DEGREES > CONVERSION FROM MINUTES TO DECIMAL DEGREES (EXAMPLES)

- Example 1: toe 17 min (17') = 0.283 decimal degrees according to table. Procedure for this: The imaginary line starting at the top of the 7-min column moving downwards and the line starting on the left in the 10-min row moving right meet at point/column 0.283.
- Example 2: camber 1° 25' (1 degree and 25 min) = 1.417 decimal degrees. This is the result from the table (1 degree or 60 min) = 1.000 + 0.417 (25 min).

WM 4495TW CONVERSION TABLE FOR WHEEL ALIGNMENT VALUES (ALL MODELS) > MINUTES TO DECIMAL DEGREES > CONVERSION FROM DECIMAL DEGREES TO MINUTES (EXAMPLES)

- Example 1: toe 0.350 decimal degree = 21 min (21'). A search is performed for the decimal value (0.350) in the table. The co-ordinates are then formed from this point/value. Line to the left = 20' and line upwards = 1' (which equals 20' + 1').
- Example 2: camber 1.683 decimal degrees = 1° 41' (1 degree and 41 min). This result is obtained as follows: Split the value into 1.000 = 1 degree (1°) and search for the remainder 0.683 in the table. Then form the co-ordinates again. Line to the left = 40' and line upwards = 1' (which equals

40' + 1').

WM 370235 CHECKING AND TOPPING UP ATF (ALL MODELS) > TOOLS

Designation	Type	Number	Description	
Manual metering pumps HDP 500 Porsche	Workshop equipment	WE 1372		
PIWIS Tester II	Special tool	9818		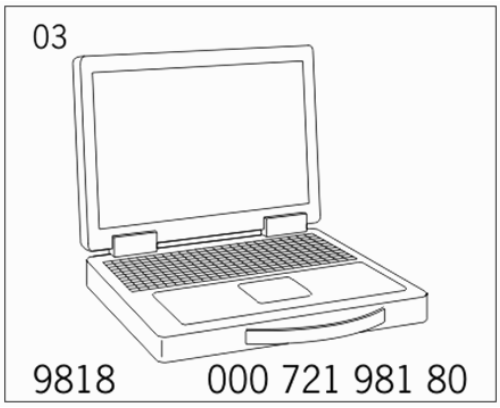

WM 370235 CHECKING AND TOPPING UP ATF (ALL MODELS) > TECHNICAL VALUES

Location	Description	Type	Basic value	Tolerance 1	Tolerance 2
Fastening screw securing housing to intermediate housing on cover	M8 x 40 (28 ea.)/replace aluminum screw	Initial tightening	8 Nm (6 ftlb.)		
Fastening screw securing housing to intermediate housing on cover		Final tightening	+120°		
Fastening screw securing cover to intermediate housing	M8 x 55 (2 ea.)	Initial tightening	15 Nm (11 ftlb.)		
Fastening screw securing cover to intermediate housing		Final tightening	+90°		

Fastening screw securing differential flange to transmission housing	M8 x 38 (10 ea.)	Initial tightening	20 Nm (15 ftlb.)		
Fastening screw securing differential flange to transmission housing		Final tightening	+90°		
Fastening screw securing oil pan to transmission housing	M6 x 20 (15 ea.)	Tightening torque	10 Nm (7.5 ftlb.)		
Fastening screw securing clutch cover on transmission housing	M6 x 20 (5 ea.)	Tightening torque	10 Nm (7.5 ftlb.)		
Speed module to bearing bracket	M6 x 8.021 x 25	Tightening torque	10 Nm (7.5 ftlb.)		
Fastening screw securing pump to housing	M8 x 30 (5 ea.)	Tightening torque	25 Nm (19 ftlb.)		
Fastening screw securing hydraulic system to transmission housing	M6 x 45 (6 ea.)	Initial tightening	8 Nm (6 ftlb.)		
Fastening screw securing hydraulic system to transmission housing		Final tightening	+120°		
Fastening screw securing bearing bracket to intermediate housing	M8 x 40 (7 ea.)/replace aluminum screw	Initial tightening	8 Nm (6 ftlb.)		
Fastening screw securing bearing bracket to intermediate housing		Final tightening	+120°		
Fastening screw securing idler gear	M8 x 85 (2 ea.)	Tightening torque	25 Nm (19 ftlb.)		

support to bearing bracket					
Fastening screw securing sucking jet pump to pump module.	M5 x 20 (2 ea.)	Tightening torque	4.5 Nm (3 ftlb.)		
Fastening screw securing pressure filter to transmission housing	M6 x 20 (3 ea.)	Tightening torque	10 Nm (7.5 ftlb.)		
Screw on drive shaft	M14 x 1.5	Initial tightening	100 Nm (74 ftlb.)		
Screw on drive shaft		Final tightening	+120°	+30°	
Screw on intermediate shaft	M26 x 1.5 x 29/replace	Tightening torque	205 Nm (151.5 ftlb.)		
Screw on inner intermediate shaft	M26 x 1.5 x 29/replace	Tightening torque	205 Nm (151.5 ftlb.)		
Fastening screw for left flanged shaft	M8 x 25	Initial tightening	15 Nm (11 ftlb.)		
Fastening screw securing left flanged shaft		Final tightening	45°		
Drain plug on intermediate shaft housing/oil inspection plug on transmission housing.	M22 x 1.5 x 10.8 (2 ea.)/replace aluminum screw	Tightening torque	45 Nm (33 ftlb.)		
Drain plug on oil pan	M22 x 1.5 x 9.5	Tightening torque	45 Nm (33 ftlb.)		
Fastening screw securing cable guide to transmission housing	M6 x 20 (5 ea.)	Tightening torque	8 Nm (6 ftlb.)		
Sealing sleeve to transmission housing	M6 x 20	Tightening torque	10 Nm (7.5 ftlb.)		
Oil inspection plug on intermediate housing	M22 x 1.5 x 10.8/replace aluminum screw	Tightening torque	45 Nm (33 ftlb.)		

Fastening screw securing bending vibration balancer to cover	M8 (3 ea.)/replace	Initial tightening	20 Nm (15 ftlb.)		
Fastening screw securing bending vibration balancer to cover		Final tightening	+90°	+/-20°	
ATF transmission oil (clutches, mechatronics)		Filling capacity	7 Liter		
ATF transmission oil change quantity		Filling capacity	6.5 Liter		

WM 370235 CHECKING AND TOPPING UP ATF (ALL MODELS) > TECHNICAL VALUES > PORSCHE DOPPELKUPPLUNG (PDK) MECHANISM

Housing to intermediate housing on cover. → **Initial tightening: 8 Nm (6 ftlb.) → Final tightening: +120°**

Cover to intermediate housing. → **Initial tightening: 15 Nm (11 ftlb.) → Final tightening: +90°**

Differential flange to transmission housing. → **Initial tightening: 20 Nm (15 ftlb.) → Final tightening: +90°**

Oil pan to transmission housing. → **Tightening torque: 10 Nm (7.5 ftlb.)**

Clutch cover to transmission housing. → **Tightening torque: 10 Nm (7.5 ftlb.)**

Speed module to bearing bracket. → **Tightening torque: 10 Nm (7.5 ftlb.)**

Pump to housing. → **Tightening torque: 25 Nm (19 ftlb.)**

Hydraulic system to transmission housing. → **Initial tightening: 8 Nm (6 ftlb.) → Final tightening: +120°**

Bearing bracket to intermediate housing. → **Initial tightening: 8 Nm (6 ftlb.) → Final tightening: +120°**

Idler gear support to bearing bracket. → **Tightening torque: 25 Nm (19 ftlb.)**

Sucking jet pump to pump module. → **Tightening torque: 4.5 Nm (3 ftlb.)**

Pressure filter to transmission housing. → **Tightening torque: 10 Nm (7.5 ftlb.)**

Screw on drive shaft. → **Initial tightening: 100 Nm (74 ftlb.) → Final tightening: +120°+30°**

Screw on intermediate shaft. → **Tightening torque: 205 Nm (151.5 ftlb.)**

Screw on inner intermediate shaft. → **Tightening torque: 205 Nm (151.5 ftlb.)**

Left flanged shaft. → **Initial tightening: 15 Nm (11 ftlb.) → Final tightening: 45°**

Drain plug on intermediate shaft housing/oil inspection plug on transmission housing. → **Tightening torque: 45 Nm (33 ftlb.)**

Drain plug on oil pan. → **Tightening torque: 45 Nm (33 ftlb.)**

Cable guide to transmission housing. → **Tightening torque: 8 Nm (6 ftlb.)**

Sealing sleeve to transmission housing. → **Tightening torque: 10 Nm (7.5 ftlb.)**

Oil inspection plug on intermediate housing. → **Tightening torque: 45 Nm (33 ftlb.)**

Bending vibration balancer to cover. → **Initial tightening: 20 Nm (15 ftlb.)** → **Final tightening: +90°+/-20°**

WM 370235 CHECKING AND TOPPING UP ATF (ALL MODELS) > INFORMATION > ATF FILLING CAPACITIES

Porsche Doppelkupplung (PDK)	
Specification: CastrolBOT342A	
ATF transmission oil (clutches, mechatronics) New filling including 0.5 litres of volume for filling the ATF lines	→ **Filling capacity: 7 Liter**
ATFtransmission oil change quantity	→ **Filling capacity: 6.5 Liter**

WM 370235 CHECKING AND TOPPING UP ATF (ALL MODELS) > INFORMATION > TEST CONDITIONS

Information

Always pay particular attention to the following before raising the vehicle:

- Deactivate the levelling system before raising the vehicle (press and hold the levelling system button for at least 10 seconds).
- If a transmission range is engaged while the vehicle is raised, the levelling system must first be deactivated using PIWIS Tester II 9818 . To do this, select >>Levelling system/PASM<< >>Drive links/checks<< >>Activate/deactivate vehicle<< in the control unit overview. Select the value "Deactivate levelling system (permanently)" and press "Start" [F8] to execute the function.
  Re-activate the levelling system when the work is complete. To do this, select the value "Activate levelling system" in the same menu item and press "Start" [F8] to execute the function.
- Transmission must not be in limp-home mode.
- Warm up transmission in lower load range. Switch all transmission ranges several times while doing so.
- Read out the ATF temperature using **PIWIS Tester II 9818.**
- ATF temperature: 30 - 50 °C.

- Selector lever is in position P.
- Parking brake actuated.
- Test and filling process at idle speed.
- Air conditioning and heating switched off.
- The ATF temperature must not be higher than 30 °C at the beginning of the test.
- If the ATF temperature is higher than 30 °C, let the transmission cool down.

WM 370235 CHECKING AND TOPPING UP ATF (ALL MODELS) > PRELIMINARY WORK

Information

To ensure that the transmission is filled correctly, the vehicle must be horizontal on the lifting platform.

1. Remove cover for front underbody. → Removing cover for front underbody
2. Place oil collection pan under the transmission.

WM 370235 CHECKING AND TOPPING UP ATF (ALL MODELS) > CHECKING AND TOPPING UP ATF

WARNING: Hot fluid

- *Danger of scalding*

→ Let the fluid cool down.

→ Wear personal protective gear.

NOTE: Dirt and contamination

- *Risk of damage to units or components*

→ Protect components from dirt and contamination.

→ Clean or replace dirty components.

NOTE: Fill level too low

- *Risk of damage to components.*

→ Do not start the engine.

→ Do not tow the vehicle.

Information

Only use oil approved by Porsche in the Porsche Doppelkupplung (PDK) .

Information

- Read out the ATF temperature using PIWIS Tester II 9818.
- The ATF temperature must not be higher than 30 °C at the beginning of the ATF test.
- The ATF level changes as the ATF temperature changes.
- Perform ATF test when the engine running and selector lever in position P.
- An ATF test performed when the ATF temperature is too low will result in overfilling.
- An ATF test performed when the temperature is too high will result in insufficient filling.
- An ATF level that is too high or too low will impair the function of the transmission.

Information

- The ATF level is checked at the ATF inspection plug.
- The ATF level is correct if a small amount of fluid still emerges at the ATF inspection plug at an ATF temperature of between 30° and 50 °C.

Information

Always pay particular attention to the following before raising the vehicle:

- Deactivate the levelling system before raising the vehicle (press and hold the levelling system button for at least 10 seconds).
- If a transmission range is engaged while the vehicle is raised, the levelling system must first be deactivated using PIWIS Tester II 9818. To do this, select >>Levelling system/PASM<< >>Drive links/checks<< >>Activate/deactivate vehicle<< in the control unit overview. Select the value "Deactivate levelling system (permanently)" and press "Start" [F8] to execute the function. Re-activate the levelling system when the work is complete. To do this, select the value "Activate levelling system" in the same menu item and press "Start" [F8] to execute the function.

1. Read off the ATF temperature on **PIWIS Tester II 9818** while the engine is running.
2. Leave engine running at idle speed.
3. Place oil collection pan underneath.

4. Fill manual metering pump **Manual metering pumps HDP 500 Porsche WE 1372** with ATF for the Porsche Doppelkupplung (PDK).

5. Check and top up ATF.

    1. 5.1. When an ATF temperature of 30 °C is reached, unscrew the ATF inspection plug **-arrow-** .

    2. 5.2. If ATF emerges from the ATF control opening before the ATF temperature has reached 40 °C, the ATF level is OK.

    3. 5.3. If no ATF emerges at a temperature of up to 40 °C, add ATF using **manual metering pump HDP 500 Porsche WE 1372** until ATF emerges.

    Fig 1: Locating ATF Inspection Plug

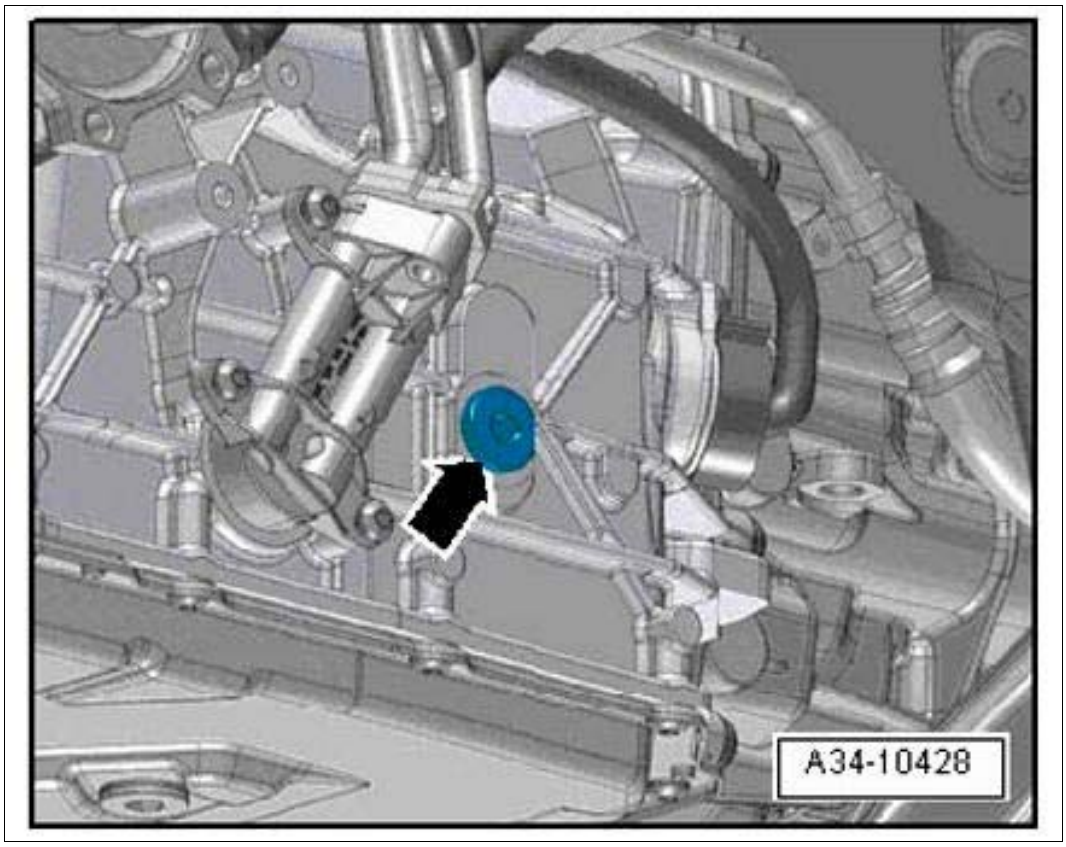

Courtesy of PORSCHE CARS NORTH AMERICA, INC.

Information

1. The ATF inspection plug must be closed again at 50 °C at the latest.

2. Switch off the engine if necessary, let the transmission cool down and repeat the test.

6. **Screw in and tighten new** ATF inspection plug with a **new** sealing ring. **Tightening torque 45 Nm (33 ftlb.)**

WM 370235 CHECKING AND TOPPING UP ATF (ALL MODELS) > SUBSEQUENT

WORK

1. Install cover for front underbody. → Installing cover for front underbody
2. Move oil collection pan away.
3. Perform a test drive.

WM 370419 REMOVING AND INSTALLING SELECTOR KNOB (ALL MODELS) > REMOVING SELECTOR KNOB

Information

Do not apply lateral forces to the pull rod as it could break off.

Fig 1: Caution - Do Not Use Force On Pull Rod

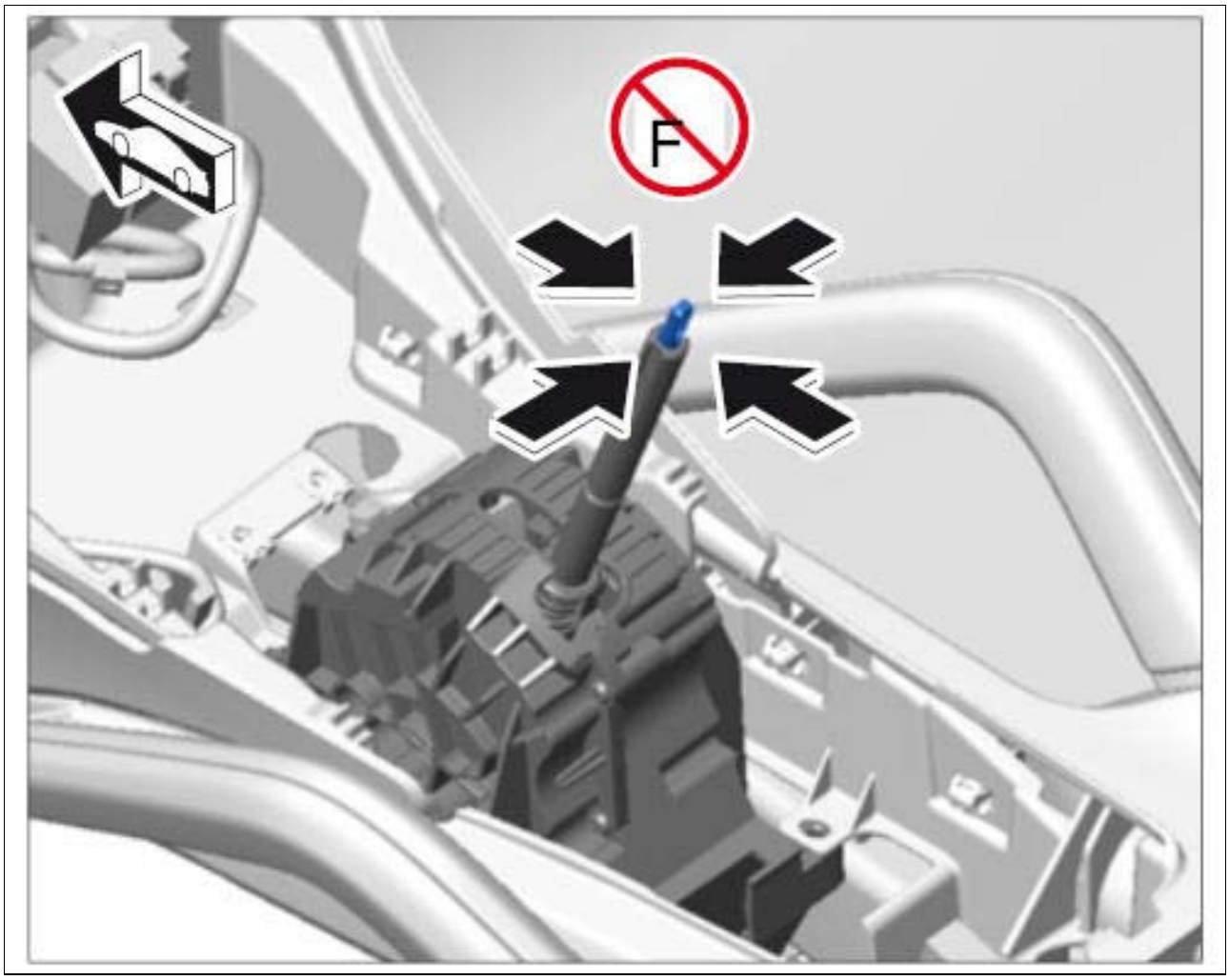

Courtesy of PORSCHE CARS NORTH AMERICA, INC.

1. Turn locking mechanism at the bottom of the shift lever boot 45 degrees in **-direction of arrow A-** and release selector knob by pulling it up in **-direction of arrow B-** .

Fig 2: Releasing Selector Knob

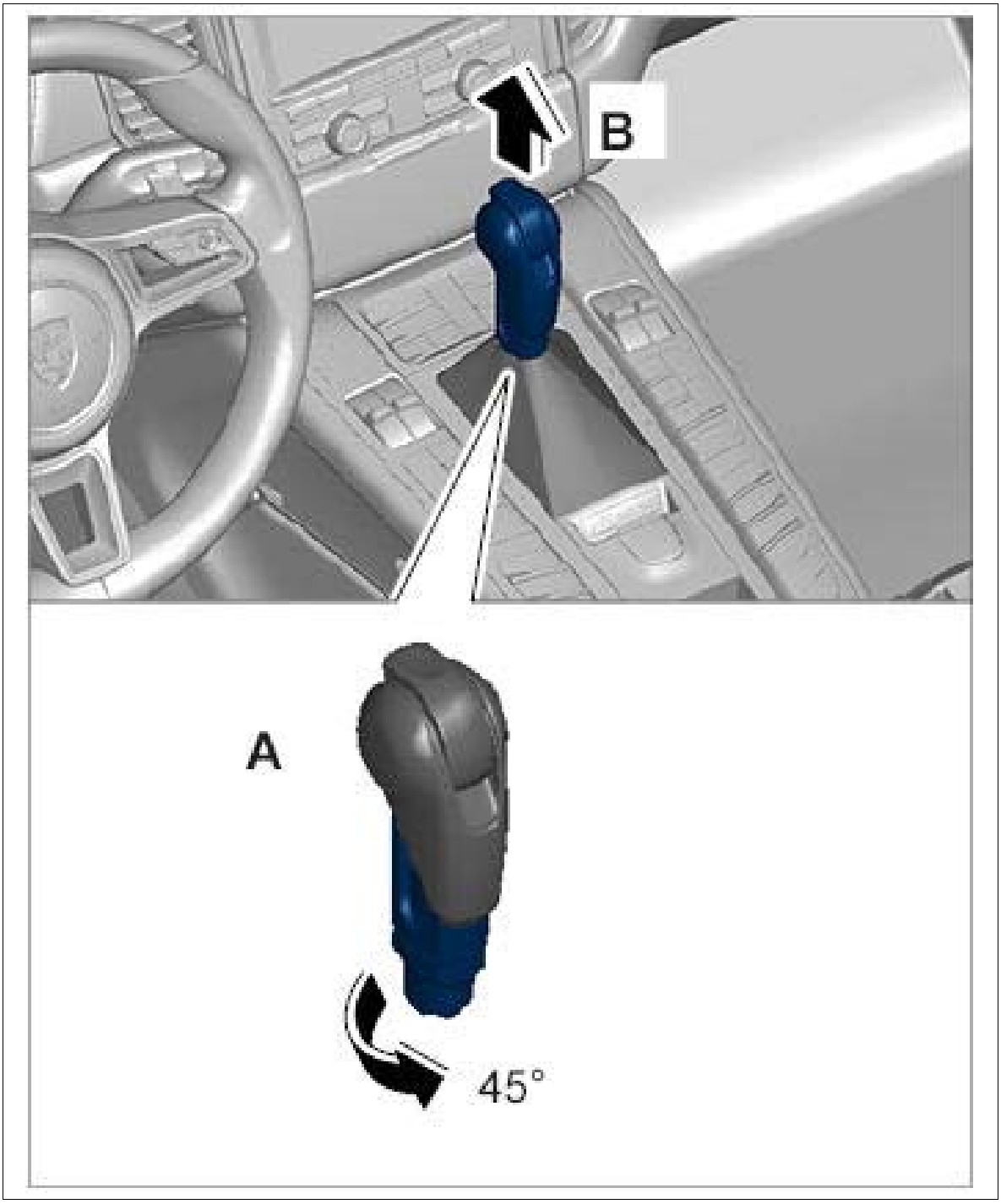

Courtesy of PORSCHE CARS NORTH AMERICA, INC.

2. Pull selector knob **-2-** up slightly, position assembly wedge on selector knob cover **-1-** and **-3-** and unclip carefully.

Fig 3: Identifying Selector Knob

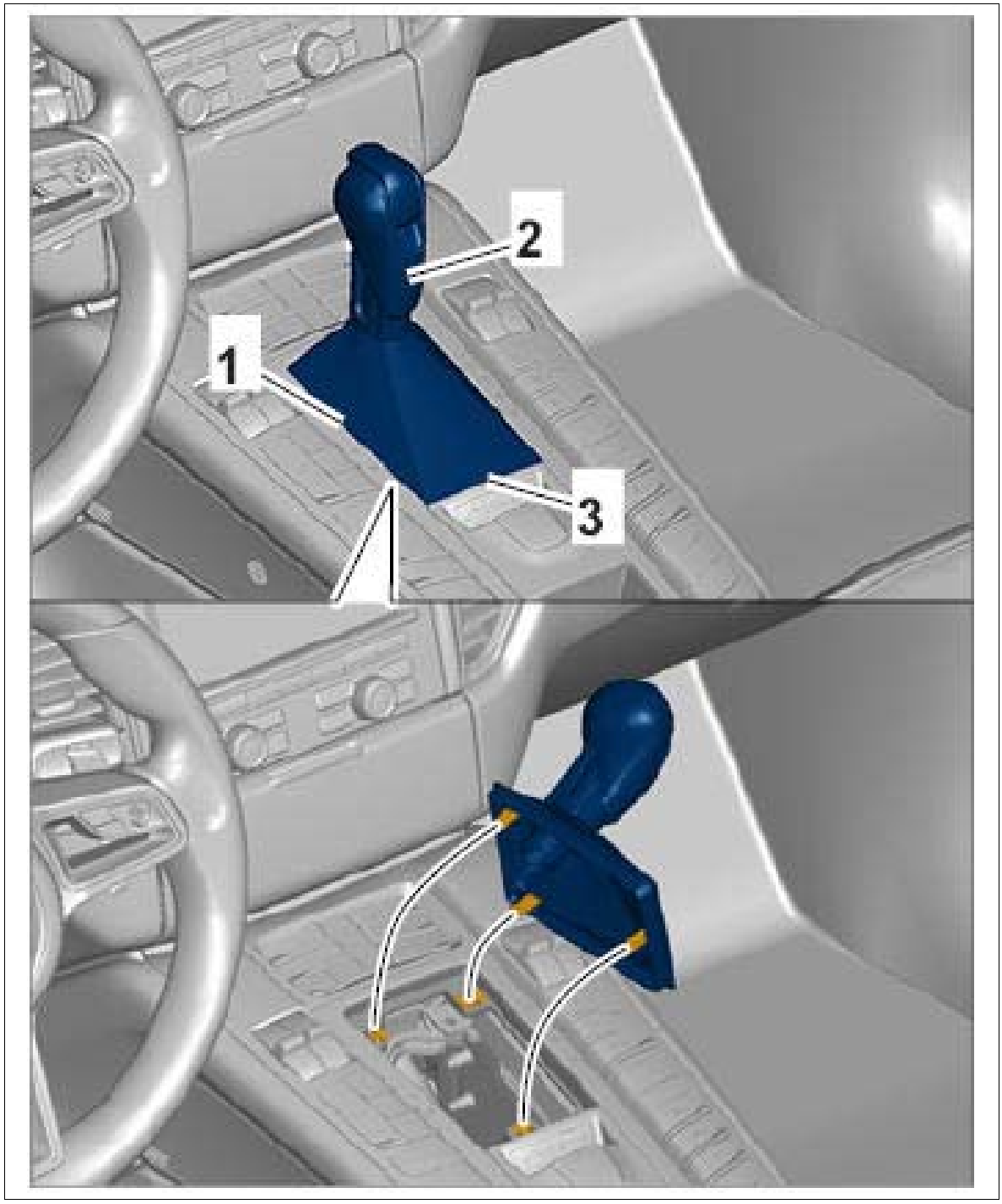

Courtesy of PORSCHE CARS NORTH AMERICA, INC.

3. Pull off selector knob with selector knob cover.

WM 370419 REMOVING AND INSTALLING SELECTOR KNOB (ALL MODELS) > INSTALLING SELECTOR KNOB

Information

Do not apply lateral forces to the pull rod as it could break off.

Fig 1: Caution - Do Not Use Force On Pull Rod

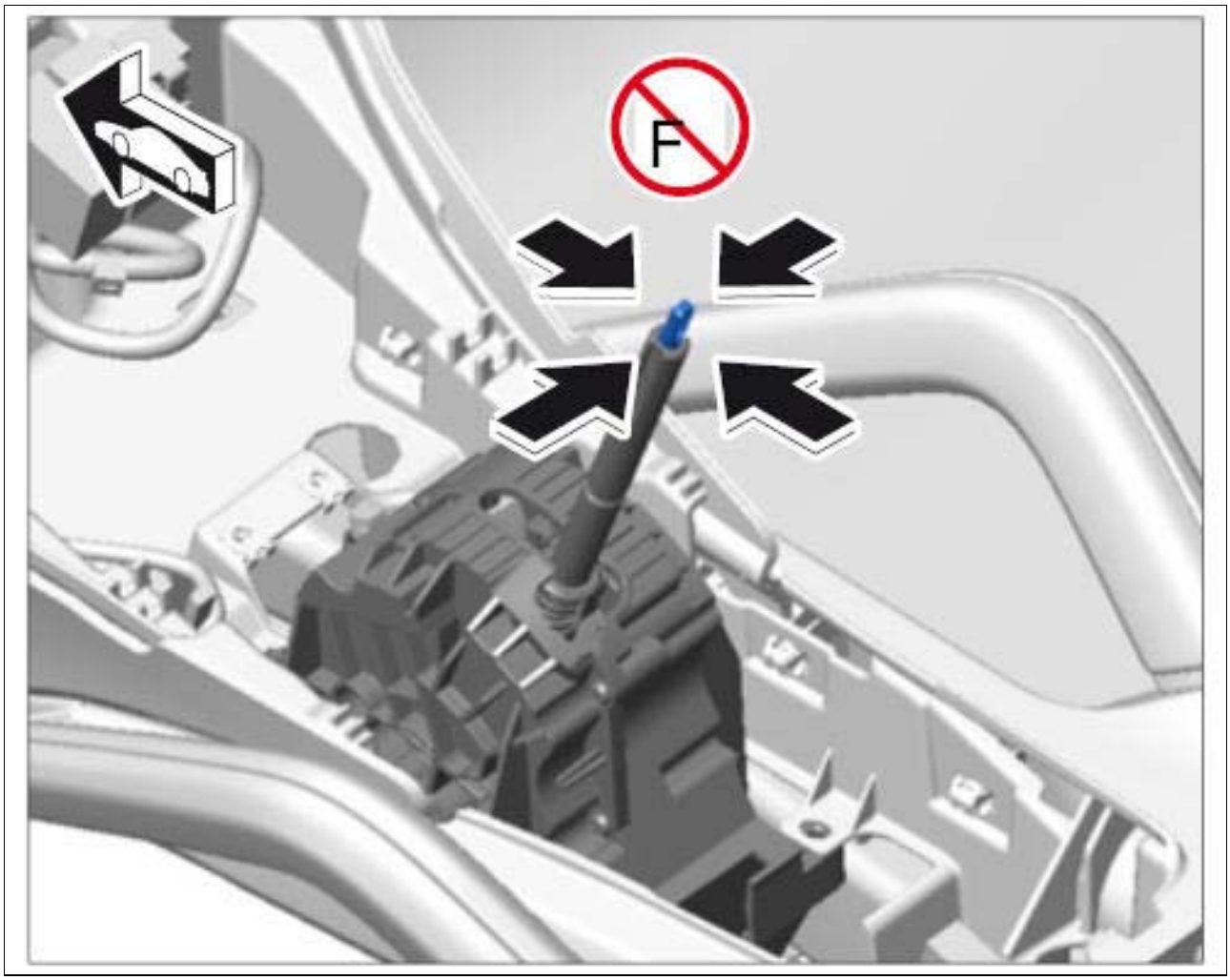

Courtesy of PORSCHE CARS NORTH AMERICA, INC.

1. Position selector knob with selector knob cover.
    1. 1.1. Fit selector knob cover over the pull rod and position selector knob loosely.
    2. 1.2. Clip locking lugs for the selector knob cover into the center console.

Fig 2: Identifying Selector Knob Cover

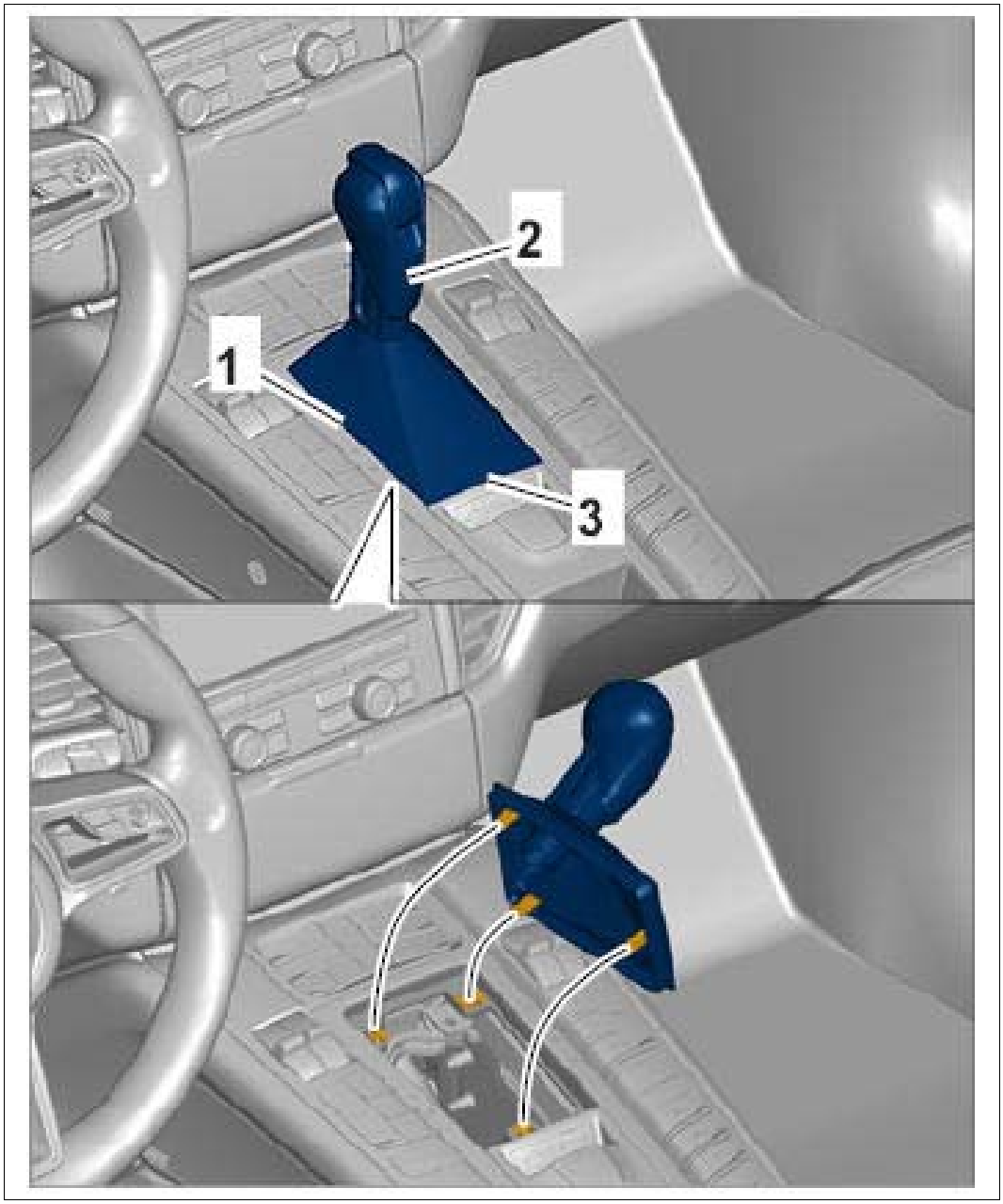

Courtesy of PORSCHE CARS NORTH AMERICA, INC.

2. Turn locking mechanism at the shift lever boot 45 degrees in **-direction of arrow-** and secure selector knob.

Fig 3: Securing Selector Knob

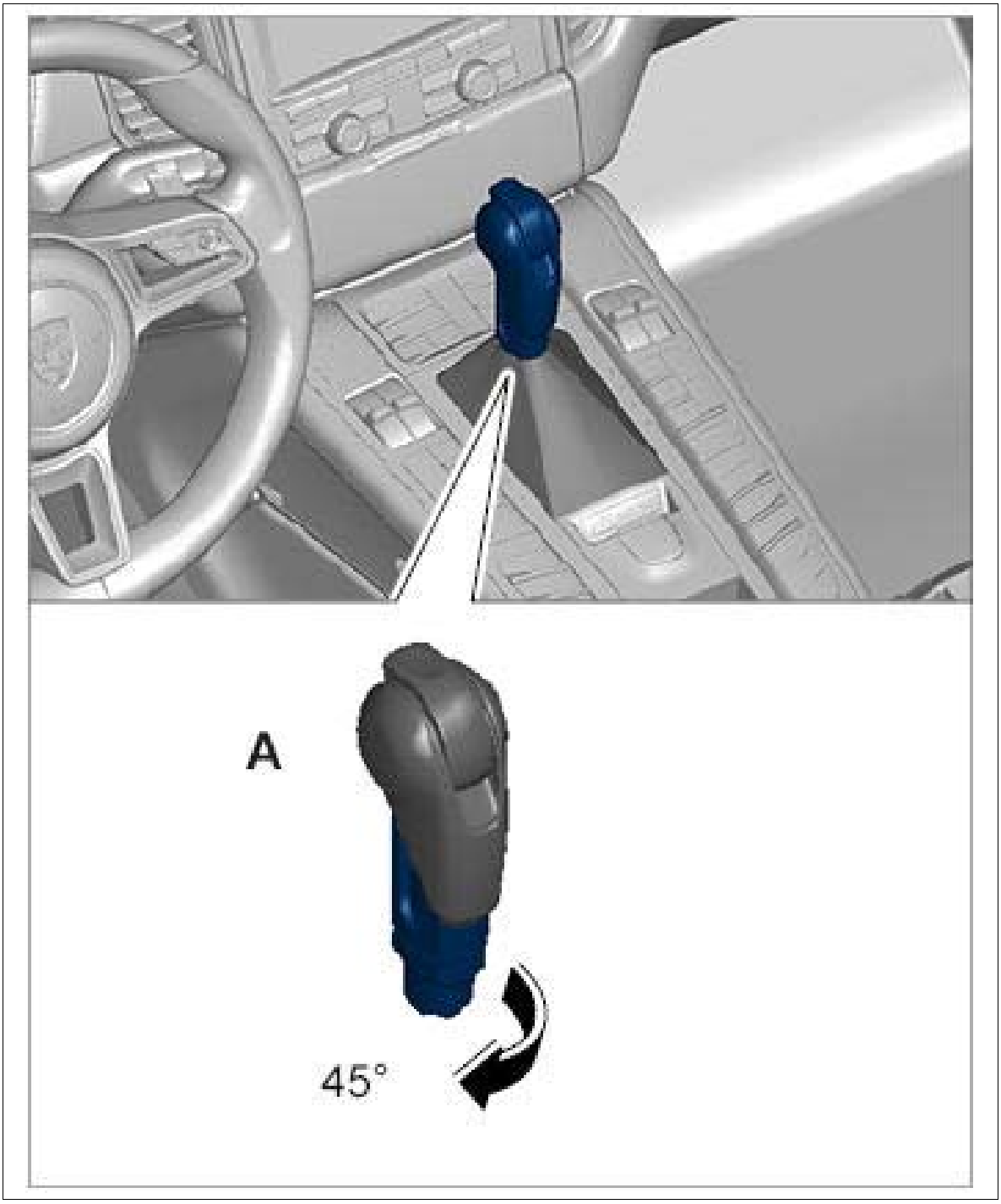

Courtesy of PORSCHE CARS NORTH AMERICA, INC.

WM 3704K2 CALIBRATING SELECTOR KNOB (ALL MODELS) > PRELIMINARY WORK

1. Selector lever control unit replaced.
    1. 1.1. Selector knob connector is not connected.

WM 3704K2 CALIBRATING SELECTOR KNOB (ALL MODELS) > CALIBRATING SELECTOR KNOB

Information

Do not operate the brakes during the entire procedure.

1. Switch off ignition.
2. Move selector knob to position **P** .
3. Open the driver's door.
4. Switch ignition on and then off again.
5. The four position displays **(P; R; N; D)** must flash in the instrument cluster.
6. Plug in selector lever connector.
    1. 6.1. Position display in the instrument cluster changes to **P** .
7. **Wait 2 seconds.**
8. **Press** the emergency release button **-arrow- five times within 3 seconds.**
    1. 8.1. The four position displays **(P; R; N; D)** must now flash again in the instrument cluster.
    2. 8.2. If this does not happen, repeat the procedure starting from Step 4.

Fig 1: Locating Emergency Release Button

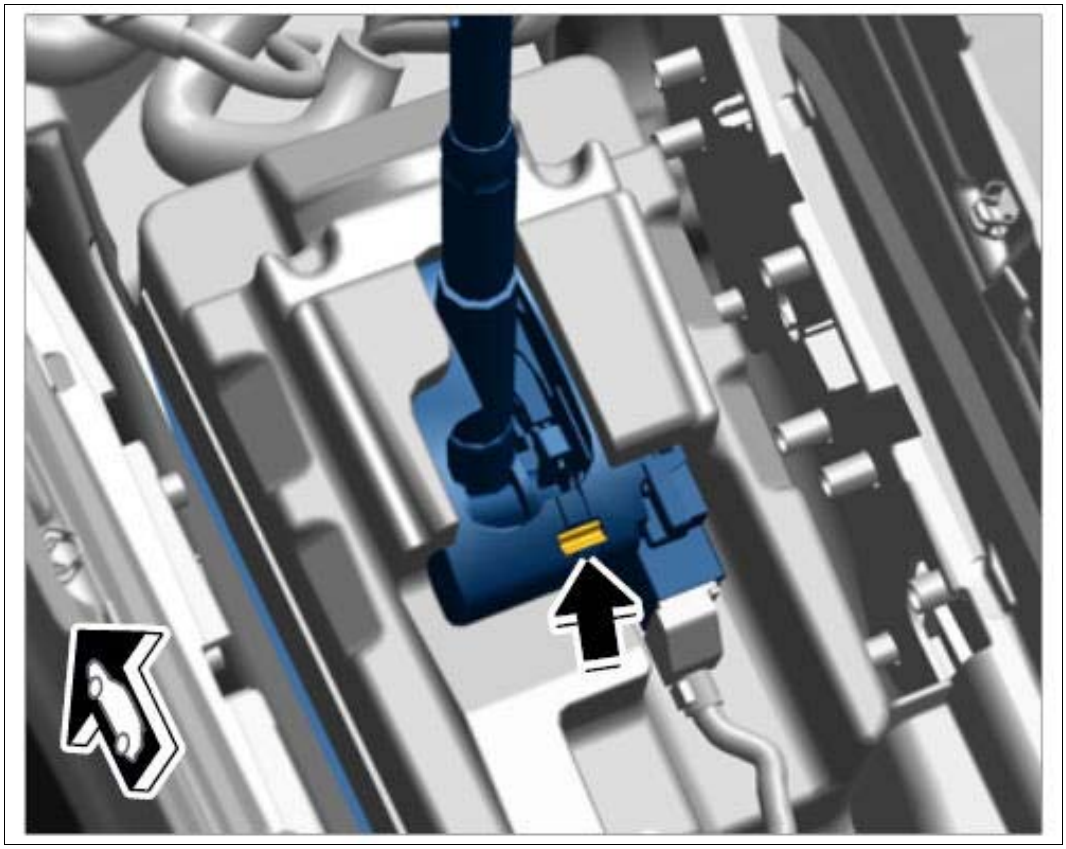

Courtesy of PORSCHE CARS NORTH AMERICA, INC.

9. Press the emergency release button once (i.e. 6 times in total),↓ shift from **P** to **D** and wait **1 second** .
    1. 9.1. The emergency release button must be released again immediately after shifting out of **P** .
10. Move selector knob to position **M** .
    1. 10.1. Do not shift into position **M+** or **M-** while doing this.
11. Leave the selector knob in position **M** until the position displays stop flashing in the instrument cluster and position **D** is indicated.
    1. 11.1. This can take up to 7 seconds.
12. The calibration process is now complete. If the flashing display stopped even before this, calibration must be repeated.
13. Checking calibration.
    1. 13.1. Start the engine.
    2. 13.2. Shift through all positions using the selector knob - all positions must now be displayed correctly in the position display in the instrument cluster.
    3. 13.3. If this is not the case, calibration must be repeated.

14. Delete the fault memory in the transmission and instrument cluster control unit using the PIWIS Tester.

WM 3704K2 CALIBRATING SELECTOR KNOB (ALL MODELS) > SUBSEQUENT WORK

1. Install selector knob. → Installing Selector Knob .

WM 370819 REMOVING AND INSTALLING SELECTOR SUPPORT (ALL MODELS) > TOOLS

Designation	Type	Number	Description	
PIWIS Tester II	Special tool	9818		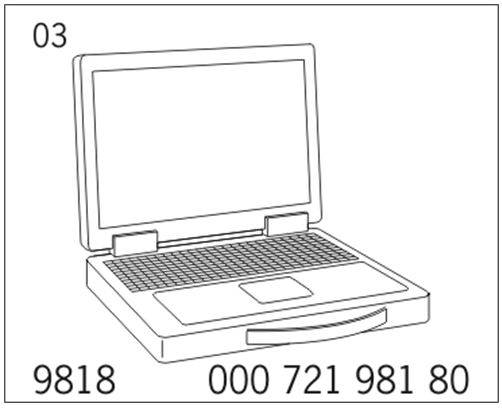
socket insert a/f 5	VW tool	T40031		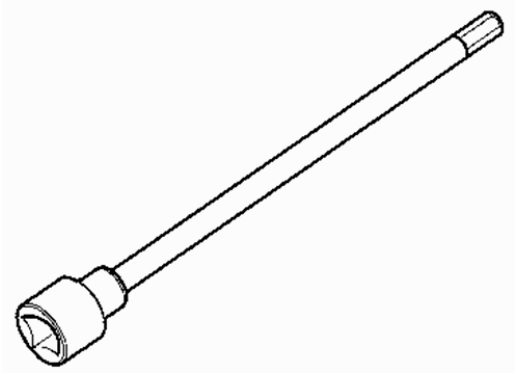

WM 370819 REMOVING AND INSTALLING SELECTOR SUPPORT (ALL MODELS) > TECHNICAL VALUES

Location	Description	Type	Basic value	Tolerance 1	Tolerance 2
Fastening nut	Fastening screw on transmission mount	Tightening torque	20 Nm (15 ftlb.)		

Fastening screw	Fastening screw on transmission support	Tightening torque	70 Nm (52 ftlb.)		
Fastening screw	Fastening screw on transmission bracket	Tightening torque	40 Nm (30 ftlb.)		
Fastening nut	Fastening nut on transmission bracket	Tightening torque	20 Nm (15 ftlb.)		
Fastening screws	Step 1	Tightening torque	20 Nm (15 ftlb.)		
Fastening screw	Step 2	Torque angle	+90°		
Fastening nuts	Selector support	Tightening torque	8 Nm (6 ftlb.)		
Clamping screw	Clamping screw for adjusting locking cable	Tightening torque	13 Nm (9.5 ftlb.)		
Fastening screws	Locking cable holder to transmission	Tightening torque	8 Nm (6 ftlb.)		

WM 370819 REMOVING AND INSTALLING SELECTOR SUPPORT (ALL MODELS) > TECHNICAL VALUES > TRANSMISSION BRACKET

Fig 1: Identifying Transmission Bracket, Nut And Screws

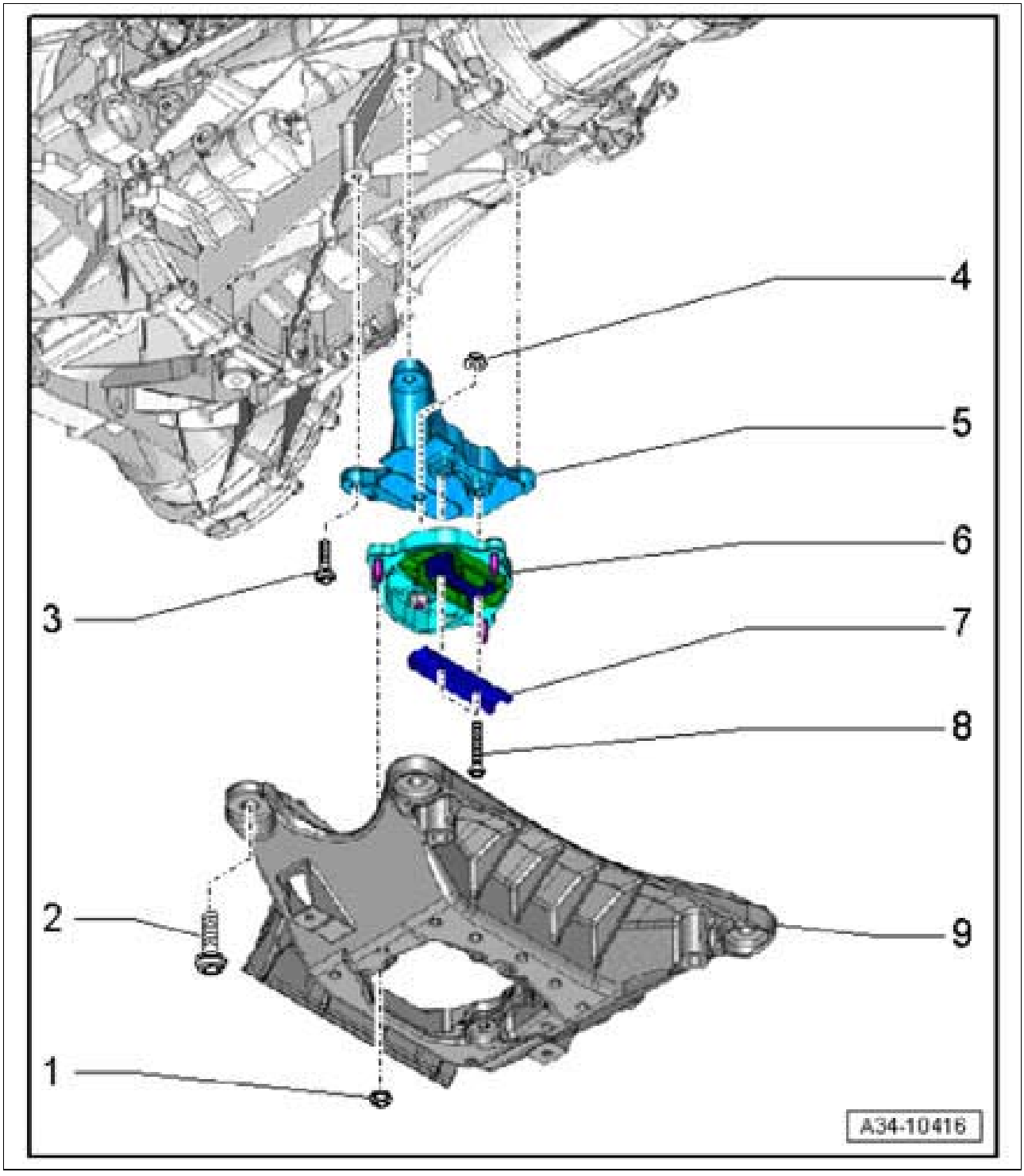

Courtesy of PORSCHE CARS NORTH AMERICA, INC.

1. Fastening nut → **Tightening torque: 20 Nm (15 ftlb.)**
2. Fastening screw → **Tightening torque: 70 Nm (52 ftlb.)**
3. Fastening screw → **Tightening torque: 40 Nm (30 ftlb.)**
4. Fastening nut → **Tightening torque: 20 Nm (15 ftlb.)**

5. Transmission bracket

6. Transmission mount

7. Lower lock for transmission mount

8. Fastening screw → **Tightening torque: 20 Nm (15 ftlb.) → Torque angle: +90°**

9. Transmission support

WM 370819 REMOVING AND INSTALLING SELECTOR SUPPORT (ALL MODELS) > TECHNICAL VALUES > COMPONENT OVERVIEW - SELECTOR SUPPORT, LOCKING CABLE

Fig 1: Overview Of Selector Support, Locking Cable

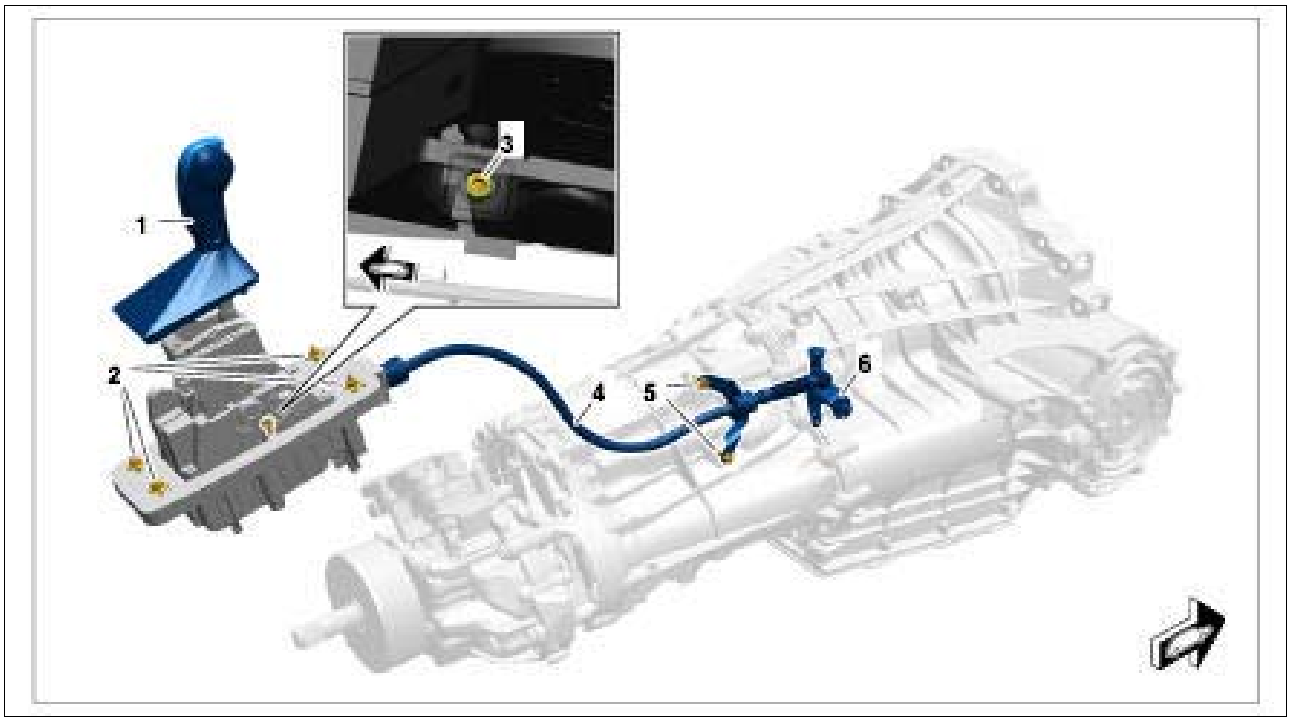

Courtesy of PORSCHE CARS NORTH AMERICA, INC.

1. Selector knob

2. Fastening nuts for selector support → **Tightening torque: 8 Nm (6 ftlb.)**

3. Adjusting screw for locking cable → **Tightening torque: 13 Nm (9.5 ftlb.)**

4. Locking cable

5. Fastening screws for locking cable holder → **Tightening torque: 8 Nm (6 ftlb.)**

6. Selector lever

WM 370819 REMOVING AND INSTALLING SELECTOR SUPPORT (ALL MODELS) > INFORMATION > COMPONENT OVERVIEW - SELECTOR SUPPORT, LOCKING CABLE

Fig 1: Overview Of Selector Support, Locking Cable

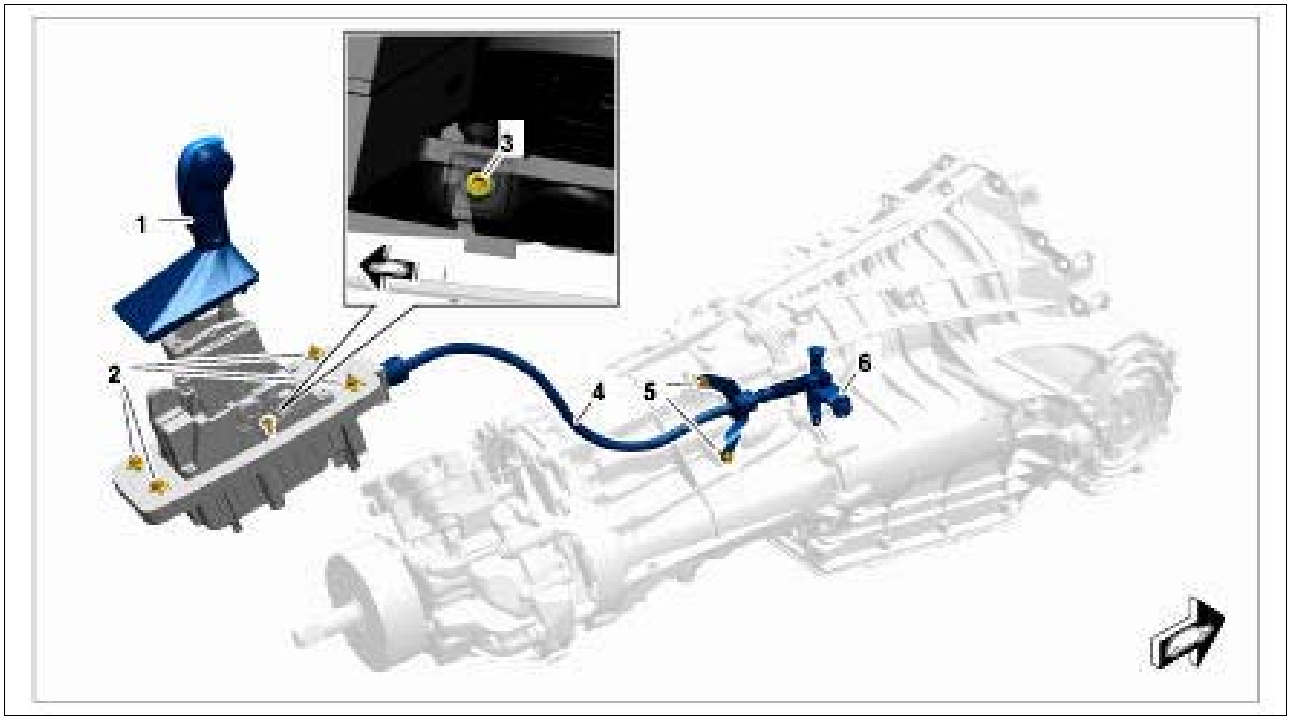

Courtesy of PORSCHE CARS NORTH AMERICA, INC.

1. Selector knob
2. Fastening nuts for selector support
3. Adjusting screw for locking cable
4. Locking cable
5. Fastening screws for locking cable holder
6. Selector lever

WM 370819 REMOVING AND INSTALLING SELECTOR SUPPORT (ALL MODELS) > PRELIMINARY WORK

1. Raise the vehicle on a lifting platform. → 4X00IN LIFTING THE VEHICLE
2. Move selector lever to position N.
3. Remove center console trim. → Removing Center Console Trim
4. Remove switch console. → Removing Switch Console
5. Remove upper part of center console cover. → Removing Upper Part Of Center Console Cover

WM 370819 REMOVING AND INSTALLING SELECTOR SUPPORT (ALL MODELS) > REMOVING SELECTOR SUPPORT

Information

Do not apply lateral forces to the pull rod as it could break off.

Fig 1: Caution - Do Not Use Force On Pull Rod

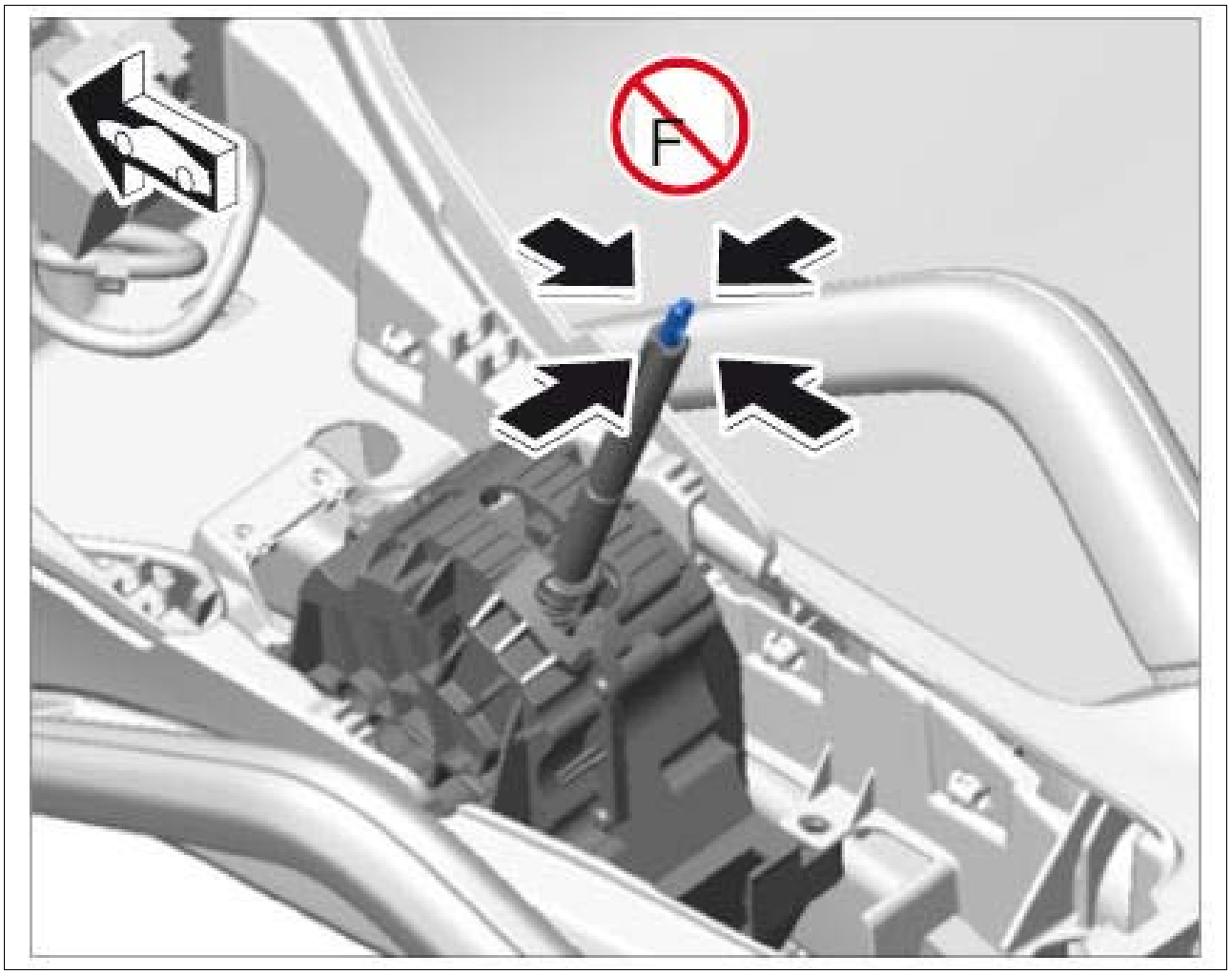

Courtesy of PORSCHE CARS NORTH AMERICA, INC.

1. Press holder for switch console **-1-** in **-direction of arrow-** and remove it.

Fig 2: Pressing Switch Console Holder

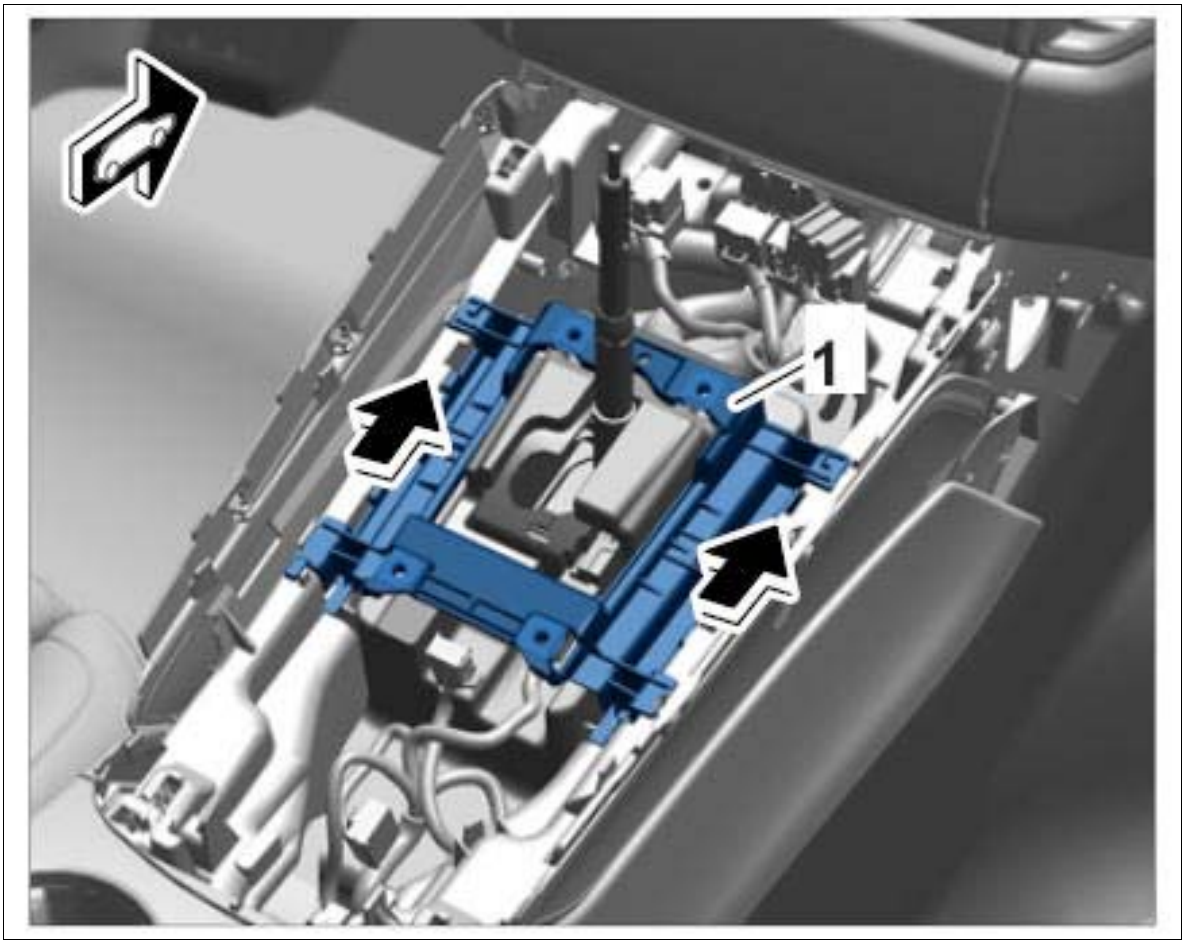

Courtesy of PORSCHE CARS NORTH AMERICA, INC.

2. Disconnect electric plug connection **-2-** and remove insulating mat **-1-** .

Fig 3: Identifying Insulating Mat And Plug Connection

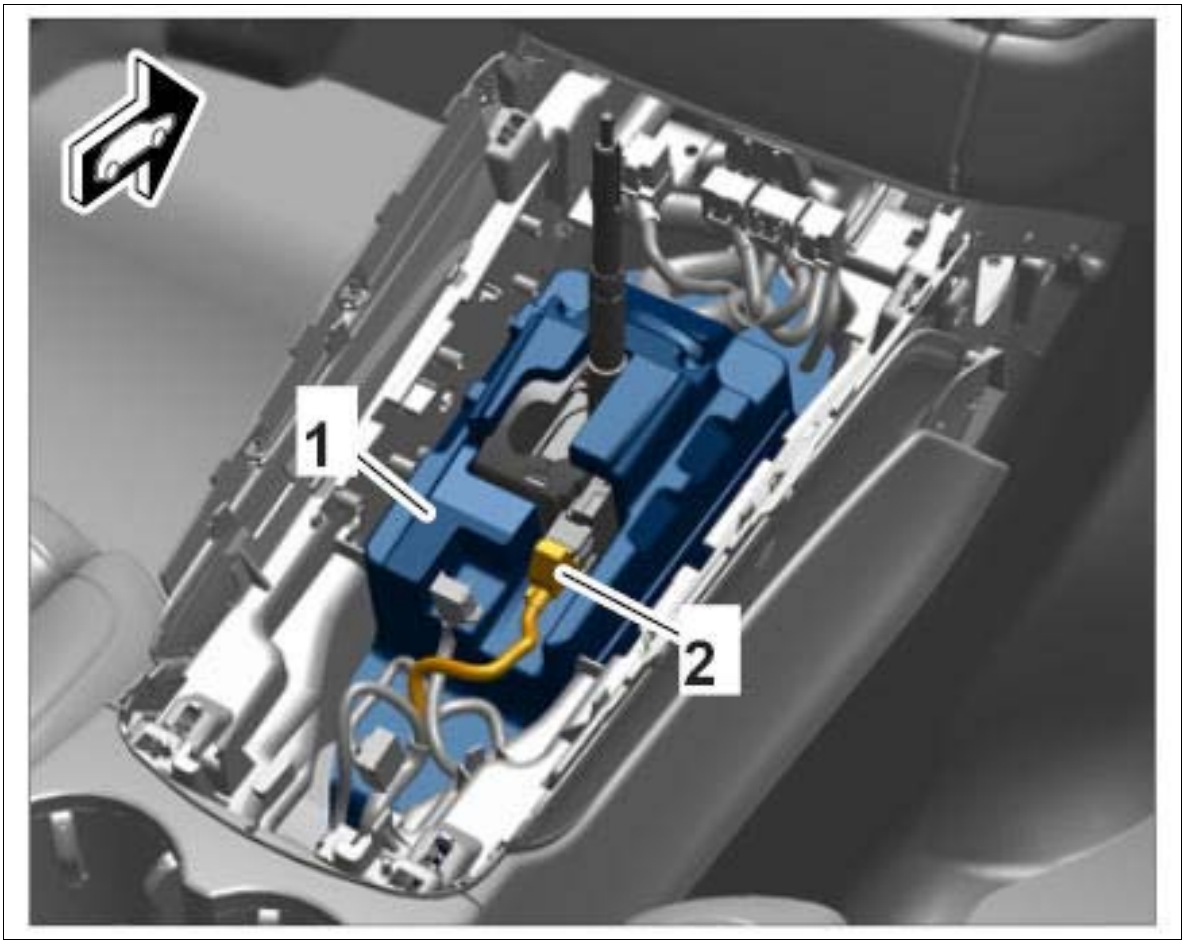

Courtesy of PORSCHE CARS NORTH AMERICA, INC.

3. Loosen selector support.

    1. 3.1. Press release **-3-** .

    2. 3.2. Selector knob **-2-** in position "P".

        Information

        1. Loosen clamping screw for locking cable by only about 1 turn.

        2. The clamping screw is only accessible in selector-lever position "P".

        3. When the clamping screw is loosened, the selector lever must remain in position "P".

    3. 3.3. Loosen clamping screw **-1-** for locking cable by about 1 turn using **socket insert a/f 5 T40031.**

        Clamping screw remains in place.

    4. 3.4. Unscrew fastening nuts **-4-** .

Fig 4: Identifying Selector Support Fastening Nuts

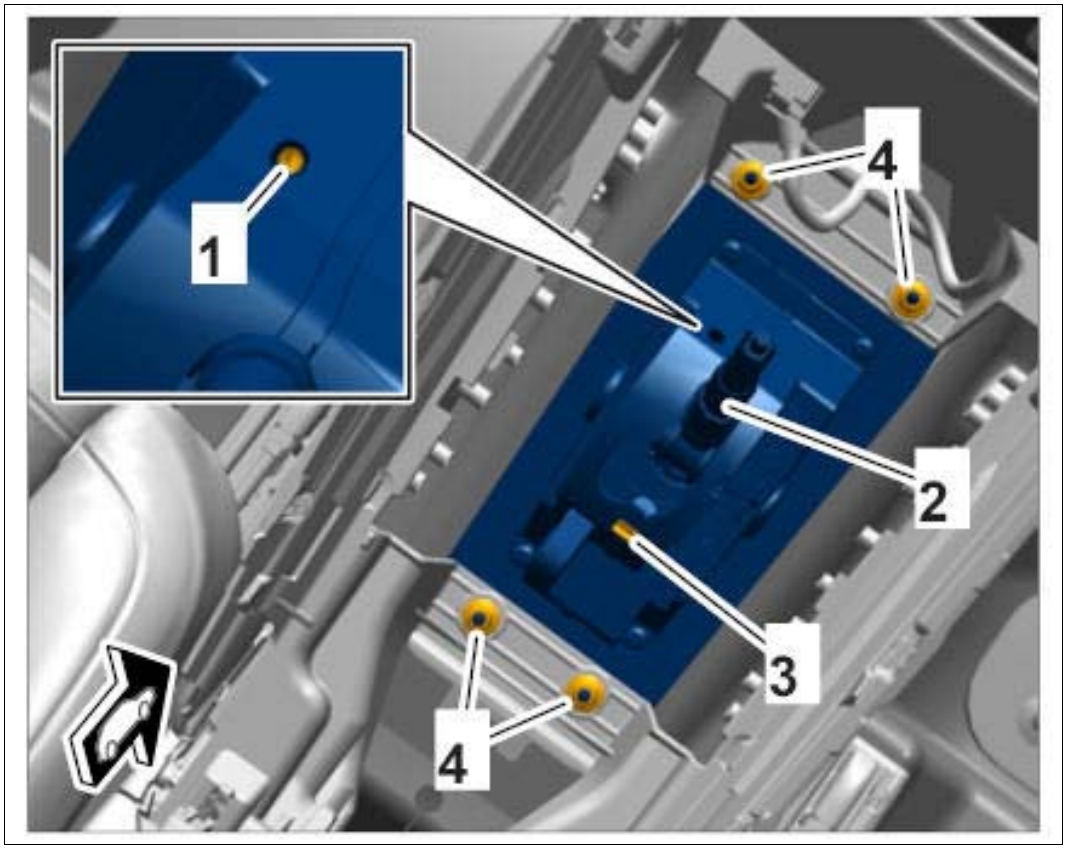

Courtesy of PORSCHE CARS NORTH AMERICA, INC.

4. Unscrew fastening nuts **-2-** and remove heat shield.

Fig 5: Identifying Heat Shield Fastening Nuts

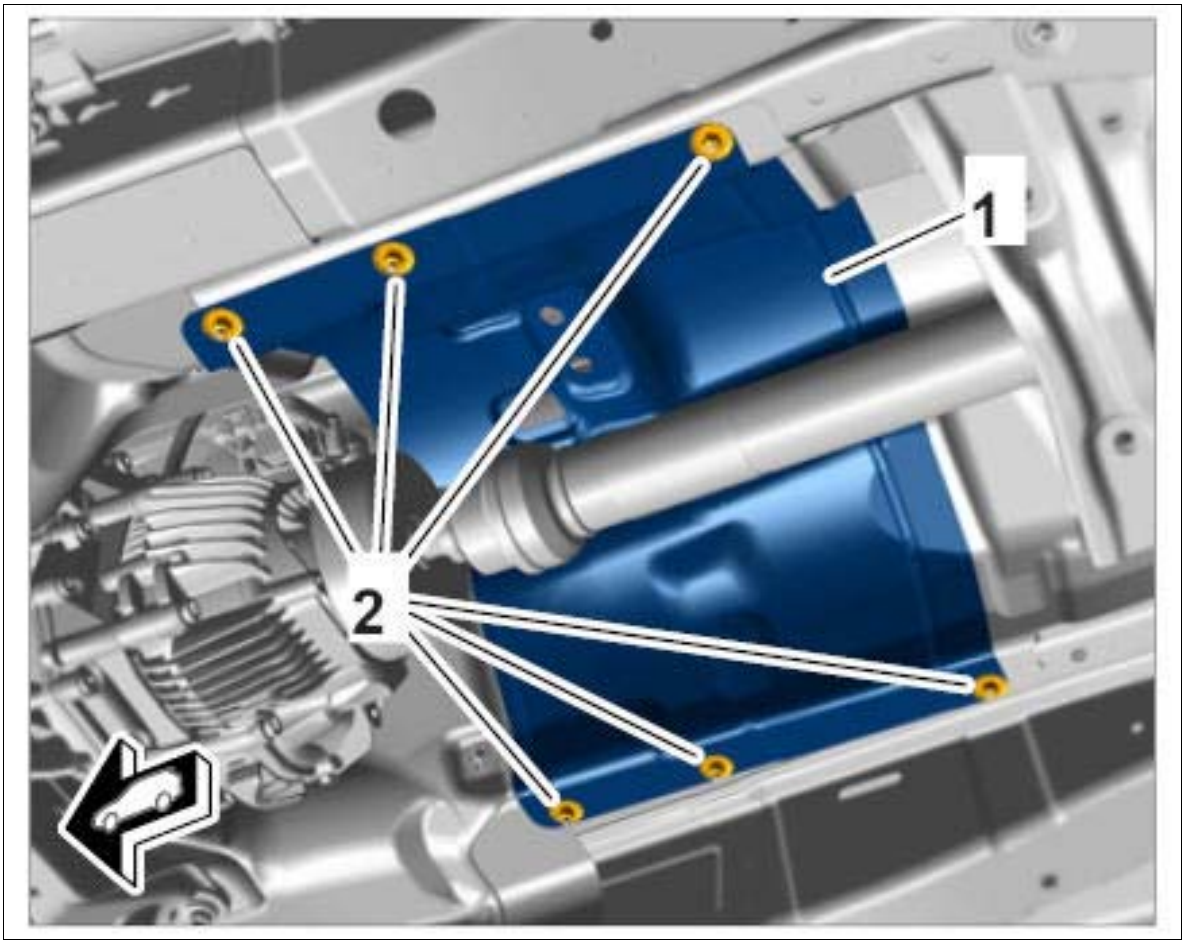

Courtesy of PORSCHE CARS NORTH AMERICA, INC.

5. Unscrew fastening screws **-1-** and **-3-** , support the transmission using transmission bracket and lower it by about 25 mm.

Fig 6: Identifying Gear Support Fastening Screws

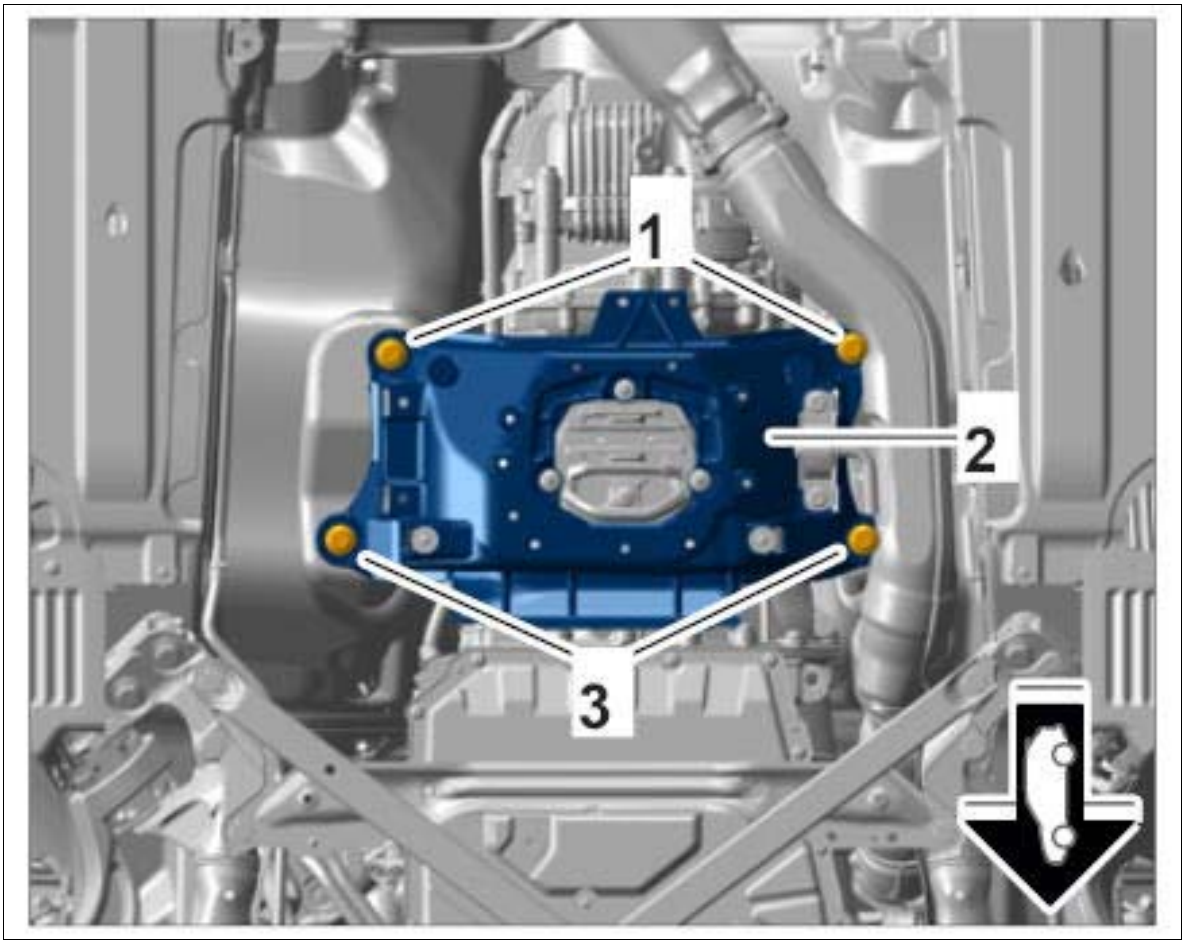

Courtesy of PORSCHE CARS NORTH AMERICA, INC.

6. Remove selector support.

    1. 6.1. Loosen the safety clip **-1-** and pull locking cable **-2-** out of the selector support **-3-** .

    2. 6.2. Remove selector support **-3-** .

Fig 7: Identifying Selector Support, Locking Cable And Clip

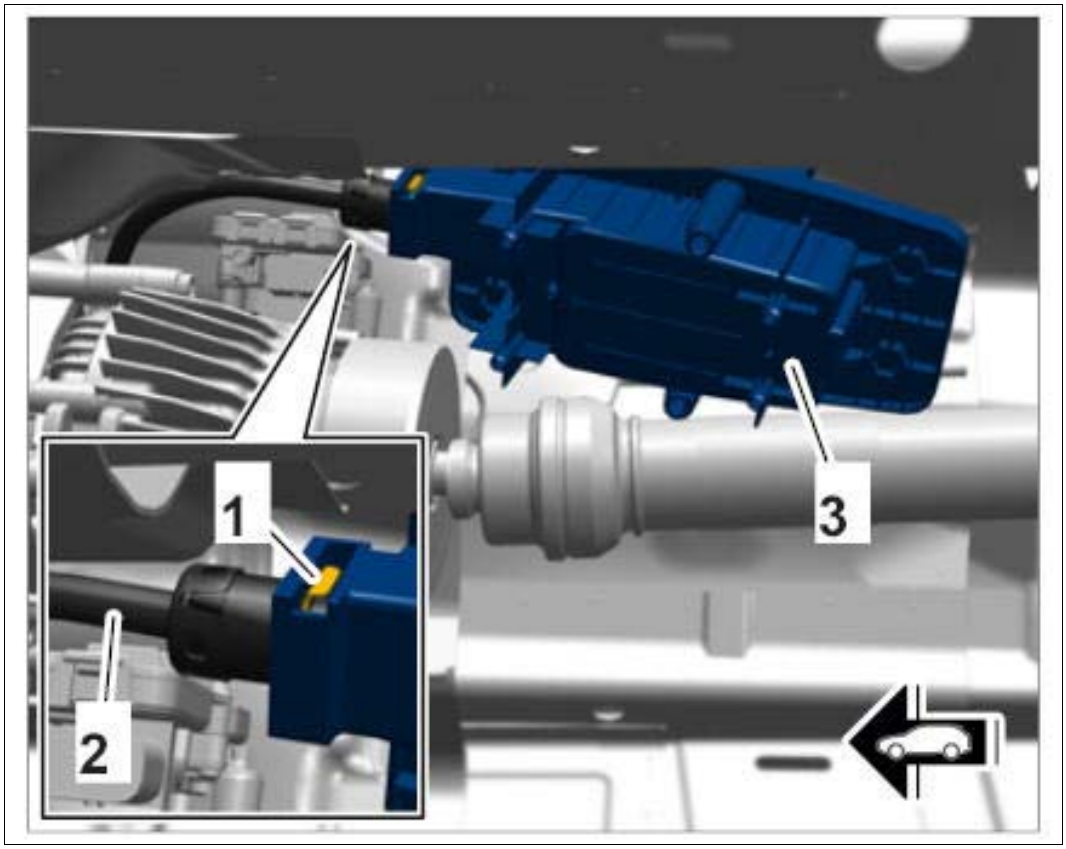

Courtesy of PORSCHE CARS NORTH AMERICA, INC.

WM 370819 REMOVING AND INSTALLING SELECTOR SUPPORT (ALL MODELS) > INSTALLING SELECTOR SUPPORT

Information

Do not apply lateral forces to the pull rod as it could break off.

Fig 1: Caution - Do Not Use Force On Pull Rod

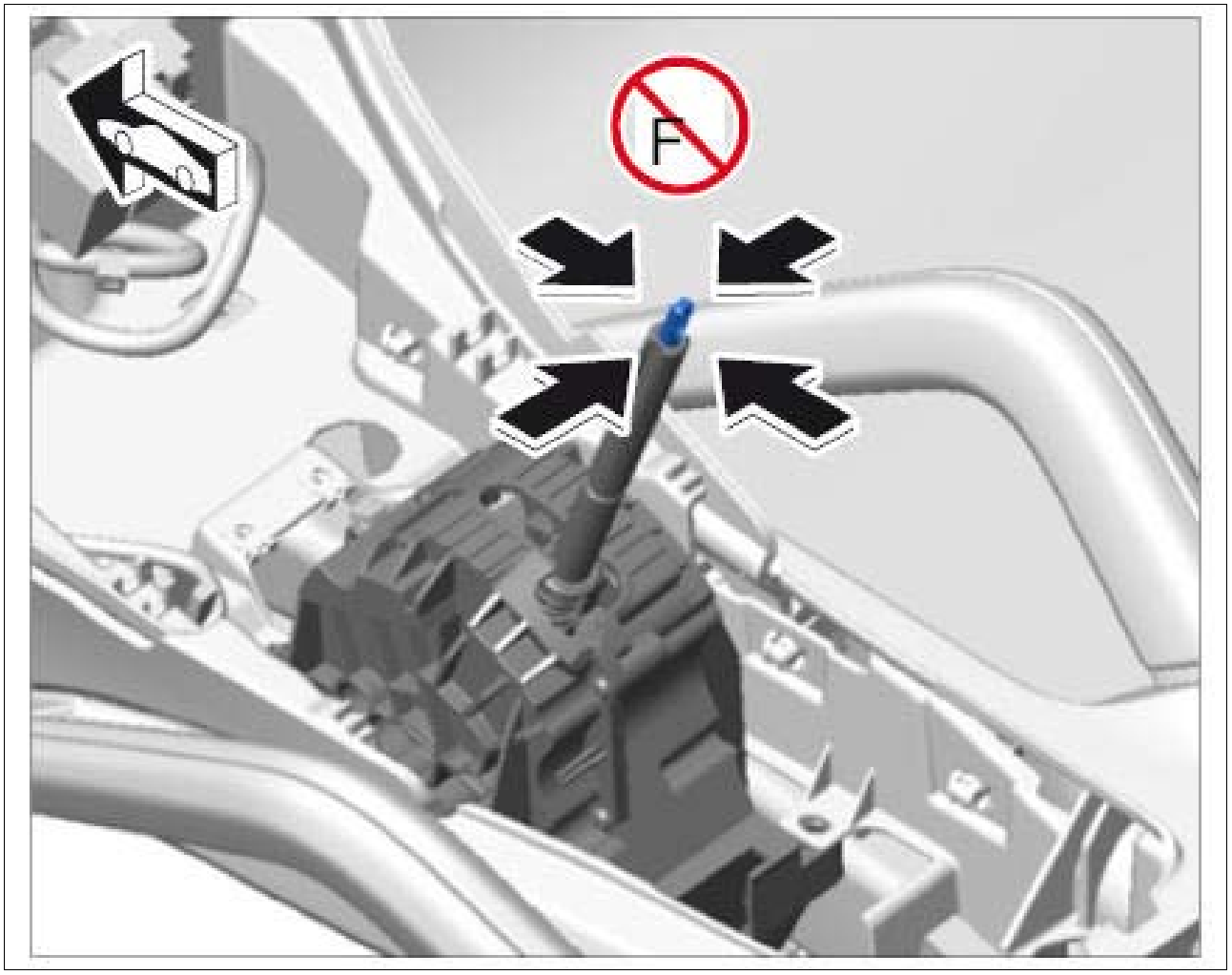

Courtesy of PORSCHE CARS NORTH AMERICA, INC.

Information

After replacing the selector support, calibrate it using **PIWIS Tester II 9818.**

1. Install selector support.
    1. 1.1. Guide locking cable **-2-** into the selector support **-3-** and engage safety clip **-1-** .
    2. 1.2. Position selector support **-3-** .

Fig 2: Identifying Selector Support, Locking Cable And Clip

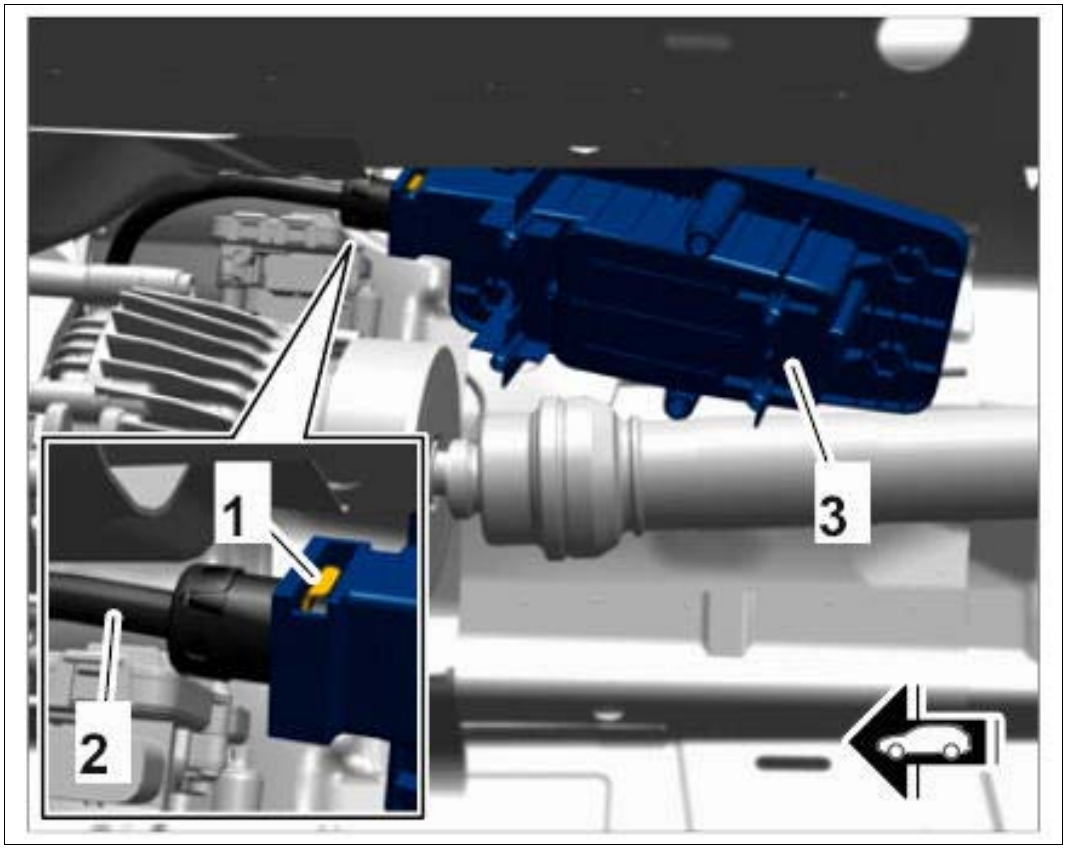

Courtesy of PORSCHE CARS NORTH AMERICA, INC.

2. Position heat shield and fit and tighten fastening nuts **-2-** .

Fig 3: Identifying Heat Shield Fastening Nuts

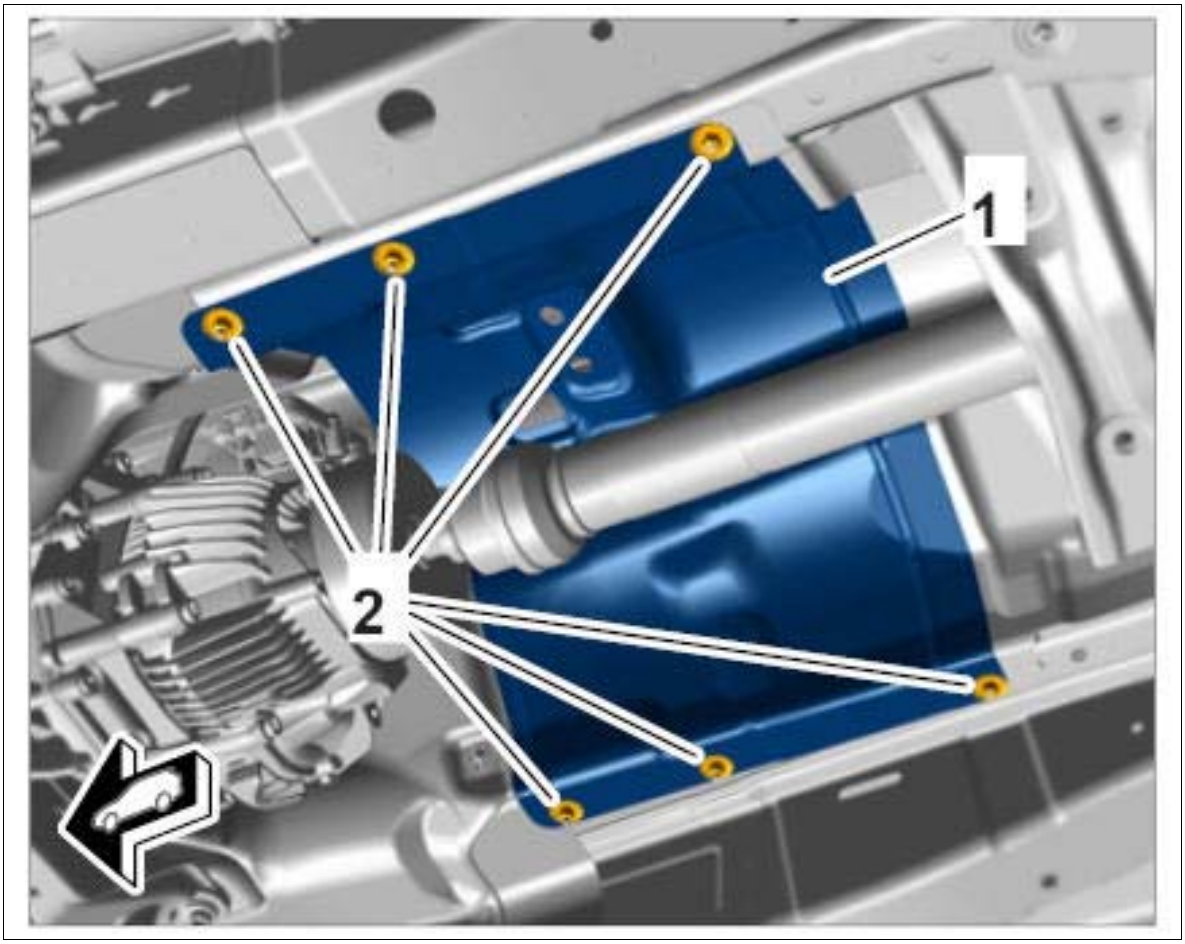

Courtesy of PORSCHE CARS NORTH AMERICA, INC.

3. Lift the transmission and fit and tighten fastening screws **-1-** and **-3-** . **Tightening torque 70 Nm (52 ftlb.)**
4. Secure selector support.
    1. 4.1. Position selector support.
    2. 4.2. Fit fastening nuts **-4-** and tighten them. **Tightening torque 8 Nm (6 ftlb.)**

Fig 4: Identifying Gear Support Fastening Screws

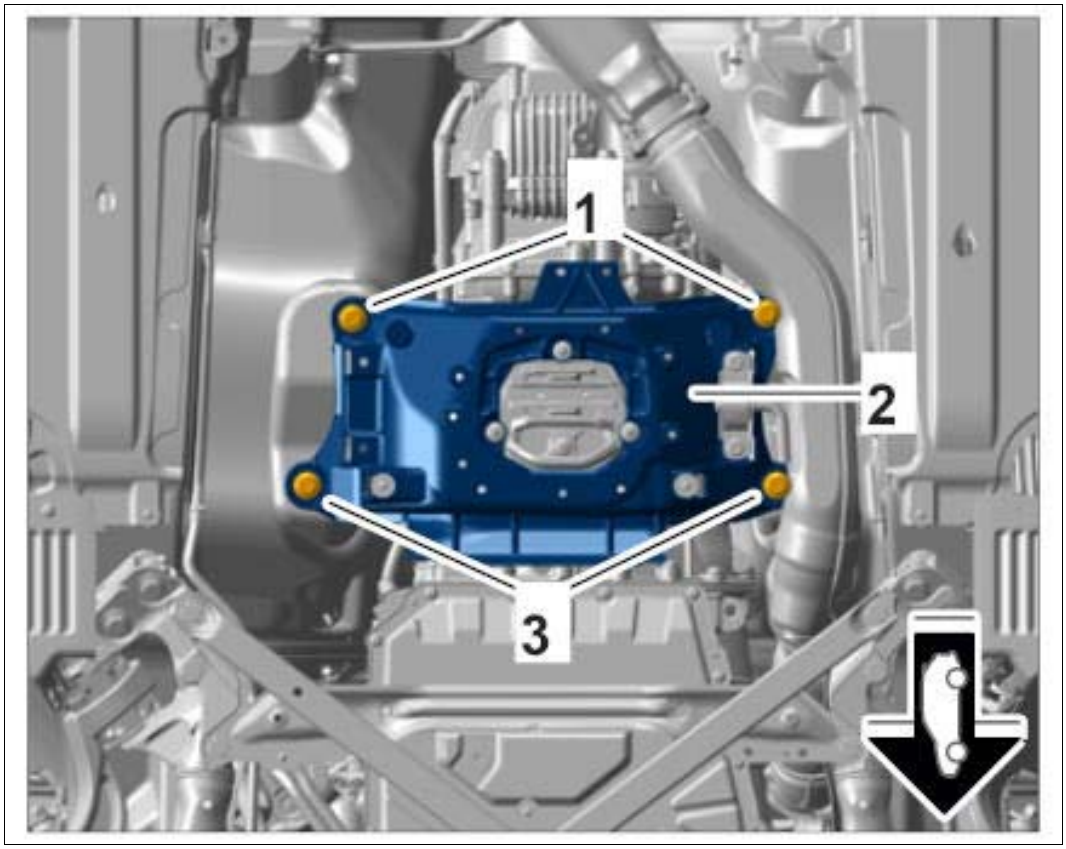

Courtesy of PORSCHE CARS NORTH AMERICA, INC.

Information

1. Loosen clamping screw for locking cable by only about 1 turn.
2. The clamping screw is only accessible in selector-lever position "P".
3. When the clamping screw is loosened, the selector lever must remain in position "P".

3. 4.3. Tighten clamping screw **-1-** for locking cable using **socket insert a/f 5 T40031. Tightening torque 13 Nm (9.5 ftlb.)**
4. 4.4. Press release **-3-** .
5. 4.5. Selector knob **-2-** in position "N".

Fig 5: Identifying Selector Support Screws And Knob

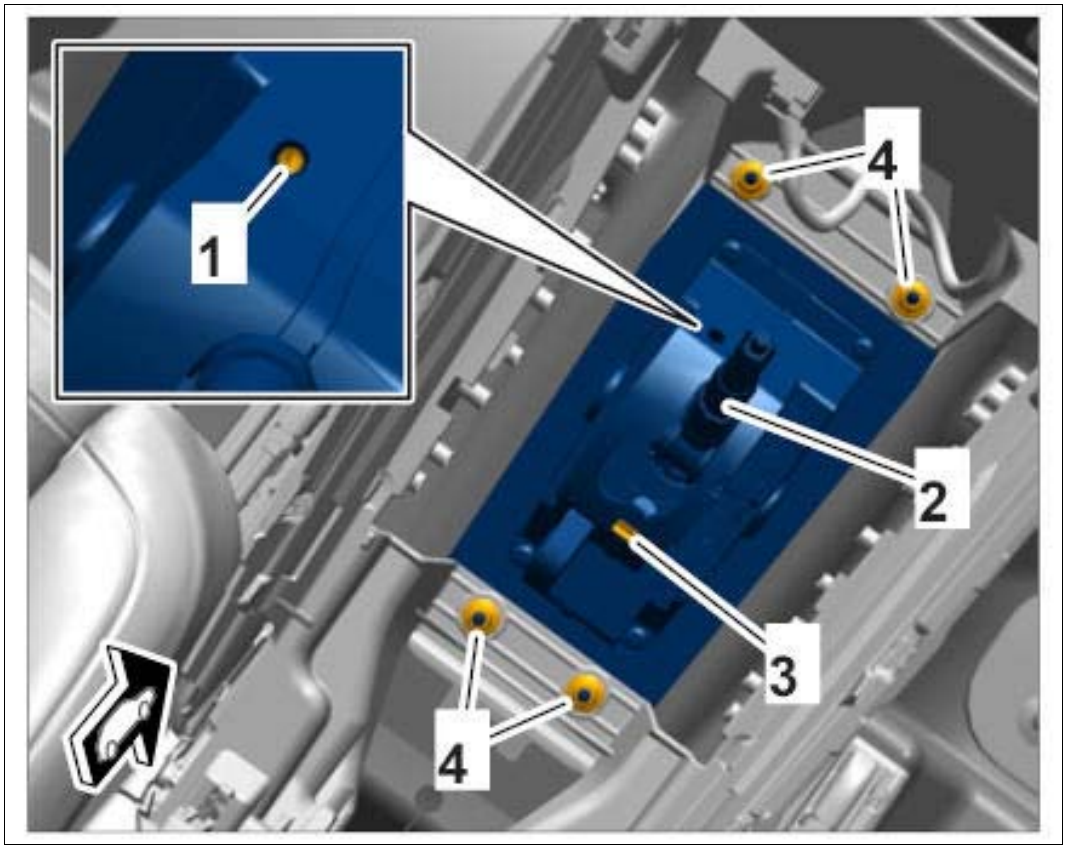

Courtesy of PORSCHE CARS NORTH AMERICA, INC.

5. Connect electric plug connection **-2-** and position insulating mat **-1-** .

Fig 6: Identifying Insulating Mat Plug Connection

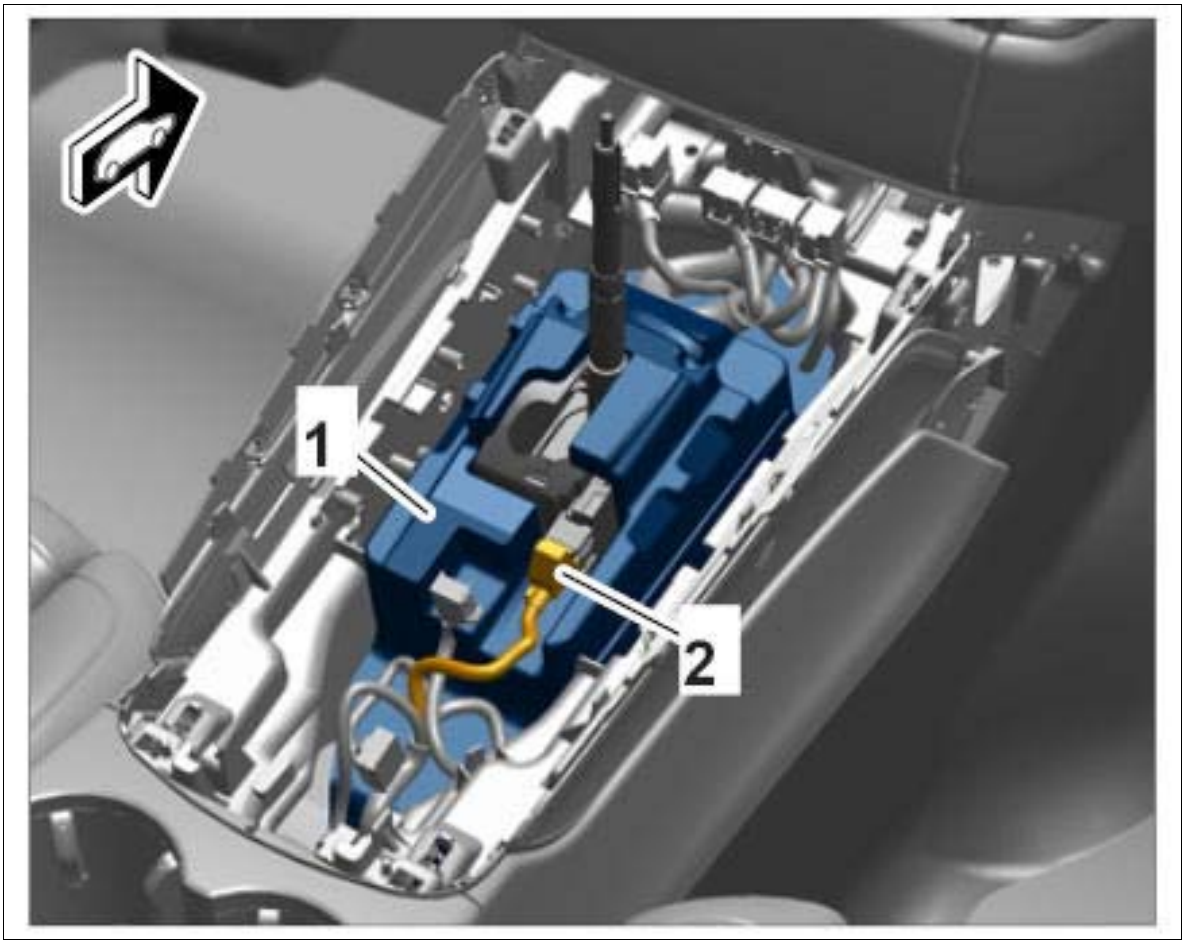

Courtesy of PORSCHE CARS NORTH AMERICA, INC.

6. Press holder for switch console **-1-** in **-direction of arrow-** and secure it.

Fig 7: Pressing Switch Console Holder

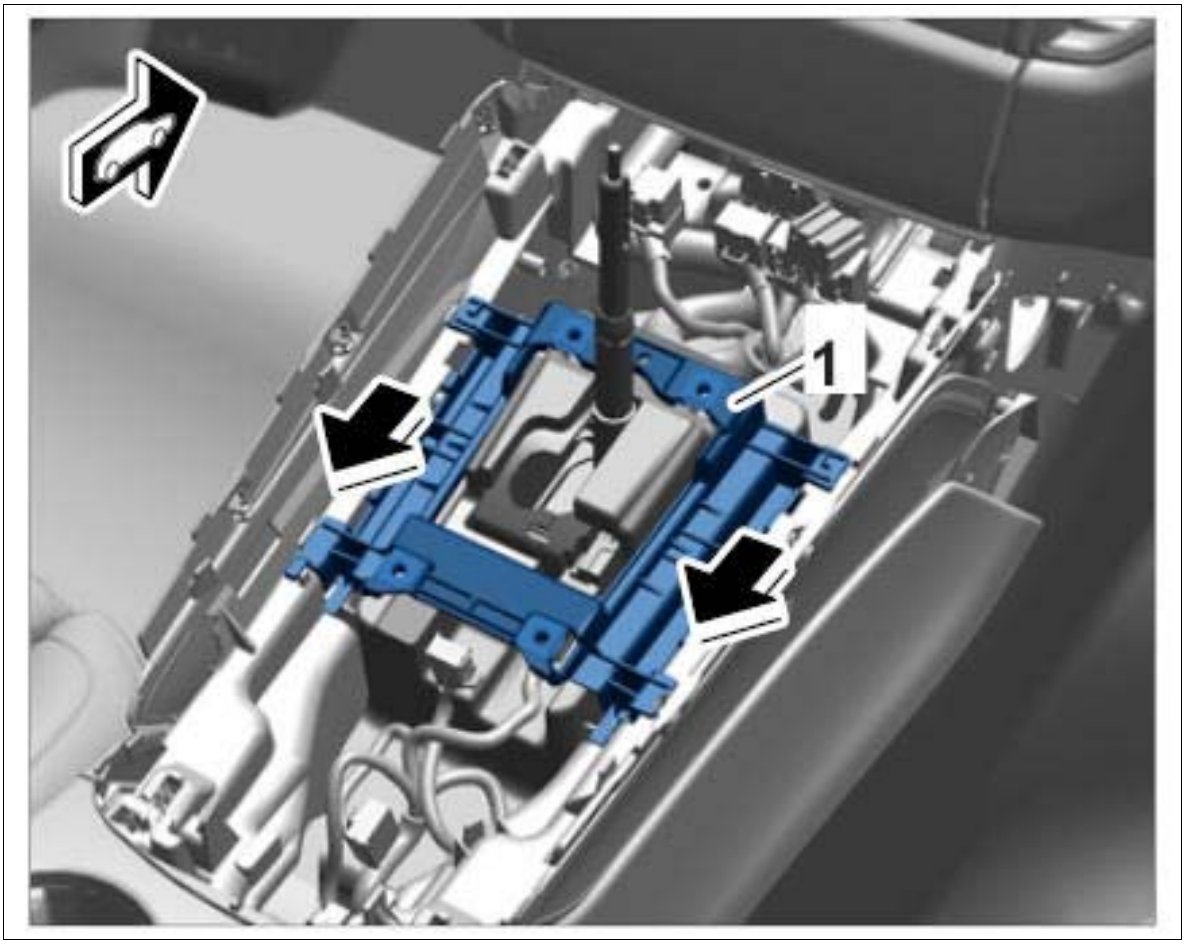

Courtesy of PORSCHE CARS NORTH AMERICA, INC.

WM 370819 REMOVING AND INSTALLING SELECTOR SUPPORT (ALL MODELS) > SUBSEQUENT WORK

1. Install upper part of center console cover. → Installing Upper Part Of Center Console Cover
2. Install switch console. → Installing Upper Part Of Center Console Cover
3. Install center console trim. → Installing Center Console Trim
4. Move selector lever to position "P".

   After replacing the selector support:

5. Calibrate selector support using **PIWIS Tester II 9818.**
    1. 5.1. Overview -> PDK -> Maintenance/repairs -> Calibration -> [F12]
    2. 5.2. Calibration after **replacing** selector lever control unit -> [F12]
    3. 5.3. Follow the instructions on **PIWIS Tester II 9818.** [F12]

4. 5.4. Start the calibration process by pressing [F8].
5. 5.5. Erase the fault memory.

WM 371315 ADJUSTING LOCKING CABLE (ALL MODELS) > TOOLS

Designation	Type	Number	Description	
socket insert a/f 5	VW tool	T40031		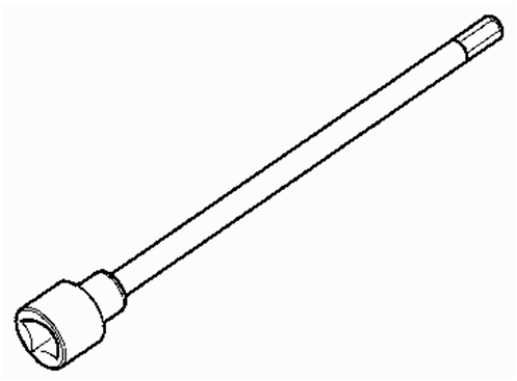

WM 371315 ADJUSTING LOCKING CABLE (ALL MODELS) > TECHNICAL VALUES

Location	Description	Type	Basic value	Tolerance 1	Tolerance 2
Fastening nut	Fastening screw on transmission mount	Tightening torque	20 Nm (15 ftlb.)		
Fastening screw	Fastening screw on transmission support	Tightening torque	70 Nm (52 ftlb.)		
Fastening screw	Fastening screw on transmission bracket	Tightening torque	40 Nm (30 ftlb.)		
Fastening nut	Fastening nut on transmission bracket	Tightening torque	20 Nm (15 ftlb.)		
Fastening screws	Step 1	Tightening torque	20 Nm (15 ftlb.)		
Fastening screw	Step 2	Torque angle	+90°		
Fastening nuts	Selector support	Tightening torque	8 Nm (6 ftlb.)		
Clamping screw	Clamping screw for adjusting locking cable	Tightening torque	13 Nm (9.5 ftlb.)		

Fastening screws	Locking cable holder to transmission	Tightening torque	8 Nm (6 ftlb.)		

WM 371315 ADJUSTING LOCKING CABLE (ALL MODELS) > TECHNICAL VALUES > TRANSMISSION BRACKET

Fig 1: Identifying Transmission Bracket, Nut And Screws

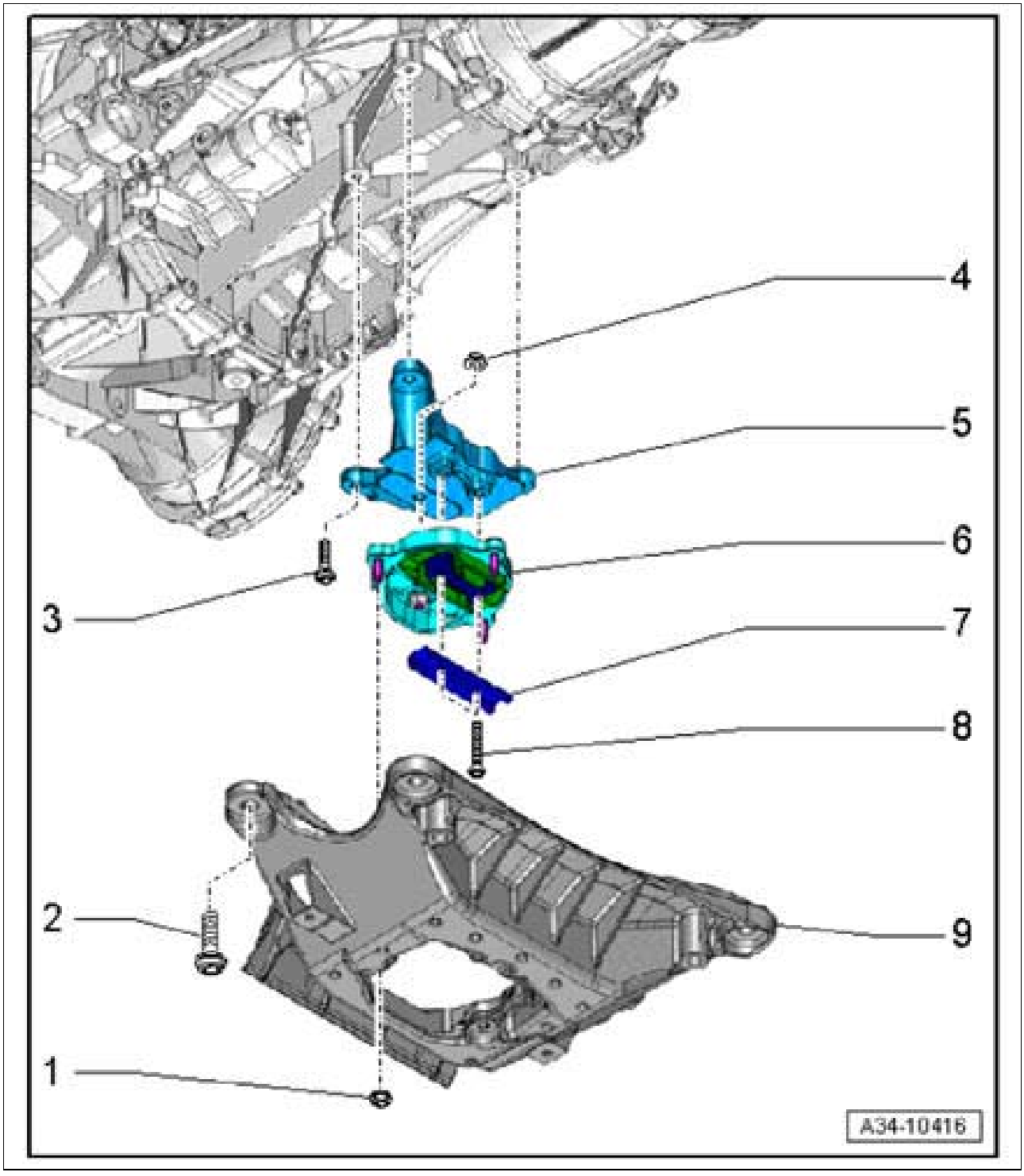

Courtesy of PORSCHE CARS NORTH AMERICA, INC.

1. Fastening nut → **Tightening torque: 20 Nm (15 ftlb.)**
2. Fastening screw → **Tightening torque: 70 Nm (52 ftlb.)**
3. Fastening screw → **Tightening torque: 40 Nm (30 ftlb.)**
4. Fastening nut → **Tightening torque: 20 Nm (15 ftlb.)**

5. Transmission bracket
6. Transmission mount
7. Lower lock for transmission mount
8. Fastening screw → **Tightening torque: 20 Nm (15 ftlb.) → Torque angle: +90°**
9. Transmission support

WM 371315 ADJUSTING LOCKING CABLE (ALL MODELS) > TECHNICAL VALUES > COMPONENT OVERVIEW - SELECTOR SUPPORT, LOCKING CABLE

Fig 1: Overview Of Selector Support, Locking Cable

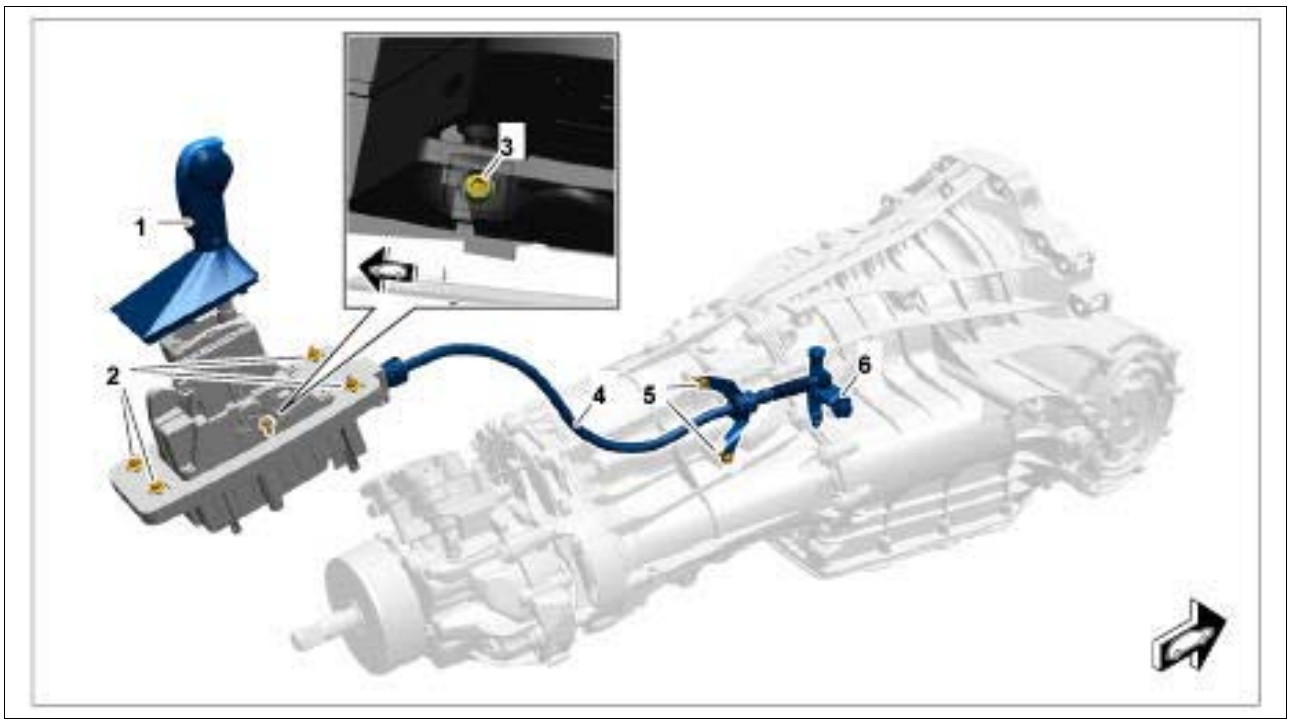

Courtesy of PORSCHE CARS NORTH AMERICA, INC.

1. Selector knob
2. Fastening nuts for selector support → **Tightening torque: 8 Nm (6 ftlb.)**
3. Adjusting screw for locking cable → **Tightening torque: 13 Nm (9.5 ftlb.)**
4. Locking cable
5. Fastening screws for locking cable holder → **Tightening torque: 8 Nm (6 ftlb.)**
6. Selector lever

WM 371315 ADJUSTING LOCKING CABLE (ALL MODELS) > PRELIMINARY WORK

1. Remove center console trim. → Removing Center Console Trim
2. Remove upper part of center console cover. → Removing Upper Part Of Center Console Cover
3. Remove switch console. → Removing Switch Console

WM 371315 ADJUSTING LOCKING CABLE (ALL MODELS) > ADJUSTING LOCKING CABLE

Information

Do not apply lateral forces to the pull rod as it could break off.

Fig 1: Caution - Do Not Use Force On Pull Rod

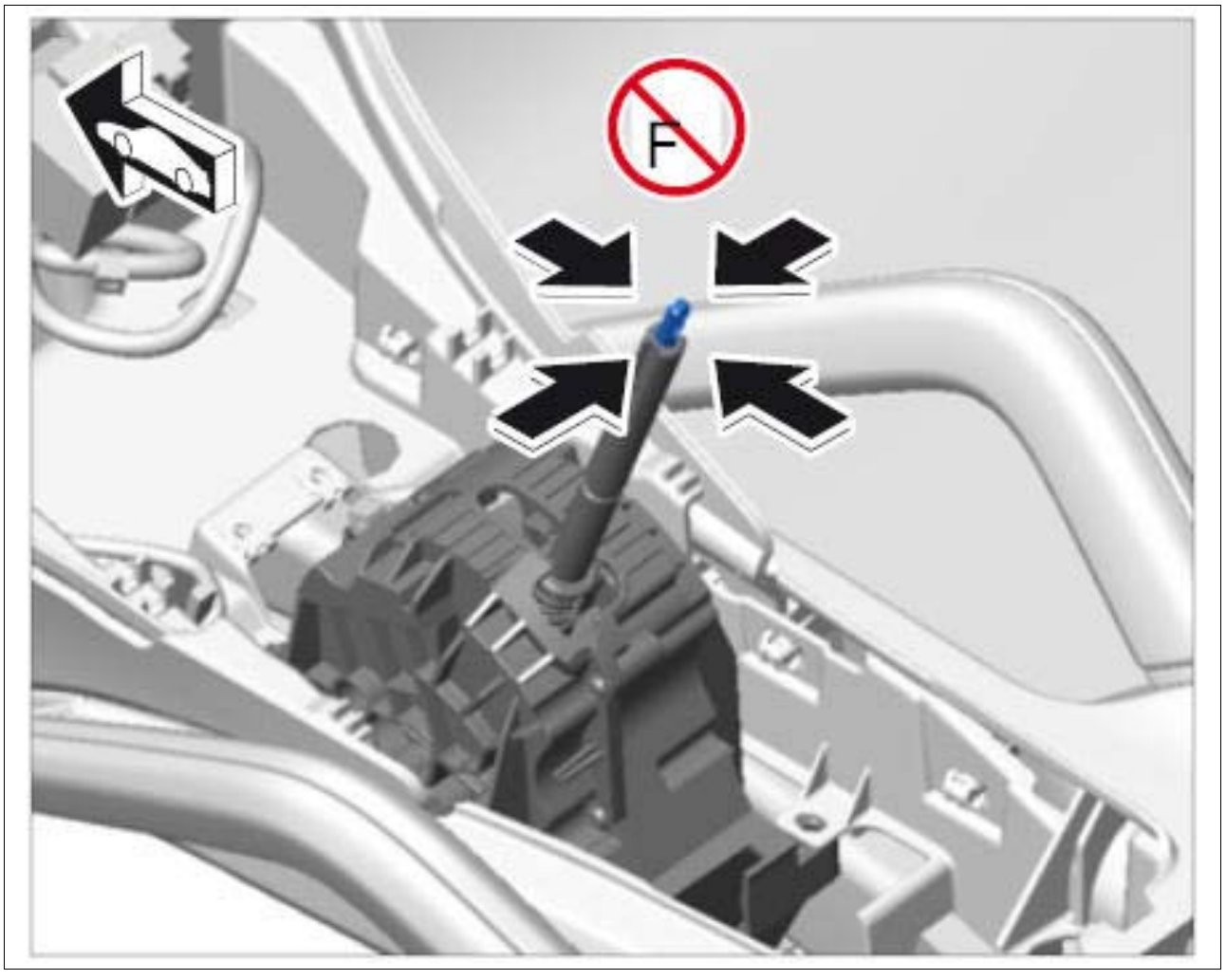

Courtesy of PORSCHE CARS NORTH AMERICA, INC.

1. Press holder for switch console **-1-** in **-direction of arrow-** and remove it.

Fig 2: Pressing Switch Console Holder

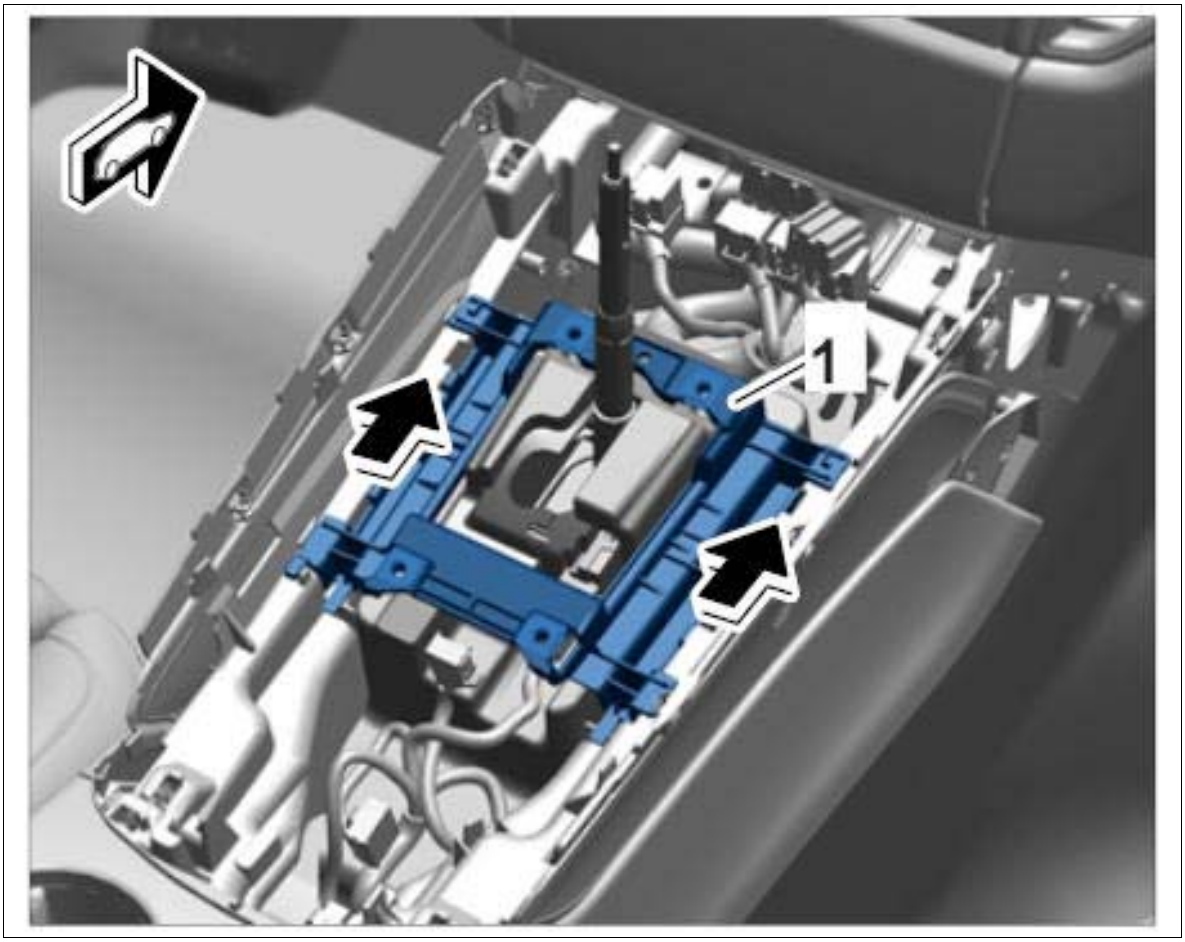

Courtesy of PORSCHE CARS NORTH AMERICA, INC.

2. Disconnect electric plug connection **-2-** and remove insulating mat **-1-** .

Fig 3: Identifying Insulating Mat Plug Connection

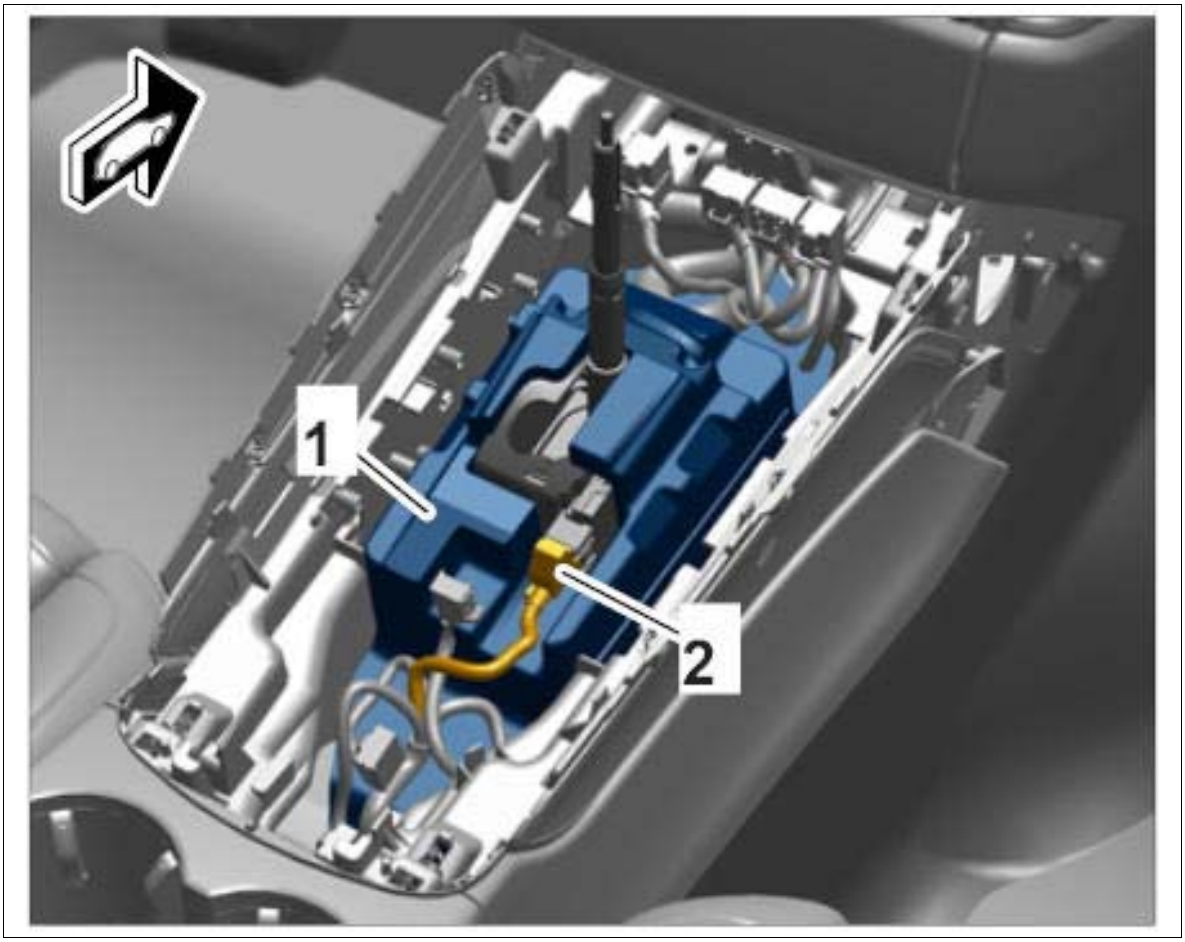

Courtesy of PORSCHE CARS NORTH AMERICA, INC.

3. Move selector lever to position "P".

   Information

   1. Loosen clamping screw for locking cable by only about 1 turn.
   2. The clamping screw is only accessible in selector-lever position "P".
   3. When the clamping screw is loosened, the selector lever must remain in position "P".

4. Loosen clamping screw **-1-** for locking cable by about 1 turn using **socket insert a/f 5 T40031.**

   Clamping screw remains in place.

Fig 4: Identifying Locking Cable Fastening Screw

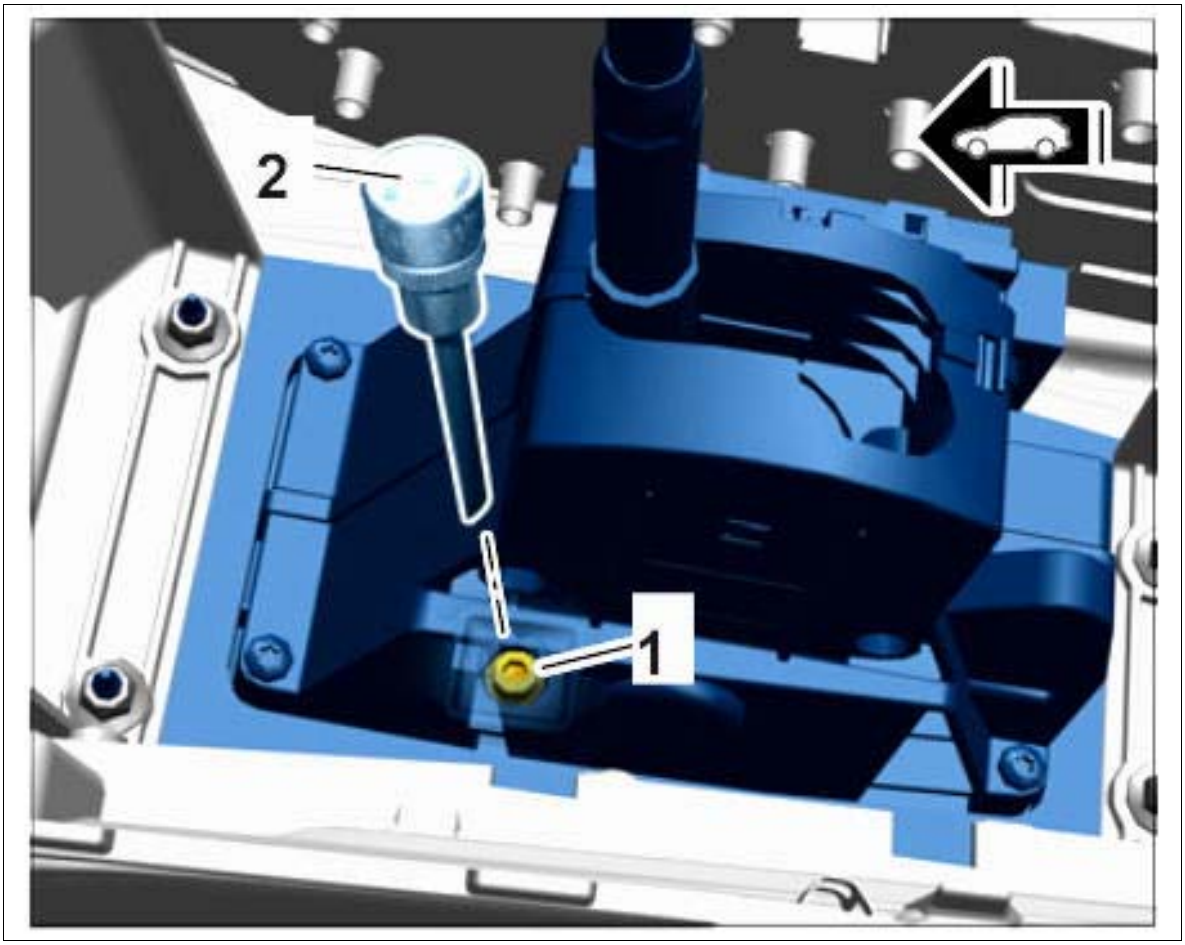

Courtesy of PORSCHE CARS NORTH AMERICA, INC.

5. Unscrew fastening screws **-1-** and **-3-** , support the transmission using transmission bracket and lower it by about 25 mm.

Fig 5: Identifying Gear Support Fastening Screws

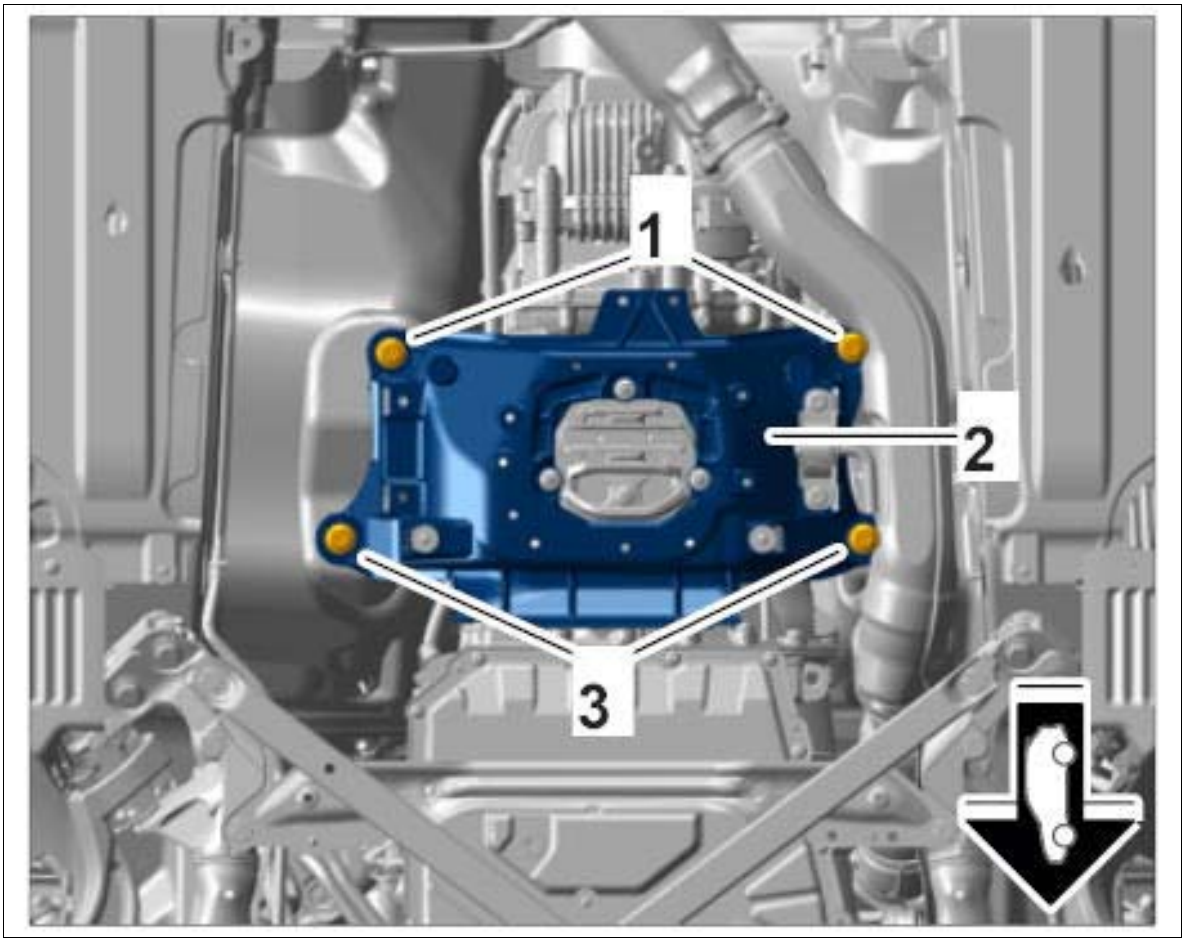

Courtesy of PORSCHE CARS NORTH AMERICA, INC.

6. Adjust the locking cable **-1-** .
    1. 6.1. Loosen ball socket **-1-** .
    2. 6.2. The selector-lever position **-2-** on the transmission must be at the rearmost position **-direction of arrow-** .
    3. 6.3. Secure ball socket **-1-** .

Fig 6: Positioning Selector-Lever

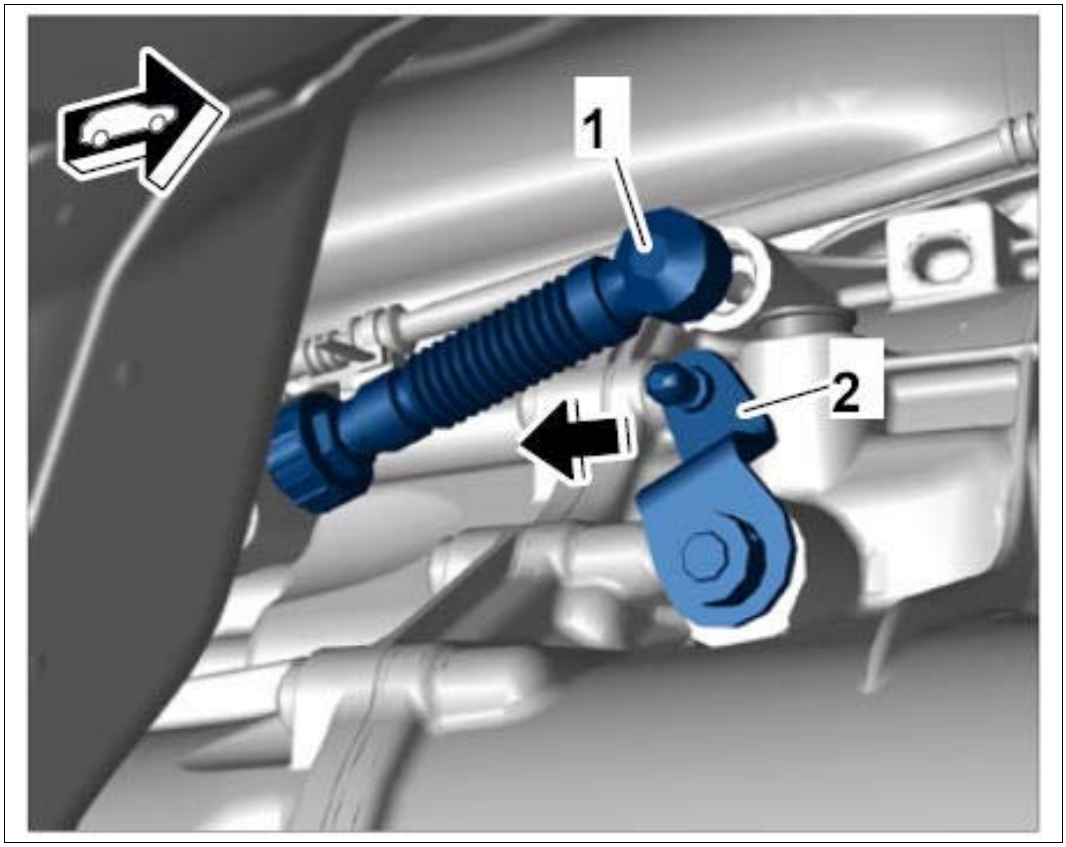

Courtesy of PORSCHE CARS NORTH AMERICA, INC.

7. Tighten fastening screw **-1-** for the locking cable using **socket insert a/f 5 T40031.**

Fig 7: Identifying Locking Cable Fastening Screw

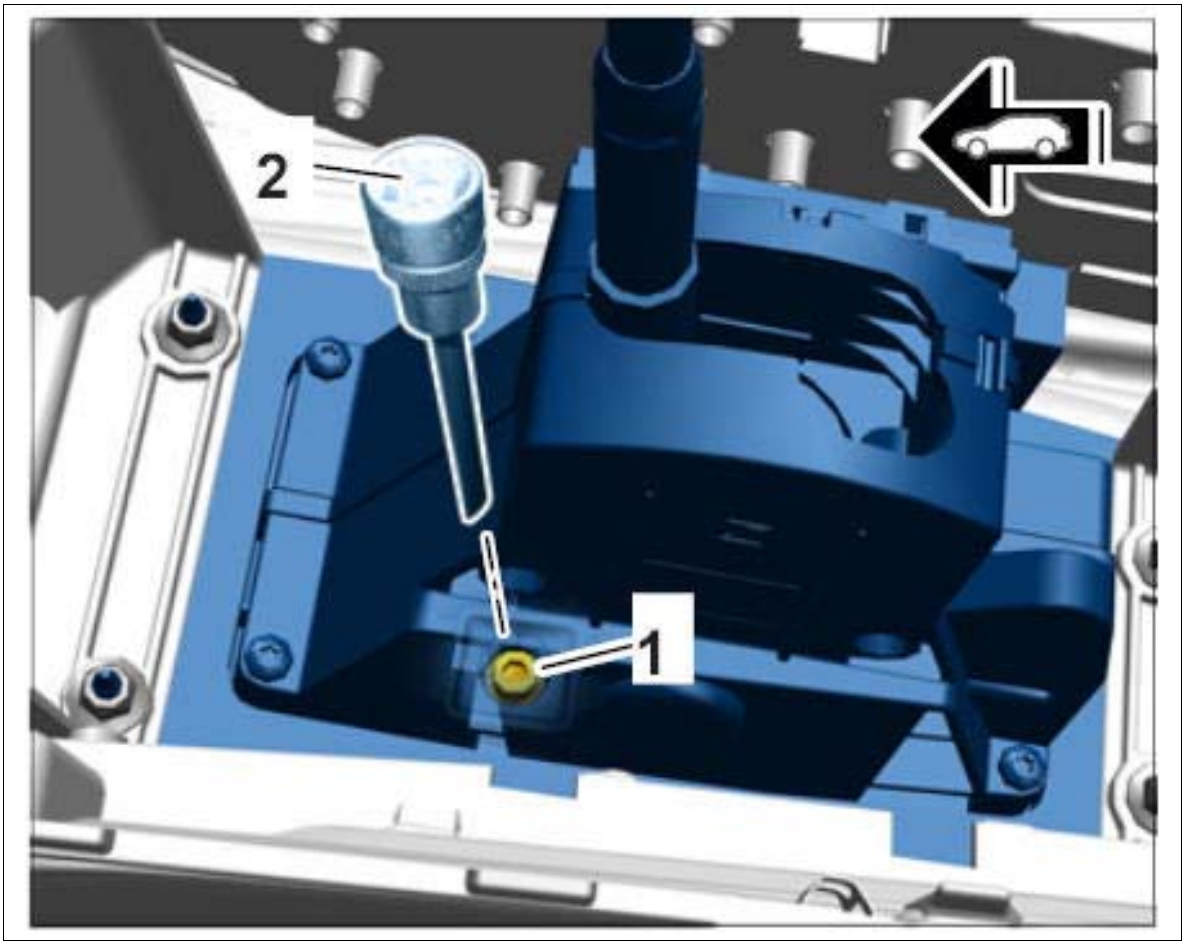

Courtesy of PORSCHE CARS NORTH AMERICA, INC.

8. Lift the transmission and fit and tighten fastening screws **-1-** and **-3-** . **Tightening torque 70 Nm (52 ftlb.)**

Fig 8: Identifying Gear Support Fastening Screws

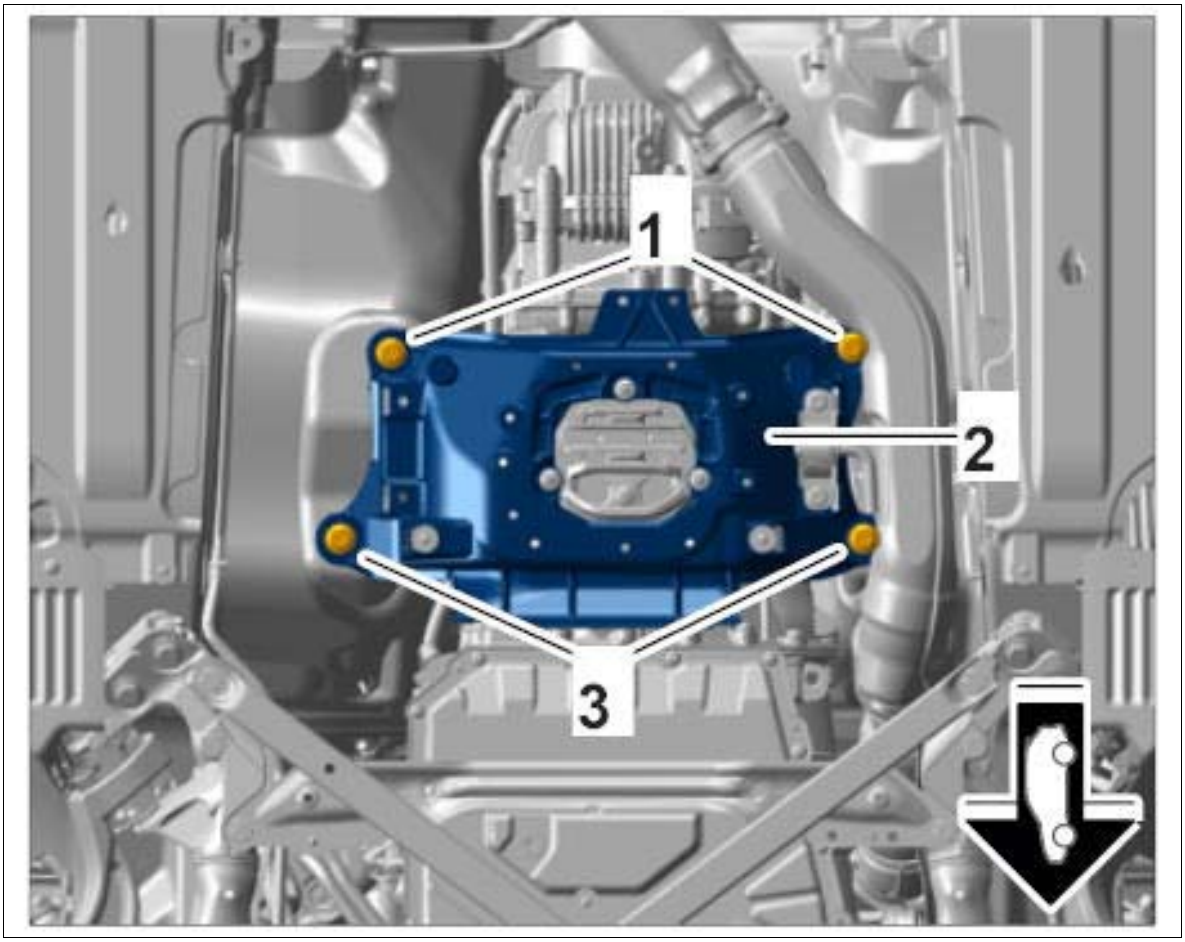

Courtesy of PORSCHE CARS NORTH AMERICA, INC.

9. Press release **-3-** , actuate selector knob **-2-** and move selector lever from position "P" to "D" and from position "D" to "M" and back again several times.

Fig 9: Identifying Selector Support And Knob

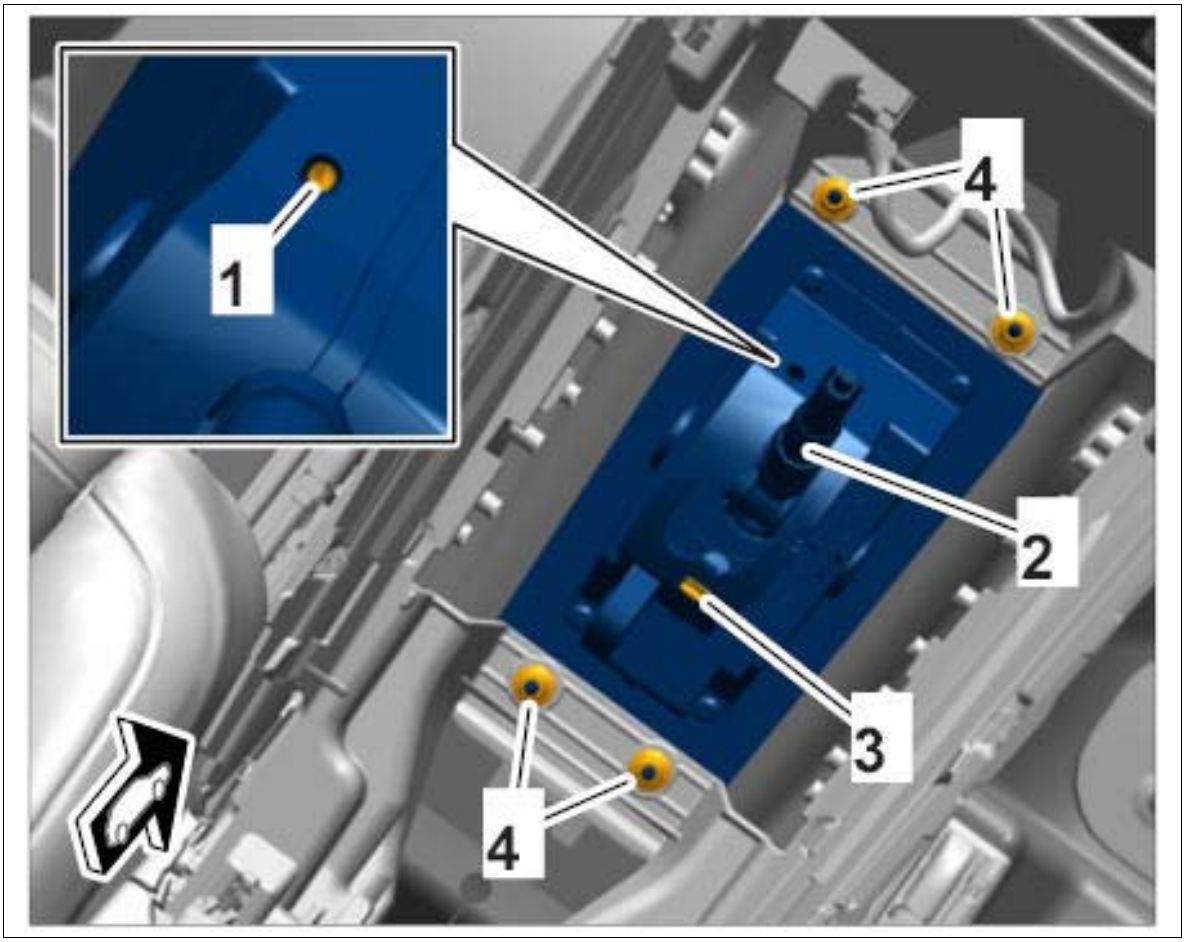

Courtesy of PORSCHE CARS NORTH AMERICA, INC.

10. Position insulating mat **-1-** and connect electric plug connection **-2-** .

Fig 10: Identifying Insulating Mat Plug Connection

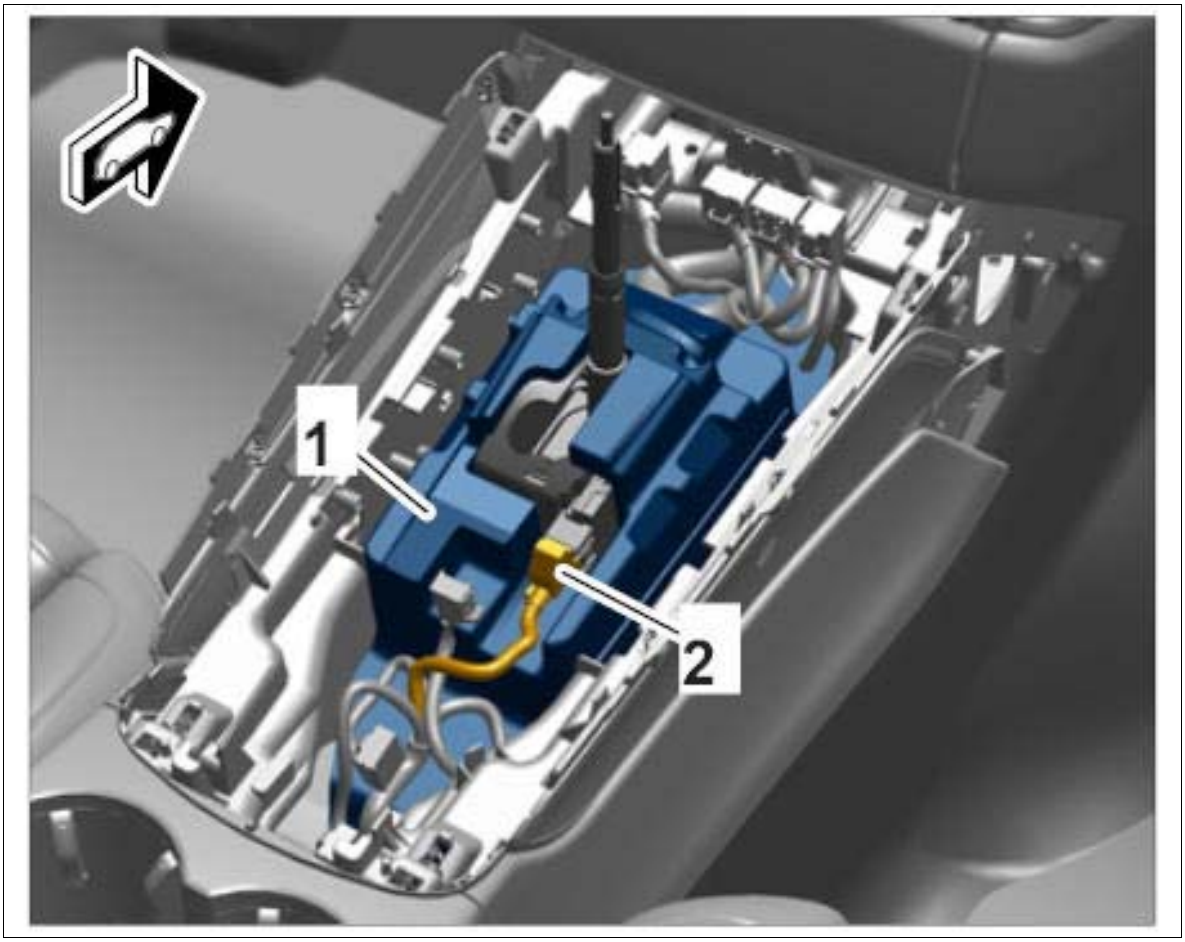

Courtesy of PORSCHE CARS NORTH AMERICA, INC.

11. Position holder for switch console **-1-** and engage in **-direction of arrow-** .

Fig 11: Positioning Switch Console Holder

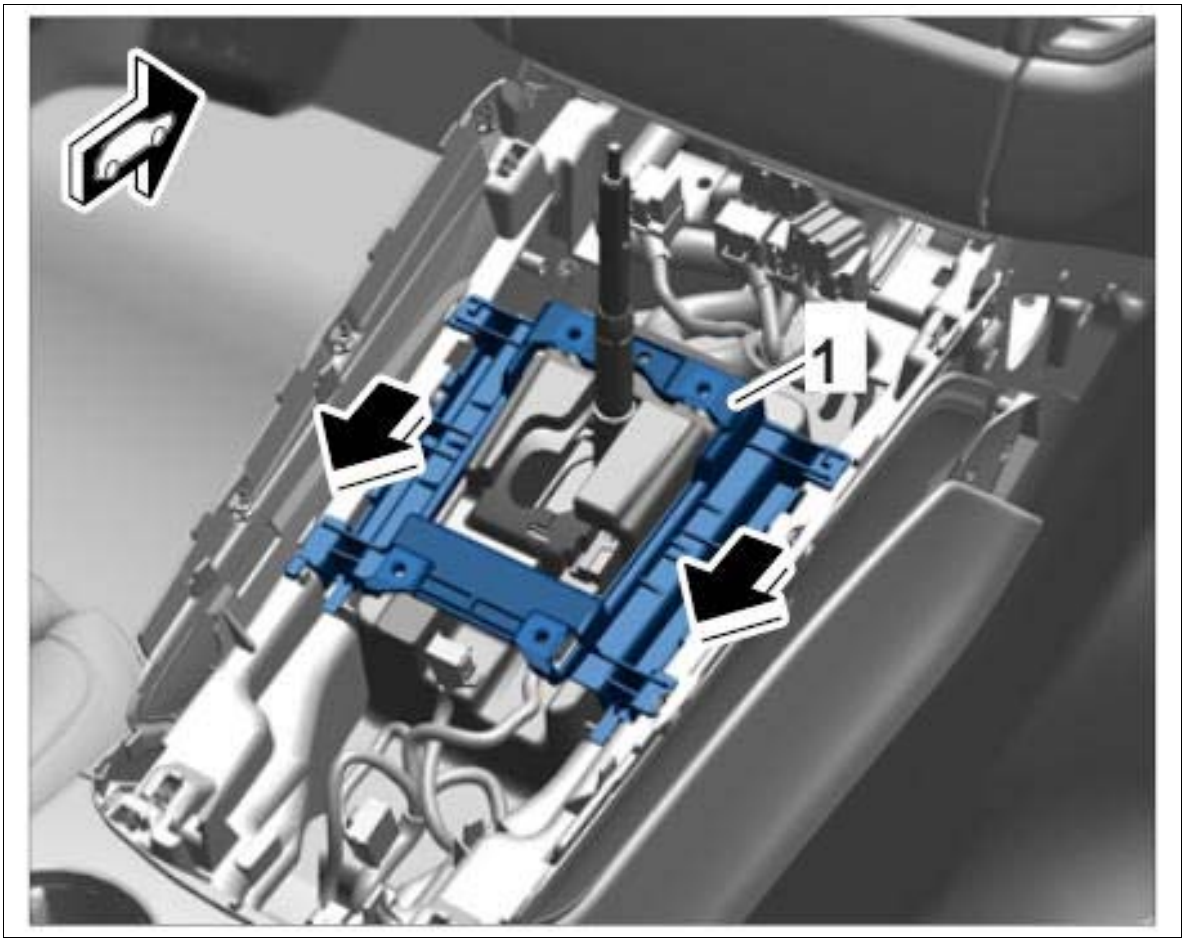

Courtesy of PORSCHE CARS NORTH AMERICA, INC.

WM 371315 ADJUSTING LOCKING CABLE (ALL MODELS) > SUBSEQUENT WORK

1. Install switch console. → Installing Switch Console
2. Install upper part of center console cover. → Installing Upper Part Of Center Console Cover
3. Install center console trim. → Installing Center Console Trim

WM 371315 ADJUSTING LOCKING CABLE (ALL MODELS) > FUNCTION TEST

1. Move selector lever from position "P" to "D" and from position "D" to "M" and back again several times.
2. Check that the parking lock is disengaged.
    1. 2.1. Insert ignition key into the ignition lock.
    2. 2.2. Move selector lever to position "P". "P" appears in the instrument cluster.

3. 2.3. Actuate the service brake.
4. 2.4. Start the engine.
5. 2.5. Move selector lever to position "D". "D" appears in the instrument cluster.
6. 2.6. Release the service brake. If the vehicle moves forward, the test is complete. Otherwise, all connecting pieces must be checked again.

3. Check that the parking lock is engaged (engine running).
    1. 3.1. Insert ignition key into the ignition lock.
    2. 3.2. Move selector lever to position "P". "P" appears in the instrument cluster.
    3. 3.3. Actuate the service brake.
    4. 3.4. Start the engine.
    5. 3.5. Release the service brake. The vehicle must not move. Otherwise, the entire system must be checked.
    6. 3.6. Switch off engine.
4. Check that the parking lock is engaged (blocking effect).
    1. 4.1. Insert ignition key into the ignition lock.
    2. 4.2. Move selector lever to position "P". "P" appears in the instrument cluster.
    3. 4.3. Move selector lever to position "N". "N" appears in the instrument cluster.
    4. 4.4. Get another person to help you to push the vehicle for a distance of at least one metre. It must be possible to move the vehicle. Otherwise, the entire system must be checked.
    5. 4.5. Actuate the service brake.
    6. 4.6. Move selector lever to position "P". "P" appears in the instrument cluster.
    7. 4.7. Get another person to help you to push the vehicle. The vehicle must not move (a max. movement of 150 mm is acceptable). Otherwise, the entire system must be checked.

WM 371319 REMOVING AND INSTALLING LOCKING CABLE (ALL MODELS) > TOOLS

Designation	Type	Number	Description	

socket insert a/f 5	VW tool	T40031		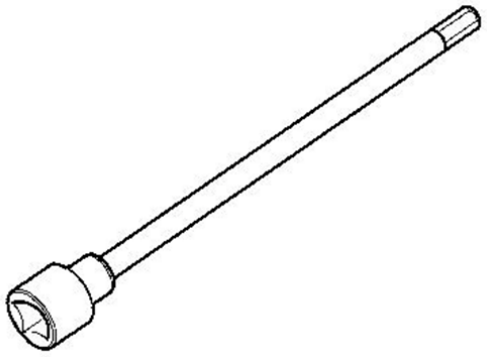

WM 371319 REMOVING AND INSTALLING LOCKING CABLE (ALL MODELS) > TECHNICAL VALUES

Location	Description	Type	Basic value	Tolerance 1	Tolerance 2
Fastening nut	Fastening screw on transmission mount	Tightening torque	20 Nm (15 ftlb.)		
Fastening screw	Fastening screw on transmission support	Tightening torque	70 Nm (52 ftlb.)		
Fastening screw	Fastening screw on transmission bracket	Tightening torque	40 Nm (30 ftlb.)		
Fastening nut	Fastening nut on transmission bracket	Tightening torque	20 Nm (15 ftlb.)		
Fastening screws	Step 1	Tightening torque	20 Nm (15 ftlb.)		
Fastening screw	Step 2	Torque angle	+90°		
Fastening nuts	Selector support	Tightening torque	8 Nm (6 ftlb.)		
Clamping screw	Clamping screw for adjusting locking cable	Tightening torque	13 Nm (9.5 ftlb.)		
Fastening screws	Locking cable holder to transmission	Tightening torque	8 Nm (6 ftlb.)		

WM 371319 REMOVING AND INSTALLING LOCKING CABLE (ALL MODELS) >

TECHNICAL VALUES > TRANSMISSION BRACKET

Fig 1: Identifying Transmission Bracket, Nut And Screws

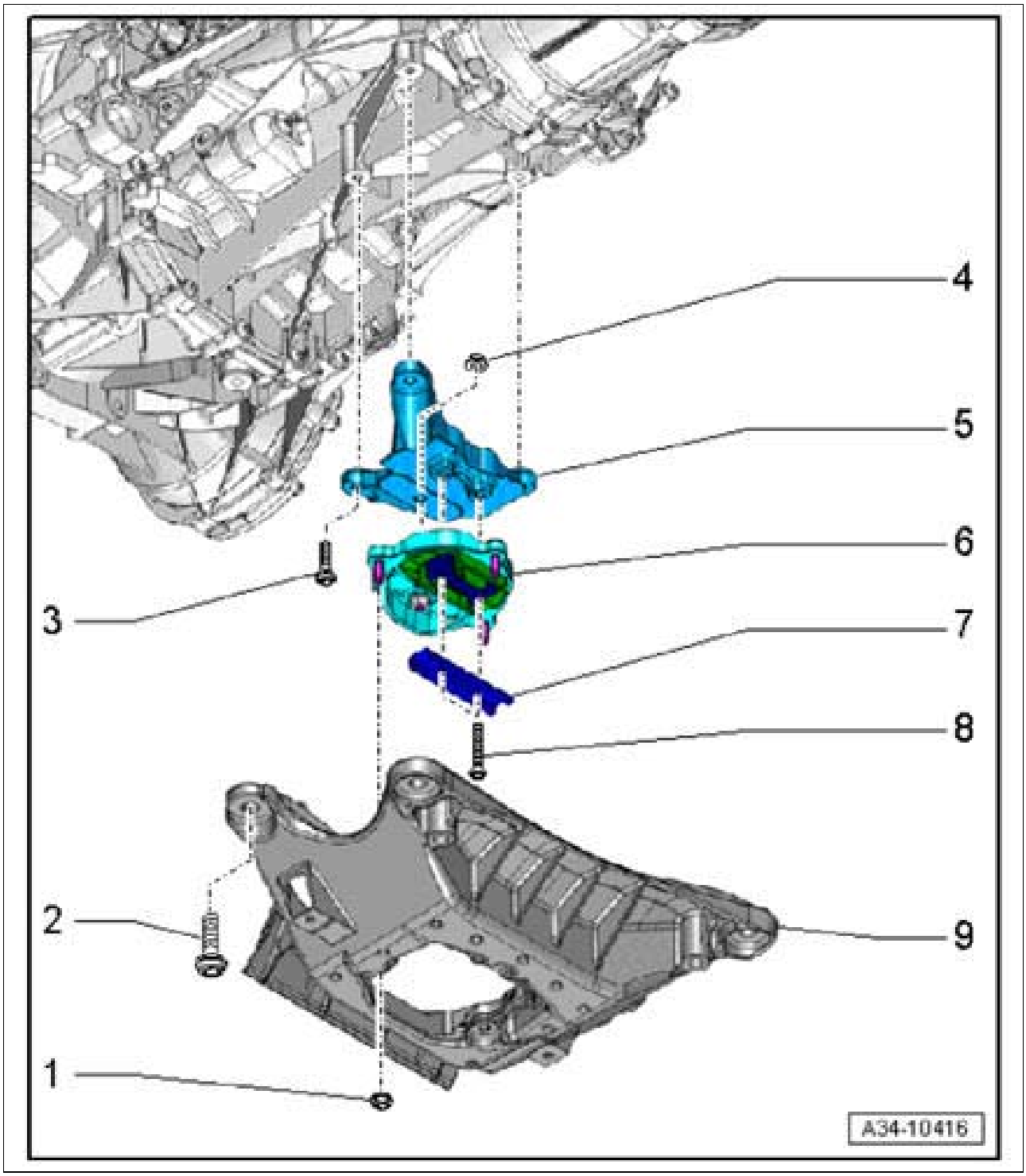

Courtesy of PORSCHE CARS NORTH AMERICA, INC.

1. Fastening nut → **Tightening torque: 20 Nm (15 ftlb.)**
2. Fastening screw → **Tightening torque: 70 Nm (52 ftlb.)**
3. Fastening screw → **Tightening torque: 40 Nm (30 ftlb.)**

4. Fastening nut → **Tightening torque: 20 Nm (15 ftlb.)**
5. Transmission bracket
6. Transmission mount
7. Lower lock for transmission mount
8. Fastening screw → **Tightening torque: 20 Nm (15 ftlb.)** → **Torque angle: +90°**
9. Transmission support

WM 371319 REMOVING AND INSTALLING LOCKING CABLE (ALL MODELS) > TECHNICAL VALUES > COMPONENT OVERVIEW - SELECTOR SUPPORT, LOCKING CABLE

Fig 1: Overview Of Selector Support, Locking Cable

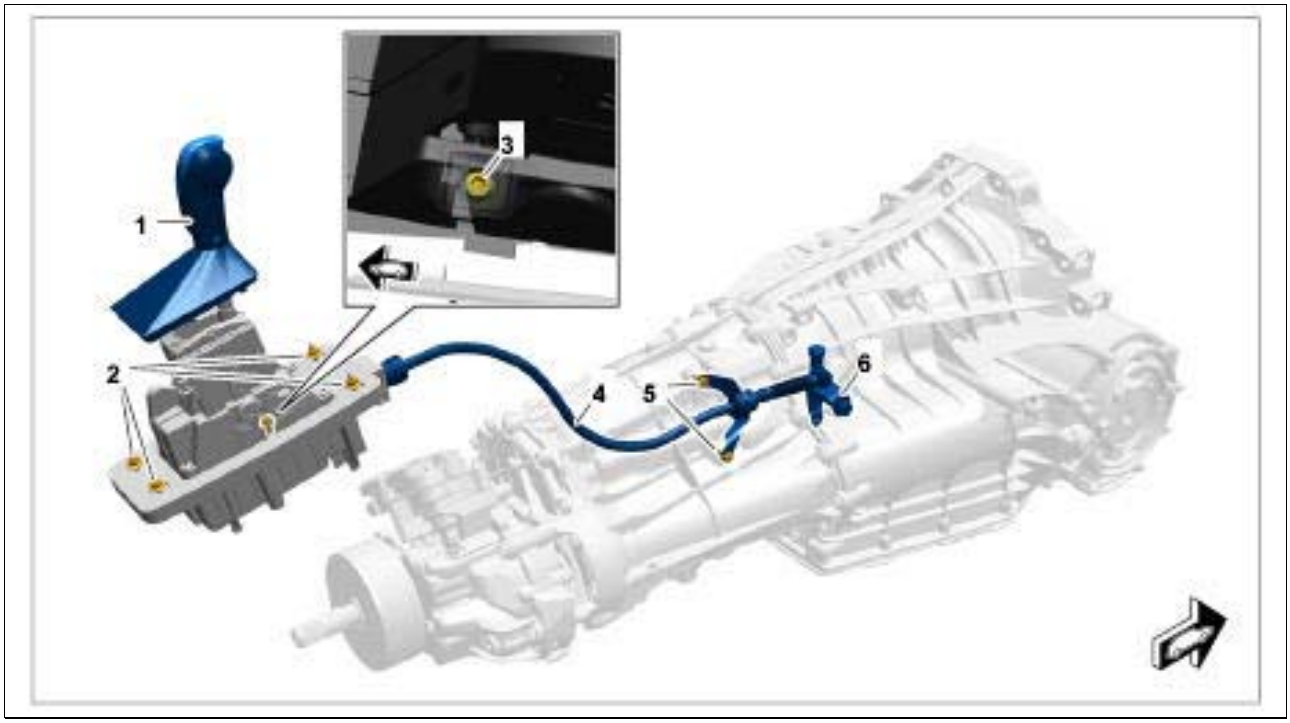

Courtesy of PORSCHE CARS NORTH AMERICA, INC.

1. Selector knob
2. Fastening nuts for selector support → **Tightening torque: 8 Nm (6 ftlb.)**
3. Adjusting screw for locking cable → **Tightening torque: 13 Nm (9.5 ftlb.)**
4. Locking cable
5. Fastening screws for locking cable holder → **Tightening torque: 8 Nm (6 ftlb.)**
6. Selector lever

WM 371319 REMOVING AND INSTALLING LOCKING CABLE (ALL MODELS) > PRELIMINARY WORK

1. Raise the vehicle on a lifting platform. → 4X00IN LIFTING THE VEHICLE
2. Remove center console trim. → Removing Center Console Trim
3. Remove upper part of center console cover. → Removing Upper Part Of Center Console Cover
4. Remove switch console. → Removing Switch Console

WM 371319 REMOVING AND INSTALLING LOCKING CABLE (ALL MODELS) > REMOVING LOCKING CABLE

Information

Do not apply lateral forces to the pull rod as it could break off.

Fig 1: Caution - Do Not Use Force On Pull Rod

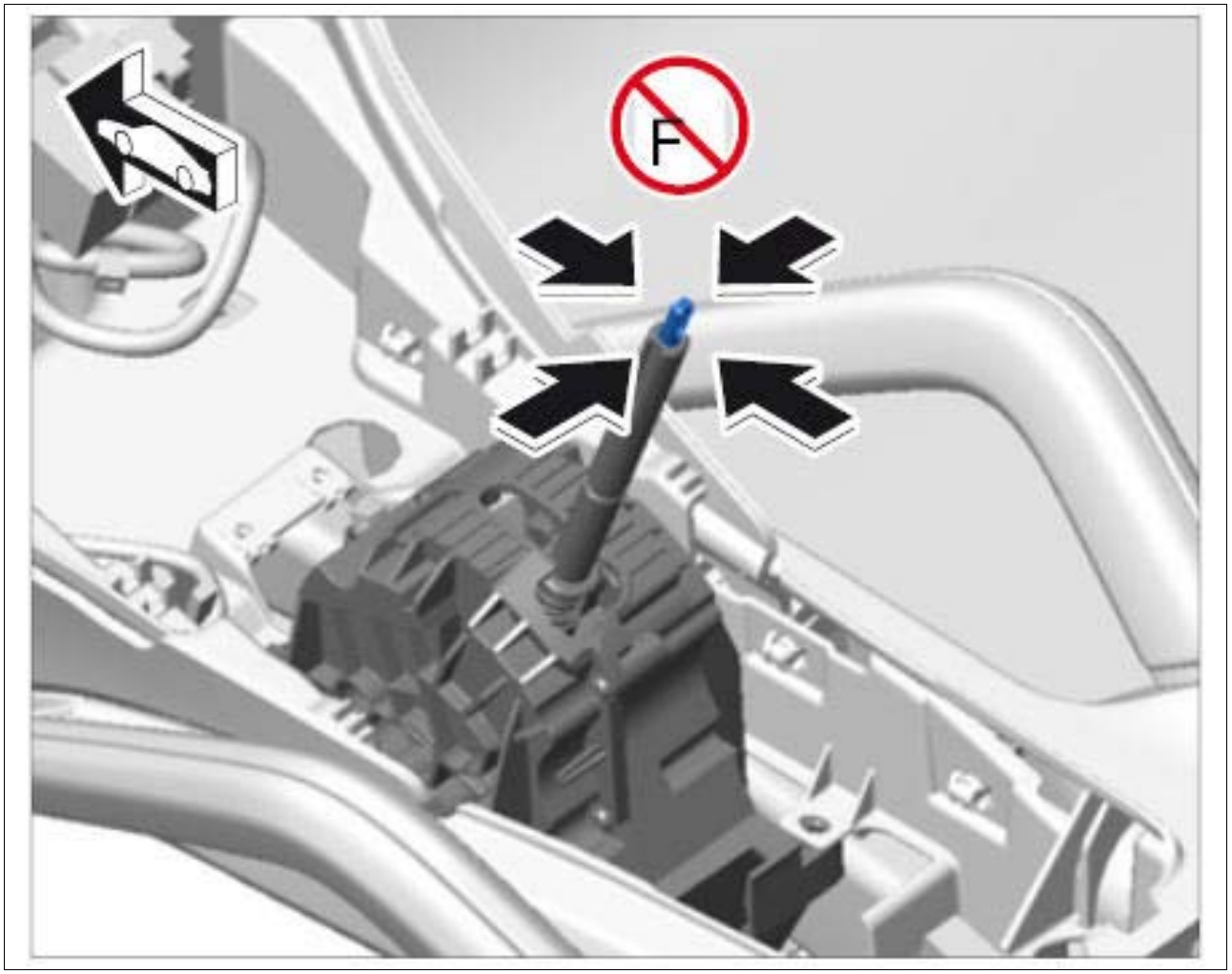

Courtesy of PORSCHE CARS NORTH AMERICA, INC.

1. Press holder for switch console **-1-** in **-direction of arrow-** and remove it.

Fig 2: Pressing Switch Console Holder

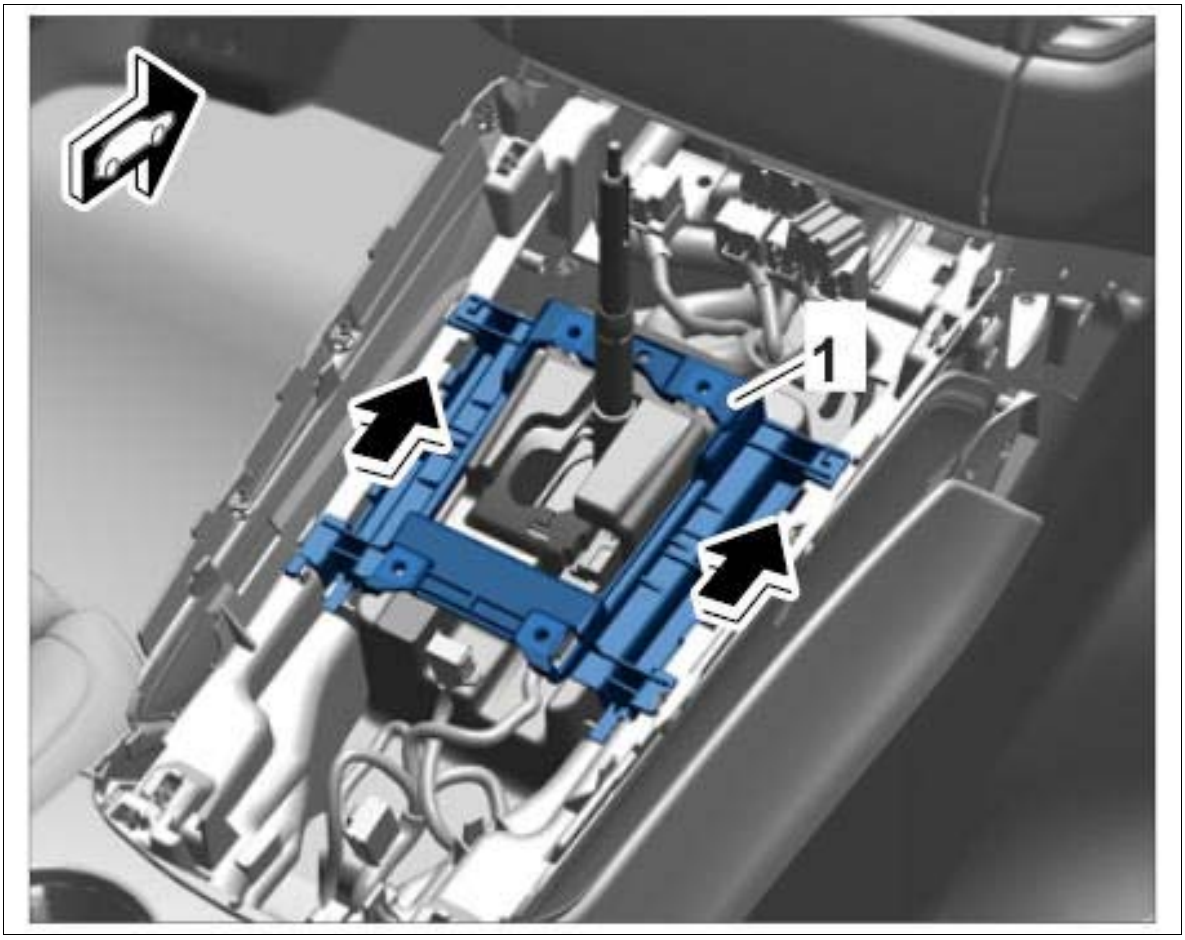

Courtesy of PORSCHE CARS NORTH AMERICA, INC.

2. Disconnect electric plug connection **-2-** and remove insulating mat **-1-** .

Fig 3: Identifying Insulating Mat Plug Connection

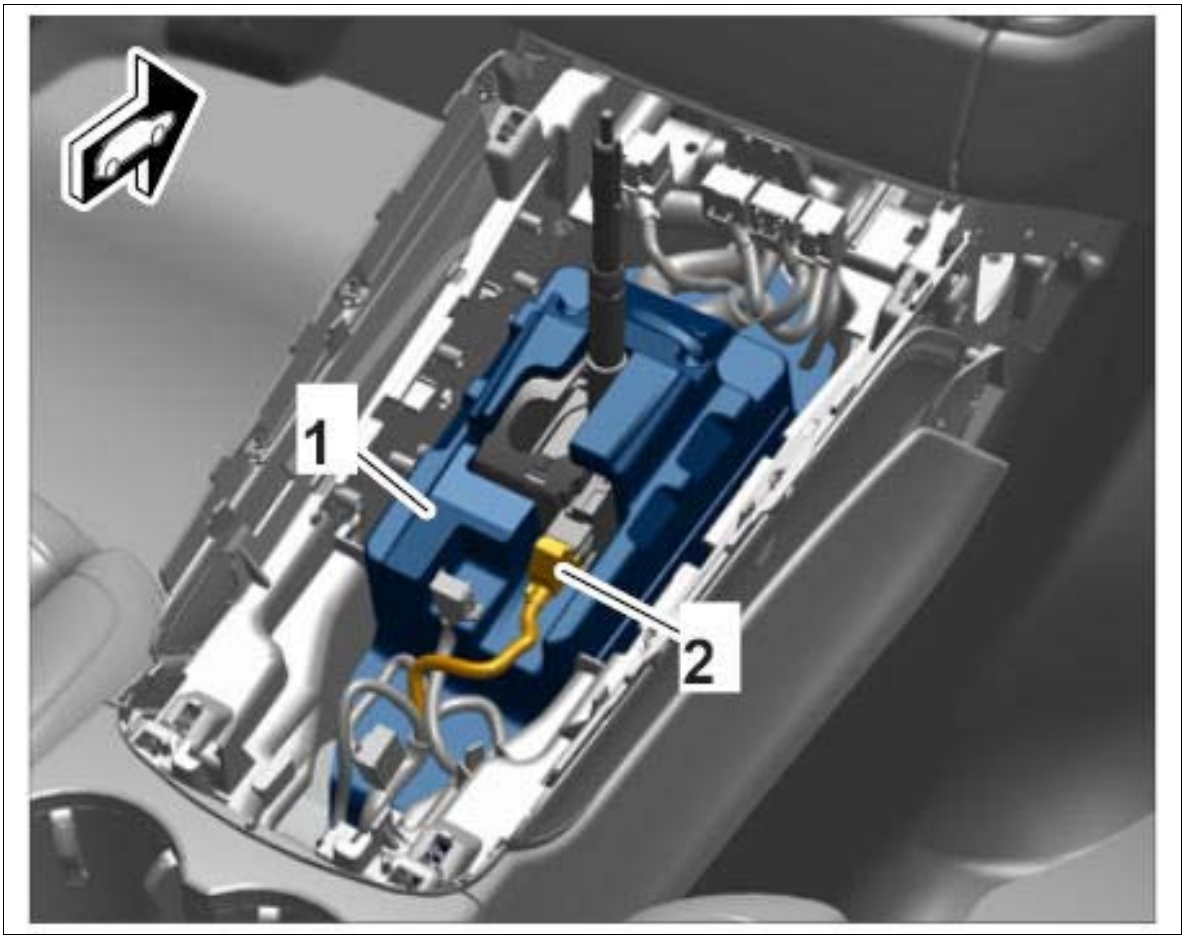

Courtesy of PORSCHE CARS NORTH AMERICA, INC.

3. Move selector lever to position "P".

   Information

   1. Loosen clamping screw for locking cable by only about 1 turn.
   2. The clamping screw is only accessible in selector-lever position "P".
   3. When the clamping screw is loosened, the selector lever must remain in position "P".

4. Loosen clamping screw **-1-** for locking cable using **socket insert a/f 5 T40031.**

   Clamping screw remains in place.

Fig 4: Identifying Locking Cable Fastening Screw

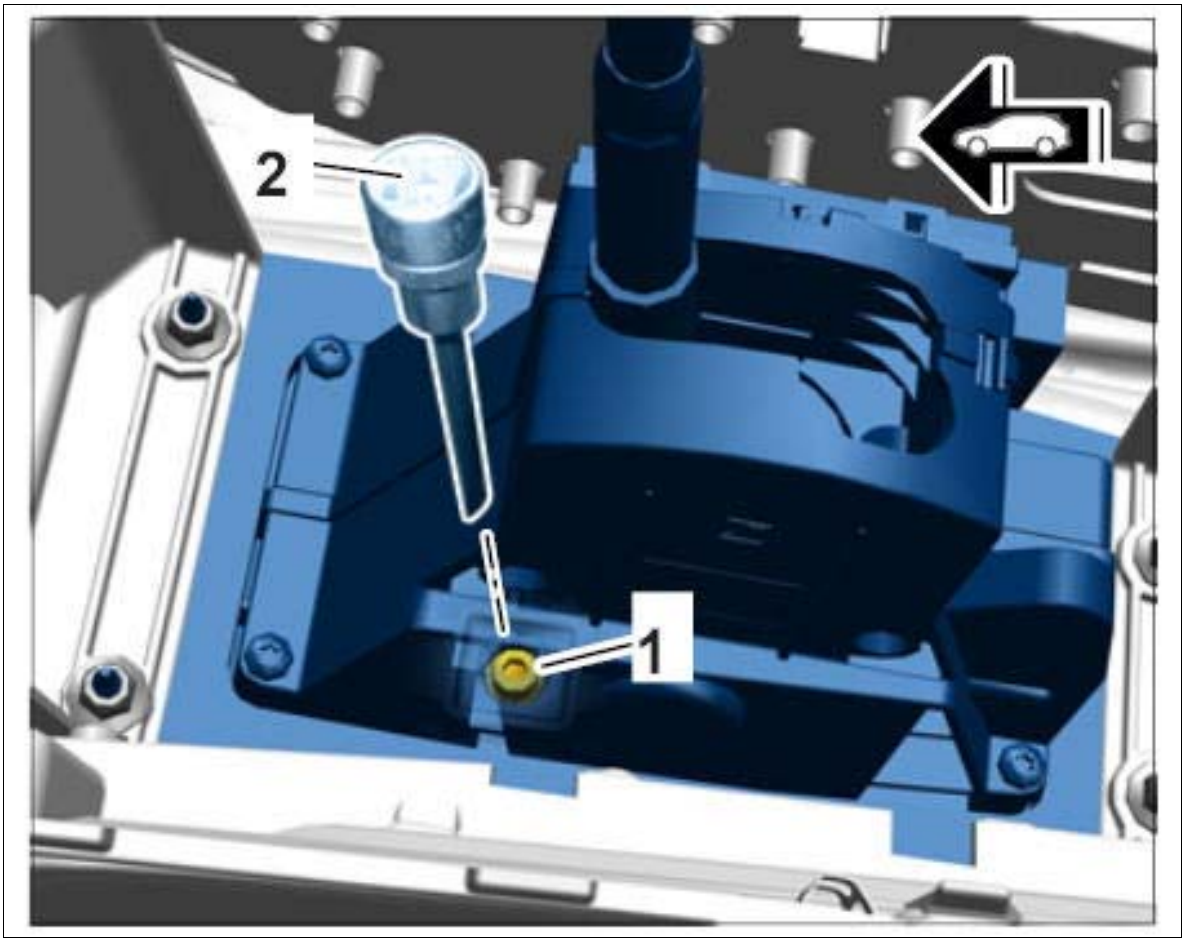

Courtesy of PORSCHE CARS NORTH AMERICA, INC.

5. Unscrew fastening screws **-1-** and **-3-** , support the transmission using transmission bracket and lower it by about 25 mm.

Fig 5: Identifying Gear Support Fastening Screws

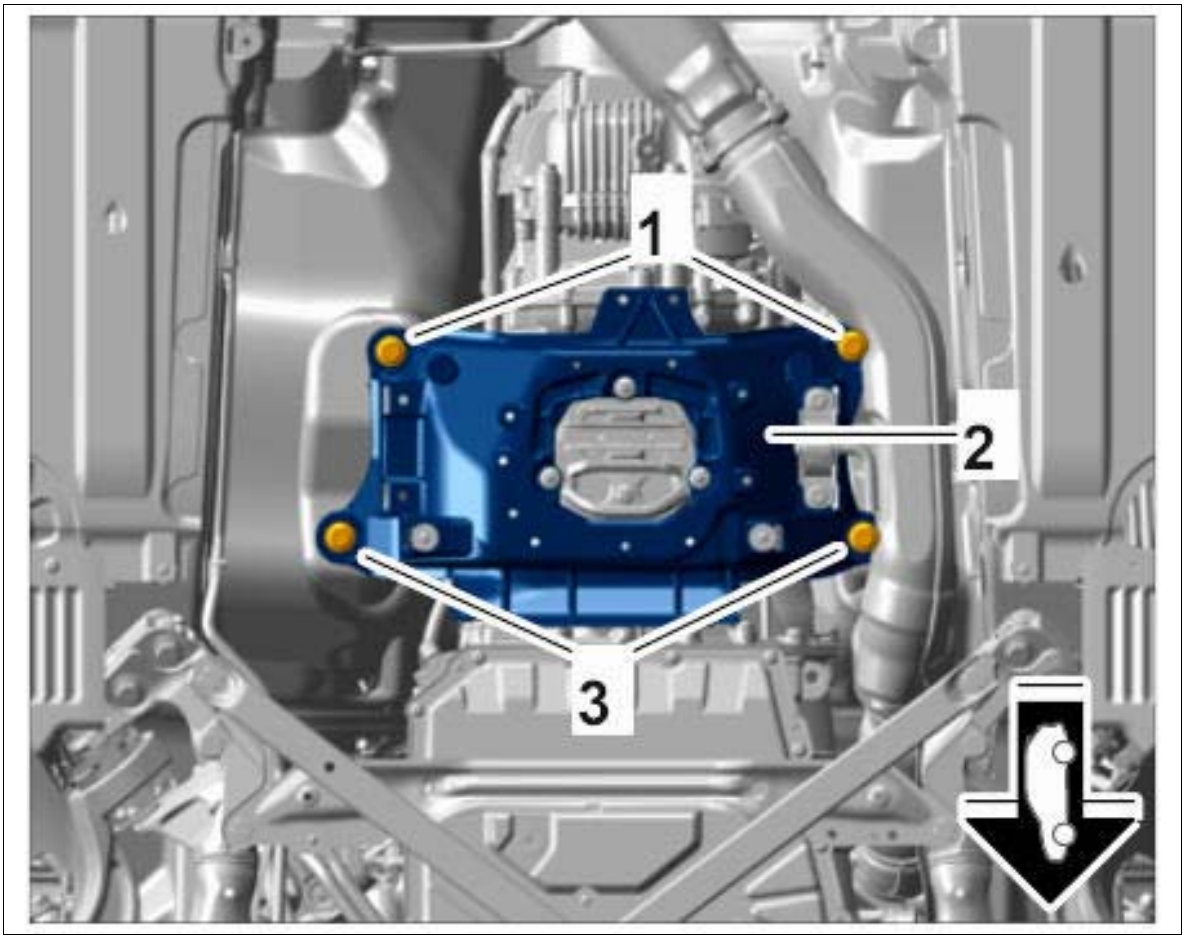

Courtesy of PORSCHE CARS NORTH AMERICA, INC.

6. Unscrew fastening nuts **-2-** and remove heat shield.

Fig 6: Identifying Heat Shield Fastening Nuts

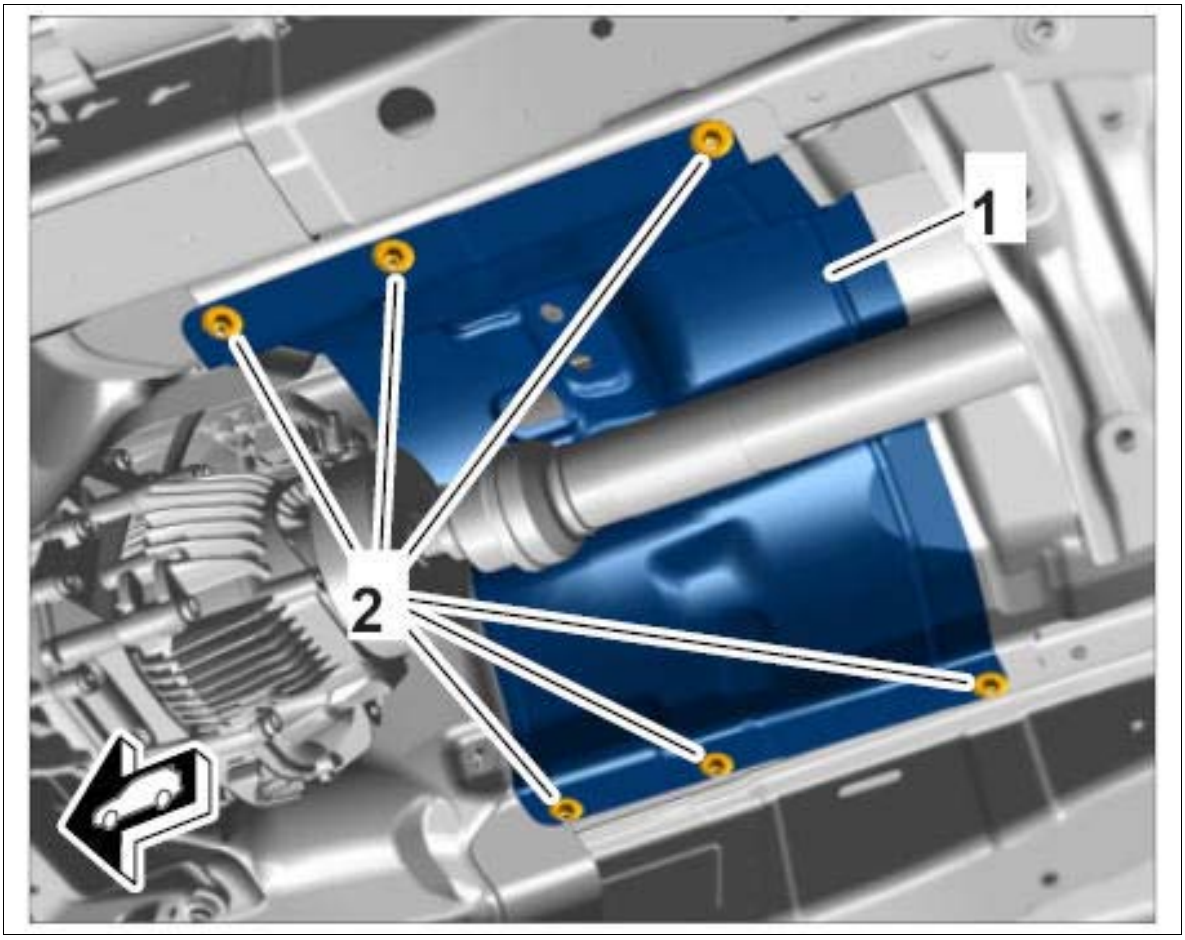

Courtesy of PORSCHE CARS NORTH AMERICA, INC.

7. Loosen safety clip **-2-** .
8. Remove locking cable **-1-** .

Fig 7: Identifying Locking Cable Safety Clip

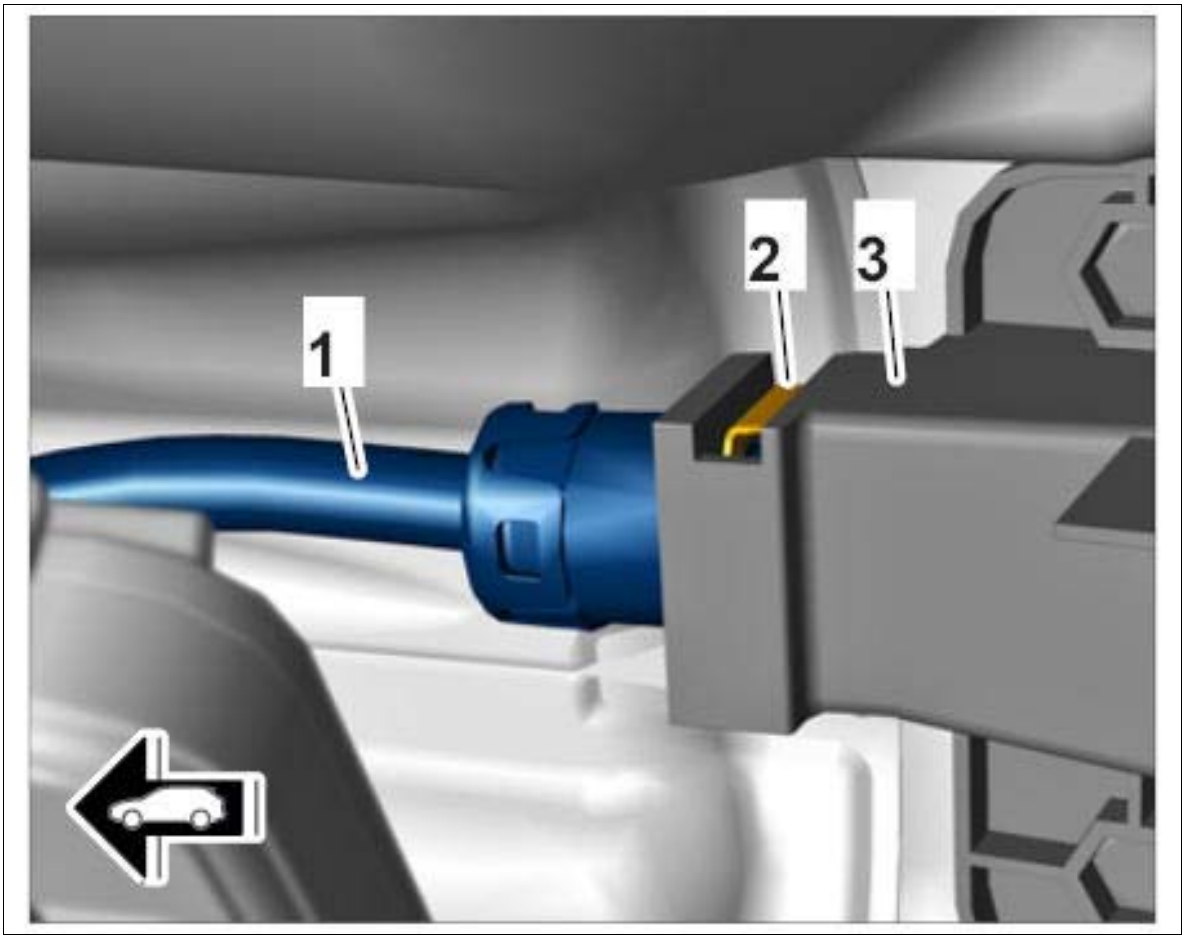

Courtesy of PORSCHE CARS NORTH AMERICA, INC.

1. 8.1. Loosen ball socket **-2-** .
2. 8.2. Loosen fastening screws for holder and remove holder for locking cable.
3. 8.3. Remove locking cable **-1-** .

Fig 8: Identifying Locking Cable And Ball Socket

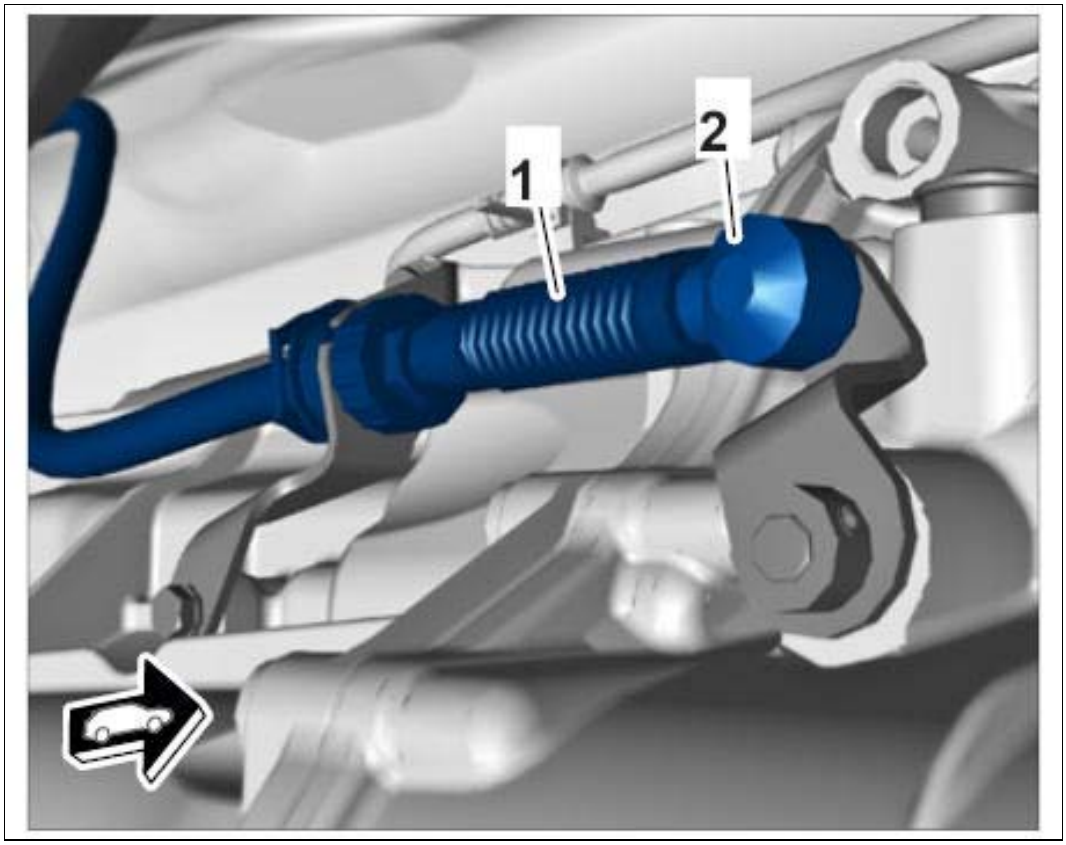

Courtesy of PORSCHE CARS NORTH AMERICA, INC.

WM 371319 REMOVING AND INSTALLING LOCKING CABLE (ALL MODELS) > INSTALLING LOCKING CABLE

Information

Do not apply lateral forces to the pull rod as it could break off.

Fig 1: Caution - Do Not Use Force On Pull Rod

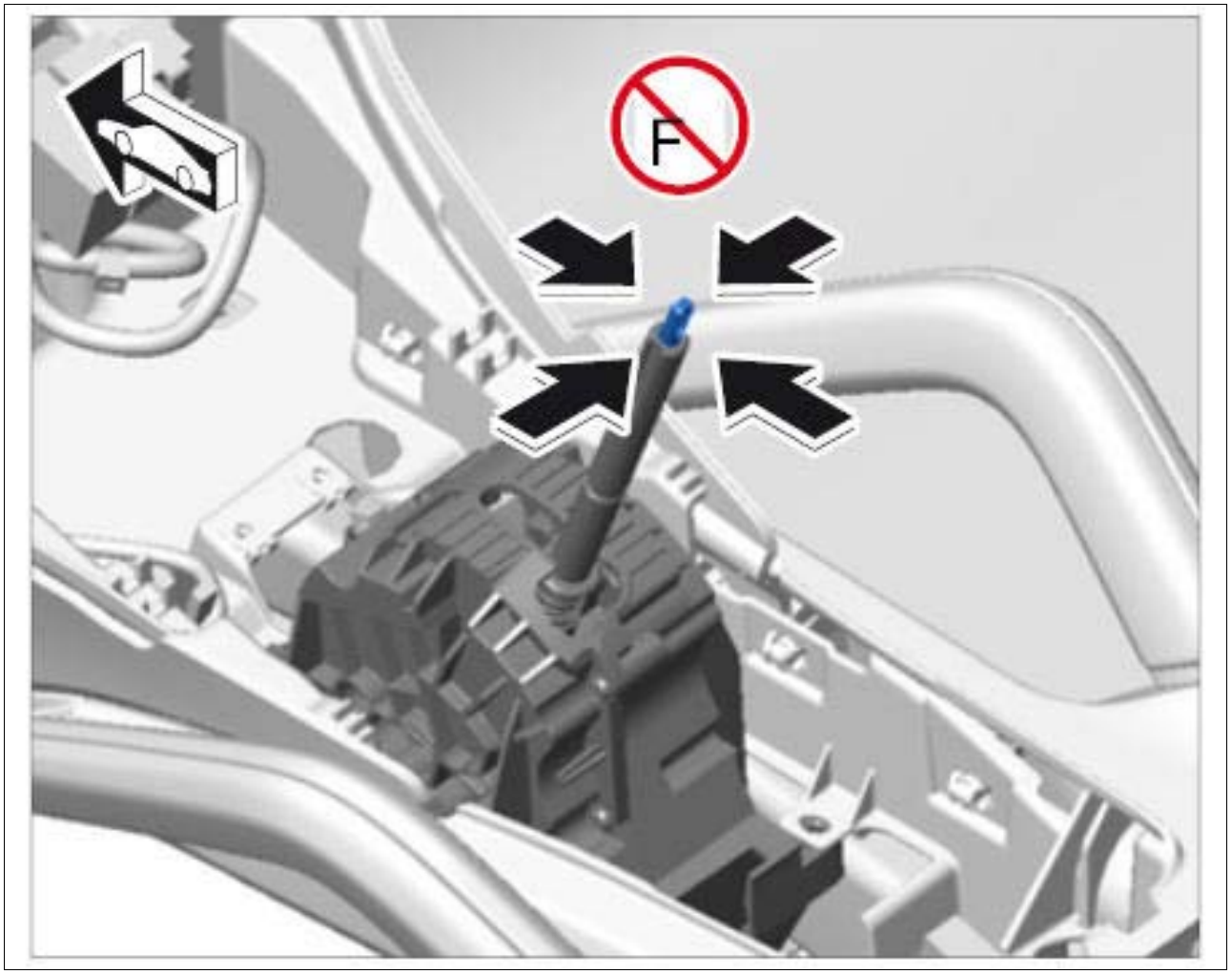

Courtesy of PORSCHE CARS NORTH AMERICA, INC.

1. Install locking cable **-1-** .
    1. 1.1. Position locking cable **-1-** .
    2. 1.2. Fit holder for locking cable and fit and tighten fastening screws. **Tightening torque 8 Nm (6 ftlb.)**
    3. 1.3. Insert ball socket **-2-** .

Fig 2: Identifying Locking Cable And Ball Socket

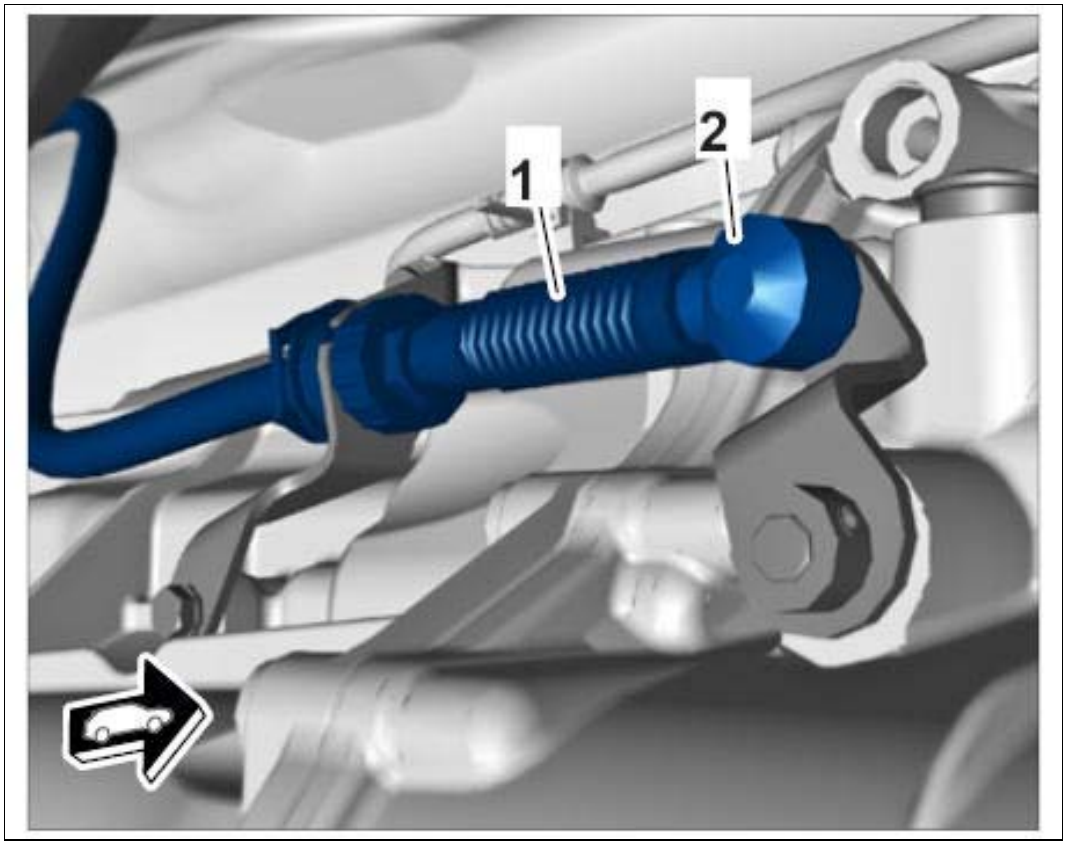

Courtesy of PORSCHE CARS NORTH AMERICA, INC.

2. Guide locking cable **-1-** into the selector support **-3-** and fit safety clip **-2-** .

Fig 3: Identifying Locking Cable Safety Clip

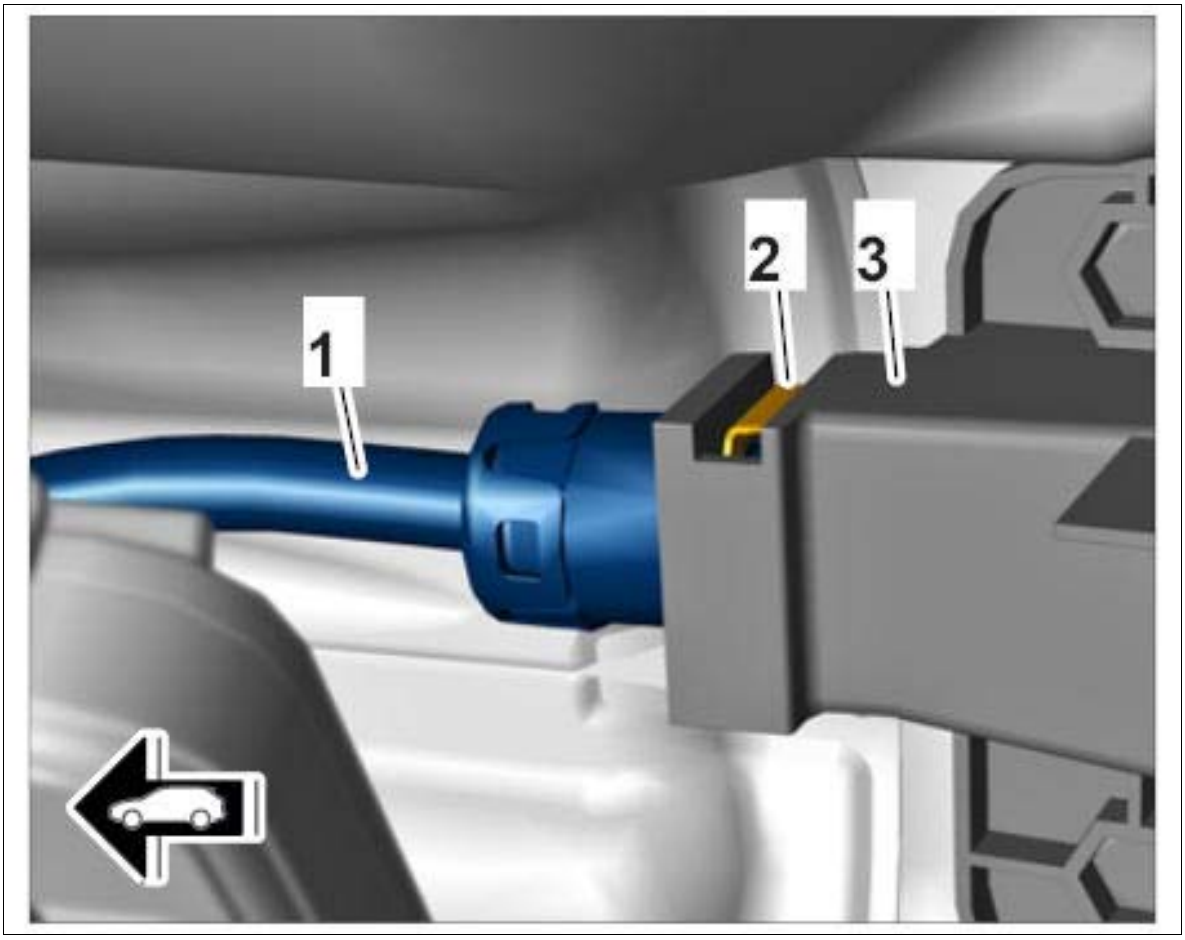

Courtesy of PORSCHE CARS NORTH AMERICA, INC.

3. Position heat shield and fit and tighten fastening nuts **-2-** .

Fig 4: Identifying Heat Shield Fastening Nuts

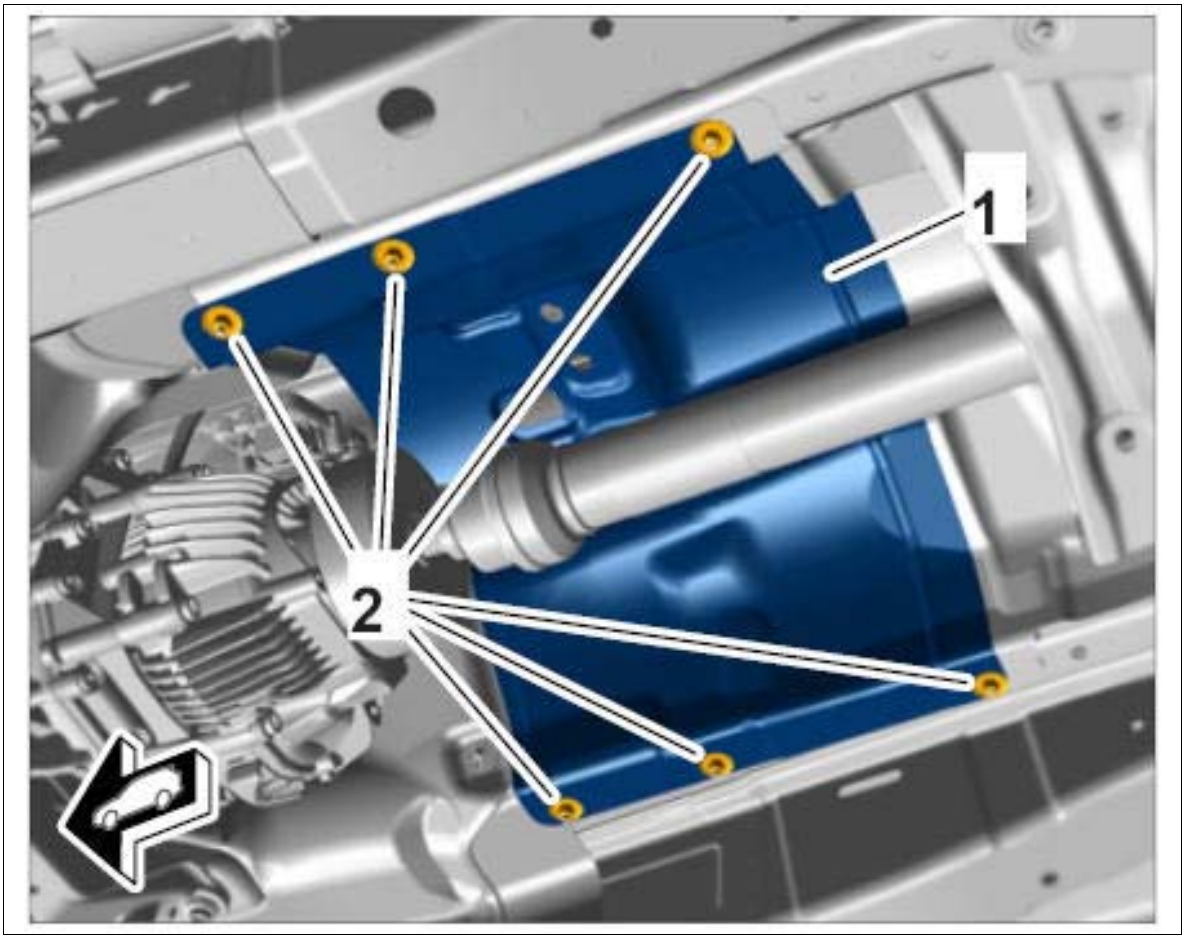

Courtesy of PORSCHE CARS NORTH AMERICA, INC.

4. Lift the transmission and fit and tighten fastening screws **-1-** and **-3-** . **Tightening torque 70 Nm (52 ftlb.)**

Fig 5: Identifying Gear Support Fastening Screws

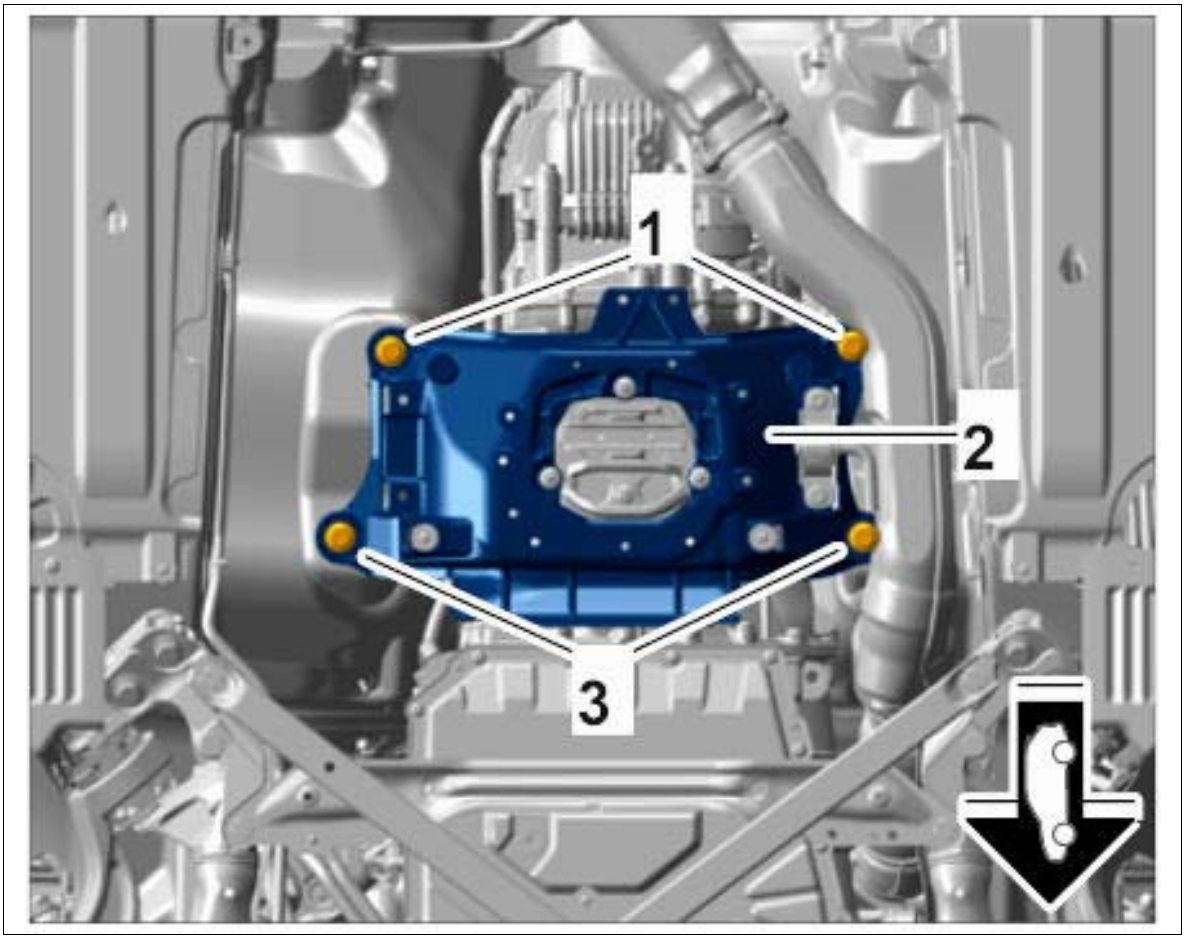

Courtesy of PORSCHE CARS NORTH AMERICA, INC.

Information

1. Loosen clamping screw for locking cable by only about 1 turn.
2. The clamping screw is only accessible in selector-lever position "P".
3. When the clamping screw is loosened, the selector lever must remain in position "P".

5. Tighten fastening screw **-1-** for the locking cable using **socket insert a/f 5 T40031. Tightening torque 13 Nm (9.5 ftlb.)**

Fig 6: Identifying Locking Cable Fastening Screw

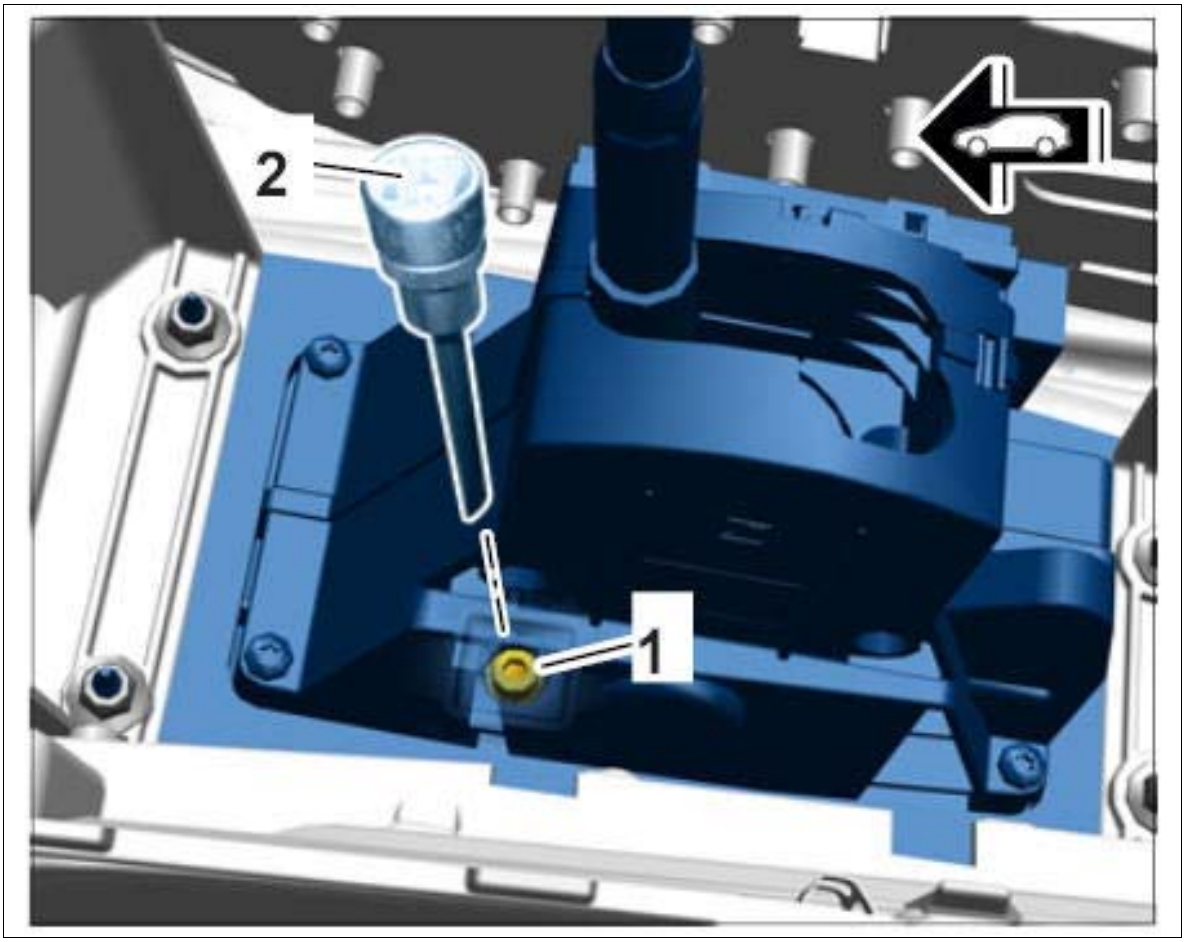

Courtesy of PORSCHE CARS NORTH AMERICA, INC.

6. Press release **-3-** , actuate selector knob **-2-** and move selector lever from position "P" to "D" and from position "D" to "M" and back again several times.

Fig 7: Identifying Selector Support And Knob

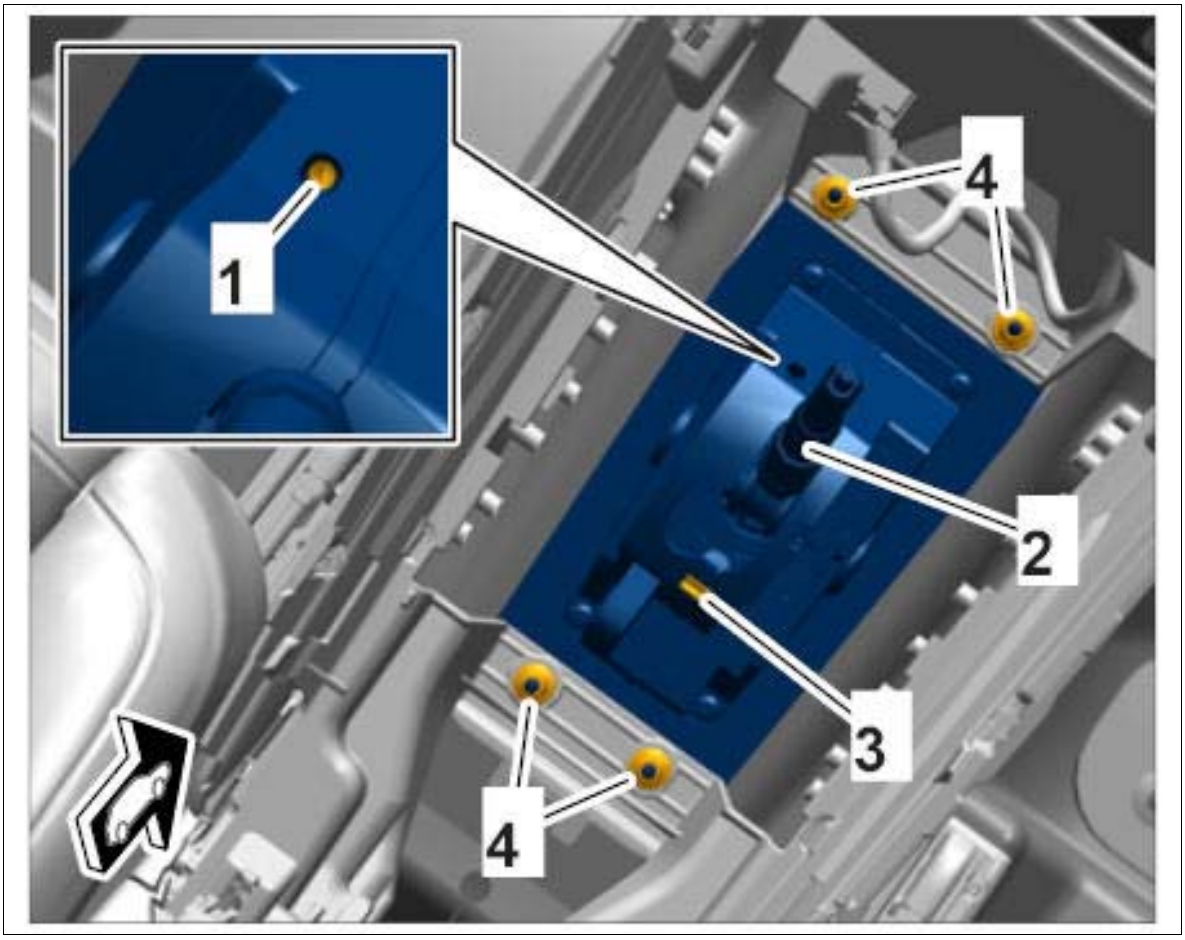

Courtesy of PORSCHE CARS NORTH AMERICA, INC.

7. Position insulating mat **-1-** and connect electric plug connection **-2-** .

Fig 8: Identifying Insulating Mat Plug Connection

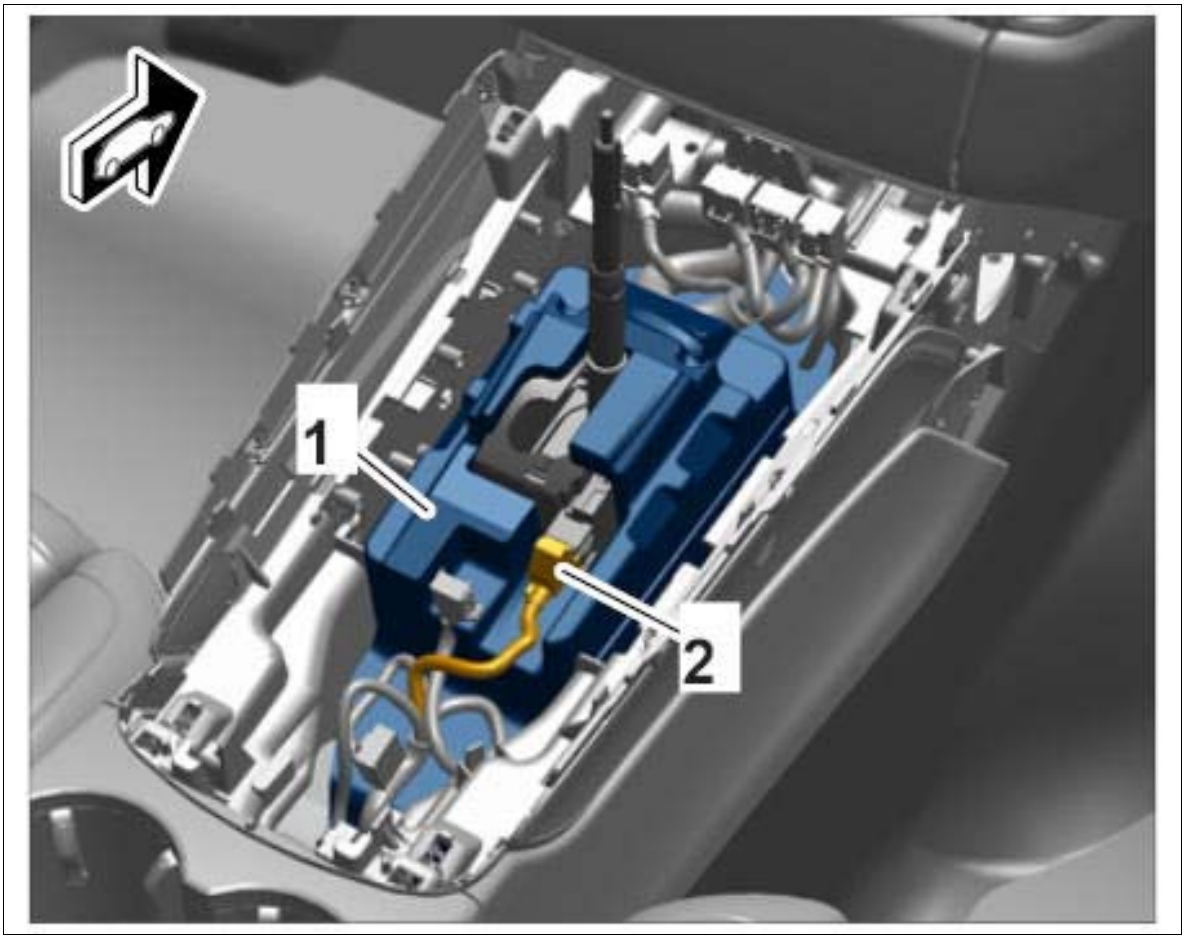

Courtesy of PORSCHE CARS NORTH AMERICA, INC.

8. Position holder for switch console **-1-** and engage in **-direction of arrow-** .

Fig 9: Positioning Switch Console Holder

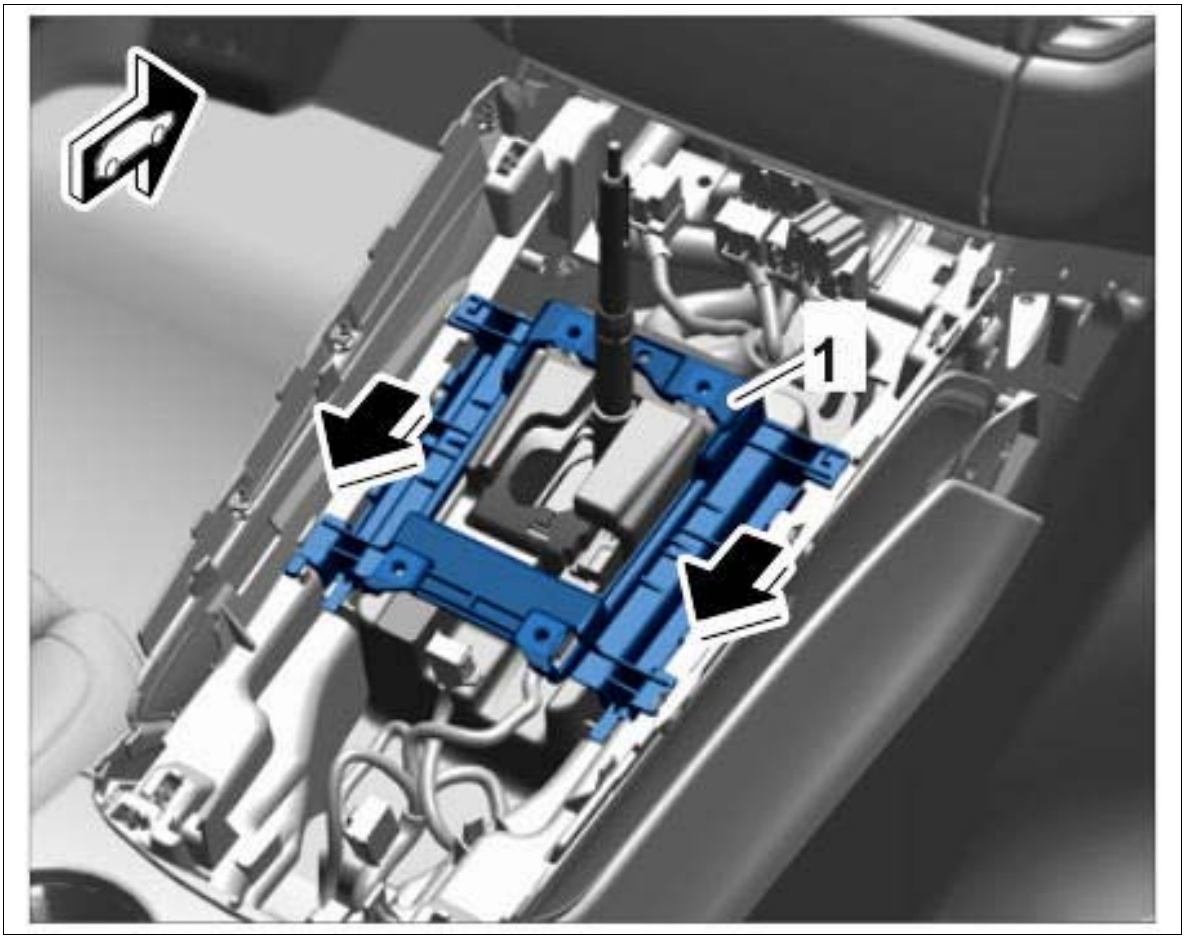

Courtesy of PORSCHE CARS NORTH AMERICA, INC.

WM 371319 REMOVING AND INSTALLING LOCKING CABLE (ALL MODELS) > SUBSEQUENT WORK

1. Install switch console. → Installing Switch Console
2. Install upper part of center console cover. → Installing Upper Part Of Center Console Cover
3. Install center console trim. → Installing Center Console Trim

WM 371319 REMOVING AND INSTALLING LOCKING CABLE (ALL MODELS) > SUBSEQUENT WORK > FUNCTION TEST

1. Move selector lever from position "P" to "D" and from position "D" to "M" and back again several times.
2. Check that the parking lock is disengaged.
    1. 2.1. Insert ignition key into the ignition lock.

2. 2.2. Move selector lever to position "P". "P" appears in the instrument cluster.
3. 2.3. Actuate the operating brake.
4. 2.4. Start the engine.
5. 2.5. Move selector lever to position "D". "D" appears in the instrument cluster.
6. 2.6. Release the operating brake. If the vehicle moves forward, the test is complete. Otherwise, all connecting pieces must be checked again.

3. Check that the parking lock is engaged (engine running).
    1. 3.1. Insert ignition key into the ignition lock.
    2. 3.2. Move selector lever to position "P". "P" appears in the instrument cluster.
    3. 3.3. Actuate the operating brake.
    4. 3.4. Start the engine.
    5. 3.5. Release the operating brake. The vehicle must not move. Otherwise, the entire system must be checked.
    6. 3.6. Switch off engine.
4. Check that the parking lock is engaged (blocking effect).
    1. 4.1. Insert ignition key into the ignition lock.
    2. 4.2. Move selector lever to position "P". "P" appears in the instrument cluster.
    3. 4.3. Move selector lever to position "N". "N" appears in the instrument cluster.
    4. 4.4. Get another person to help you to push the vehicle for a distance of at least one metre. It must be possible to move the vehicle. Otherwise, the entire system must be checked.
    5. 4.5. Actuate the operating brake.
    6. 4.6. Move selector lever to position "P". "P" appears in the instrument cluster.
    7. 4.7. Get another person to help you to push the vehicle. The vehicle must not move (a max. movement of 150 mm is acceptable). Otherwise, the entire system must be checked.

WM 373427 REMOVING AND MOUNTING PORSCHE DOPPELKUPPLUNG (PDK) (EXCEPT MACAN) > TOOLS

Designation	Type	Number	Description	
workshop crane	Workshop equipment	WE 1188		

assembly fixture - Panamera	Workshop equipment	WE 1367		
socket-wrench insert	Special tool	9836/1		
attachment and retaining device	VW tool	T40294		

WM 373427 REMOVING AND MOUNTING PORSCHE DOPPELKUPPLUNG (PDK) (EXCEPT MACAN) > TECHNICAL VALUES

Location	Description	Type	Basic value	Tolerance 1	Tolerance 2
Transmission to driver	M10 x 1 x 15.5/6 ea.	Tightening torque	60 Nm (44 ftlb.)		
Fastening screw securing heat shield to transmission	M6 x 12 and M6 x 16	Tightening torque	8 Nm (6 ftlb.)	+/-1.5 Nm (+/- 1 ftlb.)	
Fastening screws		Tightening torque	23 Nm (17 ftlb.)		

WM 373427 REMOVING AND MOUNTING PORSCHE DOPPELKUPPLUNG (PDK) (EXCEPT MACAN) > PRELIMINARY WORK

1. Remove engine. → Removing Engine
2. Remove catalytic converter. → Removing Catalytic Converter
3. Unscrew fastening screws **-2-** and remove heat shield at the left **-1-** .

   Fig 1: Identifying Catalytic Converter Heat Shield Fastening Screws (Left Side)

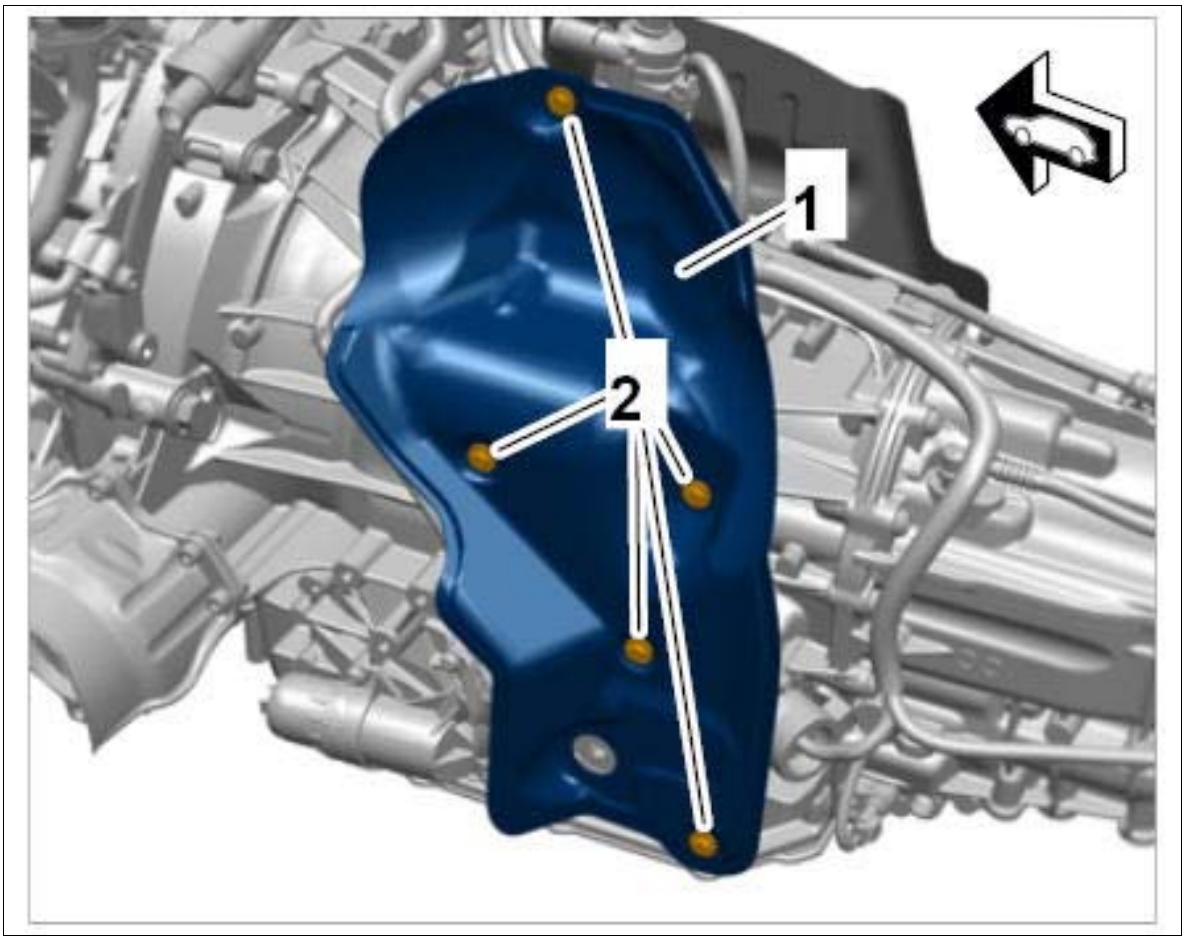

Courtesy of PORSCHE CARS NORTH AMERICA, INC.

4. Unscrew fastening screws **-2-** and remove heat shield at the right **-1-** .

Fig 2: Identifying Catalytic Converter Heat Shield Fastening Screws (Right Side)

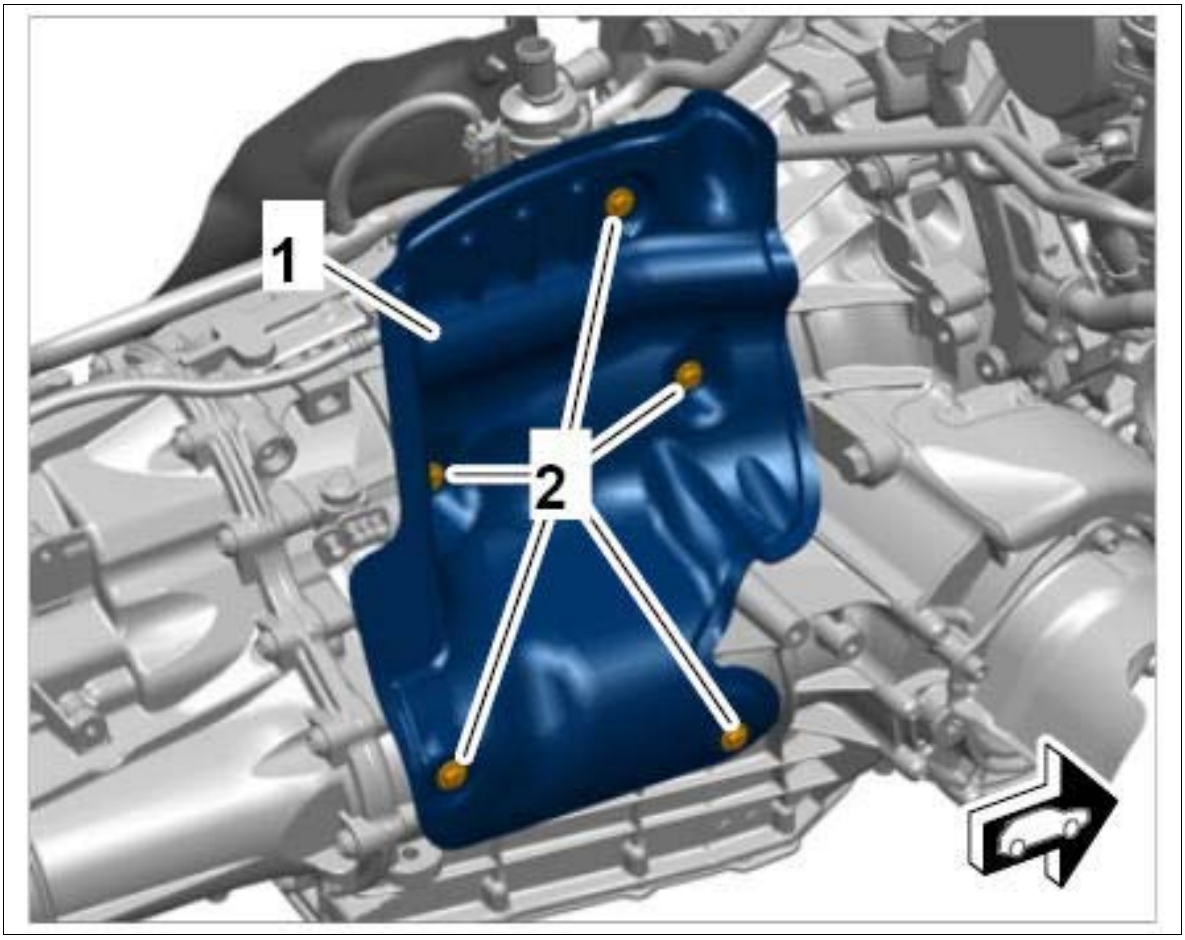

Courtesy of PORSCHE CARS NORTH AMERICA, INC.

5. Remove heat shields on the drive shaft at both sides.

   Unscrew fastening screws **-arrows-** and remove heat shields.

Fig 3: Locating Drive Shaft Heat Shield Fastening Screws

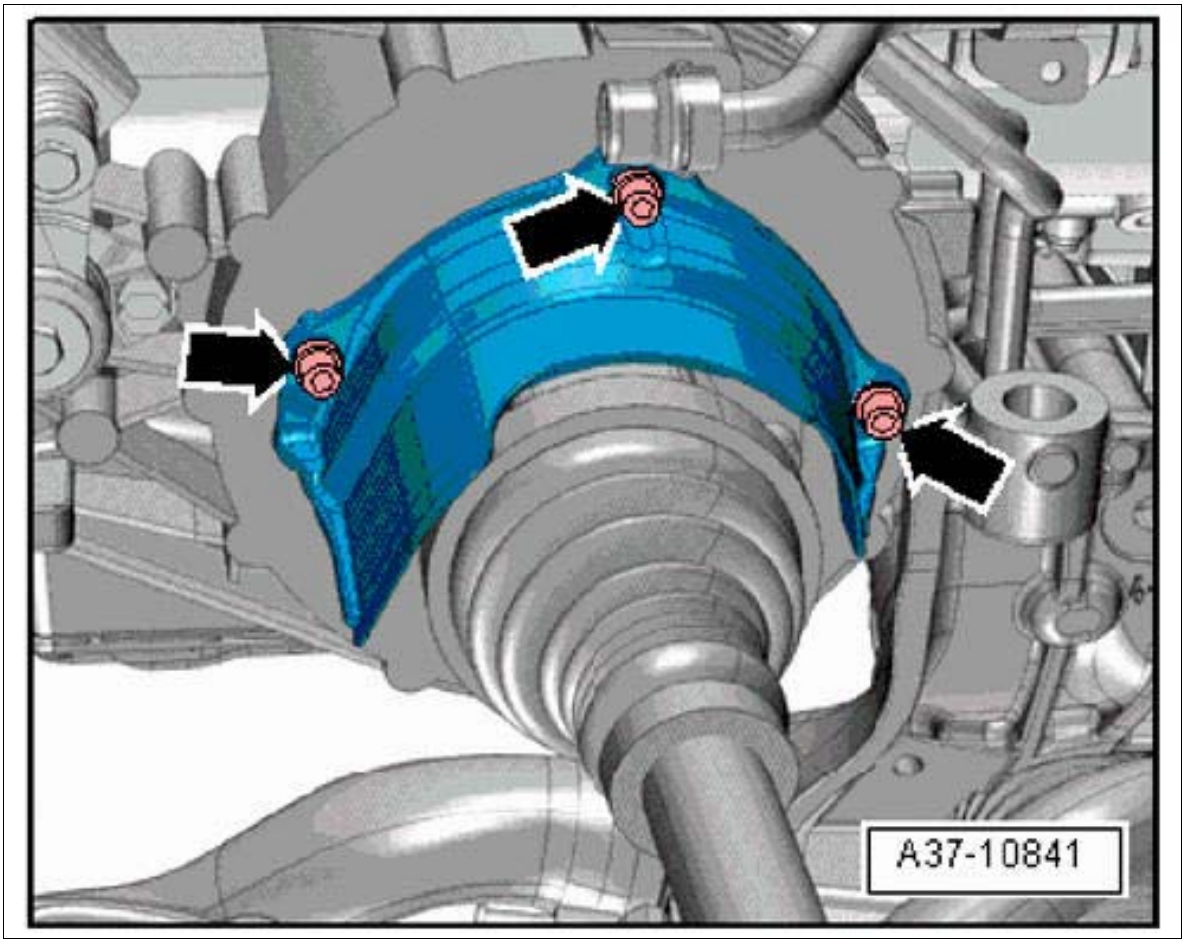

Courtesy of PORSCHE CARS NORTH AMERICA, INC.

6. Loosen drive shafts at both sides from the transmission. → Removing And Installing Front Drive Shaft
7. Remove ATF lines. → Removing Line For ATF Cooling

WM 373427 REMOVING AND MOUNTING PORSCHE DOPPELKUPPLUNG (PDK) (EXCEPT MACAN) > REMOVING PORSCHE DOPPELKUPPLUNG (PDK)

Information

- The pictures shown in this document may differ from the original.

1. Disconnect electric plug connections **-1...4-** , release holder **-6-** and place wire harness **-5-** on the engine.

Fig 1: Identifying Transmission Wire Harness Plug Connections

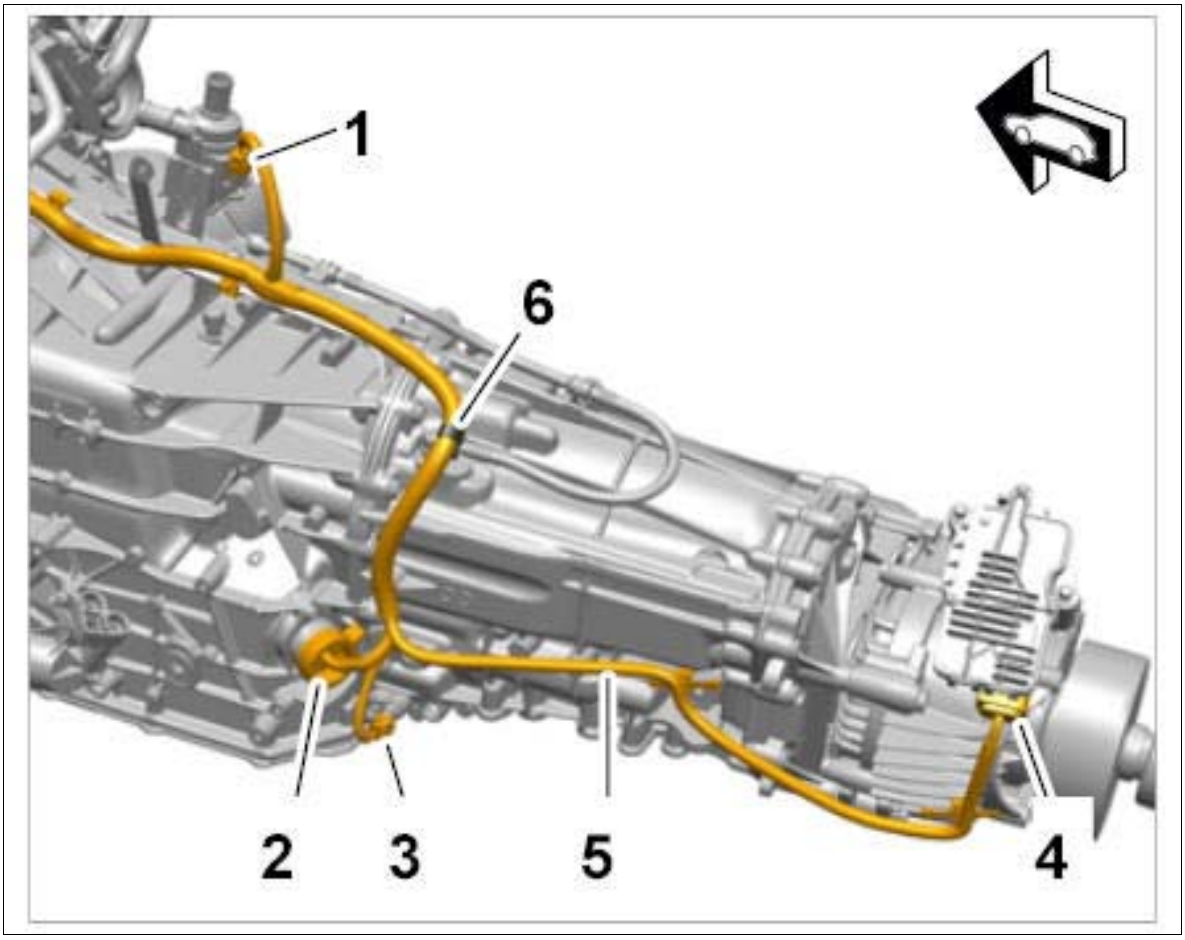

Courtesy of PORSCHE CARS NORTH AMERICA, INC.

2. Unscrew fastening screws **-2-** and disconnect holder **-1-** with auxiliary pump from the transmission.

Fig 2: Identifying Auxiliary Pump Holder Fastening Screws

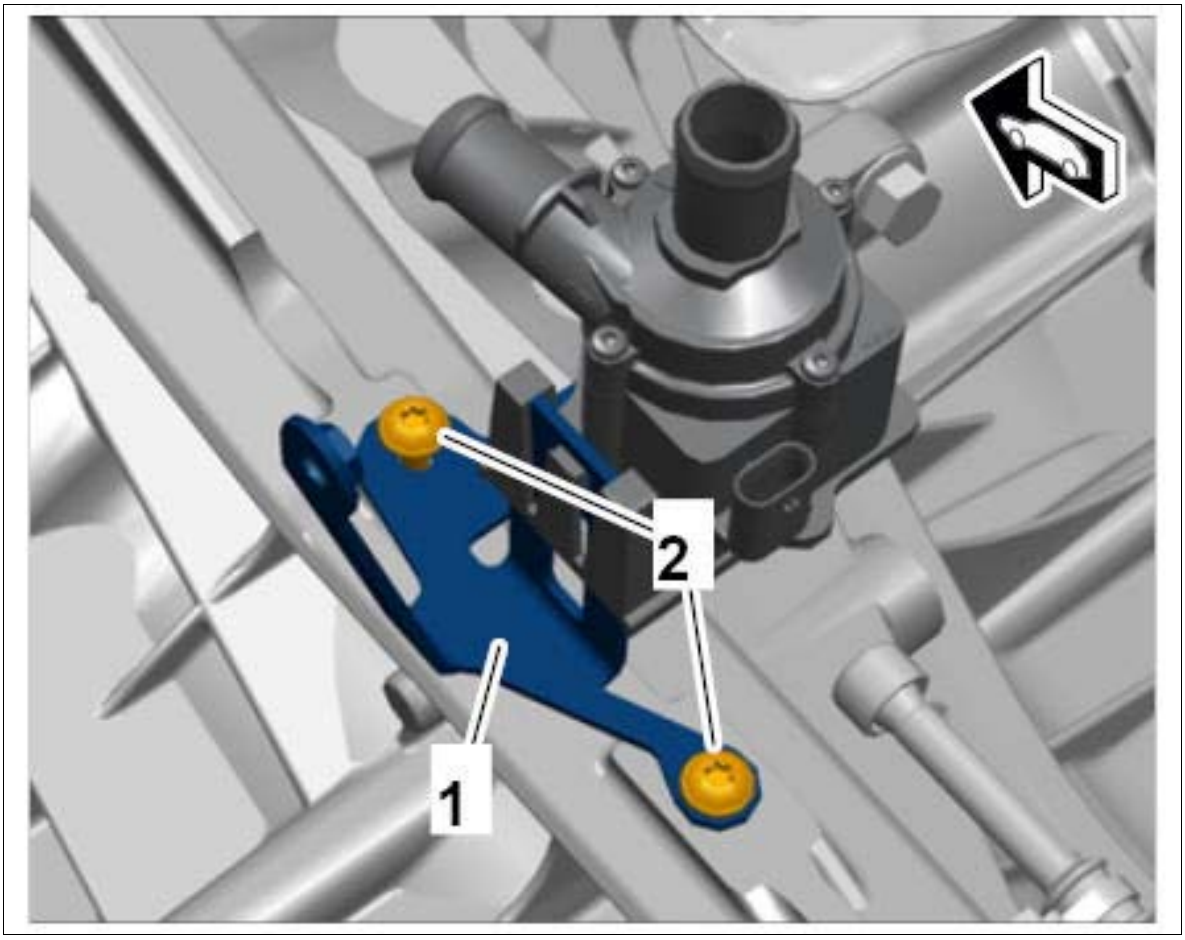

Courtesy of PORSCHE CARS NORTH AMERICA, INC.

3. Pull off cover on drive plate **-arrow-** at the underside of the transmission.

Fig 3: Pulling Drive Plate Cover

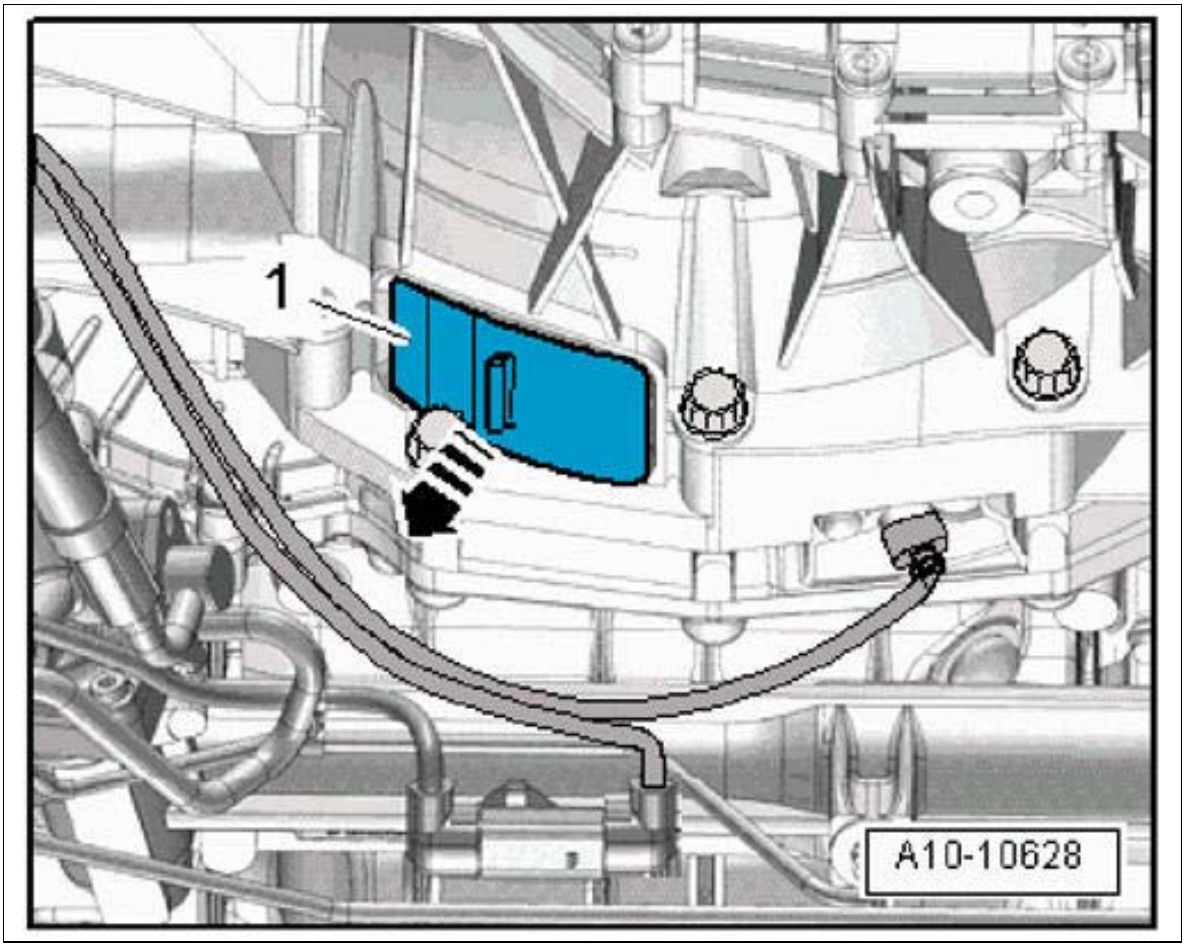

Courtesy of PORSCHE CARS NORTH AMERICA, INC.

4. Loosen dual-mass flywheel from the drive plate.

    1. 4.1. Unscrew fastening screw **-arrow-** .

       Counter at the crankshaft when loosening the screws.

    2. 4.2. For the next screw, turn the crankshaft a further 60° in **direction of rotation of the engine.**

Fig 4: Locating Dual-Mass Flywheel Screw

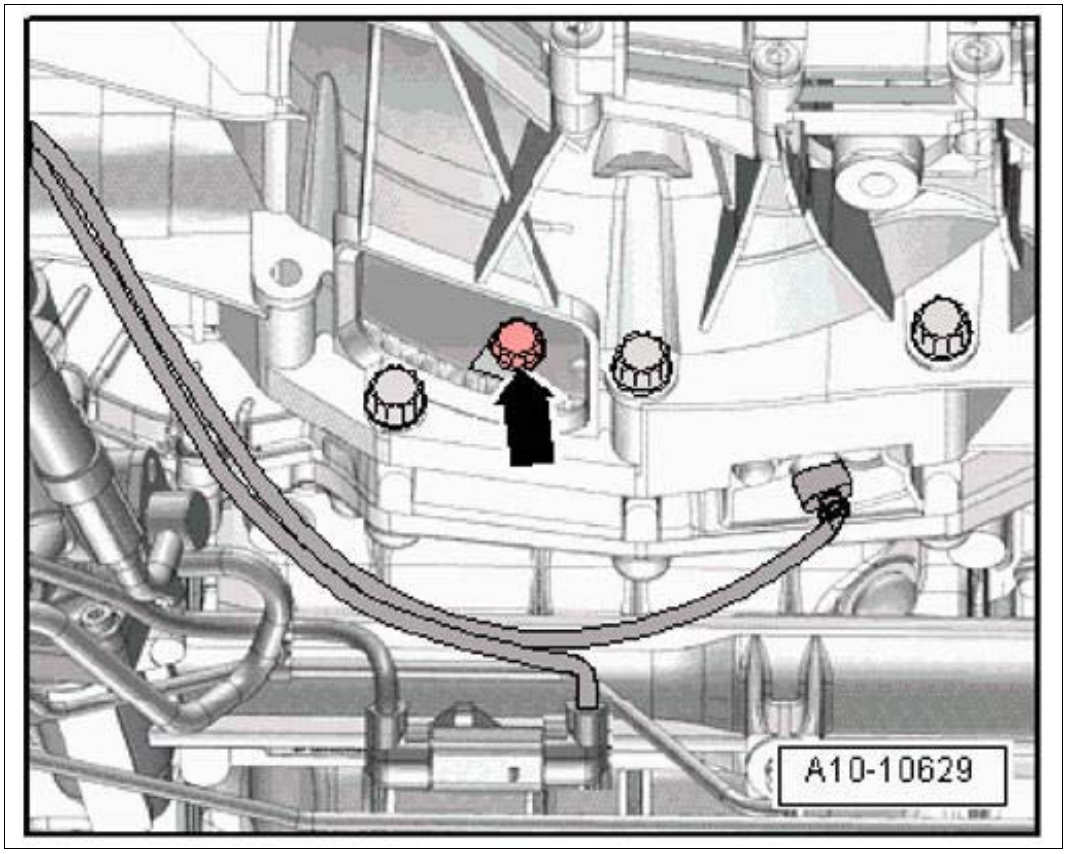

Courtesy of PORSCHE CARS NORTH AMERICA, INC.

5. Secure the engine to prevent it from slipping using support from **assembly fixture - Panamera WE 1367 -1-** .

Fig 5: Supporting Engine

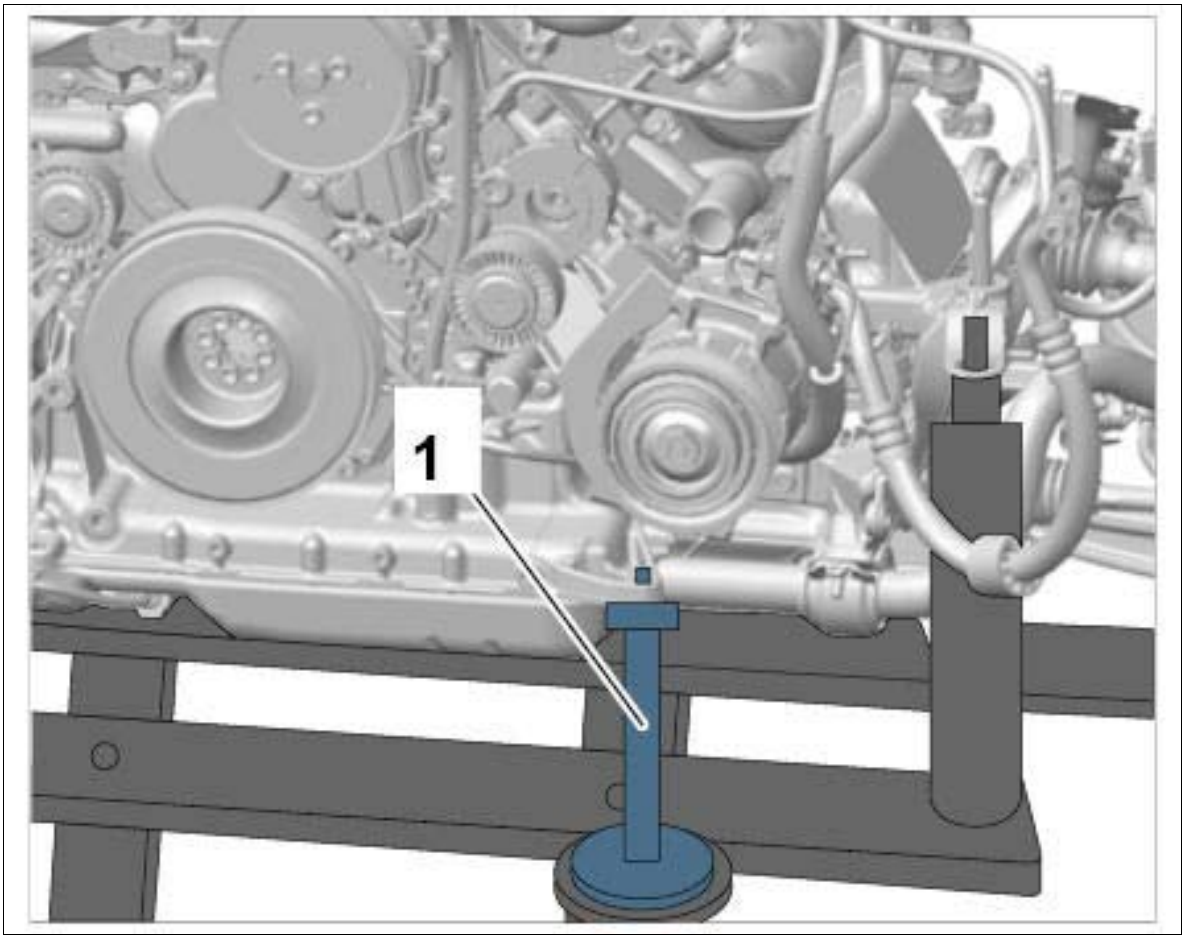

Courtesy of PORSCHE CARS NORTH AMERICA, INC.

6. Use **attachment and retaining device T40294** to secure the transmission to the **workshop crane WE 1188.**

    1. 6.1. **Attachment and retaining device T40294** must be engaged in the housing bores on the right.

    2. 6.2. Fit knurled screw **-arrow-** at the left on the transmission.

Fig 6: Attaching Retaining Device T40294

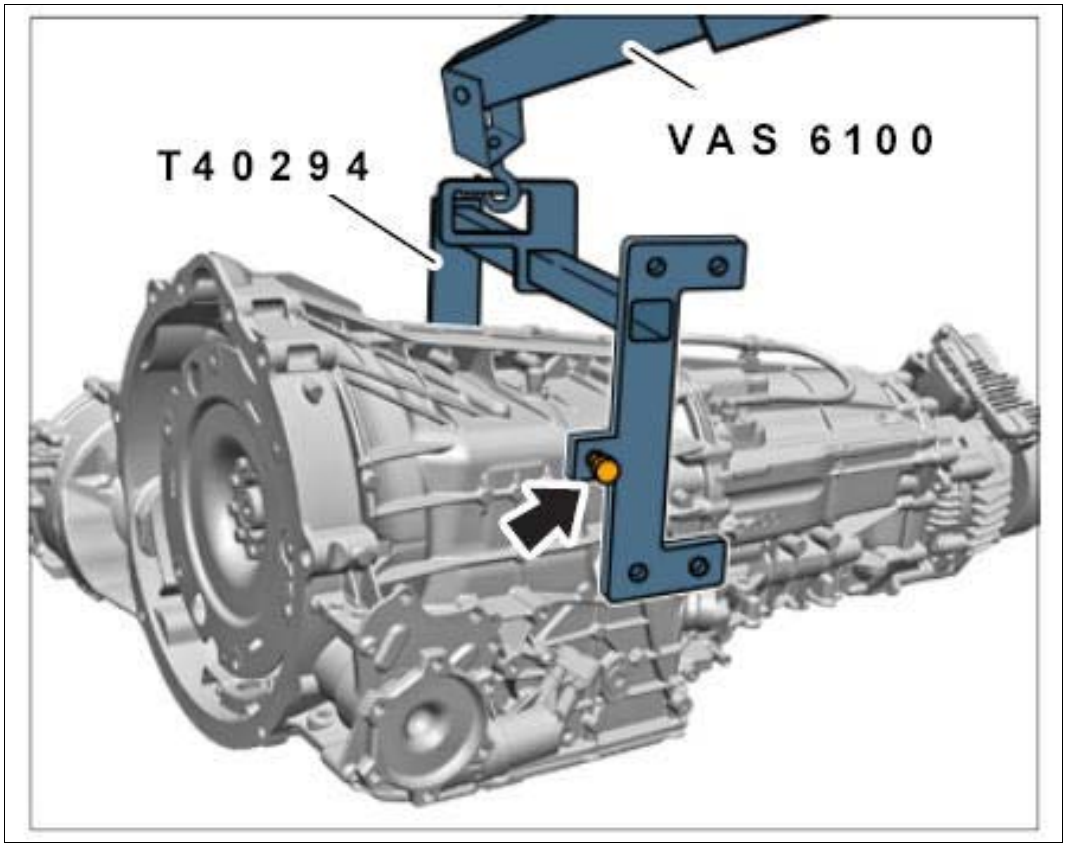

Courtesy of PORSCHE CARS NORTH AMERICA, INC.

7. Loosen fastening screws **-1 and 5-** and remove transmission.

Check clearance during removal.

1. 7.1. Remove spacer **-2-** from the dowel sleeves.

Fig 7: Identifying Porsche Doppelkupplung (PDK)

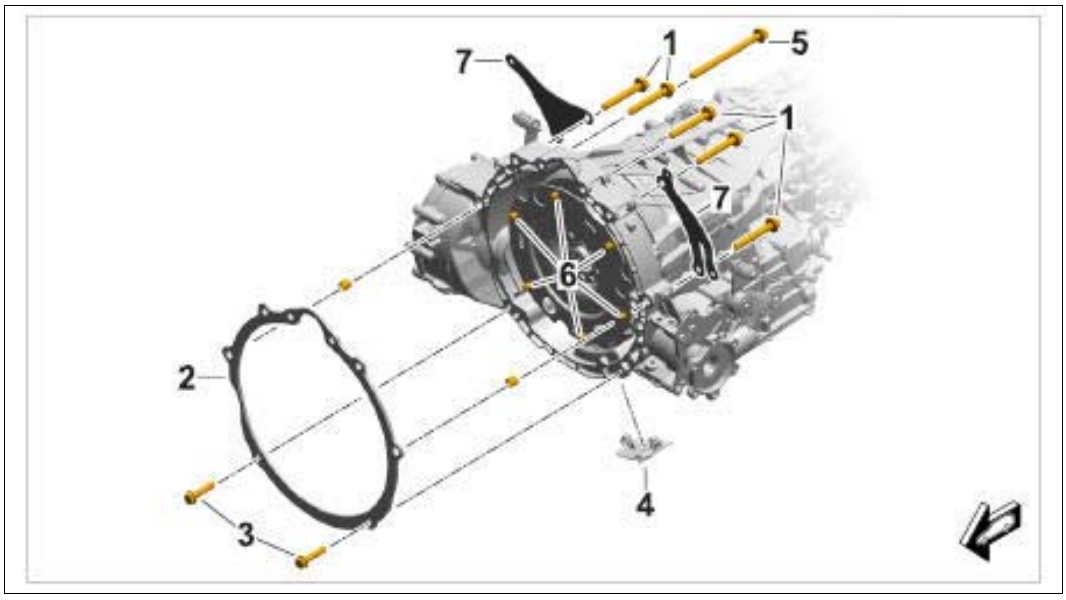

Courtesy of PORSCHE CARS NORTH AMERICA, INC.

WM 373427 REMOVING AND MOUNTING PORSCHE DOPPELKUPPLUNG (PDK) (EXCEPT MACAN) > MOUNTING PORSCHE DOPPELKUPPLUNG (PDK)

1. Use **attachment and retaining device T40294** to secure the transmission to the **workshop crane WE 1188.**

    1. 1.1. **Attachment and retaining device T40294** must be engaged in the housing bores on the right.

    2. 1.2. Fit knurled screw **-arrow-** at the left on the transmission.

    Fig 1: Attaching Retaining Device T40294

    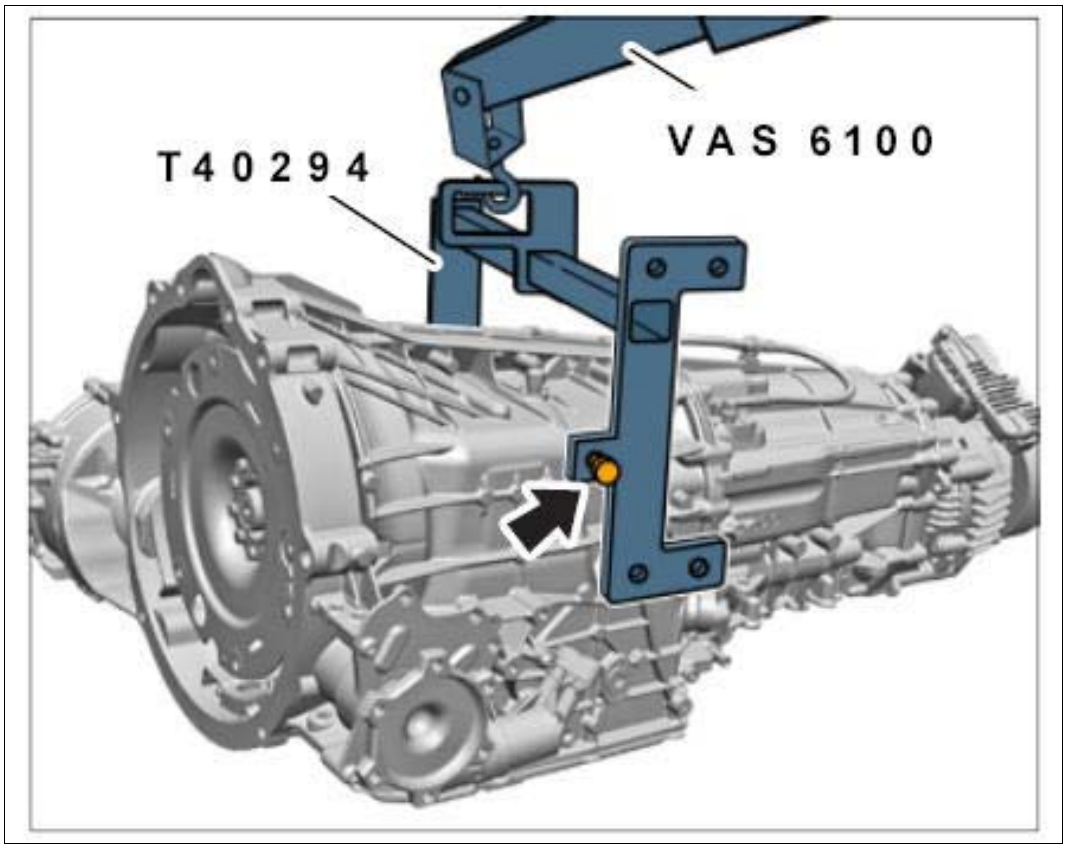

    Courtesy of PORSCHE CARS NORTH AMERICA, INC.

2. Mount transmission.

    1. 2.1. Fit spacer **-2-** on the dowel sleeves on the engine.

    Check that the spacers are fitted at the correct position.

    2. 2.2. Position transmission and fit and tighten fastening screws **-1 and 5-** with holders **-7-** .

    3. 2.3. Tighten fastening screws **-1 and 5-** .

Fig 2: Identifying Porsche Doppelkupplung (PDK)

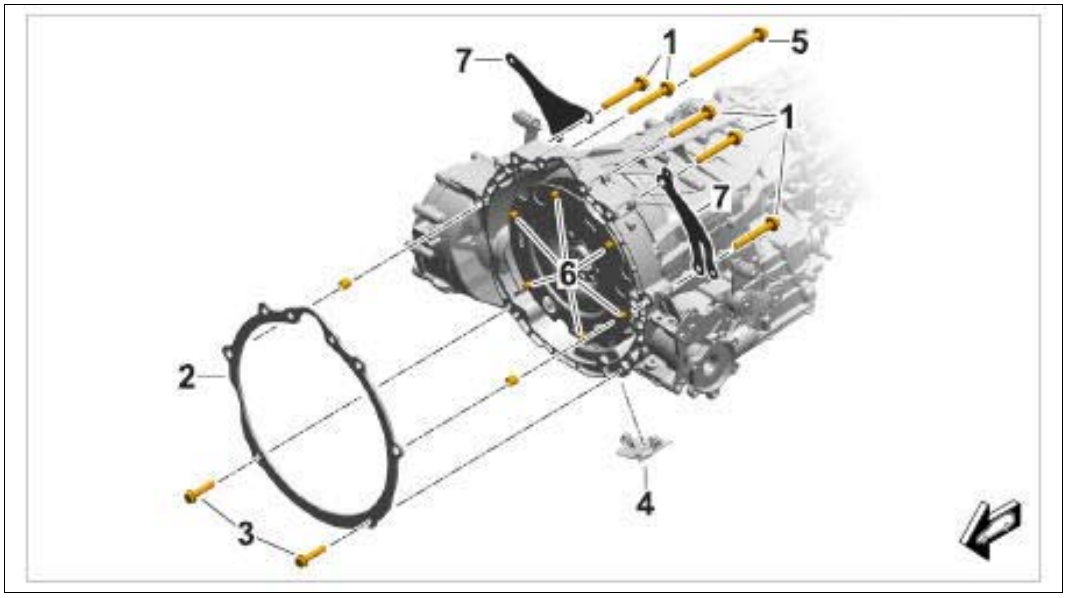

Courtesy of PORSCHE CARS NORTH AMERICA, INC.

3. Secure dual-mass flywheel on the drive plate.

    1. 3.1. Fit fastening screws **-arrow-** .

       Turn the crankshaft a further 60° in **direction of rotation of the engine.**

    2. 3.2. Tighten fastening screws **-arrow-** using **socket-wrench insert 9836/1. Tightening torque 60 Nm (44 ftlb.)**

       Counter the crankshaft at the pulley when tightening the fastening screws.

Fig 3: Locating Dual-Mass Flywheel Screws

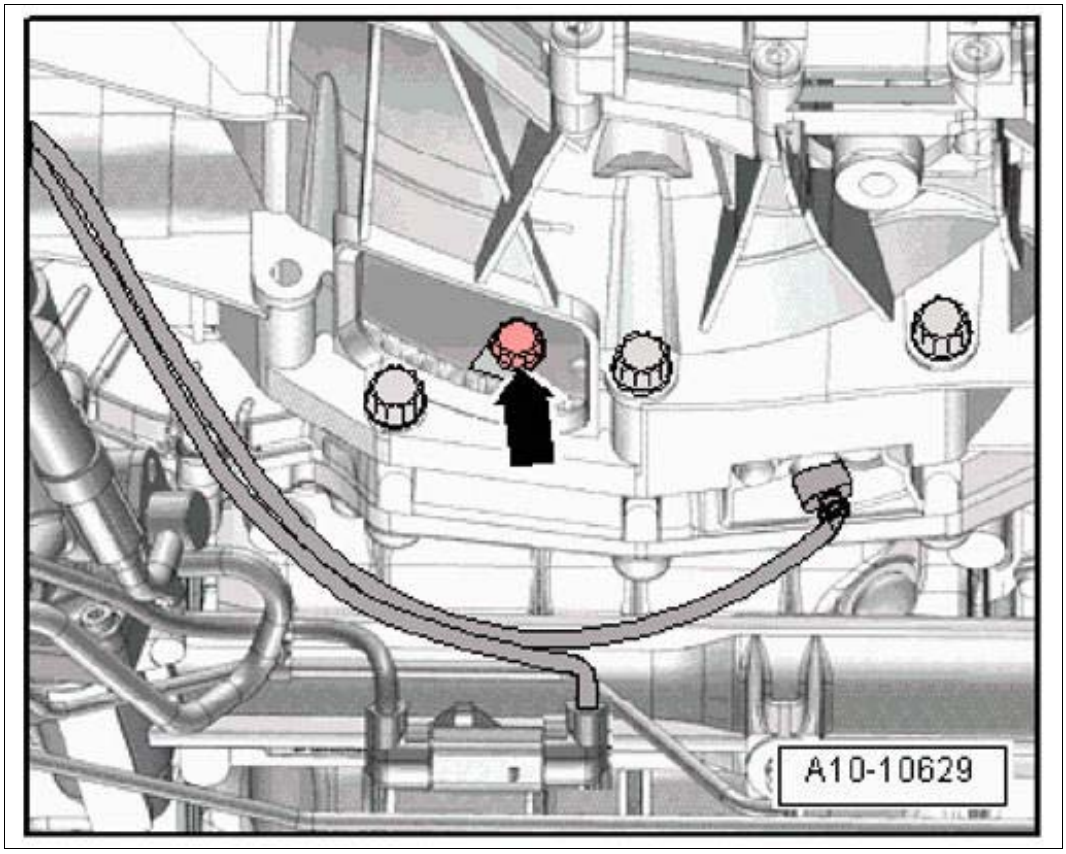

Courtesy of PORSCHE CARS NORTH AMERICA, INC.

4. Install cover **-1-** on the underside of the transmission.

Fig 4: Removing Drive Plate Cover

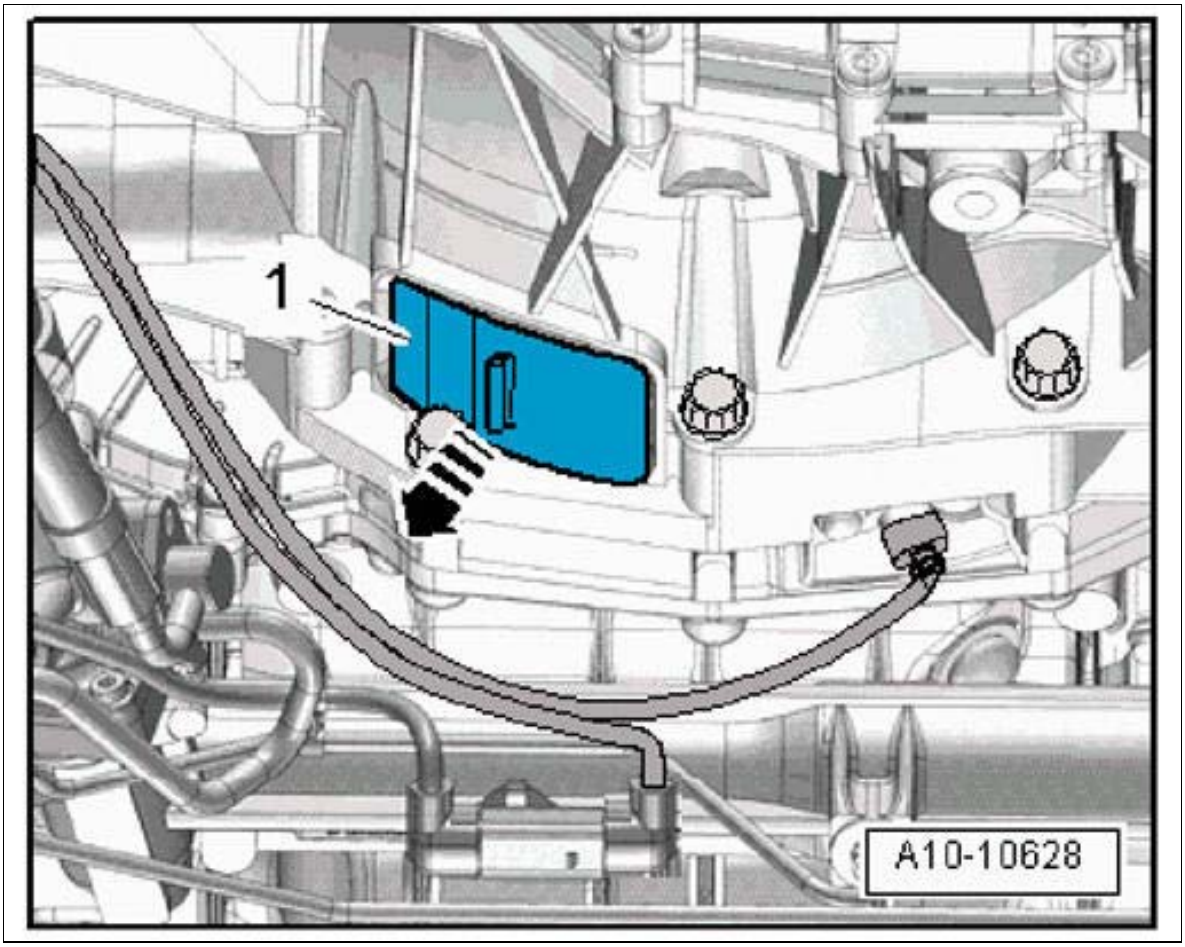

Courtesy of PORSCHE CARS NORTH AMERICA, INC.

5. Fit holder **-1-** with auxiliary pump on the transmission and tighten fastening screws **-2-** .

Fig 5: Identifying Auxiliary Pump Holder And Screw

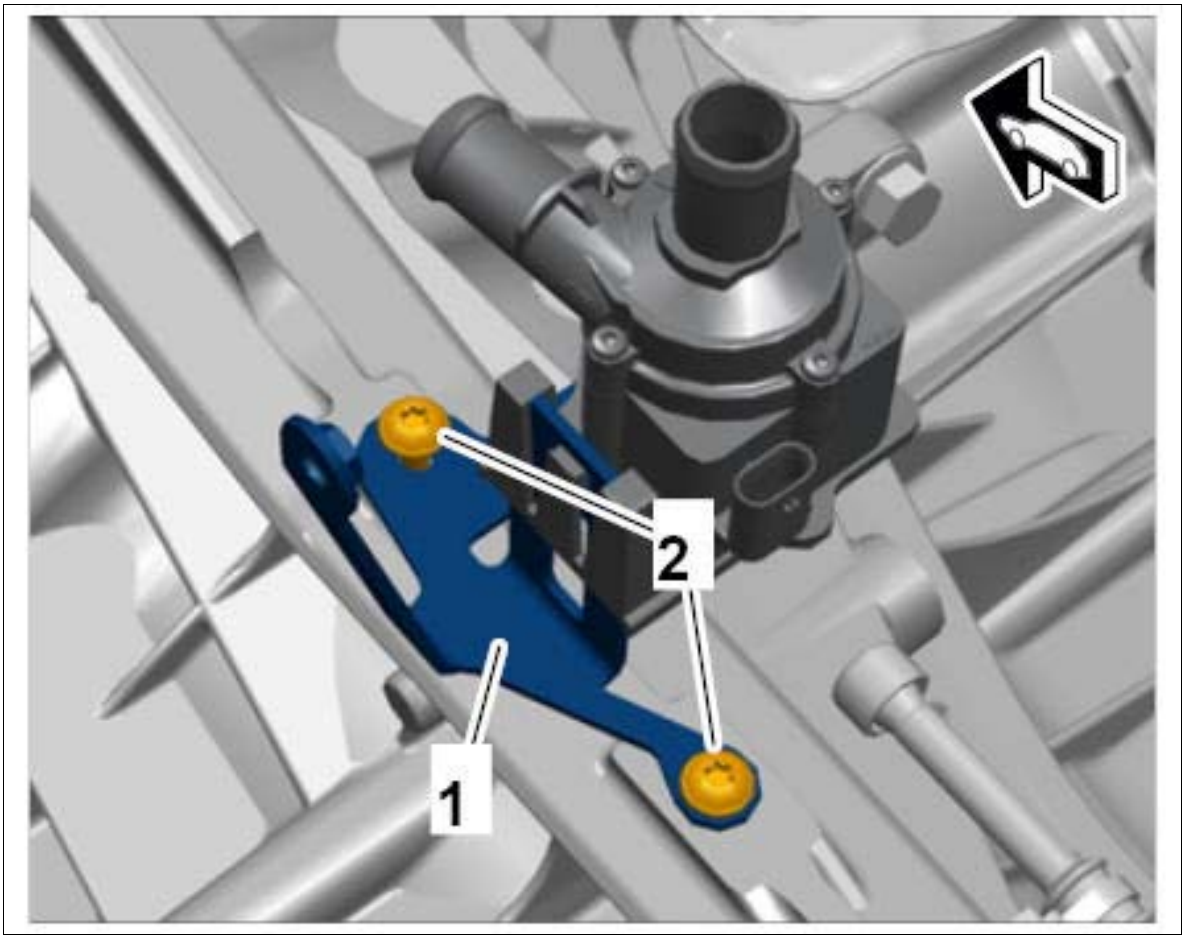

Courtesy of PORSCHE CARS NORTH AMERICA, INC.

6. Connect electric plug connections **-1...4-** , clip in holder **-6-** and secure the wiring harness at the transmission.

Fig 6: Identifying Transmission Wire Harness Plug Connections

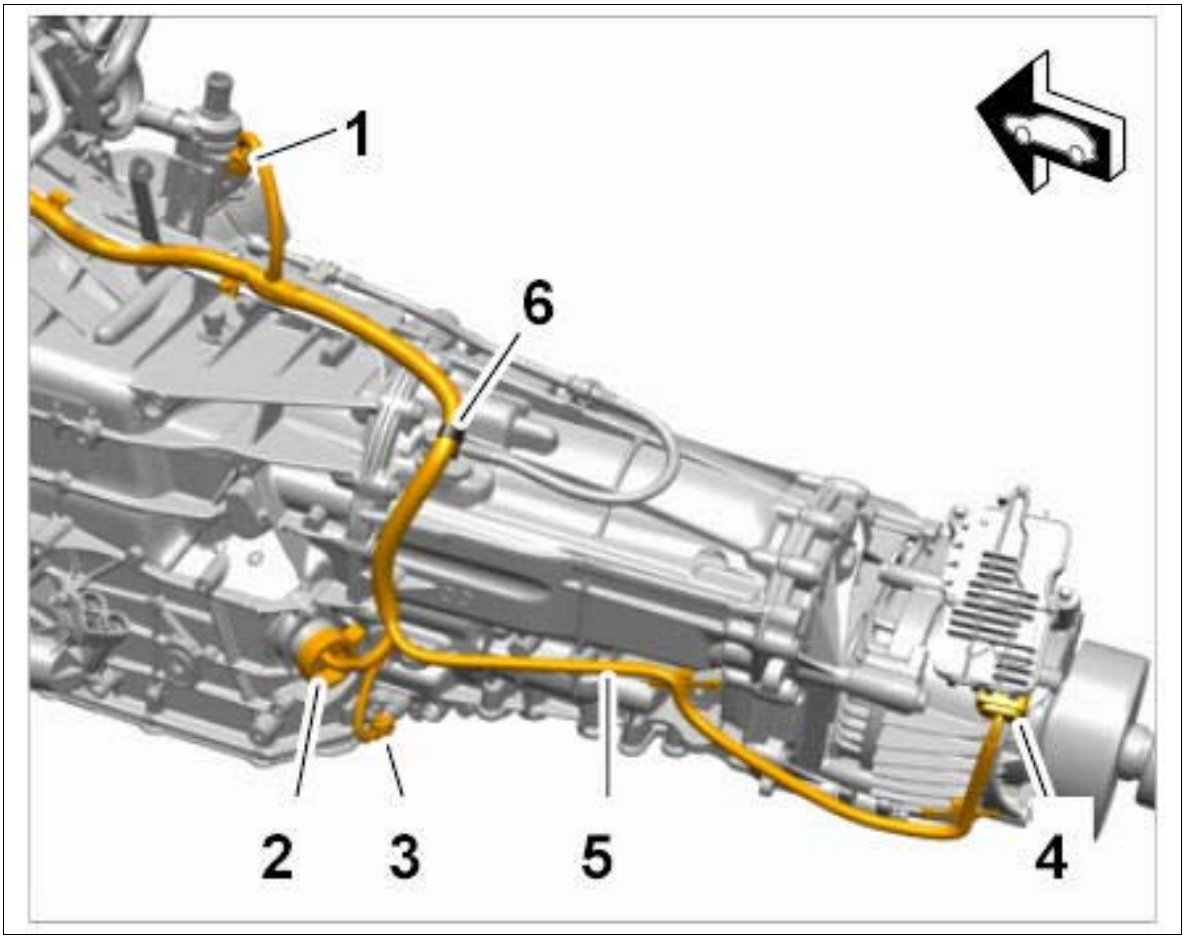

Courtesy of PORSCHE CARS NORTH AMERICA, INC.

WM 373427 REMOVING AND MOUNTING PORSCHE DOPPELKUPPLUNG (PDK) (EXCEPT MACAN) > SUBSEQUENT WORK

1. Install ATF lines. → Installing Line For ATF Cooling
2. Secure the drive shafts on both sides. → Installing Front Drive Shaft
3. Fit heat shields for the drive shaft on both sides and secure with fastening screws **-arrows-** .

   Tighten fastening screws **-arrows-** . **Tightening torque 23 Nm (17 ftlb.)**

Fig 1: Locating Drive Shaft Heat Shield Screws

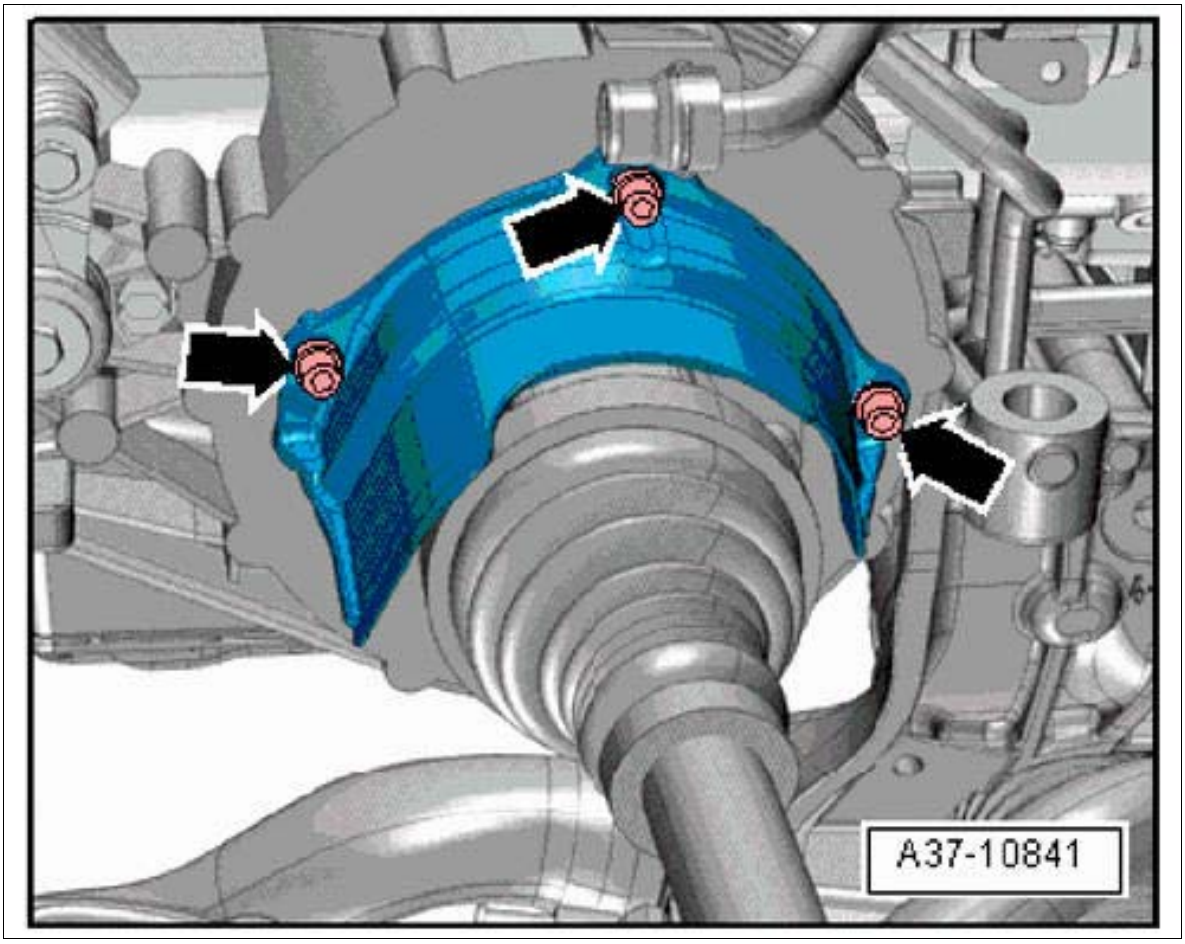

Courtesy of PORSCHE CARS NORTH AMERICA, INC.

4. Fit left heat shield **-1-** and secure with fastening screws **-2-** . **Tightening torque 8 Nm (6 ftlb.) +/-1.5 Nm (+/-1 ftlb.)**

Fig 2: Identifying Catalytic Converter Heat Shield Screws (Left Side)

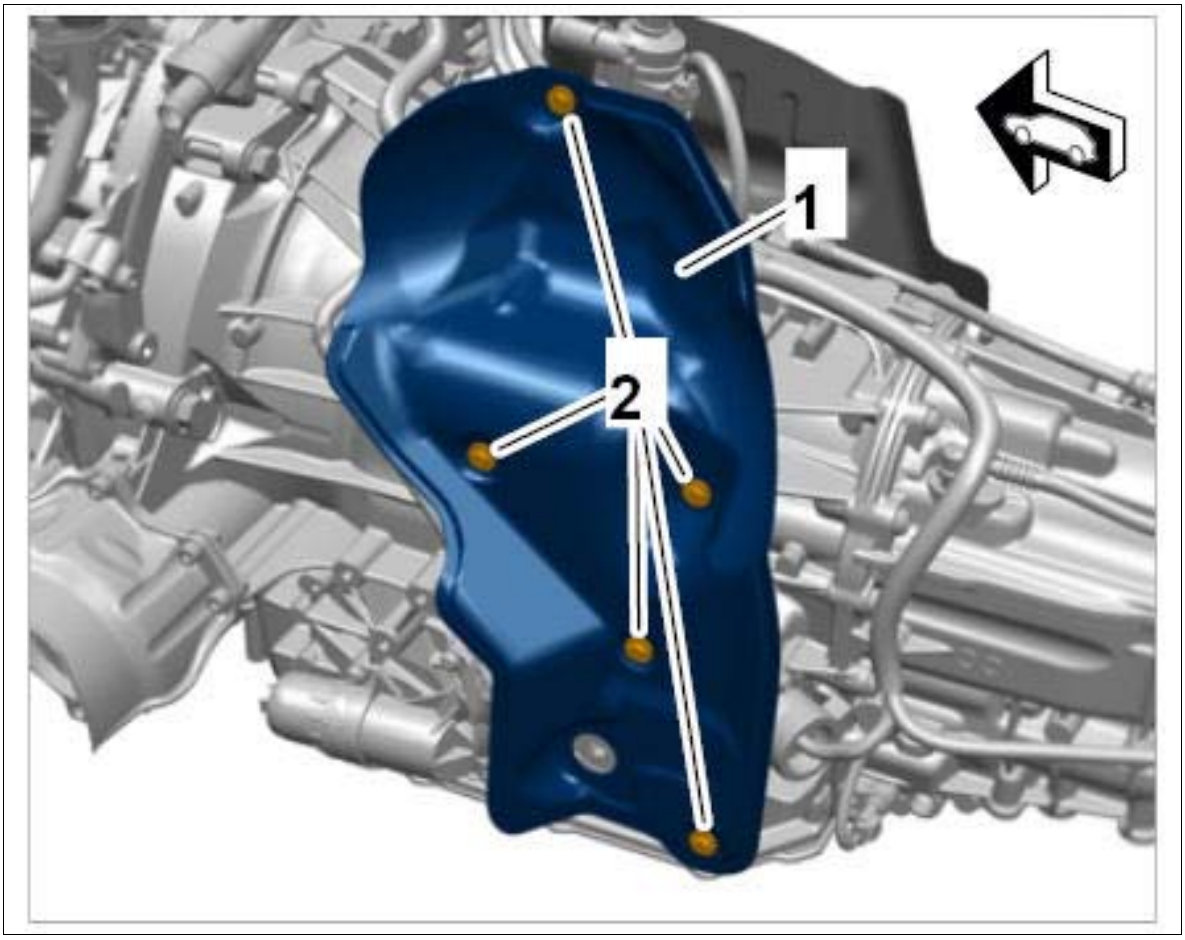

Courtesy of PORSCHE CARS NORTH AMERICA, INC.

5. Fit right heat shield **-1-** and secure with fastening screws **-2-** . **Tightening torque 8 Nm (6 ftlb.) +/-1.5 Nm (+/-1 ftlb.)**

Fig 3: Identifying Catalytic Converter Heat Shield Screws (Right Side)

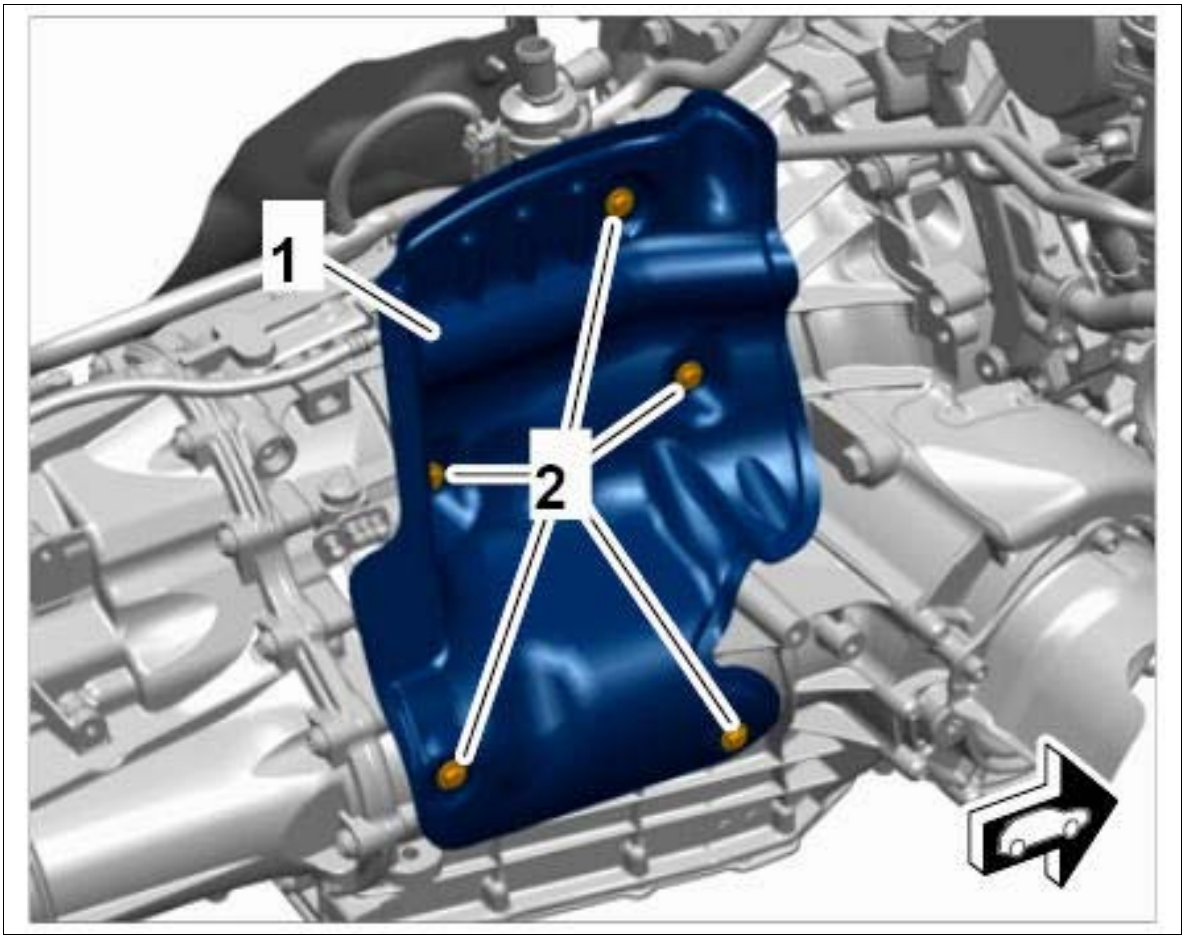

Courtesy of PORSCHE CARS NORTH AMERICA, INC.

6. Install catalytic converter. → Installing Catalytic Converter
7. Install engine. → Installing Engine

WM 373455 REPLACING PORSCHE DOPPELKUPPLUNG (PDK) (ALL MODELS) > PRELIMINARY WORK

1. Depending on model:

   Remove Porsche Doppelkupplung (PDK). → WM 373427 REMOVING AND MOUNTING PORSCHE DOPPELKUPPLUNG (PDK) and WM 373455 REPLACING PORSCHE DOPPELKUPPLUNG (PDK)

   Remove Porsche Doppelkupplung (PDK). → Removing Porsche Doppelkupplung (PDK)

WM 373455 REPLACING PORSCHE DOPPELKUPPLUNG (PDK) (ALL MODELS) > SUBSEQUENT WORK

1. Depending on model:

   Install Porsche Doppelkupplung (PDK). → WM 373427 REMOVING AND MOUNTING PORSCHE DOPPELKUPPLUNG (PDK) and WM 373455 REPLACING PORSCHE DOPPELKUPPLUNG (PDK)

   Fit Porsche Doppelkupplung (PDK). → Mounting Porsche Doppelkupplung (PDK)

WM 375519 REMOVING AND INSTALLING ATF PAN (ALL MODELS) > TECHNICAL VALUES

Location	Description	Type	Basic value	Tolerance 1	Tolerance 2
ATF drain plug on oil pan		Tightening torque	45 Nm (33 ftlb.)		
Fastening screw	ATF oil pan to transmission	Tightening torque	10 Nm (7.5 ftlb.)		
Fastening screw	Mechatronics to transmission	Tightening torque	10 Nm (7.5 ftlb.)		
Fastening screw	Retaining bracket to transmission	Tightening torque	10 Nm (7.5 ftlb.)		
Fastening screw	ATF filter housing to transmission	Tightening torque	10 Nm (7.5 ftlb.)		
Fastening screw	ATF lines to ATF filter housing	Tightening torque	20 Nm (15 ftlb.)		
ATF inspection plug		Tightening torque	45 Nm (33 ftlb.)		
Fastening screw	ATF connector housing	Tightening torque	8 Nm (6 ftlb.)		
Fastening screw	Cable guide for RPM sensor to transmission	Tightening torque	8 Nm (6 ftlb.)		
Fastening screws	ATF oil pan	Tightening torque	10 Nm (7.5 ftlb.)		
Fastening screws	Heat shield to front-axle carrier	Tightening torque	9 Nm (6.5 ftlb.)		
Fastening screw	Heat shield to front-axle carrier	Tightening torque	20 Nm (15 ftlb.)		
Fastening screws	Heat shield over engine mount	Tightening torque	20 Nm (15 ftlb.)		
Fastening screws	Heat shield to front-axle carrier	Tightening torque	9 Nm (6.5 ftlb.)		

Fastening screw	Heat shield to front-axle carrier	Tightening torque	20 Nm (15 ftlb.)		
Fastening screws	Heat shield over engine mount	Tightening torque	20 Nm (15 ftlb.)		
Fastening screws	Retainer plate to front-axle carrier	Tightening torque	30 Nm (22 ftlb.)		
Fastening screw	Step 1, engine mount	Initial tightening	90 Nm (67 ftlb.)		
Fastening screw	Step 2, engine mount	Final tightening	+90°		
Fastening screw	Step 1, front-axle carrier to body	Initial tightening	115 Nm (85 ftlb.)		
Fastening screw	Step 2, front-axle carrier to body	Final tightening	+90°		
Fastening screw	Step 1, front-axle carrier to body	Initial tightening	115 Nm (85 ftlb.)		
Fastening screw	Step 2, front-axle carrier to body	Final tightening	+90°		
Fastening screws	Engine mount to front-axle carrier	Tightening torque	55 Nm (41 ftlb.)		
Fastening screws	Step 1, cross-strut to front-axle carrier	Initial tightening	90 Nm (67 ftlb.)		
Fastening screws	Step 2, cross-strut to front-axle carrier	Final tightening	+135°		
Front fastening screw	Step 1, cross-strut to front-axle carrier	Initial tightening	90 Nm (67 ftlb.)		
Fastening screw	Step 2, Cross-strut to front-axle carrier	Final tightening	+90°		
Fastening screw	Step 1, fastening screw for connecting link	Initial tightening	40 Nm (30 ftlb.)		
Fastening screw	Step 2, fastening screw for connecting link	Final tightening	+90°		
Fastening screw	Step 1, fastening screw for connecting link	Initial tightening	40 Nm (30 ftlb.)		
Fastening screw	Step 2, fastening screw for connecting link	Final tightening	+90°		

Fastening nut		Tightening torque	25 Nm (19 ftlb.)		
Fastening screw	Protective plate	Tightening torque	20 Nm (15 ftlb.)		

WM 375519 REMOVING AND INSTALLING ATF PAN (ALL MODELS) > TECHNICAL VALUES > COMPONENT OVERVIEW OF CONTROL MECHANISM FOR TRANSMISSION

Fig 1: Overview Of Transmission Control Mechanism

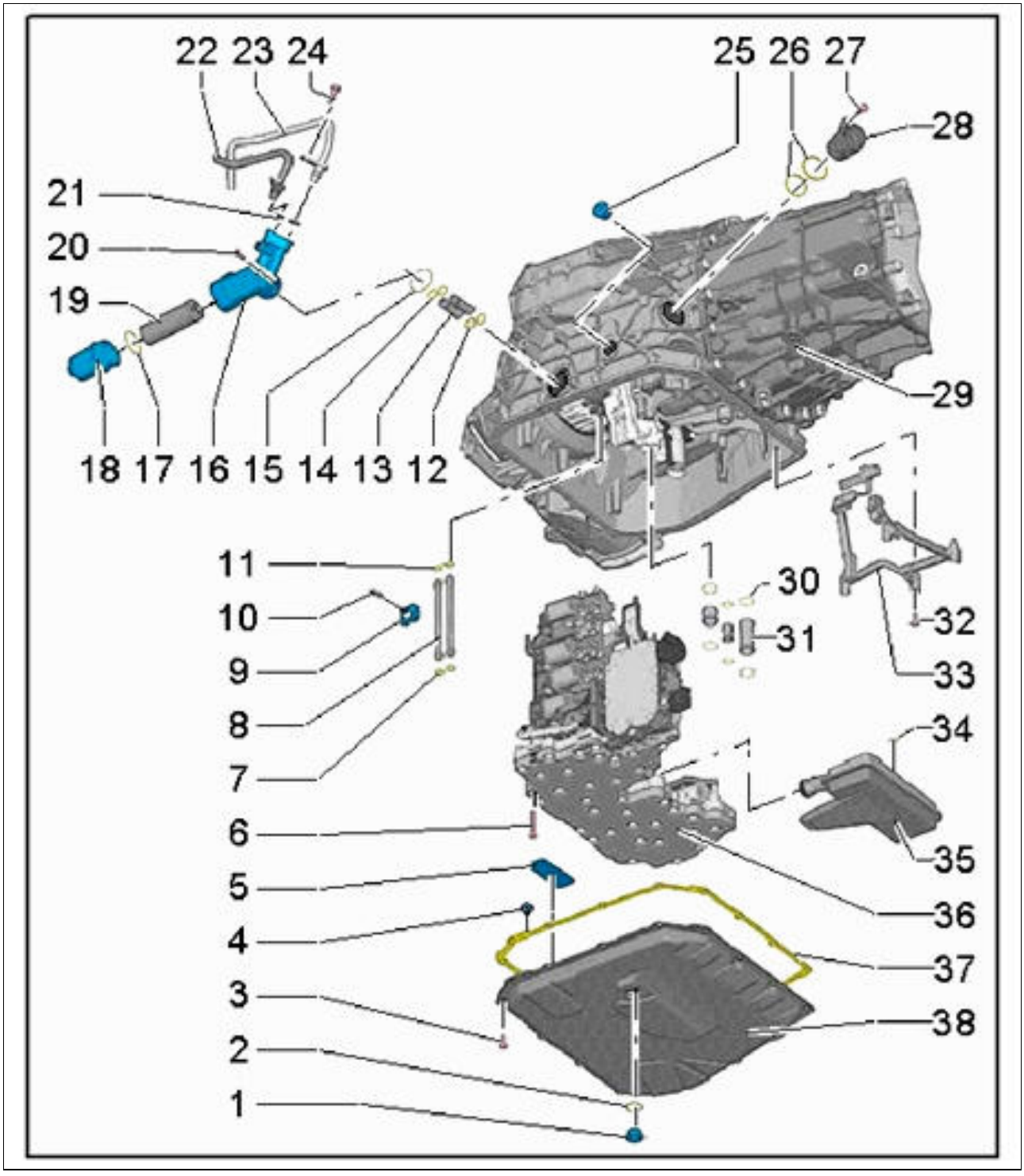

Courtesy of PORSCHE CARS NORTH AMERICA, INC.

1. ATF drain plug → **Tightening torque: 45 Nm (33 ftlb.)**
2. Sealing ring/**replace**
3. Fastening screw → **Tightening torque: 10 Nm (7.5 ftlb.)**
4. Expansion rivet

    1. In original equipment for securing seal to ATF oil pan
    2. Not absolutely necessary for installation
5. Magnet
    1. Clean magnet when changing ATF
6. Fastening screw → **Tightening torque: 10 Nm (7.5 ftlb.)**
7. O-rings/**replace**
8. ATF pressure pipes
9. Retaining bracket for ATF pressure pipes
10. Fastening screw → **Tightening torque: 10 Nm (7.5 ftlb.)**
11. O-rings/**replace**
12. O-rings/**replace**
13. ATF oil pipes
14. O-rings/**replace**
15. O-ring/**replace**
16. ATF filter housing
17. O-ring/**replace**
18. ATF filter housing cover
19. ATF spin-on filter
20. Fastening screw → **Tightening torque: 10 Nm (7.5 ftlb.)**
21. O-rings/**replace**
22. ATF return line
23. ATF supply line
24. Fastening screw → **Tightening torque: 20 Nm (15 ftlb.)**
25. ATF filler screw and inspection plug → **Tightening torque: 45 Nm (33 ftlb.)**
26. O-rings/not available individually
27. Fastening screw → **Tightening torque: 8 Nm (6 ftlb.)**
28. Connector housing with O-rings
29. Transmission housing
30. O-rings/not available individually
31. ATF oil pipes with O-rings

32. Fastening screw → **Tightening torque: 8 Nm (6 ftlb.)**

33. Cable guide for RPM sensors

34. O-ring/**replace**

35. ATF suction filter

36. Control mechanism for transmission

37. Seal/**replace**

38. ATF oil pan

WM 375519 REMOVING AND INSTALLING ATF PAN (ALL MODELS) > TECHNICAL VALUES > COMPONENT OVERVIEW - ATF OIL PAN

1... 15 - Fastening screws for ATF oil pan → **Tightening torque: 10 Nm (7.5 ftlb.)**

Fig 1: Locating ATF Oil Pan Screws

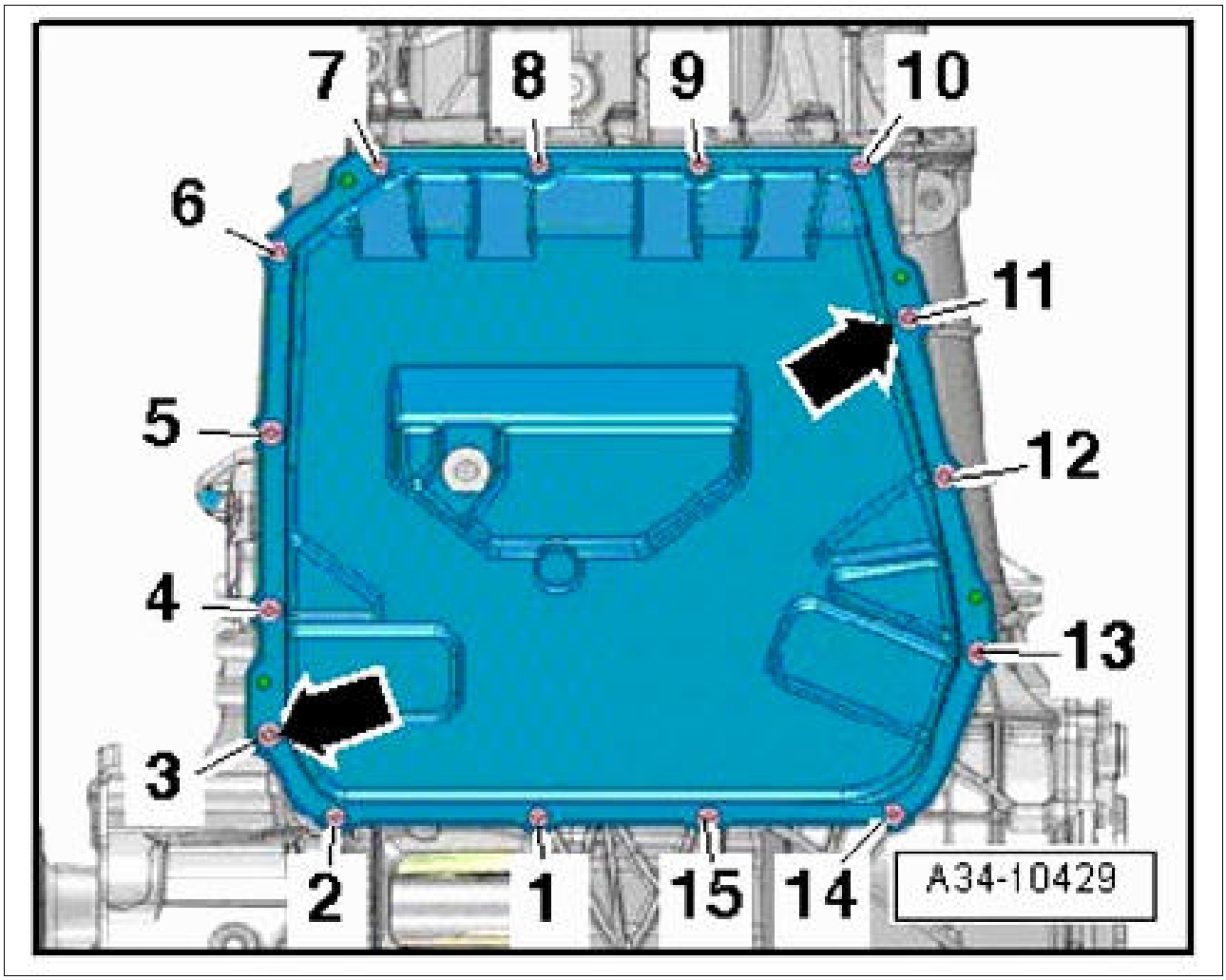

Courtesy of PORSCHE CARS NORTH AMERICA, INC.

1. ATF oil pan
2. Seal/**replace**
3. Expansion rivet
    1. In original equipment for securing seal to ATF oil pan
    2. Not absolutely necessary for installation

Fig 2: Locating ATF Oil Pan Seal

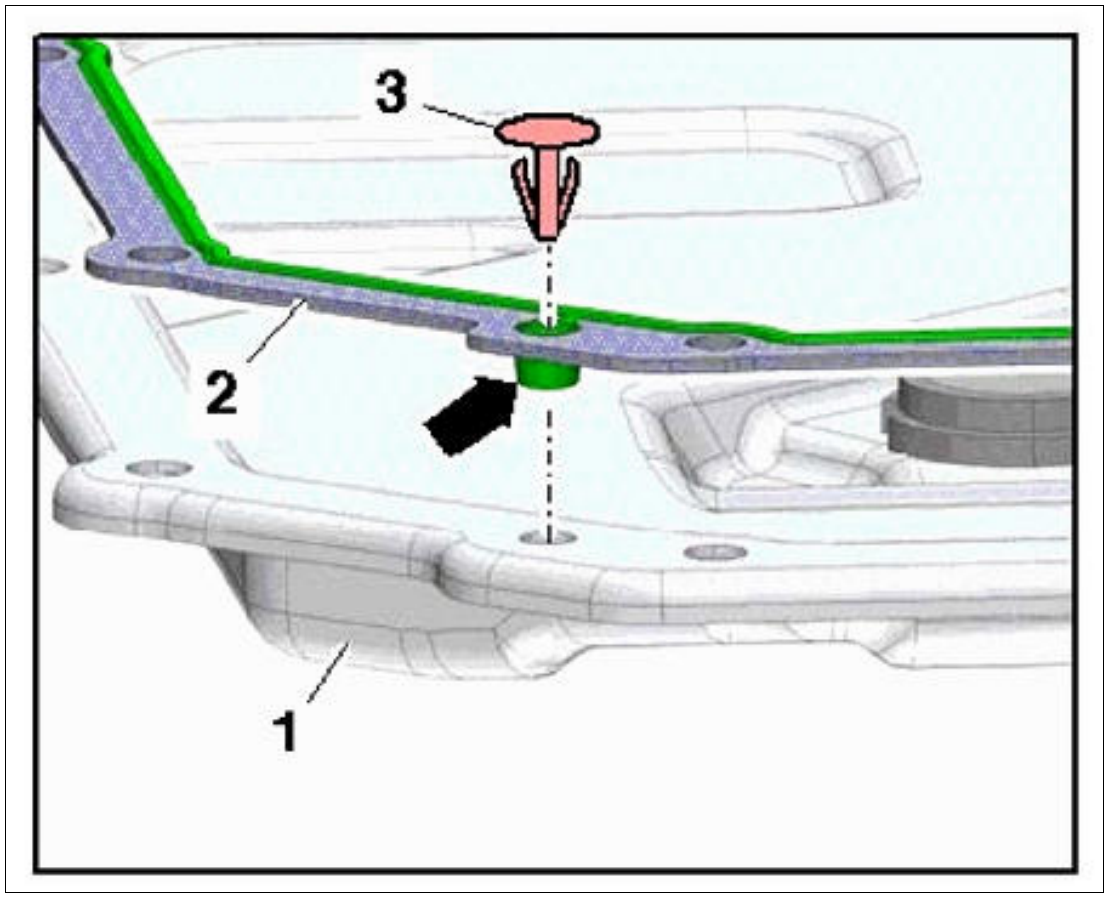

Courtesy of PORSCHE CARS NORTH AMERICA, INC.

arrows

- Magnetic strips
- Clean magnetic strips when removing ATF oil pan

Fig 3: Locating ATF Oil Pan Magnetic Strips

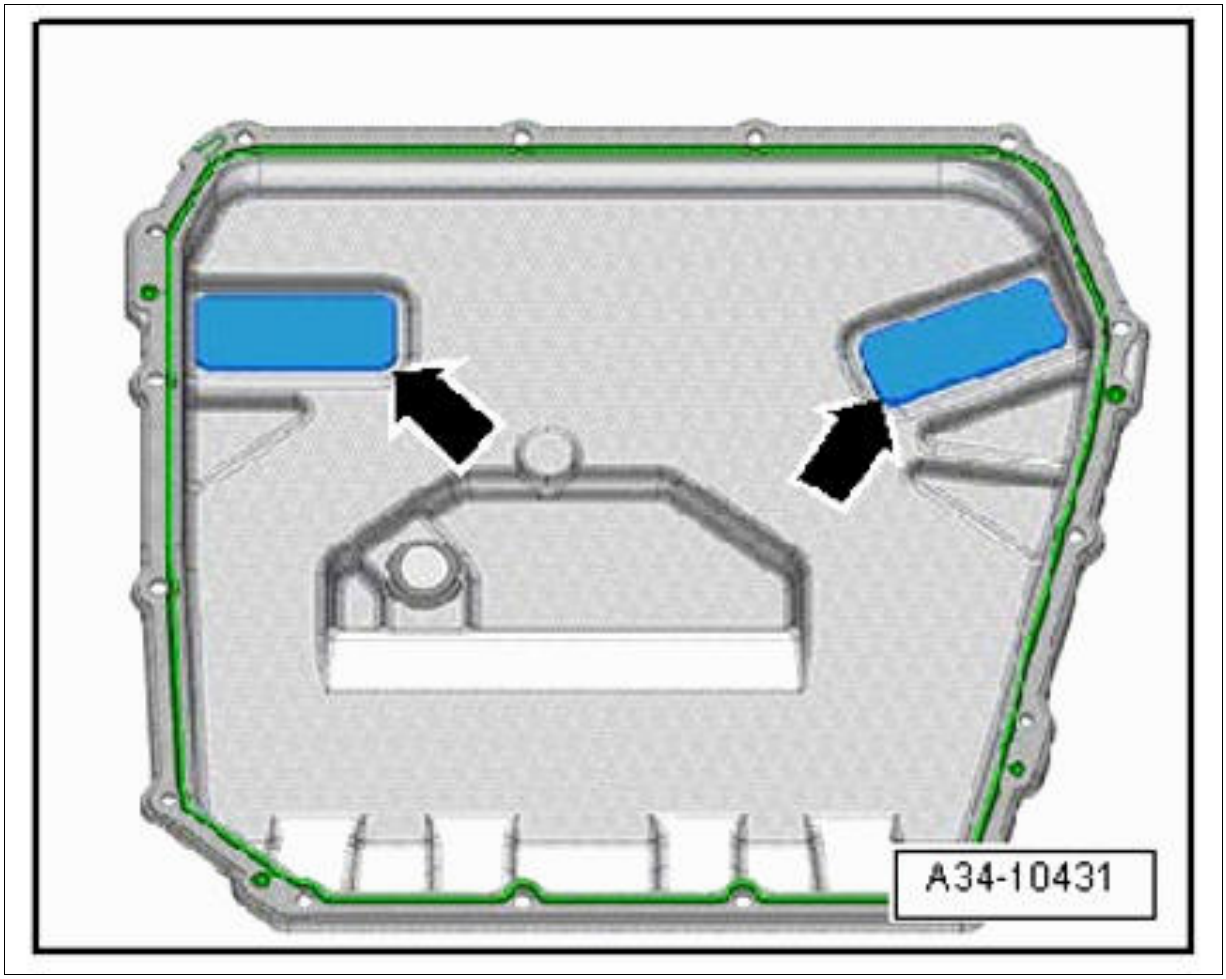

Courtesy of PORSCHE CARS NORTH AMERICA, INC.

Front-axle carrier

Fig 4: Identifying Front-Axle Carrier Screws

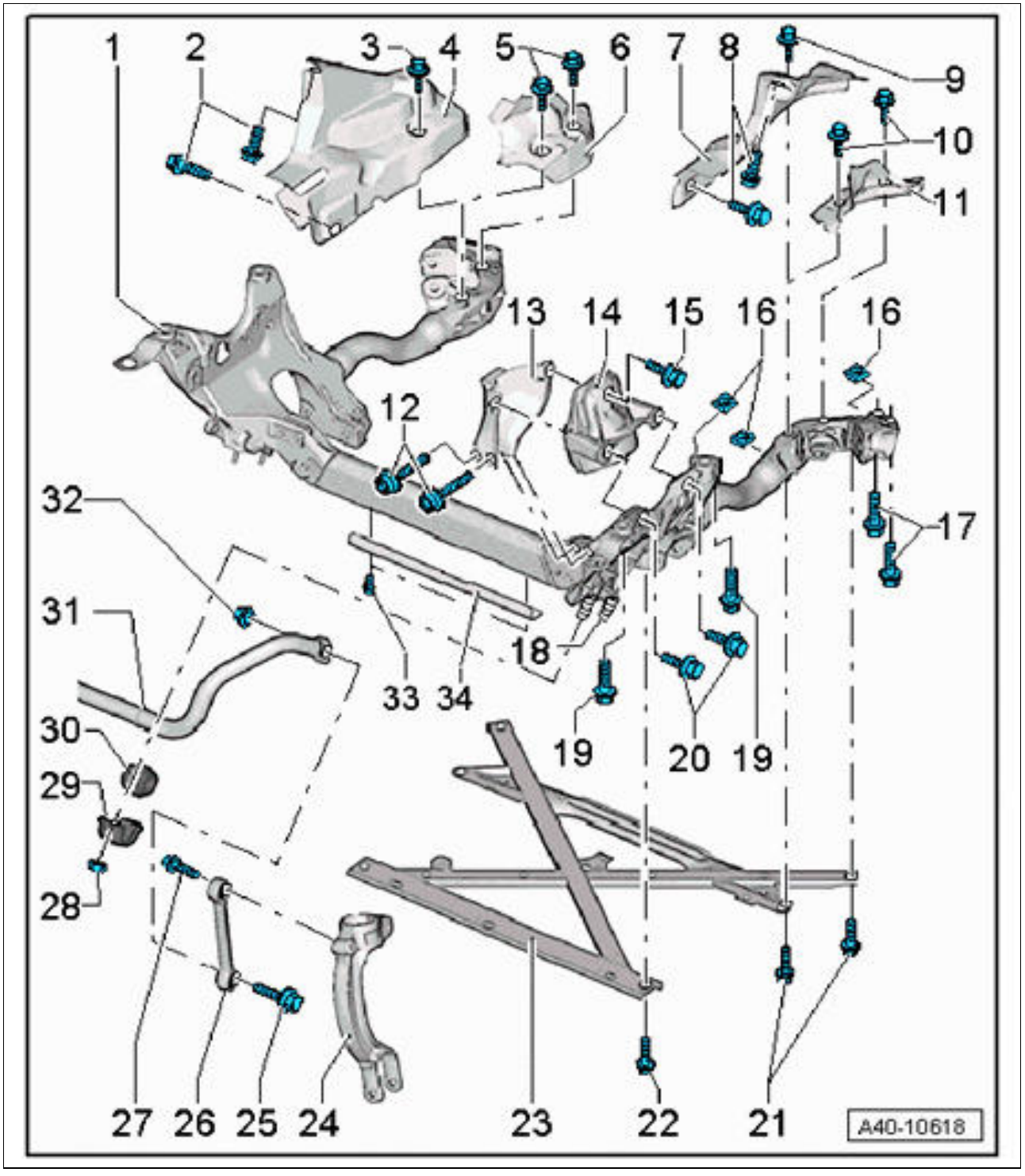

Courtesy of PORSCHE CARS NORTH AMERICA, INC.

1. Front-axle carrier
2. Fastening screws → **Tightening torque: 9 Nm (6.5 ftlb.)**
3. Fastening screw → **Tightening torque: 20 Nm (15 ftlb.)**
4. Right heat shield on front-axle carrier

5. Fastening screws → **Tightening torque: 20 Nm (15 ftlb.)**
6. Right heat shield over engine mount
7. Left heat shield on front-axle carrier
8. Fastening screws → **Tightening torque: 9 Nm (6.5 ftlb.)**
9. Fastening screw → **Tightening torque: 20 Nm (15 ftlb.)**
10. Fastening screws → **Tightening torque: 20 Nm (15 ftlb.)**
11. Left heat shield on engine mount
12. Fastening screws/replace → **Tightening torque: 30 Nm (22 ftlb.)**
13. Retainer plate for engine mount
14. Engine mount
15. Fastening screw/replace → **Initial tightening: 90 Nm (67 ftlb.)** → **Final tightening: +90°**
16. Square nut/**replace**
17. Fastening screws/replace → **Initial tightening: 115 Nm (85 ftlb.)** → **Final tightening: +90°**
18. Stud/**replace if damaged**
19. Fastening screw/replace → **Initial tightening: 115 Nm (85 ftlb.)** → **Final tightening: +90°**
20. Fastening screws → **Tightening torque: 55 Nm (41 ftlb.)**
21. Rear fastening screws to cross-strut/replace → **Initial tightening: 90 Nm (67 ftlb.)** → **Final tightening: +135°**
22. Front fastening screw to cross-strut/replace → **Initial tightening: 90 Nm (67 ftlb.)** → **Final tightening: +90°**
23. Cross-strut for front-axle carrier
24. Shock absorber fork
25. Fastening screw/replace → **Initial tightening: 40 Nm (30 ftlb.)** → **Final tightening: +90°**
    1. Must be tightened at empty weight position
26. Connecting link
27. Fastening screw/replace → **Initial tightening: 40 Nm (30 ftlb.)** → **Final tightening: +90°**
    1. Must be tightened at empty weight position
28. Fastening nut/replace → **Tightening torque: 25 Nm (19 ftlb.)**
29. Clip
30. Rubber mounting
    1. Opening in the rubber mounting must be facing the front-axle carrier during installation.

2. The anti-roll bar and rubber mounting be free of grease during assembly.

31. Anti-roll bar
32. Fastening nut
33. Fastening screw for protective plate → **Tightening torque: 20 Nm (15 ftlb.)**
34. Protective plate

Tightening sequence for front-axle carrier

Fig 5: Identifying Front-Axle Carrier Components

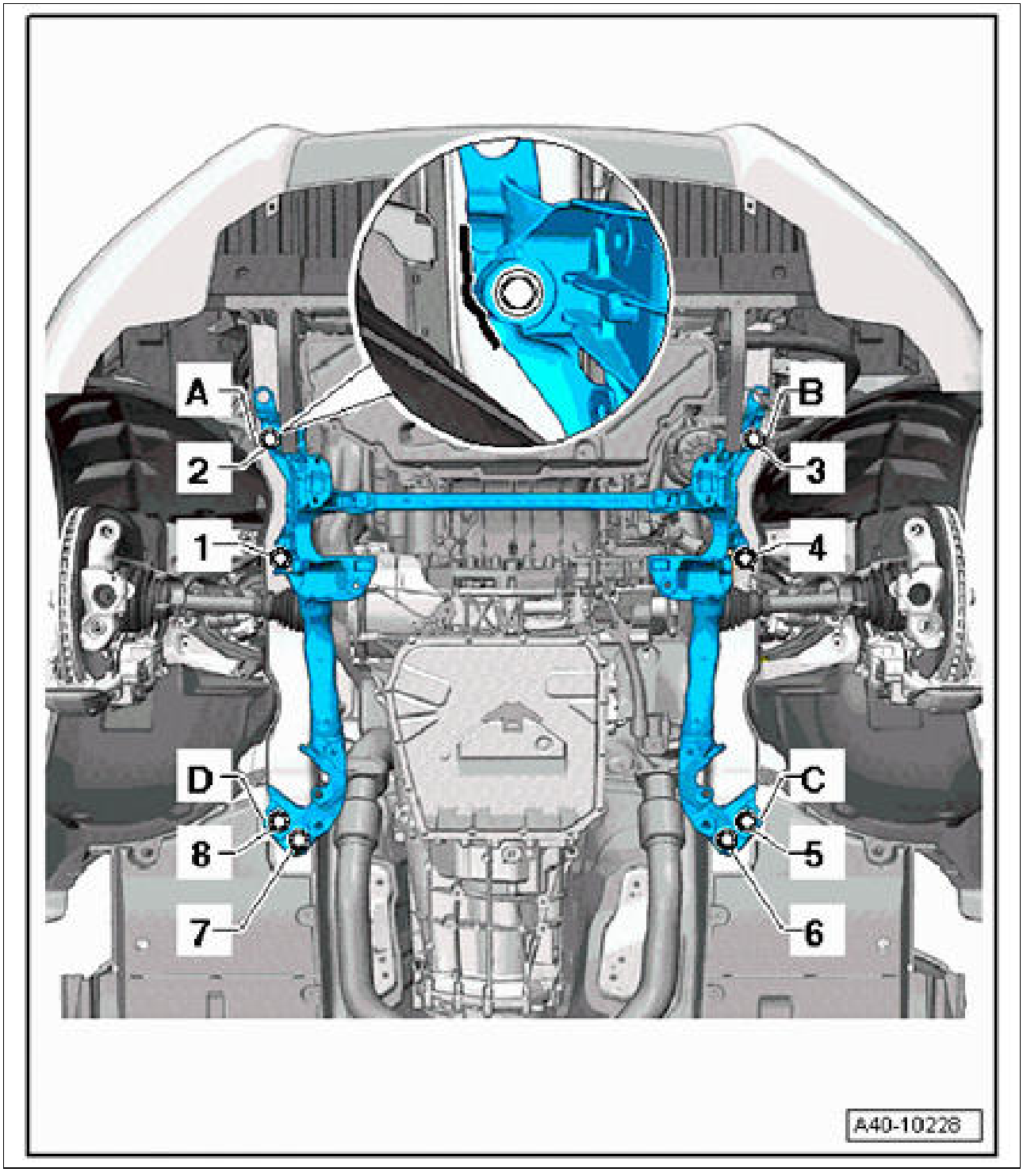

Courtesy of PORSCHE CARS NORTH AMERICA, INC.

A - D - Mark installation position before removal

1 to 8 - Fastening screws on front-axle carrier

WM 375519 REMOVING AND INSTALLING ATF PAN (ALL MODELS) > PRELIMINARY

WORK

1. Move selector lever to position **"P"** .
2. Remove cover for center underbody. →Removing cover for center underbody

WM 375519 REMOVING AND INSTALLING ATF PAN (ALL MODELS) > REMOVING ATF PAN

WARNING: ATF!

- *Possible danger of injury or damage (swollen hoses, skin irritation, danger of slipping, etc.)*

→ Before lines are opened, place a cloth underneath them!

→ Components that come into contact with ATF must be cleaned IMMEDIATELY with water!

→ Take appropriate protective measures (e.g. use gloves, safety goggles, oil binding material)

→ Collect emerging ATF!

WARNING: Danger of objects or loads falling down

- *Risk of squashing or crushing*

→ Secure components to prevent them from falling down.

WARNING: Hot fluid

- *Danger of scalding*

→ Let the fluid cool down.

→ Wear personal protective gear.

NOTE: Dirt and contamination

- *Risk of damage to units or components*

→ Protect components from dirt and contamination.

→ Clean or replace dirty components.

Information

- The engine must not be started if there is no ATF in the transmission.
- Risk of damage to the transmission.

1. Remove cross-strut for front-axle carrier.
    1. 1.1. Unscrew fastening screws **-arrows -** .
    2. 1.2. When removing the cross-strut, unclip line **-1-** .

    Fig 1: Locating Cross-Strut Screws

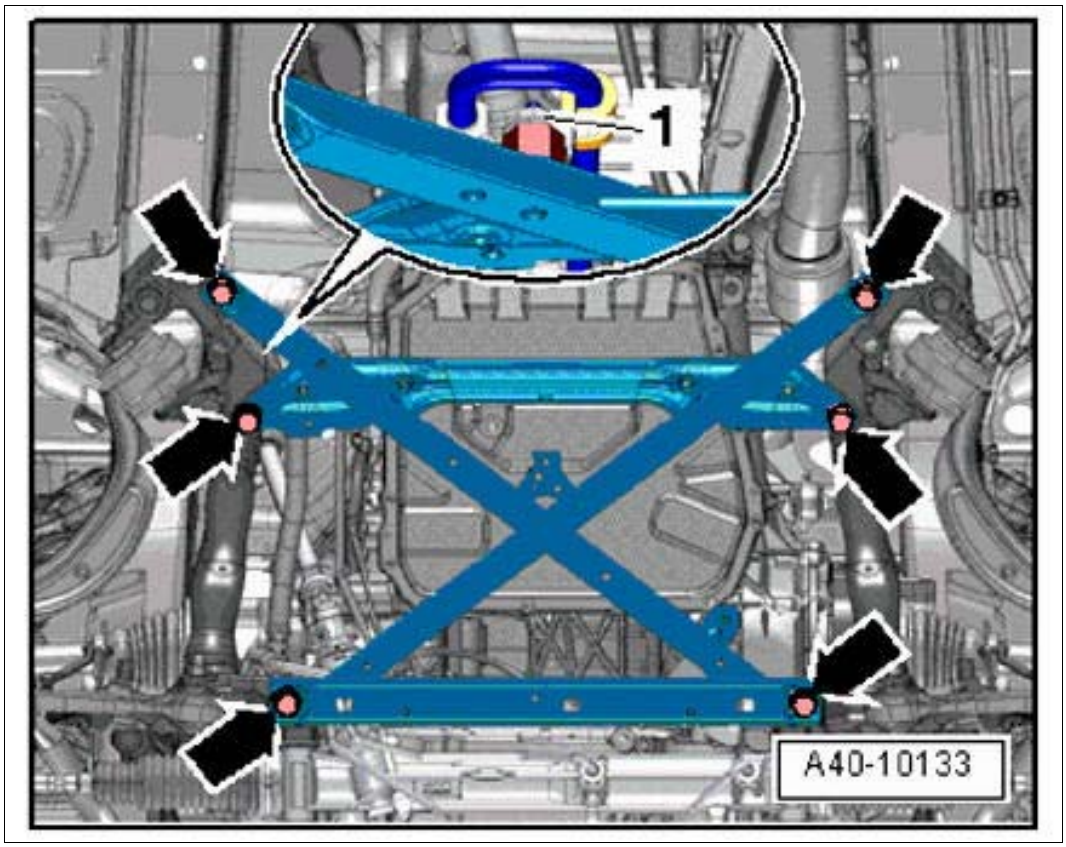

Courtesy of PORSCHE CARS NORTH AMERICA, INC.

2. Place a drip pan underneath.
3. Unscrew ATF oil drain plug **-arrow-** on the ATF oil pan and drain ATF.

Fig 2: Locating ATF Drain Plug Screw

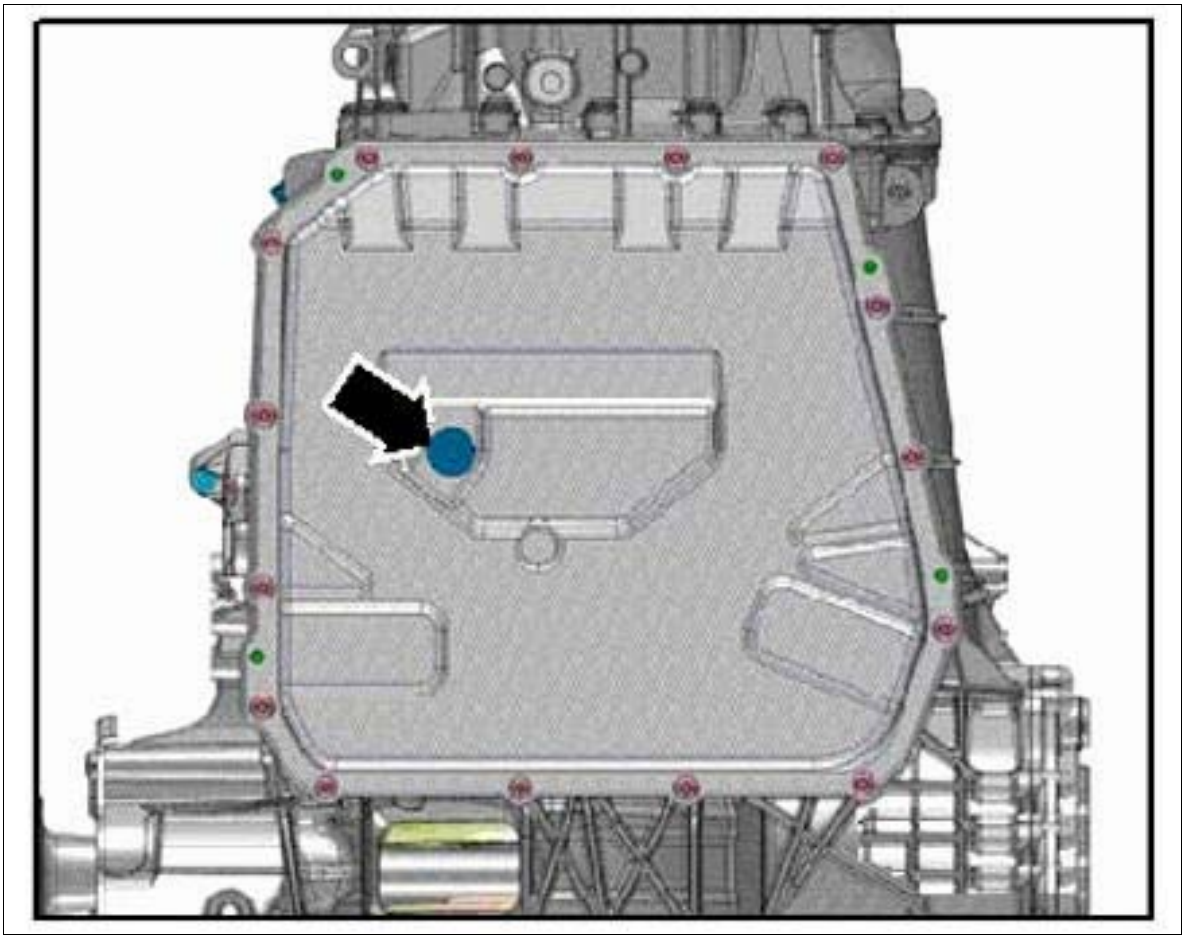

Courtesy of PORSCHE CARS NORTH AMERICA, INC.

4. Unscrew fastening screws **-1... 15-** in diagonally opposite sequence and remove ATF pan.

Fig 3: ATF Oil Pan Screws Loosening Sequence

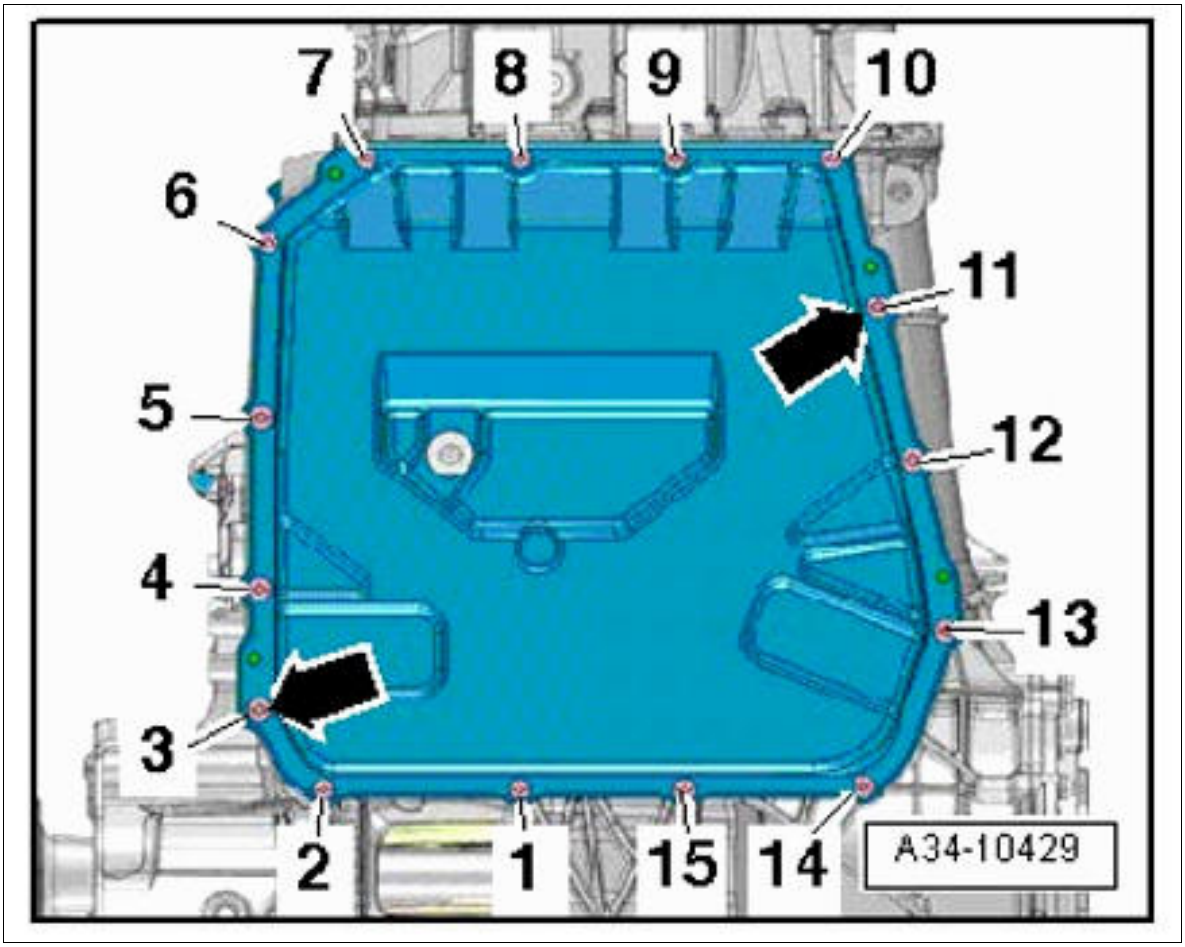

Courtesy of PORSCHE CARS NORTH AMERICA, INC.

5. Remove old seal on the ATF pan.
6. Place ATF pan on a clean surface.

WM 375519 REMOVING AND INSTALLING ATF PAN (ALL MODELS) > INSTALLING ATF PAN

NOTE: Dirt and contamination

- *Risk of damage to units or components*

→ Protect components from dirt and contamination.

→ Clean or replace dirty components.

Information

- The engine must not be started if there is no ATF in the transmission.

- Risk of damage to the transmission.

1. **Fit a new** seal.

    1. 1.1. Clean sealing face on the ATF pan.
    2. 1.2. Insert nubs **-arrow-** of the **new** seal **-2-** into the ATF pan **-1-** .

    Fig 1: Locating ATF Pan Seal

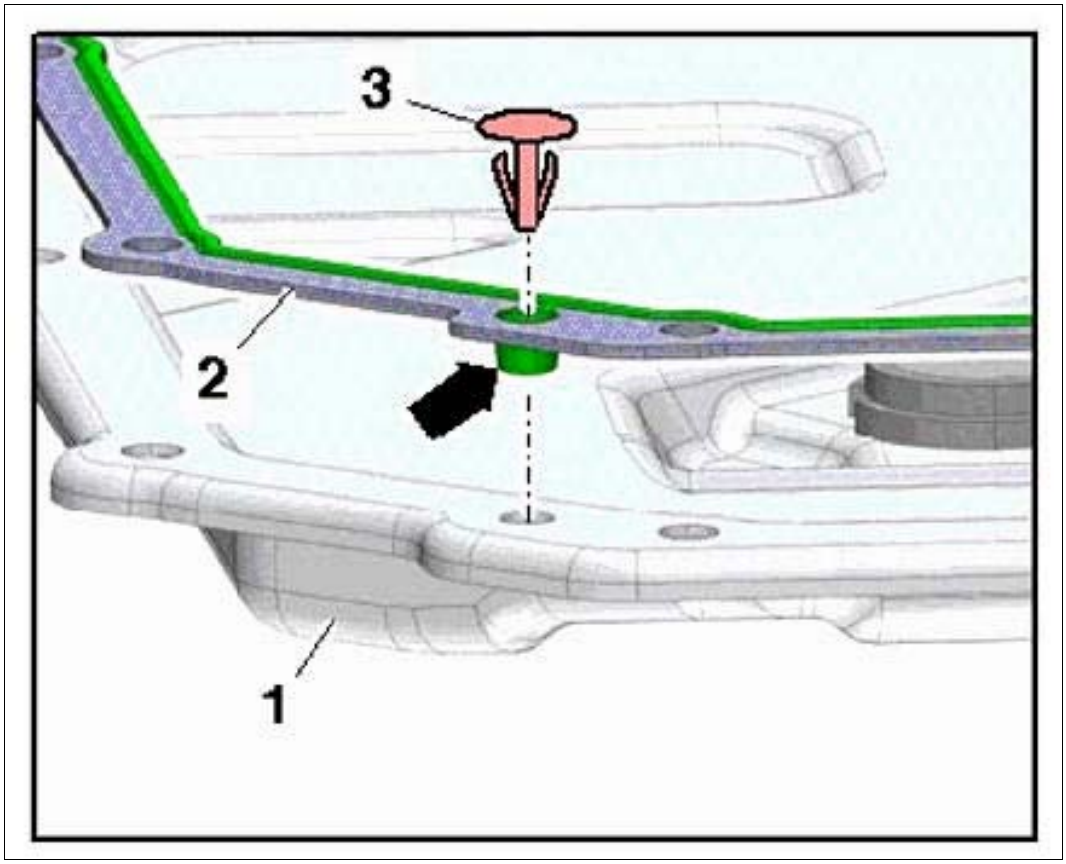

Courtesy of PORSCHE CARS NORTH AMERICA, INC.

2. Clean the magnetic strips **-arrows-** and check that they are fitted over the entire surface in the ATF pan.

Fig 2: Locating ATF Oil Pan Magnetic Strips

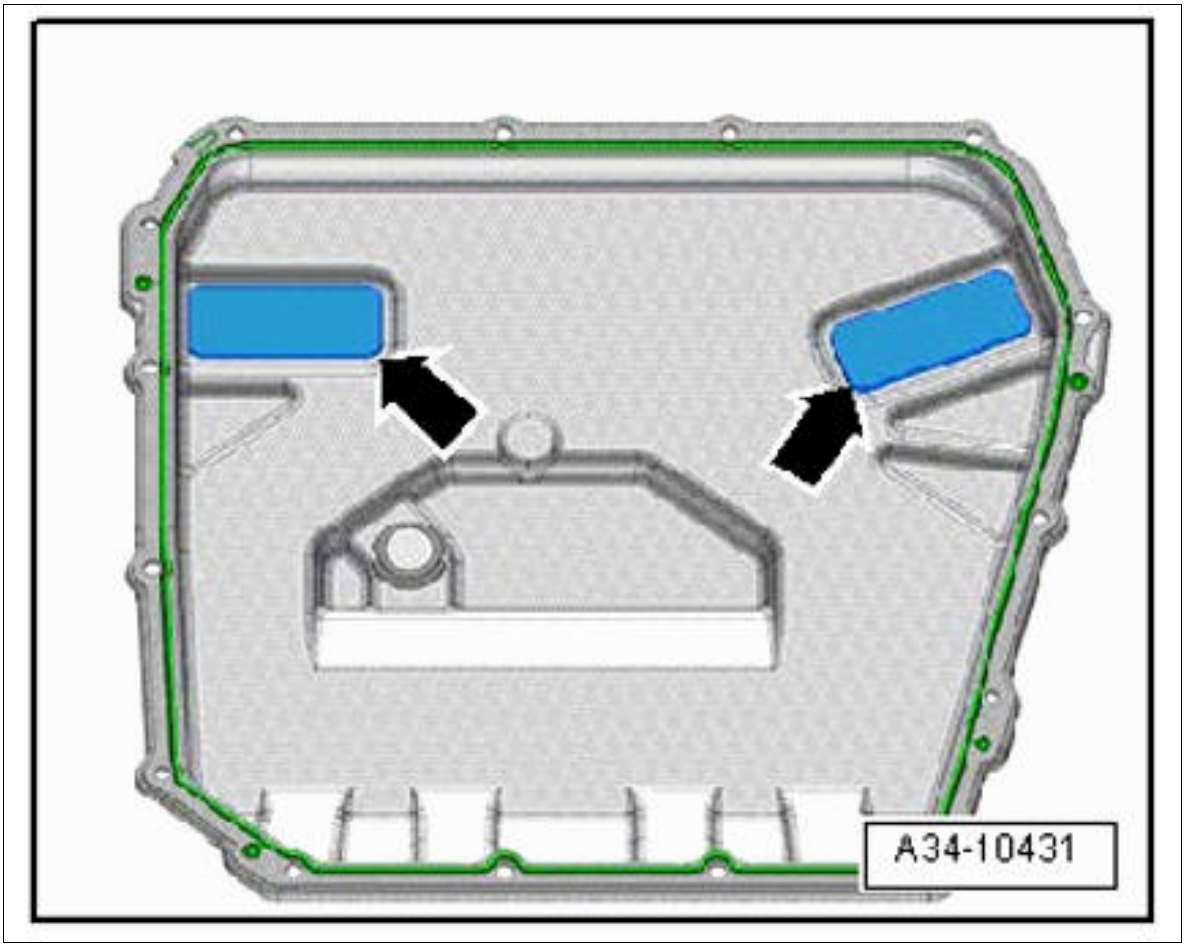

Courtesy of PORSCHE CARS NORTH AMERICA, INC.

3. Install ATF pan.
    1. 3.1. Position ATF pan.
    2. 3.2. Fit fastening screws **-1... 15-** by hand and screw in as far as they will go.
    3. 3.3. Tighten fastening screws. **Tightening torque 10 Nm (7.5 ftlb.)**

Fig 3: ATF Oil Pan Screws Tightening Sequence

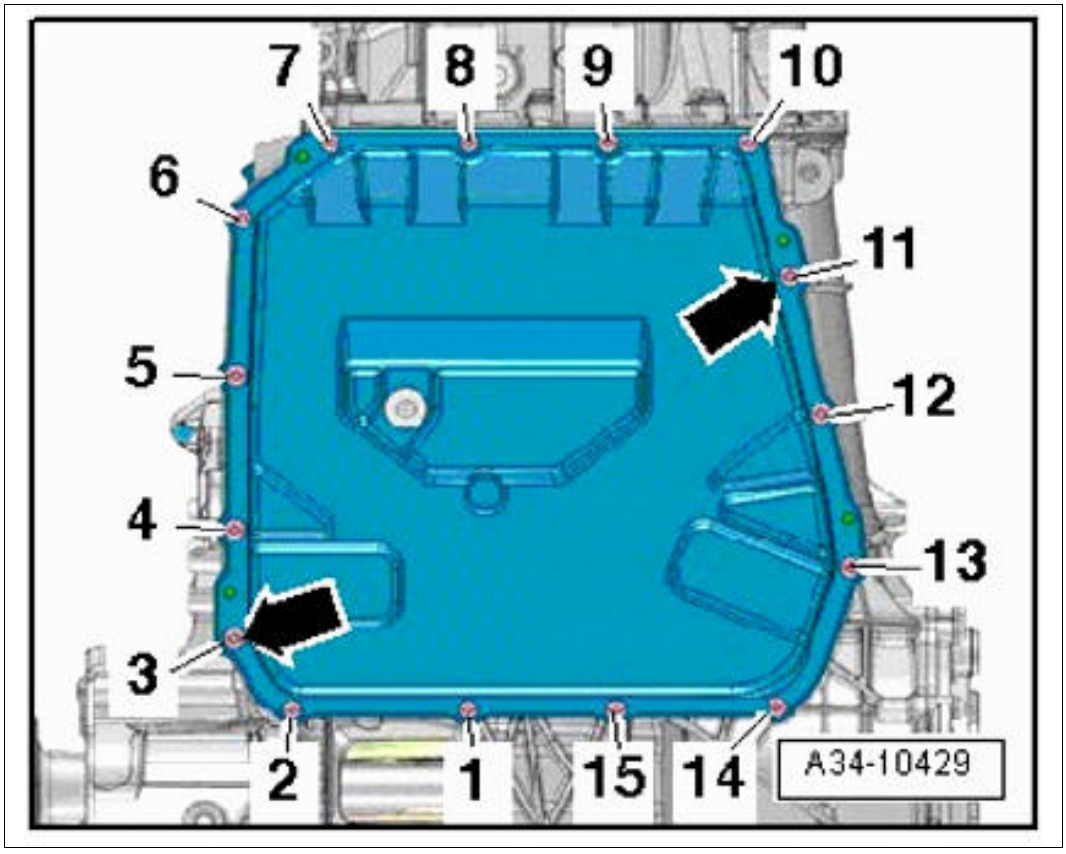

Courtesy of PORSCHE CARS NORTH AMERICA, INC.

4. Fit and tighten ATF drain plug. **Tightening torque 45 Nm (33 ftlb.)**

Fig 4: Locating ATF Drain Plug

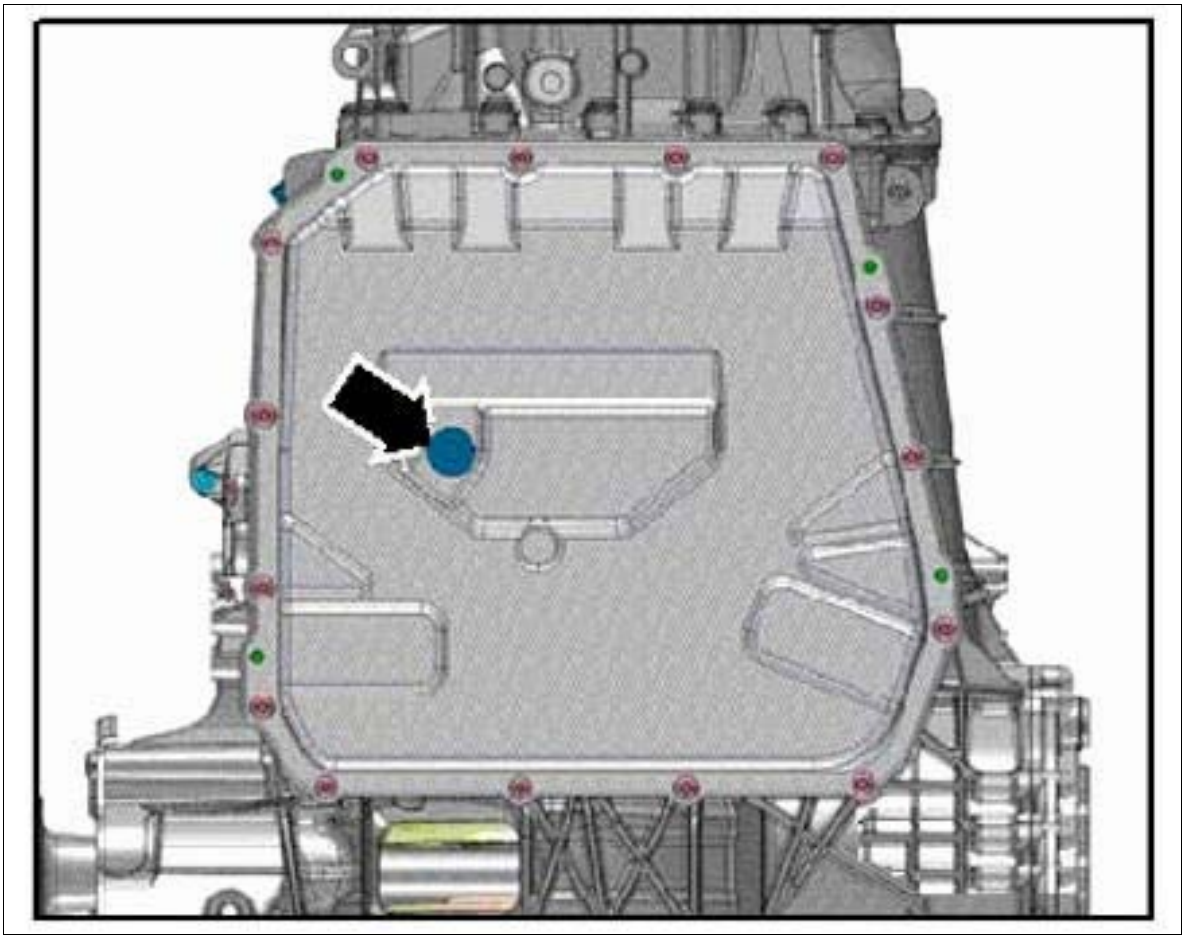

Courtesy of PORSCHE CARS NORTH AMERICA, INC.

5. Install cross-strut for front-axle carrier.
    1. 5.1. Clip in line **-1-** .
    2. 5.2. **Fit new** fastening screws **-2-** and **-3-** and screw in as far as they will go.
    3. 5.3. **Tighten new** fastening screws **-2-** .

       Step 1 **Initial tightening 90 Nm (67 ftlb.)**

       Step 2 **Final tightening +135°**
    4. 5.4. **Tighten new** fastening screws **-3-** .

       Step 1 **Initial tightening 90 Nm (67 ftlb.)**

       Step 2 **Final tightening +90°**

Fig 5: Identifying Cross-Strut Screws

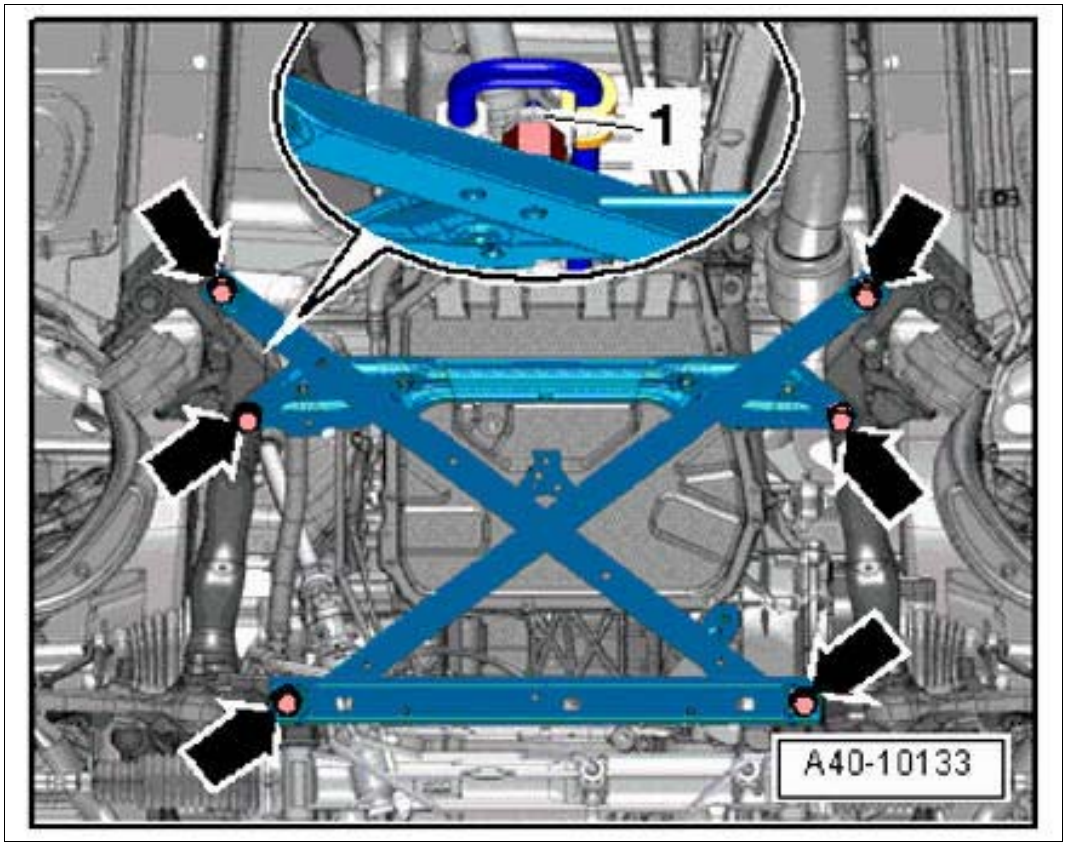

Courtesy of PORSCHE CARS NORTH AMERICA, INC.

WM 375519 REMOVING AND INSTALLING ATF PAN (ALL MODELS) > SUBSEQUENT WORK

1. Top up ATF. → 370235 CHECKING AND TOPPING UP ATF
2. Install cover for center underbody. → Installing cover for center underbody

WM 386019 REMOVING AND INSTALLING ATF COOLER (ALL MODELS) > TECHNICAL VALUES

Location	Description	Type	Basic value	Tolerance 1	Tolerance 2
Fastening screw	Charge-air cooler to radiator	Tightening torque	7 Nm (5 ftlb.)		
Fastening screw	Radiator holder to lower lock carrier	Tightening torque	5 Nm (3.5 ftlb.)		

WM 386019 REMOVING AND INSTALLING ATF COOLER (ALL MODELS) > INFORMATION > COMPONENT OVERVIEW OF RADIATOR

Fig 1: Overview Of Radiator

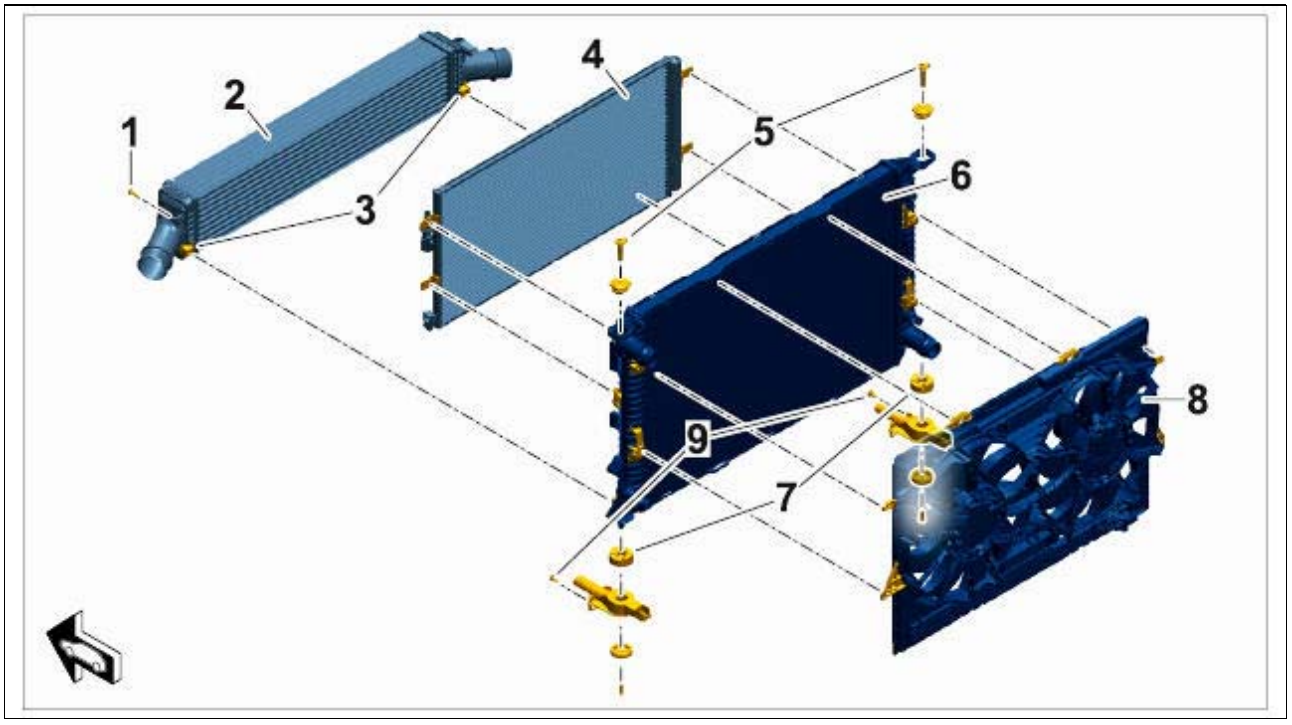

Courtesy of PORSCHE CARS NORTH AMERICA, INC.

1. Fastening screw → **Tightening torque: 7 Nm (5 ftlb.)**
2. Charge-air cooler
3. Charge-air cooler holder to radiator
4. Condenser
5. Retaining pins with rubber buffer to radiator

6. Radiator and ATF cooler
    1. The ATF cooler is integrated as a closed system in the radiator.
7. Rubber buffer, radiator to lower lock carrier
8. Cooling fan housing
9. Fastening screw securing holder to lower lock carrier → **Tightening torque: 5 Nm (3.5 ftlb.)**

WM 386019 REMOVING AND INSTALLING ATF COOLER (ALL MODELS) > REMOVING ATF COOLER

> *WARNING: ATF!*
>
> - *Possible danger of injury or damage (swollen hoses, skin irritation, danger of slipping, etc.)*

→ Before lines are opened, place a cloth underneath them!

→ Components that come into contact with ATF must be cleaned IMMEDIATELY with water!

→ Take appropriate protective measures (e.g. use gloves, safety goggles, oil binding material)

→ Collect emerging ATF!

Information

- The ATF cooler is integrated in the radiator as a closed system and cannot be replaced separately.
    1. Remove radiator. → Removing radiator

WM 386019 REMOVING AND INSTALLING ATF COOLER (ALL MODELS) > INSTALLING ATF COOLER

Information

- The ATF cooler is integrated in the radiator as a closed system and cannot be replaced separately.
    1. Install radiator. → Installing radiator

WM 386019 REMOVING AND INSTALLING ATF COOLER (ALL MODELS) > SUBSEQUENT WORK

1. Check and top up ATF. → 370235 CHECKING AND TOPPING UP ATF

WM 386219 REMOVING AND INSTALLING LINE FOR ATF COOLING (ALL MODELS) > TECHNICAL VALUES

Location	Description	Type	Basic value	Tolerance 1	Tolerance 2
Fastening screw for starter (on engine side)		Tightening torque	65 Nm (48 ftlb.)		
Fastening screw for starter (on transmission side)	Step 1	Tightening torque	30 Nm (22 ftlb.)		
Fastening screw for starter (on transmission side)	Step 2	Torque angle	+105°		
Fastening nut securing B+ wiring harness to starter		Tightening torque	15 Nm (11 ftlb.)		
Fastening screw	Retaining bracket for engine mount	Tightening torque	30 Nm (22 ftlb.)		
Fastening screw	Engine support	Tightening torque	40 Nm (30 ftlb.)		
Fastening screw	Heat shield	Tightening torque	10 Nm (7.5 ftlb.)		
Fastening screws	Step 1, engine mount	Tightening torque	90 Nm (67 ftlb.)		
Fastening screw	Step 2, engine mount	Torque angle	+90°		
Fastening screw	Front-axle carrier to engine mount	Tightening torque	55 Nm (41 ftlb.)		
ATF filter housing cover		Tightening torque	8 Nm (6 ftlb.)		
Fastening screw	ATF lines to ATF filter housing	Tightening torque	20 Nm (15 ftlb.)		
Fastening screw	ATF filter housing to transmission	Tightening torque	10 Nm (7.5 ftlb.)		
Fastening screw securing connection piece for ATF lines to transmission	M8 x 25	Tightening torque	20 Nm (15 ftlb.)		

Fastening screws	ATF lines to radiator	Tightening torque	5 Nm (3.5 ftlb.)		
Union nuts	ATF line connection point	Tightening torque	29 Nm (21 ftlb.)		
Fastening screw	ATF line to oil pan	Tightening torque	8 Nm (6 ftlb.)		
Fastening screw	ATF line to oil pan	Tightening torque	8 Nm (6 ftlb.)		

WM 386219 REMOVING AND INSTALLING LINE FOR ATF COOLING (ALL MODELS) > TECHNICAL VALUES > ASSEMBLY OVERVIEW - STARTER

Fig 1: Overview Of Starter (V6 Diesel Engine)

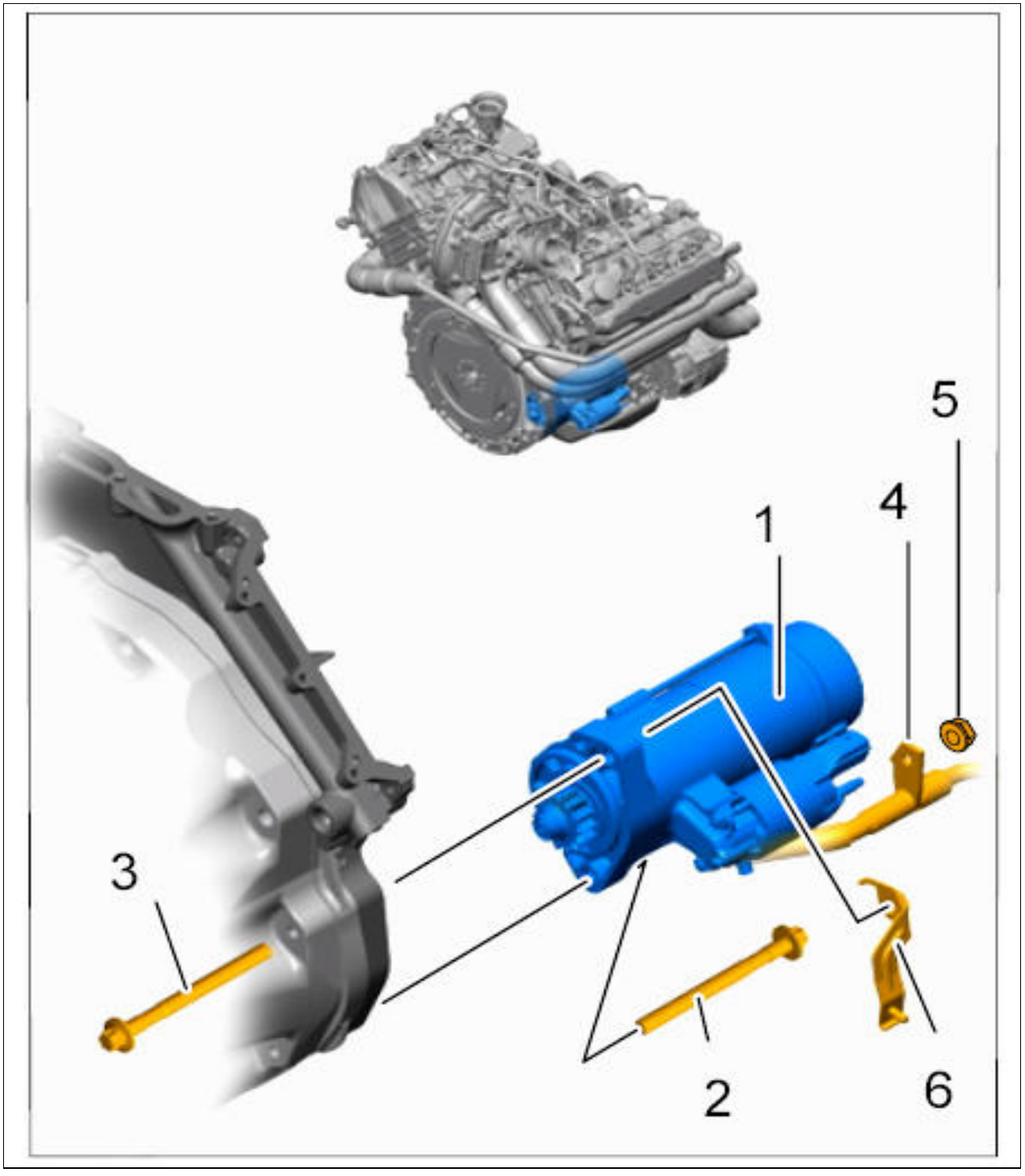

Courtesy of PORSCHE CARS NORTH AMERICA, INC.

1. Starter
2. Fastening screw → **Tightening torque: 65 Nm (48 ftlb.)**
3. Fastening screw/**replace** → **Tightening torque: 30 Nm (22 ftlb.)** → **Torque angle: +105°**
4. B+ wiring harness

5. Nut → **Tightening torque: 15 Nm (11 ftlb.)**

6. Holder

    1. Secure with starter to engine housing

WM 386219 REMOVING AND INSTALLING LINE FOR ATF COOLING (ALL MODELS) > TECHNICAL VALUES > ASSEMBLY OVERVIEW - ANCILLARY UNIT MOUNTS

Fig 1: Overview Of Ancillary Unit Mounts

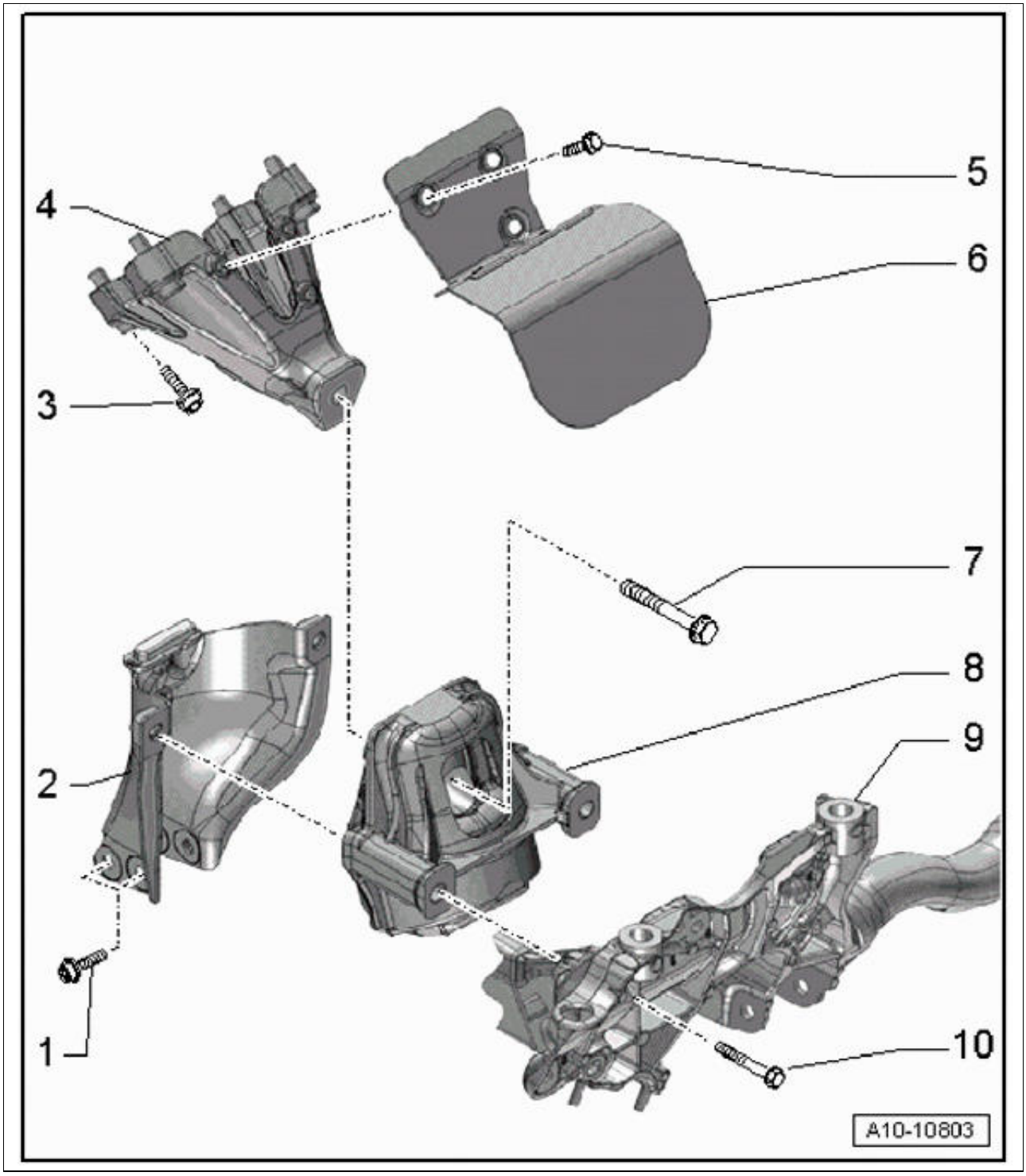

Courtesy of PORSCHE CARS NORTH AMERICA, INC.

1. Fastening screw → **Tightening torque: 30 Nm (22 ftlb.)**
2. Retaining bracket for engine mount
    1. Replace retaining bracket if engine mount is defective
3. Fastening screw → **Tightening torque: 40 Nm (30 ftlb.)**

4. Engine support
5. Fastening screw → **Tightening torque: 10 Nm (7.5 ftlb.)**
6. Heat shield
7. Fastening screws/**replace** → **Tightening torque: 90 Nm (67 ftlb.)** → **Torque angle: +90°**
8. Engine mount
    1. With solenoid valve for electrohydraulic engine mounting
9. Front-axle carrier
10. Fastening screw → **Tightening torque: 55 Nm (41 ftlb.)**

WM 386219 REMOVING AND INSTALLING LINE FOR ATF COOLING (ALL MODELS) > TECHNICAL VALUES > COMPONENT OVERVIEW - ATF FILTER

Fig 1: Identifying ATF Filter, Lines And Housing

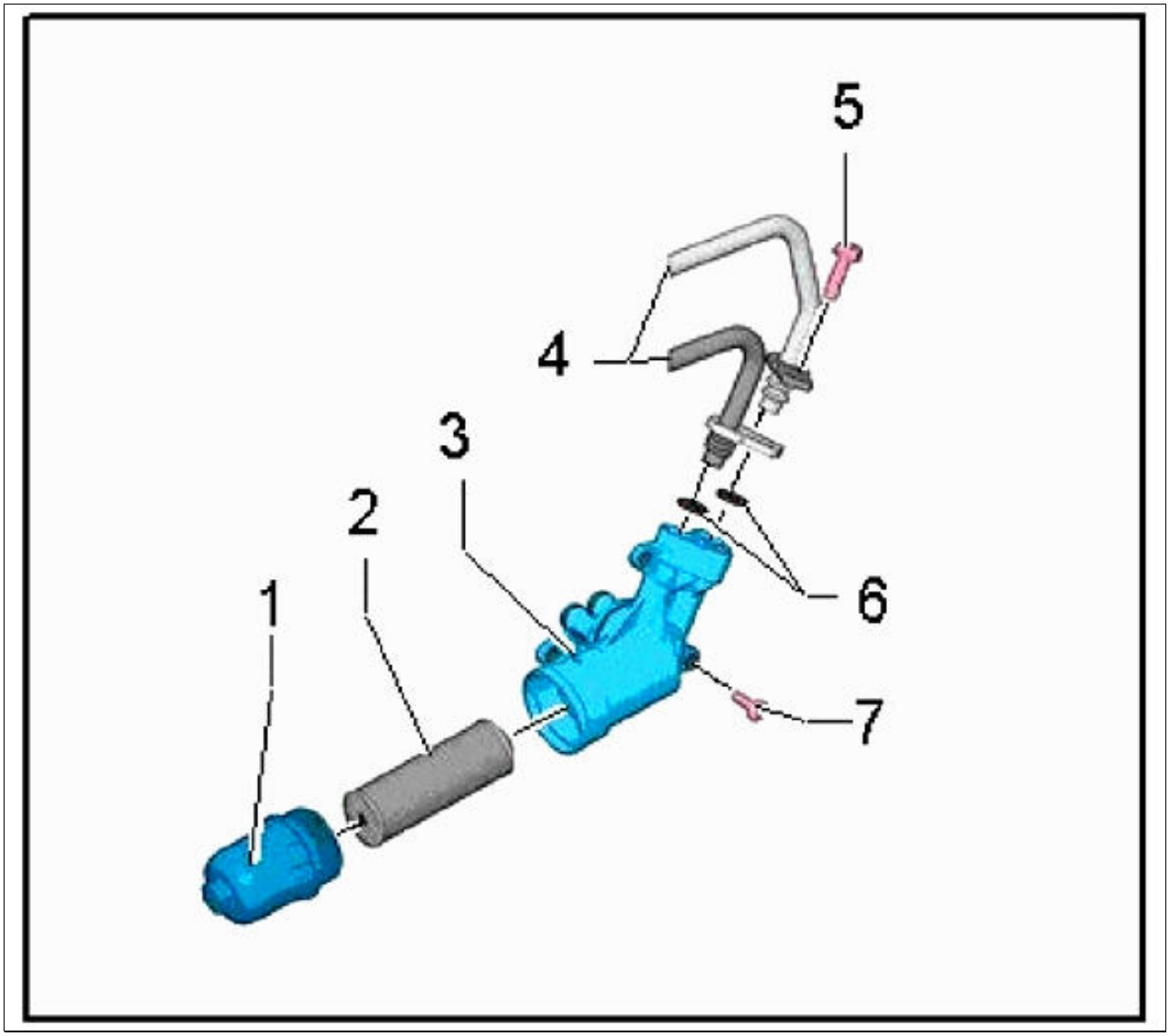

Courtesy of PORSCHE CARS NORTH AMERICA, INC.

1. ATF filter housing cover → **Tightening torque: 8 Nm (6 ftlb.)**
2. ATF filter
3. ATF filter housing
4. ATF lines
5. Fastening screw securing ATF lines → **Tightening torque: 20 Nm (15 ftlb.)**
6. Sealing rings/**replace**
7. Fastening screw for ATF filter housing → **Tightening torque: 10 Nm (7.5 ftlb.)**

WM 386219 REMOVING AND INSTALLING LINE FOR ATF COOLING (ALL MODELS) >

TECHNICAL VALUES > ATF LINES

Connection piece for ATF supply and return lines to transmission → **Tightening torque: 20 Nm (15 ftlb.)**

ATF lines

Fig 1: Identifying ATF Lines

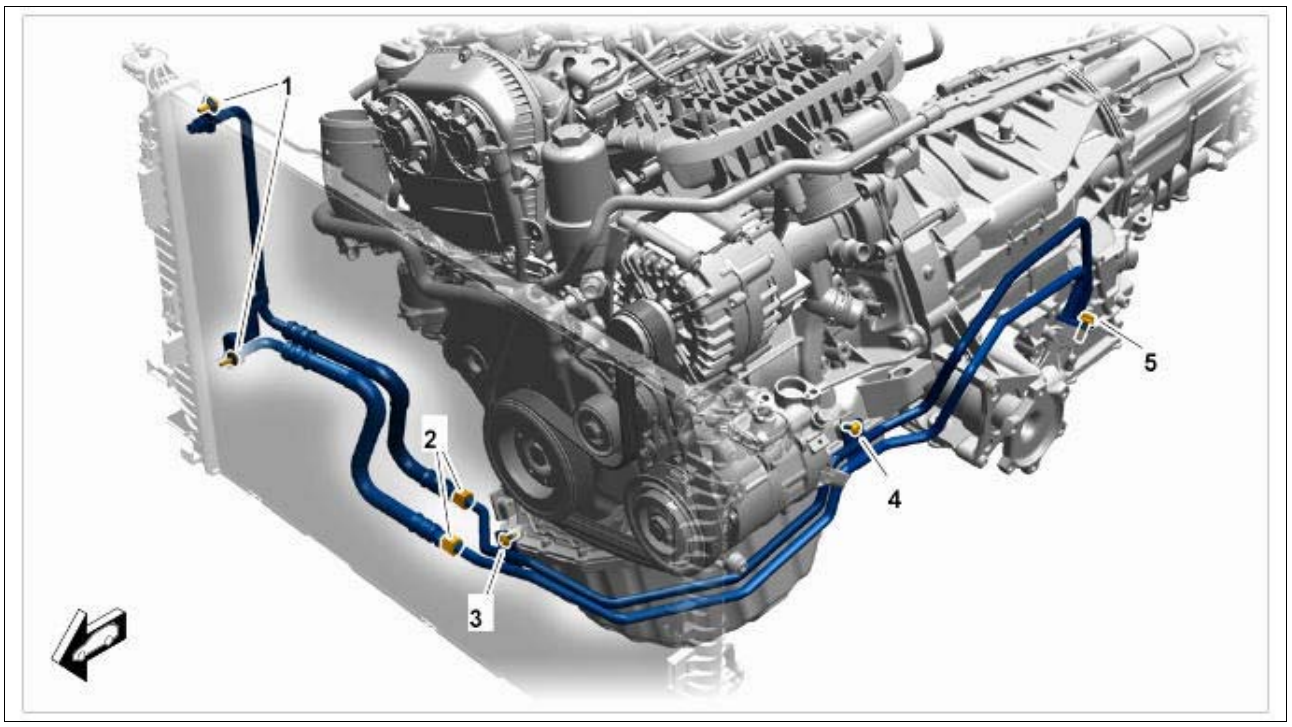

Courtesy of PORSCHE CARS NORTH AMERICA, INC.

1. Fastening screws securing ATF lines to radiator → **Tightening torque: 5 Nm (3.5 ftlb.)**
2. Union nuts securing connection point for ATF lines → **Tightening torque: 29 Nm (21 ftlb.)**
3. Fastening screw → **Tightening torque: 8 Nm (6 ftlb.)**
4. Fastening screw → **Tightening torque: 8 Nm (6 ftlb.)**
5. Fastening screw

WM 386219 REMOVING AND INSTALLING LINE FOR ATF COOLING (ALL MODELS) > PRELIMINARY WORK

1. Remove underbody cover. → Removing cover for front underbody

WM 386219 REMOVING AND INSTALLING LINE FOR ATF COOLING (ALL MODELS) > REMOVING LINE FOR ATF COOLING

WARNING: ATF!

- *Possible danger of injury or damage (swollen hoses, skin irritation, danger of slipping, etc.)*

→ Before lines are opened, place a cloth underneath them!

→ Components that come into contact with ATF must be cleaned IMMEDIATELY with water!

→ Take appropriate protective measures (e.g. use gloves, safety goggles, oil binding material)

→ Collect emerging ATF!

CAUTION: Hot components

- *Risk of burns*

→ Let hot components cool down.

→ Wear personal protective gear.

Information

Before re-installing the ATF lines, check the O-rings on the lines for damage and replace them if necessary.

Coat O-rings on ATF lines with ATF.

Close off all lines and connections using suitable stoppers during removal.

Do not open the stoppers for the lines and connections until shortly before installation.

1. Disconnect ATF line at the union nuts **-1 and 2-** , disconnect it at the connection point and close it off using a stopper.

Fig 1: Locating ATF Connection Point

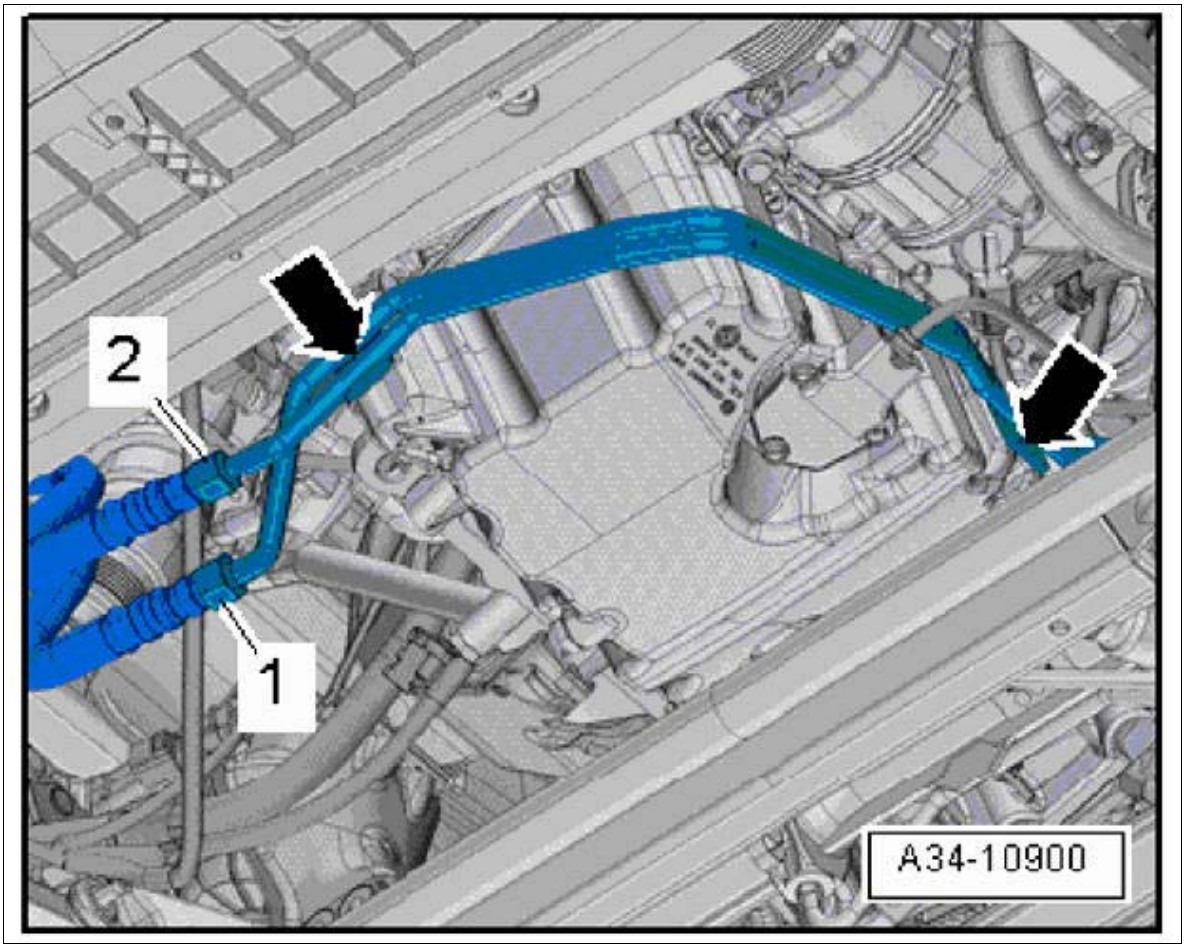

Courtesy of PORSCHE CARS NORTH AMERICA, INC.

2. Unscrew fastening screws **-1-** and disconnect ATF lines **-2-** from the cooler.

Fig 2: Identifying Cooler ATF Line Fastening Screws

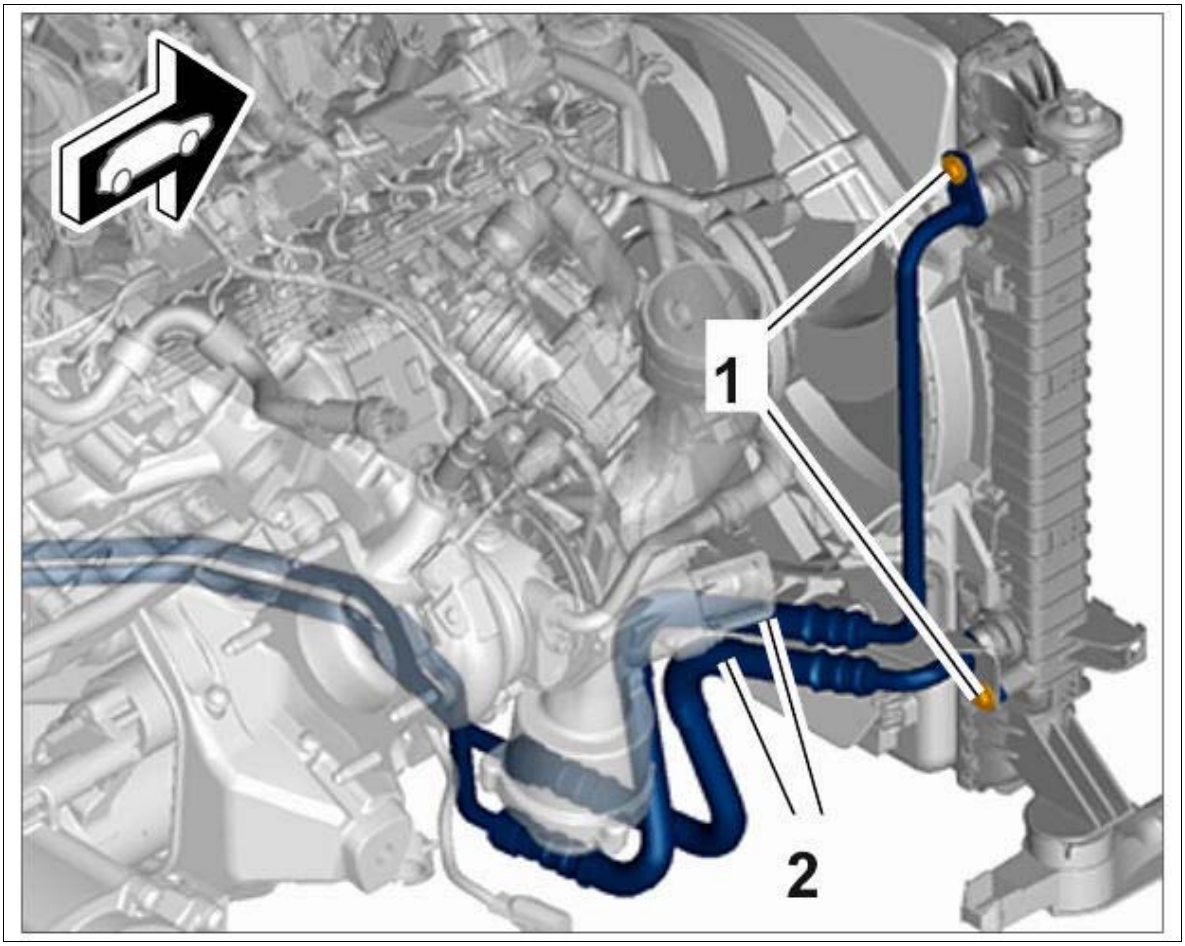

Courtesy of PORSCHE CARS NORTH AMERICA, INC.

3. Unscrew fastening screws **-arrows-** .

Fig 3: Locating ATF Connection Point

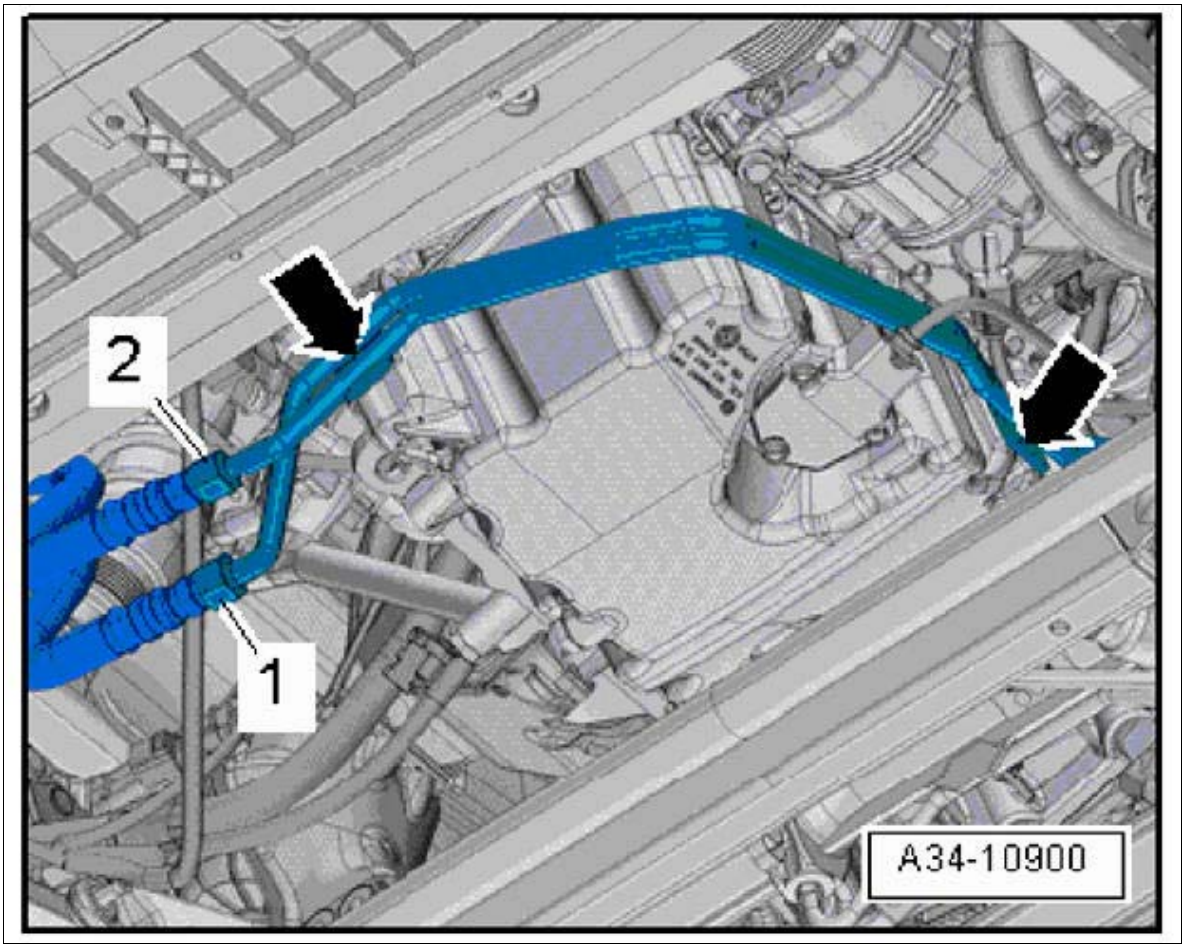

Courtesy of PORSCHE CARS NORTH AMERICA, INC.

4. Unscrew fastening screw **-arrow-** and pull ATF line **-1 and 2-** out of the ATF spin-on filter housing.

Fig 4: Locating ATF Line

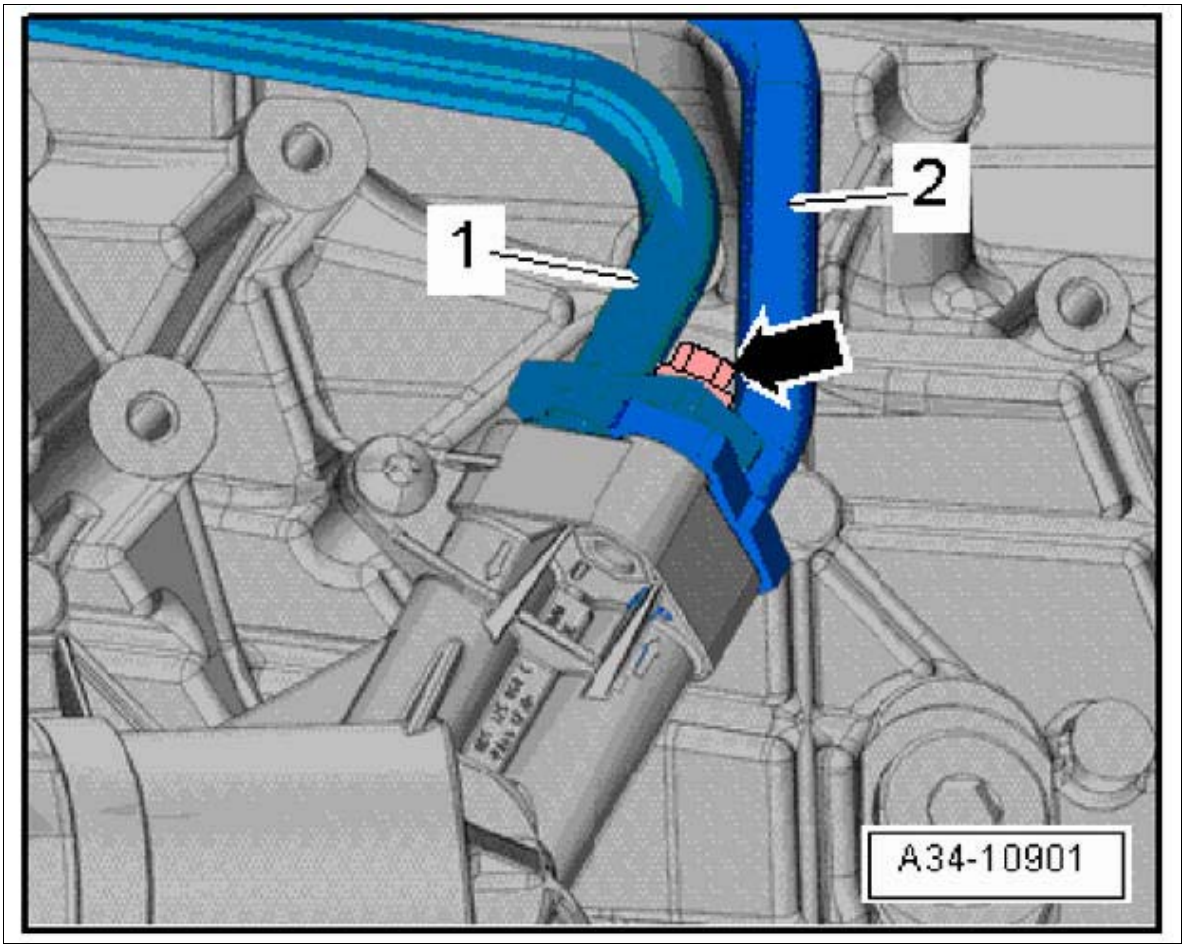

Courtesy of PORSCHE CARS NORTH AMERICA, INC.

5. Guide ATF lines **-1-** out over the halfshaft flange in **-direction of arrow-** and remove them.

Fig 5: Removing ATF Line

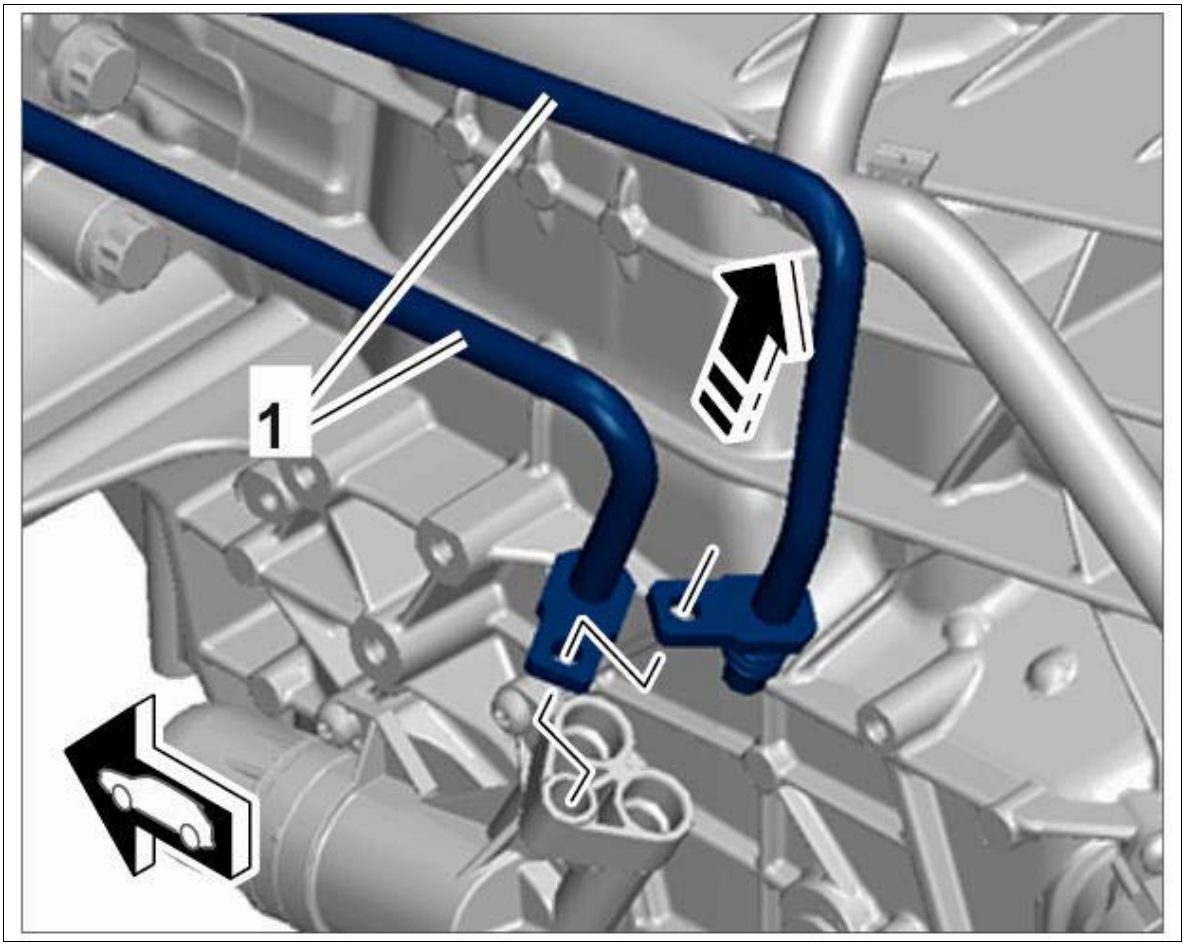

Courtesy of PORSCHE CARS NORTH AMERICA, INC.

WM 386219 REMOVING AND INSTALLING LINE FOR ATF COOLING (ALL MODELS) > INSTALLING LINE FOR ATF COOLING

Information

Before re-installing the ATF lines, check the O-rings on the lines for damage and replace them if necessary.

Coat O-rings on ATF lines with ATF.

Close off all lines and connections using suitable stoppers during removal.

Do not open the stoppers for the lines and connections until shortly before installation.

1. Replace sealing rings on the ATF lines.

Fig 1: Locating ATF Lines Sealing Rings

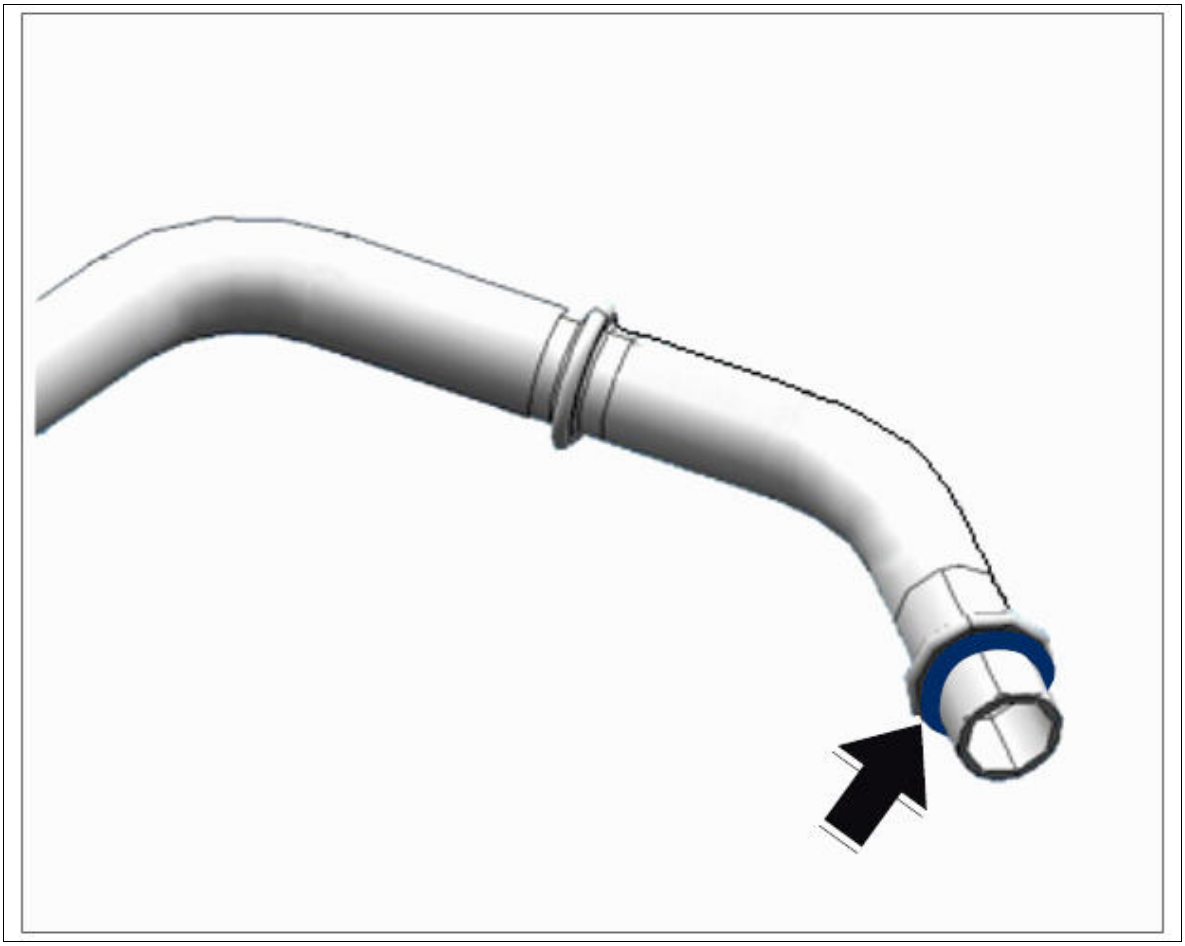

Courtesy of PORSCHE CARS NORTH AMERICA, INC.

2. Guide in ATF lines **-1-** over the halfshaft flange in **-direction of arrow-** and position them in the ATF spin-on filter housing.

Fig 2: Installing ATF Line

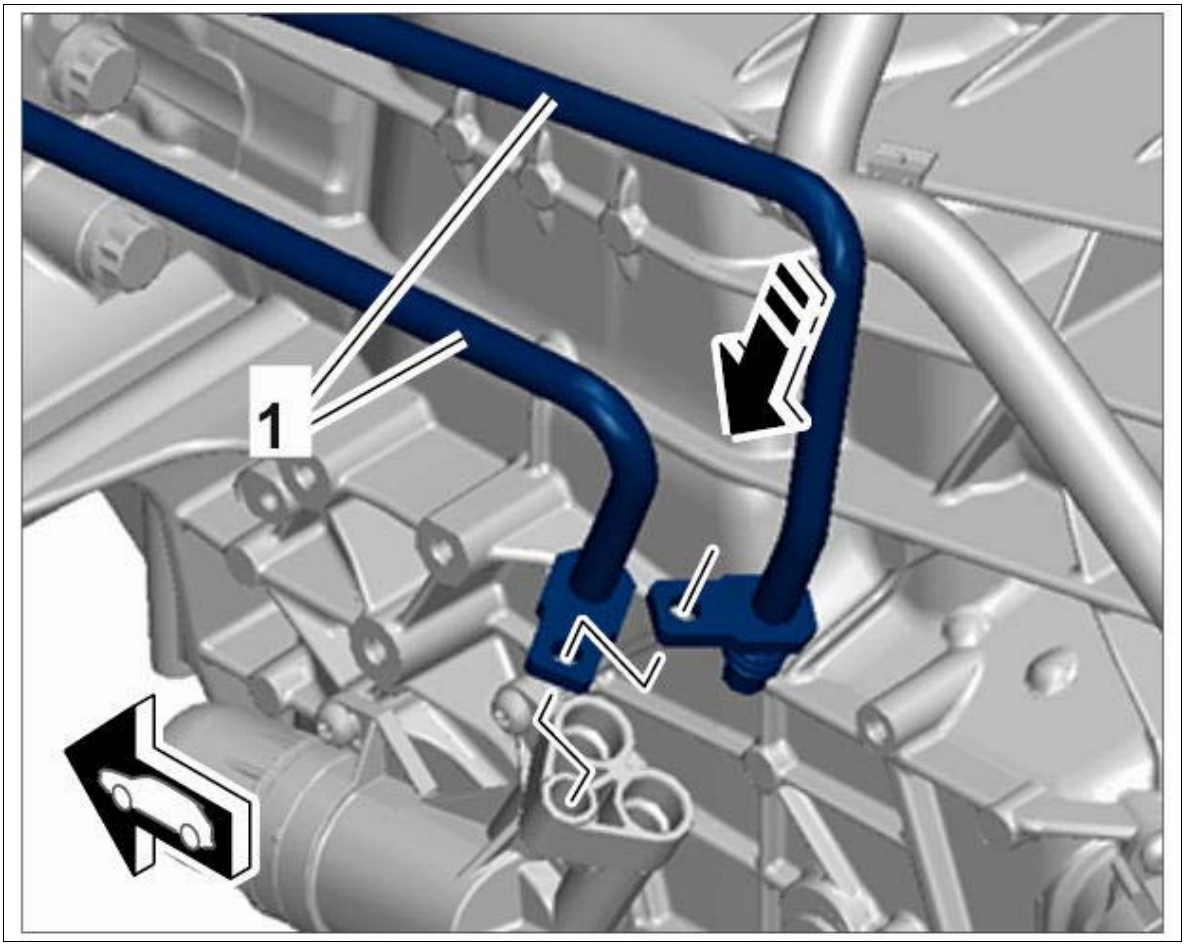

Courtesy of PORSCHE CARS NORTH AMERICA, INC.

3. Fit and tighten fastening screw **-arrow-** . **Tightening torque 20 Nm (15 ftlb.)**

Fig 3: Locating ATF Line

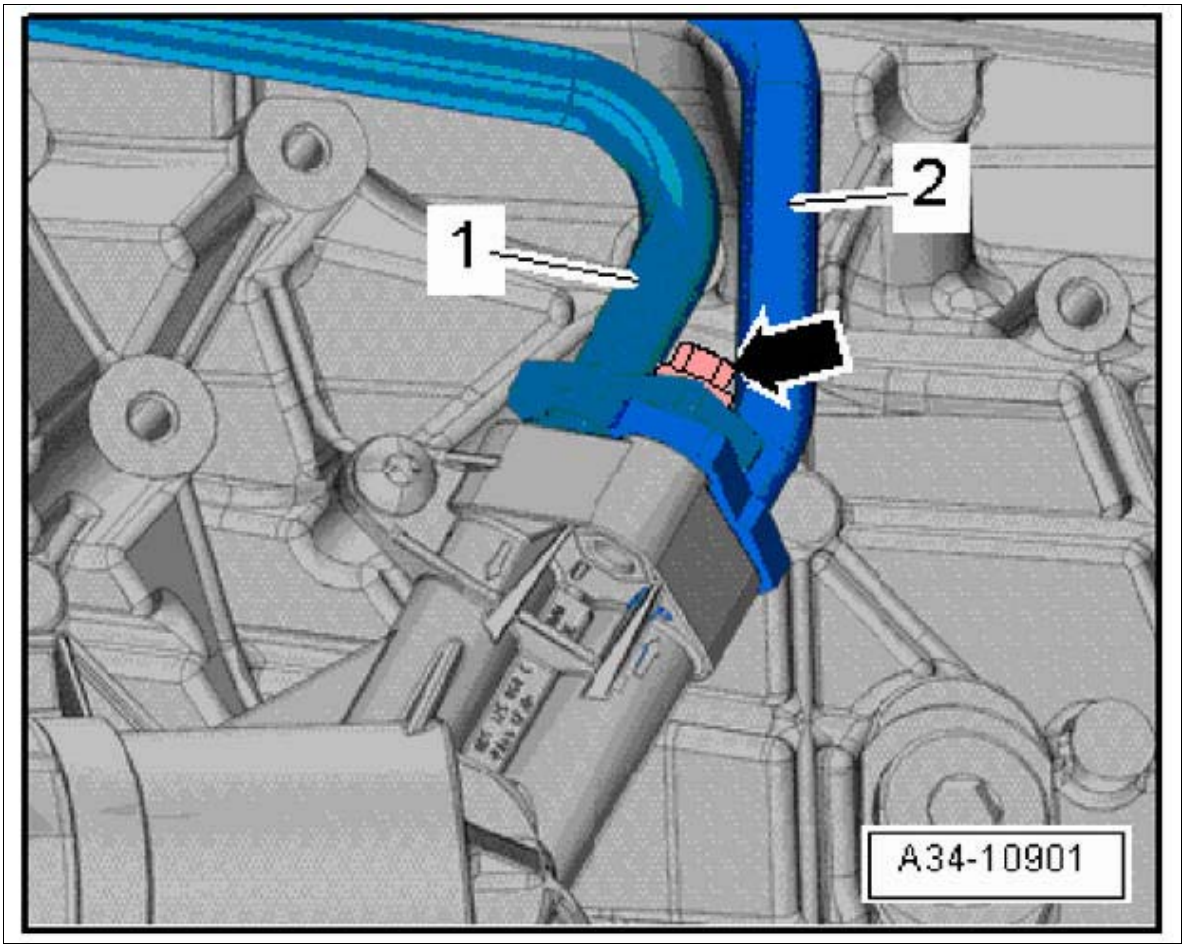

Courtesy of PORSCHE CARS NORTH AMERICA, INC.

4. Fit and tighten fastening screws **-arrows-** . **Tightening torque 8 Nm (6 ftlb.)**

Fig 4: Locating ATF Connection Point

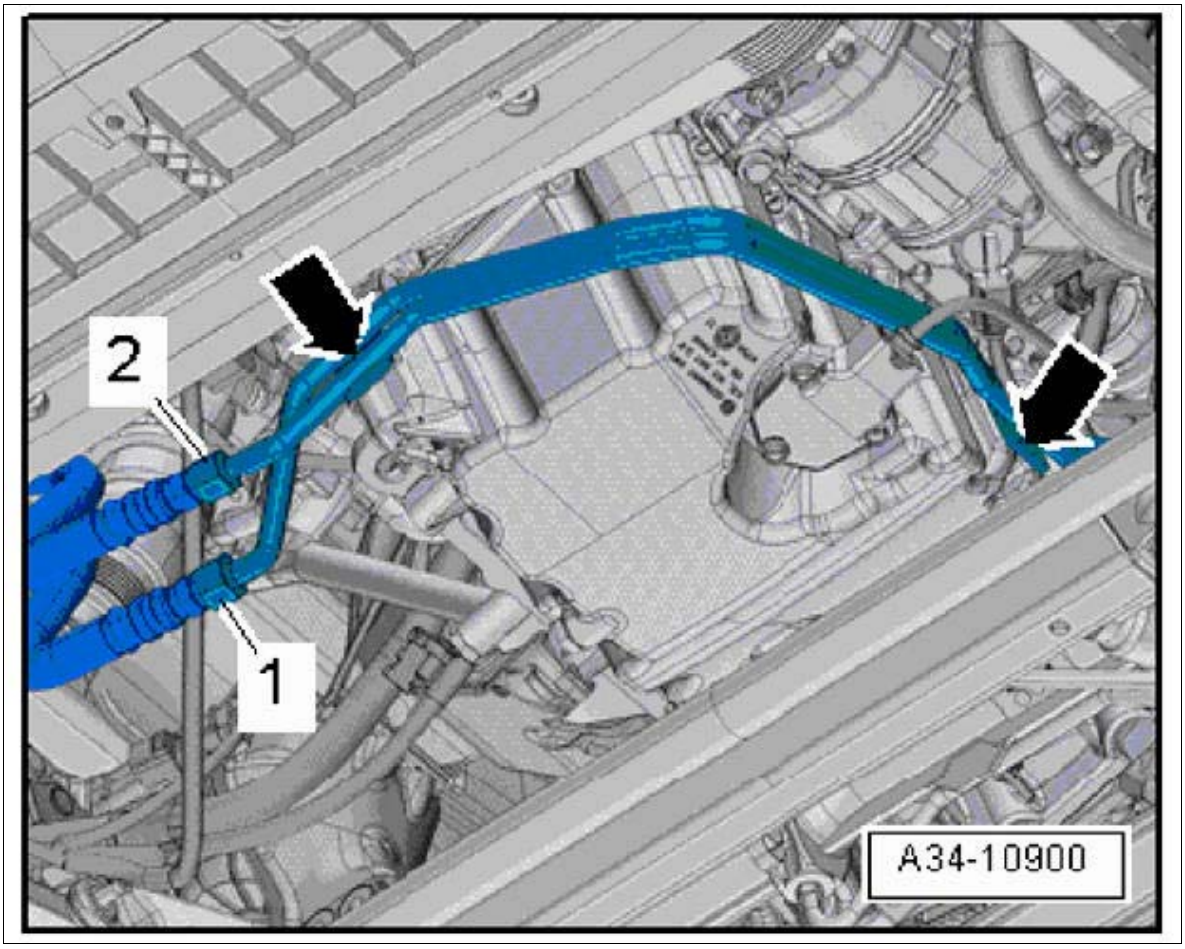

Courtesy of PORSCHE CARS NORTH AMERICA, INC.

5. Position ATF lines **-2-** on the cooler and fit and tighten fastening screws **-1-** .

Fig 5: Identifying Cooler ATF Line

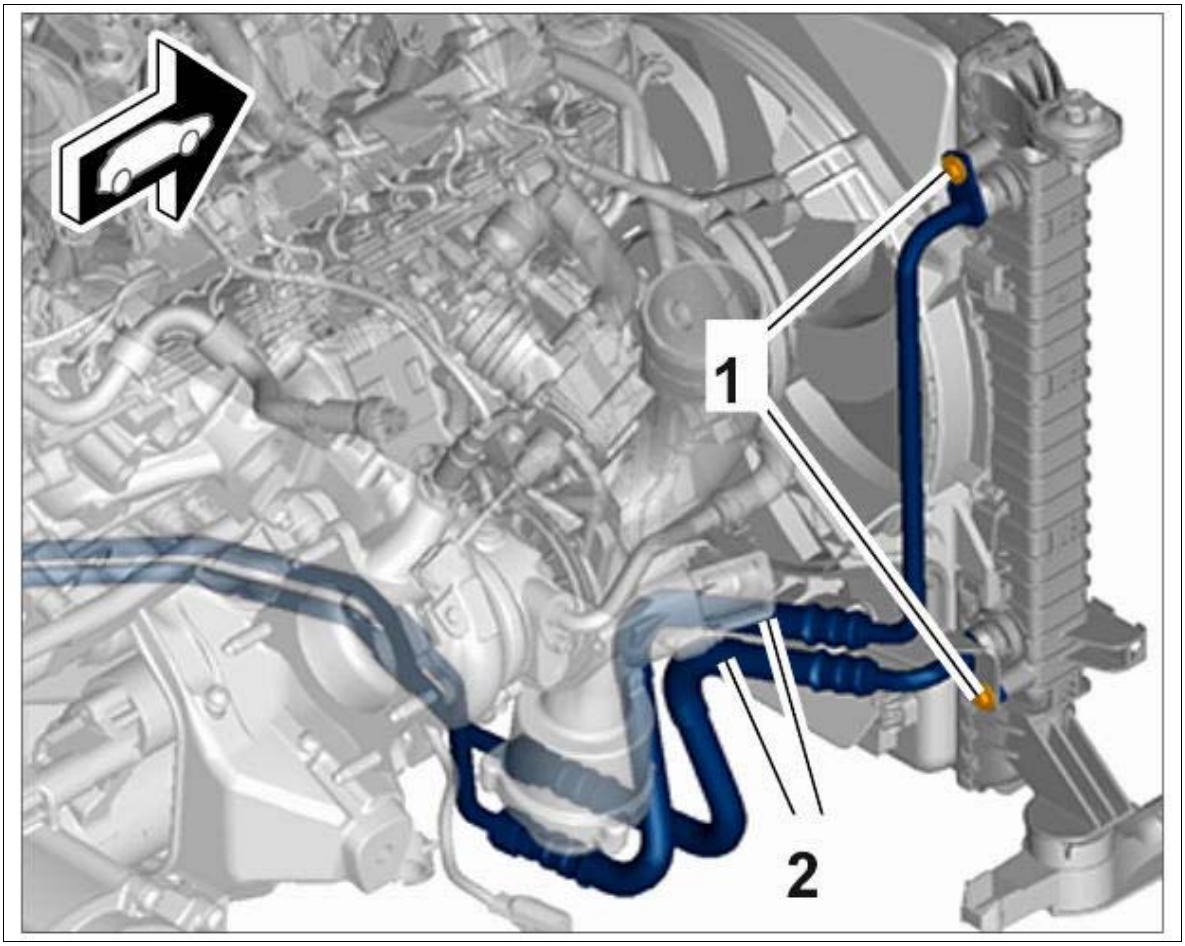

Courtesy of PORSCHE CARS NORTH AMERICA, INC.

6. Connect ATF lines and fit and tighten union nuts **-1 and 2-** .

Fig 6: Locating ATF Connection Point

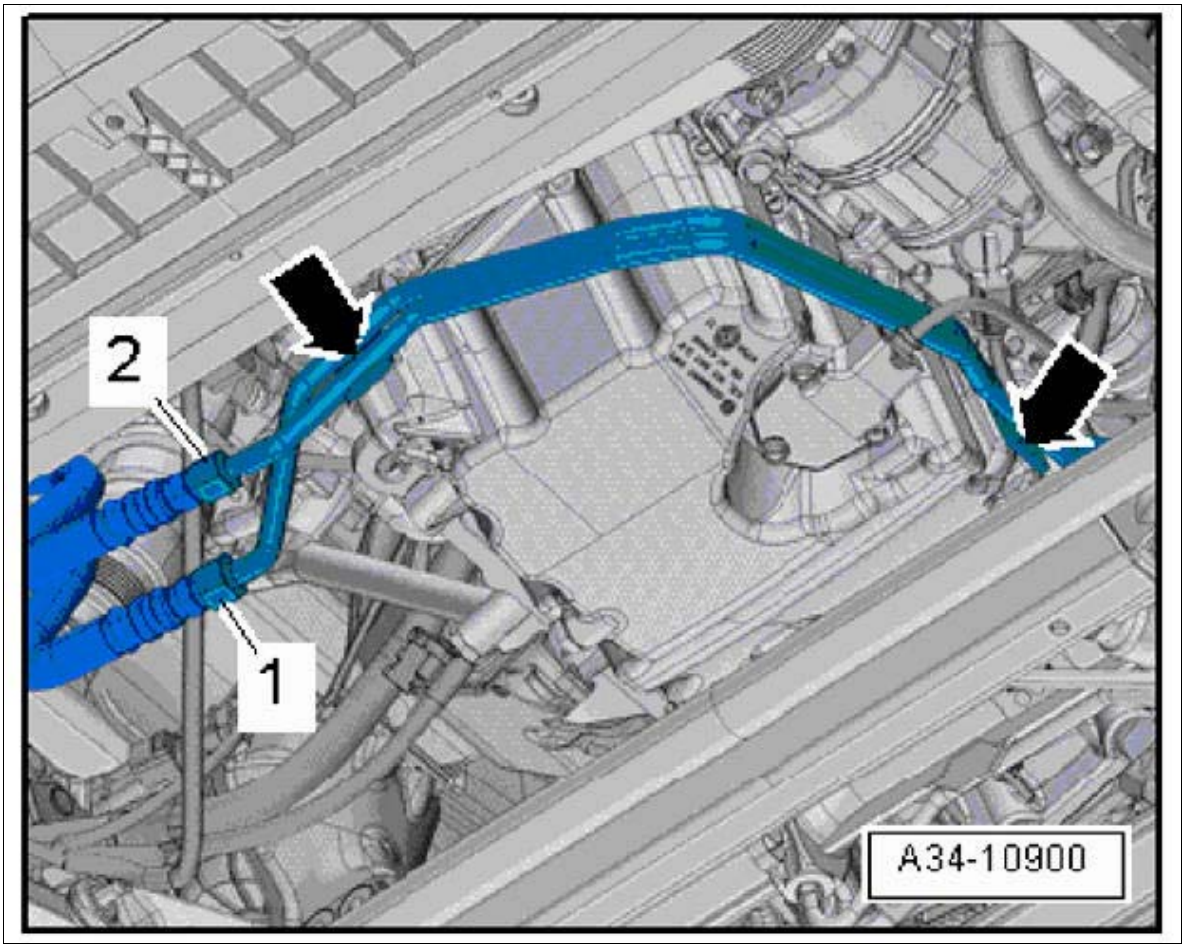

Courtesy of PORSCHE CARS NORTH AMERICA, INC.

WM 386219 REMOVING AND INSTALLING LINE FOR ATF COOLING (ALL MODELS) > SUBSEQUENT WORK

1. Check and top up ATF. → 370235 CHECKING AND TOPPING UP ATF
2. Install underbody cover. → Installing cover for front underbody

WM 387719 REMOVING AND INSTALLING CONTROL MECHANISM FOR TRANSMISSION (ALL MODELS) > TOOLS

Designation	Type	Number	Description	

PIWIS Tester II	Special tool	9818		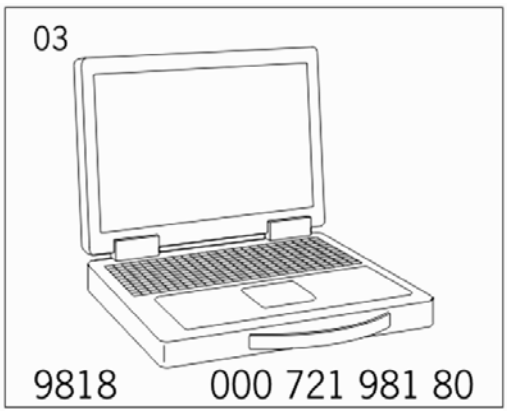

WM 387719 REMOVING AND INSTALLING CONTROL MECHANISM FOR TRANSMISSION (ALL MODELS) > TECHNICAL VALUES

Location	Description	Type	Basic value	Tolerance 1	Tolerance 2
ATF drain plug on oil pan		Tightening torque	45 Nm (33 ftlb.)		
Fastening screw	ATF oil pan to transmission	Tightening torque	10 Nm (7.5 ftlb.)		
Fastening screw	Mechatronics to transmission	Tightening torque	10 Nm (7.5 ftlb.)		
Fastening screw	Retaining bracket to transmission	Tightening torque	10 Nm (7.5 ftlb.)		
Fastening screw	ATF filter housing to transmission	Tightening torque	10 Nm (7.5 ftlb.)		
Fastening screw	ATF lines to ATF filter housing	Tightening torque	20 Nm (15 ftlb.)		
ATF inspection plug		Tightening torque	45 Nm (33 ftlb.)		
Fastening screw	ATF connector housing	Tightening torque	8 Nm (6 ftlb.)		
Fastening screw	Cable guide for rpm sensor to transmission	Tightening torque	8 Nm (6 ftlb.)		

WM 387719 REMOVING AND INSTALLING CONTROL MECHANISM FOR TRANSMISSION (ALL MODELS) > TECHNICAL VALUES > COMPONENT OVERVIEW OF CONTROL MECHANISM FOR TRANSMISSION

Fig 1: Overview Of Transmission Control Mechanism

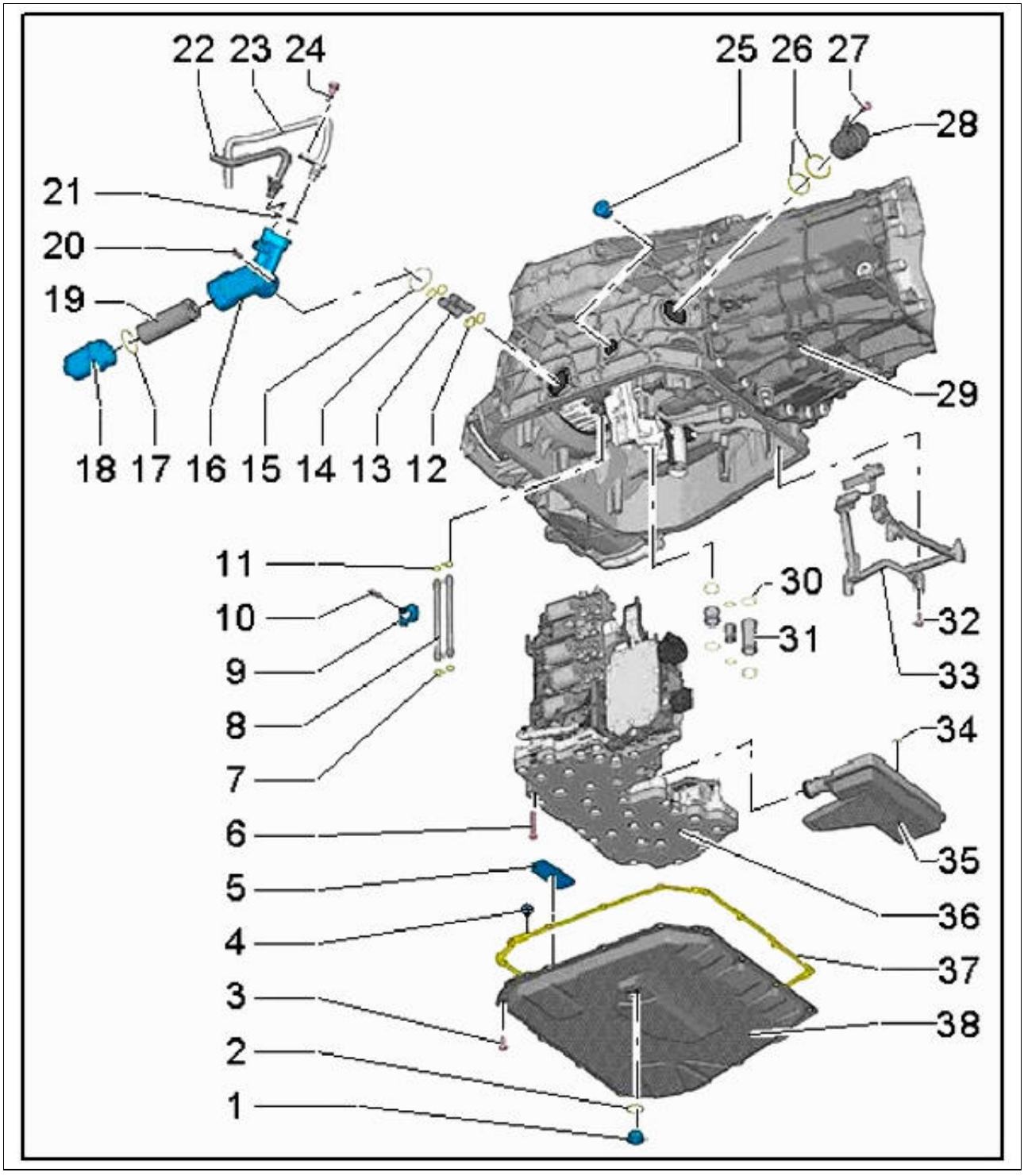

Courtesy of PORSCHE CARS NORTH AMERICA, INC.

1. ATF drain plug → **Tightening torque: 45 Nm (33 ftlb.)**
2. Sealing ring/**replace**
3. Fastening screw → **Tightening torque: 10 Nm (7.5 ftlb.)**
4. Expansion rivet

    1. In original equipment for securing seal to ATF oil pan
    2. Not absolutely necessary for installation
5. Magnet
    1. Clean magnet when changing ATF
6. Fastening screw → **Tightening torque: 10 Nm (7.5 ftlb.)**
7. O-rings/**replace**
8. ATF pressure pipes
9. Retaining bracket for ATF pressure pipes
10. Fastening screw → **Tightening torque: 10 Nm (7.5 ftlb.)**
11. O-rings/**replace**
12. O-rings/**replace**
13. ATF oil pipes
14. O-rings/**replace**
15. O-ring/**replace**
16. ATF filter housing
17. O-ring/**replace**
18. ATF filter housing cover
19. ATF spin-on filter
20. Fastening screw → **Tightening torque: 10 Nm (7.5 ftlb.)**
21. O-rings/**replace**
22. ATF return line
23. ATF supply line
24. Fastening screw → **Tightening torque: 20 Nm (15 ftlb.)**
25. ATF filler screw and inspection plug → **Tightening torque: 45 Nm (33 ftlb.)**
26. O-rings/**not available individually**
27. Fastening screw → **Tightening torque: 8 Nm (6 ftlb.)**
28. Connector housing with O-rings
29. Transmission housing
30. O-rings/**not available individually**
31. ATF oil pipes with O-rings

32. Fastening screw → **Tightening torque: 8 Nm (6 ftlb.)**
33. Cable guide for rpm sensors
34. O-ring/**replace**
35. ATF suction filter
36. Control mechanism for transmission
37. Seal/**replace**
38. ATF oil pan

WM 387719 REMOVING AND INSTALLING CONTROL MECHANISM FOR TRANSMISSION (ALL MODELS) > PRELIMINARY WORK

1. Disconnect the battery. → Removing battery
2. Remove ATF pan. → Removing ATF pan

WM 387719 REMOVING AND INSTALLING CONTROL MECHANISM FOR TRANSMISSION (ALL MODELS) > REMOVING CONTROL MECHANISM FOR TRANSMISSION

WARNING: Hot fluid

- *Danger of scalding*

→ Let the fluid cool down.

→ Wear personal protective gear.

CAUTION: Pointed or sharp objects

- *Risk of cracks, pricks or cuts*

→ Wear personal protective gear.

NOTE: Voltage peaks

- *Risk of damage to loads or to the control unit*

→ Disconnect the battery before removing the component or control unit.

Information

- Discharge the transmission electrostatically before removing control mechanism for transmission.
- The sealing face of the control mechanism for transmission must not be damaged.
- Only loosen the fastening screws with brightly colored screw heads, otherwise damage can occur.
- Control mechanism for transmission is partly secured in the transmission.
- If the control mechanism for transmission has to be pried off, get another mechanic to secure the control mechanism for transmission to prevent it from falling out.
- To pry off the control mechanism, two fastening screws can be screwed in slightly to prevent the control unit from falling down.
- Only set the control mechanism for transmission down with the screw head side facing downwards.

Information

- Do not touch plug contacts in the connector for the transmission with your hands.
- When prying out the tappets, do not use the sensors for support.

1. Carefully pull ATF suction filter to the rear in **-direction of arrow-** and remove it from the control mechanism for transmission.

Fig 1: Pulling ATF Suction Filter

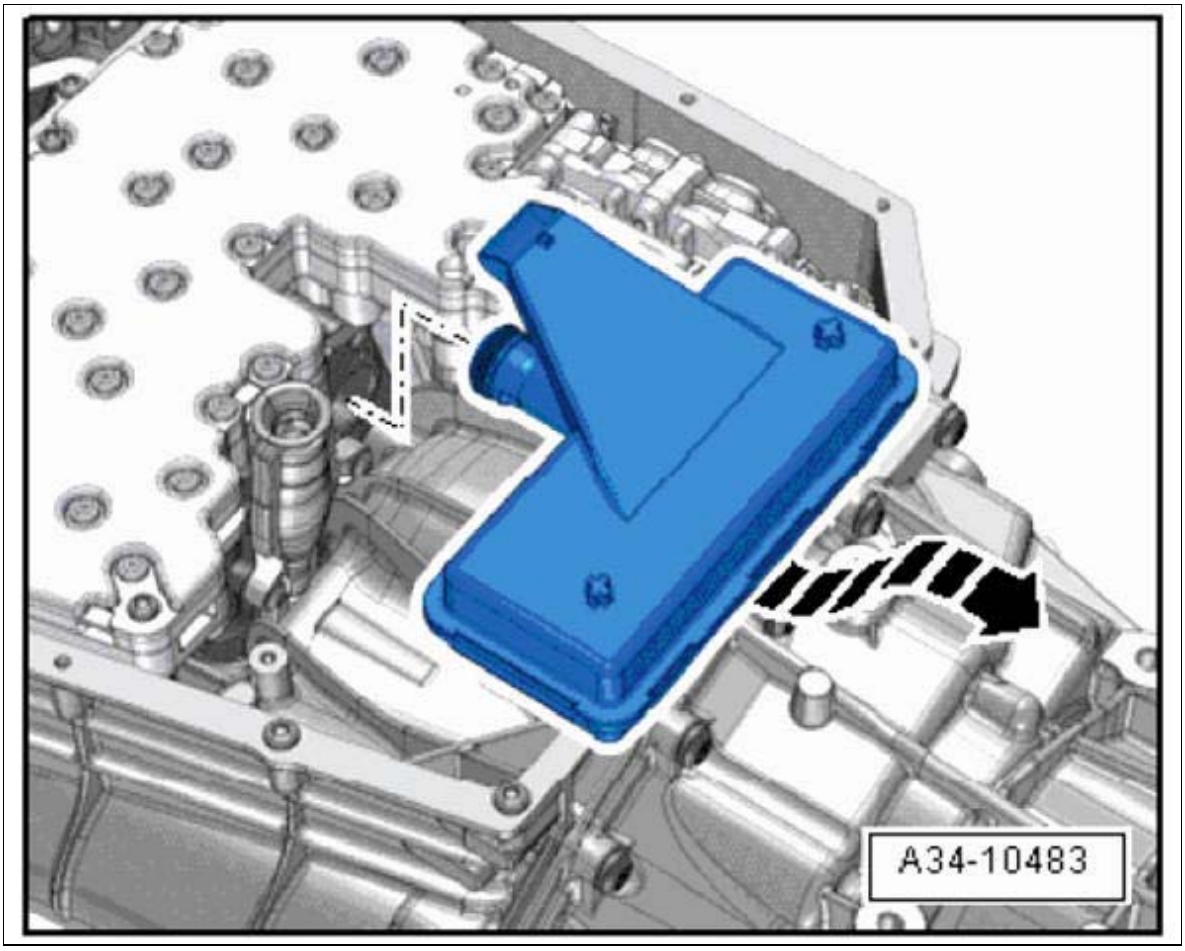

Courtesy of PORSCHE CARS NORTH AMERICA, INC.

2. Turn electric plug connection in **-direction of arrow-** and disconnect plug connection.

Fig 2: Turning Electric Plug Connection

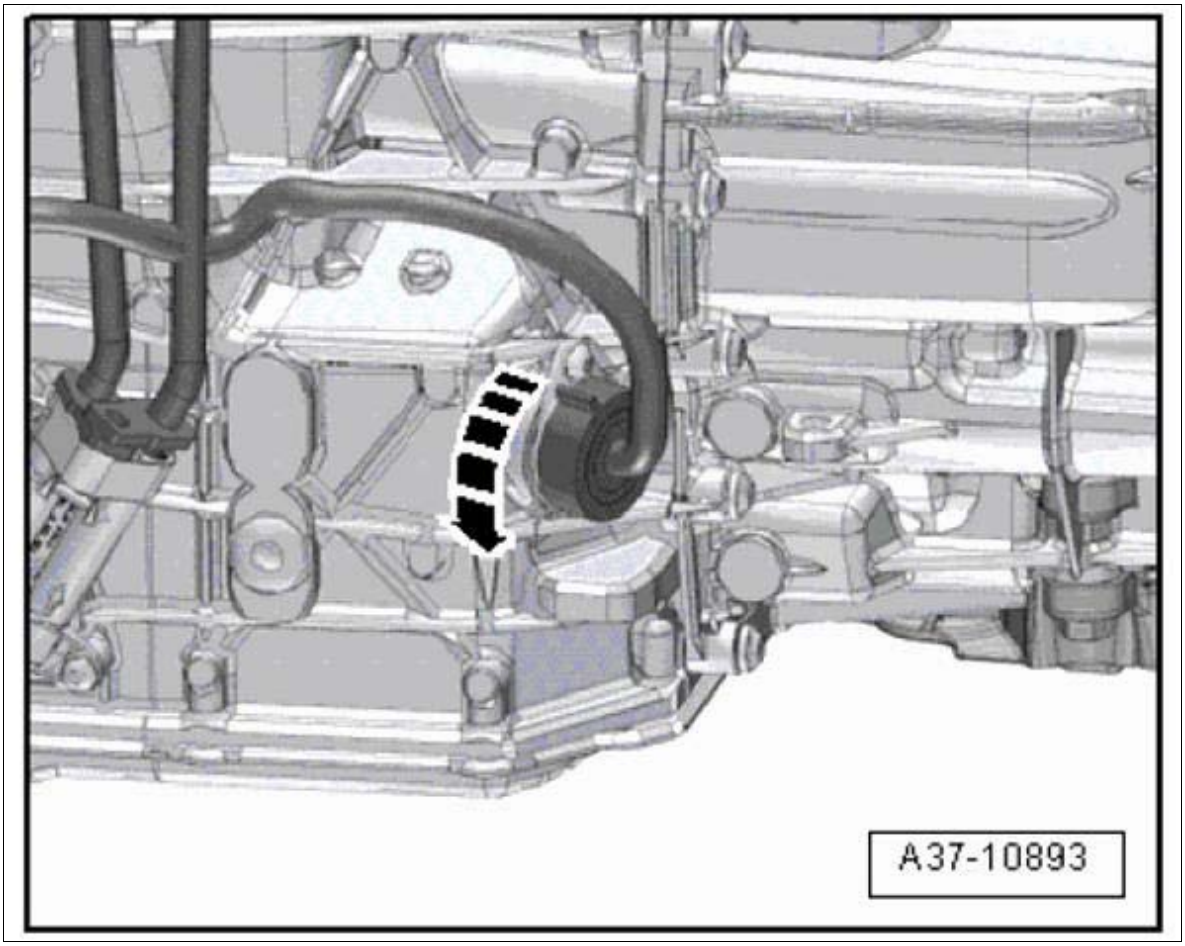

Courtesy of PORSCHE CARS NORTH AMERICA, INC.

3. Unscrew fastening screw **-1-** , turn connector housing in **-direction of arrow-** and pull it off.

Fig 3: Removing Connector Housing

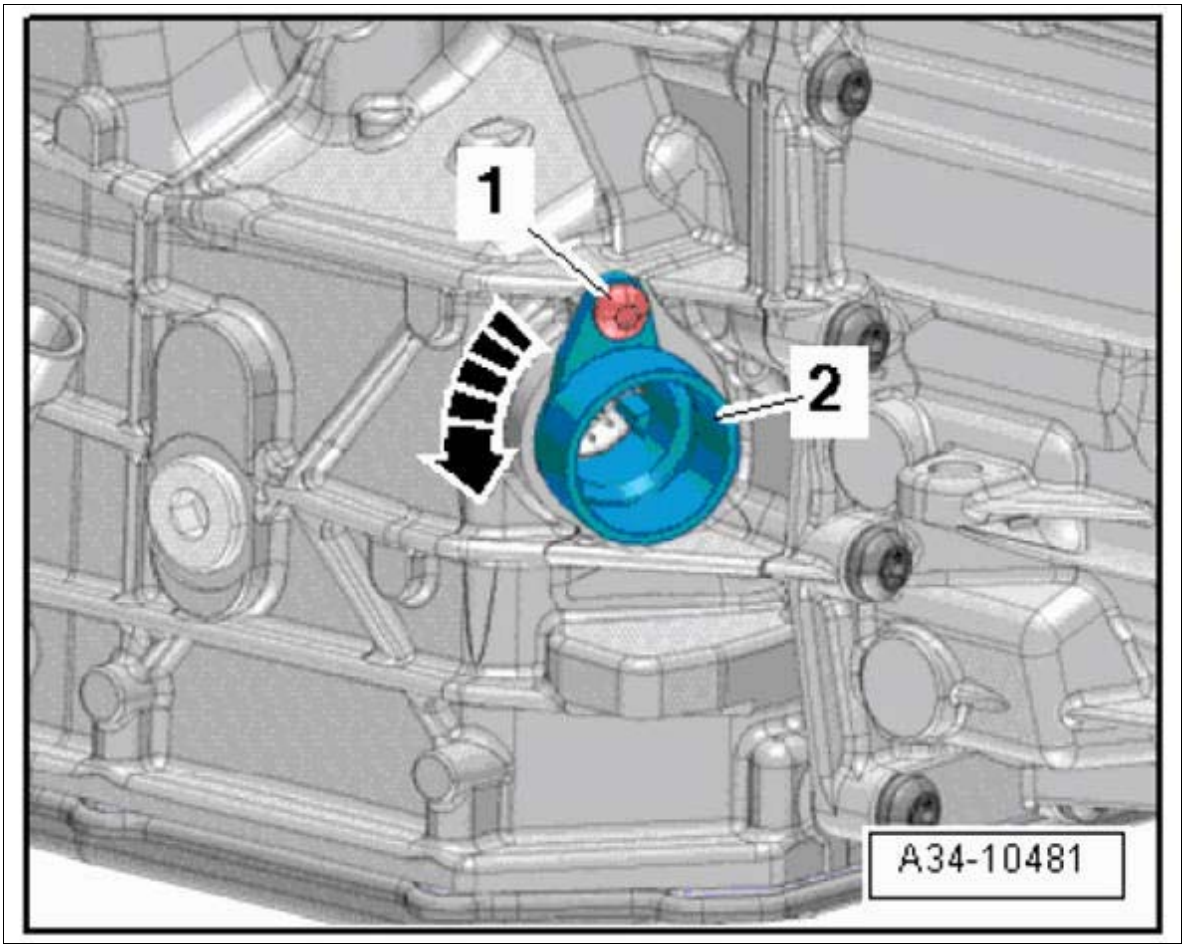

Courtesy of PORSCHE CARS NORTH AMERICA, INC.

4. Release fuse **-1-** in **-direction of arrow-** , press in release **-2-** and disconnect electric plug connection.

Fig 4: Disconnecting RPM Sensors Electric Plug Connection

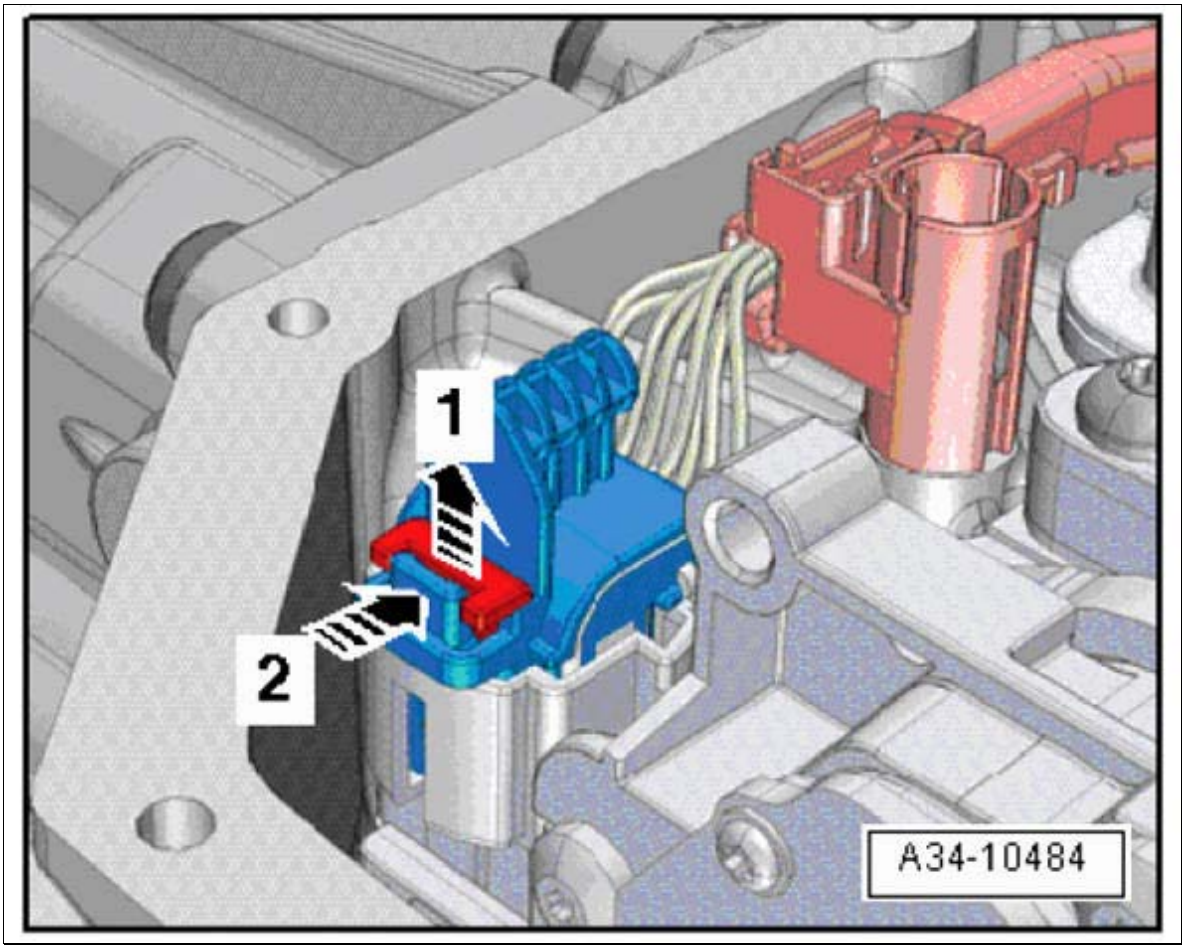

Courtesy of PORSCHE CARS NORTH AMERICA, INC.

5. Unscrew fastening screws **-1... 6-** .

Fig 5: Transmission Control Mechanism Screws Loosening Sequence

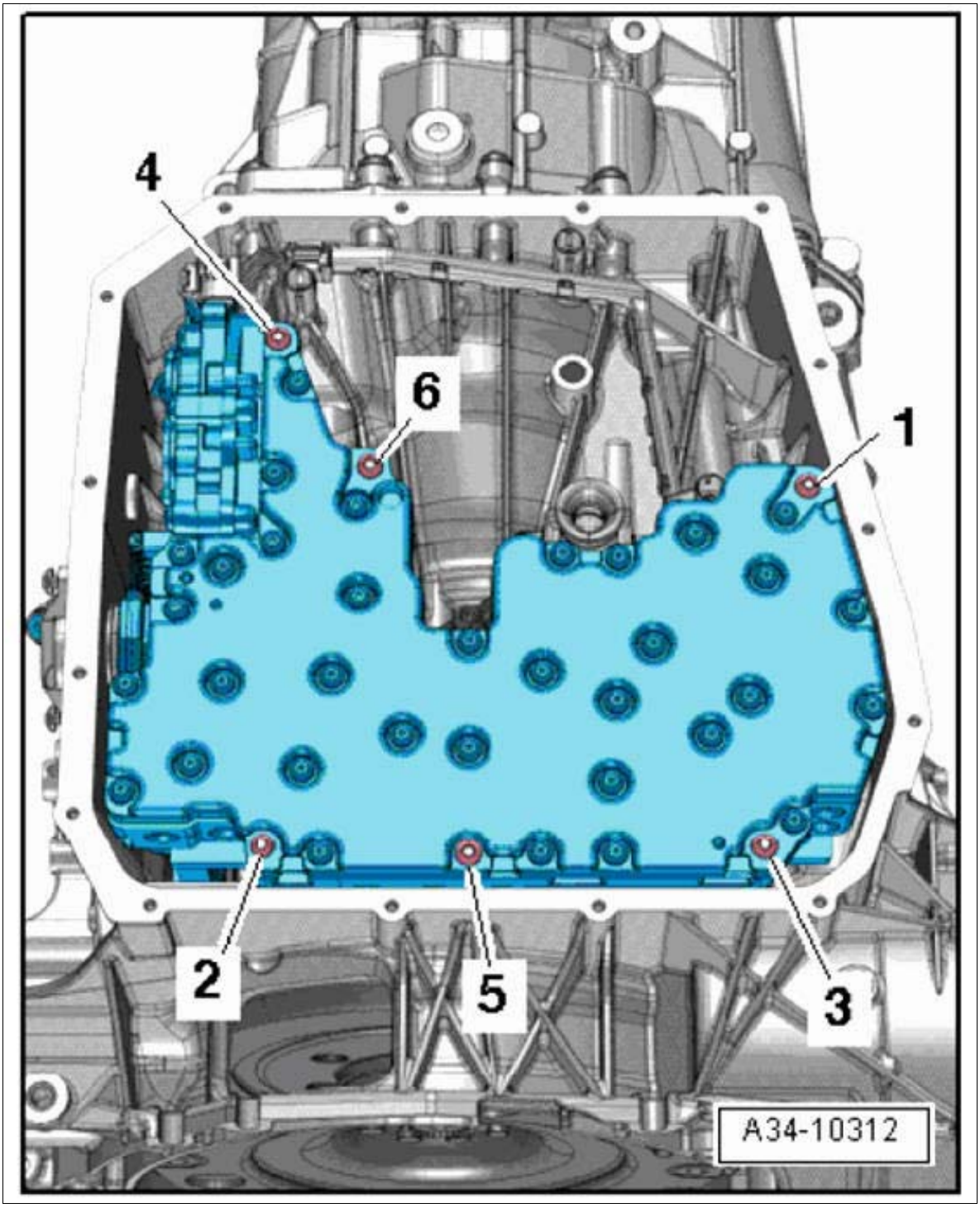

Courtesy of PORSCHE CARS NORTH AMERICA, INC.

6. Remove control mechanism for transmission **-3-** .

    1. 6.1. Unscrew fastening screws **-1-** .
    2. 6.2. Carefully detach ATF filter housing in **-direction of arrow -** and remove it from the control mechanism for transmission.
    3. 6.3. Carefully remove control mechanism for transmission **-3-** in **-direction of**

arrow- .

Fig 6: Removing Transmission Control Mechanism

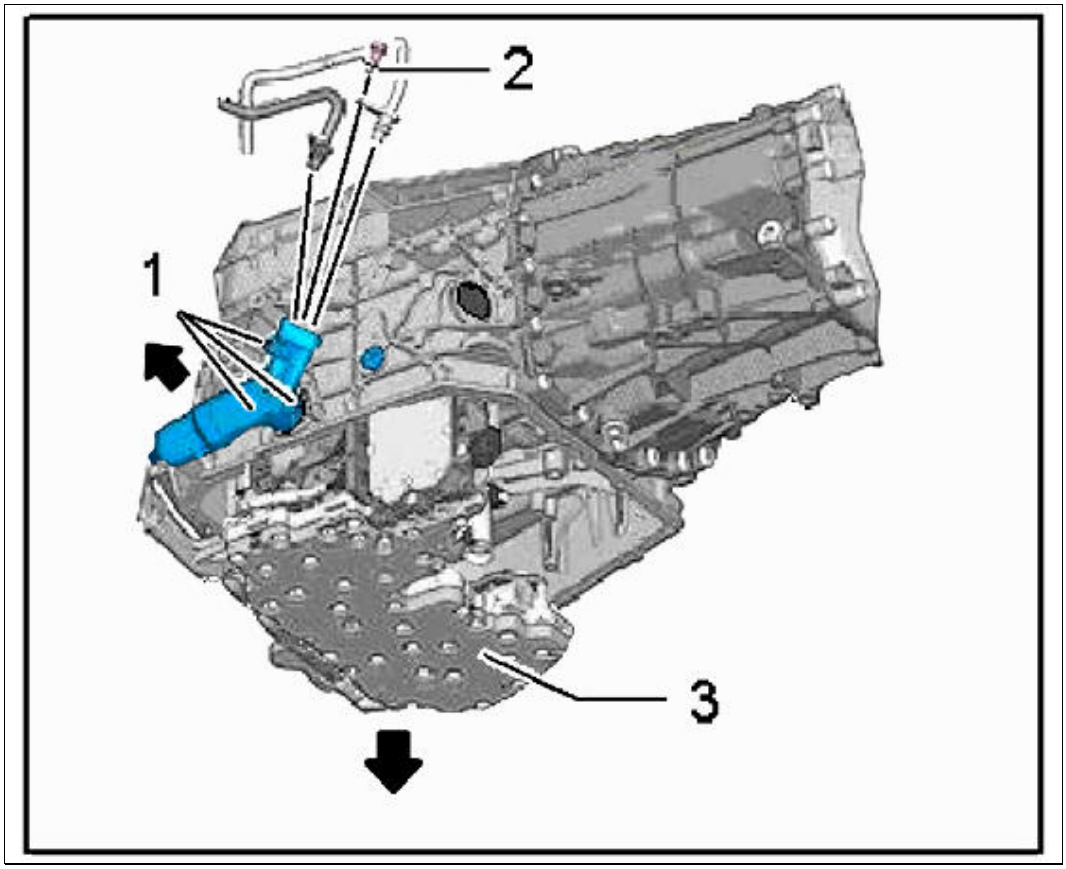

Courtesy of PORSCHE CARS NORTH AMERICA, INC.

7. Remove ATF oil pipes.
    1. 7.1. Disconnect ATF oil pipes **-1 and 2-** .
    2. 7.2. Disconnect ATF oil pipes **-3... 5-** .
    3. 7.3. Replace O-rings, coat with ATF and re-insert ATF oil pipes.
    4. 7.4. Check that the ATF oil pipes are fitted correctly.

Fig 7: Locating ATF Oil Pipes

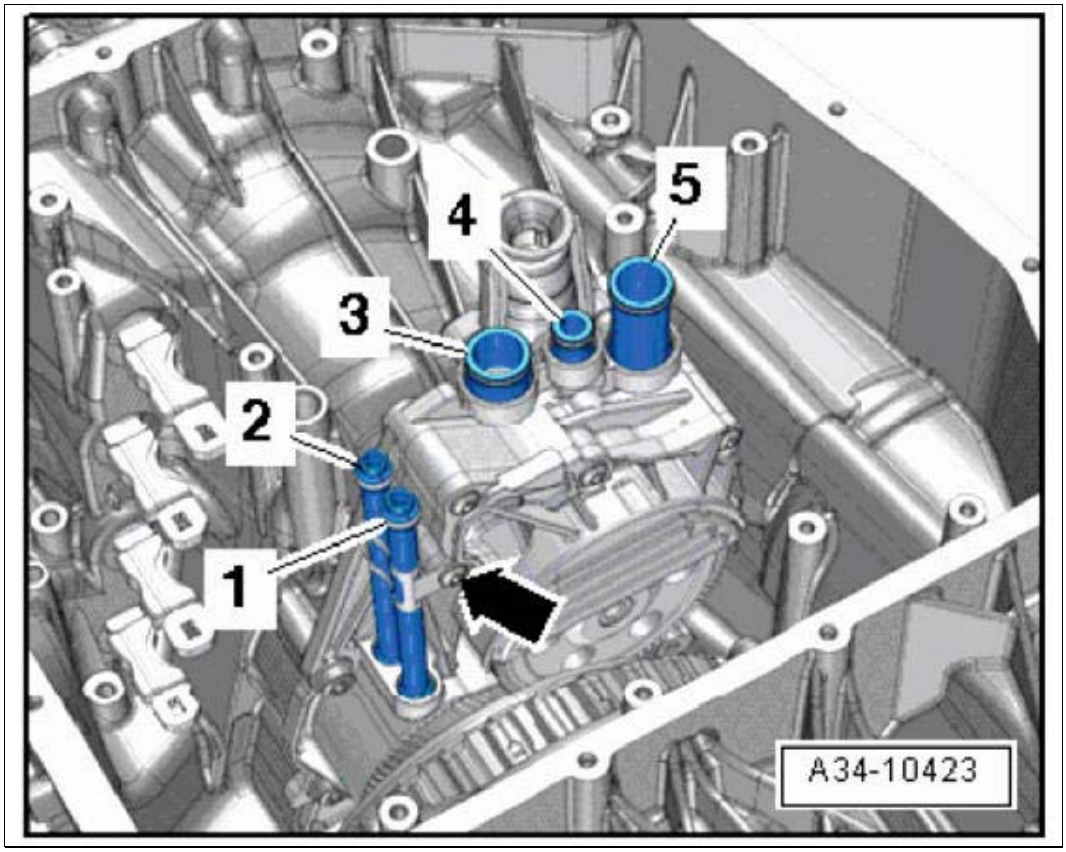

Courtesy of PORSCHE CARS NORTH AMERICA, INC.

WM 387719 REMOVING AND INSTALLING CONTROL MECHANISM FOR TRANSMISSION (ALL MODELS) > REMOVING CONTROL MECHANISM FOR TRANSMISSION > ADJUSTING SHIFT FORKS AND GEAR ACTUATORS

Information

- Before installing the control mechanism for transmission, move shift forks and gear actuators into center position.

Information

- Do not touch plug contacts in the connector for the transmission with your hands.
- When prying out the tappets, do not use the sensors for support.

Adjusting shift forks:

Every shift fork has 3 positions:

- Gear engaged **-G-**
- Idle speed **-N-** (center position)
- Gear engaged **-G-**

Information

- Before installing the control mechanism for transmission, move shift forks and gear actuators into center position.

1. Adjust shift forks.

1. 1.1. Check shift positions of shift forks **-1... 4-** manually.
2. 1.2. Shift each of the four shift forks to each position once one after the other. **-arrows-** .
3. 1.3. Move all shift forks back to center position.

Fig 1: Checking Shift Forks

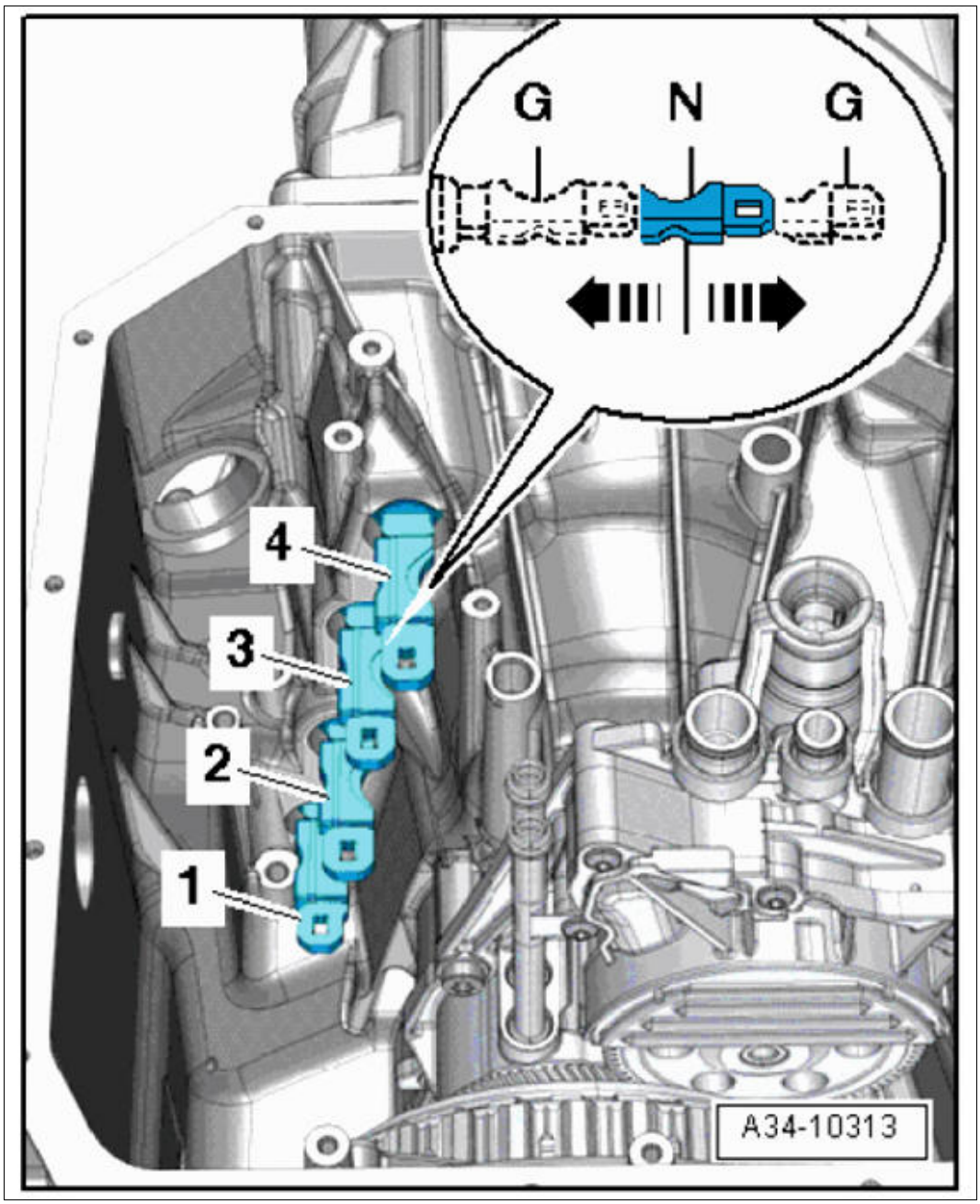

Courtesy of PORSCHE CARS NORTH AMERICA, INC.

Adjusting gear actuators:

1. Dimension **-a-** = 33.5 mm

Information

1. Before installing the control mechanism for transmission, move shift forks and gear actuators into center position.

2. Adjust gear actuators.

1. 2.1. Adjust the four gear actuators on the back of the control mechanism for transmission to center position with the dimension **-a-** .

Fig 2: Measuring Shift Forks

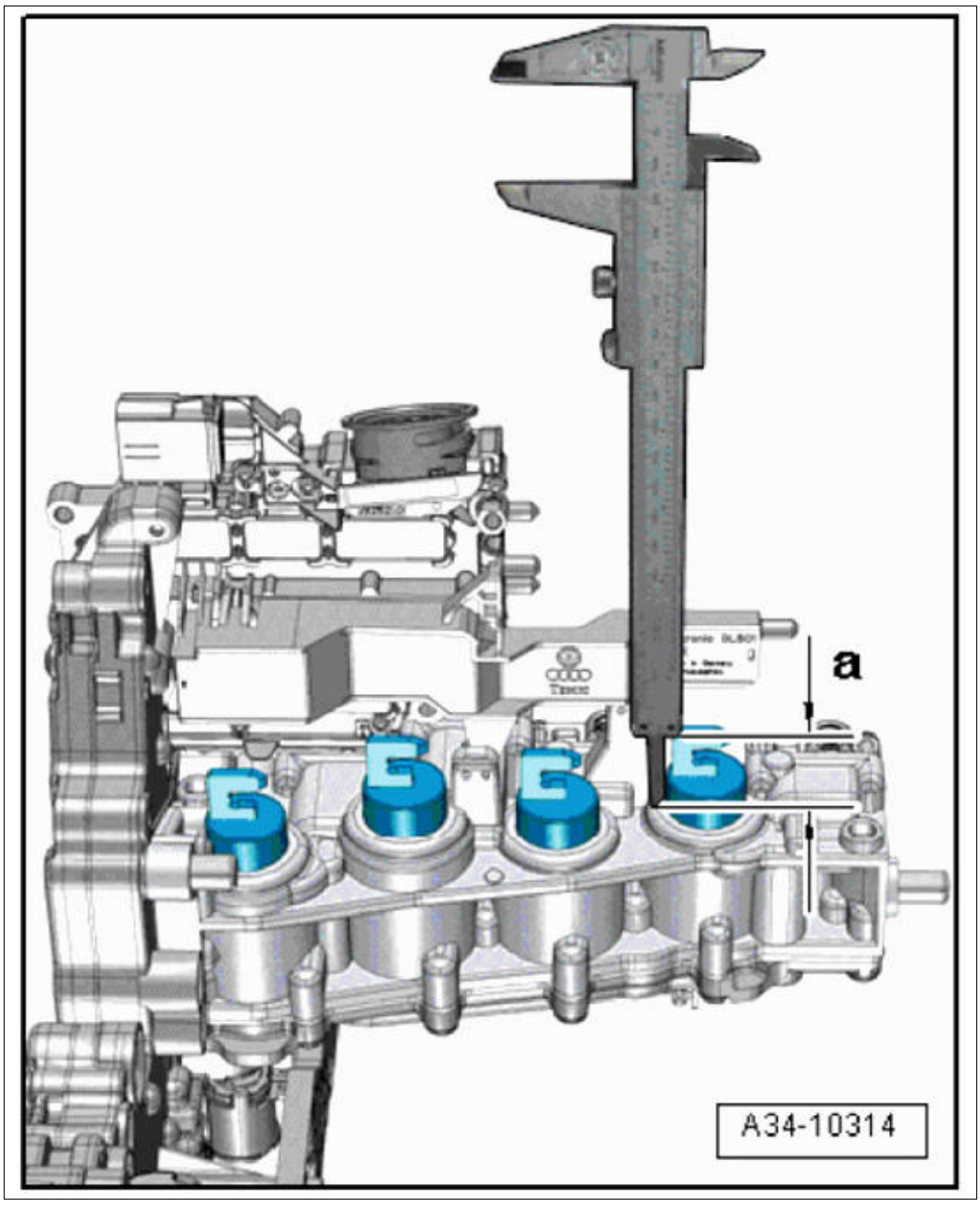

Courtesy of PORSCHE CARS NORTH AMERICA, INC.

3. Align drivers **-arrows-** for the gear actuators so that they engage in the eyelets on the shift forks during installation.

Fig 3: Locating Shift Fork

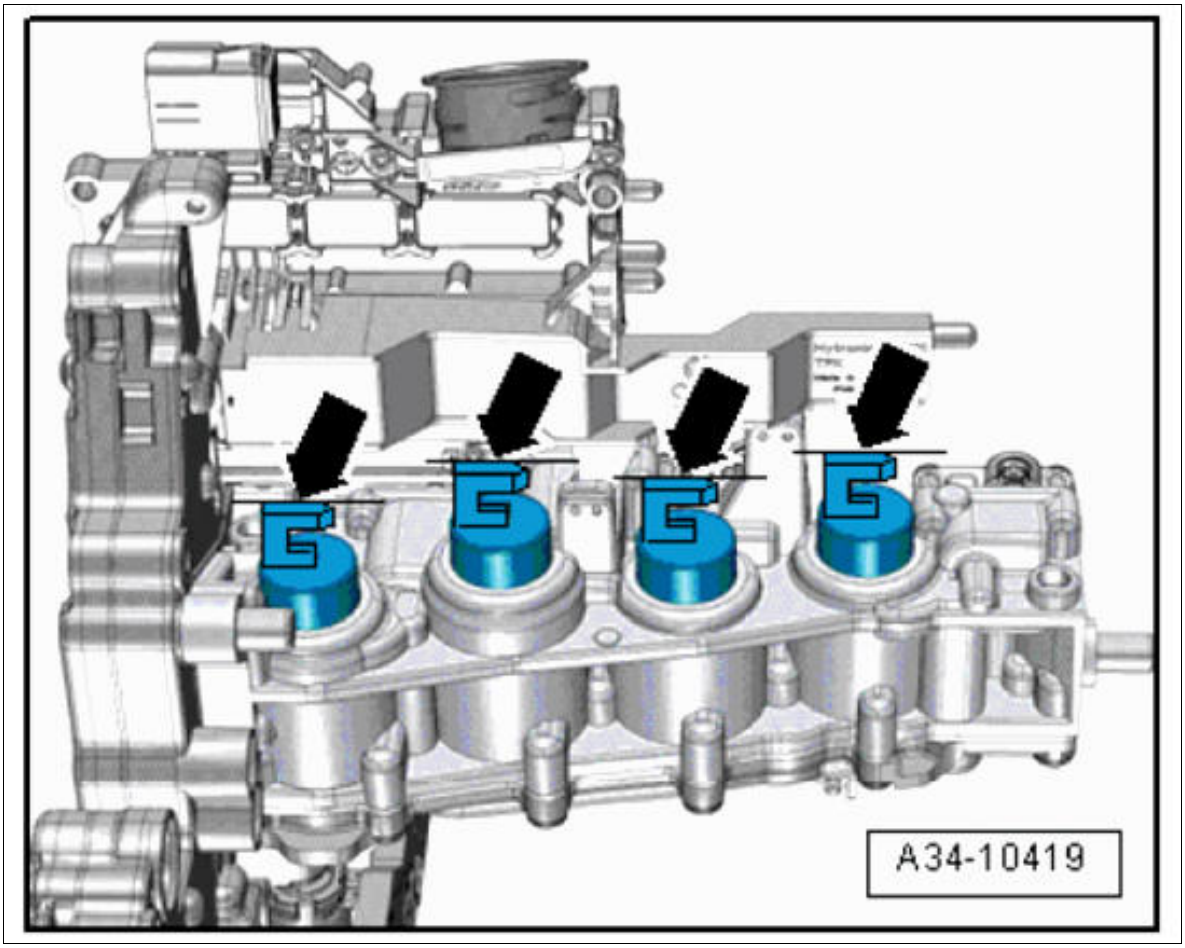

Courtesy of PORSCHE CARS NORTH AMERICA, INC.

WM 387719 REMOVING AND INSTALLING CONTROL MECHANISM FOR TRANSMISSION (ALL MODELS) > INSTALLING CONTROL MECHANISM FOR TRANSMISSION

Information

After installing the control mechanism for transmission, code and calibrate it using **PIWIS Tester II 9818** .

1. Check shift forks.
    1. 1.1. Check all gear actuators by directing a torch through the opening between the control mechanism for transmission and transmission housing.
    2. 1.2. All four drivers for the gear actuators must engage in the related eyelets on the shift forks. → Shift fork

Fig 1: Identifying Shift Fork

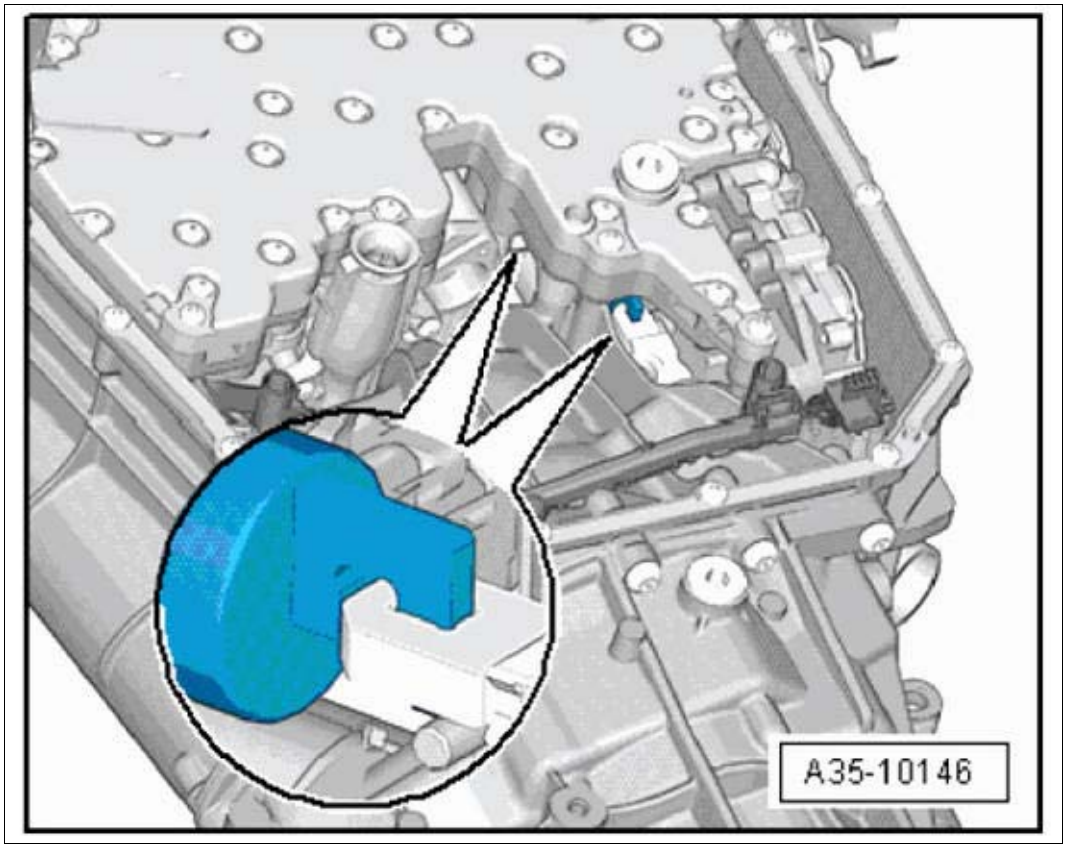

Courtesy of PORSCHE CARS NORTH AMERICA, INC.

2. Check that the ATF oil pipes **-1... 5-** are fitted securely.

Fig 2: Locating ATF Oil Pipes

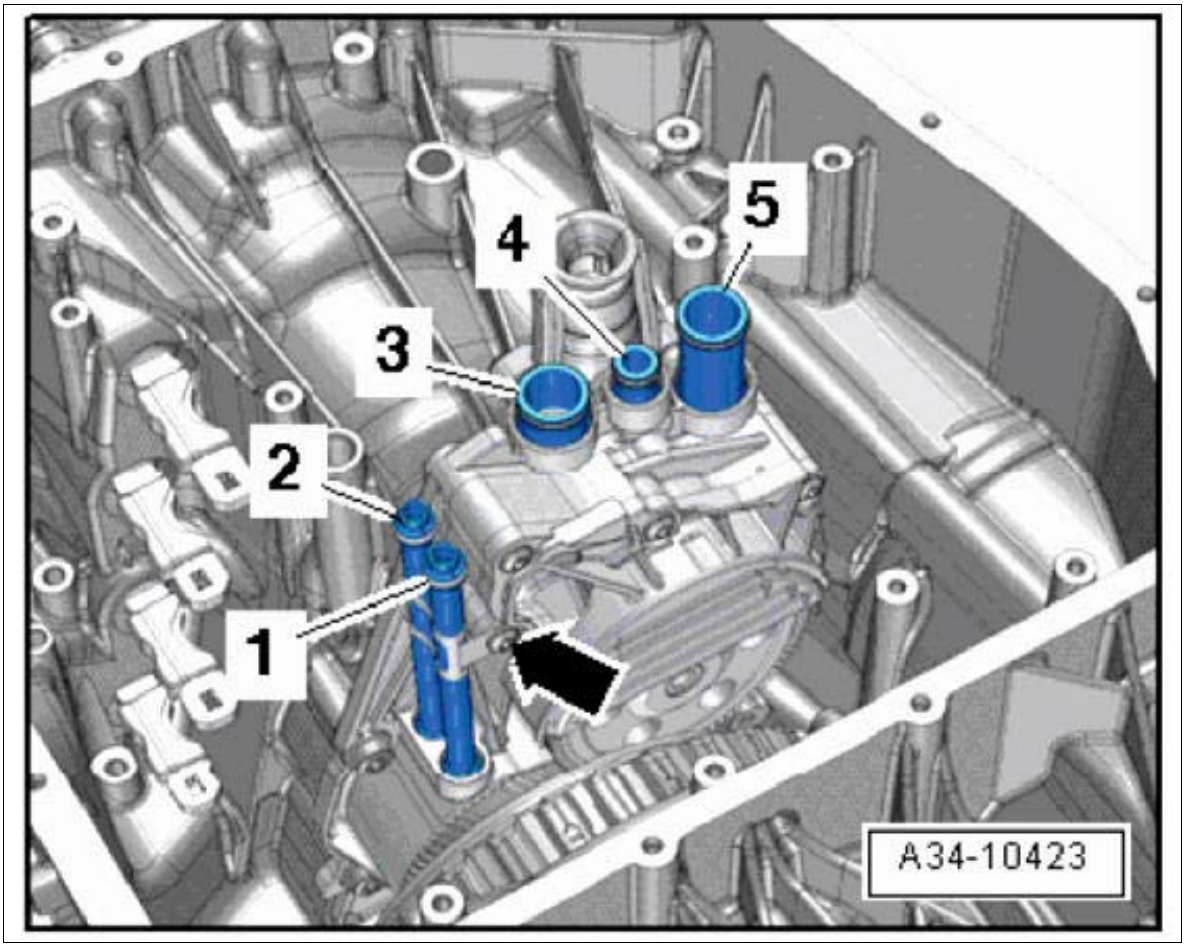

Courtesy of PORSCHE CARS NORTH AMERICA, INC.

3. Install control mechanism for transmission **-3-** .

    1. 3.1. Pull ATF filter housing out slightly.
    2. 3.2. Guide control mechanism for transmission **-3-** in **-direction of arrow-** until it is fitted in the transmission.
    3. 3.3. Check that the control mechanism for transmission is fitted correctly.
    4. 3.4. Fit ATF filter housing on the control mechanism for transmission and check that the oil pipes are fitted correctly.
    5. 3.5. Fit and tighten fastening screws **-1-** . Tightening torque 10 Nm (7.5 ftlb.)

Fig 3: Installing Transmission Control Mechanism

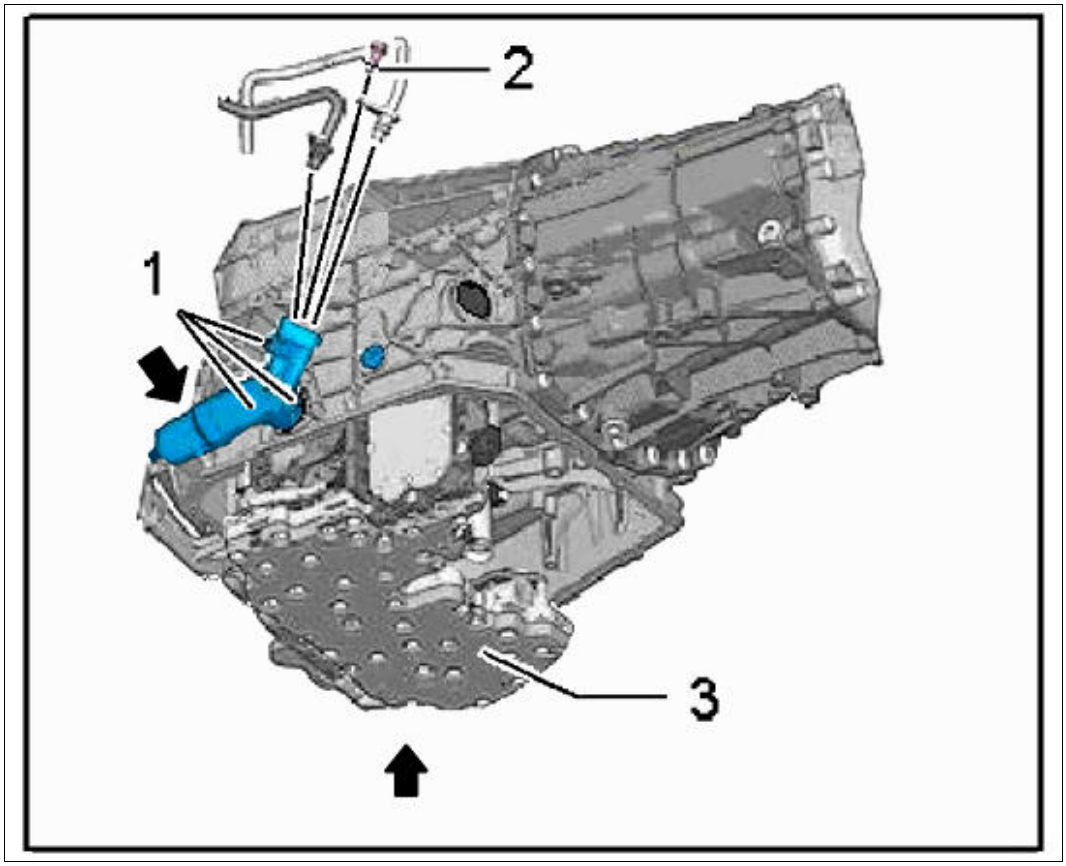

Courtesy of PORSCHE CARS NORTH AMERICA, INC.

4. Fit and tighten fastening screws **-1... 6-** . **Tightening torque 10 Nm (7.5 ftlb.)**

Fig 4: Transmission Control Mechanism Screws Tightening Sequence

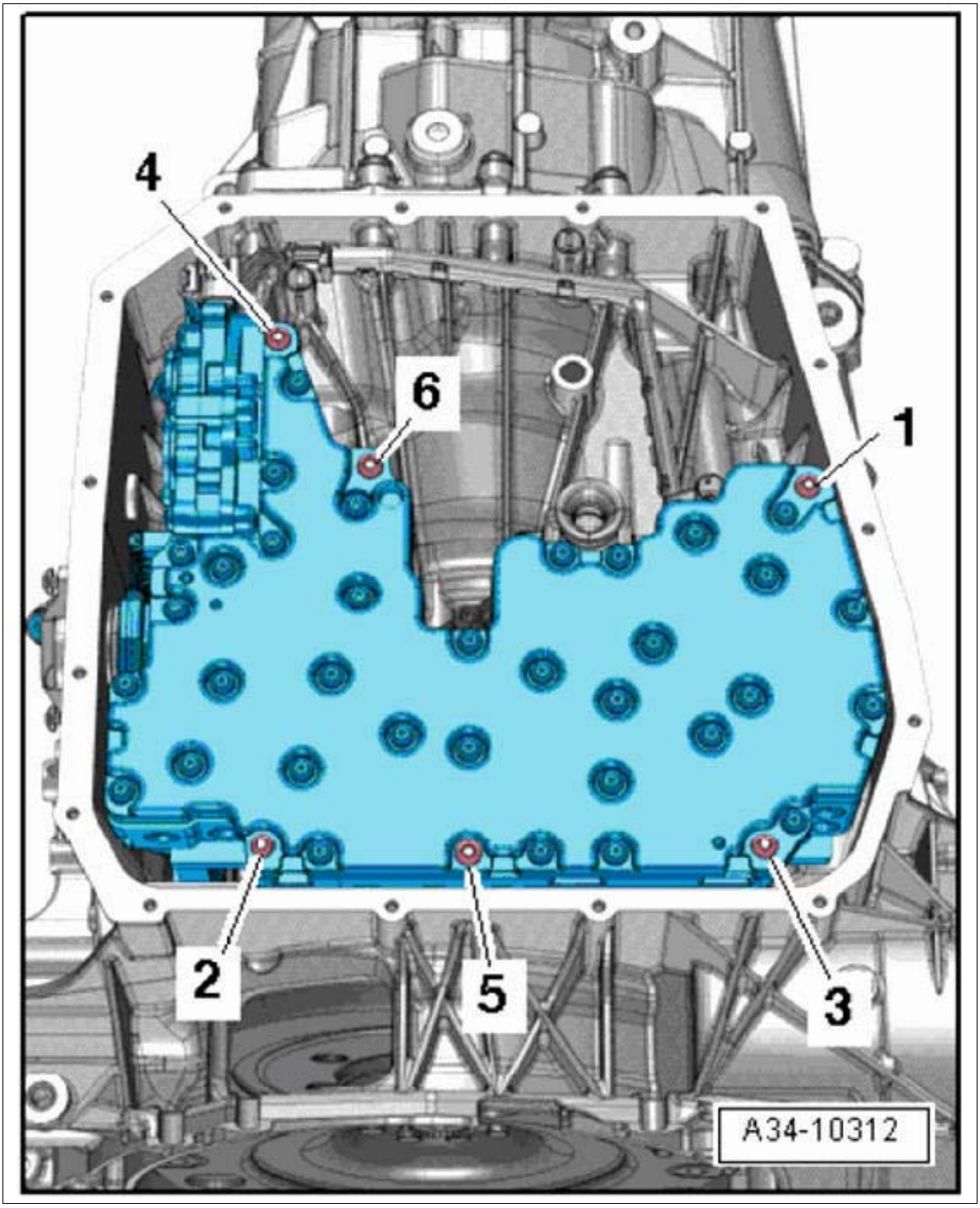

Courtesy of PORSCHE CARS NORTH AMERICA, INC.

5. Connect electric plug connection and engage the lock **-1-** .

Fig 5: Connecting RPM Sensors Electric Plug Connection

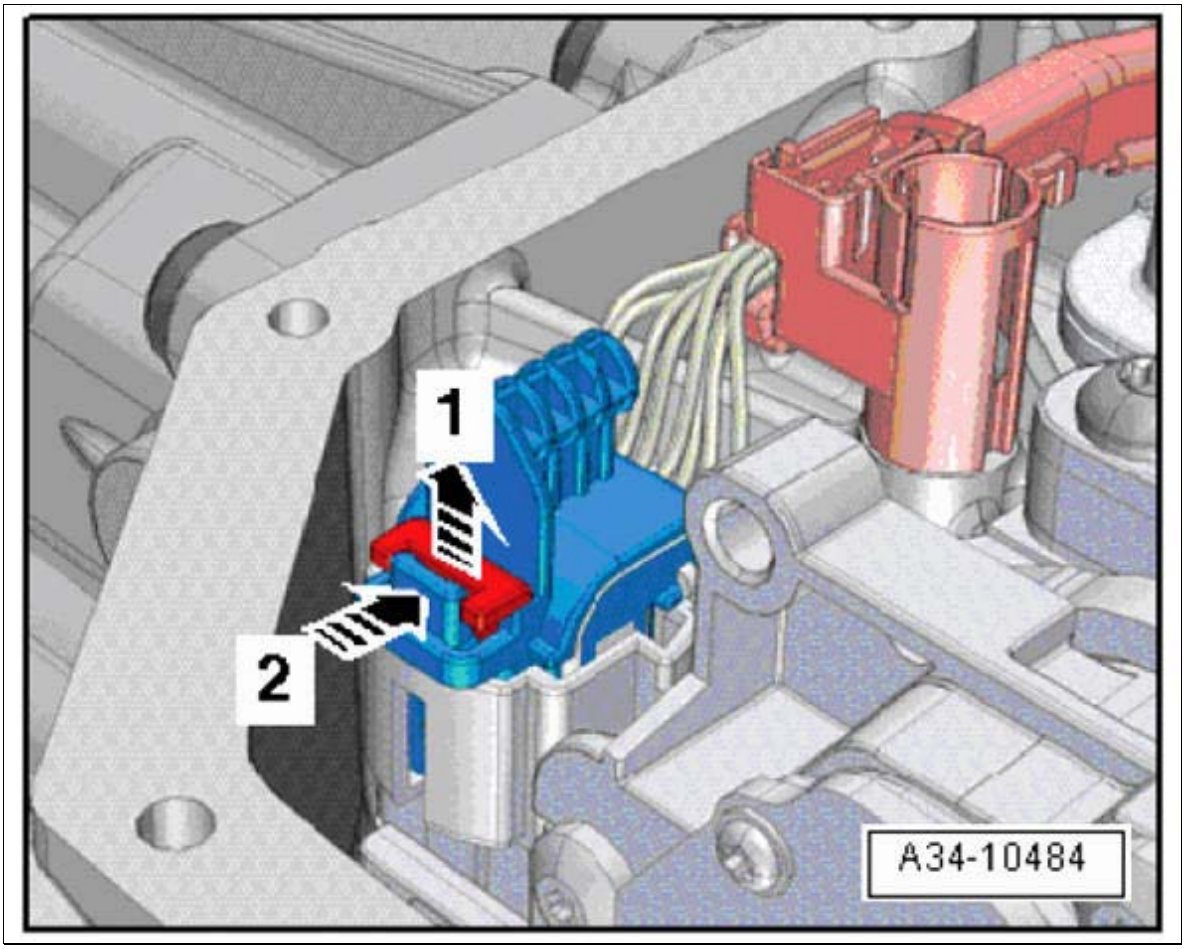

Courtesy of PORSCHE CARS NORTH AMERICA, INC.

6. Guide in connector housing **-2-** and turn it in **-direction of arrow-** until you reach the bore for the fastening screw. Then fit and tighten fastening screw **-1-** . **Tightening torque 8 Nm (6 ftlb.)**

Fig 6: Turning Connector Housing

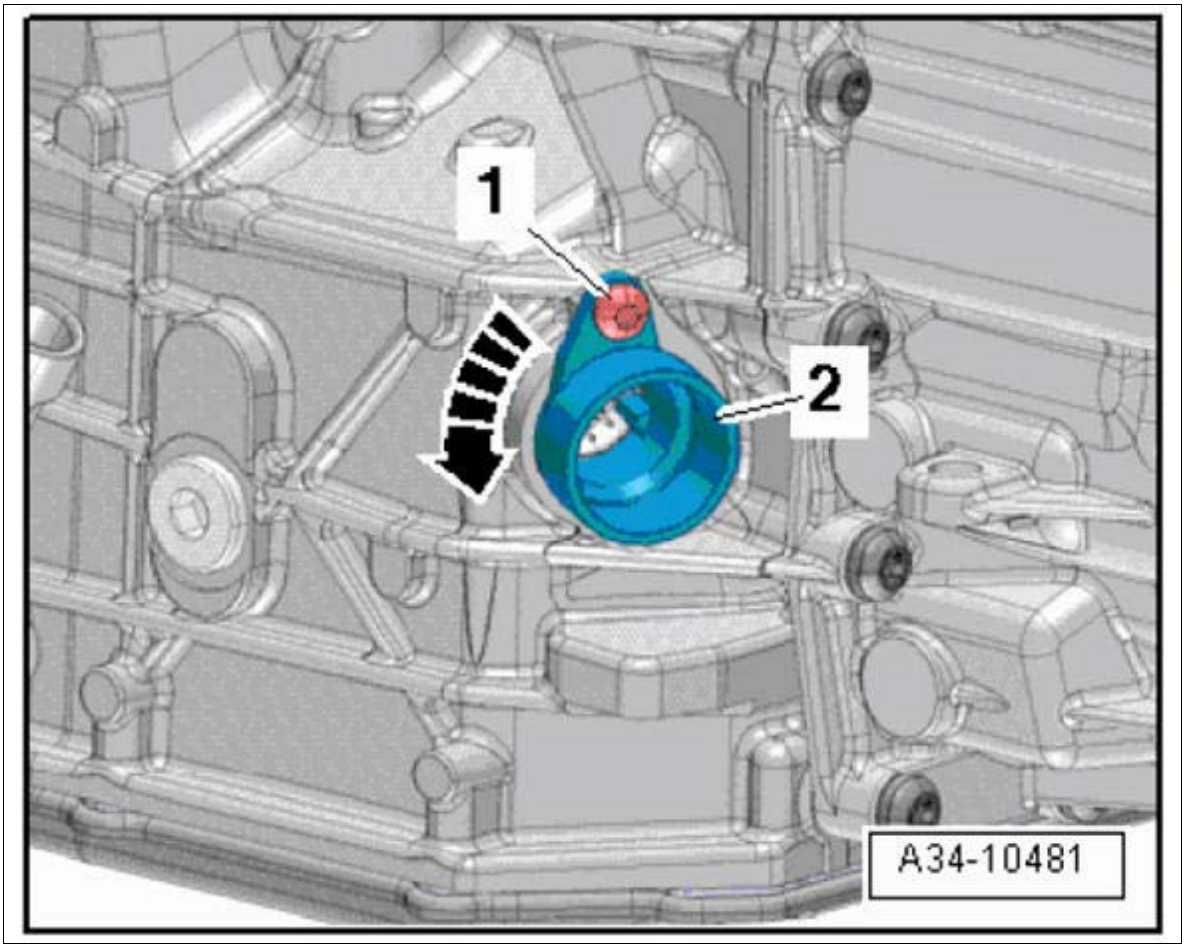

Courtesy of PORSCHE CARS NORTH AMERICA, INC.

7. Connect electric plug connection on connector housing and lock it by turning the lock in **-direction of arrow-** .

Fig 7: Connecting Electric Plug Connection

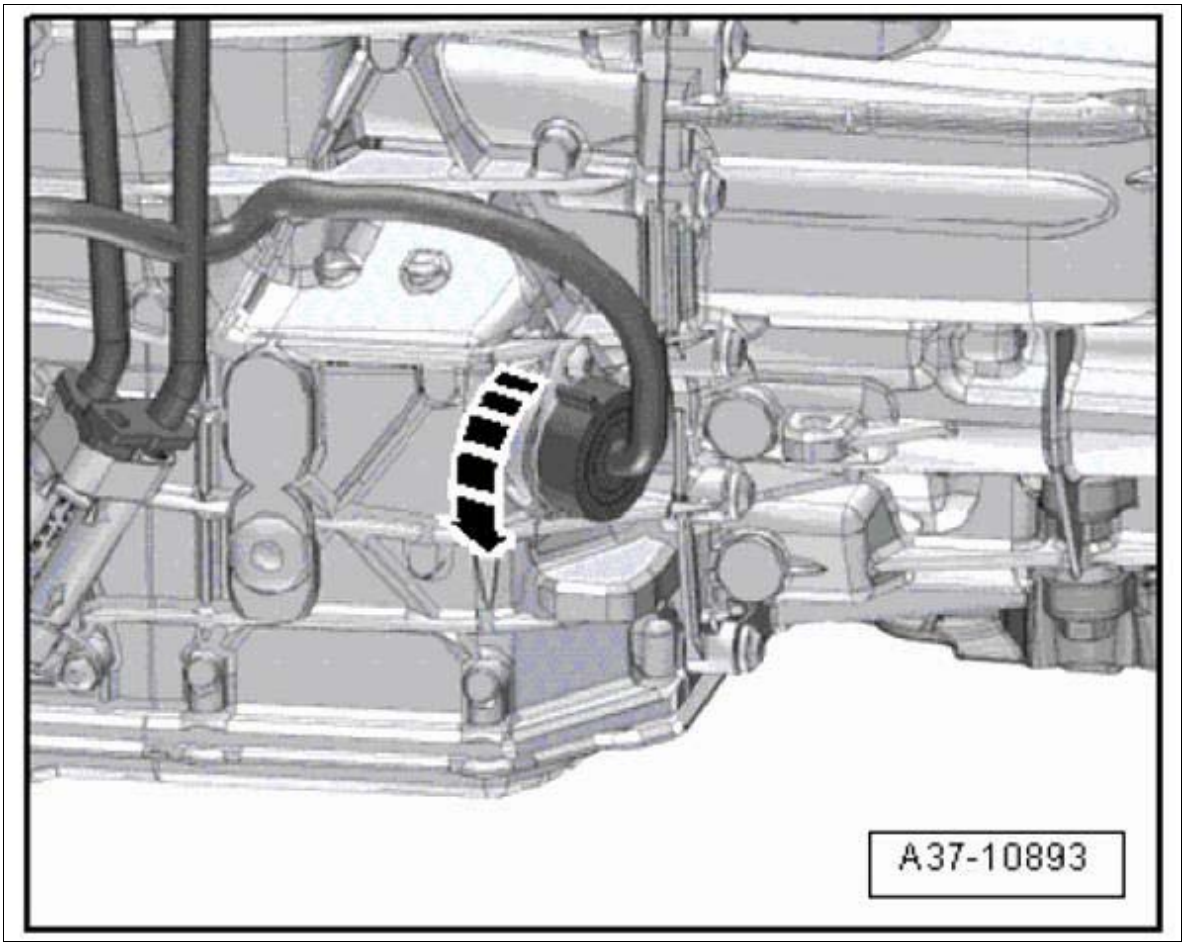

Courtesy of PORSCHE CARS NORTH AMERICA, INC.

8. Replace seal **-2-** .

Fig 8: Identifying ATF Suction Filter Seal

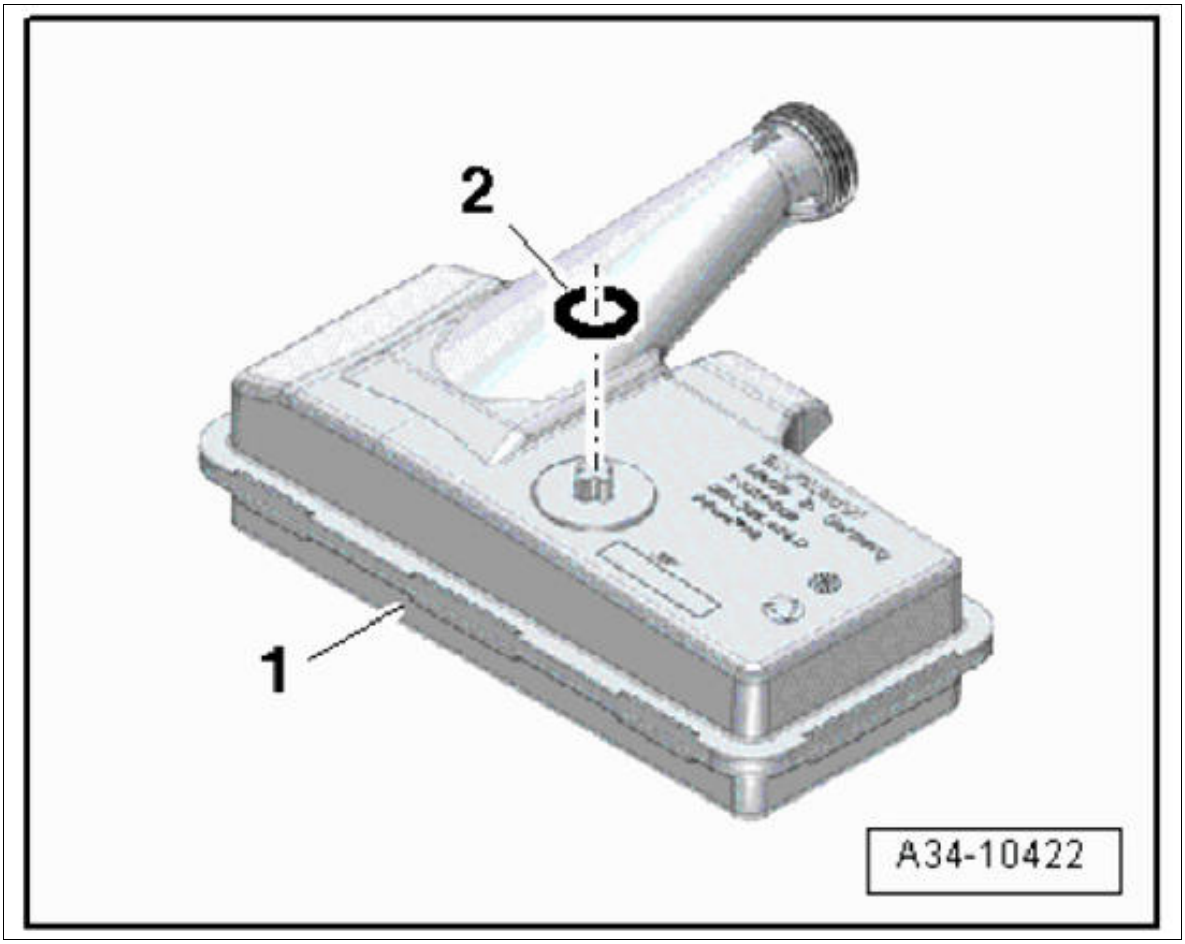

Courtesy of PORSCHE CARS NORTH AMERICA, INC.

9. Guide ATF suction filter into the control mechanism for transmission in **-direction of arrow-** .

Fig 9: Installing ATF Suction Filter

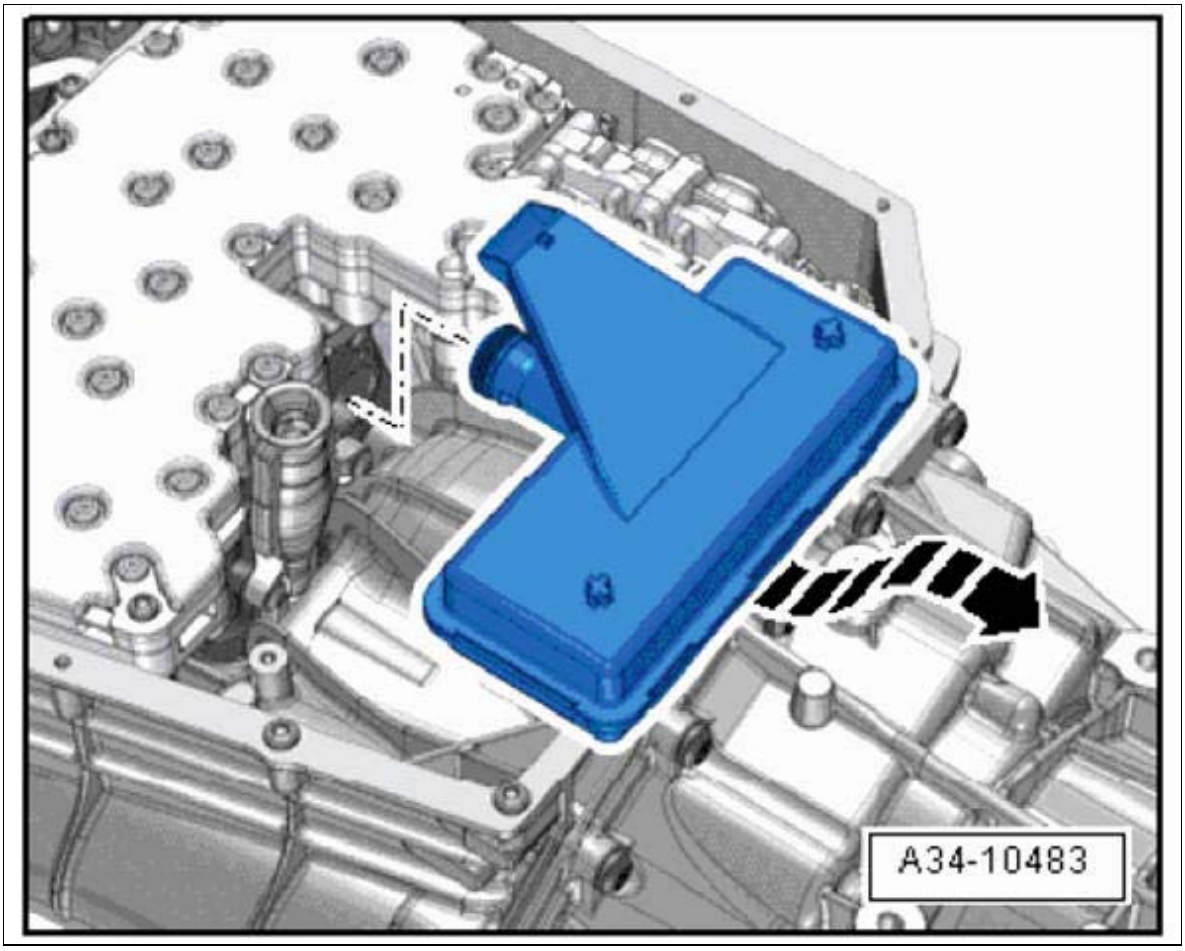

Courtesy of PORSCHE CARS NORTH AMERICA, INC.

WM 387719 REMOVING AND INSTALLING CONTROL MECHANISM FOR TRANSMISSION (ALL MODELS) > SUBSEQUENT WORK

1. Install ATF pan. → Installing ATF pan
2. Top up ATF. → 370235 CHECKING AND TOPPING UP ATF
3. Connect the battery. → Installing battery
4. **Calibration after removing and installing the control mechanism:**

   Calibrate control mechanism for transmission using **PIWIS Tester II 9818** .

   1. 4.1. Overview -> PDK -> Maintenance/repairs -> Calibration after **removing and installing** mechatronics -> [F12]
   2. 4.2. Follow the instructions on **PIWIS Tester II 9818** and press [F12]
   3. 4.3. Start the calibration process by pressing [F8].
   4. 4.4. Erase the fault memory.

WM 387719 REMOVING AND INSTALLING CONTROL MECHANISM FOR TRANSMISSION (ALL MODELS) > SUBSEQUENT WORK > REPLACING CONTROL MECHANISM FOR TRANSMISSION

After replacing control mechanism for transmission:

1. Program control mechanism for transmission.

   Automatic programming.

   1. 1.1. Use **PIWIS Tester II 9818** to program control mechanism for transmission automatically
   2. 1.2. Overview -> PDK -> Programming -> Automatic programming -> [F12].
   3. 1.3. Perform automatic programming

2. Teach engine immobilizer.

   1. 2.1. Overview -> Diagnostics -> Online teaching functions > Engine immobilizer -> [F12]

3. **Calibrate control mechanism for transmission.**

   Calibrate control mechanism for transmission using **PIWIS Tester II 9818** .

   1. 3.1. Overview -> PDK -> Maintenance/repairs -> Calibration after **replacing** mechatronics -> [F12]
   2. 3.2. Follow the instructions on **PIWIS Tester II 9818** and press [F12]
   3. 3.3. Start the calibration process by pressing [F8].
   4. 3.4. Erase the fault memory.

4. **Code control mechanism for transmission.**

   Code control mechanism for transmission using **PIWIS Tester II 9818** .

   1. 4.1. Overview -> PDK -> Coding/adaptations -> Automatic coding -> [F12]
   2. 4.2. Perform automatic coding.

WM 3X00IN TECHNICAL VALUES - TRANSMISSION (ALL MODELS) > TECHNICAL VALUES

Location	Description	Type	Basic value	Tolerance 1	Tolerance 2
ATF transmission oil (clutches, mechatronics)		Filling capacity	7 Liter		
ATF transmission oil change quantity		Filling capacity	6.5 Liter		
MTF transmission oil (gear wheels, front-axle final drive)		Filling capacity	4.1 Liter		
MTF transmission oil change quantity		Filling capacity	4.1 Liter		
Transmission oil for hang-on transmission		Filling capacity	0.58 Liter		
Transmission oil for rear axle differential without lock		Filling capacity	1.2 Liter		
Transmission oil for rear axle differential with lock		Filling capacity	1.45 Liter		
Fastening screw securing transmission to engine	M12 x 1.5 x 85/5 ea.	Tightening torque	80 Nm (59 ftlb.)		
Fastening screw securing transmission to engine	M10 x 50/2 ea.	Initial tightening	15 Nm (11 ftlb.)		
Fastening screw securing transmission to engine	M10 x 50	Final tightening	+105°		
Fastening screw securing transmission to	M12 x 1.5 x 155	Tightening torque	80 Nm (59 ftlb.)		

engine					
Transmission to driver	M10 x 1 x 15.5/6 ea.	Tightening torque	60 Nm (44 ftlb.)		
Fastening screw securing transmission to engine	M12 x 100/5 ea.	Initial tightening	30 Nm (22 ftlb.)		
Fastening screw securing transmission to engine	M12 x 100	Final tightening	+105°	+/-30°	
Fastening screw securing transmission to engine	M12 x 125	Initial tightening	30 Nm (22 ftlb.)		
Fastening screw securing transmission to engine	M12 x 125	Final tightening	+105°	+/-30°	
Fastening screw securing transmission to engine	M10 x 60/3 ea.	Initial tightening	15 Nm (11 ftlb.)		
Fastening screw securing transmission to engine	M10 x 60	Final tightening	+105°	+/-30°	
Fastening screw securing starter to transmission	M10 x 50	Tightening torque	65 Nm (48 ftlb.)		
Transmission to driver	M10 x 1 x 15.5/6 ea.	Tightening torque	60 Nm (44 ftlb.)		
Fastening screw securing transmission to engine	M12 x 120 x 90/2 ea.	Initial tightening	30 Nm (22 ftlb.)		
Fastening screw securing transmission to engine	M12 x 120 x 90	Final tightening	+105°	+/-30°	
Fastening screw securing transmission to engine	M12 x 75/2 ea.	Initial tightening	30 Nm (22 ftlb.)		

Fastening screw securing transmission to engine	M12 x 75	Final tightening	+105°	+/-30°	
Transmission to driver	M10 x 1 x 15.5	Tightening Torque	60 Nm (44 ftlb.)		
Fastening screw securing transmission to engine	M10 x 40/2 ea.	Initial tightening	15 Nm (11 ftlb.)		
Fastening screw securing transmission to engine	M10 x 40	Final tightening	+105°	+/-30°	
Fastening screw securing transmission to engine	M12 x 50	Initial tightening	30 Nm (22 ftlb.)		
Fastening screw securing transmission to engine	M12 x 50	Final tightening	+105°	+/-30°	
Fastening screw securing starter to transmission	M10 x 50	Tightening torque	65 Nm (48 ftlb.)	+/-15 %	
Fastening screw securing transmission to engine	M12 x 100 x 90/1 ea.	Initial tightening	30 Nm (22 ftlb.)		
Fastening screw securing transmission to engine	M12 x 100 x 90	Final tightening	+105°	+/-30°	
Fastening screw securing transmission to starter	M12 x 100 x 90/1 ea.	Initial tightening	30 Nm (22 ftlb.)		
Fastening screw securing transmission to starter	M12 x 100 x 90	Final tightening	+105°	+/-30°	
Fastening screw securing heat shield to transmission	M6 x 12 and M6 x 16	Tightening torque	8 Nm (6 ftlb.)	+/-1.5 Nm (+/-1 ftlb.)	

Fastening screw securing selector support to transmission	M6 x 20	Tightening torque	8 Nm (6 ftlb.)		
Fastening nut securing selector support to tunnel	M6 nut/4 ea.	Tightening torque	8 Nm (6 ftlb.)		
Fastening screw securing housing to intermediate housing on cover	M8 x 40 (28 ea.)/replace aluminum screw	Initial tightening	8 Nm (6 ftlb.)		
Fastening screw securing housing to intermediate housing on cover		Final tightening	+120°		
Fastening screw securing cover to intermediate housing	M8 x 55 (2 ea.)	Initial tightening	15 Nm (11 ftlb.)		
Fastening screw securing cover to intermediate housing		Final tightening	+90°		
Fastening screw securing differential flange to transmission housing	M8 x 38 (10 ea.)	Initial tightening	20 Nm (15 ftlb.)		
Fastening screw securing differential flange to transmission housing		Final tightening	+90°		
Fastening screw securing oil pan to transmission housing	M6 x 20 (15 ea.)	Tightening torque	10 Nm (7.5 ftlb.)		
Fastening screw securing clutch cover on transmission housing	M6 x 20 (5 ea.)	Tightening torque	10 Nm (7.5 ftlb.)		
Speed module to bearing bracket	M6 x 8.021 x 25	Tightening torque	10 Nm (7.5 ftlb.)		

Fastening screw securing pump to housing	M8 x 30 (5 ea.)	Tightening torque	25 Nm (19 ftlb.)		
Fastening screw securing hydraulic system to transmission housing	M6 x 45 (6 ea.)	Initial tightening	8 Nm (6 ftlb.)		
Fastening screw securing hydraulic system to transmission housing		Final tightening	+120°		
Fastening screw securing bearing bracket to intermediate housing	M8 x 40 (7 ea.)/replace aluminum screw	Initial tightening	8 Nm (6 ftlb.)		
Fastening screw securing bearing bracket to intermediate housing		Final tightening	+120°		
Fastening screw securing idler gear support to bearing bracket	M8 x 85 (2 ea.)	Tightening torque	25 Nm (19 ftlb.)		
Fastening screw securing sucking jet pump to pump module.	M5 x 20 (2 ea.)	Tightening torque	4.5 Nm (3 ftlb.)		
Fastening screw securing pressure filter to transmission housing	M6 x 20 (3 ea.)	Tightening torque	10 Nm (7.5 ftlb.)		
Screw on drive shaft	M14 x 1.5	Initial tightening	100 Nm (74 ftlb.)		
Screw on drive shaft		Final tightening	+120°	+30°	
Screw on intermediate shaft	M26 x 1.5 x 29/replace	Tightening torque	205 Nm (151.5 ftlb.)		
Screw on inner intermediate shaft	M26 x 1.5 x 29/replace	Tightening torque	205 Nm (151.5 ftlb.)		

Fastening screw for left flanged shaft	M8 x 25	Initial tightening	15 Nm (11 ftlb.)		
Fastening screw securing left flanged shaft		Final tightening	45°		
Drain plug on intermediate shaft housing/oil inspection plug on transmission housing.	M22 x 1.5 x 10.8 (2 ea.)/replace aluminum screw	Tightening torque	45 Nm (33 ftlb.)		
Drain plug on oil pan	M22 x 1.5 x 9.5	Tightening torque	45 Nm (33 ftlb.)		
Fastening screw securing cable guide to transmission housing	M6 x 20 (5 ea.)	Tightening torque	8 Nm (6 ftlb.)		
Sealing sleeve to transmission housing	M6 x 20	Tightening torque	10 Nm (7.5 ftlb.)		
Oil inspection plug on intermediate housing	M22 x 1.5 x 10.8/replace aluminum screw	Tightening torque	45 Nm (33 ftlb.)		
Fastening screw securing bending vibration balancer to cover	M8 (3 ea.)/replace	Initial tightening	20 Nm (15 ftlb.)		
Fastening screw securing bending vibration balancer to cover		Final tightening	+90°	+/-20°	
Fastening nut	Fastening screw on transmission mount	Tightening torque	20 Nm (15 ftlb.)		
Fastening screw	Fastening screw on transmission support	Tightening torque	70 Nm (52 ftlb.)		
Fastening screw	Fastening screw on transmission bracket	Tightening torque	40 Nm (30 ftlb.)		
Fastening nut	Fastening nut on transmission bracket	Tightening torque	20 Nm (15 ftlb.)		

Fastening screws	Step 1	Tightening torque	20 Nm (15 ftlb.)		
Fastening screw	Step 2	Torque angle	+90°		
Fastening screws		Tightening torque	23 Nm (17 ftlb.)		
ATF drain plug on oil pan		Tightening torque	45 Nm (33 ftlb.)		
Fastening screw	ATF oil pan to transmission	Tightening torque	10 Nm (7.5 ftlb.)		
Fastening screw	Mechatronics to transmission	Tightening torque	10 Nm (7.5 ftlb.)		
Fastening screw	Retaining bracket to transmission	Tightening torque	10 Nm (7.5 ftlb.)		
Fastening screw	ATF filter housing to transmission	Tightening torque	10 Nm (7.5 ftlb.)		
Fastening screw	ATF lines to ATF filter housing	Tightening torque	20 Nm (15 ftlb.)		
ATF inspection plug		Tightening torque	45 Nm (33 ftlb.)		
Fastening screw	ATF connector housing	Tightening torque	8 Nm (6 ftlb.)		
Fastening screw	Cable guide for rpm sensor to transmission	Tightening torque	8 Nm (6 ftlb.)		
Fastening screws	ATF oil pan	Tightening torque	10 Nm (7.5 ftlb.)		
ATF filter housing cover		Tightening torque	8 Nm (6 ftlb.)		
Fastening screw	ATF lines to ATF filter housing	Tightening torque	20 Nm (15 ftlb.)		
Fastening screw	ATF filter housing to transmission	Tightening torque	10 Nm (7.5 ftlb.)		
Fastening nuts	Selector support	Tightening torque	8 Nm (6 ftlb.)		
Clamping screw	Clamping screw for adjusting locking cable	Tightening torque	13 Nm (9.5 ftlb.)		
Fastening screws	Locking cable holder to transmission	Tightening torque	8 Nm (6 ftlb.)		

Fastening screw securing connection piece for ATF lines to transmission	M8 x 25	Tightening torque	20 Nm (15 ftlb.)		
Fastening screws	ATF lines to radiator	Tightening torque	5 Nm (3.5 ftlb.)		
Union nuts	ATF line connection point	Tightening torque	29 Nm (21 ftlb.)		
Fastening screw	ATF line to oil pan	Tightening torque	8 Nm (6 ftlb.)		
Fastening screw	ATF line to oil pan	Tightening torque	8 Nm (6 ftlb.)		
Fastening screws securing transfer gear to Porsche Doppelkupplung (PDK)	M10 x 70/replace	Initial tightening	50 Nm (37 ftlb.)		
Fastening screws securing transfer gear to Porsche Doppelkupplung (PDK)		Final tightening	+90°		
Fastening screws	Step 1: Cardan shaft to rear axle differential	Tightening torque	21 Nm (16 ftlb.)		
Fastening screws	Step 2: Cardan shaft to rear axle differential	Torque angle	+90°		
Fastening screws	Heat shield to holder	Tightening torque	55 Nm (41 ftlb.)		
Fastening nut	Heat shield to body	Tightening torque	2.1 Nm (1.5 ftlb.)		
Fastening screws	Heat shield to tank holder	Tightening torque	15 Nm (11 ftlb.)		
Fastening screws	Tunnel support	Tightening torque	55 Nm (41 ftlb.)		
Rear fastening screw securing rear final drive to rear axle carrier	M12 x 80	Tightening torque	95 Nm (70 ftlb.)		
Bottom fastening screw securing rear final drive to	M10 x 92/replace	Initial tightening	40 Nm (30 ftlb.)		

rear axle carrier					
Bottom fastening screw securing rear final drive to rear axle carrier		Final tightening	+90°		
Fastening screw on servo motor for rear-differential lock		Tightening torque	13 Nm (9.5 ftlb.)		
Inspection and filler plug for all-wheel final drive		Tightening torque	45 Nm (33 ftlb.)		
ATF inspection and filler plug		Tightening torque	0 Nm (0 ftlb.)		
Transmission oil drain plug		Tightening torque	45 Nm (33 ftlb.)		
Oil drain plug on rear final drive		Tightening torque	35 Nm (26 ftlb.)	+/-5 Nm (+/- 3.5 ftlb.)	
Inspection and filler plug on rear final drive		Tightening torque	35 Nm (26 ftlb.)	+/-5 Nm (+/- 3.5 ftlb.)	

WM 3X00IN TECHNICAL VALUES - TRANSMISSION (ALL MODELS) > INFORMATION > FILLING CAPACITIES

Porsche Doppelkupplung (PDK)	
Specification: Castrol BOT342A	
ATF transmission oil (clutches, mechatronics) New filling including volume of 0.5 liters for filling the ATF lines	→ **Filling capacity: 7 Liter**
ATF transmission oil change quantity	→ **Filling capacity: 6.5 Liter**
Front-axle final drive	
Specification: Castrol BOT233FEQ with additive	
MTF transmission oil (gear wheels, front-axle final drive)	→ **Filling capacity: 4.1 Liter**
MTF transmission oil change quantity	→ **Filling capacity: 4.1 Liter**
Hang-on transmission	
Specification: Shell TF0870 Qatar	
Transmission oil for hang-on transmission	→ **Filling capacity: 0.58 Liter**
Rear axle differential without lock	

Specification: Castrol SAF-PD	
Transmission oil for rear axle differential	→ **Filling capacity: 1.2 Liter**
Rear axle differential with lock	
Specification: Castrol SAF Carbon mod.	
Transmission oil for rear axle differential	→ **Filling capacity: 1.45 Liter**

WM 3X00IN TECHNICAL VALUES - TRANSMISSION (ALL MODELS) > GROUP 37 > TRANSMISSION CODE

Model	Engine	Transmission code
Macan	2.0 l. R4 Turbo	PEZ
Macan S	3.0 l. V6 BiTurbo [HP]	PFA
Macan Turbo	3.6 l. V6 BiTurbo	
Macan S Diesel	3.0 l. V6 Turbo Diesel	PEX

WM 3X00IN TECHNICAL VALUES - TRANSMISSION (ALL MODELS) > GROUP 37 > PORSCHE DOPPELKUPPLUNG (PDK) ON ENGINE > MACAN S & MACAN TURBO

Fig 1: Identifying Porsche Doppelkupplung (V6 BT Engine)

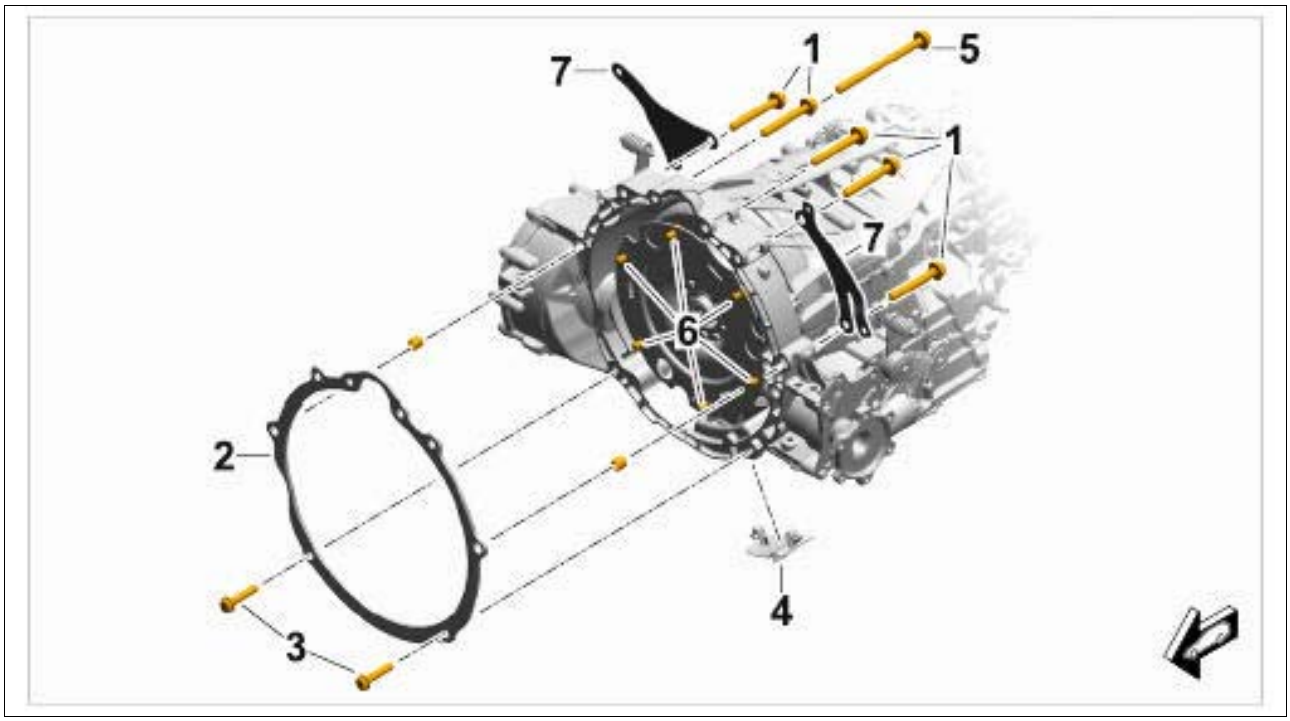

Courtesy of PORSCHE CARS NORTH AMERICA, INC.

1. Screw, M12 x 1.5 x **85** → **Tightening torque: 80 Nm (59 ftlb.)**
2. Spacer ring
3. Screw, M10 x 50 → **Initial tightening: 15 Nm (11 ftlb.)** → **Final tightening: +105°**
4. Cover
5. Screw, M12 x 1.5 x 155 → **Tightening torque: 80 Nm (59 ftlb.)**
6. Screw, M10 x 1.5 x 15.5 → **Tightening torque: 60 Nm (44 ftlb.)**
7. Exhaust system support

WM 3X00IN TECHNICAL VALUES - TRANSMISSION (ALL MODELS) > GROUP 37 > PORSCHE DOPPELKUPPLUNG (PDK) ON ENGINE > MACAN DIESEL S

Fig 1: Identifying Porsche Doppelkupplung (V6 Diesel Engine)

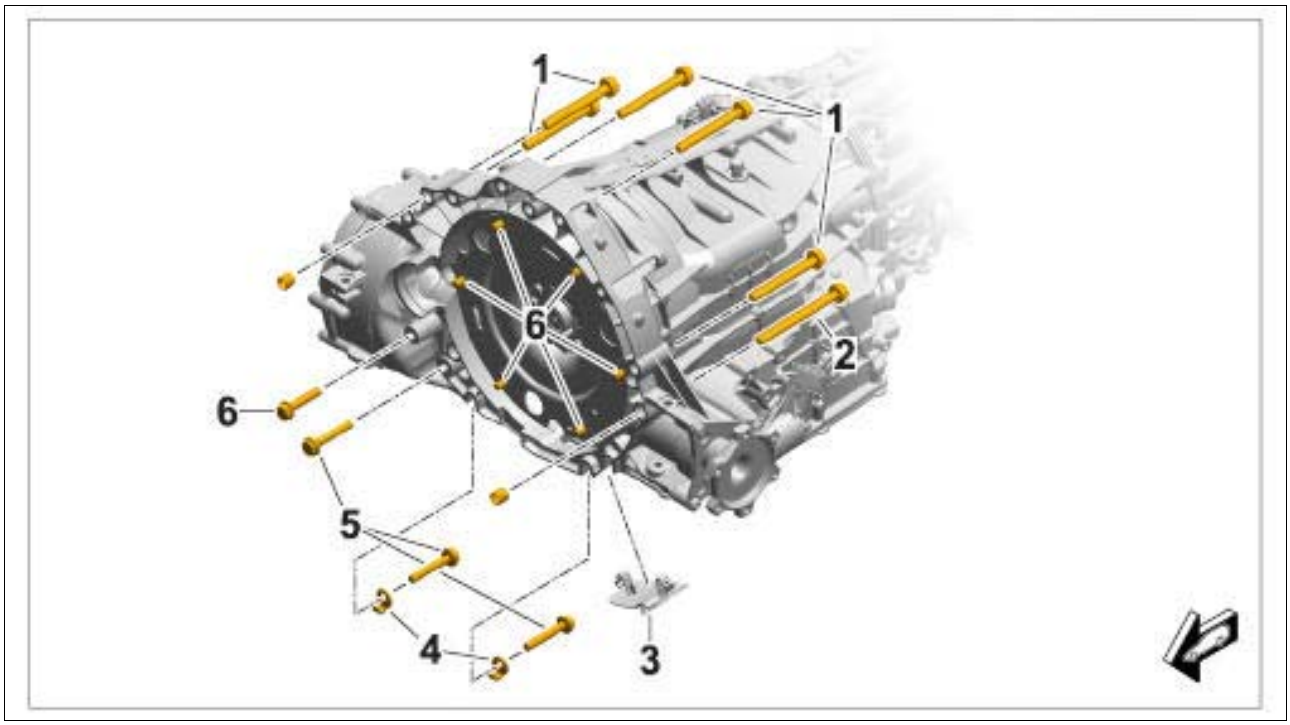

Courtesy of PORSCHE CARS NORTH AMERICA, INC.

1. Screw, M12 x 100 → **Initial tightening: 30 Nm (22 ftlb.)** → **Final tightening: +105°+/-30°**
2. Screw, M12 x 125 → **Initial tightening: 30 Nm (22 ftlb.)** → **Final tightening: +105°+/-30°**
3. Cover
4. Twist lock
5. Screw, M10 x 60 → **Initial tightening: 15 Nm (11 ftlb.)** → **Final tightening: +105°+/-30°**
6. Screw, M10 x 50 → **Tightening torque: 65 Nm (48 ftlb.)**

7. Screw, M10 x 1.5 x 15.5 → **Tightening torque: 60 Nm (44 ftlb.)**

WM 3X00IN TECHNICAL VALUES - TRANSMISSION (ALL MODELS) > GROUP 37 > PORSCHE DOPPELKUPPLUNG (PDK) ON ENGINE > MACAN

Fig 1: Identifying Porsche Doppelkupplung (R4T Engine)

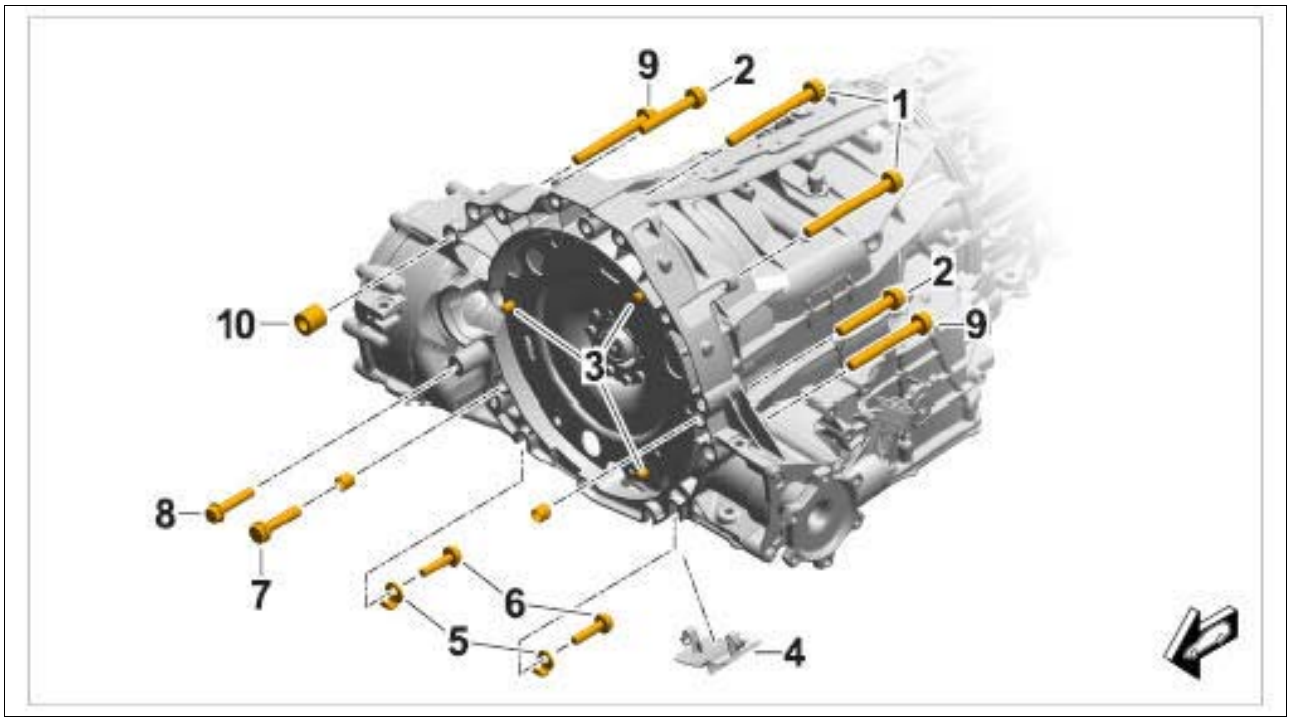

Courtesy of PORSCHE CARS NORTH AMERICA, INC.

1. Screw, M12 x 120 x 90 → **Initial tightening: 30 Nm (22 ftlb.) → Final tightening: +105°+/-30°**
2. Screw, M12 x 75 → **Initial tightening: 30 Nm (22 ftlb.) → Final tightening: +105°+/-30°**
3. Screw, M10 x 1 x 15.5 → **Tightening Torque: 60 Nm (44 ftlb.)**
4. Cover
5. Twist lock
6. Screw, M10 x 40 → **Initial tightening: 15 Nm (11 ftlb.) → Final tightening: +105°+/-30°**
7. Screw, M12 x 50 → **Initial tightening: 30 Nm (22 ftlb.) → Final tightening: +105°+/-30°**
8. Screw, M10 x 50 → **Tightening torque: 65 Nm (48 ftlb.)+/-15 %**
9. Screw, M12 x 100 x 90 → **Initial tightening: 30 Nm (22 ftlb.) → Final tightening: +105°+/-30° → Initial tightening: 30 Nm (22 ftlb.) → Final tightening: +105°+/-30°**
10. Spacer sleeve

WM 3X00IN TECHNICAL VALUES - TRANSMISSION (ALL MODELS) > GROUP 37 > PORSCHE DOPPELKUPPLUNG (PDK) AND GEAR SELECTION

Heat shield to transmission. → **Tightening torque: 8 Nm (6 ftlb.)+/-1.5 Nm (+/-1 ftlb.)**

Selector cable support to transmission. → **Tightening torque: 8 Nm (6 ftlb.)**

Gearshift bracket to tunnel. → **Tightening torque: 8 Nm (6 ftlb.)**

WM 3X00IN TECHNICAL VALUES - TRANSMISSION (ALL MODELS) > GROUP 37 > PORSCHE DOPPELKUPPLUNG (PDK) MECHANISM

Housing to intermediate housing on cover. → **Initial tightening: 8 Nm (6 ftlb.)** → **Final tightening: +120°**

Cover to intermediate housing. → **Initial tightening: 15 Nm (11 ftlb.)** → **Final tightening: +90°**

Differential flange to transmission housing. → **Initial tightening: 20 Nm (15 ftlb.)** → **Final tightening: +90°**

Oil pan to transmission housing. → **Tightening torque: 10 Nm (7.5 ftlb.)**

Clutch cover to transmission housing. → **Tightening torque: 10 Nm (7.5 ftlb.)**

Speed module to bearing bracket. → **Tightening torque: 10 Nm (7.5 ftlb.)**

Pump to housing. → **Tightening torque: 25 Nm (19 ftlb.)**

Hydraulic system to transmission housing. → **Initial tightening: 8 Nm (6 ftlb.)** → **Final tightening: +120°**

Bearing bracket to intermediate housing. → **Initial tightening: 8 Nm (6 ftlb.)** → **Final tightening: +120°**

Idler gear support to bearing bracket. → **Tightening torque: 25 Nm (19 ftlb.)**

Sucking jet pump to pump module. → **Tightening torque: 4.5 Nm (3 ftlb.)**

Pressure filter to transmission housing. → **Tightening torque: 10 Nm (7.5 ftlb.)**

Screw on drive shaft. → **Initial tightening: 100 Nm (74 ftlb.)** → **Final tightening: +120°+30°**

Screw on intermediate shaft. → **Tightening torque: 205 Nm (151.5 ftlb.)**

Screw on inner intermediate shaft. → **Tightening torque: 205 Nm (151.5 ftlb.)**

Left flanged shaft. → **Initial tightening: 15 Nm (11 ftlb.)** → **Final tightening: 45°**

Drain plug on intermediate shaft housing/oil inspection plug on transmission housing. → **Tightening torque: 45 Nm (33 ftlb.)**

Drain plug on oil pan. → **Tightening torque: 45 Nm (33 ftlb.)**

Cable guide to transmission housing. → **Tightening torque: 8 Nm (6 ftlb.)**

Sealing sleeve to transmission housing. → **Tightening torque: 10 Nm (7.5 ftlb.)**

Oil inspection plug on intermediate housing. → **Tightening torque: 45 Nm (33 ftlb.)**

Bending vibration balancer to cover. → **Initial tightening: 20 Nm (15 ftlb.) → Final tightening: +90°+/-20°**

Transmission bracket

Fig 1: Identifying Transmission Bracket Nut And Screw

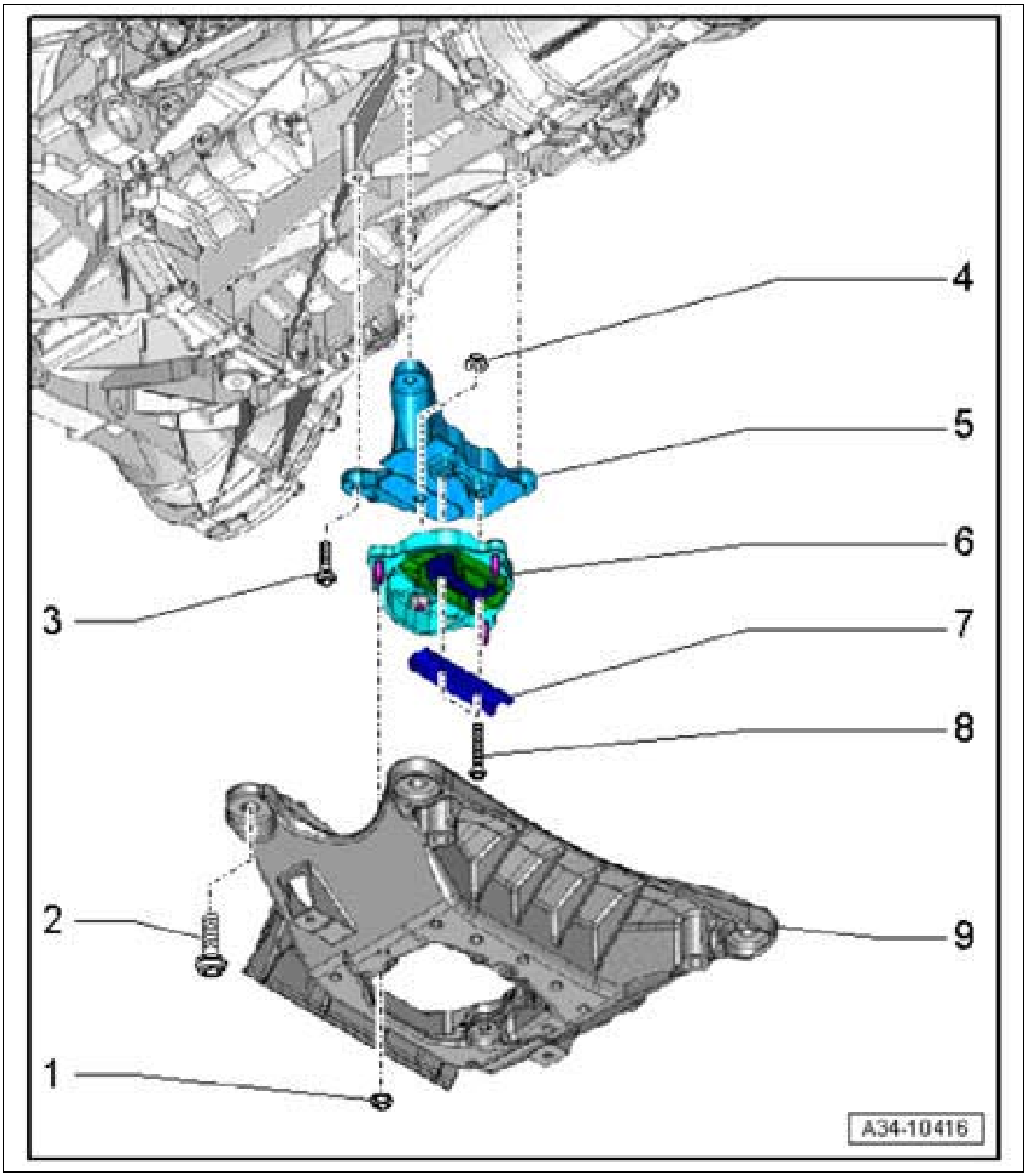

Courtesy of PORSCHE CARS NORTH AMERICA, INC.

1. Fastening nut → **Tightening torque: 20 Nm (15 ftlb.)**
2. Fastening screw → **Tightening torque: 70 Nm (52 ftlb.)**
3. Fastening screw → **Tightening torque: 40 Nm (30 ftlb.)**
4. Fastening nut → **Tightening torque: 20 Nm (15 ftlb.)**
5. Transmission bracket
6. Transmission mount
7. Lower lock for transmission mount
8. Fastening screw → **Tightening torque: 20 Nm (15 ftlb.)** → **Torque angle: +90°**
9. Transmission support

WM 3X00IN TECHNICAL VALUES - TRANSMISSION (ALL MODELS) > GROUP 37 > HEAT SHIELD

arrows - Fastening screws → **Tightening torque: 23 Nm (17 ftlb.)**

Fig 1: Locating Drive Shaft Heat Shield & Screws

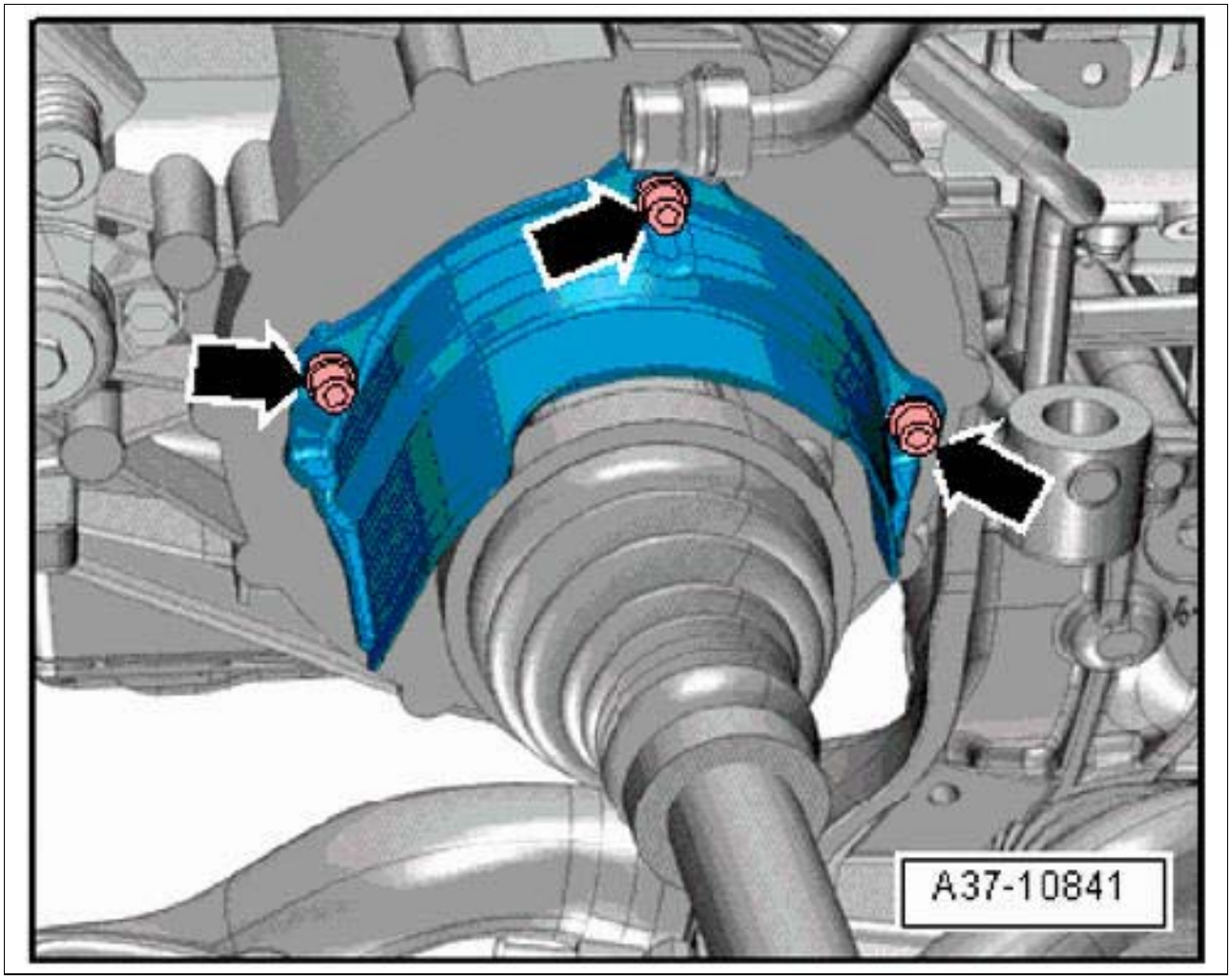

Courtesy of PORSCHE CARS NORTH AMERICA, INC.

WM 3X00IN TECHNICAL VALUES - TRANSMISSION (ALL MODELS) > GROUP 37 > COMPONENT OVERVIEW OF CONTROL MECHANISM FOR TRANSMISSION

Fig 1: Overview Of Transmission Control Mechanism

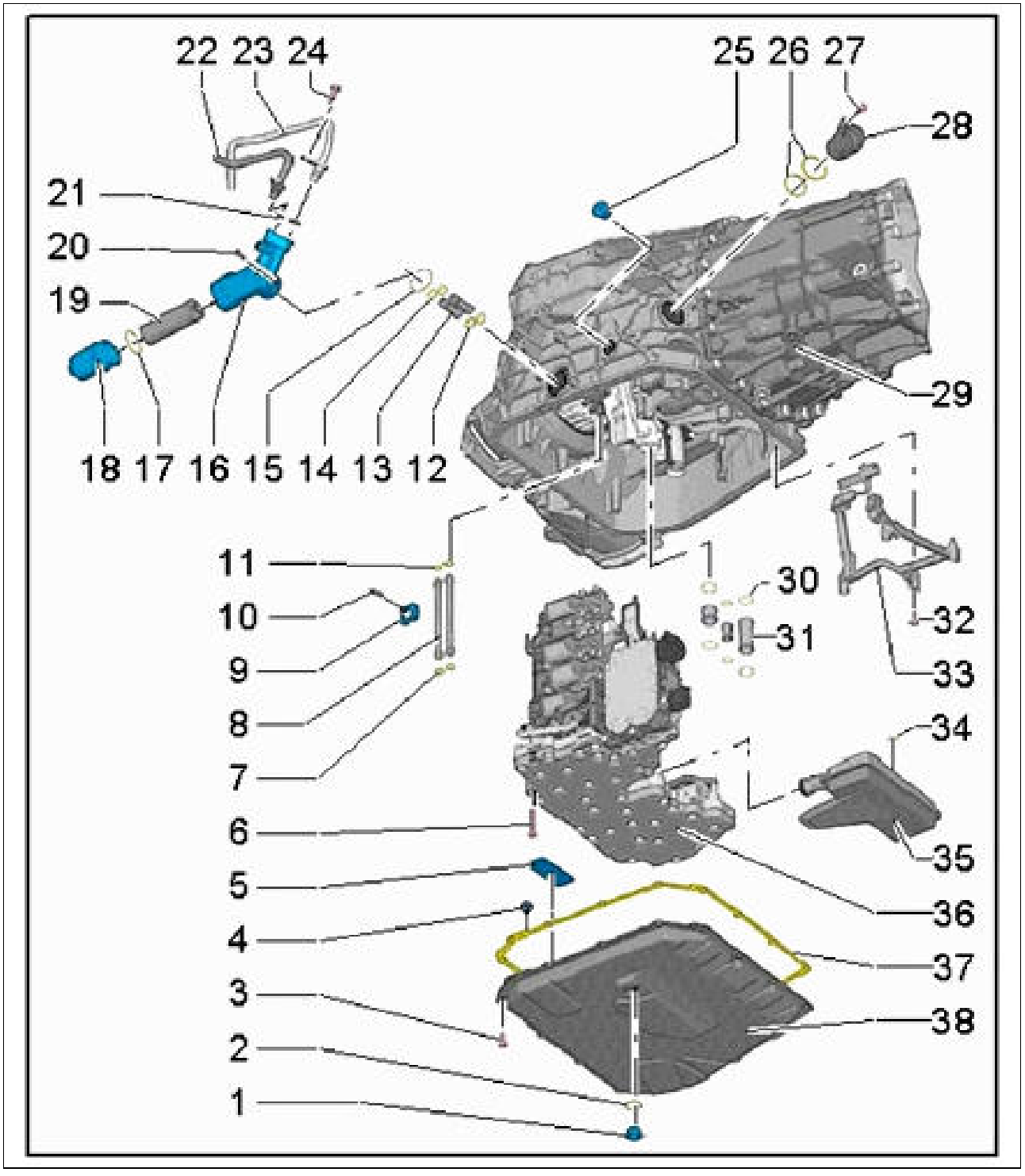

Courtesy of PORSCHE CARS NORTH AMERICA, INC.

1. ATF drain plug → **Tightening torque: 45 Nm (33 ftlb.)**
2. Sealing ring/replace
3. Fastening screw → **Tightening torque: 10 Nm (7.5 ftlb.)**
4. Expansion rivet

    1. In original equipment for securing seal to ATF oil pan
    2. Not absolutely necessary for installation
5. Magnet
    1. Clean magnet when changing ATF
6. Fastening screw → **Tightening torque: 10 Nm (7.5 ftlb.)**
7. O-rings/**replace**
8. ATF pressure pipes
9. Retaining bracket for ATF pressure pipes
10. Fastening screw → **Tightening torque: 10 Nm (7.5 ftlb.)**
11. O-rings/**replace**
12. O-rings/**replace**
13. ATF oil pipes
14. O-rings/**replace**
15. O-ring/**replace**
16. ATF filter housing
17. O-ring/**replace**
18. ATF filter housing cover
19. ATF spin-on filter
20. Fastening screw → **Tightening torque: 10 Nm (7.5 ftlb.)**
21. O-rings/**replace**
22. ATF return line
23. ATF supply line
24. Fastening screw → **Tightening torque: 20 Nm (15 ftlb.)**
25. ATF filler screw and inspection plug → **Tightening torque: 45 Nm (33 ftlb.)**
26. O-rings/**not available individually**
27. Fastening screw → **Tightening torque: 8 Nm (6 ftlb.)**
28. Connector housing with O-rings
29. Transmission housing
30. O-rings/**not available individually**
31. ATF oil pipes with O-rings

32. Fastening screw → **Tightening torque: 8 Nm (6 ftlb.)**
33. Cable guide for rpm sensors
34. O-ring/**replace**
35. ATF suction filter
36. Control mechanism for transmission
37. Seal/**replace**
38. ATF oil pan

WM 3X00IN TECHNICAL VALUES - TRANSMISSION (ALL MODELS) > GROUP 37 > COMPONENT OVERVIEW - ATF OIL PAN

1... 15 - Fastening screws for ATF oil pan → **Tightening torque: 10 Nm (7.5 ftlb.)**

Fig 1: Identifying ATF Oil Pan Screws

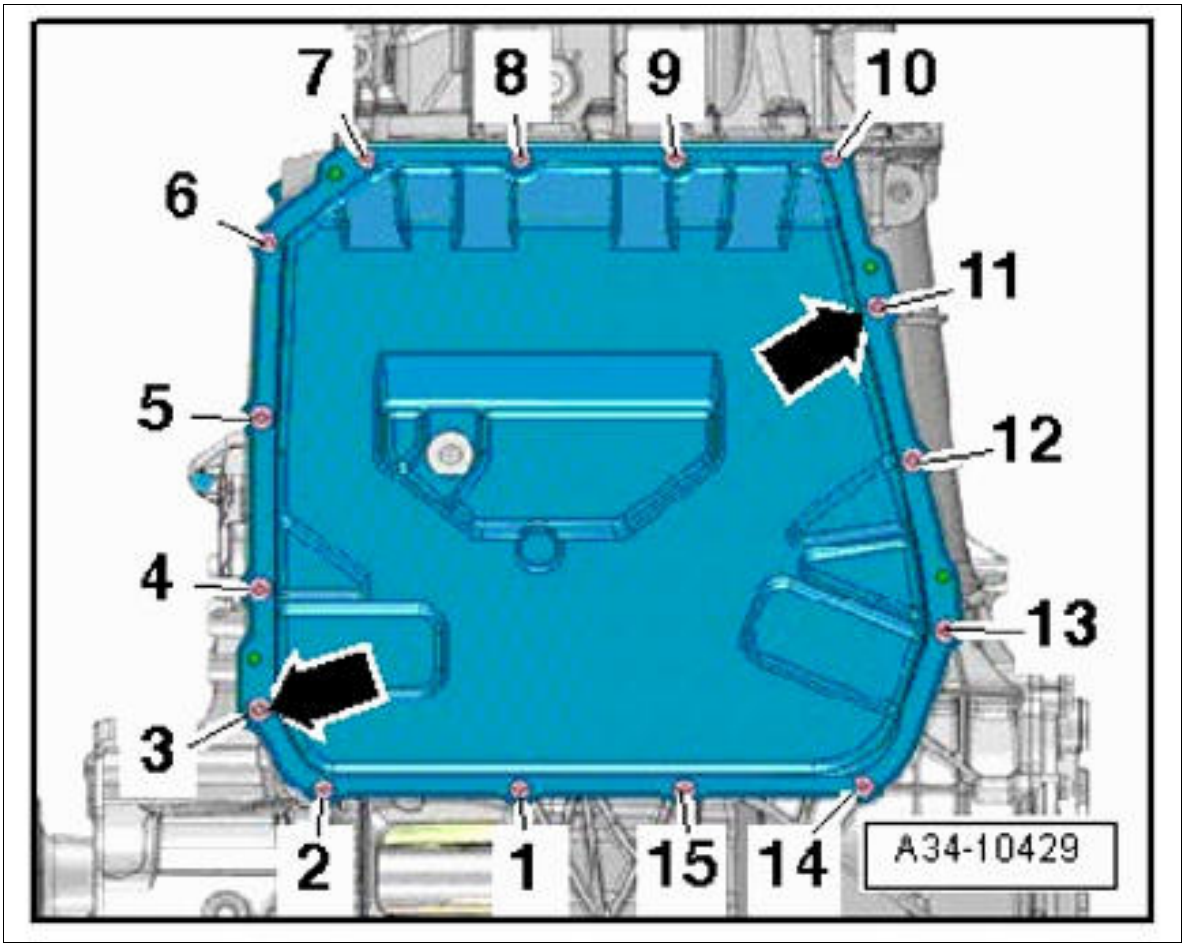

Courtesy of PORSCHE CARS NORTH AMERICA, INC.

1. ATF oil pan
2. Seal/**replace**

3. Expansion rivet

    1. In original equipment for securing seal to ATF oil pan
    2. Not absolutely necessary for installation

    Fig 2: Identifying ATF Oil Pan Seal

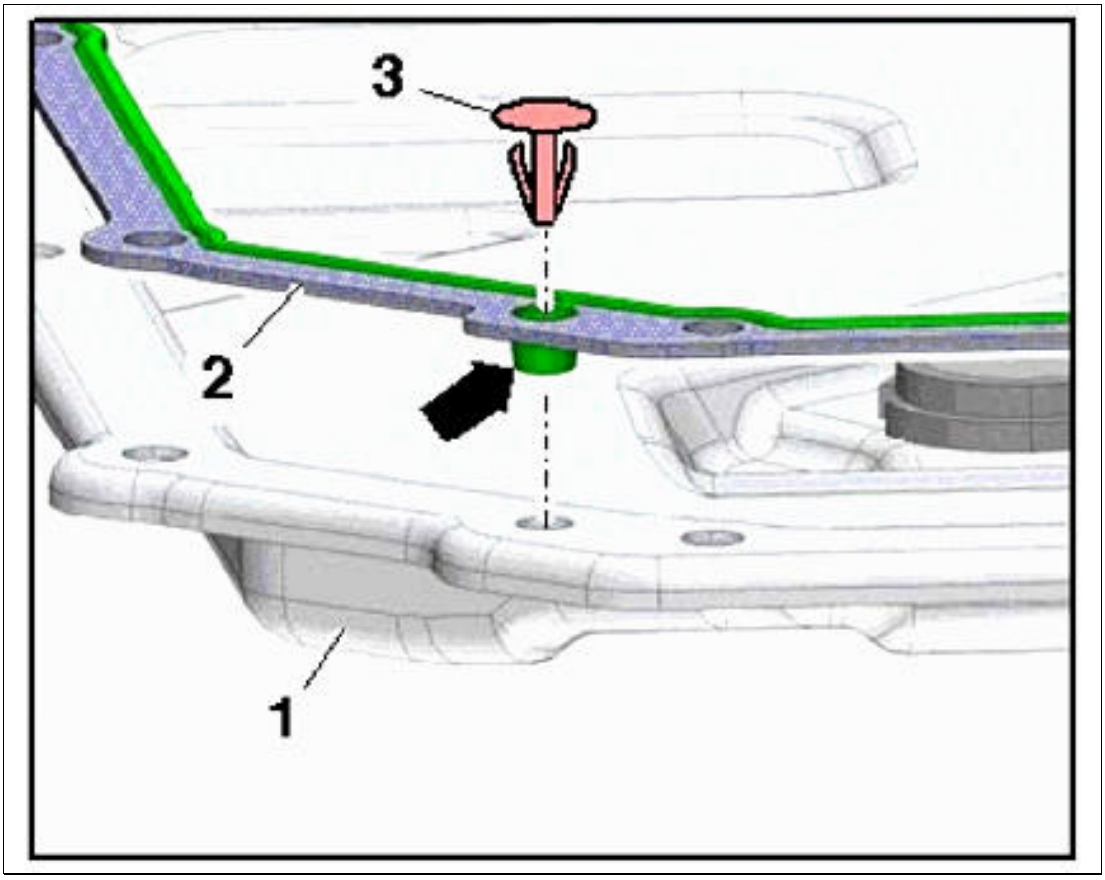

Courtesy of PORSCHE CARS NORTH AMERICA, INC.

arrows

- Magnetic strips
- Clean magnetic strips when removing ATF oil pan

Fig 3: Identifying ATF Oil Pan Magnetic Strips

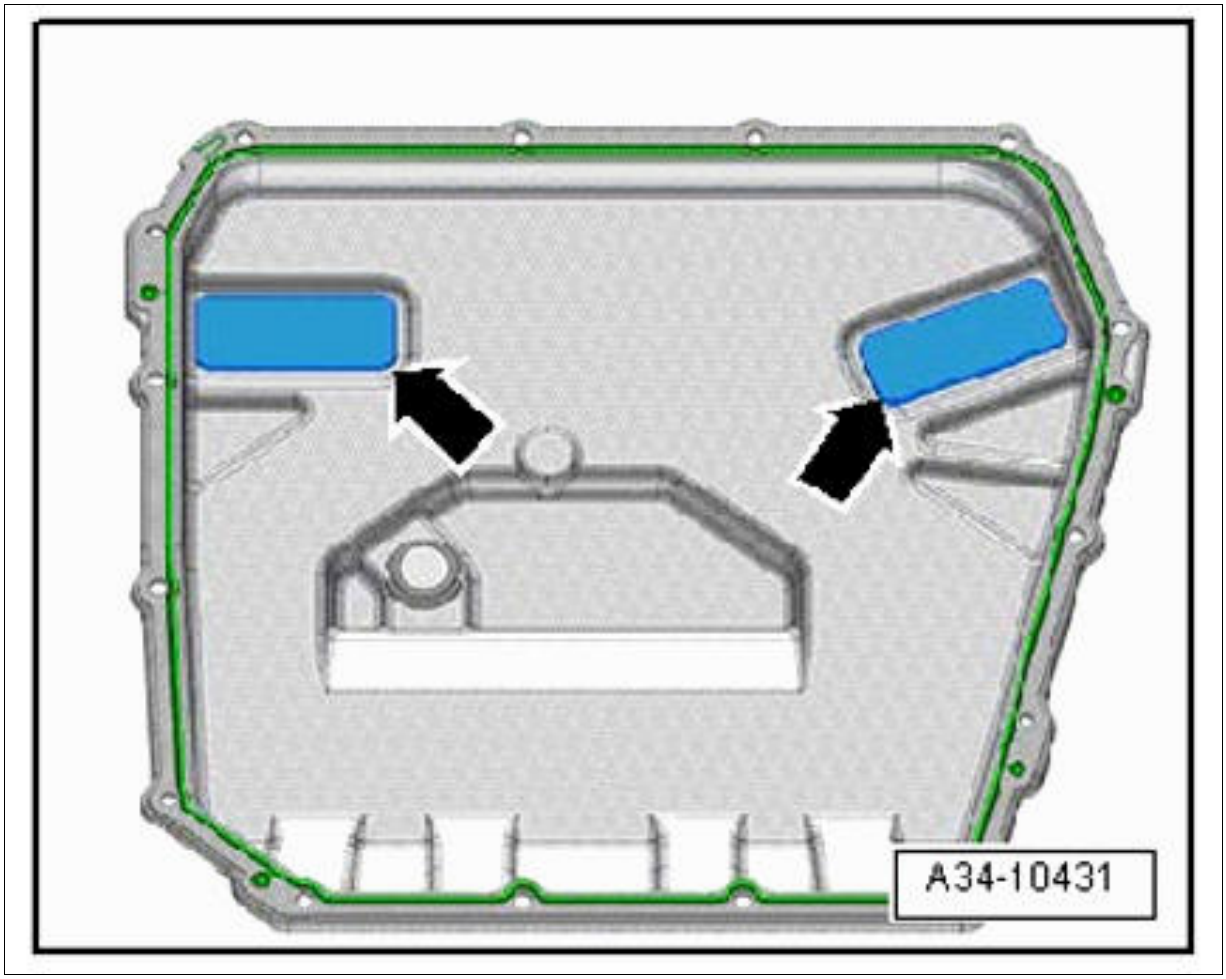

Courtesy of PORSCHE CARS NORTH AMERICA, INC.

WM 3X00IN TECHNICAL VALUES - TRANSMISSION (ALL MODELS) > GROUP 37 > COMPONENT OVERVIEW - ATF FILTER

Fig 1: Identifying ATF Filter, Housing And Line

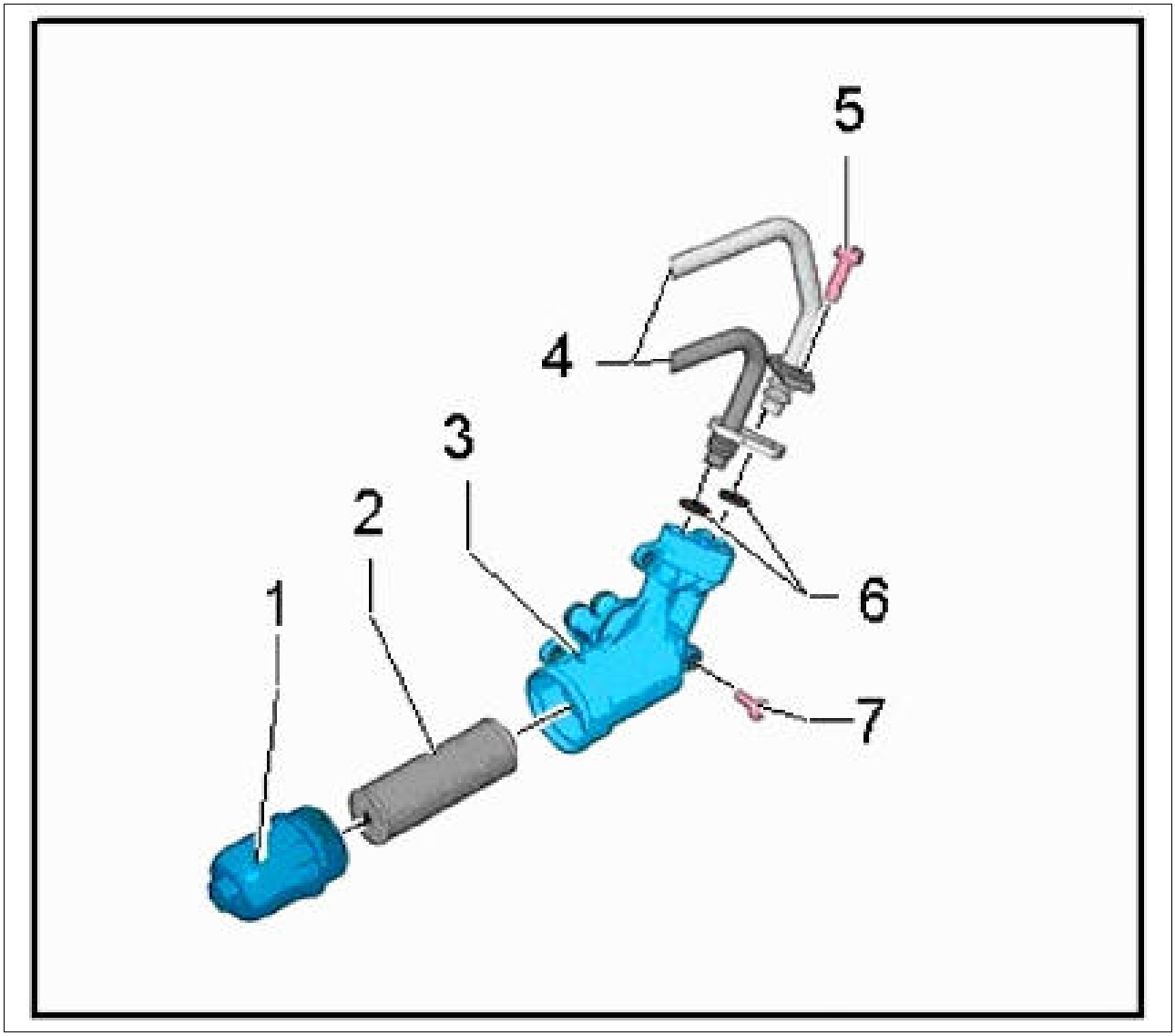

Courtesy of PORSCHE CARS NORTH AMERICA, INC.

1. ATF filter housing cover → **Tightening torque: 8 Nm (6 ftlb.)**
2. ATF filter
3. ATF filter housing
4. ATF lines
5. Fastening screw securing ATF lines → **Tightening torque: 20 Nm (15 ftlb.)**
6. Sealing rings/**replace**
7. Fastening screw for ATF filter housing → **Tightening torque: 10 Nm (7.5 ftlb.)**

WM 3X00IN TECHNICAL VALUES - TRANSMISSION (ALL MODELS) > GROUP 37 >

COMPONENT OVERVIEW - SELECTOR SUPPORT, LOCKING CABLE

Fig 1: Overview Of Selector Support & Locking Cable

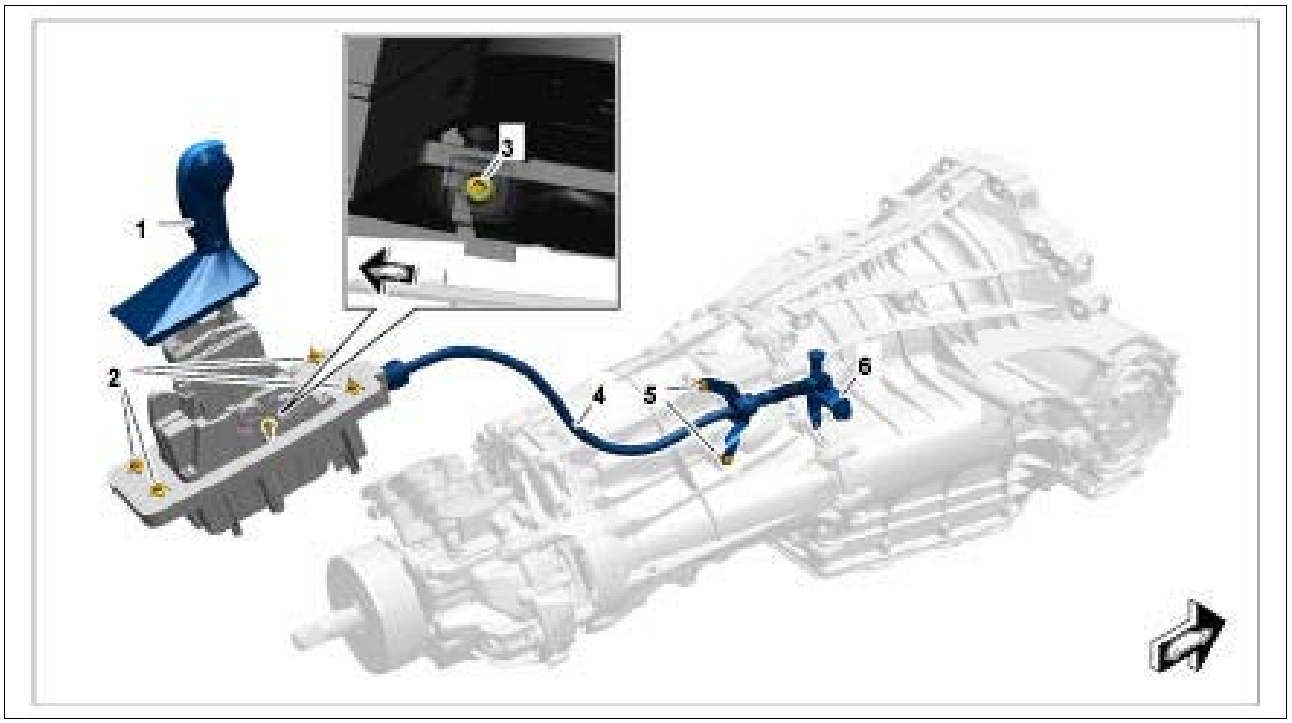

Courtesy of PORSCHE CARS NORTH AMERICA, INC.

1. Selector knob
2. Fastening nuts for selector support → **Tightening torque: 8 Nm (6 ftlb.)**
3. Adjusting screw for locking cable → **Tightening torque: 13 Nm (9.5 ftlb.)**
4. Locking cable
5. Fastening screws for locking cable holder → **Tightening torque: 8 Nm (6 ftlb.)**
6. Selector lever

WM 3X00IN TECHNICAL VALUES - TRANSMISSION (ALL MODELS) > GROUP 38 > ATF LINES

Connection piece for ATF supply and return lines to transmission → **Tightening torque: 20 Nm (15 ftlb.)**

ATF lines

Fig 1: Identifying ATF Lines



Courtesy of PORSCHE CARS NORTH AMERICA, INC.

1. Fastening screws securing ATF lines to radiator → **Tightening torque: 5 Nm (3.5 ftlb.)**
2. Union nuts securing connection point for ATF lines → **Tightening torque: 29 Nm (21 ftlb.)**
3. Fastening screw → **Tightening torque: 8 Nm (6 ftlb.)**
4. Fastening screw → **Tightening torque: 8 Nm (6 ftlb.)**
5. Fastening screw

WM 3X00IN TECHNICAL VALUES - TRANSMISSION (ALL MODELS) > GROUP 39 > TRANSFER GEAR

Transfer gear to Porsche Doppelkupplung (PDK) → **Initial tightening: 50 Nm (37 ftlb.) → Final tightening: +90°**

WM 3X00IN TECHNICAL VALUES - TRANSMISSION (ALL MODELS) > GROUP 39 > TUNNEL SUPPORT AND CARDAN SHAFT BEARING

Fig 1: Identifying Cardan Shaft

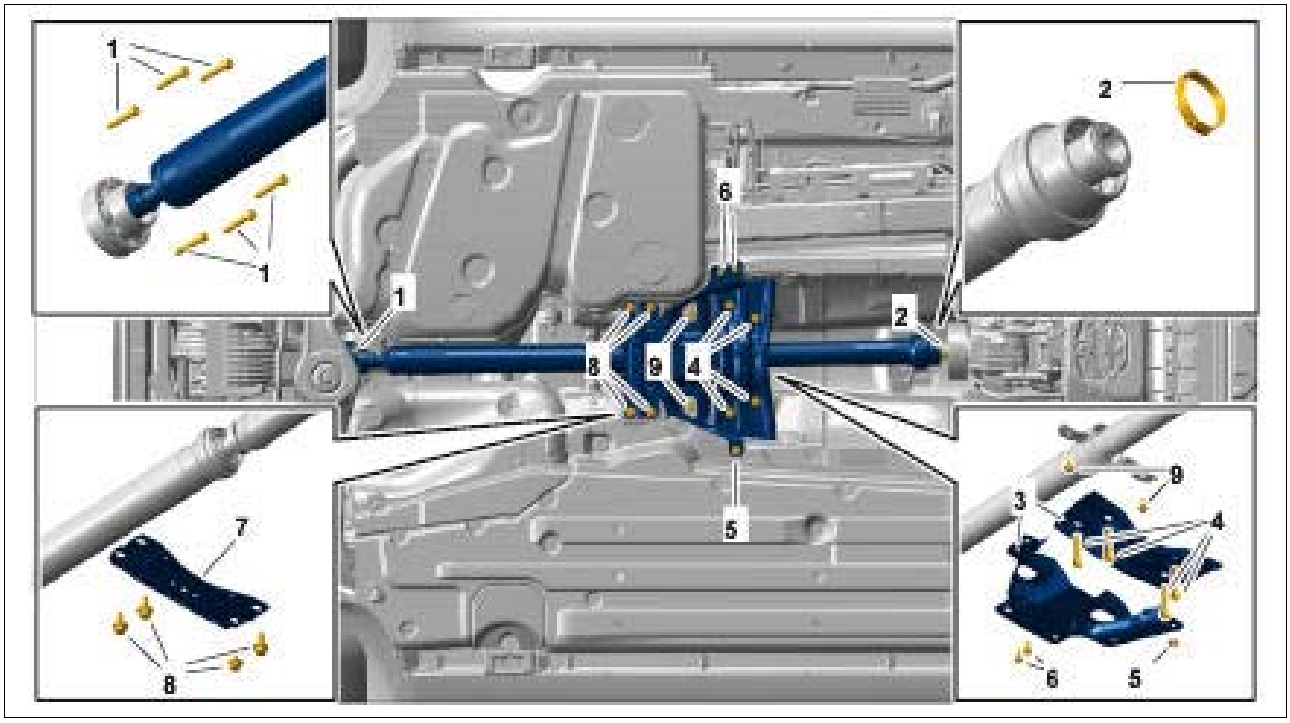

Courtesy of PORSCHE CARS NORTH AMERICA, INC.

1. Fastening screws securing cardan shaft to rear axle differential/**replace screws and plates → Tightening torque: 21 Nm (16 ftlb.) → Torque angle: +90°**
2. Locking clip
3. Heat shield
4. Fastening screws → **Tightening torque: 55 Nm (41 ftlb.)**
5. Fastening nut → **Tightening torque: 2.1 Nm (1.5 ftlb.)**
6. Fastening screws → **Tightening torque: 15 Nm (11 ftlb.)**
7. Tunnel support
8. Fastening screws → **Tightening torque: 55 Nm (41 ftlb.)**

WM 3X00IN TECHNICAL VALUES - TRANSMISSION (ALL MODELS) > GROUP 39 > FINAL DRIVE

Fig 1: Identifying Rear Final Drive

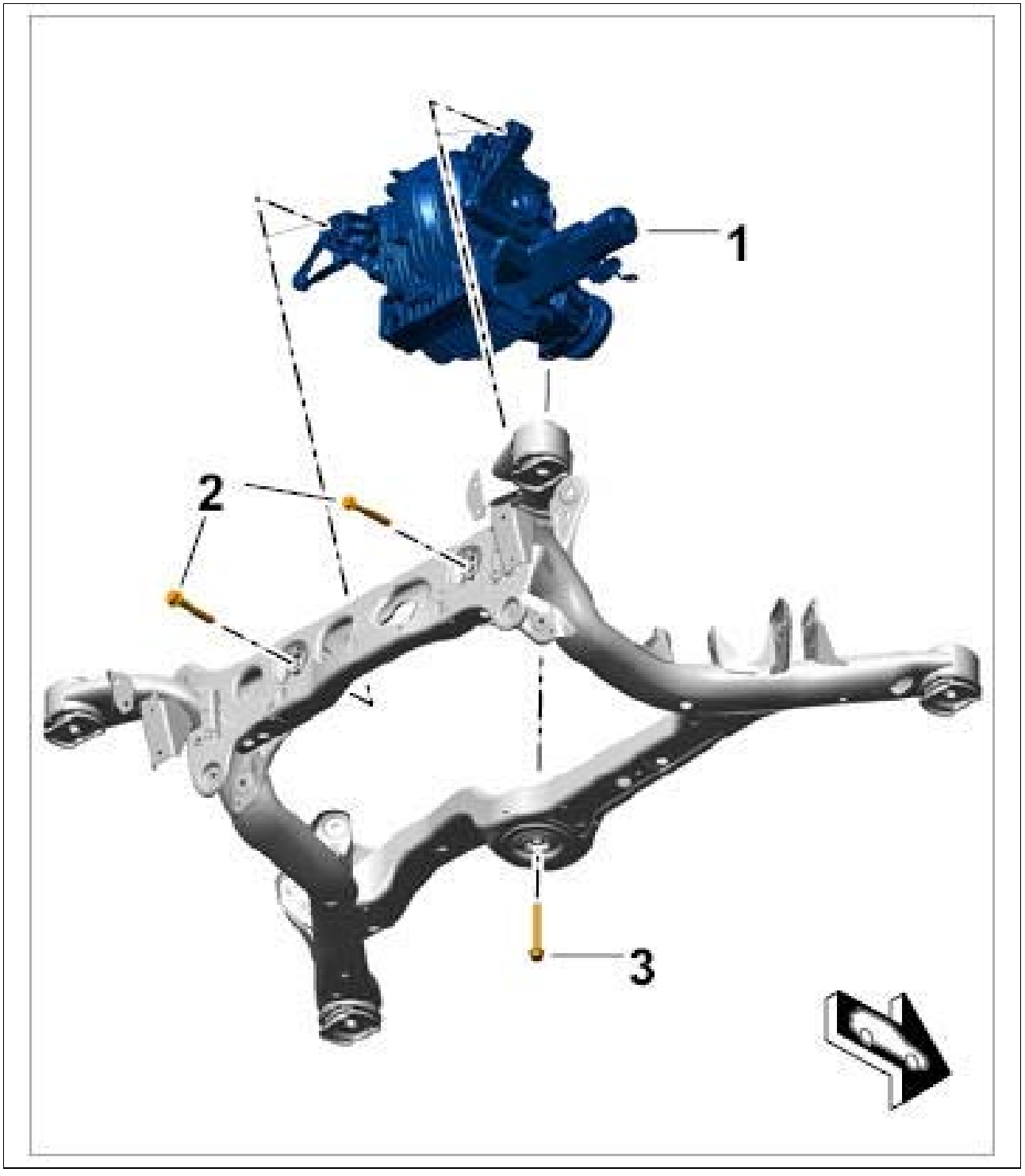

Courtesy of PORSCHE CARS NORTH AMERICA, INC.

1. Rear final drive
2. Rear final drive to rear axle carrier (rear screws) → **Tightening torque: 95 Nm (70 ftlb.)**
3. Rear final drive to rear axle carrier (bottom screw) → **Initial tightening: 40 Nm (30 ftlb.)** → **Final tightening: +90°**

Servo motor for rear-differential lock → **Tightening torque: 13 Nm (9.5 ftlb.)**

WM 3X00IN TECHNICAL VALUES - TRANSMISSION (ALL MODELS) > OVERVIEW OF SCREW PLUGS

Fig 1: Overview Of Screw Plugs

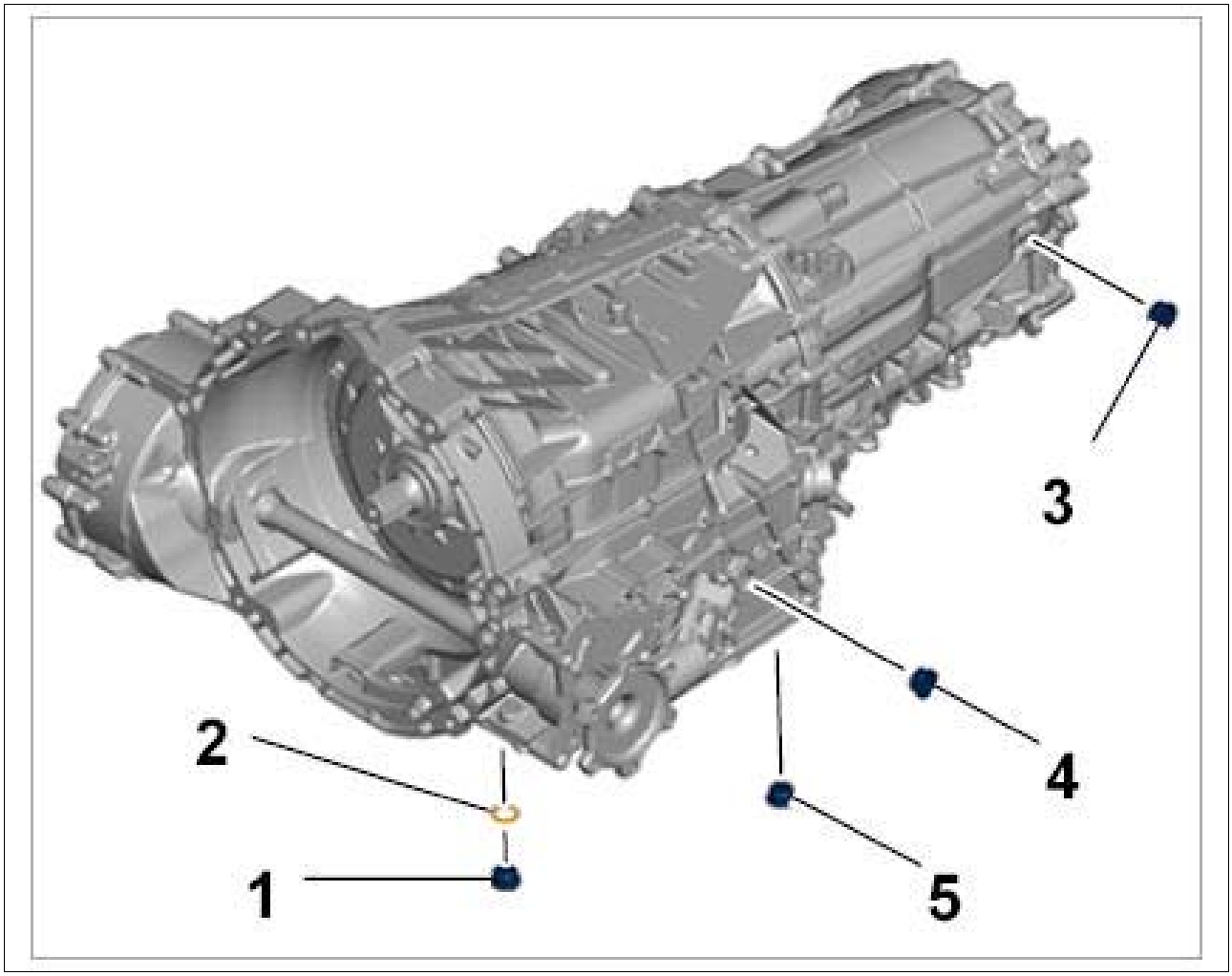

Courtesy of PORSCHE CARS NORTH AMERICA, INC.

1. ATF drain plug
2. Sealing ring/**replace**
3. Inspection and filler plug for all-wheel final drive → **Tightening torque: 45 Nm (33 ftlb.)**
4. ATF inspection and filler plug → **Tightening torque: 0 Nm (0 ftlb.)**
5. Transmission oil drain plug → **Tightening torque: 45 Nm (33 ftlb.)**

1. Oil drain plug on rear final drive → **Tightening torque: 35 Nm (26 ftlb.)+/-5 Nm (+/-3.5 ftlb.)**
2. Inspection and filler plug on rear final drive → **Tightening torque: 35 Nm (26 ftlb.)+/-5 Nm (+/-3.5 ftlb.)**

Fig 2: Identifying Rear Final Drive Oil Drain Plug

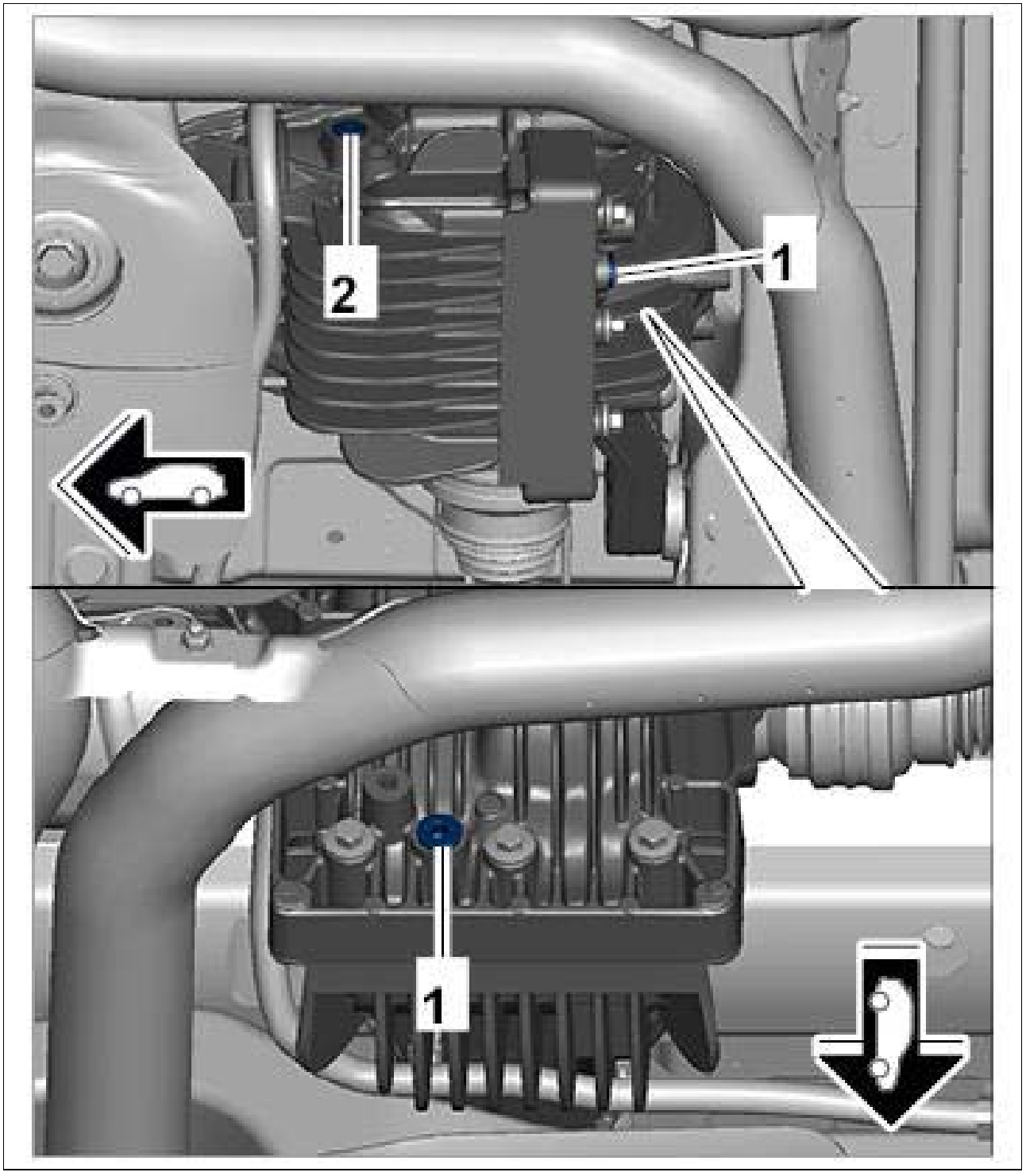

Courtesy of PORSCHE CARS NORTH AMERICA, INC.

Service Manual: SYSTEM WIRING DIAGRAMS

AIR CONDITIONING

Fig 1: Automatic A/C Circuit (1 of 4)

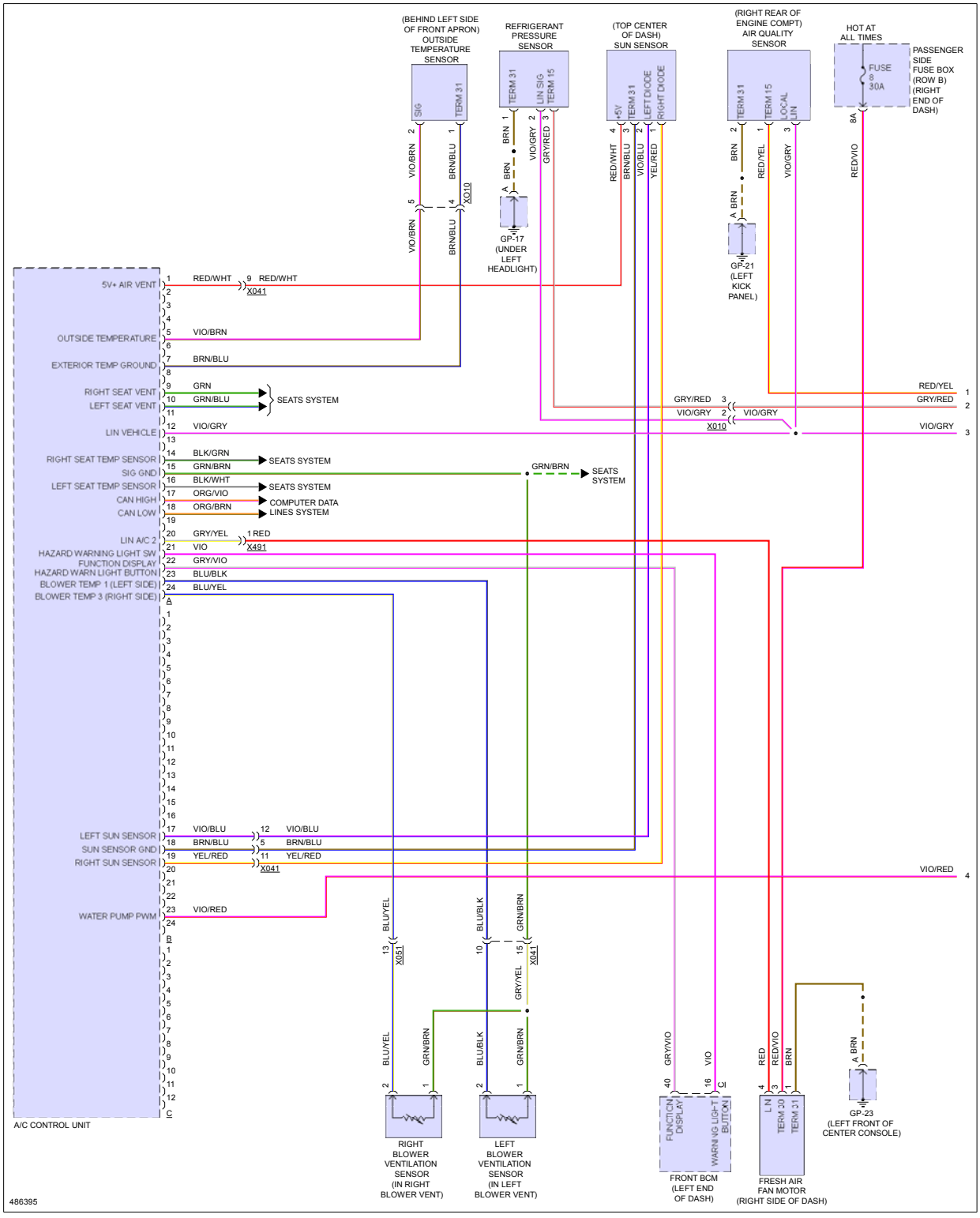

Fig 2: Automatic A/C Circuit (2 of 4)

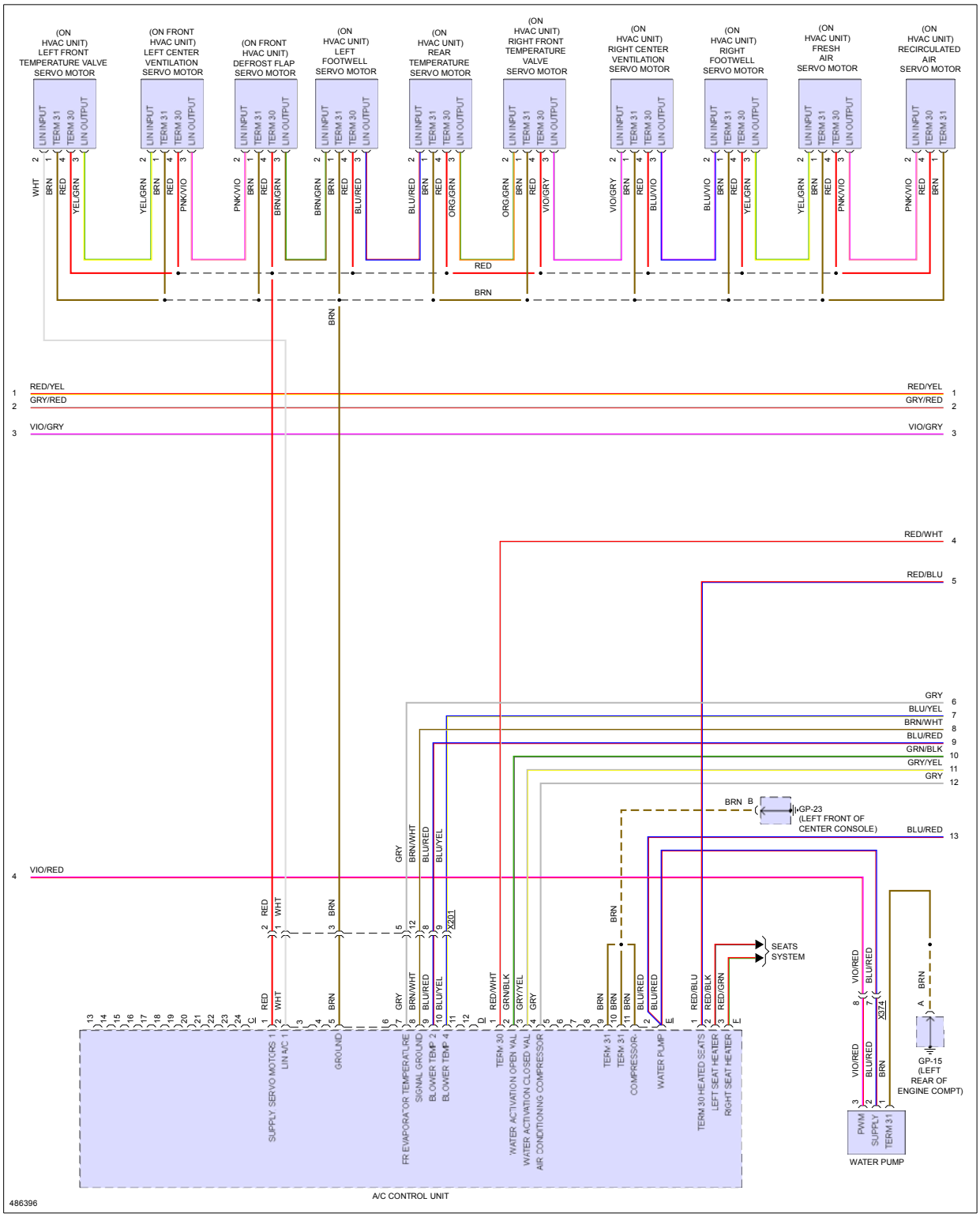

Fig 3: Automatic A/C Circuit (3 of 4)

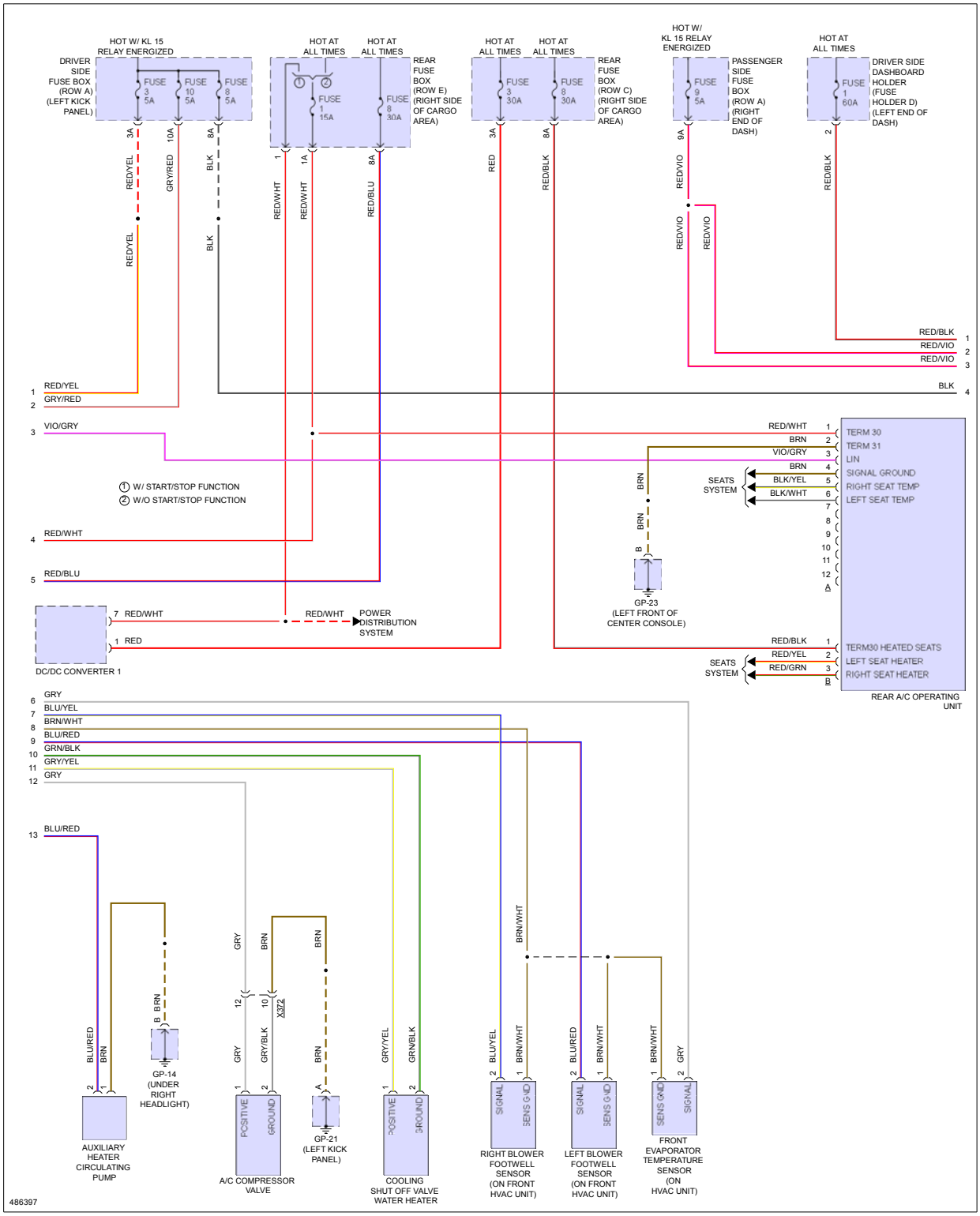

Fig 4: Automatic A/C Circuit (4 of 4)

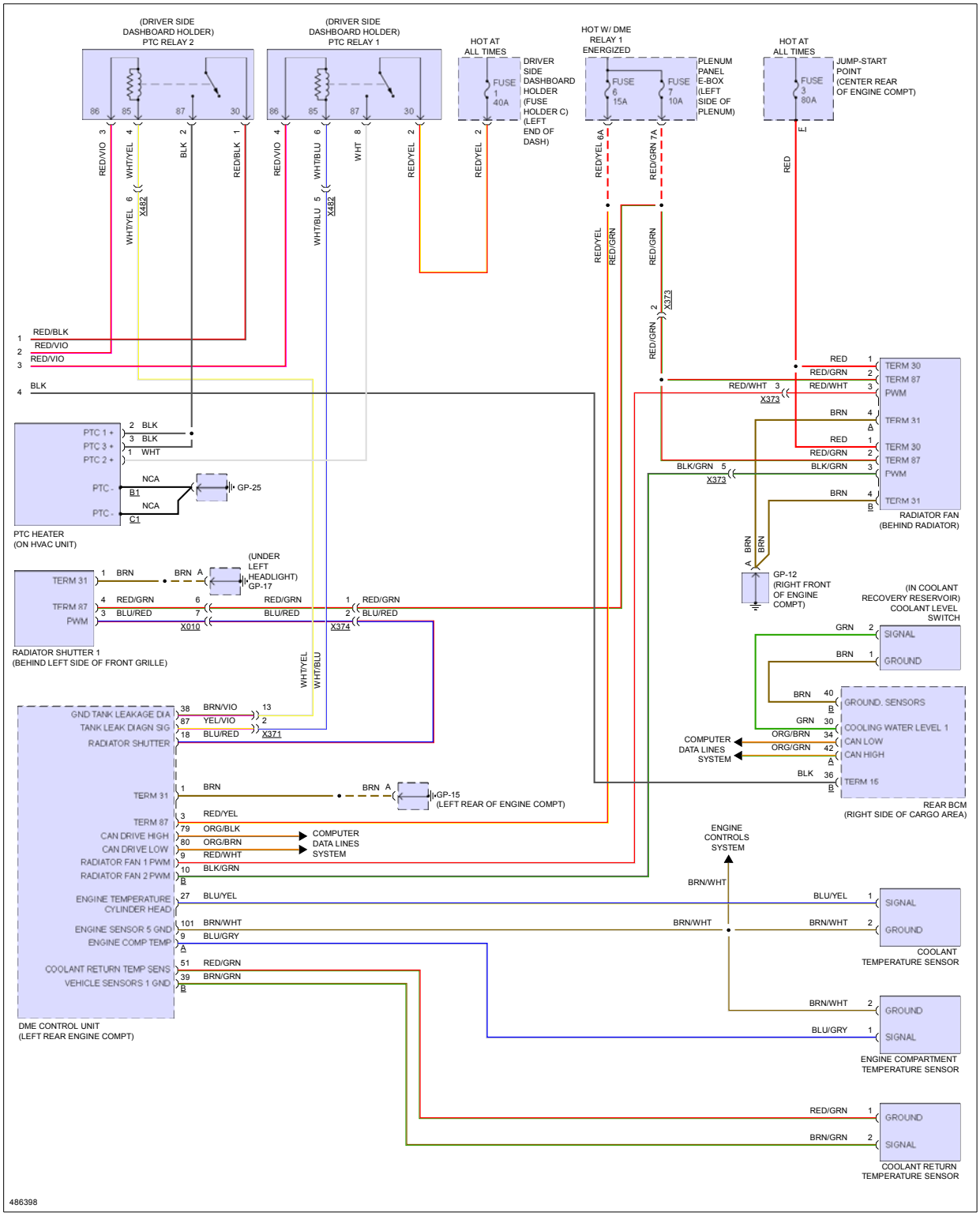

ANTI-LOCK BRAKES

Fig 1: Anti-lock Brakes Circuit

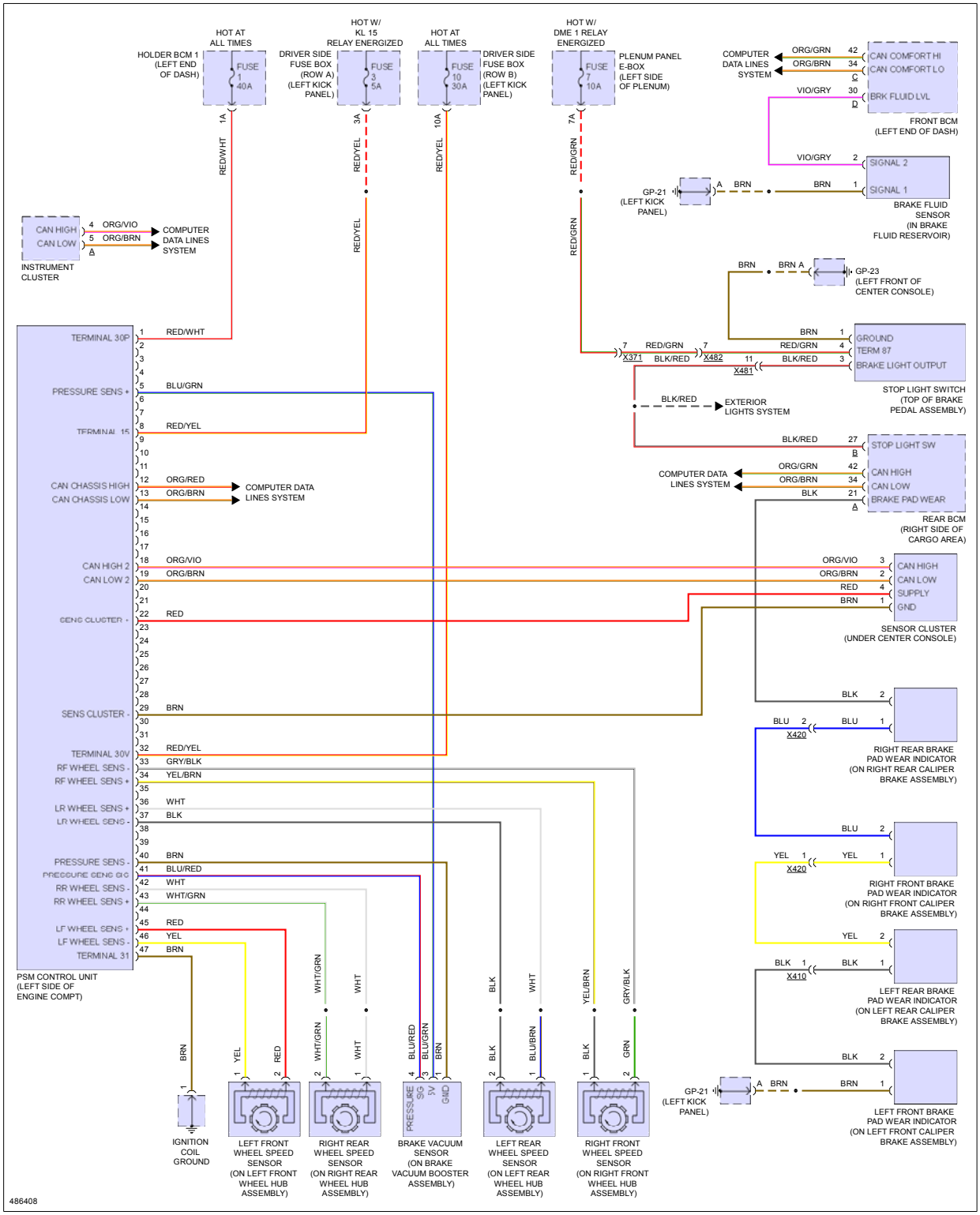

ANTI-THEFT

Fig 1: Anti-theft Circuit (1 of 4)

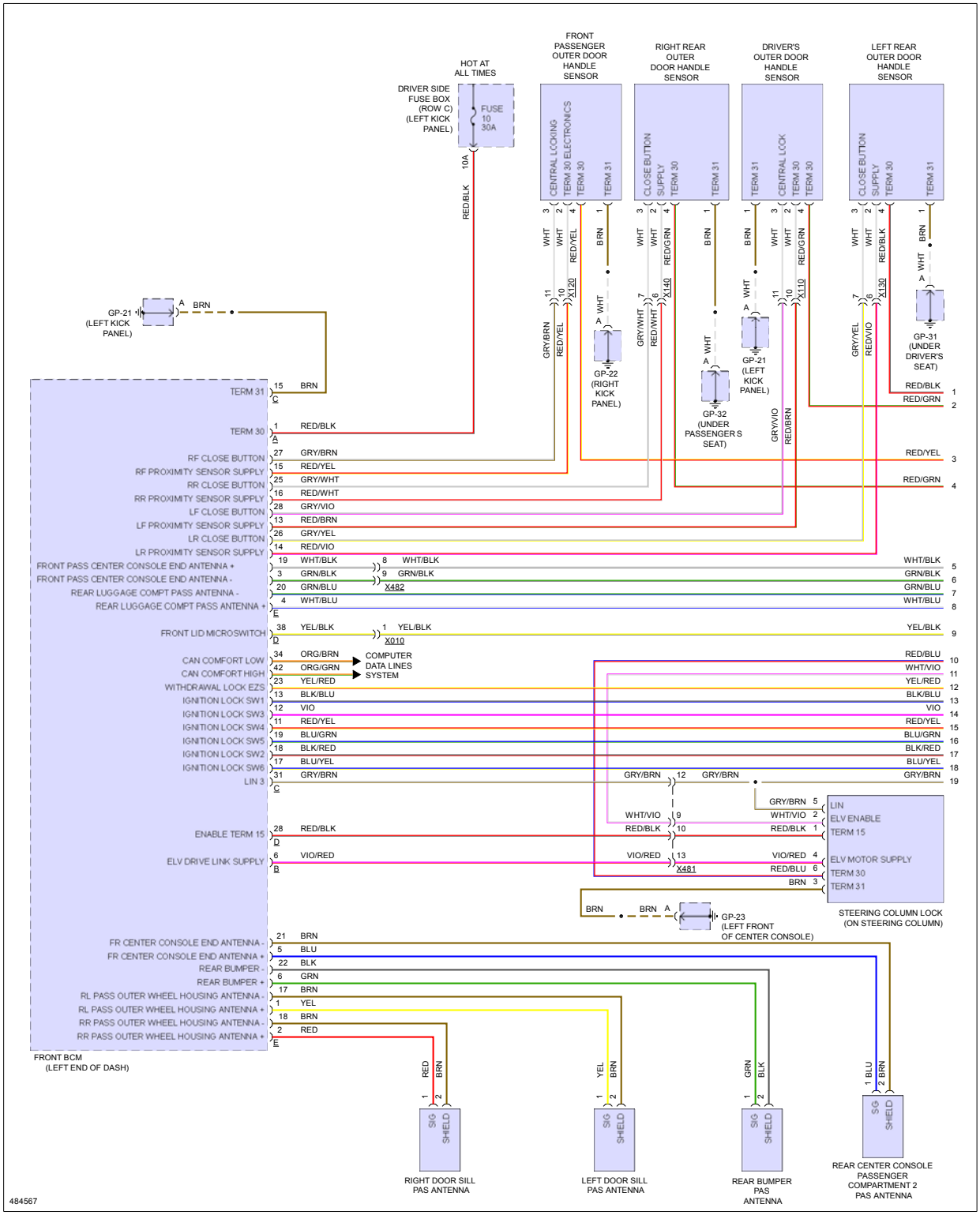

Fig 2: Anti-theft Circuit (2 of 4)

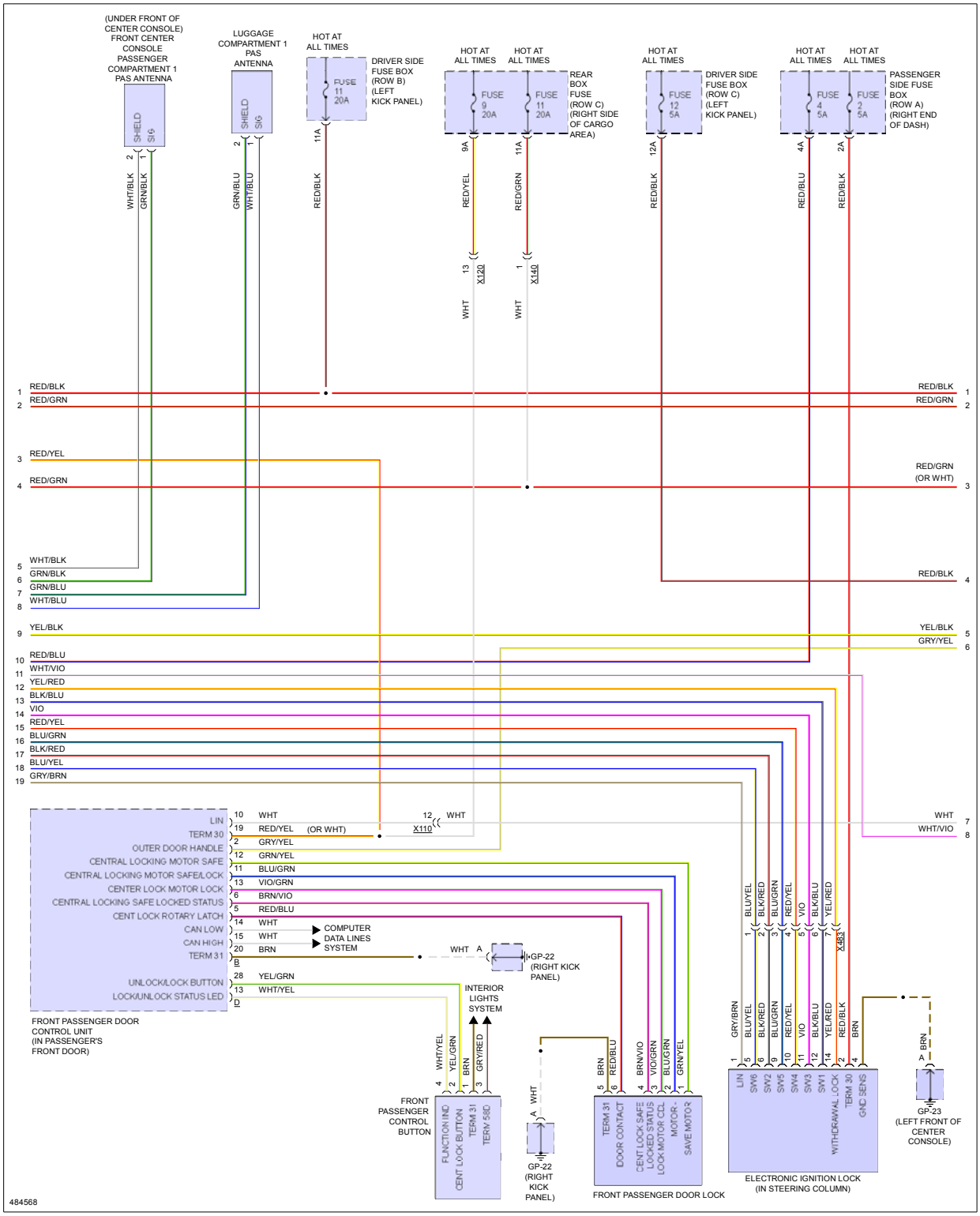

Fig 3: Anti-theft Circuit (3 of 4)

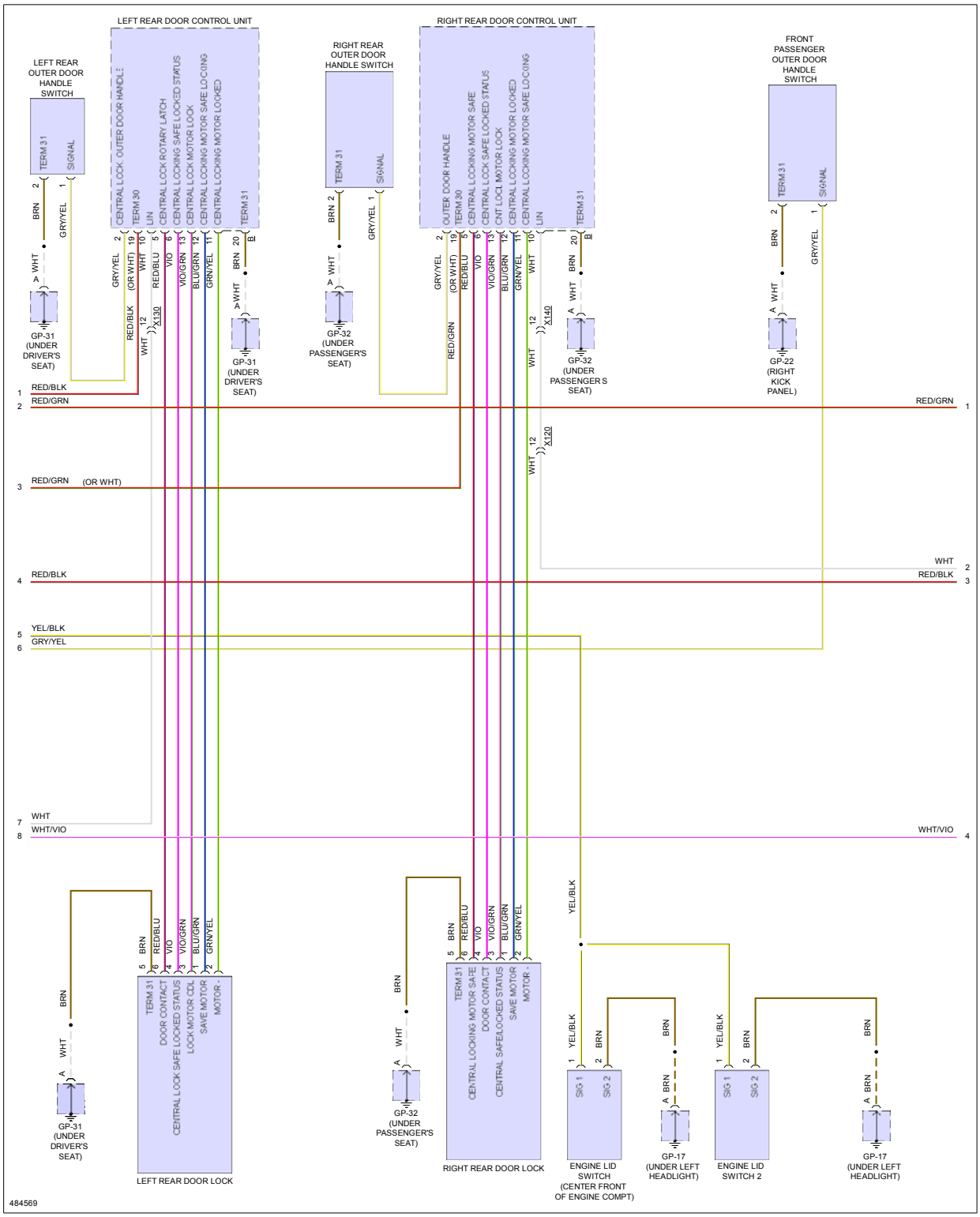

Fig 4: Anti-theft Circuit (4 of 4)

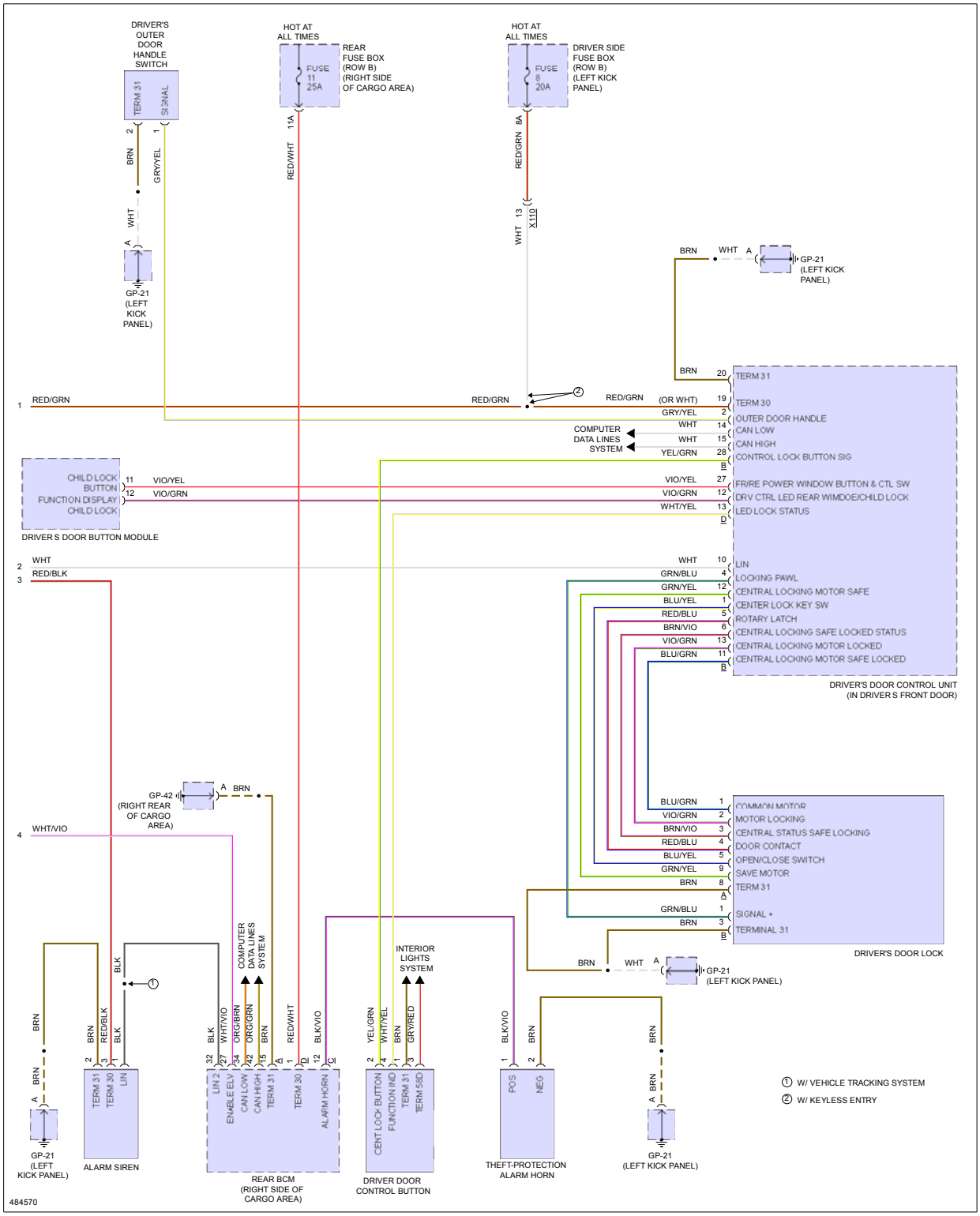

BODY CONTROL MODULES

Fig 1: Front Controller Circuit

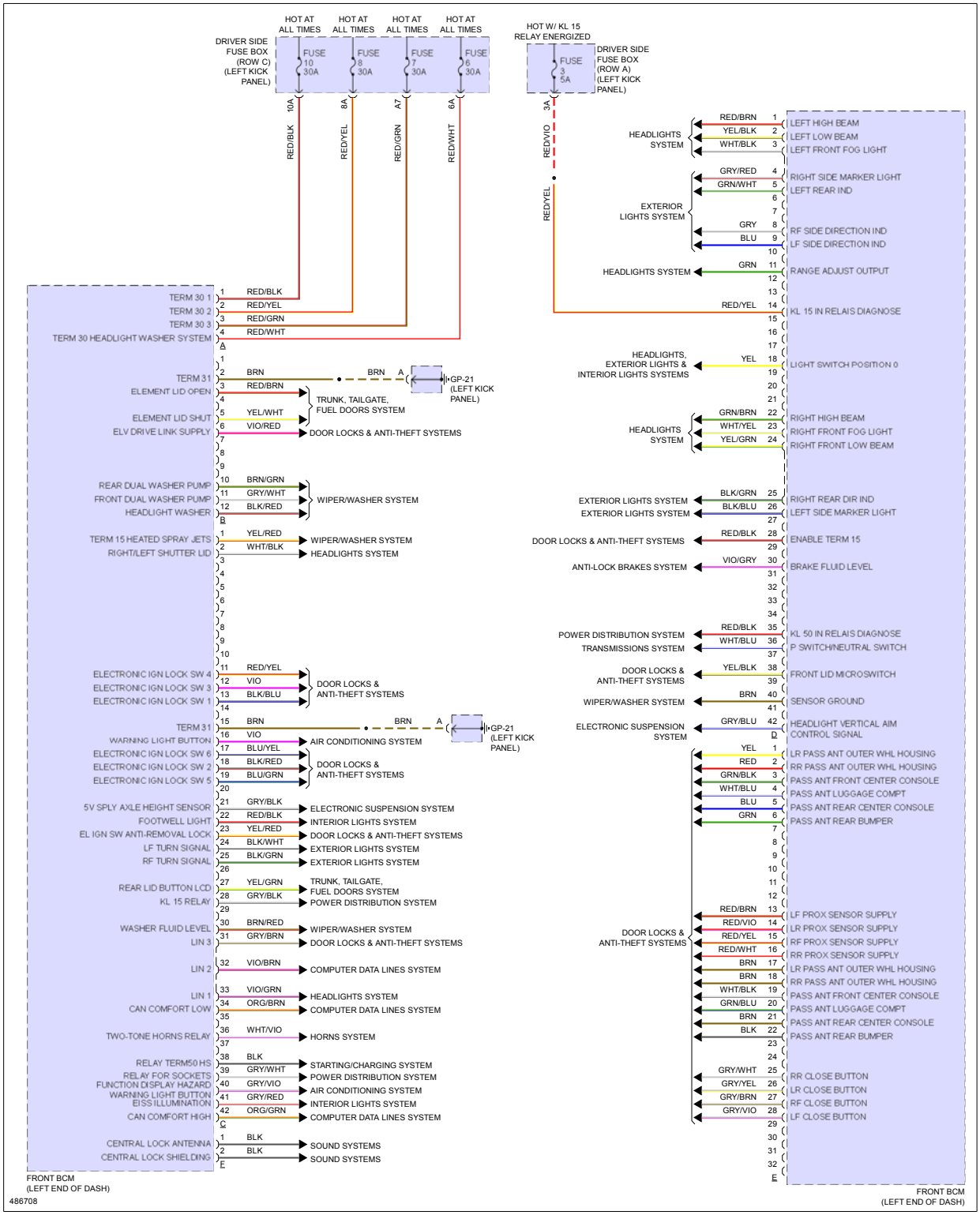

Fig 2: Rear Control Unit Circuit

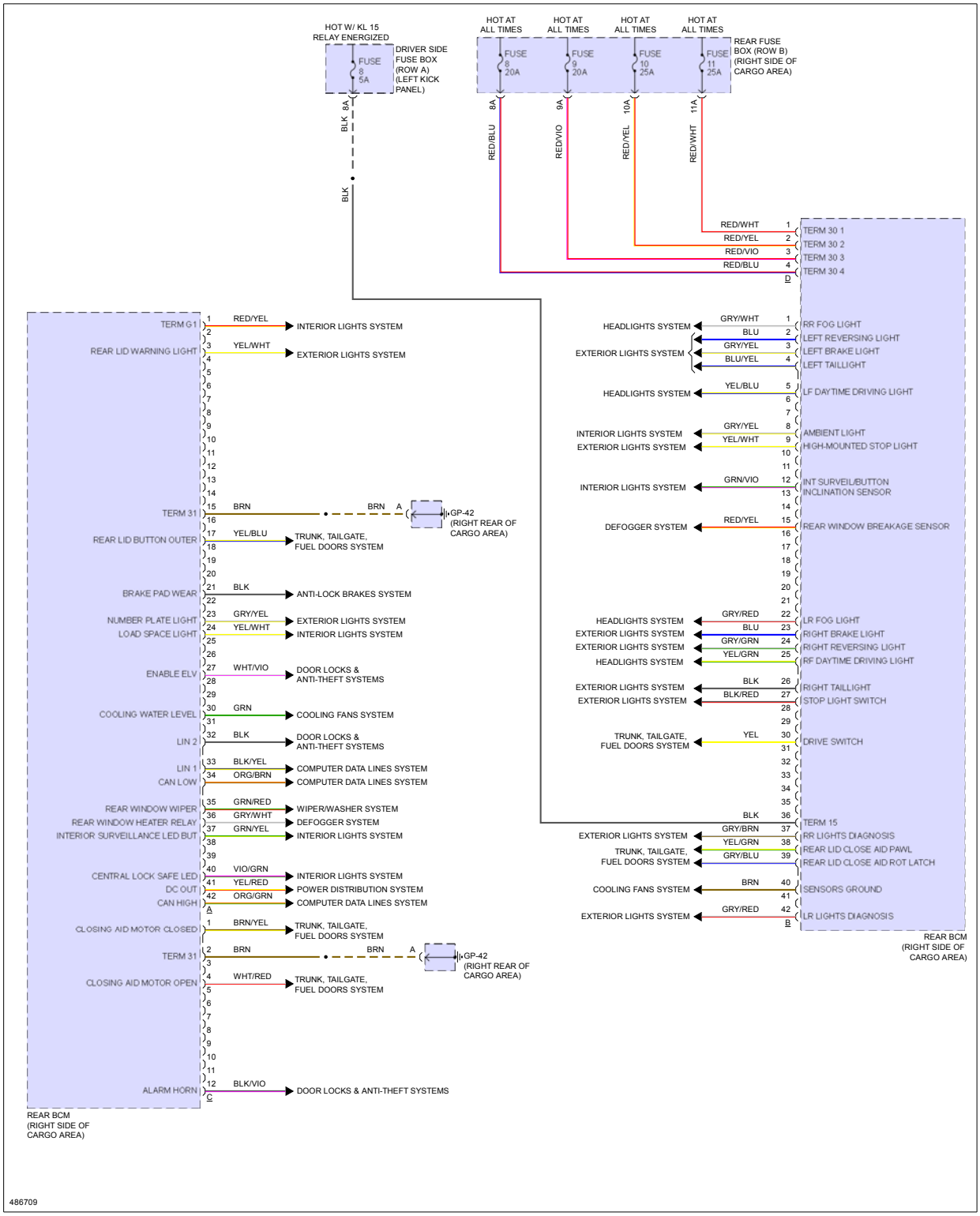

COMPUTER DATA LINES

Fig 1: Computer Data Lines Circuit (1 of 3)

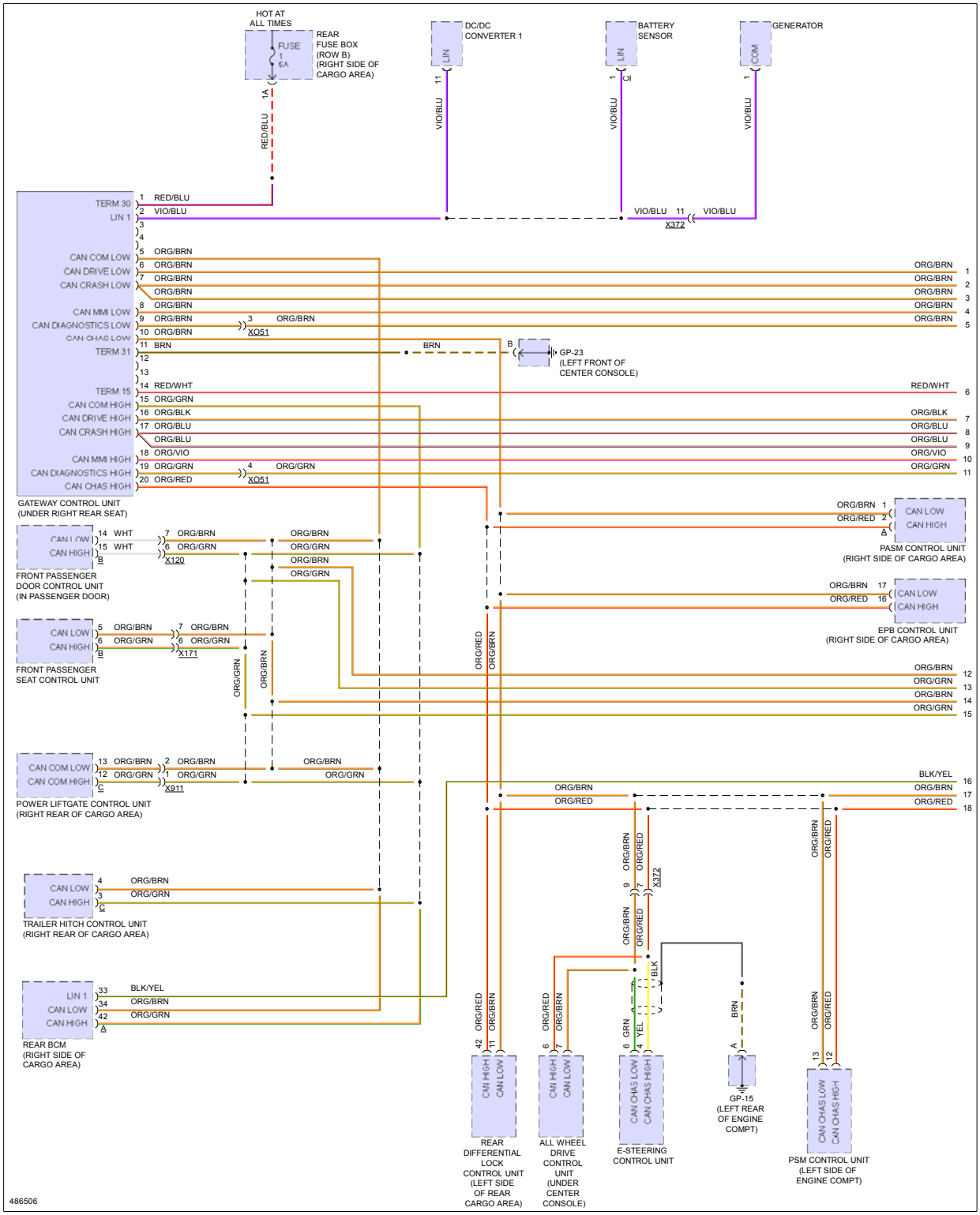

Fig 2: Computer Data Lines Circuit (2 of 3)

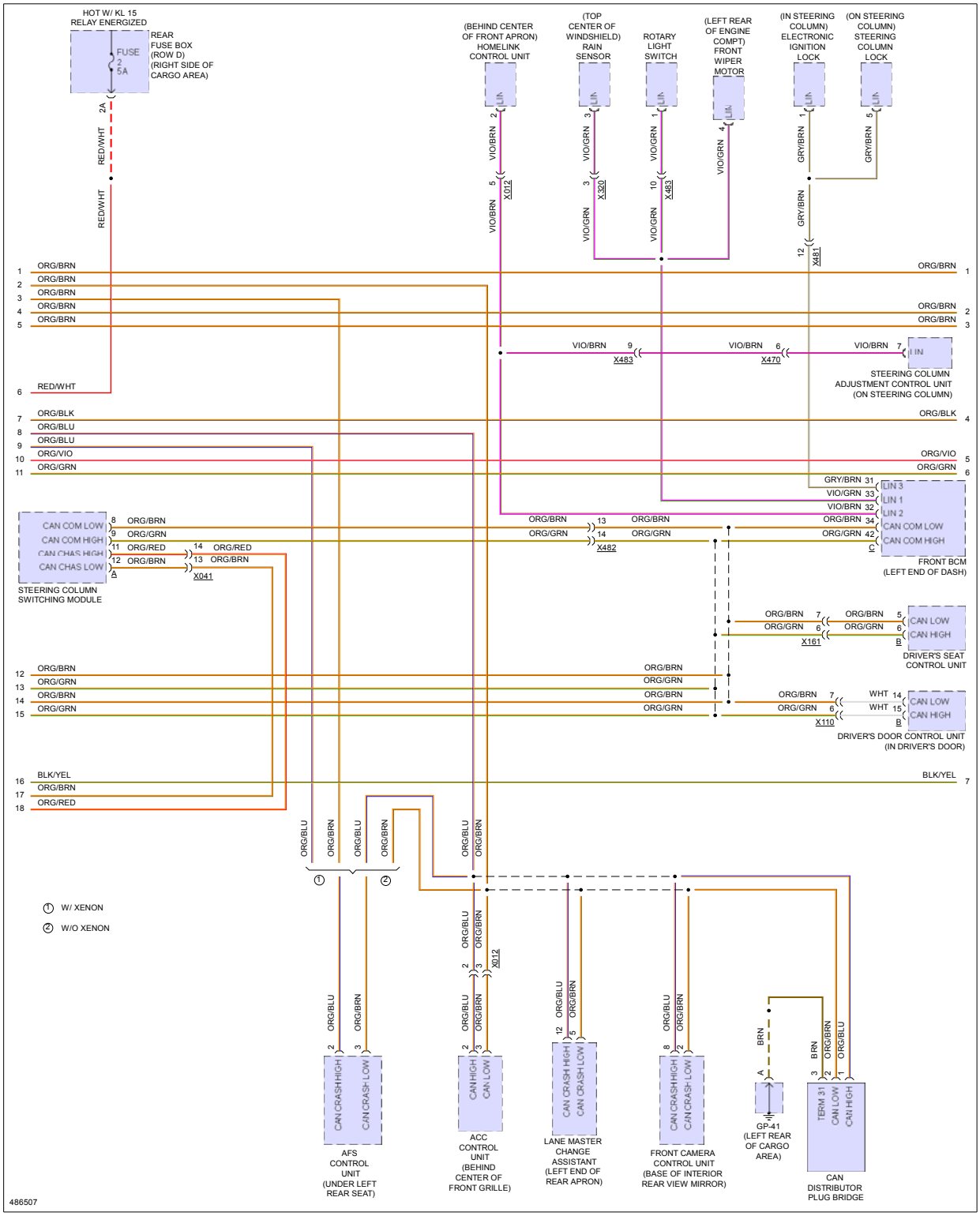

Fig 3: Computer Data Lines Circuit (3 of 3)

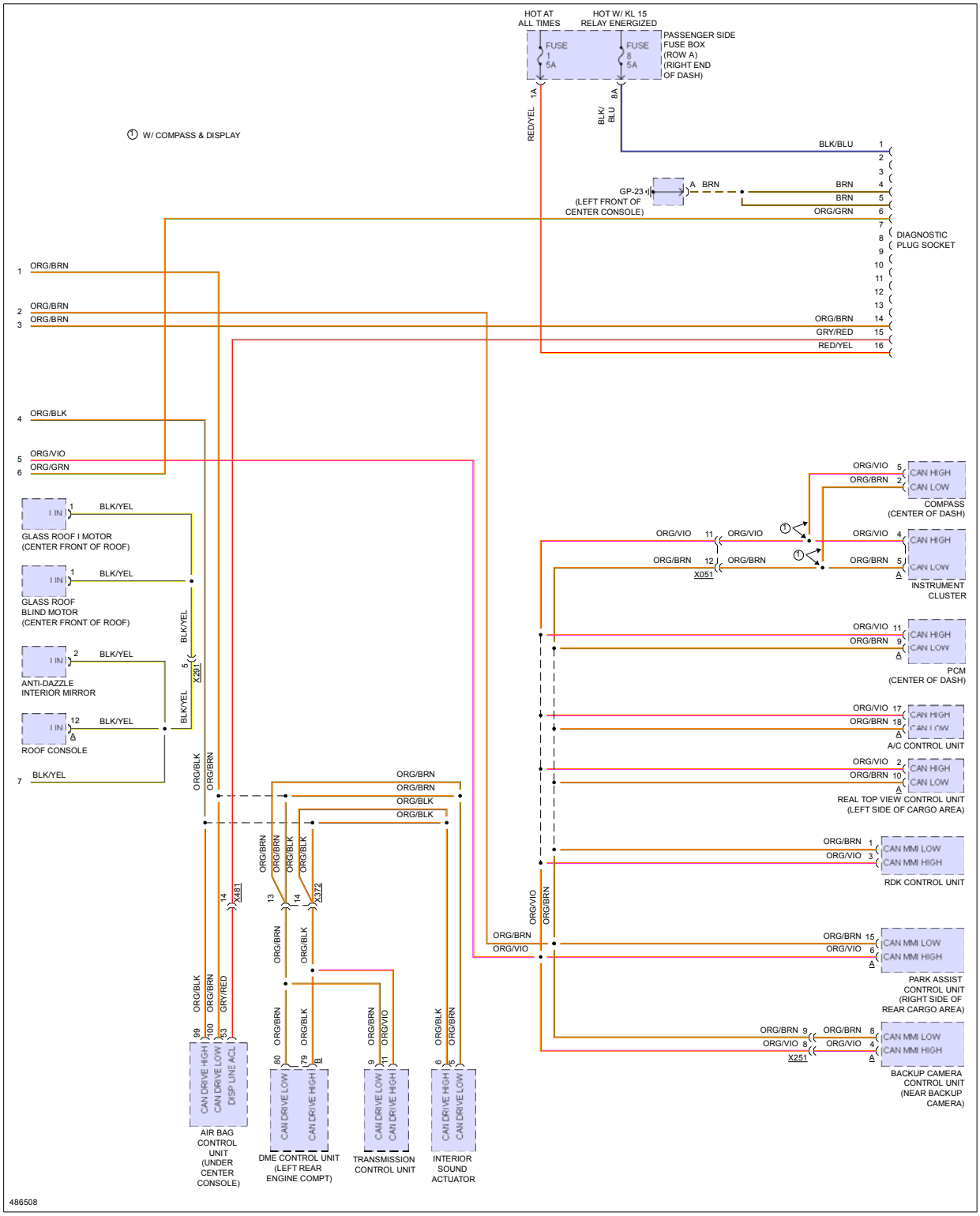

COOLING FAN

Fig 1: Cooling Fan Circuit

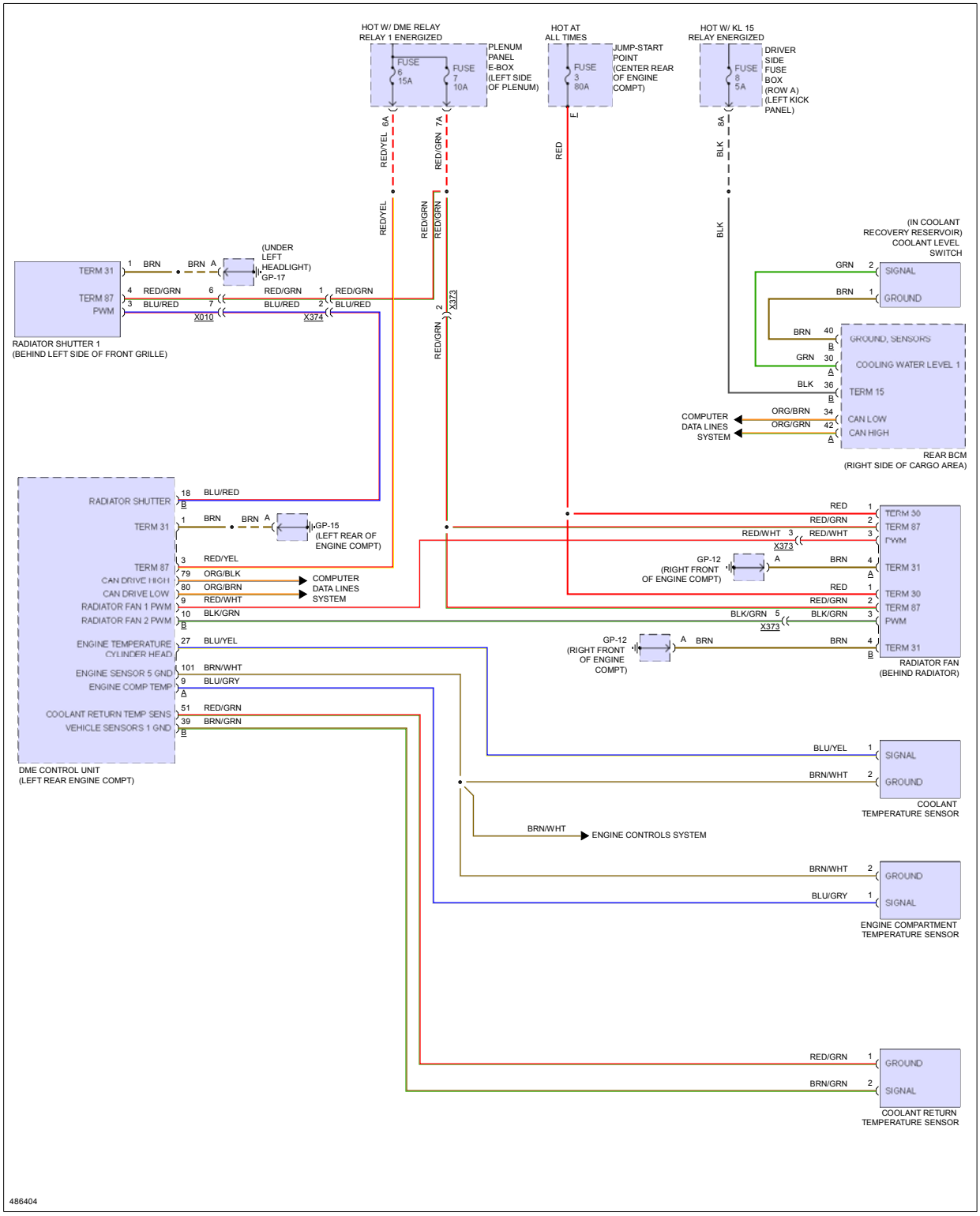

CRUISE CONTROL

Fig 1: Cruise Control Circuit

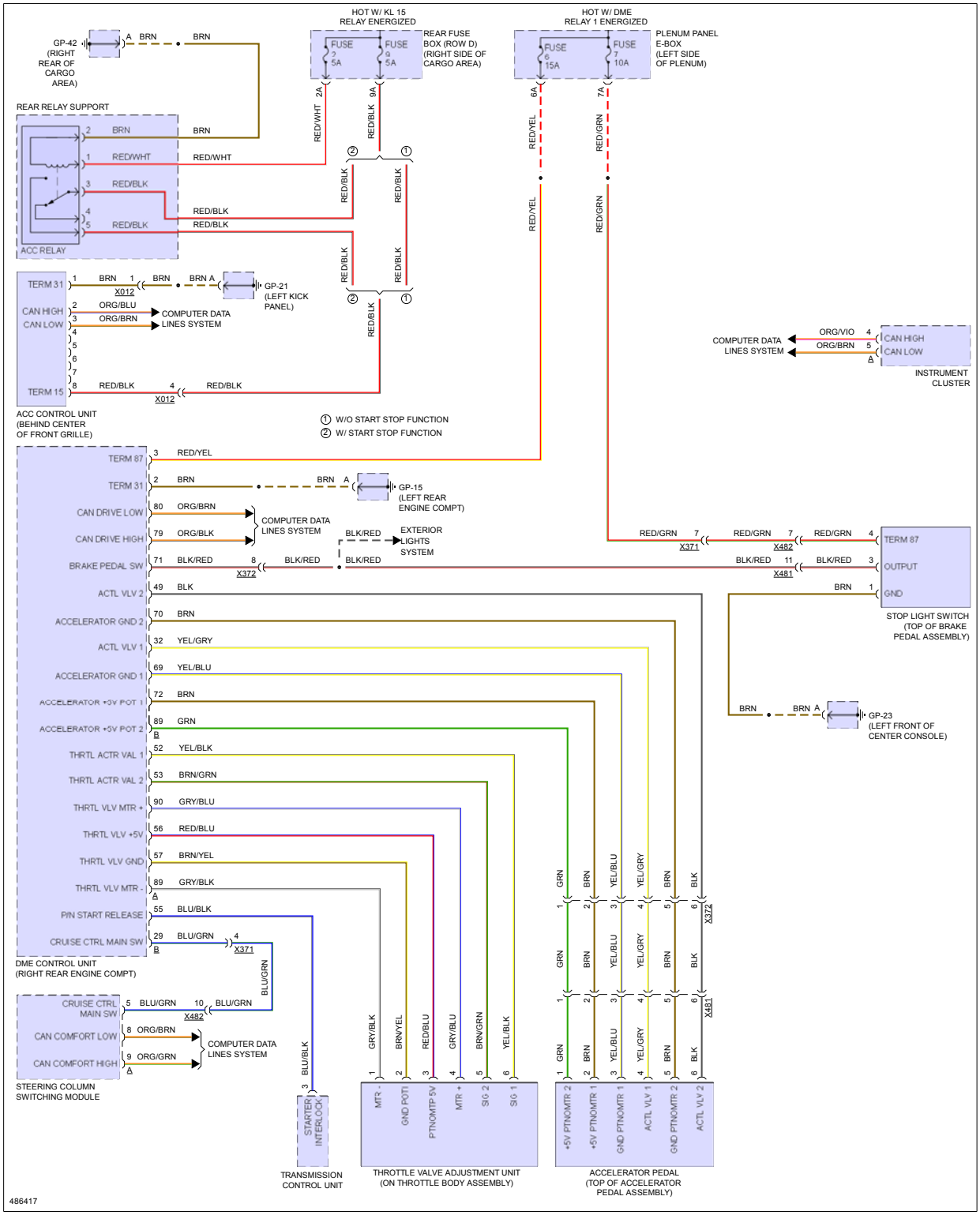

DEFOGGERS

Fig 1: Defoggers Circuit

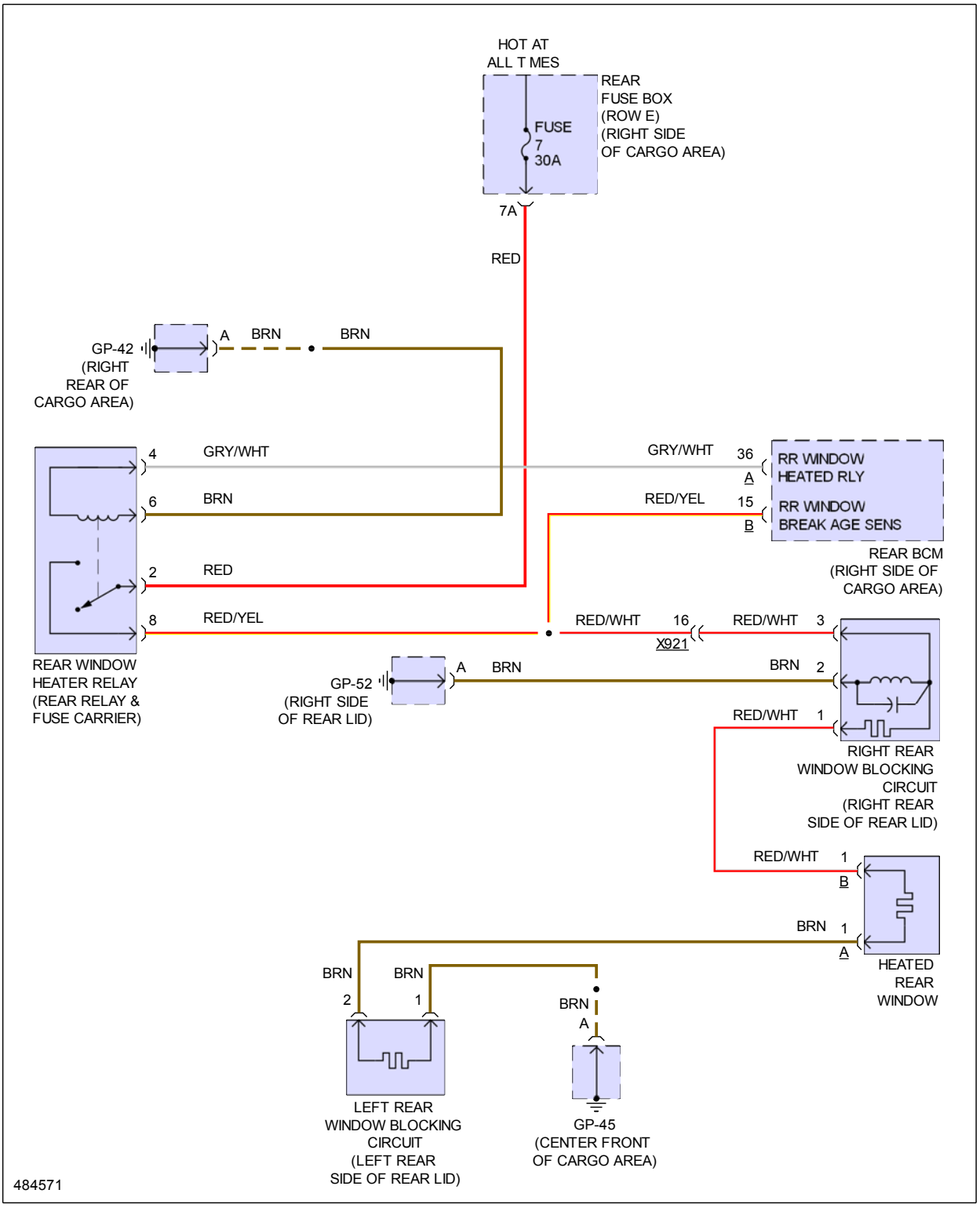

ELECTRONIC POWER STEERING

Fig 1: Electronic Power Steering Circuit

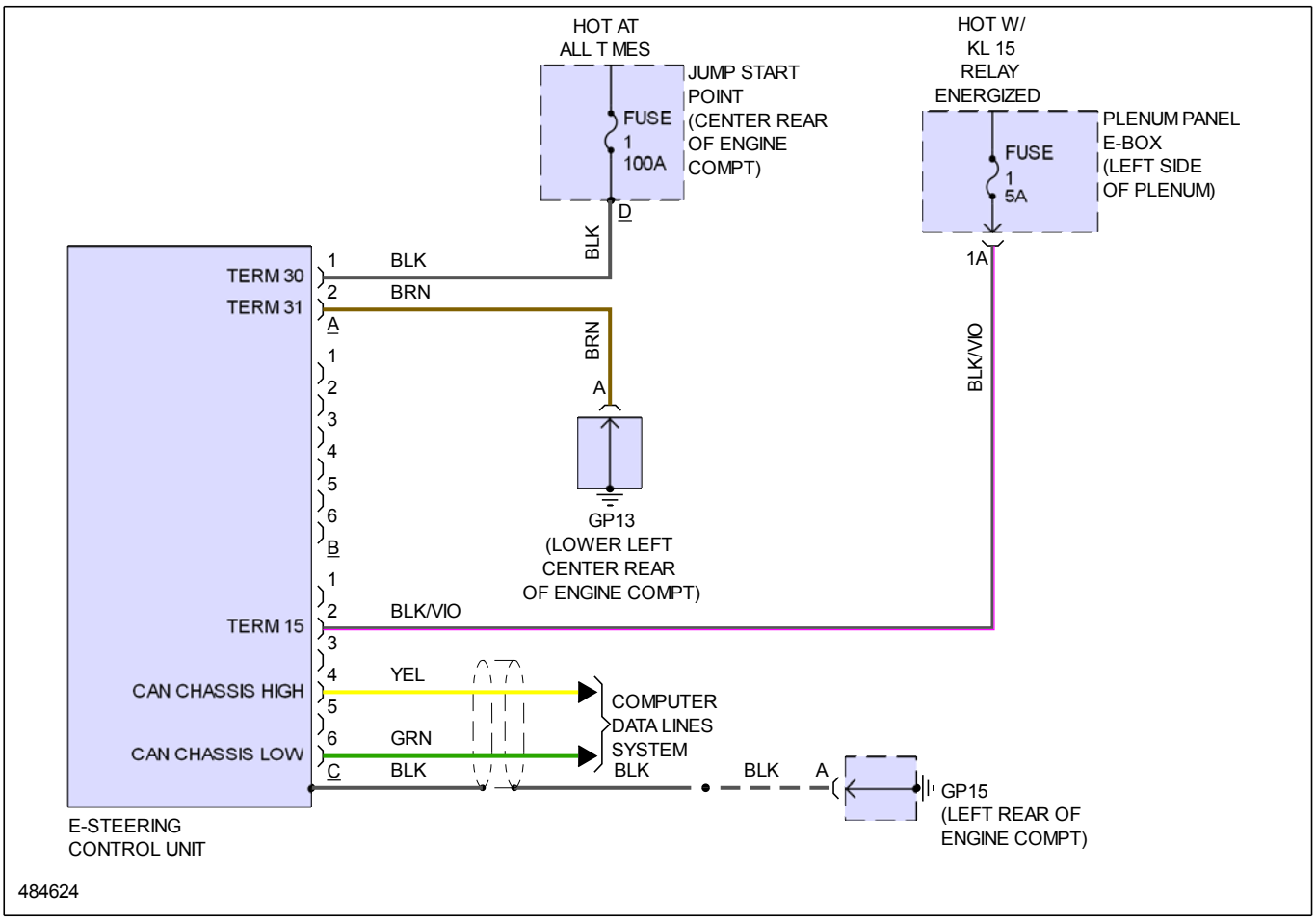

Fig 2: Power Tilt Steering Column Circuit

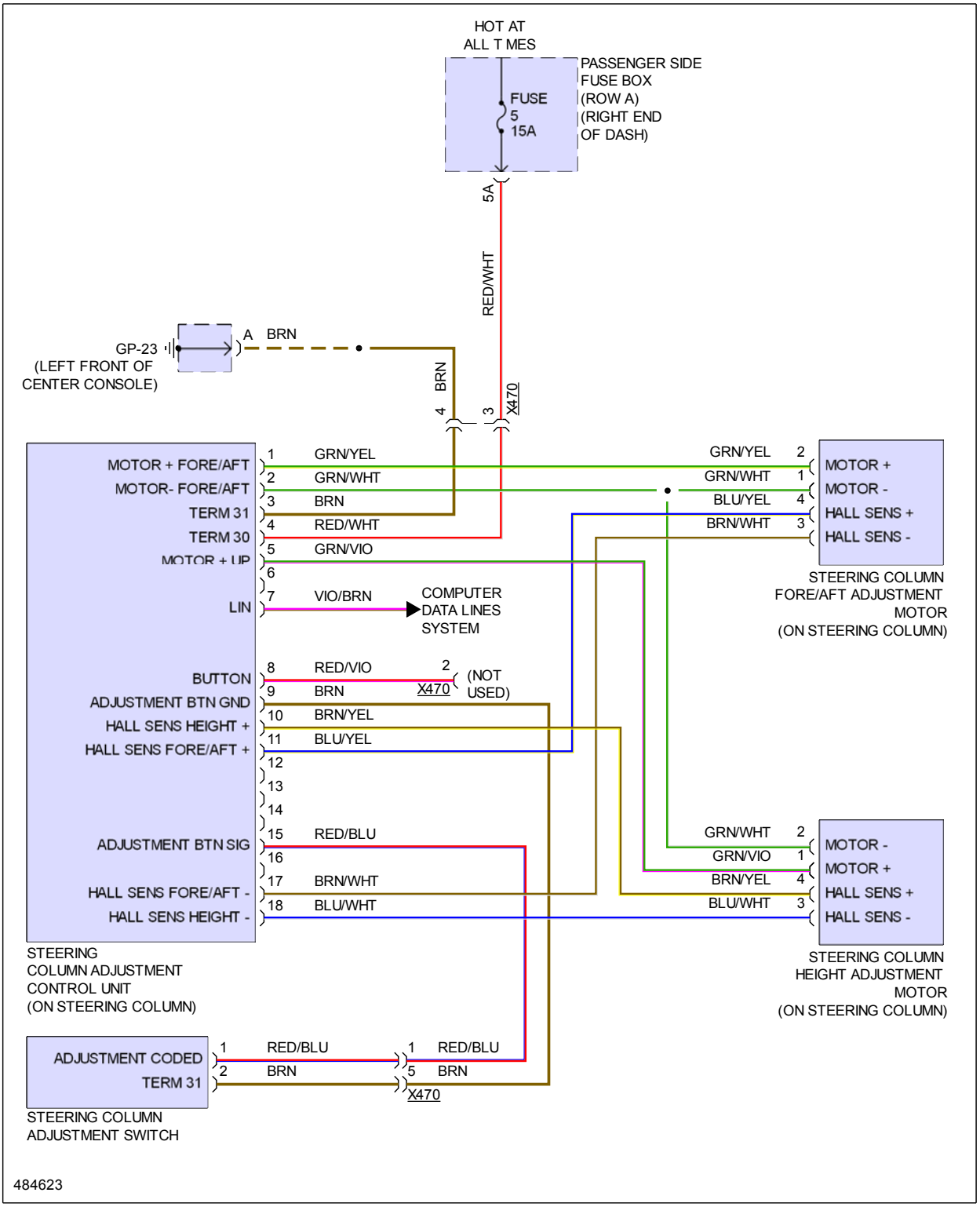

ELECTRONIC SUSPENSION

Fig 1: Electronic Suspension Circuit (1 of 2)

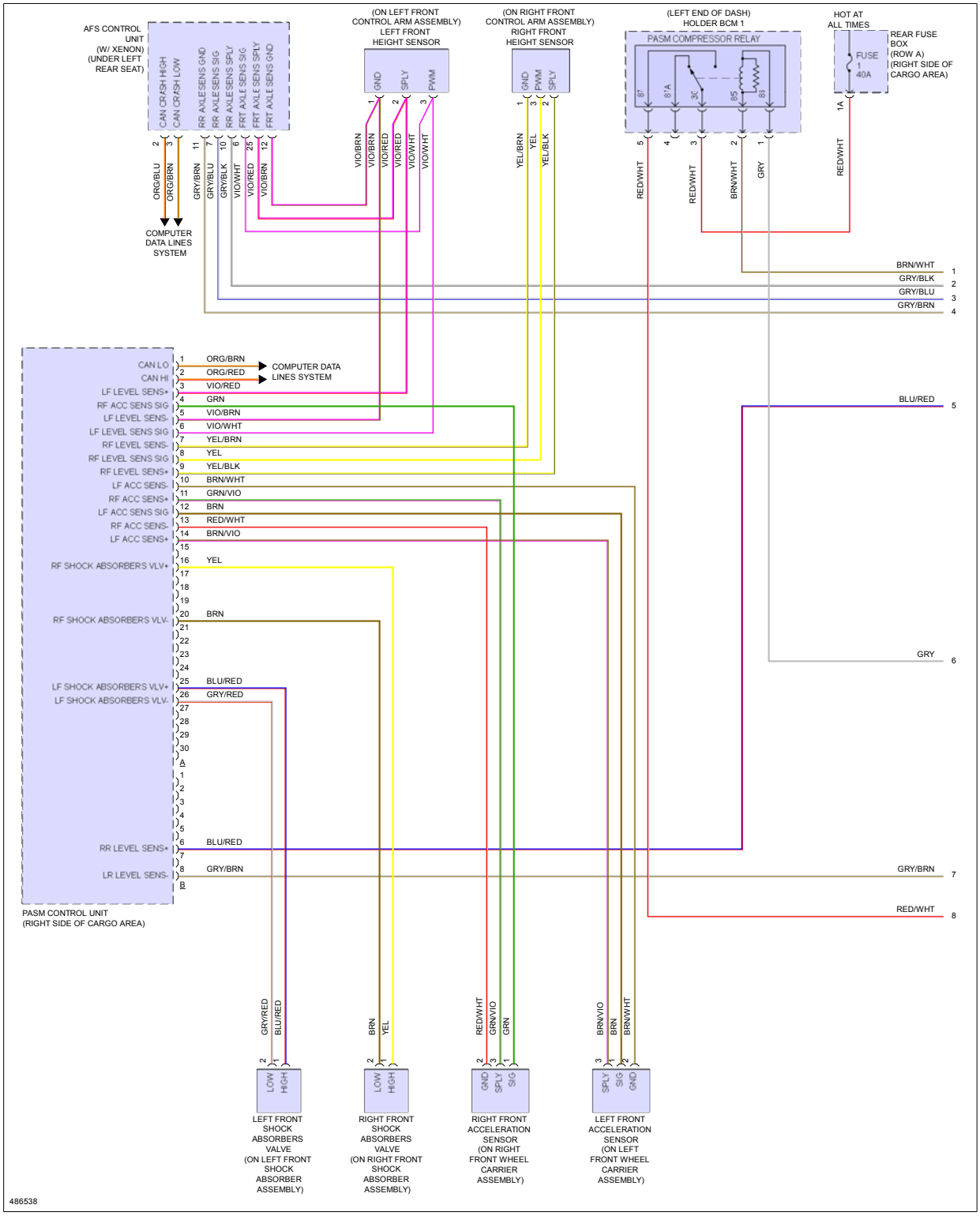

Fig 2: Electronic Suspension Circuit (2 of 2)

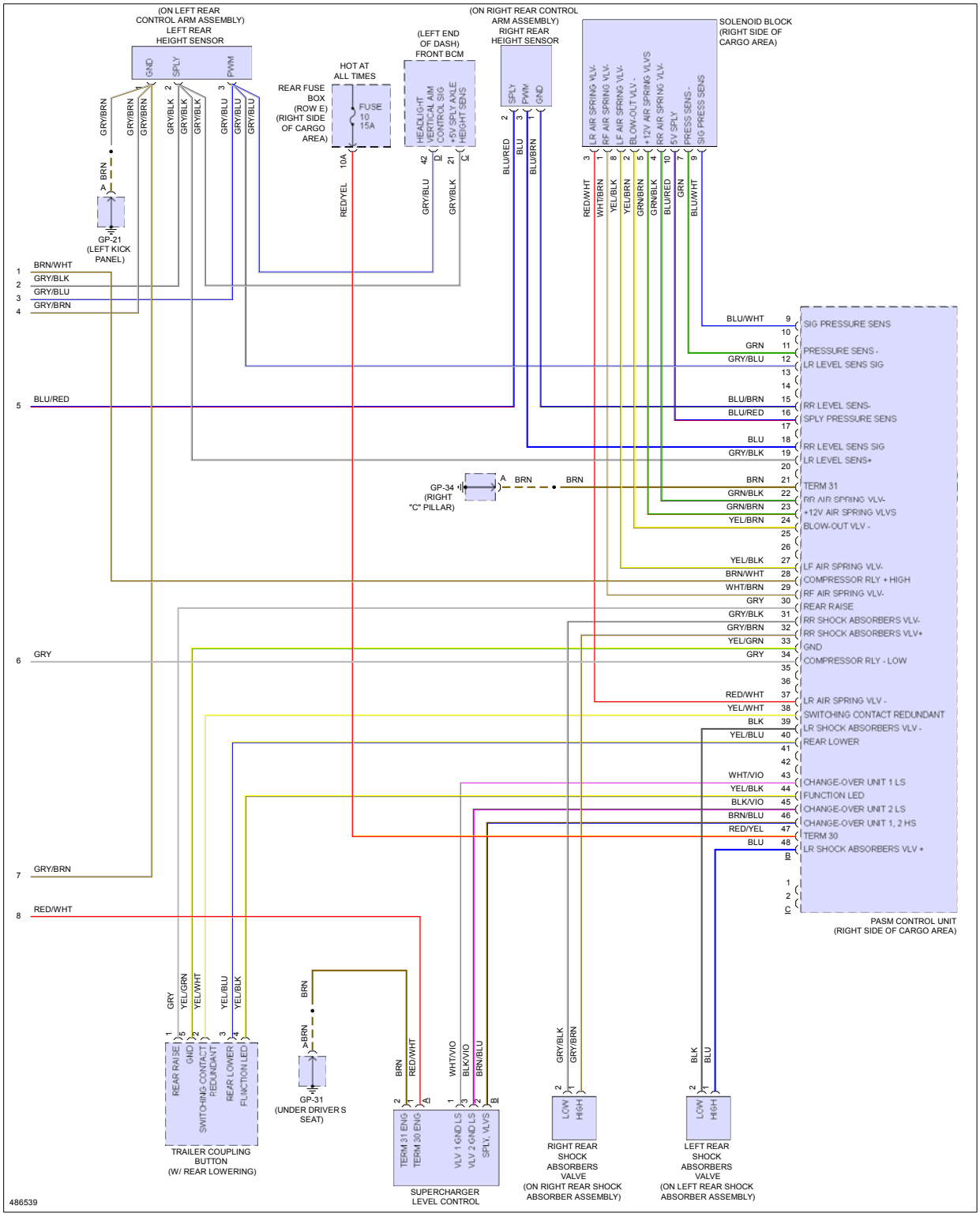

ENGINE PERFORMANCE > 3.0L TURBO

Fig 1: 3.0L Turbo, Engine Performance Circuit (1 of 6)

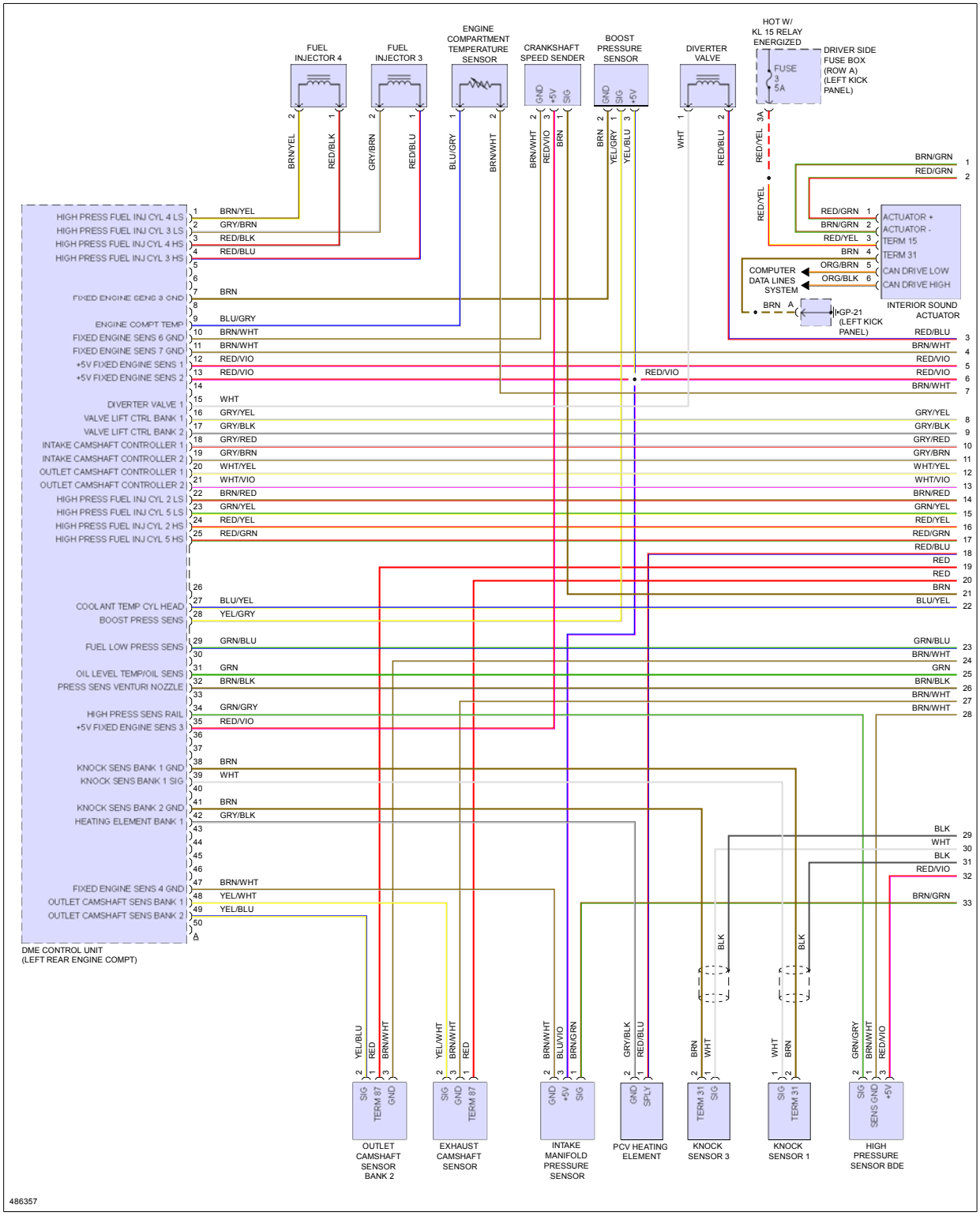

Fig 2: 3.0L Turbo, Engine Performance Circuit (2 of 6)

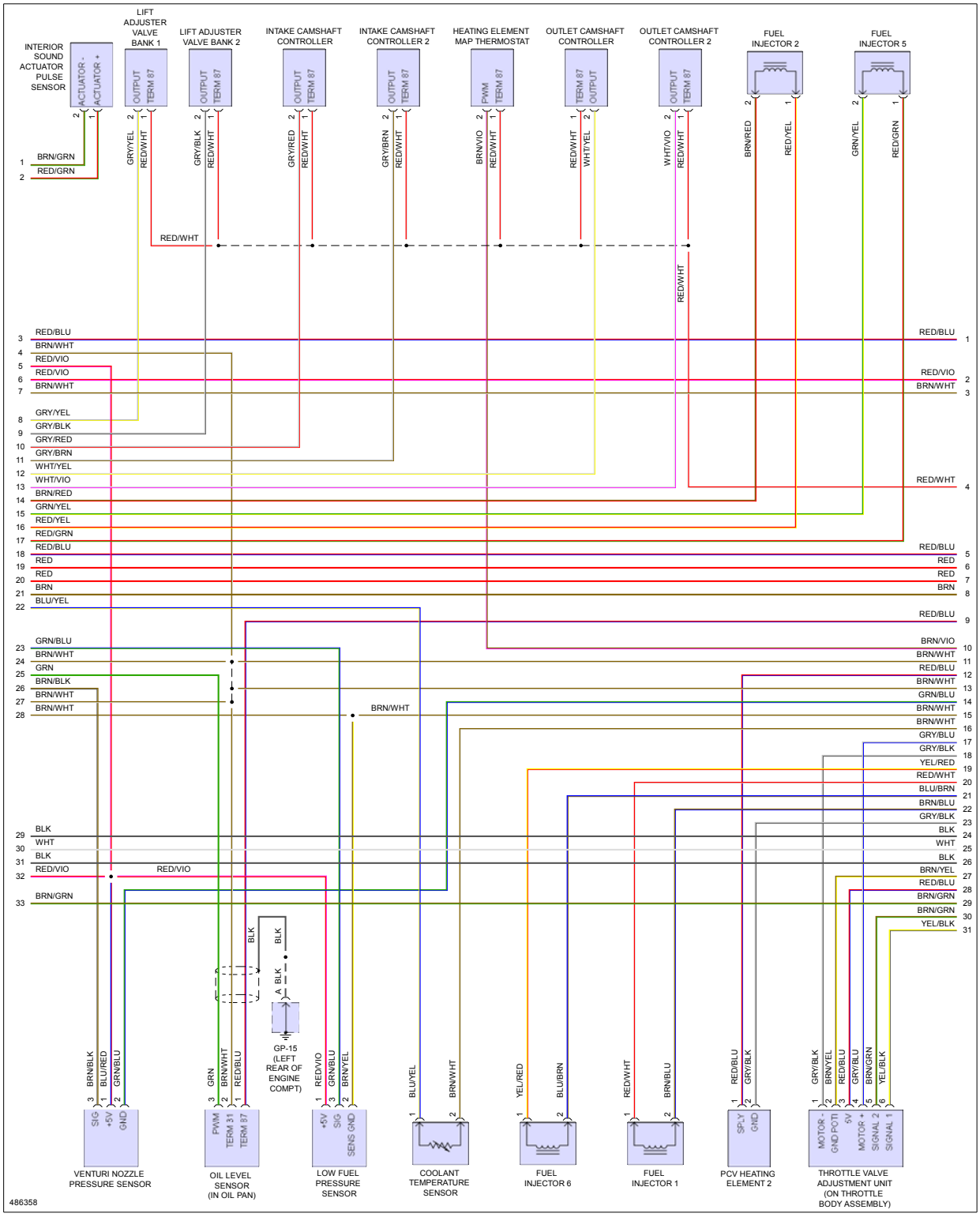

Fig 3: 3.0L Turbo, Engine Performance Circuit (3 of 6)

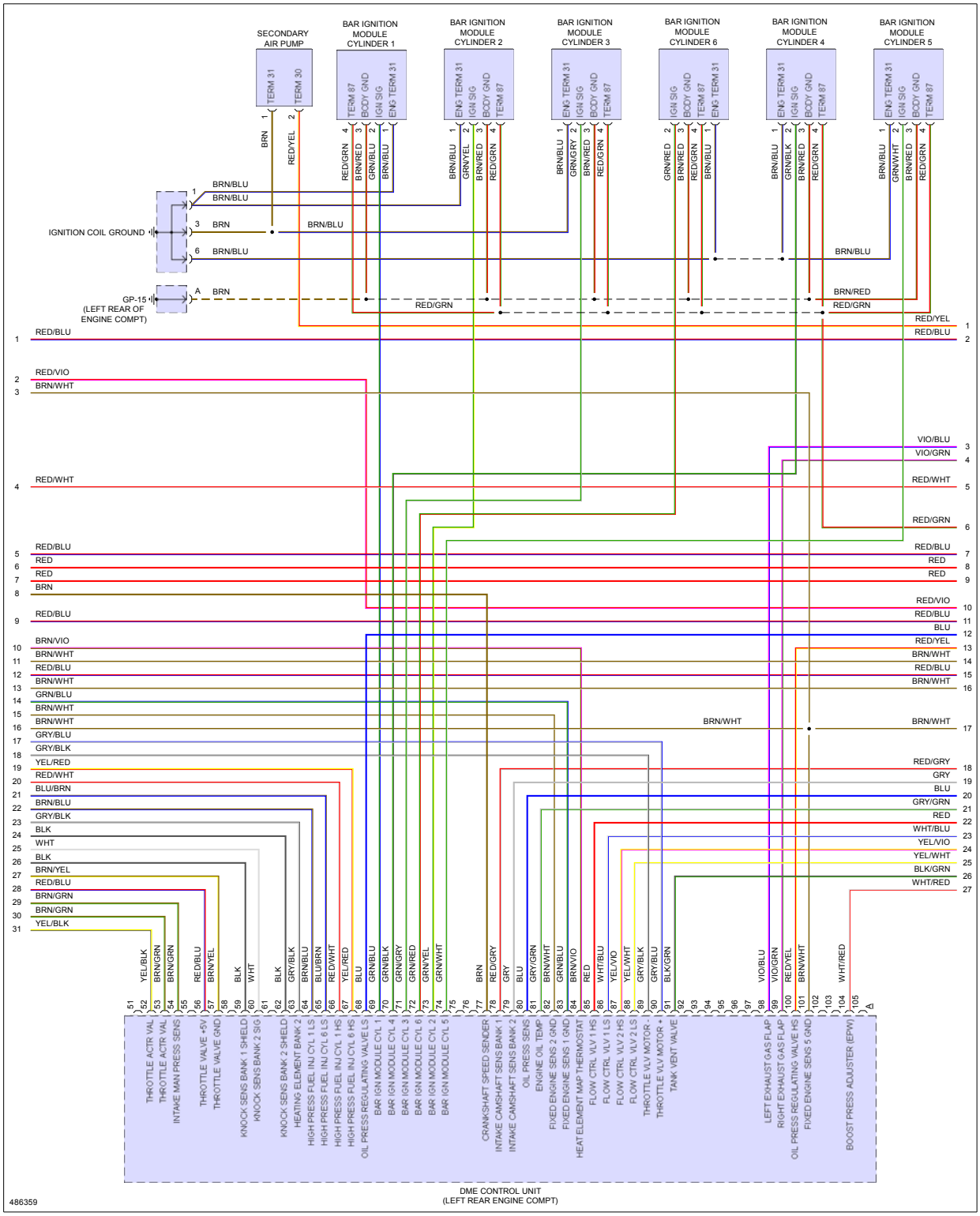

Fig 4: 3.0L Turbo, Engine Performance Circuit (4 of 6)

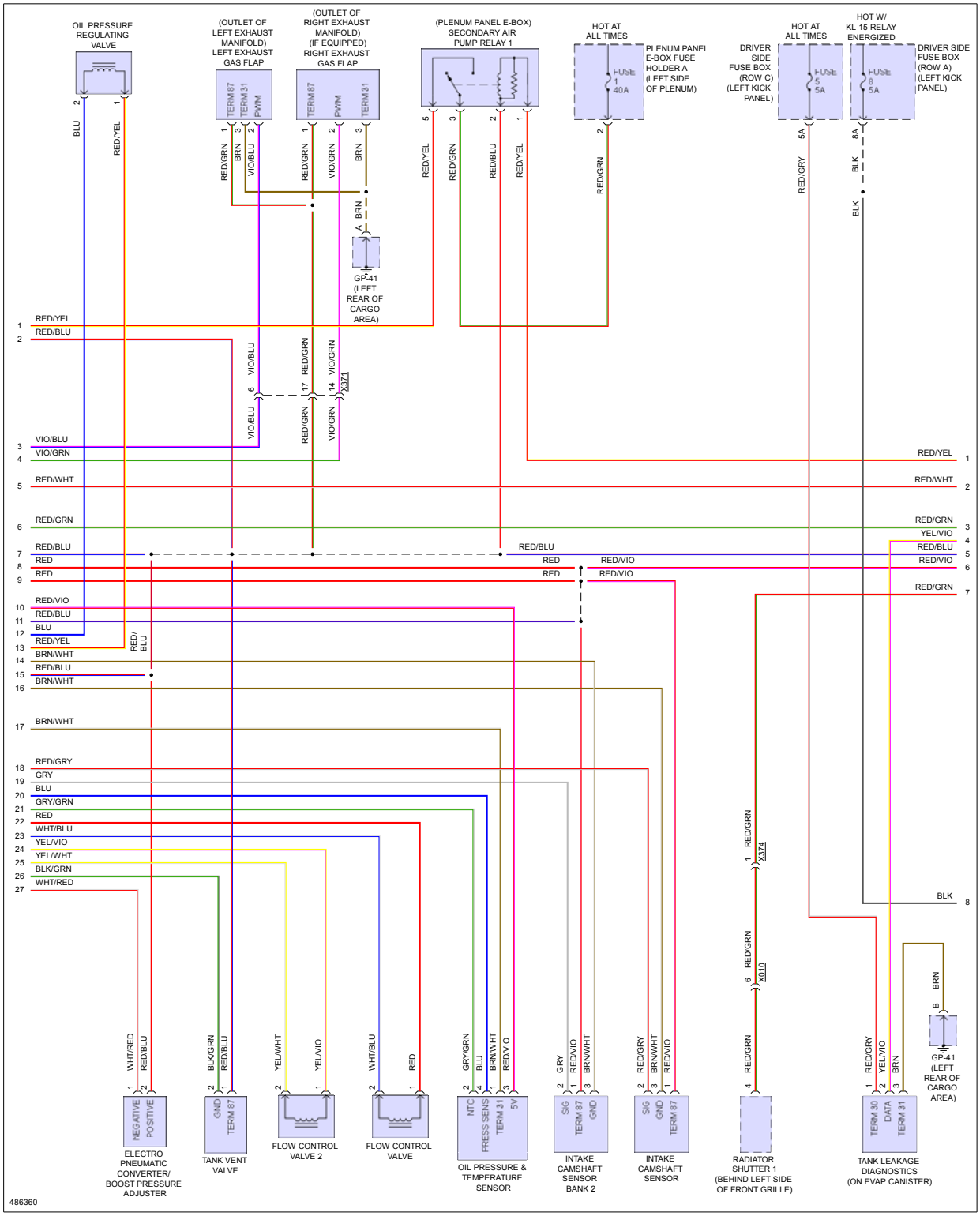

Fig 5: 3.0L Turbo, Engine Performance Circuit (5 of 6)

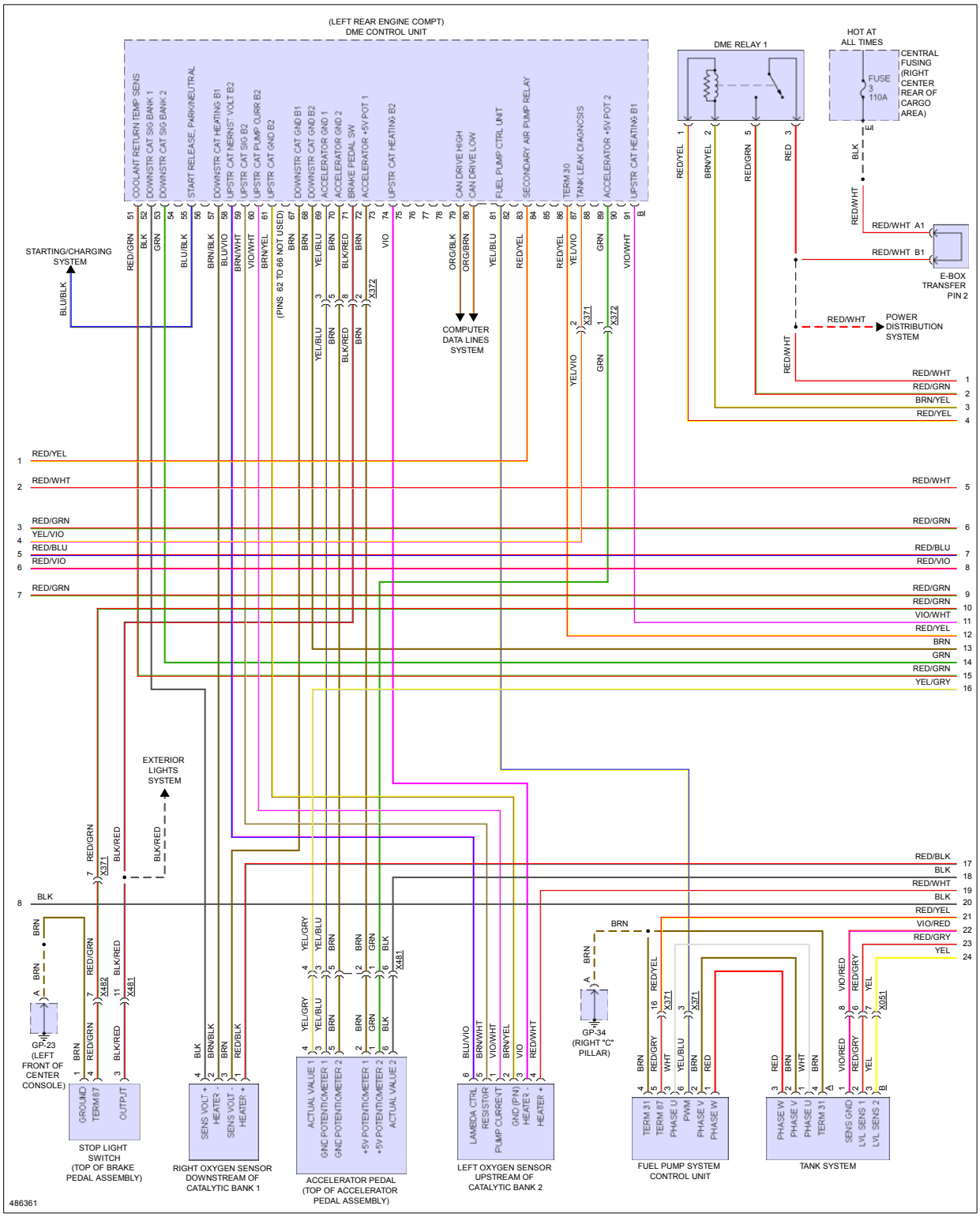

Fig 6: 3.0L Turbo, Engine Performance Circuit (6 of 6)

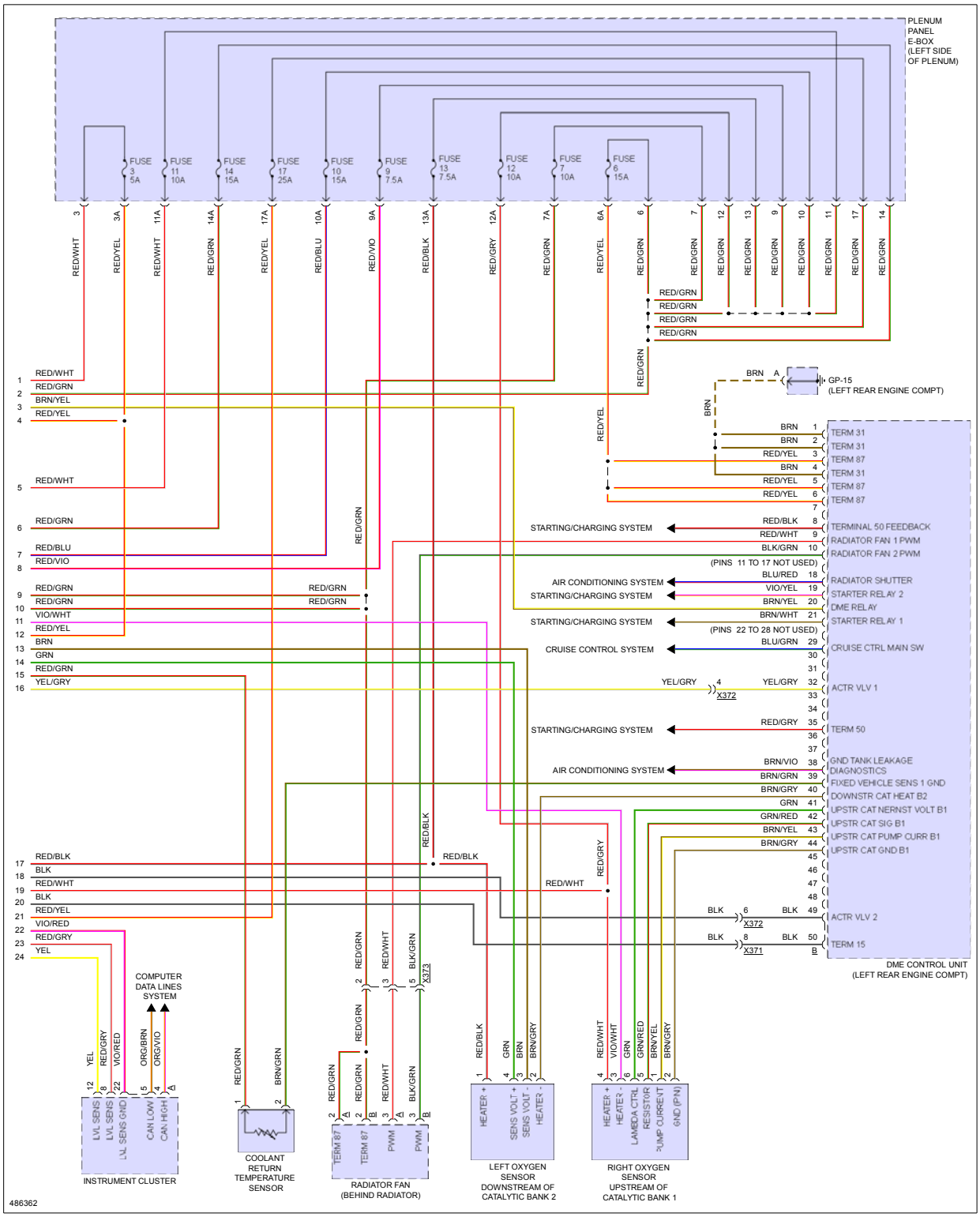

ENGINE PERFORMANCE > 3.6L TURBO

Fig 1: 3.6L Turbo, Engine Performance Circuit (1 of 6)

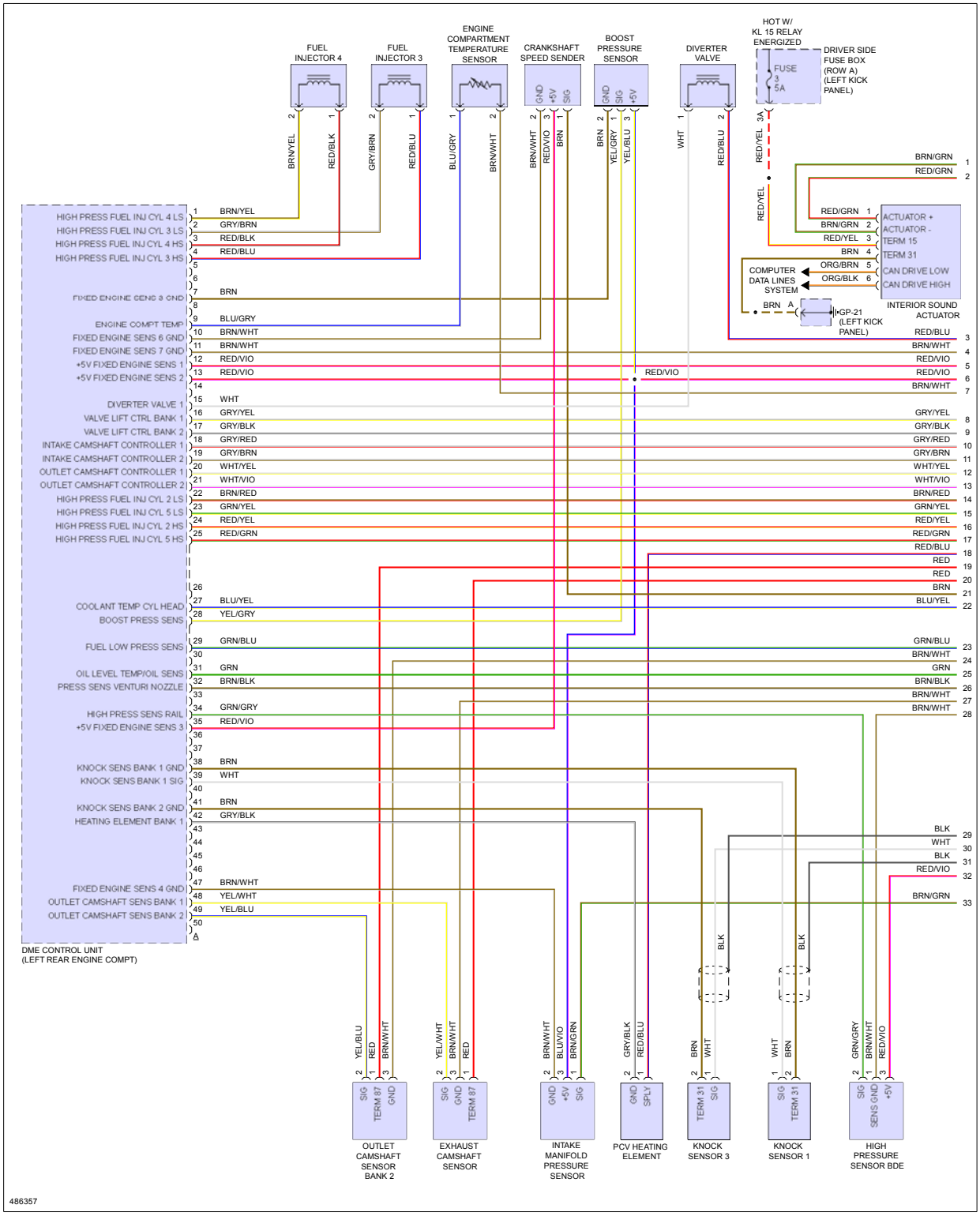

Fig 2: 3.6L Turbo, Engine Performance Circuit (2 of 6)

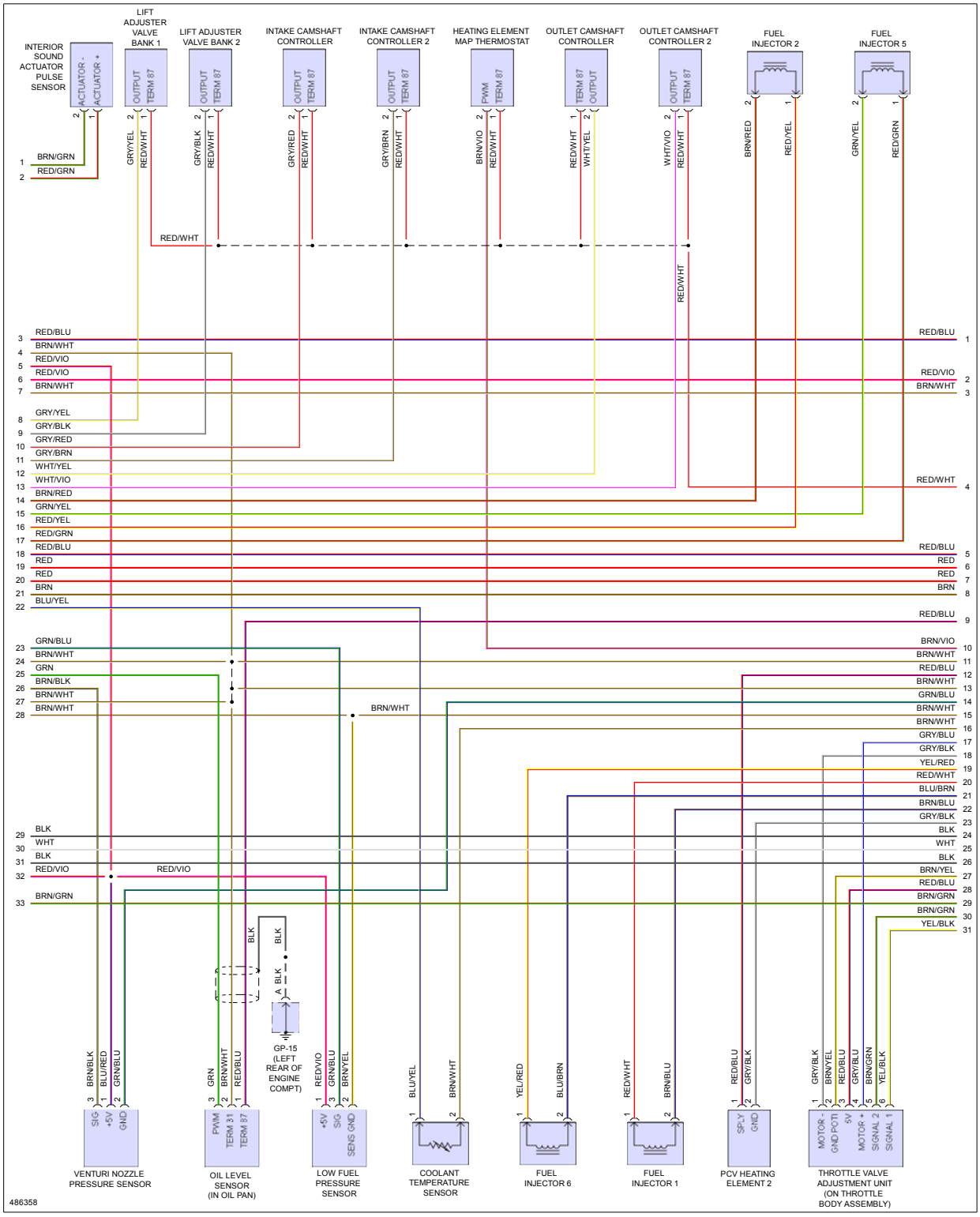

Fig 3: 3.6L Turbo, Engine Performance Circuit (3 of 6)

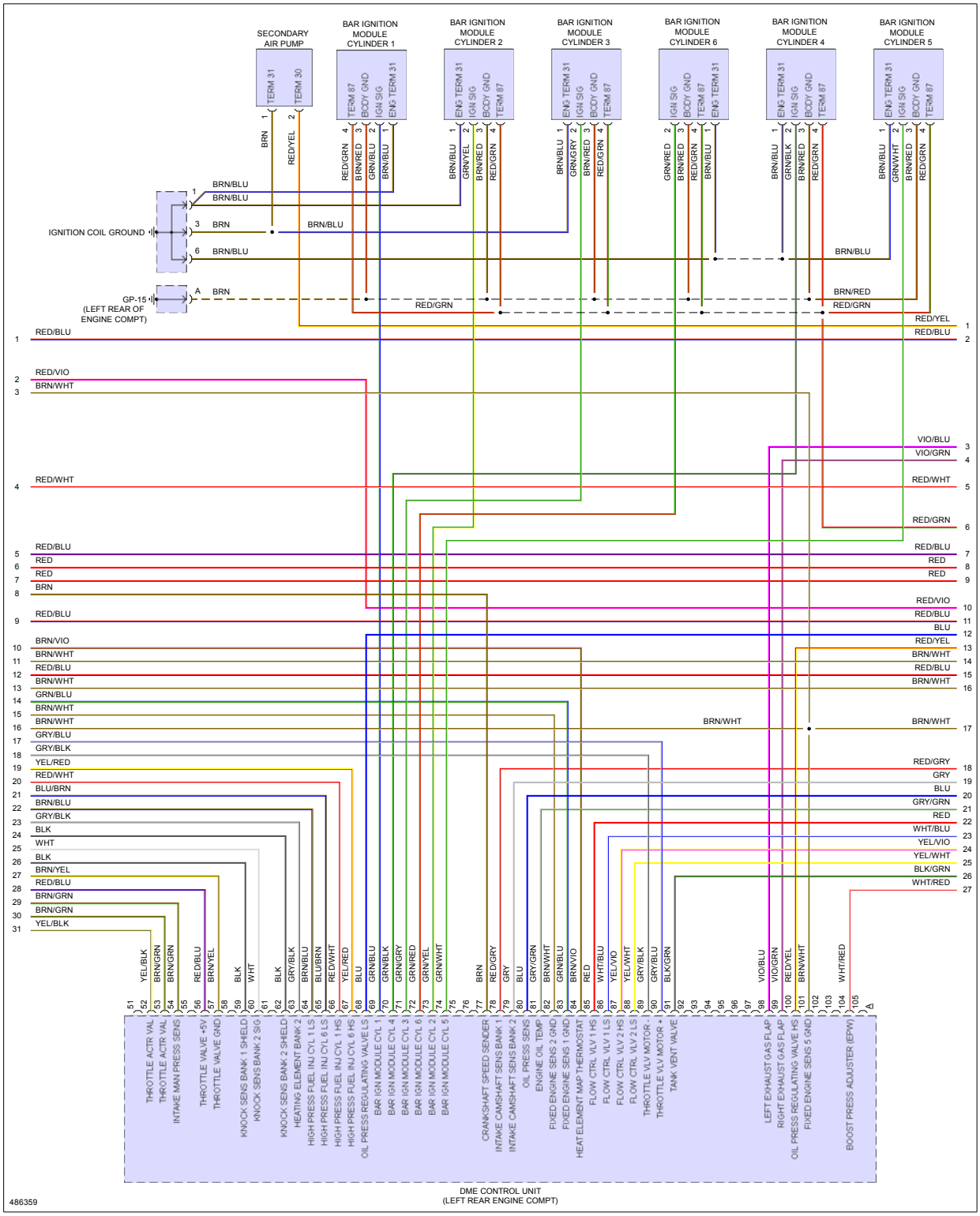

Fig 4: 3.6L Turbo, Engine Performance Circuit (4 of 6)

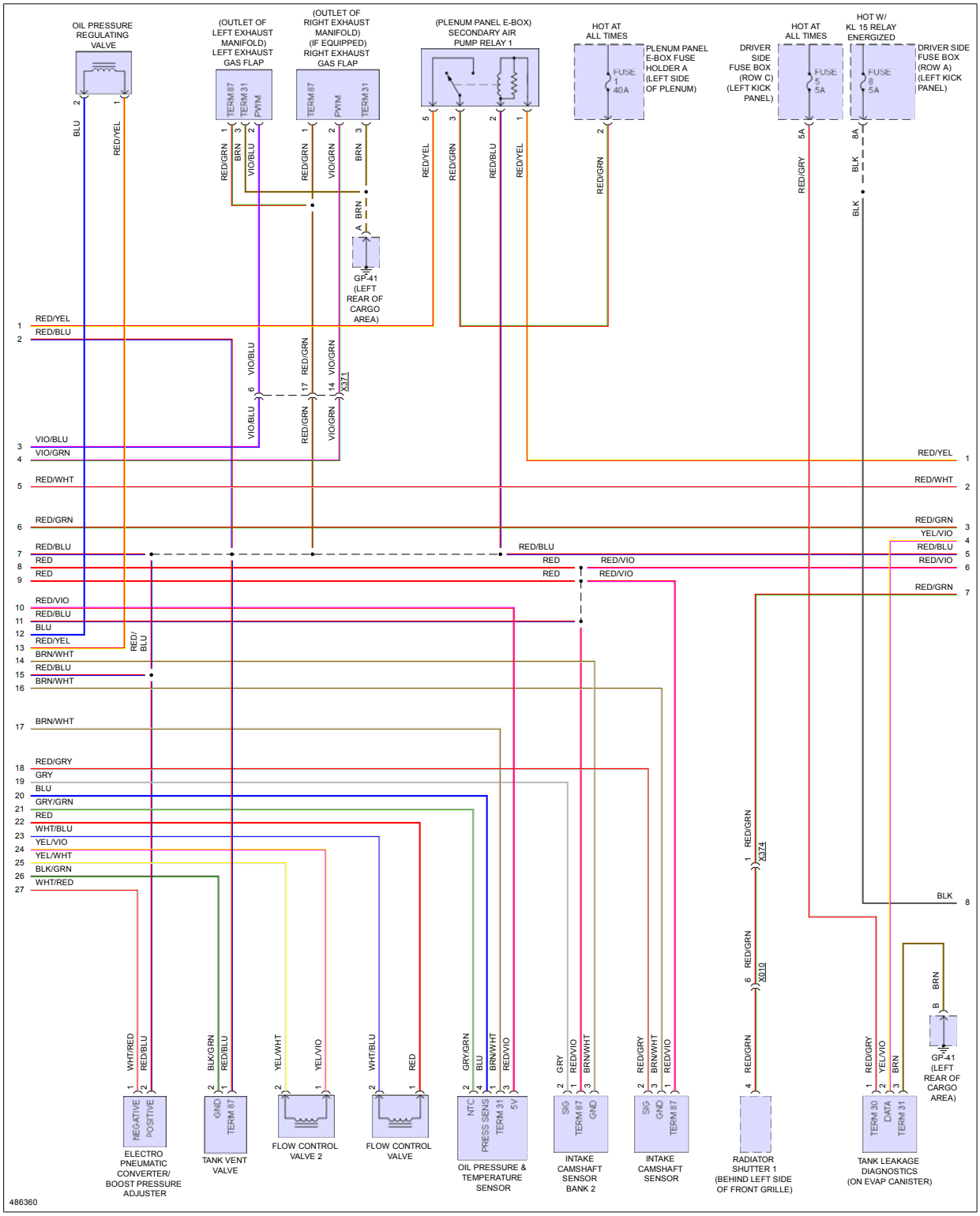

Fig 5: 3.6L Turbo, Engine Performance Circuit (5 of 6)

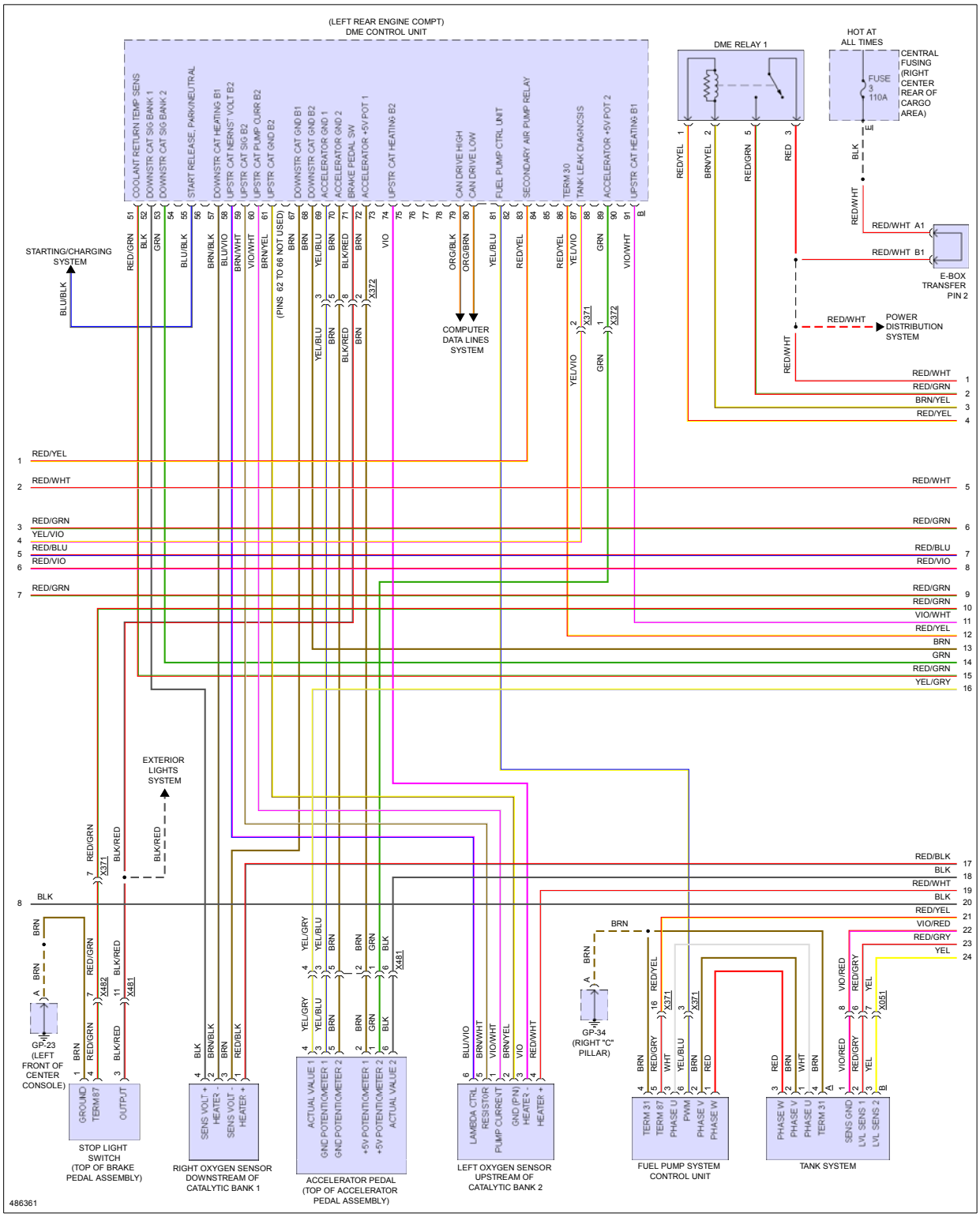

Fig 6: 3.6L Turbo, Engine Performance Circuit (6 of 6)

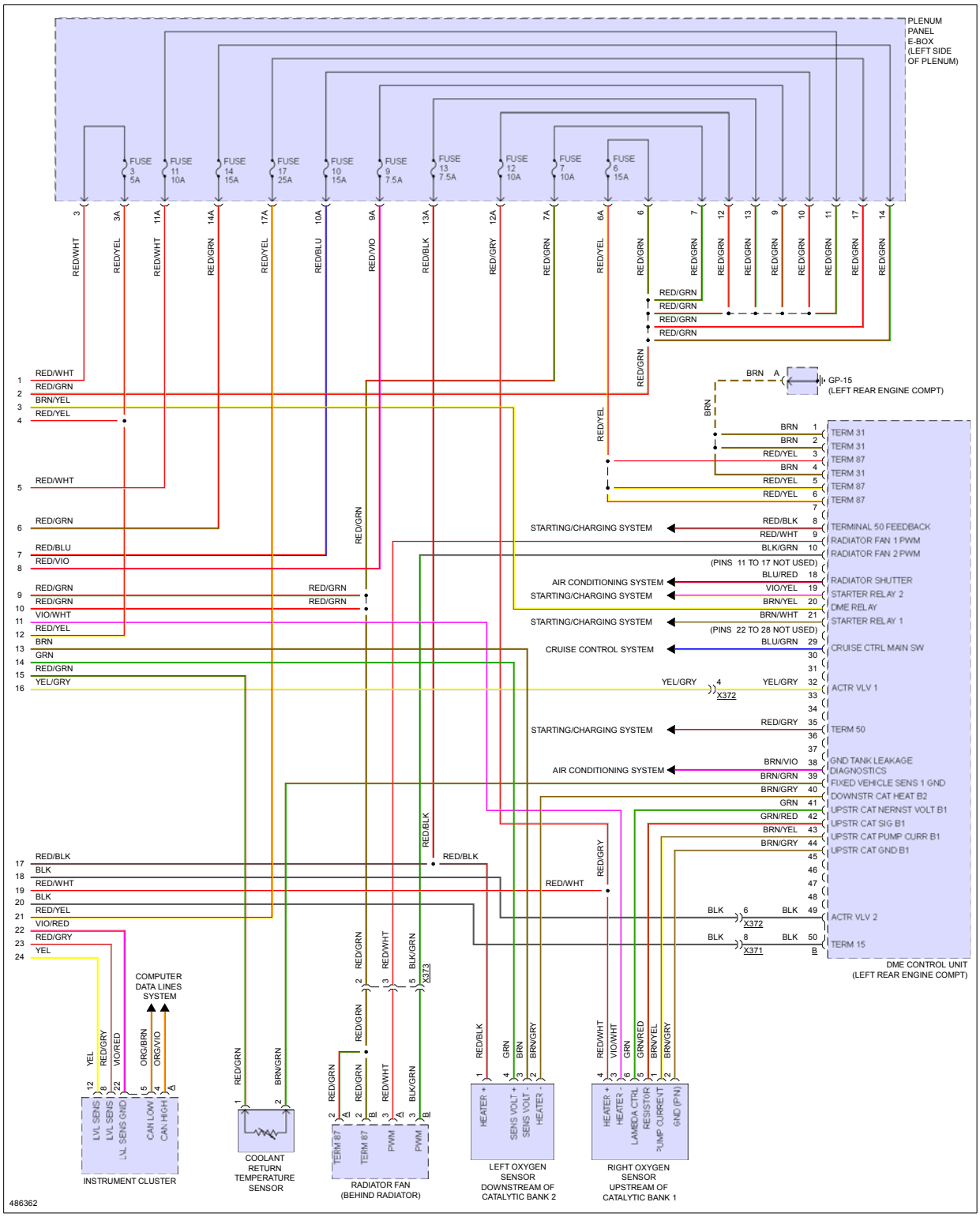

EXTERIOR LIGHTS

Fig 1: Backup Lamps Circuit

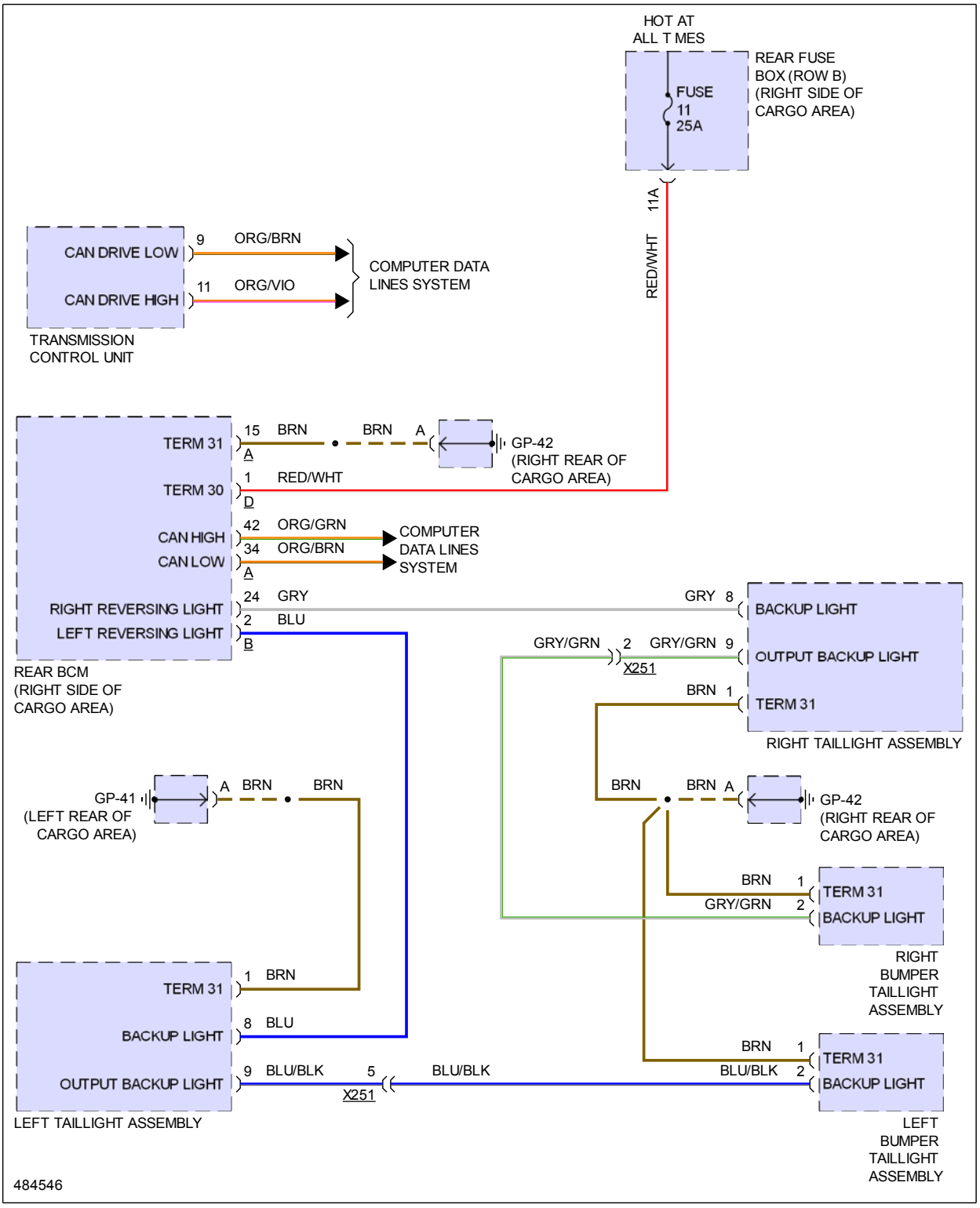

Fig 2: Exterior Lamps Circuit (1 of 3)

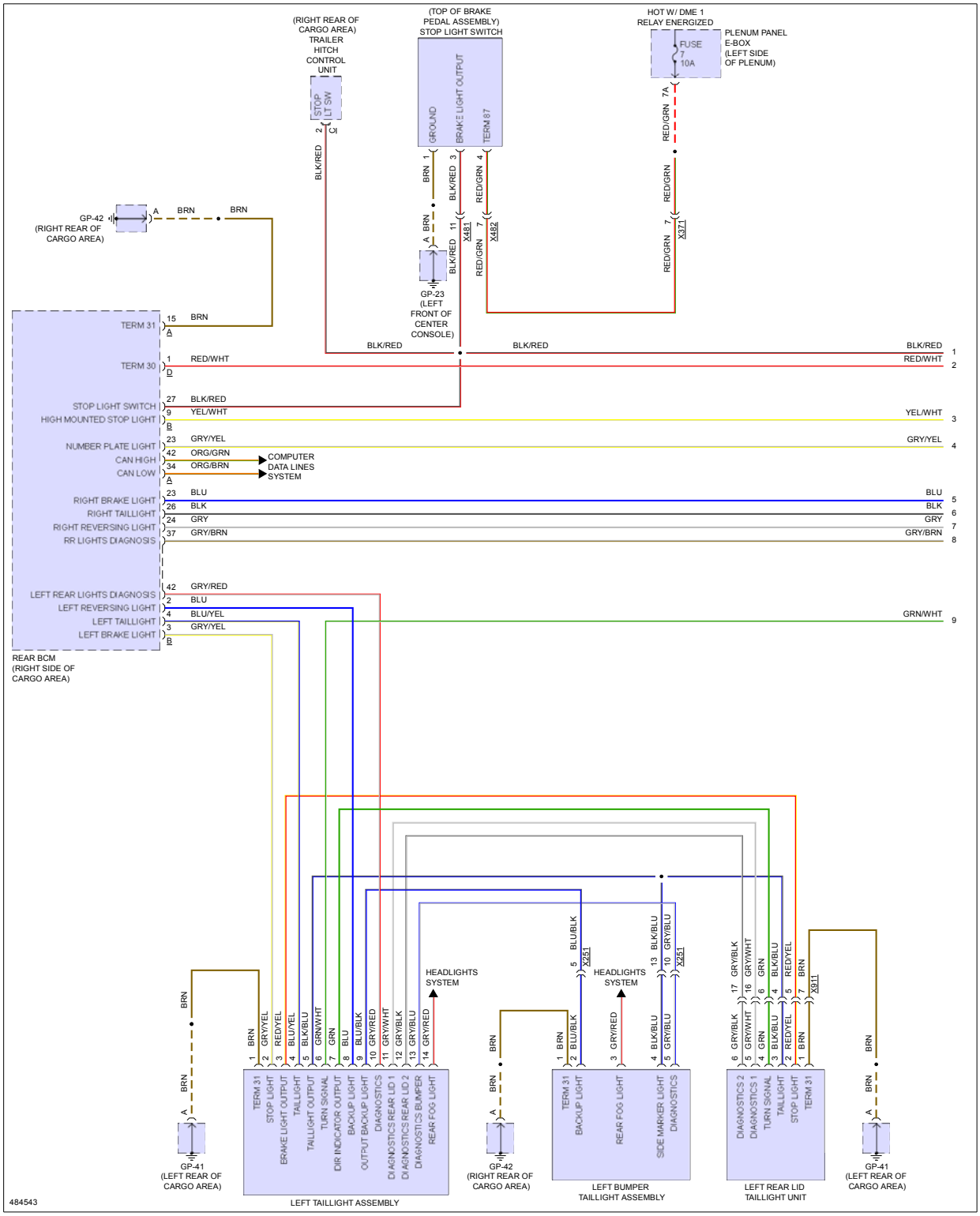

Fig 3: Exterior Lamps Circuit (2 of 3)

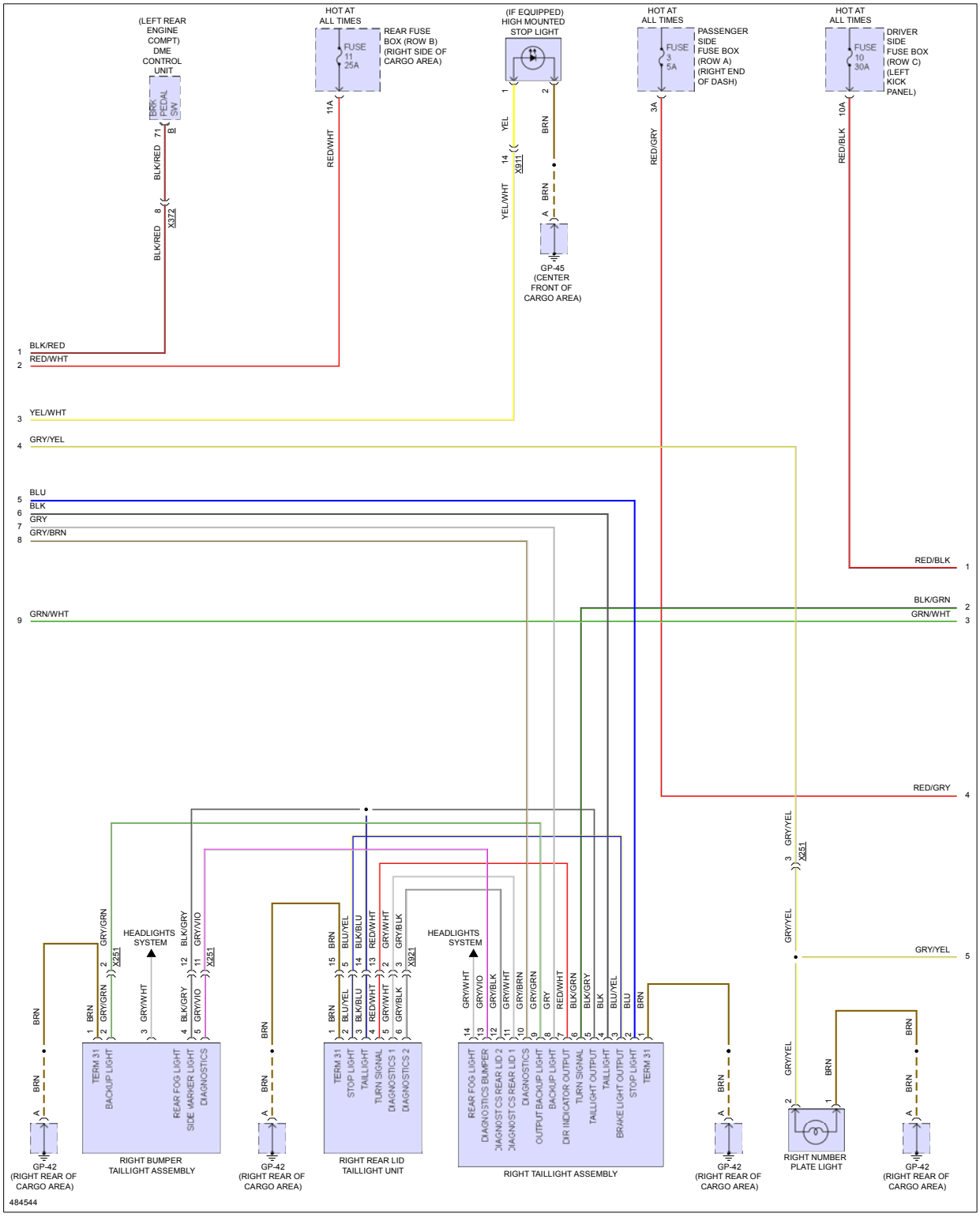

Fig 4: Exterior Lamps Circuit (3 of 3)

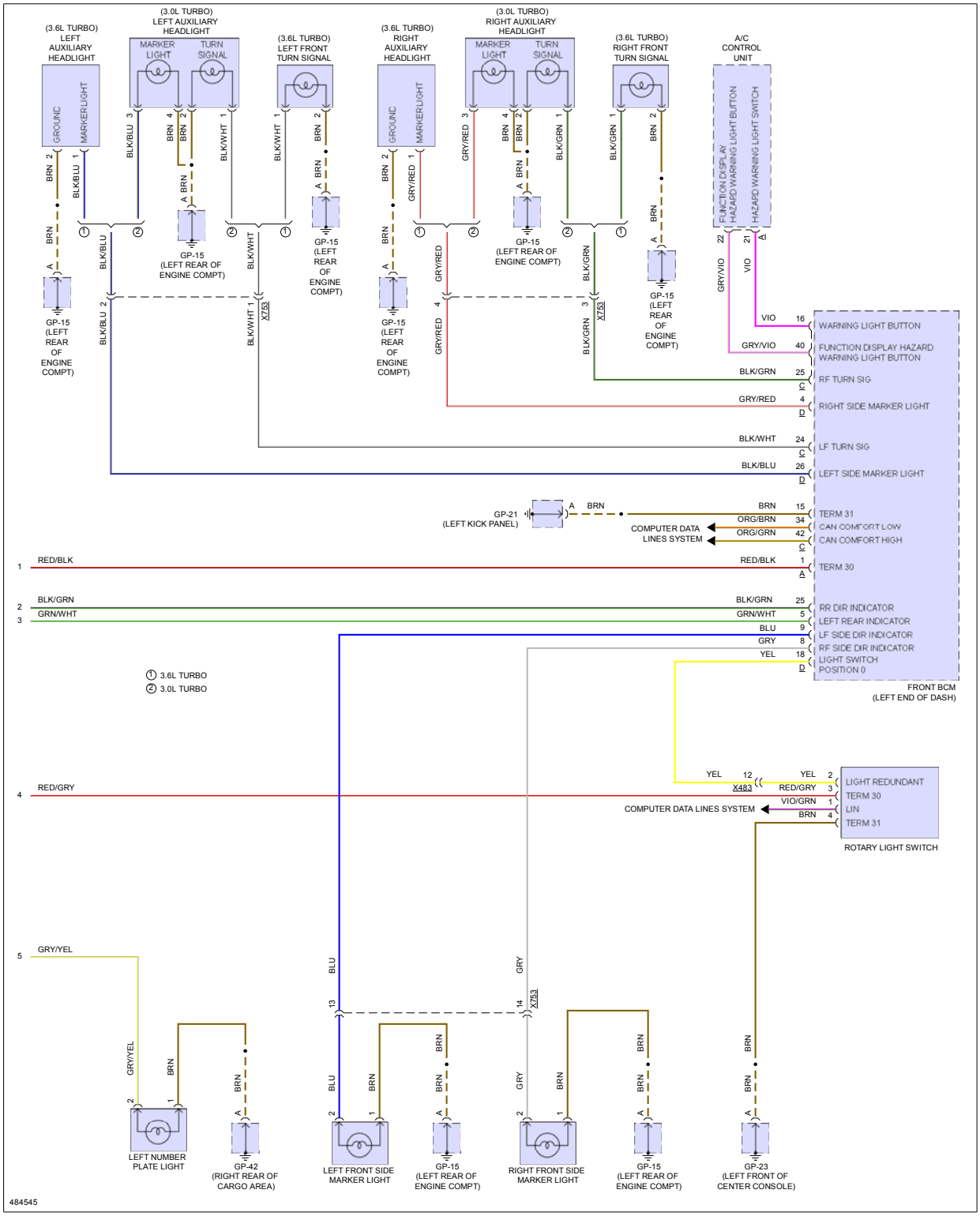

Fig 5: Trailer Tow Circuit

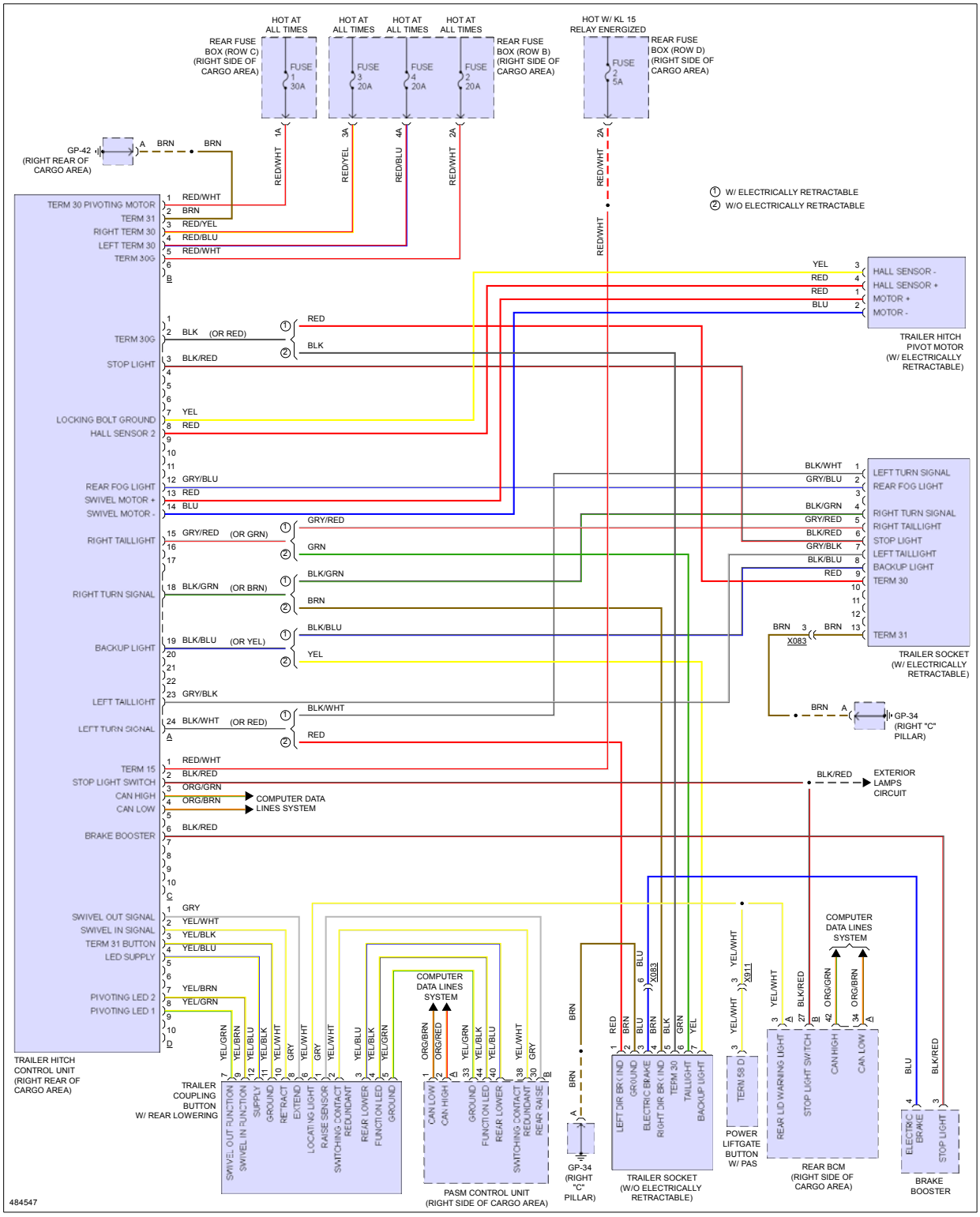

GROUND DISTRIBUTION

Fig 1: Ground Distribution Circuit (1 of 7)

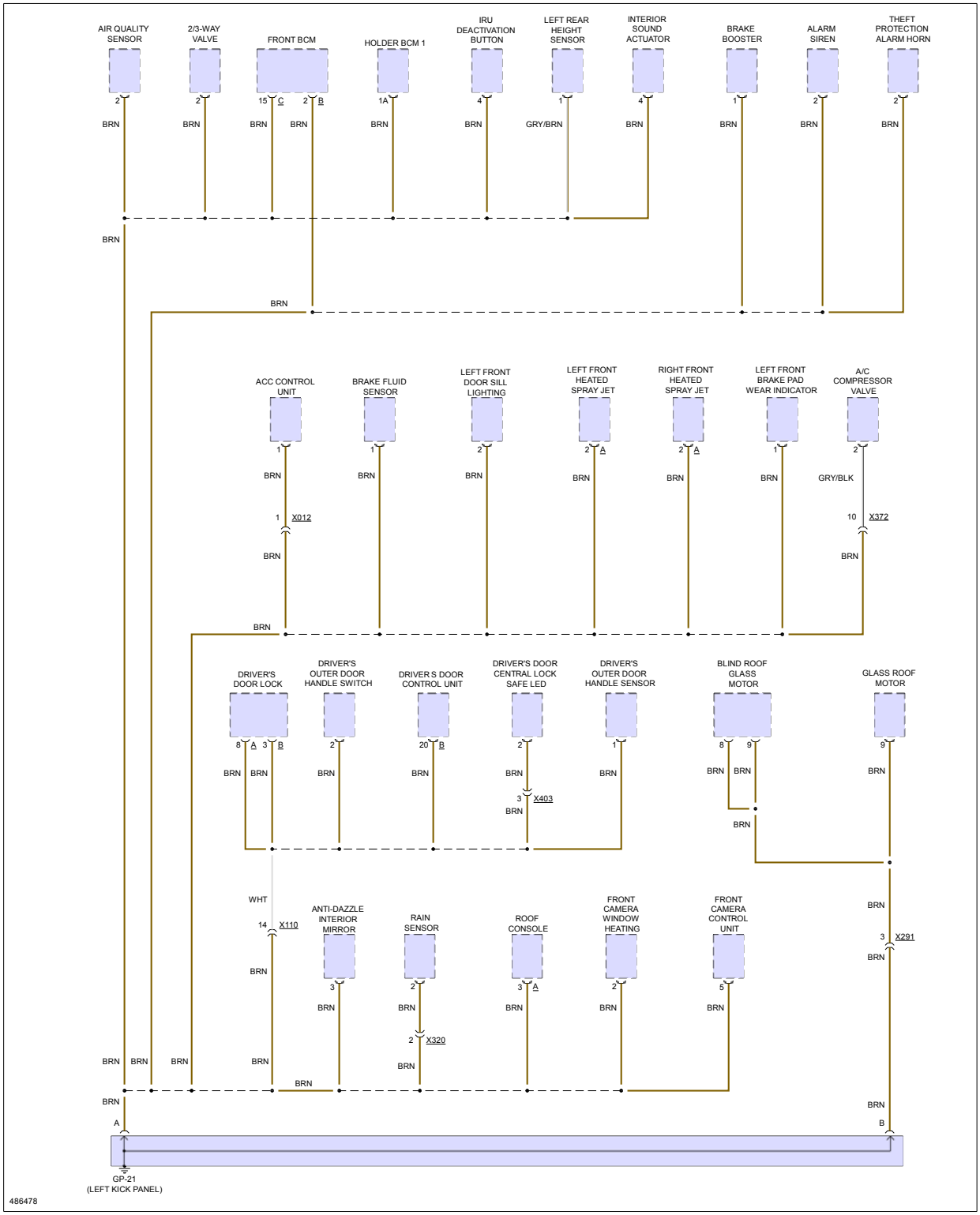

Fig 2: Ground Distribution Circuit (2 of 7)

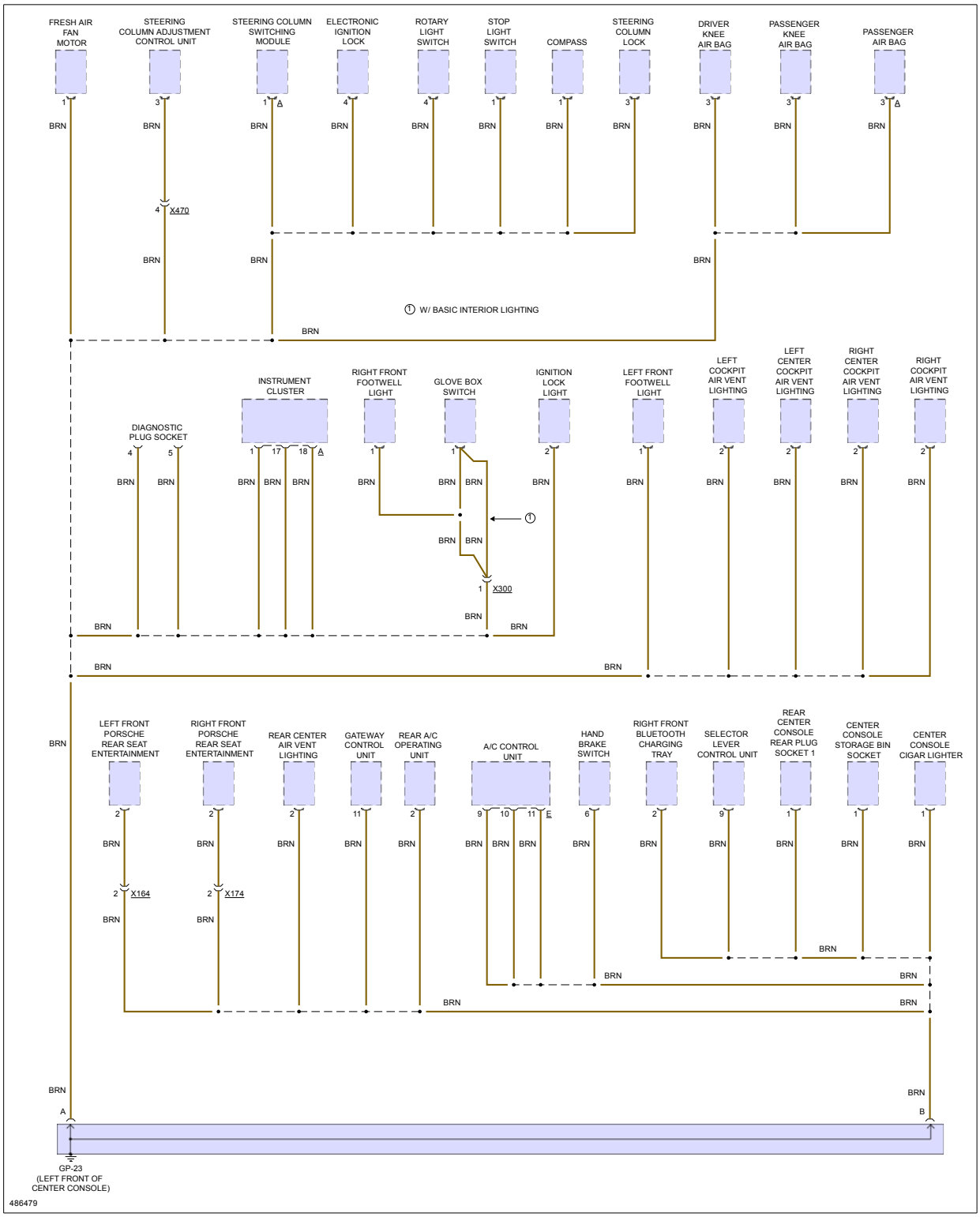

Fig 3: Ground Distribution Circuit (3 of 7)

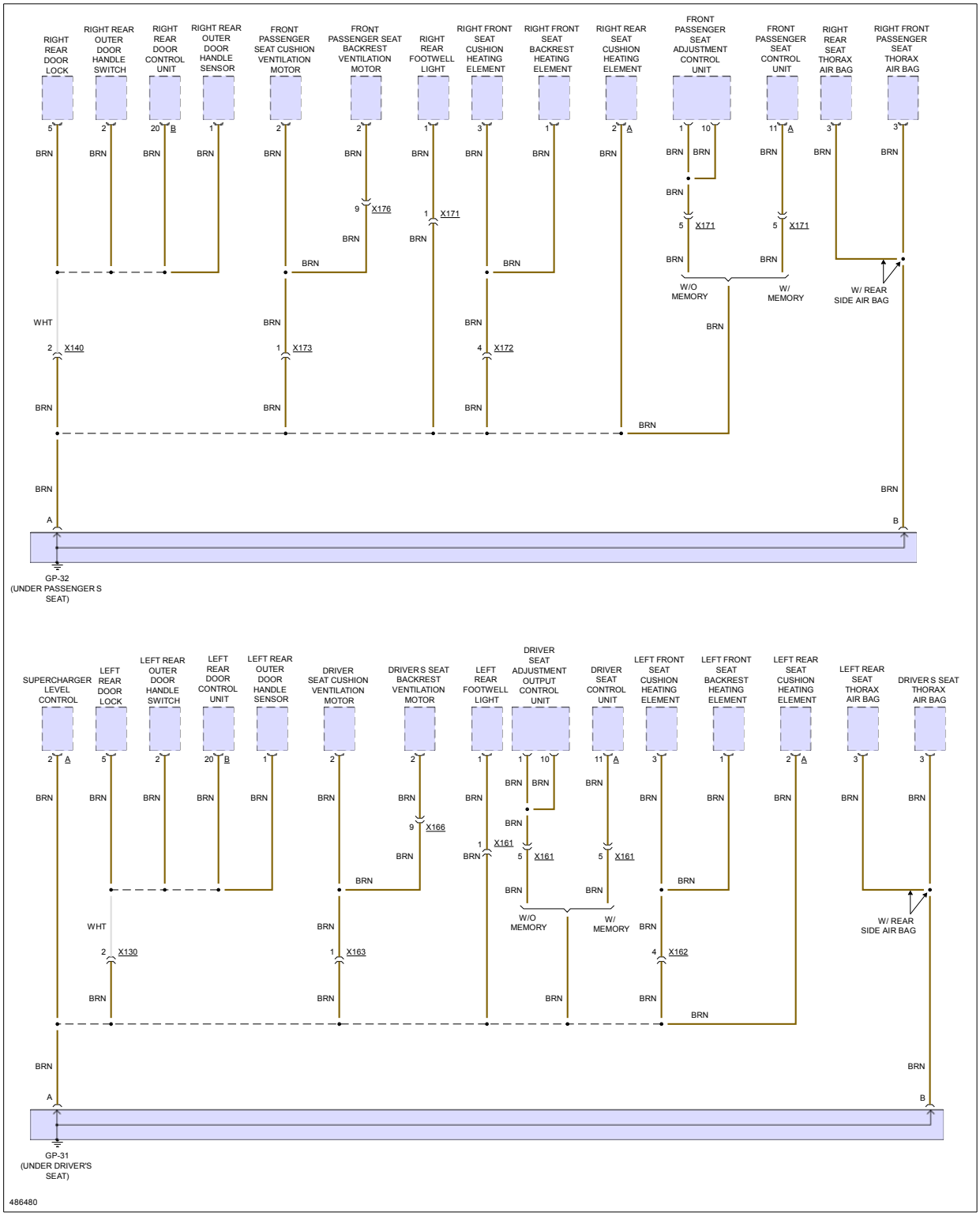

Fig 4: Ground Distribution Circuit (4 of 7)

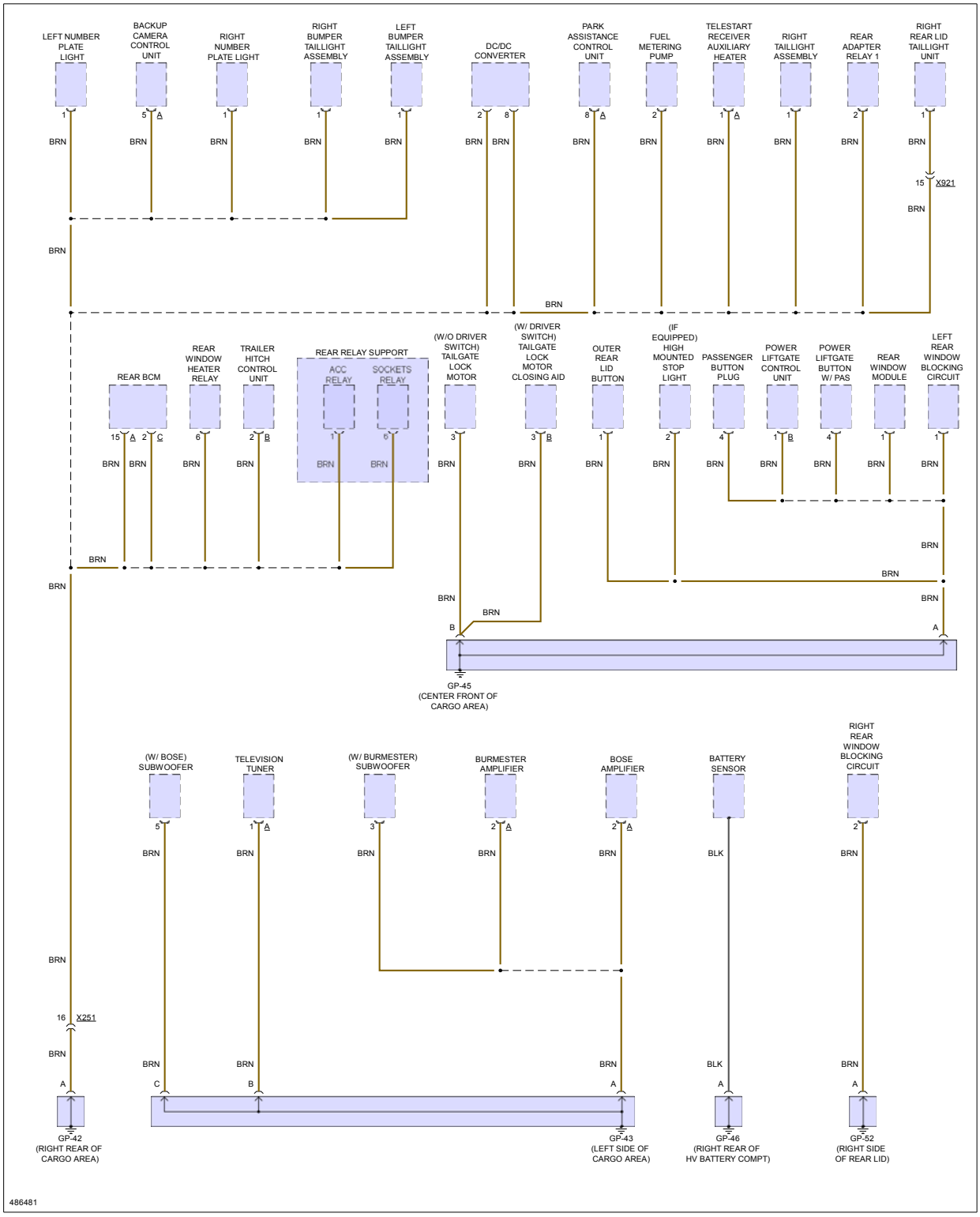

Fig 5: Ground Distribution Circuit (5 of 7)

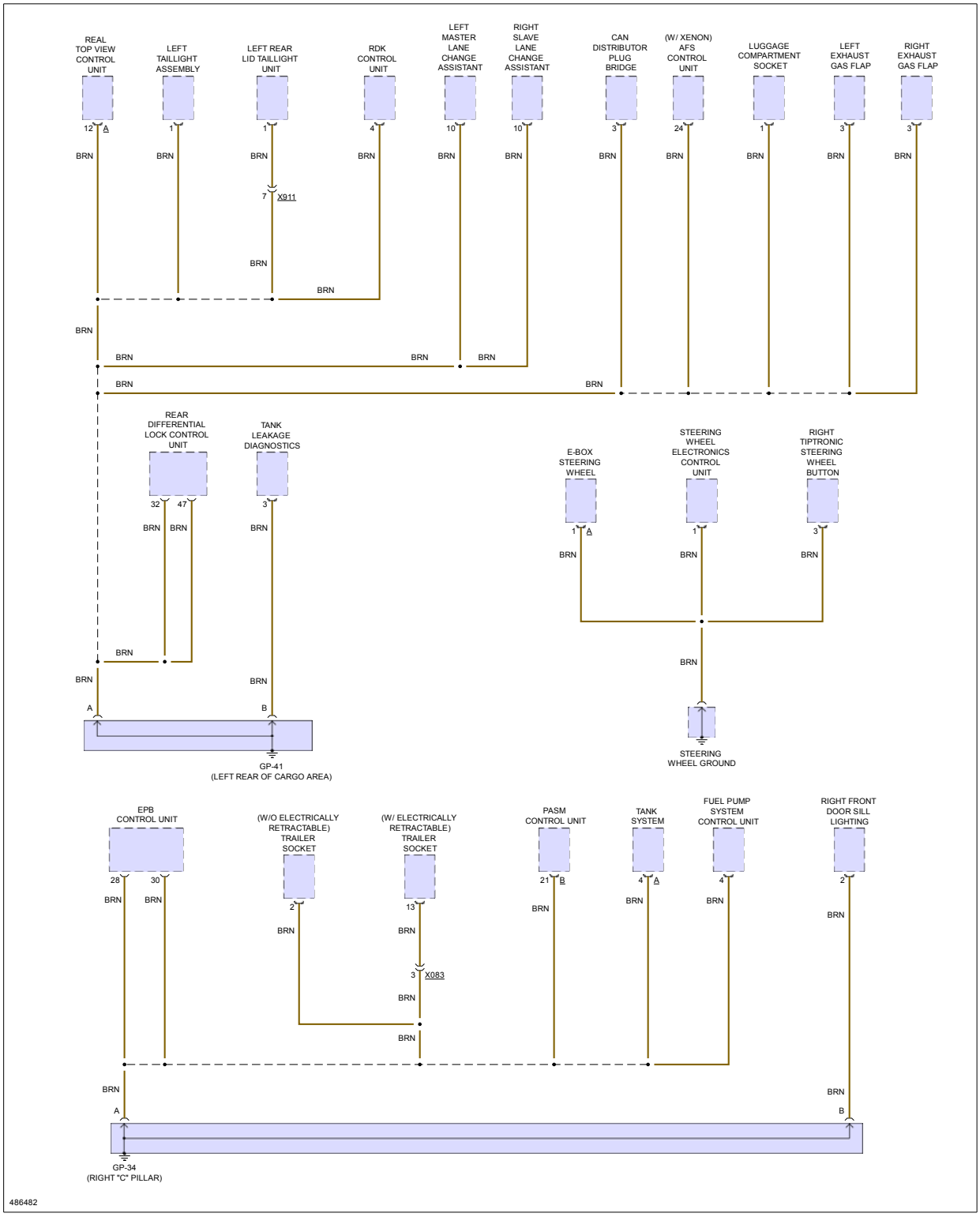

Fig 6: Ground Distribution Circuit (6 of 7)

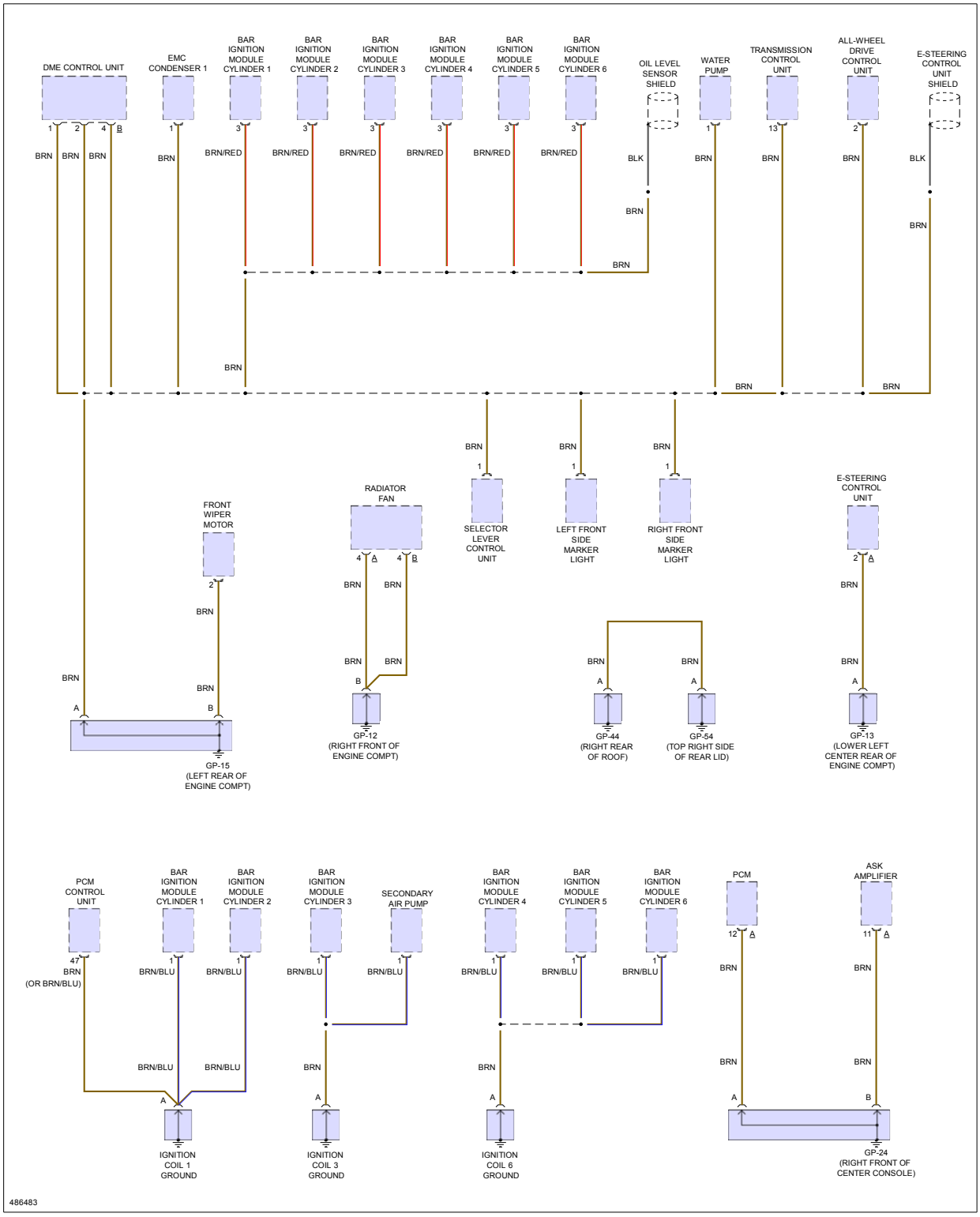

Fig 7: Ground Distribution Circuit (7 of 7)

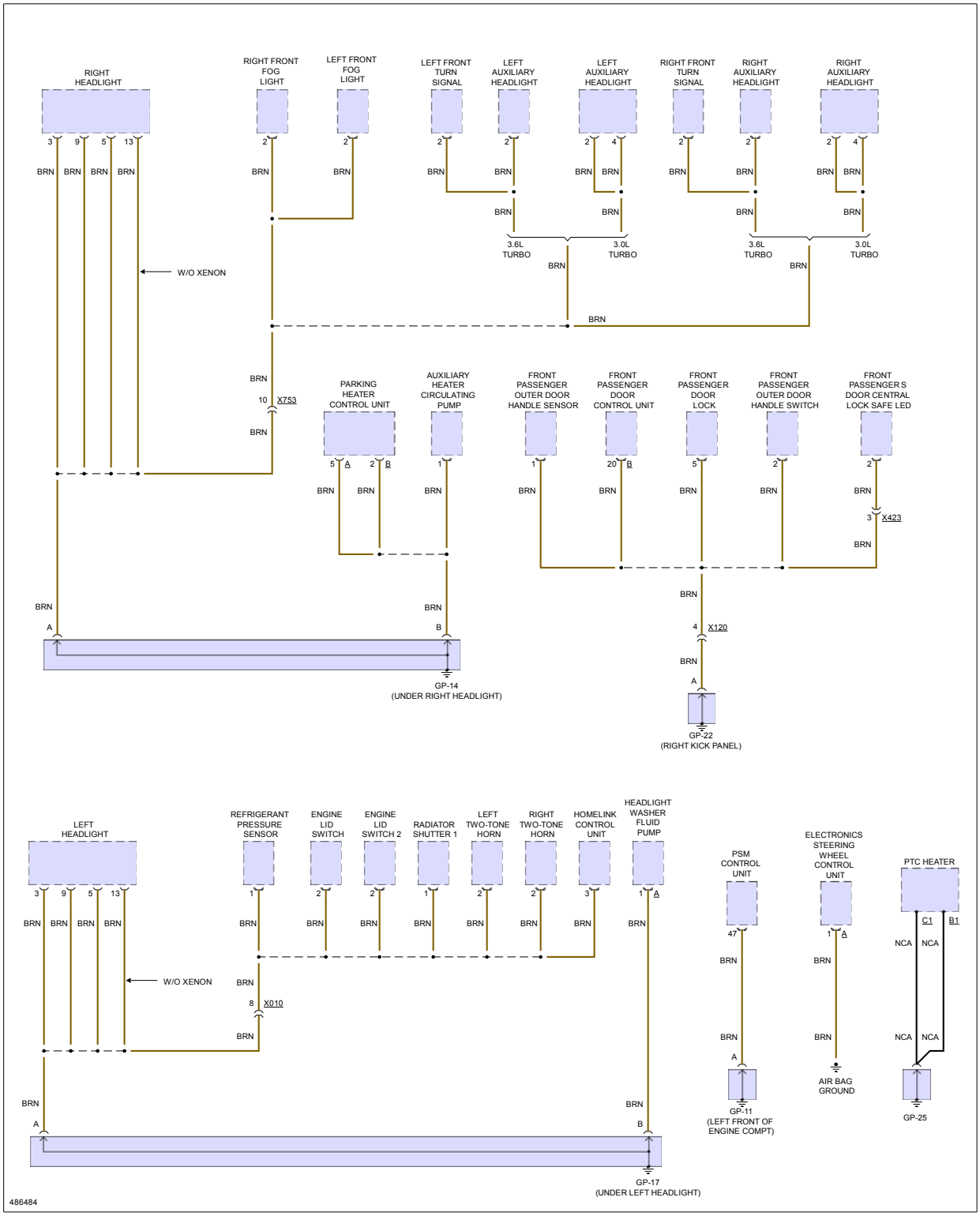

HEADLIGHTS

Fig 1: Headlights Circuit (1 of 3)

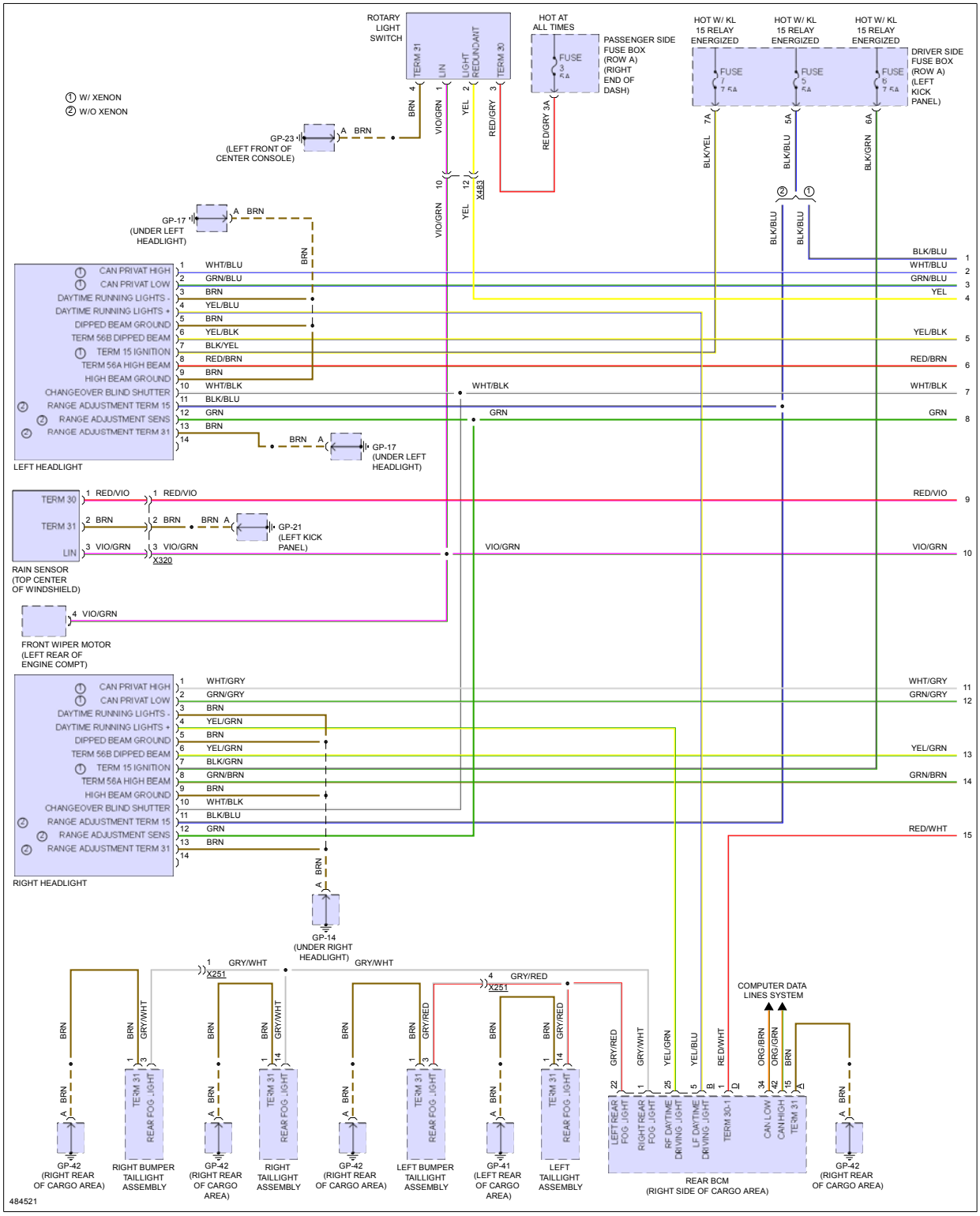

Fig 2: Headlights Circuit (2 of 3)

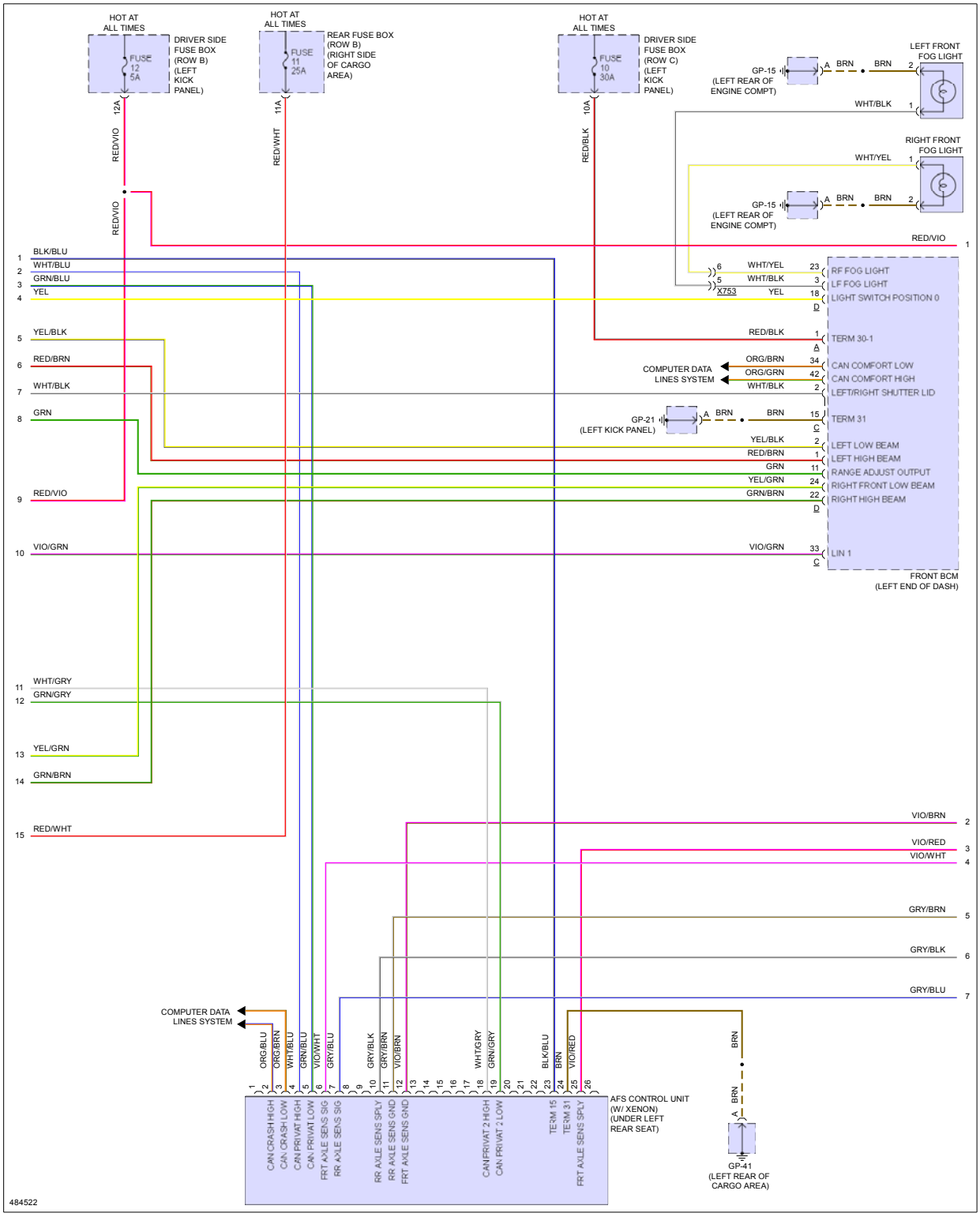

Fig 3: Headlights Circuit (3 of 3)

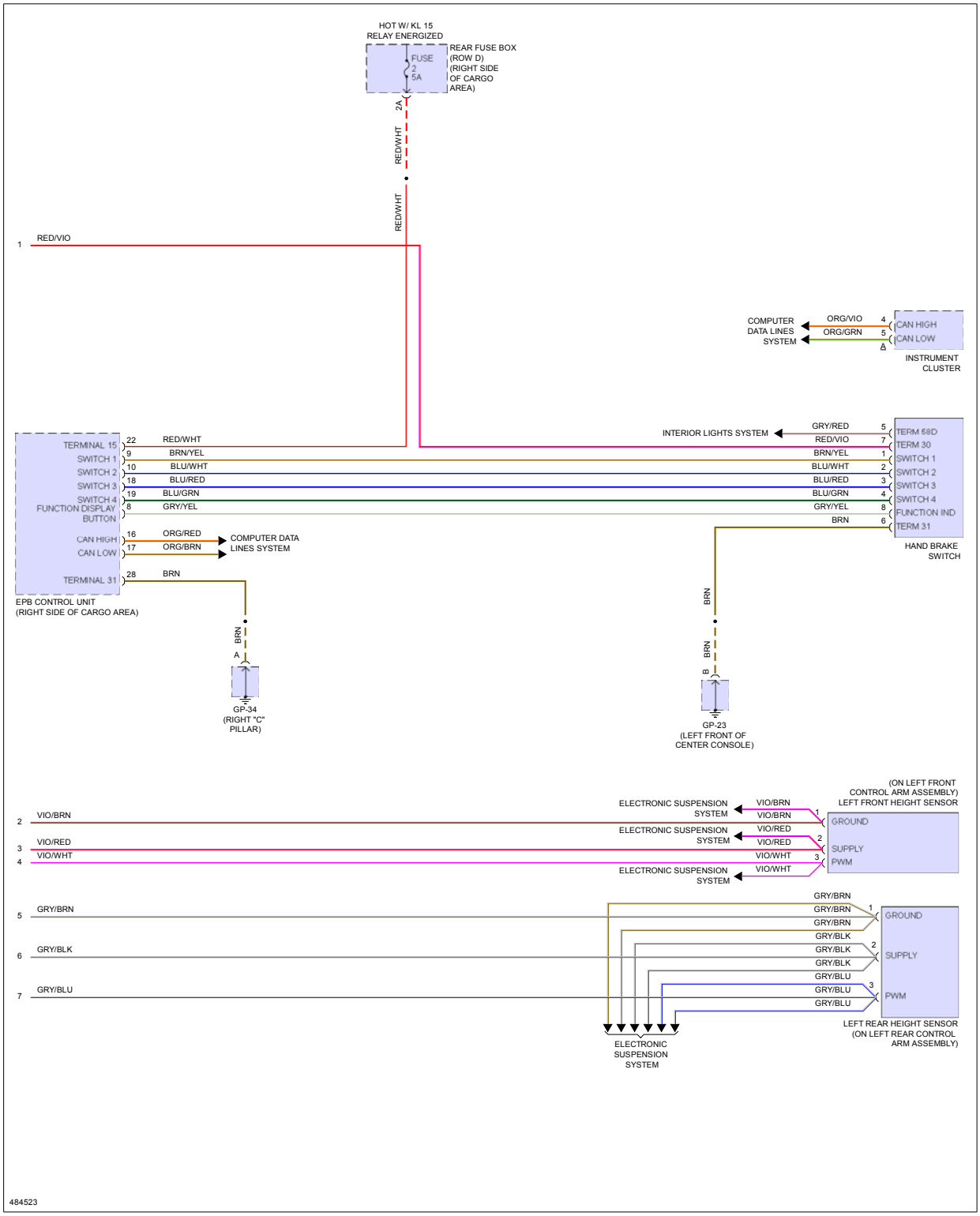

HORN

Fig 1: Horn Circuit

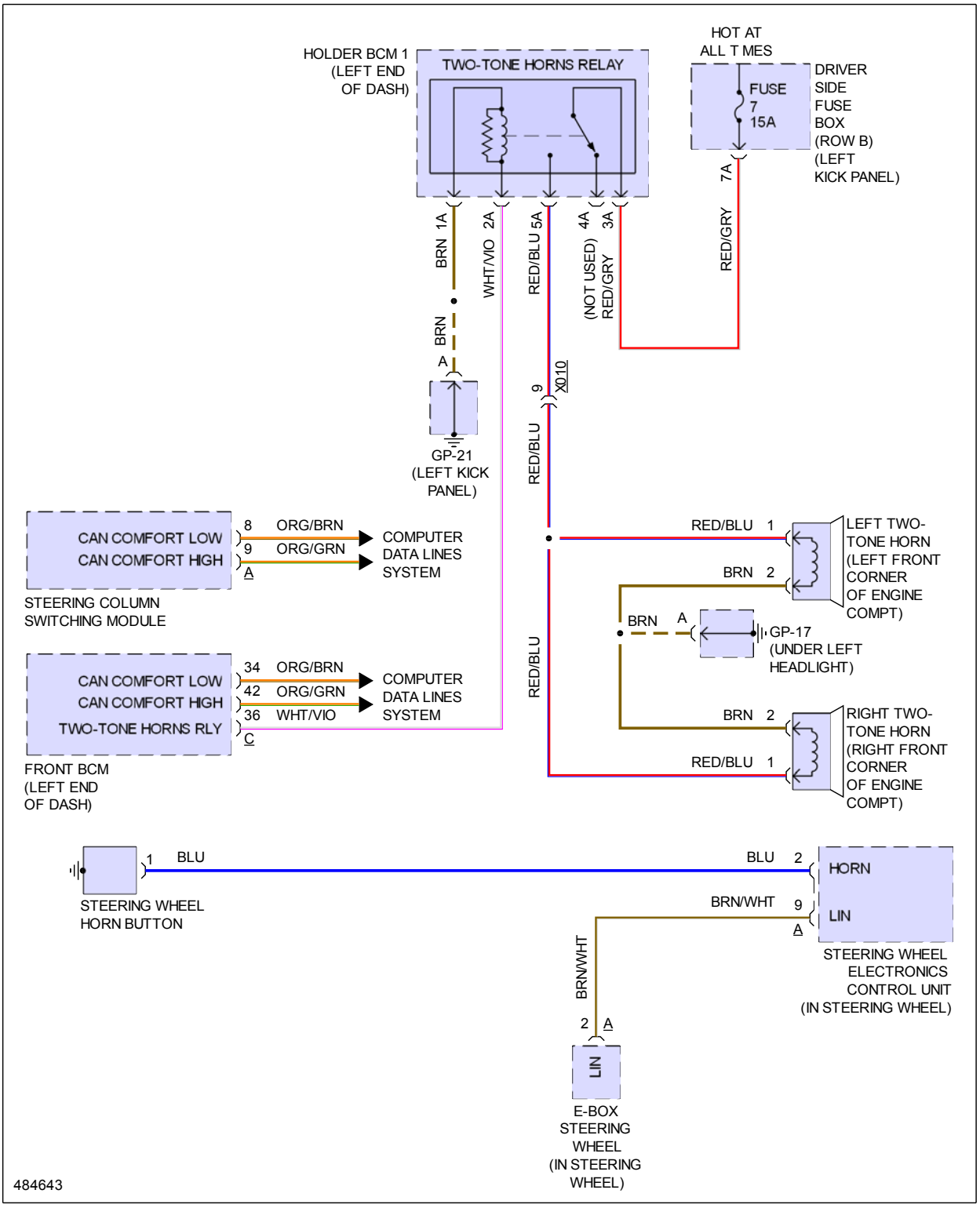

INSTRUMENT CLUSTER

Fig 1: Electronic Compass Circuit

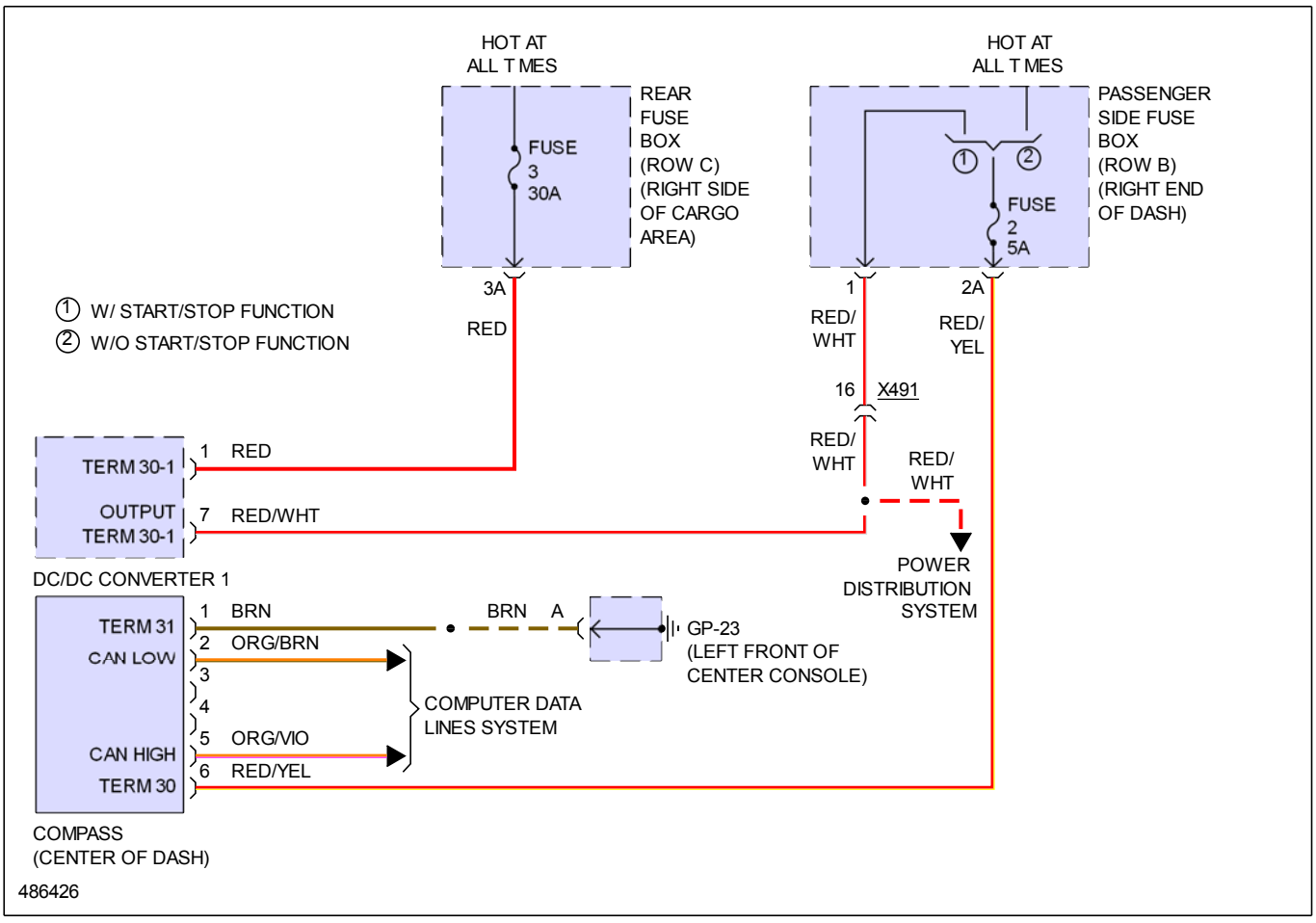

Fig 2: Instrument Cluster Circuit

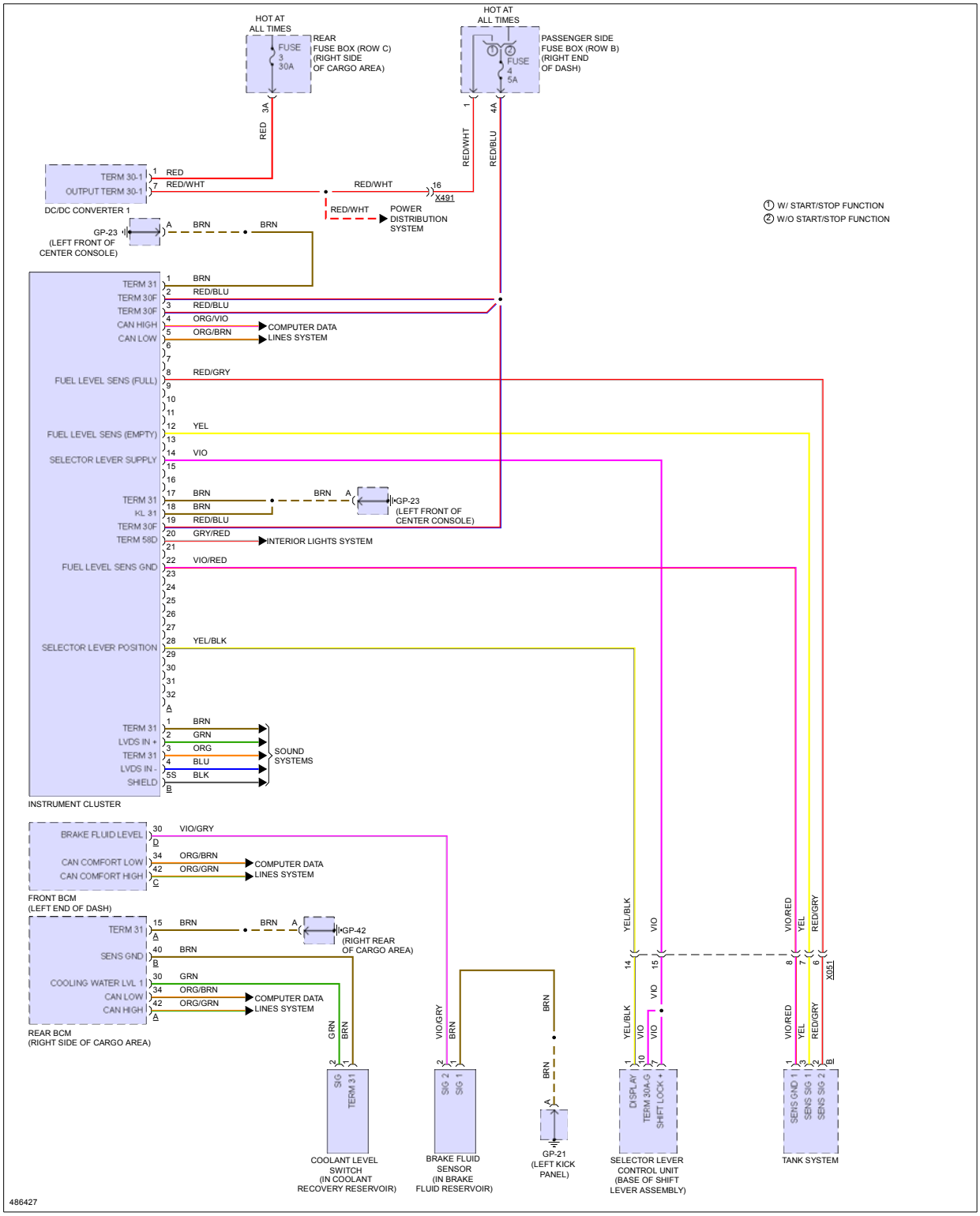

Fig 3: Overhead Console Circuit

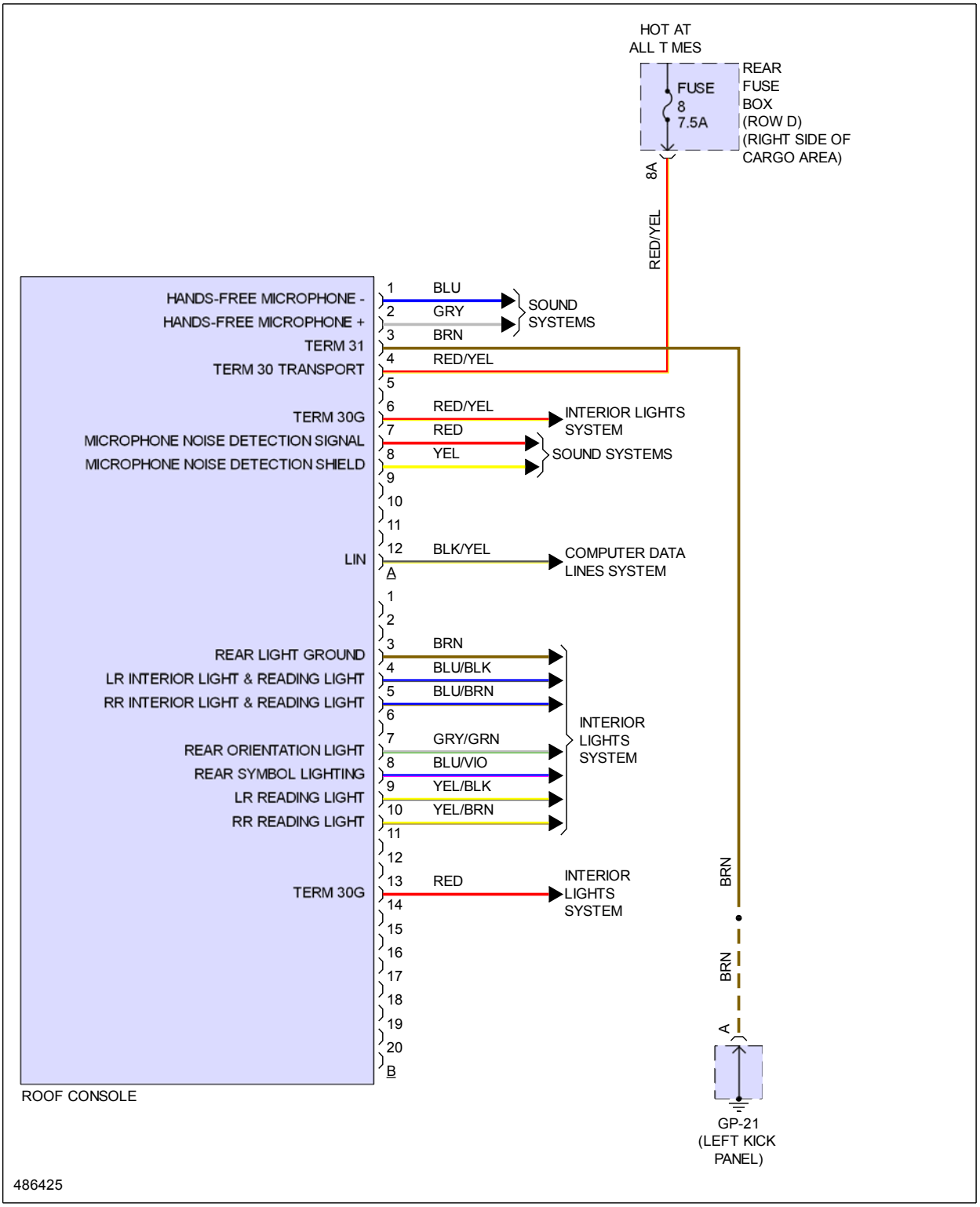

INTERIOR LIGHTS

Fig 1: Interior Lights Circuit (1 of 4)

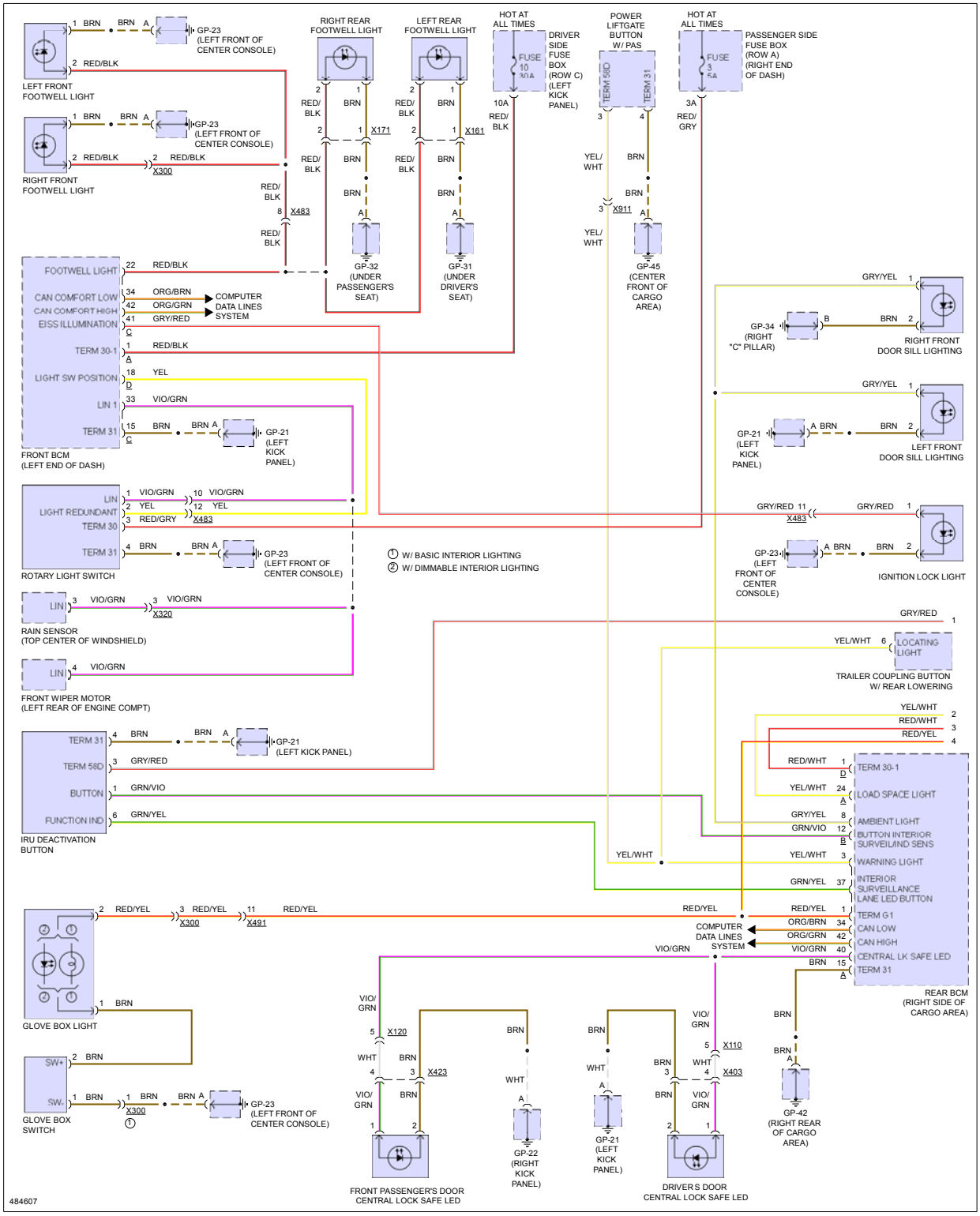

Fig 2: Interior Lights Circuit (2 of 4)

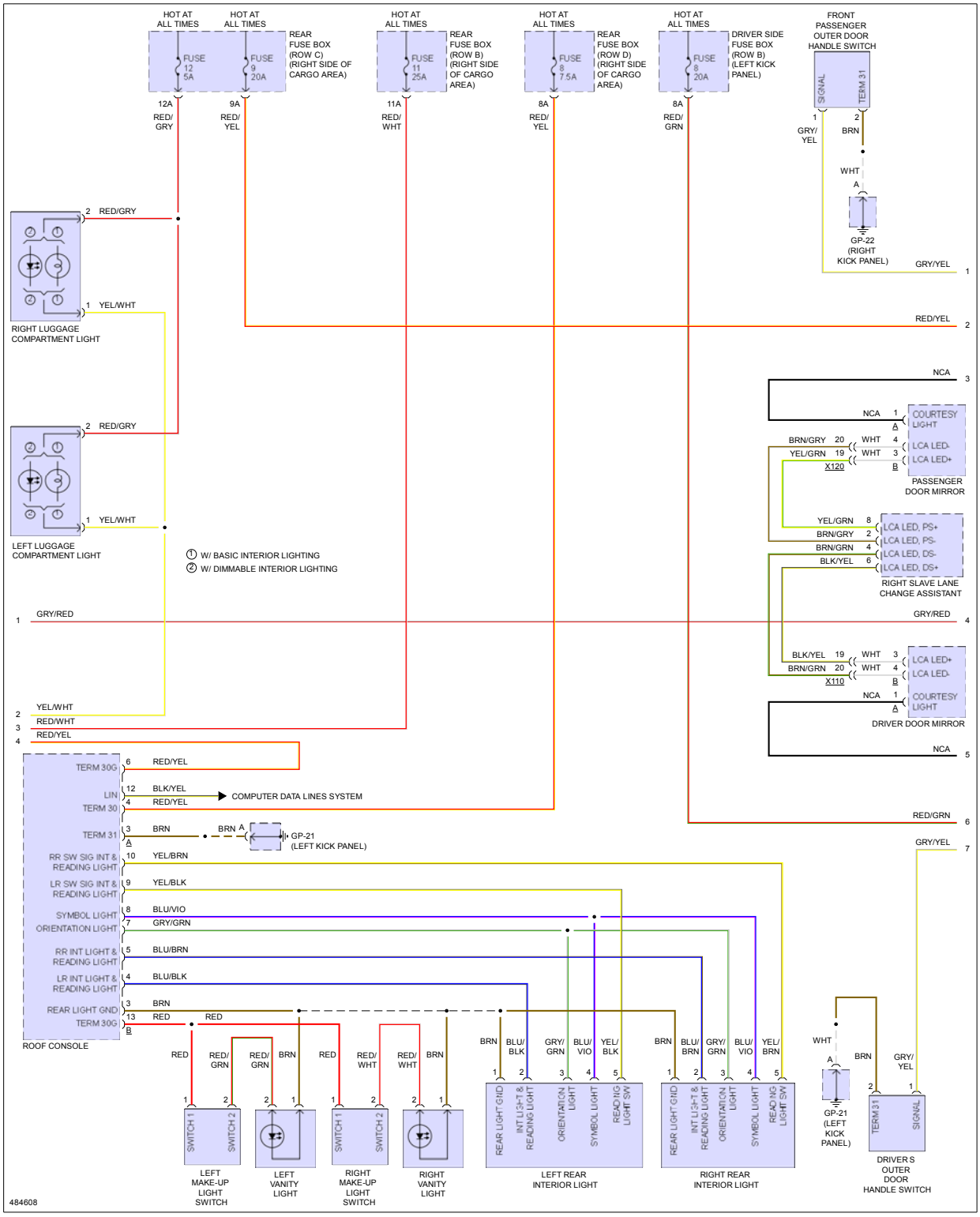

Fig 3: Interior Lights Circuit (3 of 4)

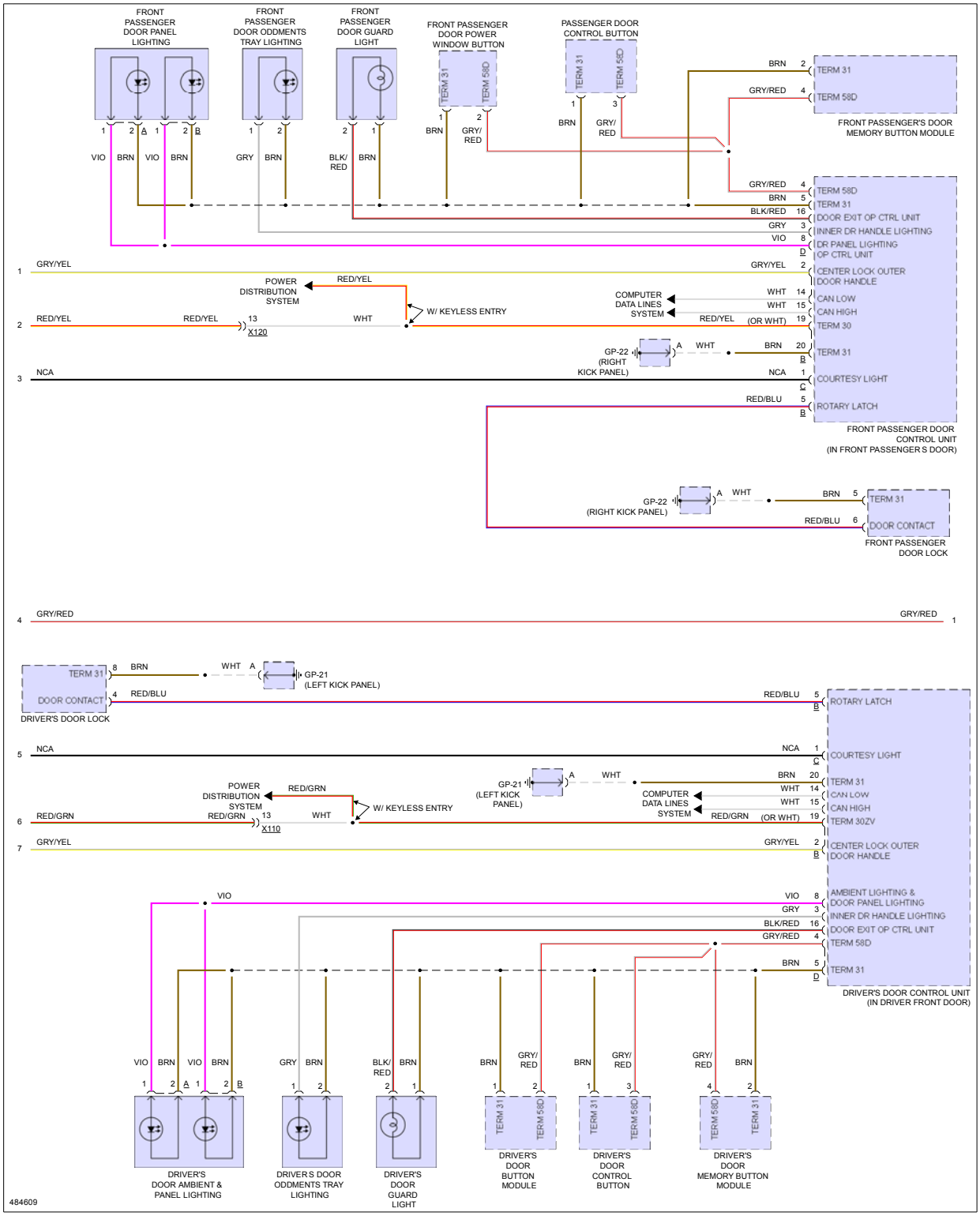

Fig 4: Interior Lights Circuit (4 of 4)

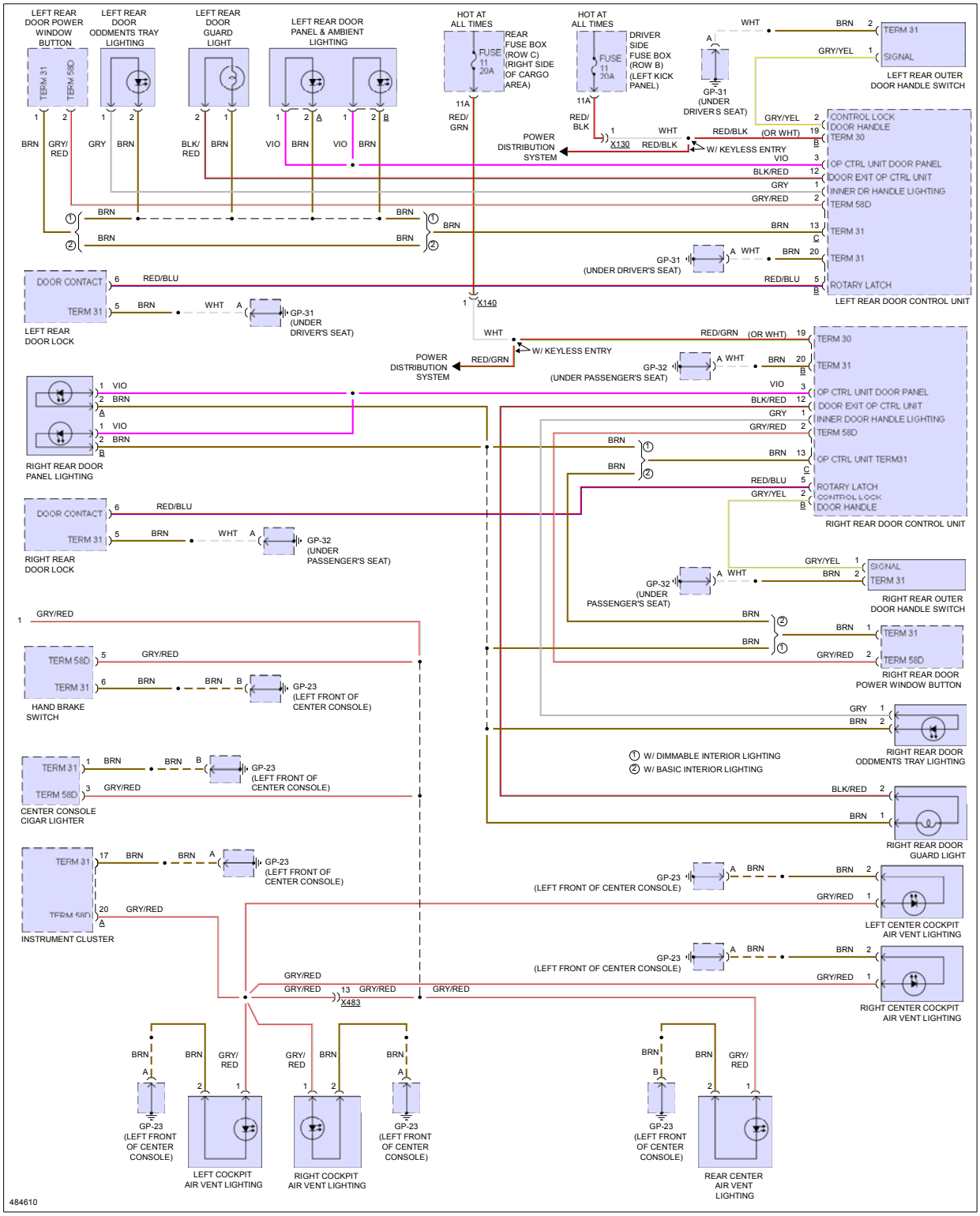

MEMORY SYSTEMS

Fig 1: Driver"s Memory Seat Circuit (1 of 2)

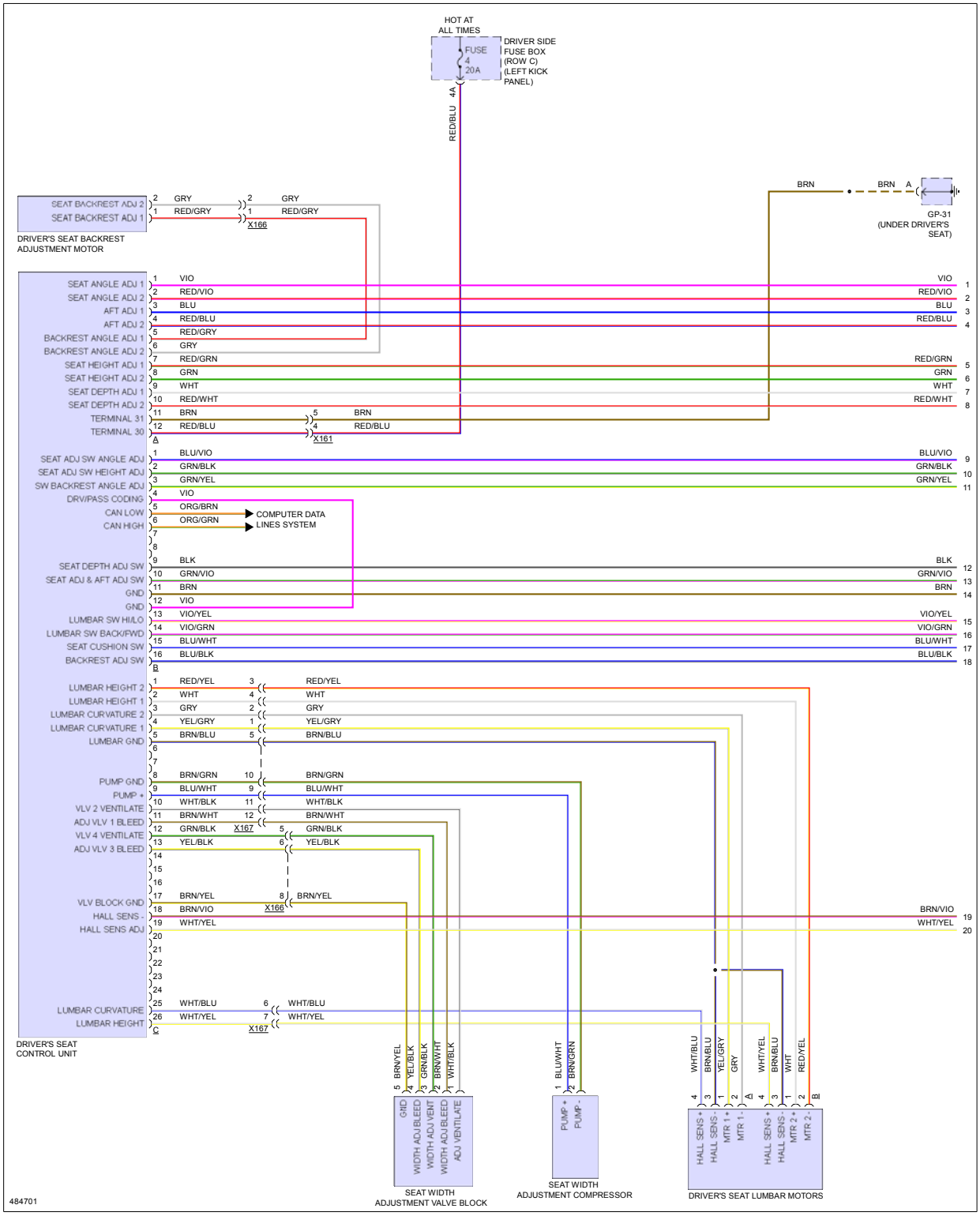

Fig 2: Driver"s Memory Seat Circuit (2 of 2)

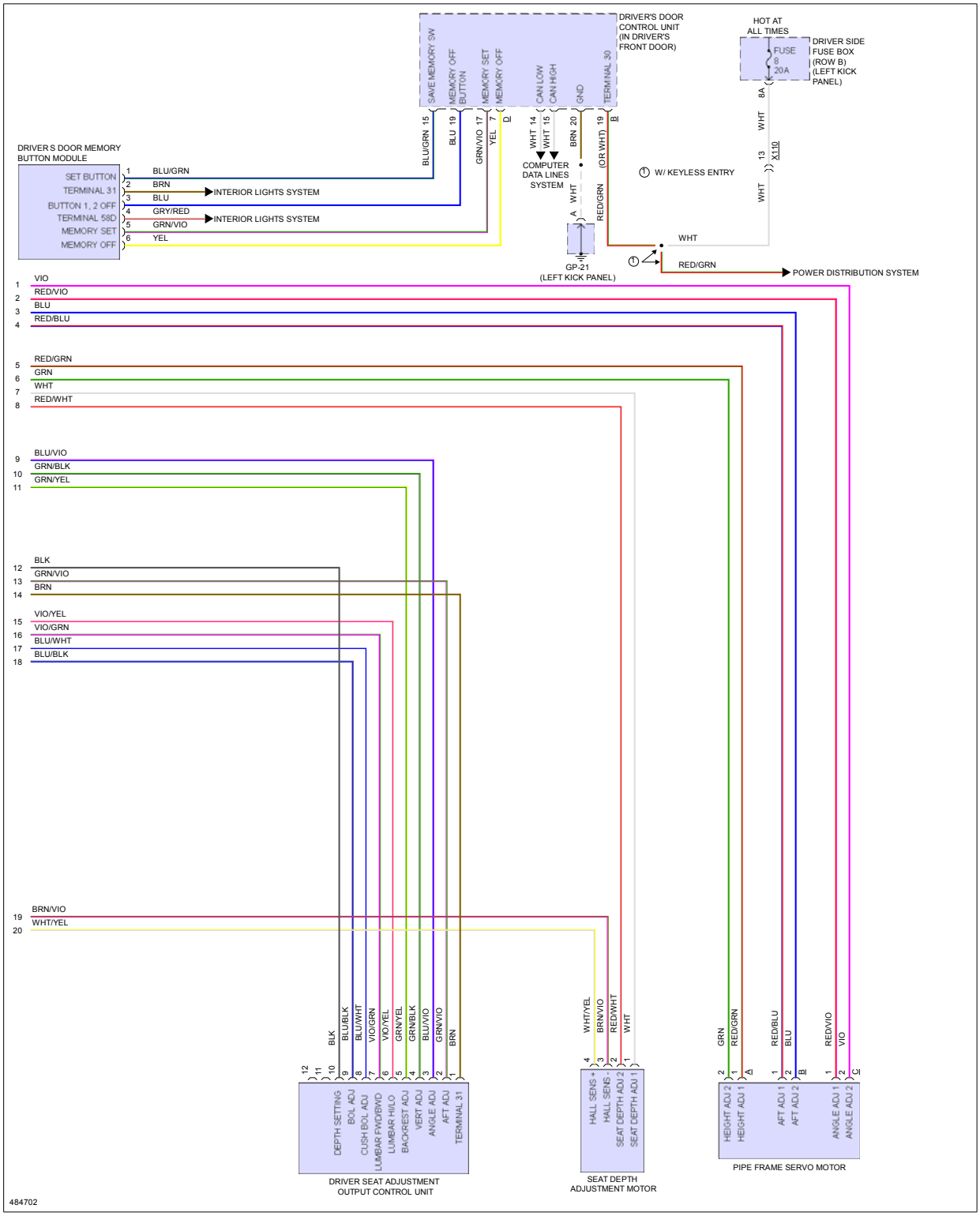

Fig 3: Memory Mirrors Circuit

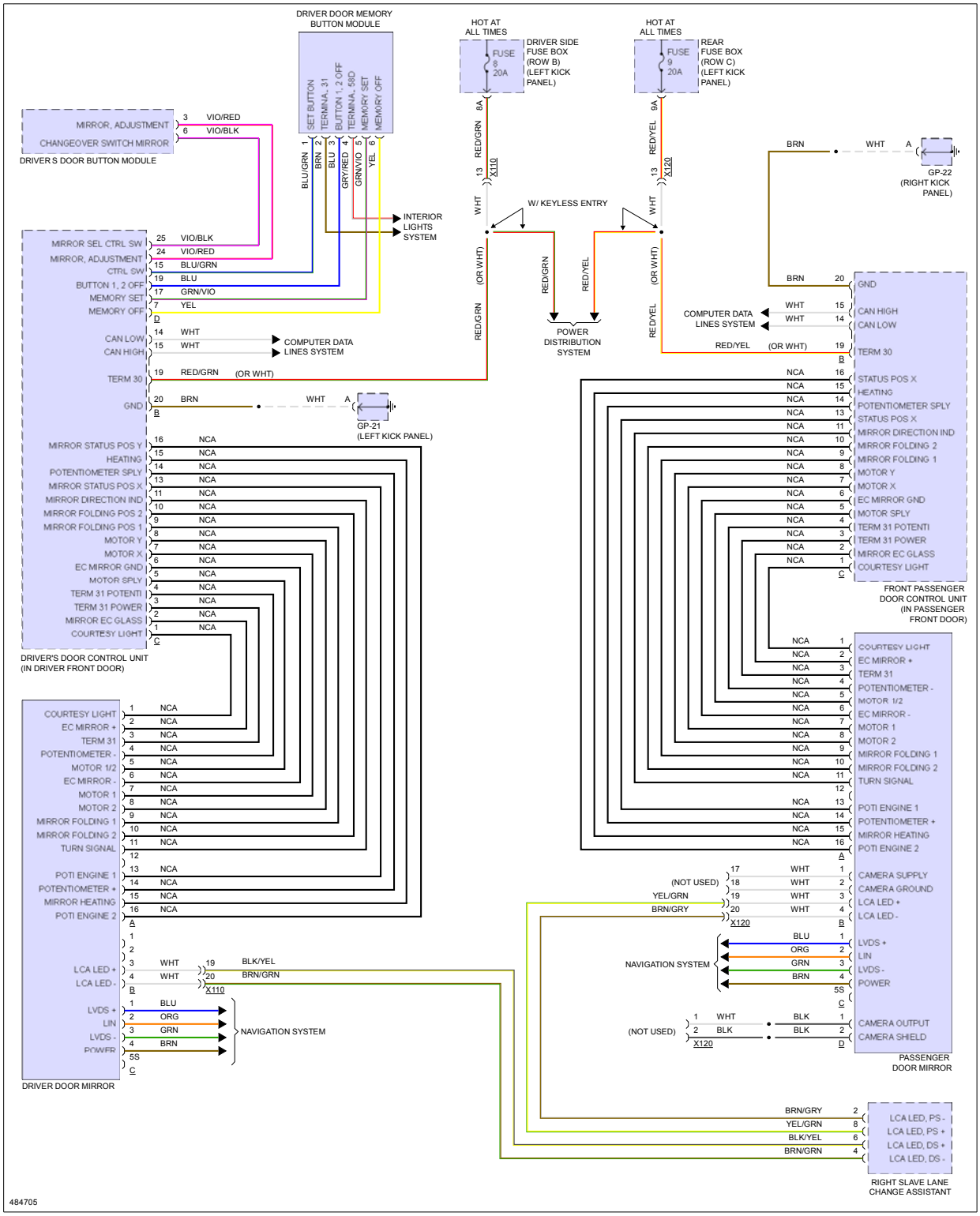

Fig 4: Passenger"s Memory Seat Circuit (1 of 2)

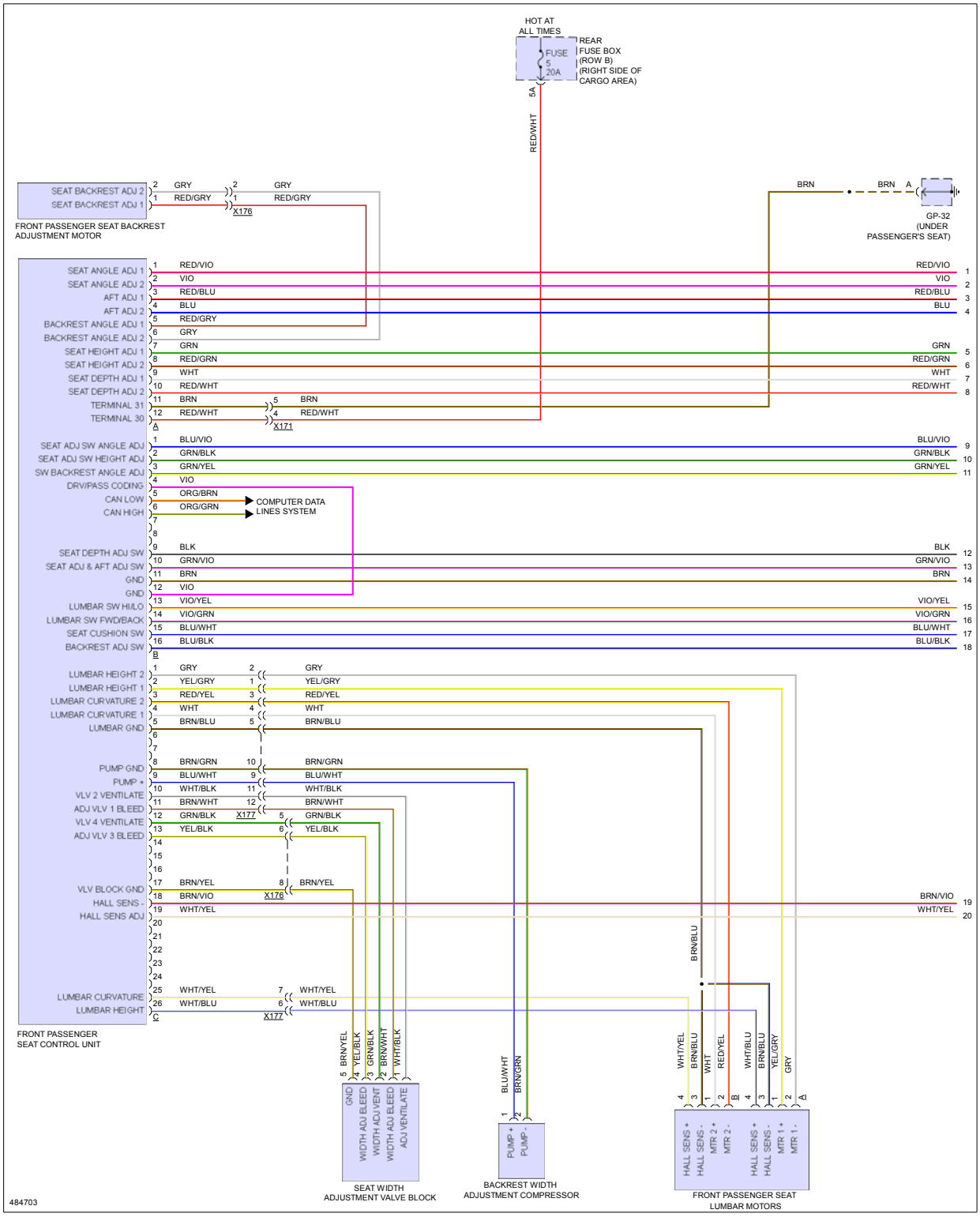

Fig 5: Passenger"s Memory Seat Circuit (2 of 2)

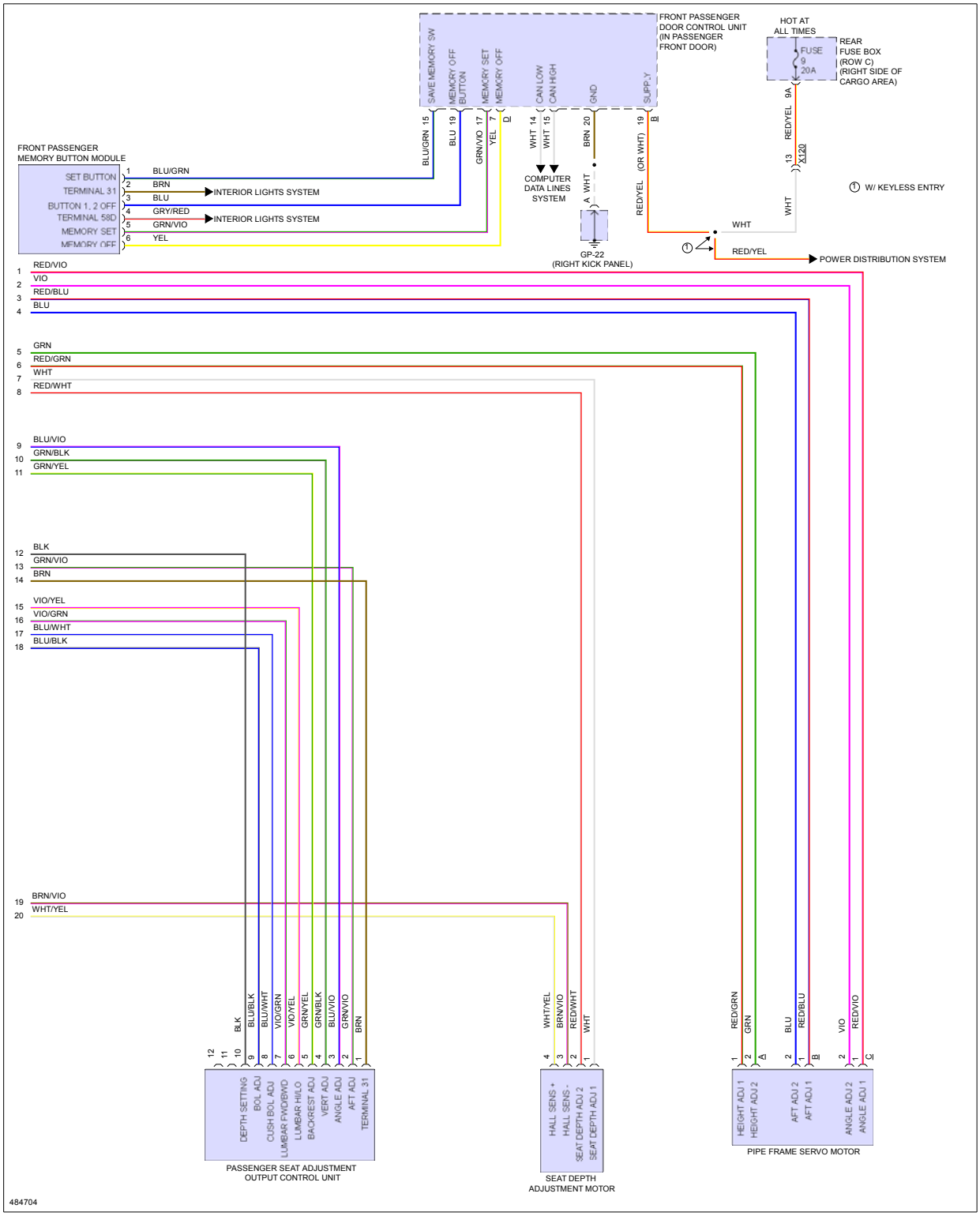

Fig 6: Steering Column Memory Circuit

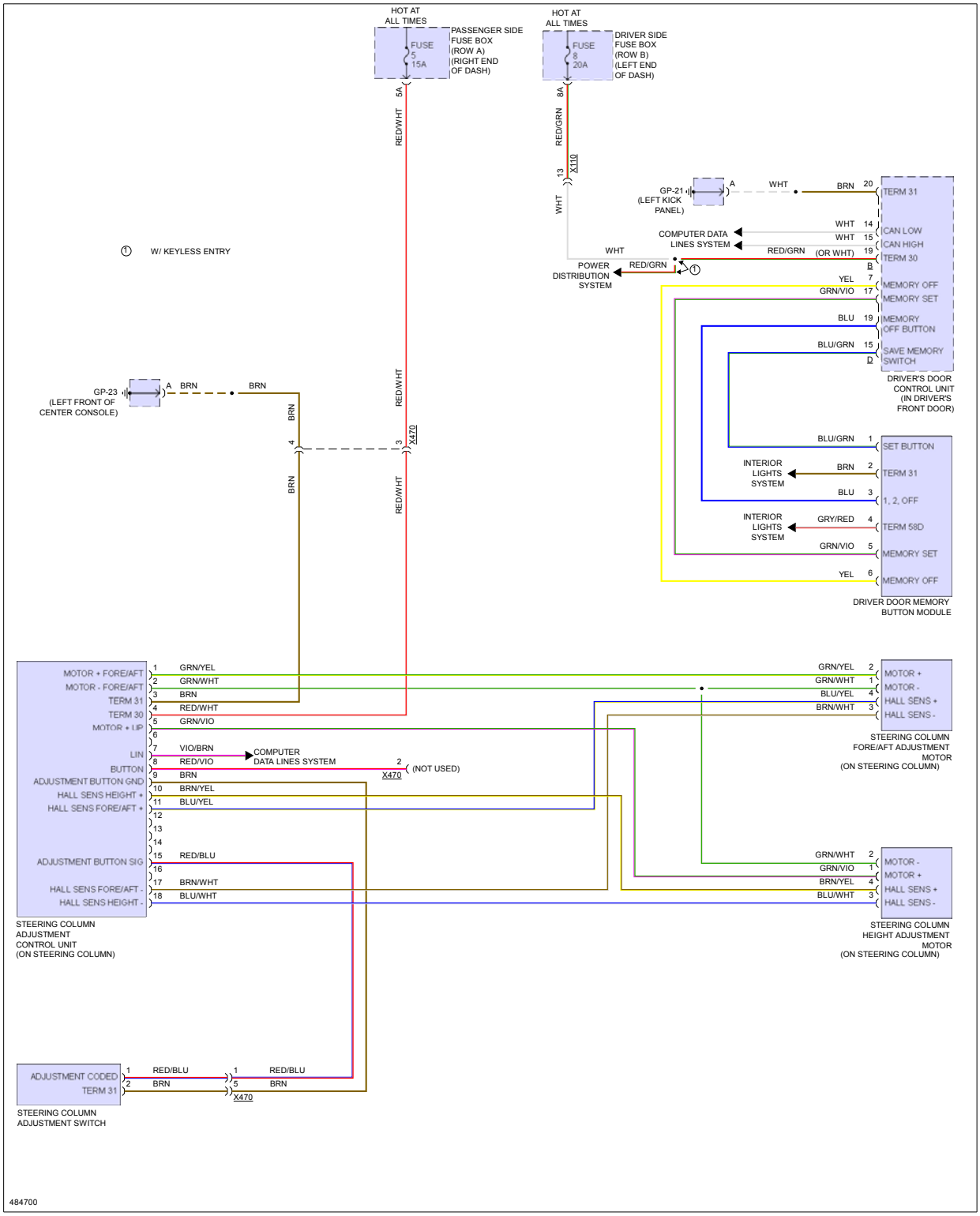

NAVIGATION

Fig 1: Front Camera Circuit

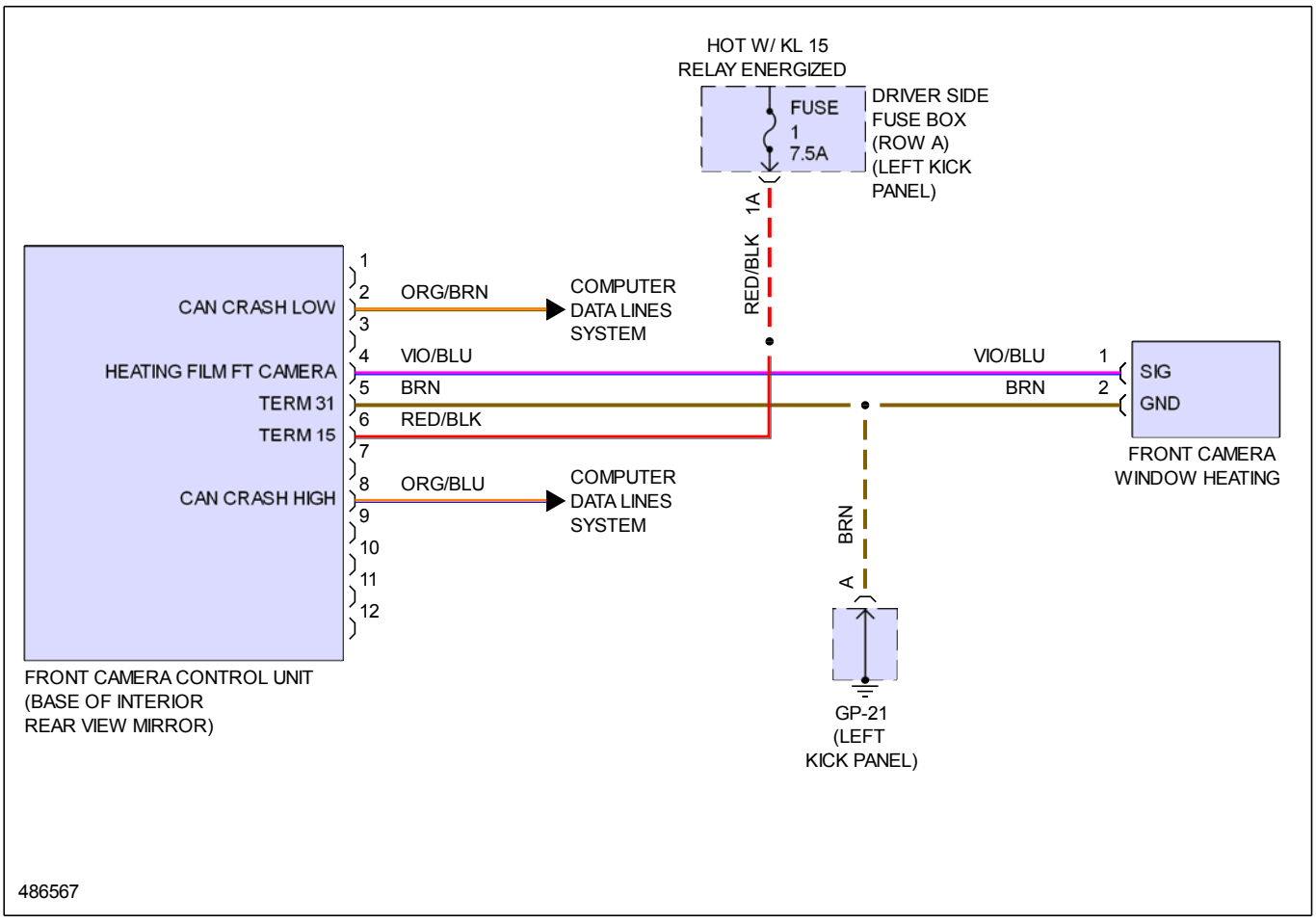

Fig 2: Lane Change Assistance Circuit

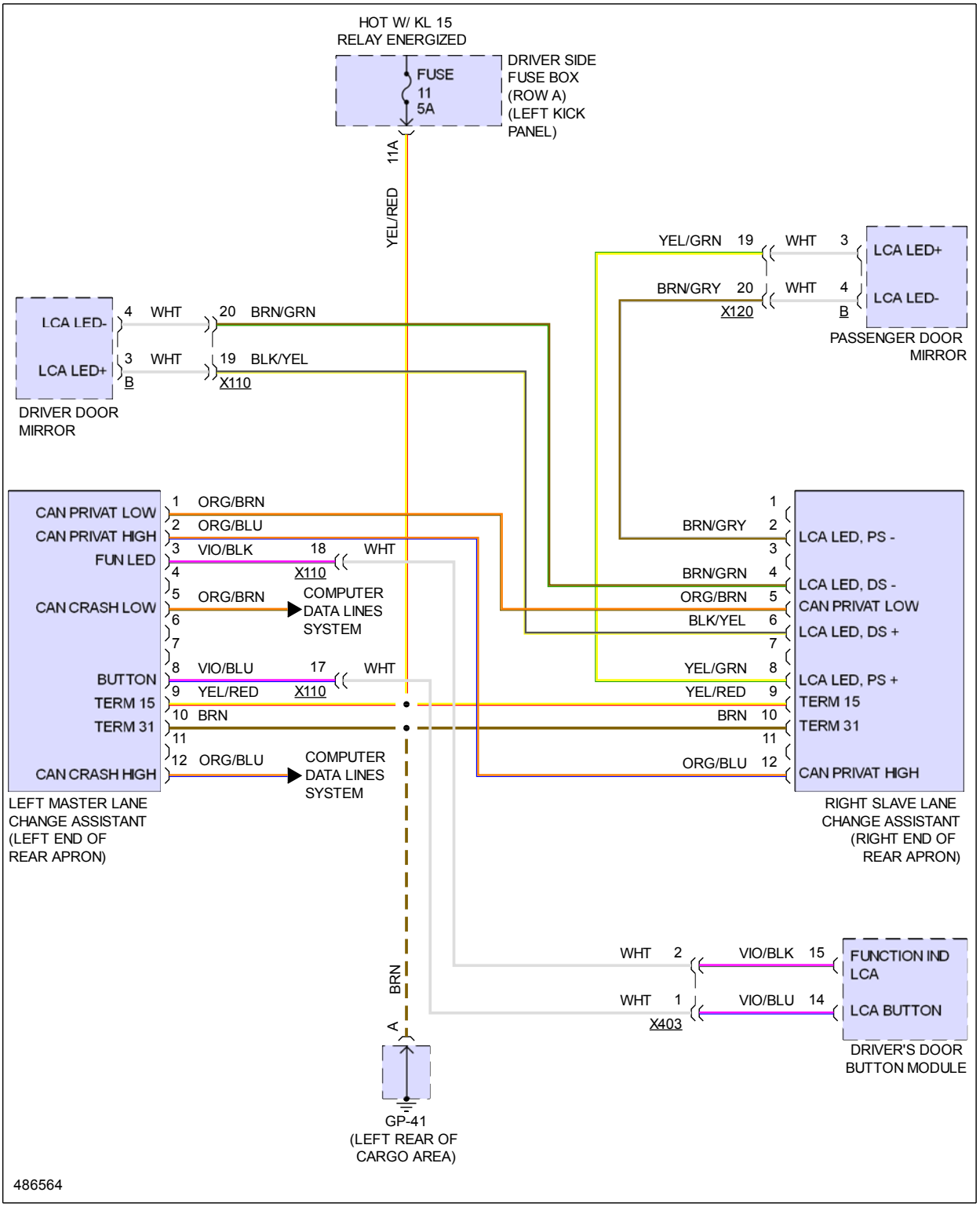

Fig 3: Navigation Circuit, W/ ASK (1 of 3)

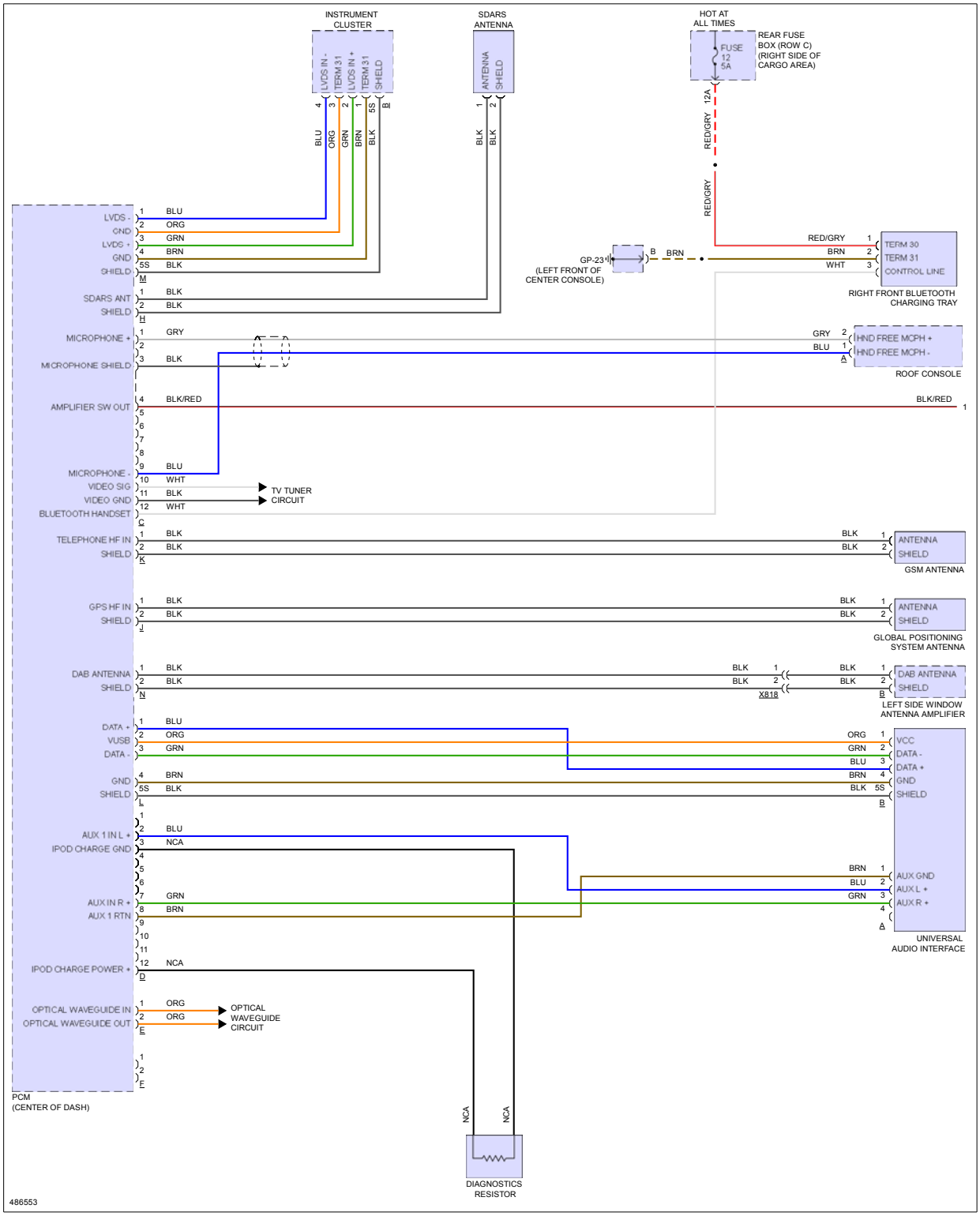

Fig 4: Navigation Circuit, W/ ASK (2 of 3)

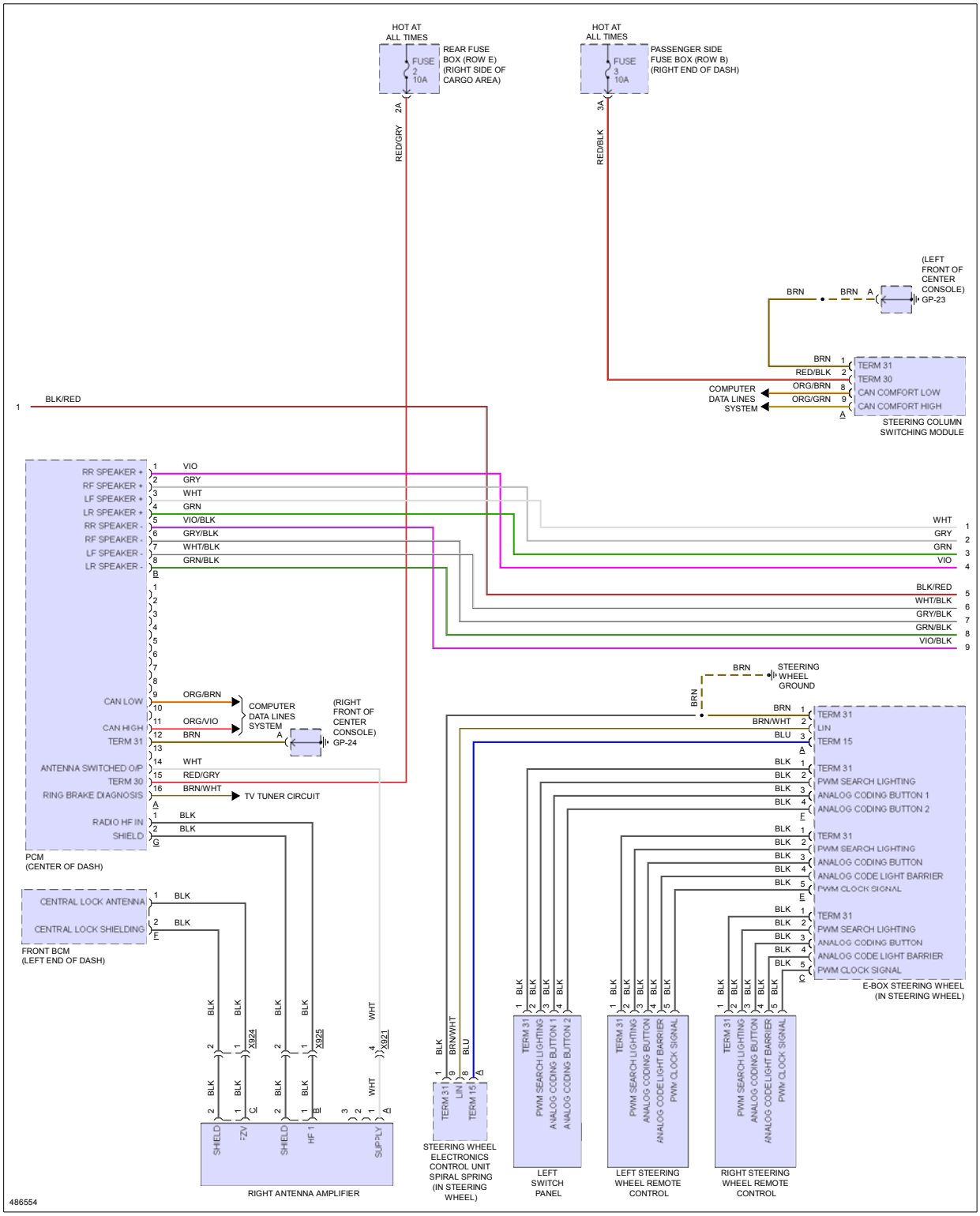

Fig 5: Navigation Circuit, W/ ASK (3 of 3)

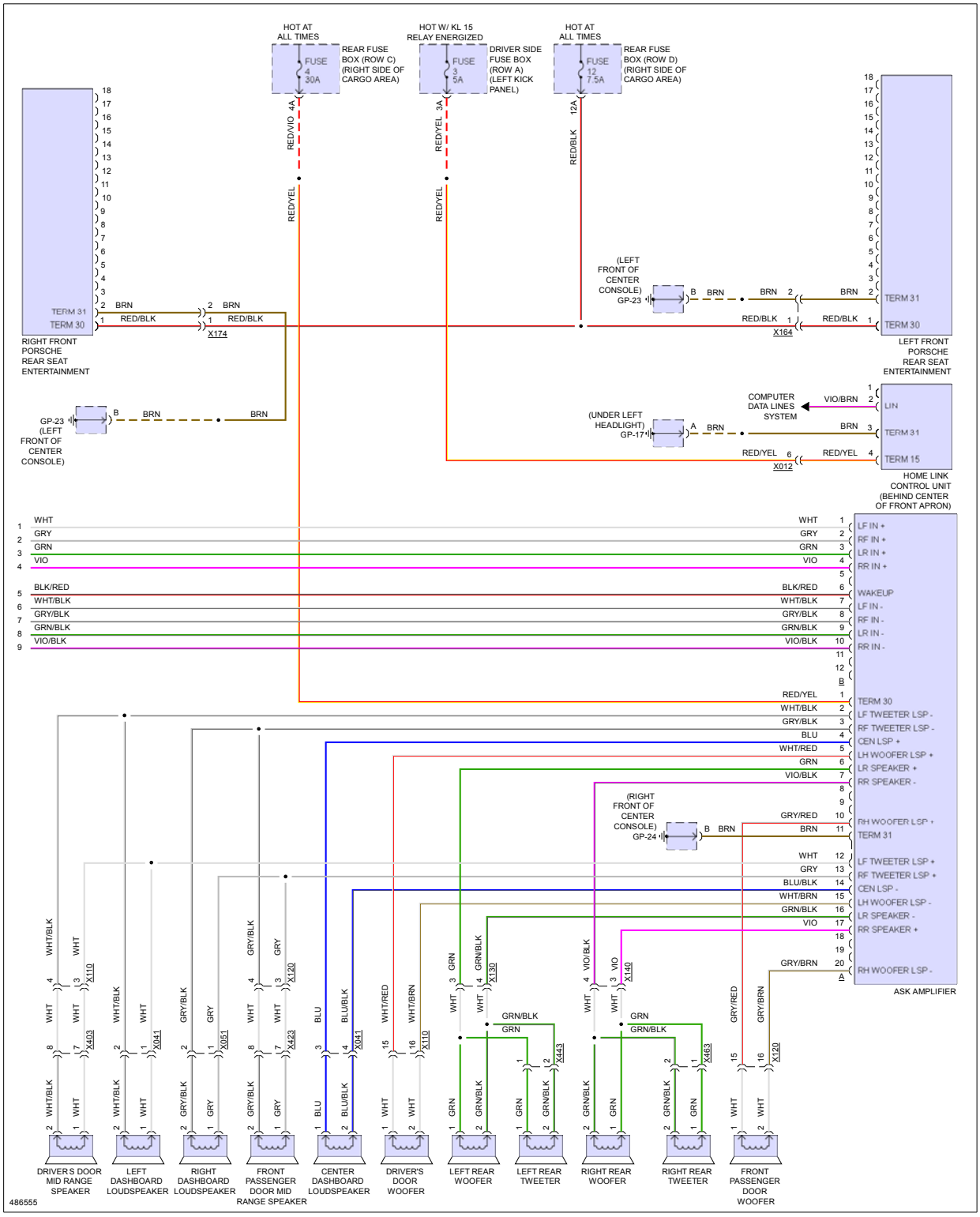

Fig 6: Navigation Circuit, W/ Bose (1 of 3)

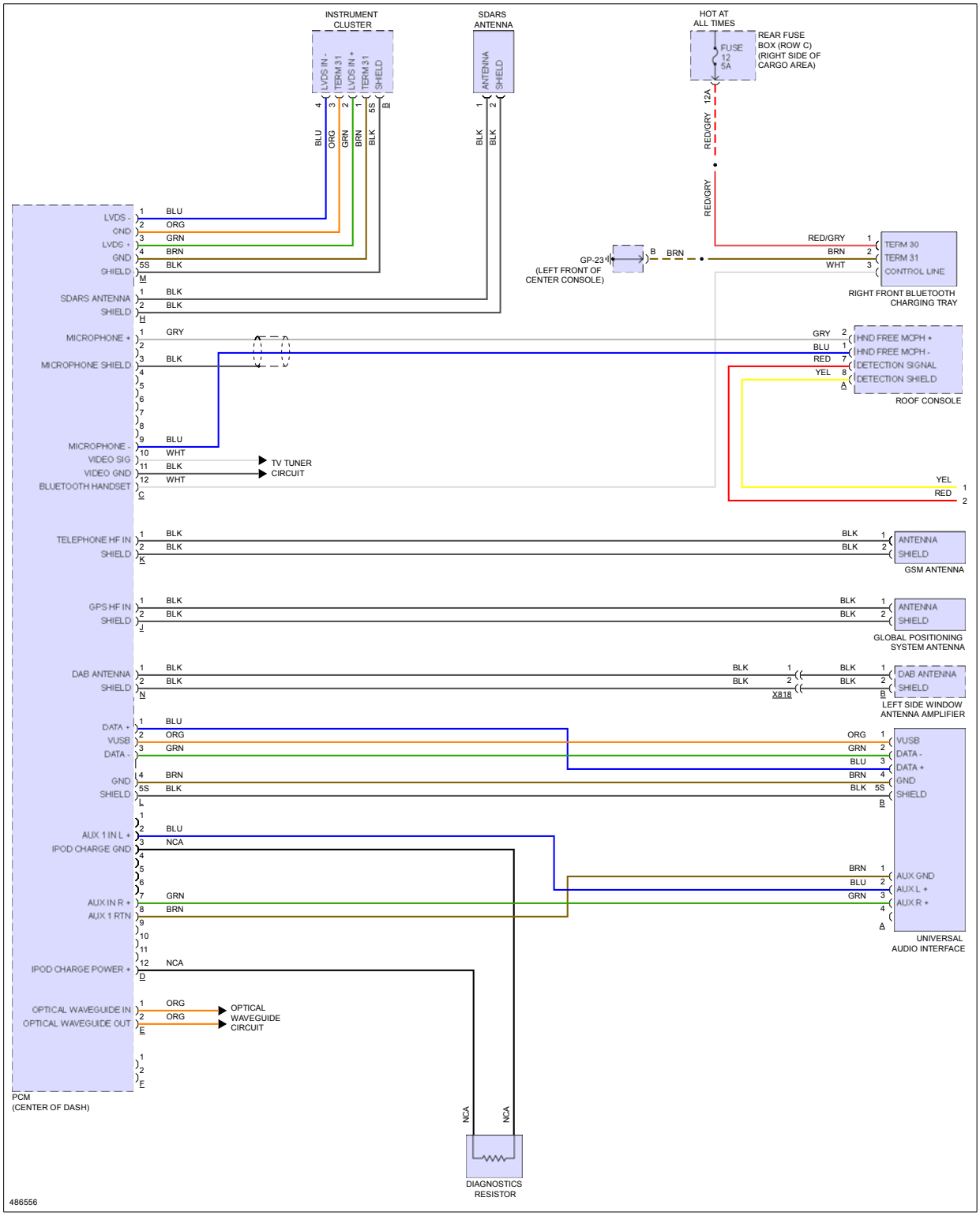

Fig 7: Navigation Circuit, W/ Bose (2 of 3)

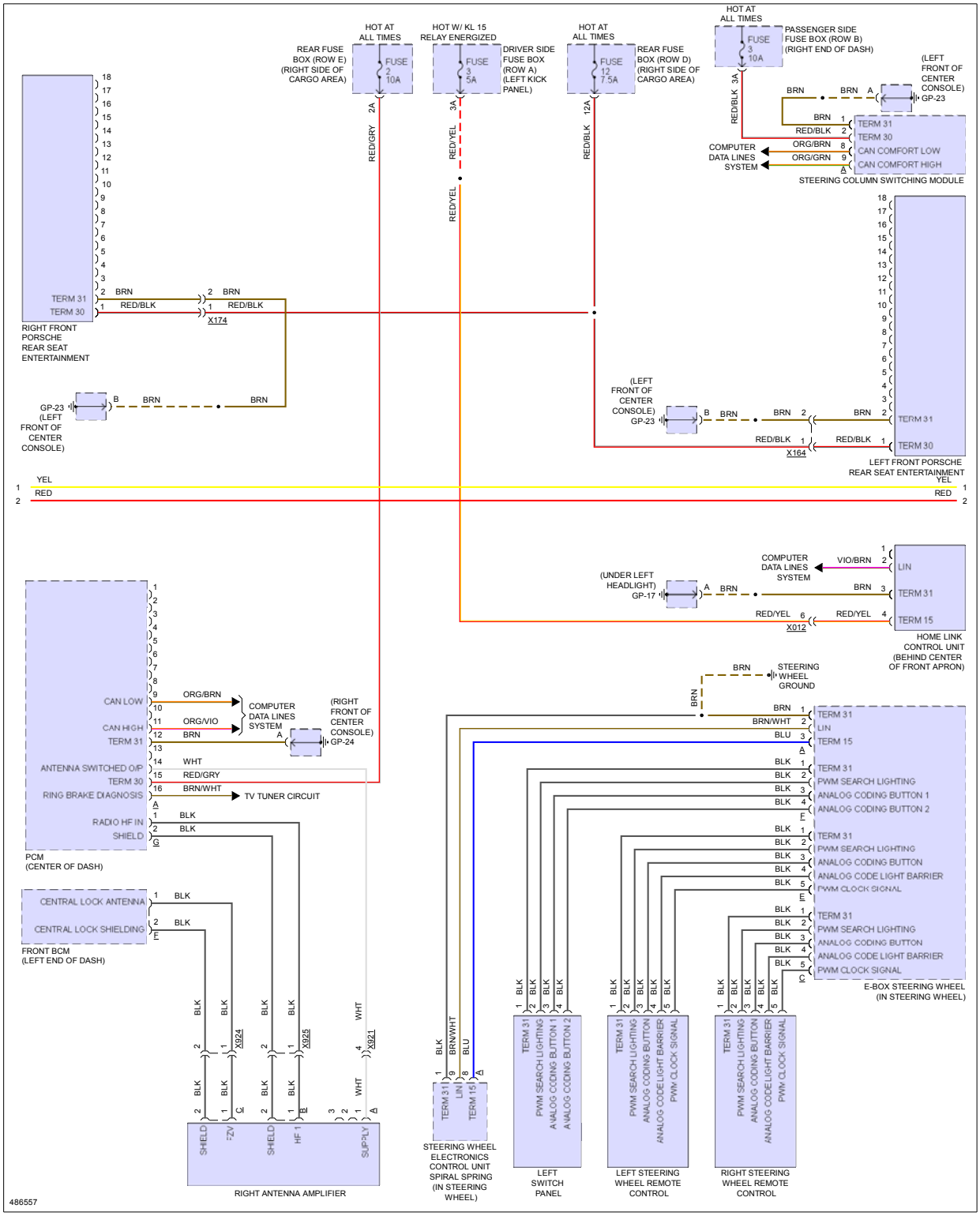

Fig 8: Navigation Circuit, W/ Bose (3 of 3)

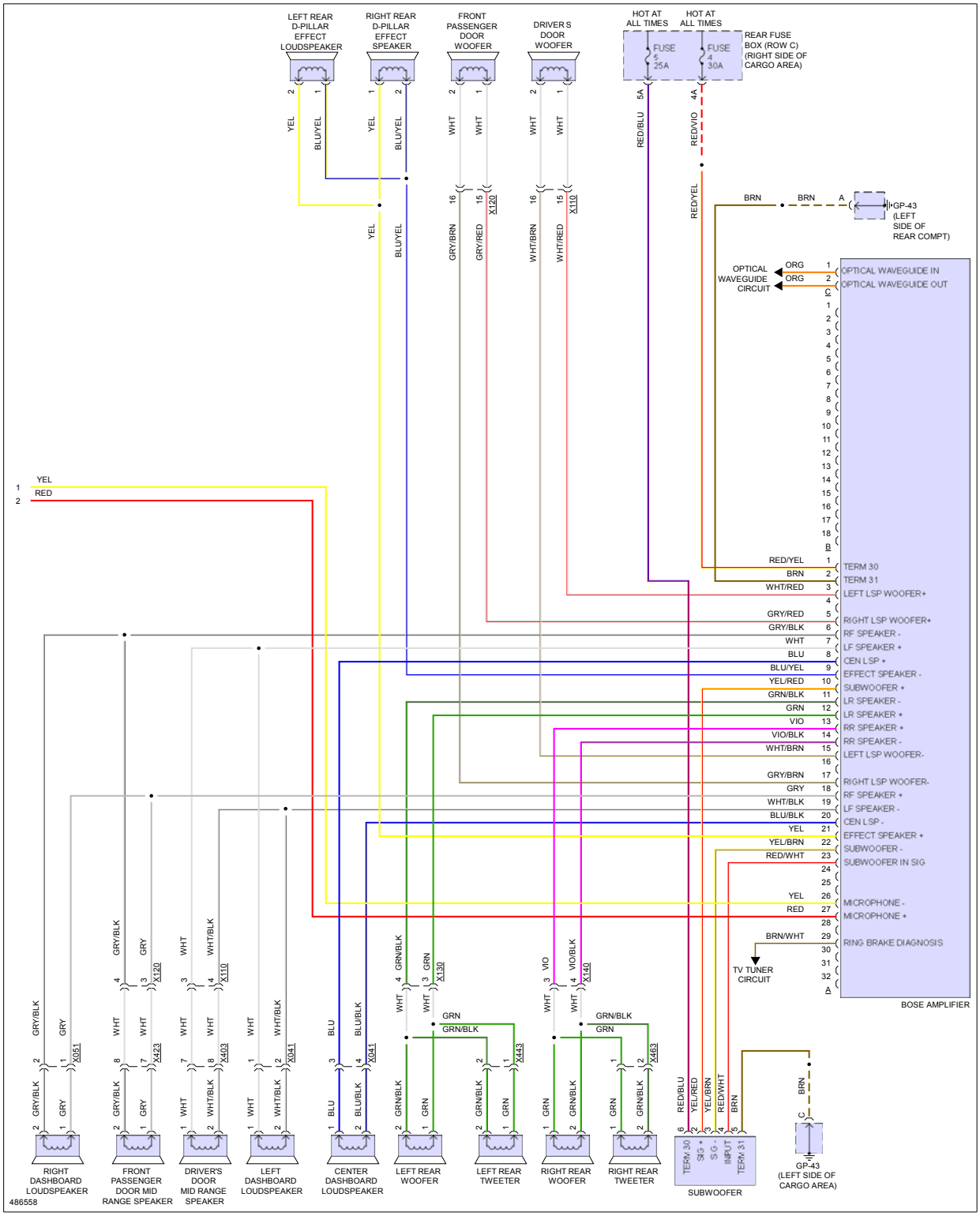

Fig 9: Navigation Circuit, W/ Burmester (1 of 4)

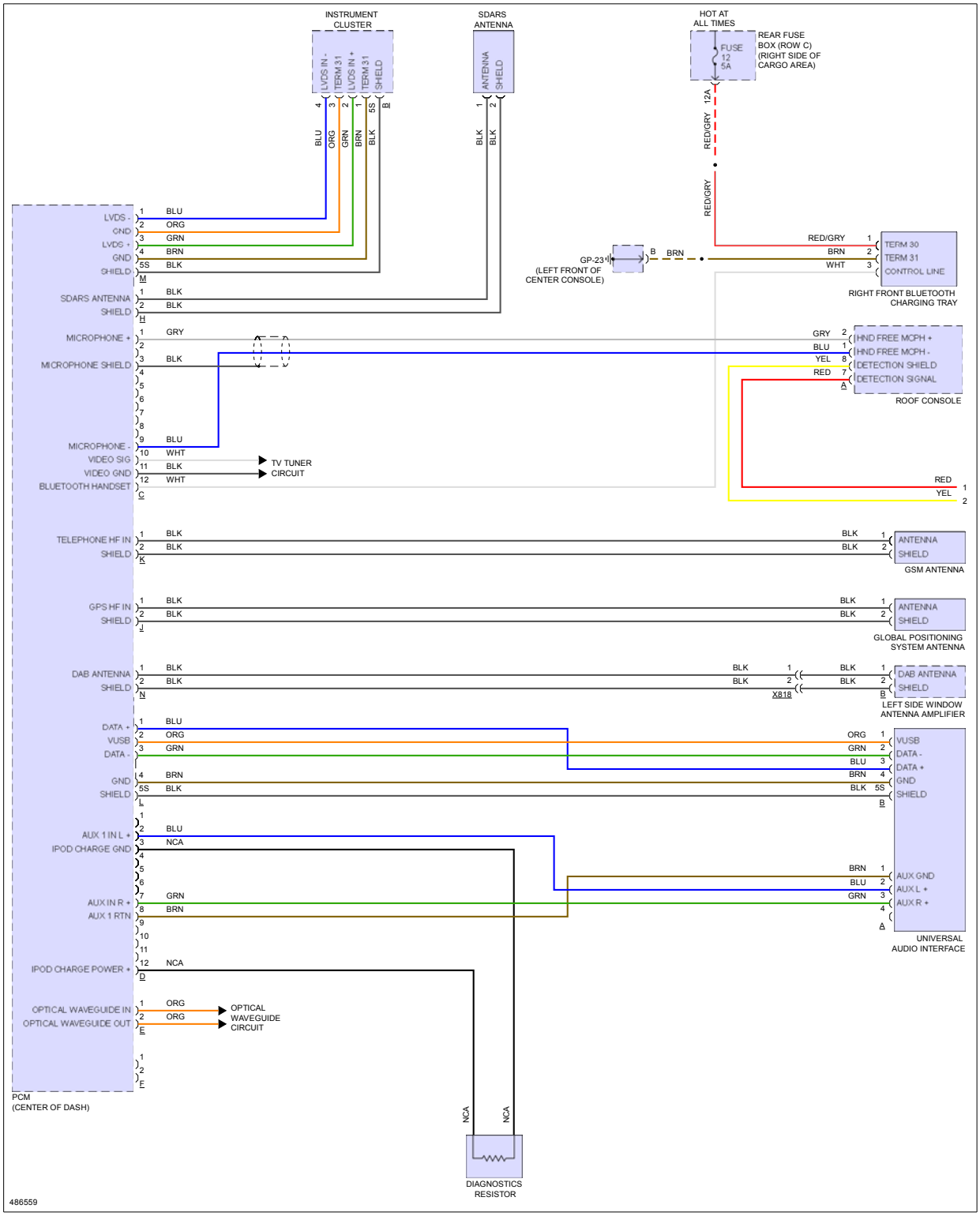

Fig 10: Navigation Circuit, W/ Burmester (2 of 4)

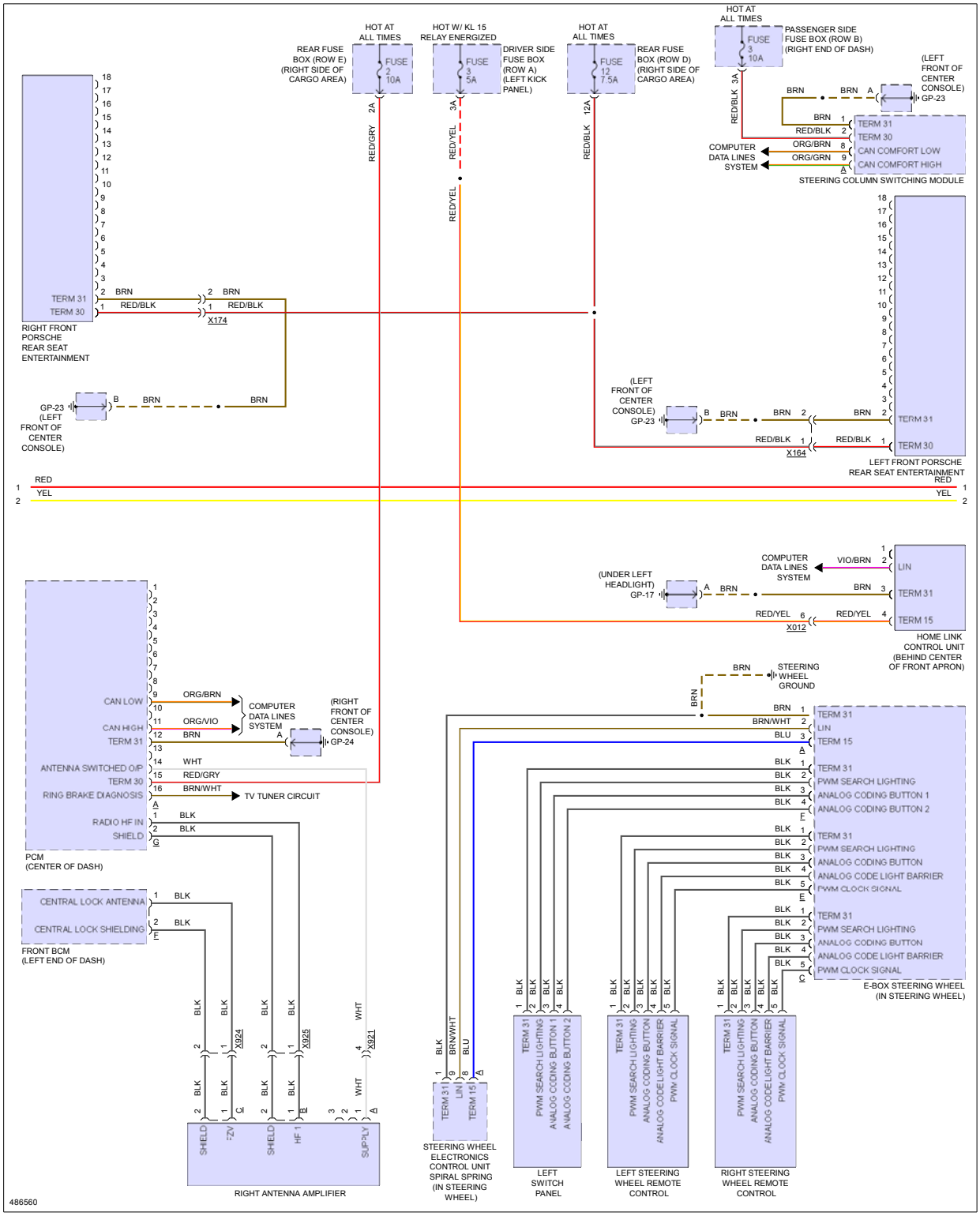

Fig 11: Navigation Circuit, W/ Burmester (3 of 4)

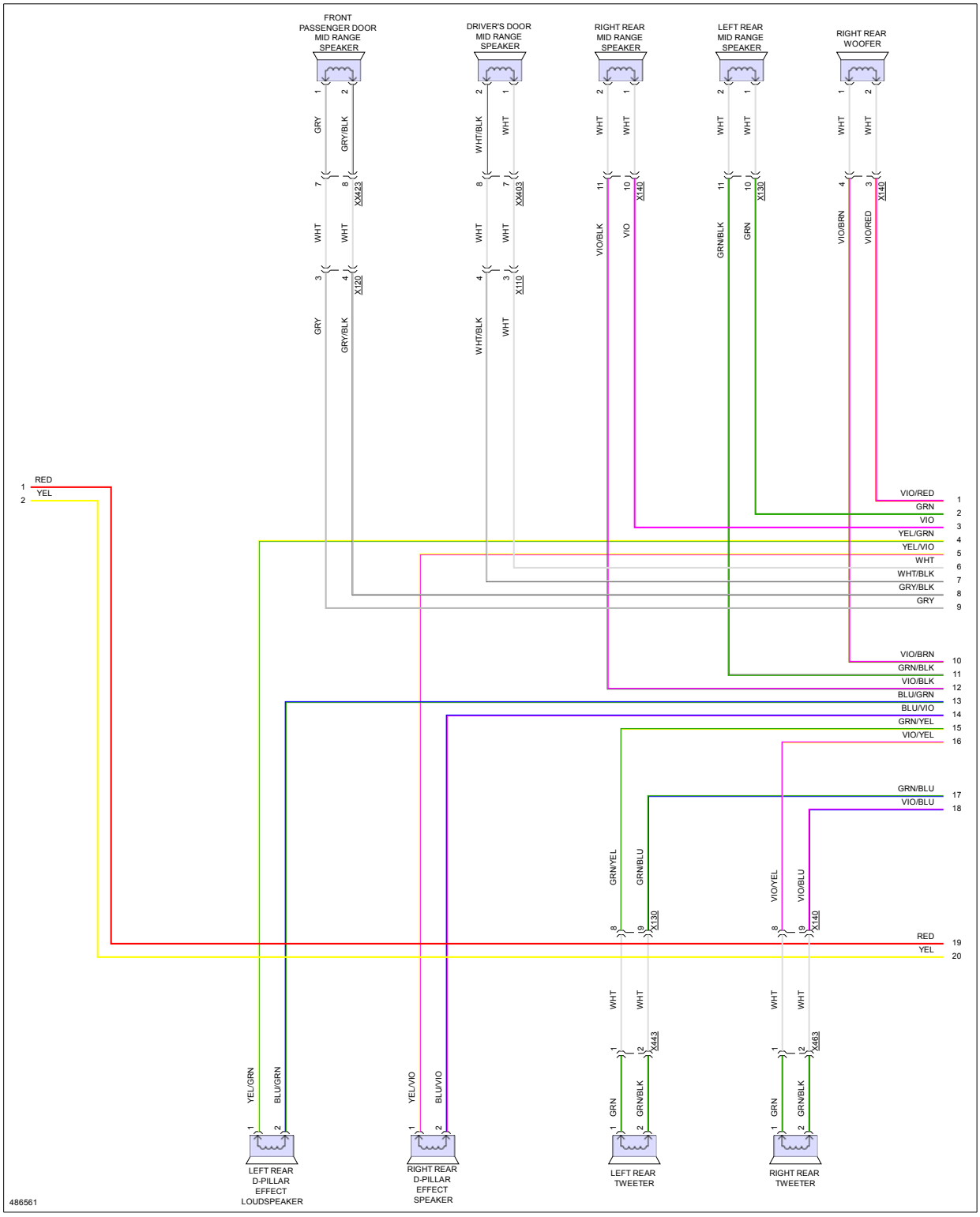

Fig 12: Navigation Circuit, W/ Burmester (4 of 4)

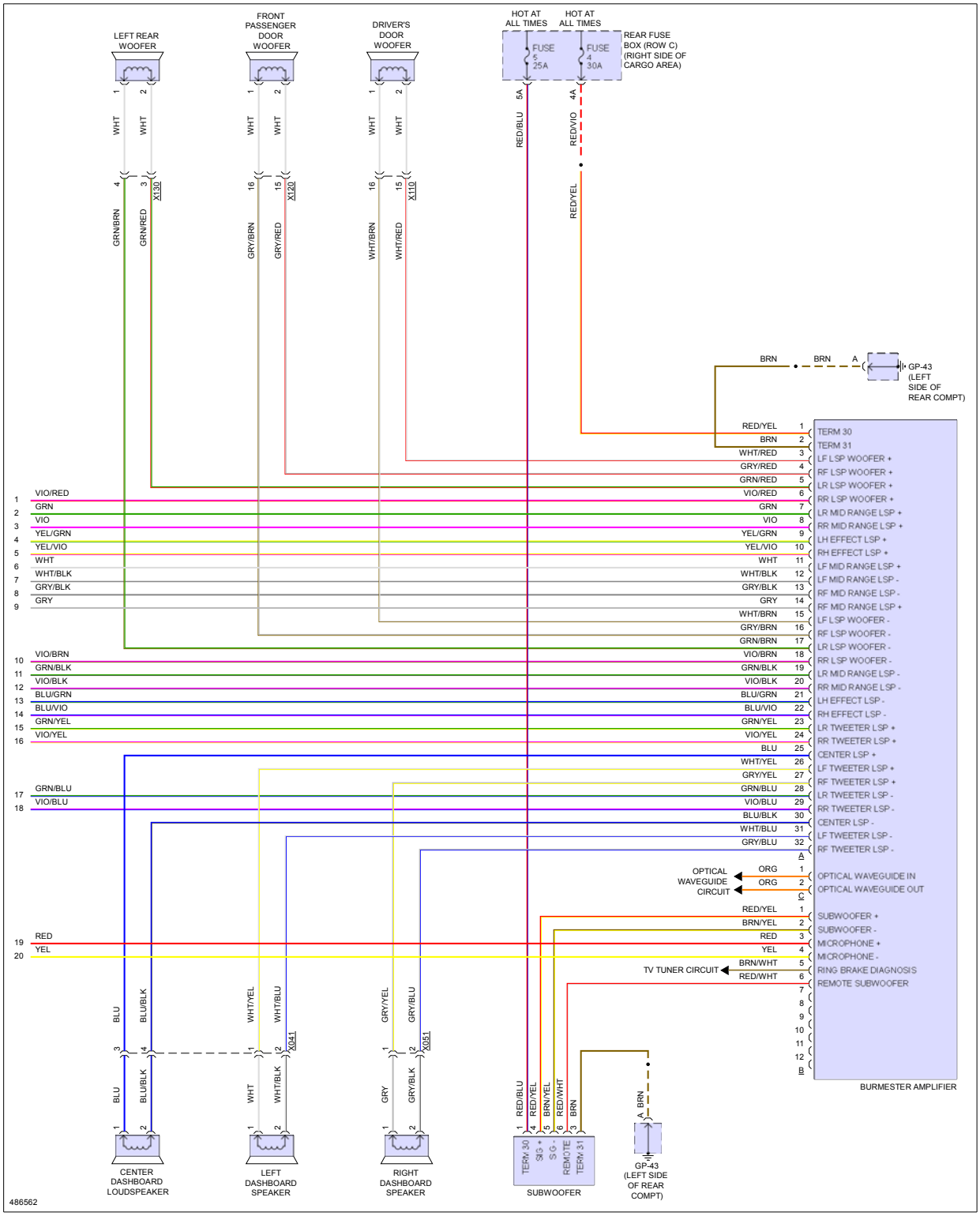

Fig 13: Parking Assistant Circuit

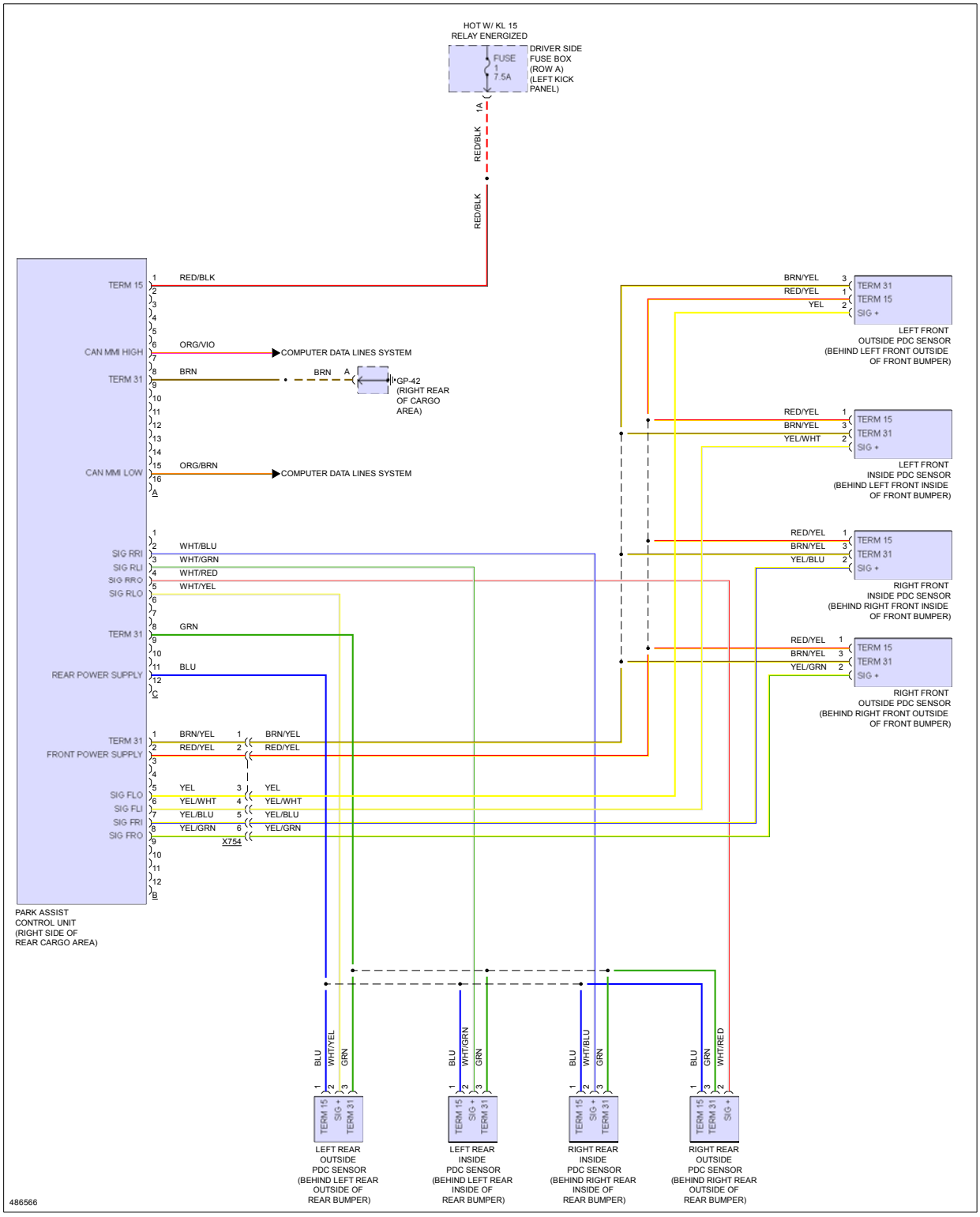

Fig 14: Real Top view Circuit

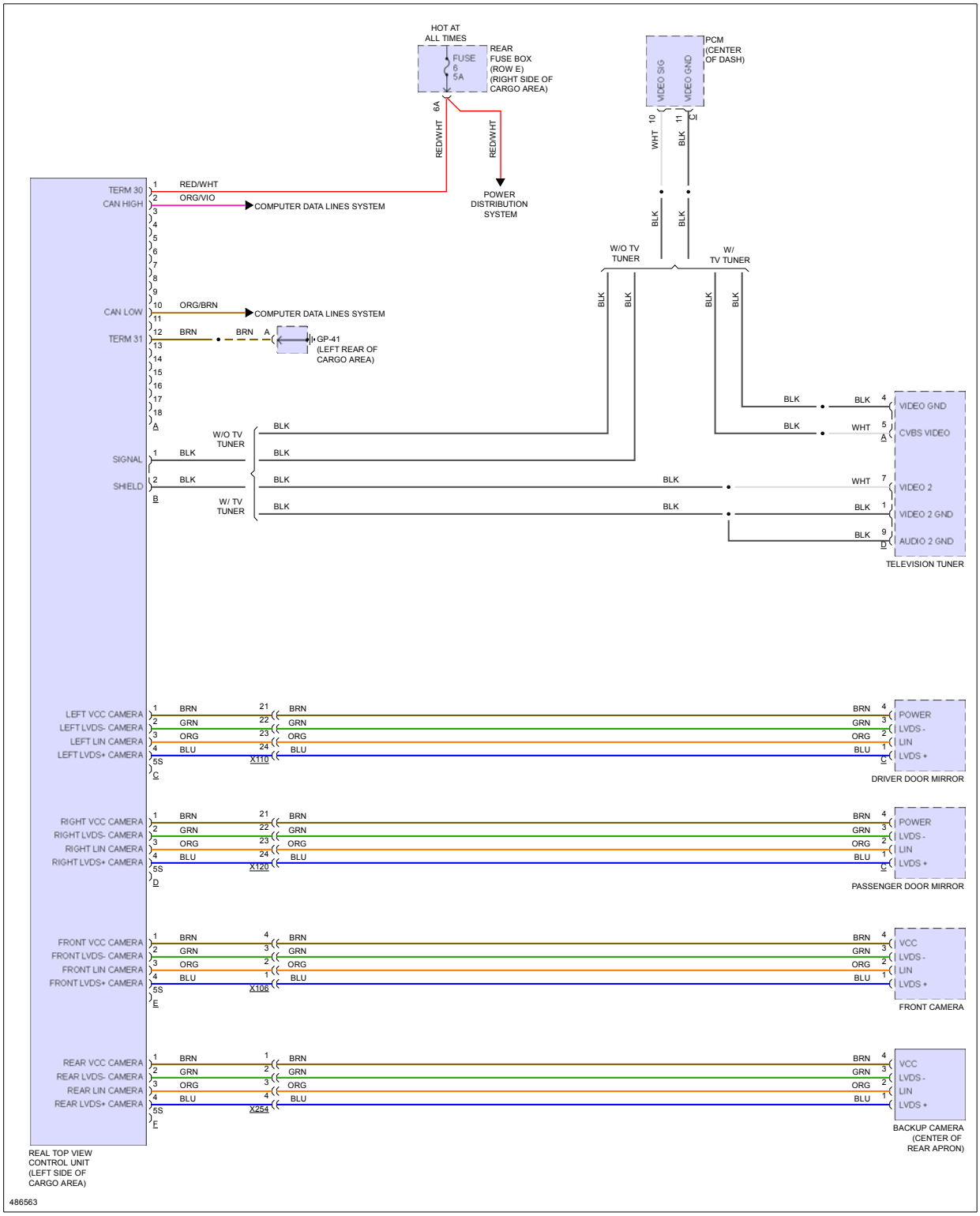

Fig 15: Rear Camera Circuit

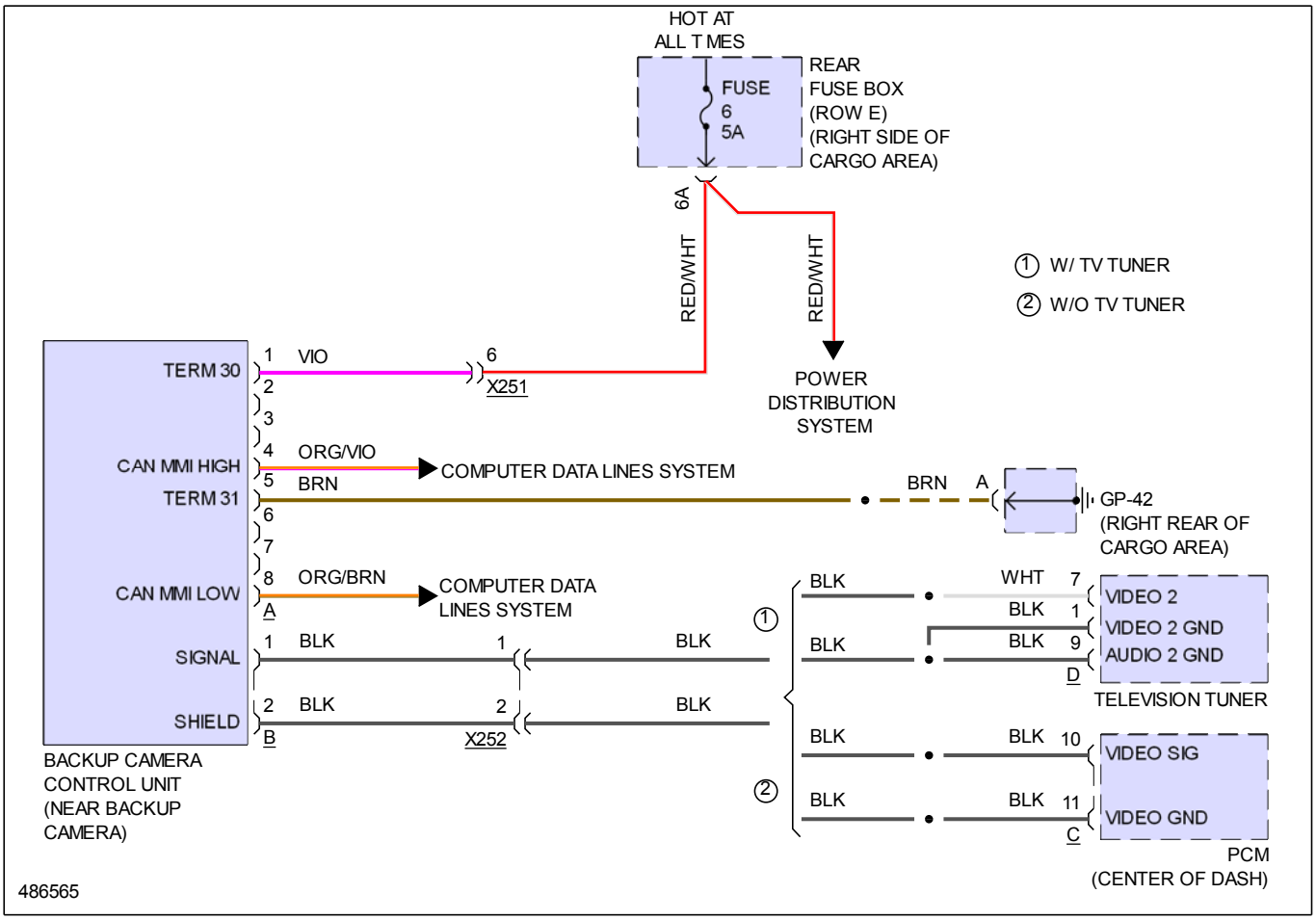

POWER DISTRIBUTION

Fig 1: Power Distribution Circuit (1 of 6)

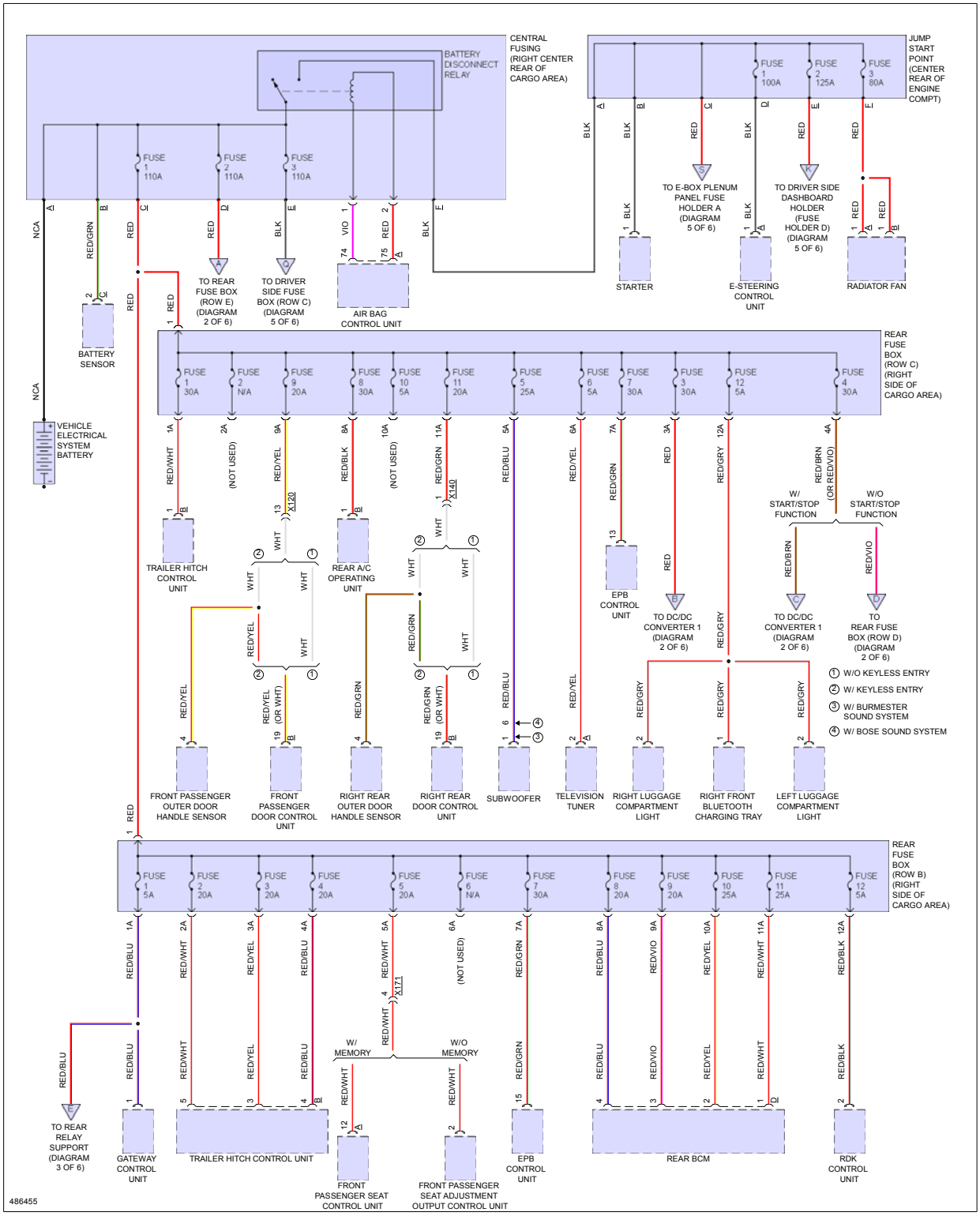

Fig 2: Power Distribution Circuit (2 of 6)

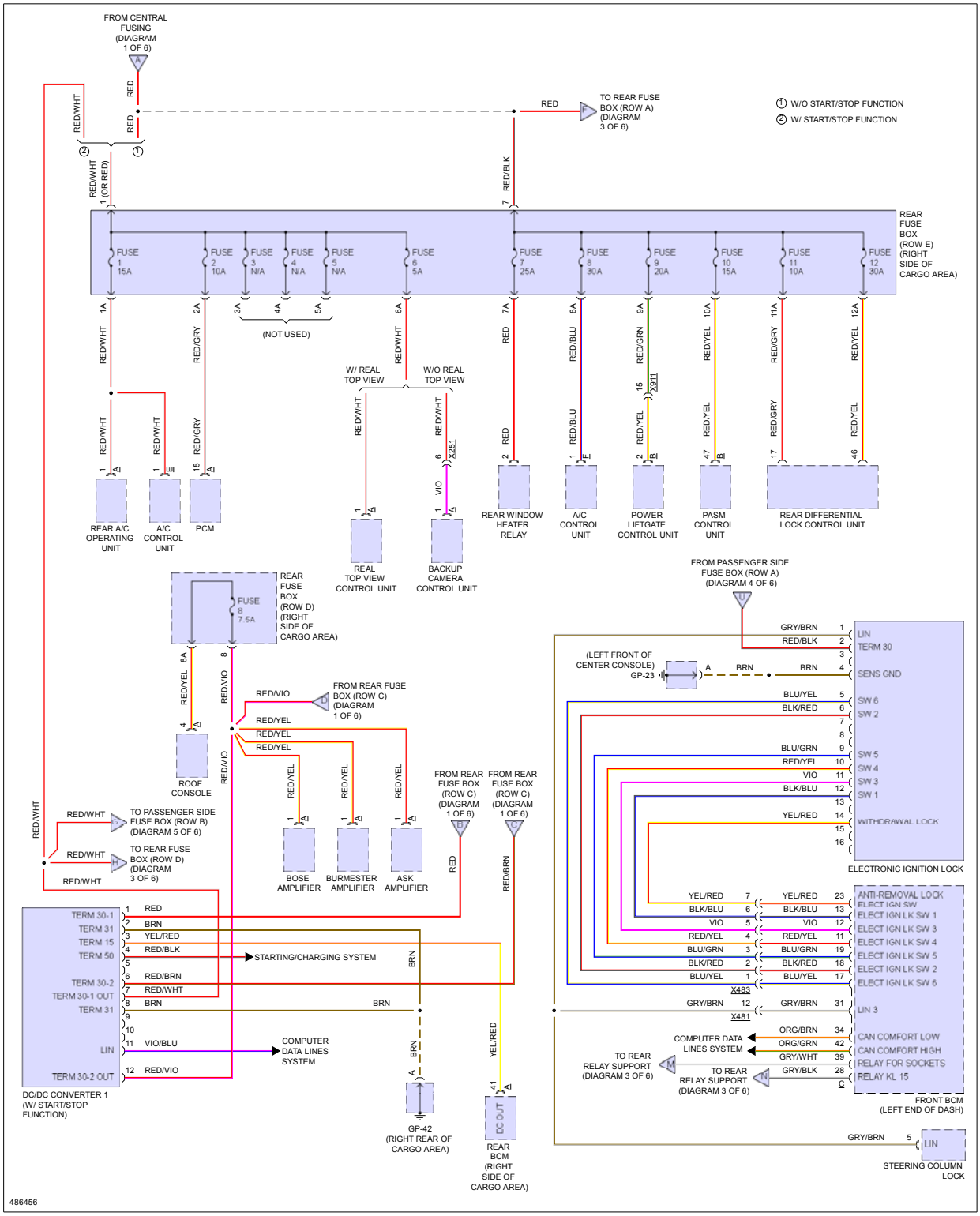

Fig 3: Power Distribution Circuit (3 of 6)

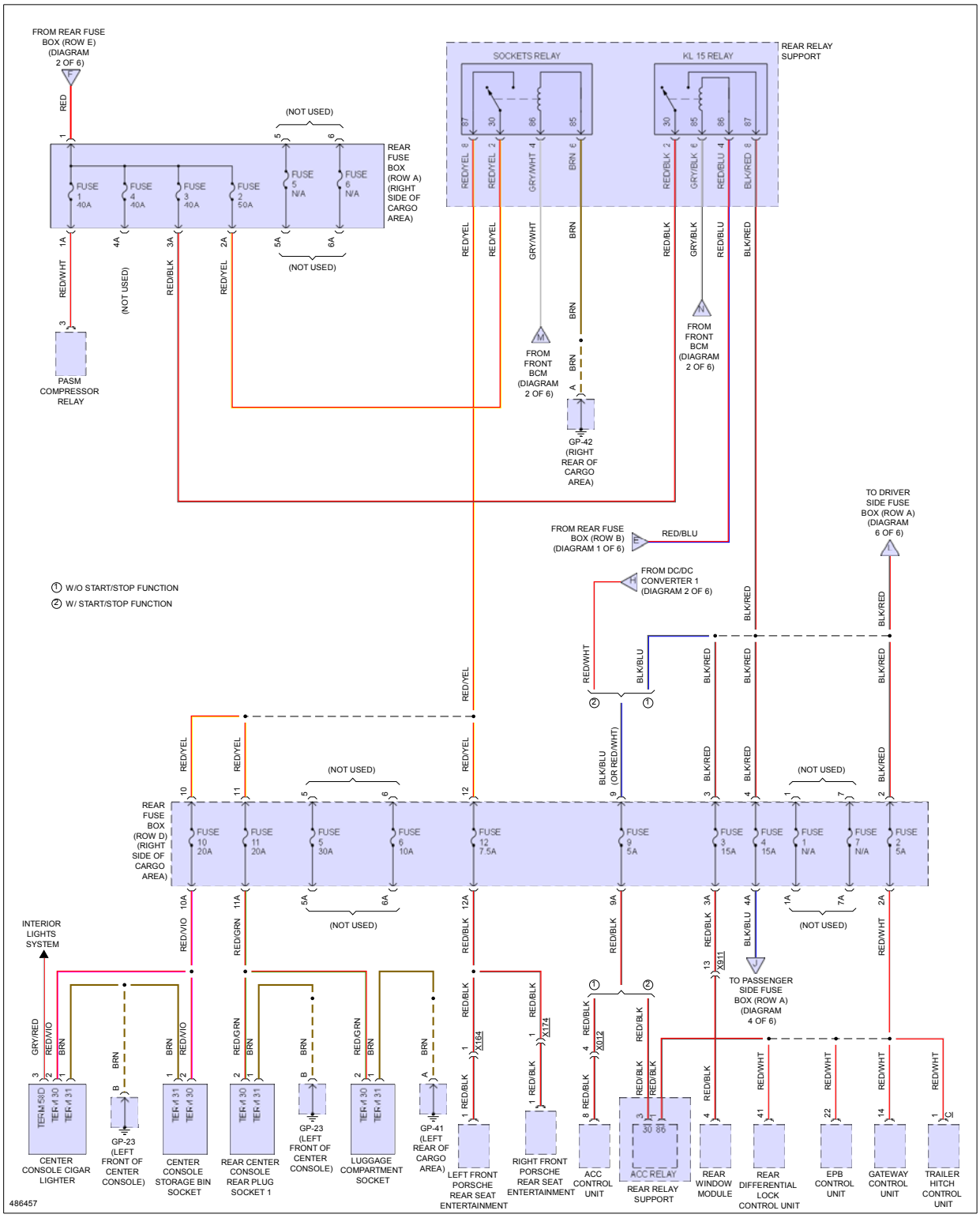

Fig 4: Power Distribution Circuit (4 of 6)

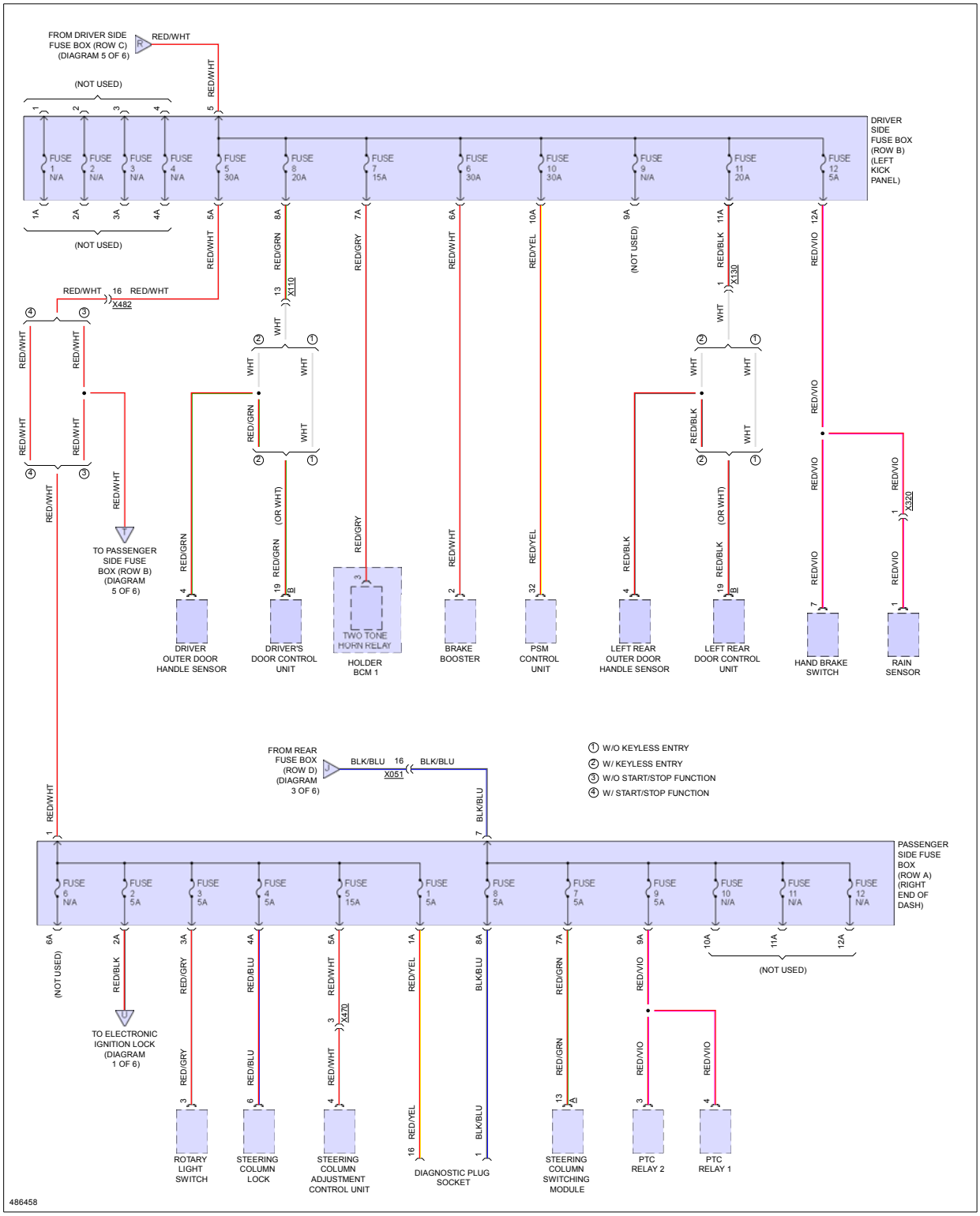

Fig 5: Power Distribution Circuit (5 of 6)

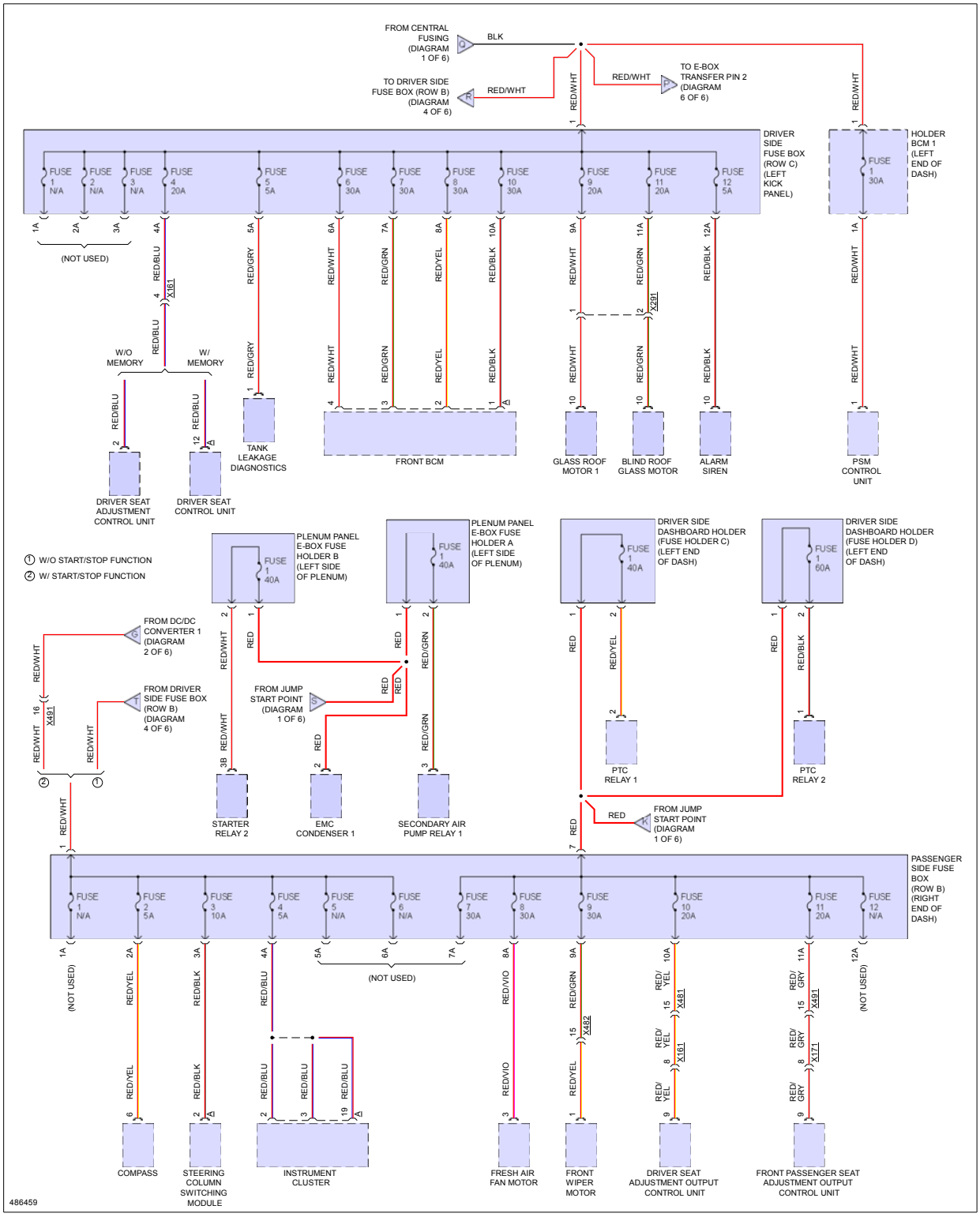

Fig 6: Power Distribution Circuit (6 of 6)

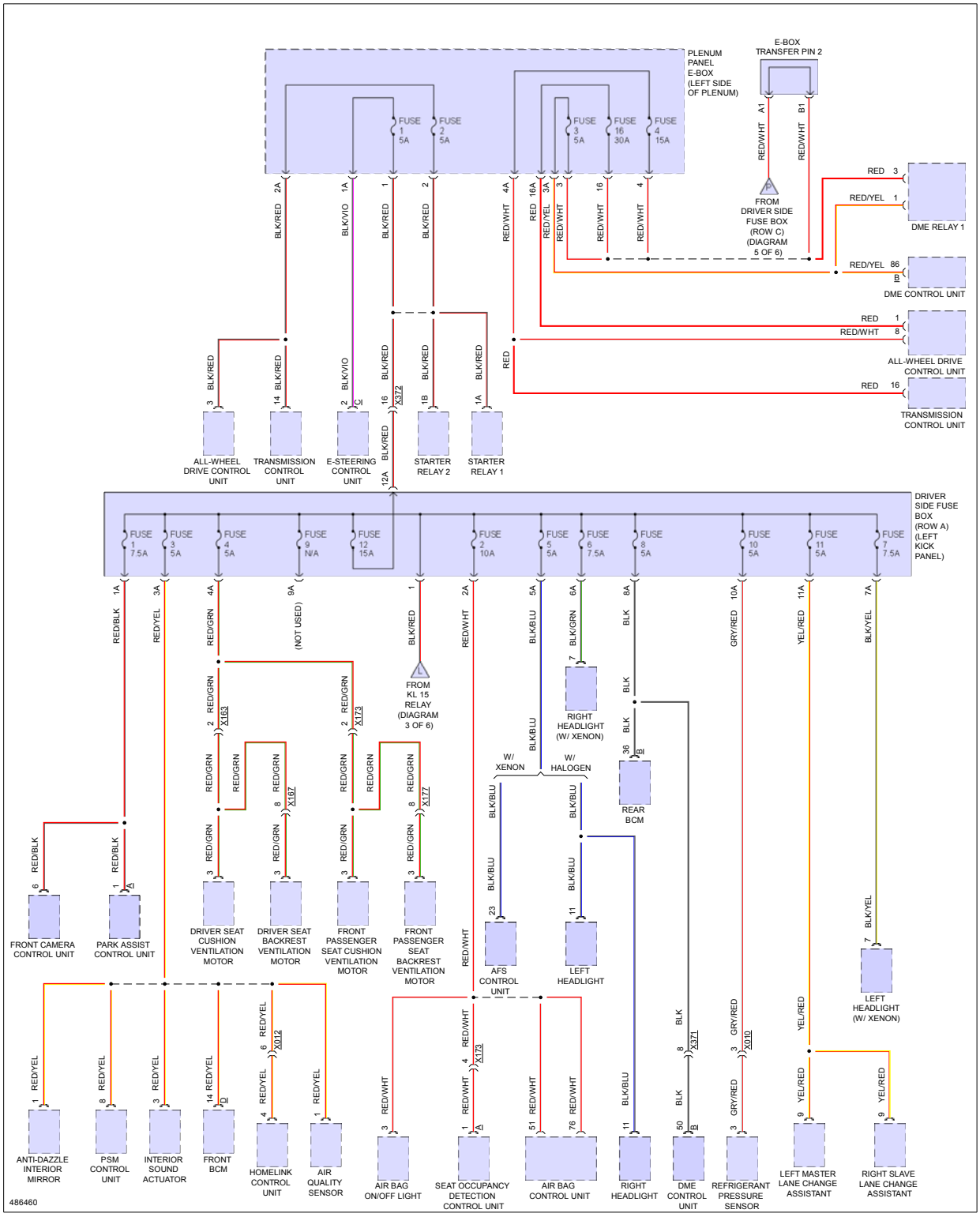

POWER DOOR LOCKS

Fig 1: Power Door Locks Circuit (1 of 4)

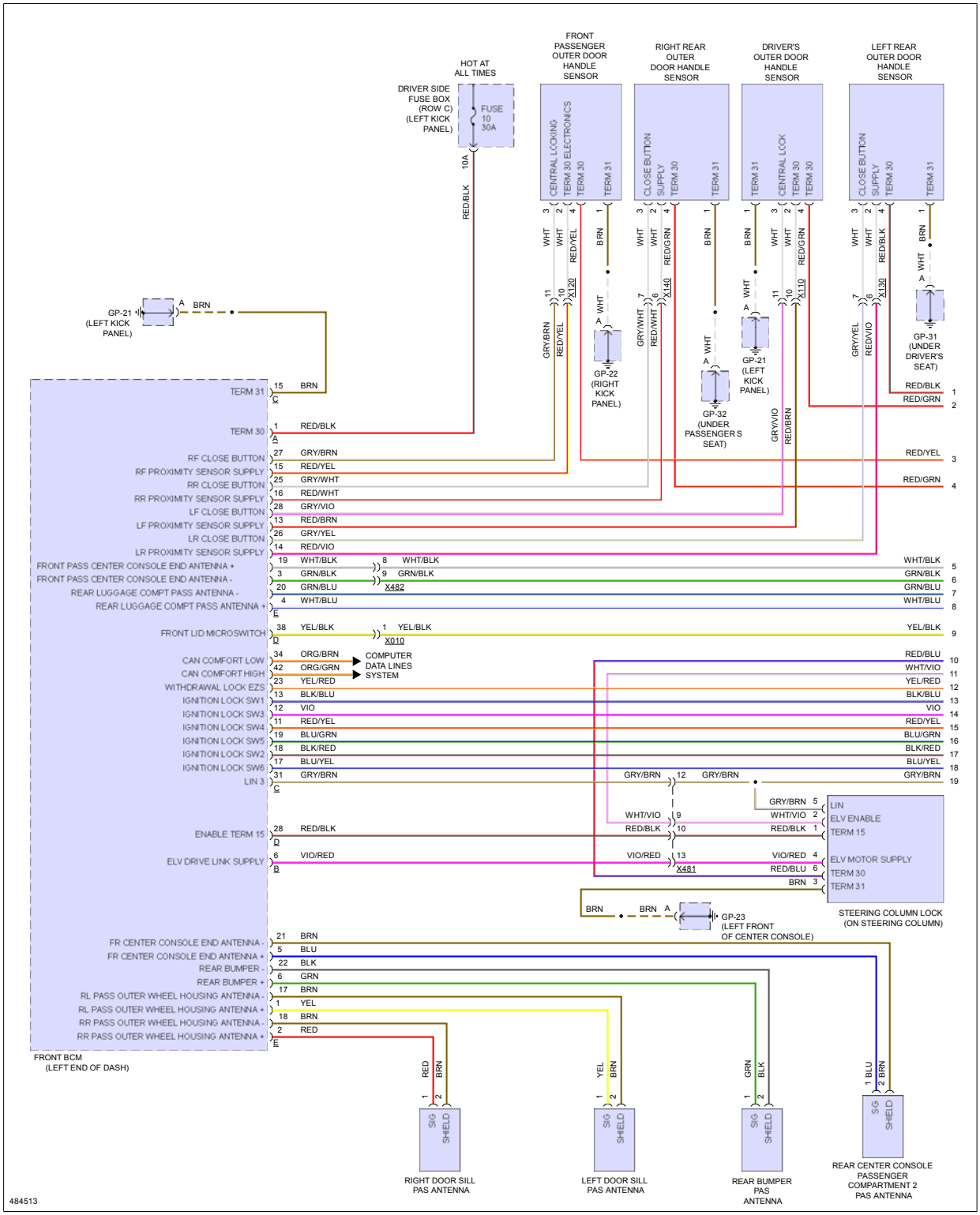

Fig 2: Power Door Locks Circuit (2 of 4)

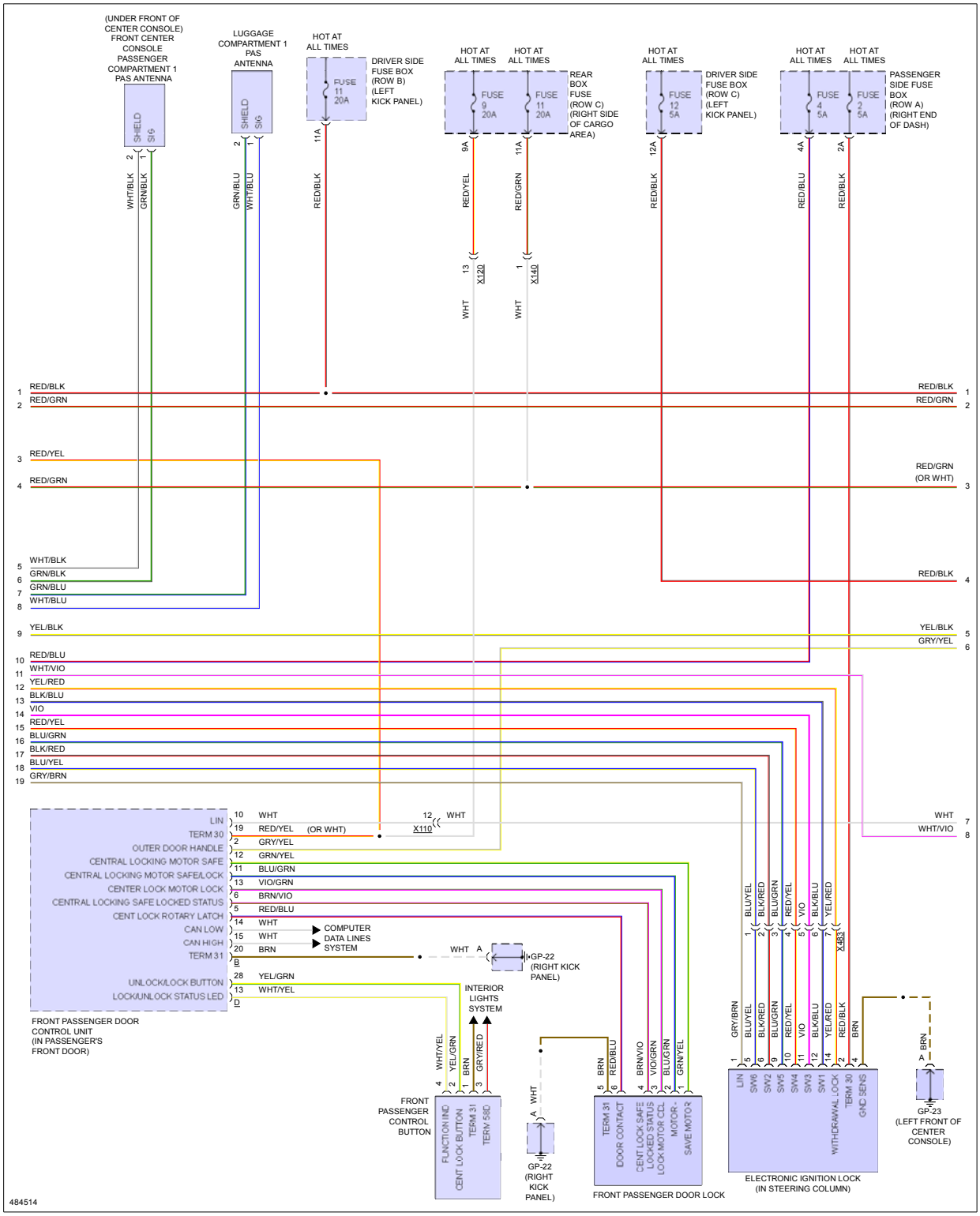

Fig 3: Power Door Locks Circuit (3 of 4)

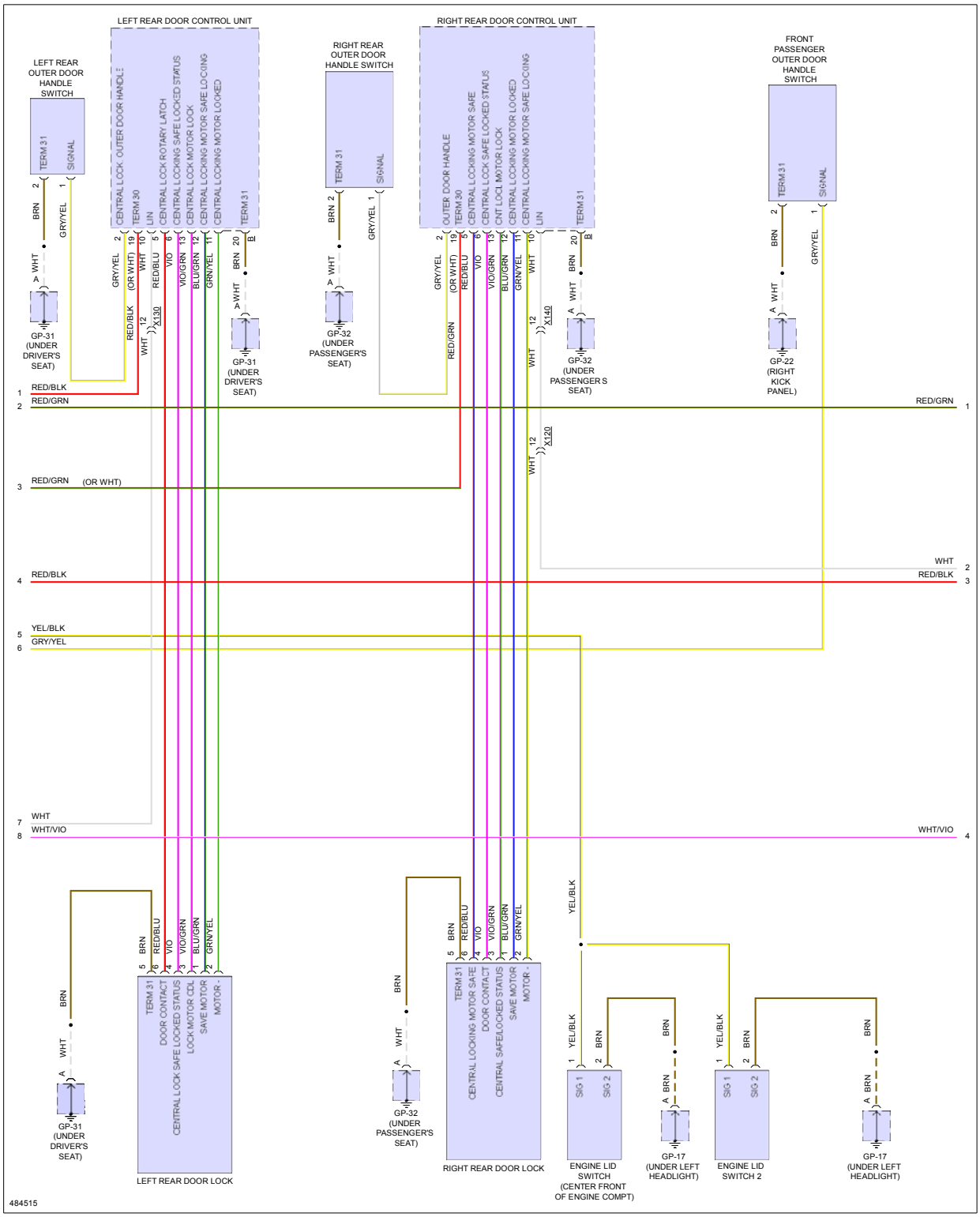

Fig 4: Power Door Locks Circuit (4 of 4)

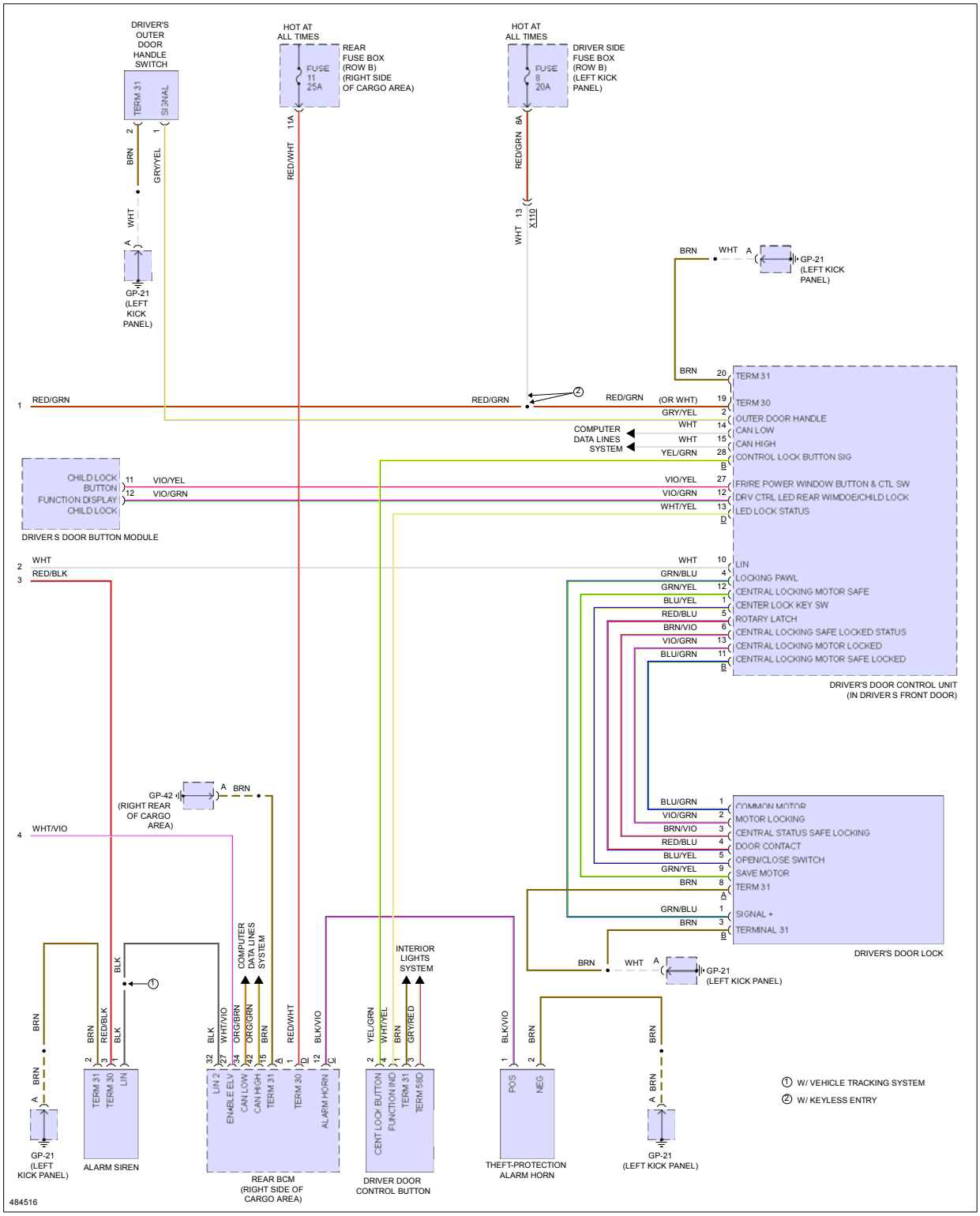

POWER MIRRORS

Fig 1: Auto Anti-dazzling Mirror Circuit

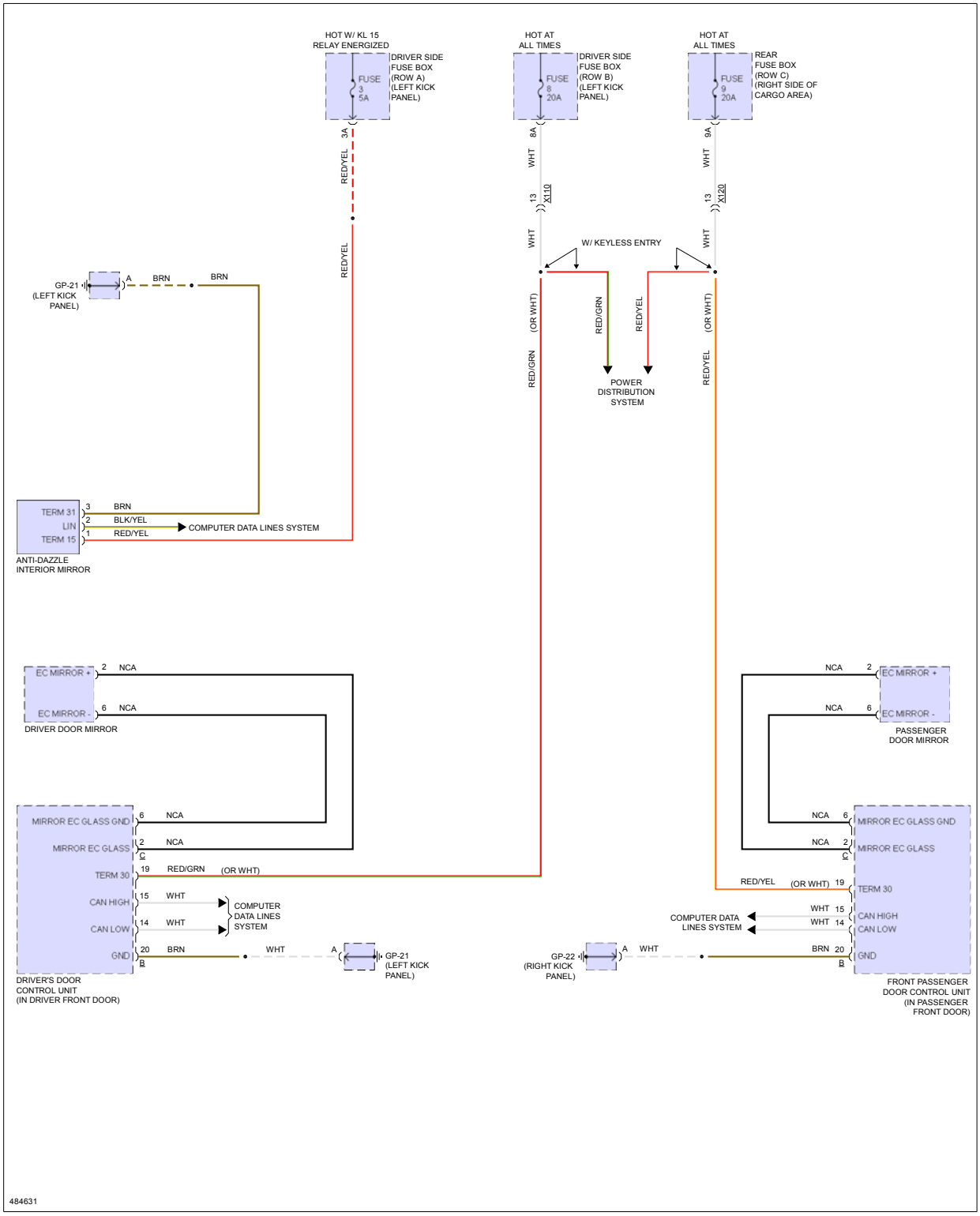

Fig 2: Power Mirrors Circuit

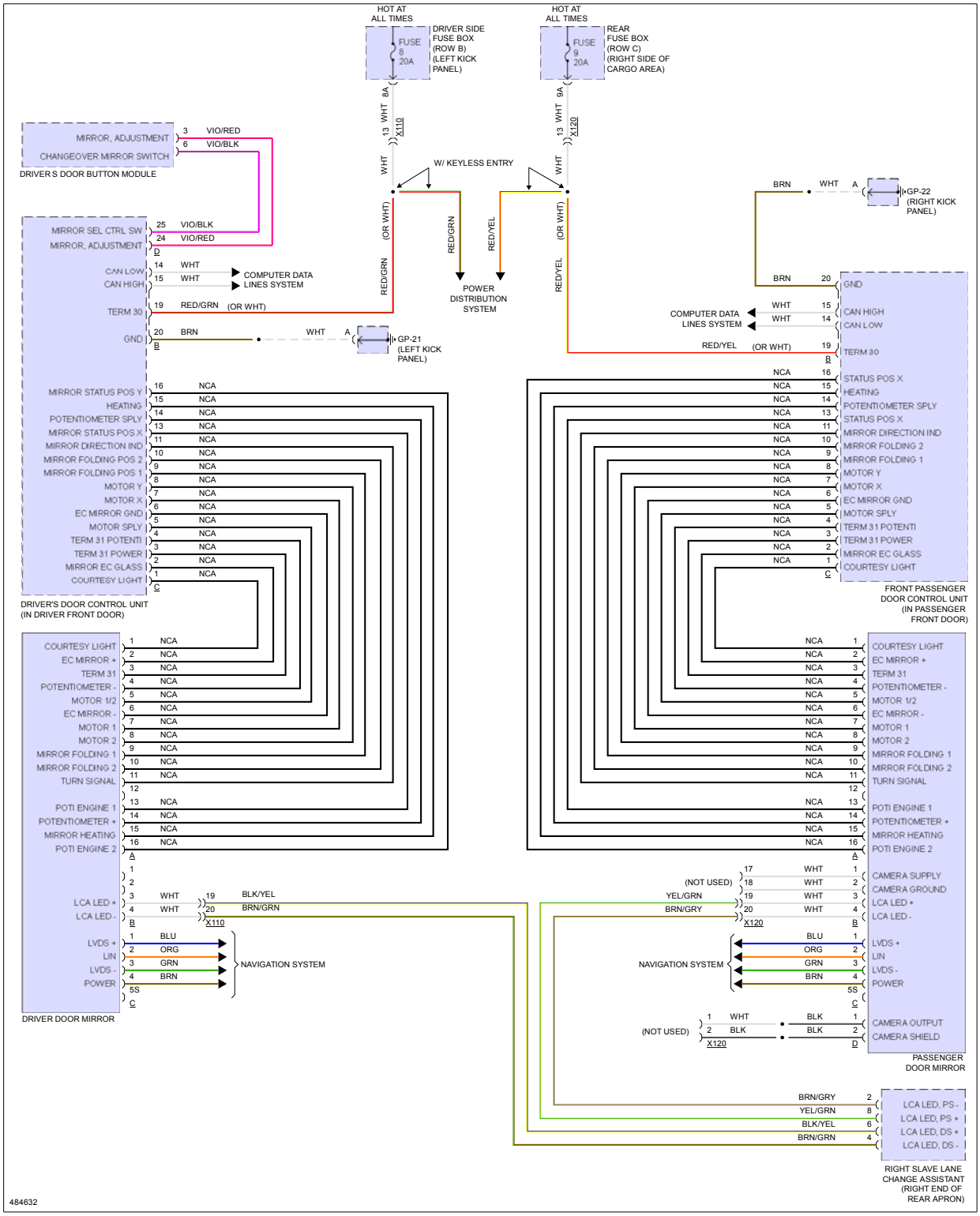

POWER SEATS

Fig 1: Driver Power Seat Circuit

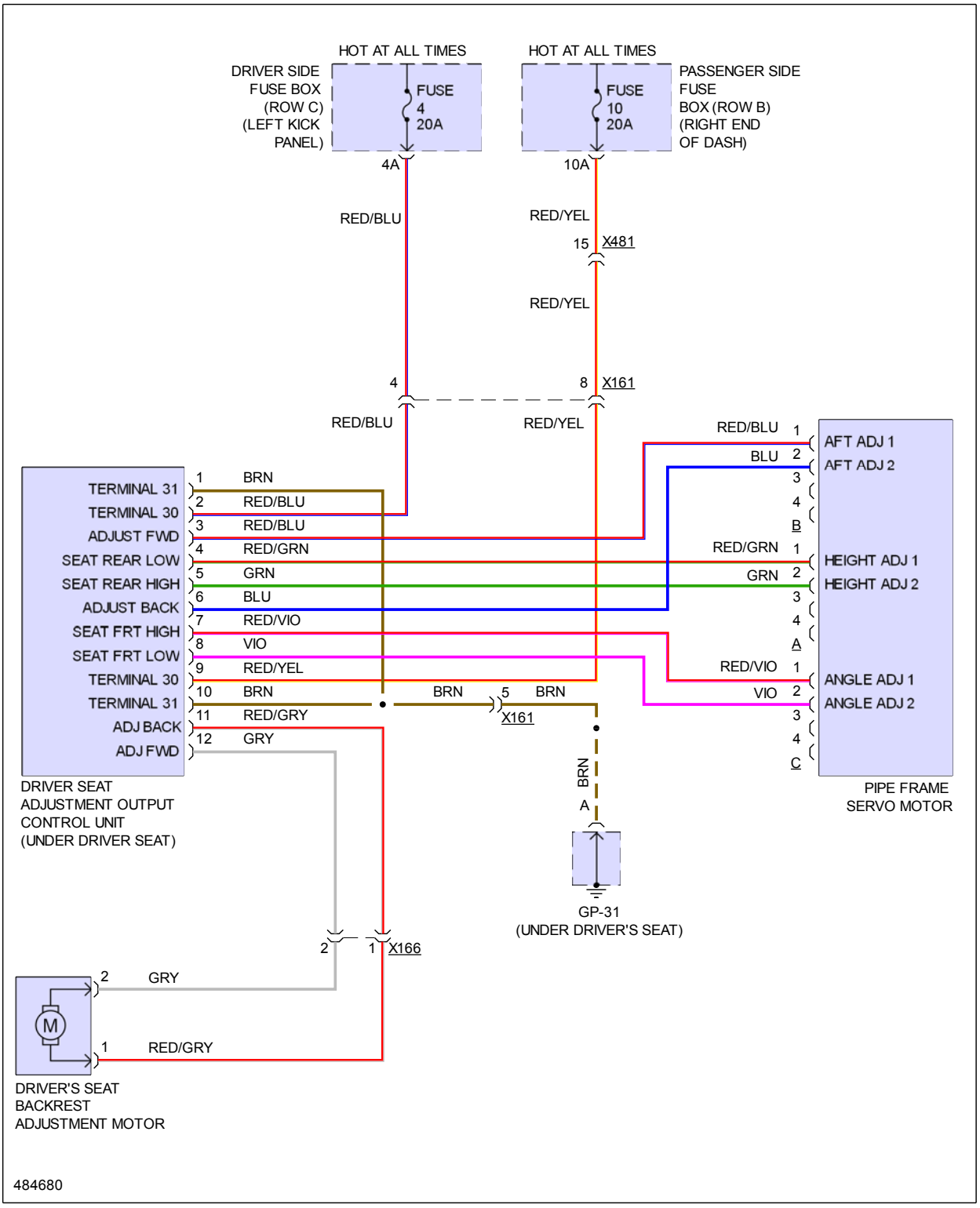

Fig 2: Front Seat Heater Circuit

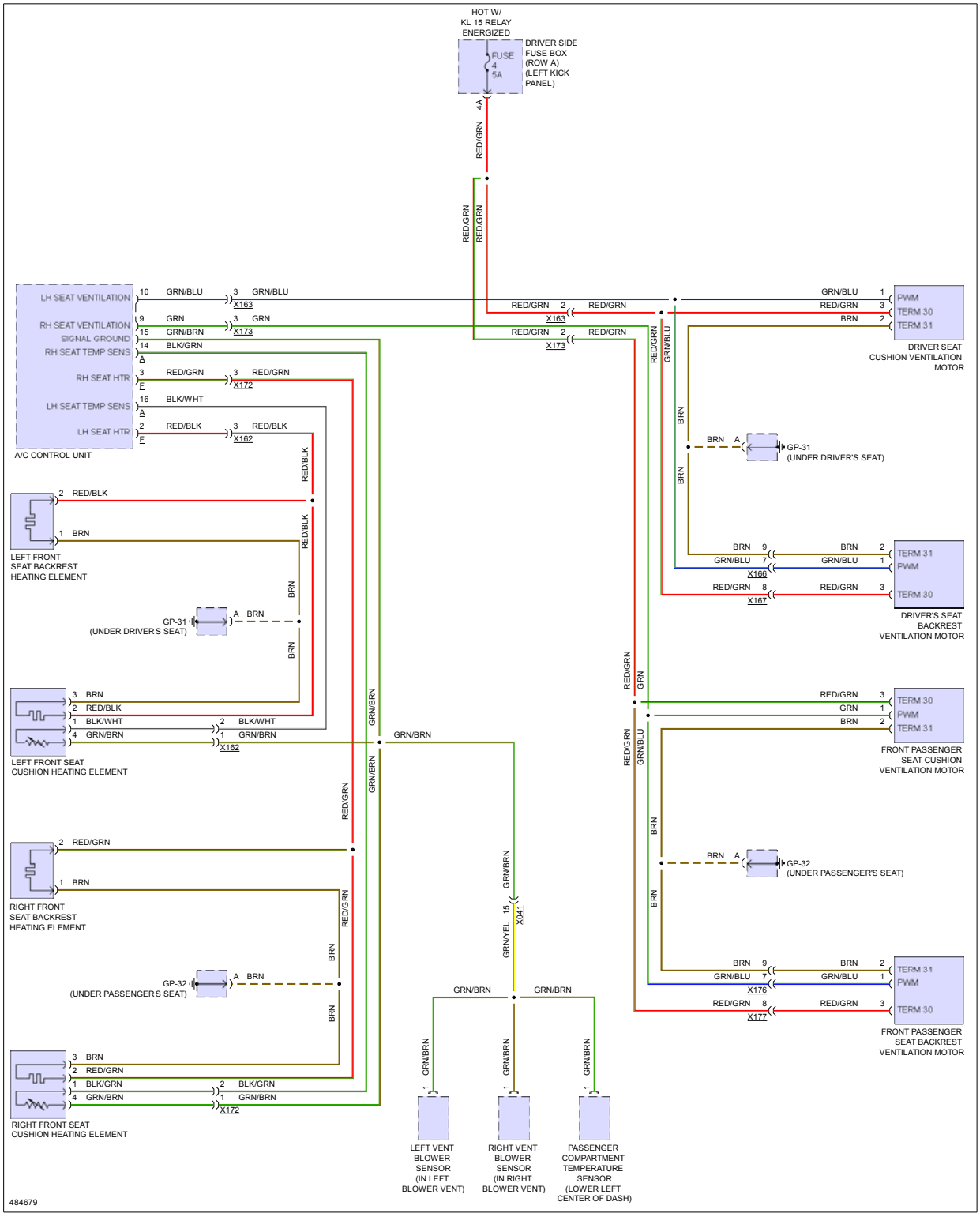

Fig 3: Heated Steering Wheel Circuit

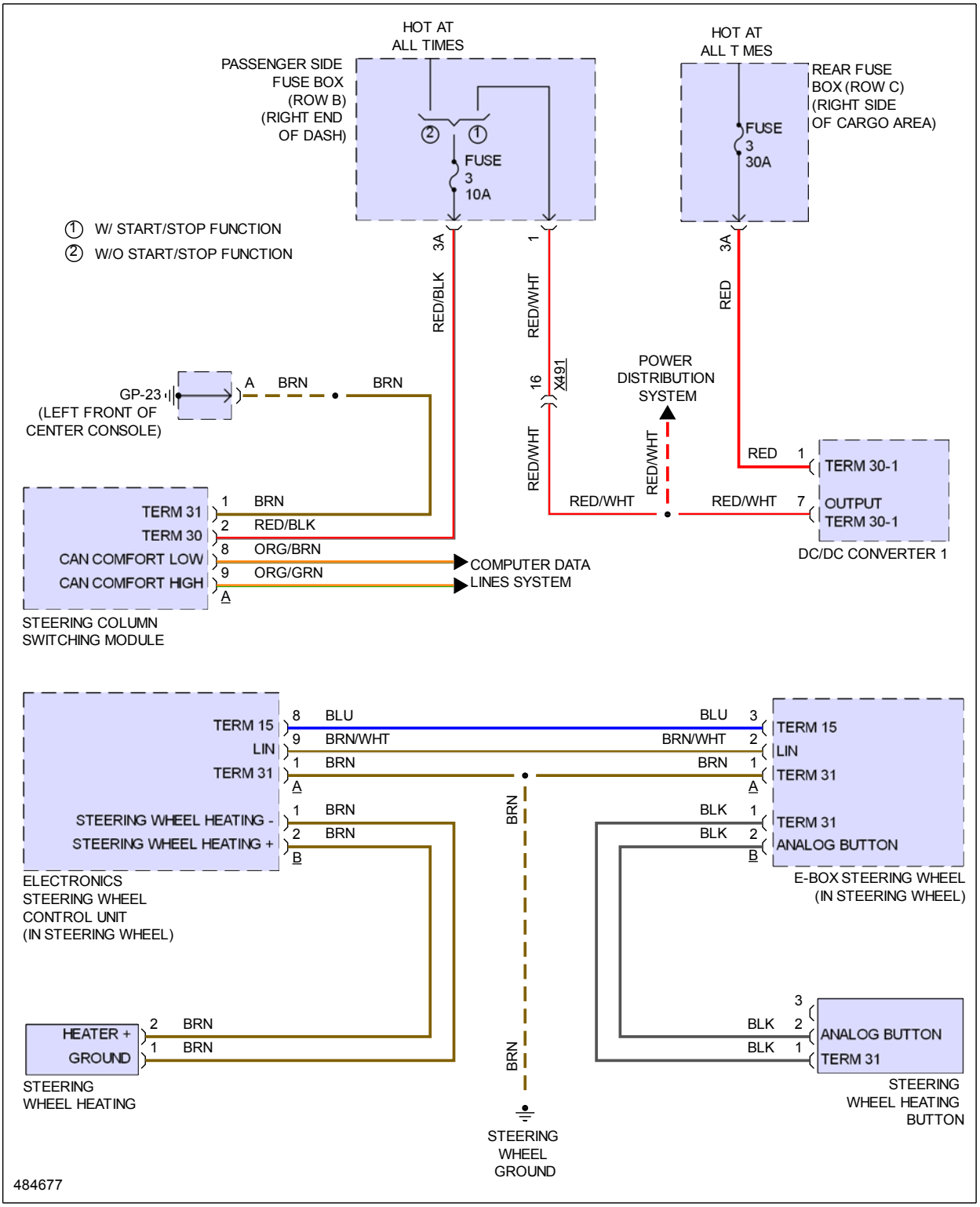

Fig 4: Passenger Power Seat Circuit

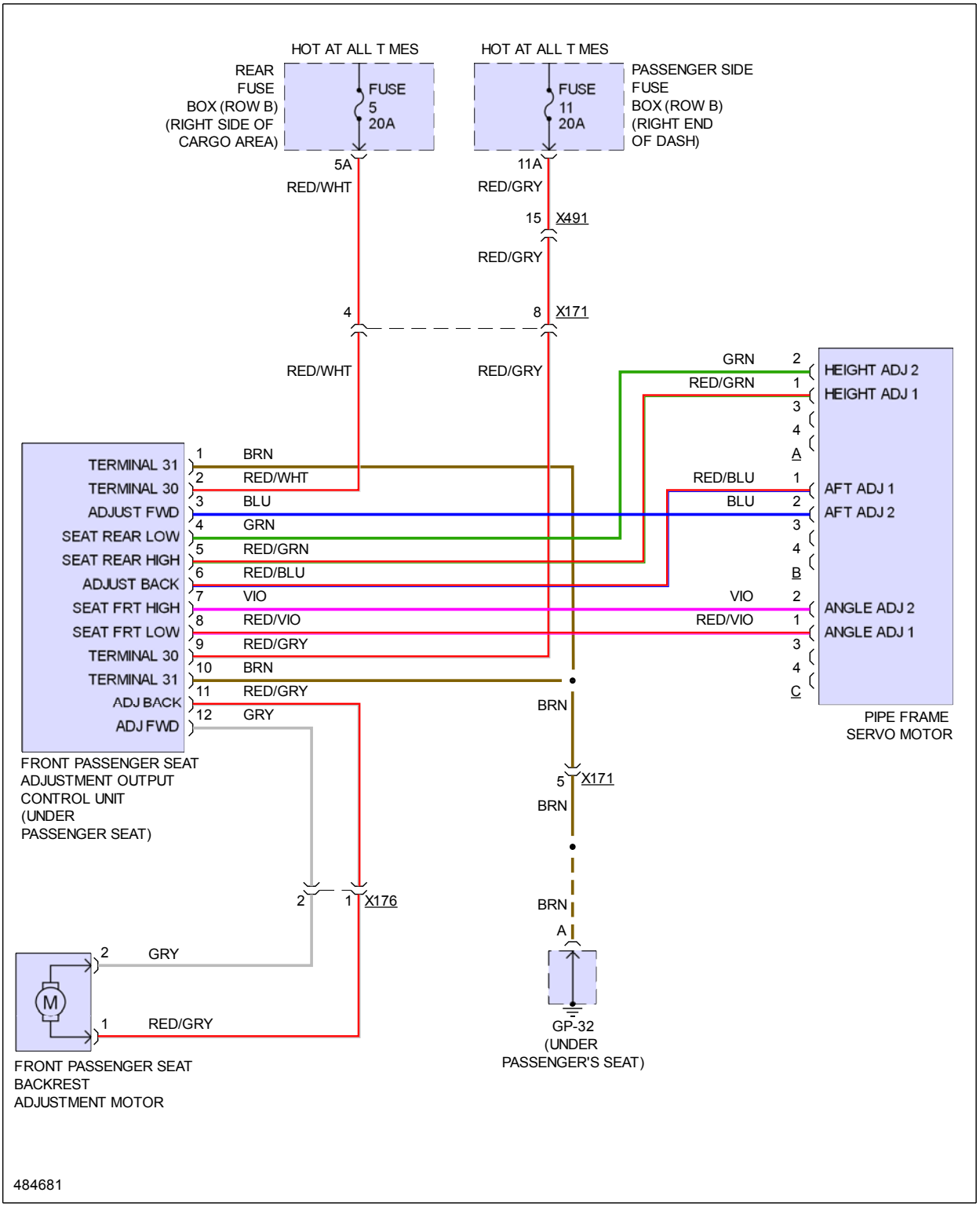

Fig 5: Rear Seat Heater Circuit

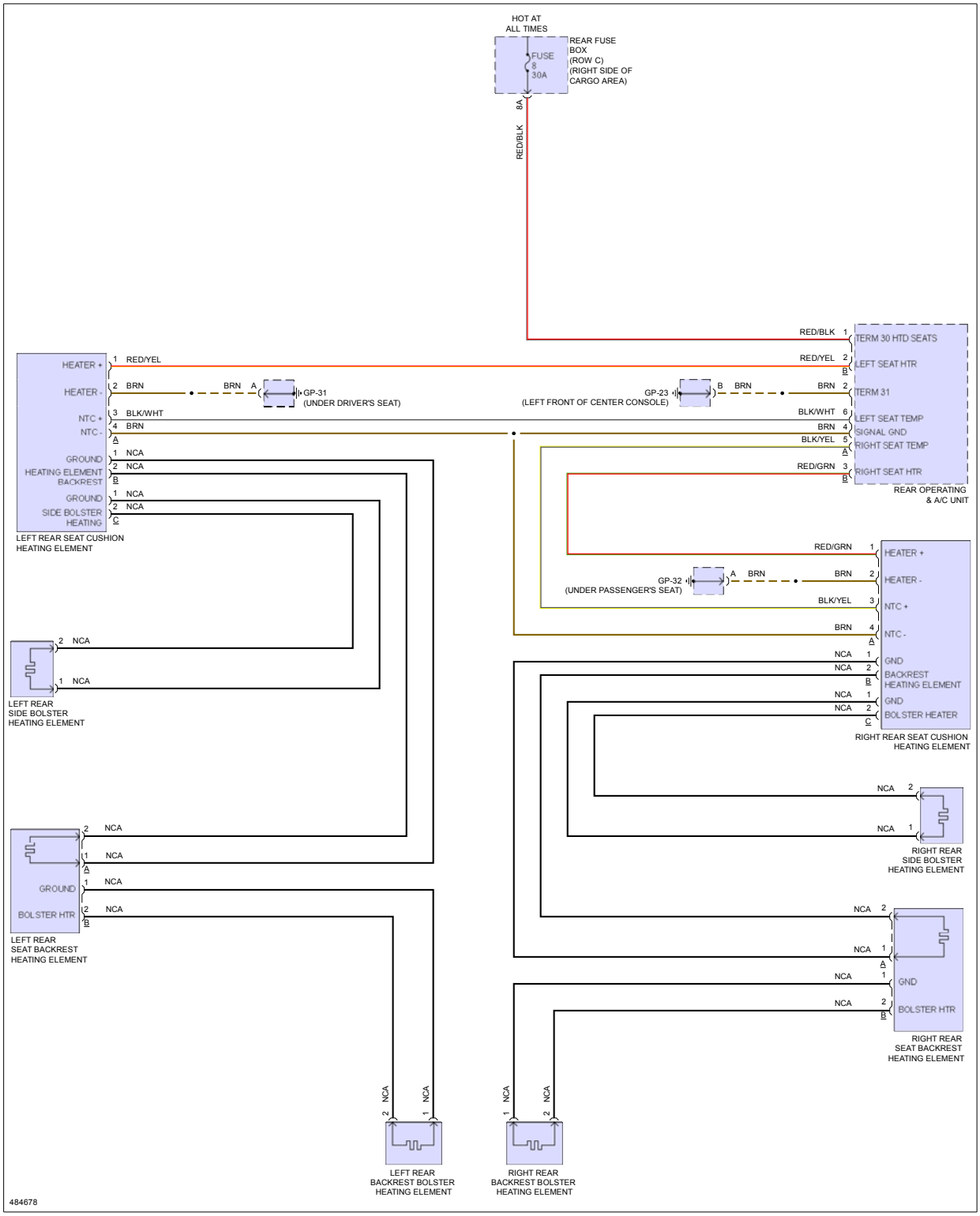

POWER TOP/SUNROOF

Fig 1: Power Top/Sunroof Circuit

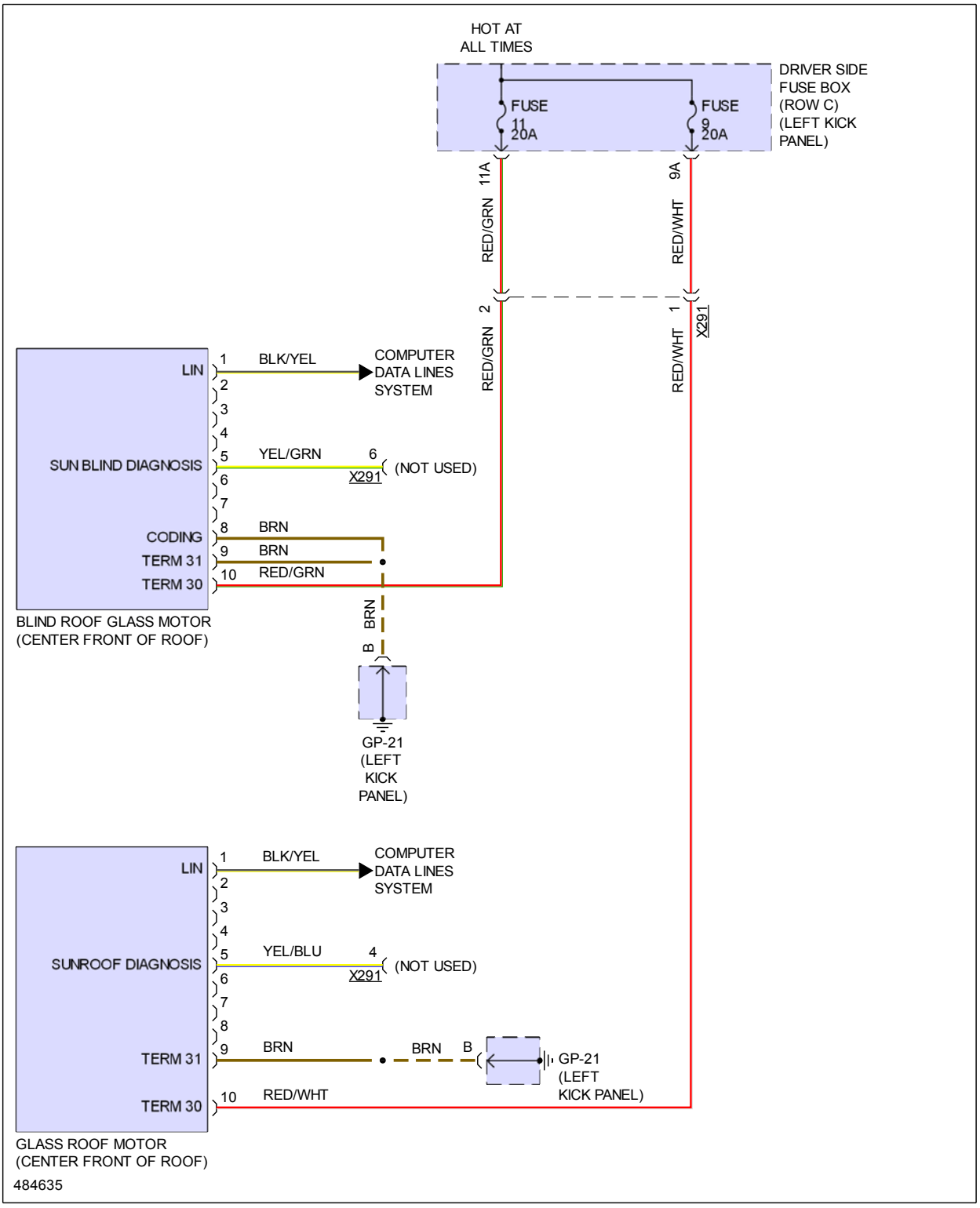

POWER WINDOWS

Fig 1: Power Windows Circuit

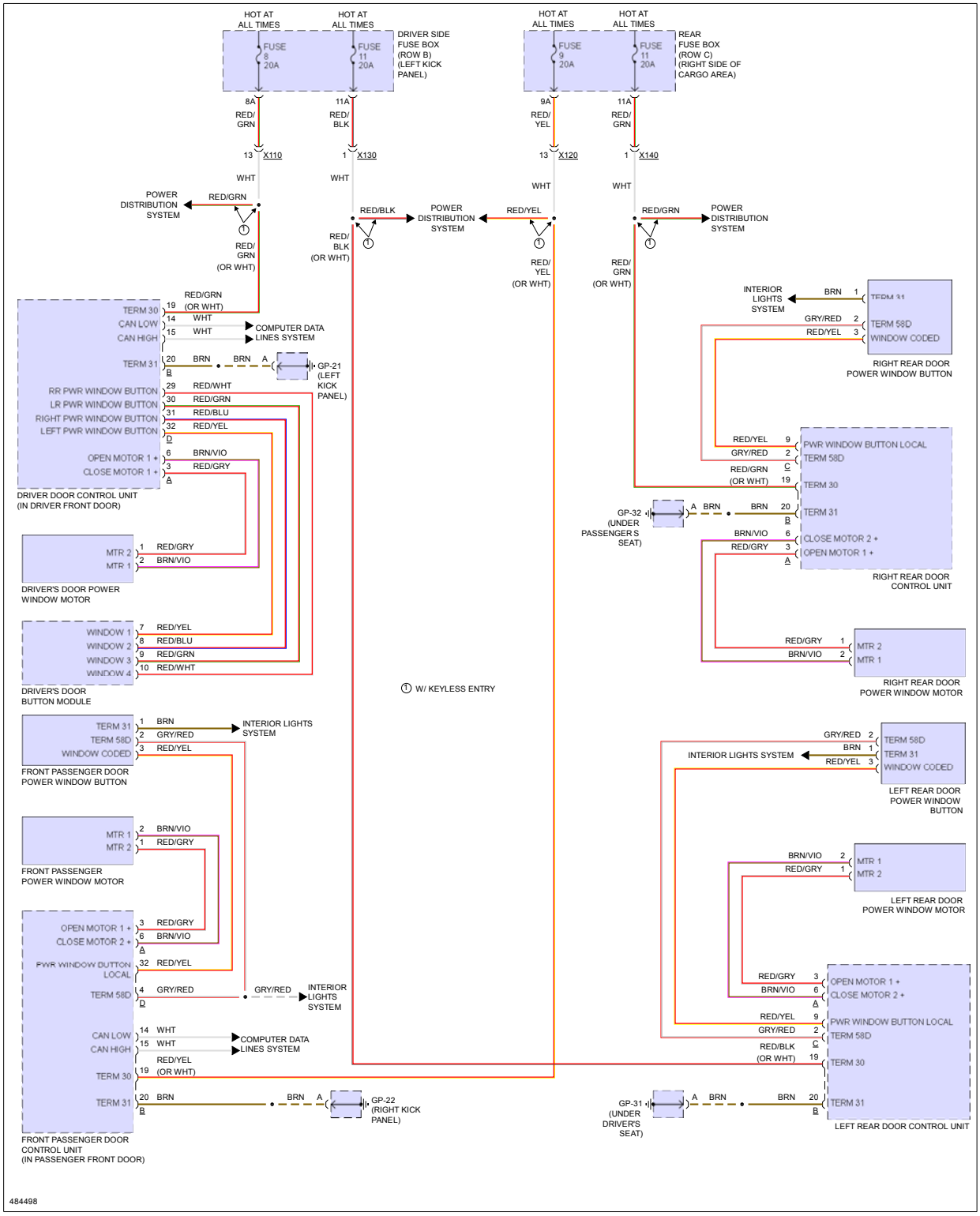

RADIO

Fig 1: Optical WaveGuide Circuit

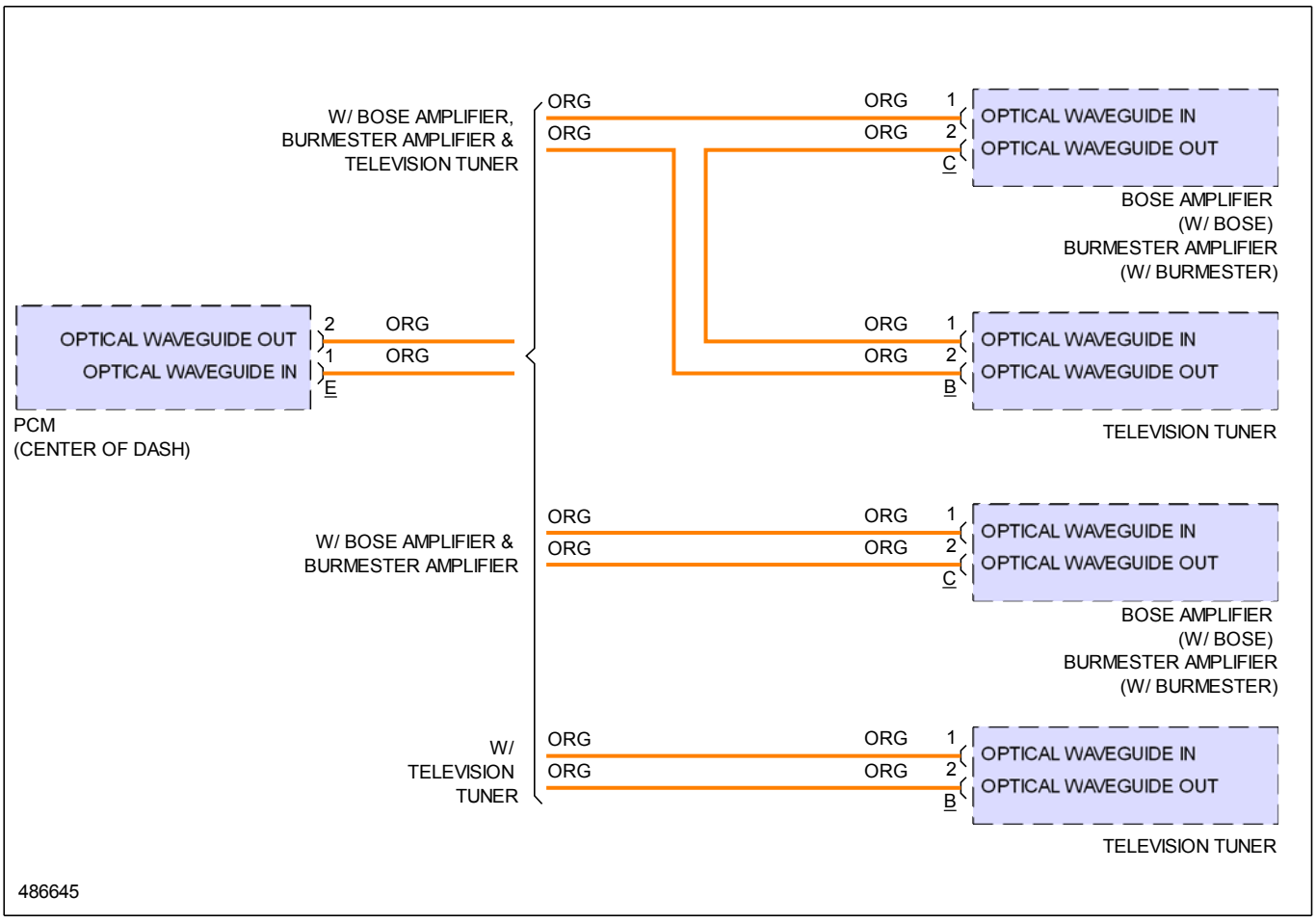

Fig 2: Premium Radio Circuit, W/ ASK (1 of 3)

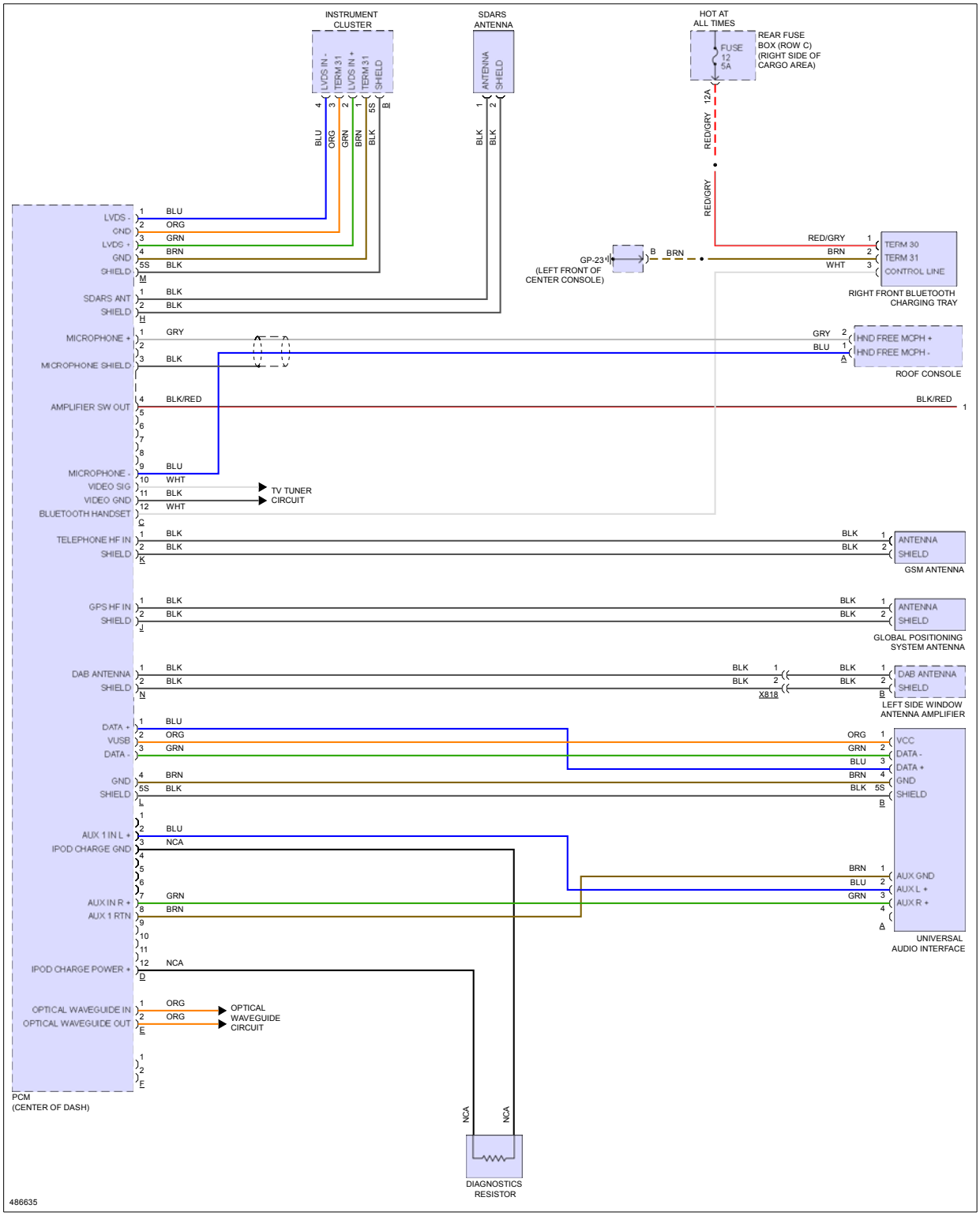

Fig 3: Premium Radio Circuit, W/ ASK (2 of 3)

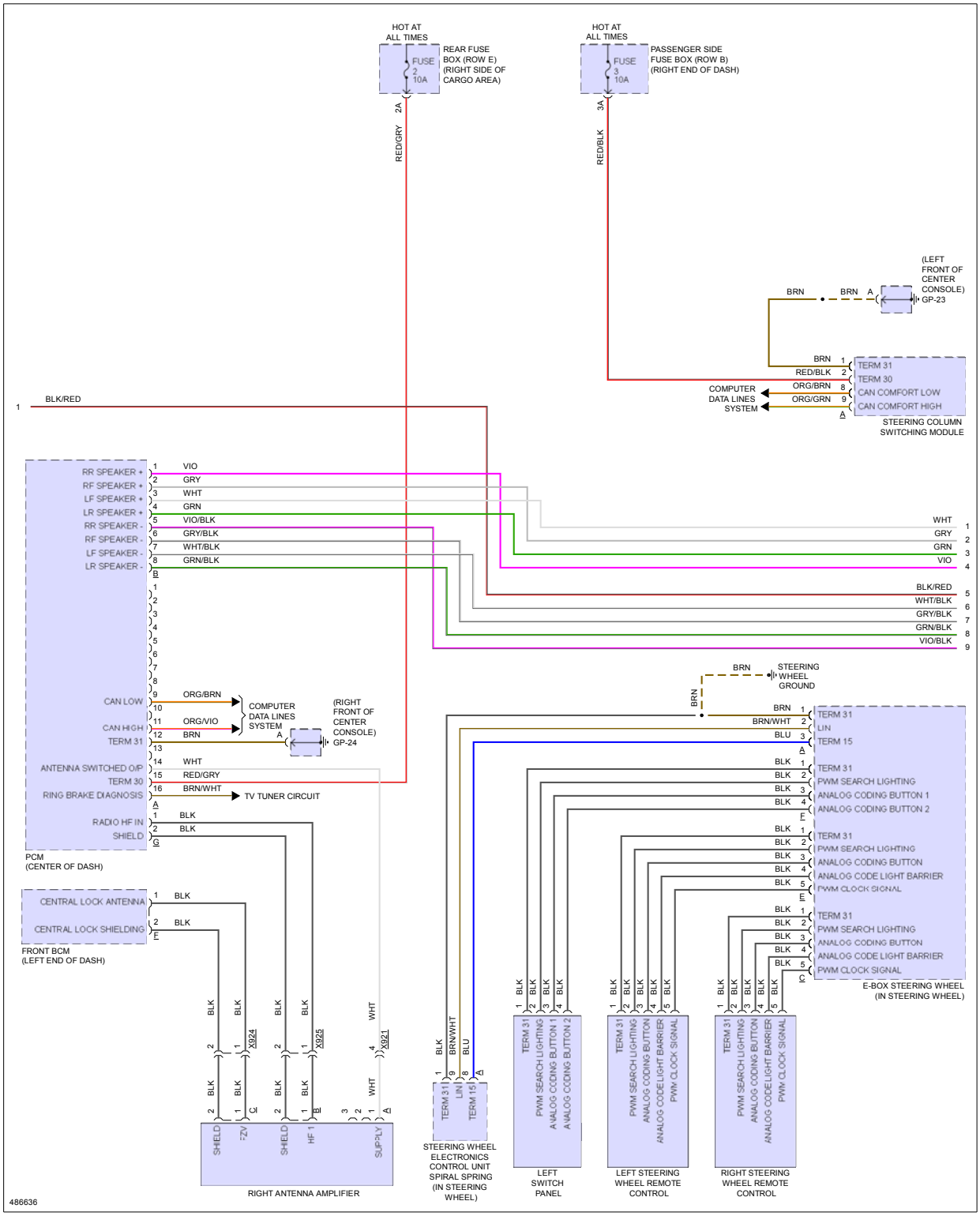

Fig 4: Premium Radio Circuit, W/ ASK (3 of 3)

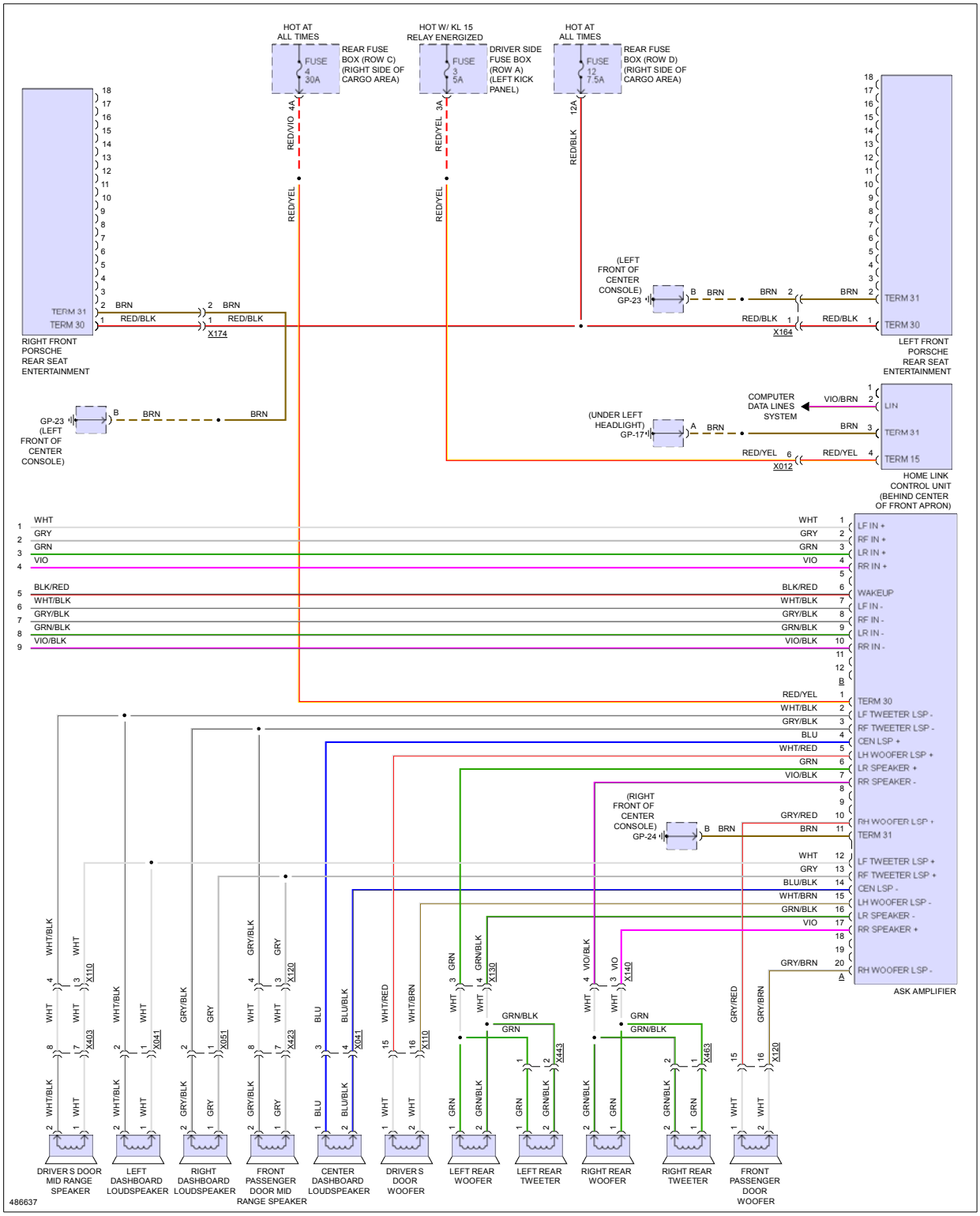

Fig 5: Premium Radio Circuit, W/ Bose (1 of 3)

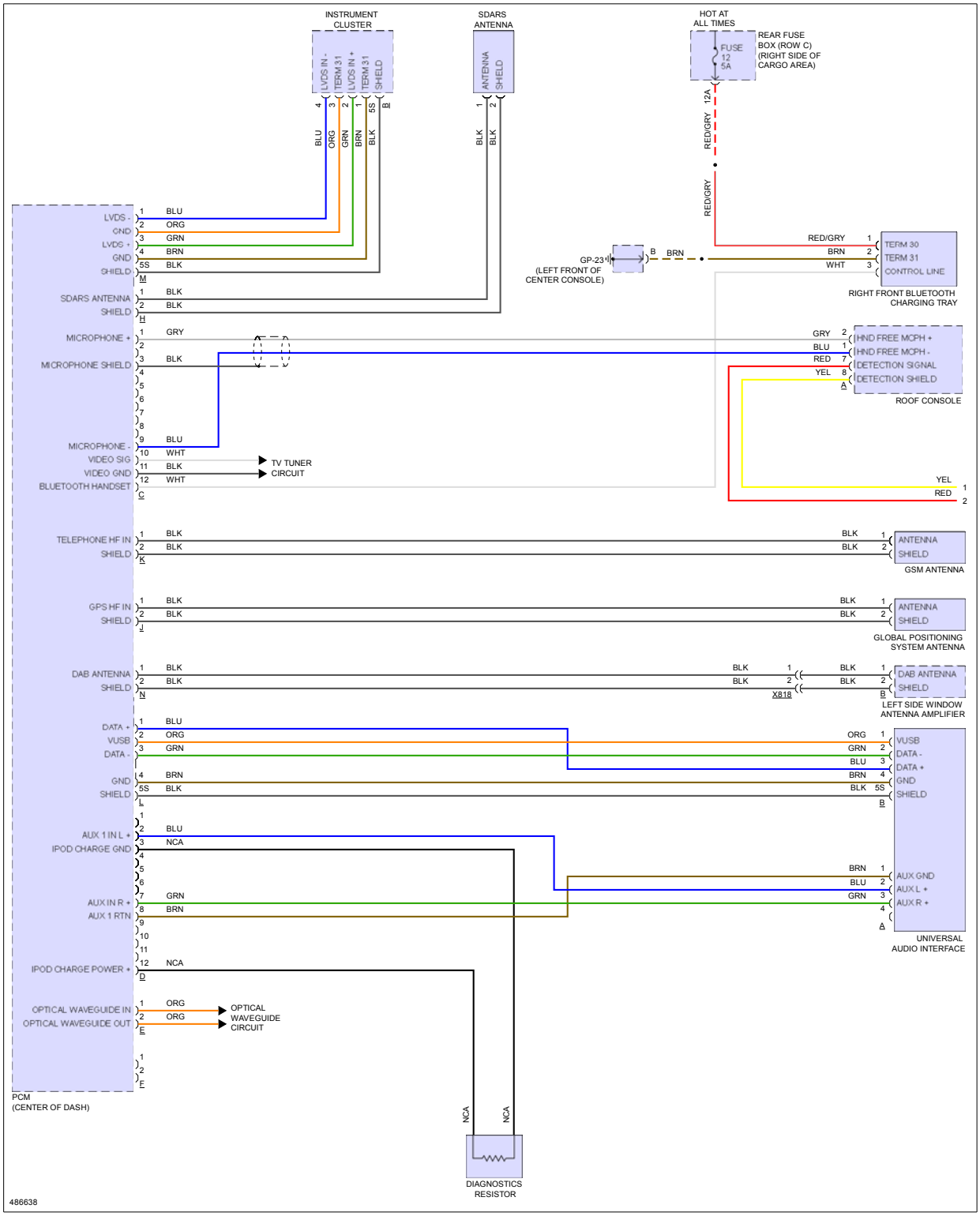

Fig 6: Premium Radio Circuit, W/ Bose (2 of 3)

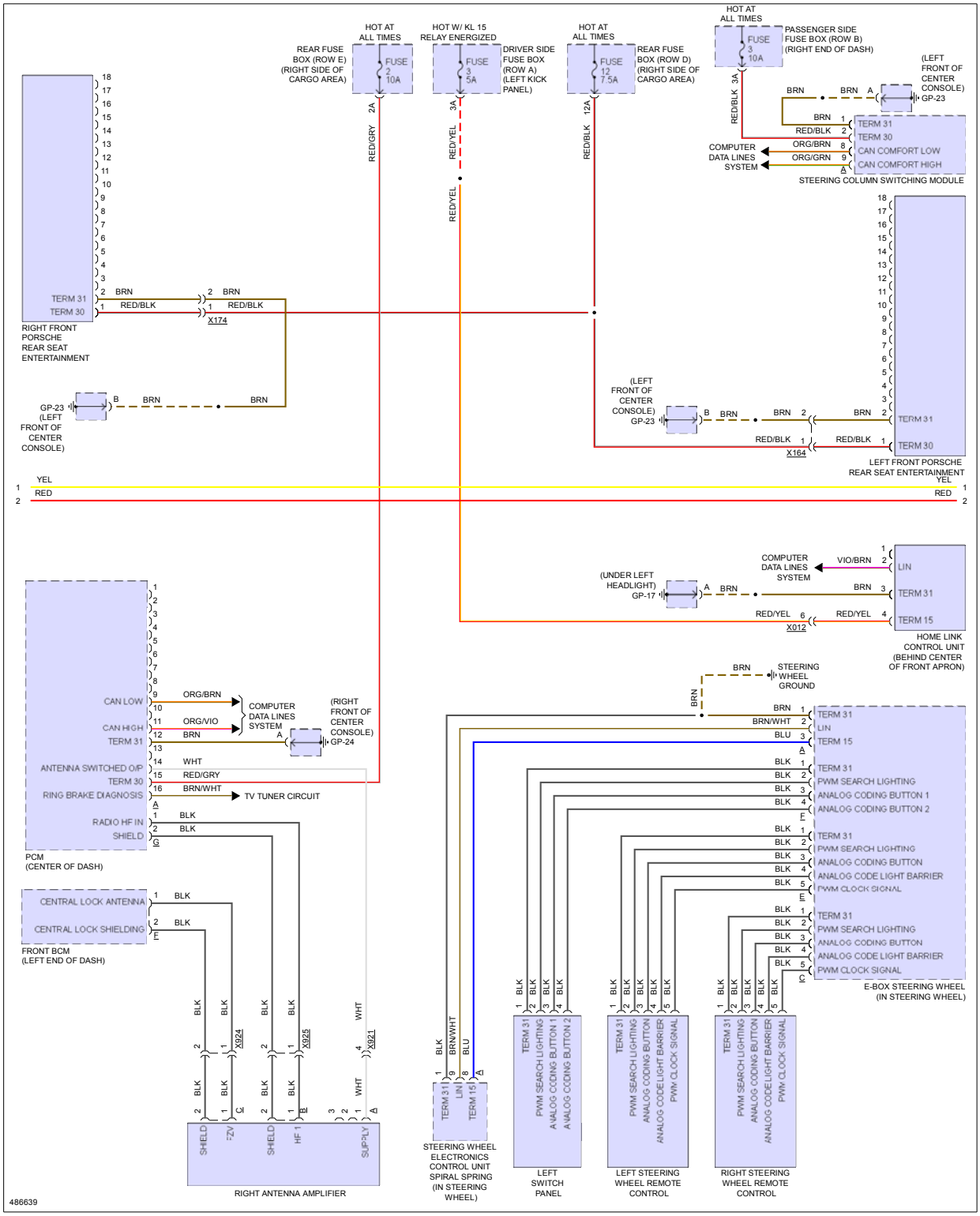

Fig 7: Premium Radio Circuit, W/ Bose (3 of 3)

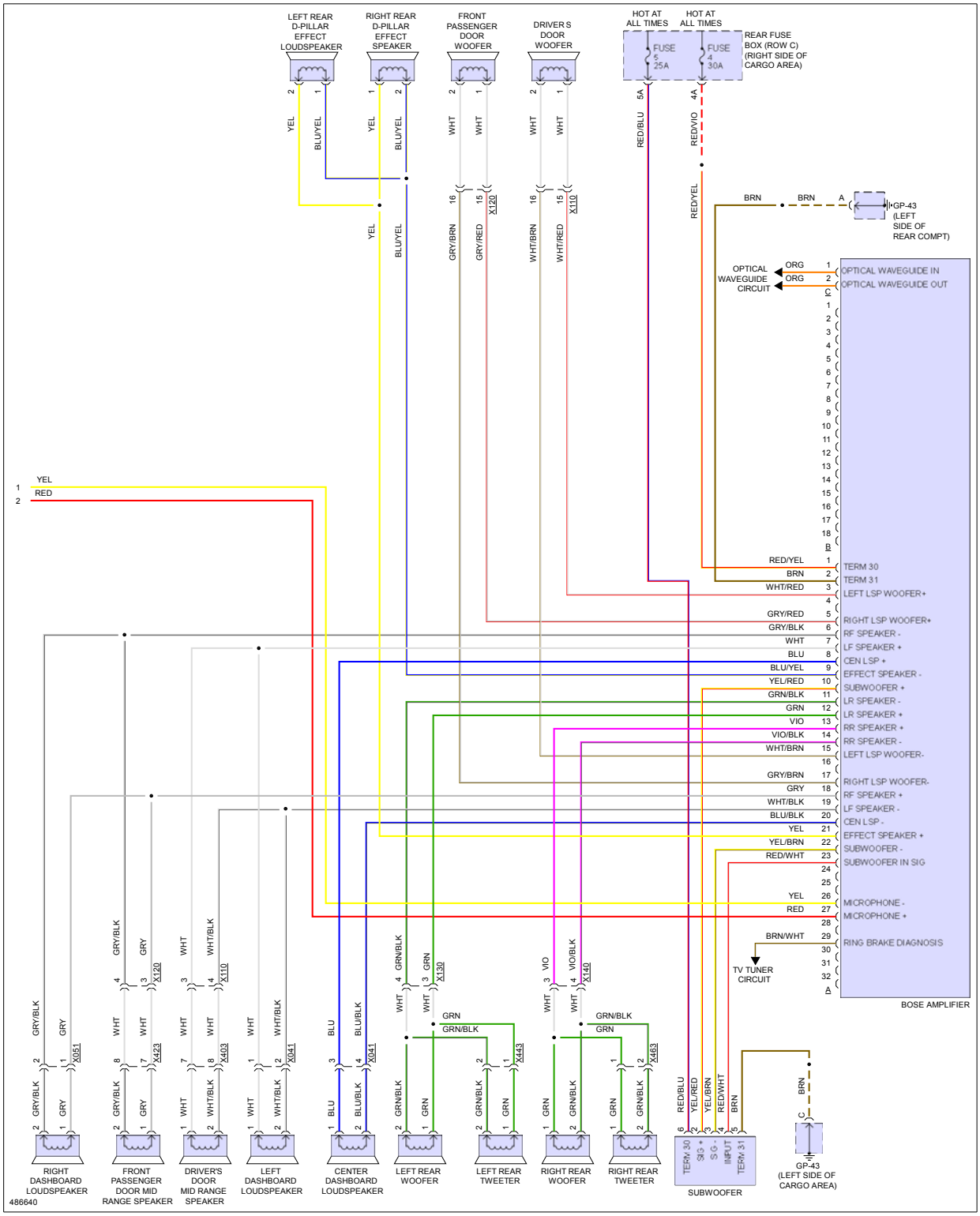

Fig 8: Premium Radio Circuit, W/ Burmester (1 of 4)

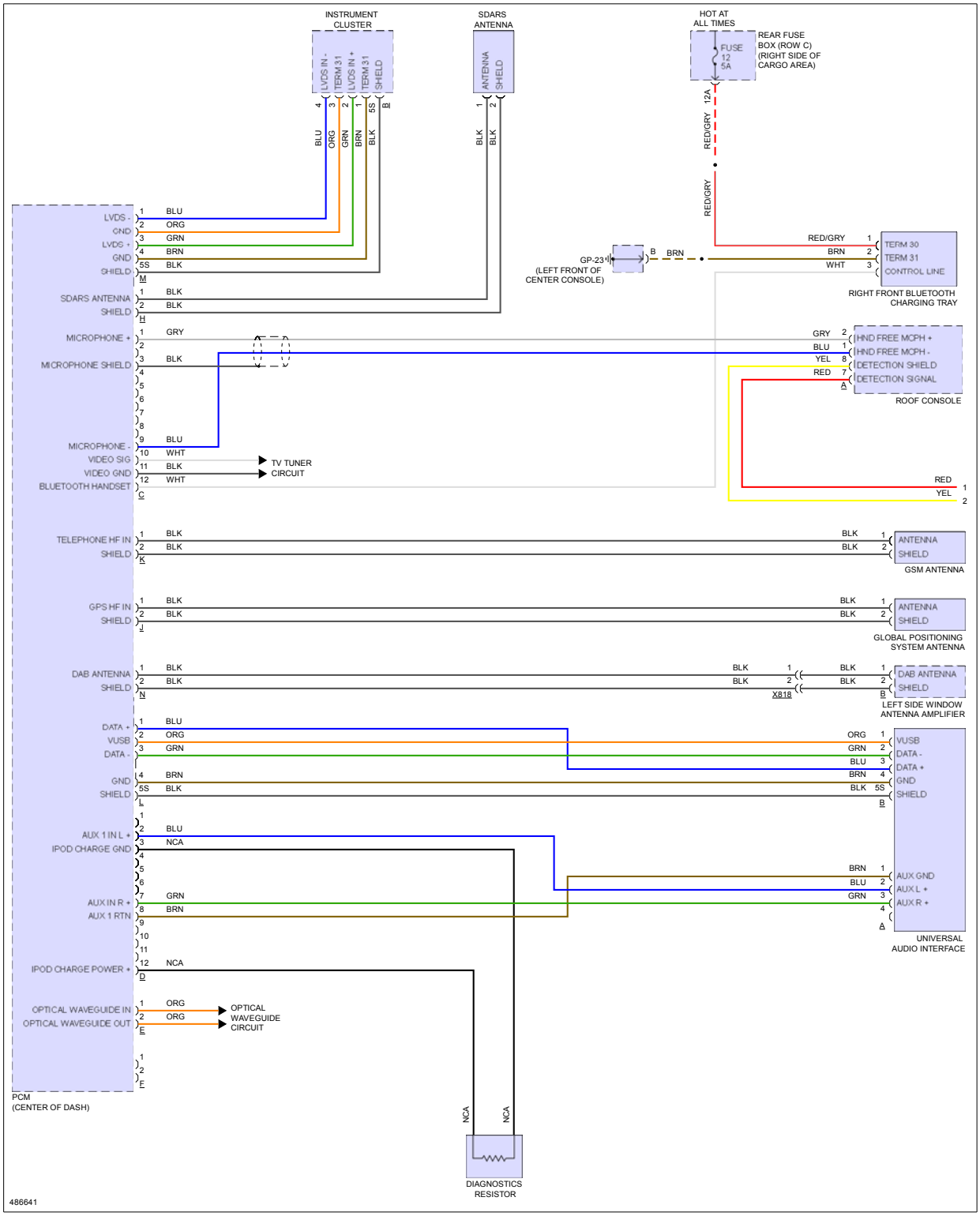

Fig 9: Premium Radio Circuit, W/ Burmester (2 of 4)

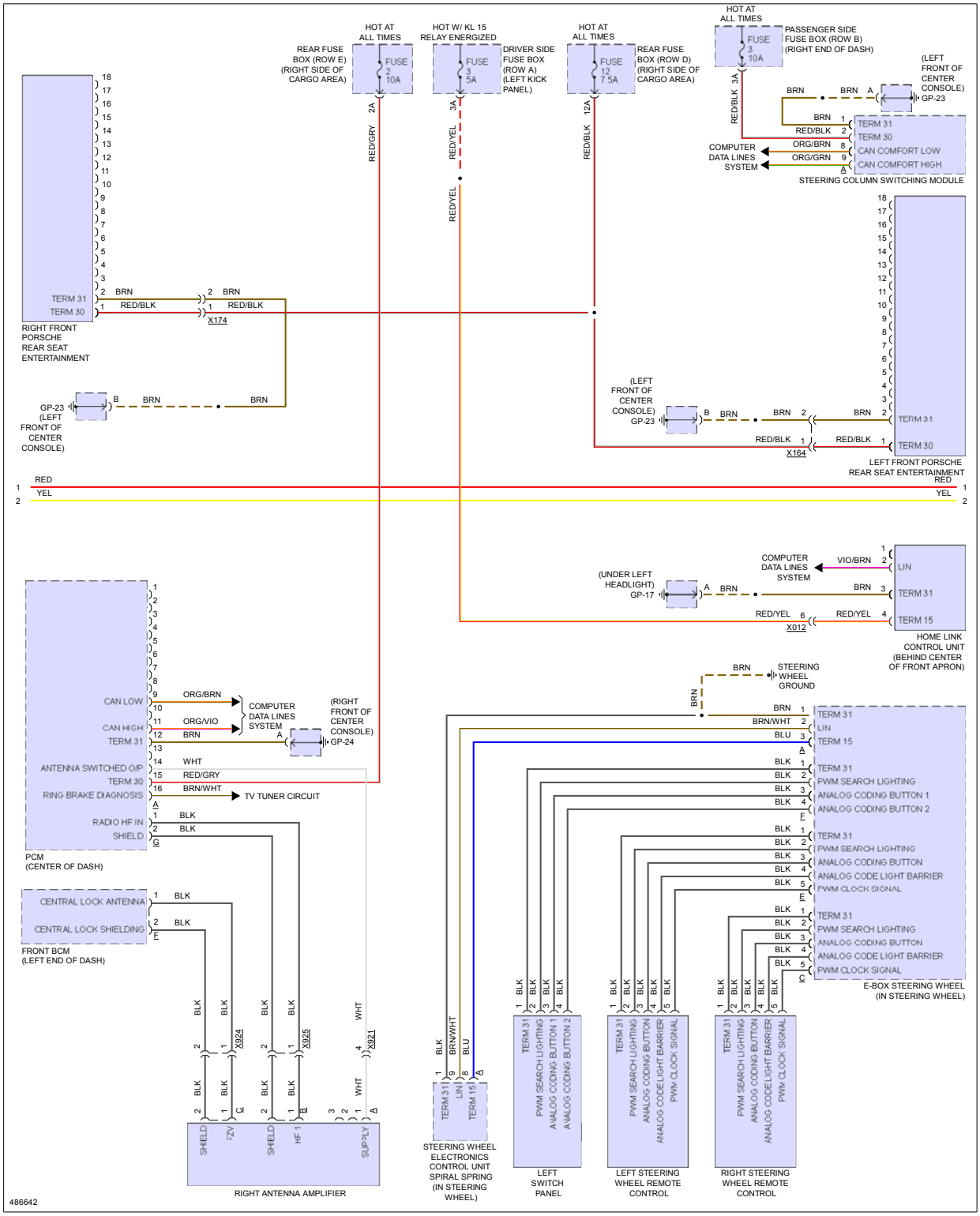

Fig 10: Premium Radio Circuit, W/ Burmester (3 of 4)

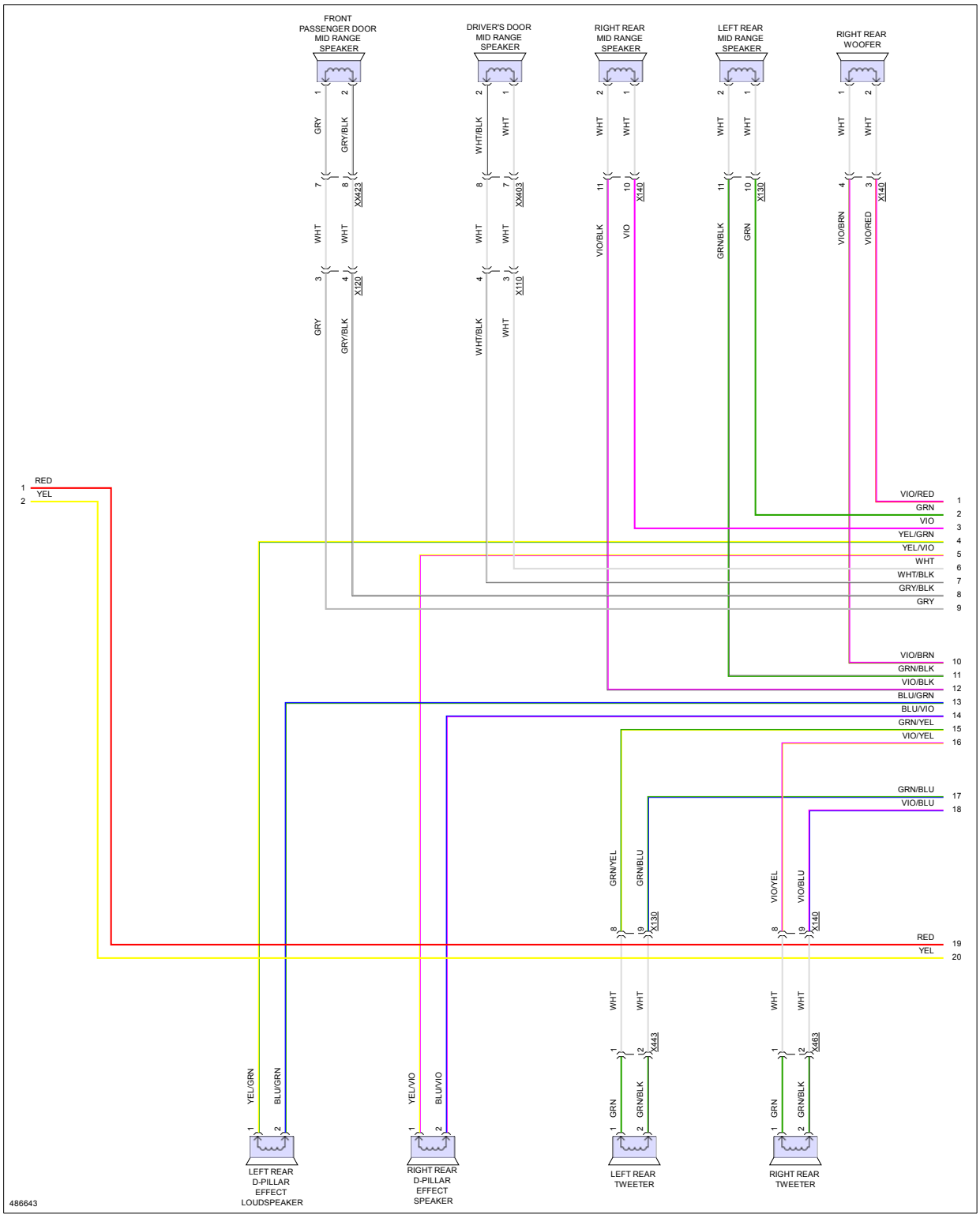

Fig 11: Premium Radio Circuit, W/ Burmester (4 of 4)

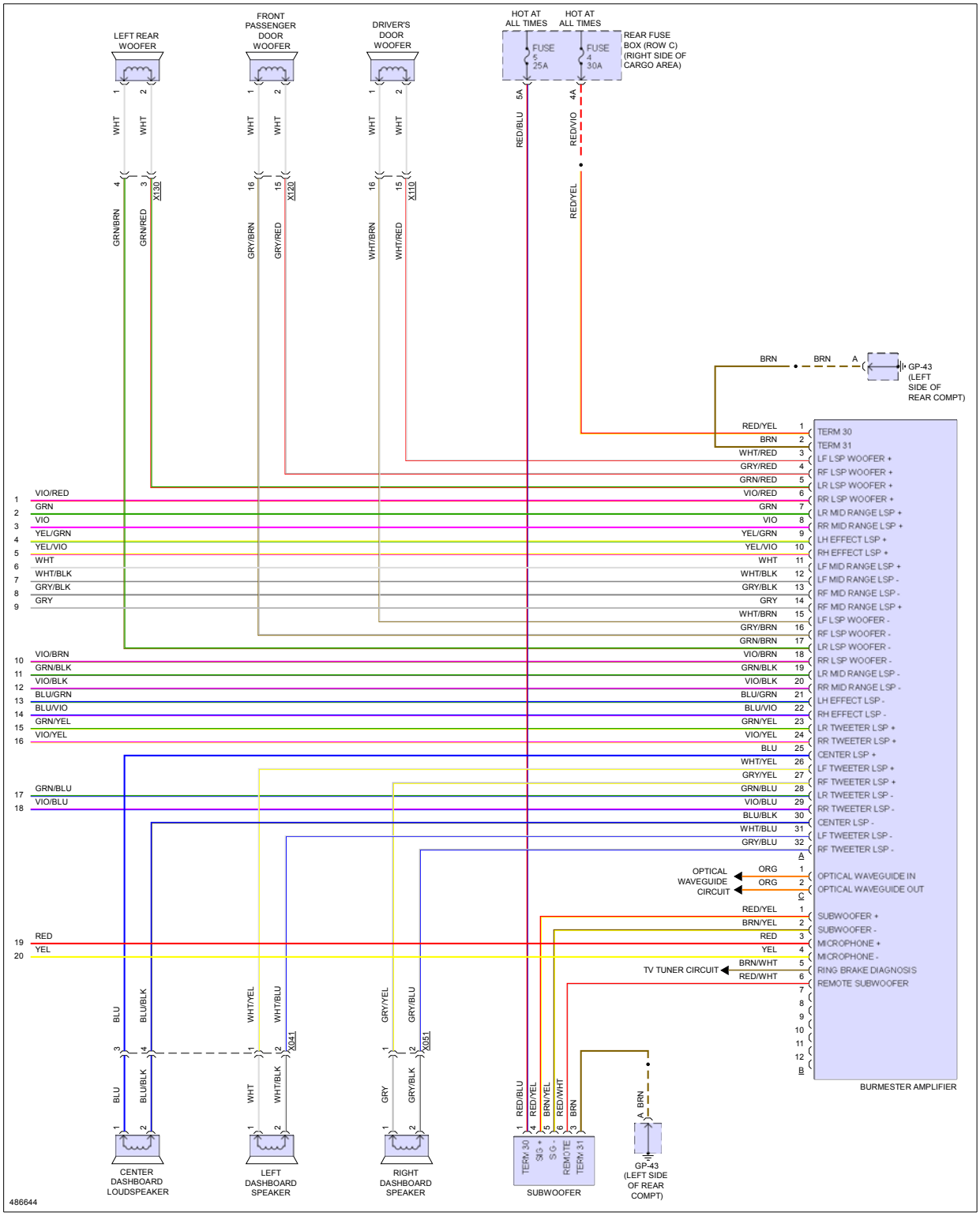

Fig 12: TV Tuner Circuit

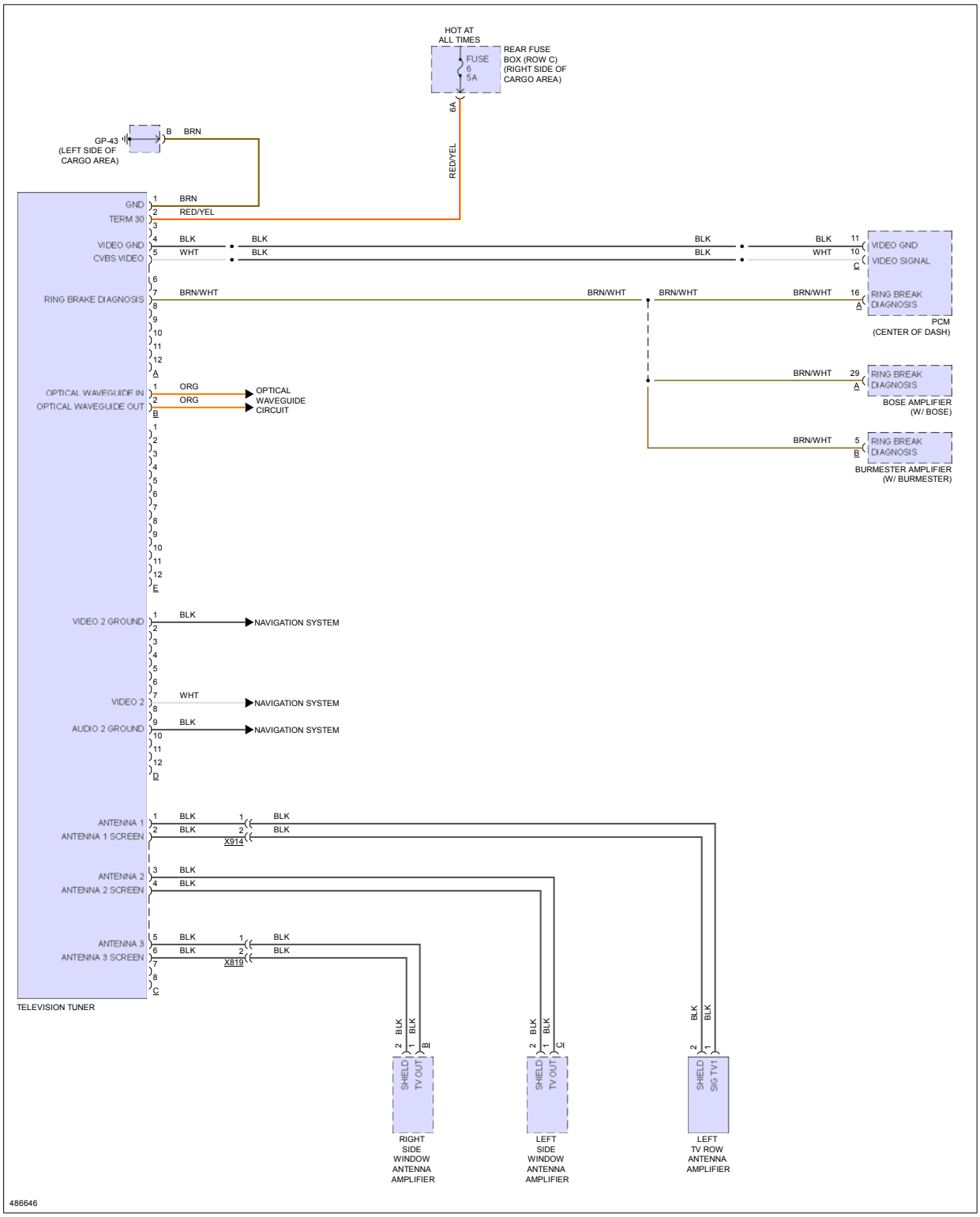

SHIFT INTERLOCK

Fig 1: Electronic Parking Brake Circuit

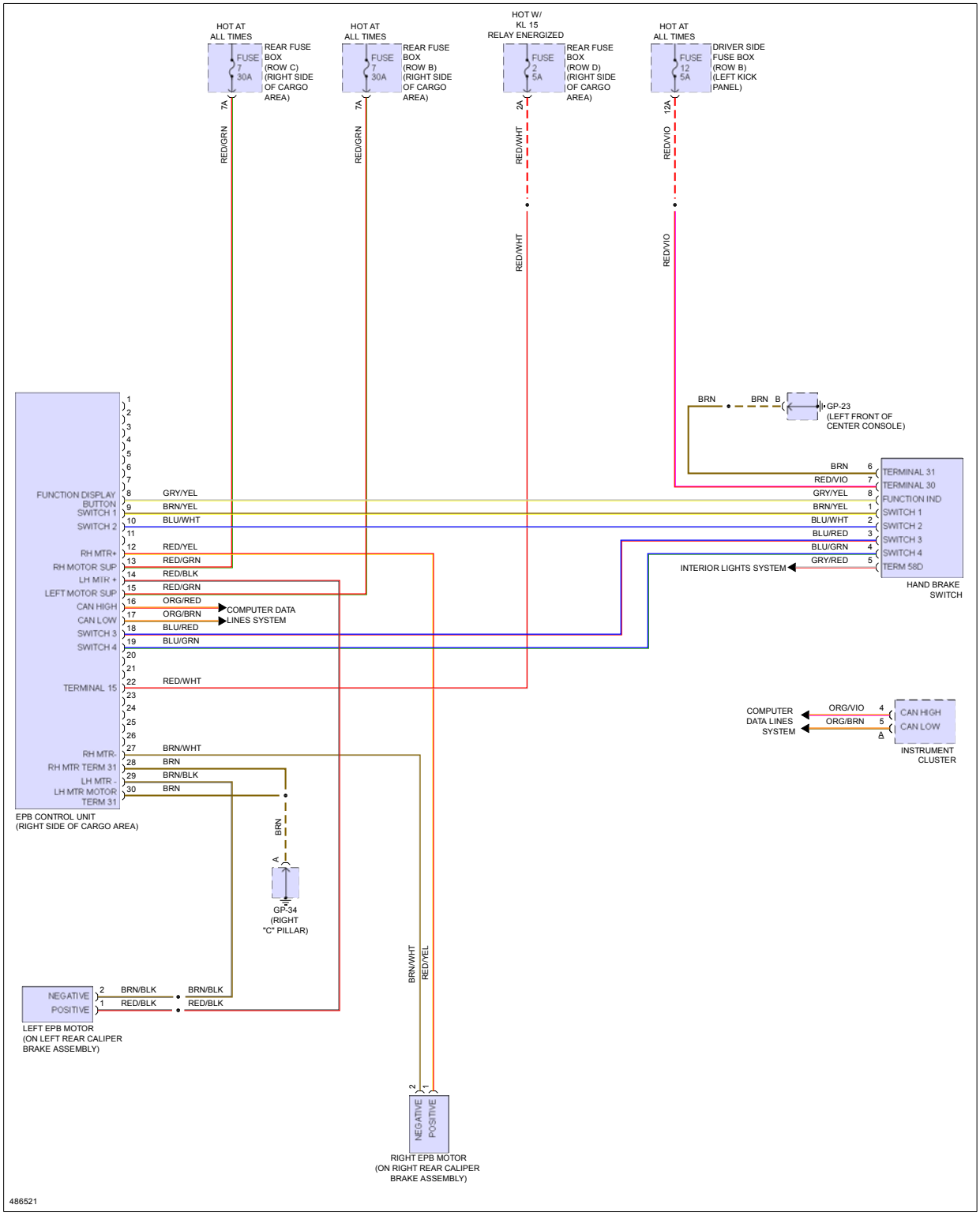

Fig 2: Shift Interlock Circuit

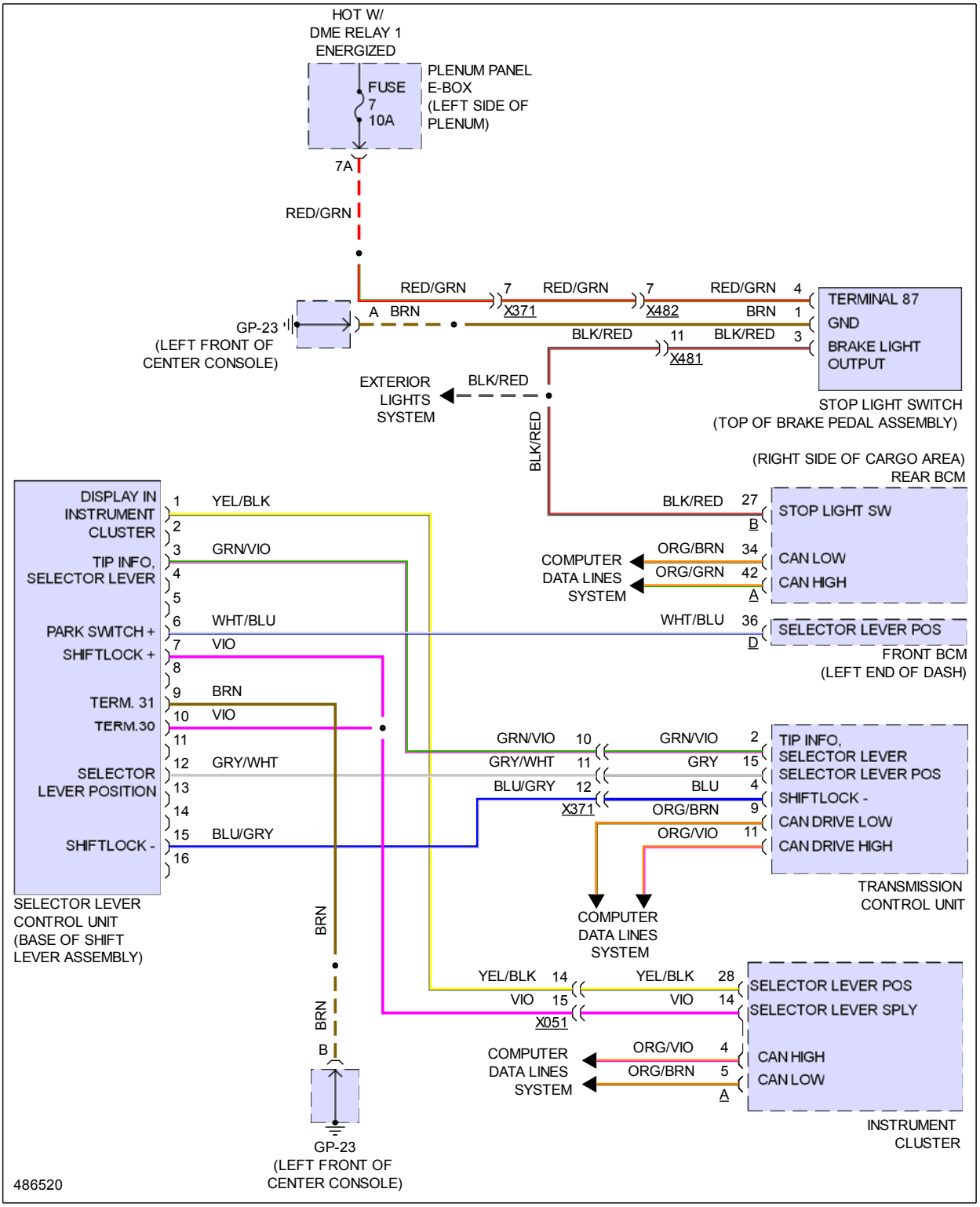

STARTING/CHARGING

Fig 1: Charging Circuit

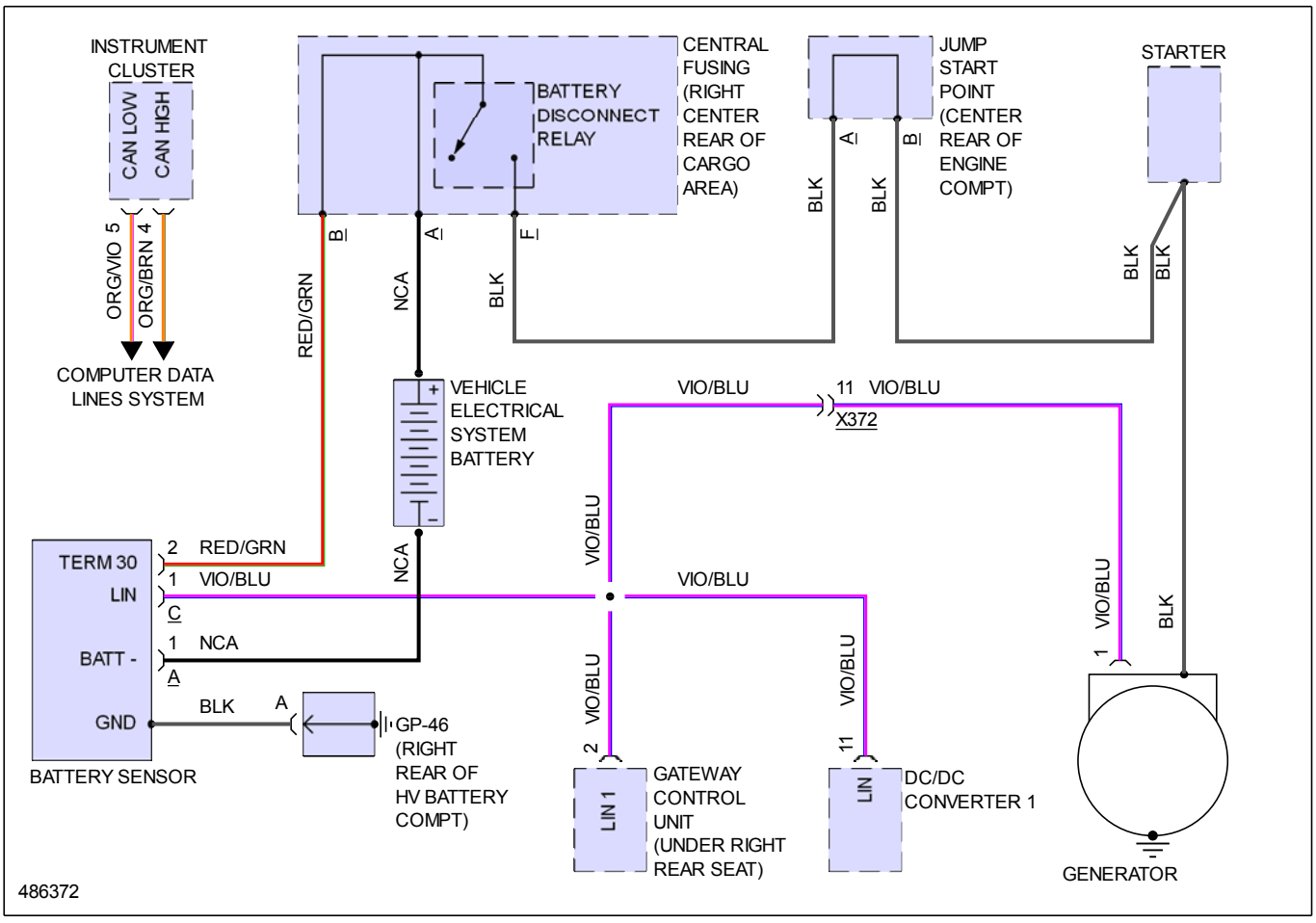

Fig 2: Starting Circuit

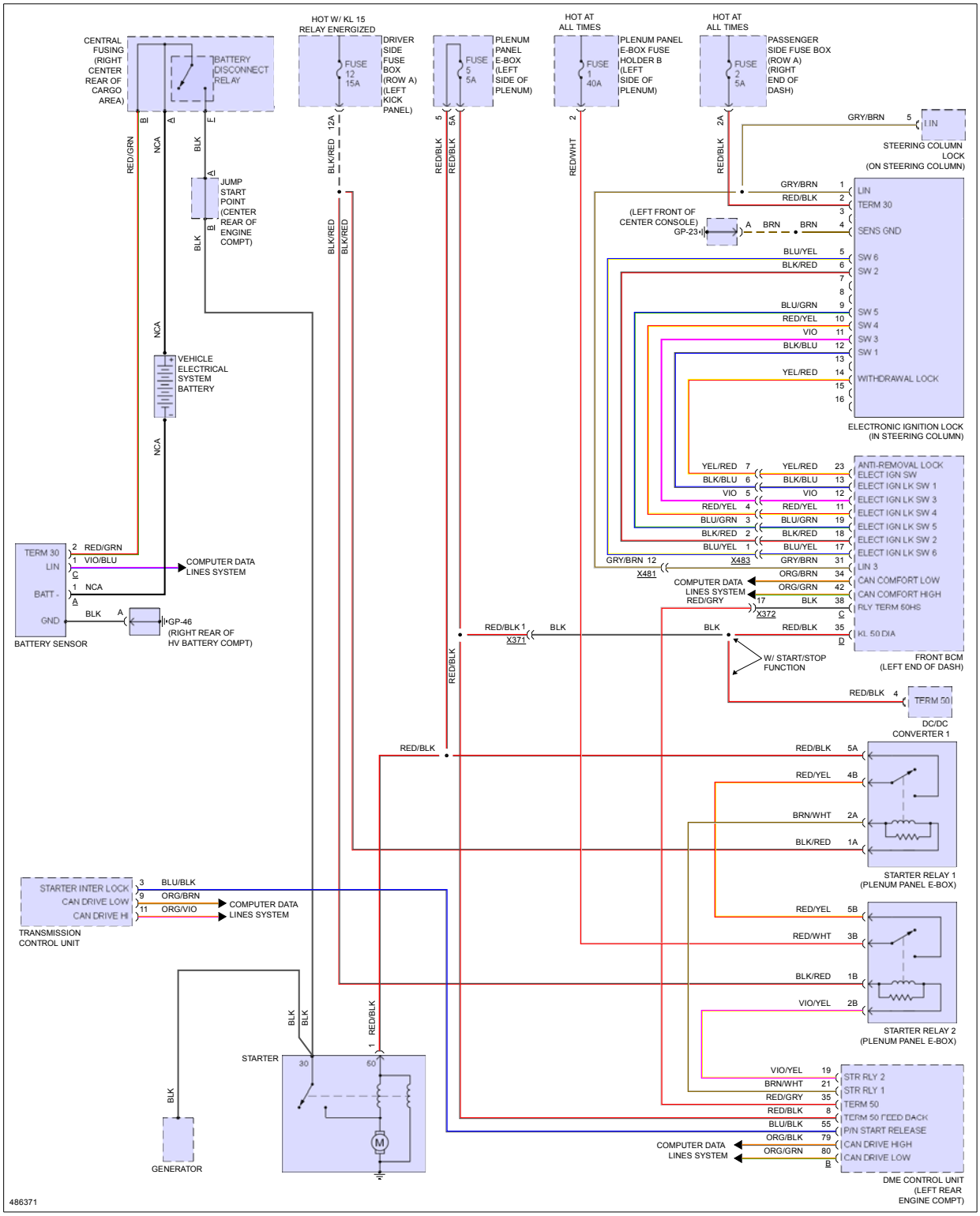

SUPPLEMENTAL RESTRAINTS

Fig 1: Supplemental Restraints Circuit (1 of 3)

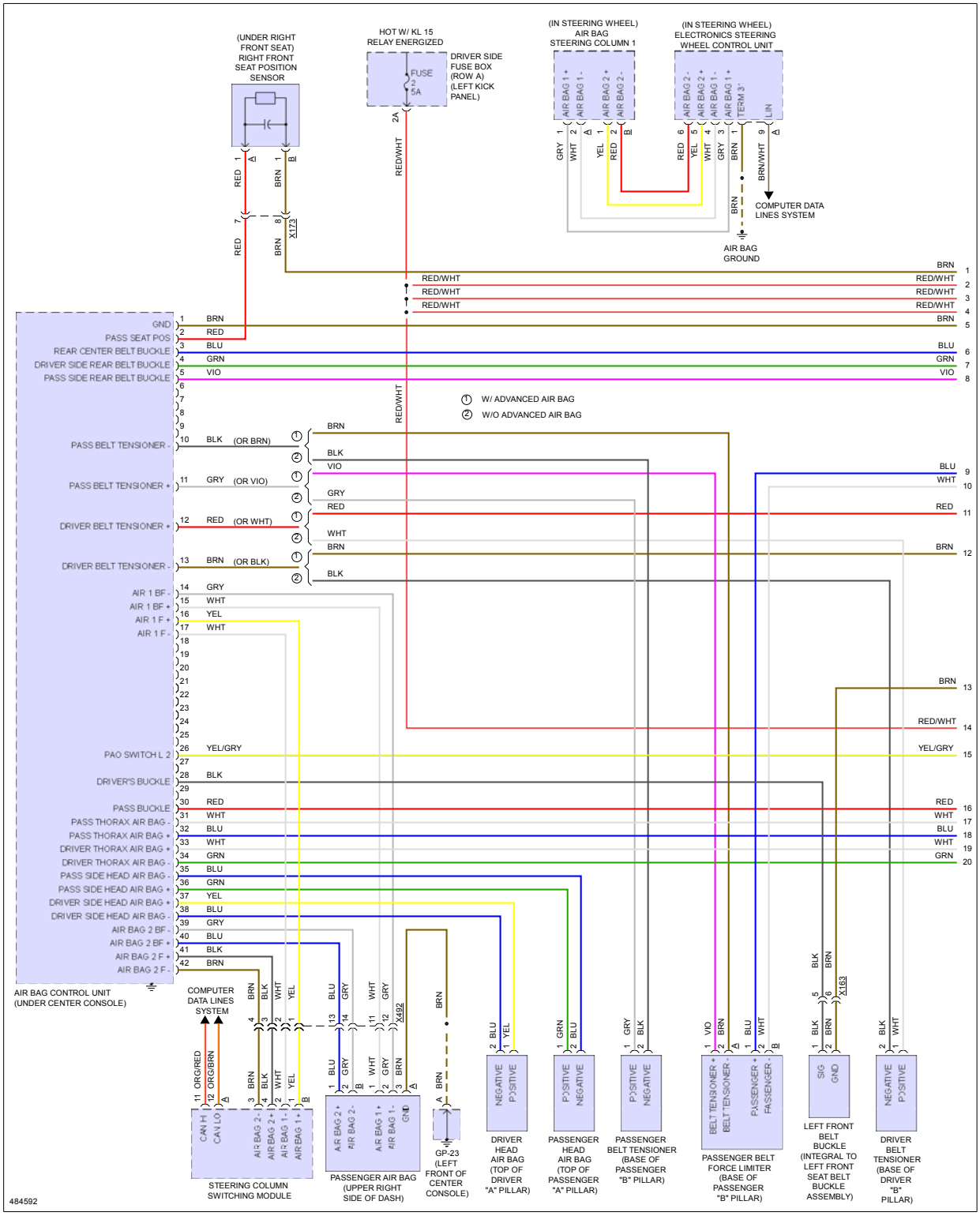

Fig 2: Supplemental Restraints Circuit (2 of 3)

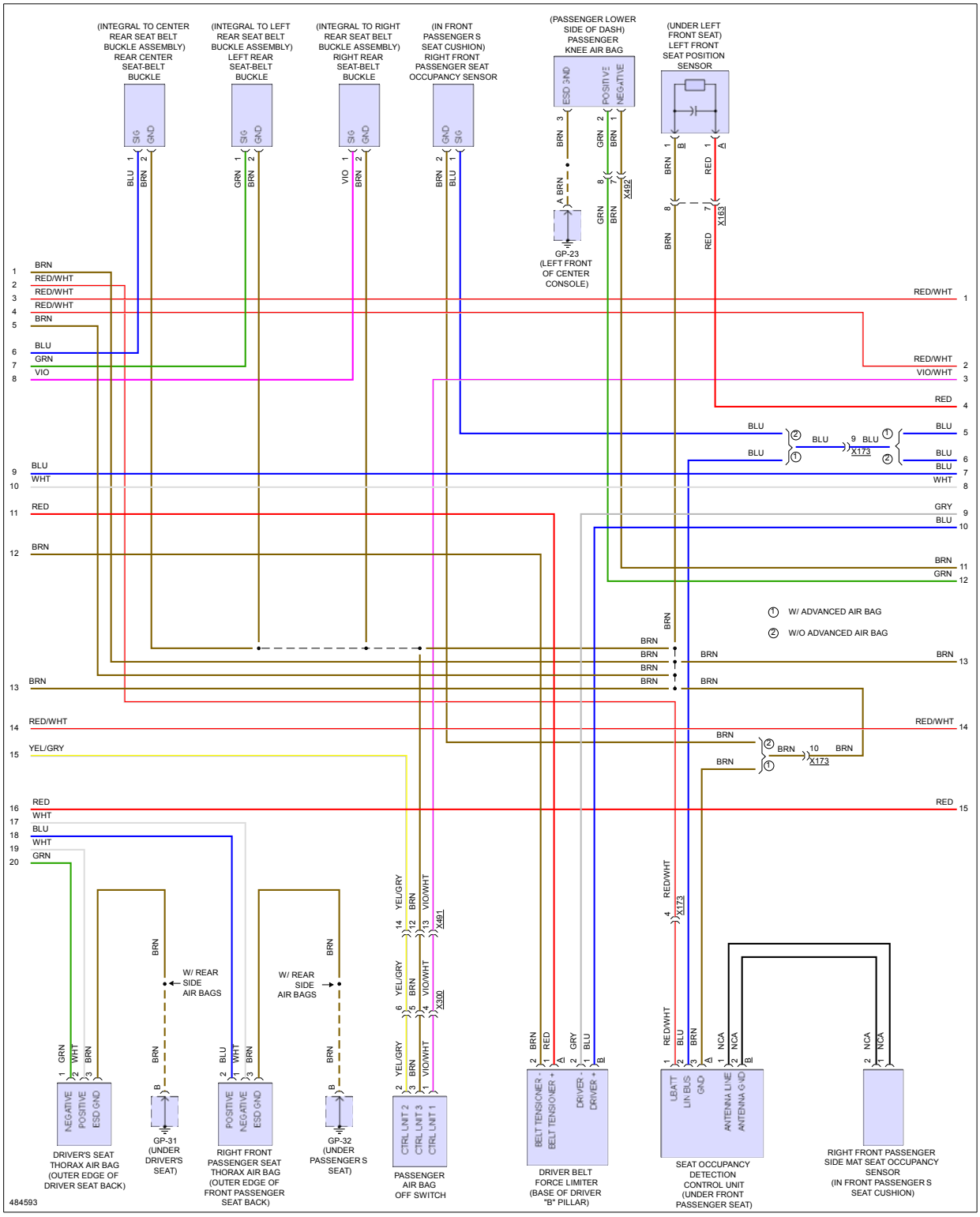

Fig 3: Supplemental Restraints Circuit (3 of 3)

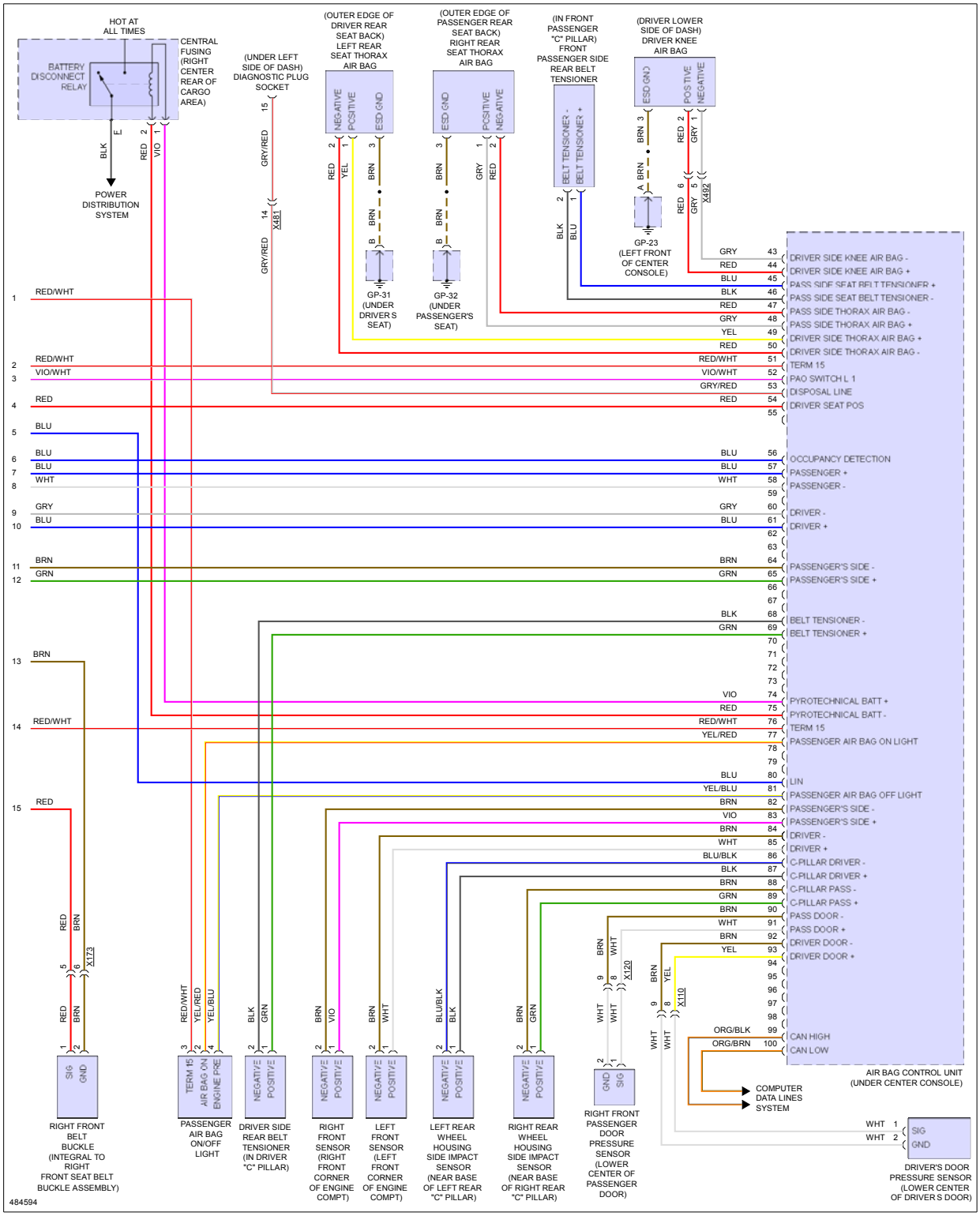

TRANSMISSION

Fig 1: A/T Circuit

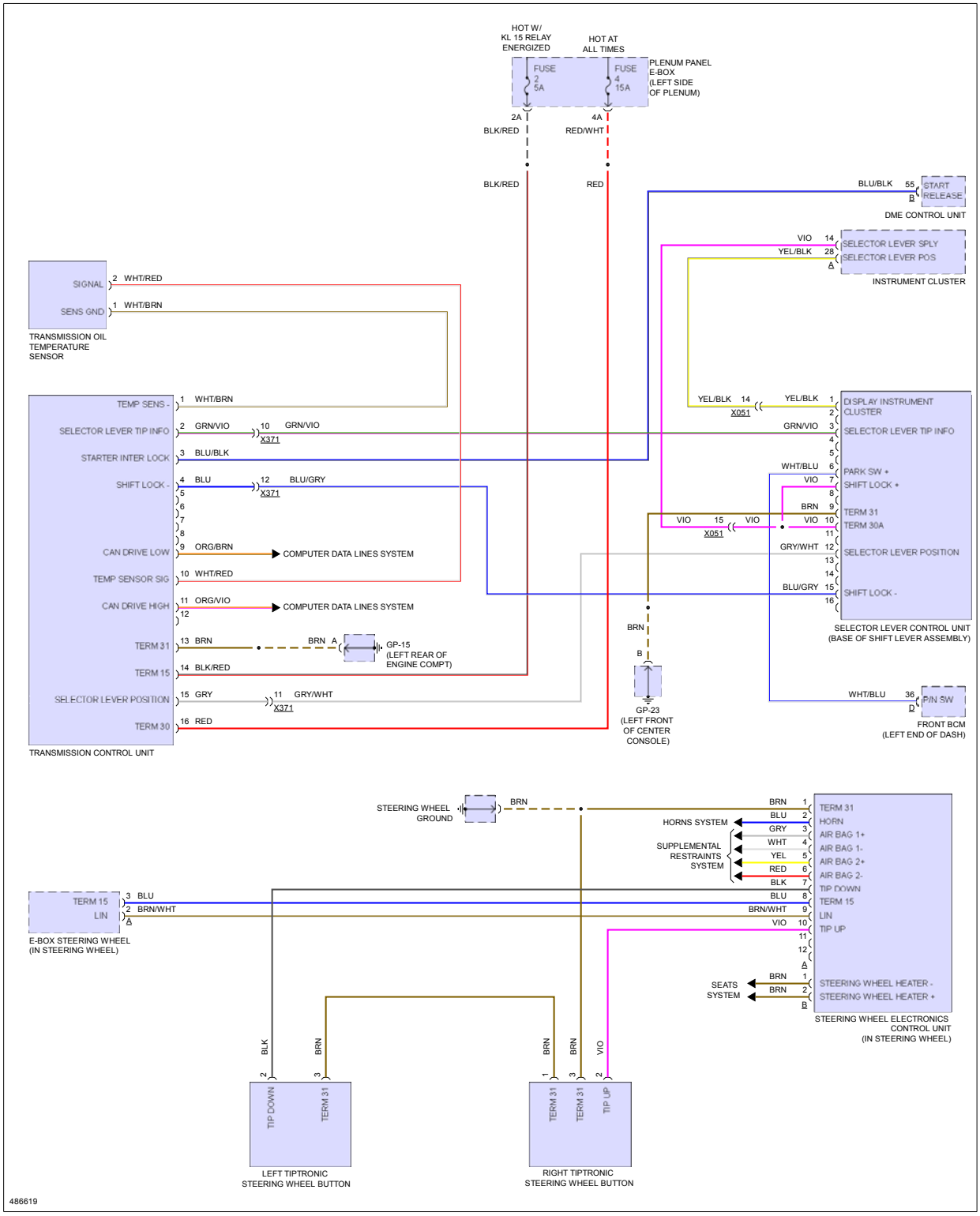

Fig 2: AWD Circuit

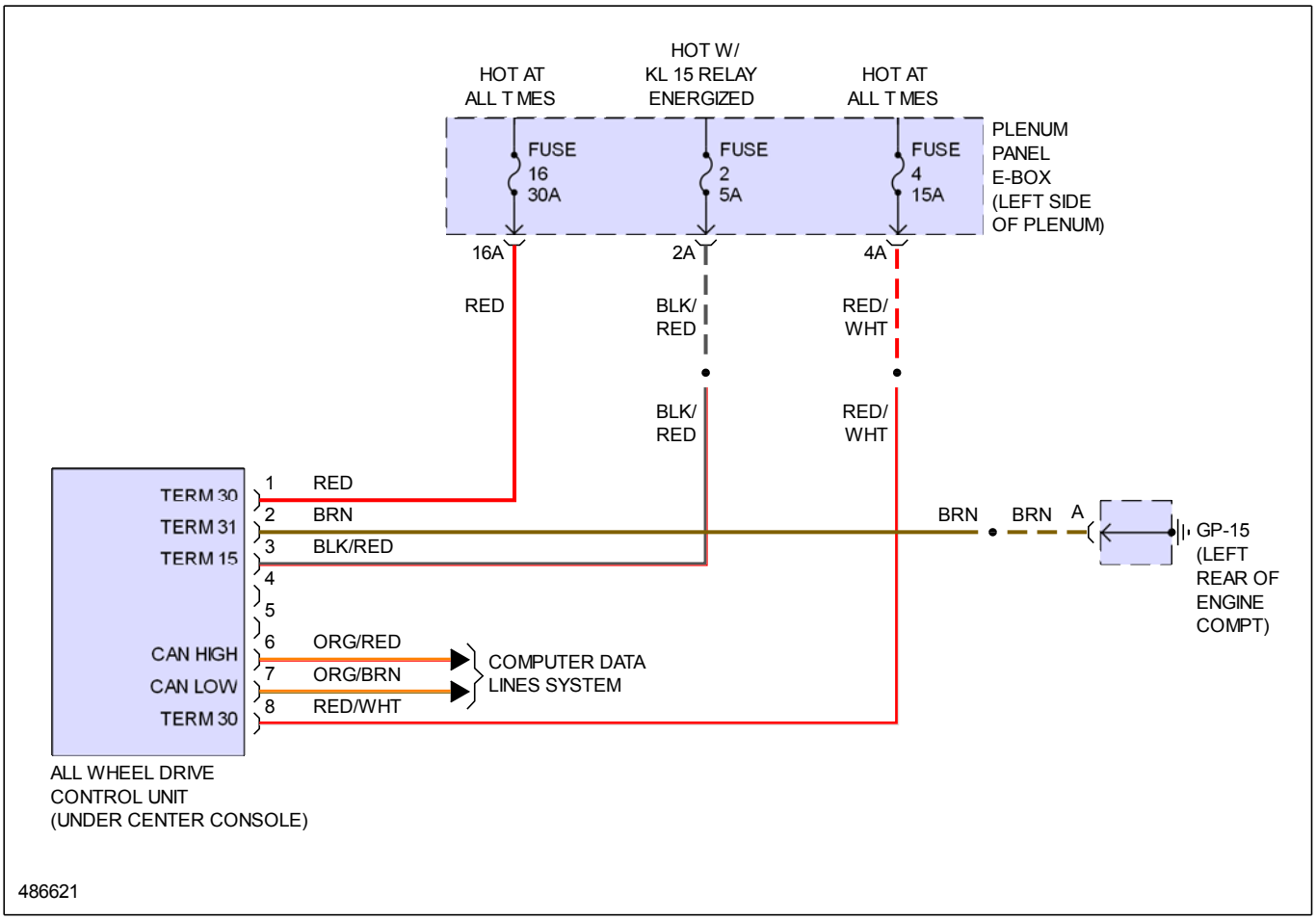

Fig 3: Rear Differential Lock Circuit

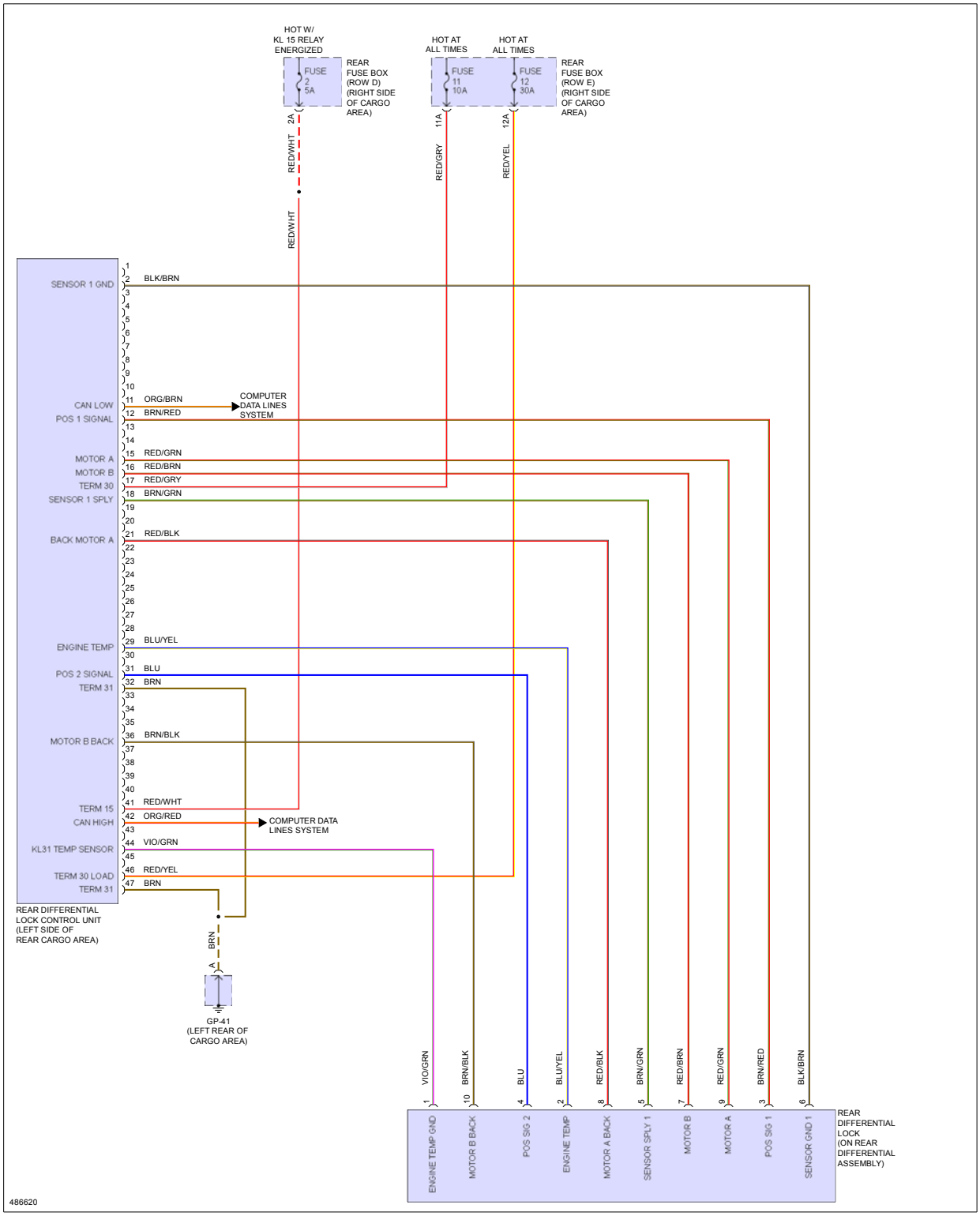

TRUNK, TAILGATE, FUEL DOOR

Fig 1: Tailgate & Fuel Door Release Circuit (1 of 2)

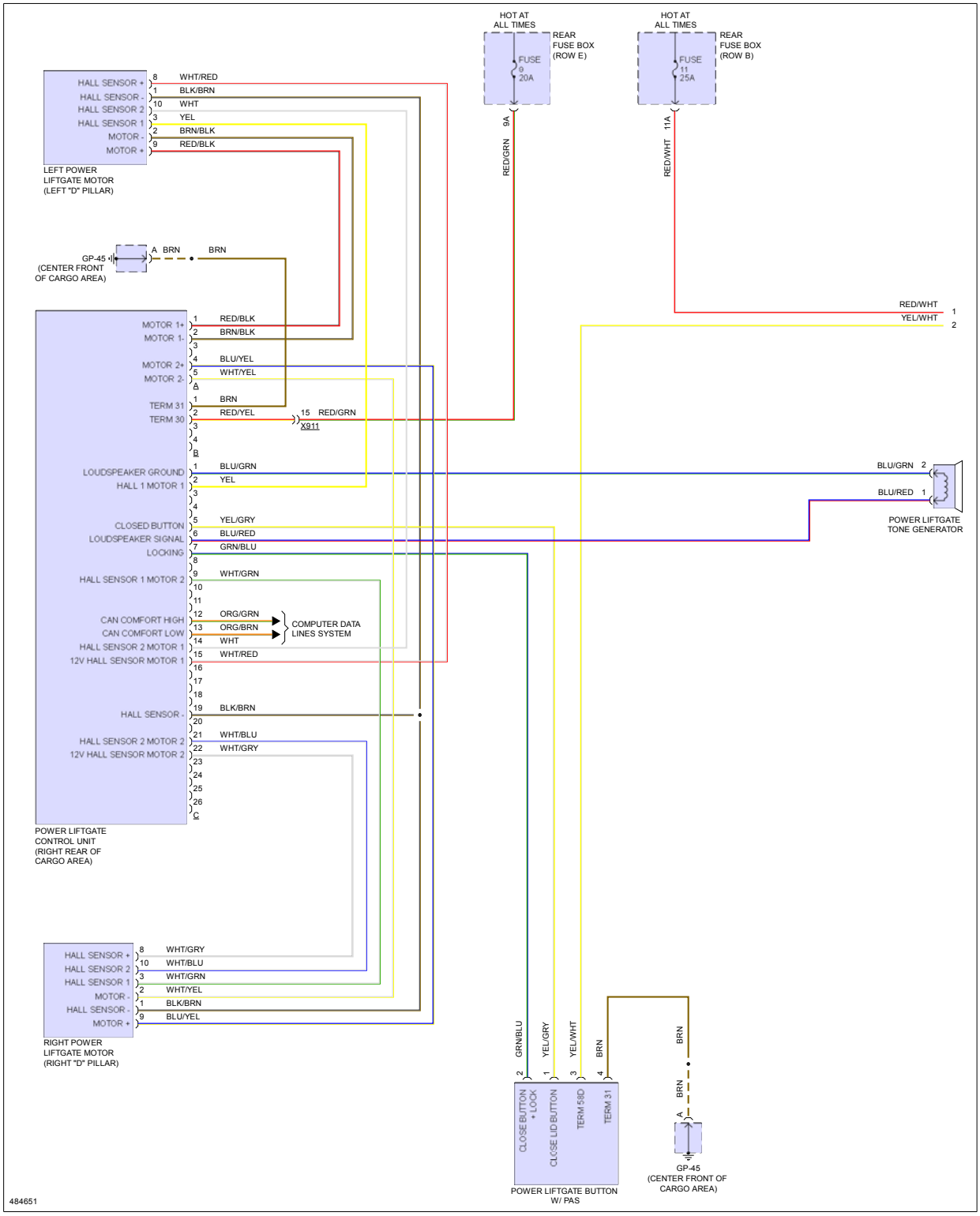

Fig 2: Tailgate & Fuel Door Release Circuit (2 of 2)

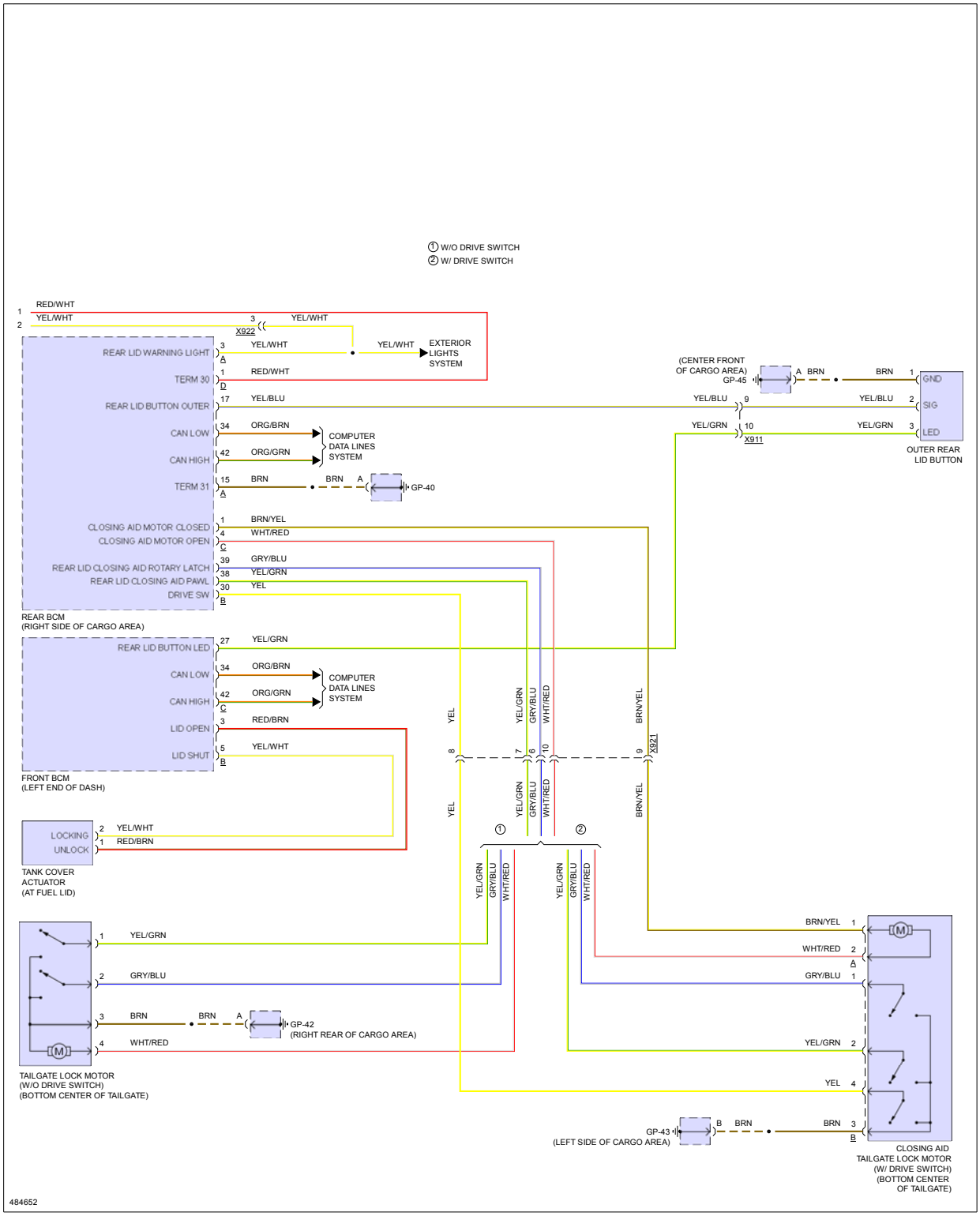

WARNING SYSTEMS

Fig 1: Warning Systems Circuit

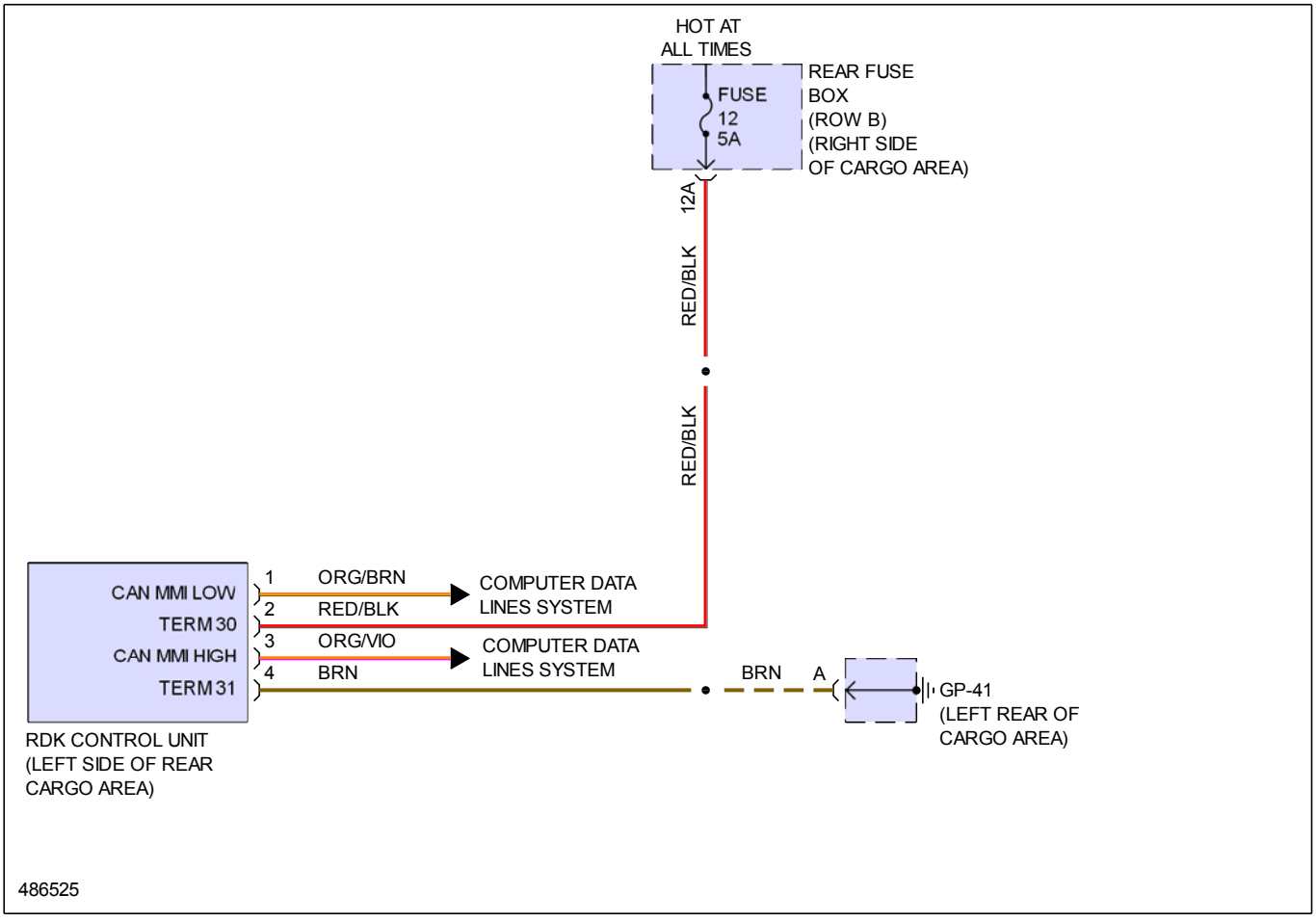

WIPER/WASHER

Fig 1: Front Wiper/Washer Circuit

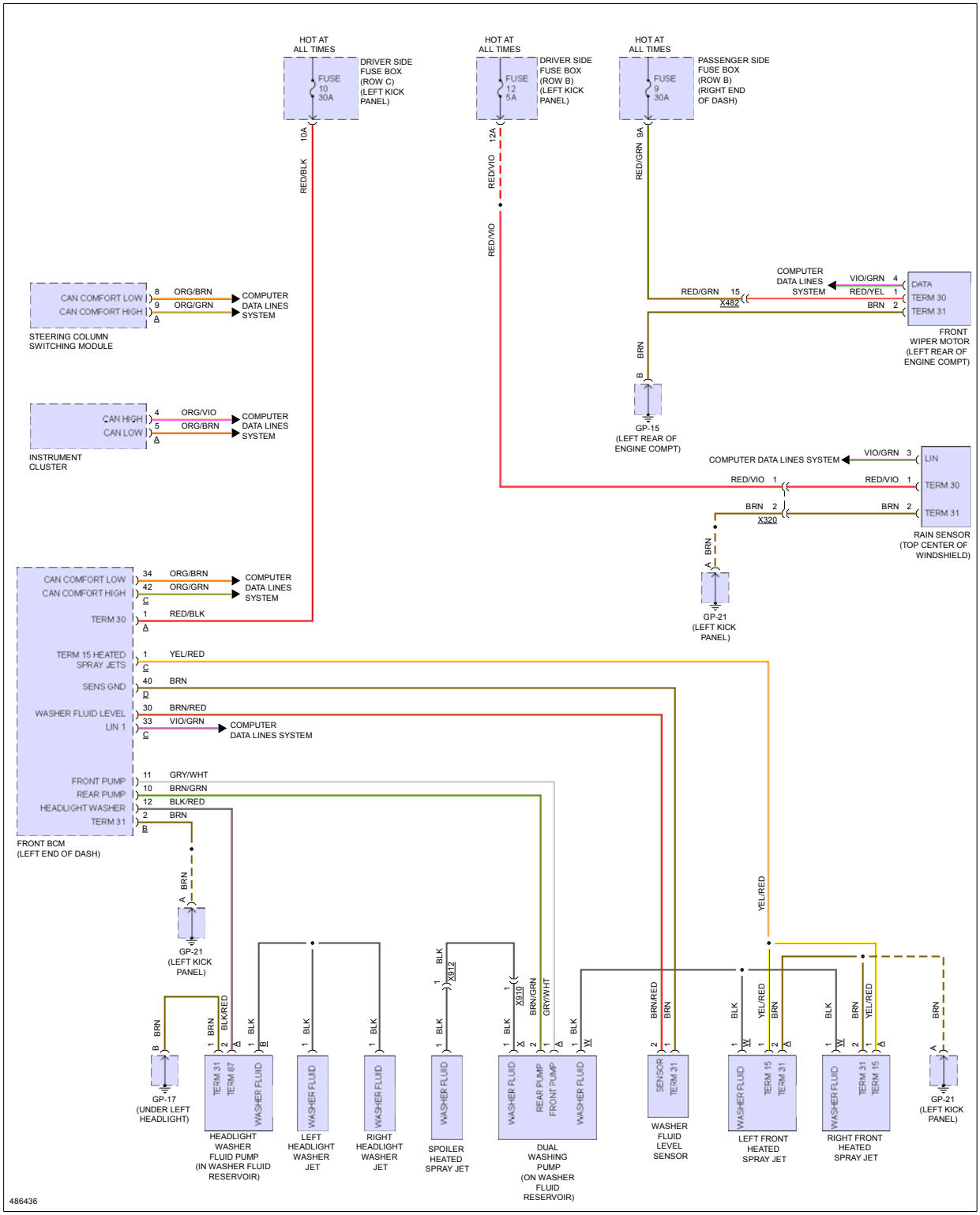

Fig 2: Rear Wiper Circuit

