OPEL ASTRA

Owner's Manual

Wir leben Autos.

Contents

Introduction 2
In brief 6
Keys, doors and windows 23
Seats, restraints 40
Storage 62
Instruments and controls 102
Lighting 142
Climate control 155
Driving and operating 164
Vehicle care 224
Service and maintenance 284
Technical data 287
Customer information 321
Index 324

Introduction

Fuel	Designation			
Engine oil	Grade			
	Viscosity			
Tyre pressure		Tyre size	Front	Rear
	Summer tyres			
	Winter tyres			
Weights				
	Gross vehicle weight rating			
	- Kerb weight, basic model			
	= Loading			

Vehicle specific data

Please enter your vehicle's data on the previous page to keep it easily accessible. This information is available in the sections "Service and maintenance" and "Technical data" as well as on the identification plate.

Introduction

Your vehicle is a designed combination of advanced technology, safety, environmental friendliness and economy.

This Owner's Manual provides you with all the necessary information to enable you to drive your vehicle safely and efficiently.

Make sure your passengers are aware of the possible risk of accident and injury which may result from improper use of the vehicle.

You must always comply with the specific laws and regulations of the country that you are in. These laws may differ from the information in this Owner's Manual.

When this Owner's Manual refers to a workshop visit, we recommend your Opel Service Partner. For gas vehicles we recommend an Opel Repairer authorised for servicing gas vehicles.

All Opel Service Partners provide first-class service at reasonable prices. Experienced mechanics trained by Opel work according to specific Opel instructions.

The customer literature pack should always be kept ready to hand in the vehicle.

Using this manual

- This manual describes all options and features available for this model. **Certain descriptions, including those for display and menu functions, may not apply to your vehicle due to model variant, country specifications, special equipment or accessories.**
- The "In brief" section will give you an initial overview.
- The table of contents at the beginning of this manual and within each section shows where the information is located.
- The index will enable you to search for specific information.
- This Owner's Manual depicts left-hand drive vehicles. Operation is similar for right-hand drive vehicles.
- The Owner's Manual uses the factory engine designations. The corresponding sales designations can be found in the section "Technical data".
- Directional data, e.g. left or right, or front or back, always relate to the direction of travel.
- The vehicle display screens may not support your specific language.
- Display messages and interior labelling are written in **bold** letters.

Danger, Warnings and Cautions

⚠ Danger

Text marked ⚠ **Danger** provides information on risk of fatal injury. Disregarding this information may endanger life.

⚠ Warning

Text marked ⚠ **Warning** provides information on risk of accident or injury. Disregarding this information may lead to injury.

Caution

Text marked **Caution** provides information on possible damage to the vehicle. Disregarding this information may lead to vehicle damage.

Symbols

Page references are indicated with ⇨. ⇨ means "see page".

We wish you many hours of pleasurable driving.

Adam Opel AG

In brief

Initial drive information

Vehicle unlocking

Press button to unlock the doors and load compartment. Open the doors by pulling the handles.

5-door hatchback, Sports tourer

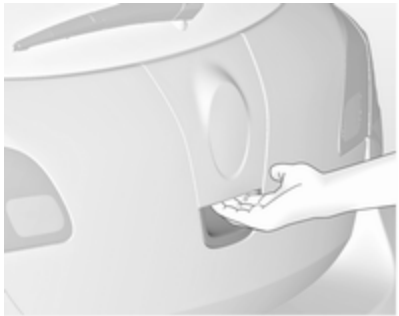

To open the tailgate, push the touchpad switch below the brand emblem.

3-door hatchback

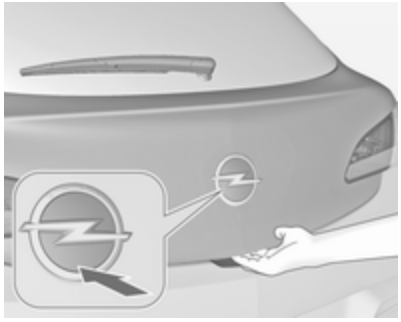

To open the tailgate, push the brand emblem at the bottom half.

Press button on remote control to unlock and open the tailgate. The doors remain locked.

4-door notchback

Press button on the remote control for at least 2 seconds; the boot lid opens slightly.

Radio remote control ⇨ 23, Central locking system ⇨ 25, Load compartment ⇨ 28.

Seat adjustment

Seat positioning

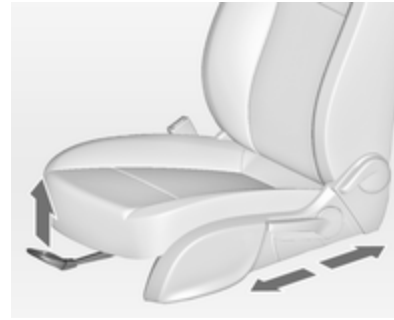

Pull handle, slide seat, release handle.

Seat position ⇨ 42, Seat adjustment ⇨ 42.

⚠ Danger
Do not sit nearer than 25 cm from the steering wheel, to permit safe airbag deployment.

Seat backrests

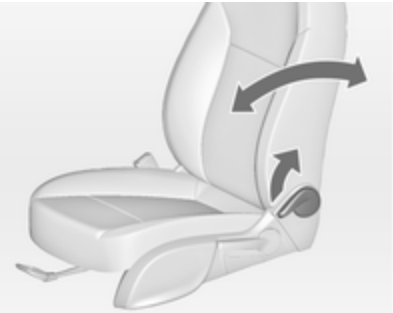

Pull lever, adjust inclination and release lever. Allow the seat to engage audibly.

Seat position ⇨ 42, Seat adjustment ⇨ 42, Seat folding ⇨ 45.

Seat height

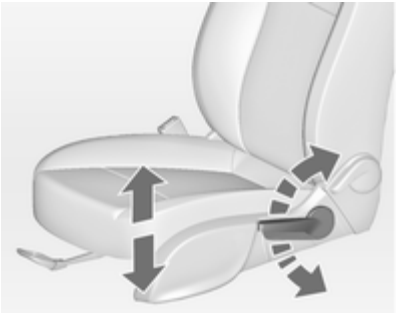

Lever pumping motion

up = seat higher
down = seat lower

Seat position ⇨ 42, Seat adjustment ⇨ 42.

Seat inclination

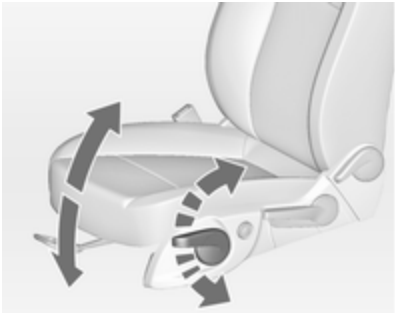

Lever pumping motion

up = front end higher
down = front end lower

Seat position ⇨ 42, Seat adjustment ⇨ 42.

Power seat adjustment

Operate switch **1**:

forwards/ backwards	=	length adjustment
upwards/ downwards	=	height adjustment
upwards/ downwards at front	=	inclination adjustment

Operate switch **2**:

forwards/ backwards at the top	=	backrest adjustment

Power seat adjustment ⇨ 46, Seat folding ⇨ 45.

Head restraint adjustment

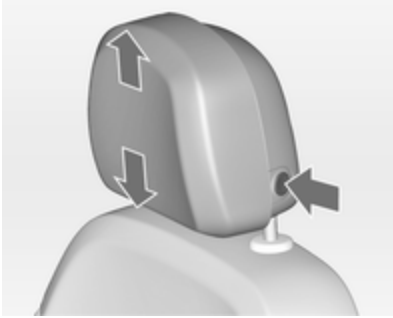

Press release button, adjust height, engage.

Head restraints ⇨ 40.

Seat belt

Pull out the seat belt and engage in belt buckle. The seat belt must not be twisted and must fit close against the body. The backrest must not be tilted back too far (maximum approx. 25 °).

To release belt, press red button on belt buckle.

Seat position ⇨ 42, Seat belts ⇨ 49, Airbag system ⇨ 52.

Mirror adjustment

Interior mirror

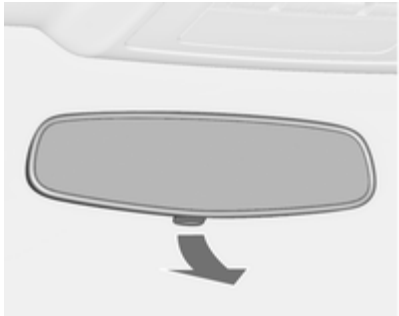

To reduce dazzle, adjust the lever on the underside of the mirror housing.

Interior mirror ⇨ 34, Automatic anti-dazzle interior mirror ⇨ 34.

Exterior mirrors

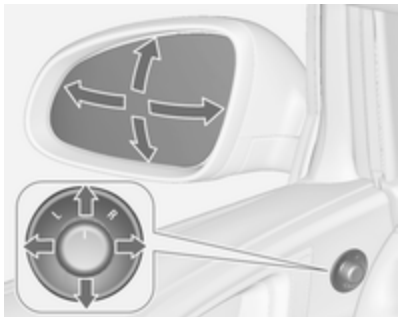

Select the relevant exterior mirror and adjust it.

Convex exterior mirrors ⇨ 33, Electric adjustment ⇨ 33, Folding exterior mirrors ⇨ 33, Heated exterior mirrors ⇨ 34.

Steering wheel adjustment

Unlock the lever, adjust the steering wheel, then engage the lever and ensure it is fully locked.

Do not adjust the steering wheel unless the vehicle is stationary and the steering wheel lock has been released.

Airbag system ⇨ 52, Ignition positions ⇨ 165.

Instrument panel overview

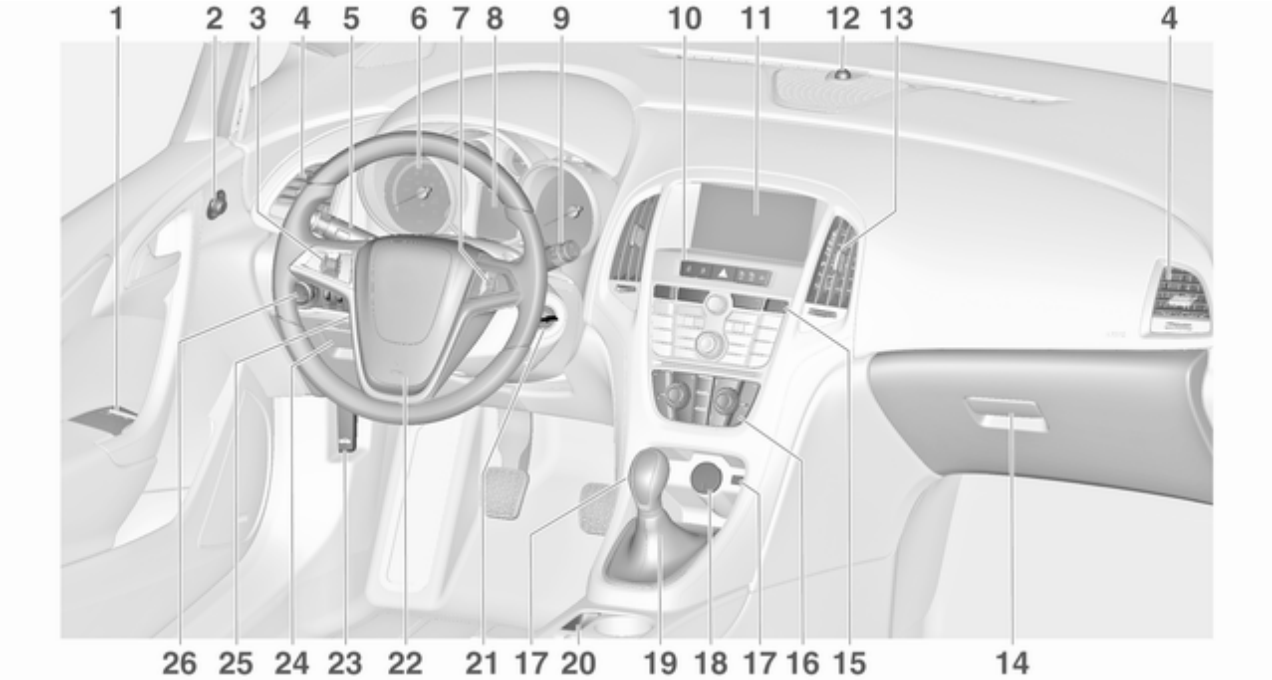

1 Power windows 35
2 Exterior mirrors 33
3 Cruise control 183
Speed limiter 185
Adaptive cruise control 186
Forward collision alert 193
4 Side air vents 162
5 Turn and lane-change signals, headlight flash, low beam and high beam, high beam assist 149
Exit lighting 153
Parking lights 150
Buttons for Driver Information Centre 121
6 Instruments 110
7 Steering wheel controls 102
8 Driver Information Centre 121
9 Windscreen wiper, windscreen washer system, headlight washer system, rear wiper, rear washer system 104
10 Sport mode 181
Central locking system 25
Fuel selector 111
Hazard warning flashers 149
Control indicator for airbag deactivation 115
Control indicator for front passenger seat belt 115
Tour mode 181
11 Info-Display 126
12 Anti-theft alarm system status LED 30
13 Centre air vents 162
14 Glovebox 62
15 Traction Control system 178
Electronic Stability Control . 179
Parking assist 198
Advanced parking assist 201
Lane departure warning 211
Eco button for stop-start system 167
Unlock button for boot lid 28
16 Climate control system 155
17 AUX input, USB input, SD card slot 12
18 Power outlet 108
19 Selector lever, manual transmission 175
Automatic transmission 171
20 Electric parking brake 176
21 Ignition switch with steering wheel lock 165
22 Horn 103
Driver airbag 53
23 Bonnet release lever 226
24 Storage compartment, fuse box 255
25 Steering wheel adjustment 102
26 Light switch 142
Headlight range adjustment 144
Front fog lights 149

Rear fog light 150
Instrument illumination 151

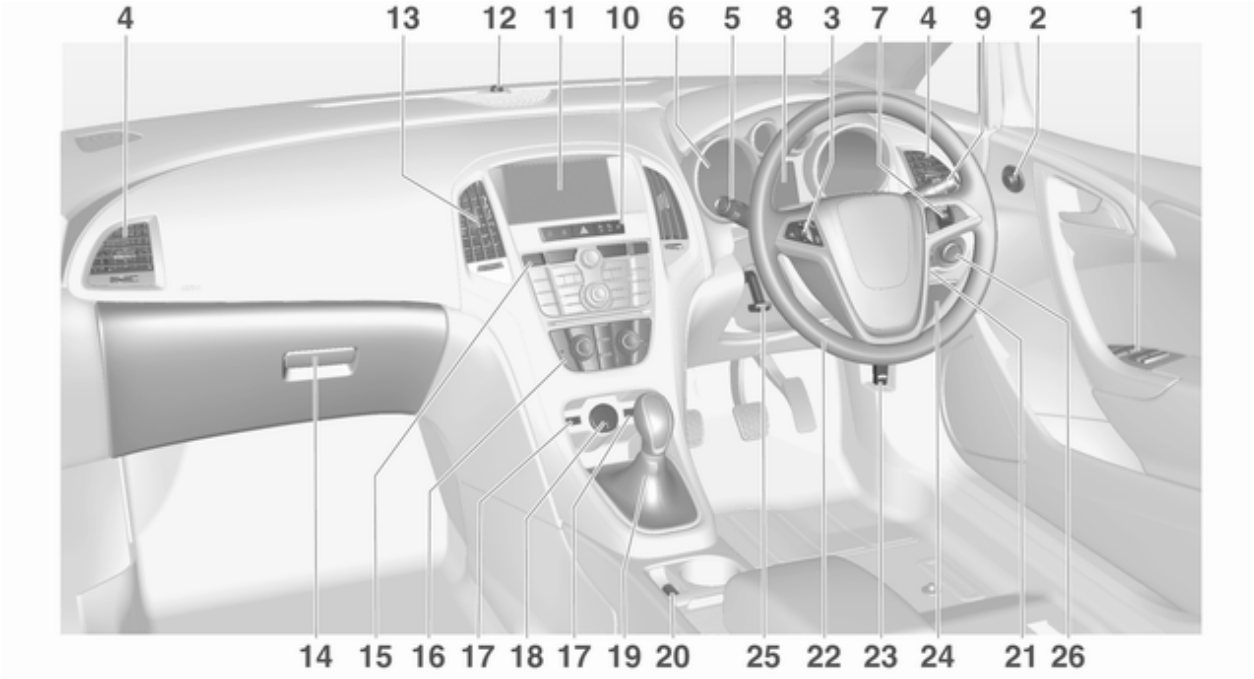
4
13
12
11
10
6
5
8
3
7
4
9
2
1
14
15
16
17
18
17
19
20
25
22
23
24
21
26

Exterior lighting

Turn light switch:

0 = lights off
⇶ = sidelights
≡D = low beam

Automatic light control

AUTO = automatic light control: exterior lighting is switched on and off automatically
⏻ = activation or deactivation of the automatic light control
⇶ = sidelights
≡D = low beam

Fog lights

Press light switch:

≡D = front fog lights
D≡ = rear fog light

Lighting ⇨ 142.

Headlight flash, high beam and low beam

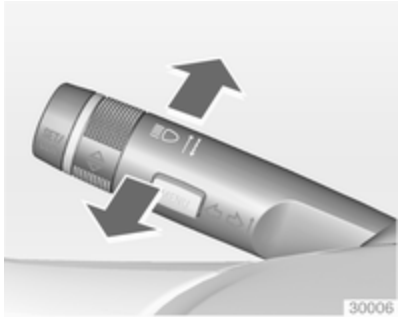

headlight flash = pull lever
high beam = push lever
low beam = push or pull lever

Automatic light control ⇨ 143, High beam ⇨ 143, Headlight flash ⇨ 144, Adaptive forward lighting ⇨ 145.

Turn and lane-change signals

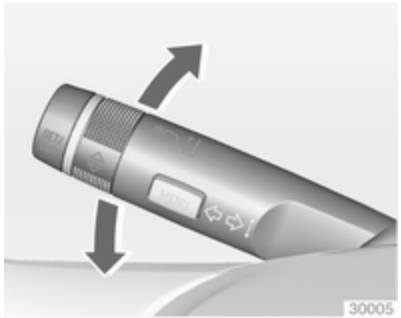

lever up = right turn signal
lever down = left turn signal

Turn and lane-change signals ⇨ 149, Parking lights ⇨ 150.

Hazard warning flashers

Operated with the ⚠ button.

Hazard warning flashers ⇨ 149.

Horn

Press 📯.

Washer and wiper systems

Windscreen wiper

2 = fast
1 = slow
⊘ = interval wiping or automatic wiping with rain sensor
O = off

For a single wipe when the windscreen wiper is off, press the lever down.

Windscreen wiper ⇨ 104, Wiper blade replacement ⇨ 231.

Windscreen and headlight washer

Pull lever.

Windscreen and headlight washer system ⇨ 104, Washer fluid ⇨ 228.

Rear window wiper

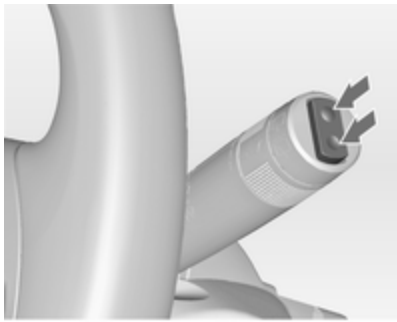

Press the rocker switch to activate the rear window wiper:

upper switch	=	continuous operation
lower switch	=	intermittent operation
middle position	=	off

Rear window washer

Push lever.

Washer fluid is sprayed on the rear window and the wiper wipes a few times.

Rear window wiper/washer ⇨ 106.

Climate control

Heated rear window, heated exterior mirrors

The heating is operated by pressing the button.

Heated rear window ⇨ 37.

Demisting and defrosting the windows

Press button .

Set the temperature control to the highest level.

Cooling on.

Heated rear window on.

Climate control system ⇨ 155.

Transmission

Manual transmission

Reverse: with the vehicle stationary, wait 3 seconds after depressing clutch pedal and then press the release button on the selector lever and engage the gear.

If the gear does not engage, set the lever to neutral, release the clutch pedal and depress again; then repeat gear selection.

Manual transmission ⇨ 175.

Automatic transmission

P = park
R = reverse
N = neutral
D = drive

Manual mode: move selector lever from **D** to the left.

+ = higher gear
− = lower gear

The selector lever can only be moved out of **P** when the ignition is on and the brake pedal is applied. To engage **P** or **R**, press the release button.

Automatic transmission ⇨ 171.

Starting off

Check before starting off

- Tyre pressure and condition ⇨ 260, ⇨ 309.
- Engine oil level and fluid levels ⇨ 226.
- All windows, mirrors, exterior lighting and number plates are free from dirt, snow and ice and are operational.
- Proper position of mirrors, seats, and seat belts ⇨ 33, ⇨ 42, ⇨ 50.
- Brake function at low speed, particularly if the brakes are wet.

Starting the engine

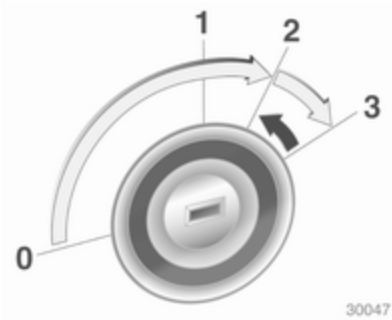

- Turn key to position **1**
- move the steering wheel slightly to release the steering wheel lock
- operate clutch and brake
- automatic transmission in **P** or **N**
- do not operate accelerator pedal
- diesel engines: turn the key to position **2** for preheating and wait until control indicator extinguishes
- turn key to position **3** and release

Starting the engine ⇨ 165.

Stop-start system

If the vehicle is at a low speed or at a standstill and certain conditions are fulfilled, activate an Autostop as follows:

- Depress the clutch pedal
- set the lever in neutral
- release the clutch pedal

An Autostop is indicated by the needle at the **AUTOSTOP** position in the tachometer.

To restart the engine, depress the clutch pedal again.

Stop-start system ⇨ 167.

Parking

- Always apply the parking brake. Activate the manual parking brake without pressing the release button. Apply as firmly as possible on a downhill slope or uphill slope. Depress foot brake at the same time to reduce operating force.

  For vehicles with electric parking brake, pull switch Ⓟ for approx. one second.
- Switch off the engine. Turn the ignition key to position **0** and remove it. Turn the steering wheel until the steering wheel lock is felt to engage.

  For vehicles with automatic transmission, the key can only be removed when the selector lever is in the **P** position.
- If the vehicle is on a level surface or uphill slope, engage first gear or set the selector lever to **P** before switching off the ignition. On an uphill slope, turn the front wheels away from the kerb.

If the vehicle is on a downhill slope, engage reverse gear or set the selector lever to **P** before switching off the ignition. Turn the front wheels towards the kerb.

- Lock the vehicle with button 🔒 on the radio remote control.

  Activate the anti-theft alarm system ⇨ 30.
- Do not park the vehicle on an easily ignitable surface. The high temperature of the exhaust system could ignite the surface.
- Close the windows and the sunroof.
- The engine cooling fans may run after the engine has been switched off ⇨ 225.
- After running at high engine speeds or with high engine loads, operate the engine briefly at a low load or run in neutral for approx. 30 seconds before switching off, in order to protect the turbocharger.

Keys, locks ⇨ 23, Laying the vehicle up for a long period of time ⇨ 224.

Keys, doors and windows

Keys, locks 23
Doors 28
Vehicle security 30
Exterior mirrors 33
Interior mirrors 34
Windows 35
Roof 38

Keys, locks

Keys

Replacement keys

The key number is specified in the Car Pass or on a detachable tag.

The key number must be quoted when ordering replacement keys as it is a component of the immobiliser system.

Locks ⇨ 280.

Key with foldaway key section

Press button to extend. To fold the key, first press the button.

Car Pass

The Car Pass contains security related vehicle data and should therefore be kept in a safe place.

When the vehicle is taken to a workshop, this vehicle data is needed in order to perform certain operations.

Radio remote control

Used to operate:

- Central locking system
- Anti-theft locking system
- Anti-theft alarm system
- Power windows
- Sunroof

The radio remote control has a range of approx. 20 metres. It can be restricted by external influences. The hazard warning flashers confirm operation.

Handle with care, protect from moisture and high temperatures and avoid unnecessary operation.

Fault

If the central locking system cannot be operated with the radio remote control, it may be due to the following:

- Range exceeded
- Battery voltage too low
- Frequent, repeated operation of the radio remote control while not in range, which will require re-synchronisation
- Overload of the central locking system by operating at frequent intervals, the power supply is interrupted for a short time
- Interference from higher-power radio waves from other sources

Unlocking ⇨ 25.

Basic settings

Some settings can be changed in the menu **Settings** in the Info-Display. Vehicle personalisation ⇨ 134.

Radio remote control battery replacement

Replace the battery as soon as the range reduces.

Batteries do not belong in household waste. They must be disposed of at an appropriate recycling collection point.

Key with foldaway key section

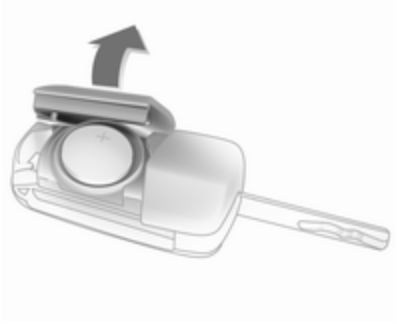

Extend the key and open the unit. Replace the battery (battery type CR 2032), paying attention to the installation position. Close the unit and synchronise.

Radio remote control synchronisation

After replacing the battery, unlock the door with the key in the driver's door lock. The radio remote control is synchronised by switching on the ignition.

Memorised settings

Whenever the key is removed from the ignition switch, the following settings are automatically memorised by the key:

- Lighting
- Infotainment system
- Central locking system
- Sport mode settings
- Comfort settings

The saved settings are automatically used the next time the memorised key is inserted into the ignition switch and turned to position **1** ⇨ 165.

A precondition is that **Personalization by driver** is activated in the personal settings of the Graphic-Info-Display. This must be set for each key used. On vehicles equipped with Colour-Info-Display, the personalisation is permanently activated.

Vehicle personalisation ⇨ 134.

Central locking system

Unlocks and locks doors, load compartment and fuel filler flap.

A pull on an interior door handle unlocks the respective door. Pulling the handle once more opens the door.

Note
In the event of an accident in which airbags or belt pretensioners are deployed, the vehicle is automatically unlocked.

Note
A short time after unlocking with the remote control the doors are locked automatically if no door has been opened.

Unlocking

Press button 🔒.

Two settings are selectable:

- To unlock only the driver's door, load compartment and fuel filler flap, press button 🔒 once. To unlock all doors, press button 🔒 twice

  or

- press button 🔓 once to unlock all doors, load compartment and fuel filler flap

The setting can be changed in the menu **Settings** in the Info-Display. Vehicle personalisation ⇨ 134.

The setting can be saved for the key being used. Memorised settings ⇨ 25.

Unlocking and opening the tailgate ⇨ 28.

Locking

Close doors, load compartment and fuel filler flap.

Press button 🔒.

If the driver's door is not closed properly, the central locking system will not work.

Central locking buttons

Locks or unlocks all doors, the load compartment and fuel filler flap from inside the passenger compartment.

Press the 🔒 button to lock.

Press the 🔓 button to unlock.

Fault in radio remote control system

Unlocking

Manually unlock the driver's door by turning the key in the lock. Switch on the ignition and press the central locking button 🔓 to unlock the other doors, load compartment and fuel filler flap. By switching on the ignition, the anti-theft locking system is deactivated.

Locking

Manually lock the driver's door by turning the key in the lock.

Fault in central locking system

Unlocking

Manually unlock the driver's door by turning the key in the lock. The other doors can be opened by pulling the interior handle twice. The load compartment and fuel filler flap cannot be opened. To deactivate the anti-theft locking system, switch on the ignition ⇨ 30.

Locking

Push inside locking knob of all doors except driver's door. Then close the driver's door and lock it from the outside with the key. The fuel filler flap and tailgate cannot be locked.

Automatic locking

This security feature can be configured to automatically lock all doors, load compartment and fuel filler flap as soon as a certain speed is exceeded.

Additionally it is configurable to unlock the driver's door or all doors after the ignition is switched off and the ignition key is removed (manual transmission) or the selector lever is moved to **P** position (automatic transmission).

Settings can be changed in the menu **Settings** in the Info-Display. Vehicle personalisation ⇨ 134.

The settings can be saved for the key being used ⇨ 25.

Child locks

⚠Warning

Use the child locks whenever children are occupying the rear seats.

Using a key or suitable screwdriver, turn the child lock in the rear door to the horizontal position. The door cannot be opened from the inside.

To deactivate, turn the child lock to the vertical position.

Doors

Load compartment

Tailgate

Opening

5-door hatchback

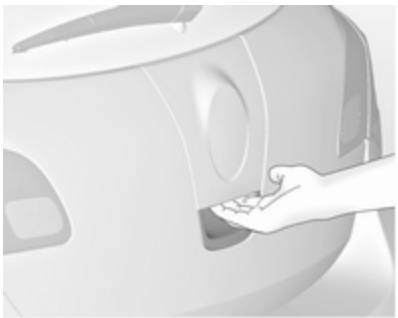

After unlocking, push the touchpad switch below the brand emblem and open the tailgate.

3-door hatchback

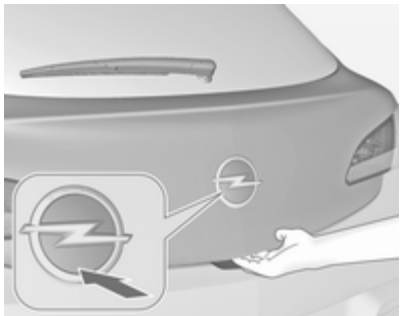

Press button on radio remote control or push the brand emblem at the bottom half to unlock and open the tailgate.

Pressing button opens the tailgate even if the doors are locked.

Sports tourer

After unlocking, push the touchpad switch under the tailgate moulding and open the tailgate.

Central locking system ⇨ 25.

4-door notchback

To unlock the boot lid, press button on the remote control for at least 2 seconds, or, to open from the inside, press button in the centre console; the boot lid is opened slightly.

With the doors centrally locked, the boot lid cannot be opened with button in the centre console.

Closing

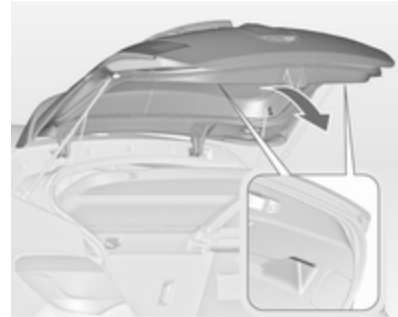

Use one of the interior handles.

Do not push the touchpad switch or the emblem whilst closing as this will unlock the tailgate again.

Central locking system ⇨ 25.

General hints for operating tailgate

⚠ Danger

Do not drive with the tailgate open or ajar, e.g. when transporting bulky objects, since toxic exhaust gases, which cannot be seen or smelled, could enter the vehicle. This can cause unconsciousness and even death.

Caution

Before opening the tailgate check overhead obstructions, such as a garage door, to avoid damage to the tailgate. Always check the moving area above and behind the tailgate.

Note
The installation of certain heavy accessories onto the tailgate may affect its ability to remain open.

Vehicle security

Anti-theft locking system

⚠ Warning

Do not use the system if there are people in the vehicle! The doors cannot be unlocked from the inside.

The system deadlocks all the doors. All doors must be closed otherwise the system cannot be activated.

If the ignition was on, the driver's door must be opened and closed once so that the vehicle can be secured.

Unlocking the vehicle disables the mechanical anti-theft locking system. This is not possible with the central locking button.

Activating

Press 🔒 on the radio remote control twice within 15 seconds.

Anti-theft alarm system

The anti-theft alarm system is combined with the anti-theft locking system.

It monitors:

- Doors, tailgate, bonnet
- Passenger compartment including adjoining load compartment
- Vehicle inclination, e.g. if it is raised
- Ignition

Activation

- Self-activated 30 seconds after locking the vehicle (initialisation of the system)
- Directly by pressing on the radio remote control once more after locking

Note
Changes to the vehicle interior such as the use of seat covers, and open windows or sunroof, could impair the function of passenger compartment monitoring.

Activation without monitoring of passenger compartment and vehicle inclination

Switch off the monitoring of passenger compartment and vehicle inclination when animals are being left in the vehicle, because of high volume ultrasonic signals or movements triggering the alarm. Also switch off when the vehicle is on a ferry or train.

1. Close tailgate, bonnet, windows and sunroof.
2. Press button . LED in the button illuminates for a maximum of 10 minutes.
3. Close doors.
4. Activate the anti-theft alarm system.

Status message is displayed in the Driver Information Centre.

Status LED

Status LED is integrated in the sensor on top of the instrument panel.

Status during the first 30 seconds of anti-theft alarm system activation:

LED illuminates	=	test, arming delay.
LED flashes quickly	=	doors, tailgate or bonnet not completely closed, or system fault.

Status after system is armed:

LED flashes slowly	=	system is armed.

Seek the assistance of a workshop in the event of faults.

Deactivation

Unlocking the vehicle deactivates the anti-theft alarm system.

Alarm

When triggered, the alarm sounds via a separate battery-backed power sounder, and the hazard warning lights flash simultaneously. The number and duration of alarm signals are stipulated by legislation.

The alarm can be silenced by pressing any button on the radio remote control or by switching on the ignition.

The anti-theft alarm system can be deactivated only by pressing button 🔓 or by switching on the ignition.

A triggered alarm, which has not been interrupted by the driver, will be indicated by the hazard warning lights. They will flash quickly three times the next time the vehicle is unlocked with the radio remote control. Additionally a warning message or a warning code is displayed in the Driver Information Centre after switching on the ignition.

Vehicle messages ⇨ 128.

Immobiliser

The system is part of the ignition switch and checks whether the vehicle is allowed to be started with the key being used.

The immobiliser is activated automatically after the key has been removed from the ignition switch.

If the control indicator 🔒 flashes when the ignition is on, there is a fault in the system; the engine cannot be started. Switch off the ignition and repeat the start attempt.

If the control indicator continues flashing, attempt to start the engine using the spare key and seek the assistance of a workshop.

Note
The immobiliser does not lock the doors. You should always lock the vehicle after leaving it and switch on the anti-theft alarm system ⇨ 25, ⇨ 30.

Control indicator 🔒 ⇨ 120.

Exterior mirrors

Convex shape

The convex exterior mirror contains an aspherical area and reduces blind spots. The shape of the mirror makes objects appear smaller, which will affect the ability to estimate distances.

Electric adjustment

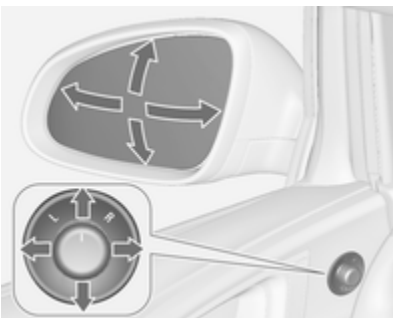

Select the relevant exterior mirror by turning the control to left **(L)** or right **(R)**. Then swivel the control to adjust the mirror.

In position **0** no mirror is selected.

Folding mirrors

For pedestrian safety, the exterior mirrors will swing out of their normal mounting position if they are struck with sufficient force. Reposition the mirror by applying slight pressure to the mirror housing.

Electric folding

Turn control to **0**, then push the control down. Both exterior mirrors will fold.

Push the control down again - both exterior mirrors return to their original position.

If an electrically folded mirror is manually extended, pressing down the control will only electrically extend the other mirror.

Heated mirrors

Operated by pressing the button.

Heating works with the engine running and is switched off automatically after a short time.

Interior mirrors

Manual anti-dazzle

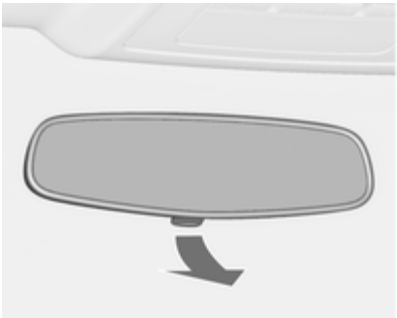

To reduce dazzle, adjust the lever on the underside of the mirror housing.

Automatic anti-dazzle

Dazzle from following vehicles at night is automatically reduced.

Windows

Windscreen

Heat-reflecting windscreen

The heat-reflecting windscreen has a coating which reflects solar radiation. Also data signals, e.g. from toll stations, might be reflected.

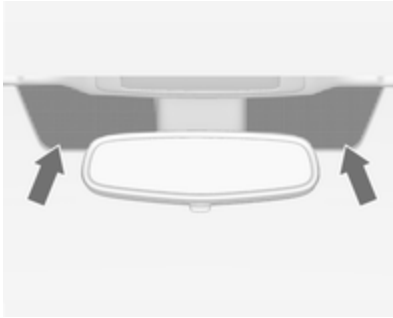

The marked areas on the windscreen are not covered with the coating. Devices for electronic data recording and fee payment must be attached in these areas. Otherwise data recording malfunctions may occur.

Windscreen stickers

Do not attach stickers such as toll road stickers or similar on the windscreen in the area of the interior mirror. Otherwise the detection zone of the sensor and the view area of the camera in the mirror housing could be restricted.

Manual windows

The door windows can be opened or closed with the window winders.

Power windows

⚠ Warning

Take care when operating the power windows. Risk of injury, particularly to children.

If there are children on the rear seats, switch on the child safety system for the power windows.

Keep a close watch on the windows when closing them. Ensure that nothing becomes trapped in them as they move.

Switch on ignition to operate power windows. Retained power off ⇨ 165.

Operate the switch for the respective window by pushing to open or pulling to close.

Pushing or pulling gently to the first detent: window moves up or down as long as the switch is operated.

Pushing or pulling firmly to the second detent and then releasing: window moves up or down automatically with safety function enabled. To stop movement, operate the switch once more in the same direction.

Safety function

If the window glass encounters resistance above the middle of the window during automatic closing, it is immediately stopped and opened again.

Override safety function

In the event of closing difficulties due to frost or the like, switch on the ignition, then pull the switch to the first detent and hold. The window moves up without safety function enabled. To stop movement, release the switch.

Child safety system for rear windows

Press switch to deactivate rear door power windows; the LED illuminates. To activate, press again.

Operating windows from outside

The windows can be operated remotely from outside the vehicle.

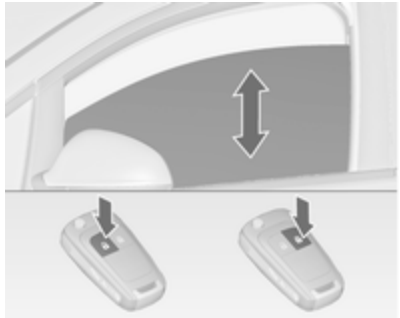

Press and hold button to open windows.

Press and hold button to close windows.

Release button to stop window movement.

If the windows are fully opened or closed, the hazard warning lights will flash twice.

Overload

If the windows are repeatedly operated within short intervals, the window operation is disabled for some time.

Initialising the power windows

If the windows cannot be closed automatically (e.g. after disconnecting the vehicle battery), a warning message or a warning code is displayed in the Driver Information Centre.

Vehicle messages ⇨ 128.

Activate the window electronics as follows:

1. Close doors.
2. Switch on ignition.
3. Pull switch until the window is closed and keep pulling for additional 2 seconds.
4. Repeat for each window.

Heated rear window

Operated by pressing the button.

Heating works with the engine running and is switched off automatically after a short time.

Sun visors

The sun visors can be folded down or swivelled to the side to prevent dazzling.

If the sun visors have integral mirrors, the mirror covers should be closed when driving.

A ticket holder is located on the backside of the sun visor.

Roof

Sunroof

⚠Warning

Take care when operating the sunroof. Risk of injury, particularly to children.

Keep a close watch on the movable parts when operating them. Ensure that nothing becomes trapped in them as they move.

Switch on ignition to operate the sunroof.

Open or close

Press or gently to the first detent: sunroof is opened or closed with safety function enabled as long as the switch is operated.

Press or firmly to the second detent and then release: the sunroof is opened or closed automatically with safety function enabled. To stop movement, operate the switch once more.

Raise or close

Press or : sunroof is raised or closed automatically with safety function enabled.

If the sunroof is raised, it can be opened in one step by pressing .

Sunblind

The sunblind is manually operated.

Close or open the sunblind by sliding. When the sunroof is open, the sunblind is always open.

General hints

Safety function

If the sunroof encounters resistance during automatic closing, it is immediately stopped and opened again.

Override safety function

In the event of closing difficulties, e.g. due to frost, hold the switch pressed to the second detent. The sunroof closes with safety function disabled. To stop movement, release the switch.

Closing sunroof from outside

The sunroof can be closed remotely from outside the vehicle.

Press and hold button to close the sunroof.

Release the button to stop the movement.

Initialising after a power failure

After a power failure, it may only be possible to operate the sunroof to a limited extent. Have the system initialised by your workshop.

Glass panel

Panorama roof

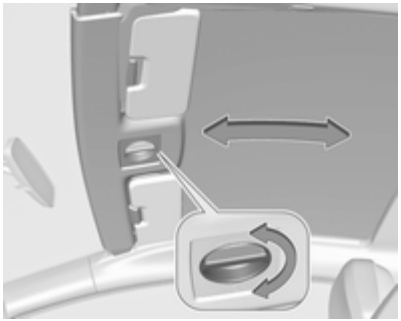

Turn the handle and move the roof cover to a suitable position.

The roof cover engages in position after releasing the handle.

Note
Close the sun visors before sliding the roof lining.

Seats, restraints

Head restraints 40
Front seats 42
Rear seats 49
Seat belts 49
Airbag system 52
Child restraints 56

Head restraints

Position

⚠Warning

Only drive with the head restraint set to the proper position.

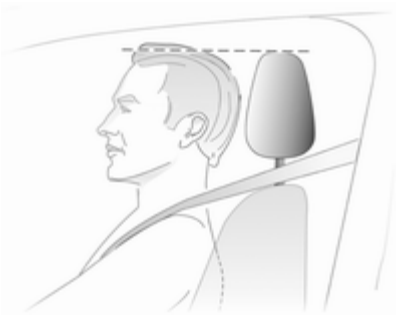

The upper edge of the head restraint should be at upper head level. If this is not possible for extremely tall people, set to highest position, and set to lowest position for small people.

Adjustment

Head restraints on front seats

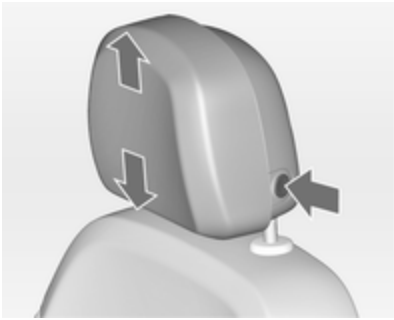

Height adjustment
Press release button, adjust height, engage.

Horizontal adjustment

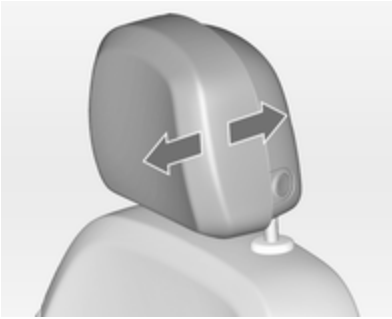

To adjust horizontally, pull the head restraint forwards. It engages in several positions.

To return to its rearmost position, pull fully forwards and release.

Head restraints on rear seats

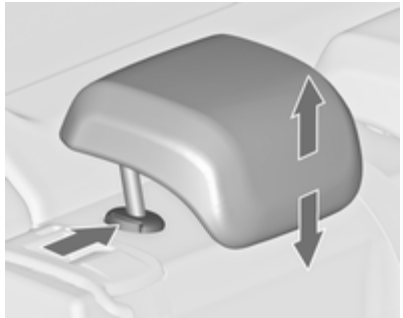

Height adjustment

Pull the head restraint upwards or press the catch to release and push the head restraint downwards.

Removal

Press both catches, pull the head restraint upwards and remove.

Active head restraints

In the event of a rear-end impact, the front parts of the active head restraints are moved slightly forwards. Thus the head is supported so that the risk of whiplash injury is reduced.

Note
Approved accessories may only be attached if the seat is not in use.

Front seats

Seat position

⚠ Warning

Only drive with the seat correctly adjusted.

- Sit with buttocks as far back against the backrest as possible. Adjust the distance between the seat and the pedals so that legs are slightly angled when pressing the pedals. Slide the front passenger seat as far back as possible.
- Sit with shoulders as far back against the backrest as possible. Set the backrest rake so that it is possible to easily reach the steering wheel with arms slightly bent. Maintain contact between shoulders and the backrest when turning the steering wheel. Do not angle the backrest too far back. We recommend a maximum rake of approx. 25°.
- Adjust the steering wheel ⇨ 102.
- Set seat height high enough to have a clear field of vision on all sides and of all display instruments. There should be at least one hand of clearance between head and the roof frame. Your thighs should rest lightly on the seat without pressing into it.
- Adjust the head restraint ⇨ 40.
- Adjust the height of the seat belt ⇨ 50.
- Adjust the thigh support so that there is a space approx. two fingers wide between the edge of the seat and the hollow of the knee.
- Adjust the lumbar support so that it supports the natural shape of the spine.

Seat adjustment

⚠ Danger

Do not sit nearer than 25 cm from the steering wheel, to permit safe airbag deployment.

⚠ Warning

Never adjust seats while driving as they could move uncontrollably.

⚠ Warning

Never store any subjects under the seats.

Drive only with engaged seats and backrests.

Seat positioning

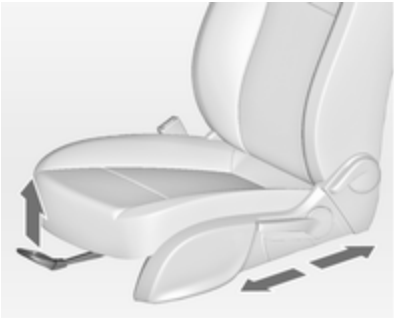

Pull handle, slide seat, release handle.

Seat backrests

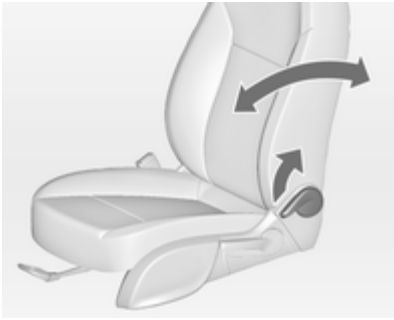

Pull lever, adjust inclination and release lever. Allow the backrest to engage audibly.

Seat height

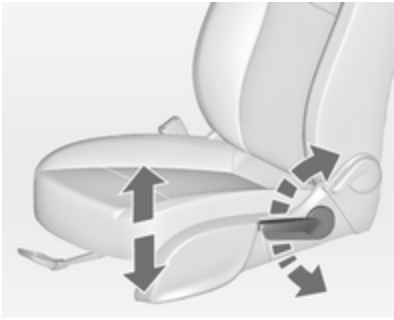

Lever pumping motion

up = seat higher
down = seat lower

Seat inclination

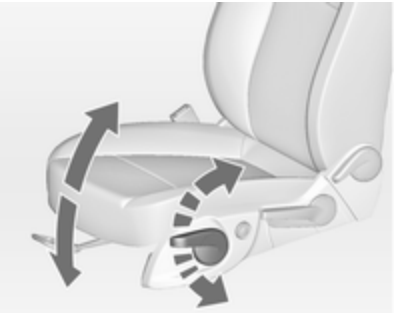

Lever pumping motion

up = front end higher
down = front end lower

Lumbar support

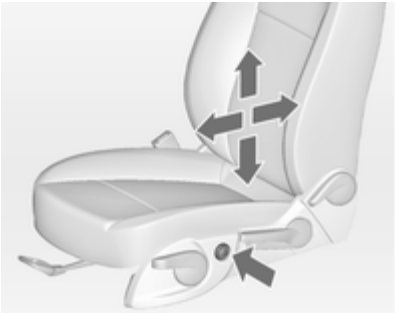

Adjust lumbar support using the four-way switch to suit personal requirements.

Moving support up and down: push switch up or down.

Increasing and decreasing support: push switch forwards or backwards.

Adjustable thigh support

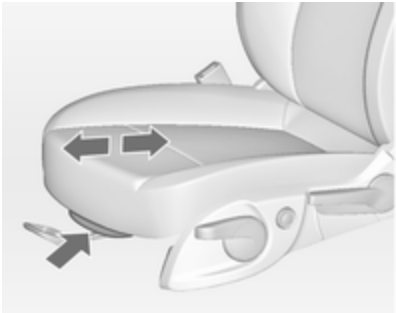

Pull the lever and slide the thigh support.

Side bolster, OPC version

Adjust seat width and backrest width using the switches to suit personal requirements.

Operate front rocker switch to change seat width.

Operate rear rocker switch to change backrest width.

Seat folding

Caution
When seat height is in highest position, push head restraints down and lift up sun visors before folding backrest forwards.

Seat folding on manual operated seats

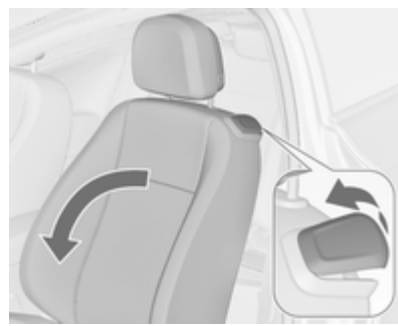

Lift release lever and fold backrest forwards. Slide seat forwards.

To restore, slide the seat backwards. Move the backrest against the resistance to the upright position and engage.

The memory function allows the seat to engage in its original position.

Do not operate backrest inclination lever while backrest is tilted forward.

Vehicles with panorama roof: to tilt backrest forward, push head restraints down and lift up sun visors.

The illustration shows the release lever on OPC seat.

⚠ Danger

Move the backrest to an upright position before folding to avoid injury.

Seat folding on power seats

Lift release lever and fold backrest forwards. The seat slides automatically forwards to the stop.

To restore lift backrest to upright position and engage. The seat slides automatically backwards to the original position.

In case the head restraint of the folded backrest is blocked by the upper windscreen frame, slightly let the seat move backwards before lifting up the backrest ⇨ 46.

Safety function

If the power seat encounters resistance while sliding forward or rearward, it is immediately stopped and moved back.

Overload

If the folding function is electrically overloaded, the power supply is automatically cut-off for a short time.

Power seat adjustment

⚠ Warning

Care must be taken when operating the power seats. There is a risk of injury, particularly for children. Objects could become trapped.

Keep a close watch on the seats when adjusting them. Vehicle passengers should be informed accordingly.

Seat lengthwise position

Move switch forwards/backwards.

Seat height

Move switch upwards/downwards.

Seat inclination

Move front of switch upwards/ downwards.

Seat backrests

Turn switch forwards/backwards.

Lumbar support

Adjust lumbar support using the four-way switch to suit personal requirements.

Moving support up and down: push switch up or down.

Increasing and decreasing support: push switch forwards or backwards.

Adjustable thigh support

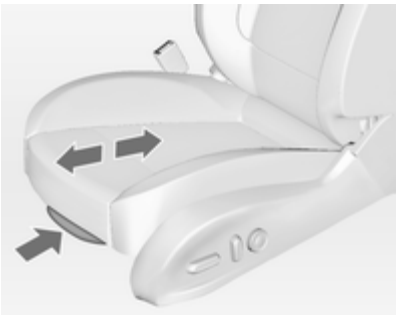

Pull the lever and slide the thigh support.

Overload

If the seat setting is electrically overloaded, the power supply is automatically cut-off for a short time.

Armrest

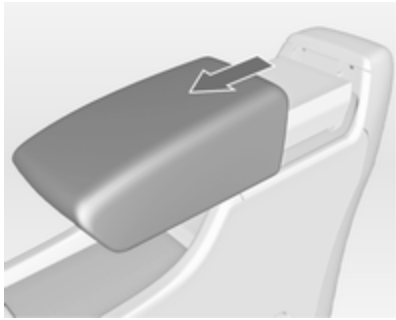

The armrest can be slid forwards by 10 cm. Under the armrest there is a storage compartment.

Armrest storage ⇨ 64.

Heating

Adjust heating to the desired setting by pressing the button for the respective seat one or more times. The control indicator in the button indicates the setting.

Prolonged use of the highest setting for people with sensitive skin is not recommended.

Seat heating is operational when engine is running and during an Autostop.

Stop-start system ⇨ 167.

Rear seats

Armrest

Fold armrest down. The armrest contains cupholders and a storage box.

Seat belts

The seat belts are locked during heavy acceleration or deceleration of the vehicle holding the occupants in the sitting position. Therefore the risk of injury is considerably reduced.

⚠ Warning

Fasten seat belt before each trip.

In the event of an accident, people not wearing seat belts endanger their fellow occupants and themselves.

Seat belts are designed to be used by only one person at a time. Child restraint system ⇨ 56.

Periodically check all parts of the belt system for damage, pollution and proper functionality.

Have damaged components replaced. After an accident, have the belts and triggered belt pretensioners replaced by a workshop.

⚠ Warning

The openings in the backrests of the OPC seats are not designed to mount or carry through any kind of additional seat belts.

Note
Make sure that the belts are not damaged by shoes or sharp-edged objects or trapped. Prevent dirt from getting into the belt retractors.

Seat belt reminder

Front seats are equipped with a seat belt reminder, indicated for driver seat as control indicator in the tachometer ⇨ 115 and for passenger seat in the centre console ⇨ 113.

Belt force limiters

On the front seats, stress on the body is reduced by the gradual release of the belt during a collision.

Belt pretensioners

In the event of a head-on or rear-end collision of a certain severity, the front seat belts are tightened.

⚠ Warning

Incorrect handling (e.g. removal or fitting of belts) can trigger the belt pretensioners.

Deployment of the belt pretensioners is indicated by continuous illumination of control indicator ⇨ 115.

Triggered belt pretensioners must be replaced by a workshop. Belt pretensioners can only be triggered once.

Note
Do not affix or install accessories or other objects that may interfere with the operation of the belt pretensioners. Do not make any modifications to belt pretensioner components as this will invalidate the vehicle type approval.

Three-point seat belt

Fastening

Withdraw the belt from the retractor, guide it untwisted across the body and insert the latch plate into the buckle. Tighten the lap belt regularly whilst driving by pulling the shoulder belt.

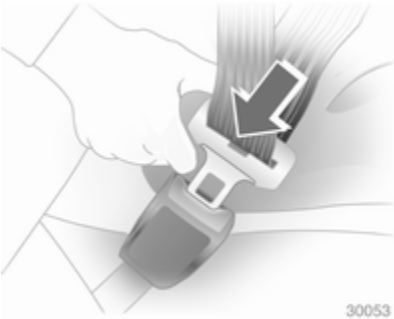

Loose or bulky clothing prevents the belt from fitting snugly. Do not place objects such as handbags or mobile phones between the belt and your body.

⚠ Warning

The belt must not rest against hard or fragile objects in the pockets of your clothing.

Seat belt reminder ⇨ 115.

Height adjustment

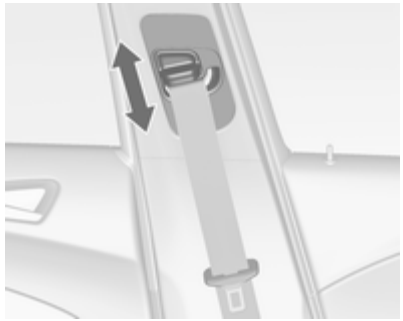

1. Pull belt out slightly.
2. Press button.
3. Adjust height and engage.

Adjust the height so that the belt lies across the shoulder. It must not lie across the throat or upper arm.

Do not adjust while driving.

Removing

To release belt, press red button on belt buckle.

Seat belts on the rear seats

The seat belt for the rear centre seat can only be withdrawn from the retractor if the backrest is engaged in upright position.

Using the seat belt while pregnant

⚠ Warning

The lap belt must be positioned as low as possible across the pelvis to prevent pressure on the abdomen.

Airbag system

The airbag system consists of a number of individual systems depending on the scope of equipment.

When triggered, the airbags inflate within milliseconds. They also deflate so quickly that it is often unnoticeable during the collision.

⚠ Warning

If handled improperly the airbag systems can be triggered in an explosive manner.

Note

The airbag systems and belt pretensioner control electronics are located in the centre console area. Do not put any magnetic objects in this area.

Do not affix any objects onto the airbag covers and do not cover them with other materials.

Each airbag is triggered only once. Have deployed airbags replaced by a workshop. Furthermore, it may be necessary to have the steering wheel, the instrument panel, parts of the panelling, the door seals, handles and the seats replaced.

Do not make any modifications to the airbag system as this will invalidate the vehicle type approval.

When the airbags inflate escaping hot gases may cause burns.

Control indicator for airbag systems ⇨ 115.

Front airbag system

The front airbag system consists of one airbag in the steering wheel and one in the instrument panel on the front passenger side. These can be identified by the word **AIRBAG**.

Additionally there is a warning label on the side of the instrument panel, visible when the front passenger door is open, or on the front passenger sun visor.

The front airbag system is triggered in the event of a front-end impact of a certain severity. The ignition must be switched on.

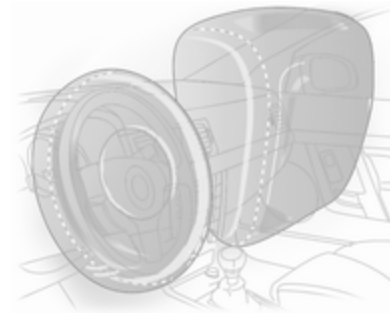

The inflated airbags cushion the impact, thereby reducing the risk of injury to the upper body and head of the front seat occupants considerably.

⚠ Warning

Optimum protection is only provided when the seat is in the proper position ⇨ 42.

Keep the area in which the airbag inflates clear of obstructions.

Fit the seat belt correctly and engage securely. Only then the airbag is able to protect.

Side airbag system

The side airbag system consists of an airbag in each front seat backrest. This can be identified by the word **AIRBAG**.

The side airbag system is triggered in the event of a side impact of a certain severity. The ignition must be switched on.

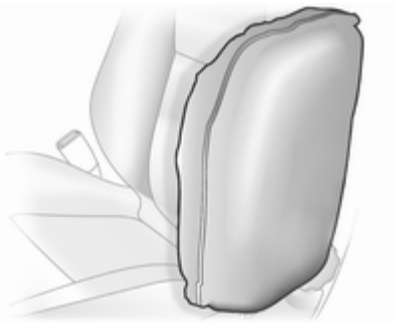

The inflated airbags cushion the impact, thereby reducing the risk of injury to the upper body and pelvis in the event of a side-on collision considerably.

⚠ Warning

Keep the area in which the airbag inflates clear of obstructions.

Note
Only use protective seat covers that have been approved for the vehicle. Be careful not to cover the airbags.

Curtain airbag system

The curtain airbag system consists of an airbag in the roof frame on each side. This can be identified by the word **AIRBAG** on the roof pillars.

The curtain airbag system is triggered in the event of a side-on impact of a certain severity. The ignition must be switched on.

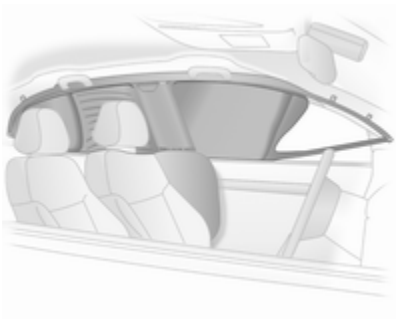

The inflated airbags cushion the impact, thereby reducing the risk of injury to the head in the event of a side-on impact considerably.

⚠ Warning

Keep the area in which the airbag inflates clear of obstructions.

The hooks on the handles in the roof frame are only suitable for hanging up light articles of clothing, without coat hangers. Do not keep any items in these clothes.

Airbag deactivation

The front passenger airbag system must be deactivated if a child restraint system is to be fitted on this seat. The side airbag and curtain airbag systems, the belt pretensioners and all driver airbag systems will remain active.

The front passenger airbag system can be deactivated via a key-operated switch on the right side of the instrument panel.

Use the ignition key to choose the position:

OFF = front passenger airbag is deactivated and will not inflate in the event of a collision. Control indicator OFF illuminates continuously in the centre console. A child restraint system can be installed in accordance with the chart **Child restraint installation locations** ⇨ 58. No adult person is allowed to occupy the front passenger seat.

ON = front passenger airbag is active. A child restraint system must not be installed.

⚠ Danger

Risk of fatal injury for a child using a child restraint system on a seat with activated front passenger airbag.

Risk of fatal injury for an adult person on a seat with deactivated front passenger airbag.

If the control indicator illuminates for approx. 60 seconds after the ignition is switched on, the front passenger airbag system will inflate in the event of a collision.

If both control indicators are illuminated at the same time, there is a system failure. The status of the system is not discernible, therefore no person is allowed to occupy the front passenger seat. Contact a workshop immediately.

Change status only when the vehicle is stopped with the ignition off.

Status remains until the next change.

Control indicator for airbag deactivation ⇨ 115.

Child restraints

Child restraint systems

We recommend the Opel child restraint system which is tailored specifically to the vehicle.

When a child restraint system is being used, pay attention to the following usage and installation instructions and also those supplied with the child restraint system.

Always comply with local or national regulations. In some countries, the use of child restraint systems is forbidden on certain seats.

⚠ Warning

When using a child restraint system on the front passenger seat, the airbag systems for the front passenger seat must be

deactivated; if not, the triggering of the airbags poses a risk of fatal injury to the child.

This is especially the case if rear-facing child restraint systems are used on the front passenger seat.

Airbag deactivation ⇨ 55.

Selecting the right system

The rear seats are the most convenient location to fasten a child restraint system.

Children should travel facing rearwards in the vehicle as long as possible. This makes sure that the child's backbone, which is still very weak, is under less strain in the event of an accident.

Suitable are restraint systems that comply with ECE 44-03 or ECE 44-04. Check local laws and regulations for mandatory use of child restraint systems.

Ensure that the child restraint system to be installed is compatible with the vehicle type.

Ensure that the mounting location of the child restraint system within the vehicle is correct.

Allow children to enter and exit the vehicle only on the side facing away from the traffic.

When the child restraint system is not in use, secure the seat with a seat belt or remove it from the vehicle.

Note

Do not stick anything on the child restraint systems and do not cover them with any other materials.

A child restraint system which has been subjected to stress in an accident must be replaced.

Child restraint installation locations

Permissible options for fitting a child restraint system

Weight and age class	On front passenger seat activated airbag	On front passenger seat deactivated airbag	On rear outboard seats	On rear centre seat
Group 0: up to 10 kg or approx. 10 months	X	U[1]	U[2]	U
Group 0+: up to 13 kg or approx. 2 years	X	U[1]	U[2]	U
Group I: 9 to 18 kg or approx. 8 months to 4 years	X	U[1]	U[2]	U
Group II: 15 to 25 kg or approx. 3 to 7 years	X	X	U	U
Group III: 22 to 36 kg or approx. 6 to 12 years	X	X	U	U

[1] = Only if front passenger seat airbag system is deactivated. If the child restraint system is being secured using a three-point seat belt, move seat height adjustment to uppermost position and ensure that vehicle safety belt runs forwards from the upper anchorage point. Adjust seat backrest inclination as far as necessary to a vertical position to ensure that the belt is tight on the buckle side.

[2] = Seat available with ISOFIX and Top-Tether mounting brackets ⇨ 61.

U = Universal suitability in conjunction with three-point seat belt.

X = No child restraint system permitted in this weight class.

Permissible options for fitting an ISOFIX child restraint system

Weight class	Size class	Fixture	On front passenger seat	On rear outboard seats	On rear centre seat
Group 0: up to 10 kg	E	ISO/R1	X	IL	X
Group 0+: up to 13 kg	E	ISO/R1	X	IL	X
	D	ISO/R2	X	IL	X
	C	ISO/R3	X	IL	X
Group I: 9 to 18 kg	D	ISO/R2	X	IL	X
	C	ISO/R3	X	IL	X
	B	ISO/F2	X	IL, IUF	X
	B1	ISO/F2X	X	IL, IUF	X
	A	ISO/F3	X	IL, IUF	X

IL = Suitable for particular ISOFIX restraint systems of the 'specific-vehicle', 'restricted' or 'semi-universal' categories. The ISOFIX restraint system must be approved for the specific vehicle type.
IUF = Suitable for ISOFIX forward-facing child restraint systems of universal category approved for use in this weight class.
X = No ISOFIX child restraint system approved in this weight class.

ISOFIX size class and seat device

A – ISO/F3	=	Forward-facing child restraint system for children of maximum size in the weight class 9 to 18 kg.
B – ISO/F2	=	Forward-facing child restraint system for smaller children in the weight class 9 to 18 kg.
B1 – ISO/F2X	=	Forward-facing child restraint system for smaller children in the weight class 9 to 18 kg.
C – ISO/R3	=	Rear-facing child restraint system for children of maximum size in the weight class up to 18 kg.
D – ISO/R2	=	Rear-facing child restraint system for smaller children in the weight class up to 18 kg.
E – ISO/R1	=	Rear-facing child restraint system for young children in the weight class up to 13 kg.

ISOFIX child restraint systems

Fasten vehicle-approved ISOFIX child restraint systems to the ISOFIX mounting brackets. Specific vehicle ISOFIX child restraint system positions are marked in the table by IL.

ISOFIX mounting brackets are indicated by a label on the backrest.

Top-tether fastening eyes

Depending on country specific equipment, the vehicle might have two or three fastening eyes.

Top-Tether fastening eyes are marked with the symbol for a child seat.

On Notchback version, open the flap of the required fastening eye on the placement area behind the head restraints, marked by the child seat symbol.

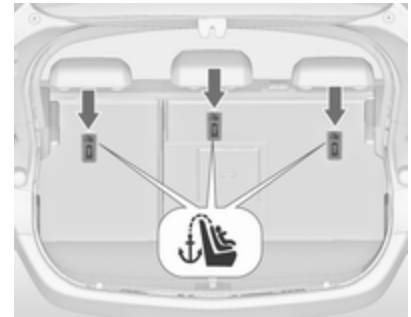

On Hatchback and Sports Tourer fastening eyes are on the backside of rear seats.

In addition to the ISOFIX mounting, fasten the Top-Tether strap to the Top-Tether fastening eyes. The strap must run between the two guide rods of the head restraint.

ISOFIX child restraint systems of universal category positions are marked in the table by IUF.

Storage

Storage compartments 62
Load compartment 84
Roof rack system 99
Loading information 100

Storage compartments

⚠ Warning

Do not store heavy or sharp objects in the storage compartments. Otherwise, the storage compartment lid could open and vehicle occupants could be injured by objects being thrown around in the event of hard braking, a sudden change in direction or an accident.

Glovebox

The glovebox features a pen holder, a credit card holder and a coin holder.

The glovebox should be closed whilst driving.

Cupholders

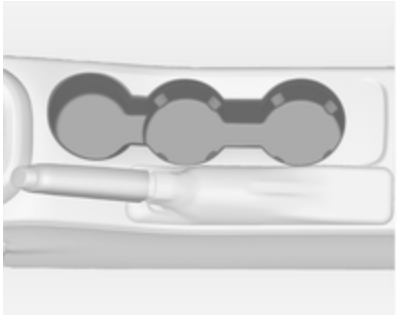

Cupholders are located in the centre console.

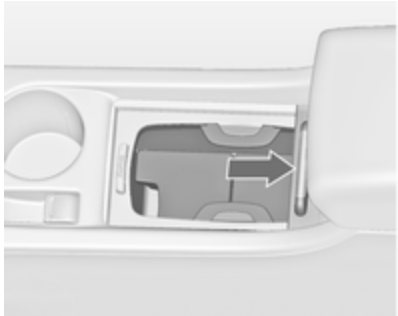

Depending on the version, cupholders are located under a cover in the centre console. Slide cover backwards. Bottles can be stowed after folding up the intermediate shelf ⇨ 65.

Additional cupholders are located in the rear armrest. Fold down the armrest.

Front storage

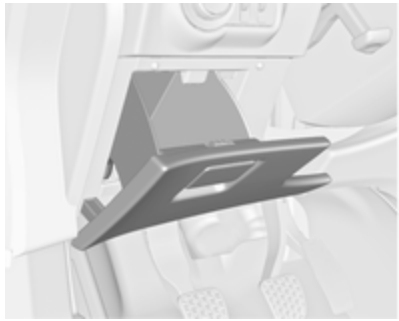

A storage compartment is located next to the steering wheel.

Underseat storage

Press button in the recess and pull out drawer. Maximum load: 3 kg. To close, push in and engage.

On version with rear carrier system ⇨ 66, the tyre repair kit is stowed in the drawer.

Tyre repair kit ⇨ 265.

Armrest storage

Storage under the front armrest

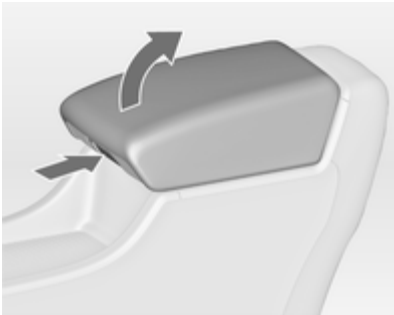

Press button to fold up the armrest. The armrest must be in rearmost position.

Storage in the rear armrest

Fold down armrest and open cover.

Close cover before folding the armrest up.

Centre console storage

Front console

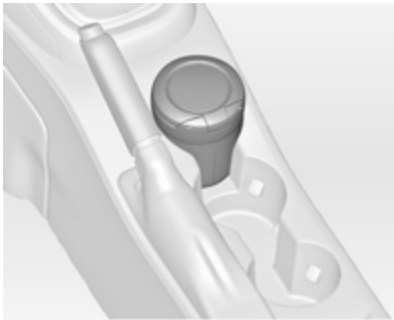

The storage container can be used to store small items.

Depending on the version, a storage compartment is located under a cover.

Slide cover backwards.

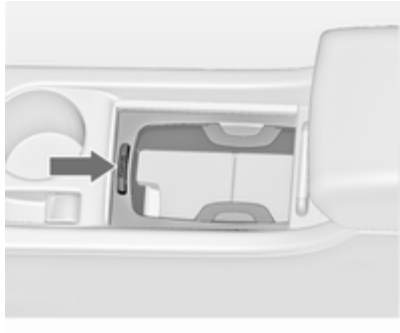

Press button to remove the frame of the cupholder. The frame can be stowed in the glovebox.

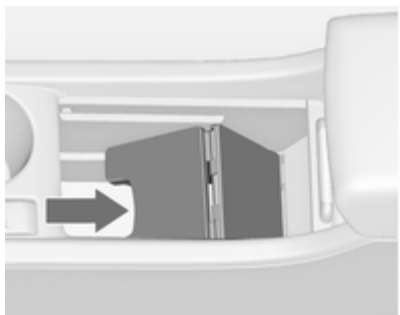

A further storage compartment is located under the intermediate shelf. Fold up the intermediate shelf and fix it in the vertical position. The frame of the cupholder can be reintegrated to stow bottles.

Rear console

Pull out the drawer.

Caution
Do not use for ashes or for other glowing items.

Rear carrier system

Rear carrier system for two bicycles

The rear carrier system (Flex-Fix system) allows bicycles to be attached to a pull-out carrier integrated into the vehicle floor. The transportation of other objects is not permitted.

The maximum load of the rear carrier system is 40 kg. The maximum load per bicycle is 20 kg.

The wheelbase of a bicycle must not exceed 1.15 metres. Otherwise the secure fastening of a bicycle is not possible.

If not in use, the carrier system must be slid back into the vehicle floor.

There must not be any objects on the bicycles that could become loose during transportation.

Caution
Do not attach bicycles with carbon pedal cranks to bicycle carriers. The bicycles might get damaged.

Extending

Open the tailgate.

⚠ Warning
No-one should be in the extension zone of the rear carrier system, risk of injury.

Pull release lever up. The system disengages and travels quickly out of the bumper.

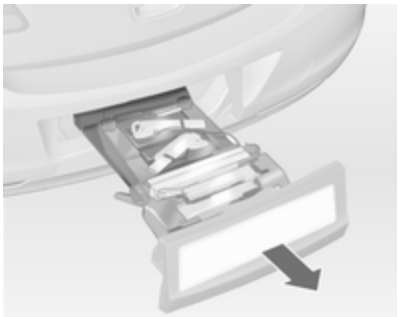

Completely pull out the rear carrier system until you hear it engage.

Ensure that it is not possible to push in the rear carrier system without pulling the release lever again

⚠Warning

It is only permissible to fit objects to the rear carrier system if the system has been correctly engaged. If the rear carrier system will not engage correctly, do not fit objects to the system and slide the system back. Seek the assistance of a workshop.

Install the tail lamps

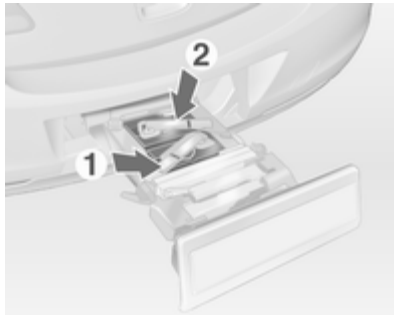

First remove the rear (**1**), then the front (**2**) tail lamp from the recesses.

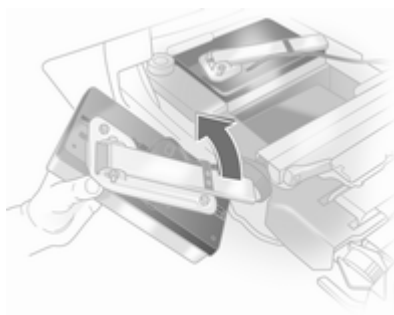

Open out the lamp support on the back of the tail lamp completely.

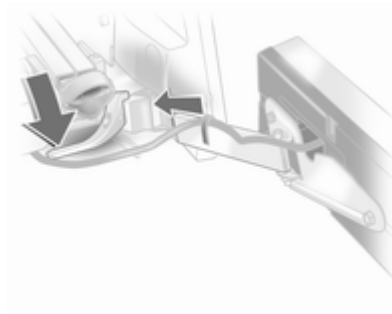

Push the clamping lever down and push the lamp support into the retainer until it engages.

Perform this procedure for both tail lamps.

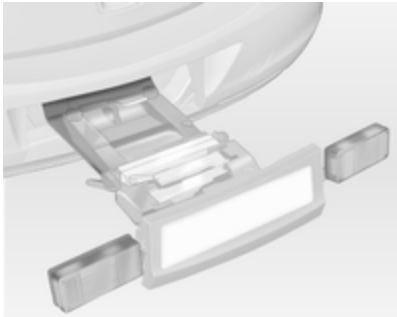

Check the cable and lamp position to make sure these are correctly installed and are securely located.

Lock the rear carrier system

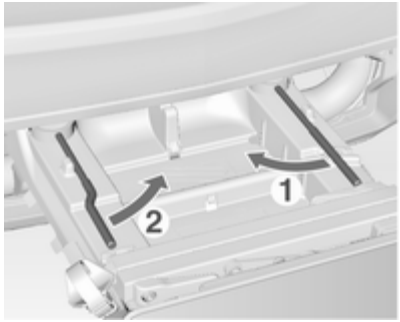

Swivel the right clamping lever (**1**) first, followed by the left clamping lever (**2**), until a resistance is noticeable.

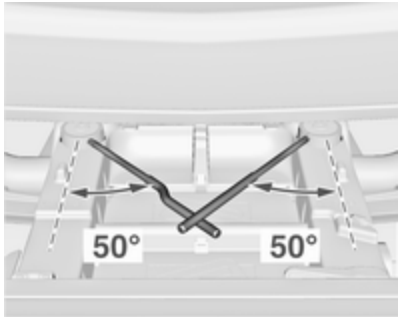

The rear carrier system is locked when the clamping levers are swivelled by approx. 50°. Otherwise safe functionality is not guaranteed.

Note
Close the tailgate.

Unfold pedal crank recesses

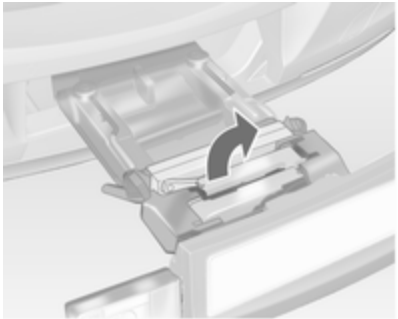

Fold one or both pedal crank recesses upwards until the diagonal support engages.

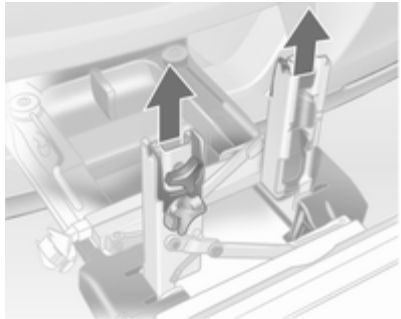

Remove the pedal crank mounts from the pedal crank recesses.

Adapting the rear carrier system to a bicycle

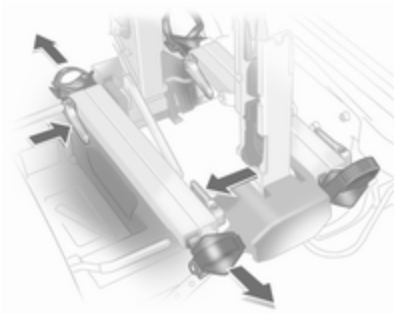

Press the release lever and withdraw the wheel recesses.

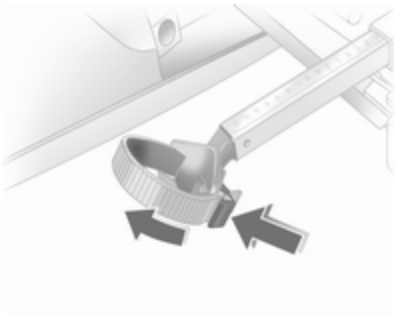

Push the release lever on the strap retainer and remove the strap retainer.

Prepare the bicycle for attachment

Note
The maximum width for the pedal crank is 38.3 mm and the maximum depth is 14.4 mm.

Rotate the left pedal (without a chain cog) vertically downwards. The pedal on the left pedal crank must be horizontal.

The front bicycle must have its front wheel facing left.

The rear bicycle must have its front wheel facing right.

Attaching a bicycle to the rear carrier system

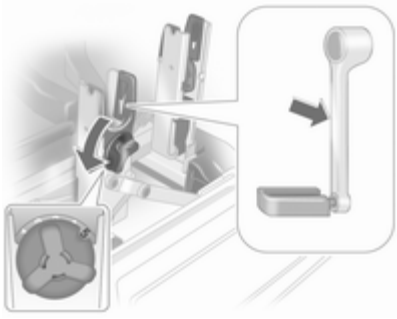

With the rotary lever on the pedal crank recess, roughly adapt the adjustable pedal crank unit to the protrusion of the pedal crank.

If the bicycle has straight pedal cranks, unscrew the pedal crank unit completely (position **5**).

If the bicycle has curved pedal cranks, screw in the pedal crank unit all the way (position **1**).

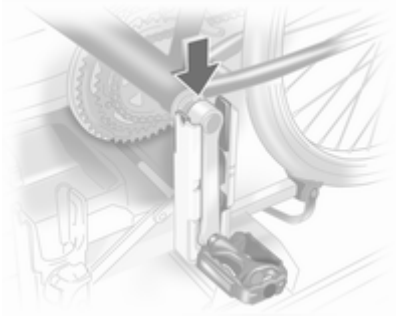

Put on the bicycle. The pedal crank here must be placed in the pedal crank recess opening, as shown in the illustration.

Caution

Make sure that the pedal does not touch the surface of the rear end carrier. Otherwise the crankset might be damaged during the transport.

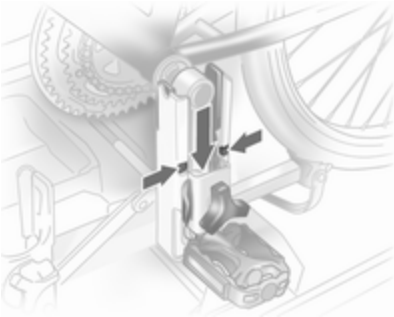

Insert pedal crank mount into outer rail of each pedal crank recess from above and slide downwards until at least underneath the notching.

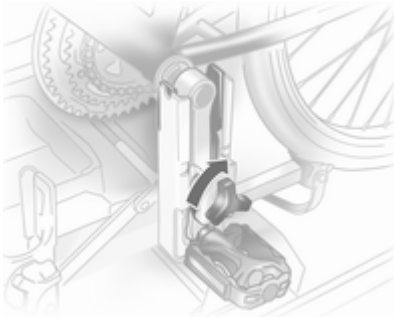

Attach the pedal crank by rotating the attachment screw on the pedal crank mount.

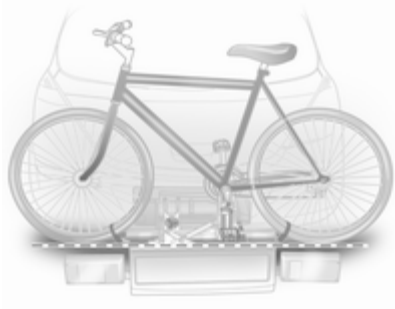

Place the wheel recesses such that the bicycle is more or less horizontal. Here, the distance between the pedals and the tailgate should be at least 5 cm.

Both bicycle tyres must be in the wheel recesses.

Caution

Make sure to pull out the wheel recesses as far as necessary to have both bicycle tyres placed in the recesses. Otherwise a horizontal mounting of the bicycle is not ensured. Disregard could lead to damage of the bicycle wheels caused by hot exhaust fumes.

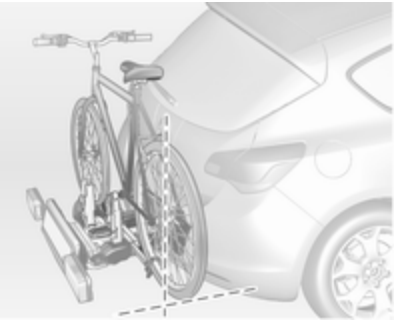

Align the bicycle in the longitudinal direction of the vehicle: Slightly loosen the pedal mount.

Place the bicycle upright using the rotary lever on the pedal crank recess.

If the two bicycles obstruct one another, the relative positions of the bicycles can be adapted by adjusting the wheel recesses and the rotary lever on the pedal crank recess until the bicycles no longer touch one another. Make sure there is sufficient clearance from the vehicle.

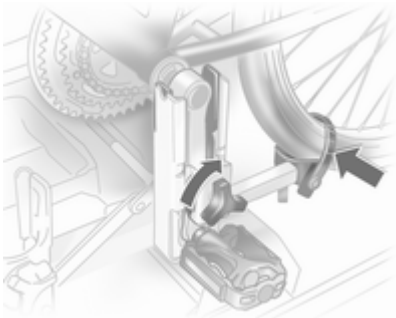

Tighten the attachment screw for the pedal bearing mount to its maximum point by hand.

Secure both bicycle wheels to the wheel recesses using the strap retainers.

Check the bicycle to make sure it is secure.

Caution

Ensure gap between bicycle and vehicle is at least 5 cm. If necessary, loosen handlebar and swivel sideways.

The settings for the wheel recesses and on the rotary lever on the pedal crank recess should be noted and saved for each bicycle. Correct presetting will facilitate refitting of the bicycle.

It is recommended to attach a warning sign at the rearmost bicycle to increase visibility.

Removing a bicycle from the rear carrier system

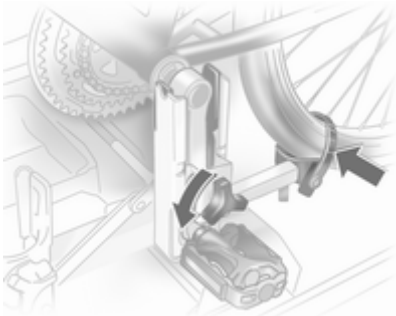

Undo strap retainers on both bicycle tyres.

Hold on to the bicycle, loosen the attachment screw for the pedal bearing mount, then lift the pedal bearing mount to remove it.

Retracting the rear carrier system

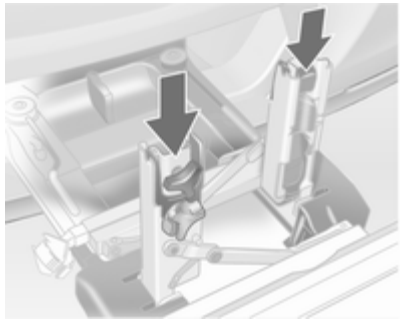

Push the pedal crank mounts into the pedal crank recess, as shown in the illustration.

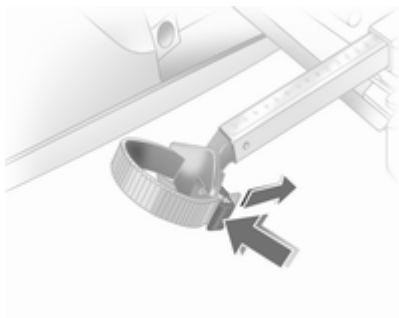

Insert the strap retainer and pull tightly downwards as far as possible.

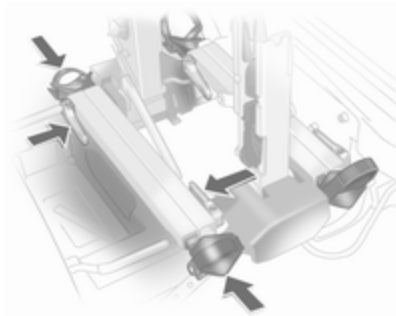

Press release lever and slide in wheel recesses all the way as far as they will go.

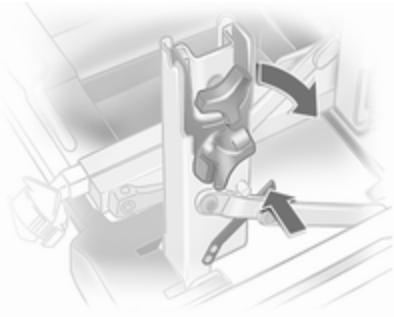

Disengage the locking lever on the diagonal support and fold both pedal crank recesses down.

⚠Warning
Risk of pinching.

Swivel first the left clamping lever (**1**), followed by the right clamping lever (**2**), until they stop.

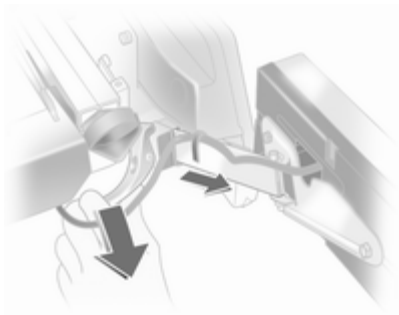

Push the clamping lever down and pull both lamp supports out of the recesses.

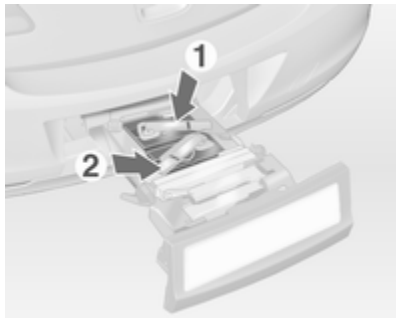

Fold in the lamp supports on the backs of the tail lamps.

First place the front (**1**) tail lamp, then the rear (**2**) tail lamp in the recesses and push down as far as possible. Push cables all the way into all guides in order to prevent damage.

Open the tailgate.

Push the release lever up and hold. Lift the system slightly and push it into the bumper until it engages.

Release lever must return to original position.

⚠Warning

If the system cannot be correctly engaged, please seek the assistance of a workshop.

Rear carrier system for four bicycles

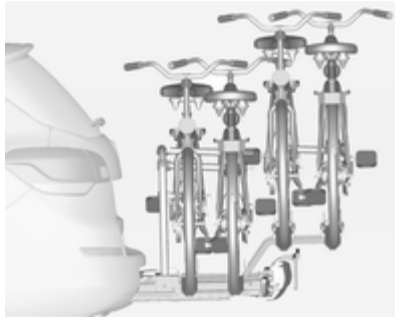

The rear carrier system (Flex-Fix system) allows two bicycles to be attached to a pull-out carrier integrated into the vehicle floor. It is possible to attach two further bicycles on an adapter. The transportation of other objects is not permitted.

The maximum load of the rear carrier system is 80 kg with attached adapter and 60 kg without attached adapter. The maximum load per bicycle on the pull-out carrier is 30 kg. This allows the attachment of electrically-powered bicycles to the pull-out carrier. The maximum load per bicycle on the adapter is 20 kg.

The wheelbase of a bicycle must not exceed 1.15 metres. Otherwise the secure fastening of a bicycle is not possible.

If not in use, the carrier system must be slid back into the vehicle floor.

There must not be any objects on the bicycles that could become loose during transportation.

Caution

If the rear carrier system is extended and the vehicle is fully loaded, the chassis clearance will be reduced.

Drive carefully whenever the road has a strong inclination or when driving over a ramp, bump, etc.

Caution

Consult your bicycle dealer before attaching bicycles with carbon frames. The bicycles might get damaged.

Extending

Open the tailgate.

⚠Warning

No-one should be in the extension zone of the rear carrier system, risk of injury.

Pull release lever up. The system disengages and travels quickly out of the bumper.

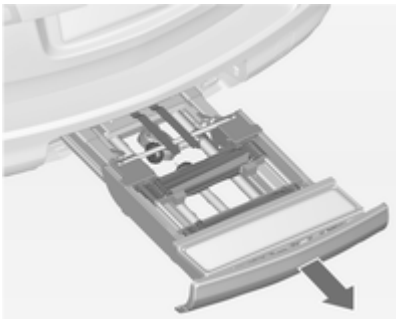

Completely pull out the rear carrier system until you hear it engage.

Ensure that it is not possible to push in the rear carrier system without pulling the release lever again.

⚠Warning

It is only permissible to fit objects to the rear carrier system if the system has been correctly engaged. If the rear carrier system will not engage correctly, do not fit objects to the system and slide the system back. Seek the assistance of a workshop.

Unfold number plate holder

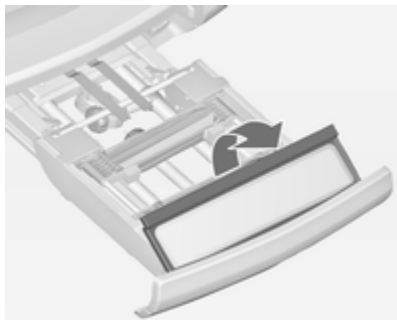

Lift the number plate holder and fold it backwards.

Fold out tail lamps

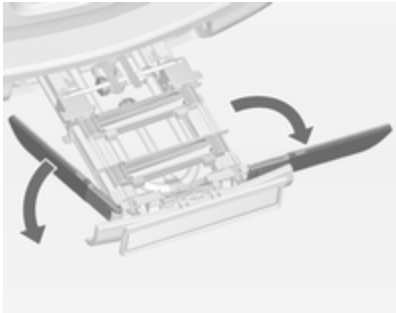

Fold out both tail lamps.

Lock the rear carrier system

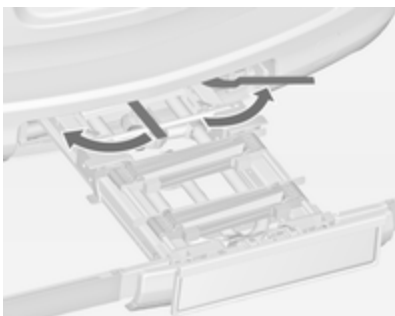

Swivel both clamping levers sidewards as far as they will go.

Otherwise safe functionality is not guaranteed.

Fold out wheel recesses

Fold out both wheel recesses.

Assembling the bicycle rack

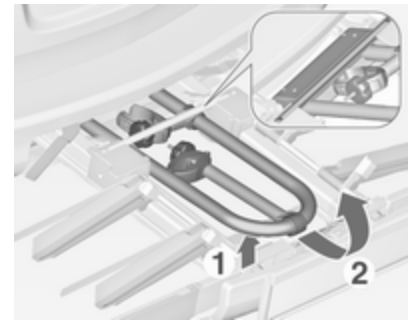

Lift the rack at the rear (**1**) and pull it backwards.

Fold up the rack (**2**).

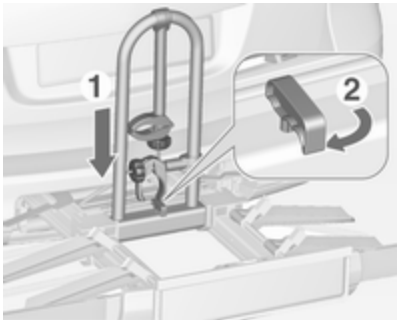

Push down the rack (**1**) and swivel handle (**2**) backwards to engage.

Attaching the first bicycle

1. Rotate the pedals into position (as shown in the illustration) and put the bicycle on the foremost wheel recess.

   Make sure that the bicycle stands centrally on the wheel recesses.

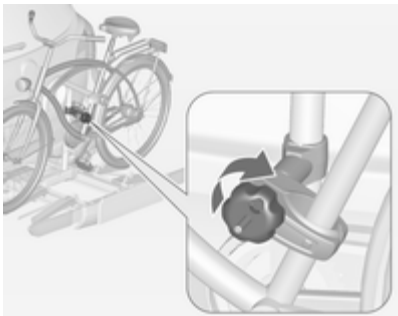

2. Attach the short mounting bracket to the bicycle frame. Turn the knob clockwise to fasten.

3. Secure both bicycle wheels to the wheel recesses using the strap retainers.
4. Check the bicycle to make sure it is secure.

Caution
Ensure gap between bicycle and vehicle is at least 5 cm. If necessary, loosen handlebar and swivel sidewards.

Attaching the adapter

When carrying more than two bicycles, the adapter must be fixed before the second bicycle is attached.

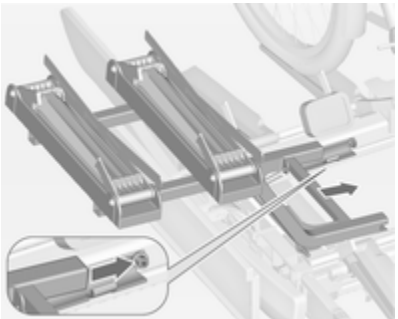

1. Apply the adapter to the rear carrier system as shown in the illustration.

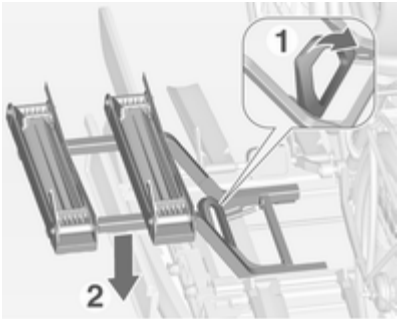

2. Turn the lever (**1**) forwards and hold, then lower the adapter (**2**) at the rear.
3. Release lever and check if the adapter is engaged securely.

4. Guide the strap attached to the adapter underneath the lever for folding back the rear carrier system. Fasten the strap.

Attaching further bicycles

The attachment of further bicycles is similar to the attachment of the first bicycle. Additionally some steps must be considered:

1. Before putting on the bicycle, always unfold the wheel recesses for the next bicycle if necessary.
2. Always rotate the pedals into an appropriate position before putting on the bicycle.

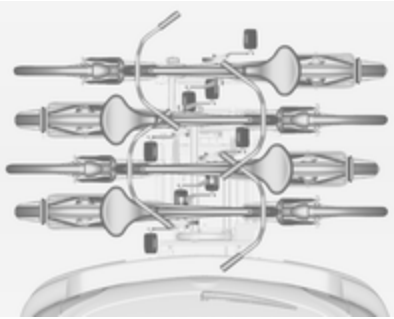

3. Position the bicycles on the rear carrier system alternately aligned to the left and to the right.
4. Align the bicycles to the one attached before. The wheel hubs of the bicycles must not touch each other.
5. Attach the bicycles with mounting brackets and strap retainers as described for the first bicycle. The mounting brackets should be fixed in parallel.

   Use the long mounting bracket to attach the second bicycle to the rack.

   Use the longer accessory mounting bracket to attach the third bicycle to the rack.

   Use the short accessory mounting bracket to attach the fourth bicycle. The bracket must be fixed between the frames of the third and fourth bicycle.

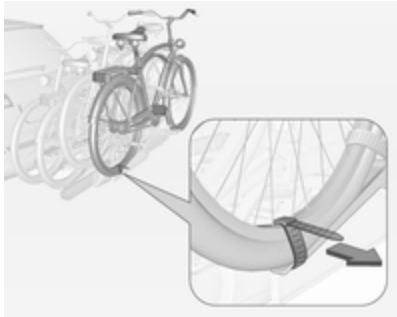

6. Additionally secure both bicycle wheels of the fourth bicycle to the wheel recesses using the tensioning straps.

It is recommended to attach a warning sign at the rearmost bicycle to increase visibility.

Fold the rear carrier system backwards

The rear carrier system can be folded backwards to get access to the load compartment.

- Without attached adapter:

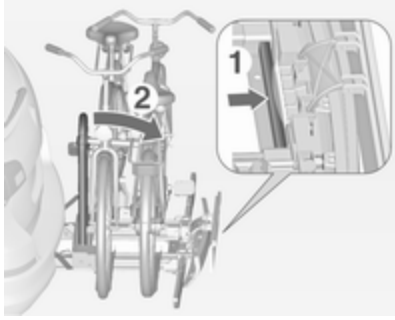

Push the lever (**1**) to disengage and hold.

Pull the rack (**2**) backwards to fold the rear carrier system.

- With attached adapter:

> **⚠ Warning**
>
> Take care when disengaging the rear carrier system as it will tilt backwards. Risk of injury.

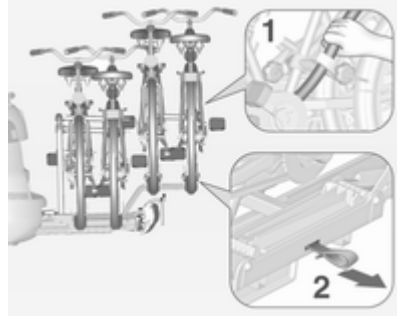

Hold frame (**1**) of rearmost bicycle with one hand and pull the loop (**2**) to disengage.

Hold rearmost bicycle with both hands and fold the rear carrier system backwards.

To increase visibility, the tail lights of the vehicle are activated when the rear carrier system is folded back.

> **⚠ Warning**
>
> When folding the rear carrier system forwards again, take care that the system is engaged securely.

Removing bicycles

Undo strap retainers on both bicycle tyres.

Turn knob anti-clockwise and remove mounting brackets.

Detaching adapter

Detach the adapter before removing the last bicycle left on the rear carrier system.

1. Fold in wheel recesses.

2. Unbutton the strap.

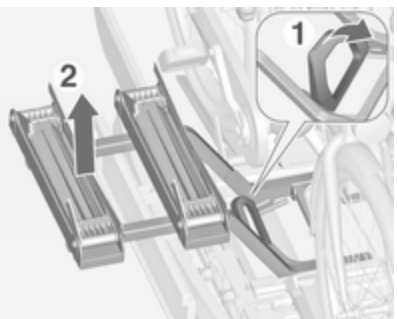

3. Turn the lever (**1**) forwards and hold.
4. Lift the adapter (**2**) at the rear and remove.

Disassembling the bicycle rack

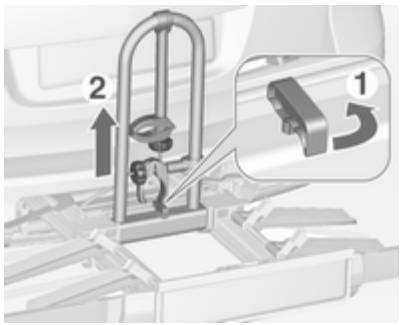

Arrange mounting brackets as shown in the illustration.

Swivel handle (**1**) forwards to disengage and lift the rack (**2**).

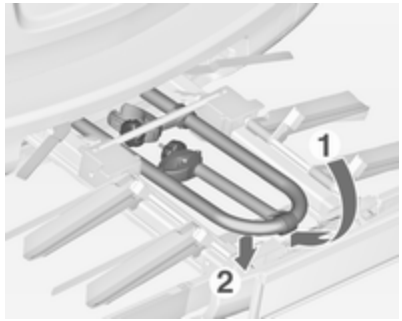

Fold the rack backwards, then push forwards until it stops (**1**).

Press the rack down at the rear (**2**).

Fold in wheel recesses

Fold in both wheel recesses.

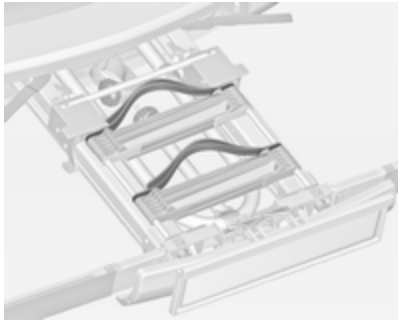

Stow the strap retainers accurately.

Unlock the rear carrier system

Swivel both clamping levers inwards as far as they will go.

Fold in tail lamps
Swivel in both tail lamps.

Fold in number plate holder
Lift the number plate holder and fold it forwards.

Retracting the rear carrier system

Caution
Take care that all foldable parts, e.g. wheel recesses and mounting brackets, are stowed accurately. Otherwise the rear carrier system might get damaged when trying to retract it.

Push the release lever up and hold. Lift the system slightly and push it into the bumper until it engages.

Release lever must return to original position.

⚠Warning
If the system cannot be correctly engaged, please seek the assistance of a workshop.

Load compartment

The rear seat backrest is divided into two parts. Both parts can be folded down.

Load compartmentextension, 3-door and 5-door hatchback, 4-door notchback

- Only 3-door and 5-door hatchback: remove the load compartment cover if necessary.
- Press and hold the catch to push the head restraints down ⇨ 40.
- Fold up the rear armrest.

- Guide the seat belts through side supports to protect them against damage. When folding the backrests, pull the seat belts along with them.
- Pull the release lever on one or both sides and fold down the backrests onto the seat cushion.

- Take the seat belt out of the seat backrest guide and put it behind the retainer as shown in the illustration.

To fold up, raise the backrests and guide them into an upright position until they engage audibly.

Ensure that the seat belts of the outboard seats are placed in the corresponding belt guides.

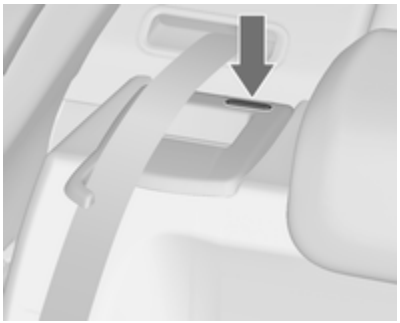

The backrests are properly engaged when the red marks on both sides near the release lever are no longer visible.

⚠ Warning

When folding up, ensure that backrests are securely locked in position before driving. Failure to do so may result in personal injury

or damage to the load or vehicle in the event of hard braking or a collision.

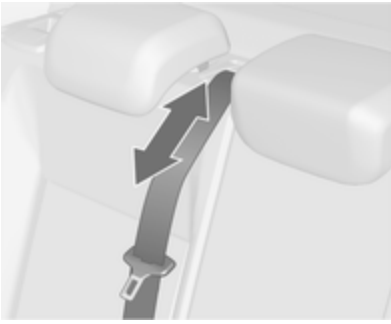

The seat belt of the centre seat could be blocked when the backrest is folded up too quickly. To unlock the retractor, push in the seat belt or pull it out by approx. 20 mm then release.

Load compartment extension, Sports tourer

Folding down rear backrests

- Remove the load compartment cover if necessary.
- Press and hold the catch to push the head restraints down ⇨ 40.
- Fold up the rear armrest.

- Guide the seat belts through side supports to protect them against damage. When folding the backrests, pull the seat belts along with them.
- Pull the release lever on one or both sides and fold down the backrests onto the seat cushion.

Electric seat folding

On vehicles with electric seat folding, the rear seats can also be folded from the load compartment.

- Pull switch on left or right sidewall of the load compartment to fold the corresponding part of the rear seat.

⚠ Warning

Take care when operating the electric foldable rear seats. The seat backrest is folded with considerable power. Risk of injury, particularly to children.

Ensure that nothing is attached to the rear seats or located on the seat cushion.

If the vehicle is to be loaded via a rear door, take the seat belt out of the seat backrest guide and put it behind the retainer (as shown in the illustration).

- To fold up, raise the backrests and guide them into an upright position until they engage audibly.

Ensure that the seat belts of the outboard seats are placed in the corresponding belt guides.

The backrests are properly engaged when the red marks on both sides near the release lever are no longer visible.

⚠ Warning

Only drive the vehicle if the backrests are securely locked into position. Otherwise there is a risk of personal injury or damage to the load or vehicle in the event of hard braking or a collision.

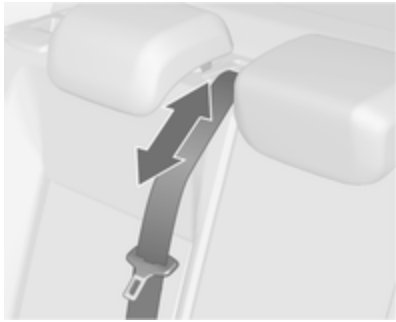

The seat belt of the centre seat could be blocked when the backrest is folded up too quickly. To unlock the retractor, push in the seat belt or pull it out by approx. 20 mm then release.

Raise the seat cushion and fold the backrest

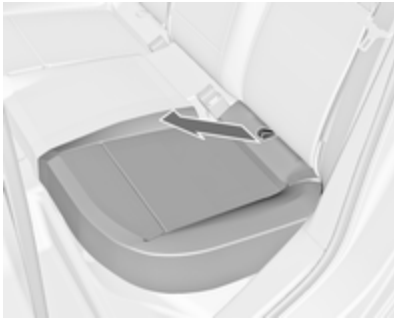

- Pull the strap on one or both seat cushions and lift the rear of the cushion forwards.
- Press and hold the catch to push the head restraints down ⇨ 40.
- Pull the release lever on one or both sides of the backrests and fold down onto the seat cushion to get a flat load bay.

Remove the seat cushion

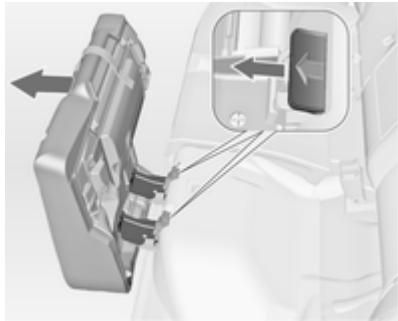

- Push both levers forward and remove seat cushion to extend the loading area.

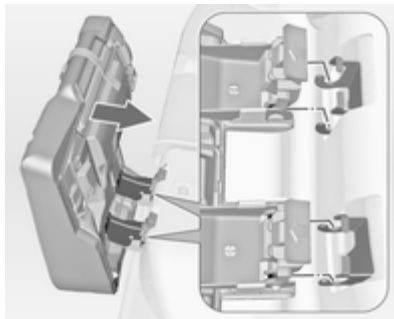

- To attach, apply seat cushion as shown in the illustration and engage both levers.

Open the pass-through in the rear centre backrest

- Fold down the rear armrest.

- Pull the grip and open the cover.

Suitable for loading long, narrow objects.

Ensure that the cover engages after folding up.

The closed cover can be secured from the side of the load compartment. Turn the knob 90°:

knob horizontal	=	cover secured from the side of the passenger compartment
knob vertical	=	cover not secured

Rear storage

3-door hatchback

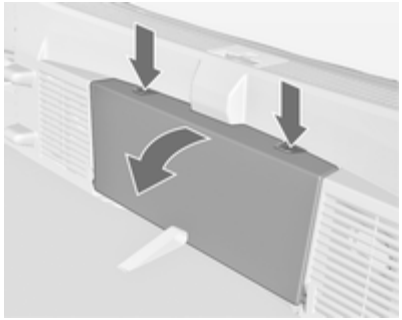

Press both buttons and fold down cover.

Maximum load: 0.5 kg.

Load compartment cover

Do not place any objects on the cover.

3-door and 5-door hatchback

Removing

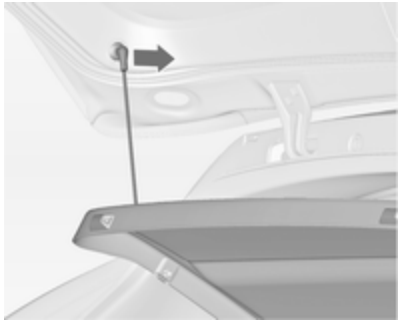

Unhook retaining straps from tailgate.

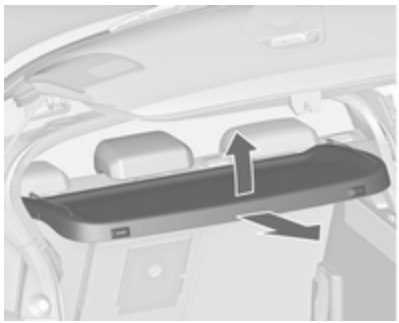

Lift cover at the rear and push it upwards at the front.

Remove the cover.

If the height adjustable cover is mounted in the middle or upper position, the load compartment cover can be stowed below it.

Height adjustable cover ⇨ 90.

Fitting

Engage cover in side guides and fold downwards. Attach retaining straps to tailgate.

Sports tourer

Closing cover

Pull the cover towards the rear using the handle until it engages in the sideward retainers.

Opening cover

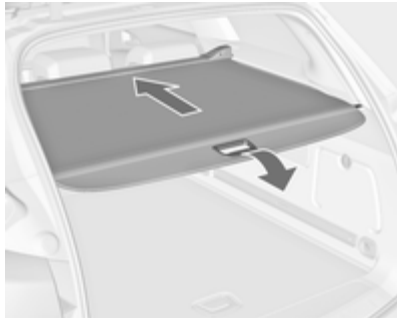

Pull the handle at the end of the cover to the rear and downwards. It rolls up automatically.

Cover in upper position

Push the handle at the end of the cover downwards. The rear of the cover is guided upwards automatically.

Removing cover

Open the load compartment cover.

Pull the release lever on the right side up and hold it. Lift the cover first on the right side and remove from retainers.

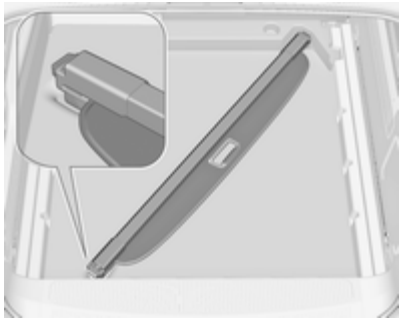

The removed cover can be stored under the rear floor cover like shown in the graphic.

Rear floor storage cover ⇨ 90.

Installing cover

Insert the left side of the load compartment cover in the recess, pull the release lever up and hold it, insert the right side of the load compartment cover and engage.

Rear floor storage cover

Rear floor cover, 3-door hatchback, 5-door hatchback

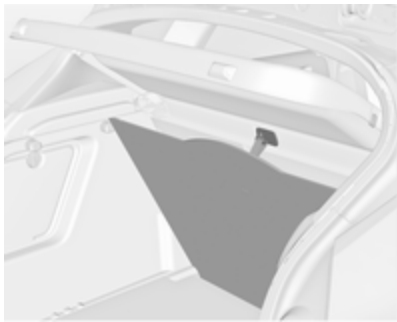

The rear floor cover can be lifted. Hinge the loop into the hook on the lower side of the load compartment cover.

Caution
Only use the hook for hanging up the rear floor cover and the height adjustable cover.

Height adjustable cover, 3-door hatchback, 5-door hatchback

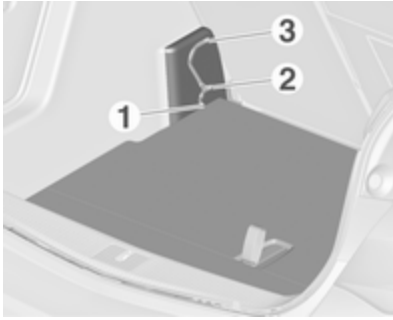

The height adjustable cover can be mounted in three positions:

- directly above the rear floor cover (**1**),
- in a middle position (**2**)
- in an upper position (**3**).

Caution
Ensure that the front and rear end of the height adjustable cover are attached to the same level.

Lifting

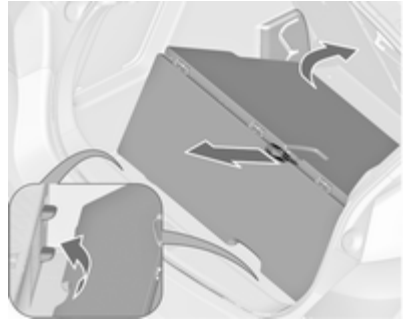

To lift the cover to a higher level, pull the loop backwards and lift the rear edge of the cover onto the corresponding supports.

Lowering

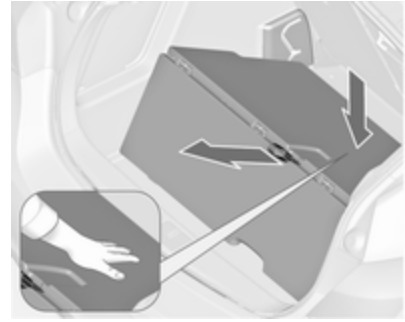

To lower the cover, pull the strap backwards and push down the front centre of the cover at the same time.

Caution
Do not lower the height adjustable cover to position **1** in vehicles equipped with subwoofer. The subwoofer could be damaged.

Note

- If mounted in position **2** or **3**, the space between the rear floor cover and the height adjustable cover can be used as a stowage compartment.
- The height adjustable cover can be lifted and hooked in with the strap when it is mounted in position **1** or **2**.
- If mounted in position **2**, an almost completely flat load bay is created if the rear seat backrests are folded forwards.
- Opening the side covers (e.g. when exchanging the rear light bulbs) is only possible with the height adjustable cover mounted in position **1** or **2**.

Caution
The height adjustable cover is able to withstand a load of no more than 100 kg.

Rear floor cover, Sports tourer

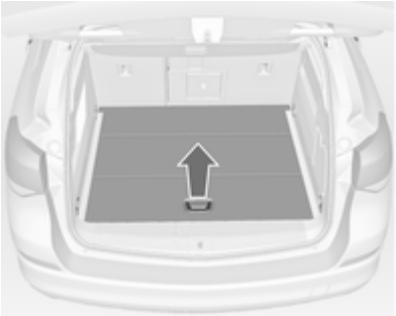

Lift the rear floor cover by pulling the handle. Fold and place the cover behind the rear seats.

The storage compartment below the rear floor cover can be divided by a bar.

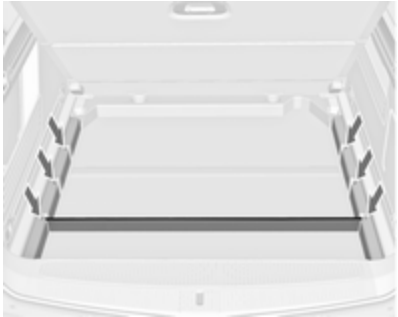

Insert the bar into the recesses at the sidewalls.

Caution
Insert the bar into the rearmost recess when transporting heavy objects in the load compartment. Otherwise the rear floor cover might be damaged.

Lashing eyes

The lashing eyes are designed to secure items against slippage, e.g. using lashing straps or luggage net.

Cargo management system

The FlexOrganizer is a flexible system for dividing up the load compartment.

The system consists of:

- adapters,
- mesh pockets,
- hooks,
- service box,
- strap set.

The components are fitted in rails on both side panels using adapters and hooks.

Installation of adapters in the rails

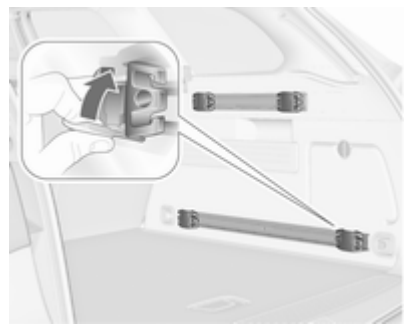

Fold open the handle plate, insert the adapter into the upper and lower groove of the rail and move to the required position. Turn the handle plate upwards to lock the adapter. To remove, turn the handle plate down and move out of the rail.

Variable partition net

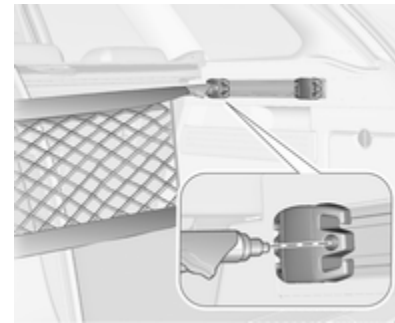

Insert adapters into the required position in the rails. Stick together the halves of the net rods.

To install, push rods together a little and insert into the relevant openings in the adapters.

To remove, press the net rods together and remove from the adapters.

Net pocket

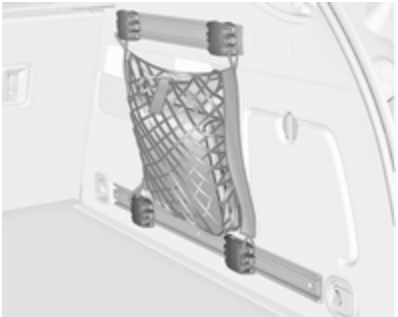

Insert adapters into the required position in the rails. The net pocket can be suspended from the adapters.

Installation of hooks in the rails

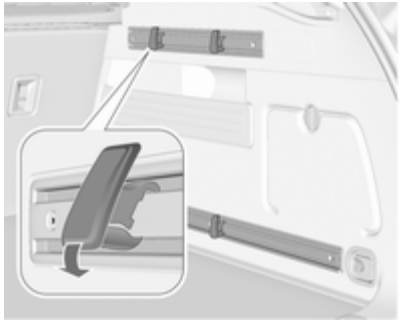

Insert the hook in the desired position first in the upper groove of the rail and then press in the lower groove. To remove, first pull out of the upper groove.

Service box

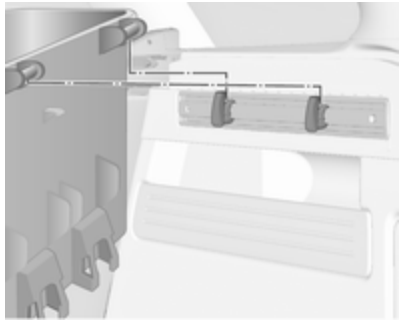

Install two hooks in the upper rail. Insert the upper brackets of the box from above into the hooks.

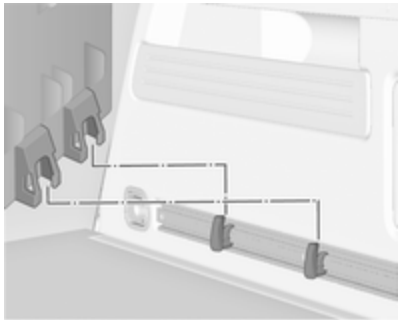

Alternatively install both hooks in the lower rail. Plug in the lower brackets of the box from above into the lower hooks.

Strap set

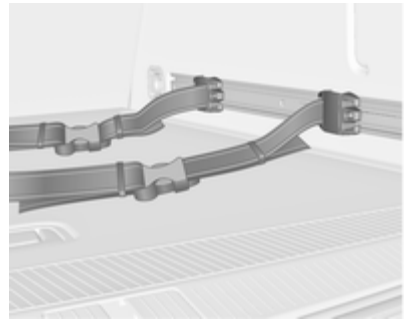

Insert the adapters of the strap set in a rail. Make sure that the belt is not twisted.

The strap set has two locks to open.

The belt can be tightened.

Safety net

The safety net is available on the Sports tourer and can be installed behind the rear seats or, if the rear seat backrests are folded and the seat cushions raised, behind the front seats.

Passengers must not be transported behind the safety net.

Installation

Behind the rear seats

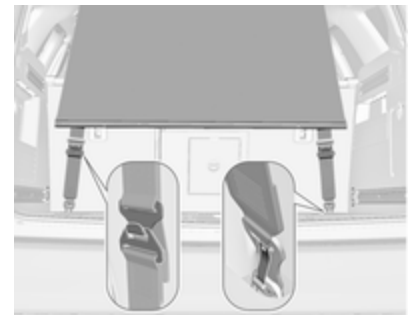

Attach lower hook with opening facing backward to eye in the right and left of the floor. Adjust strap length on safety net by attaching the upper hook to the eyes of the strap. Keep strap under tension while proceeding with installation of rod.

Behind the front seats

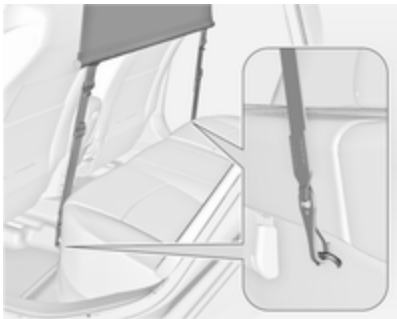

Attach strap to eyes underneath the rear seat cushion.

Fold backrests forward.

To get a flat load bay, first fold seat cushion before attaching the safety net. Move front seats forward to ease tension if necessary.

Installation of the rod

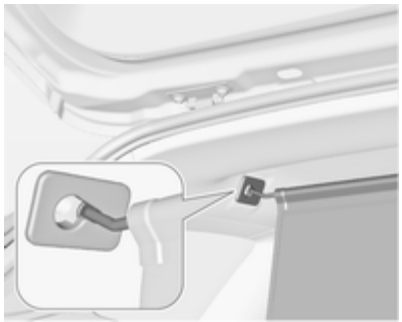

There are two installation openings in the roof frame: suspend and engage rod of net at one side, compress rod and suspend and engage at other side.

Load compartment ⇨ 84.

Removal

Unhook the safety net rods from the brackets in the roof frame. Detach straps from the eyes. Roll up the net and secure with a strap.

The removed safety net can be stored under the rear floor cover ⇨ 90.

Warning triangle

3-door hatchback, 5-door hatchback

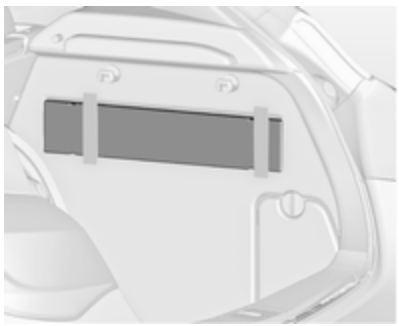

Stow the warning triangle in the space behind the strap on the right side of the load compartment.

Sports tourer

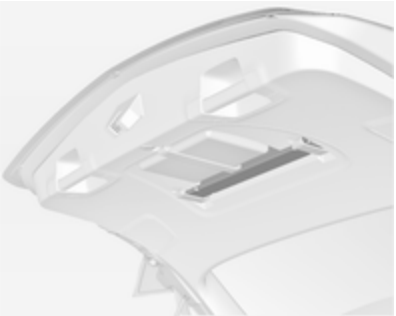

Fold down straps. Stow the warning triangle in the space behind the straps on the inside of the tailgate.

4-door notchback

Stow the warning triangle in the recess on the left side of the load compartment.

First aid kit

5-door hatchback

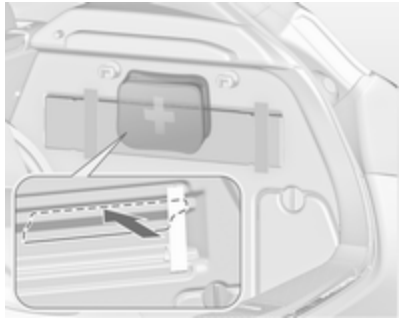

Stow the first aid kit in the stowage compartment behind the warning triangle.

Before first use, press in the interior trim at the top and at the sides of the perforation. Then fold the trim outward to gain access to the stowage compartment.

3-door hatchback

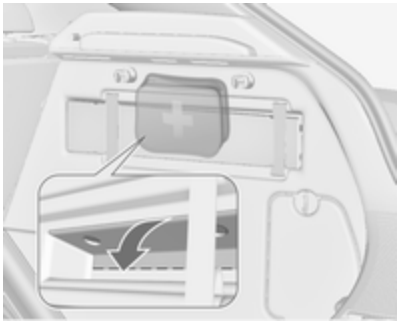

Stow the first aid kit in the stowage compartment behind the warning triangle.

Use the recesses to fold down the cover.

Depending on the equipment, the first aid kit can be stored in the rear storage ⇨ 88.

Sports tourer

Fold down strap. Stow the first aid kit in the space behind a strap on the inside of the tailgate.

4-door notchback

Stow the first aid kit in the space behind the mesh net on the right side of the load compartment.

Roof rack system

Roof rack

For safety reasons and to avoid damage to the roof, the vehicle approved roof rack system is recommended. For further information contact your workshop.

Follow the installation instructions and remove the roof rack when not in use.

Mounting roof rack

Detach the cover from each mounting point by using a coin.

5-door hatchback, 4-door notchback

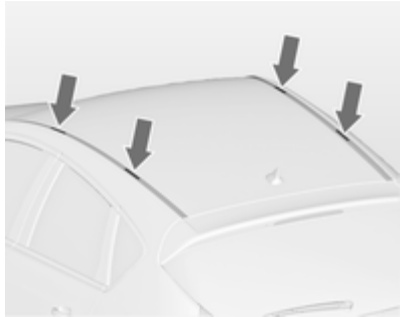

3-door hatchback

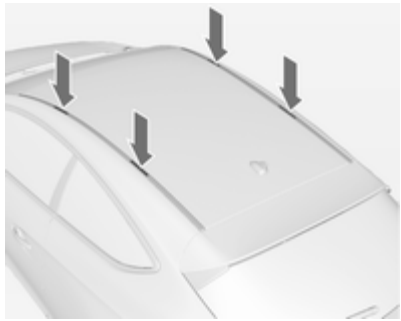

Sports tourer with roof railing

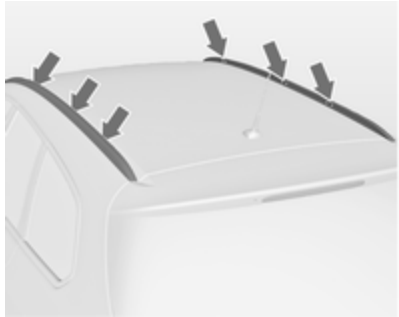

Fasten the roof rack in the area of the holes, indicated by the arrows in the illustration.

Loading information

- Heavy objects in the load compartment should be placed against the seat backrests. Ensure that the backrests are securely engaged. If objects can be stacked, heavier objects should be placed at the bottom.
- Secure objects with lashing straps attached to the lashing eyes ⇨ 93. Attach the height adjustable cover in the lowest position **(1)** ⇨ 90.
- Use the four hooks at the sidewalls of the load compartment for hanging up carrier bags. Maximum load: 5 kg per hook.

- Sports tourer: Use the hooks at the sidewalls of the load compartment for hanging up carrier bags. Press to fold out the hook.
- Secure loose objects in the load compartment to prevent them from sliding.
- When transporting objects in the load compartment, the backrests of the rear seats must not be angled forward.
- Do not allow the load to protrude above the upper edge of the backrests.
- Do not place any objects on the load compartment cover or the instrument panel, and do not cover the sensor on top of the instrument panel.
- The load must not obstruct the operation of the pedals, parking brake and gear selector lever, or hinder the freedom of movement of the driver. Do not place any unsecured objects in the interior.
- Do not drive with an open load compartment.

⚠ Warning

Always make sure that the load in the vehicle is securely stowed. Otherwise objects can be thrown around inside the vehicle and cause personal injury or damage to the load or car.

- The payload is the difference between the permitted gross

vehicle weight (see identification plate ⇨ 287) and the EC kerb weight.

To calculate the payload, enter the data for your vehicle in the Weights table at the front of this manual.

The EC kerb weight includes weights for the driver (68 kg), luggage (7 kg) and all fluids (tank 90 % full).

Optional equipment and accessories increase the kerb weight.

- Driving with a roof load increases the sensitivity of the vehicle to cross-winds and has a detrimental effect on vehicle handling due to the vehicle's higher centre of gravity. Distribute the load evenly and secure it properly with retaining straps. Adjust the tyre pressure and vehicle speed according to the load conditions. Check and retighten the straps frequently.

  Do not drive faster than 120 km/h.

  The permissible roof load is 75 kg for the 3-door / 5-door hatchback and 4-door notchback, for the Sports tourer it is 100 kg. The roof load is the combined weight of the roof rack and the load.

Instruments and controls

Controls 102
Warning lights, gauges and indicators 110
Information displays 121
Vehicle messages 128
Trip computer 132
Vehicle personalisation 134

Controls

Steering wheel adjustment

Unlock lever, adjust steering wheel, then engage lever and ensure it is fully locked.

Do not adjust steering wheel unless vehicle is stationary and steering wheel lock has been released.

Steering wheel controls

The Infotainment system, the cruise control and a connected mobile phone can be operated via the controls on the steering wheel.

Further information is available in the Infotainment system manual.

Driver assistance systems ⇨ 183.

Heated steering wheel

Activate heating by pressing button. Activation is indicated by the LED in the button.

The recommended grip areas of the steering wheel are heated quicker and to a higher temperature than the other areas.

Heating is operational when the engine is running and during an Autostop.

Stop-start system ⇨ 167.

Horn

Press .

Windscreen wiper/washer

Windscreen wiper

2 = fast
1 = slow
⊽ = interval wiping
O = off

For a single wipe when the windscreen wiper is off, press the lever down.

Do not use if the windscreen is frozen.

Switch off in car washes.

Adjustable wiper interval

Wiper lever in position ⊽.

Turn the adjuster wheel to adjust the desired wipe interval:

short interval	=	turn adjuster wheel upwards
long interval	=	turn adjuster wheel downwards

Automatic wiping with rain sensor

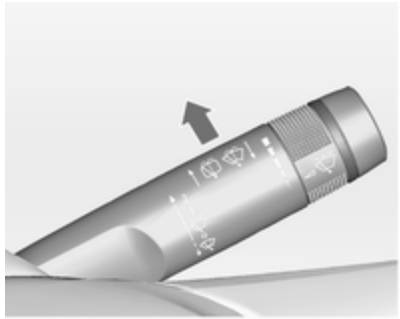

⊽ = automatic wiping with rain sensor

The rain sensor detects the amount of water on the windscreen and automatically regulates the frequency of the windscreen wiper.

If the wiper frequency is above 20 seconds the wiper arm moves slightly down to park position.

Adjustable sensitivity of the rain sensor

Turn the adjuster wheel to adjust the sensitivity:

low sensitivity	=	turn adjuster wheel downwards
high sensitivity	=	turn adjuster wheel upwards

Keep the sensor free from dust, dirt and ice.

Windscreen and headlight washer

Pull lever. Washer fluid is sprayed onto the windscreen and the wiper wipes a few times.

If the headlights are on, washer fluid is also sprayed onto the headlights, provided that the lever is pulled sufficiently long. Afterwards the headlight washer system is inoperable for 5 wash cycles or until engine or headlights have been switched off and on again.

Rear window wiper/washer

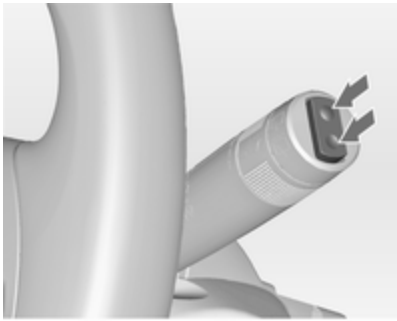

Press the rocker switch to activate the rear window wiper:

upper position	=	continuous operation
lower position	=	intermittent operation
middle position	=	off

Push lever. Washer fluid is sprayed onto the rear window and the wiper wipes a few times.

Do not use if the rear window is frozen.

Switch off in car washes.

The rear window wiper comes on automatically when the windscreen wiper is switched on and reverse gear is engaged.

Activation or deactivation of this function can be changed in the menu **Settings** in the Info-Display.

Vehicle personalisation ⇨ 134.

The rear window washer system is deactivated when the fluid level is low.

Outside temperature

A drop in temperature is indicated immediately and a rise in temperature after a time delay.

If outside temperature drops to 3 °C, a warning message is displayed in the Driver Information Centre with Uplevel-Display or Uplevel-Combi-Display.

⚠Warning
The road surface may already be icy even though the display indicates a few degrees above 0 °C.

Clock

Date and time are shown in the Info-Display.

Time and date settings

CD 300/CD 400/CD400plus and **Navi 600/Navi 900**

Press the **CONFIG** button. The menu **Settings** is displayed.

Select **Time & Date**.

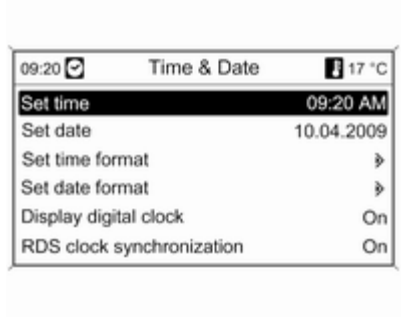

Selectable setting options:

- **Set time**: Changes the time shown on the display.
- **Set date**: Changes the date shown on the display.
- **Set time format**: Changes indication of hours between **12 hours** and **24 hours**.
- **Set date format**: Changes indication of date between **MM/DD/YYYY** and **DD.MM.YYYY**.
- **Display digital clock**: Switches on/off indication of time on the display.
- **RDS clock synchronization**: The RDS signal of most VHF transmitters automatically sets the time. RDS time synchronisation can take a few minutes. Some transmitters do not send a correct time signal. In such cases, it is recommended to switch off automatic time synchronisation.

Vehicle personalisation ⇨ 134.

Time and date settings

CD 600/Navi 650/Navi 950

Press the **Config** button and then select the **Time and Date** menu item to display the respective submenu.

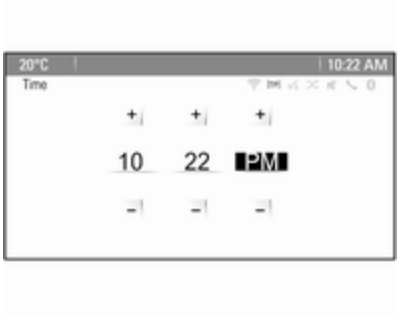

Note
If **RDS Auto Time Adjust** is activated, time and date are automatically set by the system.

See Infotainment system manual for further information.

Set time
To adjust the time settings, select the **Set Time** menu item. Turn the multifunction knob to adjust the first setting.

Press the multifunction knob to confirm the input. The coloured background moves to the next setting.

Adjust all settings.

Set date
To adjust the time settings, select the **Set Date** menu item. Turn the multifunction knob to adjust the first setting.

Press the multifunction knob to confirm the input. The coloured background moves to the next setting.

Adjust all settings.

Time format
To choose the desired time format, select **12 hr / 24 hr Format**. Activate **12 Hour** or **24 Hour**.

Vehicle personalisation ⇨ 134.

Power outlets

A 12 Volt power outlet is located in the front console.

A further 12 Volt power outlet is located in the rear console. Fold the cover downwards.

Sports tourer: A 12 Volt power outlet is located at the left sidewall in the load compartment.

Do not exceed the maximum power consumption of 120 watts.

With ignition off, the power outlets are deactivated. Additionally the power outlets are deactivated in the event of low vehicle battery voltage.

Electric accessories that are connected must comply with the electromagnetic compatibility requirements laid down in DIN VDE 40 839.

Do not connect any current-delivering accessories, e.g. electric charging devices or batteries.

Do not damage the outlet by using unsuitable plugs.

Stop-start system ⇨ 167.

Cigarette lighter

The cigarette lighter is located in the front console.

Press in cigarette lighter. It switches off automatically once the element is glowing. Pull out lighter.

Ashtrays

Caution
To be used only for ash and not for combustible rubbish.

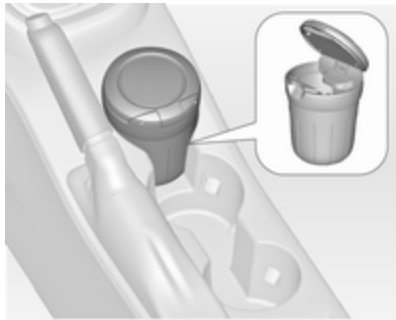

The portable ashtray can be placed in the cupholders.

Warning lights, gauges and indicators

Instrument cluster

In some versions, the needles of the instruments briefly rotate to the end position when the ignition is switched on.

Speedometer

Indicates vehicle speed.

Odometer

The bottom line displays the recorded distance in km.

Trip odometer

The top line displays the recorded distance since the last reset.

To reset, press the **SET/CLR** button on the turn signal lever for a few seconds ⇨ 121.

Some versions are equipped with a reset knob between speedometer and Driver Information Centre: to reset hold the knob depressed for a few seconds with the ignition on.

Trip odometer counts up to a distance of 2000 km and then restarts at 0.

Tachometer

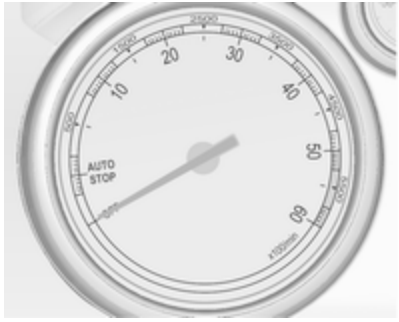

Displays the engine speed.

Drive in a low engine speed range for each gear as much as possible.

Caution
If the needle is in the red warning zone, the maximum permitted engine speed is exceeded. Engine at risk.

Fuel gauge

Displays the fuel level or gas level in the tank depending on the operation mode.

Control indicator ⬬ illuminates if the level in the tank is low. Refuel immediately if it flashes.

During liquid gas operation, the system automatically switches over to petrol operation when gas tanks are empty ⇨ 111.

Never run the tank dry.

Because of the fuel remaining in the tank, the top-up quantity may be less than the specified tank capacity.

Fuel selector

Press button **LPG** to switch between petrol and liquid gas operation. The LED ▬ status shows the current operating mode.

▬ off	=	petrol operation
▬ illuminates	=	liquid gas operation
▬ flashes	=	no switching is possible, one type of fuel is empty

As soon as the liquid gas tank is empty, petrol operation is automatically engaged until the ignition is switched off.

Fuel for liquid gas operation ⇨ 213.

Engine coolant temperature gauge

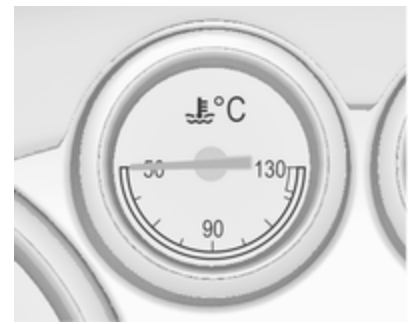

Displays the coolant temperature.

left area	=	engine operating temperature not yet reached
central area	=	normal operating temperature
right area	=	temperature too high

Caution
If engine coolant temperature is too high, stop vehicle, switch off engine. Danger to engine. Check coolant level.

Service display

The engine oil life system lets you know when to change the engine oil and filter. Based on driving conditions, the interval at which an engine oil and filter change will be indicated can vary considerably.

In the Uplevel-Display or Uplevel-Combi-Display, the remaining oil life duration is displayed in the **Vehicle Information Menu**.

In the Midlevel-Display, the remaining engine oil life duration is displayed by the control indicator ⚙, therefore the ignition must be switched on, with the engine not running.

The menu and function can be selected via the buttons on the turn signal lever.

To display the remaining engine oil life duration:

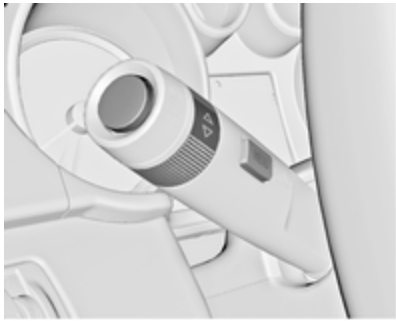

Press the **MENU** button to select the **Vehicle Information Menu**.

Turn the adjuster wheel to select **Remaining Oil Life**.

The system must be reset every time the engine oil is changed to allow proper functionality. Seek the assistance of a workshop.

Press the **SET/CLR** button to reset. Therefore the ignition must be switched on, with the engine not running.

When the system has calculated that engine oil life has been diminished, **Change Engine Oil Soon** or a warning

code appears in the Driver Information Centre. Have engine oil and filter changed by a workshop within one week or 500 km (whichever occurs first).

Driver Information Centre ⇨ 121.

Service information ⇨ 284.

Control indicators

The control indicators described are not present in all vehicles. The description applies to all instrument versions. Depending on the equipment, the position of the control indicators may vary. When the ignition is switched on, most control indicators will illuminate briefly as a functionality test.

The control indicator colours mean:

red	=	danger, important reminder
yellow	=	warning, information, fault
green	=	confirmation of activation
blue	=	confirmation of activation
white	=	confirmation of activation

Control indicators in the instrument cluster

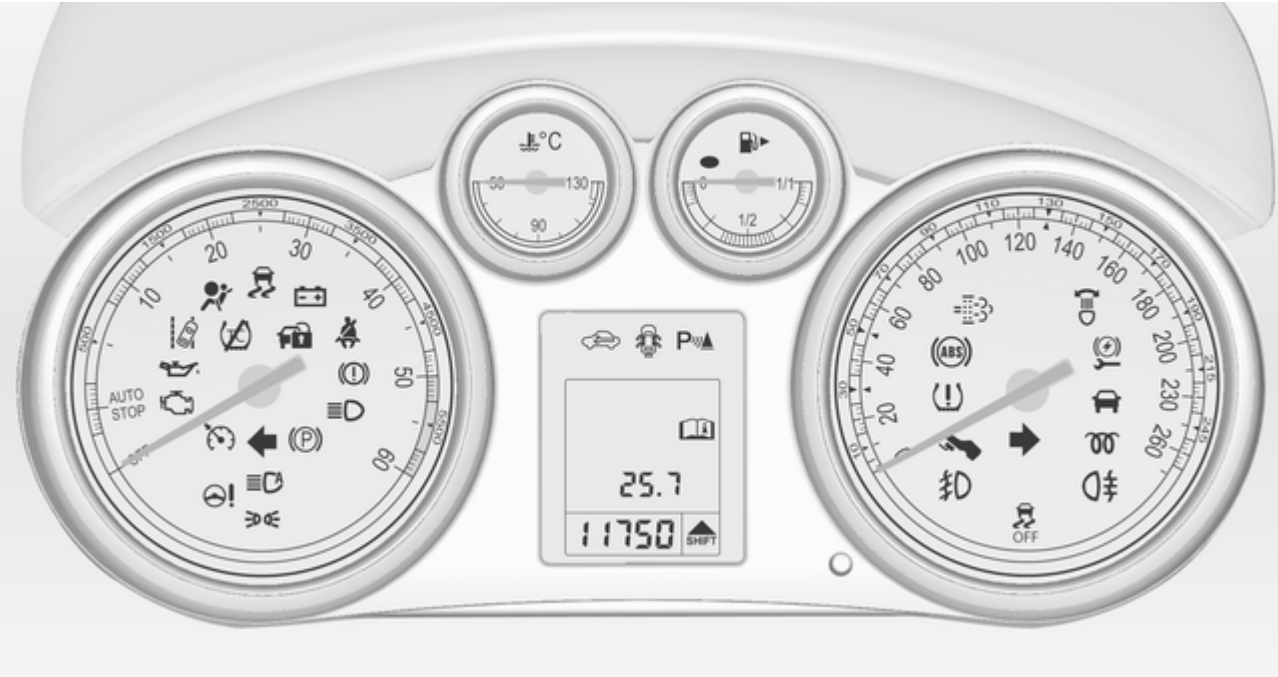

Control indicators in the centre console

Turn signal

⇦⇨ illuminates or flashes green.

Illuminates briefly

The parking lights are switched on.

Flashes

A turn signal or the hazard warning flashers are activated.

Rapid flashing: failure of a turn signal light or associated fuse, failure of turn signal light on trailer.

Bulb replacement ⇨ 232, Fuses ⇨ 252.

Turn signals ⇨ 149.

Seat belt reminder

Seat belt reminder on front seats

for driver's seat illuminates or flashes red.

2 for front passenger seat illuminates or flashes red, when the seat is occupied.

Illuminates

After the ignition has been switched on until the seat belt has been fastened.

Flashes

After having started the engine for a maximum of 100 seconds until the seat belt has been fastened.

Airbag and belt tensioners

illuminates red.

When the ignition is switched on, the control indicator illuminates for approx. 4 seconds. If it does not illuminate, does not go out after 4 seconds or illuminates whilst driving, there is a fault in the airbag system. Seek the assistance of a workshop. The airbags and belt pretensioners may fail to trigger in the event of an accident.

Deployment of the belt pretensioners or airbags is indicated by continuous illumination of .

⚠Warning
Have the cause of the fault remedied immediately by a workshop.

Belt pretensioners, airbag system ⇨ 49, ⇨ 52.

Airbag deactivation

2 illuminates yellow.

Illuminates for approx. 60 seconds after the ignition is switched on. The front passenger airbag is activated.

illuminates yellow.

The front passenger airbag is deactivated ⇨ 55.

⚠ Danger

Risk of fatal injury for a child using a child restraint system together with activated front passenger airbag.

Risk of fatal injury for an adult person with deactivated front passenger airbag.

Charging system

illuminates red.

Illuminates when the ignition is switched on and extinguishes shortly after the engine starts.

Illuminates when the engine is running

Stop, switch off engine. Vehicle battery is not charging. Engine cooling may be interrupted. The brake servo unit may cease to be effective. Seek the assistance of a workshop.

Malfunction indicator light

illuminates or flashes yellow.

Illuminates when the ignition is switched on and extinguishes shortly after the engine starts.

Illuminates when the engine is running

Fault in the emission control system. The permitted emission limits may be exceeded. Seek the assistance of a workshop immediately.

Flashes when the engine is running

Fault that could lead to catalytic converter damage. Ease up on the accelerator until the flashing stops. Seek the assistance of a workshop immediately.

Service vehicle soon

illuminates yellow.

Additionally a warning message or a warning code is displayed.

The vehicle needs a service.

Seek the assistance of a workshop.

Vehicle messages ⇨ 128.

Brake and clutch system

Brake and clutch fluid level

illuminates red.

The brake and clutch fluid level is too low ⇨ 229.

⚠ Warning

Stop. Do not continue your journey. Consult a workshop.

Illuminates after the ignition is switched on if the manual parking brake is applied ⇨ 176.

Operate pedal

illuminates or flashes yellow.

Clutch pedal must be operated to start the engine. Stop-start system ⇨ 167.

Illuminates

Brake pedal must be operated to release the electric parking brake ⇨ 176.

Flashes

Clutch pedal must be operated to start the engine ⇨ 165.

Electric parking brake

(P) illuminates or flashes red.

Illuminates

Electric parking brake is applied ⇨ 176.

Flashes

Electric parking brake is not fully applied or released. Switch on ignition, depress brake pedal and attempt to reset the system by first releasing and then applying the electric parking brake. If (P) remains flashing, do not drive and seek the assistance of a workshop.

Electric parking brake fault

illuminates or flashes yellow.

Illuminates

Electric parking brake is operating with degraded performance ⇨ 176.

Flashes

Electric parking brake is in service mode. Stop vehicle, apply and release the electric parking brake to reset.

⚠ Warning

Have the cause of the fault remedied immediately by a workshop.

Antilock brake system (ABS)

(ABS) illuminates yellow.

Illuminates for a few seconds after the ignition is switched on. The system is ready for operation when the control indicator extinguishes.

If the control indicator does not go out after a few seconds, or if it illuminates while driving, there is a fault in the ABS. The brake system remains operational but without ABS regulation.

Antilock brake system ⇨ 175.

Upshift

SHIFT illuminates green as control indicator, or is shown as a symbol in the Driver Information Centre with Uplevel-Display or Uplevel-Combi-

Display, when upshifting is recommended for fuel saving reasons.

On some versions gear shift indication is popped up as full page in the Driver Information Centre.

EcoFlex drive assistant ⇨ 132.

Power steering

⊖! illuminates yellow.

Illuminates with power steering reduced

Power steering is reduced due to overheating of the system. Control indicator extinguishes when the system has cooled down.

Stop-start system ⇨ 167.

Illuminates with power steering disabled

Failure in the power steering system. Consult a workshop.

Lane departure warning

illuminates green or flashes yellow.

Illuminates green

System is switched on and ready to operate.

Flashes yellow

System recognises an unintended lane change.

Ultrasonic parking assist

P illuminates yellow.

Fault in system

or

Fault due to sensors that are dirty or covered by ice or snow

or

Interference due to external sources of ultrasound. Once the source of interference is removed, the system will operate normally.

Have the cause of the fault in the system remedied by a workshop.

Ultrasonic parking assist ⇨ 198.

Electronic Stability Control off

OFF illuminates yellow.

The system is deactivated.

Electronic Stability Control and Traction Control system

illuminates or flashes yellow.

Illuminates

A fault in the system is present. Continued driving is possible. Driving stability, however, may deteriorate depending on road surface conditions.

Have the cause of the fault remedied by a workshop.

Flashes

The system is actively engaged. Engine output may be reduced and the vehicle may be braked automatically to a small degree.

Electronic Stability Control ⇨ 179, Traction Control system ⇨ 178.

Traction Control system off

illuminates yellow.

The system is deactivated.

Preheating

illuminates yellow.

Preheating is activated. Only activates when outside temperature is low.

Diesel particle filter

illuminates or flashes yellow.

The diesel particle filter requires cleaning.

Continue driving until extinguishes. If possible, do not allow engine speed to drop below 2000 rpm.

Illuminates

The diesel particle filter is full. Start cleaning process as soon as possible.

Flashes

The maximum filling level of the filter is reached. Start cleaning process immediately to avoid damage to the engine.

Diesel particle filter ⇨ 170, Stop-start system ⇨ 167.

Tyre pressure monitoring system

illuminates or flashes yellow.

Illuminates

Tyre pressure loss. Stop immediately and check tyre pressure.

Flashes

Fault in system or tyre without pressure sensor mounted (e.g. spare wheel). After 60-90 seconds the control indicator illuminates continuously. Consult a workshop.

Engine oil pressure

illuminates red.

Illuminates when the ignition is switched on and extinguishes shortly after the engine starts.

Illuminates when the engine is running

Caution
Engine lubrication may be interrupted. This may result in damage to the engine and/or locking of the drive wheels.

1. Depress clutch.
2. Select neutral gear, set selector lever to **N**.
3. Move out of the flow of traffic as quickly as possible without impeding other vehicles.
4. Switch off ignition.

⚠Warning

When the engine is off, considerably more force is needed to brake and steer. During an Autostop the brake servo unit will still be operational.

Do not remove key until vehicle is stationary, otherwise the steering wheel lock could engage unexpectedly.

Check oil level before seeking the assistance of a workshop ⇨ 226.

Low fuel

⬬ illuminates or flashes yellow.

Illuminates

Level in fuel tank is too low.

Flashes

Fuel used up. Refuel immediately. Never run the tank dry.

Catalytic converter ⇨ 171.

Bleeding the diesel fuel system ⇨ 231.

Immobiliser

🔒 flashes yellow.

Fault in the immobiliser system. The engine cannot be started.

Reduced engine power

illuminates yellow.

The engine power is limited. Consult a workshop.

Exterior light

illuminates green.

The exterior lights are on ⇨ 142.

High beam

illuminates blue.

Illuminates when high beam is on or during headlight flash ⇨ 143, or when high beam is on with high beam assist or intelligent light range ⇨ 145.

High beam assist

illuminates green.

The high beam assist or intelligent light range is activated ⇨ 143, ⇨ 145.

Adaptive forward lighting

illuminates or flashes yellow.

Illuminates

Fault in system.

Seek the assistance of a workshop.

Flashes

System switched to symmetrical low beam.

Control indicator flashes for approx. 4 seconds after the ignition is switched on as a reminder that the system has been activated ⇨ 145.

Automatic light control ⇨ 143.

Fog light

illuminates green.

The front fog lights are on ⇨ 149.

Rear fog light

illuminates yellow.

The rear fog light is on ⇨ 150.

Low washer fluid

illuminates yellow.

The washer fluid level is low.

Washer fluid ⇨ 228.

Cruise control

illuminates white or green.

Illuminates white

The system is on.

Illuminates green

Cruise control is active.

Cruise control ⇨ 183.

Adaptive cruise control

illuminates white or green.

Illuminates white

The system is on.

Illuminates green

Adaptive cruise control is active.

Adaptive cruise control ⇨ 186.

Vehicle detected ahead

illuminates green.

A vehicle ahead is detected in the same lane.

Adaptive cruise control ⇨ 186, Forward collision alert ⇨ 193.

Door open

illuminates red.

A door or the tailgate is open.

Information displays

Driver Information Centre

The Driver Information Centre (DIC) is located in the instrument cluster between speedometer and tachometer. It is available as Midlevel-Display, Uplevel-Display or Uplevel-Combi-Display.

Midlevel-Display indicates:

- overall odometer
- trip odometer
- some control indicators
- vehicle information

- trip/fuel information
- vehicle messages, displayed as code numbers ⇨ 128.

In the Uplevel-Display the following main menus can be selected by pushing the **MENU** button:

- **Vehicle Information Menu**
- **Trip/Fuel Information Menu**
- **Performance Menu**

In the Uplevel-Combi-Display, menu pages can be selected by pushing the **MENU** button, Menu symbols are indicated in the top line of the display:

- **Vehicle Information Menu**
- **Trip/Fuel Information Menu**
- ECO **ECO Information Menu**
- **Performance Menu**

Some of the displayed functions differ when the vehicle is being driven or at a standstill. Some functions are only available when the vehicle is being driven.

Vehicle personalisation ⇨ 134.
Memorised settings ⇨ 25.

Selecting menus and functions

The menus and functions can be selected via the buttons on the turn signal lever.

Press the **MENU** button to switch between the menus or to return from a submenu to the next higher menu level.

Turn the adjuster wheel to highlight a menu option or to set a numeric value.

Press the **SET/CLR** button to select a function or to confirm a message.

Vehicle Information Menu

Press the **MENU** button to select the **Vehicle Information Menu**, or on Uplevel-Combi-Display select 🚗.

Turn the adjuster wheel to select a submenu. Press the **SET/CLR** button to confirm.

Follow the instructions given in the submenus.

Possible submenus can be, depending on the version:

- **Unit**: displayed units can be changed
- **Tire Pressure**: checks tyre pressure of all wheels during driving ⇨ 261
- **Tire Load**: select tyre pressure category according to the actually inflated tyre pressure ⇨ 261

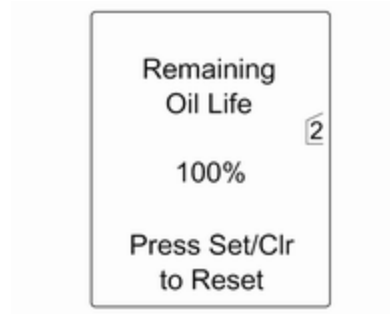

- **Remaining Oil Life**: indicates when to change the engine oil and filter ⇨ 112

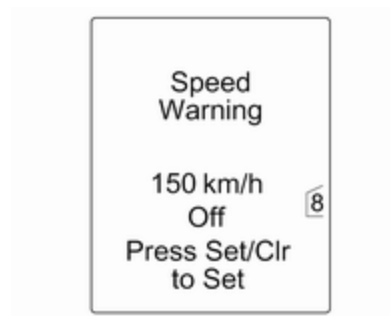

- **Speed Warning**: if exceeding the preset speed, a warning chime will be activated
- **Traffic Sign Assistant**: displays detected traffic signs for the current route section ⇨ 208
- **Following Dist.**: displays the distance to a preceding moving vehicle ⇨ 196

Selection and indication can be different between Midlevel-, Uplevel-, and Uplevel-Combi-Display.

Trip/Fuel Information Menu

Press the **MENU** button to select the **Trip/Fuel Information Menu**, or select / ⁝ \ on Uplevel-Combi-Display.

Turn the adjuster wheel to select a submenu. Press the **SET/CLR** button to confirm.

- Trip odometer 1
- Trip odometer 2
- Digital speed

Trip odometer 2 and digital speed are only available on vehicles with Uplevel-Display or Uplevel-Combi-Display.

Reset trip odometer by pressing the **SET/CLR** button on the turn signal lever for a few seconds or by pressing the reset knob between speedometer and Driver Information Centre with the ignition on.

On vehicles with trip computer more submenus are available.

Selection and indication can be different between Midlevel-, Uplevel-, and Uplevel-Combi-Display.

Trip/Fuel Information Menu, Trip Computer ⇨ 132.

ECO Information Menu

Press the **MENU** button to select **eco** in the top line of the Uplevel-Combi-Display.

Turn the adjuster wheel to select a submenu. Press the **SET/CLR** button to confirm.

Submenus are:

- **Shift indication**: Current gear is indicated inside an arrow. The figure above recommends upshifting for fuel saving reasons.

  Eco index display: The current fuel consumption is indicated on a segment display. For economical driving adapt your driving characteristic to keep the filled segments within the Eco area. The more segments are filled, the higher the fuel consumption. Simultaneously the current consumption value is indicated.

- **Top Consumers**: List of top comfort consumers currently switched on is displayed in descending order. Fuel saving potential is indicated. A switched off consumer disappears from the list and the consumption value will be updated.

  During sporadic driving conditions, the engine will activate the heated rear window automatically to increase the engine load. In this event, the heated rear window is indicated as one of the top consumers, without activation by the driver.

- **Economy Trend**: Displays the average consumption development over a distance of 50 km. Filled segments display the consumption in 5 km steps and shows the effect of topography or driving behaviour on fuel consumption.

Performance Menu

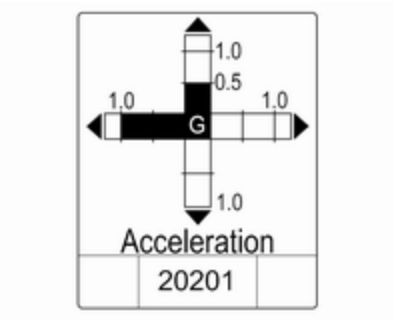

Press the **MENU** button to select the **Performance Menu**, or select on Uplevel-Combi-Display.

Turn the adjuster wheel to select a submenu. Press the **SET/CLR** button to confirm.

Submenus are:

- **Acceleration**: Display of current acceleration in all directions.
- **Lap Timer**: Display of lap times, top speed, average speed and average time. Follow the instructions given in the submenu.
- **Coolant Temp.**: Display of coolant temperature.
- **Battery Volt.**: Display of vehicle battery voltage.

Graphic-Info-Display, Colour-Info-Display

Depending on the vehicle configuration the vehicle has a Graphic- or Colour-Info-Display. The Info-Display is located in the instrument panel above the Infotainment system.

Graphic-Info-Display

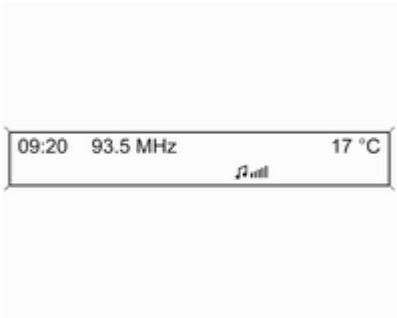

Depending on the Infotainment system, the Graphic-Info-Display is available in two versions.

Graphic-Info-Display indicates:

- time ⇨ 107
- outside temperature ⇨ 106
- date ⇨ 107
- Infotainment system, see description in the Infotainment system manual
- settings for vehicle personalisation ⇨ 134

Colour-Info-Display

The Colour-Info-Display indicates in colour:

- time ⇨ 107
- outside temperature ⇨ 106
- date ⇨ 107
- Infotainment system, see description in the Infotainment system manual
- navigation, see description in the Infotainment system manual
- system settings
- vehicle messages ⇨ 128
- settings for vehicle personalisation ⇨ 134

The type of information and how it is displayed depends on the equipment of the vehicle and the settings made.

Selecting menus and settings

Menus and settings are accessed via the display.

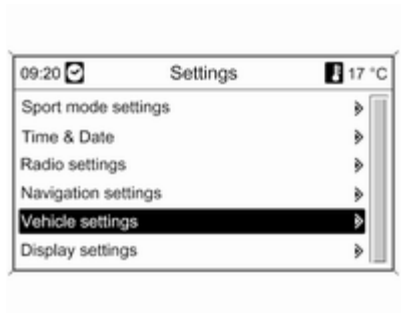

Selections are made via:

- menus
- function buttons and multifunction knob of the Infotainment system

Selecting with the Infotainment system

Select a function via the Infotainment system buttons. The menu of the selected function is displayed.

The multifunction knob is used to select an item and to confirm.

Multifunction knob

The multifunction knob is the central control element for the menus:

Turn

- To mark a menu option
- To set a numeric value or to display a menu option

Press (the outer ring)

- To select or activate the marked option
- To confirm a set value
- To switch a system function on/off

BACK button

Press button to:

- exit a menu without changing settings
- return from a submenu to a higher menu level
- delete the last character in a character sequence

Press and hold the button for a few seconds to delete the entire entry.

Vehicle personalisation ⇨ 134.

Memorised settings ⇨ 25.

Smartphone controller

The smartphone controller allows a smartphone to access vehicle data via WLAN or Bluetooth connection. This data can then be displayed and analysed on the smartphone.

Vehicle messages

Messages are indicated mainly in the Driver Information Centre (DIC), in some cases together with a warning and signal buzzer.

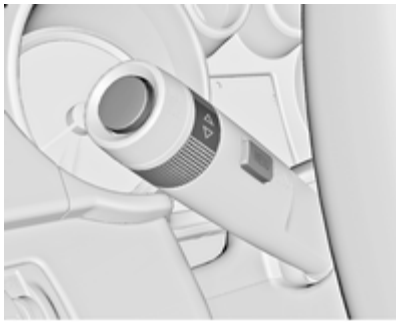

Press the **SET/CLR** button, the **MENU** button or turn the adjuster wheel to confirm a message.

Vehicle messages on the Midlevel-Display

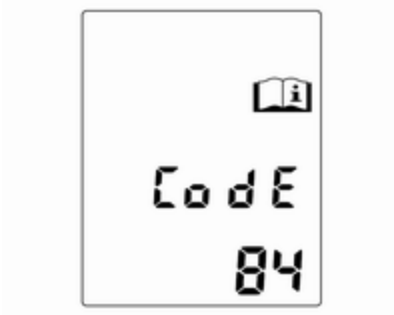

The vehicle messages are displayed as code numbers.

No.	Vehicle message
2	No radio remote control detected, depress clutch pedal for a restart
3	Engine coolant level low
4	Air conditioning off
5	Steering wheel is locked

No.	Vehicle message
6	Depress brake pedal to release electric parking brake
7	Turn steering wheel, switch ignition off and then on
9	Turn steering wheel, start engine again
12	Vehicle overloaded
13	Compressor overheated
15	Centre high-mounted brake light failure
16	Brake light failure
17	Headlight levelling malfunction
18	Left low beam failure
19	Rear fog light failure
20	Right low beam failure
21	Left sidelight failure
22	Right sidelight failure
23	Reversing light failure

No.	Vehicle message
24	Number plate light failure
25	Left front turn signal failure
26	Left rear turn signal failure
27	Right front turn signal failure
28	Right rear turn signal failure
29	Check trailer brake light
30	Check trailer reversing light
31	Check left trailer turn signal
32	Check right trailer turn signal
33	Check trailer rear fog light
34	Check trailer rear light
35	Replace battery in radio remote control
48	Clean side blind zone alert system
49	Lane departure warning unavailable
53	Tighten gas cap

No.	Vehicle message
54	Water in diesel fuel filter
55	Diesel particle filter is full ⇨ 170
56	Tyre pressure imbalance on front axle
57	Tyre pressure imbalance on rear axle
58	Tyres without TPMS sensors detected
59	Open and then close driver window
60	Open and then close front passenger window
61	Open and then close rear left window
62	Open and then close rear right window
65	Theft attempted
66	Service theft alarm system
67	Service steering wheel lock

No.	Vehicle message
68	Service power steering
69	Service suspension system
70	Service level control system
71	Service rear axle
74	Service AFL
75	Service air conditioning
76	Service side blind zone alert system
77	Service lane departure warning
79	Top up engine oil
81	Service transmission
82	Change engine oil soon
83	Service adaptive cruise control
84	Engine power is reduced
89	Service vehicle soon
94	Shift to park before exiting
95	Service airbag

No.	Vehicle message
128	Bonnet open
134	Park assist fault, clean bumper
136	Service parking assist
145	Check washer fluid level
174	Low vehicle battery
258	Park assist off

Vehicle messages on the Uplevel-Display or Uplevel-Combi-Display

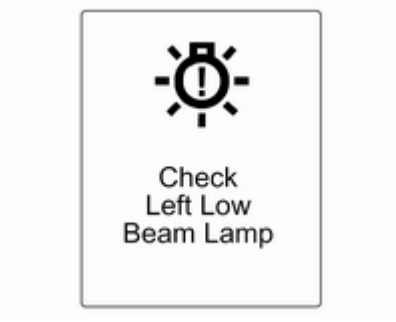

The vehicle messages are displayed as text. Follow the instructions given in the messages.

The system displays messages regarding the following topics:

- Fluid levels
- Anti-theft alarm system
- Brakes
- Drive systems
- Ride control systems
- Cruise control
- Object detection systems
- Lighting, bulb replacement
- Wiper/washer system
- Doors, windows
- Radio remote control
- Seat belts
- Airbag systems
- Engine and transmission
- Tyre pressure
- Diesel particle filter
- Vehicle battery status

Vehicle messages on the Colour-Info-Display

Some important messages appear additionally in the Colour-Info-Display. Press the multifunction knob to confirm a message. Some messages only pop up for a few seconds.

Warning chimes

When starting the engine or whilst driving

Only one warning chime will sound at a time.

The warning chime regarding unfastened seat belts has priority over any other warning chime.

- If seat belt is not fastened.
- If a door or the tailgate is not fully closed when starting off.
- If a certain speed is exceeded with parking brake applied.
- If a programmed speed is exceeded.
- If a warning message or a warning code appears in the Driver Information Centre.
- If the parking assist detects an object.
- If unintended lane change occurs.
- If the reverse gear is engaged and the rear end carrier extended.
- If the diesel particle filter has reached the maximum filling level.

When the vehicle is parked and/or the driver's door is opened

- When the key is in the ignition switch.
- With exterior lights on.

During an Autostop

- If the driver's door is opened.

Battery voltage

When the vehicle battery voltage is running low, a warning message or warning code 174 will appear in the Driver Information Centre.

1. Switch off immediately any electric consumers which are not required for a safe ride, e.g. seat heating, heated rear window or other main consumers.
2. Charge the vehicle battery by driving continuously for a while or by using a charging device.

The warning message or warning code will disappear after the engine has been started twice consecutively without a voltage drop.

If the vehicle battery cannot be recharged, have the cause of the fault remedied by a workshop.

Trip computer

The menus and functions can be selected via the buttons on the turn signal lever ⇨ 121.

Press the **MENU** button to select the **Trip/Fuel Information Menu**, or select /⁝\ on the Uplevel-Combi-Display.

Trip/Fuel Information Menu on Uplevel-Display

Turn the adjuster wheel to select one of the submenus:

- Trip odometer 1
- Trip odometer 2
- Range
- Average consumption
- Instantaneous consumption
- Average speed
- Digital speed
- Traffic sign assistant
- Route guidance

Trip/Fuel Information Menu on Uplevel-Combi-Display

Turn the adjuster wheel to select the submenus:

- Trip odometer 1
- Average consumption 1
- Average speed 1

- Trip odometer 2
- Average consumption 2
- Average speed 2

- Digital speed
- Range
- Instantaneous consumption
- Route guidance

Trip computer 1 and 2

The information of two trip computers can be reset separately for odometer, average consumption and average speed by pressing the **SET/CLR** button, making it possible to display different trip information for different drivers.

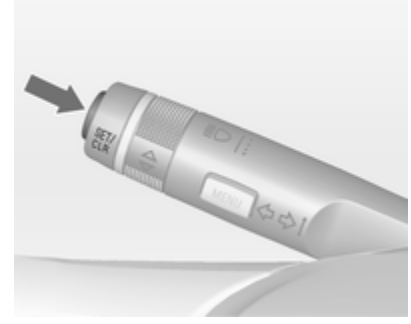

Trip odometer

Trip odometer displays the recorded distance since a certain reset.

Trip odometer counts up to a distance of 2000 km and then restarts at 0.

To reset, press the **SET/CLR** button for a few seconds.

Range

Range is calculated from current fuel tank content and current consumption. The display shows average values.

After refuelling, the range is updated automatically after a brief delay.

When the fuel level in the tank is low, a message appears on vehicles with Uplevel-Display or Uplevel-Combi-Display.

When the tank has to be refuelled immediately, a warning code or warning message is displayed on vehicles with Midlevel- and Uplevel-Display or Uplevel-Combi-Display.

Additionally the control indicator ⬬ in the fuel gauge illuminates or flashes ⇨ 120.

Average consumption

Display of average consumption. The measurement can be reset at any time and starts with a default value.

To reset, press the **SET/CLR** button for a few seconds.

Instantaneous consumption

Display of the instantaneous consumption.

Average speed

Display of average speed. The measurement can be reset at any time.

To reset, press the **SET/CLR** button for a few seconds.

Digital speed

Digital display of the instantaneous speed.

Traffic sign assistant

Indicates detected traffic signs for the current route section ⇨ 208.

Route guidance

Additionally to the navigation information in the Color-Info-Display, route guidance is displayed in the Driver Information Centre.

Vehicle personalisation

The vehicle's behaviour can be personalised by changing the settings in the Info-Display.

Some of the personal settings for different drivers can be memorised individually for each vehicle key. Memorised settings ⇨ 25.

Depending on vehicle equipment and country-specific regulations some of the functions described below may not be available.

Some functions are only displayed or active when the engine is running.

Personal settings in the Graphic-Info-Display

CD 300/CD 400/CD400plus

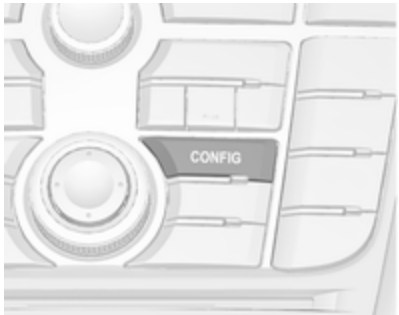

Press the **CONFIG** button. The menu **Settings** is displayed.

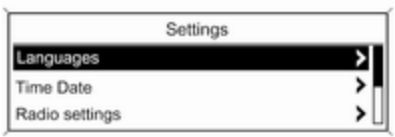

The following settings can be selected by turning and pressing the multifunction knob:

- **Sport mode settings**
- **Languages**
- **Time Date**
- **Radio settings**
- **Phone settings**
- **Vehicle settings**

In the corresponding submenus the following settings can be changed:

Sport mode settings

The driver can select the functions which will be activated in Sport mode ⇨ 181.

- **Sport suspension**: Damping becomes harder.
- **Sport powertrain performance**: Accelerator pedal and gear change characteristics become more responsive.
- **Sport steering**: Steering support is reduced.
- **Swap backlight colour main instr.**: Change of instrument illumination colour.

Languages

Selection of the desired language.

Time Date

See Clock ⇨ 107.

Radio settings

See description for Infotainment system in the Infotainment system manual.

Phone settings

See description for Infotainment system in the Infotainment system manual.

Vehicle settings

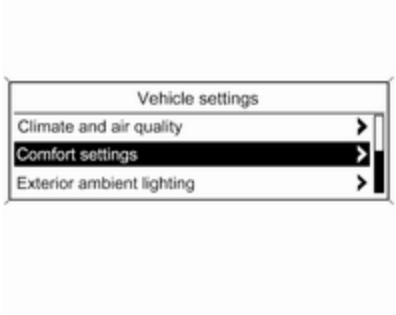

- **Climate and air quality**

  Auto fan speed: Modifies the level of the cabin airflow of the climate control in automatic mode.

  Climate control mode: Controls the state of the cooling compressor when the vehicle is started. Last setting (recommended) or at vehicle start either always ON or always OFF.

  Auto rear demist: Activates automatically rear heated window.

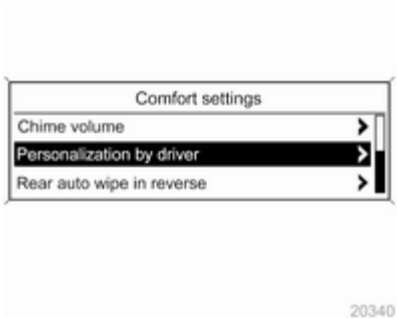

- **Comfort settings**

  Chime volume: Changes the volume of warning chimes.

  Personalization by driver: Activates or deactivates the personalisation function.

  Rear auto wipe in reverse: Activates or deactivates automatically switching on of the rear window wiper when reverse gear is engaged.

- **Park assist / Collision detection**

  Park assist: Activates or deactivates the ultrasonic parking assist.

  Auto collision preparation: Activates or deactivates the automatic brake functionality of the vehicle in the event of imminent collision danger. The following is selectable: the system will take over brake control, warn by chimes only or is deactivated.

  Side blind zone alert: Changes the settings for the side blind spot alert system.

- **Exterior ambient lighting**

  Duration upon exit of vehicle: Activates or deactivates and change the duration of exit lighting.

  Exterior lighting by unlocking: Activates or deactivates the welcome lighting.

- **Power door locks**

  Auto door lock: Activates or deactivates the automatic door unlocking function after switching off ignition. Activates or deactivates the automatic door locking function after driving off.

  Stop door lock if door open: Activates or deactivates the

automatic door locking function while a door is open.

Delayed door lock: Activates or deactivates the delayed door locking function.

- **Remote locking, unlocking, starting**

  Remote unlock feedback: Activates or deactivates the hazard warning flasher feedback whilst unlocking.

  Remote door unlock: Changes the configuration to unlock only the driver's door or the whole vehicle whilst unlocking.

  Auto relock doors: Activates or deactivates the automatic relock function after unlocking without opening the vehicle.

- **Restore factory settings**

  Restore factory settings: Reset all settings to the default settings.

Personal settings in the Colour-Info-Display

Navi 600/Navi 900

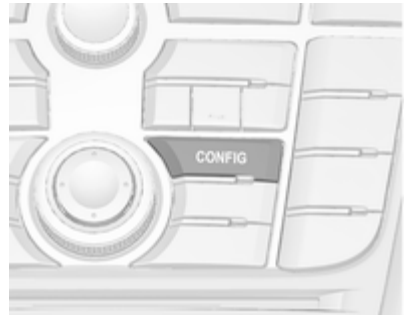

Press the **CONFIG** button. The menu **Settings** is displayed.

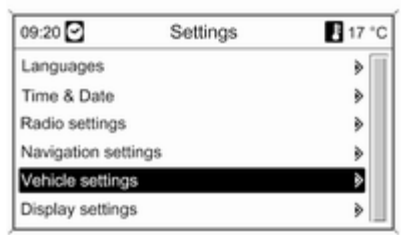

The following settings can be selected by turning and pressing the multifunction knob:

- **Sport mode settings**
- **Languages**
- **Time & Date**
- **Radio settings**
- **Phone settings**
- **Navigation settings**
- **Vehicle settings**
- **Display settings**

In the corresponding submenus the following settings can be changed:

Sport mode settings

The driver can select the functions which will be activated in Sport mode ⇨ 181.

- **Sport suspension**: Damping becomes harder.
- **Sport powertrain performance**: Accelerator pedal and gear change characteristics become more responsive.

- **Sport steering**: Steering support is reduced.
- **Swap backlight colour main instr.**: Change of instrument illumination colour.

Languages
Selection of the desired language.

Time & Date
See Clock ⇨ 107.

Radio settings
See description for Infotainment system in the Infotainment system manual.

Phone settings
See description for Infotainment system in the Infotainment system manual.

Navigation settings
See description for Infotainment system in the Infotainment system manual.

Vehicle settings

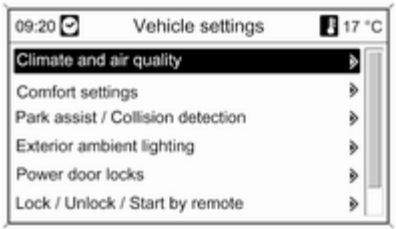

- **Climate and air quality**

  Auto fan speed: Modifies the level of the cabin airflow of the climate control in automatic mode.

  Climate control mode: Controls the state of the cooling compressor when the vehicle is started. Last setting (recommended) or at vehicle start either always ON or always OFF.

  Auto rear demist: Activates automatically the rear heated window.

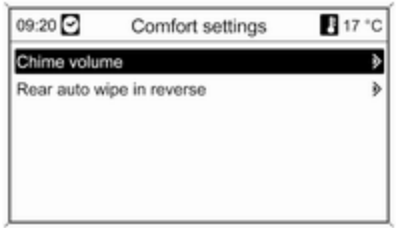

- **Comfort settings**

  Chime volume: Changes the volume of warning chimes.

  Rear auto wipe in reverse: Activates or deactivates automatically switching on of the rear window wiper when reverse gear is engaged.

- **Park assist / Collision detection**

  Park assist: Activates or deactivates the ultrasonic parking assist.

  Auto collision preparation: Activates or deactivates the automatic brake functionality of the

vehicle in the event of imminent collision danger. The following is selectable: the system will take over brake control, warn by chimes only or is deactivated.

Side blind zone alert: Changes the settings for the side blind spot alert system.

- **Exterior ambient lighting**

  Duration upon exit of vehicle: Activates or deactivates and changes the duration of exit lighting.

  Exterior lighting by unlocking: Activates or deactivates the welcome lighting.

- **Power door locks**

  Auto door lock: Activates or deactivates the automatic door unlocking function after switching off ignition. Activates or deactivates the automatic door locking function after driving off.

  Prevent doorlock while door open: Activates or deactivates the automatic door locking function while a door is open.

- **Lock / Unlock / Start by remote**

  Remote unlock feedback: Activates or deactivates the hazard warning flasher feedback whilst unlocking.

  Remote door unlock: Changes the configuration to unlock only the driver's door or the whole vehicle whilst unlocking.

  Auto relock doors: Activates or deactivates the automatic relock function after unlocking without opening the vehicle.

- **Restore factory settings**

  Restore factory settings: Resets all settings to the default settings.

Display settings

Selectable display settings:

- **Day mode**: Optimisation for daylight conditions.
- **Night mode**: Optimisation for darkness.
- **Automatic mode**: The display changes mode when the vehicle lights are switched on/off.
- **Rear view camera**: Changes the settings for the rear view camera.
- **Picture frame**: See description for Infotainment system in the Infotainment system manual.

Settings in the Colour-Info-Display

CD 600/Navi 650/Navi 950

Press the **CONFIG** button on the Infotainment system faceplate to enter the Configuration menu.

Turn the multifunction knob to scroll upwards or downwards in the list. Press the multifunction knob (Navi 950 / Navi 650: press the outer ring) to select a menu item.

- Sport Mode Profile
- Languages
- Time and Date
- Radio Settings
- Phone Settings
- Navigation Settings
- Display Settings
- Vehicle Settings

In the corresponding submenus the following settings can be changed:

Sport Mode Profile

- **Engine Sport Performance**:

  Accelerator pedal and gear change characteristics become more responsive.
- **Sport Mode Back Lighting**:

  Change of instrument illumination colour.
- **Sport Suspension**: Damping becomes harder.
- **Sport Steering**: Steering support is reduced.

Languages

Selection of the desired language.

Time and Date

See Infotainment system manual for further information.

Radio Settings

See Infotainment system manual for further information.

Phone Settings

See Infotainment system manual for further information.

Navigation Settings

See Infotainment system manual for further information.

Display Settings

- **Home Page Menu**:

  See Infotainment system manual for further information.
- **Rear Camera Options**:

  Press to adjust the rear camera options ⇨ 206.
- **Display Off**:

  See Infotainment system manual for further information.
- **Map Settings**:

  See Infotainment system manual for further information.

Vehicle Settings

- **Climate and Air Quality**

  Auto Fan Speed: Modifies the fan regulation. Changed setting will be active after switching the ignition off and on again.

  Air Conditioning Mode: Activates or deactivates cooling when switching

on the ignition or uses the last chosen setting.

Auto Demist: Activate or deactivate auto demist.

Auto Rear Demist: Activates automatically the rear heated window.

- **Comfort and Convenience**

  Chime Volume: Change the volume of warning chimes.

  Personalisation by Driver: Activates or deactivates the personalisation function.

  Auto Reverse Gear Wiper: Activate or deactivate automatically switching on of the rear window wiper when reverse gear is engaged.

- **Collision Detection Systems**

  Park Assist: Activate or deactivate the ultrasonic sensors.

  Automatic Collision Preparation: Activates or deactivates the automatic brake functionality of the vehicle in the event of imminent collision danger. The following is selectable: the system will take over brake control, warn by chimes only or is deactivated completely.

  Side Blind Zone Alert: Activates or deactivates the side blind spot alert system.

- **Lighting**

  Vehicle Locator Lights: Activate or deactivate the entry lighting.

  Exit Lighting: Activate or deactivate and change the duration of exit lighting.

- **Power Door Locks**

  Open Door Anti Lock Out: Activate or deactivate the automatic door locking function while a door is open.

  Auto Door Lock: Activates or deactivates the automatic door unlocking function after switching off ignition. Activates or deactivates the automatic door locking function after driving-off.

  Delay Door Lock: Activate or deactivate the delayed door locking function.

- **Remote Lock/Unlock/Start**

  Remote Lock Feedback: Activate or deactivate the hazard warning light feedback whilst locking.

  Remote Unlock Feedback: Activate or deactivate the hazard warning flasher feedback whilst unlocking.

  Remote Door Unlock: Change the configuration to unlock only the driver's door or the whole vehicle whilst unlocking.

  Relock Remotely Unlocked Doors: Activates or deactivates the automatic relock function after unlocking without opening the vehicle.

- **Return to Factory Settings?**: Reset all settings to the default settings.

Lighting

Exterior lighting 142
Interior lighting 151
Lighting features 152

Exterior lighting

Light switch

Turn light switch:

0 = lights off
⇛⇚ = sidelights
≣D = low beam

Control indicator ⇛⇚ ⇨ 120.

Light switch with Automatic light control

Turn light switch:

AUTO = automatic light control: low beam is switched on and off automatically depending on external lighting conditions.
⏻ = activation or deactivation of the automatic light control. Switch turns back to **AUTO**.
⇛⇚ = sidelights
≣D = low beam

In the Driver Information Centre with Uplevel-Display or Uplevel-Combi-Display, the current status of the automatic light control is displayed.

When switching on the ignition, automatic light control is active.

When low beam is on, ≫⊂ lights up. Control indicator ≫⊂ ⇨ 120.

Tail lights

Tail lights are illuminated together with low/high beam and sidelights.

Automatic light control

When the automatic light control function is switched on and the engine is running, the system switches between daytime running light and headlights automatically depending on the lighting conditions and information given by the rain sensor system.

Daytime running light ⇨ 145.

Automatic headlight activation

During poor lighting conditions the headlights are switched on.

Furthermore the headlights are switched on if the windscreen wipers have been activated for several wipes.

Tunnel detection

When a tunnel is entered the headlights are switched on immediately.

Adaptive forward lighting ⇨ 145.

High beam

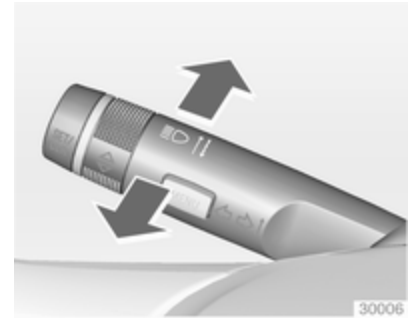

To switch from low to high beam, push lever.

To switch to low beam, push lever again or pull.

High beam assist

This feature allows high beam as main driving light by night and when vehicle speed is faster than 40 km/h.

It switches to low beam when:

- a sensor detects the lights of oncoming or preceding vehicles
- the vehicle speed is slower than 20 km/h
- it is foggy or snowy
- driving in urban areas

If there are no restrictions detected, the system switches back to high beam.

Activation

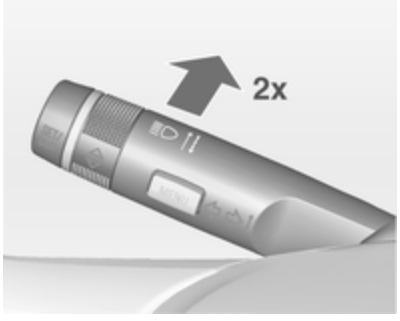

The high beam assist is activated by pushing the indicator lever twice with a speed above 40 km/h.

The green control indicator illuminates continuously when the assist is activated, the blue one illuminates when high beam is on.

Control indicator ⇨ 120.

Deactivation

Push indicator lever once. It is also deactivated when front fog lights are switched on.

If a headlight flash is activated when the high beam is on, the high beam assist will be deactivated.

If a headlight flash is activated when the high beam is off, the high beam assist will stay activated.

The latest setting of the high beam assist will remain after the ignition is switched on again.

Headlight flash

To activate the headlight flash, pull lever.

Headlight range adjustment

Manual headlight range adjustment

To adapt headlight range to the vehicle load to prevent dazzling: turn thumb wheel to required position.

0 = front seats occupied
1 = all seats occupied
2 = all seats occupied and load compartment laden
3 = driver's seat occupied and load compartment laden.

Dynamic automatic headlight levelling ⇨ 145.

Headlights when driving abroad

The asymmetrical headlight beam extends visibility at the edge of the road at the passenger side.

However, when driving in countries where traffic drives on the opposite side of the road, adjust the headlights to prevent dazzling of oncoming traffic.

Vehicles with halogen headlight system

The headlights do not have to be adjusted.

Vehicles with Xenon headlight system

1. Key in ignition switch.
2. Pull turn signal lever and hold (headlight flash).
3. Switch on ignition.
4. After approx. 5 seconds the control indicator ⚠ starts flashing and an acoustic signal sounds.

Control indicator ⚠ ⇨ 120.

Every time the ignition is switched on, ⚠ flashes as a reminder for approx. 4 seconds.

For deactivation operate the same procedure as described above. ⚠ will not flash when function is deactivated.

Daytime running lights

Daytime running lights increase visibility of the vehicle during daylight.

They are switched on automatically when ignition is on.

If the vehicle is equipped with automatic light control function, the system switches between daytime running light and low/high beam automatically depending on the lighting conditions and information given by the rain sensor system. Automatic light control ⇨ 143.

Adaptive forward lighting

The Adaptive forward lighting functions are only available with Bi-Xenon headlights. Light range, light distribution and intensity of light are variably triggered depending on the light conditions, weather and road type.

With the light switch in position **AUTO** all lighting functions are available.

The following functions are available also with light switch in position ≡D:

- Dynamic curve lighting
- Cornering light
- Reversing function
- Dynamic automatic headlight levelling

Playstreet lighting

Activated automatically at low speed up to approx. 30 km/h. The light beam is turned at an angle of 8° to the roadside.

Town lighting

Activated automatically at a speed range between approx. 40 and 55 km/h and when street lights are detected by the light sensor. The light range is reduced by an extended light distribution.

Country lighting

Activated automatically at a speed range between approx. 55 and 115 km/h. The beam of light and the brightness is different between the left and the right side.

Motorway lighting

Activated automatically at a speed above approx. 115 km/h and minimal steering movements. It switches on after a delay or directly when the vehicle is powerfully accelerated. The light beam is longer and brighter.

Adverse weather lighting

Activated automatically up to a speed of approx. 70 km/h, when the rain sensor recognizes condensation or the wiper operates continuously. The range, distribution and light intensity is regulated variably depending on visibility.

Dynamic curve lighting

The light beam pivots based on steering wheel angle and speed, improving lighting in curves.

Control indicator ⇨ 120.

Corner lighting

On tight bends or when turning off, depending on the steering angle or the turn signal light, an additional left or right reflector is switched on which illuminates the road at a right angle to the direction of travel. It is activated up to a speed of 40 km/h.

Control indicator ⇨ 120.

Reversing function

If the headlights are on and reverse gear is engaged, both corner lights are switched on. They remain illuminated for 20 seconds after disengaging reverse gear or until driving faster than 17 km/h in a forward gear.

High Beam Assist

This feature allows high beam as main driving light by night and when vehicle speed is faster than 40 km/h.

It switches to low beam when:

- the camera in the windscreen detects the lights of oncoming or preceding vehicles
- the vehicle speed is slower than 20 km/h
- it is foggy or snowy
- driving in urban areas

If there are no restrictions detected, the system switches back to high beam.

Activation

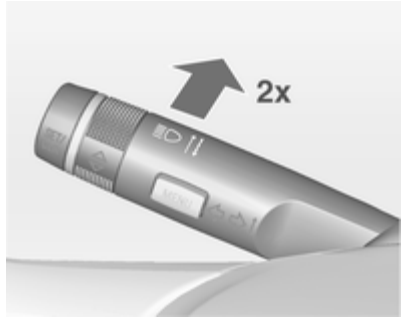

The high beam assist is activated by pushing the indicator lever twice with a speed above 40 km/h.

The green control indicator illuminates continuously when the assist is activated, the blue one illuminates when high beam is on.

Control indicator ⇨ 120.

Deactivation

Push indicator lever once. It is also deactivated when front fog lights are switched on.

If a headlight flash is activated when the high beam is on, the high beam assist will be deactivated.

If a headlight flash is activated when the high beam is off, the high beam assist will stay activated.

High beam assist is alwayas active after the ignition is switched on.

Intelligent light ranging with automatic high beam activation

Intelligent light ranging uses the properties of Bi-Xenon headlights to extend the light range of the low beam by up to 400 metres and additionally activates automatic high beam without dazzling or disturbing oncoming or preceding traffic.

High beam is deactivated and the low beam light range is reduced to avoid dazzling when the following restrictions are detected by the front camera in the windscreen:

- a preceding vehicle is recognised,
- an oncoming vehicle is recognised,
- urban areas are entered,
- it is foggy or snowy.

If there are no restrictions detected, the system switches back to high beam.

When the system is active, the front camera monitors the area ahead of the vehicle and ensures an optimum light distribution for maximum driver vision during almost all conditions.

Intelligent light ranging with automatic high beam activation therefore reduces the difference between conventional low and high beam without drastic changes in light-range, distribution and intensity.

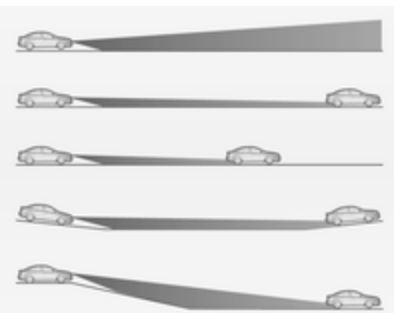

A special topographical evaluation function detects preceding vehicles on hills or slopes by recognising the rear light moving ahead. The system adjusts the height of the light range to ensure optimum illumination on the road ahead without dazzling.

Activation

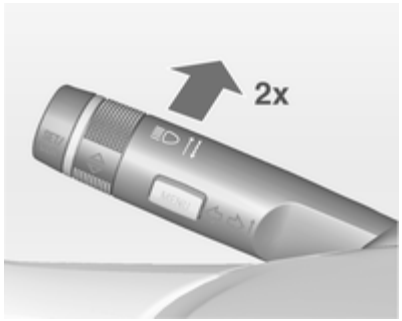

Intelligent light ranging and automatic high beam activation are switched on together by pushing the indicator lever twice. They can be switched on with ignition on.

Automatic high beam activation operates at a speed above 40 km/h and deactivates below 20 km/h. Intelligent light ranging operates above 55 km/h.

The green control indicator illuminates continuously when the function is activated, the blue one illuminates when high beam switches on automatically.

Deactivation

Push indicator lever once. It is also deactivated when front fog lights are switched on.

Dynamic automatic headlight levelling

To prevent oncoming traffic from dazzle, headlight levelling is automatically adjusted based on inclination information measured by front and rear axle, acceleration or deceleration and vehicle speed.

Fault in adaptive forward lighting system

When the system detects a failure in the Adaptive forward lighting system, the system moves to a preset position to avoid dazzling of oncoming traffic. If this is not possible the affected headlight will be automatically switched off. In any case one headlight will stay on. A warning is displayed in the Driver Information Centre.

Hazard warning flashers

Operated with the button.

In the event of an accident with airbag deployment the hazard warning flashers are activated automatically.

Turn and lane-change signals

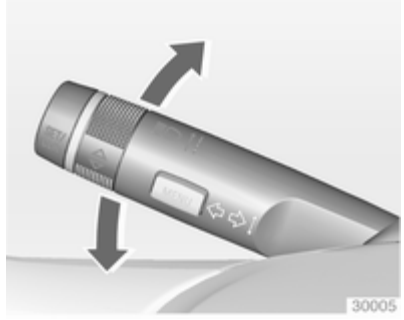

lever up = right turn signal
lever down = left turn signal

If the lever is moved past the resistance point, the turn signal is switched on constantly. When the steering wheel moves back, the turn signal is automatically deactivated.

For three flashes, e.g. when changing lanes, press the lever until resistance is felt and then release.

When a trailer is connected, turn signal flashes six times when pressing the lever until resistance is felt and then releasing.

Move the lever to the resistance point and hold for longer indication.

Switch the turn signal off manually by moving the lever to its original position.

Front fog lights

Operated with the button.

Light switch in position **AUTO**: switching on front fog lights will switch headlights on automatically.

Rear fog lights

Operated with the button.

Light switch in position **AUTO**: switching on rear fog light will switch headlights on automatically.

Light switch in position : rear fog light can only be switched on with front fog lights.

The vehicle rear fog light is deactivated when towing.

Parking lights

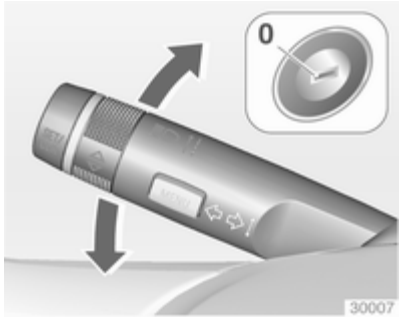

When the vehicle is parked, the parking lights on one side can be activated:

1. Switch off ignition.
2. Move turn signal lever all the way up (right parking lights) or down (left parking lights).

Confirmed by a signal and the corresponding turn signal control indicator.

Reversing lights

The reversing light comes on when the ignition is on and reverse gear is selected.

Misted light covers

The inside of the light housing may mist up briefly in poor, wet and cold weather conditions, in heavy rain or after washing. The mist disappears quickly by itself; to help switch on the headlights.

Interior lighting

Instrument panel illumination control

Brightness of the following lights can be adjusted when the exterior lights are on:

- Instrument panel illumination
- Info-Display
- Illuminated switches and operation elements.

Turn thumb wheel and hold until the desired brightness is obtained.

On vehicles with light sensor, the brightness can only be adjusted when the exterior lights are on and the light sensor detects night conditions.

Interior lights

During entry and exit of the vehicle, the front and rear courtesy lights automatically switch on and then off after a delay.

Note
In the event of an accident with airbag deployment the courtesy lights are turned on automatically.

Front courtesy light

Operate rocker switch:

	=	automatic switching on and off.
press	=	on.
press	=	off.

Courtesy light on version with panorama roof

Left and right lamps are separately switchable.

Operate rocker switches:

centre position	=	automatic switching on and off.
press I	=	on.
press 0	=	off.

Rear courtesy lights

Illuminates in conjunction with the front courtesy light depending on rocker switch position.

Press ⚠ or ⚠ to switch on manually.

Reading lights

Operated with ⚠ and ⚠ buttons in front and rear courtesy lights.

Sunvisor lights

Illuminates when the cover is opened.

Lighting features

Centre console lighting

Spotlight incorporated in the interior lighting comes on when headlights are switched on.

Entry lighting

Welcome lighting

The following lights are switched on for a short time by unlocking the vehicle with the radio remote control:

- headlights,
- tail lights,
- reversing lights,
- number plate lights,
- instrument panel light,
- interior lights,
- door and console lights,
- puddle lights.

Some functions work only in the dark and facilitates locating the vehicle.

The lighting switches off immediately when the ignition key is turned to position **1** ⇨ 165.

Activation or deactivation of this function can be changed in the menu **Settings** in the Info-Display. Vehicle personalisation ⇨ 134.

The settings can be saved for the key being used ⇨ 25.

The following lights will additionally switch on when the driver's door is opened:

- all switches
- Driver Information Centre
- door pocket lights
- console lights

Exit lighting

The following lights switch on if the key is removed from the ignition switch:

- Interior lights
- Instrument panel light (only when it is dark)
- Door and console lights
- Puddle lights

They will switch off automatically after a delay and will be activated again if the driver's door is opened.

Headlights, tail lights, reversing lights and number plate lights illuminate the surrounding area for an adjustable time after leaving the vehicle.

Switching on

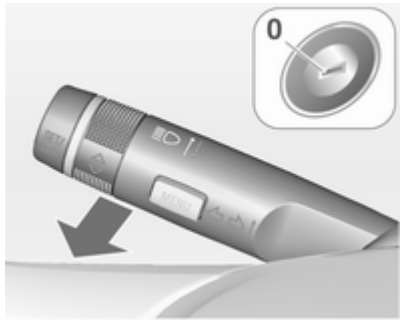

1. Switch off ignition.
2. Remove ignition key.
3. Open driver's door.
4. Pull turn signal lever.
5. Close driver's door.

If the driver's door is not closed the lights switch off after two minutes.

Exit lighting is switched off immediately if the turn signal lever is pulled while the driver's door is open.

Activation, deactivation and duration of this function can be changed in the menu **Settings** in the Info-Display. Vehicle personalisation ⇨ 134.

The settings can be saved for the key being used ⇨ 25.

Battery discharge protection

Vehicle battery state of charge function

The function guarantees longest vehicle battery life via a generator with controllable power output and optimised power distribution.

To prevent discharge of the vehicle battery when driving, the following systems are reduced automatically in two stages and finally switched off:

- Auxiliary heater
- Heated rear window and mirrors
- Heated seats
- Fan

In the second stage a message which confirms the activation of the vehicle battery discharge protection will be displayed in the Driver Information Centre.

Switching off electric lights

To prevent discharge of the vehicle battery when the ignition is switched off, some interior lights are switched off automatically after some time.

Climate control

Climate control systems 155
Air vents 162
Maintenance 163

Climate control systems

Heating and ventilation system

Controls for:
- Temperature
- Air distribution
- Fan speed
- Demisting and defrosting

Heated rear window ⇨ 37.

Temperature

red = warm
blue = cold

Heating will not be fully effective until the engine has reached normal operating temperature.

Air distribution

= to windscreen and front door windows
= to head area via adjustable air vents
= to foot well

All combinations are possible.

Fan speed

Adjust the air flow by switching the fan to the desired speed.

Demisting and defrosting

- Press button : fan automatically switches to higher speed, the air distribution is directed towards the windscreen.
- Set temperature control to warmest level.
- Switch on heated rear window .
- Open side air vents as required and direct them towards the door windows.

Air conditioning system

In addition to the heating and ventilation system, the air conditioning system has controls for:

= cooling
= air recirculation

Heated seats ⇨ 49, Heated steering wheel ⇨ 103.

Cooling

Press button to switch on cooling. Activation is indicated by the LED in the button. Cooling is only functional when the engine is running and climate control fan is switched on.

Press button again to switch off cooling.

The air conditioning system cools and dehumidifies (dries) as soon as the outside temperature is slightly above the freezing point. Therefore condensation may form and drip from under the vehicle.

If no cooling or drying is required, switch the cooling system off to save fuel. Activated cooling might inhibit autostops.

Air recirculation system

Press button to activate air recirculation mode. Activation is indicated by the LED in the button.

Press button again to deactivate recirculation mode.

⚠ Warning

The exchange of fresh air is reduced in air recirculation mode. In operation without cooling the air humidity increases, so the windows may mist up from inside. The quality of the passenger compartment air deteriorates, which may cause the vehicle occupants to feel drowsy.

In warm and very humid ambient air conditions, the windscreen might mist up from outside, when cold air is directed to it. If windscreen mists up from outside, activate windscreen wiper and deactivate .

Maximum cooling

Briefly open the windows so that hot air can disperse quickly.

- Switch on cooling .
- Air circulation system on.
- Press air distribution switch .
- Set temperature control to coldest level.
- Set fan speed to highest level.
- Open all vents.

Demisting and defrosting the windows

- Press button : fan automatically switches to higher speed, the air distribution is directed towards the windscreen.
- Switch cooling on.
- Set temperature control to warmest level.
- Switch on heated rear window .
- Open side air vents as required and direct them towards the door windows.

Note

If the button is pressed while the engine is running, an Autostop will be inhibited until the button is pressed again.

If the button is pressed while the engine is in an Autostop, the engine will restart automatically.

Stop-start system ⇨ 167.

Electronic climate control system

The dual zone climate control allows different climatisation temperatures for driver and front passenger side.

In Automatic mode temperature, fan speed and air distribution are regulated automatically.

Controls for:

- Temperature on driver side
- Air distribution
- Fan speed
- Temperature on front passenger side

	=	cooling
AUTO	=	automatic mode
	=	manual air recirculation
	=	demisting and defrosting

Heated rear window ⇨ 37, Heated seats ⇨ 49, Heated steering wheel ⇨ 103.

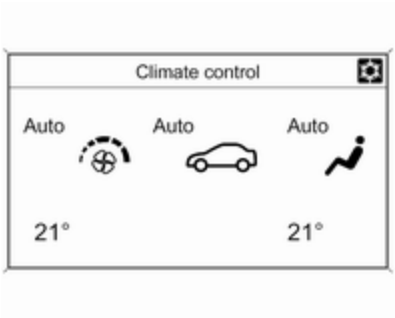

Each change of settings is shown in the Info-Display for a few seconds.

The electronic climate control system is only fully operational when the engine is running.

Automatic mode AUTO

Basic setting for maximum comfort:

- Press **AUTO** button, the air distribution and fan speed are regulated automatically.
- Open all air vents to allow optimised air distribution in automatic mode.
- Press ☼ to switch on optimal cooling and demisting. Activation is indicated by the LED in the button.
- Set the preselected temperatures for driver and front passenger using the left and right rotary knob. Recommended temperature is 22 °C.

The fan speed regulation in automatic mode can be changed in the menu **Settings**.

Vehicle personalisation ⇨ 134.

Temperature preselection

Set temperatures to the desired value.

If the minimum temperature **Lo** is set, the climate control system runs at maximum cooling, if cooling ❄ is switched on.

If the maximum temperature **Hi** is set, the climate control system runs at maximum heating.

Note
If ❄ is switched on, reducing the set cabin temperature can cause the engine to restart from an Autostop or inhibit an Autostop.

Demisting and defrosting the windows

- Press button. Activation is indicated by the LED in the button.
- Press cooling button ❄. Activation is indicated by the LED in the button.
- Temperature and air distribution are set automatically and the fan runs at high speed.
- Switch on heated rear window.
- To return to previous mode: press button, to return to automatic mode: press button **AUTO**.

Setting of automatic rear window heating can be changed in the menu **Settings** in the Info-Display. Vehicle personalisation ⇨ 134.

Note
If the button is pressed while the engine is running, an Autostop will be inhibited until the button is pressed again.

If the button is pressed while the engine is in an Autostop, the engine will restart automatically.

Stop-start system ⇨ 167.

Manual settings

Climate control system settings can be changed by activating the buttons and rotary knobs as follows.
Changing a setting will deactivate the automatic mode.

Fan speed

Press lower button to decrease or upper button to increase fan speed as shown in the illustration. The fan speed is indicated by the number of segments in the display.

Pressing the lower button longer: fan and cooling are switched off.

Pressing the upper button longer: the fan runs at maximum speed.

To return to automatic mode: Press **AUTO** button.

Air distribution

Press appropriate button for desired adjustment. Activation is indicated by the LED in the button.

- = to windscreen and front door windows.
- = to head area via adjustable air vents
- = to foot well.

All combcombinations are possible.

Return to automatic air distribution: press button **AUTO**.

Cooling

Press button to switch on cooling. Activation is indicated by the LED in the button. Cooling is only functional when the engine is running and climate control fan is switched on.

Press button again to switch off cooling.

The air conditioning system cools and dehumidifies (dries) when outside temperature is above a specific level. Therefore condensation may form and drip from under the vehicle.

If no cooling or drying is required, switch the cooling system off to save fuel. When the cooling system is switched off, no engine restart will be requested by the climate control system during an Autostop. Exception: defrost system is activated and outside temperature above 0° C requests a restart.

The display will indicate **ACON** when cooling is activated or **ACOFF** when the cooling is deactivated.

Activation or deactivation of cooling operation after engine start can be changed in the menu **Settings** in the Info-Display. Vehicle personalisation ⇨ 134.

Air recirculation mode

Press button to activate the air recirculation mode. Activation is indicated by the LED in the button.

Press button again to deactivate recirculation mode.

⚠Warning

The exchange of fresh air is reduced in air recirculation mode. In operation without cooling the air humidity increases, so the windows may mist up from inside. The quality of the passenger compartment air deteriorates, which may cause the vehicle occupants to feel drowsy.

In warm and very humid ambient air conditions, the windscreen might mist up from outside, when cold air is directed to it. If windscreen mists up from outside, activate windscreen wiper and deactivate .

Basic settings

Some settings can be changed in the menu **Settings** in the Info-Display. Vehicle personalisation ⇨ 134.

Auxiliary heater

Air heater

Quickheat is an electric auxiliary air heater which automatically warms up the passenger compartment more quickly.

Air vents

Adjustable air vents

At least one air vent must be open while the cooling is on.

To open the vent, turn the adjuster wheel towards the bigger ▮ symbol. Adjust the air amount at the vent outlet by turning the adjuster wheel.

Direct the flow of air by tilting and swivelling the slats.

To close the vent, turn the adjuster wheel towards the smaller ▮ symbol.

⚠ Warning

Do not attach any objects to the slats of the air vents. Risk of damage and injury in case of an accident.

Fixed air vents

Additional air vents are located beneath the windscreen and door windows and in the foot wells.

Maintenance

Air intake

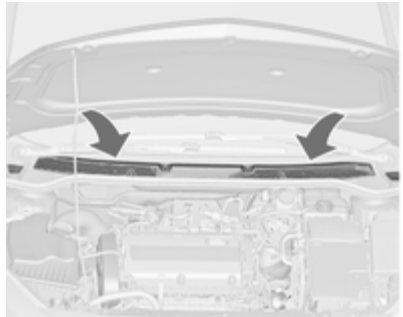

The air intake in front of the windscreen in the engine compartment must be kept clear to allow air intake. Remove any leaves, dirt or snow.

Pollen filter

The pollen filter cleans dust, soot, pollen and spores from the air entering the vehicle through the air intake.

Air conditioning regular operation

In order to ensure continuously efficient performance, cooling must be operated for a few minutes once a month, irrespective of the weather and time of year. Operation with cooling is not possible when the outside temperature is too low.

Service

For optimal cooling performance, it is recommended to annually check the climate control system, starting three years after initial vehicle registration, including:

- Functionality and pressure test
- Heating functionality
- Leakage check
- Check of drive belts
- Cleaning of condenser and evaporator drainage
- Performance check

Driving and operating

Driving hints 164
Starting and operating 165
Engine exhaust 170
Automatic transmission 171
Manual transmission 175
Brakes 175
Ride control systems 178
Driver assistance systems 183
Fuel 213
Trailer hitch 219

Driving hints

Control of the vehicle

Never coast with engine not running (except during Autostop)

Many systems will not function in this situation (e.g. brake servo unit, power steering). Driving in this manner is a danger to yourself and others. All systems function during an Autostop, but there will be a controlled reduction in power steering assist and vehicle speed is reduced.

Stop-start system ⇨ 167.

Idle boost

If charging of the battery is required due to battery condition, the power output of the generator has to be increased. This will be achieved by an idle boost which may be audible.

On vehicles with Uplevel- or Uplevel-Combi-Display, a message appears in the Driver Information Centre.

Pedals

To ensure the pedal travel is uninhibited, there must be no mats in the area of the pedals.

Steering

If power steering assist is lost because the engine stops or due to a system malfunction, the vehicle can be steered but may require increased effort.

Control indicator ⊖! ⇨ 118.

Caution

Vehicles equipped with hydraulic power steering:

If the steering wheel is turned until it reaches the end of its travel, and is held in that position for more than 15 seconds, damage may occur to the power steering system and there may be loss of power steering assist.

Starting and operating

New vehicle running-in

Do not brake unnecessarily hard for the first few journeys.

During the first drive, smoke may occur because of wax and oil evaporating off the exhaust system. Park the vehicle in the open for a while after the first drive and avoid inhaling the fumes.

During the running-in period fuel and engine oil consumption may be higher and the cleaning process of the diesel particle filter may take place more often. Autostop may be inhibited to allow for charging the battery.

Diesel particle filter ⇨ 170.

Ignition switch positions

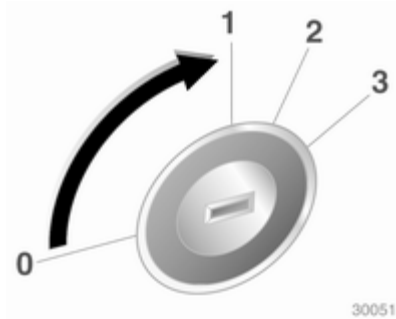

0 = Ignition off
1 = Steering wheel lock released, ignition off
2 = Ignition on, for diesel engine: preheating
3 = Starting

Retained power off

The following electronic systems can work until the driver's door is opened or at the latest for 10 minutes after the ignition is switched off:

- Power windows
- Sunroof
- Power outlets

Power to the Infotainment system will continue to operate for 30 minutes or until the key is removed from the ignition switch, regardless of whether any door will be opened.

Starting the engine

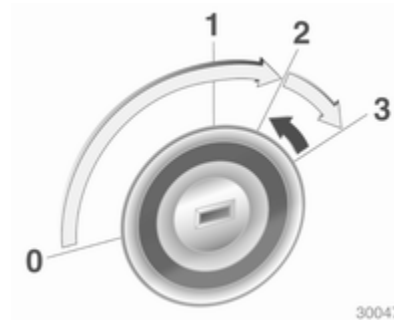

Manual transmission: operate clutch.

Automatic transmission: operate brake and move the selector lever to **P** or **N**.

Do not operate the accelerator pedal.

Diesel engine: turn the key to position **2** for preheating until control indicator ⚯ extinguishes.

Turn the key briefly to position **3** and release: an automatic procedure operates the starter with a short delay as long as the engine is running, see Automatic Starter Control.

Before restarting or to switch off the engine, turn the key back to position **0**.

During an Autostop, the engine can be started by depressing the clutch pedal.

Starting the vehicle at low temperatures

The start of the engine without additional heaters is possible down to -25 °C for diesel engines and -30 °C for petrol engines. Required is an engine oil with the correct viscosity, the correct fuel, performed services and a sufficiently charged battery. With temperatures below -30 °C the automatic transmission need a warming phase of approx. 5 minutes. The selector lever must be in position **P**.

Automatic Starter Control

This function controls the engine starting procedure. The driver does not have to hold the key in position **3**. Once applied, the system will go on starting automatically until the engine is running. Because of the checking procedure, the engine starts running after a short delay.

Possible reasons for a non-starting engine:

- Clutch pedal not operated (manual transmission)
- Brake pedal not operated or selector lever not in **P** or **N** (automatic transmission)
- Timeout occurred

Turbo engine warm-up

Upon start-up, engine available torque may be limited for a short time, especially when the engine temperature is cold. The limitation is to allow the lubrication system to fully protect the engine.

Overrun cut-off

The fuel supply is automatically cut off during overrun, i.e. when the vehicle is driven with a gear engaged but accelerator is released.

Stop-start system

The stop-start system helps to save fuel and to reduce the exhaust emissions. When conditions allow, it switches off the engine as soon as the vehicle is at a low speed or at a standstill, e.g. at a traffic light or in a traffic jam. It starts the engine automatically as soon as the clutch is depressed. A battery sensor ensures that an Autostop is only performed if the vehicle battery is sufficiently charged for a restart.

Activation

The stop-start system is available as soon as the engine is started, the vehicle starts-off and the conditions as stated below in this section are fulfilled.

Deactivation

Deactivate the stop-start system manually by pressing the **eco** button. Deactivation is indicated when the LED in the button extinguishes.

Autostop

If the vehicle is at a low speed or at a standstill, activate an Autostop as follows:

- Depress the clutch pedal
- set the lever in neutral
- release the clutch pedal

The engine will be switched off while the ignition stays on.

An Autostop is indicated by the needle at the **AUTOSTOP** position in the tachometer.

During an Autostop, the heating and brake performance will be maintained.

Caution
The steering assist can be reduced during an Autostop.

Conditions for an Autostop

The stop-start system checks if each of the following conditions is fulfilled:

- The stop-start system is not manually deactivated
- the bonnet is fully closed
- the driver's door is closed or the driver's seat belt is fastened
- the vehicle battery is sufficiently charged and in good condition
- the engine is warmed up
- the engine coolant temperature is not too high
- the engine exhaust temperature is not too high, e.g. after driving with high engine load
- the ambient temperature is above -5° C
- the climate control system allows an Autostop
- the brake vacuum is sufficient
- the self-cleaning function of the diesel particle filter is not active
- the vehicle was driven at least at walking speed since the last Autostop

Otherwise an Autostop will be inhibited.

Certain settings of the climate control system may inhibit an Autostop. See Climate control chapter for more details ⇨ 158.

Immediately after motorway driving an Autostop may be inhibited.

New vehicle running-in ⇨ 165.

Vehicle battery discharge protection

To ensure reliable engine restarts, several battery discharge protection features are implemented as part of the stop-start system.

Power saving measures

During an Autostop, several electric features, e.g. auxiliary electric heater or rear window heating are disabled or switched into a power saving mode. The fan speed of the climate control system is reduced to save power.

Restart of the engine by the driver

Depress the clutch pedal to restart the engine.

The engine start is indicated by the needle at the idle speed position in the tachometer.

If the selector lever is shifted out of neutral before depressing the clutch first, control indicator illuminates or is shown as a symbol in the Driver Information Centre.

Control indicator ⇨ 116.

Restart of the engine by the stop-start system

The selector lever has to be in neutral to enable an automatic restart.

If one of the following conditions occurs during an Autostop, the engine will be restarted automatically by the stop-start system:

- The stop-start system is manually deactivated
- the bonnet is opened

- the driver's seat belt is unfastened and the driver's door is opened
- the engine temperature is too low
- the charging level of the vehicle battery is below a defined level
- the brake vacuum is not sufficient
- the vehicle is driven at least at walking speed
- the climate control system requests an engine start
- the air conditioning is manually switched on

If the bonnet is not fully closed, a warning message is displayed in the Driver Information Centre.

If an electric accessory, e.g. a portable CD player, is connected to the power outlet, a brief power drop during restart might be noticeable.

Parking

- Do not park the vehicle on an easily ignitable surface. The high temperature of the exhaust system could ignite the surface.
- Always apply parking brake. Apply manual parking brake without pressing release button. Apply as firmly as possible on downhill or uphill slopes. Depress the foot brake at the same time to reduce operating force.

  Apply electric parking brake by pulling switch Ⓟ for approx. one second.
- Switch off the engine and ignition. Turn the steering wheel until the steering wheel lock engages.
- If the vehicle is on a level surface or uphill slope, engage first gear or set the selector lever to **P** before switching off the ignition. On an uphill slope, turn the front wheels away from the kerb.

  If the vehicle is on a downhill slope, engage reverse gear or set the selector lever to **P** before switching off the ignition. Turn the front wheels towards the kerb.
- Lock the vehicle and activate the anti-theft alarm system.

Note
In the event of an accident with airbag deployment, the engine is turned off automatically if the vehicle comes to a standstill within a certain time.

Engine exhaust

⚠ Danger

Engine exhaust gases contain poisonous carbon monoxide, which is colourless and odourless and could be fatal if inhaled.

If exhaust gases enter the interior of the vehicle, open the windows. Have the cause of the fault rectified by a workshop.

Avoid driving with an open load compartment, otherwise exhaust gases could enter the vehicle.

Diesel particle filter

The diesel particle filter system filters harmful soot particles out of the exhaust gases. The system includes a self-cleaning function that runs automatically during driving without any notification. The filter is cleaned by periodically burning off the soot particles at high temperature. This process takes place automatically under set driving conditions and may take up to 25 minutes. Typically it needs between 7 and 12 minutes. Autostop is not available and fuel consumption may be higher during this period. The emission of smells and smoke during this process is normal.

Under certain driving conditions, e.g. short distances, the system cannot clean itself automatically.

If the cleaning of the filter is required and if previous driving conditions did not enable automatic cleaning, it will be indicated by control indicator . Simultaneously **Diesel partic. filter is full continue driving** or warning code 55 appears in the Driver Information Centre.

 illuminates when diesel particle filter is full. Start cleaning process as soon as possible.

 flashes when diesel particle filter has reached the maximum filling level. Start cleaning process immediately to avoid damage to the engine.

Cleaning process

To activate cleaning process, continue driving, keep engine speed above 2000 revolutions per minute. Shift down if necessary. Diesel particle filter cleaning is then started.

If illuminates additionally, cleaning is not possible, seek the assistance of a workshop.

Caution

If the cleaning process is interrupted, there is a risk of provoking severe engine damage.

Cleaning takes place quickest at high engine speeds and loads.

The control indicator extinguishes as soon as the self-cleaning operation is complete.

Catalytic converter

The catalytic converter reduces the amount of harmful substances in the exhaust gases.

Caution
Fuel grades other than those listed on pages ⇨ 213, ⇨ 292 could damage the catalytic converter or electronic components. Unburnt petrol will overheat and damage the catalytic converter. Therefore avoid excessive use of the starter, running the fuel tank dry and starting the engine by pushing or towing.

In the event of misfiring, uneven engine running, a reduction in engine performance or other unusual problems, have the cause of the fault rectified by a workshop as soon as possible. In an emergency, driving can be continued for a short period, keeping vehicle speed and engine speed low.

Automatic transmission

The automatic transmission permits automatic gearshifting (automatic mode) or manual gearshifting (manual mode).

Transmission display

The mode or selected gear is shown in the transmission display.

Selector lever

P = park position, wheels are locked, engage only when the vehicle is stationary and the parking brake is applied
R = reverse gear, engage only when the vehicle is stationary
N = neutral
D = automatic mode with all gears

The selector lever is locked in **P** and can only be moved when the ignition is on and the brake pedal is applied.

Without brake pedal applied, the control indicator illuminates.

If the selector lever is not in **P** when the ignition is switched off, the control indicators and **P** flash.

To engage **P** or **R**, press the release button.

The engine can only be started with the lever in position **P** or **N**. When position **N** is selected, press the brake pedal or apply the parking brake before starting.

Do not accelerate while engaging a gear. Never depress the accelerator pedal and brake pedal at the same time.

When a gear is engaged, the vehicle slowly begins to creep when the brake is released.

Engine braking

To utilise the engine braking effect, select a lower gear in good time when driving downhill, see manual mode.

Rocking the vehicle

Rocking the vehicle is only permissible if the vehicle is stuck in sand, mud or snow. Move the selector lever between **D** and **R** in a repeat pattern. Do not race the engine and avoid sudden acceleration.

Parking

Apply the parking brake and engage **P**.

The ignition key can only be removed when the selector lever is in position **P**.

Manual mode

Move selector lever out of position **D** towards the left and then forwards or backwards.

+ = Shift to a higher gear.

− = Shift to a lower gear.

If a higher gear is selected when vehicle speed is too low, or a lower gear when vehicle speed is too high, the shift is not executed. This can cause a message in the Driver-Info-Display.

In manual mode no automatic shifting to a higher gear takes place at high engine revolutions.

Electronic driving programmes

- Following a cold start, the operating temperature programme increases engine speed to quickly bring the catalytic converter to the required temperature.
- The automatic neutral shift function automatically shifts to idling when the vehicle is stopped with a forward gear engaged and the brake pedal is pressed.
- When SPORT mode is engaged, the vehicle shifts at higher engine speeds (unless cruise control is on). SPORT mode ⇨ 181.
- Special programmes automatically adapt the shifting points when driving up inclines or down hills.
- When starting off in snowy or icy conditions or on other slippery surfaces, the electronic transmission control selects a higher gear automatically.

Kickdown

If the accelerator pedal is pressed down completely in automatic mode, the transmission shifts to a lower gear depending on engine speed.

Fault

In the event of a fault, illuminates. Additionally a code number or a vehicle message is displayed in the Driver Information Centre. Vehicle messages ⇨ 128.

The transmission no longer shifts automatically. Continued travel is possible with manual shifting.

Only the highest gear is available. Depending on the fault, 2nd gear may also be available in manual mode. Shift only when vehicle is at a standstill.

Have the cause of the fault remedied by a workshop.

Interruption of power supply

In the event of an interruption of power supply, the selector lever cannot be moved out of the **P** position. The ignition key cannot be removed from the ignition switch.

If the vehicle battery is discharged, start the vehicle using jump leads ⇨ 276.

If the vehicle battery is not the cause of the fault, release the selector lever.

1. Apply the parking brake.

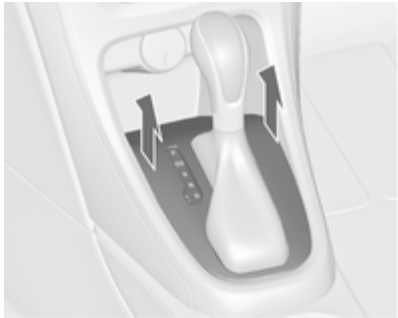

2. Release the selector lever trim from the centre console at the front, fold it upwards and rotate it to the left.

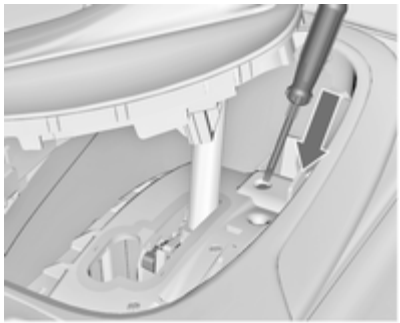

3. Insert a screwdriver into the opening as far as it will go and move the selector lever out of **P** or **N**. If **P** or **N** is engaged again, the selector lever will be locked in position again. Have the cause of the power supply interruption remedied by a workshop.
4. Mount the selector lever trim onto the centre console and refit.

Manual transmission

To engage reverse, with the vehicle stationary wait 3 seconds after depressing the clutch pedal and then press the release button on the selector lever and engage the gear.

If the gear does not engage, set the lever to neutral, release the clutch pedal and depress again; then repeat gear selection.

Do not grind the clutch unnecessarily.

When operating, depress the clutch pedal completely. Do not use the pedal as a foot rest.

Caution
It is not advisable to drive with the hand resting on the selector lever.

Brakes

The brake system comprises two independent brake circuits.

If a brake circuit fails, the vehicle can still be braked using the other brake circuit. However, braking effect is achieved only when the brake pedal is depressed firmly. Considerably more force is needed for this. The braking distance is extended. Seek the assistance of a workshop before continuing your journey.

When the engine is not running, the support of the brake servo unit disappears once the brake pedal has been depressed once or twice. Braking effect is not reduced, but braking requires significantly greater force. It is especially important to bear this in mind when being towed.

Control indicator ⓘ ⇨ 116.

Antilock brake system

Antilock brake system (ABS) prevents the wheels from locking.

ABS starts to regulate brake pressure as soon as a wheel shows a tendency to lock. The vehicle remains steerable, even during hard braking.

ABS control is made apparent through a pulse in the brake pedal and the noise of the regulation process.

For optimum braking, keep the brake pedal fully depressed throughout the braking process, despite the fact that the pedal is pulsating. Do not reduce the pressure on the pedal.

After starting off the system performs a self-test which may be audible.

Control indicator (ABS) ⇨ 117.

Adaptive brake light

During full braking, all three brake lights flash for the duration of ABS control.

Fault

⚠Warning

If there is a fault in the ABS, the wheels may be liable to lock due to braking that is heavier than normal. The advantages of ABS are no longer available. During hard braking, the vehicle can no longer be steered and may swerve.

Have the cause of the fault remedied by a workshop.

Parking brake

Manual parking brake

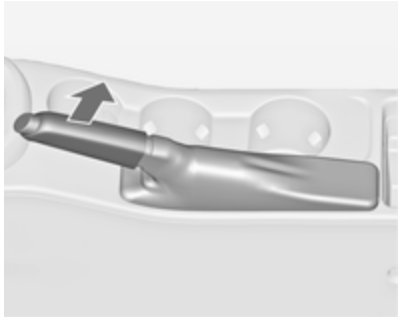

Always apply parking brake firmly without operating the release button, and apply as firmly as possible on a downhill or uphill slope.

To release the parking brake, pull the lever up slightly, press the release button and fully lower the lever.

To reduce the operating forces of the parking brake, depress the foot brake at the same time.

Control indicator (!) ⇨ 116.

Electric parking brake

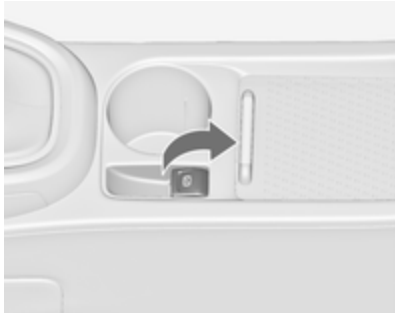

Applying when vehicle is stationary

Pull switch Ⓟ for approx.
one second, the electric parking brake operates automatically with an adequate force. For maximum force, e.g. parking with trailer or on inclines, pull switch Ⓟ twice.

The electric parking brake is applied when control indicator Ⓟ illuminates ⇨ 117.

The electric parking brake can always be activated, even if the ignition is off.

Do not operate electric parking brake system too often without engine running because this will discharge the vehicle battery.

Before leaving the vehicle, check the electric parking brake status. Control indicator Ⓟ ⇨ 117.

Releasing

Switch on ignition. Keep brake pedal depressed and then push switch Ⓟ.

Drive away function

Depressing clutch pedal (manual transmission) or engaging drive gear (automatic transmission) and then depressing the accelerator pedal releases the electric parking brake automatically. This is not possible when the switch is pulled at the same time.

This function also helps driving away on inclines.

Aggressive drive away may reduce life time of wear parts.

Dynamic braking when vehicle is moving

When the vehicle is moving and the switch Ⓟ is kept pulled, the electric parking brake system will decelerate the vehicle, but will not apply statically.

As soon as the switch Ⓟ is released, dynamic braking will be stopped.

Fault

Failure mode of electric parking brake is indicated by control indicator ⚠ and by a code number or a vehicle message which is displayed in the Driver Information Centre. Vehicle messages ⇨ 128.

Apply electric parking brake: pull and hold the switch Ⓟ for more than 5 seconds. If control indicator Ⓟ illuminates, electric parking brake is applied.

Release electric parking brake: push and hold the switch Ⓟ for more than 2 seconds. If control indicator Ⓟ extinguishes, electric parking brake is released.

Control indicator Ⓟ flashes: electric parking brake is not fully applied or released. When continuously flashing, release electric parking brake and retry applying.

Brake assist

If the brake pedal is depressed quickly and forcefully, maximum brake force is automatically applied (full braking).

Maintain steady pressure on the brake pedal for as long as full braking is required. Maximum brake force is automatically reduced when the brake pedal is released.

Hill start assist

The system helps prevent unintended movement when driving away on inclines.

When releasing the foot brake after stopping on an incline, the brakes remain on for a further two seconds. The brakes release automatically as soon as the vehicle begins to accelerate.

The hill start assist is not active during an Autostop.

Ride control systems

Traction Control system

The Traction Control system (TC) is a component of the Electronic Stability Control (ESC) ⇨ 179.

TC improves driving stability when necessary, regardless of the type of road surface or tyre grip, by preventing the drive wheels from spinning.

As soon as the drive wheels starts to spin, engine output is reduced and the wheel spinning the most is braked individually. This considerably improves the driving stability of the vehicle on slippery road surfaces.

TC is operational after each engine start as soon as the control indicator ⚹ extinguishes.

When TC operates ⚹ flashes.

⚠Warning

Do not let this special safety feature tempt you into taking risks when driving.

Adapt speed to the road conditions.

Control indicator ⇨ 118.

Deactivation

TC can be switched off when spinning of drive wheels is required:

press button briefly to deactivate TC, illuminates. Deactivation is displayed as status message in the Driver Information Centre.

TC is reactivated by pressing the button again.

TC is also reactivated the next time the ignition is switched on.

Electronic Stability Control

Electronic Stability Control (ESC) improves driving stability when necessary, regardless of the type of road surface or tyre grip. It also prevents the drive wheels from spinning. ESC operates in combination with the Traction Control system (TC) ⇨ 178.

As soon as the vehicle starts to swerve (understeer/oversteer), engine output is reduced and the wheels are braked individually. This considerably improves the driving stability of the vehicle on slippery road surfaces.

ESC is operational after each engine start as soon as the control indicator extinguishes.

When ESC operates flashes.

⚠Warning

Do not let this special safety feature tempt you into taking risks when driving.

Adapt speed to the road conditions.

Control indicator ⇨ 118.

Deactivation

For a more sporty behaviour ESC and TC can be deactivated separately:

- press button ⚠ briefly: only Traction control system is inactive, ESC remains active, ⚠ illuminates
- hold button ⚠ pressed for min. 5 seconds: TC and ESC are deactivated, ⚠ and ⚠ off illuminate.

Additionally the selected mode is displayed as status message in the Driver Information Centre.

If the vehicle comes into threshold with deactivated ESP, the system will reactivate ESP for the time duration of the threshold, when the brake pedal is depressed once.

ESC is reactivated by pressing the ⚠ button again. If the TC system was previously disabled, both TC and ESC are reactivated.

ESC is also reactivated the next time the ignition is switched on.

Deactivation, OPC version

For very high-performance driving ESC and TC can be deactivated separately. The following modes are selectable:

- press button ⚠ briefly: only Traction control system is inactive, ESC remains active, ⚠ illuminates
- press button ⚠ twice briefly within 2 seconds: TC is inactive, ESC is operable without engine power reduction, ⚠ and ⚠ off illuminate
- hold button ⚠ pressed for min. 5 seconds: TC and ESC are completely inactive, ⚠ and ⚠ off illuminate.

Additionally the selected mode is displayed as status message in the Driver Information Centre.

On OPC version TC and ESC remain deactivated even if the vehicle comes into threshold with unstable driveability.

ESC is reactivated by pressing the ⚠ button again. If the TC system was previously disabled, both TC and ESC are reactivated.

ESC is also reactivated the next time the ignition is switched on.

Interactive driving system

Flex Ride

Flex Ride driving system allows the driver to select between three driving modes:

- SPORT mode: press button **SPORT**, LED illuminates.
- TOUR mode: press button **TOUR**, LED illuminates.
- NORMAL mode: both buttons **SPORT** and **TOUR** are not pressed, no LED illuminates.

Deactivate SPORT mode and TOUR mode by pressing corresponding button once more.

In each driving mode Flex Ride networks the following electronic systems:

- Continuous Damping Control.
- Accelerator Pedal Control.
- Steering Control.
- Electronic Stability Control (ESC).
- Antilock brake system (ABS) with cornering brake control (CBC).
- Automatic transmission.

SPORT mode

The settings of the systems are adapted to a sportier driving style:

- Damping of shock absorbers reacts more stiffly to provide better contact with the road surface.
- The engine reacts more quickly to the accelerator pedal.
- Steering support is reduced.
- Shift points of automatic transmission occur later.
- With SPORT mode activated, the illumination of main instruments changes from white to red.

TOUR mode

The settings of the systems are adapted to a comfort driving style:

- Damping of shock absorbers reacts more softly.
- Accelerator pedal reacts with standard settings.
- Steering support is in standard mode.
- Shift points of automatic transmission occur in a comfort mode.
- Illumination of main instruments is white.

NORMAL mode

All settings of the systems are adapted to standard values.

Drive mode control

Within each manual selected driving mode SPORT, TOUR or NORMAL, the Drive Mode Control (DMC) detects and analyses continuously the real driving characteristic, responses by the driver, and the active dynamic state of the vehicle. If necessary, the control unit of DMC

automatically changes the settings within the selected driving mode or, when recognising greater variations, the driving mode is changed for the length of variation.

If, for example, NORMAL mode is selected and DMC detects a sporty driving behaviour, DMC changes several settings of the Normal mode into sporty settings. The DMC changes to SPORT mode in case of very sporty driving behaviour.

If, for example, TOUR mode is selected and whilst driving on a winding road a sudden hard brake is necessary, DMC will detect the dynamic vehicle condition and changes the settings for suspension to SPORT mode to increase vehicle stability.

When the driving characteristic or the dynamic vehicle state returns to former state, DMC will change the settings to the preselected driving mode.

Personalised settings in the Sport mode

The driver can select the functions of the SPORT mode when **SPORT** button is pressed. These settings can be changed in the menu **Settings** in the Info-Display. Vehicle personalisation ⇨ 134.

Flex Ride - OPC Version

The OPC Version of Flex Ride system works in the same way as the standard Flex Ride system with the difference that the modes have a more sporty characteristic.

OPC Flex Ride driving system allows the driver to select between three driving modes:

- OPC mode: press button **OPC**, LED illuminates.
- SPORT mode: press button **SPORT**, LED illuminates.
- NORMAL mode: neither button **SPORT** nor **OPC** is pressed, no LED illuminates.

Deactivate SPORT mode and OPC mode by pressing corresponding button once more.

In each driving mode OPC Flex Ride networks the following electronic systems:

- Continuous Damping Control.
- Accelerator Pedal Control.
- Steering Control.
- Electronic Stability Control (ESC).
- Antilock brake system (ABS) with cornering brake control (CBC).

NORMAL mode
In NORMAL mode, when neither SPORT nor OPC button is pressed, all settings of the systems are adapted to standard values.

SPORT mode
The settings of the systems are adapted to a sportier driving style.

OPC mode
The drive dynamic characteristics are adapted to high performance settings.

In this mode the illumination of main instruments is switched to red.

Personalised settings in the OPC mode
The driver can select the functions of the OPC mode when **OPC** button is pressed. These settings can be changed in the menu **Settings** in the Info-Display. Vehicle personalisation ⇨ 134.

Driver assistance systems

⚠ Warning

Driver assistance systems are developed to support the driver and not to replace his attention.

The driver accepts full responsibility when driving the vehicle.

When using driver assistance systems, always take care regarding the current traffic situation.

Cruise control

The Cruise control can store and maintain speeds of approx. 30 to 200 km/h. Deviations from the stored speeds may occur when driving uphill or downhill.

For safety reasons the cruise control cannot be activated until the foot brake has been operated once. Activating in first gear is not possible.

Do not use the cruise control if it is not advisable to maintain a constant speed.

With automatic transmission, only activate cruise control in automatic mode.

Control indicator ⇨ 121.

Switching on
Press button, control indicator in instrument cluster illuminates white.

Activation
Accelerate to the desired speed and turn thumb wheel to **SET/-**, the current speed is stored and

maintained. Control indicator in instrument cluster illuminates green. Accelerator pedal can be released.

Vehicle speed can be increased by depressing the accelerator pedal. When the accelerator pedal is released, the previously stored speed is resumed.

Cruise control remains activated while gearshifting.

Increase speed

With cruise control active, hold thumb wheel turned to **RES/+** or briefly turn to **RES/+** repeatedly: speed increases continuously or in small increments.

Alternatively accelerate to the desired speed and store by turning to **SET/-**.

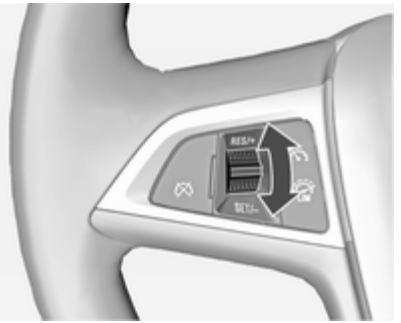

Reduce speed

With cruise control active, hold thumb wheel turned to **SET/-** or briefly turn to **SET/-** repeatedly: speed decreases continuously or in small increments.

Deactivation

Press button , control indicator in instrument cluster illuminates white. Cruise control is deactivated. Last used set speed is stored in memory for later speed resume.

Automatic deactivation:

- vehicle speed below approx. 30 km/h,
- vehicle speed above approx. 200 km/h,
- the brake pedal is depressed,
- the clutch pedal is depressed for a few seconds,
- selector lever in **N**,
- engine speed in a very low range,
- the Traction Control system or Electronic Stability Control is operating.

Resume stored speed

Turn thumb wheel to **RES/+** at a speed above 30 km/h. The stored speed will be obtained.

Switching off

Press button , control indicator in instrument cluster extinguishes. The stored speed is deleted.

Pressing button for activating speed limiter or switching off the ignition also switches off cruise control and deletes the stored speed.

Speed limiter

The speed limiter prevents the vehicle exceeding a preset maximum speed.

The maximum speed can be set at a speed above 25 km/h.

The driver can only accelerate up to the preset speed. Deviations from the limited speed may occur when driving downhill.

The preset speed limit is displayed in the top line of the Driver Information Centre when the system is active.

Activation

Press button . If cruise control or adaptive cruise control has been activated before, it is switched off when speed limiter is activated and the control indicator extinguishes.

Set speed limit

With speed limiter active, hold thumb wheel turned to **RES/+** or briefly turn to **RES/+** repeatedly until the desired maximum speed is displayed in the Driver Information Centre.

Alternatively accelerate to the desired speed and briefly turn thumb wheel to **SET/-**: the current speed is stored as maximum speed. Speed limit is displayed in the Driver Information Centre.

Change speed limit

With speed limiter active, turn thumb wheel to **RES/+** to increase or **SET/-** to decrease the desired maximum speed.

Exceeding the speed limit

In the event of an emergency it is possible to exceed the speed limit by depressing the accelerator pedal firmly beyond the point of resistance.

The limited speed will flash in the Driver Information Centre and, depending on the vehicle, additionally a chime sounds during this period.

Release the accelerator pedal and the speed limiter function is reactivated once a speed lower than the limit speed is obtained.

Deactivation

Press button : speed limiter is deactivated and the vehicle can be driven without speed limit.

The limited speed is stored and a corresponding message appears in the Driver Information Centre.

Resume limit speed

Turn thumb wheel to **RES/+**. The stored speed limit will be obtained.

Switching off

Press button , the speed limit indication in the Driver Information Centre extinguishes. The stored speed is deleted.

By pressing button to activate cruise control or adaptive cruise control or by switching off the ignition, speed limiter is also deactivated and the stored speed is deleted.

Adaptive cruise control

Adaptive cruise control is an enhancement to traditional cruise control with the additional feature of maintaining a certain distance behind the vehicle ahead.

Adaptive cruise control automatically decelerates the vehicle when approaching a slower moving vehicle. It then adjusts the vehicle speed to follow the vehicle ahead at the selected following distance. The vehicle speed increases or decreases to follow the vehicle in front, but will not exceed the set speed. It may apply limited braking with activated brake lights.

The adaptive cruise control can store and maintain speeds over approx. 50 km/h and brakes automatically to follow a slower vehicle driving ahead to a minimum speed of 30 km/h.

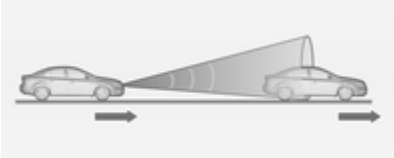

Adaptive cruise control uses a radar sensor to detect the vehicles ahead. If no vehicle is detected in the driving path, the adaptive cruise control will behave like a traditional cruise control.

For safety reasons, the system cannot be activated before the brake pedal has been depressed once since switching on ignition. Activation in first gear is not possible.

Adaptive cruise control is mainly advised to be used on long straight roads, e.g. highways or country roads with steady traffic. Do not use the system if it is not advisable to maintain a constant speed.

Control indicator ⇨ 121, ⇨ 121.

⚠Warning

The complete driver attention is always required while driving with adaptive cruise control. The driver stays fully in control of the vehicle because the brake pedal, the accelerator pedal and the cancel switch have priority over any adaptive cruise control operation.

Switching on

Press button to switch on adaptive cruise control. The control indicator illuminates white.

Activation by setting the speed

Adaptive cruise control can be activated between 50 km/h and 180 km/h.

Accelerate to the desired speed and turn thumb wheel to **SET/-**, the current speed is stored and maintained. Control indicator illuminates green.

The adaptive cruise control symbol, the following distance setting and set speed are indicated in the top line of the Driver Information Centre.

The accelerator pedal can be released. Adaptive cruise control remains activated while gearshifting.

Overriding set speed

It is always possible to drive faster than the selected set speed by depressing the accelerator pedal. When the accelerator pedal is released, the vehicle returns to the desired distance if a slower vehicle is ahead. Otherwise it returns to the stored speed.

Once the system is activated, adaptive cruise control decelerates or brakes if it detects a vehicle ahead, which is slower or closer than the desired following distance.

⚠ Warning

Accelerating by the driver deactivates automatic braking by the system. This is indicated as a pop-up warning in the Driver Information Centre.

Increase speed

With adaptive cruise control active, hold thumb wheel turned to **RES/+**: speed increases continuously in large increments, or activate repeatedly **RES/+**: speed increases in small increments.

If the vehicle is driven with adaptive cruise control active much faster than the desired speed, e.g. after depressing the accelerator pedal, then the current speed can be stored and maintained by turning the thumb wheel to **SET/-**.

Reduce speed

With adaptive cruise control active, hold thumb wheel turned to **SET/-**: speed decreases continuously in large increments, or activate repeatedly **SET/-**: speed decreases in small increments.

If the vehicle is driven with adaptive cruise control active much slower than the desired speed, e.g. because of a slower vehicle ahead, then the current speed can be stored and maintained by turning the thumb wheel to **SET/-**.

Resume stored speed

If the system is switched on but inactive, then turn thumb wheel to **RES/+** at a speed above 50 km/h to resume the stored speed.

Setting the following distance

When adaptive cruise control detects a slower moving vehicle in the driving path, it will adjust the vehicle speed to maintain the following distance selected by the driver.

The following distance can be set to near, medium or far.

Press button ⛷; the current setting is shown on the Driver Information Centre. Press button ⛷ again to change the following distance. The setting is also displayed in the top line of the Driver Information Centre.

The selected following distance is indicated by filled distance bars in the adaptive cruise control page.

Note that the following distance setting is shared with the sensitivity setting of forward collision alert.

Example: If setting 3 (far) is selected, then the driver is warned sooner before a possible collision, also if adaptive cruise control is inactive or switched off.

⚠ Warning

The driver accepts full responsibility for the appropriate following distance based on traffic, weather and visibility conditions. Following distance must be adjusted or the system switched off when required by the prevailing conditions.

Detecting the vehicle ahead

The green illuminated vehicle ahead control indicator is displayed in the speedometer when the system detects a vehicle in the driving path.

If this symbol does not display, or displays briefly, adaptive cruise control will not respond to vehicles ahead.

Deactivation

Adaptive cruise control is deactivated by the driver when:

- button is pressed,
- brake pedal is applied,
- clutch pedal is depressed for more than four seconds,
- gear selector lever of automatic transmission is moved to **N**.

The system is also automatically deactivated when:

- vehicle speed slows down below 45 km/h or accelerates above 190 km/h,
- Traction Control system is operating for more than 20 seconds,

- Electronic Stability Control is operating,
- there is no traffic and nothing detected on the road sides for several minutes. In this case there are no radar echoes and the sensor may report that it is blocked,
- collision imminent braking is applying the brakes,
- radar sensor is blocked by an ice or water film,
- fault is detected in the radar, engine or brake system.

When adaptive cruise control is deactivated automatically, the control indicator illuminates white and a warning symbol is displayed as a pop-up in the Driver Information Centre.

The stored speed is maintained.

⚠Warning

When adaptive cruise control is deactivated, the driver must take over full brake and engine control.

Switching off

Press button to switch off adaptive cruise control. The control indicator extinguishes. The stored speed is deleted.

Switching off the ignition also switches off adaptive cruise control and deletes the stored speed.

Driver's attention

- Use adaptive cruise control carefully on bends or mountain roads, as it can lose the vehicle ahead and need time to detect it again.
- Do not use the system on slippery roads as it can create rapid changes in tyre traction (wheel spinning), so that you could lose control.
- Do not use adaptive cruise control during rain, snow or heavy dirt, as the radar sensor can be covered by a water film, dust, ice or snow. This reduces or suppresses completely the visibility. In case of sensor blockage, clean the sensor cover.

System limits

- The system's automatic brake force does not permit hard braking and the braking level may not be sufficient to avoid a collision.
- After a sudden lane change, the system needs a certain time to detect the next preceding vehicle.

So if a new vehicle is detected, the system may accelerate instead of braking.

- Adaptive cruise control does ignore the oncoming traffic.
- Adaptive cruise control does not brake for stopped vehicles, pedestrians or animals.

Bends

The adaptive cruise control calculates a predicted path based on the centrifugal force. This predicted path considers the current bend characteristic, but cannot consider a future bend change. The system may lose the current vehicle ahead or consider a vehicle which is not in the actual lane. This can happen when entering or exiting a bend or if the bend gets stronger or weaker. If it no longer detects any vehicle ahead, then control indicator 🚗 will extinguish.

If the centrifugal force is too high in a bend, the system slows down the vehicle slightly. This braking level is not designed to avoid spinning off the bend. The driver is responsible for reducing the selected speed before entering a bend and in general to adapt the speed to the road type and to existing speed limits.

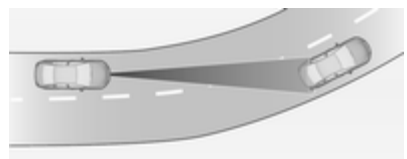

Motorways

On motorways, adapt the set speed to the situation and the weather. Always consider that adaptive cruise control has a limited visibility range, a limited braking level and a certain reaction time to verify if a vehicle is on the driving path or not. Adaptive cruise control may not be able to brake the vehicle in time to avoid a collision with a much slower vehicle or after a lane change. This is particularly true if driving fast or if the visibility is reduced due to weather conditions.

While entering or exiting a motorway, adaptive cruise control may lose the vehicle ahead and accelerate up to the set speed. For this reason, decrease the set speed before the exit or before the entry.

Vehicle path changes

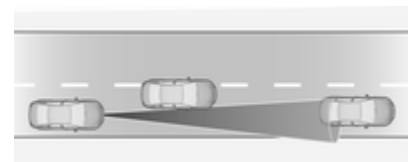

If another vehicle enters your driving path, adaptive cruise control will first consider the vehicle when it is completely in your path. Be ready to take action and depress the brake pedal, if you need to brake more quickly.

Hill and trailer considerations

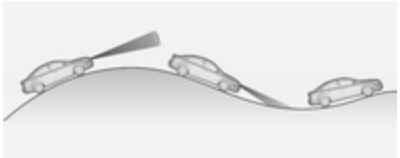

System performance on hills and when towing a trailer depends on your vehicle speed, vehicle load, traffic conditions and the road gradient. It may not detect a vehicle in your path while driving on hills. On steep hills, you may have to use the accelerator pedal to maintain your vehicle speed. When going downhill, especially when towing a trailer, you may have to brake to maintain or reduce your speed.

Note that applying the brake deactivates the system. It is not recommended to use adaptive cruise control on steep hills especially when towing a trailer.

Radar unit

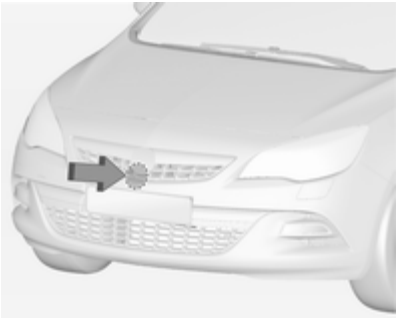

The radar unit is mounted behind the radiator grille below the brand emblem.

⚠ Warning

The radar unit was aligned carefully during manufacture. Therefore, after a frontal accident, do not use the system. The front bumper may appear to be intact, however the sensor behind can be out of position and react incorrectly. After an accident, consult a workshop to verify and correct the adaptive cruise control sensor position.

Settings

Settings can be changed in the **Auto collision preparation** menu in the vehicle personalisation, ⇨ 134.

Fault

If the adaptive cruise control does not work due to temporary conditions (e.g. blockage by ice) or if there is a permanent system error, then a message is displayed in the Driver Information Centre.

Vehicle messages ⇨ 128.

Forward collision alert

The forward collision alert can help to avoid or reduce the harm caused by front-end crashes. If a vehicle directly ahead is approached too quickly, a warning chime and alert in the Driver Information Centre is provided.

The green illuminated vehicle ahead symbol appears in the speedometer when the system has detected a vehicle in the driving path. A precondition is that forward collision alert is activated in the vehicle personalisation menu ⇨ 134 or that it is not deactivated by the button (depending on the system, see following).

Depending on the vehicle's equipment, there are two variants of the forward collision alert available:

- **Forward collision alert based on radar system**

  on vehicles equipped with adaptive cruise control ⇨ 186.
- **Forward collision alert based on front camera system**

  on vehicles with traditional cruise control or none ⇨ 183.

Forward collision alert based on radar system

The system uses the radar sensor behind the radiator grille to detect a vehicle directly ahead, in your path, within a maximum distance of 150 metres.

Activation

Forward collision alert operates automatically above walking speed, provided that **Auto collision preparation** setting is not deactivated in the vehicle personalisation menu ⇨ 134.

Selecting the alert sensitivity

The alert sensitivity can be set to near, medium or far.

Press button ; the current setting is shown on the Driver Information Centre. Press button again to change the alert sensitivity. The setting is also displayed in the top line of the Driver Information Centre.

Note that the alert timing sensitivity setting is shared with the following distance setting of the adaptive cruise control. So changing the alert timing sensitivity changes the adaptive cruise control following distance setting.

Alerting the driver

When approaching another vehicle too rapidly, the collision alert warning page will be indicated in the Driver Information Centre. Simultaneously a warning chime sounds. Depress the brake pedal, if it is required by the situation.

Settings

Settings can be changed in the **Auto collision preparation** menu in the vehicle personalisation ⇨ 134.

Forward collision alert based on front camera system

Forward collision alert uses the front camera system in the windscreen to detect a vehicle directly ahead, in your path, within a distance of approx. 60 metres.

Activation

Forward collision alert operates automatically above 40 km/h, if it is not deactivated by button ⚠, see below.

Selecting the alert sensitivity

The alert sensitivity can be set to near, medium or far.

Press button ⚠; the current setting is shown on the Driver Information Centre. Press button ⚠ again to change the alert sensitivity.

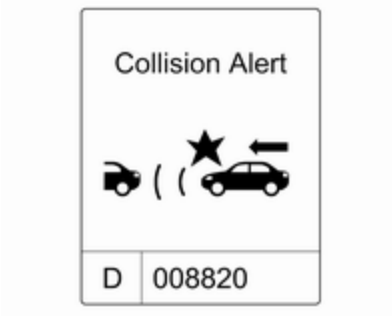

Alerting the driver

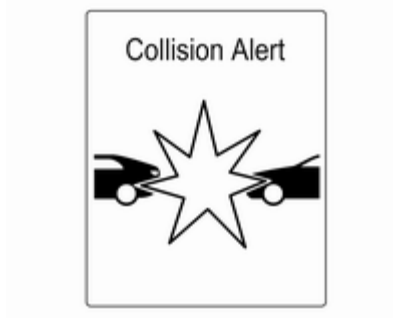

When approaching another vehicle too rapidly, the collision alert warning page will be indicated in the Driver Information Centre. Simultaneously a warning chime sounds. Depress the brake pedal, if it is required by the situation.

Deactivation

The system can be deactivated. Press button ⚠ repeatedly until the following message appears in the Driver Information Centre.

General information for both variants of forward collision alert

⚠ Warning

Forward collision alert is just a warning system and does not apply the brakes. When approaching a vehicle ahead too rapidly, it may not provide you enough time to avoid a collision.

The driver accepts full responsibility for the appropriate following distance based on traffic, weather and visibility conditions.

The complete attention of the driver is always required while driving. The driver must always be ready to take action and apply the brakes.

System limitations

The system is designed to warn only for vehicles, but may react also to other metallic objects.

In the following cases, forward collision alert may not detect a vehicle ahead or sensor performance is limited:

- on winding roads,
- when weather limits visibility, e.g. fog, rain, or snow,
- when the sensor is blocked by snow, ice, slush, mud, dirt, or windscreen damage.

Following distance indication

The following distance indication displays the distance to a preceding moving vehicle. The system uses, depending on the vehicle equipment, either the radar behind the radiator grille or the front camera in the windscreen to detect the distance of a vehicle directly ahead in your path. It is active at speeds above 40 km/h.

When a preceding vehicle is detected ahead, the distance is indicated in seconds, displayed on a page in the Driver Information Centre ⇨ 121. Press the **MENU** button on the turn signal lever to select **Vehicle Information Menu** and turn the adjuster wheel to choose following distance indication page.

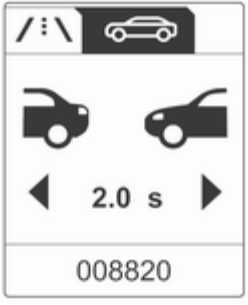

The minimum indicated distance is 0.5 s.

If there is no vehicle ahead or the vehicle ahead is out of range, two dashes will be displayed: -.- s.

Active Emergency Braking

Active emergency braking can help to reduce the damage from crashes with vehicles and obstacles directly ahead, when a collision can no longer be avoided either by manual braking or by steering. Before the active emergency braking applies, the driver is warned by the forward collision alert ⇨ 193.

The feature uses various inputs (e.g. radar sensor, brake pressure, vehicle speed) to calculate the probability of a frontal collision.

Active emergency braking operates automatically above walking speed, provided that **Auto collision preparation** setting is not deactivated in the vehicle personalisation menu ⇨ 134.

The system includes:

- Brake preparation system
- Emergency automatic braking
- Forward looking brake assist

⚠Warning

This system is not intended to replace the driver responsibility of driving the vehicle and looking ahead. Its function is limited to supplemental use only. The driver shall continue to apply the brake pedal as the driving situation dictates.

Brake preparation system

When approaching a vehicle ahead so quickly that a collision is likely, the brake preparation system slightly pressurises the brakes. This reduces the response time, when a manual or automatic braking is requested.

The brake system is prepared so that braking can occur more rapidly.

Emergency automatic braking

After the brake preparation and just before the imminent collision, this function automatically applies limited braking to reduce the impact speed of the collision.

Forward looking brake assist

In addition to brake preparation system and emergency automatic braking, the forward looking brake assist function makes the brake assist more sensitive. In this way, depressing the brake pedal slightly results immediately in a strong braking. This function helps the driver brake quicker and stronger before the imminent collision.

⚠Warning

Active emergency braking is not designed to apply strong autonomous braking or to avoid automatically a collision. It is designed to reduce the vehicle speed before collision. It may not react on stopped vehicles, pedestrians or animals. After a sudden lane change, the system needs a certain time to detect the next preceding vehicle.

The complete attention of the driver is always required while driving. The driver shall always be ready to take action and apply the brakes and steer to avoid collisions. The system is designed to work with all occupants wearing their seat belts.

System limitations

The active emergency braking has limited or no function during rain, snow or heavy dirt, as the radar sensor can be covered by a water film, dust, ice or snow. In case of sensor blockage, clean the sensor cover.

In some seldom cases the active emergency braking system may provide a short automatic braking in situations that seem to be unnecessary, for instance due to traffic signs in a curve or due to vehicles in another lane. This is

acceptable operation, the vehicle does not need service. Firmly apply the accelerator pedal to override the automatic braking.

Settings

Settings can be changed in the **Auto collision preparation** menu in the vehicle personalisation, ⇨ 134.

Fault

In the event of a system service requirement, a message is displayed in the Driver Information Centre.

If the system does not work as it should do, vehicle messages are displayed in the Driver Information Centre.

Vehicle messages ⇨ 128.

Parking assist

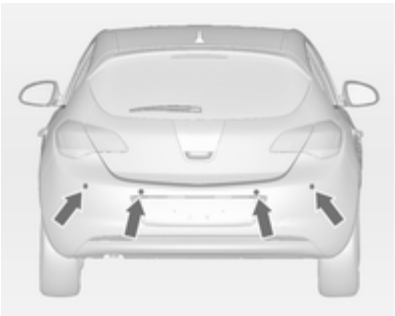

The parking assist makes parking easier by measuring the distance between the vehicle and obstacles, and giving acoustic signals. It is the driver, however, who bears full responsibility for the parking manoeuvre.

The system consists of four ultrasonic parking sensors in the rear bumper. If the vehicle is equipped with a front parking assist, the system consists of four additional ultrasonic parking sensors in the front bumper.

The system uses two different frequencies for the front and rear sensors, respectively, each with a different sound.

Control indicator P ⇨ 118.

Button P or

Parking assist will be activated and deactivated by pressing the parking assist button P. If the vehicle is additionally equipped with advanced parking assist ⇨ 201 parking assist is equipped with button . In this case both systems will be operated by button .

For activating or deactivating parking assist push button P or once briefly. For activating or deactivating advanced parking assist push button P or for approx. one second.

If one system is active, it can be switched between both systems by pushing the button shorter or longer.

Activation

When reverse gear is engaged, the system is activated automatically.

The front parking assist can also be activated at a low speed by pressing the parking assist button P or briefly.

An illuminated LED in the parking assist button indicates that the system is ready to operate.

Indication

The system warns the driver with acoustic signals against handicaps in front of or behind the vehicle.

Depending on which of the sensors are closer to an obstacle, you will hear a buzzing sound of the respective sensors. The interval between the sounds becomes shorter as the vehicle gets closer to the obstacle. When the distance is less than 30 cm, the buzzing is continuous.

Additionally the distance to obstacles can be shown in the Driver Information Centre ⇨ 121.

On version with Uplevel-Display, the distance to a front obstacle is indicated by changing segments.

On version with Uplevel-Combi-Display, the distance to a front and rear obstacle is indicated by changing distance lines around the vehicle.

The distance indication in the display can be inhibited by vehicle messages with a higher priority. Once the distance indication was overwritten by a vehicle message, distance is no more indicated until parking assist is activated again.

Deactivation

Deactivate the system by pressing the parking assist button P or P briefly.

The LED in the button extinguishes and **Park Assist Off** will be displayed in the Driver Information Centre.

The system is deactivated automatically when exceeding a certain speed.

If the P or P button is pressed once within an ignition cycle, the front parking assist is always reactivated when the vehicle speed goes below a certain value.

Fault

In the event of a fault in the system, P illuminates or a message is displayed in the Driver Information Centre.

If the system does not work due to temporary conditions like snow covered sensors, P illuminates or a message is displayed in the Driver Information Centre.

Vehicle messages ⇨ 128.

⚠ Warning

Under certain circumstances, various reflective surfaces on objects or clothing as well as external noise sources may cause the system to fail to detect obstacles.

Special attention has to be paid to low obstacles which can damage the lower part of the bumper.

Caution

Performance of the sensor can be reduced when sensors are covered, e.g. by ice or snow.

Performance of the parking assist system can be reduced due to heavy loading.

Special conditions apply if there are taller vehicles involved (e.g. off-road vehicles, mini vans, vans). Object identification in the upper part of these vehicles cannot be guaranteed.

Objects with a very small reflection cross section, like objects of narrow size or soft materials, may not be detected by the system.

Parking assist will not detect objects out of the detection range.

Note
The parking assist system automatically detects factory-fitted towing equipment. It is deactivated when the connector is plugged in.

The sensor may detect a non-existing object (echo disturbance) caused by external acoustical or mechanic disturbances.

Note
If engaging a forward gear and exceeding a certain speed, the rear parking assist will be deactivated when the rear carrier system is extended.

If engaging reverse at first, the parking assist will detect the rear carrier system and provide a buzzing sound. Press P or briefly to deactivate the parking assist.

Advanced parking assist

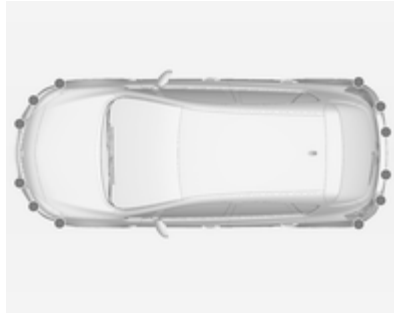

The advanced parking assist system manoeuvres the driver into a parking slot by giving instructions on the Driver Information Centre and acoustic signals. It is the driver, however, who bears full responsibility for accepting the parking slot suggested by the system and the parking manoeuvre.

The system uses the sensors of the parking assist system in combination with two additional sensors on both sides of the front bumper and the rear bumper.

Button

Advanced parking assist and parking assist ⇨ 198 both use the same button to operate the systems. For activating or deactivating parking assist push button once briefly. For activating or deactivating advanced parking assist push button for approx. one second.

If one system is active, it can be switched between both systems by pushing the button shorter or longer.

Activation

When looking for a parking slot, the system has to be activated by pushing the button for approx. one second.

The system can only be activated at a speed up to 30 km/h and the system searches for a parking slot at a speed up to 30 km/h.

The maximum allowed parallel distance between the vehicle and a row of parking cars is 1.8 metres.

Note
Before using the advanced parking assist the first time, the vehicle has to be driven at least for 40 km to calibrate the system automatically.

Functionality

When the vehicle passes a row of cars and the system is activated, the advanced parking assist system begins looking for a suitable parking slot. When a suitable slot is detected, a visual feedback on the Driver Information Centre and an acoustic signal are given.

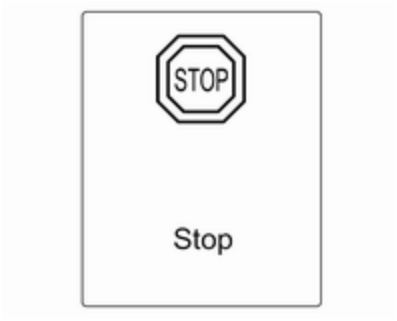

The parking slot suggestion of the system is accepted when the vehicle is stopped by the driver within 10 metres after the Stop message is given. The system calculates the optimal route into the parking slot. Then it manoeuvres the driver into the slot by giving detailed instructions.

The instructions show:

- a hint when driving faster than 30 km/h,
- the demand to stop the vehicle, when a parking slot is detected,
- the direction of driving during the parking manoeuvre,
- the steering wheel position during parking,
- for some of the instructions a progress bar is shown.

A successful parking manoeuvre is indicated by the End position symbol.

If the driver does not stop the vehicle within 10 metres after a parking slot is proposed, the system starts to search for another suitable parking slot.

Changing the parking side

The system is configured to detect parking slots on the passenger side. To detect parking slots on the driver side, switch turn indicator to the driver side.

Display priorities

After activating the advanced parking assist, a message appears on the Driver Information Centre. Indication of messages with higher priority like vehicle messages ⇨ 128 will be displayed. After approving the message by pressing the **SET/CLR** button, parking assist messages appear again and parking can be continued.

Deactivation

The system is deactivated by:

- pushing button ⊟P⊿ for approx. one second
- parking manoeuvre successfully ended
- driving faster than 30 km/h
- switching off the ignition

Deactivation by the driver or by the system during manoeuvring will be indicated by **Parking Deactivated** in the Driver Information Centre.

Fault

A message appears in the Driver Information Centre when:

- there is a fault in the system
- the driver did not successfully complete the parking manoeuvre
- the system is not operational

If an object is detected during parking instructions, **Stop** is indicated in the Driver Information Centre. Removing the object will resume the parking manoeuvre. If the object is not removed, the system will be deactivated. Push button for approx. one second to activate the system and search for a new parking slot.

Important hints for using the parking assist systems

⚠ Warning

Under certain circumstances, various reflective surfaces on objects or clothing as well as external noise sources may cause the system to fail to detect obstacles.

Special attention has to be paid to low obstacles which can damage the lower part of the bumper.

Caution

Performance of the sensor can be reduced when sensors are covered, e.g. by ice or snow.

Performance of the parking assist system can be reduced due to heavy loading.

Special conditions apply if there are taller vehicles involved (e.g. off-road vehicles, mini vans,

vans). Object identification in the upper part of these vehicles cannot be guaranteed.

Objects with a very small reflection cross section, like objects of narrow size or soft materials, may not be detected by the system.

Parking assist will not detect objects out of the detection range.

Note
The parking assist system automatically detects factory-fitted towing equipment. It is deactivated when the connector is plugged in.

It is possible that the sensor detects a non-existing object (echo disturbance) caused by external acoustical or mechanic disturbances.

Advanced parking assist system may not respond to changes in the parking space after initiating a parallel parking manoeuvre.

Side blind spot alert

The Side blind spot alert system detects and reports objects on either side of the vehicle, within a specified "blind spot" zone. The system alerts visually in each exterior mirror, when detecting objects that may not be visible in the interior and exterior mirrors.

The system's sensors are located in the bumper on the left and right side of the vehicle.

⚠ Warning

Side blind spot alert does not replace driver vision.

The system does not detect:

- Vehicles outside the side blind zones which may be rapidly approaching.
- Pedestrians, cyclists or animals.

Before changing a lane, always check all mirrors, look over the shoulder and use the turn signal.

When the system detects a vehicle in the side blind zone while driving forward, either while passing a vehicle or being passed, an amber warning symbol will illuminate in the relevant exterior mirror. If the driver then activates the turn signal, the warning symbol starts flashing amber as a warning not to change lanes.

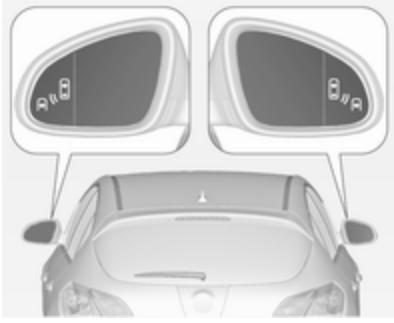

Side blind spot alert is active from speeds of 10 km/h up to 140 km/h. Driving faster than 140 km/h deactivates the system, indicated by low lighting warning symbols in both exterior mirrors. Reducing the

speed again will extinguish the warning symbols. If a vehicle is then detected in the blind zone, the warning symbols will illuminate as normal on the relevant side.

When the vehicle is started, both exterior mirror displays will briefly come on to indicate that the system is operating.

The system can be activated or deactivated in the menu **Settings** in the Info-Display, vehicle personalisation ⇨ 134.

Deactivation is indicated by a message in the Driver Information Centre.

Detection zones

The system sensor covers a zone of approx. 3 metres on both sides of the vehicle. This zone starts at each exterior mirror and extends rearwards by approx. 3 metres. The height of the zone is approx. between 0.5 metres and 2 metres off the ground.

The system is deactivated if the vehicle is towing a trailer.

Side blind spot alert is designed to ignore stationary objects such as guardrails, posts, curbs, walls and beams. Parked vehicles or oncoming vehicles are not detected.

Fault

Occasional missed alerts can occur under normal circumstances and will increase in wet conditions.

Side blind spot alert does not operate when the left or right corners of the rear bumper are covered with mud, dirt, snow, ice, slush, or in heavy rainstorms. Cleaning instructions ⇨ 280.

In the event of a fault in the system or if the system does not work due to temporary conditions, a message is displayed in the Driver Information Centre. Seek the assistance of a workshop.

Rear view camera

The rear view camera assists the driver when reversing by displaying a view of the area behind the vehicle.

The view of the camera is displayed in the Colour-Info-Display.

⚠ Warning

The rear view camera does not replace driver vision. Note that objects that are outside the camera's field of view and the advanced parking assist sensors, e.g. below the bumper or underneath the vehicle, are not displayed.

Do not reverse the vehicle by only looking at the Info-Display and check the surrounding behind and around the vehicle before reversing.

Activation

Rear view camera is automatically activated when reverse gear is engaged.

Functionality

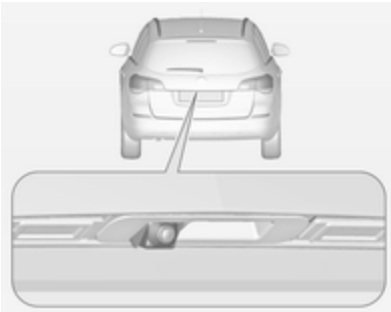

The camera is mounted in the tailgate handle and has a viewing angle of 130°.

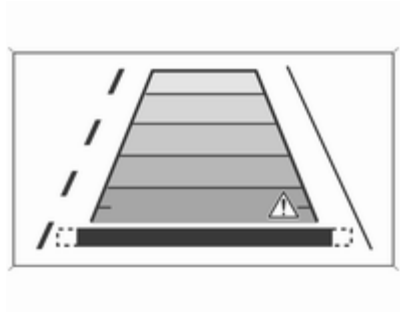

Due to the high position of the camera the rear bumper can be seen on the display as a guide to position.

The area displayed by the camera is limited. The distance of the image that appears on the display differs from the actual distance.

Guiding lines

Dynamic guiding lines are horizontal lines in 1 metre intervals projected on the picture to define the distance to shown objects.

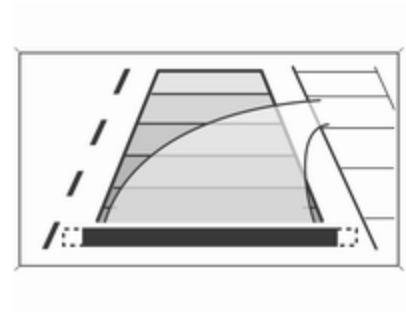

Trajectory lane of the vehicle is shown in accordance with the steering angle.

The function can be deactivated in the menu **Settings** in the Info-Display. Vehicle personalisation ⇨ 134.

Warning symbols

Warning symbols are indicated as triangles ⚠on the picture which show obstacles detected by the rear sensors of the advanced parking assist.

Display settings

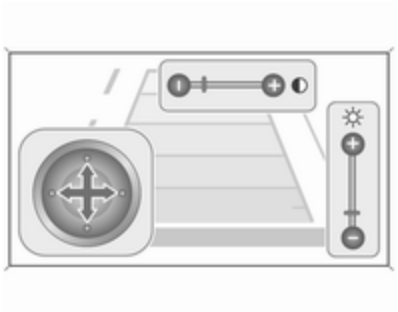

Brightness can be set with the up/down buttons of the multifunction knob.

Contrast can be set with left/right buttons of the multifunction knob.

Deactivation

The camera is deactivated when a certain forward speed is exceeded or if reverse gear is not engaged for approx. 10 seconds.

Activation or deactivation of the rear view camera can be changed in the menu **Settings** in the Info-Display. Vehicle personalisation ⇨ 134.

Fault

Fault messages are displayed with a ⚠ on the top line of the Info-Display.

The rear view camera may not operate properly when:

- the surrounding is dark,
- the sun or the beam of headlights is shining directly into the camera lens,
- ice, snow, mud, or anything else covers the camera lens. Clean the lens, rinse it with water, and wipe it with a soft cloth,
- the tailgate is not closed correctly,
- the vehicle had a rear end accident,
- there are extreme temperature changes.

Traffic sign assistant

Functionality

The traffic sign assistant system detects designated traffic signs via a front camera and displays them in the Driver Information Centre.

Traffic signs, which will be detected, are:

Limit and no passing signs

- speed limit
- no passing
- end of speed limit
- end of no passing

Road signs
Beginning and end of:

- motorways
- A-roads
- play streets

Add on signs

- additional hints to traffic signs
- restriction of trailer towing
- wet warning
- ice warning
- direction arrows

Speed limit signs are displayed in the Driver Information Centre until the next speed limit sign or end of speed limit is detected or up to a defined sign timeout.

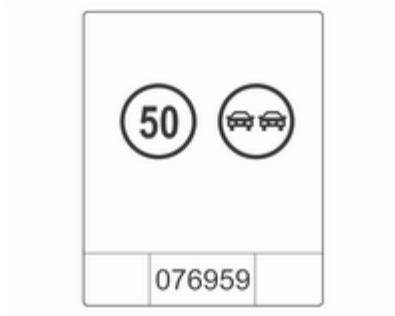

Combinations of more signs in the display are possible.

An exclamation mark in a frame indicates that there is an add on sign detected which cannot be recognised by the system.

The system is active up to a speed of 200 km/h depending on the lighting conditions. At night the system is active up to a speed of 160 km/h.

As soon as the speed becomes slower than 55 km/h the display will be reset and the content of the traffic sign page will be cleared. The next recognized speed indication will be displayed.

Display indication

Traffic signs are displayed on the page **Traffic sign detection** on the Driver Information Centre, chosen via the adjuster wheel on the turn signal lever ⇨ 121.

When another function on the Driver Information Centre menu was selected and then **Traffic sign detection** page is chosen again, the last recognised traffic sign will be displayed.

After the traffic sign page is cleared by the system, the following symbol is indicated:

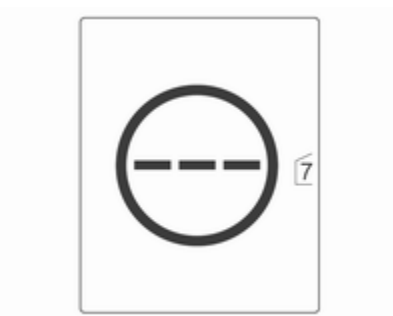

The content of the traffic sign page is also cleared during driving by pushing the **SET/CLR** button on the turn signal lever for a longer time.

Pop-up function

Speed limits and no passing signs are displayed as pop-ups on each page of the Driver Information Centre.

The pop-up function can be deactivated on the traffic sign page by pressing the **SET/CLR** button on the turn signal lever.

Once setting page is displayed, select **Off** to deactivate pop-up function. Reactivated by selecting **On**. When switching on the ignition, pop-up function is deactivated.

Pop-up indication is displayed for approx. 8 seconds in the Driver Information Centre.

Fault

The traffic sign assistant system may not operate correctly when:

- the area of the windscreen, where the front camera is located, is not clean
- traffic signs are completely or partially covered or difficult to discern
- there are adverse environmental conditions, e.g. heavy rain, snow, direct sunlight or shadows. In this case **No Traffic Sign Detection due to Weather** is indicated on the display
- traffic signs are incorrectly mounted or damaged
- traffic signs do not comply with the Vienna Convention on traffic signs (Wiener Übereinkommen über Straßenverkehrszeichen)

Caution

The system is intended to help the driver within a defined speed range to discern certain traffic signs. Do not ignore traffic signs which are not displayed by the system.

The system does not discern any other than the conventional traffic signs that might give or end a speed limit.

Do not let this special feature tempt you into taking risks when driving.

Always adapt speed to the road conditions.

The driver assistance systems do not relieve the driver from full responsibility for vehicle operation.

Lane departure warning

The lane departure warning system observes the lane markings between which the vehicle is driving via a front camera. The system detects lane changes and warns the driver in the event of an unintended lane change via visual and acoustic signals.

Criteria for the detection of an unintended lane change are:

- no operation of turn signals
- no brake pedal operation
- no active accelerator operation or speeding-up
- no active steering

If the driver is active, no warning will be issued.

Activation

The lane departure warning system is activated by pressing the button. The illuminated LED in the button indicates that the system is switched on. When the control indicator in the instrument cluster illuminates green, the system is ready to operate.

The system is only operable at vehicle speeds above 56 km/h and if lane markings are available.

When the system recognises an unintended lane change, the control indicator changes to yellow and flashes. Simultaneously a chime sound is activated.

Deactivation

The system is deactivated by pressing button, the LED in the button extinguishes.

At speeds below 56 km/h the system is inoperable.

Fault

The lane departure warning system may not operate properly when:

- the windscreen is not clean
- there are adverse environmental conditions like heavy rain, snow, direct sunlight or shadows

The system can not operate when no lane marking is detected.

Fuel

Fuel for petrol engines

Only use unleaded fuel that complies with European standard EN 228 or E DIN 51626-1 or equivalent.

Your engine is capable to run with E10 fuel that fulfills these standards. E10 fuel contains up to 10 % bioethanol.

Use fuel with the recommended octane rating ⇨ 292. Use of fuel with too low an octane rating can reduce engine power and torque and slightly increases fuel consumption.

Caution

Do not use fuel or fuel additives that contain metallic compounds such as manganese-based additives. This may cause engine damage.

Caution

Use of fuel that does not comply to EN 228 or E DIN 51626-1 or equivalent can lead to deposits or engine damage and may affect your warranty.

Caution

Use of fuel with too low an octane rating could lead to uncontrolled combustion and engine damage.

Fuel for diesel engines

Only use diesel fuel that complies with EN 590.

In countries outside the European Union use Euro-Diesel fuel with a sulphur concentration below 50 ppm.

Caution

Use of fuel that does not comply to EN 590 or similar can lead to engine powerloss, increased wear or engine damage and may affect your warranty.

Do not use marine diesel oils, heating oils, Aquazole and similar diesel-water emulsions. Diesel fuels must not be diluted with fuels for petrol engines.

Fuel for liquid gas operation

Liquid gas is known as LPG (Liquefied Petroleum Gas) or under its French name GPL (Gaz de Pétrole Liquéfié). LPG is also known as Autogas.

LPG consists mainly of propane and butane. The octane rating is between 105 and 115, depending on the butane proportion. LPG is stored liquid at around 5 - 10 bar pressure.

The boiling point depends on the pressure and mixing ratio. At ambient pressure, it is between -42 °C (pure propane) and -0.5 °C (pure butane).

Caution
The system works at an ambient temperature of approx. -8 °C to 100 °C.

Full function of the LPG system can only be guaranteed with liquid gas which complies with the minimum requirements of DIN EN 589.

Fuel selector

Pressing the **LPG** button switches between petrol and liquid gas operation as soon as the required parameters (coolant temperature, gas temperature and minimum engine speed) have been reached. The requirements are usually fulfilled after around 60 seconds (depending on exterior temperature) and the first firm press on the accelerator. The LED status shows the current operating mode.

⬬ off	=	petrol operation
⬬ illuminates	=	liquid gas operation
⬬ flashes	=	no switching is possible, one type of fuel is empty

As soon as the liquid gas tanks are empty, petrol operation is automatically engaged until the ignition is switched off.

Every six months, run the petrol tank down until control indicator ⬬ illuminates, then refuel. This helps maintain fuel quality and system function for petrol operation.

Fill the tank completely at regular intervals to prevent corrosion in the tank.

Faults and remedies

If gas mode is not possible, check the following:

- Is there enough liquid gas present?
- Is there enough petrol present for starting?

Due to extreme temperatures in combination with the gas composition, it may take slightly longer before the system switches from petrol to gas mode.

In extreme situations, the system may also switch back to petrol mode if the minimum requirements are not fulfilled.

Seek the assistance of a workshop in the event of all other faults.

Caution

Repairs and adjustments may only be made by trained specialists in order to maintain the safety and warranty on the LPG system.

Liquid gas is given a particular odour (odorised) so that any leaks can be detected easily.

⚠ Warning

If you smell gas in the vehicle or in the immediate vicinity, switch to petrol mode immediately. No smoking. No naked flames or ignition sources.

If possible, close the manual shut-off valve on the multivalve. The multivalve is located on the liquid gas tank in the load compartment, underneath the rear floor cover.

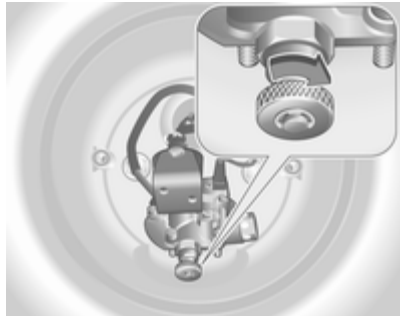

Turn the thumb wheel clockwise.

If no further gas odour is perceptible when the manual shut-off valve is closed, the vehicle can be used in petrol mode. If the gas odour persists, do not start the engine. Have the cause of the fault remedied by a workshop.

When using underground car parks, follow the instructions of the operator and local laws.

Note
In the event of an accident, switch off the ignition and lights. Close the manual shut-off valve on multivalve.

Refuelling

⚠ Danger

Before refuelling, switch off engine and any external heaters with combustion chambers. Switch off any mobile phones.

Follow the operating and safety instructions of the filling station when refuelling.

⚠ Danger

Fuel is flammable and explosive. No smoking. No naked flames or sparks.

If you can smell fuel in your vehicle, have the cause of this remedied immediately by an authorized dealer.

Caution

In case of misfuelling, do not switch on ignition.

Fuel filler flap is located at right rear side of the vehicle.

The fuel filler flap can only be opened if the vehicle is unlocked. Pull flap at the recess and open..

To open, turn the cap slowly to the left.

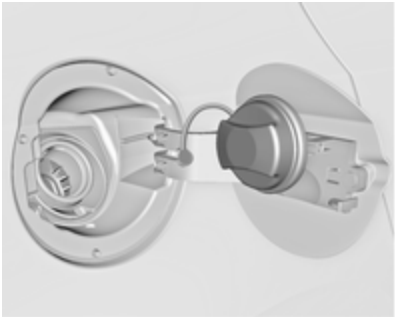

The fuel filler cap can be retained in the bracket on the fuel filler flap.

For refuelling, fully insert the pump nozzle and switch it on.

After automatic cut-off, it can be topped up with max. two doses of fuel.

Caution

Wipe off any overflowing fuel immediately.

To close, turn the fuel filler cap to the right until it clicks.

Close the flap and let engage.

Liquid gas refuelling

Follow the operating and safety instructions of the filling station when refuelling.

The filling valve for the liquid gas is behind the fuel filler cap.

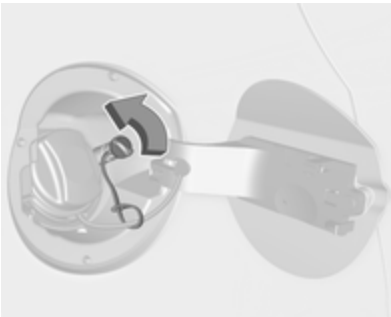

Unscrew protective cap from the filler neck.

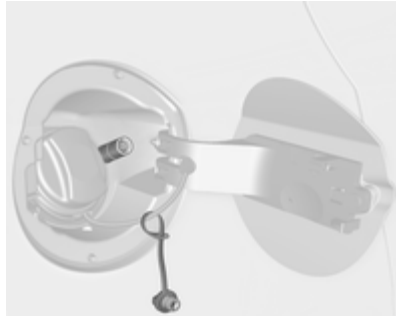

Fit the required adapter.

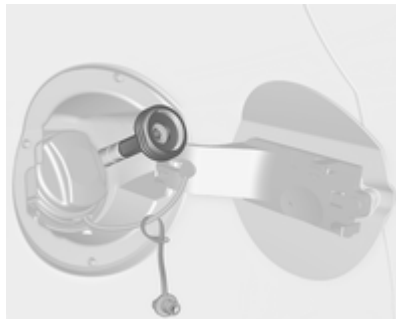

ACME Adapter: Screw the nut of the filling nozzle onto the adapter. Press locking lever on filler nozzle down.

DISH (Italy) filler neck: Place the filler nozzle into the adapter. Press locking lever on filler nozzle down.

Bayonet filler neck: Place filler nozzle on the adapter and turn to the left or right through one quarter turn. Pull locking lever of filler nozzle fully.

EURO filler neck: Press the filler nozzle onto the adapter until it engages.

Press the button of the liquid gas supply point. The filling system stops or begins to run slowly when 80% ofthe tank volume is reached (maximum fill level).

Release button on filling system and the filling process stops. Release the locking lever and remove the filler nozzle. A small quantity of liquid gas can escape.

Remove adapter and stow in vehicle.

Fit protective cap to prevent the penetration of foreign bodies into the filler opening and the system.

⚠Warning

Due to the system design, an escape of liquid gas after releasing the locking lever is unavoidable. Avoid inhaling.

⚠Warning

The liquid gas tank may only be filled to 80% for safety reasons.

The multivalve on the liquid gas tank automatically limits the fill quantity. If a larger quantity is added, we recommend not exposing the vehicle to the sun until the excess amount has been used up.

Filling adapter

As filling systems are not standardised, different adapters are required which are available from Opel Distributors and from Opel Authorised Repairers.

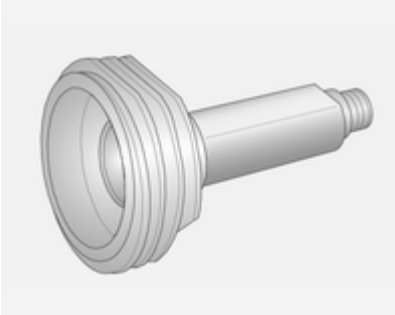

ACME adapter: Belgium, Germany, Ireland, Luxembourg, Switzerland

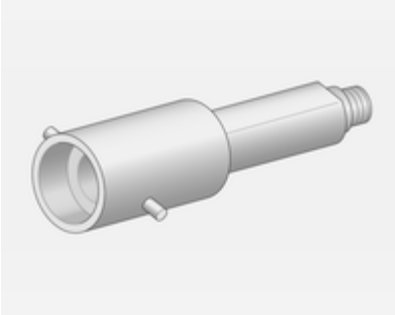

Bayonet adapter: Netherlands, Norway, Spain, United Kingdom

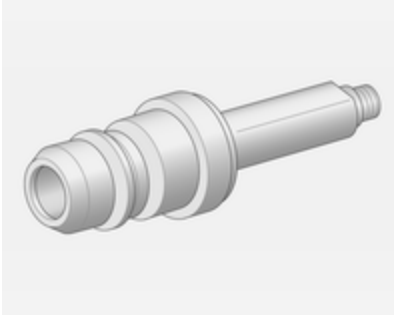

EURO adapter: Spain

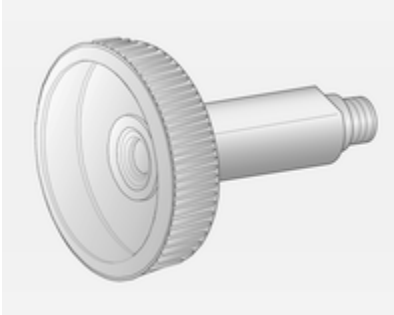

DISH (Italy) adapter: Bosnia-Herzegovina, Bulgaria, Denmark, Estonia, France, Greece, Italy,

Croatia, Latvia, Lithuania, Macedonia, Austria, Poland, Portugal, Romania, Sweden, Switzerland, Serbia, Slovakia, Slovenia, Czech Republic, Turkey, Ukraine, Hungary

Fuel filler cap

Only use genuine fuel filler caps. Diesel-engined vehicles have special fuel filler caps.

Fuel consumption - CO_2-Emissions

The fuel consumption (combined) of the model Opel Astra is within a range of 8.1 to 3.7 l/100 km.

The CO_2 emission (combined) is within a range of 189 to 99 g/km.

For the values specific to your vehicle, refer to the EEC Certificate of Conformity provided with your vehicle or other national registration documents.

General information

The official fuel consumption and specific CO_2 emission figures quoted relate to the EU base model with standard equipment.

Fuel consumption data and CO_2 emission data are determined according to regulation R (EC) No. 715/2007 (in the latest applicable version), taking into consideration the vehicle weight in running order, as specified by the regulation.

The figures are provided only for the purpose of comparison between different vehicle variants and must not be taken as a guarantee for the actual fuel consumption of a particular vehicle. Additional equipment may result in slightly higher results than the stated consumption and CO_2 figures.

Furthermore, fuel consumption is dependent on personal driving style as well as road and traffic conditions.

Trailer hitch

General information

Only use towing equipment that has been approved for your vehicle. Entrust retrofitting of towing equipment to a workshop. It may be necessary to make changes that affect the cooling system, heat shields or other equipment.

The bulb outage detection function for trailer brake light cannot detect a partial bulb outage, e.g. in case of 4 x 5 Watt bulbs, the function only detects lamp outage when only a single 5 Watt lamp remains or none remain.

Fitting of towing equipment could cover the opening of the towing eye. If this is the case use the coupling ball bar for towing. Always keep the coupling ball bar in the vehicle.

Driving characteristics and towing tips

Before attaching a trailer, lubricate the coupling ball. However, do not do so if a stabiliser, which acts on the coupling ball, is being used to reduce snaking movements.

For trailers with low driving stability and caravan trailers with a permitted gross vehicle weight of more than 1300 kg the use of a stabiliser is strongly recommended when driving above 80 km/h.

If the trailer starts snaking, drive more slowly, do not attempt to correct the steering and brake sharply if necessary.

When driving downhill, drive in the same gear as if driving uphill and drive at a similar speed.

Adjust tyre pressure to the value specified for full load ⇨ 309.

Trailer towing

Trailer loads

The permissible trailer loads are vehicle and engine-dependent maximum values which must not be exceeded. The actual trailer load is the difference between the actual gross weight of the trailer and the actual coupling socket load with the trailer coupled.

The permissible trailer loads are specified in the vehicle documents. In general, they are valid for gradients up to max. 12 %.

The permitted trailer load applies up to the specified incline and up to an altitude of 1000 metres above sea level. Since engine power decreases as altitude increases due to the air becoming thinner, therefore reducing climbing ability, the permissible gross train weight also decreases by 10 % for every 1000 metres of additional altitude. The gross train weight does not have to be reduced when driving on roads with slight inclines (less than 8 %, e.g. motorways).

The permissible gross train weight must not be exceeded. This weight is specified on the identification plate ⇨ 287.

Vertical coupling load

The vertical coupling load is the load exerted by the trailer on the coupling ball. It can be varied by changing the weight distribution when loading the trailer.

The maximum permissible vertical coupling load (75 kg) is specified on the towing equipment identification plate and in the vehicle documents. Always aim for the maximum load, especially in the case of heavy trailers. The vertical coupling load should never fall below 25 kg.

Rear axle load

When the trailer is coupled and the towing vehicle fully loaded, the permissible rear axle load (see identification plate or vehicle documents) may be exceeded by 60 kg, the gross vehicle weight rating may be exceeded by 60 kg. If the permissible rear axle load is exceeded, a maximum speed of 100 km/h applies.

Towing equipment

Caution
When operating without a trailer, remove the coupling ball bar.

Stowage of coupling ball bar

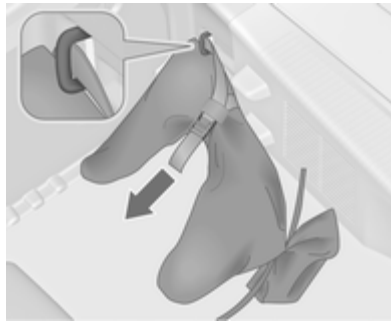

The bag with the coupling ball bar is stowed in the rear stowage compartment on the floor.

Place the strap through the lashing eye, wrap around twice and tighten the strap to secure the bag.

Fitting the coupling ball bar

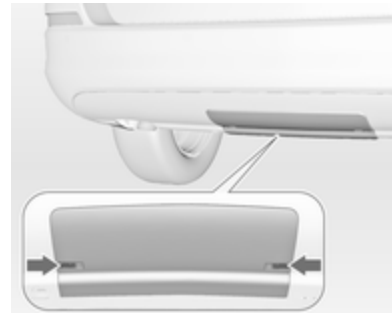

Press fastenings inward and remove cover, except 3-door hatchback.

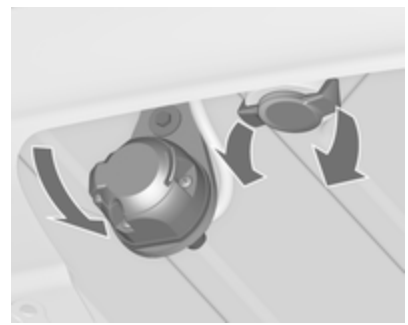

Disengage and fold down the socket. Remove the sealing plug from the opening for the coupling ball bar and stow it.

Checking the tensioning of the coupling ball bar

- Red marking on rotary knob must point towards green marking on coupling ball bar.
- The gap between the rotary knob and the coupling ball bar must be approx. 6 mm.
- The key must be in position 🔓.

Otherwise, the coupling ball bar must be tensioned before being inserted:

- Unlock coupling ball bar by turning key to position 🔓.

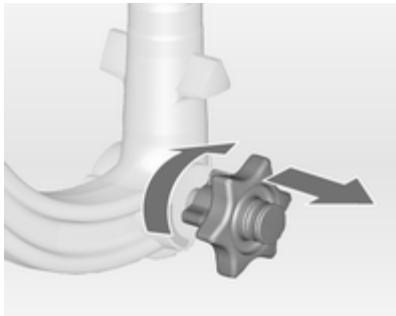

- Pull out rotary knob and turn clockwise as far as it will go.

Inserting the coupling ball bar

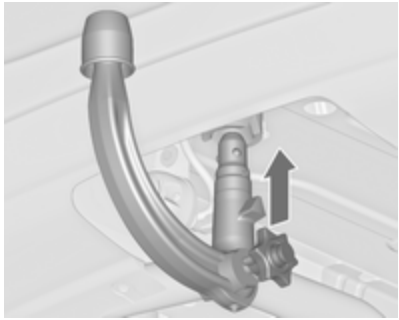

Insert the tensioned coupling ball bar in the opening and push firmly upwards until it audibly engages.

The rotary handle snaps back into its original position resting against the coupling ball bar without a gap.

⚠ Warning
Do not touch rotary handle during insertion.

Lock the coupling ball bar by turning the key to position 🔒. Remove the key and close the protective flap.

Eye for break-away stopping cable

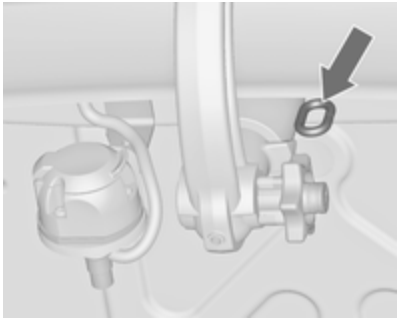

Attach breakaway stopping cable to eye.

Check that the coupling ball bar is correctly installed

- Green marking on rotary knob must point towards green marking on coupling ball bar.
- There must be no gap between the rotary handle and the coupling ball bar.
- The coupling ball bar must be firmly engaged in the opening.
- The coupling ball bar must be locked and the key removed.

⚠ Warning

Towing a trailer is permitted only when a coupling ball bar is fitted correctly. If the coupling ball bar does not engage correctly, seek the assistance of a workshop.

Dismounting the coupling ball bar

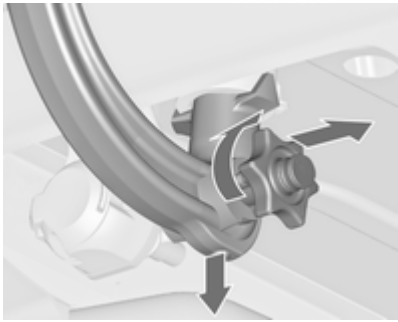

Open the protective flap and turn the key to position 🔓 to unlock the coupling ball bar.

Pull out rotary handle and turn clockwise as far as it will go. Pull out coupling ball bar downwards.

Insert sealing plug in opening. Fold away socket.

Replace cover, except 3-door hatchback.

Trailer stability assist

If the system detects snaking movements, engine power is reduced and the vehicle/trailer combination is selectively braked until the snaking ceases. While system is working keep steering wheel as still as possible.

Trailer stability assist (TSA) is a function of the Electronic Stability Control ⇨ 179.

Vehicle care

General Information 224
Vehicle checks 225
Bulb replacement 232
Electrical system 252
Vehicle tools 258
Wheels and tyres 260
Jump starting 276
Towing 278
Appearance care 280

General Information

Accessories and vehicle modifications

We recommend the use of genuine parts and accessories and factory approved parts specific for your vehicle type. We cannot assess or guarantee reliability of other products - even if they have a regulatory or otherwise granted approval.

Do not make any modifications to the electrical system, e.g. changes of electronic control units (chip tuning).

Caution
When transporting the vehicle on a train or on a recovery vehicle, the mud flaps might be damaged.

Vehicle storage

Storage for a long period of time

If the vehicle is to be stored for several months:

- Wash and wax the vehicle.
- Have the wax in the engine compartment and underbody checked.
- Clean and preserve the rubber seals.
- Fill up fuel tank completely.
- Change the engine oil.
- Drain the washer fluid reservoir.
- Check the coolant antifreeze and corrosion protection.
- Adjust tyre pressure to the value specified for full load.
- Park the vehicle in a dry, well ventilated place. Engage first or reverse gear or set selector lever to **P**. Prevent the vehicle from rolling.
- Do not apply the parking brake.

- Open the bonnet, close all doors and lock the vehicle.
- Disconnect the clamp from the negative terminal of the vehicle battery. Beware that all systems are not functional, e.g. anti-theft alarm system.

Putting back into operation

When the vehicle is to be put back into operation:

- Connect the clamp to the negative terminal of the vehicle battery. Activate the electronics of the power windows.
- Check tyre pressure.
- Fill up the washer fluid reservoir.
- Check the engine oil level.
- Check the coolant level.
- Fit the number plate if necessary.

End-of-life vehicle recovery

Information on end-of-life vehicle recovery centres and the recycling of end-of-life vehicles is available on our website, where legally required. Only entrust this work to an authorised recycling centre.

Gas vehicles must be recycled by a service centre authorised for gas vehicles.

Vehicle checks

Performing work

⚠ Warning

Only perform engine compartment checks when the ignition is off.

The cooling fan may start operating even if the ignition is off.

⚠ Danger

The ignition system and Xenon headlights use extremely high voltage. Do not touch.

Bonnet

Opening

Pull the release lever and return it to its original position.

Move the safety catch sideways to the left vehicle side and open the bonnet.

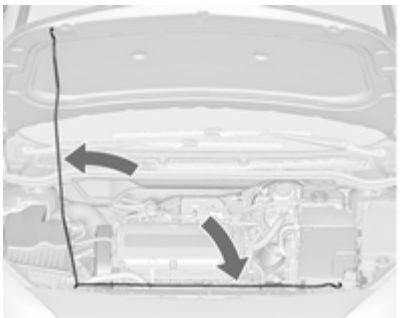

Secure the bonnet support.

If the bonnet is opened during an Autostop, the engine will be restarted automatically for safety reasons.

Closing

Before closing the bonnet, press the support into the holder.

Lower the bonnet and let it fall into the latch from a low height (20-25 cm). Check that the bonnet is engaged.

Caution

Do not press the bonnet into the latch to avoid dents.

Engine oil

Check the engine oil level manually on a regular basis to prevent damage to the engine. Ensure that the correct specification of oil is used. Recommended fluids and lubricants ⇨ 285.

Check with the vehicle on a level surface. The engine must be at operating temperature and switched off for at least 5 minutes.

Pull out the dipstick, wipe it clean, insert it to the stop on the handle, pull out and read the engine oil level.

Insert dipstick to the stop on the handle and make half a turn.

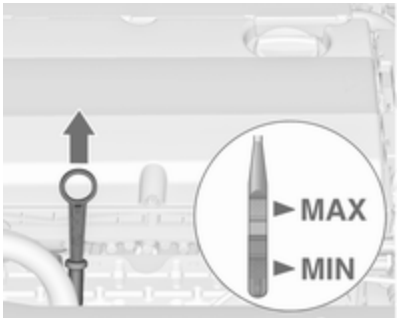

Different dipsticks are used depending on engine variant.

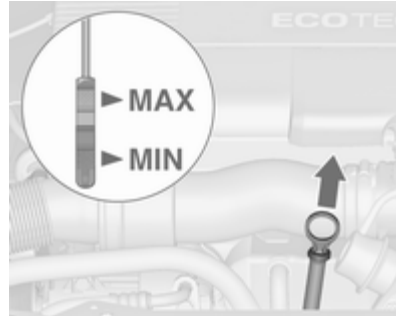

When the engine oil level has dropped to the **MIN** mark, top up engine oil.

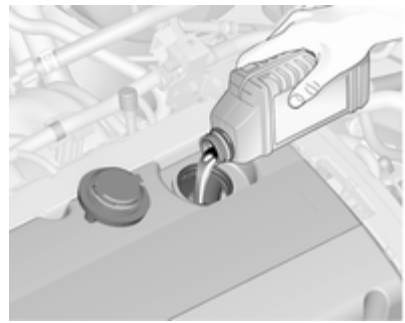

We recommend the use of the same grade of engine oil that was used at last change.

The engine oil level must not exceed the **MAX** mark on the dipstick.

Caution
Overfilled engine oil must be drained or suctioned out.

Capacities ⇨ 308.

Fit the cap on straight and tighten it.

Engine coolant

The coolant provides freeze protection down to approx. -28 °C. In northern countries with very low temperatures the factory filled coolant provides frost protection down to approx. -37°C.

Caution
Only use approved antifreeze.

Coolant level

Caution

Too low a coolant level can cause engine damage.

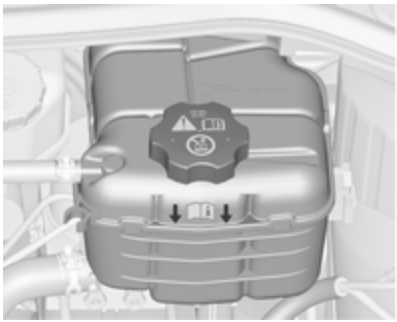

If the cooling system is cold, the coolant level should be above the filling line mark. Top up if the level is low.

⚠Warning

Allow the engine to cool before opening the cap. Carefully open the cap, relieving the pressure slowly.

To top up use a 1:1 mixture of released coolant concentrate mixed with clean tap water. If no coolant concentrate is available, use clean tap water. Install the cap tightly. Have the coolant concentration checked and have the cause of the coolant loss remedied by a workshop.

Washer fluid

Fill with clean water mixed with a suitable quantity of windscreen washer fluid which contains antifreeze. For the correct mixing ratio refer to the washer fluid container.

Caution

Only washer fluid with a sufficient antifreeze concentration provides protection at low temperatures or a sudden drop in temperature.

Brakes

In the event of minimum thickness of the brake lining, a squealing noise sounds during braking.

Continued driving is possible but have the brake lining replaced as soon as possible.

Once new brake linings are installed, do not brake unnecessarily hard for the first few journeys.

Brake fluid

⚠Warning

Brake fluid is poisonous and corrosive. Avoid contact with eyes, skin, fabrics and painted surfaces.

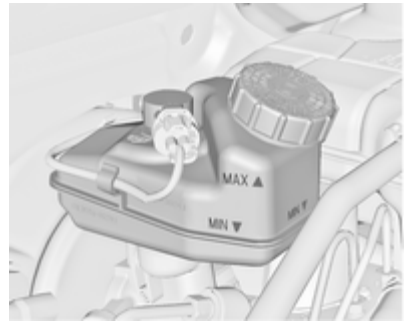

The brake fluid level must be between the **MIN** and **MAX** marks.

When topping up, ensure maximum cleanliness as contamination of the brake fluid can lead to brake system malfunctions. Have the cause of the loss of brake fluid remedied by a workshop.

Only use high-performance brake fluid approved for the vehicle. Brake and clutch fluid ⇨ 285.

Vehicle battery

Vehicles without stop-start system will be equipped with a lead acid battery. Vehicles with stop-start system will be equipped with an AGM battery which is not a lead acid battery.

The vehicle battery is maintenance-free provided that the driving profile allows sufficient charging of the battery. Short-distance-driving and frequent engine starts can discharge the battery. Avoid the use of unnecessary electrical consumers.

Batteries do not belong in household waste. They must be disposed of at an appropriate recycling collection point.

Laying up the vehicle for more than 4 weeks can lead to battery discharge. Disconnect the clamp from the negative terminal of the vehicle battery.

Ensure the ignition is switched off before connecting or disconnecting the vehicle battery.

Vehicle battery discharge protection ⇨ 153.

Replacing the vehicle battery

Note
Any deviation from the instructions given in this section may lead to temporary deactivation of the stop-start system.

When the vehicle battery is being replaced, please ensure that there are no open ventilation holes in the vicinity of the positive terminal. If a ventilation hole is open in this area, it must be closed off with a dummy cap, and the ventilation in the vicinity of the negative terminal must be opened.

Only use vehicle batteries that allow the fuse box to be mounted above the vehicle battery.

In vehicles with stop-start system, be sure to have the AGM (Absorptive Glass Mat) battery replaced with another AGM battery.

An AGM battery can be identified by the label on the battery. We recommend the use of an original Opel vehicle battery.

Note
Using an AGM vehicle battery different from the original Opel vehicle battery may result in a lower performance of the stop-start system.

We recommend that you have the vehicle battery replaced by a workshop.

Stop-start system ⇨ 167.

Charging the vehicle battery

⚠ Warning

On vehicles with stop-start system, ensure that the charging potential does not exceed 14.6 volts when using a battery charger. Otherwise the vehicle battery might be damaged.

Jump starting ⇨ 276.

Warning label

Meaning of symbols:

- No sparks, naked flames or smoking.
- Always shield eyes. Explosive gases can cause blindness or injury.
- Keep the vehicle battery out of reach of children.
- The vehicle battery contains sulphuric acid which could cause blindness or serious burn injuries.
- See the Owner's Manual for further information.
- Explosive gas may be present in the vicinity of the vehicle battery.

Diesel fuel system bleeding

If the tank has been run dry, the diesel fuel system must be bled. Switch on the ignition three times for 15 seconds at a time. Then crank the engine for a maximum of 40 seconds. Repeat this process after no less than 5 seconds. If the engine fails to start, seek the assistance of a workshop.

Wiper blade replacement

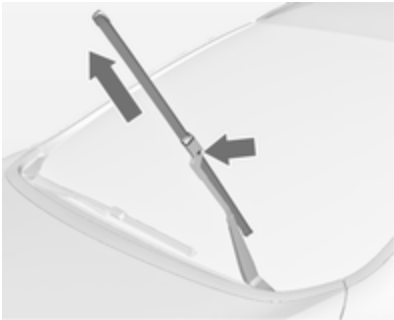

Lift the wiper arm until it stays in the raised position, press button to disengage the wiper blade and remove.

Attach the wiper blade slightly angled to the wiper arm and push until it engages.

Lower wiper arm carefully.

Wiper blade on the rear window

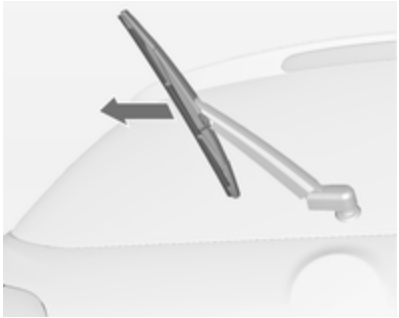

Lift wiper arm. Disengage wiper blade as shown in illustration and remove.

Attach the wiper blade slightly angled to the wiper arm and push until it engages.

Lower wiper arm carefully.

Bulb replacement

Switch off the ignition and switch off the relevant switch or close the doors.

Only hold a new bulb at the base! Do not touch the bulb glass with bare hands.

Use only the same bulb type for replacement.

Replace headlight bulbs from within the engine compartment.

Bulb check

After a bulb replacement switch on the ignition, operate and check the lights.

Halogen headlights

5-door hatchback, 4-door notchback, Sports tourer

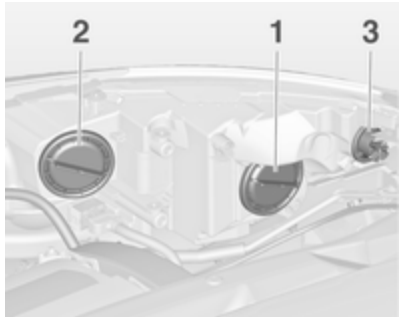

Halogen headlights with separate bulbs for low beam and high beam.

Low beam (1) outer bulb.

High beam (2) inner bulb.

Sidelight/Daytime running light (3).

Low beam (1)

1. Rotate the cap (1) anticlockwise and remove it.

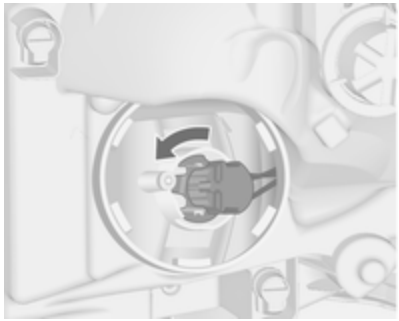

2. Rotate the bulb holder anticlockwise to disengage. Withdraw the bulb holder from the reflector.

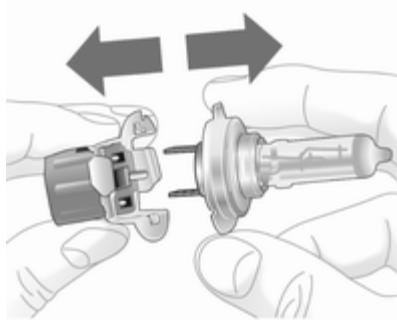

3. Detach the bulb from the bulb holder and replace the bulb.
4. Insert the bulb holder, engaging the two lugs into the reflector and rotate clockwise to secure.
5. Fit the cap and rotate clockwise.

High beam (2)

1. Rotate the cap (2) anticlockwise and remove it.
2. Rotate the bulb holder anticlockwise to disengage. Withdraw the bulb holder from the reflector.
3. Detach the bulb from the bulb holder and replace the bulb.
4. Insert the bulb holder, engaging the two lugs into the reflector and rotate clockwise to secure.
5. Fit the cap and rotate clockwise.

Sidelights/Daytime running light (3)

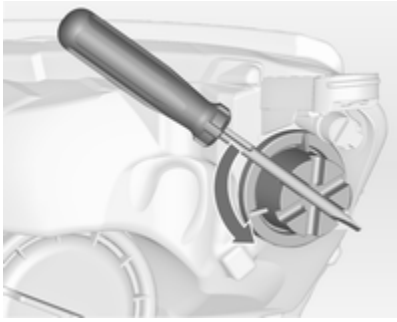

1. Rotate the cap (3) anticlockwise and remove it. Use the screwdriver to rotate the cap.

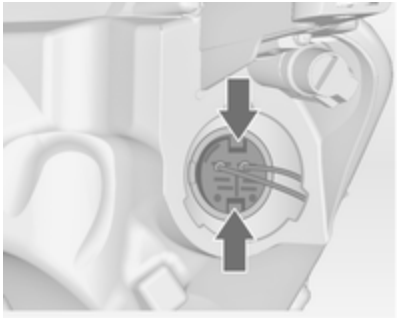

2. Press latches together and withdraw the bulb holder from the reflector.

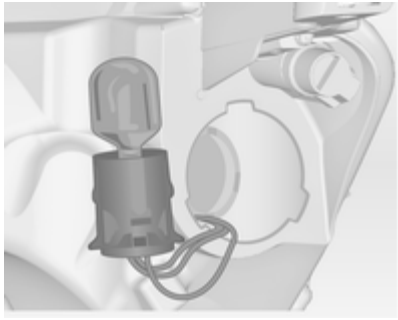

3. Remove the bulb from the socket and replace the bulb.
4. Insert the bulb holder into the reflector. Fit the cap and rotate clockwise.

3-door hatchback

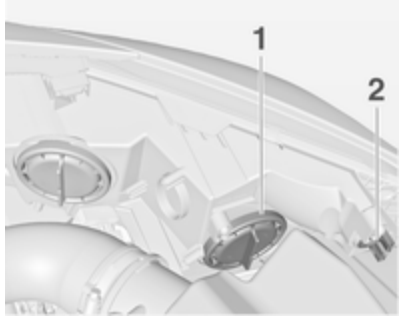

Bi-Halogen Headlight (1) with one bulb for low and high beam.

Sidelight/Daytime running light (2).

Low/High beam (1)

1. Rotate the cap (1) anticlockwise and remove it.

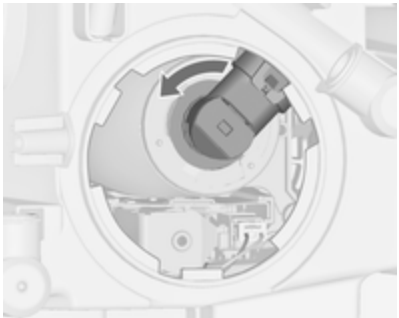

2. Rotate the bulb holder anticlockwise to disengage. Withdraw the bulb holder from the reflector.

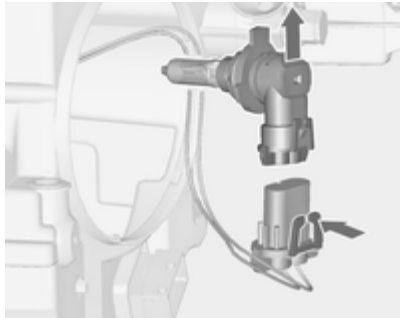

3. Disengage the bulb holder from the plug connector by pressing the retaining lug.
4. Replace the bulb and connect bulb holder with the plug connector.
5. Insert the bulb holder, engaging the two lugs into the reflector and rotate clockwise to secure.
6. Fit the cap and rotate clockwise.

Sidelight/Daytime running light (2)

1. Rotate bulb socket (2) anticlockwise to disengage. Withdraw the bulb socket from the reflector.

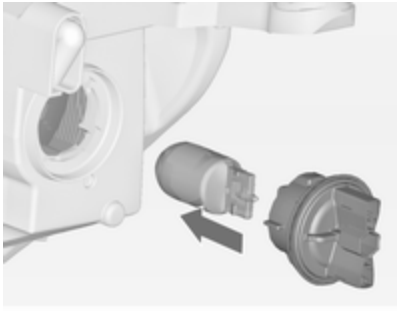

2. Remove the bulb from the socket by pulling.
3. Replace and insert new bulb into socket.
4. Insert the bulb socket into the reflector and turn clockwise.

Adaptive forward lighting

⚠ Danger

Adaptive forward lighting system uses Xenon headlights.

Xenon headlights work under extremely high electrical voltage. Do not touch. Have bulbs replaced by a workshop.

Sidelight/Daytime running lights are designed as Light Emitting Diodes (LEDs) and cannot be changed.

Bulbs for corner lighting can be changed.

Corner lighting

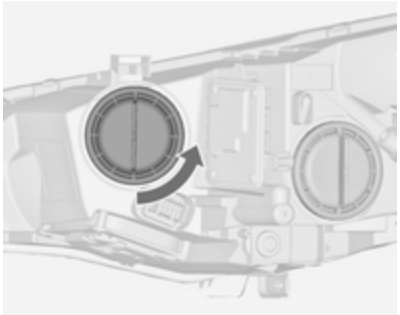

1. Rotate the cap anticlockwise and remove it.

2. Rotate the bulb holder anticlockwise to disengage. Withdraw the bulb holder from the reflector.

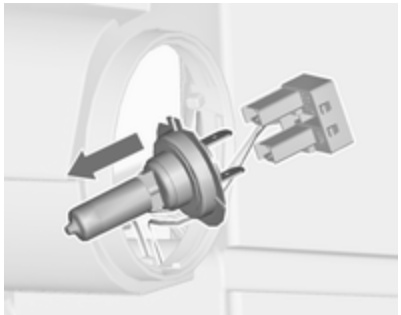

3. Disengage the bulb from the plug connector by pulling.
4. Replace the bulb and connect bulb holder with the plug connector.
5. Insert the bulb holder, engaging the two lugs into the reflector and rotate clockwise to secure.
6. Fit the cap and rotate clockwise.

Fog lights

5-door hatchback, 4-door notchback, Sports tourer

1. Release both caps with a screwdriver at the marked area.

2. Unscrew both screws and remove turn light assembly from the bumper.

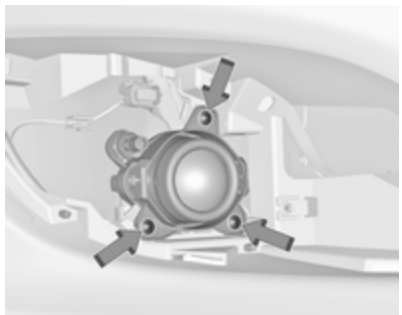

3. Unscrew three screws and remove fog light assembly from the bumper.

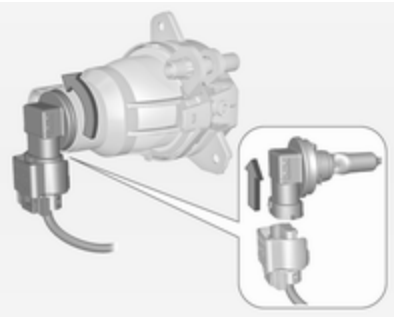

4. Turn the bulb socket anti-clockwise and remove it from the reflector.
5. Disengage the bulb socket from the plug connector by pressing the retaining lug.
6. Replace and insert bulb socket into the reflector, turn socket clockwise and attach the plug connector.
7. Attach fog light assembly into the bumper and fix with three screws.
8. Attach turn light assembly into the bumper and fix with two screws.
9. Engage both caps.

3-door hatchback

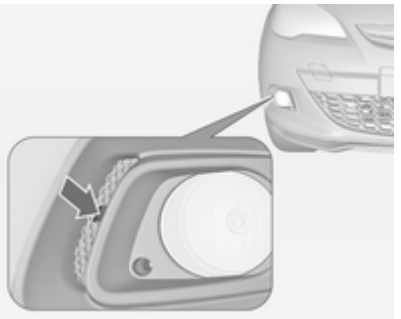

1. Disengage the cover with a screwdriver in the recess and remove the cover.

2. Unscrew both screws and remove light assembly from the bumper.

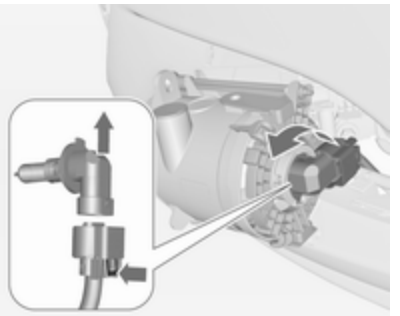

3. Turn the bulb socket anti-clockwise and remove it from the reflector.
4. Disengage the bulb socket from the plug connector by pressing the retaining lug.
5. Remove and replace the bulb socket with bulb and attach the plug connector.
6. Insert the bulb socket into the reflector by turning clockwise and engage.
7. Mount the light assembly by tightening both screws.
8. Assemble and engage the cover.

Front turn signal lights

5-door hatchback, 4-door notchback, Sports tourer

1. Release both caps with a screwdriver at the marked area.

2. Unscrew both screws and remove light assembly from the bumper.

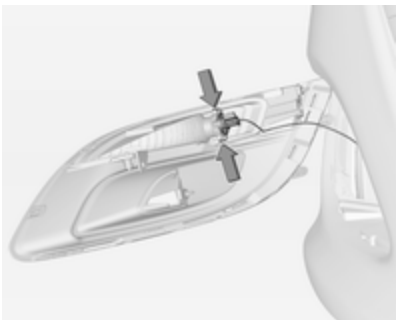

3. Disengage the bulb socket from the reflector by pressing both retaining lugs.

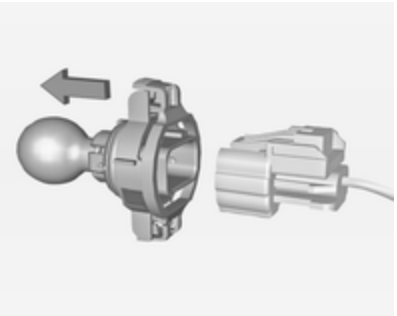

4. Disengage the plug connector from the bulb socket by pressing the retaining lug.
5. Remove and replace the bulb socket with bulb.
6. Insert the bulb socket into the reflector and attach the plug connector.
7. Attach light assembly into the bumper and fix with both screws.
8. Engage both caps.

5-door hatchback, 4-door notchback, Sports tourer with Sport/GSi front bumper

The bulbs are accessible from beneath the vehicle.

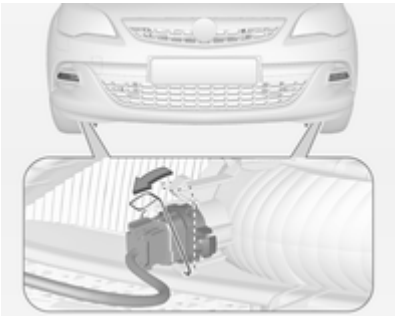

1. Disengage the spring clip and then swivel it backwards.
2. Pull the bulb socket with bulb out of the reflector.

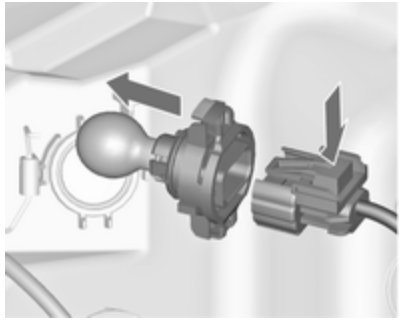

3. Disengage the bulb socket from the plug connector by pressing the retaining lug.
4. Remove and replace the bulb socket with bulb.
5. Attach the plug connector.
6. Insert the bulb socket into the reflector.
7. Swivel the spring clip forwards and engage.

3-door hatchback

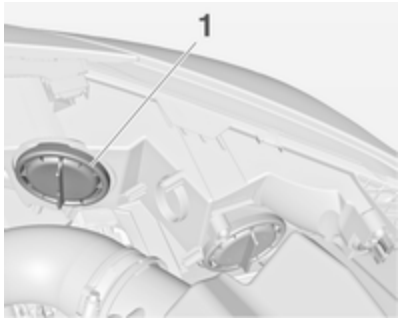

1. Rotate cap (1) anticlockwise and remove it.

2. Rotate bulb socket anticlockwise to disengage and withdraw from the reflector.

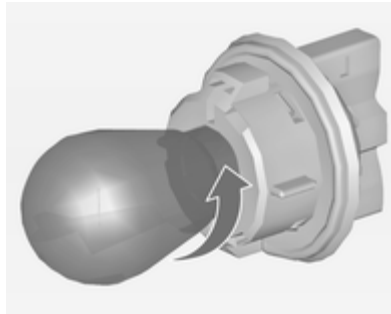

3. Remove the bulb from the socket by turning anticlockwise.
4. Replace and insert new bulb into socket by turning clockwise.
5. Insert the bulb socket into the reflector and turn clockwise.
6. Fit the cap and rotate clockwise.

Tail lights

5-door hatchback

1. Release the cover on the respective side and remove it.

2. Unscrew the plastic securing nut from the inside by hand.

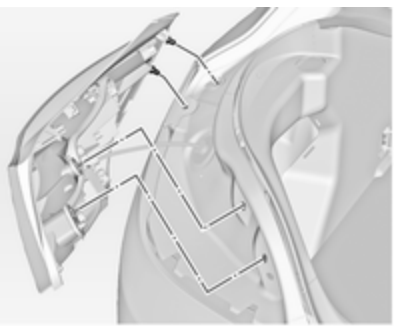

3. Carefully withdraw the tail light assembly from recesses and remove. Make sure that the cable duct remains in position.
4. Detach the cable from the retainer.
5. Detach the wiring plug from the bulb carrier.

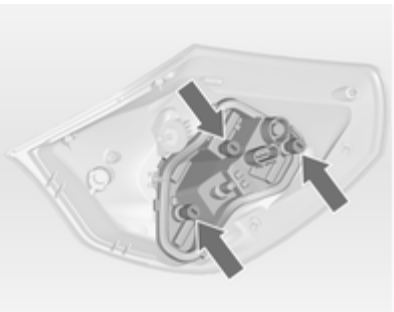

6. Unscrew the three screws with a screwdriver and remove the bulb carrier from the light assembly.

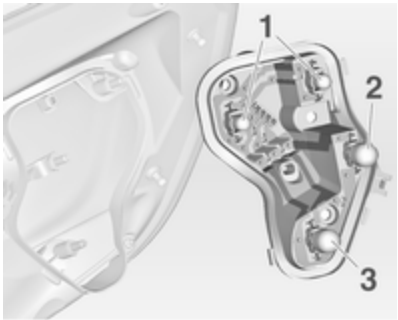

7. Remove and replace the bulb by withdrawing or pushing the bulb slightly into the socket and rotating anticlockwise:

   Tail light (**1**)

   Brake light (**2**)

   Turn signal light (**3**)
8. Insert the bulb carrier into the tail light assembly and screw into place. Connect the wiring plug and press the cable into the retainer. Fit light assembly with the retaining pins into the recesses of the car body and tighten the securing nut from the inside of the load compartment.

Close the cover and engage.

Light assembly in the tailgate

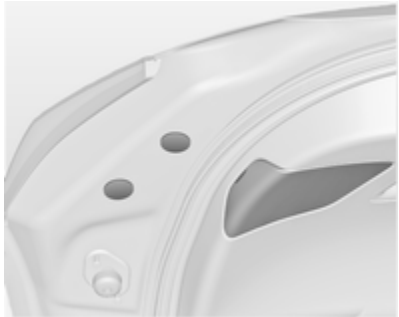

1. Open the tailgate and remove the cover and both blind cover on the respective side.
2. Unscrew and remove three screws.
3. Remove the light assembly. Make sure that the cable duct remains in position.

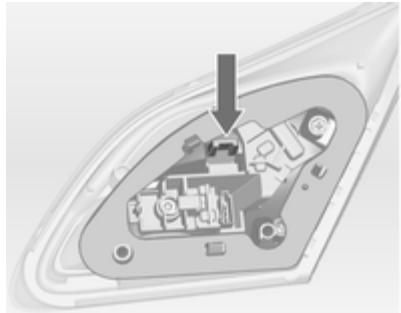

4. Press the retaining lug and remove the bulb carrier from the light assembly.

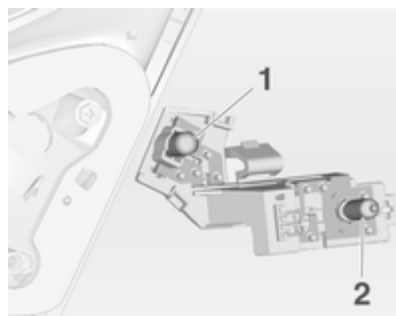

5. Remove and replace the bulb by withdrawing or pushing the bulb slightly into the socket and rotating anticlockwise:

   Tail light (**1**)

   Rear fog light/Reverse light (**2**), depending on the side.
6. Insert the bulb carrier into the tail light assembly. Fit light assembly on the tailgate and tighten the screws from the inside. Attach all covers.

4-door notchback

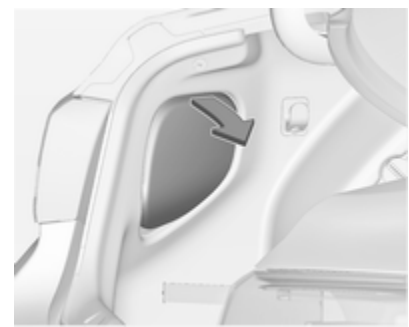

1. Remove cover on the responding side.

2. Unscrew two plastic securing nuts from the inside by hand.

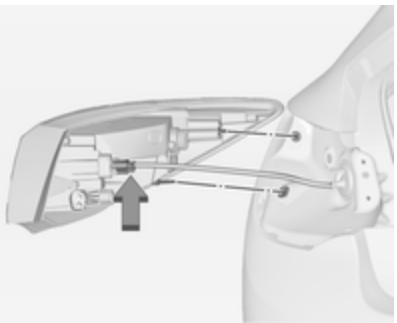

3. Carefully withdraw tail light assembly from recesses and remove. Make sure that the cable duct remains in position.
4. Detach wiring plug from bulb carrier.

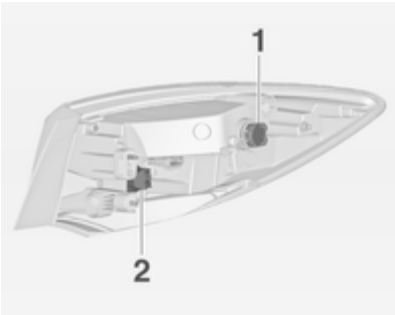

5. Remove the bulb holder by turning and replace the bulb by withdrawing or pushing the bulb slightly into the socket and rotating anticlockwise:

   Tail light/Brake light (**1**)

   Turn signal light (**2**)
6. Insert bulb holder and turn clockwise. Connect the wiring plug. Fit light assembly with the retaining pins into the recesses of the car body and tighten the securing nuts from the inside of the load compartment. Attach cover.

Light assembly in the tailgate

1. Open the tailgate and remove the cover on the respective side.

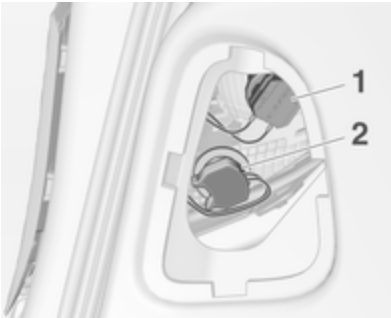

2. Remove the bulb holder by turning and replace the bulb by withdrawing or pushing the bulb slightly into the socket and rotating anticlockwise:

   Tail light (**1**)

   Rear fog light/Reverse light (**2**), depending on the side.
3. Insert bulb holder and turn clockwise. Attach cover.

Sports tourer

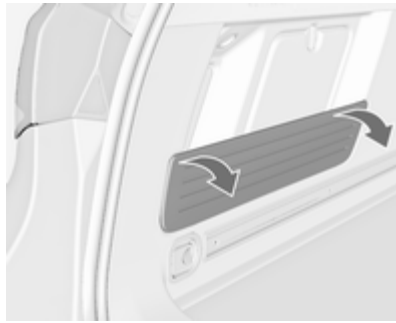

1. On left-hand side, fold down the blind and remove.

2. Remove cover on the respective side.

3. Unscrew two plastic securing nuts from the inside by hand.

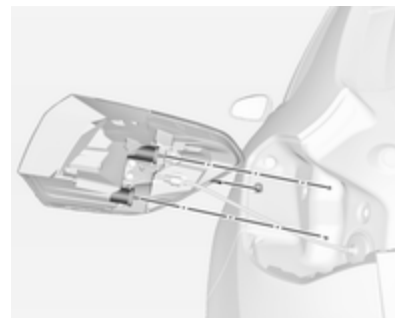

4. Carefully withdraw tail light assembly from recesses and remove. Make sure that the cable duct remains in position.
5. Detach wiring plug from bulb carrier.

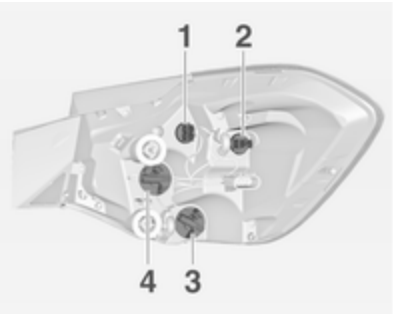

6. Remove the bulb holder by turning anticlockwise and replace the bulb by withdrawing or pushing the bulb slightly into the socket and rotating anticlockwise:

   Tail lights (**1** + **2**)

   Turn signal light (**3**)

   Brake light (**4**)

7. Connect the wiring plug and press the cable into the retainer. Fit light assembly with the retaining pins into the recesses of the car body and tighten the securing nuts from the inside of the load compartment. Attach cover.

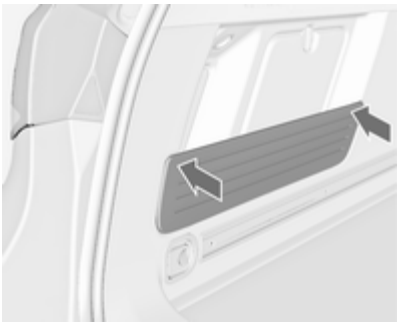

When assembling press the blind on the left-hand side into the rubber grommets to reach full retention force.

Light assembly in the tailgate

1. Open the tailgate and remove the blind covers on the respective side.
2. Unscrew and remove the screws.
3. Remove the tail light assembly and detach wiring plug from the bulb carrier.

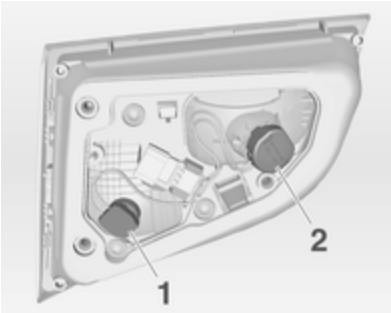

4. Remove the bulb holder by turning anticlockwise and replace the bulb by withdrawing or pushing the bulb slightly into the socket and rotating anticlockwise:

   Tail light (**1**)

   Rear fog light/Reverse light (**2**), depending on the side.
5. Fit the light assembly in the tailgate and tighten the screws from the inside. Attach all covers.

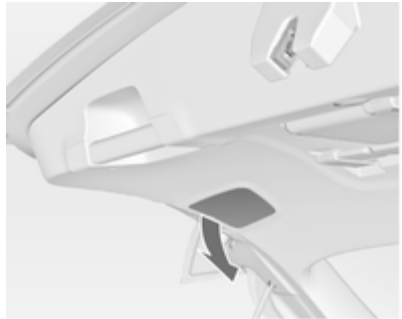

Rear fog light respectively reverse light (**2**), depending on the side, can be replaced by a cover in the tailgate without removing the light assembly: remove cover, turn bulb holder and replace the bulb by rotating anticlockwise.

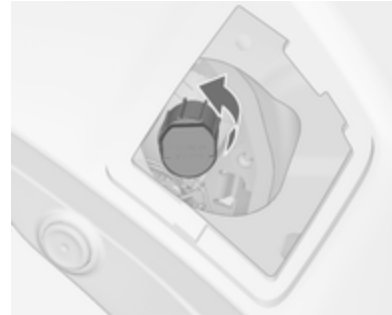

3-door hatchback

1. Release the cover on the respective side and remove it.

2. Unscrew both plastic securing nuts from the inside by hand.

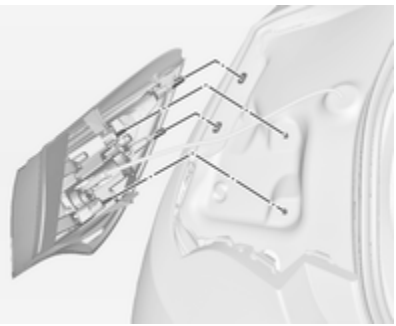

3. Carefully withdraw the light assembly from the recesses and remove.
4. Detach wiring plug from bulb carrier.

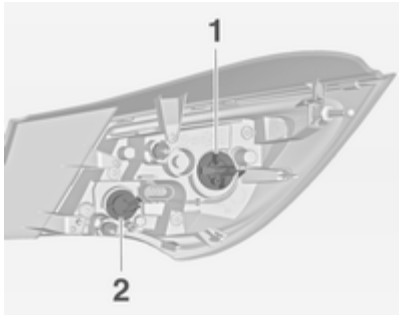

5. Remove the bulb holder by turning and replace the bulb by withdrawing or pushing the bulb slightly into the socket and rotating anticlockwise:

   Tail light/Brake light (**1**)

   Turn signal light (**2**)

   version with Light Emitting Diode (LED)

   Only turn signal light (**2**) can be changed.
6. Insert and turn bulb holder clockwise into the tail light assembly. Connect the wiring plug with the light assembly. Fit light assembly with the retaining pins into the recesses of the car body and tighten the securing nuts from the inside of the load compartment. Close cover and engage.

Light assembly in the tailgate

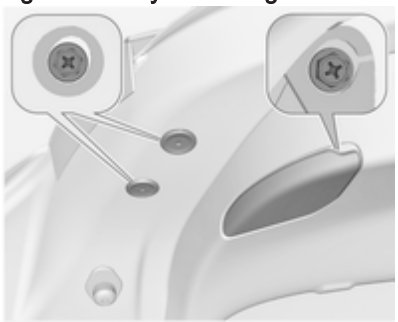

1. Open the tailgate and remove the covers on the respective side.

2. Unscrew three screws.
3. Remove the tail light assembly from tailgate.
4. Remove the bulb holder by turning and replace the bulb by withdrawing or pushing the bulb slightly into the socket and rotating anticlockwise:

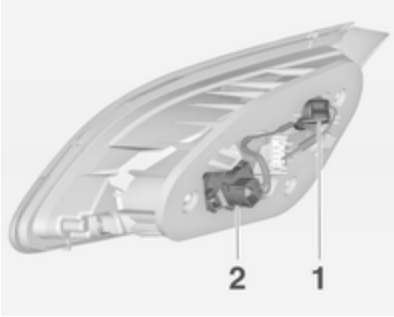

Tail light (**1**)

Rear fog light/Reverse light (**2**), depending on the side.

(**2**) (only one side)

version with Light Emitting Diode (LED)

Only rear fog light respectively reverse light (**2**), depending on the side, can be changed.

5. Insert and turn bulb holder clockwise into the tail light assembly. Fit the tail light assembly in the tailgate and tighten the screws. Attach all covers.

Side turn signal lights

3-door hatchback

To replace bulb, remove lamp housing:

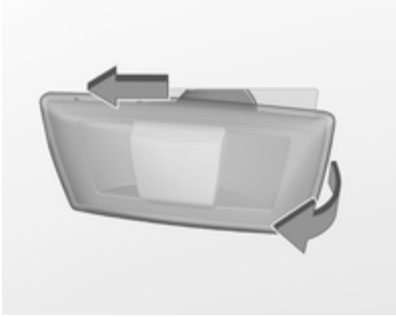

1. On left vehicle side, slide lamp to the front and remove it out of the front wing with the rear end.

   On right vehicle side, slide lamp to the rear and remove it out of the front wing with the front end.

2. Turn bulb holder anticlockwise and remove from housing.

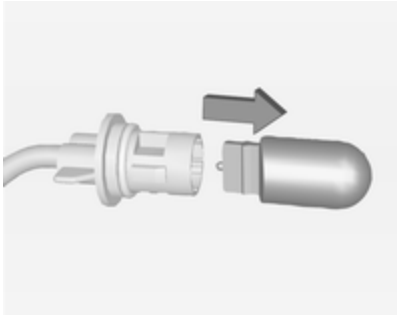

3. Pull bulb from bulb holder and replace it.
4. Insert bulb holder and turn clockwise.
5. On left side: insert front end into front wing, slide forward and insert rear end.

   On right side: insert rear end into front wing, slide rearward and insert front end.

5-door hatchback, 4-door notchback, Sports tourer

To replace bulb, remove lamp housing:

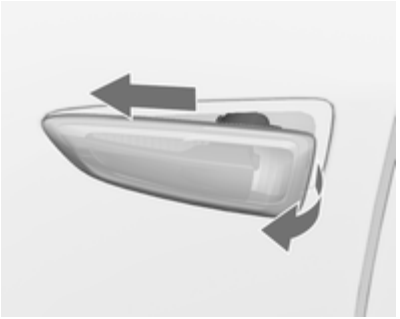

1. On left vehicle side, slide lamp to the front and remove it out of the front wing with the rear end.

   On right vehicle side, slide lamp to the rear and remove it out of the front wing with the front end.

2. Turn bulb holder anticlockwise and remove from housing.

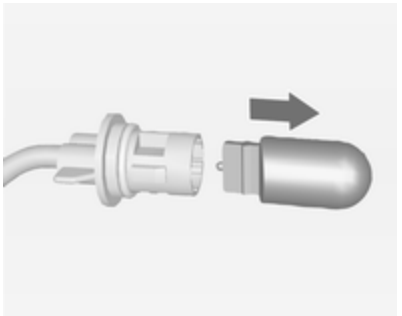

3. Pull bulb from bulb holder and replace it.

4. Insert bulb holder and turn clockwise.
5. On left side: insert front end into front wing, slide forward and insert rear end.

   On right side: insert rear end into front wing, slide rearward and insert front end.

Number plate light

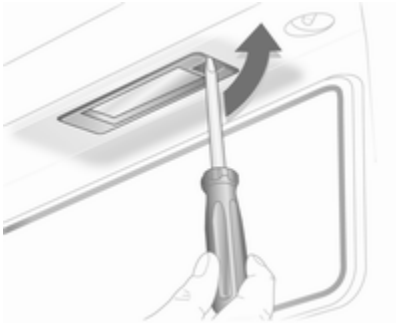

1. Insert screwdriver in recess of the cover, press to the side and release spring.

2. Remove lamp downwards, taking care not to pull on the cable.

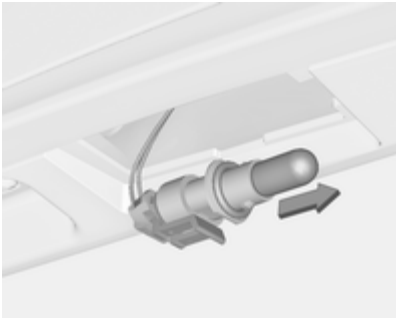

3. Remove bulb holder from lamp housing by turning anticlockwise.
4. Pull bulb from bulb holder and replace it.
5. Insert bulb holder into lamp housing and turn clockwise.
6. Insert lamp into bumper and let engage.

Interior lights

Courtesy light, reading lights

Have bulbs replaced by a workshop.

Load compartment light

Have bulbs replaced by a workshop.

Instrument panel illumination

Have bulbs replaced by a workshop.

Electrical system

Fuses

Data on the replacement fuse must match the data on the defective fuse.

There are three fuse boxes in the vehicle:

- in the front left of the engine compartment,
- in left-hand drive vehicles, in the interior behind the storage compartment, or, in right-hand drive vehicles, behind the glovebox,
- behind a cover on the left side of the load compartment.

Before replacing a fuse, turn off the respective switch and the ignition.

A blown fuse can be recognized by its melted wire. Do not replace the fuse until the cause of the fault has been remedied.

Some functions are protected by several fuses.

Fuses may also be inserted without existence of a function.

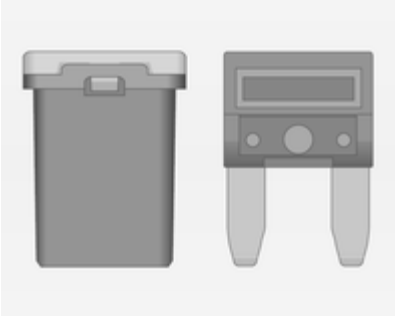

Fuse extractor

A fuse extractor may be located in the fuse box in the engine compartment.

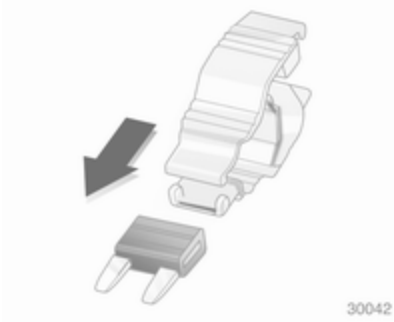

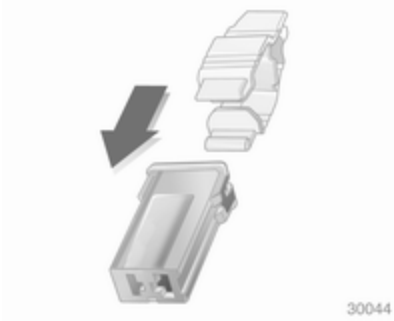

Place the fuse extractor on the various types of fuse from the top or side, and withdraw fuse.

Engine compartment fuse box

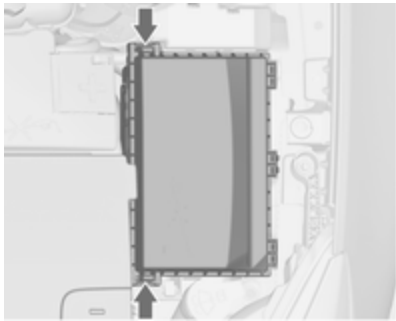

The fuse box is in the front left of the engine compartment.

Disengage the cover and fold it upwards until it stops. Remove the cover vertically upwards.

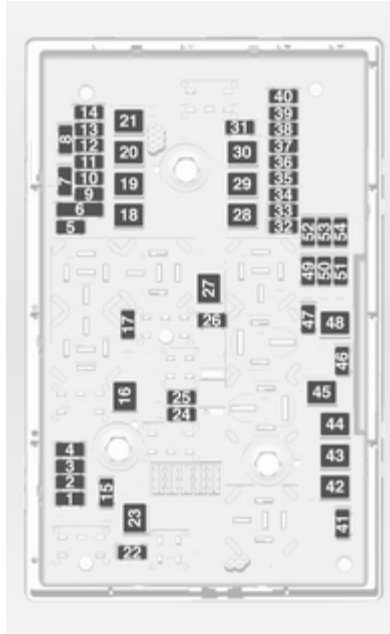

No.	Circuit
1	Engine control module
2	Lambda sensor
3	Fuel injection, ignition system
4	Fuel injection, ignition system
5	–
6	Mirror heating, anti-theft alarm system
7	Fan control, engine control module, transmission control module
8	Lambda sensor, engine cooling
9	Rear window sensor
10	Vehicle battery sensor
11	Trunk release
12	Adaptive forward lighting, automatic light control
13	ABS
14	Rear window wiper

No.	Circuit
15	Engine control module
16	Starter
17	Transmission control module
18	Heated rear window
19	Front power windows
20	Rear power windows
21	Rear electrical centre
22	Left high beam (Halogen)
23	Headlamp washer system
24	Right low beam (Xenon)
25	Left low beam (Xenon)
26	Front fog lights
27	Diesel fuel heating
28	Start stop system
29	Electric parking brake
30	ABS
31	Adaptive cruise control

No.	Circuit
32	Airbag
33	Adaptive forward lighting, automatic light control
34	Exhaust gas recirculation
35	Exterior mirror, rain sensor
36	Climate control
37	Canister vent solenoid
38	Vacuum pump
39	Central control module
40	Windscreen washer, rear window washer system
41	Right high beam (Halogen)
42	Radiator fan
43	Windscreen wiper
44	Windscreen wiper
45	Radiator fan
46	–

No.	Circuit
47	Horn
48	Radiator fan
49	Fuel pump
50	Headlamp levelling, adaptive forward lighting
51	Air shutter
52	Auxiliary heater, diesel engine
53	Transmission control module, engine control module
54	Vacuum pump, instrument panel cluster, heating ventilation, air conditioning system

After having changed defective fuses, close the fuse box cover and press until it engages.

If the fuse box cover is not closed correctly, malfunction may occur.

Instrument panel fuse box

In left-hand drive vehicles, the fuse box is behind the storage compartment in the instrument panel.

Open the compartment and push it to the left to unlock. Fold the compartment down and remove it.

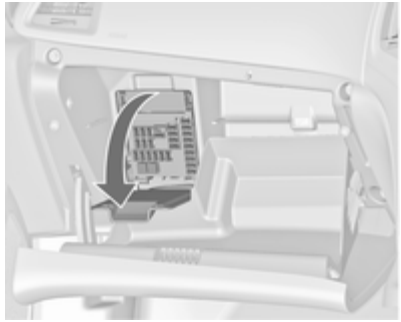

In right-hand drive vehicles, the fuse box is located behind a cover in the glovebox. Open the glovebox, then open the cover and fold it down.

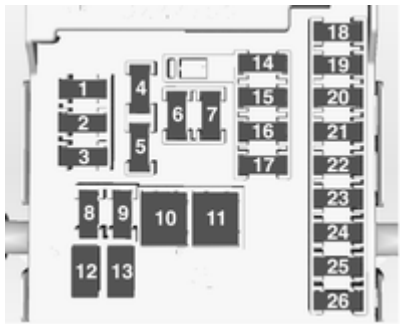

No.	Circuit
1	Displays
2	Exterior lights, body control module
3	Exterior lights, body control module
4	Infotainment system
5	Infotainment system, instrument
6	Power outlet, cigarette lighter
7	Power outlet
8	Left low beam, body control module
9	Right low beam, body control module, airbag module
10	Door locks, body control module
11	Interior fan
12	–
13	–

No.	Circuit
14	Diagnostic connector
15	Airbag
16	Power outlet
17	Air conditioning system
18	Logistics
19	Body control module
20	Body control module
21	Instrument panel cluster, anti-theft alarm system
22	Ignition sensor
23	Body control module
24	Body control module
25	–
26	Power outlet load compartment (if no load compartment fuse box) (Sports tourer only)

Load compartment fuse box

3-door hatchback, 5-door hatchback

The fuse box is on the left side of the load compartment behind a cover.

Remove the cover.

Sports tourer

The fuse box is on the left side of the load compartment behind a cover.

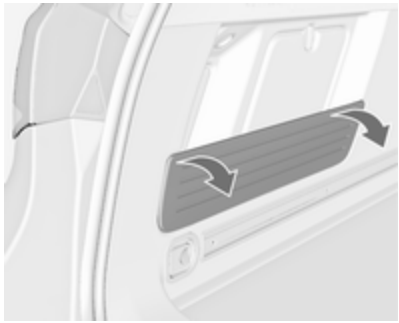

Fold down the blind and remove.

Remove the cover.

Fuse assignments

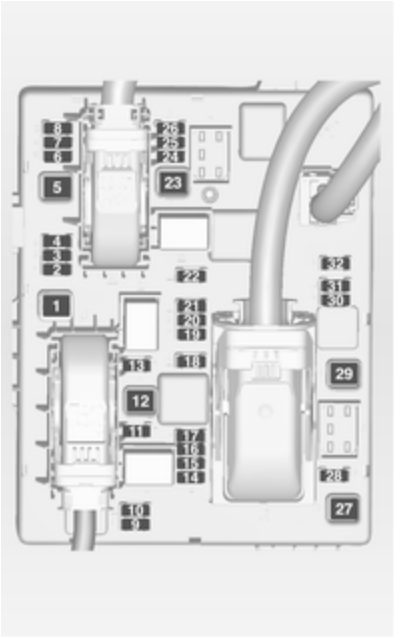

No.	Circuit
1	–
2	Trailer outlet
3	Parking assist
4	–
5	–
6	–
7	Power seat
8	–
9	–
10	–
11	Trailer module, trailer socket
12	Trailer module
13	Trailer outlet
14	Rear seat, electrical folding
15	–
16	Inside mirror, rear view camera
17	Power outlet

No.	Circuit
18	–
19	Steering wheel heating
20	Sunroof
21	Heated front seats
22	–
23	–
24	–
25	–
26	–
27	–
28	–
29	–
30	–
31	Amplifier, subwoofer
32	Active damping system, lane departure warning

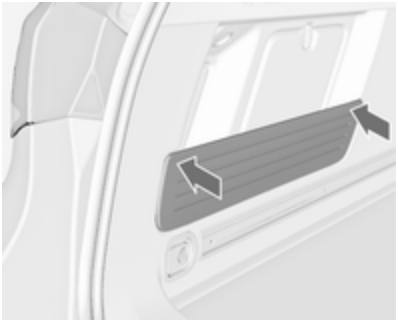

When assembling press the blind into the rubber grommets to reach full retention force.

Vehicle tools

Tools

Vehicles with tyre repair kit

Some tools and the towing eye are located together with the tyre repair kit in a tool box in the load compartment below the floor cover.

3-door and 5-door hatchback

Sports Tourer and 4-door notchback

On version with rear carrier system ⇨ 66, the tyre repair kit, a screwdriver and the towing eye are located in the drawer under the front passenger seat ⇨ 64.

Vehicles with spare wheel

Variant 1a: 3-door and 5-door hatchback with rigid wheel wrench

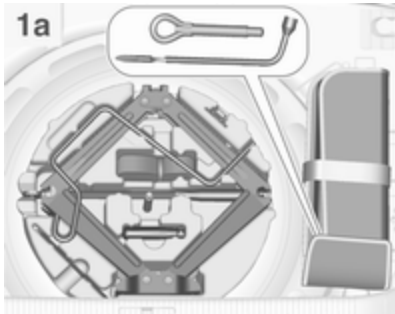

The jack, the tools and a strap for securing a damaged wheel are in the tool box below the spare wheel in the load compartment. The wheel wrench and the towing eye are in the tool bag located in the spare wheel well near the tool box. Spare wheel ⇨ 272.

Variant 1b: 3-door and 5-door hatchback with foldable wheel wrench

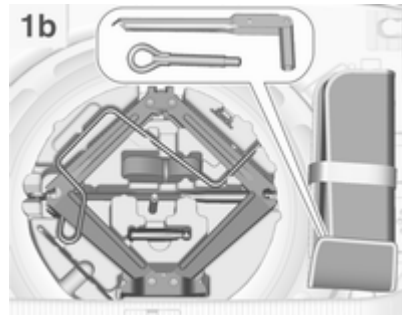

Same content as variant **1a**, but with a foldable wheel wrench instead of the rigid wheel wrench located in the tool bag.

Variant 2: Sports Tourer

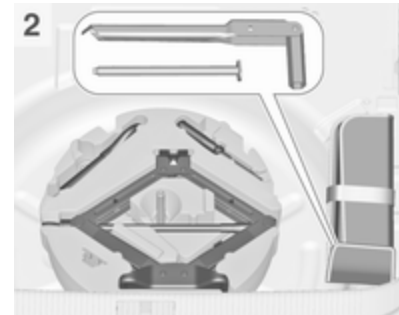

The jack, the tools and the towing eye are in the tool box below the spare wheel in the load compartment. The wheel wrench and an extension bolt for securing a damaged wheel (only vehicles with temporary spare wheel) are in the tool bag located in the spare wheel well near the tool box. Spare wheel ⇨ 272.

Variant 3: 4-door notchback

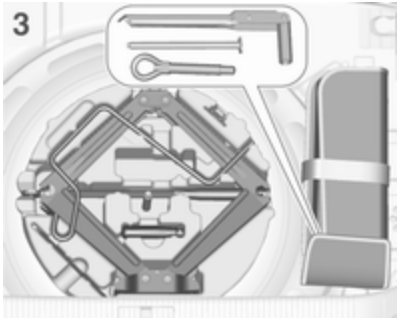

The jack and the tools are in the tool box below the spare wheel in the load compartment. The wheel wrench, the towing eye and an extension bolt for securing a damaged wheel (only vehicles with temporary spare wheel) are in the tool bag located in the spare wheel well near the tool box. Spare wheel ⇨ 272.

Wheels and tyres

Tyre condition, wheel condition

Drive over edges slowly and at right angles if possible. Driving over sharp edges can cause tyre and wheel damage. Do not trap tyres on the kerb when parking.

Regularly check the wheels for damage. Seek the assistance of a workshop in the event of damage or unusual wear.

Winter tyres

Winter tyres improve driving safety at temperatures below 7 °C and should therefore be fitted on all wheels.

In accordance with country-specific regulations, affix the speed sticker in the driver's field of view.

OPC Version: Tyres of size 235/45 R18 are only permitted as winter tyres.

Tyre designations

E.g. **215/60 R 16 95 H**

215 = Tyre width, mm
60 = Cross-section ratio (tyre height to tyre width), %
R = Belt type: Radial
RF = Type: RunFlat
16 = Wheel diameter, inches
95 = Load index e.g. 95 is equivalent to 690 kg
H = Speed code letter

Speed code letter:

Q = up to 160 km/h
S = up to 180 km/h
T = up to 190 km/h
H = up to 210 km/h
V = up to 240 km/h
W = up to 270 km/h

Tyre pressure

Check the pressure of cold tyres at least every 14 days and before any long journey. Do not forget the spare wheel. This also applies to vehicles with tyre pressure monitoring system.

Unscrew the valve cap.

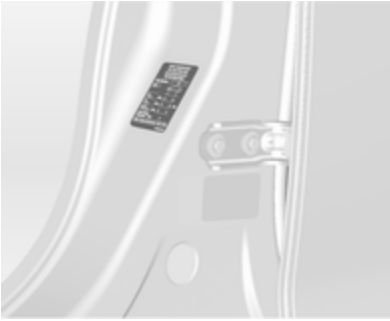

Tyre pressure ⇨ 309 and on the label on the front left or right door frame.

The tyre pressure data refers to cold tyres. It applies to summer and winter tyres.

Always inflate the spare tyre to the pressure specified for full load.

The ECO tyre pressure serves to achieve the smallest amount of fuel consumption possible.

Incorrect tyre pressures will impair safety, vehicle handling, comfort and fuel economy and will increase tyre wear.

Tyre pressures differ depending on various options. For the correct tyre pressure value, follow the procedure below:

1. Identify the body style.
2. Identify the engine identifier code. Engine data ⇨ 292.
3. Identify the respective tyre.

The tyre pressure tables show all possible tyre combinations ⇨ 309.

For the tyres approved for your vehicle, refer to the EEC Certificate of Conformity provided with your vehicle or other national registration documents.

The driver is responsible for correct adjustment of tyre pressure.

⚠ Warning

If the pressure is too low, this can result in considerable tyre warm-up and internal damage, leading to tread separation and even to tyre blow-out at high speeds.

If the tyre pressure must be reduced or increased on a vehicle with tyre pressure monitoring system, switch off ignition.

Tyre pressure monitoring system

The tyre pressure monitoring system checks the pressure of all four wheels once a minute when vehicle speed exceeds a certain limit.

Caution

Tyre pressure monitoring system warns just about low tyre pressure condition and does not replace regular tyre maintenance by the driver.

All wheels must be equipped with pressure sensors and the tyres must have the prescribed pressure.

The current tyre pressures can be shown in the **Vehicle Information Menu** in the Driver Information Centre.

The menu can be selected by the buttons on the turn signal lever.

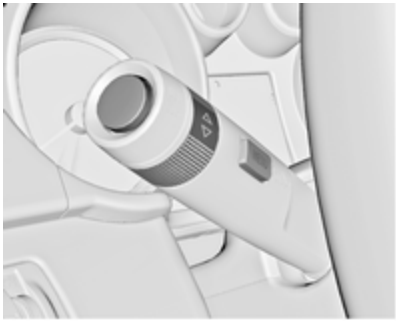

Press the **MENU** button to select the **Vehicle Information Menu**.

Turn the adjuster wheel to select the tyre pressure monitoring system.

System status and pressure warnings are displayed by a message with the corresponding tyre flashing in the Driver Information Centre.

A detected low tyre pressure condition is indicated by the control indicator (!) ⇨ 119.

If (!) illuminates, stop as soon as possible and inflate the tyres as recommended ⇨ 309.

After inflating, driving may be required to update the tyre pressure values in the DIC. During this time (!) may illuminate.

If (!) illuminates at lower temperatures and extinguishes after some driving, this could be an indicator for getting low pressure. Check tyre pressure.

Vehicle messages ⇨ 128.

If the tyre pressure must be reduced or increased, switch off ignition.

Only mount wheels with pressure sensors, otherwise the tyre pressure will not be displayed and ⓘ illuminates continuously.

A spare wheel or temporary spare wheel is not equipped with pressure sensors. The tyre pressure monitoring system is not operational for these wheels. Control indicator ⓘ illuminates. For the further three wheels the system remains operational.

The use of commercially available liquid tyre repair kits can impair the function of the system. Factory-approved repair kits can be used.

External high-power radio equipment could disrupt the tyre pressure monitoring system.

Each time the tyres are replaced, tyre pressure monitoring system sensors must be dismounted and serviced. For the screwed sensor: replace valve core and sealing ring. For clipped sensor: replace complete valve stem.

Vehicle loading status

Adjust tyre pressure to load condition according to tyre information label or tyre pressure chart ⇨ 309, and select the relevant setting in the menu **Tire Load** in the Driver Information Centre, **Vehicle Information Menu** ⇨ 121.

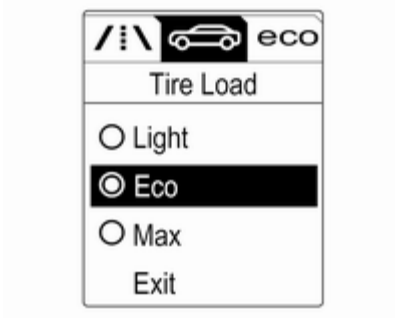

Select:

- **Light** for comfort pressure up to 3 people
- **Eco** for Eco pressure up to 3 people
- **Max** for full loading

Auto learn function

After changing wheels, the vehicle must be stationary for approx. 20 minutes, before the system recalculates. The following relearn process takes up to 10 minutes of driving with a minimum speed of 20 km/h. In this case, – – can be displayed or pressure values can swap in the Driver Information Centre.

If problems occur during the relearn process, a warning message is displayed in the Driver Information Centre.

Temperature dependency

Tyre pressure depends on the temperature of the tyre. During driving, tyre temperature and pressure increase.

The tyre pressure value displayed in the Driver Information Centre shows the actual tyre pressure. Therefore it is important to check tyre pressure with cold tyres.

Tread depth

Check tread depth at regular intervals.

Tyres should be replaced for safety reasons at a tread depth of 2-3 mm (4 mm for winter tyres).

For safety reasons it is recommended that the tread depth of the tyres on one axle should not vary by more than 2 mm.

The legally permissible minimum tread depth (1.6 mm) has been reached when the tread has worn down as far as one of the tread wear indicators (TWI). Their position is indicated by markings on the sidewall.

If there is more wear at the front than the rear, swap round front wheels and rear wheels periodically. Ensure that the direction of rotation of the wheels is the same as before.

Tyres age, even if they are not used. We recommend tyre replacement every 6 years.

Changing tyre and wheel size

If tyres of a different size than those fitted at the factory are used, it may be necessary to reprogramme the speedometer as well as the nominal tyre pressure and make other vehicle modifications.

After converting to a different tyre size, have the label with tyre pressures replaced.

⚠ Warning

Use of unsuitable tyres or wheels may lead to accidents and will invalidate the vehicle type approval.

Wheel covers

Wheel covers and tyres that are factory approved for the respective vehicle and comply with all of the relevant wheel and tyre combination requirements must be used.

If the wheel covers and tyres used are not factory approved, the tyres must not have a rim protection ridge.

Wheel covers must not impair brake cooling.

⚠ Warning

Use of unsuitable tyres or wheel covers could lead to sudden pressure loss and thereby accidents.

Tyre chains

Use tyre chains only on front wheels.

⚠Warning
Damage may lead to tyre blowout.

5-door hatchback, 4-door notchback, Sports tourer
Always use fine mesh chains that add no more than 10 mm to the tyre tread and the inboard sides (including chain lock).

Tyre chains are only permitted on tyres of size 205/60 R 16 and 215/50 R 17.

3-door hatchback
Tyre chains are permitted on tyres of size 225/55 R 17. Always use fine mesh chains that add no more than 10 mm to the tyre tread and the inboard sides (including chain lock).

Tyre chains are also permitted on tyres of size 245/45 R 18. Always use fine mesh chains that add no more than 7 mm to the tyre tread and the inboard sides (including chain lock).

OPC Version
Tyre chains are permitted on tyres of size 235/45 R 18. Always use fine mesh chains that add no more than 10 mm to the tyre tread and the inboard sides (including chain lock).

General
The use of tyre chains is not permitted on the temporary spare wheel.

Tyre repair kit

Minor damage to the tyre tread can be repaired with the tyre repair kit.

Do not remove foreign bodies from the tyres.

Tyre damage exceeding 4 mm or that is at tyre's sidewall cannot be repaired with the tyre repair kit.

⚠Warning
Do not drive faster than 80 km/h. Do not use for a lengthy period. Steering and handling may be affected.

If you have a flat tyre:

Apply the parking brake and engage first gear, reverse gear or **P**.

The tyre repair kit is in a compartment under the floor cover in the load compartment or, on version with rear carrier system, in the drawer under the passenger seat ⇨ 64.

The illustrations show different versions.

1. Take the tyre repair kit from the compartment.
2. Remove the compressor.

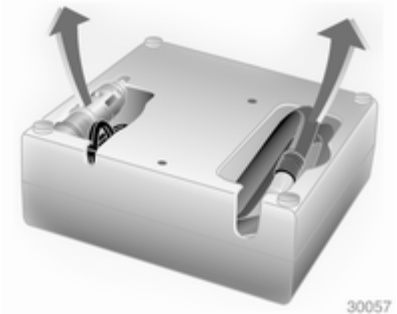

3. Remove the electrical connection cable and air hose from the stowage compartments on the underside of the compressor.

4. Screw the compressor air hose to the connection on the sealant bottle.
5. Fit the sealant bottle into the retainer on the compressor.

   Set the compressor near the tyre in such a way that the sealant bottle is upright.

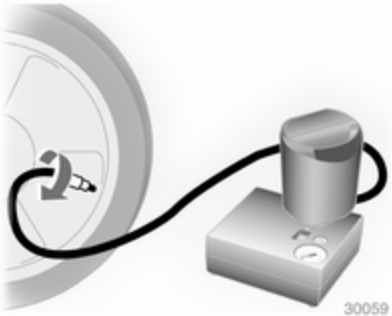

6. Unscrew valve cap from defective tyre.
7. Screw the filler hose to the tyre valve.
8. The switch on the compressor must be set to O.
9. Connect the compressor plug to the power outlet or cigarette lighter socket.

   To avoid discharging the battery, we recommend running the engine.

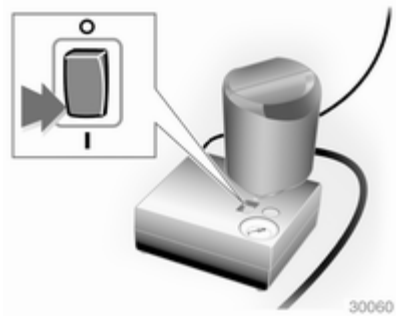

10. Set the rocker switch on the compressor to I. The tyre is filled with sealant.
11. The compressor pressure gauge briefly indicates up to 6 bar whilst the sealant bottle is emptying (approx. 30 seconds). Then the pressure starts to drop.
12. All of the sealant is pumped into the tyre. Then the tyre is inflated.
13. The prescribed tyre pressure should be obtained within 10 minutes. Tyre pressure ⇨ 309. When the correct pressure is obtained, switch off the compressor.

If the prescribed tyre pressure is not obtained within 10 minutes, remove the tyre repair kit. Move the vehicle one tyre rotation. Reattach the tyre repair kit and continue the filling procedure for 10 minutes. If the prescribed tyre pressure is still not obtained, the tyre is too badly damaged. Seek the assistance of a workshop.

Drain excess tyre pressure with the button over the pressure indicator.

Do not run the compressor longer than 10 minutes.

14. Detach the tyre repair kit. Push catch on bracket to remove sealant bottle from bracket. Screw the tyre inflation hose to the free connection of the sealant bottle. This prevents sealant from escaping. Stow tyre repair kit in load compartment.
15. Remove any excess sealant using a cloth.
16. Take the label indicating maximum permitted speed from the sealant bottle and affix in the driver's field of view.
17. Continue driving immediately so that sealant is evenly distributed in the tyre. After driving approx. 10 km (but no more than 10 minutes), stop and check tyre pressure. Screw compressor air hose directly onto tyre valve and compressor when doing this.

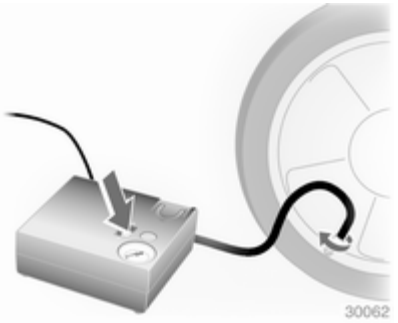

If tyre pressure is more than 1.3 bar, set it to the correct value. Repeat the procedure until there is no more loss of pressure.

If the tyre pressure has fallen below 1.3 bar, the vehicle must not be used. Seek the assistance of a workshop.

18. Stow away tyre repair kit in load compartment.

Note
The driving characteristics of the repaired tyre are severely affected, therefore have this tyre replaced.

If unusual noise is heard or the compressor becomes hot, turn compressor off for at least 30 minutes.

The built-in safety valve opens at a pressure of 7 bar.

Note the expiry date of the kit. After this date its sealing capability is no longer guaranteed. Pay attention to storage information on sealant bottle.

Replace the used sealant bottle. Dispose of the bottle as prescribed by applicable laws.

The compressor and sealant can be used from approx. -30 °C.

The adapters supplied can be used to pump up other items e.g. footballs, air mattresses, inflatable dinghies etc. They are located on the underside of the compressor. To remove, screw on compressor air hose and withdraw adapter.

Wheel changing

Some vehicles are equipped with a tyre repair kit instead of a spare wheel ⇨ 265.

Make the following preparations and observe the following information:

- Park the vehicle on a level, firm and non-skid surface. The front wheels must be in the straight-ahead position.
- Apply the parking brake and engage first gear, reverse gear or P.
- Remove the spare wheel ⇨ 272.
- Never change more than one wheel at once.
- Use the jack only to change wheels in case of puncture, not for seasonal winter or summer tyre change.
- If the ground on which the vehicle is standing is soft, a solid board (max. 1 cm thick) should be placed under the jack.
- No people or animals may be in the vehicle when it is jacked-up.
- Never crawl under a jacked-up vehicle.
- Do not start the vehicle when it is raised on the jack.
- Clean wheel nuts and thread with a clean cloth before mounting the wheel.

⚠Warning

Do not grease wheel bolt, wheel nut and wheel nut cone.

1. Disengage wheel nut caps with a screwdriver and remove. Pull off the wheel cover with the hook. Vehicle tools ⇨ 258.

   Alloy wheels: Disengage wheel nut caps with a screwdriver and remove. To protect the wheel, place a soft cloth between the screwdriver and the alloy wheel.

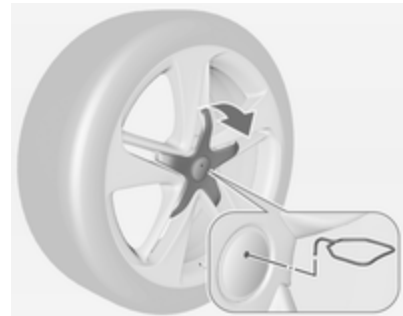

   Alloy wheels with centre wheel bolt cap: Disengage centre cap by inserting and pulling the extractor in the recess of the brand emblem, vehicle tools ⇨ 258.

2. Two types of jacks and wheel nut wrenches are possible depending on the version, vehicle tools ⇨ 258.

   Variant 1a with rigid wheel wrench:

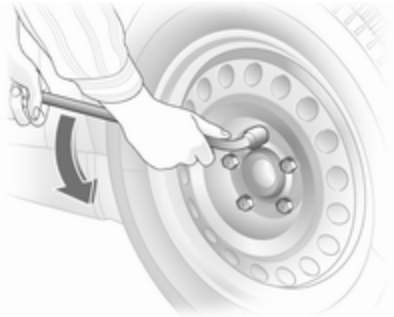

Install the wheel wrench ensuring that it locates securely and loosen each wheel nut by half a turn.

Variants1b, 2 and 3 with foldable wheel wrench:

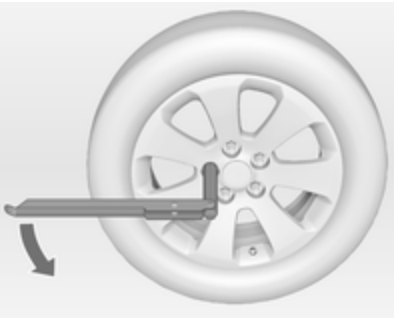

Fold out the wheel wrench and install ensuring that it locates securely and loosen each wheel nut by half a turn.

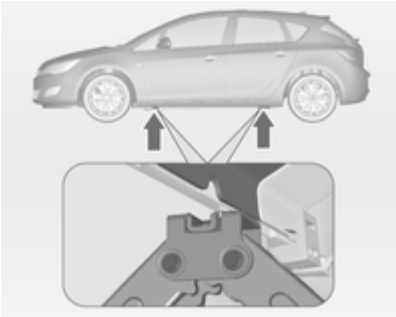

3. Ensure the jack is correctly positioned under the relevant vehicle jacking point.

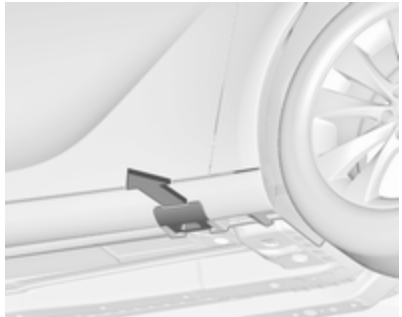

Some versions have sill panellings with covered vehicle jacking points: pull out the cover at the respective jacking point firstly.

4. **3-door / 5-door hatchback and 4-door notchback, jack variants 1a, 1b and 3, ⇨ 258:**

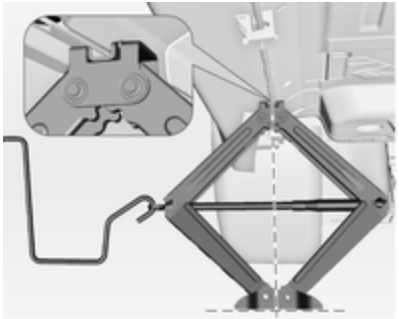

Set the jack to the necessary height. Position it directly below the jacking point in a manner that prevents it from slipping.

Attach jack handle and with the jack correctly aligned rotate handle until wheel is clear of the ground.

Sports Tourer, jack variant 2, ⇨ 258:

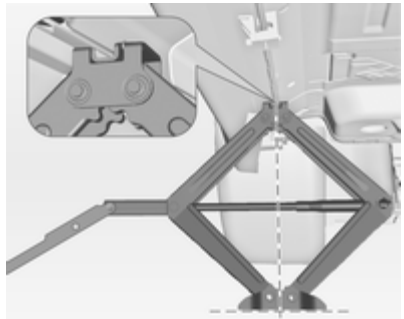

Set the jack to the necessary height. Position it directly below the jacking point in a manner that prevents it from slipping.

Attach wheel wrench and with the jack correctly aligned rotate wheel wrench until wheel is clear of the ground.

5. Unscrew the wheel nuts.
6. Change the wheel. Spare wheel ⇨ 272.
7. Screw on the wheel nuts.
8. Lower the vehicle and remove jack.
9. Install the wheel wrench ensuring that it locates securely and tighten each nut in a crosswise sequence. Tightening torque is 140 Nm.

10. Align the valve hole in the wheel cover with the tyre valve before installing.

    Install wheel nut caps.

    Install centre cap on alloy wheels.
11. Install vehicle jacking point cover on versions with sill panelling.
12. Stow the replaced wheel ⇨ 272 and the vehicle tools ⇨ 258.
13. Check the tyre pressure of the installed tyre and the wheel nut torque as soon as possible.

Have the defective tyre renewed or repaired as soon as possible.

Jacking position for lifting platform

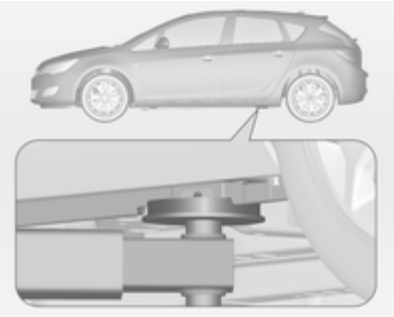

Rear arm position of the lifting platform centrically under the recess of the sill.

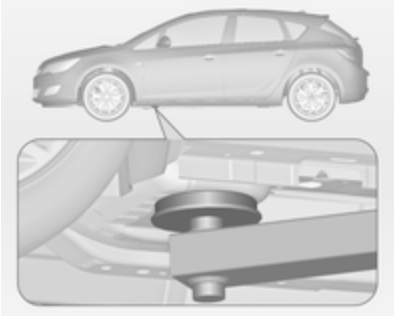

Front arm position of the lifting platform at the underbody.

Spare wheel

Some vehicles are equipped with a tyre repair kit instead of a spare wheel.

A spare wheel can be classified as a temporary spare wheel depending on the size compared to the other mounted wheels and country regulations.

The spare wheel has always a steel rim.

Caution

The use of a spare wheel that is smaller than the other wheels or in combination with winter tyres could affect driveability. Have the defective tyre replaced as soon as possible.

The spare wheel is located in the load compartment beneath the floor covering. It is secured with a wing nut.

To remove:

1. Open the floor cover.

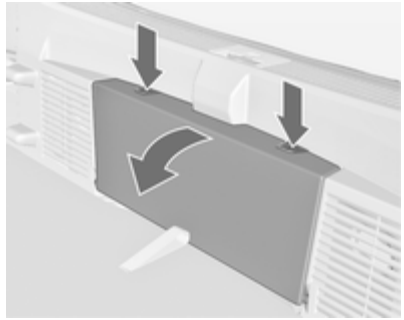

2. Only 3-door hatchback: remove rear storage by pressing both buttons. Fold down cover and extract storage upwards.
3. The spare wheel is secured with a wing nut. Untwist nut, remove conus (only 3-door hatchback) to take out the spare wheel.

   Under the spare wheel there is the box with vehicle tools.
4. When, after a wheel change, no wheel is placed in the spare wheel well, secure the tool box by turning right back the wing nut and close floor cover.

Stowing a damaged full size wheel in the load compartment, 3-door and 5-door hatchback

The spare wheel well is not designed for other tyre sizes than the spare wheel. A damaged full size wheel must be stowed in the load compartment and secured with a strap. Vehicle tools ⇨ 258. To secure the wheel:

1. Position the wheel outside up close to one sidewall of the load compartment.

2. Place the loop end of the strap through the front lashing eye on the appropriate side.

3. Place the hook end of the strap through the loop and pull it until the strap is fastened securely to the lashing eye.

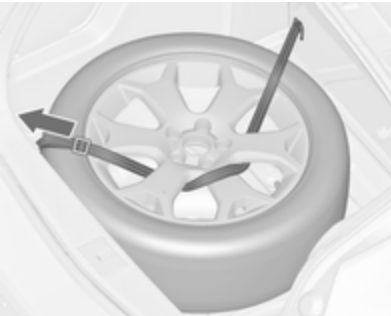

4. Insert the strap through the spokes of the wheel as shown in the illustration.
5. Mount the hook to the rear lashing eye.
6. Tighten the strap and secure it using the buckle.

⚠ Danger

Always drive with folded up and engaged rear seat backrests when stowing a damaged full size wheel in the load compartment.

Stowing a damaged full size wheel in the spare wheel well, Sports Tourer and 4-door notchback

Vehicles equipped with a full size spare wheel:

A damaged full size wheel must be stowed outside up in the spare wheel well secured with the wing nut.

The floor cover can be placed on the projecting wheel.

Vehicles equipped with a temporary spare wheel:

Secure a damaged full size wheel outside up with the wing nut in the spare wheel well after exchanging the thread bolt by an extension bolt, placed in the tool bag ⇨ 258. To replace the bolt:

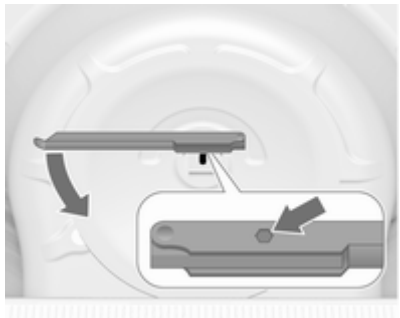

1. Install the hexagon key of the wheel wrench ensuring that it locates securely on the bolt.
2. Turn the wheel wrench anticlockwise to loosen the bolt. Remove the bolt.
3. Take the extension bolt from the tool bag ⇨ 258 and screw it in hand-tight using the hexagon key of the wheel wrench.
4. Store the tool box and the damaged wheel outside up in the spare wheel well and secure it by turning the wing nut clockwise on the bolt.

The floor cover can be placed on the projecting wheel.

Replace the extension bolt with the short bolt before placing the temporary spare wheel in the well after renewing or repairing the defective wheel.

Stowing the spare wheel back in the well after replacing the damaged wheel

1. Open the floor cover, untwist and remove wing nut.

   Only 3-door hatchback: open floor cover, remove rear storage, untwist and remove wing nut and conus.

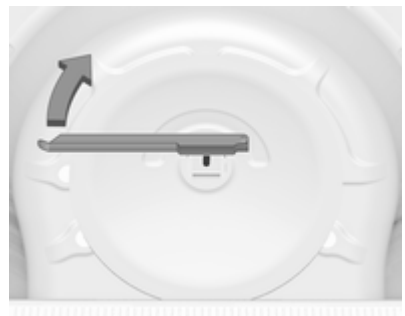

2. Only Sports tourer and 4-door notchback with temporary spare wheel: replace the extension bolt with the short bolt by using the hexagon key of the wheel wrench.
3. Place the tools in the tool box or the tool bag ⇨ 258.
4. Place spare wheel outside up in the wheel well and secure by turning the wing nut right back.

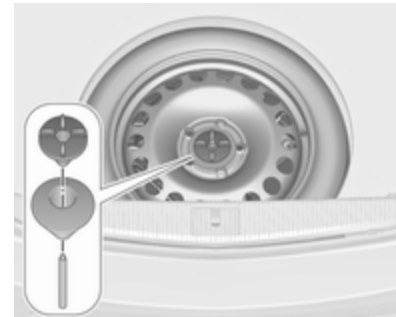

   Only 3-door hatchback: position the excentric conus in the recess of the spare wheel before turning the wing nut right back.
5. Close floor cover and insert rear storage (only 3-door hatchback).

⚠Warning

Storing a jack, a wheel or other equipment in the load compartment could cause injury if they are not fixed properly. During a sudden stop or a collision, loose equipment could strike someone.

Store jack and tools always in the respective storage compartments and secure them by fixing.

Damaged wheel placed in the load compartment must always be secured by the strap.

Temporary spare wheel

Caution

The use of a spare wheel that is smaller than the other wheels or in combination with winter tyres could affect driveability. Have the defective tyre replaced as soon as possible.

Only mount one temporary spare wheel. Do not drive faster than 80 km/h. Take curves slowly. Do not use for a long period of time.

If your vehicle gets a flat tyre on the rear while towing another vehicle, mount the temporary spare wheel in the front and the full tyre in the rear.

Tyre chains ⇨ 265.

Directional tyres

Fit directional tyres such that they roll in the direction of travel. The rolling direction is indicated by a symbol (e.g. an arrow) on the sidewall.

The following applies to tyres fitted opposing the rolling direction:

- Driveability may be affected. Have the defective tyre renewed or repaired as soon as possible.
- Drive particularly carefully on wet and snow-covered road surfaces.

Jump starting

Do not start with quick charger.

A vehicle with a discharged vehicle battery can be started using jump leads and the vehicle battery of another vehicle.

⚠Warning

Be extremely careful when starting with jump leads. Any deviation from the following instructions can lead to injuries or damage caused by battery explosion or damage to the electrical systems of both vehicles.

⚠Warning

Avoid contact of the battery with eyes, skin, fabrics and painted surfaces. The fluid contains sulphuric acid which can cause injuries and damage in the event of direct contact.

- Never expose the vehicle battery to naked flames or sparks.
- A discharged vehicle battery can already freeze at a temperature of 0 °C. Defrost the frozen vehicle battery before connecting jump leads.
- Wear eye protection and protective clothing when handling a vehicle battery.
- Use a booster vehicle battery with the same voltage (12 Volts). Its capacity (Ah) must not be much less than that of the discharged vehicle battery.
- Use jump leads with insulated terminals and a cross section of at least 16 mm^2 (25 mm^2 for diesel engines).
- Do not disconnect the discharged vehicle battery from the vehicle.
- Switch off all unnecessary electrical consumers.
- Do not lean over the vehicle battery during jump starting.
- Do not allow the terminals of one lead to touch those of the other lead.
- The vehicles must not come into contact with each other during the jump starting process.
- Apply the parking brake, transmission in neutral, automatic transmission in **P**.
- Open the positive terminal protection caps of both vehicle batteries.

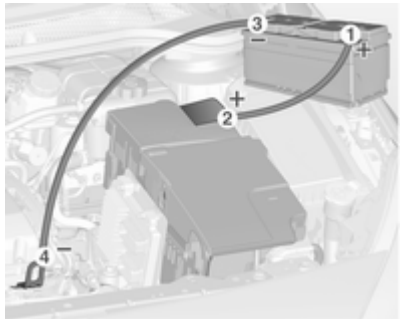

Lead connection order:

1. Connect the red lead to the positive terminal of the booster vehicle battery.
2. Connect the other end of the red lead to the positive terminal of the discharged vehicle battery.
3. Connect the black lead to the negative terminal of the booster vehicle battery.
4. Connect the other end of the black lead to a vehicle grounding point, such as the engine block or an engine mounting bolt. Connect as far away from the discharged vehicle battery as possible, however at least 60 cm.

Route the leads so that they cannot catch on rotating parts in the engine compartment.

To start the engine:

1. Start the engine of the vehicle providing the jump.

2. After 5 minutes, start the other engine. Start attempts should be made for no longer than 15 seconds at an interval of 1 minute.
3. Allow both engines to idle for approx. 3 minutes with the leads connected.
4. Switch on electrical consumers (e.g. headlights, heated rear window) of the vehicle receiving the jump start.
5. Reverse above sequence exactly when removing leads.

Towing

Towing the vehicle

Insert a screwdriver in the slot at the lower part of the cap. Release the cap by carefully moving the screwdriver downwards.

The towing eye is stowed with the vehicle tools ⇨ 258.

Screw in the towing eye as far as it will go until it stops in a horizontal position.

Attach a tow rope – or better still a tow rod – to the towing eye.

The towing eye must only be used for towing and not for recovering the vehicle.

Switch on ignition to release steering wheel lock and to permit operation of brake lights, horn and windscreen wiper.

Transmission in neutral.

Caution

Drive slowly. Do not drive jerkily. Excessive tractive force can damage the vehicle.

When the engine is not running, considerably more force is needed to brake and steer.

To prevent the entry of exhaust gases from the towing vehicle, switch on the air recirculation and close the windows.

Vehicles with automatic transmission: The vehicle must be towed facing forwards, not faster than 80 km/h nor further than 100 km. In all other cases and when the transmission is defective, the front axle must be raised off the ground.

Seek the assistance of a workshop.

After towing, unscrew the towing eye.

Insert cap at the top and engage downwards.

Towing another vehicle

Insert a screwdriver in the slot at the lower bend of the cap. Release the cap by carefully moving the screwdriver downwards.

The towing eye is stowed with the vehicle tools ⇨ 258.

Screw in the towing eye as far as it will go until it stops in a horizontal position.

The lashing eye at the rear underneath the vehicle must never be used as a towing eye.

Attach a tow rope – or even better a tow bar – to the towing eye.

The towing eye must only be used for towing and not for recovering a vehicle.

Caution

Drive slowly. Do not drive jerkily. Excessive tractive force can damage the vehicle.

After towing, unscrew the towing eye.

Insert cap at the top and engage downwards.

Appearance care

Exterior care

Locks

The locks are lubricated at the factory using a high quality lock cylinder grease. Use de-icing agent only when absolutely necessary, as this has a degreasing effect and impairs lock function. After using a de-icing agent, have the locks regreased by a workshop.

Washing

The paintwork of your vehicle is exposed to environmental influences. Wash and wax your vehicle regularly. When using automatic vehicle washes, select a programme that includes waxing.

Bird droppings, dead insects, resin, pollen and the like should be cleaned off immediately, as they contain aggressive constituents which can cause paint damage.

If using a vehicle wash, comply with the vehicle wash manufacturer's instructions. The windscreen wiper and rear window wiper must be switched off. Remove antenna and external accessories such as roof racks etc.

If you wash your vehicle by hand, make sure that the insides of the wheel housings are also thoroughly rinsed out.

Clean edges and folds on opened doors and the bonnet as well as the areas they cover.

Caution

Always use a cleaning agent with a pH value of 4 to 9.

Do not use cleaning agents on hot surfaces.

Have the door hinges of all doors greased by a workshop.

Do not clean the engine compartment with a steam-jet or high-pressure jet cleaner.

On vehicles with emblem touchpad: when cleaning with a high-pressure jet cleaner ensure a minimum distance of 30 cm when working around the tailgate to prevent unintended unlocking.

Thoroughly rinse and leather-off the vehicle. Rinse leather frequently. Use separate leathers for painted and glass surfaces: remnants of wax on the windows will impair vision.

Do not use hard objects to remove spots of tar. Use tar removal spray on painted surfaces.

Exterior lights

Headlight and other light covers are made of plastic. Do not use any abrasive or caustic agents, do not use an ice scraper, and do not clean them dry.

Polishing and waxing

Wax the vehicle regularly (at the latest when water no longer beads). Otherwise, the paintwork will dry out.

Polishing is necessary only if the paint has become dull or if solid deposits have become attached to it.

Paintwork polish with silicone forms a protective film, making waxing unnecessary.

Plastic body parts must not be treated with wax or polishing agents.

Windows and windscreen wiper blades

Use a soft lint-free cloth or chamois leather together with window cleaner and insect remover.

When cleaning the rear window from inside, always wipe in parallel to the heating element to prevent damage.

For mechanical removal of ice, use a sharp-edged ice scraper. Press the scraper firmly against the glass so that no dirt can get under it and scratch the glass.

Clean smearing wiper blades with a soft cloth and window cleaner.

Sunroof

Never clean with solvents or abrasive agents, fuels, aggressive media (e.g. paint cleaner, acetone-containing solutions etc.), acidic or highly alkaline media or abrasive pads. Do not apply wax or polishing agents to the sunroof.

Glass panel

Never clean with solvents or abrasive agents, fuels, aggressive media (e.g. paint cleaner, acetone-containing solutions etc.), acidic or highly alkaline media or abrasive pads. Do not apply wax or polishing agents to the glass panel.

Wheels and tyres

Do not use high-pressure jet cleaners.

Clean rims with a pH-neutral wheel cleaner.

Rims are painted and can be treated with the same agents as the body.

Paintwork damage

Rectify minor paintwork damage with a touch-up pen before rust forms. Have more extensive damage or rust areas repaired by a workshop.

Underbody

Some areas of the vehicle underbody have a PVC undercoating while other critical areas have a durable protective wax coating.

After the underbody is washed, check the underbody and have it waxed if necessary.

Bitumen/rubber materials could damage the PVC coating. Have underbody work carried out by a workshop.

Before and after winter, wash the underbody and have the protective wax coating checked.

Liquid gas system

⚠ Danger

Liquid gas is heavier than air and can collect in sink points.

Take care when performing work at the underbody in a pit.

For painting work and when using a drying booth at a temperature above 60 °C, the liquid gas tank must be removed.

Do not make any modifications to the liquid gas system.

Towing equipment

Do not clean the coupling ball bar with a steam-jet or high-pressure jet cleaner.

Rear carrier system

Clean the rear carrier system with a steam-jet or high-pressure jet cleaner at least once a year.

Operate the rear carrier system periodically if not in regular use, in particular during winter.

Air shutter

Clean the shutter system in the front bumper to maintain correct functionality.

Interior care

Interior and upholstery

Only clean the vehicle interior, including the instrument panel fascia and panelling, with a dry cloth or interior cleaner.

Clean the leather upholstery with clear water and a soft cloth. In case of heavy soiling, use leather care.

The instrument cluster and the displays should only be cleaned using a soft damp cloth. If necessary use a weak soap solution.

Clean fabric upholstery with a vacuum cleaner and brush. Remove stains with an upholstery cleaner.

Clothing fabrics may not be colourfast. This could cause visible discolourations, especially on light-

coloured upholstery. Removable stains and discolourations should be cleaned as soon as possible.

Clean seat belts with lukewarm water or interior cleaner.

Caution

Close Velcro fasteners as open Velcro fasteners on clothing could damage seat upholstery.

The same applies to clothing with sharp-edged objects, like zips or belts or studded jeans.

Plastic and rubber parts

Plastic and rubber parts can be cleaned with the same cleaner as used to clean the body. Use interior cleaner if necessary. Do not use any other agent. Avoid solvents and petrol in particular. Do not use high-pressure jet cleaners.

Service and maintenance

General information 284
Recommended fluids, lubricants and parts 285

General information

Service information

In order to ensure economical and safe vehicle operation and to maintain the value of your vehicle, it is of vital importance that all maintenance work is carried out at the proper intervals as specified.

The detailed, up-to-date service schedule for your vehicle is available at the workshop.

Service display ⇨ 112.

European service intervals

Maintenance of your vehicle is required every 30,000 km or after 1 year, whichever occurs first, unless otherwise indicated in the service display.

The European service intervals are valid for the following countries:

Andorra, Austria, Belgium, Bosnia-Herzegovina, Bulgaria, Croatia, Cyprus, Czech Republic, Denmark, Estonia, Finland, France, Germany, Greece, Greenland, Hungary, Iceland, Ireland, Italy, Latvia, Lithuania, Luxembourg, Macedonia, Malta, Montenegro, Netherlands, Norway, Poland, Portugal, Romania, Slovakia, Slovenia, Spain, Sweden, Switzerland, United Kingdom.

Service display ⇨ 112.

International service intervals

Maintenance of your vehicle is required every 15,000 km or after 1 year, whichever occurs first, unless otherwise indicated in the service display.

The international service intervals are valid for the countries which are not listed in the European service intervals.

Service display ⇨ 112.

Confirmations

Confirmation of service is recorded in the Service and Warranty Booklet. The date and mileage is completed with the stamp and signature of the servicing workshop.

Make sure that the Service and Warranty Booklet is completed correctly as continuous proof of service is essential if any warranty or goodwill claims are to be met, and is also a benefit when selling the vehicle.

Service interval with remaining engine oil life duration

The service interval is based on several parameters depending on usage.

The service display lets you know when to change the engine oil.

Service display ⇨ 112.

Recommended fluids, lubricants and parts

Recommended fluids and lubricants

Only use products that meet the recommended specifications. Damage resulting from the use of products not in line with these specifications will not be covered by the warranty.

⚠ Warning

Operating materials are hazardous and could be poisonous. Handle with care. Pay attention to information given on the containers.

Engine oil

Engine oil is identified by its quality and its viscosity. Quality is more important than viscosity when selecting which engine oil to use. The oil quality ensures e.g. engine cleanliness, wear protection and oil aging control, whereas viscosity grade gives information on the oil's thickness over a temperature range.

Dexos is the newest engine oil quality that provides optimum protection for gasoline and diesel engines. If it is unavailable, engine oils of other listed qualities have to be used. Recommendations for gasoline engines are also valid for Compressed Natural Gas (CNG), Liquified Petroleum Gas (LPG) and Ethanol (E85) fuelled engines.

Select the appropriate engine oil based on its quality and on the minimum ambient temperature ⇨ 289.

Topping up engine oil

Engine oils of different manufacturers and brands can be mixed as long as they comply with the required engine oil quality and viscosity.

Use of engine oil with only ACEA A1/B1 or only A5/B5 quality is prohibited, since it can cause long-term engine damage under certain operating conditions.

Select the appropriate engine oil based on its quality and on the minimum ambient temperature ⇨ 289.

Additional engine oil additives

The use of additional engine oil additives could cause damage and invalidate the warranty.

Engine oil viscosity grades

The SAE viscosity grade gives information of the thickness of the oil.

Multigrade oil is indicated by two figures, e.g. SAE 5W-30. The first figure, followed by a W, indicates the low temperature viscosity and the second figure the high temperature viscosity.

Select the appropriate viscosity grade depending on the minimum ambient temperature ⇨ 289.

All of the recommended viscosity grades are suitable for high ambient temperatures.

Coolant and antifreeze

Use only organic acid type-long life coolant (LLC) antifreeze approved for the vehicle. Consult a workshop.

The system is factory filled with coolant designed for excellent corrosion protection and frost protection down to approx. -28 °C. In northern countries with very low temperatures the factory filled coolant provides frost protection down to approx. -37°C. This concentration should be maintained all year round. The use of additional coolant additives that intend to give additional corrosion protection or seal against minor leaks can cause function problems. Liability for consequences resulting from the use of additional coolant additives will be rejected.

Brake and clutch fluid

Only use high-performance brake fluid approved for the vehicle, consult a workshop.

Over time, brake fluid absorbs moisture which will reduce braking effectiveness. The brake fluid should therefore be replaced at the specified interval.

Brake fluid should be stored in a sealed container to avoid water absorption.

Ensure brake fluid does not become contaminated.

Technical data

Vehicle identification 287
Vehicle data 289

Vehicle identification

Vehicle Identification Number

The Vehicle Identification Number is visible through the windscreen.

Identification plate

The identification plate is located on the front left door frame.

Information on identification label:

1 = Manufacturer
2 = Type approval number
3 = Vehicle Identification Number
4 = Permissible gross vehicle weight rating in kg
5 = Permissible gross train weight in kg
6 = Maximum permissible front axle load in kg
7 = Maximum permissible rear axle load in kg
8 = Vehicle-specific or country-specific data

The combined total of front and rear axle loads must not exceed the permissible gross vehicle weight. For example, if the front axle is bearing its maximum permissible load, the rear axle can only bear a load that is equal to the gross vehicle weight minus the front axle load.

The technical data is determined in accordance with European Community standards. We reserve the right to make modifications.

Specifications in the vehicle documents always have priority over those given in this manual.

Engine identification

The technical data tables show the engine identifier code. Engine data ⇨ 292.

To identify the respective engine, refer to the engine power in the EEC Certificate of Conformity provided with your vehicle or other national registration documents.

Vehicle data
Recommended fluids and lubricants

European service schedule

Required engine oil quality

	All European countries (except Belarus, Moldova, Russia, Serbia, Turkey)		Only Israel	
Engine oil quality	Petrol engines (including CNG, LPG, E85)	Diesel engines	Petrol engines (including CNG, LPG, E85)	Diesel engines
dexos 1	–	–	✓	–
dexos 2	✓	✓	–	✓

In case dexos quality is unavailable you may use max. 1 litre engine oil quality ACEA C3 once between each oil change.

Engine oil viscosity grades

	All European countries and Israel (except Belarus, Moldova, Russia, Serbia, Turkey)
Ambient temperature	Petrol and diesel engines
down to -25 °C	SAE 5W-30 or SAE 5W-40
below -25 °C	SAE 0W-30 or SAE 0W-40

International service schedule

Required engine oil quality

	All countries outside Europe except Israel		Only Belarus, Moldova, Russia, Serbia, Turkey	
Engine oil quality	Petrol engines (including CNG, LPG, E85)	Diesel engines	Petrol engines (including CNG, LPG, E85)	Diesel engines
dexos 1	✓	–	–	–
dexos 2	–	✓	✓	✓

In case dexos quality is unavailable you may use the oil qualities listed below:

	All countries outside Europe except Israel		Only Belarus, Moldova, Russia, Serbia, Turkey	
Engine oil quality	Petrol engines (including CNG, LPG, E85)	Diesel engines	Petrol engines (including CNG, LPG, E85)	Diesel engines
GM-LL-A-025	✓	–	✓	–
GM-LL-B-025	–	✓	–	✓

	All countries outside Europe except Israel		Only Belarus, Moldova, Russia, Serbia, Turkey	
Engine oil quality	Petrol engines (including CNG, LPG, E85)	Diesel engines	Petrol engines (including CNG, LPG, E85)	Diesel engines
ACEA A3/B3	✓	–	✓	–
ACEA A3/B4	✓	✓	✓	✓
ACEA C3	✓	✓	✓	✓
API SM	✓	–	✓	–
API SN resource conserving	✓	–	✓	–

Engine oil viscosity grades

	All countries outside Europe (except Israel), including Belarus, Moldova, Russia, Serbia, Turkey
Ambient temperature	Petrol and diesel engines
down to -25 °C	SAE 5W-30 or SAE 5W-40
below -25 °C	SAE 0W-30 or SAE 0W-40
down to -20 °C	SAE 10W-30[1)] or SAE 10W-40[1)]

[1)] Permitted, but usage of SAE 5W-30 or SAE 5W-40 with dexos quality is recommended.

Engine data

Sales designation	1.4	1.4	1.4	1.4	1.6	1.6	1.6
Engine identifier code	A14XEL	A14XER	A14NEL	A14NET LPG	A16XER	A16LET	A16XHT
Number of cylinders	4	4	4	4	4	4	4
Piston displacement [cm^3]	1398	1398	1364	1364	1598	1598	1598
Engine power [kW]	64	74	88	103	85	132	125
at rpm	6000	6000	4200-6000	4900-6000	6000	5500	6000
Torque [Nm]	130	130	200	200	155	230	260
at rpm	4000	4000	1850-4200	1850-4900	4000	2200	1650-3200
Fuel type	Petrol	Petrol	Petrol	Petrol/LPG	Petrol	Petrol	Petrol
Octane rating RON							
recommended	95	95	95	95	95	95	98
possible	98	98	98	98	98	98	95
possible	91	91	91	91	91	91	91
Gas	–	–	–	LPG	–	–	–
Oil consumption [l/1000 km]	0.6	0.6	0.6	0.6	0.6	0.6	0.6

Sales designation	1.8	2.0 OPC	1.3	1.7	1.7	1.7
Engine identifier code	A18XER	A20NFT	A13DTE	A17DTE	A17DTC	A17DTF
Number of cylinders	4	4	4	4	4	4
Piston displacement [cm^3]	1796	1998	1248	1686	1686	1686
Engine power [kW]	103	206	70	81	81	96
at rpm	6300	5300	4000	4000	4000	4000
Torque [Nm]	175	400	190	280	280	300
at rpm	3800	2400-4800	1750-3250	1750-2500	1750-2500	2000-2500
Fuel type	Petrol	Petrol	Diesel	Diesel	Diesel	Diesel
Octane rating RON						
recommended	95	98				
possible	98	95				
possible	91	91				
Oil consumption [l/1000 km]	0.6	0.6	0.6	0.6	0.6	0.6

Sales designation	1.7	2.0 Turbo	2.0 Turbo
Engine identifier code	**A17DTS**	**A20DTH**	**A20DTR**
Number of cylinders	4	4	4
Piston displacement [cm^3]	1686	1956	1956
Engine power [kW]	96	121	143
at rpm	4000	4000	4000
Torque [Nm]	300	350	400
at rpm	2000-2500	1750-2500	1750-2500
Fuel type	Diesel	Diesel	Diesel
Oil consumption [l/1000 km]	0.6	0.6	0.6

Performance

3-door hatchback

Engine	A14XER	A14NEL	A14NET	A16LET	A16XHT
Maximum speed[2] [km/h]					
Manual transmission	178[3]	192	201	220	219
Automatic transmission	–	–	200	–	210

Engine	A18XER	A20NFT	A17DTE	A17DTC	A17DTF
Maximum speed[2] [km/h]					
Manual transmission	200	250	183	182	197
Automatic transmission	–	–	–	–	–

Engine	A17DTS	A20DTH	A20DTR
Maximum speed[2] [km/h]			
Manual transmission	196	210	225
Automatic transmission	–	207	–

[2] The maximum speed indicated is achievable at kerb weight (without driver) plus 200 kg payload. Optional equipment could reduce the specified maximum speed of the vehicle.

[3] 4th gear.

5-door hatchback

Engine	A14XEL	A14XER	A14NEL	A14NET	A16LET	A16XER
Maximum speed[2] [km/h]						
Manual transmission	168	178	192	202	221	188
Automatic transmission	–	–	–	200	211	182

Engine	A16XHT	A13DTE	A17DTE	A17DTC	A17DTF
Maximum speed[2] [km/h]					
Manual transmission	220	175	188	186	201
Automatic transmission	212	–	–	–	–

Engine	A17DTS	A20DTH	A20DTR
Maximum speed[2] [km/h]			
Manual transmission	198	215	226
Automatic transmission	–	209	–

[2] The maximum speed indicated is achievable at kerb weight (without driver) plus 200 kg payload. Optional equipment could reduce the specified maximum speed of the vehicle.

4-door notchback

Engine	A14XER	A14NET	A16LET	A16XER	A16XHT
Maximum speed[2] [km/h]					
Manual transmission	178[3]	202	221	188	[4]
Automatic transmission	–	200	211	182	–

Engine	A13DTE	A17DTE	A17DTC	A17DTF
Maximum speed[2] [km/h]				
Manual transmission	175	191	188	206
Automatic transmission	–	–	–	–

Engine	A17DTS	A20DTH
Maximum speed[2] [km/h]		
Manual transmission	203	215
Automatic transmission	–	209

[2] The maximum speed indicated is achievable at kerb weight (without driver) plus 200 kg payload. Optional equipment could reduce the specified maximum speed of the vehicle.
[3] 4th gear.
[4] Value was not available at time of printing.

Sports tourer

Engine	A14XER	A14NEL	A14NET	A16LET	A16XER	A16XHT
Maximum speed [km/h][2)]						
Manual transmission	175	190	200	220	185	220
Automatic transmission	–	–	198	210	180	211

Engine	A13DTE	A17DTE	A17DTF	A17DTC	A17DTS
Maximum speed [2)][km/h]					
Manual transmission	174	186	198	184	195
Automatic transmission	–	–	–	–	–

Engine	A17DTL	A20DTH
Maximum speed [2)][km/h]		
Manual transmission	176	212
Automatic transmission	–	207

[2)] The maximum speed indicated is achievable at kerb weight (without driver) plus 200 kg payload. Optional equipment could reduce the specified maximum speed of the vehicle.

Vehicle weight

Kerb weight, basic model without any optional equipment

3-door hatchback	Engine	Manual transmission	Automatic transmission
with air conditioning [kg]	A14XER	1393	–
	A14NEL	1437	–
	A14NET	1437	1471
	A16LET	1471	–
	A16XHT	1503	1503
	A18XER	1437	–
	A20NFT	1550	–
	A17DTE	1503	–
	A17DTS	1503	–
with air conditioning [kg]	A17DTC	1503	–
	A17DTF	1503	–
	A20DTH	1550	1571
	A20DTR	1571	–

Kerb weight, basic model with all optional equipment

3-door hatchback	Engine	Manual transmission	Automatic transmission
with air conditioning [kg]	A14XER	1503	–
	A14NEL	1571	–
	A14NET	1571	1613
	A16LET	1613	–
	A16XHT	1664	1664
	A18XER	1571	–
	A20NFT	1701	–
	A17DTE	1664	–
	A17DTS	1664	–
with air conditioning [kg]	A17DTC	1664	–
	A17DTF	1664	–
	A20DTH	1701	1701
	A20DTR	1701	–

Kerb weight, basic model without any optional equipment

5-door hatchback	Engine	Manual transmission	Automatic transmission
without/with air conditioning [kg]	A14XEL	1373/1388	–
	A14XER	1373/1388	–
	A14NEL	1393/1408	–
	A14NET	1393/1408	–/1453
	A16LET	–/1490	–/1503
	A16XER	1393/1408	–/1443
	A16XHT	–/1503	–
	A13DTE	1393/1408	–
	A17DTC	1503/1518	–
without/with air conditioning [kg]	A17DTE	1503/1518	–
	A17DTF	1503/1518	–
	A17DTS	1503/1518	–
	A20DTH	1503/1518	–/1590
	A20DTR	1571	–

Kerb weight, basic model with all optional equipment

5-door hatchback	Engine	Manual transmission	Automatic transmission
without/with air conditioning [kg]	A14XEL	–/1545	–
	A14XER	–/1545	–
	A14NEL	–/1611	–
	A14NET	–/1611	–/1613
	A16LET	–/1613	–/1665
	A16XER	–/1578	–/1613
	A16XHT	–/1664	–
	A13DTE	–/1571	–
	A17DTC	–/1664	–
without/with air conditioning [kg]	A17DTE	–/1664	–
	A17DTF	–/1664	–
	A17 DTS	–/1664	–
	A20DTH	–/1711	–/1731
	A20DTR	–/1701	–

Kerb weight, basic model without any optional equipment

4-door notchback	Engine	Manual transmission	Automatic transmission
without/with air conditioning [kg]	A14XER	1393	–
	A14NET	1437	1483
	A16LET	1471	1503
	A16XER	1393	1449
	A16XHT	1503	–
	A13DTE	1471	–
	A17DTE	1503	–
	A17DTC	1503	–
	A17DTF	1503	–
without/with air conditioning [kg]	A17DTS	1503	–
	A20DTH	[5]	–

[5] Value was not available at time of printing.

Kerb weight, basic model with all optional equipment

4-door notchback	Engine	Manual transmission	Automatic transmission
without/with air conditioning [kg]	A14XER	1550	–
	A14NET	1613	1613
	A16LET	1613	1664
	A16XER	1571	1613
	A16XHT	1644	–
	A13DTE	1613	–
	A17DTE	1701	–
	A17DTC	1701	–
	A17DTF	1701	–
without/with air conditioning [kg]	A17 DTS	1701	–
	A20DTH	[5]	–

[5] Value was not available at time of printing.

Kerb weight, basic model without any optional equipment

Sports tourer	Engine	Manual transmission	Automatic transmission
without/with air conditioning [kg]	A14XER	1393/1408	–
	A14NEL	1471/1486	–/1503
	A14NET	1437/1452	–/1503
	A16LET	–/1503	–/1550
	A16XER	1437/1452	–/1503
	A16XHT	–/1550	1571
	A13DTE	1471/1486	–
	A17DTE	1550	–
	A17DTF	1550	–
without/with air conditioning [kg]	A17DTC	1550	–
	A17DTS	1550	–
	A20DTH	1550/1565	–/1613

Kerb weight, basic model with all optional equipment

Sports tourer	Engine	Manual transmission	Automatic transmission
without/with air conditioning [kg]	A14XER	–/1571	–
	A14NEL	–/1664	–/1664
	A14NET	–/1664	–/1664
	A16LET	–/1664	–/1701
	A16XER	–/1613	–/1664
	A16XHT	–/1733	–
	A13DTE	–/1664	–
	A17DTE	1733	–
	A17DTF	1733	–
without/with air conditioning [kg]	A17DTC	1733	–
	A17DTS	1733	–
	A20DTH	1733	–/1733

Vehicle dimensions

	3-door hatchback	5-door hatchback	4-door notchback	Sports tourer
Length [mm]	4466	4419	4658	4698
Width without exterior mirrors [mm]	1840	1814	1814	1814
Width with two exterior mirrors [mm]	2020	2013	2013	2013
Height (without antenna) [mm]	1482	1510	1500	1535
Length of load compartment floor [mm]	855	836	1084	1069
Length of load compartment with folded rear seats [mm]	1617	1549	1778	1835
Load compartment width [mm]	980	1027	976	1026
Load compartment height [mm]	512	554	546	721
Wheelbase [mm]	2695	2685	2685	2685
Turning circle diameter [m]	11.4	11.5	11.5	11.5

Capacities

Engine oil

Engine	A14XEL, A14XER	A14NEL, A14NET	A16LET, A16XER	A16XHT	A18XER	A20NFT
including Filter [l]	4.0	4.0	4.5	5.5	4.5	6.0
between MIN and MAX [l]	1.0	1.0	1.0	1.0	1.0	1.0

Engine	A13DTE ecoFlex	A17DTE, A17DTC	A17DTF, A17DTS	A20DTH, A20DTR
including Filter [l]	3.5	5.4	5.4	4.5
between MIN and MAX [l]	1.0	1.0	1.0	1.0

Fuel tank

Petrol/diesel, refilling quantity [l]	56[6)]
LPG, refilling quantity [l]	38[7)]

[6)] A13 DTE diesel engine with stop-start system reduced refilling quantity: 46 litres.
[7)] Sports tourer: 36.

Tyre pressures

Tyre pressures differ depending on the model variant. The order of the listed car models is as follows:

- 3-door hatchback
- 5-door hatchback, 4-door notchback, Sports tourer

Refer to the table header to find the correct tyre pressure for your model.

3-door hatchback		Comfort with up to 3 people		ECO with up to 3 people		With full load	
Engine	Tyres	front	rear	front	rear	front	rear
		[kPa/bar] ([psi])	[kPa/bar] ([psi])	[kPa/bar] ([psi])	[kPa/bar] ([psi])	[kPa/bar] ([psi])	[kPa/bar] ([psi])
A14XER, A18XER	225/55 R17,	210/2.1 (30)	210/2.1 (30)	250/2.5 (36)	250/2.5 (36)	220/2.2 (32)	260/2.6 (38)
	235/45 R19,[8]						
	235/50 R18,[8]						
	235/55 R17,[8]						
	245/45 R18[9]						

[8] Not permitted with tyre chains.
[9] Only use special snow chains. We recommend your workshop.

3-door hatchback		Comfort with up to 3 people		ECO with up to 3 people		With full load	
Engine	Tyres	front	rear	front	rear	front	rear
		[kPa/bar] ([psi])	[kPa/bar] ([psi])	[kPa/bar] ([psi])	[kPa/bar] ([psi])	[kPa/bar] ([psi])	[kPa/bar] ([psi])
A14NEL, A14NET	225/55 R17,	210/2.1 (30)	210/2.1 (30)	270/2.7 (39)	270/2.7 (39)	220/2.2 (32)	270/2.7 (39)
	235/45 R19,[8]						
	235/50 R18,[8]						
	235/55 R17,[8]						
	245/40 R20,[8]						
	245/45 R18[9]						
A16LET	225/55 R17,	210/2.1 (30)	210/2.1 (30)	250/2.5 (36)	250/2.5 (36)	220/2.2 (32)	260/2.6 (38)
	235/45 R19,[8]						
	235/50 R18,[8]						
	235/55 R17,[8]						
	245/40 R20,[8]						
	245/45 R18[9]						

[8] Not permitted with tyre chains.
[9] Only use special snow chains. We recommend your workshop.

3-door hatchback		Comfort with up to 3 people		ECO with up to 3 people		With full load	
Engine	Tyres	front	rear	front	rear	front	rear
		[kPa/bar] ([psi])	[kPa/bar] ([psi])	[kPa/bar] ([psi])	[kPa/bar] ([psi])	[kPa/bar] ([psi])	[kPa/bar] ([psi])
A17DTE	225/55 R17, 245/45 R18[9)]	210/2.1 (30)	210/2.1 (30)	250/2.5 (36)	250/2.5 (36)	220/2.2 (32)	260/2.6 (38)
A17DTS, A17DTC	225/55 R17, 235/45 R19,[8)] 235/50 R18,[8)] 235/55 R17,[8)] 245/40 R20,[8)] 245/45 R18[9)]	210/2.1 (30)	210/2.1 (30)	260/2.6 (38)	260/2.6 (38)	220/2.2 (32)	260/2.6 (38)

9) Only use special snow chains. We recommend your workshop.
8) Not permitted with tyre chains.

3-door hatchback		Comfort with up to 3 people		ECO with up to 3 people		With full load	
Engine	Tyres	front	rear	front	rear	front	rear
		[kPa/bar] ([psi])	[kPa/bar] ([psi])	[kPa/bar] ([psi])	[kPa/bar] ([psi])	[kPa/bar] ([psi])	[kPa/bar] ([psi])
A16XHT, A20DTH, A20DTR	225/55 R17,	230/2.3 (33)	230/2.3 (33)	270/2.7 (39)	270/2.7 (39)	240/2.4 (35)	280/2.8 (41)
	235/45 R19,[8]						
	235/50 R18,[8]						
	235/55 R17,[8]						
	245/40 R20,[8]						
	245/45 R18[9]						
A20NFT	235/45 R18,[10]	240/2.4 (35)	240/2.4 (35)	–	–	260/2.6 (38)	300/3.0 (43)
	245/40 R19,[8]						
	245/35 R20[8]	270/2.7 (39)	250/2.5 (36)	–	–	280/2.8 (41)	310/3.1 (44)
All	Temporary spare wheel	420/4.2 (61)	420/4.2 (61)	–	–	420/4.2 (61)	420/4.2 (61)

[8] Not permitted with tyre chains.
[9] Only use special snow chains. We recommend your workshop.
[10] Only permitted as winter tyres.

5-door hatchback, 4-door notchback, Sports tourer		Comfort with up to 3 people		ECO with up to 3 people		With full load	
Engine	Tyres	front	rear	front	rear	front	rear
		[kPa/bar] ([psi])	[kPa/bar] ([psi])	[kPa/bar] ([psi])	[kPa/bar] ([psi])	[kPa/bar] ([psi])	[kPa/bar] ([psi])
A14XER, A14XEL	205/55 R16,[11)]	220/2.2 (32)	220/2.2 (32)	270/2.7 (39)	270/2.7 (39)	230/2.3 (33)	270/2.7 (39)
	205/60 R16,						
	215/50 R17,						
	215/60R16,[11)]						
	225/45 R17[11)]						

[11)] Not permitted with tyre chains.

5-door hatchback, 4-door notchback, Sports tourer		Comfort with up to 3 people		ECO with up to 3 people		With full load	
Engine	Tyres	front	rear	front	rear	front	rear
		[kPa/bar] ([psi])	[kPa/bar] ([psi])	[kPa/bar] ([psi])	[kPa/bar] ([psi])	[kPa/bar] ([psi])	[kPa/bar] ([psi])
A14NET, A14NEL, A16XER	205/55 R16,[11]	220/2.2 (32)	220/2.2 (32)	270/2.7 (39)	270/2.7 (39)	230/2.3 (33)	270/2.7 (39)
	205/60 R16,						
	215/50 R17,						
	215/60R16,[11]						
	225/45 R17,[11]						
	225/45 R18,[11]						
	235/40 R19[11]						

[11] Not permitted with tyre chains.

5-door hatchback, 4-door notchback, Sports tourer		Comfort with up to 3 people		ECO with up to 3 people		With full load	
Engine	Tyres	front	rear	front	rear	front	rear
		[kPa/bar] ([psi])	[kPa/bar] ([psi])	[kPa/bar] ([psi])	[kPa/bar] ([psi])	[kPa/bar] ([psi])	[kPa/bar] ([psi])
A16LET	205/65 R16, [12)][11)]	230/2.3 (33)	230/2.3 (33)	270/2.7 (39)	270/2.7 (39)	240/2.4 (35)	280/2.8 (41)
	215/60 R16,[11)]						
	225/50 R17,[11)]						
	235/45 R18[11)]						
	235/40 R19[11)]	240/2.4 (35)	220/2.2 (32)	–	–	250/2.5 (36)	290/2.9 (42)
	205/60 R16, [12)]	250/2.5 (36)	230/2.3 (33)	–	–	260/2.6 (38)	300/3.0 (43)
	215/50 R17[12)]						

[12)] Only permitted as winter tyres.
[11)] Not permitted with tyre chains.

5-door hatchback, 4-door notchback, Sports tourer		Comfort with up to 3 people		ECO with up to 3 people		With full load	
Engine	Tyres	front	rear	front	rear	front	rear
		[kPa/bar] ([psi])	[kPa/bar] ([psi])	[kPa/bar] ([psi])	[kPa/bar] ([psi])	[kPa/bar] ([psi])	[kPa/bar] ([psi])
A13DTE	205/60 R16,	220/2.2 (32)	220/2.2 (32)	270/2.7 (39)	270/2.7 (39)	230/2.3 (33)	270/2.7 (39)
	215/50 R17,						
	215/60 R16[11)]						

[11)] Not permitted with tyre chains.

5-door hatchback, 4-door notchback, Sports tourer		Comfort with up to 3 people		ECO with up to 3 people		With full load	
Engine	Tyres	front	rear	front	rear	front	rear
		[kPa/bar] ([psi])	[kPa/bar] ([psi])	[kPa/bar] ([psi])	[kPa/bar] ([psi])	[kPa/bar] ([psi])	[kPa/bar] ([psi])
A17DTC, A17DTS	205/65 R16, [12][11]	230/2.3 (33)	230/2.3 (33)	270/2.7 (39)	270/2.7 (39)	240/2.4 (35)	280/2.8 (41)
	215/60 R16, [11]						
	225/50 R17, [11]						
	235/45 R18[11]						
	205/55 R16,[11]	240/2.4 (35)	220/2.2 (32)	–	–	250/2.5 (36)	290/2.9 (42)
	215/50 R17,[12]						
	225/45 R17,[11]						
	235/40 R19[11]						
	205/60 R16[12]	250/2.5 (36)	230/2.3 (33)	–	–	260/2.6 (38)	300/3.0 (43)

[12] Only permitted as winter tyres.
[11] Not permitted with tyre chains.

5-door hatchback, 4-door notchback, Sports tourer		Comfort with up to 3 people		ECO with up to 3 people		With full load	
Engine	Tyres	front	rear	front	rear	front	rear
		[kPa/bar] ([psi])	[kPa/bar] ([psi])	[kPa/bar] ([psi])	[kPa/bar] ([psi])	[kPa/bar] ([psi])	[kPa/bar] ([psi])
A16XHT, A17DTE, A17DTF	205/65 R16, [12)][11)]	230/2.3 (33)	230/2.3 (33)	270/2.7 (39)	270/2.7 (39)	240/2.4 (35)	280/2.8 (41)
	215/60 R16, [11)]						
	225/50 R17, [11)]						
	235/45 R18[11)]						
	205/55 R16,[11)]	240/2.4 (35)	220/2.2 (32)	–	–	250/2.5 (36)	290/2.9 (42)
	225/45 R17,[11)]						
	235/40 R19[11)]						
	205/60 R16,[12)]	250/2.5 (36)	230/2.3 (33)	–	–	260/2.6 (38)	300/3.0 (43)
	215/50 R17[12)]						

[12)] Only permitted as winter tyres.
[11)] Not permitted with tyre chains.

5-door hatchback, 4-door notchback, Sports tourer		Comfort with up to 3 people		ECO with up to 3 people		With full load	
Engine	Tyres	front	rear	front	rear	front	rear
		[kPa/bar] ([psi])	[kPa/bar] ([psi])	[kPa/bar] ([psi])	[kPa/bar] ([psi])	[kPa/bar] ([psi])	[kPa/bar] ([psi])
A20DTH	205/65 R16, [11]	230/2.3 (33)	230/2.3 (33)	270/2.7 (39)	270/2.7 (39)	240/2.4 (35)	280/2.8 (41)
	215/60 R16,[11]						
	225/50 R17,[11]						
	235/45 R18[11]						
	235/40 R19[11]	240/2.4 (35)	220/2.2 (32)	–	–	250/2.5 (36)	290/2.9 (42)
	205/60 R16,[12]	250/2.5 (36)	230/2.3 (33)	–	–	260/2.6 (38)	300/3.0 (43)
	215/50 R17[12]						
A20DTR	215/50 R17,[12]	250/2.5 (36)	230/2.3 (33)	270/2.7 (39)	270/2.7 (39)	260/2.6 (38)	290/2.9 (42)
	235/45 R18[11]						

[11] Not permitted with tyre chains.
[12] Only permitted as winter tyres.

5-door hatchback, 4-door notchback, Sports tourer		Comfort with up to 3 people		ECO with up to 3 people		With full load	
Engine	Tyres	front	rear	front	rear	front	rear
		[kPa/bar] ([psi])	[kPa/bar] ([psi])	[kPa/bar] ([psi])	[kPa/bar] ([psi])	[kPa/bar] ([psi])	[kPa/bar] ([psi])
	235/40 R19[11)]	270/2.7 (39)	250/2.5 (36)	–	–	280/2.8 (41)	300/3.0 (43)
All	Temporary spare wheel	420/4.2 (61)	420/4.2 (61)	–	–	420/4.2 (61)	420/4.2 (61)

[11)] Not permitted with tyre chains.

Customer information

Customer information 321
Vehicle data recording and privacy 321

Customer information

Declaration of conformity

This vehicle has systems that transmit and/or receive radio waves subject to Directive 1999/5/EC. These systems are in compliance with the essential requirements and other relevant provisions of Directive 1999/5/EC. Copies of the original Declarations of Conformity can be obtained on our website.

Vehicle data recording and privacy

Event data recorders

Data storage modules in the vehicle

A large number of electronic components of your vehicle contain data storage modules temporarily or permanently storing technical data about the condition of the vehicle, events and errors. In general, this technical information documents the condition of parts, modules, systems or the environment:

- Operating conditions of system components (e.g. filling levels)
- Status messages of the vehicle and its single components (e.g. number of wheel revolutions / rotational speed, deceleration, lateral acceleration)
- Dysfunctions and defects in important system components

- Vehicle reactions in particular driving situations (e.g. inflation of an airbag, activation of the stability regulation system)
- Environmental conditions (e.g. temperature)

These data are exclusively technical and help identifying and correcting errors as well as optimizing vehicle functions.

Motion profiles indicating travelled routes cannot be created with these data.

If services are used (e.g. repair works, service processes, warranty cases, quality assurance), employees of the service network (manufacturer included) are able to read out this technical information from the event and error data storage modules applying special diagnostic devices. If required, you will receive further information at these workshops. After an error has been corrected, the data are deleted from the error storage module or they are constantly overwritten.

When using the vehicle, situations may occur in which these technical data related to other information (accident report, damages on the vehicle, witness statements etc.) may be associated with a specific person - possibly, with the assistance of an expert.

Additional functions contractually agreed upon with the client (e.g. vehicle location in emergency cases) allow the transmission of particular vehicle data from the vehicle.

Radio Frequency Identification (RFID)

RFID technology is used in some vehicles for functions such as tyre pressure monitoring and ignition system security. It is also used in connection with conveniences such as radio remote controls for door locking/unlocking and starting, and in-vehicle transmitters for garage door openers. RFID technology in Opel vehicles does not use or record personal information or link with any other Opel system containing personal information.

Index

A

Accessories and vehicle modifications 224
Active Emergency Braking..... 196
Active head restraints..... 41
Adaptive cruise control..... 121, 186
Adaptive forward lighting 120, 145, 236
Adjustable air vents 162
Advanced parking assist..... 201
Airbag and belt tensioners 115
Airbag deactivation 55, 115
Airbag system 52
Air conditioning regular operation 163
Air conditioning system 156
Air intake 163
Air vents..... 162
Antilock brake system 175
Antilock brake system (ABS) 117
Anti-theft alarm system 30
Anti-theft locking system 30
Appearance care..... 280
Armrest..... 48, 49
Armrest storage 64
Ashtrays 109
Automatic anti-dazzle 34
Automatic light control 143
Automatic locking 27
Automatic transmission 171
Auxiliary heater..... 162

B

Battery discharge protection 153
Battery voltage 131
Belts..... 49
Bicycle rack..... 66
Bonnet 226
Brake and clutch fluid..... 285
Brake and clutch system 116
Brake assist 178
Brake fluid 229
Brakes 175, 229
Breakdown..... 278
Bulb replacement 232

C

Capacities 308
Cargo management system 93
Car Pass 23
Catalytic converter 171
Central locking system 25
Centre console lighting 152
Centre console storage 65
Changing tyre and wheel size ... 264
Charging system 116
Child locks 27
Child restraint installation locations 58

Child restraints..... 56
Child restraint systems 56
Cigarette lighter 109
Climate control 19
Climate control systems..... 155
Clock..... 107
Code..... 128
Control indicators..... 113
Control of the vehicle 164
Controls..... 102
Convex shape 33
Coolant and antifreeze..... 285
Cruise control 121, 183
Cupholders 62
Curtain airbag system 54
Curve lighting..... 145

D

Danger, Warnings and Cautions . . . 4
Daytime running lights 145
Declaration of conformity..... 321
Diesel fuel system bleeding 231
Diesel particle filter..... 119, 170
Door open 121
Doors..... 28
Driver assistance systems..... 183
Driver Information Centre..... 121
Driving characteristics and
towing tips 220
Driving hints..... 164

E

Electric adjustment 33
Electrical system..... 252
Electric parking brake..... 117
Electric parking brake fault..... 117
Electronic climate control system 158
Electronic driving programmes . . 173
Electronic Stability Control..... 179
Electronic Stability Control and
Traction Control system..... 118
Electronic Stability Control off..... 118
End-of-life vehicle recovery 225
Engine compartment fuse box ... 253
Engine coolant 227
Engine coolant temperature
gauge 111
Engine data 292
Engine exhaust 170
Engine identification..... 288
Engine oil 226, 285, 289
Engine oil pressure 119
Entry lighting 152
Event data recorders..... 321
Exit lighting 153
Exterior care 280
Exterior light 120
Exterior lighting 16, 142
Exterior mirrors..... 33

F

Fault 173
First aid..... 97
First aid kit 97
Fixed air vents 163
Flex-Fix system..... 66
Fog light 120
Fog lights 237
Folding mirrors 33
Following distance indication..... 196
Forward collision alert..... 193
Front airbag system 53
Front fog lights 149
Front seats..... 42
Front storage..... 63
Front turn signal lights 239
Fuel..... 213
Fuel consumption - CO_2-
Emissions 219
Fuel for diesel engines 213
Fuel for liquid gas operation..... 213
Fuel for petrol engines 213
Fuel gauge 111
Fuel selector 111
Fuses 252

G

Gauges..... 110
General information 219

Glass panel 39
Glovebox 62
Graphic-Info-Display, Colour-Info-Display 126

H
Halogen headlights 232
Hand brake..... 175, 176
Hazard warning flashers 149
Headlight flash 144
Headlight range adjustment 144
Headlights..... 142
Headlights when driving abroad 145
Head restraint adjustment 9
Head restraints 40
Heated mirrors 34
Heated rear window 37
Heated steering wheel 103
Heating 49
Heating and ventilation system . 155
Height adjustable rear floor cover 90
High beam 120, 143
High beam assist..... 120, 143
Hill start assist 178
Horn 17, 103

I
Identification plate 287
Ignition switch positions 165
Immobiliser 32, 120
Indicators..... 110
Information displays..... 121
Instrument cluster 110
Instrument panel fuse box 255
Instrument panel illumination 251
Instrument panel illumination control 151
Instrument panel overview 12
Interactive driving system..... 181
Interior care 282
Interior lighting..... 151
Interior lights 151, 251
Interior mirrors..... 34
Interruption of power supply 174
Introduction 3
ISOFIX child restraint systems 61

J
Jump starting 276

K
Key, memorised settings..... 25
Keys 23
Keys, locks..... 23

L
Lane departure warning..... 118, 211
Lashing eyes 93
Lighting features..... 152
Light switch 142
Load compartment 28, 84
Load compartment cover 88
Load compartment fuse box 256
Loading information 100
Low fuel 120
Low washer fluid 121

M
Malfunction indicator light 116
Manual anti-dazzle 34
Manual mode 173
Manual transmission 175
Manual windows 35
Memorised settings..... 25
Mirror adjustment 10
Misted light covers 150

N
New vehicle running-in 165
Number plate light 251

O
Object detection systems..... 198
Odometer 110
Oil, engine..... 285, 289
Outside temperature 106
Overrun cut-off 166

P

Parking 21, 169
Parking assist 198
Parking brake 176
Parking lights 150
Particulate filter..... 170
Performance 295
Performing work 225
Pollen filter 163
Power outlets 108
Power seat adjustment 46
Power steering..... 118
Power windows 35
Preheating 119
Puncture..... 268

Q

Quickheat..... 162

R

Radio Frequency Identification (RFID)..... 322
Radio remote control 23
Reading lights 152
Rear carrier system..... 66
Rear floor storage cover 90
Rear fog light 121
Rear fog lights 150
Rear seats..... 49
Rear storage..... 88
Rear view camera 206
Rear window wiper/washer 106
Recommended fluids and lubricants 285, 289
Reduced engine power..... 120
Refuelling 215
Retained power off..... 165
Reversing lights 150
Ride control systems..... 178
Roof..... 38
Roof load..... 100
Roof rack 99

S

Safety belts..... 49
Safety net 95
Seat adjustment 7, 42
Seat belt 10
Seat belt reminder 115
Seat belts 49
Seat folding 45
Seat position 42
Selector lever 172
Service 163, 284
Service display 112
Service information 284
Service vehicle soon 116
Side airbag system 54
Side blind spot alert..... 205
Sidelights..... 142
Side turn signal lights 249
Smartphone controller..... 128
Spare wheel 272
Speed limiter..... 185
Speedometer 110
Starting and operating..... 165
Starting off 20
Starting the engine 165
Steering..... 164
Steering wheel adjustment . . 11, 102
Steering wheel controls 102
Stop-start system..... 167
Storage..... 62
Storage compartments..... 62
Sunroof 38
Sunvisor lights 152
Sun visors 37
Symbols 4

T

Tachometer 110
Tail lights 241
Three-point seat belt 50
Tools 258
Top-tether fastening eyes 61
Tow bar..... 219
Towing..... 219, 278
Towing another vehicle 279
Towing equipment 221
Towing the vehicle 278

Traction Control system 178
Traction Control system off..... 119
Traffic sign assistant..... 208
Trailer coupling..... 219
Trailer stability assist 223
Trailer towing 220
Transmission 20
Transmission display 171
Tread depth 264
Trip computer 132
Trip odometer 110
Turn and lane-change signals ... 149
Turn signal 115
Tyre chains 265
Tyre designations 260
Tyre pressure 260
Tyre pressure monitoring system..... 119, 261
Tyre pressures 309
Tyre repair kit 265

U

Ultrasonic parking assist ... 118, 198
Underseat storage 64
Upholstery..... 282
Upshift..... 117
Using this manual 3

V

Vehicle battery 229
Vehicle checks..... 225
Vehicle data..... 289
Vehicle data recording and privacy..... 321
Vehicle detected ahead..... 121
Vehicle dimensions 307
Vehicle Identification Number 287
Vehicle jack..... 258
Vehicle messages 128
Vehicle personalisation 134
Vehicle security..... 30
Vehicle specific data 3
Vehicle storage..... 224
Vehicle tools..... 258
Vehicle unlocking 6
Vehicle weight 299
Ventilation..... 155

W

Warning chimes 131
Warning lights..... 110
Warning triangle 96
Washer and wiper systems 18
Washer fluid 228
Wheel changing 268
Wheel covers 264
Wheels and tyres 260
Windows..... 35
Windscreen..... 35
Windscreen wiper/washer 104
Winter tyres 260
Wiper blade replacement 231

Copyright by ADAM OPEL AG, Rüsselsheim, Germany.

The information contained in this publication is effective as of the date indicated below. Adam Opel AG reserves the right to make changes to the technical specifications, features and design of the vehicles relative to the information in this publication as well as changes to the publication itself.

Edition: August 2013, ADAM OPEL AG, Rüsselsheim.

Printed on chlorine-free bleached paper.

KTA-2685/8-en

08/2013