FRONT BUMPER

COMPONENTS

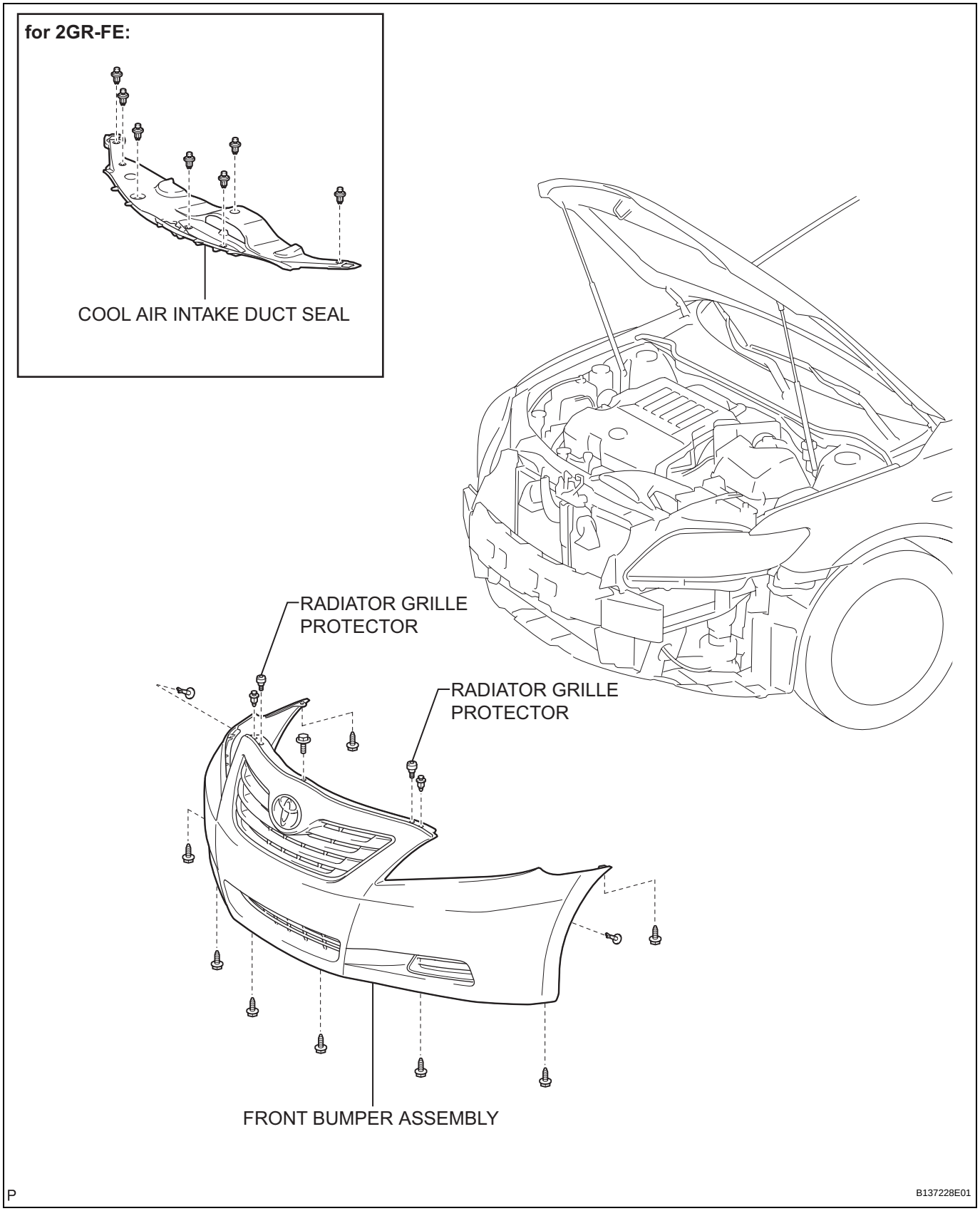

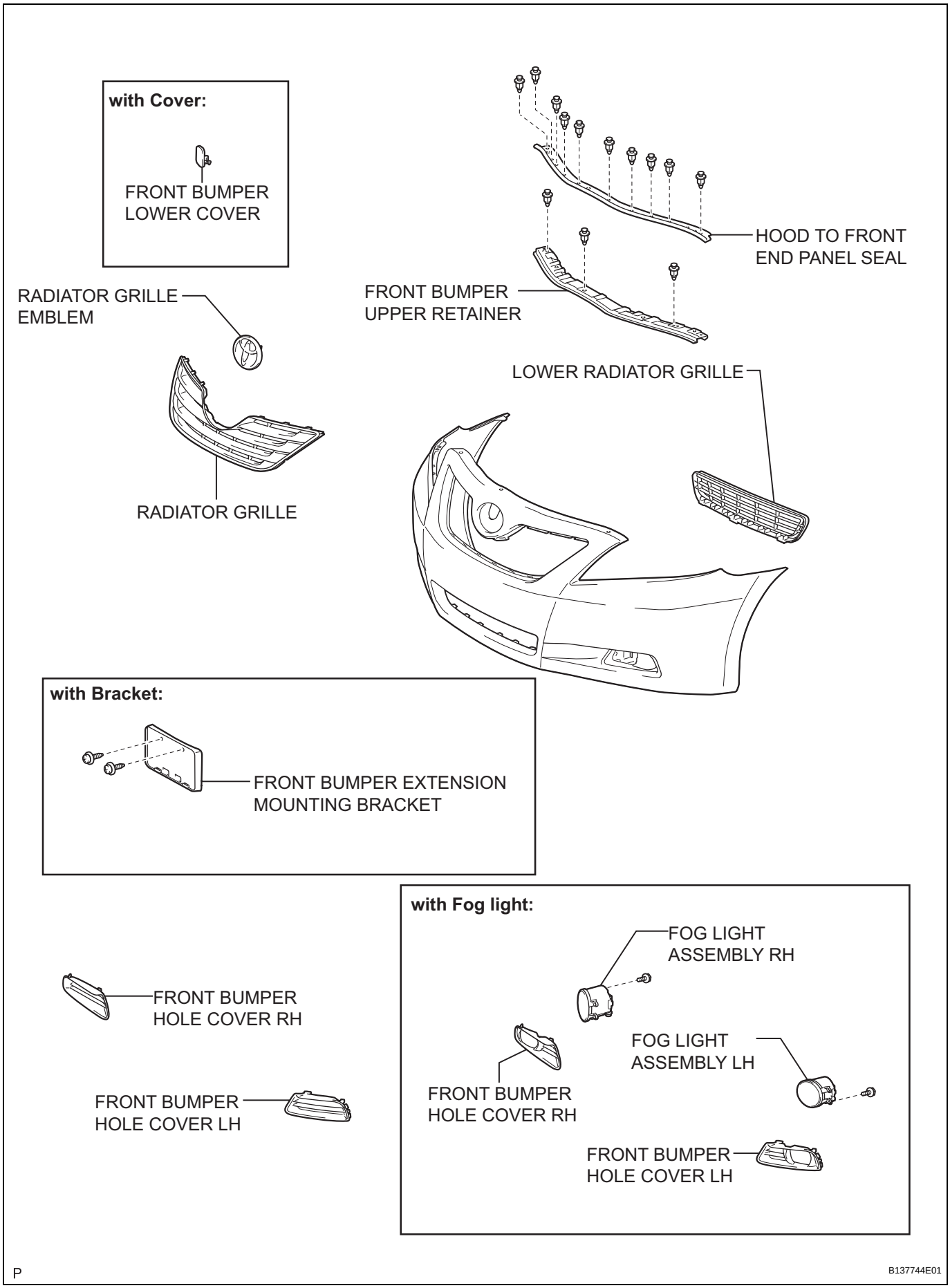
with Cover:
FRONT BUMPER LOWER COVER
HOOD TO FRONT END PANEL SEAL
RADIATOR GRILLE EMBLEM
FRONT BUMPER UPPER RETAINER
LOWER RADIATOR GRILLE
RADIATOR GRILLE
with Bracket:
FRONT BUMPER EXTENSION MOUNTING BRACKET
with Fog light:
FOG LIGHT ASSEMBLY RH
FRONT BUMPER HOLE COVER RH
FOG LIGHT ASSEMBLY LH
FRONT BUMPER HOLE COVER RH
FRONT BUMPER HOLE COVER LH
FRONT BUMPER HOLE COVER LH
P
B137744E01

with Front Spoiler:

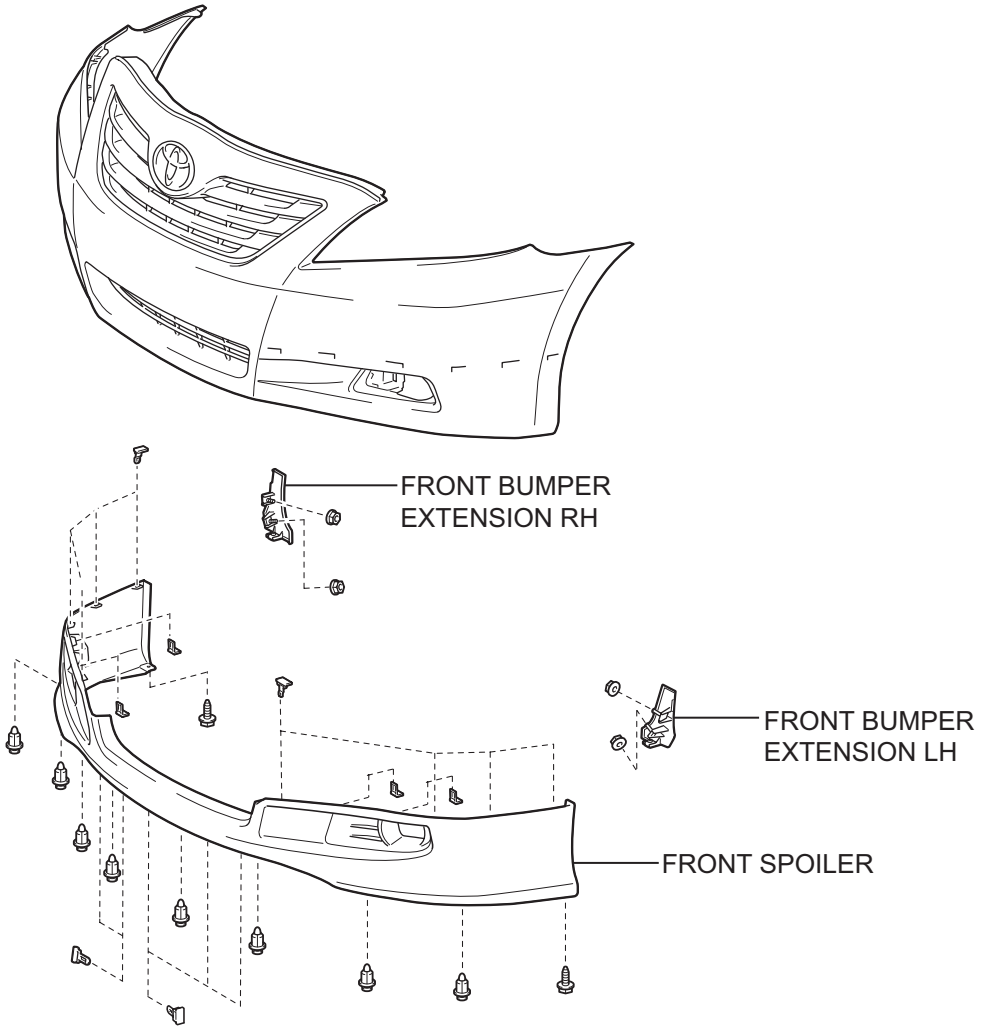

P

B137745E01

ET

FRONT BUMPER
SIDE RETAINER RH

34 (347, 25)

FRONT BUMPER
ENERGY ABSORBER

34 (347, 25)

FRONT BUMPER REINFORCEMENT
SUB-ASSEMBLY

FRONT BUMPER
SIDE RETAINER LH

N*m (kgf*cm, ft.*lbf) : Specified torque

P B137743E01

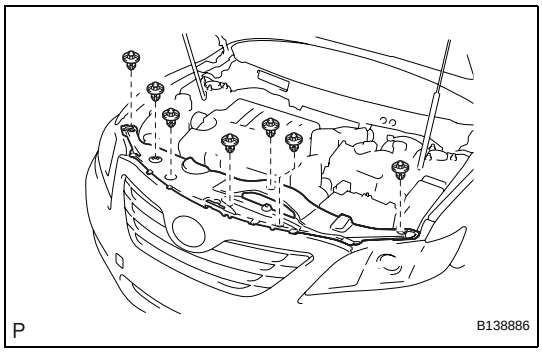

REMOVAL

1. **REMOVE COOL AIR INTAKE DUCT SEAL (for 2GR-FE)**
   (a) Remove the 7 clips and cool air intake duct seal.

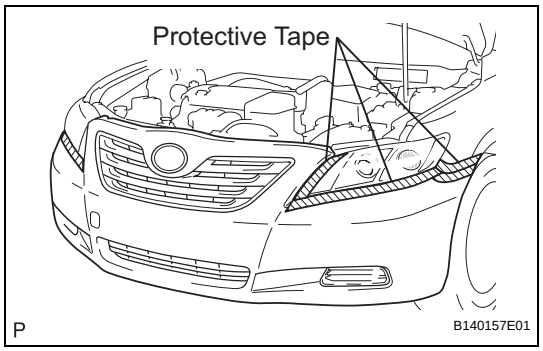

2. REMOVE FRONT BUMPER ASSEMBLY (w/o Fog Light)

(a) Put protective tape around the front bumper assembly.

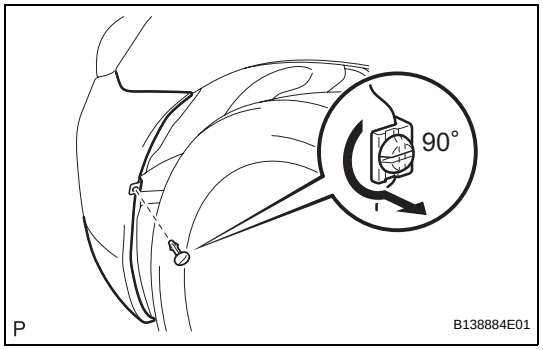

(b) Using a screwdriver, turn the pin 90 degrees and remove the pin hold clip.
HINT:
Use the same procedures for the RH side and LH side.

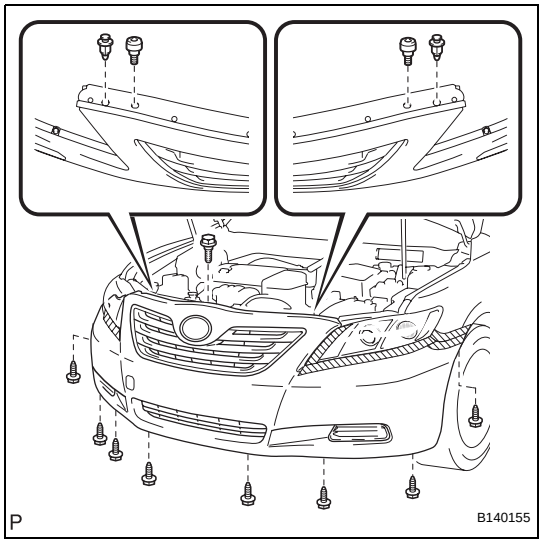

(c) Remove the 8 screws, 2 clips, 2 radiator grille protectors and bolt.

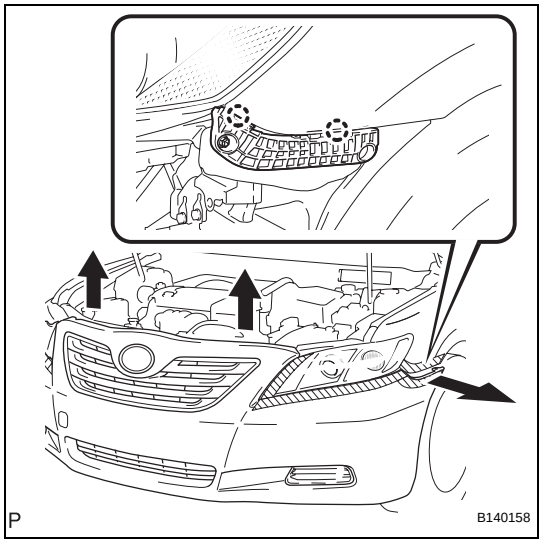

(d) Disengage the 2 claws and disconnect the front bumper assembly as shown in the illustration.
HINT:
Use the same procedures for the RH side and LH side.

(e) Remove the front bumper assembly.

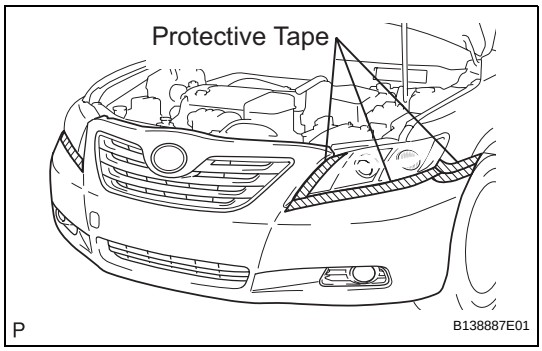

3. REMOVE FRONT BUMPER ASSEMBLY (w/ Fog Light)

(a) Put protective tape around the front bumper assembly.

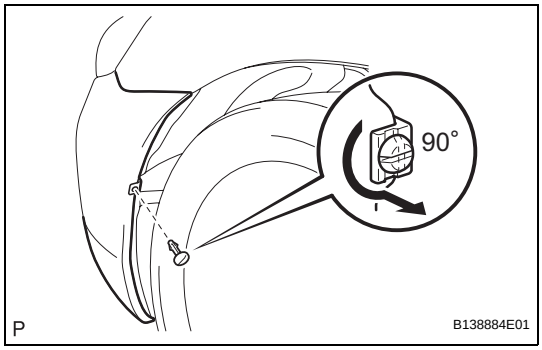

(b) Using a screwdriver, turn the pin 90 degrees and remove the pin hold clip.
HINT:
Use the same procedures for the RH side and LH side.

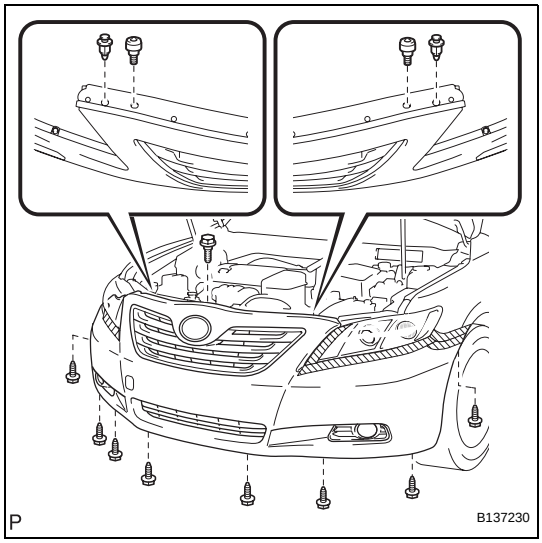

(c) Remove the 8 screws, 2 clips, 2 radiator grille protectors and bolt.

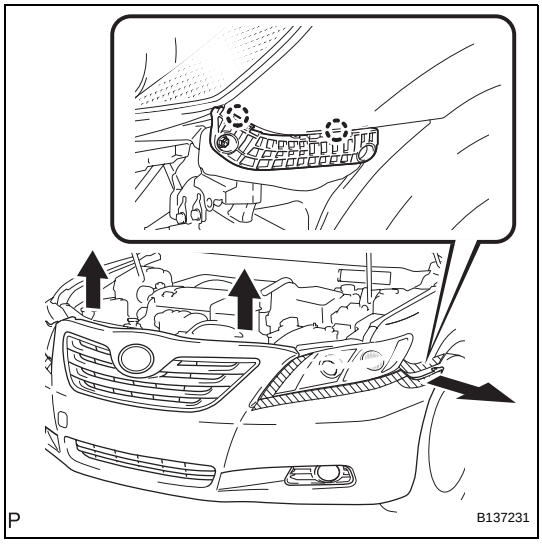

(d) Disengage the 2 claws and disconnect the front bumper assembly as shown in the illustration.
HINT:
Use the same procedures for the RH side and LH side.

(e) Disconnect each connector, and then remove the front bumper assembly.

DISASSEMBLY

1. **REMOVE FOG LIGHT ASSEMBLY LH (w/ Fog Light) (See page LI-79)**
2. **REMOVE FOG LIGHT ASSEMBLY RH (w/ Fog Light)**
3. **REMOVE FRONT SPOILER (w/ Front Spoiler)**
   (a) Remove the 2 screws and 25 clips.

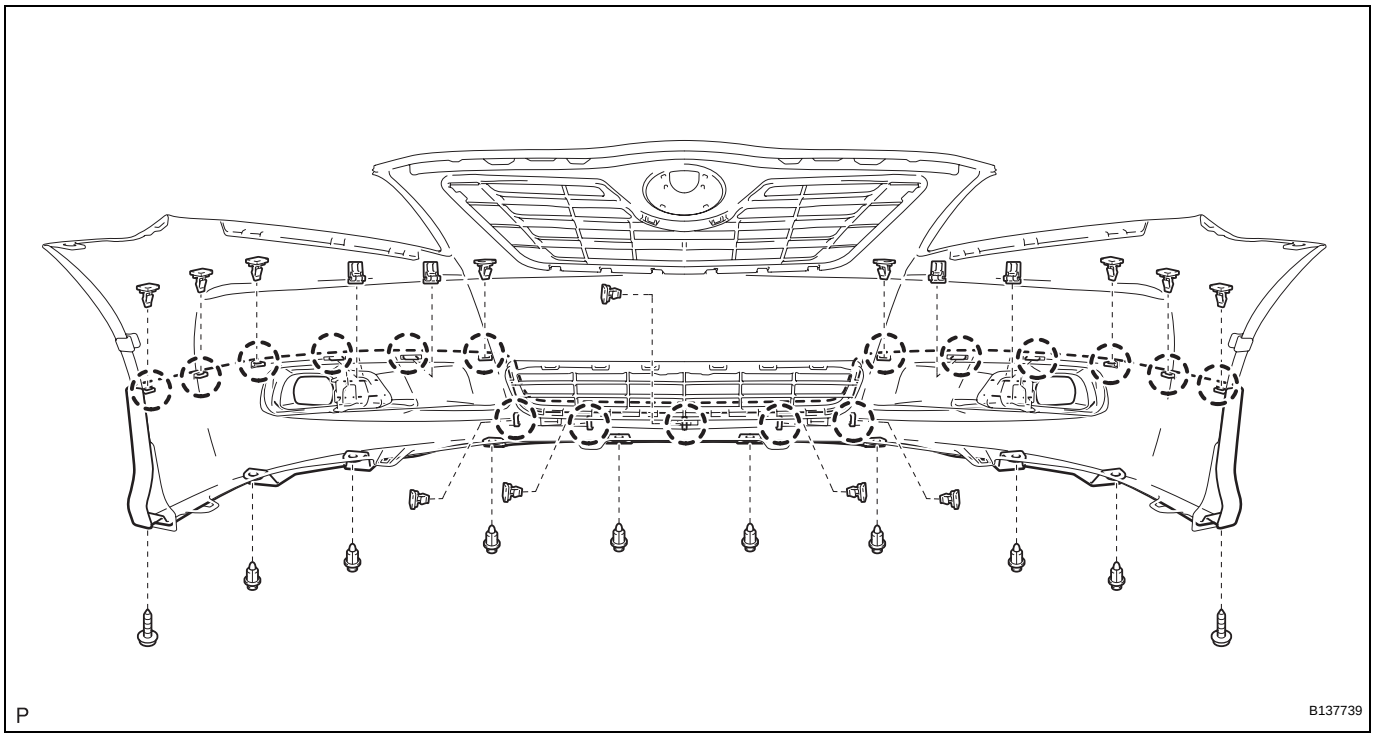

   (b) Disengage the 17 claws and remove the front spoiler.

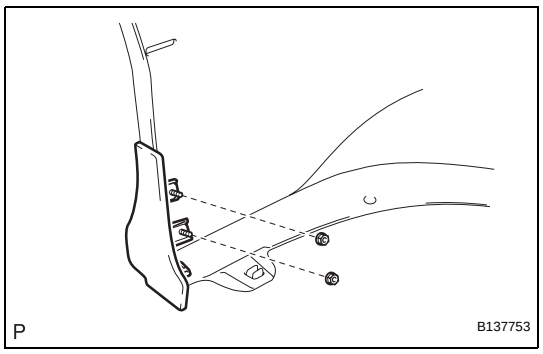

4. **REMOVE FRONT BUMPER EXTENSION LH (w/ Front Spoiler)**
   (a) Remove the 2 nuts and front bumper extension LH.
5. **REMOVE FRONT BUMPER EXTENSION RH (w/ Front Spoiler)**
6. **REMOVE FRONT BUMPER EXTENSION MOUNTING BRACKET (w/ Bracket)**
   (a) Remove the 2 screws.

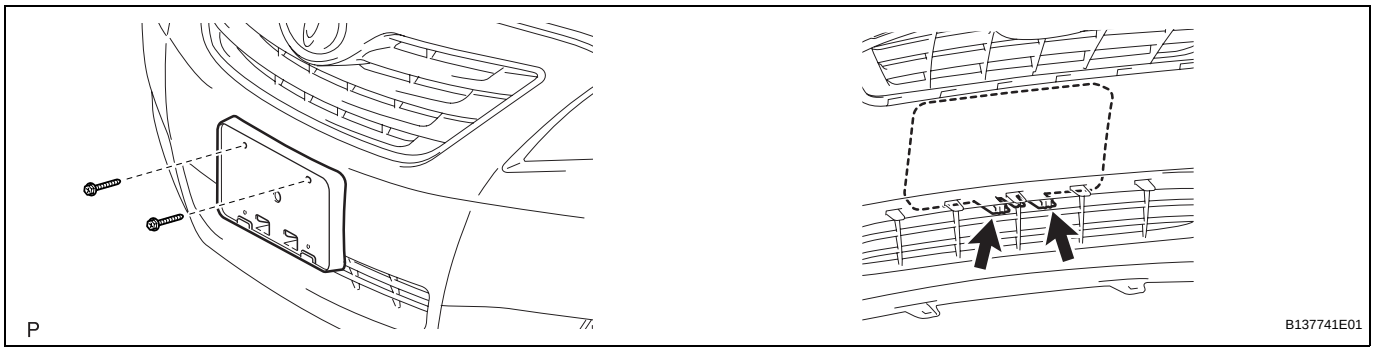

(b) Disengage the 2 claws and remove the front bumper extension mounting bracket.

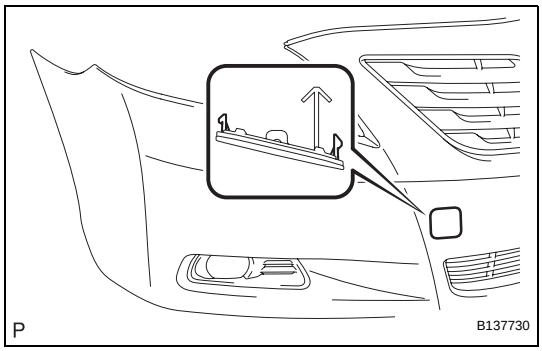

7. REMOVE FRONT BUMPER LOWER COVER (w/ Cover)

(a) Disengage the 2 claws and remove the front bumper lower cover.

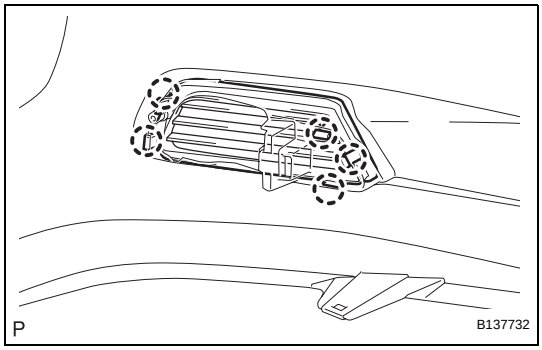

8. REMOVE FRONT BUMPER HOLE COVER LH (w/o Fog Light)

(a) Disengage the 5 claws and remove the front bumper hole cover LH.

9. REMOVE FRONT BUMPER HOLE COVER RH (w/o Fog Light)

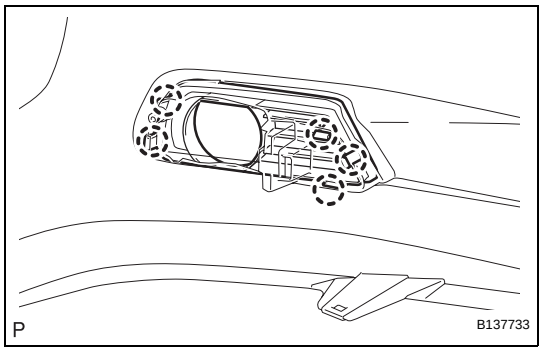

10. REMOVE FRONT BUMPER HOLE COVER LH (w/ Fog Light)

(a) Disengage the 5 claws and remove the front bumper hole cover LH.

11. REMOVE FRONT BUMPER HOLE COVER RH (w/ Fog Light)

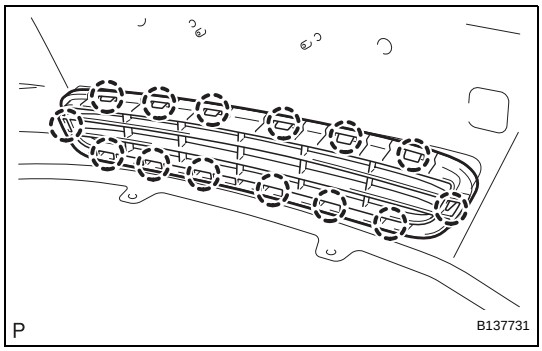

12. REMOVE LOWER RADIATOR GRILLE

(a) Disengage the 14 claws and remove the lower radiator grille.

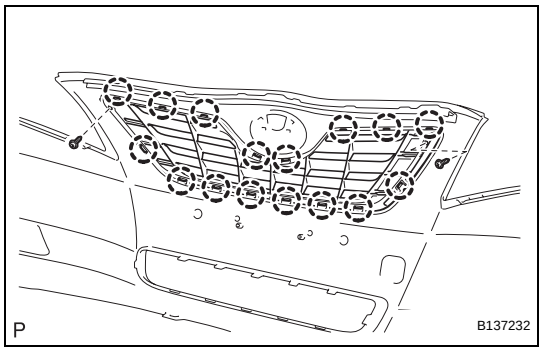

13. REMOVE RADIATOR GRILLE

(a) Remove the 2 screws.

(b) Disengage the 16 claws and remove the radiator grille.

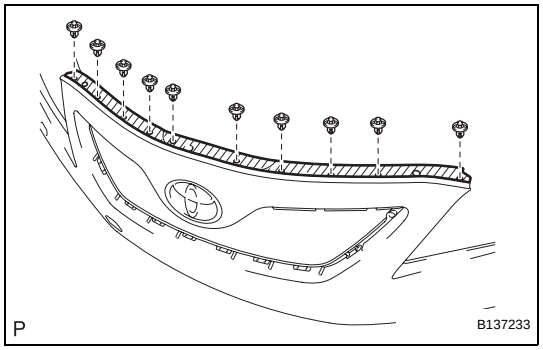

14. REMOVE HOOD TO FRONT END PANEL SEAL

(a) Remove the 10 clips and hood to front end panel seal.

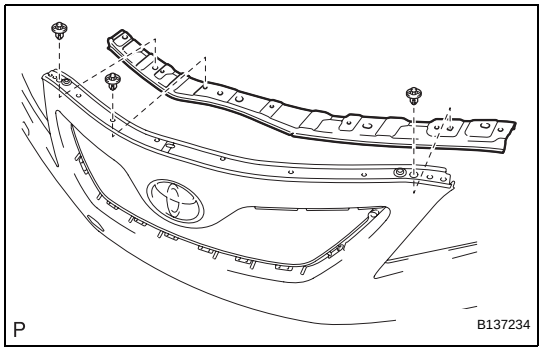

15. REMOVE FRONT BUMPER UPPER RETAINER

(a) Remove the 3 clips and front bumper upper retainer.

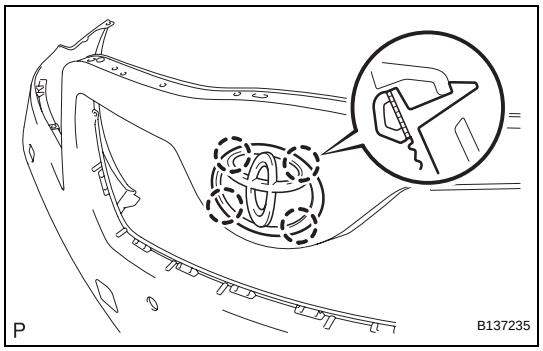

16. REMOVE RADIATOR GRILLE EMBLEM

(a) Disengage the 4 claws and remove the radiator grille emblem.

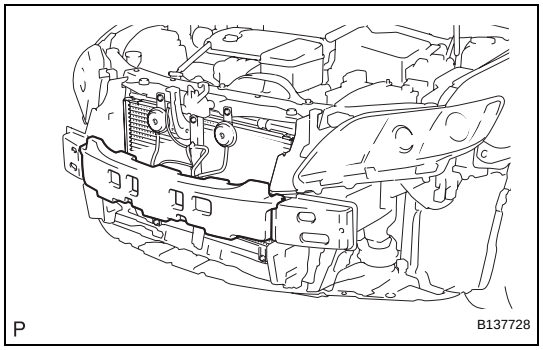

17. REMOVE FRONT BUMPER ENERGY ABSORBER

(a) Remove the front bumper energy absorber from the front bumper reinforcement sub-assembly.

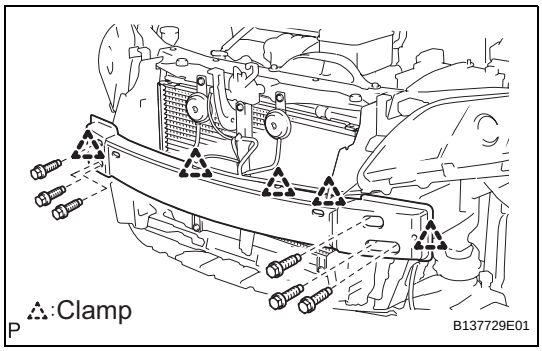

18. REMOVE FRONT BUMPER REINFORCEMENT SUB-ASSEMBLY
(a) Disengage each clamp.
(b) Remove the 6 bolts and front bumper reinforcement sub-assembly.

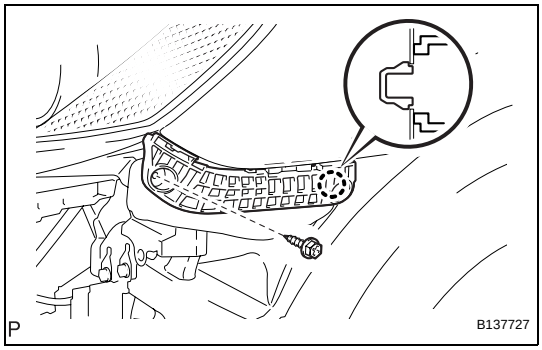

19. REMOVE FRONT BUMPER SIDE RETAINER LH
(a) Remove the screw.
(b) Disengage the claw and remove the front bumper side retainer LH.

20. REMOVE FRONT BUMPER SIDE RETAINER RH

REASSEMBLY

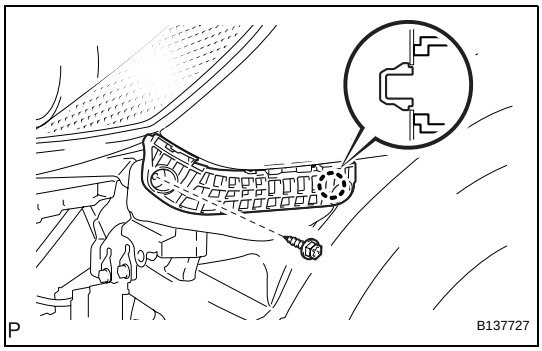

1. INSTALL FRONT BUMPER SIDE RETAINER LH
(a) Engage the claw and install the front bumper side retainer LH.
(b) Install the screw.

2. INSTALL FRONT BUMPER SIDE RETAINER RH

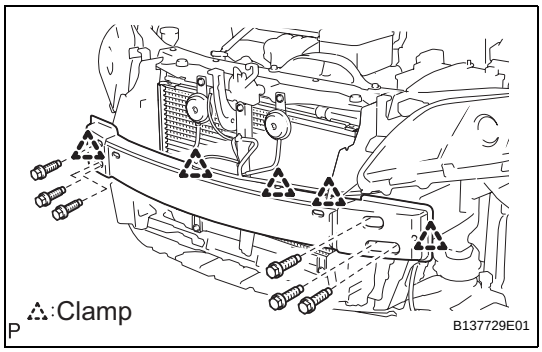

3. INSTALL FRONT BUMPER REINFORCEMENT SUB-ASSEMBLY
(a) Install the front bumper reinforcement sub-assembly with the 6 bolts.
Torque: 34 N*m (347 kgf*cm, 25 ft.*lbf)
(b) Engage each clamp.

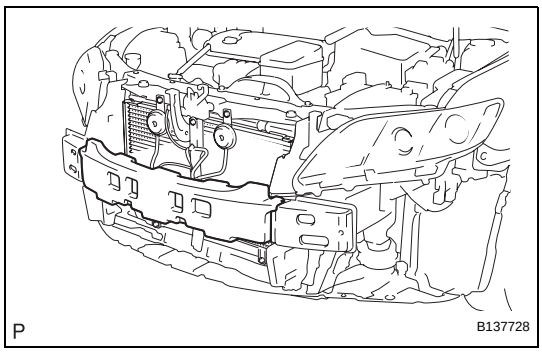

4. INSTALL FRONT BUMPER ENERGY ABSORBER
(a) Install the front bumper energy absorber to the front bumper reinforcement sub-assembly.

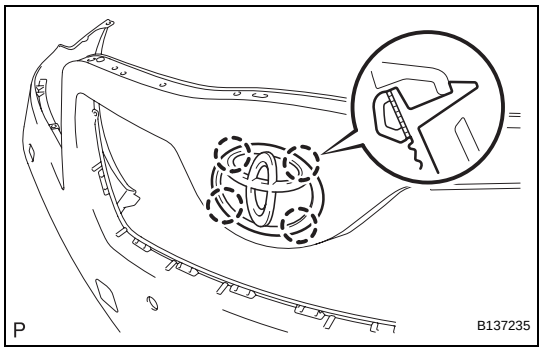

5. INSTALL RADIATOR GRILLE EMBLEM

(a) Engage the 4 claws and install the radiator grille emblem.

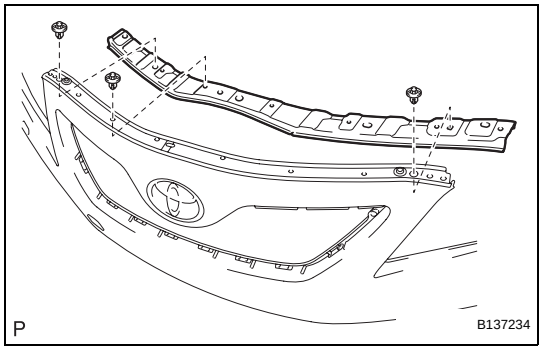

6. INSTALL FRONT BUMPER UPPER RETAINER

(a) Install the front bumper upper retainer with the 3 clips.

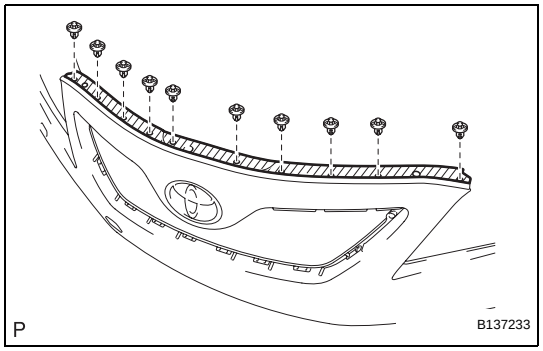

7. INSTALL HOOD TO FRONT END PANEL SEAL

(a) Apply new double-sided tape to the hood to front end panel seal.
(b) Remove the release paper from the hood to front end panel seal.
(c) Install the hood to front end panel seal with the 10 clips.

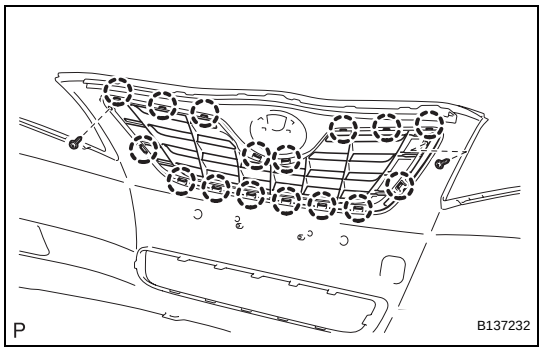

8. INSTALL RADIATOR GRILLE

(a) Engage the 16 claws and install the radiator grille.
(b) Install the 2 screws.

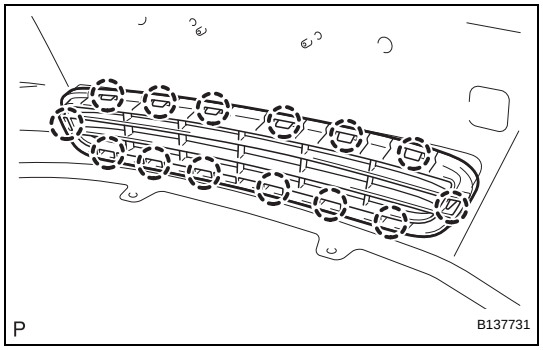

9. INSTALL LOWER RADIATOR GRILLE

(a) Engage the 14 claws and install the lower radiator grille.

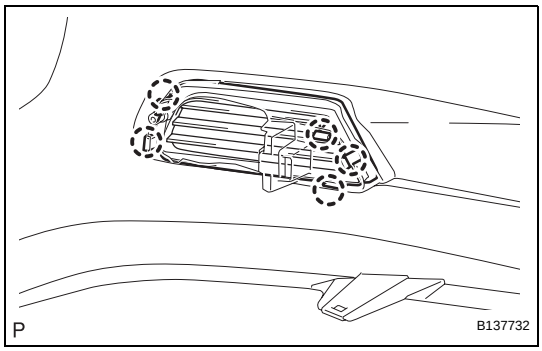

10. INSTALL FRONT BUMPER HOLE COVER LH (w/o Fog Light)

(a) Engage the 5 claws and install the front bumper hole cover LH.

11. INSTALL FRONT BUMPER HOLE COVER RH (w/o Fog Light)

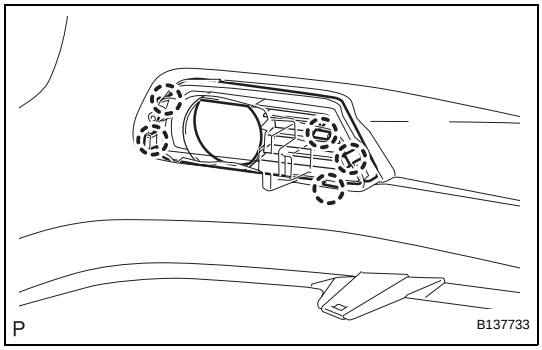

12. INSTALL FRONT BUMPER HOLE COVER LH (w/ Fog Light)

(a) Engage the 5 claws and install the front bumper hole cover LH.

13. INSTALL FRONT BUMPER HOLE COVER RH (w/ Fog Light)

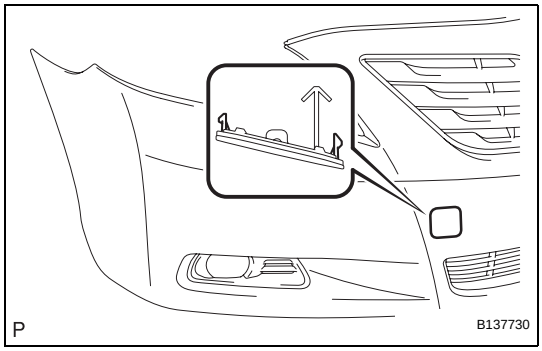

14. INSTALL FRONT BUMPER LOWER COVER (w/ Cover)

(a) Engage the 2 claws and install the front bumper lower cover.

15. INSTALL FRONT BUMPER EXTENSION MOUNTING BRACKET (w/ Bracket)

(a) Engage the 2 claws and install the front bumper extension mounting bracket.

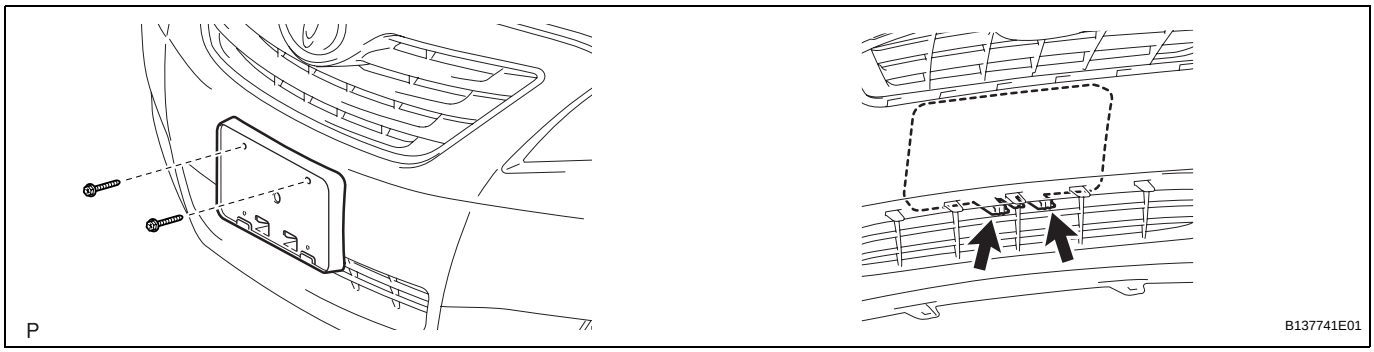

(b) Install the 2 screws.

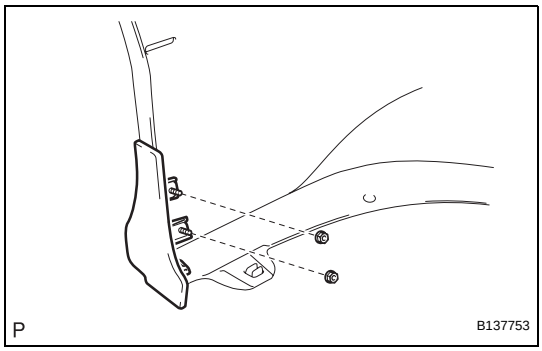

16. INSTALL FRONT BUMPER EXTENSION LH (w/ Front Spoiler)

(a) Install the front bumper extension LH with the 2 nuts.

17. INSTALL FRONT BUMPER EXTENSION RH (w/ Front Spoiler)

18. INSTALL FRONT SPOILER (w/ Front Spoiler)
(a) Engage the 17 claws and install the front spoiler.

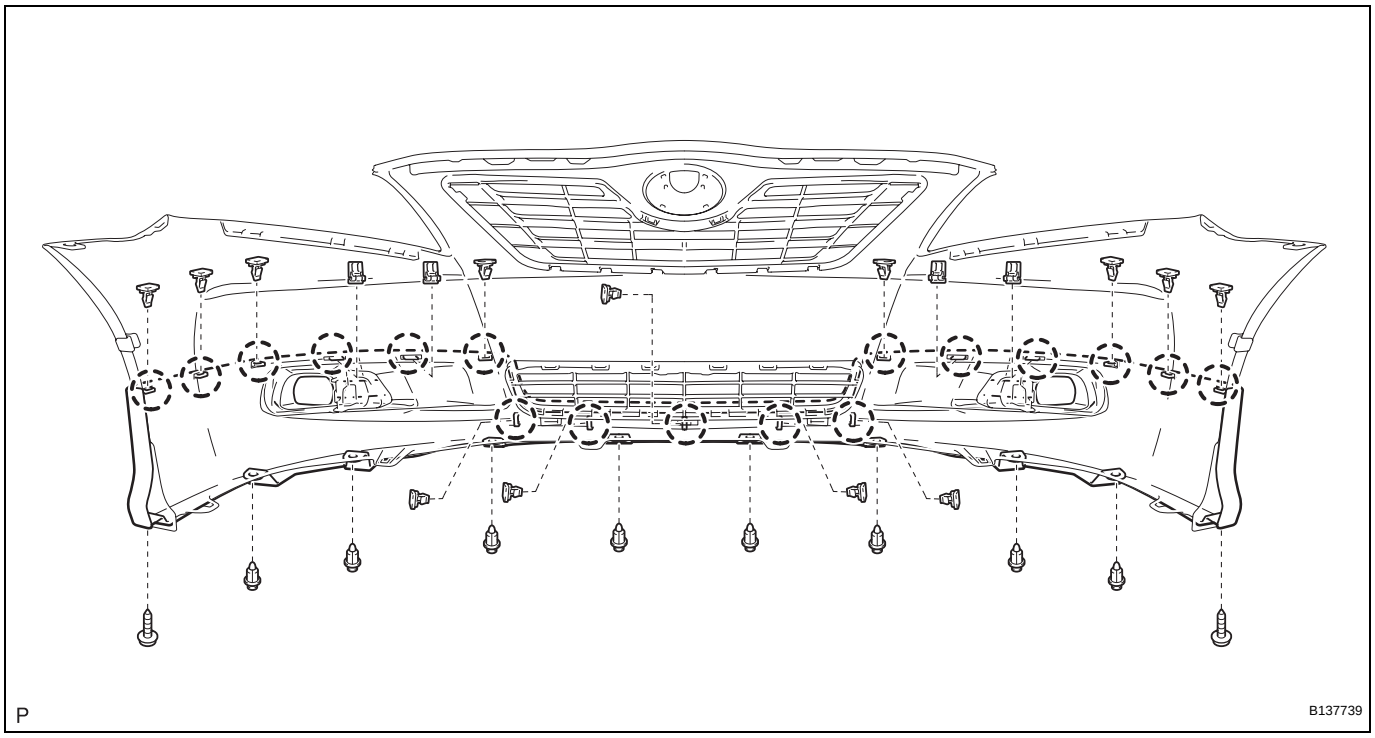

(b) Install the 25 clips and 2 screws.

19. INSTALL FOG LIGHT ASSEMBLY LH (w/ Fog Light) (See page LI-82)

20. INSTALL FOG LIGHT ASSEMBLY RH (w/ Fog Light)

INSTALLATION

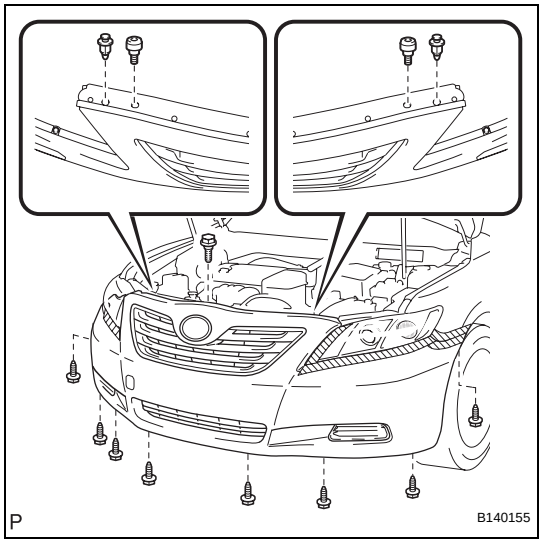

1. INSTALL FRONT BUMPER ASSEMBLY (w/o Fog Light)
(a) Engage each claw.
(b) Install the front bumper assembly with the 8 screws, 2 clips, 2 radiator grille protectors and bolt.

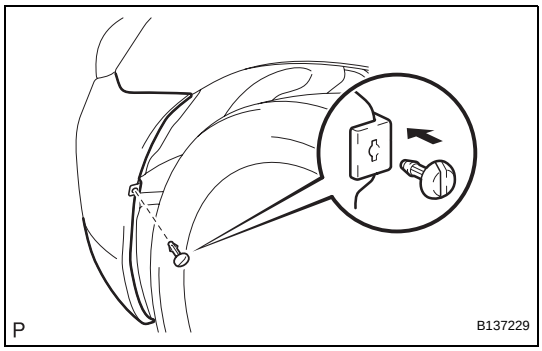

(c) Install the pin hold clip.
HINT:
Use the same procedures for the RH side and LH side.

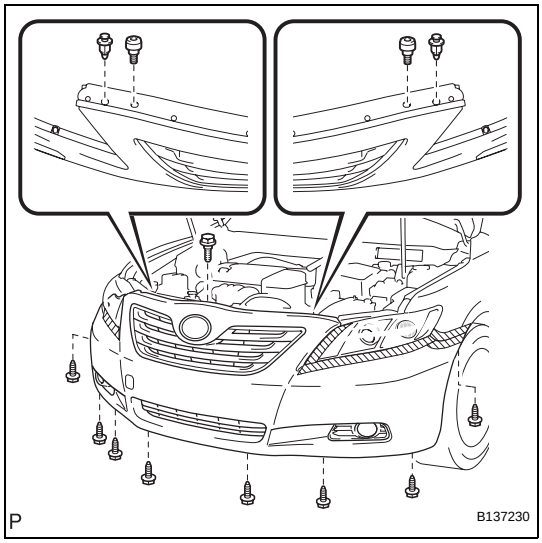

2. INSTALL FRONT BUMPER ASSEMBLY (w/ Fog Light)

(a) Connect each connector.
(b) Engage each claw.
(c) Install the front bumper assembly with the 8 screws, 2 clips, 2 radiator grille protectors and bolt.

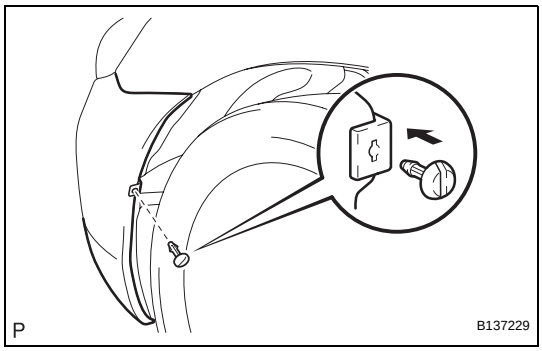

(d) Install the pin hold clip.
HINT:
Use the same procedures for the RH side and LH side.

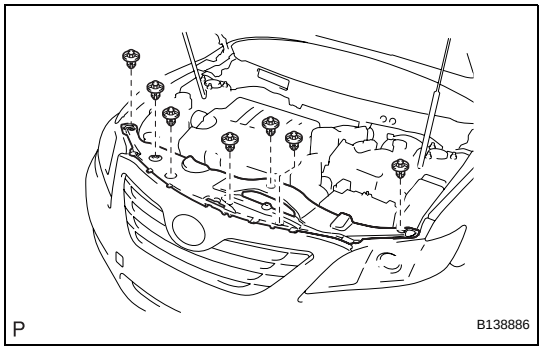

3. INSTALL COOL AIR INTAKE DUCT SEAL (for 2GR-FE)

(a) Install the cool air intake duct seal with the 7 clips.

4. VEHICLE PREPARATION FOR FOG LIGHT AIMING (w/ Fog Light) (See page LI-79)

5. PREPARATION FOR FOG LIGHT AIMING (w/ Fog Light) (See page LI-80)

6. INSPECT FOG LIGHT AIMING (w/ Fog Light) (See page LI-81)

7. ADJUST FOG LIGHT AIMING (w/ Fog Light) (See page LI-82)

REAR BUMPER

COMPONENTS

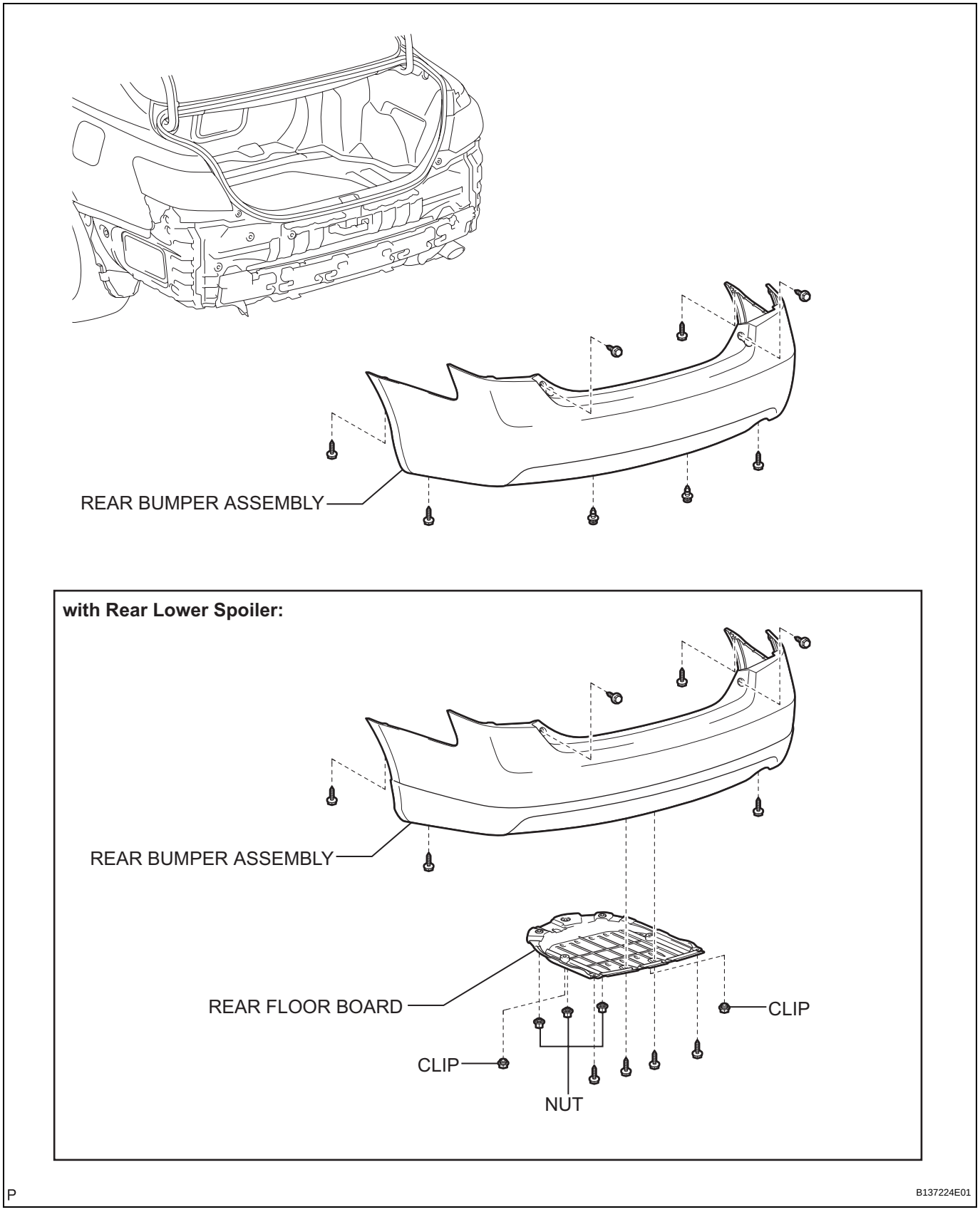

ET

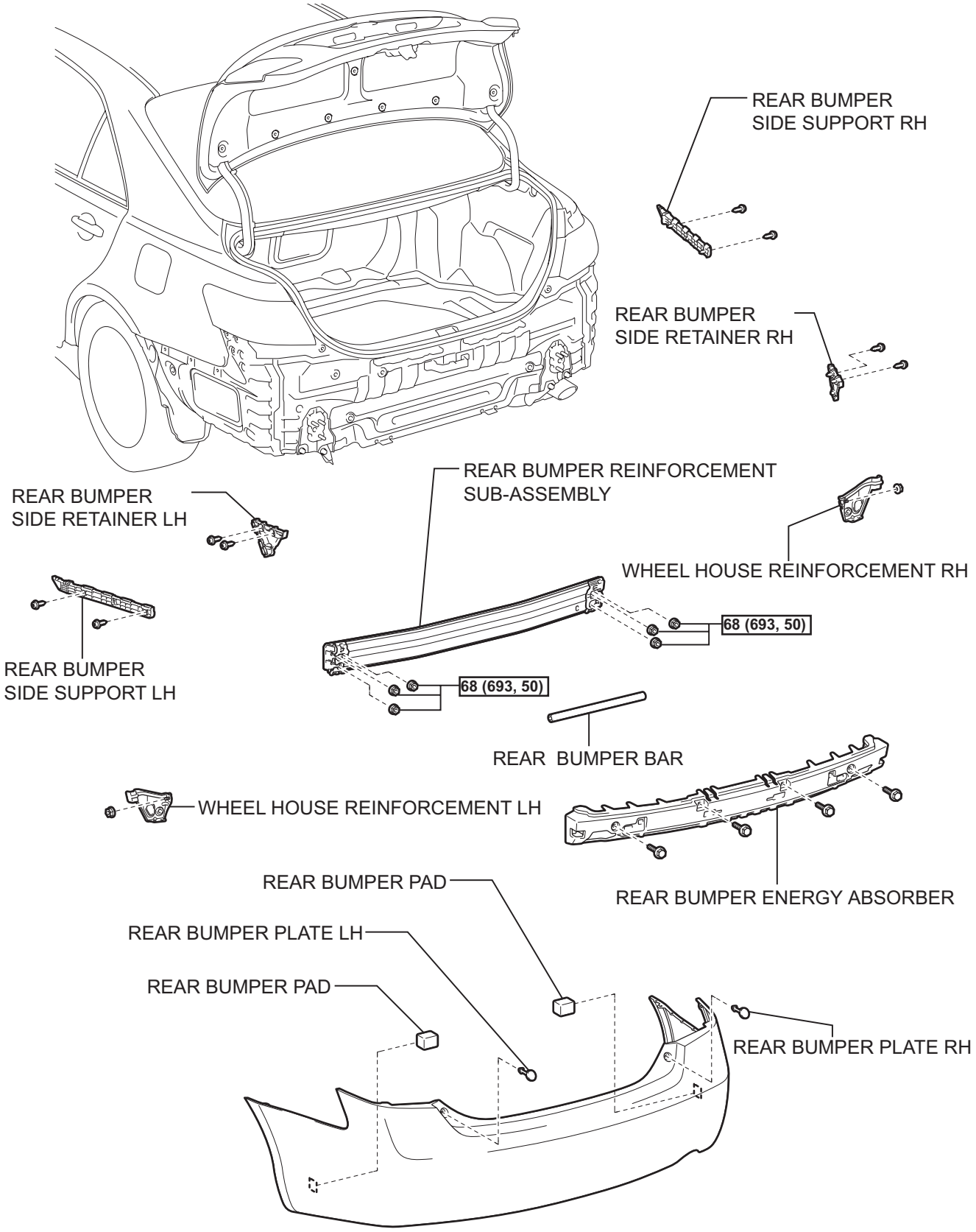

N*m (kgf*cm, ft.*lbf): Specified torque

P

B137225E01

with Rear Lower Spoiler:

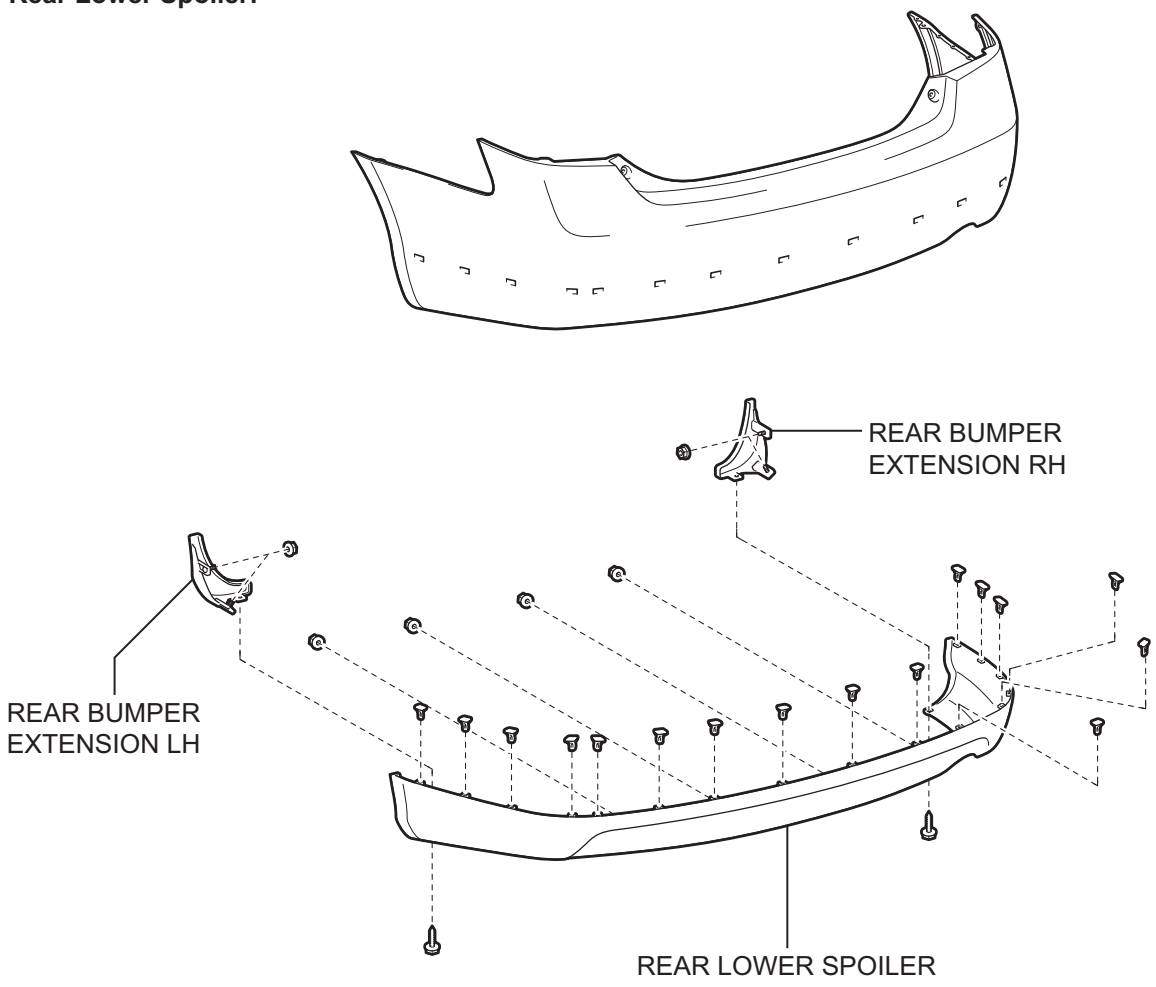

P B140152E01

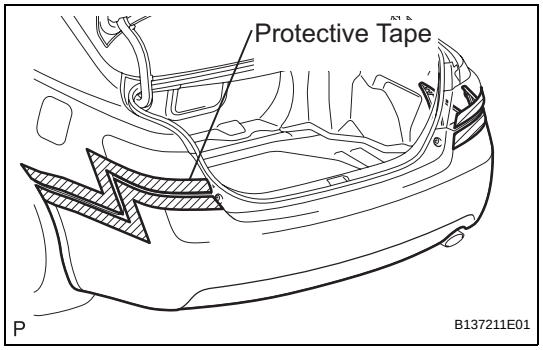

P B137211E01

REMOVAL

1. REMOVE REAR BUMPER ASSEMBLY (w/o Rear Lower Spoiler)

(a) Put protective tape around the rear bumper assembly.

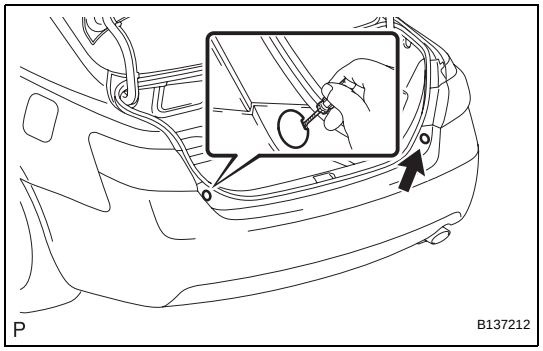

P B137212

(b) Using a screwdriver, open the 2 rear bumper plates.
HINT:
Tape the screwdriver tip before use.

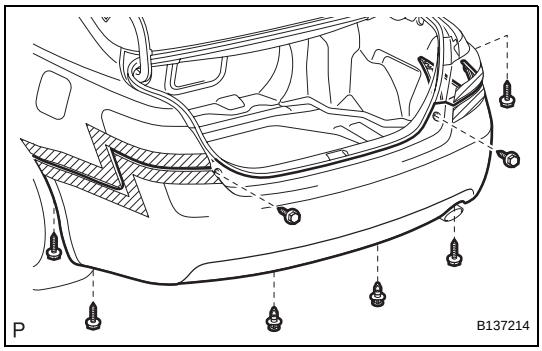

(c) Remove the 6 screws and 2 clips.

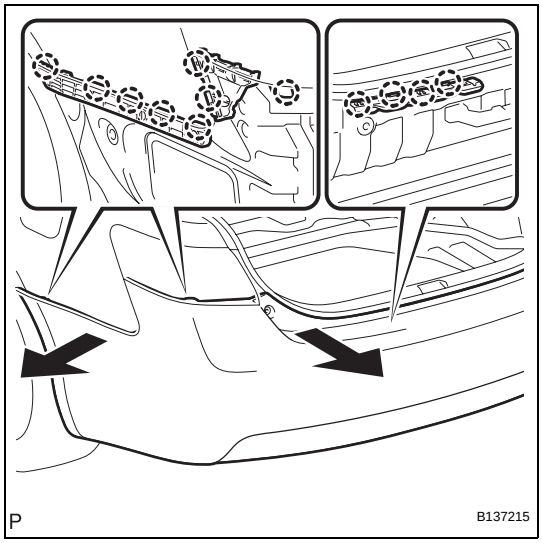

(d) Disengage the 12 claws and disconnect the rear bumper assembly as shown in the illustration.
HINT:
Use the same procedures for the RH side and LH side.

(e) Remove the rear bumper assembly.

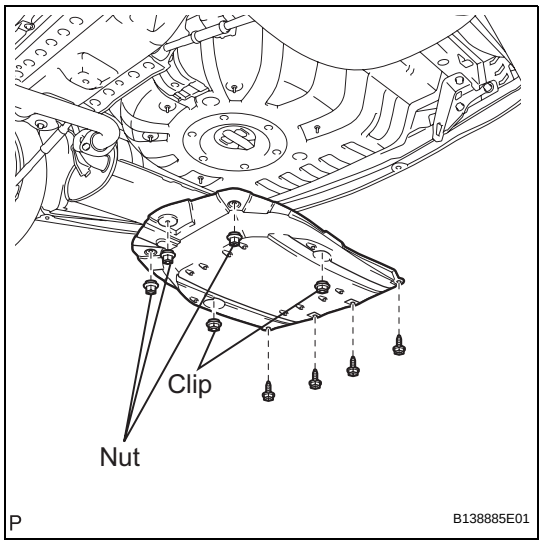

2. REMOVE REAR FLOOR BOARD (w/ Rear Lower Spoiler)

(a) Remove the 4 screws, 2 clips, 3 nuts and rear floor board.

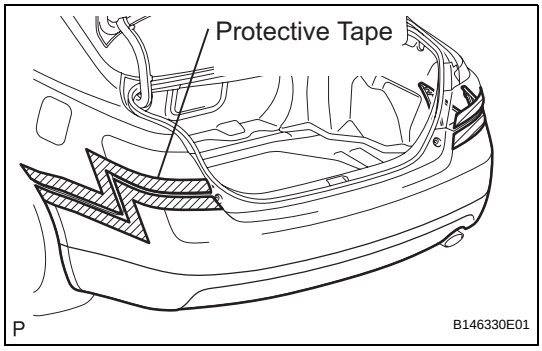

3. REMOVE REAR BUMPER ASSEMBLY (w/ Rear Lower Spoiler)

(a) Put protective tape around the rear bumper assembly.

ET

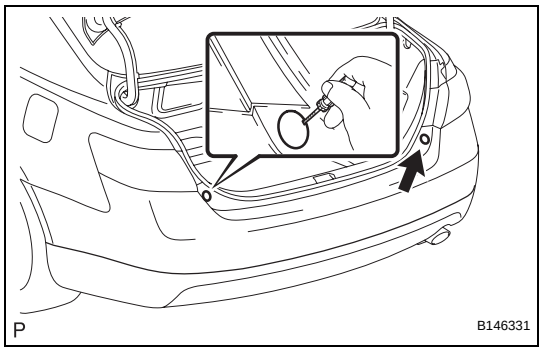

(b) Using a screwdriver, open the 2 rear bumper plates.
HINT:
Tape the screwdriver tip before use.

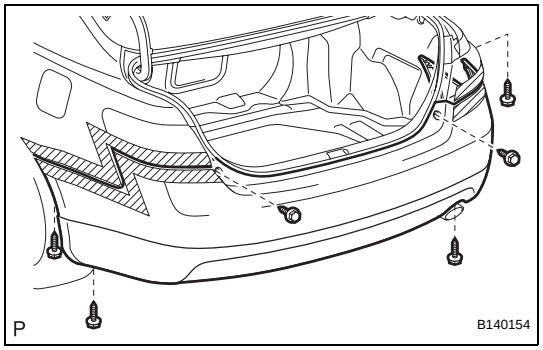

(c) Remove the 6 screws.

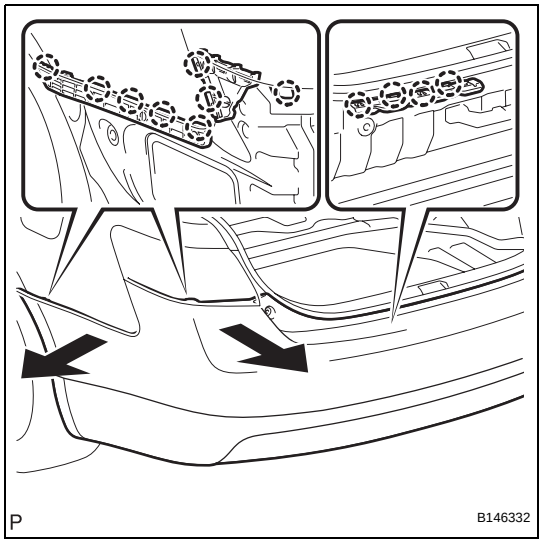

(d) Disengage the 12 claws and disconnect the rear bumper assembly as shown in the illustration.
HINT:
Use the same procedures for the RH side and LH side.

(e) Remove the rear bumper assembly.

DISASSEMBLY

1. REMOVE REAR LOWER SPOILER (w/ Rear Lower Spoiler)

(a) Remove the 2 screws, 4 nuts and 16 clips.

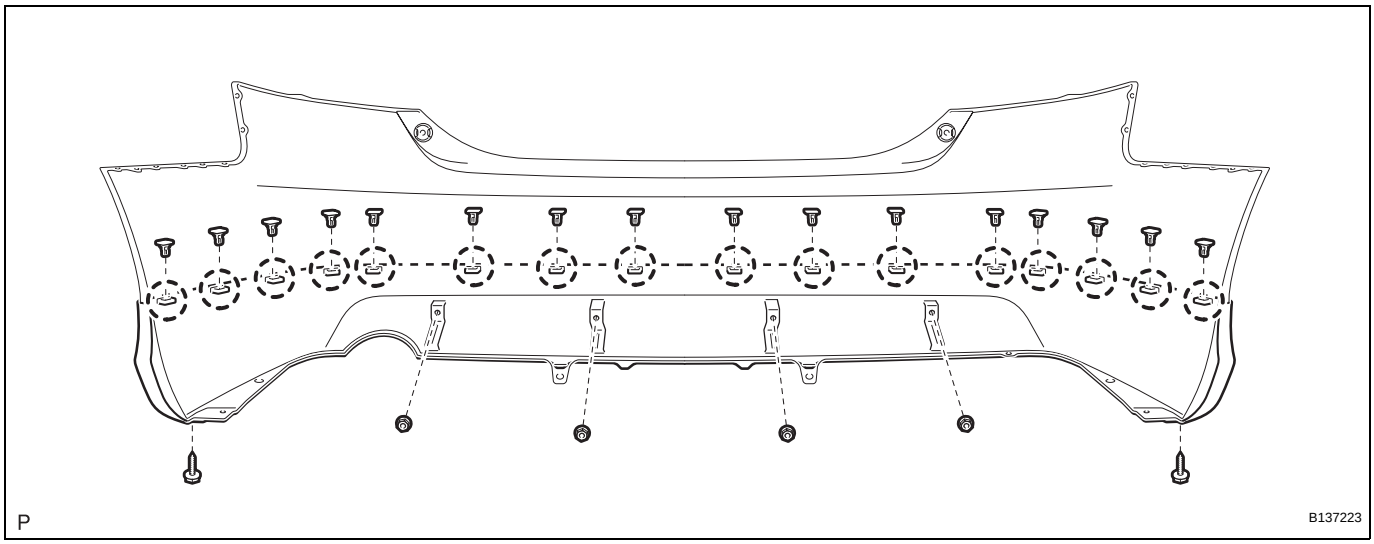

(b) Disengage the 16 claws and remove the rear lower spoiler.

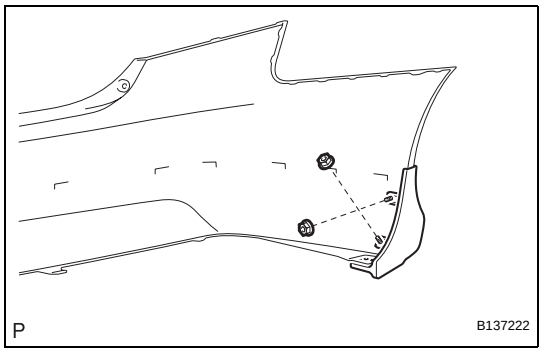

2. REMOVE REAR BUMPER EXTENSION LH (w/ Rear Lower Spoiler)

(a) Remove the 2 nuts and rear bumper extension LH.

3. REMOVE REAR BUMPER EXTENSION RH (w/ Rear Lower Spoiler)

4. REMOVE REAR BUMPER PLATE LH

5. REMOVE REAR BUMPER PLATE RH

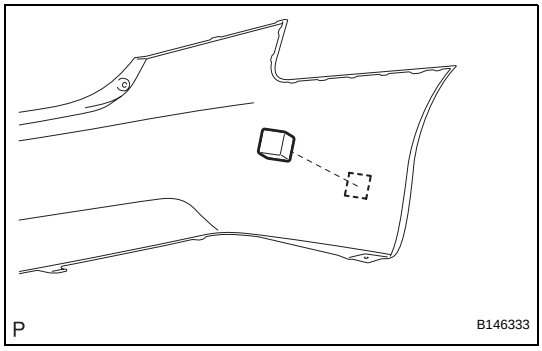

6. REMOVE REAR BUMPER PAD

(a) Remove the rear bumper pad.

HINT:

Use the same procedures for the RH side and LH side.

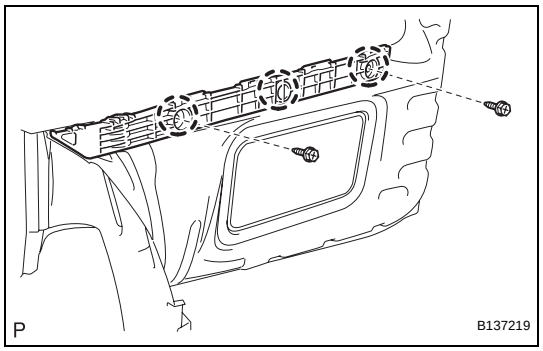

7. REMOVE REAR BUMPER SIDE SUPPORT LH
(a) Remove the 2 screws.
(b) Disengage the 3 claws and remove the rear bumper side support LH.

8. REMOVE REAR BUMPER SIDE SUPPORT RH

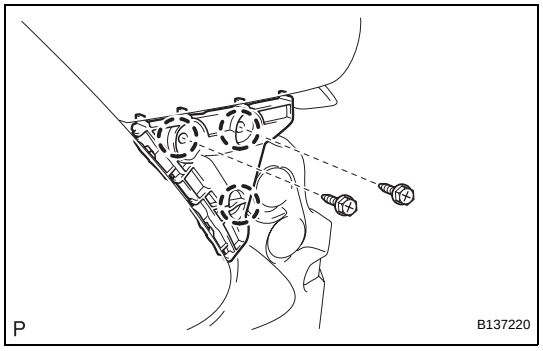

9. REMOVE REAR BUMPER SIDE RETAINER LH
(a) Remove the 2 screws.
(b) Disengage the 3 claws and remove the rear bumper side retainer LH.

10. REMOVE REAR BUMPER SIDE RETAINER RH

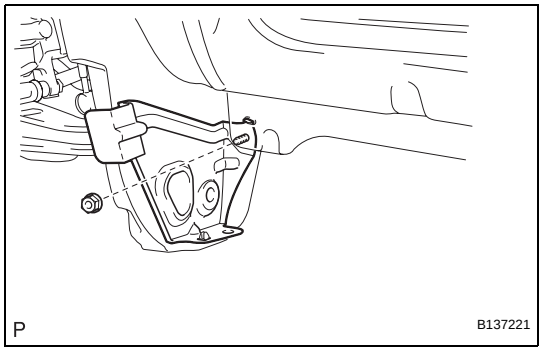

11. REMOVE WHEEL HOUSE REINFORCEMENT LH
(a) Remove the nut and wheel house reinforcement LH.

12. REMOVE WHEEL HOUSE REINFORCEMENT RH

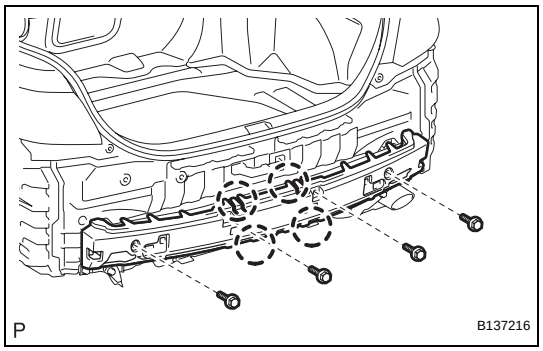

13. REMOVE REAR BUMPER ENERGY ABSORBER
(a) Remove the 4 bolts.
(b) Disengage the 4 claws and remove the rear bumper energy absorber.

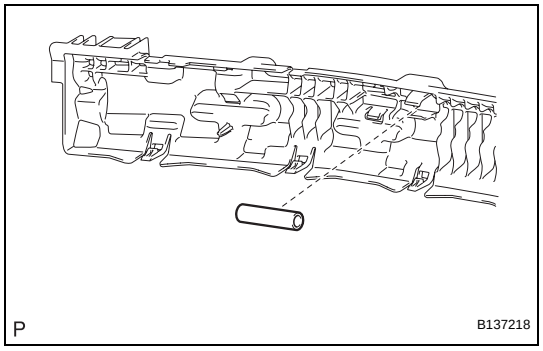

14. REMOVE REAR BUMPER BAR
(a) Remove the rear bumper bar from the rear bumper energy absorber.

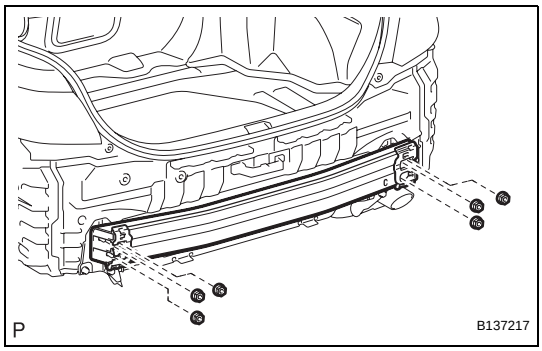

15. REMOVE REAR BUMPER REINFORCEMENT SUB-ASSEMBLY

(a) Remove the 6 nuts and rear bumper reinforcement sub-assembly.

REASSEMBLY

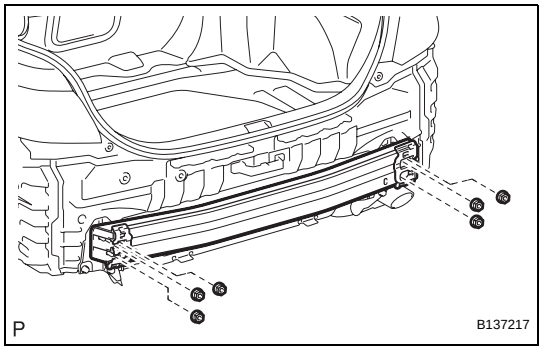

1. INSTALL REAR BUMPER REINFORCEMENT SUB-ASSEMBLY

(a) Install the rear bumper reinforcement sub-assembly with the 6 nuts.
Torque: 68 N*m (693 kgf*cm, 50 ft.*lbf)

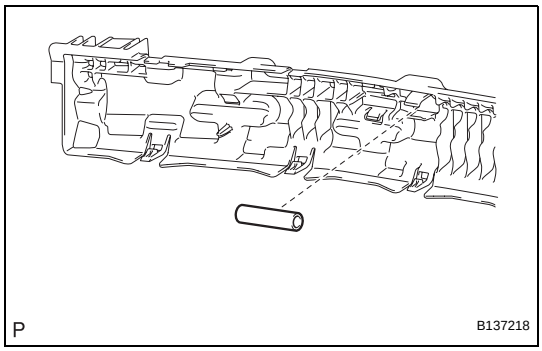

2. INSTALL REAR BUMPER BAR

(a) Install the rear bumper bar on the rear bumper energy absorber.

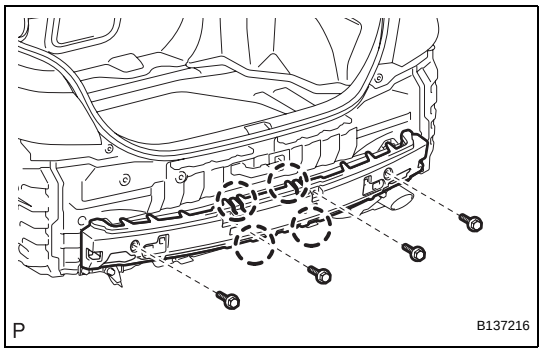

3. INSTALL REAR BUMPER ENERGY ABSORBER

(a) Engage the 4 claws and install the rear bumper energy absorber.
(b) Install the 4 bolts.

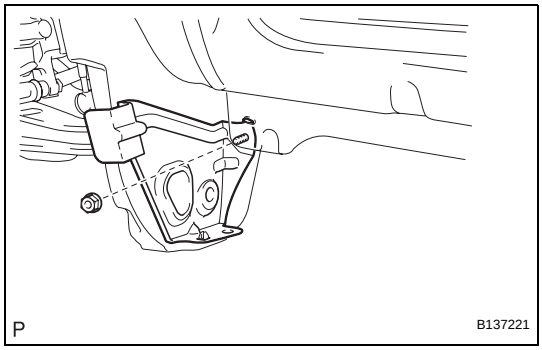

4. INSTALL WHEEL HOUSE REINFORCEMENT LH

(a) Install the wheel house reinforcement LH with the nut.

5. INSTALL WHEEL HOUSE REINFORCEMENT RH

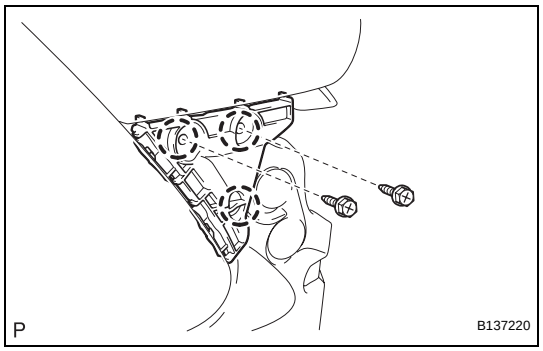

6. INSTALL REAR BUMPER SIDE RETAINER LH
(a) Engage the 3 claws and install the rear bumper side retainer LH.
(b) Install the 2 screws.

7. INSTALL REAR BUMPER SIDE RETAINER RH

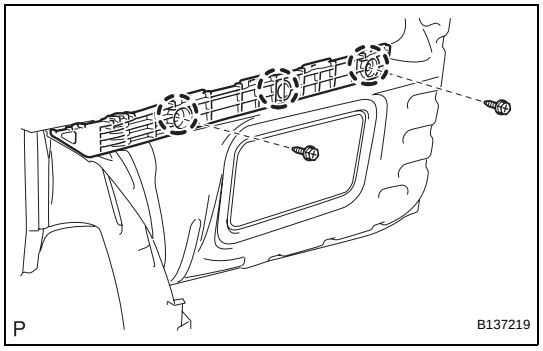

8. INSTALL REAR BUMPER SIDE SUPPORT LH
(a) Engage the 3 claws and install the rear bumper side support LH.
(b) Install the 2 screws.

9. INSTALL REAR BUMPER SIDE SUPPORT RH

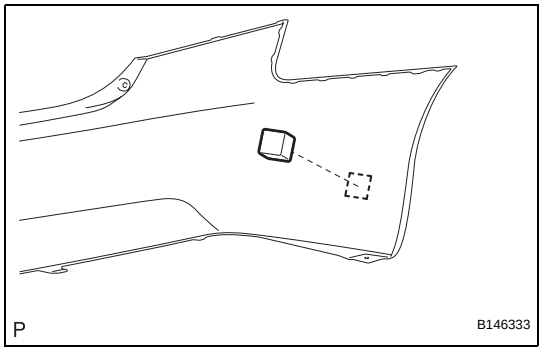

10. INSTALL REAR BUMPER PAD
(a) Apply new double-sided tape to the rear bumper pad.
(b) Remove the release paper from the rear bumper pad.
(c) Install the rear bumper pad.
HINT:
Use the same procedures for the RH side and LH side.

11. INSTALL REAR BUMPER PLATE LH

12. INSTALL REAR BUMPER PLATE RH

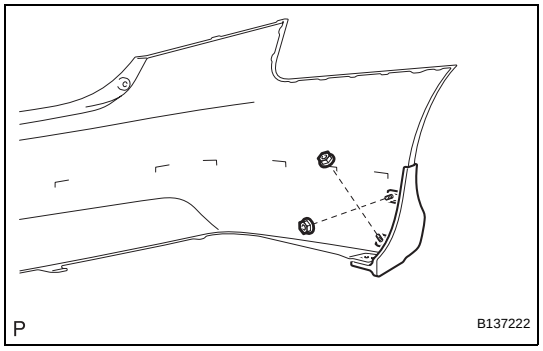

13. INSTALL REAR BUMPER EXTENSION LH (w/ Rear Lower Spoiler)
(a) Install the rear bumper extension LH with the 2 nuts.

14. INSTALL REAR BUMPER EXTENSION RH (w/ Rear Lower Spoiler)

15. INSTALL REAR LOWER SPOILER (w/ Rear Lower Spoiler)

(a) Engage the 16 claws and install the rear lower spoiler.

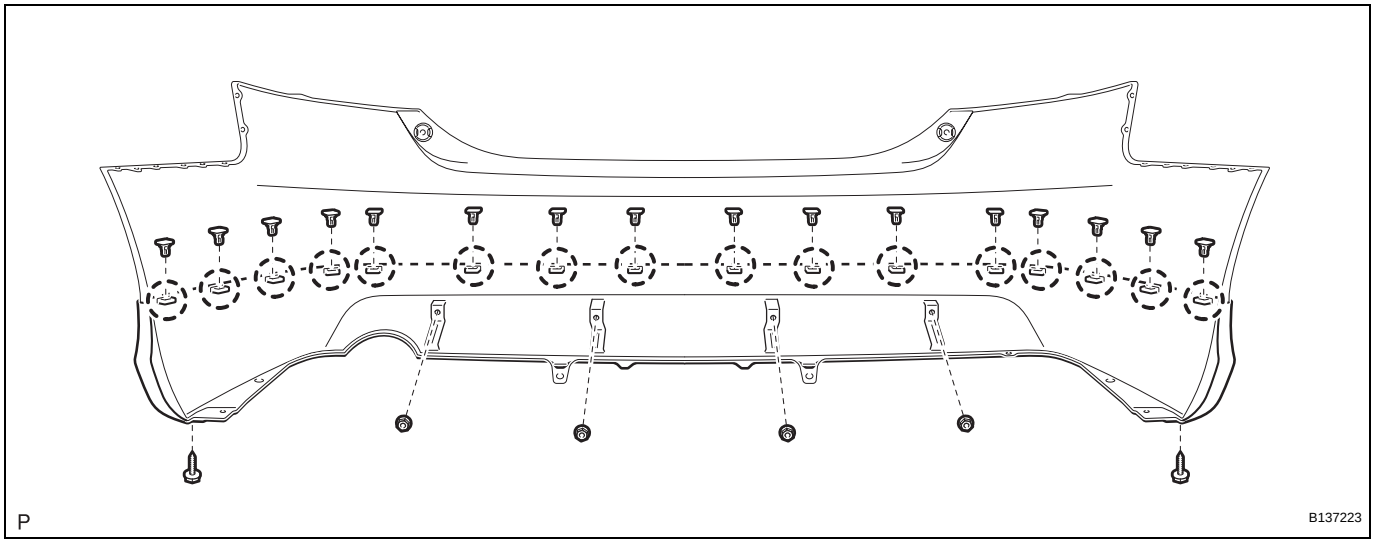

(b) Install the 16 clips, 4 nuts and 2 screws.

INSTALLATION

1. INSTALL REAR BUMPER ASSEMBLY (w/o Rear Lower Spoiler)

(a) Engage each claw.

(b) Install the rear bumper assembly with the 6 screws and 2 clips.

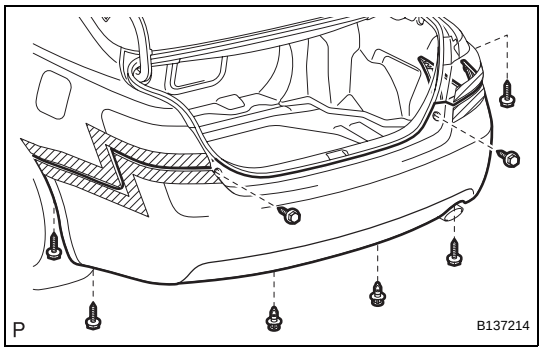

(c) Install the 2 rear bumper plates.

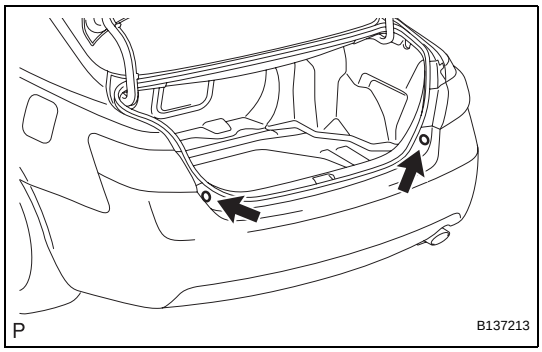

2. INSTALL REAR BUMPER ASSEMBLY (w/ Rear Lower Spoiler)

(a) Engage each claw.

(b) Install the rear bumper assembly with the 6 screws.

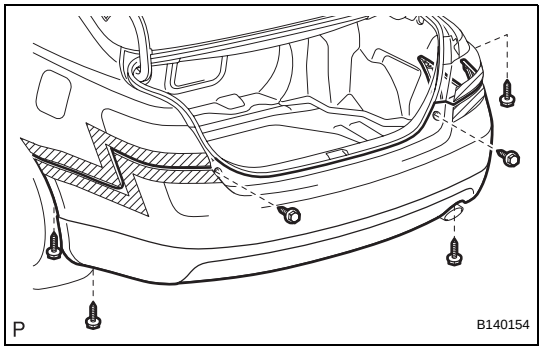

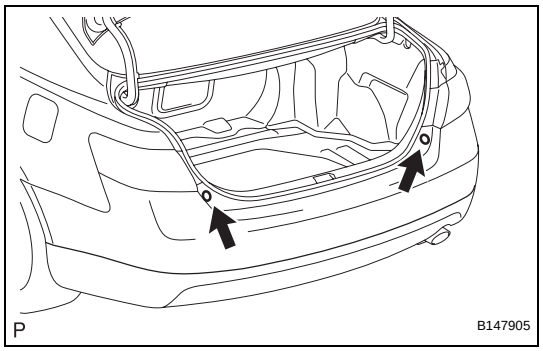

(c) Install the 2 rear bumper plates.

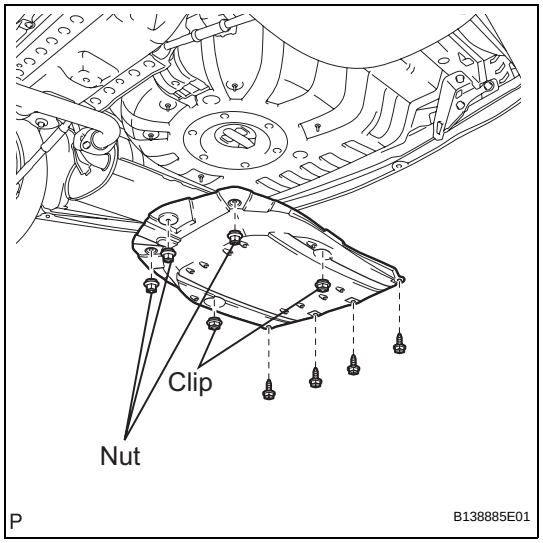

3. INSTALL REAR FLOOR BOARD (w/ Rear Lower Spoiler)

(a) Install the rear floor board with the 3 nuts, 2 clips and 4 screws.

NAME PLATE

COMPONENTS

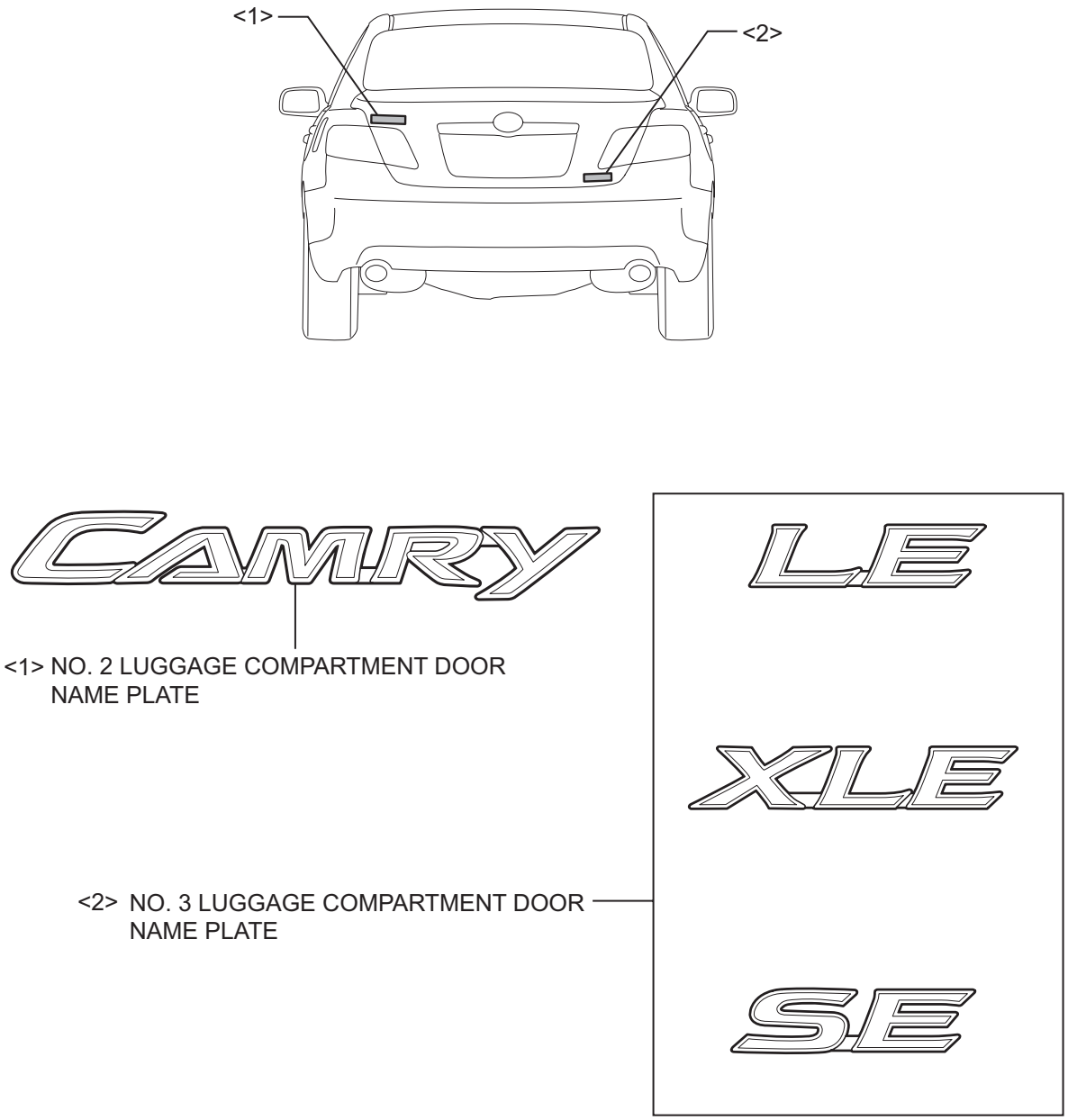

P

B137020E01

REMOVAL

HINT:
When removing the name plate, heat the vehicle body and name plate using a heat light.

Heating temperature

Item	Temperature
Vehicle Body	**40 to 60°C (104 to 140°F)**
Name Plate	**20 to 30°C (68 to 86°F)**

NOTICE:
Do not heat the vehicle body and name plate excessively.

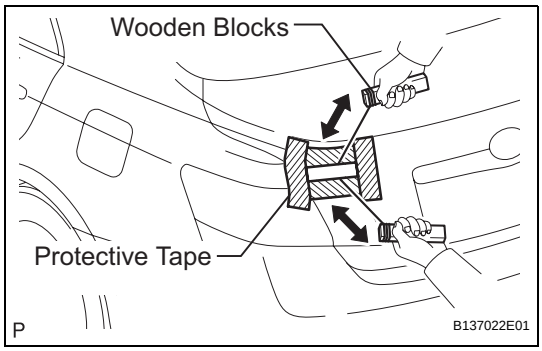

1. **REMOVE NO. 2 LUGGAGE COMPARTMENT DOOR NAME PLATE**
   (a) Put protective tape around the name plate.
   (b) Insert a piano wire between the vehicle body and name plate.
   (c) Tie objects that can serve as handles (for example, wooden blocks) to both wire ends.
   (d) Pull the piano wire and scrape off the double-sided tape that holds the name plate to the vehicle body.
   NOTICE:
   - **If reusing the name plate, take care not to damage the name plate.**
   - **Be careful not to damage the vehicle body.**

   (e) Remove the name plate.

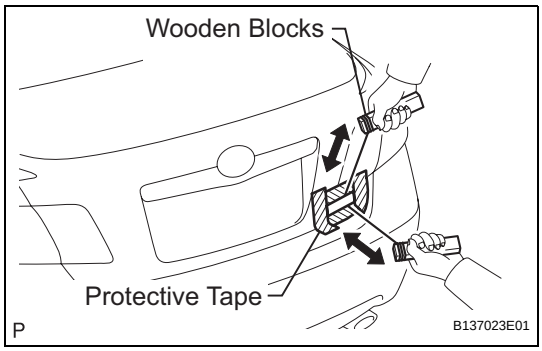

2. **REMOVE NO. 3 LUGGAGE COMPARTMENT DOOR NAME PLATE**
   (a) Put protective tape around the name plate.
   (b) Insert a piano wire between the vehicle body and name plate.
   (c) Tie objects that can serve as handles (for example, wooden blocks) to both wire ends.
   (d) Pull the piano wire and scrape off the double-sided tape that holds the name plate to the vehicle body.
   NOTICE:
   - **If reusing the name plate, take care not to damage the name plate.**
   - **Be careful not to damage the vehicle body.**

   (e) Remove the name plate.

INSTALLATION

HINT:
When installing the name plate, heat the vehicle body and name plate using a heat light.

Heating temperature

Item	Temperature
Vehicle Body	**40 to 60°C (104 to 140°F)**
Name Plate	**20 to 30°C (68 to 86°F)**

NOTICE:
Do not heat the vehicle body and name plate excessively.

1. INSTALL NO. 2 LUGGAGE COMPARTMENT DOOR NAME PLATE

(a) Clean the vehicle body surface.
  (1) Using a heat light, heat the vehicle body surface.
  (2) Remove the double-sided tape from the vehicle body.
  (3) Wipe off any tape adhesive residue with cleaner.

(b) Clean the name plate. (If reusing the name plate)
  (1) Using a heat light, heat the name plate.
  (2) Remove the double-sided tape from the name plate.
  (3) Wipe off any tape adhesive residue with cleaner.
  (4) Apply new double-sided tape to the name plate.

(c) Install the name plate.

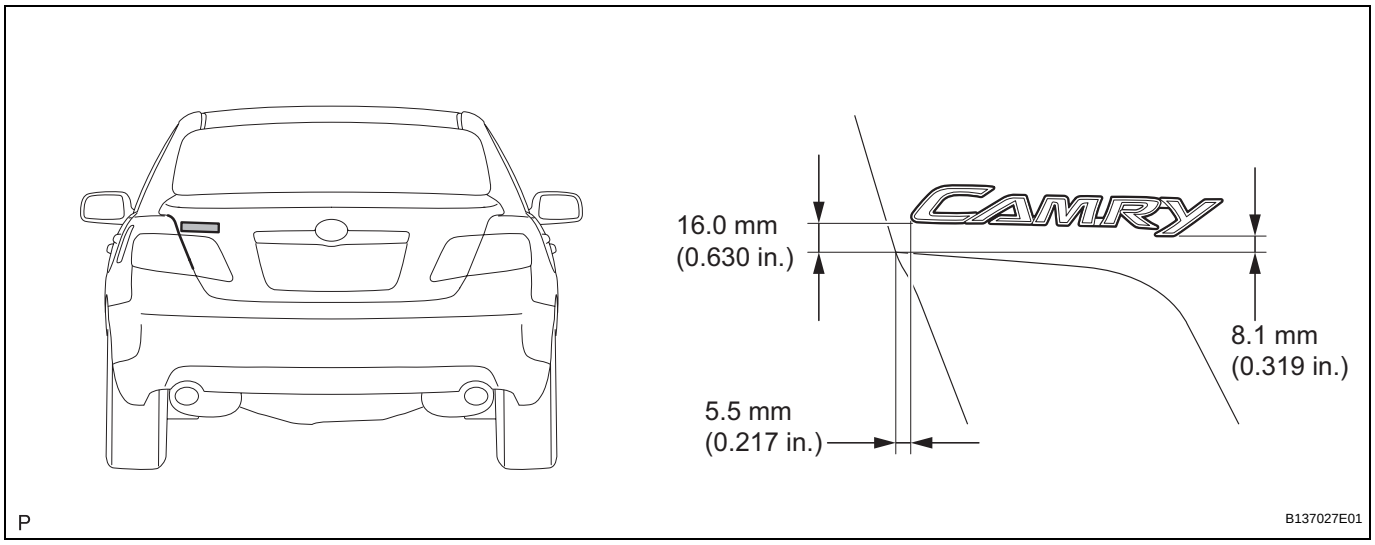

  (1) Using a heat light, heat the vehicle body and name plate.
  (2) Remove the release paper from the name plate.
  HINT:
  After removing the release paper, keep the exposed adhesive free from foreign matter.
  (3) Install the name plate.

ET

2. INSTALL NO. 3 LUGGAGE COMPARTMENT DOOR NAME PLATE

(a) Clean the vehicle body surface.
  (1) Using a heat light, heat the vehicle body surface.
  (2) Remove the double-sided tape from the vehicle body.
  (3) Wipe off any tape adhesive residue with cleaner.

(b) Clean the name plate. (If reusing the name plate)
  (1) Using a heat light, heat the name plate.
  (2) Remove the double-sided tape from the name plate.
  (3) Wipe off any tape adhesive residue with cleaner.
  (4) Apply new double-sided tape to the name plate.

(c) Install the name plate.
  (1) Using a heat light, heat the vehicle body and name plate.
  (2) Remove the release paper from the name plate.
  HINT:
  After removing the release paper, keep the exposed adhesive free from foreign matter.
  (3) Install the name plate.
  For name plate LE:

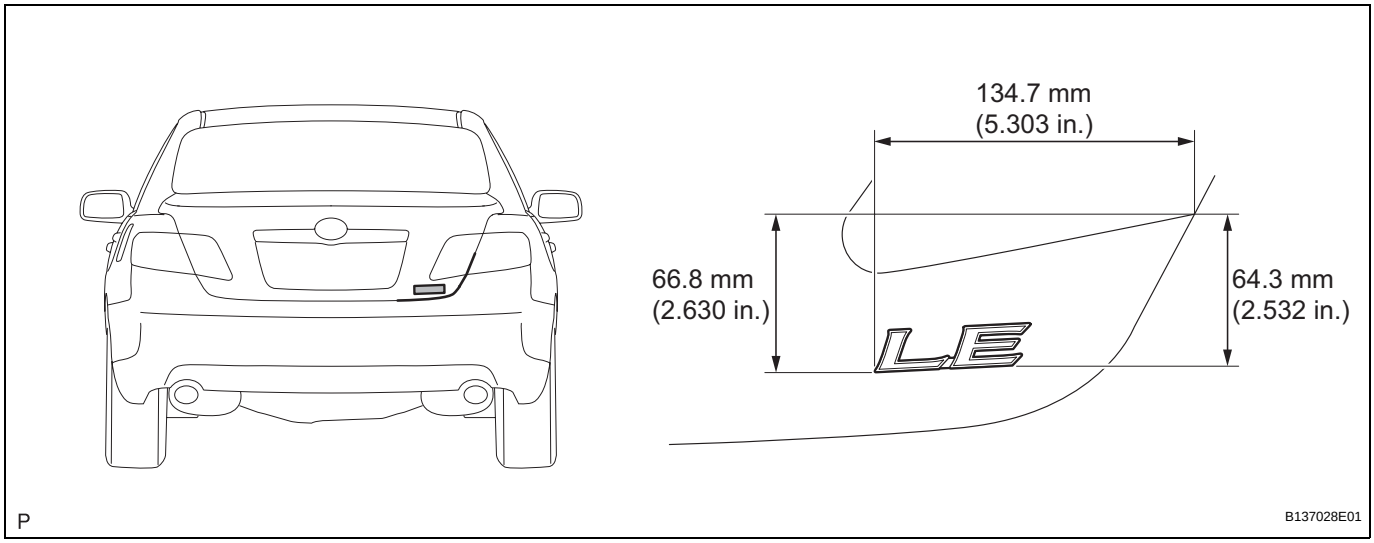

For name plate XLE:

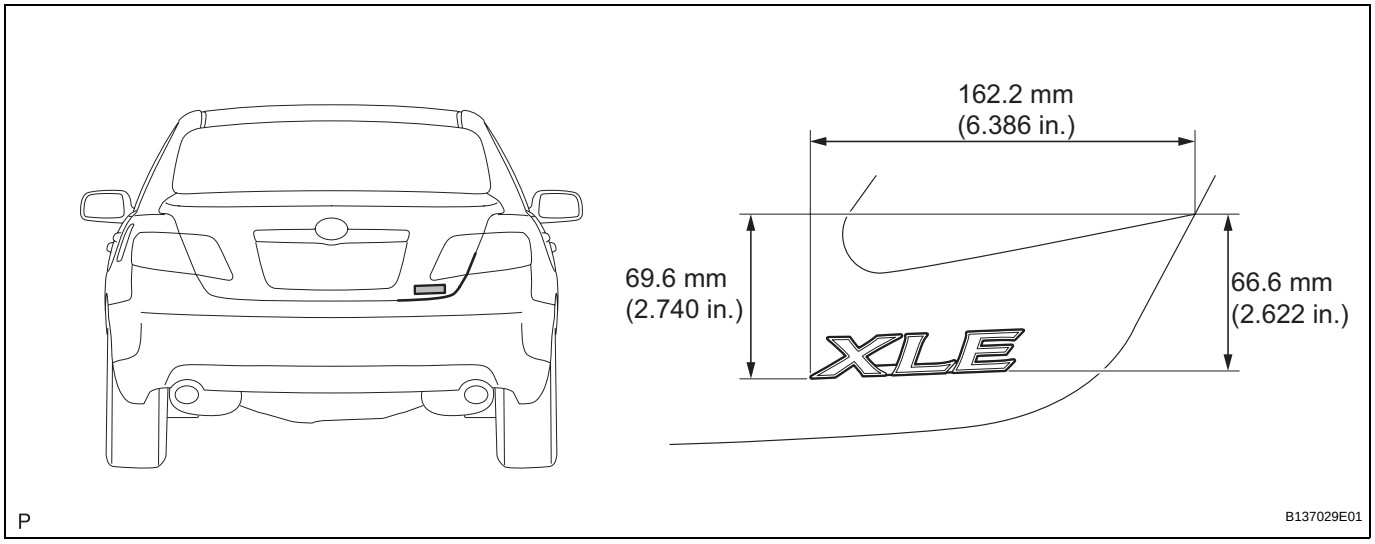

For name plate SE:

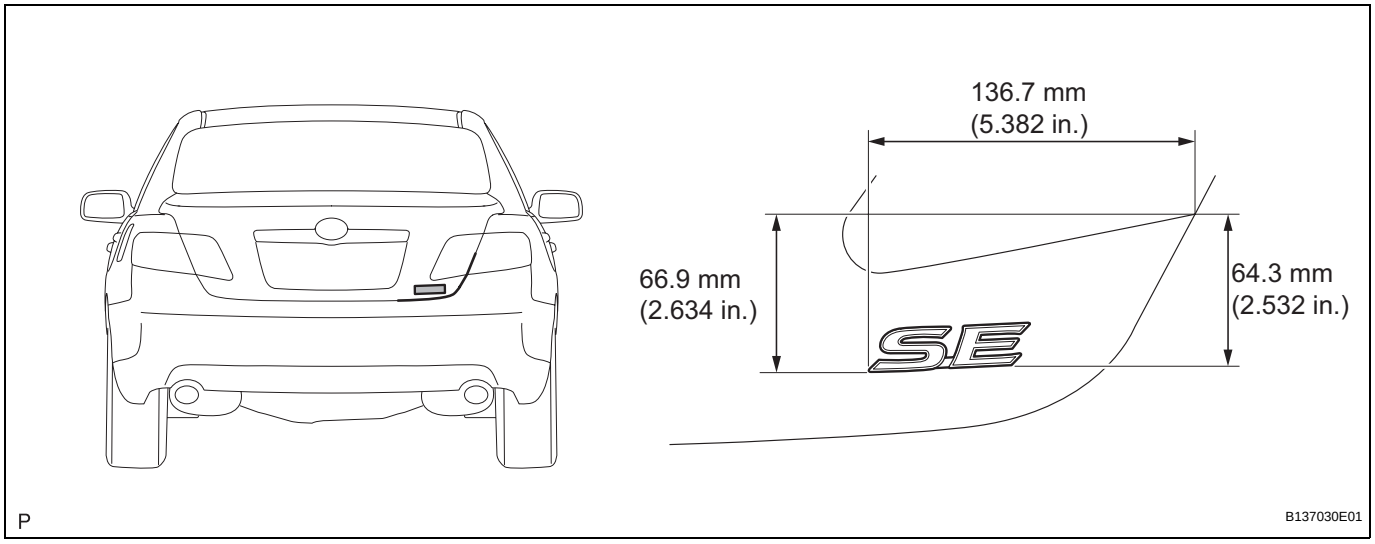

REAR SPOILER

COMPONENTS

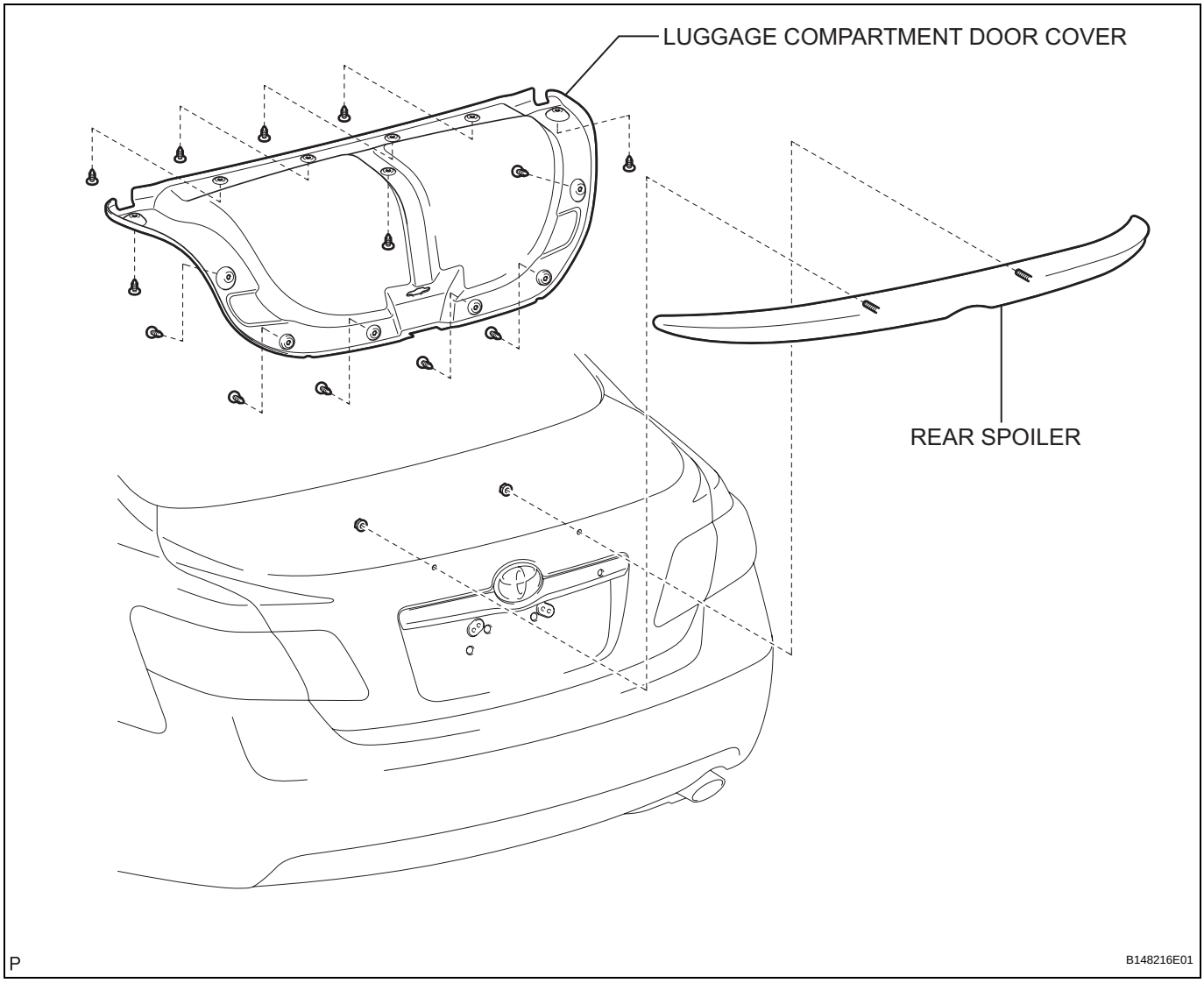

REMOVAL

1. REMOVE LUGGAGE COMPARTMENT DOOR COVER (See page ET-61)

2. REMOVE REAR SPOILER

HINT:
When removing the rear spoiler, heat the vehicle body and rear spoiler using a heat light.

Heating temperature

Item	Temperature
Vehicle Body	**40 to 60°C (104 to 140°F)**
Spoiler	**20 to 30°C (68 to 86°F)**

NOTICE:
Do not heat the vehicle body and spoiler excessively.

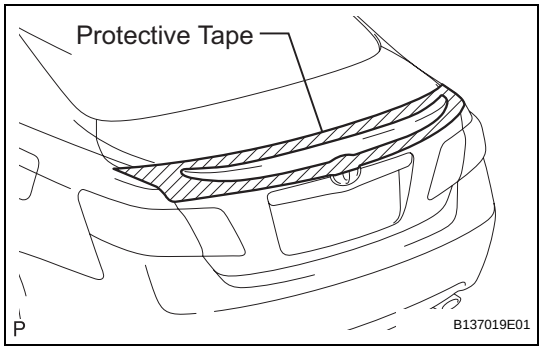

(a) Put protective tape around the rear spoiler.

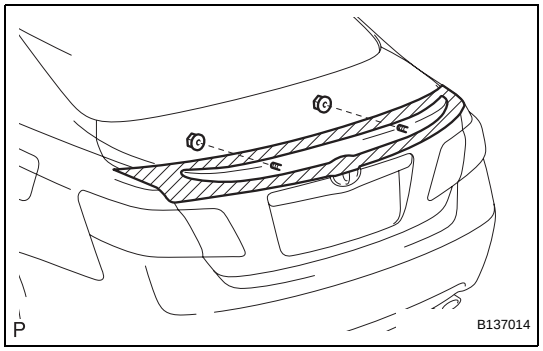

(b) Remove the 2 nuts.

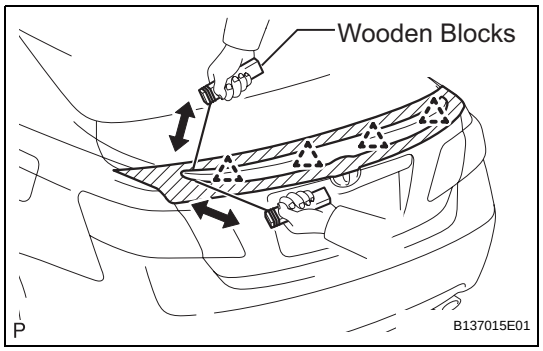

(c) Insert a piano wire between the vehicle body and rear spoiler.

(d) Tie objects that can serve as handles (for example, wooden blocks) to both wire ends.

(e) Pull the piano wire and scrape off the double-sided tape that holds the spoiler to the vehicle body.

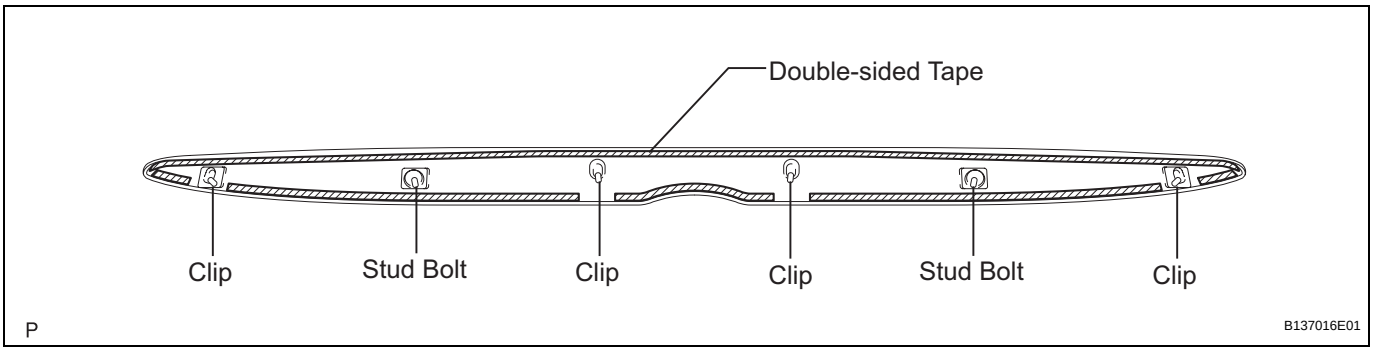

NOTICE:

- **If reusing the spoiler, take care not to damage the spoiler.**
- **Be careful not to damage the vehicle body.**

(f) Disengage the 4 clips and remove the rear spoiler.

INSTALLATION

1. INSTALL REAR SPOILER

HINT:
When installing the spoiler, heat the vehicle body and spoiler using a heat light.

Heating temperature

Item	Temperature
Vehicle Body	**40 to 60°C (104 to 140°F)**
Spoiler	**20 to 30°C (68 to 86°F)**

NOTICE:
Do not heat the vehicle body and rear spoiler excessively.

(a) Clean the vehicle body surface.
  (1) Using a heat light, heat the vehicle body surface.
  (2) Remove the double-sided tape from the vehicle body.
  (3) Wipe off any tape adhesive residue with cleaner.

(b) Clean the rear spoiler. (If reusing the rear spoiler)
  (1) Using a heat light, heat the rear spoiler.
  (2) Remove the double-sided tape from the rear spoiler.
  (3) Wipe off any tape adhesive residue with cleaner.
  (4) Apply new double-sided tape to the rear spoiler.

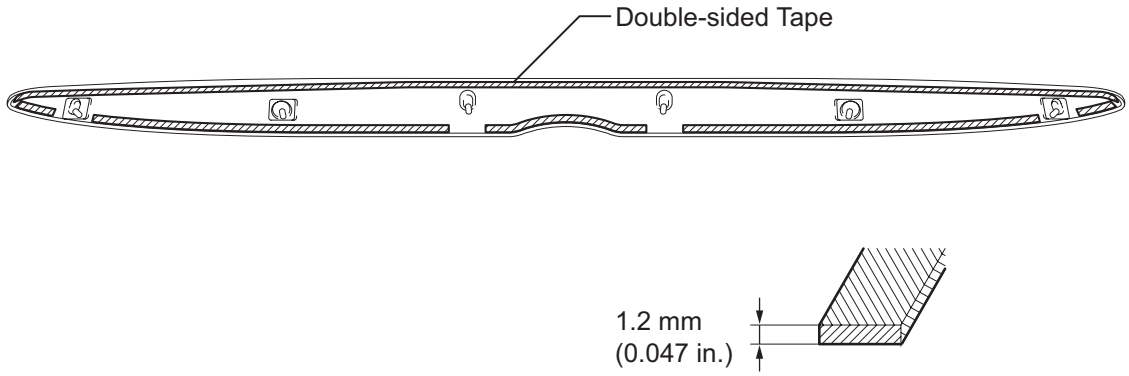

P
B137017E01

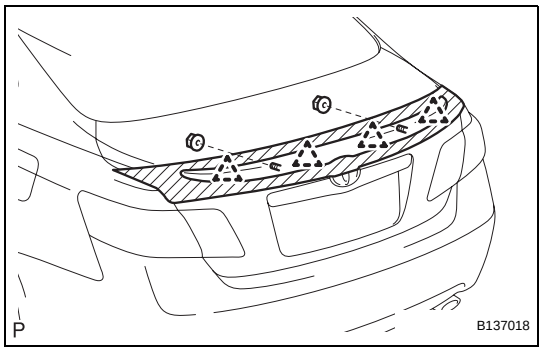

(c) Install the rear spoiler.
  (1) Using a heat light, heat the vehicle body and rear spoiler.
  (2) Remove the release paper from the rear spoiler.
  HINT:
  After removing the release paper, keep the exposed adhesive free from foreign matter.
  (3) Engage the 4 clips and install the rear spoiler with the 2 nuts.

2. INSTALL LUGGAGE COMPARTMENT DOOR COVER (See page ET-64)

FRONT DOOR BELT MOULDING

COMPONENTS

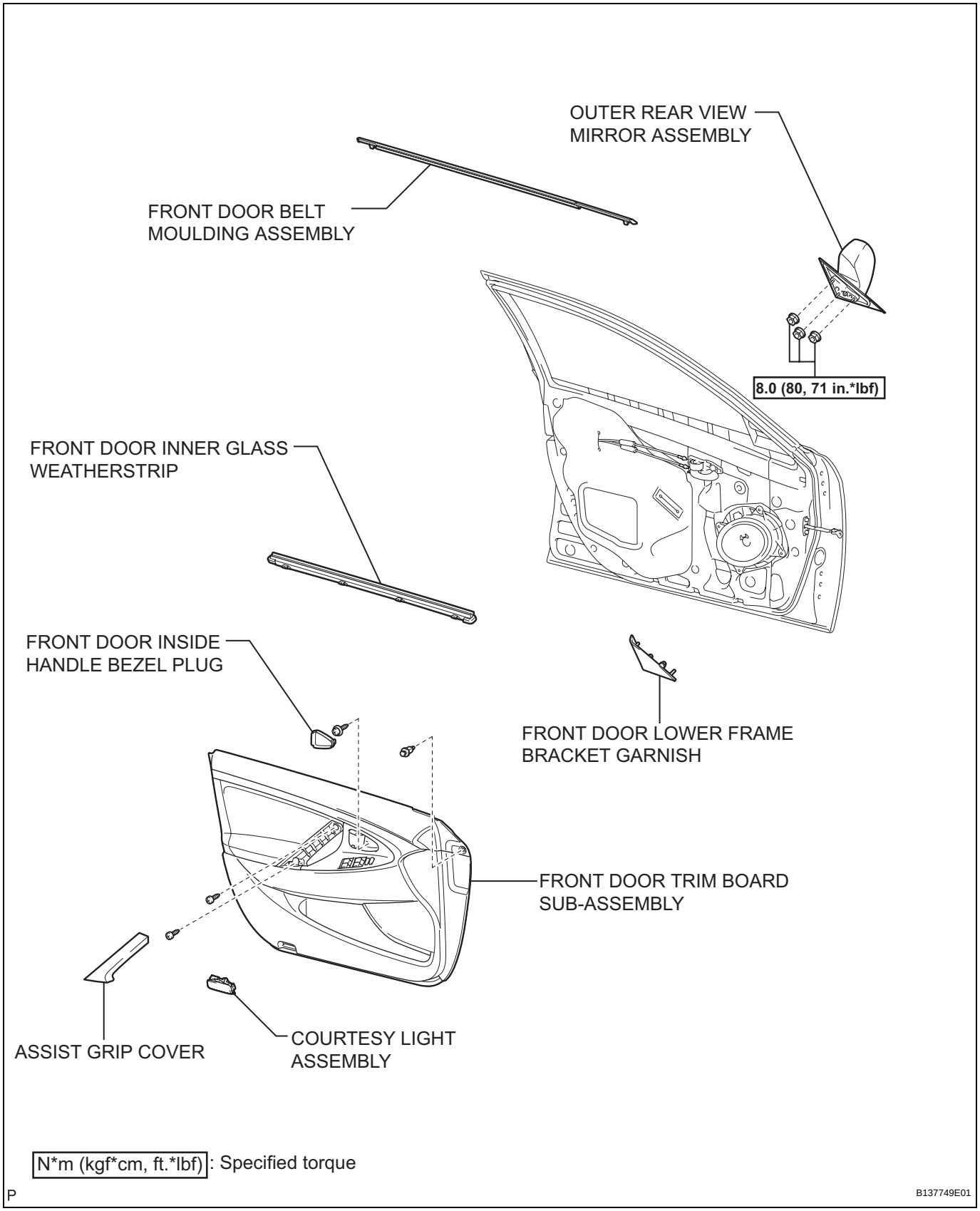

ET

REMOVAL

1. **REMOVE FRONT DOOR LOWER FRAME BRACKET GARNISH (See page ED-14)**
2. **REMOVE FRONT DOOR INSIDE HANDLE BEZEL PLUG (See page ED-14)**
3. **REMOVE ASSIST GRIP COVER (See page ED-15)**
4. **REMOVE COURTESY LIGHT ASSEMBLY (See page ED-15)**
5. **REMOVE FRONT DOOR TRIM BOARD SUB-ASSEMBLY (See page ED-15)**
6. **REMOVE FRONT DOOR INNER GLASS WEATHERSTRIP (See page ED-16)**
7. **REMOVE OUTER REAR VIEW MIRROR ASSEMBLY (See page MI-15)**
8. **REMOVE FRONT DOOR BELT MOULDING ASSEMBLY**
   (a) Fully open the front door glass.
   (b) Put protective tape around the front door belt moulding assembly.

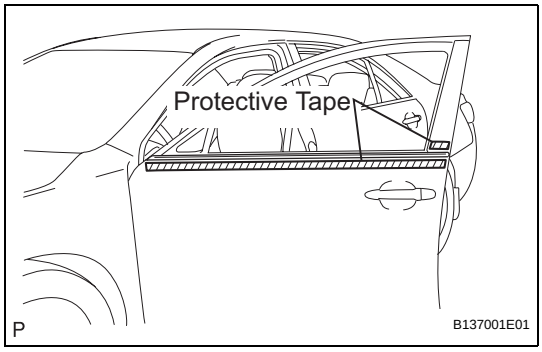

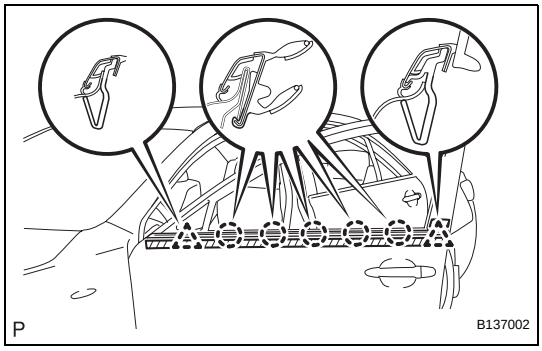

   (c) Using a moulding remover, disengage the 2 clips and 5 claws, and remove the front door belt moulding assembly.
   HINT:
   Tape the remover tip before use.
   NOTICE:
   Be careful when removing the moulding as there are claws attached to the front and rear ends of the moulding.

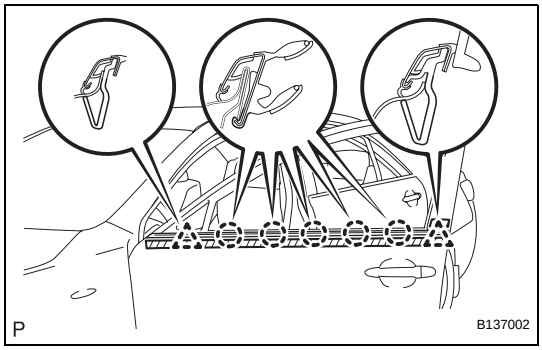

INSTALLATION

1. **INSTALL FRONT DOOR BELT MOULDING ASSEMBLY**
   (a) Engage the 2 clips and 5 claws, and install the front door belt moulding assembly.
2. **INSTALL OUTER REAR VIEW MIRROR ASSEMBLY (See page MI-17)**
3. **INSTALL FRONT DOOR INNER GLASS WEATHERSTRIP (See page ED-32)**
4. **INSTALL FRONT DOOR TRIM BOARD SUB-ASSEMBLY (See page ED-33)**
5. **INSTALL COURTESY LIGHT ASSEMBLY (See page ED-34)**

6. **INSTALL ASSIST GRIP COVER (See page ED-34)**
7. **INSTALL FRONT DOOR INSIDE HANDLE BEZEL PLUG (See page ED-34)**
8. **INSTALL FRONT DOOR LOWER FRAME BRACKET GARNISH (See page ED-34)**

REAR DOOR BELT MOULDING

COMPONENTS

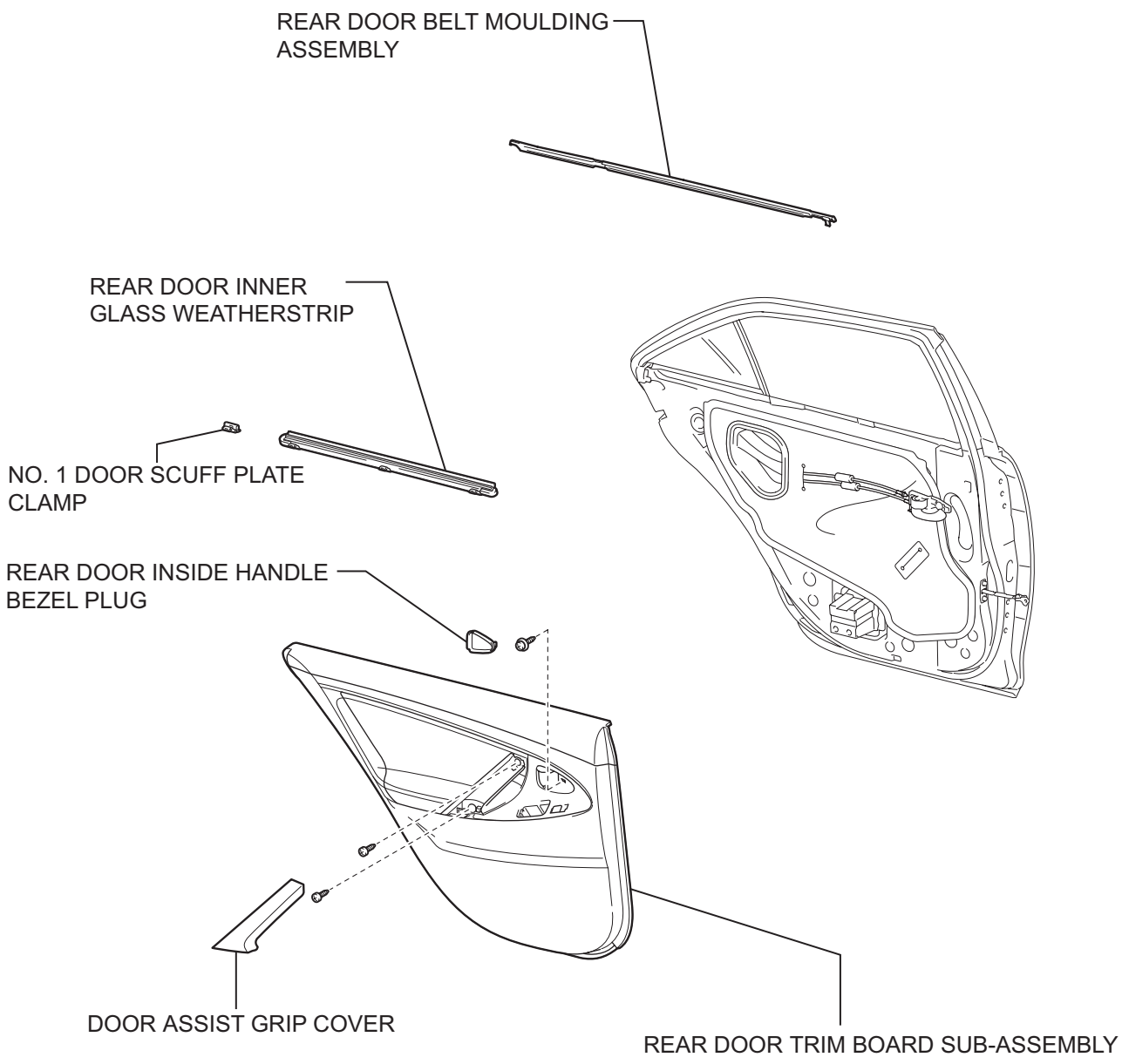

P

B137751E01

REMOVAL

1. **REMOVE REAR DOOR INSIDE HANDLE BEZEL PLUG (See page ED-38)**
2. **REMOVE DOOR ASSIST GRIP COVER (See page ED-38)**
3. **REMOVE REAR DOOR TRIM BOARD SUB-ASSEMBLY (See page ED-39)**
4. **REMOVE REAR DOOR INNER GLASS WEATHERSTRIP (See page ED-40)**
5. **REMOVE REAR DOOR BELT MOULDING ASSEMBLY**
   (a) Fully open the rear door glass.
   (b) Put protective tape around the rear door belt moulding assembly.

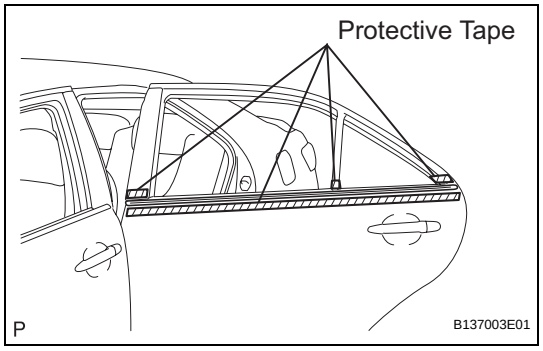

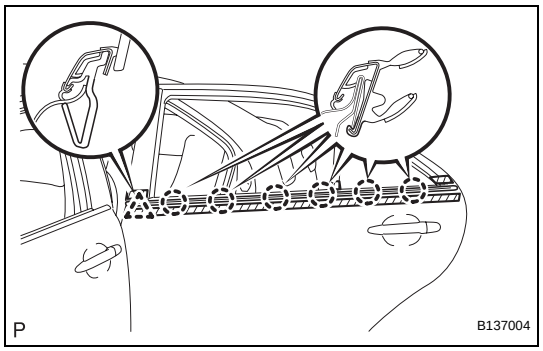

   (c) Using a moulding remover, disengage the clip and 6 claws, and remove the rear door belt moulding assembly.
   HINT:
   Tape the remover tip before use.
   NOTICE:
   Be careful when removing the moulding as there are claws attached to the front end of the moulding.

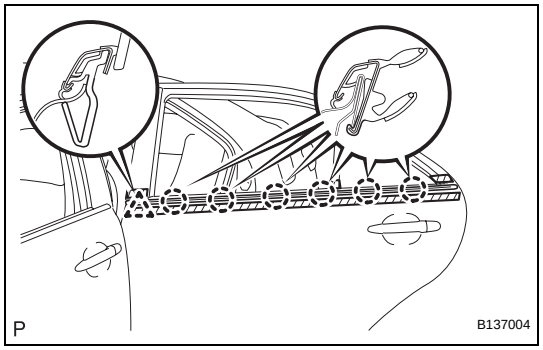

INSTALLATION

1. **INSTALL REAR DOOR BELT MOULDING ASSEMBLY**
   (a) Engage the clip and 6 claws, and install the rear door belt moulding assembly.
2. **INSTALL REAR DOOR INNER GLASS WEATHERSTRIP (See page ED-54)**
3. **INSTALL REAR DOOR TRIM BOARD SUB-ASSEMBLY (See page ED-55)**
4. **INSTALL DOOR ASSIST GRIP COVER (See page ED-56)**
5. **INSTALL REAR DOOR INSIDE HANDLE BEZEL PLUG (See page ED-56)**

ROOF DRIP SIDE FINISH MOULDING

COMPONENTS

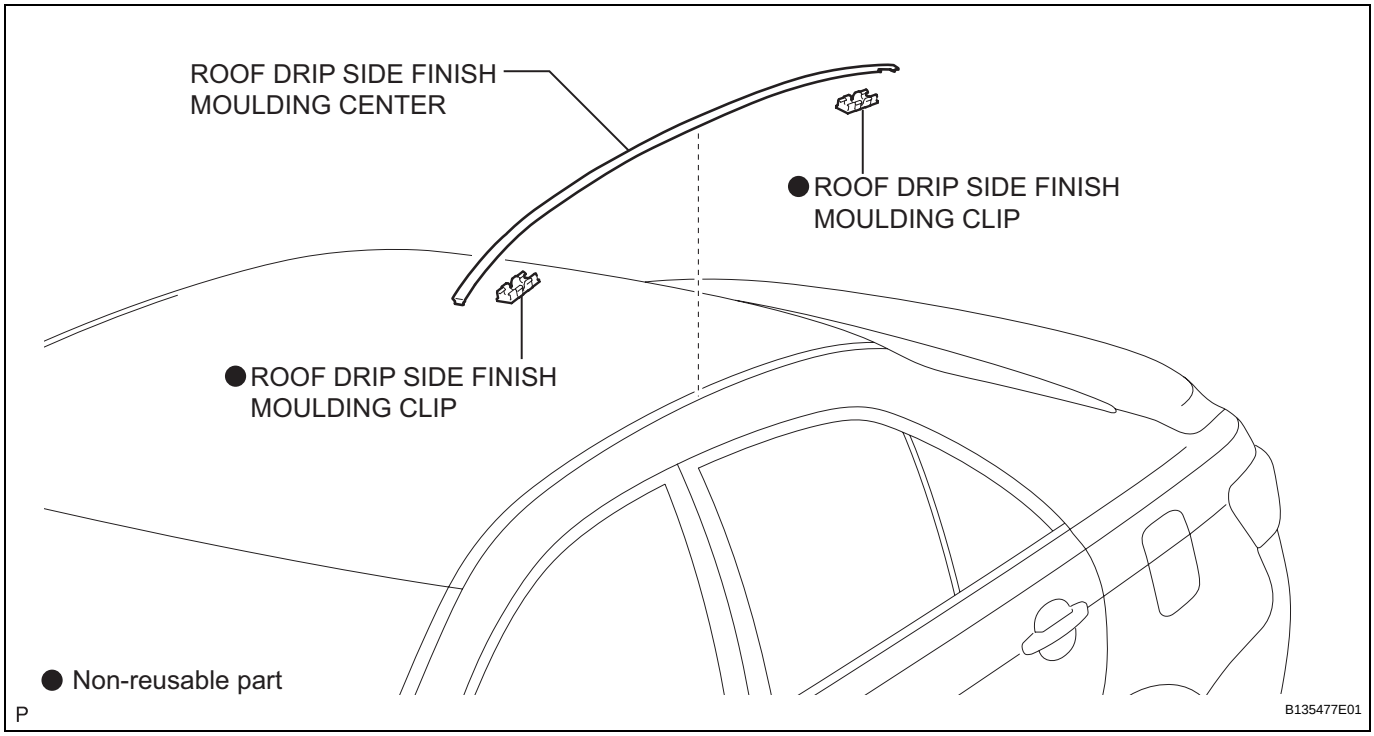

REMOVAL

1. REMOVE ROOF DRIP SIDE FINISH MOULDING CENTER

HINT:
When removing the roof drip side finish moulding center, heat the body and roof drip side finish moulding center using a heat light.

Heating temperature

Item	Temperature
Vehicle Body	**40 to 60°C (104 to 140°F)**
Moulding	**20 to 30°C (68 to 86°F)**

NOTICE:
Do not heat the vehicle body and moulding excessively.

(a) Put protective tape around the roof drip side finish moulding center.

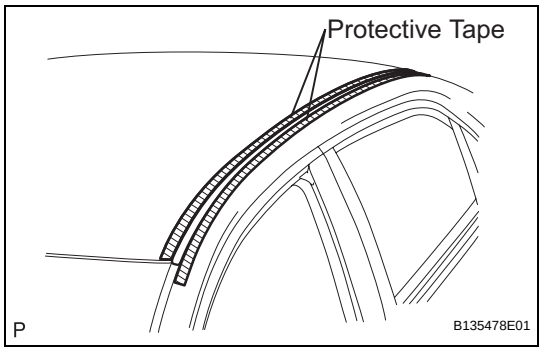

(b) Using a moulding remover, disengage the 2 clips and remove the roof drip side finish moulding center.

NOTICE:
- **Do not remove the clips.**
- **If the clips are damaged or dropped off, replace them with new ones.**

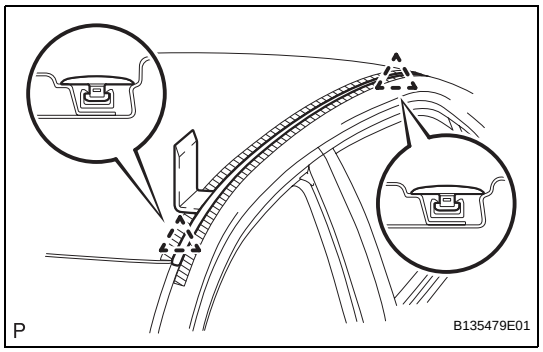

2. REMOVE ROOF DRIP SIDE FINISH MOULDING CLIP

HINT:
Perform the following procedure if replacing the roof drip side finish moulding clips.

(a) Remove the 2 roof drip side finish moulding clips.

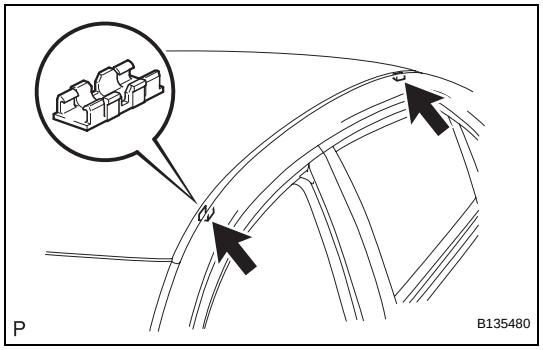

INSTALLATION

1. INSTALL ROOF DRIP SIDE FINISH MOULDING CLIP

NOTICE:

If installing new clips, remove the double-sided tape remaining where the clips will be installed on the body and clean the body with a non-residue type solvent.

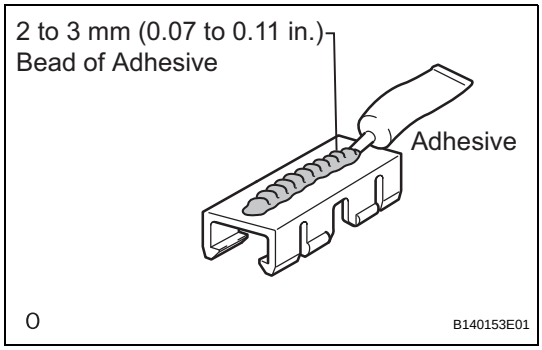

(a) Apply a 2 to 3 mm (0.07 to 0.11 in.) bead of adhesive (3M DP-105 or equivalent) to new roof drip side finish moulding clips.
HINT:
Adhesive strength (tensile strength): 13.7 MPa (140 kgf/cm^2) or more (when the temperature is 23°C)

(b) Install the roof drip side finish moulding clips to the positions on the roof panel shown in the illustration. Determine the locations and firmly press and install the roof drip side finish moulding clips after lightly rubbing up adhesive (3M DP-105 or equivalent).

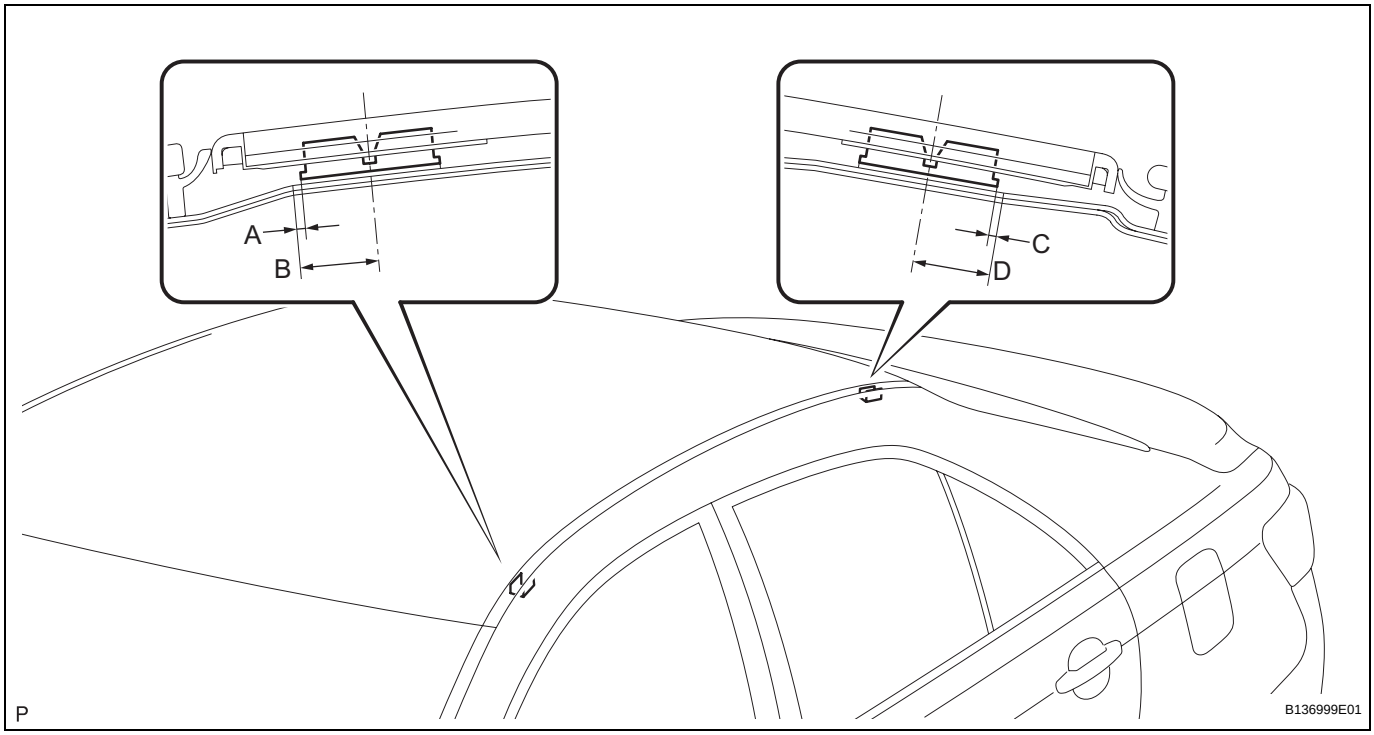

Standard dimension

Area	Dimension
A	1.4 mm (0.055 in.)
B	12.4 mm (0.488 in.)
C	1.1 mm (0.043 in.)
D	12.1 mm (0.476 in.)

HINT:
- Initial hardening time: 20 minutes
- Complete hardening time: 48 hours

2. INSTALL ROOF DRIP SIDE FINISH MOULDING CENTER

(a) Install the roof drip side finish moulding center when 20 minutes or more have elapsed after pressing and installing the roof drip side finish moulding clips.

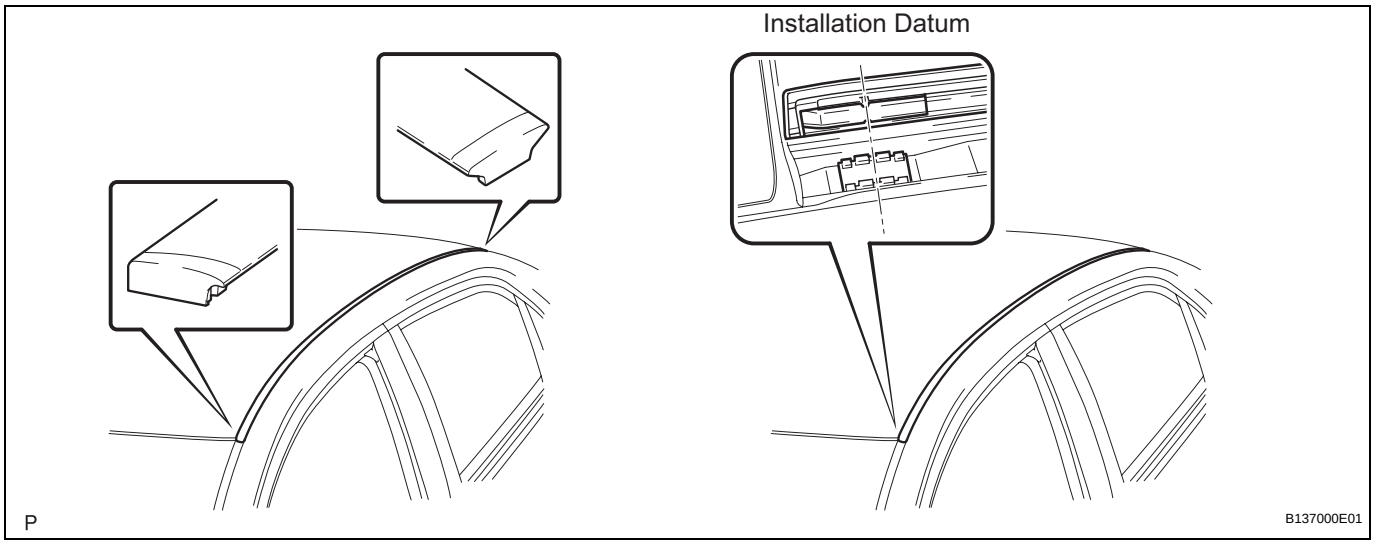

NOTICE:

- **Install the roof drip side finish moulding center in the proper direction.**
- **Set the front clip to the installation datum. Make sure that the front clip and roof drip side finish moulding center are fit each other.**

ROCKER PANEL MOULDING

COMPONENTS

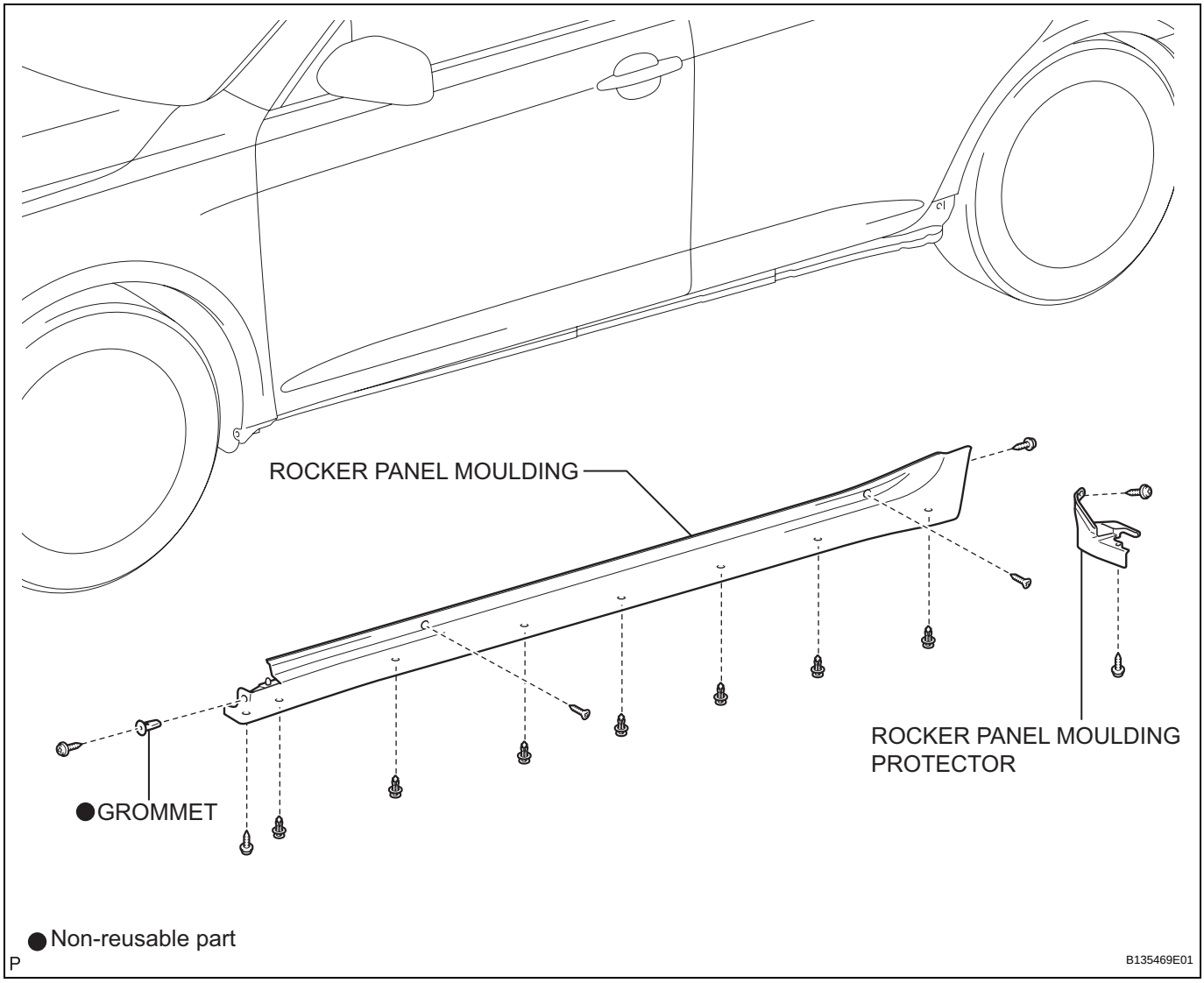

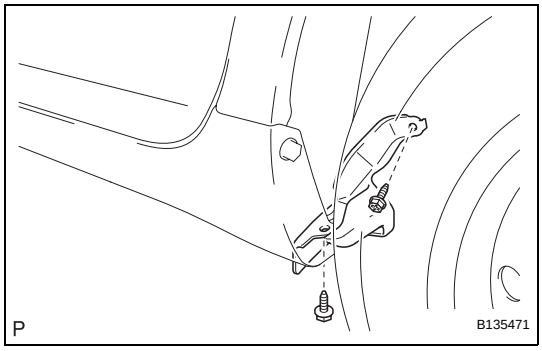

REMOVAL

1. REMOVE ROCKER PANEL MOULDING PROTECTOR

(a) Remove the 2 screws and rocker panel moulding protector.

2. REMOVE ROCKER PANEL MOULDING

(a) Put protective tape around the rocker panel moulding.

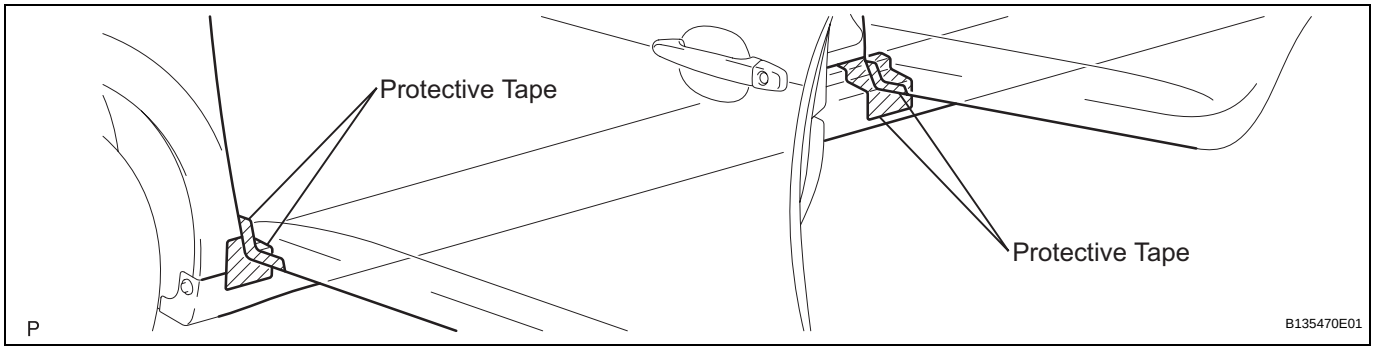

(b) Remove the 2 screws and grommet.

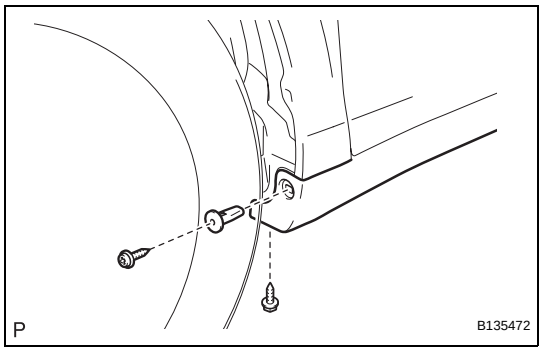

(c) Remove the screw.

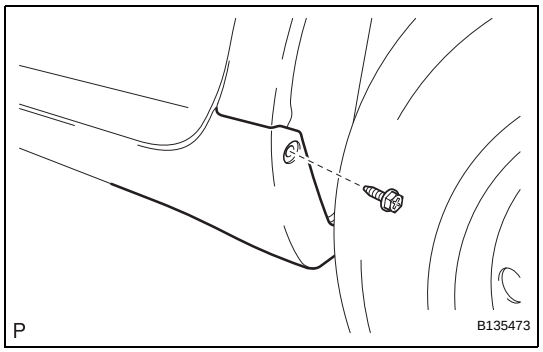

(d) Remove the 7 clips.

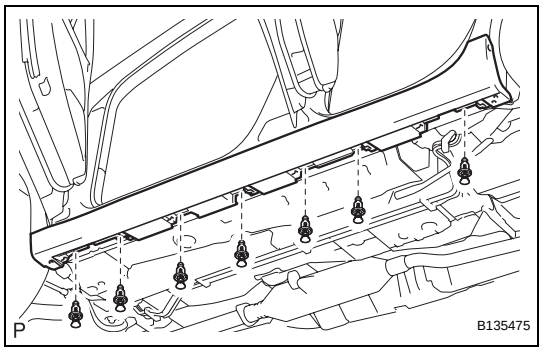

ET

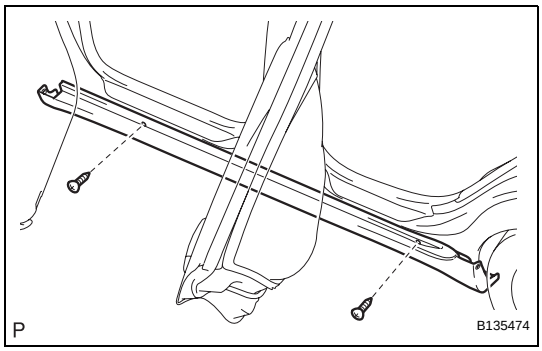

(e) Remove the 2 screws.

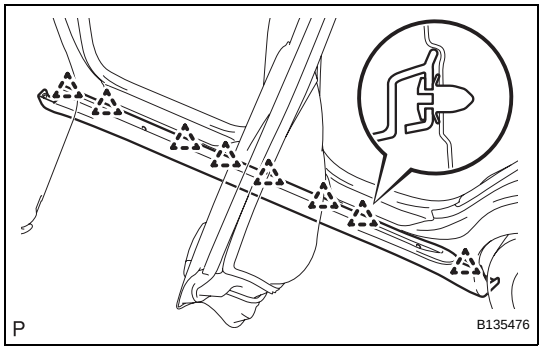

(f) Disengage the 8 clips and remove the rocker panel moulding.

INSTALLATION

1. INSTALL ROCKER PANEL MOULDING

(a) Engage the 8 clips and install the rocker panel moulding.

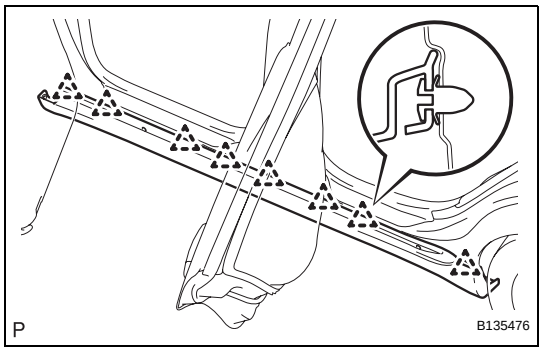

(b) Install the 2 screws.

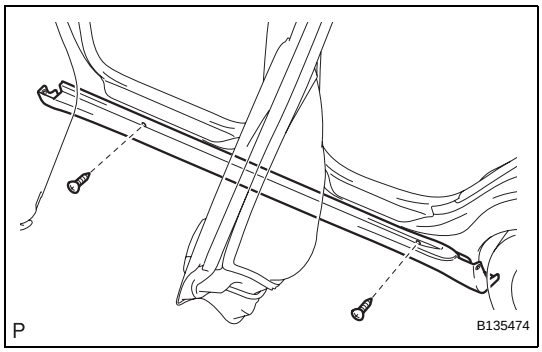

(c) Install the 7 clips.

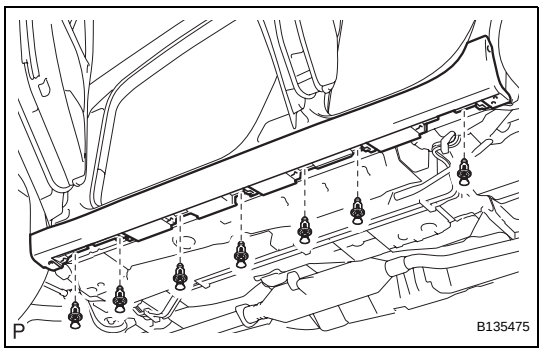

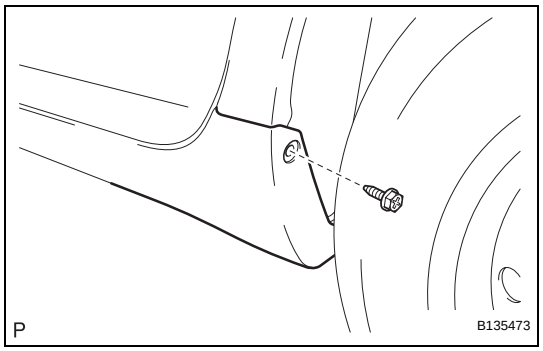

(d) Install the screw.

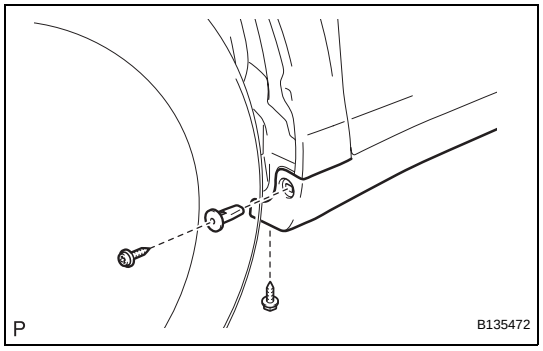

(e) Install a new grommet and 2 screws.

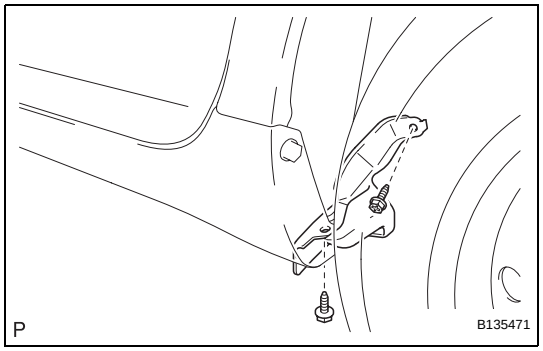

2. INSTALL ROCKER PANEL MOULDING PROTECTOR

(a) Install the rocker panel moulding protector with the 2 screws.

FRONT DOOR WINDOW FRAME MOULDING

COMPONENTS

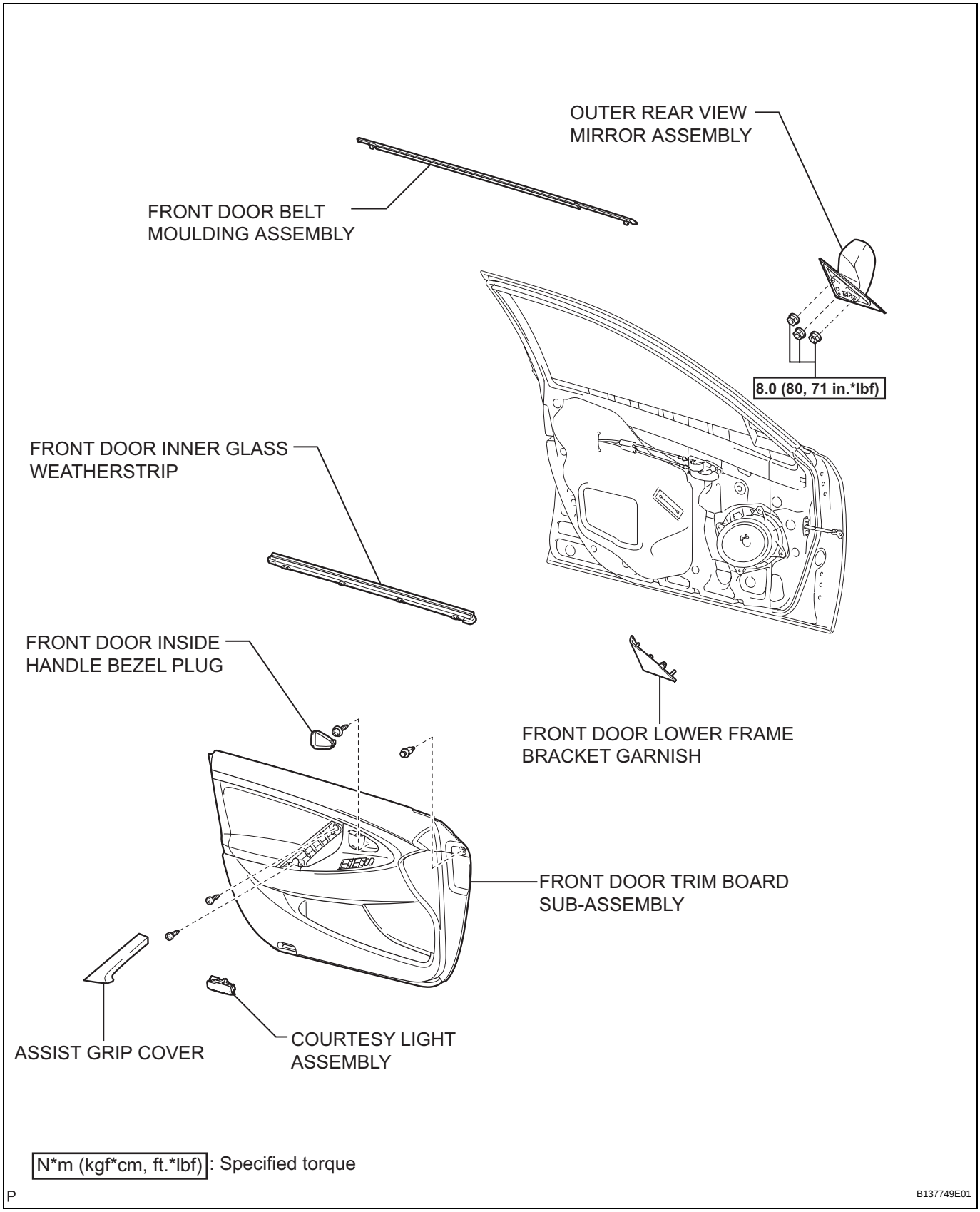

ET

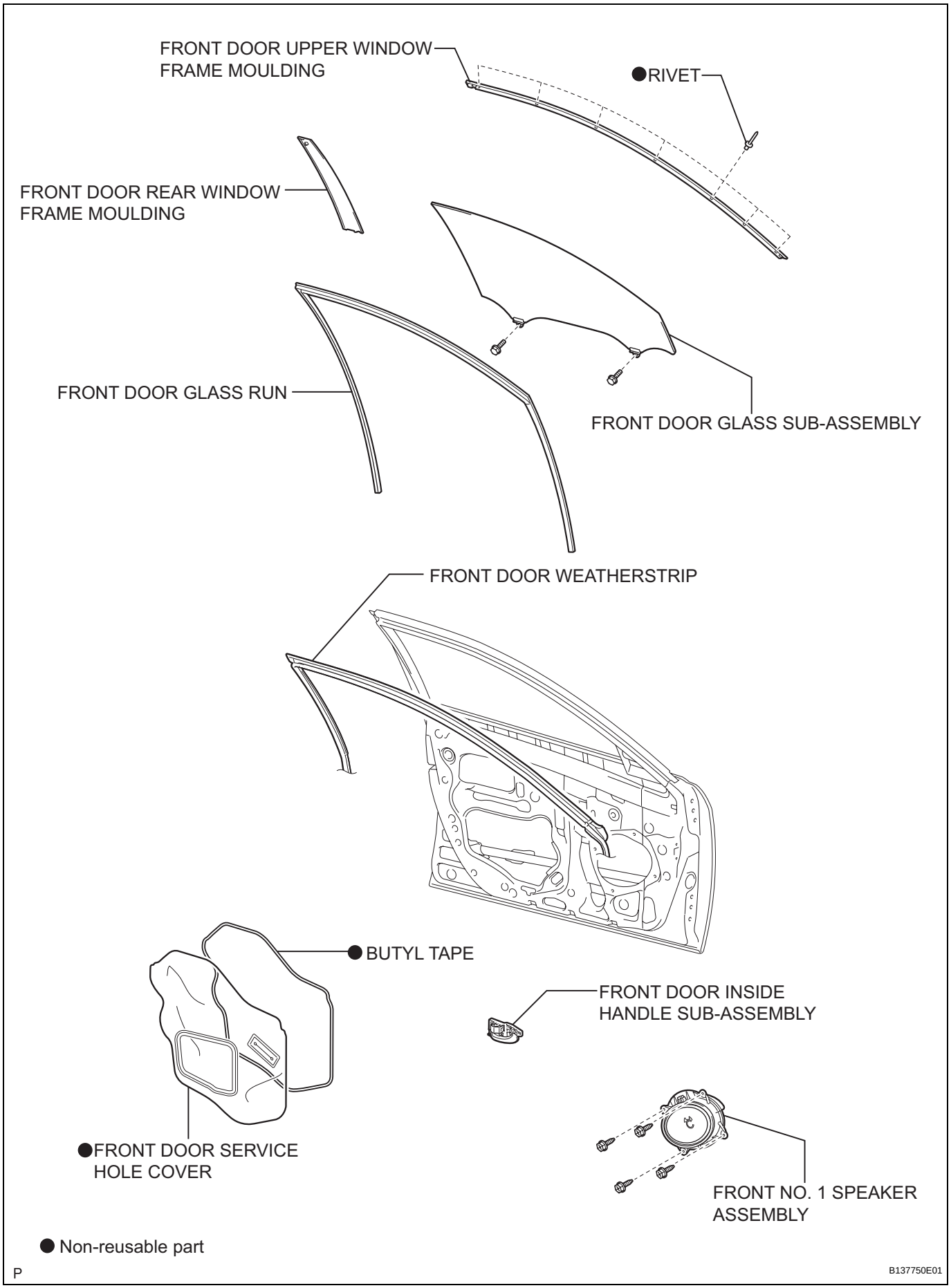
FRONT DOOR UPPER WINDOW FRAME MOULDING
●RIVET
FRONT DOOR REAR WINDOW FRAME MOULDING
FRONT DOOR GLASS RUN
FRONT DOOR GLASS SUB-ASSEMBLY
FRONT DOOR WEATHERSTRIP
● BUTYL TAPE
FRONT DOOR INSIDE HANDLE SUB-ASSEMBLY
●FRONT DOOR SERVICE HOLE COVER
FRONT NO. 1 SPEAKER ASSEMBLY
● Non-reusable part
P
B137750E01

REMOVAL

1. **REMOVE FRONT DOOR LOWER FRAME BRACKET GARNISH (See page ED-14)**
2. **REMOVE FRONT DOOR INSIDE HANDLE BEZEL PLUG (See page ED-14)**
3. **REMOVE ASSIST GRIP COVER (See page ED-15)**
4. **REMOVE COURTESY LIGHT ASSEMBLY (See page ED-15)**
5. **REMOVE FRONT DOOR TRIM BOARD SUB-ASSEMBLY (See page ED-15)**
6. **REMOVE FRONT DOOR INNER GLASS WEATHERSTRIP (See page ED-16)**
7. **REMOVE FRONT DOOR INSIDE HANDLE SUB-ASSEMBLY (See page ED-17)**
8. **REMOVE FRONT NO. 1 SPEAKER ASSEMBLY (See page AV-155)**
9. **REMOVE OUTER REAR VIEW MIRROR ASSEMBLY (See page MI-15)**
10. **REMOVE FRONT DOOR SERVICE HOLE COVER (See page ED-17)**
11. **REMOVE FRONT DOOR GLASS SUB-ASSEMBLY (See page ED-17)**
12. **REMOVE FRONT DOOR GLASS RUN (See page ED-19)**
13. **REMOVE FRONT DOOR WEATHERSTRIP**
    (a) Using a clip remover, disengage the clip and remove the front door weatherstrip.
14. **REMOVE FRONT DOOR REAR WINDOW FRAME MOULDING**
    HINT:
    When removing the front door rear window frame moulding, heat the vehicle body and front door rear window frame moulding using a heat light.
    Heating temperature

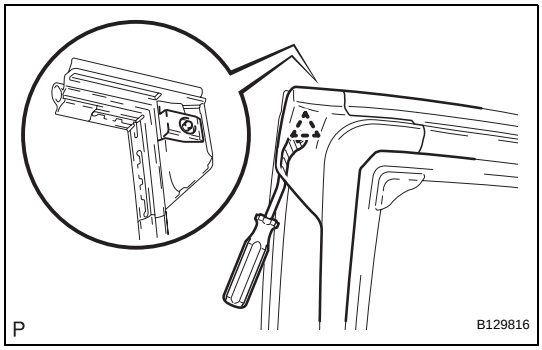

Item	Temperature
Vehicle Body	40 to 60°C (104 to 140°F)
Moulding	20 to 30°C (68 to 86°F)

NOTICE:
Do not heat the vehicle body and moulding excessively.

(a) Using a heat light, heat the front door rear window frame moulding.

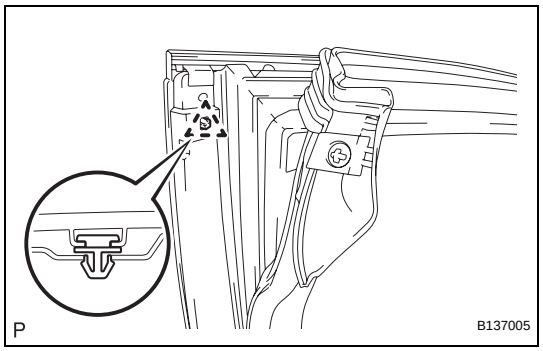

(b) Disengage the clip.

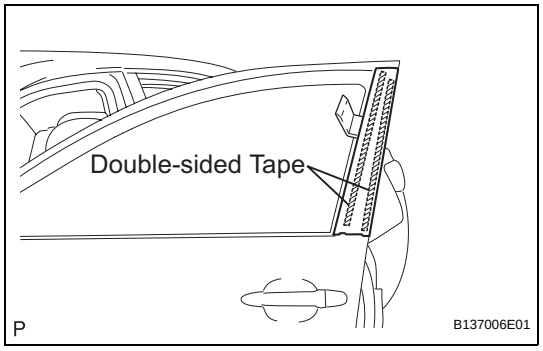

(c) Using a moulding remover, remove the front door rear window frame moulding.

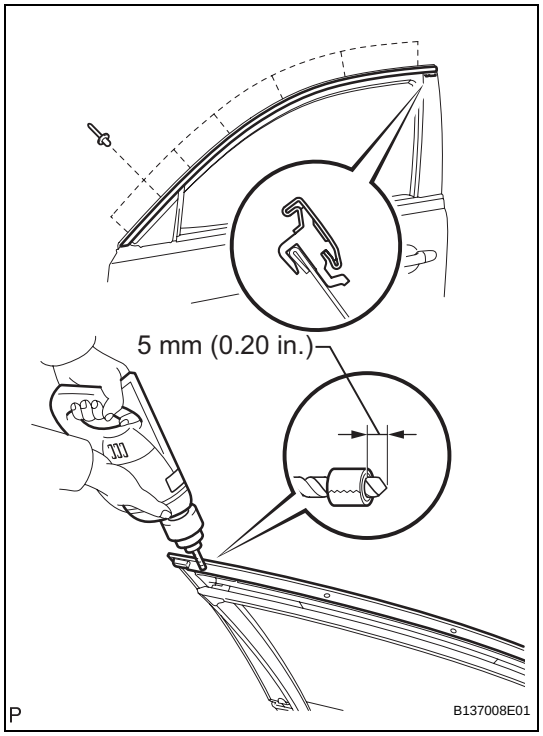

15. REMOVE FRONT DOOR UPPER WINDOW FRAME MOULDING

(a) Put a 4 mm (0.16 in.) drill bit into a drill.

(b) Tape the drill bit without the portion of 5 mm (0.20 in.) from the tip covered.
HINT:
Tape the drill bit to prevent the drill bit from going too deep.

(c) Lightly press the drill against the rivets, drill off the flanges of the rivets, and remove the 7 rivets.
NOTICE:
- **Pressing the drill too firmly will cause the rivet to turn and result in the rivet not being drilled through.**
- **Do not pry the rivets with the drill, because this may cause damage to the installation holes of the rivets or the drill bit.**
- **Be careful when touching the drilled rivets as they may become hot.**

(d) Using a vacuum cleaner, remove the rivet fragments and shavings from the drilled areas.

(e) Remove the front door upper window frame moulding from the door frame.

INSTALLATION

1. INSTALL FRONT DOOR UPPER WINDOW FRAME MOULDING

(a) Install the front door upper window frame moulding to the door frame.

(b) Using an air riveter or hand riveter with a nose piece, install the front door upper window frame moulding with 7 new rivets.
HINT:
If the rivet cannot be cut, pull it once and cut it.

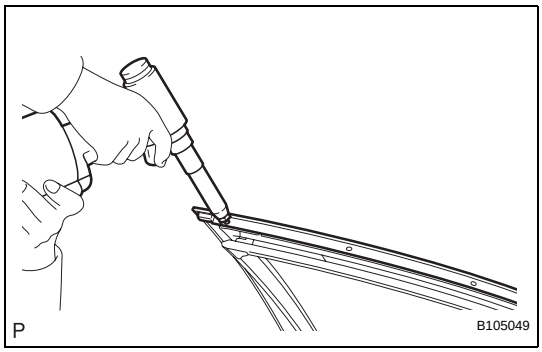

NOTICE:

- **Do not pry the rivet with the riveter, as this will cause damage to the riveter and mandrel.**

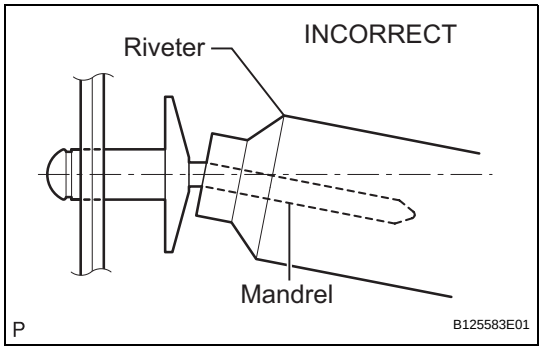

- **Confirm that the rivets are seated properly against the moulding. Do not tilt the riveter when installing the rivet to the moulding. Do not leave any space between the rivet head and moulding.**

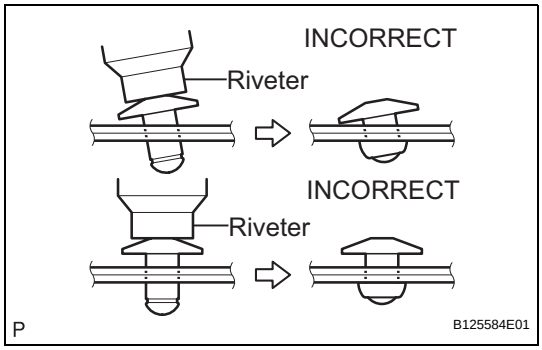

- **Do not leave any space between the moulding and door frame. Firmly hold together the 2 items while installing the rivet.**

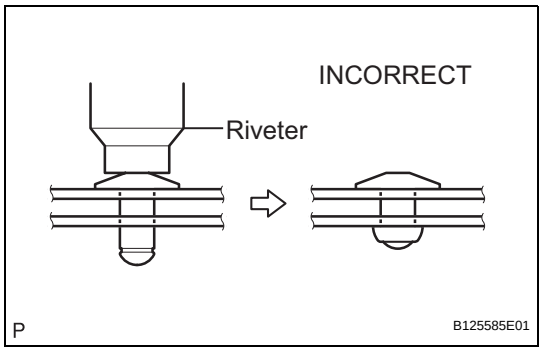

2. INSTALL FRONT DOOR REAR WINDOW FRAME MOULDING

HINT:
When installing the front door rear window frame moulding, heat the vehicle body and front door rear window frame moulding using a heat light.

Heating temperature

Item	Temperature
Vehicle Body	**40 to 60°C (104 to 140°F)**
Moulding	**20 to 30°C (68 to 86°F)**

NOTICE:
Do not heat the vehicle body and front door window frame moulding excessively.

(a) Clean the vehicle body surface.
  (1) Using a heat light, heat the vehicle body surface.
  (2) Remove the double-sided tape from the vehicle body.
  (3) Wipe off any tape adhesive residue with cleaner.

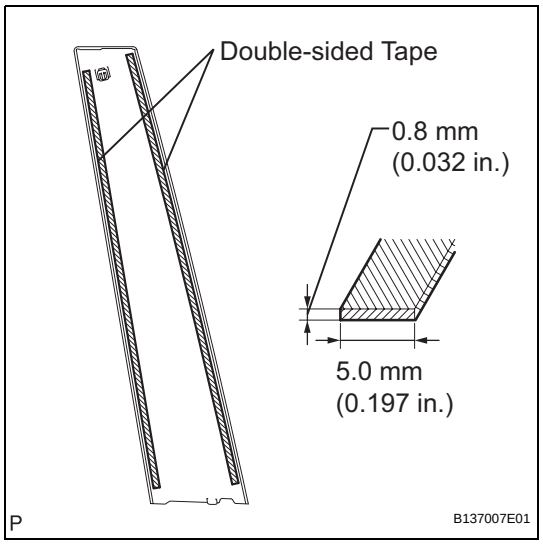

(b) Clean the front door rear window frame moulding. (If reusing the front door rear window frame moulding)
  (1) Using a heat light, heat the front door rear window frame moulding.
  (2) Remove the double-sided tape from the front door rear window frame moulding.
  (3) Wipe off any tape adhesive residue with cleaner.
  (4) Apply new double-sided tape to the front door rear window frame moulding.

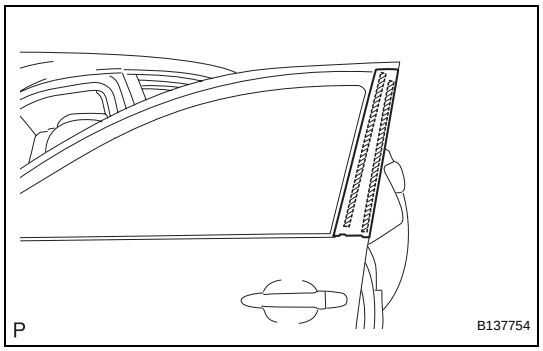

(c) Install the front door rear window frame moulding.
  (1) Using a heat light, heat the vehicle body and front door rear window frame moulding.
  (2) Remove the release paper from the front door rear window frame moulding.
  HINT:
  After removing the release paper, keep the exposed adhesive free from foreign matter.

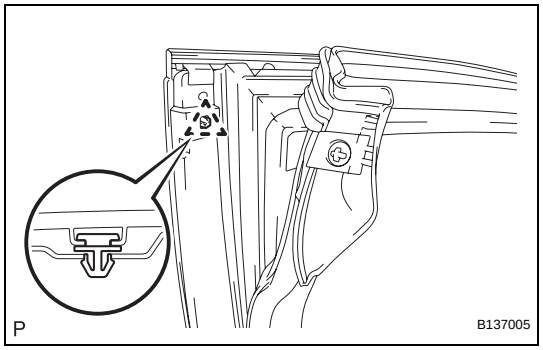

  (3) Engage the clip and install the front door rear window frame moulding.

ET

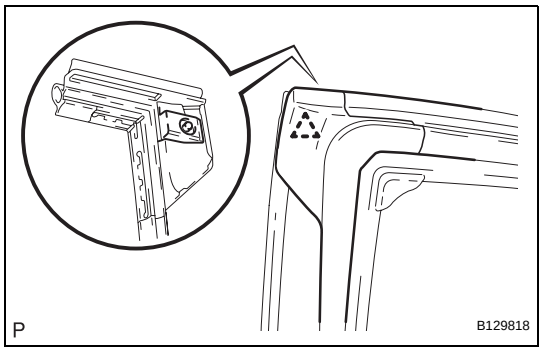

3. **INSTALL FRONT DOOR WEATHERSTRIP**
   (a) Engage the clip and install the front door weatherstrip.
4. **INSTALL FRONT DOOR GLASS RUN (See page ED-30)**
5. **INSTALL FRONT DOOR GLASS SUB-ASSEMBLY (See page ED-31)**
6. **INSTALL FRONT DOOR SERVICE HOLE COVER (See page ED-32)**
7. **INSTALL OUTER REAR VIEW MIRROR ASSEMBLY (See page MI-17)**
8. **INSTALL FRONT NO. 1 SPEAKER ASSEMBLY (See page AV-157)**
9. **INSTALL FRONT DOOR INSIDE HANDLE SUB-ASSEMBLY (See page ED-33)**
10. **INSTALL FRONT DOOR INNER GLASS WEATHERSTRIP (See page ED-32)**
11. **INSTALL FRONT DOOR TRIM BOARD SUB-ASSEMBLY (See page ED-33)**
12. **INSTALL COURTESY LIGHT ASSEMBLY (See page ED-34)**
13. **INSTALL ASSIST GRIP COVER (See page ED-34)**
14. **INSTALL FRONT DOOR INSIDE HANDLE BEZEL PLUG (See page ED-34)**
15. **INSTALL FRONT DOOR LOWER FRAME BRACKET GARNISH (See page ED-34)**

REAR DOOR WINDOW FRAME MOULDING

COMPONENTS

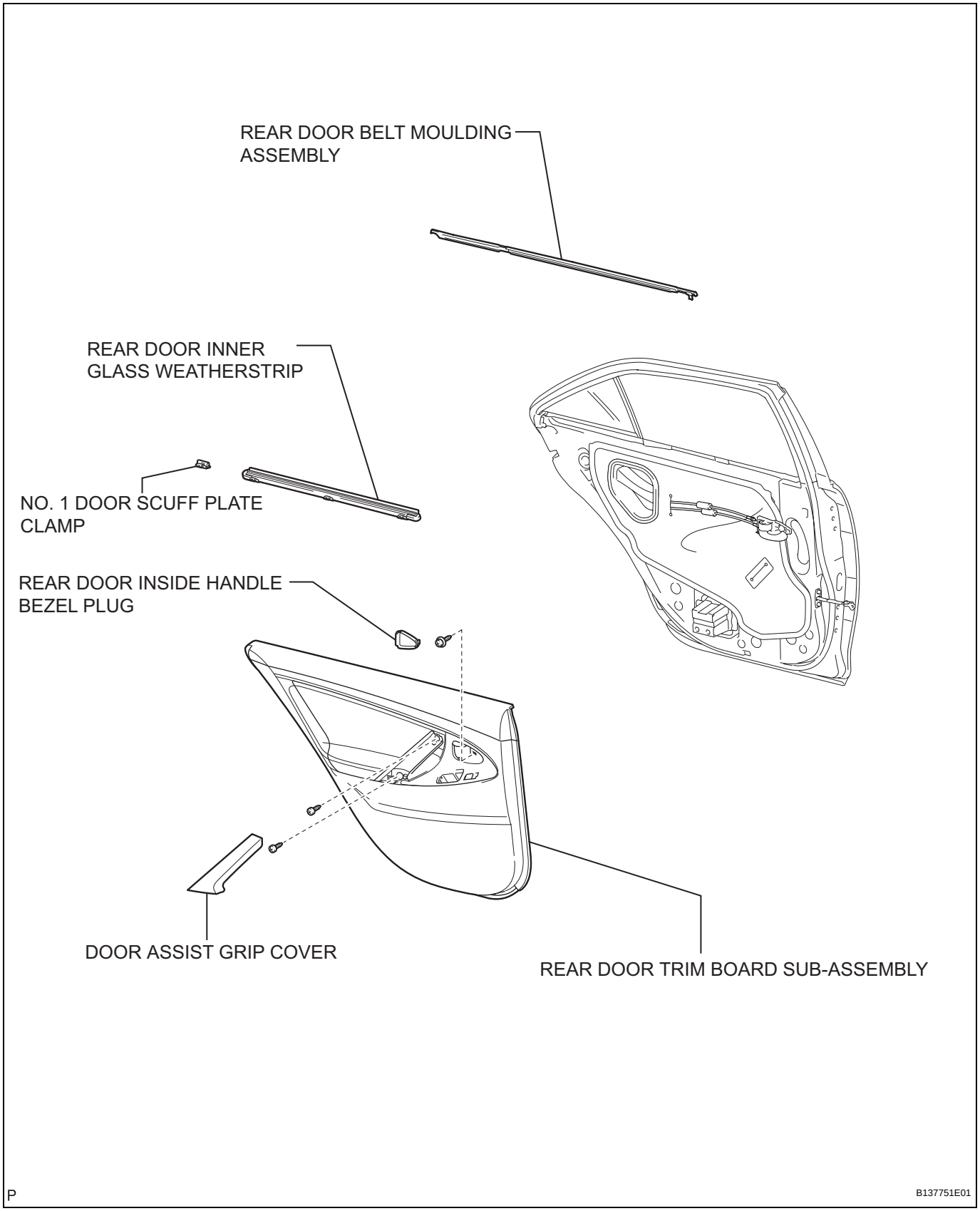

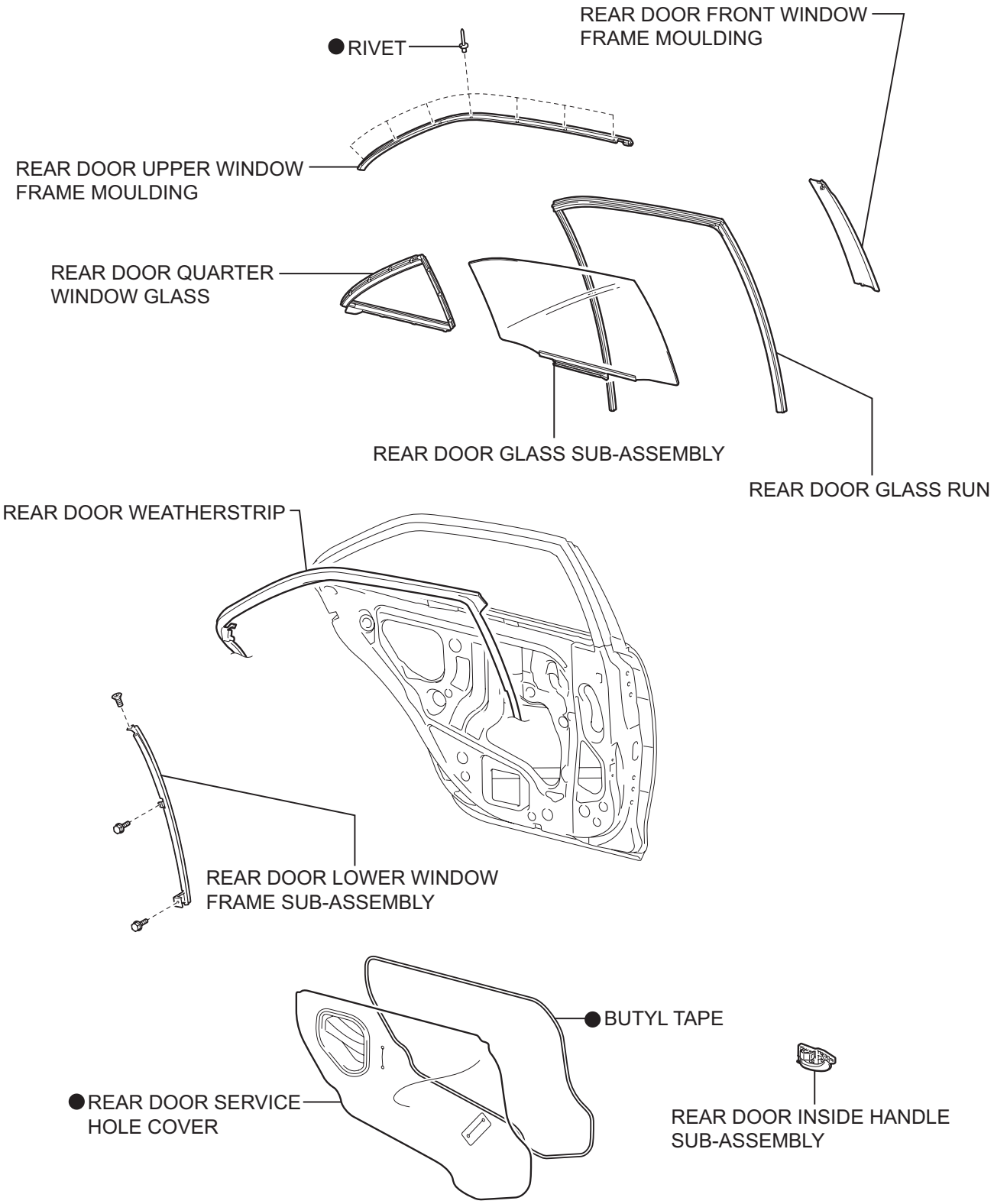

● Non-reusable part

P

B137752E01

REMOVAL

1. **REMOVE REAR DOOR INSIDE HANDLE BEZEL PLUG (See page ED-38)**
2. **REMOVE DOOR ASSIST GRIP COVER (See page ED-38)**
3. **REMOVE REAR DOOR TRIM BOARD SUB-ASSEMBLY (See page ED-39)**
4. **REMOVE REAR DOOR INNER GLASS WEATHERSTRIP (See page ED-40)**
5. **REMOVE REAR DOOR INSIDE HANDLE SUB-ASSEMBLY (See page ED-40)**
6. **REMOVE REAR DOOR SERVICE HOLE COVER (See page ED-41)**
7. **REMOVE REAR DOOR GLASS RUN (See page ED-42)**
8. **REMOVE REAR DOOR LOWER WINDOW FRAME SUB-ASSEMBLY (See page ED-42)**
9. **REMOVE REAR DOOR QUARTER WINDOW GLASS (See page ED-43)**
10. **REMOVE REAR DOOR GLASS SUB-ASSEMBLY (See page ED-43)**
11. **REMOVE REAR DOOR WEATHERSTRIP**
    (a) Using a clip remover, disengage the clip and remove the rear door weatherstrip.

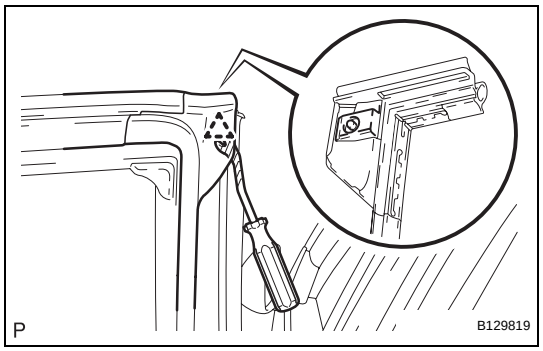

12. **REMOVE REAR DOOR FRONT WINDOW FRAME MOULDING**
    HINT:
    When removing the rear door front window frame moulding, heat the vehicle body and rear door front window frame moulding using a heat light.
    Heating temperature

Item	Temperature
Vehicle Body	40 to 60°C (104 to 140°F)
Moulding	20 to 30°C (68 to 86°F)

NOTICE:
Do not heat the vehicle body and moulding excessively.

(a) Using a heat light, heat the rear door front window frame moulding.

ET

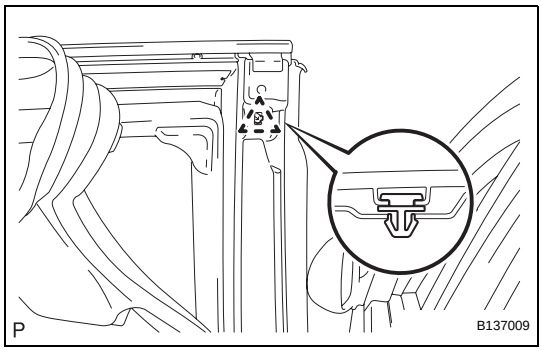

(b) Disengage the clip.

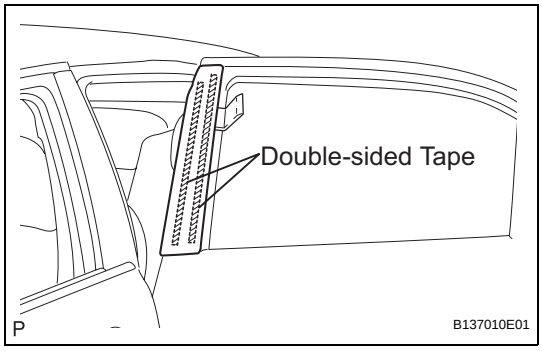

(c) Using a moulding remover, remove the rear door front window frame moulding.

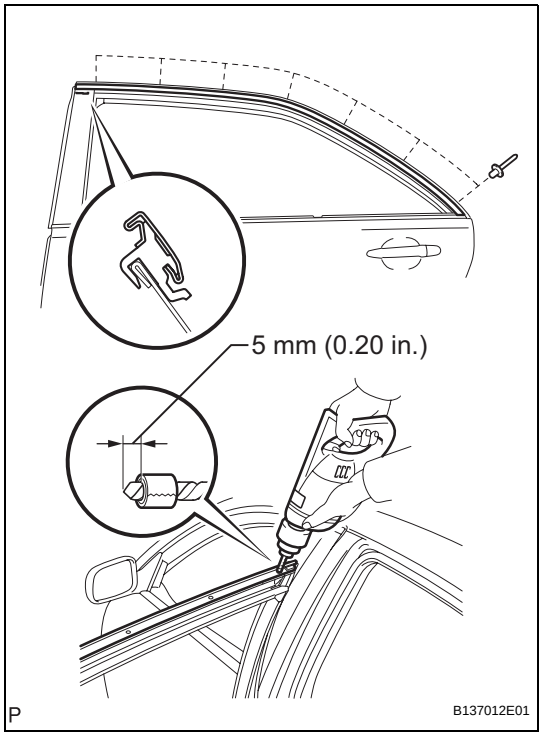

13. REMOVE REAR DOOR UPPER WINDOW FRAME MOULDING

(a) Put a 4 mm (0.16 in.) drill bit into a drill.

(b) Tape the drill bit without the portion of 5 mm (0.20 in.) from the tip covered.
HINT:
Tape the drill bit to prevent the drill bit from going too deep.

(c) Lightly press the drill bit against the rivets, drill off the flanges of the rivets, and remove the 7 rivets.
NOTICE:
- **Pressing the drill too firmly will cause the rivet to turn and result in the rivet not being drilled through.**
- **Do not pry the rivets with the drill, as this may cause damage to the installation holes of the rivets or the drill bit.**
- **Be careful when touching the drilled rivets, as they may become hot.**

(d) Using a vacuum cleaner, remove the rivet fragments and shavings from the drilled areas.

(e) Remove the rear door upper window frame moulding from the door frame.

INSTALLATION

1. INSTALL REAR DOOR UPPER WINDOW FRAME MOULDING

(a) Install the rear door upper window frame moulding to the door frame.

(b) Using an air riveter or hand riveter with a nose piece, install the rear door upper window frame moulding with 7 new rivets.
HINT:
If the rivet cannot be cut, pull it once and cut it.

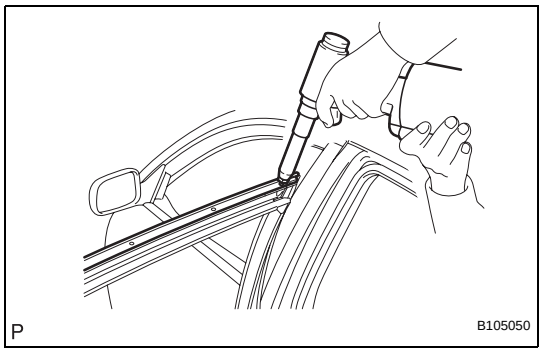

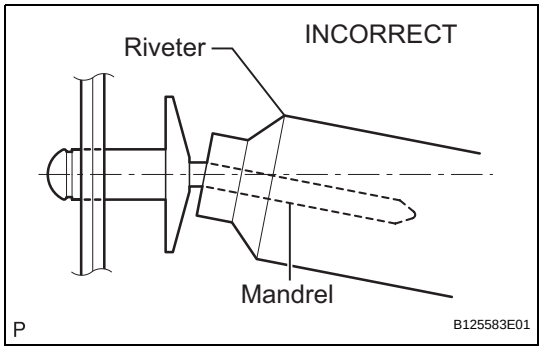

NOTICE:

- **Do not pry the rivet with the riveter, as this will cause damage to the riveter and mandrel.**

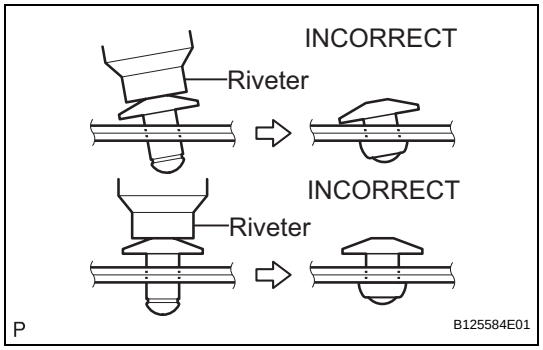

- **Confirm that the rivets are seated properly against the moulding. Do not tilt the riveter when installing the rivet to the moulding. Do not leave any space between the rivet head and moulding.**

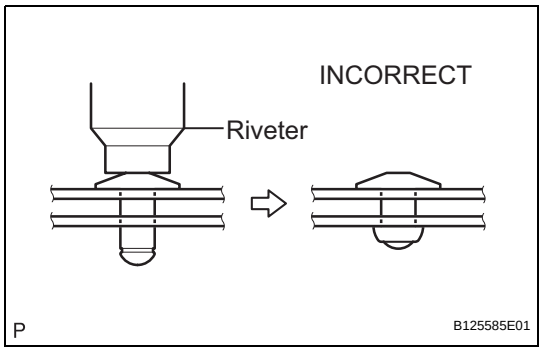

- **Do not leave any space between the moulding and door frame. Firmly hold together the 2 items while installing the rivet.**

2. INSTALL REAR DOOR FRONT WINDOW FRAME MOULDING

HINT:
When installing the rear door front window frame moulding, heat the vehicle body and rear door front window frame using a heat light.

Heating temperature

Item	Temperature
Vehicle Body	**40 to 60°C (104 to 140°F)**
Moulding	**20 to 30°C (68 to 86°F)**

NOTICE:
Do not heat the vehicle body and rear door window frame moulding excessively.

(a) Clean the vehicle body surface.
  (1) Using a heat light, heat the vehicle body surface.
  (2) Remove the double-sided tape from the vehicle body.
  (3) Wipe off any tape adhesive residue with cleaner.

(b) Clean the rear door front window frame moulding. (If reusing the rear door front window frame moulding)
  (1) Using a heat light, heat the rear door front window frame moulding.
  (2) Remove the double-sided tape from the rear door front window frame moulding.
  (3) Wipe off any tape adhesive residue with cleaner.
  (4) Apply new double-sided tape to the rear door front window frame moulding.

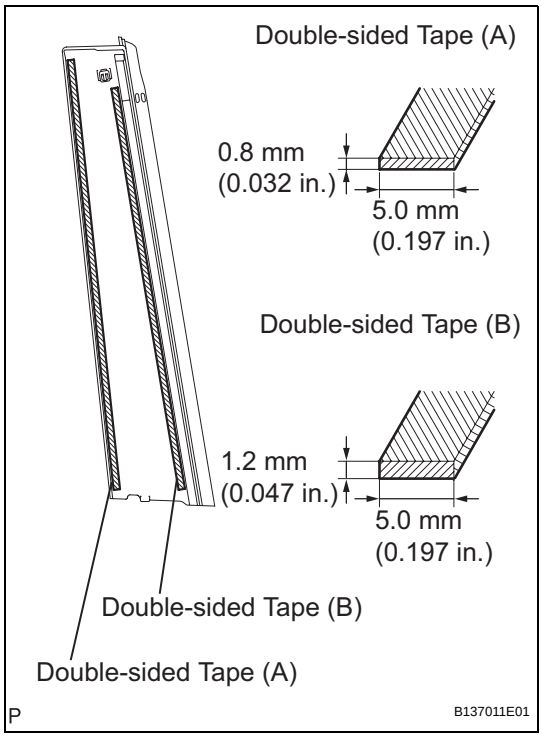

(c) Install the rear door front window frame moulding.
  (1) Using a heat light, heat the vehicle body and rear door front window frame moulding.
  (2) Remove the release paper from the rear door front window frame moulding.
  HINT:
  After removing the release paper, keep the exposed adhesive free from foreign matter.

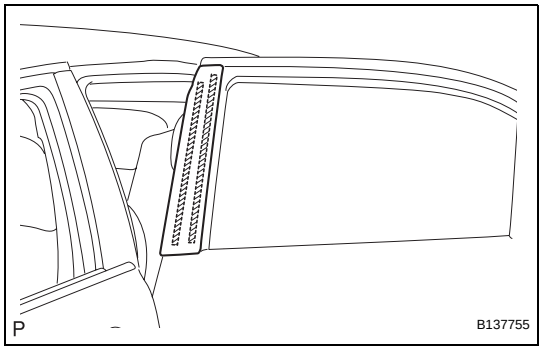

  (3) Engage the clip and install the rear door front window frame moulding.

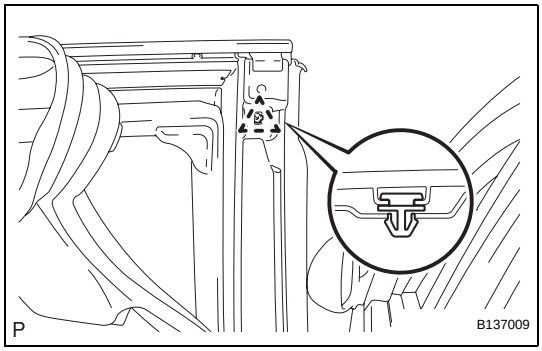

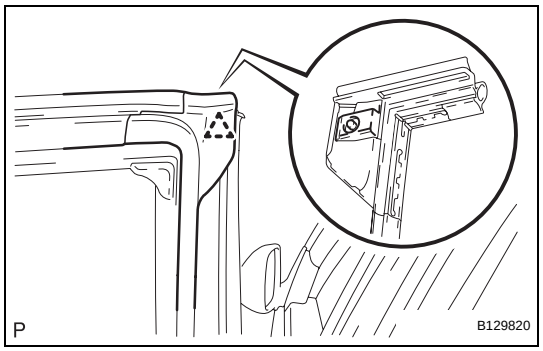

3. **INSTALL REAR DOOR WEATHERSTRIP**
   (a) Engage the clip and install the rear door weatherstrip.
4. **INSTALL REAR DOOR GLASS SUB-ASSEMBLY (See page ED-52)**
5. **INSTALL REAR DOOR QUARTER WINDOW GLASS (See page ED-52)**
6. **INSTALL REAR DOOR LOWER WINDOW FRAME SUB-ASSEMBLY (See page ED-52)**
7. **INSTALL REAR DOOR GLASS RUN (See page ED-52)**
8. **INSTALL REAR DOOR SERVICE HOLE COVER (See page ED-53)**
9. **INSTALL REAR DOOR INSIDE HANDLE SUB-ASSEMBLY (See page ED-55)**
10. **INSTALL REAR DOOR INNER GLASS WEATHERSTRIP (See page ED-54)**
11. **INSTALL REAR DOOR TRIM BOARD SUB-ASSEMBLY (See page ED-55)**
12. **INSTALL DOOR ASSIST GRIP COVER (See page ED-56)**
13. **INSTALL REAR DOOR INSIDE HANDLE BEZEL PLUG (See page ED-56)**

LUGGAGE COMPARTMENT DOOR GARNISH

COMPONENTS

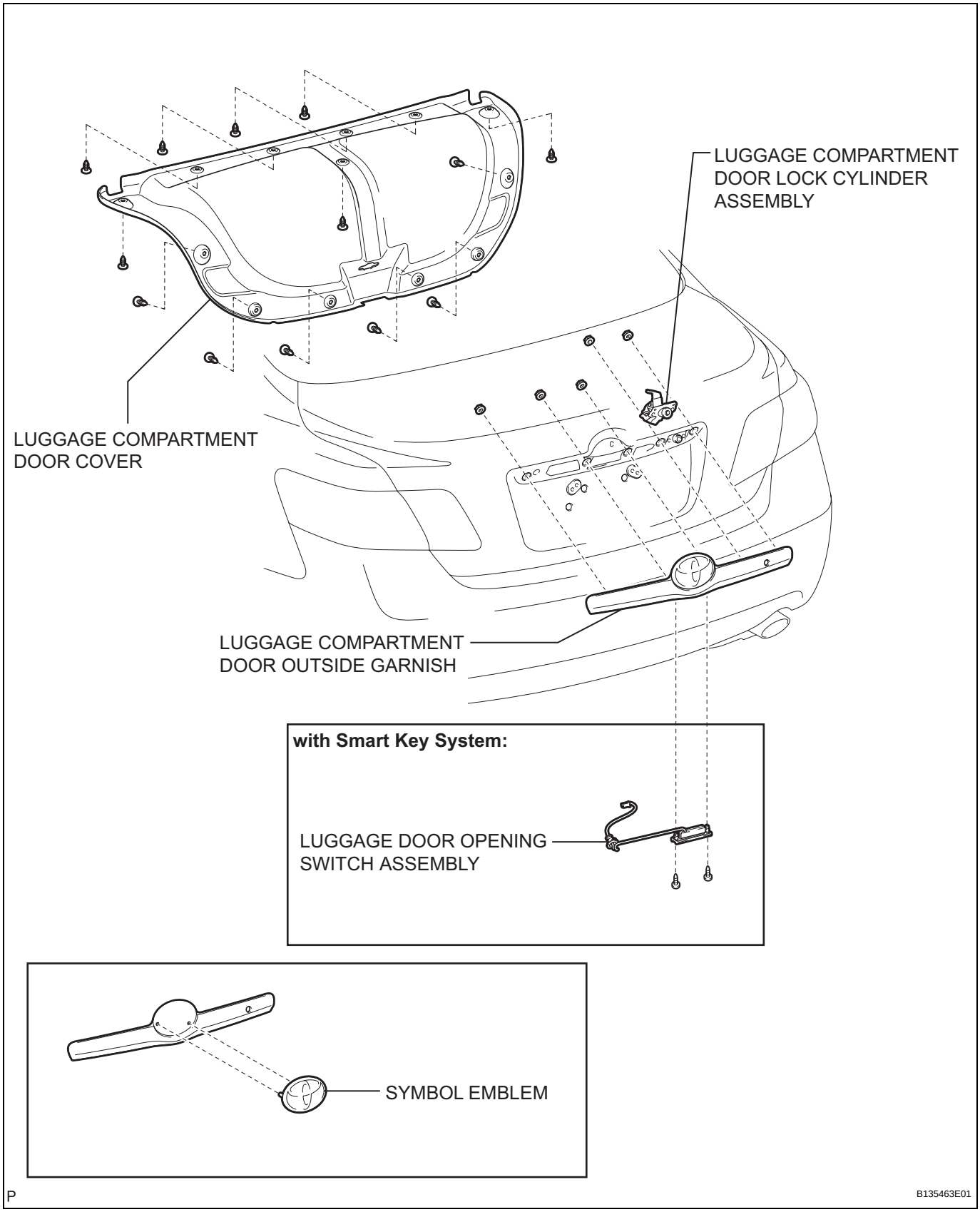

REMOVAL

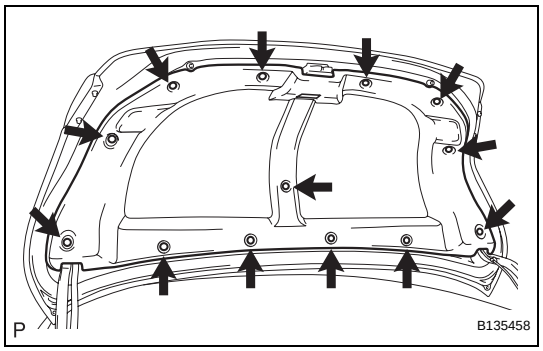

1. REMOVE LUGGAGE COMPARTMENT DOOR COVER

(a) Using a clip remover, remove the 13 clips and luggage compartment door cover.

2. REMOVE LUGGAGE DOOR OPENING SWITCH ASSEMBLY (w/ Smart Key System) (See page DL-246)

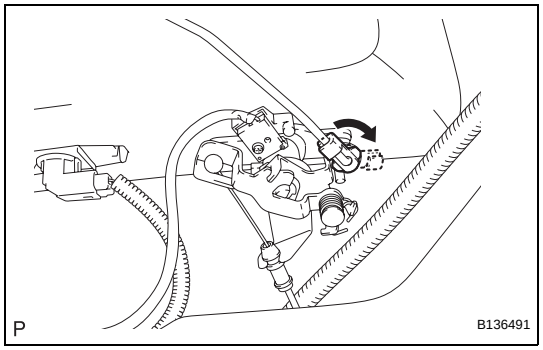

3. REMOVE LUGGAGE COMPARTMENT DOOR LOCK CYLINDER ASSEMBLY

(a) Disconnect the rod.

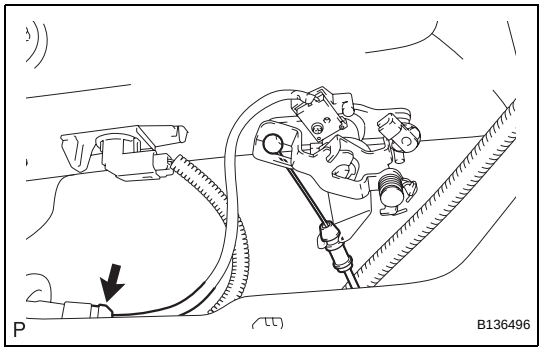

(b) Disconnect the cable and connector.

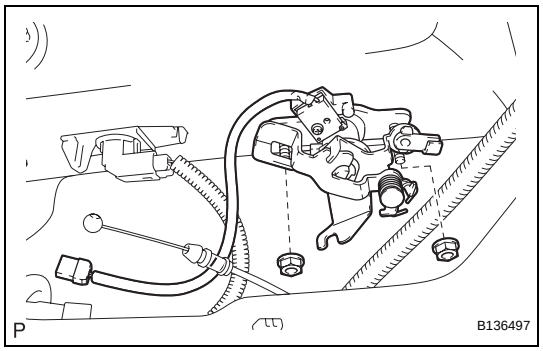

(c) Remove the 2 nuts and luggage compartment door lock cylinder assembly.

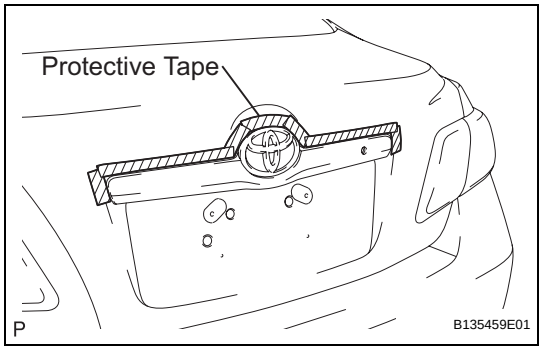

4. REMOVE LUGGAGE COMPARTMENT DOOR OUTSIDE GARNISH

(a) Put protective tape around the luggage compartment door outside garnish.

ET

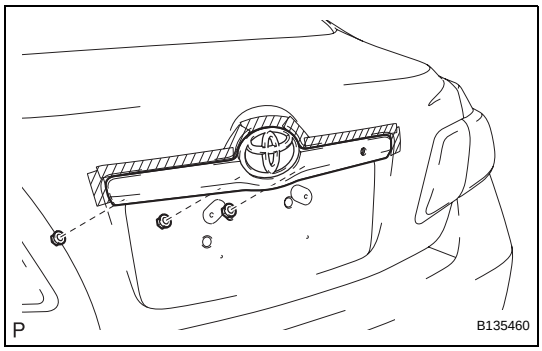

(b) Remove the 3 nuts.

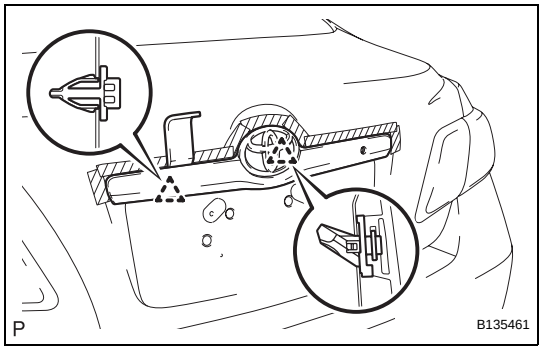

(c) Using a moulding remover, disengage the 2 clips and remove the luggage compartment door outside garnish.

5. REMOVE SYMBOL EMBLEM

HINT:
When removing the symbol emblem, heat the luggage compartment door outside garnish and symbol emblem using a heat light.

Heating temperature

Item	Temperature
Luggage compartment door outside garnish	**40 to 60°C (104 to 140°F)**
Symbol emblem	**20 to 30°C (68 to 86°F)**

NOTICE:
Do not heat the luggage compartment door outside garnish and symbol emblem excessively.

(a) Put protective tape around the symbol emblem.

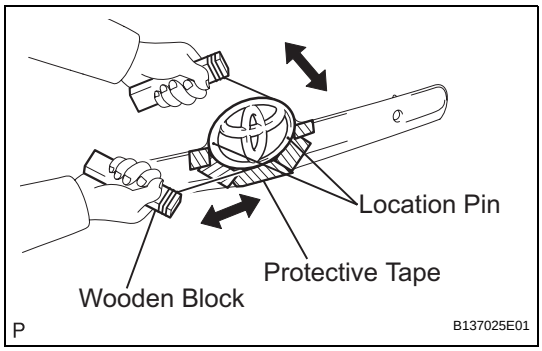

(b) Insert a piano wire between the luggage compartment door outside garnish and symbol emblem.

(c) Tie objects that can serve as handles (for example, wooden blocks) to both wire ends.

(d) Pull the piano wire and scrape off the double-sided tape that holds the symbol emblem to the luggage compartment door outside garnish.

NOTICE:
- **If reusing the symbol emblem, take care not to damage the symbol emblem.**
- **Be careful not to damage the luggage compartment door outside garnish.**

(e) Remove the symbol emblem.

INSTALLATION

1. INSTALL SYMBOL EMBLEM

HINT:
When installing the symbol emblem, heat the luggage compartment door outside garnish and symbol emblem using a heat light.

Heating temperature

Item	Temperature
Luggage compartment door outside garnish	**40 to 60°C (104 to 140°F)**
Symbol emblem	**20 to 30°C (68 to 86°F)**

NOTICE:
Do not heat the luggage compartment door outside garnish and symbol emblem excessively.

(a) Clean the luggage compartment door outside garnish surface.
  (1) Using a heat light, heat the luggage compartment door outside garnish surface.
  (2) Remove the double-sided tape from the luggage compartment door outside garnish.
  (3) Wipe off any tape adhesive residue with cleaner.

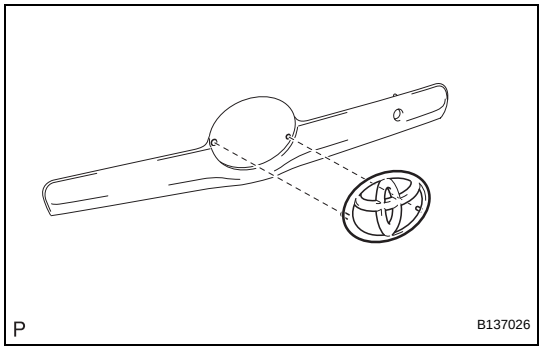

(b) Clean the symbol emblem. (If reusing the symbol emblem)
  (1) Using a heat light, heat the symbol emblem.
  (2) Remove the double-sided tape from the symbol emblem.
  (3) Wipe off any tape adhesive residue with cleaner.
  (4) Apply new double-sided tape to the symbol emblem.

(c) Install the symbol emblem.
  (1) Using a heat light, heat the luggage compartment door outside garnish and symbol emblem.
  (2) Remove the release paper from the symbol emblem.
  HINT:
  After removing the release paper, keep the exposed adhesive free from foreign matter.
  (3) Install the symbol emblem.

2. INSTALL LUGGAGE COMPARTMENT DOOR OUTSIDE GARNISH

(a) Engage the 2 clips and install the luggage compartment door outside garnish.

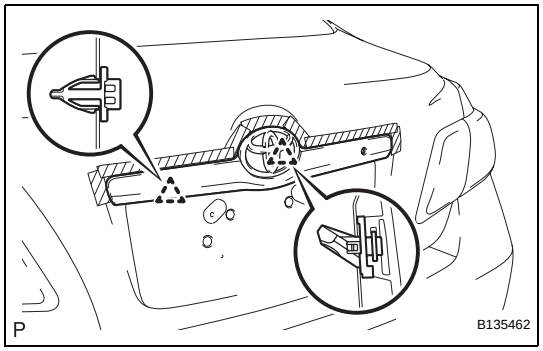

ET

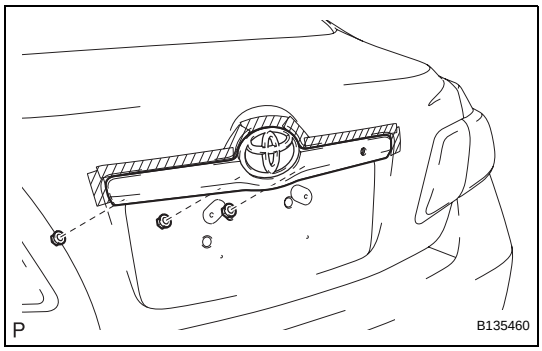

(b) Install the 3 nuts.

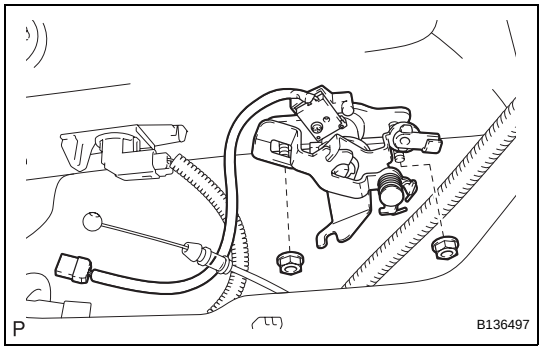

3. INSTALL LUGGAGE COMPARTMENT DOOR LOCK CYLINDER ASSEMBLY

(a) Install the luggage compartment door lock cylinder with the 2 nuts.

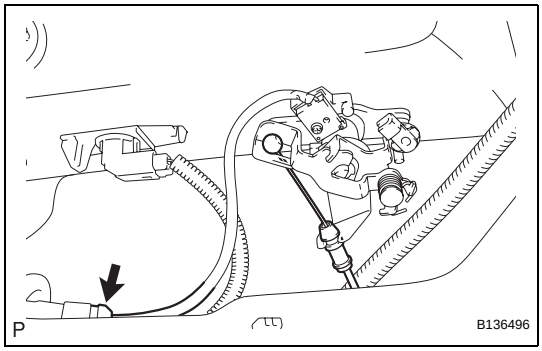

(b) Connect the cable and connector.

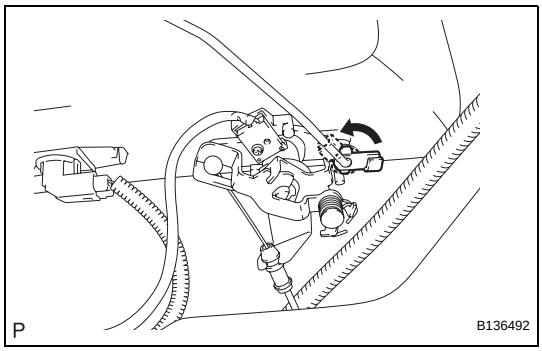

(c) Connect the rod.

4. INSTALL LUGGAGE DOOR OPENING SWITCH ASSEMBLY (w/ Smart Key System) (See page DL-246)

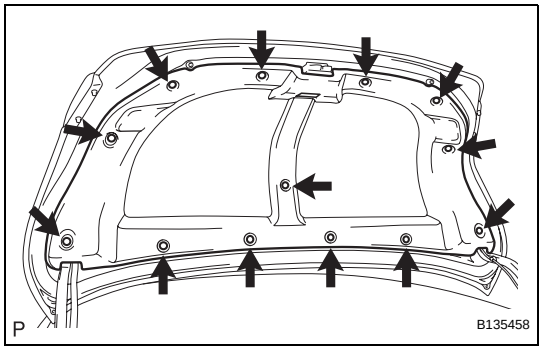

5. INSTALL LUGGAGE COMPARTMENT DOOR COVER

(a) Install the luggage compartment door cover with the 13 clips.

FRONT DOOR BLACK OUT TAPE

COMPONENTS

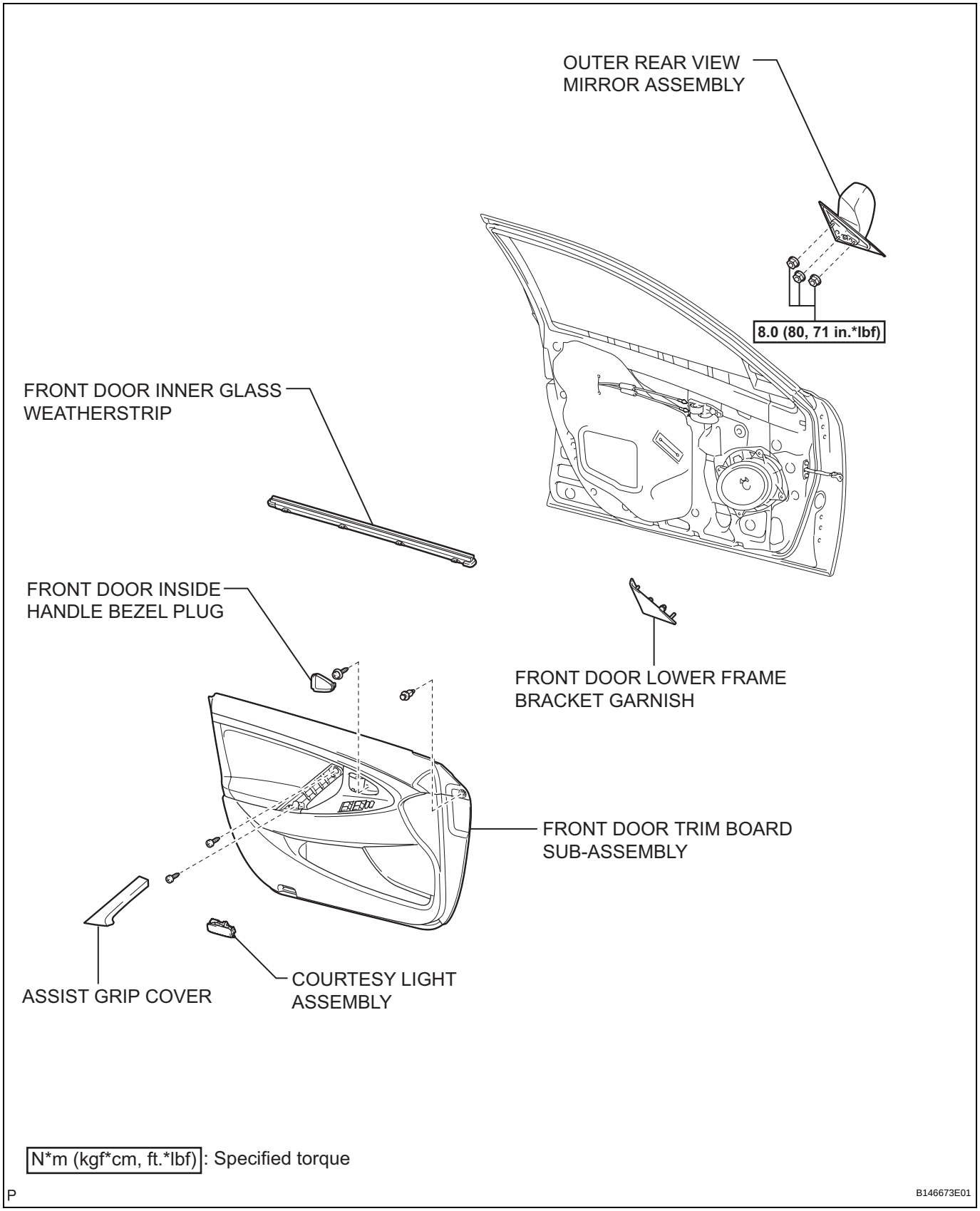

ET

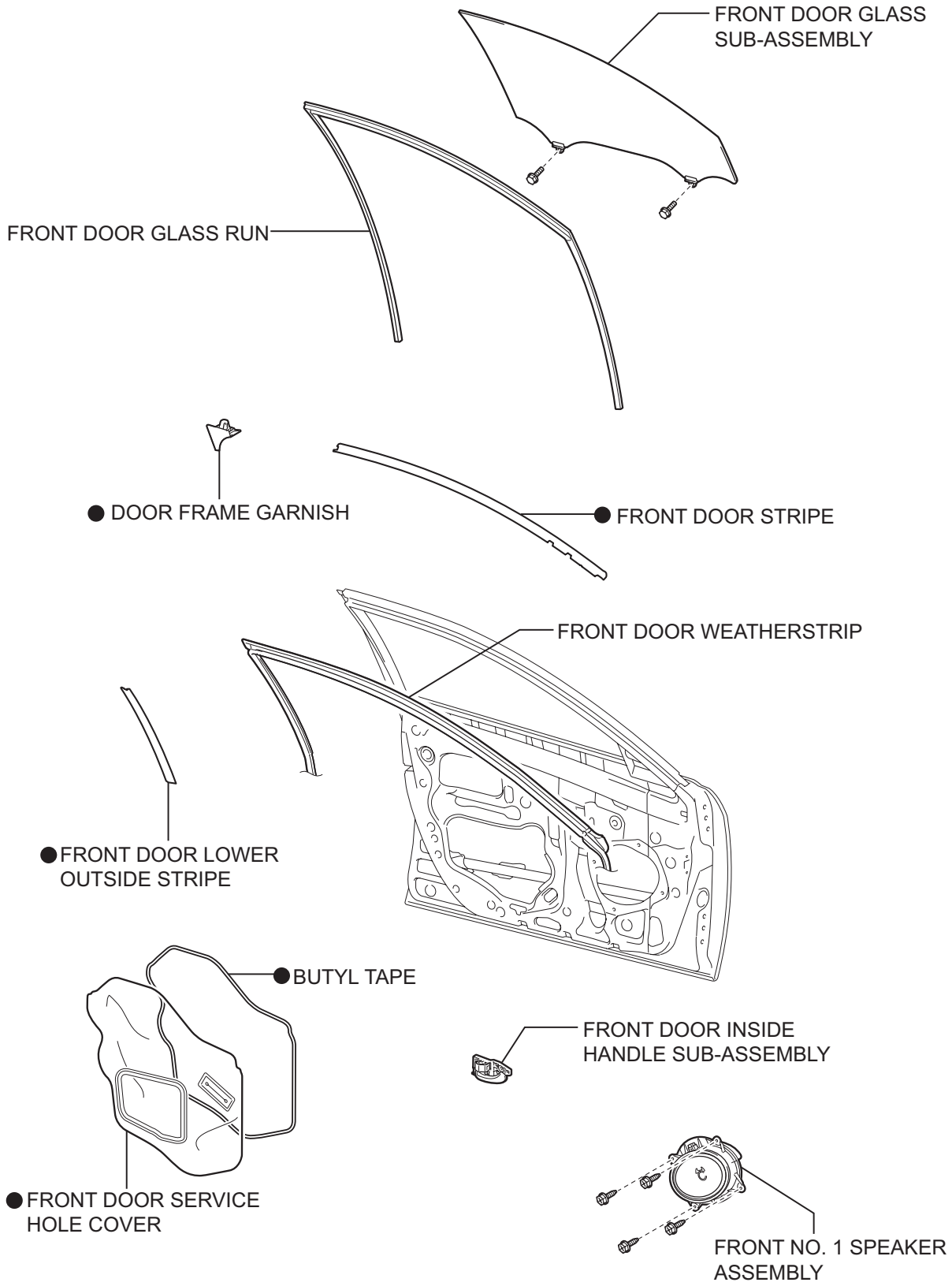

● Non-reusable part

P

B146674E01

REMOVAL

1. **REMOVE FRONT DOOR LOWER FRAME BRACKET GARNISH (See page ED-14)**
2. **REMOVE FRONT DOOR INSIDE HANDLE BEZEL PLUG (See page ED-14)**
3. **REMOVE ASSIST GRIP COVER (See page ED-15)**
4. **REMOVE COURTESY LIGHT ASSEMBLY (See page ED-15)**
5. **REMOVE FRONT DOOR TRIM BOARD SUB-ASSEMBLY (See page ED-15)**
6. **REMOVE FRONT DOOR INNER GLASS WEATHERSTRIP (See page ED-16)**
7. **REMOVE FRONT DOOR INSIDE HANDLE SUB-ASSEMBLY (See page ED-17)**
8. **REMOVE FRONT NO. 1 SPEAKER ASSEMBLY (See page AV-155)**
9. **REMOVE OUTER REAR VIEW MIRROR ASSEMBLY (See page MI-15)**
10. **REMOVE FRONT DOOR SERVICE HOLE COVER (See page ED-17)**
11. **REMOVE FRONT DOOR GLASS SUB-ASSEMBLY (See page ED-17)**
12. **REMOVE FRONT DOOR GLASS RUN (See page ED-19)**
13. **REMOVE FRONT DOOR WEATHERSTRIP (See page ET-48)**
14. **REMOVE DOOR FRAME GARNISH (See page ED-19)**
15. **REMOVE FRONT DOOR STRIPE**
    (a) Using a heat light, heat the front door stripe.
    Heating temperature

Item	Temperature
Vehicle Body	40 to 60°C (104 to 140°F)

    NOTICE:
    Do not heat the vehicle body excessively.
    (b) Pull back an edge of the front door stripe and pull it parallel to the vehicle body to pull it off.
16. **REMOVE FRONT DOOR LOWER OUTSIDE STRIPE**
    (a) Using a heat light, heat the front door lower outside stripe.
    Heating temperature

Item	Temperature
Vehicle Body	40 to 60°C (104 to 140°F)

    NOTICE:
    Do not heat the vehicle body excessively.

(b) Pull back an edge of the front door lower outside stripe and pull it parallel to the vehicle body to pull it off.

INSTALLATION

1. REPAIR INSTRUCTION

(a) Clean the vehicle body surface.

(1) Using a heat light, heat the vehicle body surface.

Heating temperature

Item	Temperature
Vehicle Body	**40 to 60°C (104 to 140°F)**

NOTICE:
Do not heat the vehicle body excessively.

(2) Wipe off any tape adhesive residue with cleaner.

(b) Installation temperature

(1) When ambient temperature is below 15°C, perform the installation procedure after warming the vehicle body surface (installation surface of the door frame) and tape up to between 20 to 30°C using a heat light. When ambient temperature is above 35°C, cool the vehicle body surface (installation surface of the door frame) and tape down to between 20 to 30°C prior to installation.

HINT:
- The most appropriate temperature for installing the tape is 25°C.
- When the temperature is low, the tape turns stiff and comes off easily. When the temperature is high, the tape looses elasticity.

(c) Before installation

(1) Remove any roughness of coating and dirt on and around the vehicle body surface where the tape will be installed (installation surface of the door frame). If any roughness or dirt remains when pressing the tape onto the surface, air will be trapped under the tape and result in a poor appearance.

HINT:
Spray water on the shop floor to settle any dust.

(d) Key points for handling the tape

(1) The tape bends and rolls up easily. Store the tape between flat pieces of cardboard or other similar objects and keep it dry and level.

NOTICE:
Do not bend the tape or leave it in high temperature places.

(e) Key points for installation of the tape (how to use a squeegee and installation procedure for flat surfaces)

NOTICE:
- **Conduct positioning of the tape with a high accuracy to achieve a neat finish and to avoid peeling.**

- **The tape cannot be reused because it deforms or does not fit any more after being removed.**

(1) To avoid air bubbles, slightly raise the part of the tape that are going to be applied so that its adhesive surface does not touch the vehicle body while applying the tape. Tilt the squeegee at a 40 to 50° (for pressing forward) or 30 to 45° (for pulling) to the vehicle body surface and press the tape onto the vehicle body surface with a force of 20 to 30 N (2 to 3 kgf) at a constant slow speed of 3 to 7 cm per second.

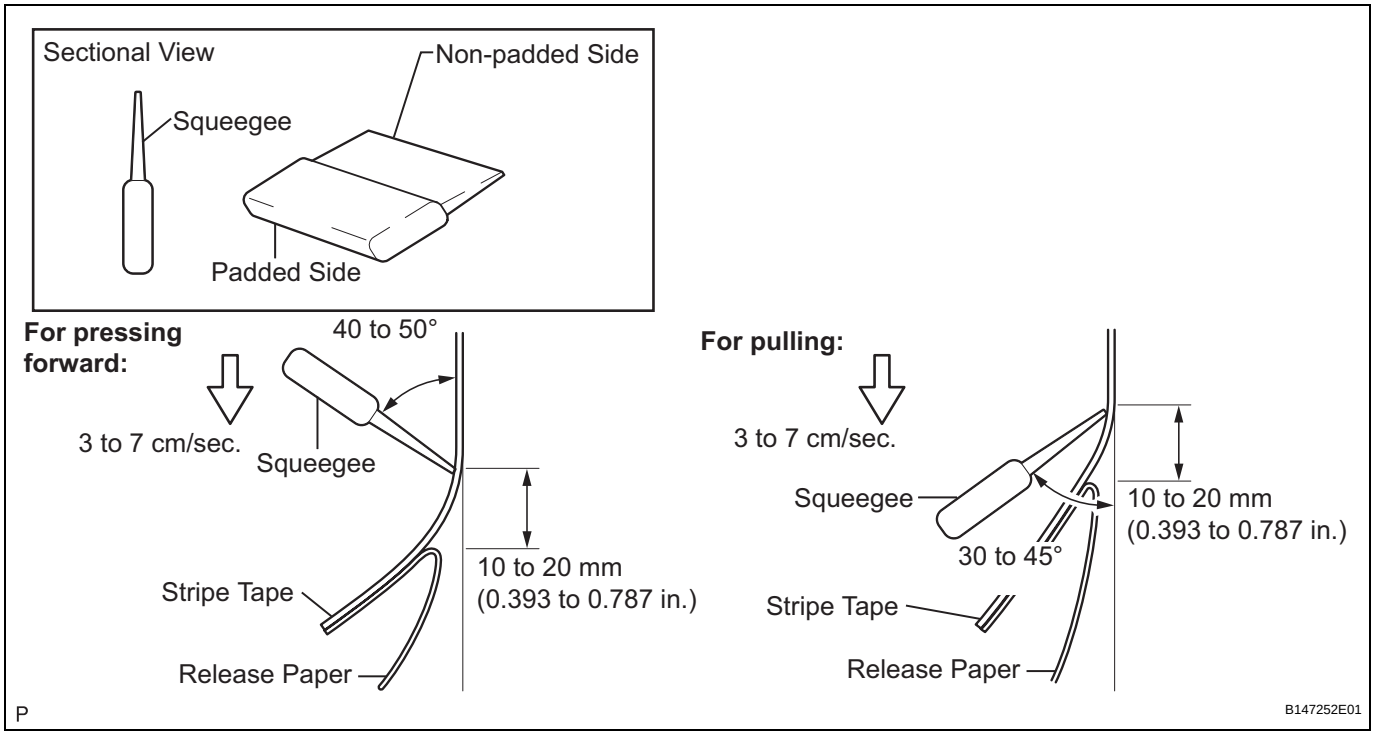

NOTICE:
Be sure to observe the specified pressing speed, force, and angle of the squeegee to avoid wrinkles or air bubbles.

HINT:

- Either angle of the squeegee (for pressing forward or for pulling) is acceptable.
- Be sure to apply the tape while removing the release paper 10 to 20 mm from the edge of the squeegee.

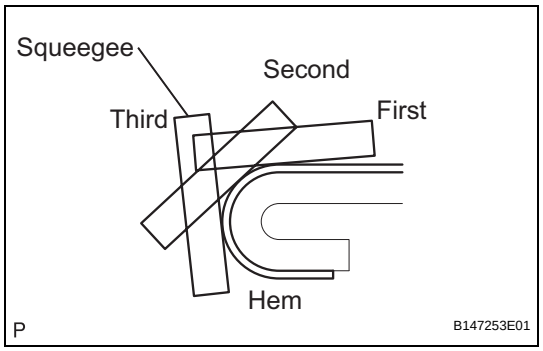

(f) Key points for installation of the tape (how to use a squeegee and installation procedure for hemming surfaces)
  (1) If it is difficult to press the tape, press it in several steps as shown in the illustration. Use your fingers or the padded surface of a squeegee to slowly apply the tape to the hem of the vehicle, especially for a small hem.
  HINT:
  When applying the tape to the backside of a hem, remove the release paper and use your fingers or the padded surface of a squeegee.

(g) Key points for installation of the tape (how to use a squeegee and installation procedure for corners)
  (1) Remove the release paper and apply the tape carefully with your fingers.
  (2) Before applying the tape to each corner, heat the tape using a heat light and gradually apply it, to avoid wrinkles on the tape and achieve a neat finish.

(h) Check after installation
  (1) After completing the application, check if the tape is applied neatly. If the tape is not applied neatly, reapply using new tape.
  NOTICE:
  Do not reuse the tape.

2. INSTALL FRONT DOOR LOWER OUTSIDE STRIPE

(a) Refer to the illustration to position the front door lower outside stripe.

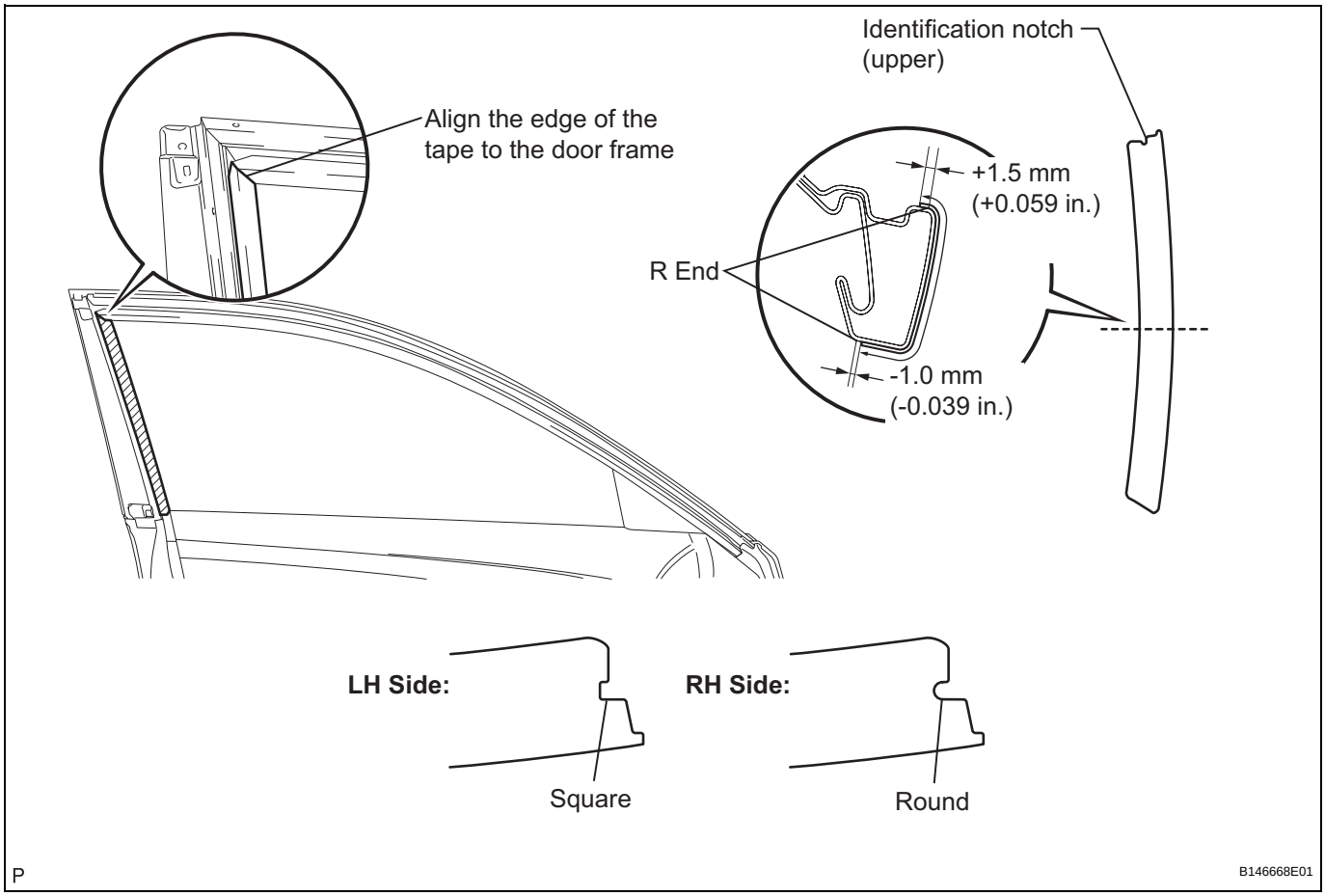

(b) Remove the release paper and apply the stripe.

3. INSTALL FRONT DOOR STRIPE

NOTICE:

Be sure to install the front door stripe after applying the front door lower outside stripe.

(a) Refer to the illustration to position the front door stripe.

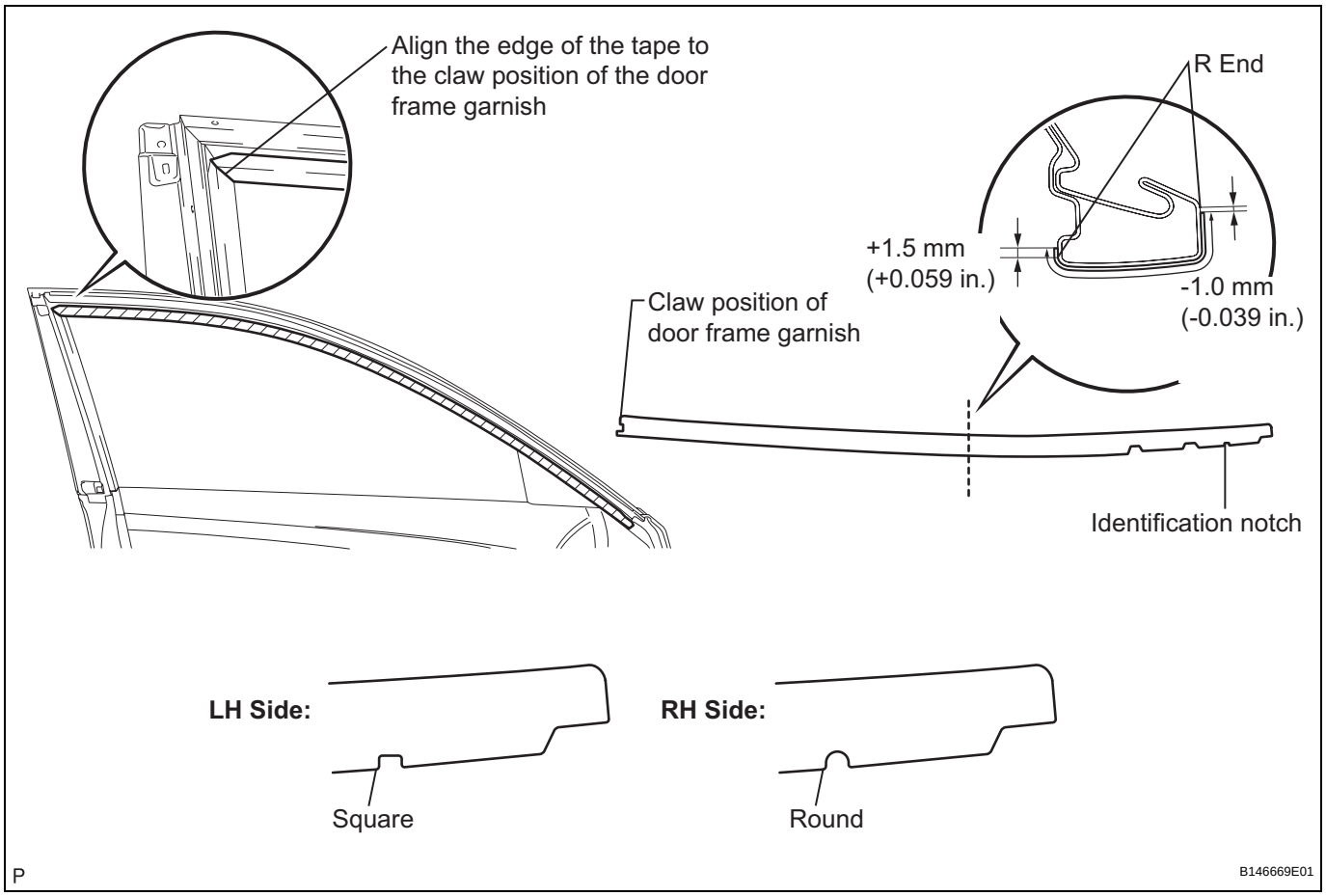

(b) Remove the release paper and apply the stripe.

4. **INSTALL DOOR FRAME GARNISH (See page ED-30)**
5. **INSTALL FRONT DOOR WEATHERSTRIP (See page ET-51)**
6. **INSTALL FRONT DOOR GLASS RUN (See page ED-30)**
7. **INSTALL FRONT DOOR GLASS SUB-ASSEMBLY (See page ED-31)**
8. **INSTALL FRONT DOOR SERVICE HOLE COVER (See page ED-32)**
9. **INSTALL OUTER REAR VIEW MIRROR ASSEMBLY (See page MI-17)**
10. **INSTALL FRONT NO. 1 SPEAKER ASSEMBLY (See page AV-157)**
11. **INSTALL FRONT DOOR INSIDE HANDLE SUB-ASSEMBLY (See page ED-33)**
12. **INSTALL FRONT DOOR INNER GLASS WEATHERSTRIP (See page ED-32)**
13. **INSTALL FRONT DOOR TRIM BOARD SUB-ASSEMBLY (See page ED-33)**

14. **INSTALL COURTESY LIGHT ASSEMBLY (See page ED-34)**
15. **INSTALL ASSIST GRIP COVER (See page ED-34)**
16. **INSTALL FRONT DOOR INSIDE HANDLE BEZEL PLUG (See page ED-34)**
17. **INSTALL FRONT DOOR LOWER FRAME BRACKET GARNISH (See page ED-34)**

REAR DOOR BLACK OUT TAPE

COMPONENTS

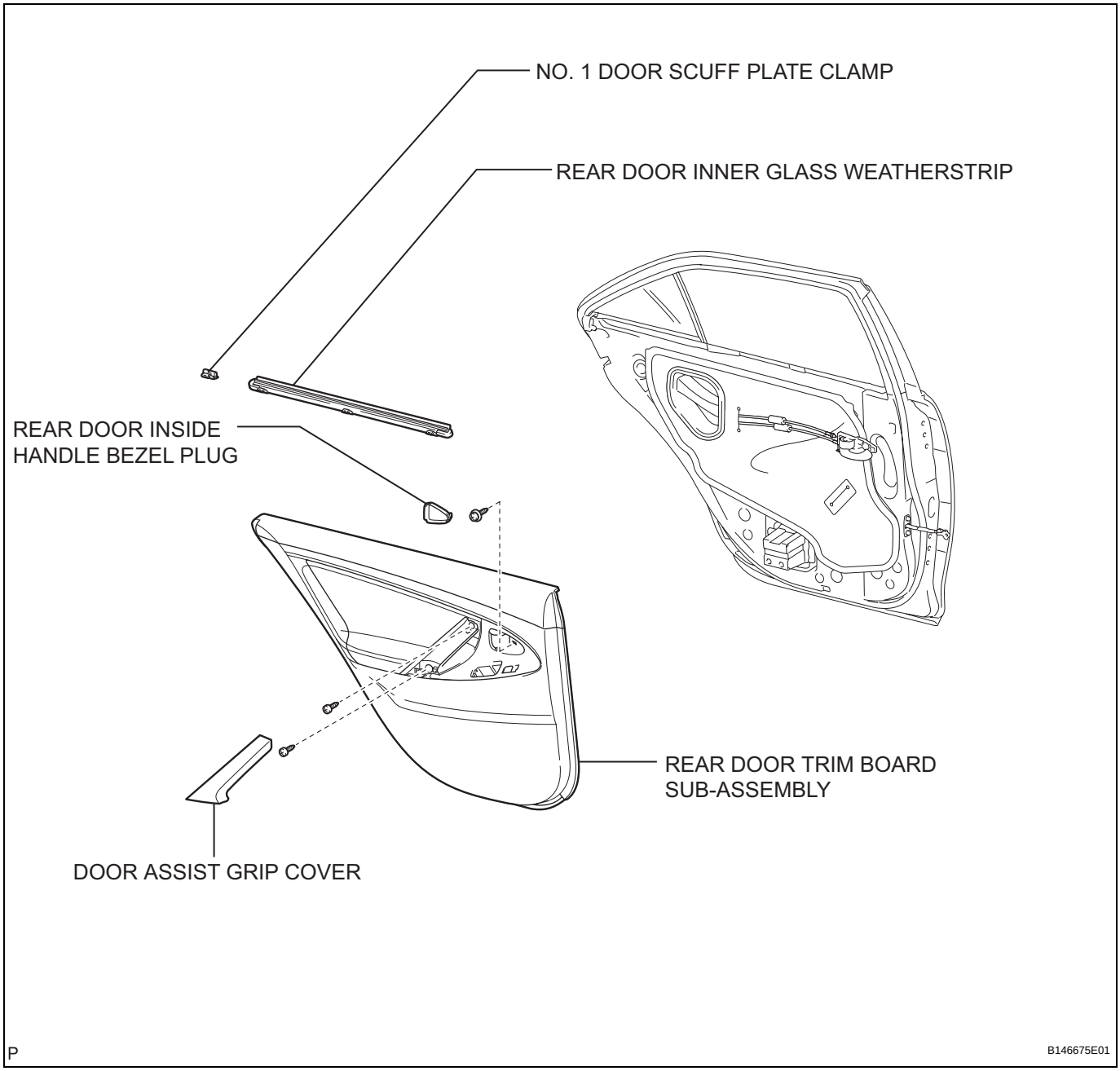

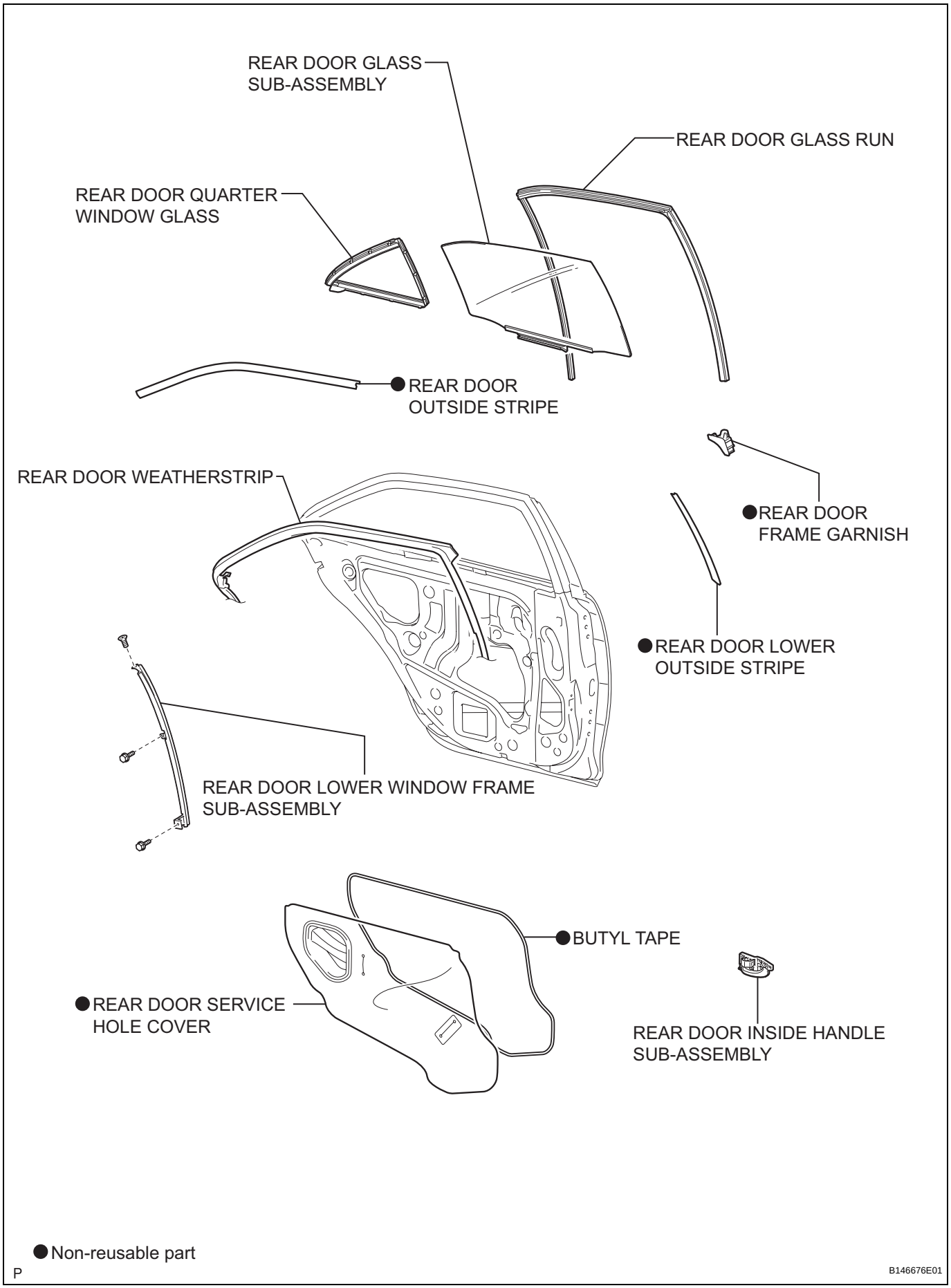
REAR DOOR GLASS SUB-ASSEMBLY
REAR DOOR GLASS RUN
REAR DOOR QUARTER WINDOW GLASS
● REAR DOOR OUTSIDE STRIPE
REAR DOOR WEATHERSTRIP
● REAR DOOR FRAME GARNISH
● REAR DOOR LOWER OUTSIDE STRIPE
REAR DOOR LOWER WINDOW FRAME SUB-ASSEMBLY
● BUTYL TAPE
● REAR DOOR SERVICE HOLE COVER
REAR DOOR INSIDE HANDLE SUB-ASSEMBLY
● Non-reusable part
P
B146676E01

REMOVAL

1. **REMOVE REAR DOOR INSIDE HANDLE BEZEL PLUG (See page ED-38)**
2. **REMOVE DOOR ASSIST GRIP COVER (See page ED-38)**
3. **REMOVE REAR DOOR TRIM BOARD SUB-ASSEMBLY (See page ED-39)**
4. **REMOVE REAR DOOR INNER GLASS WEATHERSTRIP (See page ED-40)**
5. **REMOVE REAR DOOR INSIDE HANDLE SUB-ASSEMBLY (See page ED-40)**
6. **REMOVE REAR DOOR SERVICE HOLE COVER (See page ED-41)**
7. **REMOVE REAR DOOR GLASS RUN (See page ED-42)**
8. **REMOVE REAR DOOR LOWER WINDOW FRAME SUB-ASSEMBLY (See page ED-42)**
9. **REMOVE REAR DOOR QUARTER WINDOW GLASS (See page ED-43)**
10. **REMOVE REAR DOOR GLASS SUB-ASSEMBLY (See page ED-43)**
11. **REMOVE REAR DOOR WEATHERSTRIP (See page ET-55)**
12. **REMOVE REAR DOOR OUTSIDE STRIPE**
    (a) Using a heat light, heat the rear door outside stripe.
    Heating temperature

Item	Temperature
Vehicle Body	40 to 60°C (104 to 140°F)

    NOTICE:
    Do not heat the vehicle body excessively.
    (b) Pull back an edge of the rear door outside stripe and pull it parallel to the vehicle body to pull it off.
13. **REMOVE REAR DOOR LOWER OUTSIDE STRIPE**
    (a) Using a heat light, heat the rear door lower outside stripe.
    Heating temperature

Item	Temperature
Vehicle Body	40 to 60°C (104 to 140°F)

    NOTICE:
    Do not heat the vehicle body excessively.
    (b) Pull back an edge of the rear door lower outside stripe and pull it parallel to the vehicle body to pull it off.

INSTALLATION

1. REPAIR INSTRUCTION

(a) Clean the vehicle body surface.

(1) Using a heat light, heat the vehicle body surface.

Heating temperature

Item	Temperature
Vehicle Body	**40 to 60°C (104 to 140°F)**

NOTICE:
Do not heat the vehicle body excessively.

(2) Wipe off any tape adhesive residue with cleaner.

(b) Installation temperature

(1) When ambient temperature is below 15°C, perform the installation procedure after warming the vehicle body surface (installation surface of the door frame) and tape up to between 20 to 30°C using a heat light. When ambient temperature is above 35°C, cool the vehicle body surface (installation surface of the door frame) and tape down to between 20 to 30°C prior to installation.

HINT:
- The most appropriate temperature for installing the tape is 25°C.
- When the temperature is low, the tape turns stiff and comes off easily. When the temperature is high, the tape looses elasticity.

(c) Before installation

(1) Remove any roughness of coating and dirt on and around the vehicle body surface where the tape will be installed (installation surface of the door frame). If any roughness or dirt remains when pressing the tape onto the surface, air will be trapped under the tape and result in a poor appearance.

HINT:
Spray water on the shop floor to settle any dust.

(d) Key points for handling the tape

(1) The tape bends and rolls up easily. Store the tape between flat pieces of cardboard or other similar objects and keep it dry and level.

NOTICE:
Do not bend the tape or leave it in high temperature places.

(e) Key points for installation of the tape (how to use a squeegee and installation procedure for flat surfaces)

NOTICE:
- **Conduct positioning of the tape with a high accuracy to achieve a neat finish and to avoid peeling.**

- **The tape cannot be reused because it deforms or does not fit any more after being removed.**

(1) To avoid air bubbles, slightly raise the part of the tape that are going to be applied so that its adhesive surface does not touch the vehicle body while applying the tape. Tilt the squeegee at a 40 to 50° (for pressing forward) or 30 to 45° (for pulling) to the vehicle body surface and press the tape onto the vehicle body surface with a force of 20 to 30 N (2 to 3 kgf) at a constant slow speed of 3 to 7 cm per second.

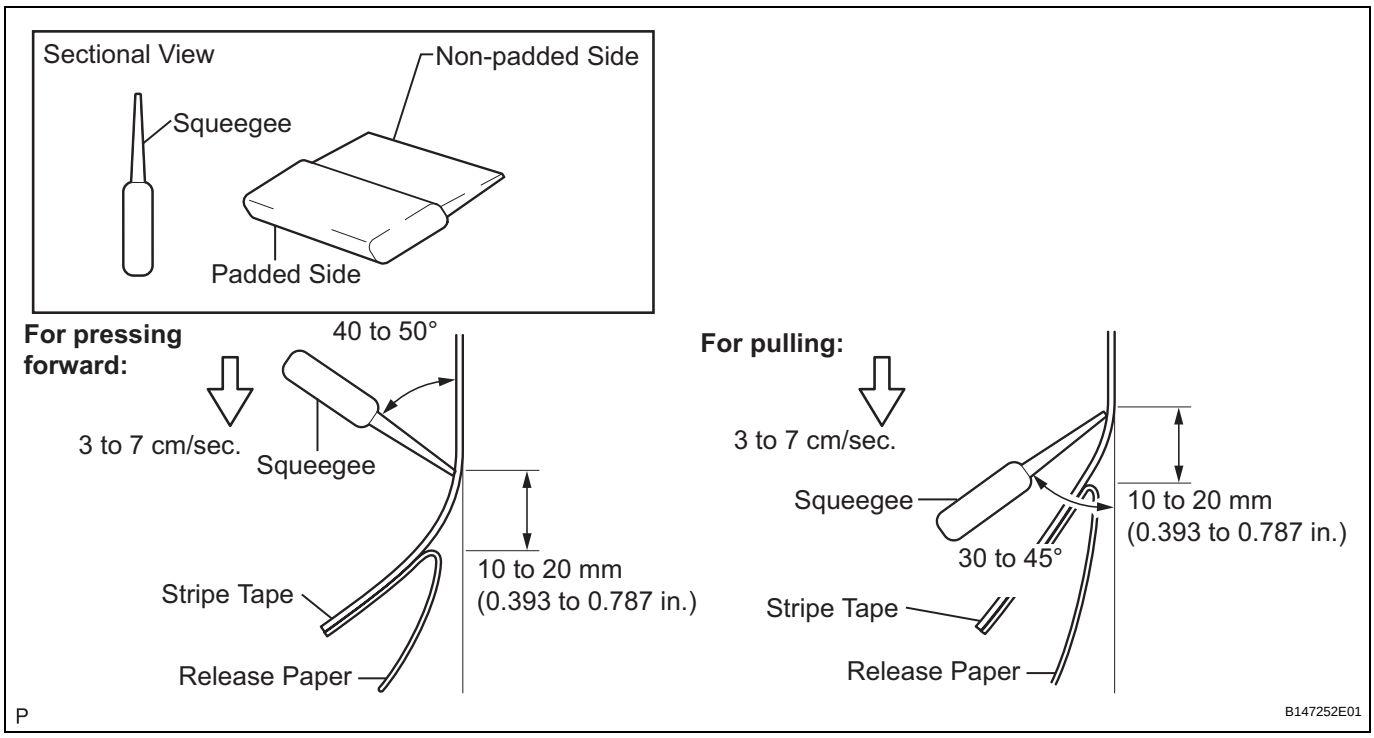

NOTICE:
Be sure to observe the specified pressing speed, force, and angle of the squeegee to avoid wrinkles or air bubbles.

HINT:

- Either angle of the squeegee (for pressing forward or for pulling) is acceptable.
- Be sure to apply the tape while removing the release paper 10 to 20 mm from the edge of the squeegee.

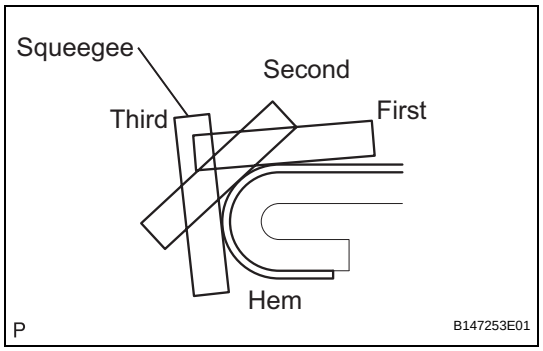

(f) Key points for installation of the tape (how to use a squeegee and installation procedure for hemming surfaces)
  (1) If it is difficult to press the tape, press it in several steps as shown in the illustration. Use your fingers or the padded surface of a squeegee to slowly apply the tape to the hem of the vehicle, especially for a small hem.
  HINT:
  When applying the tape to the backside of a hem, remove the release paper and use your fingers or the padded surface of a squeegee.

(g) Key points for installation of the tape (how to use a squeegee and installation procedure for corners)
  (1) Remove the release paper and apply the tape carefully with your fingers.
  (2) Before applying the tape to each corner, heat the tape using a heat light and gradually apply it, to avoid wrinkles on the tape and achieve a neat finish.

(h) Check after installation
  (1) After completing the application, check if the tape is applied neatly. If the tape is not applied neatly, reapply using new tape.
  NOTICE:
  Do not reuse the tape.

2. INSTALL REAR DOOR LOWER OUTSIDE STRIPE

(a) Refer to the illustration to position the rear door lower outside stripe.

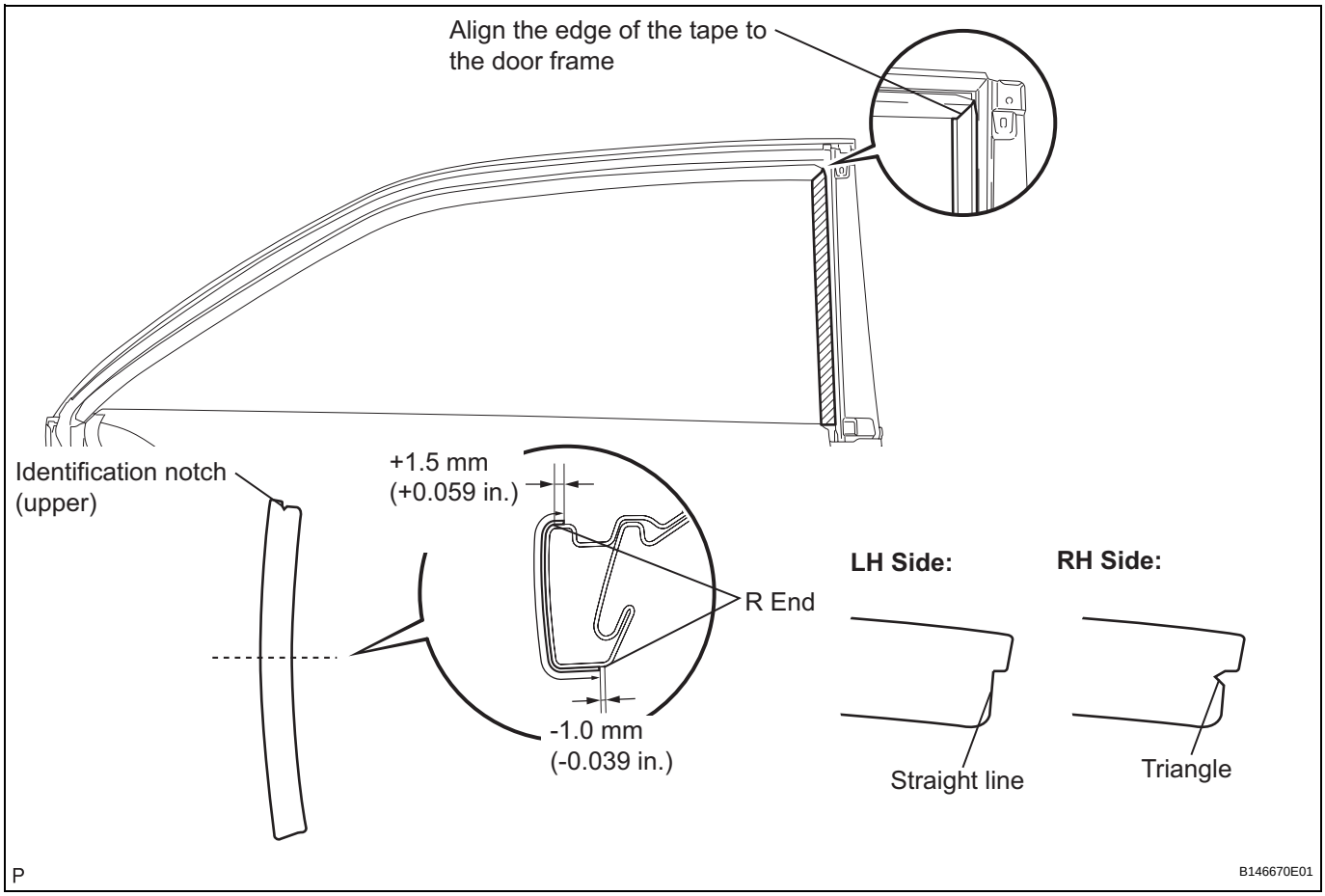

(b) Remove the release paper and apply the stripe.

3. INSTALL REAR DOOR OUTSIDE STRIPE

NOTICE:

Be sure to install the rear door outside stripe after applying the rear door lower outside stripe.

(a) Refer to the illustration to position the rear door outside stripe.

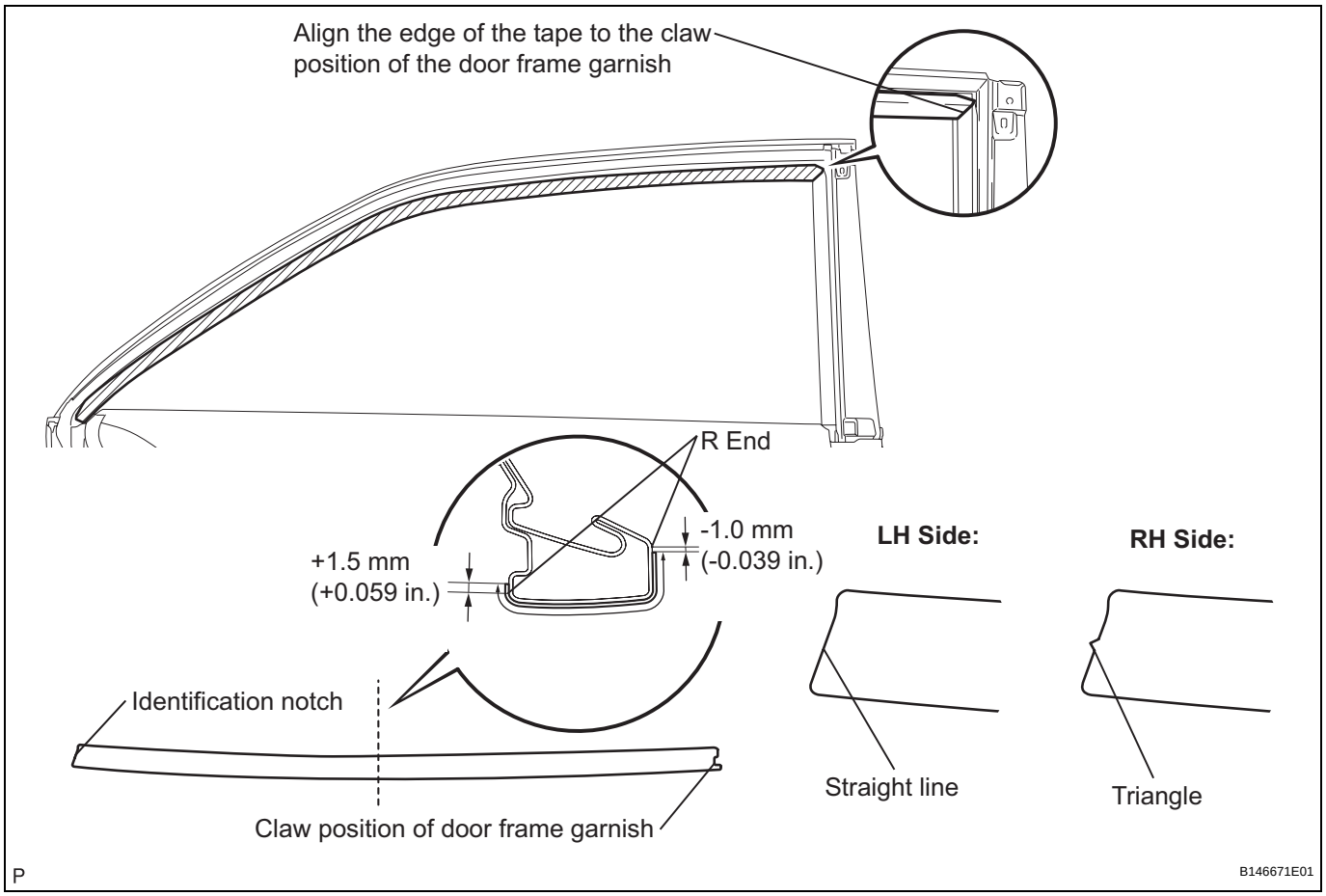

(b) Remove the release paper and apply the stripe.

4. **INSTALL REAR DOOR FRAME GARNISH (See page ED-51)**
5. **INSTALL REAR DOOR WEATHERSTRIP (See page ET-59)**
6. **INSTALL REAR DOOR GLASS SUB-ASSEMBLY (See page ED-52)**
7. **INSTALL REAR DOOR QUARTER WINDOW GLASS (See page ED-52)**
8. **INSTALL REAR DOOR LOWER WINDOW FRAME SUB-ASSEMBLY (See page ED-52)**
9. **INSTALL REAR DOOR GLASS RUN (See page ED-52)**
10. **INSTALL REAR DOOR SERVICE HOLE COVER (See page ED-53)**
11. **INSTALL REAR DOOR INSIDE HANDLE SUB-ASSEMBLY (See page ED-55)**
12. **INSTALL REAR DOOR INNER GLASS WEATHERSTRIP (See page ED-54)**
13. **INSTALL REAR DOOR TRIM BOARD SUB-ASSEMBLY (See page ED-55)**

14. **INSTALL DOOR ASSIST GRIP COVER (See page ED-56)**
15. **INSTALL REAR DOOR INSIDE HANDLE BEZEL PLUG (See page ED-56)**