Chevrolet Cavalier 2001 fuse box diagram

Instrument panel

The fuse panel is located at the driver's side of the instrument panel.

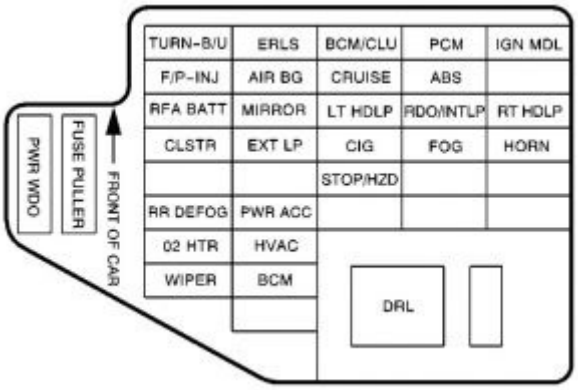

Chevrolet Cavalier – fuse box – instrument panel

Fuse	Circuitry
TURN-B/U	Turn Signals, Back-Up Lamps
ERLS	Engine Relays
BCM/CLU	Body Control Module, Instrument Panel Cluster
PCM	Powertrain Control Module
IGN MDL	Ignition Module
F/P-INJ	Fuel Pump, Fuel Injectors
AIR BG	Air Bag
CRUISE	Cruise Control Switch
ABS	Anti-Lock Brake (Ignition)
Blank	Not Used
RFA BATT	Remote Keyless Entry System
MIRROR	Power Mirror
LT HDLP	Left Headlamp
RDO/INTLP	Radio, Interior Lamps
RT HDLP	Right Headlamp
CLSTR	Instrument Panel Cluster
EXT LP	Exterior Lamps
CIG	Cigarette Lighter, Diagnostic Link Connector

FOG	Fog Lamps
HORN	Horn
Blank	Not Used
Blank	Not Used
STOP/HZD	Stop Lamps, Hazard Lamps
Blank	Not Used
Blank	Not Used
RR DEFOG	Rear Window Defogger
PWR ACC	Power Door Locks, Convertible Top Switch
Blank	Not Used
Blank	Not Used
Blank	Not Used
O2 HTR	Oxygen Sensor Heater
HVAC	Climate Control System
WIPER	Windshield Wiper
BCM	Body Control Module
Blank	Not Used
PWR WDO	Power Windows, Sunroof, Convertible Top (Circuit Breaker)
DRL	Daytime Running Lamps (Relay)

Engine Compartment Fuse Block

The engine compartment fuse block is located on the driver's side of the engine compartment.

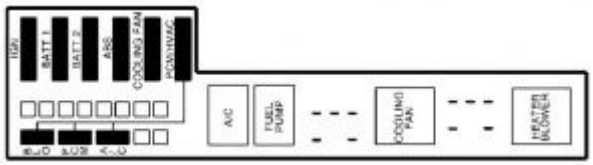

Chevrolet Cavalier – fuse box – engine compartment

Fuse	Circuitry
IGN	Ignition Switch Circuits
BATT 1	Power ACC/Stoplamp Circuits

BATT 2	Lighting Circuits
ABS	Anti-Lock Brake System
COOLING FAN	Engine Cooling Fan
PCM/HVAC	Powertrain Control Module, Heater and A/C Blower
BLO	Heater and A/C Blower
PCM	Powertrain Control Module
A/C	A/C Compressor
FUEL PUMP	Fuel Pump
HEATER BLOWER	Heater and A/C Blower