SRT

2013 VIPER

OWNER'S MANUAL

Downloaded from www.Manualslib.com manuals search engine

A

n Canada, the name
o be deleted and the
ubstitution therefore.

frequent causes of

impaired with blood
inimum. If you are
ignated non-drinking
lic transportation.

an accident. Your
eflexes are slower,
hen you have been
ve.

This manual illustrates and describes the operation of features and equipment that are either standard or optional on this vehicle. This manual may also include a description of features and equipment that are no longer available or were not ordered on this vehicle. Please disregard any features and equipment described in this manual that are not on this vehicle.

Chrysler Group LLC reserves the right to make changes in design and specifications, and/or make additions to or improvements to its products without imposing any obligation upon itself to install them on products previously manufactured.

Copyright © 2012 Chrysler Group LLC

Downloaded from www.Manualslib.com manuals search engine

TABLE OF CONTENTS

SECTION		PAGE
1	INTRODUCTION	3
2	THINGS TO KNOW BEFORE STARTING YOUR VEHICLE	9
3	UNDERSTANDING THE FEATURES OF YOUR VEHICLE	73
4	UNDERSTANDING YOUR INSTRUMENT PANEL	123
5	STARTING AND OPERATING	173
6	WHAT TO DO IN EMERGENCIES	233
7	MAINTAINING YOUR VEHICLE	251
8	MAINTENANCE SCHEDULES	299
9	IF YOU NEED CONSUMER ASSISTANCE	317
10	INDEX	327

Downloaded from www.Manualslib.com manuals search engine

Downloaded from www.Manualslib.com manuals search engine

INTRODUCTION

CONTENTS

■ INTRODUCTION 4
■ HOW TO USE THIS MANUAL 4
■ WARNINGS AND CAUTIONS 6
■ VEHICLE IDENTIFICATION NUMBER 6
■ VEHICLE MODIFICATIONS/ALTERATIONS 7

Downloaded from www.Manualslib.com manuals search engine

INTRODUCTION

Congratulations on selecting your new Chrysler Group LLC vehicle. Be assured that it represents precision workmanship, distinctive styling, and high quality - all essentials that are traditional to our vehicles.

This Owner's Manual has been prepared with the assistance of service and engineering specialists to acquaint you with the operation and maintenance of your vehicle. It is supplemented by Warranty Information, and various customer-oriented documents. Please take the time to read these publications carefully. Following the instructions and recommendations in this manual will help assure safe and enjoyable operation of your vehicle.

NOTE: After reviewing the owner information, it should be stored in the vehicle for convenient referencing and remain with the vehicle when sold.

When it comes to service, remember that your authorized dealer knows your vehicle best, has factory-trained technicians and genuine parts, and cares about your satisfaction.

HOW TO USE THIS MANUAL

Consult the Table of Contents to determine which section contains the information you desire.

Since the specification of your vehicle depends on the items of equipment ordered, certain descriptions and illustrations may differ from your vehicle's equipment.

The detailed index at the back of this Owner's Manual contains a complete listing of all subjects.

Consult the following table for a description of the symbols that may be used on your vehicle or throughout this Owner's Manual:

Downloaded from www.Manualslib.com manuals search engine

Downloaded from www.Manualslib.com manuals search engine

WARNINGS AND CAUTIONS

This Owners Manual contains **WARNINGS** against operating procedures that could result in a collision or bodily injury. It also contains **CAUTIONS** against procedures that could result in damage to your vehicle. If you do not read this entire Owners Manual, you may miss important information. Observe all Warnings and Cautions.

VEHICLE IDENTIFICATION NUMBER

The Vehicle Identification Number (VIN) is on the left front corner of the instrument panel and is visible from outside the vehicle through the windshield. This number also appears on the Automobile Information Disclosure Label affixed to a window on your vehicle, the vehicle registration, and the title.

Vehicle Identification Number

NOTE: It is illegal to remove or alter the VIN.

Downloaded from www.Manualslib.com manuals search engine

VEHICLE MODIFICATIONS/ALTERATIONS

WARNING!

Any modifications or alterations to this vehicle could seriously affect its roadworthiness and safety and may lead to a collision resulting in serious injury or death.

Downloaded from www.Manualslib.com manuals search engine

Downloaded from www.Manualslib.com manuals search engine

THINGS TO KNOW BEFORE STARTING YOUR VEHICLE

CONTENTS

■ A WORD ABOUT YOUR KEYS 12
- □ Keyless Ignition Node (KIN) 12
- □ Key Fob 13
- □ Ignition Or Accessory On Message 14

■ SENTRY KEY® 15
- □ Replacement Keys 16
- □ Customer Key Programming 17
- □ General Information 17

■ VEHICLE SECURITY ALARM SYSTEM 18
- □ Rearming of the System. 18
- □ To Arm The System. 18
- □ To Disarm The System. 19

■ ILLUMINATED ENTRY 20

■ REMOTE KEYLESS ENTRY (RKE) 20
- □ To Unlock The Doors. 21
- □ To Lock The Doors 22
- □ To Unlatch The Liftgate 22
- □ Using The Panic Alarm 22
- □ Programming Additional Transmitters 23
- □ Transmitter Battery Replacement 23

Downloaded from www.Manualslib.com manuals search engine

- General Information 24

■ DOOR LOCKS 25

- Power Door Locks 25

■ WINDOWS 28

- Power Windows 28
- Auto-Down Feature 29
- AUTO-Up Feature With Anti-Pinch Protection — If Equipped 29
- Reset Auto-Up 30

■ LIFTGATE 30

■ OCCUPANT RESTRAINTS 33

- Lap/Shoulder Belts 34
- Lap/Shoulder Belt Untwisting Procedure 39
- Enhanced Seat Belt Use Reminder System (BeltAlert®) 40
- Automatic Locking Retractor Mode (ALR) — If Equipped 41
- Seat Belt Pretensioners — If Equipped 42
- Seat Belts and Pregnant Women 42
- Seat Belt Extender 42
- Driver And Passenger Supplemental Restraint System (SRS) — Air Bags 43
- Air Bag Deployment Sensors And Controls 48
- Event Data Recorder (EDR) 59
- Child Restraints 60

■ BREAK-IN RECOMMENDATIONS 67

Downloaded from www.Manualslib.com manuals search engine

■ SAFETY TIPS 68
- Transporting Passengers. 68
- Exhaust Gas 68
- Safety Checks You Should Make Inside The Vehicle 69
- Periodic Safety Checks You Should Make Outside The Vehicle 70

Downloaded from www.Manualslib.com manuals search engine

A WORD ABOUT YOUR KEYS

Your vehicle uses a keyless ignition system. This system consists of a Key Fob with Remote Keyless Entry (RKE) transmitter and a Keyless Ignition Node (KIN).

Keyless Enter-N-Go™ Feature

This vehicle is equipped with the Keyless Enter-N-Go™ feature, (refer to "Keyless Enter-N-Go" in "Things To Know Before Starting Your Vehicle" for further information).

Keyless Ignition Node (KIN)

This feature allows the driver to operate the ignition with the push of a button, as long as the Remote Keyless Entry (RKE) transmitter is in the passenger compartment.

The Keyless Ignition Node (KIN) has four operating positions, three of which are labeled and will illuminate when in position. The three positions are OFF, ACC, and ON/RUN. The fourth position is START, during start RUN will illuminate.

NOTE: In case the ignition does not change with the push of a button, the RKE transmitter (Key Fob) may have a low or dead battery.

Downloaded from www.Manualslib.com manuals search engine

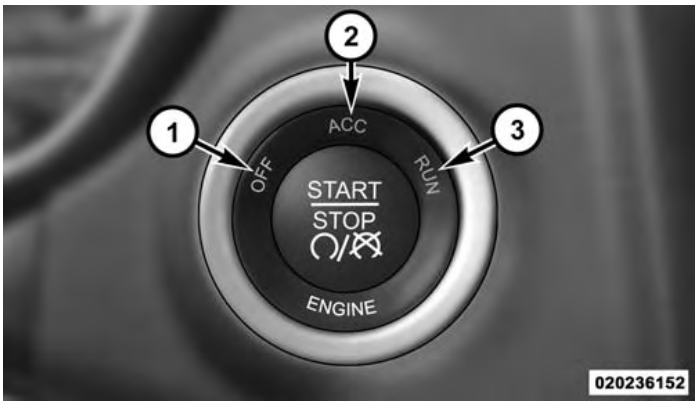

Keyless Ignition Node (KIN)

1 — OFF
2 — ACC (ACCESSORY)
3 — ON/RUN

Key Fob

The Key Fob also contains the Remote Keyless Entry (RKE) transmitter and an emergency key, which stores in the rear of the Key Fob.

The emergency key allows for entry into the vehicle hatch should the battery in the vehicle or the Key Fob go dead.

To remove the emergency key, slide the mechanical latch on the back of the Key Fob sideways with your thumb and then pull the key out with your other hand.

Downloaded from www.Manualslib.com manuals search engine

020271496

Emergency Key Removal

NOTE: You can insert the double-sided emergency key into the lock cylinders with either side up.

Ignition Or Accessory On Message

Opening the driver's door when the ignition is in ACC or ON (engine not running), a chime will sound to remind you to cycle the ignition to OFF. In addition to the chime, the ignition or accessory on message will display in the cluster.

NOTE: With the Uconnect® system, the power window switches, radio and power outlets will remain active for up to 10 minutes after the ignition is cycled to the OFF position. Opening either front door will cancel this feature. The time for this feature is programmable. Refer to "Uconnect® Settings" in "Understanding Your Instrument Panel" for further information.

Downloaded from www.Manualslib.com manuals search engine

WARNING!

- **When leaving the vehicle, always remove the Key Fob from the vehicle and lock your vehicle.**
- **Never leave children alone in a vehicle, or with access to an unlocked vehicle.**
- **Allowing children to be in a vehicle unattended is dangerous for a number of reasons. A child or others could be seriously or fatally injured. Children should be warned not to touch the parking brake, brake pedal or the shift lever.**
- **Do not leave the Key Fob in or near the vehicle, or in a location accessible to children, and do not leave a vehicle equipped with Keyless Enter-N-Go™ in the ACC or ON/RUN mode. A child could operate power windows, other controls, or move the vehicle.**

(Continued)

WARNING! ***(Continued)***

- **Do not leave children or animals inside parked vehicles in hot weather. Interior heat build-up may cause serious injury or death.**

CAUTION!

An unlocked car is an invitation to thieves. Always remove the Key Fob from vehicle, cycle the ignition OFF and lock all doors when leaving the vehicle unattended.

SENTRY KEY®

The Sentry Key® Immobilizer system prevents unauthorized vehicle operation by disabling the engine. The system does not need to be armed or activated. Operation is automatic, regardless of whether the vehicle is locked or unlocked.

Downloaded from www.Manualslib.com manuals search engine

The system uses a Key Fob with Remote Keyless Entry (RKE) transmitter, a Keyless Ignition Node (KIN) and a RF receiver to prevent unauthorized vehicle operation. Therefore, only Key Fobs that are programmed to the vehicle can be used to start and operate the vehicle.

After cycling the ignition to the ON/RUN position, the Vehicle Security Light will turn on for three seconds for a bulb check. If the light remains on after the bulb check, it indicates that there is a problem with the electronics. In addition, if the light begins to flash after the bulb check, it indicates that someone used an invalid Key Fob to start the engine. Either of these conditions will result in the engine being shut off after two seconds.

If the Vehicle Security Light turns on during normal vehicle operation (vehicle running for longer than 10 seconds), it indicates that there is a fault in the electronics. Should this occur, have the vehicle serviced as soon as possible by an authorized dealer.

CAUTION!

The Sentry Key® Immobilizer system is not compatible with some after-market remote starting systems. Use of these systems may result in vehicle starting problems and loss of security protection.

All of the Key Fobs provided with your new vehicle have been programmed to the vehicle electronics.

Replacement Keys

NOTE: Only Key Fobs that are programmed to the vehicle electronics can be used to start and operate the vehicle. Once a Key Fob is programmed to a vehicle, it cannot be programmed to any other vehicle.

Downloaded from www.Manualslib.com manuals search engine

CAUTION!

- **Always remove the Key Fobs from the vehicle and lock all doors when leaving the vehicle unattended.**
- **For vehicles equipped with Keyless Enter-N-Go™, always remember to place the ignition in the OFF position.**

At the time of purchase, the original owner is provided with a four-digit Personal Identification Number (PIN). Keep the PIN in a secure location. This number is required for authorized dealer replacement of Key Fobs. Duplication of Key Fobs may be performed at an authorized dealer, this procedure consists of programming a blank Key Fob to the vehicle electronics. A blank Key Fob is one that has never been programmed.

NOTE: When having the Sentry Key® Immobilizer System serviced, bring all vehicle keys with you to an authorized dealer.

Customer Key Programming

Programming Key Fobs or RKE transmitters may be performed at an authorized dealer.

General Information

The Sentry Key® system complies with FCC rules Part 15 and with RSS-210 of Industry Canada. Operation is subject to the following conditions:

- This device may not cause harmful interference.
- This device must accept any interference that may be received, including interference that may cause undesired operation.

Downloaded from www.Manualslib.com manuals search engine

VEHICLE SECURITY ALARM SYSTEM

The Vehicle Security Alarm monitors the doors, liftgate, and hood for unauthorized entry and the ignition for unauthorized operation. If something triggers the alarm, the Vehicle Security Alarm will prevent the vehicle from starting. It will also sound the horn and flash the park lights, and taillights.

Rearming of the System

If something triggers the alarm, and no action is taken to disarm it, the Vehicle Security Alarm will turn off the horn after three minutes, turn off all of the visual signals (flashing lights) after 15 minutes, and then rearm itself.

To Arm The System

Follow these steps to arm the Vehicle Security Alarm:

1. Make sure the vehicle ignition system is the ″OFF″ position.
2. Perform one of the following methods to lock the vehicle:

Press LOCK on the interior power door lock switch with the driver and/or passenger door open.

Press the LOCK button on the Remote Keyless Entry (RKE) transmitter.

3. If any doors are open, close them.

Entering The Liftgate With The System Armed

NOTE: Using the key to open the liftgate while the Vehicle Security Alarm is armed will trigger the alarm.

Press the LIFTGATE release button on the RKE transmitter twice to allow access without triggering the alarm or having to disarm the Vehicle Security Alarm. Then, within 30 seconds, open the liftgate by using the key cylinder or the LIFTGATE release switch located in the exterior liftgate handle.

Downloaded from www.Manualslib.com manuals search engine

To Disarm The System

The Vehicle Security Alarm can be disarmed using any of the following methods:

- Press the UNLOCK button on the Remote Keyless Entry (RKE) transmitter.
- Cycle the vehicle ignition system out of the OFF position:
  - Press the Keyless Enter-N-Go™ Start/Stop button (requires at least one valid Key Fob in the vehicle).

NOTE:

- The liftgate key cylinder cannot arm or disarm the Vehicle Security Alarm.
- When the Vehicle Security Alarm is armed, the interior power door lock switches will not unlock the doors.

The Vehicle Security Alarm is designed to protect your vehicle; however, you can create conditions where the system will give you a false alarm. If one of the previously described arming sequences has occurred, the Vehicle Security Alarm will arm regardless of whether you are in the vehicle or not. If you remain in the vehicle and open a door, the alarm will sound. If this occurs, disarm the Vehicle Security Alarm.

If the Vehicle Security Alarm is armed and the battery becomes disconnected, the Vehicle Security Alarm will remain armed when the battery is reconnected; the exterior lights will flash, the horn will sound. If this occurs, disarm the Vehicle Security Alarm.

Tamper Alert

If something has triggered the Vehicle Security Alarm in your absence, the horn will sound three times and the exterior lights will blink three times when you disarm the Vehicle Security Alarm. Check the vehicle for tampering.

Downloaded from www.Manualslib.com manuals search engine

Electronic Immobilization System

The Electronic Immobilization system prevents unauthorized vehicle operation by disabling the engine. The system does not need to be armed or activated. Operation is automatic, regardless of whether the vehicle is locked or unlocked.

ILLUMINATED ENTRY

The interior lights will turn on whenever a door is opened or the liftgate is opened and the dimmer switch is not in the defeat position.

The interior lights will turn on, remain on for approximately 30 seconds, and then fade to off if any of the following occur:

- A door is opened using the outside door handle and then closed.
- A door is unlocked using the Remote Keyless Entry (RKE) transmitter.

The interior lights will turn on and remain on for about four seconds and then fade to off if a door is opened using the inside door handle.

NOTE: None of the courtesy lights will operate if the dimmer control is in the "defeat" position (extreme downward position), unless the overhead map/reading lights are turned on manually.

REMOTE KEYLESS ENTRY (RKE)

The RKE system allows you to lock or unlock the doors and liftgate, or activate the Panic Alarm from distances up to approximately 200 ft (60 m) using a hand-held Key Fob with RKE transmitter. The RKE transmitter does not need to be pointed at the vehicle to activate the system.

Downloaded from www.Manualslib.com manuals search engine

021371495

Key Fob With RKE Transmitter

To Unlock The Doors

Press and release the UNLOCK button on the RKE transmitter once to unlock the driver's door or twice to unlock both doors and the liftgate. The park lights and turn signal lights will flash to acknowledge the signal and the illuminated entry system will turn on. refer to "Uconnect® Access Programmable Settings" in "Understanding Your Instrument Panel" for further information.

Remote Key Unlock, Driver Door/Both Doors First

This feature lets you program the system to unlock either the driver's door or all doors on the first press of the UNLOCK button on the RKE transmitter. To change the current setting, refer to "Uconnect® Access Settings" in "Understanding Your Instrument Panel" for further information.

Flash Lights With Remote Key Lock

This feature lets you program the system to unlock either the driver's door or all doors on the first press of the UNLOCK button on the RKE transmitter. To change the current setting, refer to "Uconnect® Access Settings" in "Understanding Your Instrument Panel" for further information.

Downloaded from www.Manualslib.com manuals search engine

To Lock The Doors

Press and release the LOCK button on the RKE transmitter to lock the doors. The horn will chirp once and the park lights and turn signal lights will flash to acknowledge the signal.

Sound Horn With Remote Key Lock

This feature will cause the horn to chirp when the doors are locked with the RKE transmitter. This feature can be turned on or turned off. To change the current setting, refer to "Uconnect® Access Settings" in "Understanding Your Instrument Panel" for further information.

To Unlatch The Liftgate

Press the LIFTGATE button on the RKE transmitter two times within five seconds to unlatch the liftgate.

Using The Panic Alarm

To turn the Panic Alarm feature on or off, press and hold the PANIC button on the RKE transmitter for at least one second and release. When the Panic Alarm is on, the headlights will turn on, the park lights will flash, the horn will pulse on and off, and the interior lights will turn on.

The Panic Alarm will stay on for three minutes unless you turn it off by either pressing the PANIC button a second time or drive the vehicle at a speed of 15 mph (24 km/h) or greater.

NOTE: The interior lights will turn off if you cycle the ignition switch to the ACC or ON/RUN position while the Panic Alarm is activated. However, the exterior lights and horn will remain on.

Downloaded from www.Manualslib.com manuals search engine

Programming Additional Transmitters

Programming Key Fobs or RKE transmitters may be performed at an authorized dealer.

Transmitter Battery Replacement

The recommended replacement battery is one CR2032 battery.

NOTE:

- Perchlorate Material — special handling may apply. See www.dtsc.ca.gov/hazardouswaste/perchlorate
- Do not touch the battery terminals that are on the back housing or the printed circuit board.

1. Remove the emergency key by sliding the mechanical latch on the back of the RKE transmitter sideways with your thumb and then pull the key out with your other hand.
2. Insert the tip of the emergency key or a #2 flat blade screwdriver into the slot and gently pry the two halves of the RKE transmitter apart. Make sure not to damage the seal during removal.

021337430

Emergency Key Removal

Downloaded from www.Manualslib.com manuals search engine

3. Remove the battery by turning the back cover over (battery facing downward) and tapping it lightly on a solid surface such as a table or similar, then replace the battery. When replacing the battery, match the + sign on the battery to the + sign on the inside of the battery clip, located on the back cover. Avoid touching the new battery with your fingers. Skin oils may cause battery deterioration. If you touch a battery, clean it with rubbing alcohol.
4. To assemble the RKE transmitter case, snap the two halves together.

General Information

This RKE transmitter complies with FCC rules Part 15. Operation is subject to the following conditions:

1. This device may not cause harmful interference.
2. This device must accept any interference that may be received, including interference that may cause undesired operation.

If your RKE transmitter fails to operate from a normal distance, check for these two conditions:

1. Closeness to a radio transmitter, such as a radio station tower, airport transmitter, and some mobile or CB radios can affect transmitter operation. To verify if this is the cause, move the vehicle to another area and test RKE transmitter operation.
2. The RKE transmitter may become “out of sync” and will no longer function if operated more than 255 times while out of range of the vehicle (23 ft or 7 m) or if operated while the vehicle battery is dead or disconnected. To “synchronize” the RKE transmitter, cycle the ignition to the OFF position. Close the hood and all doors. Press both buttons on the RKE transmitter for about 10 seconds. The horn will chirp once to acknowledge the signal. Normal RKE transmitter operation should resume.

Downloaded from www.Manualslib.com manuals search engine

3. The RKE transmitter battery may be weak or dead. The expected life of the battery is a minimum of three years.

DOOR LOCKS

WARNING!

- **Do not touch the exhaust pipe sill covers when entering or exiting your vehicle. They can be hot enough to burn you. Observe the warning labels on each door closure panel.**
- **For personal security in the event of an collision, lock the vehicle doors as you drive as well as when you park and leave the vehicle.**
- **When leaving the vehicle, always cycle the ignition to the OFF position lock, and lock your vehicle. Unsupervised use of vehicle equipment may cause severe personal injuries and death.**

(Continued)

WARNING! *(Continued)*

- **Never leave children alone in a vehicle. Leaving unattended children in a vehicle is dangerous for a number of reasons. A child or others could be injured seriously or fatally. Don't leave the ignition in the ON position. A child could operate power windows, other controls, or move the vehicle.**

Power Door Locks

A power door lock switch is on each door trim panel. Use this switch to lock or unlock the doors.

WARNING!

- **For personal security and safety in the event of a collision, lock the vehicle doors before you drive as well as when you park and leave the vehicle.**

(Continued)

Downloaded from www.Manualslib.com manuals search engine

WARNING! ***(Continued)***

- **Never leave children alone in a vehicle, or with access to an unlocked vehicle.**
- **Allowing children to be in a vehicle unattended is dangerous for a number of reasons. A child or others could be seriously or fatally injured. Children should be warned not to touch the parking brake, brake pedal or the shift lever.**
- **Do not leave the Key Fob in or near the vehicle, or in a location accessible to children, and do not leave Keyless Enter-N-Go™ in the ACC or ON/RUN mode. A child could operate power windows, other controls, or move the vehicle.**

Power Door Lock Switch

If you press the power door lock switch while the ignition is in the ACC or ON/RUN position, and any front door is open, the power locks will not operate. This prevents you from accidentally locking the Key Fob in the vehicle. Cycling the ignition to the OFF position or closing the door will allow the locks to operate. If a door

Downloaded from www.Manualslib.com manuals search engine

is open, and the ignition is in the ACC or ON/RUN position, a chime will sound as a reminder to remove the Key Fob.

Automatic Door Locks

The auto door lock feature default condition is enabled. When enabled, the door locks will lock automatically when the vehicle's speed exceeds 5 mph (8 km/h). The auto door lock feature can be enabled or disabled by your authorized dealer for service.

Automatic Unlock Doors On Exit

The doors will unlock automatically on vehicles with power door locks if:

1. The Automatic Unlock Doors On Exit feature is enabled.
2. The driver door is opened.
3. The doors were not previously unlocked.

Automatic Unlock Doors On Exit Programming

To change the current setting, refer to "Uconnect® Settings" in "Understanding Your Instrument Panel" for further information.

NOTE: Use the Automatic Unlock Doors On Exit feature in accordance with local laws.

Downloaded from www.Manualslib.com manuals search engine

WINDOWS

Power Windows

The window controls on the driver's door control both of the door windows.

Power Window Switches

There are single window controls on the passenger door trim panel, which operate the passenger door window. The window controls will operate only when the ignition is in the ACC or ON/RUN position.

The power window switches will remain active for up to 10 minutes after the ignition is cycled to the OFF position. Opening either front door will cancel this feature. The time is programmable. Refer to "Uconnect® Access Settings" in "Understanding Your Instrument Panel" for further information.

WARNING!

Never leave children unattended in a vehicle, and do not let children play with power windows. Do not leave the key fob in or near the vehicle, and do not leave a vehicle equipped with Keyless Enter-N-Go™

(Continued)

Downloaded from www.Manualslib.com manuals search engine

WARNING! *(Continued)*

in the ACC or ON/RUN mode. Occupants, particularly unattended children, can become entrapped by the windows while operating the power window switches. Such entrapment may result in serious injury or death.

Auto-Down Feature

Both power window switches have an AUTO-down feature. Press the window switch to the second detent, release, and the window will go down automatically.

To open the window part way, press the window switch to the first detent and release it when you want the window to stop.

To stop the window from going all the way down during the AUTO-down operation, pull up on the switch briefly.

AUTO-Up Feature With Anti-Pinch Protection — If Equipped

Lift the window switch to the second detent, release, and the window will go up automatically.

To stop the window from going all the way up during the AUTO-up operation, push down on the switch briefly.

To close the window part way, lift the window switch to the first detent and release it when you want the window to stop.

NOTE:

- If the window runs into any obstacle during auto-closure, it will reverse direction and then go back down. Remove the obstacle and use the window switch again to close the window.

Downloaded from www.Manualslib.com manuals search engine

- Any impact due to rough road conditions may trigger the auto-reverse function unexpectedly during auto-closure. If this happens, pull the switch lightly to the first detent and hold to close the window manually.

WARNING!

There is no anti-pinch protection when the window is almost closed. Be sure to clear all objects from the window before closing.

Reset Auto-Up

Should the Auto Up feature stop working, the window probably needs to be reset. To reset Auto Up:

1. Pull the window switch up to close the window completely and continue to hold the switch up for an additional two seconds after the window is closed.
2. Push the window switch down firmly to the second detent to open the window completely and continue to hold the switch down for an additional two seconds after the window is fully open.

LIFTGATE

The liftgate can be unlocked or locked by the Remote Keyless Entry (RKE) transmitter, the manual lock cylinder located on the rear panel or by activating either of the power door lock switches located on the door trim panels.

Downloaded from www.Manualslib.com manuals search engine

Rear Panel Manual Lock Cylinder

To unlock the liftgate with the RKE transmitter, press the LIFTGATE button on the RKE transmitter two times.

Once unlocked, the liftgate can be opened or closed. To open the liftgate, press the LIFTGATE RELEASE switch located under the right side of the tail panel, which is located below the liftgate, then pull the liftgate open with one fluid motion.

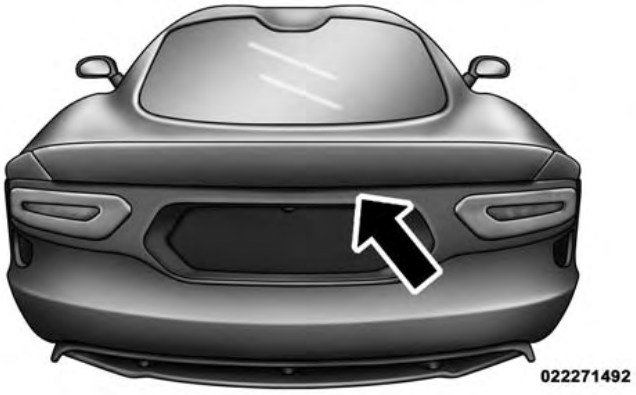

Pull Up On The Liftgate

Downloaded from www.Manualslib.com manuals search engine

NOTE: The liftgate release switch will be ignored under the following conditions:

- When the ignition is in ON/RUN and the parking brake is not set.
- When vehicle speed is not 0 mph (0 km/h).
- When all doors are locked (except for RKE transmitter liftgate access). Refer to "Entering the Liftgate with the System Armed — Coupe" under "Security Alarm System" for additional information.

The liftgate ajar icon will illuminate in the Electronic Vehicle Information Center (EVIC) when the liftgate is open.

WARNING!

- **Driving with the liftgate open can allow poisonous exhaust gases into your vehicle. You and your passengers could be injured by these fumes. Keep the liftgate closed when you are operating the vehicle.**
- **If you are required to drive with the liftgate open, make sure that all windows are closed, and the climate control blower switch is set at high speed. Do not use the recirculation mode.**

Gas props support the liftgate in the open position. However, because the gas pressure drops with temperature, it may be necessary to assist the props when opening the liftgate in cold weather.

Downloaded from www.Manualslib.com manuals search engine

OCCUPANT RESTRAINTS

Some of the most important safety features in your vehicle are the restraint systems:

- Three-point lap and shoulder belts for all seating positions
- Advanced Front Air Bags for driver and front passenger
- An energy-absorbing steering column and steering wheel
- Knee bolsters/blockers for front seat occupants
- Seat belts incorporate pretensioners to enhance occupant protection by managing occupant energy during an impact event — if equipped
- Passenger side seatbelt incorporates an Automatic Locking Retractor (ALR), which locks the seat belt webbing into position by extending the belt all the way out and then adjusting the belt to the desired length to restrain a child seat or secure a large item in a seat — if equipped

If you will be carrying children too small for adult-sized seat belts, the seat belts or tether anchor feature also can be used to hold infant and child restraint systems. For more information on the tether anchor, refer to Child Restraint Tether Anchor.

NOTE: The Advanced Front Air bags have a multistage inflator design. This allows the air bag to have different rates of inflation based on several factors, including the severity and type of collision.

Please pay close attention to the information in this section. It tells you how to use your restraint system properly, to keep you and your passengers as safe as possible.

Downloaded from www.Manualslib.com manuals search engine

WARNING!

In a collision, you and your passengers can suffer much greater injuries if you are not properly buckled up. You can strike the interior of your vehicle or other passengers, or you can be thrown out of the vehicle. Always be sure you and others in your vehicle are buckled up properly.

Buckle up even though you are an excellent driver, even on short trips. Someone on the road may be a poor driver and cause an collision that includes you. This can happen far away from home or on your own street.

Research has shown that seat belts save lives, and they can reduce the seriousness of injuries in an collision. Some of the worst injuries happen when people are thrown from the vehicle. Seat belts reduce the possibility of ejection and the risk of injury caused by striking the inside of the vehicle. **Everyone in a motor vehicle should be belted at all times**.

Lap/Shoulder Belts

Each seat belt is a combined lap/shoulder belt system. The belt webbing retractor will lock only during very sudden stops or impacts. This feature allows the shoulder portion of the belt to move freely with you under normal conditions. However, in an collision, the belt will lock and reduce your risk of striking the inside of the vehicle or being thrown out of the vehicle.

Downloaded from www.Manualslib.com manuals search engine

WARNING!

- It is extremely dangerous to ride in a cargo area, inside or outside of a vehicle. In a collision, people riding in these areas are more likely to be seriously injured or killed.
- Do not allow people to ride in any area of your vehicle that is not equipped with seats and seat belts.
- Be sure everyone in your vehicle is in a seat and using a seat belt properly.
- Wearing a seat belt incorrectly is dangerous. Seat belts are designed to go around the large bones of your body. These are the strongest parts of your body and can take the force of a collision they best.

(Continued)

WARNING! *(Continued)*

- Wearing your belt in the wrong place can make your injuries in a collision much worse. You might suffer internal injuries, or you could even slide out of part of the belt. Follow these instructions wear you seat belt safely and to keep your passengers safe, too.
- Two people should never be belted into a single seat belt. People belted together can crash into one another in an collision, hurting one another badly. Never use a lap/shoulder belt or a lap belt for more than one person, no matter what their size.

Downloaded from www.Manualslib.com manuals search engine

Lap/Shoulder Belt Operating Instructions

1. Enter the vehicle and close the door. Sit back and adjust the seat.
2. The seat belt latch plate is located at the side of your seat back. Grasp the latch plate and pull out the belt.

Latch Plate

3. Slide the latch plate up the webbing as far as necessary to make the belt go around your lap.
4. When the belt is long enough to fit, insert the latch plate into the buckle until you hear a "click."

Latch Plate To Buckle

Downloaded from www.Manualslib.com manuals search engine

WARNING!

- **A belt that is buckled into the wrong buckle will not protect you properly. The lap portion could ride too high on your body, possibly causing internal injuries. Always buckle your belt into the buckle nearest you.**
- **A belt that is too loose will not protect you properly. In a sudden stop, you could move too far forward, increasing the possibility of injury. Wear your seat belt snugly.**

(Continued)

WARNING! ***(Continued)***

- **A belt that is worn under your arm is dangerous. Your body could strike the inside surfaces of the vehicle in a collision, increasing head and neck injury. A belt worn under the arm can cause internal injuries. Ribs aren't as strong as shoulder bones. Wear the belt over your shoulder so that your strongest bones will take the force in a collision.**
- **A shoulder belt placed behind you will not protect you from injury during a collision. You are more likely to hit your head in a collision if you do not wear your shoulder belt. The lap and shoulder belt are meant to be used together.**

5. Position the lap belt across your thighs, below your abdomen. To remove slack in the lap belt portion, pull up a little on the shoulder belt, as shown.

Downloaded from www.Manualslib.com manuals search engine

Removing Slack From Belt

6. To loosen the lap belt if it is too tight, lift up on the shoulder belt and pull on the lap belt. A snug belt reduces the risk of sliding under the belt in an collision.

WARNING!

- **A lap belt worn too high can increase the risk of injury in a collision. The belt forces won't be at the strong hip and pelvic bones, but across your abdomen. Always wear the lap part of your seat belt as low as possible and keep it snug.**
- **A twisted belt may not protect you properly. In a collision, it could even cut into you. Be sure the belt is straight. If you can't straighten a belt in your vehicle, take it to your authorized dealer immediately and have it fixed.**

7. Position the shoulder belt on your chest so that it is comfortable and not resting on your neck. The retractor will withdraw any slack in the belt.

Downloaded from www.Manualslib.com manuals search engine

8. To release the belt, push the red button in the buckle. The belt will retract automatically to its stowed position. If necessary, slide the latch plate down the webbing to allow it to retract fully.

WARNING!

A frayed or torn belt could rip apart in a collision and leave you with no protection. Inspect the belt system periodically, checking for cuts, frays, or loose parts. Damaged parts must be replaced immediately. Do not disassemble or modify the system. Seat belt assemblies must be replaced after a collision if they have been damaged (bent retractor, torn webbing, etc.).

Lap/Shoulder Belt Untwisting Procedure

Use the following procedure to untwist a twisted lap/shoulder belt.

1. Position the latch plate as close as possible to the anchor point.
2. At about 6 to 12 in (15 to 30 cm) above the latch plate, grasp and twist the belt webbing 180 degrees to create a fold that begins immediately above the latch plate.
3. Slide the latch plate upward over the folded webbing. The folded webbing must enter the slot at the top of the latch plate.
4. Continue to slide the latch plate up until it clears the folded webbing.

Downloaded from www.Manualslib.com manuals search engine

Enhanced Seat Belt Use Reminder System (BeltAlert®)

BeltAlert® is a feature intended to remind the driver and front passenger (if equipped with front passenger BeltAlert®) to fasten their seat belts. The feature is active whenever the ignition is on. If the driver or front seat passenger is unbelted, the Seat Belt Reminder Light will turn on and remain on until both front seat belts are fastened.

The BeltAlert® warning sequence begins after the vehicle speed is over 5 mph (8 km/h), by blinking the Seat Belt Reminder Light and sounding an intermittent chime. Once the sequence starts, it will continue for the entire duration or until the respective seatbelts are fastened. After the sequence completes, the Seat Belt Reminder Light remains illuminated until the respective seat belts are fastened. The driver should instruct all other occupants to fasten their seat belts. If a front seat belt is unbuckled while traveling at speeds greater than 5 mph (8 km/h), BeltAlert® will provide both audio and visual notification.

The front passenger seat BeltAlert® is not active when the front passenger seat is unoccupied. BeltAlert® may be triggered when an animal or heavy object is on the front passenger seat or when the seat is folded flat (if equipped). It is recommended that pets be restrained in the rear seat in pet harnesses or pet carriers that are secured by seat belts, and cargo is properly stowed.

BeltAlert® can be enabled or disabled by your authorized dealer. Chrysler Group LLC does not recommend deactivating BeltAlert®.

NOTE: Although BeltAlert® has been deactivated, the Seat Belt Reminder Light will continue to illuminate while the driver's or front passenger (if equipped with BeltAlert®) seat belt remains unfastened.

Downloaded from www.Manualslib.com manuals search engine

Automatic Locking Retractor Mode (ALR) — If Equipped

In this mode, the shoulder belt is automatically prelocked. The belt will still retract to remove any slack in the shoulder belt. The Automatic Locking Mode is available on all passenger-seating positions with a combination lap/shoulder belt. Use the Automatic Locking Mode anytime a child safety seat is installed in a seating position that has a belt with this feature. Children 12 years old and under should always be properly restrained in the rear seat.

How To Engage The Automatic Locking Mode

1. Buckle the combination lap and shoulder belt.
2. Grasp the shoulder portion and pull downward until the entire belt is extracted.
3. Allow the belt to retract. As the belt retracts, you will hear a clicking sound. This indicates the safety belt is now in the Automatic Locking Mode.

How To Disengage The Automatic Locking Mode

Unbuckle the combination lap/shoulder belt and allow it to retract completely to disengage the Automatic Locking Mode and activate the vehicle sensitive (emergency) locking mode.

WARNING!

- **The belt and retractor assembly must be replaced if the seat belt assembly Automatic Locking Retractor (ALR) feature or any other seat belt function is not working properly when checked according to the procedures in the Service Manual.**
- **Failure to replace the belt and retractor assembly could increase the risk of injury in collisions.**

Downloaded from www.Manualslib.com manuals search engine

Seat Belt Pretensioners — If Equipped

The seat belts for both front seating positions may be equipped with pretensioning devices that are designed to remove slack from the seat belt in the event of an collision. These devices may improve the performance of the seat belt by assuring that the belt is tight about the occupant early in an collision. Pretensioners work for all size occupants, including those in child restraints.

NOTE: These devices are not a substitute for proper seat belt placement by the occupant. The seat belt still must be worn snugly and positioned properly.

The pretensioners are triggered by the Occupant Restraint Controller (ORC). Like the air bags, the pretensioners are single use items. A deployed pretensioner or a deployed air bag must be replaced immediately.

Seat Belts and Pregnant Women

We recommend that pregnant women use the seat belts throughout their pregnancy. Keeping the mother safe is the best way to keep the baby safe.

Pregnant women should wear the lap portion of the belt across the thighs and as snug across the hips as possible. Keep the belt low so that it does not come across the abdomen. That way the strong bones of the hips will take the force if there is an collision.

Seat Belt Extender

If a seat belt is too short, even when extended fully, your authorized dealer can provide you with a seat belt extender. This extender should only be used if the existing belt is not long enough. When it is not required, remove the extender, and store it.

Downloaded from www.Manualslib.com manuals search engine

WARNING!

Using a seat belt extender when not needed can increase the risk of injury in a collision. Only use the seat belt extender when the lap belt is not long enough when it is worn low and snug, and in the recommended seating positions. Remove and store the extender when not needed.

Driver And Passenger Supplemental Restraint System (SRS) — Air Bags

This vehicle has Advanced Front Air Bags for the driver and passenger as a supplement to the seat belt restraint systems. The driver's Advanced Front Air Bag is mounted in the steering wheel. The passenger's Advanced Front Air Bag is mounted underneath a cover in the passenger's side of the instrument panel. The words SRS/AIRBAG is embossed on the Air Bag covers.

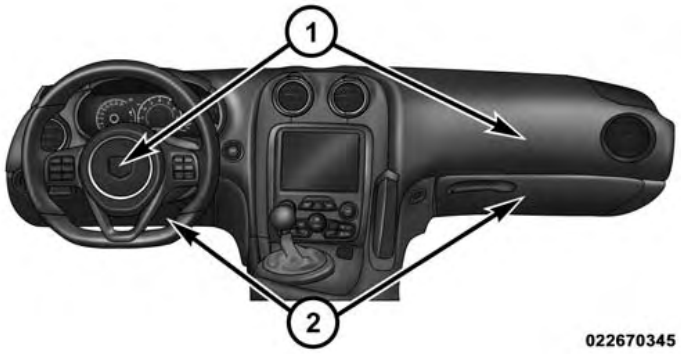

Advanced Front Air Bag And Knee Bolster Locations

1 — Driver And Passenger Advanced Front Air Bag
2 — Knee Bolster

Downloaded from www.Manualslib.com manuals search engine

NOTE: These Air Bags are certified to the new Federal regulations for Advanced Air Bags. The passenger's Advanced Front Air Bag is certified to the Federal regulations that define Occupant Classification (Refer to "Air Bag Deployment Sensors And Controls").

WARNING!

- **No objects should be placed over or near the air bag on the instrument panel, because any such objects could cause harm if the vehicle is in a collision severe enough to cause the air bag to inflate.**

(Continued)

WARNING! ***(Continued)***

- **Do not put anything on or around the air bag covers or attempt to open them manually. You may damage the air bags and you could be injured because the air bags may no longer be functional. The protective covers for the air bag cushions are designed to open only when the air bags are inflating.**
- **Do not drill, cut or tamper with the knee bolster in any way.**
- **Do not mount any accessories to the knee bolster such as alarm lights, stereos, citizen band radios, etc.**

(Continued)

Downloaded from www.Manualslib.com manuals search engine

WARNING! ***(Continued)***

- **Relying on the Air Bags alone could lead to more severe injuries in a collision. The Air Bags work with your seat belt to restrain you properly. In some collisions, Air Bags won't deploy at all. Always wear your seat belts even though you have Air Bags.**
- **Being too close to the steering wheel or instrument panel during Air Bag deployment could cause serious injury. Air Bags need room to inflate. Sit back, extending your arms comfortably to reach the steering wheel or instrument panel.**

The first stage inflator is triggered immediately during an impact that requires air bag deployment. This low output is used in less severe collisions. A higher energy output is used for more severe collisions.

The Air Bags have a multistage inflator design. This allows the air bag to have different rates of inflation that are based on several factors, including collision severity and occupant size.

While the seat belts are designed to protect the driver and passenger in many types of collisions, the Air Bags will deploy in certain frontal collisions depending on several factors, including the severity and type of collision. However, even in collisions where the Air Bags deploy, all occupants need the seat belts to keep them in the right position for the Air Bags to protect properly.

Downloaded from www.Manualslib.com manuals search engine

NOTE:

- The passenger Advanced Front Air Bag may not deploy if the Occupant Classification System (refer to "Air Bag Deployment Sensors And Controls") determines the seat is empty or is occupied by someone that is classified in the "child" category. This could be a child, a teenager, or even a small adult. Therefore, even if the driver's Advanced Front Air Bag deploys, the passenger's Advanced Front Air Bag may not deploy.
- Air Bag covers may not be obvious in the interior trim; but they will open during Air Bag deployment.
- After any collision, the vehicle should be taken to an authorized dealer immediately.

Here are some simple steps you can take to minimize the risk of harm from a deploying Air Bag:

1. An infant up to one year or approximately 20 lbs (9 kg) should never ride in the vehicle because in the event of a crash, the rear-facing child seat places them too close to the passenger Air Bag.
2. An infant in a rear-facing child safety seat, designed for a child up to one year or approximately 20 lbs (9 kg), should never ride in the front seat of a vehicle equipped with a passenger Air Bag, unless the Air Bag is shut OFF. An Air Bag deployment can cause severe injury or death to an infant in this position. Refer to "Passenger Air Bag Disabled (PAD) Indicator Light".
3. A child who is not big enough to wear the vehicle seat belt properly should be secured in a child safety seat or booster seat. (Refer to "Child Restraints")

Downloaded from www.Manualslib.com manuals search engine

4. An older child who does not use a child safety seat or booster seat should ride buckled properly in their seat.
5. Never allow a child to place the shoulder belt behind them or under the arm.
6. Never allow a child to lean forward toward the instrument panel as a passenger Air Bag deployment could cause severe injury or death to a child in this position.
7. For a child from 1 to 12 years old: Move the passenger seat as far back as possible. For a child from 20 to 60 lbs (9 kg to 27 kg): Secure them in the appropriate child safety seat or booster seat. If too large for a booster seat, the child should wear the lap/shoulder belt properly.
8. Read the instructions provided with your child restraint to make sure that you are using it properly.
9. Read the instructions provided with your child safety seat or booster seat to make sure that you are using it properly.
10. All occupants should always wear their lap and shoulder belts properly.
11. Position the driver seat and passenger seat as far away from the instrument panel as practical to allow the Air Bags room to inflate. Note that the power adjustable pedals allow for more driver's seat adjustment options. Refer to "Adjustable Pedals" in "Understanding The Features Of Your Vehicle" for details.

Downloaded from www.Manualslib.com manuals search engine

Air Bag System Components

Your vehicle may be equipped with the following Air Bag system components:

- Occupant Restraint Controller (ORC)
- Air Bag Warning Light
- Steering Wheel and Column
- Instrument Panel
- Knee Impact Bolster
- Driver Advanced Front Air Bag
- Passenger Advanced Front Air Bag
- Front Impact Sensors
- Front Seat Belt Pretensioners, Seat Belt Buckle Switch, and Seat Track Position Sensors
- Occupant Classification System (OCS)
- Occupant Classification Module (OCM)
- Passenger Air Bag Disable (PAD) Indicator Light
- Flex Mat

Knee Impact Bolsters

The Knee Impact Bolsters help protect the knees of the driver and the passenger, and position front occupants for the best interaction with the Advanced Front Air Bags.

Air Bag Deployment Sensors And Controls

The following requirements must be strictly adhered to:

- Do not modify the passenger seat assembly or components in any way.
- Do not use prior or future model year seat covers not designated for the specific model being repaired. Always use the correct seat cover specified for the vehicle.

Downloaded from www.Manualslib.com manuals search engine

- Do not replace the seat cover with an aftermarket seat cover.
- Do not add a secondary seat cover other than those approved by Chrysler Group LLC/Mopar®.
- At no time should any Supplemental Restraint System (SRS) component or SRS related component or fastener be modified or replaced with any part except those which are approved by Chrysler Group LLC/Mopar®.

Occupant Restraint Controller (ORC)

The ORC is part of a Federally regulated safety system required for this vehicle.

The ORC determines if deployment of the front Air Bags in a frontal collision is required. Based on the impact sensors signals, a central electronic ORC deploys the Advanced Front Air Bags, and seat belt pretentioners, if equipped, as required, depending on several factors, including the severity and type of impact. The Air Bag inflators are designed to provide different rates of inflation. The ORC may prevent passenger Air Bag deployment based on input from the Occupant Classification System (OCS).

Advanced Front Air Bags are designed to provide additional protection by supplementing the seat belts in certain frontal collisions depending on the severity and type of collision. Advanced Front Air Bags are not expected to reduce the risk of injury in rear, side, or rollover collisions.

The Advanced Front Air Bags will not deploy in all frontal collisions, including some that may produce substantial vehicle damage — for example, some pole collisions, truck underrides, and angle offset collisions. On the other hand, depending on the type and location of

Downloaded from www.Manualslib.com manuals search engine

impact, Advanced Front Air Bags may deploy in crashes with little vehicle front-end damage but that produce a severe initial deceleration.

Because Air Bag sensors measure vehicle deceleration over time, vehicle speed and damage by themselves are not good indicators of whether or not an Air Bag should have deployed.

Seat belts are necessary for your protection in all collisions, and also are needed to help keep you in position, away from an inflating Air Bag.

The ORC monitors the readiness of the electronic parts of the Air Bag system whenever the ignition is in the START or ON/RUN position. If the ignition is in the OFF position, in the ACC position, or not in the ignition, the Air Bag system is not on and the Air Bags will not inflate.

The ORC contains a backup power supply system that may deploy the Air Bags even if the battery loses power or it becomes disconnected prior to deployment.

The ORC turns on the Air Bag Warning Light and Passenger Air Bag Disable (PAD) Indicator Light for four to eight seconds as a self-check when the ignition is first turned to ON/RUN. After the self-check, the Air Bag Warning Light will turn off and the PAD Indicator Light will function normally (Refer to “Passenger Air Bag Disable (PAD) Indicator Light”). If the ORC detects a malfunction in any part of the system, it turns on the Air Bag Warning Light either momentarily or continuously. A single chime will sound if the light comes on again after initial startup.

It also includes diagnostics that will illuminate the instrument cluster Air Bag Warning Light if a malfunction is noted that could affect the Air Bag system. The diagnostics also record the nature of the malfunction.

Downloaded from www.Manualslib.com manuals search engine

WARNING!

Ignoring the Air Bag Warning Light in your instrument panel could mean you won't have the air bags to protect you in a collision. If the light does not come on as a bulb check when the ignition is first turned on, stays on after you start the vehicle, or if it comes on as you drive, have an authorized dealer service the air bag system immediately.

Driver Air Bag/Passenger Air Bag Inflator Units

The Driver Air Bag Inflator Unit is mounted in the steering wheel. The Passenger Air Bag Inflator Unit is mounted underneath a cover in the passenger side of the instrument panel. When the ORC detects a collision requiring the Advanced Front Air Bags, it signals the inflator units. A large quantity of non-toxic gas is generated to inflate the Air Bags. Different Air Bag inflation rates may be possible based on several factors, including collision type, severity and occupant size. The steering wheel hub trim cover and the upper right side of the instrument panel separate and then fold out of the way, as the Air Bags inflate to their full size. The Air Bags inflate fully in about 50 to 70 ms. This is about half of the time it takes to blink your eyes. The Air Bags then deflate quickly while helping to restrain the driver and passenger. The Air Bag gas is vented toward the instrument panel through vent holes in the Air Bag material. In this way, the Air Bags do not interfere with your control of the vehicle.

Occupant Classification Module (OCM)

The OCS is part of a Federally regulated safety system for this vehicle.

The Occupant Classification Module (OCM) is located underneath the passenger seat. The OCM uses input from the Flex Mat to classify the occupant in the passenger seat into a size category. The OCM communicates this

Downloaded from www.Manualslib.com manuals search engine

information to the ORC. The ORC may modify the rate of passenger Air Bag inflation or prevent passenger Advanced Front Air Bag deployment based on occupant classification.

If there is a fault present in the OCS, the Air Bag Warning Light will turn on. This indicates that you should take the vehicle to an authorized dealer for service immediately. The Air Bag Warning Light will turn on whenever there is a fault present, which can affect the operation of the Air Bag system. If there is a fault present in the OCS, both the PAD Indicator Light and the Air Bag Warning Light will illuminate to show that the passenger Air Bag is turned off. Should this occur the passenger Air Bag would remain off until the fault is cleared. If an object is lodged under the seat and interferes with operation of the Flex Mat, a fault will occur which turns on both the PAD Indicator Light and the Air Bag Warning Light. Once the lodged object is removed, the fault will be cleared automatically after a short period.

Passenger Air Bag Disabled (PAD) Indicator Light

The Passenger Air Bag Disabled (PAD) Indicator Light indicates to the driver and passenger when the passenger Advanced Front Air Bag is turned OFF. In the presence of an occupant seated properly in the passenger seat, when the PAD Indicator Light is illuminated, the passenger Advanced Front Air Bag is turned OFF.

The passenger Advanced Front Air Bag will be enabled for most any size adult who is seated properly in the passenger seat. The passenger Advanced Front Air Bag may or may not be enabled for (depending on size) a small teenager or a small adult who is seated properly in the passenger seat. The driver and passenger should always use the PAD Indicator Light as an indication that the passenger is positioned properly in their seat. If the PAD Indicator Light comes on when an adult or teenager is in the passenger seat, have the passenger reposition their self in the seat until the light goes out. Remember, if

Downloaded from www.Manualslib.com manuals search engine

the PAD Indicator Light is illuminated the passenger Advanced Front Air Bag will not inflate in the event of a collision.

The passenger Advanced Front Air Bag will not be enabled for most any size child who is seated properly in the passenger seat and for most properly installed child restraint systems. However, under certain conditions, even with a properly installed child restraint system, the PAD Indicator Light may not be on, even though the Advanced Front Air Bag is disabled. This can occur if the child restraint is lighter than the threshold weight necessary to turn the PAD Indicator Light on. In any case, **DO NOT** assume the passenger Advanced Front Air Bag is turned off if the PAD Indicator Light is not illuminated.

WARNING!

- **Never place a rear facing infant seat in front of an air bag. A deploying passenger Advanced Front Air Bag can cause death or serious injury to a child 12 years or younger, including a child in a rearward facing infant seat.**
- **Only use a rearward-facing child restraint in a rear seat.**

Flex Mat

The Flex Mat is located beneath the passenger seat cushion foam. The Flex Mat sends signals to the OCM for classifying the occupant in the passenger seat.

Any weight on the seat will be sensed by the Flex Mat. In order for the OCS to operate as designed, it is important for the front passenger to be seated properly and properly wearing the seat belt. Properly seated passengers are:

Downloaded from www.Manualslib.com manuals search engine

- Sitting upright
- Facing forward
- Sitting in the center of the seat with their feet comfortably on or near the floor
- Sitting with their back against the seat back and the seat back in an upright position

The OCS may not classify the front passenger properly if:

- The front passenger's weight is transferred to another part of the vehicle (like the door, arm rest or instrument panel)
- The front passenger leans forward, sideways or turns around
- The front passenger seatback is not in the full upright position
- The front passenger carries or holds an object while seated (e.g., backpack, box, etc.)

WARNING!

Occupants in the front passenger seat sitting improperly may cause the OCS to not classify the passenger's weight accurately. This may result in serious injury or death in a collision. Always wear your seat belt and sit properly, with the seat back in an upright position, your back against the seat back, sitting upright, facing forward, in the center of the seat, with your feet comfortably on or near the floor. Do not carry or hold any objects (e.g., backpacks, boxes, etc.) while seated in the front passenger seat. Holding an object may cause the OCS to not classify the passenger's weight accurately, which may result in serious injury or death in a collision.

Downloaded from www.Manualslib.com manuals search engine

Furthermore, objects lodged under the seat can prevent the occupant's weight from being measured properly and may result in the occupant being classified improperly.

WARNING!

- **Placing an object on the floor under the front passenger seat may prevent the OCS from working properly, which may result in serious injury or death in a collision.**
- **Do not place any objects on the floor under the front passenger seat.**

The passenger seat assembly contains critical components that affect passenger Advanced Front Air Bag deployment. In order for the OCS to properly classify a front seat passenger, the OCS components must function as designed. Do not make any modifications to the front passenger seat components, assembly, or to the seat cover. If the seat, trim cover, or cushion needs service for any reason, take the vehicle to your authorized dealer. Only Chrysler Group LLC approved seat accessories may be used

The following requirements must be strictly followed:

- Do not modify the front passenger seat assembly or components in any way.
- Do not use prior or future model year seat covers or cushions not designated by Chrysler Group LLC for the specific model being repaired. Always use the correct seat cover and cushion specified for the vehicle.
- Do not replace the seat cover or cushion with an aftermarket seat cover or cushion.
- Do not add a secondary seat cover or mat.
- At no time should any supplemental restraint system (SRS) component or SRS related component or fastener be modified or replaced with any part except those which are approved by Chrysler Group LLC .

Downloaded from www.Manualslib.com manuals search engine

WARNING!

Unapproved modifications or service procedures to the passenger seat assembly, its related components, seat cover or cushion may inadvertently change the Air Bag deployment in case of a frontal collision. This could result in death or serious injury to the front passenger if the vehicle is involved in a collision. A modified vehicle may not comply with required Federal Motor Vehicle Safety Standards (FMVSS) and/or Canadian Motor Vehicle Safety Standards (CMVSS).

Enhanced Accident Response System

In the event of an impact causing Air Bag deployment, if the communication network remains intact, and the power remains intact, depending on the nature of the event the ORC will determine whether to have the Enhanced Accident Response System perform the following functions:

- Cut off fuel to the engine.
- Flash hazard lights as long as the battery has power or until the ignition is cycled to OFF.
- Turn on the interior lights, which remain on as long as the battery has power or until the ignition is cycled to OFF.
- Unlock the doors automatically.

If A Deployment Occurs

The front Air Bags are designed to deflate immediately after deployment.

NOTE: Front Air Bags will not deploy in all collisions. This does not mean something is wrong with the Air Bag system.

Downloaded from www.Manualslib.com manuals search engine

If you do have a collision, which deploys the Air Bags, any or all of the following may occur:

- The nylon Air Bag material may sometimes cause abrasions and/or skin reddening to the driver and front passenger as the Air Bags deploy and unfold. The abrasions are similar to friction rope burns or those you might get sliding along a carpet or gymnasium floor. They are not caused by contact with chemicals. They are not permanent and normally heal quickly. However, if you haven't healed significantly within a few days, or if you have any blistering, see your doctor immediately.
- As the Air Bags deflate, you may see some smoke-like particles. The particles are a normal by-product of the process that generates the non-toxic gas used for Air Bag inflation. These airborne particles may irritate the skin, eyes, nose, or throat. If you have skin or eye irritation, rinse the area with cool water. For nose or throat irritation, move to fresh air. If the irritation continues, see your doctor. If these particles settle on your clothing, follow the garment manufacturer's instructions for cleaning.

Do not drive your vehicle after the Air Bags have deployed. If you are involved in another collision, the Air Bags will not be in place to protect you.

WARNING!

Deployed air bags and seat belt pretensioners can not protect you in another collision. Have the air bags, seat belt pretensioners, and the front seat belt retractor assemblies replaced by an authorized dealer immediately. Also, have the Occupant Restraint Controller (ORC) system serviced as well.

Downloaded from www.Manualslib.com manuals search engine

Maintaining Your Air Bag System

WARNING!

- **Modifications to any part of the air bag system could cause it to fail when you need it. You could be injured if the air bag system is not there to protect you. Do not modify the components or wiring, including adding any kind of badges or stickers to the steering wheel hub trim cover or the upper right side of the instrument panel. Do not modify the front bumper, vehicle body structure, or add aftermarket side steps or running boards.**
- **It is dangerous to try to repair any part of the air bag system yourself. Be sure to tell anyone who works on your vehicle that it has an air bag system.**

(Continued)

WARNING! ***(Continued)***

- **Do not attempt to modify any part of your air bag system. The air bag may inflate accidentally or may not function properly if modifications are made. Take your vehicle to an authorized dealer for any air bag system service. If your seat, including your trim cover and cushion, needs to be serviced in any way (including removal or loosening/tightening of seat attachment bolts), take the vehicle to your authorized dealer. Only manufacturer approved seat accessories may be used. If it is necessary to modify the air bag system for persons with disabilities, contact your authorized dealer.**

Downloaded from www.Manualslib.com manuals search engine

Air Bag Warning Light

You will want to have the Air Bags ready to inflate for your protection in a collision. The Air Bag Warning Light monitors the internal circuits and interconnecting wiring associated with Air Bag system electrical components. While the Air Bag system is designed to be maintenance free, if any of the following occurs, have an authorized dealer service the Air Bag system immediately.

- The Air Bag Warning Light does not come on during the four to eight seconds when the ignition is first cycled to the ON/RUN position.
- The Air Bag Warning Light remains on after the four to eight-second interval.
- The Air Bag Warning Light comes on intermittently or remains on while driving.

NOTE: If the speedometer, tachometer, or any engine related gauges are not working, the Occupant Restraint Controller (ORC) may also be disabled. The Air Bags may not be ready to inflate for your protection. Promptly check the fuse block for blown fuses. Refer to the label located on the inside of the fuse block cover for the proper Air Bag fuses. See your authorized dealer if the fuse is good.

Event Data Recorder (EDR)

This vehicle is equipped with an event data recorder (EDR). The main purpose of an EDR is to record, in certain crash or near crash-like situations, such as an air bag deployment or hitting a road obstacle, data that will assist in understanding how a vehicle's systems performed. The EDR is designed to record data related to vehicle dynamics and safety systems for a short period of time, typically 30 seconds or less. The EDR in this vehicle is designed to record such data as:

- How various systems in your vehicle were operating;

Downloaded from www.Manualslib.com manuals search engine

- Whether or not the driver and passenger safety belts were buckled/fastened;
- How far (if at all) the driver was depressing the accelerator and/or brake pedal; and,
- How fast the vehicle was traveling.

These data can help provide a better understanding of the circumstances in which crashes and injuries occur.

NOTE: EDR data are recorded by your vehicle only if a non-trivial crash situation occurs; no data are recorded by the EDR under normal driving conditions and no personal data (e.g., name, gender, age, and crash location) are recorded. However, other parties, such as law enforcement, could combine the EDR data with the type of personally identifying data routinely acquired during a crash investigation.

To read data recorded by an EDR, special equipment is required, and access to the vehicle or the EDR is needed. In addition to the vehicle manufacturer, other parties, such as law enforcement, that have the special equipment, can read the information if they have access to the vehicle or the EDR.

Child Restraints

Everyone in your vehicle needs to be buckled up all the time, including babies and children. Every state in the United States and all Canadian provinces require small children ride in proper restraint systems. This is the law, and you can be prosecuted for ignoring it.

WARNING!

In a collision, an unrestrained child can become a projectile inside the vehicle. The force required to hold even an infant on your lap could become so great that you could not hold the child, no matter

(Continued)

Downloaded from www.Manualslib.com manuals search engine

WARNING! ***(Continued)***

how strong you are. The child and others could be badly injured. Any child riding in your vehicle should be in a proper restraint for the child's size.

There are different sizes and types of restraints for children from newborn size to the child almost large enough for an adult safety belt. Always check the child seat Owner's Manual to ensure you have the correct seat for your child. Use the restraint that is correct for your child.

Infant and Child Restraints

- Safety experts recommend that children ride rearward-facing in the vehicle until they are two years old or until they reach either the height or weight limit of their rear facing child safety seat. Two types of child restraints can be used rearward-facing: infant carriers and convertible child seats.
- The infant carrier is only used rearward-facing in the vehicle. It is recommended for children from birth until they reach the weight or height limit of the infant carrier. Convertible child seats can be used either rearward-facing or forward-facing in the vehicle. Convertible child seats often have a higher weight limit in the rearward-facing direction than infant carriers do, so they can be used rearward-facing by children who have outgrown their infant carrier but are still less than at least two years old. Children should remain rearward-facing until they reach the highest weight or height allowed by their convertible child seat.

WARNING!

Rearward-facing infant restraints must never be secured in the passenger seat of a vehicle with a passenger Air Bag. In a collision, a passenger Air Bag may deploy causing severe injury or death to infants riding in rearward-facing infant restraints.

Downloaded from www.Manualslib.com manuals search engine

Older Children and Child Restraints

Children who are two years old or who have outgrown their rear-facing convertible child seat can ride forward-facing in the vehicle. Forward-facing child seats and convertible child seats used in the forward-facing direction are for children who are over two years old or who have outgrown the rear-facing weight or height limit of their rear-facing convertible child seat. Children should remain in a forward-facing child seat with a harness for as long as possible, up to the highest weight or height allowed by the child seat.

All children whose weight or height is above the forward-facing limit for the child seat should use a belt-positioning booster seat until the vehicle's seat belts fit properly. If the child cannot sit with knees bent over the vehicle's seat cushion while the child's back is against the seatback, they should use a belt-positioning booster seat. The child and belt-positioning booster seat are held in the vehicle by the seat belt.

WARNING!

- **Improper installation can lead to failure of an infant or child restraint. It could come loose in a collision. The child could be badly injured or killed. Follow the child restraint manufacturer's directions exactly when installing an infant or child restraint.**
- **When your child restraint is not in use, secure it in the vehicle with the seat belt or tether anchorage, or remove it from the vehicle. Do not leave it loose in the vehicle. In a sudden stop or accident, it could strike the occupants or seatbacks and cause serious personal injury.**

Downloaded from www.Manualslib.com manuals search engine

Children Too Large for Booster Seats

Children who are large enough to wear the shoulder belt comfortably, and whose legs are long enough to bend over the front of the seat when their back is against the seatback, should use the seat belt in the seat. Use this simple 5-step test to decide whether the child can use the vehicle's seat belt alone:

- Can the child sit all the way back against the back of the vehicle seat?
- Do the child's knees bend comfortably over the front of the vehicle seat – while they are still sitting all the way back?
- Does the shoulder belt cross the child's shoulder between their neck and arm?
- Is the lap part of the belt as low as possible, touching the child's thighs and not their stomach?
- Can the child stay seated like this for the whole trip?

If the answer to any of these questions was "no," then the child still needs to use a booster seat in this vehicle. If the child is using the lap/shoulder belt, check belt fit periodically. A child's squirming or slouching can move the belt out of position. If the shoulder belt contacts the face or neck, move the child closer to the center of the vehicle. Never allow a child to put the shoulder belt under an arm or behind their back.

NOTE: For additional information, refer to www.seatcheck.org or call 1–866–SEATCHECK. Canadian residents, should refer to Transport Canada's website for additional information. http://www.tc.gc.ca/eng/roadsafety/safedrivers-childsafety-index-53.htm

Downloaded from www.Manualslib.com manuals search engine

WARNING!

Improper installation of a child restraint to the tether anchorage can lead to failure of an infant or child restraint. The child could be badly injured or killed. Follow the manufacturer's directions exactly when installing an infant or child restraint.

Child Restraint Tether Anchor

Child restraints having tether straps and hooks for connection to tether anchors have been available for some time. In fact, many child restraint manufacturers will provide add-on tether-strap kits for some of their older products. There is a tether strap anchor located behind the child tether access cover behind the passenger seat.

To attach a child restraint tether strap:

1. Move the seat forward.
2. Move the seatback to its full forward position.
3. Remove the child tether access cover by prying either side with a screwdriver or similar tool, as shown.

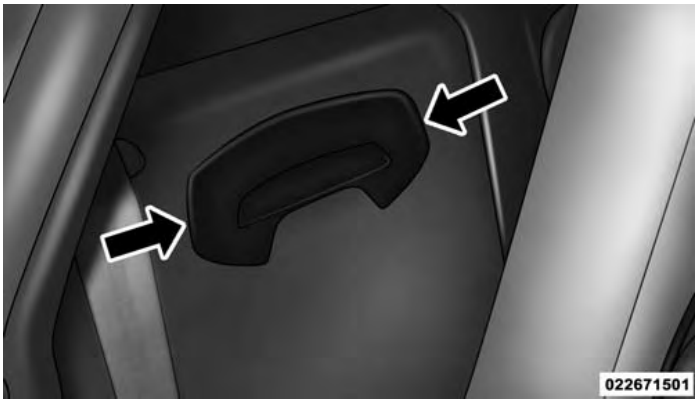

Child Tether Access Cover

Downloaded from www.Manualslib.com manuals search engine

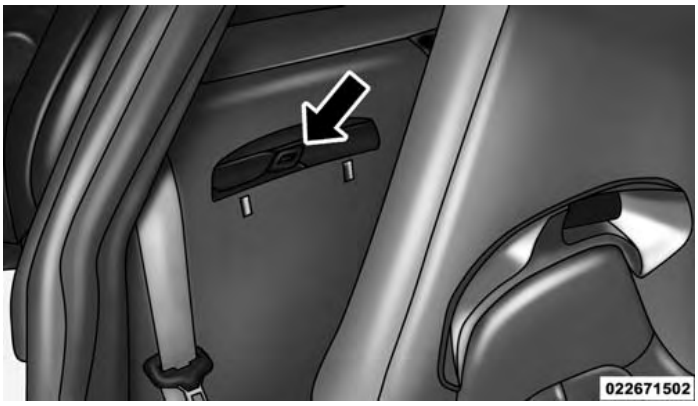

Child Tether

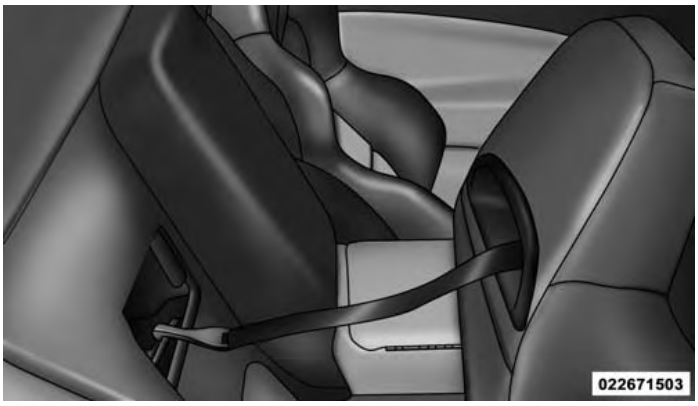

Tether Hook

NOTE: While the child tether is in use, keep the access cover in a safe place so that it can be replaced after use of the child tether.

4. Pass the child restraint tether hook through either opening in the seatback underneath the head restraint.
5. Attach the tether hook to the anchor loop.
6. Move the seat to its farthest rearward position. Apply body pressure to the seat to be sure the seat adjusters have latched.
7. Return the seatback to an upright position.

Downloaded from www.Manualslib.com manuals search engine

8. Install the child restraint according to the manufacturer's directions.
9. Remove slack from the tether strap according to the child restraint manufacturer's directions.

WARNING!

An incorrectly anchored tether strap could lead to increased head motion and possible injury to the child. Use only the anchor position directly behind the child seat to secure a child restraint top tether strap.

Installing Child Restraints Using The Vehicle Seat belt

The passenger seat belt is equipped with an automatic locking retractor for child restraint system installation. It is designed to keep the lap portion of the restraint held tightly to the passenger seat (Refer to "Automatic Locking Mode").

To restrain the child seat:

1. Pull enough webbing from the retractor to allow the belt to pass through the child restraint and insert the latch plate into the buckle until you hear a "click."
2. Grasp the shoulder portion of the belt and pull all of the webbing out of the retractor.
3. Allow some of the webbing to retract back into the retractor. As the belt retracts, you will hear a clicking sound indicating that the belt is now in Automatic Locking Mode.
4. Tighten the lap portion of the belt and allow the excess webbing to retract back to the retractor. If it still does not make the child restraint secure, then secure the child restraint with the Child Restraint Tether Anchor.

Downloaded from www.Manualslib.com manuals search engine

NOTE: Once the belt is in Automatic Locking Mode, you will not be able to pull any more of the webbing out of the retractor. In this mode, you will only be able to retract excess webbing into the retractor to secure the child restraint.

Transporting Pets

Deploying Air Bags could harm your pet. An unrestrained pet will be thrown about and possibly injured, or injure a passenger during panic braking or in an collision.

Pets should be restrained in pet harnesses or pet carriers that are secured by seat belts.

BREAK-IN RECOMMENDATIONS

A long break-in period is not required for the drivetrain (engine, transmission, and rear axle) in your new vehicle. Following these few simple guidelines is all that is necessary for a good break-in.

For the first 500 miles (800 km):

- Keep your vehicle speed below the legal, posted speed limit and your engine speed below 4,000 RPM.
- Avoid driving at a constant speed, either fast or slow, for long periods.
- Do not make any full throttle starts and avoid full throttle acceleration.
- Use the proper gear for your speed range.
- Wait until the engine has reached normal operating temperature before driving at the recommended maximum break-in speed.
- Avoid excessive idling.
- Check the engine oil level at every fuel fill.

Downloaded from www.Manualslib.com manuals search engine

NOTE: A new engine will consume some oil during the first few thousand miles (kilometers) of operation. This should be considered a normal part of the break-in and not interpreted as a sign of difficulty.

SAFETY TIPS

Transporting Passengers

NEVER TRANSPORT PASSENGERS IN THE CARGO AREA.

WARNING!

- **Do not leave children or animals inside parked vehicles in hot weather. Interior heat build-up may cause serious injury or death.**

(Continued)

WARNING! ***(Continued)***

- **It is extremely dangerous to ride in a cargo area, inside or outside of a vehicle. In a collision, people riding in these areas are more likely to be seriously injured or killed.**
- **Do not allow people to ride in any area of your vehicle that is not equipped with seats and seat belts.**
- **Be sure everyone in your vehicle is in a seat and using a seat belt properly.**

Exhaust Gas

WARNING!

Exhaust gases can injure or kill. They contain carbon monoxide (CO), which is colorless and odorless. Breathing it can make you unconscious and can

(Continued)

Downloaded from www.Manualslib.com manuals search engine

WARNING! ***(Continued)***

eventually poison you. To avoid breathing (CO), follow these safety tips:

- **Do not run the engine in a closed garage or in confined areas any longer than needed to move your vehicle in or out of the area.**
- **If you are required to drive with the trunk/liftgate open, make sure that all windows are closed and the climate control BLOWER switch is set at high speed. DO NOT use the recirculation mode.**
- **If it is necessary to sit in a parked vehicle with the engine running, adjust your heating or cooling controls to force outside air into the vehicle. Set the blower at high speed.**

The best protection against carbon monoxide entry into the vehicle body is a properly maintained engine exhaust system.

Whenever a change is noticed in the sound of the exhaust system, when exhaust fumes can be detected inside the vehicle, or when the underside or rear of the vehicle is damaged, have a competent mechanic inspect the complete exhaust system and adjacent body areas for broken, damaged, deteriorated, or mispositioned parts. Open seams or loose connections could permit exhaust fumes to seep into the passenger compartment. In addition, inspect the exhaust system each time the vehicle is raised for lubrication or oil change. Replace as required.

Safety Checks You Should Make Inside The Vehicle

Seat Belts

Inspect the belt system periodically, checking for cuts, frays, and loose parts. Damaged parts must be replaced immediately. Do not disassemble or modify the system.

Downloaded from www.Manualslib.com manuals search engine

Front seat belt assemblies must be replaced after a collision. Rear seat belt assemblies must be replaced after a collision if they have been damaged (i.e., bent retractor, torn webbing, etc.). If there is any question regarding belt or retractor condition, replace the belt.

Air Bag Warning Light

The light should come on and remain on for four to eight seconds as a bulb check when the ignition is first cycled to ON. If the light is not lit during starting, see your authorized dealer. If the light stays on, flickers, or comes on while driving, have the system checked by an authorized dealer.

Defroster

Check operation by selecting the defrost mode and place the blower control on high speed. You should be able to feel the air directed against the windshield. See your authorized dealer for service if your defroster is inoperable.

Floor Mat Safety Information

Always use floor mats designed to fit the foot well of your vehicle. Use only floor mats that leave the pedal area unobstructed and that are firmly secured so that they cannot slip out of position and interfere with the pedals or impair safe operation of your vehicle in other ways.

Periodic Safety Checks You Should Make Outside The Vehicle

Tires

Examine tires for excessive tread wear and uneven wear patterns. Check for stones, nails, glass, or other objects lodged in the tread. Inspect the tread and sidewall for cuts and cracks. Check the wheel nuts for tightness. Check the tires for proper pressure.

Downloaded from www.Manualslib.com manuals search engine

Lights

Have someone observe the operation of brake lights and exterior lights while you work the controls. Check turn signal and high beam indicator lights on the instrument panel.

Door Latches

Check for positive closing, latching, and locking.

Fluid Leaks

Check area under vehicle after overnight parking for fuel, engine coolant, oil, or other fluid leaks. Also, if gasoline fumes are detected or if fuel, power steering fluid, or brake fluid leaks are suspected, the cause should be located and corrected immediately.

Downloaded from www.Manualslib.com manuals search engine

Downloaded from www.Manualslib.com manuals search engine

UNDERSTANDING THE FEATURES OF YOUR VEHICLE

CONTENTS

■ MIRRORS 76
- □ Automatic Dimming Mirror 76
- □ Outside Mirrors 77
- □ Power Mirrors 78
- □ Vanity Mirror 79

■ SEATS 80
- □ Manual Seats 80
- □ Power Seats 83

■ TO OPEN AND CLOSE THE HOOD 85

■ LIGHTS 88
- □ Headlight Switch 88
- □ Automatic Headlights 89
- □ Headlights On With Wipers (Available with Automatic Headlights Only) 89
- □ Headlight Time Delay 89
- □ Daytime Running Lights (DRL) 90
- □ Lights-On Reminder 90
- □ Multifunction Lever 90
- □ Turn Signals 91
- □ High/Low Beam Switch 91

Downloaded from www.Manualslib.com manuals search engine

- Flash-To-Pass 92
- Interior Lights 92

■ WINDSHIELD WIPERS AND WASHERS 95

- Intermittent Wiper System 95
- Wiper Operation 95
- Mist Feature 96
- Windshield Washers 96
- Headlights On With Wipers (Available with Automatic Headlights Only) 97

■ TILT STEERING COLUMN 97

■ ADJUSTABLE PEDALS 98

- Adjustable Foot Rest 100

■ ELECTRONIC SPEED CONTROL 101

- To Activate 102
- To Set A Desired Speed 102
- To Deactivate 103
- To Resume Speed 103
- To Vary The Speed Setting 103
- To Accelerate For Passing 103

■ PARKVIEW® REAR BACK UP CAMERA — IF EQUIPPED 104

- Turning ParkView® On Or Off — With Touch—Screen Radio 106

■ GARAGE DOOR OPENER — IF EQUIPPED . . .106

- Before You Begin Programming HomeLink® . .107
- Programming A Rolling Code 108
- Programming A Non-Rolling Code 110

Downloaded from www.Manualslib.com manuals search engine

- Canadian/Gate Operator Programming 111
- Using HomeLink® 113
- Security 113
- Troubleshooting Tips 113
- General Information 114

■ ELECTRICAL POWER OUTLETS 115

■ CUPHOLDERS — If Equipped 117

■ STORAGE 118
- Glovebox Storage 118
- Console Features 119
- Door Storage 121

■ REAR WINDOW FEATURES 121
- Rear Window Defroster 121

Downloaded from www.Manualslib.com manuals search engine

MIRRORS

Automatic Dimming Mirror

This mirror automatically adjusts for headlight glare from vehicles behind you. This feature will be defaulted on, and only be disabled when the vehicle is moving in reverse.

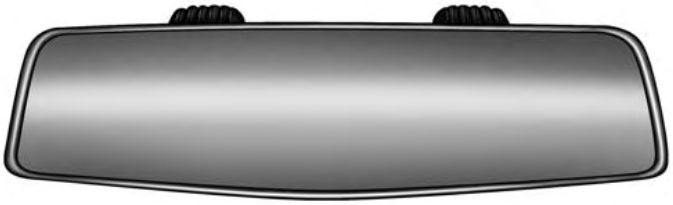

030471324

Automatic Dimming Mirror

NOTE: The mirror contains an Assist button and a 9–1–1 button located on the bottom of the mirror.

Downloaded from www.Manualslib.com manuals search engine

Assist Call

The rear view mirror contains an ASSIST push button which automatically connects the vehicle occupants to one of several predefined locations for immediate support:

- Roadside Assistance – If you get a flat tire, or need a tow, just press the Assist button and you'll be connected to someone who can help. Roadside Assistance will know what vehicle you're driving and its location. Additional fees may apply for roadside Assistance.
- Uconnect® Access Customer Care – In-vehicle support for Uconnect® Access and Uconnect® Access via Mobile features.
- Vehicle Customer Care – Total support for all other vehicle issues.

9-1-1 Call

Report an accident without taking your eyes off the road. Just press 9-1-1 on your mirror and connect.

CAUTION!

To avoid damage to the mirror during cleaning, never spray any cleaning solution directly onto the mirror. Apply the solution onto a clean cloth and wipe the mirror clean.

Outside Mirrors

To receive maximum benefit, adjust the outside mirrors to center on the adjacent lane of traffic and a slight overlap of the view obtained from the inside mirror.

NOTE: The passenger side convex outside mirror will give a much wider view to the rear, and especially of the lane next to your vehicle.

Downloaded from www.Manualslib.com manuals search engine

WARNING!

Vehicles and other objects seen in the passenger side convex mirror will look smaller and farther away than they really are. Relying too much on your passenger side mirror could cause you to collide with another vehicle or other object. Use your inside mirror when judging the size or distance of a vehicle seen in the passenger side mirror.

Power Mirrors

The power mirror controls are located on the driver-side door trim panel.

Power Mirror Controls

The power mirror controls consist of mirror select buttons and a four-way mirror control switch. To adjust a mirror, press either the L (left) or R (right) to select the mirror that you want to adjust.

NOTE: A light in the selected button will illuminate indicating the mirror is activated and can be adjusted.

Downloaded from www.Manualslib.com manuals search engine

Using the mirror control switch, press on any of the four arrows for the direction that you want the mirror to move.

Vanity Mirror

A vanity mirror is on the passenger side sun visor. To use the mirror, rotate the sun visor downward and swing the mirror cover upward.

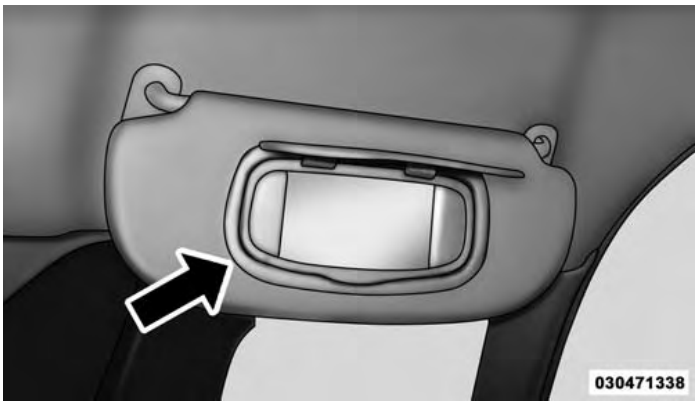

Vanity Mirror

Downloaded from www.Manualslib.com manuals search engine

SEATS

Seats are a part of the Occupant Restraint System of the vehicle.

WARNING!

- **It is dangerous to ride in a cargo area, inside or outside of a vehicle. In a collision, people riding in these areas are more likely to be seriously injured or killed.**
- **Do not allow people to ride in any area of your vehicle that is not equipped with seats and seat belts. In a collision, people riding in these areas are more likely to be seriously injured or killed.**
- **Be sure everyone in your vehicle is in a seat and using a seat belt properly.**

Manual Seats

Forward and Rearward Adjustment

The adjusting bar is at the front of the seat, near the floor. Pull the bar upward to move the seat forward or rearward. Release the bar once the seat is in the desired position. Then, using body pressure, move forward and rearward on the seat to be sure that the seat adjusters have latched.

Downloaded from www.Manualslib.com manuals search engine

Seat Adjustment Bar

Seat Height Adjustment

The seat height adjustment lever is located on the outboard side of the seat. Pull upward on the lever to raise the seat height or push downward on the lever to lower the seat height.

Height Adjustment Lever

Downloaded from www.Manualslib.com manuals search engine

Recliner Adjustment

The recliner lever is located on the outboard side of the seat. To recline the seat, lean forward slightly, pull the recliner lever upward, lean backward until the seat is in the desired position, and release the lever. To return the seat to its full upright position, lean forward, pull the recliner lever upward and hold it until the seat returns to its full upright position.

Recline Lever

Downloaded from www.Manualslib.com manuals search engine

WARNING!

- **Adjusting a seat while driving may be dangerous. Moving a seat while driving could result in loss of control which could cause a collision and serious injury or death.**
- **Seats should be adjusted before fastening the seat belts and while the vehicle is parked. Serious injury or death could result from a poorly adjusted seat belt.**
- **Do not ride with the seatback reclined so that the shoulder belt is no longer resting against your chest. In a collision you could slide under the seat belt, which could result in serious injury or death.**

Power Seats

On models equipped with power seats, the power seat switch is located on the outboard side of the seat near the floor.

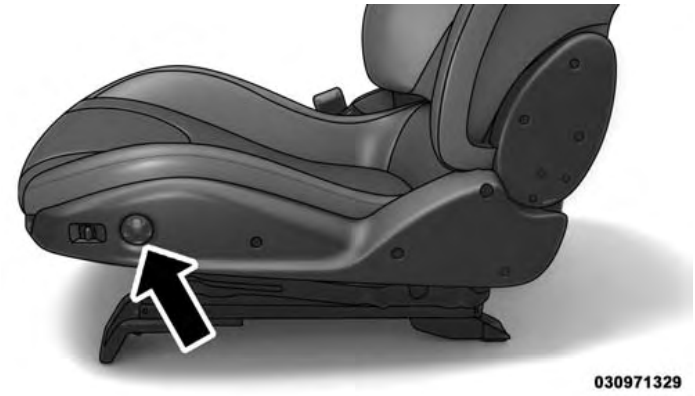

Power Seat Switch

Downloaded from www.Manualslib.com manuals search engine

Adjusting The Seat Forward Or Rearward

The seat can be adjusted both forward and rearward. Push the seat switch forward or rearward, the seat will move in the direction of the switch. Release the switch when the desired position has been reached.

Adjusting The Seat Up Or Down

The height of the seats can be adjusted up or down. Push upward or push downward on the seat switch, the seat will move in the direction of the switch. Release the switch when the desired position is reached.

Reclining The Seatback Forward Or Rearward

The seatback can be reclined both forward and rearward. Push the power seat recliner switch forward or rearward, the seatback will move in the direction of the switch. Release the switch when the desired position has been reached.

Power Seat Recliner Switch

Downloaded from www.Manualslib.com manuals search engine

WARNING!

- **Adjusting a seat while driving may be dangerous. Moving a seat while driving could result in loss of control which could cause a collision and serious injury or death.**
- **Seats should be adjusted before fastening the seat belts and while the vehicle is parked. Serious injury or death could result from a poorly adjusted seat belt.**
- **Do not ride with the seatback reclined so that the shoulder belt is no longer resting against your chest. In a collision you could slide under the seat belt, which could result in serious injury or death.**

CAUTION!

Do not place any article under a power seat or impede its ability to move as it may cause damage to the seat controls. Seat travel may become limited if movement is stopped by an obstruction in the seat's path.

TO OPEN AND CLOSE THE HOOD

1. Reach into the back side area of the drivers front fender to gain access to the hood release lever.

Downloaded from www.Manualslib.com manuals search engine

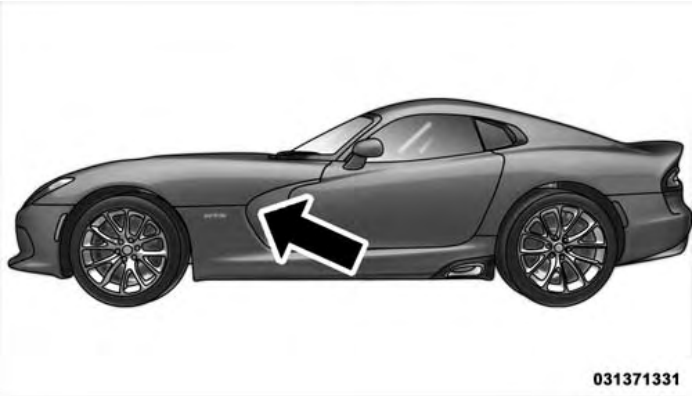

Hood Release Lever Location

2. Pull the hood release lever rearward to release the hood latches.

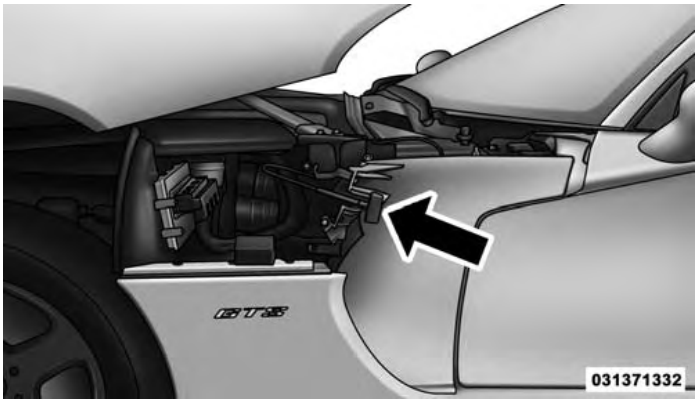

Hood Release Lever

3. Lift the hood upward to the full forward position.

Downloaded from www.Manualslib.com manuals search engine

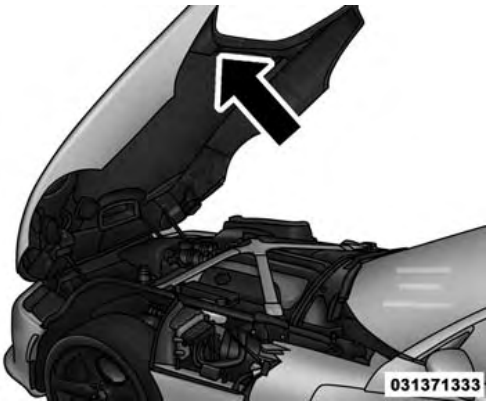

Opened Hood

NOTE: The recommended lift point is to place the lifting hand forward of one of the wiper arms and pull up. The assist props will help raise and hold the hood to a normal usage position.

CAUTION!

- **Do not leave the hood open in areas where strong gust of wind are likely. Such a place might be by the side of the road where large trucks pass by. Strong gusts of wind may damage the hood. Always close the hood in such situations.**
- **To prevent possible damage, do not slam the hood to close it. Simply lower the hood until it is open approximately 6 in (15 cm) and then drop it. This should secure both latches. Never drive the vehicle unless the hood is fully closed with both latches engaged.**

WARNING!

Be sure the hood is fully latched before driving your vehicle. If the hood is not fully latched, it could open

(Continued)

Downloaded from www.Manualslib.com manuals search engine

WARNING! ***(Continued)***

when the vehicle is in motion and block your vision. Failure to follow this warning could result in serious injury or death.

LIGHTS

Headlight Switch

The headlight switch is located on the left side of the instrument panel. This switch controls the operation of the headlights, parking lights, instrument panel lights, instrument panel light dimming and interior lights.

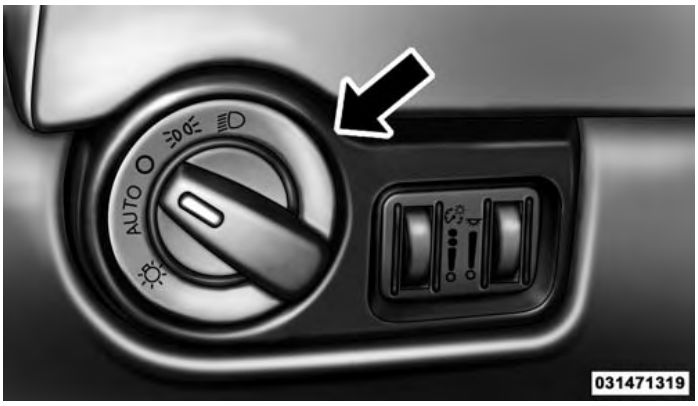

Headlight Switch

Rotate the headlight switch clockwise to the first detent for parking light and instrument panel light operation. Rotate the headlight switch to the second detent for headlight, parking light and instrument panel light operation.

Downloaded from www.Manualslib.com manuals search engine

Automatic Headlights

This system automatically turns the headlights on or off according to ambient light levels. To turn the system on, rotate the headlight switch counterclockwise to the A (AUTO) position. When the system is on, the headlight time delay feature is also on. This means the headlights will stay on for up to 90 seconds after placing the ignition in the OFF position. To turn the Automatic system off, move the headlight switch out of the AUTO position.

NOTE: The engine must be running before the headlights will come on in the automatic mode.

Headlights On With Wipers (Available with Automatic Headlights Only)

When this feature is active, the headlights will turn on approximately 10 seconds after the wipers are turned on if the headlight switch is placed in the AUTO position. In addition, the headlights will turn off when the wipers are turned off if they were turned on by this feature.

NOTE: The Headlights On with Wipers feature can be turned on or off using the Uconnect® System, refer to "Uconnect® Settings" in "Understanding Your Instrument Panel" for further information.

Headlight Time Delay

This feature provides the safety of headlight illumination for up to 90 seconds (programmable) when leaving your vehicle in an unlit area.

To activate the delay feature, place the ignition in the OFF position while the headlights are still on. Then, turn off the headlights within 45 seconds. The delay interval begins when the headlight switch is turned off.

If you turn the headlights or parking lights on, or place the ignition in ACC or RUN, the system will cancel the delay.

If you turn the headlights off before the ignition, they will turn off in the normal manner.

Downloaded from www.Manualslib.com manuals search engine

NOTE:

- The lights must be turned off within 45 seconds of placing the ignition in the OFF position to activate this feature.
- The headlight delay time is programmable using the Uconnect® System, refer to "Uconnect® Settings" in "Understanding Your Instrument Panel" for further information.

Daytime Running Lights (DRL)

The LED Daytime Running Lights will come on whenever the ignition is placed in the RUN position, the headlights are off and the parking brake is off. The headlight switch must be used for normal nighttime driving.

NOTE: If allowed by law in the country in which the vehicle was purchased the Daytime Running Lights can be turned on and off using the Uconnect® System, refer to "Uconnect® Settings" in "Understanding Your Instrument Panel" for further information.

Lights-On Reminder

If the headlights or parking lights are on after the ignition is placed in the OFF position, a chime will sound to alert the driver when the driver's door is opened.

Multifunction Lever

The multifunction lever controls the operation of the turn signals, headlight beam selection and passing lights. The multifunction lever is located on the left side of the steering column.

Downloaded from www.Manualslib.com manuals search engine

Multifunction Lever

Turn Signals

Move the multifunction lever up or down and the arrows on each side of the instrument cluster flash to show proper operation of the front and rear turn signal lights.

NOTE:

- If either light remains on and does not flash, or there is a very fast flash rate, check for a defective outside light bulb. If an indicator fails to light when the lever is moved, it would suggest that the indicator bulb is defective.
- A "Turn Signal On" message will appear in the EVIC (if equipped) and a continuous chime will sound if the vehicle is driven more than 1 mile (1.6 km) with either turn signal on.

High/Low Beam Switch

Push the multifunction lever away from you to switch the headlights to high beam. Pull the multifunction lever toward you to switch the headlights back to low beam.

Downloaded from www.Manualslib.com manuals search engine

Flash-To-Pass

You can signal another vehicle with your headlights by lightly pulling the multifunction lever toward you. This will turn on the high beams headlights until the lever is released.

Interior Lights

The interior lights come on when a door is opened.

To protect the battery, the interior lights will turn off automatically 10 minutes after the ignition is moved to the LOCK position. This will occur if the interior lights were switched on manually or are on because a door is open. This includes the glove box light, but not the trunk light. To restore interior light operation, either turn the ignition switch ON or cycle the light switch.

Dimmer Controls

The dimmer control is part of the headlight switch and is located on the left side of the instrument panel.

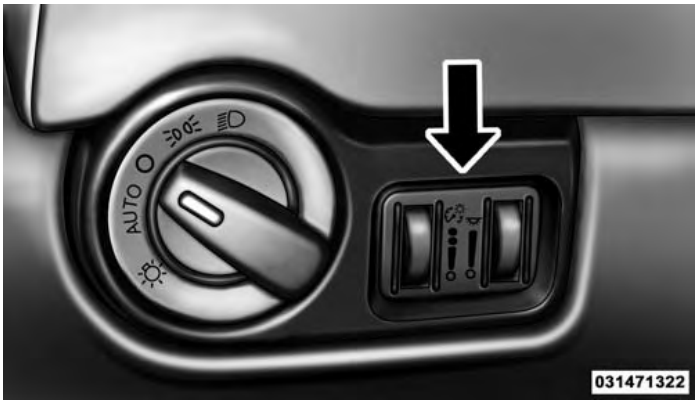

Dimmer Controls

Downloaded from www.Manualslib.com manuals search engine

With the parking lights or headlights on, rotating the left dimmer control upward will increase the brightness of the instrument panel lights and turn on the courtesy lights.

Left Dimmer Control

The right dimmer control adjusts the ambient light for the interior door release handles.

Right Dimmer Control

Downloaded from www.Manualslib.com manuals search engine

Interior Light Control

Rotate the left dimmer control completely upward to the second detent to turn on the interior lights. The interior lights will remain on when the dimmer control is in this position.

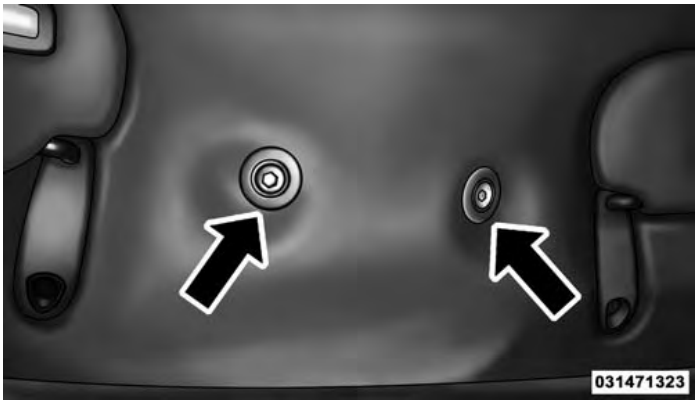

Interior Lights

Interior Light Defeat (OFF)

Rotate the left dimmer control to the extreme bottom OFF position. The interior lights will remain off when the doors are open.

Parade Mode (Daytime Brightness Feature)

Rotate the dimmer control upward to the first detent. This feature brightens all text displays such as the odometer, EVIC (if equipped), and radio when the parking lights or headlights are on.

Downloaded from www.Manualslib.com manuals search engine

WINDSHIELD WIPERS AND WASHERS

The multifunction lever operates the windshield wipers and washer when the ignition is placed in the ON/RUN or ACC position. The multifunction lever is located on the left side of the steering column.

Windshield Wiper/Washer Control

Intermittent Wiper System

Use the intermittent wiper when weather conditions make a single wiping cycle with a variable pause between cycles desirable. Rotate the end of the multifunction lever to the first detent position, and then turn the end of the lever to select the desired delay interval. There are five delay settings, which allow you to regulate the wipe interval from a minimum of one cycle every second to a maximum of approximately 36 seconds between cycles. The delay intervals will double in duration when the vehicle speed is 10 mph (16 km/h) or less.

Wiper Operation

Rotate the end of the multifunction lever to the first detent, past the intermittent settings for low-speed wiper operation, or to the second detent past the intermittent settings for high-speed wiper operation.

Downloaded from www.Manualslib.com manuals search engine

CAUTION!

- **Turn the windshield wipers off when driving through an automatic car wash. Damage to the windshield wipers may result if the wiper control is left in any position other than off.**
- **In cold weather, always turn off the wiper switch and allow the wipers to return to the "Park" position before turning off the engine. If the wiper switch is left on and the wipers freeze to the windshield, damage to the wiper motor may occur when the vehicle is restarted.**
- **Always remove any buildup of snow that prevents the windshield wiper blades from returning to the off position. If the windshield wiper control is turned off and the blades cannot return to the off position, damage to the wiper motor may occur.**

Mist Feature

When a single wipe to clear off road mist or spray from a passing vehicle is needed, push the washer knob, located on the end of the multifunction lever, inward to the first detent and release. The wipers will cycle one time and automatically shut off.

NOTE: The mist feature does not activate the washer pump; therefore, no washer fluid will be sprayed on the windshield. The wash function must be used in order to spray the windshield with washer fluid.

Windshield Washers

To use the windshield washer, push the washer knob, located on the end of the multifunction lever, inward to the second detent. Washer fluid will be sprayed and the wiper will operate for two to three cycles after the washer knob is released from this position. If the washer knob is depressed while in the delay range, the wiper will operate for several seconds after the washer knob is

Downloaded from www.Manualslib.com manuals search engine

released. It will then resume the intermittent interval previously selected. If the washer knob is pushed while in the off position, the wiper will turn on and cycle approximately three times after the wash knob is released.

To prevent freeze-up of your windshield washer system in cold weather, select a solution or mixture that meets or exceeds the temperature range of your climate. This rating information can be found on most washer fluid containers.

WARNING!

Sudden loss of visibility through the windshield could lead to a collision. You might not see other vehicles or other obstacles. To avoid sudden icing of the windshield during freezing weather, warm the windshield with the defroster before and during windshield washer use.

Headlights On With Wipers (Available with Automatic Headlights Only)

When this feature is active, the headlights will turn on approximately 10 seconds after the wipers are turned on if the headlight switch is placed in the AUTO position. In addition, the headlights will turn off when the wipers are turned off if they were turned on by this feature.

NOTE: The Headlights On with Wipers feature can be turned on or off using the Uconnect® System, refer to "Uconnect® Settings" in "Understanding Your Instrument Panel" for further information.

TILT STEERING COLUMN

The tilt release lever is located below the multifunction lever on the left side of the steering column. To tilt the column, simply pull the release lever rearward toward you and then move the steering wheel upward or downward as desired. When the column is in the desired

Downloaded from www.Manualslib.com manuals search engine

position, push the release lever forward to lock the column firmly in place.

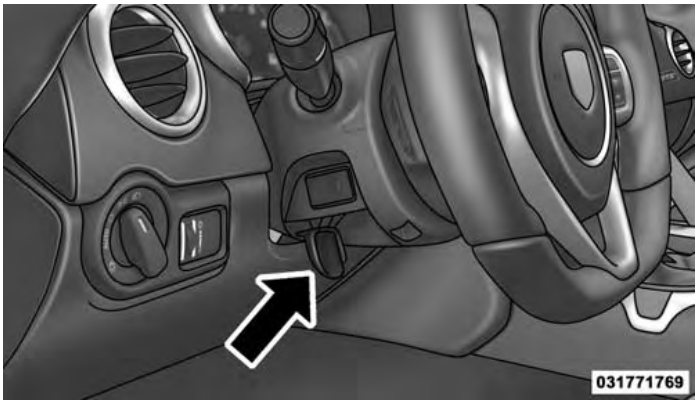

Tilt Steering Column Lever

WARNING!

Do not adjust the steering column while driving. Adjusting the steering column while driving or driving with the steering column unlocked, could cause the driver to lose control of the vehicle. Failure to follow this warning may result in serious injury or death.

ADJUSTABLE PEDALS

The adjustable pedals system is designed to allow a greater range of driver comfort for steering wheel tilt and seat position. This feature allows the brake, accelerator, and clutch pedal to move toward or away from the driver to provide improved position with the steering wheel. The pedals can be adjusted with the ignition OFF.

The adjustable pedal switch is located to the left side of the steering column.

Downloaded from www.Manualslib.com manuals search engine

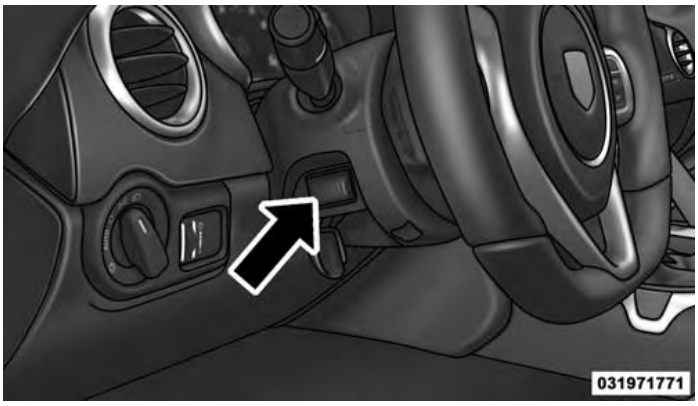

Adjustable Pedals Switch

NOTE:

- Always adjust the pedals to a position that allows full pedal travel.
- Further small adjustments may be necessary to find the best possible seat/pedal position.

CAUTION!

Do not place any article under the adjustable pedals or impede its ability to move as it may cause damage to the pedal controls. Pedal travel may become limited if movement is stopped by an obstruction in the adjustable pedal's path.

WARNING!

Do not adjust the pedals while the vehicle is moving. You could lose control and have an accident. Always adjust the pedals while the vehicle is parked.

Downloaded from www.Manualslib.com manuals search engine

Adjustable Foot Rest

This feature allows the driver to adjust the foot rest forward or backward and to rotate it upward or downward to allow for greater driving comfort.

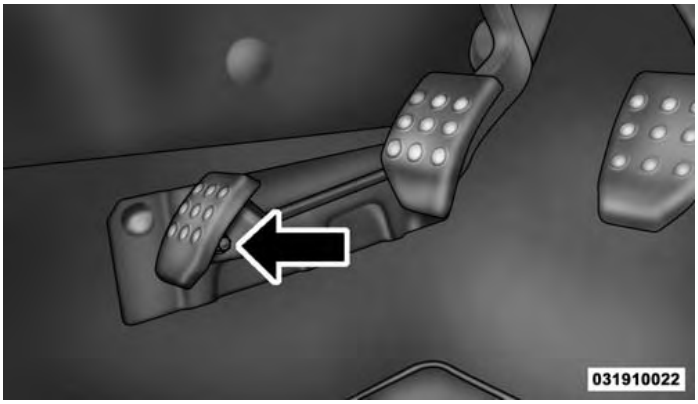

Adjustable Foot Rest

To adjust the pedal:

1. Adjust the seat and steering column to a comfortable position.
2. Using a 13 mm socket wrench, loosen the nut on the pedal.
3. Slide the pedal either forward or backward and rotate it upward or downward as desired.
4. Tighten the nut, being careful not to over tighten it.

Downloaded from www.Manualslib.com manuals search engine

ELECTRONIC SPEED CONTROL

When engaged, the Electronic Speed Control takes over accelerator operations at speeds greater than 25 mph (40 km/h).

The Electronic Speed Control buttons are located on the right side of the steering wheel.

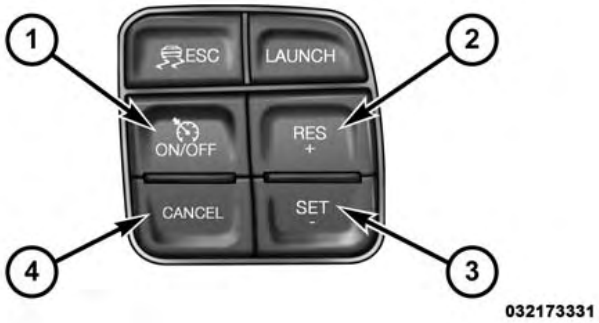

Electronic Speed Control Buttons

1 — ON/OFF	2 — RES +
4 — CANCEL	3 — SET -

Downloaded from www.Manualslib.com manuals search engine

NOTE: In order to ensure proper operation, the Electronic Speed Control System has been designed to shut down if multiple Speed Control functions are operated at the same time. If this occurs, the Electronic Speed Control System can be reactivated by pushing the Electronic Speed Control ON/OFF button and resetting the desired vehicle set speed.

To Activate

Push the ON/OFF button. The Cruise Indicator Light in the Electronic Vehicle Information Center (EVIC) will illuminate. To turn the system off, push the ON/OFF button a second time. The Cruise Indicator Light will turn off. The system should be turned off when not in use.

WARNING!

Leaving the Electronic Speed Control system on when not in use is dangerous. You could accidentally set the system or cause it to go faster than you want. You could lose control and have an accident. Always leave the system OFF when you are not using it.

To Set A Desired Speed

Turn the Electronic Speed Control ON. When the vehicle has reached the desired speed, press the SET (-) button and release. Release the accelerator and the vehicle will operate at the selected speed.

NOTE: The vehicle should be traveling at a steady speed and on level ground before pressing the SET button.

Downloaded from www.Manualslib.com manuals search engine

To Deactivate

A soft tap on the brake pedal, pushing the CANCEL button, or normal brake pressure while slowing the vehicle will deactivate Electronic Speed Control without erasing the set speed memory. Pressing the ON/OFF button or turning the ignition switch OFF erases the set speed memory.

To Resume Speed

To resume a previously set speed, push the RES (+) button and release. Resume can be used at any speed above 20 mph (32 km/h).

To Vary The Speed Setting

When the Electronic Speed Control is set, you can increase speed by pushing the RES (+) button. If the button is continually pressed, the set speed will continue to increase until the button is released, then the new set speed will be established.

Pressing the RES (+) button once will result in a 1 mph (1.6 km/h) increase in set speed. Each subsequent tap of the button results in an increase of 1 mph (1.6 km/h).

To decrease speed while the Electronic Speed Control is set, push the SET (-) button. If the button is continually held in the SET (-) position, the set speed will continue to decrease until the button is released. Release the button when the desired speed is reached, and the new set speed will be established.

Pressing the SET (-) button once will result in a 1 mph (1.6 km/h) decrease in set speed. Each subsequent tap of the button results in a decrease of 1 mph (1.6 km/h).

To Accelerate For Passing

Press the accelerator as you would normally. When the pedal is released, the vehicle will return to the set speed.

Downloaded from www.Manualslib.com manuals search engine

Using Electronic Speed Control On Hills

The transmission may downshift on hills to maintain the vehicle set speed.

NOTE: The Electronic Speed Control system maintains speed up and down hills. A slight speed change on moderate hills is normal.

On steep hills, a greater speed loss or gain may occur so it may be preferable to drive without Electronic Speed Control.

WARNING!

Electronic Speed Control can be dangerous where the system cannot maintain a constant speed. Your vehicle could go too fast for the conditions, and you could lose control and have an accident. Do not use Electronic Speed Control in heavy traffic or on roads that are winding, icy, snow-covered or slippery.

PARKVIEW® REAR BACK UP CAMERA — IF EQUIPPED

Your vehicle may be equipped with the ParkView® Rear Back Up Camera that allows you to see an on-screen image of the rear surroundings of your vehicle whenever the shift lever is put into REVERSE. The image will be displayed on the touchscreen display along with a caution note to “check entire surroundings” across the top of the screen. After five seconds this note will disappear. The ParkView® camera is located on the rear of the vehicle above the rear License plate.

When the vehicle is shifted out of REVERSE, the rear camera mode is exited and the navigation or audio screen appears again.

When displayed, static grid lines will illustrate the width of the vehicle and will show separate zones that will help

Downloaded from www.Manualslib.com manuals search engine

indicate the distance to the rear of the vehicle.The following table shows the approximate distances for each zone:

Zone	Distance to the rear of the vehicle
Red	0 - 1 ft (0 - 30 cm)
Yellow	1 ft - 3 ft (30 cm - 1 m)
Green	3 ft or greater (1 m or greater)

WARNING!

Drivers must be careful when backing up even when using the ParkView® Rear Back Up Camera. Always check carefully behind your vehicle, and be sure to check for pedestrians, animals, other vehicles, obstructions, or blind spots before backing up. You are responsible for the safety of your surroundings and must continue to pay attention while backing up. Failure to do so can result in serious injury or death.

CAUTION!

- **To avoid vehicle damage, ParkView® should only be used as a parking aid. The ParkView® camera is unable to view every obstacle or object in your drive path.**

(Continued)

Downloaded from www.Manualslib.com manuals search engine

CAUTION! ***(Continued)***

- **To avoid vehicle damage, the vehicle must be driven slowly when using ParkView® to be able to stop in time when an obstacle is seen. It is recommended that the driver look frequently over his/her shoulder when using ParkView®.**

NOTE: If snow, ice, mud, or any foreign substance builds up on the camera lens, clean the lens, rinse with water, and dry with a soft cloth. Do not cover the lens.

Turning ParkView® On Or Off — With Touch—Screen Radio

1. Turn the Radio on.
2. Press the "More" soft-key.
3. Press the "Settings" soft-key.
4. Press the "Safety & Driving Assistance" soft-key.
5. Press the check box soft key next to "Parkview® Backup Camera" to enable/disable.

GARAGE DOOR OPENER — IF EQUIPPED

HomeLink® replaces up to three hand-held transmitters that operate devices such as garage door openers, motorized gates, lighting or home security systems. The HomeLink® unit is powered by your vehicles 12 Volt battery.

The HomeLink® buttons, located on the sunvisor, designate the three different HomeLink® channels. The HomeLink® indicator is located above the center button.

Downloaded from www.Manualslib.com manuals search engine

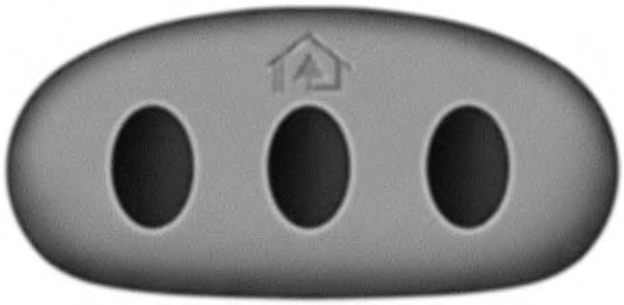

033972522

HomeLink® Buttons Sunvisor

NOTE: HomeLink® is disabled when the Vehicle Security Alarm is active.

Before You Begin Programming HomeLink®

Be sure that your vehicle is parked outside of the garage before you begin programming.

For more efficient programming and accurate transmission of the radio-frequency signal it is recommended that a new battery be placed in the hand-held transmitter of the device that is being programmed to the HomeLink® system.

Erase all channels before you begin programming. To erase the channels place the ignition in the ON/RUN position and press and hold the two outside HomeLink® buttons (I and III) for up 20 seconds or until the red indicator flashes.

NOTE:

- Erasing all channels should only be performed when programming HomeLink® for the first time. Do not erase channels when programming additional buttons.
- If you have any problems, or require assistance, please call toll-free 1–800–355–3515 or, on the Internet at www.HomeLink.com for information or assistance.

Downloaded from www.Manualslib.com manuals search engine

Programming A Rolling Code

For programming garage door openers that were manufactured after 1995. These garage door openers can be identified by the "LEARN" or "TRAIN" button located where the hanging antenna is attached to the garage door opener. It is NOT the button that is normally used to open and close the door. The name and color of the button may vary by manufacturer.

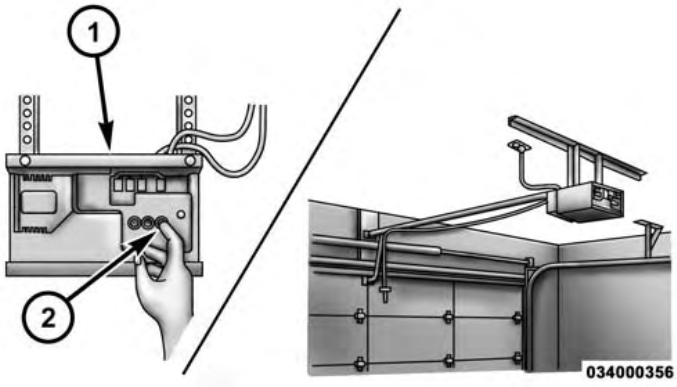

Training The Garage Door Opener

1 — Door Opener
2 — Training Button

1. Cycle the ignition to the ON/RUN position.

Downloaded from www.Manualslib.com manuals search engine

2. Place the hand-held transmitter 1 to 3 in (3 to 8 cm) away from the HomeLink® button you wish to program while keeping the HomeLink® indicator light in view.
3. Simultaneously press and hold both the HomeLink® button you want to program and the hand-held transmitter button.
4. Continue to hold both buttons and observe the indicator light. The HomeLink® indicator will flash slowly and then rapidly after HomeLink® has received the frequency signal from the hand-held transmitter. Release both buttons after the indicator light changes from slow to rapid.
5. At the garage door opener motor (in the garage), locate the "LEARN" or "TRAINING" button. This can usually be found where the hanging antenna wire is attached to the garage door opener/device motor. Firmly press and release the "LEARN" or "TRAINING" button. On some garage door openers/devices there may be a light that blinks when the garage door opener/device is in the LEARN/TRAIN mode.

NOTE: You have 30 seconds in which to initiate the next step after the LEARN button has been pressed.

6. Return to the vehicle and press the programmed HomeLink® button twice (holding the button for two seconds each time). If the garage door opener/device activates, programming is complete.

NOTE: If the garage door opener/device does not activate, press the button a third time (for two seconds) to complete the training.

To program the remaining two HomeLink® buttons, repeat each step for each remaining button. DO NOT erase the channels.

Downloaded from www.Manualslib.com manuals search engine

Reprogramming A Single HomeLink® Button

To reprogram a channel that has been previously trained, follow these steps:

1. Cycle the ignition to the ON/RUN position.
2. Press and hold the desired HomeLink® button until the indicator light begins to flash after 20 seconds. **Do not release the button.**
3. **Without releasing the button** proceed with "Programming A Rolling Code" Step 2 and follow all remaining steps.

Programming A Non-Rolling Code

For programming Garage Door Openers manufactured before 1995.

1. Cycle the ignition to the ON/RUN position.
2. Place the hand-held transmitter 1 to 3 in (3 to 8 cm) away from the HomeLink® button you wish to program while keeping the HomeLink® indicator light in view.
3. Simultaneously press and hold both the HomeLink® button you want to program and the hand-held transmitter button.
4. Continue to hold both buttons and observe the indicator light. HomeLink® indicator will flash slowly and then rapidly after HomeLink® has received the frequency signal from the hand-held transmitter. Release both buttons after the indicator light changes from slow to rapid.
5. Press and hold the programmed HomeLink® button and observe the indicator light.
   - If the indicator light stays on constantly, programming is complete and the garage door/device should activate when the HomeLink® button is pressed.

Downloaded from www.Manualslib.com manuals search engine

- To program the remaining two HomeLink® buttons, repeat each step for each remaining button. DO NOT erase the channels.

Reprogramming A Single HomeLink® Button

To reprogram a channel that has been previously trained, follow these steps:

1. Cycle the ignition to the ON/RUN position.
2. Press and hold the desired HomeLink® button until the indicator light begins to flash after 20 seconds. **Do not release the button.**
3. **Without releasing the button** proceed with "Programming A Non-Rolling Code" Step 2 and follow all remaining steps.

Canadian/Gate Operator Programming

For programming transmitters in Canada/United States that require the transmitter signals to "time-out" after several seconds of transmission.

Canadian radio frequency laws require transmitter signals to time-out (or quit) after several seconds of transmission – which may not be long enough for HomeLink® to pick up the signal during programming. Similar to this Canadian law, some U.S. gate operators are designed to time-out in the same manner.

It may be helpful to unplug the device during the cycling process to prevent possible overheating of the garage door or gate motor.

1. Cycle the ignition to the ON/RUN position.

Downloaded from www.Manualslib.com manuals search engine

2. Place the hand-held transmitter 1 to 3 in (3 to 8 cm) away from the HomeLink® button you wish to program while keeping the HomeLink® indicator light in view.
3. Continue to press and hold the HomeLink® button, while you press and release ("cycle"), your hand-held transmitter every two seconds until HomeLink® has successfully accepted the frequency signal. The indicator light will flash slowly and then rapidly when fully trained.
4. Watch for the HomeLink® indicator to change flash rates. When it changes, it is programmed. It may take up to 30 seconds or longer in rare cases. The garage door may open and close while you are programming.
5. Press and hold the programmed HomeLink® button and observe the indicator light.
   - If the indicator light stays on constantly, programming is complete and the garage door/device should activate when the HomeLink® button is pressed.
   - To program the two remaining HomeLink® buttons, repeat each step for each remaining button. DO NOT erase the channels.

If you unplugged the garage door opener/device for programming, plug it back in at this time.

Reprogramming A Single HomeLink® Button

To reprogram a channel that has been previously trained, follow these steps:

1. Cycle the ignition to the ON/RUN position.
2. Press and hold the desired HomeLink® button until the indicator light begins to flash after 20 seconds. **Do not release the button.**
3. **Without releasing the button** proceed with "Canadian/Gate Operator Programming" Step 2 and follow all remaining steps.

Downloaded from www.Manualslib.com manuals search engine

Using HomeLink®

To operate, press and release the programmed HomeLink® button. Activation will now occur for the programmed device (i.e., garage door opener, gate operator, security system, entry door lock, home/office lighting, etc.,). The hand-held transmitter of the device may also be used at any time.

Security

It is advised to erase all channels before you sell or turn in your vehicle.

To do this, press and hold the two outside buttons for 20 seconds until the red indicator flashes. Note that all channels will be erased. Individual channels cannot be erased.

The HomeLink® Universal Transceiver is disabled when the Vehicle Security Alarm is active.

Troubleshooting Tips

If you are having trouble programming HomeLink®, here are some of the most common solutions:

- Replace the battery in the original hand-held transmitter.
- Press the LEARN button on the Garage Door Opener to complete the training for a Rolling Code.
- Did you unplug the device for programming and remember to plug it back in?

If you have any problems, or require assistance, please call toll-free 1–800–355–3515 or, on the Internet at www.HomeLink.com for information or assistance.

Downloaded from www.Manualslib.com manuals search engine

WARNING!

- **Your motorized door or gate will open and close while you are programming the universal transceiver. Do not program the transceiver if people, pets or other objects are in the path of the door or gate. Only use this transceiver with a garage door opener that has a "stop and reverse" feature as required by Federal safety standards. This includes most garage door opener models manufactured after 1982. Do not use a garage door opener without these safety features. Call toll-free 1–800–355–3515 or, on the Internet at www.HomeLink.com for safety information or assistance.**
- **Vehicle exhaust contains carbon monoxide, a dangerous gas. Do not run your vehicle in the garage while programming the transceiver. Exhaust gas can cause serious injury or death.**

General Information

This device complies with FCC rules Part 15 and Industry Canada RSS-210. Operation is subject to the following two conditions:

1. This device may not cause harmful interference.
2. This device must accept any interference that may be received including interference that may cause undesired operation.

NOTE:

- The transmitter has been tested and it complies with FCC and IC rules. Changes or modifications not expressly approved by the party responsible for compliance could void the user's authority to operate the device.
- The term IC before the certification/registration number only signifies that Industry Canada technical specifications were met.

Downloaded from www.Manualslib.com manuals search engine

ELECTRICAL POWER OUTLETS

Your vehicle is equipped with two 12 Volt (13 Amp) power outlet that can be used to power cellular phones, small electronics and other low powered electrical accessories.

One power outlet is located on the center console to the right of the shifter. Push down on the power outlet to access the opening. Push down on it again to close. This power outlet is powered when the ignition is in the ON or ACC position.

The second power outlet is located between the seat backs above the cup holders. This power outlet is connected directly by the battery and powered at all times.

Downloaded from www.Manualslib.com manuals search engine

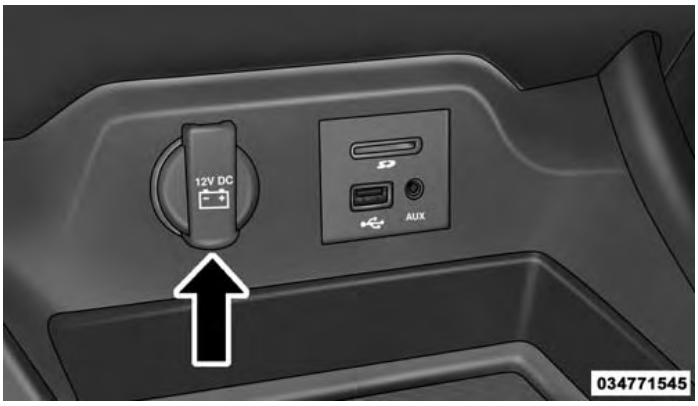

NOTE: Do not exceed the maximum power of 160 Watts (13 Amps) at 12 Volts. If the 160 Watt (13 Amp) power rating is exceeded the fuse protecting the system will need to be replaced.

WARNING!

To avoid serious injury or death:

- **Only devices designed for use in this type of outlet should be inserted into any 12 Volt outlet.**
- **Do not touch with wet hands.**
- **Close the lid when not in use and while driving the vehicle.**
- **If this outlet is mishandled, it may cause an electric shock and failure.**

Downloaded from www.Manualslib.com manuals search engine

CAUTION!

- **Many accessories that can be plugged in draw power from the vehicle's battery, even when not in use (i.e., cellular phones, etc.). Eventually, if plugged in long enough, the vehicle's battery will discharge sufficiently to degrade battery life and/or prevent the engine from starting.**
- **Accessories that draw higher power (i.e., coolers, vacuum cleaners, lights, etc.) will degrade the battery even more quickly. Only use these intermittently and with greater caution.**
- **After the use of high power draw accessories, or long periods of the vehicle not being started (with accessories still plugged in), the vehicle must be driven a sufficient length of time to allow the generator to recharge the vehicle's battery.**

CUPHOLDERS — If Equipped

There are two cupholders located in the rear of the center console.

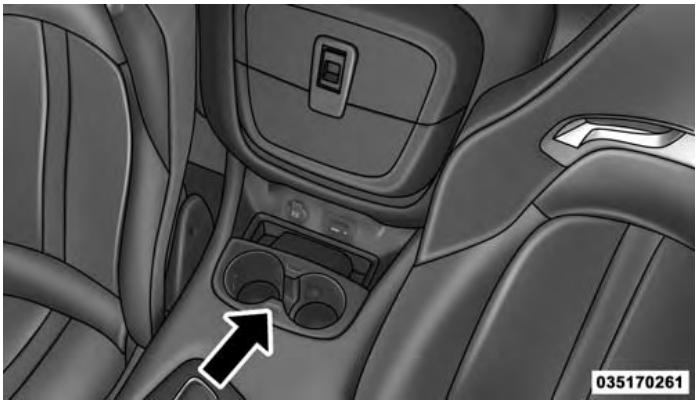

Center Console Cupholders

Downloaded from www.Manualslib.com manuals search engine

STORAGE

Glovebox Storage

An electronic glovebox storage compartment is located on the passenger side of the instrument panel. Push in the button to open the glovebox.

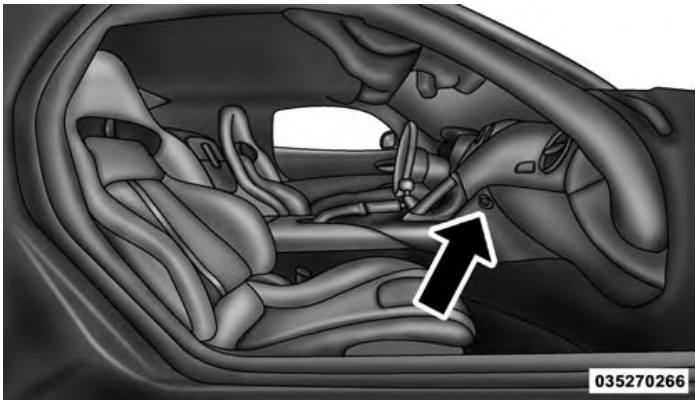

Glove Box Storage Compartment

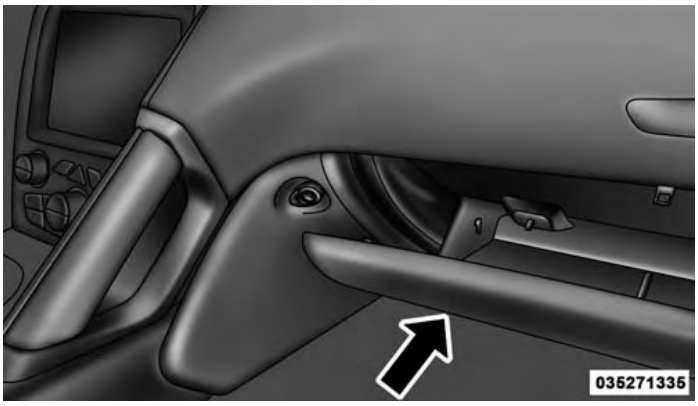

Opened Glove Box Storage Compartment

NOTE: The glovebox storage compartment will lock with the door locks.

Downloaded from www.Manualslib.com manuals search engine

Console Features

Console Cubby Bin — If Equipped

An open storage area, or cubby bin, is located in the center console rearward of the shift lever.

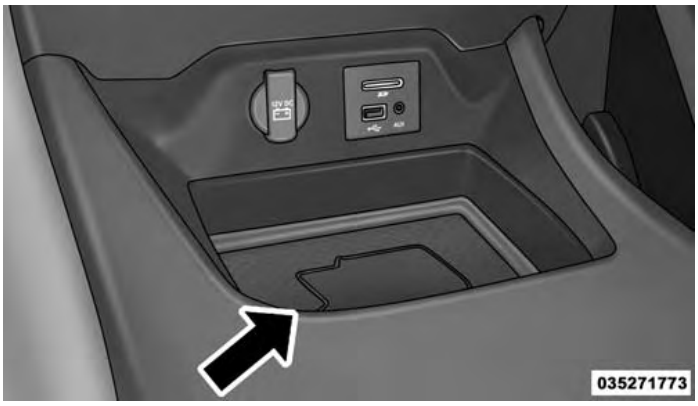

Center Console Cubby Bin Location

Cargo Net Storage— If Equipped

There is a cargo net storage area located between the driver and passengers seat.

Cargo Net Storage Location

Downloaded from www.Manualslib.com manuals search engine

Storage Bin — If Equipped

There is a storage bin located between the driver and passengers seat. Pull up on the release lever to open the storage bin.

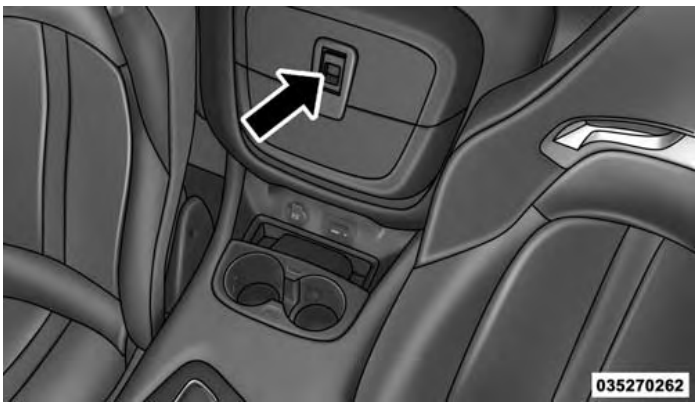

Storage Bin Location

WARNING!

Do not operate this vehicle with a console compartment lid in the open position. Cellular phones, music players, and other handheld electronic devices should be stowed while driving. Use of these devices while driving can cause an accident due to distraction, resulting in death or injury.

Downloaded from www.Manualslib.com manuals search engine

Door Storage

The door panels contain storage areas located in the lower center area of the door panel.

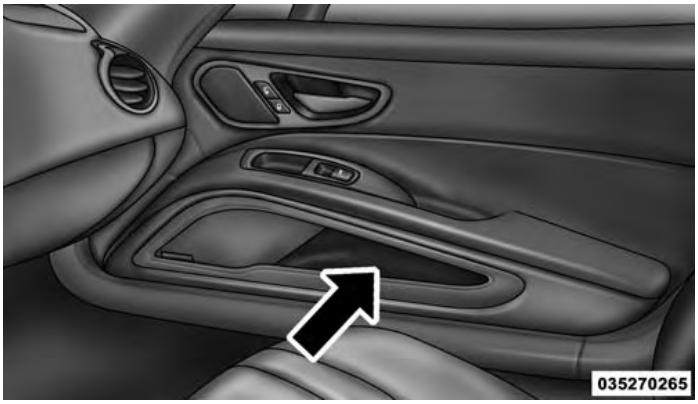

Door Panel Storage

REAR WINDOW FEATURES

Rear Window Defroster

The rear window defroster button is located on the climate control panel. Press this button to turn on the rear window defroster. An indicator in the button will illuminate when the rear window defroster is on. The rear window defroster automatically turns off after approximately 10 minutes. For an additional five minutes of operation, press the button a second time.

NOTE: To prevent excessive battery drain, use the rear window defroster only when the engine is operating.

Downloaded from www.Manualslib.com manuals search engine

CAUTION!

Failure to follow these cautions can cause damage to the heating elements:

- **Use care when washing the inside of the rear window. Do not use abrasive window cleaners on the interior surface of the window. Use a soft cloth and a mild washing solution, wiping parallel to the heating elements. Labels can be peeled off after soaking with warm water.**
- **Do not use scrapers, sharp instruments, or abrasive window cleaners on the interior surface of the window.**
- **Keep all objects a safe distance from the window.**

Downloaded from www.Manualslib.com manuals search engine

UNDERSTANDING YOUR INSTRUMENT PANEL

CONTENTS

- INSTRUMENT PANEL FEATURES 125
- INSTRUMENT CLUSTER 126
- INSTRUMENT CLUSTER DESCRIPTIONS 127
- ELECTRONIC VEHICLE INFORMATION CENTER (EVIC) 138
  - Electronic Vehicle Information Center (EVIC) Displays 140
  - Electronic Vehicle Information Center (EVIC) Messages 142
  - EVIC Amber Telltales 143
  - EVIC Red Telltales 144
  - EVIC Green Telltales 146
  - EVIC Selectable Menu Items 146
  - Screen Setup Driver Selectable Items 152
- Uconnect® ACCESS SETTINGS 153
  - Hard-Keys 153
  - Soft-Keys 153
  - Customer Programmable Features — Uconnect® Access System Settings 153
- Uconnect® RADIOS — IF EQUIPPED 163

Downloaded from www.Manualslib.com manuals search engine

■ iPod®/USB/MP3 CONTROL — IF EQUIPPED. 163
■ STEERING WHEEL AUDIO CONTROLS 164
□ Radio Operation 164
■ RADIO ANTENNA 164
■ RADIO OPERATION AND MOBILE PHONES . .165
■ CLIMATE CONTROLS 165
□ Automatic Temperature Control (ATC). 165
□ Summer Operation 170
□ Winter Operation. 171
□ Vacation/Storage 171
□ Window Fogging and Frosting 171
□ Outside Air Intake. 171
□ Control Setting Suggestions for Various Weather Conditions 172

Downloaded from www.Manualslib.com manuals search engine

INSTRUMENT PANEL FEATURES

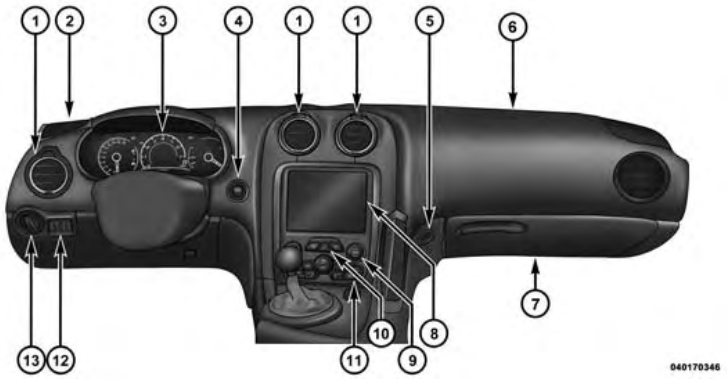

1 — Air Outlet
2 — Sound System Speaker
3 — Instrument Cluster
4 — Keyless Enter-N-Go™ Start/Stop Button
5 — Glove Compartment Lock
6 — Passenger Air Bag
7 — Glove Compartment
8 — Uconnect® System
9 — Uconnect® System Hard Controls
10 — Switch Bank (Screen Off, Hazard Switch, Back Button)
11 — Climate Controls
12 — Dimmer Controls
13 — Headlight Switch

Downloaded from www.Manualslib.com manuals search engine

INSTRUMENT CLUSTER

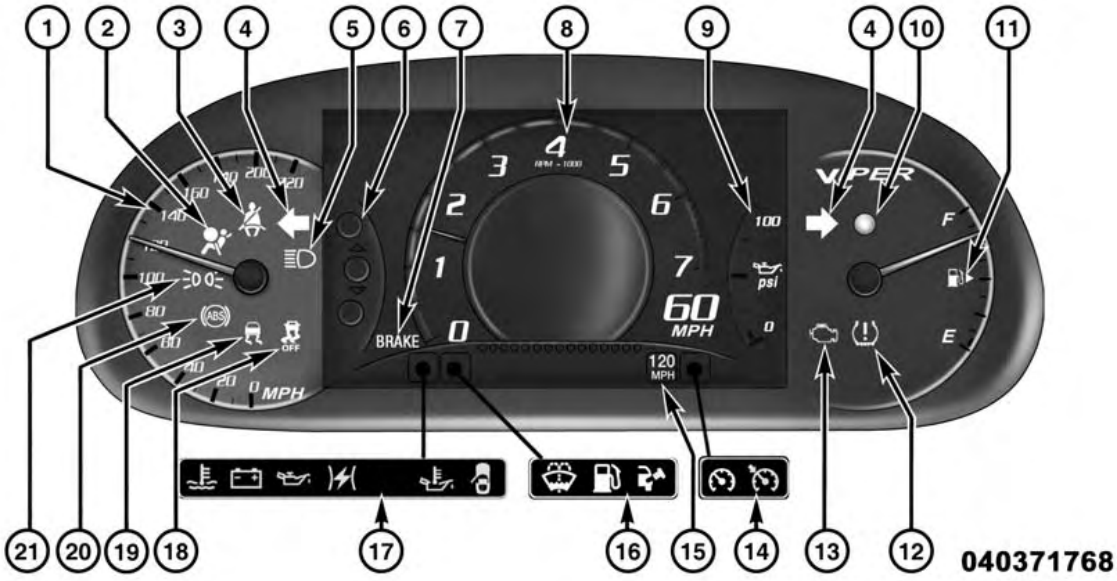

Downloaded from www.Manualslib.com manuals search engine

INSTRUMENT CLUSTER DESCRIPTIONS

1. Speedometer

Indicates vehicle speed.

2. Air Bag Warning Light

This light will turn on for four to eight seconds as a bulb check when the ignition is first cycled to ON/RUN. If the light is either not on during starting, stays on, or turns on while driving, have the system inspected at an authorized dealer as soon as possible. Refer to "Occupant Restraints" in "Things To Know Before Starting Your Vehicle" for further information.

3. Seat Belt Reminder Light

When the ignition is first cycled to ON/RUN, this light will turn on for four to eight seconds as a bulb check. During the bulb check, if the driver's seat belt is unbuckled, a chime will sound. After the bulb check or when driving, if the driver's seat belt remains unbuckled, the Seat Belt Reminder Light will illuminate and the chime will sound. Refer to "Occupant Restraints" in "Things To Know Before Starting Your Vehicle" for further information.

4. Turn Signal Indicators

The arrow will flash with the exterior turn signal when the turn signal lever is operated.

If the vehicle electronics sense that the vehicle is driven more than 1 mile (1.6 km) with either turn signal on, a continuous chime will sound to alert you to turn the signals off. If either indicator flashes at a rapid rate, check for a defective outside light bulb.

- Both turn signal arrows will flash in unison with the front and rear turn signals when the HAZARD WARNING button is operated.

Downloaded from www.Manualslib.com manuals search engine

NOTE: Leaving the hazard flashers on for extended periods will wear down the battery.

5. High Beam Indicator

This indicator shows that the high beam headlights are on. Push the multifunction lever forward to switch the headlights to high beam, and pull toward yourself (normal position) to return to low beam.

6. EVIC Menu Set (Selectable ICONS)

The EVIC displays are located In the center portion of the cluster and consists of eight section:

- Speedometer (Digital or Analog) (km/h or mph)
- Main Screen — The inner ring of the display will illuminate in gray under normal conditions, yellow for non critical warning, red for critical warnings and white for on demand information.
- Selectable Information (Compass, Temp, Range, to Empty, Trip A, Trip B, Average MPG)
- Menu Titles / Odometer
- Menu Set (Selectable Icons)
- Shift Lever Status (PRNDL)
- Reconfigurable Telltales
- Audio / Phone Information
- Sub-menu Current Position — Whenever there are sub-menus available, the position within the sub-menus is here

Refer to Electronic Vehicle Information Center (EVIC) for further information.

7. Brake Warning Light

BRAKE

This light monitors various brake functions, including brake fluid level and parking brake application. If the brake light turns on it may

Downloaded from www.Manualslib.com manuals search engine

indicate that the parking brake is applied, that the brake fluid level is low, or that there is a problem with the anti-lock brake system reservoir.

If the light remains on when the parking brake has been disengaged, and the fluid level is at the full mark on the master cylinder reservoir, it indicates a possible brake hydraulic system malfunction or that a problem with the Brake Booster has been detected by the Anti-Lock Brake System (ABS) / Electronic Stability Control (ESC) system. In this case, the light will remain on until the condition has been corrected. If the problem is related to the brake booster, the ABS pump will run when applying the brake and a brake pedal pulsation may be felt during each stop.

The dual brake system provides a reserve braking capacity in the event of a failure to a portion of the hydraulic system. A leak in either half of the dual brake system is indicated by the Brake Warning Light, which will turn on when the brake fluid level in the master cylinder has dropped below a specified level.

The light will remain on until the cause is corrected.

WARNING!

Driving a vehicle with the red brake light on is dangerous. Part of the brake system may have failed. It will take longer to stop the vehicle. You could have a collision. Have the vehicle checked immediately.

Vehicles equipped with the Anti-Lock Brake System (ABS), are also equipped with Electronic Brake Force Distribution (EBD). In the event of an EBD failure, the Brake Warning Light will turn on along with the ABS Light. Immediate repair to the ABS system is required.

Operation of the Brake Warning Light can be checked by cycling the ignition from the OFF position to the ON/RUN position. The light should illuminate for approximately two seconds. The light should then turn off unless

Downloaded from www.Manualslib.com manuals search engine

the parking brake is applied or a brake fault is detected. If the light does not illuminate, have the light inspected by an authorized dealer.

The light also will turn on when the parking brake is applied with the ignition in the ON/RUN position.

NOTE: This light shows only that the parking brake is applied. It does not show the degree of brake application.

8. Tachometer

This gauge measures engine revolutions-per-minute (RPM x 1000)

9. Oil Pressure Warning Light

This light indicates low engine oil pressure. The light should turn on momentarily when the engine is started. If the light turns on while driving, stop the vehicle and shut off the engine as soon as possible. A chime will sound when this light turns on. Do not operate the vehicle until the cause is corrected. This light does not indicate how much oil is in the engine. The engine oil level must be checked under the hood.

10. Vehicle Security Light — If Equipped

This light will flash at a fast rate for approximately 15 seconds, when the vehicle security alarm is arming, and then will flash slowly until the vehicle is disarmed.

11. Fuel Gauge

The pointer shows the level of fuel in the fuel tank when the ignition is in the ON/RUN position.

12. Tire Pressure Monitoring Telltale Light — If Equipped

Each tire, including the spare (if provided), should be checked monthly when cold and inflated to the inflation pressure recommended by the vehicle manufacturer on the vehicle

Downloaded from www.Manualslib.com manuals search engine

placard or tire inflation pressure label. (If your vehicle has tires of a different size than the size indicated on the vehicle placard or tire inflation pressure label, you should determine the proper tire inflation pressure for those tires.)

As an added safety feature, your vehicle has been equipped with a Tire Pressure Monitoring System (TPMS) that illuminates a low tire pressure telltale when one or more of your tires is significantly under-inflated. Accordingly, when the low tire pressure telltale illuminates, you should stop and check your tires as soon as possible, and inflate them to the proper pressure. Driving on a significantly under-inflated tire causes the tire to overheat and can lead to tire failure. Under-inflation also reduces fuel efficiency and tire tread life, and may affect the vehicle's handling and stopping ability.

Please note that the TPMS is not a substitute for proper tire maintenance, and it is the driver's responsibility to maintain correct tire pressure, even if under-inflation has not reached the level to trigger illumination of the TPMS low tire pressure telltale.

Your vehicle has also been equipped with a TPMS malfunction indicator to indicate when the system is not operating properly. The TPMS malfunction indicator is combined with the low tire pressure telltale. When the system detects a malfunction, the telltale will flash for approximately one minute and then remain continuously illuminated. This sequence will continue upon subsequent vehicle start-ups as long as the malfunction exists. When the malfunction indicator is illuminated, the system may not be able to detect or signal low tire pressure as intended. TPMS malfunctions may occur for a variety of reasons, including the installation of replacement or alternate tires or wheels on the vehicle that prevent the TPMS from functioning properly. Always check the TPMS malfunction telltale after replacing one or more tires or wheels on your vehicle, to ensure that the

Downloaded from www.Manualslib.com manuals search engine

replacement or alternate tires and wheels allow the TPMS to continue to function properly.

CAUTION!

The TPMS has been optimized for the original equipment tires and wheels. TPMS pressures and warning have been established for the tire size equipped on your vehicle. Undesirable system operation or sensor damage may result when using replacement equipment that is not of the same size, type, and/or style. Aftermarket wheels can cause sensor damage. Do not use tire sealant from a can or balance beads if your vehicle is equipped with a TPMS, as damage to the sensors may result.

13. Malfunction Indicator Light (MIL)

The Malfunction Indicator Light (MIL) is part of an onboard diagnostic system, called OBD, that monitors engine control systems. The light will illuminate when the ignition is in the ON/RUN position, before engine start. If the bulb does not come on when cycling the ignition from OFF to ON/RUN, have the condition checked promptly.

Certain conditions, such as poor fuel quality, etc., may illuminate the MIL after engine start. The vehicle should be serviced if the light stays on through several of your typical driving cycles. In most situations, the vehicle will drive normally and will not require towing.

CAUTION!

Prolonged driving with the Malfunction Indicator Light (MIL) on could cause damage to the engine control system. It also could affect fuel economy and drivability. If the MIL is flashing, severe catalytic converter damage and power loss will soon occur. Immediate service is required.

Downloaded from www.Manualslib.com manuals search engine

WARNING!

A malfunctioning catalytic converter, as referenced above, can reach higher temperatures than in normal operating conditions. This can cause a fire if you drive slowly or park over flammable substances such as dry plants, wood, cardboard, etc. This could result in death or serious injury to the driver, occupants or others.

14. Electronic Speed Control Indicator Lights

- *Electronic Speed Control ON Indicator*

This light will turn on when the electronic speed control is ON. For further information, refer to "Electronic Speed Control" in "Understanding The Features Of Your Vehicle."

- *Electronic Speed Control SET Indicator*

This light will turn on when the electronic speed control is SET. For further information, refer to "Electronic Speed Control" in "Understanding The Features Of Your Vehicle."

15. Cruise Speed Set Value

Speed value shown when set.

16. EVIC Amber Telltale Lights

When the appropriate conditions exist, the following EVIC Amber Telltale Lights will display:

- *Windshield Washer Fluid Low Indicator — If Equipped*

This light will turn on to indicate the windshield washer fluid is low

4

Downloaded from www.Manualslib.com manuals search engine

- *Low Fuel Light*

When the fuel level reaches approximately 3.0 gal (11.0 L) this light will turn on, and remain on until fuel is added.

17. EVIC Red Telltale Lights

When the appropriate conditions exist, the following EVIC Red Telltale Lights will display:

- *Engine Temperature*

This telltale warns of an overheated engine condition. As temperatures rise and the gauge approaches **H, or 260°F**, this telltale will illuminate and a single chime will sound after reaching a set threshold. Further overheating will cause the temperature gauge to pass **H, or 260°F**, a continuous chime will occur until the engine is allowed to cool.

If the telltale turns on while driving, safely pull over and stop the vehicle. If the A/C system is on, turn it off. Also, shift the transmission into NEUTRAL and idle the vehicle. If the temperature reading does not return to normal, turn the engine off immediately and call for service. Refer to "If Your Engine Overheats" in "What To Do In Emergencies" for more information.

- *Charging System*

This telltale shows the status of the electrical charging system. If the telltale stays on or comes on while driving, turn off some of the vehicle's non-essential electrical devices or increase engine speed (if at idle). If the charging system telltale remains on, it means that the vehicle is experiencing a problem with the charging system. Obtain SERVICE IMMEDIATELY. See an authorized dealer.

If jump starting is required, refer to "Jump Starting Procedures" in "What To Do In Emergencies".

Downloaded from www.Manualslib.com manuals search engine

- *Oil Pressure Warning*

This telltale indicates low engine oil pressure. If the light turns on while driving, stop the vehicle and shut off the engine as soon as possible. A chime will sound for four minutes when this light turns on.

Do not operate the vehicle until the cause is corrected. This light does not show how much oil is in the engine. The engine oil level must be checked under the hood.

- *Electronic Throttle Control (ETC)*

This telltale informs you of a problem with the Electronic Throttle Control (ETC) system. If the telltale comes on while driving, have the system checked by an authorized dealer.

If a problem is detected, the telltale will come on while the engine is running. Cycle the ignition when the vehicle has completely stopped and the shift lever is placed in the NEUTRAL position and the parking brake applied. The telltale should turn off.

If the telltale remains lit with the engine running, your vehicle will usually be drivable. However, see an authorized dealer for service as soon as possible. If the telltale is flashing when the engine is running, immediate service is required. You may experience reduced performance, an elevated/rough idle or engine stall and your vehicle may require towing.

- *Oil Temperature Warning Light*

This telltale indicates high engine oil temperature. If the light turns on while driving, stop the vehicle and shut off the engine as soon as possible. A chime will sound for four minutes when this light turns on.

- *Door Ajar*

This telltale turns on when one or more doors are ajar. The telltale will show which doors are ajar.

Downloaded from www.Manualslib.com manuals search engine

18. Electronic Stability Control (ESC) OFF Indicator Light — If Equipped

This light indicates the Electronic Stability Control (ESC) is off.

19. Electronic Stability Control (ESC) Activation/ Malfunction Indicator Light — If Equipped

The "ESC Activation/Malfunction Indicator Light" in the instrument cluster will come on when the ignition is cycled to the ON/RUN position. It should go out with the engine running. If the "ESC Activation/Malfunction Indicator Light" comes on continuously with the engine running, a malfunction has been detected in the ESC system. If this light remains on after several ignition cycles, and the vehicle has been driven several miles (kilometers) at speeds greater than 30 mph (48 km/h), see your authorized dealer as soon as possible to have the problem diagnosed and corrected.

NOTE:

- The "ESC Off Indicator Light" and the "ESC Activation/Malfunction Indicator Light" come on momentarily each time the ignition is cycled to ON/RUN.
- Each time the ignition is cycled to ON/RUN, the ESC system will be ON, even if it was turned off previously.
- The ESC system will make buzzing or clicking sounds when it is active. This is normal; the sounds will stop when ESC becomes inactive following the maneuver that caused the ESC activation.

Downloaded from www.Manualslib.com manuals search engine

20. Anti-Lock Brake (ABS) Light

This light monitors the Anti-Lock Brake System (ABS). The light will turn on when the ignition is cycled to the ON/RUN position and may stay on for as long as four seconds.

If the ABS light remains on or turns on while driving, it indicates that the Anti-Lock portion of the brake system is not functioning and that service is required. However, the conventional brake system will continue to operate normally if the BRAKE warning light is not on.

If the ABS light is on, the brake system should be serviced as soon as possible to restore the benefits of Anti-Lock brakes. If the ABS light does not turn on when the ignition is cycled to the ON/RUN position, have the light inspected by an authorized dealer.

21. Park/Headlight ON Indicator — If Equipped

This indicator will illuminate when the park lights or headlights are turned on.

Downloaded from www.Manualslib.com manuals search engine

ELECTRONIC VEHICLE INFORMATION CENTER (EVIC)

040971548

The Electronic Vehicle Information Center (EVIC) features a driver-interactive display that is located in the instrument cluster.

This system allows the driver to select a variety of useful information by pressing the switches mounted on the steering wheel. The EVIC consists of the following:

- Digital Speedometer
- SRT Performance Info
- Vehicle Info
- Fuel Economy Info
- Trip A
- Trip B
- Radio Info
- Stored Messages
- Screen Setup
- Diagnostic Codes
- Vehicle Hibernation Settings

Downloaded from www.Manualslib.com manuals search engine

- Vehicle Settings

The system allows the driver to select information by pressing the following buttons mounted on the steering wheel:

040971549

EVIC Steering Wheels Buttons

- *UP Arrow Button*

△ Press and release the UP arrow button to scroll upward through the main menu and sub-menus (Fuel Economy, Trip A, Trip B, Audio, Stored Messages, Screen Set Up).

- *DOWN Arrow Button*

▽ Press and release the DOWN arrow button to scroll downward through the main menu and sub-menus (Fuel Economy, Trip A, Trip B, Audio, Stored Messages, Screen Set Up).

- *RIGHT Arrow Button*

▷ Press and release the RIGHT arrow button to access/select the information screens or sub-menu screens of a main menu item. Press and hold the RIGHT arrow button for two seconds to reset displayed/selected features that can be reset.

Downloaded from www.Manualslib.com manuals search engine

- *LEFT Arrow Button*

◁ Press the LEFT arrow button to return to the main menu from an info screen or sub-menu item.

Electronic Vehicle Information Center (EVIC) Displays

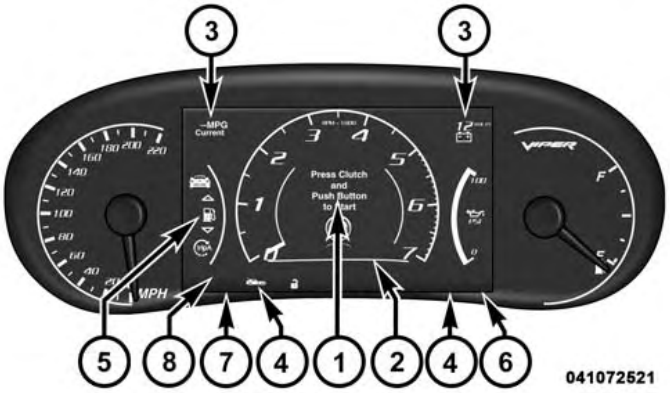

The EVIC displays are located in the center portion of the cluster and consists of the following sections:

Downloaded from www.Manualslib.com manuals search engine

1. Main Screen — The inner ring of the display will illuminate in grey under normal conditions, yellow for non critical warnings, red for critical warnings and white for on demand information.
2. Audio / Phone Information and Sub-menu Information — Whenever there are sub-menus available, the position within the sub-menus is shown here.
3. Reconfigurable Telltales/Information
4. Telltales/Indicators
5. Selectable Information (Vehicle Info, SRT, Fuel Economy, Stored Messages, Audio, Trip A, Trip B, Average MPG)
6. Suspension Status
7. ESC Status
8. Launch Control status when launch control mode is entered.

The main display area will normally display the main menu or the screens of a selected feature of the main menu. The main display area also displays "pop up" messages that consist of approximately 60 possible warning or information messages. These pop up messages fall into several categories:

- ***Five Second Stored Messages***

When the appropriate conditions occur, this type of message takes control of the main display area for five seconds and then returns to the previous screen. Most of the messages of this type are then stored (as long as the condition that activated it remains active) and can be reviewed from the "Messages" main menu item. As long as there is a stored message, an "i" will be displayed in the EVIC's compass/outside temp line. Examples of this message type are "Right Front Turn Signal Lamp Out" and "Low Tire Pressure".

Downloaded from www.Manualslib.com manuals search engine

- ***Unstored Messages***

This message type is displayed indefinitely or until the condition that activated the message is cleared. Examples of this message type are "Turn Signal On" (if a turn signal is left on) and "Lights On" (if driver leaves the vehicle).

- ***Five Second Unstored Messages***

When the appropriate conditions occur, this type of message takes control of the main display area for five seconds and then returns to the previous screen. An example of this message type is "Automatic High Beams On".

Electronic Vehicle Information Center (EVIC) Messages

- Front Seatbelts Unbuckled
- Driver Seatbelt Unbuckled
- Passenger Seatbelt Unbuckled
- Key Fob Battery Low
- Service Airbag System
- ESC Status
- Oil Pressure Low
- Fuel Low
- Service Antilock Brake System
- Service Electronic Throttle Control
- Cruise Off
- Cruise Ready
- Cruise Set To XXX MPH
- Tire Pressure Screen With Low Tire Pressure Warnings
- Service Tire Pressure System
- Parking Brake Engaged

Downloaded from www.Manualslib.com manuals search engine

- Brake Fluid Low
- Service Electronic Braking System
- Engine Temperature Hot
- Battery Voltage Low
- Service Electronic Throttle Control
- Lights On
- Right Turn Signal Light Out
- Left Turn Signal Light Out
- Turn Signal On
- Service Airbag System
- Service Airbag Warning Light
- Driver Seatbelt Unbuckled
- Passenger Seatbelt Unbuckled
- Front Seatbelts Unbuckled
- Door Open
- Doors Open
- Engage Park Brake to Prevent Rolling

EVIC Amber Telltales

This area will show amber caution telltales. These telltales include:

- ***Low Fuel Telltale***

When the fuel level reaches approximately 3.0 gal (11.0 L) this light will turn on, and remain on until fuel is added.

Downloaded from www.Manualslib.com manuals search engine

- *Electronic Speed Control Ready*

This light will turn on when the electronic speed control is ON. For further information, refer to "Electronic Speed Control" in "Understanding The Features Of Your Vehicle."

EVIC Red Telltales

This area will show red telltales. These telltales include:

- *Door Ajar*

This light will turn on to indicate that one or more doors may be ajar.

- *Trunk Ajar*

This telltale is on when the trunk is not closed.

- *Oil Pressure Warning Light*

This telltale indicates low engine oil pressure. If the light turns on while driving, stop the vehicle and shut off the engine as soon as possible. A chime will sound for four minutes when this light turns on.

Do not operate the vehicle until the cause is corrected. This light does not show how much oil is in the engine. The engine oil level must be checked under the hood.

- *Charging System Light*

This light shows the status of the electrical charging system. If the light stays on or comes on while driving, turn off some of the vehicle's non-essential electrical devices or increase engine speed (if at idle). If the charging system light remains on, it means that the vehicle is experiencing a problem with the charging system. Obtain SERVICE IMMEDIATELY. See an authorized dealer.

Downloaded from www.Manualslib.com manuals search engine

If jump starting is required, refer to "Jump Starting Procedures" in "What To Do In Emergencies".

- *Electronic Throttle Control (ETC) Light*

This light informs you of a problem with the Electronic Throttle Control (ETC) system. The light will come on when the ignition is first cycled ON and remain on briefly as a bulb check. If the light does not come on during starting, have the system checked by an authorized dealer.

If a problem is detected, the light will come on while the engine is running. Cycle the ignition when the vehicle has completely stopped and the shift lever is in Neutral, with the Parking Brake applied. The light should turn off.

If the light remains lit with the engine running, your vehicle will usually be drivable. However, see an authorized dealer for service as soon as possible. If the light is flashing when the engine is running, immediate service is required. You may experience reduced performance, an elevated/rough idle or engine stall and your vehicle may require towing.

- *Engine Temperature Warning Light*

This light warns of an overheated engine condition. As temperatures rise and the gauge approaches **H,** this indicator will illuminate and a single chime will sound after reaching a set threshold. Further overheating will cause the temperature gauge to pass **H,** the indicator will continuously flash and a continuous chime will occur until the engine is allowed to cool.

If the light turns on while driving, safely pull over and stop the vehicle. If the A/C system is on, turn it off. Also, shift the transmission into NEUTRAL and idle the vehicle. If the temperature reading does not return to normal, turn the engine off immediately and call for service. Refer to "If Your Engine Overheats" in "What To Do In Emergencies" for more information.

Downloaded from www.Manualslib.com manuals search engine

EVIC Green Telltales

- *Electronic Speed Control SET*

This telltale will illuminate green when the electronic speed control is SET. For further information, refer to "Electronic Speed Control" in "Understanding The Features Of Your Vehicle."

EVIC Selectable Menu Items

Press and release the UP or DOWN arrow buttons until the desired Selectable Menu icon is highlighted in the EVIC.

Tachometer

Press and release the UP or DOWN arrow button until the Tachometer icon is highlighted in the EVIC. Press and release the RIGHT arrow button to change the display between full tachometer or with digital speedometer.

MPH — km/h

Press and release the UP or DOWN arrow button until the MPH-km/h icon is highlighted in the EVIC. Press and release the RIGHT arrow button to change the display between MPH or km/h

Downloaded from www.Manualslib.com manuals search engine

Vehicle Info (Customer Information Features)

Press and release the UP or DOWN arrow button until the Vehicle Info icon is highlighted in the EVIC. Press and release the RIGHT arrow button and Coolant Temp will be displayed. Press the UP or DOWN arrow button to scroll through the following information sub-menus:

Tire Pressure

Press and release the UP or DOWN arrow button until "Tire Pressure" is highlighted in the EVIC. Press and release the RIGHT arrow button and one of the following will be displayed:

- If tire pressure is OK for all tires a vehicle ICON is displayed with tire pressure values in each corner of the ICON.
- If one or more tires have low pressure, The tire pressure values in each corner of the ICON with the pressure value of the low tire displayed in a different color than the other tire pressure value.
- If the Tire Pressure system requires service, "Service Tire Pressure System" is displayed.

Tire PSI is an information only function and cannot be reset. Press and release the LEFT arrow button to return to the main menu.

Refer to "Tire Pressure Monitoring System (TPMS)" under "Starting and Operating" for further information.

Coolant Temperature

Press and release the UP or DOWN arrow button until "Coolant Temperature" is highlighted in the EVIC. Press and release the RIGHT arrow button and the coolant temperature will be displayed.

Downloaded from www.Manualslib.com manuals search engine

Oil Temperature

Press and release the UP or DOWN arrow button until "Oil Temperature" is highlighted in the EVIC. Press and release the RIGHT arrow button and the oil temperature will be displayed.

Battery Voltage

Press and release the UP or DOWN arrow button until "Battery Voltage" is highlighted in the EVIC. Press and release the RIGHT arrow button and the battery voltage will be displayed.

Intake Air Temp.

Press and release the UP or DOWN arrow button until "Intake Air Temp." is highlighted in the EVIC. Press and release the RIGHT arrow button and the intake air temperature will be displayed.

Current Torque

Press and release the UP or DOWN arrow button until "Current Torque" is highlighted in the EVIC. Press and release the RIGHT arrow button and the current torque will be displayed.

Current Power

Press and release the UP or DOWN arrow button until "Current Power" is highlighted in the EVIC. Press and release the RIGHT arrow button and the current power will be displayed.

Downloaded from www.Manualslib.com manuals search engine

SRT Performance Info

Press and release the UP or DOWN arrow button until the SRT icon is highlighted in the EVIC. Press and release the RIGHT arrow button and 0–60 MPH Duration will be displayed. Press the UP or DOWN arrow button to scroll through the following information sub-menus:

Braking Distance

Press and release the UP or DOWN arrow button until the last Braking Distance information is displayed.

1/8 Mile Top Speed & Duration

Press and release the UP or DOWN arrow button until the last 1/8 Mile Top Speed & Duration information is displayed.

Current G-Forces

Press and release the UP or DOWN arrow button until the Current G-Forces are displayed.

Peak G-Forces

Press and release the UP or DOWN arrow button until the Peak G-Forces are displayed.

0–60 MPH

Press and release the UP or DOWN arrow button until the last 0–60 MPH information is displayed.

Fuel Economy

Press and release the UP or DOWN arrow button until the Fuel Economy icon is highlighted. Press the RIGHT arrow button and the next screen will display the following:

Average Fuel Economy/Miles Per Gallon (MPG Bargraph)

Downloaded from www.Manualslib.com manuals search engine

Range To Empty (RTE)

Current Miles Per Gallon (MPG)

Trip A

Press and release the UP or DOWN arrow button until the Trip A icon is highlighted in the EVIC (Toggle left or right to select Trip A or Trip B). (Toggle left or right to select Trip A or Trip B) The Trip A information will display the following:

- Distance
- Average Fuel Economy
- Average Speed
- Elapsed Time

Hold the SELECT/RIGHT arrow button to reset all the information.

Trip B

Press and release the Left or Right arrow button until the Trip B icon is highlighted in the EVIC (Toggle left or right to select Trip A or Trip B). The Trip B information will display the following:

- Distance
- Average Fuel Economy
- Average Speed
- Elapsed Time

Hold the SELECT/RIGHT arrow button to reset all the information.

Downloaded from www.Manualslib.com manuals search engine

Audio

Press and release the UP or DOWN arrow button until the Audio display icon is highlighted in the EVIC. Press and release the SELECT/RIGHT arrow button to display the active source.

Stored Messages

Press and release the UP arrow button until the Messages display icon is highlighted in the EVIC. This feature shows the number of stored warning messages. Pressing the RIGHT arrow button will allow you to see what the stored messages are.

Diagnostic Codes

Press and release the UP or DOWN arrow button until the Diagnostic Code icon is highlighted in the EVIC. Press and release the RIGHT arrow button to display any present diagnostic trouble codes along with a brief definition.

Vehicle Hibernation

Press and release the UP or DOWN arrow button until the Hibernation icon is highlighted in the EVIC. Press and release the RIGHT arrow button to activate the Vehicle Hibernation Mode, which minimizes vehicle battery drain while the vehicle is being stored.

Downloaded from www.Manualslib.com manuals search engine

Screen Setup Driver Selectable Items

Upper Left

- None
- Compass
- Outside Temp (default setting)
- ime
- Range To Empty (RTE)
- Average MPG
- Current MPG
- Trip A
- Trip B
- Coolant Temp.
- Oil Temp.
- Battery Voltage

Upper Right

- None
- Compass (default setting)
- Outside Temp
- Time
- Range To Empty (RTE)
- Average MPG
- Current MPG
- Trip A
- Trip B
- Coolant Temp.
- Oil Temp.
- Battery Voltage

Downloaded from www.Manualslib.com manuals search engine

Restore To Defaults (Restores All Settings To Default Settings)

- Cancel
- Okay

Uconnect® ACCESS SETTINGS

The Uconnect® Access system uses a combination of soft and hard keys located on the center of the instrument panel that allows you to access and change the customer programmable features.

Hard-Keys

Hard-Keys are located below the Uconnect® Access system in the center of the instrument panel. In addition, there is a Scroll/Enter control knob located on the right side of the Climate Controls in the center of the instrument panel. Turn the control knob to scroll through menus and change settings (i.e., 30, 60, 90), press the center of the control knob one or more times to select or change a setting (i.e., ON, OFF).

Soft-Keys

Soft-Keys are accessible on the Uconnect® Access display.

Customer Programmable Features — Uconnect® Access System Settings

Press the Apps soft-key, then press the Settings soft-key to display the menu setting screen. In this mode the Uconnect® Access system allows you to access programmable features that may be equipped such as Display, Clock, Safety/Assistance, Lights, Doors & Locks, Auto-On Comfort, Engine Off Operation, Compass Settings, Audio, Phone/Bluetooth and SiriusXM Setup.

NOTE: Only one touchscreen area may be selected at a time.

Downloaded from www.Manualslib.com manuals search engine

When making a selection, press the soft-key to enter the desired mode. Once in the desired mode press and release the preferred setting until a check-mark appears next to the setting, showing that setting has been selected.

Once the setting is complete press the Back Arrow soft-key to return to the previous menu or press the X soft-key to close out of the settings screen. Pressing the Up or Down Arrow soft-keys on the right side of the screen will allow you to toggle up or down through the available settings.

Display

After pressing the Display soft-key the following settings will be available.

- ***Display Mode***

When in this display you may select one of the auto display settings. To change Mode status, touch and release the Day, Night or Auto soft-key. Then touch the arrow back soft-key.

- ***Display Brightness With Headlights ON***

When in this display, you may select the brightness with the headlights on. Adjust the brightness with the + and – setting soft-keys or by selecting any point on the scale between the + and – soft-keys. Then touch the arrow back soft-key.

- ***Display Brightness With Headlights OFF***

When in this display, you may select the brightness with the headlights off. Adjust the brightness with the + and – setting soft-keys or by selecting any point on the scale between the + and – soft-keys. Then touch the arrow back soft-key.

- ***Set Language***

When in this display, you may select one of three languages for all display nomenclature, including the trip functions and the navigation system (if equipped). Touch the Set Language soft-key and then touch the desired

Downloaded from www.Manualslib.com manuals search engine

language soft-key until a check-mark appears next to the language, showing that setting has been selected. Touch the back arrow soft-key to return to the previous menu.

- ***Units***

When in this display, you may select to have the EVIC, odometer, and navigation system (if equipped) changed between US and Metric units of measure. Touch US or Metric until a check-mark appears next to the setting, showing that setting has been selected. Touch the back arrow soft-key to return to the previous menu.

- ***Voice Response Length***

When in this display, you may change the Voice Response Length settings. To change the Voice Response Length, touch the Brief or Detailed soft-key until a check-mark appears next to the setting, showing that setting has been selected. Touch the back arrow soft-key to return to the previous menu.

- ***Touchscreen Beep***

When in this display, you may turn on or shut off the sound heard when a touch screen button (soft-key) is pressed. Touch the Touchscreen Beep soft-key until a check-mark appears next to the setting, showing that setting has been selected. Touch the back arrow soft-key to return to the previous menu.

- ***Navigation Turn-By-Turn In Cluster — If Equipped***

When this feature is selected, the turn-by-turn directions will appear in the display as the vehicle approaches a designated turn within a programmed route. To make your selection, touch the Navigation Turn-By-Turn In Cluster soft-key, until a check-mark appears next to the setting, showing that setting has been selected. Touch the back arrow soft-key to return to the previous menu.

Downloaded from www.Manualslib.com manuals search engine

Clock

After pressing the Clock soft-key the following settings will be available.

- *Sync Time With GPS*

When in this display, you may automatically have the radio set the time. To change the Sync Time setting touch the Sync with GPS Time soft-key until a check-mark appears next to the setting, showing that setting has been selected. Touch the back arrow soft-key to return to the previous menu.

- *Set Time Hours*

When in this display, you may adjust the hours. The Sync with GPS Time soft-key must be unchecked. To make your selection touch the + or - soft-keys to adjust the hours up or down. Touch the back arrow soft-key to return to the previous menu or touch the X soft-key to close out of the settings screen.

- *Set Time Minutes*

When in this display, you may adjust the minutes. The Sync with GPS Time soft-key must be unchecked. To make your selection touch the + or - soft-keys to adjust the minutes up or down. Touch the back arrow soft-key to return to the previous menu or touch the X soft-key to close out of the settings screen.

- *Time Format*

When in this display, you may select the time format display setting. Touch the Time Format soft-key until a check-mark appears next to the 12hrs or 24hrs setting, showing that setting has been selected. Touch the back arrow soft-key to return to the previous menu.

Downloaded from www.Manualslib.com manuals search engine

Safety / Assistance

After pressing the Safety / Assistance soft-key the following settings will be available.

- *ParkView® Backup Camera*

Your vehicle may be equipped with the ParkView® Rear Back Up Camera that allows you to see an on-screen image of the rear surroundings of your vehicle whenever the shift lever is put into REVERSE. The image will be displayed on the radio touchscreen display along with a caution note to "check entire surroundings" across the top of the screen. After five seconds, this note will disappear. The ParkView® camera is located on the rear of the vehicle above the rear License plate. To make your selection, touch the ParkView® Backup Camera soft-key, until a check-mark appears next to setting, showing that setting has been selected. Touch the back arrow soft-key to return to the previous menu.

Lights

After pressing the Lights soft-key the following settings will be available.

- *Headlight Illumination On Approach*

When this feature is selected, the headlights will activate and remain on for 0, 30, 60, or 90 seconds when the doors are unlocked with the Remote Keyless Entry (RKE) transmitter. To change the Illuminated Approach status, touch the + or - soft-key to select your desired time interval. Touch the back arrow soft-key to return to the previous menu.

- *Headlights With Wipers — If Equipped*

When this feature is selected, and the headlight switch is in the AUTO position, the headlights will turn on approximately 10 seconds after the wipers are turned on. The headlights will also turn off when the wipers are turned off if they were turned on by this feature. To make

Downloaded from www.Manualslib.com manuals search engine

your selection, touch the Headlights With Wipers softkey, until a check-mark appears next to setting, showing that setting has been selected. Touch the back arrow soft-key to return to the previous menu.

- *Daytime Running Lights – If Equipped*

When this feature is selected, the headlights will turn on whenever the engine is running. To make your selection, touch the Daytime Running Lights soft-key, until a check-mark appears next to setting, showing that setting has been selected. Touch the back arrow soft-key to return to the previous menu.

- *Flash Headlights With Lock*

When this feature is selected, the headlights will flash when the doors are locked or unlocked with the Remote Keyless Entry (RKE) transmitter. This feature may be selected with or without the sound horn on lock feature selected. To make your selection, touch the Flash Headlights with Lock soft-key, until a check-mark appears next to setting, showing that setting has been selected. Touch the back arrow soft-key to return to the previous menu.

Doors & Locks

After pressing the Doors & Locks soft-key the following settings will be available.

- *Auto Unlock On Exit*

When this feature is selected, all doors will unlock when the vehicle is stopped and the transmission is in the PARK or NEUTRAL position and the driver's door is opened. To make your selection, touch the Auto Unlock On Exit soft-key, until a check-mark appears next to setting, showing that setting has been selected. Touch the back arrow soft-key to return to the previous menu.

- *Flash Headlight With Lock*

When this feature is selected, the front and headlights will flash when the doors are locked or unlocked with the

Downloaded from www.Manualslib.com manuals search engine

Remote Keyless Entry (RKE) transmitter. To make your selection, touch the Flash Lights With Lock soft-key, until a check-mark appears next to setting, showing that setting has been selected. Touch the back arrow soft-key to return to the previous menu.

- ***Sound Horn With Lock***

When this feature is selected, the horn will sound when the Key Fob Lock button is pressed. To make your selection, touch the Sound Horn With Lock soft-key, until a check-mark appears next to setting, showing that setting has been selected. Touch the back arrow soft-key to return to the previous menu.

- ***1st Press Of Key Fob Unlocks***

When 1st Press Of Key Fob Unlocks is selected, only the driver's door will unlock on the first press of the Remote Keyless Entry (RKE) transmitter UNLOCK button. When 1st Press Of Key Fob Unlocks is selected, you must press the RKE transmitter UNLOCK button twice to unlock the passenger's doors. When Unlock All Doors On 1st Press is selected, all of the doors will unlock on the first press of the RKE transmitter UNLOCK button.

NOTE: If the vehicle is programmed 1st Press Of Key Fob Unlocks, all doors will unlock no matter which Passive Entry equipped door handle is grasped. If 1st Press Of Key Fob Unlocks is programmed, only the driver's door will unlock when the driver's door is grasped. With Passive Entry, if 1st Press Of Key Fob Unlocks is programmed touching the handle more than once will only result in the driver's door opening. If driver door first is selected, once the driver door is opened, the interior door lock/unlock switch can be used to unlock all doors (or use RKE transmitter).

Downloaded from www.Manualslib.com manuals search engine

Engine Off Options

After pressing the Engine Off Options soft-key the following settings will be available.

- *Engine Off Power Delay*

When this feature is selected, the power window switches, radio, Uconnect® phone system (if equipped), DVD video system (if equipped), power sunroof (if equipped), and power outlets will remain active for up to 10 minutes after the ignition is cycled to OFF. Opening either front door will cancel this feature. To change the Engine Off Power Delay status touch the 0 seconds, 45 seconds, 5 minutes or 10 minutes soft-key. Then touch the arrow back soft-key.

- *Headlight Off Delay*

When this feature is selected, the driver can choose to have the headlights remain on for 0, 30, 60, or 90 seconds when exiting the vehicle. To change the Headlight Off Delay status touch the + or - soft-key to select your desired time interval. Touch the back arrow soft-key to return to the previous menu.

Compass Settings – If Equipped

After pressing the Compass Settings soft-key the following settings will be available.

- *Variance*

Compass Variance is the difference between Magnetic North and Geographic North. To compensate for the differences the variance should be set for the zone where the vehicle is driven, per the zone map. Once properly set, the compass will automatically compensate for the differences, and provide the most accurate compass heading.

Downloaded from www.Manualslib.com manuals search engine

NOTE: Keep magnetic materials away from the top of the instrument panel, such as iPod's, Mobile Phones, Laptops and Radar Detectors. This is where the compass module is located, and it can cause interference with the compass sensor, and it may give false readings.

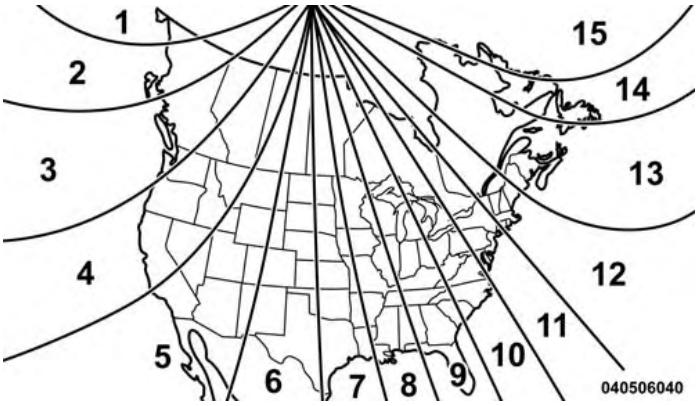

Compass Variance Map

- ***Perform Compass Calibration***

Touch the Calibration soft-key to change this setting. This compass is self-calibrating, which eliminates the need to manually reset the compass. When the vehicle is new, the compass may appear erratic and the EVIC will display CAL until the compass is calibrated. You may also calibrate the compass by pressing the ON soft-key and completing one or more 360-degree turns (in an area free from large metal or metallic objects) until the CAL indicator displayed in the EVIC turns off. The compass will now function normally.

Audio

After pressing the Audio soft-key the following settings will be available.

- ***Balance/Fade***

When in this display you may adjust the Balance and Fade settings.

Downloaded from www.Manualslib.com manuals search engine

- *Equalizer*

When in this display you may adjust the Bass, Mid and Treble settings. Adjust the settings with the + and – setting soft-keys or by selecting any point on the scale between the + and – soft-keys. Then touch the arrow back soft-key.

NOTE: Bass/Mid/Treble allow you to simply slide your finger up or down to change the setting as well as touch directly on the desired setting.

- *Speed Adjusted Volume*

This feature increases or decreases volume relative to vehicle speed. To change the Speed Adjusted Volume touch the Off, 1, 2 or 3 soft-key. Then touch the arrow back soft-key.

- *Surround Sound*

This feature provides simulated surround sound mode. To make your selection, touch the Surround Sound soft-key, select On or Off followed by pressing the arrow back soft-key.

Phone/Bluetooth

After pressing the Phone/Bluetooth soft-key the following settings will be available.

- *Paired Devices*

This feature shows which phones are paired to the Phone/Bluetooth system. For further information, refer to the Uconnect® Access User's Manual.

SiriusXM Setup

After pressing the SIRIUS Setup soft-key the following settings will be available.

- *Channel Skip*

SiriusXM can be programmed to designate a group of channels that are the most desirable to listen to or to exclude undesirable channels while scanning. To make your selection, touch the Channel Skip soft-key, select the channels you would like to skip followed by pressing the arrow back soft-key.

Downloaded from www.Manualslib.com manuals search engine

- *Subscription Information*

New vehicle purchasers or lessees will receive a free limited time subscription to SiriusXM Satellite Radio with your radio. Following the expiration of the free services, it will be necessary to access the information on the Subscription Information screen in order to re-subscribe.

Touch the Subscription Info soft-key to access the Subscription Information screen.

Write down the SIRIUS ID numbers for your receiver. To reactivate your service, either call the number listed on the screen or visit the provider online.

NOTE: SiriusXM Travel Link is a separate subscription and is available for U.S. residents only.

Uconnect® RADIOS — IF EQUIPPED

For detailed information about your Uconnect® radio refer to your Uconnect® Supplement Manual.

iPod®/USB/MP3 CONTROL — IF EQUIPPED

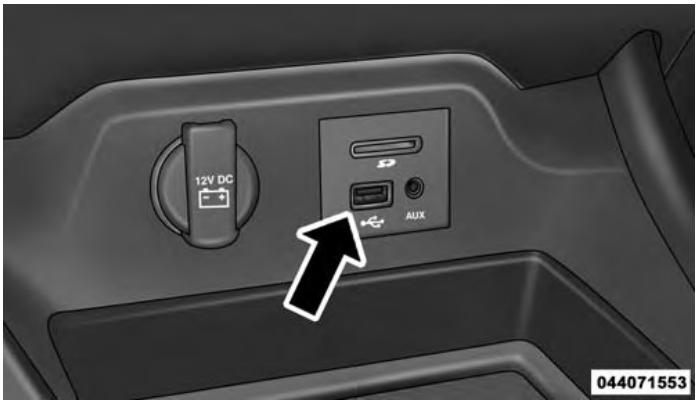

This feature allows an iPod® or external USB device to be plugged into the USB port.

Downloaded from www.Manualslib.com manuals search engine

iPod® control supports Mini, 4G, Photo, Nano, 5G iPod® and iPhone® devices. Some iPod® software versions may not fully support the iPod® control features. Please visit Apple's website for software updates.

For further information, refer to the Uconnect® Access User's Manual.

STEERING WHEEL AUDIO CONTROLS

The remote sound system controls are located on the rear surface of the steering wheel. Reach behind the wheel to access the switches.

The right hand control is a rocker type switch with a pushbutton in the center. Pressing the top of the switch will increase the volume, and pressing the bottom of the switch will decrease the volume.

The button located in the center of the right hand control will switch modes to Radio or other valid audio source.

The left hand control is a rocker type switch with a pushbutton in the center. The function of the left hand control is different depending on which mode you are in.

The following describes the left hand control operation in each mode.

Radio Operation

Pressing the top of the switch will SEEK up for the next listenable station and pressing the bottom of the switch will SEEK down for the next listenable station.

The button located in the center of the left hand control will tune to the next pre-set station that you have programmed in the radio pre-set pushbuttons.

RADIO ANTENNA

The radio antenna is located in the windshield.

Downloaded from www.Manualslib.com manuals search engine

RADIO OPERATION AND MOBILE PHONES

Under certain conditions, the mobile phone being on in your vehicle can cause erratic or noisy performance from your radio. This condition may be lessened or eliminated by relocating the mobile phone antenna. This condition is not harmful to the radio. If your radio performance does not satisfactorily "clear" by the repositioning of the antenna, it is recommended that the radio volume be turned down or off during mobile phone operation when not using Uconnect® (if equipped).

CLIMATE CONTROLS

The Climate Control System allows you to regulate the temperature, amount, and direction of air circulating throughout the vehicle. The controls are located on the instrument panel below the radio.

Automatic Temperature Control (ATC)

Hard-Keys

The hard-keys located below the Uconnect® Access screen.

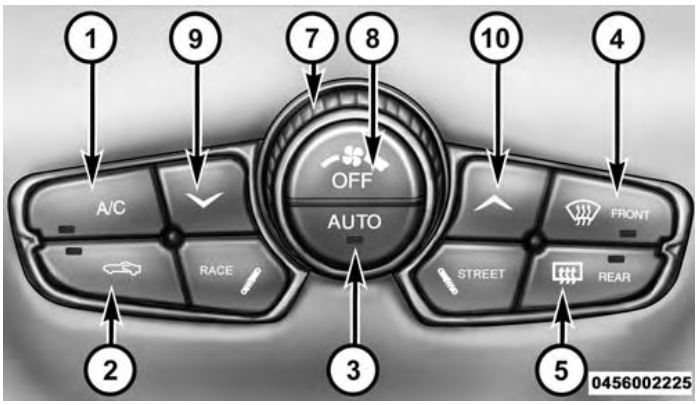

Automatic Climate Controls — Hard-keys

Downloaded from www.Manualslib.com manuals search engine

Soft-Keys

Soft-keys are accessible on the Uconnect® Access system screen.

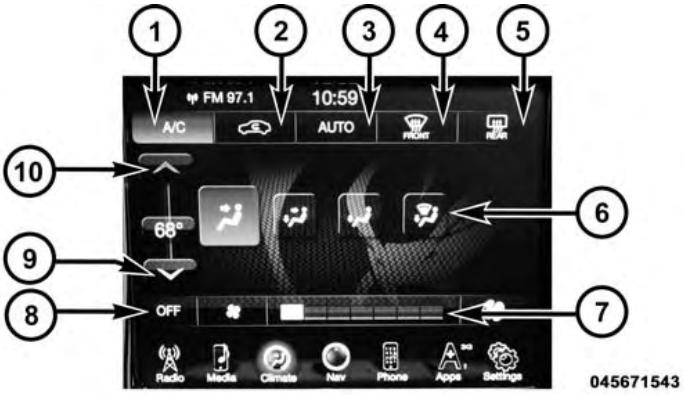

Uconnect® Access Temperature Controls — Soft-keys

Button Descriptions (Applies To Both Hard-keys And Soft-keys)

1. A/C Button

Press and release to change the current setting, the indicator illuminates when A/C is ON. Performing this function again will cause the A/C operation to switch into manual mode and the A/C indicator will turn off.

2. Recirculation Button

Press and release to change the current setting, the indicator illuminates when ON.

3. AUTO Temperature Control

Controls airflow temperature, distribution, volume, and the amount of air recirculation automatically. Press and release to select. Refer to "Automatic Operation" for more information. Performing this function will cause the ATC to switch between manual mode and automatic modes.

Downloaded from www.Manualslib.com manuals search engine

4. Front Defrost Button

Press and release to change the current airflow setting to Defrost mode. The indicator illuminates when this feature is ON. Performing this function will cause the ATC to switch into manual mode. The blower speed may increase when Defrost mode is selected. If the front defrost mode is turned off the climate system will return the previous setting.

5. Rear Defrost Button

Press and release this button to turn on the rear window defroster and the heated outside mirrors (if equipped). An indicator will illuminate when the rear window defroster is on. The rear window defroster automatically turns off after 10 minutes.

CAUTION!

Failure to follow these cautions can cause damage to the heating elements:

- **Use care when washing the inside of the rear window. Do not use abrasive window cleaners on the interior surface of the window. Use a soft cloth and a mild washing solution, wiping parallel to the heating elements. Labels can be peeled off after soaking with warm water.**
- **Do not use scrapers, sharp instruments, or abrasive window cleaners on the interior surface of the window.**
- **Keep all objects a safe distance from the window.**

Downloaded from www.Manualslib.com manuals search engine

6. Modes

The airflow distribution mode can be adjusted so air comes from the instrument panel outlets, floor outlets, demist outlets and defrost outlets. The Mode settings are as follows:

- ***Panel Mode***

Air comes from the outlets in the instrument panel. Each of these outlets can be individually adjusted to direct the flow of air. The air vanes of the center outlets and outboard outlets can be moved up and down or side to side to regulate airflow direction. There is a shut off wheel located below the air vanes to shut off or adjust the amount of airflow from these outlets.

- ***Bi-Level Mode***

Air comes from the instrument panel outlets and floor outlets. A slight amount of air is directed through the defrost and side window demister outlets.

NOTE: BI-LEVEL mode is designed under comfort conditions to provide cooler air out of the panel outlets and warmer air from the floor outlets.

- ***Floor Mode***

Air comes from the floor outlets. A slight amount of air is directed through the defrost and side window demister outlets.

- ***Mix Mode***

Air comes from the floor, defrost and side window demist outlets. This mode works best in cold or snowy conditions.

Downloaded from www.Manualslib.com manuals search engine

7. Blower Control

Blower control is used to regulate the amount of air forced through the climate system. There are seven blower speeds available. Adjusting the blower will cause automatic mode to switch to manual operation. The speeds can be selected using either hard-heys or soft-keys as follows:

Hard-key

The blower speed increases as you turn the control clockwise from the lowest blower setting. The blower speed decreases as you turn the knob counter-clockwise.

Soft-key

Use the small blower icon to reduce the blower setting and the large blower icon to increase the blower setting. Blower can also be selected by pressing the blower bar area between the icons.

8. Climate Control OFF Button

Press and release this button to turn the Climate Control ON/OFF.

9. Temperature Control Down Button

Push the button for cooler temperature settings.

10. Temperature Control Up Button

Push the button for warmer temperature settings.

Automatic Operation

1. Press the AUTO hard-key or soft-key button on the Automatic Temperature Control (ATC) Panel.
2. Next, adjust the temperature you would like the system to maintain by adjusting the driver and passenger temperature hard or soft control buttons. Once the desired temperature is displayed, the system will achieve and automatically maintain that comfort level.

Downloaded from www.Manualslib.com manuals search engine

3. When the system is set up for your comfort level, it is not necessary to change the settings. You will experience the greatest efficiency by simply allowing the system to function automatically.

NOTE:

- It is not necessary to move the temperature settings for cold or hot vehicles. The system automatically adjusts the temperature, mode, and blower speed to provide comfort as quickly as possible.
- The temperature can be displayed in U.S. or Metric units by selecting the US/M customer-programmable feature. Refer to the "Uconnect® Access System Settings" in this section of the manual.

To provide you with maximum comfort in the Automatic mode, during cold start-ups the blower fan will remain on low until the engine warms up. The blower will increase in speed and transition into Auto mode.

Recirculation Control

When outside air contains smoke, odors, or high humidity, or if rapid cooling is desired, you may wish to recirculate interior air by pressing the RECIRCULATION control button. Recirculation mode should only be used temporarily. The recirculation LED will illuminate on the blower control knob when this button is selected. Push the button a second time to turn off the Recirculation mode LED and allow outside air into the vehicle.

NOTE: In cold weather, use of Recirculation mode may lead to excessive window fogging. The Recirculation mode is not allowed in Defrost mode to improve window clearing operation. Recirculation will be disabled automatically if these modes are selected.

Summer Operation

The engine cooling system in air conditioned vehicles must be protected with a high-quality antifreeze coolant to provide proper corrosion protection and to protect

Downloaded from www.Manualslib.com manuals search engine

against engine overheating. A solution of 50% ethylene glycol antifreeze coolant and 50% water is recommended. Refer to "Maintenance Procedures" in "Maintaining Your Vehicle" for proper coolant selection.

Winter Operation

To ensure the best possible heater and defroster performance, make sure the engine cooling system is functioning properly and the proper amount, type, and concentration of coolant is used. Refer to "Maintenance Procedures" in "Maintaining Your Vehicle" for proper coolant selection. Use of the air Recirculation mode during Winter months is not recommended because it may cause window fogging.

Vacation/Storage

Any time you store your vehicle or keep it out of service (i.e., vacation) for two weeks or more, run the air conditioning system at idle for about five minutes in fresh air with the blower setting in high. This will ensure adequate system lubrication to minimize the possibility of compressor damage when the system is started again.

Window Fogging and Frosting

Vehicle windows tend to fog on the inside of the glass in mild, rainy and/or humid weather. Windows may frost on the inside of the glass in very cold weather. To clear the windows, select Defrost or Mix mode and increase the front blower speed. Do not use the Recirculation mode without A/C for long periods, as fogging may occur.

Outside Air Intake

Make sure the air intake, located directly in front of the windshield, is free of obstructions such as leaves. Leaves collected in the air intake may reduce airflow, can cause odor, and if they enter the plenum they could plug the water drains. In Winter months make sure the air intake is clear of ice, slush and snow.

Downloaded from www.Manualslib.com manuals search engine

Control Setting Suggestions for Various Weather Conditions

WEATHER	CONTROL SETTINGS
HOT WEATHER AND VEHICLE INTERIOR IS VERY HOT	Start vehicle and put Mode Control in position and turn on A/C. Set Fan Control to High. Roll windows down to flush out hot air. Roll windows up after hot air is flushed out. Turn Mode Control to and set Fan and Temp Knobs as desired once car has cooled.
WARM WEATHER	Set the Mode Control to position and turn A/C on in sunny weather. Choose the position for cloudy or dark conditions with A/C on.
COOL OR COLD HUMID CONDITIONS	Set the Mode Control to position and turn the A/C on in sunny weather. Choose the position and turn on the A/C in cloudy or dark conditions.
COLD DRY CONDITIONS	Use the position in sunny weather, the position in cloudy or dark weather, and the Mode Knob setting for snowy or very cold weather that requires extra heat to the windshield. 815193c4

Downloaded from www.Manualslib.com manuals search engine

STARTING AND OPERATING

CONTENTS

■ STARTING PROCEDURES 176
- □ Normal Starting. 176
- □ If Engine Fails To Start 178
- □ After Starting 179

■ MANUAL TRANSMISSION 179
- □ Shifting. 180
- □ Recommended Shift Speeds 182
- □ Skip Shift Indicator Light 182

■ STREET/RACE MODE – IF EQUIPPED 183

■ LAUNCH MODE – IF EQUIPPED 184

■ DRIVING ON SLIPPERY SURFACES 186
- □ Acceleration 186
- □ Traction 186

■ DRIVING THROUGH WATER 187
- □ Flowing/Rising Water 187
- □ Shallow Standing Water 187

■ POWER STEERING 189
- □ Power Steering Fluid Check 190

■ PARKING BRAKE 191

■ BRAKE SYSTEM 193

Downloaded from www.Manualslib.com manuals search engine

- Brake Pad Break-In 193
- Anti-Lock Brake System 195

■ ELECTRONIC BRAKE CONTROL SYSTEM 197

- Anti-Lock Brake System (ABS) 198
- Traction Control System (TCS) 198
- Electronic Stability Control 198

■ TIRE SAFETY INFORMATION 202

- Tire Markings 202
- Tire Identification Number (TIN). 206
- Tire Terminology And Definitions 207
- Tire Loading And Tire Pressure 209

■ TIRES — GENERAL INFORMATION 214

- Tire Pressure 214
- Tire Inflation Pressures 215
- Tire Pressures For High Speed Operation 217
- Radial Ply Tires 217
- Tire Spinning 217
- Tread Wear Indicators 218
- Life Of Tire 219
- Replacement Tires 219
- Tire Storage 221
- TIRE CHAINS (TRACTION DEVICES) 221

■ SNOW TIRES 221

■ TIRE ROTATION RECOMMENDATIONS 221

Downloaded from www.Manualslib.com manuals search engine

■ TIRE PRESSURE MONITOR SYSTEM (TPMS) . .223
- Tire Pressure Monitoring Low Pressure Warnings 223

■ FUEL REQUIREMENTS 225
- 8.4L Engine. 225
- Reformulated Gasoline 225
- Gasoline/Oxygenate Blends 226
- E-85 Usage In Non-Flex Fuel Vehicles 226
- MMT In Gasoline 227
- Materials Added To Fuel 227
- Fuel System Cautions. 227
- Carbon Monoxide Warnings 228

■ ADDING FUEL 229
- Emergency Fuel Filler Door Release. 230

■ TRAILER TOWING 230

■ RECREATIONAL TOWING (BEHIND MOTORHOME, ETC.) 231
- Towing This Vehicle Behind Another Vehicle (Flat Towing With All Four Wheels On The Ground) 231

■ GROUND CLEARANCE 232

Downloaded from www.Manualslib.com manuals search engine

STARTING PROCEDURES

Before starting your vehicle, adjust your seat, adjust the inside and outside mirrors, fasten your seat belt, and if present, instruct any other occupant to buckle their seat belt.

WARNING!

Never leave children alone in a vehicle. Leaving unattended children in a vehicle is dangerous for a number of reasons. A child or others could be seriously or fatally injured. Do not leave the key fob in or near the vehicle (or in a location accessible to children), and do not leave a vehicle equipped with Keyless Enter-N-Go™ in the ACC or ON/RUN mode. A child could operate power windows, other controls, or move the vehicle.

CAUTION!

Long periods of engine idling, especially at high engine speeds, can cause excessive exhaust temperatures, which can damage your vehicle. Do not leave your vehicle unattended with the engine running.

Normal Starting

CAUTION!

Long periods of engine idling, especially at high engine speeds, can cause excessive exhaust temperatures, which can damage your vehicle. Do not leave your vehicle unattended with the engine running.

Downloaded from www.Manualslib.com manuals search engine

NOTE:

- You must disarm the security system in order to start the engine. Refer to "Security Alarm System" in "Things To Know Before Starting Your Vehicle" for further information.
- Normal starting of either a cold or a warm engine does not require pumping or pressing the accelerator pedal. However, if the engine has not started within three seconds, slightly press the accelerator pedal while continuing to crank. If the engine fails to start within 15 seconds, wait five seconds, then repeat the "Normal Starting" procedure.

To Start The Engine:

1. Fully apply the parking brake.
2. Press the clutch pedal to the floor.

NOTE: The engine will not start unless the clutch pedal is pressed to the floor.

3. Place the shift lever in NEUTRAL.
4. Press the red ENGINE START/STOP button located on the instrument panel. Release the button when the engine starts.

Engine START/STOP Button

Downloaded from www.Manualslib.com manuals search engine

If Engine Fails To Start

CAUTION!

To prevent damage to the starter, do not crank the engine for more than 15 seconds at a time. Wait 10 to 15 seconds before trying again.

WARNING!

- **Never pour fuel or other flammable liquids into the throttle body air inlet opening in an attempt to start the vehicle. This could result in a flash fire causing serious personal injury.**

(Continued)

WARNING! ***(Continued)***

- **Do not attempt to push or tow your vehicle to get it started. Unburned fuel could enter the catalytic converter and once the engine has started, ignite and damage the converter and vehicle. If the vehicle has a discharged battery, booster cables may be used to obtain a start from a booster battery or the battery in another vehicle. This type of start can be dangerous if done improperly, so follow this procedure carefully. Refer to "Jump Starting" in "What To Do In Emergencies" for further information.**

If the engine is flooded, it may start to run, but not have enough power to continue running when the ENGINE START button is released. If this occurs, continue cranking up to 15 seconds with the accelerator pedal pushed all the way to the floor. Release the accelerator pedal and the ENGINE START button once the engine is running smoothly.

Downloaded from www.Manualslib.com manuals search engine

If the engine shows no sign of starting after two 15 second periods of cranking with the accelerator pedal held to the floor, the "Normal Starting" procedure should be repeated.

After Starting

The idle speed is controlled automatically and it will decrease as the engine warms up.

MANUAL TRANSMISSION

NOTE: The parking brake should be engaged and the shift lever placed into REVERSE before leaving the vehicle, especially when parked on an incline.

Your vehicle is equipped with a high torque capacity dual disc clutch. The clutch pedal must be fully pressed to the floor during each shift. As you release the clutch pedal, lightly press the accelerator pedal.

CAUTION!

- **Never drive with your foot resting on the clutch pedal, or try to hold the vehicle on a hill with the clutch pedal partially engaged, as this will cause abnormal wear on the clutch.**
- **Failure to press the clutch pedal fully to the floor may cause increased shift efforts, and may result in damage to the clutch and transmission.**
- **Do not rest your hand on the shift lever while driving, as this may result in transmission damage.**
- **Do not attempt to shift the transmission if the rear wheels are spinning due to loss of traction. Damage to the transmission may occur.**

Be sure the transmission is in first gear when moving forward from a standing position.

Downloaded from www.Manualslib.com manuals search engine

CAUTION!

Failure to start out in first gear when moving forward from a starting position may result in damage to the clutch.

Shifting

Fully press the clutch pedal and lift your foot off the accelerator pedal before shifting gears. As you release the clutch pedal, lightly press the accelerator pedal. Damage to the transmission or clutch may occur if you do not fully press the clutch pedal and lift off of the accelerator pedal when shifting.

The six-speed manual transmission has a spring that centers the shift lever near third and fourth gear. This spring helps you know which gear you are in when you are shifting. Be careful when shifting from first to second or downshifting from sixth to fifth.

The spring will try to pull the shift lever toward third and fourth gear. Make sure you move the shift lever into second or fifth gear. If you let the shift lever move in the direction of the pulling, you may end shifting from first to fourth or from sixth to third gear.

You will find it easier to use only the lower gears for most city driving. For steady highway driving with light accelerations, sixth gear is recommended.

Never drive with your foot resting on the clutch pedal, or try to hold the vehicle on a hill with the clutch pedal partially engaged. This will cause abnormal wear on the clutch.

Never shift into REVERSE until the vehicle has come to a complete stop.

Downloaded from www.Manualslib.com manuals search engine

NOTE:

- Your vehicle is equipped with a transmission reverse inhibitor system. When vehicle speed is greater than 3 mph (5 km/h), the reverse inhibitor activates to help prevent shifts into REVERSE. When at a complete stop, you may notice light shift efforts into REVERSE with the ignition in the ON position, and increased shift efforts into REVERSE with the ignition in the OFF position. This is normal operation of the transmission reverse inhibitor system.
- Shifting gears during cold weather may require an increased effort until the transmission lubricant is warm. This is normal and not harmful to the transmission.
- Due to the high performance nature of your drivetrain, a certain amount of noise from the transmission is normal. This noise can be most noticeable when the vehicle is idling in NEUTRAL with the clutch engaged (clutch pedal released), but it may also be heard when driving. The noise may also be more noticeable when the transmission is warm. This noise is normal and is not an indication of a problem with your clutch or transmission.
- You must always use first gear (or Reverse) when starting from a standing position.

CAUTION!

Always make sure the vehicle comes to a complete stop before shifting into REVERSE. Failure to do so may result in transmission damage.

Downloaded from www.Manualslib.com manuals search engine

Recommended Shift Speeds

To use your manual transmission for fuel economy it should be upshifted as listed below. Shift at the vehicle speeds listed for acceleration. Earlier upshifts during cruise conditions (relatively steady speeds) will result in increased fuel economy, and may be used as indicated.

MANUAL TRANSMISSION RECOMMENDED SHIFT SPEEDS					
	1-2	2-3	3-4	4-5	5-6
mph (km/h)	15 (24)	25 (40)	40 (64)	45 (72)	50 (80)

Higher upshift speeds may be used to obtain a desired acceleration rate.

Skip Shift Indicator Light

There are times when you must shift the transmission directly from first gear into fourth gear instead of from first gear into second gear. This is to help you get the best possible fuel economy from your vehicle. This occurs when engine coolant is higher than 107°F (42°C), and vehicle speed is greater than 16 mph (26 km/h) but less than 18 mph (29 km/h), and engine speed is less than 1,650 RPM, and the transmission is in first gear, and the accelerator is at 20% throttle or less. The "Skip Shift Indicator Light" located in the tachometer will illuminate during these times.

When the "Skip Shift Indicator Light" illuminates, the shift mechanism will only allow shifts from first gear to fourth gear. After you shift the transmission into fourth gear, you can press the clutch in and shift to another forward gear.

Downloaded from www.Manualslib.com manuals search engine

Downshifting - Proper downshifting will improve fuel economy and prolong engine life.

To maintain a safe speed and prolong brake life, downshift to maintain a safe speed when descending a steep grade.

CAUTION!

If you skip more than one gear while downshifting or downshift at too high a vehicle speed, you could damage the engine, transmission, or clutch.

WARNING!

Skipping more than one gear while downshifting, could cause you to lose control of your vehicle. You could have a collision.

STREET/RACE MODE – IF EQUIPPED

This vehicle is equipped with an electronic controlled damping system. This system allows for a street suspension damping setting or a firmer race suspension damping setting. When in street mode the system automatically shifts the suspension dampers to the firmer Race damping setting during some hard acceleration and braking situations. The system also reduces body roll and pitch in many driving situations including acceleration and braking. There are two modes of operation:

NOTE: With the ignition in the ON/RUN position, the suspension damping system will be in the last mode the system was in when the vehicle was turned off. The driver can select either Street or Race damping mode at any time.

- Street Mode — This mode will give a sporty, but comfortable ride. Within this mode, the suspension will adapt to the vehicle inputs, including vehicle

Downloaded from www.Manualslib.com manuals search engine

speed, braking and acceleration. This mode is driver selectable when the vehicle is placed in STREET mode (press the "STREET" button on the Instrument Panel). This mode will set suspension for maximum performance handling and is intended for a smoother ride on the various types of pavement and road conditions while still providing damping levels appropriate extreme capabilities.

- Race Mode — This mode is driver selectable when the vehicle is placed in RACE mode (press the "RACE" button on the Instrument Panel). This mode is for track use only and will supply maximum grip to the tires.

NOTE: The RACE setting will provide a firmer ride.

- When RACE mode is enabled, a Shock symbol with "RACE" next to it will light up in the instrument cluster.

LAUNCH MODE – IF EQUIPPED

This system maximizes acceleration traction for straight line racing.

1. Bring vehicle to complete stop on a level track surface with the engine running.
2. Set the steering wheel for straight ahead driving.
3. Fully depress the clutch and select the first gear position.
4. Press and release the "LAUNCH" Button (Located on the steering wheel controls).

Downloaded from www.Manualslib.com manuals search engine

LAUNCH Button

5. Press the accelerator pedal to the floor.

NOTE: If the cluster launch EVIC message indicates all conditions are correct for launch and the throttle is pressed to the floor quickly (within approximately 1/2 second) the system will hold the engine speed to a preset speed (below the engine rev limiter speed).

6. Release the clutch.

Pressing the launch control button when launch control is active will deactivate launch control also shifting the vehicle into second gear will disable the system..

NOTE:

- Launch Mode brings the engine to optimum launch RPM and waits for the driver to release the clutch. Launch Mode then uses engine throttle only to achieve controlled wheelslip for maximum acceleration through first gear.
- Launch Mode can be used in any of the Electronic Stability Control (ESC) Modes.

Downloaded from www.Manualslib.com manuals search engine

DRIVING ON SLIPPERY SURFACES

Acceleration

WARNING!

Rapid acceleration on slippery surfaces is dangerous. You could lose control of the vehicle and possibly have a collision. Accelerate slowly and carefully whenever there is likely to be poor traction (ice, snow, wet, mud, loose sand, etc.).

Traction

When driving on wet or slushy roads, it is possible for a wedge of water to build up between the tire and road surface. This is hydroplaning and may cause partial or complete loss of vehicle control and stopping ability. To reduce this possibility, the following precautions should be observed:

1. Slow down during rainstorms or when roads are slushy.
2. Slow down if road has standing water or puddles.

CAUTION!

Driving your vehicle through deep puddles at speeds over 5 mph (8 km/h), may cause water to be ingested into the engine. This can cause severe engine damage.

3. Replace tires when tread wear indicators first become visible.
4. Keep tires properly inflated.
5. Maintain enough distance between your vehicle and the vehicle in front to avoid a collision in a sudden stop.

Downloaded from www.Manualslib.com manuals search engine

DRIVING THROUGH WATER

Driving through water more than a few inches/centimeters deep will require extra caution to ensure safety and prevent damage to your vehicle.

Flowing/Rising Water

WARNING!

Do not drive on or across a road or path where water is flowing and/or rising (as in storm run-off). Flowing water can wear away the road or path's surface and cause your vehicle to sink into deeper water. Furthermore, flowing and/or rising water can carry your vehicle away swiftly. Failure to follow this warning may result in injuries that are serious or fatal to you, your passengers, and others around you.

Shallow Standing Water

Although your vehicle is capable of driving through shallow standing water, consider the following Caution and Warning before doing so.

CAUTION!

- **Always check the depth of the standing water before driving through it. Never drive through standing water that is deeper than the bottom of the tire rims mounted on the vehicle.**
- **Determine the condition of the road or the path that is under water and if there are any obstacles in the way before driving through the standing water.**
- **Do not exceed 5 mph (8 km/h) when driving through standing water. This will minimize wave effects.**

(Continued)

Downloaded from www.Manualslib.com manuals search engine

CAUTION! *(Continued)*

- Driving through standing water may cause damage to your vehicle's drivetrain components. Always inspect your vehicle's fluids (i.e., engine oil, transmission, axle, etc.) for signs of contamination (i.e., fluid that is milky or foamy in appearance) after driving through standing water. Do not continue to operate the vehicle if any fluid appears contaminated, as this may result in further damage. Such damage is not covered by the New Vehicle Limited Warranty.
- Getting water inside your vehicle's engine can cause it to lock up and stall out, and cause serious internal damage to the engine. Such damage is not covered by the New Vehicle Limited Warranty.

WARNING!

- Driving through standing water limits your vehicle's traction capabilities. Do not exceed 5 mph (8 km/h) when driving through standing water.
- Driving through standing water limits your vehicle's braking capabilities, which increases stopping distances. Therefore, after driving through standing water, drive slowly and lightly press on the brake pedal several times to dry the brakes.
- Getting water inside your vehicle's engine can cause it to lock up and stall out, and leave you stranded.
- Failure to follow these warnings may result in injuries that are serious or fatal to you, your passengers, and others around you.

Downloaded from www.Manualslib.com manuals search engine

POWER STEERING

The standard power steering system will give you good vehicle response and increased ease of maneuverability in tight spaces. The system will provide mechanical steering capability if power assist is lost.

If for some reason the power assist is interrupted, it will still be possible to steer your vehicle. Under these conditions, you will observe a substantial increase in steering effort, especially at very low vehicle speeds and during parking maneuvers.

NOTE:

- Increased noise levels at the end of the steering wheel travel are considered normal and do not indicate that there is a problem with the power steering system.
- Upon initial start-up in cold weather, the power steering pump may make noise for a short amount of time. This is due to the cold, thick fluid in the steering system. This noise should be considered normal, and it does not in any way damage the steering system.

WARNING!

Continued operation with reduced power steering assist could pose a safety risk to yourself and others. Service should be obtained as soon as possible.

CAUTION!

Prolonged operation of the steering system at the end of the steering wheel travel will increase the steering fluid temperature and it should be avoided when possible. Damage to the power steering pump may occur.

Downloaded from www.Manualslib.com manuals search engine

Power Steering Fluid Check

Checking the power steering fluid level at a defined service interval is not required. The fluid should only be checked if a leak is suspected, abnormal noises are apparent, and/or the system is not functioning as anticipated. Coordinate inspection efforts through an authorized dealer.

CAUTION!

Do not use chemical flushes in your power steering system as the chemicals can damage your power steering components. Such damage is not covered by the New Vehicle Limited Warranty.

WARNING!

Fluid level should be checked on a level surface and with the engine off to prevent injury from moving parts and to ensure accurate fluid level reading. Do not overfill. Use only manufacturer's recommended power steering fluid.

If necessary, add fluid to restore to the proper indicated level. With a clean cloth, wipe any spilled fluid from all surfaces. Refer to "Fluids, Lubricants, and Genuine Parts" in "Maintaining Your Vehicle" for further information.

Downloaded from www.Manualslib.com manuals search engine

PARKING BRAKE

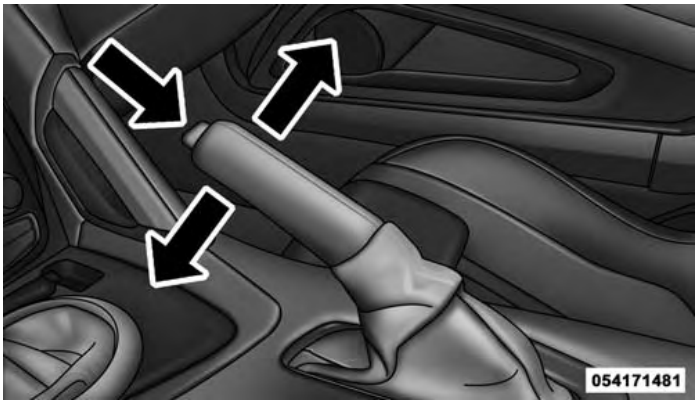

The parking brake should always be applied when the driver is not in the vehicle.

WARNING!

Before leaving the vehicle, make sure you fully apply the parking brake and shift the transmission into REVERSE. Failure to do so may cause the vehicle to roll and cause damage or injury.

As an added precaution when parking the vehicle, turn the front wheels toward the curb on a downhill grade and away from the curb on an uphill grade.

To apply the parking brake, grasp the handle and pull it rearward until you feel resistance. To release the parking brake, grasp the handle and pull it slightly while pressing the button on the end of the handle. When the button drops into the handle (releasing the lock), guide the handle downward to its stop and then release the button and the handle.

Downloaded from www.Manualslib.com manuals search engine

The "Brake System Warning Light" in the instrument cluster will turn on when the ignition is in the ON/RUN position and the parking brake is applied.

NOTE: This light only shows that the parking brake is applied or a brake/ABS system fault. It does not show the degree of brake application. If the "Brake System Warning Light" is illuminated when the parking brake is not applied please see your authorized dealer.

WARNING!

- **Never leave children alone in a vehicle. Leaving children in a vehicle unattended is dangerous for a number of reasons. A child or others could be injured seriously or fatally. Do not leave the key fob in or near the vehicle (or in a location accessible to children), and do not leave a vehicle equipped with Keyless Enter-N-Go in the ACC or ON/RUN mode. A child could operate power windows, other controls, or move the vehicle.**
- **Be sure the parking brake is fully disengaged before driving. Failure to do so can lead to brake failure, and an accident.**

Downloaded from www.Manualslib.com manuals search engine

BRAKE SYSTEM

BRAKE

Your vehicle is equipped with dual hydraulic brake systems. If either of the two hydraulic systems loses normal capability, the remaining system will still function. However, there will be some loss of overall braking effectiveness. You may notice increased pedal travel during application, greater pedal force required to slow or stop, and potential activation of the "Brake System Warning Light."

In the event power assist is lost for any reason (i.e., repeated brake applications with the engine off) the brakes will still function. However, the effort required to brake the vehicle will be much greater than that required with the power system operating.

Brake Pad Break-In

NOTE: Your vehicle is equipped with a high performance braking system. The brake pads are a semi-metallic compound, which offer superior fade resistance for consistent operation. A compromise to using this type of brake pad is that the brakes may squeal slightly under certain weather and operating conditions (.i.e., during light brake applications).

The brakes on your new vehicle do not require a long break-in period. However, you should avoid repeated hard brake applications from high speeds during initial break-in. In addition, you should avoid severe brake loading, such as may be encountered when descending long mountain grades.

Downloaded from www.Manualslib.com manuals search engine

Safe Operating Tips

WARNING!

To use your brakes and accelerator more safely, follow these tips:

- **Do not "ride" the brakes by resting your foot on the pedal. This could overheat the brakes and result in unpredictable braking action, longer stopping distances, or brake damage.**
- **When descending mountains or hills, repeated braking can cause brake fade with loss of braking control. Avoid repeated heavy braking by downshifting the transmission whenever possible.**

(Continued)

WARNING! ***(Continued)***

- **Do not drive too fast for road conditions, especially when roads are wet or slushy. A wedge of water can build up between the tire tread and the road. This hydroplaning action can cause loss of traction, braking ability, and control.**
- **After going through deep water or a car wash, brakes may become wet, resulting in decreased performance and unpredictable braking action. Dry the brakes by gentle, intermittent pedal action while driving at very slow speeds.**

Downloaded from www.Manualslib.com manuals search engine

Anti-Lock Brake System

The Anti-Lock Brake System (ABS) is designed to aid the driver in maintaining vehicle control under adverse braking conditions. The system operates with a separate computer to modulate hydraulic pressure to prevent wheel lock-up and help avoid skidding on slippery surfaces.

NOTE: During severe braking conditions, a pulsing sensation may occur and a clicking noise will be heard. This is normal, indicating that the ABS is functioning.

The ABS conducts a low-speed self-test at about 12 mph (20 km/h). If you have your foot lightly on the brake while this test is occurring, you may feel slight pedal movement. The movement can be more apparent on ice and snow. This is normal.

The ABS pump motor runs during the self-test at 12 mph (20 km/h) and during an ABS stop. The pump motor makes a low humming noise during operation, which is normal.

CAUTION!

The Anti-Lock Brake System is subject to possible detrimental effects of electronic interference caused by improperly installed aftermarket radios or telephones.

Downloaded from www.Manualslib.com manuals search engine

WARNING!

- **The Anti-Lock Brake System (ABS) contains sophisticated electronic equipment that may be susceptible to interference caused by improperly installed or high output radio transmitting equipment. This interference can cause possible loss of anti-lock braking capability. Installation of such equipment should be performed by qualified professionals.**
- **Pumping of the Anti-Lock Brakes will diminish their effectiveness and may lead to a collision. Pumping makes the stopping distance longer. Just press firmly on your brake pedal when you need to slow down or stop.**

(Continued)

WARNING! ***(Continued)***

- **The Anti-Lock Brake System (ABS) cannot prevent the natural laws of physics from acting on the vehicle, nor can it increase braking or steering efficiency beyond that afforded by the condition of the vehicle brakes and tires or the traction afforded.**
- **The Anti-Lock Brake System (ABS) cannot prevent collisions, including those resulting from excessive speed in turns, following another vehicle too closely, or hydroplaning.**
- **The capabilities of an Anti-Lock Brake System (ABS) equipped vehicle must never be exploited in a reckless or dangerous manner, that could jeopardize the user's safety or the safety of others.**

All vehicle wheels and tires must be the same size and type as the original equipment and the tires must be properly inflated to produce accurate signals for the computer.

Downloaded from www.Manualslib.com manuals search engine

WARNING!

Significant over or under-inflation of tires, or mixing sizes of tires or wheels on the vehicle can lead to loss of braking effectiveness.

Anti-Lock Brake Warning Light

The "Anti-Lock Brake Warning Light" will turn on and stay on briefly as a bulb check when the ignition is first turned on. If the light does not turn on during starting, have it repaired promptly.

This light also illuminates at vehicle start-up to indicate that the ABS self-check is in process. If the light remains on after start-up, or turns on and remains on at road speeds, it may indicate a system malfunction or that the system is inoperative. In this case, the system reverts to standard non-anti-lock brakes. If this occurs, safely bring the vehicle to a complete stop as soon as possible and cycle the ignition to attempt to reset the ABS. If the light remains on, see your authorized dealer immediately to have the system serviced. Also, if the "BRAKE Warning Light" and the "ABS Warning Light" are on, and the parking brake is fully released, see your authorized dealer immediately.

ELECTRONIC BRAKE CONTROL SYSTEM

Your vehicle is equipped with an advanced electronic brake control system that includes the Anti-Lock Brake System (ABS), Traction Control System (TCS), Brake Assist System (BAS), and Electronic Stability Control (ESC). All of these systems work together to enhance vehicle stability and control in various driving conditions.

Downloaded from www.Manualslib.com manuals search engine

Anti-Lock Brake System (ABS)

This system aids the driver in maintaining vehicle control under adverse braking conditions. The system controls hydraulic brake pressure to prevent wheel lock-up and help avoid skidding on slippery surfaces during braking. Refer to "Anti-Lock Brake System" in "Starting and Operating" for further information.

WARNING!

The ABS cannot prevent the natural laws of physics from acting on the vehicle, nor can it increase the traction afforded by prevailing road conditions. The ABS cannot prevent collisions, including those resulting from excessive speed in turns, driving on very slippery surfaces, or hydroplaning. The capabilities of an ABS-equipped vehicle must never be exploited in a reckless or dangerous manner which could jeopardize the user's safety or the safety of others.

Traction Control System (TCS)

This system monitors the amount of wheel spin of each driven wheel. If wheel spin is detected, brake pressure is applied to the slipping wheel(s) and engine power is reduced to provide enhanced acceleration and stability.

Electronic Stability Control

In full on mode this system enhances directional control and stability of the vehicle under various driving conditions. The ESC corrects for oversteering and understeering the vehicle by applying the brake of the appropriate wheel. Engine power may also be reduced to assist in counteracting the condition of oversteer or understeer and help the vehicle maintain the desired path.

Downloaded from www.Manualslib.com manuals search engine

In full on mode ESC uses sensors in the vehicle to determine the path that the driver intends to steer the vehicle and compares it to the actual path of the vehicle. When the actual path does not match the intended path, the ESC applies the brake of the appropriate wheel to assist in counteracting the condition of oversteer or understeer.

- Oversteer – when the vehicle is turning more than appropriate for the steering wheel position.
- Understeer – when the vehicle is turning less than appropriate for the steering wheel position.

WARNING!

The Electronic Stability Control (ESC) cannot prevent the natural laws of physics from acting on the vehicle, nor can it increase the traction afforded by

(Continued)

WARNING! ***(Continued)***

prevailing road conditions. ESC cannot prevent all accidents, including those resulting from excessive speed in turns, driving on very slippery surfaces, or hydroplaning. ESC also cannot prevent accidents resulting from loss of vehicle control due to inappropriate driver input for the conditions. Only a safe, attentive, and skillful driver can prevent accidents. The capabilities of an ESC equipped vehicle must never be exploited in a reckless or dangerous manner which could jeopardize the user's safety or the safety of others.

Downloaded from www.Manualslib.com manuals search engine

ESC Operating Modes

ESC Button

The ESC system has four available operating modes:

ESC On

This is the normal operating mode for the ESC. Whenever the vehicle is started, the ESC system will be in this mode. This mode should be used for most driving situations. The ESC should only be turned OFF for specific reasons as noted in the following paragraphs.

Full Off

This mode is intended for off-highway or off-road use only and should not be used on any public roadways. In this mode, all TCS and ESC stability features are turned OFF. To enter the "Full Off" mode, press and hold the "ESC Off" switch for five seconds while the vehicle is stopped with the engine running. After five seconds, a chime will sound, the "ESC Activation/Malfunction Indicator Light" will illuminate, and the "ESC OFF" message will display in the vehicle odometer. The "ESC OFF"

Downloaded from www.Manualslib.com manuals search engine

message may appear in the Electronic Vehicle Information Center (EVIC). Refer to "Electronic Vehicle Information Center (EVIC)" in "Understanding Your Instrument Panel" for further information. To turn ESC ON again, momentarily press the "ESC Off" switch.

WARNING!

With the ESC switched OFF, the enhanced vehicle stability offered by ESC is unavailable. In an emergency evasive maneuver, the ESC system will not engage to assist in maintaining stability. The "Full Off" ESC mode is intended for off-highway or off-road only.

Sport Mode

Sport mode has reduced traction control and reduced stability control. To enter the "Sport Mode" mode, press the "ESC" switch once (located on the steering wheel). The "ESC Sport Light" will illuminate, and the "ESC SPORT" message will display in the vehicle odometer. Refer to "Electronic Vehicle Information Center (EVIC)" in "Understanding Your Instrument Panel" for further information.

Track Mode

Track Mode has no traction control and has reduced stability control. To enter the "Track Mode" mode, press the "ESC" switch twice. The "ESC Track Light" will illuminate, and the "ESC TRACK" message will display in the vehicle odometer. Refer to "Electronic Vehicle Information Center (EVIC)" in "Understanding Your Instrument Panel" for further information.

Downloaded from www.Manualslib.com manuals search engine

WARNING!

In the ESC "Full Off" mode, the engine torque reduction and stability features are disabled. Therefore, the enhanced vehicle stability offered by ESC is unavailable. In an emergency evasive maneuver, the ESC system will not engage to assist in maintaining stability. "ESC Off" mode is intended for off-highway or off-road use only.

TIRE SAFETY INFORMATION

Tire Markings

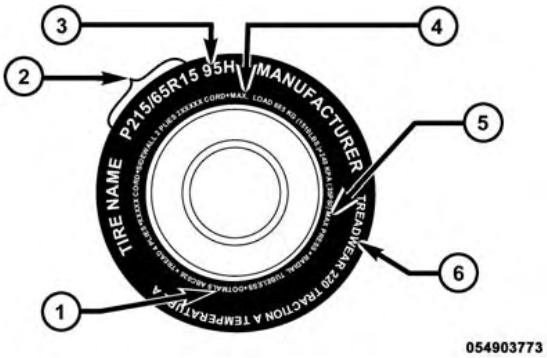

1 — U.S. DOT Safety Standards Code (TIN)
2 — Size Designation
3 — Service Description
4 — Maximum Load
5 — Maximum Pressure
6 — Treadwear, Traction and Temperature Grades

Downloaded from www.Manualslib.com manuals search engine

NOTE:

- P (Passenger) - Metric tire sizing is based on U.S. design standards. P-Metric tires have the letter "P" molded into the sidewall preceding the size designation. Example: P215/65R15 95H.
- European-Metric tire sizing is based on European design standards. Tires designed to this standard have the tire size molded into the sidewall beginning with the section width. The letter "P" is absent from this tire size designation. Example: 215/65R15 96H.
- LT (Light Truck) - Metric tire sizing is based on U.S. design standards. The size designation for LT-Metric tires is the same as for P-Metric tires except for the letters "LT" that are molded into the sidewall preceding the size designation. Example: LT235/85R16.
- Temporary spare tires are spares designed for temporary emergency use only. Temporary high pressure compact spare tires have the letter "T" or "S" molded into the sidewall preceding the size designation. Example: T145/80D18 103M.
- High flotation tire sizing is based on U.S. design standards and it begins with the tire diameter molded into the sidewall. Example: 31x10.5 R15 LT.

Downloaded from www.Manualslib.com manuals search engine

Tire Sizing Chart

EXAMPLE:
Size Designation:
P = Passenger car tire size based on U.S. design standards **"....blank...."** = Passenger car tire based on European design standards **LT** = Light truck tire based on U.S. design standards **T or S** = Temporary spare tire **31** = Overall diameter in inches (in)
215 = Section width in millimeters (mm)
65 = Aspect ratio in percent (%) — Ratio of section height to section width of tire **10.5** = Section width in inches (in)
R = Construction code — "R" means radial construction — "D" means diagonal or bias construction
15 = Rim diameter in inches (in)

Downloaded from www.Manualslib.com manuals search engine

EXAMPLE:
Service Description:
95 = Load Index — A numerical code associated with the maximum load a tire can carry
H = Speed Symbol — A symbol indicating the range of speeds at which a tire can carry a load corresponding to its load index under certain operating conditions — The maximum speed corresponding to the speed symbol should only be achieved under specified operating conditions (i.e., tire pressure, vehicle loading, road conditions, and posted speed limits)
Load Identification:
"....blank...." = Absence of any text on the sidewall of the tire indicates a Standard Load (SL) tire
Extra Load (XL) = Extra load (or reinforced) tire
Light Load (LL) = Light load tire
C, D, E, F, G = Load range associated with the maximum load a tire can carry at a specified pressure
Maximum Load— Maximum load indicates the maximum load this tire is designed to carry
Maximum Pressure— Maximum pressure indicates the maximum permissible cold tire inflation pressure for this tire

Downloaded from www.Manualslib.com manuals search engine

Tire Identification Number (TIN)

The TIN may be found on one or both sides of the tire, however, the date code may only be on one side. Tires with white sidewalls will have the full TIN, including the date code, located on the white sidewall side of the tire.

Look for the TIN on the outboard side of black sidewall tires as mounted on the vehicle. If the TIN is not found on the outboard side, then you will find it on the inboard side of the tire.

EXAMPLE:
DOT MA L9 ABCD 0301
DOT = Department of Transportation — This symbol certifies that the tire is in compliance with the U.S. Department of Transportation tire safety standards and is approved for highway use
MA = Code representing the tire manufacturing location (two digits)
L9 = Code representing the tire size (two digits)
ABCD = Code used by the tire manufacturer (one to four digits)
03 = Number representing the week in which the tire was manufactured (two digits) — 03 means the 3rd week

Downloaded from www.Manualslib.com manuals search engine

EXAMPLE:
DOT MA L9 ABCD 0301
01 = Number representing the year in which the tire was manufactured (two digits) — 01 means the year 2001 — Prior to July 2000, tire manufacturers were only required to have one number to represent the year in which the tire was manufactured. Example: 031 could represent the 3rd week of 1981 or 1991

Tire Terminology And Definitions

Term	Definition
B-Pillar	The vehicle B-Pillar is the structural member of the body located behind the front door.
Cold Tire Inflation Pressure	Cold tire inflation pressure is defined as the tire pressure after the vehicle has not been driven for at least 3 hours, or driven less than 1 mile (1.6 km) after sitting for a three hour period. Inflation pressure is measured in units of PSI (pounds per square inch) or kPa (kilopascals).

Downloaded from www.Manualslib.com manuals search engine

Term	Definition
Maximum Inflation Pressure	The maximum inflation pressure is the maximum permissible cold tire inflation pressure for this tire. The maximum inflation pressure is molded into the sidewall.
Recommended Cold Tire Inflation Pressure	Vehicle manufacturer's recommended cold tire inflation pressure as shown on the tire placard.
Tire Placard	A paper label permanently attached to the vehicle describing the vehicle's loading capacity, the original equipment tire sizes and the recommended cold tire inflation pressures.

Downloaded from www.Manualslib.com manuals search engine

Tire Loading And Tire Pressure

Tire And Loading Information Placard Location

NOTE: The proper cold tire inflation pressure is listed on the driver's side B-Pillar or the rear edge of the driver's side door.

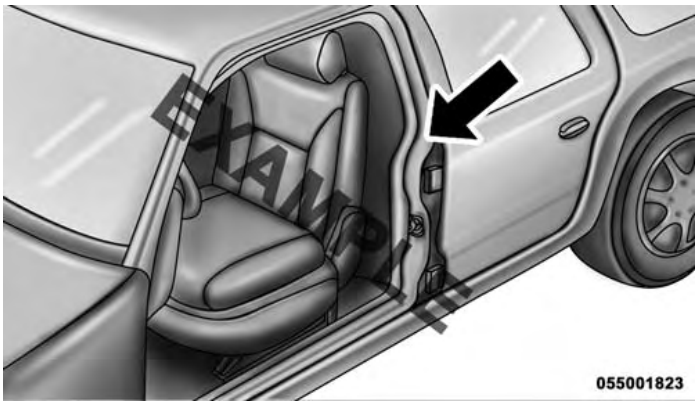

Tire Placard Location

Downloaded from www.Manualslib.com manuals search engine

Tire And Loading Information Placard

811b5a9a

Tire and Loading Information Placard

This placard tells you important information about the:

1) number of people that can be carried in the vehicle
2) total weight your vehicle can carry
3) tire size designed for your vehicle
4) cold tire inflation pressures for the front, rear, and spare tires.

Loading

The vehicle maximum load on the tire must not exceed the load carrying capacity of the tire on your vehicle. You will not exceed the tire's load carrying capacity if you adhere to the loading conditions, tire size, and cold tire inflation pressures specified on the Tire and Loading Information placard and in the "Vehicle Loading" section of this manual.

NOTE: Under a maximum loaded vehicle condition, gross axle weight ratings (GAWRs) for the front and rear axles must not be exceeded. For further information on GAWRs, vehicle loading, and trailer towing, refer to "Vehicle Loading" in this section.

Downloaded from www.Manualslib.com manuals search engine

To determine the maximum loading conditions of your vehicle, locate the statement "The combined weight of occupants and cargo should never exceed XXX lbs or XXX kg" on the Tire and Loading Information placard. The combined weight of occupants, cargo/luggage and trailer tongue weight (if applicable) should never exceed the weight referenced here.

Steps For Determining Correct Load Limit

1. Locate the statement "The combined weight of occupants and cargo should never exceed XXX lbs or XXX kg" on your vehicle's placard.
2. Determine the combined weight of the driver and passengers that will be riding in your vehicle.
3. Subtract the combined weight of the driver and passengers from XXX lbs or XXX kg.
4. The resulting figure equals the available amount of cargo and luggage load capacity. For example, if "XXX" amount equals 1,400 lbs (635 kg) and there will be five 150 lb (68 kg) passengers in your vehicle, the amount of available cargo and luggage load capacity is 650 lbs (295 kg) (since 5 x 150 = 750, and 1400 – 750 = 650 lbs [295 kg]).
5. Determine the combined weight of luggage and cargo being loaded on the vehicle. That weight may not safely exceed the available cargo and luggage load capacity calculated in Step 4.
6. If your vehicle will be towing a trailer, load from your trailer will be transferred to your vehicle. Consult this manual to determine how this reduces the available cargo and luggage load capacity of your vehicle.

Downloaded from www.Manualslib.com manuals search engine

NOTE:

- The following table shows examples on how to calculate total load, cargo/luggage, and towing capacities of your vehicle with varying seating configurations and number and size of occupants. This table is for illustration purposes only and may not be accurate for the seating and load carry capacity of your vehicle.
- For the following example, the combined weight of occupants and cargo should never exceed 865 lbs (392 kg).

Downloaded from www.Manualslib.com manuals search engine

Occupants			Combined weight of occupants and cargo from Tire Placard	MINUS	Combined Occupant's weight	=	AVAILABLE Cargo/Luggage and Trailer Tongue Weight
TOTAL	FRONT	REAR					
EXAMPLE 1							
5	2	3	865 lbs	minus	Occupant 1: 200 lbs Occupant 2: 130 lbs Occupant 3: 160 lbs Occupant 4: 100 lbs Occupant 5: 80 lbs TOTAL WEIGHT: 670 lbs 670 lbs	=	195 lbs
EXAMPLE 2							
3	2	1	865 lbs	minus	Occupant 1: 210 lbs Occupant 2: 180 lbs Occupant 3: 150 lbs TOTAL WEIGHT: 540 lbs 540 lbs	=	325 lbs
EXAMPLE 3							
2	2	0	865 lbs	minus	Occupant 1: 200 lbs Occupant 2: 200 lbs TOTAL WEIGHT: 400 lbs 400 lbs	=	465 lbs

EXAMPLE

811a4d11

5

Downloaded from www.Manualslib.com manuals search engine

WARNING!

Overloading of your tires is dangerous. Overloading can cause tire failure, affect vehicle handling, and increase your stopping distance. Use tires of the recommended load capacity for your vehicle. Never overload them.

TIRES — GENERAL INFORMATION

Tire Pressure

Proper tire inflation pressure is essential to the safe and satisfactory operation of your vehicle. Three primary areas are affected by improper tire pressure:

Safety

WARNING!

- **Improperly inflated tires are dangerous and can cause collisions.**
- **Under-inflation increases tire flexing and can result in over-heating and tire failure.**
- **Over-inflation reduces a tire's ability to cushion shock. Objects on the road and chuckholes can cause damage that result in tire failure.**
- **Over-inflated or under-inflated tires can affect vehicle handling and can fail suddenly, resulting in loss of vehicle control.**
- **Unequal tire pressures can cause steering problems. You could lose control of your vehicle.**

(Continued)

Downloaded from www.Manualslib.com manuals search engine

WARNING! ***(Continued)***

- **Unequal tire pressures from one side of the vehicle to the other can cause the vehicle to drift to the right or left.**
- **Always drive with each tire inflated to the recommended cold tire inflation pressure.**

Economy

Improper inflation pressures can cause uneven wear patterns to develop across the tire tread. These abnormal wear patterns will reduce tread life resulting in a need for earlier tire replacement. Under-inflation also increases tire rolling resistance resulting in higher fuel consumption.

Ride Comfort And Vehicle Stability

Proper tire inflation contributes to a comfortable ride. Over-inflation produces a jarring and uncomfortable ride. Both under-inflation and over-inflation affect the stability of the vehicle and can produce a feeling of sluggish response or over responsiveness in the steering.

Unequal tire pressures can cause erratic and unpredictable steering response.

Unequal tire pressure from side to side may cause the vehicle to drift left or right.

Tire Inflation Pressures

The proper cold tire inflation pressure is listed on the driver's side "B" Pillar or rear edge of the driver's side door.

The tire pressure should be checked and adjusted as well as inspected for signs of tire wear or visible damage at least once a month. Use a good quality pocket-type gauge to check tire pressure. Do not make a visual judgement when determining proper inflation. Radial tires may look properly inflated even when they are under-inflated.

Downloaded from www.Manualslib.com manuals search engine

CAUTION!

After inspecting or adjusting the tire pressure, always reinstall the valve stem cap. This will prevent moisture and dirt from entering the valve stem, which could damage the valve stem.

Inflation pressures specified on the placard are always "cold tire inflation pressure." Cold tire inflation pressure is defined as the tire pressure after the vehicle has not been driven for at least three hours, or driven less than 1 mile (1.6 km) after a three hour period. The cold tire inflation pressure must not exceed the maximum inflation pressure molded into the tire sidewall.

Check tire pressures more often if subject to a wide range of outdoor temperatures, as tire pressures vary with temperature changes.

Tire pressures change by approximately 1 psi (7 kPa) per 12°F (7°C) of air temperature change. Keep this in mind when checking tire pressure inside a garage, especially in the winter.

Example: If garage temperature = 68°F (20°C) and the outside temperature = 32°F (0°C) then the cold tire inflation pressure should be increased by 3 psi (21 kPa), which equals 1 psi (7 kPa) for every 12°F (7°C) for this outside temperature condition.

Tire pressure may increase from 2 to 6 psi (13 to 40 kPa) during operation. DO NOT reduce this normal pressure build up or your tire pressure will be too low.

Downloaded from www.Manualslib.com manuals search engine

Tire Pressures For High Speed Operation

The manufacturer advocates driving at safe speeds within posted speed limits. Where speed limits or conditions are such that the vehicle can be driven at high speeds, maintaining correct tire inflation pressure is very important. Increased tire pressure and reduced vehicle loading may be required for high-speed vehicle operation. Refer to original equipment or an authorized tire dealer for recommended safe operating speeds, loading and cold tire inflation pressures.

WARNING!

High speed driving with your vehicle under maximum load is dangerous. The added strain on your tires could cause them to fail. You could have a serious collision. Do not drive a vehicle loaded to the maximum capacity at continuous speeds above 75 mph (120 km/h).

Radial Ply Tires

WARNING!

Combining radial ply tires with other types of tires on your vehicle will cause your vehicle to handle poorly. The instability could cause a collision. Always use radial ply tires in sets of four. Never combine them with other types of tires.

Cuts and punctures in radial tires are repairable only in the tread area because of sidewall flexing. Consult your authorized tire dealer for radial tire repairs.

Tire Spinning

When stuck in mud, sand, snow, or ice conditions, do not spin your vehicle's wheels above 30 mph (48 km/h) or for longer than 30 seconds continuously without stopping when you are stuck.

Downloaded from www.Manualslib.com manuals search engine

Refer to "Freeing A Stuck Vehicle" in "What To Do In Emergencies" for further information.

WARNING!

Fast spinning tires can be dangerous. Forces generated by excessive wheel speeds may cause tire damage or failure. A tire could explode and injure someone. Do not spin your vehicle's wheels faster than 30 mph (48 km/h) for more than 30 seconds continuously when you are stuck, and do not let anyone near a spinning wheel, no matter what the speed.

Tread Wear Indicators

Tread wear indicators are in the original equipment tires to help you in determining when your tires should be replaced.

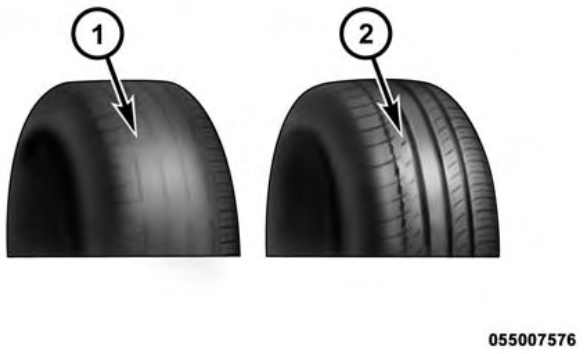

1 — Worn Tire
2 — New Tire

These indicators are molded into the bottom of the tread grooves. They will appear as bands when the tread depth becomes 1/16 in (2 mm). When the tread is worn to the tread wear indicators, the tire should be replaced.

Downloaded from www.Manualslib.com manuals search engine

Life Of Tire

The service life of a tire is dependent upon varying factors including, but not limited to:

- Driving style
- Tire pressure
- Distance driven
- Performance tires, tires with a speed rating of V or higher, and summer tires, typically have a reduced tread life. Rotation of these tires per the vehicle maintenance schedule is highly recommended.

WARNING!

Tires and the spare tire should be replaced after six years, regardless of the remaining tread. Failure to follow this warning can result in sudden tire failure.

(Continued)

WARNING! *(Continued)*

You could lose control and have a collision resulting in serious injury or death.

Keep dismounted tires in a cool, dry place with as little exposure to light as possible. Protect tires from contact with oil, grease, and gasoline.

Replacement Tires

The tires on your new vehicle provide a balance of many characteristics. They should be inspected regularly for wear and correct cold tire inflation pressure. The manufacturer strongly recommends that you use tires equivalent to the originals in size, quality and performance when replacement is needed. (Refer to the paragraph on "Tread Wear Indicators"). Refer to the "Tire and Loading Information" placard for the size designation of your tire. The Load Index and Speed Symbol for your tire will be found on the original equipment tire sidewall. See the

Downloaded from www.Manualslib.com manuals search engine

Tire Sizing Chart example found in the Tire Safety Information section of this manual for more information relating to the Load Index and Speed Symbol of a tire.

It is recommended to replace the two front tires or two rear tires as a pair. Replacing just one tire can seriously affect your vehicle's handling. If you ever replace a wheel, make sure that the wheel's specifications match those of the original wheels.

It is recommended you contact your original equipment or an authorized tire dealer with any questions you may have on tire specifications or capability. Failure to use equivalent replacement tires may adversely affect the safety, handling, and ride of your vehicle.

WARNING!

- **Do not use a tire, wheel size or rating other than that specified for your vehicle. Some combinations of unapproved tires and wheels may change suspension dimensions and performance characteristics, resulting in changes to steering, handling, and braking of your vehicle. This can cause unpredictable handling and stress to steering and suspension components. You could lose control and have a collision resulting in serious injury or death. Use only the tire and wheel sizes with load ratings approved for your vehicle.**
- **Never use a tire with a smaller load index or capacity, other than what was originally equipped on your vehicle. Using a tire with a smaller load index could result in tire overloading and failure. You could lose control and have a collision.**

(Continued)

Downloaded from www.Manualslib.com manuals search engine

WARNING! *(Continued)*

- **Failure to equip your vehicle with tires having adequate speed capability can result in sudden tire failure and loss of vehicle control.**

CAUTION!

Replacing original tires with tires of a different size may result in false speedometer and odometer readings.

Tire Storage

Tire storage is addressed in the Pirelli Limited Tire Warranty Booklet.

Specific recommendations on guidelines for long term tire storage for this vehicle should be requested of the Pirelli Tire Corporation 1-800-747-3554.

TIRE CHAINS (TRACTION DEVICES)

Due to limited clearance, tire chains or traction devices are not recommended.

CAUTION!

Damage to the vehicle may result if tire chains are used.

SNOW TIRES

There are no snow tires that are compatible with the wheels on this vehicle.

TIRE ROTATION RECOMMENDATIONS

Tires on the front and rear axles of vehicles operate at different loads and perform different steering, driving, and braking functions. For these reasons, they wear at unequal rates.

Downloaded from www.Manualslib.com manuals search engine

These effects can be reduced by timely rotation of tires. The benefits of rotation are especially worthwhile with aggressive tread designs such as those on all season type tires. Rotation will increase tread life, help to maintain mud, snow, and wet traction levels, and contribute to a smooth, quiet ride.

Refer to the "Maintenance Schedule" for the proper maintenance interval. Remember, more frequent rotation is permissible if desired. Also, correct for anything causing rapid or unusual wear prior to performing the tire rotation.

NOTE: Each wheel on your vehicle contains a tire pressure sensor. The Tire Pressure Monitor System (TPMS) learns the location of each sensor though system programming. Although not required, the manufacturer recommends reprogramming the TPMS after rotating the tires so that the system can relearn each sensor's location. See your authorized dealer for system reprogramming.

The front and rear tires are different sizes and cannot be used in place of each other. Rotate the tires "side-to-side" as shown in the diagram.

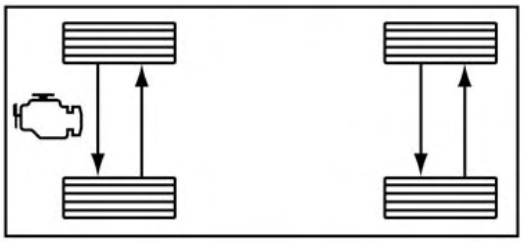

81f10b20

Tire Rotation

Downloaded from www.Manualslib.com manuals search engine

TIRE PRESSURE MONITOR SYSTEM (TPMS)

The Tire Pressure Monitor System (TPMS) uses wireless technology with wheel rim mounted electronic sensors to monitor tire pressure levels. Sensors mounted to each wheel as part of the valve stem transmit tire pressure readings to the receiver module. It is particularly important for you to check the tire pressure in all of the tires on your vehicle monthly and to maintain the proper pressure. The TPMS consists of the following components: • Receiver module, • Four TPM sensors, • Various TPMS messages, which display in the Electronic Vehicle Information Center (EVIC), and • TPM Telltale Light The matching full size spare wheel and tire assembly (if equipped) has a TPM sensor.

Tire Pressure Monitoring Low Pressure Warnings

The TPM Telltale Light will illuminate in the instrument cluster and a chime will sound when tire pressure is low in one or more of the four active road tires. In addition, the EVIC will display a "LOW TIRE" message and a graphic showing the pressure values of each tire with the low tire pressure values flashing or changing color.

Should this occur, you should stop as soon as possible and inflate the tires with a low pressure condition (those flashing or in a different color in the EVIC graphic) to the vehicle's recommended cold placard pressure inflation value. Once the system receives the updated tire pressures, the system will automatically update, the graphic display in the EVIC will stop flashing or change color back to the original color, and the TPM Telltale Light will turn off. The vehicle may need to be driven for up to 20 minutes above 15 mph (24 km/h) in order for the TPMS to receive this information.

Downloaded from www.Manualslib.com manuals search engine

Service TPMS Warning

If a system fault is detected, the TPM Telltale Light will flash on and off for 75 seconds and then remain on solid. The system fault will also sound a chime. In addition, the EVIC will display a "SERVICE TPM SYSTEM" message for a minimum of five seconds and then display dashes (--) in place of the pressure value to indicate which sensor is not being received.

If the ignition switch is cycled, this sequence will repeat, providing the system fault still exists. If the system fault no longer exists, the TPM Telltale Light will no longer flash, and the "SERVICE TPM SYSTEM" message will no longer display, and a pressure value will display in place of the dashes. A system fault can occur due to any of the following:

1. Signal interference due to electronic devices or driving next to facilities emitting the same radio frequencies as the TPM sensors.
2. Installing aftermarket window tinting that contains materials that may block radio wave signals.
3. Accumulation of snow or ice around the wheels or wheel housings.
4. Using tire chains on the vehicle.
5. Using wheels/tires not equipped with TPM sensors.

The EVIC will also display a "SERVICE TPM SYSTEM" message for a minimum of five seconds when a system fault related to an incorrect sensor location fault is detected. In this case, the "SERVICE TPM SYSTEM" message is then followed with a graphic display with pressure values still shown. This indicates that the pressure values are still being received from the TPM sensors but they may not be located in the correct vehicle position. The system still needs to be serviced as long as the "SERVICE TPM SYSTEM" message is displayed.

Downloaded from www.Manualslib.com manuals search engine

FUEL REQUIREMENTS

8.4L Engine

The 8.4L engine is designed to meet all emissions regulations and provide excellent fuel economy and performance when using high-quality premium unleaded gasoline with an octane rating of 91 or higher.

Light spark knock at low engine speeds is not harmful to your engine. However, continued heavy spark knock at high speeds can cause damage and immediate service is required.

Poor quality gasoline can cause problems such as hard starting, stalling, and hesitations. If you experience these symptoms, try another brand of "premium" gasoline before considering service for the vehicle.

Over 40 automobile manufacturers around the world have issued and endorsed consistent gasoline specifications (the World Wide Fuel Charter, WWFC) which define fuel properties necessary to deliver enhanced emissions, engine performance, and durability for your vehicle. The manufacturer recommends the use of gasolines that meet the WWFC specifications if they are available.

Reformulated Gasoline

Many areas of the country require the use of cleaner burning gasoline referred to as "Reformulated Gasoline." Reformulated gasolines contain oxygenates and are specifically blended to reduce vehicle emissions and improve air quality.

The manufacturer supports the use of reformulated gasolines. Properly blended reformulated gasolines will provide excellent performance and durability of engine and fuel system components.

Downloaded from www.Manualslib.com manuals search engine

Gasoline/Oxygenate Blends

Some fuel suppliers blend unleaded gasoline with oxygenates such as Ethanol. Fuels blended with oxygenates may be used in your vehicle.

CAUTION!

DO NOT use gasoline containing Methanol or gasoline containing more than 10% Ethanol. Use of these blends may result in starting and driveability problems, damage critical fuel system components, cause emissions to exceed the applicable standard, and/or cause the "Malfunction Indicator Light" to illuminate. Pump labels should clearly communicate if a fuel contains greater than 10% Ethanol.

Problems that result from using gasoline containing Methanol or gasoline containing more than 10% Ethanol are not the responsibility of the manufacturer and may not be covered under warranty.

E-85 Usage In Non-Flex Fuel Vehicles

Non-FFV vehicles are compatible with gasoline containing 10% ethanol (E10). Gasoline with higher ethanol content may void the vehicle's warranty.

If a Non-FFV vehicle is inadvertently fueled with E-85 fuel, the engine will have some or all of these symptoms:

- operate in a lean mode
- OBD II "Malfunction Indicator Light" on
- poor engine performance
- poor cold start and cold drivability
- increased risk for fuel system component corrosion

To fix a Non-FFV vehicle inadvertently fueled once with E-85 perform the following:

- drain the fuel tank (see your authorized dealer)
- change the engine oil and oil filter

Downloaded from www.Manualslib.com manuals search engine

- disconnect and reconnect the battery to reset the engine controller memory

More extensive repairs will be required for prolonged exposure to E-85 fuel.

MMT In Gasoline

MMT is a manganese-containing metallic additive that is blended into some gasoline to increase octane. Gasoline blended with MMT provides no performance advantage beyond gasoline of the same octane number without MMT. Gasoline blended with MMT reduces spark plug life and reduces emissions system performance in some vehicles. The manufacturer recommends that gasoline without MMT be used in your vehicle. The MMT content of gasoline may not be indicated on the gasoline pump, therefore, you should ask your gasoline retailer whether the gasoline contains MMT. MMT is prohibited in Federal and California reformulated gasoline.

Materials Added To Fuel

All gasoline sold in the United States is required to contain effective detergent additives. Use of additional detergents or other additives is not needed under normal conditions and they would result in additional cost. Therefore, you should not have to add anything to the fuel.

Fuel System Cautions

CAUTION!

Follow these guidelines to maintain your vehicle's performance:

- **The use of leaded gas is prohibited by Federal law. Using leaded gasoline can impair engine performance and damage the emissions control system.**

(Continued)

Downloaded from www.Manualslib.com manuals search engine

CAUTION! *(Continued)*

- **An out-of-tune engine or certain fuel or ignition malfunctions can cause the catalytic converter to overheat. If you notice a pungent burning odor or some light smoke, your engine may be out of tune or malfunctioning and may require immediate service. Contact your authorized dealer for service assistance.**
- **The use of fuel additives, which are now being sold as octane enhancers, is not recommended. Most of these products contain high concentrations of methanol. Fuel system damage or vehicle performance problems resulting from the use of such fuels or additives is not the responsibility of the manufacturer.**

NOTE: Intentional tampering with the emissions control system can result in civil penalties being assessed against you.

Carbon Monoxide Warnings

WARNING!

Carbon monoxide (CO) in exhaust gases is deadly. Follow the precautions below to prevent carbon monoxide poisoning:

- **Do not inhale exhaust gases. They contain carbon monoxide, a colorless and odorless gas, which can kill. Never run the engine in a closed area, such as a garage, and never sit in a parked vehicle with the engine running for an extended period. If the vehicle is stopped in an open area with the engine running for more than a short period, adjust the ventilation system to force fresh, outside air into the vehicle.**

(Continued)

Downloaded from www.Manualslib.com manuals search engine

WARNING! ***(Continued)***

- **Guard against carbon monoxide with proper maintenance. Have the exhaust system inspected every time the vehicle is raised. Have any abnormal conditions repaired promptly. Until repaired, drive with all side windows fully open.**
- **Keep the trunk closed when driving your vehicle to prevent carbon monoxide and other poisonous exhaust gases from entering the vehicle.**

ADDING FUEL

1. Press the fuel filler door release switch (located in the driver's door map pocket).
2. Open the fuel filler door.
3. There is no fuel filler cap. A flapper door inside the pipe seals the system.
4. Insert the fuel nozzle fully into the filler pipe – the nozzle opens and holds the flapper door while refueling.

NOTE: Only the correct size nozzle opens the latches allowing the flapper door to open.

5. Fill the vehicle with fuel – when the fuel nozzle "clicks" or shuts off the fuel tank is full.
6. Remove the fuel nozzle and close the fuel door.

NOTE: A funnel is provided (located in the trunk in the spare tire area) to open the flapper door to allow for emergency refueling with a gas can.

CAUTION!

To avoid fuel spillage and overfilling, do not "top off" the fuel tank after filling.

Downloaded from www.Manualslib.com manuals search engine

WARNING!

- **Never have any smoking materials lit in or near the vehicle when the fuel door is open or the tank is being filled.**
- **Never add fuel when the engine is running. This is in violation of most state and federal fire regulations and may cause the "Malfunction Indicator Light" to turn on.**
- **A fire may result if gasoline is pumped into a portable container that is inside of a vehicle. You could be burned. Always place gas containers on the ground while filling.**

Emergency Fuel Filler Door Release

If you are unable to open the fuel filler door, use the fuel filler door emergency release.

1. Open the trunk.
2. Remove the access cover (located on the right side inner trim panel).
3. Pull the release cable.

TRAILER TOWING

Trailer towing with this vehicle is not recommended.

Downloaded from www.Manualslib.com manuals search engine

RECREATIONAL TOWING (BEHIND MOTORHOME, ETC.)

Towing This Vehicle Behind Another Vehicle (Flat Towing With All Four Wheels On The Ground)

Towing Condition	Wheels OFF The Ground	Manual Transmission
Flat Tow	None	**NOT ALLOWED**
Dolly Tow	Front	**NOT ALLOWED**
	Rear	**NOT RECOMMENDED**
On Trailer	All	OK

NOTE: If the vehicle requires towing, make sure all four wheels are off the ground.

CAUTION!

Towing this vehicle in violation of the above requirements can cause severe transmission damage. Damage from improper towing is not covered under the New Vehicle Limited Warranty.

Downloaded from www.Manualslib.com manuals search engine

GROUND CLEARANCE

The front and rear fascias and side sills ride low and ground clearance is limited.

CAUTION!

Damage to the front and rear fascias and side sills can occur if you disregard the low ground clearance in these areas of your vehicle. Pay close attention when parking to avoid running into parking curbs. Exercise caution when entering or exiting steep driveways, or when pulling off the road onto soft shoulders.

Downloaded from www.Manualslib.com manuals search engine

WHAT TO DO IN EMERGENCIES

CONTENTS

■ HAZARD WARNING FLASHER 234
■ IF YOUR ENGINE OVERHEATS 234
■ TIREFIT KIT 235
□ TIREFIT Storage 236
□ TIREFIT Kit Components And Operation. 236
□ TIREFIT Usage Precautions. 238
□ Sealing A Tire With TIREFIT. 240
■ JUMP-STARTING PROCEDURES 245
■ FREEING A STUCK VEHICLE 249
■ TOWING A DISABLED VEHICLE 250

Downloaded from www.Manualslib.com manuals search engine

HAZARD WARNING FLASHER

The Hazard Warning flasher switch is located in the center of the instrument panel above the climate controls.

Press the switch to turn on the Hazard Warning flasher. When the switch is activated, all directional turn signals will flash on and off to warn oncoming traffic of an emergency. Press the switch a second time to turn off the Hazard Warning flasher.

This is an emergency warning system and it should not be used when the vehicle is in motion. Use it when your vehicle is disabled and it is creating a safety hazard for other motorists.

When you must leave the vehicle to seek assistance, the Hazard Warning flasher will continue to operate even though the ignition is placed in the OFF position.

NOTE: With extended use the Hazard Warning flasher may wear down your battery.

IF YOUR ENGINE OVERHEATS

In any of the following situations, you can reduce the potential for overheating by taking the appropriate action.

- **On the highways —** Slow down and use the highest gear possible.
- **In city traffic —** While stopped, put the transmission in NEUTRAL, but do not increase engine idle speed.
- **In city traffic —** While moving, shift into the highest gear possible to reduce engine RPM.

Downloaded from www.Manualslib.com manuals search engine

NOTE: There are steps that you can take to slow down an impending overheat condition:

- If your air conditioner (A/C) is on, turn it off. The A/C system adds heat to the engine cooling system and turning the A/C off can help remove this heat.
- You can also turn the temperature control to maximum heat, the mode control to floor and the blower control to high. This allows the heater core to act as a supplement to the radiator and aids in removing heat from the engine cooling system.

WARNING!

You or others can be badly burned by hot engine coolant (antifreeze) or steam from your radiator. If you see or hear steam coming from under the hood, do not open the hood until the radiator has had time to cool. Never try to open a cooling system pressure cap when the radiator or coolant bottle is hot.

TIREFIT KIT

Small punctures up to ¼″ (6 mm) in the tire tread can be sealed with TIREFIT. Foreign objects (e.g., screws or nails) should not be removed from the tire. TIREFIT can be used in outside temperatures down to approximately -4°F (-20°C).

This kit will provide a temporary tire seal, allowing you to drive your vehicle up to 100 miles (160 km) with a maximum speed of 55 mph (88 km/hr).

Downloaded from www.Manualslib.com manuals search engine

TIREFIT Storage

The TIREFIT kit is located in left side of the trunk.

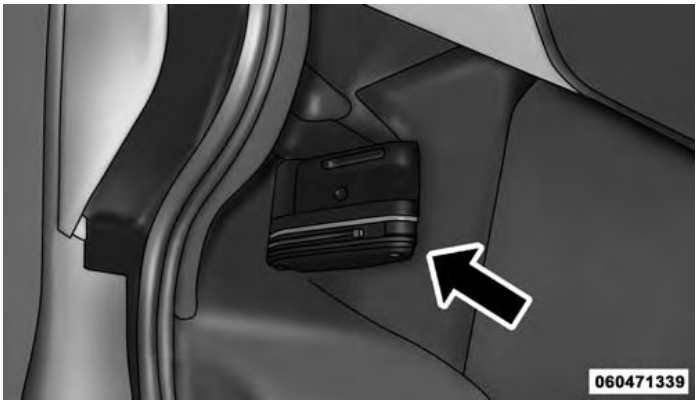

TIREFIT Location

TIREFIT Kit Components And Operation

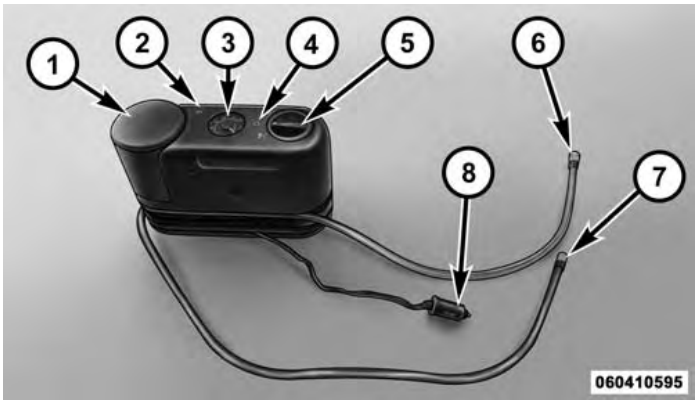

TIREFIT Components

1. Sealant Bottle
2. Deflation Button
3. Pressure Gauge

Downloaded from www.Manualslib.com manuals search engine

4. Power Button
5. Mode Select Knob
6. Sealant Hose (Clear)
7. Air Pump Hose (Black)
8. Power Plug

Using The Mode Select Knob And Hoses

Your TIREFIT kit is equipped with the following symbols to indicate the air or sealant mode.

Selecting Air Mode

Turn the Mode Select Knob (5) to this position for air pump operation only. Use the Black Air Pump Hose (7) when selecting this mode.

Selecting Sealant Mode

Turn the Mode Select Knob (5) to this position to inject the TIREFIT Sealant and to inflate the tire. Use the Sealant Hose (clear hose) (6) when selecting this mode.

Using The Power Button

Push and release the Power Button (4) once to turn On the TIREFIT kit. Push and release the Power Button (4) again to turn Off the TIREFIT kit.

Using The Deflation Button

Press the Deflation Button (2) to reduce the air pressure in the tire if it becomes over-inflated.

Downloaded from www.Manualslib.com manuals search engine

TIREFIT Usage Precautions

- Replace the TIREFIT Sealant Bottle (1) and Sealant Hose (6) prior to the expiration date (printed on the bottle label) to assure optimum operation of the system. Refer to "Sealing a Tire with TIREFIT" section (F) "Sealant Bottle and Hose Replacement".
- The Sealant Bottle (1) and Sealant Hose (6) are a one tire application use. After each use, always replace these components immediately at an authorized dealer.
- When the TIREFIT sealant is in a liquid form, clean water, and a damp cloth will remove the material from the vehicle or tire and wheel components. Once the sealant dries, it can easily be peeled off and properly discarded.
- For optimum performance, make sure the valve stem on the wheel is free of debris before connecting the TIREFIT kit.
- You can use the TIREFIT air pump to inflate bicycle tires. The kit also comes with two needles, located in the Accessory Storage Compartment (on the bottom of the air pump) for inflating sport balls, rafts, or similar inflatable items. However, use only the Air Pump Hose (7) and make sure the Mode Select Knob (5) is in the Air Mode when inflating such items to avoid injecting sealant into them. The TIREFIT Sealant is only intended to seal punctures less than ¼ in (6 mm) diameter in the tread of your vehicle.
- Do not lift or carry the TIREFIT kit by the hoses.

Downloaded from www.Manualslib.com manuals search engine

WARNING!

- Do not attempt to seal a tire on the side of the vehicle closest to traffic. Pull far enough off the road to avoid the danger of being hit when using the TIREFIT kit.
- Do not use TIREFIT or drive the vehicle under the following circumstances:
  - If the puncture in the tire tread is approximately 1/4 in. (6 mm) or larger.
  - If the tire has any sidewall damage.
  - If the tire has any damage from driving with extremely low tire pressure.
  - If the tire has any damage from driving on a flat tire.
  - If the wheel has any damage.
  - If you are unsure of the condition of the tire or the wheel.

(Continued)

WARNING! *(Continued)*

- Keep TIREFIT away from open flames or heat source.
- A loose TIREFIT kit thrown forward in a collision or hard stop could endanger the occupants of the vehicle. Always stow the TIREFIT kit in the place provided. Failure to follow these warnings can result in injuries that are serious or fatal to you, your passengers, and others around you.
- Take care not to allow the contents of TIREFIT to come in contact with hair, eyes, or clothing. TIREFIT is harmful if inhaled, swallowed, or absorbed through the skin. It causes skin, eye, and respiratory irritation. Flush immediately with plenty of water if there is any contact with eyes or skin. Change clothing as soon as possible, if there is any contact with clothing.

(Continued)

Downloaded from www.Manualslib.com manuals search engine

WARNING! ***(Continued)***

- **TIREFIT Sealant solution contains latex. In case of an allergic reaction or rash, consult a physician immediately. Keep TIREFIT out of reach of children. If swallowed, rinse mouth immediately with plenty of water and drink plenty of water. Do not induce vomiting! Consult a physician immediately.**

Sealing A Tire With TIREFIT

(A) Whenever You Stop To Use TIREFIT:

1. Pull over to a safe location and turn on the vehicle's Hazard Warning flashers.
2. Verify that the valve stem (on the wheel with the deflated tire) is in a position that is near to the ground. This will allow the TIREFIT Hoses (6) and (7) to reach the valve stem and keep the TIREFIT kit flat on the ground. This will provide the best positioning of the kit when injecting the sealant into the deflated tire and running the air pump. Move the vehicle as necessary to place the valve stem in this position before proceeding.
3. Place the transmission in Gear and place the ignition in the OFF position.
4. Set the parking brake.

(B) Setting Up To Use TIREFIT:

1. Turn the Mode Select Knob (5) to the Sealant Mode position.
2. Uncoil the Sealant Hose (6) and then remove the cap from the fitting at the end of the hose.
3. Place the TIREFIT kit flat on the ground next to the deflated tire.
4. Remove the cap from the valve stem and then screw the fitting at the end of the Sealant Hose (6) onto the valve stem.

Downloaded from www.Manualslib.com manuals search engine

5. Uncoil the Power Plug (8) and insert the plug into the vehicle's 12 Volt power outlet.

NOTE: Do not remove foreign objects (e.g., screws or nails) from the tire.

(C) Injecting TIREFIT Sealant Into The Deflated Tire:

- Always start the engine before turning ON the TIREFIT kit.

NOTE: Manual transmission vehicles must have the parking brake engaged and the shift lever in NEUTRAL.

- After pressing the Power Button (4), the sealant (white fluid) will flow from the Sealant Bottle (1) through the Sealant Hose (6) and into the tire.

NOTE: Sealant may leak out through the puncture in the tire.

If the sealant (white fluid) does not flow within 0 – 10 seconds through the Sealant Hose (6):

1. Press the Power Button (4) to turn Off the TIREFIT kit. Disconnect the Sealant Hose (6) from the valve stem. Make sure the valve stem is free of debris. Reconnect the Sealant Hose (6) to the valve stem. Check that the Mode Select Knob (5) is in the Sealant Mode position and not Air Mode. Press the Power Button (4) to turn On the TIREFIT kit.
2. Connect the Power Plug (8) to a different 12 Volt power outlet in your vehicle or another vehicle, if available. Make sure the engine is running before turning ON the TIREFIT kit.
3. The Sealant Bottle (1) may be empty due to previous use. Call for assistance.

Downloaded from www.Manualslib.com manuals search engine

NOTE: If the Mode Select Knob (5) is on Air Mode and the pump is operating, air will dispense from the Air Pump Hose (7) only, not the Sealant Hose (6).

If the sealant (white fluid) does flow through the Sealant Hose (6):

1. Continue to operate the pump until sealant is no longer flowing through hose (typically takes 30 - 70 seconds). As the sealant flows through the Sealant Hose (6), the Pressure Gauge (3) can read as high as 70 psi (5 Bar). The Pressure Gauge (3) will decrease quickly from approximately 70 psi (5 Bar) to the actual tire pressure when the Sealant Bottle (1) is empty.
2. The pump will start to inject air into the tire immediately after the Sealant Bottle (1) is empty. Continue to operate the pump and inflate the tire to the pressure indicated on the tire pressure label on the driver-side latch pillar (recommended pressure). Check the tire pressure by looking at the Pressure Gauge (3).

If the tire does not inflate to at least 26 psi (1.8 Bar) pressure within 15 minutes:

- The tire is too badly damaged. Do not attempt to drive the vehicle further. Call for assistance.

NOTE: If the tire becomes over-inflated, press the Deflation Button to reduce the tire pressure to the recommended inflation pressure before continuing.

If the tire inflates to the recommended pressure or is at least 26 psi (1.8 Bar) pressure within 15 minutes:

1. Press the Power Button (4) to turn off the TIREFIT kit.
2. Remove the Speed Limit sticker from the top of the Sealant Bottle (1) and place the sticker on the instrument panel.
3. Immediately disconnect the Sealant Hose (6) from the valve stem, reinstall the cap on the fitting at the end of the hose, and place the TIREFIT kit in the vehicle storage location. Quickly proceed to (D) “Drive Vehicle”.

Downloaded from www.Manualslib.com manuals search engine

CAUTION!

- **The metal end fitting from Power Plug (8) may get hot after use, so it should be handled carefully.**
- **Failure to reinstall the cap on the fitting at the end of the Sealant Hose (6) can result in sealant contacting your skin, clothing, and the vehicle's interior. It can also result in sealant contacting internal TIREFIT kit components which may cause permanent damage to the kit.**

(D) Drive Vehicle:

Immediately after injecting sealant and inflating the tire, drive the vehicle 5 miles (8 km) or 10 minutes to ensure distribution of the TIREFIT Sealant within the tire. Do not exceed 55 mph (88 km/h).

WARNING!

TIREFIT is not a permanent flat tire repair. Have the tire inspected and repaired or replaced after using TIREFIT. Do not exceed 55 mph (88 km/h) until the tire is repaired or replaced. Failure to follow this warning can result in injuries that are serious or fatal to you, your passengers, and others around you.

(E) After Driving:

Pull over to a safe location. Refer to "Whenever You Stop to Use TIREFIT" before continuing.

1. Turn the Mode Select Knob (5) to the Air Mode position.
2. Uncoil the power plug and insert the plug into the vehicle's 12 Volt power outlet.

Downloaded from www.Manualslib.com manuals search engine

3. Uncoil the Air Pump Hose (7) (black in color) and screw the fitting at the end of hose (7) onto the valve stem.
4. Check the pressure in the tire by reading the Pressure Gauge (3).

If tire pressure is less than 19 psi (1.3 Bar), the tire is too badly damaged. Do not attempt to drive the vehicle further. Call for assistance.

If the tire pressure is 19 psi (1.3 Bar) or higher:

1. Press the Power Button (4) to turn on TIREFIT and inflate the tire to the pressure indicated on the tire and loading information label on the driver-side door opening.

NOTE: If the tire becomes over-inflated, press the Deflation Button to reduce the tire pressure to the recommended inflation pressure before continuing.

2. Disconnect the TIREFIT kit from the valve stem, reinstall the cap on the valve stem and unplug from 12 Volt outlet.
3. Place the TIREFIT kit in its proper storage area in the vehicle.
4. Have the tire inspected and repaired or replaced at the earliest opportunity at an authorized dealer or tire service center.
5. Replace the Sealant Bottle (1) and Sealant Hose (6) assembly at your authorized dealer as soon as possible. Refer to "(F) Sealant Bottle and Hose Replacement."

NOTE: When having the tire serviced, advise the authorized dealer or service center that the tire has been sealed using the TIREFIT service kit.

Downloaded from www.Manualslib.com manuals search engine

(F) Sealant Bottle And Hose Replacement:

1. Uncoil the Sealant Hose (6) (clear in color).
2. Locate the round Sealant Bottle release button in the recessed area under the sealant bottle.
3. Press the Sealant Bottle release button. The Sealant Bottle (1) will pop up. Remove the bottle and dispose of it accordingly.
4. Clean any remaining sealant from the TIREFIT housing.
5. Position the new Sealant Bottle (1) in the housing so that the Sealant Hose (6) aligns with the hose slot in the front of the housing. Press the bottle into the housing. An audible click will be heard indicating the bottle is locked into place.
6. Verify that the cap is installed on the fitting at the end of the Sealant Hose (6) and return the hose to its storage area (located on the bottom of the air pump).
7. Return the TIREFIT kit to its storage location in the vehicle.

JUMP-STARTING PROCEDURES

WARNING!

- **Take care to avoid the radiator cooling fan whenever the hood is raised. It can start anytime the ignition switch is ON. You can be hurt by the fan.**

(Continued)

Downloaded from www.Manualslib.com manuals search engine

WARNING! ***(Continued)***

- **Do not attempt to push or tow your vehicle to get it started. Vehicles equipped with an automatic transaxle cannot be started this way and may be damaged. Unburned fuel could enter the catalytic converter and once the engine has started, ignite and damage the converter and vehicle. If the vehicle has a discharged battery, booster cables may be used to obtain a start from another vehicle. This type of start can be dangerous if done improperly, so follow this procedure carefully.**
- **Wear eye protection and remove any metal jewelry such as watch bands or bracelets that might make an inadvertent electrical contact. You could be seriously injured.**

NOTE: The battery is located underneath an access panel inside the rear compartment on the left side of the vehicle. A remote battery terminal is located in the engine compartment for jump-starting.

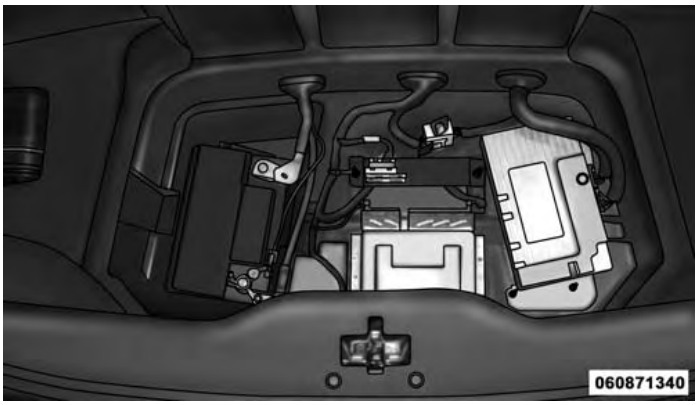

Battery Location

Downloaded from www.Manualslib.com manuals search engine

1. Wear eye protection and remove any metal jewelry such as watchbands or bracelets that might make an inadvertent electrical contact.
2. When boost is provided by a battery in another vehicle, park that vehicle within booster cable reach, but without allowing the vehicles touch one another.
3. Set the parking brake, place the transmission in NEUTRAL, and turn the ignition OFF on both vehicles.
4. Turn off the heater, radio, and all unnecessary electrical loads.
5. Remove the plastic fuse cover to gain access to the remote jump-start positive post **(+)** in the engine compartment. Refer to the following illustration for remote jump-starting connections.

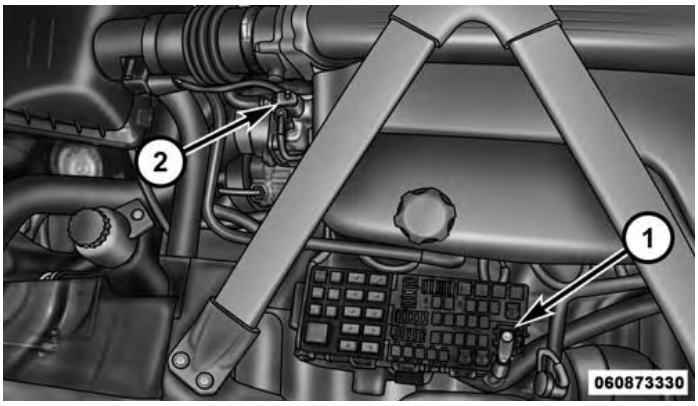

Remote Jump Start Connections

1 — Positive Battery Post (+)
2 — Negative Battery Post (-)

Downloaded from www.Manualslib.com manuals search engine

CAUTION!

Failure to follow these procedures could result in damage to the charging system of the booster vehicle or the discharged vehicle.

6. Connect the positive **(+)** end of the jumper cable to the remote positive **(+)** post of the discharged vehicle.
7. Connect the opposite end of the positive **(+)** jumper cable to the positive **(+)** post of the booster battery.
8. Connect the negative end **(-)** of the jumper cable to the negative **(-)** post of the booster battery.
9. Connect the opposite end of the negative **(-)** jumper cable to the remote negative **(-)** post of the vehicle with the discharged battery.

WARNING!

Do not connect the cable to the negative post (-) of the discharged battery. The resulting electrical spark could cause the battery to explode and could result in personal injury.

10. Start the engine in the vehicle that has the booster battery, let the engine idle a few minutes, and then start the engine in the vehicle with the discharged battery.

Once the engine is started, remove the jumper cables in the reverse sequence:

11. Disconnect the negative **(-)** jumper cable from the remote negative **(-)** post of the vehicle with the discharged battery.
12. Disconnect the negative end **(-)** of the jumper cable from the negative **(-)** post of the booster battery.

Downloaded from www.Manualslib.com manuals search engine

13. Disconnect the positive **(+)** jumper cable from the positive **(+)** post of the booster battery.
14. Disconnect the positive **(+)** end of the jumper cable from the remote positive **(+)** post of the discharged vehicle.

If frequent jump-starting is required to start your vehicle you should have the battery and charging system inspected at your authorized dealer.

CAUTION!

Accessories plugged into the vehicle power outlets draw power from the vehicle's battery, even when not in use (i.e., cellular phones, etc.). Eventually, if plugged in long enough without engine operation, the vehicle's battery will discharge sufficiently to degrade battery life and/or prevent the engine from starting.

FREEING A STUCK VEHICLE

If your vehicle becomes stuck in mud, sand, or snow, it can often be moved using a rocking motion. Turn your steering wheel right and left to clear the area around the front wheels. Then shift back and forth between 2nd gear and REVERSE, while gently pressing the accelerator. Use the least amount of pressure to maintain the rocking motion, without spinning the wheels, or racing the engine.

CAUTION!

- **When "rocking" a stuck vehicle by shifting between 2nd gear and REVERSE, do not spin the wheels faster than 15 mph (24 km/h), or drivetrain damage may result.**

(Continued)

Downloaded from www.Manualslib.com manuals search engine

CAUTION! *(Continued)*

- **Revving the engine or spinning the wheels too fast may lead to transmission or clutch overheating and failure. It can also damage the tires. Do not spin the wheels above 30 mph (48 km/h) while in gear (no transmission shifting occurring).**

WARNING!

Fast spinning tires can be dangerous. Forces generated by excessive wheel speeds may cause damage, or even failure, of the axle and tires. A tire could explode and injure someone. Do not spin your vehicle's wheels faster than 30 mph (48 km/h) or for longer than 30 seconds continuously without stopping when you are stuck. And do not let anyone near a spinning wheel, no matter what the speed.

TOWING A DISABLED VEHICLE

Do not tow with sling-type equipment. Only use flatbed equipment. Always comply with applicable state or local towing ordinances.

CAUTION!

Towing this vehicle in violation of the above requirements can cause severe transmission damage. Damage from improper towing is not covered under the New Vehicle Limited Warranty.

Downloaded from www.Manualslib.com manuals search engine

MAINTAINING YOUR VEHICLE

CONTENTS

- ENGINE COMPARTMENT — 8.4L 253
- ONBOARD DIAGNOSTIC SYSTEM (OBD II) . . .254
- EMISSIONS INSPECTION AND MAINTENANCE PROGRAMS 254
- REPLACEMENT PARTS 256
- DEALER SERVICE 256
- MAINTENANCE PROCEDURES 257
  - Engine Oil 257
  - Engine Oil Filter 259
  - Engine Air Cleaner Filter 259
  - Maintenance-Free Battery 260
  - Hibernation Mode 262
  - Air Conditioner Maintenance 263
  - Body Lubrication 264
  - Wiper Blades 265
  - Adding Washer Fluid 266
  - Exhaust System 266
  - Cooling System 269
  - Brake System 274
  - Manual Transmission 277

Downloaded from www.Manualslib.com manuals search engine

- Hydraulic Clutch 278
- Rear Axle 278
- Appearance Care And Protection From Corrosion 279

■ FUSES 284
- Power Distribution Center 284

■ VEHICLE STORAGE 290

■ REPLACEMENT BULBS 292

■ BULB REPLACEMENT 293
- Front Headlamp, Front Park/Turn Signal Lamp 293
- Front/Rear Side Marker Lamp 293
- Taillamp, Tail/Stop Lamp 294
- Rear Turn Signal Lamp 294
- Backup Lamps. 294

■ FLUID CAPACITIES 295

■ FLUIDS, LUBRICANTS AND GENUINE PARTS 296
- Engine 296
- Chassis 297

Downloaded from www.Manualslib.com manuals search engine

ENGINE COMPARTMENT — 8.4L

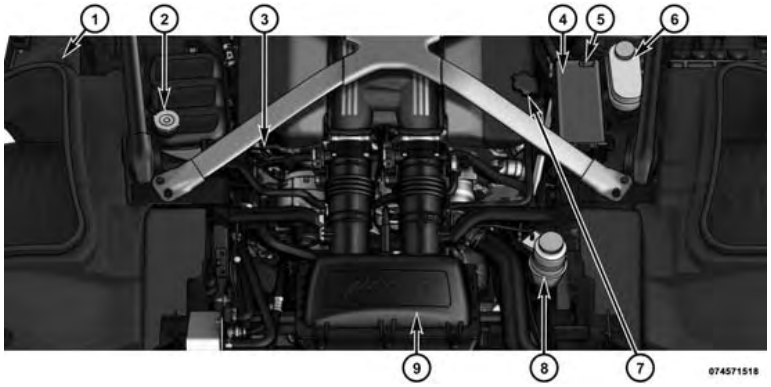

1 — Washer Fluid Reservoir
2 — Coolant Pressure Cap
3 — Engine Oil Dipstick
4 — Power Distribution Center
5 — Remote Jump Start Positive Battery Post
6 — Brake/Clutch Fluid Reservoir
7 — Engine Oil Fill
8 — Power Steering Fluid Reservoir
9 — Air Cleaner Filter

Downloaded from www.Manualslib.com manuals search engine

ONBOARD DIAGNOSTIC SYSTEM (OBD II)

To meet new government regulations and promote cleaner air, your vehicle is equipped with a sophisticated onboard diagnostic system called OBD II. This system monitors the performance of the emissions and engine control systems. When these systems are operating properly, your vehicle will provide excellent performance and fuel economy, as well as engine emissions well within current government regulations.

If any of these systems require service, the OBD II system will turn on the Malfunction Indicator Light. It will also store diagnostic codes and other information to assist your service technician in making repairs. Although your vehicle will usually be drivable and not need towing, see your authorized dealer for service as soon as possible.

CAUTION!

Prolonged driving with the light on could cause further damage to the emission control system. It could also affect fuel economy and driveability. The vehicle must be serviced before any state emissions tests can be performed.

If the light is flashing, severe catalytic converter damage and power loss will soon occur. Immediate service is required.

EMISSIONS INSPECTION AND MAINTENANCE PROGRAMS

In some localities, it may be a legal requirement to pass an inspection of your vehicle's emissions control system. Failure to pass could prevent vehicle registration.

For states that require an Inspection and Maintenance (I/M), this check verifies the "Malfunction

Downloaded from www.Manualslib.com manuals search engine

Indicator Light (MIL)" is functioning and is not on when the engine is running, and that the OBD II system is ready for testing.

Normally, the OBD II system will be ready. The OBD II system may **not** be ready if your vehicle was recently serviced, recently had a dead battery or a battery replacement. If the OBD II system should be determined not ready for the I/M test, your vehicle may fail the test.

Your vehicle has a simple ignition key-actuated test, which you can use prior to going to the test station. To check if your vehicle's OBD II system is ready, you must do the following:

1. Turn the ignition switch to the ON position, but do not crank or start the engine.
2. If you crank or start the engine, you will have to start this test over.
3. As soon as you turn the ignition switch to the ON position, you will see the MIL symbol come on as part of a normal bulb check.
4. Approximately 15 seconds later, one of two things will happen:

- The MIL will flash for about 10 seconds and then return to being fully illuminated until you turn OFF the ignition or start the engine. This means that your vehicle's OBD II system is **not ready** and you should **not** proceed to the I/M station.
- The MIL will not flash at all and will remain fully illuminated until you turn OFF the ignition or start the engine. This means that your vehicle's OBD II system is **ready** and you can proceed to the I/M station.

If your OBD II system is **not ready,** you should see your authorized dealer or repair facility. If your vehicle was recently serviced or had a battery failure or replacement,

Downloaded from www.Manualslib.com manuals search engine

you may need to do nothing more than drive your vehicle as you normally would in order for your OBD II system to update. A recheck with the above test routine may then indicate that the system is now ready.

Regardless of whether your vehicle's OBD II system is ready or not, if the MIL is illuminated during normal vehicle operation you should have your vehicle serviced before going to the I/M station. The I/M station can fail your vehicle because the MIL is on with the engine running.

REPLACEMENT PARTS

Use of genuine MOPAR® parts for normal/scheduled maintenance and repairs is highly recommended to ensure the designed performance. Damage or failures caused by the use of non-MOPAR® parts for maintenance and repairs will not be covered by the manufacturer's warranty.

DEALER SERVICE

Your authorized dealer has the qualified service personnel, special tools, and equipment to perform all service operations in an expert manner. Service Manuals are available which include detailed service information for your vehicle. Refer to these Service Manuals before attempting any procedure yourself.

NOTE: Intentional tampering with emissions control systems may void your warranty and could result in civil penalties being assessed against you.

WARNING!

You can be badly injured working on or around a motor vehicle. Only do service work for which you have the knowledge and the proper equipment. If you have any doubt about your ability to perform a service job, take your vehicle to a competent mechanic.

Downloaded from www.Manualslib.com manuals search engine

MAINTENANCE PROCEDURES

The pages that follow contain the **required** maintenance services determined by the engineers who designed your vehicle.

Besides those maintenance items specified in the fixed maintenance schedule, there are other components which may require servicing or replacement in the future.

CAUTION!

- **Failure to properly maintain your vehicle or perform repairs and service when necessary could result in more costly repairs, damage to other components or negatively impact vehicle performance. Immediately have potential malfunctions examined by an authorized dealer or qualified repair center.**

(Continued)

CAUTION! *(Continued)*

- **Your vehicle has been built with improved fluids that protect the performance and durability of your vehicle and also allow extended maintenance intervals. Do not use chemical flushes in these components as the chemicals can damage your engine, transmission, power steering or air conditioning. Such damage is not covered by the New Vehicle Limited Warranty. If a flush is needed because of component malfunction, use only the specified fluid for the flushing procedure.**

Engine Oil

Checking Oil Level

To assure proper engine lubrication, the engine oil must be maintained at the correct level. Check the oil level at regular intervals, such as every fuel stop. The best time to

Downloaded from www.Manualslib.com manuals search engine

check the oil level is approximately five minutes after a fully warmed engine is turned off or before starting the engine after it has sat overnight.

Checking the oil while the vehicle is on level ground also will improve the accuracy of the oil level readings. Add oil only when the level is below the SAFE mark.

CAUTION!

Overfilling or underfilling will cause oil aeration or loss of oil pressure. This could damage your engine.

Change Engine Oil

Refer to the "Maintenance Schedule" for the proper maintenance intervals.

NOTE: Under no circumstances should oil change intervals exceed 6,000 miles (10,000 km) or six months, whichever occurs first.

Engine Oil Selection

For best performance and maximum protection under all types of operating conditions, the manufacturer only recommends full synthetic engine oils that meet the requirements of Chrysler Material Standard MS-10725.

The manufacturer recommends the use of a full synthetic 0W-40 or equivalent engine oil.

CAUTION!

Do not use chemical flushes in your engine oil as the chemicals can damage your engine. Such damage is not covered by the New Vehicle Limited Warranty.

Engine Oil Viscosity (SAE Grade)

SAE 0W-40 engine oil is preferred for use in all operating temperatures.

Downloaded from www.Manualslib.com manuals search engine

The engine oil filler cap also shows the recommended engine oil viscosity for your engine. For information on engine oil filler cap location, refer to "Engine Compartment" in "Maintaining Your Vehicle" for further information.

Materials Added To Engine Oil

The manufacturer strongly recommends against the addition of any additives (other than leak detection dyes) to the engine oil. Engine oil is an engineered product and its performance may be impaired by supplemental additives.

Disposing Of Used Engine Oil And Oil Filters

Care should be taken in disposing of used engine oil and oil filters from your vehicle. Used oil and oil filters, indiscriminately discarded, can present a problem to the environment. Contact your authorized dealer, service station or governmental agency for advice on how and where used oil and oil filters can be safely discarded in your area.

Engine Oil Filter

The engine oil filter should be replaced with a new filter at every engine oil change.

Engine Oil Filter Selection

This manufacturer's engines have a full-flow type oil filter. Use a filter of this type for replacement. The quality of replacement filters varies considerably. Only high quality filters should be used to assure most efficient service. MOPAR® engine oil filters are a high quality oil filter and are recommended.

Engine Air Cleaner Filter

Refer to the "Maintenance Schedule" for the proper maintenance intervals.

Downloaded from www.Manualslib.com manuals search engine

WARNING!

The air induction system (air cleaner, hoses, etc.) can provide a measure of protection in the case of engine backfire. Do not remove the air induction system (air cleaner, hoses, etc.) unless such removal is necessary for repair or maintenance. Make sure that no one is near the engine compartment before starting the vehicle with the air induction system (air cleaner, hoses, etc.) removed. Failure to do so can result in serious personal injury.

Engine Air Cleaner Filter Selection

The quality of replacement engine air cleaner filters varies considerably. Only high quality filters should be used to assure most efficient service. MOPAR® engine air cleaner filters are a high quality filter and are recommended.

CAUTION!

Some aftermarket air cleaners and filters can cause mass air flow sensor issues which can lead to a driveability problem or a limp home condition.

Maintenance-Free Battery

The top of the maintenance-free battery is vented, and must be replaced with a vented battery.

The battery is located underneath an access panel inside the rear compartment on the left side of the vehicle. A remote battery terminal is located in the engine compartment for jump-starting. Refer to "Jump-Starting Procedures" in "What To Do In Emergencies" for further information.

To gain access to the battery, remove the floor portion of the rear compartment carpet.

Downloaded from www.Manualslib.com manuals search engine

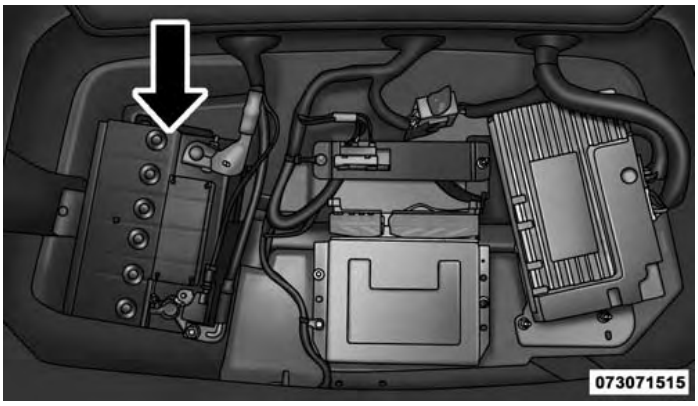

Battery Location

WARNING!

- **Battery fluid is a corrosive acid solution and can burn or even blind you. Do not allow battery fluid to contact your eyes, skin, or clothing. Do not lean over a battery when attaching clamps. If acid splashes in eyes or on skin, flush the area immediately with large amounts of water.**
- **Battery gas is flammable and explosive. Keep flame or sparks away from the battery. Do not use a booster battery or any other booster source with an output greater than 12 Volts. Do not allow cable clamps to touch each other.**
- **Battery posts, terminals, and related accessories contain lead and lead compounds. Wash hands after handling.**

Downloaded from www.Manualslib.com manuals search engine

CAUTION!

- **It is essential when replacing the cables on the battery that the positive cable is attached to the positive post and the negative cable is attached to the negative post. Battery posts are marked positive (+) and negative (-) and are identified on the battery case. Cable clamps should be tight on the terminal posts and free of corrosion.**
- **If a "fast charger" is used while the battery is in the vehicle, disconnect both vehicle battery cables before connecting the charger to the battery. Do not use a "fast charger" to provide starting voltage.**

Hibernation Mode

The Hibernation mode feature conserves battery power when storing the vehicle. It allows for up to three months of storage time without losing radio and engine controller memory. Using this feature is an alternative to disconnecting the battery.

NOTE: This vehicle is designed to sit in storage with a fully charged battery for up to 30 days. If you plan to store the vehicle longer than 30 days, we recommend doing one of the following:

- Disconnect the battery.
- Use the battery charger.
- Put the vehicle into Battery Save mode (3-month charge).

Downloaded from www.Manualslib.com manuals search engine

To Activate Hibernation Mode

1. Cycle the ignition switch to (ACCY).
2. Select Hibernation mode within the Electronic Vehicle Information Center (EVIC).
3. Press and hold the right arrow button on the steering wheel controls for 1 second. Vehicle will countdown from ten seconds and enter Hibernation Mode.

NOTE: You may press the right arrow button on the steering wheel controls during the countdown to abort Hibernation Mode.

To Deactivate Hibernation Mode

1. Press the RKE UNLOCK button to unlock the vehicle.
2. Press the ignition switch to the ON/RUN position.

Air Conditioner Maintenance

For best possible performance, your air conditioner should be checked and serviced by an authorized dealer at the start of each warm season. This service should include cleaning of the condenser fins and a performance test. Drive belt tension should also be checked at this time.

CAUTION!

Do not use chemical flushes in your air conditioning system as the chemicals can damage your air conditioning components. Such damage is not covered by the New Vehicle Limited Warranty.

Downloaded from www.Manualslib.com manuals search engine

WARNING!

- **Use only refrigerants and compressor lubricants approved by the manufacturer for your air conditioning system. Some unapproved refrigerants are flammable and can explode, injuring you. Other unapproved refrigerants or lubricants can cause the system to fail, requiring costly repairs. Refer to Warranty Information Book, located on the DVD, for further warranty information.**
- **The air conditioning system contains refrigerant under high pressure. To avoid risk of personal injury or damage to the system, adding refrigerant or any repair requiring lines to be disconnected should be done by an experienced technician.**

Refrigerant Recovery And Recycling

R-134a Air Conditioning Refrigerant is a hydrofluorocarbon (HFC) that is endorsed by the Environmental Protection Agency and is an ozone-saving product. However, the manufacturer recommends that air conditioning service be performed by authorized dealer or other service facilities using recovery and recycling equipment.

NOTE: Use only manufacturer approved A/C system sealers, stop leak products, seal conditioners, compressor oil, and refrigerants.

Body Lubrication

Locks and all body pivot points, including such items as seat tracks, door hinge pivot points and rollers, liftgate, tailgate, sliding doors and hood hinges, should be lubricated periodically with a lithium based grease, such as MOPAR® Spray White Lube to assure quiet, easy operation and to protect against rust and wear. Prior to the application of any lubricant, the parts concerned should

Downloaded from www.Manualslib.com manuals search engine

be wiped clean to remove dust and grit; after lubricating excess oil and grease should be removed. Particular attention should also be given to hood latching components to ensure proper function. When performing other underhood services, the hood latch, release mechanism and safety catch should be cleaned and lubricated.

The external lock cylinders should be lubricated twice a year, preferably in the Fall and Spring. Apply a small amount of a high quality lubricant, such as MOPAR® Lock Cylinder Lubricant directly into the lock cylinder.

Wiper Blades

Clean the rubber edges of the wiper blades and the windshield and rear window periodically with a sponge or soft cloth and a mild nonabrasive cleaner. This will remove accumulations of salt, waxes, or road film, and help reduce streaking and smearing.

Operation of the wipers on dry glass for long periods may cause deterioration of the wiper blades. Always use washer fluid when using the wipers to remove salt or dirt from a dry windshield or rear window.

Avoid using the wiper blades to remove frost or ice from the windshield or rear window. Make sure that they are not frozen to the glass before turning them on to avoid damaging the blade. Keep the blade rubber out of contact with petroleum products such as engine oil, gasoline, etc.

NOTE: Life expectancy of wiper blades varies depending on geographical area and frequency of use. Poor performance of blades may be present with chattering, marks, water lines or wet spots. If any of these conditions are present, clean the wiper blades or replace as necessary.

Downloaded from www.Manualslib.com manuals search engine

Adding Washer Fluid

The windshield washer fluid reservoir is located in the front of the engine compartment on the passenger side of the vehicle. Be sure to check the fluid level in the reservoir at regular intervals. Fill the reservoir with windshield washer solvent (not engine coolant (anti-freeze) and operate the system for a few seconds to flush out the residual water.

WARNING!

Commercially available windshield washer solvents are flammable. They could ignite and burn you. Care must be exercised when filling or working around the washer solution.

Exhaust System

The best protection against carbon monoxide entry into the vehicle body is a properly maintained engine exhaust system.

If you notice a change in the sound of the exhaust system; or if the exhaust fumes can be detected inside the vehicle; or when the underside or rear of the vehicle is damaged; have an authorized technician inspect the complete exhaust system and adjacent body areas for broken, damaged, deteriorated, or mispositioned parts. Open seams or loose connections could permit exhaust fumes to seep into the passenger compartment. In addition, have the exhaust system inspected each time the vehicle is raised for lubrication or oil change. Replace as required.

Downloaded from www.Manualslib.com manuals search engine

WARNING!

- Exhaust gases can injure or kill. They contain carbon monoxide (CO), which is colorless and odorless. Breathing it can make you unconscious and can eventually poison you. To avoid breathing CO, refer to "Safety Tips/Exhaust Gas" in "Things To Know Before Starting Your Vehicle" for further information.
- A hot exhaust system can start a fire if you park over materials that can burn. Such materials might be grass or leaves coming into contact with your exhaust system. Do not park or operate your vehicle in areas where your exhaust system can contact anything that can burn.

CAUTION!

- The catalytic converter requires the use of unleaded fuel only. Leaded gasoline will destroy the effectiveness of the catalyst as an emissions control device and may seriously reduce engine performance and cause serious damage to the engine.
- Damage to the catalytic converter can result if your vehicle is not kept in proper operating condition. In the event of engine malfunction, particularly involving engine misfire or other apparent loss of performance, have your vehicle serviced promptly. Continued operation of your vehicle with a severe malfunction could cause the converter to overheat, resulting in possible damage to the converter and vehicle.

Downloaded from www.Manualslib.com manuals search engine

Under normal operating conditions, the catalytic converter will not require maintenance. However, it is important to keep the engine properly tuned to assure proper catalyst operation and prevent possible catalyst damage.

NOTE: Intentional tampering with emissions control systems can result in civil penalties being assessed against you.

In unusual situations involving grossly malfunctioning engine operation, a scorching odor may suggest severe and abnormal catalyst overheating. If this occurs, stop the vehicle, turn off the engine and allow it to cool. Service, including a tune-up to manufacturer's specifications, should be obtained immediately.

To minimize the possibility of catalytic converter damage:

- Do not shut off the engine or interrupt the ignition, when the transmission is in gear and the vehicle is in motion.
- Do not try to start the engine by pushing or towing the vehicle.
- Do not idle the engine with any spark plug wires disconnected or removed, such as when diagnostic testing, or for prolonged periods during very rough idle or malfunctioning operating conditions.

Downloaded from www.Manualslib.com manuals search engine

Cooling System

WARNING!

- **When working near the radiator cooling fan, disconnect the fan motor lead or turn the ignition switch to the LOCK position. The fan is temperature controlled and can start at any time the ignition switch is in the ON position.**
- **You or others can be badly burned by hot engine coolant (antifreeze) or steam from your radiator. If you see or hear steam coming from under the hood, do not open the hood until the radiator has had time to cool. Never try to open a cooling system pressure cap when the radiator is hot.**

Coolant Checks

Check engine coolant (antifreeze) protection every 12 months (before the onset of freezing weather, where applicable). If the engine coolant (antifreeze) is dirty or rusty in appearance, the system should be drained, flushed, and refilled with fresh engine coolant (antifreeze). Check the front of the A/C condenser/radiator for any accumulation of bugs, leaves, etc. If dirty, clean by gently spraying water from a garden hose vertically down the face of the condenser/radiator.

Check the coolant recovery bottle tubing for brittle rubber, cracking, tears, cuts, and tightness of the connection at the bottle and radiator. Inspect the entire system for leaks.

With the engine at normal operating temperature (but not running), check the cooling system pressure cap for proper vacuum sealing by draining a small amount of engine coolant (antifreeze) from the radiator drain cock.

Downloaded from www.Manualslib.com manuals search engine

If the cap is sealing properly, the engine coolant (antifreeze) will begin to drain from the coolant recovery bottle. DO NOT REMOVE THE COOLANT PRESSURE CAP WHEN THE COOLING SYSTEM IS HOT.

Cooling System – Drain, Flush, And Refill

If the engine coolant (antifreeze) is dirty or contains visible sediment, clean and flush with OAT coolant (antifreeze) that meets the requirements of Chrysler Material Standard MS-12106.

Refer to the "Maintenance Schedule" for the proper maintenance intervals.

Selection Of Coolant

Refer to "Fluids, Lubricants, and Genuine Parts" in "Maintaining Your Vehicle" for further information.

CAUTION!

- **Mixing of engine coolant (antifreeze) other than specified Organic Additive Technology (OAT) engine coolant (antifreeze), may result in engine damage and may decrease corrosion protection. Organic Additive Technology (OAT) engine coolant is different and should not be mixed with Hybrid Organic Additive Technology (HOAT) engine coolant (antifreeze) or any "globally compatible" coolant (antifreeze). If a non-OAT engine coolant (antifreeze) is introduced into the cooling system in an emergency, it should be flushed with OAT coolant and replaced with the specified OAT engine coolant (antifreeze) as soon as possible.**

(Continued)

Downloaded from www.Manualslib.com manuals search engine

CAUTION! ***(Continued)***

- **Do not use water alone or alcohol-based engine coolant (antifreeze) products. Do not use additional rust inhibitors or antirust products, as they may not be compatible with the radiator engine coolant and may plug the radiator.**
- **This vehicle has not been designed for use with propylene glycol-based engine coolant (antifreeze). Use of propylene glycol-based engine coolant (antifreeze) is not recommended.**

Adding Coolant

Your vehicle has been built with an improved engine coolant (OAT coolant conforming to MS-12106) that allows extended maintenance intervals. This engine coolant (antifreeze) can be used up to ten years or 150,000 miles (240,000 km) before replacement. To prevent reducing this extended maintenance period, it is important that you use the same engine coolant (OAT coolant conforming to MS-12106) throughout the life of your vehicle.

Please review these recommendations for using Organic Additive Technology (OAT) engine coolant (antifreeze) that meets the requirements of Chrysler Material Standard MS-12106. When adding engine coolant (antifreeze):

- We recommend using MOPAR® Antifreeze/Coolant 10 Year/150,000 Mile Formula OAT (Organic Additive Technology) that meets the requirements of Chrysler Material Standard MS-12106.
- Mix a minimum solution of 50% OAT engine coolant that meets the requirements of Chrysler Material Standard MS-12106 and distilled water. Use higher concentrations (not to exceed 70%) if temperatures below –34° F (–37° C) are anticipated.

Downloaded from www.Manualslib.com manuals search engine

- Use only high purity water such as distilled or deionized water when mixing the water/engine coolant (antifreeze) solution. The use of lower quality water will reduce the amount of corrosion protection in the engine cooling system.

Please note that it is the owner's responsibility to maintain the proper level of protection against freezing according to the temperatures occurring in the area where the vehicle is operated.

NOTE: Mixing engine coolant (antifreeze) types is not recommended and can result in cooling system damage. Drain, flush, and refill as soon as possible to avoid damage if coolant types are mixed in an emergency.

Cooling System Pressure Cap

The cap must be fully tightened to prevent loss of engine coolant (antifreeze), and to insure that engine coolant (antifreeze) will return to the radiator from the coolant recovery bottle.

The cap should be inspected and cleaned if there is any accumulation of foreign material on the sealing surfaces.

WARNING!

- **The warning words "DO NOT OPEN HOT" on the cooling system pressure cap are a safety precaution. Never add engine coolant (antifreeze) when the engine is overheated. Do not loosen or remove the cap to cool an overheated engine. Heat causes pressure to build up in the cooling system. To prevent scalding or injury, do not remove the pressure cap while the system is hot or under pressure.**
- **Do not use a pressure cap other than the one specified for your vehicle. Personal injury or engine damage may result.**

Downloaded from www.Manualslib.com manuals search engine

Disposal Of Used Engine Coolant

Used ethylene glycol-based engine coolant (antifreeze) is a regulated substance requiring proper disposal. Check with your local authorities to determine the disposal rules for your community. To prevent ingestion by animals or children, do not store ethylene glycol-based engine coolant (antifreeze) in open containers or allow it to remain in puddles on the ground. If ingested by a child or pet, seek emergency assistance immediately. Clean up any ground spills immediately.

Coolant Level

The coolant bottle provides a quick visual method for determining that the coolant level is adequate. With the engine OFF and cold, the level of the engine coolant (antifreeze) in the bottle should be between the ranges indicated on the bottle.

The radiator normally remains completely full, so there is no need to remove the radiator cap unless checking for engine coolant (antifreeze) freeze point or replacing coolant. Advise your service attendant of this. As long as the engine operating temperature is satisfactory, the coolant bottle need only be checked once a month.

When additional engine coolant (antifreeze) is needed to maintain the proper level, only OAT coolant that meets the requirements of Chrysler Material Standard MS-12106 should be added to the coolant bottle. Do not overfill.

Points To Remember

NOTE: When the vehicle is stopped after a few miles/kilometers of operation, you may observe vapor coming from the front of the engine compartment. This is normally a result of moisture from rain, snow, or high humidity accumulating on the radiator and being vaporized when the thermostat opens, allowing hot engine coolant (antifreeze) to enter the radiator.

Downloaded from www.Manualslib.com manuals search engine

If an examination of your engine compartment shows no evidence of radiator or hose leaks, the vehicle may be safely driven. The vapor will soon dissipate.

- Do not overfill the coolant expansion bottle.
- Check the coolant freeze point in the radiator and in the coolant expansion bottle. If engine coolant (antifreeze) needs to be added, the contents of the coolant expansion bottle must also be protected against freezing.
- If frequent engine coolant (antifreeze) additions are required, the cooling system should be pressure tested for leaks.
- Maintain engine coolant (antifreeze) concentration at a minimum of 50% OAT coolant (conforming to MS-12106) and distilled water for proper corrosion protection of your engine which contains aluminum components.
- Make sure that the coolant expansion bottle overflow hoses are not kinked or obstructed.
- Keep the front of the radiator clean. If your vehicle is equipped with air conditioning, keep the front of the condenser clean.
- Do not change the thermostat for Summer or Winter operation. If replacement is ever necessary, install ONLY the correct type thermostat. Other designs may result in unsatisfactory engine coolant (antifreeze) performance, poor gas mileage, and increased emissions.

Brake System

In order to assure brake system performance, all brake system components should be inspected periodically. Refer to “Maintenance Schedule” for the proper maintenance intervals.

Downloaded from www.Manualslib.com manuals search engine

WARNING!

Riding the brakes can lead to brake failure and possibly an accident. Driving with your foot resting or riding on the brake pedal can result in abnormally high brake temperatures, excessive lining wear, and possible brake damage. You would not have your full braking capacity in an emergency.

Master Cylinder – Brake Fluid Level Check

Check the fluid level in the master cylinder immediately if the brake system warning light indicates system failure.

Check the fluid level in the master cylinder when performing underhood services.

Clean the top of the master cylinder area before removing the cap. If necessary, add fluid to bring the fluid level up to the requirements described on the brake fluid reservoir.

Overfilling of fluid is not recommended because it may cause leaking in the system.

With disc brakes, fluid level can be expected to fall as the brake pads wear. However, low fluid level may be caused by a leak and a checkup may be needed.

Use only the manufacturer's recommended brake fluid. Refer to "Fluids, Lubricants, and Genuine Parts" in "Maintaining Your Vehicle" for further information. Use of a brake fluid that may have a lower initial boiling point or unidentified as to specification, may result in sudden brake failure during hard prolonged braking.

Downloaded from www.Manualslib.com manuals search engine

WARNING!

- **Use only manufacturer's recommended brake fluid. Refer to "Fluids, Lubricants, and Genuine Parts" in "Maintaining Your Vehicle" for further information. Using the wrong type of brake fluid can severely damage your brake system and/or impair its performance. The proper type of brake fluid for your vehicle is also identified on the original factory installed hydraulic master cylinder reservoir.**

(Continued)

WARNING! ***(Continued)***

- **To avoid contamination from foreign matter or moisture, use only new brake fluid or fluid that has been in a tightly closed container. Keep the master cylinder reservoir cap secured at all times. Brake fluid in a open container absorbs moisture from the air resulting in a lower boiling point. This may cause it to boil unexpectedly during hard or prolonged braking, resulting in sudden brake failure. This could result in a accident.**
- **Overfilling the brake fluid reservoir can result in spilling brake fluid on hot engine parts, causing the brake fluid to catch fire. Brake fluid can also damage painted and vinyl surfaces, care should be taken to avoid its contact with these surfaces.**

(Continued)

Downloaded from www.Manualslib.com manuals search engine

WARNING! *(Continued)*

- **Do not allow petroleum based fluid to contaminate the brake fluid. Brake seal components could be damaged, causing partial or complete brake failure. This could result in an accident.**

Change Brake Fluid

Brake fluid will tend to absorb moisture from the atmosphere over time. If the fluid becomes contaminated with water, brake performance will deteriorate. Therefore, the brake fluid must be changed at the intervals specified in the "Maintenance Schedule." Refer to "Maintenance Schedule" for further information. See your authorized dealer for service.

Manual Transmission

Transmission Fluid Level Check

Check the fluid in the transmission when performing other underbody services.

Check the fluid level by removing the fill plug located on the left side of the transmission. The fluid level should be approximately 1/4 in (6.4 mm) below the bottom of the fill hole. Add fluid, if necessary, to maintain the proper level. Refer to "Fluids, Lubricants, and Genuine Parts" in "Maintaining Your Vehicle" for further information.

NOTE: DO NOT overfill transmission, damage can occur.

CAUTION!

Using a transmission fluid other than the manufacturer's recommended fluid may cause deterioration

(Continued)

Downloaded from www.Manualslib.com manuals search engine

CAUTION! ***(Continued)***

in transmission shift quality and/or damage to the transmission. Refer to "Fluids, Lubricants, and Genuine Parts" in "Maintaining Your Vehicle" for fluid specifications.

Change Transmission Fluid

Refer to "Maintenance Schedule" for the proper maintenance intervals. If contaminated with water, change the fluid immediately. See your authorized dealer for service.

Hydraulic Clutch

Master Cylinder – Clutch Fluid Level Check

The clutch hydraulic system is fed by a segregated volume of fluid within the brake system master cylinder reservoir. In the event of leakage or wear, use only the manufacturer's recommended brake fluid. Refer to "Fluids, Lubricants, and Genuine Parts" in "Maintaining Your Vehicle" for further information.

Rear Axle

Axle Lubricant Level Check

Check the exterior of the axle for evidence of gear oil leakage every 12 months or 6,000 miles (10 000 km). This check should be made with the vehicle level and on the ground or raised on an axle and wheel type hoist. The axle lubricant level should be between the bottom of the filler plug and a point approximately 3/8 inch (9.5 mm) below the filler plug. If adding axle lubricant, use only the manufacturer's recommended axle lubricant. Refer to "Fluids, Lubricants, and Genuine Parts" in "Maintaining Your Vehicle" for further information.

Downloaded from www.Manualslib.com manuals search engine

CAUTION!

Using axle fluid other than the manufactured recommended fluid may cause a shudder/noise issue. refer to "Fluids Lubes and Genuine Parts" in " Maintaining Your Vehicle" for further information.

Change Axle Lubricant

Refer to "Maintenance Schedule" for the proper maintenance intervals. Change the lubricant immediately if contaminated with water. See your authorized dealer for service.

Appearance Care And Protection From Corrosion

Protection Of Body And Paint From Corrosion

Vehicle body care requirements vary according to geographic locations and usage. Chemicals that make roads passable in snow and ice, and chemicals that are sprayed on trees and road surfaces during other seasons, are highly corrosive to the metal in your vehicle. Outside parking, which exposes your vehicle to airborne contaminants, road surfaces on which the vehicle is operated, extreme hot or cold weather and other extreme conditions will have an adverse effect on paint, metal trim, and underbody protection.

The following maintenance recommendations will enable you to obtain maximum benefit from the corrosion resistance built into your vehicle.

Washing

- Wash your vehicle regularly. Always wash your vehicle in the shade using MOPAR® Car Wash, or a mild car wash soap, and rinse the panels completely with clear water.
- If insects, tar, or other similar deposits have accumulated on your vehicle, use MOPAR® Super Kleen Bug and Tar Remover to remove.

Downloaded from www.Manualslib.com manuals search engine

- Use a high quality cleaner wax, such as MOPAR® Cleaner Wax to remove road film, stains and to protect your paint finish. Take care never to scratch the paint.
- Avoid using abrasive compounds and power buffing that may diminish the gloss or thin out the paint finish.

CAUTION!

- **Do not use abrasive or strong cleaning materials such as steel wool or scouring powder that will scratch metal and painted surfaces.**
- **Use of power washers exceeding 1,200 psi (8 274 kPa) can result in damage or removal of paint and decals.**

Wheel And Wheel Trim Care

- All wheels and wheel trim, especially aluminum and chrome plated wheels, should be cleaned regularly with a mild soap and water to prevent corrosion.
- To remove heavy soil and/or excessive brake dust, use MOPAR® Wheel Cleaner.

CAUTION!

Do not use scouring pads, steel wool, a bristle brush, or metal polishes. Do not use oven cleaner. These products may damage the wheel's protective finish. Avoid automatic car washes that use acidic solutions or harsh brushes that may damage the wheel's protective finish. Only MOPAR® Wheel Cleaner or equivalent is recommended.

Downloaded from www.Manualslib.com manuals search engine

Interior Care

Use MOPAR® Total Clean to clean fabric upholstery and carpeting.

Use MOPAR® Total Clean to clean vinyl upholstery.

MOPAR® Total Clean is specifically recommended for leather upholstery.

Your leather upholstery can be best preserved by regular cleaning with a damp soft cloth. Small particles of dirt can act as an abrasive and damage the leather upholstery and should be removed promptly with a damp cloth. Stubborn soils can be removed easily with a soft cloth and MOPAR® Total Clean. Care should be taken to avoid soaking your leather upholstery with any liquid. Please do not use polishes, oils, cleaning fluids, solvents, detergents, or ammonia-based cleaners to clean your leather upholstery. Application of a leather conditioner is not required to maintain the original condition.

WARNING!

Do not use volatile solvents for cleaning purposes. Many are potentially flammable, and if used in closed areas they may cause respiratory harm.

Leather or Vinyl Seat/Trim Care and Cleaning

Leather is best preserved by regular cleaning with a damp soft cloth. Small particles of dirt can act as an abrasive and damage the leather surface and should be removed immediately with a damp cloth. Stubborn soils can be removed easily with a soft cloth and MOPAR® Total Clean or equivalent. Care should be taken to avoid soaking the leather with any liquid. Please do not use polishes, oils, cleaning fluids, solvents, detergents, or ammonia-based cleaners to clean the leather. Application of a leather conditioner is not required to maintain the original condition.

Downloaded from www.Manualslib.com manuals search engine

Glass Surfaces

All glass surfaces should be cleaned on a regular basis with MOPAR® Glass Cleaner, or any commercial household-type glass cleaner. Never use an abrasive type cleaner. Use caution when cleaning the inside rear window equipped with electric defrosters or the right rear quarter window equipped with the radio antenna. Do not use scrapers or other sharp instrument that may scratch the elements.

When cleaning the rear view mirror, spray cleaner on the towel or rag that you are using. Do not spray cleaner directly on the mirror.

Cleaning Plastic Instrument Cluster Lenses

The lenses in front of the instruments in this vehicle are molded in clear plastic. When cleaning the lenses, care must be taken to avoid scratching the plastic.

1. Clean with a wet soft rag. A mild soap solution may be used, but do not use high alcohol content or abrasive cleaners. If soap is used, wipe clean with a clean damp rag.
2. Dry with a soft cloth.

Seat Belt Maintenance

Do not bleach, dye or clean the belts with chemical solvents or abrasive cleaners. This will weaken the fabric. Sun damage can also weaken the fabric.

If the belts need cleaning, use a mild soap solution or lukewarm water. Do not remove the belts from the car to wash them. Dry with a soft cloth.

Replace the belts if they appear frayed or worn or if the buckles do not work properly.

Downloaded from www.Manualslib.com manuals search engine

Aero Group — If Equipped

Please review all of the precautionary notes regarding the Aero Group option.

Front Splitter

The front splitter will not flex or compress against impacts from the front. If an impact does occur, have the splitter inspected. A cracked or delaminated splitter should be replaced.

Front Splitter

Always leave ample room and be sure to educate anyone you allow to operate the vehicle.

Downloaded from www.Manualslib.com manuals search engine

CAUTION!

Use care when approaching parking blocks, tall speed bumps and garage curbs. These surfaces can damage your splitter.

Use caution when driving up to sloped surfaces or over speed bumps. Approaching a speed bump or a slope at a slight angle may improve your clearance.

CAUTION!

- **Hard contact with steep ramps may cause damage to your splitter.**
- **Replace rub strips when they are worn down to 3/8 inch (10 mm) on the front edge. This will avoid damage to the carbon fiber panel**

FUSES

Power Distribution Center

The Power Distribution Center is located in the engine compartment on the driver's side of the vehicle. This center contains fuses and relays.

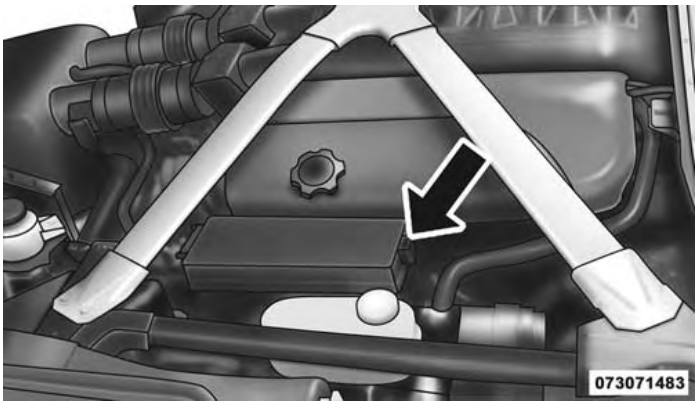

Power Distribution Center

Downloaded from www.Manualslib.com manuals search engine

Cavity	Relay	Cartridge Fuse	Mini-Fuse	Description
3	—	40 Amp Green	—	Rad Fan
4	—	40 Amp Green	—	Rad Fan Rly High
5	—	40 Amp Green	—	ABS/ESP Pump Feed
6	—	40 Amp Green	—	Starter
7	—	40 Amp Green	—	CBC (Ext. Lighting #1)
8	—	40 Amp Green	—	CBC (Ext. Lighting #2)
9	—	30 Amp Pink	—	CBC (Int. Lighting, washer)
10	—	30 Amp Pink	—	CBC (Power Lock)
11	—	Jumper Black	—	B+ Jumper
12	—	25 Amp Natural	—	ABS/ESP Valve Feed
13	—	—	20 Amp Yellow	Horn
14	—	—	10 Amp Red	A/C Clutch
15	—	—	10 Amp Red	Diagnostic, Mirror, Fuel Door, Stop Switch
16	—	—	15 Amp Blue	KIN, RF Hub

Downloaded from www.Manualslib.com manuals search engine

Cavity	Relay	Cartridge Fuse	Mini-Fuse	Description
17	—	—	25 Amp circuit breaker	Power Seats
18	—	30 Amp Pink	—	Driver Door Mod
19	—	30 Amp Pink	—	Passenger Door Mod
20	—	30 Amp Pink	—	EBL
21	—	20 Amp Blue	—	Wiper
22	—	—	—	B+ Jumper
23	—	Jumper Black	—	B+ Jumper
24	—	—	25 Amp Natural	PCM- Powertrain Control Module
25	—	—	25 Amp Natural	Fuel Pump
26	—	—	20 Amp Yellow	ASD #1
27	—	—	20 Amp Yellow	ASD #2
28	—	—	—	Spare
29	—	40 Amp Green	—	HVAC Blower

Downloaded from www.Manualslib.com manuals search engine

Cavity	Relay	Cartridge Fuse	Mini-Fuse	Description
30	—	20 Amp Yellow	—	RR Power Outlet, Adj. Pedals, UCI
31	—	—	—	B+ Jumper
32	—	Jumper Black	—	B+ Jumper
33	—	20 Amp Yellow	—	Spare
34	—	—	—	B+ Jumper
35	—	Jumper Black	—	Spare
36	—	—	10 Amp Red	ORC Mod Run
37	—	—	15 Amp Blue	Cluster, Mirror, Camera
38	—	—	20 Amp Yellow	Active Damping Suspension
39	—	—	10 Amp Red	HVAC Module, In Car Temp
40	—	—	15 Amp Blue	Radio
41	G8VA	—	—	Run/Start
42	G8VA	—	—	Fuel Door

Downloaded from www.Manualslib.com manuals search engine

Cavity	Relay	Cartridge Fuse	Mini-Fuse	Description
43AC (Forward Fuse)	—	—	10 Amp Red	SCCM
43BE (Rearward Fuse)	—	—	10 Amp Red	Corax
44BE (Rearward Fuse)	—	—	10 Amp Red	IBS
45	—	—	10 Amp Red	PCM- Powertrain Control Module
46	—	—	10 Amp Red	ESP Module
47	—	—	10 Amp Red	ORC Module
48	—	—	10 Amp Red	SCCM
49	—	—	25 Amp Natural	Amplifier
50	HC Micro	—	—	Rad Fan
51	HC Micro	—	—	Rad Fan Relay SER/PAR

Downloaded from www.Manualslib.com manuals search engine

Cavity	Relay	Cartridge Fuse	Mini-Fuse	Description
52	HC Micro	—	—	Starter Relay
53	HC Micro	—	—	EBL Relay
54	HC Relay	—	—	Rad Fan Relay High
55	HC Micro	—	—	Wiper ON/OFF
56	HC Micro	—	—	Wiper LO/HI
57	G8VA	—	—	Horn Relay
58	G8VA	—	—	A/C Clutch Relay
59	HC Micro	—	—	HVAC Blower
60	HC Micro	—	—	Fuel Pump
61	G8VA	—	—	Run Relay #1
62	G8VA	—	—	Run Relay #2
63	HC Micro	—	—	ASD #1
64	HC Micro	—	—	ASD #2
65	G8VA	—	—	Run Accy #1, Pop Up

Downloaded from www.Manualslib.com manuals search engine

CAUTION!

- **When installing the power distribution center cover, it is important to ensure the cover is properly positioned and fully latched. Failure to do so may allow water to get into the power distribution center and possibly result in an electrical system failure.**
- **When replacing a blown fuse, it is important to use only a fuse having the correct amperage rating. The use of a fuse with a rating other than indicated may result in a dangerous electrical system overload. If a properly rated fuse continues to blow, it indicates a problem in the circuit that must be corrected.**

VEHICLE STORAGE

We recommend that you follow these guidelines for storing your vehicle for extended periods.

- Fill the fuel tank. This will prevent water condensation inside the tank. If you plan to store your vehicle more than two months, add an anti-oxidant fuel stabilizer to the fuel tank.
- Change the oil to remove any corrosive combustion related acids in the crankcase.
- Check that the radiator coolant level of protection is to at least -20°F (-29°C).
- Make sure that all tires are inflated to the optimum pressure.
- Wash and wax the vehicle to protect the finish.
- Store the vehicle in a dry, well-ventilated location.
- Move the wiper blades away from the windshield.

Downloaded from www.Manualslib.com manuals search engine

- Block the wheels. Do not apply the parking brake.
- Cut blocks of plywood about the same size of the tires. Cover each block with indoor/outdoor carpeting and place them between the tires and concrete. This will prevent tire flat spotting.
- For long-term storage, remove the tires and put the vehicle up on blocks. Stack the tires on plywood and cover with a tarp to prevent flat spotting.
- If the vehicle will be subjected to freezing temperatures, either remove the battery and store it in a dry, well ventilated area or connect a trickle charger (1.5 Amp) with automatic shutdown / overcharge protection to the battery. However, do not leave the trickle charger hooked up to the battery without being plugged in to a 110 Volt AC outlet, as this will result in further drain on the vehicle's battery. If the vehicle is not going to be driven in the next three weeks, perform the battery recharge procedure in the Service Manual. Then, either disconnect the battery at the negative terminal or use the "Battery Save Feature" to conserve battery power. Refer to "Maintenance Procedures/ Battery Save Feature" in "Maintaining Your Vehicle" for further information.

NOTE: Disconnecting the battery causes the engine control system to lose memory of some "learned" functions. After reconnecting the battery, the engine may run rough until the control module "relearns" these functions. Using the Battery Save Feature will prevent the engine controller from loosing its memory.

CAUTION!

Use care when disconnecting the remote positive cable. It is connected to the battery and can short out to any metal on the vehicle. Always tape or wrap the exposed cable end to prevent electrical shorts.

Downloaded from www.Manualslib.com manuals search engine

- **Check the battery every four to six weeks to ensure that the voltage is above 12.40 Volts. The voltage will drop more rapidly in hot temperatures. If battery voltage drops below 12.40 Volts, follow the battery recharge procedure in the Service Manual.**

NOTE: To help prevent the battery from discharging during shorter periods of inactivity, perform the following:

1. Make sure that the liftgate, hood, doors, windows are completely closed.
2. Make sure that Remote Keyless Entry (RKE) transmitter is operating and that the battery is good.
3. Make sure that the HOOD, LIFTGATE, and DOOR switches are in adjustment. Perform the quick system check, which follows: Use the remote transmitter to set the alarm. If the alarm SET light comes on and flashes, the system is operating properly. If not, there is a problem with a switch or the system. See your authorized dealer for service.

- Cover the vehicle whenever possible to prevent accidental damage to the finish.

REPLACEMENT BULBS

Interior Bulbs

	Bulb Number
Message Center Indicators	103
Cluster	103
Gauge Pack	103
Heater Control	37
Interior Lamp	LED (Serviced at Authorized Dealer)

Downloaded from www.Manualslib.com manuals search engine

	Bulb Number
Courtesy Foot Well Lights	194
Cargo Lamp (Coupe Lift-gate)	168

Exterior Bulbs

	Bulb Number
Low/High Beam Head-lamp	LED (Serviced at Authorized Dealer)
Front Park/Turn Signal Lamp	LED (Serviced at Authorized Dealer)
Front Side Marker Lamp	2886X
Center High Mounted Stop Lamp (CHMSL)	LED (Serviced at Authorized Dealer)
Tail/Stop/Turn Signal Lamp	LED (Serviced at Authorized Dealer)
Rear Marker Lamp	194
Backup Lamp	3157
License Lamp	LED (Serviced at Authorized Dealer)

BULB REPLACEMENT

Front Headlamp, Front Park/Turn Signal Lamp

For bulb replacement, see your authorized dealer.

Front/Rear Side Marker Lamp

1. Remove the front/rear side marker. Use a fiber stick or similar tool to gently pry the lamp on the outboard side to disengage the clip.

Downloaded from www.Manualslib.com manuals search engine

NOTE:

- If a screwdriver is used, make sure a soft material is placed between the vehicle body and tool so not to scratch the paint.

2. Rotate the bulb's socket counterclockwise, and remove the bulb and socket assembly from the housing.
3. Pull the bulb out of the socket and insert the replacement bulb.
4. Install the bulb and socket assembly into the housing, and rotate the socket clockwise to lock it in place.
5. Reinstall the front/rear side marker.

Taillamp, Tail/Stop Lamp

For bulb replacement, see your authorized dealer.

Rear Turn Signal Lamp

For bulb replacement, see your authorized dealer.

Backup Lamps

1. Reach behind the rear bumper and press the release tabs on the backup lamp housing.
2. Separate the backup lamp housing from the rear bumper fascia.
3. Disconnect the electrical harness connector.
4. Turn the bulb and socket assembly counterclockwise, and then pull it out of the backup lamp assembly.
5. Remove the bulb from the connector socket and install the replacement bulb.
6. Reinstall the bulb and socket assembly into the backup lamp assembly, and then turn it clockwise.
7. Reinstall the backup lamp housing into the rear bumper fascia.

Downloaded from www.Manualslib.com manuals search engine

FLUID CAPACITIES

	U.S.	Metric
Fuel (Approximate)	16 Gallons	60.6 Liters
Engine Oil With Filter		
8.4 Liter Engine – We recommend you use SAE 0W-40, API Certified.	11 Quarts	10.4 Liters
Transmission		
8.4 Liter Engine – We recommend you use MOPAR® ATF+4® Automatic Transmission Fluid.	3.4 Quarts	3.2 Liters
Rear Axle		
We recommend you use Castrol SAF-XJ/SAE 75W-140 Synthetic Gear and Axle Lubricant.	1.5 Quarts	1.4 Liters
Cooling System *		
8.4 Liter Engine – We recommend you use MOPAR® Antifreeze/Engine Coolant 10 Year/150,000 Mile Formula or equivalent.	16 Quarts	15 Liters
* Includes heater and coolant recovery bottle filled to MAX level.		

Downloaded from www.Manualslib.com manuals search engine

FLUIDS, LUBRICANTS AND GENUINE PARTS

Engine

Component	Fluid, Lubricant, or Genuine Part
Engine Coolant	We recommend you use MOPAR® Antifreeze/Coolant 10 Year/150,000 Mile Formula OAT (Organic Additive Technology).
Engine Oil	We recommend you use a full synthetic 0W-40 or equivalent engine oil.
Engine Oil Filter	We recommend you use MOPAR® Engine Oil Filters.
Spark Plugs	We recommend you use MOPAR® Spark Plugs, see your authorized dealer.
Fuel Selection	We recommend you use Premium Unleaded 91 Octane Only or Higher

Downloaded from www.Manualslib.com manuals search engine

Chassis

Component	Fluid, Lubricant, or Genuine Part
Transmission	We recommend you use MOPAR® ATF+4® Automatic Transmission Fluid.
Rear Axle	We recommend you use Castrol SAF-XJ/SAE 75W-140 Synthetic Gear and Axle Lubricant.
Brake/Clutch Master Cylinder	We recommend you use MOPAR® Brake and Clutch Fluid DOT 4 Motor Vehicle.
Power Steering Reservoir	We recommend you use MOPAR® Power Steering Fluid + 4, MOPAR® or ATF+4® Automatic Transmission Fluid.

Downloaded from www.Manualslib.com manuals search engine

Downloaded from www.Manualslib.com manuals search engine

MAINTENANCE SCHEDULES

CONTENTS

■ MAINTENANCE SCHEDULES 300
□ Required Maintenance Intervals 301

Downloaded from www.Manualslib.com manuals search engine

MAINTENANCE SCHEDULES

The Scheduled Maintenance services listed in this manual must be done at the times or mileages specified to protect your vehicle warranty and ensure the best vehicle performance and reliability. More frequent maintenance may be needed for vehicles in severe operating conditions, such as dusty areas and very short trip driving. Inspection and service should also be done anytime a malfunction is suspected.

NOTE: Under no circumstances should oil change intervals exceed 6,000 miles (10 000 km) or six months, whichever comes first.

CAUTION!
Failure to perform the required maintenance items may result in damage to the vehicle.

At Each Stop For Fuel

- Check the engine oil level about five minutes after a fully warmed engine is shut off. Checking the oil level while the vehicle is on level ground will improve the accuracy of the oil level reading. Add oil only when the level is at or below the ADD or MIN mark.
- Check the windshield washer solvent and add if required.

Once A Month

- Check tire pressure and look for unusual wear or damage.
- Inspect the battery, and clean and tighten the terminals as required.

Downloaded from www.Manualslib.com manuals search engine

- Check the fluid levels of the coolant reservoir, brake master cylinder, power steering, and transmission, and add as needed.
- Check all lights and all other electrical items for correct operation.

At Each Oil Change

- Change the engine oil filter.
- Inspect the exhaust system.

NOTE: Also, inspect the exhaust system if you notice a change in the sound of the exhaust system, or if the exhaust fumes can be detected inside the vehicle.

- Inspect the brake hoses.
- Inspect the suspension components.
- Lubricate door hinges and check springs.
- Check the engine coolant level, hoses, and clamps.
- Check power steering fluid level.

Required Maintenance Intervals

Refer to the Maintenance Schedules on the following pages for the required maintenance intervals.

Downloaded from www.Manualslib.com manuals search engine

6,000 Miles (10,000 km) or 6 Months Maintenance Service Schedule

- ❏ Change the engine oil and engine oil filter.
- ❏ Rotate tires.

Odometer Reading Date

Repair Order # Dealer Code

Signature, Authorized Service Center

12,000 Miles (20,000 km) or 12 Months Maintenance Service Schedule

- ❏ Change the engine oil and engine oil filter.
- ❏ Rotate tires.
- ❏ Replace the air conditioning filter (if equipped).
- ❏ Inspect the brake linings, and replace if necessary.
- ❏ Inspect the exhaust system. Perform the first inspection at 12,000 miles (20 000 km) or 12 months.
- ❏ Inspect the manual transmission fluid, add as necessary.
- ❏ Inspect the front suspension and tie rod ends for cracks or leaks and all parts for damage, wear, improper looseness or end play; replace if necessary.

Odometer Reading Date

Repair Order # Dealer Code

Signature, Authorized Service Center

Downloaded from www.Manualslib.com manuals search engine

18,000 Miles (30,000 km) or 18 Months Maintenance Service Schedule

- ❏ Change the engine oil and engine oil filter.
- ❏ Rotate tires.
- ❏ Change the rear axle fluid.

Odometer Reading Date

Repair Order # Dealer Code

Signature, Authorized Service Center

24,000 Miles (40,000 km) or 24 Months Maintenance Service Schedule

- ❏ Change the engine oil and engine oil filter.
- ❏ Rotate tires.
- ❏ Replace the air conditioning filter (if equipped).
- ❏ Inspect the brake linings, and replace if necessary.
- ❏ Inspect the exhaust system.
- ❏ Inspect the manual transmission fluid, add as necessary.
- ❏ Inspect the front suspension and tie rod ends for cracks or leaks and all parts for damage, wear, improper looseness or end play; replace if necessary.

Odometer Reading Date

Repair Order # Dealer Code

Signature, Authorized Service Center

Downloaded from www.Manualslib.com manuals search engine

30,000 Miles (50,000 km) or 30 Months Maintenance Service Schedule

- ❏ Change the engine oil and engine oil filter.
- ❏ Rotate tires.
- ❏ Replace the engine air cleaner filter.
- ❏ Adjust parking brake on vehicles equipped with four-wheel disc brakes.

Odometer Reading Date

Repair Order # Dealer Code

Signature, Authorized Service Center

36,000 Miles (60,000 km) or 36 Months Maintenance Service Schedule

- ❏ Change the engine oil and engine oil filter.
- ❏ Rotate tires.
- ❏ Replace the air conditioning filter (if equipped).
- ❏ Inspect the brake linings, and replace if necessary.
- ❏ Change the rear axle fluid.
- ❏ Change the manual transmission fluid.
- ❏ Inspect the front suspension and tie rod ends for cracks or leaks and all parts for damage, wear, improper looseness or end play; replace if necessary.

Odometer Reading Date

Repair Order # Dealer Code

Signature, Authorized Service Center

Downloaded from www.Manualslib.com manuals search engine

42,000 Miles (70,000 km) or 42 Months Maintenance Service Schedule

- ❏ Change the engine oil and engine oil filter.
- ❏ Rotate tires.

Odometer Reading Date

Repair Order # Dealer Code

Signature, Authorized Service Center

48,000 Miles (80,000 km) or 48 Months Maintenance Service Schedule

- ❏ Change the engine oil and engine oil filter.
- ❏ Rotate tires.
- ❏ Replace the air conditioning filter (if equipped).
- ❏ Inspect the brake linings, and replace if necessary.
- ❏ Inspect the exhaust system.
- ❏ Inspect the front suspension and tie rod ends for cracks or leaks and all parts for damage, wear, improper looseness or end play; replace if necessary.
- ❏ Inspect the manual transmission fluid, add as necessary.

Odometer Reading Date

Repair Order # Dealer Code

Signature, Authorized Service Center

Downloaded from www.Manualslib.com manuals search engine

54,000 Miles (90,000 km) or 54 Months Maintenance Service Schedule

- ❏ Change the engine oil and engine oil filter.
- ❏ Rotate tires.
- ❏ Change the rear axle fluid.

Odometer Reading Date

Repair Order # Dealer Code

Signature, Authorized Service Center

60,000 Miles (100,000 km) or 60 Months Maintenance Service Schedule

- ❏ Change the engine oil and engine oil filter.
- ❏ Rotate tires.
- ❏ Replace the engine air cleaner filter.
- ❏ Replace the air conditioning filter (if equipped).
- ❏ Inspect the brake linings, and replace if necessary.
- ❏ Adjust parking brake on vehicles equipped with four-wheel disc brakes.
- ❏ Inspect the manual transmission fluid, add as necessary.
- ❏ Inspect the front suspension and tie rod ends for cracks or leaks and all parts for damage, wear, improper looseness or end play; replace if necessary.
- ❏ Change the rear axle fluid.

Odometer Reading Date

Repair Order # Dealer Code

Signature, Authorized Service Center

Downloaded from www.Manualslib.com manuals search engine

66,000 Miles (110,000 km) or 66 Months Maintenance Service Schedule

- ❏ Change the engine oil and engine oil filter.
- ❏ Rotate tires.

Odometer Reading Date

Repair Order # Dealer Code

Signature, Authorized Service Center

72,000 Miles (120,000 km) or 72 Months Maintenance Service Schedule

- ❏ Change the engine oil and engine oil filter.
- ❏ Rotate tires.
- ❏ Replace the air conditioning filter (if equipped).
- ❏ Inspect the brake linings, and replace if necessary.
- ❏ Change the rear axle fluid.
- ❏ Inspect the exhaust system.
- ❏ Change the manual transmission fluid.
- ❏ Inspect the front suspension and tie rod ends for cracks or leaks and all parts for damage, wear, improper looseness or end play; replace if necessary.

Odometer Reading Date

Repair Order # Dealer Code

Signature, Authorized Service Center

Downloaded from www.Manualslib.com manuals search engine

78,000 Miles (130,000 km) or 78 Months Maintenance Service Schedule

- ❏ Change the engine oil and engine oil filter.
- ❏ Rotate tires.

Odometer Reading Date

Repair Order # Dealer Code

Signature, Authorized Service Center

84,000 Miles (140,000 km) or 84 Months Maintenance Service Schedule

- ❏ Change the engine oil and engine oil filter.
- ❏ Rotate tires.
- ❏ Replace the air conditioning filter (if equipped).
- ❏ Inspect the brake linings, and replace if necessary.
- ❏ Inspect the manual transmission fluid, add as necessary.
- ❏ Inspect the front suspension and tie rod ends for cracks or leaks and all parts for damage, wear, improper looseness or end play; replace if necessary.

Odometer Reading Date

Repair Order # Dealer Code

Signature, Authorized Service Center

Downloaded from www.Manualslib.com manuals search engine

90,000 Miles (150,000 km) or 90 Months Maintenance Service Schedule

- ❏ Change the engine oil and engine oil filter.
- ❏ Rotate tires.
- ❏ Replace the engine air cleaner filter.
- ❏ Inspect and replace the PCV Valve if necessary.*
- ❏ Change the rear axle fluid.
- ❏ Adjust parking brake on vehicles equipped with four-wheel disc brakes.

Odometer Reading Date

Repair Order # Dealer Code

Signature, Authorized Service Center

96,000 Miles (160,000 km) or 96 Months Maintenance Service Schedule

- ❏ Change the engine oil and engine oil filter.
- ❏ Rotate tires.
- ❏ Replace the air conditioning filter (if equipped).
- ❏ Replace the spark plugs.
- ❏ Inspect the brake linings, and replace if necessary.
- ❏ Inspect the exhaust system.
- ❏ Inspect the front suspension and tie rod ends for cracks or leaks and all parts for damage, wear, improper looseness or end play; replace if necessary.
- ❏ Inspect the manual transmission fluid, add as necessary.

Odometer Reading Date

Repair Order # Dealer Code

Signature, Authorized Service Center

Downloaded from www.Manualslib.com manuals search engine

102,000 Miles (170,000 km) or 102 Months Maintenance Service Schedule

- ❏ Change the engine oil and engine oil filter.
- ❏ Rotate tires.

Odometer Reading Date

Repair Order # Dealer Code

Signature, Authorized Service Center

108,000 Miles (180,000 km) or 108 Months Maintenance Service Schedule

- ❏ Change the engine oil and engine oil filter.
- ❏ Rotate tires.
- ❏ Replace the air conditioning filter (if equipped).
- ❏ Inspect the brake linings, and replace if necessary.
- ❏ Change the rear axle fluid.
- ❏ Change the manual transmission fluid.
- ❏ Inspect the front suspension and tie rod ends for cracks or leaks and all parts for damage, wear, improper looseness or end play; replace if necessary.

Odometer Reading Date

Repair Order # Dealer Code

Signature, Authorized Service Center

Downloaded from www.Manualslib.com manuals search engine

114,000 Miles (190,000 km) or 114 Months Maintenance Service Schedule

- ❏ Change the engine oil and engine oil filter.
- ❏ Rotate tires.

Odometer Reading Date

Repair Order # Dealer Code

Signature, Authorized Service Center

Downloaded from www.Manualslib.com manuals search engine

120,000 Miles (200,000 km) or 120 Months Maintenance Service Schedule

- ❏ Change the engine oil and engine oil filter.
- ❏ Rotate tires.
- ❏ Replace the engine air cleaner filter.
- ❏ Replace the air conditioning filter (if equipped).
- ❏ Flush and replace the engine coolant at 120 months or 150,000 miles (250 000 km) whichever comes first.
- ❏ Inspect the brake linings, and replace if necessary.
- ❏ Adjust parking brake on vehicles equipped with four-wheel disc brakes.
- ❏ Inspect the exhaust system.
- ❏ Inspect the manual transmission fluid, add as necessary.
- ❏ Inspect the front suspension and tie rod ends for cracks or leaks and all parts for damage, wear, improper looseness or end play; replace if necessary.

Odometer Reading _____ Date _____

Repair Order # _____ Dealer Code _____

Signature, Authorized Service Center _____

Downloaded from www.Manualslib.com manuals search engine

126,000 Miles (210,000 km) or 126 Months Maintenance Service Schedule

- ❏ Change the engine oil and engine oil filter.
- ❏ Rotate tires.
- ❏ Change the rear axle fluid.

Odometer Reading Date

Repair Order # Dealer Code

Signature, Authorized Service Center

132,000 Miles (220,000 km) or 132 Months Maintenance Service Schedule

- ❏ Change the engine oil and engine oil filter.
- ❏ Rotate tires.
- ❏ Replace the air conditioning filter (if equipped).
- ❏ Inspect the brake linings, and replace if necessary.
- ❏ Inspect the manual transmission fluid, add as necessary.
- ❏ Inspect the front suspension and tie rod ends for cracks or leaks and all parts for damage, wear, improper looseness or end play; replace if necessary.

Odometer Reading Date

Repair Order # Dealer Code

Signature, Authorized Service Center

Downloaded from www.Manualslib.com manuals search engine

138,000 Miles (230,000 km) or 138 Months Maintenance Service Schedule

- ❏ Change the engine oil and engine oil filter.
- ❏ Rotate tires.

Odometer Reading Date

Repair Order # Dealer Code

Signature, Authorized Service Center

144,000 Miles (240,000 km) or 144 Months Maintenance Service Schedule

- ❏ Change the engine oil and engine oil filter.
- ❏ Rotate tires.
- ❏ Replace the air conditioning filter (if equipped).
- ❏ Inspect the brake linings, and replace if necessary.
- ❏ Inspect the exhaust system.
- ❏ Inspect the front suspension and tie rod ends for cracks or leaks and all parts for damage, wear, improper looseness or end play; replace if necessary.
- ❏ Change the manual transmission fluid.
- ❏ Change the rear axle fluid.

Odometer Reading Date

Repair Order # Dealer Code

Signature, Authorized Service Center

Downloaded from www.Manualslib.com manuals search engine

150,000 Miles (250,000 km) or 150 Months Maintenance Service Schedule

- ❏ Change the engine oil and engine oil filter.
- ❏ Rotate tires.
- ❏ Replace the engine air cleaner filter.
- ❏ Flush and replace the engine coolant at 150,000 miles (250 000 km) or 120 months whichever comes first.
- ❏ Adjust parking brake on vehicles equipped with four-wheel disc brakes.

Odometer Reading Date

Repair Order # Dealer Code

Signature, Authorized Service Center

Downloaded from www.Manualslib.com manuals search engine

* This maintenance is recommended by the manufacturer to the owner, but is not required to maintain emissions warranty.

WARNING!

- **You can be badly injured working on or around a motor vehicle. Do only service work for which you have the knowledge and the right equipment. If you have any doubt about your ability to perform a service job, take your vehicle to a competent mechanic.**
- **Failure to properly inspect and maintain your vehicle could result in a component malfunction and effect vehicle handling and performance. This could cause an accident.**

Downloaded from www.Manualslib.com manuals search engine

IF YOU NEED CONSUMER ASSISTANCE

CONTENTS

- SUGGESTIONS FOR OBTAINING SERVICE FOR YOUR VEHICLE 319
  - Prepare For The Appointment. 319
  - Prepare A List 319
  - Be Reasonable With Requests 319
- IF YOU NEED ASSISTANCE 319
  - Chrysler Group LLC Customer Center. 320
  - Chrysler Canada Inc. Customer Center 320
  - In Mexico contact: 320
  - Customer Assistance For The Hearing Or Speech Impaired (TDD/TTY). 321
  - Service Contract 321
- WARRANTY INFORMATION 322
- MOPAR® PARTS 322
- REPORTING SAFETY DEFECTS 322
  - In The 50 United States And Washington, D.C.. 322
  - In Canada. 323
- PUBLICATION ORDER FORMS 323

Downloaded from www.Manualslib.com manuals search engine

■ DEPARTMENT OF TRANSPORTATION UNIFORM TIRE QUALITY GRADES 325

□ Treadwear. 325

□ Traction Grades 325

□ Temperature Grades. 326

Downloaded from www.Manualslib.com manuals search engine

SUGGESTIONS FOR OBTAINING SERVICE FOR YOUR VEHICLE

Prepare For The Appointment

If you are having warranty work done, be sure to have the right papers with you. Take your warranty folder. All work to be performed may not be covered by the warranty. Discuss additional charges with the service manager. Keep a maintenance log of your vehicle's service history. This can often provide a clue to the current problem.

Prepare A List

Make a written list of your vehicle's problems or the specific work you want done. If you've had an accident or work done that is not on your maintenance log, let the service advisor know.

Be Reasonable With Requests

If you list a number of items and you must have your vehicle by the end of the day, discuss the situation with the service advisor and list the items in order of priority. At many authorized dealer, you may obtain a rental vehicle at a minimal daily charge. If you need a rental, it is advisable to make these arrangements when you call for an appointment.

IF YOU NEED ASSISTANCE

The manufacturer and its authorized dealer are vitally interested in your satisfaction. We want you to be happy with our products and services.

Warranty service must be done by an authorized dealer. We strongly recommend that you take the vehicle to an authorized dealer. They know your vehicle the best, and are most concerned that you get prompt and high quality service. The manufacturer's authorized dealer have the facilities, factory-trained technicians, special tools, and the latest information to ensure the vehicle is fixed correctly and in a timely manner.

Downloaded from www.Manualslib.com manuals search engine

This is why you should always talk to an authorized dealer service manager first. Most matters can be resolved with this process.

- If for some reason you are still not satisfied, talk to the general manager or owner of the authorized dealer. They want to know if you need assistance.
- If an authorized dealer is unable to resolve the concern, you may contact the manufacturer's customer center.

Any communication to the manufacturer's customer center should include the following information:

- Owner's name and address
- Owner's telephone number (home and office)
- Authorized dealer name
- Vehicle Identification Number (VIN)
- Vehicle delivery date and mileage

Chrysler Group LLC Customer Center

P.O. Box 21–8004

Auburn Hills, MI 48321–8004

Phone: (855) SRT–TEAM

Chrysler Canada Inc. Customer Center

P.O. Box 1621

Windsor, Ontario N9A 4H6

Phone: (800) 465–2001 English / (800) 387–9983 French

In Mexico contact:

Av. Prolongacion Paseo de la Reforma, 1240

Sante Fe C.P. 05109

Mexico, D. F.

In Mexico City: 5081-7568

Outside Mexico City: 1-800-505-1300

Downloaded from www.Manualslib.com manuals search engine

Customer Assistance For The Hearing Or Speech Impaired (TDD/TTY)

To assist customers who have hearing difficulties, the manufacturer has installed special TDD (Telecommunication Devices for the Deaf) equipment at its customer center. Any hearing or speech impaired customer, who has access to a TDD or a conventional teletypewriter (TTY) in the United States, can communicate with the manufacturer by dialing 1–800–380–CHRY.

Canadian residents with hearing difficulties that require assistance can use the special needs relay service offered by Bell Canada. For TTY teletypewriter users, dial 711 and for Voice callers, dial 1 800 855-0511 to connect with a Bell Relay Service operator.

Service Contract

You may have purchased a service contract for a vehicle to help protect you from the high cost of unexpected repairs after the manufacturer's New Vehicle Limited Warranty expires. The manufacturer stands behind only the manufacturer's service contracts. If you purchased a manufacturer's service contract, you will receive Plan Provisions and an Owner Identification Card in the mail within three weeks of the vehicle delivery date. If you have any questions about the service contract, call the manufacturer's Service Contract National Customer Hotline at 1-800-521-9922 (Canadian residents, call (800) 465–2001 English / (800) 387–9983 French).

The manufacturer will not stand behind any service contract that is not the manufacturer's service contract. It is not responsible for any service contract other than the manufacturer's service contract. If you purchased a service contract that is not a manufacturer's service contract, and you require service after the manufacturer's New Vehicle Limited Warranty expires, please refer to the contract documents, and contact the person listed in those documents.

Downloaded from www.Manualslib.com manuals search engine

We appreciate that you have made a major investment when you purchased the vehicle. An authorized dealer has also made a major investment in facilities, tools, and training to assure that you are absolutely delighted with the ownership experience. You will be pleased with their sincere efforts to resolve any warranty issues or related concerns.

WARNING!

Engine exhaust, some of its constituents, and certain vehicle components contain, or emit, chemicals known to the State of California to cause cancer and birth defects, or other reproductive harm. In addition, certain fluids contained in vehicles and certain products of component wear contain, or emit, chemicals known to the State of California to cause cancer and birth defects, or other reproductive harm.

WARRANTY INFORMATION

See the Warranty Information Booklet, located on the DVD, for the terms and provisions of Chrysler Group LLC warranties applicable to this vehicle and market.

MOPAR® PARTS

MOPAR® fluids, lubricants, parts, and accessories are available from an authorized dealer. They are recommended for your vehicle in order to help keep the vehicle operating at its best.

REPORTING SAFETY DEFECTS

In The 50 United States And Washington, D.C.

If you believe that your vehicle has a defect that could cause a crash or cause injury or death, you should immediately inform the National Highway Traffic Safety Administration (NHTSA) in addition to notifying the manufacturer.

Downloaded from www.Manualslib.com manuals search engine

If NHTSA receives similar complaints, it may open an investigation, and if it finds that a safety defect exists in a group of vehicles, it may order a recall and remedy campaign. However, NHTSA cannot become involved in individual problems between you, your authorized dealer, and the manufacturer.

To contact NHTSA, you may either call the Auto Safety Hotline toll free at 1–888–327–4236 (TTY: 1–800–424– 9153), or go to http://www.safercar.gov; or write to: Administrator, NHTSA, 1200 New Jersey Avenue, SE., West Building, Washington, D.C. 20590. You can also obtain other information about motor vehicle safety from http://www.safercar.gov.

In Canada

If you believe that your vehicle has a safety defect, you should contact the Customer Service Department immediately. Canadian customers who wish to report a safety defect to the Canadian government should contact Transport Canada, Motor Vehicle Defect Investigations and Recalls at 1-800-333-0510 or go to http://www.tc.gc.ca/roadsafety/

PUBLICATION ORDER FORMS

To order the following manuals, you may use either the website or the phone numbers listed below. Visa, Mastercard, American Express, and Discover orders are accepted. If you prefer mailing your payment, please call for an order form.

NOTE: A street address is required when ordering manuals (no P.O. Boxes).

Service Manuals

These comprehensive Service Manuals provide the information that students and professional technicians need in

Downloaded from www.Manualslib.com manuals search engine

diagnosing/troubleshooting, problem solving, maintaining, servicing, and repairing Chrysler Group LLC vehicles. A complete working knowledge of the vehicle, system, and/or components is written in straightforward language with illustrations, diagrams, and charts.

Diagnostic Procedure Manuals

Diagnostic Procedure Manuals are filled with diagrams, charts and detailed illustrations. These practical manuals make it easy for students and technicians to find and fix problems on computer-controlled vehicle systems and features. They show exactly how to find and correct problems the first time, using step-by-step troubleshooting and drivability procedures, proven diagnostic tests and a complete list of all tools and equipment.

Owner's Manuals

These Owner's Manuals have been prepared with the assistance of service and engineering specialists to acquaint you with specific Chrysler Group LLC vehicles. Included are starting, operating, emergency and maintenance procedures as well as specifications, capabilities and safety tips.

Call toll free at:

- **1–800–890–4038 (U.S.)**
- **1–800–387–1143 (Canada)**

Or

Visit us on the Worldwide Web at:

- **www.techauthority.com**

Downloaded from www.Manualslib.com manuals search engine

DEPARTMENT OF TRANSPORTATION UNIFORM TIRE QUALITY GRADES

The following tire grading categories were established by the National Highway Traffic Safety Administration. The specific grade rating assigned by the tire's manufacturer in each category is shown on the sidewall of the tires on your vehicle.

All passenger car tires must conform to Federal safety requirements in addition to these grades.

Treadwear

The Treadwear grade is a comparative rating, based on the wear rate of the tire when tested under controlled conditions on a specified government test course. For example, a tire graded 150 would wear one and one-half times as well on the government course as a tire graded 100. The relative performance of tires depends upon the actual conditions of their use, however, and may depart significantly from the norm due to variations in driving habits, service practices, and differences in road characteristics and climate.

Traction Grades

The Traction grades, from highest to lowest, are AA, A, B, and C. These grades represent the tire's ability to stop on wet pavement, as measured under controlled conditions on specified government test surfaces of asphalt and concrete. A tire marked C may have poor traction performance.

WARNING!

The traction grade assigned to this tire is based on straight-ahead braking traction tests, and does not include acceleration, cornering, hydroplaning, or peak traction characteristics.

Downloaded from www.Manualslib.com manuals search engine

Temperature Grades

The temperature grades are A (the highest), B, and C, representing the tire's resistance to the generation of heat and its ability to dissipate heat, when tested under controlled conditions on a specified indoor laboratory test wheel. Sustained high temperature can cause the material of the tire to degenerate and reduce tire life, and excessive temperature can lead to sudden tire failure. The grade C corresponds to a level of performance, which all passenger car tires must meet under the Federal Motor Vehicle Safety Standard No. 109. Grades B and A represent higher levels of performance on the laboratory test wheel, than the minimum required by law.

WARNING!

The temperature grade for this tire is established for a tire that is properly inflated and not overloaded. Excessive speed, under-inflation, or excessive loading, either separately or in combination, can cause heat buildup and possible tire failure.

Downloaded from www.Manualslib.com manuals search engine

INDEX

Downloaded from www.Manualslib.com manuals search engine

About Your Brakes 193
ABS (Anti-Lock Brake System) 195
Adding Engine Coolant (Antifreeze) 271
Adding Fuel 229
Adding Washer Fluid 266
Additives, Fuel 227
Adjustable Pedals 98
Airbag 43
Airbag Deployment 49
Airbag Light 50
Airbag Maintenance 58
Air Cleaner, Engine (Engine Air Cleaner Filter) 259
Air Conditioner Maintenance 263
Air Conditioning, Operating Tips 172
Air Conditioning Refrigerant 263
Air Conditioning System 263
Air Pressure, Tires 215
Alarm Light 130
Alarm System (Security Alarm) 18
Alterations/Modifications, Vehicle 7
Antenna 164
Antifreeze (Engine Coolant) 270
  Capacities 295
  Disposal 273
Anti-Lock Brake System (ABS) 195
Anti-Lock Warning Light 137
Anti-Theft Security Alarm (Theft Alarm) 18
Appearance Care 279
Auto Down Power Windows 29
Automatic Door Locks 27
Automatic Headlights 89
Auto Unlock, Doors 27
Auto Up Power Windows 29
Auxiliary Electrical Outlet (Power Outlet) 115
Auxiliary Power Outlet 115

Battery 260
  Emergency Starting 245

Downloaded from www.Manualslib.com manuals search engine

Jump Starting 245
Keyless Transmitter Replacement (RKE) 23
Location 260
Saving Feature (Protection) 262
Storing Vehicle 262
Belts, Seat 33
Body Mechanism Lubrication 264
B-Pillar Location 209
Brake Control System, Electronic 197
Brake, Parking 191
Brake System 193
Anti-Lock (ABS) 193
Fluid Check 275
Master Cylinder 275
Warning Light 128
Break-In Recommendations, New Vehicle 67
Brightness, Interior Lights 92
Bulb Replacement 293
Bulbs, Light 71
Camera, Rear 104
Capacities, Antifreeze (Engine Coolant) 295
Capacities, Fluid 295
Caps, Filler
Oil (Engine) 258
Power Steering 190
Radiator (Coolant Pressure) 272
Carbon Monoxide Warning 68
Car Washes 279
Cellular Phone 165
Chains, Tire 221
Chart, Tire Sizing 204
Check Engine Light (Malfunction Indicator Light) . .132
Checking Your Vehicle For Safety 68
Checks, Safety 68
Child Restraint 60
Child Restraint Tether Anchors 64
Clean Air Gasoline 225

Downloaded from www.Manualslib.com manuals search engine

Cleaning
Wheels 280
Windshield Wiper Blades 265
Climate Control 165
Clutch Fluid 278
Contract, Service 321
Coolant Pressure Cap (Radiator Cap) 272
Cooling System 269
Adding Coolant (Antifreeze) 271
Coolant Capacity 295
Coolant Level 269
Disposal of Used Coolant 273
Drain, Flush, and Refill 270
Inspection 273
Points to Remember 273
Pressure Cap 272
Radiator Cap 272
Selection of Coolant (Antifreeze) 270
Corrosion Protection 279
Cruise Light 133
Cupholders 117
Customer Assistance 319

Data Recorder, Event 59
Daytime Brightness, Interior Lights 94
Daytime Running Lights 90
Dealer Service 256
Defroster, Rear Window 121
Defroster, Windshield 70
Delay (Intermittent) Wipers 95
Diagnostic System, Onboard 254
Dimmer Switch, Headlight 91
Dipsticks
Power Steering 190
Disposal
Antifreeze (Engine Coolant) 273
Door Locks 25
Door Locks, Automatic 27

Downloaded from www.Manualslib.com manuals search engine

Door Opener, Garage 106
Doors 25
Driving
Through Flowing, Rising, or Shallow Standing Water 187

Electrical Outlet, Auxiliary (Power Outlet) 115
Electric Remote Mirrors 78
Electronic Brake Control System 197
Traction Control System 198
Electronic Speed Control (Cruise Control) 101
Electronic Stability Control (ESC) 198
Electronic Vehicle Information Center (EVIC) 104
Emergency Brake 191
Emergency, In Case of
Freeing Vehicle When Stuck 249
Hazard Warning Flasher 234
Jump Starting 245
Overheating 234
Towing 250
Emission Control System Maintenance 254
Engine 253
Air Cleaner 259
Break-In Recommendations 67
Checking Oil Level 257
Compartment 253
Coolant (Antifreeze) 269
Cooling 269
Exhaust Gas Caution 32
Fails to Start 178
Flooded, Starting 178
Fuel Requirements 225
Oil 257
Oil Change Interval 258
Oil Filler Cap 258
Oil Selection 258
Overheating 234
Engine Oil Viscosity 258

Downloaded from www.Manualslib.com manuals search engine

Enhanced Accident Response Feature 56
Ethanol 226
Event Data Recorder 59
Exhaust Gas Caution. 32
Exhaust System 68
Exterior Lighting 88
Exterior Lights 71

Filters
  Air Cleaner 259
  Engine Oil 259
  Engine Oil Disposal 259
Flashers
  Hazard Warning 234
  Turn Signal 71
Flash-To-Pass 92
Flooded Engine Starting 178
Fluid Capacities 295
Fluid Leaks 71
Fluid Level Checks
  Brake 275
  Capacities 295
  Clutch Fluid 278
  Cooling System 269
  Engine Oil 257
  Manual Transmission 277
  Power Steering 190
Fluids, Lubricants and Genuine Parts 296
Four-Way Hazard Flasher 234
Freeing A Stuck Vehicle 249
Fuel. 225
  Additives 227
  Clean Air 225
  Ethanol 226
  Gasoline 225
  Gauge 130
  Materials Added 227
  Methanol 226

Downloaded from www.Manualslib.com manuals search engine

Octane Rating 225
Requirements 225
Tank Capacity 295
Fuses 284

Garage Door Opener (HomeLink®) 106
Gasoline, Clean Air 225
Gasoline (Fuel) 225
Gasoline, Reformulated 225
Gauges
Fuel 130
Speedometer 127
Tachometer 130
General Information 17
Glass Cleaning 282
Ground Clearance 232

Hazard
Driving Through Flowing, Rising, or Shallow Standing Water 187
Hazard Warning Flasher 234
Headlights
Automatic 89
Delay 89
High Beam/Low Beam Select Switch 91
Lights On Reminder 90
On With Wipers 89
Passing 92
Switch 88
Time Delay 89
High Beam/Low Beam Select (Dimmer) Switch 91
Holder, Cup 117
HomeLink® (Garage Door Opener) 106
Hood Release 85
Hydraulic Clutch Fluid 278

Downloaded from www.Manualslib.com manuals search engine

Illuminated Entry 20
Immobilizer (Sentry Key) 15
Infant Restraint 60
Inside Rearview Mirror 76
Instrument Cluster 127
Instrument Panel and Controls 125
Instrument Panel Lens Cleaning 282
Interior Appearance Care 281
Interior Lights 92
Intermittent Wipers (Delay Wipers) 95
Introduction 4

Jump Starting 245

Key Fob 12
Key-In Reminder 14
Keyless Entry System 12
Keyless Go 12
Key, Programming 17
Key, Replacement 16
Key, Sentry (Immobilizer) 15
Knee Bolster 43

Lane Change and Turn Signals 91
Lap/Shoulder Belts 34
Latches 71
  Hood 85
Latch Plate 36
Lead Free Gasoline 225
Leaks, Fluid 71
Life of Tires 219
Liftgate 30
Light Bulbs 71
Lights 71
  Airbag 59
  Alarm 130
  Anti-Lock 137
  Automatic Headlights 89

Downloaded from www.Manualslib.com manuals search engine

Brake Warning 128
Bulb Replacement 292
Cruise 133
Daytime Running 90
Dimmer Switch, Headlight 90
Exterior 71
Hazard Warning Flasher 234
Headlights 88
Headlights On Reminder 90
Headlights On With Wipers 89
Headlight Switch 88
High Beam 91
High Beam Indicator 128
High Beam/Low Beam Select 91
Illuminated Entry 20
Instrument Cluster 88
Intensity Control 92
Interior 92
Lights On Reminder 90
Malfunction Indicator (Check Engine) 132
Oil Pressure 130
Parade Mode (Daytime Brightness) 94
Passing 92
Seat Belt Reminder 127
Security Alarm (Theft Alarm) 130
Service 292
Service Engine Soon (Malfunction Indicator) 132
Theft Alarm (Security Alarm) 130
Tire Pressure Monitoring (TPMS) 130
Turn Signal 71
Vanity Mirror 79
Warning (Instrument Cluster Description) 127
Loading Vehicle
Tires 209
Locks 25
Automatic Door 27
Auto Unlock 27
Door 25

Downloaded from www.Manualslib.com manuals search engine

Power Door 25
Low Tire Indicator 223
Low Tire Pressure System 223
Lubrication, Body 264

Maintenance Free Battery. 260
Maintenance Procedures 257
Maintenance Schedule 300
Malfunction Indicator Light (Check Engine). 132
Manual, Service 323
Manual Transmission 179
Fluid Level Check 277
Lubricant Selection 297
Shift Speeds 182
Methanol 226
Mirrors 76
Electric Remote 78
Outside 77
Rearview 76
Vanity 79
Modifications/Alterations, Vehicle 7
Monitor, Tire Pressure System 223
Mopar Parts 256
MTBE/ETBE 226
Multi-Function Control Lever 90

New Vehicle Break-In Period 67

Occupant Restraints 33
Octane Rating, Gasoline (Fuel) 225
Oil, Engine 257
Capacity 295
Change Interval 258
Checking 257
Dipstick 257
Disposal 259
Filter 259
Filter Disposal 259

Downloaded from www.Manualslib.com manuals search engine

Materials Added to 259
Recommendation 258
Viscosity 258
Oil Filter, Selection 259
Onboard Diagnostic System 254
Opener, Garage Door (HomeLink®) 106
Operator Manual (Owner's Manual) 4
Outside Rearview Mirrors 77
Overheating, Engine 234
Owner's Manual (Operator Manual) 4

Paint Care 279
Panic Alarm 22
Parking Brake 191
Parking On Hill 191
Passing Light 92
Pedals, Adjustable 98
Pets 67
Pets, Transporting 67
Placard, Tire and Loading Information 210
Power
Brakes 193
Door Locks 25
Mirrors 78
Outlet (Auxiliary Electrical Outlet) 115
Steering 189
Windows 28
Pregnant Women and Seat Belts 42
Pretensioners
Seat Belts 42
Programming Transmitters (Remote Keyless Entry) . . .23

Radial Ply Tires 217
Radiator Cap (Coolant Pressure Cap) 272
Radio Antenna 164
Radio Operation 165
Rear Camera 104
Rear Liftgate 30

Downloaded from www.Manualslib.com manuals search engine

Rear Window Defroster 121
Rear Window Features 121
Reclining Front Seats 82
Recorder, Event Data 59
Recreational Towing 231
Reformulated Gasoline 225
Refrigerant 264
Reminder, Lights On 90
Reminder, Seat Belt 40
Remote Keyless Entry (RKE) 20
Remote Sound System (Radio) Controls 164
Replacement Keys 16
Replacement Parts 256
Replacement Tires 219
Reporting Safety Defects 322
Restraints, Child 60
Restraints, Infant 61
Restraints, Occupant 33
Rocking Vehicle When Stuck 249
Rotation, Tires 221

Safety Checks Inside Vehicle 69
Safety Checks Outside Vehicle 70
Safety Defects, Reporting 322
Safety, Exhaust Gas 32
Safety Information, Tire 202
Safety Tips 68
Schedule, Maintenance 300
Seat Belt Maintenance 282
Seat Belt Reminder 40
Seat Belts 33
  And Pregnant Women 42
  Child Restraint 60
  Extender 42
  Inspection 69
  Operating Instructions 36
  Pretensioners 42
  Untwisting Procedure 39

Downloaded from www.Manualslib.com manuals search engine

Seats 80
Adjustment 80
Reclining 82
Security Alarm (Theft Alarm). 18
Selection of Coolant (Antifreeze). 296
Selection of Oil 258
Sentry Key (Immobilizer) 15
Sentry Key Programming 17
Sentry Key Replacement 16
Service Assistance 319
Service Contract 321
Service Engine Soon Light (Malfunction Indicator) . .132
Service Manuals 323
Shift Indicator Light 182
Shift Speeds 179
Shoulder Belts 34
Signals, Turn 71
Snow Chains (Tire Chains). 221
Snow Tires 221
Speed Control (Cruise Control). 101
Speedometer. 127
Sport Mode 137
Starting 176
Emergency (Jump Starting) 245
Engine Fails to Start 178
Starting and Operating 176
Starting Procedures 176
Steering
Column Controls 90
Power 189
Tilt Column 97
Steering Wheel Audio Controls 164
Steering Wheel Mounted Sound System Controls . . .164
Storage 290
Storage, Vehicle. 171
Stuck, Freeing. 249
Supplemental Restraint System - Airbag 43

Downloaded from www.Manualslib.com manuals search engine

Tachometer 130
Theft Alarm (Security Alarm) 18
Theft System (Security Alarm) 18
Tilt Steering Column 97
Time Delay, Headlight 89
Tire and Loading Information Placard 209
TIREFIT 235
Tire Markings 202
Tires 70
  Aging (Life of Tires) 219
  Air Pressure 214
  Chains 221
  General Information 214
  High Speed 217
  Inflation Pressures 215
  Life of Tires 219
  Load Capacity 209
  Pressure Monitor System (TPMS) 223
  Pressure Warning Light 130
  Quality Grading 325
  Radial 217
  Replacement 219
  Rotation 221
  Safety 202
  Sizes 204
  Snow Tires 221
  Spinning 217
  Storage 221
  Tread Wear Indicators 218
Tire Safety Information 202
Towing 230
  Disabled Vehicle 250
  Recreational 231
Traction 186
Traction Control 198
Trailer Towing 230
Transmission 277
  Fluid 297

Downloaded from www.Manualslib.com manuals search engine

Shifting 179
Transmitter Battery Service (Remote Keyless Entry) . . .23
Transmitter Programming (Remote Keyless Entry) . . .23
Transmitter, Remote Keyless Entry (RKE) 20
Transporting Pets 67
Tread Wear Indicators 218
Turn Signals. 91

Uniform Tire Quality Grades 325
Universal Transmitter 106
Unleaded Gasoline 225
Untwisting Procedure, Seat Belt 39
Upholstery Care 281

Vanity Mirrors 79
Vehicle Identification Number (VIN) 6
Vehicle Loading 210
Vehicle Modifications/Alterations 7
Vehicle Storage 171
Vehicle Theft Alarm (Security Alarm) 18
Vinyl Trim 281
Viscosity, Engine Oil 258

Warning Flasher, Hazard 234
Warning Lights (Instrument Cluster Description) . . .127
Warnings and Cautions. 6
Warranty Information 322
Washer
Adding Fluid 266
Washers, Windshield. 96
Washing Vehicle 279
Water
Driving Through 187
Wheel and Wheel Trim 280
Wheel and Wheel Trim Care 280
Window Fogging 171
Windows 28
Power 28

Downloaded from www.Manualslib.com manuals search engine

Windshield Defroster 70
Windshield Washers 95
Windshield Wiper Blades. 265
Windshield Wipers 95
Wiper Blade Replacement 265
Wipers, Intermittent 95

Downloaded from www.Manualslib.com manuals search engine

RANSMITTING

corporated into this
e immunity to radio
adios and telephone
by trained personnel.
g installation.

l be made directly to
battery as possible.
ld be made to body
battery connection.

e mounted on the roof
e should be used in
. Magnets may affect
npass on vehicles so

The antenna cable should be as short as practical and routed away from the vehicle wiring when possible. Use only fully shielded coaxial cable.

Carefully match the antenna and cable to the radio to ensure a low Standing Wave Ratio (SWR).

Mobile radio equipment with output power greater than normal may require special precautions.

All installations should be checked for possible interference between the communications equipment and the vehicle's electronic systems.

Downloaded from www.Manualslib.com manuals search engine

SRT SERVICE

STICK WITH THE SPECIALISTS®

Chrysler Group LLC

13ZD-126-AA

First Edition Rev 1

Printed in U.S.A.

Downloaded from www.Manualslib.com manuals search engine