1. General Description

A: SPECIFICATION

Fuel tank	Capacity	64 ℓ (16.9 US gal, 14.1 Imp gal)
	Install locations	Under rear seat
Fuel pump	Type	Impeller
	Shutoff discharge pressure	550 — 850 kPa (5.6 — 8.7 kg/cm^2, 79.7 — 123.2 psi)
	Discharge rate	125 ℓ (33 US gal, 27.5 Imp gal)/h or more [12 V at 300 kPa (3.06 kg/cm^2, 43.5 psi)]
Fuel filter		In-tank type

B: COMPONENT

1. INTAKE MANIFOLD

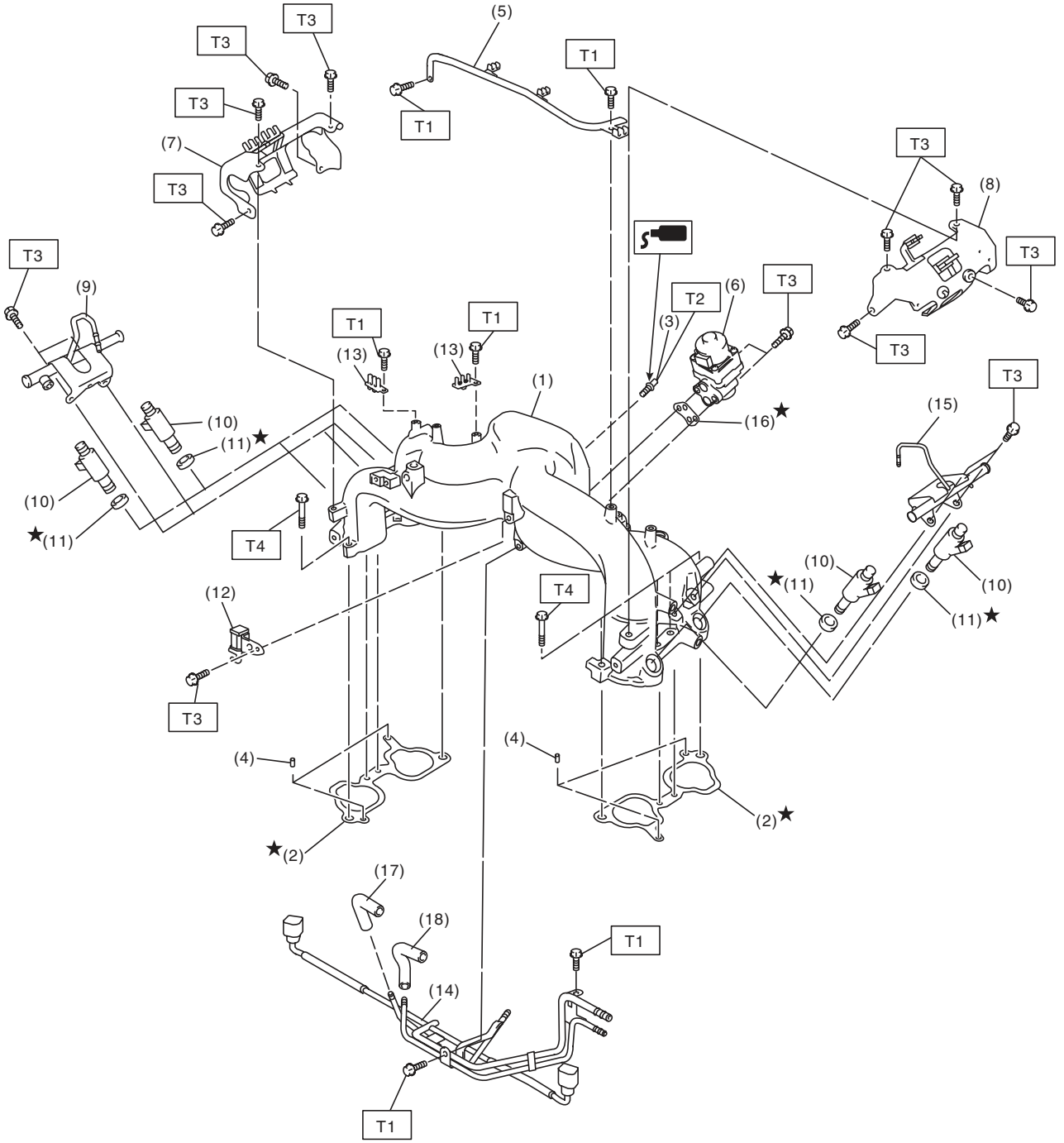

FU-04028

(1) Intake manifold
(2) Gasket
(3) Nipple
(4) Guide pin
(5) Plug cord stay
(6) EGR valve
(7) Fuel pipe protector RH
(8) Fuel pipe protector LH
(9) Fuel injector pipe RH
(10) Fuel injector
(11) O-ring
(12) Purge control solenoid valve
(13) Plug cord holder
(14) Fuel pipe ASSY
(15) Fuel injector pipe LH
(16) Gasket
(17) Evaporation hose (A)
(18) Evaporation hose (B)

Tightening torque:N·m (kgf-m, ft-lb)	
T1:	***6.4 (0.7, 4.7)***
T2:	***17 (1.7, 12.5)***
T3:	***19 (1.9, 14.0)***
T4:	***25 (2.5, 18.4)***

2. AIR INTAKE SYSTEM

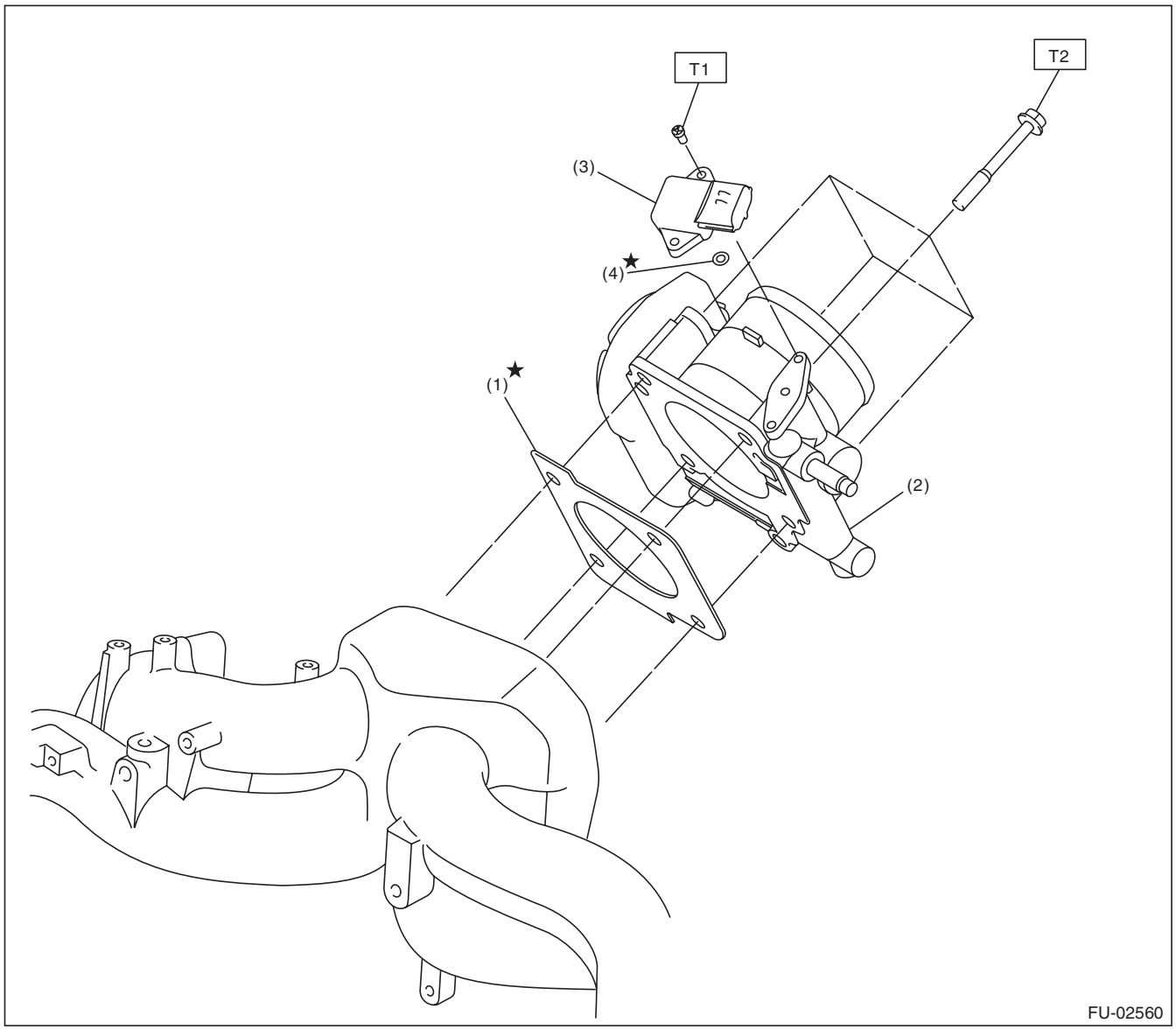

(1) Gasket
(2) Throttle body
(3) Manifold absolute pressure sensor
(4) O-ring

Tightening torque:N·m (kgf-m, ft-lb)	
T1:	***2 (0.2, 1.5)***
T2:	***8 (0.8, 5.9)***

3. CRANKSHAFT POSITION, CAMSHAFT POSITION AND KNOCK SENSORS

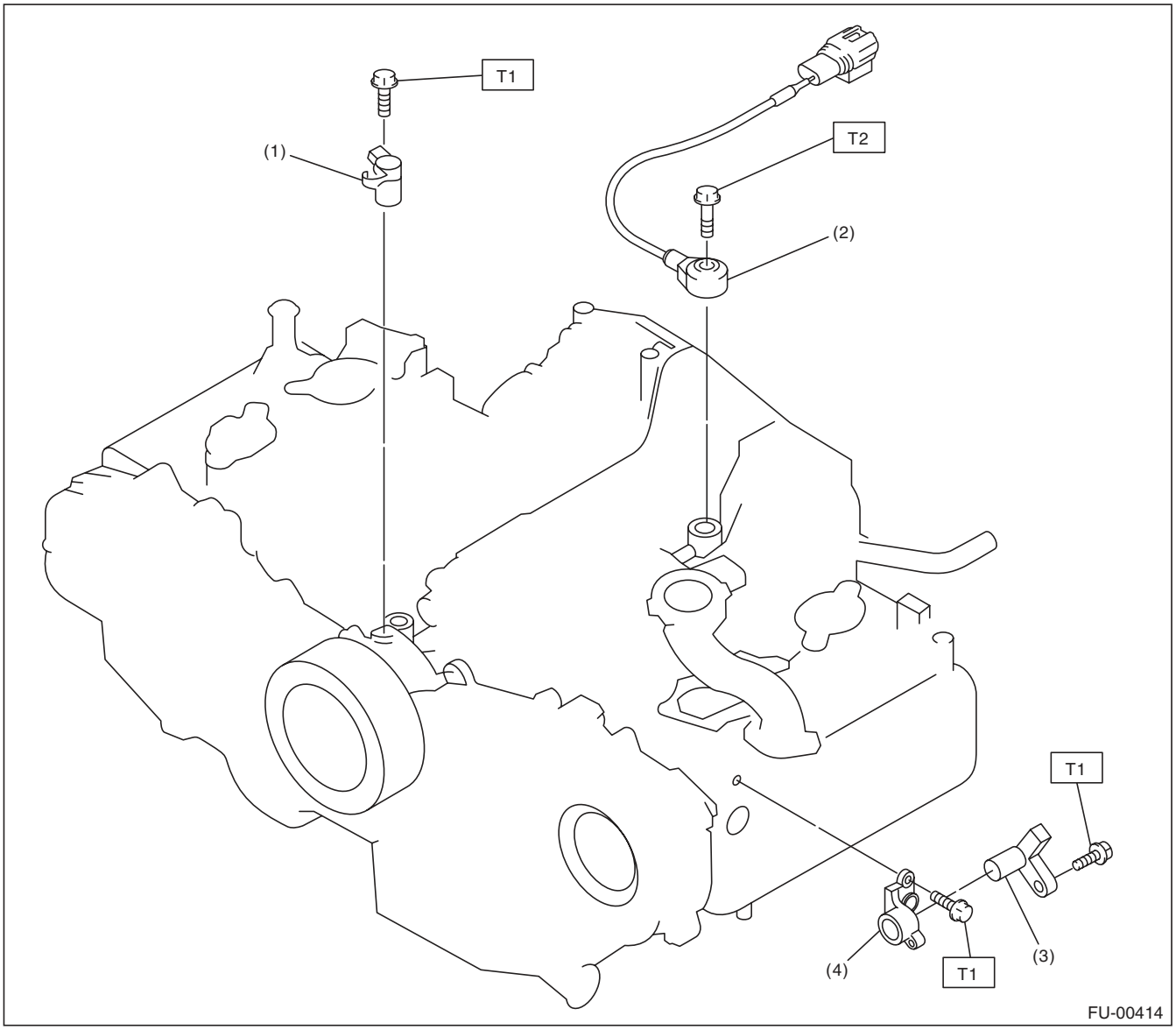

(1)	Crankshaft position sensor	(3)	Camshaft position sensor	***Tightening torque:N·m (kgf-m, ft-lb)***
(2)	Knock sensor	(4)	Camshaft position sensor support	***T1: 6.4 (0.7, 4.7)***
				T2: 24 (2.4, 17.7)

4. FUEL TANK

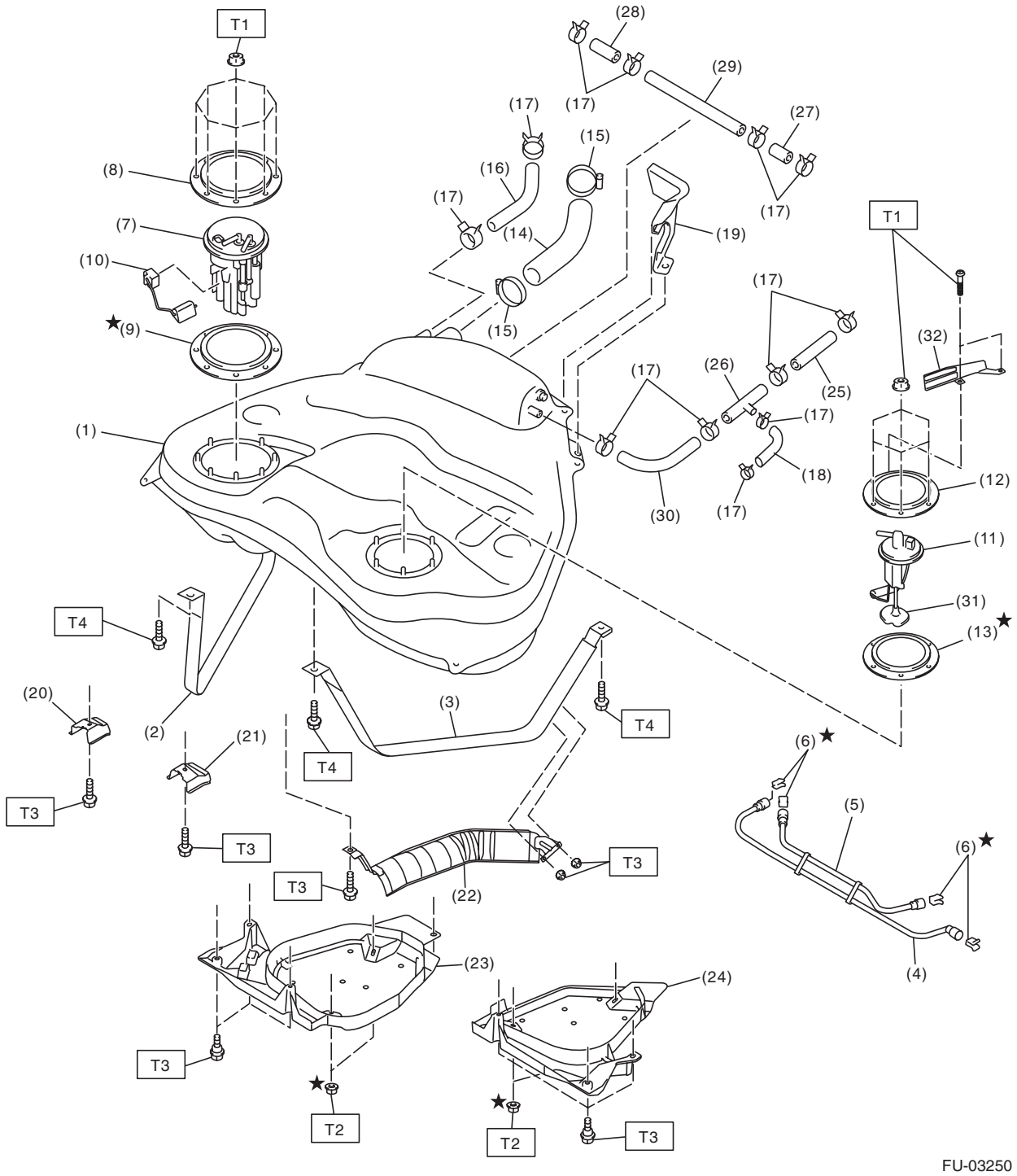
T1
(28)
(29)
(17)
(17)
(27)
(15)
(8)
(16)
(17)
(17)
(7)
(14)
(19)
(10)
(17)
★(9)
(15)
(32)
(17)
(26)
(25)
(1)
(17)
(18)
(12)
(30)
(17)
(11)
(31)
T4
(13)★
(20)
(3)
(2)
(21)
T4
T4
(6)★
T3
(5)
T3
(6)★
T3
T3
(22)
(23)
(24)
(4)
T3
★
T2
★
T2
T3
FU-03250

(1) Fuel tank
(2) Fuel tank band RH
(3) Fuel tank band LH
(4) Delivery tube
(5) Jet pump tube
(6) Retainer
(7) Fuel pump ASSY
(8) Fuel pump upper plate
(9) Fuel pump gasket
(10) Fuel level sensor
(11) Fuel sub level sensor
(12) Fuel sub level sensor upper plate
(13) Fuel sub level sensor gasket
(14) Fuel filler hose
(15) Clamp
(16) Evaporation hose A
(17) Clip
(18) Evaporation hose F
(19) Fuel tank protector LH (Rear)
(20) Stopper RH
(21) Stopper LH
(22) Heat shield cover
(23) Fuel tank protector RH (Front)
(24) Fuel tank protector LH (Front)
(25) Evaporation hose B
(26) Connector
(27) Evaporation hose C
(28) Evaporation hose D
(29) Evaporation pipe
(30) Evaporation hose E
(31) Fuel sub level sensor filter
(32) Fuel sub level sensor protector

Tightening torque:N·m (kgf-m, ft-lb)

T1: 4.4 (0.4, 3.2)
T2: 9 (0.9, 6.6)
T3: 17.5 (1.8, 12.9)
T4: 33 (3.4, 24.3)

5. FUEL LINE

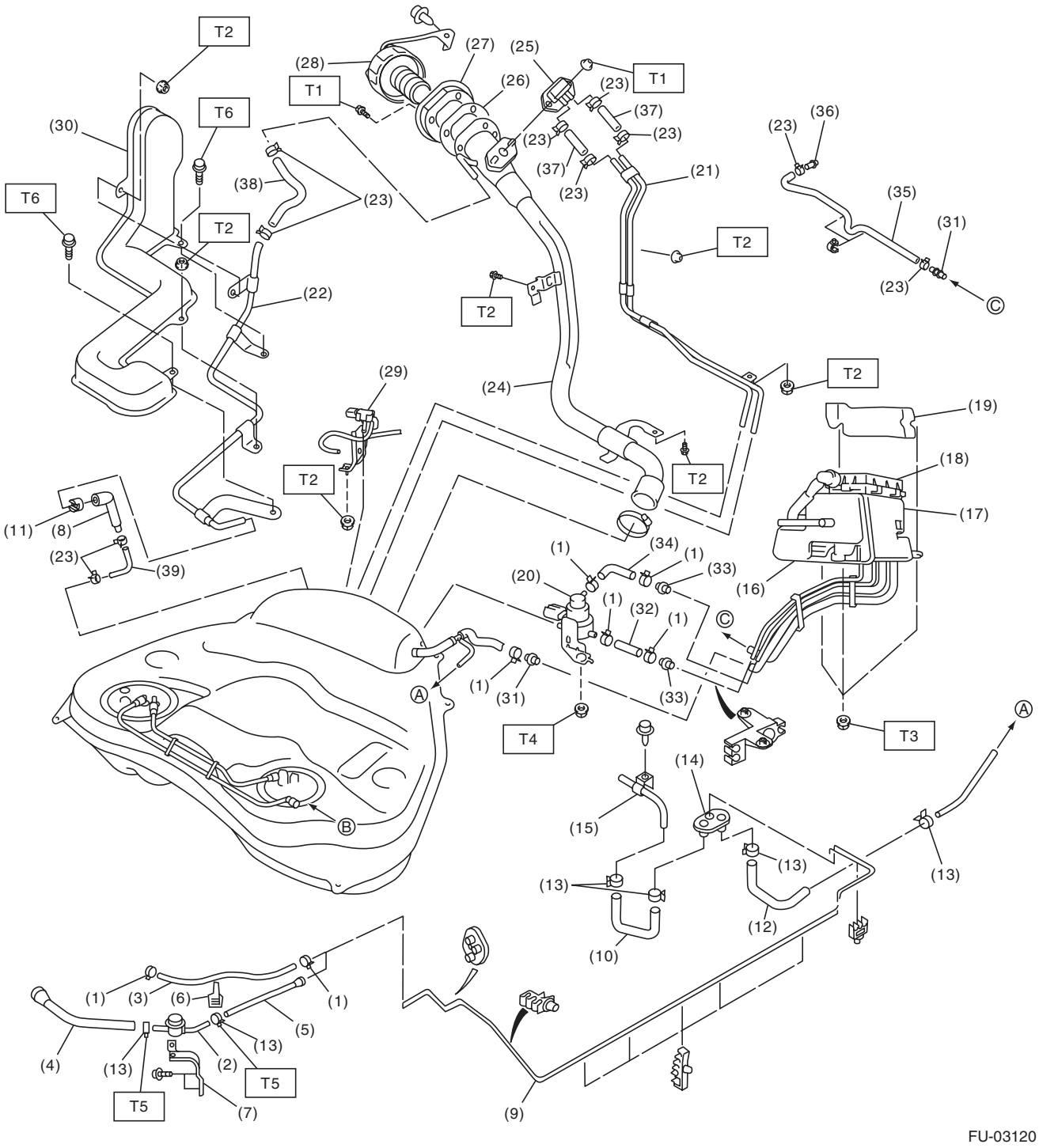
T2
T6
T1
(28)
(27)
(25)
(26)
(23)
(37)
(36)
(30)
(38)
(21)
(35)
(31)
(22)
(29)
(24)
(19)
(18)
(17)
(11)
(8)
(39)
(34)
(33)
(20)
(32)
(16)
(1)
(31)
(33)
T4
T3
(14)
(15)
(13)
(12)
(10)
(3)
(6)
(5)
(4)
(2)
T5
(7)
(9)
A
B
C
FU-03120

(1) Clip
(2) Fuel damper
(3) Evaporation hose A
(4) Fuel delivery hose A
(5) Fuel delivery hose B
(6) Clip
(7) Bracket
(8) Evaporation tube
(9) Fuel pipe ASSY A
(10) Fuel delivery hose C
(11) Retainer
(12) Evaporation hose B
(13) Clamp
(14) Grommet
(15) Fuel pipe ASSY B
(16) Canister
(17) Drain valve
(18) Drain filter
(19) Canister protector
(20) Pressure control solenoid valve
(21) Evaporation pipe A
(22) Evaporation pipe B
(23) Clip
(24) Fuel filler pipe
(25) Shut valve
(26) Gasket
(27) Filler ring
(28) Fuel filler cap
(29) Fuel tank pressure sensor
(30) Evaporation pipe protector
(31) Connector A
(32) Canister hose A
(33) Connector B
(34) Canister hose B
(35) Drain hose
(36) Drain hose connector
(37) Evaporation hose C
(38) Evaporation hose D
(39) Evaporation hose E

Tightening torque:N·m (kgf-m, ft-lb)	
T1:	***4.4 (0.4, 3.2)***
T2:	***7.5 (0.8, 5.5)***
T3:	***8 (0.8, 5.9)***
T4:	***17.6 (1.8, 13)***
T5:	***1.25 (0.1, 0.9)***
T6:	***1 (0.1, 0.7)***

6. FUEL PUMP

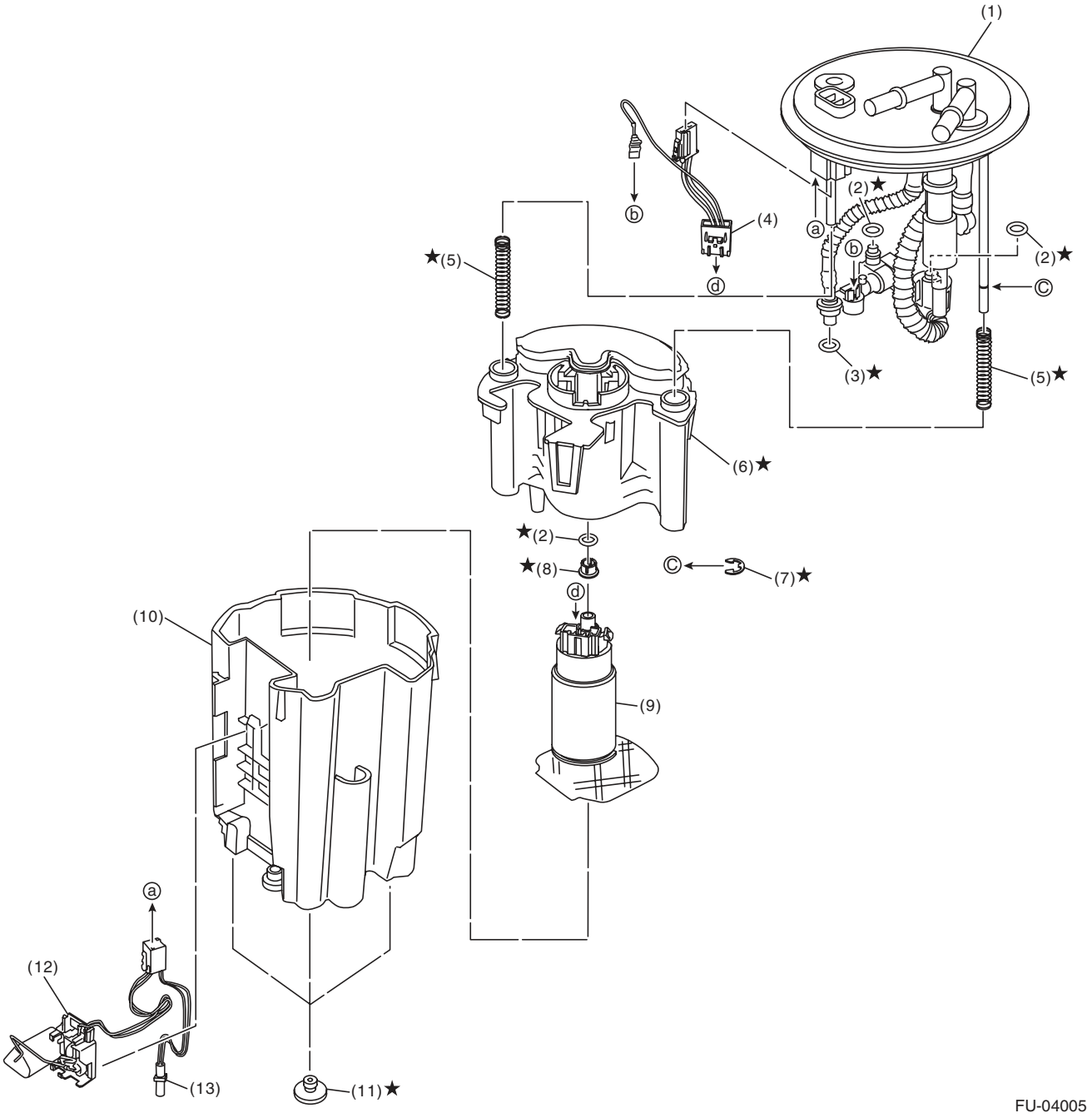

(1)	Sub tank bracket ASSY	(6)	Fuel filter	(10)	Sub tank
(2)	O-ring	(7)	Clip	(11)	Cushion
(3)	O-ring	(8)	Spacer	(12)	Fuel level sensor
(4)	Fuel pump harness	(9)	Pump ASSY	(13)	Fuel temperature sensor
(5)	Spring				

C: CAUTION

- Wear appropriate work clothing, including a cap, protective goggles and protective shoes when performing any work.
- Remove contamination including dirt and corrosion before removal, installation or disassembly.
- Keep the disassembled parts in order and protect them from dust and dirt.
- Before removal, installation or disassembly, be sure to clarify the failure. Avoid unnecessary removal, installation, disassembly and replacement.
- Vehicle components are extremely hot after driving. Be wary of receiving burns from heated parts.
- Be sure to tighten fasteners including bolts and nuts to the specified torque.
- Place shop jacks or rigid racks at the specified points.
- Before disconnecting connectors of sensors or units, be sure to disconnect the ground cable from the battery.
- Place “NO OPEN FLAMES” signs near the working area.
- Prepare a container and cloth to prevent scattering of fuels when performing work where fuels can be spilled. If the fuel spills, wipe it off immediately to prevent from penetrating into floor or flowing out for environmental protection.
- Follow all government and local regulations concerning disposal of refuse when disposing fuel.

D: PREPARATION TOOL

ILLUSTRATION	TOOL NUMBER	DESCRIPTION	REMARKS
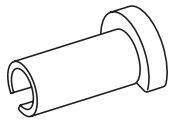 ST42099AE000	42099AE000	QUICK CONNECTOR RELEASE	Used for removing the quick connector.
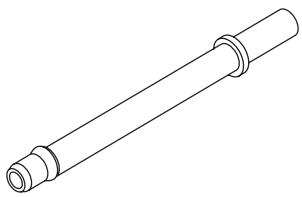 ST18471AA000	18471AA000	FUEL PIPE ADAPTER	Used for draining fuel.
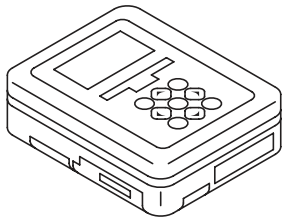 ST1B022XU0	1B022XU0	SUBARU SELECT MONITOR III KIT	Used for draining fuel.

2. Throttle Body

A: REMOVAL

1) Set the vehicle on a lift.
2) Disconnect the ground cable from battery.

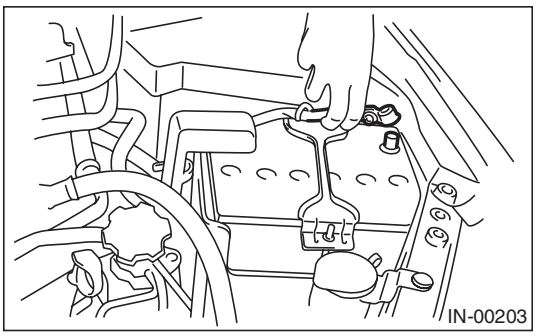

3) Lift up the vehicle.
4) Remove the under cover.
5) Drain approximately 3.0 ℓ (3.2 US qt, 2.6 Imp qt) of coolant. <Ref. to CO(H4SO)-13, DRAINING OF ENGINE COOLANT, REPLACEMENT, Engine Coolant.>
6) Remove the air intake chamber. <Ref. to IN(H4SO)-7, REMOVAL, Air Intake Chamber.>
7) Disconnect the throttle position sensor connector (A) and manifold absolute pressure sensor connector (B).

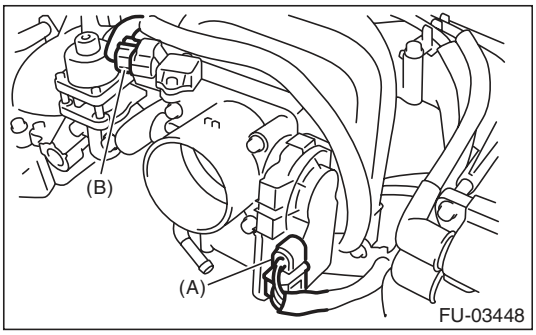

8) Disconnect the engine coolant hoses (A) from the throttle body.
9) Remove the bolts (B) which secure the throttle body to the intake manifold, and remove the throttle body.

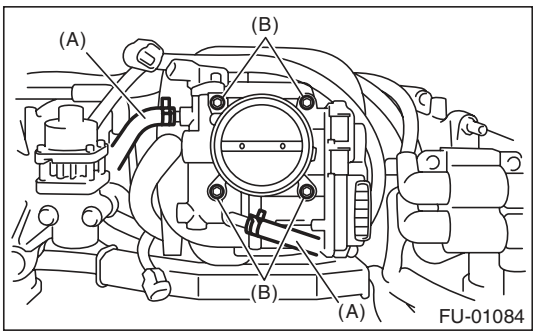

B: INSTALLATION

Install in the reverse order of removal.

NOTE:
Use a new gasket.

Tightening torque:
8 N·m (0.8 kgf-m, 5.9 ft-lb)

3. Intake Manifold

A: REMOVAL

1) Set the vehicle on a lift.
2) Release the fuel pressure. <Ref. to FU(H4SO)-43, RELEASING OF FUEL PRESSURE, PROCEDURE, Fuel.>
3) Disconnect the ground cable from battery.

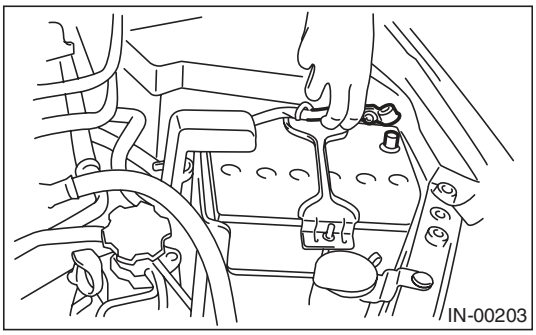

4) Open the fuel filler lid, and remove the fuel filler cap.
5) Lift up the vehicle.
6) Remove the under cover.
7) Drain approximately 3.0 ℓ (3.2 US qt, 2.6 Imp qt) of coolant. <Ref. to CO(H4SO)-13, DRAINING OF ENGINE COOLANT, REPLACEMENT, Engine Coolant.>
8) Remove the air intake duct and air intake chamber. <Ref. to IN(H4SO)-8, REMOVAL, Air Intake Duct.> <Ref. to IN(H4SO)-7, REMOVAL, Air Intake Chamber.>
9) Remove the generator. <Ref. to SC(H4SO)-14, REMOVAL, Generator.>
10) Disconnect the spark plug cord from the spark plug.
11) Disconnect the engine coolant hoses (A) from throttle body.

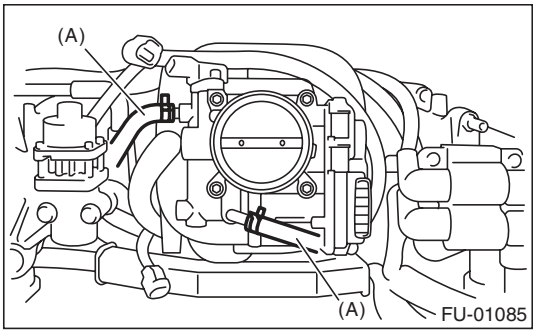

12) Disconnect the brake booster vacuum hose (A).

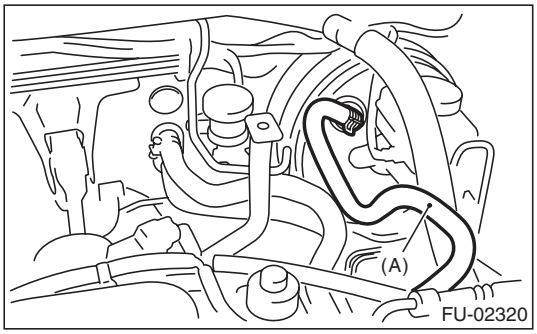

13) Disconnect the PCV hose (A) from intake manifold.

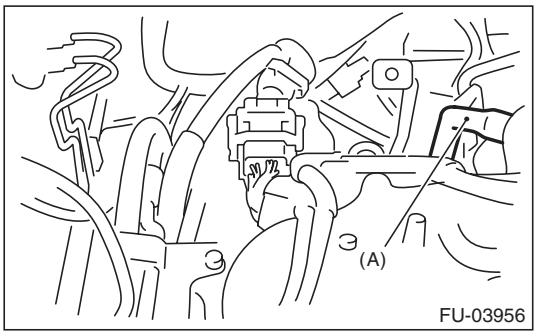

14) Remove the bolt, and disconnect the bulk head harness connector from the engine harness connector and rear engine hanger.

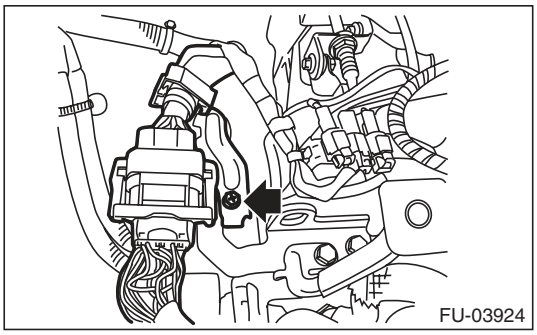

15) Slide the engine harness connector in the direction of the arrow and remove the rear engine hanger.

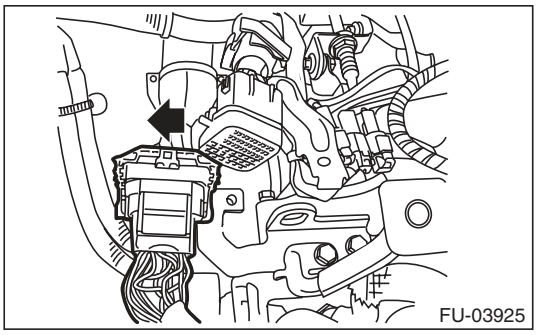

16) Disconnect the connectors from the engine coolant temperature sensor.

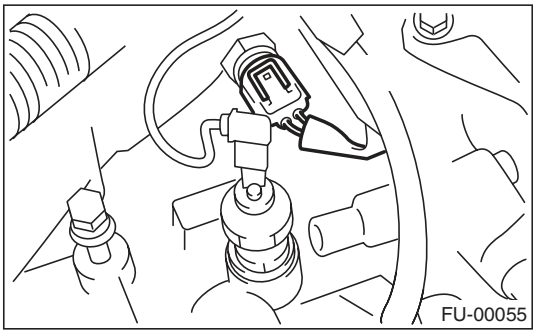

17) Disconnect the knock sensor connector.

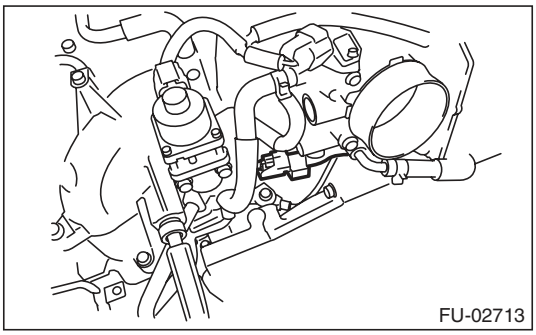

18) Disconnect the connector from crankshaft position sensor.

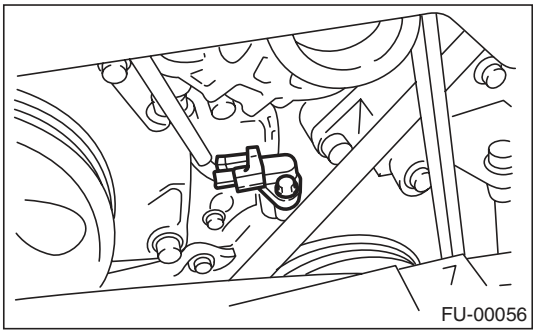

19) Disconnect the connector from power steering pump switch (A).
20) Disconnect the connector from the oil pressure switch (B).

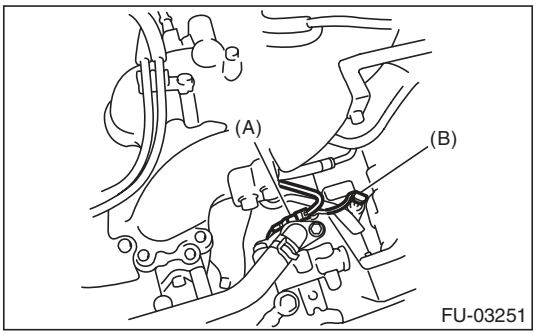

21) Disconnect the connector from the camshaft position sensor.

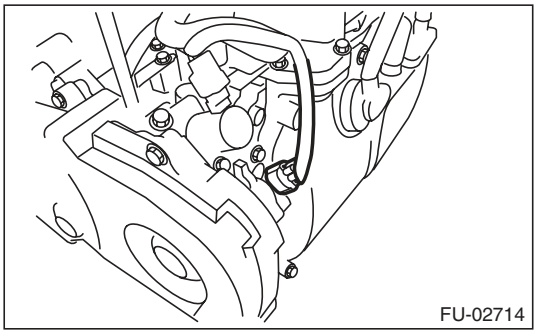

22) Disconnect the front oxygen (A/F) sensor connector (A) and rear oxygen sensor connector (B).

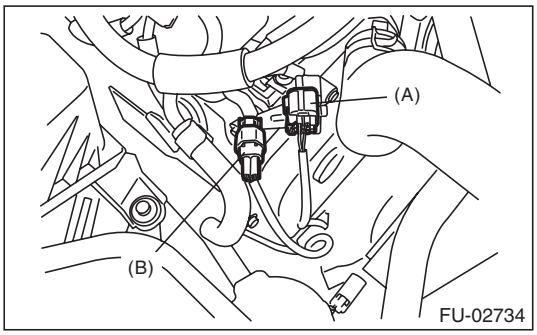

23) Disconnect the connector from the oil switching solenoid valve.
24) Disconnect the connector from the variable valve lift diagnosis oil pressure switch.

- LH side

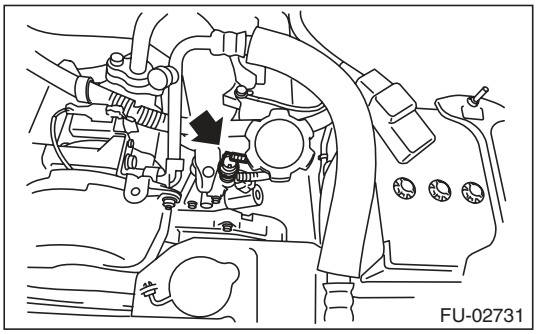

- RH side

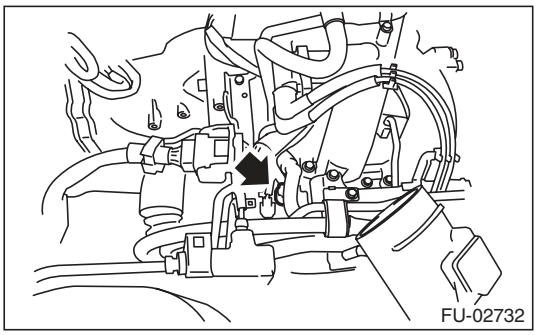

25) Disconnect the connector from the oil temperature sensor.

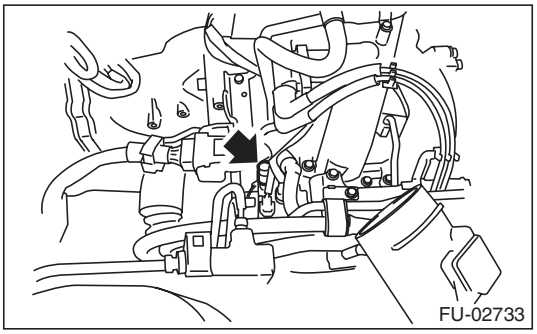

26) Remove the EGR pipe from intake manifold.

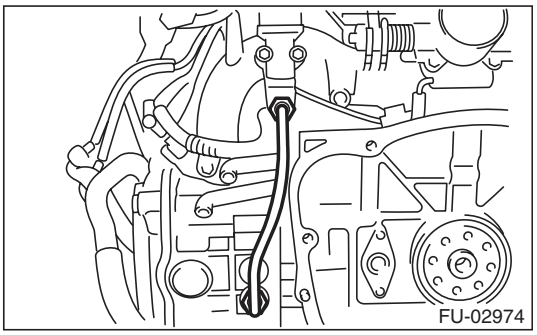

27) Disconnect the fuel hoses from fuel pipe.
(1) Disconnect the quick connector on the fuel delivery line by pushing the ST in the direction of the arrow.

ST 42099AE000 QUICK CONNECTOR RELEASE

(2) Remove the clip and disconnect the evaporation hose from the pipe.

CAUTION:
- **Be careful not to spill fuel.**
- **Catch the fuel from hoses using a container or cloth.**

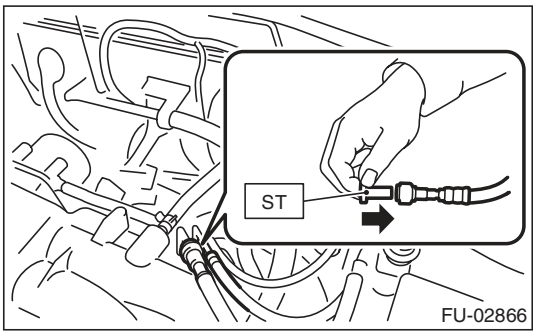

28) Remove the bolts which secure intake manifold to cylinder head.

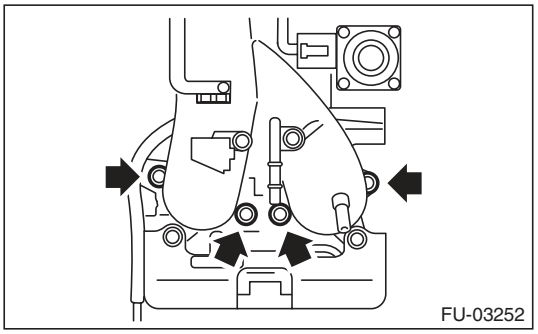

29) Remove the intake manifold.

B: INSTALLATION

1) Install the intake manifold onto cylinder heads.

NOTE:
Use a new gasket.

Tightening torque:
25 N·m (2.5 kgf-m, 18.4 ft-lb)

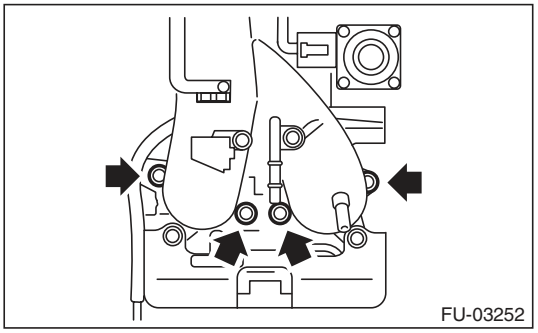

2) Connect the fuel delivery hose and evaporation hose to the fuel pipe. <Ref. to FU(H4SO)-66, INSTALLATION, Fuel Delivery and Evaporation Lines.>

NOTE:
If fuel hoses or clamps are damaged, replace them with new parts.

3) Install the EGR pipe to intake manifold.

Tightening torque:
34 N·m (3.5 kgf-m, 25.1 ft-lb)

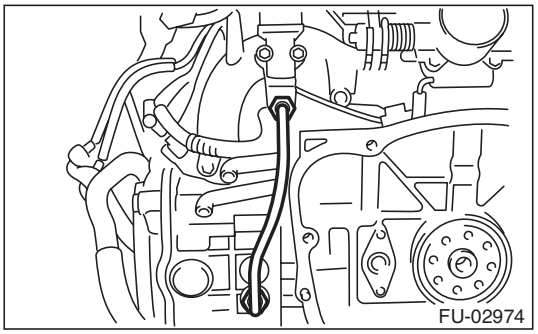

4) Connect the connector to the oil temperature sensor.

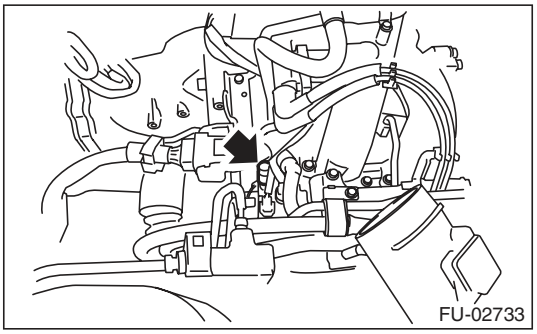

5) Connect the connector to the variable valve lift diagnosis oil pressure switch.

- LH side

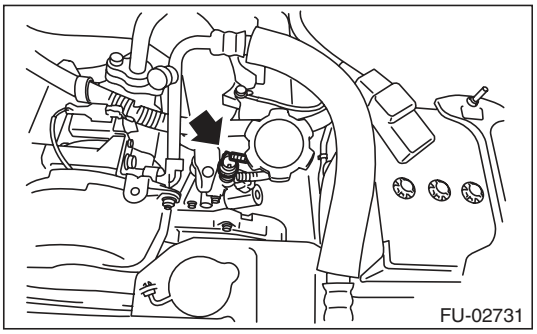

- RH side

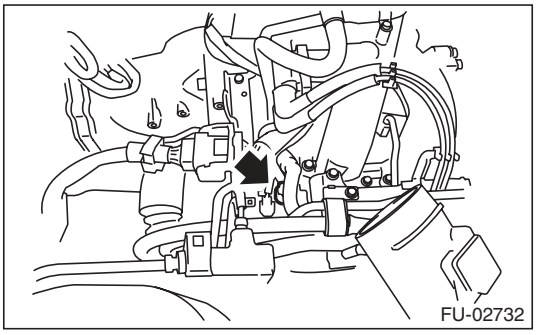

6) Connect the connector to the oil switching solenoid valve.

7) Connect the front oxygen (A/F) sensor connector (A) and rear oxygen sensor connector (B).

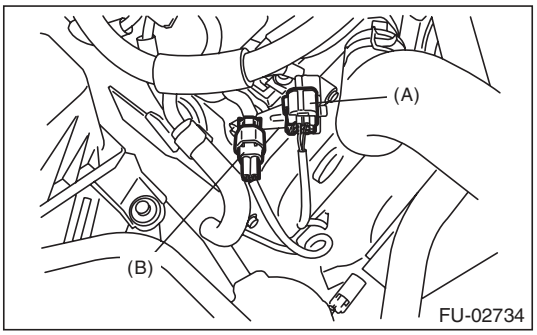

8) Connect the connectors to camshaft position sensor.

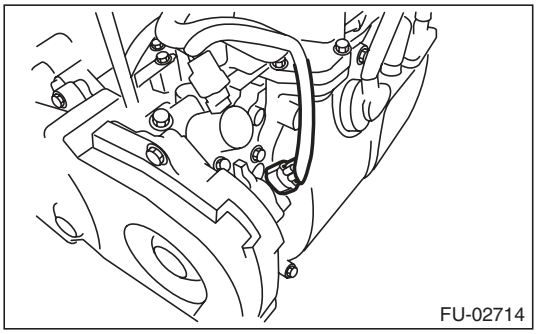

9) Connect the connector to the power steering pump switch (A).

10) Connect the connector to the oil pressure switch (B).

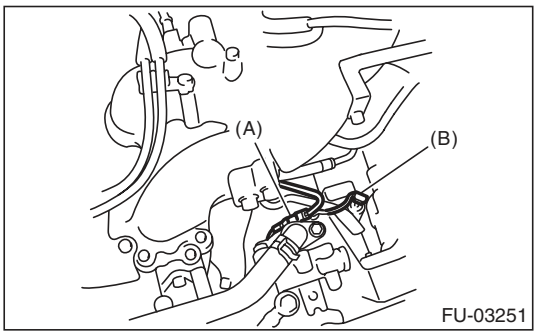

11) Connect the connector to crankshaft position sensor.

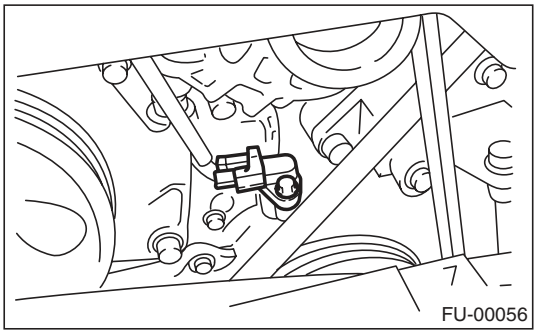

12) Connect the knock sensor connector.

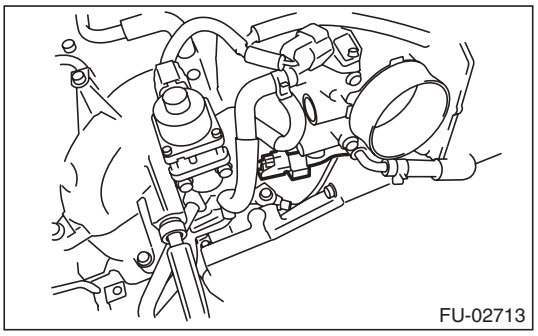

13) Connect the connector to engine coolant temperature sensor.

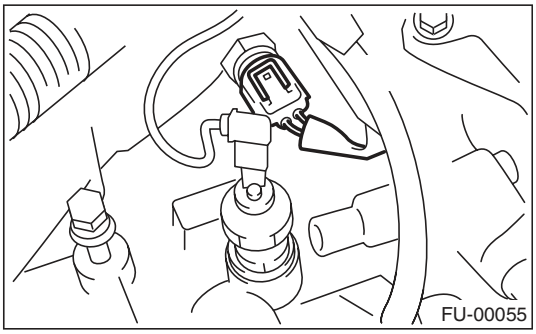

14) Connect the PCV hose (A) to intake manifold.

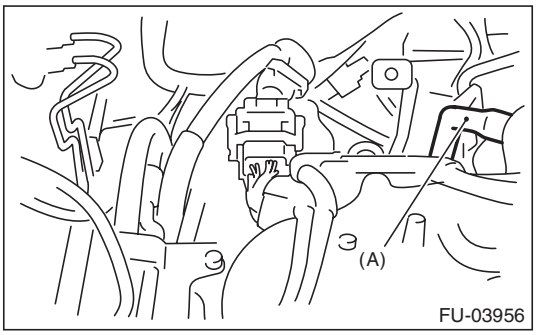

15) Connect the brake booster hose (A).

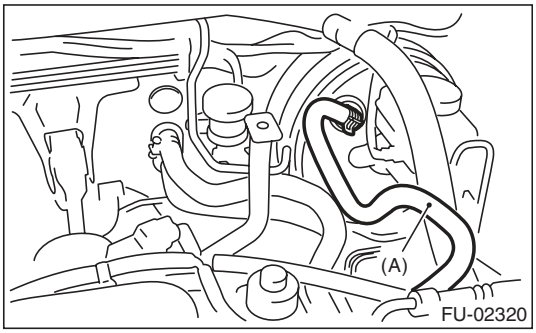

16) Connect the engine harness connector to the bulkhead harness connector and fasten to the rear engine hanger with bolt.

Tightening torque:
6.4 N·m (0.7 kgf-m, 4.7 ft-lb)

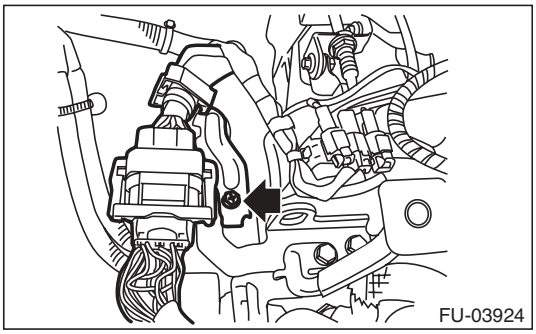

17) Connect the engine coolant hoses (A) to throttle body.

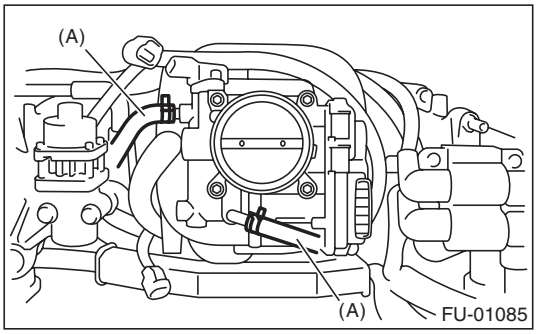

18) Connect the spark plug cords to spark plugs.
19) Install the generator. <Ref. to SC(H4SO)-14, INSTALLATION, Generator.>
20) Install the air intake duct and air intake chamber. <Ref. to IN(H4SO)-8, INSTALLATION, Air Intake Duct.> <Ref. to IN(H4SO)-7, INSTALLATION, Air Intake Chamber.>
21) Connect the ground cable to battery.

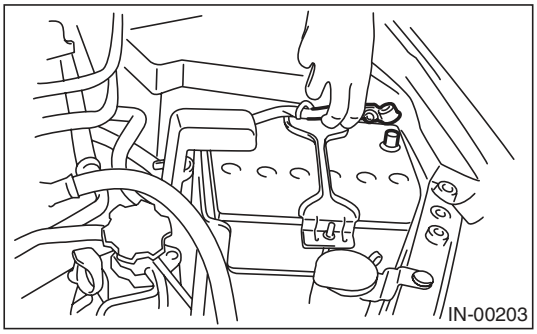

22) Lift up the vehicle.
23) Install the under cover.
24) Lower the vehicle.
25) Fill engine coolant. <Ref. to CO(H4SO)-13, DRAINING OF ENGINE COOLANT, REPLACEMENT, Engine Coolant.>

C: DISASSEMBLY

1) Disconnect the engine ground terminal from intake manifold.

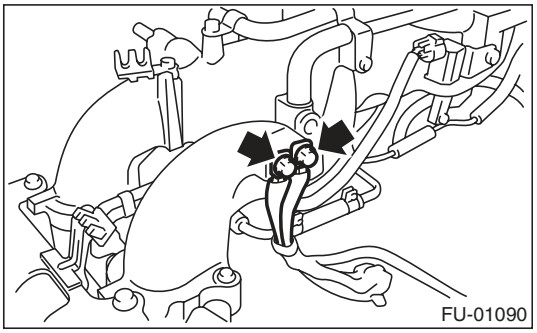

2) Remove the ignition coil and ignitor assembly. <Ref. to IG(H4SO)-6, REMOVAL, Ignition Coil and Ignitor Assembly.>
3) Remove the throttle body. <Ref. to FU(H4SO)-12, REMOVAL, Throttle Body.>
4) Remove the EGR valve. <Ref. to FU(H4SO)-29, REMOVAL, EGR Valve.>
5) Remove the plug cord stay.

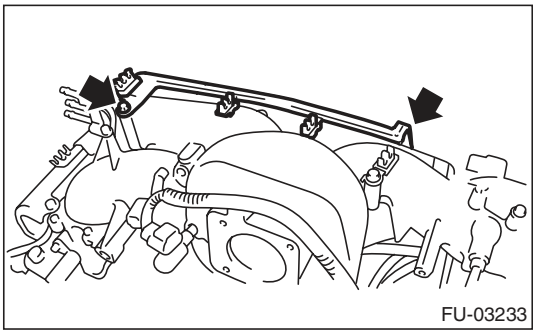

6) Remove the fuel pipe protector LH.

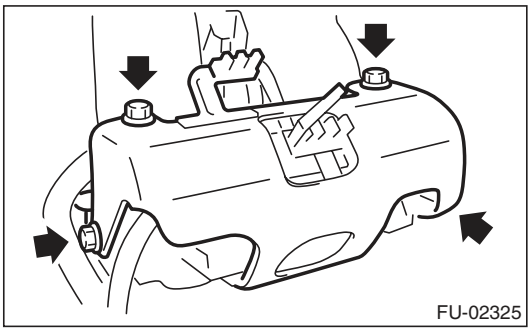

7) Remove the fuel pipe protector RH.

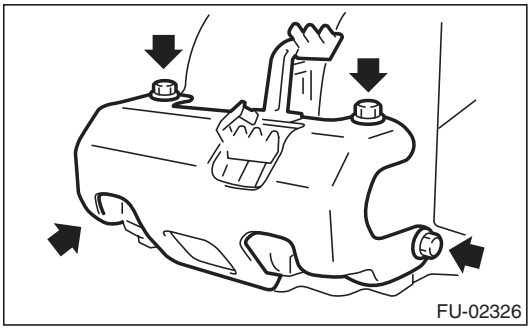

8) Disconnect the connectors (A) from fuel injector.
9) Remove the harness band (B) which holds the engine harness to the fuel injector pipe.

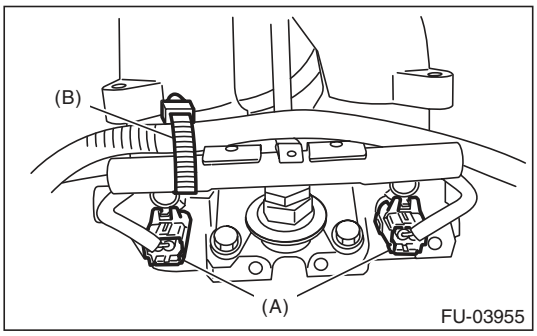

10) Remove the purge control solenoid valve. <Ref. to EC(H4SO)-7, REMOVAL, Purge Control Solenoid Valve.>
11) Remove the bolts which hold engine harness to intake manifold.

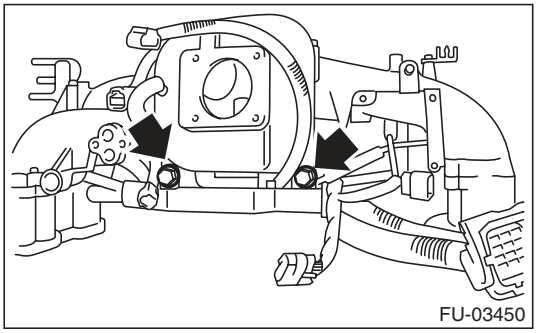

12) Remove the engine harness from intake manifold.
13) Remove the bolts which install fuel injector pipe on the intake manifold as shown in the figure

- RH side

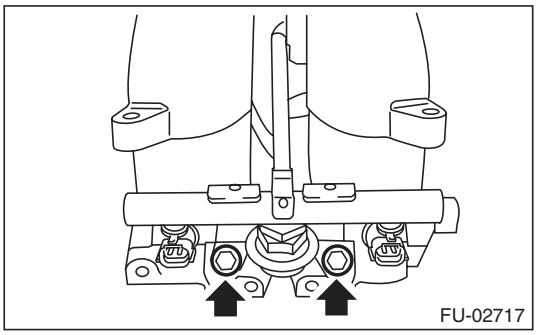

- LH side

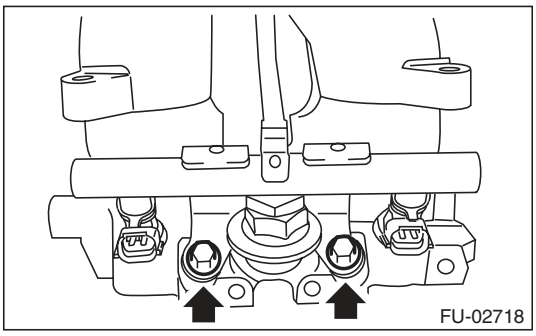

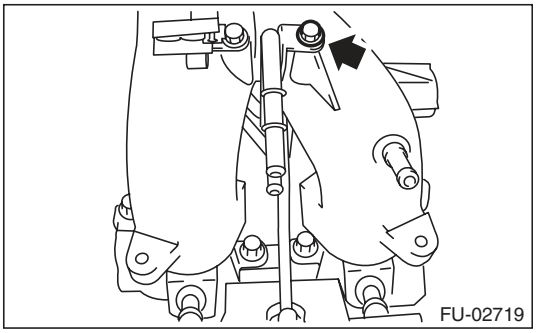

14) Remove the fuel injectors from the fuel injector pipe.
15) Disconnect the quick connector that fastens the fuel injector pipe RH to the fuel pipe.

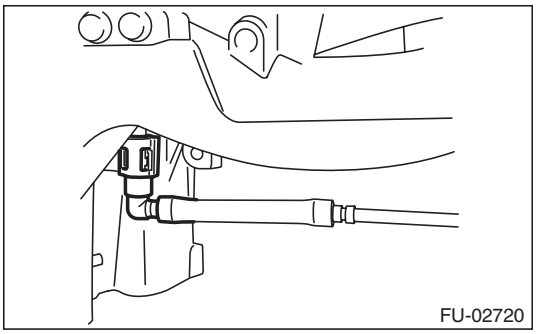

16) Disconnect the quick connector that fastens the fuel injector pipe LH to the fuel pipe.

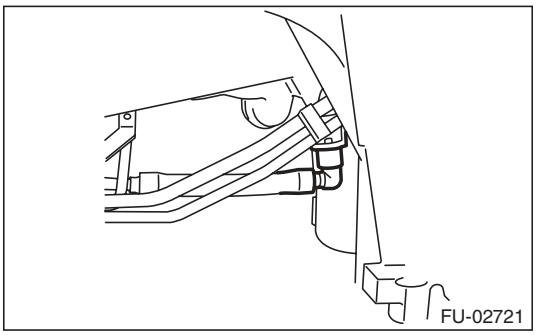

17) Remove the fuel injector pipe RH and LH.

18) Remove the bolts which install fuel pipes on intake manifold.

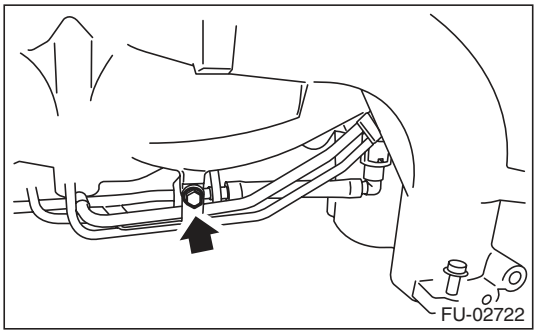

19) Remove the fuel pipe from the intake manifold.

D: ASSEMBLY

NOTE:
When assembling the nipple, apply liquid gasket.

Liquid gasket:
THREE BOND 1105 (Part No. 004403010) or equivalent

Tightening torque:
17 N·m (1.7 kgf-m, 12.5 ft-lb)

1) Tighten the bolts which install fuel pipes on intake manifold.

Tightening torque:
6.4 N·m (0.7 kgf-m, 4.7 ft-lb)

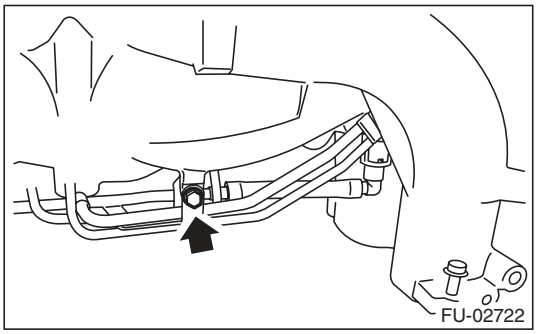

2) Connect the fuel injector pipe LH to the fuel pipe.

NOTE:
Connect the quick connector securely.

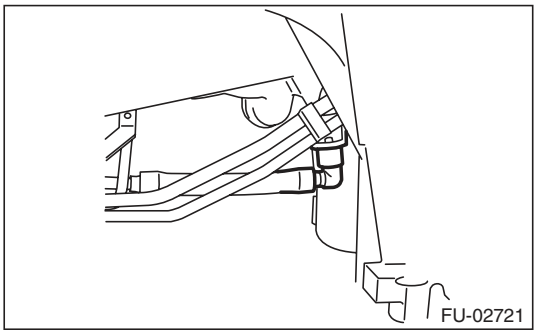

3) Connect the fuel injector pipe RH to the fuel pipe.

NOTE:
Connect the quick connector securely.

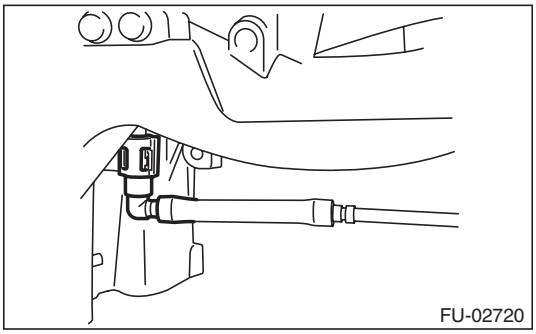

4) Install the fuel injector.
5) Tighten the bolts which install fuel injector pipes on intake manifold.

- RH side

Tightening torque:
19 N·m (1.9 kgf-m, 14.0 ft-lb)

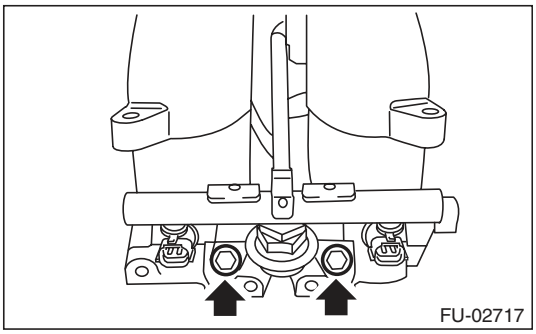

- LH side

Tightening torque:
19 N·m (1.9 kgf-m, 14.0 ft-lb)

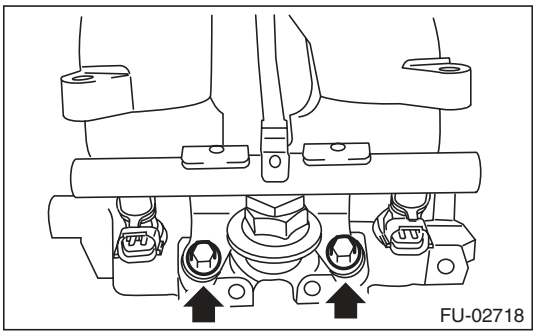

Tightening torque:
6.4 N·m (0.7 kgf-m, 4.7 ft-lb)

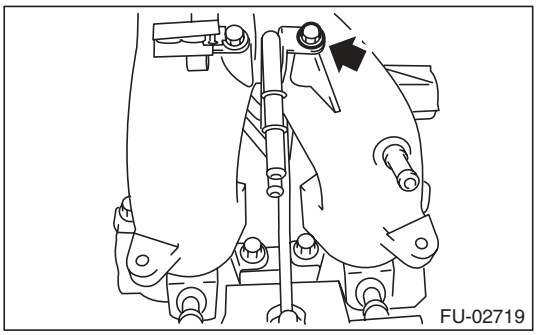

6) Install the engine harness to the intake manifold.
7) Tighten the bolts which install engine harness on intake manifold.

Tightening torque:
19 N·m (1.9 kgf-m, 14.0 ft-lb)

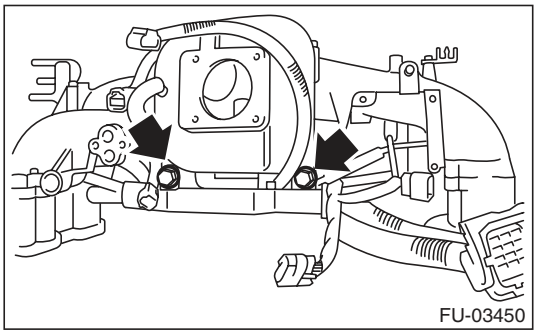

8) Install the purge control solenoid valve. <Ref. to EC(H4SO)-7, INSTALLATION, Purge Control Solenoid Valve.>
9) Connect the connectors (A) to fuel injector.
10) Hold the engine harness to injector pipe by harness band (B).

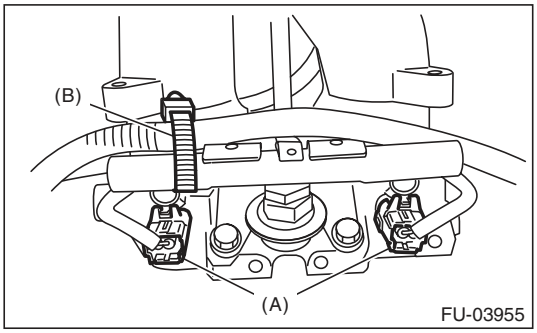

11) Install the fuel pipe protector RH.

Tightening torque:
19 N·m (1.9 kgf-m, 14.0 ft-lb)

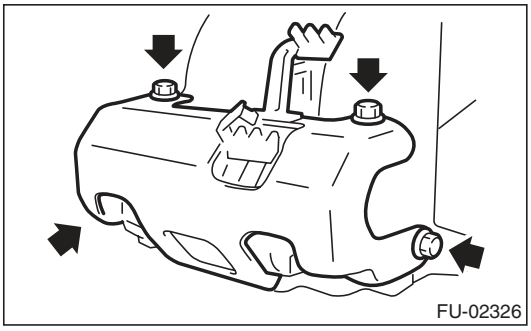

12) Install the fuel pipe protector LH.

Tightening torque:
19 N·m (1.9 kgf-m, 14.0 ft-lb)

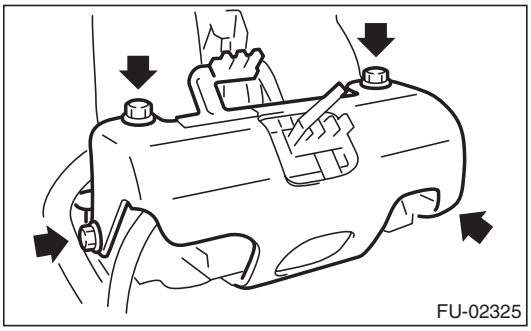

13) Install the plug cord stay.

Tightening torque:
6.4 N·m (0.7 kgf-m, 4.7 ft-lb)

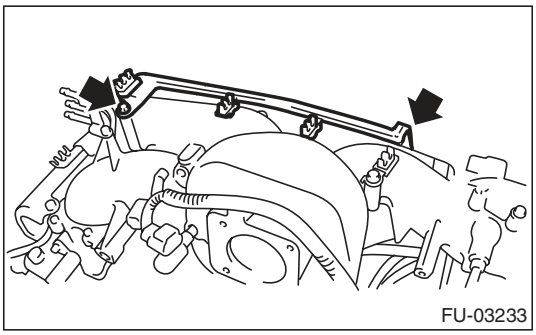

14) Install the EGR valve. <Ref. to FU(H4SO)-29, INSTALLATION, EGR Valve.>
15) Install the throttle body to intake manifold. <Ref. to FU(H4SO)-12, INSTALLATION, Throttle Body.>
16) Install the ignition coil and ignitor assembly. <Ref. to IG(H4SO)-6, INSTALLATION, Ignition Coil and Ignitor Assembly.>
17) Install the engine ground terminal to intake manifold.

Tightening torque:
19 N·m (1.9 kgf-m, 14.0 ft-lb)

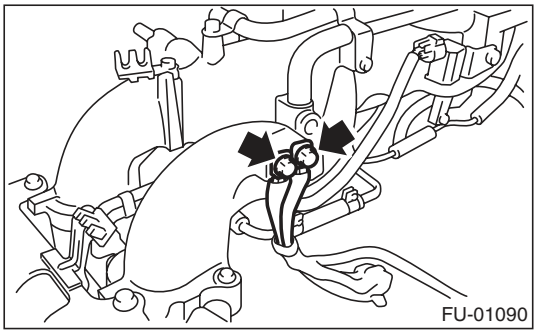

E: INSPECTION

Make sure the fuel pipe and fuel hoses are not damaged and the connections are tightened firmly.

4. Engine Coolant Temperature Sensor

A: REMOVAL

1) Disconnect the ground cable from battery.

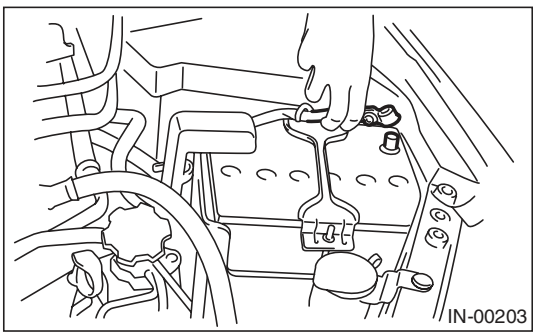

2) Remove the generator. <Ref. to SC(H4SO)-14, REMOVAL, Generator.>
3) Drain engine coolant. <Ref. to CO(H4SO)-13, DRAINING OF ENGINE COOLANT, REPLACEMENT, Engine Coolant.>
4) Disconnect the connectors from the engine coolant temperature sensor.

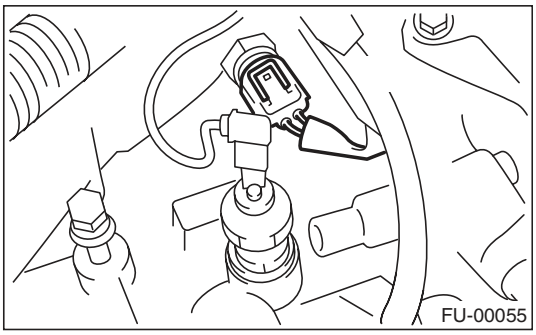

5) Remove the engine coolant temperature sensor.

B: INSTALLATION

Install in the reverse order of removal.

NOTE:
Use a new gasket.

Tightening torque:
18 N·m (1.8 kgf-m, 13.3 ft-lb)

5. Crankshaft Position Sensor

A: REMOVAL

1) Disconnect the ground cable from battery.

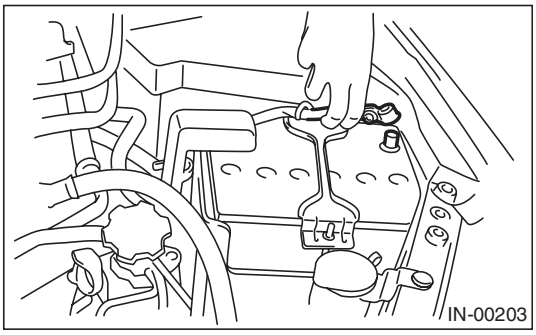

2) Remove the bolt which installs crankshaft position sensor to cylinder block.

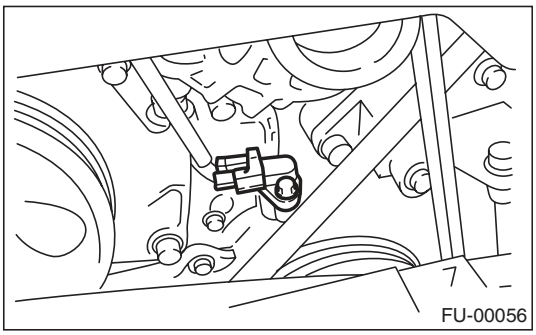

3) Remove the crankshaft position sensor, and then disconnect the connector from it.

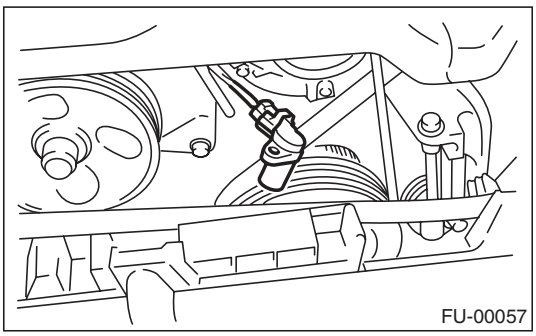

B: INSTALLATION

Install in the reverse order of removal.

Tightening torque:
6.4 N·m (0.7 kgf-m, 4.7 ft-lb)

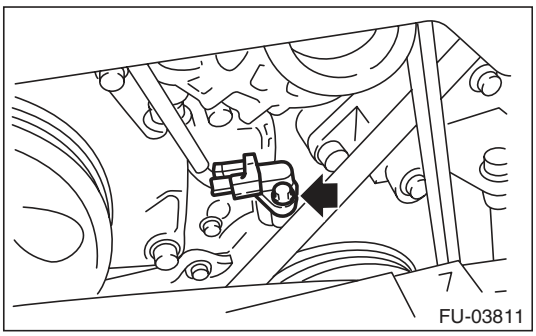

6. Camshaft Position Sensor

A: REMOVAL

1) Disconnect the ground cable from battery.

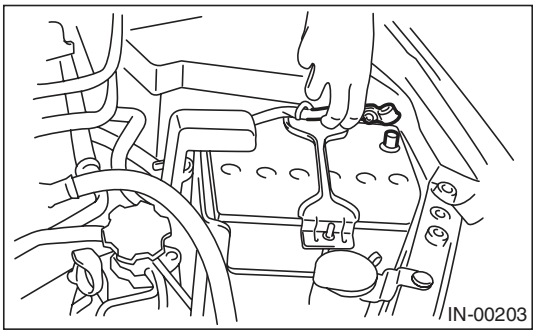

2) Disconnect the connector from the camshaft position sensor.

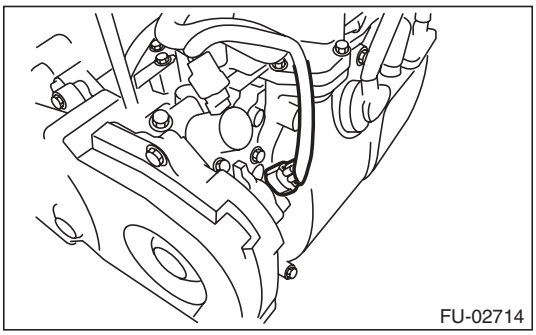

3) Remove the bolt which installs camshaft position sensor to support.

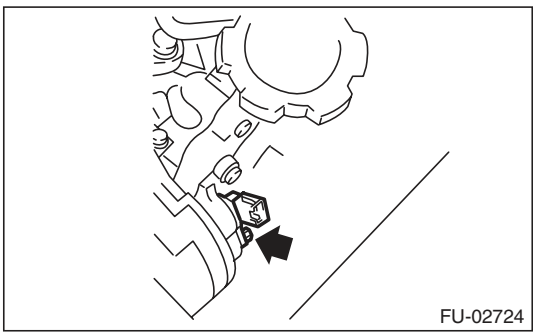

4) Remove the bolt which installs camshaft position sensor support to camshaft cap LH.

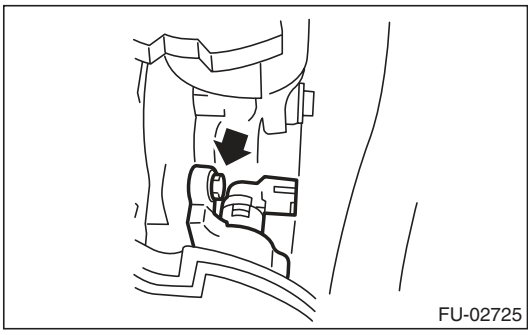

5) Remove the camshaft position sensor and the camshaft position sensor support as a unit.

6) Remove the camshaft position sensor from the camshaft position sensor support.

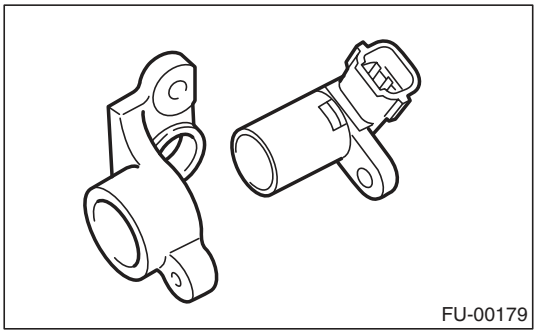

B: INSTALLATION

Install in the reverse order of removal.

Tightening torque:
Camshaft position sensor support
6.4 N·m (0.7 kgf-m, 4.7 ft-lb)
Camshaft position sensor
6.4 N·m (0.7 kgf-m, 4.7 ft-lb)

7. Knock Sensor

A: REMOVAL

1) Disconnect the ground cable from battery.

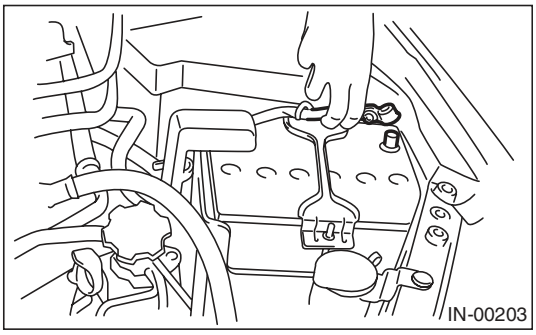

2) Remove the air intake chamber. <Ref. to IN(H4SO)-7, REMOVAL, Air Intake Chamber.>
3) Disconnect the knock sensor connector.

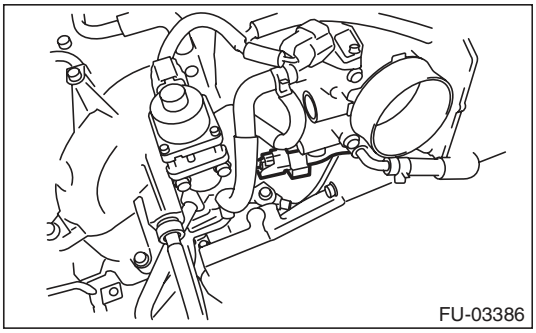

4) Remove the knock sensor from the cylinder block.

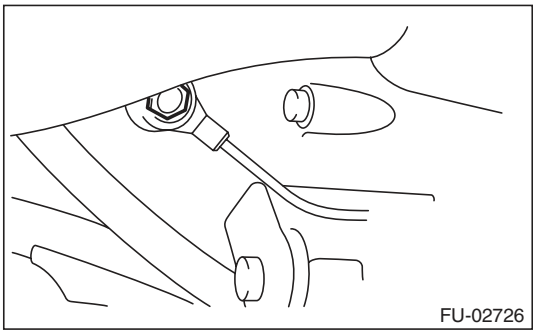

B: INSTALLATION

1) Install the knock sensor to the cylinder block.

NOTE:
Extraction area of knock sensor cord must be positioned at a 60° angle relative to the engine rear.

Tightening torque:
24 N·m (2.4 kgf-m, 17.7 ft-lb)

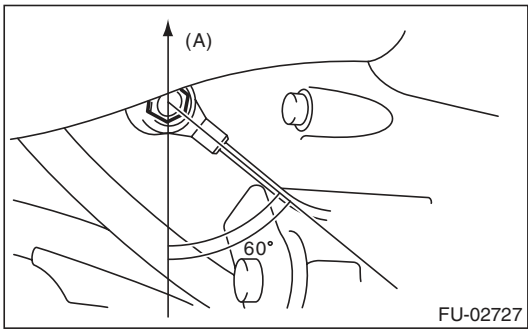

(A) Front side

2) Connect the knock sensor connector.

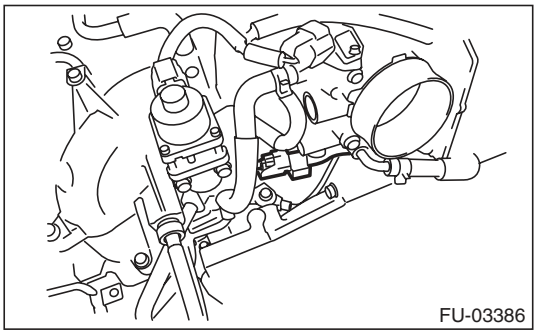

3) Install the air intake chamber. <Ref. to IN(H4SO)-7, INSTALLATION, Air Intake Chamber.>
4) Connect the ground cable to battery.

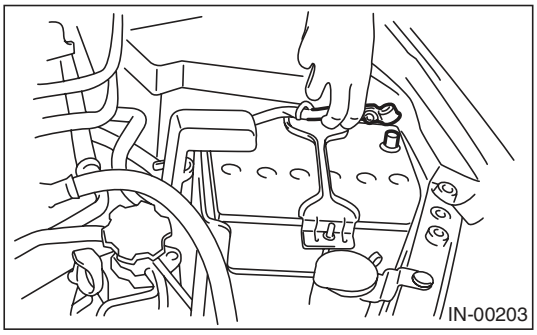

8. Throttle Position Sensor

A: SPECIFICATION

Throttle body is a non-disassembled part, so do not remove the throttle position sensor from throttle body.
Refer to “Throttle Body” for removal and installation procedure. <Ref. to FU(H4SO)-12, REMOVAL, Throttle Body.> <Ref. to FU(H4SO)-12, INSTALLATION, Throttle Body.>

9. Manifold Absolute Pressure Sensor

A: REMOVAL

1) Disconnect the ground cable from battery.

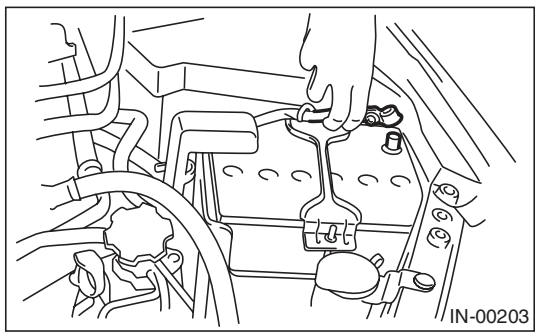

2) Disconnect the connector from the manifold absolute pressure sensor and remove the manifold absolute pressure sensor from throttle body.

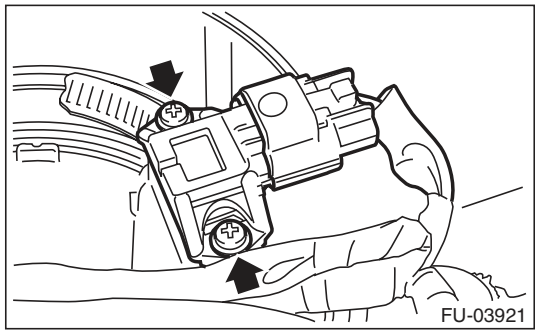

B: INSTALLATION

Install in the reverse order of removal.

NOTE:
Use new O-rings.

Tightening torque:
2 N·m (0.2 kgf-m, 1.5 ft-lb)

10. Mass Air Flow and Intake Air Temperature Sensor

A: REMOVAL

1) Disconnect the ground cable from battery.

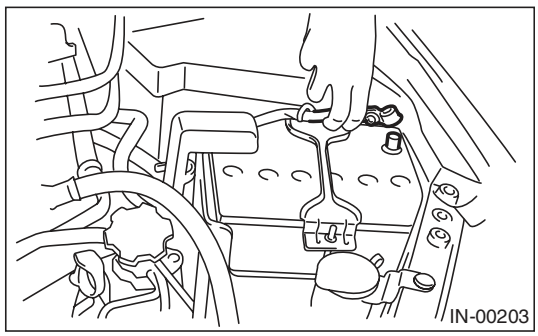

2) Disconnect the connector from the mass air flow and intake air temperature sensor, and remove the mass air flow and intake air temperature sensor.

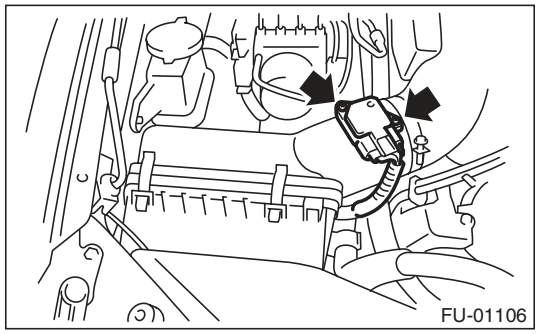

B: INSTALLATION

Install in the reverse order of removal.

Tightening torque:
1 N·m (0.1 kgf-m, 0.7 ft-lb)

11.EGR Valve

A: REMOVAL

1) Disconnect the ground cable from battery.

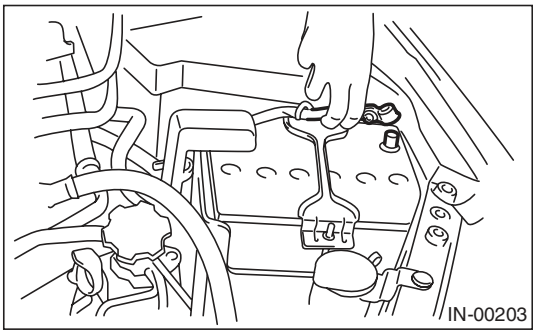

2) Disconnect the connector from the EGR valve.

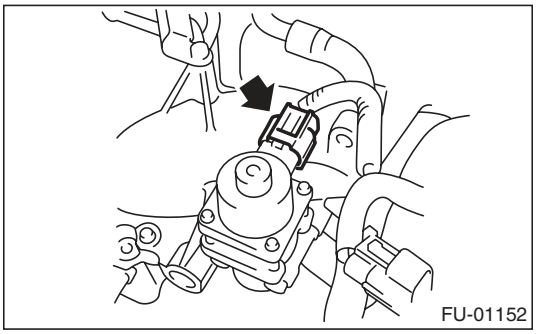

3) Remove the EGR valve from intake manifold.

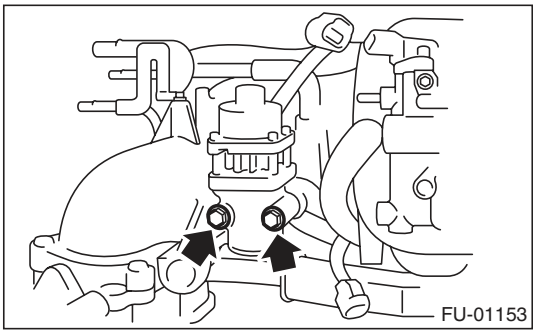

B: INSTALLATION

Install in the reverse order of removal.

NOTE:
Use a new gasket.

Tightening torque:
19 N·m (1.9 kgf-m, 14.0 ft-lb)

12. Fuel Injector

A: REMOVAL

1. RH SIDE

1) Release the fuel pressure. <Ref. to FU(H4SO)-43, RELEASING OF FUEL PRESSURE, PROCEDURE, Fuel.>
2) Disconnect the ground cable from battery.

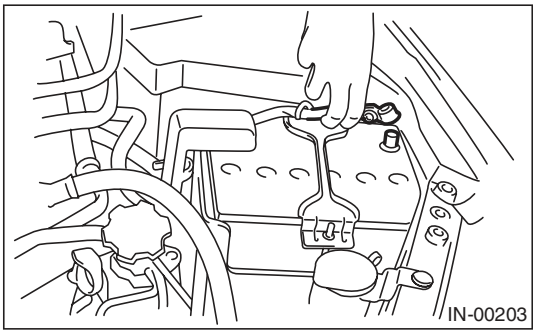

3) Open the fuel filler lid, and remove the fuel filler cap.
4) Remove the intake boot.
5) Remove the spark plug cords from spark plugs (#1 and #3 cylinders).
6) Remove the fuel pipe protector RH.

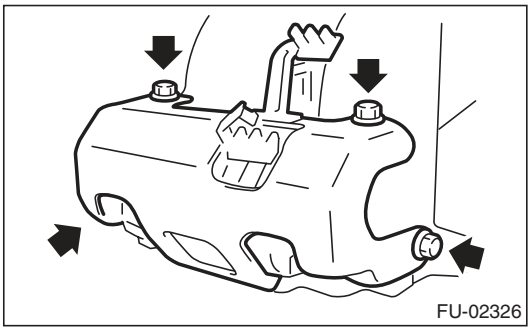

7) Disconnect the connectors (A) from fuel injector.
8) Remove the harness band (B) which holds the engine harness to injector pipe.

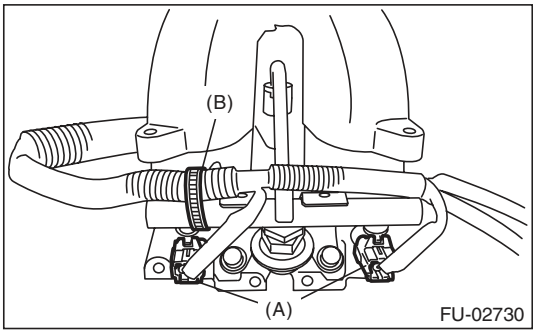

9) Remove the bolt which holds fuel injector pipe onto intake manifold.

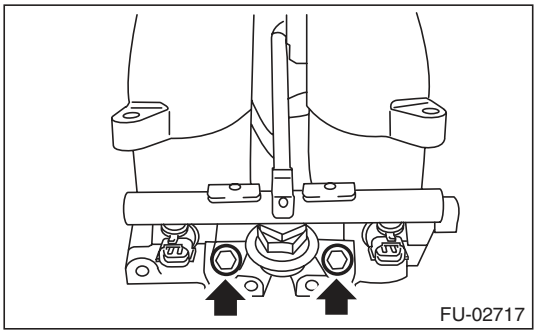

10) Remove the fuel injector while lifting up the fuel injector pipe.

2. LH SIDE

1) Release the fuel pressure. <Ref. to FU(H4SO)-43, RELEASING OF FUEL PRESSURE, PROCEDURE, Fuel.>
2) Remove the battery. <Ref. to SC(H4SO)-20, REMOVAL, Battery.>
3) Open the fuel filler lid, and remove the fuel filler cap.
4) Remove the spark plug cords from spark plugs (#2 and #4 cylinders).
5) Remove the fuel pipe protector LH.

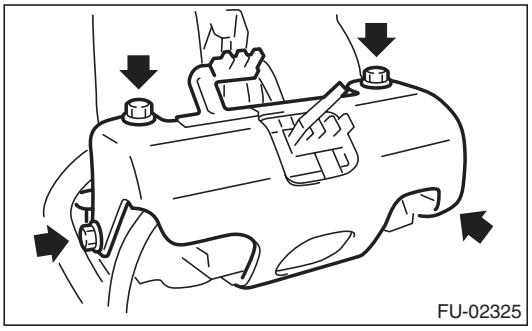

6) Disconnect the connectors (A) from fuel injector.
7) Remove the harness band (B) which holds the engine harness to injector pipe.

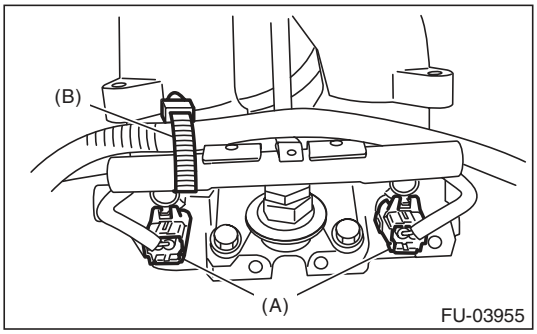

8) Remove the bolt which holds fuel injector pipe onto intake manifold.

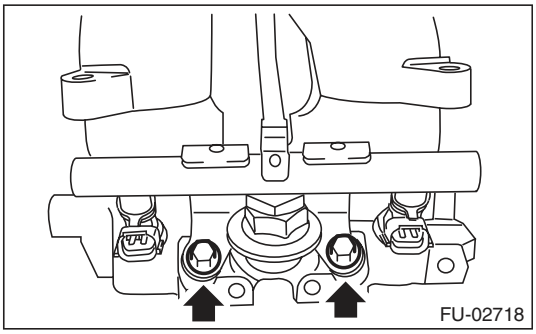

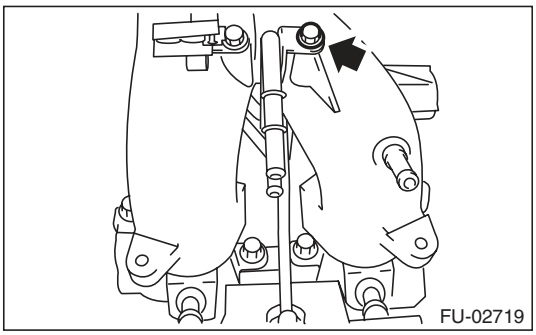

9) Remove the fuel injector while lifting up the fuel injector pipe.

B: INSTALLATION

1. RH SIDE

Install in the reverse order of removal.

NOTE:
Use new O-rings.

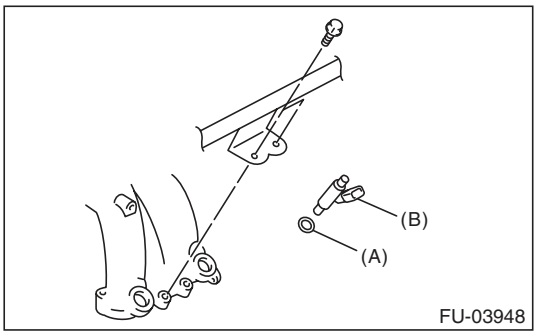

(A) O-ring
(B) Fuel injector

Tightening torque:
19 N·m (1.9 kgf-m, 14.0 ft-lb)

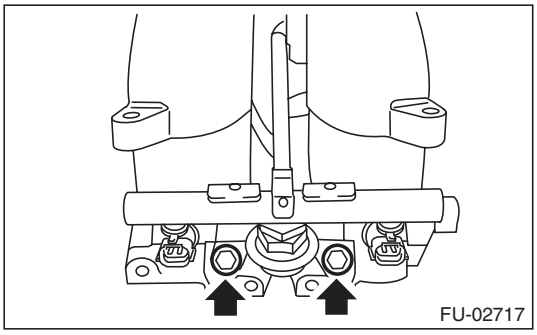

Tightening torque:
19 N·m (1.9 kgf-m, 14.0 ft-lb)

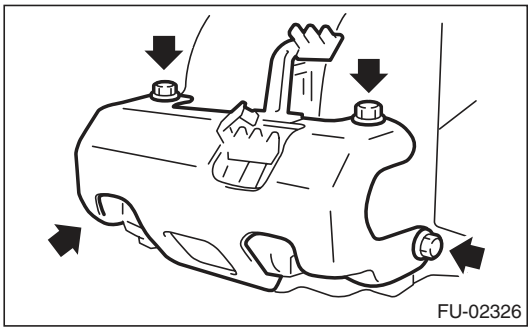

2. LH SIDE

Install in the reverse order of removal.

NOTE:
Use new O-rings.

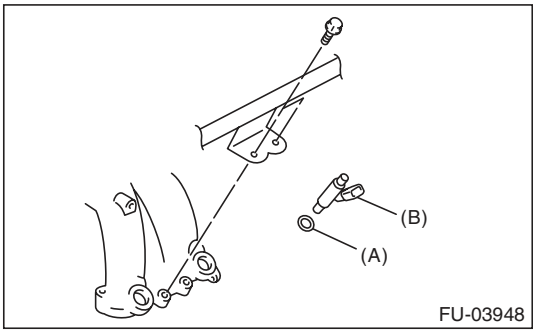

(A) O-ring
(B) Fuel injector

Tightening torque:
6.4 N·m (0.7 kgf-m, 4.7 ft-lb)

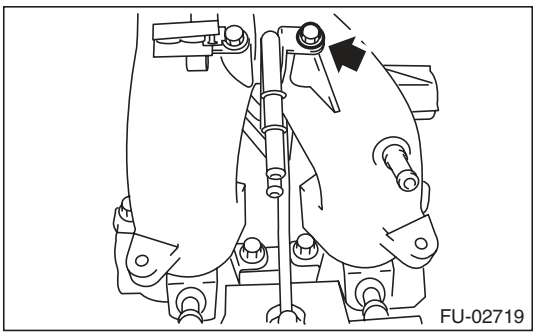

Tightening torque:
19 N·m (1.9 kgf-m, 14.0 ft-lb)

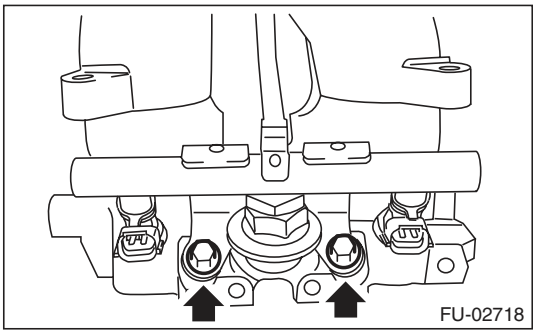

Tightening torque:
19 N·m (1.9 kgf-m, 14.0 ft-lb)

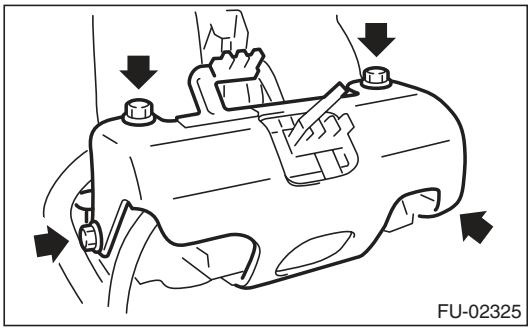

13. Variable Valve Lift Diagnosis Oil Pressure Switch

A: REMOVAL

1) Disconnect the ground cable from battery.

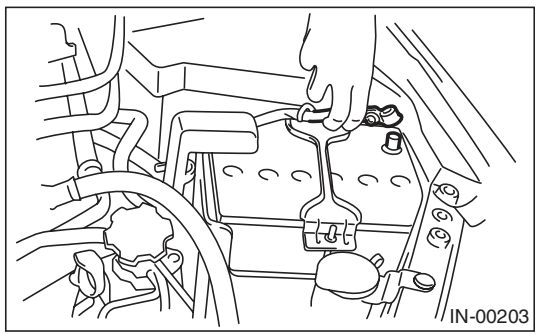

2) Remove the air intake chamber. <Ref. to IN(H4SO)-7, REMOVAL, Air Intake Chamber.>
3) Disconnect the connector from the variable valve lift diagnosis oil pressure switch.
4) Remove the variable valve lift diagnosis oil pressure switch.

- LH side

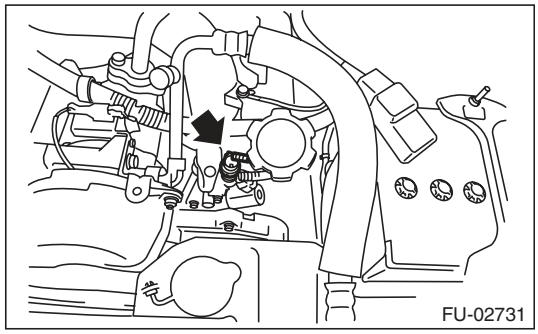

- RH side

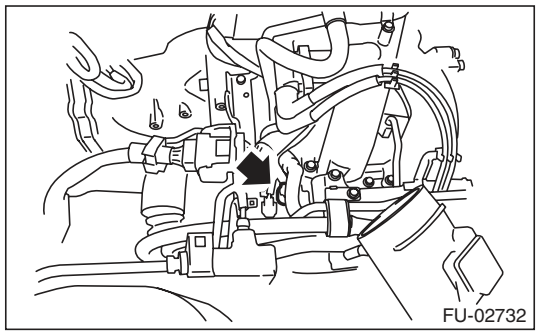

B: INSTALLATION

Install in the reverse order of removal.

NOTE:
Apply liquid gasket to the variable valve lift diagnosis oil pressure switch threads.

Liquid gasket:
THREE BOND 1324 (Part No. 004403042) or equivalent

Tightening torque:
17 N·m (1.7 kgf-m, 12.5 ft-lb)

14. Oil Temperature Sensor

A: REMOVAL

1) Disconnect the ground cable from battery.

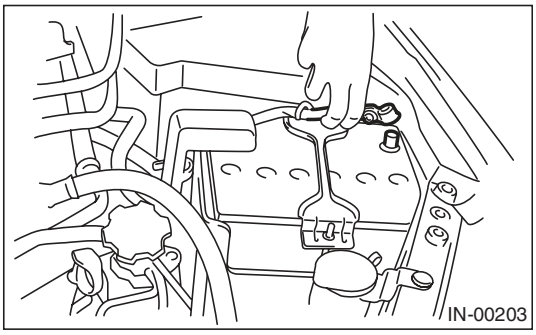

2) Remove the air intake chamber. <Ref. to IN(H4SO)-7, REMOVAL, Air Intake Chamber.>
3) Remove the engine harness connector from the bracket.
4) Disconnect the connector from the oil temperature sensor.
5) Remove the oil temperature sensor.

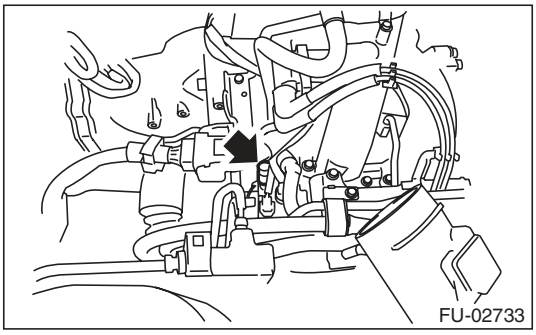

B: INSTALLATION

Install in the reverse order of removal.

NOTE:
Apply liquid gasket to the oil temperature sensor threads.

Liquid gasket:
THREE BOND 1324 (Part No. 004403042) or equivalent

Tightening torque:
18 N·m (1.8 kgf-m, 13.3 ft-lb)

15. Front Oxygen (A/F) Sensor

A: REMOVAL

1) Set the vehicle on a lift.
2) Disconnect the ground cable from battery.

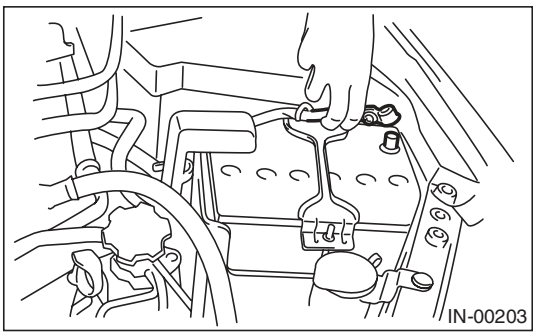

3) Remove the air intake duct. <Ref. to IN(H4SO)-8, REMOVAL, Air Intake Duct.>
4) Remove the clip fastening the harness and disconnect the front oxygen (A/F) sensor connector.

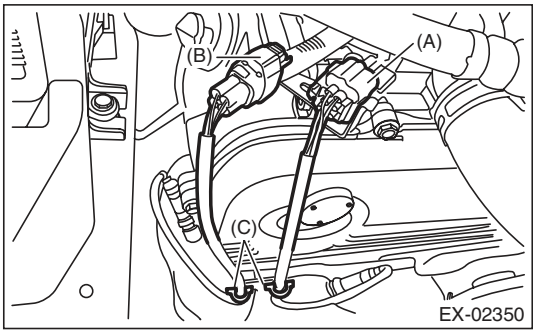

(A) Front oxygen (A/F) sensor connector
(B) Rear oxygen sensor connector
(C) Clip

5) Lift up the vehicle.
6) Remove the under cover.
7) Apply spray-type lubricant to the threaded portion of front oxygen (A/F) sensor, and leave it for one minute or more.
8) Remove the front oxygen (A/F) sensor.

CAUTION:
When removing the front oxygen (A/F) sensor, wait until exhaust pipe cools, otherwise it will damage the exhaust pipe.

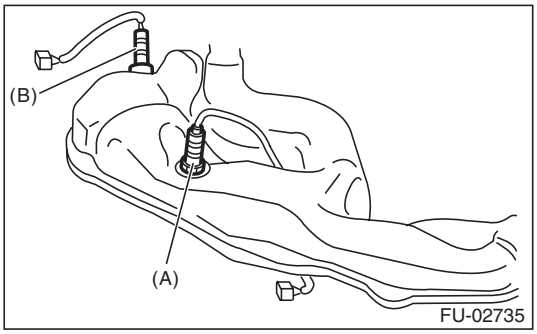

(A) Front oxygen (A/F) sensor
(B) Rear oxygen sensor

B: INSTALLATION

CAUTION:
If lubricant is spilt onto the exhaust pipe, wipe it off with cloth to avoid emission of smoke or causing a fire.

1) Before installing front oxygen (A/F) sensor, apply anti-seize compound only to the threaded portion of front oxygen (A/F) sensor to make the next removal easier.

CAUTION:
Never apply anti-seize compound to the protector of front oxygen (A/F) sensor.

Anti-seize compound:
NEVER-SEEZ NSN, JET LUBE SS-30 or equivalent

2) Install the front oxygen (A/F) sensor.

Tightening torque:
21 N·m (2.1 kgf-m, 15.5 ft-lb)

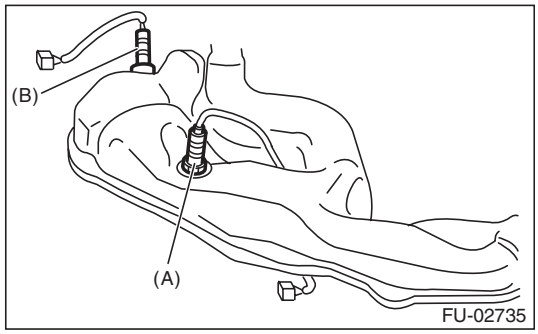

(A) Front oxygen (A/F) sensor
(B) Rear oxygen sensor

3) Install the under cover.
4) Lower the vehicle.
5) Connect the connector of front oxygen (A/F) sensor connector and fasten the harness with clips.

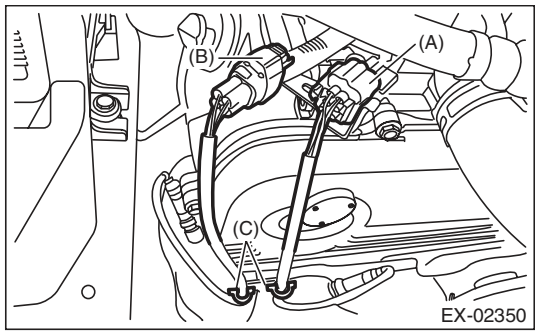

(A) Front oxygen (A/F) sensor connector
(B) Rear oxygen sensor connector
(C) Clip

6) Connect the ground cable to battery.

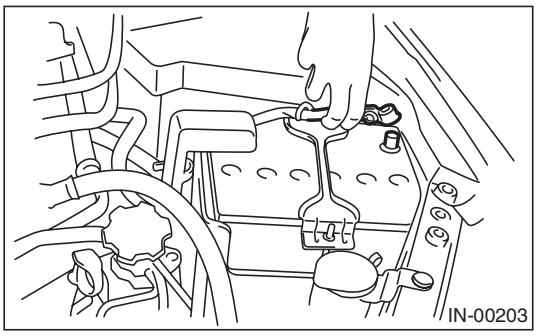

16. Rear Oxygen Sensor

A: REMOVAL

1) Set the vehicle on a lift.
2) Disconnect the ground cable from battery.

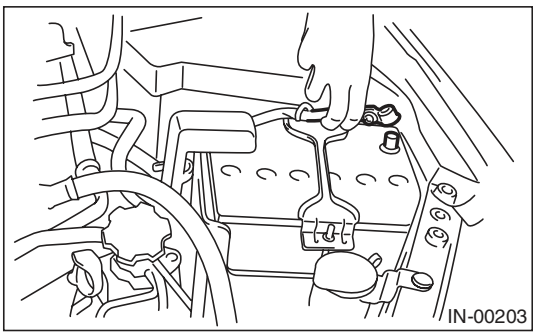

3) Remove the air intake duct. <Ref. to IN(H4SO)-8, REMOVAL, Air Intake Duct.>
4) Remove the clip fastening the harness and disconnect the rear oxygen sensor connector.

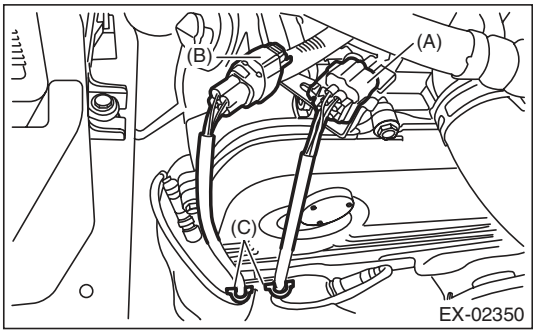

(A) Front oxygen (A/F) sensor connector
(B) Rear oxygen sensor connector
(C) Clip

5) Lift up the vehicle.
6) Remove the under cover.
7) Apply spray-type lubricant to the threaded portion of rear oxygen sensor, and leave it for one minute or more.
8) Remove the rear oxygen sensor.

CAUTION:
When removing the rear oxygen sensor, wait until exhaust pipe cools, otherwise it will damage the exhaust pipe.

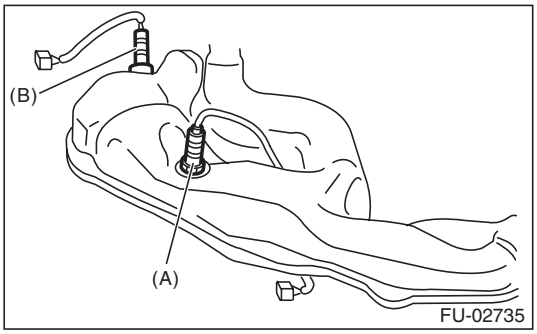

(A) Front oxygen (A/F) sensor
(B) Rear oxygen sensor

B: INSTALLATION

CAUTION:
If lubricant is spilt onto the exhaust pipe, wipe it off with cloth to avoid emission of smoke or causing a fire.

1) Before installing rear oxygen sensor, apply the anti-seize compound only to the threaded portion of rear oxygen sensor to make the next removal easier.

CAUTION:
Never apply anti-seize compound to the protector of rear oxygen sensor.

Anti-seize compound:
NEVER-SEEZ NSN, JET LUBE SS-30 or equivalent

2) Install the rear oxygen sensor.

Tightening torque:
21 N·m (2.1 kgf-m, 15.5 ft-lb)

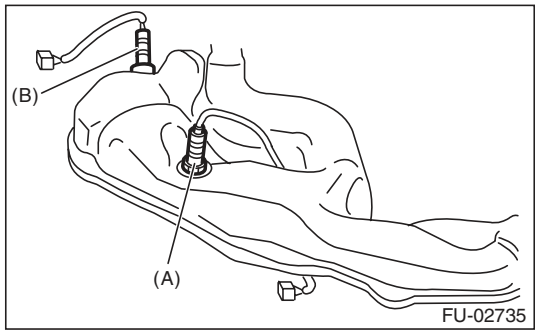

(A) Front oxygen (A/F) sensor
(B) Rear oxygen sensor

3) Install the under cover.
4) Lower the vehicle.
5) Connect the rear oxygen sensor connector and fasten the harness with clips.

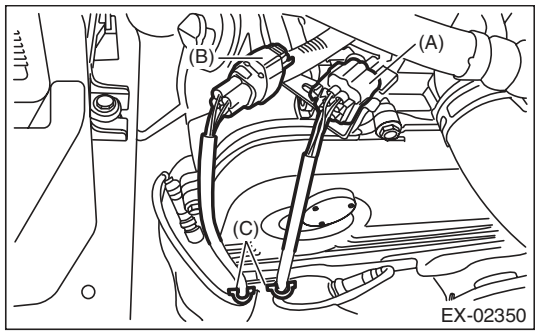

(A) Front oxygen (A/F) sensor connector
(B) Rear oxygen sensor connector
(C) Clip

6) Connect the ground cable to battery.

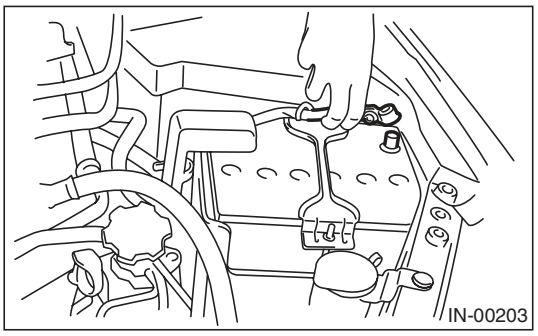

17. Engine Control Module (ECM)

A: REMOVAL

1) Disconnect the ground cable from battery.

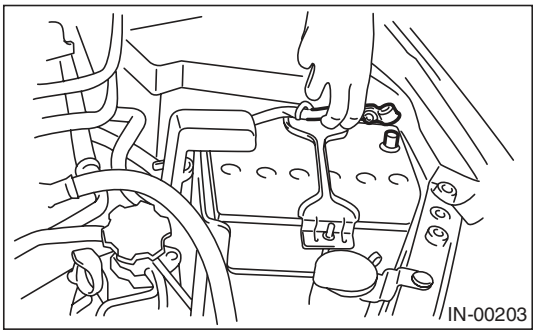

2) Remove the lower inner trim of passenger's side. <Ref. to EI-61, REMOVAL, Lower Inner Trim.>
3) Detach the floor mat of passenger's seat.
4) Remove the protect cover.

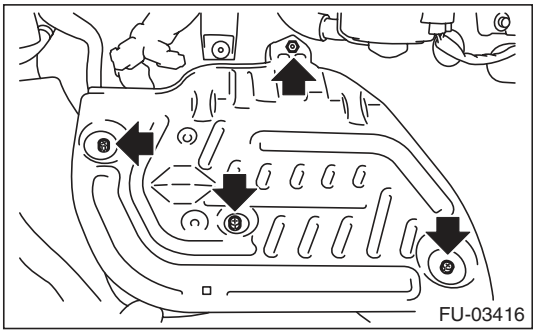

5) Remove the bolts and nuts which hold the ECM to the bracket.

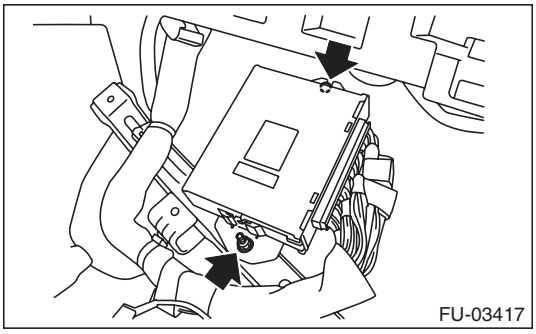

6) Disconnect the ECM connectors, and take out the ECM.

B: INSTALLATION

Install in the reverse order of removal.

CAUTION:
When the ECM of model with immobilizer has been replaced, be sure to perform the registration of immobilizer system. (Refer to the "PC application help for Subaru Select Monitor".)

NOTE:
When replacing the ECM, be careful not to use the wrong spec. ECM to avoid any damage on the fuel injection system.

Tightening torque:
7.5 N·m (0.8 kgf-m, 5.5 ft-lb)

18. Main Relay

A: REMOVAL

1) Disconnect the ground cable from battery.

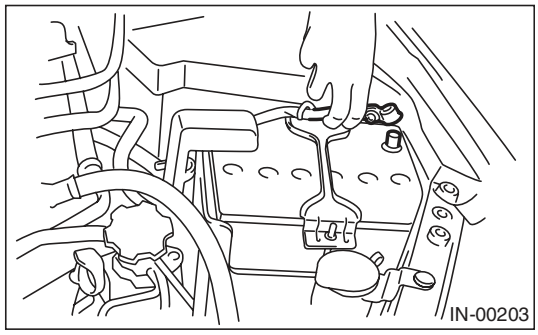

2) Remove the glove box. <Ref. to EI-52, REMOVAL, Glove Box.>
3) Remove the harness cover (A).

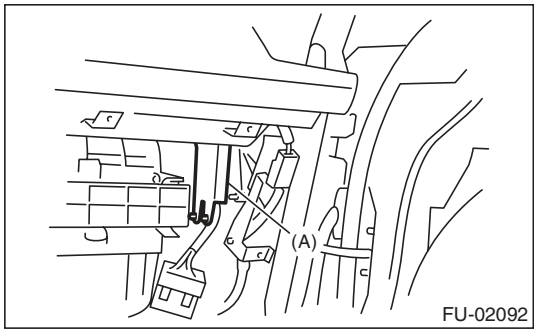

4) Disconnect the connectors from main relay.

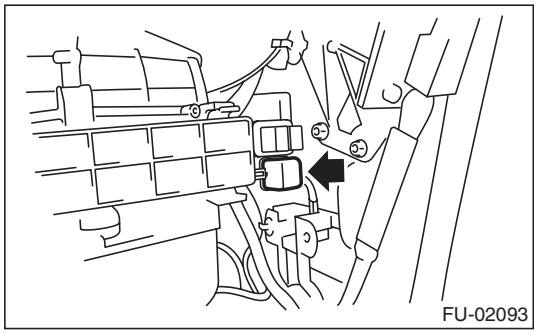

B: INSTALLATION

Install in the reverse order of removal.

19. Fuel Pump Relay

A: REMOVAL

1) Disconnect the ground cable from battery.

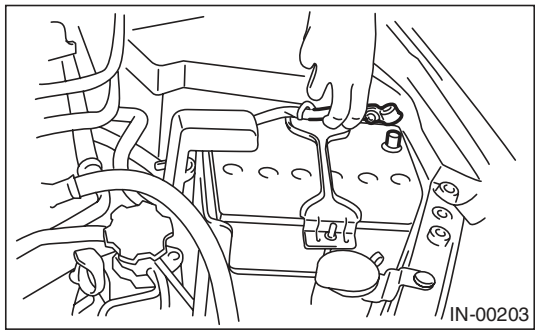

2) Remove the glove box. <Ref. to EI-52, REMOVAL, Glove Box.>
3) Remove the harness cover (A).

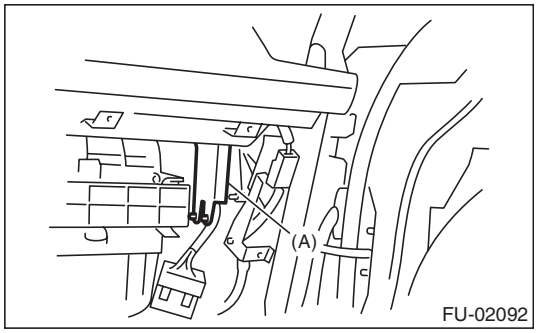

4) Disconnect the connector from fuel pump relay.

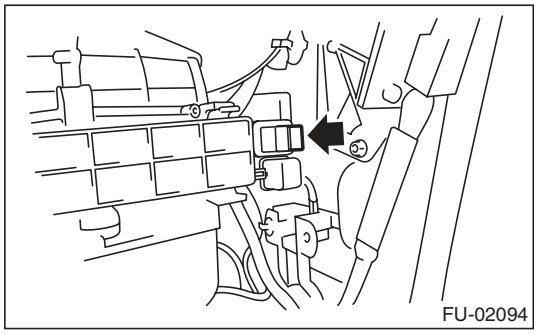

B: INSTALLATION

Install in the reverse order of removal.

20. Electronic Throttle Control Relay

A: REMOVAL

1) Disconnect the ground cable from battery.

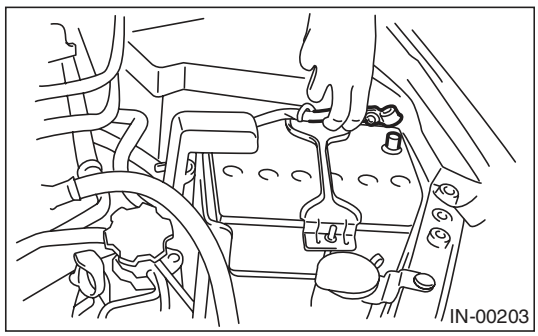

2) Remove the glove box. <Ref. to EI-52, REMOVAL, Glove Box.>
3) Remove the harness cover (A).

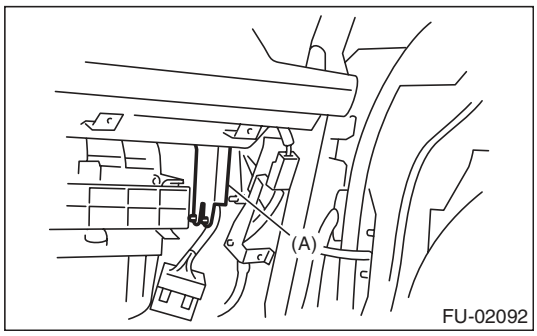

4) Disconnect the connector from electronic throttle control relay.

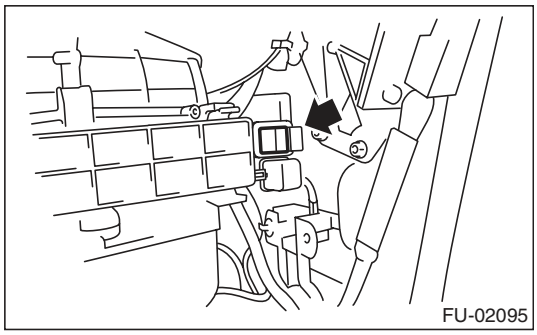

B: INSTALLATION

Install in the reverse order of removal.

21. Fuel

A: PROCEDURE

1. RELEASING OF FUEL PRESSURE

WARNING:
Place "NO OPEN FLAMES" signs near the working area.

CAUTION:
Be careful not to spill fuel.

1) Remove the fuse of fuel pump from main fuse box.

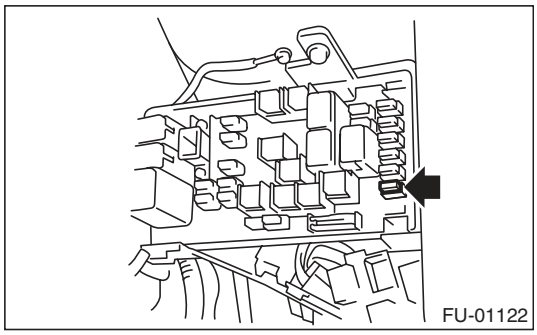

2) Start the engine and run it until it stalls.
3) After the engine stalls, crank it for five more seconds.
4) Turn the ignition switch to OFF.
5) Install the fuse of fuel pump to the main fuse box.

2. DRAINING FUEL (WITH SUBARU SELECT MONITOR)

WARNING:
Place "NO OPEN FLAMES" signs near the working area.

CAUTION:
Be careful not to spill fuel.

NOTE:
- If the fuel pump cannot be actuated, refer to DRAINING FUEL (THROUGH THE FUEL FILLER HOSE). <Ref. to FU(H4SO)-44, DRAINING FUEL (THROUGH THE FUEL FILLER HOSE), PROCEDURE, Fuel.>
- Be careful not to let the battery run-out.

1) Release the fuel pressure. <Ref. to FU(H4SO)-43, RELEASING OF FUEL PRESSURE, PROCEDURE, Fuel.>
2) Attach ST to the fuel delivery pipe and push ST in the direction of arrow mark to disconnect the fuel delivery hose.
ST 42099AE000 QUICK CONNECTOR RELEASE

CAUTION:
- **Be careful not to spill fuel.**
- **Catch the fuel from hoses using a container or cloth.**

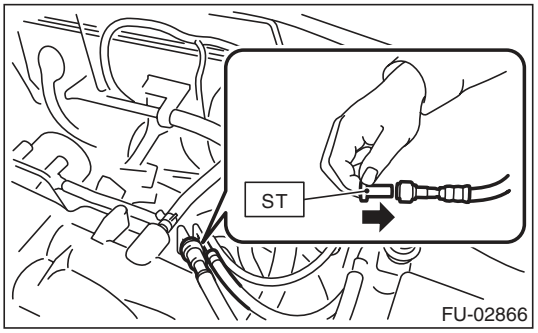

3) Connect ST to the fuel delivery hose.
ST 18471AA000 FUEL PIPE ADAPTER
4) Connect the gasoline proof hose to ST and put the end of the hose in the container.
5) Drive the fuel pump and drain the fuel using Subaru Select Monitor. <Ref. to EN(H4SO)(diag)-52, FUEL PUMP CONTROL (ON/OFF DRIVE), OPERATION, System Operation Check Mode.>

CAUTION:
Be careful not to spill fuel.

3. DRAINING FUEL (THROUGH THE FUEL FILLER HOSE)

WARNING:
Place "NO OPEN FLAMES" signs near the working area.

CAUTION:
- **Be careful not to spill fuel.**
- **Fuel may remain in the fuel filler pipe. Draining the fuel from the fuel filler pipe through the fill opening using the gasoline proof pump and the gasoline proof hose (ø10 or less) before the operation.**

1) Set the vehicle on a lift.
2) Lift up the vehicle.
3) Remove the rear exhaust pipe and muffler. <Ref. to EX(H4SO)-8, REMOVAL, Rear Exhaust Pipe.> <Ref. to EX(H4SO)-10, REMOVAL, Muffler.>
4) Open the fuel filler lid, and remove the fuel filler cap.
5) Drain the fuel from the fuel filler pipe through the fill opening using the gasoline proof pump and the gasoline proof hose (ø10 or less).
6) Disconnect the fuel filler hose (A) from the fuel filler pipe.

CAUTION:
- **Be careful not to spill fuel.**
- **Catch the fuel from hoses using a container or cloth.**

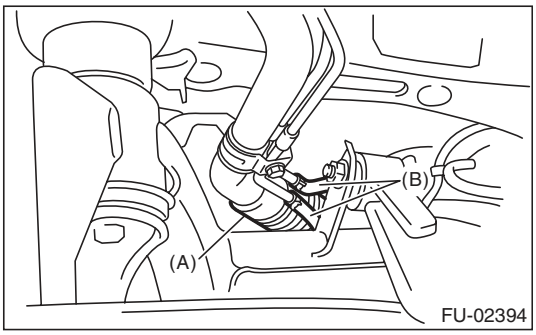

(A) Fuel filler hose
(B) Evaporation hose

7) Set the container under the vehicle and insert the gasoline proof hose (ø10 or less) into the fuel filler hose to drain the fuel.

CAUTION:
Be careful not to spill fuel.

22. Fuel Tank

A: REMOVAL

WARNING:
Place "NO OPEN FLAMES" signs near the working area.

CAUTION:
Be careful not to spill fuel.

1) Set the vehicle on a lift.
2) Release the fuel pressure. <Ref. to FU(H4SO)-43, RELEASING OF FUEL PRESSURE, PROCEDURE, Fuel.>
3) Drain fuel. <Ref. to FU(H4SO)-43, DRAINING FUEL (WITH SUBARU SELECT MONITOR), PROCEDURE, Fuel.>
4) Disconnect the ground cable from battery.

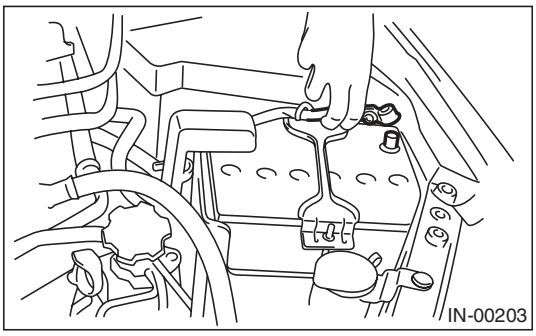

5) Remove the rear seat.
6) Remove the service hole cover of fuel pump.
   (1) Remove the bolt (A).
   (2) Push the grommet (B) down and remove the service hole cover.

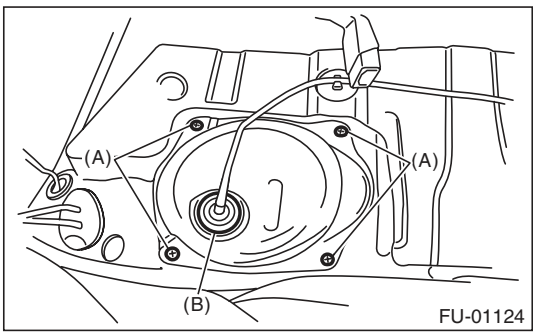

7) Disconnect the connector from fuel pump.

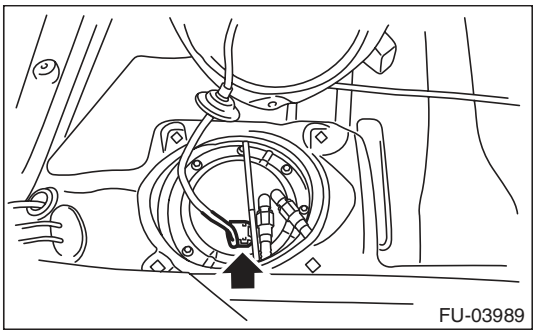

8) Remove the service hole cover of fuel sub level sensor.
   (1) Remove the bolt (A).
   (2) Push the grommet (B) down and remove the service hole cover.

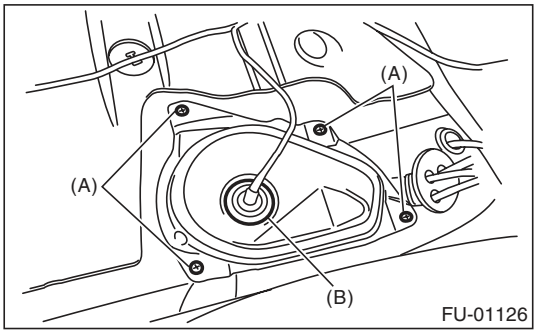

9) Disconnect connector (A) from fuel sub level sensor.
10) Disconnect the quick connector on the fuel delivery tube (B). <Ref. to FU(H4SO)-65, REMOVAL, Fuel Delivery and Evaporation Lines.>

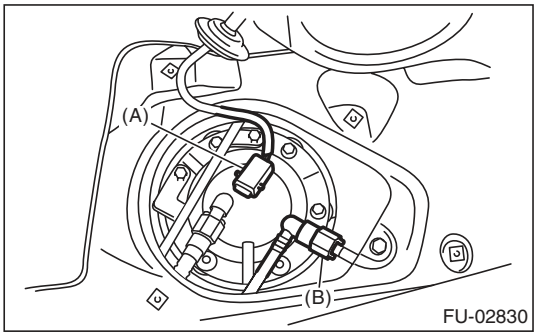

11) Remove the trunk room trim. (Sedan model) <Ref. to EI-70, REMOVAL, Trunk Room Trim.>
12) Remove the rear quarter trim. (Wagon model) <Ref. to EI-63, WAGON MODEL, REMOVAL, Rear Quarter Trim.>
13) Remove the pipe protector.

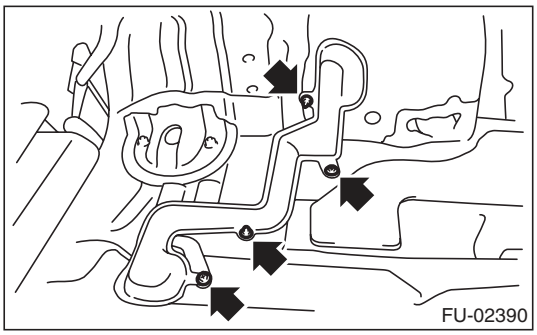

14) Remove the grommet and disconnect the quick connector of the evaporation pipe. <Ref. to FU(H4SO)-65, REMOVAL, Fuel Delivery and Evaporation Lines.>

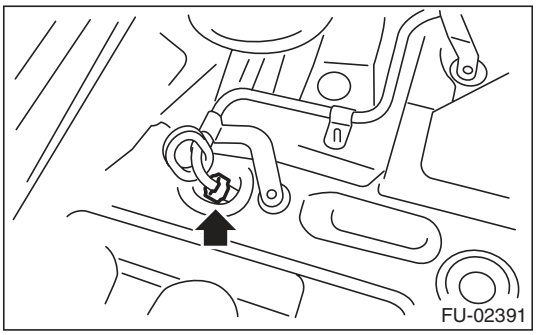

15) Remove the rear wheels.
16) Lift up the vehicle.
17) Remove the bolts which secure the rear brake hose mounting bracket.

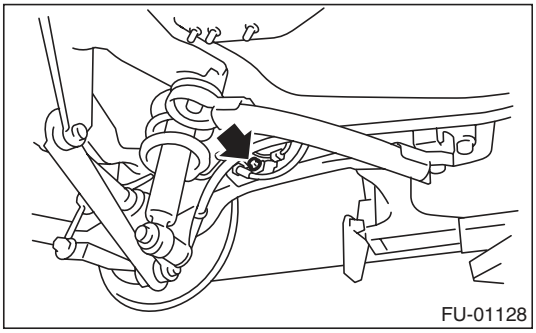

18) Remove the rear disc brake assembly and tie it to the body side of the vehicle.

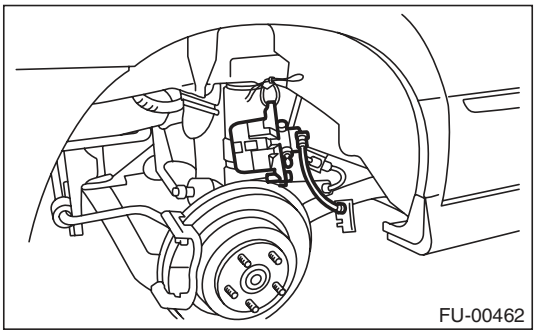

19) Remove the parking brake cable from the parking brake assembly. <Ref. to PB-6, REMOVAL, Parking Brake Assembly (Rear Disc Brake).>
20) Remove the rear exhaust pipe. <Ref. to EX(H4SO)-8, REMOVAL, Rear Exhaust Pipe.>
21) Remove the propeller shaft. <Ref. to DS-10, REMOVAL, Propeller Shaft.>
22) Remove the heat shield cover and fuel tank protector.
23) Disconnect the connector from the rear ABS wheel speed sensor.

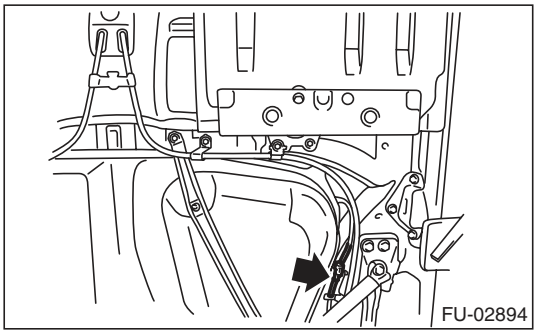

24) Remove the bolts securing the parking brake cable clamp.

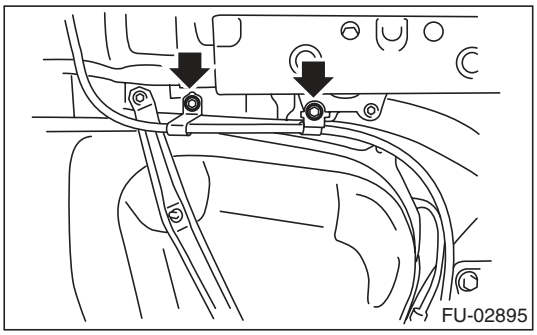

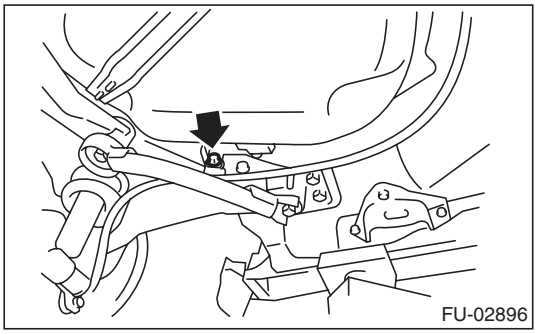

25) Remove the rear suspension assembly.

WARNING:
A helper is required to perform this work.

(1) Support the rear differential with the transmission jack.
(2) Remove the bolts which hold the rear shock absorber to the rear suspension arm.

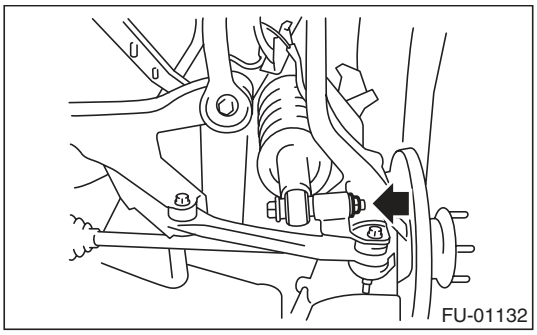

(3) Remove the bolts which secure the rear suspension assembly to the body.

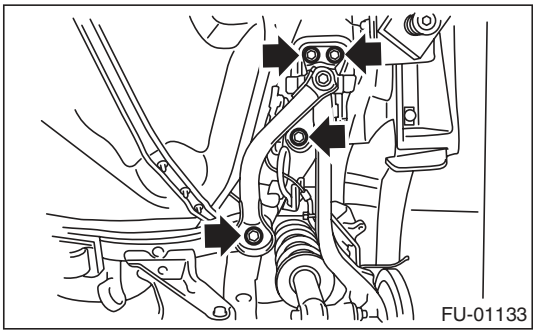

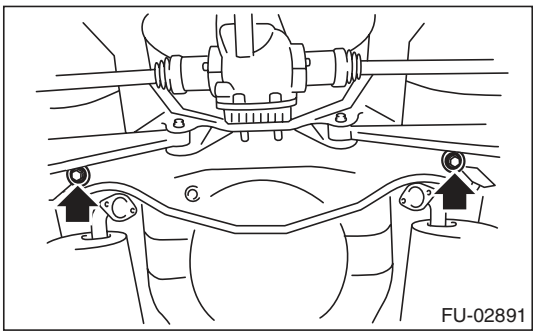

(4) Remove the rear suspension assembly.

26) Disconnect the connector.

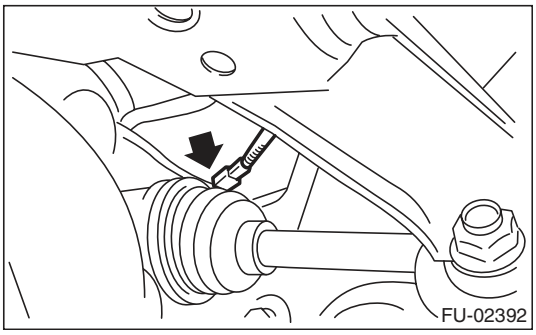

27) Disconnect the evaporation hose.

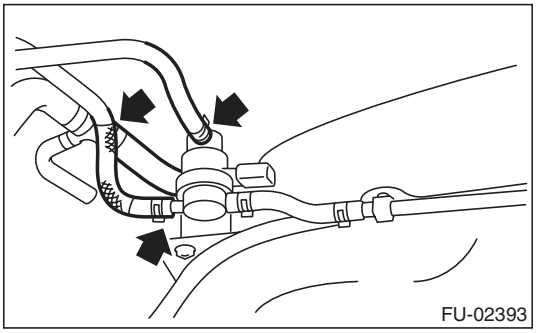

28) Disconnect the fuel filler hose (A) and evaporation hose (B).

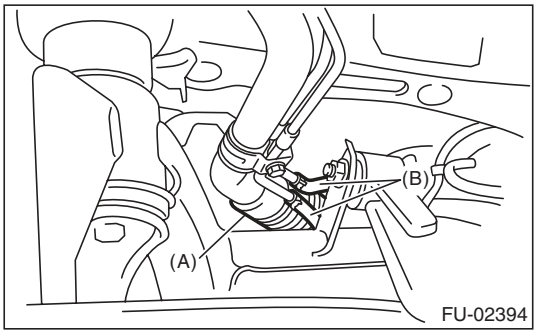

29) Support the fuel tank with a transmission jack, remove the bolts from the fuel tank band, and remove the fuel tank from the vehicle.

WARNING:

- **A helper is required to perform this work.**
- **Fuel may remain in the fuel tank. This will cause the left and right sides to be unbalanced. Be careful not to drop the fuel tank when removing.**

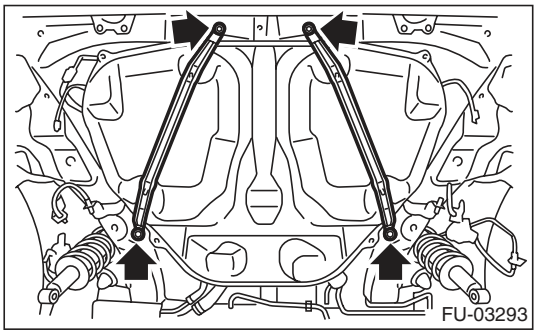

B: INSTALLATION

1) Support the fuel tank with a transmission jack, set the fuel tank in place, and temporarily tighten the bolts of the fuel tank band.

WARNING:
A helper is required to perform this work.

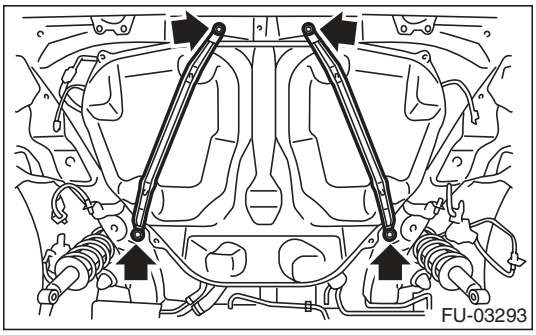

2) Securely insert the fuel filler hose (A) and evaporation hose (B) into the specified position, then attach the clamp or clip as shown in the figure.

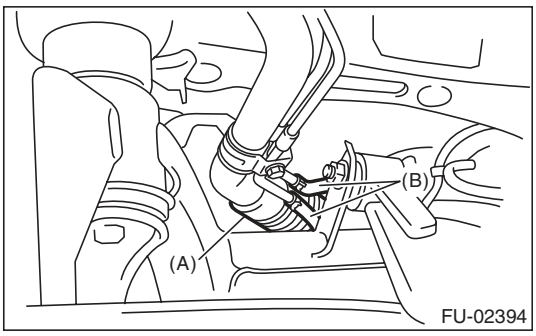

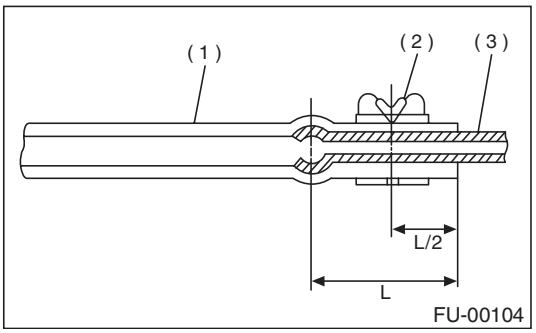

(1) Hose
(2) Clamp or clip
(3) Pipe

3) Connect the evaporation hose.

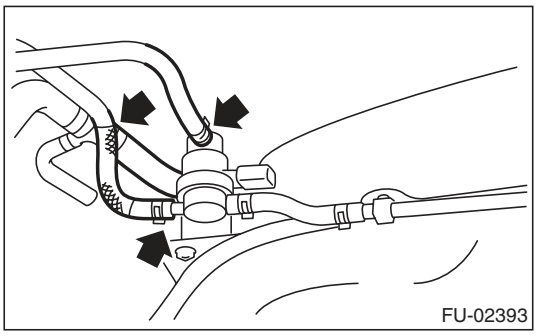

4) Tighten the fuel tank band bolts.

Tightening torque:
33 N·m (3.4 kgf-m, 24.3 ft-lb)

5) Connect the connector.

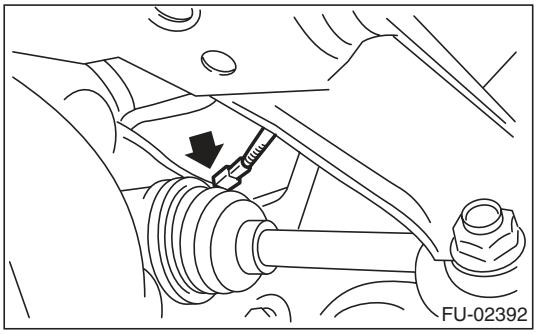

6) Install the rear suspension assembly.

WARNING:
A helper is required to perform this work.

(1) Support the rear differential with the transmission jack.
(2) Support the rear suspension assembly, and tighten the bolts which secure the rear suspension assembly to the body.

Tightening torque:
T1: 125 N·m (12.7 kgf-m, 92.2 ft-lb)
T2: 175 N·m (17.8 kgf-m, 129.1 ft-lb)

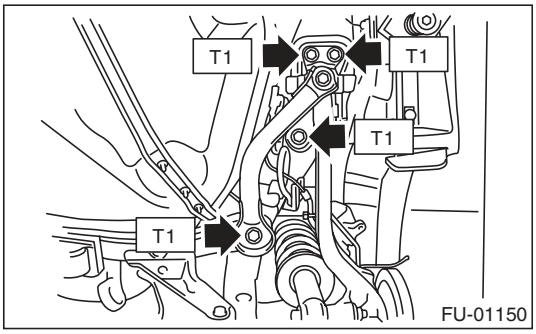

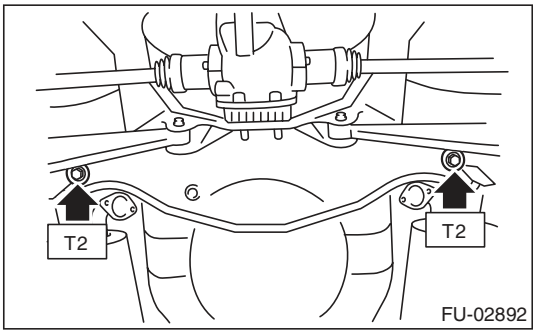

(3) Tighten the bolts which hold the rear shock absorber to the rear suspension arm. <Ref. to RS-10, INSTALLATION, Rear Arm.>

Tightening torque:
62 N·m (6.3 kgf-m, 45.7 ft-lb)

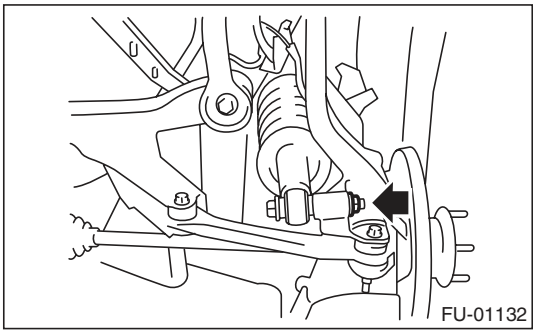

7) Tighten the bolts holding the parking brake cable clamp.

Tightening torque:
18 N·m (1.8 kgf-m, 13.3 ft-lb)

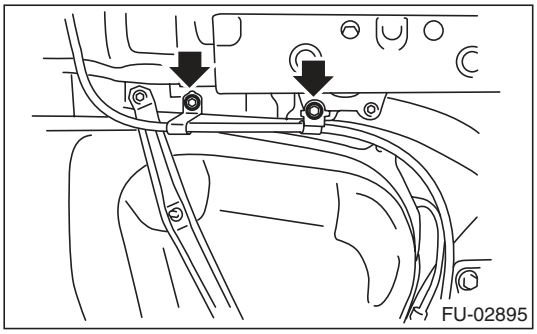

Tightening torque:
33 N·m (3.4 kgf-m, 24.3 ft-lb)

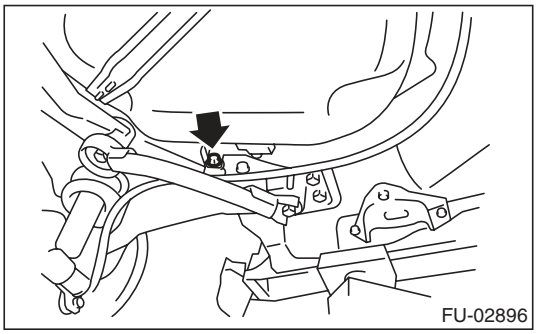

8) Connect the connector to the rear ABS wheel speed sensor.

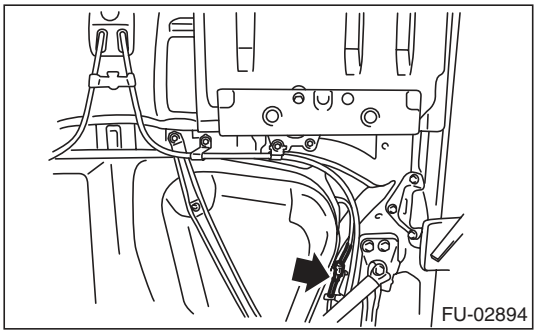

9) Install the heat shield cover.

Tightening torque:
17.5 N·m (1.8 kgf-m, 12.9 ft-lb)

10) Install the fuel tank protector.

Tightening torque:
Nut: 9 N·m (0.9 kgf-m, 6.6 ft-lb)
Bolt: 17.5 N·m (1.8 kgf-m, 12.9 ft-lb)

11) Install the propeller shaft. <Ref. to DS-11, INSTALLATION, Propeller Shaft.>

12) Install the rear exhaust pipe. <Ref. to EX(H4SO)-8, INSTALLATION, Rear Exhaust Pipe.>

13) Lower the vehicle.

14) Connect the parking brake cable to the parking brake assembly. <Ref. to PB-7, INSTALLATION, Parking Brake Assembly (Rear Disc Brake).>
15) Install the rear disc brake assembly.

Tightening torque:
66 N·m (6.7 kgf-m, 48.7 ft-lb)

16) Tighten the bolts which secure the rear brake hose mounting bracket.

Tightening torque:
33 N·m (3.4 kgf-m, 24.3 ft-lb)

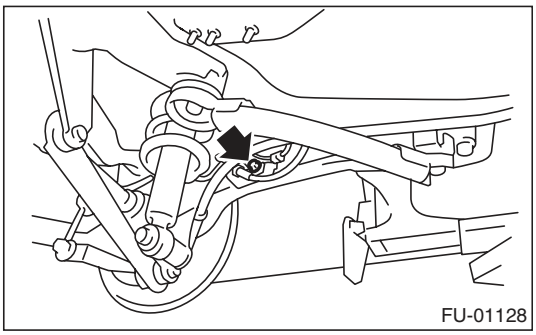

17) Lower the vehicle.
18) Install the rear wheels.

Tightening torque:
120 N·m (12.2 kgf-m, 88.5 ft-lb)

19) Connect the quick connector of the evaporation pipe. <Ref. to FU(H4SO)-66, INSTALLATION, Fuel Delivery and Evaporation Lines.>

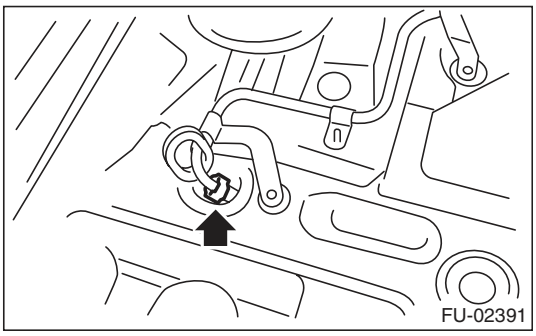

20) Install the pipe protector.

Tightening torque:
T1: 1 N·m (0.1 kgf-m, 0.7 ft-lb)
T2: 7.5 N·m (0.8 kgf-m, 5.5 ft-lb)

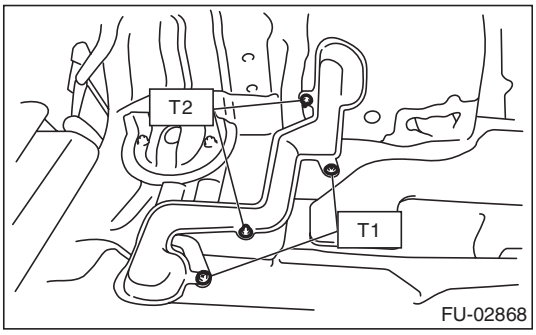

21) Install the trunk room trim. (Sedan model) <Ref. to EI-71, INSTALLATION, Trunk Room Trim.>
22) Install the rear quarter trim. (Wagon model) <Ref. to EI-64, INSTALLATION, Rear Quarter Trim.>
23) Connect connector (A) to the fuel sub level sensor.
24) Connect the quick connector of the fuel delivery hose (B). <Ref. to FU(H4SO)-66, INSTALLATION, Fuel Delivery and Evaporation Lines.>

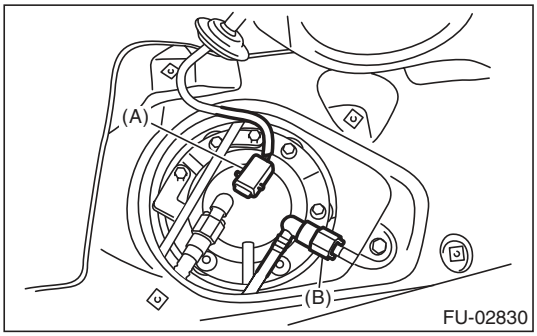

25) Install the service hole cover of fuel sub level sensor.

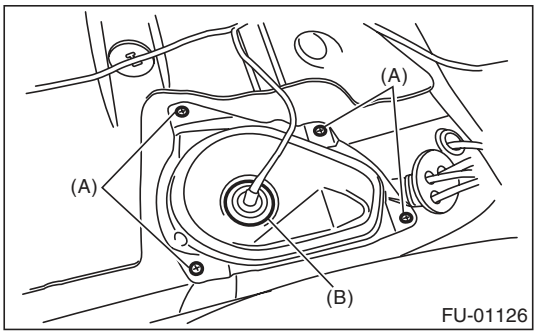

(A) Bolt
(B) Grommet

26) Connect the connector to the fuel pump.

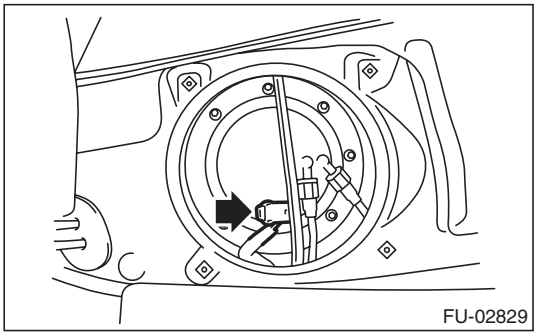

27) Install the service hole cover of fuel pump.

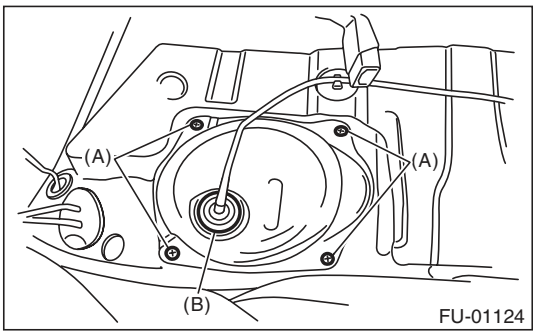

(A) Bolt
(B) Grommet

28) Install the rear seat.
29) Connect the ground cable to battery.

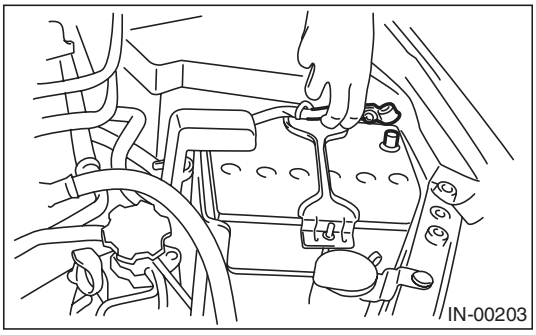

30) Inspect the wheel alignment and adjust if necessary.

C: INSPECTION

1) Check that the fuel tank does not have holes, cracks or is damaged in any way.
2) Check that the fuel pipe and fuel hose are not cracked and those connections are tight.

23. Fuel Filler Pipe

A: REMOVAL

WARNING:
Place "NO OPEN FLAMES" signs near the working area.

CAUTION:
Be careful not to spill fuel.

1) Set the vehicle on a lift.
2) Release the fuel pressure. <Ref. to FU(H4SO)-43, RELEASING OF FUEL PRESSURE, PROCEDURE, Fuel.>
3) Drain fuel. <Ref. to FU(H4SO)-43, DRAINING FUEL (WITH SUBARU SELECT MONITOR), PROCEDURE, Fuel.>
4) Disconnect the ground cable from battery.

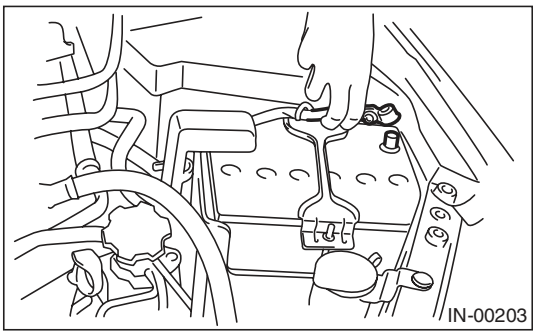

5) Open the fuel filler lid, and remove the filler cap.
6) Remove the screws which secure gasket.

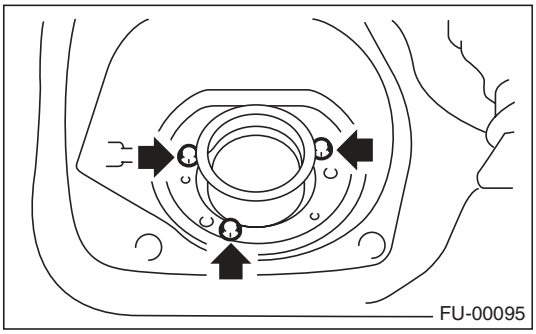

7) Remove the rear wheel RH.
8) Lift up the vehicle.
9) Remove the mud guard. <Ref. to EI-29, REMOVAL, Mud Guard.>
10) Remove the rear sub frame. <Ref. to RS-21, REMOVAL, Rear Sub Frame.>
11) Remove the bolts which hold fuel filler pipe bracket on the body.

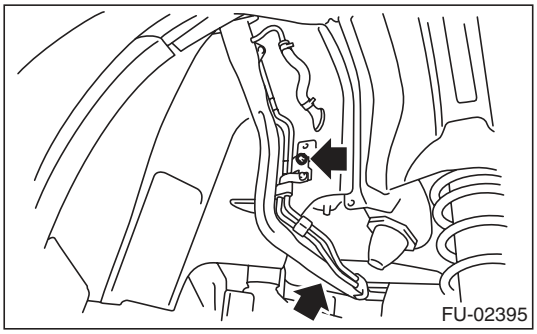

12) Loosen the clamp, and disconnect the fuel filler hose (A) and evaporation hose (B).

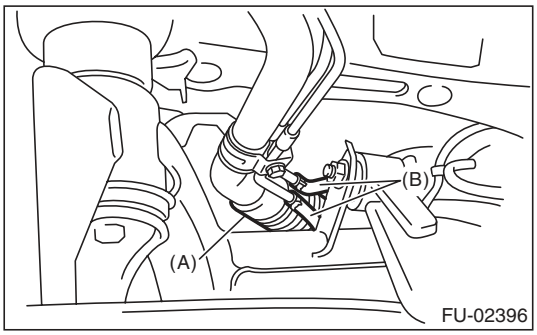

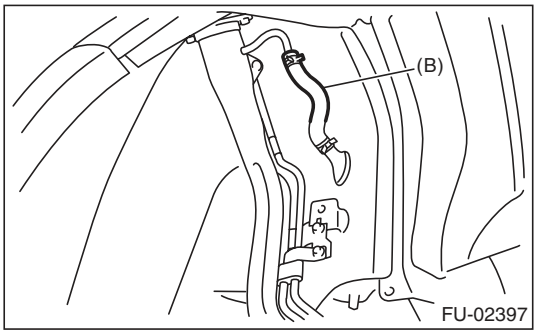

13) Remove the fuel filler pipe to the underside of the vehicle.

B: INSTALLATION

1) Open the fuel filler lid.
2) Set the fuel saucer (A) with rubber gasket (C), and insert the fuel filler pipe into hole from the inner side of apron.
3) Align the holes in fuel filler pipe neck and set the cup (B), and tighten the screws.

NOTE:
If the edges of rubber seal are folded toward inside, straighten it with a flat tip screwdriver.

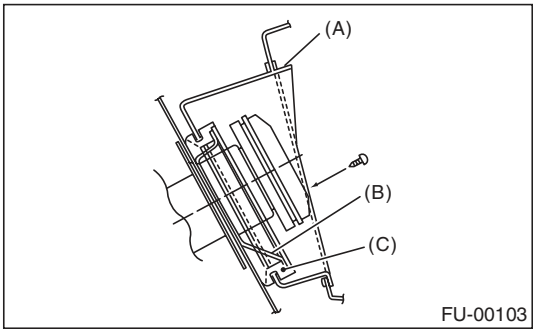

4) Securely insert the fuel filler hose (A) and evaporation hose (B) into the specified position, then attach the clamp or clip as shown in the figure.

Tightening torque:
2.5 N·m (0.3 kgf-m, 1.8 ft-lb)

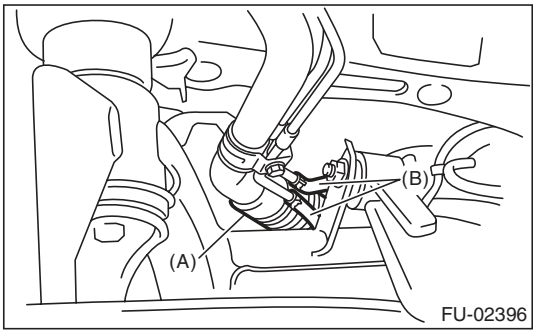

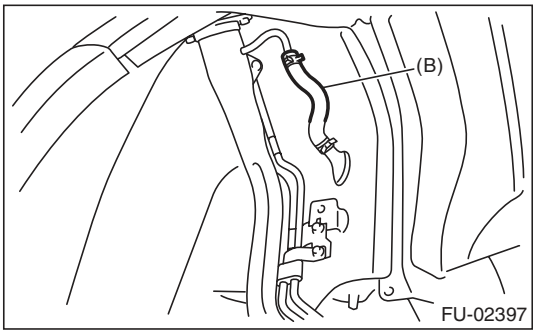

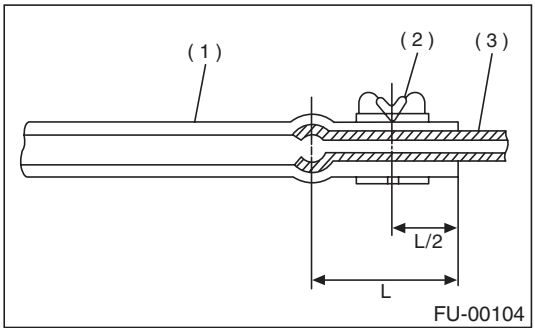

(1) Hose
(2) Clamp or clip
(3) Pipe

5) Tighten the bolts which hold fuel filler pipe bracket on the body.

Tightening torque:
7.5 N·m (0.8 kgf-m, 5.5 ft-lb)

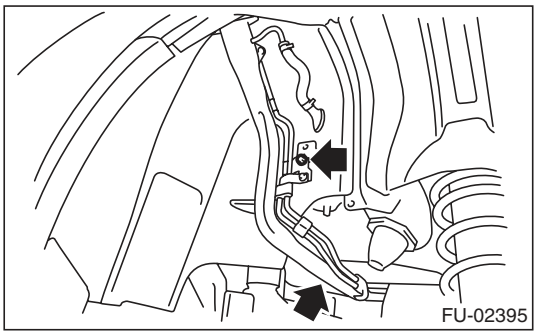

6) Install the rear sub frame. <Ref. to RS-21, INSTALLATION, Rear Sub Frame.>
7) Install the mud guard. <Ref. to EI-29, INSTALLATION, Mud Guard.>
8) Lower the vehicle.
9) Install the rear wheel RH.

Tightening torque:
120 N·m (12.2 kgf-m, 88.5 ft-lb)

10) Connect the ground cable to battery.

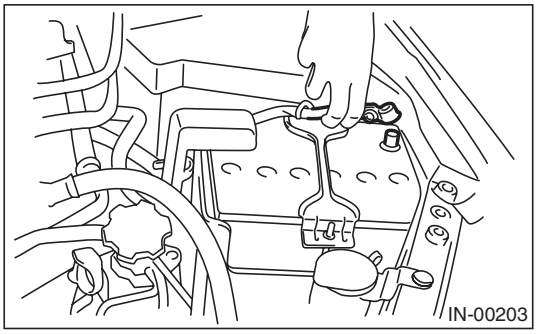

11) Inspect the wheel alignment and adjust if necessary.

C: INSPECTION

1) Check that the fuel tank does not have holes, cracks or is damaged in any way.
2) Make sure that the fuel hose is not cracked and that the connections are tight.

D: DISASSEMBLY

1) Move the clip and disconnect the evaporation hose from the shut valve.

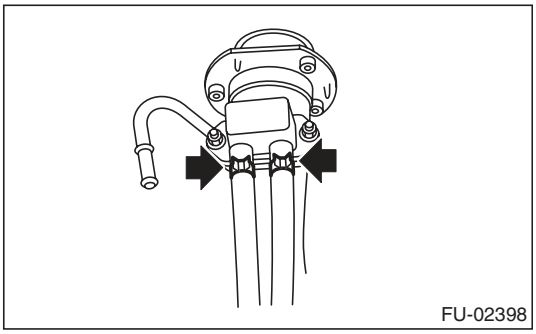

2) Remove the nut which holds the evaporation pipe assembly to the fuel filler pipe.

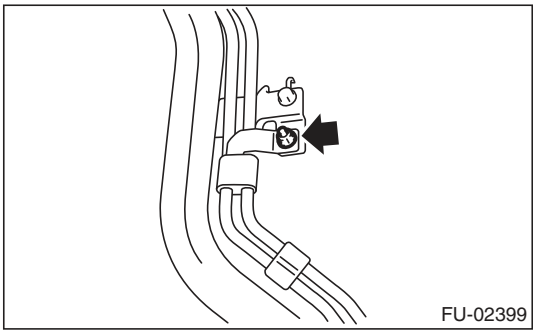

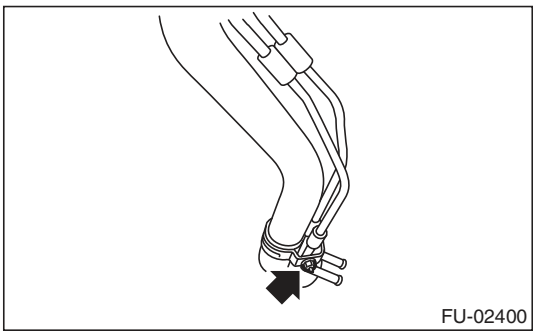

3) Remove the shut valve from the fuel filler pipe. <Ref. to EC(H4SO)-15, REMOVAL, Shut Valve.>

E: ASSEMBLY

1) Install the shut valve to the fuel filler pipe. <Ref. to EC(H4SO)-15, INSTALLATION, Shut Valve.>
2) Tighten the nuts which secure the evaporation pipe assembly to the fuel filler pipe.

Tightening torque:
7.5 N·m (0.76 kgf-m, 5.5 ft-lb)

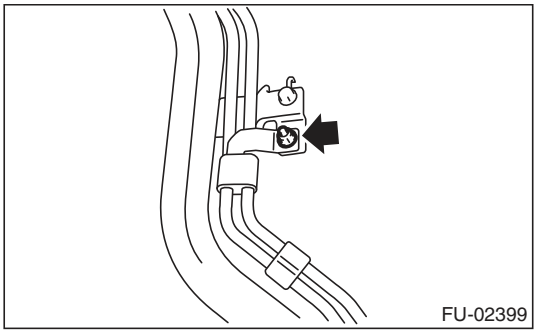

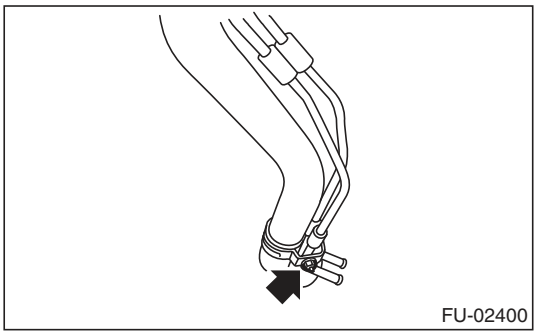

3) Connect the evaporation hose to the shut valve.

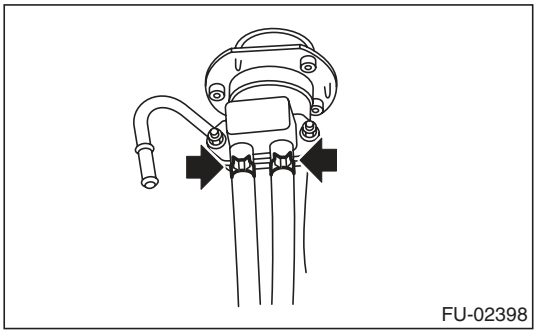

24. Fuel Pump

A: REMOVAL

WARNING:
Place "NO OPEN FLAMES" signs near the working area.

CAUTION:
- **Be careful not to spill fuel.**
- **If the fuel gauge indicates that two thirds or more of the fuel is remaining, be sure to drain fuel before starting work to avoid the fuel to spill.**

NOTE:
Fuel pump assembly consists of fuel pump, fuel filter and fuel level sensor.

1) Release the fuel pressure. <Ref. to FU(H4SO)-43, RELEASING OF FUEL PRESSURE, PROCEDURE, Fuel.>
2) Drain fuel. <Ref. to FU(H4SO)-43, DRAINING FUEL (WITH SUBARU SELECT MONITOR), PROCEDURE, Fuel.>
3) Disconnect the ground cable from battery.

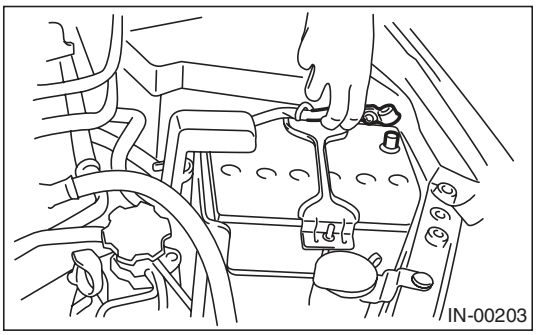

4) Remove the rear seat.
5) Remove the service hole cover.
   (1) Remove the bolt (A).
   (2) Push the grommet (B) down and remove the service hole cover.

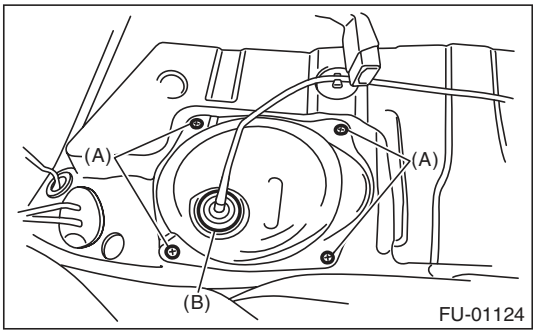

6) Disconnect the connector from fuel pump.

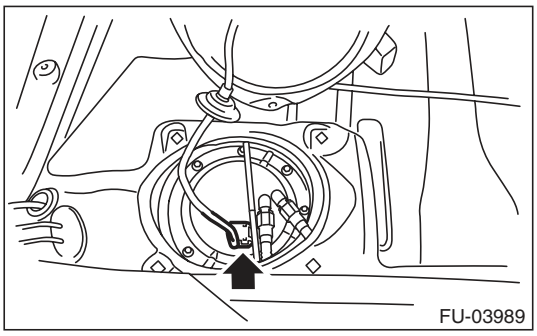

7) Disconnect the quick connector of fuel delivery tube and jet pump tube. <Ref. to FU(H4SO)-65, REMOVAL, Fuel Delivery and Evaporation Lines.>
8) Remove the nuts which install fuel pump assembly onto fuel tank.

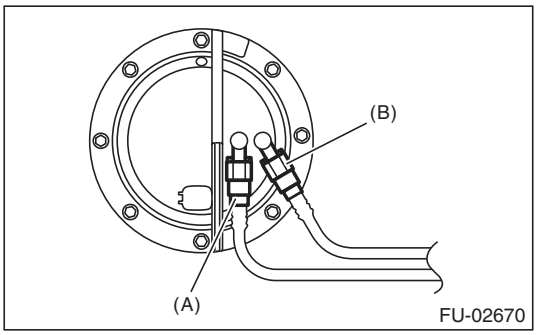

(A) Fuel delivery tube
(B) Jet pump tube

9) Remove the fuel pump assembly from the fuel tank.

B: INSTALLATION

Install in the reverse order of removal while being careful of the following.
- Make sure the sealing portion is free from fuel or foreign matter before installation.
- Install with the protrusion (A) of gasket aimed at the front side of the vehicle.
- Insert the protrusion (B) of the gasket into the upper plate. (3 places)
- Align the protrusion (C) of the fuel pump assembly to the cutout in the upper plate.
- Tighten the nuts to the specified torque in the order as shown in the figure.

NOTE:
Use a new gasket and retainer.

Tightening torque:
4.4 N·m (0.4 kgf-m, 3.2 ft-lb)

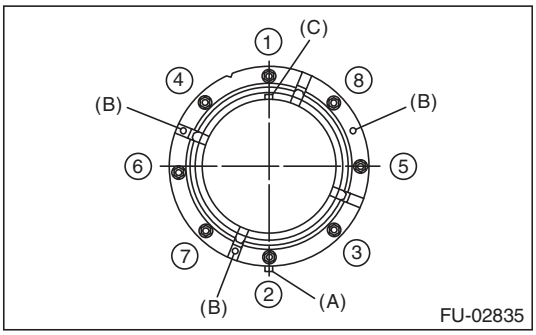

C: INSPECTION

Connect the lead harness to the connector terminal of fuel pump, and apply the battery power supply to check whether the pump operates.

WARNING:
- **Wipe off fuel completely.**
- **Keep the battery as far apart from fuel pump as possible.**
- **Be sure to perform the ON/OFF operation on the battery side.**
- **Do not run the fuel pump for a long time under non-load condition.**

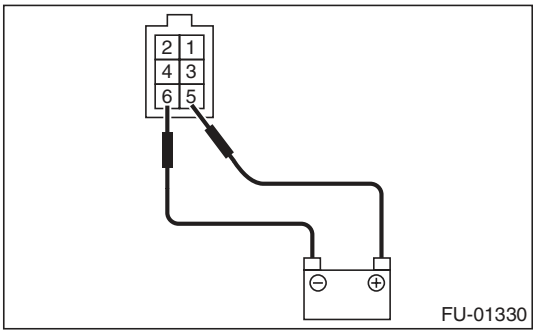

25. Fuel Level Sensor

A: REMOVAL

WARNING:
Place "NO OPEN FLAMES" signs near the working area.

CAUTION:
- **Be careful not to spill fuel.**
- **If the fuel gauge indicates that two thirds or more of the fuel is remaining, be sure to drain fuel before starting work to avoid the fuel to spill.**

NOTE:
The fuel level sensor is built in fuel pump assembly.
1) Remove the fuel pump assembly. <Ref. to FU(H4SO)-55, REMOVAL, Fuel Pump.>
2) Disconnect the connector from fuel pump bracket.
3) Remove the fuel level sensor and fuel temperature sensor.

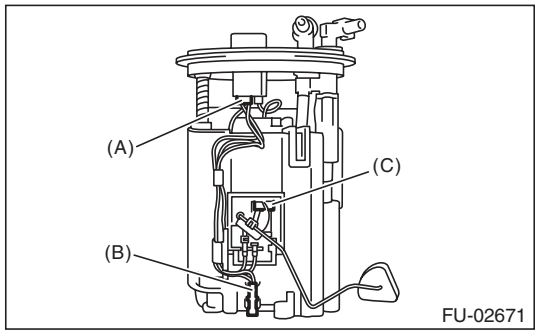

(A) Connector
(B) Fuel temperature sensor
(C) Fuel level sensor

B: INSTALLATION

Install in the reverse order of removal.

26. Fuel Sub Level Sensor

A: REMOVAL

WARNING:
Place "NO OPEN FLAMES" signs near the working area.

CAUTION:
- **Be careful not to spill fuel.**
- **If the fuel gauge indicates that two thirds or more of the fuel is remaining, be sure to drain fuel before starting work to avoid the fuel to spill.**

1) Release the fuel pressure. <Ref. to FU(H4SO)-43, RELEASING OF FUEL PRESSURE, PROCEDURE, Fuel.>
2) Drain fuel. <Ref. to FU(H4SO)-43, DRAINING FUEL (WITH SUBARU SELECT MONITOR), PROCEDURE, Fuel.>
3) Disconnect the ground cable from battery.

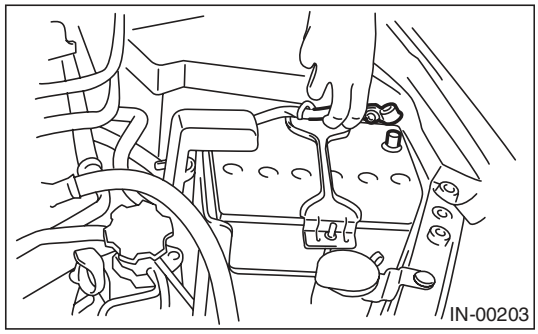

4) Remove the rear seat.
5) Remove the service hole cover.
   (1) Remove bolt (A).
   (2) Push the grommet (B) down and remove the service hole cover.

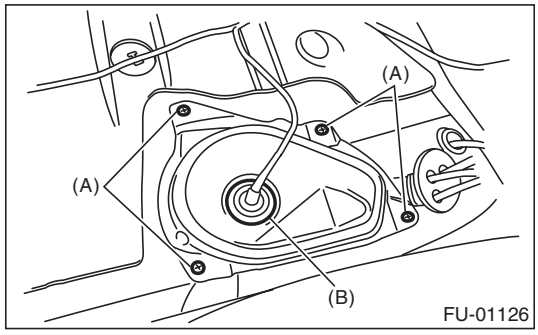

6) Disconnect the connector from the fuel sub level sensor.

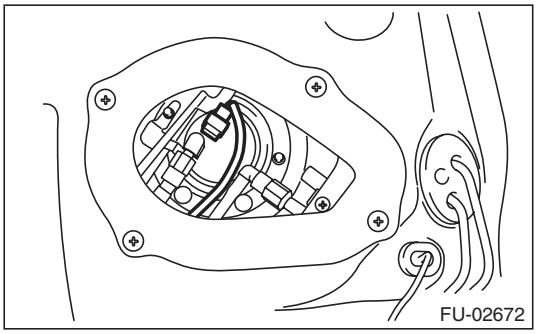

7) Disconnect the quick connector of fuel delivery tube and jet pump tube. <Ref. to FU(H4SO)-65, REMOVAL, Fuel Delivery and Evaporation Lines.>
8) Remove the nuts and bolts which install fuel sub level sensor on fuel tank.

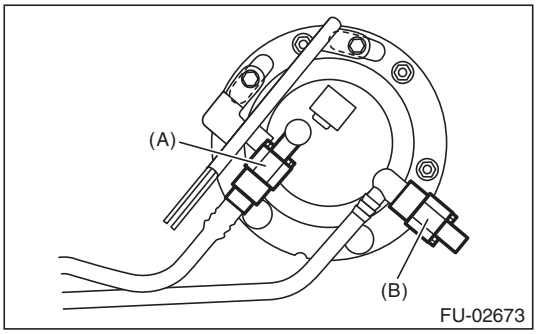

(A) Jet pump tube
(B) Delivery tube

9) Remove the fuel sub level sensor.

B: INSTALLATION

Install in the reverse order of removal while being careful of the following.

- Make sure the sealing portion is free from fuel or foreign matter before installation.
- Align the protrusion (A) of gasket with the position shown in the figure.
- Align protrusion (B) of the fuel sub level sensor to the cut out in the fuel sublevel sensor upper plate.
- Tighten the nuts and bolts to the specified torque in the order as shown in the figure.

NOTE:
Use a new gasket and retainer.

Tightening torque:
4.4 N·m (0.4 kgf-m, 3.2 ft-lb)

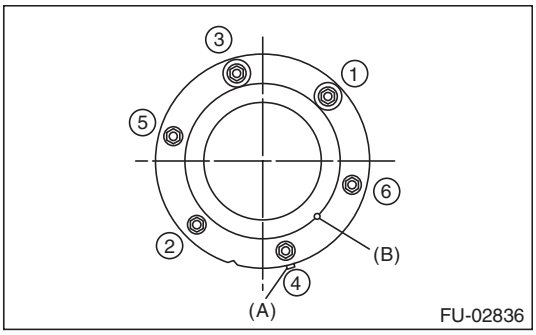

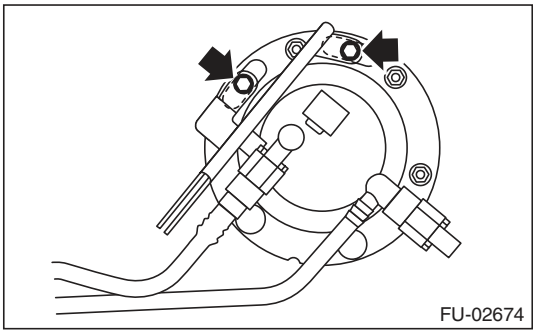

27. Fuel Filter

A: REMOVAL

WARNING:
Place "NO OPEN FLAMES" signs near the working area.

CAUTION:
- **Be careful not to spill fuel.**
- **If the fuel gauge indicates that two thirds or more of the fuel is remaining, be sure to drain fuel before starting work to avoid the fuel to spill.**
- **Be careful not to drop or apply any impact to the fuel pump during work. This may deteriorate its performance.**

NOTE:
The fuel filter is built in fuel pump assembly.

1) Remove the fuel pump assembly. <Ref. to FU(H4SO)-55, REMOVAL, Fuel Pump.>

2) Remove the fuel level sensor and fuel temperature sensor. <Ref. to FU(H4SO)-57, REMOVAL, Fuel Level Sensor.>

3) Disconnect the pump assembly connector from the sub tank bracket assembly.

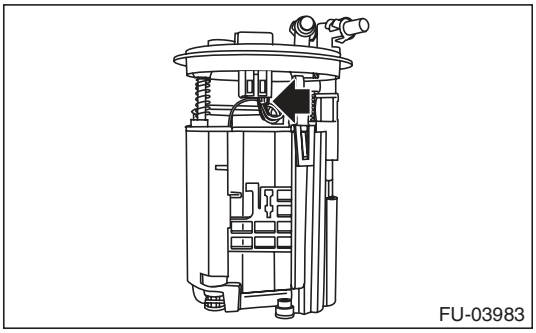
FU-03983

4) Cut off the tab holders connecting the sub tank bracket assembly and the sub tank in four locations, and separate the two.

CAUTION:
Be careful not to damage the sub tank.

NOTE:
If the o-ring is remaining on the sub tank, remove.

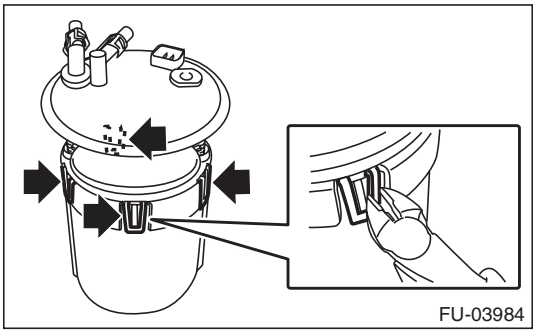
FU-03984

5) Disconnect the fuel piping connector from the fuel filter assembly in two locations.

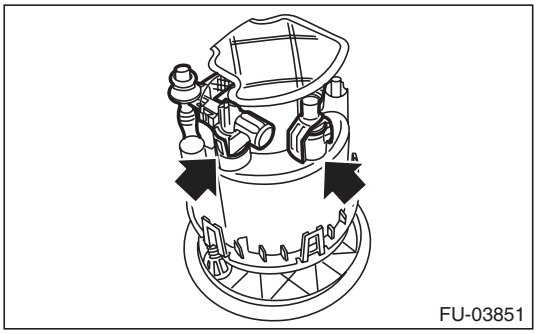
FU-03851

6) Push to compress the fuel filter assembly in the direction of the arrow, remove clip (A), and separate the sub tank bracket assembly and the fuel filter assembly.

CAUTION:
When separating the sub tank bracket assembly and the fuel filter assembly, be careful not to damage the ground wire.

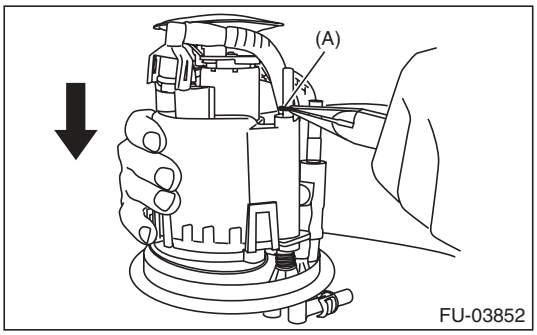

FU-03852

7) Disconnect the connector from the pump assembly.

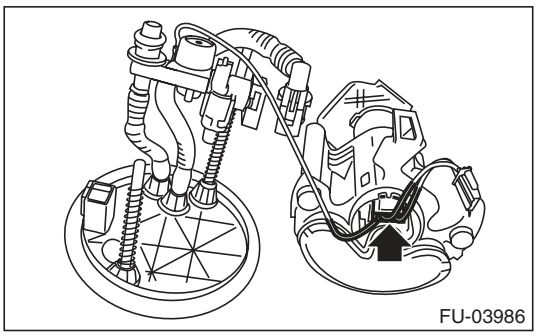
FU-03986

8) Lift the two tab holders connecting the pump assembly to the fuel filter using a flat tip screwdriver (with a shaft diameter of approx. 3 mm (0.12 in)), etc., and separate the fuel filter and pump assembly.

CAUTION:

- **To prevent damaging the tabs of the pump assembly, wrap the tip of flat tip screwdriver (A), etc. with tape (B).**

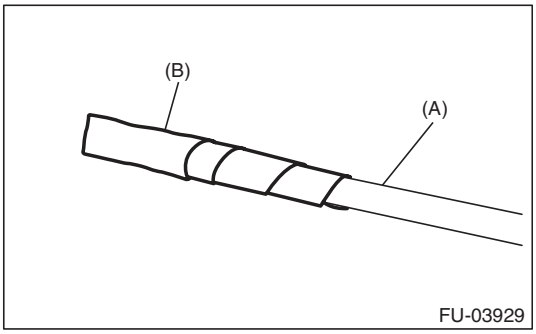

- **Be careful not to drop or apply any impact to the pump assembly.**

NOTE:
If the spacer and o-ring is remaining on the pump assembly, remove these.

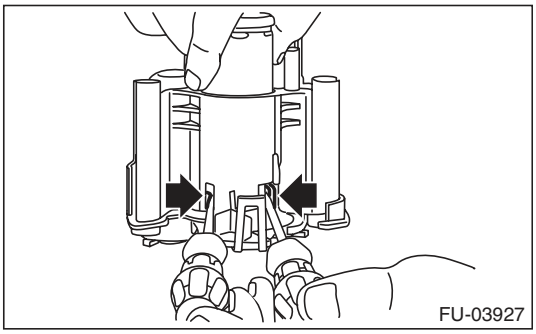

B: INSTALLATION

1) Assemble o-ring (A) and spacer (B) to the fuel pump, and attach the pump assembly to the fuel filter.

NOTE:
- Use new O-rings (8 mm (0.31 in) inner diameter).
- Use a new spacer.
- Apply gasoline to the o-ring.
- Insert the pump assembly until a “pop” is heard.

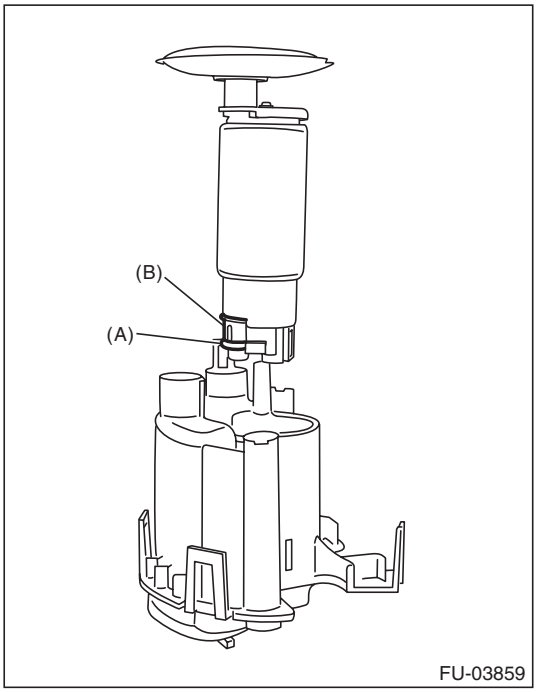

2) Connect the connector to the pump assembly.

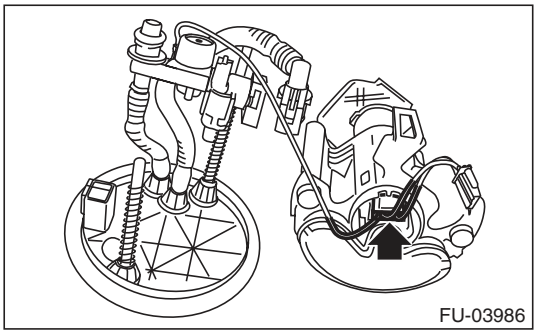

3) Attach spring (A) to the metal rod of the sub tank bracket assembly, and assemble the fuel filter assembly.

NOTE:
Use a new spring.

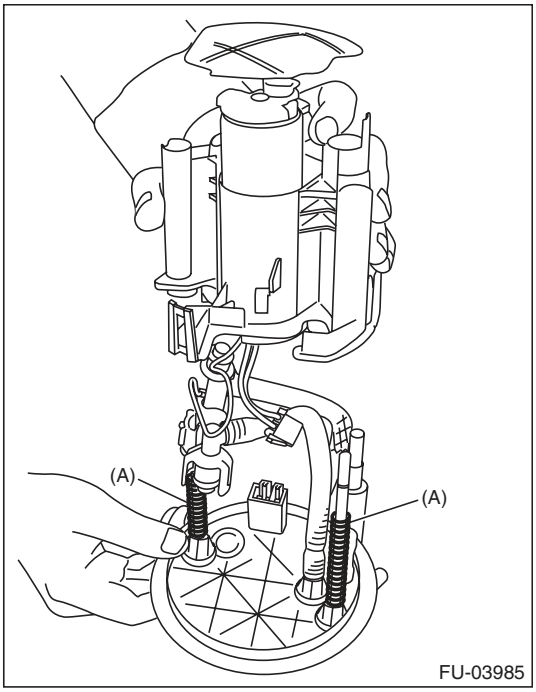

4) Push the fuel filter assembly in the direction of the arrow to compress, and attach clip (A).

NOTE:
Use a new clip.

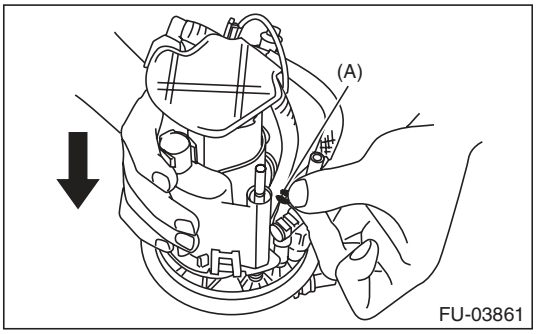

5) Connect the fuel piping connector to the fuel filter assembly.

NOTE:
- Use new O-rings.
- Apply gasoline to the o-ring.
- The O-rings of the black and white connectors are identified by a difference in diameter. Be careful not to confuse the two during assembly.

O-ring inner diameter:
Black connector O-ring [Approx. 7 mm (0.28 in)]
White connector O-ring [Approx. 8 mm (0.31 in)]

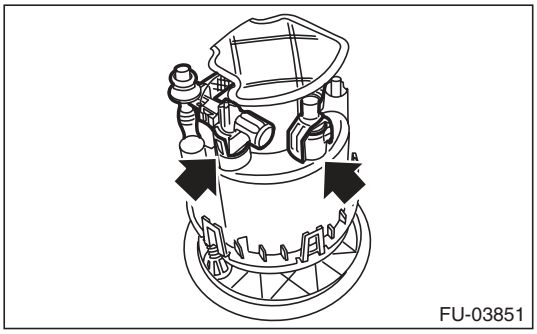

6) Attach the O-ring (A) to the fuel filter assembly, and attach the sub tank to the sub tank bracket assembly.

NOTE:
- Use new O-rings (8 mm (0.31 in) inner diameter).
- Apply gasoline to the o-ring.
- Insert the pump assembly until a “pop” is heard.

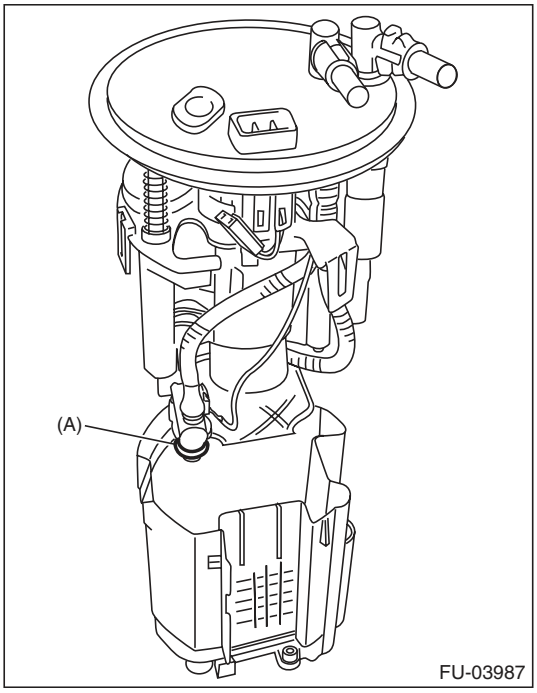

7) Replace the cushion on the rear face of the sub tank with a new cushion.

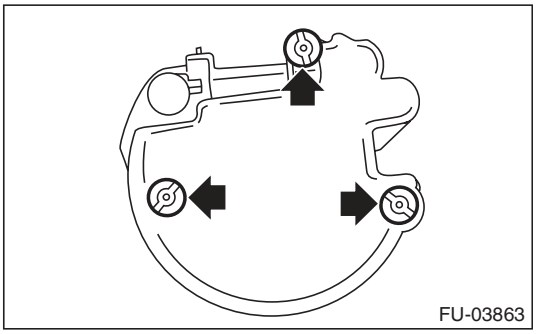

8) Connect the pump assembly connector to the sub tank bracket assembly.

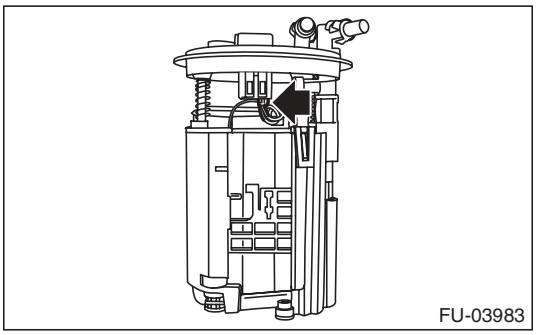

9) Install the fuel level sensor and fuel temperature sensor. <Ref. to FU(H4SO)-57, INSTALLATION, Fuel Level Sensor.>

10) Install the fuel pump assembly. <Ref. to FU(H4SO)-56, INSTALLATION, Fuel Pump.>

28. Fuel Damper

A: REMOVAL

WARNING:
Place "NO OPEN FLAMES" signs near the working area.

CAUTION:
- **Be careful not to spill fuel.**
- **Catch the fuel from hoses using a container or cloth.**

1) Release the fuel pressure. <Ref. to FU(H4SO)-43, RELEASING OF FUEL PRESSURE, PROCEDURE, Fuel.>
2) Remove the fuel damper from the fuel delivery line.

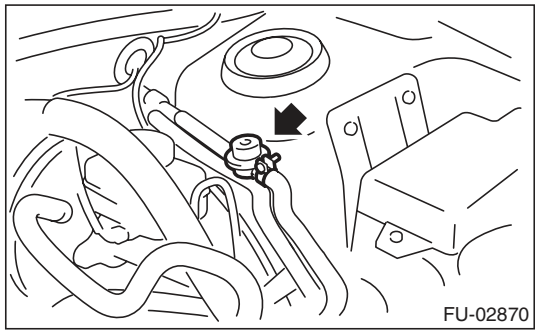

B: INSTALLATION

CAUTION:
If fuel hoses or clamps are damaged, replace them with new parts.
Install in the reverse order of removal.

Tightening torque:
1.25 N·m (0.1 kgf-m, 0.9 ft-lb)

29. Fuel Delivery and Evaporation Lines

A: REMOVAL

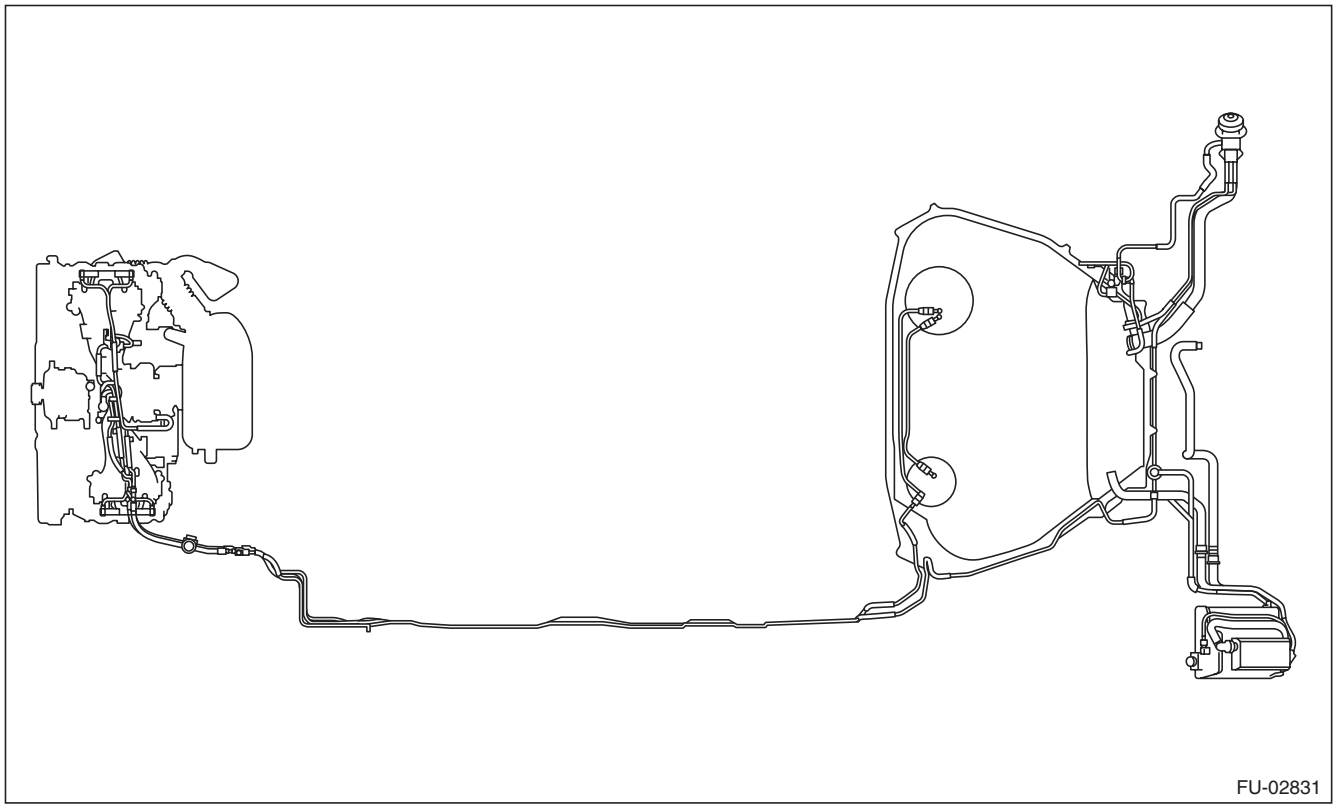

WARNING:
Place "NO OPEN FLAMES" signs near the working area.

CAUTION:
Be careful not to spill fuel.

1) Set the vehicle on a lift.
2) Release the fuel pressure. <Ref. to FU(H4SO)-43, RELEASING OF FUEL PRESSURE, PROCEDURE, Fuel.>
3) Open the fuel filler lid, and remove the fuel filler cap.
4) Remove the floor mat. <Ref. to EI-72, REMOVAL, Floor Mat.>
5) In the engine compartment, disconnect the fuel delivery hoses and evaporation hose.
   (1) Disconnect the quick connector of the fuel delivery line by pushing the ST in the direction of the arrow.

ST 42099FE000 QUICK CONNECTOR RELEASE

   (2) Remove the clip and disconnect the evaporation hose from the pipe.

CAUTION:
- **Be careful not to spill fuel.**
- **Catch the fuel from hoses using a container or cloth.**

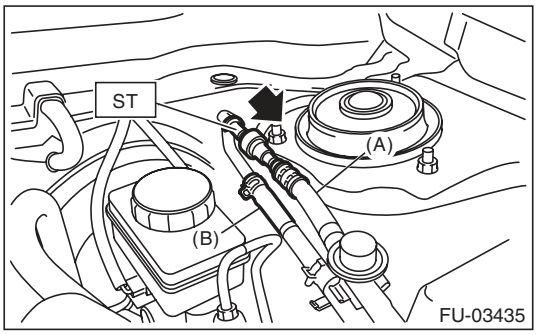

(A) Fuel delivery hose
(B) Evaporation hose

6) Remove the canister. <Ref. to EC(H4SO)-5, REMOVAL, Canister.>
7) Remove the fuel tank. <Ref. to FU(H4SO)-45, REMOVAL, Fuel Tank.>
8) Remove the fuel pipe assembly.
9) Disconnect the quick connector, and disconnect the fuel delivery tube and jet pump tube.
(1) Clean the pipe and connector, if they are covered with dust.
(2) To prevent from damaging or entering foreign matter, wrap the pipes and connectors with plastic bag etc.

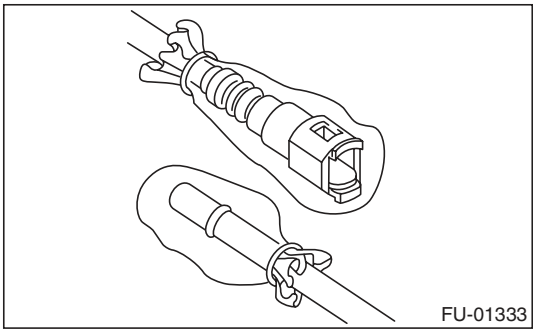

(3) Hold the connector (A) and push the retainer (B) down.
(4) Pull out the connector (A) from the retainer (B).

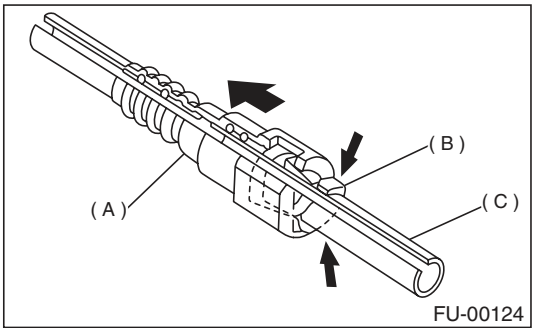

(A) Connector
(B) Retainer
(C) Pipe

B: INSTALLATION

Install in the reverse order of removal while being careful of the following.

1. CONNECTING THE FUEL LINE QUICK CONNECTOR

CAUTION:
Make sure there is no damage or dust on the connections. If necessary, clean seal surface of pipe.

NOTE:
Use a new retainer.

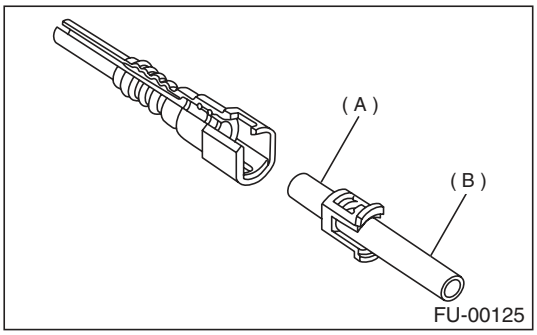

(A) Seal surface
(B) Pipe

1) Set the new retainer (B) to connector (A).
2) Push the pipe into the connector completely.

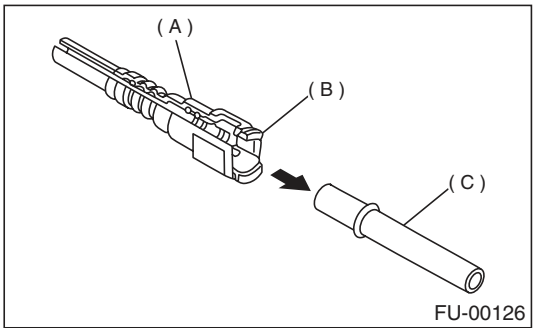

(A) Connector
(B) Retainer
(C) Pipe

CAUTION:
- **Pull the connector to ensure it is connected securely.**
- **Make sure the two retainer pawls are engaged in their mating positions in the connector.**
- **Be sure to inspect hoses and their connections for any leakage of fuel.**

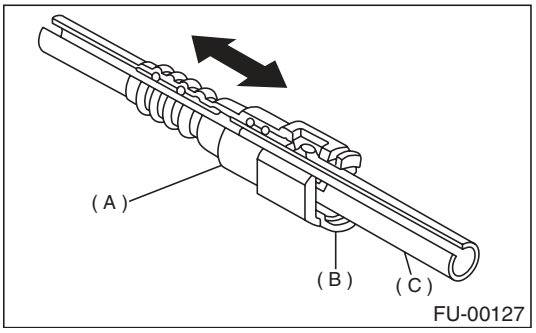

(A) Connector
(B) Retainer
(C) Pipe

2. CONNECTING THE FUEL DELIVERY HOSE.

Connect the fuel delivery hose to the pipe with an overlap of 20 to 25 mm (0.79 to 0.98 in).
Type A: When the amount to be inserted is specified.
Type B: When the amount to be inserted is not specified.

L1: 2.5±1.5 mm (0.098±0.059 in)

L2: 22.5±2.5 mm (0.886±0.098 in)

CAUTION:
Be sure to inspect hoses and their connections for any leakage of fuel.

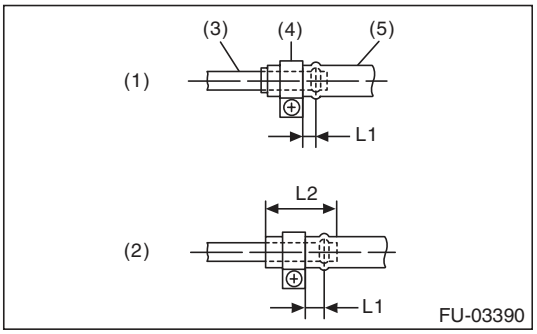

(1) Type A
(2) Type B
(3) Pipe
(4) Clamp
(5) Hose

3. CONNECTING THE EVAPORATION HOSE

Connect the evaporation hose to the pipe with an overlap of 15 to 20 mm (0.59 to 0.79 in).

L = 17.5±2.5 mm (0.689±0.098 in)

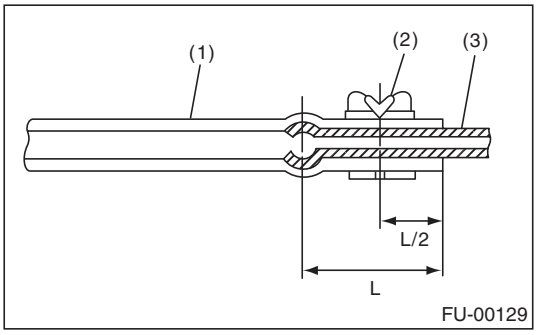

(1) Hose
(2) Clip
(3) Pipe

C: INSPECTION

1) Make sure that there are no cracks on the fuel pipes and fuel hoses.
2) Make sure the fuel pipe and fuel hose connections are tightened firmly.

30. Fuel System Trouble in General

A: INSPECTION

Trouble and possible cause		Corrective action
1. Insufficient fuel supply to injector		
1)	Fuel pump does not operate.	
	❍ Defective terminal contact	Inspect contact, especially ground, and tighten it securely.
	❍ Trouble in electromagnetic or electronic circuit parts	Replace the faulty parts.
2)	Decline of fuel pump function	Replace the fuel pump.
3)	Clogged fuel filter	Replace the fuel filter. Clean or replace the fuel tank if necessary.
4)	Clogged or bent fuel pipe or hose	Clean, correct or replace the fuel pipe or hose.
5)	Air is mixed in the fuel system.	Inspect or retighten each connection part.
6)	Clogged or bent air breather tube or pipe.	Clean, correct or replace the air breather tube or pipe.
7)	Damaged diaphragm of pressure regulator	Replace.
2. Leakage or blow out of fuel		
1)	Loose joints of the fuel pipe	Retighten.
2)	Cracked fuel pipe, hose and fuel tank	Replace.
3)	Defective welding part on the fuel tank	Replace.
4)	Clogged or bent air breather tube or air vent tube	Clean, correct or replace the air breather tube or air vent tube.
3. Gasoline smell inside of compartment		
1)	Loose joints at air breather tube, air vent tube and fuel filler pipe	Retighten.
2)	Fuel saucer gasket air tightness fault	Correct or replace the gasket.
3)	Inoperative fuel pump modulator or circuit	Replace.
4. Defective fuel meter indicator		
1)	Defective operation of fuel level sensor	Replace.
2)	Defective operation of fuel meter	Replace.
5. Noise		
1)	Large operation noise or vibration of fuel pump	Replace.

NOTE:
- When the vehicle is left unattended for an extended period of time, water may accumulate in the fuel tank. Fill fuel fully to prevent the problem.
- In snow-covered areas, mountainous areas, skiing areas, etc. where ambient temperatures drop to 0°C (32°F) or less throughout the winter season, use a water removing agent in the fuel system to prevent freezing fuel system and accumulating water.
- When water is accumulated in fuel filter, fill the water removing agent in the fuel tank.
- Before using water removing agent, follow the cautions noted on the bottle.

1. General Description

A: CAUTION

- Wear appropriate work clothing, including a cap, protective goggles and protective shoes when performing any work.
- Remove contamination including dirt and corrosion before removal, installation or disassembly.
- Keep the disassembled parts in order and protect them from dust and dirt.
- Before removal, installation or disassembly, be sure to clarify the failure. Avoid unnecessary removal, installation, disassembly and replacement.
- Vehicle components are extremely hot after driving. Be wary of receiving burns from heated parts.
- Be sure to tighten fasteners including bolts and nuts to the specified torque.
- Place shop jacks or rigid racks at the specified points.
- Before disconnecting connectors of sensors or units, be sure to disconnect the ground cable from battery.

B: PREPARATION TOOL

1. SPECIAL TOOL

ILLUSTRATION	TOOL NUMBER	DESCRIPTION	REMARKS
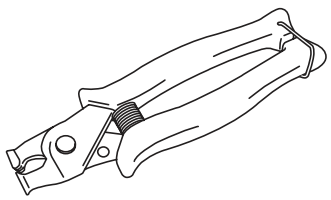 ST18353AA000	18353AA000	CLAMP PLIERS	• Used for removing and installing the PCV hose. • This is a general tool made by the French company CAILLAU. (code) 54.0.000.205 To make this easier to obtain, it has been provided with a tool number.

2. Front Catalytic Converter

A: REMOVAL

The front catalytic converter is integrated into the front exhaust pipe; therefore, refer to “Front Exhaust Pipe” for the removal procedure. <Ref. to EX(H4SO)-4, REMOVAL, Front Exhaust Pipe.>

B: INSTALLATION

The front catalytic converter is integrated into the front exhaust pipe; therefore, refer to “Front Exhaust Pipe” for the installation procedure. <Ref. to EX(H4SO)-5, INSTALLATION, Front Exhaust Pipe.>

C: INSPECTION

1) Check the connections and welds for exhaust leaks.
2) Check for hole or rust.

3. Rear Catalytic Converter

A: REMOVAL

The rear catalytic converter is integrated into the center exhaust pipe; therefore, refer to “Center Exhaust Pipe” for the removal procedure. <Ref. to EX(H4SO)-7, REMOVAL, Center Exhaust Pipe.>

B: INSTALLATION

The rear catalytic converter is integrated into the center exhaust pipe; therefore, refer to “Center Exhaust Pipe” for the installation procedure. <Ref. to EX(H4SO)-7, INSTALLATION, Center Exhaust Pipe.>

C: INSPECTION

1) Check the connections and welds for exhaust leaks.
2) Check for hole or rust.

4. Canister

A: REMOVAL

1) Set the vehicle on a lift.
2) Disconnect the ground cable from battery.

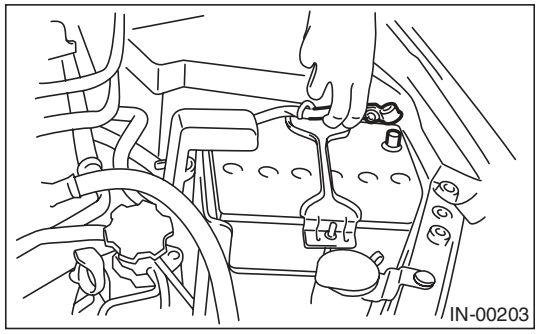

3) Lift up the vehicle.
4) Remove the rear wheel LH.
5) Remove the rear mud guard LH. <Ref. to EI-29, REAR MUD GUARD, REMOVAL, Mud Guard.>
6) Disconnect quick connector (A).
7) Disconnect the drain valve connector (B).
8) Remove clip (C).

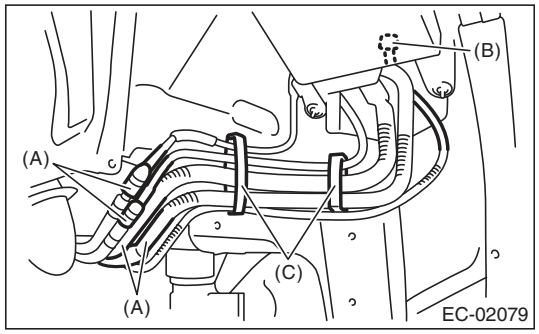

9) Remove the canister from body.

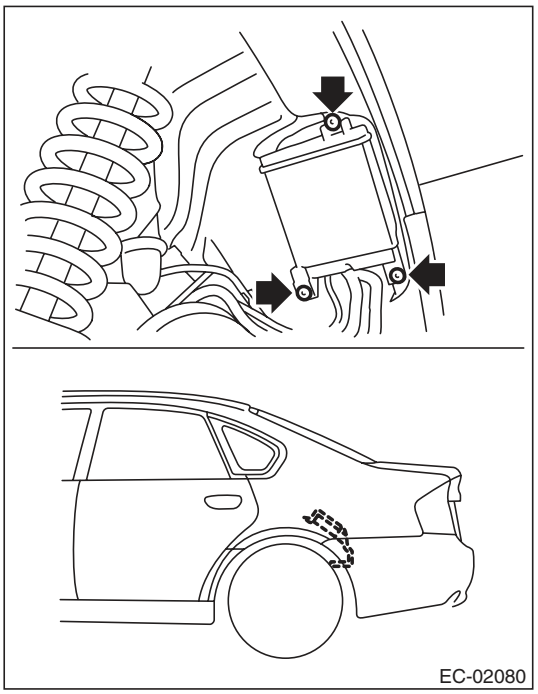

B: INSTALLATION

Install in the reverse order of removal.

NOTE:
Check that there is no damage or dust on the quick connector. If necessary, clean the seal surface of the pipe.

Tightening torque:
8 N·m (0.8 kgf-m, 5.9 ft-lb)

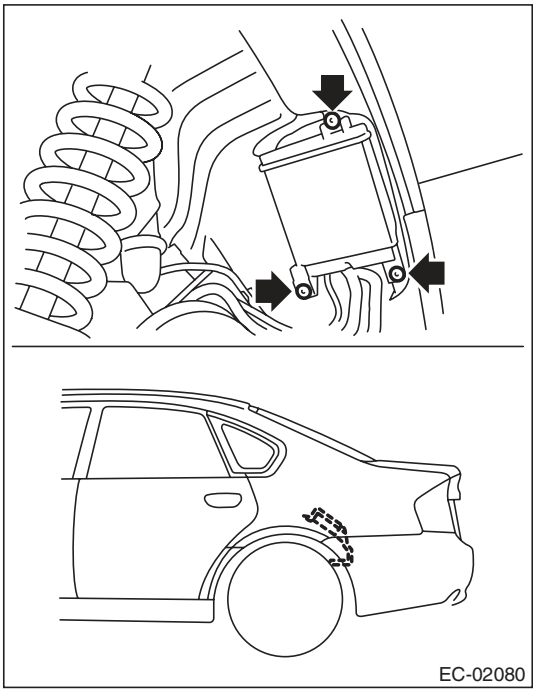

C: INSPECTION

Make sure the canister and canister hoses are not cracked or loose.

5. Purge Control Solenoid Valve

A: REMOVAL

1) Disconnect the ground cable from battery.

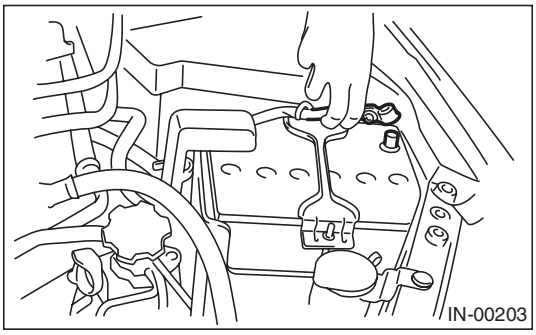

2) Disconnect the connector and evaporation hoses of purge control solenoid valve, and then remove the purge control solenoid valve.

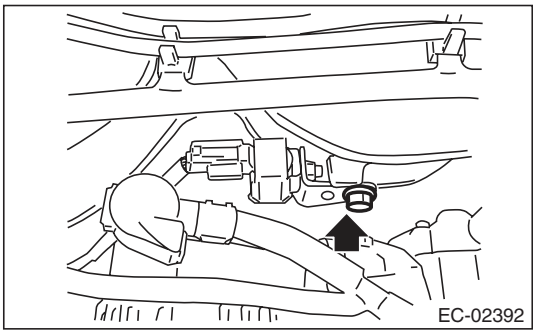

B: INSTALLATION

Install in the reverse order of removal.

Tightening torque (Purge control solenoid valve attachment bolt):
19 N·m (1.9 kgf-m, 14.0 ft-lb)

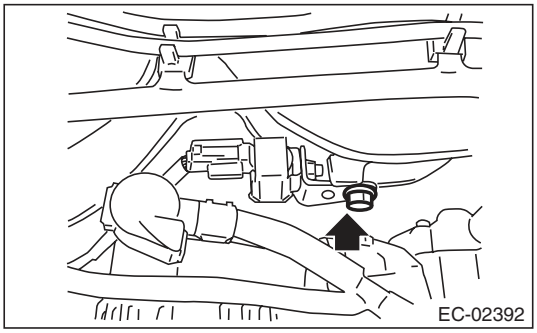

NOTE:
Connect the evaporation hose as shown in the figure.

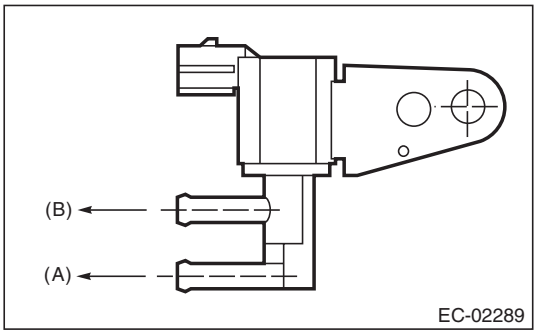

(A) To fuel pipe (intake manifold)
(B) To fuel pipe (evaporation line)

C: INSPECTION

Make sure the hoses are not cracked or loose.

6. EGR Valve

A: REMOVAL

For removal procedures, refer to “FU” section. <Ref. to FU(H4SO)-29, REMOVAL, EGR Valve.>

B: INSTALLATION

For installation procedures, refer to “FU” section. <Ref. to FU(H4SO)-29, INSTALLATION, EGR Valve.>

7. Fuel Level Sensor

A: REMOVAL

For removal procedures, refer to “FU” section. <Ref. to FU(H4SO)-57, REMOVAL, Fuel Level Sensor.>

B: INSTALLATION

For installation procedures, refer to “FU” section. <Ref. to FU(H4SO)-57, INSTALLATION, Fuel Level Sensor.>

8. Fuel Temperature Sensor

A: REMOVAL

The fuel temperature sensor is integrated into fuel level sensor as one unit; therefore, refer to “Fuel Level Sensor” for removal procedure. <Ref. to FU(H4SO)-57, REMOVAL, Fuel Level Sensor.>

B: INSTALLATION

The fuel temperature sensor and fuel level sensor are integrated into one unit; therefore, refer to “Fuel Level Sensor” for installation procedure. <Ref. to FU(H4SO)-57, INSTALLATION, Fuel Level Sensor.>

9. Fuel Sub Level Sensor

A: REMOVAL

For removal procedures, refer to “FU” section. <Ref. to FU(H4SO)-58, REMOVAL, Fuel Sub Level Sensor.>

B: INSTALLATION

For installation procedures, refer to “FU” section. <Ref. to FU(H4SO)-59, INSTALLATION, Fuel Sub Level Sensor.>

10. Fuel Tank Pressure Sensor

A: REMOVAL

WARNING:
Place "NO OPEN FLAMES" signs near the working area.

1) Set the vehicle on a lift.
2) Disconnect the ground cable from battery.

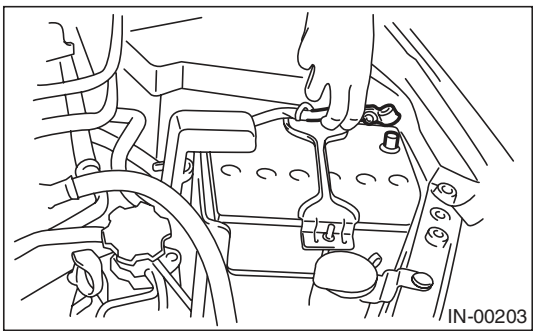

3) Open the fuel filler lid, and remove the fuel filler cap.
4) Lift up the vehicle.
5) Disconnect the connector from the fuel tank pressure sensor.
6) Disconnect the pressure hose from the fuel tank pressure sensor.
7) Remove the fuel tank pressure sensor along with the bracket.

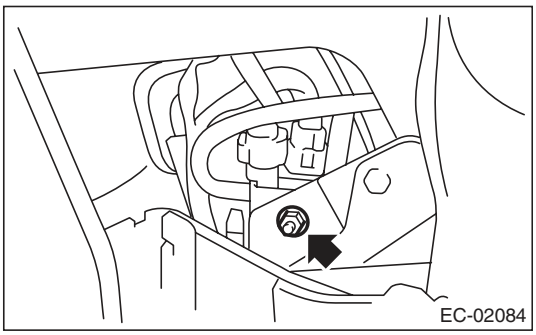

B: INSTALLATION

Install in the reverse order of removal.

Tightening torque:
7.4 N·m (0.8 kgf-m, 5.5 ft-lb)

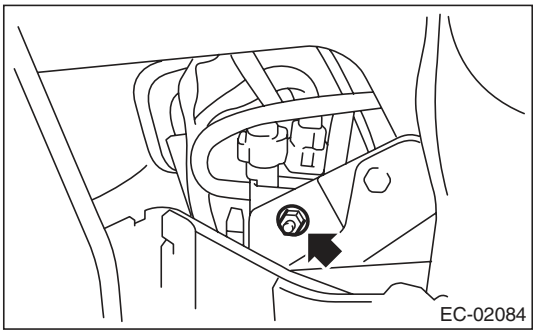

C: INSPECTION

Make sure the hoses are not cracked or loose.

11. Pressure Control Solenoid Valve

A: REMOVAL

1) Set the vehicle on a lift.
2) Disconnect the ground cable from battery.

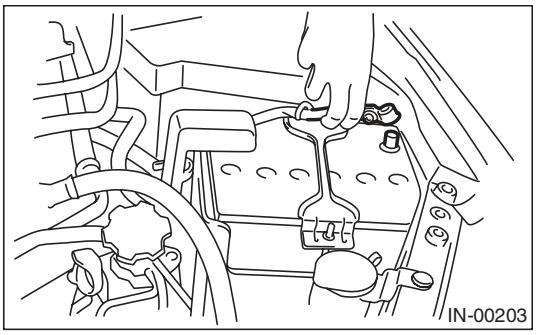

3) Lift up the vehicle.
4) Disconnect connector (A) from the pressure control solenoid valve.
5) Disconnect the evaporation hose (B) from the pressure control solenoid valve.
6) Remove the bolts (C) which secure the bracket to the fuel tank.

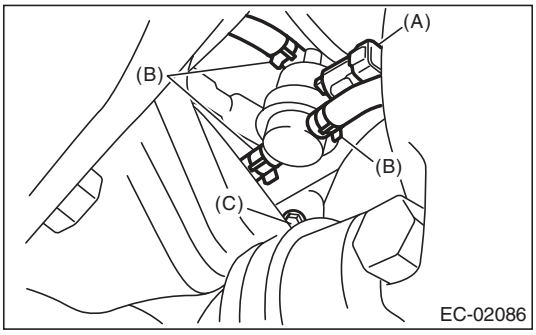

7) Remove the pressure control solenoid valve and bracket as a unit.
8) Remove the pressure control solenoid valve from the bracket.

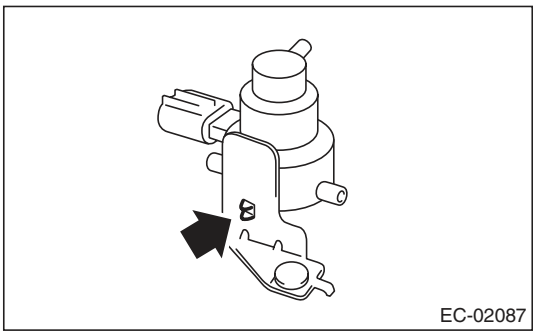

B: INSTALLATION

Install in the reverse order of removal.

Tightening torque:
7.35 N·m (0.7 kgf-m, 5.4 ft-lb)

C: INSPECTION

Make sure the hoses are not cracked or loose.

12. Drain Filter

A: SPECIFICATION

Canister is a non-disassembled part, so do not remove the drain filter from canister.
Refer to “Canister” for removal and installation procedures. <Ref. to EC(H4SO)-5, REMOVAL, Canister.> <Ref. to EC(H4SO)-6, INSTALLATION, Canister.>

13.Shut Valve

A: REMOVAL

WARNING:
Place "NO OPEN FLAMES" signs near the working area.

CAUTION:
Be careful not to spill fuel.

1) Remove the fuel filler pipe.
<Ref. to FU(H4SO)-52, REMOVAL, Fuel Filler Pipe.>
2) Disconnect the evaporation hose from the shut valve.

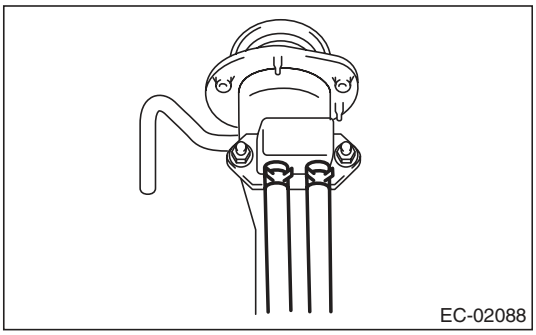

3) Remove the shut valve from the fuel filler pipe.

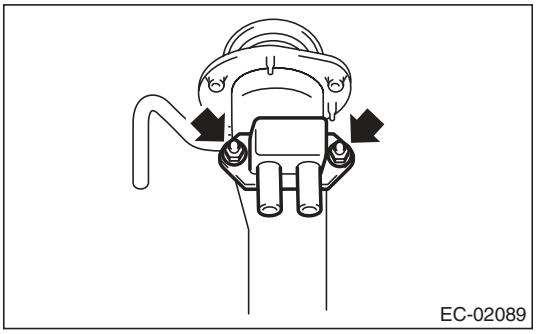

B: INSTALLATION

Install in the reverse order of removal.

Tightening torque:
4.5 N·m (0.5 kgf-m, 3.3 ft-lb)

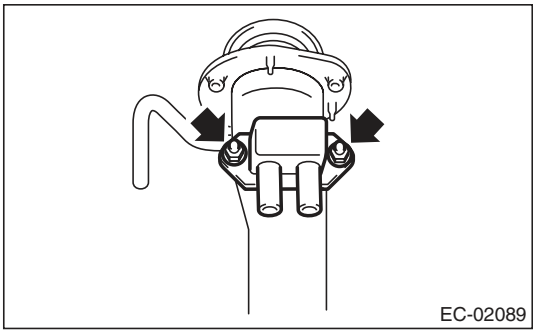

C: INSPECTION

Make sure the hoses are not cracked or loose.

14. Drain Valve

A: SPECIFICATION

Canister is a non-disassembled part, so do not remove the drain valve from canister.
Refer to “Canister” for removal and installation procedures. <Ref. to EC(H4SO)-5, REMOVAL, Canister.> <Ref. to EC(H4SO)-6, INSTALLATION, Canister.>

15. PCV Hose Assembly

A: REMOVAL

CAUTION:
Do not remove unless the PCV hose, diagnostics connector and PCV valve are damaged.

1) Remove the air intake chamber. <Ref. to IN(H4SO)-7, REMOVAL, Air Intake Chamber.>
2) Fit the depression in the ST with the protrusion on the clamp to unlock.
3) Remove the PCV hose assembly.

ST 18353AA000 CLAMP PLIERS

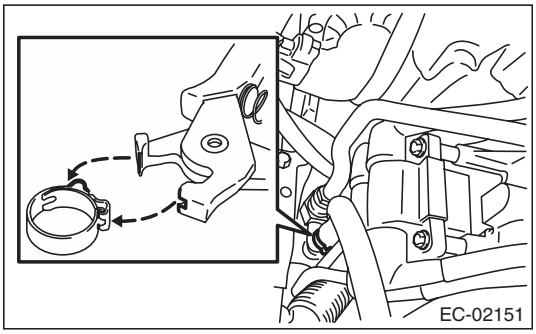

B: INSTALLATION

1) Install the PCV hose assembly, then lock by fitting the ST on the clamp protrusion.

NOTE:
Replace the clamp with a new part.

ST 18353AA000 CLAMP PLIERS

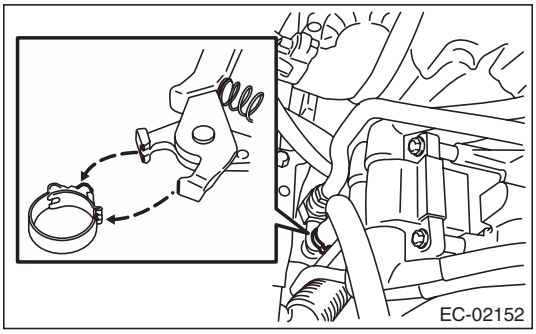

2) Install the air intake chamber. <Ref. to IN(H4SO)-7, INSTALLATION, Air Intake Chamber.>

1. General Description

A: COMPONENT

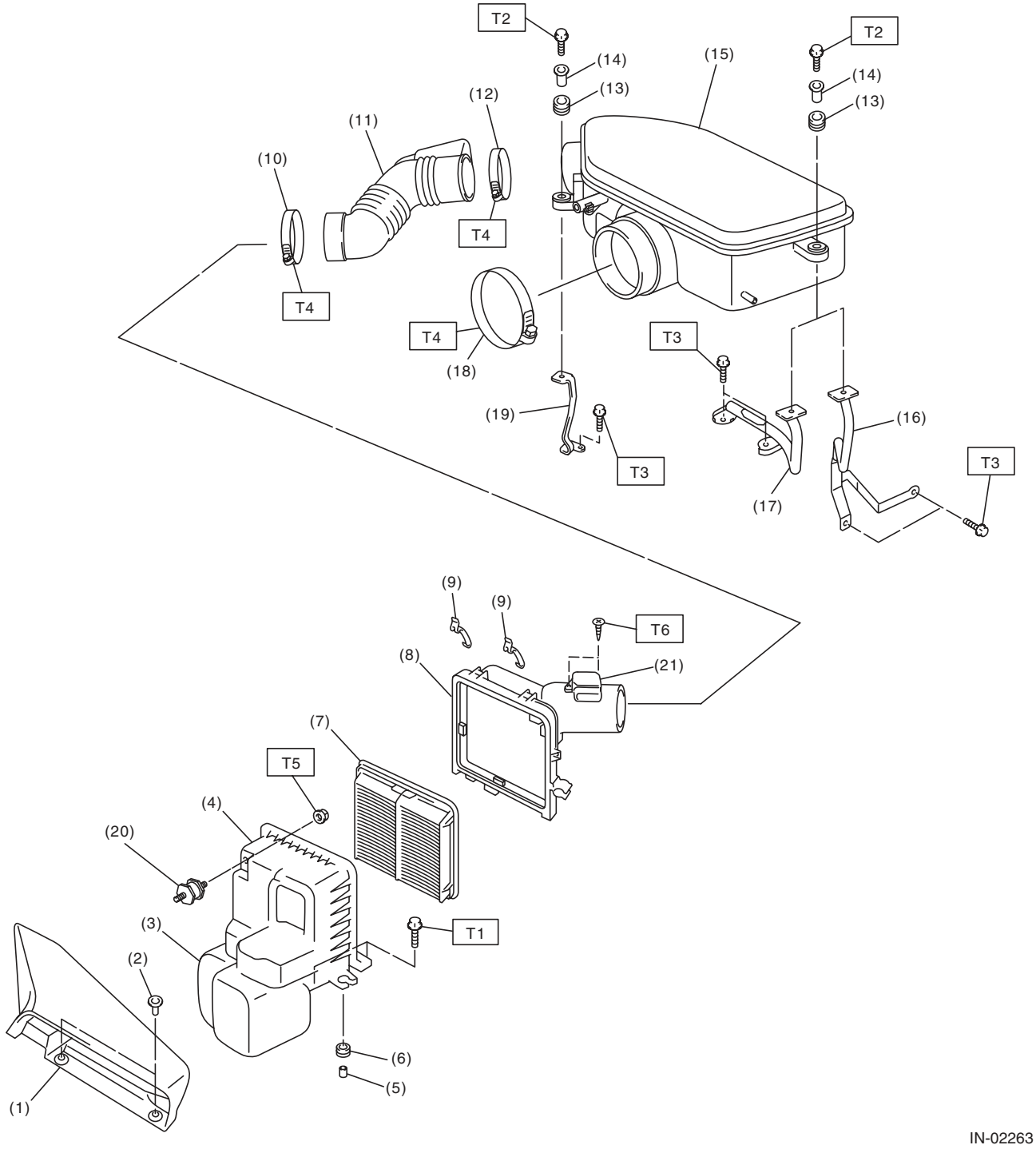

(1) Air intake duct
(2) Clip
(3) Resonator chamber
(4) Air cleaner case (front)
(5) Spacer
(6) Cushion
(7) Air cleaner element
(8) Air cleaner case (rear) (with HC adsorption filter: U5 model and C5 model)
(9) Clip
(10) Clamp
(11) Intake boot
(12) Clamp
(13) Cushion
(14) Spacer
(15) Air intake chamber
(16) Stay LH (MT model)
(17) Stay LH (AT model)
(18) Clamp
(19) Stay RH
(20) Cushion
(21) Mass air flow and intake air temperature sensor

Tightening torque:N·m (kgf-m, ft-lb)	
T1:	***6 (0.6, 4.4)***
T2:	***6.5 (0.7, 4.8)***
T3:	***16 (1.6, 11.8)***
T4:	***3 (0.3, 2.2)***
T5:	***7.5 (0.8, 5.5)***
T6:	***1 (0.1, 0.7)***

B: CAUTION

- Wear appropriate work clothing, including a cap, protective goggles and protective shoes when performing any work.
- Remove contamination including dirt and corrosion before removal, installation or disassembly.
- Keep the disassembled parts in order and protect them from dust and dirt.
- Before removal, installation or disassembly, be sure to clarify the failure. Avoid unnecessary removal, installation, disassembly and replacement.
- Vehicle components are extremely hot after driving. Be wary of receiving burns from heated parts.
- Be sure to tighten fasteners including bolts and nuts to the specified torque.
- Place shop jacks or rigid racks at the specified points.
- Before disconnecting connectors of sensors or units, be sure to disconnect the ground cable from the battery.

2. Air Cleaner Element

A: REMOVAL

1) Disconnect the ground cable from battery.

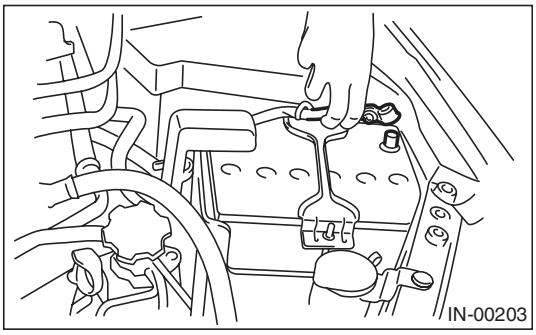

2) Disconnect the connector from mass air flow and intake air temperature sensor.

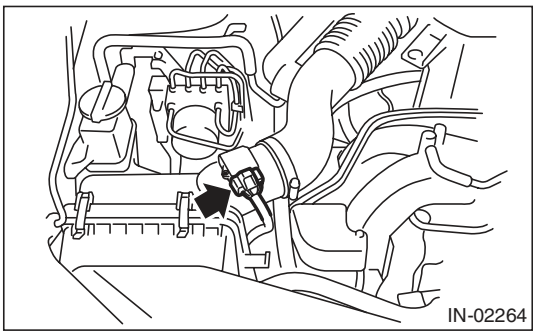

3) Loosen the clamps (A) which connect the air cleaner case and the intake boot.
4) Remove the clip (B) securing the upper side of air cleaner case.

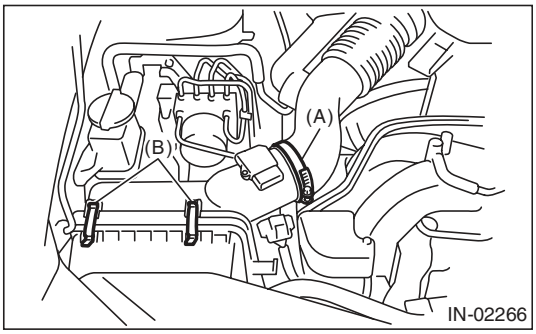

5) Remove the air cleaner case (rear) and air cleaner element.

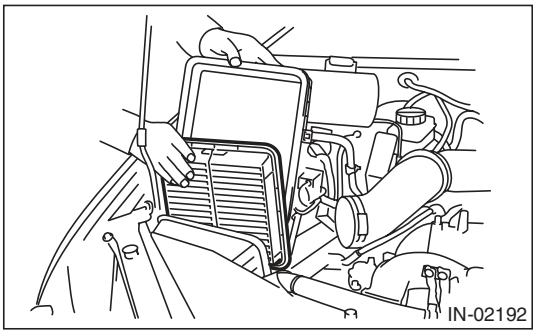

B: INSTALLATION

Install in the reverse order of removal.

CAUTION:
Be sure to use SUBARU genuine air cleaner element depending on the engine type when replacing the air cleaner elements. Using other air cleaner element may affect the engine performance.

NOTE:
- Check that there are no foreign objects in the air cleaner case.
- When installing the air cleaner case (rear), align the protrusion of the air cleaner case (rear) to the hole on the air cleaner case (front) to install.

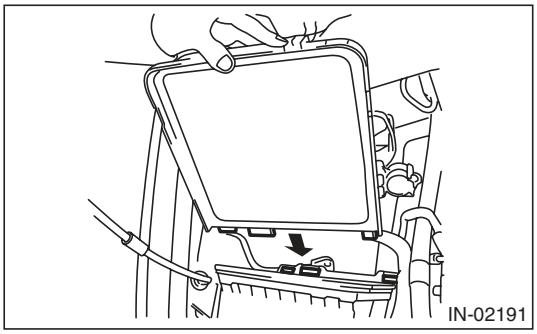

Tightening torque:
Clamp (A):
3 N·m (0.3 kgf-m, 2.2 ft-lb)

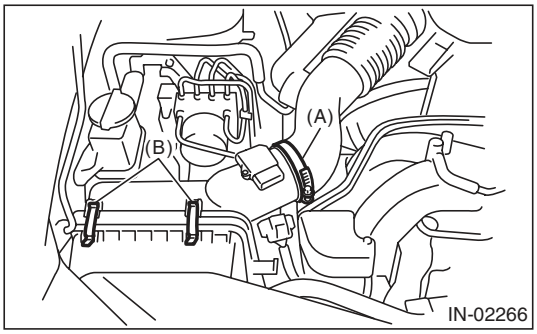

C: INSPECTION

1) Replace if excessively damaged or dirty.
2) Replace the air cleaner case (rear) when the HC adsorption filter is damaged. (U5 model and C5 model)

3. Air Cleaner Case

A: REMOVAL

1) Disconnect the ground cable from battery.

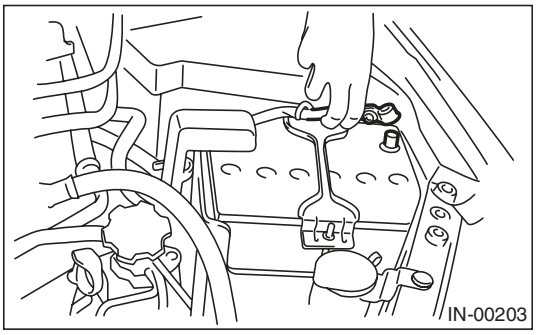

2) Disconnect the connector from mass air flow and intake air temperature sensor.

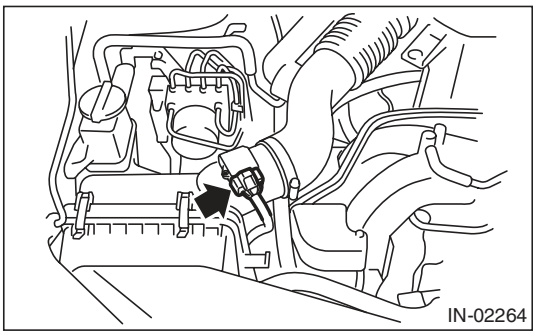

3) Loosen the clamps (A) which connect the air cleaner case and the intake boot.
4) Remove the clip (B) securing the upper side of air cleaner case.

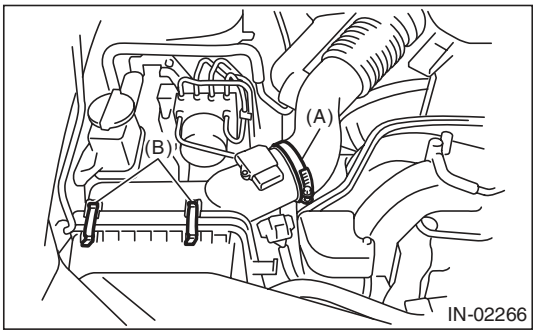

5) Remove the air cleaner case (rear) and air cleaner element.

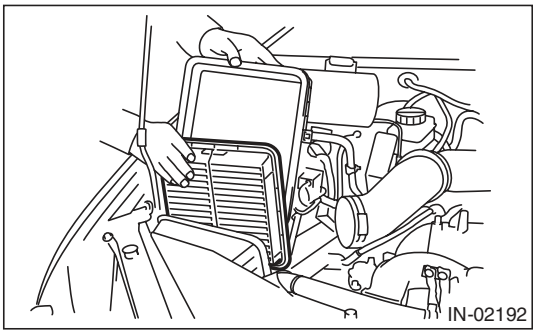

6) Remove the air intake duct. <Ref. to IN(H4SO)-8, REMOVAL, Air Intake Duct.>
7) Remove the bolts (A) and nut (B) which secure the air cleaner case to body.

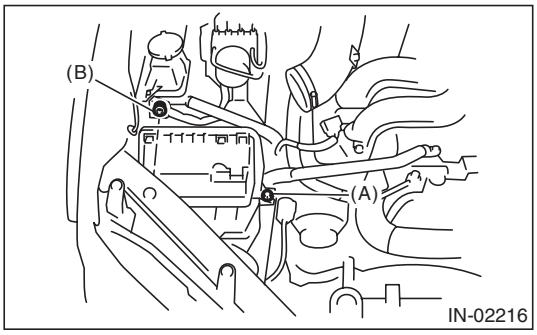

8) Remove the air cleaner case (front).

B: INSTALLATION

Install in the reverse order of removal.

Tightening torque:
Bolt (A)
6 N·m (0.6 kgf-m, 4.4 ft-lb)
Nut (B)
7.5 N·m (0.8 kgf-m, 5.5 ft-lb)

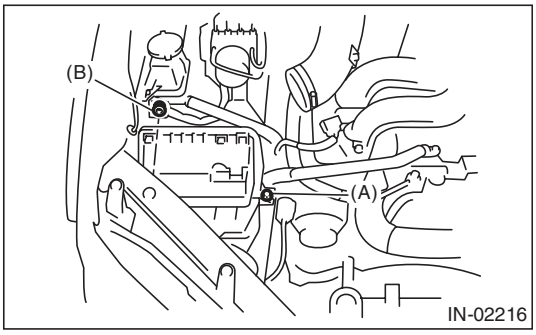

NOTE:
When installing the air cleaner case (rear), align the protrusion of the air cleaner case (rear) to the hole on the air cleaner case (front) to install.

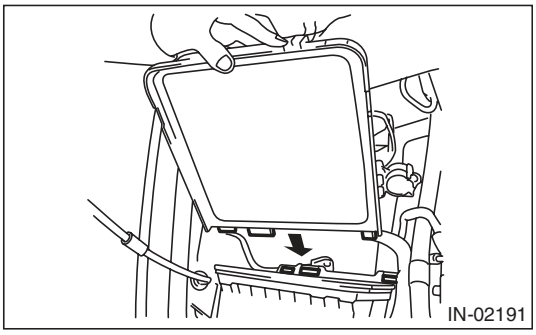

Tightening torque:
Clamp (A):
3 N·m (0.3 kgf-m, 2.2 ft-lb)

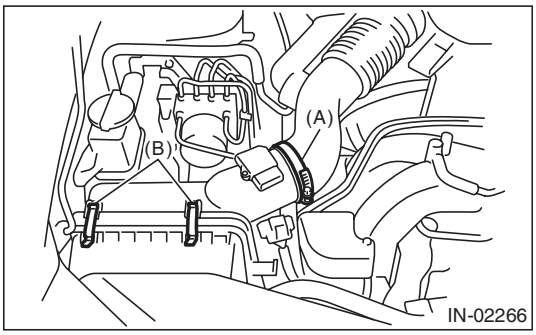

C: INSPECTION

Check for cracks or loose connections.

4. Air Intake Chamber

A: REMOVAL

1) Loosen the clamp (A) which connects air intake chamber to throttle body.
2) Loosen the clamp (B) which connects intake boot to air intake chamber.
3) Remove the bolt (C) which secures air intake chamber to the stay.
4) Disconnect the connector (D).

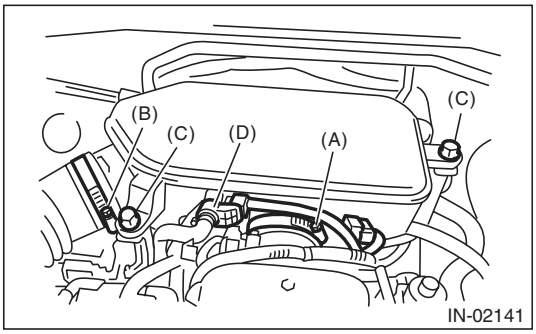

5) Disconnect the blow-by hoses, and then remove air intake chamber.

B: INSTALLATION

Install in the reverse order of removal.

Tightening torque:
Clamp (A), (B)
3 N·m (0.3 kgf-m, 2.2 ft-lb)
Bolt (C)
6.5 N·m (0.7 kgf-m, 4.8 ft-lb)

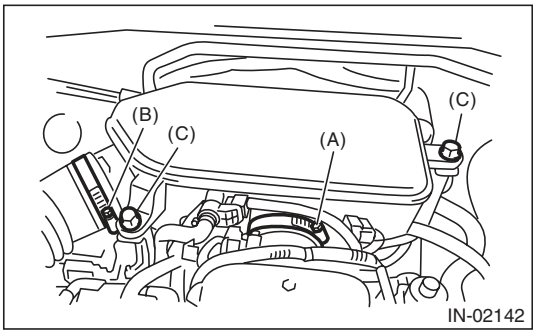

C: INSPECTION

1) Check for cracks or loose connections.
2) Inspect that no foreign objects are mixed in the air intake chamber.

5. Air Intake Duct

A: REMOVAL

1) Remove the clip which installs the air intake duct on the front side of body.
2) Remove the air intake duct.

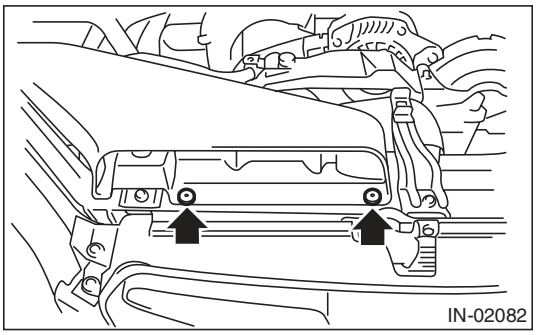

B: INSTALLATION

Install in the reverse order of removal.

C: INSPECTION

1) Check for cracks or loose connections.
2) Check that no foreign matter is mixed in air intake duct.

6. Resonator Chamber

A: REMOVAL

The resonator chamber and air cleaner case are integrated into one unit; therefore, refer to “Air Cleaner Case” for removal procedure. <Ref. to IN(H4SO)-5, REMOVAL, Air Cleaner Case.>

B: INSTALLATION

The resonator chamber and air cleaner case are integrated into one unit; therefore, refer to “Air Cleaner Case” for installation procedure. <Ref. to IN(H4SO)-6, INSTALLATION, Air Cleaner Case.>

C: INSPECTION

Check for cracks or loose connections.

Resonator Chamber

1. General Description

A: SPECIFICATION

Engine	Model			2.5 L
	Cylinder arrangement			Horizontally opposed, liquid cooled, 4-cylinder, 4-stroke gasoline engine
	Valve system mechanism			Belt driven Single overhead camshaft 4 valve/cylinder
	Bore × Stroke mm (in)			99.5 × 79.0 (3.917 × 3.110)
	Displacement cm^3 (cu in)			2,457 (150)
	Compression ratio			10.0
	Compression pressure (at 200 — 300 rpm) kPa (kg/cm^2, psi)			1,020 — 1,275 (10.4 — 13.0, 148 — 185)
	Number of piston rings			Pressure ring: 2, Oil ring: 1
	Intake valve timing	Constant	Open	BTDC 0°
			Close	ABDC 58°
		Low speed	Open	BTDC 0°
			Close	ABDC –10°
		High speed	Open	BTDC 14°
			Close	ABDC 62°
	Exhaust valve timing		Open	BBDC 30°
			Close	ATDC 14°
	Valve clearance mm (in)		Intake	0.20±0.04 (0.0079±0.0016)
			Exhaust	0.25±0.04 (0.0098±0.0016)
	Idling speed [at neutral position on MT, or “P” or “N” position on AT] rpm		MT	650±100 (No load) 850±100 (A/C ON)
			AT	700±100 (No load) 850±100 (A/C ON)
	Ignition order			1 → 3 → 2 → 4
	Ignition timing BTDC/rpm		MT	10°±8°/650
			AT	15°±10°/700

NOTE:
US: Undersize OS: Oversize

Belt tension adjuster	Protrusion of adjuster rod			mm (in)	5.2 — 6.2 (0.205 — 0.244)
Valve rocker arm	Clearance between shaft and arm			mm (in)	Standard	0.020 — 0.054 (0.0008 — 0.0021)
Camshaft	Bending limit				mm (in)	0.025 (0.00098) or less
	Thrust clearance			mm (in)	Standard	0.030 — 0.090 (0.0012 — 0.0035)
	Cam lobe height mm (in)	Intake	Constant		Standard	40.075 — 40.175 (1.5778 — 1.5817)
			Low speed		Standard	35.496 — 35.596 (1.3975 — 1.4014)
			High speed		Standard	40.315 — 40.415 (1.5872 — 1.5911)
		Exhaust			Standard	39.289 — 39.389 (1.5468 — 1.5507)
	Camshaft journal O.D.				mm (in)	31.928 — 31.945 (1.2570 — 1.2577)
	Camshaft journal hole I.D.				mm (in)	32.000 — 32.018 (1.2598 — 1.2605)
	Oil clearance			mm (in)	Standard	0.055 — 0.090 (0.0022 — 0.0035)
Cylinder head	Surface warping limit (Mating surface with cylinder block)				mm (in)	0.035 (0.0014)
	Grinding limit				mm (in)	0.1 (0.004)
	Standard height				mm (in)	97.5 (3.84)
Valve seat	Seating angle					90°
	Contacting width mm (in)		Intake		Standard	0.8 — 1.4 (0.03 — 0.055)
			Exhaust		Standard	1.2 — 1.8 (0.047 — 0.071)
Valve guide	Inside diameter				mm (in)	6.000 — 6.012 (0.2362 — 0.2367)
	Protrusion above head			mm (in)	Intake	20.0 — 21.0 (0.787 — 0.827)
					Exhaust	16.5 — 17.5 (0.650 — 0.689)
Valve	Head edge thickness mm (in)		Intake		Standard	0.8 — 1.2 (0.03 — 0.047)
			Exhaust		Standard	1.0 — 1.4 (0.039 — 0.055)
	Stem outer diameter			mm (in)	Intake	5.950 — 5.965 (0.2343 — 0.2348)
					Exhaust	5.945 — 5.960 (0.2341 — 0.2346)
	Valve stem gap mm (in)		Standard		Intake	0.035 — 0.062 (0.0014 — 0.0024)
					Exhaust	0.040 — 0.067 (0.0016 — 0.0026)
	Overall length			mm (in)	Intake	120.6 (4.75)
					Exhaust	121.7 (4.79)
Valve spring	Free length				mm (in)	55.2 (2.173)
	Squareness					2.5°, 2.4 (0.094) or less
	Tension/spring height			N (kgf, lb)/mm (in)	Set	235.3 — 270.7 (24 — 27.6, 52.9 — 60.8) /45.0 (1.772)
					Lift	578.9 — 639.9 (59.1 — 65.3, 130.3 — 143.9) /34.7 (1.366)
Cylinder block	Surface warping limit (mating with cylinder head)				mm (in)	0.025 (0.00098)
	Grinding limit				mm (in)	0.1 (0.004)
	Standard height				mm (in)	201.0 (7.91)
	Cylinder inner diameter mm (in)		Standard		A	99.505 — 99.515 (3.9175 — 3.9179)
					B	99.495 — 99.505 (3.9171 — 3.9175)
	Taper			mm (in)	Standard	0.015 (0.0006)
	Out-of-roundness			mm (in)	Standard	0.010 (0.0004)
	Piston clearance			mm (in)	Standard	–0.010 — 0.010 (–0.00039 — 0.00039)
	Cylinder inner diameter boring limit (diameter)				mm (in)	To 100.005 (3.9372)
Piston	Outer diameter mm (in)		Standard		A	99.505 — 99.515 (3.9175 — 3.9179)
					B	99.495 — 99.505 (3.9171 — 3.9175)
			0.25 (0.0098) OS			99.745 — 99.765 (3.9270 — 3.9277)
			0.50 (0.0197) OS			99.995 — 100.015 (3.9368 — 3.9376)

Piston pin	Standard clearance between piston and piston pin mm (in)		Standard	0.004 — 0.008 (0.0002 — 0.0003)
	Degree of fit			Piston pin must be fitted into position with thumb at 20°C (68°F).
Piston ring	Ring closed gap mm (in)	Top ring	Standard	0.20 — 0.35 (0.0079 — 0.0138)
		Second ring	Standard	0.37 — 0.52 (0.0146 — 0.0205)
		Oil ring	Standard	0.20 — 0.50 (0.0079 — 0.0197)
	Ring groove gap mm (in)	Top ring	Standard	0.040 — 0.080 (0.0016 — 0.0031)
		Second ring	Standard	0.030 — 0.070 (0.0012 — 0.0028)
Connecting rod	Bend or twist per 100 mm (3.94 in) in length mm (in)		Service limit	0.10 (0.0039)
	Thrust clearance mm (in)		Standard	0.070 — 0.330 (0.0028 — 0.0130)
Bearing of large end	Oil clearance mm (in)		Standard	0.016 — 0.044 (0.0006 — 0.0017)
	Bearing size (Thickness at center) mm (in)	Standard		1.492 — 1.501 (0.0587 — 0.0591)
		0.03 (0.0012) US		1.510 — 1.513 (0.0594 — 0.0596)
		0.05 (0.0020) US		1.520 — 1.523 (0.0598 — 0.0600)
		0.25 (0.0098) US		1.620 — 1.623 (0.0638 — 0.0639)
Bushing of small end	Clearance between piston pin and bushing mm (in)		Standard	0 — 0.022 (0 — 0.0009)
Crankshaft	Bending limit mm (in)			0.035 (0.0014)
	Crank pin	Out-of-roundness mm (in)		0.003 (0.0001)
		Cylindricality mm (in)		0.004 (0.0002)
		Grinding limit (dia.) mm (in)		To 51.750 (2.0374)
	Crank journal	Out-of-roundness mm (in)		0.005 (0.0002)
		Cylindricality mm (in)		0.006 (0.0002)
		Grinding limit (dia.) mm (in)		To 59.758 (2.3527)
	Crank pin outer diameter mm (in)	Standard		51.984 — 52.000 (2.0466 — 2.0472)
		0.03 (0.0012) US		51.954 — 51.970 (2.0454 — 2.0461)
		0.05 (0.0020) US		51.934 — 51.950 (2.0446 — 2.0453)
		0.25 (0.0098) US		51.734 — 51.750 (2.0368 — 2.0374)
	Crank journal outer diameter mm (in)	Standard		59.992 — 60.008 (2.3619 — 2.3625)
		0.03 (0.0012) US		59.962 — 59.978 (2.3607 — 2.3613)
		0.05 (0.0020) US		59.942 — 59.958 (2.3599 — 2.3605)
		0.25 (0.0098) US		59.742 — 59.758 (2.3520 — 2.3527)
	Thrust clearance mm (in)	Standard		0.030 — 0.115 (0.0012 — 0.0045)
	Oil clearance mm (in)	Standard		0.010 — 0.030 (0.0004 — 0.0012)
Main bearing	Bearing size (Thickness at center) mm (in)	#1, #3	Standard	1.998 — 2.011 (0.0787 — 0.0792)
			0.03 (0.0012) US	2.017 — 2.020 (0.0794 — 0.0795)
			0.05 (0.0020) US	2.027 — 2.030 (0.0798 — 0.0799)
			0.25 (0.0098) US	2.127 — 2.130 (0.0837 — 0.0839)
		#2, #4, #5	Standard	2.000 — 2.013 (0.0787 — 0.0793)
			0.03 (0.0012) US	2.019 — 2.022 (0.0795 — 0.0796)
			0.05 (0.0020) US	2.029 — 2.032 (0.0799 — 0.0800)
			0.25 (0.0098) US	2.129 — 2.132 (0.0838 — 0.0839)

B: COMPONENT

1. TIMING BELT

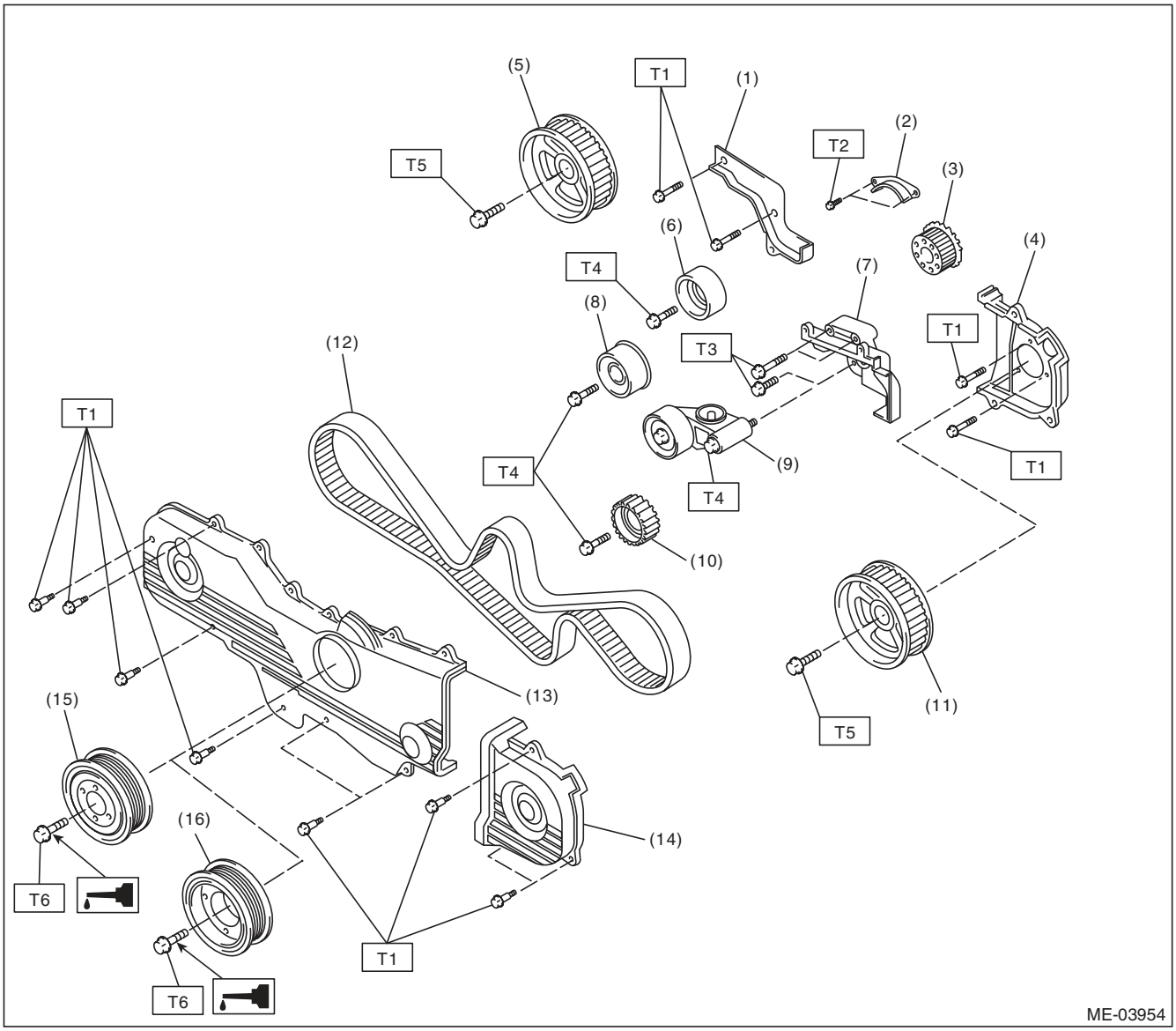

(1) Timing belt cover No. 2 RH
(2) Timing belt guide (MT model)
(3) Crank sprocket
(4) Timing belt cover No. 2 LH
(5) Cam sprocket No. 1
(6) Belt idler (A)
(7) Tensioner bracket
(8) Belt idler (B)
(9) Automatic belt tension adjuster ASSY
(10) Belt idler No. 2
(11) Cam sprocket No. 2
(12) Timing belt
(13) Front timing belt cover
(14) Timing belt cover LH
(15) Crank pulley (MT model)
(16) Crank pulley (AT model)

Tightening torque:N·m (kgf-m, ft-lb)

T1: 5 (0.5, 3.7)
T2: 9.75 (1.0, 7.2)
T3: 24.5 (2.5, 18.1)
T4: 39 (4.0, 28.8)
T5: 78 (8.0, 57.5)
T6: <Ref. to ME(H4SO)-41, INSTALLATION, Crank Pulley.>

2. CYLINDER HEAD AND CAMSHAFT

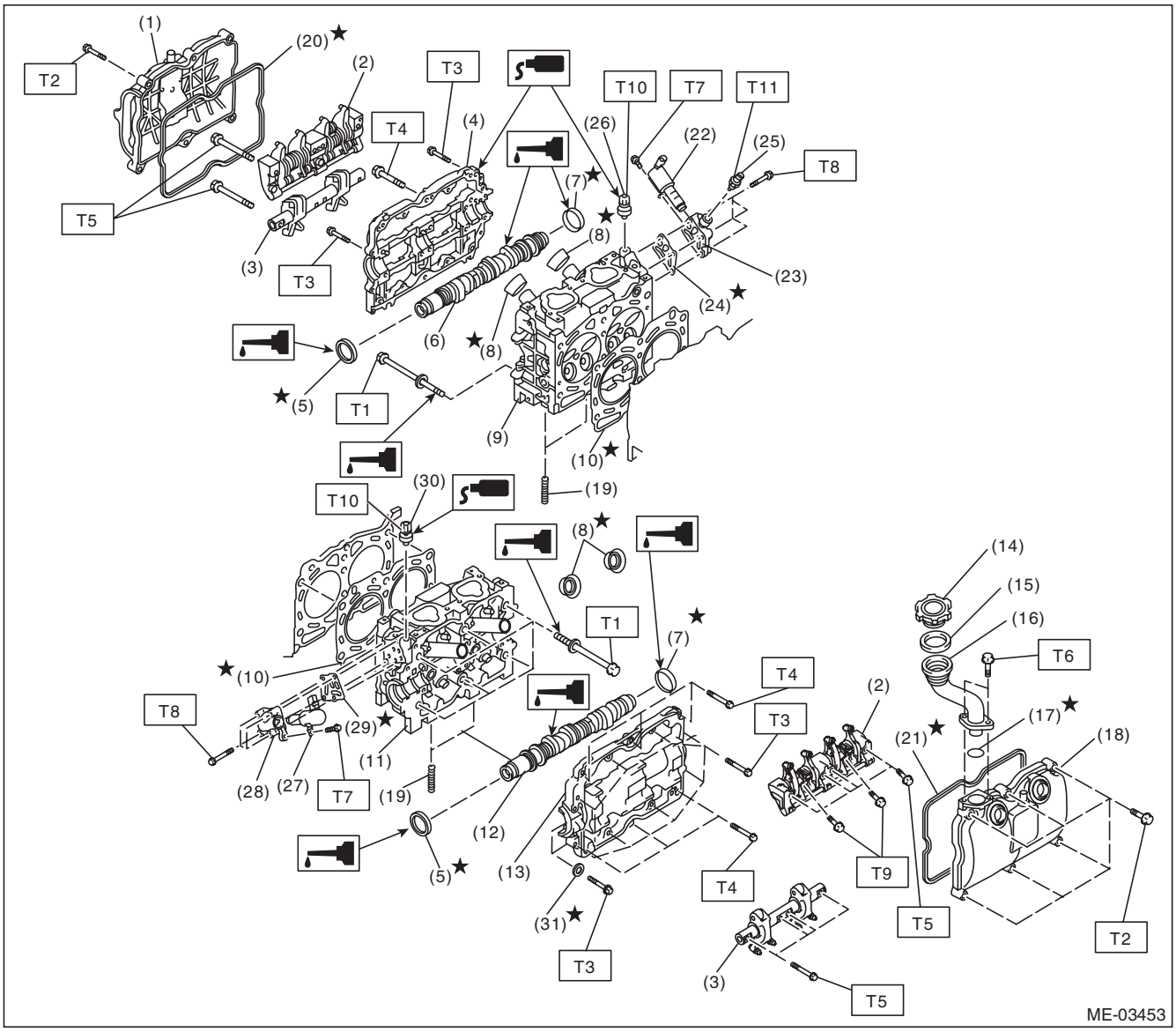

(1)	Rocker cover RH	(18)	Rocker cover LH	(31)	Seal washer
(2)	Intake valve rocker ASSY	(19)	Stud bolt		
(3)	Exhaust valve rocker ASSY	(20)	Rocker cover gasket RH		
(4)	Camshaft cap RH	(21)	Rocker cover gasket LH		
(5)	Oil seal	(22)	Oil switching solenoid valve RH		
(6)	Camshaft RH	(23)	Oil switching solenoid valve holder RH		
(7)	Plug	(24)	Gasket		
(8)	Spark plug pipe gasket	(25)	Oil temperature sensor		
(9)	Cylinder head RH	(26)	Variable valve lift diagnosis oil pressure switch RH		
(10)	Cylinder head gasket	(27)	Oil switching solenoid valve LH		
(11)	Cylinder head LH	(28)	Oil switching solenoid valve holder LH		
(12)	Camshaft LH	(29)	Gasket		
(13)	Camshaft cap LH	(30)	Variable valve lift diagnosis oil pressure switch LH		
(14)	Oil filler cap				
(15)	Gasket				
(16)	Oil filler duct				
(17)	O-ring				

Tightening torque:N·m (kgf-m, ft-lb)

T1:	***<Ref. to ME(H4SO)-59, INSTALLATION, Cylinder Head.>***
T2:	***<Ref. to ME(H4SO)-52, INSTALLATION, Valve Rocker Assembly.>***
T3:	***9.75 (1.0, 7.2)***
T4:	***18 (1.8, 13.3)***
T5:	***25 (2.5, 18.4)***
T6:	***6.4 (0.7, 4.7)***
T7:	***8 (0.8, 5.9)***
T8:	***10 (1.0, 7.4)***
T9:	***6 (0.6, 4.4)***
T10:	***17 (1.7, 12.5)***
T11:	***18 (1.8, 13.3)***

3. VALVE ROCKER ASSEMBLY

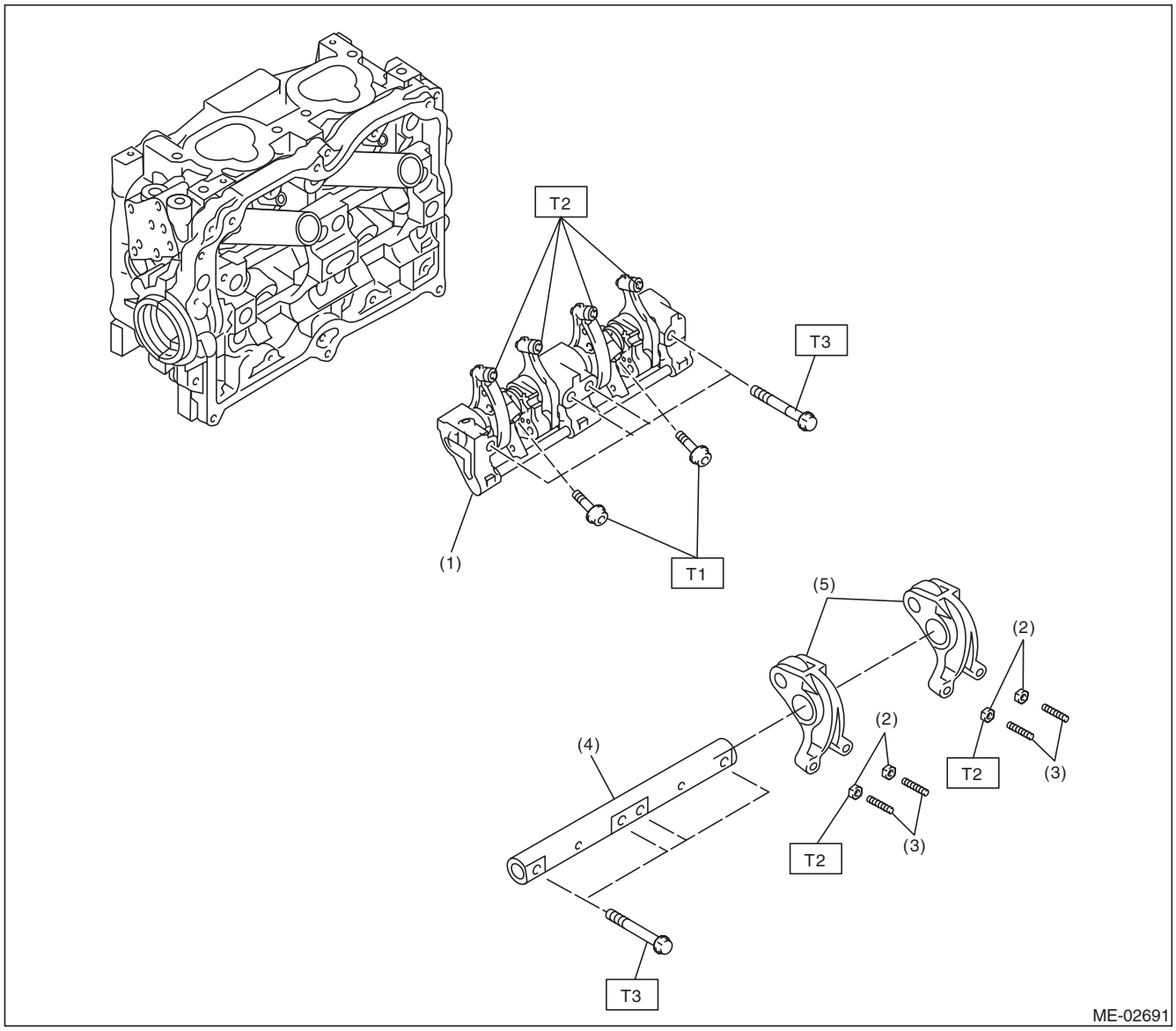

(1) Intake valve rocker ASSY
(2) Valve rocker nut
(3) Valve rocker adjusting screw
(4) Exhaust rocker shaft
(5) Exhaust valve rocker arm

Tightening torque:N·m (kgf-m, ft-lb)
T1: 6 (0.6, 4.4)
T2: 9.75 (1.0, 7.2)
T3: 25 (2.5, 18.4)

4. CYLINDER HEAD AND VALVE ASSEMBLY

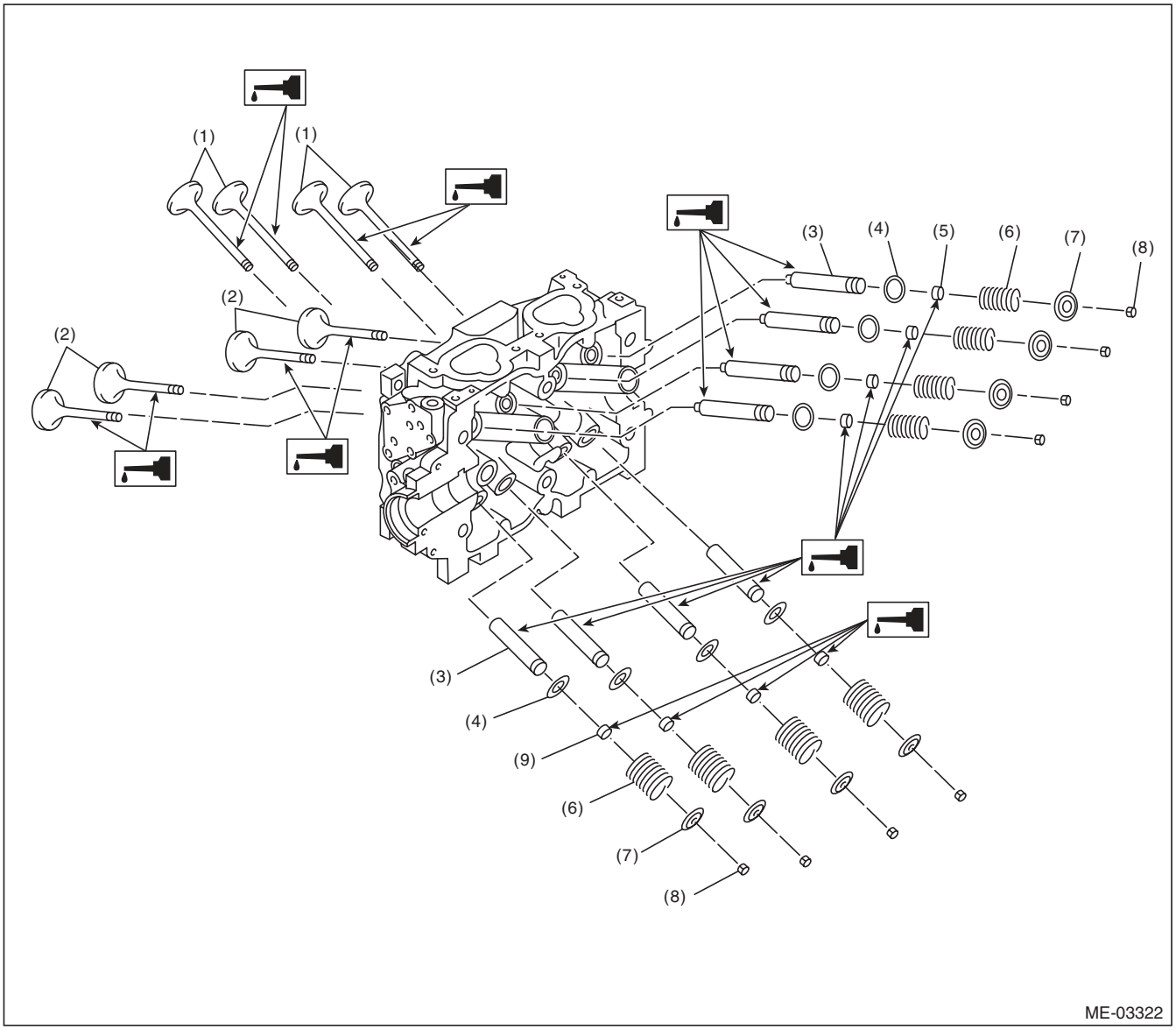

(1)	Exhaust valve	(4)	Valve spring seat	(7)	Retainer
(2)	Intake valve	(5)	Intake valve oil seal	(8)	Retainer key
(3)	Valve guide	(6)	Valve spring	(9)	Exhaust valve oil seal

5. CYLINDER BLOCK

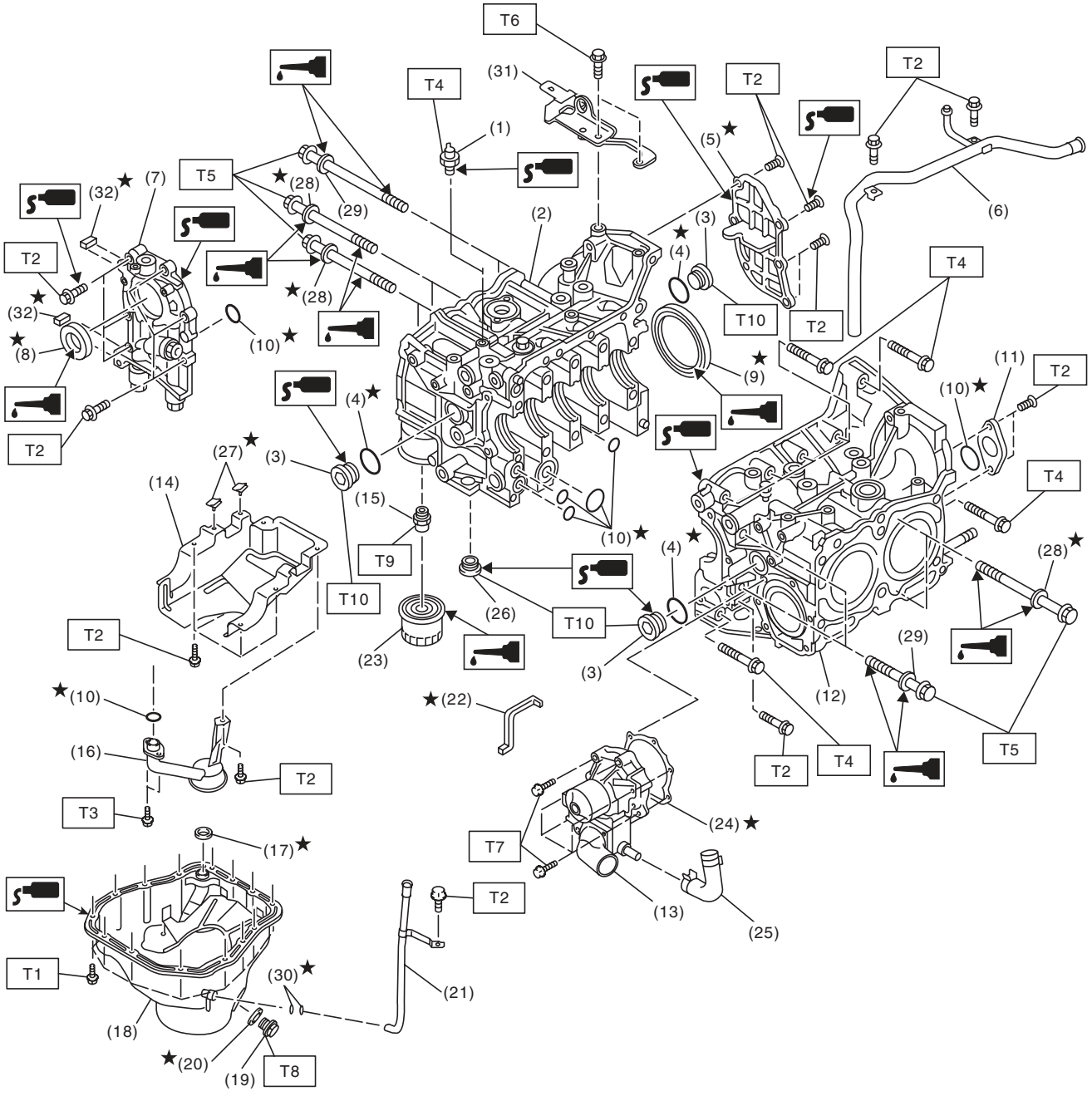

ME-03563

(1) Oil pressure switch
(2) Cylinder block RH
(3) Service hole plug
(4) Gasket
(5) Oil separator cover
(6) Water by-pass pipe
(7) Oil pump
(8) Front oil seal
(9) Rear oil seal
(10) O-ring
(11) Service hole cover
(12) Cylinder block LH
(13) Water pump
(14) Baffle plate
(15) Oil filter connector
(16) Oil strainer
(17) Gasket
(18) Oil pan
(19) Drain plug
(20) Drain plug gasket
(21) Oil level gauge guide
(22) Water pump sealing
(23) Oil filter
(24) Gasket
(25) Water pump hose
(26) Plug
(27) Seal
(28) Seal washer
(29) Washer
(30) O-ring
(31) Engine rear hanger
(32) Oil pump seal

Tightening torque:N·m (kgf-m, ft-lb)	
T1:	***5 (0.5, 3.7)***
T2:	***6.4 (0.7, 4.7)***
T3:	***10 (1.0, 7.4)***
T4:	***25 (2.5, 18.4)***
T5:	***<Ref. to ME(H4SO)-71, INSTALLATION, Cylinder Block.>***
T6:	***16 (1.6, 11.8)***
T7:	***First 12 (1.2, 8.9)*** ***Second 12 (1.2, 8.9)***
T8:	***44 (4.5, 32.5)***
T9:	***45 (4.6, 33.2)***
T10:	***70 (7.1, 51.6)***

6. CRANKSHAFT AND PISTON

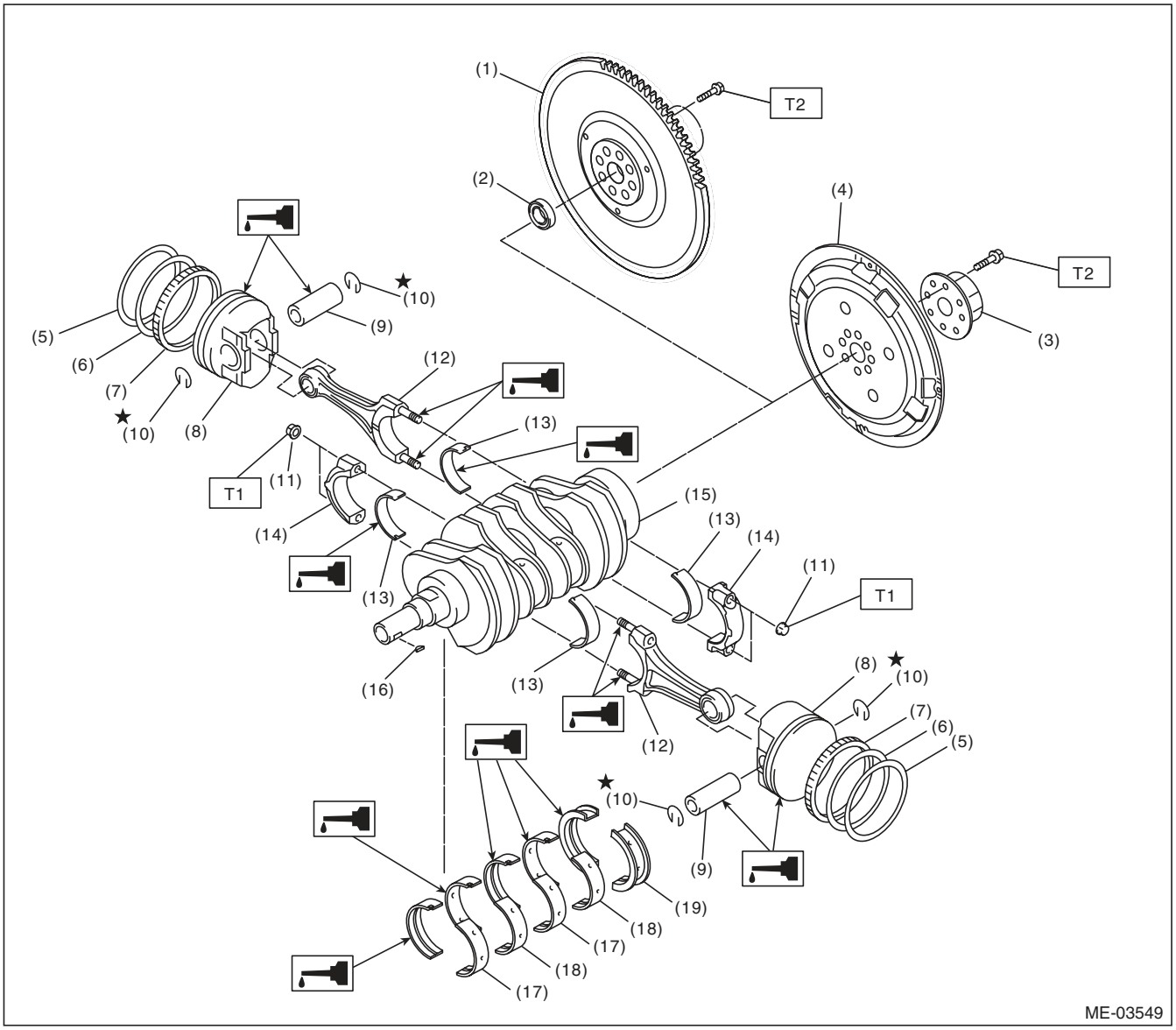

(1)	Flywheel (MT model)	(9)	Piston pin	(17)	Crankshaft bearing #1, #3
(2)	Ball bearing (MT model)	(10)	Snap ring	(18)	Crankshaft bearing #2, #4
(3)	Reinforcement (AT model)	(11)	Connecting rod nut	(19)	Crankshaft bearing #5
(4)	Drive plate (AT model)	(12)	Connecting rod		
(5)	Top ring	(13)	Connecting rod bearing		
(6)	Second ring	(14)	Connecting rod cap		
(7)	Oil ring	(15)	Crankshaft		
(8)	Piston	(16)	Woodruff key		

Tightening torque:N·m (kgf-m, ft-lb)

T1: 45 (4.6, 33.2)

T2: 72 (7.3, 53.1)

7. ENGINE MOUNTING

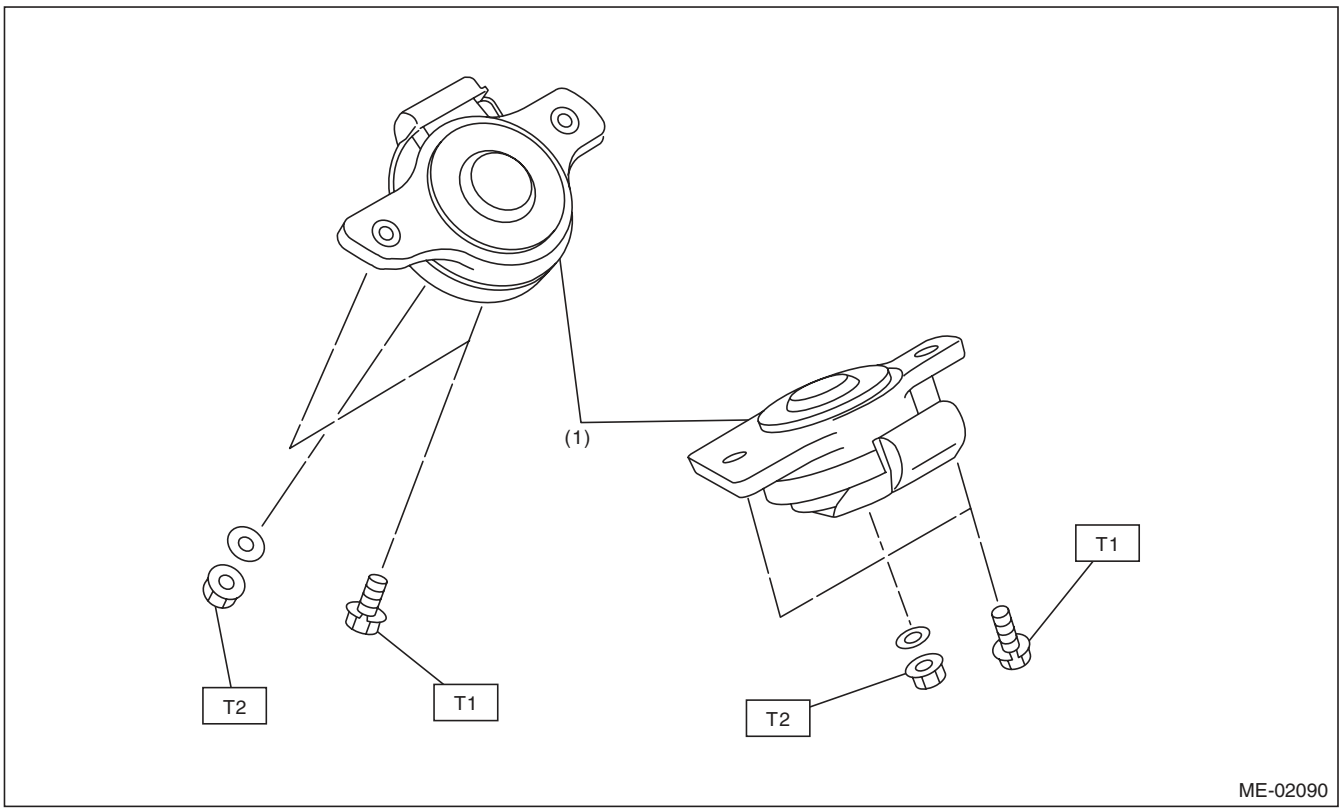

(1) Front cushion rubber

Tightening torque:N·m (kgf-m, ft-lb)
T1: 35 (3.6, 25.8)
T2: 75 (7.6, 55.3)

C: CAUTION

- Wear appropriate work clothing, including a cap, protective goggles and protective shoes when performing any work.
- Remove contamination including dirt and corrosion before removal, installation or disassembly.
- Keep the disassembled parts in order and protect them from dust and dirt.
- Before removal, installation or disassembly, be sure to clarify the failure. Avoid unnecessary removal, installation, disassembly and replacement.
- Vehicle components are extremely hot after driving. Be wary of receiving burns from heated parts.
- Be sure to tighten fasteners including bolts and nuts to the specified torque.
- Place shop jacks or rigid racks at the specified points.
- Before disconnecting connectors of sensors or units, be sure to disconnect the ground cable from the battery.
- All parts should be thoroughly cleaned, paying special attention to engine oil passages, pistons and bearings.
- Rotating parts and sliding parts such as piston, bearing and gear should be coated with oil prior to assembly.
- Be careful not to let oil, grease or coolant contact the timing belt, clutch disc and flywheel.
- All removed parts, if to be reused, should be reinstalled in the original positions and directions.
- Bolts, nuts and washers should be replaced with new parts as required.
- Even if necessary inspections have been made in advance, proceed with assembly work while making rechecks.
- Remove or install the engine in an area where chain hoists, lifting devices, etc. are available for ready use.
- Be sure not to damage coated surfaces of body panels with tools, or not to stain seats and windows with coolant or oil. Place a cover over fender, as required, for protection.
- Prior to starting work, prepare the following:

Service tools, clean cloth, containers to catch coolant and oil, wire ropes, chain hoist, transmission jacks, etc.

- Lift up or lower the vehicle when necessary. Make sure to support the correct positions.

D: PREPARATION TOOL

1. SPECIAL TOOL

ILLUSTRATION	TOOL NUMBER	DESCRIPTION	REMARKS
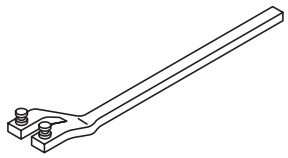 ST18231AA010	18231AA010	CAM SPROCKET WRENCH	• Used for removing and installing cam sprocket. • CAM SPROCKET WRENCH (499207100) can also be used.
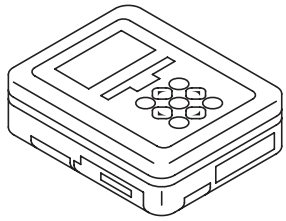 ST1B022XU0	1B022XU0	SUBARU SELECT MONITOR III KIT	Used for troubleshooting the electrical system.
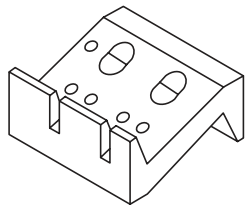 ST-498267800	498267800	CYLINDER HEAD TABLE	• Used for replacing valve guides. • Used for removing and installing valve spring.
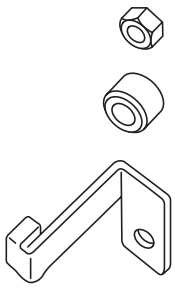 ST-498277200	498277200	STOPPER SET	Used for installing automatic transmission assembly to engine.

ILLUSTRATION	TOOL NUMBER	DESCRIPTION	REMARKS
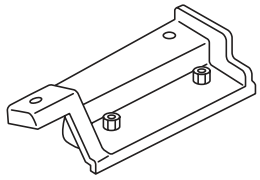 ST-498457000	498457000	ENGINE STAND ADAPTER RH	Used together with the ENGINE STAND (499817100).
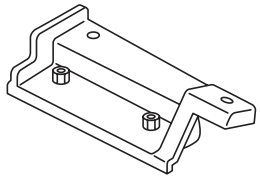 ST-498457100	498457100	ENGINE STAND ADAPTER LH	Used together with the ENGINE STAND (499817100).
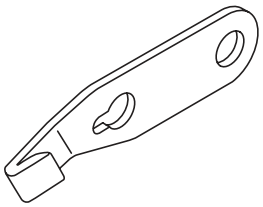 ST-498497100	498497100	CRANKSHAFT STOPPER	Used for removing and installing flywheel and drive plate.
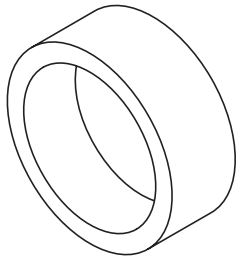 ST-498747300	498747300	PISTON GUIDE	Used for installing piston in cylinder.
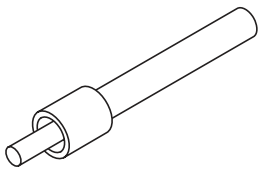 ST-498857100	498857100	VALVE OIL SEAL GUIDE	Used for press-fitting of intake and exhaust valve guide oil seals.

ILLUSTRATION	TOOL NUMBER	DESCRIPTION	REMARKS
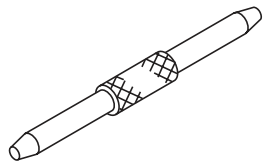 ST-499017100	499017100	PISTON PIN GUIDE	Used for installing piston pin, piston and connecting rod.
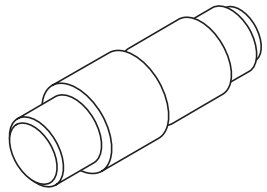 ST-499037100	499037100	CONNECTING ROD BUSHING REMOVER AND INSTALLER	Used for removing and installing connecting rod bushing.
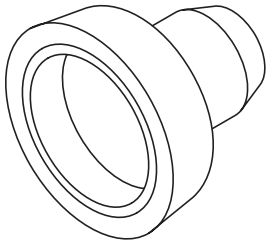 ST-499587200	499587200	CRANKSHAFT OIL SEAL INSTALLER	• Used for installing crankshaft oil seal. • Used together with the CRANKSHAFT OIL SEAL GUIDE (499597100).
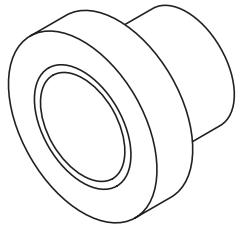 ST-499587500	499587500	OIL SEAL INSTALLER	• Used for installing camshaft oil seal. • Used together with the OIL SEAL GUIDE (499597000).
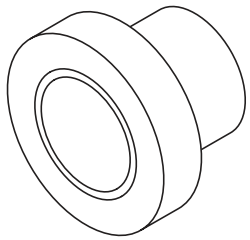 ST-499587700	499587700	CAMSHAFT OIL SEAL INSTALLER	Used for installing cylinder head plug.

ILLUSTRATION	TOOL NUMBER	DESCRIPTION	REMARKS
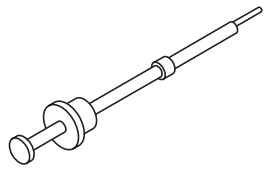 ST-499097700	499097700	PISTON PIN REMOVER ASSY	Used for removing piston pin.
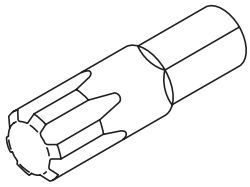 ST-499497000	499497000	TORX® PLUS	Used for removing and installing camshaft cap.
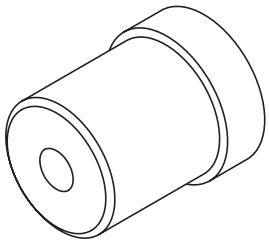 ST-499587100	499587100	OIL SEAL INSTALLER	Used for installing oil pump oil seal.
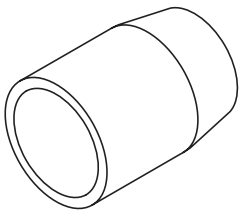 ST-499597000	499597000	OIL SEAL GUIDE	• Used for installing camshaft oil seal. • Used together with the OIL SEAL INSTALLER (499587500).
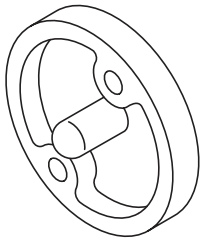 ST-499597100	499597100	CRANKSHAFT OIL SEAL GUIDE	• Used for installing crankshaft oil seal. • Used together with the CRANKSHAFT OIL SEAL INSTALLER (499587200).

ILLUSTRATION	TOOL NUMBER	DESCRIPTION	REMARKS
ST-499718000	499718000	VALVE SPRING REMOVER	Used for removing and installing valve spring.
ST-499767200	499767200	VALVE GUIDE REMOVER	Used for removing valve guides.
ST-499767400	499767400	VALVE GUIDE REAMER	Used for reaming valve guides.
ST-499767700	499767700	VALVE GUIDE ADJUSTER	Used for installing valve guides. (Intake side)
ST-499767800	499767800	VALVE GUIDE ADJUSTER	Used for installing valve guides. (Exhaust side)

ILLUSTRATION	TOOL NUMBER	DESCRIPTION	REMARKS
ST-499817100	499817100	ENGINE STAND	• Stand used for engine disassembly and assembly. • Used together with the ENGINE STAND ADAPTER RH (498457000) & LH (498457100).
ST-499977100	499977100	CRANK PULLEY WRENCH	Used to stop rotation of the crank pulley when loosening or tightening crank pulley bolts. (MT model)
ST-499977400	499977400	CRANK PULLEY WRENCH	Used to stop rotation of the crank pulley when loosening or tightening crank pulley bolts. (AT model)
ST-499987500	499987500	CRANKSHAFT SOCKET	Used for rotating crankshaft.
ST42099AE000	42099AE000	QUICK CONNECTOR RELEASE	Used for disconnecting quick connector in the engine compartment.

ILLUSTRATION	TOOL NUMBER	DESCRIPTION	REMARKS
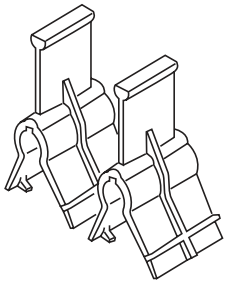 ST18354AA000	18354AA000	VALVE ROCKER HOLDER	Used for installing the valve rocker assembly (intake). (2-piece set)
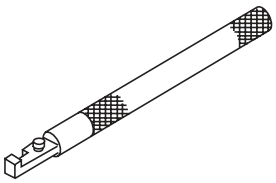 ST18258AA000	18258AA000	SPRING INSTALLER	Used for installing the valve rocker assembly (intake).

2. GENERAL TOOL

TOOL NAME	REMARKS
Compression gauge	Used for measuring compression.
Vacuum gauge	Used for measuring intake manifold vacuum.
Oil pressure gauge	Used for measuring engine oil pressure.
Fuel pressure gauge	Used for measuring fuel pressure.
Timing light	Used for measuring ignition timing.

E: PROCEDURE

It is possible to conduct the following service procedures with engine on vehicle, however, the procedures described in this section are based on the condition that the engine is removed from vehicle.

- V-belt
- Timing belt
- Valve rocker ASSY
- Camshaft
- Cylinder head

2. Compression

A: INSPECTION

CAUTION:
After warming-up, engine becomes very hot. Be careful not to burn yourself during measurement.

1) After warming-up the engine, turn the ignition switch to OFF.
2) Make sure that the battery is fully charged.
3) Release the fuel pressure. <Ref. to FU(H4SO)-43, RELEASING OF FUEL PRESSURE, PROCEDURE, Fuel.>
4) Remove all the spark plugs. <Ref. to IG(H4SO)-4, REMOVAL, Spark Plug.>
5) Fully open the throttle valve.
6) Check the starter motor for satisfactory performance and operation.
7) Secure the compression gauge tightly against the spark plug hole.

NOTE:
When using a screw-in type compression gauge, the screw should be less than 18 mm (0.71 in) long.

8) Crank the engine by the starter motor, and read the maximum value on the gauge when the needle of gauge is steady.

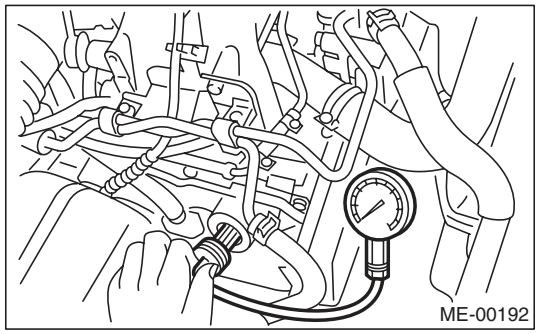

9) Perform at least two measurements per cylinder, and check that the values are correct.

Compression (fully open throttle):
Standard
1,020 — 1,275 kPa
(10.4 — 13.0 kgf/cm^2, 148 — 185 psi)
Difference between cylinders
49 kPa (0.5 kgf/cm^2, 7 psi) or less

10) After inspection, install the related parts in the reverse order of removal.

3. Idle Speed

A: INSPECTION

1) Before checking the idle speed, check the following item:
   (1) Check the air cleaner element is free from clogging, ignition timing is correct, spark plugs are in good condition, and hoses are connected properly.
   (2) Check the malfunction indicator light does not illuminate.
2) Warm up the engine.
3) Read the engine idle speed using Subaru Select Monitor. <Ref. to EN(H4SO)(diag)-34, READ CURRENT DATA FOR ENGINE (NORMAL MODE), OPERATION, Subaru Select Monitor.>
4) Check the idle speed when no-loaded. (Headlight, heater fan, rear defroster, radiator fan, A/C and etc. are OFF)

Idle speed [No load and gear in neutral, or "P", "N" range]:
650±100 rpm (MT model)
700±100 rpm (AT model)

5) Check the idle speed when loaded. (Turn the A/C switch to "ON" and operate the compressor for at least one minute before measurement.)

Idle speed [A/C ON and gear in neutral or "P" or "N" range]:
850±100 rpm

NOTE:
Idle speed cannot be adjusted manually, because the idle speed is automatically adjusted. If the prescribed idle speed cannot be maintained, refer to the General On-board Diagnosis Table under "Engine Control System". <Ref. to EN(H4SO)(diag)-2, Basic Diagnostic Procedure.>

4. Ignition Timing

A: INSPECTION

CAUTION:
After warming-up, engine becomes very hot. Be careful not to burn yourself at measurement.

1) Before checking the ignition timing, check the following item:
   (1) Check the air cleaner element is free from clogging, spark plugs are in good condition, and hoses are connected properly.
   (2) Check the malfunction indicator light does not illuminate.
2) Warm up the engine.
3) Stop the engine, and turn the ignition switch to OFF.
4) Connect the timing light to #1 cylinder spark plug cord, and then light the timing mark with the timing light.
5) Start the engine and check the ignition timing at idle speed as shown below.

Ignition timing [BTDC/rpm]:
10°±8°/650 (MT model)
15°±8°/700 (AT model)

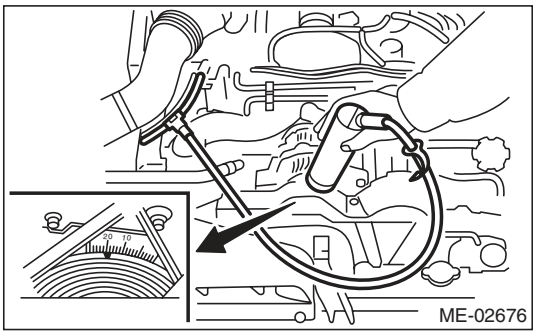

If the timing is not correct, check the ignition control system. <Ref. to EN(H4SO)(diag)-2, Basic Diagnostic Procedure.>

5. Intake Manifold Vacuum

A: INSPECTION

1) Warm up the engine.
2) Disconnect the brake booster vacuum hose from the intake manifold, and then install the vacuum gauge.
3) Keep the engine at idle speed and read the vacuum gauge indication.
By observing the gauge needle movement, the internal condition of the engine can be diagnosed as described below.

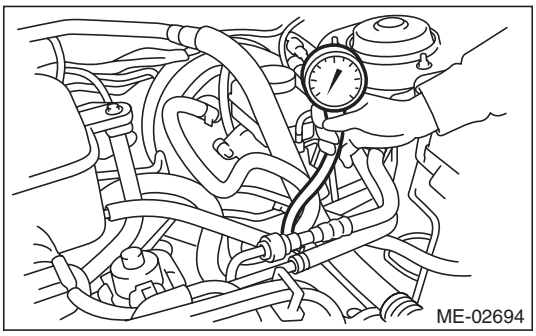

Vacuum pressure (at idling, A/C "OFF"):
Less than –60.0 kPa
(–450 mmHg, –17.72 inHg)

Diagnosis of engine condition by measurement of intake manifold vacuum	
Vacuum gauge indication	Possible engine condition
1. Needle is steady but lower than normal position. This tendency becomes more evident as engine temperature rises.	Air leakage around intake manifold gasket, disconnection or damage of vacuum hose
2. Needle intermittently drops to position lower than normal position.	Leakage around cylinder
3. Needle drops suddenly and intermittently from normal position.	Sticky valve
4. When engine speed is gradually increased, needle begins to vibrate rapidly at certain speed, and then vibration increases as engine speed increases.	Weak or broken valve springs
5. Needle vibrates above and below normal position in narrow range.	Defective ignition system

6. Engine Oil Pressure

A: INSPECTION

1) Disconnect the ground cable from the battery.

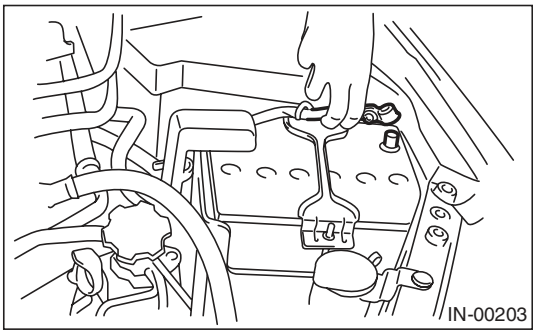

2) Remove the oil pressure switch. <Ref. to LU(H4SO)-20, REMOVAL, Oil Pressure Switch.>
3) Connect the oil pressure gauge to cylinder block.
4) Connect the ground cable to battery.

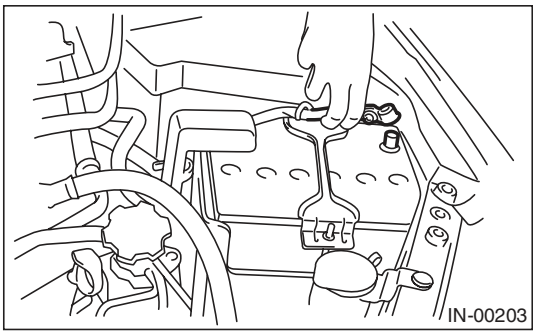

5) Start the engine, and measure the oil pressure.

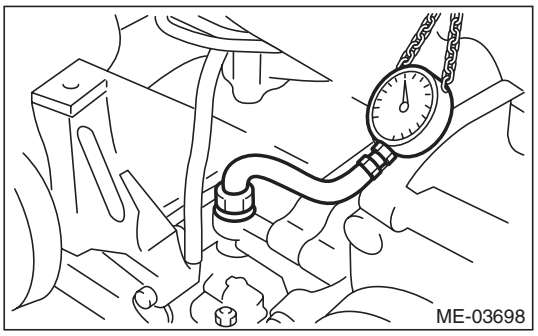

Oil pressure:

Standard

98 kPa (1.0 kg/cm^2, 14 psi) or more at 600 rpm
294 kPa (3.0 kg/cm^2, 43 psi) or more at 5,000 rpm

- If the oil pressure is out of specification, check oil pump, oil filter and lubrication line. <Ref. to LU(H4SO)-24, INSPECTION, Engine Lubrication System Trouble in General.>
- If the oil pressure warning light is ON and oil pressure is within specification, check the oil pressure switch. <Ref. to LU(H4SO)-24, INSPECTION, Engine Lubrication System Trouble in General.>

NOTE:
Standard value is based on an engine oil temperature of 80°C (176°F).

6) After measuring the oil pressure, install the oil pressure switch. <Ref. to LU(H4SO)-20, INSTALLATION, Oil Pressure Switch.>

7. Fuel Pressure

A: INSPECTION

CAUTION:
- **Before removing the fuel pressure gauge, release the fuel pressure.**
- **Be careful not to spill fuel.**
- **Catch the fuel from hoses using a container or cloth.**

NOTE:
Check or replace the fuel pump and fuel delivery line if the fuel pressure is out of the standard.

1) Release the fuel pressure. <Ref. to FU(H4SO)-43, RELEASING OF FUEL PRESSURE, PROCEDURE, Fuel.>
2) Open the fuel filler lid, and remove the fuel filler cap.
3) Disconnect the fuel delivery hose from the fuel damper, and connect the fuel pressure gauge.

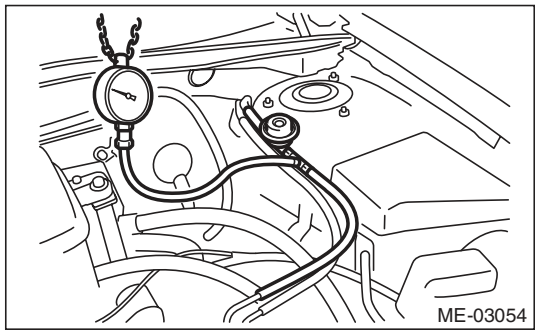

4) Start the engine.
5) Measure the fuel pressure after warming up the engine.

NOTE:
The fuel pressure gauge registers 10 to 20 kPa (0.1 to 0.2 kg/cm^2, 1 to 3 psi) higher than standard values during high-altitude operations.

Fuel pressure:
Standard:
338 — 348 kPa
(3.4 — 3.5 kg/cm^2, 49 — 50 psi)

8. Valve Clearance

A: INSPECTION

NOTE:
Inspection and adjustment of valve clearance should be performed while engine is cold.

1) Set the vehicle on a lift.
2) Lift up the vehicle.
3) Remove the under cover.
4) Lower the vehicle.
5) Disconnect the ground cable from the battery.

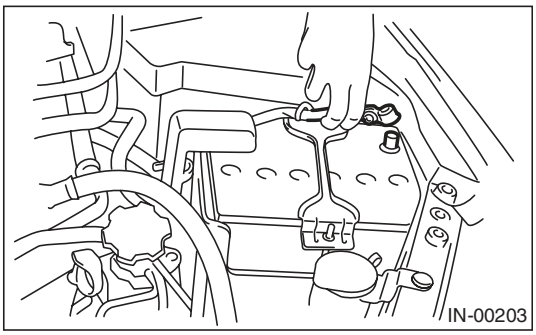

6) Remove the timing belt cover LH.

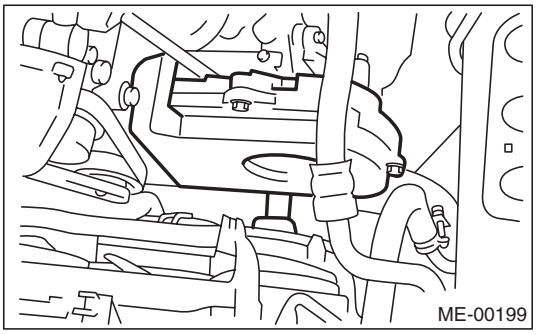

7) Remove the fuel injector. <Ref. to FU(H4SO)-30, REMOVAL, Fuel Injector.>
8) When inspecting #1 and #3 cylinders
   (1) Disconnect the spark plug cords from spark plugs RH side. <Ref. to IG(H4SO)-4, RH SIDE, REMOVAL, Spark Plug.>
   (2) Place a suitable container under the vehicle.
   (3) Disconnect the PCV hose from the rocker cover RH.
   (4) Remove the bolts, then remove the rocker cover RH.
9) When inspecting #2 and #4 cylinders
   (1) Disconnect the spark plug cords from spark plugs on LH side. <Ref. to IG(H4SO)-4, LH SIDE, REMOVAL, Spark Plug.>
   (2) Place a suitable container under the vehicle.
   (3) Disconnect the PCV hose from the rocker cover LH.
   (4) Remove the bolts, then remove the rocker cover LH.
10) Set #1 cylinder piston to top dead center of compression stroke by rotating the crank pulley clockwise using the socket wrench.

NOTE:
When the arrow mark (A) on cam sprocket LH is at the top position, the #1 cylinder piston is at top dead center of the compression stroke.

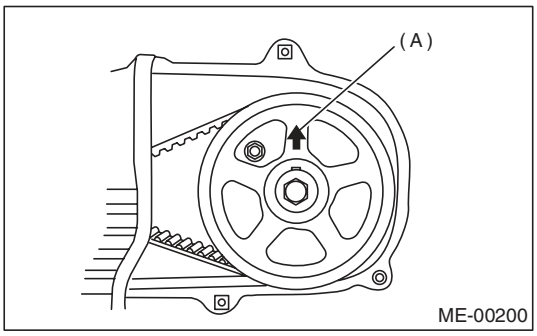

11) Measure #1 cylinder valve clearance by using thickness gauge (A).

NOTE:
- Insert the thickness gauge (A) in as horizontally as possible with respect to the valve stem end face.
- Lift up the vehicle, and then measure the exhaust valve clearances.

Valve clearance:
Intake
0.20±0.04 mm (0.0079±0.0016 in)
Exhaust
0.25±0.04 mm (0.0098±0.0016 in)

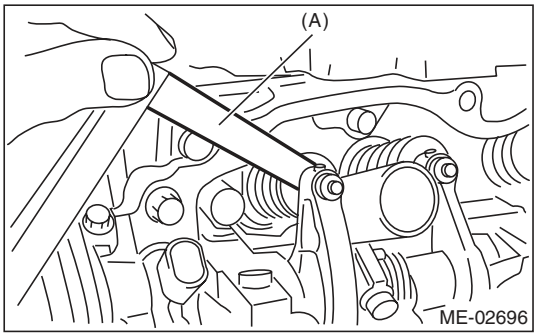

12) If necessary, adjust the valve clearance. <Ref. to ME(H4SO)-28, ADJUSTMENT, Valve Clearance.>

13) Measure the valve clearance in #3, #2 and #4 cylinder in the same measurement procedure as #1 cylinder in this order.

NOTE:
• Be sure to set the cylinder pistons to their respective top dead centers on compression stroke before measuring valve clearances.
• By rotating the crank pulley clockwise every 180° from the state that #1 cylinder piston is on the top dead center of compression stroke, #3, #2 and #4 cylinder pistons come to the top dead center of compression stroke in this order.

14) After inspection, install the related parts in the reverse order of removal.

NOTE:
Use a new rocker cover gasket.

B: ADJUSTMENT

NOTE:
Adjustment of valve clearance should be performed while engine is cold.

1) Set #1 cylinder piston to top dead center of compression stroke by rotating the crank pulley clockwise using the socket wrench.

NOTE:
When the arrow mark (A) on cam sprocket LH is at the top position, the #1 cylinder piston is at top dead center of the compression stroke.

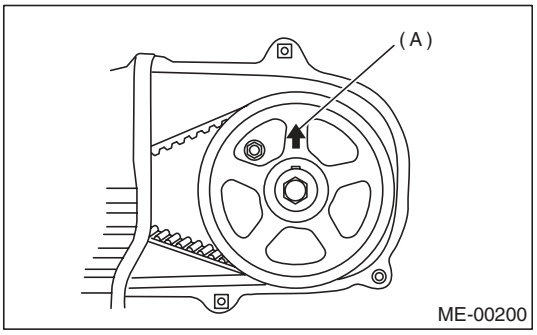

2) Adjust the #1 cylinder valve clearance.
(1) Loosen the valve rocker nut and screw.
(2) Set a suitable thickness gauge.
(3) While noting the valve clearance, tighten the valve rocker adjusting screw.
(4) When the specified valve clearance is obtained, tighten the valve rocker nut.

NOTE:
• Insert a thickness gauge in a direction as horizontal as possible with respect to the valve stem end face.
• Lift up the vehicle and adjust the exhaust valve clearances.

Valve clearance:
Intake
0.20±0.04 mm (0.0079±0.0016 in)
Exhaust
0.25±0.04 mm (0.0098±0.0016 in)

Tightening torque:
9.75 N·m (1.0 kgf-m, 7.2 ft-lb)

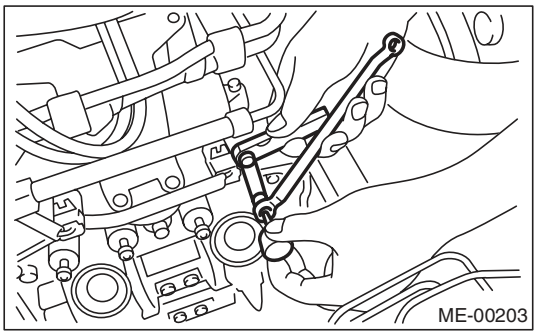

3) Adjust the valve clearance in #3, #2 and #4 cylinder in the same adjustment procedure as #1 cylinder in this order.

NOTE:
• Be sure to set the cylinder pistons to their respective top dead centers on compression stroke before adjusting valve clearances.
• By rotating the crank pulley clockwise every 180° from the state that #1 cylinder piston is on the top dead center of compression stroke, #3, #2 and #4 cylinder pistons come to the top dead center of compression stroke in this order.

4) Ensure the valve clearances of each cylinder are within specifications. If necessary, readjust the valve clearances.

9. Engine Assembly

A: REMOVAL

1) Set the vehicle on a lift.
2) Open the front hood fully and support with the front hood stay.
3) Remove the V-belt covers.

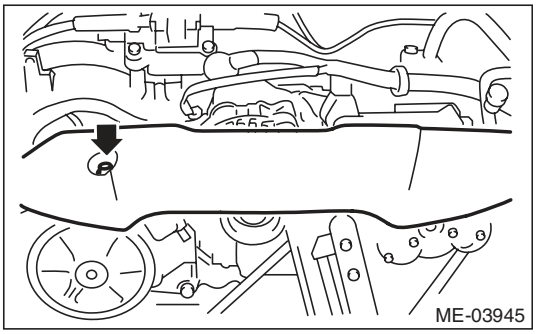

4) Collect the refrigerant from A/C system. <Ref. to AC-22, PROCEDURE, Refrigerant Recovery Procedure.>
5) Release the fuel pressure. <Ref. to FU(H4SO)-43, RELEASING OF FUEL PRESSURE, PROCEDURE, Fuel.>
6) Remove the battery. <Ref. to SC(H4SO)-20, REMOVAL, Battery.>
7) Remove the air intake duct, air cleaner case and air intake chamber. <Ref. to IN(H4SO)-8, REMOVAL, Air Intake Duct.> <Ref. to IN(H4SO)-5, REMOVAL, Air Cleaner Case.> <Ref. to IN(H4SO)-7, REMOVAL, Air Intake Chamber.>
8) Remove the under cover.
9) Remove the radiator from vehicle. <Ref. to CO(H4SO)-19, REMOVAL, Radiator.>
10) Disconnect the A/C pressure hoses from A/C compressor.
11) Remove the air intake chamber stay.

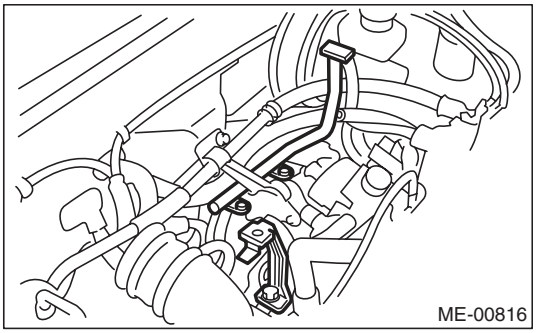

12) Disconnect the following connectors and cables.
(1) Disconnect the front oxygen (A/F) sensor connector (A) and rear oxygen sensor connector (B) and remove the clip (C) fastening the harness.

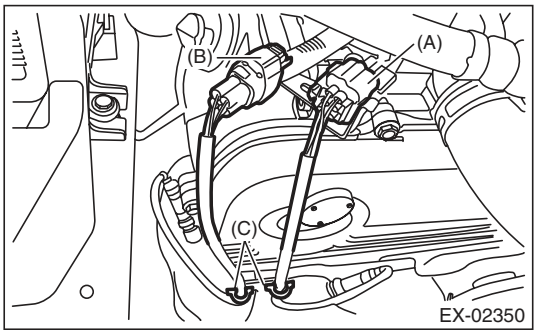

(2) Remove the bolt, and disconnect the engine harness connector from the bulk head harness connector and rear engine hanger.

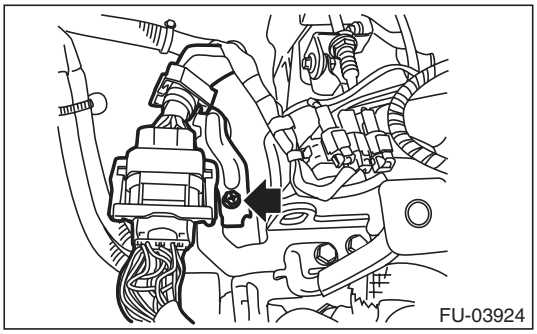

(3) Generator connector and terminal

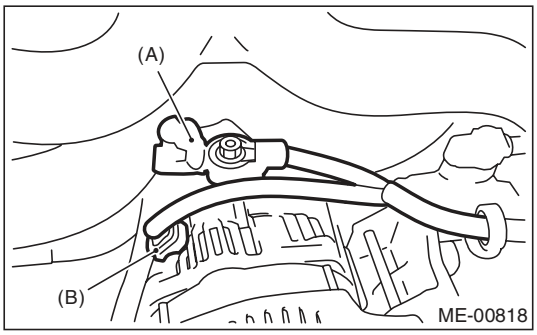

(A) Terminals
(B) Generator connector

(4) A/C compressor connector

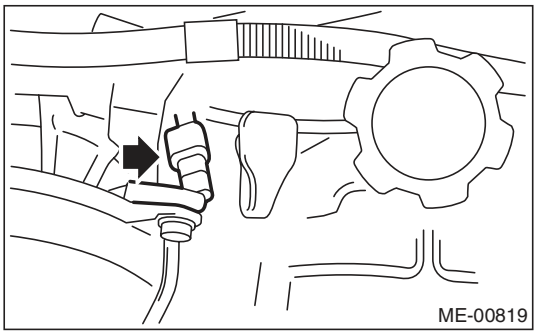

(5) Power steering pump switch connector

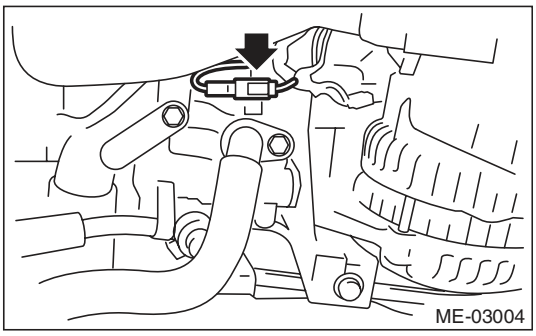

13) Disconnect the following hoses.
(1) Brake booster vacuum hose

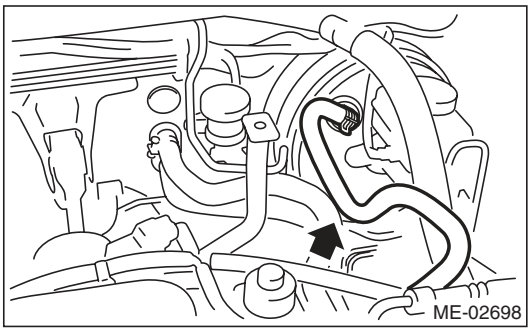

(2) Heater inlet and outlet hoses

14) Remove the power steering pump.
(1) Remove the front side belts. <Ref. to ME(H4SO)-38, FRONT SIDE BELT, REMOVAL, V-belt.>
(2) Remove the bolts which secure the power steering pump to the bracket.

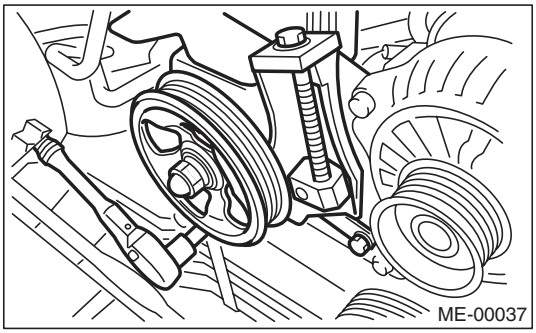

(3) Place the power steering pump on the right side wheel apron.

15) Lift up the vehicle.

16) Remove the front and center exhaust pipes. <Ref. to EX(H4SO)-4, REMOVAL, Front Exhaust Pipe.>

17) Disconnect the ground cable on the engine side.

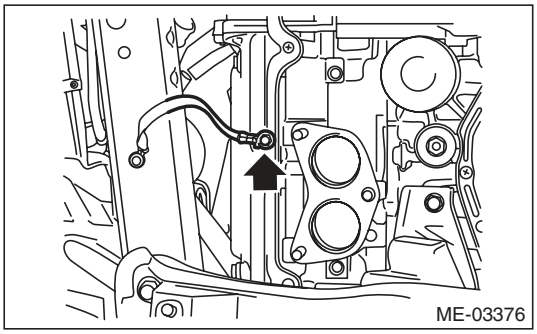

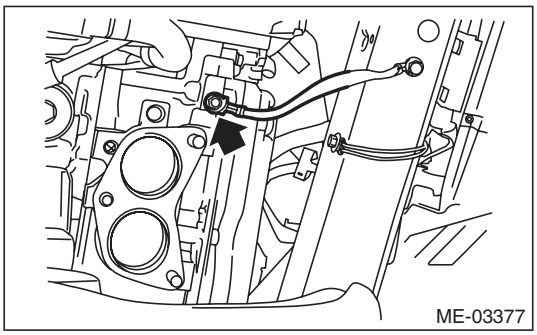

18) Remove the bolts and nuts which hold lower side of transmission to engine.

- AT model

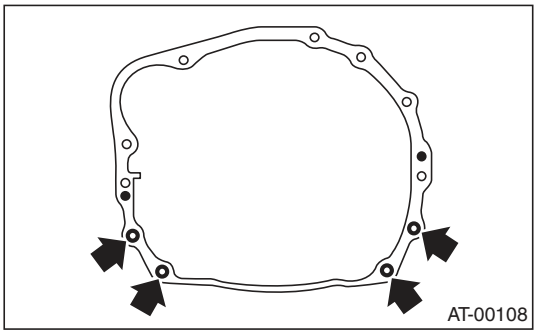

- MT model

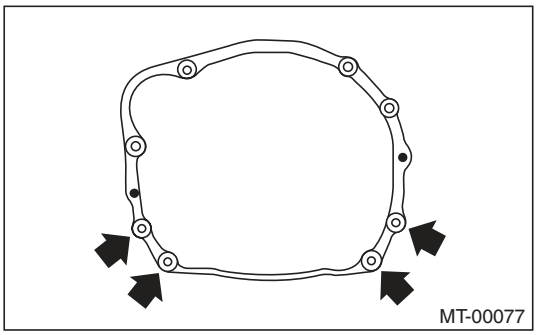

19) Remove the nuts which hold the engine mount to the front crossmember.

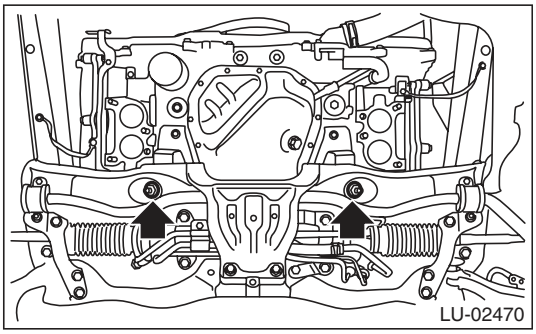

20) Separate the torque converter clutch from drive plate. (AT model)

(1) Lower the vehicle.

(2) Remove the service hole plug.

(3) Insert the wrench into the crank pulley bolt and rotate the crank pulley to remove the bolts which hold torque converter clutch to drive plate.

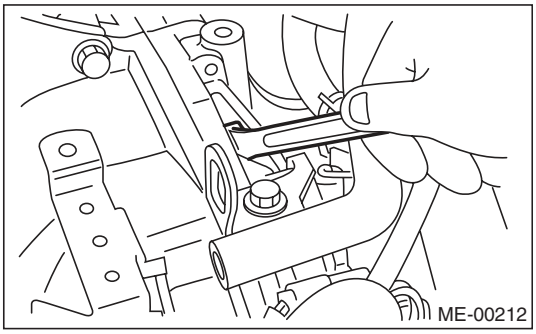

21) Remove the pitching stopper.

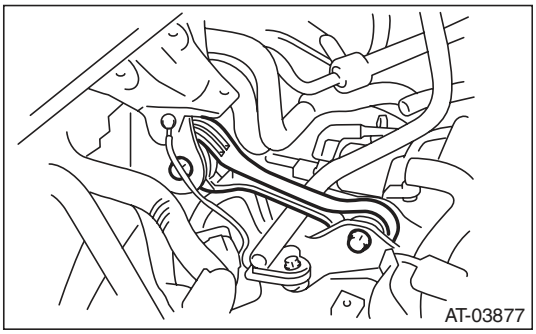

22) Disconnect the fuel delivery hose from the fuel pipe.

(1) Disconnect the quick connector on the fuel delivery line by pushing the ST in the direction of the arrow.

ST 42099AE000 QUICK CONNECTOR RELEASE

(2) Remove the clip and disconnect the evaporation hose from the pipe.

CAUTION:

- **Be careful not to spill fuel.**
- **Catch the fuel from hoses using a container or cloth.**

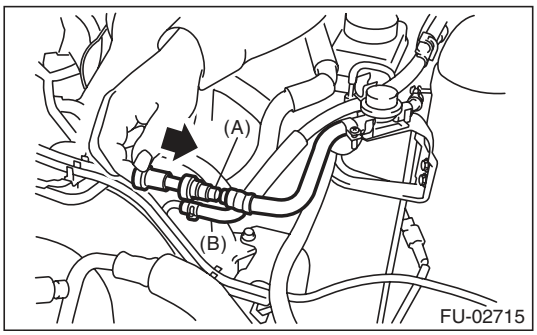

(A) Fuel delivery hose

(B) Evaporation hose

23) Support the engine with a lifting device and wire ropes.

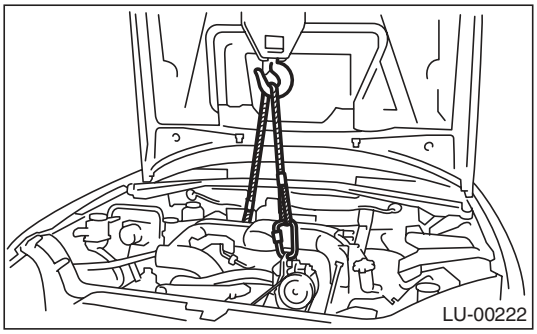

24) Support the transmission with a garage jack.

CAUTION:
Be sure to always perform this work, in order to prevent the transmission from lowering for its own weight.

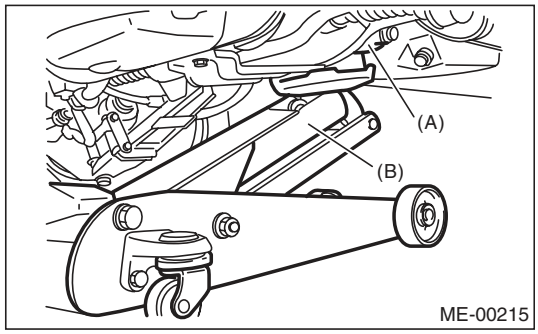

(A) Transmission
(B) Garage jack

25) Separation of engine and transmission

CAUTION:
Before removing the engine away from transmission, check to be sure no work has been overlooked.

(1) Remove the starter. <Ref. to SC(H4SO)-6, REMOVAL, Starter.>
(2) Attach the ST to the torque converter clutch case. (AT model)

ST 498277200 STOPPER SET

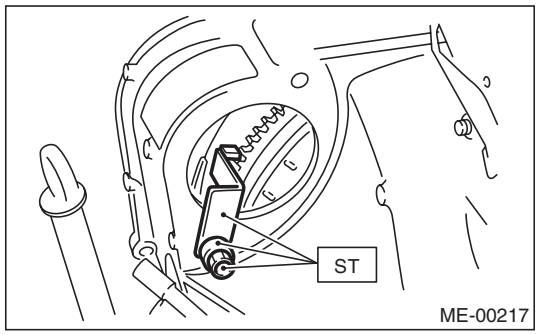

(3) Remove the bolts which hold upper side of transmission to engine.

- AT model

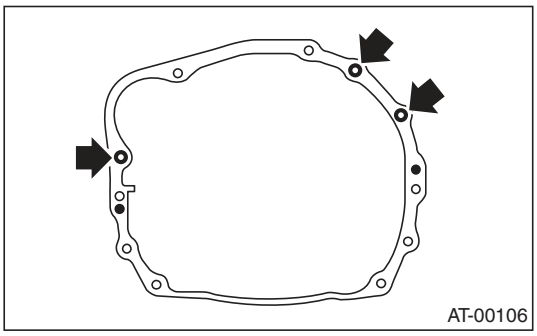

- MT model

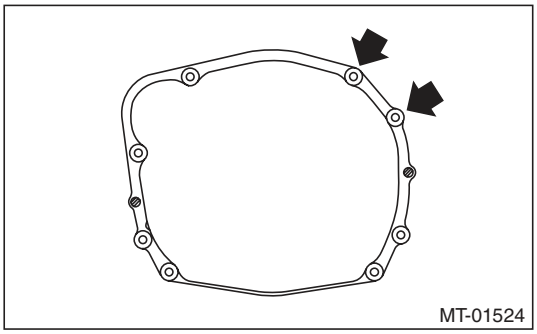

26) Remove the engine from vehicle.
(1) Slightly raise the engine.
(2) Raise the transmission with garage jack.
(3) Move the engine horizontally until main shaft is withdrawn from clutch cover. (MT model)
(4) Slowly move the engine away from engine compartment.

NOTE:
Be careful not to damage adjacent parts or body panels with crank pulley, oil level gauge, etc.

27) Remove the engine mounting from the engine.

B: INSTALLATION

1) Install the engine mounting onto the engine.

Tightening torque:
35 N·m (3.6 kgf-m, 25.8 ft-lb)

2) Apply a small amount of grease to splines of main shaft. (MT model)

Grease:
NICHIMOLY N-130 or equivalent

3) Position the engine in engine compartment and align it with transmission.

NOTE:
Be careful not to damage adjacent parts or body panels with crank pulley, oil level gauge, etc.

4) Tighten the bolts which hold upper side of transmission to engine.

Tightening torque:
50 N·m (5.1 kgf-m, 36.9 ft-lb)

- AT model

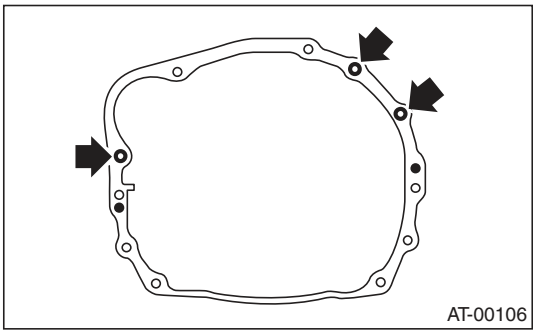

- MT model

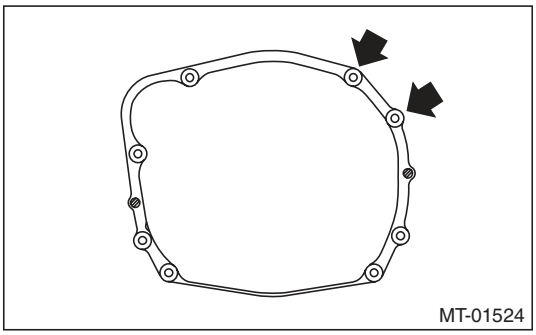

5) Remove the lifting device and wire ropes.

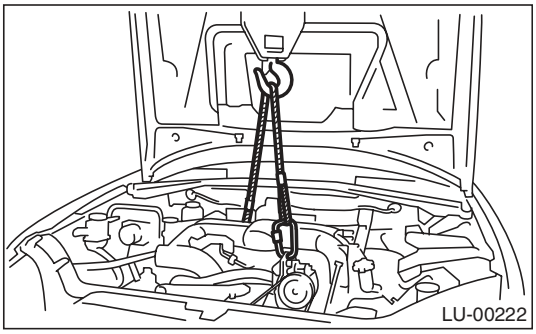

6) Remove the garage jack.

7) Install the pitching stopper.

Tightening torque:
T1: 50 N·m (5.1 kgf-m, 36.9 ft-lb)
T2: 58 N·m (5.9 kgf-m, 42.8 ft-lb)

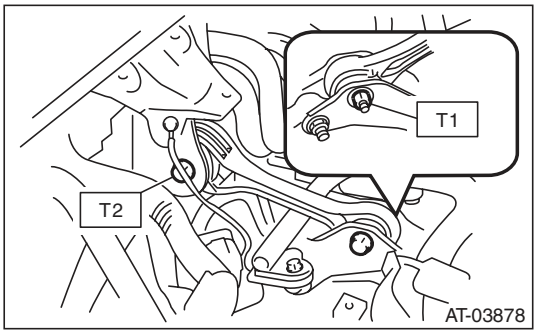

8) Remove the ST from the torque converter clutch case. (AT model)

NOTE:
Be careful not to drop the ST into the torque converter clutch case when removing the ST.
ST 498277200 STOPPER SET

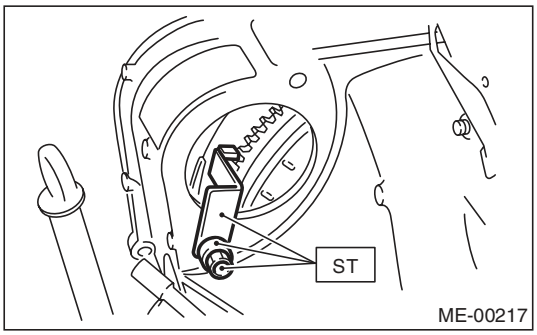

9) Install the starter. <Ref. to SC(H4SO)-6, INSTALLATION, Starter.>

10) Install the torque converter clutch to drive plate. (AT model)

(1) Insert the wrench into the crank pulley bolt and rotate the crank pulley to tighten the bolts which hold torque converter clutch to drive plate.

NOTE:
Be careful not to drop bolts into the torque converter clutch case.

Tightening torque:
25 N·m (2.5 kgf-m, 18.4 ft-lb)

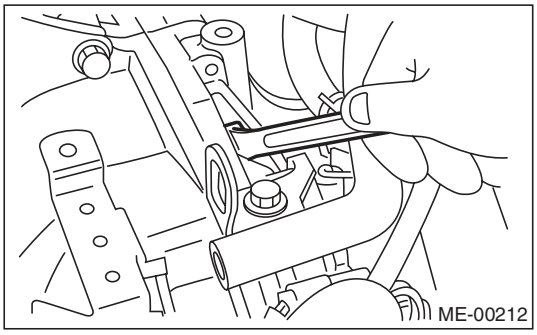

(2) Install the service hole plug.

11) Install the power steering pump.
(1) Install the power steering pump.

Tightening torque:
Refer to "COMPONENT" of "Power Steering" for the tightening torque. <Ref. to PS-3, COMPONENT, General Description.>

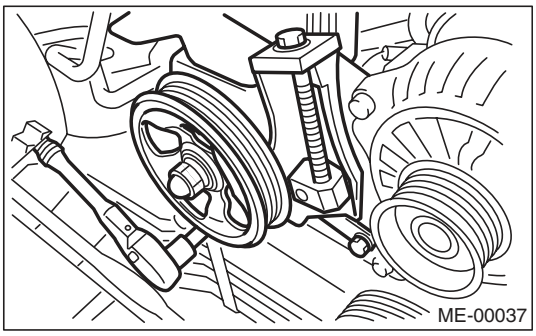
ME-00037

(2) Connect the power steering pump switch connector.

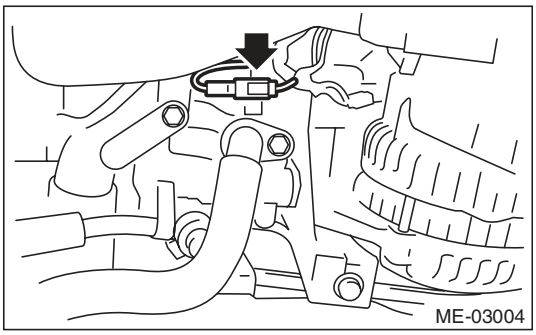
ME-03004

(3) Install and adjust the front side belt. <Ref. to ME(H4SO)-39, FRONT SIDE BELT, INSTALLATION, V-belt.>

12) Lift up the vehicle.

13) Tighten the bolts and nuts which hold lower side of the transmission to engine.

Tightening torque:
50 N·m (5.1 kgf-m, 36.9 ft-lb)

- AT model

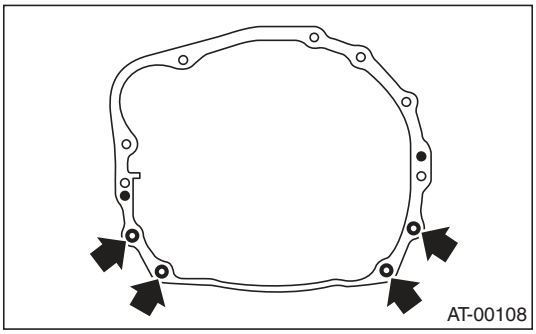
AT-00108

- MT model

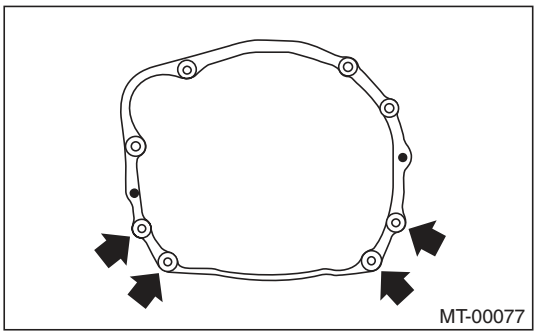
MT-00077

14) Tighten the nuts which hold the engine mount to the crossmember.

Tightening torque:
75 N·m (7.6 kgf-m, 55.3 ft-lb)

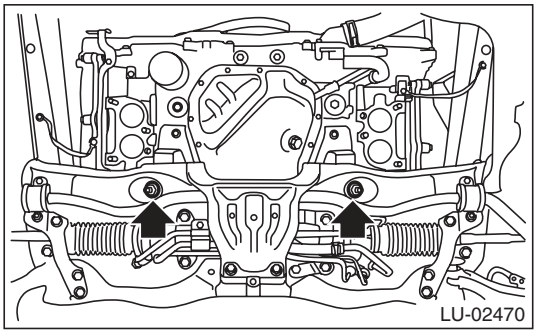
LU-02470

15) Connect the ground cable.

Tightening torque:
7.5 N·m (0.8 kgf-m, 5.5 ft-lb)

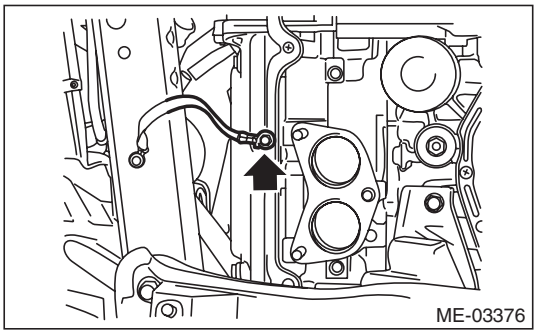
ME-03376

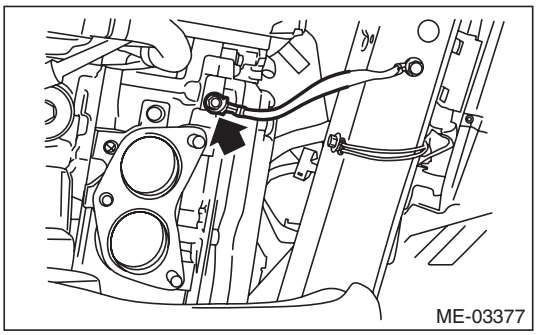
ME-03377

16) Install the front and center exhaust pipe. <Ref. to EX(H4SO)-5, INSTALLATION, Front Exhaust Pipe.>

17) Lower the vehicle.

18) Connect the following hoses.
(1) Fuel delivery hose and evaporation hose
(2) Heater inlet and outlet hoses
(3) Brake booster vacuum hose
19) Connect the following connectors and terminals.
(1) Front oxygen (A/F) sensor connector
(2) Rear oxygen sensor connector
(3) Engine harness connectors

Tightening torque:
6.4 N·m (0.7 kgf-m, 4.7 ft-lb)

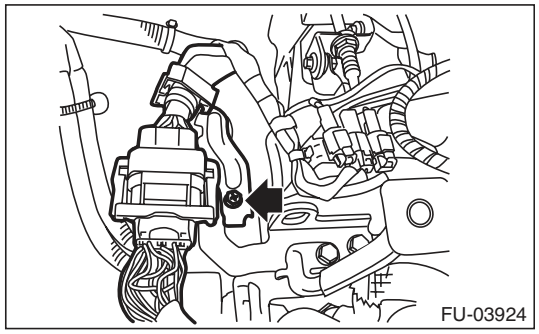

(4) Generator connector and terminal

Tightening torque:
15 N·m (1.5 kgf-m, 11.1 ft-lb)
(5) A/C compressor connector
20) Install the air intake chamber stay.

Tightening torque:
16 N·m (1.6 kgf-m, 11.8 ft-lb)
21) Install the A/C pressure hoses. <Ref. to AC-40, INSTALLATION, Hose and Pipe.>
22) Install the radiator to vehicle. <Ref. to CO(H4SO)-20, INSTALLATION, Radiator.>
23) Install the air intake duct, air cleaner case and air intake chamber. <Ref. to IN(H4SO)-8, INSTALLATION, Air Intake Duct.> <Ref. to IN(H4SO)-6, INSTALLATION, Air Cleaner Case.> <Ref. to IN(H4SO)-7, INSTALLATION, Air Intake Chamber.>
24) Install the under cover.
25) Install the battery. <Ref. to SC(H4SO)-20, INSTALLATION, Battery.>
26) Fill engine coolant. <Ref. to CO(H4SO)-13, FILLING OF ENGINE COOLANT, REPLACEMENT, Engine Coolant.>
27) Check the ATF level and replenish it if necessary. (AT model) <Ref. to 4AT-26, INSPECTION, Automatic Transmission Fluid.>
28) Charge the A/C system with refrigerant. <Ref. to AC-23, PROCEDURE, Refrigerant Charging Procedure.>
29) Install the V-belt cover.

Tightening torque:
13 N·m (1.3 kgf-m, 9.6 ft-lb)

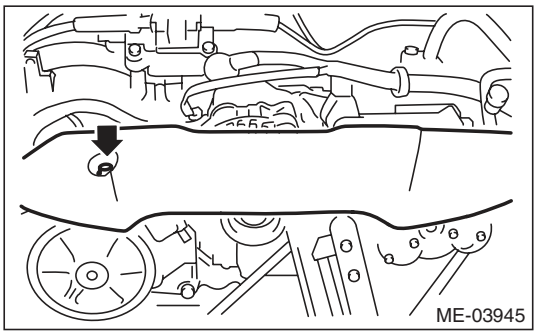

30) Remove the front hood stay, and close the front hood.
31) Lower the vehicle from lift.

C: INSPECTION

1) Check that pipes, hoses, connectors and clamps are installed firmly.
2) Check the engine coolant is at specified level.
3) Check the ATF is at specified level. (AT model)
4) Start the engine and check for exhaust gas, engine coolant, leaks of fuel, etc. Also check for noise and vibrations.

10. Engine Mounting

A: REMOVAL

1) Remove the engine unit. <Ref. to ME(H4SO)-29, REMOVAL, Engine Assembly.>
2) Remove the engine mounting from engine assembly.

B: INSTALLATION

Install in the reverse order of removal.

Tightening torque:
Engine mounting
35 N·m (3.6 kgf-m, 25.8 ft-lb)

C: INSPECTION

Make sure that no crack or other damages do not exist.

11. Preparation for Overhaul

A: PROCEDURE

1) After removing the engine from body, secure it to ST in the following procedure.

ST1	498457000	ENGINE STAND ADAPTER RH
ST2	498457100	ENGINE STAND ADAPTER LH
ST3	499817100	ENGINE STAND

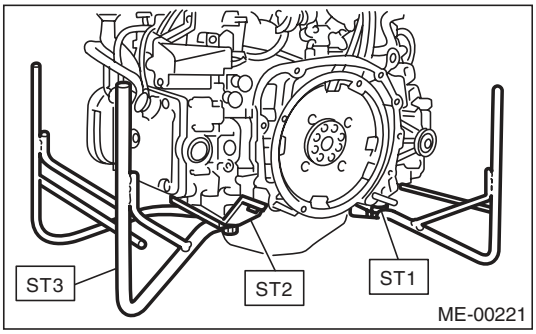

2) In this section the procedures described under each index are all connected and stated in order. The procedure for overhauling of the engine will be completed when you go through all steps in the process.
Therefore, in this section, to conduct the particular procedure within the flow of a section, you need to go back and conduct the procedure described previously in order to do that particular procedure.

12. V-belt

A: REMOVAL

NOTE:
When replacing the single part, perform the work with the engine installed to body.

1. FRONT SIDE BELT

1) Remove the V-belt covers.

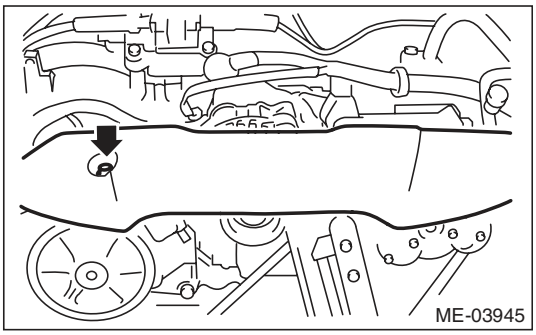

2) Loosen the bolt (A).
3) Loosen the slider bolt (B).
4) Remove the front side belt (C).

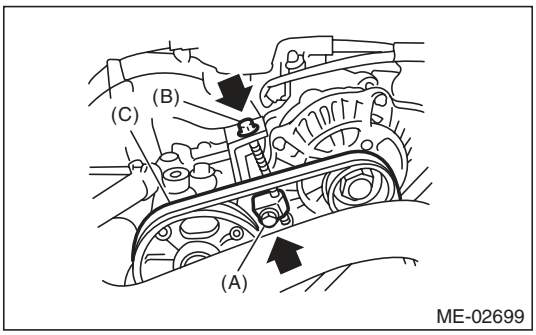

2. REAR SIDE BELT

1) Remove the front side belts. <Ref. to ME(H4SO)-38, FRONT SIDE BELT, REMOVAL, V-belt.>
2) Loosen the lock nut (A).
3) Loosen the slider bolt (B).

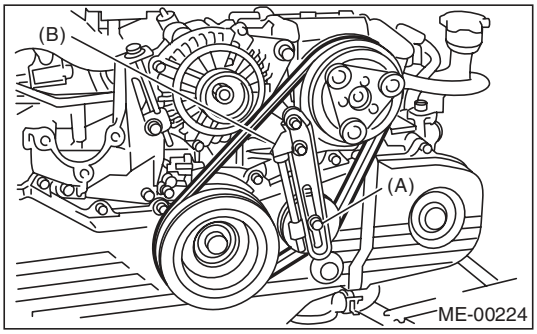

4) Remove the rear side belt.
5) Remove the belt tensioner.

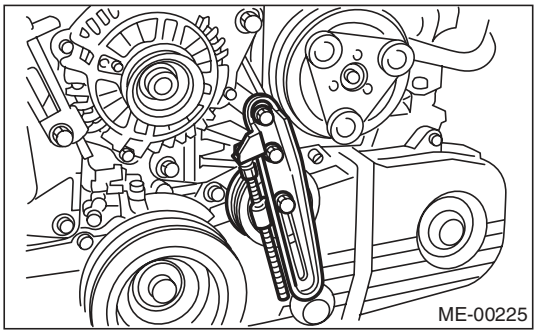

B: INSTALLATION

1. FRONT SIDE BELT

CAUTION:
- **When reusing the front side belt, wipe off dust and water with cloth.**
- **Do not use the front side belt if there is any oil, grease or coolant on the belt.**
- **Be careful not to rub the belt end surface with bare hands; exposed core may cause injury.**

1) Wipe off any dust, oil and water on the groove of each pulley with cloth.
2) Install the front side belt (C), and adjust the slider bolt (B) so as to obtain the specified belt tension. <Ref. to ME(H4SO)-40, INSPECTION, V-belt.>
3) Tighten the bolt (A).
4) Tighten the slider bolt (B).

Tightening torque:
Bolt (A)
25 N·m (2.5 kgf-m, 18.4 ft-lb)
Slider bolt (B)
8 N·m (0.8 kgf-m, 5.9 ft-lb)

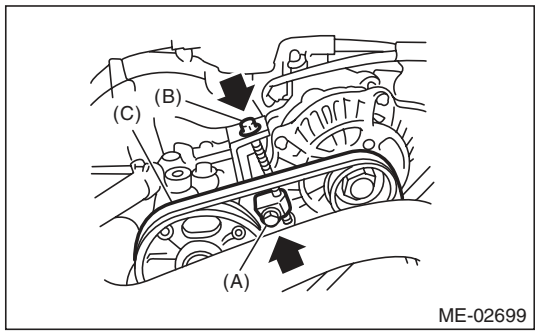

5) Install the V-belt cover.

Tightening torque:
13 N·m (1.3 kgf-m, 9.6 ft-lb)

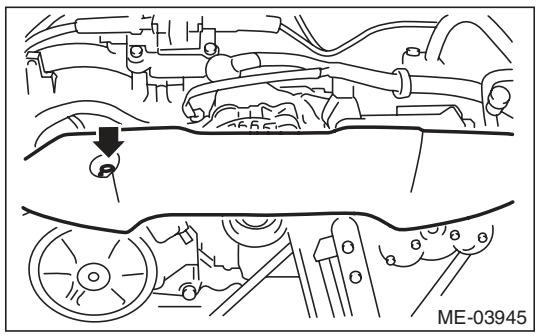

2. REAR SIDE BELT

CAUTION:
- **When reusing the rear side belt, wipe off dust and water with cloth.**
- **Do not use the rear side belt if there is any oil, grease or coolant on the belt.**
- **Be careful not to rub the belt end surface with bare hands; exposed core may cause injury.**

1) Wipe off any dust, oil and water on the groove of each pulley with cloth.
2) Install the belt tensioner.
3) Install the rear side belt, and adjust the slider bolt (B) so as to obtain the specified belt tension. <Ref. to ME(H4SO)-40, INSPECTION, V-belt.>
4) Tighten the lock nut (A).

Tightening torque:
Lock nut (A)
23 N·m (2.3 kgf-m, 17.0 ft-lb)

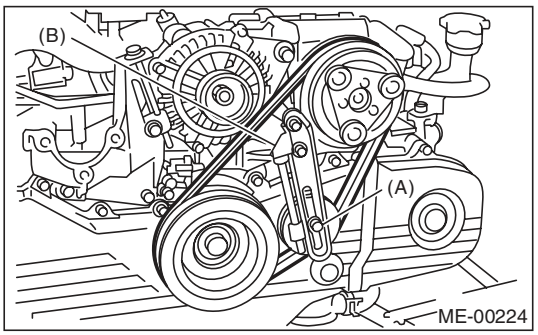

5) Install the front side belt. <Ref. to ME(H4SO)-39, FRONT SIDE BELT, INSTALLATION, V-belt.>

C: INSPECTION

1) Replace the belts, if crack, fraying or wear is found.
2) Check the belt tension and adjust it if necessary by changing the generator installing position or idler pulley installing position.

Belt tension (with belt tension gauge):

(A)
When installing new parts:
640 — 780 N (65 — 80 kgf, 144 — 175 lb)
At inspection:
490 — 640 N (50 — 65 kgf, 110 — 144 lb)

(B)
When installing new parts:
650 — 750 N (66 — 76 kgf, 146 — 169 lb)
At inspection:
350 — 450 N (36 — 46 kgf, 78 — 101 lb)

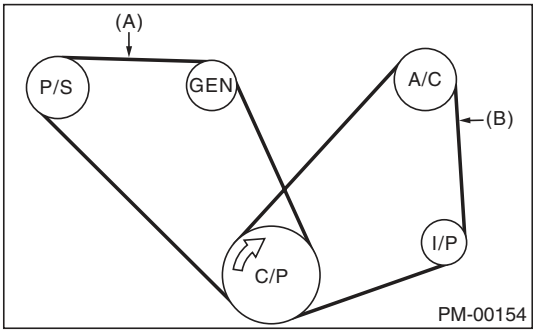

(A) Front side belt
(B) Rear side belt
C/P Crank pulley
GEN Generator pulley
P/S Power steering oil pump pulley
A/C A/C compressor pulley
I/P Idler pulley

Belt tension (without belt tension gauge):

(A)
When installing new parts:
7 — 9 mm (0.276 — 0.354 in)
At inspection:
9 — 11 mm (0.354 — 0.433 in)

(B)
When installing new parts:
7.5 — 8.5 mm (0.295 — 0.335 in)
At inspection:
9.0 — 10.0 mm (0.354 — 0.394 in)

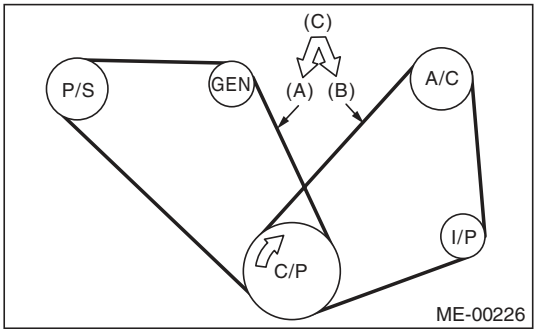

(A) Front side belt
(B) Rear side belt
(C) 98 N (10 kg, 22 lbf)
C/P Crank pulley
GEN Generator pulley
P/S Power steering oil pump pulley
A/C A/C compressor pulley
I/P Idler pulley

13. Crank Pulley

A: REMOVAL

NOTE:
When replacing the single part, perform the work with the engine installed to body.

1) Remove the V-belts. <Ref. to ME(H4SO)-38, REMOVAL, V-belt.>

2) Use the ST to lock the crank pulley, and remove the crank pulley bolts.

ST 499977100 CRANK PULLEY WRENCH (MT MODEL)
ST 499977400 CRANK PULLEY WRENCH (AT MODEL)

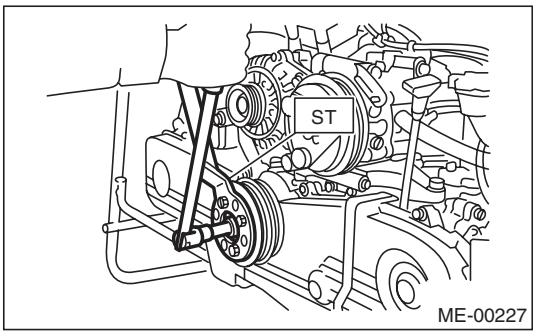

3) Remove the crank pulley.

B: INSTALLATION

1. AT MODEL

1) Install the crank pulley.

2) Use the ST to lock the crank pulley, and attach the crank pulley bolts.

ST 499977400 CRANK PULLEY WRENCH

(1) Clean the crankshaft thread using compressed air.
(2) Apply engine oil to the crank pulley bolt seat and thread.
(3) Tighten the bolts temporarily with tightening torque of 44 N·m (4.5 kgf-m, 32.5 ft-lb).
(4) Tighten the crank pulley bolts.

Tightening torque:
130 N·m (13.3 kgf-m, 95.9 ft-lb)

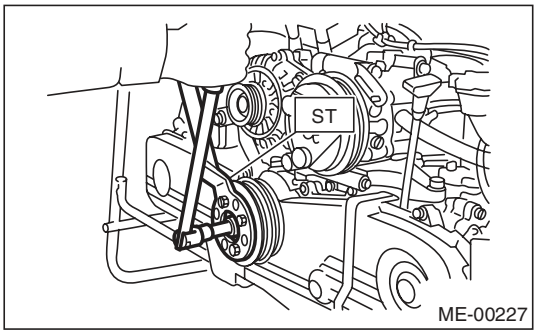

3) Check that the tightening angle of the crank pulley bolt is 45° or more. Perform the following procedure when less than 45°.

CAUTION:
If the tightening angle of crank pulley bolt is less than 45°, the bolt is damaged. In this case, the bolt must be replaced.

(1) Replace the crank pulley bolts and clean them.

Crank pulley bolt:
Part No. 12369AA011

(2) Clean the crankshaft thread using compressed air.
(3) Apply engine oil to the crank pulley bolt seat and thread.
(4) Tighten the bolts temporarily with tightening torque of 44 N·m (4.5 kgf-m, 32.5 ft-lb).
(5) Tighten the crank pulley bolts by 45° to 60°.

NOTE:
Conduct the tightening procedures by confirming the turning angle of crank pulley bolt referring to the gauge indicated on timing belt cover.

4) Install the V-belts. <Ref. to ME(H4SO)-39, INSTALLATION, V-belt.>

2. MT MODEL

1) Install the crank pulley.
2) Use the ST to lock the crank pulley, and attach the crank pulley bolts.

ST 499977100 CRANK PULLEY WRENCH

(1) Clean the crankshaft thread using compressed air.
(2) Apply engine oil to the crank pulley bolt seat and thread.
(3) Tighten the bolts temporarily with tightening torque of 44 N·m (4.5 kgf-m, 32.5 ft-lb).
(4) Tighten the crank pulley bolts.

Tightening torque:
180 N·m (18.4 kgf-m, 132.8 ft-lb)

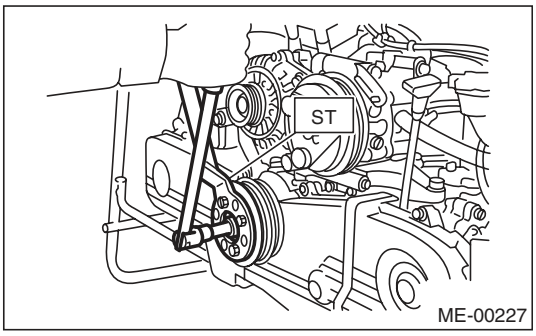

3) Check that the tightening angle of the crank pulley bolt is 65° or more. Perform the following procedure when less than 65°.

CAUTION:
If the tightening angle of crank pulley bolt is less than 65°, the bolt is damaged. In this case, the bolt must be replaced.

(1) Replace the crank pulley bolts and clean them.

Crank pulley bolt:
Part No. 12369AA011

(2) Clean the crankshaft thread using compressed air.
(3) Apply engine oil to the crank pulley bolt seat and thread.
(4) Tighten the bolts temporarily with tightening torque of 44 N·m (4.5 kgf-m, 32.5 ft-lb).
(5) Tighten the crank pulley bolts by 65° to 75°.

NOTE:
Conduct the tightening procedures by confirming the turning angle of crank pulley bolt referring to the gauge indicated on timing belt cover.

4) Install the V-belts. <Ref. to ME(H4SO)-39, INSTALLATION, V-belt.>

C: INSPECTION

1) Make sure the belt is not worn or otherwise damaged.
2) Check the tension of the belt. <Ref. to ME(H4SO)-40, INSPECTION, V-belt.>

14. Timing Belt Cover

A: REMOVAL

NOTE:
When replacing the single part, perform the work with the engine installed to body.

1) Remove the V-belts. <Ref. to ME(H4SO)-38, REMOVAL, V-belt.>
2) Remove the crank pulley. <Ref. to ME(H4SO)-41, REMOVAL, Crank Pulley.>
3) Remove the timing belt cover LH.
4) Remove the front timing belt cover.

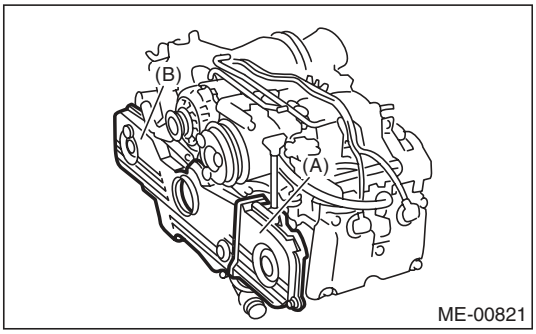

(A) Timing belt cover LH
(B) Front timing belt cover

B: INSTALLATION

1) Install the front timing belt cover.

Tightening torque:
5 N·m (0.5 kgf-m, 3.7 ft-lb)

2) Install the timing belt cover LH.

Tightening torque:
5 N·m (0.5 kgf-m, 3.7 ft-lb)

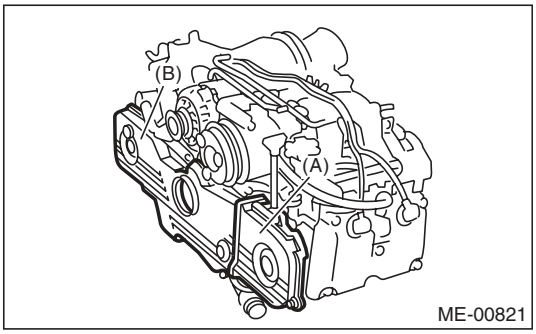

(A) Timing belt cover LH
(B) Front timing belt cover

3) Install the crank pulley. <Ref. to ME(H4SO)-41, INSTALLATION, Crank Pulley.>
4) Install the V-belts. <Ref. to ME(H4SO)-39, INSTALLATION, V-belt.>

C: INSPECTION

Check the timing belt cover for damage.

15. Timing Belt

A: REMOVAL

NOTE:
Perform the work with the engine installed to body when replacing a single part. For operation procedures, refer to “Timing Belt” in the PM section. <Ref. to PM-20, Timing Belt.>

1. TIMING BELT

1) Remove the V-belts. <Ref. to ME(H4SO)-38, REMOVAL, V-belt.>
2) Remove the crank pulley. <Ref. to ME(H4SO)-41, REMOVAL, Crank Pulley.>
3) Remove the timing belt cover. <Ref. to ME(H4SO)-43, REMOVAL, Timing Belt Cover.>
4) Remove the timing belt guide. (MT model)

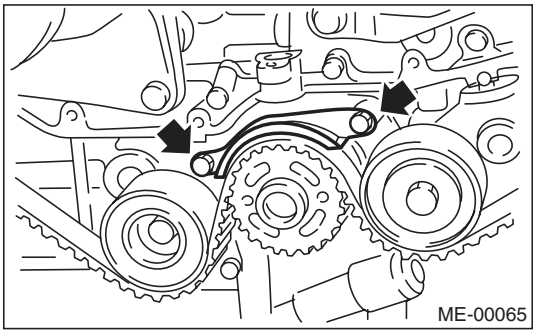

5) If the alignment mark or arrow mark (which indicates the direction of rotation) on timing belt fade away, put new marks before removing the timing belt as shown in procedures below.
   (1) Use the ST to turn crankshaft. Align the mark (a) of sprocket to the mark (b) of oil pump, and then ensure the right side cam sprocket mark (c), cam cap and cylinder head matching surface (d) or left side cam sprocket mark (e), timing belt cover notch (f) are properly adjusted.

ST 499987500 CRANKSHAFT SOCKET

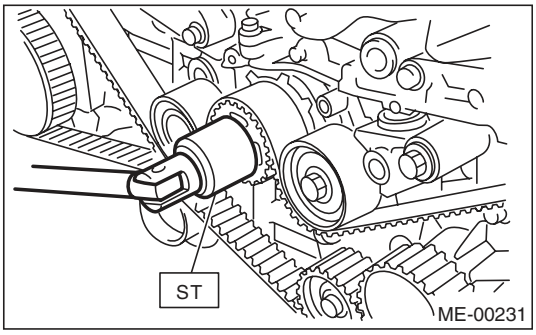

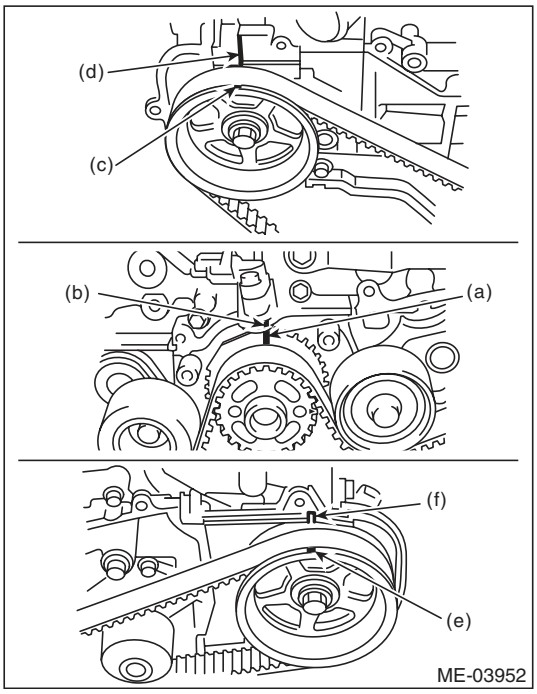

(2) Using white paint, put an alignment mark or an arrow mark on timing belts in relation to the crank sprocket and cam sprockets.

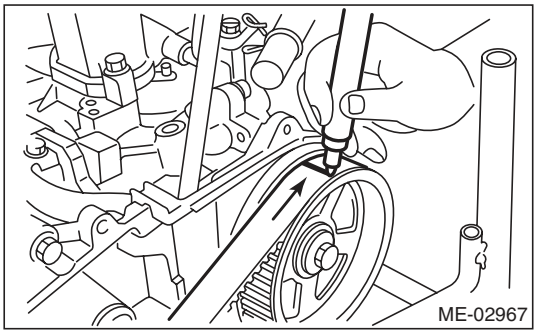

Z_1: 46.8 teeth

Z_2: 43.7 teeth

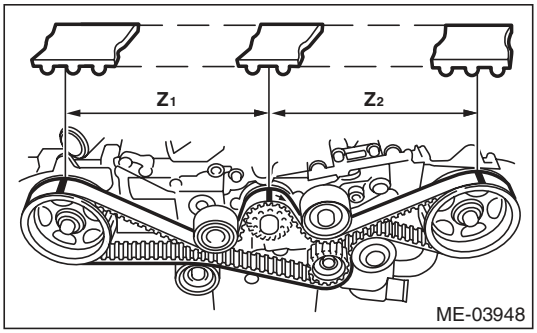

6) Remove the belt idler (A).

7) Remove the belt idler No. 2 (B).

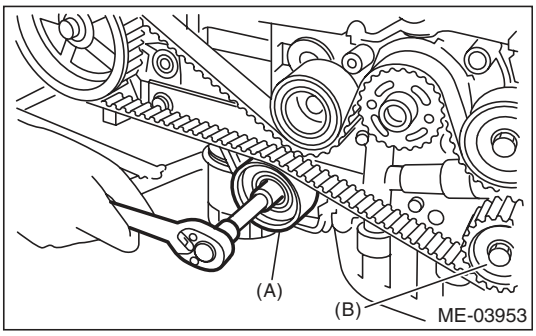

8) Remove the timing belt.

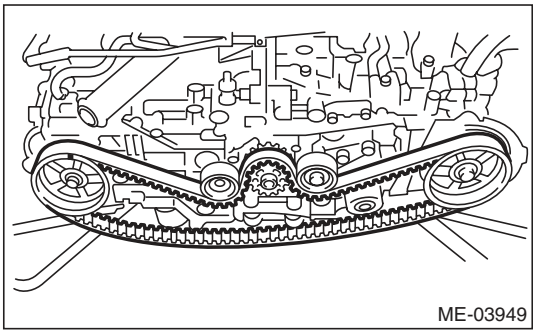

2. BELT IDLER AND AUTOMATIC BELT TENSION ADJUSTER ASSEMBLY

1) Remove the belt idler.

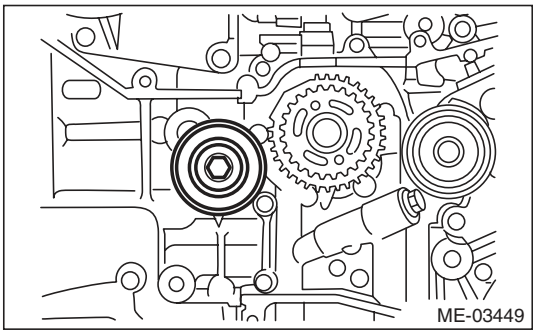

2) Remove the automatic belt tension adjuster assembly.

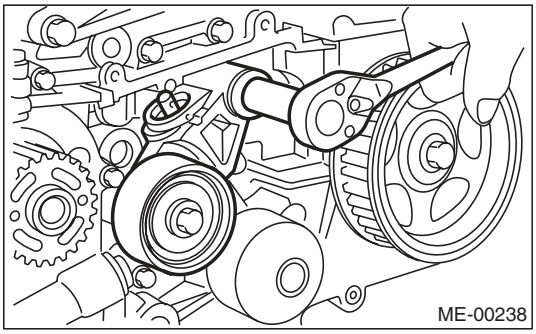

B: INSTALLATION

1. AUTOMATIC BELT TENSION ADJUSTER ASSEMBLY AND BELT IDLER

1) Prepare for installation of the automatic belt tension adjuster assembly.

CAUTION:
- **Always use a vertical type pressing tool to move the adjuster rod down.**
- **Do not use a lateral type vise.**
- **Push the adjuster rod vertically.**
- **Press-in the push adjuster rod gradually taking three minutes or more.**
- **Do not allow press pressure to exceed 9,807 N (1,000 kgf, 2,205 lb).**
- **Push in the adjuster rod to the end face of the cylinder. However, do not push in the adjuster rod below the end face of the cylinder. Doing so may damage the cylinder.**
- **Do not release the press pressure until stopper pin is completely inserted.**

(1) Attach the automatic belt tension adjuster assembly to vertical pressing tool.

(2) Slowly push in the adjuster rod with a pressure of 165 N (16.8 kgf, 37.1 lb) or more until the adjuster rod is aligned with the stopper pin hole in the cylinder.

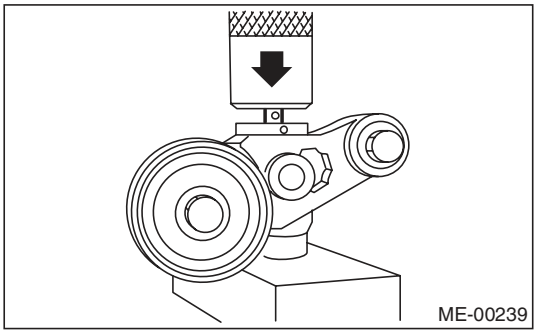

(3) With a 2 mm (0.08 in) dia. stopper pin or a 2 mm (0.08 in) (nominal) dia. hex wrench inserted into the stopper pin hole in cylinder, secure the adjuster rod.

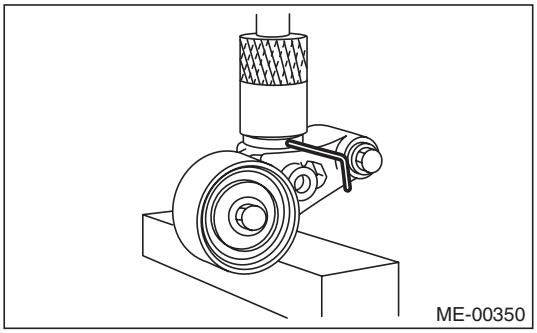

2) Install the automatic belt tension adjuster assembly.

Tightening torque:
39 N·m (4.0 kgf-m, 28.8 ft-lb)

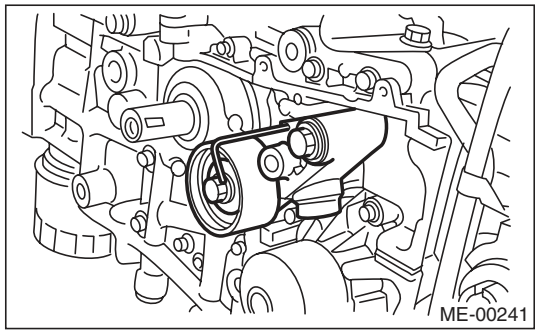

3) Install the belt idlers.

Tightening torque:
39 N·m (4.0 kgf-m, 28.8 ft-lb)

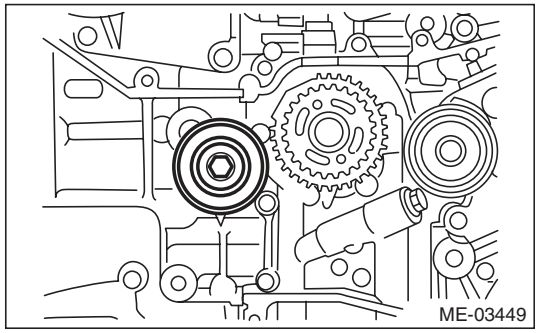

2. TIMING BELT

1) Prepare for installation of the automatic belt tension adjuster assembly. <Ref. to ME(H4SO)-45, AUTOMATIC BELT TENSION ADJUSTER ASSEMBLY AND BELT IDLER, INSTALLATION, Timing Belt.>

2) Align the mark (A) on crank sprocket with the mark (B) on oil pump.

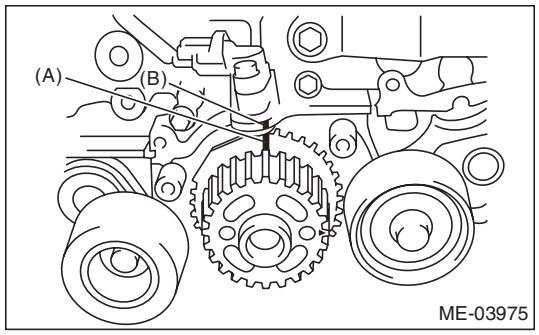

3) Turn the cam sprockets No. 1 and No. 2 using ST so that their alignment marks (A) come to top positions.

ST 18231AA010 CAM SPROCKET WRENCH

NOTE:
CAM SPROCKET WRENCH (499207100) can also be used.

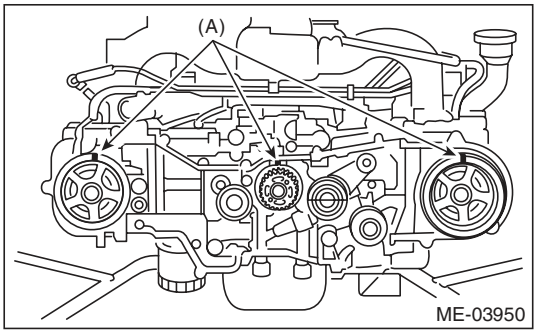

4) While aligning the alignment mark (B) on timing belt with the mark (A) on sprockets, position the timing belt properly.

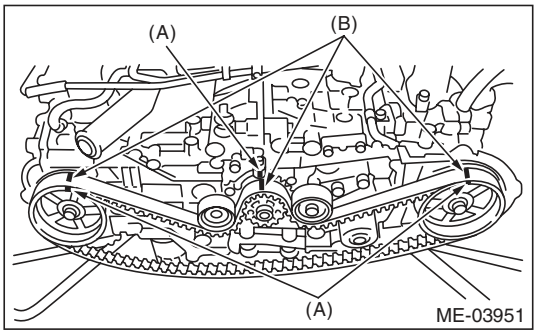

5) Install the belt idler No. 2 (B).

Tightening torque:
39 N·m (4.0 kgf-m, 28.8 ft-lb)

6) Install the belt idler (A).

Tightening torque:
39 N·m (4.0 kgf-m, 28.8 ft-lb)

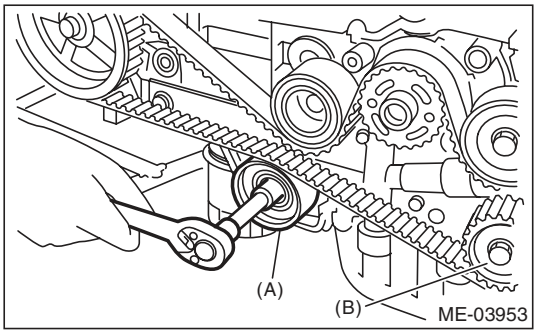

7) After ensuring the marks on timing belt and camshaft sprockets are aligned, remove the stopper pin from belt tension adjuster.

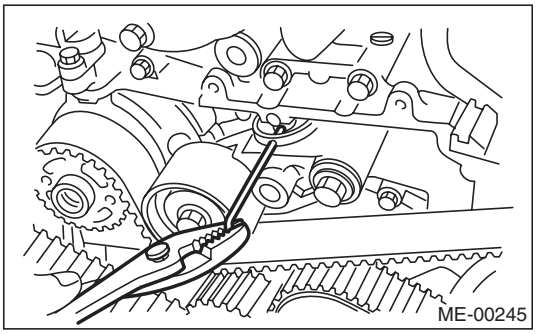

8) Install the timing belt guide. (MT model)
(1) Temporarily tighten the bolts mounting the timing belt guide.

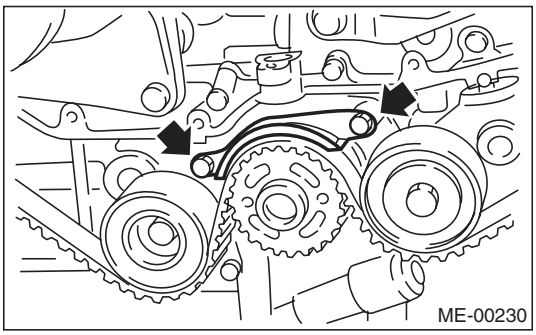

(2) Check and adjust the clearance between timing belt and timing belt guide by using thickness gauge.

Clearance:
1.0±0.5 mm (0.039±0.020 in)

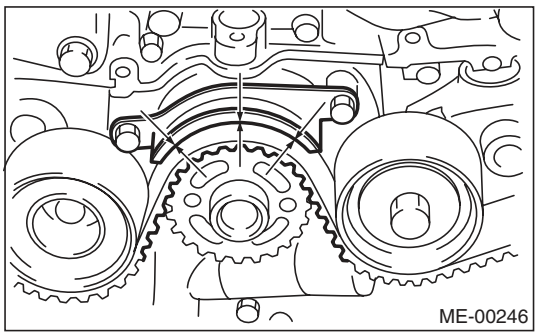

(3) Tighten the bolts mounting the timing belt guide.

Tightening torque:
9.75 N·m (1.0 kgf-m, 7.2 ft-lb)

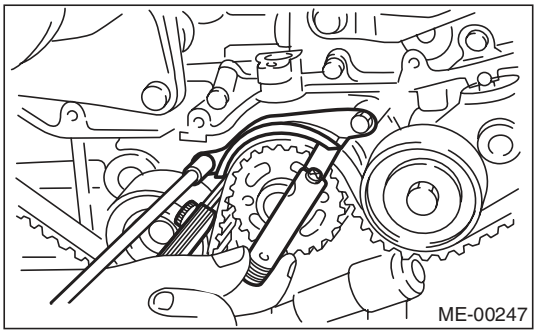

9) Install the timing belt cover. <Ref. to ME(H4SO)-43, INSTALLATION, Timing Belt Cover.>
10) Install the crank pulley. <Ref. to ME(H4SO)-41, INSTALLATION, Crank Pulley.>
11) Install the V-belts. <Ref. to ME(H4SO)-39, INSTALLATION, V-belt.>

C: INSPECTION

1. TIMING BELT

1) Check the timing belt teeth for breaks, cracks or wear. If any fault is found, replace the timing belt.
2) Check the condition on the back surface of the timing belt. If cracks are found, replace the timing belt.

CAUTION:
- **Be careful not to let oil, grease or coolant contact the timing belt. Remove quickly and thoroughly if this happens.**
- **Do not bend the timing belt sharply.**

In radial diameter h:
60 mm (2.36 in) or more

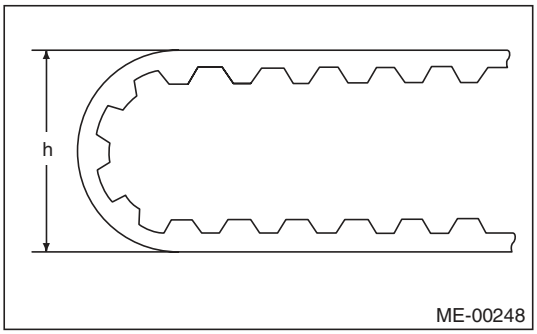

2. AUTOMATIC BELT TENSION ADJUSTER

1) Visually check the oil seals for leaks, and rod ends for abnormal wear and scratches. If necessary, replace the automatic belt tension adjuster assembly.

NOTE:
Slight traces of oil at rod's oil seal does not indicate a problem.

2) Check that the adjuster rod does not move when a pressure of 165 N (16.8 kgf, 37.1 lb) is applied to it. This is to check adjuster rod stiffness.

3) If the adjuster rod is not stiff and moves freely when applying 165 N (16.8 kgf, 37.1 lb), check it using the following procedures:

(1) Slowly press the adjuster rod down to the end surface of cylinder. Repeat this operation two to three times.

(2) With the adjuster rod moved all the way up, apply a pressure of 165 N (16.8 kgf, 37.1 lb) to it, and check the adjuster rod stiffness.

(3) If the adjuster rod is not stiff and moves down, replace the automatic belt tension adjuster assembly with a new part.

CAUTION:
- **Always use a vertical type pressing tool to move the adjuster rod down.**
- **Do not use a lateral type vise.**
- **Push the adjuster rod vertically.**
- **Press the adjuster rod gradually taking three minutes or more.**
- **Do not allow press pressure to exceed 9,807 N (1,000 kgf, 2,205 lb).**
- **Push in the adjuster rod to the end face of the cylinder. However, do not push in the adjuster rod below the end face of the cylinder. Doing so may damage the cylinder.**

4) Measure the amount of rod protrusion "H" from the end surface of the body. If it is not within specifications, replace the automatic belt tension adjuster assembly with a new part.

Amount of rod protrusion H:
5.2 — 6.2 mm (0.204 — 0.244 in)

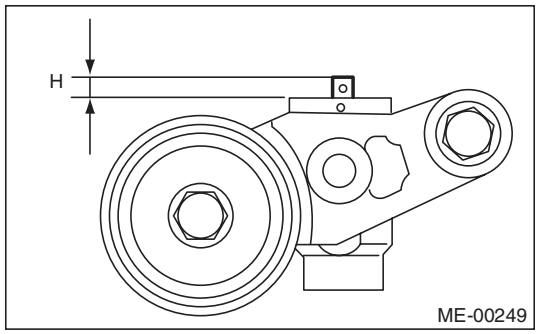

3. BELT TENSION PULLEY

1) Check the mating surfaces of timing belt and contact point of adjuster rod for abnormal wear or scratches. Replace the automatic belt tension adjuster assembly with a new part if faulty.

2) Check the belt tension pulley for smooth rotation. Replace the automatic belt tension adjuster assembly with a new part if abnormal noise or excessive play occurs.

3) Check the belt tension pulley for grease leakage.

4. BELT IDLER

1) Check the belt idler for smooth rotation. Replace if noise or excessive play occurs.

2) Check the outer contacting surfaces of idler pulley for abnormal wear and scratches.

3) Check the belt idler for grease leakage.

16.Cam Sprocket

A: REMOVAL

NOTE:
When replacing the single part, perform the work with the engine installed to body.

1) Remove the V-belts. <Ref. to ME(H4SO)-38, REMOVAL, V-belt.>
2) Remove the crank pulley. <Ref. to ME(H4SO)-41, REMOVAL, Crank Pulley.>
3) Remove the timing belt cover. <Ref. to ME(H4SO)-43, REMOVAL, Timing Belt Cover.>
4) Remove the timing belt. <Ref. to ME(H4SO)-44, REMOVAL, Timing Belt.>
5) Remove the camshaft position sensor. <Ref. to FU(H4SO)-24, REMOVAL, Camshaft Position Sensor.>
6) Fasten the cam sprocket and remove from the cam shaft using ST.

ST 18231AA010 CAM SPROCKET WRENCH

NOTE:
CAM SPROCKET WRENCH (499207100) can also be used.

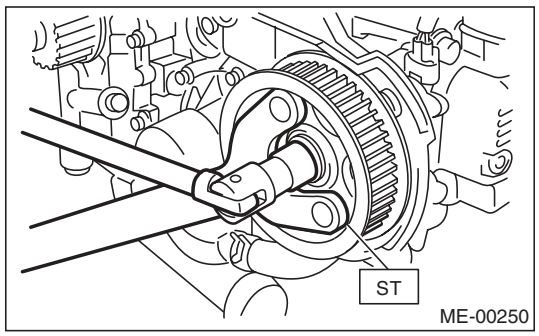

B: INSTALLATION

1) Fasten the cam sprocket and install to the cam shaft using ST.

NOTE:
Do not confuse left and right side cam sprockets during installation. They should be distinguished by the L or R indication.

ST 18231AA010 CAM SPROCKET WRENCH

NOTE:
CAM SPROCKET WRENCH (499207100) can also be used.

Tightening torque:
78 N·m (8.0 kgf-m, 57.5 ft-lb)

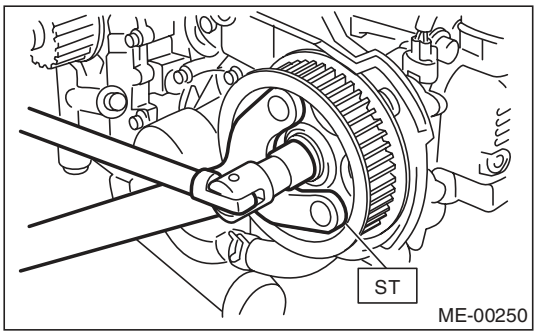

2) Install the camshaft position sensor. <Ref. to FU(H4SO)-24, INSTALLATION, Camshaft Position Sensor.>
3) Install the timing belt. <Ref. to ME(H4SO)-45, INSTALLATION, Timing Belt.>
4) Install the timing belt cover. <Ref. to ME(H4SO)-43, INSTALLATION, Timing Belt Cover.>
5) Install the crank pulley. <Ref. to ME(H4SO)-41, INSTALLATION, Crank Pulley.>
6) Install the V-belts. <Ref. to ME(H4SO)-39, INSTALLATION, V-belt.>

C: INSPECTION

1) Check the cam sprocket teeth for abnormal wear and scratches.
2) Make sure there is no free play between cam sprocket and key.
3) Check the cam sprocket protrusion used for sensor for damage and contamination of foreign matter.

17. Crank Sprocket

A: REMOVAL

NOTE:
When replacing the single part, perform the work with the engine installed to body.

1) Remove the V-belts. <Ref. to ME(H4SO)-38, REMOVAL, V-belt.>
2) Remove the crank pulley. <Ref. to ME(H4SO)-41, REMOVAL, Crank Pulley.>
3) Remove the timing belt cover. <Ref. to ME(H4SO)-43, REMOVAL, Timing Belt Cover.>
4) Remove the timing belt. <Ref. to ME(H4SO)-44, REMOVAL, Timing Belt.>
5) Remove the crank sprocket.

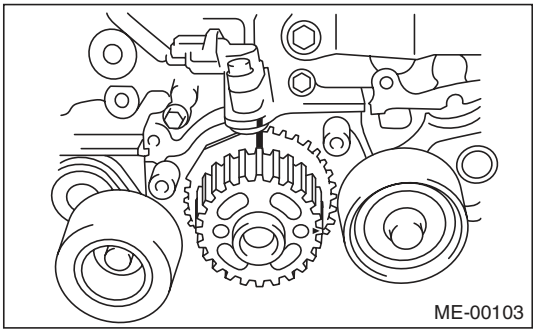

B: INSTALLATION

1) Install the crank sprocket.

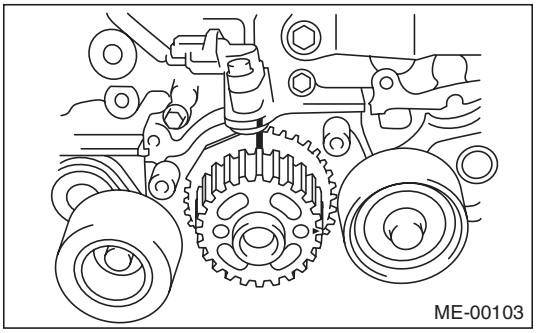

2) Install the timing belt. <Ref. to ME(H4SO)-45, INSTALLATION, Timing Belt.>
3) Install the timing belt cover. <Ref. to ME(H4SO)-43, INSTALLATION, Timing Belt Cover.>
4) Install the crank pulley. <Ref. to ME(H4SO)-41, INSTALLATION, Crank Pulley.>
5) Install the V-belts. <Ref. to ME(H4SO)-39, INSTALLATION, V-belt.>

C: INSPECTION

1) Check the crank sprocket teeth for abnormal wear and scratches.
2) Make sure there is no free play between crank sprocket and key.
3) Check the crank sprocket protrusion used for sensor for damage and contamination of foreign matter.

18. Valve Rocker Assembly

A: REMOVAL

NOTE:
Perform the work with the engine installed to body when replacing a single part. Refer to “Valve Clearance” for preparation procedures. <Ref. to ME(H4SO)-27, Valve Clearance.>

1) Remove the high tension cord.
2) Disconnect the PCV hose and remove the rocker cover.
3) Remove the valve rocker assembly.
   (1) Use the ST to rotate the spring stopper in the direction of the arrow to remove it from adjuster pin.

ST 18258AA000 SPRING INSTALLER

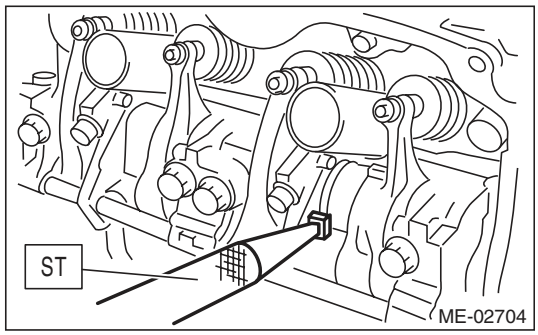

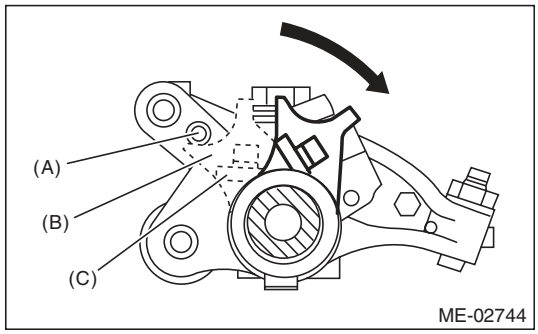

(A) Adjuster pin
(B) Spring stopper
(C) Spring

   (2) Remove the bolts (a) through (j) in alphabetical sequence.

NOTE:
Leave two or three threads of bolts (i) and (j) engaged in order to retain the valve rocker assembly.

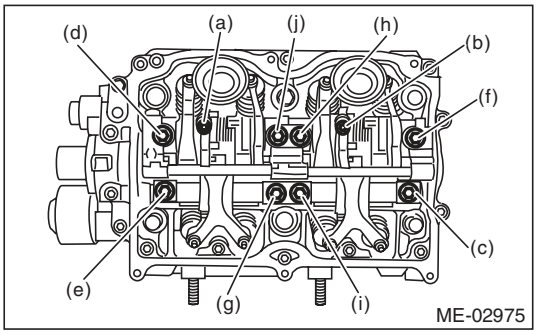

   (3) Remove the valve rocker assembly.

NOTE:
Set the ST in the position shown in the drawing to remove the intake valve rocker assembly.

ST 18354AA000 VALVE ROCKER HOLDER

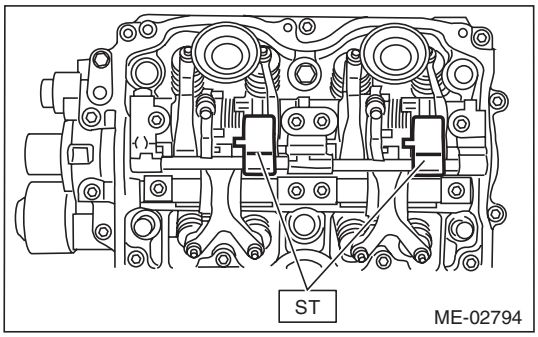

B: INSTALLATION

1) Install the valve rocker assembly.
   (1) Temporarily tighten the bolts equally in alphabetical order as shown in the figure.

NOTE:
- Do not temporarily tighten the bolts (i) and (j).
- Set the ST in the position shown in the drawing to mount the intake valve rocker assembly.

ST 18354AA000 VALVE ROCKER HOLDER

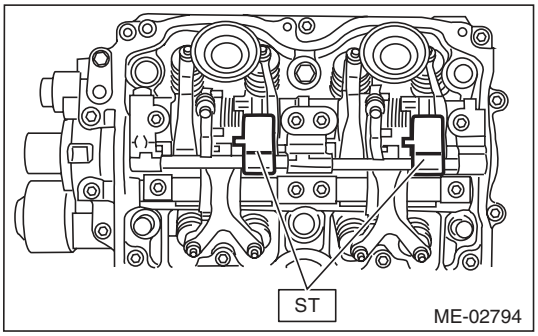

   (2) Tighten the bolts (a) through (h) to specified torque.

Tightening torque:
25 N·m (2.5 kgf-m, 18.4 ft-lb)

   (3) Tighten the bolts (i) through (j) to specified torque.

Tightening torque:
6 N·m (0.6 kgf-m, 4.4 ft-lb)

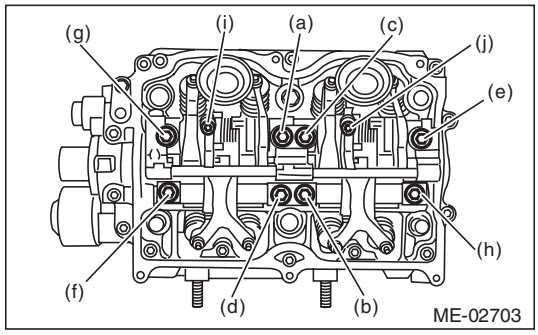

   (4) Use the ST to rotate the spring stopper in the direction of the arrow to fasten the adjuster pin.

ST 18258AA000 SPRING INSTALLER

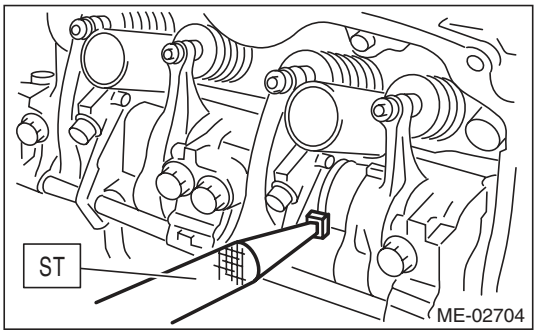

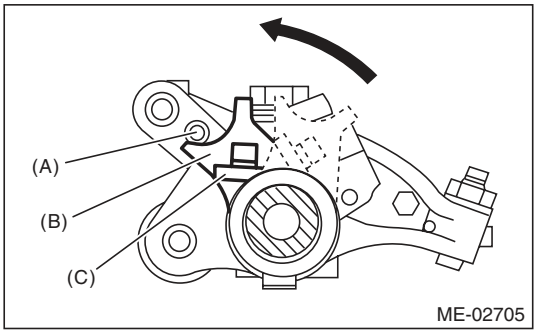

(A) Adjuster pin
(B) Spring stopper
(C) Spring

2) Remove the timing belt cover LH.
3) Adjust the valve clearance. <Ref. to ME(H4SO)-28, ADJUSTMENT, Valve Clearance.>
4) Install the timing belt cover LH.
5) Install the rocker cover.
   (1) Install the rocker cover gasket to the rocker cover.

NOTE:
Use a new rocker cover gasket.

   (2) Temporarily tighten the bolts in alphabetical order shown in the figure, tighten them in two stages.

Tightening torque:
1st
6.4 N·m (0.7 kgf-m, 4.7 ft-lb)
2nd (only (a) and (b) are tightened)
6.4 N·m (0.7 kgf-m, 4.7 ft-lb)

RH side

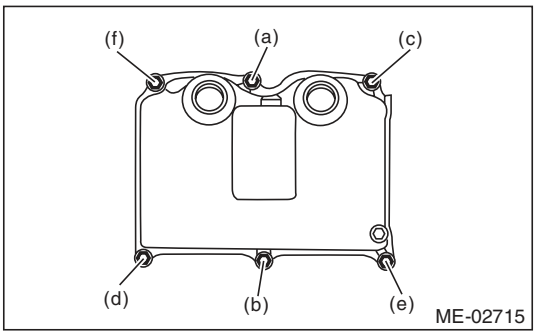

LH side

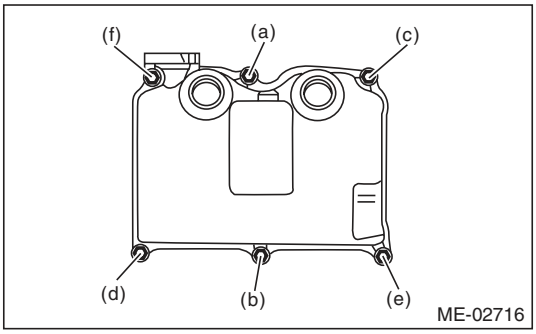

(3) Connect the PCV hose.

6) Install the high tension cord.

C: DISASSEMBLY

NOTE:
Intake valve rocker assembly cannot be disassembled.

1) Remove the exhaust valve rocker arm from the rocker shaft.

NOTE:
Keep all the removed parts in order for re-installing in their original positions.

2) Remove the nut and adjusting screw from exhaust valve rocker.

D: ASSEMBLY

NOTE:
Intake valve rocker assembly cannot be disassembled.

1) Install the adjusting screw and nut to the exhaust valve rocker.

2) Insert the exhaust valve rocker arm to rocker shaft.

NOTE:
Valve rocker arms, and rocker shaft have identification marks. Make sure the parts with same markings are properly assembled.

E: INSPECTION

1. INTAKE VALVE ROCKER ASSEMBLY

1) If the roller or valve contact surface of valve rocker arm is worn or dented excessively, replace the valve rocker assembly.

2) Check that the valve rocker arm roller rotates smoothly. If not, replace the valve rocker assembly.

2. EXHAUST VALVE ROCKER ASSEMBLY

1) Measure the inner diameter of valve rocker arm and outer diameter of valve rocker shaft, and confirm the difference (oil clearance) between the two values.

Clearance between arm and shaft:
Standard
0.020 — 0.054 mm (0.0008 — 0.0021 in)

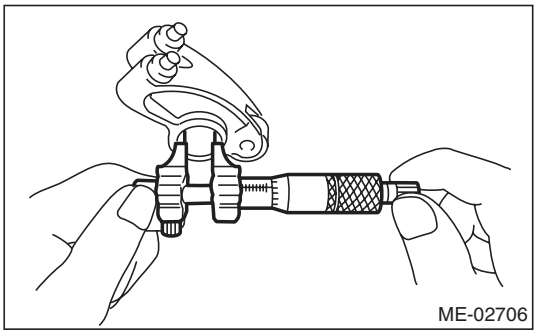

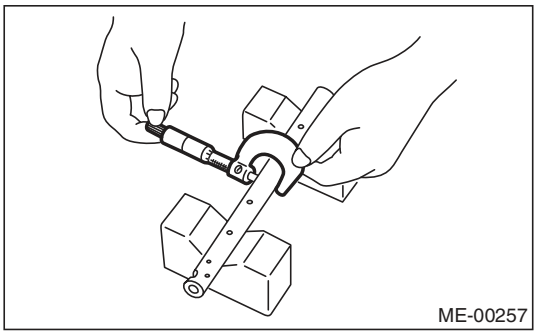

2) If the oil clearance exceeds the limit, replace the valve rocker arm or shaft, whichever shows the greater amount of wear.

Rocker arm inside diameter:
22.020 — 22.041 mm (0.8669 — 0.8678 in)

Rocker shaft diameter:
21.987 — 22.000 mm (0.8656 — 0.8661 in)

3) If the roller or valve contact surface of valve rocker arm is worn or dented excessively, replace the valve rocker arm.

4) Check that the valve rocker arm roller rotates smoothly. If not, replace the valve rocker arm.

19.Camshaft

A: REMOVAL

NOTE:
When replacing the single part, perform the work with the engine installed to body. Refer to “Valve Clearance” for preparation procedures. <Ref. to ME(H4SO)-27, Valve Clearance.>

1) Remove the V-belts. <Ref. to ME(H4SO)-38, REMOVAL, V-belt.>
2) Remove the crank pulley. <Ref. to ME(H4SO)-41, REMOVAL, Crank Pulley.>
3) Remove the timing belt cover. <Ref. to ME(H4SO)-43, REMOVAL, Timing Belt Cover.>
4) Remove the timing belt. <Ref. to ME(H4SO)-44, REMOVAL, Timing Belt.>
5) Remove the cam sprocket. <Ref. to ME(H4SO)-49, REMOVAL, Cam Sprocket.>
6) Remove the timing belt cover No. 2 LH.
7) Remove the timing belt cover No. 2 RH.

NOTE:
Do not damage or lose the seal rubber when removing the timing belt covers.

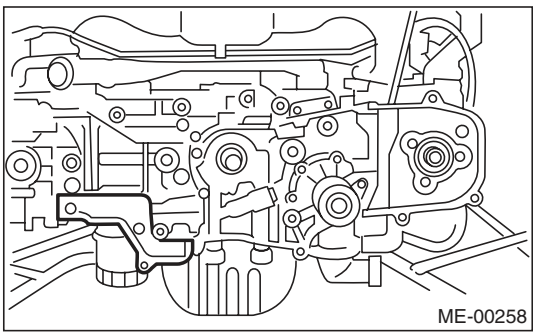

8) Remove the tensioner bracket.

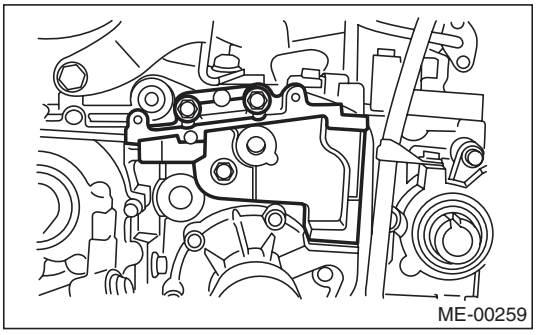

9) Remove the camshaft position sensor support. (LH side only)
10) Remove the valve rocker assembly. <Ref. to ME(H4SO)-51, REMOVAL, Valve Rocker Assembly.>
11) Remove the camshaft cap.
(1) Remove the bolts (a) and (b) in alphabetical sequence.

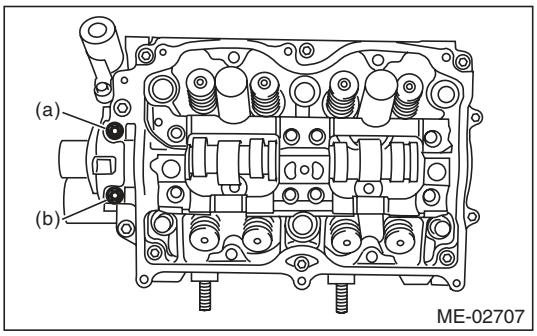

(2) Equally loosen the bolts (c) through (j) all the way in alphabetical sequence.

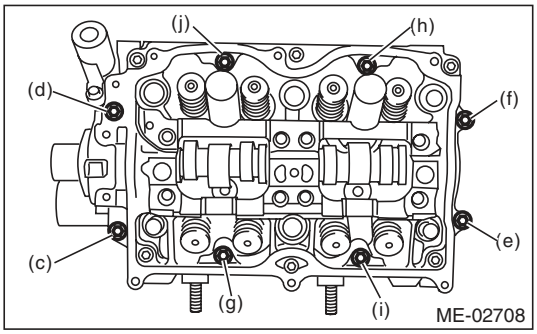

(3) Remove the bolts (k) through (p) in alphabetical sequence using ST.

ST 499497000 TORX® PLUS

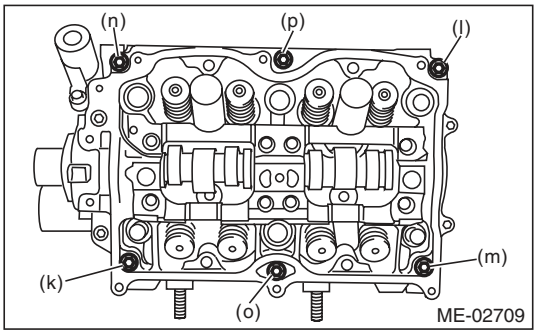

(4) Remove the camshaft cap.
12) Remove the camshaft.
13) Remove the oil seal.
14) Remove the plug from rear side of camshaft.

CAUTION:
Do not scratch the journal surface when removing the oil seal.

15) Similarly, remove the camshaft RH and related parts.

B: INSTALLATION

1) Apply a thin coat of engine oil to camshaft journals, and install the camshaft.
2) Install the camshaft cap.
   (1) Apply liquid gasket to the mating surfaces of camshaft cap.

NOTE:
Install within 5 minutes after applying liquid gasket.

Liquid gasket:
THREE BOND 1217G (Part No. K0877Y0100) or equivalent

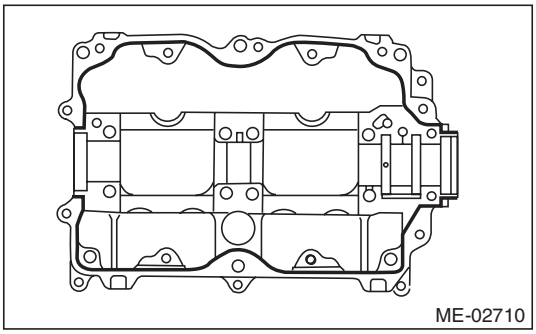

NOTE:
Apply a coat of liquid gasket of 3 mm (0.12 in) in diameter (A) along the edge (B) of camshaft cap (C) mating surface.

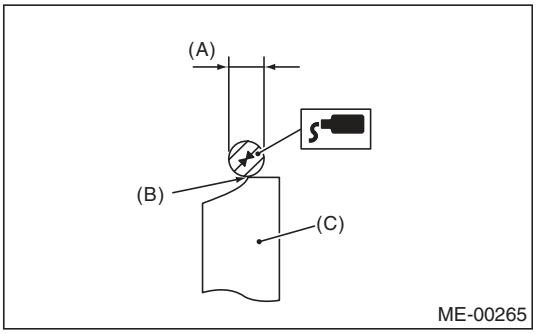

(2) Temporarily tighten the bolts (a) through (d) in alphabetical sequence.

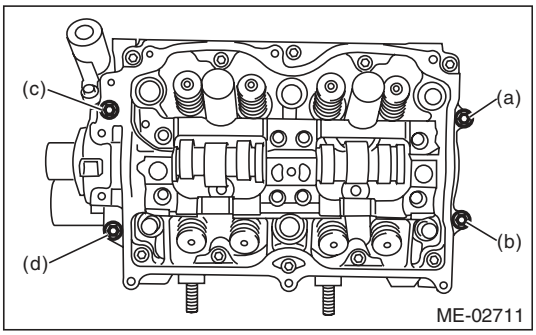

(3) Install the valve rocker assembly. <Ref. to ME(H4SO)-52, INSTALLATION, Valve Rocker Assembly.>

(4) Tighten the TORX® bolts (e) through (j) in alphabetical sequence using ST.

ST 499497000 TORX® PLUS

Tightening torque:
18 N·m (1.8 kgf-m, 13.3 ft-lb)

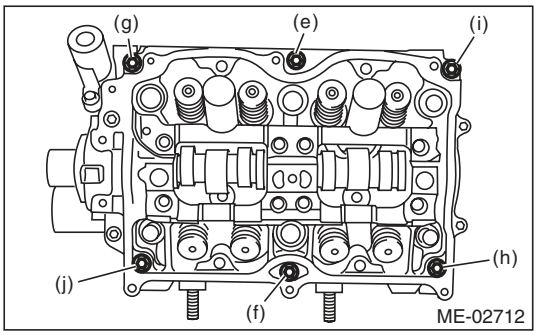

(5) Tighten the bolts (k) through (r) in alphabetical sequence.

Tightening torque:
9.75 N·m (1.0 kgf-m, 7.2 ft-lb)

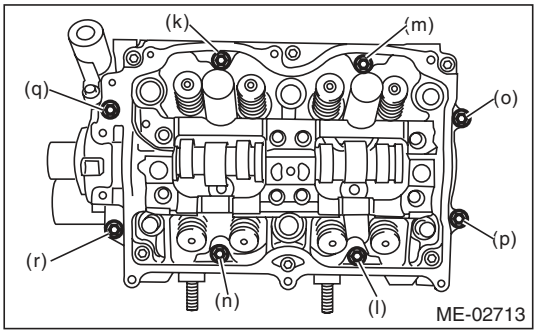

(6) Tighten the bolts (s) and (t) in alphabetical sequence.

NOTE:
- Use new seal washer.
- Install and tighten the seal washer to the bolt.

Tightening torque:
9.75 N·m (1.0 kgf-m, 7.2 ft-lb)

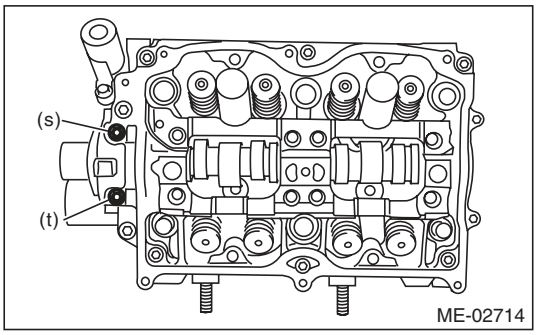

3) Apply a coat of engine oil to camshaft oil seal periphery and oil seal lips and install the oil seal (A) on camshaft using ST1 and ST2.

NOTE:
Use a new oil seal.
ST1 499597000 OIL SEAL GUIDE
ST2 499587500 OIL SEAL INSTALLER

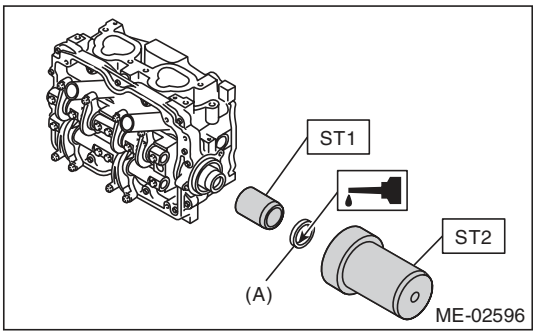

4) Apply a coat of engine oil to plug periphery and Install the plug (A) using ST.
ST 499587700 CAMSHAFT OIL SEAL INSTALLER

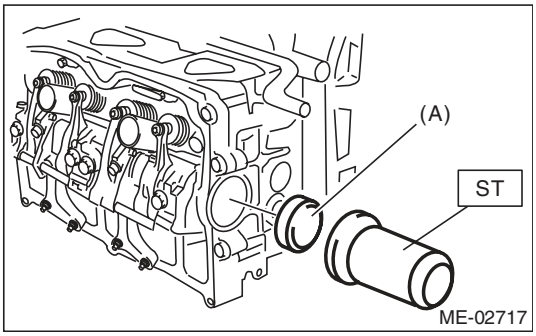

5) Install the camshaft position sensor support. (LH side only)

Tightening torque:
6.4 N·m (0.7 kgf-m, 4.7 ft-lb)

6) Similarly, install the parts on right-hand side.
7) Install the tensioner bracket.

Tightening torque:
24.5 N·m (2.5 kgf-m, 18.1 ft-lb)

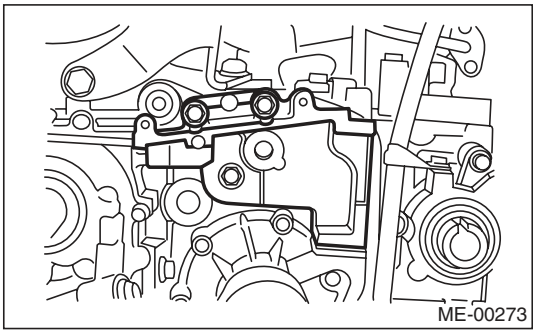

8) Install the timing belt cover No. 2 RH.

Tightening torque:
5 N·m (0.5 kgf-m, 3.7 ft-lb)

9) Install the timing belt cover No. 2 LH.

Tightening torque:
5 N·m (0.5 kgf-m, 3.7 ft-lb)

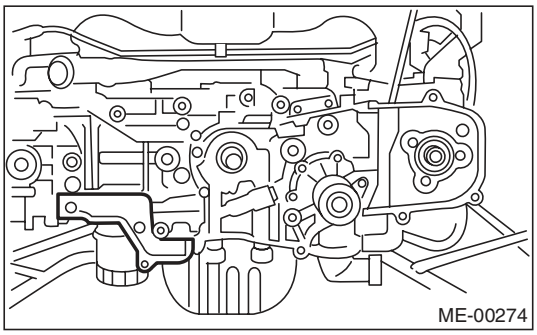

10) Install the cam sprocket. <Ref. to ME(H4SO)-49, INSTALLATION, Cam Sprocket.>
11) Install the timing belt. <Ref. to ME(H4SO)-45, INSTALLATION, Timing Belt.>
12) Adjust the valve clearance. <Ref. to ME(H4SO)-28, ADJUSTMENT, Valve Clearance.>
13) Install the rocker cover.
(1) Install the rocker cover gasket to the rocker cover.

NOTE:
Use a new rocker cover gasket.

(2) Temporarily tighten the bolts in alphabetical order shown in the figure, tighten them in two stages.

Tightening torque:
1st
6.4 N·m (0.7 kgf-m, 4.7 ft-lb)
2nd (only (a) and (b) are tightened)
6.4 N·m (0.7 kgf-m, 4.7 ft-lb)

RH side

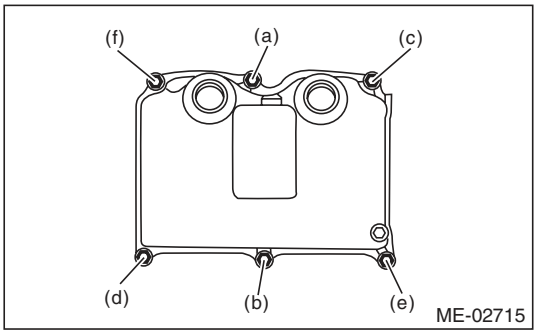

LH side

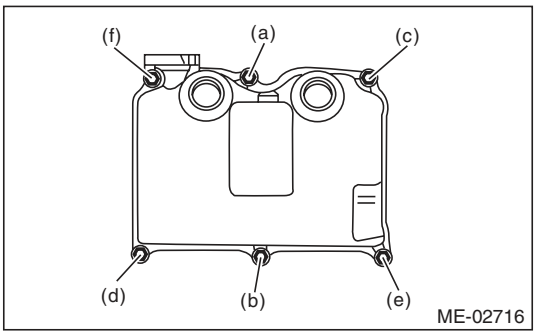

(3) Connect the PCV hose.

14) Install the high tension cord.

15) Install the timing belt cover. <Ref. to ME(H4SO)-43, INSTALLATION, Timing Belt Cover.>

16) Install the crank pulley. <Ref. to ME(H4SO)-41, INSTALLATION, Crank Pulley.>

17) Install the V-belts. <Ref. to ME(H4SO)-39, INSTALLATION, V-belt.>

C: INSPECTION

1) Measure the bend, and repair or replace if necessary.

Service limit:
0.025 mm (0.00098 in) or less

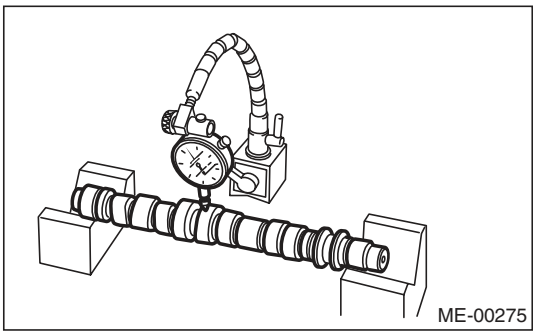

2) Check the journal for damage and wear. Replace if faulty.

3) Measure the outer diameter of camshaft journal and inner diameter of cylinder head journal, and check the difference (oil clearance) between the two values. If the oil clearance is not within the standard, replace the camshaft or cylinder head as necessary.

		Unit: mm (in)
Oil clearance	Standard	0.055 — 0.090 (0.0022 — 0.0035)
Camshaft journal O.D.		31.928 — 31.945 (1.2570 — 1.2577)
Journal hole I.D.		32.000 — 32.018 (1.2598 — 1.2605)

4) Check the cam face condition, and remove the minor faults by grinding with oil stone. Measure the cam height H. If it exceeds the standard or offset wear occurs, replace it.

Cam height H:

			Unit: mm (in)
Intake	Constant	Standard	40.075 — 40.175 (1.5778 — 1.5817)
	Low speed	Standard	35.496 — 35.596 (1.3975 — 1.4014)
	High speed	Standard	40.315 — 40.415 (1.5872 — 1.5911)
Exhaust		Standard	39.289 — 39.389 (1.5468 — 1.5507)

Cam base circle diameter A:
Intake
34.00 mm (1.3386 in)
Exhaust
34.00 mm (1.3386 in)

Base circle step of adjacent intake cams (low speed and high speed):
0.03 mm (0.001 in) or less

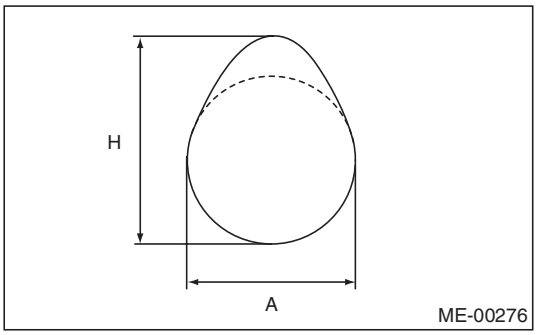

5) Measure the thrust clearance of camshaft with setting the dial gauge at end of camshaft. If the thrust clearance is not within the standard or there is offset wear, replace the camshaft caps and cylinder head as a set. If necessary, replace the camshaft.

Standard:
0.030 — 0.090 mm (0.0012 — 0.0035 in)

20. Cylinder Head

A: REMOVAL

NOTE:
- When replacing the single part, perform the work with the engine installed to body. Refer to “Valve Clearance” for preparation procedures. <Ref. to ME(H4SO)-27, Valve Clearance.>
- When performing the work with the engine installed to body, the following parts must also be removed/installed.
  - Front exhaust pipe <Ref. to EX(H4SO)-4, REMOVAL, Front Exhaust Pipe.> <Ref. to EX(H4SO)-5, INSTALLATION, Front Exhaust Pipe.>

1) Remove the V-belts. <Ref. to ME(H4SO)-38, REMOVAL, V-belt.>
2) Remove the intake manifold. <Ref. to FU(H4SO)-13, REMOVAL, Intake Manifold.>
3) Remove the crank pulley. <Ref. to ME(H4SO)-41, REMOVAL, Crank Pulley.>
4) Remove the timing belt cover. <Ref. to ME(H4SO)-43, REMOVAL, Timing Belt Cover.>
5) Remove the timing belt. <Ref. to ME(H4SO)-44, REMOVAL, Timing Belt.>
6) Remove the cam sprocket. <Ref. to ME(H4SO)-49, REMOVAL, Cam Sprocket.>
7) Remove the bolt which installs the A/C compressor bracket on cylinder head.
8) Remove the valve rocker assembly. <Ref. to ME(H4SO)-51, REMOVAL, Valve Rocker Assembly.>
9) Remove the camshaft. <Ref. to ME(H4SO)-54, REMOVAL, Camshaft.>
10) Remove the oil level gauge guide. (LH side)
11) Remove the cylinder head bolts in alphabetical sequence as shown in the figure.

NOTE:
Leave bolts (a) and (c) engaged by three or four threads to prevent the cylinder head from falling.

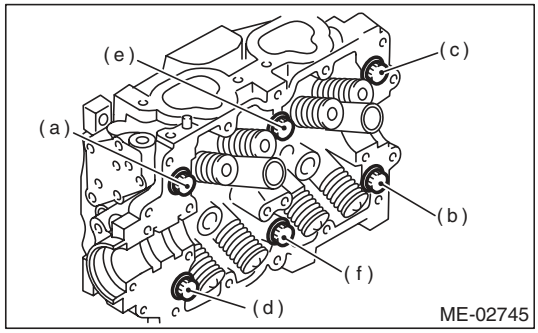

12) While tapping the cylinder head with a plastic hammer, separate it from cylinder block. Remove the bolts (a) and (c) to remove cylinder head.

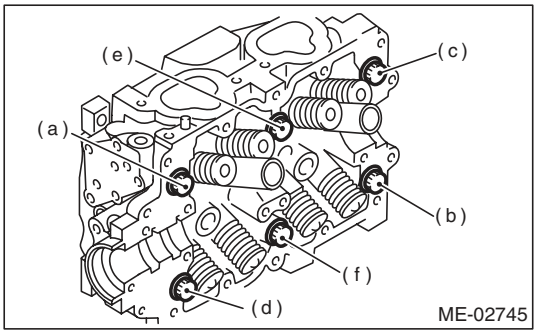

13) Remove the cylinder head gasket.

CAUTION:
Be careful not to scratch the mating surface of cylinder head and cylinder block.

14) Similarly, remove the right side cylinder head.

B: INSTALLATION

1) Install the cylinder head and gaskets on cylinder block.

CAUTION:
Be careful not to scratch the mating surface of cylinder block and cylinder head.

NOTE:
Use a new cylinder head gasket.

2) Tighten the cylinder head bolts.
   (1) Apply a thin coat of engine oil to washer and bolt thread.
   (2) Tighten all bolts to 29 N·m (3.0 kgf-m, 21.4 ft-lb) in alphabetical order.
   (3) Tighten all bolts to 69 N·m (7.0 kgf-m, 50.9 ft-lb) in alphabetical order.
   (4) Loosen all the bolts by 180° in the reverse order of installing, and loosen them further by 180°.
   (5) Tighten all bolts to 42 N·m (4.3 kgf-m, 31.0 ft-lb) in alphabetical order.
   (6) Tighten all bolts by 80 to 90° in alphabetical order.
   (7) Tighten all bolts by 40 to 45° in alphabetical order.

CAUTION:
The tightening angle of the bolt should not exceed 45°.

   (8) Further tighten the bolts (a) and (b) by 40 — 45°.

CAUTION:
Make sure the total "re-tightening angle" of the step (7) and (8) does not exceed 90°.

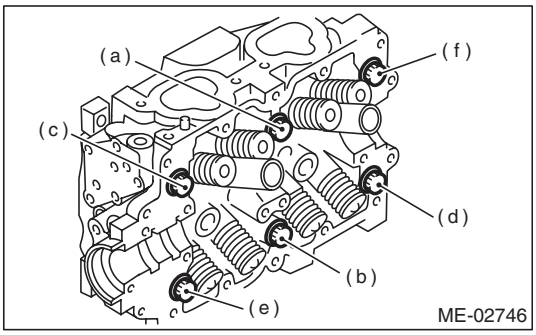

3) Install the oil level gauge guide. (LH side)

Tightening torque:
6.4 N·m (0.7 kgf-m, 4.7 ft-lb)

4) Install the camshaft. <Ref. to ME(H4SO)-55, INSTALLATION, Camshaft.>
5) Install the valve rocker assembly. <Ref. to ME(H4SO)-52, INSTALLATION, Valve Rocker Assembly.>
6) Install the A/C compressor bracket on cylinder head.

Tightening torque:
36 N·m (3.7 kgf-m, 26.6 ft-lb)

7) Install the cam sprocket. <Ref. to ME(H4SO)-49, INSTALLATION, Cam Sprocket.>
8) Install the timing belt. <Ref. to ME(H4SO)-45, INSTALLATION, Timing Belt.>
9) Adjust the valve clearance. <Ref. to ME(H4SO)-28, ADJUSTMENT, Valve Clearance.>
10) Install the rocker cover.
   (1) Install the rocker cover gasket to the rocker cover.

NOTE:
Use a new rocker cover gasket.

   (2) Temporarily tighten the bolts in alphabetical order shown in the figure, tighten them in two stages.

Tightening torque:
1st
6.4 N·m (0.7 kgf-m, 4.7 ft-lb)
2nd (only (a) and (b) are tightened)
6.4 N·m (0.7 kgf-m, 4.7 ft-lb)

RH side

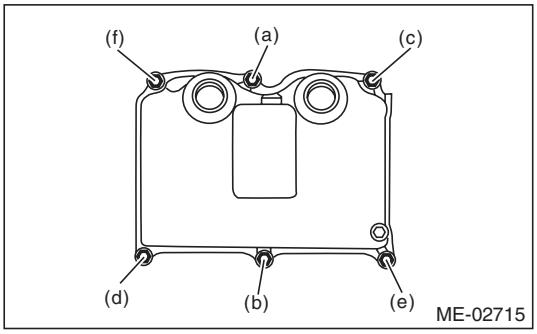

LH side

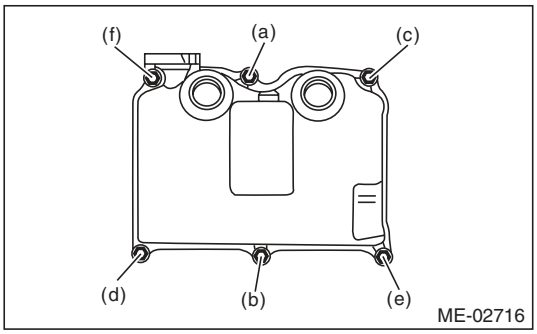

11) Install the timing belt cover. <Ref. to ME(H4SO)-43, INSTALLATION, Timing Belt Cover.>
12) Install the crank pulley. <Ref. to ME(H4SO)-41, INSTALLATION, Crank Pulley.>
13) Install the intake manifold. <Ref. to FU(H4SO)-15, INSTALLATION, Intake Manifold.>
14) Install the V-belts. <Ref. to ME(H4SO)-39, INSTALLATION, V-belt.>

C: DISASSEMBLY

1) Place the cylinder head on the ST.
ST 498267800 CYLINDER HEAD TABLE
2) Compress the valve spring and remove the valve spring retainer key using ST. Remove each valve and valve spring.
ST 499718000 VALVE SPRING REMOVER

NOTE:
- Keep all the removed parts in order for re-installing in their original positions.
- Mark each valve to prevent confusion.
- Pay careful attention not to damage the lips of intake valve oil seals and exhaust valve oil seals.
- For removal and installation procedures of the valve guide, intake valve oil seal and exhaust valve oil seal, refer to “Inspection”. <Ref. to ME(H4SO)-63, VALVE GUIDE, INSPECTION, Cylinder Head.> <Ref. to ME(H4SO)-66, INTAKE AND EXHAUST VALVE OIL SEAL, INSPECTION, Cylinder Head.>

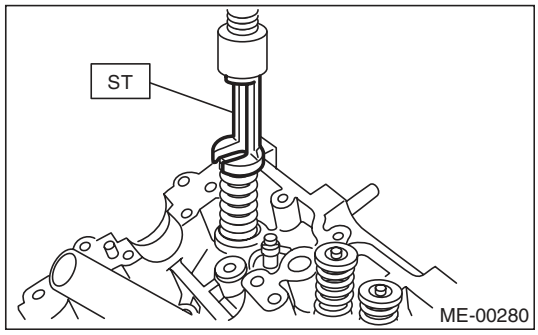

D: ASSEMBLY

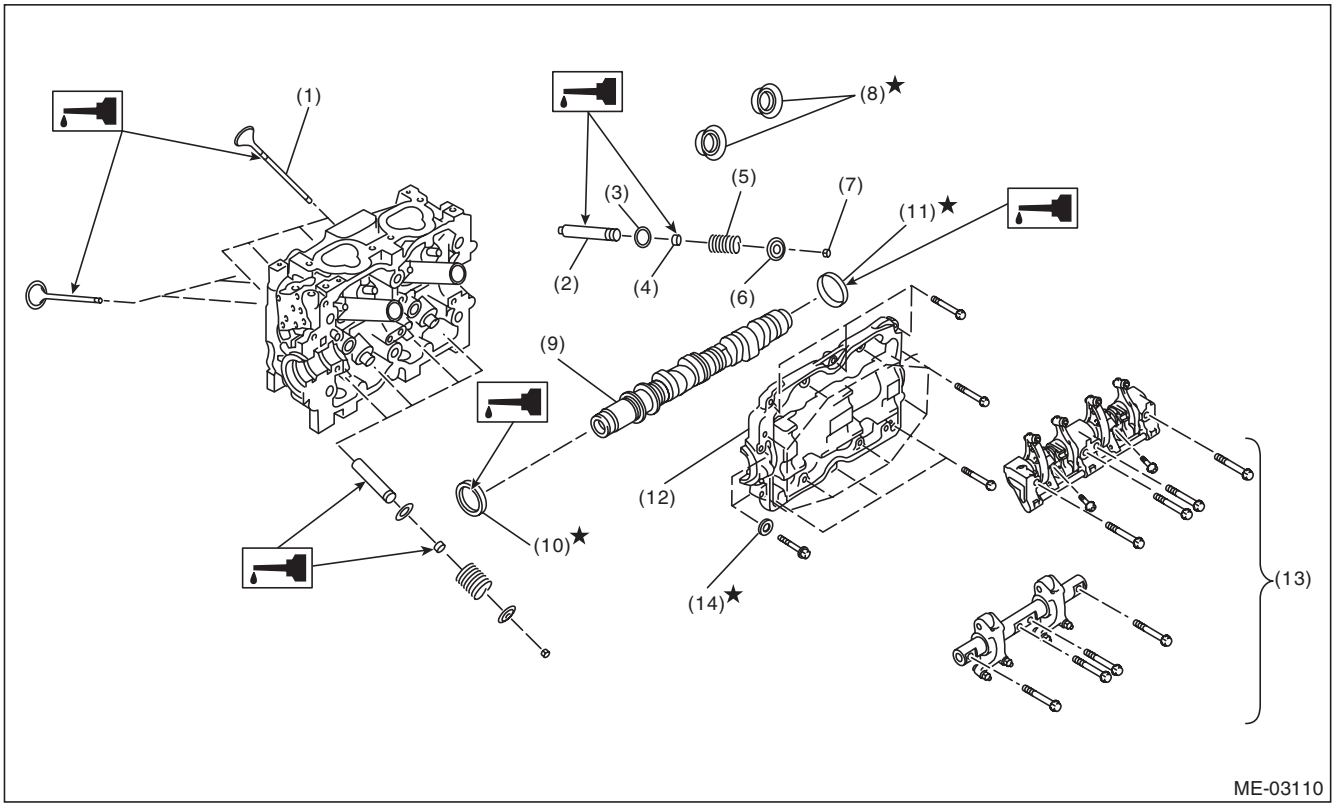

(1)	Valve	(6)	Retainer	(11)	Plug
(2)	Valve guide	(7)	Retainer key	(12)	Camshaft cap
(3)	Valve spring seat	(8)	Spark plug gasket	(13)	Valve rocker ASSY
(4)	Oil seal	(9)	Camshaft	(14)	Seal washer
(5)	Valve spring	(10)	Oil seal		

1) Install the valve spring and valve.
   (1) Coat the stem of each valve with engine oil and insert the valve into the valve guide.

NOTE:
When inserting the valve into valve guide, use special care not to damage the oil seal lip.

   (2) Set the cylinder head on ST.

ST 498267800 CYLINDER HEAD TABLE

   (3) Install the valve spring and retainer.

NOTE:
Be sure to install the valve spring with its close-coiled end facing the seat on cylinder head.

   (4) Set the ST on valve spring.

ST 499718000 VALVE SPRING REMOVER

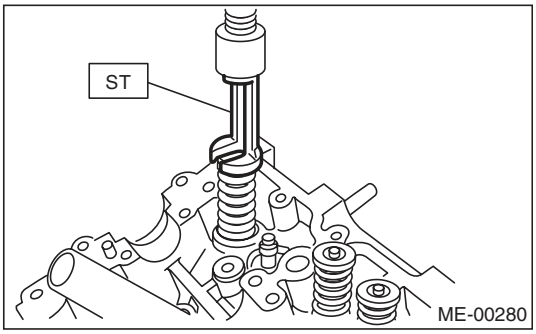

   (5) Compress the valve spring and fit the valve spring retainer key.

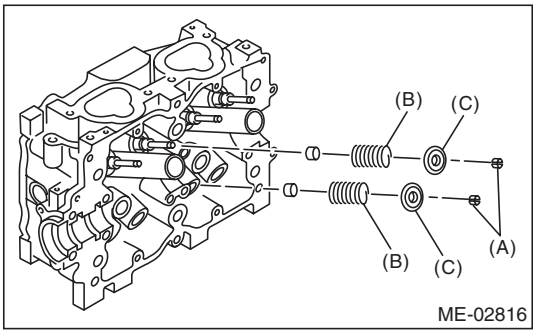

(A) Retainer key
(B) Valve spring
(C) Retainer

   (6) After installing, tap the valve spring retainers lightly with a plastic hammer for better seating.

E: INSPECTION

1. CYLINDER HEAD

1) Check for cracks or damage. Use liquid penetrant tester on the important sections to check for fissures. Check that there are no marks of gas leaking or water leaking on gasket installing surface.
2) Place the cylinder head on the ST.

ST 498267800 CYLINDER HEAD TABLE

3) Measure the warping of the cylinder head surface that mates with cylinder block using a straight edge (A) and thickness gauge (B).
If the warping exceeds the limit, correct the surface by grinding it with a surface grinder.

Warping limit:
0.035 mm (0.0014 in)

Grinding limit:
0.1 mm (0.004 in)

Standard height of cylinder head:
97.5 mm (3.84 in)

NOTE:
Uneven torque for the cylinder head bolts can cause warping. When reassembling, pay special attention to the torque so as to tighten evenly.

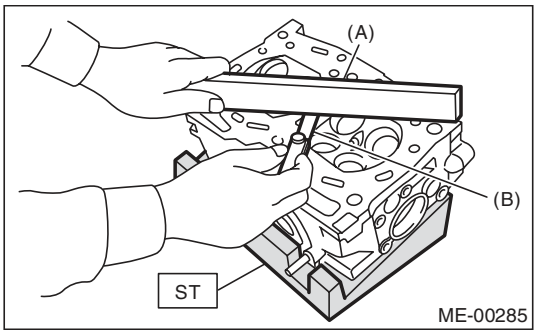

2. VALVE SEAT

Inspect the intake and exhaust valve seats, and correct the contact surfaces with a valve seat cutter if they are defective or when valve guides are replaced.

Valve seat width W:

Standard:
Intake (A)
0.8 — 1.4 mm (0.03 — 0.055 in)
Exhaust (B)
1.2 — 1.8 mm (0.047 — 0.071 in)

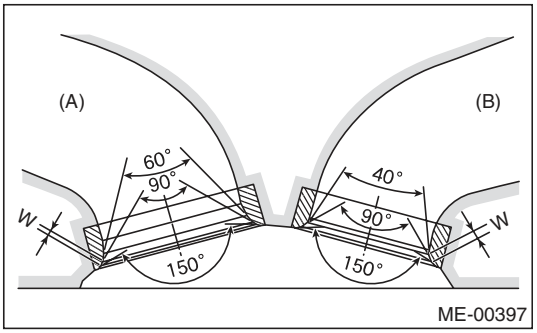

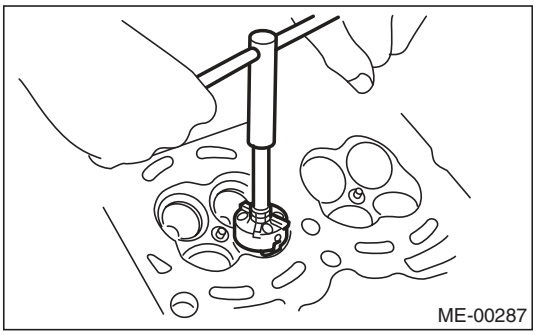

3. VALVE GUIDE

1) Check the clearance between valve guide and valve stem. The clearance can be checked by measuring respectively the outer diameter of valve stem with a micrometer and the inner diameter of valve guide with a caliper gauge.

Clearance between the valve guide and valve stem:

Standard:
Intake
0.035 — 0.062 mm (0.0014 — 0.0024 in)
Exhaust
0.040 — 0.067 mm (0.0016 — 0.0026 in)

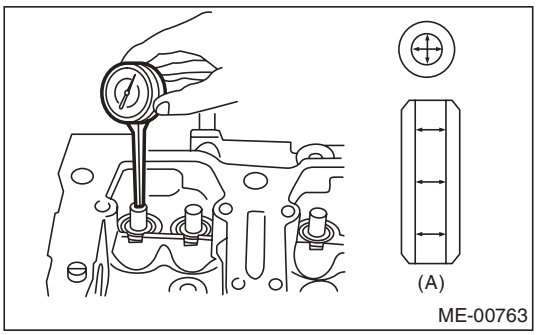

(A) Valve guide

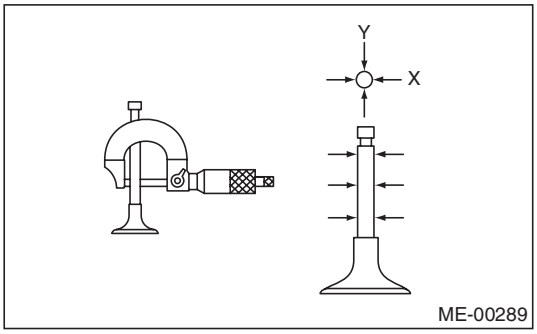

2) If the clearance between the valve guide and valve stem exceeds the standard, replace the valve guide or valve itself, whichever shows greater amount of wear or damage. See the following procedure for valve guide replacement.

Valve guide inner diameter:
6.000 — 6.012 mm (0.2362 — 0.2367 in)

Valve stem outer diameters:
Intake
5.950 — 5.965 mm (0.2343 — 0.2348 in)
Exhaust
5.945 — 5.960 mm (0.2341 — 0.2346 in)

(1) Place the cylinder head on ST1 with the combustion chamber upward so that valve guides fit the holes in ST1.

(2) Insert the ST2 into valve guide and press it down to remove the valve guide.

ST1 498267800 CYLINDER HEAD TABLE
ST2 499767200 VALVE GUIDE REMOVER

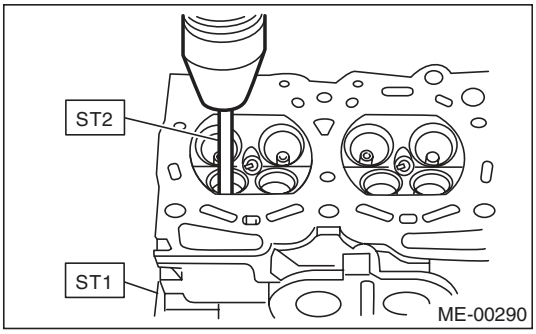

(3) Turn the cylinder head upside down and place the ST as shown in the figure.

Intake side
ST 499767700 VALVE GUIDE ADJUSTER
Exhaust side
ST 499767800 VALVE GUIDE ADJUSTER

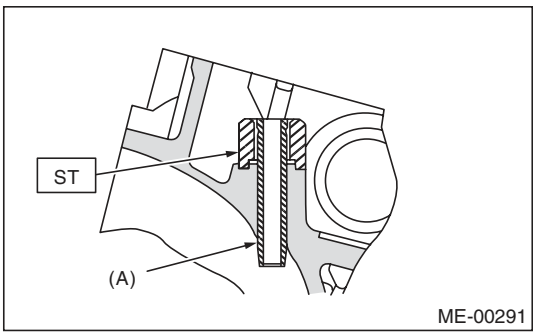

(A) Valve guide

(4) Before installing a new valve guide, make sure that neither scratches nor damages exist on the inner surface of valve guide holes in cylinder head.

(5) Put a new valve guide, coated with sufficient oil, in cylinder, and insert the ST1 into valve guide. Press in until the valve guide upper end is flush with the upper surface of ST2.

ST1 499767200 VALVE GUIDE REMOVER
Intake side
ST2 499767700 VALVE GUIDE ADJUSTER
Exhaust side
ST2 499767800 VALVE GUIDE ADJUSTER

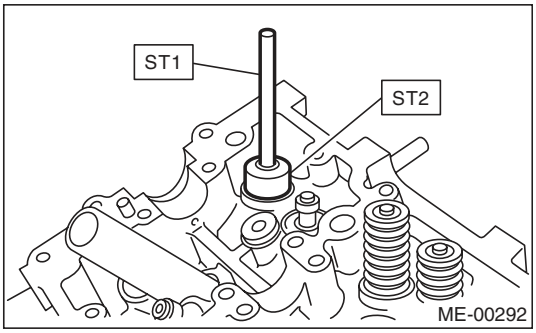

(6) Check the valve guide protrusion.

Valve guide protrusion L:
Intake
20.0 — 21.0 mm (0.787 — 0.827 in)
Exhaust
16.5 — 17.5 mm (0.650 — 0.689 in)

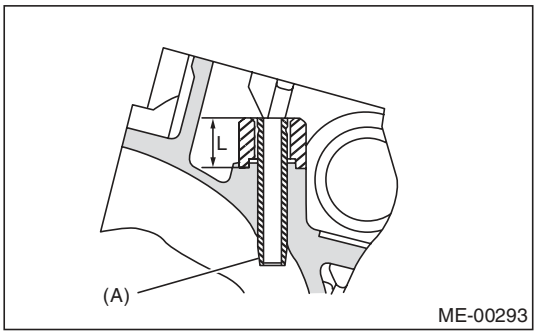

(A) Valve guide

(7) Ream the inside of valve guide using ST. Put the ST in valve guide, and rotate the ST slowly clockwise while pushing it lightly. Bring the ST back while rotating it clockwise.

NOTE:
- Apply engine oil to the ST when reaming.
- If the inner surface of valve guide is damaged, the edge of ST should be slightly ground with oil stone.
- If the inner surface of valve guide becomes lustrous and the ST does not chip, use a new ST or remedy the ST.

ST 499767400 VALVE GUIDE REAMER

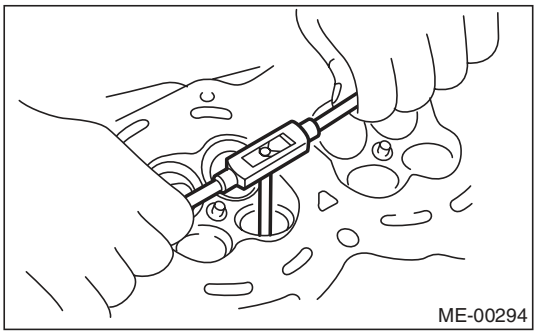

(8) After reaming, clean the valve guide to remove chips.

(9) Recheck the contact condition between valve and valve seat after replacing the valve guide.

4. INTAKE AND EXHAUST VALVE

1) Inspect the flange and stem of valve, and replace the valve with a new part if damaged, worn, deformed, or if “H” exceeds the specified limit.

Head edge thickness H:

Intake (A)
Standard:
0.8 — 1.2 mm (0.03 — 0.047 in)

Exhaust (B)
Standard:
1.0 — 1.4 mm (0.039 — 0.055 in)

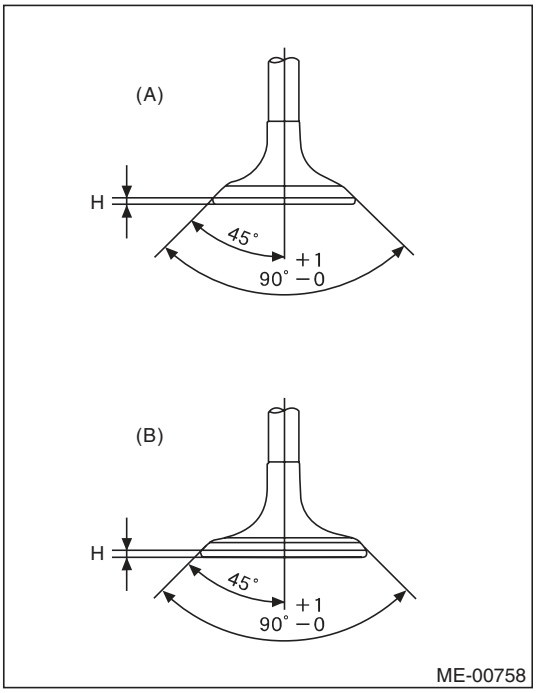

2) Put a small amount of grinding compound on the seat surface, and lap the valve and seat surface. Replace with a new valve oil seal after lapping.

NOTE:
It is possible to differentiate between the intake valve and the exhaust valve by their overall length.

Valve overall length:
Intake
120.6 mm (4.75 in)
Exhaust
121.7 mm (4.79 in)

5. VALVE SPRING

1) Check the valve springs for damage, free length, and tension. Replace the valve spring if it is not within the standard value presented in the table.
2) To measure the squareness of the valve spring, stand the valve spring on a surface plate and measure its deflection at the top of the spring using a try square.

Free length mm (in)		55.2 (2.173)
Tension/spring height N (kgf, lbf)/mm (in)	Set	235.3 — 270.7 (24 — 27.6, 52.9 — 60.8)/45.0 (1.772)
	Lift	578.9 — 639.9 (59.1 — 65.3, 130.3 — 143.9)/34.7 (1.366)
Squareness		2.5°, 2.4 mm (0.094 in) or less

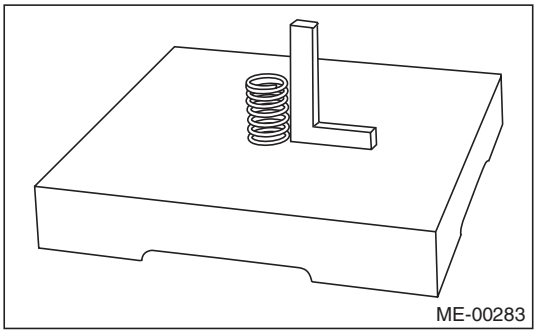

6. INTAKE AND EXHAUST VALVE OIL SEAL

1) For the following, replace the oil seal with a new part.
See the procedure 2) and subsequent for replacement procedures.
- When the lip is damaged.
- When the spring is out of the specified position.
- When readjusting the surfaces of valve and valve seat.
- When replacing the valve guide.

2) Place the cylinder head on the ST1, and press-fit the oil seal using the ST2.

ST1	498267800	CYLINDER HEAD TABLE
ST2	498857100	VALVE OIL SEAL GUIDE

NOTE:
- Apply engine oil to oil seal before press-fitting.
- When press-fitting the oil seal, do not use a hammer, etc. or strike in.
- The intake valve oil seals and exhaust valve oil seals are distinguished by their colors.

Color of rubber part:
Intake [Gray]
Exhaust [Green]

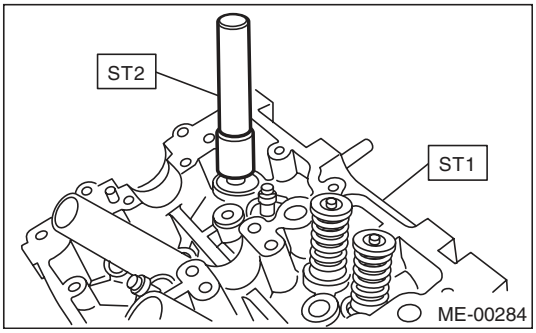

21.Cylinder Block

A: REMOVAL

NOTE:
Before conducting this procedure, drain the engine oil completely.

1) Remove the V-belts. <Ref. to ME(H4SO)-38, REMOVAL, V-belt.>
2) Remove the intake manifold. <Ref. to FU(H4SO)-13, REMOVAL, Intake Manifold.>
3) Remove the crank pulley. <Ref. to ME(H4SO)-41, REMOVAL, Crank Pulley.>
4) Remove the timing belt cover. <Ref. to ME(H4SO)-43, REMOVAL, Timing Belt Cover.>
5) Remove the timing belt. <Ref. to ME(H4SO)-44, REMOVAL, Timing Belt.>
6) Remove the crank sprocket. <Ref. to ME(H4SO)-50, REMOVAL, Crank Sprocket.>
7) Remove the generator and A/C compressor with their brackets.
8) Remove the cylinder head. <Ref. to ME(H4SO)-58, REMOVAL, Cylinder Head.>
9) Remove the clutch disc and cover. (MT model) <Ref. to CL-13, REMOVAL, Clutch Disc and Cover.>
10) Remove the flywheel. (MT model) <Ref. to CL-16, REMOVAL, Flywheel.>
11) Use the ST to lock the crankshaft, and remove the drive plate. (AT model)

ST 498497100 CRANKSHAFT STOPPER

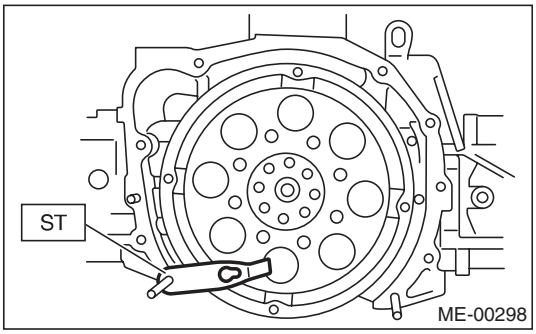

12) Remove the oil separator cover.
13) Remove the water by-pass pipe for heater.
14) Remove the water pump. <Ref. to CO(H4SO)-15, REMOVAL, Water Pump.>
15) Remove the bolts which install oil pump onto cylinder block.

NOTE:
When disassembling and checking the oil pump, loosen the relief valve plug before removing the oil pump.

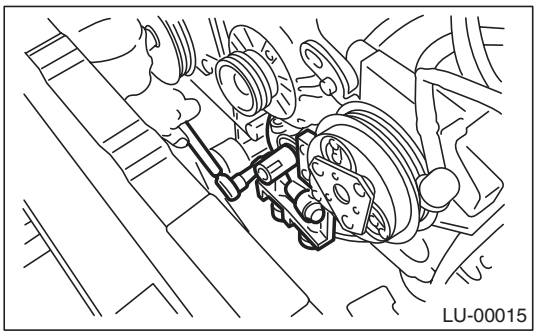

16) Remove the oil pump from cylinder block using a flat tip screwdriver.

CAUTION:
Be careful not to scratch the mating surface of cylinder block and oil pump.

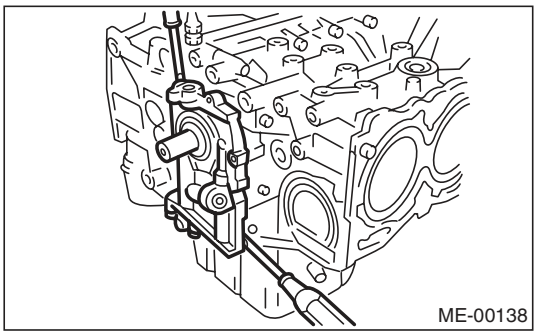

17) Remove the front oil seal from the oil pump.
18) Remove the oil pan.
    (1) Set the part so that the cylinder block LH is on the upper side.
    (2) Remove the bolts which secure oil pan to cylinder block.
    (3) Insert an oil pan cutter blade between cylinder block-to-oil pan clearance and remove the oil pan.

CAUTION:
Do not use a screwdriver or similar tools in place of oil pan cutter.

19) Remove the oil strainer.
20) Remove the baffle plate.
21) Remove the oil filter. <Ref. to LU(H4SO)-23, REMOVAL, Engine Oil Filter.>

22) Remove the water pipe assembly.

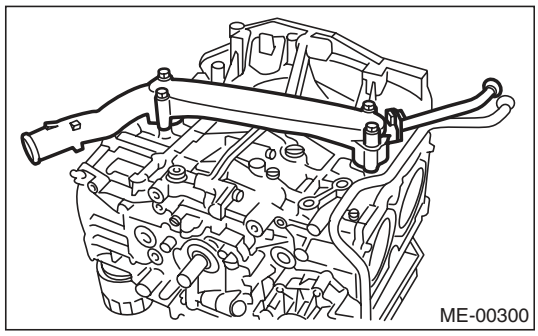

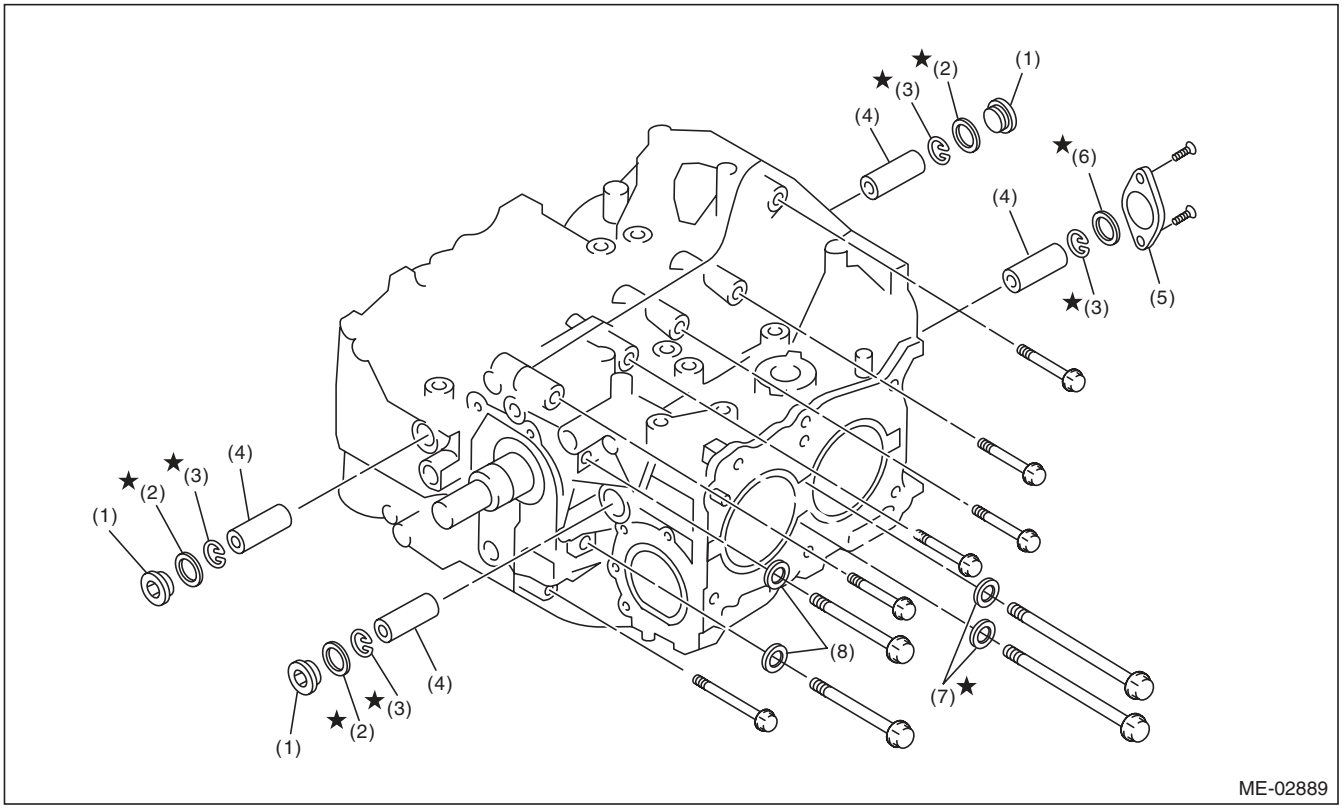

(1)	Service hole plug	(4)	Piston pin	(7)	Seal washer
(2)	Gasket	(5)	Service hole cover	(8)	Washer
(3)	Snap ring	(6)	O-ring		

23) Remove the service hole plugs using a hexagon wrench [14 mm].

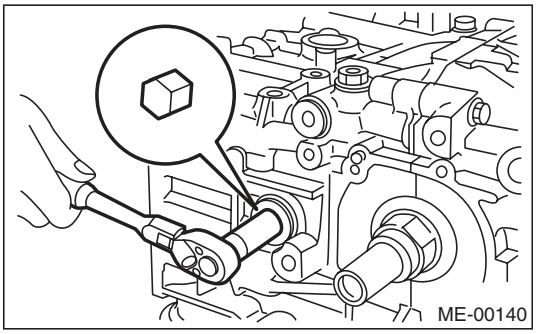

24) Remove the service hole cover.
25) Rotate the crankshaft to bring #1 and #2 pistons to bottom dead center position, then remove the piston snap ring through service hole of #1 and #2 cylinders.

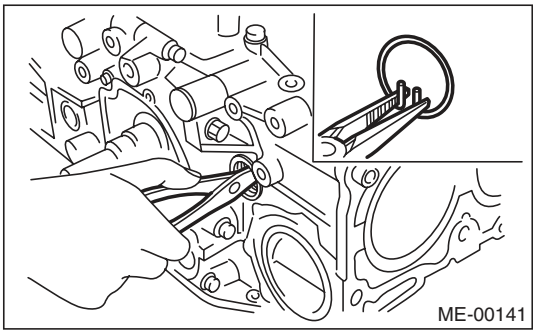

26) Draw out the piston pin from #1 and #2 pistons using ST.
ST 499097700 PISTON PIN REMOVER

NOTE:
Be careful not to confuse the original combination of piston, piston pin and cylinder.

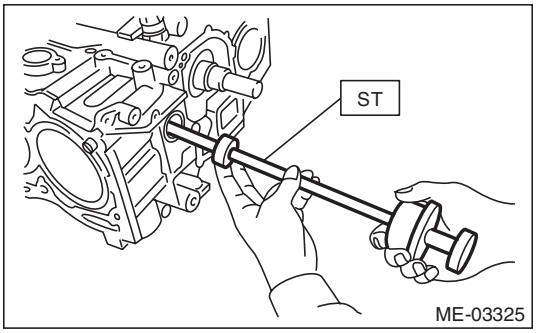

27) Similarly draw out the piston pins from #3 and #4 pistons.
28) Remove the cylinder block connecting bolt on the RH side.
29) Loosen the cylinder block connecting bolt on the LH side by 2-3 turns.
30) Set the part so that the cylinder block LH is on the upper side, and remove the cylinder block connecting bolt.

31) Separate the cylinder block LH and RH.

NOTE:
When separating the cylinder block, do not allow the connecting rod to fall or damage the cylinder block.

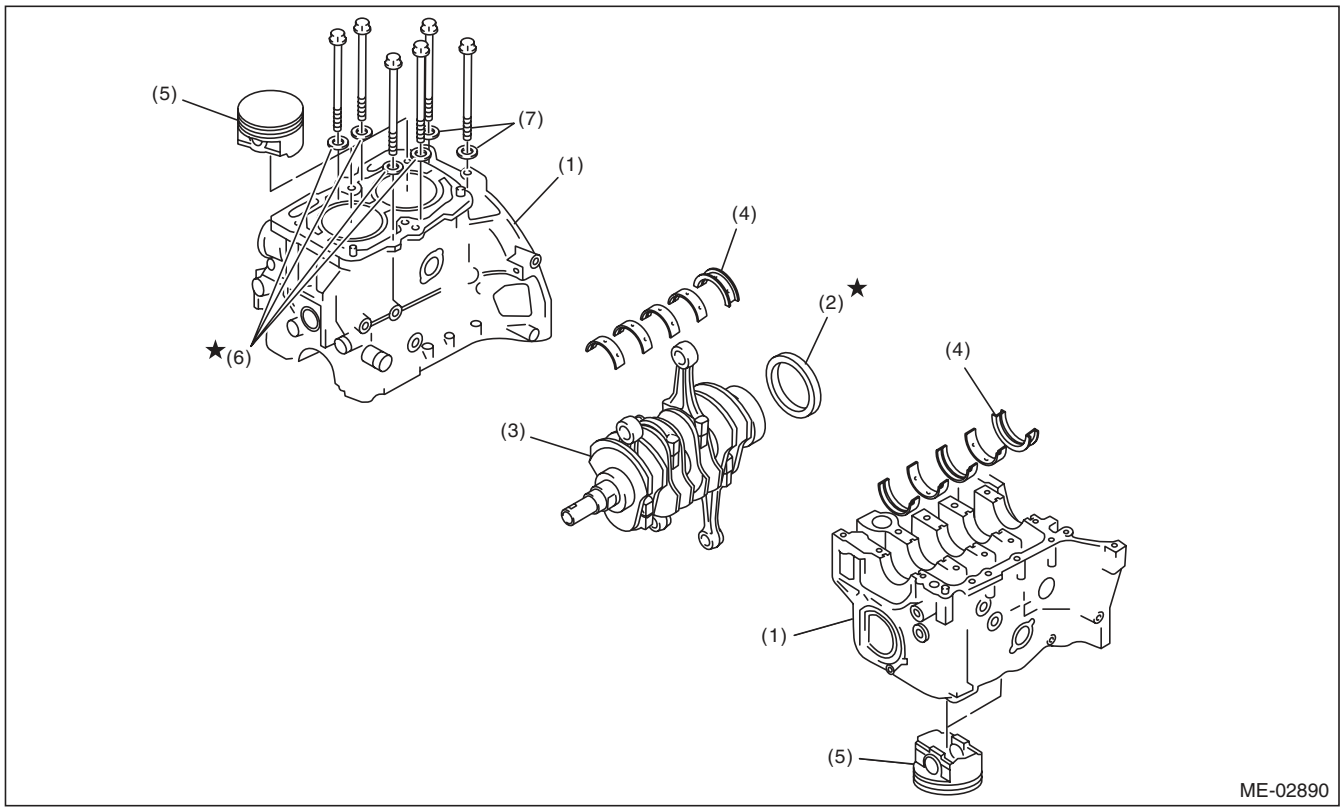

(1)	Cylinder block	(4)	Crankshaft bearing	(6)	Seal washer
(2)	Rear oil seal	(5)	Piston	(7)	Washer
(3)	Crankshaft				

32) Remove the rear oil seal.
33) Remove the crankshaft along with the connecting rods.
34) Remove the crankshaft bearings from cylinder block using a hammer handle.

NOTE:
- Press the crankshaft bearing at the end opposite to locking lip to remove.
- Be careful not to confuse the crankshaft bearing combination.

35) Remove each piston from the cylinder block using a wooden bar or hammer handle.

NOTE:
Be careful not to confuse the original combination of piston and cylinder.

B: INSTALLATION

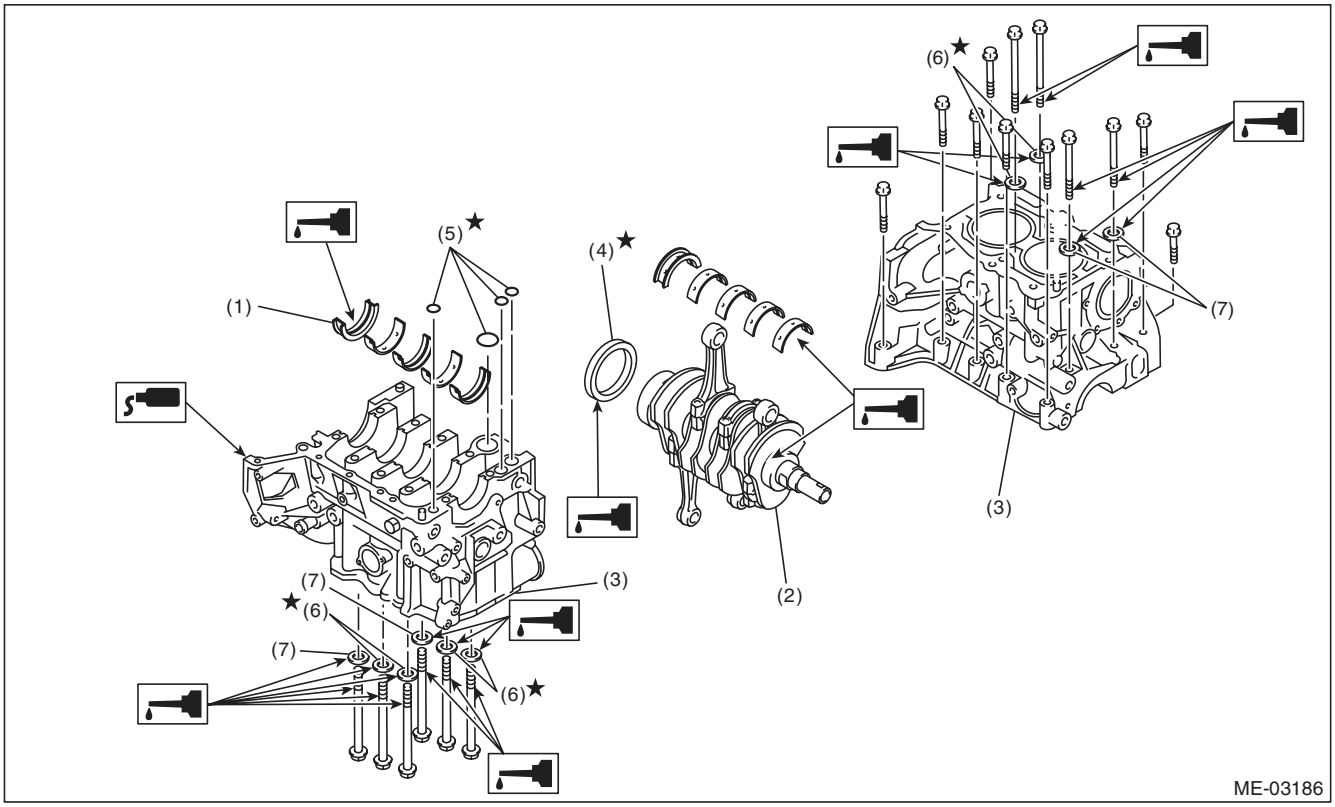

(1)	Crankshaft bearing	(4)	Rear oil seal	(6)	Seal washer
(2)	Crankshaft	(5)	O-ring	(7)	Washer
(3)	Cylinder block				

1) Remove oil on the mating surface of cylinder block before installation. Apply a coat of engine oil to the bearing and crankshaft journal.
2) Position the crankshaft and O-ring on the cylinder block RH.

NOTE:
Use new O-rings.

3) Apply liquid gasket to the mating surfaces of cylinder block RH, and position the cylinder block LH.

NOTE:
- Install within 5 minutes after applying liquid gasket.
- Do not allow liquid gasket to jut into O-ring grooves, oil passages, bearing grooves, etc.

Liquid gasket:
THREE BOND 1217G (Part No. K0877Y0100) or equivalent

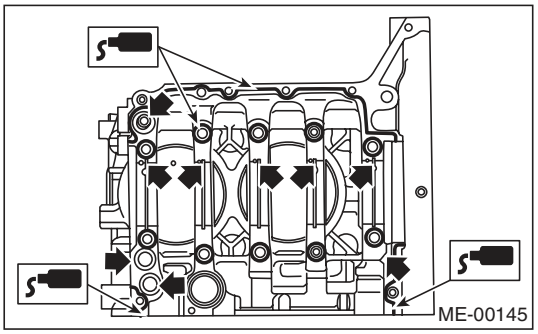

4) Apply a coat of engine oil to the washer and bolt thread.

NOTE:
Use a new seal washer.

5) Tighten the 10 mm cylinder block connecting bolts on the LH side (A — D) in alphabetical order.

Tightening torque:
10 N·m (1.0 kgf-m, 7.4 ft-lb)

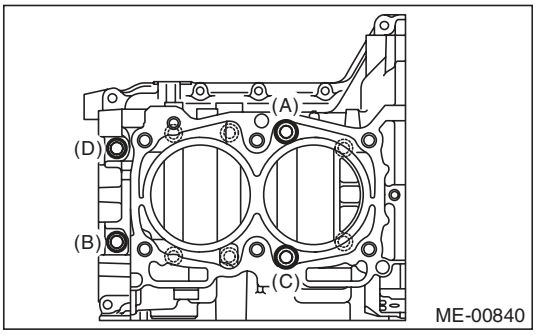

6) Tighten the 10 mm cylinder block connecting bolts on the RH side (E — J) in alphabetical order.

Tightening torque:
10 N·m (1.0 kgf-m, 7.4 ft-lb)

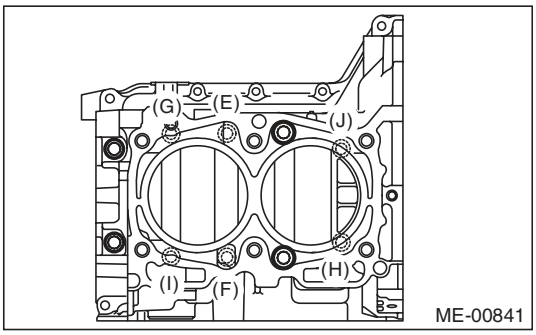

7) Tighten the LH side cylinder block connecting bolts (A — D) further in alphabetical order.

Tightening torque:
18 N·m (1.8 kgf-m, 13.3 ft-lb)

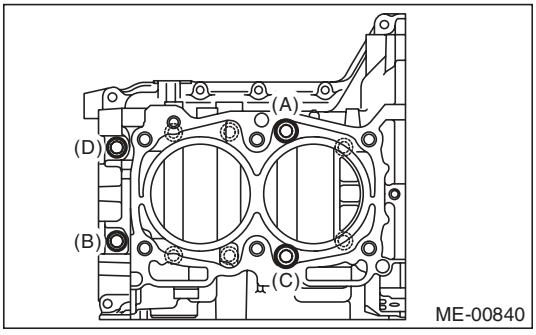

8) Tighten the RH side cylinder block connecting bolts (E — J) further in alphabetical order.

Tightening torque:
18 N·m (1.8 kgf-m, 13.3 ft-lb)

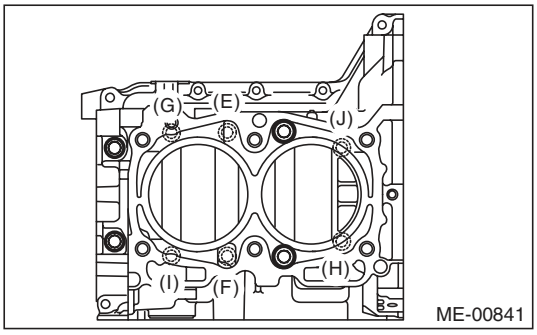

9) Tighten the LH side cylinder block connecting bolts (A — D) further in alphabetical order.

- (A), (C): Angle tightening

Tightening angle:
90°

- (B), (D): Torque tightening

Tightening torque:
40 N·m (4.1 kgf-m, 29.5 ft-lb)

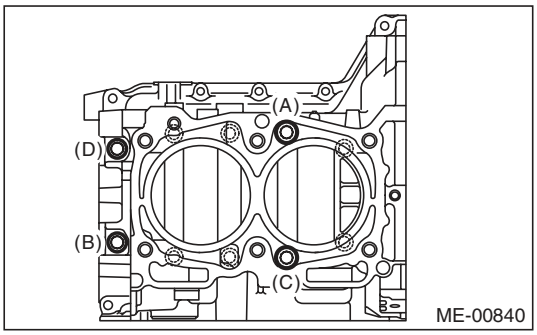

10) Tighten the RH side cylinder block connecting bolts (E — J) further in alphabetical order.

Tightening angle:
90°

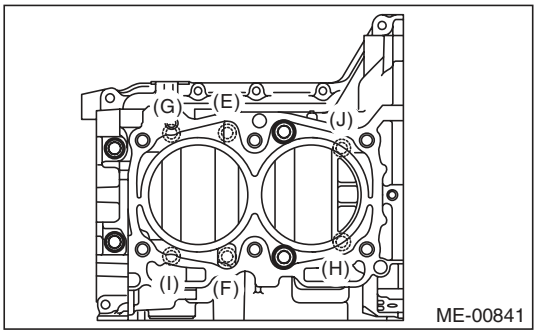

11) Tighten the 8 mm and 6 mm cylinder block connecting bolts on LH side (A — H) in alphabetical sequence.

Tightening torque:
(A) — (G): 25 N·m (2.5 kgf-m, 18.4 ft-lb)
(H): 6.4 N·m (0.7 kgf-m, 4.7 ft-lb)

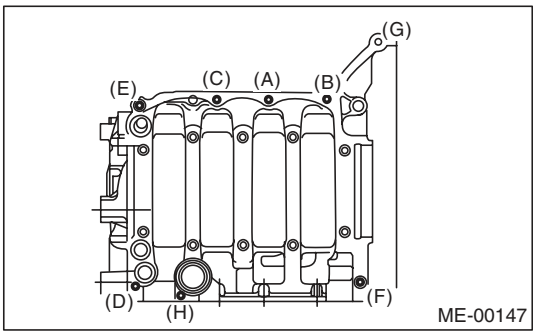

12) Apply a coat of engine oil to the oil seal periphery, then install the rear oil seal using ST1 and ST2.

NOTE:
Use new rear oil seal.

ST1	499597100	CRANKSHAFT OIL SEAL GUIDE
ST2	499587200	CRANKSHAFT OIL SEAL INSTALLER

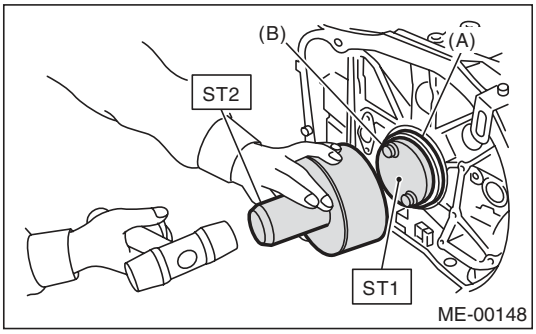

(A) Rear oil seal
(B) Flywheel attaching bolt

13) Position the top ring gap at (A) or (B) in the figure.
14) Position the second ring gap at 180° on the reverse side the top ring gap.

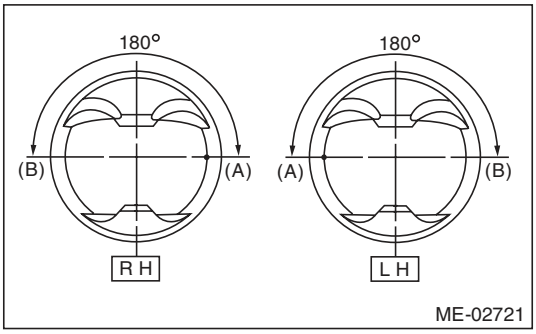

15) Position the upper rail gap at (C) in the figure.

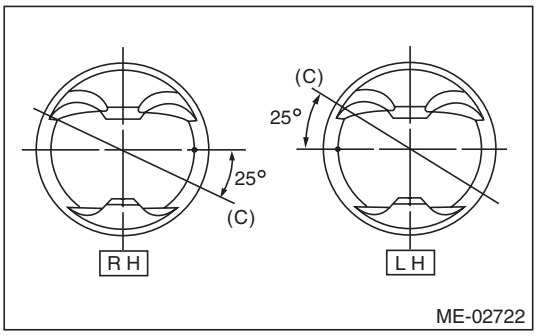

16) Align the upper rail spin stopper (E) to the side hole (D) on the piston.

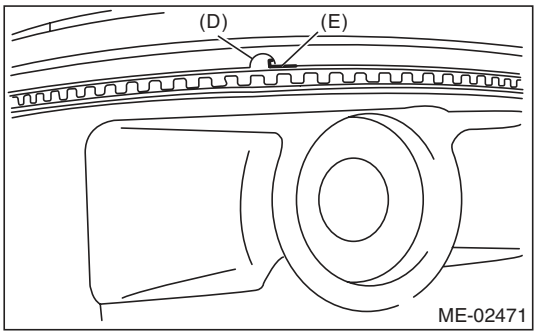

17) Position the expander gap at (F) on the 180° opposite direction of (C) in the figure.

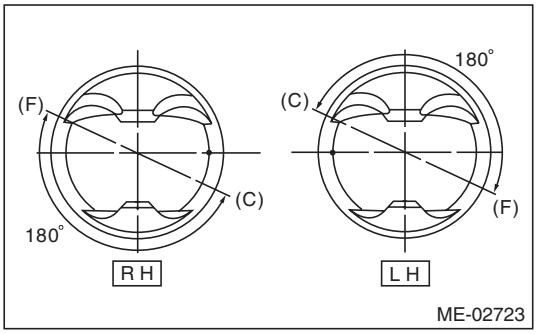

18) Set the lower rail gap at position (G), located 120° clockwise from (C).

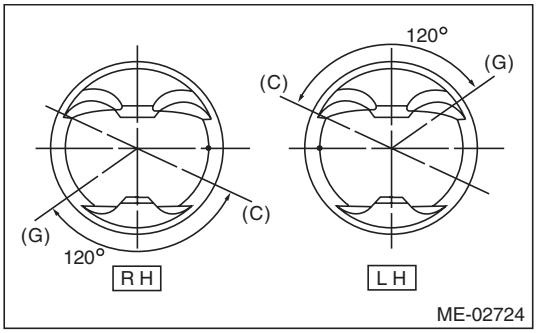

NOTE:
- Make sure ring gaps do not face the same direction.
- Make sure ring gaps are not within the piston skirt area.

19) Install the snap ring.
Before positioning the piston on the cylinder block, attach the snap ring in the service hole of the cylinder block, and the piston hole on the opposite side.

NOTE:
Use new snap rings.

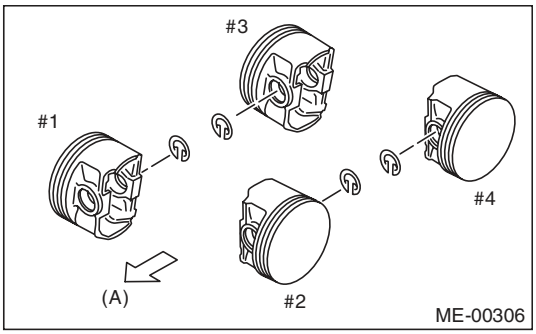

(A) Front side

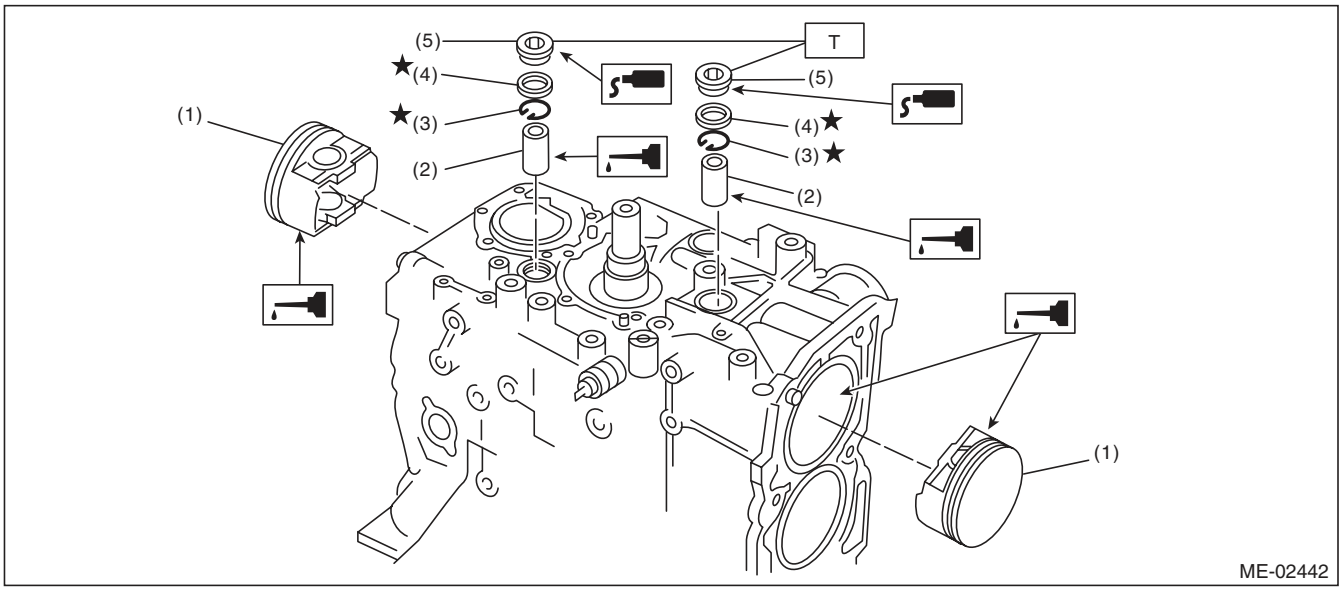

(1) Piston
(2) Piston pin
(3) Snap ring
(4) Gasket
(5) Service hole plug

Tightening torque:N·m (kgf-m, ft-lb)
T: 70 (7.1, 51.6)

20) Install the piston.
(1) Set the parts so that the #1 and #2 cylinders are on the upper side.
(2) Using the ST1, turn the crankshaft so that #1 and #2 connecting rods are set at bottom dead center.

ST1 499987500 CRANKSHAFT SOCKET

(3) Apply a coat of engine oil to the pistons and cylinders and insert pistons in their cylinders using ST2.

ST2 498747300 PISTON GUIDE

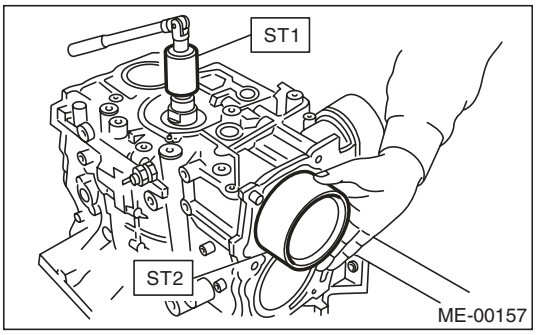

NOTE:
Face the piston front mark towards the front of the engine.

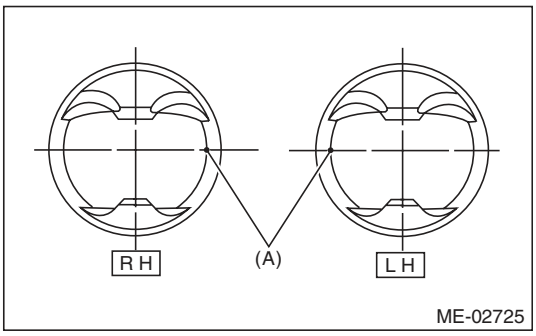

(A) Front mark

21) Install the piston pin.
(1) Apply a coat of engine oil to ST3.
(2) Insert ST3 into the service hole to align piston pin hole with connecting rod small end.

ST3 499017100 PISTON PIN GUIDE

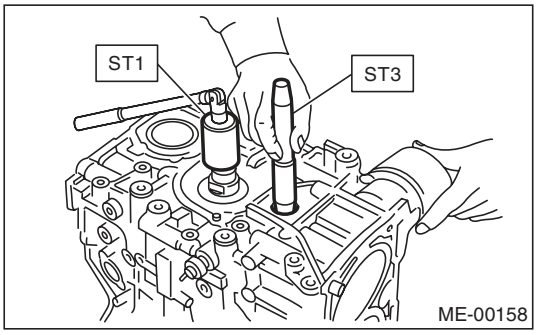

(3) Apply a coat of engine oil to piston pin, and insert the piston pin into piston and connecting rod through service hole.
(4) Install the snap ring.

NOTE:
Use new snap rings.

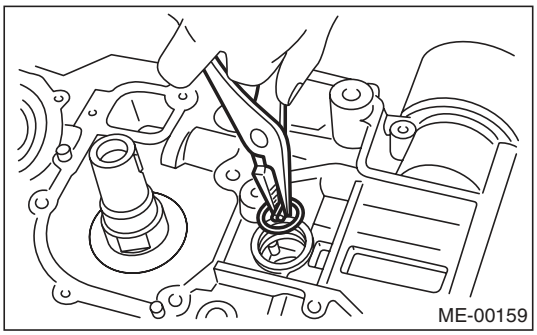

(5) Apply liquid gasket to the threaded portion of the service hole plug.

Liquid gasket:
THREE BOND 1105 (Part No. 004403010) or equivalent

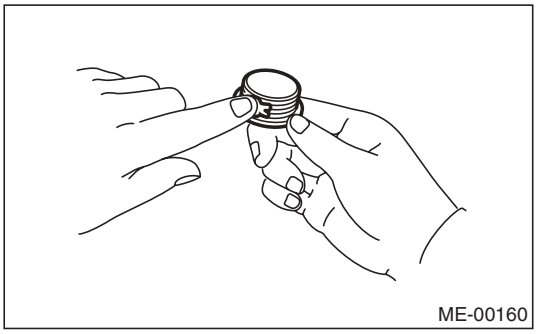

(6) Install the service hole plug and gasket.

NOTE:
Use a new gasket.

Tightening torque:
70 N·m (7.1 kgf-m, 51.6 ft-lb)

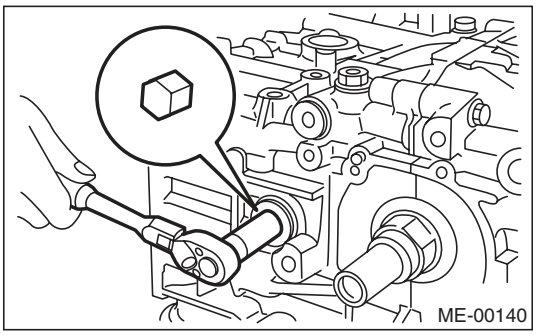

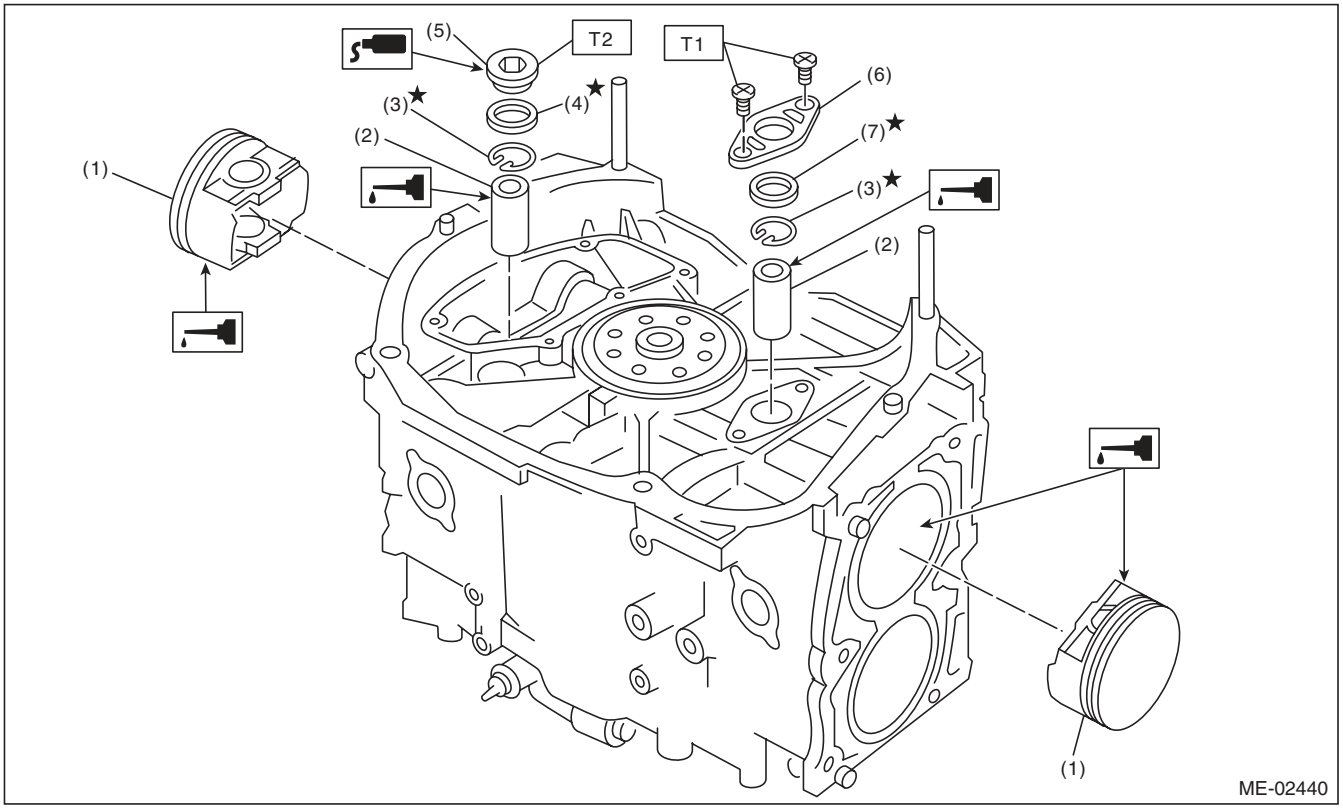

(1)	Piston	(5)	Service hole plug	***Tightening torque:N·m (kgf-m, ft-lb)***
(2)	Piston pin	(6)	Service hole cover	***T1: 6.4 (0.7, 4.7)***
(3)	Snap ring	(7)	O-ring	***T2: 70 (7.1, 51.6)***
(4)	Gasket			

(7) Set the parts so that the #3 and #4 cylinders are on the upper side. Following the same procedures as used for #1 and #2 cylinders, install the pistons and piston pins.
(8) Install the service hole cover.

NOTE:
Use new O-rings.

Tightening torque:
6.4 N·m (0.7 kgf-m, 4.7 ft-lb)

22) Install the water pipe assembly.

NOTE:
Use new O-rings.

Tightening torque:
6.4 N·m (0.7 kgf-m, 4.7 ft-lb)

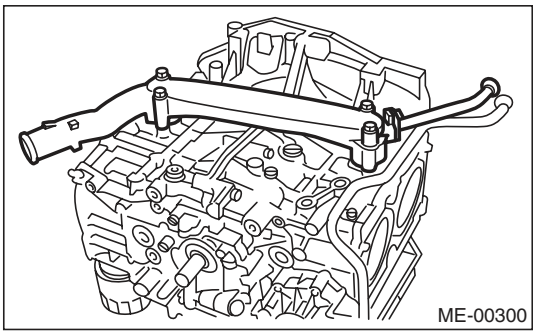

23) Install the baffle plate.

Tightening torque:
6.4 N·m (0.7 kgf-m, 4.7 ft-lb)

24) Install the oil strainer.

NOTE:
Use new O-rings.

Tightening torque:
10 N·m (1.0 kgf-m, 7.4 ft-lb)

25) Tighten the oil strainer stay together with the baffle plate.

Tightening torque:
6.4 N·m (0.7 kgf-m, 4.7 ft-lb)

26) Apply liquid gasket to the mating surfaces of oil pan, and install the oil pan.

NOTE:
Install within 5 minutes after applying liquid gasket.

Liquid gasket:
THREE BOND 1217G (Part No. K0877Y0100) or equivalent

Tightening torque:
5 N·m (0.5 kgf-m, 3.7 ft-lb)

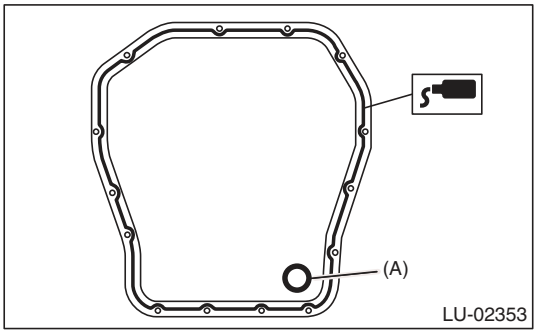

(A) Gasket

27) Apply liquid gasket to the mating surfaces of the oil separator cover and the threaded portion of bolt (A) shown in the figure (when reusing the bolt), and then install the oil separator cover.

NOTE:
- Install within 5 minutes after applying liquid gasket.
- Use a new separator cover.

Liquid gasket:
- ***Mating surface***
  THREE BOND 1217G (Part No. K0877Y0100) or equivalent
- ***(A) bolt thread (when reusing bolts)***
  THREE BOND 1324 (Part No. 004403042) or equivalent

Tightening torque:
6.4 N·m (0.7 kgf-m, 4.7 ft-lb)

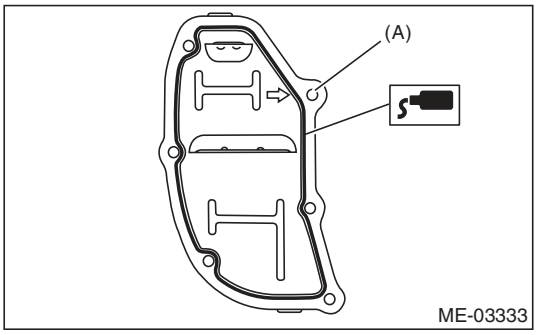

28) Install the flywheel. (MT model) <Ref. to CL-16, INSTALLATION, Flywheel.>

29) Install the clutch disc and cover. (MT model) <Ref. to CL-13, INSTALLATION, Clutch Disc and Cover.>
30) Use the ST to lock the crankshaft, and install the drive plate. (AT model)
ST 498497100 CRANKSHAFT STOPPER

Tightening torque:
72 N·m (7.3 kgf-m, 53.1 ft-lb)

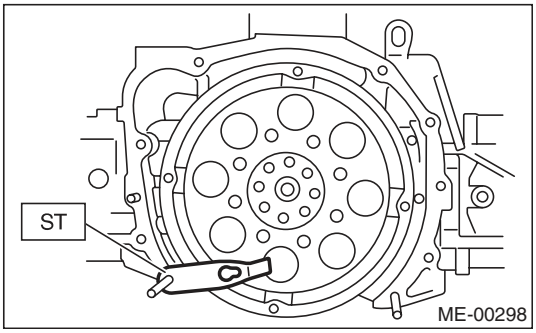

31) Install the oil pump.
(1) Install the front oil seal using the ST.
ST 499587100 OIL SEAL INSTALLER

NOTE:
Use a new front oil seal.

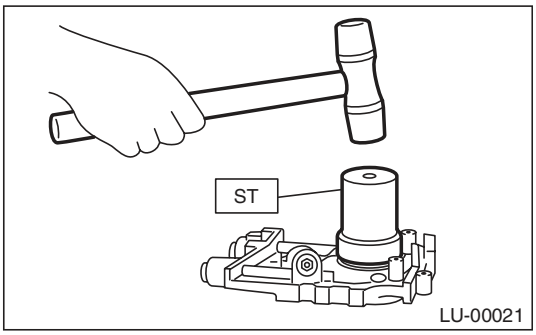

(2) Apply liquid gasket to the matching surface of oil pump.

NOTE:
Install within 5 minutes after applying liquid gasket.

Liquid gasket:
THREE BOND 1217G (Part No. K0877Y0100) or equivalent

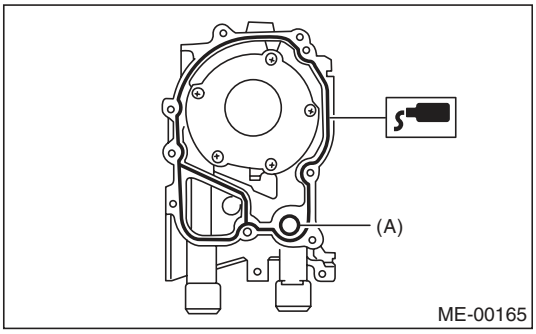

(A) O-ring

(3) Apply a coat of engine oil to the inside of oil seal.

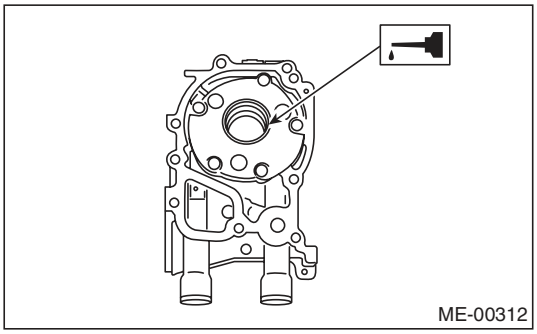

(4) Install the oil pump to cylinder block. Be careful not to damage the oil seal during installation.

NOTE:
- Make sure the oil seal lip is not folded.
- Align the flat surface of oil pump's inner rotor with crankshaft before installation.
- Use new O-rings and oil seals.
- Do not forget to assemble O-rings.

(5) Apply liquid gasket to the three bolts thread shown in figure. (when reusing bolts)

Liquid gasket:
THREE BOND 1324 (Part No. 004403042) or equivalent

Tightening torque:
T: 6.4 N·m (0.7 kgf-m, 4.7 ft-lb)

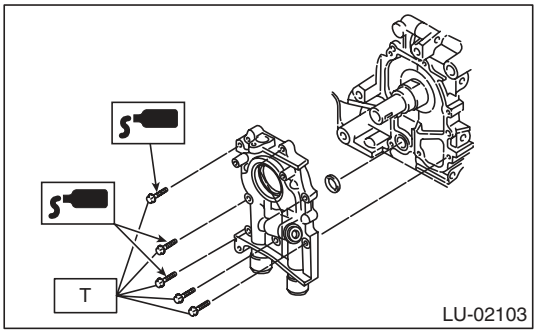

32) Install the water pump and gasket.

NOTE:
- When installing the water pump, tighten bolts in two stages in alphabetical order as shown in the figure.
- Use a new gasket.

Tightening torque:
First: 12 N·m (1.2 kgf-m, 8.9 ft-lb)
Second: 12 N·m (1.2 kgf-m, 8.9 ft-lb)

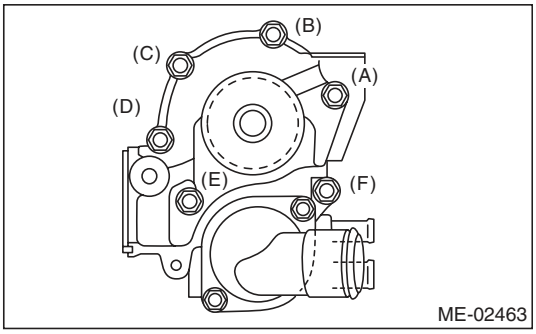

33) Install the water by-pass pipe for heater.

Tightening torque:
6.4 N·m (0.7 kgf-m, 4.7 ft-lb)

34) Install the oil filter. <Ref. to LU(H4SO)-23, INSTALLATION, Engine Oil Filter.>
35) Install the cylinder head. <Ref. to ME(H4SO)-59, INSTALLATION, Cylinder Head.>
36) Install the generator and A/C compressor with their brackets.

Tightening torque:
36 N·m (3.7 kgf-m, 26.6 ft-lb)

37) Install the crank sprocket. <Ref. to ME(H4SO)-50, INSTALLATION, Crank Sprocket.>
38) Install the timing belt. <Ref. to ME(H4SO)-45, INSTALLATION, Timing Belt.>
39) Adjust the valve clearance. <Ref. to ME(H4SO)-28, ADJUSTMENT, Valve Clearance.>
40) Install the rocker cover.
(1) Install the rocker cover gasket to the rocker cover.

NOTE:
Use a new rocker cover gasket.

(2) Temporarily tighten the bolts in alphabetical order shown in the figure, tighten them in two stages.

Tightening torque:
1st
6.4 N·m (0.7 kgf-m, 4.7 ft-lb)
2nd (only (a) and (b) are tightened)
6.4 N·m (0.7 kgf-m, 4.7 ft-lb)

RH side

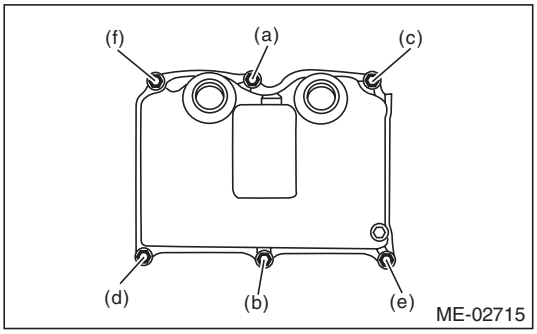

LH side

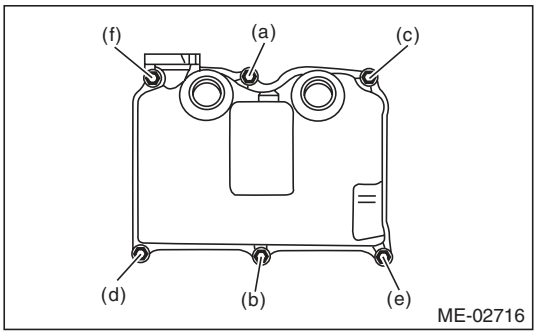

41) Install the timing belt cover. <Ref. to ME(H4SO)-43, INSTALLATION, Timing Belt Cover.>
42) Install the crank pulley. <Ref. to ME(H4SO)-41, INSTALLATION, Crank Pulley.>
43) Install the intake manifold. <Ref. to FU(H4SO)-15, INSTALLATION, Intake Manifold.>
44) Install the V-belts. <Ref. to ME(H4SO)-39, INSTALLATION, V-belt.>

C: DISASSEMBLY

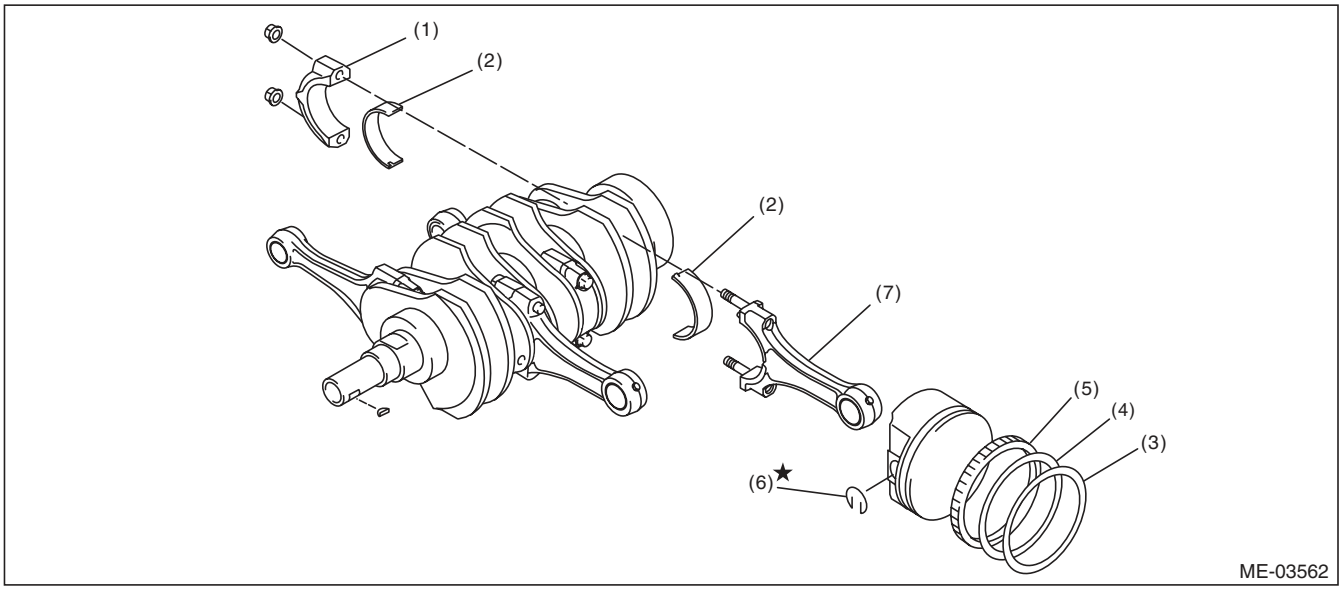

(1)	Connecting rod cap	(4)	Second ring	(6)	Snap ring
(2)	Connecting rod bearing	(5)	Oil ring	(7)	Connecting rod
(3)	Top ring				

1) Remove the connecting rod cap.
2) Remove the connecting rod bearing.

NOTE:
Keep the removed connecting rods, connecting rod caps and bearings in order so that they are kept in their original combinations/groups, and not mixed together.

3) Remove the piston rings using piston ring expander.
4) Remove the oil ring by hand.

NOTE:
Arrange the removed piston rings in proper order, to prevent confusion.

5) Remove the snap ring.

D: ASSEMBLY

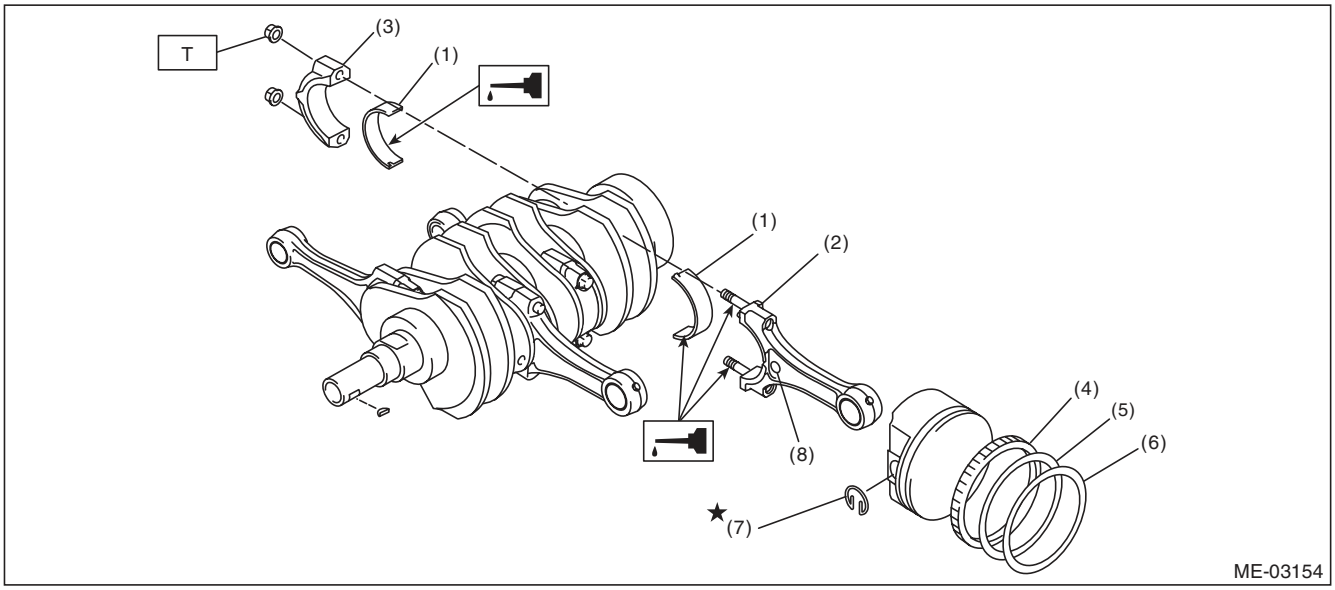

(1)	Connecting rod bearing	(5)	Second ring
(2)	Connecting rod	(6)	Top ring
(3)	Connecting rod cap	(7)	Snap ring
(4)	Oil ring	(8)	Side mark

Tightening torque:N·m (kgf-m, ft-lb)
T: 45 (4.6, 33.2)

1) Apply engine oil to the surface of the connecting rod bearings, and install the connecting rod bearings on connecting rods and connecting rod caps.
2) Position each connecting rod with the side with a side mark facing forward, and install it.
3) Attach the connecting rod cap, and tighten with connecting rod nut. Make sure the arrow on connecting rod cap faces the front during installation.

NOTE:
- Each connecting rod has its own mating cap. Make sure that they are assembled correctly by checking their matching number.
- When tightening the connecting rod nuts, apply oil on the threads.

Tightening torque:
45 N·m (4.6 kgf-m, 33.2 ft-lb)

4) Install the oil ring upper rail, expander and lower rail by hand.
5) Install the second ring and top ring using piston ring expander.

NOTE:
Assemble so that the piston ring mark “R” faces the top side of the piston.

E: INSPECTION

1. CYLINDER BLOCK

1) Check for cracks or damage. Use liquid penetrant tester on the important sections to check for fissures. Check that there are no marks of gas leaking or water leaking on gasket installing surface.
2) Check the oil passages for clogging.
3) Inspect the cylinder block surface that mates with cylinder head for warping by using a straight edge, and correct by grinding if necessary.

Warping limit:
0.025 mm (0.00098 in)

Grinding limit:
0.1 mm (0.004 in)

Standard height of cylinder block:
201.0 mm (7.91 in)

2. CYLINDER AND PISTON

1) The cylinder bore size is stamped on the front upper face of the cylinder block.

NOTE:
- Measurement should be performed at a temperature of 20°C (68°F).
- Standard sized pistons are classified into two grades, “A” and “B”. These grades should be used as guide lines in selecting a standard piston.

Standard diameter:
A: 99.505 — 99.515 mm (3.9175 — 3.9179 in)
B: 99.495 — 99.505 mm (3.9171 — 3.9175 in)

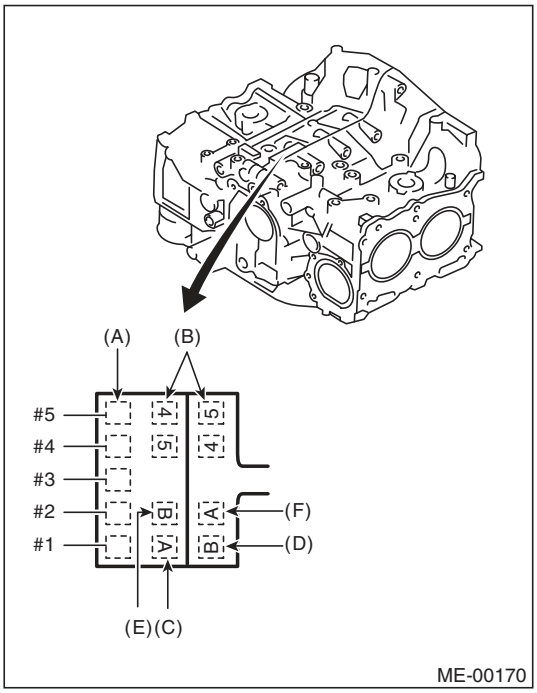

(A) Main journal size mark
(B) Cylinder block (RH) — (LH) combination mark
(C) #1 cylinder bore size mark
(D) #2 cylinder bore size mark
(E) #3 cylinder bore size mark
(F) #4 cylinder bore size mark

2) Measure inner diameter of each cylinder.
Measure the inner diameter of each cylinder in both the thrust and piston pin directions at the heights as shown in the figure, using a cylinder bore gauge.

NOTE:
Measurement should be performed at a temperature of 20°C (68°F).

Taper:
Standard:
0.015 mm (0.0006 in)

Out-of-roundness:
Standard:
0.010 mm (0.0004 in)

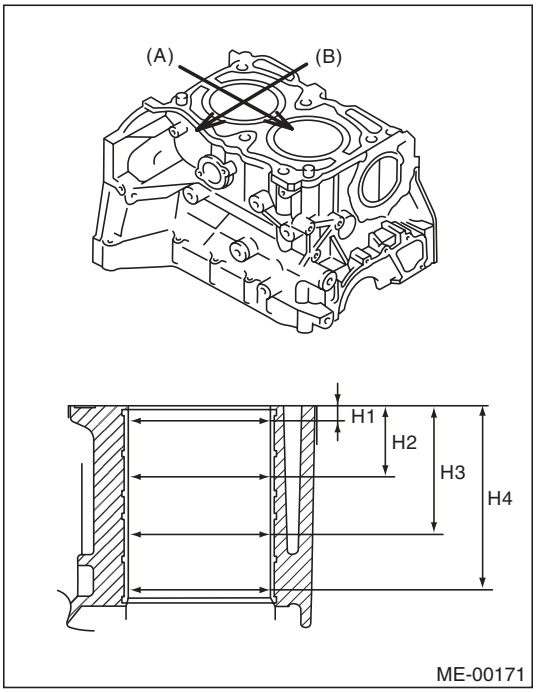

(A) Piston pin direction
(B) Thrust direction
H1 10 mm (0.39 in)
H2 45 mm (1.77 in)
H3 80 mm (3.15 in)
H4 115 mm (4.53 in)

3) When the piston is to be replaced due to general or cylinder wear, select a suitable sized piston by measuring the piston clearance.

4) Measure outer diameter of each piston.
Measure the outer diameter of each piston at the height as shown in the figure. (Thrust direction)

NOTE:
Measurement should be performed at a temperature of 20°C (68°F).

Piston grade point H:
38.2 mm (1.504 in)

Piston outer diameter:

Standard
A: 99.505 — 99.515 mm (3.9175 — 3.9179 in)
B: 99.495 — 99.505 mm (3.9171 — 3.9175 in)

0.25 mm (0.0098 in) oversize:
99.745 — 99.765 mm (3.9270 — 3.9277 in)

0.50 mm (0.0197 in) oversize:
99.995 — 100.015 mm (3.9368 — 3.9376 in)

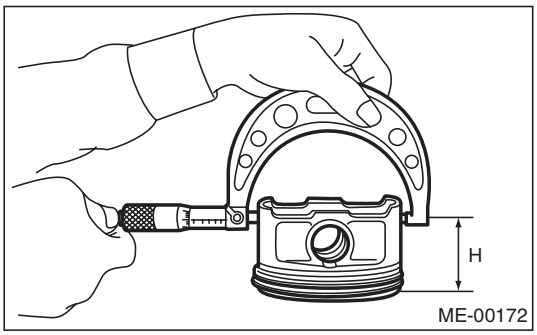

5) Calculate the clearance between cylinder and piston.

NOTE:
Measurement should be performed at a temperature of 20°C (68°F).

Cylinder to piston clearance at 20°C (68°F):
Standard:
–0.010 — 0.010 mm (–0.00039 — 0.00039 in)

6) Boring and honing

(1) If any of the measured value of taper, out-of-roundness or cylinder-to-piston clearance is out of standard or if there is any damage on the cylinder wall, rebore it to replace with an oversize piston.

CAUTION:
When any of the cylinders needs reboring, other cylinders must be bored at the same time, and replaced with oversize pistons.

(2) If the cylinder inner diameter exceeds the limit after boring and honing, replace the cylinder block.

NOTE:
Immediately after reboring, the cylinder diameter may differ from its real diameter due to temperature rise. Thus, when measuring the cylinder diameter, wait until it has cooled to room temperature.

Cylinder inner diameter boring limit (diameter):
To 100.005 mm (3.9372 in)

3. PISTON AND PISTON PIN

1) Check the piston and piston pin for breaks, cracks or wear. Replace if faulty.
2) Check the piston ring groove for wear and damage. Replace if faulty.
3) Make sure that the piston pin can be inserted into the piston pin hole with a thumb at 20°C (68°F). Replace if faulty.

Clearance between piston hole and piston pin:
Standard
0.004 — 0.008 mm (0.0002 — 0.0003 in)

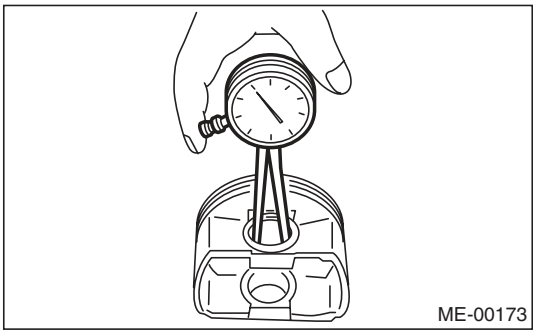
ME-00173

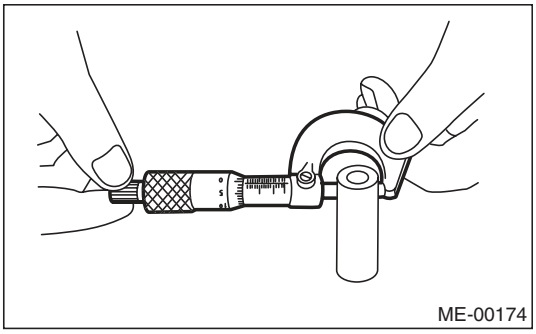
ME-00174

4) Check the snap ring installation groove (A) on the piston for burr. If necessary, remove burr from the groove so that the piston pin can lightly move.

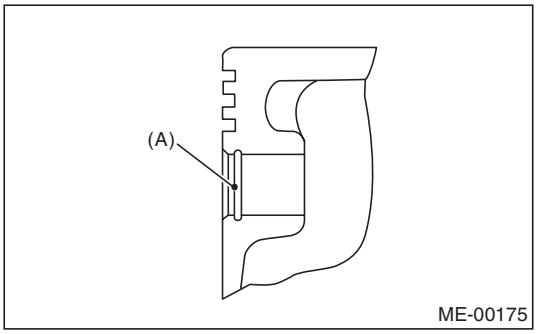

ME-00175

5) Check the piston pin snap ring for distortion, cracks and wear.

4. PISTON RING

1) If the piston ring is broken, damaged or worn, or if its tension is insufficient, or when the piston is replaced, replace the piston ring with a new part of the same size as piston.

NOTE:
- The top ring and second ring have the mark to determine the direction for installing. When installing the ring to piston, face these marks to the top side.
- Oil ring consists of the upper rail, expander and lower rail. When installing the oil ring on piston, be careful of each rails direction.

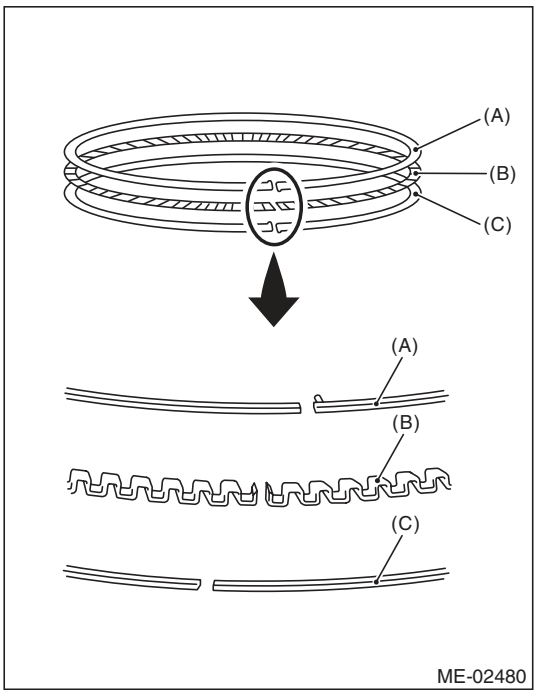

ME-02480

(A) Upper rail
(B) Expander
(C) Lower rail

2) Using the piston, insert the piston ring and oil ring into the cylinder so that they are perpendicular to the cylinder wall, and measure the piston ring gap with a thickness gauge.

		Standard mm (in)
Piston ring gap	Top ring	0.20 — 0.35 (0.0079 — 0.0138)
	Second ring	0.37 — 0.52 (0.0146 — 0.0205)
	Oil ring rail	0.20 — 0.50 (0.0079 — 0.0197)

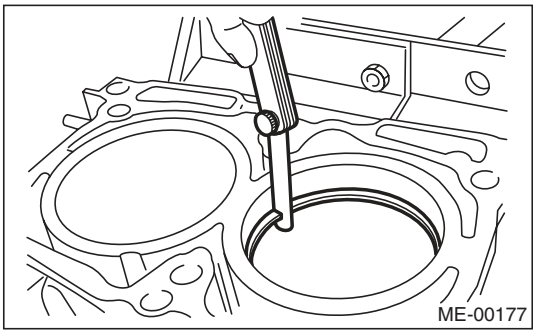

3) Fit the piston ring straight into the piston ring groove, then measure the clearance between piston ring and piston ring groove with a thickness gauge.

NOTE:
Before measuring the clearance, clean the piston ring groove and piston ring.

		Standard mm (in)
Clearance between piston ring and piston ring groove	Top ring	0.040 — 0.080 (0.0016 — 0.0031)
	Second ring	0.030 — 0.070 (0.0012 — 0.0028)

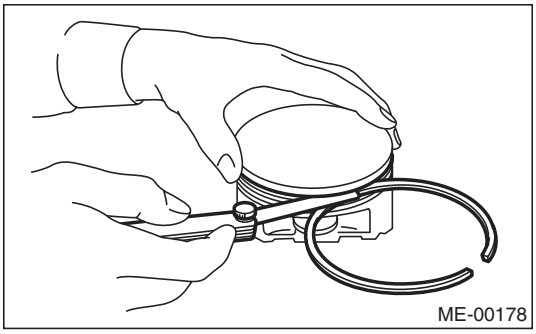

5. CONNECTING ROD

1) Replace the connecting rod, if the large or small end thrust surface is damaged.
2) Check for bend or twist using a connecting rod aligner. Replace the connecting rod if the bend or twist exceeds the limit.

Limit of bend or twist per 100 mm (3.94 in) in length:
0.10 mm (0.0039 in)

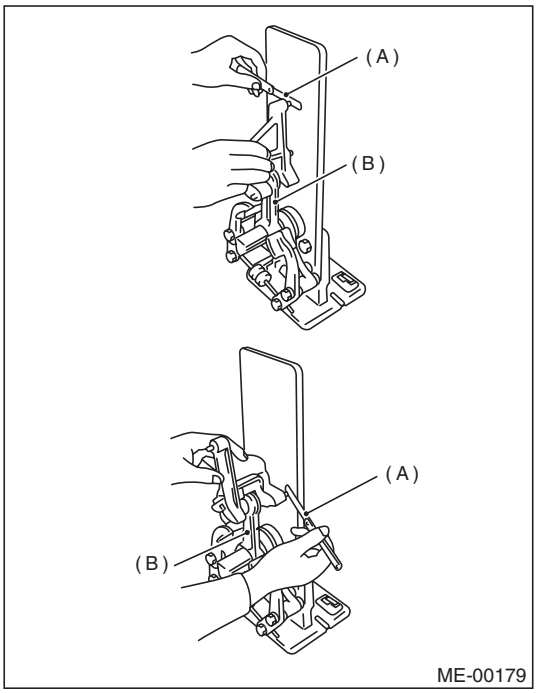

(A) Thickness gauge
(B) Connecting rod

3) Install the connecting rod with bearings attached to the crankshaft, and measure the thrust clearance using a thickness gauge. If the thrust clearance exceeds the standard or uneven wear is found, replace the connecting rod.

Connecting rod thrust clearance:
Standard
0.070 — 0.330 mm (0.0028 — 0.0130 in)

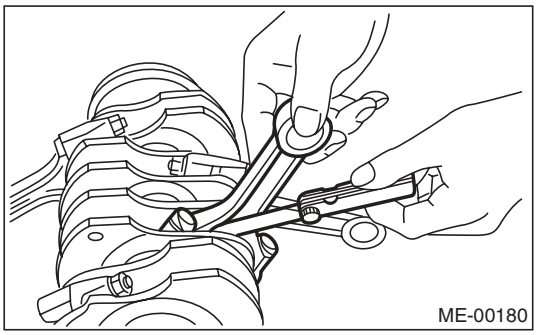

4) Inspect the connecting rod bearing for scar, peeling, seizure, melting, wear, etc.

5) Measure the oil clearance on each connecting rod bearing using plastigauge. If any oil clearance is not within the standard, replace the defective bearing with a new part of standard size or undersize as necessary.

Connecting rod oil clearance:
Standard
0.016 — 0.044 mm (0.0006 — 0.0017 in)

Unit: mm (in)

Bearing	Bearing size (Thickness at center)	Outer diameter of crank pin
Standard	1.492 — 1.501 (0.0587 — 0.0591)	51.984 — 52.000 (2.0466 — 2.0472)
0.03 (0.0012) Undersize	1.510 — 1.513 (0.0594 — 0.0596)	51.954 — 51.970 (2.0454 — 2.0461)
0.05 (0.0020) Undersize	1.520 — 1.523 (0.0598 — 0.0600)	51.934 — 51.950 (2.0446 — 2.0453)
0.25 (0.0098) Undersize	1.620 — 1.623 (0.0638 — 0.0639)	51.734 — 51.750 (2.0368 — 2.0374)

6) Inspect the bushing at connecting rod small end, and replace with a new part if worn or damaged.
7) Measure the piston pin clearance at connecting rod small end. If the measured value is not within the standard, replace it with a new part.

Clearance between piston pin and bushing:
Standard
0 — 0.022 mm (0 — 0.0009 in)

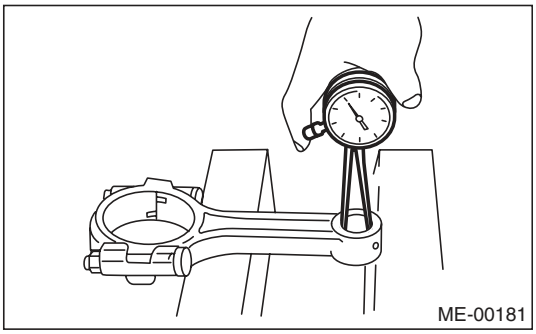
ME-00181

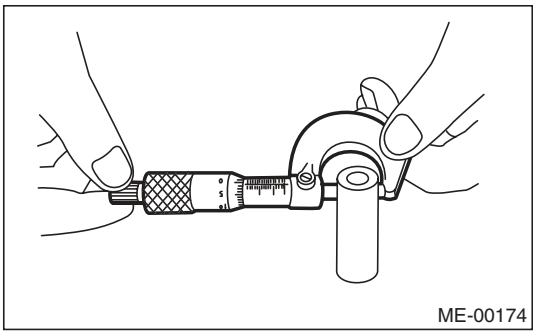
ME-00174

8) The replacement procedure for the connecting rod small end bushing is as follows.
(1) Remove the bushing from connecting rod with ST and press.
(2) Press the bushing with the ST after applying oil on the periphery of new bushing.

ST 499037100 CONNECTING ROD BUSHING REMOVER AND INSTALLER

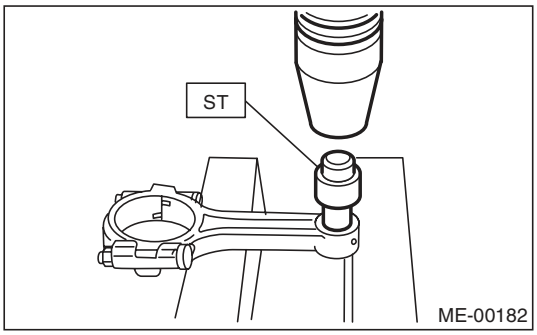

ME-00182

(3) Make two 3 mm (0.12 in) holes in the pressed bushing to match the pre-manufactured holes on the connecting rod, then ream the inside of the bushing.
(4) After completion of reaming, clean the bushing to remove chips.

6. CRANKSHAFT AND CRANKSHAFT BEARING

1) Clean the crankshaft completely, and check it for cracks using liquid penetrant tester. If defective, replace the crankshaft.
2) Measure the bend of crankshaft. If it exceeds the limit, correct or replace it.

NOTE:
If a suitable V-block is not available, using just the #1 and #5 crankshaft bearings on cylinder block, position the crankshaft on cylinder block. Then, measure the crankshaft bend using a dial gauge.

Crankshaft bend limit:
0.035 mm (0.0014 in)

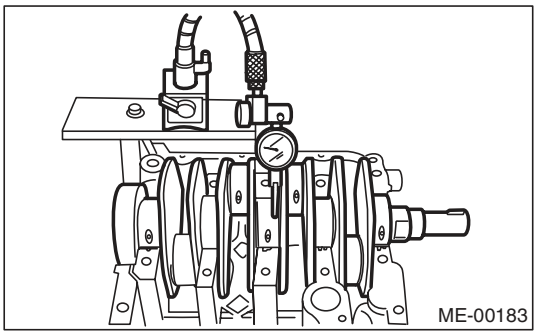
ME-00183

3) Inspect the crank journal and crank pin for wear. If they are not within the specification, replace the bearing with a suitable (undersize) one, and replace or grind to correct the crankshaft as necessary. When grinding the crank journal or crank pin, finish them to the specified dimensions according to the undersize bearing to be used.

Crank pin:
Out-of-roundness
0.003 mm (0.0001 in)
Cylindricality
0.004 mm (0.0002 in)
Grinding limit (dia.)
To 51.750 mm (2.0374 in)

Crank journal:
Out-of-roundness
0.005 mm (0.0002 in)
Cylindricality
0.006 mm (0.0002 in)
Grinding limit (dia.)
To 59.758 mm (2.3527 in)

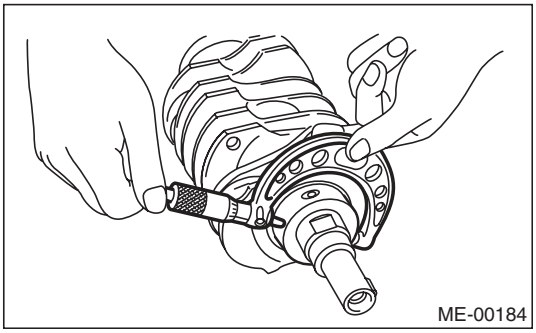

Unit: mm (in)

		Crank journal outer diameter		Crank pin outer diameter
		#1, #3	#2, #4, #5	
Standard	Journal O.D.	59.992 — 60.008 (2.3619 — 2.3625)	59.992 — 60.008 (2.3619 — 2.3625)	51.984 — 52.000 (2.0466 — 2.0472)
	Bearing size (Thickness at center)	1.998 — 2.011 (0.0787 — 0.0792)	2.000 — 2.013 (0.0787 — 0.0793)	1.492 — 1.501 (0.0587 — 0.0591)
0.03 (0.0012) Undersize	Journal O.D.	59.962 — 59.978 (2.3607 — 2.3613)	59.962 — 59.978 (2.3607 — 2.3613)	51.954 — 51.970 (2.0454 — 2.0461)
	Bearing size (Thickness at center)	2.017 — 2.020 (0.0794 — 0.0795)	2.019 — 2.022 (0.0795 — 0.0796)	1.510 — 1.513 (0.0594 — 0.0596)
0.05 (0.0020) Undersize	Journal O.D.	59.942 — 59.958 (2.3599 — 2.3605)	59.942 — 59.958 (2.3599 — 2.3605)	51.934 — 51.950 (2.0446 — 2.0453)
	Bearing size (Thickness at center)	2.027 — 2.030 (0.0798 — 0.0799)	2.029 — 2.032 (0.0799 — 0.0800)	1.520 — 1.523 (0.0598 — 0.0600)
0.25 (0.0098) Undersize	Journal O.D.	59.742 — 59.758 (2.3520 — 2.3527)	59.742 — 59.758 (2.3520 — 2.3527)	51.734 — 51.750 (2.0368 — 2.0374)
	Bearing size (Thickness at center)	2.127 — 2.130 (0.0837 — 0.0839)	2.129 — 2.132 (0.0838 — 0.0839)	1.620 — 1.623 (0.0638 — 0.0639)

4) Use a thickness gauge to measure the thrust clearance of crankshaft at #5 crank journal bearing. If the thrust clearance is not within the standard, replace the bearing.

Crankshaft thrust clearance:
Standard
0.030 — 0.115 mm (0.0012 — 0.0045 in)

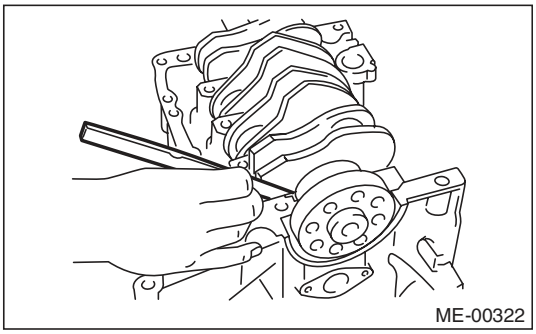

5) Inspect individual crankshaft bearings for signs of flaking, seizure, melting and wear.
6) Measure the oil clearance on each crankshaft bearing using plastigauge. If the measured value is out of standard, replace the defective bearing with an undersize one, and replace or grind to correct the crankshaft as necessary.

Crankshaft oil clearance:
Standard
0.010 — 0.030 mm (0.0004 — 0.0012 in)

22. Oil Switching Solenoid Valve

A: REMOVAL

1. RH SIDE

1) Disconnect the ground cable from the battery.

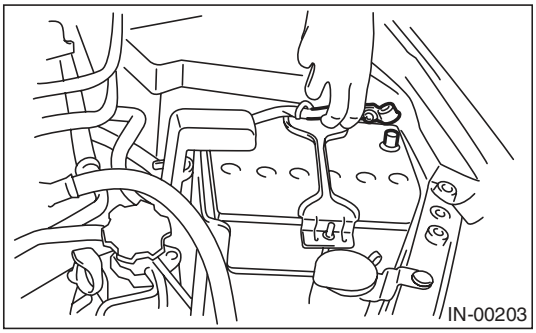

2) Remove the air intake chamber. <Ref. to IN(H4SO)-7, REMOVAL, Air Intake Chamber.>
3) Remove the bolt, and disconnect the engine harness connector from the bulk head harness connector and rear engine hanger.

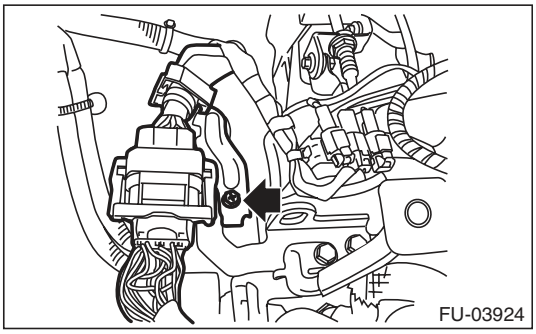

4) Slide the bulkhead harness connector in the direction of the arrow and remove the rear engine hanger.

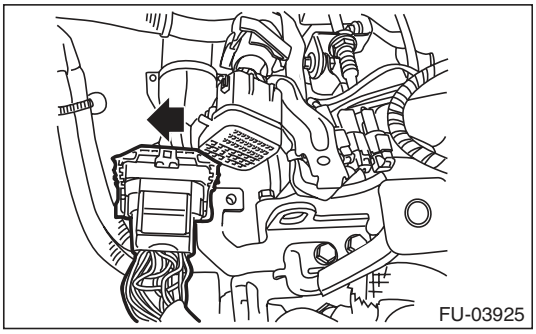

5) Disconnect the connector from the oil switching solenoid valve.
6) Remove the oil switching solenoid valve.
7) Remove the variable valve lift diagnosis oil pressure switch. <Ref. to FU(H4SO)-33, REMOVAL, Variable Valve Lift Diagnosis Oil Pressure Switch.>
8) Remove the oil temperature sensor. <Ref. to FU(H4SO)-34, REMOVAL, Oil Temperature Sensor.>
9) Remove the oil switching solenoid valve holder from the cylinder head.

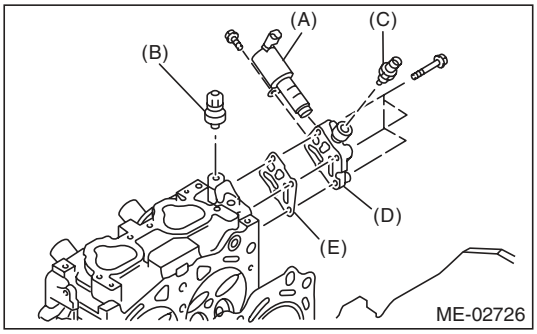

(A) Oil switching solenoid valve
(B) Variable valve lift diagnosis oil pressure switch
(C) Oil temperature sensor
(D) Oil switching solenoid valve holder
(E) Gasket

2. LH SIDE

1) Disconnect the ground cable from the battery.

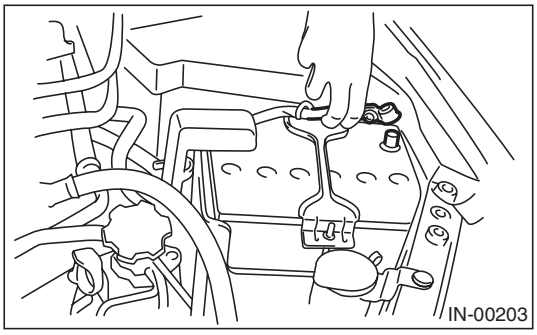

2) Remove the V-belts. <Ref. to ME(H4SO)-38, REMOVAL, V-belt.>
3) Remove the crank pulley. <Ref. to ME(H4SO)-41, REMOVAL, Crank Pulley.>
4) Remove the timing belt cover. <Ref. to ME(H4SO)-43, REMOVAL, Timing Belt Cover.>
5) Remove the timing belt. <Ref. to ME(H4SO)-44, REMOVAL, Timing Belt.>
6) Remove the cam sprocket. <Ref. to ME(H4SO)-49, REMOVAL, Cam Sprocket.>
7) Remove the timing belt cover No. 2 (LH).
8) Disconnect the connector from the oil switching solenoid valve.
9) Remove the oil switching solenoid valve.
10) Remove the variable valve lift diagnosis oil pressure switch. <Ref. to FU(H4SO)-33, REMOVAL, Variable Valve Lift Diagnosis Oil Pressure Switch.>

11) Remove the oil switching solenoid valve holder from the cylinder head.

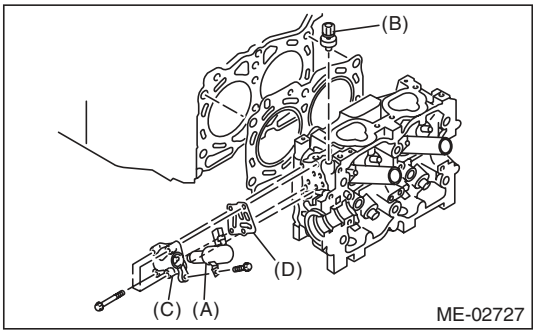

(A) Oil switching solenoid valve
(B) Variable valve lift diagnosis oil pressure switch
(C) Oil switching solenoid valve holder
(D) Gasket

B: INSTALLATION

1. RH SIDE

Install in the reverse order of removal.

NOTE:
- Use a new gasket.
- Apply liquid gasket to variable valve lift diagnosis oil pressure switch threads.
- Install the oil switching solenoid valve to the holder, then install it to the cylinder head.

Tightening torque:
T1: 8 N·m (0.8 kgf-m, 5.9 ft-lb)
T2: 10 N·m (1.0 kgf-m, 7.4 ft-lb)
T3: 17 N·m (1.7 kgf-m, 12.5 ft-lb)
T4: 18 N·m (1.8 kgf-m, 13.3 ft-lb)

Liquid gasket
THREE BOND 1324 (Part No. 004403042) or equivalent

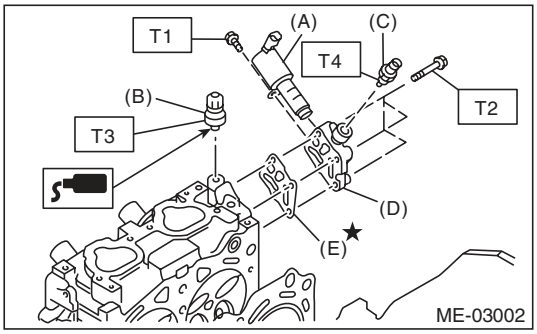

(A) Oil switching solenoid valve
(B) Variable valve lift diagnosis oil pressure switch
(C) Oil temperature sensor
(D) Oil switching solenoid valve holder
(E) Gasket

Tightening torque:
6.4 N·m (0.7 kgf-m, 4.7 ft-lb)

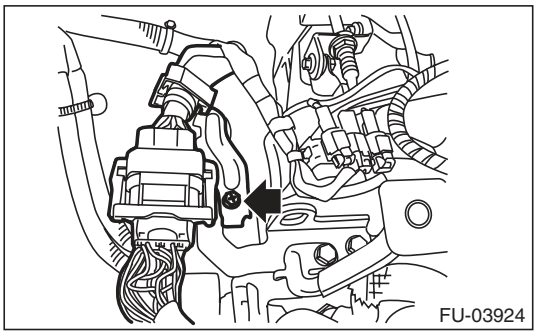

2. LH SIDE

Install in the reverse order of removal.

NOTE:
- Use a new gasket.
- Apply liquid gasket to variable valve lift diagnosis oil pressure switch threads.
- Install the oil switching solenoid valve to the holder, then install it to the cylinder head.

Tightening torque:
T1: 8 N·m (0.8 kgf-m, 5.9 ft-lb)
T2: 10 N·m (1.0 kgf-m, 7.4 ft-lb)
T3: 17 N·m (1.7 kgf-m, 12.5 ft-lb)

Liquid gasket
THREE BOND 1324 (Part No. 004403042) or equivalent

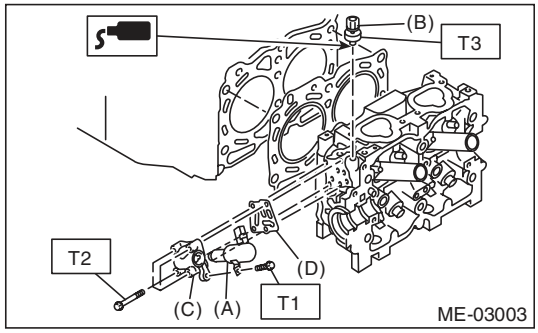

(A) Oil switching solenoid valve
(B) Variable valve lift diagnosis oil pressure switch
(C) Oil switching solenoid valve holder
(D) Gasket

23. Intake and Exhaust Valve

A: SPECIFICATION

Refer to “Cylinder Head” for removal and installation procedures of the intake and exhaust valves. <Ref. to ME(H4SO)-58, REMOVAL, Cylinder Head.> <Ref. to ME(H4SO)-59, INSTALLATION, Cylinder Head.>

24. Piston

A: SPECIFICATION

Refer to “Cylinder Block” for removal and installation procedures of pistons. <Ref. to ME(H4SO)-67, REMOVAL, Cylinder Block.> <Ref. to ME(H4SO)-71, INSTALLATION, Cylinder Block.>

25. Connecting Rod

A: SPECIFICATION

Refer to “Cylinder Block” for removal and installation procedures of connecting rods. <Ref. to ME(H4SO)-67, REMOVAL, Cylinder Block.> <Ref. to ME(H4SO)-71, INSTALLATION, Cylinder Block.>

26. Crankshaft

A: SPECIFICATION

Refer to “Cylinder Block” for removal and installation procedures of the crankshaft. <Ref. to ME(H4SO)-67, REMOVAL, Cylinder Block.> <Ref. to ME(H4SO)-71, INSTALLATION, Cylinder Block.>

27. Engine Trouble in General

A: INSPECTION

NOTE:
The “RANK” shown in the chart shows the possibilities of the cause of trouble in order from “Very often” to “Rarely”.
A — Very often
B — Sometimes
C — Rarely

Symptoms	Problem parts etc.	Possible cause	RANK
1. Engine does not start.			
1) Starter does not turn.	Starter	Defective battery-to-starter harness	B
		Defective starter switch	C
		Defective inhibitor switch	C
		Defective starter	B
	Battery	Improper connection of the terminal	A
		Run-down battery	A
		Defective charging system	B
	Friction	Seizure of crankshaft and connecting rod bearing	C
		Seized camshaft	C
		Seized or stuck piston and cylinder	C
2) Initial combustion does not occur.	Starter	Defective starter	C
	Engine control system <Ref. to EN(H4SO)(diag)-2, Basic Diagnostic Procedure.>		A
	Fuel line	Defective fuel pump and relay	A
		Clogged fuel line	B
		Lack of or insufficient fuel	B
	Timing belt	Degradation, etc.	B
		Defective timing	B
	Compression	Incorrect valve clearance	C
		Loosened spark plug or defective gasket	C
		Loosened cylinder head bolt or defective gasket	C
		Improper valve sealing	C
		Defective valve stem	C
		Worn or broken valve spring	B
		Worn or stuck piston rings, cylinder and piston	C
		Incorrect valve timing	B
		Improper engine oil (low viscosity)	B

Symptoms	Problem parts etc.	Possible cause	RANK
3) Initial combustion occurs.	Engine control system <Ref. to EN(H4SO)(diag)-2, Basic Diagnostic Procedure.>		A
	Intake system	Defective intake manifold gasket	B
		Defective throttle body gasket	B
	Fuel line	Defective fuel pump and relay	C
		Clogged fuel line	C
		Lack of or insufficient fuel	B
	Timing belt	Degradation, etc.	B
		Defective timing	B
	Compression	Incorrect valve clearance	C
		Loosened spark plug or defective gasket	C
		Loosened cylinder head bolt or defective gasket	C
		Improper valve sealing	C
		Defective valve stem	C
		Worn or broken valve spring	B
		Worn or stuck piston rings, cylinder and piston	C
		Incorrect valve timing	B
		Improper engine oil (low viscosity)	B
4) Engine stalls after initial combustion.	Engine control system <Ref. to EN(H4SO)(diag)-2, Basic Diagnostic Procedure.>		A
	Intake system	Loosened or cracked intake duct	B
		Loosened or cracked PCV hose	C
		Loosened or cracked vacuum hose	C
		Defective intake manifold gasket	B
		Defective throttle body gasket	B
		Dirty air cleaner element	C
	Fuel line	Clogged fuel line	C
		Lack of or insufficient fuel	B
	Timing belt	Degradation, etc.	B
		Defective timing	B
	Compression	Incorrect valve clearance	C
		Loosened spark plug or defective gasket	C
		Loosened cylinder head bolt or defective gasket	C
		Improper valve sealing	C
		Defective valve stem	C
		Worn or broken valve spring	B
		Worn or stuck piston rings, cylinder and piston	C
		Incorrect valve timing	B
		Improper engine oil (low viscosity)	B

Symptoms	Problem parts etc.	Possible cause	RANK
2. Rough idle and engine stall	Engine control system <Ref. to EN(H4SO)(diag)-2, Basic Diagnostic Procedure.>		A
	Intake system	Loosened or cracked intake duct	A
		Loosened or cracked PCV hose	A
		Loosened or cracked vacuum hose	A
		Defective intake manifold gasket	B
		Defective throttle body gasket	B
		Defective PCV valve	C
		Loosened oil filler cap	B
		Dirty air cleaner element	C
	Fuel line	Defective fuel pump and relay	C
		Clogged fuel line	C
		Lack of or insufficient fuel	B
	Timing belt	Defective timing	C
	Compression	Incorrect valve clearance	B
		Loosened spark plug or defective gasket	B
		Loosened cylinder head bolt or defective gasket	B
		Improper valve sealing	B
		Defective valve stem	C
		Worn or broken valve spring	B
		Worn or stuck piston rings, cylinder and piston	B
		Incorrect valve timing	A
		Improper engine oil (low viscosity)	B
	Lubrication system	Incorrect oil pressure	B
		Defective rocker cover gasket	C
	Cooling system	Over-heating	C
	Others	Evaporative emission control system malfunction	A
		Stuck or damaged throttle valve	B

Symptoms	Problem parts etc.	Possible cause	RANK
3. Low output, hesitation and poor acceleration	Engine control system <Ref. to EN(H4SO)(diag)-2, Basic Diagnostic Procedure.>		A
	Intake system	Loosened or cracked intake duct	A
		Loosened or cracked PCV hose	A
		Loosened or cracked vacuum hose	B
		Defective intake manifold gasket	B
		Defective throttle body gasket	B
		Defective PCV valve	B
		Loosened oil filler cap	B
		Dirty air cleaner element	A
	Fuel line	Defective fuel pump and relay	B
		Clogged fuel line	B
		Lack of or insufficient fuel	C
	Timing belt	Defective timing	B
	Compression	Incorrect valve clearance	B
		Loosened spark plug or defective gasket	B
		Loosened cylinder head bolt or defective gasket	B
		Improper valve sealing	B
		Defective valve stem	C
		Worn or broken valve spring	B
		Worn or stuck piston rings, cylinder and piston	C
		Incorrect valve timing	A
		Improper engine oil (low viscosity)	B
	Lubrication system	Incorrect oil pressure	B
	Cooling system	Over-heating	C
		Over-cooling	C
	Others	Evaporative emission control system malfunction	A
4. Surging	Engine control system <Ref. to EN(H4SO)(diag)-2, Basic Diagnostic Procedure.>		A
	Intake system	Loosened or cracked intake duct	A
		Loosened or cracked PCV hose	A
		Loosened or cracked vacuum hose	A
		Defective intake manifold gasket	B
		Defective throttle body gasket	B
		Defective PCV valve	B
		Loosened oil filler cap	B
		Dirty air cleaner element	B
	Fuel line	Defective fuel pump and relay	B
		Clogged fuel line	B
		Lack of or insufficient fuel	C
	Timing belt	Defective timing	B
	Compression	Incorrect valve clearance	B
		Loosened spark plug or defective gasket	C
		Loosened cylinder head bolt or defective gasket	C
		Improper valve sealing	C
		Defective valve stem	C
		Worn or broken valve spring	C
		Worn or stuck piston rings, cylinder and piston	C
		Incorrect valve timing	A
		Improper engine oil (low viscosity)	B
	Cooling system	Over-heating	B
	Others	Evaporative emission control system malfunction	C

Symptoms	Problem parts etc.	Possible cause	RANK
5. Engine does not return to idle.	Engine control system <Ref. to EN(H4SO)(diag)-2, Basic Diagnostic Procedure.>		A
	Intake system	Loosened or cracked vacuum hose	A
	Others	Stuck or damaged throttle valve	A
6. Dieseling (Run-on)	Engine control system <Ref. to EN(H4SO)(diag)-2, Basic Diagnostic Procedure.>		A
	Cooling system	Over-heating	B
	Others	Evaporative emission control system malfunction	B
7. After burning in exhaust system	Engine control system <Ref. to EN(H4SO)(diag)-2, Basic Diagnostic Procedure.>		A
	Intake system	Loosened or cracked intake duct	C
		Loosened or cracked PCV hose	C
		Loosened or cracked vacuum hose	B
		Defective PCV valve	B
		Loosened oil filler cap	C
	Timing belt	Defective timing	B
	Compression	Incorrect valve clearance	B
		Loosened spark plug or defective gasket	C
		Loosened cylinder head bolt or defective gasket	C
		Improper valve sealing	B
		Defective valve stem	C
		Worn or broken valve spring	C
		Worn or stuck piston rings, cylinder and piston	C
		Incorrect valve timing	A
	Lubrication system	Incorrect oil pressure	C
	Cooling system	Over-cooling	C
	Others	Evaporative emission control system malfunction	C
8. Knocking	Engine control system <Ref. to EN(H4SO)(diag)-2, Basic Diagnostic Procedure.>		A
	Intake system	Loosened oil filler cap	B
	Timing belt	Defective timing	B
	Compression	Incorrect valve clearance	C
		Incorrect valve timing	B
	Cooling system	Over-heating	A
9. Excessive engine oil consumption	Intake system	Loosened or cracked PCV hose	A
		Defective PCV valve	B
		Loosened oil filler cap	C
	Compression	Defective valve stem	A
		Worn or stuck piston rings, cylinder and piston	A
	Lubrication system	Loosened oil pump attaching bolts and defective gasket	B
		Defective oil filter gasket	B
		Defective crankshaft oil seal	B
		Defective rocker cover gasket	B
		Loosened oil drain plug or defective gasket	B
		Loosened oil pan fitting bolts or defective oil pan	B

Symptoms	Problem parts etc.	Possible cause	RANK
10. Excessive fuel consumption	Engine control system <Ref. to EN(H4SO)(diag)-2, Basic Diagnostic Procedure.>		A
	Intake system	Dirty air cleaner element	A
	Timing belt	Defective timing	B
	Compression	Incorrect valve clearance	B
		Loosened spark plug or defective gasket	C
		Loosened cylinder head bolt or defective gasket	C
		Improper valve sealing	B
		Defective valve stem	C
		Worn or broken valve spring	C
		Worn or stuck piston rings, cylinder and piston	B
		Incorrect valve timing	B
	Lubrication system	Incorrect oil pressure	C
	Cooling system	Over-cooling	C

28. Engine Noise

A: INSPECTION

Type of sound	Condition	Possible cause
Regular clicking sound	Sound increases as engine speed increases.	• Valve mechanism is defective. • Incorrect valve clearance • Worn valve rocker • Worn camshaft • Broken valve spring
Heavy and dull clank	Oil pressure is low.	• Worn crankshaft main bearing • Worn connecting rod bearing (large end)
	Oil pressure is normal.	• Damaged engine mounting • Loosened flywheel mounting bolt
High-pitched clank (Spark knock)	Sound is noticeable when accelerating with an overload condition.	• Ignition timing advanced • Accumulation of carbon inside combustion chamber • Wrong heat range of spark plug • Improper octane value of gasoline
Clank when engine speed is 1,000 to 2,000 rpm	Sound is reduced when fuel injector connector of noisy cylinder is disconnected. (NOTE*)	• Worn crankshaft main bearing • Worn connecting rod bearing (large end)
Knocking sound when engine is operating under idling speed and engine is warm	Sound is reduced when fuel injector connector of noisy cylinder is disconnected. (NOTE*)	• Worn cylinder liner and piston ring • Broken or stuck piston ring • Worn piston pin and hole at piston end of connecting rod
	Sound is not reduced if each fuel injector connector is disconnected in turn. (NOTE*)	• Worn cam sprocket • Worn camshaft journal bore in cylinder head
Squeaky sound	—	Insufficient generator lubrication
Rubbing sound	—	Poor contact of generator brush and rotor
Gear scream when starting engine	—	• Defective ignition starter switch • Worn gear and starter pinion
Sound like polishing glass with a dry cloth	—	• Loose V-belt • Defective water pump shaft
Hissing sound	—	• Insufficient compression • Air leakage in air intake system, hose, connection or manifold
Timing belt noise	—	• Loose timing belt • Timing belt contacting with adjacent part
Valve noise	—	Incorrect valve clearance

NOTE*)
When disconnecting the fuel injector connector, the malfunction indicator light illuminates and DTC is stored in ECM memory. Therefore, perform the Clear Memory Mode <Ref. to EN(H4SO)(diag)-50, OPERATION, Clear Memory Mode.> and Inspection Mode <Ref. to EN(H4SO)(diag)-41, PROCEDURE, Inspection Mode.> after connecting the fuel injector connector.

1. General Description

A: COMPONENT

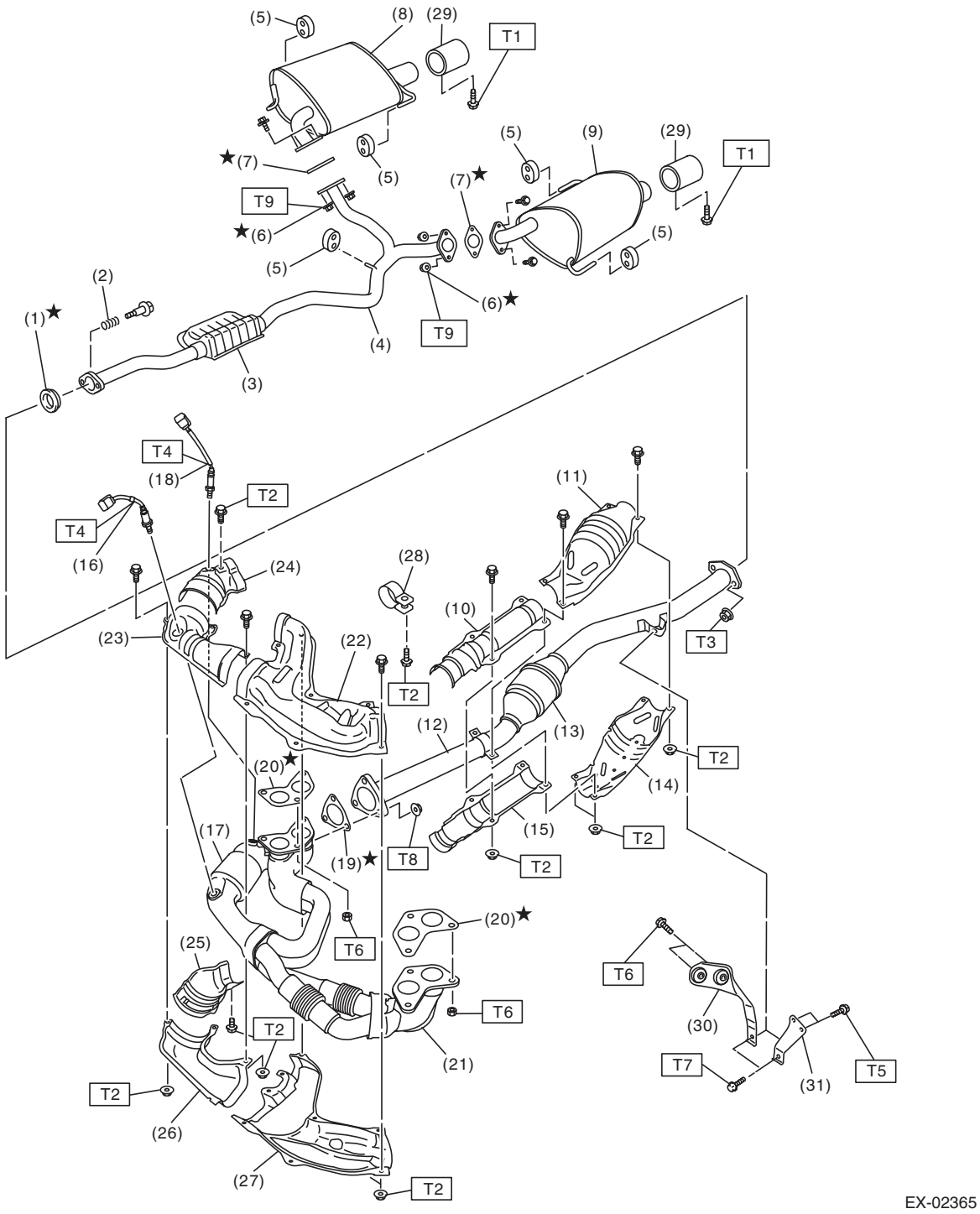

(1) Gasket
(2) Spring
(3) Chamber
(4) Rear exhaust pipe
(5) Cushion rubber
(6) Self-locking nut
(7) Gasket
(8) Muffler RH
(9) Muffler LH
(10) Center exhaust pipe front upper cover
(11) Rear catalytic converter upper cover
(12) Center exhaust pipe
(13) Rear catalytic converter
(14) Rear catalytic converter lower cover
(15) Center exhaust pipe front lower cover
(16) Front oxygen (A/F) sensor
(17) Front catalytic converter
(18) Rear oxygen sensor
(19) Gasket
(20) Gasket
(21) Front exhaust pipe
(22) Front exhaust pipe upper cover LH
(23) Front exhaust pipe upper cover RH
(24) Front catalytic converter upper cover
(25) Front catalytic converter lower cover
(26) Front exhaust pipe lower cover RH
(27) Front exhaust pipe lower cover LH
(28) Band
(29) Muffler cutter (model with muffler cutter)
(30) Hanger bracket (MT model)
(31) Hanger bracket (AT model)

Tightening torque:N·m (kgf-m, ft-lb)	
T1:	***7.5 (0.8, 5.5)***
T2:	***13 (1.3, 9.6)***
T3:	***18 (1.8, 13.3)***
T4:	***21 (2.1, 15.5)***
T5:	***23 (2.3, 17.0)***
T6:	***30 (3.1, 22.1)***
T7:	***35 (3.6, 25.8)***
T8:	***40 (4.1, 29.5)***
T9:	***48 (4.9, 35.4)***

B: CAUTION

- Wear appropriate work clothing, including a cap, protective goggles and protective shoes when performing any work.
- Remove contamination including dirt and corrosion before removal, installation or disassembly.
- Keep the disassembled parts in order and protect them from dust and dirt.
- Before removal, installation or disassembly, be sure to clarify the failure. Avoid unnecessary removal, installation, disassembly and replacement.
- Vehicle components are extremely hot after driving. Be wary of receiving burns from heated parts.
- Be sure to tighten fasteners including bolts and nuts to the specified torque.
- Place shop jacks or rigid racks at the specified points.
- Before disconnecting connectors of sensors or units, be sure to disconnect the ground cable from the battery.
- If any fat adheres to the exhaust pipe, wipe it off. Otherwise a fire may happen.

2. Front Exhaust Pipe

A: REMOVAL

CAUTION:
Vehicle components are extremely hot after driving. Be wary of receiving burns from heated parts.

1) Set the vehicle on a lift.
2) Disconnect the ground cable from battery.

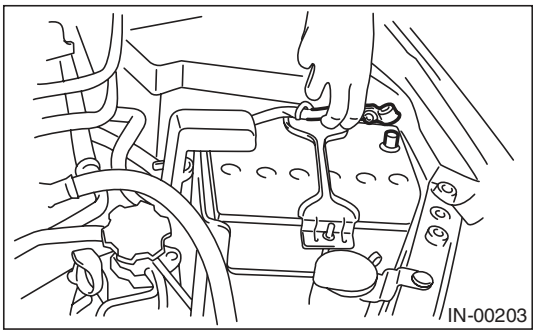

3) Remove the air intake duct. <Ref. to IN(H4SO)-8, REMOVAL, Air Intake Duct.>
4) Disconnect the front oxygen (A/F) sensor connector (A) and rear oxygen sensor connector (B) and remove the clip (C) fastening the harness.

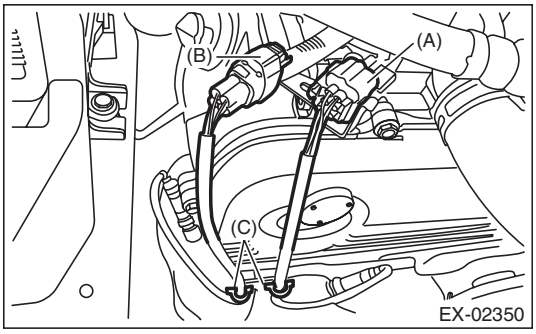

5) Lift up the vehicle.
6) Remove the under cover.
7) Separate the center exhaust pipe from rear exhaust pipe.

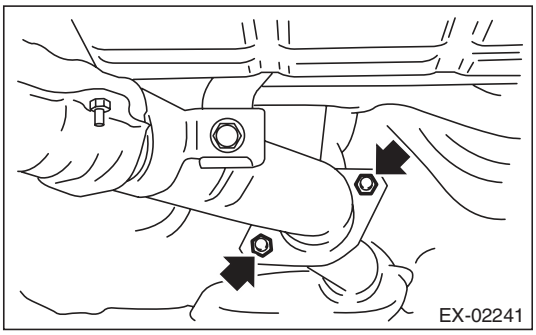

8) Remove the nuts which hold front exhaust pipe onto cylinder heads.

CAUTION:
Be careful not to drop the front and center exhaust pipe assembly.

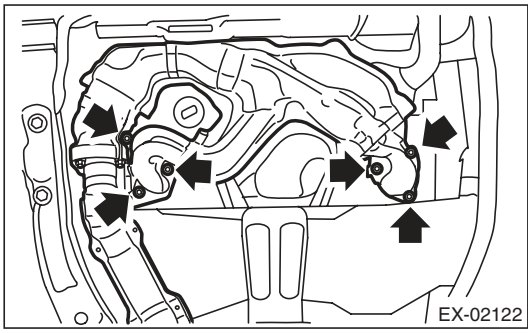

9) Remove the bolt which holds center exhaust pipe to hanger bracket.

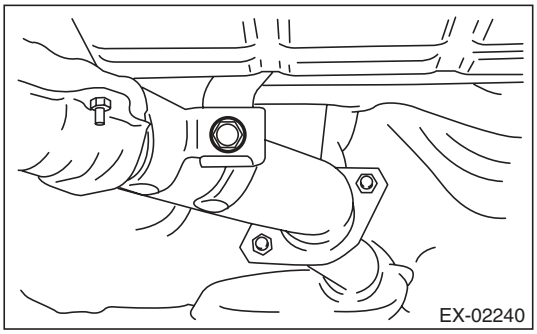

10) Remove the front and center exhaust pipe assembly from the vehicle.

CAUTION:
- **Be careful not to let the front and center exhaust pipe assembly fall off when removing as it is quite heavy.**
- **After removing the front and center exhaust pipe assemblies, do not pull on the rear exhaust pipe with excessive force.**

11) Separate the front exhaust pipe from center exhaust pipe.

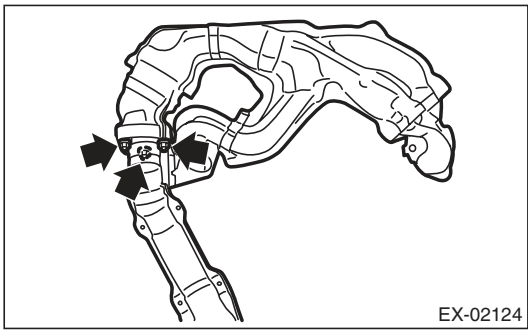

12) Remove the front oxygen (A/F) sensor and rear oxygen sensor. <Ref. to FU(H4SO)-35, REMOVAL, Front Oxygen (A/F) Sensor.> <Ref. to FU(H4SO)-37, REMOVAL, Rear Oxygen Sensor.>

B: INSTALLATION

1) Install the front oxygen (A/F) sensor and rear oxygen sensor to the front exhaust pipe. <Ref. to FU(H4SO)-36, INSTALLATION, Front Oxygen (A/F) Sensor.> <Ref. to FU(H4SO)-38, INSTALLATION, Rear Oxygen Sensor.>
2) Install the front exhaust pipe to center exhaust pipe.

NOTE:
Use a new gasket.

Tightening torque:
40 N·m (4.1 kgf-m, 29.5 ft-lb)

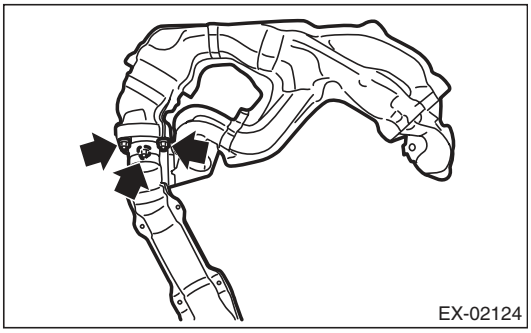

3) Install the front and center exhaust pipe assembly to the vehicle.

NOTE:
Use a new gasket.
4) Temporarily tighten the nuts which hold front exhaust pipe to cylinder heads.

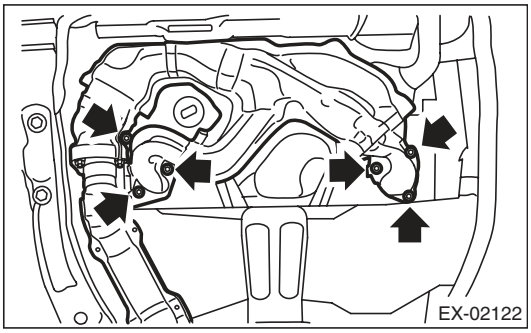

5) Tighten the bolt which holds center exhaust pipe to rear exhaust pipe.

NOTE:
Use a new gasket.

Tightening torque:
18 N·m (1.8 kgf-m, 13.3 ft-lb)

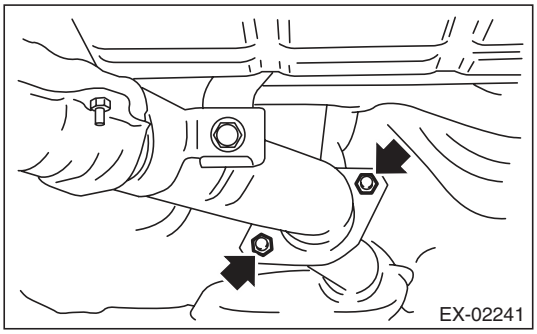

6) Tighten the bolt which holds center exhaust pipe to hanger bracket.

Tightening torque:
35 N·m (3.6 kgf-m, 25.8 ft-lb)

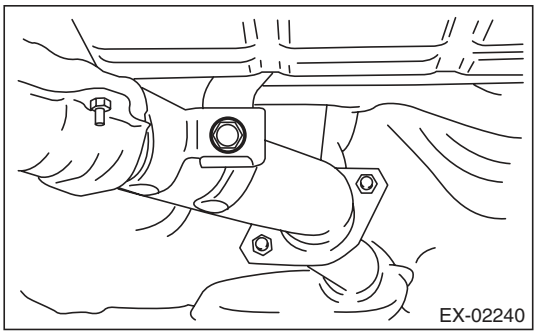

7) Tighten the nuts which hold front exhaust pipe to cylinder heads.

Tightening torque:
30 N·m (3.1 kgf-m, 22.1 ft-lb)

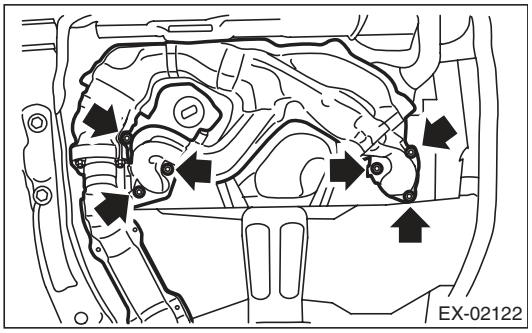

8) Install the under cover.
9) Lower the vehicle.

10) Connect the front oxygen (A/F) sensor connector (A) and rear oxygen sensor connector (B), and fasten the harness with the clip (C).

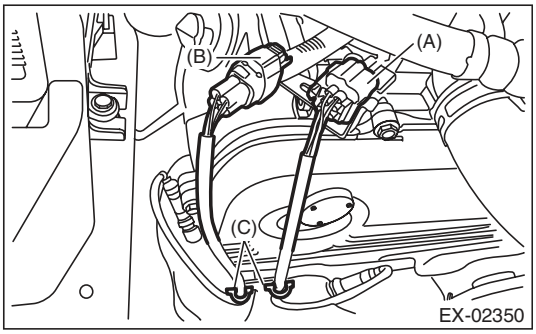

11) Install the air intake duct. <Ref. to IN(H4SO)-8, INSTALLATION, Air Intake Duct.>
12) Connect the ground cable to battery.

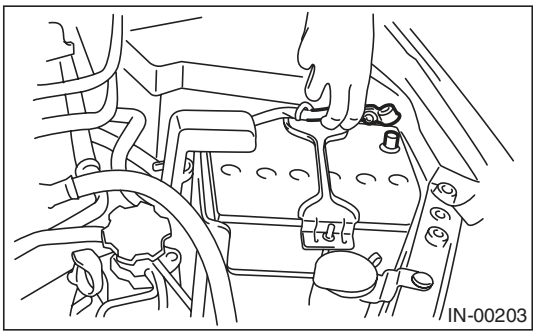

C: INSPECTION

1) Check the connections and welds for exhaust leaks.
2) Make sure there are no holes or rusting.

3. Center Exhaust Pipe

A: REMOVAL

1) After removing the center and front exhaust pipes as one unit, separate them. Refer to “Front Exhaust Pipe” for the removal procedure. <Ref. to EX(H4SO)-4, REMOVAL, Front Exhaust Pipe.>
2) Remove the front oxygen (A/F) sensor and rear oxygen sensor. <Ref. to FU(H4SO)-35, REMOVAL, Front Oxygen (A/F) Sensor.> <Ref. to FU(H4SO)-37, REMOVAL, Rear Oxygen Sensor.>

B: INSTALLATION

1) Install the front oxygen (A/F) sensor and rear oxygen sensor. <Ref. to FU(H4SO)-36, INSTALLATION, Front Oxygen (A/F) Sensor.> <Ref. to FU(H4SO)-38, INSTALLATION, Rear Oxygen Sensor.>
2) Install the center exhaust pipe and front exhaust pipe as one unit. Refer to “Front Exhaust Pipe” for the installation procedure. <Ref. to EX(H4SO)-5, INSTALLATION, Front Exhaust Pipe.>

C: INSPECTION

1) Check the connections and welds for exhaust leaks.
2) Make sure there are no holes or rusting.

4. Rear Exhaust Pipe

A: REMOVAL

CAUTION:
Vehicle components are extremely hot after driving. Be wary of receiving burns from heated parts.

1) Set the vehicle on a lift.
2) Lift up the vehicle.
3) Separate the rear exhaust pipe from center exhaust pipe.

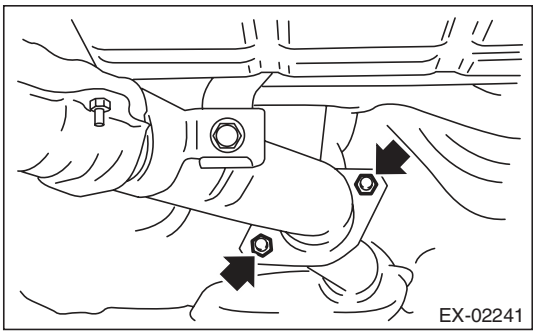

4) Separate the rear exhaust pipe from muffler.

CAUTION:
Be careful not to drop the rear exhaust pipe.

- LH side

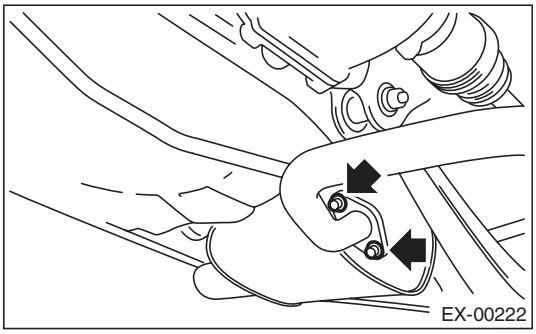

- RH side

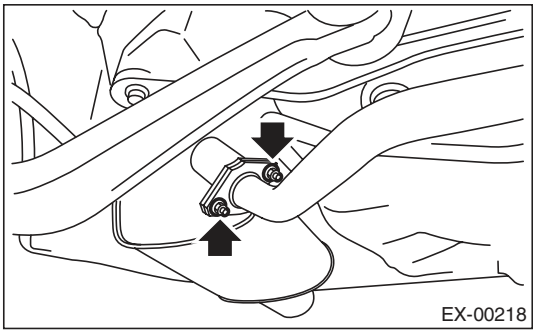

5) Apply a coat of spray type lubricant to the mating area of cushion rubber.

6) Remove the rear exhaust pipe bracket from cushion rubber.

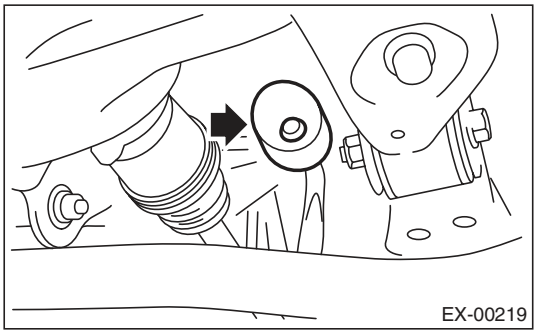

7) Remove the rear exhaust pipe.

B: INSTALLATION

1) Apply a coat of spray type lubricant to the mating area of cushion rubber.
2) Install the rear exhaust pipe bracket to cushion rubber.

NOTE:
After assembling, degrease the lubricant which was applied to the cushion rubber while removing/installing.

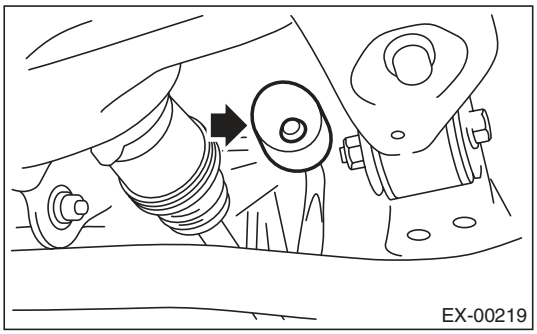

3) Install the rear exhaust pipe to muffler.

NOTE:
Use a new gasket and self-locking nut.

Tightening torque:
48 N·m (4.9 kgf-m, 35.4 ft-lb)

- LH side

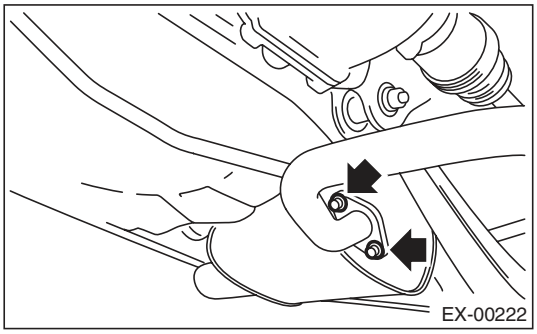

- RH side

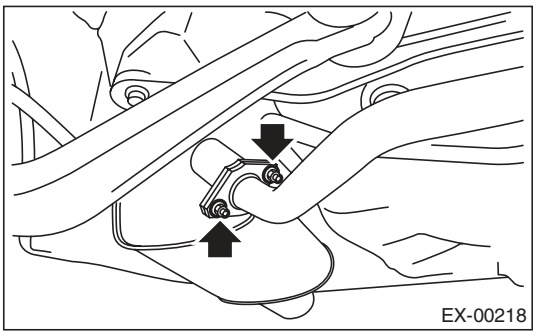

4) Install the rear exhaust pipe to center exhaust pipe.

NOTE:
Use a new gasket.

Tightening torque:
18 N·m (1.8 kgf-m, 13.3 ft-lb)

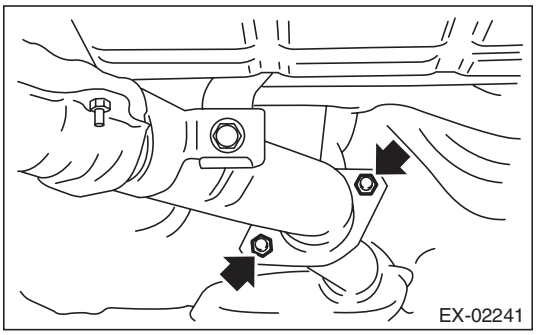

C: INSPECTION

1) Check the connections and welds for exhaust leaks.
2) Make sure there are no holes or rusting.
3) Check the cushion rubber for wear or crack.

5. Muffler

A: REMOVAL

CAUTION:
Be careful not to burn yourself, because the exhaust pipe becomes extremely hot after running.

1) Set the vehicle on a lift.
2) Lift up the vehicle.
3) Separate the muffler from rear exhaust pipe.

- LH side

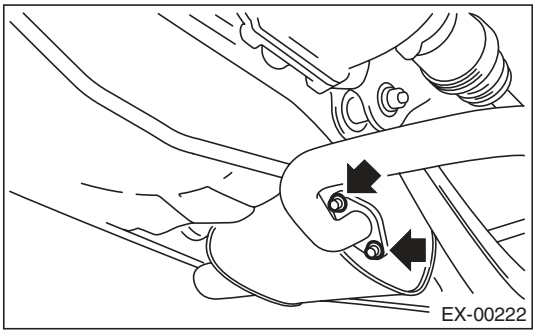

- RH side

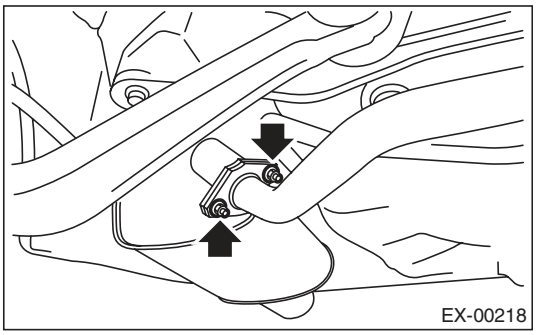

4) Apply a coat of spray type lubricant to the mating area of cushion rubber.
5) Remove the front and rear cushion rubber, and then remove the muffler.

CAUTION:
Be careful not to drop the muffler during removal.

- LH side

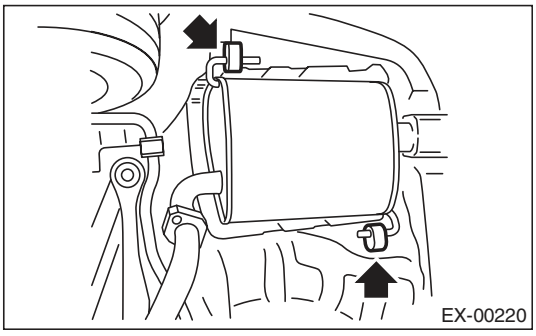

- RH side

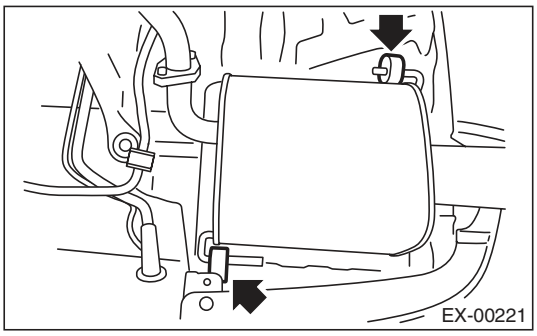

B: INSTALLATION

Install in the reverse order of removal.

NOTE:
- Use a new gasket and self-locking nut.
- After assembling, degrease the lubricant which was applied to the cushion rubber while removing/installing.

Tightening torque:
48 N·m (4.9 kgf-m, 35.4 ft-lb)

- LH side

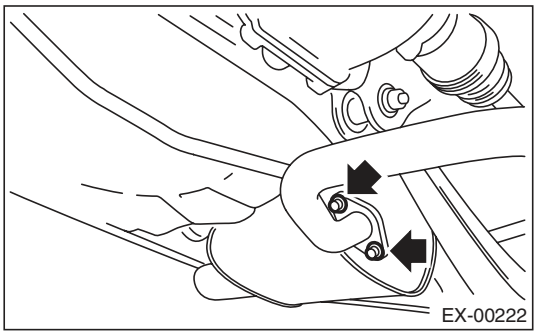

- RH side

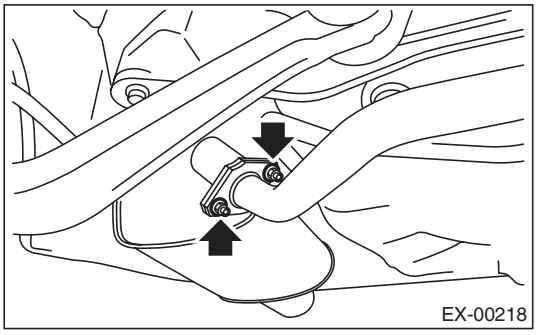

C: INSPECTION

1) Check the connections and welds for exhaust leaks.
2) Make sure there are no holes or rusting.
3) Check the cushion rubber for wear or crack.

1. General Description

A: SPECIFICATION

Cooling system				Electric fan + Forced engine coolant circulation system
Total engine coolant capacity			ℓ (US qt, Imp qt)	MT: approx. 6.4 (6.8, 5.6) AT: Approx. 6.3 (6.7, 5.5)
Water pump	Type			Centrifugal impeller type
	Discharge performance I	Discharge rate	ℓ (US gal, Imp gal) /min.	20 (5.3, 4.4)
		Pump speed — Discharge pressure		760 rpm — 2.9 kPa (0.3 mAq)
		Engine coolant temperature		80°C (176°F)
	Discharge performance II	Discharge rate	ℓ (US gal, Imp gal) /min.	100 (26.4, 22.0)
		Pump speed — Discharge pressure		3,000 rpm — 49 kPa (5.0 mAq)
		Engine coolant temperature		80°C (176°F)
	Discharge performance III	Discharge rate	ℓ (US gal, Imp gal) /min.	200 (52.8, 44.0)
		Pump speed — Discharge pressure		6,000 rpm — 225.4 kPa (23 mAq)
		Engine coolant temperature		80°C (176°F)
	Impeller diameter		mm (in)	76 (2.99)
	Number of impeller vanes			8
	Pump pulley diameter		mm (in)	60 (2.36)
	Clearance between impeller and case	Standard	mm (in)	0.5 — 1.5 (0.020 — 0.060)
Thermostat	Type			Wax pellet type
	Starting temperature to open			80 — 84°C (176 — 183°F)
	Fully opens			95°C (203°F)
	Valve lift		mm (in)	9.0 (0.354) or more
	Valve bore		mm (in)	35 (1.38)
Radiator fan	Motor input	Main fan		90 W
		Sub fan		90 W
	Fan diameter / Blade	Main fan		300 mm (11.81 in)/4
		Sub fan		300 mm (11.81 in)/5
Radiator	Type			Down flow, pressure type
	Core dimensions	Width × Height × Thickness	mm (in)	687.4 × 340 × 16 (27.06 × 13.39 × 0.63)
	Pressure range in which cap valve is open		kPa (kg/cm^2, psi)	Above: 108±15 or more (1.1±0.15, 16±2) Below: –1.0 to –4.9 or less (–0.01 — –0.05, –0.1 — –0.7)
	Fins			Corrugated fin type
Reservoir tank	Capacity		ℓ (US qt, Imp qt)	0.45 (0.48, 0.40)

	Recommended materials	Item number	Alternative
Coolant	SUBARU SUPER COOLANT (Concentrated type)	—	—
	SUBARU SUPER COOLANT (Diluted type)	K0670Y0000	
Water for dilution	Distilled water	—	Soft water or tap water
Cooling system protective agent	Cooling system conditioner	SOA345001	—

B: COMPONENT

1. WATER PUMP

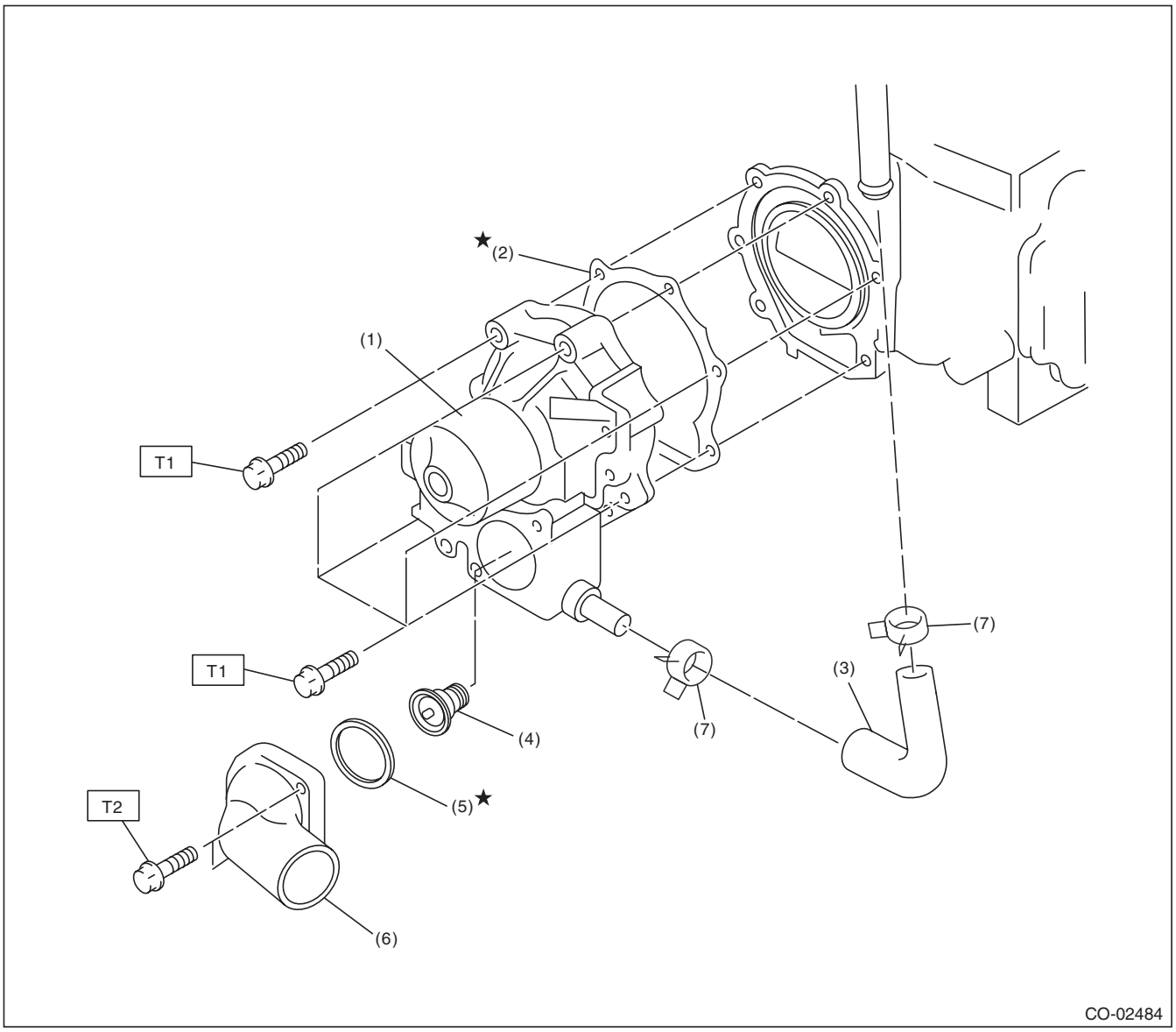

(1)	Water pump ASSY	(5)	Gasket
(2)	Gasket	(6)	Thermostat cover
(3)	Heater by-pass hose	(7)	Clip
(4)	Thermostat		

Tightening torque:N·m (kgf-m, ft-lb)

T1: First 12 (1.2, 8.9)
Second 12 (1.2, 8.9)

T2: 12 (1.2, 8.9)

2. RADIATOR & RADIATOR FAN

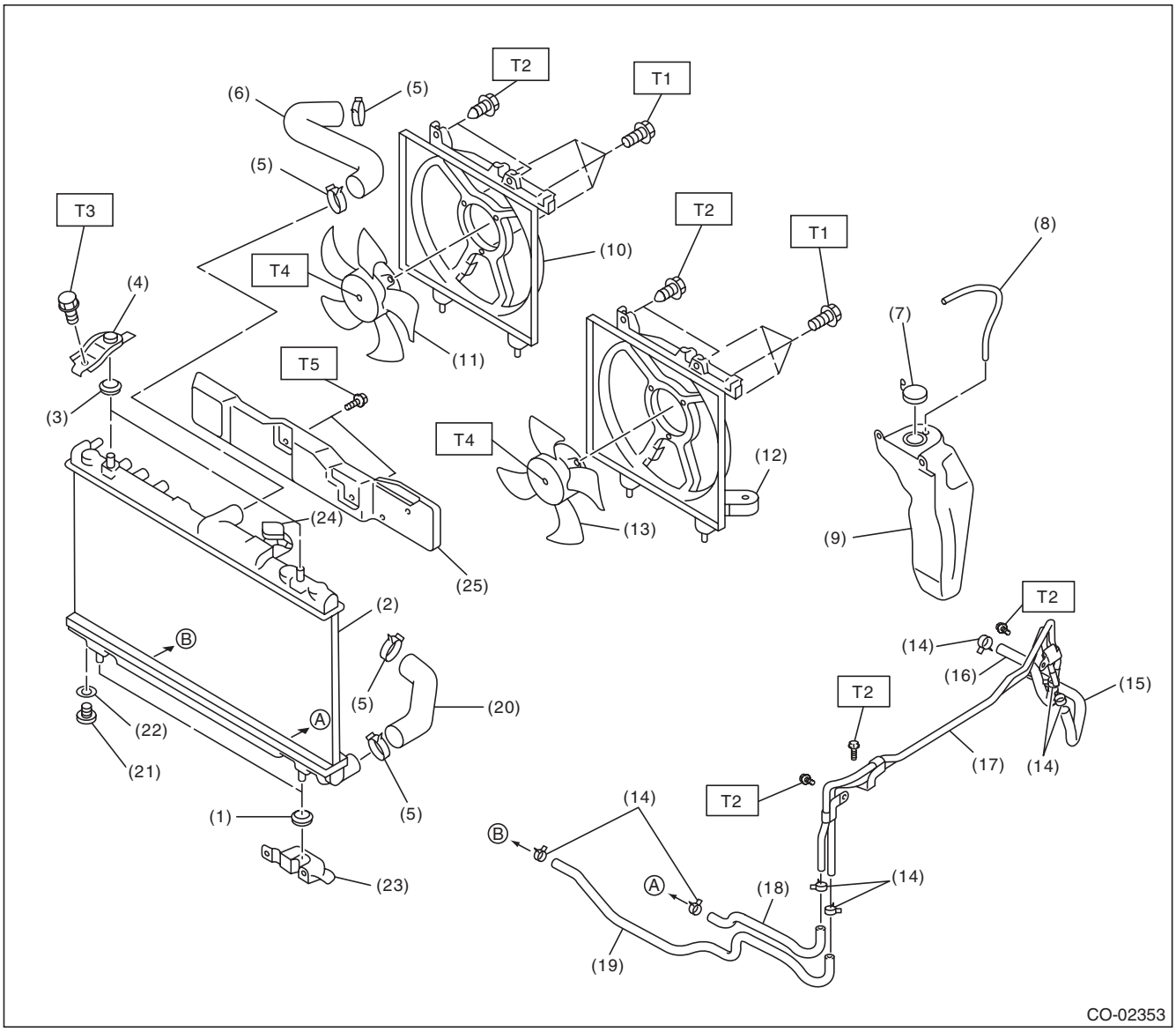

(1)	Radiator lower cushion	(12)	Radiator main fan shroud	(22)	O-ring
(2)	Radiator	(13)	Radiator main fan, radiator main fan motor ASSY	(23)	Radiator lower bracket
(3)	Radiator upper cushion			(24)	Radiator cap
(4)	Radiator upper bracket	(14)	ATF hose clip (AT model)	(25)	Heat shield cover (AT model)
(5)	Clip	(15)	ATF hose A (AT model)		
(6)	Radiator inlet hose	(16)	ATF hose B (AT model)		
(7)	Engine coolant reservoir tank cap	(17)	ATF pipe (AT model)		
(8)	Over flow hose	(18)	ATF hose C (AT model)		
(9)	Engine coolant reservoir tank	(19)	ATF hose D (AT model)		
(10)	Radiator sub fan shroud	(20)	Radiator outlet hose		
(11)	Radiator sub fan, radiator sub fan motor ASSY	(21)	Radiator drain plug		

Tightening torque:N·m (kgf-m, ft-lb)

T1: 5 (0.5, 3.7)
T2: 7.5 (0.8, 5.5)
T3: 12 (1.2, 8.9)
T4: 3.4 (0.3, 2.5)
T5: 3 (0.3, 2.2)

C: CAUTION

- Wear appropriate work clothing, including a cap, protective goggles and protective shoes when performing any work.
- Remove contamination including dirt and corrosion before removal, installation or disassembly.
- Keep the disassembled parts in order and protect them from dust and dirt.
- Before removal, installation or disassembly, be sure to clarify the failure. Avoid unnecessary removal, installation, disassembly and replacement.
- Vehicle components are extremely hot after driving. Be wary of receiving burns from heated parts.
- Be sure to tighten fasteners including bolts and nuts to the specified torque.
- Place shop jacks or rigid racks at the specified points.
- Before disconnecting connectors of sensors or units, be sure to disconnect the ground cable from battery.
- Prepare a container and cloth to prevent scattering of engine coolant when performing work where engine coolant can be spilled. If the fuel spills, wipe it off immediately to prevent from penetrating into floor or flowing out for environmental protection.
- Follow all government and local regulations concerning disposal of refuse when disposing engine coolant.

D: PREPARATION TOOL

1. SPECIAL TOOL

ILLUSTRATION	TOOL NUMBER	DESCRIPTION	REMARKS
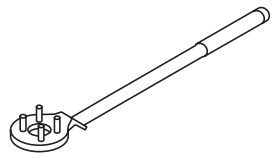 ST-499977100	499977100	CRANK PULLEY WRENCH	Used to stop rotation of the crank pulley when loosening or tightening crank pulley bolts. (MT model)
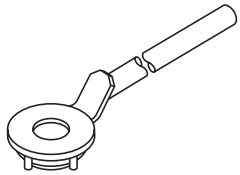 ST-499977400	499977400	CRANK PULLEY WRENCH	Used to stop rotation of the crank pulley when loosening or tightening crank pulley bolts. (AT model)
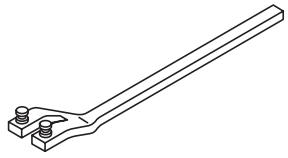 ST18231AA010	18231AA010	CAM SPROCKET WRENCH	• Used for removing and installing cam sprocket. • CAM SPROCKET WRENCH (499207100) can also be used.
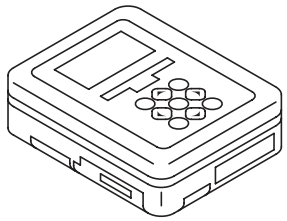 ST1B022XU0	1B022XU0	SUBARU SELECT MONITOR III KIT	Used for troubleshooting the electrical system.

2. GENERAL TOOL

TOOL NAME	REMARKS
Radiator cap tester	Used for checking radiator and radiator cap.

2. Radiator Fan System

A: WIRING DIAGRAM

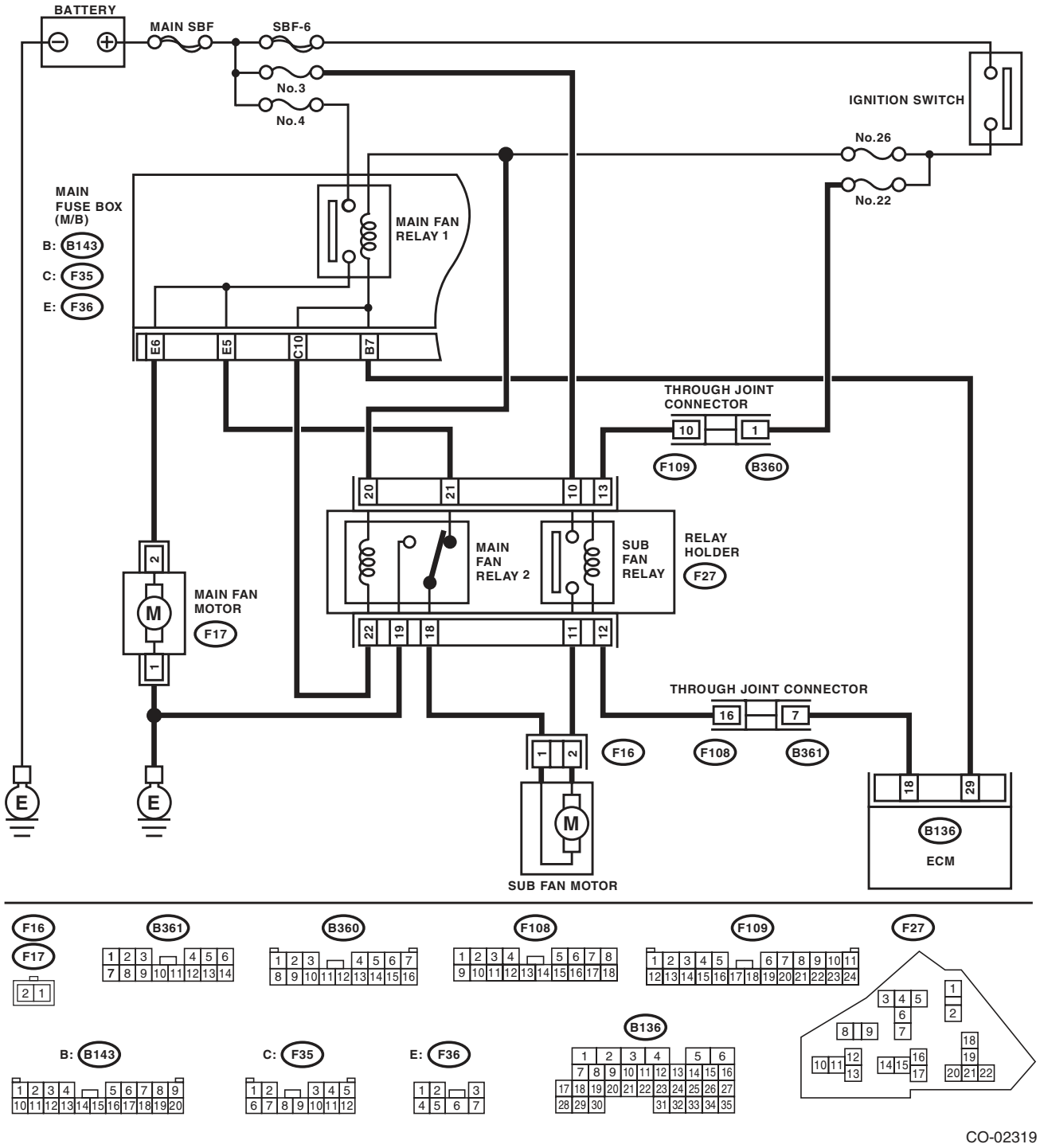

B: INSPECTION

DETECTING CONDITION:

Vehicle speed	A/C compressor load	Engine coolant temperature		
		Increase: 94°C (201°F) or less Decrease: 92°C (198°F) or less	Increase: 95 — 99°C (203 — 210°F) Decrease: 93 — 94°C (199 — 201°F)	Increase: 100°C (212°F) or more Decrease: 95°C (203°F) or more
		Radiator fan operation	Radiator fan operation	Radiator fan operation
During acceleration: 19 km/h (12 MPH) or less During deceleration: 10 km/h (6 MPH) or less	OFF	OFF	Low-Speed	High-Speed
	Low	Low-Speed	Low-Speed	High-Speed
	High	High-Speed	High-Speed	High-Speed
During acceleration: 20 — 69 km/h (12 — 43 MPH) During deceleration: 11 — 64 km/h (7 — 40 MPH)	OFF	OFF	Low-Speed	High-Speed
	Low	High-Speed	High-Speed	High-Speed
	High	High-Speed	High-Speed	High-Speed
During acceleration: 70 — 134 km/h (43 — 83 MPH) During deceleration: 65 — 129 km/h (40 — 80 MPH)	OFF	OFF	Low-Speed	High-Speed
	Low	OFF	Low-Speed	High-Speed
	High	Low-Speed	High-Speed	High-Speed
During acceleration: 135 km/h (84 MPH) or more During deceleration: 130 km/h (81 MPH) or more	OFF	OFF	OFF	High-Speed
	Low	OFF	Low-Speed	High-Speed
	High	OFF	Low-Speed	High-Speed

TROUBLE SYMPTOMS:

Radiator main fan and radiator sub fans do not rotate under the above operating conditions.

Step		Check	Yes	No
1	**CHECK OPERATION OF RADIATOR FAN.** 1) Connect the delivery (test) mode connector. 2) Turn the ignition switch to ON. 3) Using the Subaru Select Monitor, check the forced operation of the radiator fan relay. NOTE: • When performing a forced operation radiator fan relay check using the Subaru Select Monitor, the radiator main fan and radiator sub fan will repeat low speed revolution → high speed revolution → OFF in this order. • Subaru Select Monitor Refer to “Compulsory Valve Operation Check Mode” for detailed procedures. <Ref. to EN(H4SO)(diag)-51, Compulsory Valve Operation Check Mode.>	Do the radiator main fans and radiator sub fans rotate at low speed?	Go to step **2**.	Go to step **3**.

	Step	Check	Yes	No
2	**CHECK OPERATION OF RADIATOR FAN.** 1) Connect the delivery (test) mode connector. 2) Turn the ignition switch to ON. 3) Using the Subaru Select Monitor, check the forced operation of the radiator fan relay. NOTE: • When performing a forced operation radiator fan relay check using the Subaru Select Monitor, the radiator main fan and radiator sub fan will repeat low speed revolution → high speed revolution → OFF in this order. • Subaru Select Monitor Refer to "Compulsory Valve Operation Check Mode" for detailed procedures. <Ref. to EN(H4SO)(diag)-51, Compulsory Valve Operation Check Mode.>	Do the radiator main fans and radiator sub fans rotate at high speed?	Radiator main fan system is normal.	Go to step **27**.
3	**CHECK POWER SUPPLY TO SUB FAN RELAY.** 1) Turn the ignition switch to OFF. 2) Remove the sub fan relay from the relay holder. 3) Measure the voltage between the sub fan relay terminal and chassis ground. ***Connector & terminal*** ***(F27) No. 10 (+) — Chassis ground (–):***	Is the voltage 10 V or more?	Go to step **4**.	Go to step **5**.
4	**CHECK POWER SUPPLY TO SUB FAN RELAY.** 1) Turn the ignition switch to ON. 2) Measure the voltage between the sub fan relay terminal and chassis ground. ***Connector & terminal*** ***(F27) No. 13 (+) — Chassis ground (–):***	Is the voltage 10 V or more?	Go to step **7**.	Go to step **6**.
5	**CHECK FUSE.** 1) Turn the ignition switch to OFF. 2) Remove the fuse No. 3. 3) Check the condition of fuse.	Is the fuse blown out?	Replace the fuse.	Repair the power supply line.
6	**CHECK FUSE.** 1) Turn the ignition switch to OFF. 2) Remove the fuse No. 22. 3) Check the condition of fuse.	Is the fuse blown out?	Replace the fuse.	Repair the power supply line.
7	**CHECK SUB FAN RELAY.** 1) Turn the ignition switch to OFF. 2) Measure the resistance between sub fan relay terminals. ***Terminals*** ***No. 10 — No. 11:***	Is the resistance 1 MΩ or more?	Go to step **8**.	Replace the sub fan relay. <Ref. to AC-41, Relay and Fuse.>
8	**CHECK SUB FAN RELAY.** 1) Connect the battery to terminals No. 13 and No. 12 of the sub fan relay. 2) Measure the resistance between sub fan relay terminals. ***Terminals*** ***No. 10 — No. 11:***	Is the resistance less than 1 Ω?	Go to step **9**.	Replace the sub fan relay. <Ref. to AC-41, Relay and Fuse.>

	Step	Check	Yes	No
9	**CHECK HARNESS BETWEEN SUB FAN RELAY TERMINAL AND SUB FAN MOTOR CONNECTOR.** 1) Disconnect the connector from the sub fan motor. 2) Measure the resistance of harness between the sub fan relay terminal and sub fan motor connector. ***Connector & terminal*** ***(F16) No. 2 — (F27) No. 11:***	Is the resistance less than 1 Ω?	Go to step **10**.	Repair the open circuit of harness between sub fan relay terminal and sub fan motor connector.
10	**CHECK HARNESS BETWEEN SUB FAN MOTOR CONNECTOR AND MAIN FAN RELAY 2 CONNECTOR.** 1) Remove the main fan relay 2 from the relay holder. 2) Measure the resistance of harness between sub fan motor connector and main fan relay 2 connector. ***Connector & terminal*** ***(F16) No. 1 — (F27) No. 18:***	Is the resistance less than 1 Ω?	Go to step **11**.	Repair the open circuit of the harness between sub fan motor connector and main fan relay 2 connector.
11	**CHECK POOR CONTACT.** Check poor contact of sub fan motor connector.	Is there poor contact in the sub fan motor connector?	Repair the poor contact of sub fan motor connector.	Go to step **12**.
12	**CHECK SUB FAN MOTOR.** Connect the battery positive (+) terminal to terminal No. 2 of the sub fan motor, and the ground (–) terminal to terminal No. 1.	Does the radiator sub fan rotate?	Go to step **13**.	Replace the sub fan motor. <Ref. to CO(H4SO)-26, Radiator Sub Fan and Fan Motor.>
13	**CHECK MAIN FAN RELAY 2.** Measure the resistance of main fan relay 2. ***Terminals*** ***No. 21 — No. 18:***	Is the resistance less than 1 Ω?	Go to step **14**.	Replace the main fan relay 2. <Ref. to AC-41, Relay and Fuse.>
14	**CHECK HARNESS BETWEEN MAIN FAN RELAY 2 AND MAIN FAN MOTOR CONNECTOR.** 1) Disconnect the connector from the main fan motor. 2) Measure the resistance of the harness between main fan relay 2 terminal and main fan motor connector. ***Connector & terminal*** ***(F17) No. 2 — (F27) No. 21:***	Is the resistance less than 1 Ω?	Go to step **15**.	Repair the open circuit of the harness between main fan relay 2 terminal and main fan motor connector.
15	**CHECK MAIN FAN MOTOR AND GROUND CIRCUIT.** Measure the resistance between main fan motor connector and chassis ground. ***Connector & terminal*** ***(F17) No. 1 — Chassis ground:***	Is the resistance less than 5 Ω?	Go to step **16**.	Repair the open circuit of the harness between main fan motor connector and chassis ground.
16	**CHECK POOR CONTACT.** Check poor contact of main fan motor connector.	Is there poor contact in the main fan motor connector?	Repair the poor contact of main fan motor connector.	Go to step **17**.
17	**CHECK MAIN FAN MOTOR.** Connect the battery positive (+) terminal to terminal No. 2 of the main fan motor, and the ground (–) terminal to terminal No. 1.	Does the radiator main fan rotate?	Go to step **18**.	Replace the main fan motor. <Ref. to CO(H4SO)-24, Radiator Main Fan and Fan Motor.>

	Step	Check	Yes	No
18	**CHECK HARNESS BETWEEN SUB FAN RELAY AND ECM.** 1) Disconnect the connectors from ECM. 2) Measure the resistance between the sub fan relay terminal and ECM connector. ***Connector & terminal*** ***(B136) No. 18 — (F27) No. 12:***	Is the resistance less than 1 Ω?	Go to step **19**.	Repair the open circuit of harness between sub fan relay terminal and ECM.
19	**CHECK POOR CONTACT.** Check for poor contact of the ECM connector.	Is there poor contact in ECM connector?	Repair the poor contact of ECM connector.	Check the DTC. Repair the trouble cause. <Ref. to EN(H4SO)(diag)-40, Read Diagnostic Trouble Code (DTC).>
20	**CHECK MAIN FAN RELAY 1.** 1) Turn the ignition switch to OFF. 2) Remove main fan relay 1 from the main fuse box. 3) Measure the resistance of terminal in main fan relay 1 switch.	Is the resistance 1 MΩ or more?	Go to step **21**.	Replace the main fan relay 1. <Ref. to AC-41, Relay and Fuse.>
21	**CHECK MAIN FAN RELAY 1.** 1) Connect the main fan relay 1 coil side terminal to the battery. 2) Measure the resistance between terminals of main fan relay 1 switch.	Is the resistance less than 1 Ω?	Go to step **22**.	Replace the main fan relay 1. <Ref. to AC-41, Relay and Fuse.>
22	**CHECK HARNESS BETWEEN MAIN FAN RELAY 1 AND MAIN FAN MOTOR CONNECTOR.** 1) Disconnect the connector from the main fan motor. 2) Measure the resistance of the harness between main fan relay 1 terminal and main fan motor connector. ***Connector & terminal*** ***(F17) No. 2 — (F36) No. 6:***	Is the resistance less than 1 Ω?	Go to step **23**.	Repair the open circuit of the harness between main fan relay 1 terminal and main fan motor connector.
23	**CHECK HARNESS BETWEEN MAIN FAN RELAY 1 AND ECM.** 1) Disconnect the connectors from ECM. 2) Measure the resistance between main fan relay 1 terminal and ECM connector. ***Connector & terminal*** ***(B136) No. 29 — (B143) No. 7:***	Is the resistance less than 1 Ω?	Go to step **24**.	Repair the open circuit of the harness between main fan relay 1 terminal and ECM.
24	**CHECK HARNESS BETWEEN MAIN FAN RELAY 2 AND ECM.** Measure the resistance between main fan relay 2 terminal and ECM connector. ***Connector & terminal*** ***(B136) No. 29 — (F27) No. 22:***	Is the resistance less than 1 Ω?	Go to step **25**.	Repair the open circuit of the harness between main fan relay 2 terminal and ECM.
25	**CHECK FUSE.** 1) Turn the ignition switch to OFF. 2) Remove the fuse No. 4 and 26. 3) Check the condition of fuse.	Is the fuse blown out?	Replace the fuse.	Go to step **26**.
26	**CHECK POOR CONTACT.** Check for poor contact of the ECM connector.	Is there poor contact in ECM connector?	Repair the poor contact of ECM connector.	Repair the power supply circuit to the main fuse box.
27	**CHECK OPERATION OF RADIATOR FAN.** If the both fans do not rotate at high speed in the condition of step 2, check whether the radiator sub fan is rotating.	Does the radiator sub fan rotate?	Go to step **20**.	Go to step **28**.

Step		Check	Yes	No
28	**CHECK GROUND CIRCUIT OF MAIN FAN RELAY 2.** 1) Remove the main fan relay 2 from A/C relay holder. 2) Measure the resistance between main fan relay 2 terminal and chassis ground. ***Connector & terminal*** ***(F27) No. 19 — Chassis ground:***	Is the resistance less than 1 Ω?	Go to step **29**.	Repair the open circuit of harness between main fan relay 2 and chassis ground.
29	**CHECK POWER SUPPLY TO MAIN FAN RELAY 2.** 1) Turn the ignition switch to ON. 2) Measure the voltage between main fan relay 2 terminal and chassis ground. ***Connector & terminal*** ***(F27) No. 20 (+) — Chassis ground (–):***	Is the voltage 10 V or more?	Go to step **30**.	Repair the power supply line.
30	**CHECK MAIN FAN RELAY 2.** 1) Turn the ignition switch to OFF. 2) Remove the main fan relay 2. 3) Measure the resistance of main fan relay 2. ***Terminals*** ***(F27) No. 18 — (F27) No. 19:***	Is the resistance 1 MΩ or more?	Go to step **31**.	Replace the main fan relay 2. <Ref. to AC-41, Relay and Fuse.>
31	**CHECK MAIN FAN RELAY 2.** 1) Connect the battery to terminals No. 20 and No. 22 of the main fan relay 2. 2) Measure the resistance of main fan relay 2. ***Terminals*** ***(F27) No. 18 — (F27) No. 19:***	Is the resistance less than 1 Ω?	Go to step **23**.	Replace the main fan relay 2. <Ref. to AC-41, Relay and Fuse.>

3. Engine Coolant

A: REPLACEMENT

1. DRAINING OF ENGINE COOLANT

1) Set the vehicle on a lift.
2) Lift up the vehicle.
3) Remove the under cover.
4) Remove the drain plug (A) to drain engine coolant into container.

NOTE:
Remove the radiator cap so that engine coolant will drain faster.

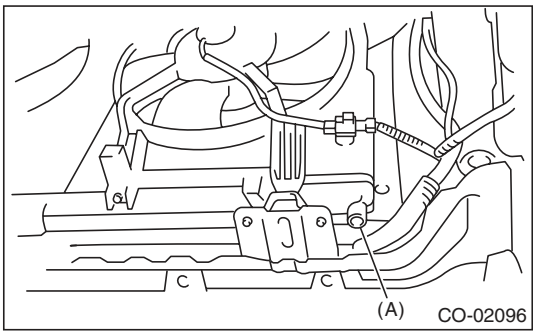

5) Install the drain plug.
6) Install the under cover.

2. FILLING OF ENGINE COOLANT

1) Pour cooling system conditioner through the filler neck.

Cooling system protective agent:
Refer to "SPECIFICATION" for the cooling system protective agent. <Ref. to CO(H4SO)-2, SPECIFICATION, General Description.>

2) Pour engine coolant into the radiator up to the filler neck position.

Recommended engine coolant:
Refer to "SPECIFICATION" for the recommended engine coolant. <Ref. to CO(H4SO)-2, SPECIFICATION, General Description.>

Amount of engine coolant:
Refer to "SPECIFICATION" for the amount of engine coolant. <Ref. to CO(H4SO)-2, SPECIFICATION, General Description.>

Engine coolant concentration:
Refer to "ADJUSTMENT" for the engine coolant concentration. <Ref. to CO(H4SO)-14, ADJUSTMENT, Engine Coolant.>

NOTE:
The SUBARU Super Coolant containing anti-freeze and anti-rust agents is especially made for SUBARU engine, which has an aluminum cylinder block. Always use SUBARU Super Coolant since other coolants may cause corrosion.

3) Fill engine coolant into the reservoir tank up to "FULL" level.

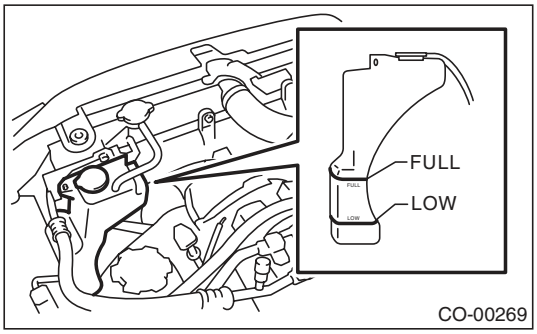

4) Close the radiator cap and start the engine. Race 5 to 6 times at 3,000 rpm or less, then stop the engine. (Complete this operation within 40 seconds.)
5) Wait for one minute after the engine stops, open the radiator cap. If the engine coolant level drops, add engine coolant into radiator up to the filler neck position.
6) Perform the procedures 4) and 5) again.
7) Attach the radiator cap and reservoir tank cap properly.
8) Start the engine and operate the heater at maximum hot position and the blower speed setting to "LO"
9) Run the engine at 2,000 rpm or less until radiator fan starts and stops.

NOTE:
Be careful with the engine coolant temperature gauge to prevent overheating.
10) Stop the engine and wait until the engine coolant temperature drops to 30°C (86°F) or less.
11) Open the radiator cap. If the engine coolant level drops, add engine coolant into radiator up to the filler neck position.
12) Attach the radiator cap correctly.
13) Set the heater setting to maximum hot position and the blower speed setting to "LO" and start the engine. Perform racing at 3,000 rpm or less. If the flowing sound is heard at this time, perform the procedures from 9) again.

B: ADJUSTMENT

1. PROCEDURE TO ADJUST THE SUBARU SUPER COOLANT CONCENTRATION

CAUTION:
SUBARU Super Coolant concentration must be used from 50 to 60% to assure the best performance of the anti-freeze and anti-rust agents.
To adjust the concentration of SUBARU Super Coolant according to temperature, find the proper SUBARU Super Coolant concentration in the table, and add diluting water to the SUBARU Super Coolant (concentrated type) until it reaches the proper dilution.

Relationship of SUBARU Super Coolant concentration and freezing temperature			
SUBARU Super Coolant concentration	50%	55%	60%
Freezing temperature	–36°C (–33°F)	–41°C (–42°F)	–50°C (–58°F)

Recommended Engine Coolant and Water for Dilution:
Refer to "SPECIFICATION" for the recommended engine coolant and diluting water. <Ref. to CO(H4SO)-2, SPECIFICATION, General Description.>

4. Water Pump

A: REMOVAL

1) Remove the radiator. <Ref. to CO(H4SO)-19, REMOVAL, Radiator.>
2) Remove the V-belts. <Ref. to ME(H4SO)-38, REMOVAL, V-belt.>
3) Remove the crank pulley. <Ref. to ME(H4SO)-41, REMOVAL, Crank Pulley.>
4) Remove the timing belt cover. <Ref. to ME(H4SO)-43, REMOVAL, Timing Belt Cover.>
5) Remove the timing belt. <Ref. to ME(H4SO)-44, TIMING BELT, REMOVAL, Timing Belt.>
6) Remove the automatic belt tension adjuster.

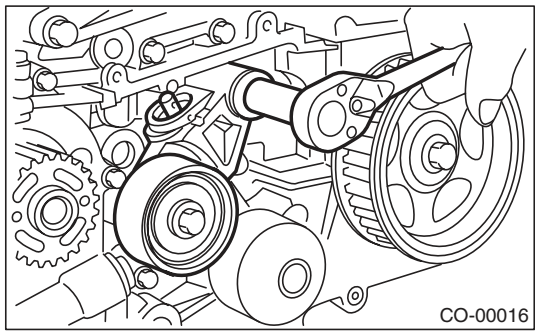

7) Remove the camshaft position sensor. <Ref. to FU(H4SO)-24, REMOVAL, Camshaft Position Sensor.>
8) Remove the cam sprocket LH. <Ref. to ME(H4SO)-49, REMOVAL, Cam Sprocket.>
9) Remove the belt cover No. 2 LH.

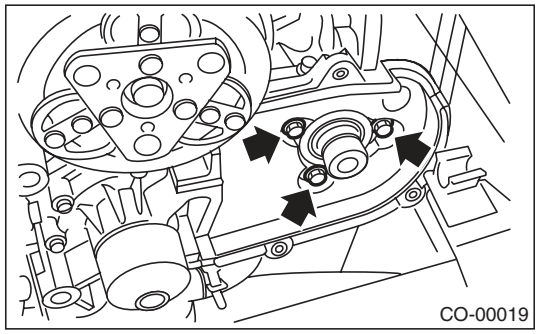

10) Remove the tensioner bracket.

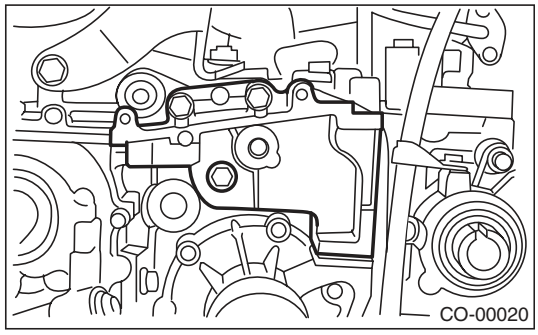

11) Disconnect the hose from water pump.
12) Remove the water pump.

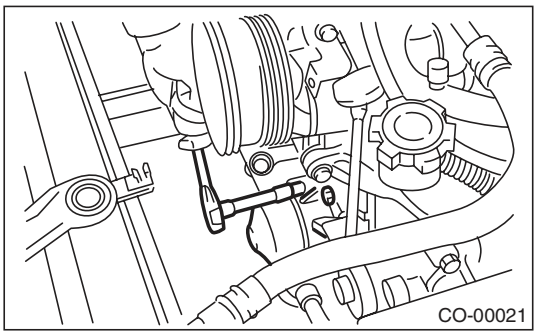

B: INSTALLATION

1) Install the water pump onto cylinder block LH.

NOTE:
- Use a new gasket.
- When installing the water pump, tighten the bolts in two stages in alphabetical sequence as shown in figure.

Tightening torque:
First
12 N·m (1.2 kgf-m, 8.9 ft-lb)
Second
12 N·m (1.2 kgf-m, 8.9 ft-lb)

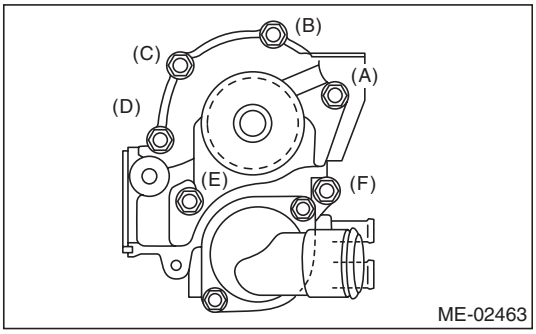

2) Install the hose to water pump.
3) Install the tensioner bracket.

Tightening torque:
24.5 N·m (2.5 kgf-m, 18.1 ft-lb)

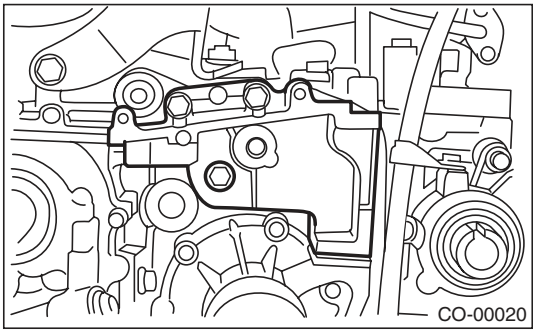

4) Install the belt cover No. 2 LH.

Tightening torque:
5 N·m (0.5 kgf-m, 3.7 ft-lb)

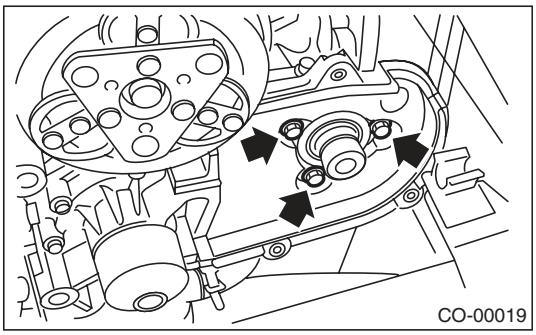

5) Install the cam sprocket LH. <Ref. to ME(H4SO)-49, INSTALLATION, Cam Sprocket.>
6) Install the camshaft position sensor. <Ref. to FU(H4SO)-24, INSTALLATION, Camshaft Position Sensor.>
7) Install an automatic belt tension adjuster with the tension rod held by a pin. <Ref. to ME(H4SO)-45, AUTOMATIC BELT TENSION ADJUSTER ASSEMBLY AND BELT IDLER, INSTALLATION, Timing Belt.>
8) Install the timing belt. <Ref. to ME(H4SO)-46, TIMING BELT, INSTALLATION, Timing Belt.>
9) Install the timing belt cover. <Ref. to ME(H4SO)-43, INSTALLATION, Timing Belt Cover.>
10) Install the crank pulley. <Ref. to ME(H4SO)-41, INSTALLATION, Crank Pulley.>
11) Install the V-belts. <Ref. to ME(H4SO)-39, INSTALLATION, V-belt.>
12) Install the radiator. <Ref. to CO(H4SO)-20, INSTALLATION, Radiator.>

C: INSPECTION

1) Check the water pump bearing for smooth rotation.
2) Check the water pump pulley for abnormalities.
3) Make sure the impeller is not abnormally deformed or damaged.
4) Inspect the clearance between impeller and pump case.

Clearance between impeller and pump case:
Standard
0.5 — 1.5 mm (0.020 — 0.060 in)

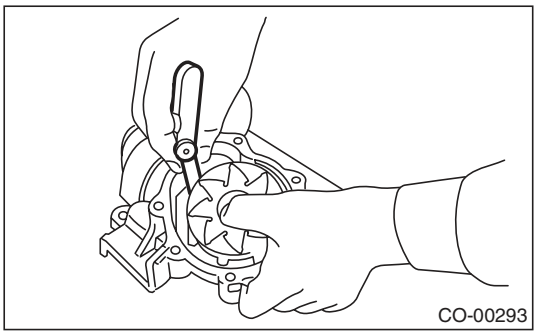

5) After water pump installation, check pulley shaft for engine coolant leaks or noise. If leaks or noise are noted, replace the water pump assembly.

5. Thermostat

A: REMOVAL

1) Set the vehicle on a lift.
2) Lift up the vehicle.
3) Remove the under cover.
4) Drain engine coolant completely. <Ref. to CO(H4SO)-13, DRAINING OF ENGINE COOLANT, REPLACEMENT, Engine Coolant.>
5) Disconnect the radiator outlet hose from thermostat cover.

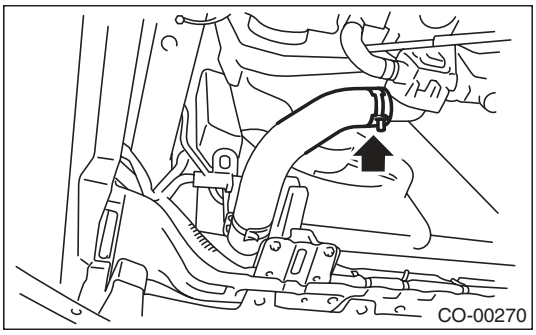

6) Remove the thermostat cover, and then remove the gasket and thermostat.

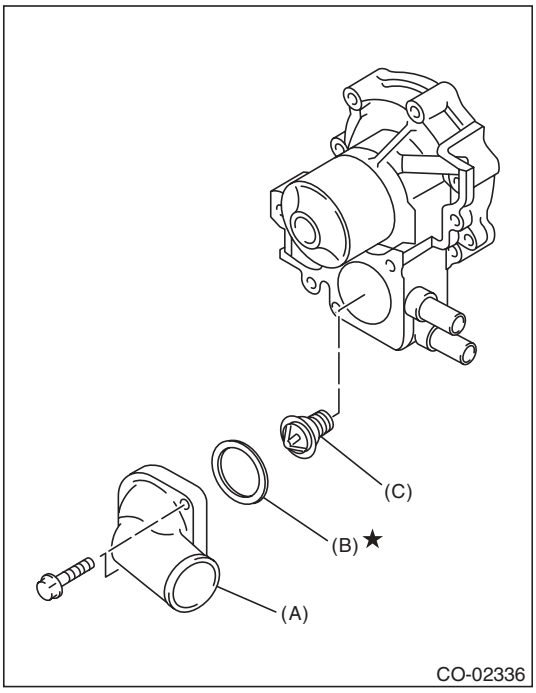

(A) Thermostat cover
(B) Gasket
(C) Thermostat

B: INSTALLATION

1) Install a gasket to thermostat.

NOTE:
Use a new gasket.

2) Install the thermostat and thermostat cover.

NOTE:
Install with the jiggle pin facing upward.

Tightening torque:
12 N·m (1.2 kgf-m, 8.9 ft-lb)

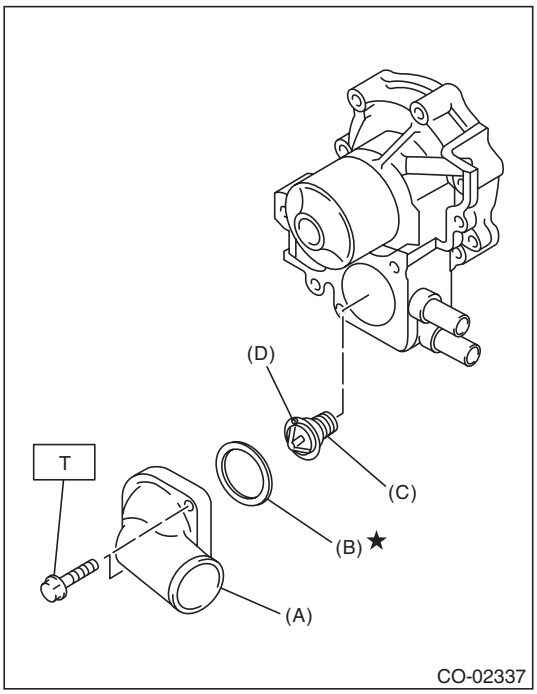

(A) Thermostat cover
(B) Gasket
(C) Thermostat
(D) Jiggle pin

3) Connect the radiator outlet hose to thermostat cover.
4) Install the under cover.
5) Lower the vehicle.
6) Fill engine coolant. <Ref. to CO(H4SO)-13, FILLING OF ENGINE COOLANT, REPLACEMENT, Engine Coolant.>

C: INSPECTION

Replace the thermostat if the valve does not close completely at an ambient temperature or if any malfunction is detected by the following test.

- Inspection method

Immerse the thermostat and a thermometer in water. Raise water temperature gradually, and measure the temperature and valve lift when the valve begins to open and when the valve is fully opened. During the test, agitate the water for even temperature distribution. The measured value should meet the specification.

NOTE:

- Leave the thermostat in the boiling water for five minutes or more before measuring valve lift.
- Hold the thermostat with a wire or the like to avoid contacting with container bottom.

Opening start temperature:
80 — 84°C (176 — 183°F)

Full open temperature:
95°C (203°F)

Total valve lift:
9.0 mm (0.354 in) or more

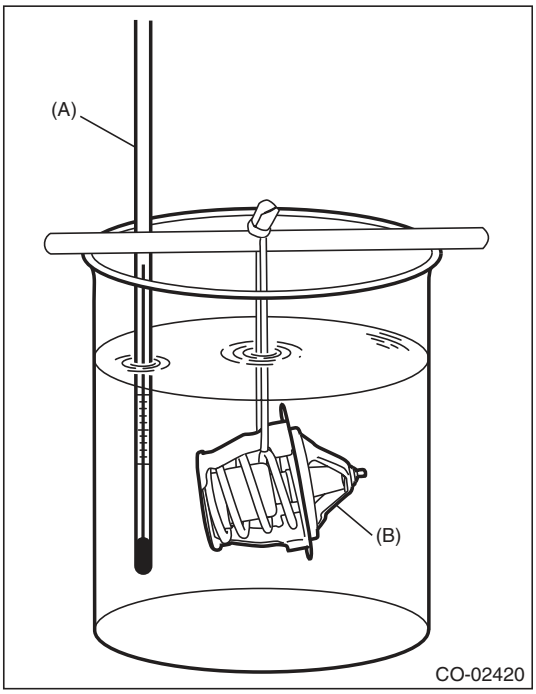

(A) Thermometer
(B) Thermostat

6. Radiator

A: REMOVAL

CAUTION:
The radiator is pressurized. Wait until engine cools down before working on the radiator.

1) Set the vehicle on a lift.
2) Disconnect the ground cable from battery.

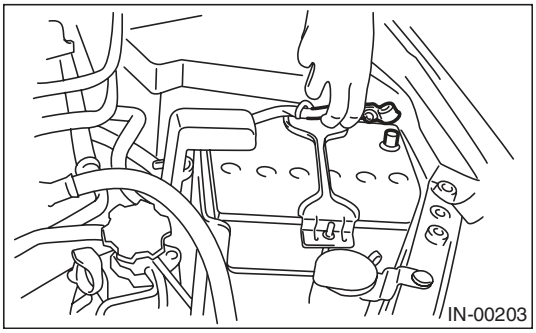

3) Lift up the vehicle.
4) Remove the under cover.
5) Remove the heat shield cover from radiator. (AT model)

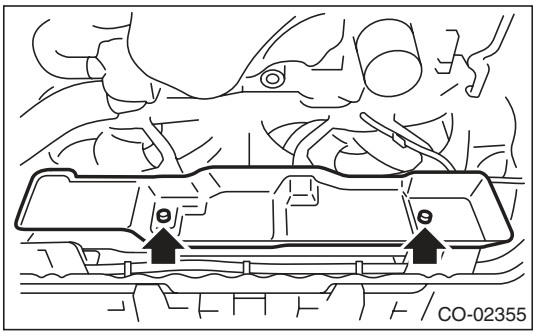

6) Drain engine coolant completely.
<Ref. to CO(H4SO)-13, DRAINING OF ENGINE COOLANT, REPLACEMENT, Engine Coolant.>

7) Disconnect the connectors of radiator main fan motor connector (A) and radiator sub fan motor connector (B).

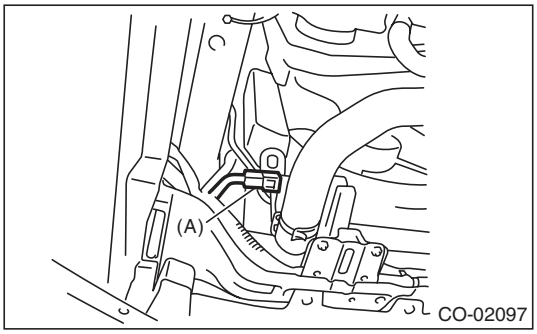

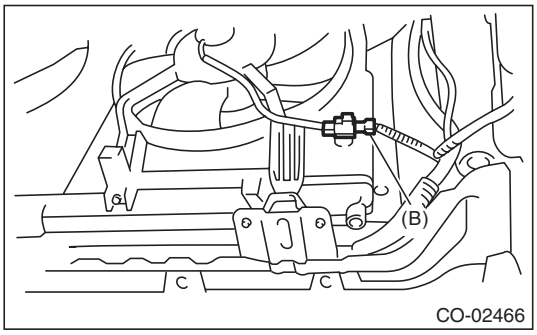

8) Disconnect the radiator outlet hose from thermostat cover.

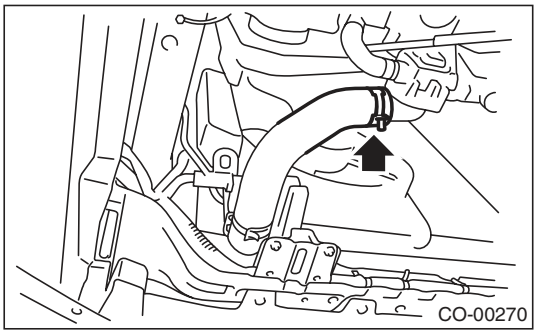

9) Disconnect the ATF cooler hoses from ATF pipes. (AT model)

NOTE:
Plug the ATF pipe to prevent ATF from leaking.

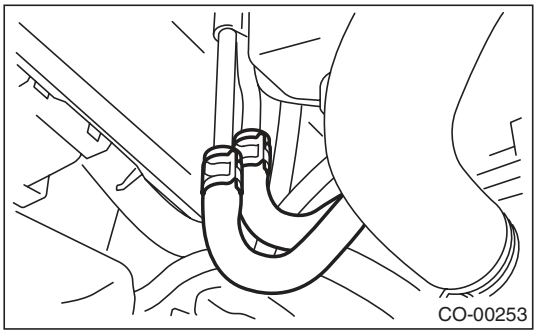

10) Lower the vehicle.
11) Disconnect the over flow hose.
12) Remove the reservoir tank. <Ref. to CO(H4SO)-28, REMOVAL, Reservoir Tank.>

13) Remove the hood stay holder.

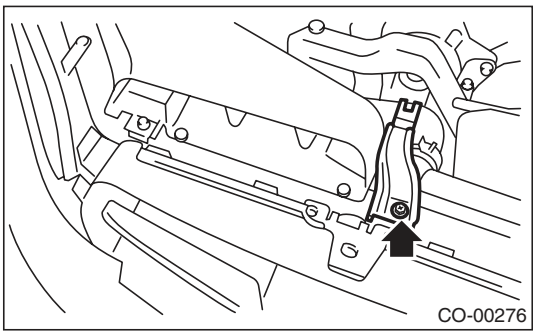

14) Remove the air intake duct. <Ref. to IN(H4SO)-8, REMOVAL, Air Intake Duct.>

15) Disconnect the radiator inlet hoses from the engine.

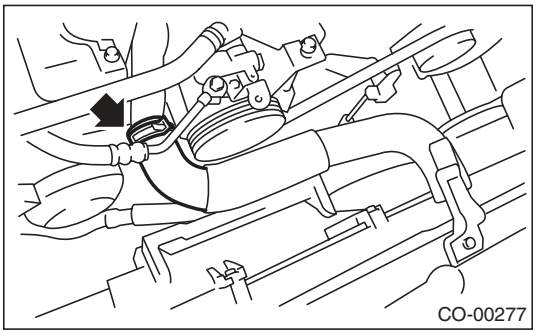

16) Remove the radiator upper brackets.

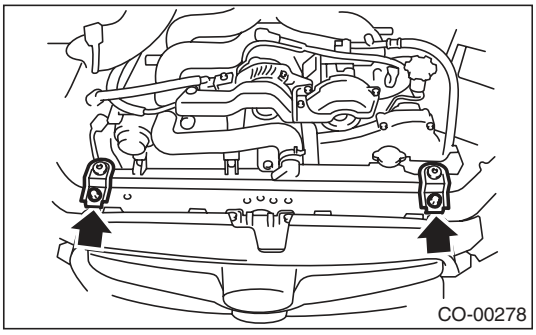

17) Lift the radiator up and away from vehicle.

B: INSTALLATION

1) Attach the radiator lower cushion to the hole on the radiator lower bracket.

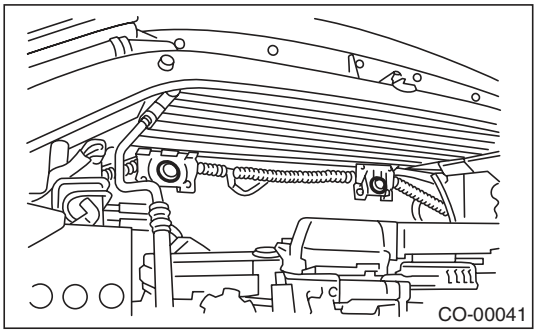

2) Install the radiator to vehicle.

NOTE:
Make pins on the lower side of radiator be fitted into the radiator lower cushions on body side.

3) Install the radiator upper brackets and tighten the bolts.

Tightening torque:
12 N·m (1.2 kgf-m, 8.9 ft-lb)

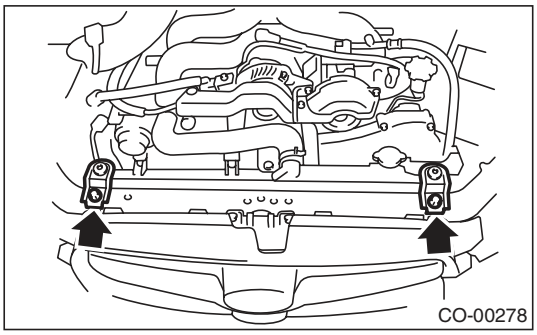

4) Connect the radiator inlet hose.

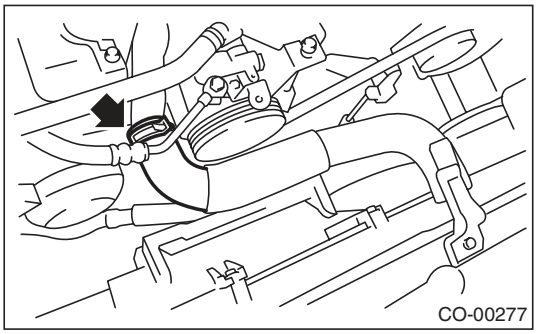

5) Install the air intake duct. <Ref. to IN(H4SO)-8, INSTALLATION, Air Intake Duct.>

6) Install the hood stay holder.

Tightening torque:
7.5 N·m (0.8 kgf-m, 5.5 ft-lb)

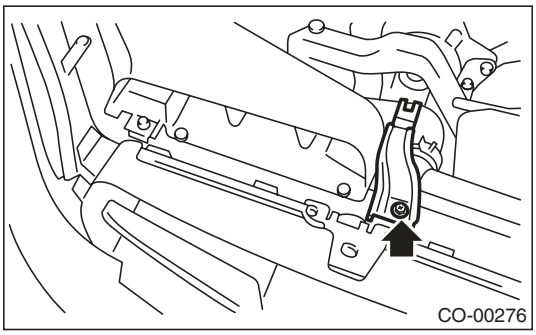

7) Install the reservoir tank. <Ref. to CO(H4SO)-28, INSTALLATION, Reservoir Tank.>
8) Connect the over flow hose.
9) Lift up the vehicle.
10) Connect the ATF cooler hoses. (AT model)

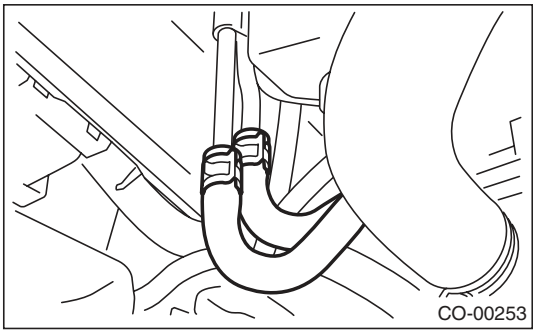

11) Connect the radiator outlet hose.

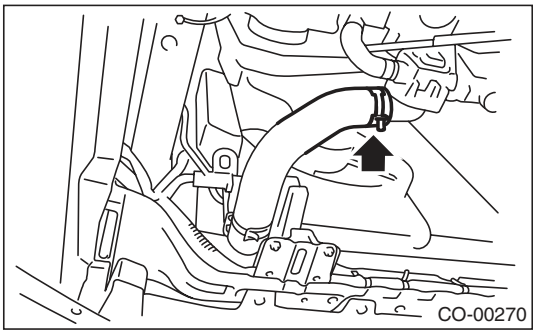

12) Connect the radiator main fan motor connector (A) and radiator sub fan motor connector (B).

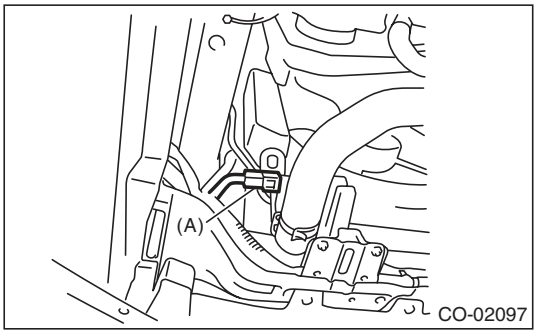

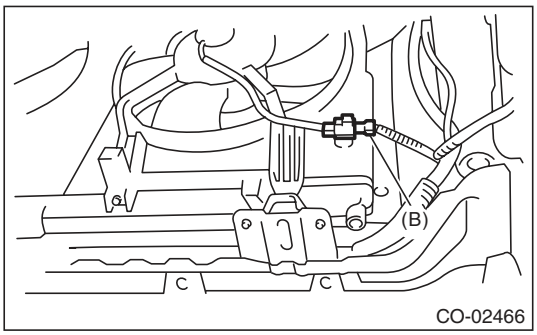

13) Install the heat shield cover. (AT model)

Tightening torque:
3 N·m (0.3 kgf-m, 2.2 ft-lb)

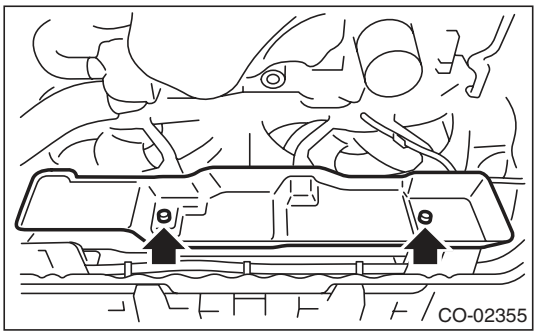

14) Install the under cover.
15) Lower the vehicle.
16) Connect the ground cable to battery.

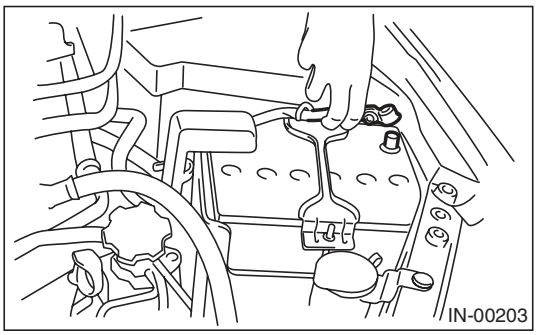

17) Fill engine coolant. <Ref. to CO(H4SO)-13, FILLING OF ENGINE COOLANT, REPLACEMENT, Engine Coolant.>
18) Check the ATF level. (AT model) <Ref. to 4AT-26, INSPECTION, Automatic Transmission Fluid.>

C: INSPECTION

1) Remove the radiator cap, fill the radiator with engine coolant, and then install the tester to the installation position of cap.

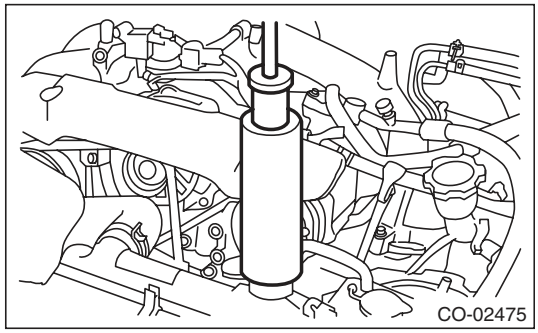

2) Apply a pressure of 157 kPa (1.6 kg/cm^2, 23 psi) to the radiator and check the following points:
- Leakage from the radiator or its vicinity
- Leakage from the hose or its connections

CAUTION:
- **Engine should be turned off.**
- **Wipe engine coolant from check points in advance.**
- **Be careful of engine coolant from spurting out when removing the tester.**
- **Be careful not to deform the filler neck of radiator when installing and removing the tester.**

7. Radiator Cap

A: INSPECTION

1) Attach the radiator cap to tester.

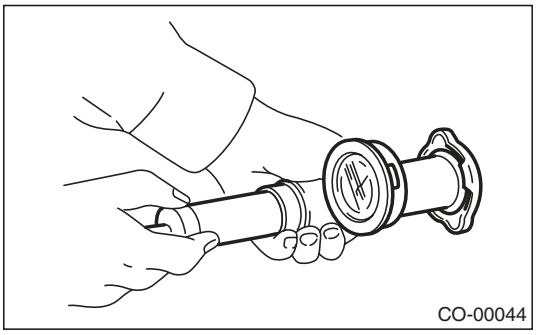

2) Increase pressure until the tester gauge pointer stops. Radiator cap is functioning properly if it holds the service limit pressure for five to six seconds. Replace the cap if it is opened under a pressure less than the service limit value.

Standard:
93 — 123 kPa
(0.95 — 1.25 kg/cm^2, 14 — 18 psi)

Service limit:
83 kPa (0.85 kg/cm^2, 12 psi)

CAUTION:
Be sure to remove foreign matter and rust from the cap in advance. Otherwise, results of pressure test will be incorrect.

8. Radiator Main Fan and Fan Motor

A: REMOVAL

1) Set the vehicle on a lift.
2) Disconnect the ground cable from battery.

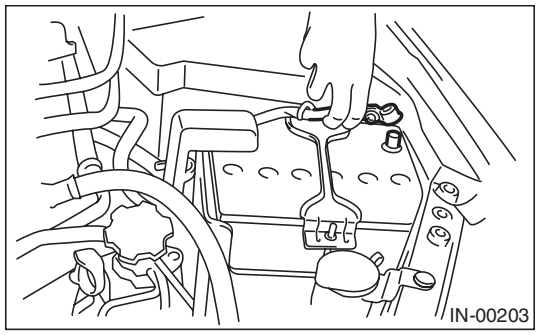

3) Lift up the vehicle.
4) Remove the under cover.
5) Disconnect the connector (A) of the radiator main fan motor.

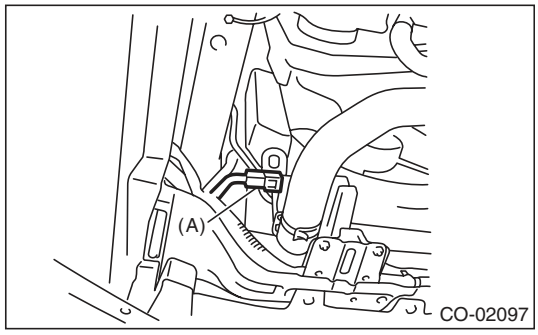

6) Remove the heat shield cover. (AT model)

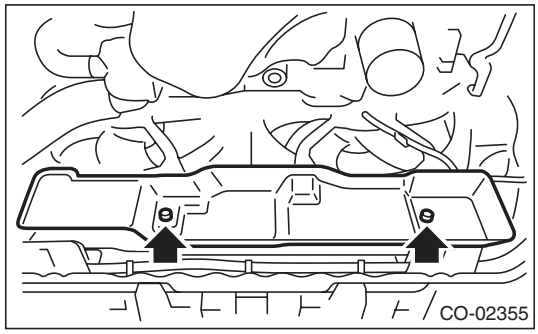

7) Remove the ATF hose from the clip of the radiator main fan motor assembly. (AT model)
8) Lower the vehicle.
9) Disconnect the over flow hose.
10) Remove the reservoir tank. <Ref. to CO(H4SO)-28, REMOVAL, Reservoir Tank.>
11) Drain approximately 2.0 ℓ of coolant. <Ref. to CO(H4SO)-13, DRAINING OF ENGINE COOLANT, REPLACEMENT, Engine Coolant.>
12) Disconnect the radiator inlet hoses from the engine.

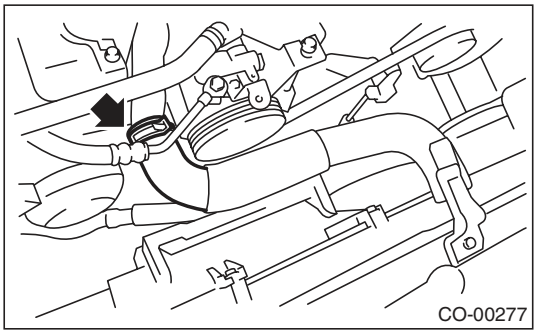

13) Remove the bolts which hold the radiator main fan shroud to the radiator.

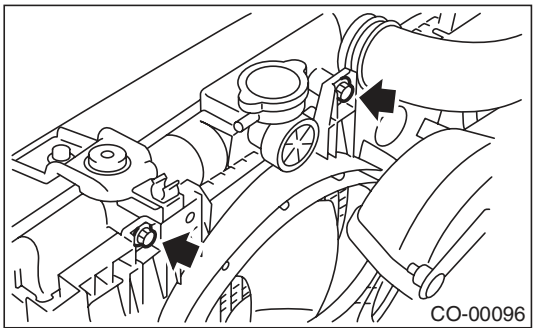

14) Remove the radiator main fan motor assembly.

B: INSTALLATION

Install in the reverse order of removal.

NOTE:
If the installation of the radiator main fan motor assembly is difficult, attempt installation after loosening the bolts which hold the radiator sub fan motor assembly.

Tightening torque:
7.5 N·m (0.8 kgf-m, 5.5 ft-lb)

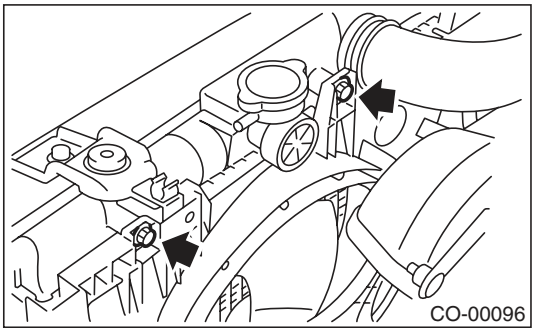

Tightening torque:
3 N·m (0.3 kgf-m, 2.2 ft-lb)

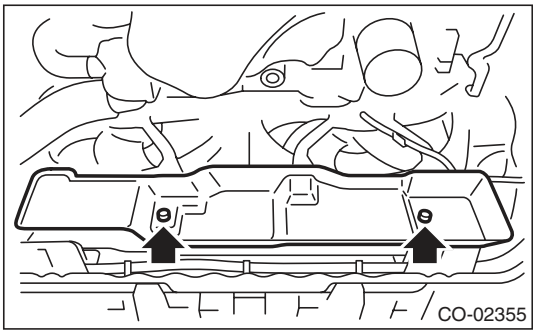

C: DISASSEMBLY

1) Remove the clip which holds motor connector onto the shroud.
2) Remove the nuts which hold the fan to the fan motor.

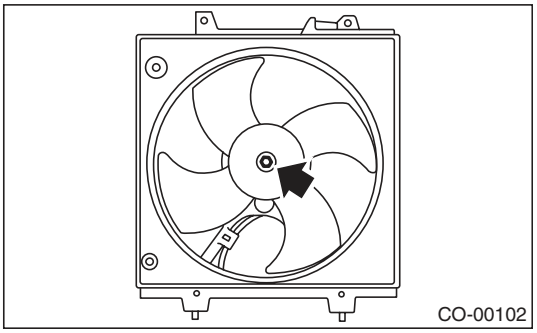

3) Remove the bolts which hold fan motor onto shroud.

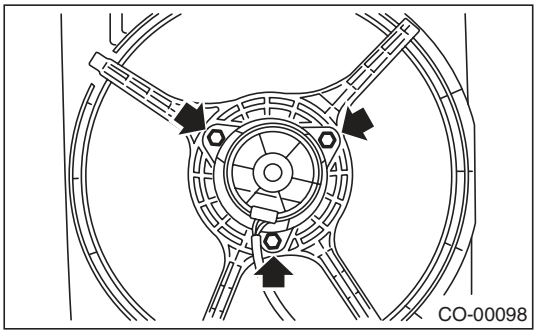

D: ASSEMBLY

Assemble in the reverse order of disassembly.

Tightening torque:
5 N·m (0.5 kgf-m, 3.7 ft-lb)

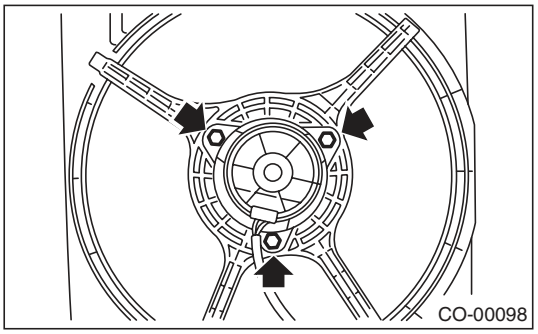

Tightening torque:
3.4 N·m (0.3 kgf-m, 2.5 ft-lb)

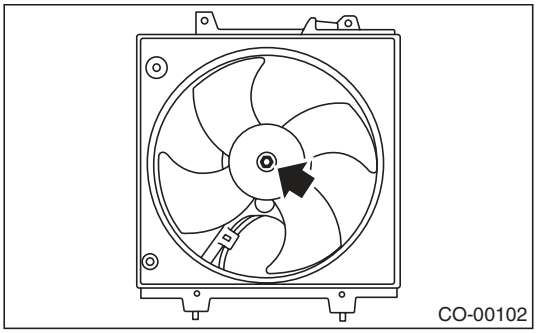

9. Radiator Sub Fan and Fan Motor

A: REMOVAL

1) Set the vehicle on a lift.
2) Disconnect the ground cable from battery.

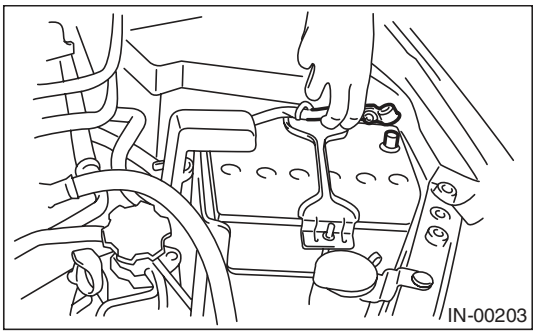

3) Lift up the vehicle.
4) Remove the under cover.
5) Remove the connector (B) of radiator sub fan motor.

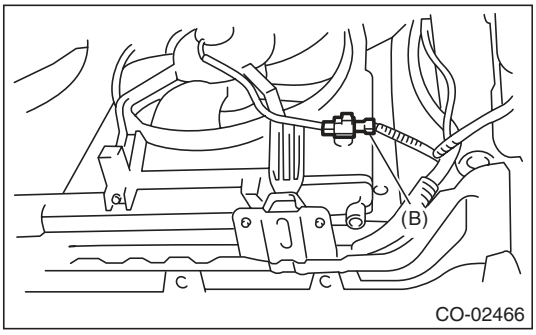

6) Remove the heat shield cover. (AT model)

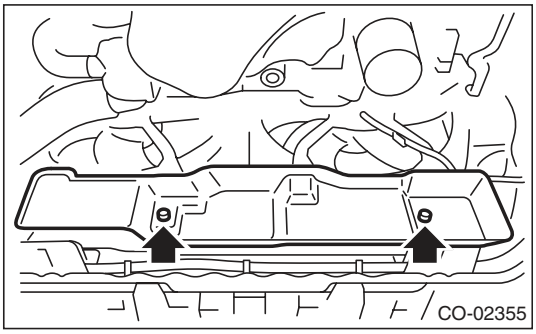

7) Remove the ATF hose from the clip of the radiator sub fan motor assembly. (AT model)
8) Lower the vehicle.
9) Remove the air intake duct (rear). <Ref. to IN(H4SO)-8, REMOVAL, Air Intake Duct.>
10) Drain approximately 2.0 ℓ of coolant. <Ref. to CO(H4SO)-13, DRAINING OF ENGINE COOLANT, REPLACEMENT, Engine Coolant.>
11) Disconnect the radiator inlet hoses from the engine.

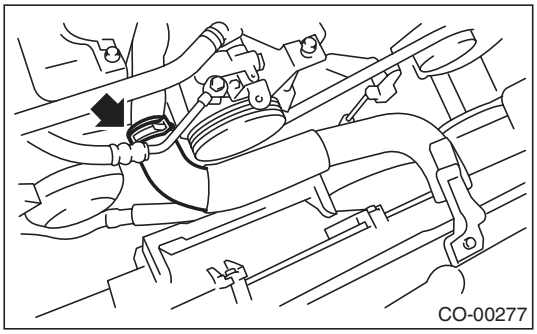

12) Remove the bolts which hold the radiator sub fan shroud to the radiator.

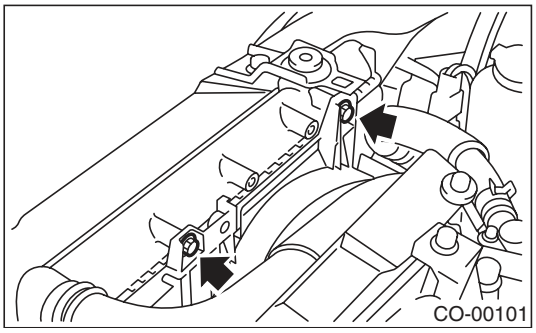

13) Remove the radiator sub fan motor assembly from underneath the vehicle.

B: INSTALLATION

Install in the reverse order of removal.

Tightening torque:
7.5 N·m (0.8 kgf-m, 5.5 ft-lb)

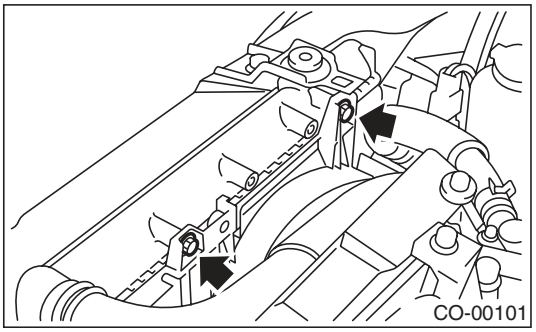

Tightening torque:
3 N·m (0.3 kgf-m, 2.2 ft-lb)

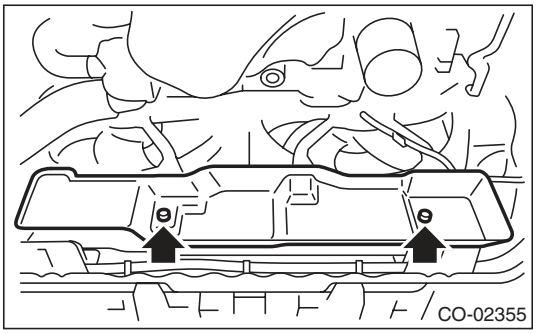

C: DISASSEMBLY

1) Remove the clip which holds the fan motor connector to the shroud.
2) Remove the nuts which hold the fan motor.

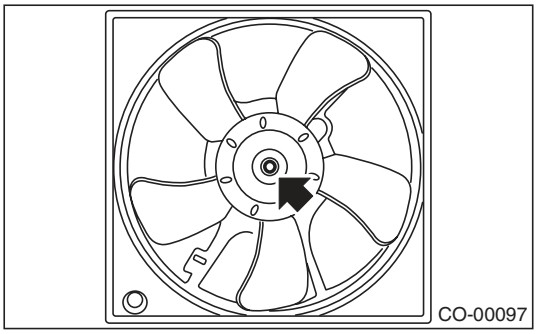

3) Remove the bolts which hold fan motor onto shroud.

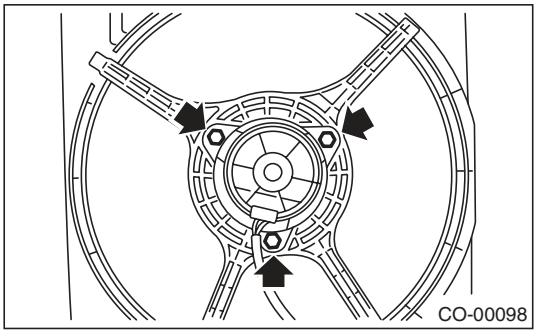

D: ASSEMBLY

Assemble in the reverse order of disassembly.

Tightening torque:
5 N·m (0.5 kgf-m, 3.7 ft-lb)

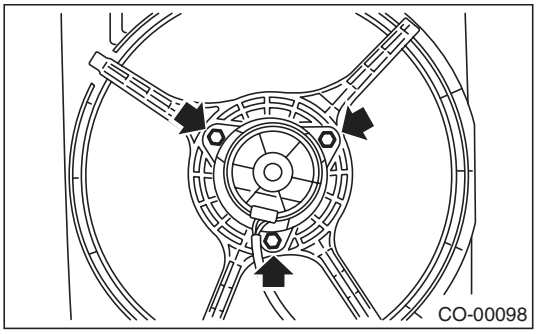

Tightening torque:
3.4 N·m (0.3 kgf-m, 2.5 ft-lb)

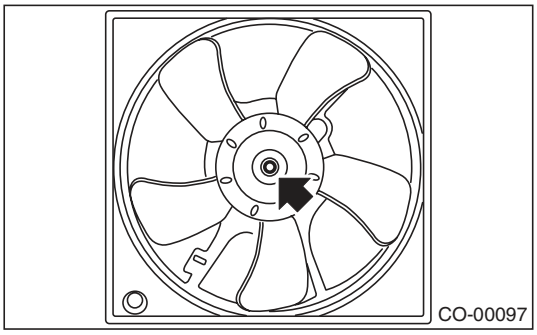

10. Reservoir Tank

A: REMOVAL

1) Disconnect the over flow hose connecting to the radiator from the reservoir tank.
2) Push in the hook (A), and pull the reserve tank in the direction of the arrow to remove.

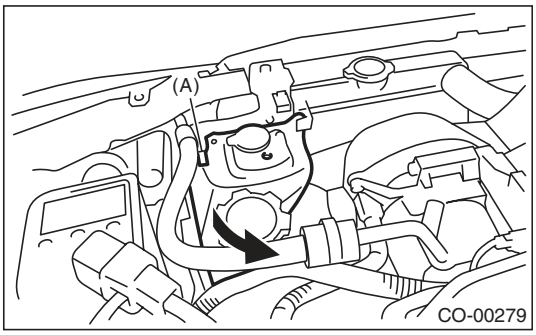

B: INSTALLATION

Install in the reverse order of removal.

C: INSPECTION

Make sure the engine coolant level is between “FULL” and “LOW”.

11. Engine Cooling System Trouble in General

A: INSPECTION

Trouble	Possible cause	Corrective action
Overheating	a. Insufficient engine coolant	Replenish engine coolant, inspect for leakage, and repair it if necessary.
	b. Loose timing belt	Repair or replace timing belt tensioner.
	c. Oil on timing belt	Replace.
	d. Malfunction of thermostat	Replace.
	e. Malfunction of water pump	Replace.
	f. Clogged engine coolant passage	Clean.
	g. Improper ignition timing	Inspect and repair ignition control system. <Ref. to EN(H4SO)(diag)-2, Basic Diagnostic Procedure.>
	h. Clogged or leaking radiator	Clean, repair or replace.
	i. Engine oil mixed in engine coolant	Replace the engine coolant. If defective is not improved, check, repair and replace the engine parts.
	j. Air/fuel mixture ratio too lean	Inspect and repair the fuel injection system. <Ref. to EN(H4SO)(diag)-2, Basic Diagnostic Procedure.>
	k. Excessive back pressure in exhaust system	Clean or replace.
	l. Insufficient clearance between piston and cylinder	Adjust or replace.
	m. Slipping clutch	Repair or replace.
	n. Dragging brake	Adjust.
	o. Defective radiator fan	Inspect the radiator fan relay, engine coolant temperature sensor or fan motor and replace them.
Over-cooling	a. Ambient temperature extremely low	Partly cover radiator front area.
	b. Defective thermostat	Replace.
Engine coolant leaks	a. Loosened or damaged connecting units on hoses	Repair or replace.
	b. Leakage from water pump	Replace.
	c. Leakage from water pipe	Repair or replace.
	d. Leakage around cylinder head gasket	Retighten cylinder head bolts or replace gasket.
	e. Damaged or cracked cylinder head and cylinder block	Repair or replace.
	f. Damaged or cracked thermostat cover	Repair or replace.
	g. Leakage from radiator	Repair or replace.
Noise	a. Timing belt problem	Replace.
	b. Defective radiator fan	Replace.
	c. Defective water pump bearing	Replace water pump.
	d. Defective water pump mechanical seal	Replace water pump.

1. General Description

A: SPECIFICATION

Lubrication method					Forced lubrication
Oil pump	Pump type				Trochoid type
	Number of teeth	Inner rotor			9
		Outer rotor			10
	Outer rotor diameter × thickness mm (in)			Non-turbo model	76 × 10 (2.99 × 0.39)
				Turbo model	78 × 10 (3.07 × 0.39)
	Tip clearance between inner and outer rotors		Standard	mm (in)	0.04 — 0.14 (0.0016 — 0.0055)
	Side clearance between inner rotor and pump case		Standard	mm (in)	0.02 — 0.07 (0.0008 — 0.0028)
	Case clearance between outer rotor and pump case		Standard	mm (in)	0.10 — 0.175 (0.0039 — 0.0069)
	Performance (Oil temperature 80°C (176°F))	600 rpm	Discharge pressure	kPa (kg/cm^2, psi)	98 (1.0, 14)
			Discharge rate	ℓ (US qt, Imp qt)/min.	4.6 (4.9, 4.0) or more
		5,000 rpm	Discharge pressure	kPa (kg/cm^2, psi)	294 (3.0, 43)
			Discharge rate	ℓ (US qt, Imp qt)/min.	47.0 (49.7, 41.4) or more
	Relief valve working pressure			kPa (kg/cm^2, psi)	588 (6.0, 85)
Oil filter	Filter type				Full-flow filter type
	Filtration area cm^2 (sq in)	Outer diameter: 68 mm (2.68 in) (Black)			800 (124)
		Outer diameter: 67.4 mm (2.65 in) (Blue)			555 (86)
	By-pass valve opening pressure			kPa (kg/cm^2, psi)	160 (1.63, 23.2)
	Outer diameter × width mm (in)	Outer diameter: 68 mm (2.68 in) (Black)			68 × 65 (2.68 × 2.56)
		Outer diameter: 67.4 mm (2.65 in) (Blue)			67.4 × 65.3 (2.65 × 2.57)
	Installation screw specifications				M 20 × 1.5
Oil pressure switch	Type				Immersed contact point type
	Operating voltage — power consumption				12 V — 3.4 W or less
	Warning light operating pressure			kPa (kg/cm^2, psi)	14.7 (0.15, 2.1)
	Proof pressure			kPa (kg/cm^2, psi)	981 (10, 142) or more
Engine oil	Total capacity (Overhaul)			ℓ (US qt, Imp qt)	5.0 (5.3, 4.4)
	When replacing engine oil and oil filter			ℓ (US qt, Imp qt)	Non-turbo model: 4.2 (4.4, 3.7) Turbo model: 4.3 (4.5, 3.8)
	When replacing engine oil only			ℓ (US qt, Imp qt)	4.0 (4.2, 3.5)

Recommended oil:

Oil complying with one of the following standards:

- ***For API standard, oil with SM "Energy Conserving" logo***
- ***For ILSAC standard, oil with GF-4 "Star burst mark" label on the container***

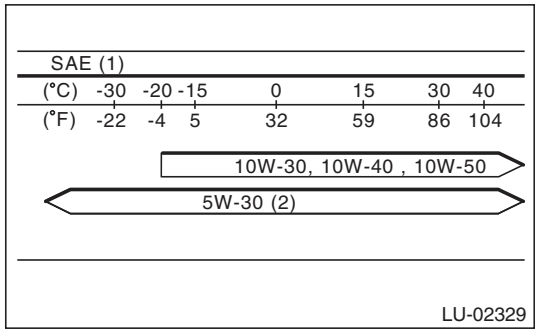

(1) SAE viscosity No. and applicable temperature

(2) Recommended

CAUTION:
It is acceptable to fill an engine with oil of another brand when replacing the oil, but make sure to use an oil with an API standard and SAE viscosity number specified by Subaru.

NOTE:
- The proper viscosity oil helps the engine maintain its ideal temperature, and cranking speed increased by reducing viscosity friction in hot condition.
- If the vehicle is used in regions of high temperatures or in other severe environments, use oil with the viscosities shown below.

API standard: SM or SL
SAE viscosity No.: 30, 40, 10W-50, 20W-40, 20W-50

B: COMPONENT

- NON-TURBO MODEL

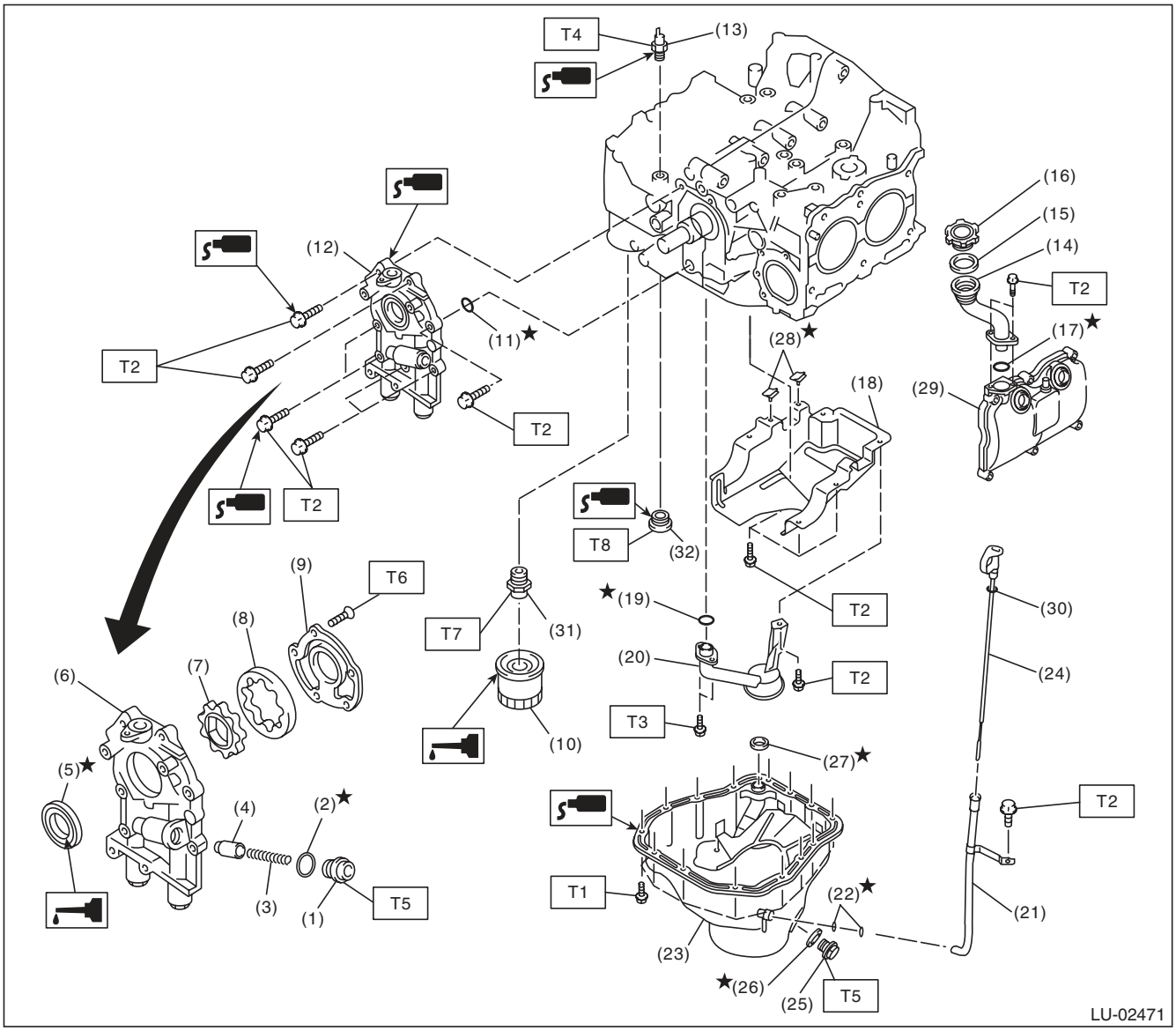

(1)	Plug	(15)	Gasket	(29)	Rocker cover
(2)	Gasket	(16)	Oil filler cap	(30)	O-ring
(3)	Relief valve spring	(17)	O-ring	(31)	Oil filter connector
(4)	Relief valve	(18)	Baffle plate	(32)	Plug
(5)	Front oil seal	(19)	O-ring		
(6)	Oil pump case	(20)	Oil strainer		
(7)	Inner rotor	(21)	Oil level gauge guide		
(8)	Outer rotor	(22)	O-ring		
(9)	Oil pump cover	(23)	Oil pan		
(10)	Oil filter	(24)	Oil level gauge		
(11)	O-ring	(25)	Drain plug		
(12)	Oil pump ASSY	(26)	Drain plug gasket		
(13)	Oil pressure switch	(27)	Gasket		
(14)	Oil filler duct	(28)	Seal		

Tightening torque:N·m (kgf-m, ft-lb)
T1: 5 (0.5, 3.7)
T2: 6.4 (0.7, 4.7)
T3: 10 (1.0, 7.4)
T4: 25 (2.5, 18.4)
T5: 44 (4.5, 32.5)
T6: 5.4 (0.6, 4.0)
T7: 45 (4.6, 33.2)
T8: 70 (7.1, 51.6)

- TURBO MODEL

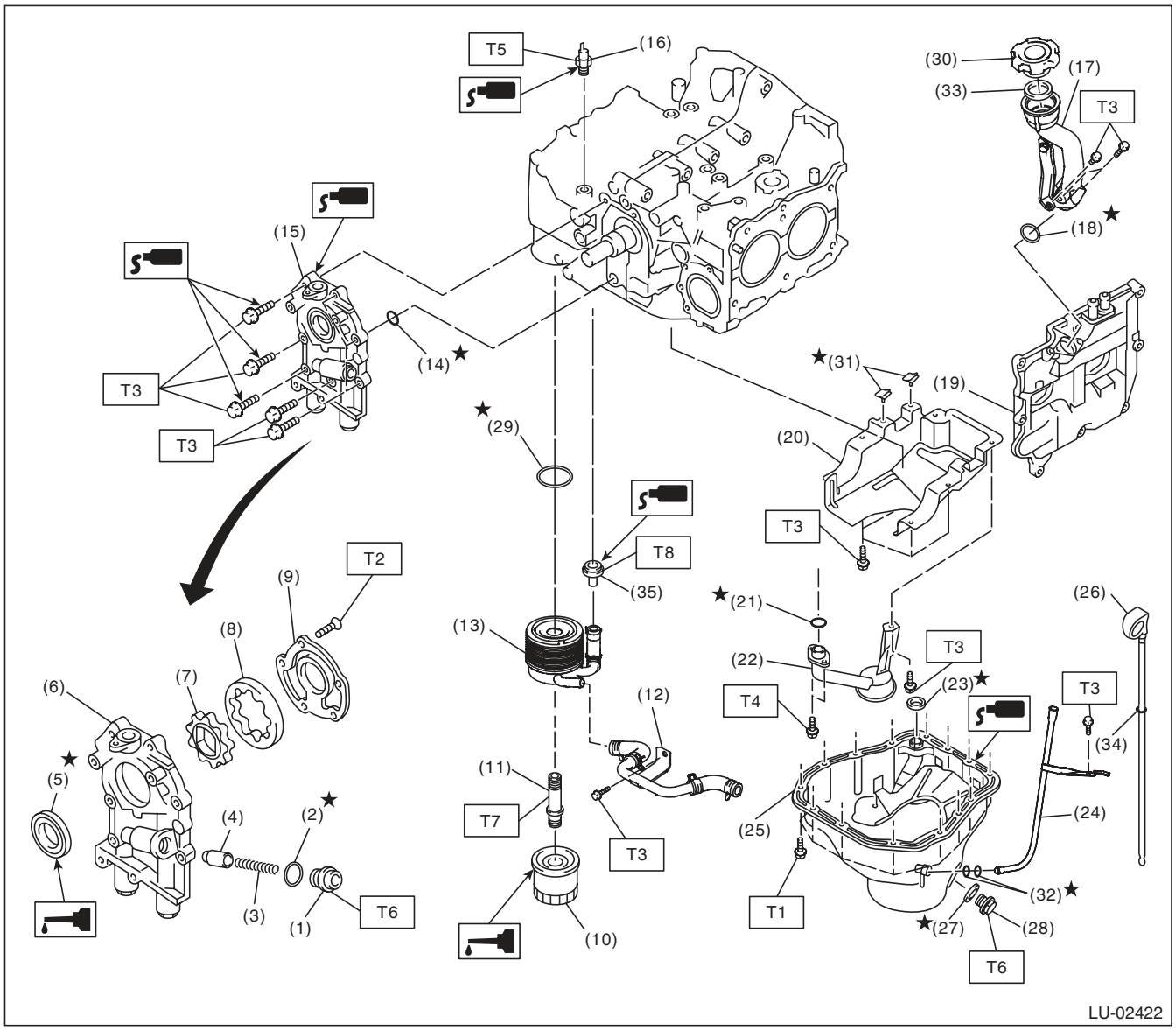

(1)	Plug	(16)	Oil pressure switch	(31)	Seal
(2)	Gasket	(17)	Oil filler duct	(32)	O-ring
(3)	Relief valve spring	(18)	O-ring	(33)	Gasket
(4)	Relief valve	(19)	Rocker cover	(34)	O-ring
(5)	Front oil seal	(20)	Baffle plate	(35)	Nipple
(6)	Oil pump case	(21)	O-ring		
(7)	Inner rotor	(22)	Oil strainer		
(8)	Outer rotor	(23)	Gasket		
(9)	Oil pump cover	(24)	Oil level gauge guide		
(10)	Oil filter	(25)	Oil pan		
(11)	Oil cooler connector	(26)	Oil level gauge		
(12)	Water by-pass pipe	(27)	Drain plug gasket		
(13)	Oil cooler	(28)	Drain plug		
(14)	O-ring	(29)	Gasket		
(15)	Oil pump ASSY	(30)	Oil filler cap		

Tightening torque:N·m (kgf-m, ft-lb)

T1: 5 (0.5, 3.7)
T2: 5.4 (0.6, 4.0)
T3: 6.4 (0.7, 4.7)
T4: 10 (1.0, 7.4)
T5: 25 (2.5, 18.4)
T6: 44 (4.5, 32.5)
T7: 54 (5.5, 39.8)
T8: 69 (7.0, 50.9)

C: CAUTION

- Wear appropriate work clothing, including a cap, protective goggles and protective shoes when performing any work.
- Remove contamination including dirt and corrosion before removal, installation or disassembly.
- Keep the disassembled parts in order and protect them from dust and dirt.
- Before removal, installation or disassembly, be sure to clarify the failure. Avoid unnecessary removal, installation, disassembly and replacement.
- Be careful not to burn your hands, because each part on the vehicle is hot after running.
- Be sure to tighten fasteners including bolts and nuts to the specified torque.
- Place shop jacks or rigid racks at the specified points.
- Before disconnecting connectors of sensors or units, be sure to disconnect the ground cable from battery.
- If the engine oil is spilt over exhaust pipe or the under cover, wipe it off with cloth to avoid emitting smoke or causing a fire.
- Prepare a container and cloth to prevent scattering of oil when performing work where fuels can be spilled. If the fuel spills, wipe it off immediately to prevent from penetrating into floor or flowing out for environmental protection.
- Follow all government and local regulations concerning disposal of refuse when disposing oil.

D: PREPARATION TOOL

1. SPECIAL TOOL

ILLUSTRATION	TOOL NUMBER	DESCRIPTION	REMARKS
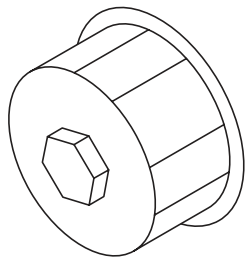 ST18332AA000	18332AA000	OIL FILTER WRENCH	Used for removing and installing oil filter (Black). (Outer diameter: 68 mm (2.68 in))
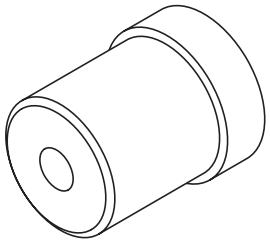 ST-499587100	499587100	OIL SEAL INSTALLER	Used for installing oil seal into oil pump.

2. GENERAL TOOL

TOOL NAME	REMARKS
Oil filter wrench (65/67 mm 14 Flutes)	Used for removing and installing oil filter (Blue). (Outer diameter: 67.4 mm (2.65 in))

2. Oil Pressure System

A: WIRING DIAGRAM

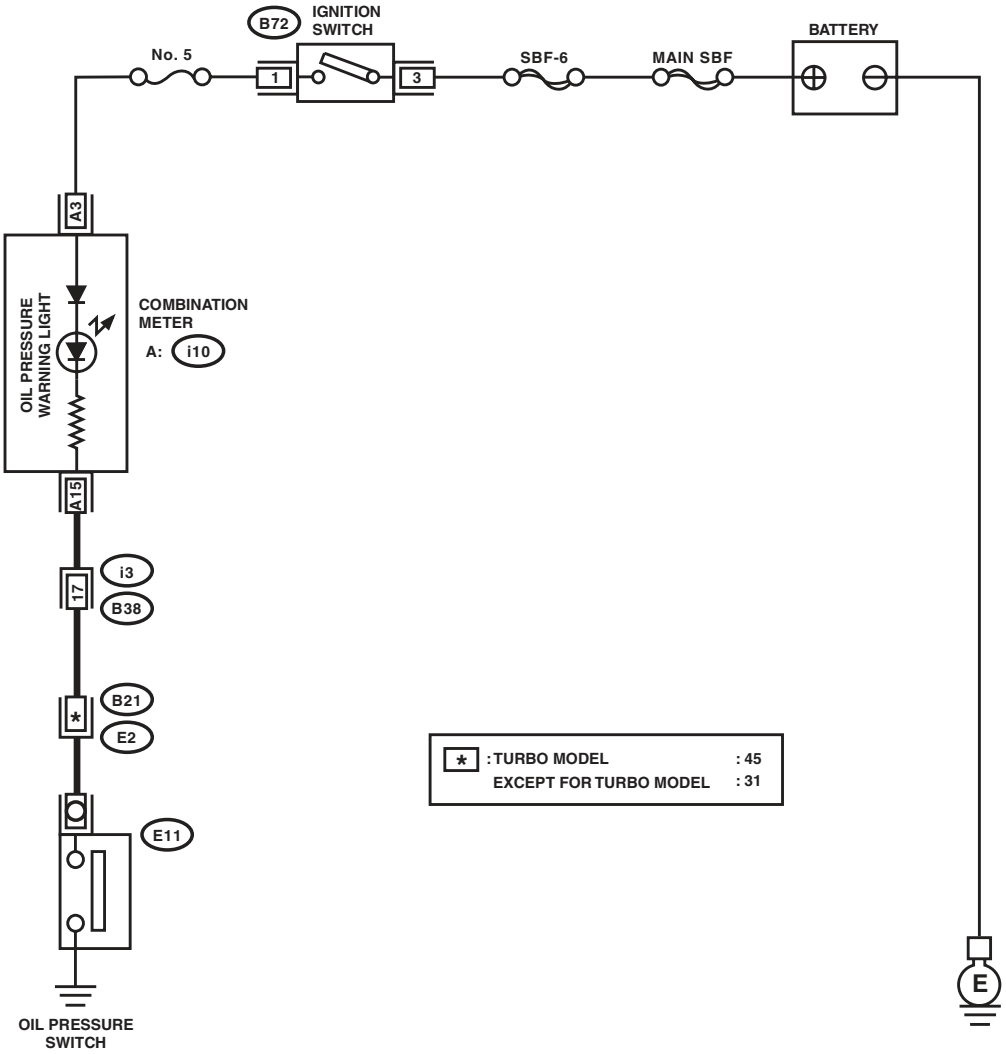

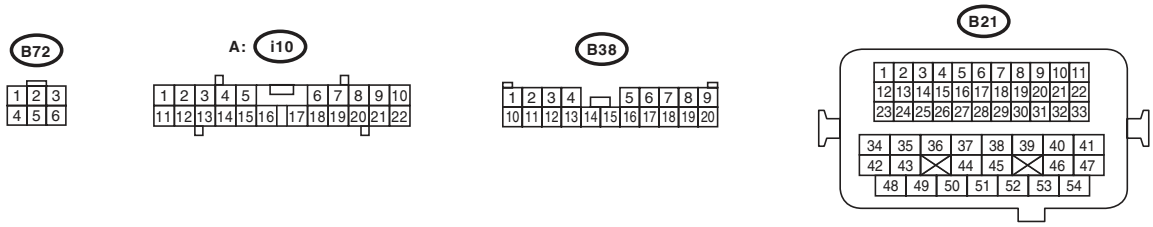

LU-02478

B: INSPECTION

Step		Check	Yes	No
1	**CHECK COMBINATION METER.** 1) Turn the ignition switch to ON (engine OFF). 2) Check other warning lights.	Does the warning light illuminate?	Go to step **2**.	Repair or replace the combination meter. <Ref. to IDI-5, INSPECTION, Combination Meter System.>
2	**CHECK THE HARNESS CONNECTOR BETWEEN THE COMBINATION METER AND THE OIL PRESSURE SWITCH.** 1) Turn the ignition switch to OFF. 2) Disconnect the connector from oil pressure switch. 3) Turn the ignition switch to ON. 4) Measure the voltage of harness between oil pressure switch connector and chassis ground. ***Connector & terminal*** ***(E11) No. 1 (+) — Chassis ground (–):***	Is the voltage 10 V or more?	Replace the oil pressure switch.	Go to step **3**.
3	**CHECK COMBINATION METER.** 1) Turn the ignition switch to OFF. 2) Remove the combination meter. 3) Measure the resistance of combination meter. ***Terminals*** ***(i10) No. 3 — No. 15:***	Is the resistance less than 10 Ω?	Repair the harness and connector. NOTE: In this case, repair the following item: • Open circuit of harness between combination meter and oil pressure switch • Poor contact in combination meter connector • Poor contact of coupling connector	Repair or replace the combination meter. <Ref. to IDI-5, INSPECTION, Combination Meter System.>

3. Engine Oil

A: INSPECTION

CAUTION:
If the engine oil is spilt over exhaust pipe or the under cover, wipe it off with cloth to avoid emitting smoke or causing a fire.

1) Park the vehicle on a level surface.
2) Remove the oil level gauge and wipe away the oil.
3) Reinsert the oil level gauge all the way. Be sure that the oil level gauge is correctly inserted and properly orientated.
4) Pull out the oil level gauge again, and check the oil level. If the engine oil level is below “L” line, check for oil leakage from engine and add oil to bring the level up to the “F” line.
5) Start the engine and warm it up for a time.
6) After turning off the engine, wait a few minutes for the oil to return to the oil pan before checking the level.

NOTE:
- Just after driving or while the engine is warm, engine oil level shows in the range between “F” line and cutout portion. This is caused by thermal expansion of engine oil.
- To prevent overfilling of engine oil, do not add oil above “F” line when the engine is cold.
- As the oil level gauge is used for daily maintenance, “F” line and “L” line is set assuming that the engine is cold.
- Non-turbo model

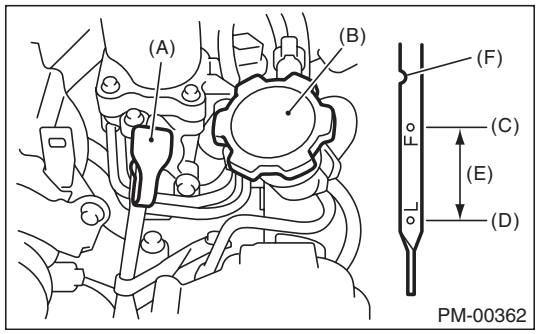

- Turbo model

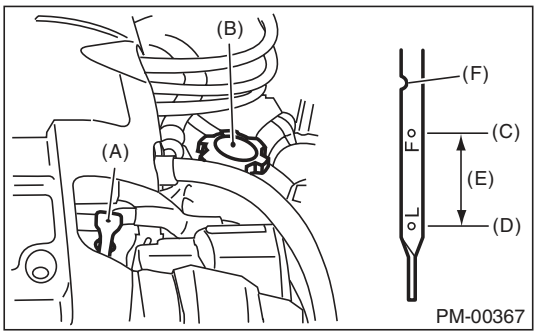

(A) Oil level gauge
(B) Engine oil filler cap
(C) “F” line
(D) “L” line
(E) Approx. 1.0 ℓ (1.1 US qt, 0.9 Imp qt)
(F) Notch mark

B: REPLACEMENT

CAUTION:
If the engine oil is spilt over exhaust pipe or the under cover, wipe it off with cloth to avoid emission of smoke or causing a fire.

1) Set the vehicle on a lift.
2) Open the engine oil filler cap for quick draining of engine oil.
3) Lift up the vehicle.
4) Drain engine oil by loosening the engine oil drain plug.

NOTE:
Prepare the container for draining of engine oil.

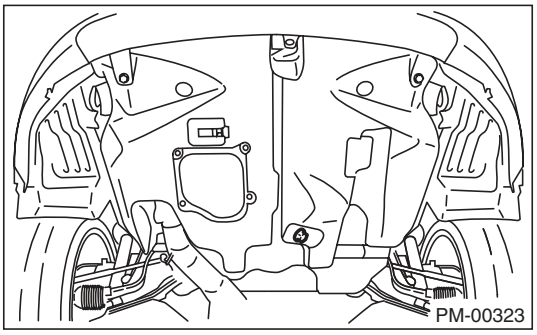

5) Tighten the engine oil drain plug after draining engine oil.

NOTE:
Use a new drain plug gasket.

Tightening torque:
44 N·m (4.5 kgf-m, 32.5 ft-lb)

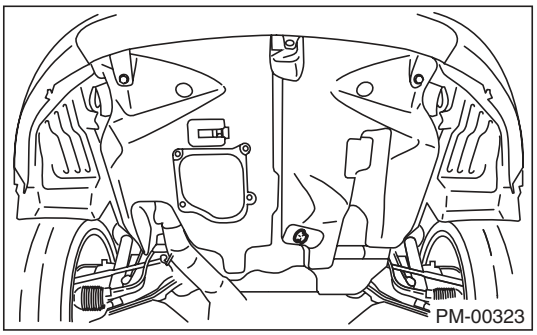

6) Lower the vehicle.
7) Using engine oil of proper quality and viscosity, fill engine oil through the oil filler duct to the “F” line on the level gauge. Make sure that the vehicle is parked on a level surface when checking oil level.

Recommended oil:
Refer to “SPECIFICATION” for the recommended oil. <Ref. to LU(H4SO)-2, SPECIFICATION, General Description.>

Engine oil capacity:
Refer to “SPECIFICATION” for the engine oil capacity. <Ref. to LU(H4SO)-2, SPECIFICATION, General Description.>

8) Close the engine oil filler cap.
9) Start the engine, and spreads the oil in engine room.
10) After stopping the engine, recheck the oil level. If necessary, add engine oil up to the “F” line on oil level gauge.

- Non-turbo model

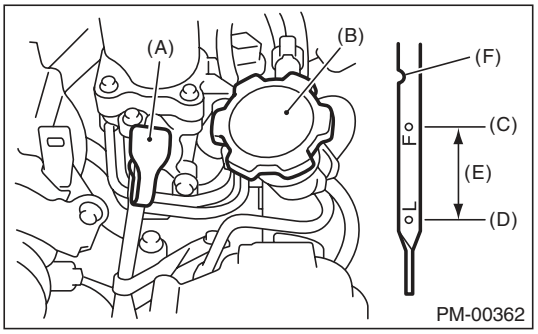

- Turbo model

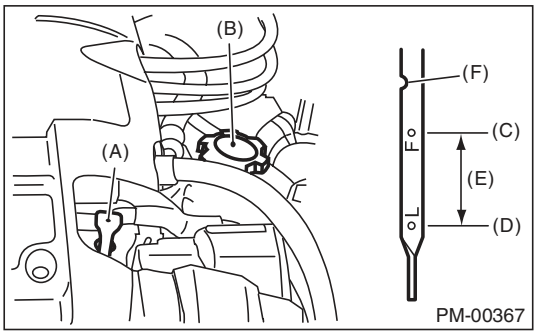

(A) Oil level gauge
(B) Engine oil filler cap
(C) “F” line
(D) “L” line
(E) Approx. 1.0 ℓ (1.1 US qt, 0.9 Imp qt)
(F) Notch mark

4. Oil Pump

A: REMOVAL

1) Set the vehicle on a lift.
2) Remove the collector cover. (Turbo model)
3) Disconnect the ground cable from battery.

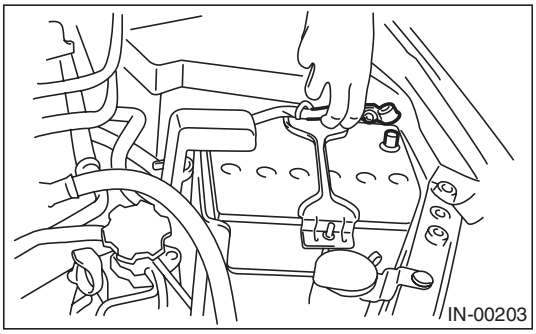

4) Lift up the vehicle.
5) Remove the under cover.
6) Remove the bolt (B) holding the oil cooler pipe to the oil pump. (Turbo model)
7) Remove the oil cooler pipe (A) and hose (C). (Turbo model)

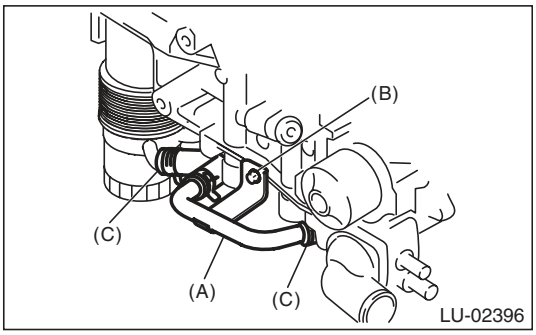

8) Lower the vehicle.
9) Remove the radiator. <Ref. to CO(H4SO)-19, REMOVAL, Radiator.> <Ref. to CO(H4DOTC)-20, REMOVAL, Radiator.>
10) Remove the crankshaft position sensor. <Ref. to FU(H4SO)-23, REMOVAL, Crankshaft Position Sensor.> <Ref. to FU(H4DOTC)-32, REMOVAL, Crankshaft Position Sensor.>
11) Remove the water pump. <Ref. to CO(H4SO)-15, REMOVAL, Water Pump.> <Ref. to CO(H4DOTC)-20, REMOVAL, Radiator.>
12) Remove the crank sprocket. <Ref. to ME(H4SO)-50, REMOVAL, Crank Sprocket.> <Ref. to ME(H4DOTC)-57, REMOVAL, Crank Sprocket.>
13) Remove the bolts which install oil pump onto cylinder block.

NOTE:
When disassembling and checking the oil pump, loosen the relief valve before removing the oil pump.

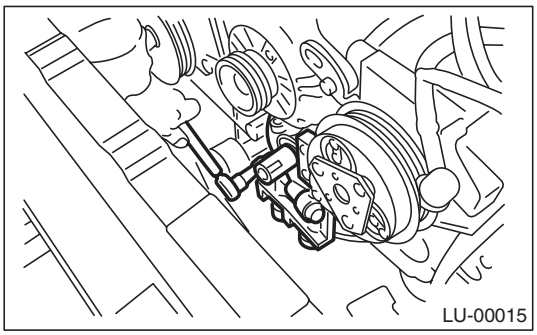

14) Remove the oil pump by using flat tip screwdriver.

CAUTION:
Be careful not to scratch mating surfaces of cylinder block and oil pump.

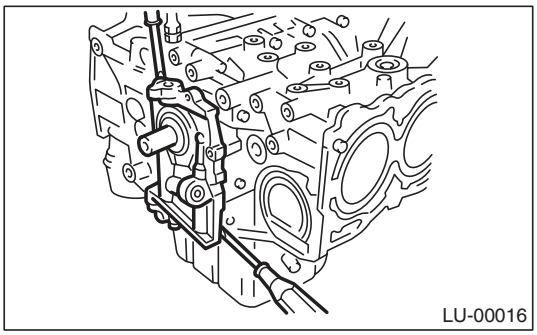

15) Remove the front oil seal from the oil pump.

B: INSTALLATION

1) Using the ST, install the front oil seal.
ST 499587100 OIL SEAL INSTALLER

NOTE:
Use a new front oil seal.

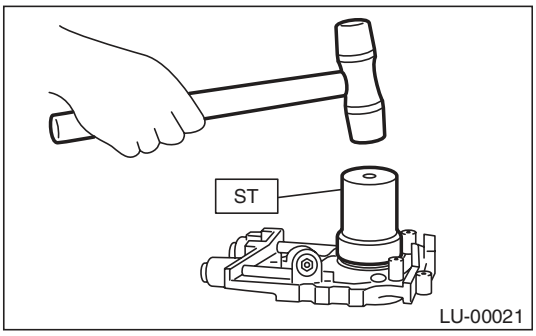

2) Apply liquid gasket to the mating surfaces of oil pump.

NOTE:
Install within 5 min. after applying liquid gasket.

Liquid gasket:
THREE BOND 1217G (Part No. K0877Y0100) or equivalent

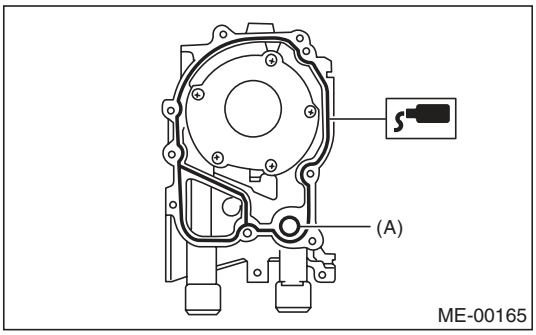

(A) O-ring

3) Apply a coat of engine oil to the inside of front oil seal.

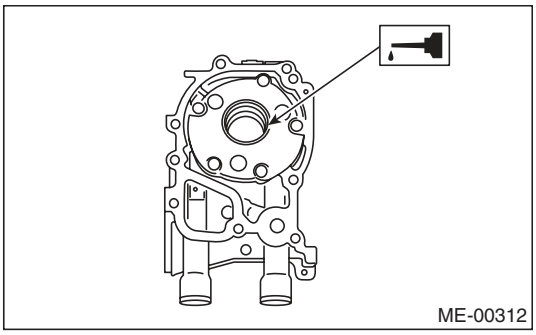

4) Install the oil pump to cylinder block. Be careful not to damage the front oil seal during installation.

NOTE:
- Make sure the front oil seal lip is not folded.
- Align the flat surface of oil pump's inner rotor with crankshaft before installation.
- Use new O-rings.
- Do not forget to install O-rings.

5) Apply liquid gasket to the three bolts thread shown in figure. (when reusing bolts)

Liquid gasket:
THREE BOND 1324 (Part No. 004403042) or equivalent

Tightening torque:
6.4 N·m (0.7 kgf-m, 4.7 ft-lb)

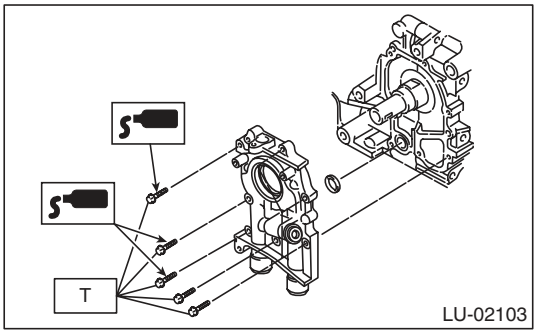

6) Install the crank sprocket. <Ref. to ME(H4SO)-50, INSTALLATION, Crank Sprocket.> <Ref. to ME(H4DOTC)-57, INSTALLATION, Crank Sprocket.>
7) Install the water pump. <Ref. to CO(H4SO)-16, INSTALLATION, Water Pump.> <Ref. to CO(H4DOTC)-16, INSTALLATION, Water Pump.>
8) Attach the crankshaft position sensor. <Ref. to FU(H4SO)-23, INSTALLATION, Crankshaft Position Sensor.> <Ref. to FU(H4DOTC)-32, INSTALLATION, Crankshaft Position Sensor.>
9) Install the radiator. <Ref. to CO(H4SO)-20, INSTALLATION, Radiator.> <Ref. to CO(H4DOTC)-21, INSTALLATION, Radiator.>
10) Lift up the vehicle.
11) Install the oil cooler pipe (A) and hose (C). (Turbo model)

12) Install the oil cooler pipe (A) to the oil pump using the bolt (B). (Turbo model)

Tightening torque:
6.4 N·m (0.7 kgf-m, 4.7 ft-lb)

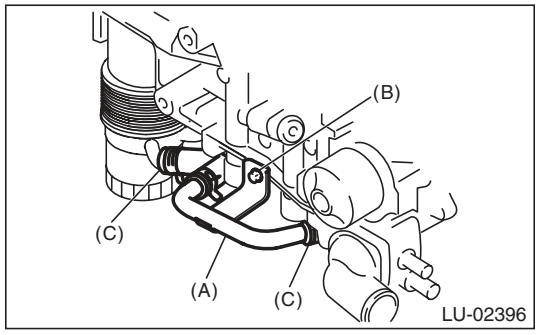

13) Install the under cover.
14) Lower the vehicle.
15) Connect the ground cable to battery.

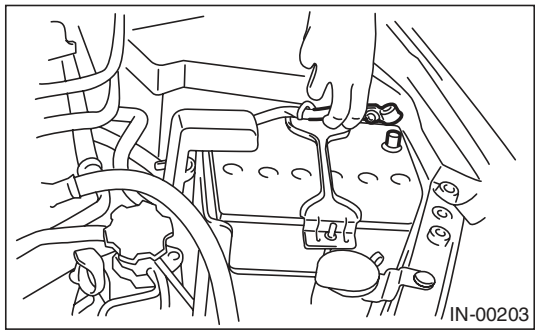

16) Install the collector cover. (Turbo model)

C: DISASSEMBLY

Remove the screw which secures oil pump cover and then disassemble oil pump. Inscribe alignment marks on the inner and outer rotors so that they can be replaced in their original positions during reassembly.

NOTE:
Before disassembling the oil pump, remove the relief valve.

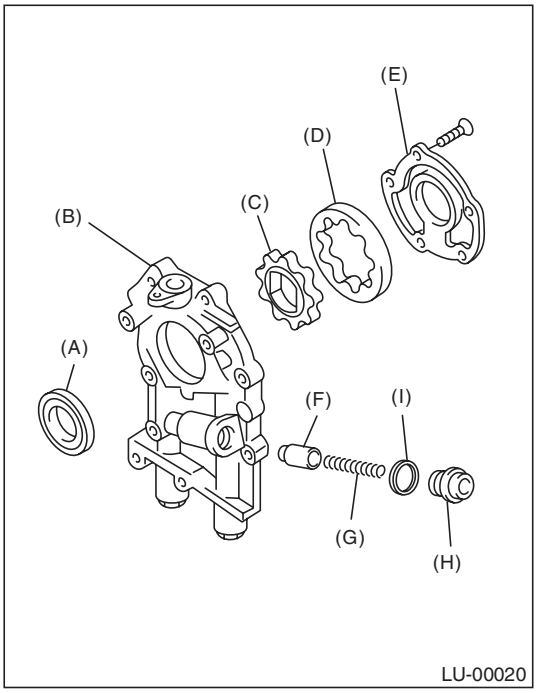

(A) Front oil seal
(B) Oil pump case
(C) Inner rotor
(D) Outer rotor
(E) Oil pump cover
(F) Relief valve
(G) Relief valve spring
(H) Plug
(I) Gasket

D: ASSEMBLY

1) Using the ST, install the front oil seal.
ST 499587100 OIL SEAL INSTALLER

NOTE:
Use a new front oil seal.

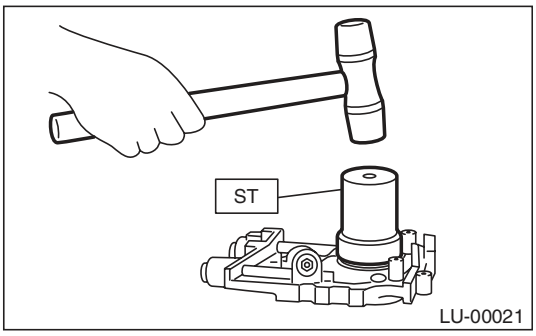

2) Apply a coat of engine oil to inner and outer rotors.
3) Assemble the inner and outer rotors in their original positions.
4) Assemble the oil relief valve and install relief valve spring and plug.

NOTE:
Use a new gasket.

5) Install the oil pump cover.

Tightening torque:
T1: 5.4 N·m (0.6 kgf-m, 4.0 ft-lb)
T2: 44 N·m (4.5 kgf-m, 32.5 ft-lb)

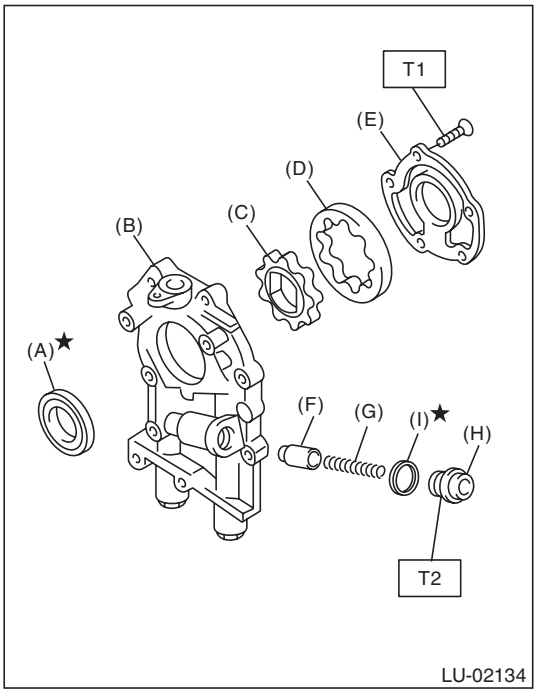

(A) Front oil seal
(B) Oil pump case
(C) Inner rotor
(D) Outer rotor
(E) Oil pump cover
(F) Relief valve
(G) Relief valve spring
(H) Plug
(I) Gasket

E: INSPECTION

1. TIP CLEARANCE

Measure the tip clearance of rotors. If the clearance is out of specification, replace the rotors as a set.

Tip clearance:
Standard
0.04 — 0.14 mm (0.0016 — 0.0055 in)

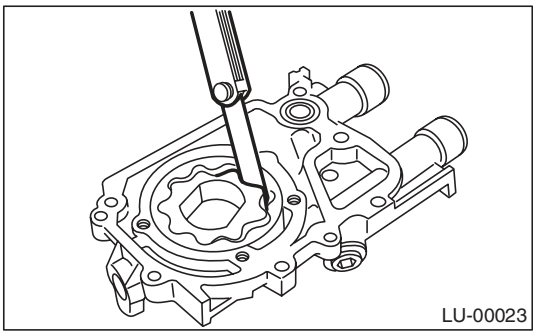

2. CASE CLEARANCE

Measure the clearance between the outer rotor and the oil pump case. If clearance is out of standard, replace the oil pump case.

Case clearance:
Standard
0.10 — 0.175 mm (0.0039 — 0.0069 in)

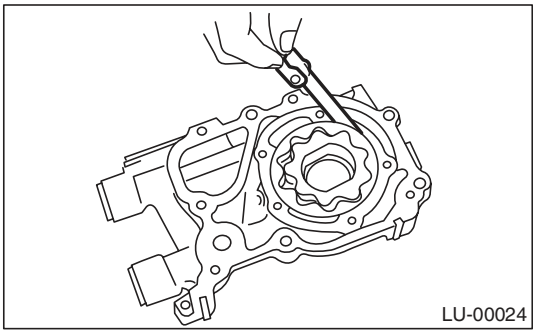

3. SIDE CLEARANCE

Measure the gap between the inner rotor and the oil pump case to measure the clearance between the oil pump inner rotor and the oil pump cover as shown in the figure. If the clearance is out of specification, replace the rotors or the oil pump case.

Side clearance:
Standard
0.02 — 0.07 mm (0.0008 — 0.0028 in)

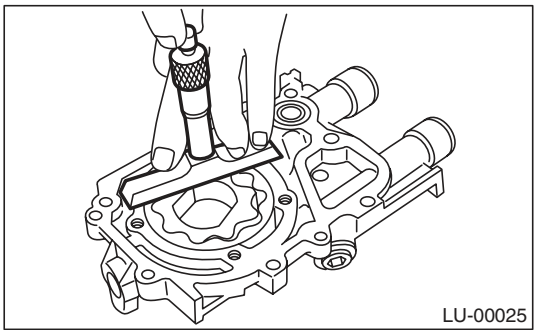

4. OIL RELIEF VALVE

Check the valve for assembly condition and damage, and the relief valve spring for damage and deterioration. Replace the parts if defective.

Relief valve spring:
Free length
73.7 mm (2.902 in)
Installed length
54.7 mm (2.154 in)
Load when installed
93.1 N (9.49 kgf, 20.88 lbf)

5. OIL PUMP CASE

Check for worn shaft hole, clogged oil passage, worn rotor chamber, cracks and other faults.

6. FRONT OIL SEAL

Check the front oil seal lips for deformation, hardening, wear, etc. and replace if defective.

5. Oil Pan and Strainer

A: REMOVAL

1) Set the vehicle on a lift.
2) Remove the collector cover. (Turbo model)
3) Disconnect the ground cable from battery.

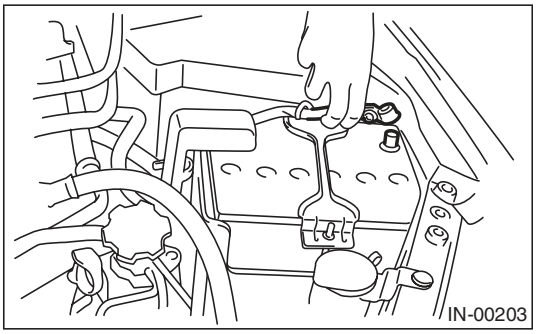

4) Remove the air intake duct. <Ref. to IN(H4SO)-8, REMOVAL, Air Intake Duct.> <Ref. to IN(H4DOTC)-9, REMOVAL, Air Intake Duct.>
5) Disconnect the connector from the mass air flow and intake air temperature sensor. (Non-turbo model)
6) Remove the air intake chamber. (Non-turbo model) <Ref. to IN(H4SO)-7, REMOVAL, Air Intake Chamber.>
7) Remove the air intake boot. (Turbo model)

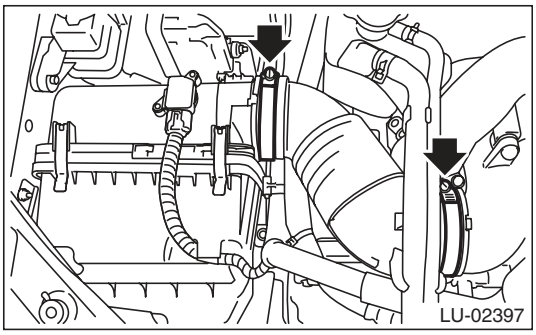

8) Remove the intercooler. (Turbo model) <Ref. to IN(H4DOTC)-12, REMOVAL, Intercooler.>
9) Remove the pitching stopper.

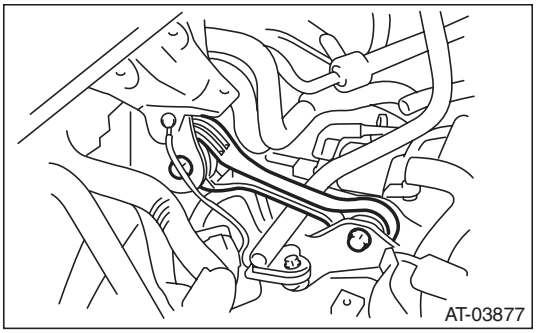

10) Remove the hood stay holder (A) and radiator upper brackets (B).

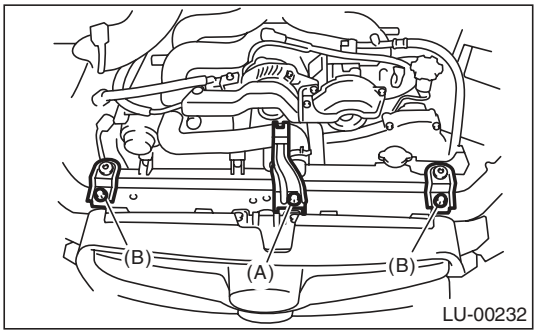

11) Support the engine with a lifting device and wire ropes.

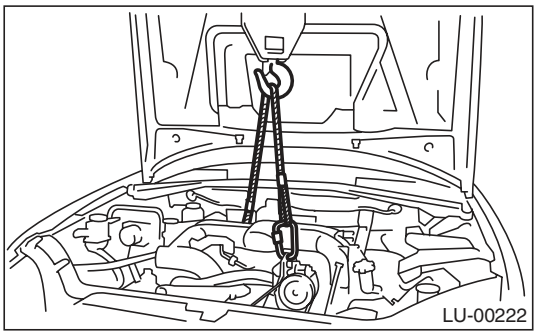

12) Lift up the vehicle.

CAUTION:
When lifting up the vehicle, raise up wire ropes at the same time.

13) Remove the under cover.
14) Drain the engine oil. <Ref. to LU(H4SO)-10, REPLACEMENT, Engine Oil.>
15) Remove the front exhaust pipe. <Ref. to EX(H4SO)-4, REMOVAL, Front Exhaust Pipe.> <Ref. to EX(H4DOTC)-5, REMOVAL, Front Exhaust Pipe.>
16) Remove the nuts which install the engine mounting onto the front crossmember.

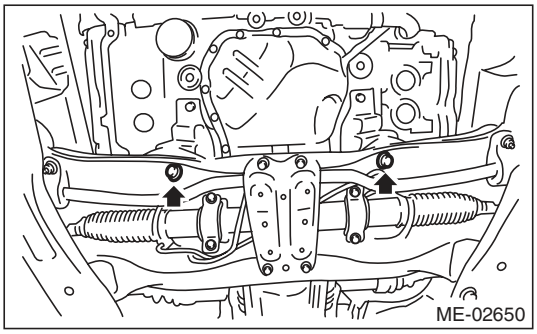

17) Remove the bolts which install oil pan on cylinder block with the engine raised up.

18) Insert the oil pan cutter blade into the gap between cylinder block and oil pan, and remove the oil pan.

CAUTION:
Do not use a screwdriver or similar tool in place of oil pan cutter.

19) Remove the oil strainer.
20) Remove the baffle plate.

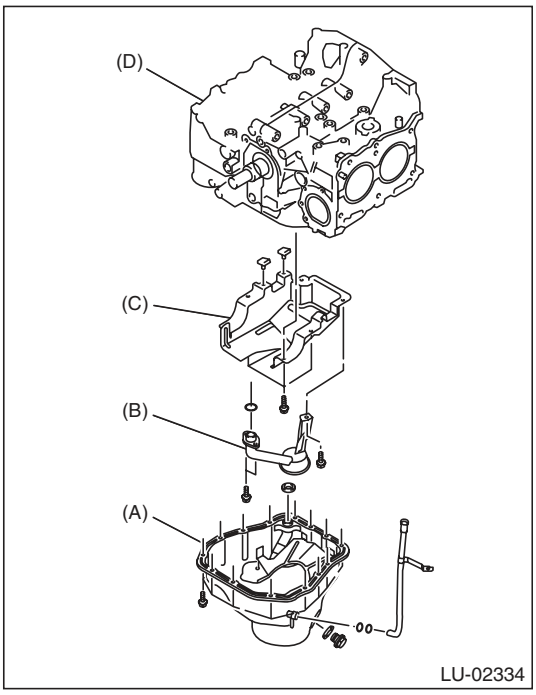

(A) Oil pan
(B) Oil strainer
(C) Baffle plate
(D) Cylinder block

B: INSTALLATION

NOTE:
Before installing the oil pan, clean the mating surface of oil pan and engine block.

1) Make sure that the seals (A) are installed securely on the baffle plate in a direction as shown in the figure below.

NOTE:
Use new seals.

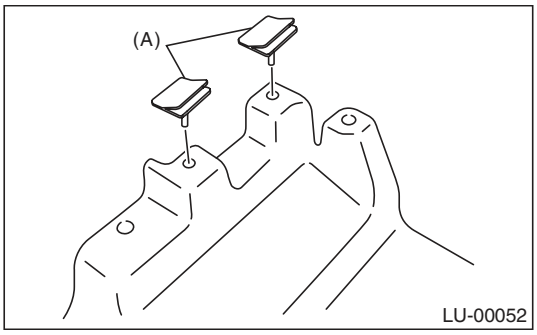

2) Install the baffle plate.

Tightening torque:
6.4 N·m (0.7 kgf-m, 4.7 ft-lb)

3) Install the oil strainer to the cylinder block.

NOTE:
Use new O-rings.

Tightening torque:
10 N·m (1.0 kgf-m, 7.4 ft-lb)

4) Tighten the oil strainer stay together with the baffle plate.

Tightening torque:
6.4 N·m (0.7 kgf-m, 4.7 ft-lb)

5) Apply liquid gasket to the mating surfaces of oil pan, and install the oil pan.

NOTE:
- Use a new gasket.
- Install within 5 min. after applying liquid gasket.

Liquid gasket:
THREE BOND 1217G (Part No. K0877Y0100) or equivalent

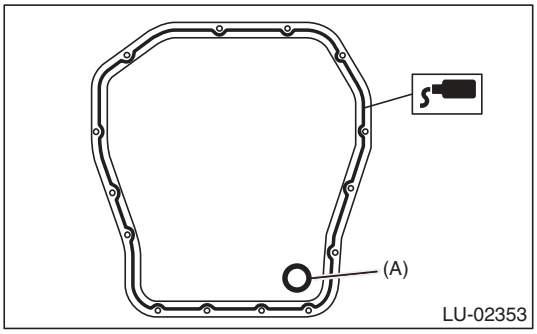

(A) Gasket

6) Tighten the bolts which install oil pan to cylinder block.

Tightening torque:
T1: 5 N·m (0.5 kgf-m, 3.7 ft-lb)
T2: 6.4 N·m (0.7 kgf-m, 4.7 ft-lb)
T3: 10 N·m (1.0 kgf-m, 7.4 ft-lb)

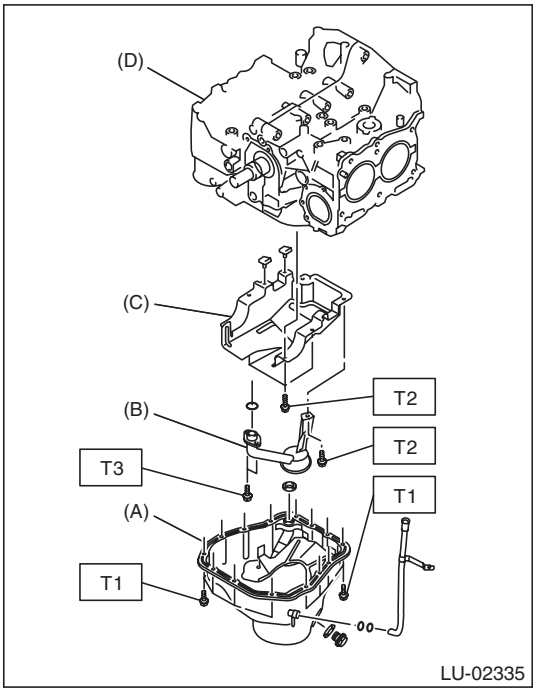

(A) Oil pan
(B) Oil strainer
(C) Baffle plate
(D) Cylinder block

7) Lower the engine onto front crossmember.
8) Tighten the nuts which install engine mount onto front crossmember.

NOTE:
Make sure that the engine mount nuts (A) and locator (B) are securely installed.

Tightening torque:
85 N·m (8.7 kgf-m, 62.7 ft-lb)

- Non-turbo model

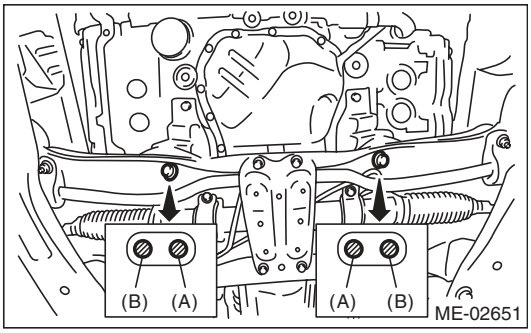

- Turbo model

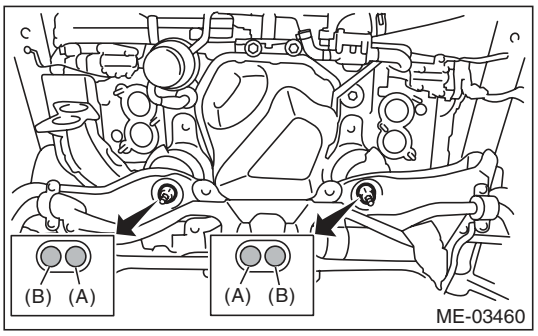

9) Install the front exhaust pipe. <Ref. to EX(H4SO)-5, INSTALLATION, Front Exhaust Pipe.> <Ref. to EX(H4DOTC)-6, INSTALLATION, Front Exhaust Pipe.>
10) Install the under cover.
11) Lower the vehicle.

CAUTION:
When lowering the vehicle, lower the lift up device and wire ropes at the same time.
12) Remove the lifting device and wire ropes.

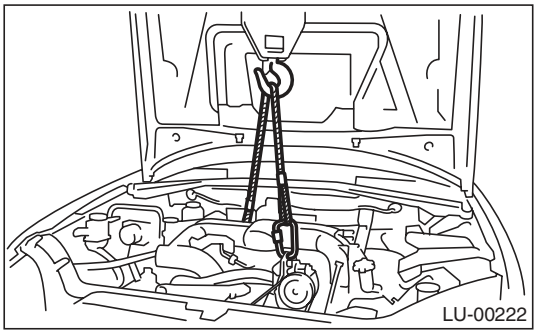

13) Install the pitching stopper.

Tightening torque:
T1: 50 N·m (5.1 kgf-m, 36.9 ft-lb)
T2: 58 N·m (5.9 kgf-m, 42.8 ft-lb)

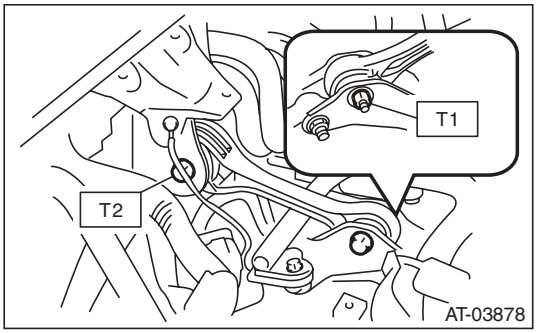

14) Install the hood stay holder (A) and radiator upper brackets (B).

Tightening torque:
(A): 7.5 N·m (0.8 kgf-m, 5.5 ft-lb)
(B): 12 N·m (1.2 kgf-m, 8.9 ft-lb)

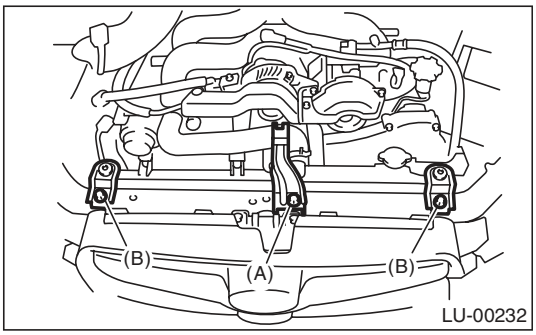

15) Install the intercooler. (Turbo model) <Ref. to IN(H4DOTC)-13, INSTALLATION, Intercooler.>
16) Install the air intake boot. (Turbo model)

Tightening torque:
2.5 N·m (0.3 kgf-m, 1.8 ft-lb)

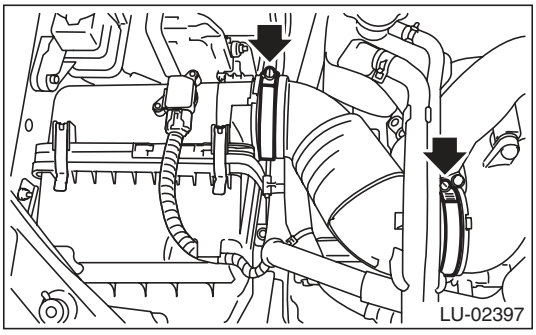

17) Install the air intake chamber. (Non-turbo model) <Ref. to IN(H4SO)-7, INSTALLATION, Air Intake Chamber.>
18) Install the air intake duct. <Ref. to IN(H4SO)-8, INSTALLATION, Air Intake Duct.> <Ref. to IN(H4DOTC)-9, INSTALLATION, Air Intake Duct.>
19) Connect the connector to the mass air flow and intake air temperature sensor. (Non-turbo model)
20) Connect the ground cable to battery.

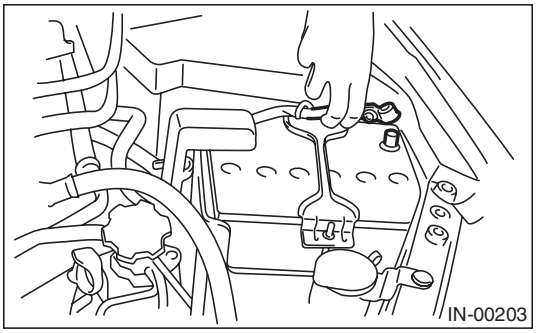

21) Install the collector cover. (Turbo model)
22) Refill the engine oil. <Ref. to LU(H4SO)-9, INSPECTION, Engine Oil.>

C: INSPECTION

Visually check that the oil pan, oil strainer and baffle plate are not damaged.

6. Oil Pressure Switch

A: REMOVAL

1) Remove the collector cover. (Turbo model)
2) Disconnect the ground cable from battery.

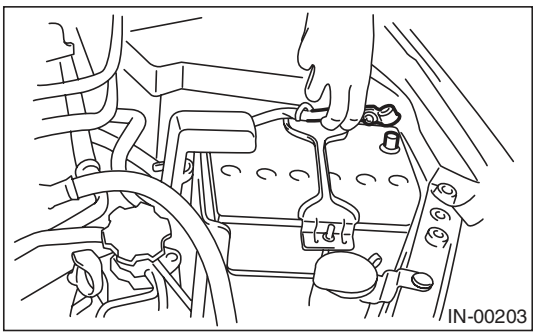

3) Remove the generator from the bracket. <Ref. to SC(H4SO)-14, REMOVAL, Generator.>
4) Disconnect the terminal from oil pressure switch.

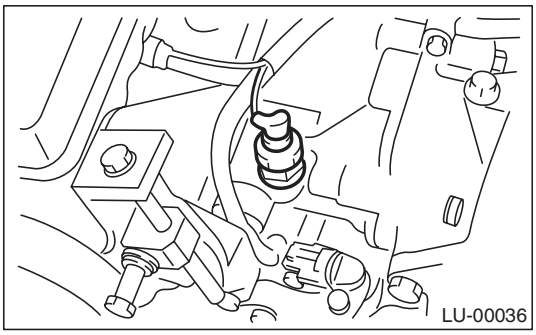

5) Remove the oil pressure switch.

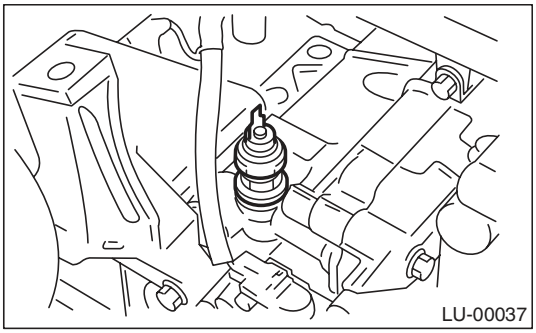

B: INSTALLATION

1) Apply liquid gasket to the oil pressure switch threads.

Liquid gasket:
THREE BOND 1324 (Part No. 004403042) or equivalent

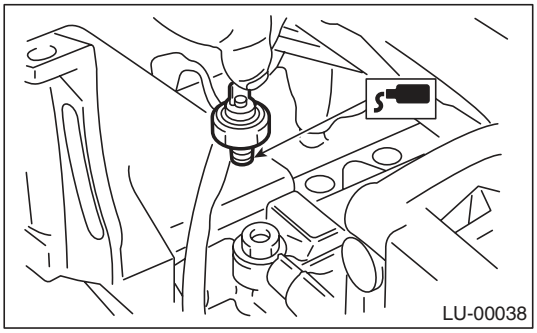

2) Install the oil pressure switch to the cylinder block.

Tightening torque:
25 N·m (2.5 kgf-m, 18.4 ft-lb)

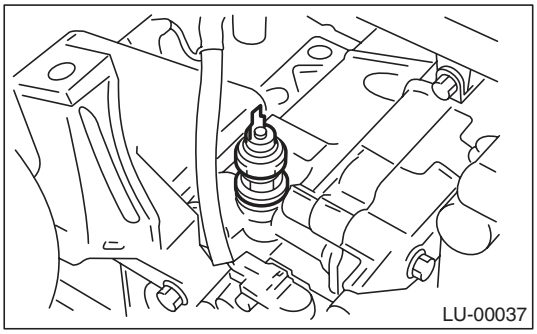

3) Connect the terminal to the oil pressure switch.

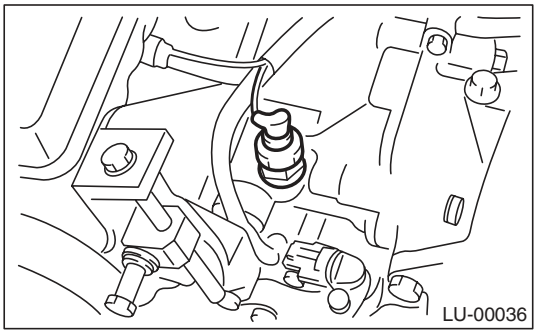

4) Install the generator to the bracket. <Ref. to SC(H4SO)-14, INSTALLATION, Generator.>

5) Connect the ground cable to battery.

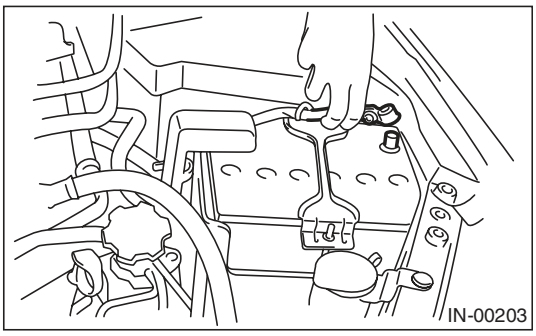

6) Install the collector cover. (Turbo model)

C: INSPECTION

Check the oil pressure switch installation portion for oil leakage and oil seepage.

7. Engine Oil Cooler

A: REMOVAL

CAUTION:
If engine oil is spilt onto the exhaust pipe, wipe it off with cloth to avoid emission of smoke or causing a fire.

NOTE:
An engine oil cooler is installed on DOHC turbo models.

1) Set the vehicle on a lift.
2) Lift up the vehicle.
3) Remove the under cover.
4) Drain engine coolant. <Ref. to CO(H4DOTC)-14, DRAINING OF ENGINE COOLANT, REPLACEMENT, Engine Coolant.>
5) Remove the engine oil filter. <Ref. to LU(H4SO)-23, REMOVAL, Engine Oil Filter.>
6) Remove the bolt (B) holding the oil cooler pipe (A) to the oil pump.
7) Remove the oil cooler pipe (A) and oil cooler hose (C).
8) Remove the oil cooler connector (D) and remove the oil cooler (E).

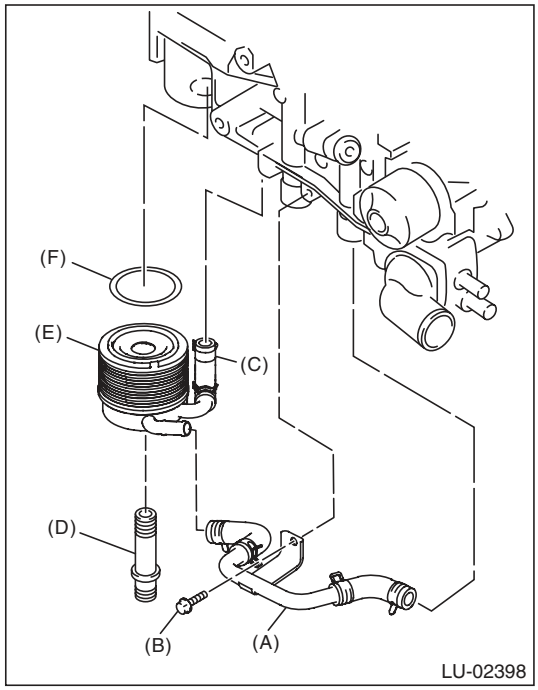

(A) Oil cooler pipe
(B) Bolt
(C) Oil cooler hose
(D) Oil cooler connector
(E) Oil cooler
(F) Gasket

B: INSTALLATION

Install in the reverse order of removal.

NOTE:
Use a new gasket.

Tightening torque:
T1: 6.4 N·m (0.7 kgf-m, 4.7 ft-lb)
T2: 54 N·m (5.5 kgf-m, 39.8 ft-lb)

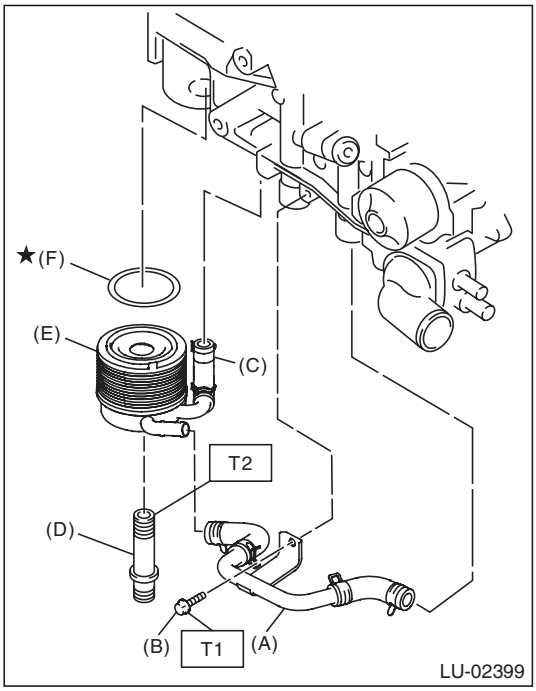

(A) Oil cooler pipe
(B) Bolt
(C) Oil cooler hose
(D) Oil cooler connector
(E) Oil cooler
(F) Gasket

C: INSPECTION

1) Check that coolant passages are not clogged using an compressed air.
2) Check the mating surfaces of cylinder block, gasket groove and oil cooler for damage.

8. Engine Oil Filter

A: REMOVAL

CAUTION:
If the engine oil is spilt over exhaust pipe or the under cover, wipe it off with cloth to avoid emission of smoke or causing a fire.

1) Set the vehicle on a lift.
2) Lift up the vehicle.
3) Remove the service hole cover clip located on the under cover.

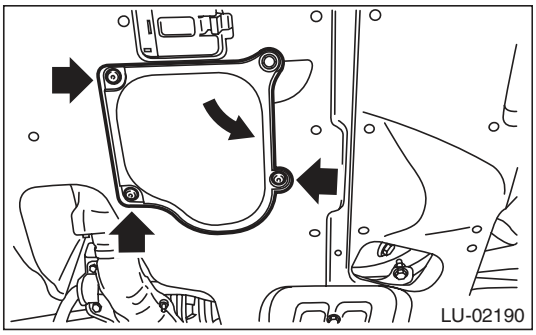

4) Rotate the service hole cover in the arrow direction.

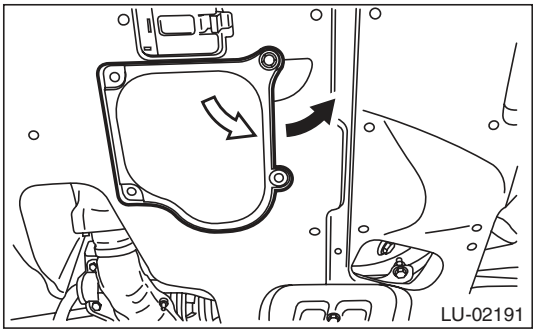

5) Remove the oil filter.
- Oil filter (Black)

Remove using the ST.

ST 18332AA000 OIL FILTER WRENCH (Outer diameter: 68 mm (2.68 in) for oil filter (black))

- Oil filter (Blue)

Remove using a general tool (65/67 mm 14 Flutes).

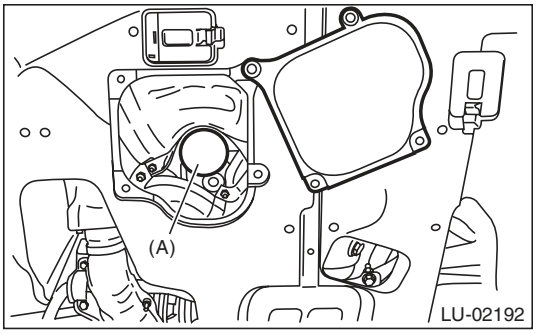

B: INSTALLATION

CAUTION:
Do not tighten excessively, or oil may leak.

1) Clean the oil filter installation surface on cylinder block or oil cooler.
2) Obtain a new oil filter and apply a thin coat of engine oil to the seal rubber.
3) Install the oil filter turning it by hand, being careful not to damage the seal rubber.
- Tighten the oil filter (Black) with an outer diameter of 68 mm (2.68 in) (approx. 1 rotation) after the seal rubber of the oil filter comes in contact with cylinder block or oil cooler. When using a torque wrench, tighten to 14 N·m (1.4 kgf-m, 10.3 ft-lb).
- Tighten the oil filter (Blue) with an outer diameter of 67.4 mm (2.65 in) (approx. 7/8 rotation) after the seal rubber of the oil filter comes in contact with cylinder block or oil cooler. When using a torque wrench, tighten to 12 N·m (1.2 kgf-m, 8.9 ft-lb).

4) Return the service hole cover to the original position.
5) Lower the vehicle.

C: INSPECTION

1) After installing the oil filter, run the engine and make sure that no oil is leaking around seal rubber.

NOTE:
The filter element and filter case are permanently jointed; therefore, interior cleaning is not necessary.

2) Check the engine oil level. <Ref. to LU(H4SO)-9, INSPECTION, Engine Oil.>

9. Engine Lubrication System Trouble in General

A: INSPECTION

Before performing diagnostics, make sure that the engine oil level is correct and no oil leakage exists.

Trouble	Possible cause		Corrective action
1. Warning light remains ON.	1) Oil pressure switch failure	Cracked diaphragm or oil leakage within switch	Replace.
		Broken spring or seized contacts	Replace.
	2) Low oil pressure	Clogging of oil filter	Replace.
		Malfunction of oil by-pass valve in oil filter	Clean or replace.
		Malfunction of oil relief valve in oil pump	Clean or replace.
		Clogged oil passage	Clean.
		Excessive tip clearance and side clearance of oil pump rotor and gear	Replace.
		Clogged oil strainer or broken pipe	Clean or replace.
	3) No oil pressure	Insufficient engine oil (including deterioration)	Replace.
		Broken pipe of oil strainer	Replace.
		Stuck oil pump rotor	Replace.
2. Warning light does not illuminate.	1) Malfunction of combination meter		Replace.
	2) Poor contact of switch contact points		Replace.
	3) Disconnection of wiring		Repair.
3. Warning light flickers momentarily.	1) Poor contact of terminals		Repair.
	2) Defective wiring harness		Repair.
	3) Low oil pressure		Check for the same possible causes as listed 1. — 2.

1. General Description

A: SPECIFICATION

Accelerator pedal	Stroke	At pedal pad	54 — 59 mm (2.13 — 2.32 in)

B: COMPONENT

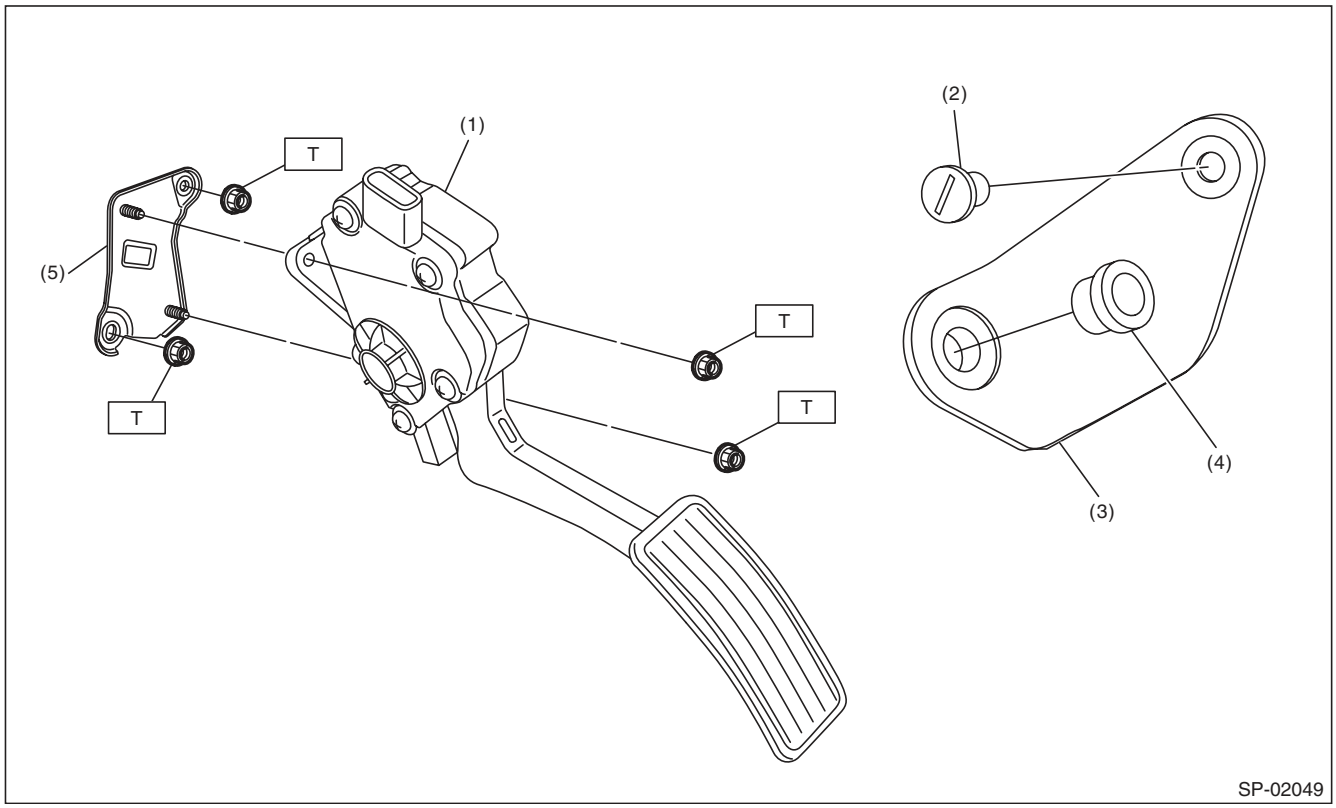

(1) Accelerator pedal ASSY
(2) Clip
(3) Accelerator plate
(4) Accelerator stopper
(5) Accelerator pedal bracket

Tightening torque:N·m (kgf-m, ft-lb)
T: 18 (1.8, 13.3)

C: CAUTION

- Wear appropriate work clothing, including a cap, protective goggles and protective shoes when performing any work.
- Remove contamination including dirt and corrosion before removal or installation.
- Keep the parts in order and protect them from dust and dirt.
- Before removal or installation, be sure to clarify the failure. Avoid unnecessary removal, installation, disassembly and replacement.
- Vehicle components are extremely hot after driving. Be wary of receiving burns from heated parts.
- Be sure to tighten fasteners including bolts and nuts to the specified torque.
- Place shop jacks or rigid racks at the specified points.
- Before disconnecting connectors of sensors or units, be sure to disconnect the ground cable from the battery.

2. Accelerator Pedal

A: REMOVAL

1) Disconnect the ground cable from battery.

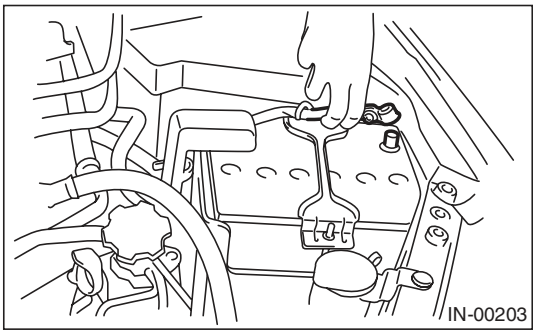

2) Disconnect the connector (A).
3) Remove the nut (B) securing accelerator pedal assembly.

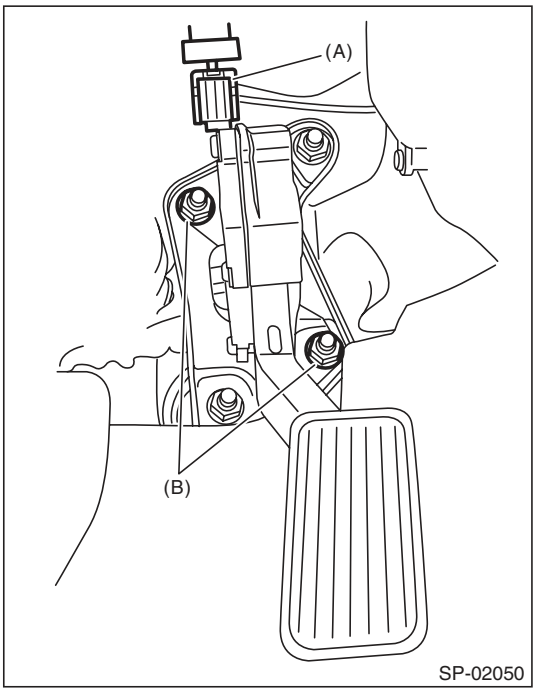

B: INSTALLATION

Install in the reverse order of removal.

Tightening torque:
18 N·m (1.8 kgf-m, 13.3 ft-lb)

C: DISASSEMBLY

NOTE:
The accelerator pedal cannot be disassembled.

D: INSPECTION

1) Check for smooth operation when the accelerator pedal is depressed.
2) Check if the accelerator pedal returns to its original position smoothly when the pedal is released.

1. General Description

A: SPECIFICATION

Item		Specification
Ignition coil & ignitor assembly	Type	FH 0363
	Manufacturer	Diamond Electric
	Secondary coil resistance	11.2 kΩ±15%
Spark plug	Manufacturer and type	NGK: FR5AP-11
	Thread size (diameter, pitch, length) mm	14, 1.25, 19
	Spark plug gap mm (in)	1.0 — 1.1 (0.039 — 0.043)
	Electrode	Platinum

B: COMPONENT

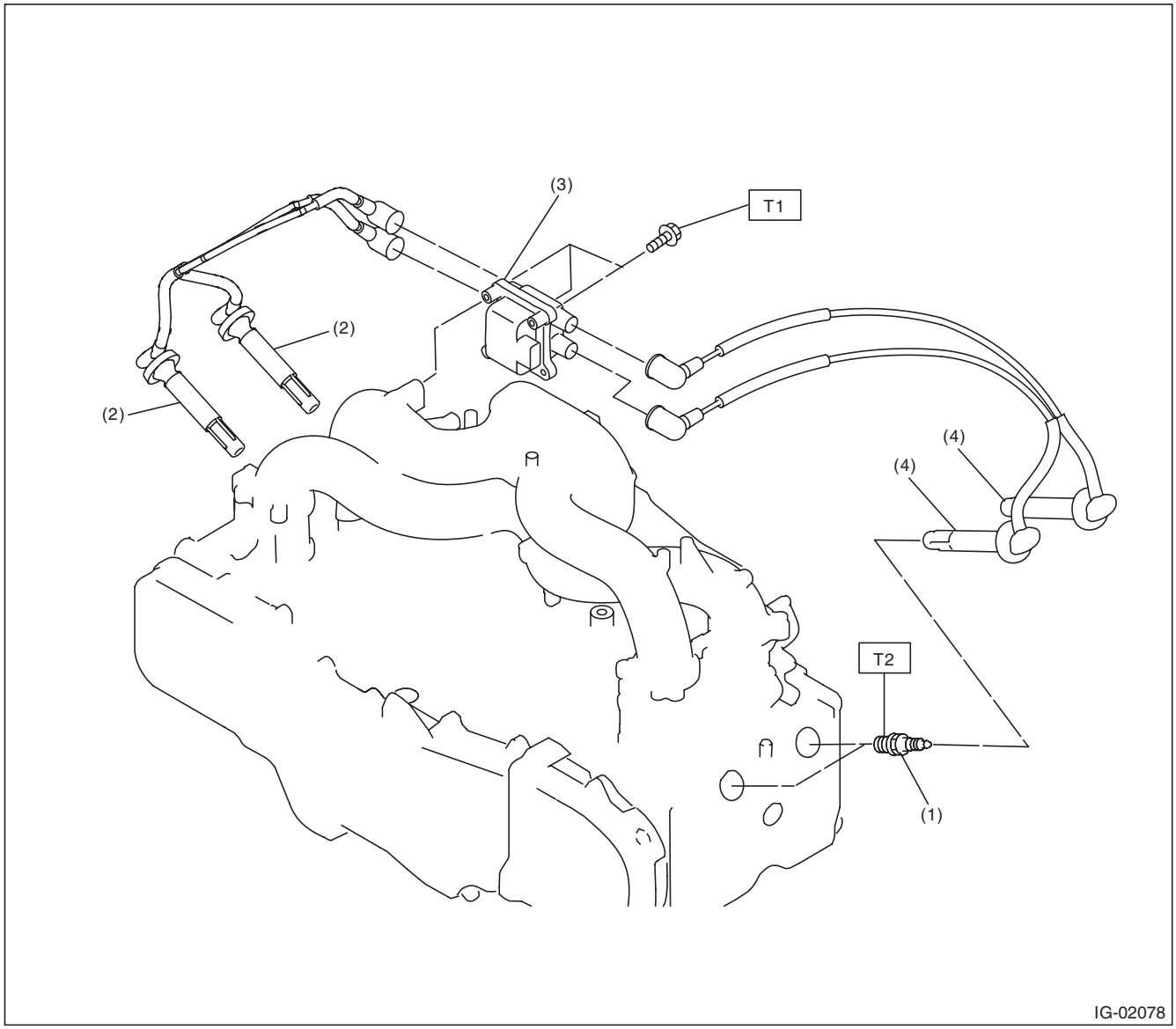

(1) Spark plug
(2) Spark plug cord (#1, #3)
(3) Ignition coil and ignitor ASSY
(4) Spark plug cord (#2, #4)

Tightening torque:N·m (kgf-m, ft-lb)
T1: 8 (0.8, 5.9)
T2: 21 (2.1, 15.5)

C: CAUTION

- Wear appropriate work clothing, including a cap, protective goggles and protective shoes when performing any work.
- Remove contamination including dirt and corrosion before removal, installation or disassembly.
- Keep the disassembled parts in order and protect them from dust and dirt.
- Before removal, installation or disassembly, be sure to clarify the failure. Avoid unnecessary removal, installation, disassembly and replacement.
- Vehicle components are extremely hot after driving. Be wary of receiving burns from heated parts.
- Be sure to tighten fasteners including bolts and nuts to the specified torque.
- Place shop jacks or rigid racks at the specified points.
- Before disconnecting connectors of sensors or units, be sure to disconnect the ground cable from the battery.

2. Spark Plug

A: REMOVAL

Spark plug:
Refer to "SPECIFICATION" for the spark plug. <Ref. to IG(H4SO)-2, SPECIFICATION, General Description.>

1. RH SIDE

1) Disconnect the ground cable from battery.

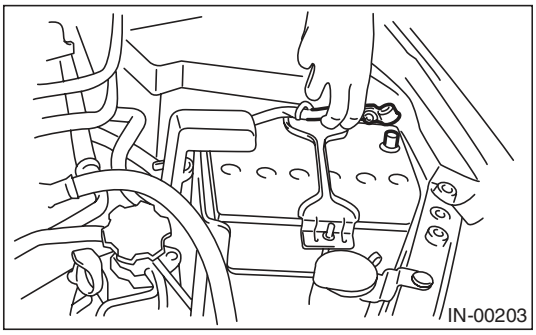

2) Remove the air cleaner case. <Ref. to IN(H4SO)-5, REMOVAL, Air Cleaner Case.>
3) Remove the spark plug cords by pulling the boot. (Do not pull the cord itself.)

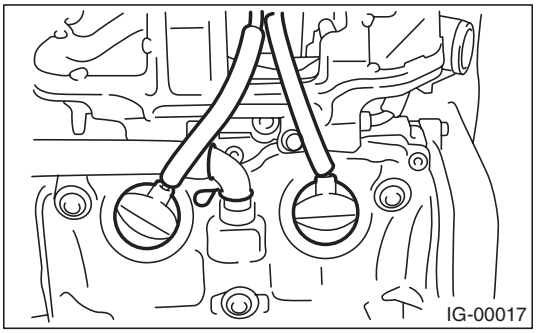

4) Remove the spark plug with a spark plug socket.

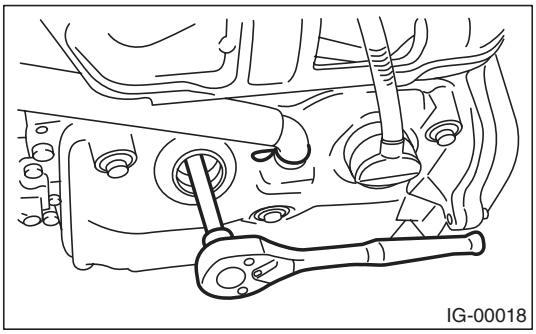

2. LH SIDE

1) Remove the battery. <Ref. to SC(H4SO)-20, REMOVAL, Battery.>
2) Remove the spark plug cords by pulling the boot. (Do not pull the cord itself.)

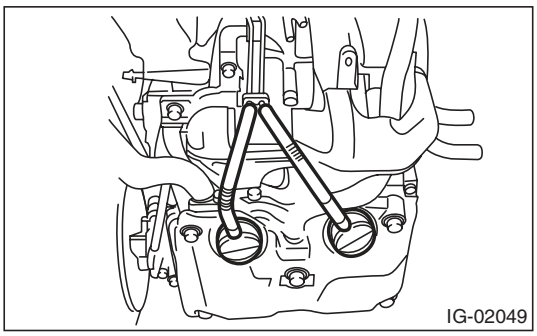

3) Remove the spark plug with a spark plug socket.

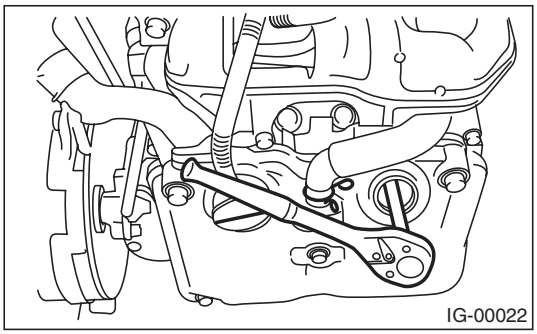

B: INSTALLATION

1. RH SIDE

Install in the reverse order of removal.

Tightening torque:
21 N·m (2.1 kgf-m, 15.5 ft-lb)

2. LH SIDE

Install in the reverse order of removal.

Tightening torque:
21 N·m (2.1 kgf-m, 15.5 ft-lb)

C: INSPECTION

Check the electrodes and inner and outer ceramic insulator of plugs, noting the type of deposits and the degree of electrode erosion.

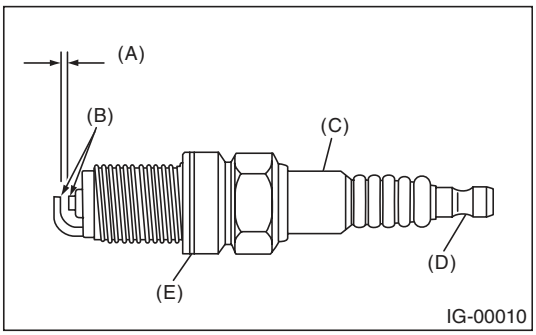

(A) Spark plug gap
(B) Carbon accumulation or wear
(C) Cracks
(D) Damage
(E) Damaged gasket

1) Normal:
Brown to grayish-tan deposits and slight electrode wear indicate correct spark plug heat range.

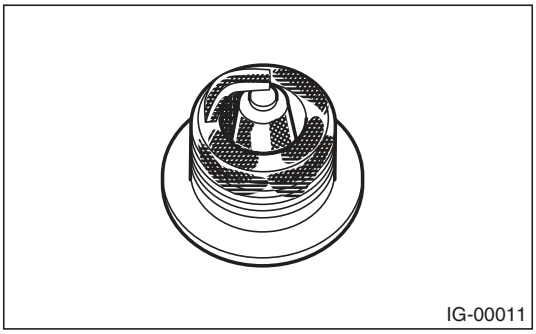

2) Carbon fouled:
Dry fluffy carbon deposits on insulator and electrode are mostly caused by slow speed driving in the city, weak ignition, too rich fuel mixture and dirty air cleaner.

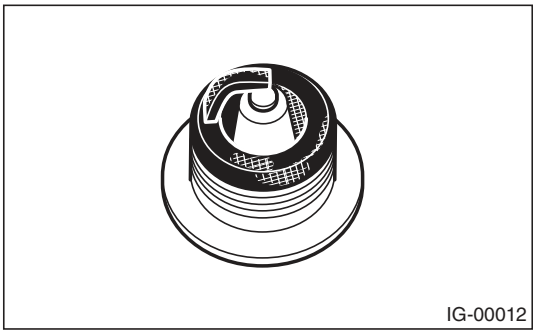

3) Oil fouled:
Wet black deposits show oil entrance into the combustion chamber through worn rings or pistons, or excessive clearance between valve guides and stems.

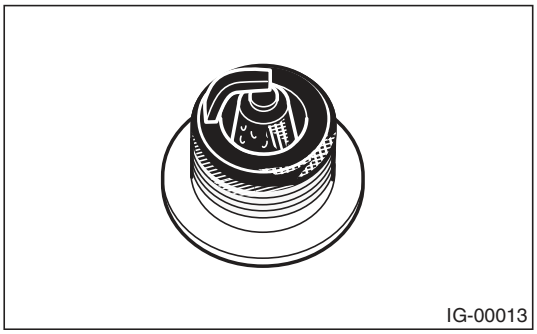

4) Overheating:
White or light gray insulator with black or brown spots and bluish burnt electrodes indicate engine overheating, incorrect ignition timing, wrong selection of fuel, and loose spark plugs.

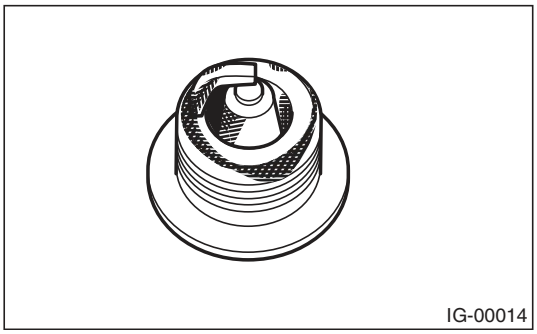

D: ADJUSTMENT

Clean spark plugs with a nylon brush, etc. Clean and remove the carbon or oxide deposits. If deposits are too stubborn, replace the spark plugs. After cleaning the spark plugs, measure the spark plug gap using a gap gauge.

NOTE:
- Never use plug cleaner.
- Do not use metal brush or it will wear insulator.

Spark plug gap L:
1.0 — 1.1 mm (0.039 — 0.043 in)

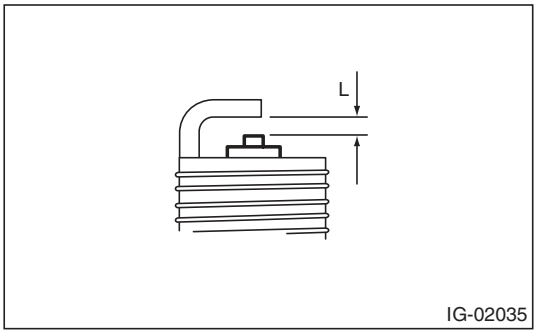

3. Ignition Coil and Ignitor Assembly

A: REMOVAL

1) Disconnect the ground cable from battery.

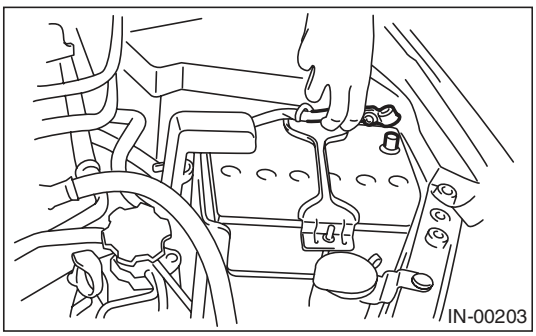

2) Disconnect the spark plug cords from ignition coil and ignitor assembly.

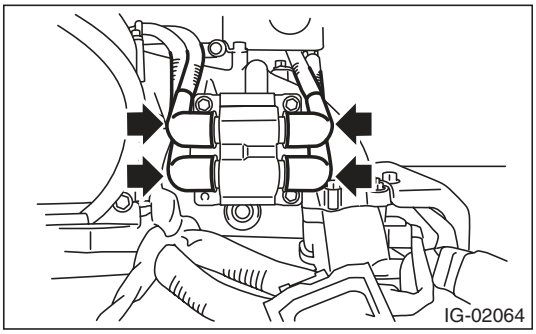

3) Disconnect the connector (A) from the ignition coil and ignitor assembly.
4) Remove the bolt (B) which secures the ignition coil and ignitor assembly to the intake manifold.

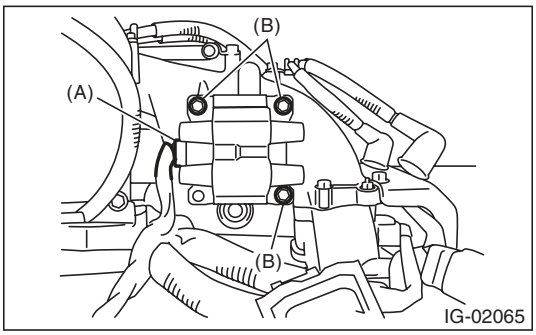

B: INSTALLATION

Install in the reverse order of removal.

Tightening torque:
8 N·m (0.8 kgf-m, 5.9 ft-lb)

CAUTION:
Connect the spark plug cords to correct positions. Failure to do so will damage the unit.

C: INSPECTION

Check the secondary coil resistance using a tester. Replace if defective.

CAUTION:
- **If the resistance is extremely low, it indicates the presence of a short-circuit.**
- **Ignitor is integrated with the coil. Therefore the resistance of primary side coil cannot be measured.**

Specified resistance:

[Secondary side]
Between (A) and (B)
11.2 kΩ±15%
Between (C) and (D)
11.2 kΩ±15%

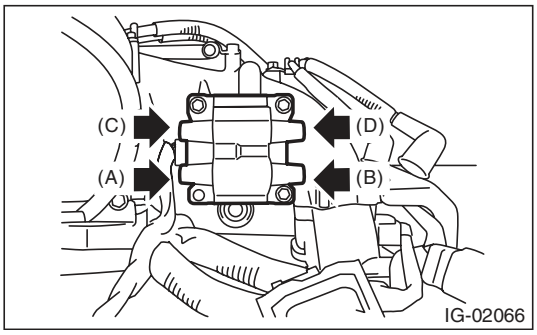

4. Spark Plug Cord

A: INSPECTION

Check the following items.

- Damage to cords, deformation, burning or rust formation of terminals
- Resistance value of cords

Specified resistance:

#1 cord: 7.1 — 12.1 kΩ
#2 cord: 12.1 — 19.9 kΩ
#3 cord: 7.7 — 13.0 kΩ
#4 cord: 12.3 — 20.2 kΩ

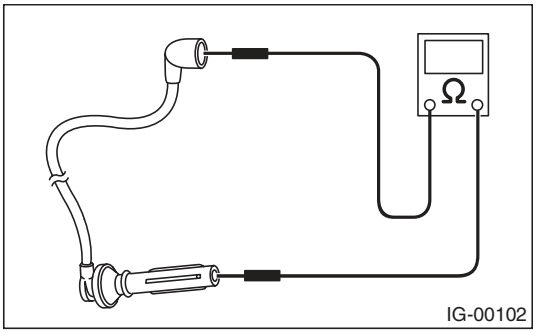

1. General Description

A: SPECIFICATION

Item			Specification	
Vehicle model			MT	AT
Starter	Type		Reduction type	
	Model		428000-4780	428000-4790
	Manufacturer		DENSO	
	Voltage and output		12 V — 1.6 kW	12 V — 1.6 kW
	Direction of rotation		Counterclockwise (when observed from pinion)	
	Number of pinion teeth		9	9
	No-load characteristics	Voltage	11 V	11 V
		Current	90 A or less	90 A or less
		Rotating speed	1,900 rpm or more	1,900 rpm or more
	Load characteristics	Voltage	8 V	8 V
		Current	370 A	370 A
		Torque	11.1 N·m (1.1 kgf-m, 8.2 ft-lb) or more	11.1 N·m (1.1 kgf-m, 8.2 ft-lb) or more
		Rotating speed	910 rpm or more	910 rpm or more
	Lock characteristics	Voltage	3 V	3 V
		Current	750 A or less	750 A or less
		Torque	15.5 N·m (1.6 kgf-m, 11.4 ft-lb) or more	15.5 N·m (1.6 kgf-m, 11.4 ft-lb) or more
Generator	Type		Rotating-field three-phase type, voltage regulator built-in type, with load response control system	
	Model	2.5 L Non-turbo, 2.5 L Turbo	A3TG2391ZC	
		3.0 L Non-turbo	A3TG0591	
	Manufacturer		MITSUBISHI ELECTRIC	
	Voltage and output		12 V — 110 A	
	Polarity on ground side		Negative	
	Direction of rotation		Clockwise (when observed from pulley side)	
	Stator connection		3-phase Y-type	
	Output current		1,500 rpm — 50 A or more 2,500 rpm — 91 A or more 5,000 rpm — 105 A or more	
	Regulated voltage		14.1 — 14.8 V [20°C (68°F)]	
Battery	Type and capacity		12 V — 48 AH (55D23L)	12 V — 52 AH (75D23L)

B: COMPONENT

1. STARTER

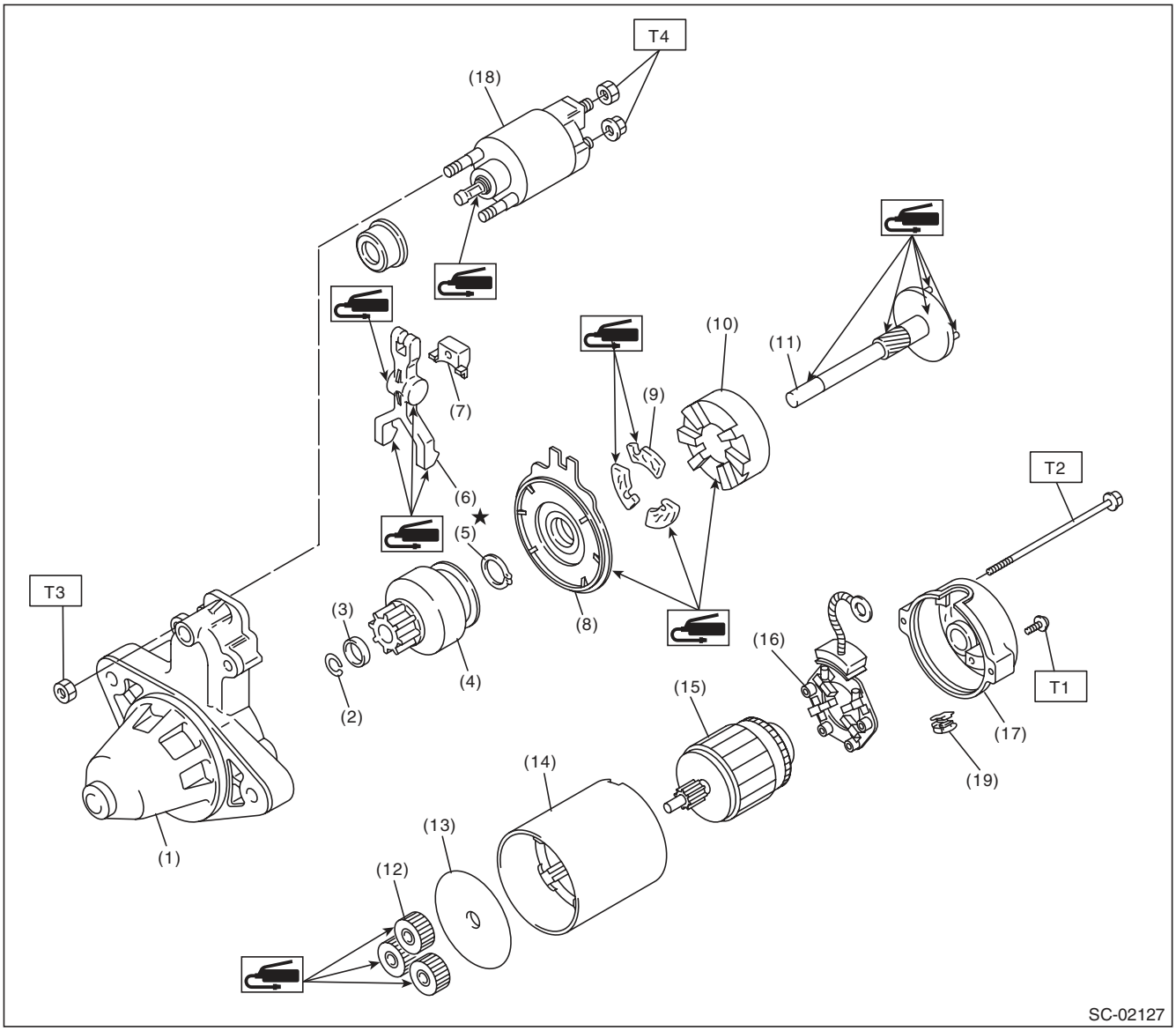

(1) Starter housing
(2) Snap ring
(3) Stopper
(4) Overrunning clutch
(5) Snap ring
(6) Shift lever
(7) Starter seal
(8) Shock absorber bearing
(9) Shock absorber
(10) Internal gear
(11) Shaft
(12) Planetary gear
(13) Starter plate
(14) Yoke
(15) Armature
(16) Brush holder ASSY
(17) Starter cover
(18) Magnet switch ASSY
(19) Drain duct

Tightening torque:N·m (kgf-m, ft-lb)	
T1:	*1.4 (0.1, 1.0)*
T2:	*6 (0.6, 4.4)*
T3:	*7.5 (0.8, 5.5)*
T4:	*10 (1.0, 7.4)*

2. GENERATOR

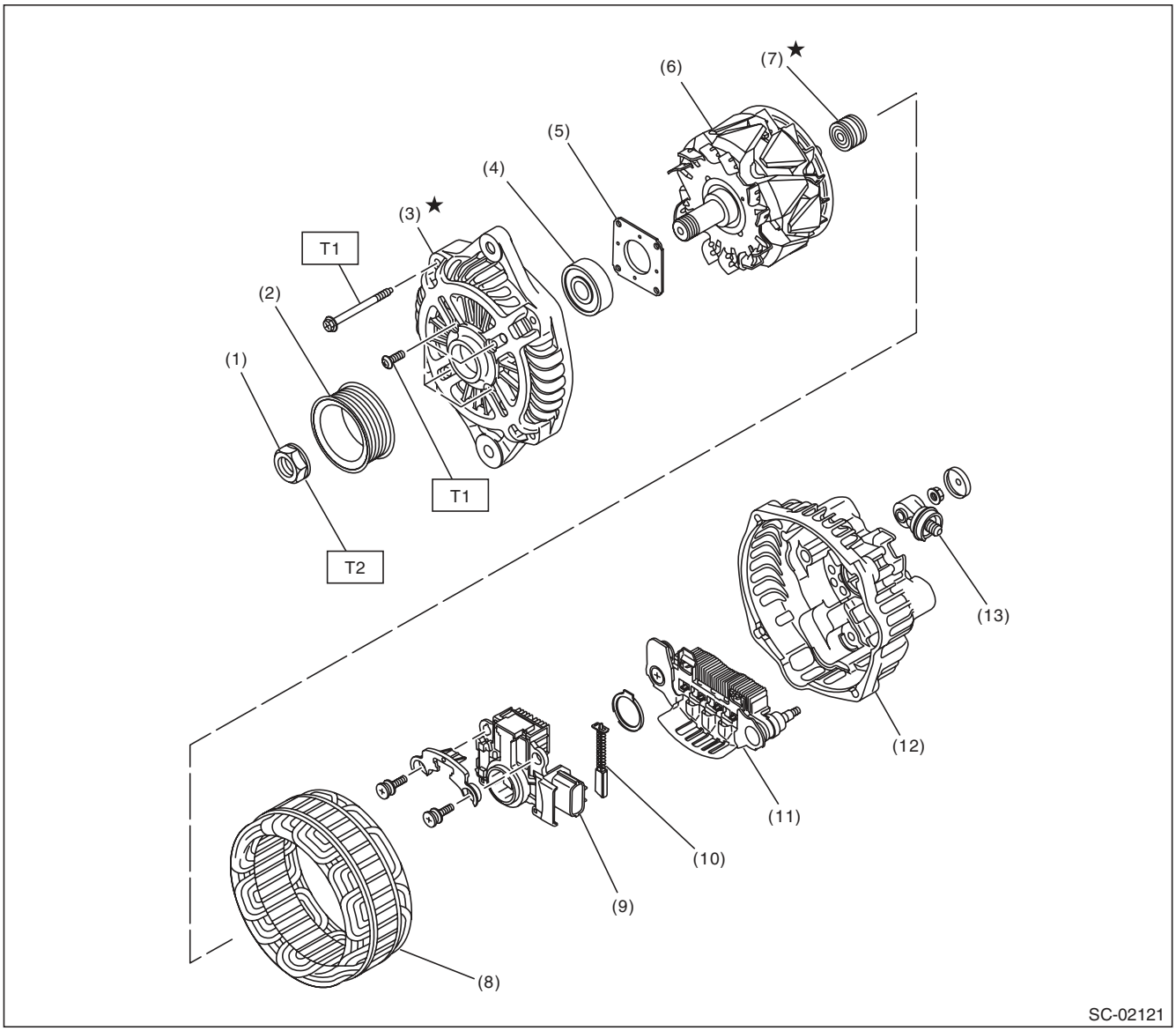

(1)	Pulley nut	(7)	Bearing	(13)	Terminal
(2)	Pulley	(8)	Stator coil		
(3)	Front cover	(9)	IC regulator with brush		
(4)	Ball bearing	(10)	Brush		
(5)	Bearing retainer	(11)	Rectifier		
(6)	Rotor	(12)	Rear cover		

Tightening torque:N·m (kgf-m, ft-lb)
T1: 4.7 (0.5, 3.5)
T2: 108 (11.0, 79.8)

C: CAUTION

- Wear appropriate work clothing, including a cap, protective goggles and protective shoes when performing any work.
- Remove contamination including dirt and corrosion before removal, installation or disassembly.
- Keep the disassembled parts in order and protect them from dust and dirt.
- Before removal, installation or disassembly, be sure to clarify the failure. Avoid unnecessary removal, installation, disassembly and replacement.
- Vehicle components are extremely hot after driving. Be wary of receiving burns from heated parts.
- Be sure to tighten fasteners including bolts and nuts to the specified torque.
- Place shop jacks or rigid racks at the specified points.
- Before disconnecting connectors of sensors or units, be sure to disconnect the ground cable from the battery.

2. Starter

A: REMOVAL

1) Disconnect the ground cable from battery.

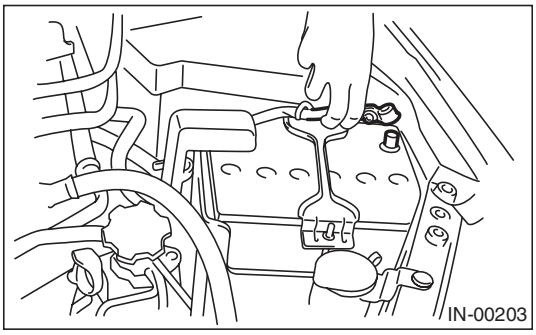

2) Remove the air intake chamber. (Non-turbo model) <Ref. to IN(H4SO)-7, REMOVAL, Air Intake Chamber.> <Ref. to IN(H6DO)-7, REMOVAL, Air Intake Chamber.>
3) Remove the intercooler. (Turbo model)
<Ref. to IN(H4DOTC)-12, REMOVAL, Intercooler.>
4) Remove the air intake chamber stay LH. (2.5 L non-turbo model)
5) Disconnect the connector and terminal from starter.

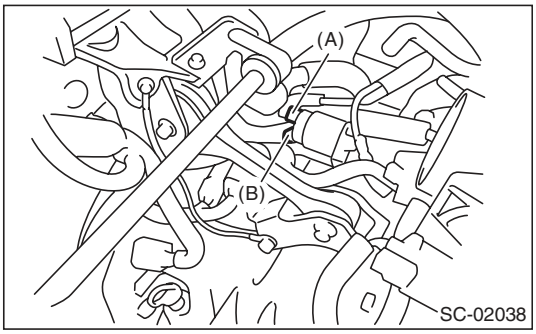

(A) Terminals
(B) Connector

6) Remove the starter from transmission.

B: INSTALLATION

Install in the reverse order of removal.

Tightening torque:
50 N·m (5.1 kgf-m, 36.9 ft-lb)

C: DISASSEMBLY

1) Loosen the nut which holds terminal M (A) of the magnet switch assembly, then disconnect the harness from the terminal.

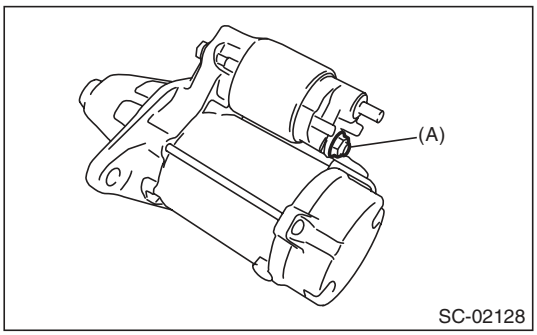

2) Remove the nuts which secure the magnet switch assembly and remove the magnet switch assembly.

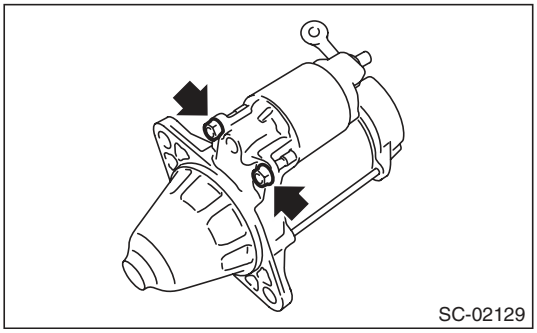

3) Remove the starter seal.

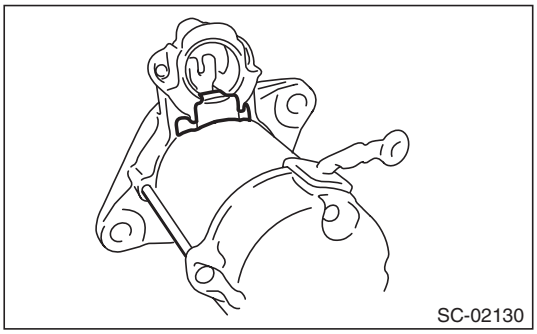

4) Remove the through bolts on both sides, and remove the starter housing.

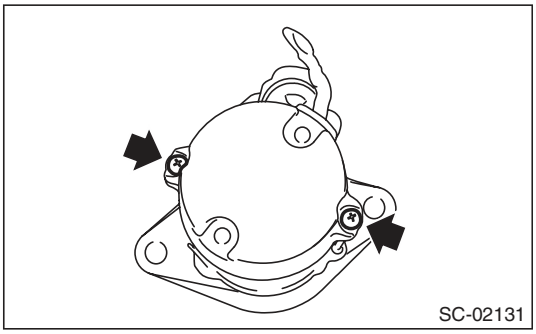

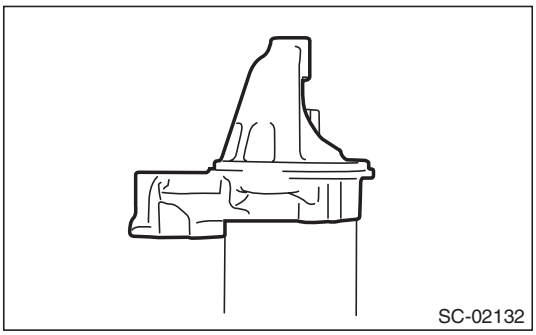

5) Remove the shift lever.

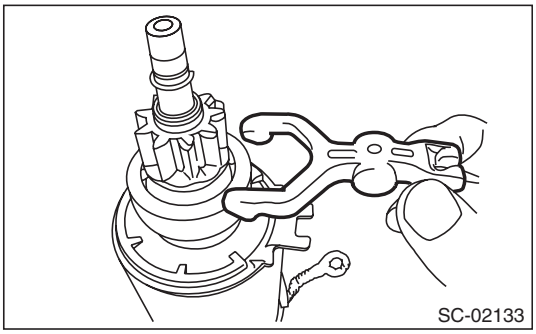

6) Remove the overrunning clutch, shock absorber bearing and shaft from the yoke as an assembly.

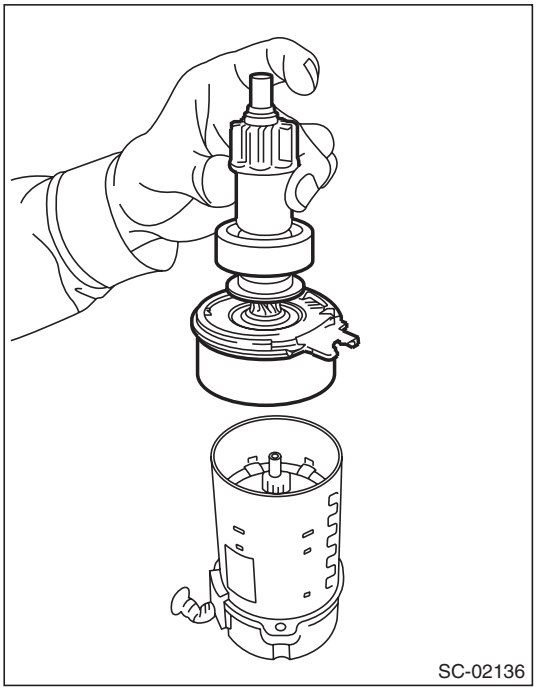

7) Remove the overrunning clutch from shaft assembly as follows:

(1) Using a plastic hammer, remove the stopper from snap ring by lightly tapping the stopper with an appropriate tool (such as a fit socket wrench).

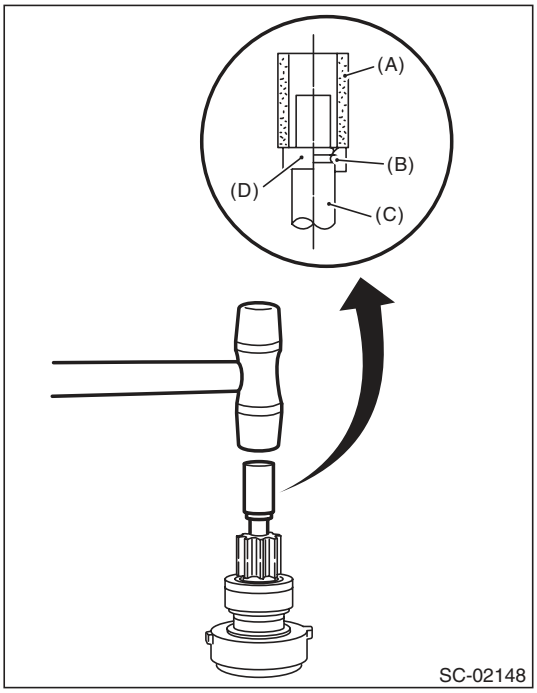

(A) Appropriate tool
(B) Snap ring
(C) Shaft
(D) Stopper

(2) Remove the snap ring (A) from the shaft, and then remove the stopper (B).

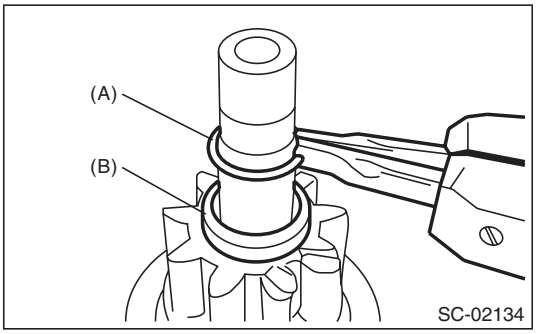

(3) Remove the overrunning clutch from the shaft.

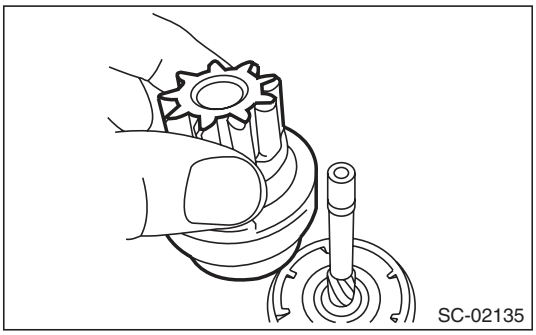

8) Remove the shock absorber as follows:

(1) Remove the starter plate.

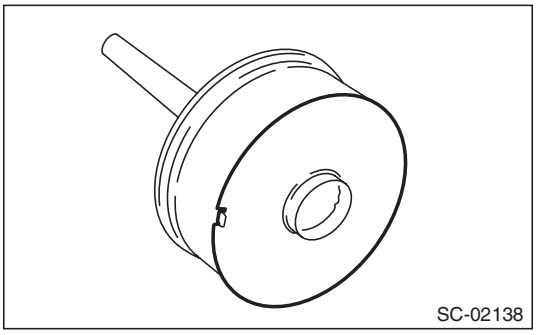

(2) Remove the planetary gear.

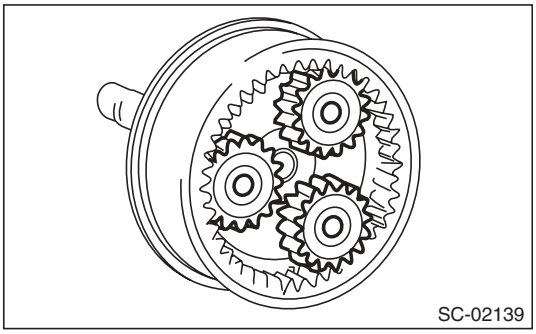

(3) Remove the snap ring, and then remove the shaft.

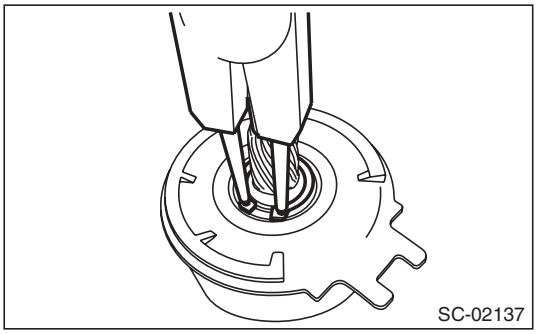

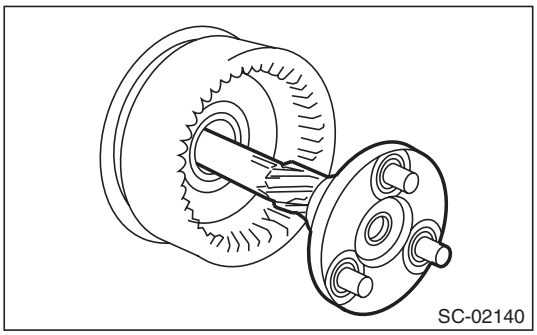

(4) Separate the shock absorber bearing (A) from the internal gear (B), and then remove the shock absorber (C).

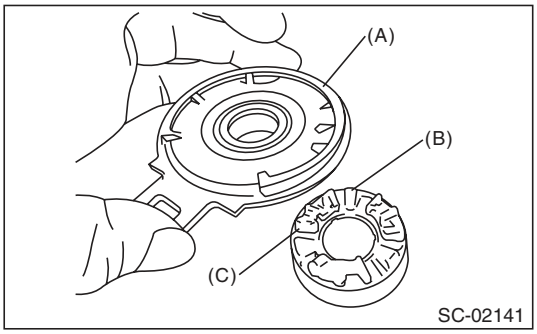

9) Remove the screws, and remove the starter cover from the brush holder assembly.

NOTE:
Hold the screws down and separate the starter cover so that the brush holder assembly remains on the armature side.

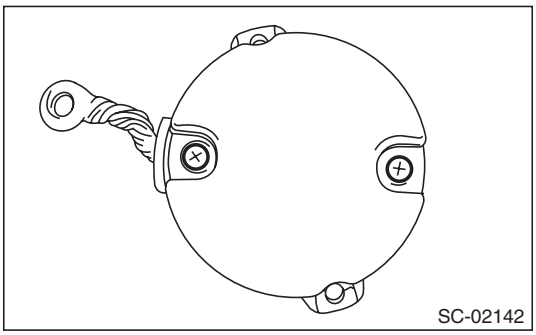

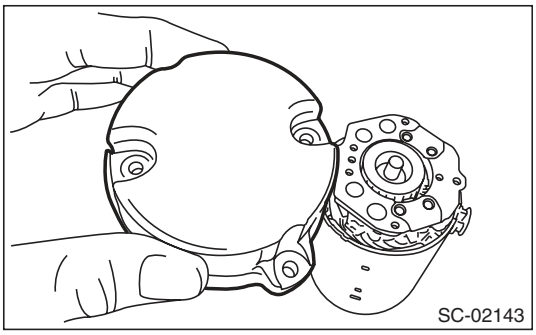

10) Remove the brush holder assembly from the armature.

NOTE:
Spread the brush with your fingers, being careful not to damage the brush.

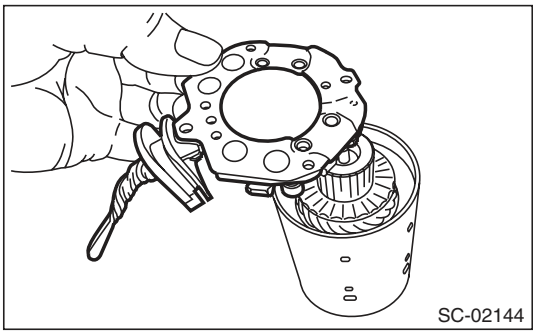

11) Remove the armature from yoke.

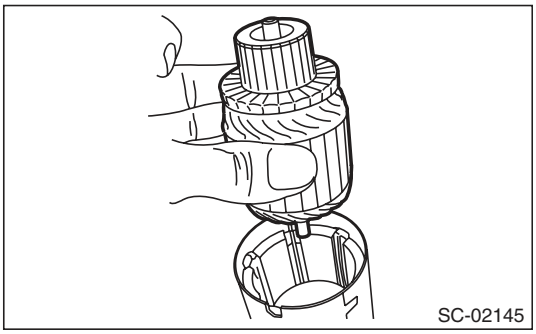

D: ASSEMBLY

1) Install the armature to yoke.

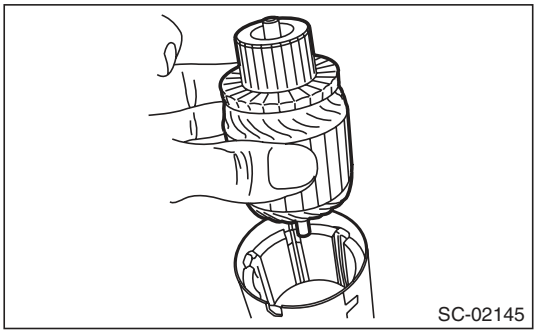

2) Install the brush holder assembly to the armature.

NOTE:
Spread the brush with your fingers, being careful not to damage the brush.

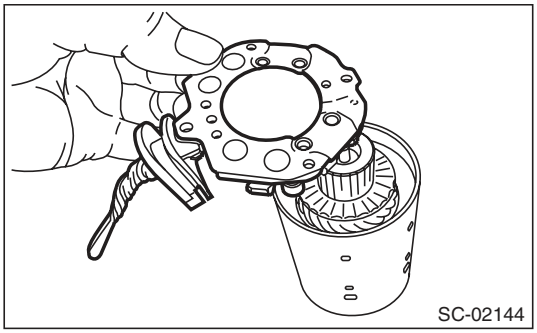

3) Install the starter cover, and then secure it to the brush holder assembly with the screws.

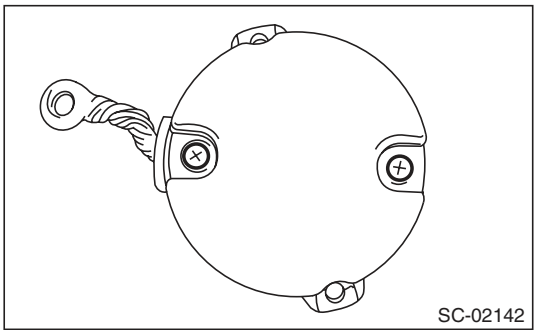

4) Assemble the shock absorber as follows:
   (1) Apply grease to the shock absorber (C), and install the internal gear (B) to the shock absorber bearing (A).

NOTE:
Align with the claw position of internal gear to install shock absorber bearing.

Grease:
DENSO HL50

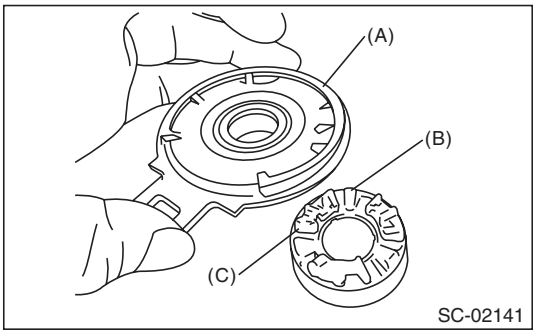

   (2) Install the shaft to the internal gear.

NOTE:
Apply grease to the sliding part for the shaft inside the internal gear.

Grease:
DENSO HL50

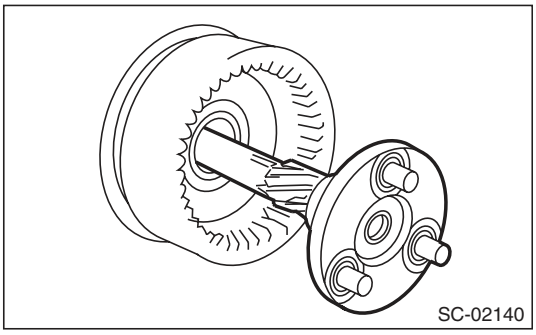

   (3) Install the snap ring to shaft.

NOTE:
Use new snap rings.

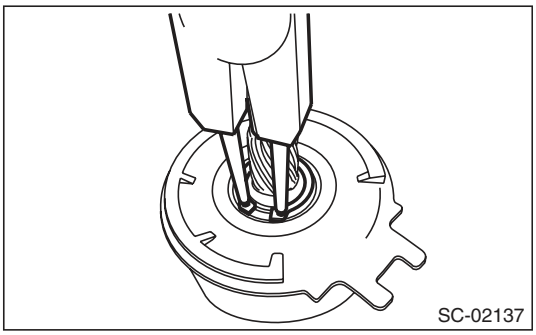

5) Install the planetary gear to the internal gear.
   (1) Apply grease to the planetary gear attachment area.

Grease:
DENSO HL50

   (2) Install the planetary gear to pin.
   (3) Apply grease to the planetary gear, internal gear and upper part of the pin.

NOTE:
- Apply grease so that it contacts each gear.
- Be careful not to allow dirt to get in.

Grease:
DENSO HL50

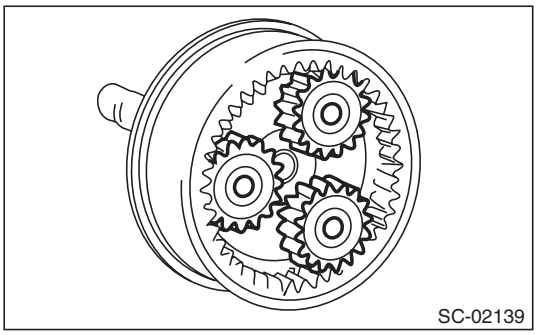

   (4) Install the starter plate.

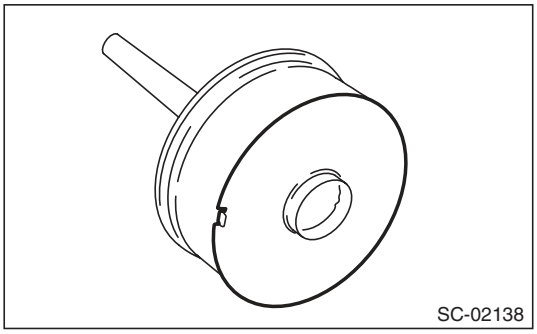

6) Assemble the overrunning clutch as follows:
   (1) Apply grease to the spline portion of the shaft.

Grease:
DENSO HL50

   (2) Install the overrunning clutch to shaft.

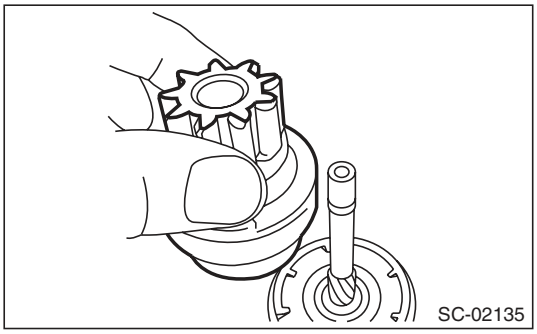

(3) Install the stopper (B) to the shaft, and install the snap ring (A).

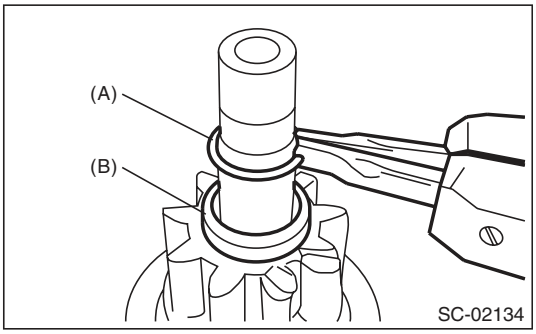

(4) Press-fit the stopper (B) to snap ring (A) using a press.

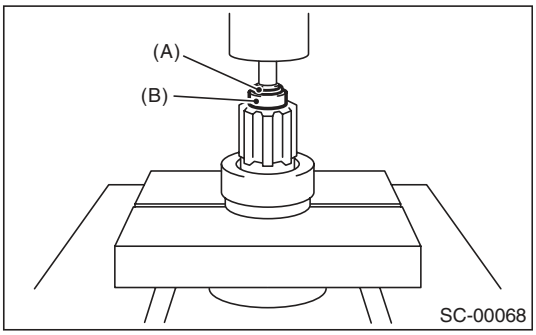

7) Assemble the overrunning clutch, shock absorber and shaft to the yoke as one unit.

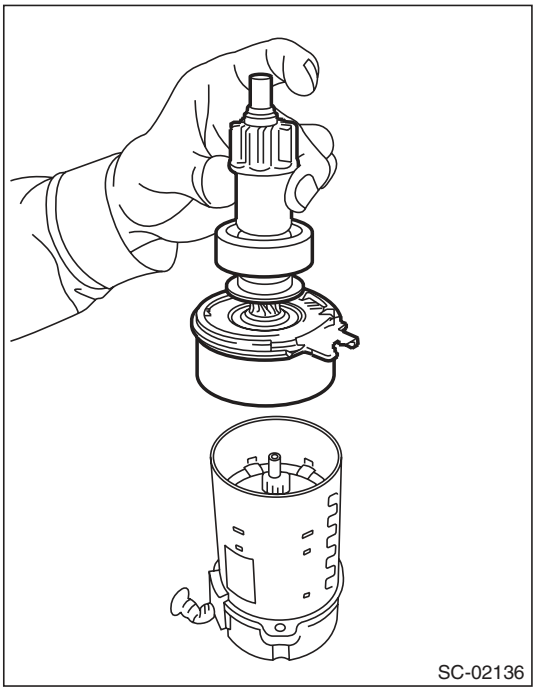

8) Install the shift lever.

NOTE:
Apply grease to the contact portion of the shift lever.

Grease:
DENSO HL50

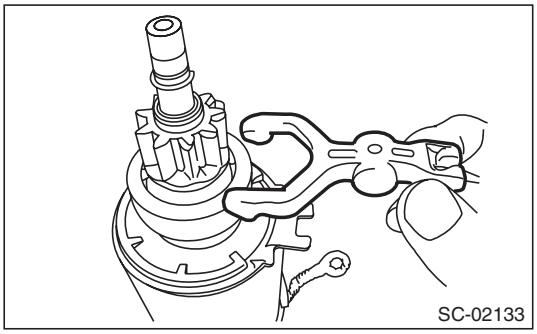

9) Install the starter housing, and tighten the through bolts on both sides.

Tightening torque:
6 N·m (0.6 kgf-m, 4.4 ft-lb)

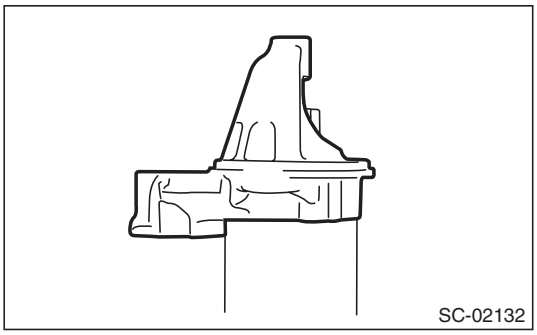

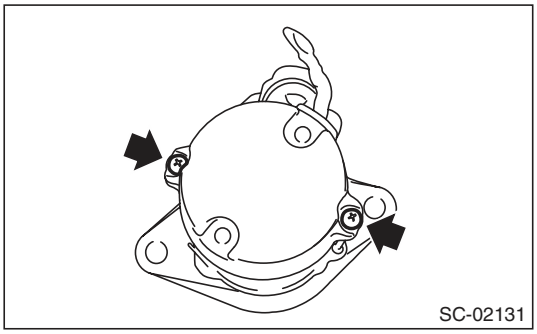

10) Install the starter seal.

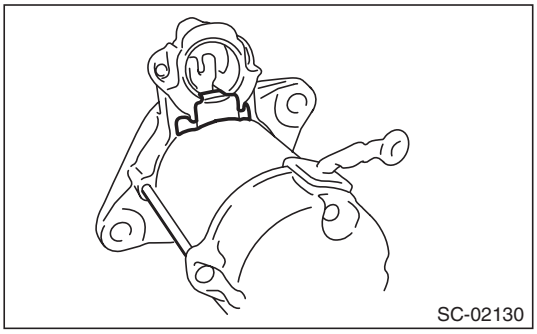

11) Install the magnet switch assembly to the starter housing, and tighten the nuts.

NOTE:
Apply grease to the installation part of the shift lever.

Grease:
DENSO HL50

Tightening torque:
7.5 N·m (0.8 kgf-m, 5.5 ft-lb)

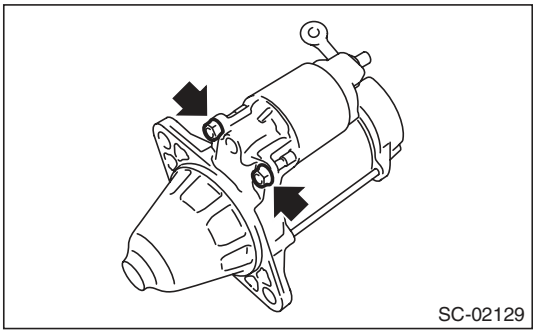

12) Install the harness to the terminal M (A) of the magnet switch assembly, and tighten the nut.

Tightening torque:
10 N·m (1.0 kgf-m, 7.4 ft-lb)

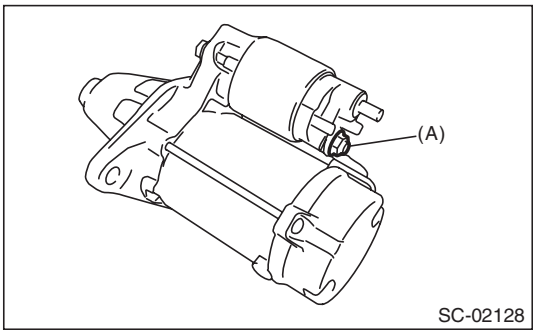

E: INSPECTION

1. SWITCH ASSEMBLY

Using a circuit tester (set to “ohm”), check that there is continuity between terminals S and M, and between terminal S and ground.
Also check to be sure there is no continuity between terminal M and B.

Terminal/Resistance:
S — M/1 Ω or less
S — Ground/1 Ω or less
M — B/1 MΩ or more

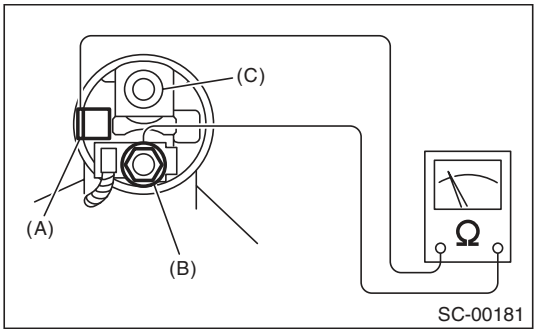

(A) Terminal S
(B) Terminal M
(C) Terminal B

2. SWITCH ASSEMBLY OPERATION

NOTE:
Test period of each test must be within short time (3 — 5 seconds).
1) Vacuum test
Disconnect the harness from terminal M and connect it as shown in the figure. Make sure the pinion gear sticks out.

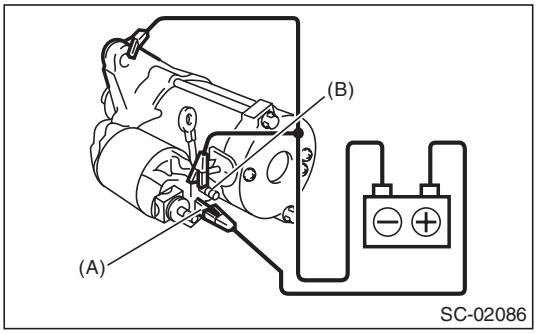

(A) Terminal S
(B) Terminal M

2) Hold test
Make sure the pinion gear remains stick out even after disconnecting terminal M in the above condition.

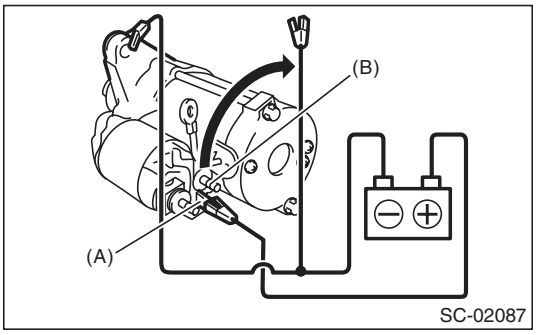

(A) Terminal S
(B) Terminal M

3) Return test
Connect the positive terminal to terminal S and the negative terminal to terminal M and starter body to pull the pinion gear at the main contact point. Make sure the pinion gear returns to its original position when the terminal S is disconnected.

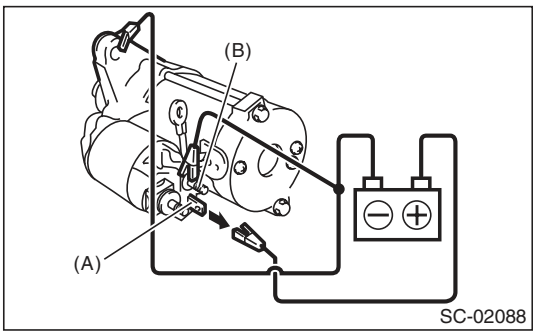

(A) Terminal S
(B) Terminal M

3. PERFORMANCE TEST

The starter should be submitted to performance tests whenever it has been overhauled, to assure its satisfactory performance when installed on the engine.
Three performance tests, no-load test, load test, and lock test, are presented here; however, if the load test and lock test cannot be performed, carry out at least the no-load test.
For these performance tests, use the circuit shown in figure.

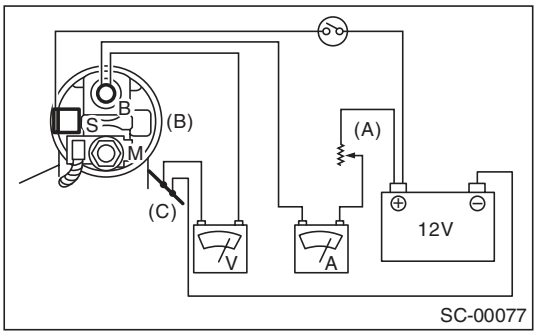

(A) Variable resistance
(B) Magnetic switch
(C) Starter body

1) No-load test
With switch on, adjust the variable resistance until the voltage is 11 V, read the value of ammeter to measure rotating speed. Compare these values with the standard.

No-load test (standard):

Voltage/Current
Max. 11 V/90 A or less

Rotating speed
1,900 rpm or more

2) Load test
Apply the specified braking torque to starter. The condition is satisfactory if the current draw and rotating speed are within specifications.

Load test (standard):

Voltage/Load
8 V/11.1 N·m (1.1 kgf-m, 8.2 ft-lb)

Current/Speed
370 A/910 rpm or more

3) Lock test
With the starter stalled, or not rotating, measure the torque developed and current draw when the voltage is adjusted to standard voltage.

Lock test (standard):

Voltage/Current
3 V/750 A or less

Torque
15.5 N·m (1.6 kgf-m, 11.4 ft-lb)

3. Generator

A: REMOVAL

1) Disconnect the ground cable from battery.

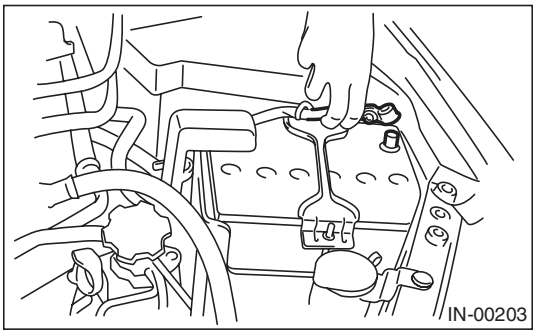

2) Remove the front side belts.
<Ref. to ME(H4SO)-38, FRONT SIDE BELT, REMOVAL, V-belt.> or <Ref. to ME(H4DOTC)-41, FRONT SIDE BELT, REMOVAL, V-belt.> <Ref. to ME(H6DO)-42, REMOVAL, V-belt.>

3) Disconnect the connector and terminal from generator.

- 2.5 L Non-turbo model

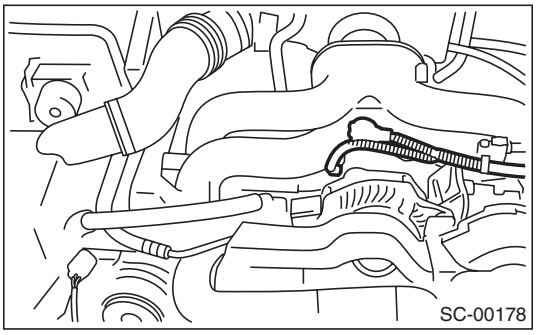

- 3.0 L Non-turbo model

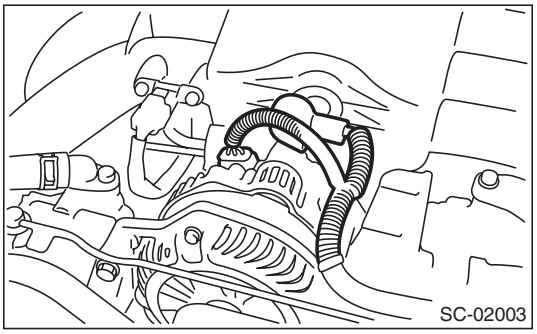

- Turbo model

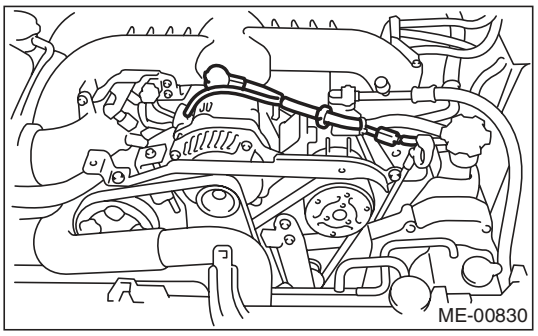

4) Remove the bolts which install the generator onto bracket.

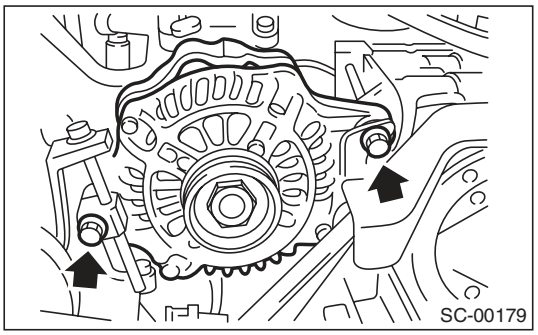

B: INSTALLATION

Install in the reverse order of removal.

Tightening torque:
25 N·m (2.5 kgf-m, 18.4 ft-lb)

CAUTION:
Check and adjust the V-belt tension.
<Ref. to ME(H4SO)-40, INSPECTION, V-belt.>
<Ref. to ME(H4DOTC)-43, INSPECTION, V-belt.>
<Ref. to ME(H6DO)-42, INSPECTION, V-belt.>

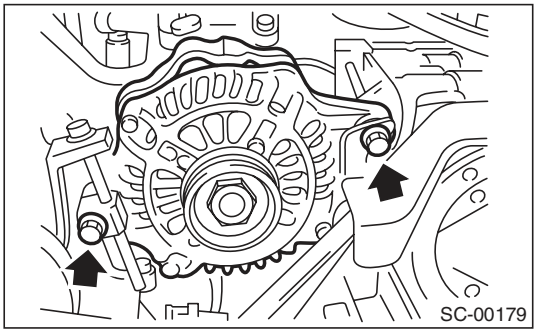

C: DISASSEMBLY

1) Remove the four through-bolts.

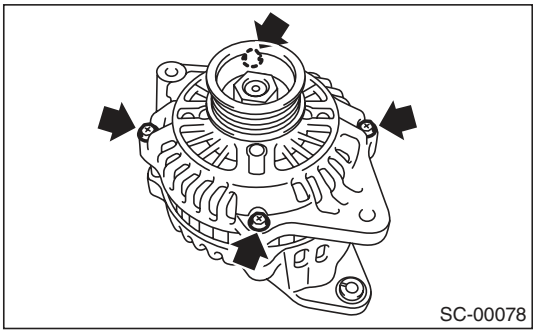

2) Use a drier to heat the rear cover (A) portion to 50°C (122°F).

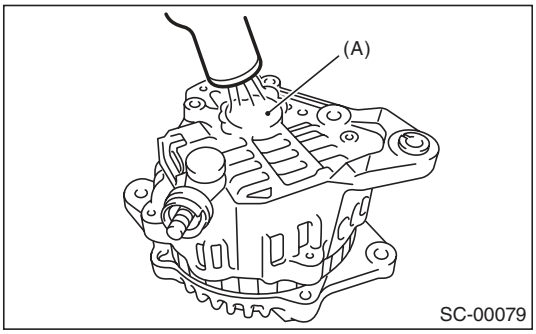

3) Insert the end of a flat tip screwdriver into the gap between stator core and front cover. Pry them apart to disassemble.

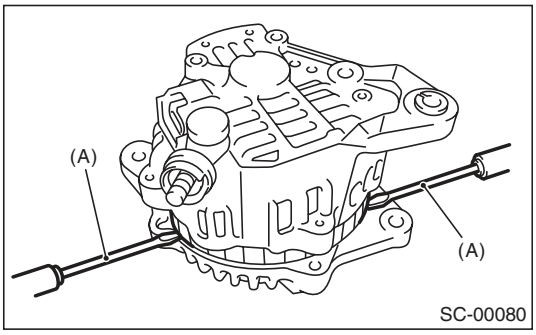

(A) Screwdriver

4) Using a vise, support the rotor and remove the pulley bolt.

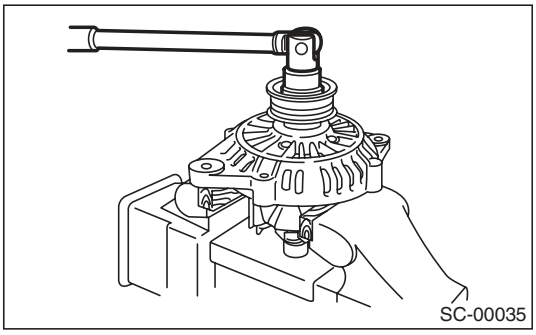

CAUTION:
When holding the rotor with a vise, place aluminum plates or wooden pieces on the vise jaws to prevent rotor from damage.

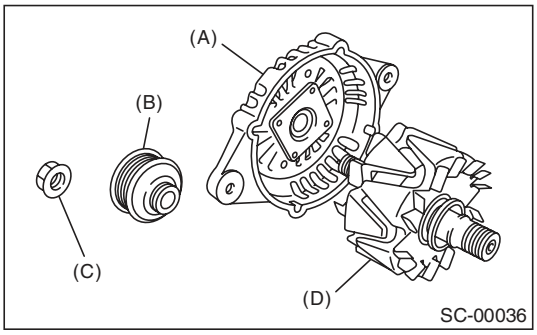

(A) Front cover
(B) Pulley
(C) Nut
(D) Rotor

5) Use the following procedures to remove the ball bearings.

(1) Remove the bolt, and then detach the bearing retainer.

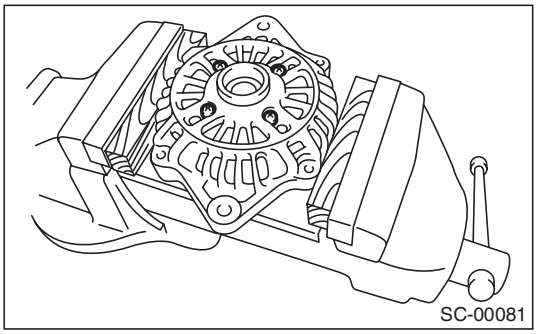

(2) Firmly attach an appropriate tool (such as a correct size socket wrench) to the bearing inner race.

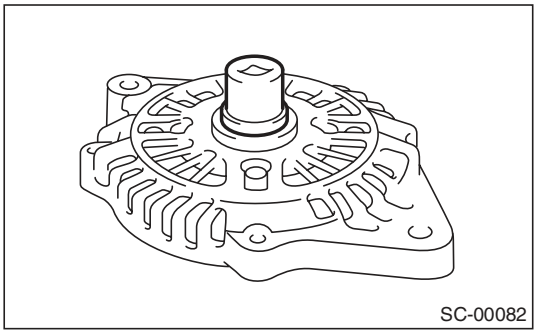

(3) Use the press to push the ball bearings out from the front cover.

6) Using the bearing puller, remove the bearings from the rotor.

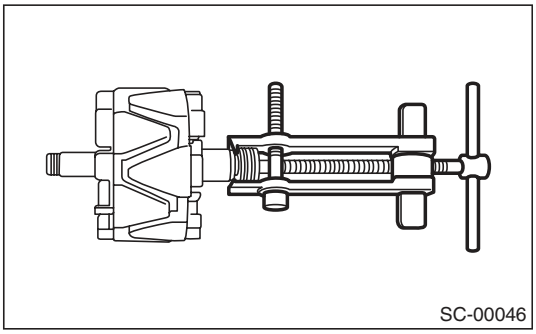

7) Disconnect the connection between the rectifier and stator coil, then remove the stator coil.

CAUTION:
The rectifier is easily damaged by heat. Do not allow a 180 — 270 W soldering iron to contact the terminals for 5 seconds or more at a time.

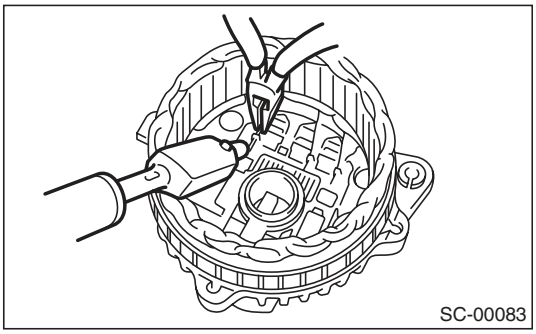

8) Use the following procedures to remove the IC regulator.

(1) Remove the screws which secure the IC regulator to the rear cover.

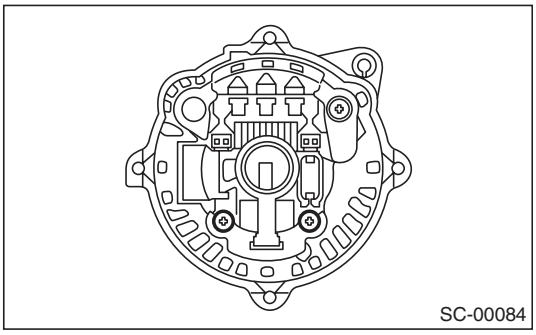

(2) Disconnect the connection between the IC regulator and rectifier, then remove the IC regulator.

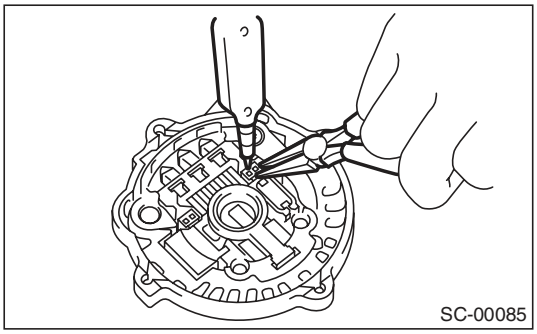

9) Use the following procedures to remove the brush.

(1) Remove the cover A.

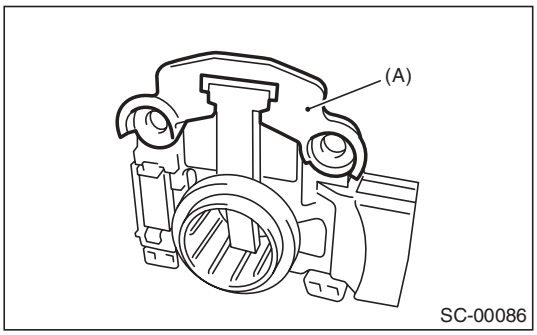

(A) Cover A

(2) Remove the cover B.

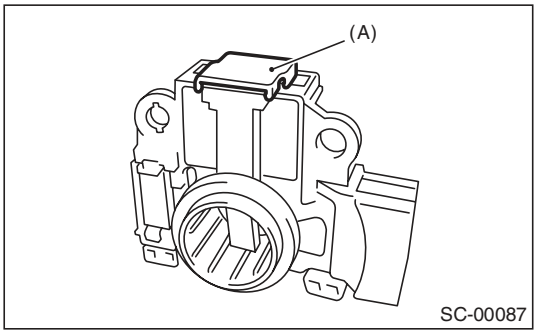

(A) Cover B

(3) Disconnect the connection and remove the brush.

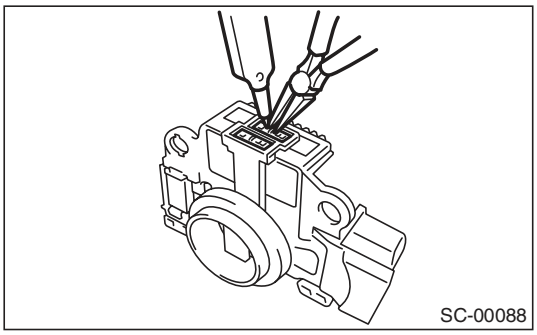

10) Remove the rectifier as follows.
(1) Remove the bolts which secure the rectifier.

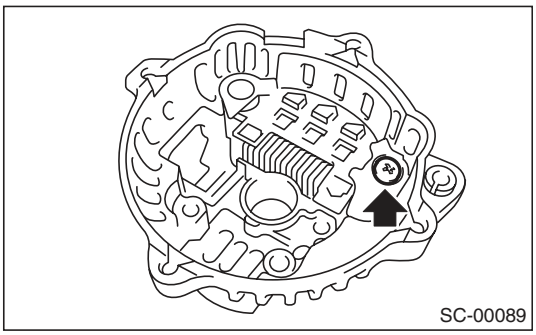

(2) Remove the cover on terminal B.

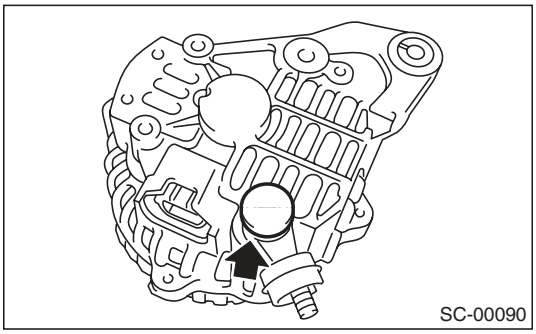

(3) Remove the nuts of terminal B, then remove the rectifier.

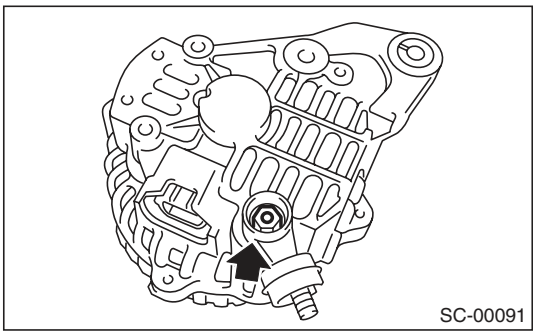

D: ASSEMBLY

Assemble in the reverse order of disassembly.
1) Pull-out of the brush
Before assembling, press the brush down into the brush holder, then fix the brush in that position by inserting a [1 mm (0.04 in) dia., 40 — 50 mm (1.6 — 2.0 in) long] wire through the hole as shown in the figure.

CAUTION:
After re-assembling, remove the wire.

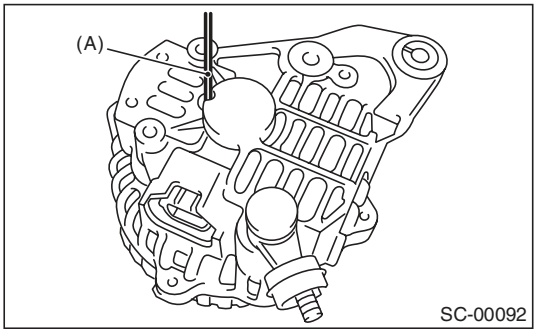

(A) Wire

2) Install the ball bearings.
(1) Set the ball bearings in the front cover, then securely install an appropriate tool (such as a socket wrench of proper size) to the bearing outer race.
(2) Using a press to press the ball bearings into the specified location.
(3) Install the bearing retainer.
3) Using a press to install the bearings (rear side) to the rotor shaft.
4) Heat the bearing box in rear cover [50 to 60°C (122 to 140°F)], and then press the rear bearing into rear cover.

CAUTION:
Do not apply grease to the rear bearings. If there is any oil on the bearing box, remove it completely.
5) After re-assembling, manually turn the pulley to check that the rotor rotates smoothly.

E: INSPECTION

1. DIODE

CAUTION:
There is the possibility of damaging the diodes if a mega-tester (used to measure high voltages) or a similar measuring instrument is used. Never use a mega tester or equivalent for this test.

1) Check the positive diode
Check for continuity between the diode lead and positive side heat sink. If resistance is 1 Ω or less only in the direction from the diode lead to the heat sink, the positive diode is OK.

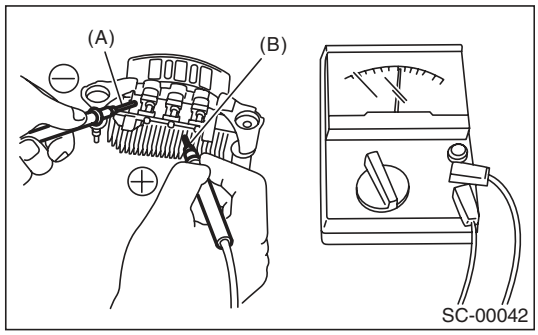

(A) Diode lead
(B) Heat sink (positive side)

2) Check negative diode
Check for continuity between the negative side heat sink and diode lead. If resistance is 1 Ω or less only in the direction from the heat sink to the diode lead, the negative diode is OK.

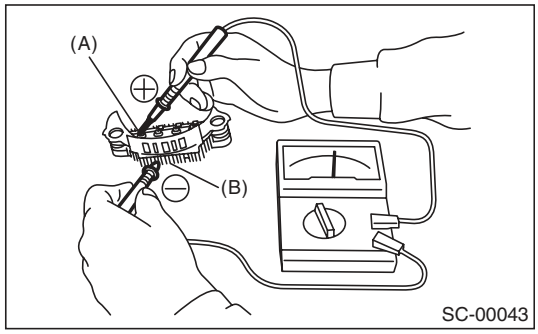

(A) Diode lead
(B) Heat sink (negative side)

2. ROTOR

1) Slip ring surface
Inspect the slip rings for contamination or any roughness on the sliding surface. Repair the slip ring surface using a lathe or sand paper.
2) Slip ring outer diameter
Measure the slip ring outer diameter. Replace the rotor assembly if the slip ring is worn.

Slip ring outer diameter:
Standard
22.7 mm (0.894 in)
Limit
22.1 mm (0.870 in)

3) Continuity test
Using a circuit tester, check the resistance between slip rings.
If the resistance is not within the standard, replace the rotor assembly.

Specified resistance:
Approximately 1.6 — 1.9 Ω

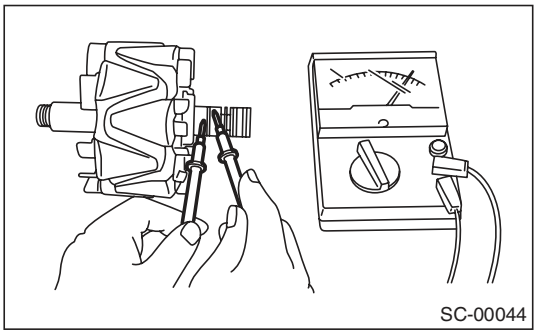

4) Insulation test
Check the continuity between slip ring and rotor core or shaft. If the resistance is 1 Ω or less, replace the rotor assembly because the rotor coil is grounded.

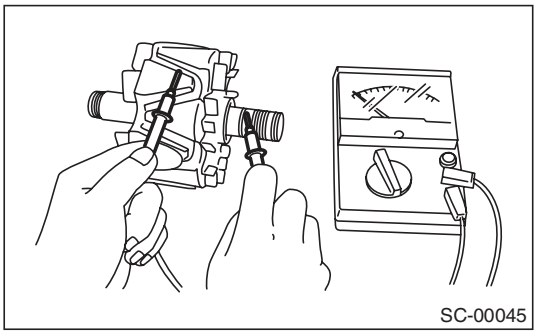

5) Ball bearings (rear side)
Check the rear ball bearing. If there is any noise, or the rotor does not rotate smoothly, replace the bearings.

3. STATOR

1) Continuity test
Inspect continuity between the stator coil lead wire terminals. If the resistance is 1 MΩ or more, the lead wire is damaged. Replace the stator assembly.

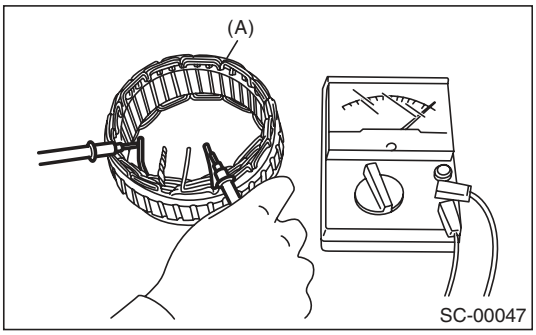

(A) Stator

2) Insulation test
Inspect the continuity between the stator coil stator core and lead wire terminals. If the resistance is 1 Ω or less, the stator coil is grounded. Replace the stator assembly.

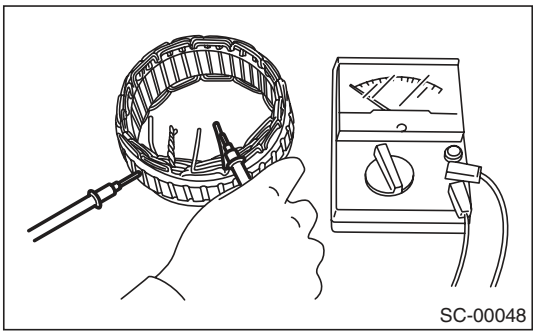

4. BRUSH

1) Measure the length of each brush. Replace the brush if wear exceeds service limits. There is a service limit mark (A) on each brush.

Brush length:
Service limit (1)
5.0 mm (0.197 in)
Standard (2)
18.5 mm (0.728 in)

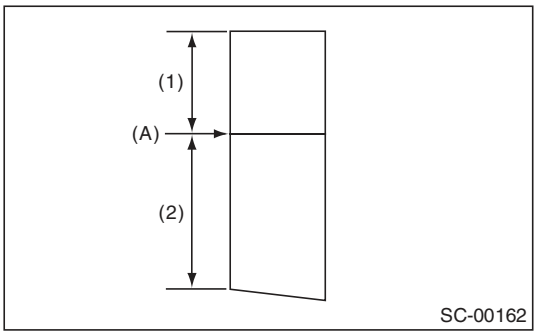

2) Check that there is appropriate pressure on the brush spring.
Using a spring pressure indicator, push the brush into the brush holder until its tip protrudes 2 mm (0.08 in). Then measure the pressure of brush spring. If the pressure is 2.2 N (0.224 kgf, 7.91 oz) or less, replace the brush spring with a new one. 4.8 — 6.0 N (0.489 — 0.612 kgf, 17.26 — 21.58 oz) pressure is required on the new spring.

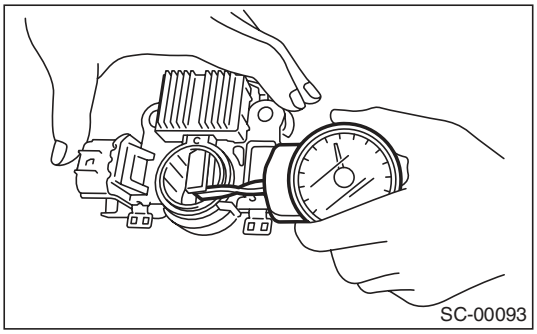

5. BEARING (FRONT SIDE)

Check the front ball bearing. Replace the ball bearings if there is resistance in the rotation, or if there is any abnormal noise.

4. Battery

A: REMOVAL

1) Disconnect the positive (+) terminal after disconnecting the negative (–) terminal of battery.
2) Remove the harness clip of the negative terminal from the battery rod.
3) Remove the flange nut from battery rod and remove battery holder.

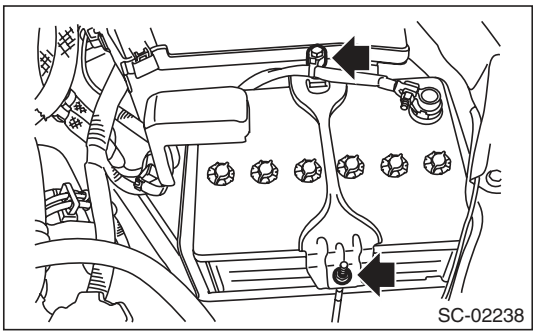

4) Remove the battery.

B: INSTALLATION

Install in the reverse order of removal.

Tightening torque:
3.5 N·m (0.4 kgf-m, 2.6 ft-lb)

NOTE:
• Clean the battery cable terminals and apply grease to retard the formation of corrosion.
• Connect the battery positive (+) terminal, and then connect the negative (–) terminal.
• After the battery is installed, initial diagnosis of the electronic throttle control is performed. Wait for 10 seconds or more after turning the ignition switch to ON, and then start the engine.

C: INSPECTION

WARNING:
• Electrolyte is corrosive acid, and has toxicity; be careful of handling the fluid.
• Make sure the electrode does not come into contact with skin, eyes or clothing. Especially at contact with eyes, flush with water for 15 minutes and get prompt medical attention.
• In addition, be careful not to let the electrode contact with the coated parts.
• Be careful when handling the batteries because they produce explosive gases.
• Be sure to keep battery away from any fire.
• For safety, in case an explosion does occur, wear eye protection or shield your eyes when working near any battery. In addition, never lean over the battery.
• Ventilate sufficiently when using or charging battery in enclosed space.
• Before starting work, remove rings, metal watch-bands, and other metal jewelry.
• Never allow metal tools to contact the positive battery terminal and anything connected to it while you are at the same time in contact with any other metallic portion of the vehicle.

1. EXTERNAL PARTS

Check the battery case, top cover, vent plugs, and terminal posts for dirt or cracks. If necessary, clean with water and wipe with a dry cloth.
Apply a thin coat of grease on the terminal posts to prevent corrosion.

2. ELECTROLYTE LEVEL

Check the electrolyte level in each cell. If the level is below MIN level, bring the level to MAX level by pouring distilled water into the battery cell. Do not fill beyond MAX level.

3. SPECIFIC GRAVITY OF ELECTROLYTE

1) Measure specific gravity of electrolyte using a hydrometer and a thermometer.
Specific gravity varies with temperature of electrolyte so that it must be corrected at 20°C (68°F) using the following equation:

S_{20}= St + 0.0007 × (t – 20)
S_{20}: Specific gravity corrected at electrolyte temperature of 20°C (68°F)
St: Measured specific gravity
t: Measured temperature (°C)
Determine whether or not battery must be charged, according to corrected specific gravity.
Standard specific gravity: 1.220 — 1.290 [20°C (68°F)]

2) Measuring the specific gravity of the electrolyte in the battery will disclose the state of charge of the battery. The relation between specific gravity and state of charge is as shown in the figure.

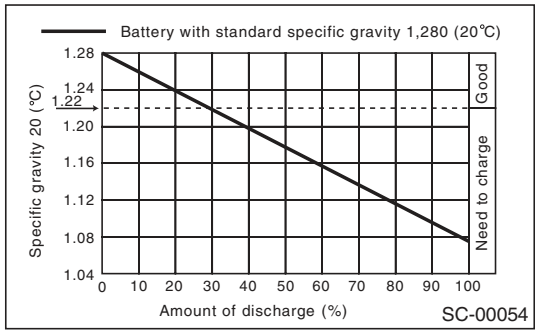

D: MEASUREMENT

WARNING:
Do not bring an open flame close to the battery when working.

CAUTION:
- **Prior to charging, corroded terminals should be cleaned with a brush and common caustic soda solution.**
- **Be careful since battery electrolyte overflows while charging the battery.**
- **Observe instructions when handling the battery charger.**
- **Before charging the battery on the vehicle, disconnect the battery ground terminal to prevent damage of generator diodes or other electrical units.**

1. JUDGMENT OF BATTERY IN CHARGED CONDITION

1) Specific gravity of electrolyte should be held within the specific range from 1.250 to 1.290 for one hour or more.
2) Voltage per battery cell should be held at a specific value in a range from 2.5 to 2.8 V for one hour or more.

2. CHECK CONDITION OF CHARGE WITH HYDROMETER

Hydrometer indicator	State of charge	Corrective action
Green dot	65% or more	Load test
Dark dot	65% or less	Charge battery
Clear dot	Low electrolyte	Replace the battery.* (If cranking is difficult)
* Check electrical system before replacement.		

3. NORMAL CHARGING

Charge the battery at the current value specified by manufacturer or at approximately 1/10 of battery's ampere-hour rating.

4. QUICK CHARGING

Quick charging is a method that the battery is charged in a short period of time with a relatively large current by using a quick charger.
Since a large current flow raises electrolyte temperature, the battery is subject to damage if the large current is used for prolonged time. For this reason, the quick charging must be carried out within a current range that will not increase the electrolyte temperature above 40°C (104°F).
Also the quick charging is a temporary mean to bring battery voltage up to some level, and battery should be charged slowly with low current as a rule.

CAUTION:

- **Observe the items in 3. NORMAL CHARGING.**
- **Never use 10 A or more when charging the battery because it will shorten the battery life.**

1. Basic Diagnostic Procedure

A: PROCEDURE

1. ENGINE

Step		Check	Yes	No
1	**CHECK ENGINE START FAILURE.** 1) Ask the customer when and how the trouble occurred using the interview checklist. <Ref. to EN(H4SO)(diag)-3, CHECK, Check List for Interview.> 2) Start the engine.	Does the engine start?	Go to step **2**.	Inspection using Diagnostics for Engine Start Failure. <Ref. to EN(H4SO)(diag)-64, Diagnostics for Engine Starting Failure.>
2	**CHECK ILLUMINATION OF MALFUNCTION INDICATOR LIGHT.**	Does the malfunction indicator light illuminate?	Go to step **3**.	Inspection using “General Diagnostic Table” <Ref. to EN(H4SO)(diag)-300, INSPECTION, General Diagnostic Table.>
3	**CHECK THE COMMUNICATION STATUS.** 1) Turn the ignition switch to OFF. 2) Connect the Subaru Select Monitor or general scan tool to the data link connector. 3) Turn the ignition switch to ON, and run the Subaru Select Monitor or general scan tool. NOTE: • SUBARU SELECT MONITOR For detailed procedures, refer to “Subaru Select Monitor”. <Ref. to EN(H4SO)(diag)-33, Subaru Select Monitor.> • General Scan Tool For detailed operation procedures, refer to the general scan tool operation manual.	Does Subaru select monitor or general scan tool communicate with vehicle normally?	Go to step **4**.	Inspection using “Diagnostics Procedure for Subaru Select Monitor Communication”. <Ref. to EN(H4SO)(diag)-78, Diagnostic Procedure for Subaru Select Monitor Communication.>
4	**CHECK DTC.** Read DTC using Subaru Select Monitor or general scan tool. NOTE: • SUBARU SELECT MONITOR Refer to “Read Diagnostic Trouble Code” for detailed operation procedure. <Ref. to EN(H4SO)(diag)-40, Read Diagnostic Trouble Code (DTC).> • General Scan Tool For detailed operation procedures, refer to the general scan tool operation manual.	Is DTC displayed on the Subaru Select Monitor or general scan tool?	Record the DTC. Repair the trouble cause. <Ref. to EN(H4SO)(diag)-80, List of Diagnostic Trouble Code (DTC).> Go to step **5**.	Repair the related parts. NOTE: If DTC is not shown on display although the malfunction indicator light illuminates, perform the diagnosis of malfunction indicator light circuit or combination meter. <Ref. to EN(H4SO)(diag)-55, Malfunction Indicator Light.>
5	**PERFORM DIAGNOSIS.** 1) Perform the Clear Memory Mode. <Ref. to EN(H4SO)(diag)-50, Clear Memory Mode.> 2) Perform the Inspection Mode. <Ref. to EN(H4SO)(diag)-41, Inspection Mode.>	Is DTC displayed on the Subaru Select Monitor or general scan tool?	Inspect using “Diagnostic Procedure with Diagnostic Trouble Code (DTC)”<Ref. to EN(H4SO)(diag)-87, Diagnostic Procedure with Diagnostic Trouble Code (DTC).>	Finish the diagnosis.

2. Check List for Interview

A: CHECK

1. CHECK LIST NO. 1

Check the following item when problem has occurred.

NOTE:
Use copies of this page for interviewing customers.

Customer's name		Engine No.	
Date of purchase		Fuel brand	
Date of repair		Odometer reading	km
V.I.N.			miles
Weather	❑ Fine ❑ Cloudy ❑ Rainy ❑ Snowy ❑ Various/Others:		
Ambient air temperature	°C (°F)		
	❑ Hot ❑ Warm ❑ Cool ❑ Cold		
Place	❑ Highway ❑ Suburbs ❑ Inner city ❑ Uphill ❑ Downhill ❑ Rough road ❑ Others:		
Engine temperature	❑ Cold ❑ Warming-up ❑ After warming-up ❑ Any temperature ❑ Others:		
Engine speed	rpm		
Vehicle speed	km/h (MPH)		
Driving conditions	❑ Not affected ❑ At starting ❑ While idling ❑ At racing ❑ While accelerating ❑ While cruising ❑ While decelerating ❑ While turning (RH/LH)		
Headlight	❑ ON/❑ OFF	Rear defogger	❑ ON/❑ OFF
Blower	❑ ON/❑ OFF	Audio	❑ ON/❑ OFF
A/C compressor	❑ ON/❑ OFF	CD/Cassette	❑ ON/❑ OFF
Radiator fan	❑ ON/❑ OFF	Car phone	❑ ON/❑ OFF
Front wiper	❑ ON/❑ OFF	Wireless device	❑ ON/❑ OFF
Rear wiper	❑ ON/❑ OFF		

2. CHECK LIST NO. 2

Check the following item about the vehicle's state when malfunction indicator light illuminates.

NOTE:
Use copies of this page for interviewing customers.

a) Other warning lights or indicators turn on. ❑ Yes / ❑ No
❑ Low fuel warning light ❑ Charge indicator light ❑ Engine coolant temperature indicator light ❑ Oil pressure warning light ❑ ATF temperature indicator light or SPORT indicator light ❑ Drivers control center differential indicator light ❑ ABS warning light ❑ VDC warning light ❑ Cruise indicator light ❑ SI-CRUISE warning light ❑ Immobilizer indicator light ❑ STEERING indicator light ❑ Glow indicator ❑ Sedimentor warning light ❑ Others:
b) Fuel level
• Lack of gasoline: ❑ Yes / ❑ No • Indicator position of fuel gauge: • Experienced running out of fuel: ❑ Yes / ❑ No
c) Intentional connecting or disconnecting of harness connectors or spark plug cords: ❑ Yes / ❑ No
• What:
d) Intentional connecting or disconnecting of hoses: ❑ Yes / ❑ No
• What:
e) Installing of parts other than genuine parts: ❑ Yes / ❑ No
• What: • Where:
f) Occurrence of noise: ❑ Yes / ❑ No
• From where: • What kind:
g) Occurrence of smell: ❑ Yes / ❑ No
• From where: • What kind:
h) Intrusion of water into engine compartment or passenger compartment: ❑ Yes / ❑ No
i) Troubles occurred
❑ Engine does not start. ❑ Engine stalls during idling. ❑ Engine stalls while driving. ❑ Engine speed decreases. ❑ Engine speed does not decrease. ❑ Rough idling ❑ Poor acceleration ❑ Back fire ❑ After fire ❑ Does not shift. ❑ Excessive shift shock

3. General Description

A: CAUTION

1) Airbag system wiring harness is routed near the ECM, main relay and fuel pump relay.

CAUTION:
- **Do not use the electrical test equipment on airbag system circuits.**
- **Be careful not to damage the airbag system wiring harness when servicing the ECM, TCM, main relay and fuel pump relay.**

2) Never connect the battery in reverse polarity. Failure to do so will damage the ECM instantly, and other parts will also be damaged.
3) Do not disconnect the battery terminals while the engine is running. A large counter electromotive force will be generated in the generator, and this voltage may damage electronic parts such as ECM etc.
4) Before disconnecting the connectors of each sensor and ECM, be sure to turn the ignition switch to OFF. Perform the Clear Memory Mode after connecting the connectors. <Ref. to EN(H4SO)(diag)-50, Clear Memory Mode.>
5) When measuring the voltage or resistance of individual sensor or all electrical control modules, use a tapered pin with a diameter of less than 0.6 mm (0.024 in). Do not insert the pin 4 mm (0.16 in) or more into the part.

CAUTION:
When replacing the ECM, be careful not to use the wrong spec. ECM to avoid any damage on the fuel injection system.

NOTE:
When replacing the ECM of the models with Immobilizer, immobilizer system must be registered. To do so, all ignition keys and ID cards need to be prepared. Refer to the “PC application help for Subaru Select Monitor”.
6) Take care not to allow water to get into the connector when servicing the vehicle in rainy weather or when washing the vehicle. Avoid exposure to water even if the connectors are waterproof.
7) Use ECM mounting stud bolts at the body side grounding point when measuring voltage and resistance inside the passenger compartment.

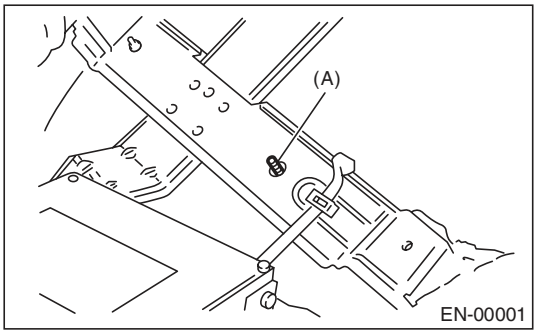

(A) Stud bolt

8) Use the engine ground terminal or engine assembly for the grounding point to chassis when measuring the voltage and resistance in engine compartment.

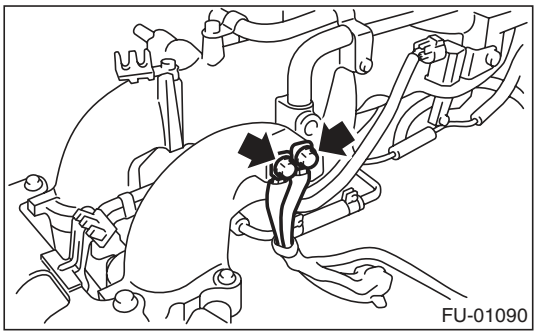

9) Every engine control system-related part is a precision part. Do not drop them.
10) Observe the following cautions when installing a radio in vehicle.

CAUTION:
- **The antenna must be kept as far apart as possible from control module. (ECM is installed under the passenger's side floor mat.)**
- **The antenna feeder must be placed as far apart as possible from the ECM and engine control system harness.**
- **Carefully adjust the antenna for correct matching.**
- **When mounting a large power type radio, pay special attention to the three items mentioned above.**
- **Incorrect installation of the radio may affect the operation of ECM.**

11) When disconnecting the fuel hose, release the fuel pressure. <Ref. to FU(H4SO)-43, RELEASING OF FUEL PRESSURE, PROCEDURE, Fuel.>

12) For the model with ABS, the ABS warning light may illuminate when performing driving test with jacked-up or lifted-up condition, but this is not a system malfunction. The reason for this is the speed difference between the front and rear wheels. After diagnosis of engine control system, perform the ABS memory clear procedure of self-diagnosis function.

B: INSPECTION

Before performing diagnostics, check the following item which might affect engine problems.

1. BATTERY

1) Measure the battery voltage and specific gravity of the electrolyte.

Standard voltage: 12 V

Specific gravity: 1.260 or more

2) Check the condition of the main and other fuses, and harnesses and connectors. Also check for proper grounding.

2. ENGINE GROUND

Check if the engine ground terminal is properly connected to engine.

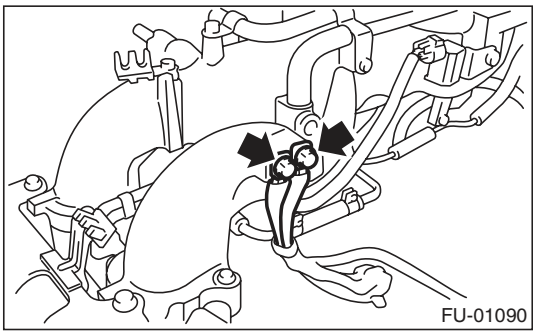

C: NOTE

- The on-board diagnostic (OBD) system detects and indicates a fault in various inputs and outputs of the complex electronic control. Malfunction indicator light in the combination meter indicates occurrence of a fault or trouble.
- Further, against such a failure or sensors as may disable the drive, the fail-safe function is provided to ensure the minimal drivability.
- The OBD system incorporated with the vehicles within this type of engine complies with OBD-II regulations. The OBD system monitors the components and the system malfunction listed in “Engine Section” which affects on emissions.
- When the system decides that a malfunction occurs, malfunction indicator light illuminates. At the same time of the malfunction indicator light illumination or blinking, a DTC and a freeze frame engine conditions are stored into on-board computer.
- The OBD system stores freeze frame engine condition data (engine load, engine coolant temperature, fuel trim, engine speed and vehicle speed, etc.) into on-board computer when it detects a malfunction.
- Freeze frame engine condition data are stored until the DTCs are cleared. However when such malfunctions as fuel trim fault and misfire are detected with the freeze frame engine condition data stored, they are rewritten into those related to the fuel trim fault and misfire.
- When the malfunction does not occur again for three consecutive driving cycles, malfunction indicator light is turned off, but DTC remains at on-board computer.
- When troubleshooting the vehicle which complies with OBD-II regulations, connect the Subaru Select Monitor or general scan tool to the vehicle.

D: PREPARATION TOOL

ILLUSTRATION	TOOL NUMBER	DESCRIPTION	REMARKS
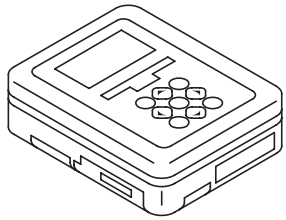 ST1B022XU0	1B022XU0	SUBARU SELECT MONITOR III KIT	Used for troubleshooting the electrical system.
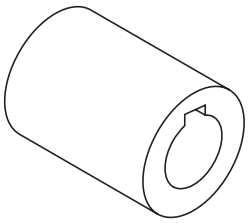 ST-499987500	499987500	CRANKSHAFT SOCKET	Used for rotating crankshaft.

4. Electrical Component Location

A: LOCATION

1. CONTROL MODULE

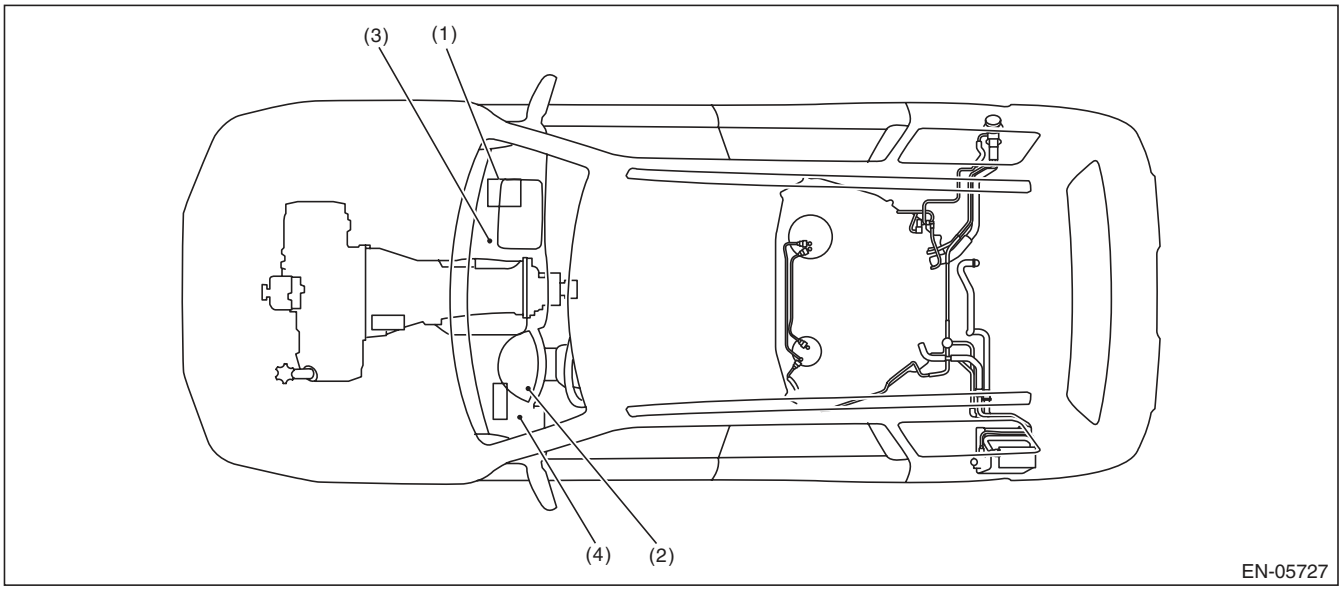

(1) Engine control module (ECM)
(2) Malfunction indicator light
(3) Delivery (test) mode connector
(4) Data link connector

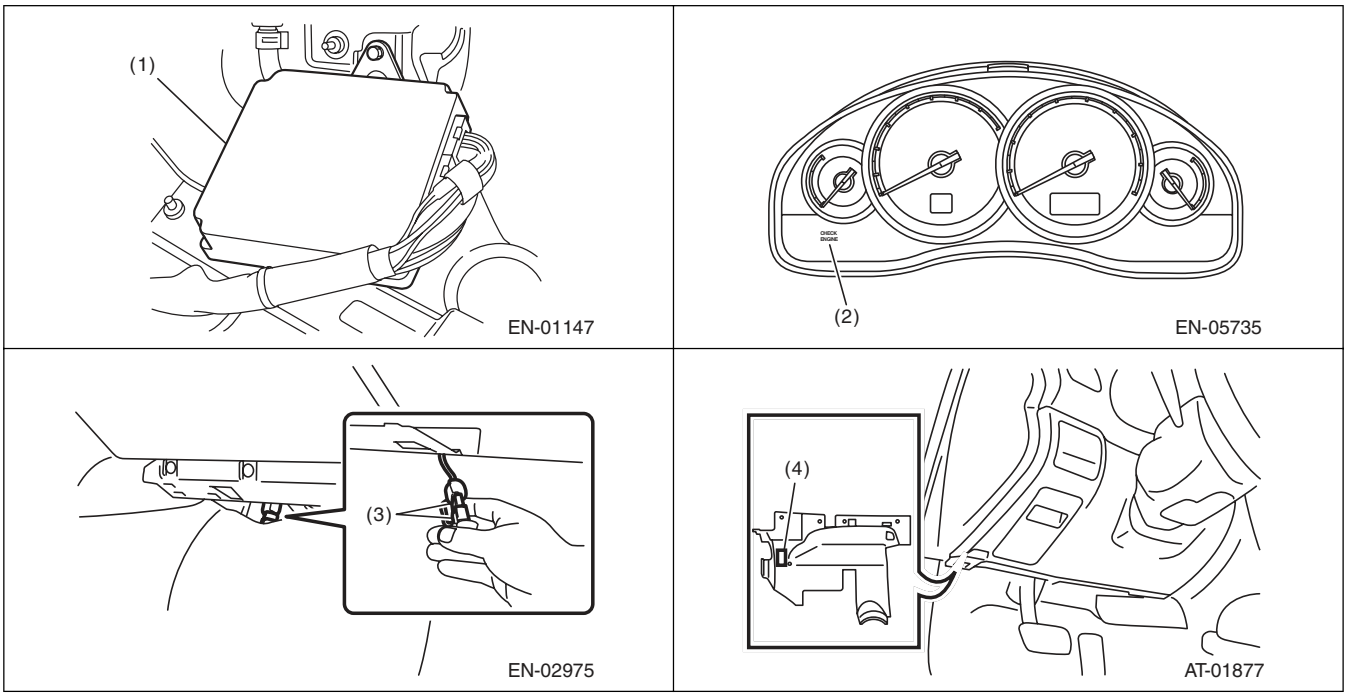

2. SENSOR

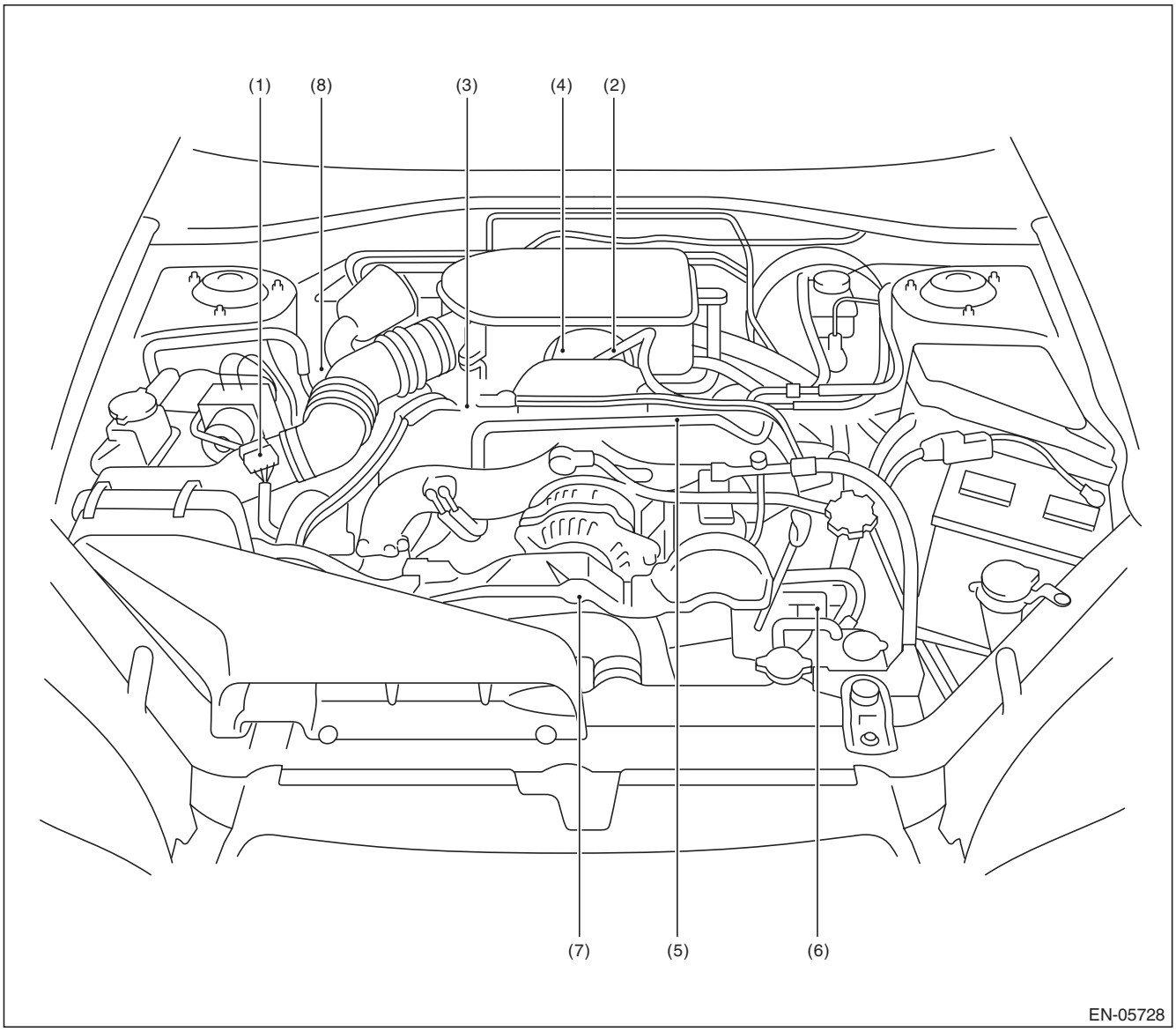

(1)	Mass air flow and intake air temperature sensor	(3)	Engine coolant temperature sensor	(6)	Camshaft position sensor
(2)	Manifold absolute pressure sensor	(4)	Electronic throttle control	(7)	Crankshaft position sensor
		(5)	Knock sensor	(8)	Oil temperature sensor

Electrical Component Location

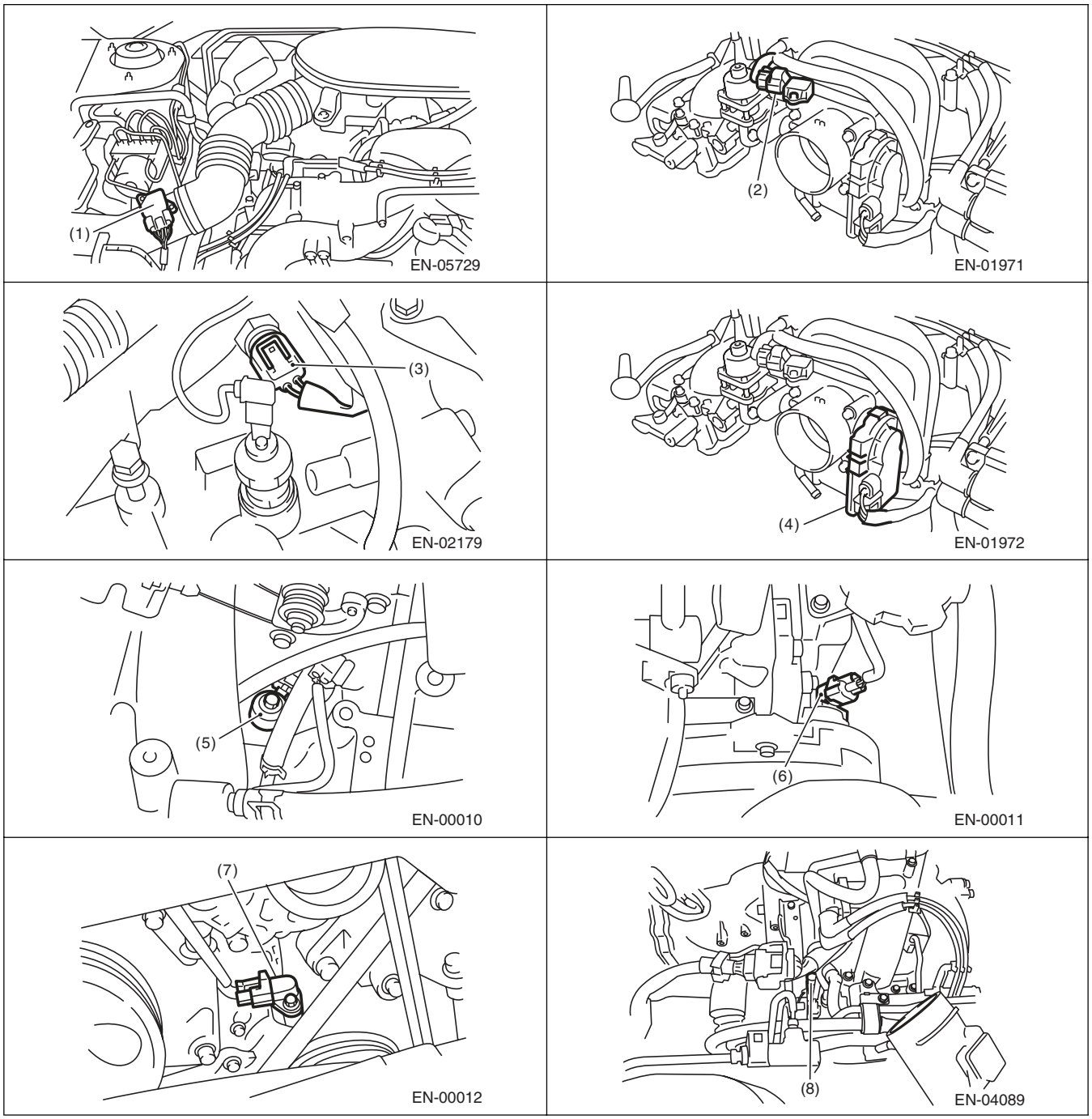

Electrical Component Location

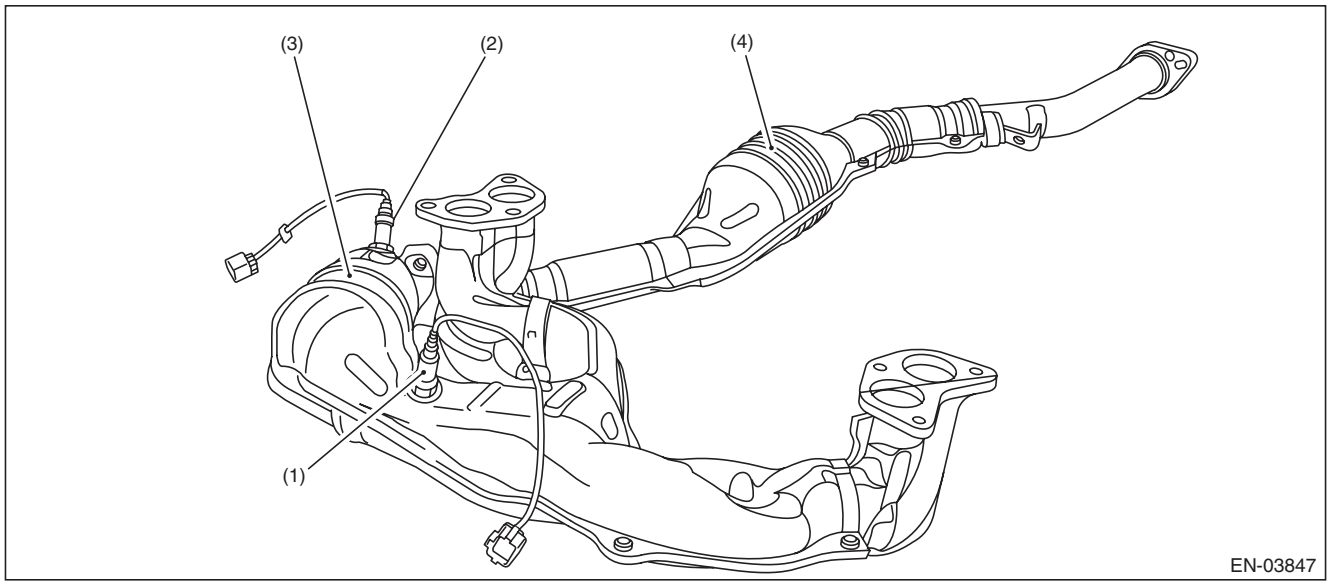

(1) Front oxygen (A/F) sensor
(2) Rear oxygen sensor
(3) Front catalytic converter
(4) Rear catalytic converter

Electrical Component Location

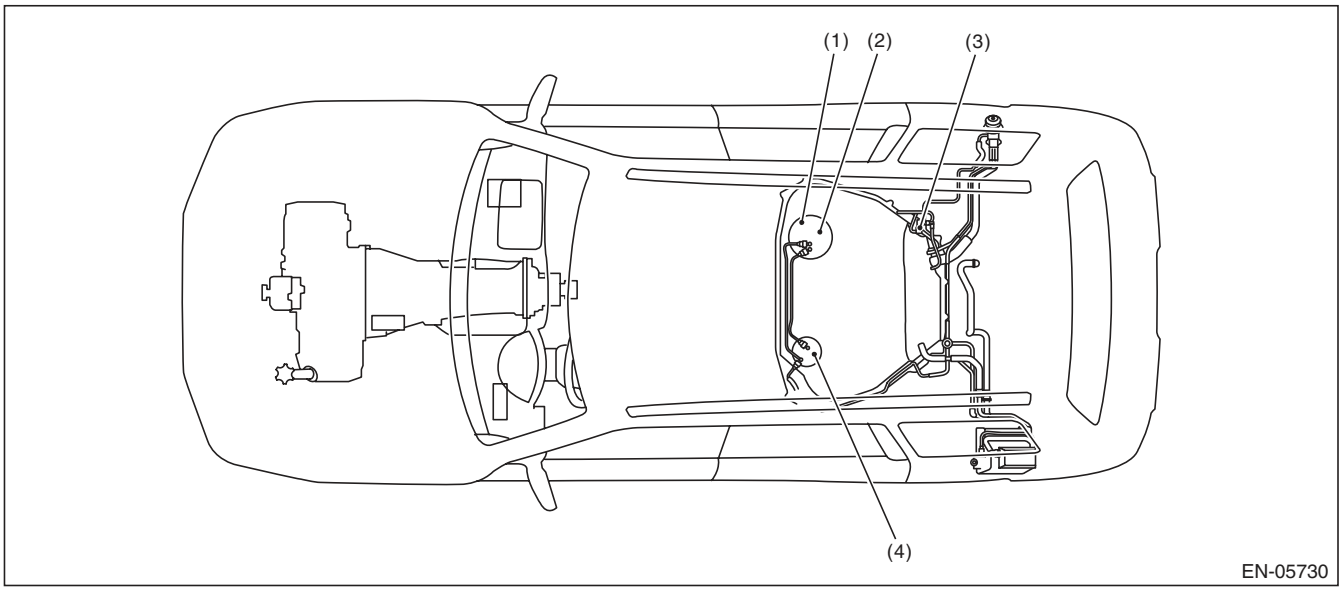

(1) Fuel level sensor
(2) Fuel temperature sensor
(3) Fuel tank pressure sensor
(4) Fuel sub level sensor

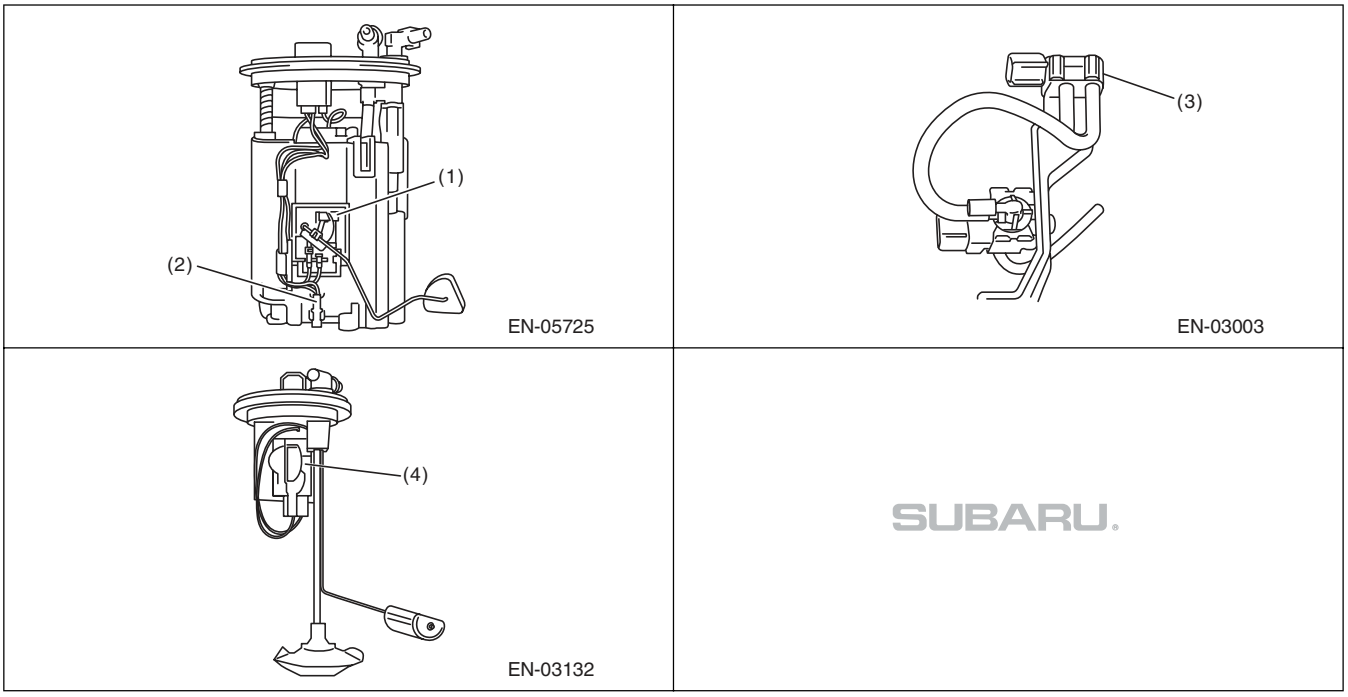

3. SOLENOID VALVE, ACTUATOR, EMISSION CONTROL SYSTEM PARTS AND IGNITION SYSTEM PARTS

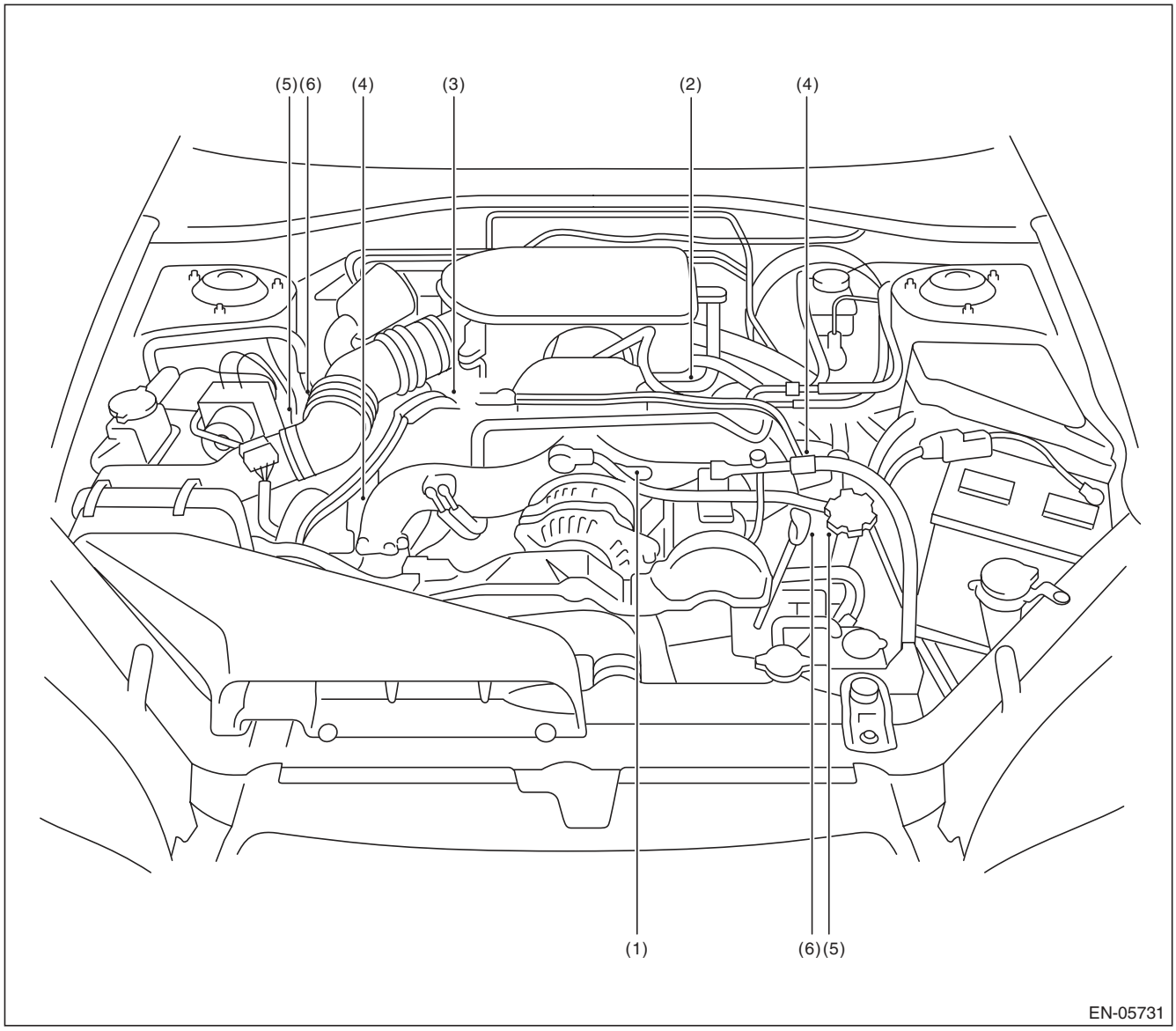

(1) Purge control solenoid valve
(2) EGR valve
(3) Ignition coil and ignitor ASSY
(4) Fuel injector
(5) Oil switching solenoid valve
(6) Variable valve lift diagnosis oil pressure switch

Electrical Component Location

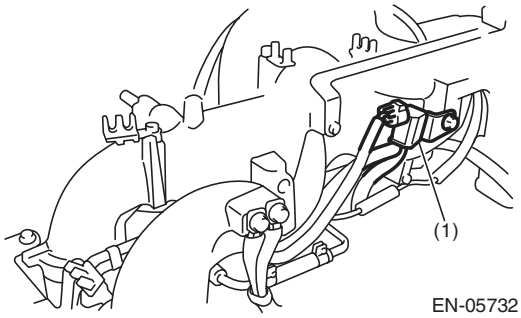

EN-05732

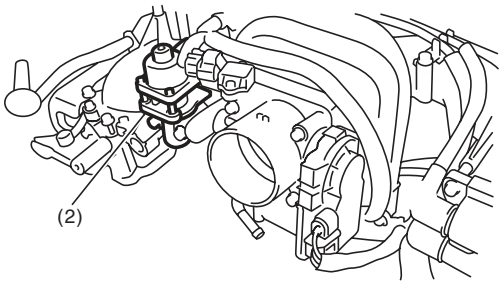

EN-01976

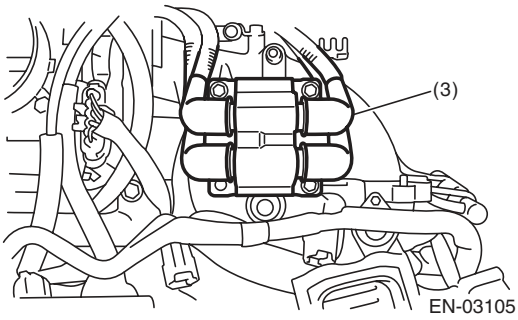

EN-03105

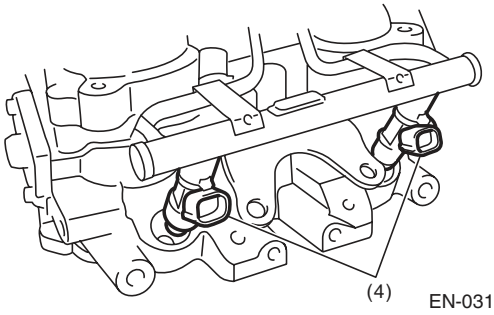

EN-03106

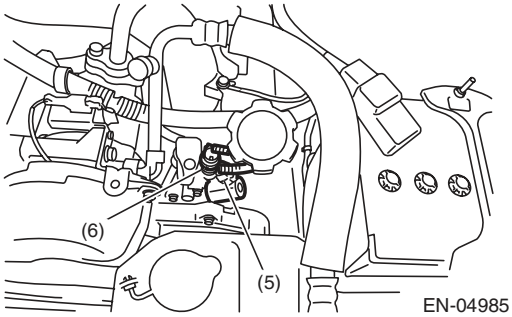

EN-04985

Electrical Component Location

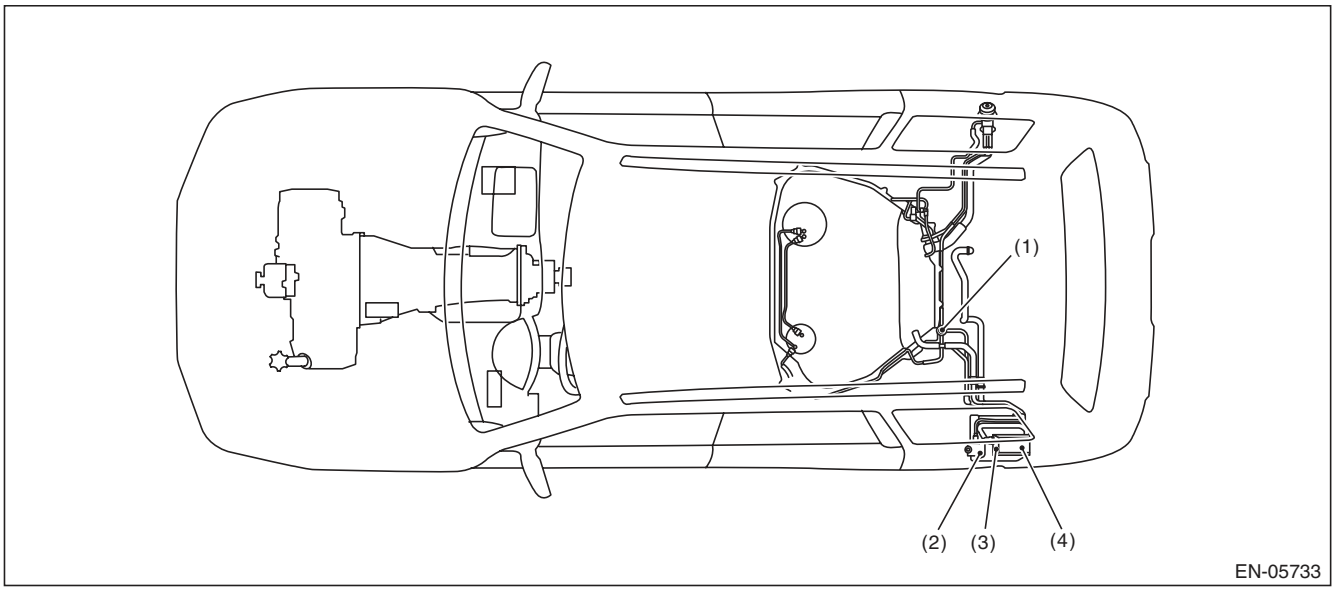

(1) Pressure control solenoid valve
(2) Canister
(3) Drain valve
(4) Drain filter

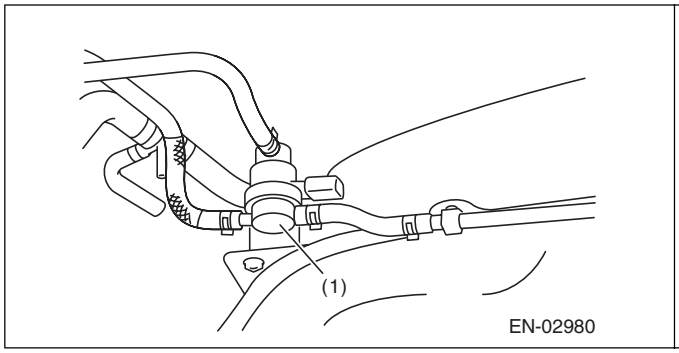

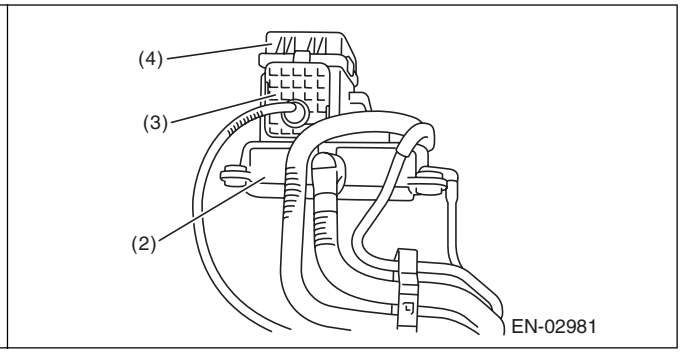

Electrical Component Location

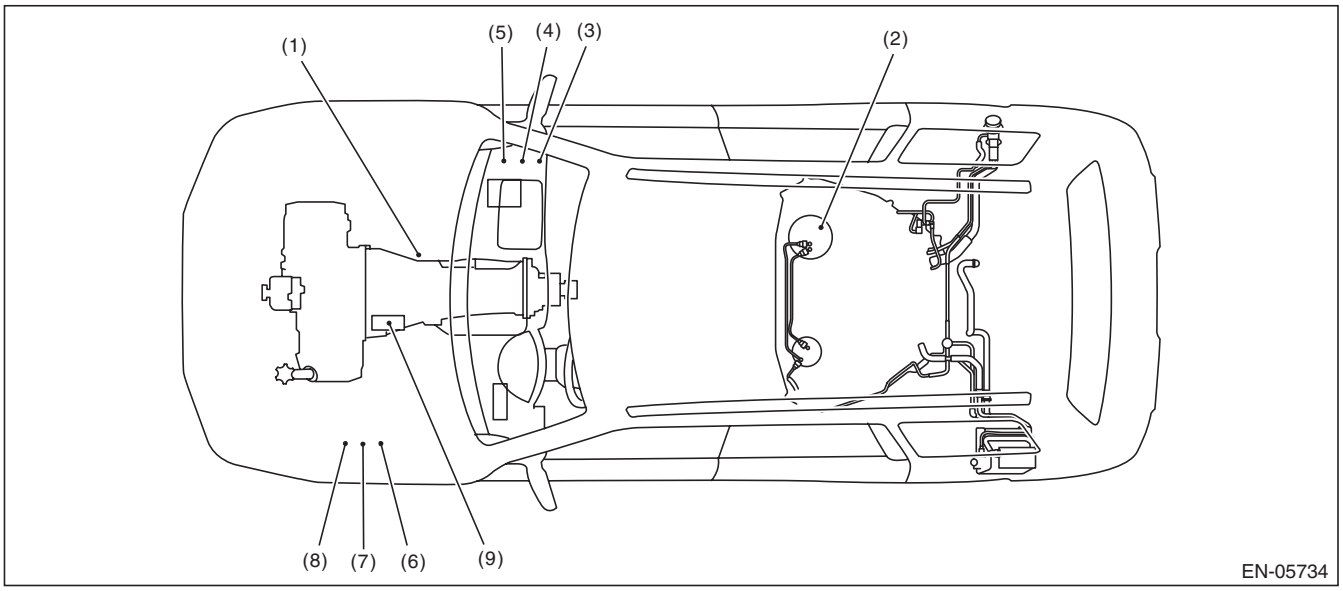

(1)	Inhibitor switch	(4)	Fuel pump relay	(7)	Radiator sub fan relay
(2)	Fuel pump	(5)	Electronic throttle control relay	(8)	Radiator main fan relay 2
(3)	Main relay	(6)	Radiator main fan relay 1	(9)	Starter

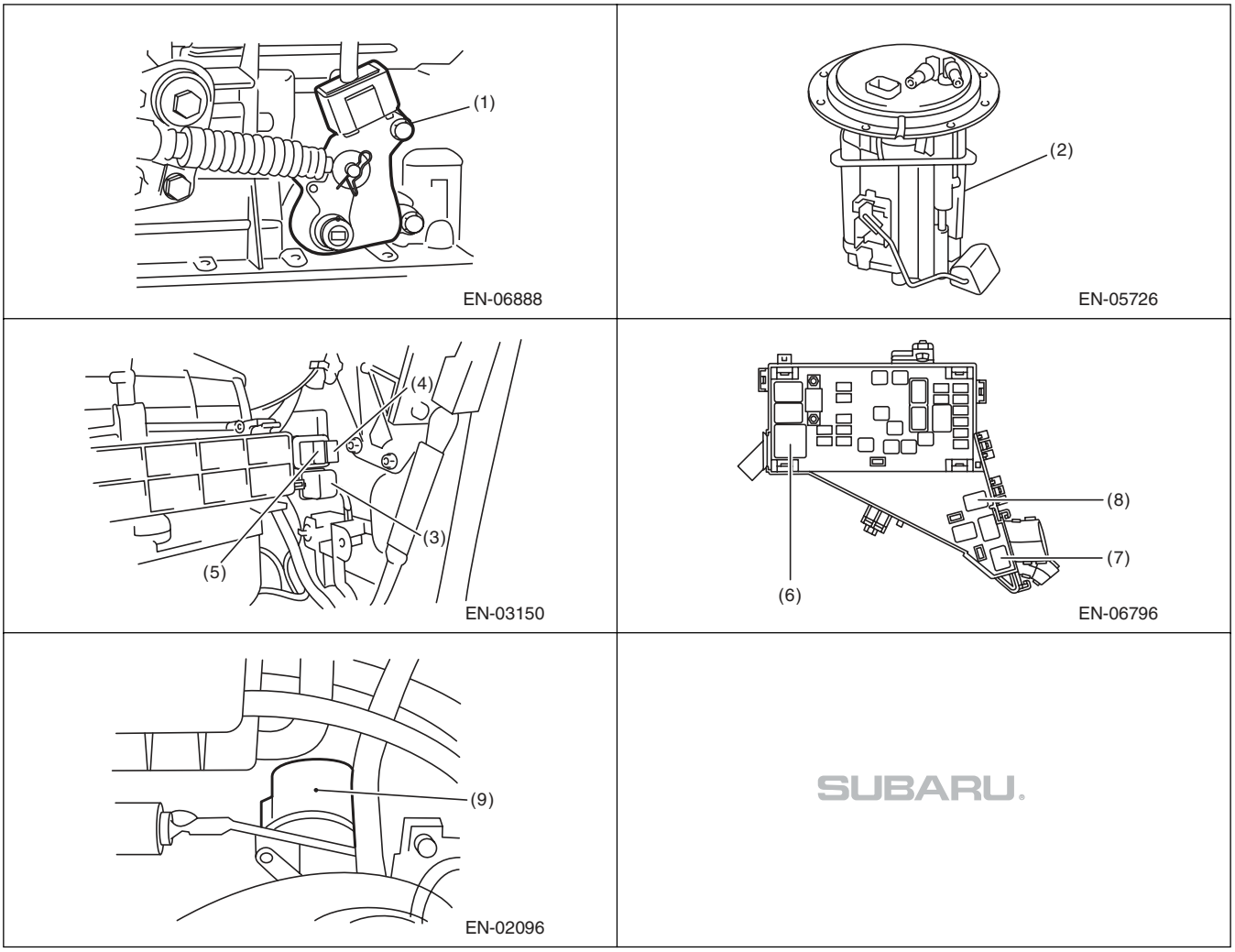

5. Engine Control Module (ECM) I/O Signal

A: ELECTRICAL SPECIFICATION

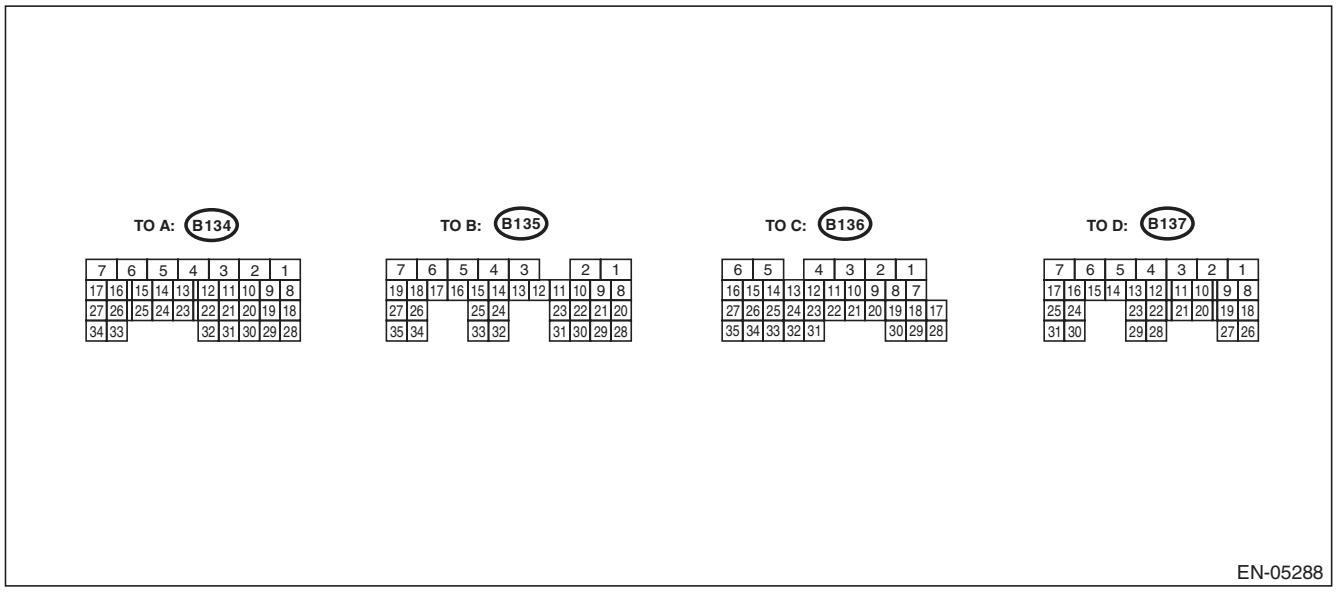

Contents		Connector No.	Terminal No.	Signal (V)		Note
				Ignition SW ON (engine OFF)	Engine ON (idling)	
Crankshaft position sensor	Signal (+)	B134	13	0	–7 — +7	Waveform
	Signal (–)	B134	14	0	0	—
	Shield	B134	24	0	0	—
Camshaft position sensor	Signal (+)	B134	12	0	–7 — +7	Waveform
	Signal (–)	B134	22	0	0	—
	Shield	B134	24	0	0	—
Electronic throttle control	Main	B134	18	0.64 — 0.72 Fully opened: 3.96	0.64 — 0.72 (After engine is warmed up.)	Fully closed: 0.6 Fully opened: 3.96
	Sub	B134	28	1.51 — 1.58 Fully opened: 4.17	1.51 — 1.58 (After engine is warmed up.)	Fully closed: 1.48 Fully opened: 4.17
	Power supply	B134	19	5	5	—
	GND (sensor)	B134	29	0	0	—
Electronic throttle control motor (+)		B137	5	Duty waveform	Duty waveform	Drive frequency: 500 Hz
Electronic throttle control motor (–)		B137	4	Duty waveform	Duty waveform	Drive frequency: 500 Hz
Electronic throttle control motor power supply		B136	1	10 — 13	12 — 14	—
Electronic throttle control motor relay		B136	21	ON: 0 OFF: 10 — 13	ON: 0 OFF: 12 — 14	When ignition switch is turned to ON: ON

Engine Control Module (ECM) I/O Signal

Contents		Connector No.	Terminal No.	Signal (V)		Note
				Ignition SW ON (engine OFF)	Engine ON (idling)	
Accelerator pedal position sensor	Main sensor signal	B135	23	Fully closed: 1.0 Fully opened: 3.5	Fully closed: 1.0 Fully opened: 3.5	—
	Main power supply	B135	21	5	5	—
	GND (Main sensor)	B135	29	0	0	—
	Sub sensor signal	B135	31	Fully closed: 1.0 Fully opened: 3.5	Fully closed: 1.0 Fully opened: 3.5	—
	Sub power supply	B135	22	5	5	—
	GND (Sub sensor)	B135	30	0	0	—
Rear oxygen sensor	Signal	B135	4	0	0 — 0.9	—
	Shield	B135	1	0	0	—
Front oxygen (A/F) sensor heater	Signal 1	B136	3	10 — 13	1 — 14	Duty waveform
	Signal 2	B136	2	10 — 13	1 — 14	Duty waveform
Rear oxygen sensor heater signal		B136	4	10 — 13	1 — 14	Duty waveform
Engine coolant temperature sensor		B134	34	1.0 — 1.4	1.0 — 1.4	After engine is warmed up.
Starter switch		B136	32	0	0	AT model Cranking: 8 — 14 MT model Cranking with the clutch pedal pressed: 8 — 14
Starter relay control		B136	20	ON: 0.5 or less OFF: 10 — 13	ON: 0.5 or less OFF: 12 — 14	—
A/C switch		B136	24	ON: 10 — 13 OFF: 0	ON: 12 — 14 OFF: 0	—
Ignition switch		B135	19	10 — 13	12 — 14	—
Neutral position switch		B136	31	ON: 0 OFF: 12±0.5		AT model: Switch is ON when select lever is shifted into “P” range or “N” range. MT model: Switch is ON when the shift lever is in neutral.
Delivery (test) mode connector		B135	27	10 — 13	13 — 14	When connected: 0
Knock sensor	Signal	B134	15	2.5	2.5	—
	Shield	B134	25	0	0	—
Back-up power supply		B135	5	10 — 13	12 — 14	Ignition switch “OFF”: 10 — 13
Control module power supply		B134	7	10 — 13	12 — 14	—
		B135	2	10 — 13	12 — 14	—
Ignition control	#1, #2	B137	18	0	1 — 3.4	Waveform
	#3, #4	B137	19	0	1 — 3.4	Waveform
Fuel injector	#1	B137	8	10 — 13	1 — 14	Waveform
	#2	B137	9	10 — 13	1 — 14	Waveform
	#3	B137	10	10 — 13	1 — 14	Waveform
	#4	B137	11	10 — 13	1 — 14	Waveform

Engine Control Module (ECM) I/O Signal

Contents		Connector No.	Terminal No.	Signal (V)		Note
				Ignition SW ON (engine OFF)	Engine ON (idling)	
Fuel pump relay control		B136	12	ON: 0.5 or less OFF: 10 — 13	ON: 0.5 or less OFF: 12 — 14	—
A/C relay control		B136	9	ON: 0.5 or less OFF: 10 — 13	ON: 0.5 or less OFF: 12 — 14	—
Radiator fan relay 1 control		B136	18	ON: 0.5 or less OFF: 10 — 13	ON: 0.5 or less OFF: 12 — 14	—
Radiator fan relay 2 control		B136	29	ON: 0.5 or less OFF: 10 — 13	ON: 0.5 or less OFF: 12 — 14	—
Self-shutoff control		B136	23	0.5 or less	0.5 or less	—
Malfunction indicator light		B136	11	—	—	Light “ON”: 1 or less Light “OFF”: 10 — 14
Engine speed output		B136	22	—	0 — 13 or more	Waveform
Oil temperature sensor signal		B134	23	1.0 — 1.4	1.0 — 1.4	After engine is warmed up.
PCV diagnosis connector		B134	30	0	0	—
Purge control solenoid valve		B137	29	ON: 1 or less OFF: 10 — 13	ON: 1 or less OFF: 12 — 14	Duty waveform
EGR valve	Signal 1	B134	8	0 or 10 — 13	0 or 12 — 14	Waveform
	Signal 2	B134	9	0 or 10 — 13	0 or 12 — 14	Waveform
	Signal 3	B134	10	0 or 10 — 13	0 or 12 — 14	Waveform
	Signal 4	B134	20	0 or 10 — 13	0 or 12 — 14	Waveform
Power steering oil pressure switch		B134	33	ON: 1 or less OFF: 10 — 13	ON: 1 or less OFF: 12 — 14	—
Blower fan switch		B135	11	ON: 0 OFF: 10 — 13	ON: 0 OFF: 12 — 14	—
A/C middle pressure switch		B136	33	ON: 0 OFF: 10 — 13	ON: 0 OFF: 12 — 14	—
Oil switching solenoid valve RH	Signal (+)	B137	25	0	Duty waveform	Drive frequency: 300 Hz
	Signal (–)	B137	24	0	0	—
Oil switching solenoid valve LH	Signal (+)	B137	31	0	Duty waveform	Drive frequency: 300 Hz
	Signal (–)	B137	30	0	0	—
Variable valve lift diagnosis oil pressure switch RH		B134	31	0	0	—
Variable valve lift diagnosis oil pressure switch LH		B134	32	0	0	—
Front oxygen (A/F) sensor	Signal (+)	B135	9	—	2.7 — 2.9	—
	Signal (–)	B135	8	—	2.35 — 2.25	—
	Shield	B135	1	0	0	—
Manifold absolute pressure sensor		B134	6	3.4 — 3.8	1.4 — 1.8	—
Air flow sensor	Signal	B135	26	—	0.3 — 4.5	—
	Shield	B135	35	0	0	—
	Ground	B135	34	0	0	—
Intake air temperature sensor signal		B135	18	0.3 — 4.6	0.3 — 4.6	—
Immobilizer communication 1		B136	26	1 or less ←→ 4 or more	1 or less ←→ 4 or more	—
Immobilizer communication 2		B136	34	1 or less ←→ 4 or more	1 or less ←→ 4 or more	—

Engine Control Module (ECM) I/O Signal

Contents		Connector No.	Terminal No.	Signal (V)		Note
				Ignition SW ON (engine OFF)	Engine ON (idling)	
SSM communication line		B136	16	1 or less ←→ 4 or more	1 or less ←→ 4 or more	—
Sensor power supply		B134	19	5	5	—
		B135	22	5	5	—
GND (sensor)		B134	29	0	0	—
		B135	30	0	0	—
Ground	(Engine 1)	B134	5	0	0	—
	(Engine 2)	B137	7	0	0	—
	(Engine 3)	B137	2	0	0	—
	(Engine 4)	B137	1	0	0	—
	(Engine 5)	B137	3	0	0	—
	(Ignition 1)	B137	26	0	0	—
	(Ignition 2)	B137	6	0	0	—
	(Body)	B136	6	0	0	—
Clutch switch		B136	25	When clutch pedal is depressed: 0 When clutch pedal is released: 10 — 13	When clutch pedal is depressed: 0 When clutch pedal is released: 12 — 14	—
Brake switch 1		B135	20	When brake pedal is depressed: 0 When brake pedal is released: 10 — 13	When brake pedal is depressed: 0 When brake pedal is released: 12 — 14	—
Brake switch 2		B135	28	When brake pedal is depressed: 10 — 13 When brake pedal is released: 0	When brake pedal is depressed: 12 — 14 When brake pedal is released: 0	—
Cruise control main switch		B135	12	ON: 0 OFF: 5	ON: 0 OFF: 5	—
Cruise control command switch		B135	24	When not operating: 3.5 — 4.5 When operating RES/ACC: 2.5 — 3.5 When operating SET/COAST: 0.5 — 1.5 When operating CANCEL: 0 — 0.5	When not operating: 3.5 — 4.5 When operating RES/ACC: 2.5 — 3.5 When operating SET/COAST: 0.5 — 1.5 When operating CANCEL: 0 — 0.5	—
Fuel temperature sensor		B135	17	2.5 — 3.8	2.5 — 3.8	Ambient temperature: 25°C (77°F)
Fuel tank pressure sensor		B135	32	2.3 — 2.7	2.3 — 2.7	Value after removing fuel filler cap and installing again
Pressure control solenoid valve		B136	28	ON: 1 or less OFF: 10 — 13	ON: 1 or less OFF: 12 — 14	—
Drain valve		B136	17	ON: 1 or less OFF: 10 — 13	ON: 1 or less OFF: 12 — 14	—
CAN communication line (+)		B136	27	2.5 — 3.5	2.5 — 3.5	Waveform
CAN communication line (–)		B136	35	1.5 — 2.5	1.5 — 2.5	Waveform
AT/MT identification line		B136	15	—	—	MT model: 1 or less

Input/output name	Measuring condition	Waveform
1. Crankshaft position sensor	At idling	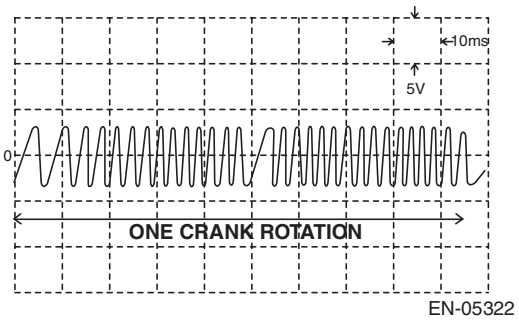
2. Camshaft position sensor	At idling	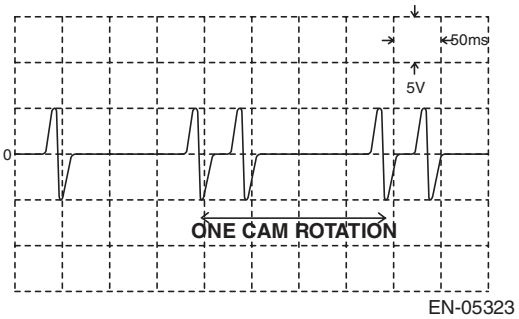

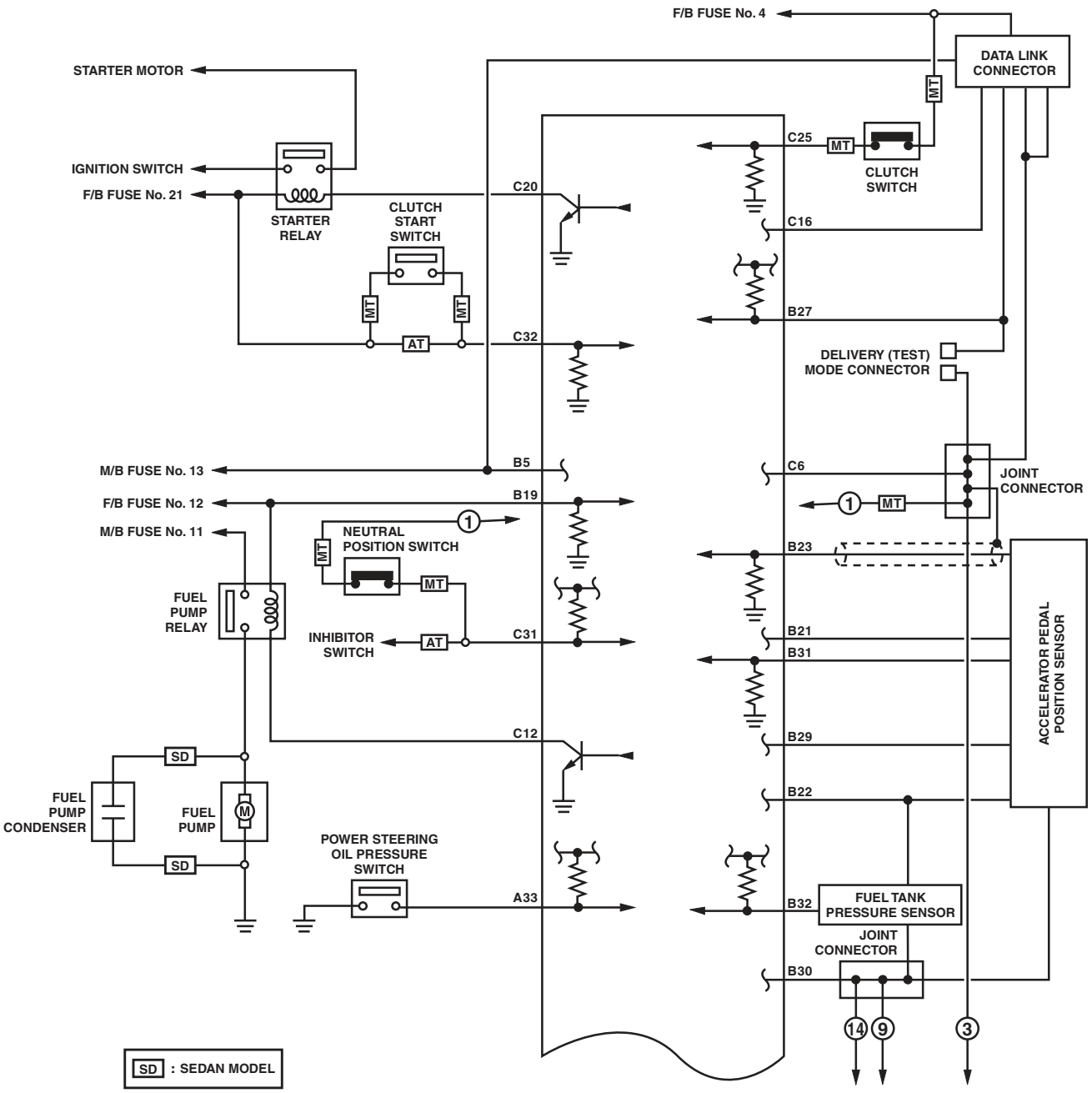
F/B FUSE No. 4
DATA LINK CONNECTOR
STARTER MOTOR
IGNITION SWITCH
F/B FUSE No. 21
STARTER RELAY
CLUTCH START SWITCH
C20
C25
CLUTCH SWITCH
C16
B27
C32
DELIVERY (TEST) MODE CONNECTOR
M/B FUSE No. 13
B5
C6
JOINT CONNECTOR
F/B FUSE No. 12
B19
M/B FUSE No. 11
NEUTRAL POSITION SWITCH
B23
FUEL PUMP RELAY
INHIBITOR SWITCH
C31
B21
B31
ACCELERATOR PEDAL POSITION SENSOR
C12
B29
B22
FUEL PUMP CONDENSER
FUEL PUMP
POWER STEERING OIL PRESSURE SWITCH
A33
B32
FUEL TANK PRESSURE SENSOR
JOINT CONNECTOR
B30
SD : SEDAN MODEL

EN-06829

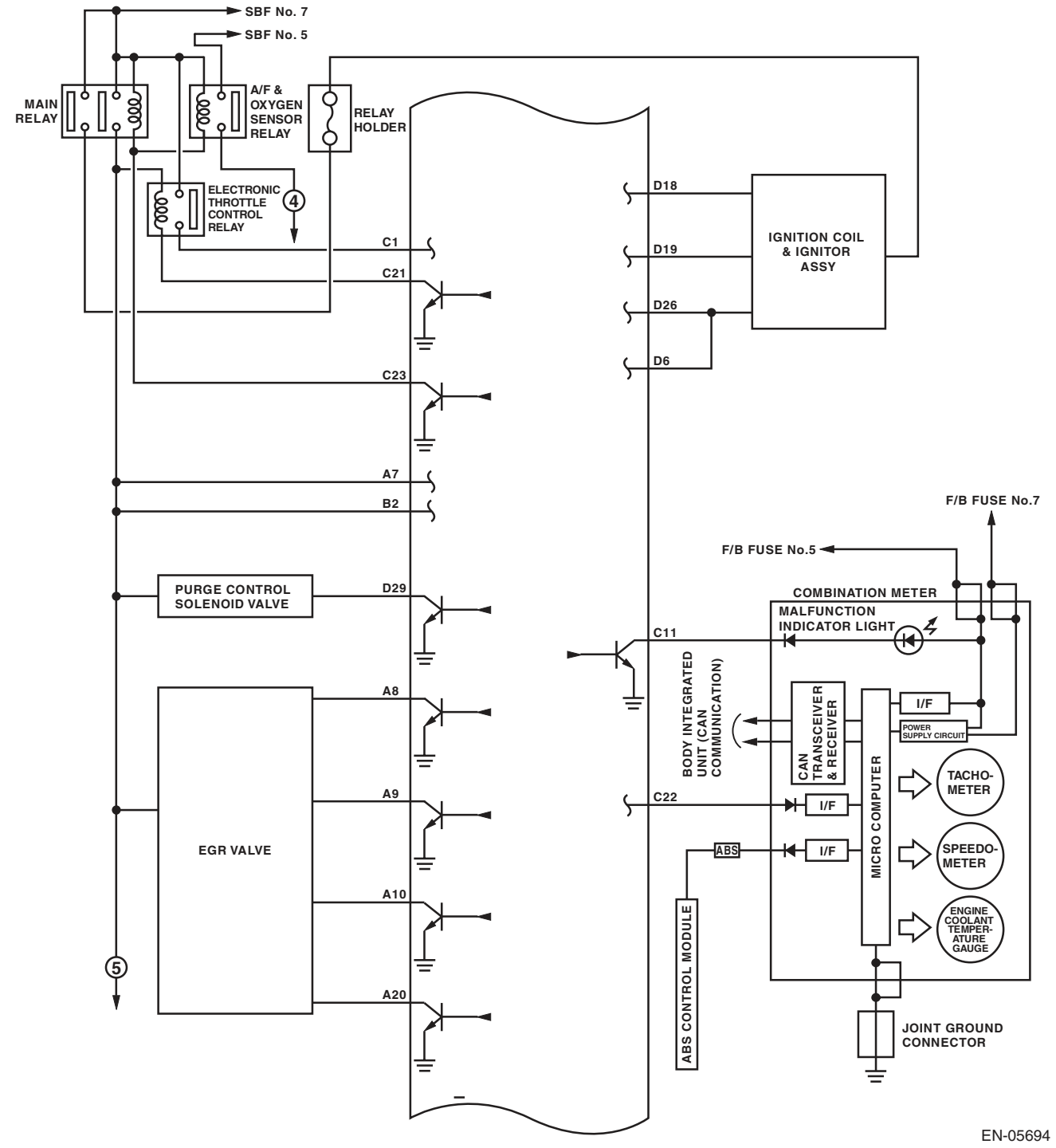
SBF No. 7
SBF No. 5
MAIN RELAY
A/F & OXYGEN SENSOR RELAY
RELAY HOLDER
ELECTRONIC THROTTLE CONTROL RELAY
4
C1
C21
C23
A7
B2
D18
D19
D26
D6
IGNITION COIL & IGNITOR ASSY
PURGE CONTROL SOLENOID VALVE
D29
EGR VALVE
A8
A9
A10
A20
5
C11
C22
BODY INTEGRATED UNIT (CAN COMMUNICATION)
CAN TRANSCEIVER & RECEIVER
MICRO COMPUTER
I/F
POWER SUPPLY CIRCUIT
ABS
ABS CONTROL MODULE
F/B FUSE No.7
F/B FUSE No.5
COMBINATION METER
MALFUNCTION INDICATOR LIGHT
TACHO-METER
SPEEDO-METER
ENGINE COOLANT TEMPER-ATURE GAUGE
JOINT GROUND CONNECTOR
EN-05694

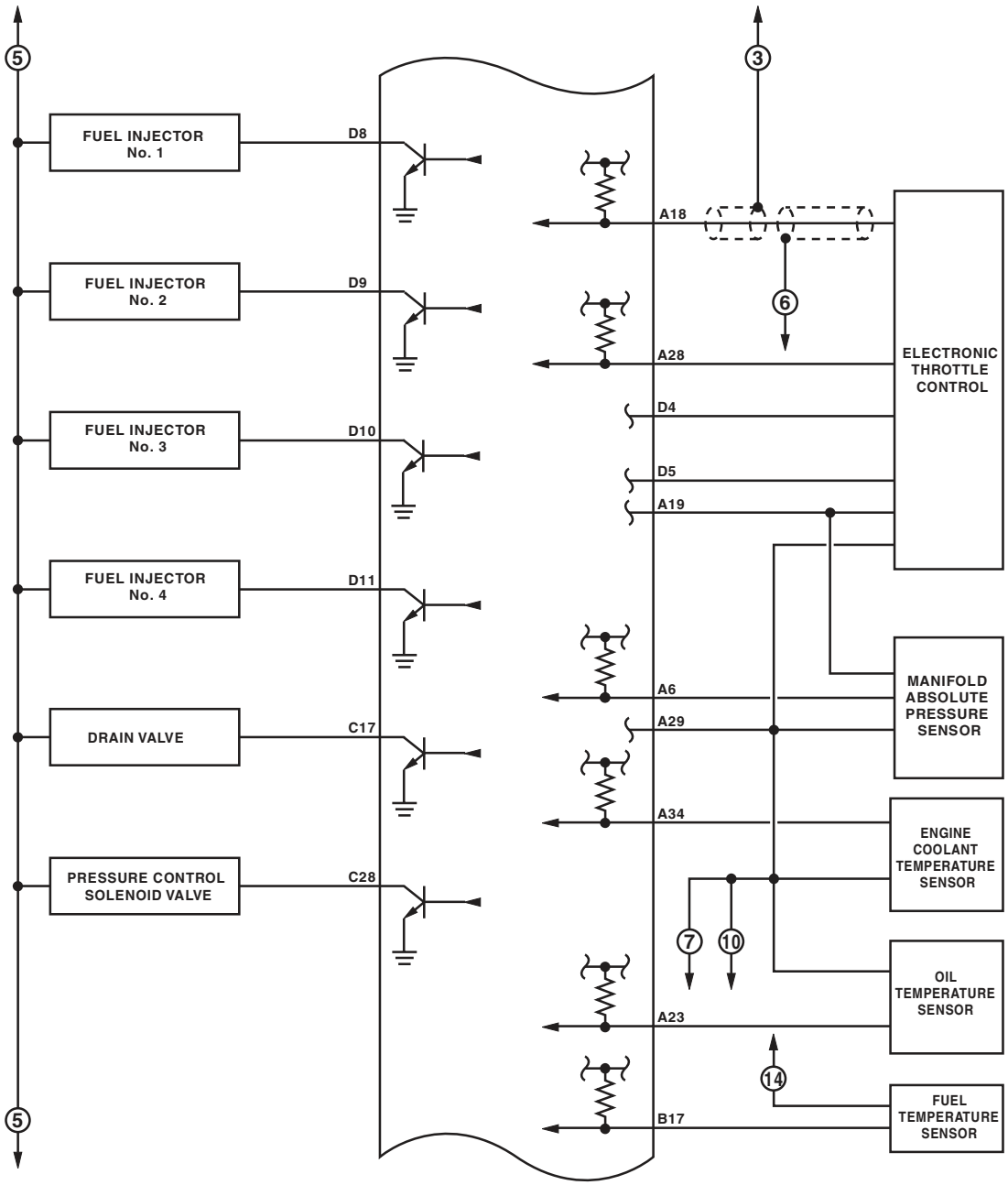
5
3
FUEL INJECTOR No. 1
D8
FUEL INJECTOR No. 2
D9
FUEL INJECTOR No. 3
D10
FUEL INJECTOR No. 4
D11
DRAIN VALVE
C17
PRESSURE CONTROL SOLENOID VALVE
C28
A18
6
A28
D4
D5
A19
ELECTRONIC THROTTLE CONTROL
A6
A29
MANIFOLD ABSOLUTE PRESSURE SENSOR
A34
ENGINE COOLANT TEMPERATURE SENSOR
7
10
OIL TEMPERATURE SENSOR
A23
14
FUEL TEMPERATURE SENSOR
B17
5

EN-05036

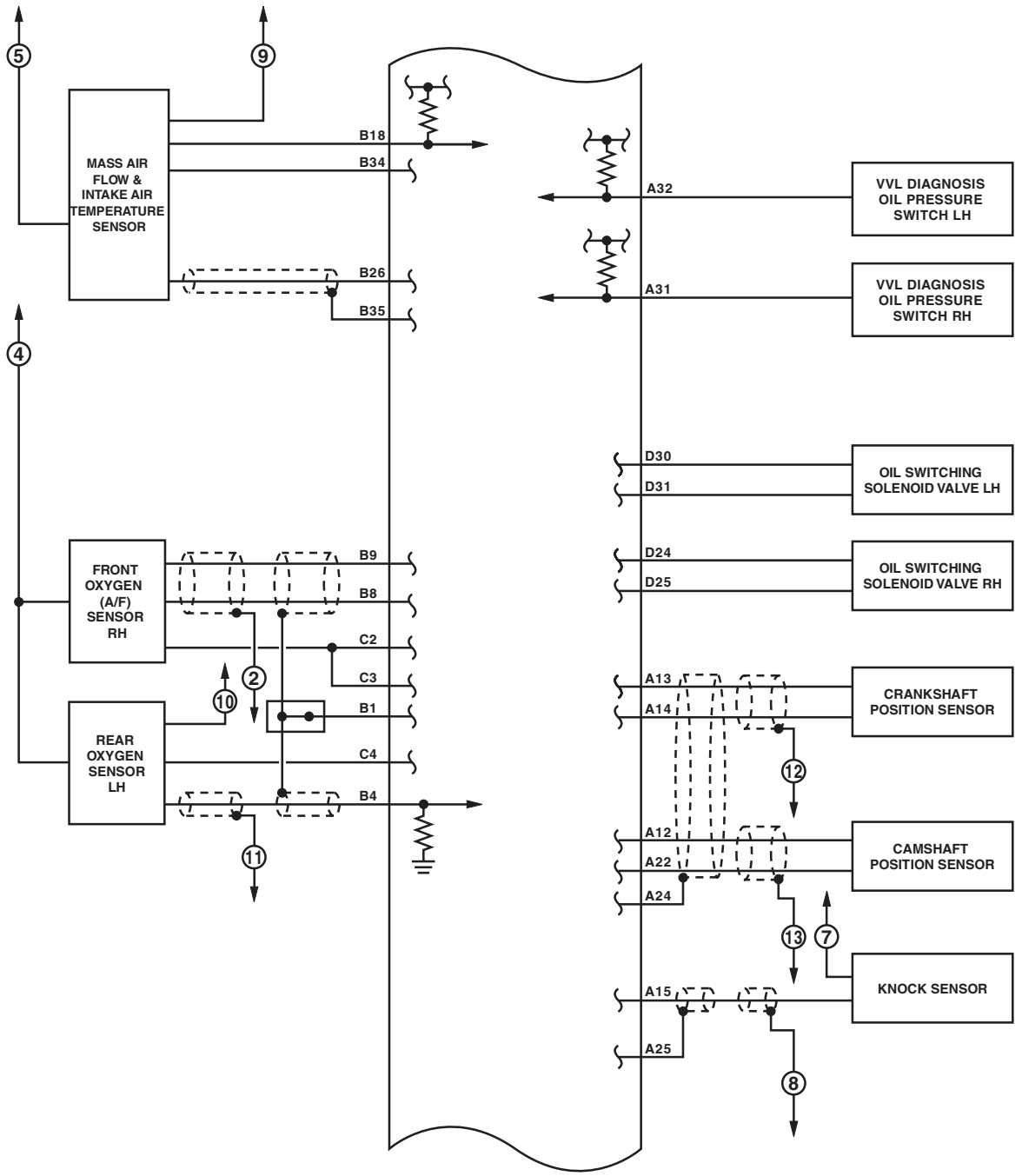
5
9
MASS AIR FLOW & INTAKE AIR TEMPERATURE SENSOR
B18
B34
B26
B35
4
FRONT OXYGEN (A/F) SENSOR RH
B9
B8
C2
C3
B1
C4
B4
2
10
REAR OXYGEN SENSOR LH
11
A32
VVL DIAGNOSIS OIL PRESSURE SWITCH LH
A31
VVL DIAGNOSIS OIL PRESSURE SWITCH RH
D30
D31
OIL SWITCHING SOLENOID VALVE LH
D24
D25
OIL SWITCHING SOLENOID VALVE RH
A13
A14
CRANKSHAFT POSITION SENSOR
12
A12
A22
A24
CAMSHAFT POSITION SENSOR
13
7
KNOCK SENSOR
A15
A25
8

EN-05695

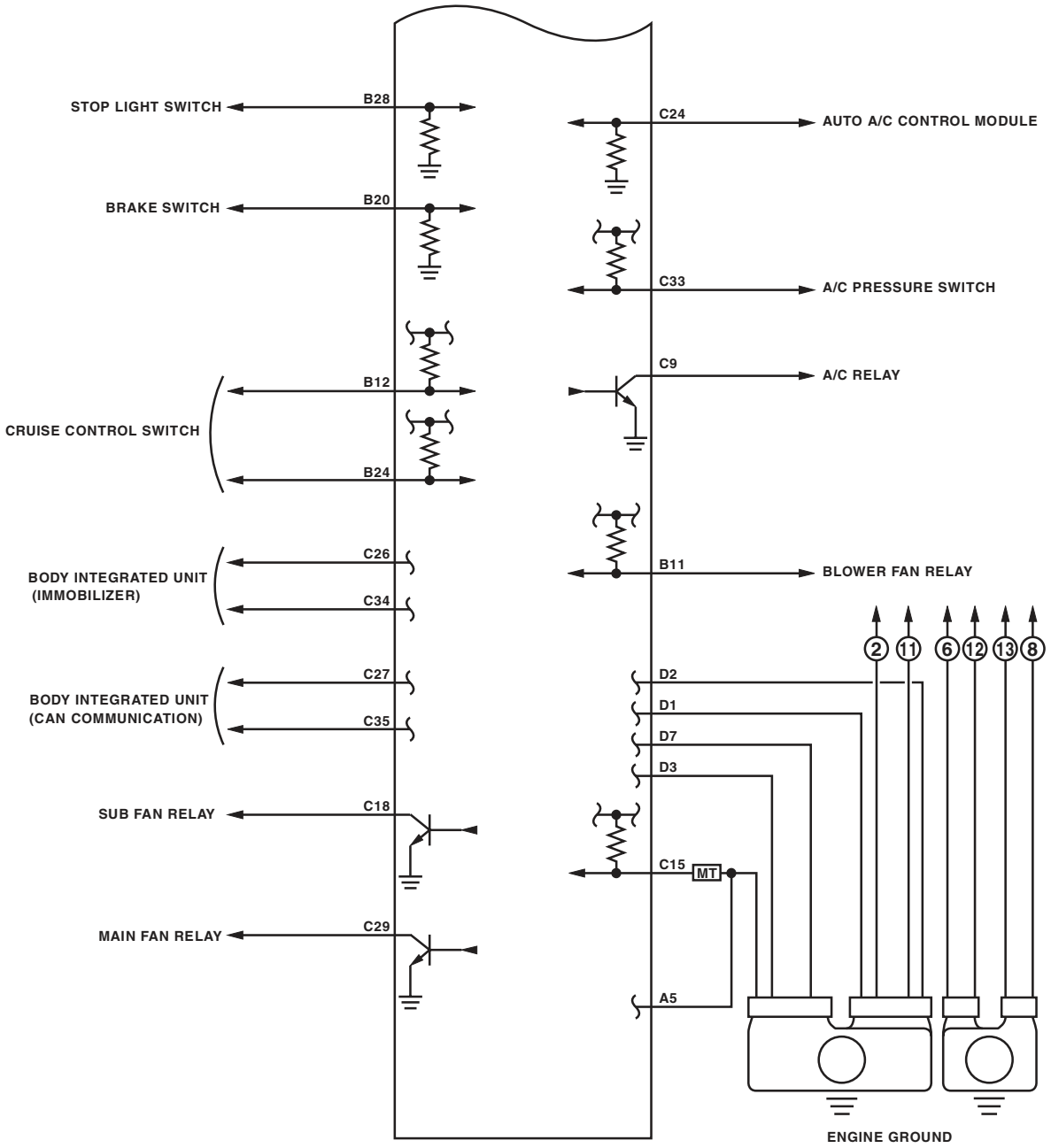
STOP LIGHT SWITCH
B28
BRAKE SWITCH
B20
CRUISE CONTROL SWITCH
B12
B24
BODY INTEGRATED UNIT (IMMOBILIZER)
C26
C34
BODY INTEGRATED UNIT (CAN COMMUNICATION)
C27
C35
SUB FAN RELAY
C18
MAIN FAN RELAY
C29
C24
AUTO A/C CONTROL MODULE
C33
A/C PRESSURE SWITCH
C9
A/C RELAY
B11
BLOWER FAN RELAY
D2
D1
D7
D3
C15
MT
A5
2
11
6
12
13
8
ENGINE GROUND

EN-05696

6. Engine Condition Data

A: ELECTRICAL SPECIFICATION

Contents	Specification
Engine Load	17.6 — 40.5 (%): Idling
	14.7 — 29.8 (%): 2,500 rpm racing

Measuring condition:
- After engine is warmed up.
- Set the select lever in “P” range or “N” range, or the shift lever in neutral.
- Turn the A/C off.
- Turn all the accessory switches to OFF.

7. Data Link Connector

A: NOTE

This connector is used for Subaru Select Monitor.

CAUTION:
Do not connect any scan tools except Subaru Select Monitor or general scan tool because the circuit for Subaru Select Monitor may be damaged.

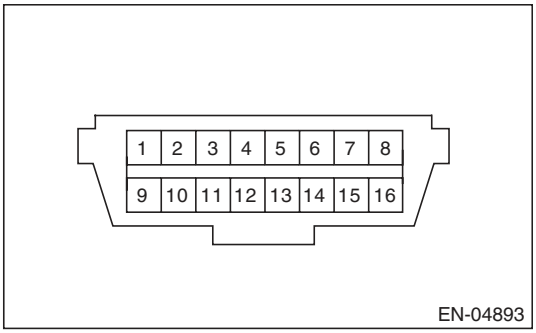

Terminal No.	Contents	Terminal No.	Contents
1	Blank	9	Blank
2	Blank	10	Blank
3	Blank	11	Blank
4	Ground	12	Blank
5	Ground	13	Blank
6	CAN (+)	14	CAN (–)
7	Subaru Select Monitor signal	15	Blank
8	Blank	16	Power supply

8. General Scan Tool

A: OPERATION

1. HOW TO USE GENERAL SCAN TOOL

1) Prepare a scan tool (general scan tool) required by SAE J1978.
2) Open the cover and connect the general scan tool to the data link connector located in the lower area of instrument panel (on the driver's side).

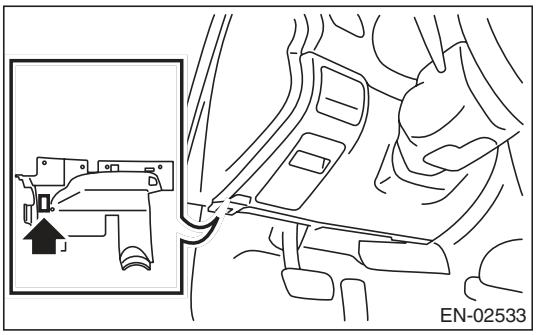

3) Using the general scan tool, call up DTC and freeze frame data.
General scan tool functions consist of:
(1) MODE $01: Current powertrain diagnostic data
(2) MODE $02: Powertrain freeze frame data
(3) MODE $03: Emission-related powertrain DTC
(4) MODE $04: Clear/Reset emission-related diagnostic information
(5) MODE $06: Request on-board monitoring test results for intermittently monitored systems
(6) MODE $07: Request on-board monitoring test results for continuously monitored systems
(7) MODE $09: Request vehicle information
Read out the data according to repair procedures. (For detailed operation procedure, refer to the general scan tool operation manual.)

NOTE:
For details concerning DTC, refer to "List of Diagnostic Trouble Code (DTC)". <Ref. to EN(H4SO)(diag)-80, List of Diagnostic Trouble Code (DTC).>

2. MODE $01: (CURRENT POWERTRAIN DIAGNOSTIC DATA)

Refer to data denoting the current operating condition of analog input/output, digital input/output or the powertrain system.
A list of the support data and PID (Parameter Identification) codes are shown in the following table.

PID	Data	Unit of measure
$01	Number of emission-related powertrain DTC, and malfunction indicator light status and diagnosis support information	—
$03	Fuel system control status	—
$04	Calculated engine load value	%
$05	Engine coolant temperature	°C
$06	Short term fuel trim	%
$07	Long term fuel trim	%
$0B	Intake manifold absolute pressure	kPa
$0C	Engine speed	rpm
$0D	Vehicle speed	MPH
$0E	Ignition timing advance	°
$0F	Intake air temperature	°C
$10	Air flow rate from the mass air flow sensor	g/s
$11	Throttle valve absolute opening angle	%
$13	Check whether oxygen sensor is installed.	—
$15	Oxygen sensor output voltage and short term fuel trim associated with oxygen sensor (Bank 1 Sensor 2)	V and %
$1C	Supporting OBD system	—
$1F	Elapsed time after starting the engine	sec
$21	Travel distance after the malfunction indicator light illuminates	miles
$24	A/F value and A/F sensor output voltage (Bank 1 Sensor 1)	– and V
$2C	Target EGR	%
$2D	EGR deviation	%
$2E	Evaporative purge	%
$2F	Fuel level	%
$30	Number of warm ups after DTC clear	—
$31	Travel distance after DTC clear	miles
$32	Fuel tank pressure	Pa
$33	Atmospheric pressure	kPa
$34	A/F value and A/F sensor current (Bank 1 Sensor 1)	– and mA
$3C	Catalyst temperature #1	°C
$41	Diagnosis monitoring per drive cycle	—
$42	ECM power supply voltage	V
$43	Absolute load	%
$44	A/F target lambda	—
$45	Relative throttle opening angle	%
$46	Ambient temperature	°C
$47	Absolute throttle opening angle 2	%
$49	Absolute accelerator opening angle 1	%
$4A	Absolute accelerator opening angle 2	%
$4C	Target throttle opening angle	%
$4D	Engine operating time while malfunction indicator lit	min
$4E	Elapsed time after DTC clear	min
$51	Fuel used	—
$5A	Relative acceleration opening angle	%

NOTE:
Refer to general scan tool manufacturer's instruction manual to access generic OBD-II PIDs (MODE $01).

3. MODE $02 (POWERTRAIN FREEZE FRAME DATA)

Refer to data denoting the operating condition when trouble is sensed by the on-board diagnosis system. A list of the support data and PID (Parameter Identification) codes are shown in the following table.

PID	Data	Unit of measure
$02	DTC that caused the freeze frame data storage required by CARB	—
$03	Fuel system control status	—
$04	Calculated engine load value	%
$05	Engine coolant temperature	°C
$06	Short term fuel trim (Bank 1 Sensor 1)	%
$07	Long term fuel trim (Bank 1 Sensor 1)	%
$0B	Intake manifold absolute pressure	kPa
$0C	Engine speed	rpm
$0D	Vehicle speed	MPH
$0E	Ignition timing advance	°
$0F	Intake air temperature	°C
$10	Air flow rate from the mass air flow sensor	g/s
$11	Throttle valve absolute opening angle	%
$13	Check whether oxygen sensor is installed.	—
$15	Oxygen sensor output voltage and short term fuel trim associated with oxygen sensor (Bank 1 Sensor 2)	V and %
$1C	Supporting OBD system	—
$1F	Elapsed time after starting the engine	sec
$2C	Target EGR	%
$2D	EGR deviation	%
$2E	Evaporative purge	%
$2F	Fuel level	%
$32	Fuel tank pressure	Pa
$33	Atmospheric pressure	kPa
$42	ECM power supply voltage	V
$43	Absolute load	%
$44	A/F target lambda	—
$45	Relative throttle opening angle	%
$46	Ambient temperature	°C
$47	Absolute throttle opening angle 2	%
$49	Absolute accelerator opening angle 1	%
$4A	Absolute accelerator opening angle 2	%
$4C	Target throttle opening angle	%

NOTE:
Refer to general scan tool manufacturer's instruction manual to access freeze frame data (MODE $02).

4. MODE $03 (EMISSION-RELATED POWERTRAIN DTC)

Refer to "List of Diagnostic Trouble Code (DTC)" for information about data denoting emission-related powertrain DTC. <Ref. to EN(H4SO)(diag)-80, List of Diagnostic Trouble Code (DTC).>

5. MODE $04 (CLEAR/RESET EMISSION-RELATED DIAGNOSTIC INFORMATION)

Refer to the mode used to clear or reset emission-related diagnostic information (OBD-II trouble diagnostic information).

NOTE:
Refer to general scan tool manufacturer's instruction manual to clear the emission-related diagnostic information (MODE $04).

6. MODE $06

Refer to test value of troubleshooting and data of test limit indicated on the support data bit sequence table. A list of the support data is shown in the following table.

OBDMID	TID	SID	Diagnostic item
$01	$81	$0A	A/F sensor continuity abnormal (Bank 1 Sensor 1)
	$82	$8D	
	$83	$14	
	$84	$1E	A/F sensor range abnormal (Bank 1 Sensor 1)
	$85	$1E	
	$86	$20	A/F sensor response abnormal (Bank 1 Sensor 1)
$02	$87	$0B	Oxygen sensor circuit abnormal (Bank 1 Sensor 2)
	$88	$0B	
	$07	$0B	Oxygen sensor drop abnormal (Bank 1 Sensor 2)
	$08	$0B	
	$A5	$0B	
	$05	$10	Oxygen sensor response abnormal (Bank 1 Sensor 2)
	$06	$10	
$21	$89	$20	Catalyst deterioration diagnosis (Bank 1)
$31	$8A	$FD	EGR system diagnosis
$39	$93	$FE	Evaporative emission control system (Cap off)
$3B	$94	$FE	Evaporative emission control system (0.04 inch leak)
	$95	$FE	
$3C	$96	$FE	Evaporative emission control system (0.02 inch leak)
	$97	$FE	
$3D	$98	$FE	Evaporative emission control system (Purge flow)
$41	$99	$24	A/F sensor heater abnormal (Bank 1 Sensor 1)
	$9A	$24	
	$9B	$14	A/F sensor heater characteristics abnormal (Bank 1 Sensor 1)
$42	$9C	$24	Oxygen sensor heater abnormal (Bank 1 Sensor 1)
	$9D	$24	
$A1	$0B	$24	Misfire monitoring (All cylinders)
	$0C	$24	
$A2	$0B	$24	Misfire monitoring (#1 cylinder)
	$0C	$24	
$A3	$0B	$24	Misfire monitoring (#2 cylinder)
	$0C	$24	
$A4	$0B	$24	Misfire monitoring (#3 cylinder)
	$0C	$24	
$A5	$0B	$24	Misfire monitoring (#4 cylinder)
	$0C	$24	

7. MODE $07

Refer to the data of DTC (pending code) for troubleshooting result about emission in the first time.

8. MODE $09

Refer to data of vehicle specification (V.I.N., calibration ID, diagnosis frequency etc.).

9. Subaru Select Monitor

A: OPERATION

1. HOW TO USE THE SUBARU SELECT MONITOR

1) Prepare the Subaru Select Monitor kit. <Ref. to EN(H4SO)(diag)-7, PREPARATION TOOL, General Description.>

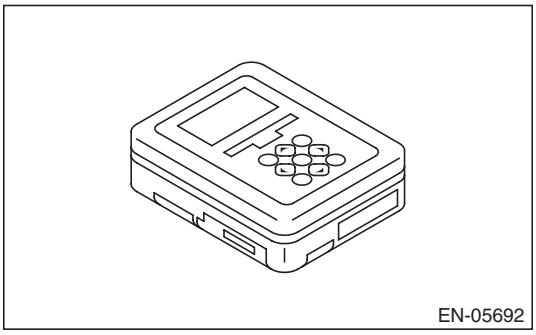

2) Prepare PC with Subaru Select Monitor installed.
3) Connect the USB cable between SDI (Subaru Diagnosis Interface) and USB port on the personal computer (dedicated port for the Subaru Select Monitor).

NOTE:
The dedicated port for the Subaru Select Monitor means the USB port which was used to install the Subaru Select Monitor.
4) Connect the diagnosis cable to SDI.
5) Connect SDI to data link connector located in the lower portion of the instrument panel (on the driver's side).

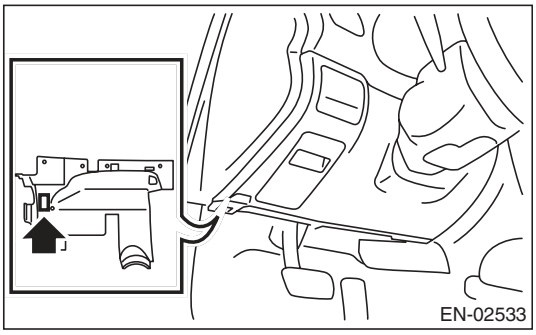

CAUTION:
Do not connect the scan tools except for Subaru Select Monitor and general scan tool.
6) Start the PC.
7) Turn the ignition switch to ON (engine OFF) and run the "PC application for Subaru Select Monitor".
8) Call up DTC and data, then record them.

NOTE:
For detailed operation procedures, refer to the "PC application help for Subaru Select Monitor".

2. READ CURRENT DATA FOR ENGINE (NORMAL MODE)

1) On the «Main Menu» display screen, select the {Each System Check}.
2) On the «System Selection Menu» display screen, select the {Engine Control System}.
3) Click the [OK] button after the information of engine type has been displayed.
4) On the «Engine Diagnosis» display screen, select the {Current Data Display & Save}.
5) On the «Current Data Display & Save» display screen, select the {Normal sampling}.
6) Using the scroll key, scroll the display screen up or down until the desired data is shown.

- A list of the support data is shown in the following table.

Contents	Display	Unit of measure	Note (at idling)
Engine load	Engine Load	%	21.0%
Engine coolant temperature signal	Coolant Temp.	°C or °F	85°C or 185°F or more (after warm up)
A/F correction 1	A/F Correction #1	%	–0.8%
A/F learning 1	A/F Learning #1	%	0.0%
Intake manifold absolute pressure	Mani. Absolute Pressure	mmHg, kPa, inHg or psig	200 — 300 mmHg, 26.7 — 40 kPa, 7.8 — 11.8 inHg or 3.8 — 5.8 psig
Engine speed signal	Engine Speed	rpm	700 rpm (Agree with the tachometer indication)
Meter vehicle speed signal	Vehicle Speed	km/h or MPH	0 km/h or 0 MPH (at parking)
Ignition timing signal	Ignition Timing	deg	14 — 16 deg
Intake air temperature signal	Intake Air Temp.	°C or °F	(Ambient air temperature)
Intake air amount	Mass Air Flow	g/s or lb/m	2.5 g/s or 0.33 lb/m
Throttle opening angle signal	Throttle Opening Angle	%	2.0%
Rear oxygen sensor voltage	Rear O2 Sensor	V	0.1 — 0.7 V
Battery voltage	Battery Voltage	V	12 — 14 V
Mass air flow voltage	Air Flow Sensor Voltage	V	1.26 V
Injection 1 pulse width	Fuel Injection #1 Pulse	ms	2.82 ms
Atmospheric pressure signal	Atmosphere Pressure	mmHg, kPa, inHg or psig	(Atmospheric pressure)
Intake manifold relative pressure	Mani. Relative Pressure	mmHg, kPa, inHg or psig	(Air intake absolute pressure – Atmospheric pressure)
Ignition timing learning value	Learned Ignition Timing	deg	0 deg
Acceleration opening angle signal	Accel. Opening Angle	%	0.0%
Fuel temperature signal	Fuel Temp.	°C or °F	+20°C or +68°F
Purge control solenoid duty ratio	CPC Valve Duty Ratio	%	0 — 3%
Number of EGR steps	No. of EGR steps	STEP	0 STEP
A/F sensor current value 1	A/F Sensor #1 Current	mA	–0.2 — 0.2 mA
A/F sensor resistance value 1	A/F Sensor #1 Resistance	Ω	32 Ω
A/F Sensor # 1	A/F Sensor #1	—	1.0
A/F correction 3	A/F Correction #3	%	0.3%
A/F learning 3	A/F Learning #3	%	0.00%
Throttle motor duty	Throttle Motor Duty	%	–15%
Throttle power supply voltage	Throttle Motor Voltage	V	(Battery voltage)
Sub throttle sensor voltage	Sub-Throttle Sensor	V	1.52 V
Main throttle sensor voltage	Main-Throttle Sensor	V	0.66 V
Sub accelerator sensor voltage	Sub-Accelerator Sensor	V	0.68 V
Main acceleration sensor voltage	Main-Accelerator Sensor	V	0.68 V
Memory vehicle speed	Memorized Cruise Speed	km/h or MPH	0 km/h or 0 MPH
Fuel level sensor signal	Fuel level resistance	Ω	2 — 96 Ω

Contents	Display	Unit of measure	Note (at idling)
Engine oil temperature	Oil Temperature	°C	≥ 85°C (After engine is warmed up.)
Oil switching solenoid valve duty R	OSV Duty R	%	16.9%
Oil switching solenoid valve duty L	OSV Duty L	%	16.9%
Oil switching solenoid valve current R	OSV Current R	mA	192 mA
Oil switching solenoid valve current L	OSV Current L	mA	192 mA
Variable valve lift mode	VVL Lift Mode	—	1
#1 cylinder roughness monitor	Roughness Monitor #1	—	0
#2 cylinder roughness monitor	Roughness Monitor #2	—	0
#3 cylinder roughness monitor	Roughness Monitor #3	—	0
#4 cylinder roughness monitor	Roughness Monitor #4	—	0
Knock sensor correction	Knocking Correction	deg	0.0 deg
Fuel tank pressure signal	Fuel Tank Pressure	mmHg, kPa, inHg or psig	+7.7 mmHg, +1.1 kPa, +0.31 inHg or +0.15 psig
AT/MT identification terminal	AT Vehicle ID Signal	—	AT vehicle/MT vehicle
Delivery (test) mode terminal	Test Mode Signal	—	OFF
D check request flag	D-check Require Flag	—	OFF
Delivery (test) mode terminal	Delivery Mode Connector (Test Mode Connector)	—	OFF
Neutral position switch signal	Neutral Position Switch	—	ON
Soft idle switch signal	Idle Switch Signal	—	ON
Ignition switch signal	Ignition Switch	—	ON
Power steering switch signal	P/S Switch Signal	—	OFF input (When OFF)
Air conditioning switch signal	A/C Switch	—	OFF input (When OFF)
Starter switch signal	Starter Switch	—	OFF
Rear oxygen monitor	Rear O2 Rich Signal	—	Rich/Lean
Knocking signal	Knocking Signal	—	None
Crankshaft position sensor signal	Crankshaft Position Sig.	—	ON
Camshaft position sensor signal	Camshaft Position Sig.	—	ON
Rear defogger switch signal	Rear Defogger SW	—	OFF input (When OFF)
Blower fan switch signal	Blower Fan SW	—	OFF input (When OFF)
Light switch signal	Light Switch	—	OFF input (When OFF)
A/C middle pressure switch signal	A/C Mid Pressure Switch	—	OFF input (When OFF)
Air conditioner compressor relay output signal	A/C Compressor Signal	—	OFF output (when OFF)
Radiator fan relay 1 signal	Radiator Fan Relay #1	—	OFF output (when OFF)
Radiator fan relay 2 signal	Radiator Fan Relay #2	—	OFF output (when OFF)
Fuel pump relay signal	Fuel Pump Relay	—	ON output
PCV hose assembly diagnosis signal	Blow-by leak Connector	—	Connected
Pressure control solenoid valve signal	PCV Solenoid Valve	—	OFF output
Drain valve signal	Vent. Solenoid Valve	—	OFF output
Variable valve lift diagnosis oil pressure switch signal 1	Eng. Oil Press. SW 1	—	ON
Variable valve lift diagnosis oil pressure switch signal 2	Eng. Oil Press. SW 2	—	ON
AT coordinate retard angle demand signal	Retard Signal from AT	—	None
AT coordinate fuel cut demand signal	Fuel Cut signal from AT	—	None
Torque control permission signal	Torque Permission Signal	—	Allowed (prohibited on MT vehicles)
Electronic throttle control motor relay signal	ETC Motor Relay	—	ON
Clutch switch signal	Clutch Switch	—	OFF (when OFF)
Stop light switch signal	Stop Light Switch	—	OFF (when OFF)
SET/COAST switch signal	SET/COAST SW	—	OFF (when OFF)

Contents	Display	Unit of measure	Note (at idling)
RES/ACC switch signal	RESUME/ACCEL SW	—	OFF (when OFF)
Brake switch signal	Brake Switch	—	OFF input (When OFF)
Main switch signal	Main Switch	—	OFF input (When OFF)
Body integrated unit data reception	Body Int. Unit Data	—	ON
Body integrated unit counter update	Body Int. Unit Count	—	ON
Cruise control cancel switch signal	CC Cancel SW	—	OFF input (When OFF)
Malfunction indicator light signal	MIL On Flag	—	Off (when unlit)

NOTE:
For detailed operation procedures, refer to the “PC application help for Subaru Select Monitor”.

3. READ CURRENT DATA FOR ENGINE (OBD MODE)

1) On the «Main Menu» display screen, select the {Each System Check}.
2) On the «System Selection Menu» display screen, select the {Engine Control System}.
3) Click the [OK] button after the information of engine type has been displayed.
4) On the «Engine Diagnosis» display screen, select the {OBD System}.
5) On the «OBD Menu» display screen, select the {Current Data Display & Save}.
6) On the «Current Data Display & Save» display screen, select the {All Data Display}.
7) Using the scroll key, scroll the display screen up or down until the desired data is shown.

- A list of the support data is shown in the following table.

Contents	Display	Referential value (at idling)	Unit of measure
Number of diagnosis code	Number of Diag. Code:	0	—
Condition of malfunction indicator light	MI (MIL)	OFF	—
Monitoring test of misfire	Misfire monitoring (Supp)	YES	—
Monitoring test of misfire	Misfire monitoring (Rdy)	YES	—
Monitoring test of fuel system	Fuel system monitoring (Supp)	YES	—
Monitoring test of fuel system	Fuel system monitoring (Rdy)	YES	—
Monitoring test of comprehensive component	Component monitoring (Supp)	YES	—
Monitoring test of comprehensive component	Component monitoring (Rdy)	YES	—
Test of catalyst	Catalyst Diagnosis (Supp)	YES	—
Test of catalyst	Catalyst Diagnosis (Rdy)	NO	—
Test of heating-type catalyst	Heated catalyst (Supp)	NO	—
Test of heating-type catalyst	Heated catalyst (Rdy)	N/A	—
Test of evaporative emission purge control system	Evaporative purge system (Supp)	YES	—
Test of evaporative emission purge control system	Evaporative purge system (Rdy)	NO	—
Secondary air system test	Secondary air system (Supp)	NO	—
Secondary air system test	Secondary air system (Rdy)	N/A	—
Test of air conditioning system refrigerant	A/C system refrigerant (Supp)	NO	—
Test of air conditioning system refrigerant	A/C system refrigerant (Rdy)	N/A	—
Test of oxygen sensor	Oxygen sensor (Supp)	YES	—
Test of oxygen sensor	Oxygen sensor (Rdy)	NO	—

Contents	Display	Referential value (at idling)	Unit of measure
Test of oxygen sensor heater	O2 Heater Diagnosis (Supp)	YES	—
Test of oxygen sensor heater	O2 Heater Diagnosis (Rdy)	NO	—
Test of EGR system	EGR system (Supp)	YES	—
Test of EGR system	EGR system (Rdy)	NO	—
Air fuel ratio control system for bank 1	Fuel system for Bank 1	Cl_normal	—
Engine load data	Calculated load value	23.0	%
Engine coolant temperature signal	Coolant Temp.	92	°C
Short term fuel trim by front oxygen (A/F) sensor (Bank 1)	Short term fuel trim B1	–0.8	%
Long term fuel trim by front oxygen (A/F) sensor (Bank 1)	Long term fuel trim B1	0.0	%
Intake manifold absolute pressure signal	Mani. Absolute Pressure	211	mmHg
Engine speed signal	Engine Speed	700	rpm
Vehicle speed signal	Vehicle Speed	0	km/h
#1 Cylinder ignition timing	Ignition timing adv. #1	16.0	°
Intake air temperature signal	Intake Air Temp.	36	°C
Intake air amount	Mass Air Flow	2.7	g/s
Throttle position signal	Throttle Opening Angle	13	%
Oxygen sensor (Bank 1 Sensor 2)	Oxygen sensor #12	0.7	V
A/F correction (Bank 1 Sensor 2)	Short term fuel trim #12	0.0	%
On-board diagnostic system	OBD System	OBD/OBD2	—
Front oxygen (A/F) sensor (bank 1 sensor 1)	Oxygen sensor #11	Support	—
Oxygen sensor (Bank 1 Sensor 2)	Oxygen sensor #12	Support	—
Elapsed time after engine start	Time Since Engine Start	—	sec
Travel distance after the malfunction indicator light illuminates	Lighted MI lamp history	—	km
A/F lambda signal (Bank 1 Sensor 1)	A/F Sensor #11	1.001	—
A/F sensor output signal (Bank 1 Sensor 1)	A/F Sensor #11	2.79	V
Target EGR	Commanded EGR	—	%
EGR error	EGR Error	—	%
Evaporative purge	Commanded Evap Purge	0	%
Fuel level signal	Fuel Level	—	%
Number of warm ups after DTC clear	Number of warm-ups	—	—
Travel distance after DTC clear	Meter since DTC cleared	—	km
Fuel tank pressure signal	Fuel Tank Pressure	8.8	mmHg
Atmospheric pressure signal	Atmosphere Pressure	Atmospheric pressure	mmHg
A/F lambda signal (Bank 1 Sensor 1)	A/F Sensor #11	1.001	—
A/F sensor current (Bank 1 Sensor 1)	A/F Sensor #11	0.00	mA
Catalytic temperature#1	Catalyst Temperature #11	—	°C
Monitoring test of misfire	Misfire monitoring (Enable)	YES	—
Monitoring test of misfire	Misfire monitoring (Comp)	NO	—
Monitoring test of fuel system	Fuel system monitoring (Enable)	YES	—
Monitoring test of fuel system	Fuel system monitoring (Comp)	NO	—
Monitoring test of comprehensive component	Component monitoring (Enable)	YES	—
Monitoring test of comprehensive component	Component monitoring (Comp)	NO	—

Contents	Display	Referential value (at idling)	Unit of measure
Test of catalyst	Catalyst Diagnosis (Enable)	YES	—
Test of catalyst	Catalyst Diagnosis (Comp)	NO	—
Test of heating-type catalyst	Heated catalyst (Enable)	N/A	—
Test of heating-type catalyst	Heated catalyst (Comp)	N/A	—
Test of evaporative emission purge control system	Evaporative purge system (Enable)	NO	—
Test of evaporative emission purge control system	Evaporative purge system (Comp)	NO	—
Secondary air system test	Secondary air system (Enable)	N/A	—
Secondary air system test	Secondary air system (Comp)	N/A	—
Test of air conditioning system refrigerant	A/C system refrigerant (Enable)	N/A	—
Test of air conditioning system refrigerant	A/C system refrigerant (Comp)	N/A	—
Test of oxygen sensor	Oxygen sensor (Enable)	YES	—
Test of oxygen sensor	Oxygen sensor (Comp)	NO	—
Test of oxygen sensor heater	O2 Heater Diagnosis (Enable)	YES	—
Test of oxygen sensor heater	O2 Heater Diagnosis (Comp)	NO	—
Test of EGR system	EGR system (Enable)	YES	—
Test of EGR system	EGR system (Comp)	NO	—
ECM power supply voltage	Control module voltage	13.789	V
Absolute load	Absolute Load Value	22	%
A/F target lambda	Target Equivalence Ratio	0.976	—
Relative throttle opening angle	Relative Throttle Pos.	2	%
Ambient temperature	Ambient Temperature	Ambient air temperature	°C
Absolute throttle opening angle 2	Absolute Throttle Pos.#2	32	%
Absolute accelerator opening angle 1	Accelerator Pedal Pos.#1	13	%
Absolute accelerator opening angle 2	Accelerator Pedal Pos.#2	13	%
Target throttle opening angle	Target Throt. Act. Cont.	0	%
Engine operating time while malfunction indicator light lit	Time while MIL lighted	—	min
Elapsed time after DTC clear	Time since DTC cleared	—	min
Fuel used	Type of fuel	GAS	—
Relative acceleration opening angle	Relative Accelera. Pos.	0	%

NOTE:
For detailed operation procedures, refer to the “PC application help for Subaru Select Monitor”.

4. READ FREEZE FRAME DATA FOR ENGINE (OBD MODE)

1) On the «Main Menu» display screen, select the {Each System Check}.
2) On the «System Selection Menu» display screen, select the {Engine Control System}.
3) Click the [OK] button after the information of engine type has been displayed.
4) On the «Engine Diagnosis» display screen, select the {OBD System}.
5) On the «OBD Menu» display screen, select the {Freeze Frame Data Display}.

- A list of the support data is shown in the following table.

Contents	Display	Unit of measure
DTCs of freeze frame data	Freeze frame data	—
Air fuel ratio control system for bank 1	Fuel system for Bank 1	—
Engine load data	Calculated load value	%
Engine coolant temperature signal	Coolant Temp.	°C or °F
Short term fuel trim by front oxygen (A/F) sensor (Bank 1)	Short term fuel trim B1	%
Long term fuel trim by front oxygen (A/F) sensor	Long term fuel trim B1	%
Intake manifold absolute pressure signal	Mani. Absolute Pressure	mmHg, kPa, inHg or psig
Engine speed signal	Engine Speed	rpm
Vehicle speed signal	Vehicle Speed	km/h or MPH
Ignition timing advance for #1 cylinder	Ignition timing adv. #1	°
Intake air temperature signal	Intake Air Temp.	°C or °F
Intake air amount	Mass Air Flow	g/s or lb/m
Throttle position signal	Throttle Opening Angle	%
Oxygen sensor (Bank 1 Sensor 2)	Oxygen sensor #12	V
A/F correction (Bank 1 Sensor 2)	Short term fuel trim #12	%
On-board diagnostic system	OBD System	—
Front oxygen (A/F) sensor (bank 1 sensor 1)	Oxygen sensor #11	—
Oxygen sensor (Bank 1 Sensor 2)	Oxygen sensor #12	—
Elapsed time after engine start	Time Since Engine Start	sec
Target EGR	Commanded EGR	%
EGR deviation	EGR Error	%
Evaporative purge	Commanded Evap Purge	%
Fuel level signal	Fuel Level	%
Fuel tank pressure signal	Fuel Tank Pressure	mmHg, kPa, inHg or psig
Atmospheric pressure	Atmosphere Pressure	mmHg, kPa, inHg or psig
ECM power supply voltage	Control module voltage	V
Absolute load	Absolute Load Value	%
A/F target lambda	Target Equivalence Ratio	—
Relative throttle opening angle	Relative Throttle Pos.	%
Ambient temperature	Ambient Temperature	°C or °F
Absolute throttle opening angle 2	Absolute Throttle Pos.#2	%
Absolute accelerator opening angle 1	Accelerator Pedal Pos.#1	%
Absolute accelerator opening angle 2	Accelerator Pedal Pos.#2	%
Target throttle opening angle	Target Throt. Act. Cont.	%

NOTE:
For detailed operation procedures, refer to the “PC application help for Subaru Select Monitor”.

5. V.I.N REGISTRATION

1) On the «Main Menu» display screen, select the {Each System Check}.
2) On the «System Selection Menu» display screen, select the {Engine Control System}.
3) Click the [OK] button after the information of engine type has been displayed.
4) On the «Engine Diagnosis» display screen, select the {Entry VIN}.
5) Perform the procedures shown on the display screen.

NOTE:
For detailed operation procedures, refer to the “PC application help for Subaru Select Monitor”.

10. Read Diagnostic Trouble Code (DTC)

A: OPERATION

1. SUBARU SELECT MONITOR (NORMAL MODE)

1) On the «Main Menu» display screen, select the {Each System Check}.
2) On the «System Selection Menu» display screen, select the {Engine Control System}.
3) Click the [OK] button after the information of engine type has been displayed.
4) On the «Engine Diagnosis» display screen, select the {Diagnostic Code(s) Display}.
5) On the «Diagnostic Code(s) Display» display screen, select the {Temporary Diagnostic Code(s)} or {Memorized Diagnostic Code(s)}.

NOTE:
- For detailed operation procedures, refer to the “PC application help for Subaru Select Monitor”.
- For details concerning DTC, refer to “List of Diagnostic Trouble Code (DTC)”. <Ref. to EN(H4SO)(diag)-80, List of Diagnostic Trouble Code (DTC).>

2. SUBARU SELECT MONITOR (OBD MODE)

1) On the «Main Menu» display screen, select the {Each System Check}.
2) On the «System Selection Menu» display screen, select the {Engine Control System}.
3) Click the [OK] button after the information of engine type has been displayed.
4) On the «Engine Diagnosis» display screen, select the {OBD System}.
5) On the «OBD Menu» display screen, select the {Diagnostic Code(s) Display}.
6) Make sure DTC is shown on the screen.

NOTE:
- For detailed operation procedures, refer to the “PC application help for Subaru Select Monitor”.
- For details concerning DTC, refer to “List of Diagnostic Trouble Code (DTC)”. <Ref. to EN(H4SO)(diag)-80, List of Diagnostic Trouble Code (DTC).>

3. GENERAL SCAN TOOL

Refer to data denoting emission-related powertrain DTC.
For details concerning DTC, refer to “List of Diagnostic Trouble Code (DTC)”. <Ref. to EN(H4SO)(diag)-80, List of Diagnostic Trouble Code (DTC).>

NOTE:
Refer to general scan tool manufacturer’s instruction manual to access powertrain DTC (MODE $03).

11.Inspection Mode

A: PROCEDURE

Perform the diagnosis shown in the following DTC table.
When performing the diagnosis not listed in “List of Diagnostic Trouble Code (DTC)”, refer to the item on the drive cycle. <Ref. to EN(H4SO)(diag)-46, Drive Cycle.>

DTC	Item	Condition
P0031	HO2S Heater Control Circuit Low (Bank 1 Sensor 1)	—
P0032	HO2S Heater Control Circuit High (Bank 1 Sensor 1)	—
P0037	HO2S Heater Control Circuit Low (Bank 1 Sensor 2)	—
P0038	HO2S Heater Control Circuit High (Bank 1 Sensor 2)	—
P0077	Intake Valve Control Solenoid Circuit High (Bank 1)	—
P0083	Intake Valve Control Solenoid Circuit High (Bank 2)	—
P0102	Mass or Volume Air Flow Circuit Low Input	—
P0103	Mass or Volume Air Flow Circuit High Input	—
P0107	Manifold Absolute Pressure/Barometric Pressure Circuit Low Input	—
P0108	Manifold Absolute Pressure/Barometric Pressure Circuit High Input	—
P0112	Intake Air Temperature Sensor 1 Circuit Low	—
P0113	Intake Air Temperature Sensor 1 Circuit High	—
P0117	Engine Coolant Temperature Circuit Low	—
P0118	Engine Coolant Temperature Circuit High	—
P0122	Throttle/Pedal Position Sensor/Switch “A” Circuit Low	—
P0123	Throttle/Pedal Position Sensor/Switch “A” Circuit High	—
P0131	O2 Sensor Circuit Low Voltage (Bank 1 Sensor 1)	—
P0132	O2 Sensor Circuit High Voltage (Bank 1 Sensor 1)	—
P0137	O2 Sensor Circuit Low Voltage (Bank 1 Sensor 2)	—
P0138	O2 Sensor Circuit High Voltage (Bank 1 Sensor 2)	—
P0140	O2 Sensor Circuit No Activity Detected (Bank 1 Sensor 2)	—
P0182	Fuel Temperature Sensor “A” Circuit Low Input	—
P0183	Fuel Temperature Sensor “A” Circuit High Input	—
P0197	Engine Oil Temperature Sensor Low	—
P0198	Engine Oil Temperature Sensor High	—
P0222	Throttle/Pedal Position Sensor/Switch “B” Circuit Low	—
P0223	Throttle/Pedal Position Sensor/Switch “B” Circuit High	—
P0327	Knock Sensor 1 Circuit Low (Bank 1 or Single Sensor)	—
P0328	Knock Sensor 1 Circuit High (Bank 1 or Single Sensor)	—
P0335	Crankshaft Position Sensor “A” Circuit	—
P0336	Crankshaft Position Sensor “A” Circuit Range/Performance	—
P0340	Camshaft Position Sensor “A” Circuit (Bank 1 or Single Sensor)	—
P0341	Camshaft Position Sensor “A” Circuit Range/Performance (Bank 1 or Single Sensor)	—
P0447	Evaporative Emission Control System Vent Control Circuit Open	—
P0448	Evaporative Emission Control System Vent Control Circuit Shorted	—
P0452	Evaporative Emission Control System Pressure Sensor Low Input	—
P0453	Evaporative Emission Control System Pressure Sensor High Input	—
P0458	Evaporative Emission System Purge Control Valve Circuit Low	—
P0462	Fuel Level Sensor “A” Circuit Low	—
P0463	Fuel Level Sensor “A” Circuit High	—
P0500	Vehicle Speed Sensor “A”	—
P0512	Starter Request Circuit	—
P0513	Incorrect Immobilizer Key	—
P0600	Serial Communication Link	—

DTC	Item	Condition
P0604	Internal Control Module Random Access Memory (RAM) Error	—
P0605	Internal Control Module Read Only Memory (ROM) Error	—
P0607	Throttle Control System Circuit Range/Performance	—
P0638	Throttle Actuator Control Range/Performance (Bank 1)	—
P0700	Transmission Control System (Mil Request)	—
P0851	Park/Neutral Switch Input Circuit Low	—
P0852	Park/Neutral Switch Input Circuit High	—
P1152	O2 Sensor Circuit Range/Performance (Low) (Bank1 Sensor1)	—
P1153	O2 Sensor Circuit Range/Performance (High) (Bank1 Sensor1)	—
P1160	Return Spring Failure	—
P1400	Exhaust Gas Recirculation Flow	—
P1420	Fuel Tank Pressure Control Sol. Valve Circuit High	—
P1491	Positive Crankcase Ventilation (Blow-by) Function Problem	—
P1560	Back-Up Voltage Circuit Malfunction	—
P1570	Antenna	—
P1571	Reference Code Incompatibility	—
P1572	IMM Circuit Failure	—
P1574	Key Communication Failure	—
P1576	EGI Control Module EEPROM	—
P1577	IMM Control Module EEPROM	—
P1578	Meter Failure	—
P2101	Throttle Actuator Control Motor Circuit Range/Performance	—
P2102	Throttle Actuator Control Motor Circuit Low	—
P2109	Throttle/Pedal Position Sensor “A” Minimum Stop Performance	—
P2122	Throttle/Pedal Position Sensor/Switch “D” Circuit Low Input	—
P2123	Throttle/Pedal Position Sensor/Switch “D” Circuit High Input	—
P2127	Throttle/Pedal Position Sensor/Switch “E” Circuit Low Input	—
P2128	Throttle/Pedal Position Sensor/Switch “E” Circuit High Input	—
P2135	Throttle/Pedal Position Sensor/Switch “A”/“B” Voltage Correlation	—
P2138	Throttle/Pedal Position Sensor/Switch “D”/“E” Voltage Correlation	—
P2227	Atmospheric Pressure Sensor Range/Performance	—
P2228	Barometric Pressure Circuit Low	—
P2229	Barometric Pressure Circuit High	—

1. PREPARATION FOR THE INSPECTION MODE

1) Check battery voltage is more than 12 V and fuel remains half [20 — 40 ℓ (5.3 — 10.6 US gal, 4.4 — 8.8 Imp gal)].
2) Lift up the vehicle using a garage jack and place it on rigid racks, or drive the vehicle onto free rollers.

WARNING:
- **Before lifting up the vehicle, ensure parking brakes are applied.**
- **Do not use a pantograph jack in place of a rigid rack.**
- **Secure a rope or wire to the front or rear towing hooks to prevent the lateral runout of front wheels.**
- **Before rotating the wheels, make sure that there is no one in front of the vehicle. Besides while the wheels are rotating, make sure that no one approaches the vehicle front side.**
- **Make sure that there is nothing around the wheels. For AWD model, pay special attention to all four wheels.**
- **While servicing, do not depress or release the clutch pedal or accelerator pedal quickly regardless of the engine speed. Quick operation may cause the vehicle to drop off the free roller.**
- **To prevent the vehicle from slipping due to vibration, do not place anything between rigid rack and the vehicle.**

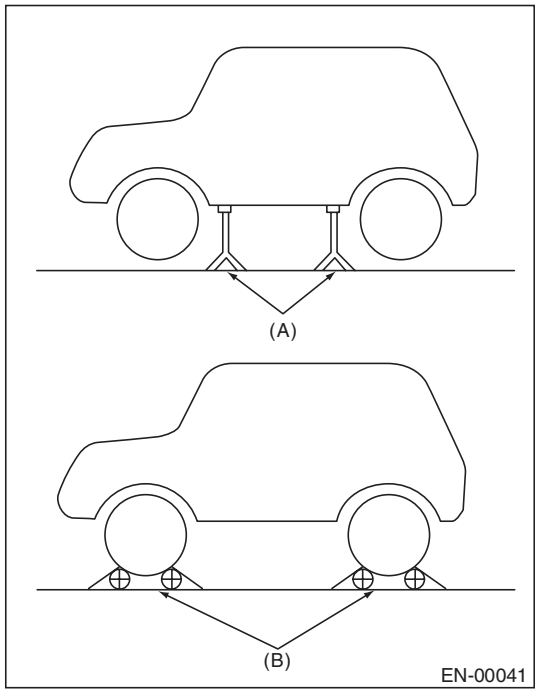

(A) Rigid rack
(B) Free roller

2. SUBARU SELECT MONITOR

1) Check that no DTC remains after clearing memory. <Ref. to EN(H4SO)(diag)-50, Clear Memory Mode.>
2) Warm up the engine.
3) Prepare the Subaru Select Monitor kit. <Ref. to EN(H4SO)(diag)-7, PREPARATION TOOL, General Description.>

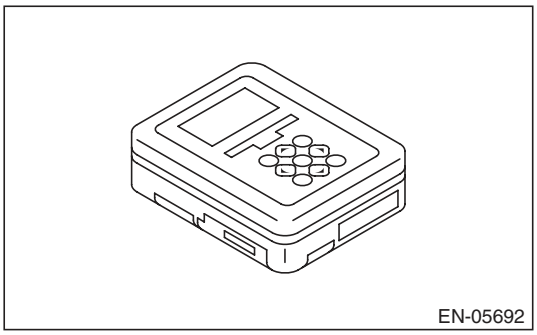

4) Prepare PC with Subaru Select Monitor installed.
5) Connect the USB cable between SDI (Subaru Diagnosis Interface) and USB port on the personal computer (dedicated port for the Subaru Select Monitor).

NOTE:
The dedicated port for the Subaru Select Monitor means the USB port which was used to install the Subaru Select Monitor.
6) Connect the diagnosis cable to SDI.
7) Connect the delivery (test) mode connector (A) located under the glove box.

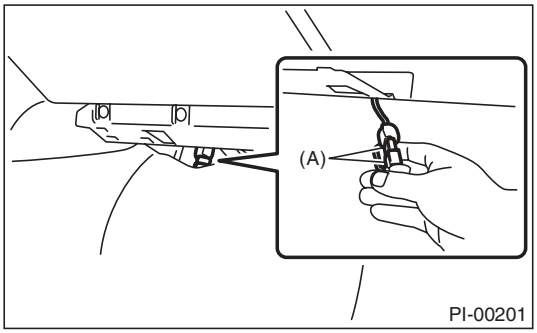

8) Connect SDI to data link connector located in the lower portion of the instrument panel (on the driver's side).

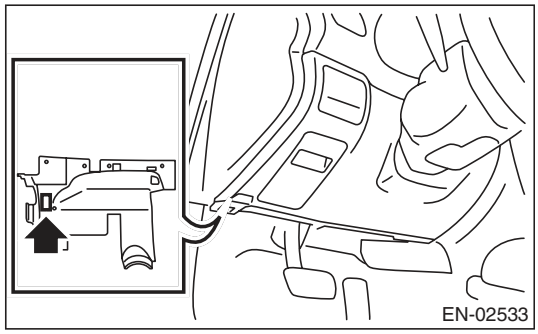

CAUTION:
Do not connect the scan tools except for Subaru Select Monitor and general scan tool.

9) Start the PC.
10) Turn the ignition switch to ON (engine OFF) and run the "PC application for Subaru Select Monitor".
11) On the «Main Menu» display screen, select the {Each System Check}.
12) On the «System Selection Menu» display screen, select the {Engine Control System}.
13) Click the [OK] button after the information of engine type has been displayed.
14) On the «Engine Diagnosis» display screen, select the {Dealer Check Mode Procedure}.
15) When the «Perform Inspection (Dealer Check) Mode?» is shown on the screen, click the [Next] button.
16) Perform subsequent procedures as instructed on the display screen.

- If trouble still remains in the memory, the corresponding DTC appears on the display screen.

NOTE:
- For detailed operation procedures, refer to the "PC application help for Subaru Select Monitor".
- For details concerning DTC, refer to "List of Diagnostic Trouble Code (DTC)".
  <Ref. to EN(H4SO)(diag)-80, List of Diagnostic Trouble Code (DTC).>
- Release the parking brake.
- The speed difference between front and rear wheels may light the ABS warning light, but this does not indicate a malfunction. When engine control diagnosis is finished, perform the ABS memory clearance procedure of self-diagnosis system. <Ref. to ABS(diag)-20, Clear Memory Mode.>

3. GENERAL SCAN TOOL

1) After performing the diagnostics and clearing the memory, check that no DTC remains. <Ref. to EN(H4SO)(diag)-50, Clear Memory Mode.>
2) Warm up the engine.
3) Connect the delivery (test) mode connector (A) located under the glove box.

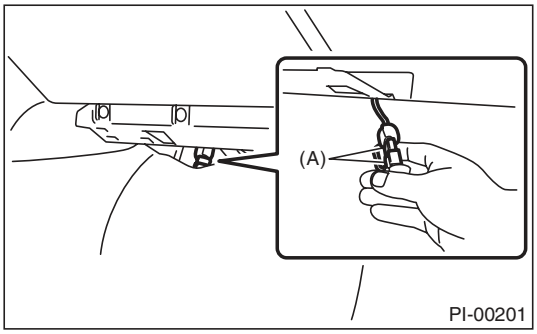

4) Connect the general scan tool to the data link connector located in the lower portion of the instrument panel (on the driver' side).

CAUTION:
Do not connect the scan tools except for Subaru Select Monitor and general scan tool.

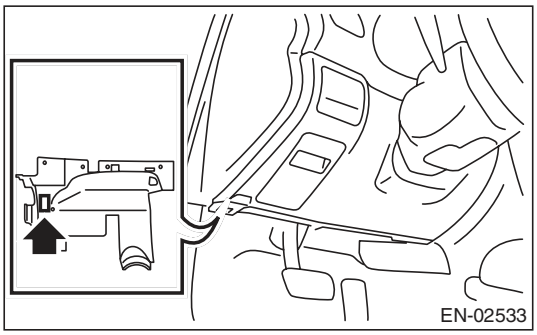

5) Start the engine.

NOTE:
- Ensure the selector lever is placed in "P" range before starting. (AT model)
- Depress the clutch pedal when starting engine. (MT model)

6) Turn the neutral position switch to ON using select lever or shift lever.
7) Depress the brake pedal to turn the brake switch ON. (AT model)
8) Keep the engine speed in 2,500 — 3,000 rpm range for 40 seconds.

9) Place the select lever or shift lever in D position (AT model) or 1st gear (MT model) and drive the vehicle at 5 to 10 km/h (3 to 6 MPH).

NOTE:
- For AWD model, release the parking brake.
- The speed difference between front and rear wheels may light the ABS warning light, but this indicates no malfunctions. When engine control diagnosis is finished, perform the ABS memory clearance procedure of self-diagnosis system. <Ref. to ABS(diag)-20, Clear Memory Mode.>

10) Using the general scan tool, check DTC and record the result(s).

NOTE:
- For detailed operation procedures, refer to the general scan tool operation manual.
- For details concerning DTC, refer to “List of Diagnostic Trouble Code (DTC)”.
<Ref. to EN(H4SO)(diag)-80, List of Diagnostic Trouble Code (DTC).>

12. Drive Cycle

A: PROCEDURE

For the troubleshooting, there are driving patterns described below. Driving in the specified pattern allows to diagnose malfunctioning items listed below. After the repair of the following trouble items, be sure to drive the vehicle with the specified drive patterns to check whether the function is resumed correctly.

1. PREPARATION FOR DRIVE CYCLE

1) Check battery voltage is more than 12 V and fuel remains half [20 — 40 ℓ (5.3 — 10.6 US gal, 4.4 — 8.8 Imp gal)].
2) After performing the diagnostics and clearing the memory, check that no DTC remains. <Ref. to EN(H4SO)(diag)-50, Clear Memory Mode.>
3) Disconnect the delivery (test) mode connector.

NOTE:
- Except for the water temperature specified at starting, be sure to carry out the diagnosis after the engine is warmed up.
- Perform the diagnosis twice if the DTC marked with *. After completing the first diagnosis, stop the engine and perform second diagnosis in same condition.

2. DRIVE CYCLE A — DRIVE THE VEHICLE WITH 80 KM/H (50 MPH) FOR 20 MINUTES, AND THEN IDLE THE ENGINE FOR A MINUTE

DTC	Item	Condition
*P0125	Insufficient Coolant Temperature for Closed Loop Fuel Control	Coolant temperature at start is less than 20°C (68°F).
*P0128	Coolant Thermostat (Engine Coolant Temperature Below Thermostat Regulating Temperature)	—
*P0133	O2 Sensor Circuit Slow Response (Bank 1 Sensor 1)	—
*P0171	System Too Lean (Bank 1)	Complete diagnosis with drive cycle B or C as well.
*P0172	System Too Rich (Bank 1)	Complete diagnosis with drive cycle B or C as well.
*P0196	Engine Oil Temperature Sensor Circuit Range/Performance	—
*P0301	Cylinder 1 Misfire Detected	Complete diagnosis with drive cycle B or C as well.
*P0302	Cylinder 2 Misfire Detected	Complete diagnosis with drive cycle B or C as well.
*P0303	Cylinder 3 Misfire Detected	Complete diagnosis with drive cycle B or C as well.
*P0304	Cylinder 4 Misfire Detected	Complete diagnosis with drive cycle B or C as well.
*P0420	Catalyst System Efficiency below Threshold (Bank 1)	—
*P0442	Evaporative Emission Control System Leak Detected (Small Leak)	Engine coolant temperature at engine start is less than 30°C (86°F).
*P0451	Evaporative Emission Control System Pressure Sensor	—
*P0456	Evaporative Emission Control System Leak Detected (Very Small Leak)	Engine coolant temperature at engine start is less than 30°C (86°F).
*P0457	Evaporative Emission Control System Leak Detected (Fuel Cap Loose/Off)	Engine coolant temperature at engine start is less than 30°C (86°F).
*P0459	Evaporative Emission System Purge Control Valve Circuit High	—
P1443	Vent Control Solenoid Valve Function Problem	—
*P2096	Post Catalyst Fuel Trim System Too Lean (Bank 1)	Complete diagnosis with drive cycle B or C as well.
*P2097	Post Catalyst Fuel Trim System Too Rich (Bank 1)	Complete diagnosis with drive cycle B or C as well.
P2103	Throttle Actuator Control Motor Circuit High	Complete diagnosis with drive cycle B or C as well.

3. DRIVE CYCLE B — 10 MINUTES IDLING

NOTE:
Drive the vehicle at 10 km/h (6 MPH) or more before diagnosis.

DTC	Item	Condition
*P0126	Insufficient Engine Coolant Temperature for Stable Operation	—
*P0171	System Too Lean (Bank 1)	Complete diagnosis with drive cycle A or C as well.
*P0172	System Too Rich (Bank 1)	Complete diagnosis with drive cycle A or C as well.
*P0301	Cylinder 1 Misfire Detected	Complete diagnosis with drive cycle A or C as well.
*P0302	Cylinder 2 Misfire Detected	Complete diagnosis with drive cycle A or C as well.
*P0303	Cylinder 3 Misfire Detected	Complete diagnosis with drive cycle A or C as well.
*P0304	Cylinder 4 Misfire Detected	Complete diagnosis with drive cycle A or C as well.
*P0464	Fuel Level Sensor Circuit Intermittent	—
*P0506	Idle Air Control System RPM Lower Than Expected	—
*P0507	Idle Air Control System RPM Higher Than Expected	—
*P2096	Post Catalyst Fuel Trim System Too Lean (Bank 1)	Complete diagnosis with drive cycle A or C as well.
*P2097	Post Catalyst Fuel Trim System Too Rich (Bank 1)	Complete diagnosis with drive cycle A or C as well.
P2103	Throttle Actuator Control Motor Circuit High	Complete diagnosis with drive cycle A or C as well.

4. DRIVE CYCLE C — DRIVE THE VEHICLE WITH FOLLOWING DRIVE PATTERNS

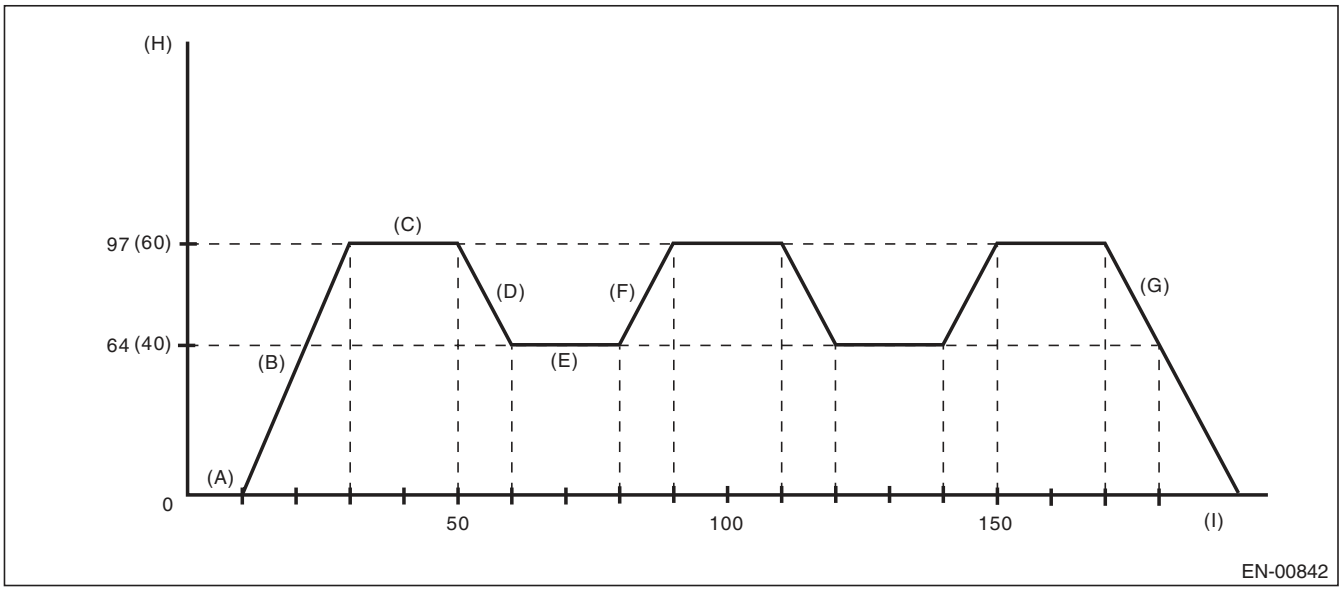

(A) Idle the engine for 10 seconds or more.

(B) Accelerate to 97 km/h (60 MPH) within 20 seconds.

(C) Drive the vehicle at 97 km/h (60 MPH) for 20 seconds.

(D) Decelerate with fully closed throttle to 64 km/h (40 MPH).

(E) Drive the vehicle at 64 km/h (40 MPH) for 20 seconds.

(F) Accelerate to 97 km/h (60 MPH) within 10 seconds.

(G) Stop vehicle with the throttle fully closed.

(H) Vehicle speed km/h (MPH)

(I) Sec.

DTC	Item	Condition
P0026	Intake Valve Control Solenoid Circuit Range/Performance (Bank 1)	—
P0028	Intake Valve Control Solenoid Circuit Range/Performance (Bank 2)	—
*P0030	HO2S Heater Control Circuit (Bank 1 Sensor 1)	—
*P0068	MAP/MAF - Throttle Position Correlation	—
P0076	Intake Valve Control Solenoid Circuit Low (Bank 1)	—
P0082	Intake Valve Control Solenoid Circuit Low (Bank 2)	—
*P0101	Mass or Volume Air Flow Circuit Range/Performance	—
P0134	O2 Sensor Circuit No Activity Detected (Bank 1 Sensor 1)	—
*P0139	O2 Sensor Circuit Slow Response (Bank 1 Sensor 2)	—
*P0171	System Too Lean (Bank 1)	Complete diagnosis with drive cycle A or B as well.
*P0172	System Too Rich (Bank 1)	Complete diagnosis with drive cycle A or B as well.
*P0301	Cylinder 1 Misfire Detected	Complete diagnosis with drive cycle A or B as well.
*P0302	Cylinder 2 Misfire Detected	Complete diagnosis with drive cycle A or B as well.
*P0303	Cylinder 3 Misfire Detected	Complete diagnosis with drive cycle A or B as well.
*P0304	Cylinder 4 Misfire Detected	Complete diagnosis with drive cycle A or B as well.
*P0400	Exhaust Gas Recirculation Flow	—
P1492	EGR Solenoid Valve Signal #1 Circuit Malfunction (Low Input)	—
P1493	EGR Solenoid Valve Signal #1 Circuit Malfunction (High Input)	—
P1494	EGR Solenoid Valve Signal #2 Circuit Malfunction (Low Input)	—
P1495	EGR Solenoid Valve Signal #2 Circuit Malfunction (High Input)	—
P1496	EGR Solenoid Valve Signal #3 Circuit Malfunction (Low Input)	—
P1497	EGR Solenoid Valve Signal #3 Circuit Malfunction (High Input)	—
P1498	EGR Solenoid Valve Signal #4 Circuit Malfunction (Low Input)	—
P1499	EGR Solenoid Valve Signal #4 Circuit Malfunction (High Input)	—
*P2096	Post Catalyst Fuel Trim System Too Lean (Bank 1)	Complete diagnosis with drive cycle A or B as well.
*P2097	Post Catalyst Fuel Trim System Too Rich (Bank 1)	Complete diagnosis with drive cycle A or B as well.
P2103	Throttle Actuator Control Motor Circuit High	Complete diagnosis with drive cycle A or B as well.

5. DRIVE CYCLE D

• Drift Diagnosis

1) Make sure that the engine coolant temperature at engine starting is less than 30°C (86°F).
2) Make sure that fuel remains 10 ℓ (2.6 US gal, 2.2 Imp gal) or more and the battery voltage is 10.9 V or more.
3) Start the engine, and check that the engine coolant temperature increases by 10°C (50°F) or more, and reaches 75°C (167°F) or more, when the engine is warmed up.
4) Idle the engine for 120 seconds or more in the condition of step 3.

• Stuck Diagnosis

1) Make sure that the battery voltage is 10.9 V or more.
2) Perform the Clear Memory Mode. <Ref. to EN(H4SO)(diag)-50, Clear Memory Mode.>
3) Drive for approximately 50 ℓ (13.2 US gal, 11 Imp gal) of fuel.

NOTE:
• It is acceptable to drive the vehicle intermittently.
• Do not disconnect the battery terminals while diagnosing. (Data will be cleared by disconnecting the battery terminals.)

DTC	Item	Condition
*P0181	Fuel Temperature Sensor “A” Circuit Range/Performance	—

6. DRIVE CYCLE E

1) Make sure that the battery voltage is 10.9 V or more.
2) Perform the Clear Memory Mode. <Ref. to EN(H4SO)(diag)-50, Clear Memory Mode.>
3) Drive for approximately 30 ℓ (7.9 US gal, 6.6 Imp gal) of fuel.

NOTE:
- It is acceptable to drive the vehicle intermittently.
- Do not disconnect the battery terminals while diagnosing. (Data will be cleared by disconnecting the battery terminals.)

DTC	Item	Condition
*P0461	Fuel Level Sensor “A” Circuit Range/Performance	—

7. DRIVE CYCLE F

1) Make sure that the engine coolant temperature at engine starting is less than 30°C (86°F).
2) Start the engine, and warm it up until engine coolant temperature increases over 95°C (203°F).
3) Idle the engine for more than 10 minutes in the condition of step 2.

NOTE:
Do not disconnect the battery terminals while diagnosing. (Data will be cleared by disconnecting the battery terminals.)

DTC	Item	Condition
*P0111	Intake Air Temperature Sensor 1 Circuit Range/Performance	—

8. DRIVE CYCLE H

1) Perform the Clear Memory Mode. <Ref. to EN(H4SO)(diag)-50, Clear Memory Mode.>
2) With the ignition switch ON, read the engine coolant temperature, intake air temperature and fuel temperature. <Ref. to EN(H4SO)(diag)-34, READ CURRENT DATA FOR ENGINE (NORMAL MODE), OPERATION, Subaru Select Monitor.>
3) If the values from step 2) satisfy the following two conditions, start the engine.

Condition:
|Engine coolant temperature — intake air temperature | ≤ 5°C (41°F)
|Engine coolant temperature — fuel temperature | ≤ 2°C (36°F)

NOTE:
- If the conditions are not satisfied, turn the ignition switch to OFF and wait until the parameters are satisfied.
- Start AT vehicles in the “P” range, and MT vehicles in the neutral position.

4) Idle the engine for 1 minute under the conditions in step 3).

DTC	Item	Condition
*P1602	Control Module Programming Error	—

13. Clear Memory Mode

A: OPERATION

NOTE:
When Clear Memory Mode is performed in OBD mode of Subaru Select Monitor, only DTCs are cleared.

1. SUBARU SELECT MONITOR (NORMAL MODE)

1) On the «Main Menu» display screen, select the {Each System Check}.
2) On the «System Selection Menu» display screen, select the {Engine Control System}.
3) Click the [OK] button after the information of engine type has been displayed.
4) On the «Engine Diagnosis» display screen, select the {Clearing Memory}.
5) When the “Clear Memory?” is shown on the screen, click the [Yes] button.
6) When “Done” and “Turn off the ignition switch.” are shown on the display screen, turn the ignition switch to OFF.

NOTE:
• Initial diagnosis of electronic throttle control is performed after memory clearance. Wait for 10 seconds or more after turning the ignition switch to ON, and then start the engine.
• For detailed operation procedures, refer to the “PC application help for Subaru Select Monitor”.

2. SUBARU SELECT MONITOR (OBD MODE)

1) On the «Main Menu» display screen, select the {Each System Check}.
2) On the «System Selection Menu» display screen, select the {Engine Control System}.
3) Click the [OK] button after the information of engine type has been displayed.
4) On the «Engine Diagnosis» display screen, select the {OBD System}.
5) On the «OBD Menu» display screen, select the {Clear Diagnostic Code}.
6) When the “Clear Diagnostic Code?” is shown on the screen, click the [Yes] button.
7) When “Done” and “Turn off the ignition switch.” are shown on the display screen, turn the ignition switch to OFF.

NOTE:
• Initial diagnosis of electronic throttle control is performed after memory clearance. Wait for 10 seconds or more after turning the ignition switch to ON, and then start the engine.
• For detailed operation procedures, refer to the “PC application help for Subaru Select Monitor”.

3. GENERAL SCAN TOOL

For clear memory procedures using the general scan tool, refer to “General Scan Tool Instruction Manual”.

NOTE:
Initial diagnosis of electronic throttle control is performed after memory clearance. For this reason, start the engine after 10 seconds or more have elapsed since the ignition switch was turned to ON.

14. Compulsory Valve Operation Check Mode

A: OPERATION

1) Prepare the Subaru Select Monitor kit. <Ref. to EN(H4SO)(diag)-7, PREPARATION TOOL, General Description.>

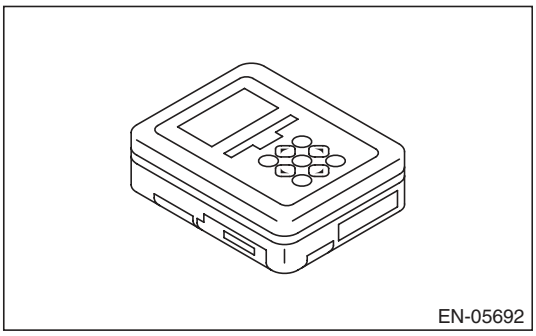

2) Prepare PC with Subaru Select Monitor installed.
3) Connect the USB cable between SDI (Subaru Diagnosis Interface) and USB port on the personal computer (dedicated port for the Subaru Select Monitor).

NOTE:
The dedicated port for the Subaru Select Monitor means the USB port which was used to install the Subaru Select Monitor.

4) Connect the diagnosis cable to SDI.
5) Connect the delivery (test) mode connector (A) located under the glove box.

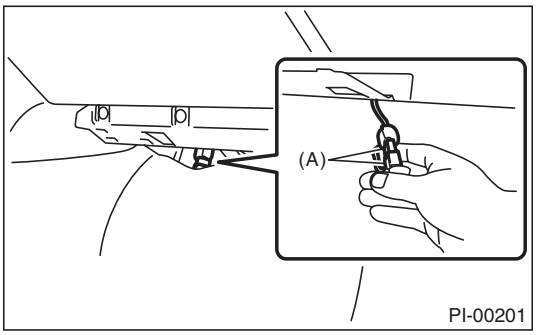

6) Connect SDI to data link connector located in the lower portion of the instrument panel (on the driver's side).

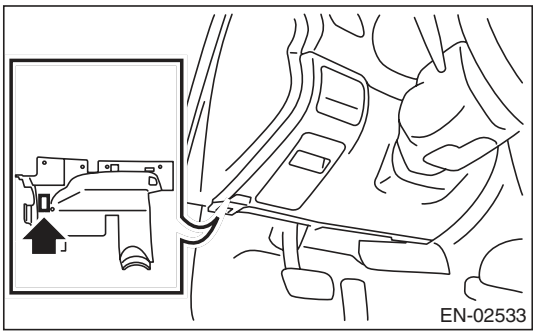

CAUTION:
Do not connect the scan tools except for Subaru Select Monitor and general scan tool.

7) Start the PC.
8) Turn the ignition switch to ON (engine OFF) and run the "PC application for Subaru Select Monitor".
9) On the «Main Menu» display screen, select the {Each System Check}.
10) On the «System Selection Menu» display screen, select the {Engine Control System}.
11) Click the [OK] button after the information of engine type has been displayed.
12) On the «Engine Diagnosis» display screen, select the {System Operation Check Mode}.
13) On the «System Operation Check Mode» display screen, select the {Actuator ON/OFF Dr.}.
14) Select the desired compulsory actuator on the «Actuator ON/OFF Operation» display screen and click the [Next] button.
15) Clicking the [End] button completes the compulsory valve operation check mode. The display will then return to the «Actuator ON/OFF Operation» screen.

- A list of the support data is shown in the following table.

Description	Display
Compulsory fuel pump relay operation check	Fuel Pump Relay
Compulsory purge control solenoid valve operation check	CPC Solenoid Valve
Compulsory radiator fan relay operation check	Radiator Fan Relay
Compulsory air conditioning relay operation check	A/C Compressor Relay
Compulsory pressure control solenoid valve operation check	PCV Solenoid Valve
Compulsory drain valve operation check	Vent. Solenoid Valve

NOTE:
- The following parts will be displayed but not functional.

Display
EGR Solenoid Valve
ASV Solenoid Valve
FICD Solenoid
Pressure Switching Sol.1
Pressure Switching Sol.2
AAI Solenoid Valve
Fuel Tank Sensor Control Valve
Turbocharger Wastegate Solenoid
EXH. Bypass Control Permit Flag
Secondary Air Combi Valve 1

- For detailed operation procedures, refer to the "PC application help for Subaru Select Monitor".

15. System Operation Check Mode

A: OPERATION

1) Prepare the Subaru Select Monitor kit. <Ref. to EN(H4SO)(diag)-7, PREPARATION TOOL, General Description.>

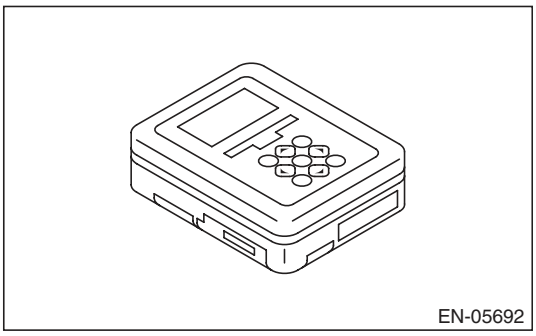

2) Prepare PC with Subaru Select Monitor installed.
3) Connect the USB cable between SDI (Subaru Diagnosis Interface) and USB port on the personal computer (dedicated port for the Subaru Select Monitor).

NOTE:
The dedicated port for the Subaru Select Monitor means the USB port which was used to install the Subaru Select Monitor.

4) Connect the diagnosis cable to SDI.
5) Connect SDI to data link connector located in the lower portion of the instrument panel (on the driver's side).

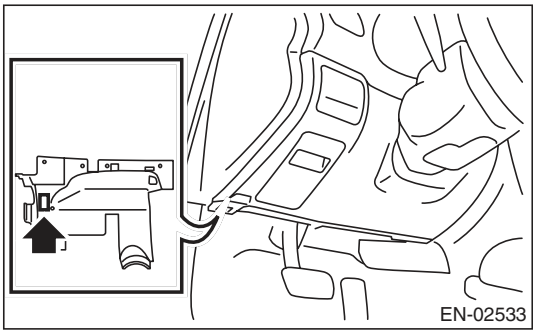

CAUTION:
Do not connect the scan tools except for Subaru Select Monitor and general scan tool.

6) Start the PC.
7) Turn the ignition switch to ON (engine OFF) and run the "PC application for Subaru Select Monitor".
8) On the «Main Menu» display screen, select the {Each System Check}.
9) On the «System Selection Menu» display screen, select the {Engine Control System}.
10) Click the [OK] button after the information of engine type has been displayed.
11) On the «Engine Diagnosis» display screen, select the {System Operation Check Mode}.
12) The following items are displayed on the monitor.

Display
Actuator ON/OFF Operation
Immobilizer System
Fuel Pump Control
Fixed Idle Ignition Timing
Idle Speed Control
Injector Control
EGR Valve Control
Injector Control

1. FUEL PUMP CONTROL (OFF DRIVE)

CAUTION:
After executing the system operation check mode, execute the Clear Memory Mode. <Ref. to EN(H4SO)(diag)-50, OPERATION, Clear Memory Mode.>

1) On the «System Operation Check Mode» display screen, select the {Fuel Pump Control}.
2) On the «Fuel Pump Control» display screen, select the {OFF Operation}.
3) On the «Start the Engine» display screen, start the engine and click the [OK] button.
4) On the «OFF Drive» display screen, click the [Execution] button and execute the OFF drive.
5) Click the [Cancel] button to stop the OFF drive.
6) Click the [F12 Exit] button to end the OFF drive. The screen will return to the «Fuel Pump Control» screen.

NOTE:
For detailed operation procedures, refer to the "PC application help for Subaru Select Monitor".

2. FUEL PUMP CONTROL (ON/OFF DRIVE)

CAUTION:
After executing the system operation check mode, execute the Clear Memory Mode. <Ref. to EN(H4SO)(diag)-50, OPERATION, Clear Memory Mode.>

1) On the «System Operation Check Mode» display screen, select the {Fuel Pump Control}.
2) On the «Fuel Pump Control» display screen, select the {ON/OFF Dr.}.
3) On the «Turn Ignition Switch ON with Engine OFF» display screen, turn the ignition switch to ON and click the [OK] button.
4) On the «ON/OFF Dr.» display screen, click the [Execution] button and execute the ON/OFF drive.
5) Click the [Cancel] button to stop the ON/OFF drive.
6) Click the [F12 Exit] button to end the ON/OFF drive. The screen will return to the «Fuel Pump Control» screen.

NOTE:
For detailed operation procedures, refer to the "PC application help for Subaru Select Monitor".

3. IDLING IGNITION TIMING FIXED

CAUTION:
After executing the system operation check mode, execute the Clear Memory Mode. <Ref. to EN(H4SO)(diag)-50, OPERATION, Clear Memory Mode.>

1) On the «System Operation Check Mode» display screen, select the {Fixed Idle Ignition Timing}.
2) On the «Start the Engine» display screen, start the engine and click the [OK] button.
3) On the «Fixed Idle Ignition Timing» display screen, click the [Execution] button and execute the idling ignition timing fixed.
4) Click the [Cancel] button to stop the idling ignition timing fixed.
5) Click the [F12 Exit] button to end the idling ignition timing fixed. The display will then return to the «System Operation Check Mode» screen.

NOTE:
For detailed operation procedures, refer to the "PC application help for Subaru Select Monitor".

4. IDLE SPEED CONTROL

CAUTION:
After executing the system operation check mode, execute the Clear Memory Mode. <Ref. to EN(H4SO)(diag)-50, OPERATION, Clear Memory Mode.>

1) On the «System Operation Check Mode» display screen, select the {Idle Speed Control}.
2) On the «Start the Engine» display screen, start the engine and click the [OK] button.
3) In the «Idle Speed Control» display screen, click the [△] button or the [▽] button to change the setting values, then click the [OK] button.
Setting is possible in a range between 500 rpm — 2,000 rpm, in increments of 50 rpm. However, the engine speed that can actually be controlled will vary depending on the vehicle.
4) Click the [Cancel] button to stop the idle speed control.
5) Click the [F12 Exit] button to end the idle speed control. The display will then return to the «System Operation Check Mode» screen.

NOTE:
For detailed operation procedures, refer to the "PC application help for Subaru Select Monitor".

5. INJECTOR CONTROL. (INJECTION STOP MODE)

CAUTION:
After executing the system operation check mode, execute the Clear Memory Mode. <Ref. to EN(H4SO)(diag)-50, OPERATION, Clear Memory Mode.>

1) On the «System Operation Check Mode» display screen, select the {Injector Control}.
2) On the «Injector Control» display screen, select the {Injection Stop Mode}.
3) On the «Injection Stop Mode» display screen, select the fuel injector to be stopped.
4) On the «Start the Engine» display screen, start the engine and click the [OK] button.
5) On the «Fuel Injector #» display screen, click the [Execution] button and execute the injection stop mode.
6) Click the [Cancel] button to stop the injection stop mode.
7) Click the [F12 Exit] button to return the «Injection Stop Mode» display screen.
8) On the «Injection Stop Mode» display screen, click the [Return] button to end the «Injection Stop Mode». The screen will return to the «Injector Control» screen.

NOTE:
For detailed operation procedures, refer to the "PC application help for Subaru Select Monitor".

6. INJECTOR CONTROL. (INJECTION QUANTITY CONTROL)

CAUTION:
After executing the system operation check mode, execute the Clear Memory Mode. <Ref. to EN(H4SO)(diag)-50, OPERATION, Clear Memory Mode.>

1) On the «System Operation Check Mode» display screen, select the {Injector Control}.
2) On the «Injector Control» display screen, select the {Injection Quantity Control}.
3) On the «Start the Engine» display screen, start the engine and click the [OK] button.
4) In the «Injection Quantity Control» display screen, click the [△] button or the [▽] button to change the setting values, then click the [OK] button.
Setting is possible in a range between 0 — 20%, in increments of 1%.
5) Click the [Cancel] button to stop the injection quantity control.
6) Click the [F12 Exit] button to end the injection quantity control. The screen will return to the «Injector Control» screen.

NOTE:
For detailed operation procedures, refer to the "PC application help for Subaru Select Monitor".

7. EGR VALVE CONTROL

CAUTION:
After executing the system operation check mode, execute the Clear Memory Mode. <Ref. to EN(H4SO)(diag)-50, OPERATION, Clear Memory Mode.>

1) On the «System Operation Check Mode» display screen, select the {EGR Valve Control}.
2) On the «Start the Engine» display screen, start the engine and click the [OK] button.
3) In the «EGR Valve Control» display screen, click the [△] button or the [▽] button to change the setting values, then click the [OK] button.
Setting is possible in increments of 1 STEP. However, the STEP number that can actually be controlled will vary depending on the vehicle.
4) Click the [Cancel] button to stop the EGR valve control.
5) Click the [F12 Exit] button to end the EGR valve control. The display will then return to the «System Operation Check Mode» screen.

NOTE:
For detailed operation procedures, refer to the “PC application help for Subaru Select Monitor”.

16. Malfunction Indicator Light

A: PROCEDURE

1. Activation of malfunction indicator light. <Ref. to EN(H4SO)(diag)-56, ACTIVATION OF MALFUNCTION INDICATOR LIGHT, Malfunction Indicator Light.>
↓
2. Malfunction indicator light does not come on. <Ref. to EN(H4SO)(diag)-57, MALFUNCTION INDICATOR LIGHT DOES NOT COME ON, Malfunction Indicator Light.>
↓
3. Malfunction indicator light does not go off. <Ref. to EN(H4SO)(diag)-59, MALFUNCTION INDICATOR LIGHT DOES NOT GO OFF, Malfunction Indicator Light.>
↓
4. Malfunction indicator light does not blink. <Ref. to EN(H4SO)(diag)-60, MALFUNCTION INDICATOR LIGHT DOES NOT BLINK, Malfunction Indicator Light.>
↓
5. Malfunction indicator light remains blinking. <Ref. to EN(H4SO)(diag)-62, MALFUNCTION INDICATOR LIGHT REMAINS BLINKING, Malfunction Indicator Light.>

B: ACTIVATION OF MALFUNCTION INDICATOR LIGHT

1) When the ignition switch is turned to ON (engine OFF), the malfunction indicator light (A) in the combination meter illuminates.

NOTE:
If the malfunction indicator light does not illuminate, perform diagnostics of the malfunction indicator light circuit or the combination meter circuit. <Ref. to EN(H4SO)(diag)-57, MALFUNCTION INDICATOR LIGHT DOES NOT COME ON, Malfunction Indicator Light.>

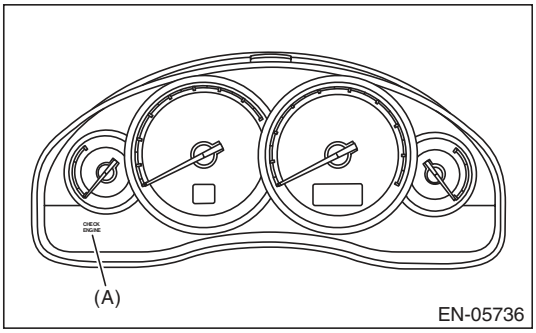

2) After starting the engine, the malfunction indicator light goes out. If it does not go off, either the engine or emission control system has malfunction.

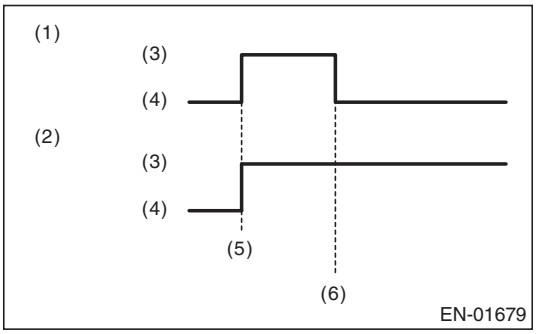

(1) No faulty
(2) Trouble occurs
(3) ON
(4) OFF
(5) Ignition switch ON
(6) Engine start

3) If the diagnostic system detects a misfire which could damage the catalyst, the malfunction indicator light will blink at a cycle of 1 Hz.

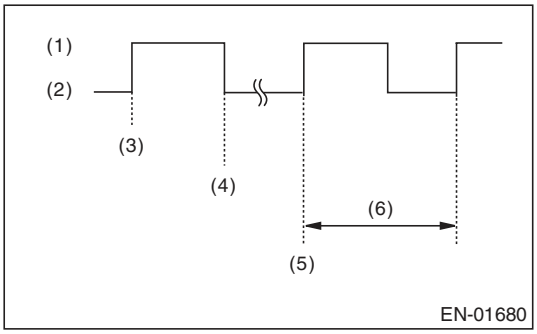

(1) ON
(2) OFF
(3) Ignition switch ON
(4) Engine start
(5) Misfire start
(6) 1 second

4) Turn the ignition switch to OFF and connect the delivery (test) mode connector.

(1) When the ignition switch is turned to ON (engine OFF), the malfunction indicator light illuminates.
(2) After the engine starts, malfunction indicator light blinks in a cycle of 0.5 Hz. (During diagnosis)
(3) Malfunction indicator light blinks at a cycle of 3 Hz after diagnosis if there is no trouble. Malfunction indicator light illuminates if faulty.

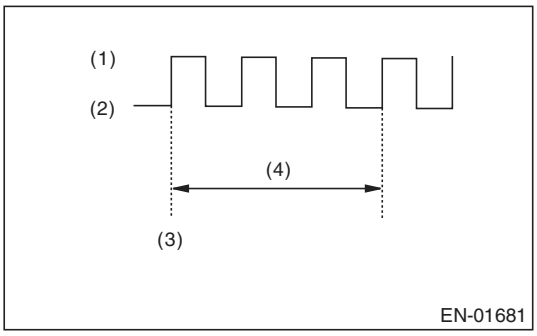

(1) ON
(2) OFF
(3) Ignition switch ON
(4) 1 second

C: MALFUNCTION INDICATOR LIGHT DOES NOT COME ON

DIAGNOSIS:

The malfunction indicator light circuit is open or shorted.

TROUBLE SYMPTOM:

When the ignition switch is turned to ON (engine OFF), malfunction indicator light does not illuminate.

WIRING DIAGRAM:

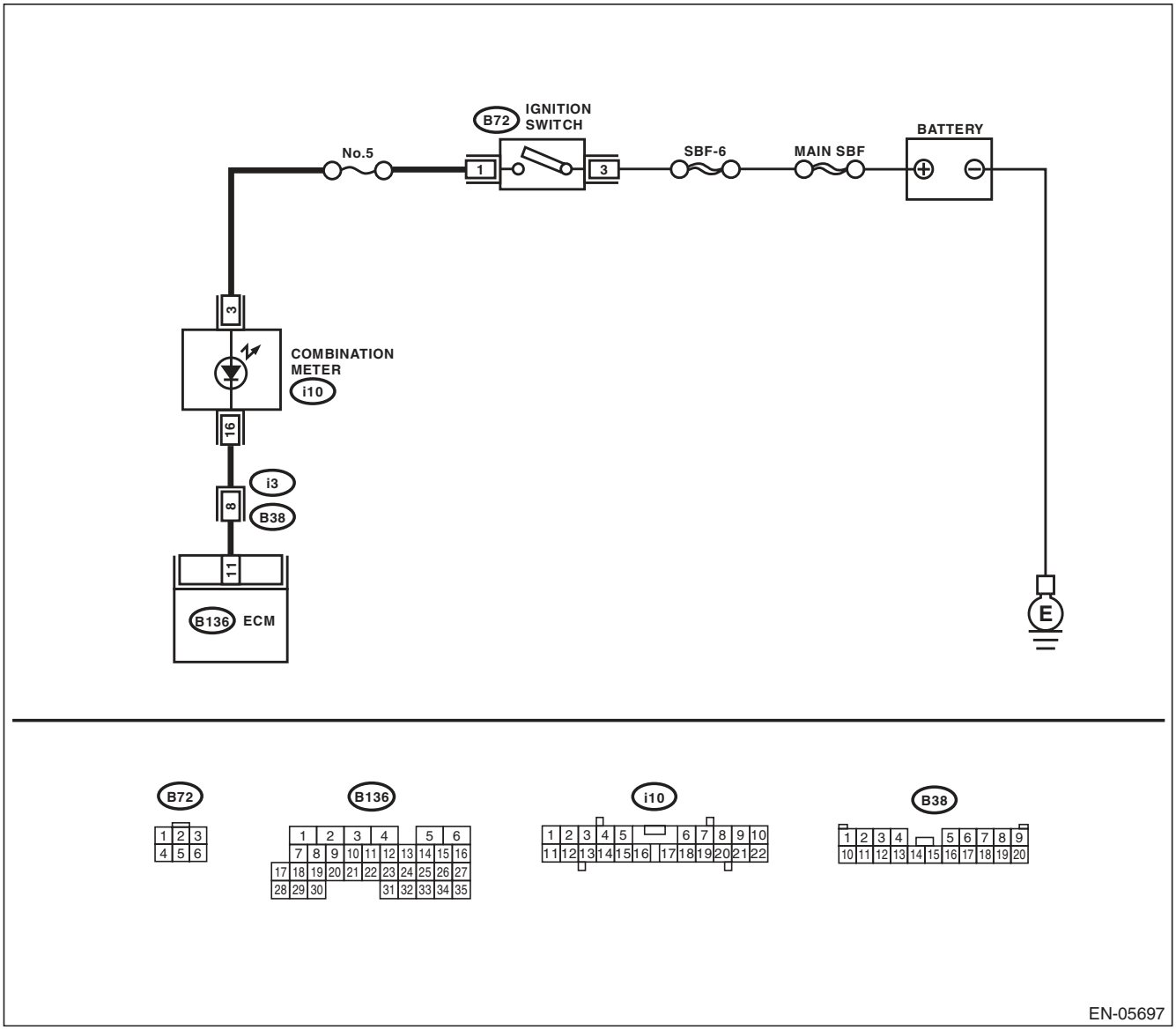

	Step	Check	Yes	No
1	**CHECK OUTPUT SIGNAL OF ECM.** 1) Turn the ignition switch to ON. 2) Measure the voltage between ECM connector and chassis ground. ***Connector & terminal*** ***(B136) No. 11 (+) — Chassis ground (–):***	Is the voltage 10 V or more?	Go to step **5**.	Go to step **2**.
2	**CHECK HARNESS BETWEEN ECM AND COMBINATION METER CONNECTOR.** 1) Turn the ignition switch to OFF. 2) Remove the combination meter. <Ref. to IDI-22, Combination Meter.> 3) Disconnect the connector from ECM and combination meter. 4) Measure the resistance of harness between ECM and combination meter connector. ***Connector & terminal*** ***(B136) No. 11 — (i10) No. 16:***	Is the resistance less than 1 Ω?	Go to step **3**.	Repair the harness and connector. NOTE: In this case, repair the following item: • Open circuit of harness between ECM and combination meter connector • Poor contact of coupling connector
3	**CHECK POOR CONTACT.** Check for poor contact of combination meter connector.	Is there poor contact in combination meter connector?	Repair the poor contact of combination meter connector.	Go to step **4**.
4	**CHECK HARNESS BETWEEN COMBINATION METER AND IGNITION SWITCH CONNECTOR.** 1) Turn the ignition switch to ON. 2) Measure the voltage between combination meter connector and chassis ground. ***Connector & terminal*** ***(i10) No. 3 (+) — Chassis ground (–):***	Is the voltage 10 V or more?	Replace the combination meter board. <Ref. to IDI-22, Combination Meter.>	Check the following item and repair if necessary. NOTE: • Blown out of fuse (No. 5) • Open or short circuit in harness between fuse (No. 5) and battery terminal • Poor contact in ignition switch connector
5	**CHECK POOR CONTACT.** Check for poor connection by shaking or pulling ECM harness.	Does the malfunction indicator light illuminate?	Repair the poor contact of ECM connector.	Go to step **6**.
6	**CHECK ECM CONNECTOR.** Check the connection of ECM connector.	Is the ECM connector correctly connected?	Replace the ECM. <Ref. to FU(H4SO)-39, Engine Control Module (ECM).>	Repair the connection of ECM connector.

D: MALFUNCTION INDICATOR LIGHT DOES NOT GO OFF

DIAGNOSIS:
The malfunction indicator light circuit is shorted.
TROUBLE SYMPTOM:
Although malfunction indicator light comes on when the engine runs, DTC is not shown on the Subaru Select Monitor display.
WIRING DIAGRAM:

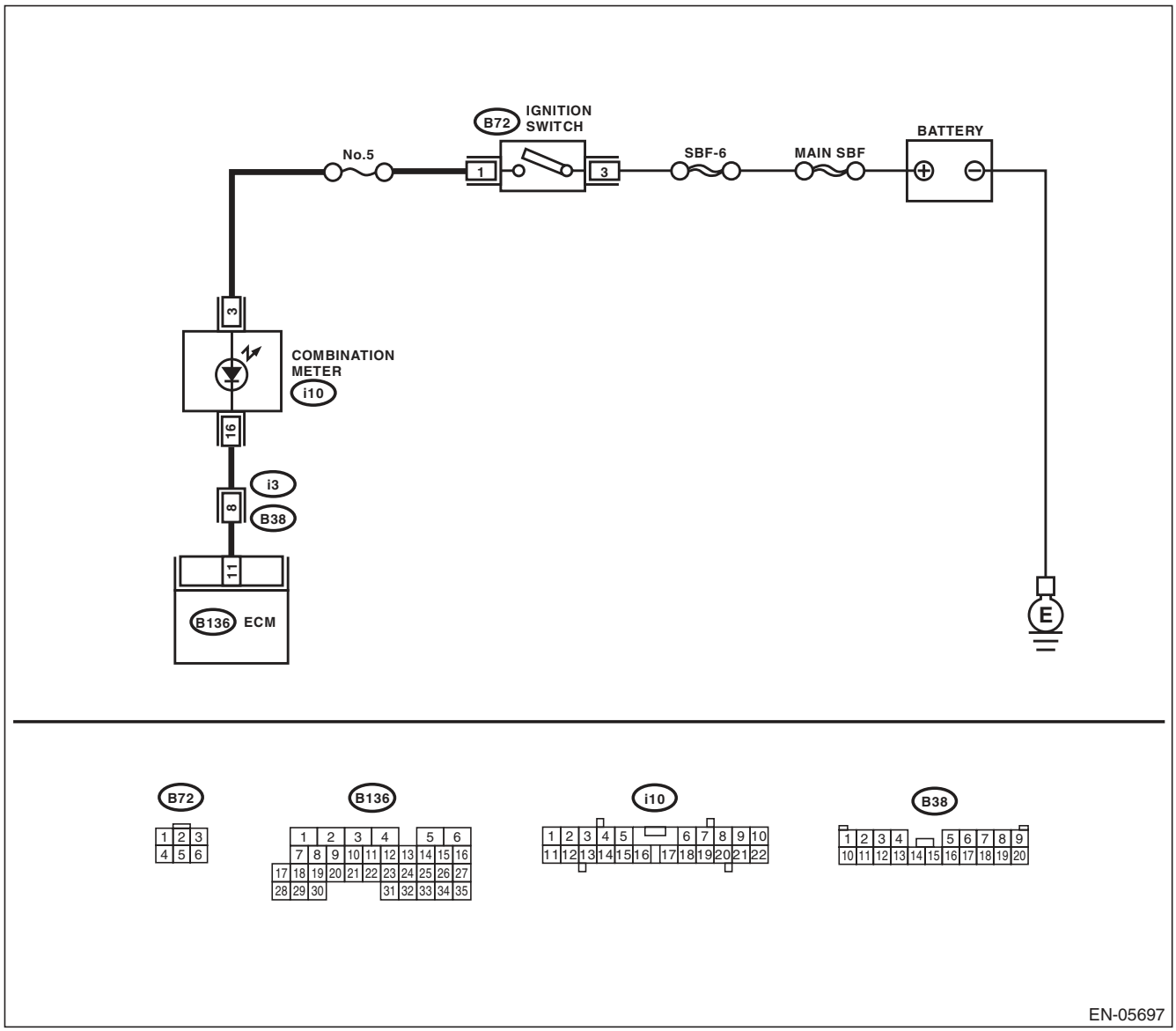

Step		Check	Yes	No
1	**CHECK HARNESS BETWEEN ECM AND COMBINATION METER CONNECTOR.** 1) Turn the ignition switch to OFF. 2) Disconnect the connectors from ECM. 3) Turn the ignition switch to ON.	Does the malfunction indicator light illuminate?	Repair the short circuit of harness between ECM and combination meter connector.	Replace the ECM. <Ref. to FU(H4SO)-39, Engine Control Module (ECM).>

E: MALFUNCTION INDICATOR LIGHT DOES NOT BLINK

DIAGNOSIS:

- The malfunction indicator light circuit is open or shorted.
- The delivery (test) mode connector circuit is open.

TROUBLE SYMPTOM:

Malfunction indicator light does not blink during Inspection Mode.

WIRING DIAGRAM:

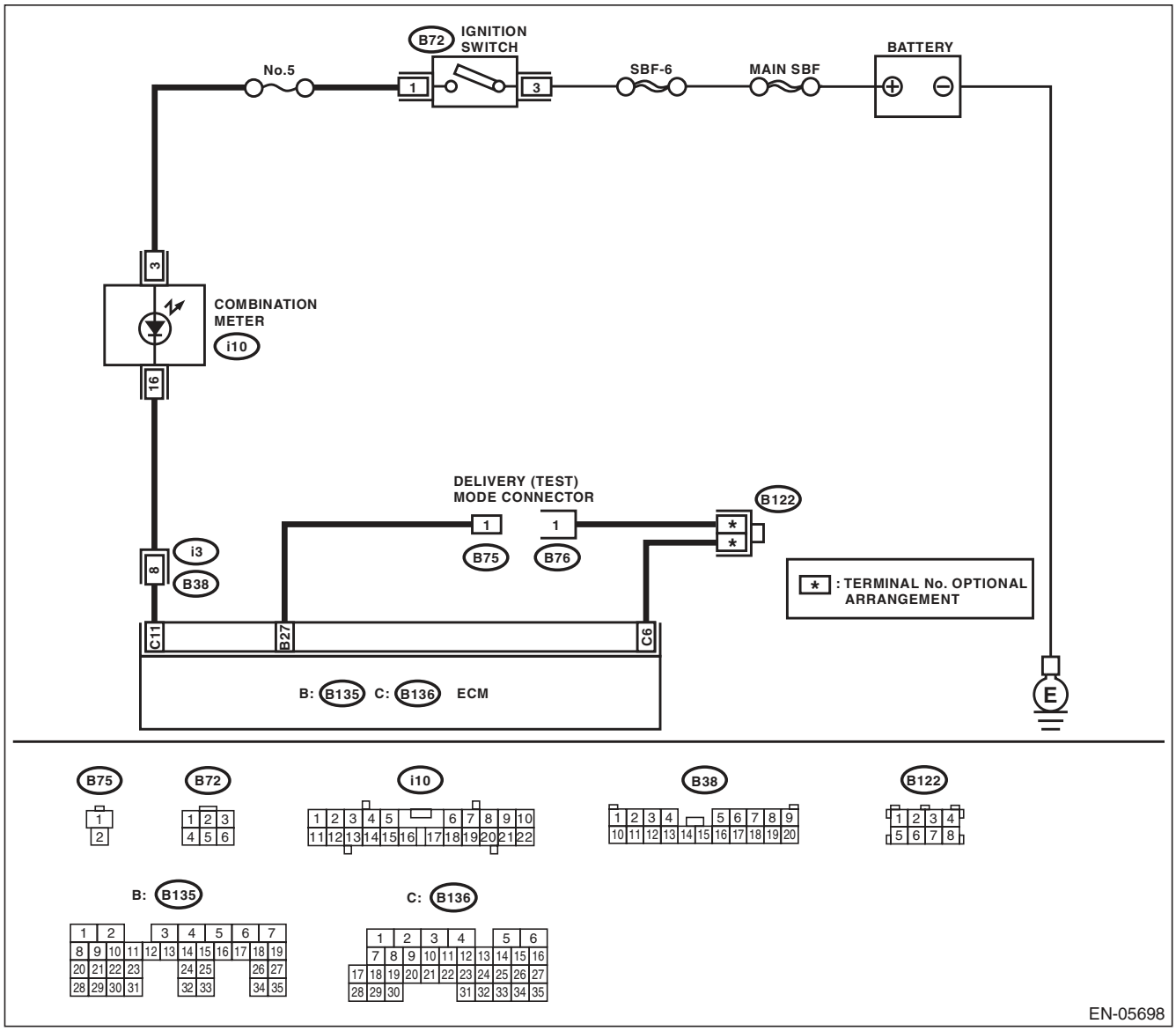

	Step	Check	Yes	No
1	**CHECK STATUS OF MALFUNCTION INDICATOR LIGHT.** 1) Turn the ignition switch to OFF. 2) Disconnect the delivery (test) mode connector. 3) Turn the ignition switch to ON. (engine OFF)	Does the malfunction indicator light illuminate?	Go to step **2**.	Repair the malfunction indicator light circuit. <Ref. to EN(H4SO)(diag)-57, MALFUNCTION INDICATOR LIGHT DOES NOT COME ON, Malfunction Indicator Light.>
2	**CHECK HARNESS BETWEEN ECM AND COMBINATION METER CONNECTOR.** 1) Turn the ignition switch to OFF. 2) Disconnect the connectors from ECM. 3) Turn the ignition switch to ON.	Does the malfunction indicator light illuminate?	Repair the short circuit of harness between ECM and combination meter connector.	Go to step **3**.
3	**CHECK HARNESS BETWEEN ECM AND DELIVERY (TEST) MODE CONNECTOR.** 1) Turn the ignition switch to OFF. 2) Disconnect the connectors from ECM. 3) Measure the resistance of harness between ECM and delivery (test) mode connector. ***Connector & terminal*** ***(B76) No. 1 — (B136) No. 6:*** ***(B75) No. 1 — (B135) No. 27:***	Is the resistance less than 1 Ω?	Go to step **4**.	Repair the harness and connector. NOTE: In this case, repair the following item: • Open circuit of harness between ECM and delivery (test) mode connector • Poor contact in joint connector
4	**CHECK POOR CONTACT.** Check for poor contact of the ECM connector.	Is there poor contact in ECM connector?	Repair the poor contact of ECM connector.	Replace the ECM. <Ref. to FU(H4SO)-39, Engine Control Module (ECM).>

F: MALFUNCTION INDICATOR LIGHT REMAINS BLINKING

DIAGNOSIS:

The delivery (test) mode connector circuit is shorted.

TROUBLE SYMPTOM:

Malfunction indicator light blinks when delivery (test) mode connector is not connected.

WIRING DIAGRAM:

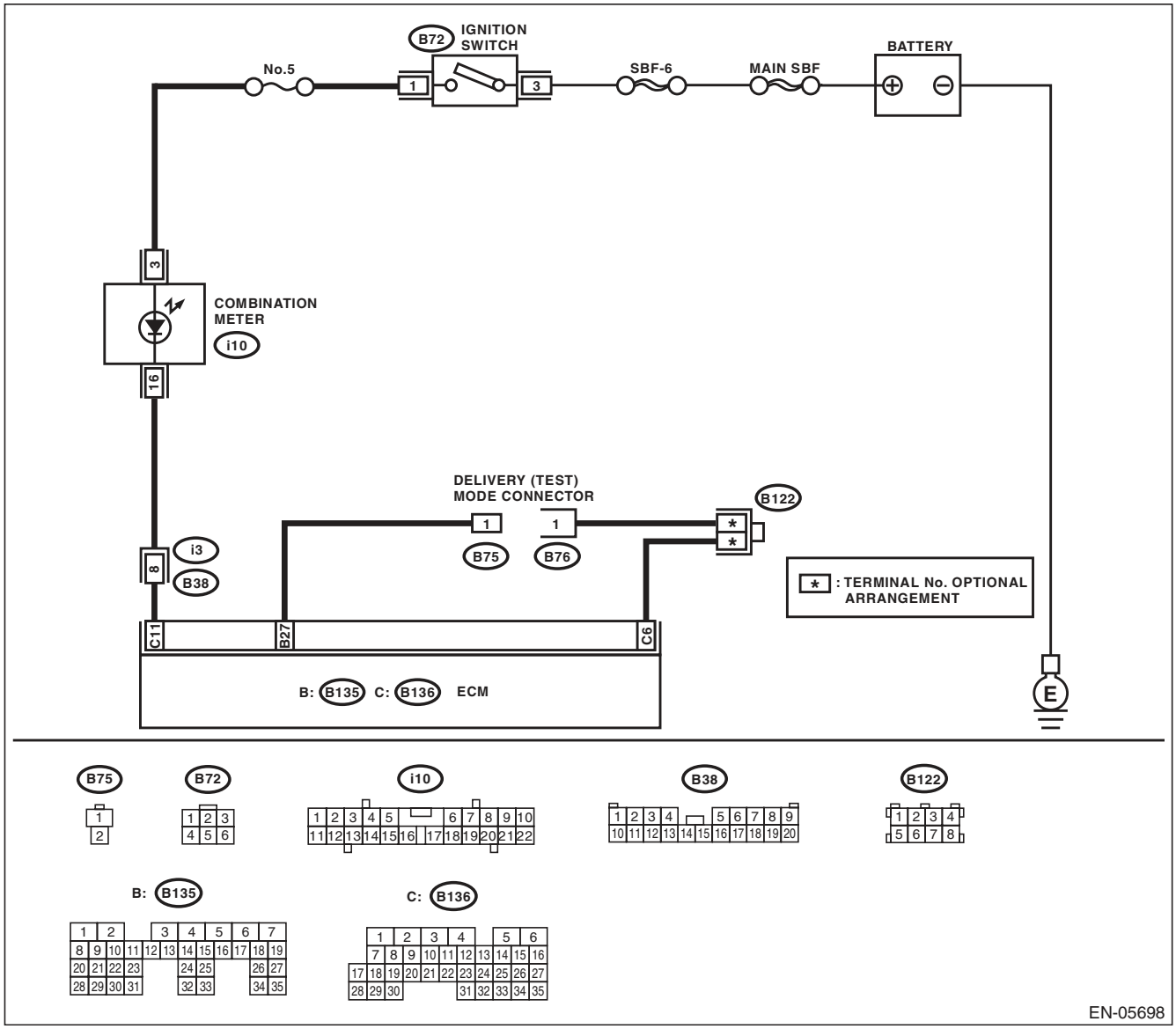

Step		Check	Yes	No
1	**CHECK DELIVERY (TEST) MODE CONNECTOR.** 1) Disconnect the delivery (test) mode connector. 2) Turn the ignition switch to ON.	Does the malfunction indicator light blink?	Go to step **2**.	System is normal. NOTE: Malfunction indicator light blinks when delivery (test) mode connector is connected.
2	**CHECK HARNESS BETWEEN ECM AND DELIVERY (TEST) MODE CONNECTOR.** 1) Turn the ignition switch to OFF. 2) Disconnect the connectors from ECM. 3) Measure the resistance of harness between ECM and chassis ground. ***Connector & terminal*** ***(B135) No. 27 — Chassis ground:***	Is the resistance less than 5 Ω?	Repair the short circuit of harness between ECM and delivery (test) mode connector.	Replace the ECM. <Ref. to FU(H4SO)-39, Engine Control Module (ECM).>

17. Diagnostics for Engine Starting Failure

A: PROCEDURE

1. Check of the fuel amount
↓
2. Inspection of starter motor circuit. <Ref. to EN(H4SO)(diag)-65, STARTER MOTOR CIRCUIT, Diagnostics for Engine Starting Failure.>
↓
3. Inspection of ECM power supply and ground line. <Ref. to EN(H4SO)(diag)-69, CHECK POWER SUPPLY AND GROUND LINE OF ENGINE CONTROL MODULE (ECM), Diagnostics for Engine Starting Failure.>
↓
4. Inspection of ignition control system. <Ref. to EN(H4SO)(diag)-71, IGNITION CONTROL SYSTEM, Diagnostics for Engine Starting Failure.>
↓
5. Inspection of fuel pump circuit. <Ref. to EN(H4SO)(diag)-74, FUEL PUMP CIRCUIT, Diagnostics for Engine Starting Failure.>
↓
6. Inspection of fuel injector circuit. <Ref. to EN(H4SO)(diag)-76, FUEL INJECTOR CIRCUIT, Diagnostics for Engine Starting Failure.>

B: STARTER MOTOR CIRCUIT

CAUTION:

After repair or replacement of faulty parts, perform Clear Memory Mode <Ref. to EN(H4SO)(diag)-50, Clear Memory Mode.>, and Inspection Mode <Ref. to EN(H4SO)(diag)-41, Inspection Mode.>.

WIRING DIAGRAM:

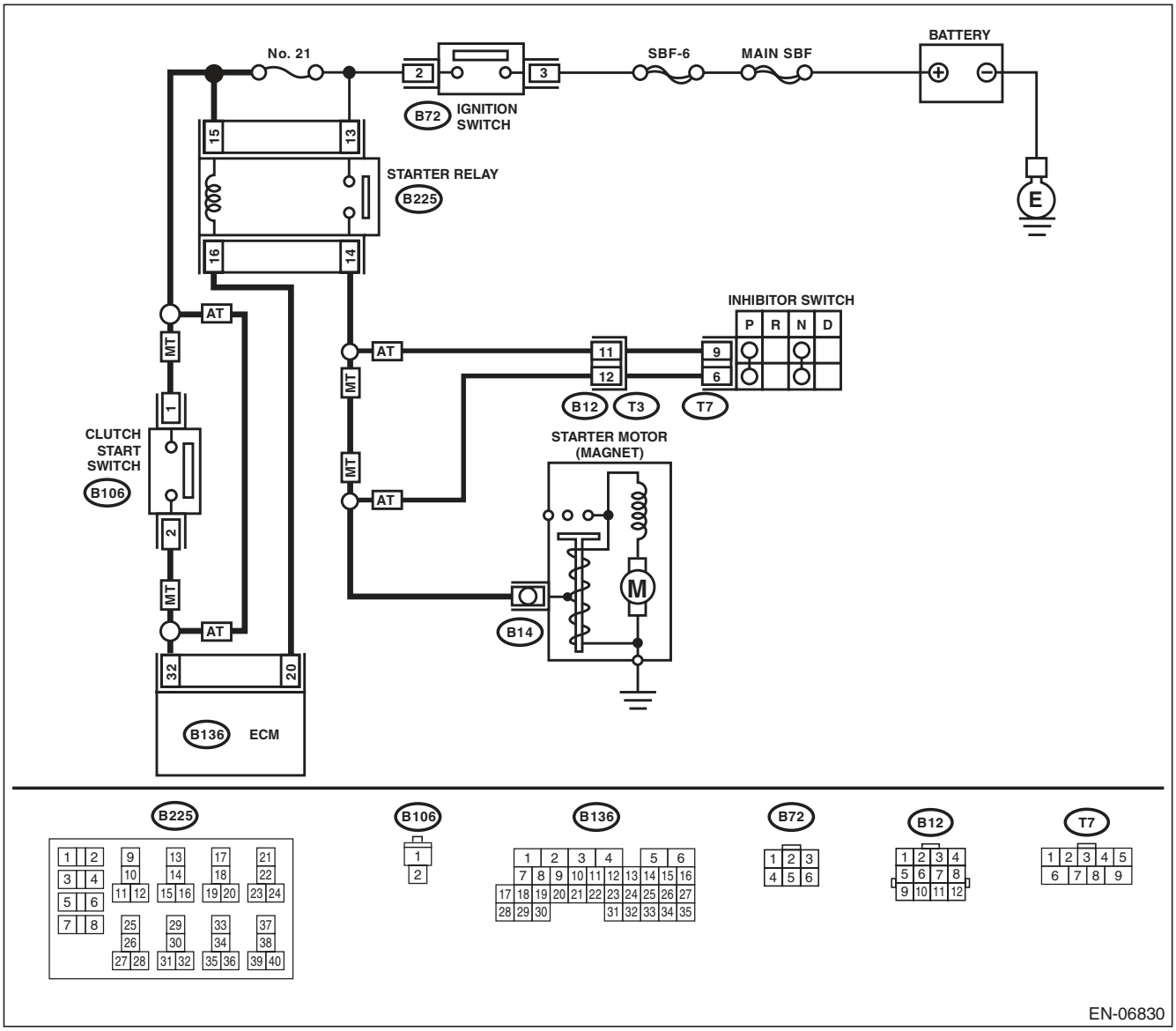

Diagnostics for Engine Starting Failure

	Step	Check	Yes	No
1	**CHECK BATTERY.** Check the battery voltage.	Is the voltage 12 V or more?	Go to step **2**.	Charge or replace the battery.
2	**CHECK OPERATION OF STARTER MOTOR.** NOTE: Check the security alarm is not sounding.	Does the starter motor operate?	Go to step **3**.	Go to step **4**.
3	**CHECK DTC.**	Is DTC displayed? <Ref. to EN(H4SO)(diag)-40, OPERATION, Read Diagnostic Trouble Code (DTC).>	Check the appropriate DTC using the "List of Diagnostic Trouble Code (DTC)". <Ref. to EN(H4SO)(diag)-80, List of Diagnostic Trouble Code (DTC).>	The circuit has returned to a normal condition at this time. Reproduce the failure, and then perform the diagnosis again. NOTE: In this case, temporary poor contact of connector may be the cause.
4	**CHECK INPUT SIGNAL FOR STARTER MOTOR.** 1) Turn the ignition switch to OFF. 2) Disconnect the connector from starter motor. 3) Turn the ignition switch to START. 4) Measure the voltage between the starter motor connector and the engine ground. ***Connector & terminal*** ***(B14) No. 1 (+) — Engine ground (–):*** NOTE: For AT model, place the select lever in "P" range or "N" range. For MT model, depress the clutch pedal.	Is the voltage 10 V or more?	Check the starter motor. <Ref. to SC(H4SO)-6, Starter.>	Go to step **5**.
5	**CHECK HARNESS BETWEEN BATTERY AND IGNITION SWITCH CONNECTOR.** 1) Disconnect the connector from ignition switch. 2) Measure the power supply voltage between ignition switch connector and chassis ground. ***Connector & terminal*** ***(B72) No. 3 (+) — Chassis ground (–):***	Is the voltage 10 V or more?	Go to step **6**.	Check the following item and repair if necessary. • Blown out of fuse • Open or ground short circuit of harness between ignition switch connector and battery
6	**CHECK IGNITION SWITCH.** 1) Disconnect the connector from ignition switch. 2) Measure the resistance between ignition switch terminals after turning the ignition switch to START position. ***Terminals*** ***No. 2 — No. 3:***	Is the resistance less than 5 Ω?	Go to step **7**.	Replace the ignition switch. <Ref. to SL-49, REPLACEMENT, Ignition Key Lock.>

	Step	Check	Yes	No
7	**CHECK INPUT VOLTAGE OF STARTER RELAY.** 1) Turn the ignition switch to OFF. 2) Disconnect the connector from starter relay. 3) Connect the connector to ignition switch. 4) Measure the input voltage between starter relay connector and chassis ground after turning the ignition switch to START position. ***Connector & terminal*** ***(B225) No. 13 (+) — Chassis ground (–):*** ***(B225) No. 15 (+) — Chassis ground (–):***	Is the voltage 10 V or more?	Go to step **8**.	Check the following item and repair if necessary. • Blown out of fuse • Open or short circuit to ground in harness between starter relay and ignition switch connector
8	**CHECK STARTER RELAY.** 1) Connect the battery to starter relay terminals No. 15 and No. 16. 2) Measure the resistance between starter relay terminals. ***Terminals*** ***No. 13 — No. 14:***	Is the resistance less than 1 Ω?	Go to step **9**.	Replace the starter relay.
9	**CHECK HARNESS BETWEEN ECM AND STARTER RELAY.** 1) Disconnect the connectors from ECM. 2) Measure the resistance of harness connector between ECM and starter relay. ***Connector & terminal*** ***(B225) No. 16 — (B136) No. 20:***	Is the resistance less than 1 Ω?	Go to step **10**.	Repair the open circuit of harness between ECM and starter relay connector.
10	**CHECK TRANSMISSION TYPE.**	Is the transmission type AT?	Go to step **11**.	Go to step **15**.
11	**CHECK ECM INPUT VOLTAGE.** 1) Turn the ignition switch to START. 2) Measure the input voltage between ECM and chassis ground. ***Connector & terminal*** ***(B136) No. 32 (+) — Chassis ground (–):***	Is the voltage 10 V or more?	Go to step **12**.	Repair the open circuit of harness between ECM and ignition switch connector.
12	**CHECK HARNESS BETWEEN STARTER RELAY AND INHIBITOR SWITCH.** 1) Turn the ignition switch to OFF. 2) Disconnect the connector from inhibitor switch. 3) Measure the resistance of harness between the starter relay and inhibitor switch. ***Connector & terminal*** ***(B225) No. 14 — (T7) No. 9:***	Is the resistance less than 1 Ω?	Go to step **13**.	Repair the harness and connector. NOTE: In this case, repair the following item: • Open circuit in harness between starter relay connector and inhibitor switch connector • Poor contact of coupling connector
13	**CHECK HARNESS BETWEEN INHIBITOR SWITCH AND STARTER MOTOR.** Measure the resistance of harness between the inhibitor switch and starter motor. ***Connector & terminal*** ***(T7) No. 6 — (B14) No. 1:***	Is the resistance less than 1 Ω?	Go to step **14**.	Repair the harness and connector. NOTE: In this case, repair the following item: • Open circuit in harness between inhibitor switch connector and starter motor • Poor contact of coupling connector

Step		Check	Yes	No
14	**CHECK INHIBITOR SWITCH.** 1) Place the select lever in “P” range or “N” range. 2) Measure the resistance between inhibitor switch terminals. ***Terminals*** ***No. 6 — No. 9:***	Is the resistance less than 1 Ω?	Check the engine control module (ECM) power supply and ground line. <Ref. to EN(H4SO)(diag)-69, CHECK POWER SUPPLY AND GROUND LINE OF ENGINE CONTROL MODULE (ECM), Diagnostics for Engine Starting Failure.>	Replace the inhibitor switch. <Ref. to 4AT-46, Inhibitor Switch.>
15	**CHECK HARNESS BETWEEN IGNITION SWITCH AND CLUTCH START SWITCH.** 1) Turn the ignition switch to OFF. 2) Disconnect the connector from clutch start switch. 3) Turn the ignition switch to START. 4) Measure the voltage between the clutch start switch and chassis ground. ***Connector & terminal*** ***(B106) No. 1 (+) — Chassis ground (–):***	Is the voltage 10 V or more?	Go to step **16**.	Repair the open circuit in harness between ignition switch connector and clutch start switch.
16	**CHECK CLUTCH START SWITCH.** Measure the resistance between clutch start switch terminals while depressing the clutch pedal. ***Terminals*** ***No. 1 — No. 2:***	Is the resistance less than 1 Ω?	Go to step **17**.	Replace the clutch start switch. <Ref. to CL-37, Clutch Switch.>
17	**CHECK HARNESS BETWEEN ECM AND CLUTCH START SWITCH.** Measure the resistance of harness between ECM and clutch start switch. ***Connector & terminal*** ***(B136) No. 32 — (B106) No. 2:***	Is the resistance less than 1 Ω?	Go to step **18**.	Repair the open circuit of harness between the ECM and clutch start switch.
18	**CHECK HARNESS BETWEEN STARTER RELAY AND STARTER MOTOR.** Measure the resistance of harness between starter relay connector and starter motor. ***Connector & terminal*** ***(B225) No. 14 — (B14) No. 1:***	Is the resistance less than 1 Ω?	Check the engine control module (ECM) power supply and ground line. <Ref. to EN(H4SO)(diag)-69, CHECK POWER SUPPLY AND GROUND LINE OF ENGINE CONTROL MODULE (ECM), Diagnostics for Engine Starting Failure.>	Repair the open circuit of the harness between starter relay connector and starter motor.

C: CHECK POWER SUPPLY AND GROUND LINE OF ENGINE CONTROL MODULE (ECM)

CAUTION:
After repair or replacement of faulty parts, perform Clear Memory Mode <Ref. to EN(H4SO)(diag)-50, OPERATION, Clear Memory Mode.>, and Inspection Mode <Ref. to EN(H4SO)(diag)-41, PROCEDURE, Inspection Mode.>.
WIRING DIAGRAM:

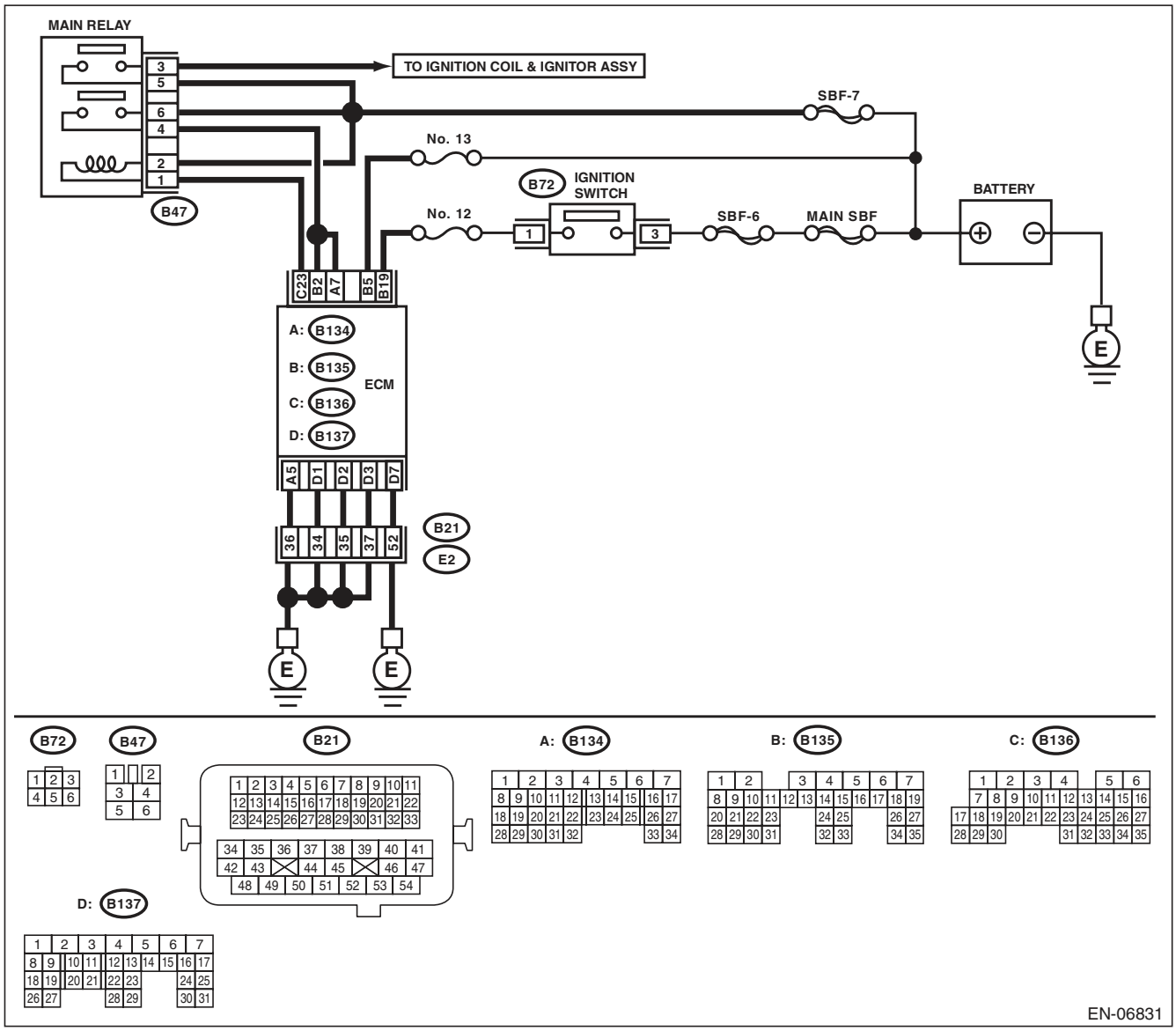

Diagnostics for Engine Starting Failure

	Step	Check	Yes	No
1	**CHECK MAIN RELAY.** 1) Turn the ignition switch to OFF. 2) Remove the main relay. 3) Connect the battery to main relay terminals No. 1 and No. 2. 4) Measure the resistance between main relay terminals. ***Terminals*** ***No. 3 — No. 5:*** ***No. 4 — No. 6:***	Is the resistance less than 1 Ω?	Go to step **2**.	Replace the main relay. <Ref. to FU(H4SO)-40, Main Relay.>
2	**CHECK GROUND CIRCUIT FOR ECM.** 1) Disconnect the connectors from ECM. 2) Measure the resistance of harness between ECM and chassis ground. ***Connector & terminal*** ***(B134) No. 5 — Chassis ground:*** ***(B137) No. 1 — Chassis ground:*** ***(B137) No. 2 — Chassis ground:*** ***(B137) No. 3 — Chassis ground:*** ***(B137) No. 7 — Chassis ground:***	Is the resistance less than 5 Ω?	Go to step **3**.	Repair the harness and connector. NOTE: In this case, repair the following item: • Open circuit of harness between ECM and engine ground • Poor contact of coupling connector
3	**CHECK INPUT VOLTAGE OF ECM.** 1) Turn the ignition switch to ON. 2) Measure the voltage between ECM connector and chassis ground. ***Connector & terminal*** ***(B135) No. 5 (+) — Chassis ground (–):*** ***(B135) No. 19 (+) — Chassis ground (–):***	Is the voltage 10 V or more?	Go to step **4**.	Repair the open or ground short circuit of harness of power supply circuit.
4	**CHECK INPUT VOLTAGE OF MAIN RELAY.** Measure the voltage between main relay connector and chassis ground. ***Connector & terminal*** ***(B47) No. 2 (+) — Chassis ground (–):*** ***(B47) No. 5 (+) — Chassis ground (–):*** ***(B47) No. 6 (+) — Chassis ground (–):***	Is the voltage 10 V or more?	Go to step **5**.	Repair the open or ground short circuit of harness of power supply circuit.
5	**CHECK INPUT VOLTAGE OF ECM.** 1) Turn the ignition switch to OFF. 2) Install the main relay. 3) Turn the ignition switch to ON. 4) Measure the voltage between ECM connector and chassis ground. ***Connector & terminal*** ***(B136) No. 23 (+) — Chassis ground (–):***	Is the voltage 10 V or more?	Go to step **6**.	Repair the open or ground short circuit of harness between ECM and main relay connector.
6	**CHECK INPUT VOLTAGE OF ECM.** 1) Turn the ignition switch to OFF. 2) Connect the connector to ECM. 3) Turn the ignition switch to ON. 4) Measure the voltage between ECM connector and chassis ground. ***Connector & terminal*** ***(B134) No. 7 (+) — Chassis ground (–):*** ***(B135) No. 2 (+) — Chassis ground (–):***	Is the voltage 10 V or more?	Check ignition control system. <Ref. to EN(H4SO)(diag)-71, IGNITION CONTROL SYSTEM, Diagnostics for Engine Starting Failure.>	Repair the harness and connector. NOTE: In this case, repair the following item: • Open circuit in harness between ECM and main relay connector • Poor contact of main relay connector

D: IGNITION CONTROL SYSTEM

CAUTION:

After repair or replacement of faulty parts, perform Clear Memory Mode <Ref. to EN(H4SO)(diag)-50, Clear Memory Mode.>, and Inspection Mode <Ref. to EN(H4SO)(diag)-41, Inspection Mode.>.

WIRING DIAGRAM:

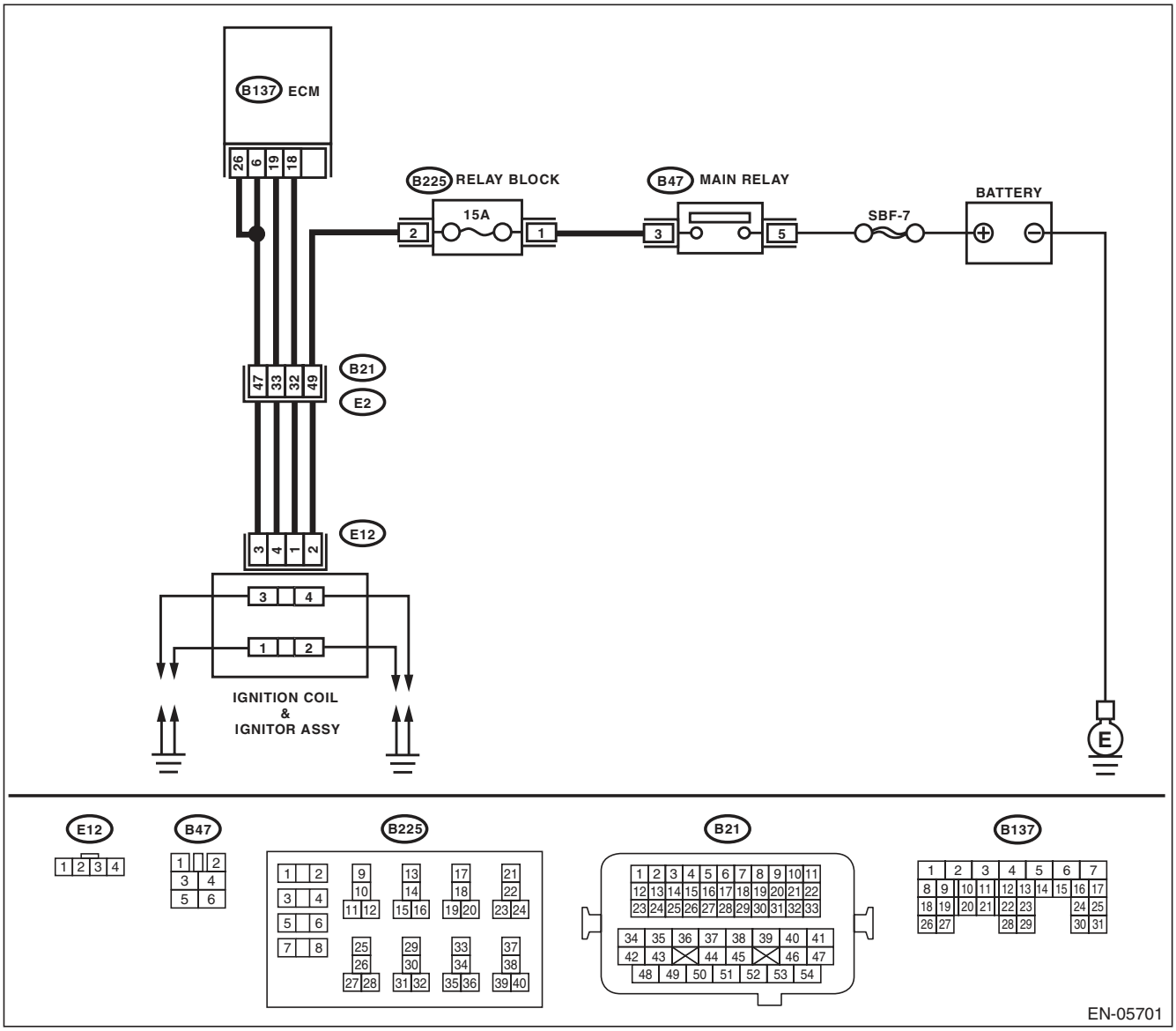

	Step	Check	Yes	No
1	**CHECK IGNITION SYSTEM FOR SPARKS.** 1) Remove the plug cord cap from each spark plug. 2) Install a new spark plug on plug cord cap. **CAUTION:** **Do not remove the spark plug from engine.** 3) Contact the spark plug's thread portion to the engine. 4) While opening the throttle valve fully, crank the engine to check that spark occurs at each cylinder.	Does spark occur at each cylinder?	Check fuel pump system. <Ref. to EN(H4SO)(diag)-74, FUEL PUMP CIRCUIT, Diagnostics for Engine Starting Failure.>	Go to step **2**.
2	**CHECK POWER SUPPLY CIRCUIT FOR IGNITION COIL AND IGNITOR ASSEMBLY.** 1) Turn the ignition switch to OFF. 2) Disconnect the connector from the ignition coil & ignitor assembly. 3) Turn the ignition switch to ON. 4) Measure the voltage between ignition coil and ignitor assembly connector and engine ground. ***Connector & terminal*** ***(E12) No. 2 (+) — Engine ground (–):***	Is the voltage 10 V or more?	Go to step **3**.	Repair the harness and connector. NOTE: In this case, repair the following item: • Open circuit of harness between the ignition coil and ignitor assembly, and main relay connector • Poor contact of coupling connector • Blown out of fuse
3	**CHECK HARNESS BETWEEN ECM AND IGNITION COIL AND IGNITOR ASSEMBLY.** 1) Turn the ignition switch to OFF. 2) Measure the resistance between the ignition coil and ignitor assembly connector and the ECM. ***Connector & terminal*** ***(E12) No. 3 — (B137) No. 6:*** ***(E12) No. 3 — (B137) No. 26:***	Is the resistance less than 1 Ω?	Go to step **4**.	Repair the harness and connector. NOTE: In this case, repair the following item: • Open circuit in harness between ECM and ignition coil and ignitor assembly connector • Poor contact of coupling connector
4	**CHECK IGNITION COIL AND IGNITOR ASSEMBLY.** 1) Remove the spark plug cords. 2) Measure the resistance between spark plug cord contact portions to check secondary coil. ***Terminals*** ***No. 1 — No. 2:*** ***No. 3 — No. 4:***	Is the resistance between 10 and 15 kΩ?	Go to step **5**.	Replace the ignition coil and ignitor assembly. <Ref. to IG(H4SO)-6, Ignition Coil and Ignitor Assembly.>
5	**CHECK INPUT SIGNAL FOR IGNITION COIL AND IGNITOR ASSEMBLY.** 1) Connect the connector to the Ignition coil and ignitor assembly. 2) Check if voltage varies synchronously with engine speed when cranking, while monitoring voltage between ignition coil and ignitor assembly connector and engine ground. ***Connector & terminal*** ***(E12) No. 1 (+) — Engine ground (–):*** ***(E12) No. 4 (+) — Engine ground (–):***	Does the voltage vary 10 V or more?	Go to step **6**.	Replace the ignition coil and ignitor assembly. <Ref. to IG(H4SO)-6, Ignition Coil and Ignitor Assembly.>

Step		Check	Yes	No
6	**CHECK HARNESS BETWEEN ECM AND IGNITION COIL AND IGNITOR ASSEMBLY CONNECTOR.** 1) Turn the ignition switch to OFF. 2) Disconnect the connectors from ECM. 3) Disconnect the connector from the ignition coil & ignitor assembly. 4) Measure the resistance of harness between ECM and ignition coil and ignitor assembly connector. ***Connector & terminal*** ***(B137) No. 18 — (E12) No. 1:*** ***(B137) No. 19 — (E12) No. 4:***	Is the resistance less than 1 Ω?	Go to step **7**.	Repair the harness and connector. NOTE: In this case, repair the following item: • Open circuit in harness between ECM and ignition coil and ignitor assembly connector • Poor contact of coupling connector	
7	**CHECK HARNESS BETWEEN ECM AND IGNITION COIL AND IGNITOR ASSEMBLY CONNECTOR.** Measure the resistance of harness between ECM and engine ground. ***Connector & terminal:*** ***(B137) No. 18 — Engine ground:*** ***(B137) No. 19 — Engine ground:***	Is the resistance 1 MΩ or more?	Repair the poor contact of ECM connector.	Repair the ground short circuit of harness between ECM and ignition coil and ignitor assembly connector.

E: FUEL PUMP CIRCUIT

CAUTION:
After repair or replacement of faulty parts, perform Clear Memory Mode <Ref. to EN(H4SO)(diag)-50, OPERATION, Clear Memory Mode.>, and Inspection Mode <Ref. to EN(H4SO)(diag)-41, PROCEDURE, Inspection Mode.>.
WIRING DIAGRAM:

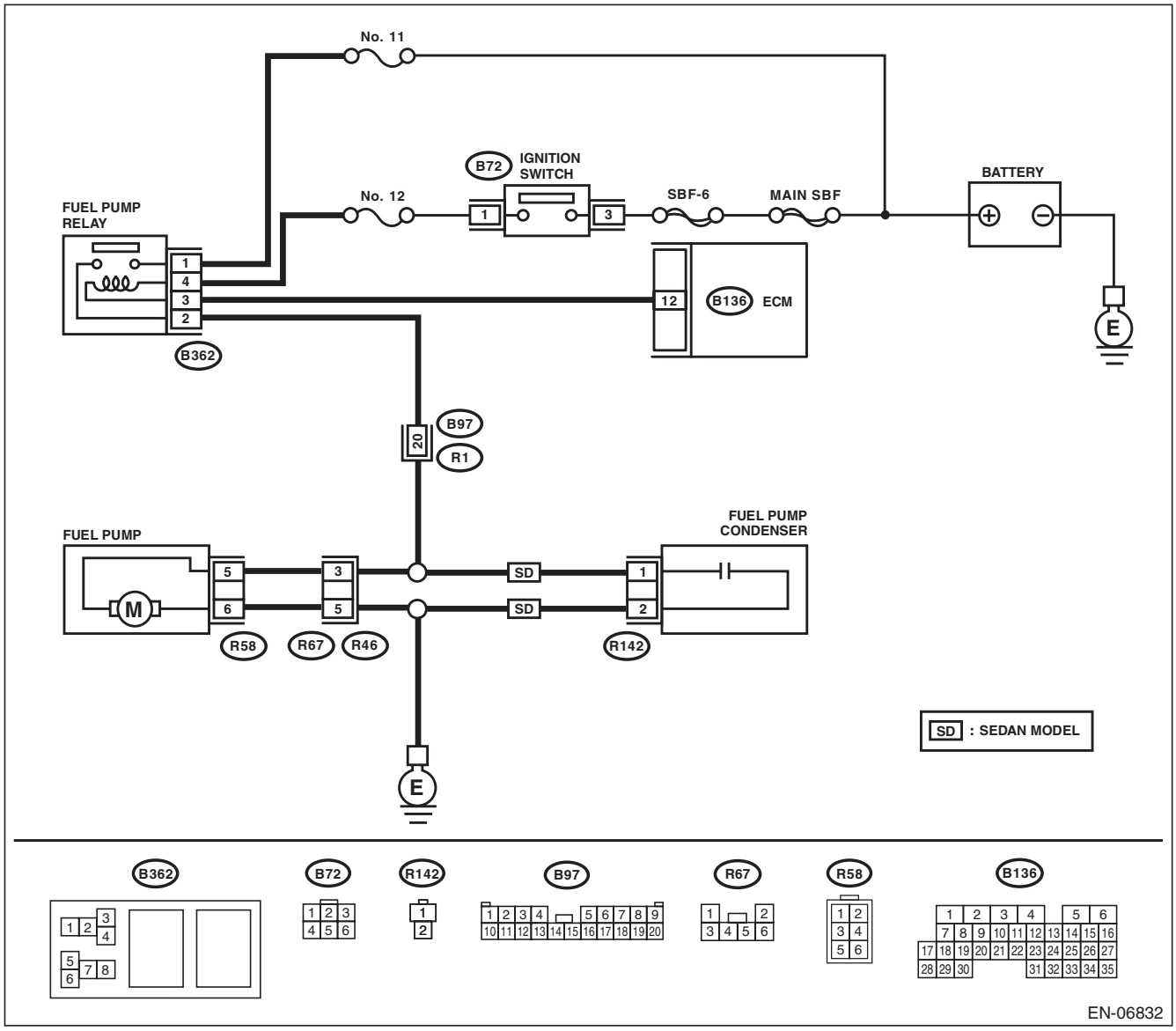

Step		Check	Yes	No
1	**CHECK OPERATING SOUND OF FUEL PUMP.** Make sure that the fuel pump operates for two seconds when turning the ignition switch to ON. NOTE: Fuel pump operation can be executed using the Subaru Select Monitor. For the procedures, refer to “Compulsory Valve Operation Check Mode”. <Ref. to EN(H4SO)(diag)-51, Compulsory Valve Operation Check Mode.>	Does the fuel pump emit operating sound?	Check the fuel injector circuit. <Ref. to EN(H4SO)(diag)-76, FUEL INJECTOR CIRCUIT, Diagnostics for Engine Starting Failure.>	Go to step **2**.

	Step	Check	Yes	No
2	**CHECK GROUND CIRCUIT OF FUEL PUMP.** 1) Turn the ignition switch to OFF. 2) Remove the fuel pump access hole lid. 3) Disconnect the connector from fuel pump. 4) Measure the resistance of harness connector between fuel pump and chassis ground. ***Connector & terminal*** ***(R58) No. 6 — Chassis ground:***	Is the resistance less than 5 Ω?	Go to step **3**.	Repair the harness and connector. NOTE: In this case, repair the following item: • Open circuit in harness between fuel pump connector and chassis grounding terminal • Poor contact of coupling connector
3	**CHECK POWER SUPPLY TO FUEL PUMP.** 1) Turn the ignition switch to ON. 2) Measure the voltage of power supply circuit between fuel pump connector and chassis ground. ***Connector & terminal*** ***(R58) No. 5 (+) — Chassis ground (–):***	Is the voltage 10 V or more?	Replace the fuel pump. <Ref. to FU(H4SO)-55, Fuel Pump.>	Go to step **4**.
4	**CHECK HARNESS BETWEEN FUEL PUMP AND FUEL PUMP RELAY CONNECTOR.** 1) Turn the ignition switch to OFF. 2) Measure the resistance of harness between fuel pump connector and fuel pump relay connector. ***Connector & terminal*** ***(R58) No. 5 — (B362) No. 2:***	Is the resistance less than 1 Ω?	Go to step **5**.	Repair the harness and connector. NOTE: In this case, repair the following item: • Open circuit in harness between fuel pump connector and fuel pump relay connector • Poor contact of coupling connector
5	**CHECK HARNESS BETWEEN FUEL PUMP AND FUEL PUMP RELAY CONNECTOR.** Measure the resistance of harness between fuel pump and fuel pump relay connector. ***Connector & terminal*** ***(R58) No. 5 — Chassis ground:***	Is the resistance 1 MΩ or more?	Go to step **6**.	Repair the short circuit of harness between fuel pump connector and fuel pump relay connector.
6	**CHECK FUEL PUMP RELAY.** 1) Remove the fuel pump relay. 2) Connect the battery to fuel pump relay terminals No. 3 and No. 4. 3) Measure the resistance between terminals of fuel pump relay. ***Terminals*** ***No. 1 — No. 2:***	Is the resistance less than 1 Ω?	Go to step **7**.	Replace the fuel pump relay. <Ref. to FU(H4SO)-41, Fuel Pump Relay.>
7	**CHECK HARNESS BETWEEN ECM AND FUEL PUMP RELAY CONNECTOR.** 1) Disconnect the connectors from ECM. 2) Measure the resistance of harness between ECM and fuel pump relay connector. ***Connector & terminal*** ***(B136) No. 12 — (B362) No. 3:***	Is the resistance less than 1 Ω?	Go to step **8**.	Repair the open circuit of harness between ECM and fuel pump relay connector.
8	**CHECK POWER SUPPLY OF FUEL PUMP RELAY.** 1) Turn the ignition switch to ON. 2) Measure the voltage between fuel pump relay connector and chassis ground. ***Connector & terminal*** ***(B362) No. 1 (+) — Chassis ground (–):*** ***(B362) No. 4 (+) — Chassis ground (–):***	Is the voltage 10 V or more?	Repair the poor contact of ECM connector.	Repair the open or ground short circuit of power supply circuit.

F: FUEL INJECTOR CIRCUIT

CAUTION:

- **Check or repair only faulty parts.**
- **After repair or replacement of faulty parts, perform Clear Memory Mode <Ref. to EN(H4SO)(diag)-50, OPERATION, Clear Memory Mode.>, and Inspection Mode <Ref. to EN(H4SO)(diag)-41, PROCEDURE, Inspection Mode.>.**

WIRING DIAGRAM:

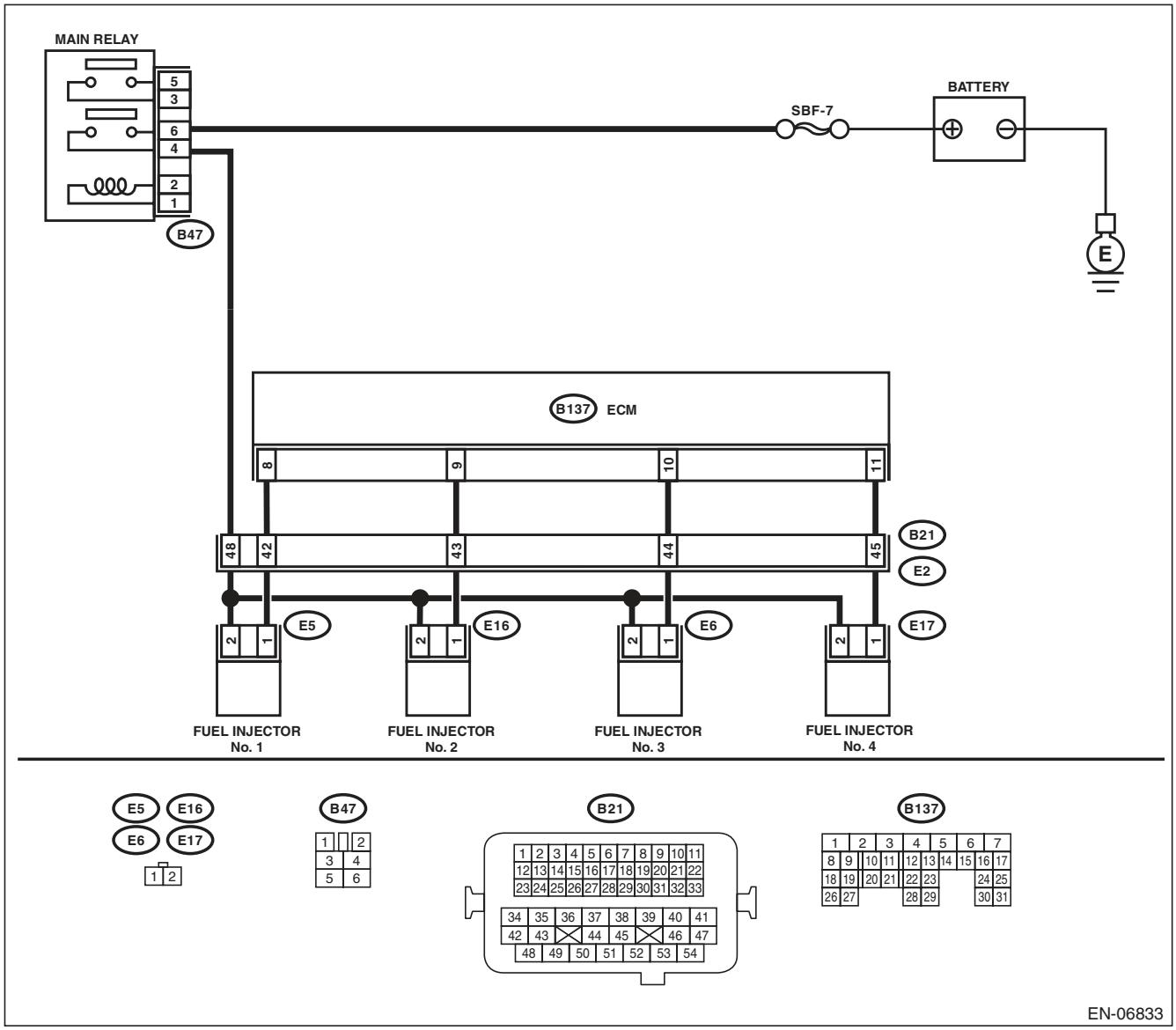

	Step	Check	Yes	No
1	**CHECK OPERATION OF EACH FUEL INJECTOR.** While cranking the engine, check each fuel injector emits operating sound. Use a sound scope or attach a screwdriver to the injector to listen to sounds for this check.	Does the fuel pump emit operating sound?	Check the fuel pressure. <Ref. to ME(H4SO)-26, INSPECTION, Fuel Pressure.>	Go to step **2**.
2	**CHECK POWER SUPPLY TO EACH FUEL INJECTOR.** 1) Turn the ignition switch to OFF. 2) Disconnect the connector from fuel injector. 3) Turn the ignition switch to ON. 4) Measure the voltage between fuel injector connector and the engine ground. ***Connector & terminal*** ***#1 (E5) No. 2 (+) — Engine ground (–):*** ***#2 (E16) No. 2 (+) — Engine ground (–):*** ***#3 (E6) No. 2 (+) — Engine ground (–):*** ***#4 (E17) No. 2 (+) — Engine ground (–):***	Is the voltage 10 V or more?	Go to step **3**.	Repair the harness and connector. NOTE: In this case, repair the following item: • Open circuit in harness between main relay connector and fuel injector connector • Poor contact of main relay connector • Poor contact of coupling connector
3	**CHECK HARNESS BETWEEN ECM AND FUEL INJECTOR CONNECTOR.** 1) Disconnect the connectors from ECM. 2) Measure the resistance of harness between ECM and fuel injector connector. ***Connector & terminal*** ***(B137) No. 8 — (E5) No. 1:*** ***(B137) No. 9 — (E16) No. 1:*** ***(B137) No. 10 — (E6) No. 1:*** ***(B137) No. 11 — (E17) No. 1:***	Is the resistance less than 1 Ω?	Go to step **4**.	Repair the harness and connector. NOTE: In this case, repair the following item: • Open circuit of harness between ECM and fuel injector connector • Poor contact of coupling connector
4	**CHECK HARNESS BETWEEN ECM AND FUEL INJECTOR CONNECTOR.** Measure the resistance between ECM and chassis ground. ***Connector & terminal*** ***#1 (B137) No. 8 — Chassis ground:*** ***#2 (B137) No. 9 — Chassis ground:*** ***#3 (B137) No. 10 — Chassis ground:*** ***#4 (B137) No. 11 — Chassis ground:***	Is the resistance 1 MΩ or more?	Go to step **5**.	Repair the short circuit to ground in harness between ECM and fuel injector connector. <Ref. to FU(H4SO)-30, Fuel Injector.>
5	**CHECK EACH FUEL INJECTOR.** 1) Turn the ignition switch to OFF. 2) Measure the resistance between each fuel injector terminals. ***Terminals*** ***No. 1 — No. 2:***	Is the resistance between 5 — 20 Ω?	Go to step **6**.	Replace the faulty fuel injector. <Ref. to FU(H4SO)-30, Fuel Injector.>
6	**CHECK POOR CONTACT.** Check for poor contact of the ECM connector.	Is there poor contact in ECM connector?	Repair the poor contact of ECM connector.	Inspection using "General Diagnostic Table"<Ref. to EN(H4SO)(diag)-300, INSPECTION, General Diagnostic Table.>

18. Diagnostic Procedure for Subaru Select Monitor Communication

A: COMMUNICATION FOR INITIALIZING IMPOSSIBLE

DIAGNOSIS:
Open or short circuit in data link connector
TROUBLE SYMPTOM:
Subaru Select Monitor communication failure
WIRING DIAGRAM:

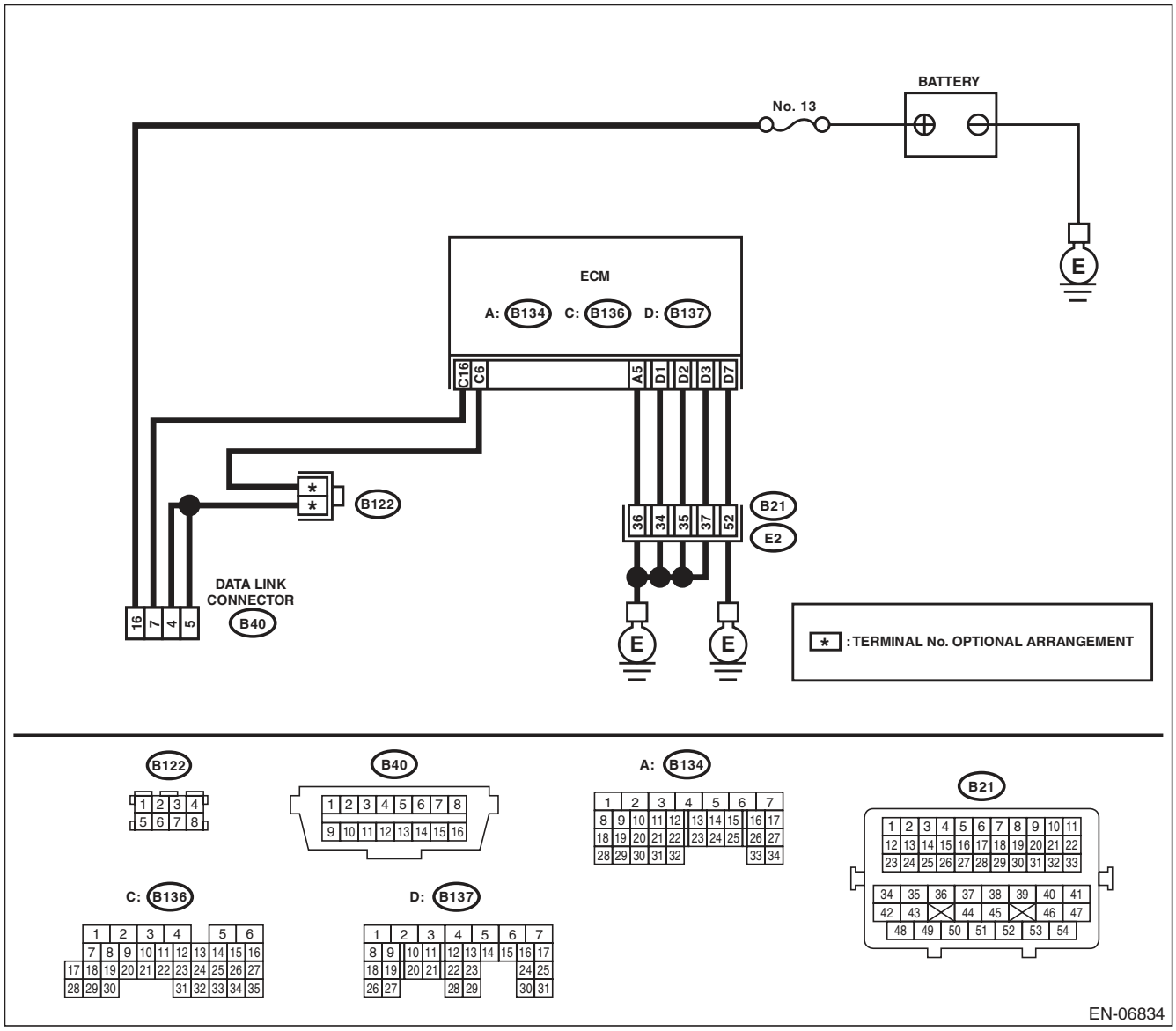

	Step	Check	Yes	No
1	**CHECK POWER SUPPLY CIRCUIT.** Connect the SDI (Subaru Diagnosis Interface) or general scan tool to data link connector.	Does SDI or general scan tool turn ON?	Go to step **4**.	Go to step **2**.
2	**CHECK POWER SUPPLY CIRCUIT.** Measure the voltage between data link connector and chassis ground. ***Connector & terminal*** ***(B40) No. 16 (+) — Chassis ground (–):***	Is the voltage 10 V or more?	Go to step **3**.	Repair the power supply circuit. NOTE: In this case, repair the following item: • Open or ground short circuit of harness between battery and data link connector • Blown out of fuse (M/B No. 13)
3	**CHECK HARNESS BETWEEN DATA LINK CONNECTOR AND CHASSIS GROUND.** 1) Turn the ignition switch to OFF. 2) Measure the resistance of harness between data link connector and chassis ground. ***Connector & terminal*** ***(B40) No. 4 — Chassis ground:*** ***(B40) No. 5 — Chassis ground:***	Is the resistance less than 5 Ω?	Repair the poor contact of data link connector.	Repair the harness and connector. NOTE: In this case, repair the following item: • Open circuit of harness between ECM and data link connector • Open circuit of harness between ECM and engine ground • Poor contact in ECM connector • Poor contact of coupling connector
4	**CHECK HARNESS BETWEEN ECM AND DATA LINK CONNECTOR.** 1) Disconnect the connectors from ECM, TCM, ABS CM, VDC CM, airbag CM and body integrated unit. **CAUTION:** **When disconnecting the connector from airbag control module, always follow the precautions on AB section. <Ref. to AB-4, CAUTION, General Description.>** 2) Measure the resistance of harness between ECM and data link connector. ***Connector & terminal*** ***(B136) No. 16 — (B40) No. 7:***	Is the resistance less than 1 Ω?	Go to step **5**.	Repair the harness and connector. NOTE: In this case, repair the following item: • Open circuit of harness between ECM and data link connector
5	**CHECK HARNESS BETWEEN ECM AND DATA LINK CONNECTOR.** Measure the resistance between data link connector and chassis ground. ***Connector & terminal*** ***(B40) No. 7 — Chassis ground:***	Is the resistance 1 MΩ or more?	Repair the poor contact in the ECM or data link connector.	Repair the ground short circuit of harness between ECM and data link connector.

19. List of Diagnostic Trouble Code (DTC)

A: LIST

DTC	Item	Reference
P0026	Intake Valve Control Solenoid Circuit Range/Performance (Bank 1)	<Ref. to EN(H4SO)(diag)-87, DTC P0026 INTAKE VALVE CONTROL SOLENOID CIRCUIT RANGE/PERFORMANCE (BANK 1), Diagnostic Procedure with Diagnostic Trouble Code (DTC).>
P0028	Intake Valve Control Solenoid Circuit Range/Performance (Bank 2)	<Ref. to EN(H4SO)(diag)-89, DTC P0028 INTAKE VALVE CONTROL SOLENOID CIRCUIT RANGE/PERFORMANCE (BANK 2), Diagnostic Procedure with Diagnostic Trouble Code (DTC).>
P0030	HO2S Heater Control Circuit (Bank 1 Sensor 1)	<Ref. to EN(H4SO)(diag)-91, DTC P0030 HO2S HEATER CONTROL CIRCUIT (BANK 1 SENSOR 1), Diagnostic Procedure with Diagnostic Trouble Code (DTC).>
P0031	HO2S Heater Control Circuit Low (Bank 1 Sensor 1)	<Ref. to EN(H4SO)(diag)-93, DTC P0031 HO2S HEATER CONTROL CIRCUIT LOW (BANK 1 SENSOR 1), Diagnostic Procedure with Diagnostic Trouble Code (DTC).>
P0032	HO2S Heater Control Circuit High (Bank 1 Sensor 1)	<Ref. to EN(H4SO)(diag)-95, DTC P0032 HO2S HEATER CONTROL CIRCUIT HIGH (BANK 1 SENSOR 1), Diagnostic Procedure with Diagnostic Trouble Code (DTC).>
P0037	HO2S Heater Control Circuit Low (Bank 1 Sensor 2)	<Ref. to EN(H4SO)(diag)-97, DTC P0037 HO2S HEATER CONTROL CIRCUIT LOW (BANK 1 SENSOR 2), Diagnostic Procedure with Diagnostic Trouble Code (DTC).>
P0038	HO2S Heater Control Circuit High (Bank 1 Sensor 2)	<Ref. to EN(H4SO)(diag)-99, DTC P0038 HO2S HEATER CONTROL CIRCUIT HIGH (BANK 1 SENSOR 2), Diagnostic Procedure with Diagnostic Trouble Code (DTC).>
P0068	MAP/MAF - Throttle Position Correlation	<Ref. to EN(H4SO)(diag)-101, DTC P0068 MAP/MAF - THROTTLE POSITION CORRELATION, Diagnostic Procedure with Diagnostic Trouble Code (DTC).>
P0076	Intake Valve Control Solenoid Circuit Low (Bank 1)	<Ref. to EN(H4SO)(diag)-103, DTC P0076 INTAKE VALVE CONTROL SOLENOID CIRCUIT LOW (BANK 1), Diagnostic Procedure with Diagnostic Trouble Code (DTC).>
P0077	Intake Valve Control Solenoid Circuit High (Bank 1)	<Ref. to EN(H4SO)(diag)-105, DTC P0077 INTAKE VALVE CONTROL SOLENOID CIRCUIT HIGH (BANK 1), Diagnostic Procedure with Diagnostic Trouble Code (DTC).>
P0082	Intake Valve Control Solenoid Circuit Low (Bank 2)	<Ref. to EN(H4SO)(diag)-107, DTC P0082 INTAKE VALVE CONTROL SOLENOID CIRCUIT LOW (BANK 2), Diagnostic Procedure with Diagnostic Trouble Code (DTC).>
P0083	Intake Valve Control Solenoid Circuit High (Bank 2)	<Ref. to EN(H4SO)(diag)-109, DTC P0083 INTAKE VALVE CONTROL SOLENOID CIRCUIT HIGH (BANK 2), Diagnostic Procedure with Diagnostic Trouble Code (DTC).>
P0101	Mass or Volume Air Flow Circuit Range/Performance	<Ref. to EN(H4SO)(diag)-111, DTC P0101 MASS OR VOLUME AIR FLOW CIRCUIT RANGE/PERFORMANCE, Diagnostic Procedure with Diagnostic Trouble Code (DTC).>
P0102	Mass or Volume Air Flow Circuit Low Input	<Ref. to EN(H4SO)(diag)-113, DTC P0102 MASS OR VOLUME AIR FLOW CIRCUIT LOW INPUT, Diagnostic Procedure with Diagnostic Trouble Code (DTC).>
P0103	Mass or Volume Air Flow Circuit High Input	<Ref. to EN(H4SO)(diag)-115, DTC P0103 MASS OR VOLUME AIR FLOW CIRCUIT HIGH INPUT, Diagnostic Procedure with Diagnostic Trouble Code (DTC).>
P0107	Manifold Absolute Pressure/Barometric Pressure Circuit Low Input	<Ref. to EN(H4SO)(diag)-117, DTC P0107 MANIFOLD ABSOLUTE PRESSURE/BAROMETRIC PRESSURE CIRCUIT LOW INPUT, Diagnostic Procedure with Diagnostic Trouble Code (DTC).>
P0108	Manifold Absolute Pressure/Barometric Pressure Circuit High Input	<Ref. to EN(H4SO)(diag)-119, DTC P0108 MANIFOLD ABSOLUTE PRESSURE/BAROMETRIC PRESSURE CIRCUIT HIGH INPUT, Diagnostic Procedure with Diagnostic Trouble Code (DTC).>

List of Diagnostic Trouble Code (DTC)

DTC	Item	Reference
P0111	Intake Air Temperature Sensor 1 Circuit Range/Performance	<Ref. to EN(H4SO)(diag)-121, DTC P0111 INTAKE AIR TEMPERATURE SENSOR 1 CIRCUIT RANGE/PERFORMANCE, Diagnostic Procedure with Diagnostic Trouble Code (DTC).>
P0112	Intake Air Temperature Sensor 1 Circuit Low	<Ref. to EN(H4SO)(diag)-123, DTC P0112 INTAKE AIR TEMPERATURE SENSOR 1 CIRCUIT LOW, Diagnostic Procedure with Diagnostic Trouble Code (DTC).>
P0113	Intake Air Temperature Sensor 1 Circuit High	<Ref. to EN(H4SO)(diag)-125, DTC P0113 INTAKE AIR TEMPERATURE SENSOR 1 CIRCUIT HIGH, Diagnostic Procedure with Diagnostic Trouble Code (DTC).>
P0117	Engine Coolant Temperature Circuit Low	<Ref. to EN(H4SO)(diag)-127, DTC P0117 ENGINE COOLANT TEMPERATURE CIRCUIT LOW, Diagnostic Procedure with Diagnostic Trouble Code (DTC).>
P0118	Engine Coolant Temperature Circuit High	<Ref. to EN(H4SO)(diag)-129, DTC P0118 ENGINE COOLANT TEMPERATURE CIRCUIT HIGH, Diagnostic Procedure with Diagnostic Trouble Code (DTC).>
P0122	Throttle/Pedal Position Sensor/Switch “A” Circuit Low	<Ref. to EN(H4SO)(diag)-131, DTC P0122 THROTTLE/PEDAL POSITION SENSOR/SWITCH “A” CIRCUIT LOW, Diagnostic Procedure with Diagnostic Trouble Code (DTC).>
P0123	Throttle/Pedal Position Sensor/Switch “A” Circuit High	<Ref. to EN(H4SO)(diag)-133, DTC P0123 THROTTLE/PEDAL POSITION SENSOR/SWITCH “A” CIRCUIT HIGH, Diagnostic Procedure with Diagnostic Trouble Code (DTC).>
P0125	Insufficient Coolant Temperature for Closed Loop Fuel Control	<Ref. to EN(H4SO)(diag)-135, DTC P0125 INSUFFICIENT COOLANT TEMPERATURE FOR CLOSED LOOP FUEL CONTROL, Diagnostic Procedure with Diagnostic Trouble Code (DTC).>
P0126	Insufficient Engine Coolant Temperature for Stable Operation	<Ref. to EN(H4SO)(diag)-136, DTC P0126 INSUFFICIENT ENGINE COOLANT TEMPERATURE FOR STABLE OPERATION, Diagnostic Procedure with Diagnostic Trouble Code (DTC).>
P0128	Coolant Thermostat (Engine Coolant Temperature Below Thermostat Regulating Temperature)	<Ref. to EN(H4SO)(diag)-138, DTC P0128 COOLANT THERMOSTAT (ENGINE COOLANT TEMPERATURE BELOW THERMOSTAT REGULATING TEMPERATURE), Diagnostic Procedure with Diagnostic Trouble Code (DTC).>
P0131	O2 Sensor Circuit Low Voltage (Bank 1 Sensor 1)	<Ref. to EN(H4SO)(diag)-139, DTC P0131 O2 SENSOR CIRCUIT LOW VOLTAGE (BANK 1 SENSOR 1), Diagnostic Procedure with Diagnostic Trouble Code (DTC).>
P0132	O2 Sensor Circuit High Voltage (Bank 1 Sensor 1)	<Ref. to EN(H4SO)(diag)-141, DTC P0132 O2 SENSOR CIRCUIT HIGH VOLTAGE (BANK 1 SENSOR 1), Diagnostic Procedure with Diagnostic Trouble Code (DTC).>
P0133	O2 Sensor Circuit Slow Response (Bank 1 Sensor 1)	<Ref. to EN(H4SO)(diag)-143, DTC P0133 O2 SENSOR CIRCUIT SLOW RESPONSE (BANK 1 SENSOR 1), Diagnostic Procedure with Diagnostic Trouble Code (DTC).>
P0134	O2 Sensor Circuit No Activity Detected (Bank 1 Sensor 1)	<Ref. to EN(H4SO)(diag)-145, DTC P0134 O2 SENSOR CIRCUIT NO ACTIVITY DETECTED (BANK 1 SENSOR 1), Diagnostic Procedure with Diagnostic Trouble Code (DTC).>
P0137	O2 Sensor Circuit Low Voltage (Bank 1 Sensor 2)	<Ref. to EN(H4SO)(diag)-147, DTC P0137 O2 SENSOR CIRCUIT LOW VOLTAGE (BANK 1 SENSOR 2), Diagnostic Procedure with Diagnostic Trouble Code (DTC).>
P0138	O2 Sensor Circuit High Voltage (Bank 1 Sensor 2)	<Ref. to EN(H4SO)(diag)-149, DTC P0138 O2 SENSOR CIRCUIT HIGH VOLTAGE (BANK 1 SENSOR 2), Diagnostic Procedure with Diagnostic Trouble Code (DTC).>
P0139	O2 Sensor Circuit Slow Response (Bank 1 Sensor 2)	<Ref. to EN(H4SO)(diag)-151, DTC P0139 O2 SENSOR CIRCUIT SLOW RESPONSE (BANK 1 SENSOR 2), Diagnostic Procedure with Diagnostic Trouble Code (DTC).>
P0140	O2 Sensor Circuit No Activity Detected (Bank 1 Sensor 2)	<Ref. to EN(H4SO)(diag)-153, DTC P0140 O2 SENSOR CIRCUIT NO ACTIVITY DETECTED (BANK1 SENSOR2), Diagnostic Procedure with Diagnostic Trouble Code (DTC).>
P0171	System Too Lean (Bank 1)	<Ref. to EN(H4SO)(diag)-155, DTC P0171 SYSTEM TOO LEAN (BANK 1), Diagnostic Procedure with Diagnostic Trouble Code (DTC).>

DTC	Item	Reference
P0172	System Too Rich (Bank 1)	<Ref. to EN(H4SO)(diag)-156, DTC P0172 SYSTEM TOO RICH (BANK 1), Diagnostic Procedure with Diagnostic Trouble Code (DTC).>
P0181	Fuel Temperature Sensor “A” Circuit Range/Performance	<Ref. to EN(H4SO)(diag)-158, DTC P0181 FUEL TEMPERATURE SENSOR “A” CIRCUIT RANGE/PERFORMANCE, Diagnostic Procedure with Diagnostic Trouble Code (DTC).>
P0182	Fuel Temperature Sensor “A” Circuit Low Input	<Ref. to EN(H4SO)(diag)-160, DTC P0182 FUEL TEMPERATURE SENSOR “A” CIRCUIT LOW INPUT, Diagnostic Procedure with Diagnostic Trouble Code (DTC).>
P0183	Fuel Temperature Sensor “A” Circuit High Input	<Ref. to EN(H4SO)(diag)-162, DTC P0183 FUEL TEMPERATURE SENSOR “A” CIRCUIT HIGH INPUT, Diagnostic Procedure with Diagnostic Trouble Code (DTC).>
P0196	Engine Oil Temperature Sensor Circuit Range/Performance	<Ref. to EN(H4SO)(diag)-164, DTC P0196 ENGINE OIL TEMPERATURE SENSOR CIRCUIT RANGE/PERFORMANCE, Diagnostic Procedure with Diagnostic Trouble Code (DTC).>
P0197	Engine Oil Temperature Sensor Low	<Ref. to EN(H4SO)(diag)-166, DTC P0197 ENGINE OIL TEMPERATURE SENSOR LOW, Diagnostic Procedure with Diagnostic Trouble Code (DTC).>
P0198	Engine Oil Temperature Sensor High	<Ref. to EN(H4SO)(diag)-168, DTC P0198 ENGINE OIL TEMPERATURE SENSOR HIGH, Diagnostic Procedure with Diagnostic Trouble Code (DTC).>
P0222	Throttle/Pedal Position Sensor/Switch “B” Circuit Low	<Ref. to EN(H4SO)(diag)-170, DTC P0222 THROTTLE/PEDAL POSITION SENSOR/SWITCH “B” CIRCUIT LOW, Diagnostic Procedure with Diagnostic Trouble Code (DTC).>
P0223	Throttle/Pedal Position Sensor/Switch “B” Circuit High	<Ref. to EN(H4SO)(diag)-172, DTC P0223 THROTTLE/PEDAL POSITION SENSOR/SWITCH “B” CIRCUIT HIGH, Diagnostic Procedure with Diagnostic Trouble Code (DTC).>
P0301	Cylinder 1 Misfire Detected	<Ref. to EN(H4SO)(diag)-173, DTC P0301 CYLINDER 1 MISFIRE DETECTED, Diagnostic Procedure with Diagnostic Trouble Code (DTC).>
P0302	Cylinder 2 Misfire Detected	<Ref. to EN(H4SO)(diag)-173, DTC P0302 CYLINDER 2 MISFIRE DETECTED, Diagnostic Procedure with Diagnostic Trouble Code (DTC).>
P0303	Cylinder 3 Misfire Detected	<Ref. to EN(H4SO)(diag)-173, DTC P0303 CYLINDER 3 MISFIRE DETECTED, Diagnostic Procedure with Diagnostic Trouble Code (DTC).>
P0304	Cylinder 4 Misfire Detected	<Ref. to EN(H4SO)(diag)-174, DTC P0304 CYLINDER 4 MISFIRE DETECTED, Diagnostic Procedure with Diagnostic Trouble Code (DTC).>
P0327	Knock Sensor 1 Circuit Low (Bank 1 or Single Sensor)	<Ref. to EN(H4SO)(diag)-180, DTC P0327 KNOCK SENSOR 1 CIRCUIT LOW (BANK 1 OR SINGLE SENSOR), Diagnostic Procedure with Diagnostic Trouble Code (DTC).>
P0328	Knock Sensor 1 Circuit High (Bank 1 or Single Sensor)	<Ref. to EN(H4SO)(diag)-182, DTC P0328 KNOCK SENSOR 1 CIRCUIT HIGH (BANK 1 OR SINGLE SENSOR), Diagnostic Procedure with Diagnostic Trouble Code (DTC).>
P0335	Crankshaft Position Sensor “A” Circuit	<Ref. to EN(H4SO)(diag)-184, DTC P0335 CRANKSHAFT POSITION SENSOR “A” CIRCUIT, Diagnostic Procedure with Diagnostic Trouble Code (DTC).>
P0336	Crankshaft Position Sensor “A” Circuit Range/Performance	<Ref. to EN(H4SO)(diag)-186, DTC P0336 CRANKSHAFT POSITION SENSOR “A” CIRCUIT RANGE/PERFORMANCE, Diagnostic Procedure with Diagnostic Trouble Code (DTC).>
P0340	Camshaft Position Sensor “A” Circuit (Bank 1 or Single Sensor)	<Ref. to EN(H4SO)(diag)-188, DTC P0340 CAMSHAFT POSITION SENSOR “A” CIRCUIT (BANK 1 OR SINGLE SENSOR), Diagnostic Procedure with Diagnostic Trouble Code (DTC).>
P0341	Camshaft Position Sensor “A” Circuit Range/Performance (Bank 1 or Single Sensor)	<Ref. to EN(H4SO)(diag)-190, DTC P0341 CAMSHAFT POSITION SENSOR “A” CIRCUIT RANGE/PERFORMANCE (BANK 1 OR SINGLE SENSOR), Diagnostic Procedure with Diagnostic Trouble Code (DTC).>
P0400	Exhaust Gas Recirculation Flow	<Ref. to EN(H4SO)(diag)-192, DTC P0400 EXHAUST GAS RECIRCULATION FLOW, Diagnostic Procedure with Diagnostic Trouble Code (DTC).>
P0420	Catalyst System Efficiency below Threshold (Bank 1)	<Ref. to EN(H4SO)(diag)-194, DTC P0420 CATALYST SYSTEM EFFICIENCY BELOW THRESHOLD (BANK 1), Diagnostic Procedure with Diagnostic Trouble Code (DTC).>

List of Diagnostic Trouble Code (DTC)

DTC	Item	Reference
P0442	Evaporative Emission Control System Leak Detected (Small Leak)	<Ref. to EN(H4SO)(diag)-198, DTC P0442 EVAPORATIVE EMISSION CONTROL SYSTEM LEAK DETECTED (SMALL LEAK), Diagnostic Procedure with Diagnostic Trouble Code (DTC).>
P0447	Evaporative Emission Control System Vent Control Circuit Open	<Ref. to EN(H4SO)(diag)-201, DTC P0447 EVAPORATIVE EMISSION CONTROL SYSTEM VENT CONTROL CIRCUIT OPEN, Diagnostic Procedure with Diagnostic Trouble Code (DTC).>
P0448	Evaporative Emission Control System Vent Control Circuit Shorted	<Ref. to EN(H4SO)(diag)-203, DTC P0448 EVAPORATIVE EMISSION CONTROL SYSTEM VENT CONTROL CIRCUIT SHORTED, Diagnostic Procedure with Diagnostic Trouble Code (DTC).>
P0451	Evaporative Emission Control System Pressure Sensor	<Ref. to EN(H4SO)(diag)-205, DTC P0451 EVAPORATIVE EMISSION CONTROL SYSTEM PRESSURE SENSOR, Diagnostic Procedure with Diagnostic Trouble Code (DTC).>
P0452	Evaporative Emission Control System Pressure Sensor Low Input	<Ref. to EN(H4SO)(diag)-207, DTC P0452 EVAPORATIVE EMISSION CONTROL SYSTEM PRESSURE SENSOR LOW INPUT, Diagnostic Procedure with Diagnostic Trouble Code (DTC).>
P0453	Evaporative Emission Control System Pressure Sensor High Input	<Ref. to EN(H4SO)(diag)-209, DTC P0453 EVAPORATIVE EMISSION CONTROL SYSTEM PRESSURE SENSOR HIGH INPUT, Diagnostic Procedure with Diagnostic Trouble Code (DTC).>
P0456	Evaporative Emission Control System Leak Detected (Very Small Leak)	<Ref. to EN(H4SO)(diag)-211, DTC P0456 EVAPORATIVE EMISSION CONTROL SYSTEM LEAK DETECTED (VERY SMALL LEAK), Diagnostic Procedure with Diagnostic Trouble Code (DTC).>
P0457	Evaporative Emission Control System Leak Detected (Fuel Cap Loose/Off)	<Ref. to EN(H4SO)(diag)-214, DTC P0457 EVAPORATIVE EMISSION CONTROL SYSTEM LEAK DETECTED (FUEL CAP LOOSE/OFF), Diagnostic Procedure with Diagnostic Trouble Code (DTC).>
P0458	Evaporative Emission System Purge Control Valve Circuit Low	<Ref. to EN(H4SO)(diag)-217, DTC P0458 EVAPORATIVE EMISSION SYSTEM PURGE CONTROL VALVE CIRCUIT LOW, Diagnostic Procedure with Diagnostic Trouble Code (DTC).>
P0459	Evaporative Emission System Purge Control Valve Circuit High	<Ref. to EN(H4SO)(diag)-219, DTC P0459 EVAPORATIVE EMISSION SYSTEM PURGE CONTROL VALVE CIRCUIT HIGH, Diagnostic Procedure with Diagnostic Trouble Code (DTC).>
P0461	Fuel Level Sensor “A” Circuit Range/Performance	<Ref. to EN(H4SO)(diag)-221, DTC P0461 FUEL LEVEL SENSOR “A” CIRCUIT RANGE/PERFORMANCE, Diagnostic Procedure with Diagnostic Trouble Code (DTC).>
P0462	Fuel Level Sensor “A” Circuit Low	<Ref. to EN(H4SO)(diag)-221, DTC P0462 FUEL LEVEL SENSOR “A” CIRCUIT LOW, Diagnostic Procedure with Diagnostic Trouble Code (DTC).>
P0463	Fuel Level Sensor “A” Circuit High	<Ref. to EN(H4SO)(diag)-221, DTC P0463 FUEL LEVEL SENSOR “A” CIRCUIT HIGH, Diagnostic Procedure with Diagnostic Trouble Code (DTC).>
P0464	Fuel Level Sensor Circuit Intermittent	<Ref. to EN(H4SO)(diag)-222, DTC P0464 FUEL LEVEL SENSOR CIRCUIT INTERMITTENT, Diagnostic Procedure with Diagnostic Trouble Code (DTC).>
P0500	Vehicle Speed Sensor “A”	<Ref. to EN(H4SO)(diag)-222, DTC P0500 VEHICLE SPEED SENSOR “A”, Diagnostic Procedure with Diagnostic Trouble Code (DTC).>
P0506	Idle Air Control System RPM Lower Than Expected	<Ref. to EN(H4SO)(diag)-223, DTC P0506 IDLE AIR CONTROL SYSTEM RPM LOWER THAN EXPECTED, Diagnostic Procedure with Diagnostic Trouble Code (DTC).>
P0507	Idle Air Control System RPM Higher Than Expected	<Ref. to EN(H4SO)(diag)-225, DTC P0507 IDLE AIR CONTROL SYSTEM RPM HIGHER THAN EXPECTED, Diagnostic Procedure with Diagnostic Trouble Code (DTC).>
P0512	Starter Request Circuit	<Ref. to EN(H4SO)(diag)-227, DTC P0512 STARTER REQUEST CIRCUIT, Diagnostic Procedure with Diagnostic Trouble Code (DTC).>
P0513	Incorrect Immobilizer Key	<Ref. to IM(diag)-16, DTC P0513 INCORRECT IMMOBILIZER KEY, Diagnostic Procedure with Diagnostic Trouble Code (DTC).>
P0600	Serial Communication Link	<Ref. to EN(H4SO)(diag)-228, DTC P0600 SERIAL COMMUNICATION LINK, Diagnostic Procedure with Diagnostic Trouble Code (DTC).>
P0604	Internal Control Module Random Access Memory (RAM) Error	<Ref. to EN(H4SO)(diag)-229, DTC P0604 INTERNAL CONTROL MODULE RANDOM ACCESS MEMORY (RAM) ERROR, Diagnostic Procedure with Diagnostic Trouble Code (DTC).>

List of Diagnostic Trouble Code (DTC)

DTC	Item	Reference
P0605	Internal Control Module Read Only Memory (ROM) Error	<Ref. to EN(H4SO)(diag)-230, DTC P0605 INTERNAL CONTROL MODULE READ ONLY MEMORY (ROM) ERROR, Diagnostic Procedure with Diagnostic Trouble Code (DTC).>
P0607	Throttle Control System Circuit Range/Performance	<Ref. to EN(H4SO)(diag)-231, DTC P0607 THROTTLE CONTROL SYSTEM CIRCUIT RANGE/PERFORMANCE, Diagnostic Procedure with Diagnostic Trouble Code (DTC).>
P0638	Throttle Actuator Control Range/Performance (Bank 1)	<Ref. to EN(H4SO)(diag)-232, DTC P0638 THROTTLE ACTUATOR CONTROL RANGE/PERFORMANCE (BANK 1), Diagnostic Procedure with Diagnostic Trouble Code (DTC).>
P0700	Transmission Control System (Mil Request)	<Ref. to EN(H4SO)(diag)-232, DTC P0700 TRANSMISSION CONTROL SYSTEM (MIL REQUEST), Diagnostic Procedure with Diagnostic Trouble Code (DTC).>
P0851	Park/Neutral Switch Input Circuit Low (AT Model)	<Ref. to EN(H4SO)(diag)-233, DTC P0851 PARK/NEUTRAL SWITCH INPUT CIRCUIT LOW (AT MODEL), Diagnostic Procedure with Diagnostic Trouble Code (DTC).>
P0851	Neutral Switch Input Circuit Low (MT Model)	<Ref. to EN(H4SO)(diag)-235, DTC P0851 NEUTRAL SWITCH INPUT CIRCUIT LOW (MT MODEL), Diagnostic Procedure with Diagnostic Trouble Code (DTC).>
P0852	Park/Neutral Switch Input Circuit High (AT Model)	<Ref. to EN(H4SO)(diag)-237, DTC P0852 PARK/NEUTRAL SWITCH INPUT CIRCUIT HIGH (AT MODEL), Diagnostic Procedure with Diagnostic Trouble Code (DTC).>
P0852	Neutral Switch Input Circuit High (MT Model)	<Ref. to EN(H4SO)(diag)-239, DTC P0852 NEUTRAL SWITCH INPUT CIRCUIT HIGH (MT MODEL), Diagnostic Procedure with Diagnostic Trouble Code (DTC).>
P1152	O2 Sensor Circuit Range/Performance (Low) (Bank1 Sensor1)	<Ref. to EN(H4SO)(diag)-241, DTC P1152 O2 SENSOR CIRCUIT RANGE/PERFORMANCE (LOW) (BANK1 SENSOR1), Diagnostic Procedure with Diagnostic Trouble Code (DTC).>
P1153	O2 Sensor Circuit Range/Performance (High) (Bank1 Sensor1)	<Ref. to EN(H4SO)(diag)-243, DTC P1153 O2 SENSOR CIRCUIT RANGE/PERFORMANCE (HIGH) (BANK1 SENSOR1), Diagnostic Procedure with Diagnostic Trouble Code (DTC).>
P1160	Return Spring Failure	<Ref. to EN(H4SO)(diag)-244, DTC P1160 RETURN SPRING FAILURE, Diagnostic Procedure with Diagnostic Trouble Code (DTC).>
P1400	Exhaust Gas Recirculation Flow	<Ref. to EN(H4SO)(diag)-245, DTC P1400 FUEL TANK PRESSURE CONTROL SOLENOID VALVE CIRCUIT LOW, Diagnostic Procedure with Diagnostic Trouble Code (DTC).>
P1420	Fuel Tank Pressure Control Sol. Valve Circuit High	<Ref. to EN(H4SO)(diag)-247, DTC P1420 FUEL TANK PRESSURE CONTROL SOL. VALVE CIRCUIT HIGH, Diagnostic Procedure with Diagnostic Trouble Code (DTC).>
P1443	Vent Control Solenoid Valve Function Problem	<Ref. to EN(H4SO)(diag)-249, DTC P1443 VENT CONTROL SOLENOID VALVE FUNCTION PROBLEM, Diagnostic Procedure with Diagnostic Trouble Code (DTC).>
P1491	Positive Crankcase Ventilation (Blow-by) Function Problem	<Ref. to EN(H4SO)(diag)-251, DTC P1491 POSITIVE CRANKCASE VENTILATION (BLOW-BY) FUNCTION PROBLEM, Diagnostic Procedure with Diagnostic Trouble Code (DTC).>
P1492	EGR Solenoid Valve Signal #1 Circuit Malfunction (Low Input)	<Ref. to EN(H4SO)(diag)-253, DTC P1492 EGR SOLENOID VALVE SIGNAL #1 CIRCUIT MALFUNCTION (LOW INPUT), Diagnostic Procedure with Diagnostic Trouble Code (DTC).>
P1493	EGR Solenoid Valve Signal #1 Circuit Malfunction (High Input)	<Ref. to EN(H4SO)(diag)-253, DTC P1493 EGR SOLENOID VALVE SIGNAL #1 CIRCUIT MALFUNCTION (HIGH INPUT), Diagnostic Procedure with Diagnostic Trouble Code (DTC).>
P1494	EGR Solenoid Valve Signal #2 Circuit Malfunction (Low Input)	<Ref. to EN(H4SO)(diag)-253, DTC P1494 EGR SOLENOID VALVE SIGNAL #2 CIRCUIT MALFUNCTION (LOW INPUT), Diagnostic Procedure with Diagnostic Trouble Code (DTC).>
P1495	EGR Solenoid Valve Signal #2 Circuit Malfunction (High Input)	<Ref. to EN(H4SO)(diag)-253, DTC P1495 EGR SOLENOID VALVE SIGNAL #2 CIRCUIT MALFUNCTION (HIGH INPUT), Diagnostic Procedure with Diagnostic Trouble Code (DTC).>

List of Diagnostic Trouble Code (DTC)

DTC	Item	Reference
P1496	EGR Solenoid Valve Signal #3 Circuit Malfunction (Low Input)	<Ref. to EN(H4SO)(diag)-253, DTC P1496 EGR SOLENOID VALVE SIGNAL #3 CIRCUIT MALFUNCTION (LOW INPUT), Diagnostic Procedure with Diagnostic Trouble Code (DTC).>
P1497	EGR Solenoid Valve Signal #3 Circuit Malfunction (High Input)	<Ref. to EN(H4SO)(diag)-253, DTC P1497 EGR SOLENOID VALVE SIGNAL #3 CIRCUIT MALFUNCTION (HIGH INPUT), Diagnostic Procedure with Diagnostic Trouble Code (DTC).>
P1498	EGR Solenoid Valve Signal #4 Circuit Malfunction (Low Input)	<Ref. to EN(H4SO)(diag)-254, DTC P1498 EGR SOLENOID VALVE SIGNAL #4 CIRCUIT MALFUNCTION (LOW INPUT), Diagnostic Procedure with Diagnostic Trouble Code (DTC).>
P1499	EGR Solenoid Valve Signal #4 Circuit Malfunction (High Input)	<Ref. to EN(H4SO)(diag)-257, DTC P1499 EGR SOLENOID VALVE SIGNAL #4 CIRCUIT MALFUNCTION (HIGH INPUT), Diagnostic Procedure with Diagnostic Trouble Code (DTC).>
P1560	Back-Up Voltage Circuit Malfunction	<Ref. to EN(H4SO)(diag)-259, DTC P1560 BACK-UP VOLTAGE CIRCUIT MALFUNCTION, Diagnostic Procedure with Diagnostic Trouble Code (DTC).>
P1570	Antenna	<Ref. to IM(diag)-17, DTC P1570 ANTENNA, Diagnostic Procedure with Diagnostic Trouble Code (DTC).>
P1571	Reference Code Incompatibility	<Ref. to IM(diag)-19, DTC P1571 REFERENCE CODE INCOMPATIBILITY, Diagnostic Procedure with Diagnostic Trouble Code (DTC).>
P1572	IMM Circuit Failure	<Ref. to IM(diag)-20, DTC P1572 IMM CIRCUIT FAILURE (EXCEPT ANTENNA CIRCUIT), Diagnostic Procedure with Diagnostic Trouble Code (DTC).>
P1574	Key Communication Failure	<Ref. to IM(diag)-23, DTC P1574 KEY COMMUNICATION FAILURE, Diagnostic Procedure with Diagnostic Trouble Code (DTC).>
P1576	EGI Control Module EEPROM	<Ref. to IM(diag)-23, DTC P1576 EGI CONTROL MODULE EEPROM, Diagnostic Procedure with Diagnostic Trouble Code (DTC).>
P1577	IMM Control Module EEPROM	<Ref. to IM(diag)-24, DTC P1577 IMM CONTROL MODULE EEPROM, Diagnostic Procedure with Diagnostic Trouble Code (DTC).>
P1578	Meter Failure	<Ref. to IM(diag)-24, DTC P1578 METER FAILURE, Diagnostic Procedure with Diagnostic Trouble Code (DTC).>
P1602	Control Module Programming Error	<Ref. to EN(H4SO)(diag)-261, DTC P1602 CONTROL MODULE PROGRAMMING ERROR, Diagnostic Procedure with Diagnostic Trouble Code (DTC).>
P2096	Post Catalyst Fuel Trim System Too Lean (Bank 1)	<Ref. to EN(H4SO)(diag)-269, DTC P2096 POST CATALYST FUEL TRIM SYSTEM TOO LEAN (BANK 1), Diagnostic Procedure with Diagnostic Trouble Code (DTC).>
P2097	Post Catalyst Fuel Trim System Too Rich (Bank 1)	<Ref. to EN(H4SO)(diag)-270, DTC P2097 POST CATALYST FUEL TRIM SYSTEM TOO RICH (BANK 1), Diagnostic Procedure with Diagnostic Trouble Code (DTC).>
P2101	Throttle Actuator Control Motor Circuit Range/Performance	<Ref. to EN(H4SO)(diag)-276, DTC P2101 THROTTLE ACTUATOR CONTROL MOTOR CIRCUIT RANGE/PERFORMANCE, Diagnostic Procedure with Diagnostic Trouble Code (DTC).>
P2102	Throttle Actuator Control Motor Circuit Low	<Ref. to EN(H4SO)(diag)-281, DTC P2102 THROTTLE ACTUATOR CONTROL MOTOR CIRCUIT LOW, Diagnostic Procedure with Diagnostic Trouble Code (DTC).>
P2103	Throttle Actuator Control Motor Circuit High	<Ref. to EN(H4SO)(diag)-283, DTC P2103 THROTTLE ACTUATOR CONTROL MOTOR CIRCUIT HIGH, Diagnostic Procedure with Diagnostic Trouble Code (DTC).>
P2109	Throttle/Pedal Position Sensor “A” Minimum Stop Performance	<Ref. to EN(H4SO)(diag)-284, DTC P2109 THROTTLE/PEDAL POSITION SENSOR “A” MINIMUM STOP PERFORMANCE, Diagnostic Procedure with Diagnostic Trouble Code (DTC).>
P2122	Throttle/Pedal Position Sensor/Switch “D” Circuit Low Input	<Ref. to EN(H4SO)(diag)-285, DTC P2122 THROTTLE/PEDAL POSITION SENSOR/SWITCH “D” CIRCUIT LOW INPUT, Diagnostic Procedure with Diagnostic Trouble Code (DTC).>
P2123	Throttle/Pedal Position Sensor/Switch “D” Circuit High Input	<Ref. to EN(H4SO)(diag)-287, DTC P2123 THROTTLE/PEDAL POSITION SENSOR/SWITCH “D” CIRCUIT HIGH INPUT, Diagnostic Procedure with Diagnostic Trouble Code (DTC).>

DTC	Item	Reference
P2127	Throttle/Pedal Position Sensor/Switch “E” Circuit Low Input	<Ref. to EN(H4SO)(diag)-289, DTC P2127 THROTTLE/PEDAL POSITION SENSOR/SWITCH “E” CIRCUIT LOW INPUT, Diagnostic Procedure with Diagnostic Trouble Code (DTC).>
P2128	Throttle/Pedal Position Sensor/Switch “E” Circuit High Input	<Ref. to EN(H4SO)(diag)-291, DTC P2128 THROTTLE/PEDAL POSITION SENSOR/SWITCH “E” CIRCUIT HIGH INPUT, Diagnostic Procedure with Diagnostic Trouble Code (DTC).>
P2135	Throttle/Pedal Position Sensor/Switch “A”/“B” Voltage Correlation	<Ref. to EN(H4SO)(diag)-293, DTC P2135 THROTTLE/PEDAL POSITION SENSOR/SWITCH “A”/“B” VOLTAGE CORRELATION, Diagnostic Procedure with Diagnostic Trouble Code (DTC).>
P2138	Throttle/Pedal Position Sensor/Switch “D”/“E” Voltage Correlation	<Ref. to EN(H4SO)(diag)-296, DTC P2138 THROTTLE/PEDAL POSITION SENSOR/SWITCH “D”/“E” VOLTAGE CORRELATION, Diagnostic Procedure with Diagnostic Trouble Code (DTC).>
P2227	Atmospheric Pressure Sensor Range/ Performance	<Ref. to EN(H4SO)(diag)-298, DTC P2227 BAROMETRIC PRESSURE CIRCUIT RANGE/PERFORMANCE, Diagnostic Procedure with Diagnostic Trouble Code (DTC).>
P2228	Barometric Pressure Circuit Low	<Ref. to EN(H4SO)(diag)-298, DTC P2228 BAROMETRIC PRESSURE CIRCUIT LOW, Diagnostic Procedure with Diagnostic Trouble Code (DTC).>
P2229	Barometric Pressure Circuit High	<Ref. to EN(H4SO)(diag)-299, DTC P2229 BAROMETRIC PRESSURE CIRCUIT HIGH, Diagnostic Procedure with Diagnostic Trouble Code (DTC).>

20. Diagnostic Procedure with Diagnostic Trouble Code (DTC)

A: DTC P0026 INTAKE VALVE CONTROL SOLENOID CIRCUIT RANGE/ PERFORMANCE (BANK 1)

DTC DETECTING CONDITION:

- Immediately at fault recognition
- GENERAL DESCRIPTION <Ref. to GD(H4SO)-8, DTC P0026 INTAKE VALVE CONTROL SOLENOID CIRCUIT RANGE/PERFORMANCE (BANK 1), Diagnostic Trouble Code (DTC) Detecting Criteria.>

TROUBLE SYMPTOM:

Improper idling

CAUTION:

After repair or replacement of faulty parts, perform Clear Memory Mode <Ref. to EN(H4SO)(diag)-50, OPERATION, Clear Memory Mode.>, and Inspection Mode <Ref. to EN(H4SO)(diag)-41, PROCEDURE, Inspection Mode.>.

WIRING DIAGRAM:

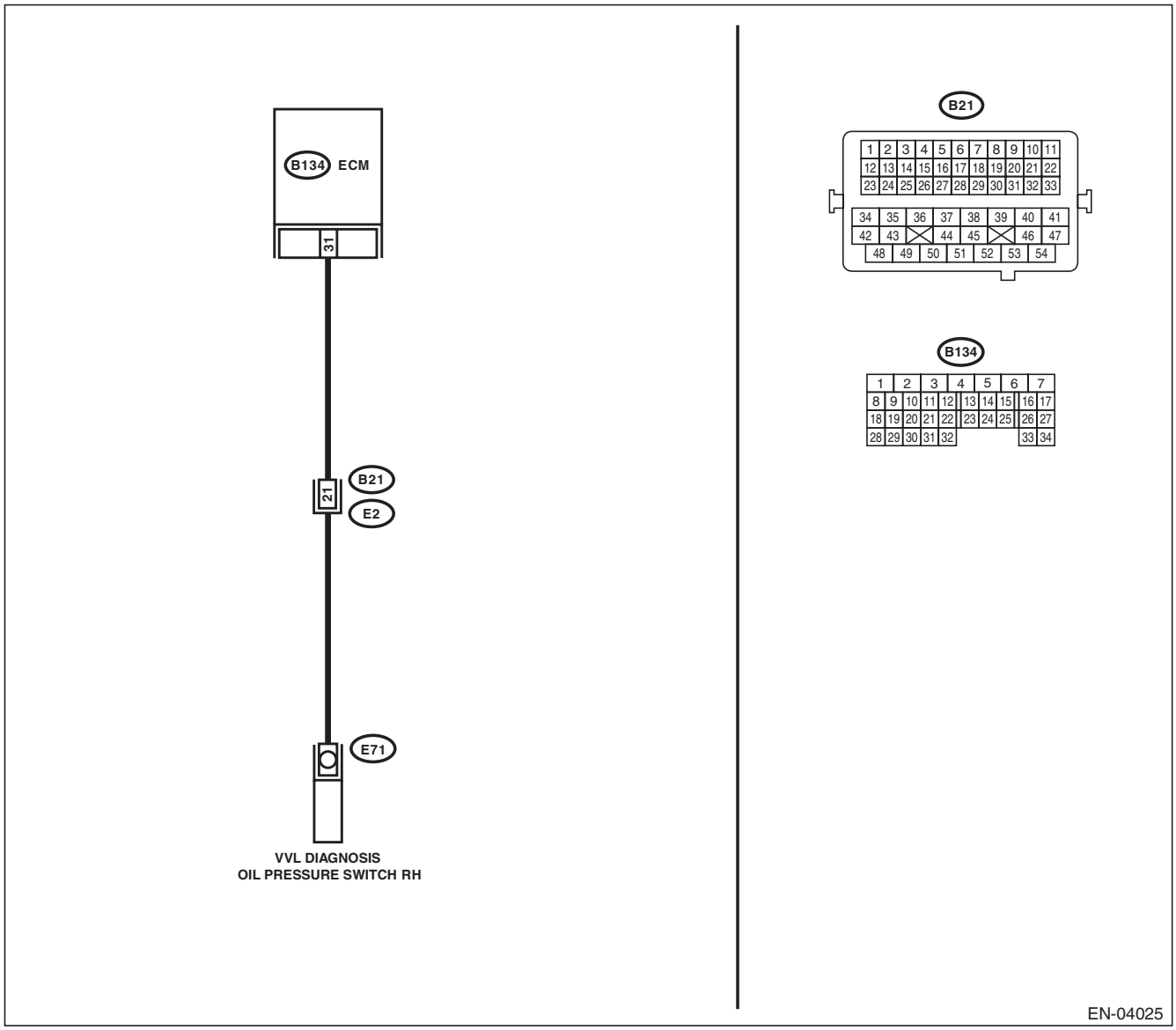

	Step	Check	Yes	No
1	**CHECK HARNESS BETWEEN ECM AND VARIABLE VALVE LIFT DIAGNOSIS OIL PRESSURE SWITCH.** 1) Warm up the engine. 2) Turn the ignition switch to OFF. 3) Disconnect the connectors from ECM and variable valve lift diagnosis oil pressure switch. 4) Measure the resistance of harness between ECM and variable valve lift diagnosis oil pressure switch connector. ***Connector & terminal*** ***(B134) No. 31 — (E71) No. 1:***	Is the resistance less than 1 Ω?	Go to step **2**.	Repair the harness and connector. NOTE: In this case, repair the following item: • Open circuit in harness between ECM and variable valve lift diagnosis oil pressure switch connector • Poor contact of coupling connector
2	**CHECK HARNESS BETWEEN ECM AND VARIABLE VALVE LIFT DIAGNOSIS OIL PRESSURE SWITCH.** Measure the resistance between variable valve lift diagnosis oil pressure switch connector and engine ground. ***Connector & terminal*** ***(E71) No. 1 — Engine ground:***	Is the resistance 1 MΩ or more?	Go to step **3**.	Repair the ground short circuit of harness between ECM and variable valve lift diagnosis oil pressure switch connector.
3	**CHECK HARNESS BETWEEN ECM AND VARIABLE VALVE LIFT DIAGNOSIS OIL PRESSURE SWITCH.** 1) Turn the ignition switch to ON. 2) Measure the voltage between variable valve lift diagnosis oil pressure switch connector and engine ground. ***Connector & terminal*** ***(E71) No. 1 (+) — Engine ground (–):***	Is the voltage 10 V or more?	Repair the short circuit of harness to power supply between ECM and variable valve lift diagnosis oil pressure switch connector.	Go to step **4**.
4	**CHECK DTC.** 1) Perform the Clear Memory Mode. 2) After idling the engine, check the DTC. NOTE: For detailed procedure, refer to “Clear Memory Mode”. <Ref. to EN(H4SO)(diag)-50, Clear Memory Mode.>	Is DTC displayed?	Replace the oil switching solenoid valve. <Ref. to ME(H4SO)-89, Oil Switching Solenoid Valve.> Go to step **5**.	End.
5	**CHECK DTC.** 1) Perform the Clear Memory Mode. 2) After idling the engine, check the DTC. NOTE: For detailed procedure, refer to “Clear Memory Mode”. <Ref. to EN(H4SO)(diag)-50, Clear Memory Mode.>	Is DTC displayed?	Check for oil routing.	End.

B: DTC P0028 INTAKE VALVE CONTROL SOLENOID CIRCUIT RANGE/ PERFORMANCE (BANK 2)

DTC DETECTING CONDITION:

- Immediately at fault recognition
- GENERAL DESCRIPTION <Ref. to GD(H4SO)-10, DTC P0028 INTAKE VALVE CONTROL SOLENOID CIRCUIT RANGE/PERFORMANCE (BANK 2), Diagnostic Trouble Code (DTC) Detecting Criteria.>

TROUBLE SYMPTOM:

Improper idling

CAUTION:

After repair or replacement of faulty parts, perform Clear Memory Mode <Ref. to EN(H4SO)(diag)-50, OPERATION, Clear Memory Mode.>, and Inspection Mode <Ref. to EN(H4SO)(diag)-41, PROCEDURE, Inspection Mode.>.

WIRING DIAGRAM:

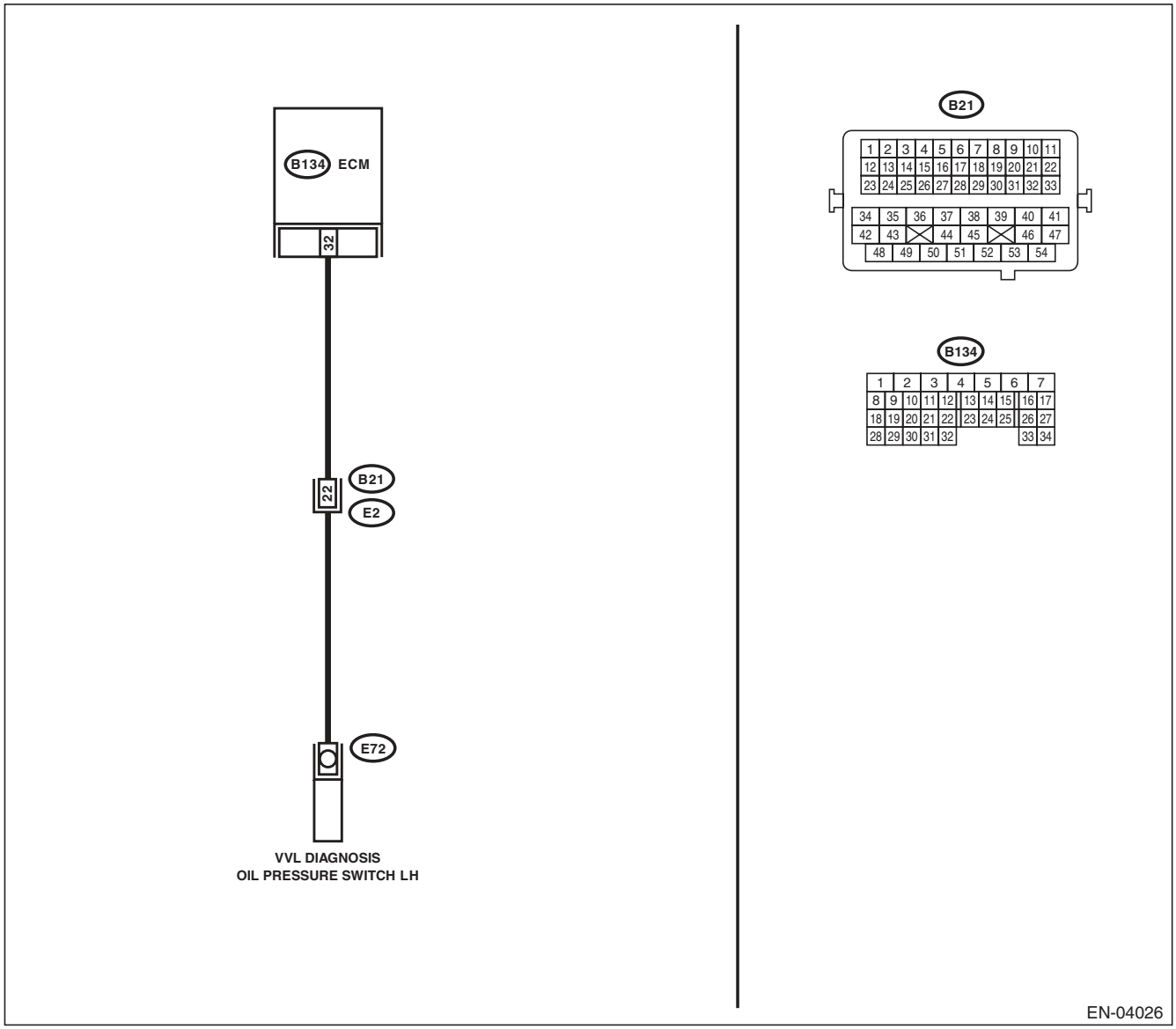

	Step	Check	Yes	No
1	**CHECK HARNESS BETWEEN ECM AND VARIABLE VALVE LIFT DIAGNOSIS OIL PRESSURE SWITCH.** 1) Warm up the engine. 2) Turn the ignition switch to OFF. 3) Disconnect the connectors from ECM and variable valve lift diagnosis oil pressure switch. 4) Measure the resistance of harness between ECM and variable valve lift diagnosis oil pressure switch connector. ***Connector & terminal*** ***(B134) No. 32 — (E72) No. 1:***	Is the resistance less than 1 Ω?	Go to step **2**.	Repair the harness and connector. NOTE: In this case, repair the following item: • Open circuit in harness between ECM and variable valve lift diagnosis oil pressure switch connector • Poor contact of coupling connector
2	**CHECK HARNESS BETWEEN ECM AND VARIABLE VALVE LIFT DIAGNOSIS OIL PRESSURE SWITCH.** Measure the resistance between variable valve lift diagnosis oil pressure switch connector and engine ground. ***Connector & terminal*** ***(E72) No. 1 — Engine ground:***	Is the resistance 1 MΩ or more?	Go to step **3**.	Repair the ground short circuit of harness between ECM and variable valve lift diagnosis oil pressure switch connector.
3	**CHECK HARNESS BETWEEN ECM AND VARIABLE VALVE LIFT DIAGNOSIS OIL PRESSURE SWITCH.** 1) Turn the ignition switch to ON. 2) Measure the voltage between variable valve lift diagnosis oil pressure switch connector and engine ground. ***Connector & terminal*** ***(E72) No. 1 (+) — Engine ground (–):***	Is the voltage 10 V or more?	Repair the short circuit of harness to power supply between ECM and variable valve lift diagnosis oil pressure switch connector.	Go to step **4**.
4	**CHECK DTC.** 1) Perform the Clear Memory Mode. 2) After idling the engine, check the DTC. NOTE: For detailed procedure, refer to “Clear Memory Mode”. <Ref. to EN(H4SO)(diag)-50, Clear Memory Mode.>	Is DTC displayed?	Replace the oil switching solenoid valve. <Ref. to ME(H4SO)-89, Oil Switching Solenoid Valve.> Go to step **5**.	End.
5	**CHECK DTC.** 1) Perform the Clear Memory Mode. 2) After idling the engine, check the DTC. NOTE: For detailed procedure, refer to “Clear Memory Mode”. <Ref. to EN(H4SO)(diag)-50, Clear Memory Mode.>	Is DTC displayed?	Check for oil routing.	End.

C: DTC P0030 HO2S HEATER CONTROL CIRCUIT (BANK 1 SENSOR 1)

DTC DETECTING CONDITION:

- Two consecutive driving cycles with fault
- GENERAL DESCRIPTION <Ref. to GD(H4SO)-11, DTC P0030 HO2S HEATER CONTROL CIRCUIT (BANK 1 SENSOR 1), Diagnostic Trouble Code (DTC) Detecting Criteria.>

CAUTION:

After repair or replacement of faulty parts, perform Clear Memory Mode <Ref. to EN(H4SO)(diag)-50, OPERATION, Clear Memory Mode.>, and Inspection Mode <Ref. to EN(H4SO)(diag)-41, PROCEDURE, Inspection Mode.>.

WIRING DIAGRAM:

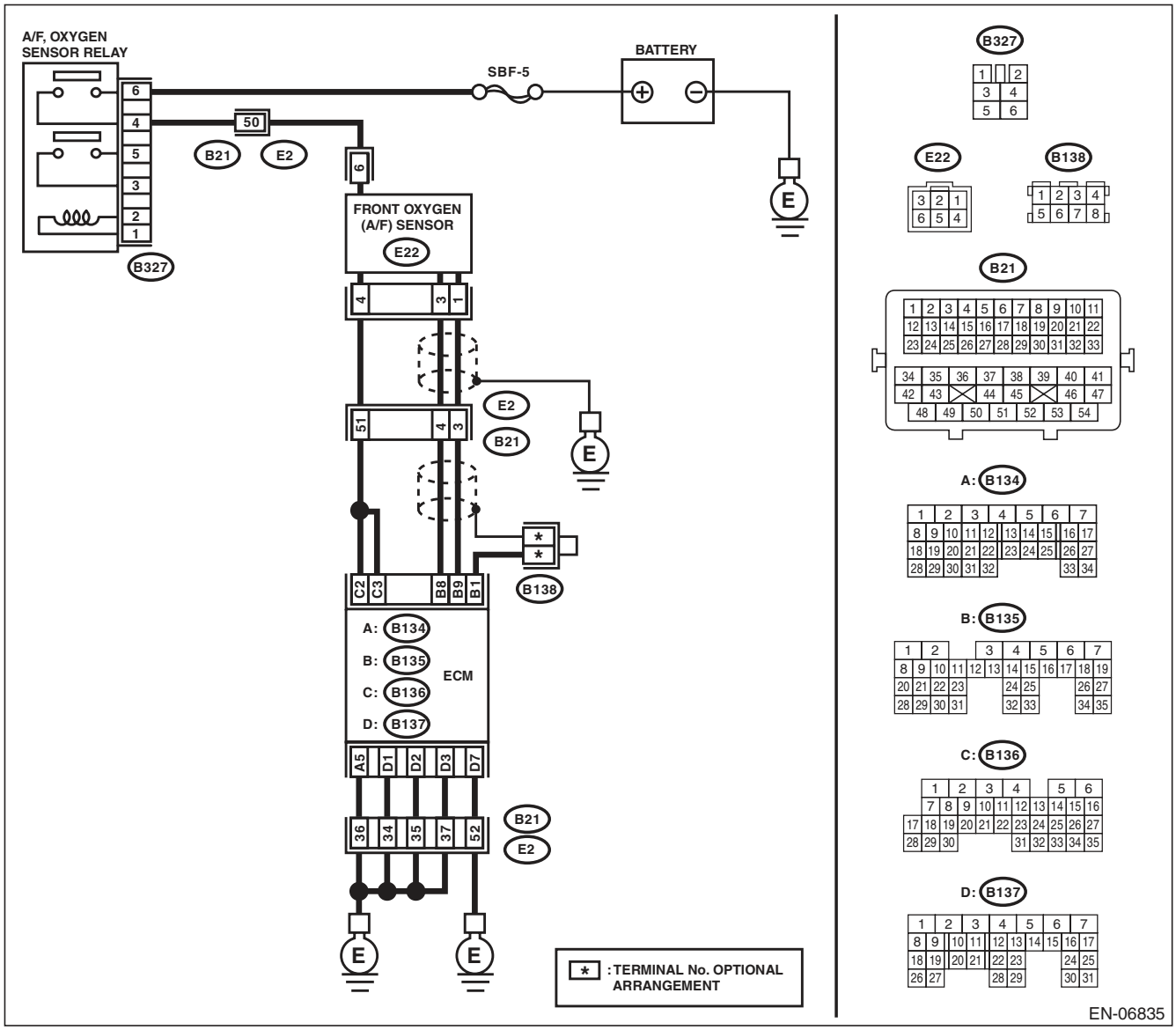

	Step	Check	Yes	No
1	**CHECK HARNESS BETWEEN ECM AND FRONT OXYGEN (A/F) SENSOR CONNECTOR.** 1) Start and warm up engine. 2) Turn the ignition switch to OFF. 3) Disconnect the connectors from ECM and front oxygen (A/F) sensor. 4) Measure the resistance of harness between ECM and front oxygen (A/F) sensor connector. ***Connector & terminal*** ***(B136) No. 2 — (E22) No. 4:*** ***(B136) No. 3 — (E22) No. 4:***	Is the resistance less than 1 Ω?	Go to step **2**.	Repair the harness and connector. NOTE: In this case, repair the following item: • Open circuit in harness between ECM and front oxygen (A/F) sensor connector • Poor contact of coupling connector
2	**CHECK HARNESS BETWEEN ECM AND FRONT OXYGEN (A/F) SENSOR CONNECTOR.** Measure the resistance of harness between ECM and front oxygen (A/F) sensor connector. ***Connector & terminal*** ***(B135) No. 9 — (E22) No. 1:*** ***(B135) No. 8 — (E22) No. 3:***	Is the resistance less than 1 Ω?	Go to step **3**.	Repair the harness and connector. NOTE: In this case, repair the following item: • Open circuit in harness between ECM and front oxygen (A/F) sensor connector • Poor contact of coupling connector
3	**CHECK FRONT OXYGEN (A/F) SENSOR.** Measure the resistance between front oxygen (A/F) sensor connector terminals. ***Terminals*** ***No. 6 — No. 4:***	Is the resistance between 2 — 3 Ω?	Go to step **4**.	Replace the front oxygen (A/F) sensor. <Ref. to FU(H4SO)-35, Front Oxygen (A/F) Sensor.>
4	**CHECK POOR CONTACT.** Check for poor contact of ECM and front oxygen (A/F) sensor connector.	Is there poor contact in ECM or front oxygen (A/F) sensor connector?	Repair the poor contact in ECM or front oxygen (A/F) sensor connector.	Replace the front oxygen (A/F) sensor. <Ref. to FU(H4SO)-35, Front Oxygen (A/F) Sensor.>

D: DTC P0031 HO2S HEATER CONTROL CIRCUIT LOW (BANK 1 SENSOR 1)

DTC DETECTING CONDITION:

- Immediately at fault recognition
- GENERAL DESCRIPTION <Ref. to GD(H4SO)-13, DTC P0031 HO2S HEATER CONTROL CIRCUIT LOW (BANK 1 SENSOR 1), Diagnostic Trouble Code (DTC) Detecting Criteria.>

CAUTION:

After repair or replacement of faulty parts, perform Clear Memory Mode <Ref. to EN(H4SO)(diag)-50, OPERATION, Clear Memory Mode.>, and Inspection Mode <Ref. to EN(H4SO)(diag)-41, PROCEDURE, Inspection Mode.>.

WIRING DIAGRAM:

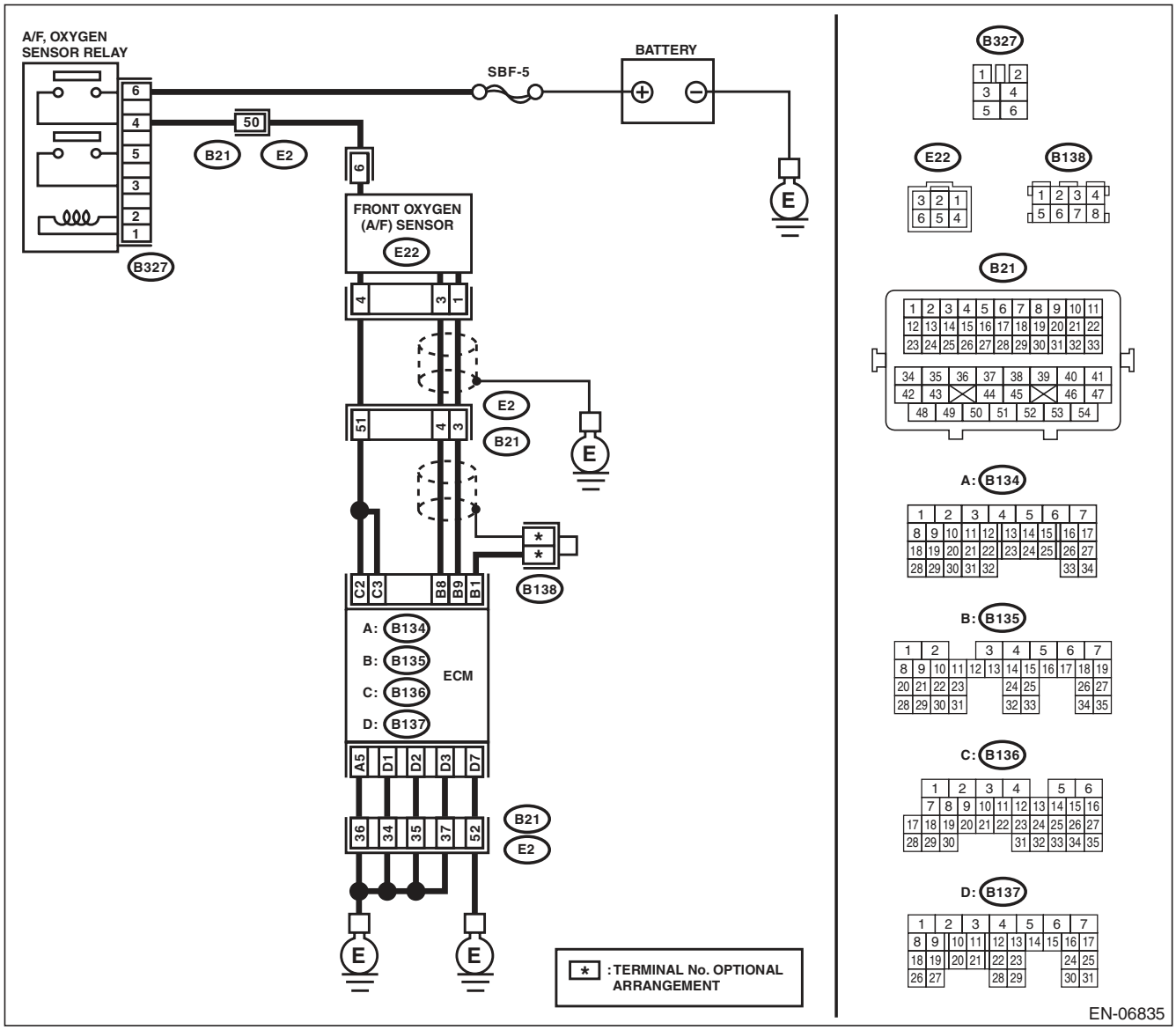

	Step	Check	Yes	No
1	**CHECK POWER SUPPLY TO FRONT OXYGEN (A/F) SENSOR.** 1) Turn the ignition switch to OFF. 2) Disconnect the connector from front oxygen (A/F) sensor. 3) Turn the ignition switch to ON. 4) Measure the voltage between front oxygen (A/F) sensor connector and engine ground. ***Connector & terminal*** ***(E22) No. 6 (+) — Engine ground (–):***	Is the voltage 10 V or more?	Go to step **2**.	Repair the power supply line. Or replace the main relay. NOTE: In this case, repair the following item: • Open circuit in harness between A/F, oxygen sensor relay connector and front oxygen (A/F) sensor connector • Poor contact of A/F, oxygen sensor relay connector • Poor contact of coupling connector • Malfunction of A/F, oxygen sensor relay
2	**CHECK HARNESS BETWEEN ECM AND FRONT OXYGEN (A/F) SENSOR.** 1) Turn the ignition switch to OFF. 2) Disconnect the connectors from ECM. 3) Measure the resistance between ECM and front oxygen (A/F) sensor connector. ***Connector & terminal*** ***(B136) No. 2 — (E22) No. 4:*** ***(B136) No. 3 — (E22) No. 4:***	Is the resistance less than 1 Ω?	Go to step **3**.	Repair the harness and connector. NOTE: In this case, repair the following item: • Open circuit in harness between ECM and front oxygen (A/F) sensor connector • Poor contact of coupling connector
3	**CHECK GROUND CIRCUIT FOR ECM.** Measure the resistance of harness between ECM and chassis ground. ***Connector & terminal*** ***(B134) No. 5 — Chassis ground:*** ***(B137) No. 1 — Chassis ground:*** ***(B137) No. 2 — Chassis ground:*** ***(B137) No. 3 — Chassis ground:*** ***(B137) No. 7 — Chassis ground:***	Is the resistance less than 5 Ω?	Go to step **4**.	Repair the harness and connector. NOTE: In this case, repair the following item: • Open circuit of harness between ECM and engine ground • Poor contact in ECM connector • Poor contact of coupling connector
4	**CHECK FRONT OXYGEN (A/F) SENSOR.** Measure the resistance between front oxygen (A/F) sensor connector terminals. ***Terminals*** ***No. 6 — No. 4:***	Is the resistance between 2 — 3 Ω?	Repair the poor contact of ECM connector.	Replace the front oxygen (A/F) sensor. <Ref. to FU(H4SO)-35, Front Oxygen (A/F) Sensor.>

E: DTC P0032 HO2S HEATER CONTROL CIRCUIT HIGH (BANK 1 SENSOR 1)

DTC DETECTING CONDITION:

- Immediately at fault recognition
- GENERAL DESCRIPTION <Ref. to GD(H4SO)-15, DTC P0032 HO2S HEATER CONTROL CIRCUIT HIGH (BANK 1 SENSOR 1), Diagnostic Trouble Code (DTC) Detecting Criteria.>

CAUTION:

After repair or replacement of faulty parts, perform Clear Memory Mode <Ref. to EN(H4SO)(diag)-50, OPERATION, Clear Memory Mode.>, and Inspection Mode <Ref. to EN(H4SO)(diag)-41, PROCEDURE, Inspection Mode.>.

WIRING DIAGRAM:

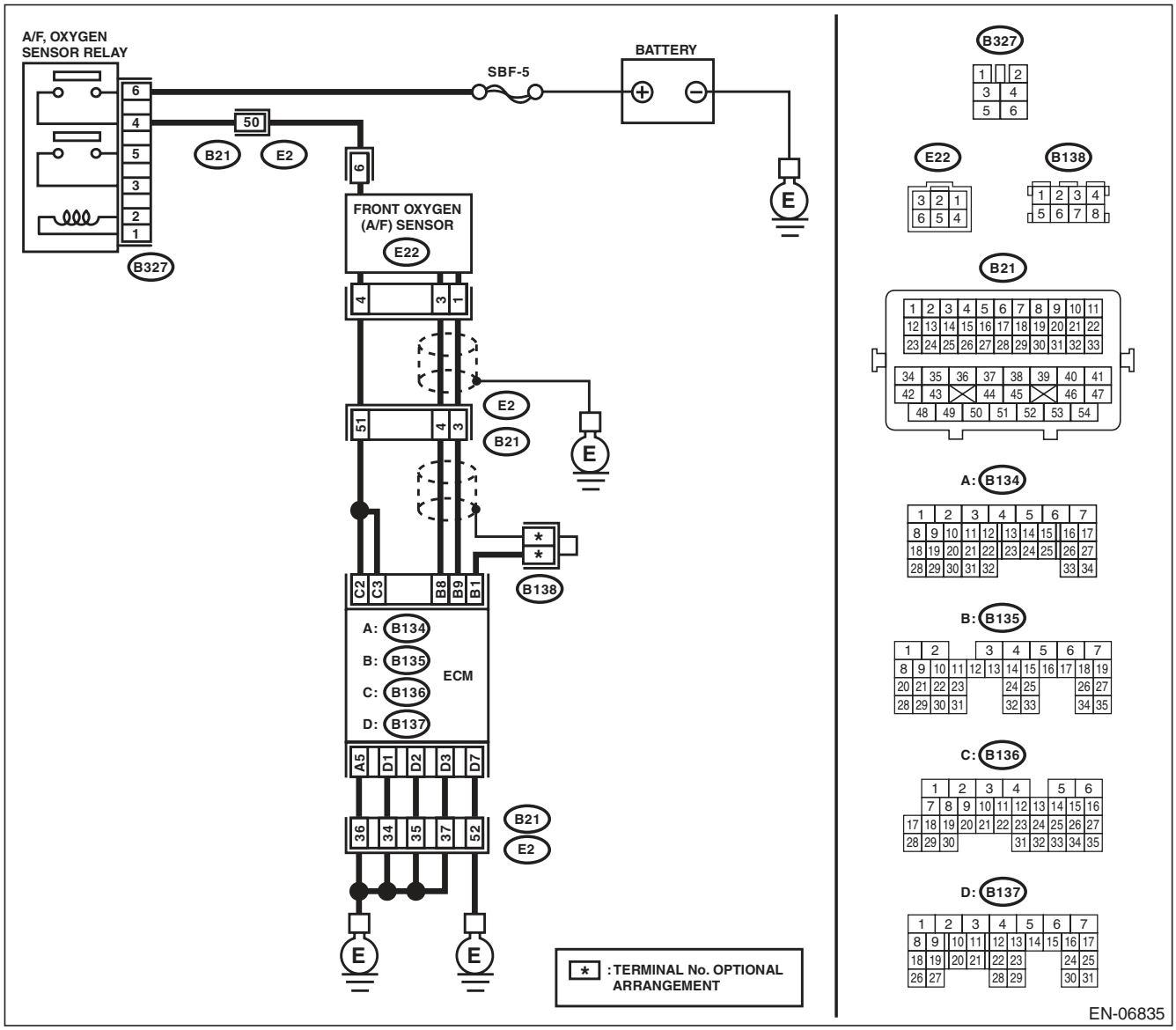

Step		Check	Yes	No
1	**CHECK HARNESS BETWEEN ECM AND FRONT OXYGEN (A/F) SENSOR.** 1) Turn the ignition switch to OFF. 2) Measure the voltage between ECM and chassis ground. ***Connector & terminal*** ***(B136) No. 2 (+) — Chassis ground (–):*** ***(B136) No. 3 (+) — Chassis ground (–):***	Is the voltage 10 V or more?	Repair the short circuit to power in the harness between ECM and front oxygen (A/F) sensor connector.	Go to step **2**.
2	**CHECK GROUND CIRCUIT FOR ECM.** 1) Disconnect the connectors from ECM. 2) Measure the resistance between ECM and chassis ground. ***Connector & terminal*** ***(B134) No. 5 — Chassis ground:*** ***(B137) No. 1 — Chassis ground:*** ***(B137) No. 2 — Chassis ground:*** ***(B137) No. 3 — Chassis ground:*** ***(B137) No. 7 — Chassis ground:***	Is the resistance less than 5 Ω?	Repair the poor contact of ECM connector.	Repair the harness and connector. NOTE: In this case, repair the following item: • Open circuit of harness between ECM and engine ground • Poor contact of coupling connector

F: DTC P0037 HO2S HEATER CONTROL CIRCUIT LOW (BANK 1 SENSOR 2)

DTC DETECTING CONDITION:

- Two consecutive driving cycles with fault
- GENERAL DESCRIPTION <Ref. to GD(H4SO)-17, DTC P0037 HO2S HEATER CONTROL CIRCUIT LOW (BANK 1 SENSOR 2), Diagnostic Trouble Code (DTC) Detecting Criteria.>

CAUTION:

After repair or replacement of faulty parts, perform Clear Memory Mode <Ref. to EN(H4SO)(diag)-50, OPERATION, Clear Memory Mode.>, and Inspection Mode <Ref. to EN(H4SO)(diag)-41, PROCEDURE, Inspection Mode.>.

WIRING DIAGRAM:

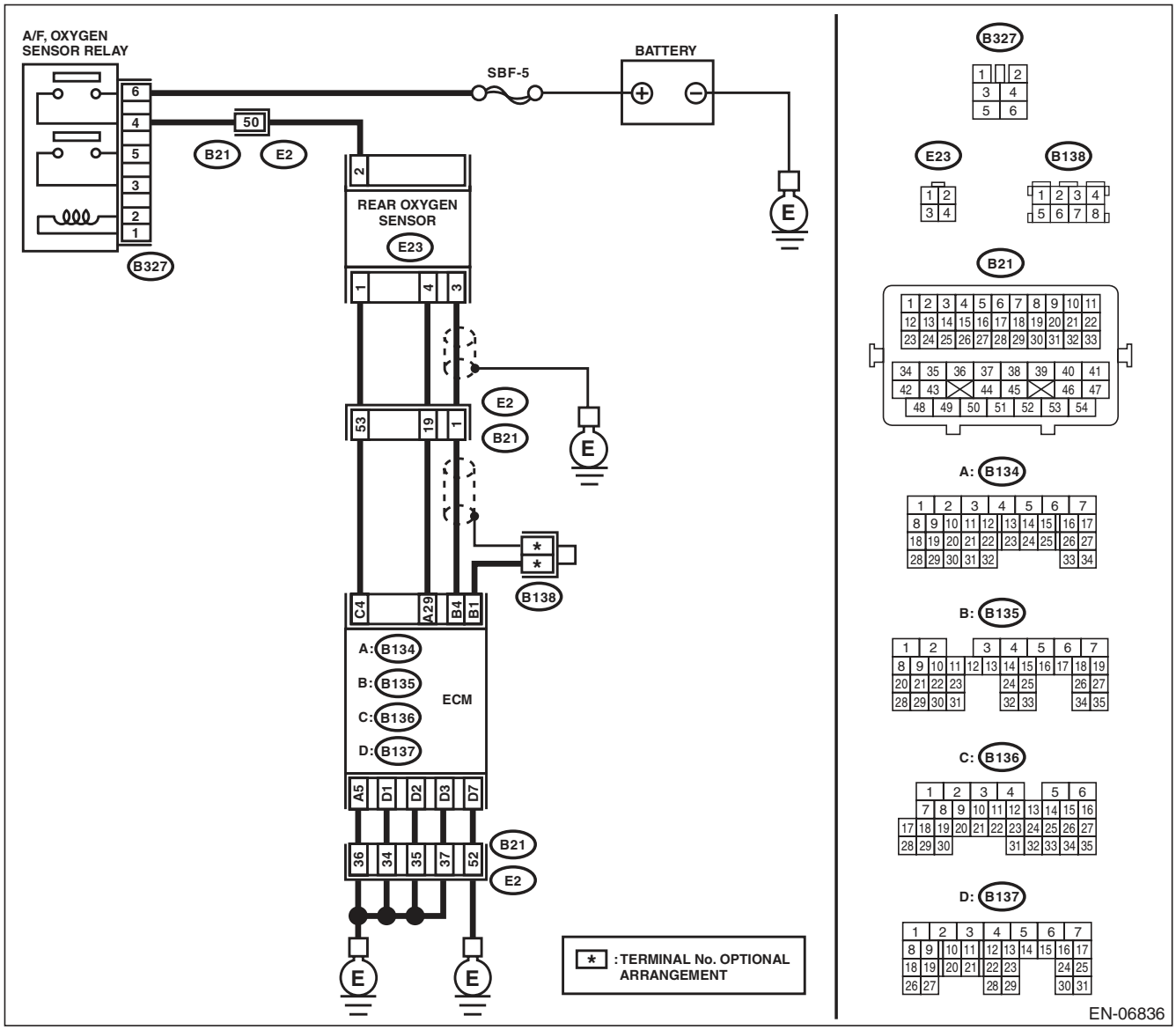

	Step	Check	Yes	No
1	**CHECK POWER SUPPLY TO REAR OXYGEN SENSOR.** 1) Turn the ignition switch to OFF. 2) Disconnect the connector from rear oxygen sensor. 3) Turn the ignition switch to ON. 4) Measure the voltage between rear oxygen sensor connector and engine ground. ***Connector & terminal*** ***(E23) No. 2 (+) — Engine ground (–):***	Is the voltage 10 V or more?	Go to step **2**.	Repair the power supply line. Or replace the main relay. NOTE: In this case, repair the following item: • Open circuit in harness between A/F, oxygen sensor relay connector and rear oxygen sensor connector • Poor contact of A/F, oxygen sensor relay connector • Poor contact of coupling connector
2	**CHECK HARNESS BETWEEN ECM AND REAR OXYGEN SENSOR.** 1) Turn the ignition switch to OFF. 2) Disconnect the connectors from ECM. 3) Measure the resistance between the ECM and oxygen sensor connector. ***Connector & terminal*** ***(B136) No. 4 — (E23) No. 1:***	Is the resistance less than 1 Ω?	Go to step **3**.	Repair the harness and connector. NOTE: In this case, repair the following item: • Open circuit in harness between ECM and rear oxygen sensor connector • Poor contact of coupling connector
3	**CHECK GROUND CIRCUIT FOR ECM.** Measure the resistance of harness between ECM and chassis ground. ***Connector & terminal*** ***(B134) No. 5 — Chassis ground:*** ***(B137) No. 1 — Chassis ground:*** ***(B137) No. 2 — Chassis ground:*** ***(B137) No. 3 — Chassis ground:*** ***(B137) No. 7 — Chassis ground:***	Is the resistance less than 5 Ω?	Go to step **4**.	Repair the harness and connector. NOTE: In this case, repair the following item: • Open circuit of harness between ECM and engine ground • Poor contact in ECM connector • Poor contact of coupling connector
4	**CHECK REAR OXYGEN SENSOR.** Measure the resistance between rear oxygen sensor connector terminals. ***Terminals*** ***No. 2 — No. 1:***	Is the resistance between 5 — 7 Ω?	Repair the poor contact of ECM connector.	Replace the rear oxygen sensor. <Ref. to FU(H4SO)-37, Rear Oxygen Sensor.>

G: DTC P0038 HO2S HEATER CONTROL CIRCUIT HIGH (BANK 1 SENSOR 2)

DTC DETECTING CONDITION:

- Two consecutive driving cycles with fault
- GENERAL DESCRIPTION <Ref. to GD(H4SO)-19, DTC P0038 HO2S HEATER CONTROL CIRCUIT HIGH (BANK 1 SENSOR 2), Diagnostic Trouble Code (DTC) Detecting Criteria.>

CAUTION:

After repair or replacement of faulty parts, perform Clear Memory Mode <Ref. to EN(H4SO)(diag)-50, OPERATION, Clear Memory Mode.>, and Inspection Mode <Ref. to EN(H4SO)(diag)-41, PROCEDURE, Inspection Mode.>.

WIRING DIAGRAM:

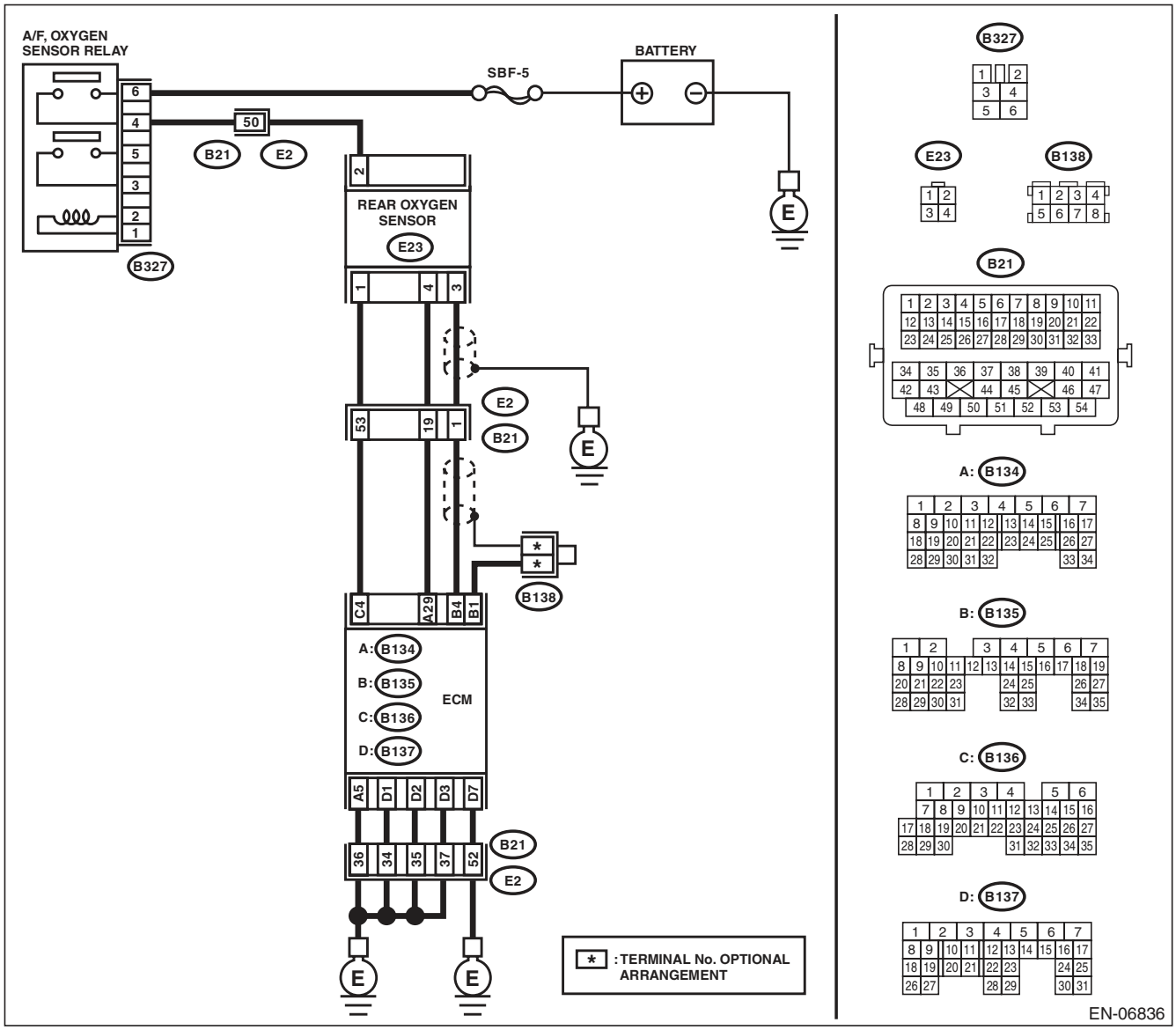

Step		Check	Yes	No
1	**CHECK HARNESS BETWEEN ECM AND REAR OXYGEN SENSOR.** 1) Turn the ignition switch to OFF. 2) Measure the voltage between ECM and chassis ground. ***Connector & terminal*** ***(B136) No. 4 (+) — Chassis ground (–):***	Is the voltage 10 V or more?	Repair the short circuit to power in the harness between ECM and rear oxygen sensor connector.	Go to step **2**.
2	**CHECK GROUND CIRCUIT FOR ECM.** 1) Disconnect the connectors from ECM. 2) Measure the resistance between ECM and chassis ground. ***Connector & terminal*** ***(B134) No. 5 — Chassis ground:*** ***(B137) No. 1 — Chassis ground:*** ***(B137) No. 2 — Chassis ground:*** ***(B137) No. 3 — Chassis ground:*** ***(B137) No. 7 — Chassis ground:***	Is the resistance less than 5 Ω?	Repair the poor contact of ECM connector.	Repair the harness and connector. NOTE: In this case, repair the following item: • Open circuit of harness between ECM and engine ground • Poor contact of coupling connector

H: DTC P0068 MAP/MAF - THROTTLE POSITION CORRELATION

DTC DETECTING CONDITION:

- Two consecutive driving cycles with fault
- GENERAL DESCRIPTION <Ref. to GD(H4SO)-21, DTC P0068 MAP/MAF - THROTTLE POSITION CORRELATION, Diagnostic Trouble Code (DTC) Detecting Criteria.>

CAUTION:

After repair or replacement of faulty parts, perform Clear Memory Mode <Ref. to EN(H4SO)(diag)-50, OPERATION, Clear Memory Mode.>, and Inspection Mode <Ref. to EN(H4SO)(diag)-41, PROCEDURE, Inspection Mode.>.

WIRING DIAGRAM:

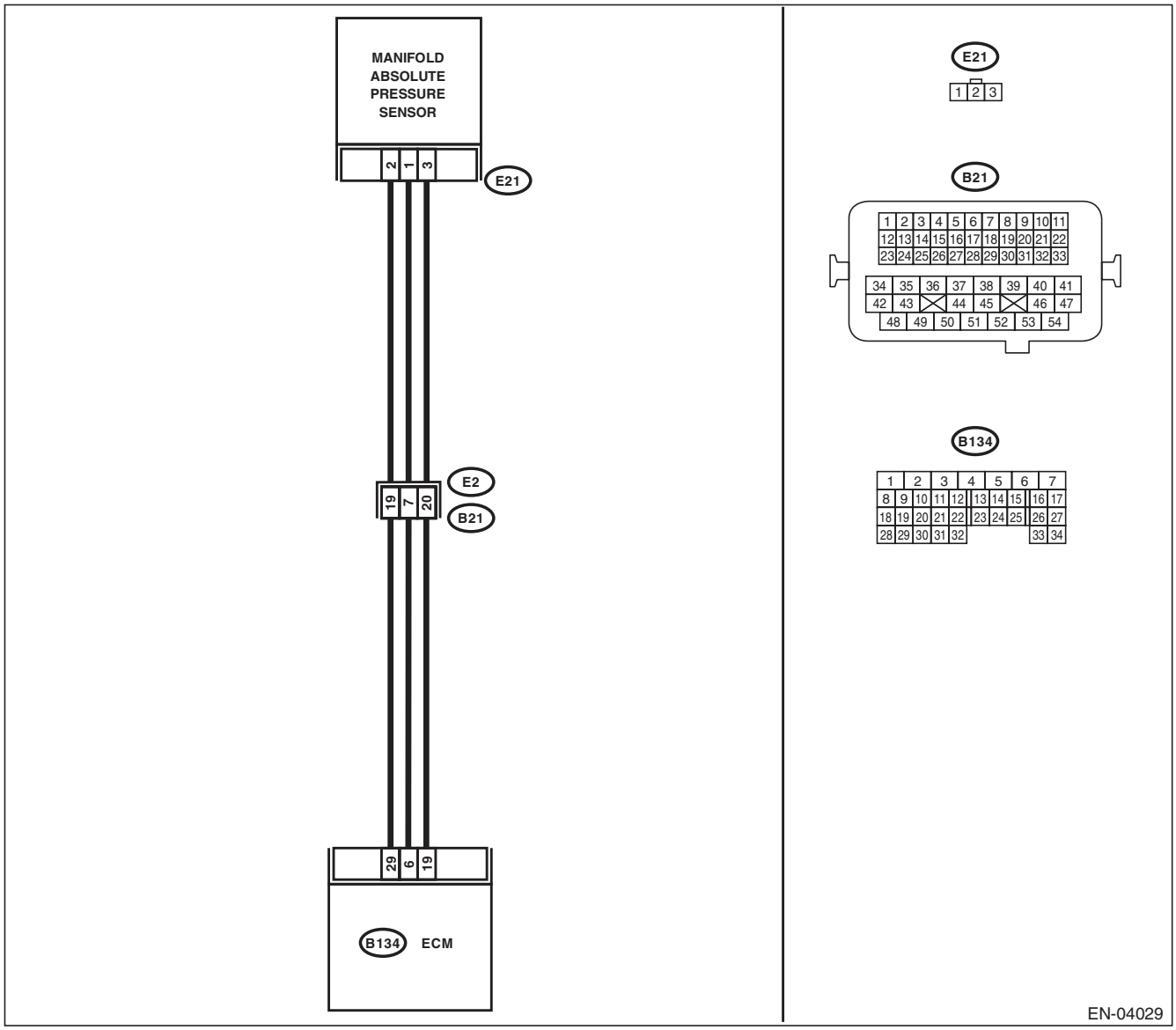

Step		Check	Yes	No
1	**CHECK AIR INTAKE SYSTEM.**	Are there holes, loose bolts or disconnection of hose on air intake system?	Repair the air intake system.	Go to step **2**.
2	**CHECK MANIFOLD ABSOLUTE PRESSURE SENSOR.** 1) Start the engine and warm up engine until coolant temperature is higher than 75°C (167°F). 2) For AT models, set the select lever to “P” range or “N” range, and for MT models, place the shift lever in the neutral position. 3) Turn the A/C switch to OFF. 4) Turn all the accessory switches to OFF. 5) Read the data of intake manifold pressure sensor signal using Subaru Select Monitor or general scan tool. NOTE: • SUBARU SELECT MONITOR For detailed operation procedure, refer to “READ CURRENT DATA FOR ENGINE”. <Ref. to EN(H4SO)(diag)-33, Subaru Select Monitor.> • General Scan Tool For detailed operation procedures, refer to the “General Scan Tool Instruction Manual”.	Is the measured value 73.3 — 106.6 kPa (550 — 800 mmHg, 21.65 — 31.50 inHg) when the ignition is turned ON, and 20.0 — 46.7 kPa (150 — 350 mmHg, 5.91 — 13.78 inHg) during idling?	Go to step **3**.	Replace the manifold absolute pressure sensor. <Ref. to FU(H4SO)-27, Manifold Absolute Pressure Sensor.>
3	**CHECK THROTTLE OPENING ANGLE.** Read the data of throttle position signal using Subaru Select Monitor or general scan tool. NOTE: • SUBARU SELECT MONITOR For detailed operation procedure, refer to “READ CURRENT DATA FOR ENGINE”. <Ref. to EN(H4SO)(diag)-33, Subaru Select Monitor.> • General Scan Tool For detailed operation procedures, refer to the “General Scan Tool Instruction Manual”.	Is the measured value less than 5% when throttle is fully closed?	Go to step **4**.	Replace the electronic throttle control. <Ref. to FU(H4SO)-12, Throttle Body.>
4	**CHECK THROTTLE OPENING ANGLE.**	Is the measured value 85% or more when throttle is fully open?	Replace the manifold absolute pressure sensor. <Ref. to FU(H4SO)-27, Manifold Absolute Pressure Sensor.>	Replace the electronic throttle control. <Ref. to FU(H4SO)-12, Throttle Body.>

I: DTC P0076 INTAKE VALVE CONTROL SOLENOID CIRCUIT LOW (BANK 1)

DTC DETECTING CONDITION:

- Immediately at fault recognition
- GENERAL DESCRIPTION <Ref. to GD(H4SO)-23, DTC P0076 INTAKE VALVE CONTROL SOLENOID CIRCUIT LOW (BANK 1), Diagnostic Trouble Code (DTC) Detecting Criteria.>

TROUBLE SYMPTOM:

Improper idling

CAUTION:

After repair or replacement of faulty parts, perform Clear Memory Mode <Ref. to EN(H4SO)(diag)-50, OPERATION, Clear Memory Mode.>, and Inspection Mode <Ref. to EN(H4SO)(diag)-41, PROCEDURE, Inspection Mode.>.

WIRING DIAGRAM:

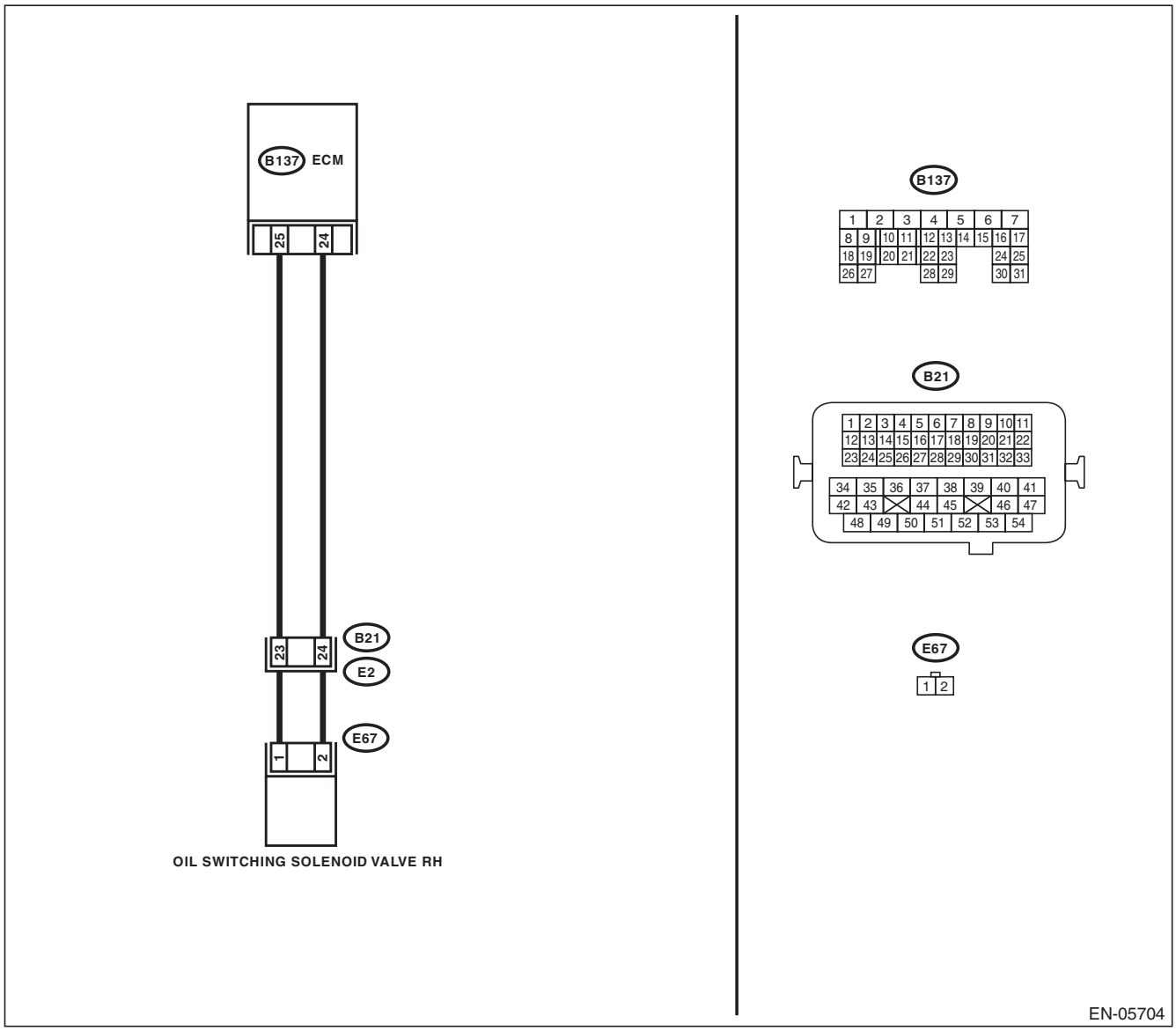

	Step	Check	Yes	No
1	**CHECK HARNESS BETWEEN ECM AND OIL SWITCHING SOLENOID VALVE.** 1) Turn the ignition switch to OFF. 2) Disconnect the connectors from the ECM and oil switching solenoid valve. 3) Measure the resistance of harness between ECM and oil switching solenoid valve. ***Connector & terminal*** ***(B137) No. 25 — (E67) No. 1:*** ***(B137) No. 24 — (E67) No. 2:***	Is the resistance less than 1 Ω?	Go to step **2**.	Repair the harness and connector. NOTE: In this case, repair the following item: • Open circuit of harness between ECM and oil switching solenoid valve connector • Poor contact of coupling connector
2	**CHECK HARNESS BETWEEN ECM AND OIL SWITCHING SOLENOID VALVE.** Measure the resistance between ECM and chassis ground. ***Connector & terminal*** ***(B137) No. 25 — Chassis ground:*** ***(B137) No. 24 — Chassis ground:***	Is the resistance 1 MΩ or more?	Go to step **3**.	Repair the ground short circuit of harness between ECM and oil switching solenoid valve connector.
3	**CHECK OIL SWITCHING SOLENOID VALVE.** Measure the resistance between oil switching solenoid valve terminals. ***Terminals*** ***No. 1 — No. 2:***	Is the resistance between 6 — 12 Ω?	Repair the poor contact of ECM and oil switching solenoid valve connector.	Replace the oil switching solenoid valve. <Ref. to ME(H4SO)-89, Oil Switching Solenoid Valve.>

J: DTC P0077 INTAKE VALVE CONTROL SOLENOID CIRCUIT HIGH (BANK 1)

DTC DETECTING CONDITION:

- Immediately at fault recognition
- GENERAL DESCRIPTION <Ref. to GD(H4SO)-24, DTC P0077 INTAKE VALVE CONTROL SOLENOID CIRCUIT HIGH (BANK 1), Diagnostic Trouble Code (DTC) Detecting Criteria.>

TROUBLE SYMPTOM:

Improper idling

CAUTION:

After repair or replacement of faulty parts, perform Clear Memory Mode <Ref. to EN(H4SO)(diag)-50, OPERATION, Clear Memory Mode.>, and Inspection Mode <Ref. to EN(H4SO)(diag)-41, PROCEDURE, Inspection Mode.>.

WIRING DIAGRAM:

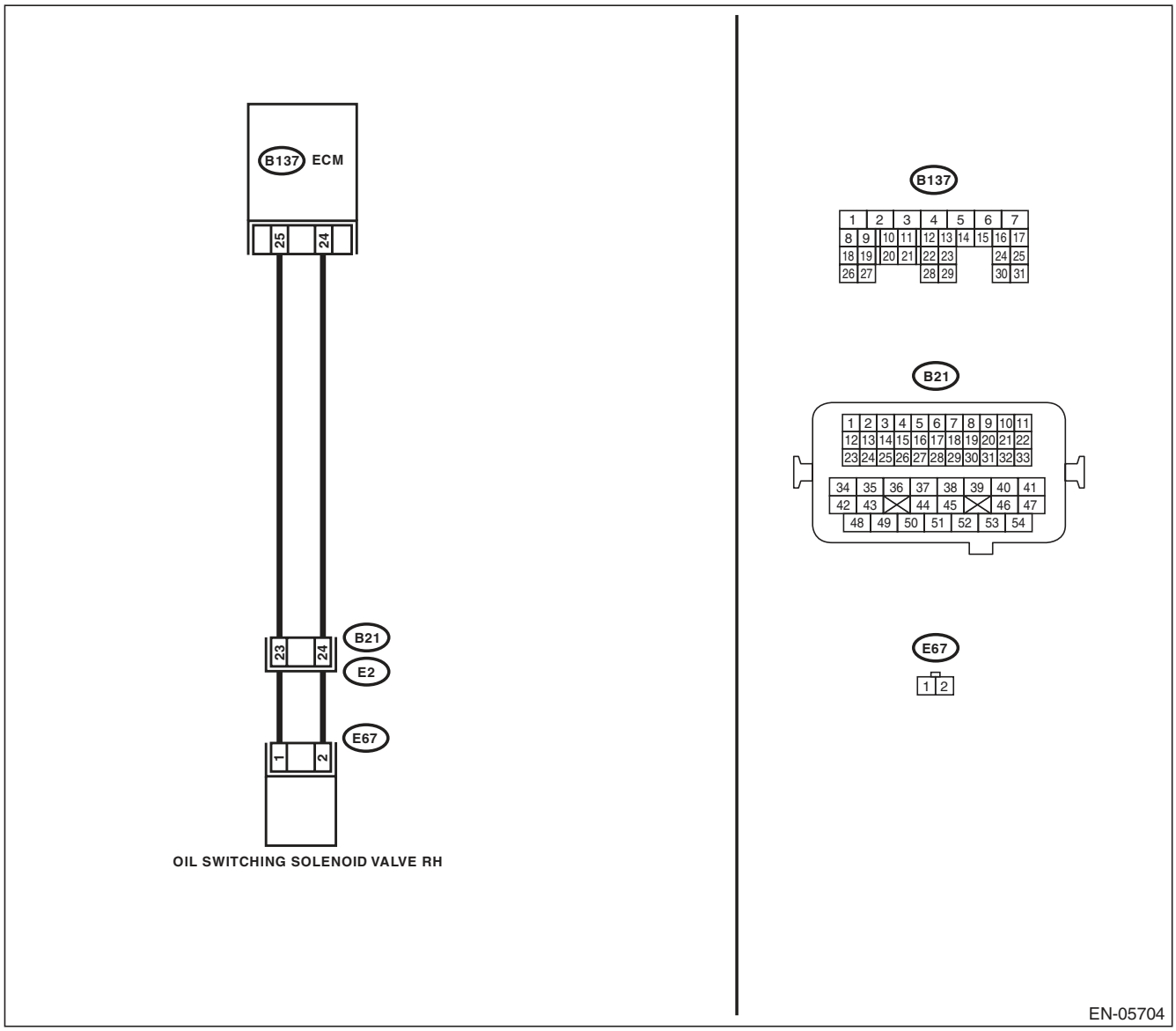

	Step	Check	Yes	No
1	**CHECK HARNESS BETWEEN ECM AND OIL SWITCHING SOLENOID VALVE.** 1) Turn the ignition switch to OFF. 2) Disconnect the connectors from the ECM and oil switching solenoid valve. 3) Measure the voltage between ECM and chassis ground. ***Connector & terminal*** ***(B137) No. 25 (+) — Chassis ground (–):*** ***(B137) No. 24 (+) — Chassis ground (–):***	Is the voltage less than 1 V?	Go to step **2**.	Repair the short circuit of harness to power supply between ECM and oil switching solenoid valve connector.
2	**CHECK HARNESS BETWEEN ECM AND OIL SWITCHING SOLENOID VALVE.** Measure the resistance of harness between ECM and oil switching solenoid valve connector. ***Connector & terminal*** ***(B137) No. 25 — (E67) No. 1:*** ***(B137) No. 24 — (E67) No. 2:***	Is the resistance less than 1 Ω?	Go to step **3**.	Repair the harness and connector. NOTE: In this case, repair the following item: • Open circuit of harness between ECM and oil switching solenoid valve connector • Poor contact of coupling connector
3	**CHECK OIL SWITCHING SOLENOID VALVE.** Measure the resistance between oil switching solenoid valve terminals. ***Terminals*** ***No. 1 — No. 2:***	Is the resistance between 6 — 12 Ω?	Repair the poor contact of ECM and oil switching solenoid valve connector.	Replace the oil switching solenoid valve. <Ref. to ME(H4SO)-89, Oil Switching Solenoid Valve.>

K: DTC P0082 INTAKE VALVE CONTROL SOLENOID CIRCUIT LOW (BANK 2)

DTC DETECTING CONDITION:

- Immediately at fault recognition
- GENERAL DESCRIPTION <Ref. to GD(H4SO)-25, DTC P0082 INTAKE VALVE CONTROL SOLENOID CIRCUIT LOW (BANK 2), Diagnostic Trouble Code (DTC) Detecting Criteria.>

TROUBLE SYMPTOM:

Improper idling

CAUTION:

After repair or replacement of faulty parts, perform Clear Memory Mode <Ref. to EN(H4SO)(diag)-50, OPERATION, Clear Memory Mode.>, and Inspection Mode <Ref. to EN(H4SO)(diag)-41, PROCEDURE, Inspection Mode.>.

WIRING DIAGRAM:

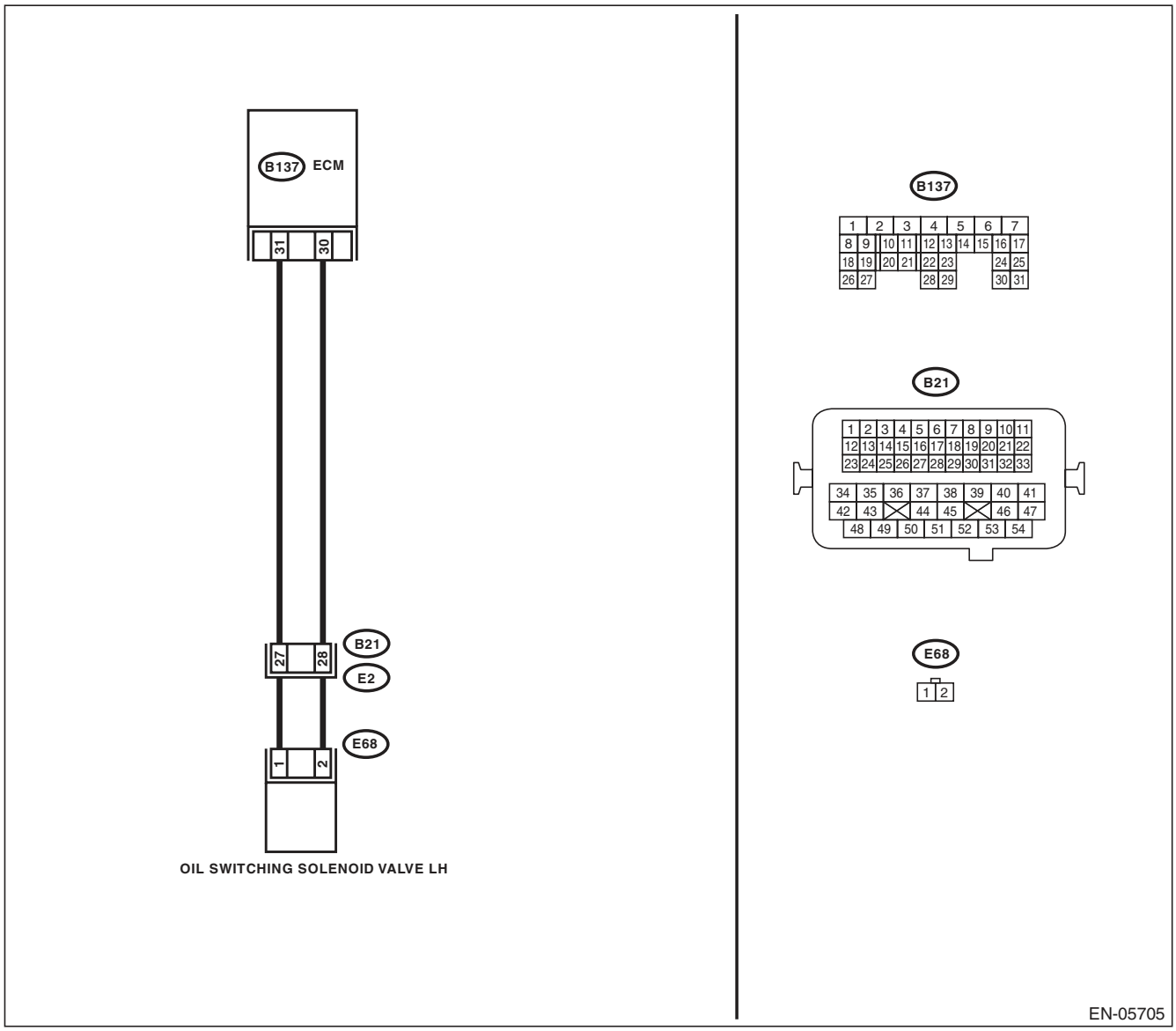

	Step	Check	Yes	No
1	**CHECK HARNESS BETWEEN ECM AND OIL SWITCHING SOLENOID VALVE.** 1) Turn the ignition switch to OFF. 2) Disconnect the connectors from the ECM and oil switching solenoid valve. 3) Measure the resistance between ECM and oil switching solenoid valve. ***Connector & terminal*** ***(B137) No. 31 — (E68) No. 1:*** ***(B137) No. 30 — (E68) No. 2:***	Is the resistance less than 1 Ω?	Go to step **2**.	Repair the harness and connector. NOTE: In this case, repair the following item: • Open circuit of harness between ECM and oil switching solenoid valve connector • Poor contact of coupling connector
2	**CHECK HARNESS BETWEEN ECM AND OIL SWITCHING SOLENOID VALVE.** Measure the resistance between ECM and chassis ground. ***Connector & terminal*** ***(B137) No. 31 — Chassis ground:*** ***(B137) No. 30 — Chassis ground:***	Is the resistance 1 MΩ or more?	Go to step **3**.	Repair the ground short circuit of harness between ECM and oil switching solenoid valve connector.
3	**CHECK OIL SWITCHING SOLENOID VALVE.** Measure the resistance between oil switching solenoid valve terminals. ***Terminals*** ***No. 1 — No. 2:***	Is the resistance between 6 — 12 Ω?	Repair the poor contact of ECM and oil switching solenoid valve connector.	Replace the oil switching solenoid valve. <Ref. to ME(H4SO)-89, Oil Switching Solenoid Valve.>

L: DTC P0083 INTAKE VALVE CONTROL SOLENOID CIRCUIT HIGH (BANK 2)

DTC DETECTING CONDITION:

- Immediately at fault recognition
- GENERAL DESCRIPTION <Ref. to GD(H4SO)-25, DTC P0083 INTAKE VALVE CONTROL SOLENOID CIRCUIT HIGH (BANK 2), Diagnostic Trouble Code (DTC) Detecting Criteria.>

TROUBLE SYMPTOM:

Improper idling

CAUTION:

After repair or replacement of faulty parts, perform Clear Memory Mode <Ref. to EN(H4SO)(diag)-50, OPERATION, Clear Memory Mode.>, and Inspection Mode <Ref. to EN(H4SO)(diag)-41, PROCEDURE, Inspection Mode.>.

WIRING DIAGRAM:

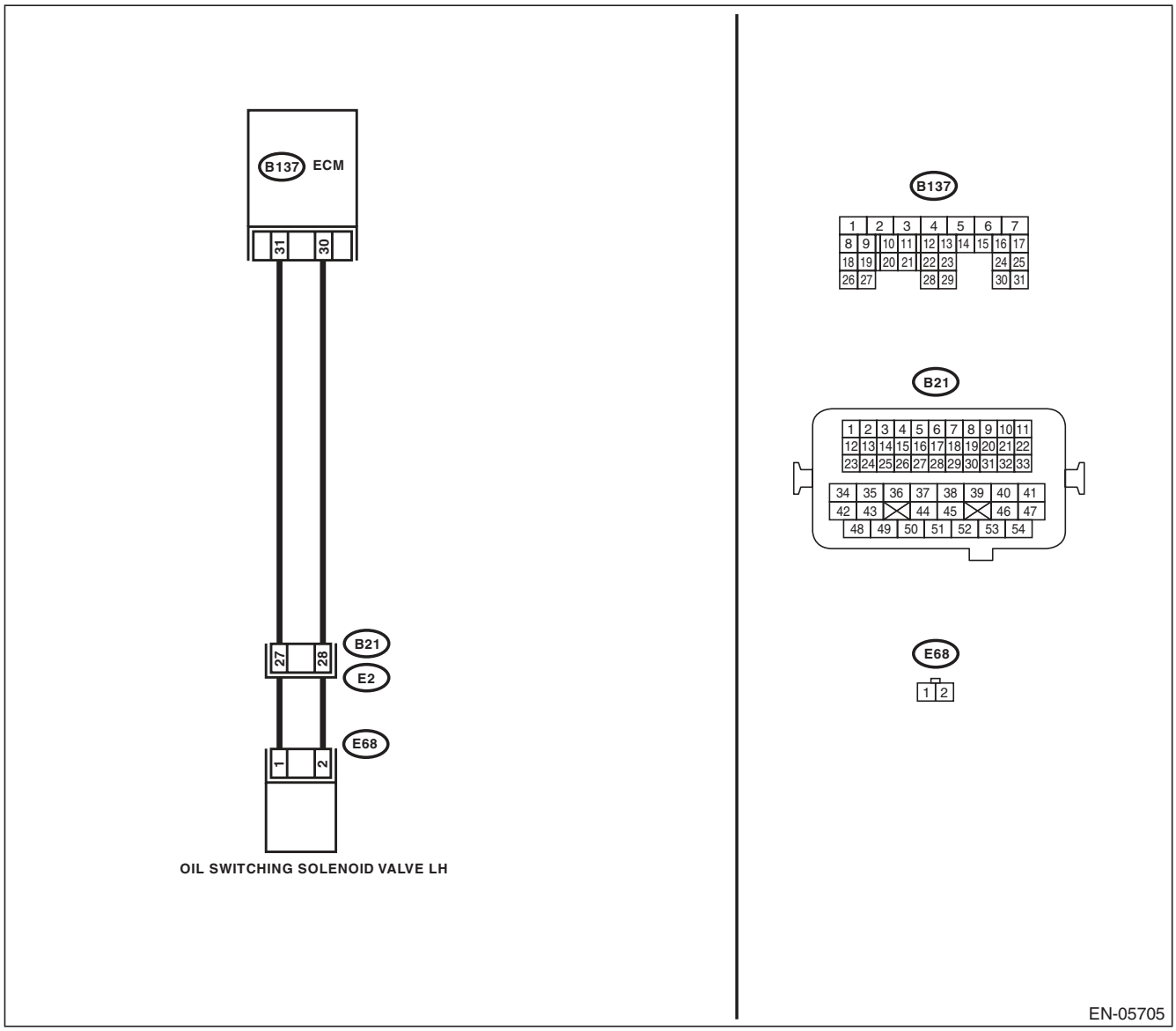

	Step	Check	Yes	No
1	**CHECK HARNESS BETWEEN ECM AND OIL SWITCHING SOLENOID VALVE.** 1) Turn the ignition switch to OFF. 2) Disconnect the connectors from the ECM and oil switching solenoid valve. 3) Measure the voltage between ECM and chassis ground. ***Connector & terminal*** ***(B137) No. 31 (+) — Chassis ground (–):*** ***(B137) No. 30 (+) — Chassis ground (–):***	Is the voltage less than 1 V?	Go to step **2**.	Repair the short circuit of harness to power supply between ECM and oil switching solenoid valve connector.
2	**CHECK HARNESS BETWEEN ECM AND OIL SWITCHING SOLENOID VALVE.** Measure the resistance between ECM and oil switching solenoid valve connector. ***Connector & terminal*** ***(B137) No. 31 — (E68) No. 1:*** ***(B137) No. 30 — (E68) No. 2:***	Is the resistance less than 1 Ω?	Go to step **3**.	Repair the harness and connector. NOTE: In this case, repair the following item: • Open circuit of harness between ECM and oil switching solenoid valve connector • Poor contact of coupling connector
3	**CHECK OIL SWITCHING SOLENOID VALVE.** Measure the resistance between oil switching solenoid valve terminals. ***Terminals*** ***No. 1 — No. 2:***	Is the resistance between 6 — 12 Ω?	Repair the poor contact of ECM and oil switching solenoid valve connector.	Replace the oil switching solenoid valve. <Ref. to ME(H4SO)-89, Oil Switching Solenoid Valve.>

M: DTC P0101 MASS OR VOLUME AIR FLOW CIRCUIT RANGE/PERFORMANCE

DTC DETECTING CONDITION:

- Two consecutive driving cycles with fault
- GENERAL DESCRIPTION <Ref. to GD(H4SO)-26, DTC P0101 MASS OR VOLUME AIR FLOW CIRCUIT RANGE/PERFORMANCE, Diagnostic Trouble Code (DTC) Detecting Criteria.>

TROUBLE SYMPTOM:

- Improper idling
- Engine stalls.
- Poor driving performance

CAUTION:

After repair or replacement of faulty parts, perform Clear Memory Mode <Ref. to EN(H4SO)(diag)-50, OPERATION, Clear Memory Mode.>, and Inspection Mode <Ref. to EN(H4SO)(diag)-41, PROCEDURE, Inspection Mode.>.

WIRING DIAGRAM:

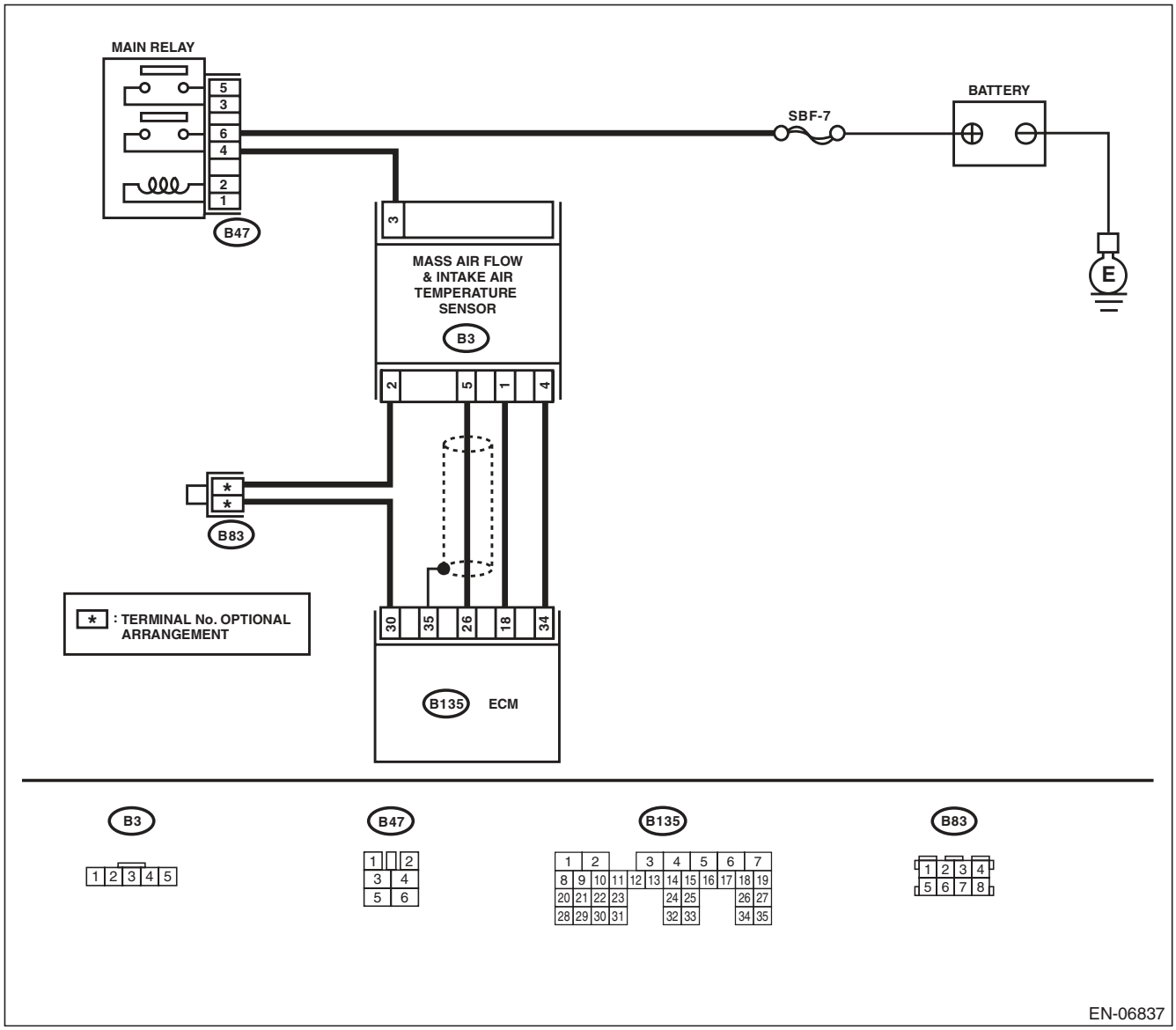

Step	Check	Yes	No
1 CHECK FOR ANY OTHER DTC ON DISPLAY.	Is any other DTC displayed?	Check the appropriate DTC using the “List of Diagnostic Trouble Code (DTC)”. <Ref. to EN(H4SO)(diag)-80, List of Diagnostic Trouble Code (DTC).>	Replace the mass air flow and intake air temperature sensor. <Ref. to FU(H4SO)-28, Mass Air Flow and Intake Air Temperature Sensor.>

N: DTC P0102 MASS OR VOLUME AIR FLOW CIRCUIT LOW INPUT

DTC DETECTING CONDITION:

- Immediately at fault recognition
- GENERAL DESCRIPTION <Ref. to GD(H4SO)-28, DTC P0102 MASS OR VOLUME AIR FLOW CIRCUIT LOW INPUT, Diagnostic Trouble Code (DTC) Detecting Criteria.>

TROUBLE SYMPTOM:

- Improper idling
- Engine stalls.
- Poor driving performance

CAUTION:

After repair or replacement of faulty parts, perform Clear Memory Mode <Ref. to EN(H4SO)(diag)-50, OPERATION, Clear Memory Mode.>, and Inspection Mode <Ref. to EN(H4SO)(diag)-41, PROCEDURE, Inspection Mode.>.

WIRING DIAGRAM:

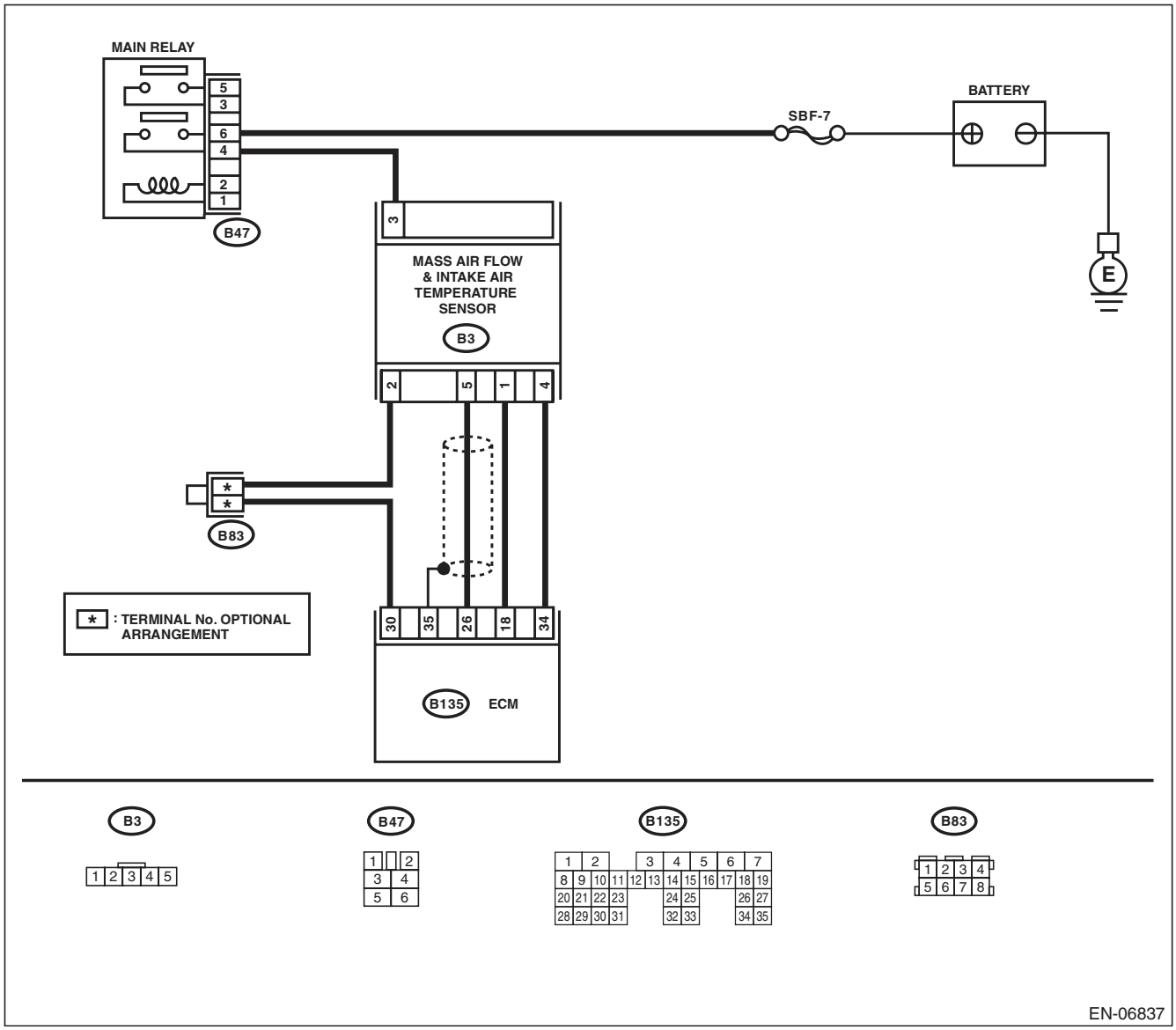

	Step	Check	Yes	No
1	**CHECK CURRENT DATA.** 1) Start the engine. 2) Read the data of air flow sensor signal using Subaru Select Monitor or general scan tool. NOTE: • SUBARU SELECT MONITOR For detailed operation procedure, refer to "READ CURRENT DATA FOR ENGINE". <Ref. to EN(H4SO)(diag)-33, Subaru Select Monitor.> • General Scan Tool For detailed operation procedures, refer to the general scan tool operation manual.	Is the voltage less than 0.2 V?	Go to step **2**.	Even if DTC is detected, the circuit has returned to a normal condition at this time. Reproduce the failure, and then perform the diagnosis again. NOTE: In this case, temporary poor contact of connector may be the cause.
2	**CHECK POWER SUPPLY OF MASS AIR FLOW AND INTAKE AIR TEMPERATURE SENSOR.** 1) Turn the ignition switch to OFF. 2) Disconnect the connector from the mass air flow and intake air temperature sensor. 3) Turn the ignition switch to ON. 4) Measure the voltage between mass air flow and intake air temperature sensor connector and engine ground. ***Connector & terminal*** ***(B3) No. 3 (+) — Engine ground (–):***	Is the voltage 10 V or more?	Go to step **3**.	Repair the harness and connector. NOTE: In this case, repair the following item: • Open circuit in harness between main relay and mass air flow and intake air temperature sensor connector • Poor contact of main relay connector
3	**CHECK HARNESS BETWEEN ECM AND MASS AIR FLOW AND INTAKE AIR TEMPERATURE SENSOR CONNECTOR.** 1) Turn the ignition switch to OFF. 2) Disconnect the connectors from ECM. 3) Measure the resistance of harness between ECM and mass air flow and intake air temperature sensor connectors. ***Connector & terminal*** ***(B135) No. 26 — (B3) No. 5:***	Is the resistance less than 1 Ω?	Go to step **4**.	Repair the open circuit of harness between ECM and mass air flow and intake air temperature sensor connector.
4	**CHECK HARNESS BETWEEN ECM AND MASS AIR FLOW AND INTAKE AIR TEMPERATURE SENSOR CONNECTOR.** Measure the resistance between ECM and chassis ground. ***Connector & terminal*** ***(B135) No. 26 — Chassis ground:***	Is the resistance 1 MΩ or more?	Go to step **5**.	Repair the ground short circuit of harness between the ECM and the mass air flow and intake air temperature sensor connectors.
5	**CHECK POOR CONTACT.** Check for any poor contact in the ECM or the mass air flow or intake air temperature sensor connector.	Is there poor contact in the ECM or the mass air flow and intake air temperature sensor connector?	Repair any poor contact in the ECM or the mass air flow and intake air temperature sensor connector.	Replace the mass air flow and intake air temperature sensor. <Ref. to FU(H4SO)-28, Mass Air Flow and Intake Air Temperature Sensor.>

O: DTC P0103 MASS OR VOLUME AIR FLOW CIRCUIT HIGH INPUT

DTC DETECTING CONDITION:

- Immediately at fault recognition
- GENERAL DESCRIPTION <Ref. to GD(H4SO)-29, DTC P0103 MASS OR VOLUME AIR FLOW CIRCUIT HIGH INPUT, Diagnostic Trouble Code (DTC) Detecting Criteria.>

TROUBLE SYMPTOM:

- Improper idling
- Engine stalls.
- Poor driving performance

CAUTION:

After repair or replacement of faulty parts, perform Clear Memory Mode <Ref. to EN(H4SO)(diag)-50, OPERATION, Clear Memory Mode.>, and Inspection Mode <Ref. to EN(H4SO)(diag)-41, PROCEDURE, Inspection Mode.>.

WIRING DIAGRAM:

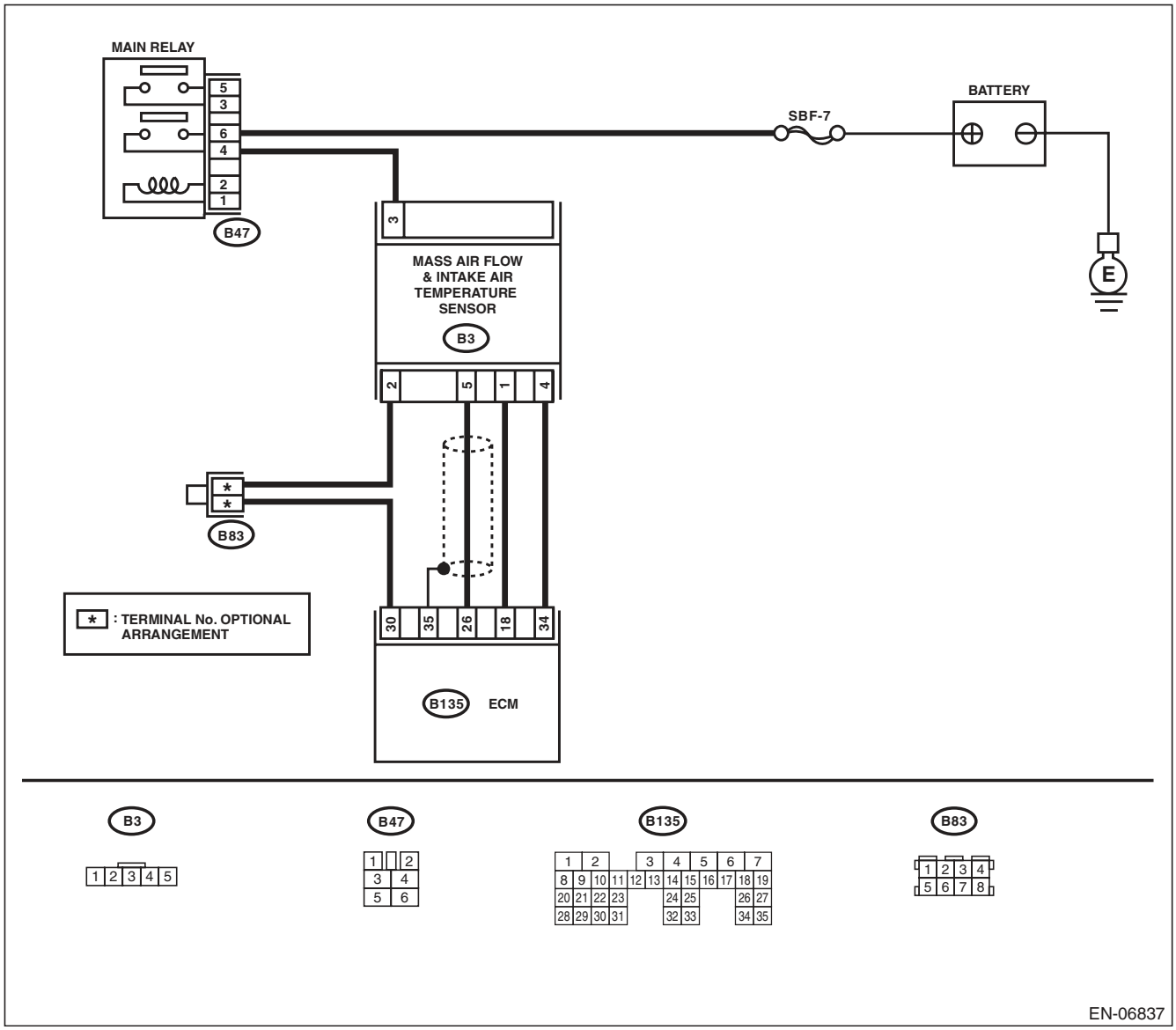

	Step	Check	Yes	No
1	**CHECK CURRENT DATA.** 1) Start the engine. 2) Read the data of air flow sensor signal using Subaru Select Monitor or general scan tool. NOTE: • SUBARU SELECT MONITOR For detailed operation procedure, refer to "READ CURRENT DATA FOR ENGINE". <Ref. to EN(H4SO)(diag)-33, Subaru Select Monitor.> • General Scan Tool For detailed operation procedures, refer to the general scan tool operation manual.	Is the voltage 5 V or more?	Go to step **2**.	Even if DTC is detected, the circuit has returned to a normal condition at this time. Reproduce the failure, and then perform the diagnosis again. NOTE: In this case, temporary poor contact of connector may be the cause.
2	**CHECK HARNESS BETWEEN ECM AND MASS AIR FLOW AND INTAKE AIR TEMPERATURE SENSOR CONNECTOR.** 1) Turn the ignition switch to OFF. 2) Disconnect the connector from the mass air flow and intake air temperature sensor. 3) Start the engine. 4) Read the data of air flow sensor signal using Subaru Select Monitor or general scan tool. NOTE: • SUBARU SELECT MONITOR For detailed operation procedure, refer to "READ CURRENT DATA FOR ENGINE". <Ref. to EN(H4SO)(diag)-33, Subaru Select Monitor.> • General Scan Tool For detailed operation procedures, refer to the general scan tool operation manual.	Is the voltage 5 V or more?	Repair the short circuit to power in the harness between the ECM and the mass air flow and intake air temperature sensor connector.	Go to step **3**.
3	**CHECK HARNESS BETWEEN ECM AND MASS AIR FLOW AND INTAKE AIR TEMPERATURE SENSOR CONNECTOR.** 1) Turn the ignition switch to OFF. 2) Measure the resistance of harness between mass air flow and intake air temperature sensor connector and engine ground. ***Connector & terminal*** ***(B3) No. 4 — Engine ground:***	Is the resistance less than 5 Ω?	Go to step **4**.	Repair the harness and connector. NOTE: In this case, repair the following item: • Open circuit of harness between ECM and the mass air flow and intake air temperature sensor connector. • Poor contact in ECM connector
4	**CHECK POOR CONTACT.** Check for any poor contact in the mass air flow and intake air temperature sensor connector.	Is there poor contact in the mass air flow and intake air temperature sensor connector?	Repair any poor contact of the mass air flow and intake air temperature sensor connector.	Replace the mass air flow and intake air temperature sensor. <Ref. to FU(H4SO)-28, Mass Air Flow and Intake Air Temperature Sensor.>

P: DTC P0107 MANIFOLD ABSOLUTE PRESSURE/BAROMETRIC PRESSURE CIRCUIT LOW INPUT

DTC DETECTING CONDITION:

- Immediately at fault recognition
- GENERAL DESCRIPTION <Ref. to GD(H4SO)-30, DTC P0107 MANIFOLD ABSOLUTE PRESSURE/ BAROMETRIC PRESSURE CIRCUIT LOW INPUT, Diagnostic Trouble Code (DTC) Detecting Criteria.>

CAUTION:

After repair or replacement of faulty parts, perform Clear Memory Mode <Ref. to EN(H4SO)(diag)-50, OPERATION, Clear Memory Mode.>, and Inspection Mode <Ref. to EN(H4SO)(diag)-41, PROCEDURE, Inspection Mode.>.

WIRING DIAGRAM:

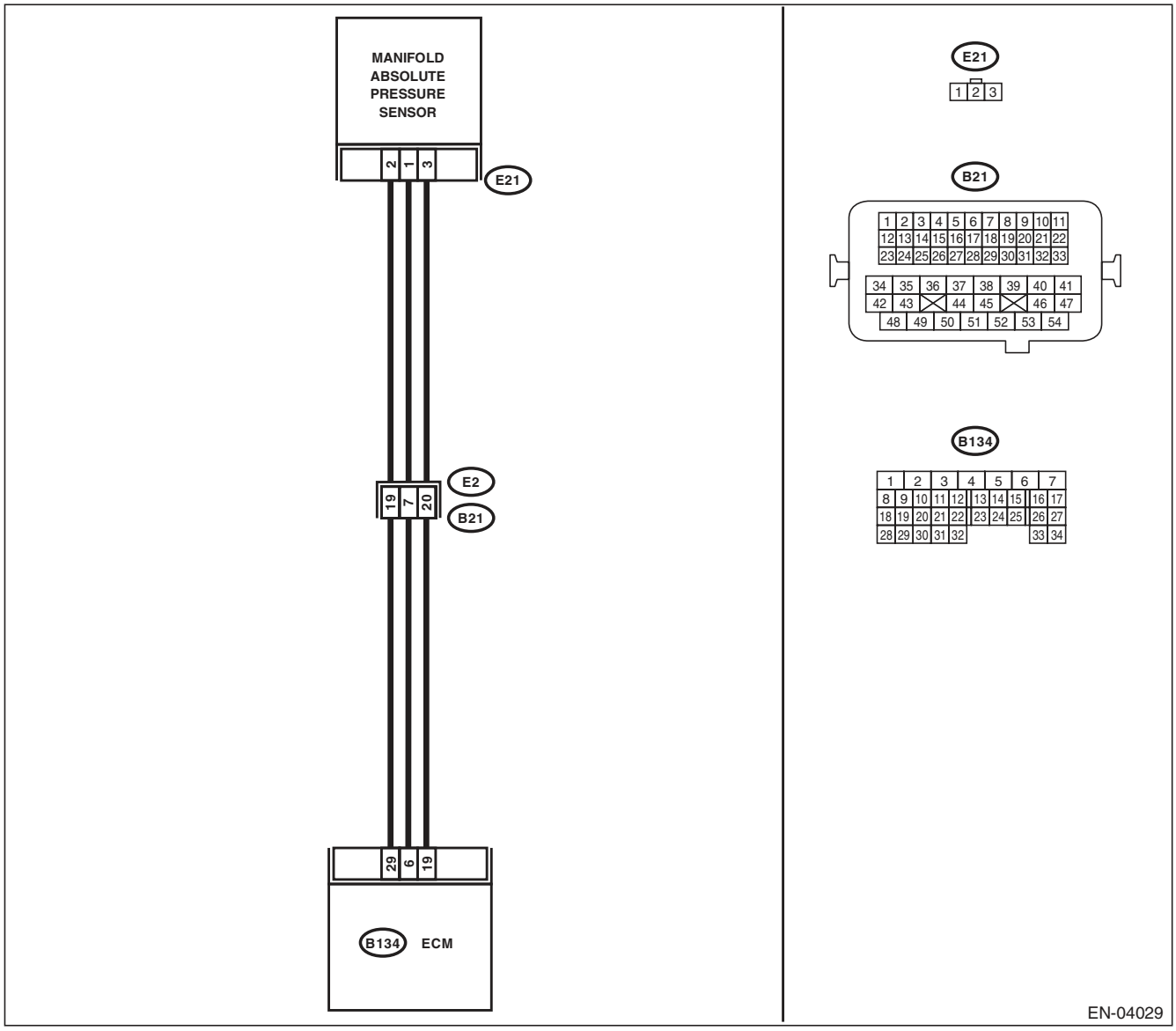

	Step	Check	Yes	No
1	**CHECK CURRENT DATA.** 1) Start the engine. 2) Read the data of intake manifold absolute pressure signal using Subaru Select Monitor or general scan tool. NOTE: • SUBARU SELECT MONITOR For detailed operation procedure, refer to "READ CURRENT DATA FOR ENGINE". <Ref. to EN(H4SO)(diag)-33, Subaru Select Monitor.> • General Scan Tool For detailed operation procedures, refer to the general scan tool operation manual.	Is the measured value less than 13.3 kPa (100 mmHg, 3.94 inHg)?	Go to step **2**.	Even if DTC is detected, the circuit has returned to a normal condition at this time. Reproduce the failure, and then perform the diagnosis again. NOTE: In this case, temporary poor contact of connector may be the cause.
2	**CHECK POWER SUPPLY OF MANIFOLD ABSOLUTE PRESSURE SENSOR.** 1) Turn the ignition switch to OFF. 2) Disconnect the connector from manifold absolute pressure sensor. 3) Turn the ignition switch to ON. 4) Measure the voltage between manifold absolute pressure sensor connector and engine ground. ***Connector & terminal*** ***(E21) No. 3 (+) — Engine ground (–):***	Is the voltage 4.5 V or more?	Go to step **3**.	Repair the harness and connector. NOTE: In this case, repair the following item: • Open circuit of harness between ECM and manifold absolute pressure sensor connector. • Poor contact in ECM connector • Poor contact of coupling connector
3	**CHECK HARNESS BETWEEN ECM AND MANIFOLD ABSOLUTE PRESSURE SENSOR CONNECTOR.** 1) Turn the ignition switch to OFF. 2) Disconnect the connectors from ECM. 3) Measure the resistance of harness between ECM and manifold absolute pressure sensor connector. ***Connector & terminal*** ***(B134) No. 6 — (E21) No. 1:***	Is the resistance less than 1 Ω?	Go to step **4**.	Repair the harness and connector. NOTE: In this case, repair the following item: • Open circuit of harness between ECM and manifold absolute pressure sensor connector. • Poor contact of coupling connector
4	**CHECK HARNESS BETWEEN ECM AND MANIFOLD ABSOLUTE PRESSURE SENSOR CONNECTOR.** Measure the resistance between ECM and chassis ground. ***Connector & terminal*** ***(B134) No. 6 — Chassis ground:***	Is the resistance 1 MΩ or more?	Go to step **5**.	Repair ground short circuit of harness between ECM and manifold absolute pressure sensor connector.
5	**CHECK POOR CONTACT.** Check for poor contact in ECM and manifold absolute pressure sensor connector.	Is there poor contact in ECM or manifold absolute pressure sensor connector?	Repair the poor contact in ECM or manifold absolute pressure sensor connector.	Replace the manifold absolute pressure sensor. <Ref. to FU(H4SO)-27, Manifold Absolute Pressure Sensor.>

Q: DTC P0108 MANIFOLD ABSOLUTE PRESSURE/BAROMETRIC PRESSURE CIRCUIT HIGH INPUT

DTC DETECTING CONDITION:

- Immediately at fault recognition
- GENERAL DESCRIPTION <Ref. to GD(H4SO)-31, DTC P0108 MANIFOLD ABSOLUTE PRESSURE/ BAROMETRIC PRESSURE CIRCUIT HIGH INPUT, Diagnostic Trouble Code (DTC) Detecting Criteria.>

CAUTION:

After repair or replacement of faulty parts, perform Clear Memory Mode <Ref. to EN(H4SO)(diag)-50, OPERATION, Clear Memory Mode.>, and Inspection Mode <Ref. to EN(H4SO)(diag)-41, PROCEDURE, Inspection Mode.>.

WIRING DIAGRAM:

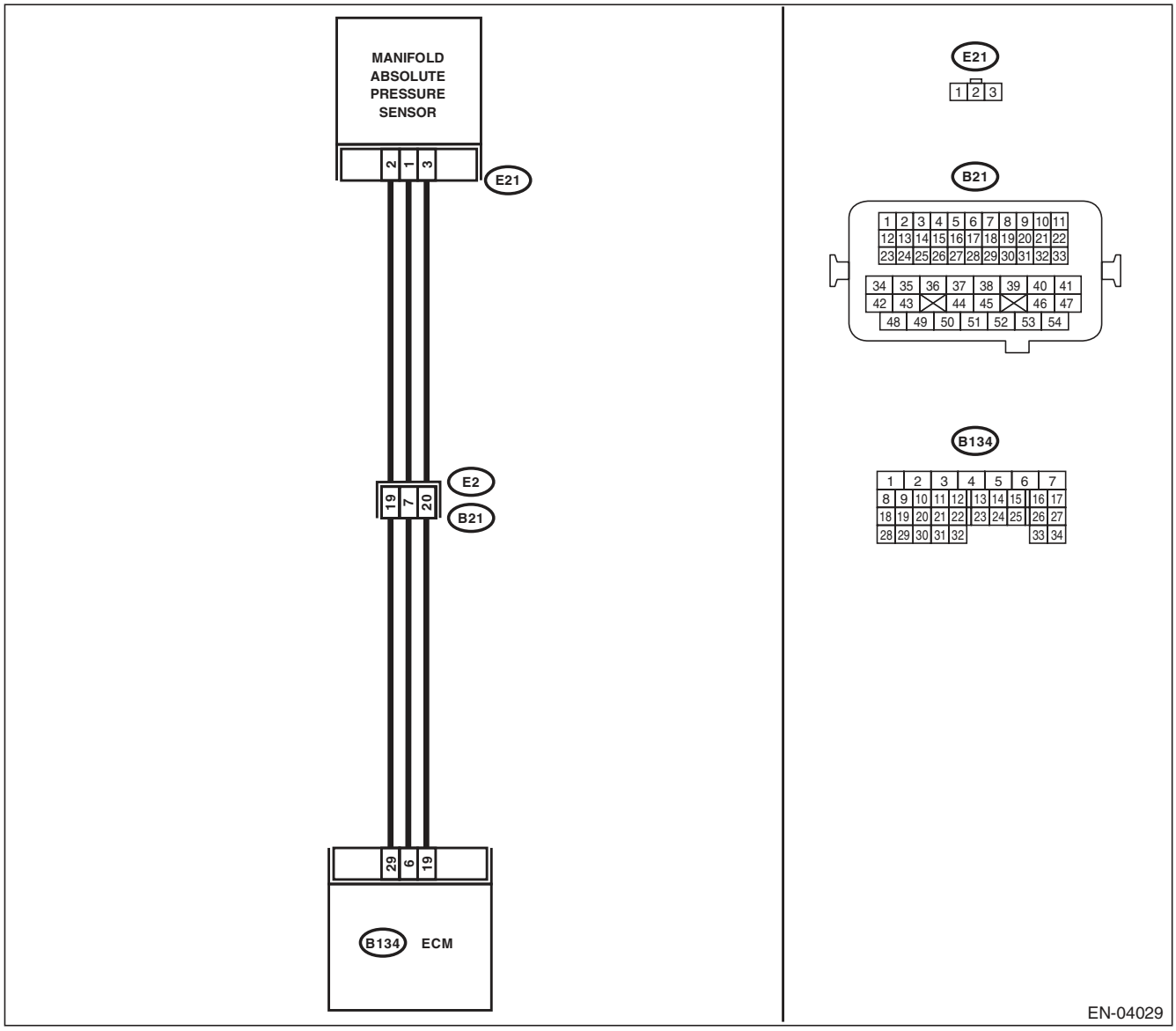

	Step	Check	Yes	No
1	**CHECK CURRENT DATA.** 1) Start the engine. 2) Read the data of intake manifold absolute pressure signal using Subaru Select Monitor or general scan tool. NOTE: • SUBARU SELECT MONITOR For detailed operation procedure, refer to "READ CURRENT DATA FOR ENGINE". <Ref. to EN(H4SO)(diag)-33, Subaru Select Monitor.> • General Scan Tool For detailed operation procedures, refer to the general scan tool operation manual.	Is the measured value 119.5 kPa (896.5 mmHg, 35.29 inHg) or more?	Go to step **2**.	Even if DTC is detected, the circuit has returned to a normal condition at this time. Reproduce the failure, and then perform the diagnosis again. NOTE: In this case, temporary poor contact of connector may be the cause.
2	**CHECK HARNESS BETWEEN ECM AND MANIFOLD ABSOLUTE PRESSURE SENSOR CONNECTOR.** 1) Turn the ignition switch to OFF. 2) Disconnect the connector from manifold absolute pressure sensor. 3) Start the engine. 4) Read the data of intake manifold absolute pressure signal using Subaru Select Monitor or general scan tool. NOTE: • SUBARU SELECT MONITOR For detailed operation procedure, refer to "READ CURRENT DATA FOR ENGINE". <Ref. to EN(H4SO)(diag)-33, Subaru Select Monitor.> • General Scan Tool For detailed operation procedures, refer to the general scan tool operation manual.	Is the measured value 119.5 kPa (896.5 mmHg, 35.29 inHg) or more?	Repair the short circuit to power in harness between ECM and manifold absolute pressure sensor connector.	Go to step **3**.
3	**CHECK HARNESS BETWEEN ECM AND MANIFOLD ABSOLUTE PRESSURE SENSOR CONNECTOR.** 1) Turn the ignition switch to OFF. 2) Measure the resistance of harness between manifold absolute pressure sensor connector and engine ground. ***Connector & terminal*** ***(E21) No. 2 — Engine ground:***	Is the resistance less than 5 Ω?	Go to step **4**.	Repair the harness and connector. NOTE: In this case, repair the following item: • Open circuit of harness between ECM and manifold absolute pressure sensor connector. • Poor contact in ECM connector • Poor contact of coupling connector
4	**CHECK POOR CONTACT.** Check for poor contact in manifold absolute pressure sensor connector.	Is there poor contact in manifold absolute pressure sensor connector?	Repair the poor contact of manifold absolute pressure sensor connector.	Replace the manifold absolute pressure sensor. <Ref. to FU(H4SO)-27, Manifold Absolute Pressure Sensor.>

R: DTC P0111 INTAKE AIR TEMPERATURE SENSOR 1 CIRCUIT RANGE/ PERFORMANCE

DTC DETECTING CONDITION:

- Two consecutive driving cycles with fault
- GENERAL DESCRIPTION <Ref. to GD(H4SO)-32, DTC P0111 INTAKE AIR TEMPERATURE SENSOR 1 CIRCUIT RANGE/PERFORMANCE, Diagnostic Trouble Code (DTC) Detecting Criteria.>

TROUBLE SYMPTOM:

- Improper idling
- Poor driving performance

CAUTION:

After repair or replacement of faulty parts, perform Clear Memory Mode <Ref. to EN(H4SO)(diag)-50, OPERATION, Clear Memory Mode.>, and Inspection Mode <Ref. to EN(H4SO)(diag)-41, PROCEDURE, Inspection Mode.>.

WIRING DIAGRAM:

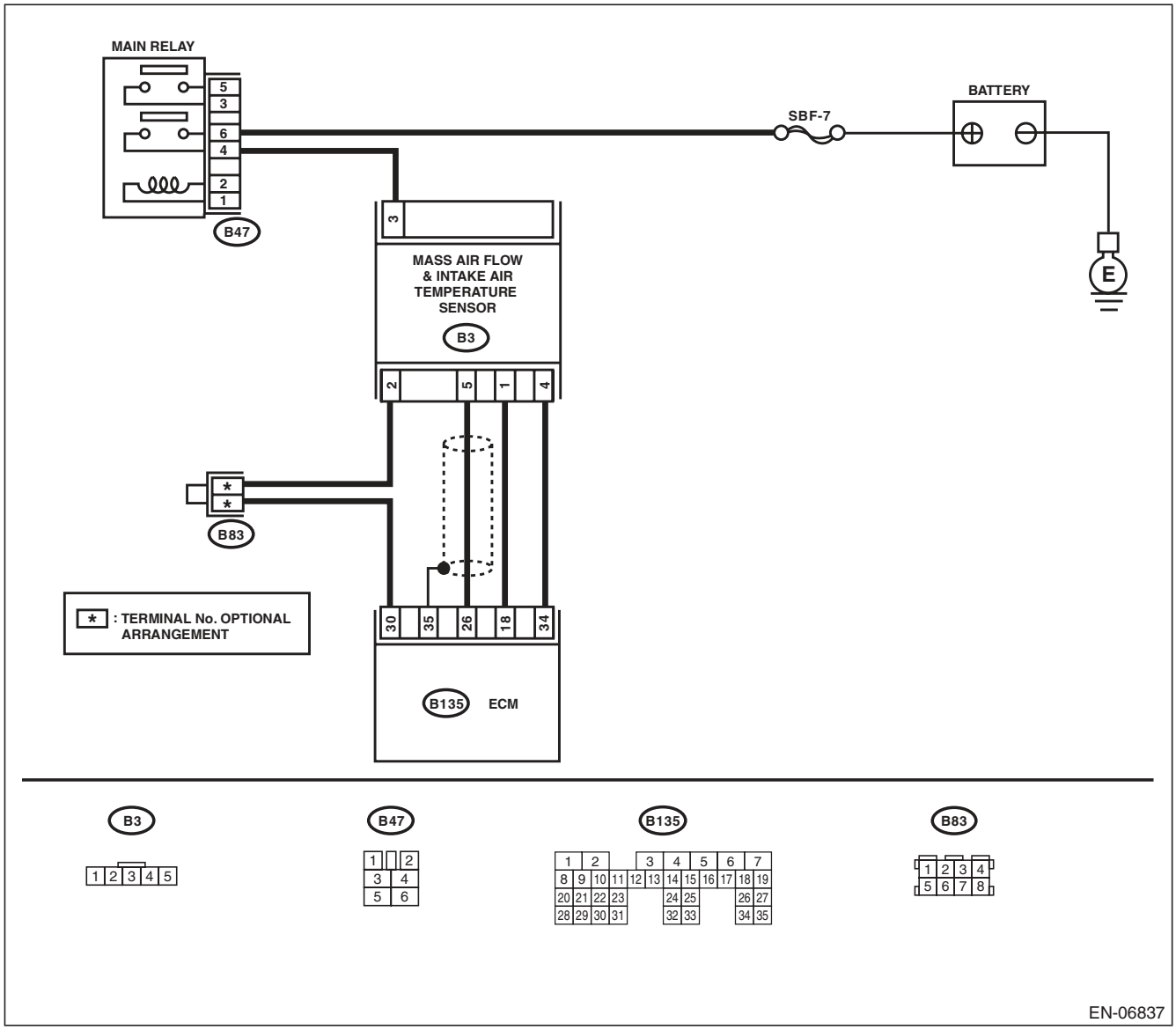

Step		Check	Yes	No
1	**CHECK ENGINE COOLANT TEMPERATURE.** 1) Start the engine and warm up completely. 2) Measure the engine coolant temperature using the Subaru Select Monitor or general scan tool. NOTE: • SUBARU SELECT MONITOR For detailed operation procedure, refer to “READ CURRENT DATA FOR ENGINE”. <Ref. to EN(H4SO)(diag)-33, Subaru Select Monitor.> • General Scan Tool For detailed operation procedures, refer to the general scan tool operation manual.	Is the engine coolant temperature 75°C (167°F) or higher?	Replace the mass air flow and intake air temperature sensor. <Ref. to FU(H4SO)-28, Mass Air Flow and Intake Air Temperature Sensor.>	Check DTC P0125 using “List of Diagnostic Trouble Code (DTC)”. <Ref. to EN(H4SO)(diag)-80, List of Diagnostic Trouble Code (DTC).>

S: DTC P0112 INTAKE AIR TEMPERATURE SENSOR 1 CIRCUIT LOW

DTC DETECTING CONDITION:

- Immediately at fault recognition
- GENERAL DESCRIPTION <Ref. to GD(H4SO)-34, DTC P0112 INTAKE AIR TEMPERATURE SENSOR 1 CIRCUIT LOW, Diagnostic Trouble Code (DTC) Detecting Criteria.>

TROUBLE SYMPTOM:

- Improper idling
- Poor driving performance

CAUTION:

After repair or replacement of faulty parts, perform Clear Memory Mode <Ref. to EN(H4SO)(diag)-50, OPERATION, Clear Memory Mode.>, and Inspection Mode <Ref. to EN(H4SO)(diag)-41, PROCEDURE, Inspection Mode.>.

WIRING DIAGRAM:

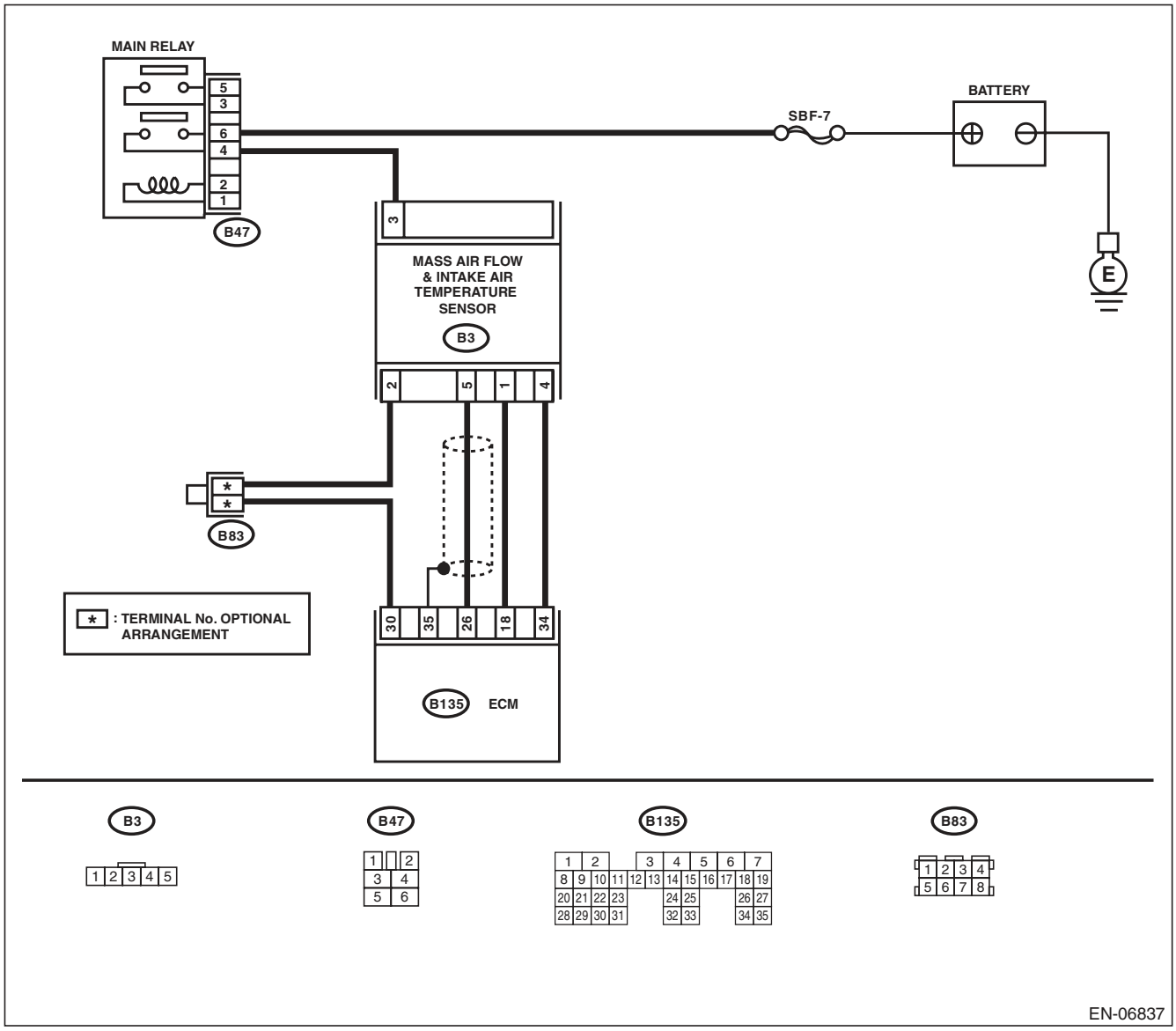

	Step	Check	Yes	No
1	**CHECK CURRENT DATA.** 1) Start the engine. 2) Read the data of intake air temperature sensor signal using Subaru Select Monitor or general scan tool. NOTE: • SUBARU SELECT MONITOR For detailed operation procedure, refer to "READ CURRENT DATA FOR ENGINE". <Ref. to EN(H4SO)(diag)-33, Subaru Select Monitor.> • General Scan Tool For detailed operation procedures, refer to the general scan tool operation manual.	Is the intake air temperature 120°C (248°F) or higher?	Go to step **2**.	Even if DTC is detected, the circuit has returned to a normal condition at this time. Reproduce the failure, and then perform the diagnosis again. NOTE: In this case, temporary poor contact of connector may be the cause.
2	**CHECK HARNESS BETWEEN ECM AND MASS AIR FLOW AND INTAKE AIR TEMPERATURE SENSOR CONNECTOR.** 1) Turn the ignition switch to OFF. 2) Disconnect the connector from ECM and mass air flow and intake air temperature sensor. 3) Measure the resistance between ECM and chassis ground. ***Connector & terminal*** ***(B135) No. 18 — Chassis ground:***	Is the resistance 1 MΩ or more?	Replace the mass air flow and intake air temperature sensor. <Ref. to FU(H4SO)-28, Mass Air Flow and Intake Air Temperature Sensor.>	Repair the ground short circuit of harness between the ECM and the mass air flow and intake air temperature sensor connectors.

T: DTC P0113 INTAKE AIR TEMPERATURE SENSOR 1 CIRCUIT HIGH

DTC DETECTING CONDITION:

- Immediately at fault recognition
- GENERAL DESCRIPTION <Ref. to GD(H4SO)-35, DTC P0113 INTAKE AIR TEMPERATURE SENSOR 1 CIRCUIT HIGH, Diagnostic Trouble Code (DTC) Detecting Criteria.>

TROUBLE SYMPTOM:

- Improper idling
- Poor driving performance

CAUTION:

After repair or replacement of faulty parts, perform Clear Memory Mode <Ref. to EN(H4SO)(diag)-50, OPERATION, Clear Memory Mode.>, and Inspection Mode <Ref. to EN(H4SO)(diag)-41, PROCEDURE, Inspection Mode.>.

WIRING DIAGRAM:

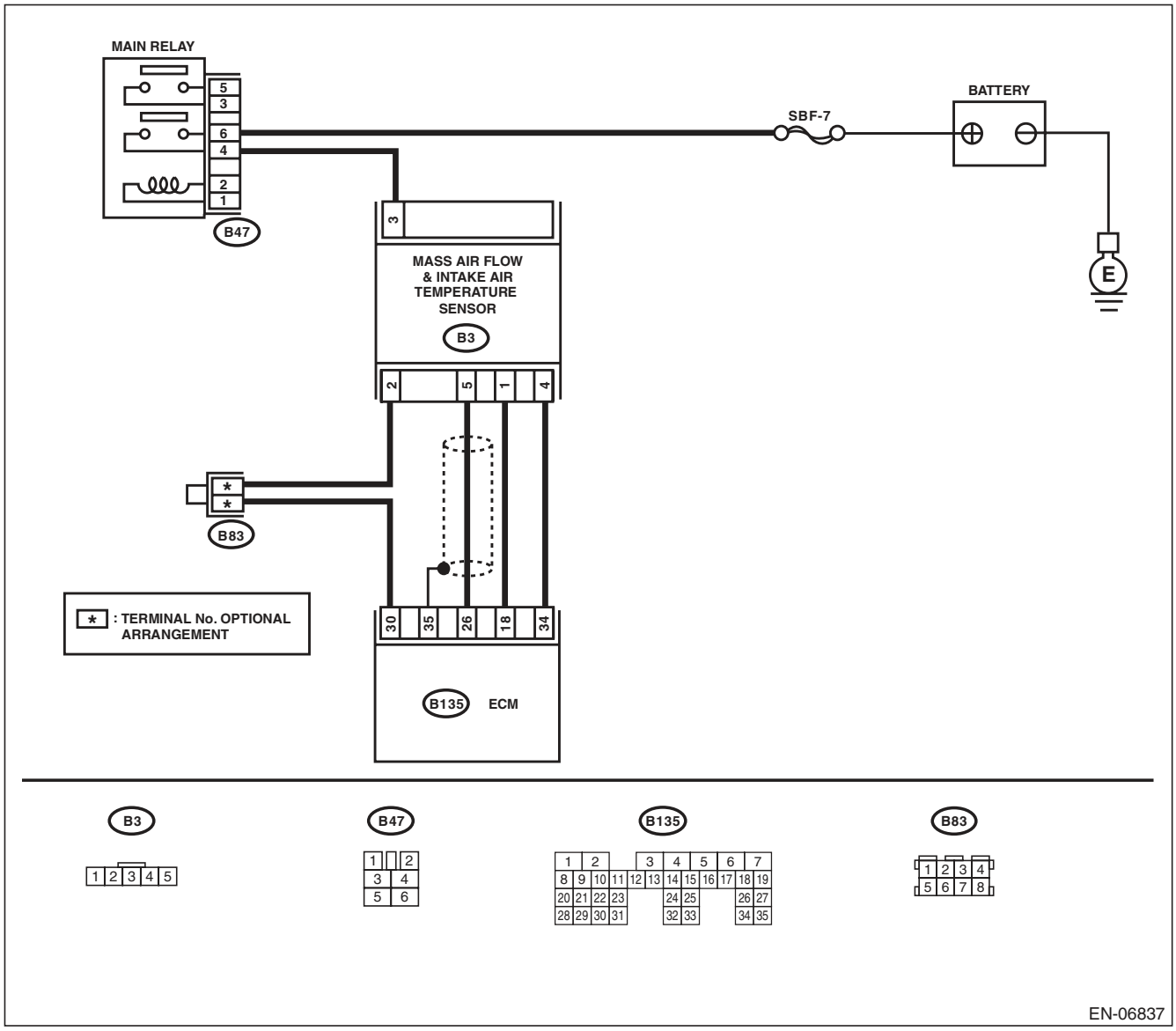

	Step	Check	Yes	No
1	**CHECK CURRENT DATA.** 1) Start the engine. 2) Read the data of intake air temperature sensor signal using Subaru Select Monitor or general scan tool. NOTE: • SUBARU SELECT MONITOR For detailed operation procedure, refer to "READ CURRENT DATA FOR ENGINE". <Ref. to EN(H4SO)(diag)-33, Subaru Select Monitor.> • General Scan Tool For detailed operation procedures, refer to the general scan tool operation manual.	Is the intake air temperature less than –40°C (–40°F) ?	Go to step **2**.	Even if DTC is detected, the circuit has returned to a normal condition at this time. Reproduce the failure, and then perform the diagnosis again. NOTE: In this case, temporary poor contact of connector may be the cause.
2	**CHECK POOR CONTACT.** Check for poor contact in the ECM or the mass air flow and intake air temperature sensor connector.	Is there poor contact in the ECM or the mass air flow and intake air temperature sensor connector?	Repair any poor contact in the ECM or the mass air flow and intake air temperature sensor connector.	Go to step **3**.
3	**CHECK HARNESS BETWEEN ECM AND MASS AIR FLOW AND INTAKE AIR TEMPERATURE SENSOR CONNECTOR.** 1) Turn the ignition switch to OFF. 2) Disconnect the connector from ECM and mass air flow and intake air temperature sensor. 3) Measure the resistance of harness between ECM and mass air flow and intake air temperature sensor connectors. ***Connector & terminal*** ***(B135) No. 18 — (B3) No. 1:*** ***(B135) No. 30 — (B3) No. 2:***	Is the resistance less than 1 Ω?	Go to step **4**.	Repair the harness and connector. NOTE: In this case, repair the following item: • Open circuit of harness between ECM and the mass air flow and intake air temperature sensor connector. • Poor contact in joint connector
4	**CHECK HARNESS BETWEEN ECM AND MASS AIR FLOW AND INTAKE AIR TEMPERATURE SENSOR CONNECTOR.** 1) Connect all connectors. 2) Turn the ignition switch to ON. 3) Measure the voltage between ECM and chassis ground. ***Connector & terminal*** ***(B135) No. 18 (+) — Chassis ground (–):***	Is the voltage 5 V or more?	Repair the short circuit to power in the harness between the ECM and the mass air flow and intake air temperature sensor connector.	Replace the mass air flow and intake air temperature sensor. <Ref. to FU(H4SO)-28, Mass Air Flow and Intake Air Temperature Sensor.>

U: DTC P0117 ENGINE COOLANT TEMPERATURE CIRCUIT LOW

DTC DETECTING CONDITION:

- Immediately at fault recognition
- GENERAL DESCRIPTION <Ref. to GD(H4SO)-36, DTC P0117 ENGINE COOLANT TEMPERATURE CIRCUIT LOW, Diagnostic Trouble Code (DTC) Detecting Criteria.>

TROUBLE SYMPTOM:

- Hard to start
- Improper idling
- Poor driving performance

CAUTION:

After repair or replacement of faulty parts, perform Clear Memory Mode <Ref. to EN(H4SO)(diag)-50, OPERATION, Clear Memory Mode.>, and Inspection Mode <Ref. to EN(H4SO)(diag)-41, PROCEDURE, Inspection Mode.>.

WIRING DIAGRAM:

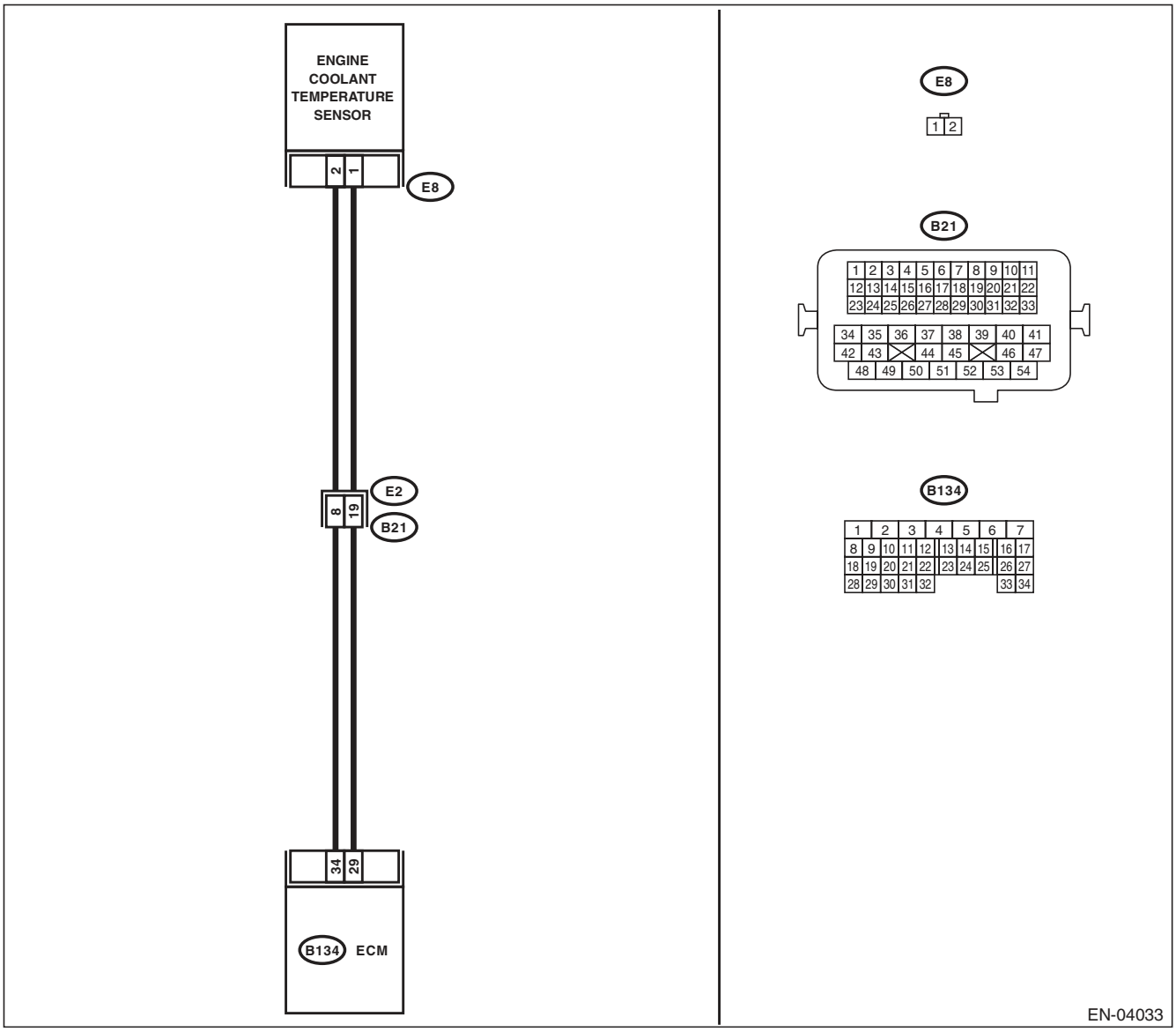

	Step	Check	Yes	No
1	**CHECK CURRENT DATA.** 1) Start the engine. 2) Read the data of engine coolant temperature sensor signal using Subaru Select Monitor or general scan tool. NOTE: • SUBARU SELECT MONITOR For detailed operation procedure, refer to "READ CURRENT DATA FOR ENGINE". <Ref. to EN(H4SO)(diag)-33, Subaru Select Monitor.> • General Scan Tool For detailed operation procedures, refer to the general scan tool operation manual.	Is the engine coolant temperature 150°C (302°F) or higher?	Go to step **2**.	Even if DTC is detected, the circuit has returned to a normal condition at this time. Reproduce the failure, and then perform the diagnosis again. NOTE: In this case, temporary poor contact of connector may be the cause.
2	**CHECK HARNESS BETWEEN ECM AND ENGINE COOLANT TEMPERATURE SENSOR CONNECTOR.** 1) Turn the ignition switch to OFF. 2) Disconnect the connectors from ECM and engine coolant temperature sensor. 3) Measure the resistance between ECM and chassis ground. ***Connector & terminal*** ***(B134) No. 34 — Chassis ground:***	Is the resistance 1 MΩ or more?	Replace the engine coolant temperature sensor. <Ref. to FU(H4SO)-22, Engine Coolant Temperature Sensor.>	Repair short circuit in harness to ground between ECM and engine coolant temperature sensor connector.

V: DTC P0118 ENGINE COOLANT TEMPERATURE CIRCUIT HIGH

DTC DETECTING CONDITION:

- Immediately at fault recognition
- GENERAL DESCRIPTION <Ref. to GD(H4SO)-37, DTC P0118 ENGINE COOLANT TEMPERATURE CIRCUIT HIGH, Diagnostic Trouble Code (DTC) Detecting Criteria.>

TROUBLE SYMPTOM:

- Hard to start
- Improper idling
- Poor driving performance

CAUTION:

After repair or replacement of faulty parts, perform Clear Memory Mode <Ref. to EN(H4SO)(diag)-50, OPERATION, Clear Memory Mode.>, and Inspection Mode <Ref. to EN(H4SO)(diag)-41, PROCEDURE, Inspection Mode.>.

WIRING DIAGRAM:

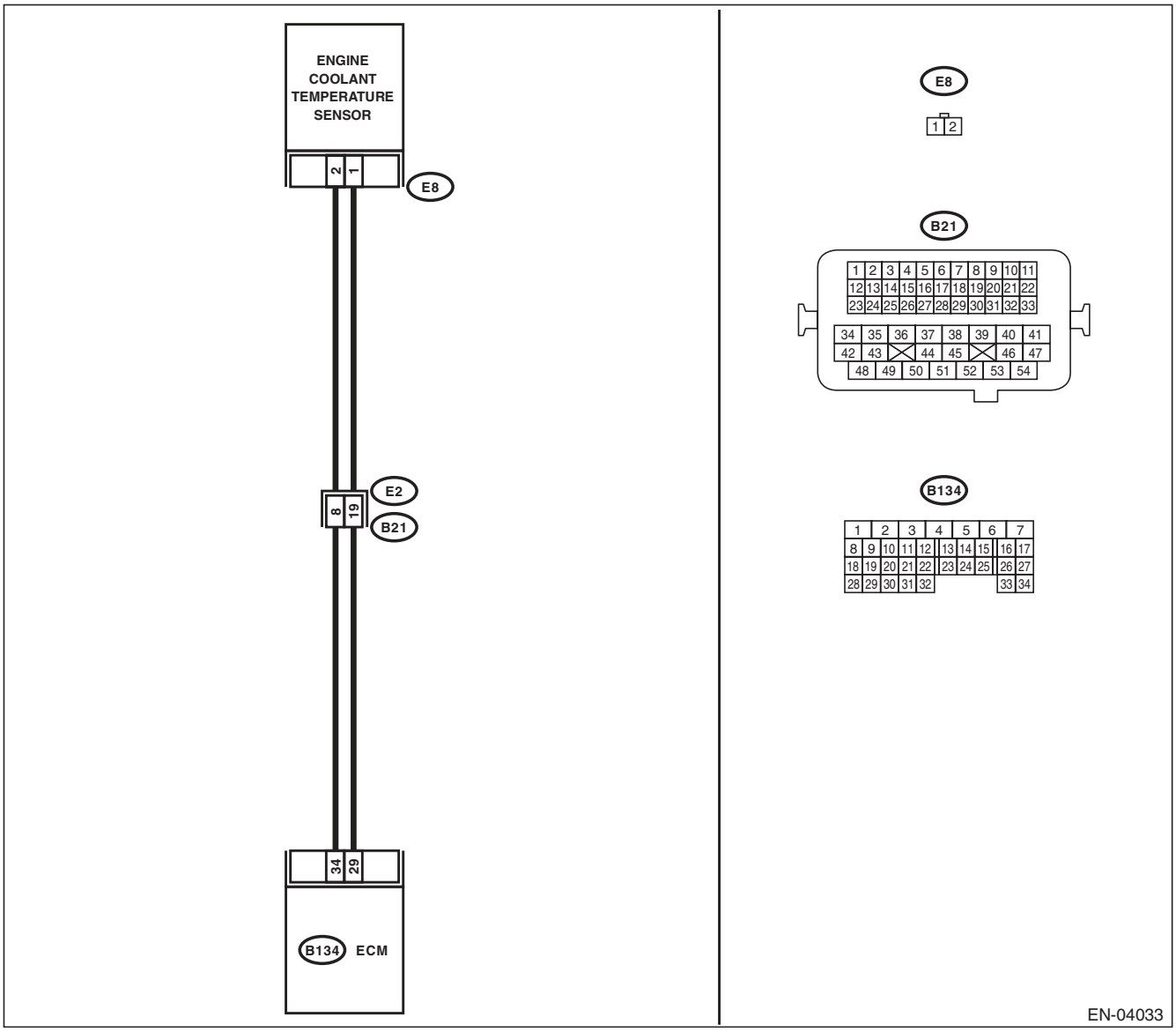

	Step	Check	Yes	No
1	**CHECK CURRENT DATA.** 1) Start the engine. 2) Read the data of engine coolant temperature sensor signal using Subaru Select Monitor or general scan tool. NOTE: • SUBARU SELECT MONITOR For detailed operation procedure, refer to "READ CURRENT DATA FOR ENGINE". <Ref. to EN(H4SO)(diag)-33, Subaru Select Monitor.> • General Scan Tool For detailed operation procedures, refer to the general scan tool operation manual.	Is the engine coolant temperature less than –40°C (–40°F) ?	Go to step **2**.	Even if DTC is detected, the circuit has returned to a normal condition at this time. Reproduce the failure, and then perform the diagnosis again. NOTE: In this case, temporary poor contact of connector may be the cause.
2	**CHECK POOR CONTACT.** Check for poor contact in ECM and engine coolant temperature sensor connector.	Is there poor contact in ECM or engine coolant temperature sensor connector?	Repair the poor contact in ECM or engine coolant temperature sensor connector.	Go to step **3**.
3	**CHECK HARNESS BETWEEN ECM AND ENGINE COOLANT TEMPERATURE SENSOR CONNECTOR.** 1) Turn the ignition switch to OFF. 2) Disconnect the connectors from ECM and engine coolant temperature sensor. 3) Measure the resistance of harness between ECM and engine coolant temperature sensor connector. ***Connector & terminal*** ***(B134) No. 34 — (E8) No. 2:*** ***(B134) No. 29 — (E8) No. 1:***	Is the resistance less than 1 Ω?	Go to step **4**.	Repair the harness and connector. NOTE: In this case, repair the following item: • Open circuit in harness between ECM and engine coolant temperature sensor connector • Poor contact of coupling connector
4	**CHECK HARNESS BETWEEN ECM AND ENGINE COOLANT TEMPERATURE SENSOR CONNECTOR.** 1) Connect all connectors. 2) Turn the ignition switch to ON. 3) Measure the voltage between ECM and chassis ground. ***Connector & terminal*** ***(B134) No. 34 (+) — Chassis ground (–):***	Is the voltage 5 V or more?	Repair the short circuit to power in harness between ECM and engine coolant temperature sensor connector.	Replace the engine coolant temperature sensor. <Ref. to FU(H4SO)-22, Engine Coolant Temperature Sensor.>

W: DTC P0122 THROTTLE/PEDAL POSITION SENSOR/SWITCH “A” CIRCUIT LOW

DTC DETECTING CONDITION:

- Immediately at fault recognition
- GENERAL DESCRIPTION <Ref. to GD(H4SO)-38, DTC P0122 THROTTLE/PEDAL POSITION SENSOR/SWITCH “A” CIRCUIT LOW, Diagnostic Trouble Code (DTC) Detecting Criteria.>

TROUBLE SYMPTOM:

- Improper idling
- Engine stalls.
- Poor driving performance

CAUTION:

After repair or replacement of faulty parts, perform Clear Memory Mode <Ref. to EN(H4SO)(diag)-50, OPERATION, Clear Memory Mode.>, and Inspection Mode <Ref. to EN(H4SO)(diag)-41, PROCEDURE, Inspection Mode.>.

WIRING DIAGRAM:

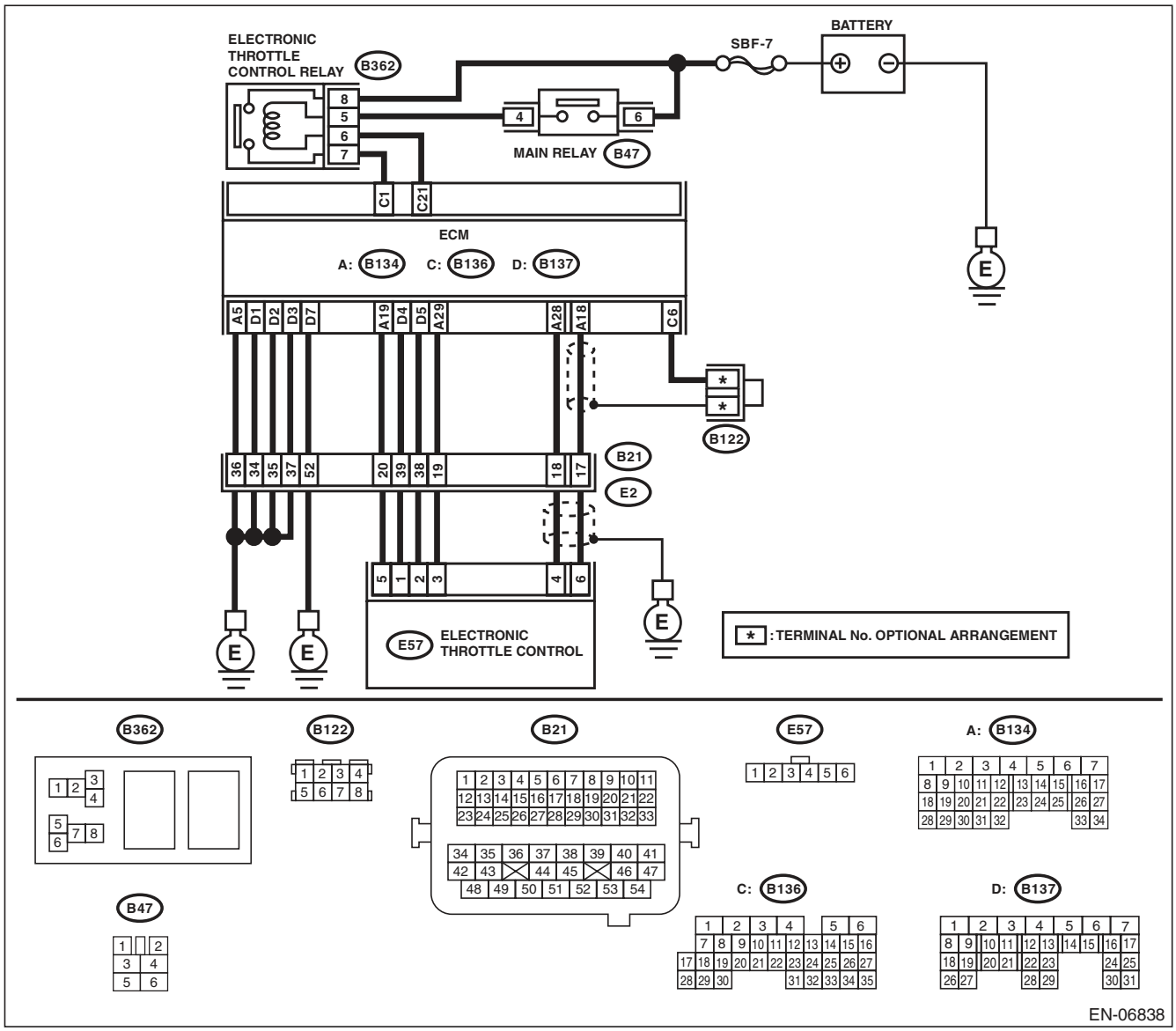

Step		Check	Yes	No
1	**CHECK HARNESS BETWEEN ECM AND ELECTRONIC THROTTLE CONTROL.** 1) Turn the ignition switch to OFF. 2) Disconnect the connectors from ECM and electronic throttle control. 3) Measure the resistance between ECM and chassis ground. ***Connector & terminal*** ***(B134) No. 19 — Chassis ground:*** ***(B134) No. 18 — Chassis ground:*** ***(B134) No. 18 — (B136) No. 6:***	Is the resistance 1 MΩ or more?	Go to step **2**.	Repair the short circuit to ground in harness between ECM and electronic throttle control connector.
2	**CHECK SHORT CIRCUIT INSIDE THE ECM.** 1) Connect the connector to ECM. 2) Measure the resistance between electronic throttle control connector and engine ground. ***Connector & terminal*** ***(E57) No. 6 — Engine ground:***	Is the resistance 1 MΩ or more?	Replace the electronic throttle control. <Ref. to FU(H4SO)-12, Throttle Body.>	Repair the short circuit to ground in harness between ECM and electronic throttle control connector. Replace the ECM if defective. <Ref. to FU(H4SO)-39, Engine Control Module (ECM).>

X: DTC P0123 THROTTLE/PEDAL POSITION SENSOR/SWITCH “A” CIRCUIT HIGH

DTC DETECTING CONDITION:

- Immediately at fault recognition
- GENERAL DESCRIPTION <Ref. to GD(H4SO)-39, DTC P0123 THROTTLE/PEDAL POSITION SENSOR/SWITCH “A” CIRCUIT HIGH, Diagnostic Trouble Code (DTC) Detecting Criteria.>

TROUBLE SYMPTOM:

- Improper idling
- Engine stalls.
- Poor driving performance

CAUTION:

After repair or replacement of faulty parts, perform Clear Memory Mode <Ref. to EN(H4SO)(diag)-50, OPERATION, Clear Memory Mode.>, and Inspection Mode <Ref. to EN(H4SO)(diag)-41, PROCEDURE, Inspection Mode.>.

WIRING DIAGRAM:

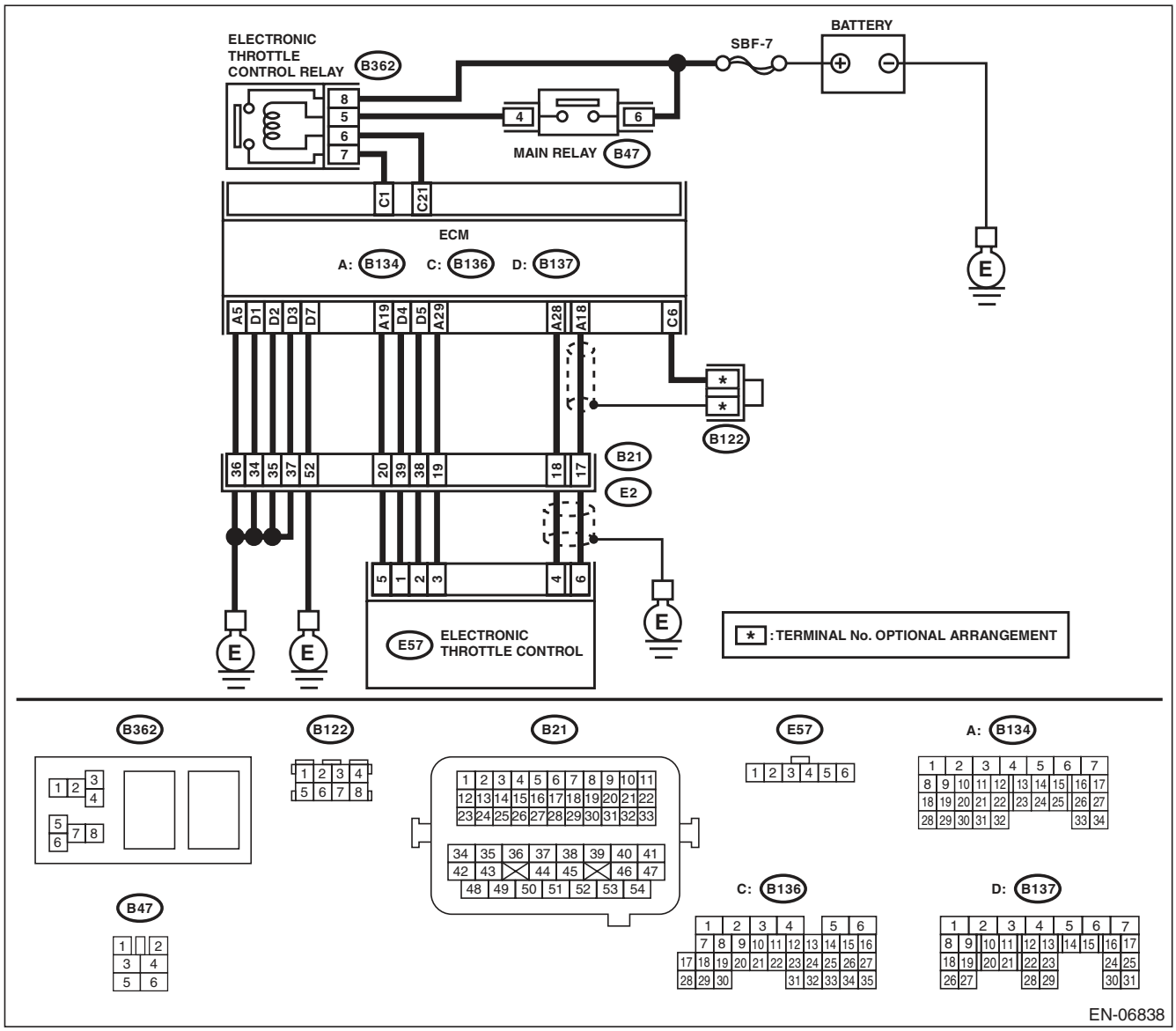

	Step	Check	Yes	No
1	**CHECK HARNESS BETWEEN ECM AND ELECTRONIC THROTTLE CONTROL.** 1) Turn the ignition switch to OFF. 2) Disconnect the connectors from ECM and electronic throttle control. 3) Measure the resistance of harness between ECM and electronic throttle control connector. ***Connector & terminal*** ***(B134) No. 18 — (E57) No. 6:*** ***(B134) No. 29 — (E57) No. 3:***	Is the resistance less than 1 Ω?	Go to step **2**.	Repair the harness and connector. NOTE: In this case, repair the following item: • Open circuit in harness between ECM and electronic throttle control connector • Poor contact of coupling connector
2	**CHECK HARNESS BETWEEN ECM AND ELECTRONIC THROTTLE CONTROL.** 1) Connect the connector to ECM. 2) Measure the resistance between electronic throttle control connector and engine ground. ***Connector & terminal*** ***(E57) No. 3 — Engine ground:***	Is the resistance less than 5 Ω?	Go to step **3**.	Repair the harness and connector. NOTE: In this case, repair the following item: • Open circuit of harness between ECM and engine ground • Poor contact in ECM connector • Poor contact of coupling connector
3	**CHECK HARNESS BETWEEN ECM AND ELECTRONIC THROTTLE CONTROL.** 1) Turn the ignition switch to ON. 2) Measure the voltage between electronic throttle control connector and engine ground. ***Connector & terminal*** ***(E57) No. 6 (+) — Engine ground (–):***	Is the voltage 4.85 V or more?	Repair the short circuit to power in the harness between ECM and electronic throttle control connector.	Go to step **4**.
4	**CHECK HARNESS BETWEEN ECM AND ELECTRONIC THROTTLE CONTROL.** 1) Turn the ignition switch to OFF. 2) Disconnect the connectors from ECM. 3) Measure the resistance between ECM connectors. ***Connector & terminal*** ***(B134) No. 19 — (B134) No. 18:***	Is the resistance 1 MΩ or more?	Repair poor contact of the electronic throttle control connector. Replace the electronic throttle control if defective. <Ref. to FU(H4SO)-12, Throttle Body.>	Repair the short circuit to power in the harness between ECM and electronic throttle control connector.

Y: DTC P0125 INSUFFICIENT COOLANT TEMPERATURE FOR CLOSED LOOP FUEL CONTROL

DTC DETECTING CONDITION:

- Two consecutive driving cycles with fault
- GENERAL DESCRIPTION <Ref. to GD(H4SO)-40, DTC P0125 INSUFFICIENT COOLANT TEMPERATURE FOR CLOSED LOOP FUEL CONTROL, Diagnostic Trouble Code (DTC) Detecting Criteria.>

TROUBLE SYMPTOM:

Engine does not return to idle.

CAUTION:

After repair or replacement of faulty parts, perform Clear Memory Mode <Ref. to EN(H4SO)(diag)-50, OPERATION, Clear Memory Mode.>, and Inspection Mode <Ref. to EN(H4SO)(diag)-41, PROCEDURE, Inspection Mode.>.

Step		Check	Yes	No
1	**CHECK TIRE SIZE.**	Is the tire size as specified and the same size as three other wheels?	Go to step **2**.	Replace the tire.
2	**CHECK ENGINE COOLANT.** Check the following items: • Amount of engine coolant • Engine coolant freeze • Contamination of engine coolant	Is the engine coolant normal?	Go to step **3**.	Fill or replace the engine coolant. <Ref. to CO(H4SO)-13, REPLACEMENT, Engine Coolant.>
3	**CHECK THERMOSTAT.**	Does the thermostat remain opened?	Replace the thermostat. <Ref. to CO(H4SO)-17, Thermostat.>	Replace the engine coolant temperature sensor. <Ref. to FU(H4SO)-22, Engine Coolant Temperature Sensor.>

Z: DTC P0126 INSUFFICIENT ENGINE COOLANT TEMPERATURE FOR STABLE OPERATION

DTC DETECTING CONDITION:

- Two consecutive driving cycles with fault
- GENERAL DESCRIPTION <Ref. to GD(H4SO)-42, DTC P0126 INSUFFICIENT ENGINE COOLANT TEMPERATURE FOR STABLE OPERATION, Diagnostic Trouble Code (DTC) Detecting Criteria.>

TROUBLE SYMPTOM:

- Hard to start
- Improper idling
- Poor driving performance

CAUTION:

After repair or replacement of faulty parts, perform Clear Memory Mode <Ref. to EN(H4SO)(diag)-50, OPERATION, Clear Memory Mode.>, and Inspection Mode <Ref. to EN(H4SO)(diag)-41, PROCEDURE, Inspection Mode.>.

WIRING DIAGRAM:

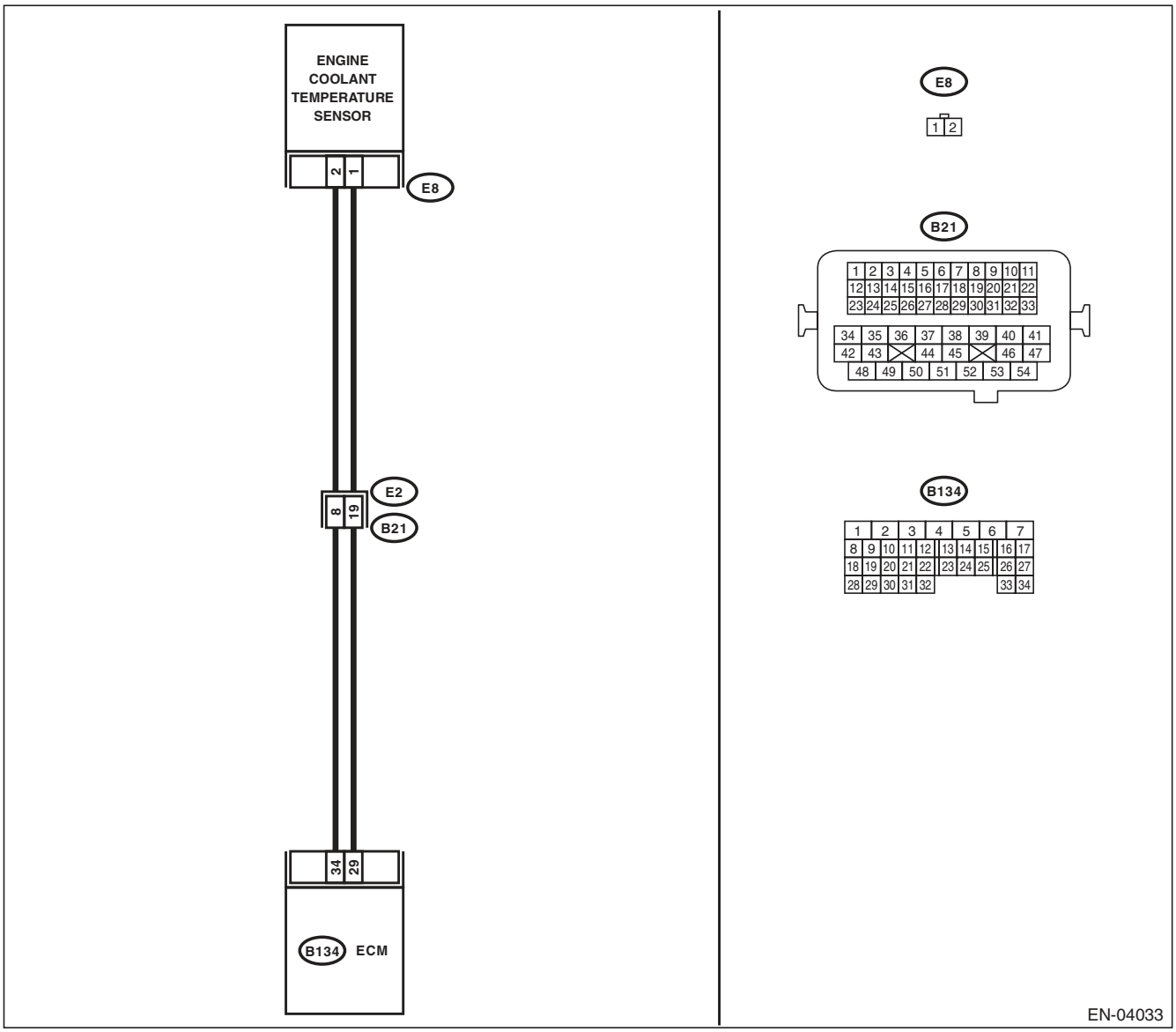

Step		Check	Yes	No
1	**CHECK ENGINE COOLANT TEMPERATURE SENSOR.** Measure the resistance between engine coolant temperature sensor terminals when the engine coolant is cold and after warmed up. ***Terminals*** ***No. 1 — No. 2:***	Is the resistance of engine coolant temperature sensor different between when engine coolant is cold and after warmed up?	Repair the poor contact of ECM connector.	Replace the engine coolant temperature sensor. <Ref. to FU(H4SO)-22, Engine Coolant Temperature Sensor.>

AA:DTC P0128 COOLANT THERMOSTAT (ENGINE COOLANT TEMPERATURE BELOW THERMOSTAT REGULATING TEMPERATURE)

DTC DETECTING CONDITION:

- Two consecutive driving cycles with fault
- GENERAL DESCRIPTION <Ref. to GD(H4SO)-44, DTC P0128 COOLANT THERMOSTAT (ENGINE COOLANT TEMPERATURE BELOW THERMOSTAT REGULATING TEMPERATURE), Diagnostic Trouble Code (DTC) Detecting Criteria.>

TROUBLE SYMPTOM:

Thermostat remains open.

CAUTION:

After repair or replacement of faulty parts, perform Clear Memory Mode <Ref. to EN(H4SO)(diag)-50, OPERATION, Clear Memory Mode.>, and Inspection Mode <Ref. to EN(H4SO)(diag)-41, PROCEDURE, Inspection Mode.>.

Step		Check	Yes	No
1	**CHECK ENGINE COOLANT.**	Are the coolant level and mixture ratio of engine coolant to anti-freeze solution correct?	Go to step **2**.	Replace the engine coolant. <Ref. to CO(H4SO)-13, REPLACEMENT, Engine Coolant.>
2	**CHECK RADIATOR FAN.** 1) Start the engine. 2) Check the radiator fan operation.	Does the radiator fan continuously rotate for 3 minutes or more during idling?	Repair radiator fan circuit. <Ref. to CO(H4SO)-24, Radiator Main Fan and Fan Motor.> and <Ref. to CO(H4SO)-26, Radiator Sub Fan and Fan Motor.>	Replace the thermostat. <Ref. to CO(H4SO)-17, Thermostat.>

AB:DTC P0131 O2 SENSOR CIRCUIT LOW VOLTAGE (BANK 1 SENSOR 1)

DTC DETECTING CONDITION:

- Immediately at fault recognition
- GENERAL DESCRIPTION <Ref. to GD(H4SO)-46, DTC P0131 O2 SENSOR CIRCUIT LOW VOLTAGE (BANK 1 SENSOR 1), Diagnostic Trouble Code (DTC) Detecting Criteria.>

CAUTION:

After repair or replacement of faulty parts, perform Clear Memory Mode <Ref. to EN(H4SO)(diag)-50, OPERATION, Clear Memory Mode.>, and Inspection Mode <Ref. to EN(H4SO)(diag)-41, PROCEDURE, Inspection Mode.>.

WIRING DIAGRAM:

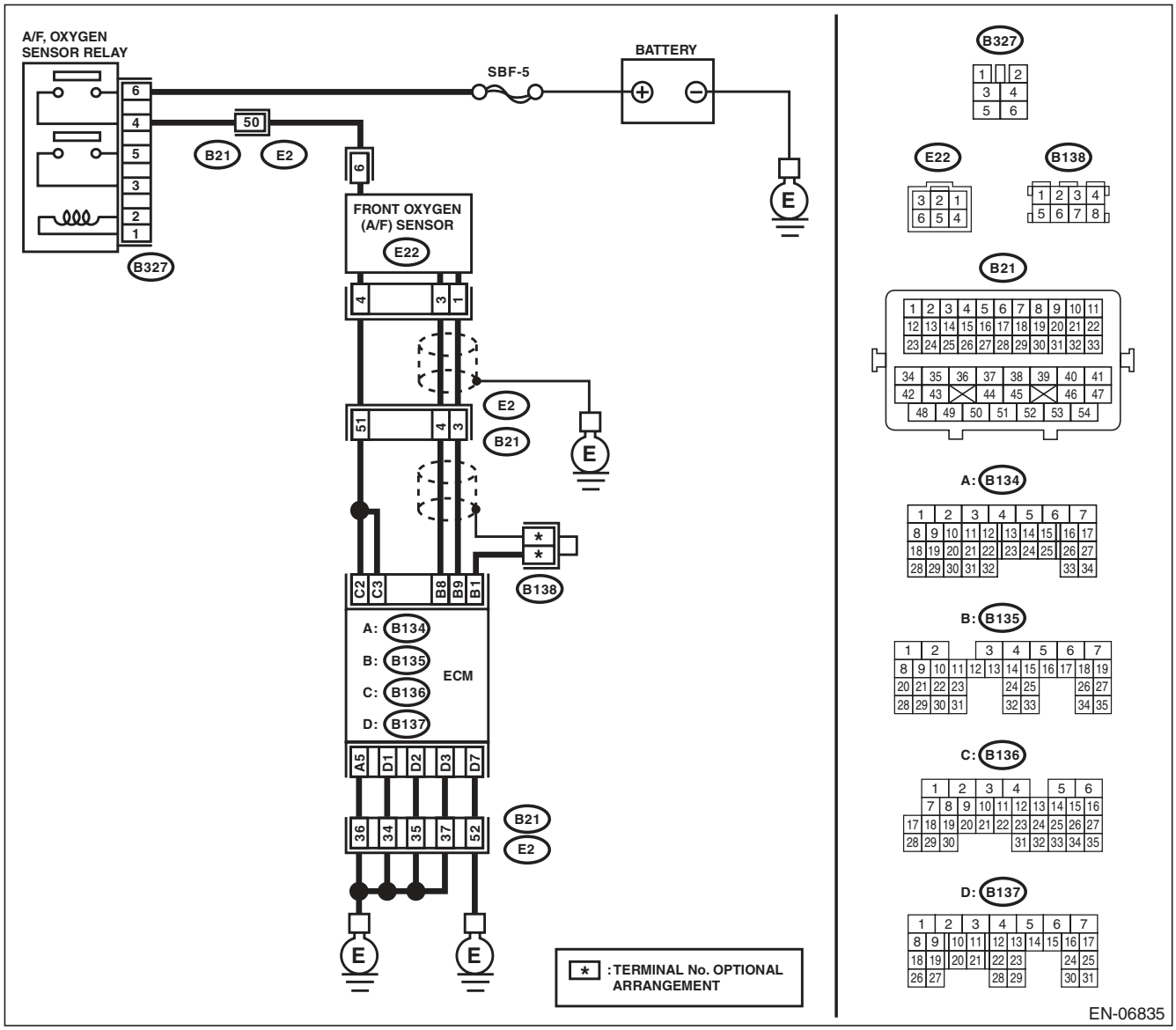

Step		Check	Yes	No
1	**CHECK FRONT OXYGEN (A/F) SENSOR CONNECTOR AND COUPLING CONNECTOR.**	Has water entered the connector?	Completely remove any water inside.	Go to step **2**.
2	**CHECK HARNESS BETWEEN ECM AND FRONT OXYGEN (A/F) SENSOR CONNECTOR.** 1) Turn the ignition switch to OFF. 2) Disconnect the connector from ECM and front oxygen (A/F) sensor connector. 3) Measure the resistance between ECM and chassis ground. ***Connector & terminal*** ***(B135) No. 9 — Chassis ground:*** ***(B135) No. 8 — Chassis ground:***	Is the resistance 1 MΩ or more?	Go to step **3**.	Repair the ground short circuit of harness between ECM and front oxygen (A/F) sensor connector.
3	**CHECK POOR CONTACT.** Check for poor contact in the front oxygen (A/F) sensor connector.	Is there poor contact in front oxygen (A/F) sensor connector?	Repair the poor contact of the front oxygen (A/F) sensor connector.	Replace the front oxygen (A/F) sensor. <Ref. to FU(H4SO)-35, Front Oxygen (A/F) Sensor.>

AC:DTC P0132 O2 SENSOR CIRCUIT HIGH VOLTAGE (BANK 1 SENSOR 1)

DTC DETECTING CONDITION:

- Immediately at fault recognition
- GENERAL DESCRIPTION <Ref. to GD(H4SO)-48, DTC P0132 O2 SENSOR CIRCUIT HIGH VOLTAGE (BANK 1 SENSOR 1), Diagnostic Trouble Code (DTC) Detecting Criteria.>

CAUTION:

After repair or replacement of faulty parts, perform Clear Memory Mode <Ref. to EN(H4SO)(diag)-50, OPERATION, Clear Memory Mode.>, and Inspection Mode <Ref. to EN(H4SO)(diag)-41, PROCEDURE, Inspection Mode.>.

WIRING DIAGRAM:

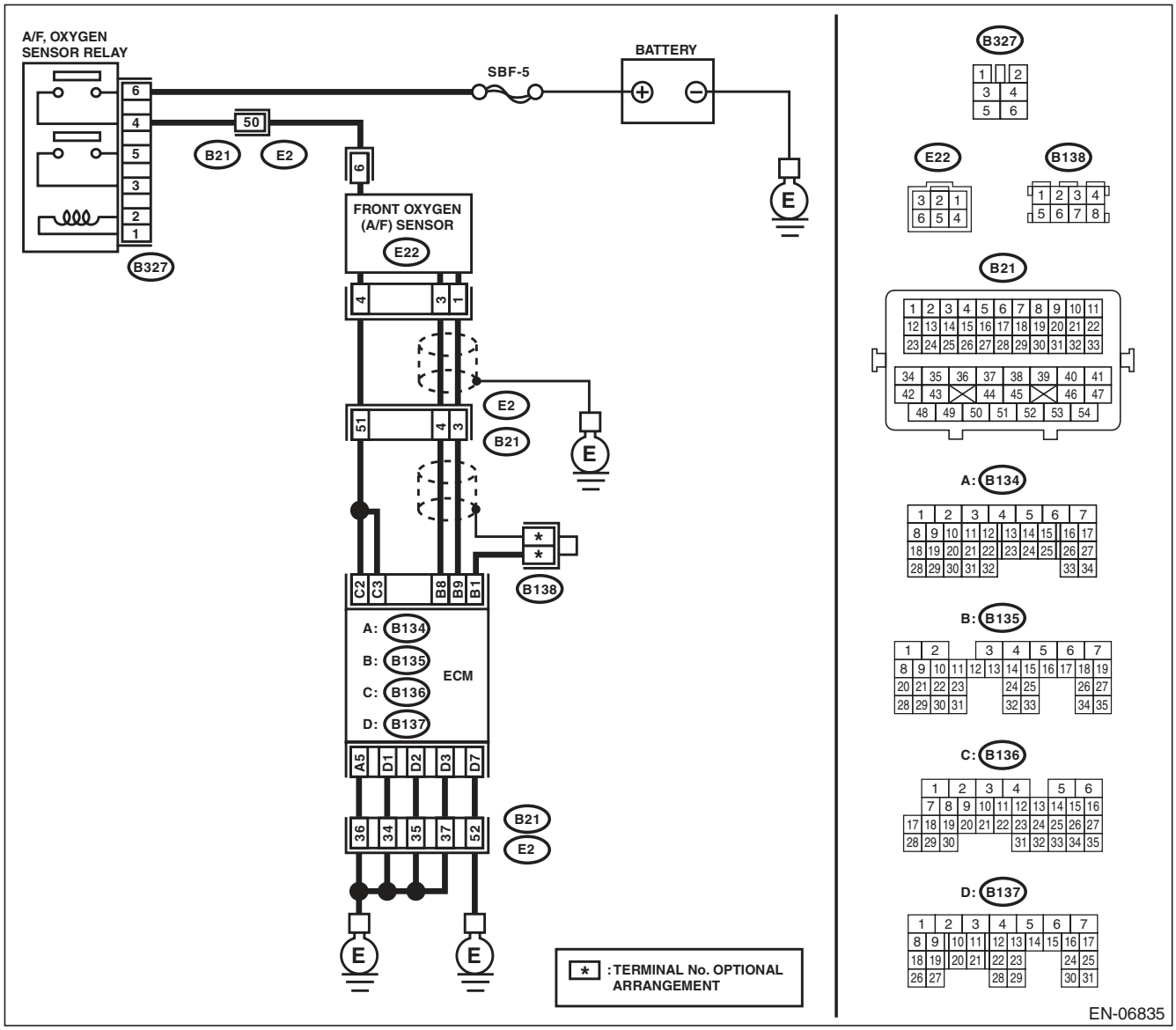

Step		Check	Yes	No
1	**CHECK FRONT OXYGEN (A/F) SENSOR CONNECTOR AND COUPLING CONNECTOR.**	Has water entered the connector?	Completely remove any water inside.	Go to step **2**.
2	**CHECK HARNESS BETWEEN ECM AND FRONT OXYGEN (A/F) SENSOR CONNECTOR.** 1) Turn the ignition switch to OFF. 2) Disconnect the connector from front oxygen (A/F) sensor. 3) Turn the ignition switch to ON. 4) Measure the voltage between ECM and chassis ground. ***Connector & terminal*** ***(B135) No. 9 (+) — Chassis ground (–):*** ***(B135) No. 8 (+) — Chassis ground (–):***	Is the voltage 8 V or more?	Repair the short circuit to power in the harness between ECM and front oxygen (A/F) sensor connector.	Replace the front oxygen (A/F) sensor. <Ref. to FU(H4SO)-35, Front Oxygen (A/F) Sensor.>

AD:DTC P0133 O2 SENSOR CIRCUIT SLOW RESPONSE (BANK 1 SENSOR 1)

DTC DETECTING CONDITION:

- Two consecutive driving cycles with fault
- GENERAL DESCRIPTION <Ref. to GD(H4SO)-50, DTC P0133 O2 SENSOR CIRCUIT SLOW RESPONSE (BANK 1 SENSOR 1), Diagnostic Trouble Code (DTC) Detecting Criteria.>

CAUTION:

After repair or replacement of faulty parts, perform Clear Memory Mode <Ref. to EN(H4SO)(diag)-50, OPERATION, Clear Memory Mode.>, and Inspection Mode <Ref. to EN(H4SO)(diag)-41, PROCEDURE, Inspection Mode.>.

WIRING DIAGRAM:

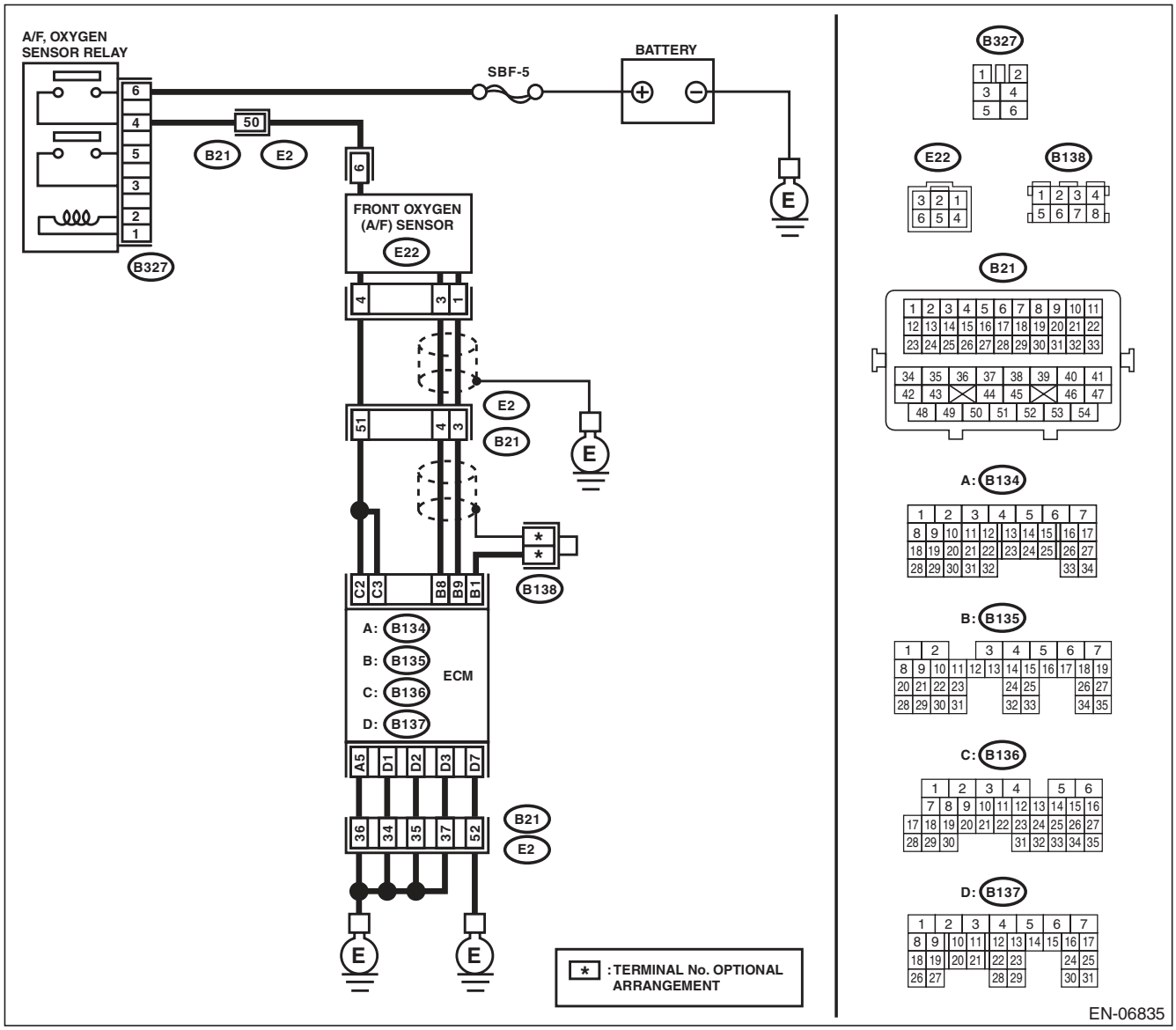

Step		Check	Yes	No
1	**CHECK EXHAUST SYSTEM.** NOTE: Check the following items. • Loose installation of front portion of exhaust pipe onto cylinder heads • Loose connection between front exhaust pipe and front catalytic converter • Damage of exhaust pipe resulting in a hole	Is there any fault in exhaust system?	Repair the exhaust system.	Replace the front oxygen (A/F) sensor. <Ref. to FU(H4SO)-35, Front Oxygen (A/F) Sensor.>

AE:DTC P0134 O2 SENSOR CIRCUIT NO ACTIVITY DETECTED (BANK 1 SENSOR 1)

DTC DETECTING CONDITION:

- Immediately at fault recognition
- GENERAL DESCRIPTION <Ref. to GD(H4SO)-53, DTC P0134 O2 SENSOR CIRCUIT NO ACTIVITY DETECTED (BANK 1 SENSOR 1), Diagnostic Trouble Code (DTC) Detecting Criteria.>

CAUTION:

After repair or replacement of faulty parts, perform Clear Memory Mode <Ref. to EN(H4SO)(diag)-50, OPERATION, Clear Memory Mode.>, and Inspection Mode <Ref. to EN(H4SO)(diag)-41, PROCEDURE, Inspection Mode.>.

WIRING DIAGRAM:

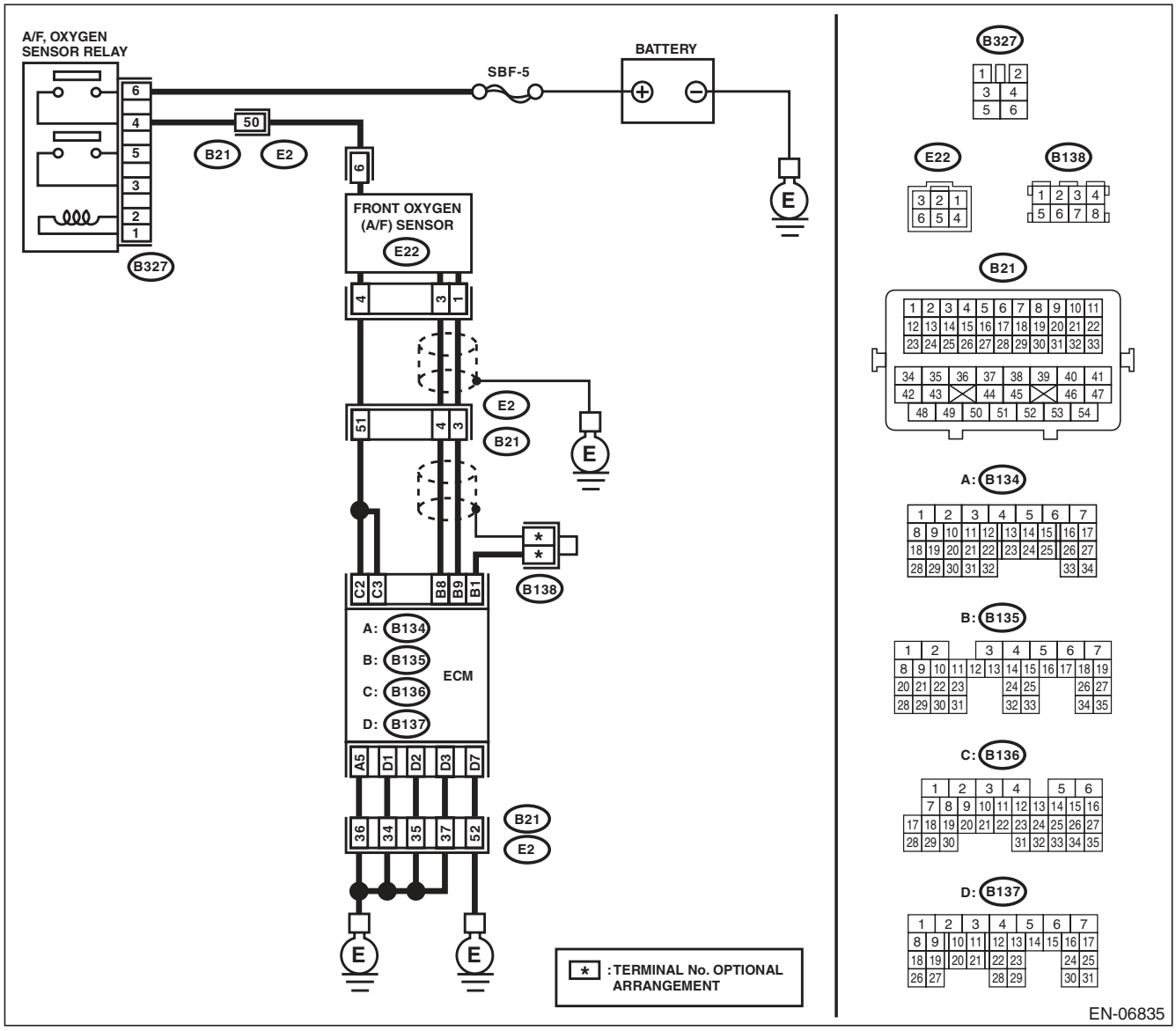

Step		Check	Yes	No
1	**CHECK HARNESS BETWEEN ECM AND FRONT OXYGEN (A/F) SENSOR CONNECTOR.** 1) Turn the ignition switch to OFF. 2) Disconnect the connectors from ECM and front oxygen (A/F) sensor connector. 3) Measure the resistance of harness between ECM and front oxygen (A/F) sensor connector. ***Connector & terminal*** ***(B135) No. 9 — (E22) No. 1:*** ***(B135) No. 8 — (E22) No. 3:***	Is the resistance less than 1 Ω?	Go to step **2**.	Repair the harness and connector. NOTE: In this case, repair the following item: • Open circuit in harness between ECM and front oxygen (A/F) sensor connector • Poor contact of coupling connector
2	**CHECK POOR CONTACT.** Check for poor contact of ECM and front oxygen (A/F) sensor connector.	Is there poor contact in ECM or front oxygen (A/F) sensor connector?	Repair the poor contact in ECM or front oxygen (A/F) sensor connector.	Replace the front oxygen (A/F) sensor. <Ref. to FU(H4SO)-35, Front Oxygen (A/F) Sensor.>

AF:DTC P0137 O2 SENSOR CIRCUIT LOW VOLTAGE (BANK 1 SENSOR 2)

DTC DETECTING CONDITION:

- Two consecutive driving cycles with fault
- GENERAL DESCRIPTION <Ref. to GD(H4SO)-55, DTC P0137 O2 SENSOR CIRCUIT LOW VOLTAGE (BANK 1 SENSOR 2), Diagnostic Trouble Code (DTC) Detecting Criteria.>

CAUTION:

After repair or replacement of faulty parts, perform Clear Memory Mode <Ref. to EN(H4SO)(diag)-50, OPERATION, Clear Memory Mode.>, and Inspection Mode <Ref. to EN(H4SO)(diag)-41, PROCEDURE, Inspection Mode.>.

WIRING DIAGRAM:

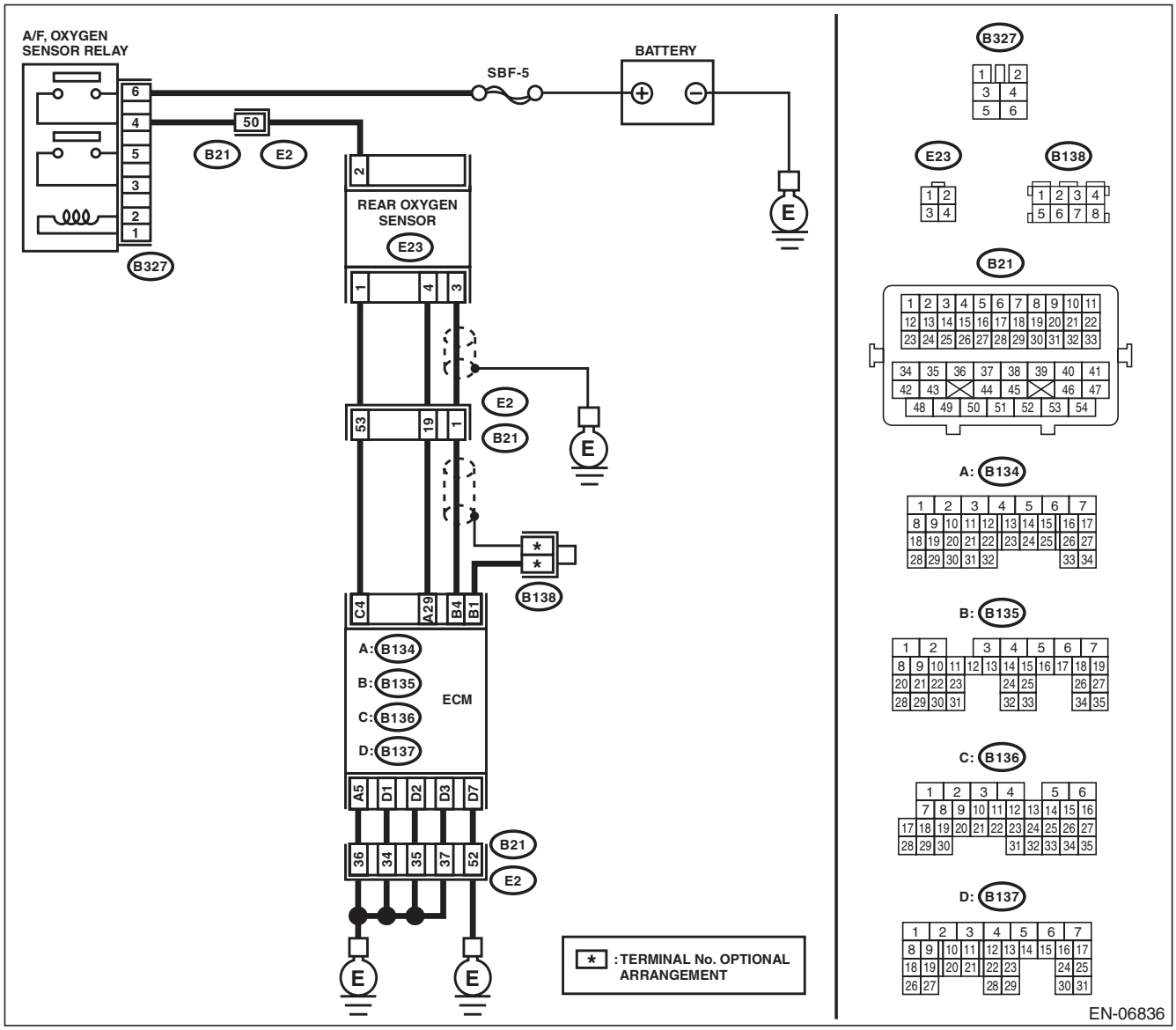

	Step	Check	Yes	No
1	**CHECK REAR OXYGEN SENSOR DATA.** 1) Warm up the engine until engine coolant temperature is above 75°C (167°F), and keep the engine speed at 3,000 rpm. (for up to 2 minutes) 2) Read the data of rear oxygen sensor signal using Subaru Select Monitor or general scan tool. NOTE: • SUBARU SELECT MONITOR For detailed operation procedure, refer to "READ CURRENT DATA FOR ENGINE". <Ref. to EN(H4SO)(diag)-33, Subaru Select Monitor.> • General Scan Tool For detailed operation procedures, refer to the general scan tool operation manual.	Is the voltage 490 mV or more?	Go to step **5**.	Go to step **2**.
2	**CHECK REAR OXYGEN SENSOR CONNECTOR AND COUPLING CONNECTOR.**	Has water entered the connector?	Completely remove any water inside.	Go to step **3**.
3	**CHECK HARNESS BETWEEN ECM AND REAR OXYGEN SENSOR CONNECTOR.** 1) Turn the ignition switch to OFF. 2) Disconnect the connectors from ECM and rear oxygen sensor. 3) Measure the resistance of harness between ECM and rear oxygen sensor connector. ***Connector & terminal*** ***(B135) No. 4 — (E23) No. 3:*** ***(B134) No. 29 — (E23) No. 4:***	Is the resistance less than 1 Ω?	Go to step **4**.	Repair the harness and connector. NOTE: In this case, repair the following item: • Open circuit in harness between ECM and rear oxygen sensor connector • Poor contact of coupling connector
4	**CHECK HARNESS BETWEEN ECM AND REAR OXYGEN SENSOR.** 1) Turn the ignition switch to OFF. 2) Disconnect the connector from rear oxygen sensor. 3) Turn the ignition switch to ON. 4) Measure the voltage between rear oxygen sensor connector and chassis ground. ***Connector & terminal*** ***(E23) No. 3 (+) — Chassis ground (–):***	Is the voltage 0.2 — 0.5 V?	Replace the rear oxygen sensor. <Ref. to FU(H4SO)-37, Rear Oxygen Sensor.>	Repair the harness and connector. NOTE: In this case, repair the following item: • Open circuit of harness between the ECM and rear oxygen sensor • Poor contact of the rear oxygen sensor connector • Poor contact in ECM connector
5	**CHECK EXHAUST SYSTEM.** Check exhaust system parts. NOTE: Check the following items. • Looseness and improper attachment of exhaust system parts • Damage (crack, hole etc.) of parts • Looseness and improper attachment of parts between front oxygen (A/F) sensor and rear oxygen sensor	Is there any fault in exhaust system?	Repair or replace faulty parts.	Replace the rear oxygen sensor. <Ref. to FU(H4SO)-37, Rear Oxygen Sensor.>

AG:DTC P0138 O2 SENSOR CIRCUIT HIGH VOLTAGE (BANK 1 SENSOR 2)

DTC DETECTING CONDITION:

- Two consecutive driving cycles with fault
- GENERAL DESCRIPTION <Ref. to GD(H4SO)-57, DTC P0138 O2 SENSOR CIRCUIT HIGH VOLTAGE (BANK 1 SENSOR 2), Diagnostic Trouble Code (DTC) Detecting Criteria.>

CAUTION:

After repair or replacement of faulty parts, perform Clear Memory Mode <Ref. to EN(H4SO)(diag)-50, OPERATION, Clear Memory Mode.>, and Inspection Mode <Ref. to EN(H4SO)(diag)-41, PROCEDURE, Inspection Mode.>.

WIRING DIAGRAM:

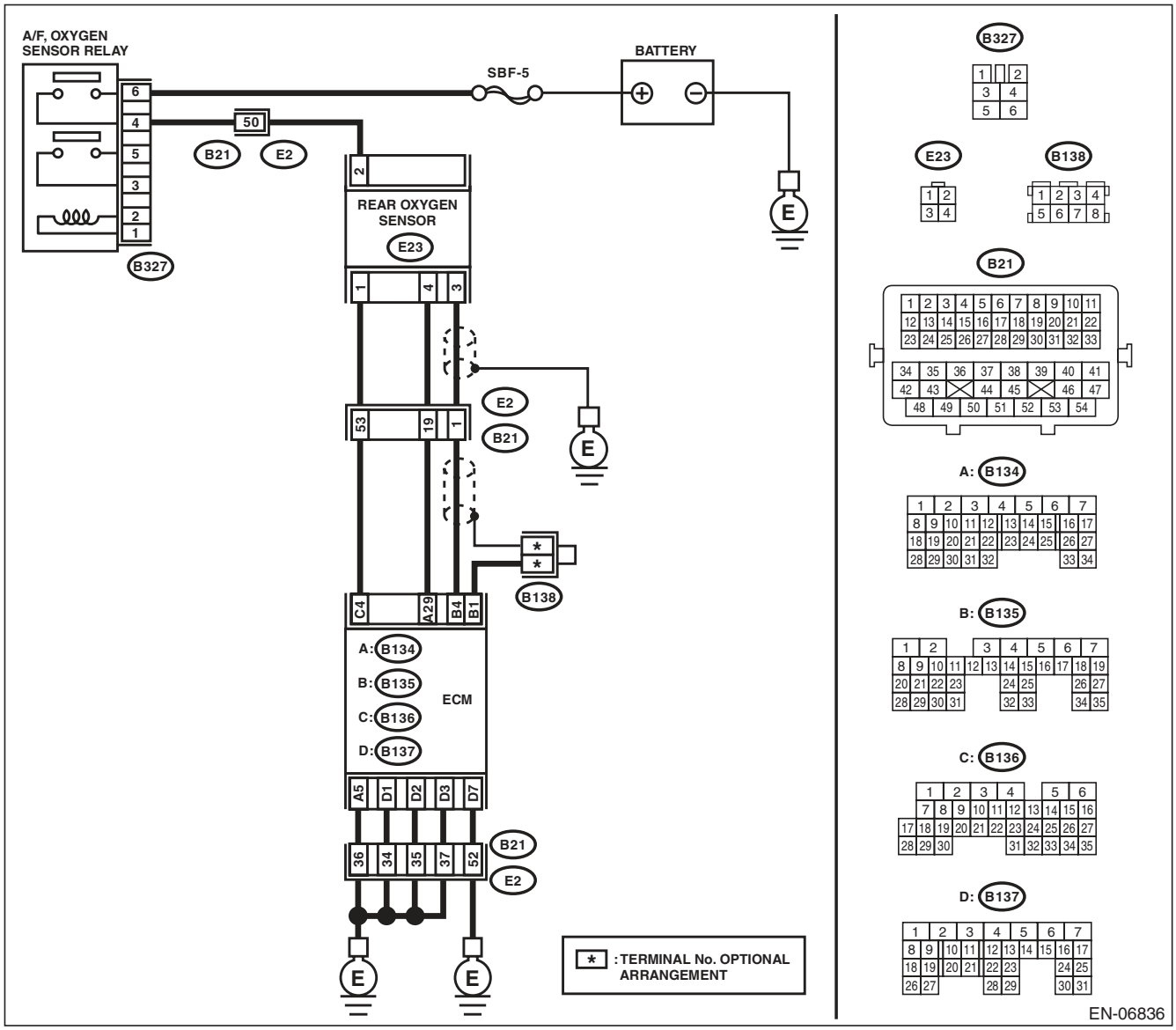

	Step	Check	Yes	No
1	**CHECK REAR OXYGEN SENSOR DATA.** 1) Warm up the engine until engine coolant temperature is above 75°C (167°F), and rapidly reduce the engine speed from 3,000 rpm. 2) Read the data of rear oxygen sensor signal using Subaru Select Monitor or general scan tool. NOTE: • SUBARU SELECT MONITOR For detailed operation procedure, refer to "READ CURRENT DATA FOR ENGINE". <Ref. to EN(H4SO)(diag)-33, Subaru Select Monitor.> • General Scan Tool For detailed operation procedures, refer to the general scan tool operation manual.	Is the voltage 250 mV or less?	Go to step **5**.	Go to step **2**.
2	**CHECK REAR OXYGEN SENSOR CONNECTOR AND COUPLING CONNECTOR.**	Has water entered the connector?	Completely remove any water inside.	Go to step **3**.
3	**CHECK HARNESS BETWEEN ECM AND REAR OXYGEN SENSOR CONNECTOR.** 1) Turn the ignition switch to OFF. 2) Disconnect the connectors from ECM and rear oxygen sensor. 3) Measure the resistance of harness between ECM and rear oxygen sensor connector. ***Connector & terminal*** ***(B135) No. 4 — (E23) No. 3:*** ***(B134) No. 29 — (E23) No. 4:***	Is the resistance less than 1 Ω?	Go to step **4**.	Repair the harness and connector. NOTE: In this case, repair the following item: • Open circuit in harness between ECM and rear oxygen sensor connector • Poor contact of coupling connector
4	**CHECK HARNESS BETWEEN ECM AND REAR OXYGEN SENSOR.** 1) Turn the ignition switch to OFF. 2) Disconnect the connector from rear oxygen sensor. 3) Turn the ignition switch to ON. 4) Measure the voltage between rear oxygen sensor connector and chassis ground. ***Connector & terminal*** ***(E23) No. 3 (+) — Chassis ground (–):***	Is the voltage 0.2 — 0.5 V?	Replace the rear oxygen sensor. <Ref. to FU(H4SO)-37, Rear Oxygen Sensor.>	Repair the harness and connector. NOTE: In this case, repair the following item: • Open circuit of harness between the ECM and rear oxygen sensor • Poor contact of the rear oxygen sensor connector • Poor contact in ECM connector
5	**CHECK EXHAUST SYSTEM.** Check exhaust system parts. NOTE: Check the following items. • Looseness and improper attachment of exhaust system parts • Damage (crack, hole etc.) of parts • Looseness and improper attachment of parts between front oxygen (A/F) sensor and rear oxygen sensor	Is there any fault in exhaust system?	Repair or replace faulty parts.	Replace the rear oxygen sensor. <Ref. to FU(H4SO)-37, Rear Oxygen Sensor.>

AH:DTC P0139 O2 SENSOR CIRCUIT SLOW RESPONSE (BANK 1 SENSOR 2)

DTC DETECTING CONDITION:

- Two consecutive driving cycles with fault
- GENERAL DESCRIPTION <Ref. to GD(H4SO)-58, DTC P0139 O2 SENSOR CIRCUIT SLOW RESPONSE (BANK 1 SENSOR 2), Diagnostic Trouble Code (DTC) Detecting Criteria.>

CAUTION:

After repair or replacement of faulty parts, perform Clear Memory Mode <Ref. to EN(H4SO)(diag)-50, OPERATION, Clear Memory Mode.>, and Inspection Mode <Ref. to EN(H4SO)(diag)-41, PROCEDURE, Inspection Mode.>.

WIRING DIAGRAM:

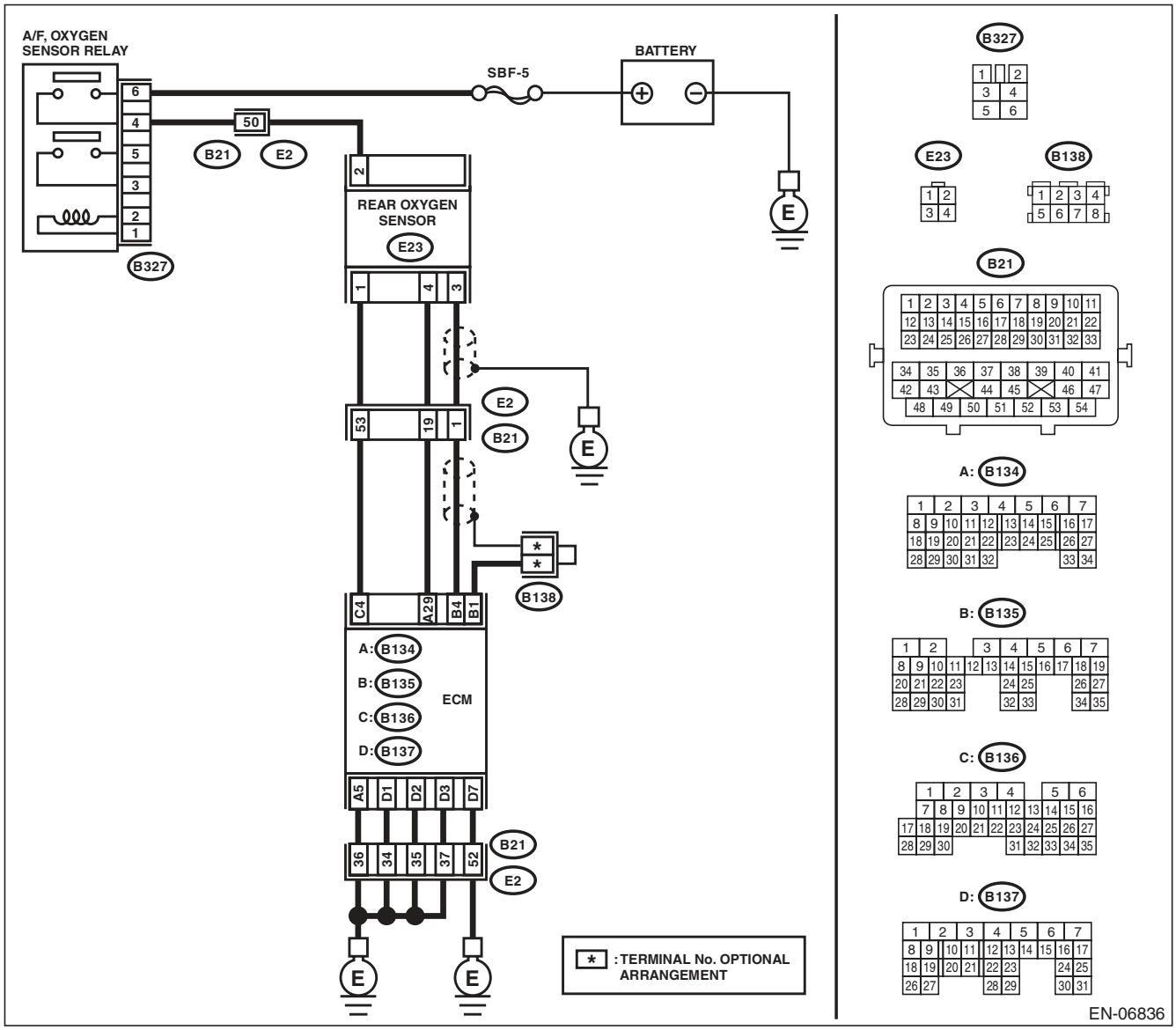

	Step	Check	Yes	No
1	**CHECK HARNESS BETWEEN ECM AND REAR OXYGEN SENSOR CONNECTOR.** 1) Turn the ignition switch to OFF. 2) Disconnect the connectors from ECM and rear oxygen sensor. 3) Measure the resistance of harness between ECM and rear oxygen sensor connector. ***Connector & terminal*** ***(B135) No. 4 — (E23) No. 3:***	Is the resistance less than 1 Ω?	Go to step **2**.	Repair the harness and connector. NOTE: In this case, repair the following item: • Open circuit in harness between ECM and rear oxygen sensor connector • Poor contact of coupling connector
2	**CHECK HARNESS BETWEEN ECM AND REAR OXYGEN SENSOR CONNECTOR.** Measure the resistance between rear oxygen sensor connector and chassis ground. ***Connector & terminal*** ***(E23) No. 3 — Chassis ground:***	Is the resistance 1 MΩ or more?	Go to step **3**.	Repair the ground short circuit of harness between ECM and rear oxygen sensor connector.
3	**CHECK REAR OXYGEN SENSOR.** Measure the resistance between rear oxygen sensor terminals. ***Terminals*** ***No. 3 — No. 4***	Is the resistance less than 1 Ω?	Replace the rear oxygen sensor. <Ref. to FU(H4SO)-37, Rear Oxygen Sensor.>	Even if DTC is detected, the circuit has returned to a normal condition at this time. Reproduce the failure, and then perform the diagnosis again. NOTE: In this case, temporary poor contact of connector may be the cause.

AI: DTC P0140 O2 SENSOR CIRCUIT NO ACTIVITY DETECTED (BANK1 SENSOR2)

DTC DETECTING CONDITION:

- Two consecutive driving cycles with fault
- GENERAL DESCRIPTION <Ref. to GD(H4SO)-63, DTC P0140 O2 SENSOR CIRCUIT NO ACTIVITY DETECTED (BANK1 SENSOR2), Diagnostic Trouble Code (DTC) Detecting Criteria.>

CAUTION:

After repair or replacement of faulty parts, perform Clear Memory Mode <Ref. to EN(H4SO)(diag)-50, OPERATION, Clear Memory Mode.>, and Inspection Mode <Ref. to EN(H4SO)(diag)-41, PROCEDURE, Inspection Mode.>.

WIRING DIAGRAM:

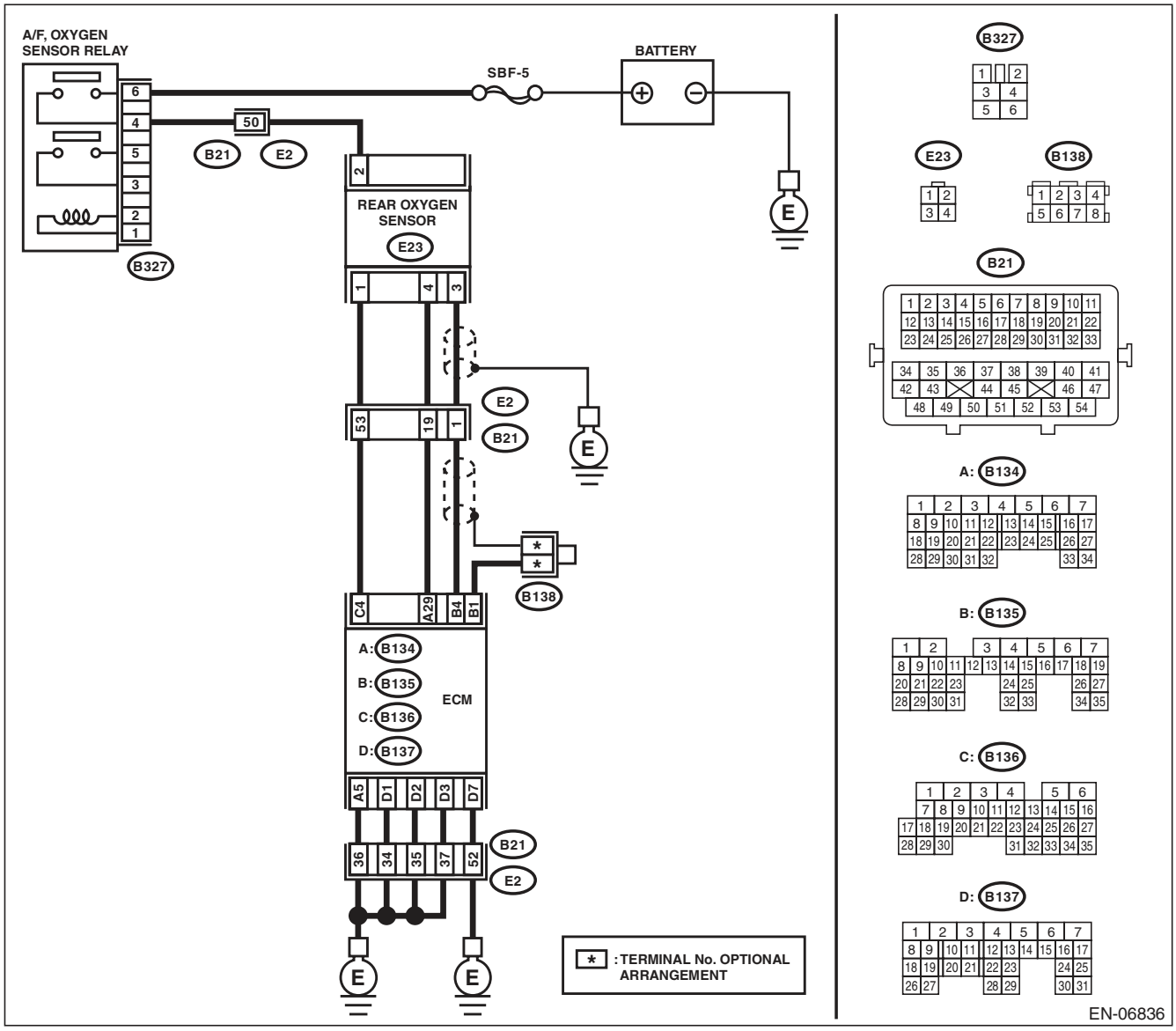

	Step	Check	Yes	No
1	**CHECK REAR OXYGEN SENSOR DATA.** 1) Warm up the engine until engine coolant temperature is above 75°C (167°F), and keep the engine speed at 3,000 rpm. (for up to 2 minutes) 2) Read the data of rear oxygen sensor signal using Subaru Select Monitor or general scan tool. NOTE: • SUBARU SELECT MONITOR For detailed operation procedure, refer to "READ CURRENT DATA FOR ENGINE". <Ref. to EN(H4SO)(diag)-33, Subaru Select Monitor.> • General Scan Tool For detailed operation procedures, refer to the general scan tool operation manual.	Is the voltage 490 mV or more?	Go to step **6**.	Go to step **2**.
2	**CHECK REAR OXYGEN SENSOR DATA.** 1) Warm up the engine until engine coolant temperature is above 75°C (167°F), and rapidly reduce the engine speed from 3,000 rpm. 2) Read the data of rear oxygen sensor signal using Subaru Select Monitor or general scan tool. NOTE: • SUBARU SELECT MONITOR For detailed operation procedure, refer to "READ CURRENT DATA FOR ENGINE". <Ref. to EN(H4SO)(diag)-33, Subaru Select Monitor.> • General Scan Tool For detailed operation procedures, refer to the general scan tool operation manual.	Is the voltage 250 mV or less?	Go to step **6**.	Go to step **3**.
3	**CHECK REAR OXYGEN SENSOR CONNECTOR AND COUPLING CONNECTOR.**	Has water entered the connector?	Completely remove any water inside.	Go to step **4**.
4	**CHECK HARNESS BETWEEN ECM AND REAR OXYGEN SENSOR CONNECTOR.** 1) Turn the ignition switch to OFF. 2) Disconnect the connectors from ECM and rear oxygen sensor. 3) Measure the resistance of harness between ECM and rear oxygen sensor connector. ***Connector & terminal*** ***(B135) No. 4 — (E23) No. 3:*** ***(B134) No. 29 — (E23) No. 4:***	Is the resistance less than 1 Ω?	Go to step **5**.	Repair the harness and connector. NOTE: In this case, repair the following item: • Open circuit in harness between ECM and rear oxygen sensor connector • Poor contact of coupling connector

Step		Check	Yes	No
5	**CHECK HARNESS BETWEEN ECM AND REAR OXYGEN SENSOR.** 1) Turn the ignition switch to OFF. 2) Disconnect the connector from rear oxygen sensor. 3) Turn the ignition switch to ON. 4) Measure the voltage between rear oxygen sensor connector and chassis ground. ***Connector & terminal*** ***(E23) No. 3 (+) — Chassis ground (–):***	Is the voltage 0.2 — 0.5 V?	Replace the rear oxygen sensor. <Ref. to FU(H4SO)-37, Rear Oxygen Sensor.>	Repair the harness and connector. NOTE: In this case, repair the following item: • Open circuit of harness between the ECM and rear oxygen sensor • Poor contact of the rear oxygen sensor connector • Poor contact in ECM connector
6	**CHECK EXHAUST SYSTEM.** Check exhaust system parts. NOTE: Check the following items. • Looseness and improper attachment of exhaust system parts • Damage (crack, hole etc.) of parts • Looseness and improper attachment of parts between front oxygen (A/F) sensor and rear oxygen sensor	Is there any fault in exhaust system?	Repair or replace faulty parts.	Replace the rear oxygen sensor. <Ref. to FU(H4SO)-37, Rear Oxygen Sensor.>

AJ:DTC P0171 SYSTEM TOO LEAN (BANK 1)

Refer to DTC P0172 for diagnostic procedure. <Ref. to EN(H4SO)(diag)-156, DTC P0172 SYSTEM TOO RICH (BANK 1), Diagnostic Procedure with Diagnostic Trouble Code (DTC).>

AK:DTC P0172 SYSTEM TOO RICH (BANK 1)

DTC DETECTING CONDITION:

- Two consecutive driving cycles with fault
- GENERAL DESCRIPTION <Ref. to GD(H4SO)-67, DTC P0172 SYSTEM TOO RICH (BANK 1), Diagnostic Trouble Code (DTC) Detecting Criteria.>

TROUBLE SYMPTOM:

- Improper idling
- Engine stalls.
- Poor driving performance

CAUTION:
After repair or replacement of faulty parts, perform Clear Memory Mode <Ref. to EN(H4SO)(diag)-50, OPERATION, Clear Memory Mode.>, and Inspection Mode <Ref. to EN(H4SO)(diag)-41, PROCEDURE, Inspection Mode.>.

	Step	Check	Yes	No
1	**CHECK EXHAUST SYSTEM.**	Are there holes or loose bolts on exhaust system?	Repair the exhaust system.	Go to step **2**.
2	**CHECK AIR INTAKE SYSTEM.**	Are there holes, loose bolts or disconnection of hose on air intake system?	Repair the air intake system.	Go to step **3**.
3	**CHECK FUEL PRESSURE.** **WARNING:** **Place "NO OPEN FLAMES" signs near the working area.** **CAUTION:** **Be careful not to spill fuel.** Measure the fuel pressure. <Ref. to ME(H4SO)-26, INSPECTION, Fuel Pressure.> **CAUTION:** **Release fuel pressure before removing the fuel pressure gauge.**	Is the measured value 339.5 — 360.5 kPa (3.5 — 3.7 kg/cm^2, 49 — 52 psi)?	Go to step **4**.	Repair the following item. Fuel pressure is too high: • Clogged fuel line or bent hose Fuel pressure is too low: • Improper fuel pump discharge • Clogged fuel line
4	**CHECK ENGINE COOLANT TEMPERATURE SENSOR.** 1) Start the engine and warm up completely. 2) Read the data of engine coolant temperature sensor signal using Subaru Select Monitor or general scan tool. NOTE: • SUBARU SELECT MONITOR For detailed operation procedure, refer to "READ CURRENT DATA FOR ENGINE". <Ref. to EN(H4SO)(diag)-33, Subaru Select Monitor.> • General Scan Tool For detailed operation procedures, refer to the general scan tool operation manual.	Is the engine coolant temperature 75°C (167°F) or higher?	Go to step **5**.	Replace the engine coolant temperature sensor. <Ref. to FU(H4SO)-22, Engine Coolant Temperature Sensor.>

	Step	Check	Yes	No
5	**CHECK MASS AIR FLOW AND INTAKE AIR TEMPERATURE SENSOR.** 1) Start the engine and warm up engine until coolant temperature is higher than 75°C (167°F). 2) For AT models, set the select lever to "P" range or "N" range, and for MT models, place the shift lever in the neutral position. 3) Turn the A/C switch to OFF. 4) Turn all the accessory switches to OFF. 5) Read the data of the mass air flow and intake air temperature sensor signal using Subaru Select Monitor or general scan tool. NOTE: • SUBARU SELECT MONITOR For detailed operation procedure, refer to "READ CURRENT DATA FOR ENGINE". <Ref. to EN(H4SO)(diag)-33, Subaru Select Monitor.> • General Scan Tool For detailed operation procedures, refer to the general scan tool operation manual.	Is the measured value 2.0 — 5.0 g/s (0.26 — 0.66 lb/m)?	Go to step **6**.	Replace the mass air flow and intake air temperature sensor. <Ref. to FU(H4SO)-28, Mass Air Flow and Intake Air Temperature Sensor.>
6	**CHECK MASS AIR FLOW AND INTAKE AIR TEMPERATURE SENSOR.** 1) Start the engine and warm up engine until coolant temperature is higher than 70°C (158°F). 2) For AT models, set the select lever to "P" range or "N" range, and for MT models, place the shift lever in the neutral position. 3) Turn the A/C switch to OFF. 4) Turn all the accessory switches to OFF. 5) Open the front hood. 6) Measure the ambient temperature. 7) Read the data of the mass air flow and intake air temperature sensor signal using Subaru Select Monitor or general scan tool. NOTE: • SUBARU SELECT MONITOR For detailed operation procedure, refer to "READ CURRENT DATA FOR ENGINE". <Ref. to EN(H4SO)(diag)-33, Subaru Select Monitor.> • General Scan Tool For detailed operation procedures, refer to the general scan tool operation manual.	Subtract ambient temperature from intake air temperature. Is the obtained value –10 — 50°C (–18 — 90°F)?	Repair the poor contact of ECM connector.	Check the mass air flow and intake air temperature sensor. <Ref. to FU(H4SO)-28, Mass Air Flow and Intake Air Temperature Sensor.>

AL:DTC P0181 FUEL TEMPERATURE SENSOR “A” CIRCUIT RANGE/ PERFORMANCE

DTC DETECTING CONDITION:

- Two consecutive driving cycles with fault
- GENERAL DESCRIPTION <Ref. to GD(H4SO)-68, DTC P0181 FUEL TEMPERATURE SENSOR “A” CIRCUIT RANGE/PERFORMANCE, Diagnostic Trouble Code (DTC) Detecting Criteria.>

CAUTION:

After repair or replacement of faulty parts, perform Clear Memory Mode <Ref. to EN(H4SO)(diag)-50, OPERATION, Clear Memory Mode.>, and Inspection Mode <Ref. to EN(H4SO)(diag)-41, PROCEDURE, Inspection Mode.>.

WIRING DIAGRAM:

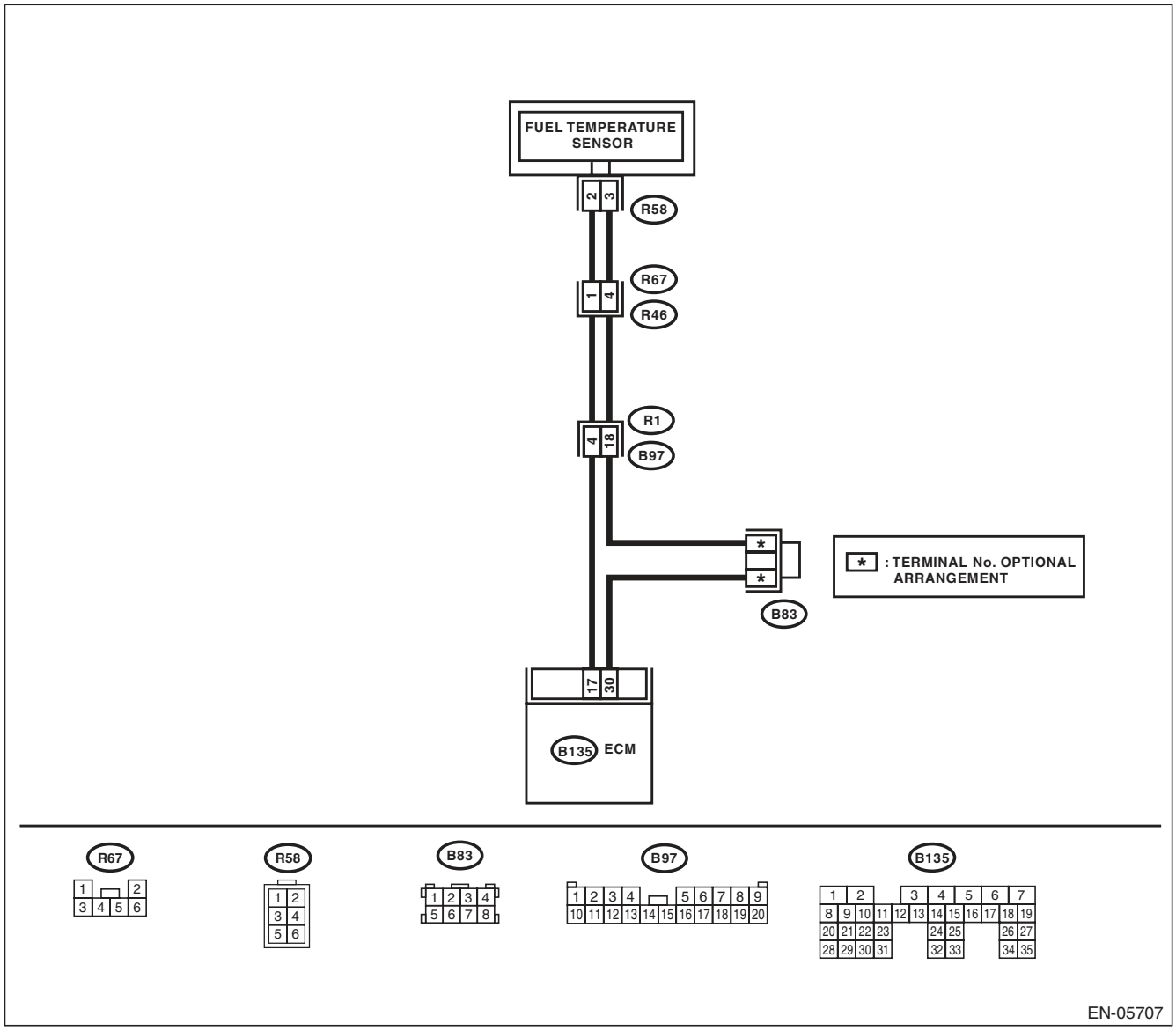

Step	Check	Yes	No
1 CHECK FOR ANY OTHER DTC ON DISPLAY.	Is any other DTC displayed?	Check the appropriate DTC using the “List of Diagnostic Trouble Code (DTC)”. <Ref. to EN(H4SO)(diag)-80, List of Diagnostic Trouble Code (DTC).>	Replace the fuel temperature sensor. <Ref. to EC(H4SO)-10, Fuel Temperature Sensor.>

AM:DTC P0182 FUEL TEMPERATURE SENSOR “A” CIRCUIT LOW INPUT

DTC DETECTING CONDITION:

- Immediately at fault recognition
- GENERAL DESCRIPTION <Ref. to GD(H4SO)-71, DTC P0182 FUEL TEMPERATURE SENSOR “A” CIRCUIT LOW INPUT, Diagnostic Trouble Code (DTC) Detecting Criteria.>

CAUTION:

After repair or replacement of faulty parts, perform Clear Memory Mode <Ref. to EN(H4SO)(diag)-50, OPERATION, Clear Memory Mode.>, and Inspection Mode <Ref. to EN(H4SO)(diag)-41, PROCEDURE, Inspection Mode.>.

WIRING DIAGRAM:

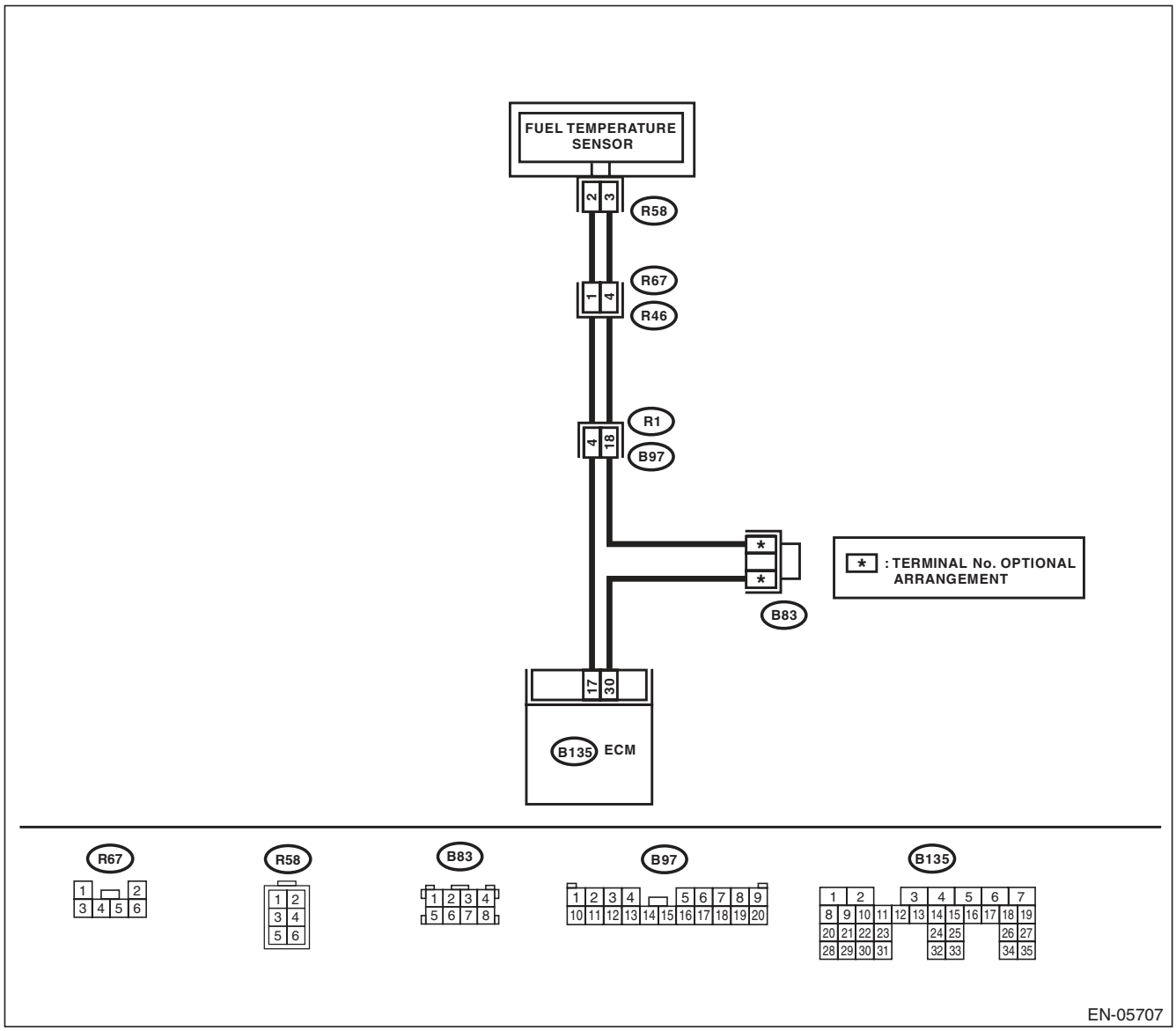

	Step	Check	Yes	No
1	**CHECK CURRENT DATA.** 1) Start the engine. 2) Read the data of fuel temperature sensor signal using Subaru Select Monitor. NOTE: For detailed operation procedure, refer to “READ CURRENT DATA FOR ENGINE”. <Ref. to EN(H4SO)(diag)-33, Subaru Select Monitor.>	Is the temperature 120°C (248°F) or higher?	Go to step **2**.	Even if DTC is detected, the circuit has returned to a normal condition at this time. Reproduce the failure, and then perform the diagnosis again. NOTE: In this case, temporary poor contact of connector may be the cause.
2	**CHECK HARNESS BETWEEN ECM AND FUEL TEMPERATURE SENSOR CONNECTOR.** 1) Turn the ignition switch to OFF. 2) Disconnect the connector from ECM and fuel temperature sensor. 3) Measure the resistance between ECM and chassis ground. ***Connector & terminal*** ***(B135) No. 17 — Chassis ground:***	Is the resistance 1 MΩ or more?	Replace the fuel temperature sensor. <Ref. to EC(H4SO)-10, Fuel Temperature Sensor.>	Repair the ground short circuit of harness between ECM and fuel pump.

AN:DTC P0183 FUEL TEMPERATURE SENSOR “A” CIRCUIT HIGH INPUT

DTC DETECTING CONDITION:

- Immediately at fault recognition
- GENERAL DESCRIPTION <Ref. to GD(H4SO)-72, DTC P0183 FUEL TEMPERATURE SENSOR “A” CIRCUIT HIGH INPUT, Diagnostic Trouble Code (DTC) Detecting Criteria.>

CAUTION:

After repair or replacement of faulty parts, perform Clear Memory Mode <Ref. to EN(H4SO)(diag)-50, OPERATION, Clear Memory Mode.>, and Inspection Mode <Ref. to EN(H4SO)(diag)-41, PROCEDURE, Inspection Mode.>.

WIRING DIAGRAM:

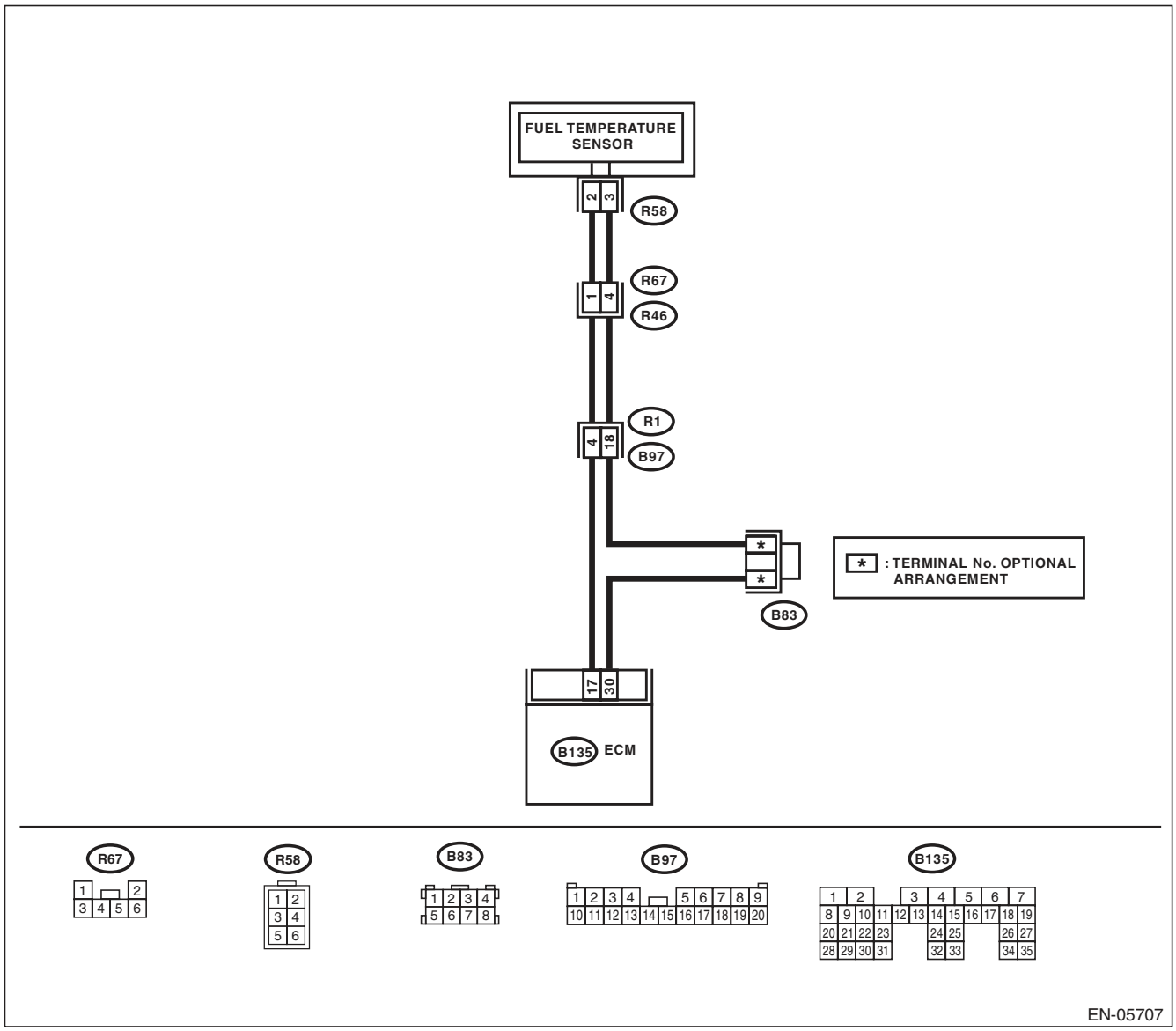

	Step	Check	Yes	No
1	**CHECK CURRENT DATA.** 1) Start the engine. 2) Read the data of fuel temperature sensor signal using Subaru Select Monitor. NOTE: For detailed operation procedure, refer to "READ CURRENT DATA FOR ENGINE". <Ref. to EN(H4SO)(diag)-33, Subaru Select Monitor.>	Is the temperature less than –40°C (–40°F)?	Go to step **2**.	Even if DTC is detected, the circuit has returned to a normal condition at this time. Reproduce the failure, and then perform the diagnosis again. NOTE: In this case, temporary poor contact of connector may be the cause.
2	**CHECK POOR CONTACT.** Repair any poor contact between the ECM and fuel temperature sensor connectors.	Is there poor contact in the ECM or fuel temperature sensor connectors?	Repair any poor contact between the ECM and fuel temperature sensor connectors.	Go to step **3**.
3	**CHECK HARNESS BETWEEN ECM AND FUEL TEMPERATURE SENSOR CONNECTOR.** 1) Turn the ignition switch to OFF. 2) Disconnect the connector from ECM and fuel temperature sensor. 3) Measure the resistance of the harness between the ECM and fuel temperature sensor connector. ***Connector & terminal*** ***(B135) No. 17 — (R58) No. 2:*** ***(B135) No. 30 — (R58) No. 3:***	Is the resistance less than 1 Ω?	Go to step **4**.	Repair the harness and connector. NOTE: In this case, repair the following item: • Open circuit in harness between ECM and fuel temperature sensor connector • Poor contact of coupling connector • Poor contact in joint connector
4	**CHECK HARNESS BETWEEN ECM AND FUEL TEMPERATURE SENSOR CONNECTOR.** 1) Connect all connectors. 2) Turn the ignition switch to ON. 3) Measure the voltage between ECM and chassis ground. ***Connector & terminal*** ***(B135) No. 17 (+) — Chassis ground (–):***	Is the voltage 5 V or more?	Repair the short circuit to power in the harness between the ECM and fuel temperature sensor connector.	Replace the fuel temperature sensor. <Ref. to EC(H4SO)-10, Fuel Temperature Sensor.>

AO:DTC P0196 ENGINE OIL TEMPERATURE SENSOR CIRCUIT RANGE/ PERFORMANCE

DTC DETECTING CONDITION:
- Two consecutive driving cycles with fault
- GENERAL DESCRIPTION <Ref. to GD(H4SO)-73, DTC P0196 ENGINE OIL TEMPERATURE SENSOR CIRCUIT RANGE/PERFORMANCE, Diagnostic Trouble Code (DTC) Detecting Criteria.>

TROUBLE SYMPTOM:
- Hard to start
- Improper idling
- Poor driving performance

CAUTION:
After repair or replacement of faulty parts, perform Clear Memory Mode <Ref. to EN(H4SO)(diag)-50, OPERATION, Clear Memory Mode.>, and Inspection Mode <Ref. to EN(H4SO)(diag)-41, PROCEDURE, Inspection Mode.>.

WIRING DIAGRAM:

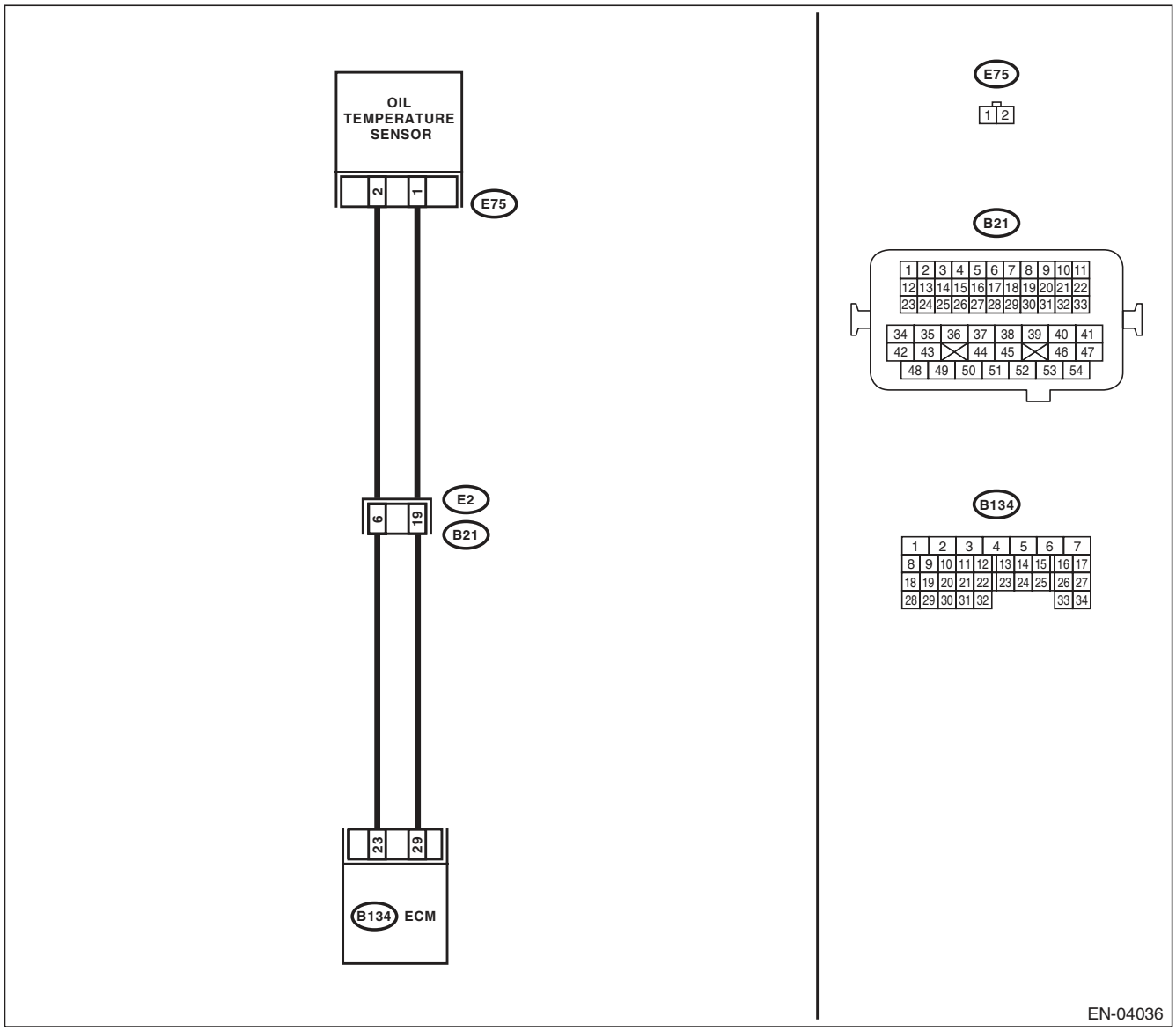

Step	Check	Yes	No
1 CHECK FOR ANY OTHER DTC ON DISPLAY.	Is any other DTC displayed?	Check the appropriate DTC using the “List of Diagnostic Trouble Code (DTC)”. <Ref. to EN(H4SO)(diag)-80, List of Diagnostic Trouble Code (DTC).>	Replace the oil temperature sensor. <Ref. to FU(H4SO)-34, Oil Temperature Sensor.>

AP:DTC P0197 ENGINE OIL TEMPERATURE SENSOR LOW

DTC DETECTING CONDITION:
- Immediately at fault recognition
- GENERAL DESCRIPTION <Ref. to GD(H4SO)-75, DTC P0197 ENGINE OIL TEMPERATURE SENSOR LOW, Diagnostic Trouble Code (DTC) Detecting Criteria.>

TROUBLE SYMPTOM:
- Hard to start
- Improper idling
- Poor driving performance

CAUTION:
After repair or replacement of faulty parts, perform Clear Memory Mode <Ref. to EN(H4SO)(diag)-50, OPERATION, Clear Memory Mode.>, and Inspection Mode <Ref. to EN(H4SO)(diag)-41, PROCEDURE, Inspection Mode.>.

WIRING DIAGRAM:

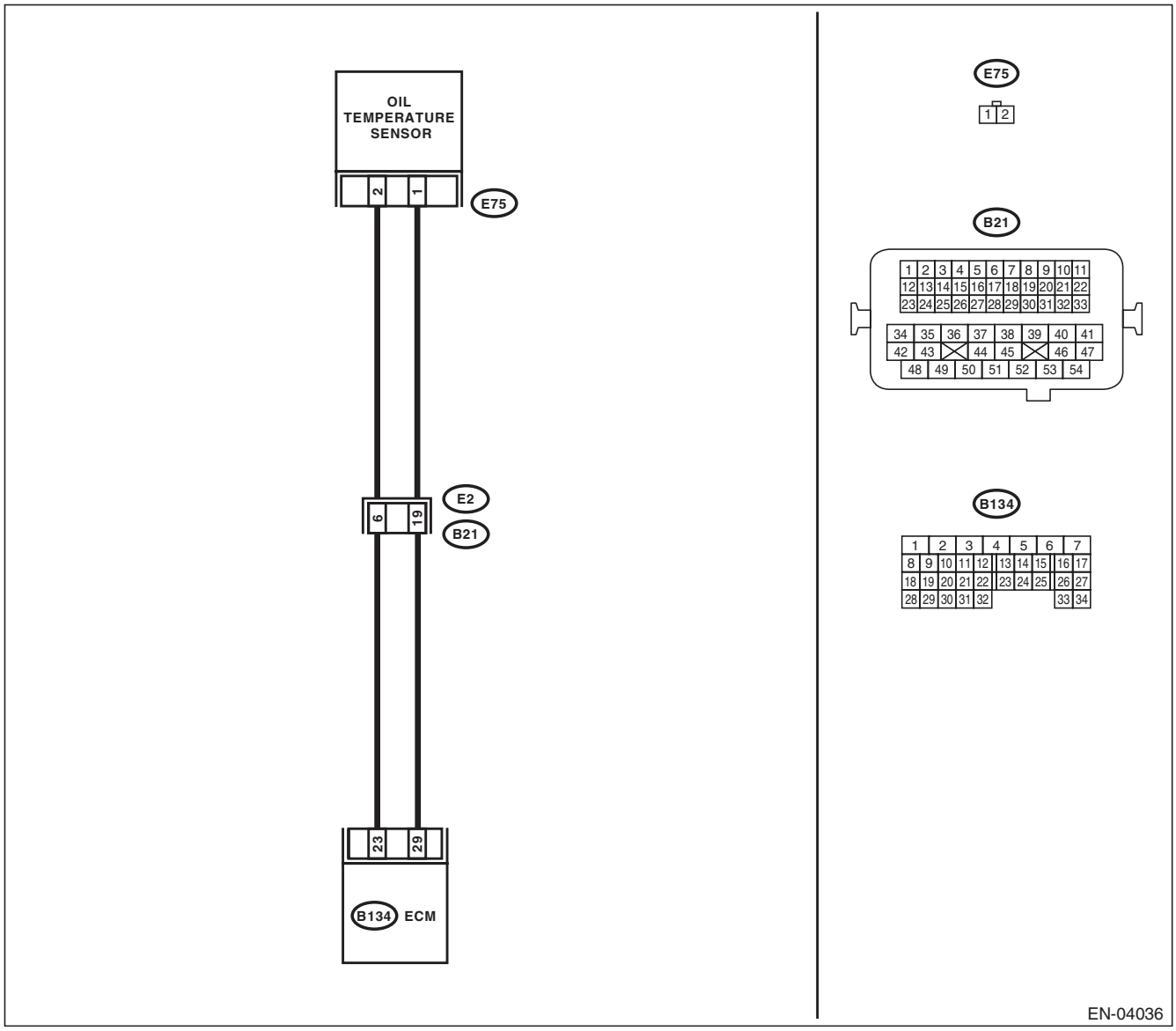

	Step	Check	Yes	No
1	**CHECK CURRENT DATA.** 1) Start the engine. 2) Read the data of oil temperature sensor signal using Subaru Select Monitor or general scan tool. NOTE: • SUBARU SELECT MONITOR For detailed operation procedure, refer to "READ CURRENT DATA FOR ENGINE". <Ref. to EN(H4SO)(diag)-33, Subaru Select Monitor.> • General Scan Tool For detailed operation procedures, refer to the general scan tool operation manual.	Is the oil temperature 215°C (419°F) or more?	Go to step **2**.	Even if DTC is detected, the circuit has returned to a normal condition at this time. Reproduce the failure, and then perform the diagnosis again. NOTE: In this case, temporary poor contact of connector may be the cause.
2	**CHECK HARNESS BETWEEN ECM AND OIL TEMPERATURE SENSOR CONNECTOR.** 1) Turn the ignition switch to OFF. 2) Disconnect the connector from ECM and oil temperature sensor. 3) Measure the resistance between ECM and chassis ground. ***Connector & terminal*** ***(B134) No. 23 — Chassis ground:***	Is the resistance 1 MΩ or more?	Replace the oil temperature sensor. <Ref. to FU(H4SO)-34, Oil Temperature Sensor.>	Repair the short circuit to ground in harness between ECM and oil temperature sensor.

AQ:DTC P0198 ENGINE OIL TEMPERATURE SENSOR HIGH

DTC DETECTING CONDITION:

- Immediately at fault recognition
- GENERAL DESCRIPTION <Ref. to GD(H4SO)-76, DTC P0198 ENGINE OIL TEMPERATURE SENSOR HIGH, Diagnostic Trouble Code (DTC) Detecting Criteria.>

TROUBLE SYMPTOM:

- Hard to start
- Improper idling
- Poor driving performance

CAUTION:

After repair or replacement of faulty parts, perform Clear Memory Mode <Ref. to EN(H4SO)(diag)-50, OPERATION, Clear Memory Mode.>, and Inspection Mode <Ref. to EN(H4SO)(diag)-41, PROCEDURE, Inspection Mode.>.

WIRING DIAGRAM:

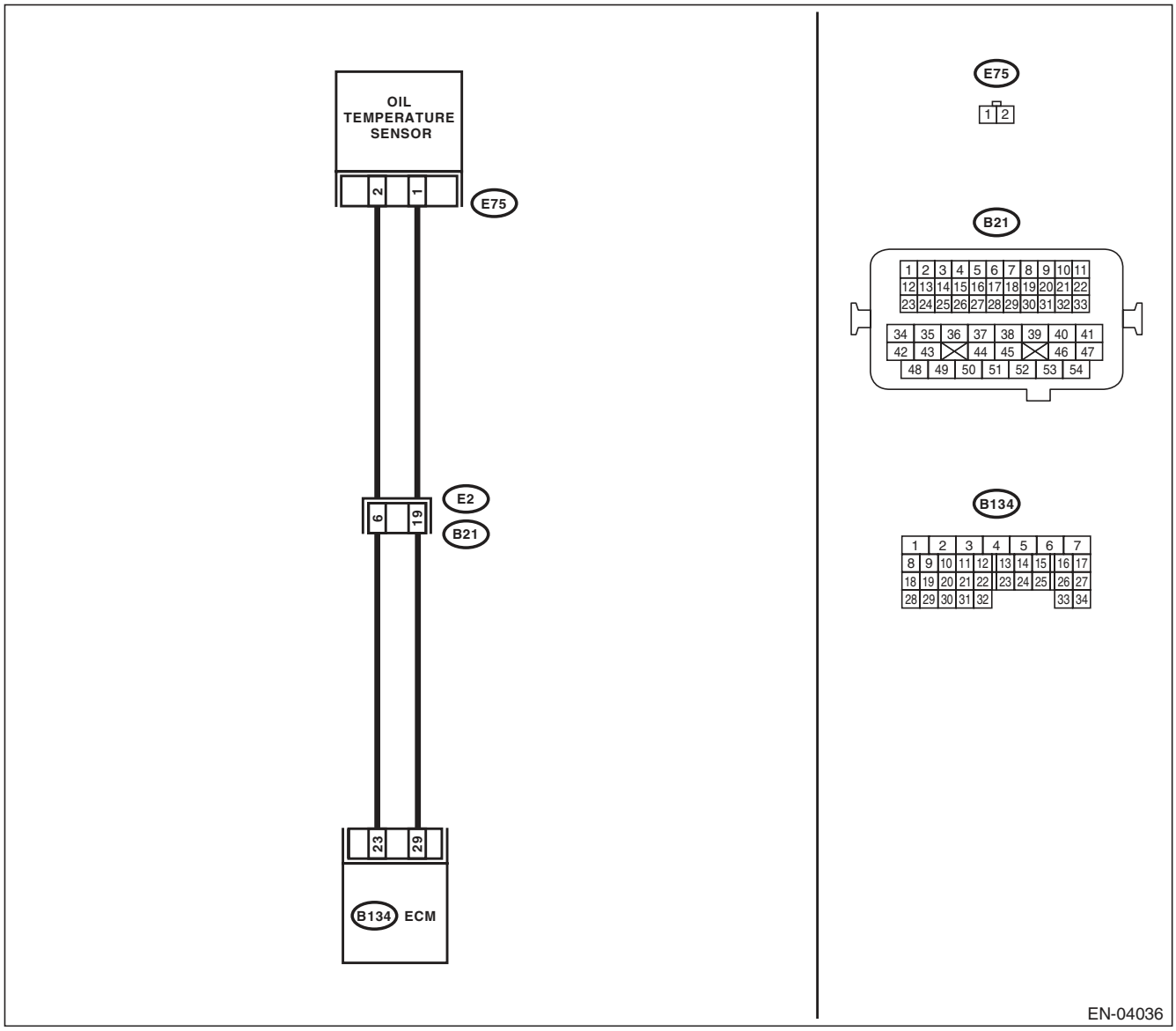

	Step	Check	Yes	No
1	**CHECK CURRENT DATA.** 1) Start the engine. 2) Read the data of oil temperature sensor signal using Subaru Select Monitor or general scan tool. NOTE: • SUBARU SELECT MONITOR For detailed operation procedure, refer to "READ CURRENT DATA FOR ENGINE". <Ref. to EN(H4SO)(diag)-33, Subaru Select Monitor.> • General Scan Tool For detailed operation procedures, refer to the general scan tool operation manual.	Is the oil temperature less than –40°C (–40°F)?	Go to step **2**.	Even if DTC is detected, the circuit has returned to a normal condition at this time. Reproduce the failure, and then perform the diagnosis again. NOTE: In this case, temporary poor contact of connector may be the cause.
2	**CHECK POOR CONTACT.** Check for poor contact of ECM and oil temperature sensor connector.	Is there poor contact in ECM or oil temperature sensor connector?	Repair the poor contact in ECM or oil temperature sensor connector.	Go to step **3**.
3	**CHECK HARNESS BETWEEN ECM AND OIL TEMPERATURE SENSOR CONNECTOR.** 1) Turn the ignition switch to OFF. 2) Disconnect the connector from ECM and oil temperature sensor. 3) Measure the resistance of harness between ECM and oil temperature sensor connector. ***Connector & terminal*** ***(B134) No. 23 — (E75) No. 2:*** ***(B134) No. 29 — (E75) No. 1:***	Is the resistance less than 1 Ω?	Go to step **4**.	Repair the harness and connector. NOTE: In this case, repair the following item: • Open circuit in harness between ECM and oil temperature sensor connector • Poor contact of coupling connector
4	**CHECK HARNESS BETWEEN ECM AND OIL TEMPERATURE SENSOR CONNECTOR.** 1) Connect all connectors. 2) Turn the ignition switch to ON. 3) Measure the voltage between ECM and chassis ground. ***Connector & terminal*** ***(B134) No. 23 (+) — Chassis ground (–):***	Is the voltage 5 V or more?	Repair the short circuit in harness to power supply between ECM and oil temperature sensor connector.	Replace the oil temperature sensor. <Ref. to FU(H4SO)-34, Oil Temperature Sensor.>

AR:DTC P0222 THROTTLE/PEDAL POSITION SENSOR/SWITCH “B” CIRCUIT LOW

DTC DETECTING CONDITION:

- Immediately at fault recognition
- GENERAL DESCRIPTION <Ref. to GD(H4SO)-77, DTC P0222 THROTTLE/PEDAL POSITION SENSOR/SWITCH “B” CIRCUIT LOW, Diagnostic Trouble Code (DTC) Detecting Criteria.>

TROUBLE SYMPTOM:

- Improper idling
- Poor driving performance
- Engine stalls.

CAUTION:

After repair or replacement of faulty parts, perform Clear Memory Mode <Ref. to EN(H4SO)(diag)-50, OPERATION, Clear Memory Mode.>, and Inspection Mode <Ref. to EN(H4SO)(diag)-41, PROCEDURE, Inspection Mode.>.

WIRING DIAGRAM:

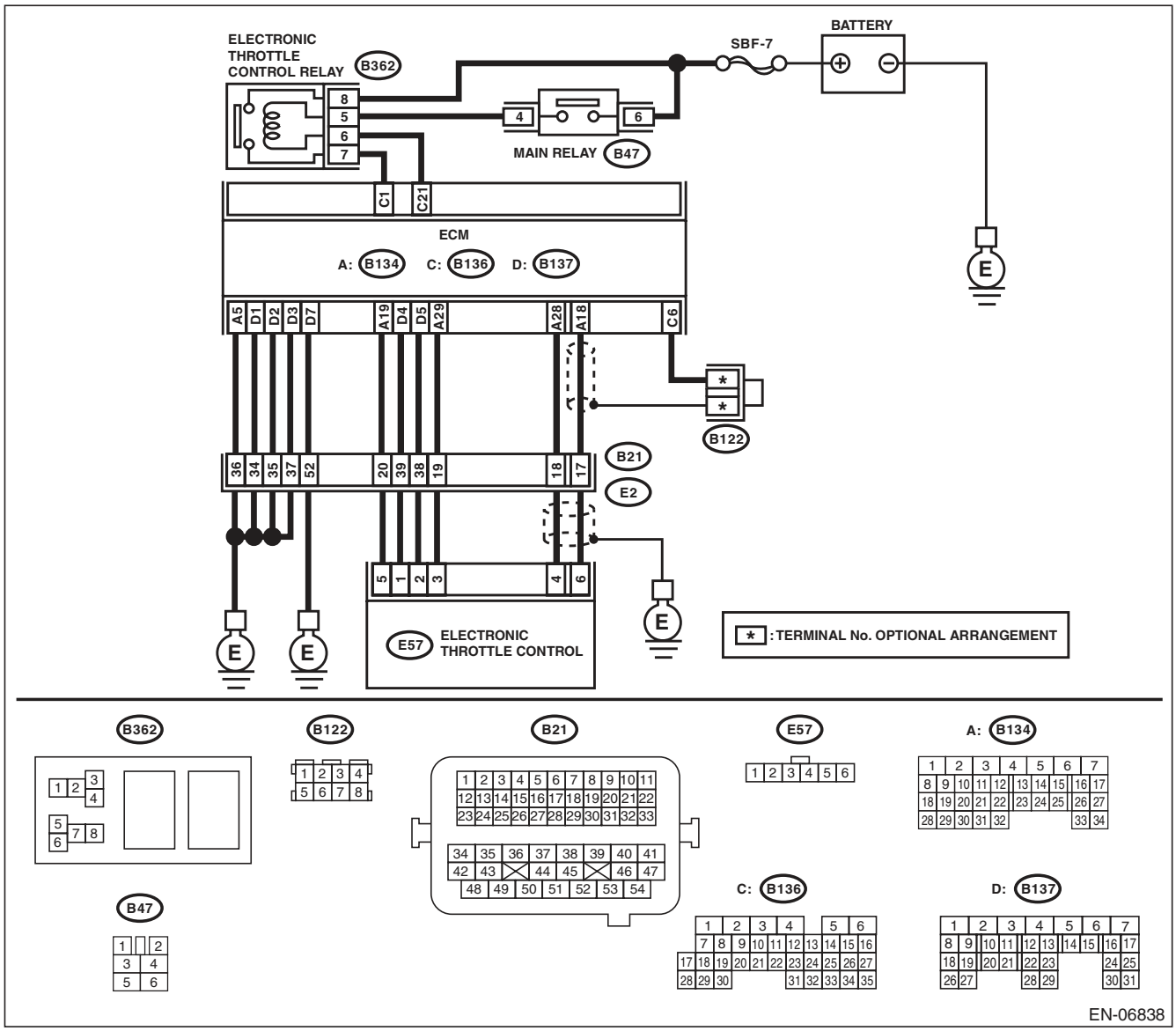

	Step	Check	Yes	No
1	**CHECK HARNESS BETWEEN ECM AND ELECTRONIC THROTTLE CONTROL.** 1) Turn the ignition switch to OFF. 2) Disconnect the connectors from ECM and electronic throttle control. 3) Measure the resistance between ECM and chassis ground. ***Connector & terminal*** ***(B134) No. 19 — Chassis ground:*** ***(B134) No. 28 — Chassis ground:***	Is the resistance 1 MΩ or more?	Go to step **2**.	Repair the short circuit to ground in harness between ECM and electronic throttle control connector.
2	**CHECK SHORT CIRCUIT INSIDE THE ECM.** 1) Connect the connector to ECM. 2) Measure the resistance between electronic throttle control connector and engine ground. ***Connector & terminal*** ***(E57) No. 4 — Engine ground:***	Is the resistance 1 MΩ or more?	Replace the electronic throttle control. <Ref. to FU(H4SO)-12, Throttle Body.>	Repair the short circuit to ground in harness between ECM and electronic throttle control connector. Replace the ECM if defective. <Ref. to FU(H4SO)-39, Engine Control Module (ECM).>

AS:DTC P0223 THROTTLE/PEDAL POSITION SENSOR/SWITCH “B” CIRCUIT HIGH

DTC DETECTING CONDITION:

- Immediately at fault recognition
- GENERAL DESCRIPTION <Ref. to GD(H4SO)-78, DTC P0223 THROTTLE/PEDAL POSITION SENSOR/SWITCH “B” CIRCUIT HIGH, Diagnostic Trouble Code (DTC) Detecting Criteria.>

TROUBLE SYMPTOM:

- Improper idling
- Poor driving performance
- Engine stalls.

CAUTION:

After repair or replacement of faulty parts, perform Clear Memory Mode <Ref. to EN(H4SO)(diag)-50, OPERATION, Clear Memory Mode.>, and Inspection Mode <Ref. to EN(H4SO)(diag)-41, PROCEDURE, Inspection Mode.>.

WIRING DIAGRAM:

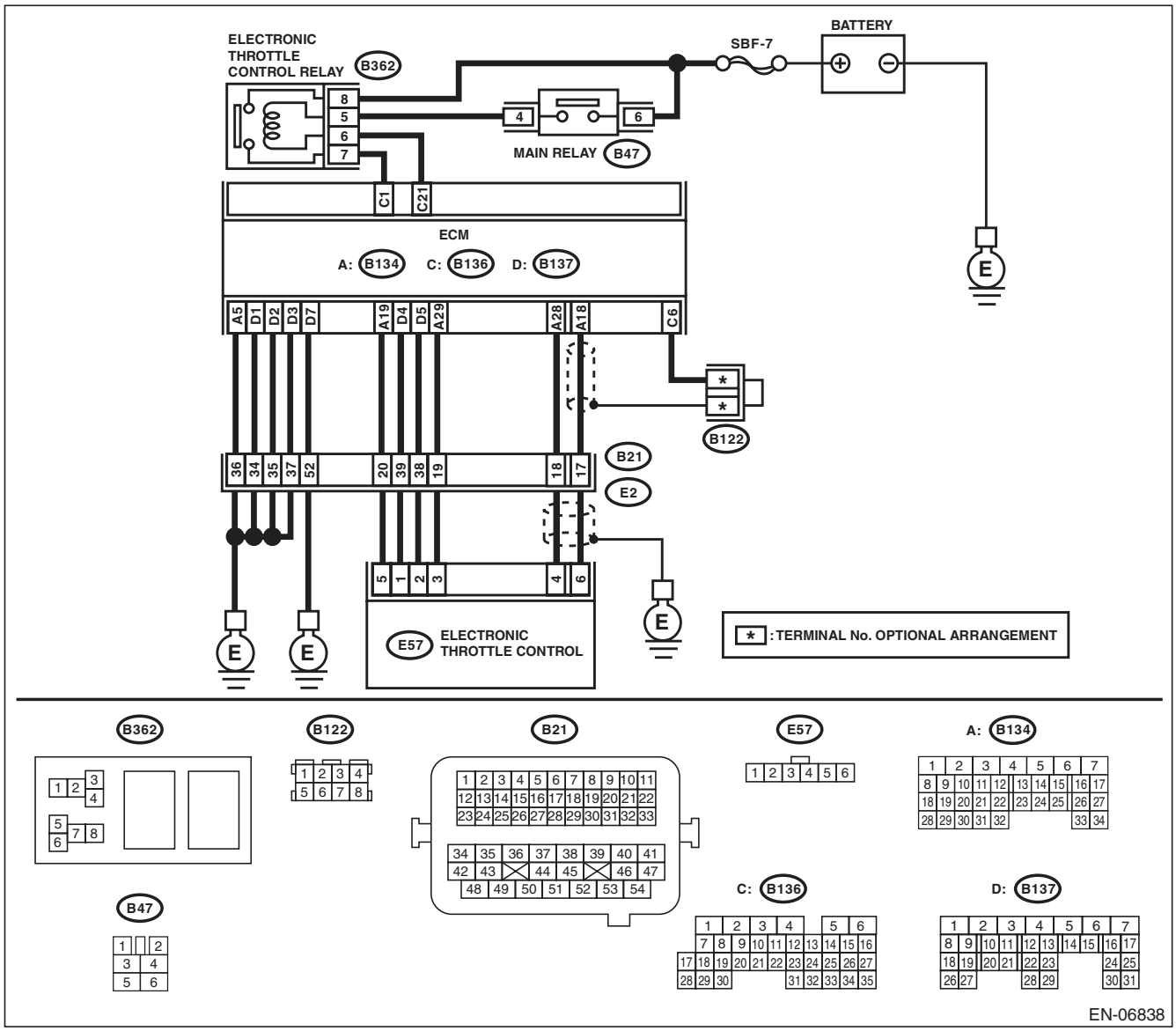

	Step	Check	Yes	No
1	**CHECK HARNESS BETWEEN ECM AND ELECTRONIC THROTTLE CONTROL.** 1) Turn the ignition switch to OFF. 2) Disconnect the connectors from ECM and electronic throttle control. 3) Measure the resistance of harness between ECM and electronic throttle control connector. ***Connector & terminal*** ***(B134) No. 28 — (E57) No. 4:*** ***(B134) No. 29 — (E57) No. 3:***	Is the resistance less than 1 Ω?	Go to step **2**.	Repair the harness and connector. NOTE: In this case, repair the following item: • Open circuit in harness between ECM and electronic throttle control connector • Poor contact of coupling connector
2	**CHECK HARNESS BETWEEN ECM AND ELECTRONIC THROTTLE CONTROL.** 1) Connect the connector to ECM. 2) Measure the resistance between electronic throttle control connector and engine ground. ***Connector & terminal*** ***(E57) No. 3 — Engine ground:***	Is the resistance less than 5 Ω?	Go to step **3**.	Repair the harness and connector. NOTE: In this case, repair the following item: • Open circuit of harness between ECM and engine ground • Poor contact in ECM connector • Poor contact of coupling connector
3	**CHECK HARNESS BETWEEN ECM AND ELECTRONIC THROTTLE CONTROL.** 1) Turn the ignition switch to ON. 2) Measure the voltage between electronic throttle control connector and engine ground. ***Connector & terminal*** ***(E57) No. 4 (+) — Engine ground (–):***	Is the voltage 4.85 V or more?	Repair the short circuit to power in the harness between ECM and electronic throttle control connector.	Go to step **4**.
4	**CHECK HARNESS BETWEEN ECM AND ELECTRONIC THROTTLE CONTROL.** 1) Turn the ignition switch to OFF. 2) Disconnect the connectors from ECM. 3) Measure the resistance between ECM connectors. ***Connector & terminal*** ***(B134) No. 19 — (B134) No. 28:***	Is the resistance 1 MΩ or more?	Repair poor contact of the electronic throttle control connector. Replace the electronic throttle control if defective. <Ref. to FU(H4SO)-12, Throttle Body.>	Repair the short circuit to power in the harness between ECM and electronic throttle control connector.

AT:DTC P0301 CYLINDER 1 MISFIRE DETECTED

NOTE:
For the diagnostic procedure, refer to DTC P0304. <Ref. to EN(H4SO)(diag)-174, DTC P0304 CYLINDER 4 MISFIRE DETECTED, Diagnostic Procedure with Diagnostic Trouble Code (DTC).>

AU:DTC P0302 CYLINDER 2 MISFIRE DETECTED

NOTE:
For the diagnostic procedure, refer to DTC P0304. <Ref. to EN(H4SO)(diag)-174, DTC P0304 CYLINDER 4 MISFIRE DETECTED, Diagnostic Procedure with Diagnostic Trouble Code (DTC).>

AV:DTC P0303 CYLINDER 3 MISFIRE DETECTED

NOTE:
For the diagnostic procedure, refer to DTC P0304. <Ref. to EN(H4SO)(diag)-174, DTC P0304 CYLINDER 4 MISFIRE DETECTED, Diagnostic Procedure with Diagnostic Trouble Code (DTC).>

AW:DTC P0304 CYLINDER 4 MISFIRE DETECTED

DTC DETECTING CONDITION:

- Two consecutive driving cycles with fault
- Immediately at fault recognition (A misfire which could damage catalyst occurs.)
- GENERAL DESCRIPTION <Ref. to GD(H4SO)-85, DTC P0304 CYLINDER 4 MISFIRE DETECTED, Diagnostic Trouble Code (DTC) Detecting Criteria.>

TROUBLE SYMPTOM:

- Engine stalls.
- Improper idling
- Rough driving

CAUTION:

After repair or replacement of faulty parts, perform Clear Memory Mode <Ref. to EN(H4SO)(diag)-50, OPERATION, Clear Memory Mode.>, and Inspection Mode <Ref. to EN(H4SO)(diag)-41, PROCEDURE, Inspection Mode.>.

WIRING DIAGRAM:

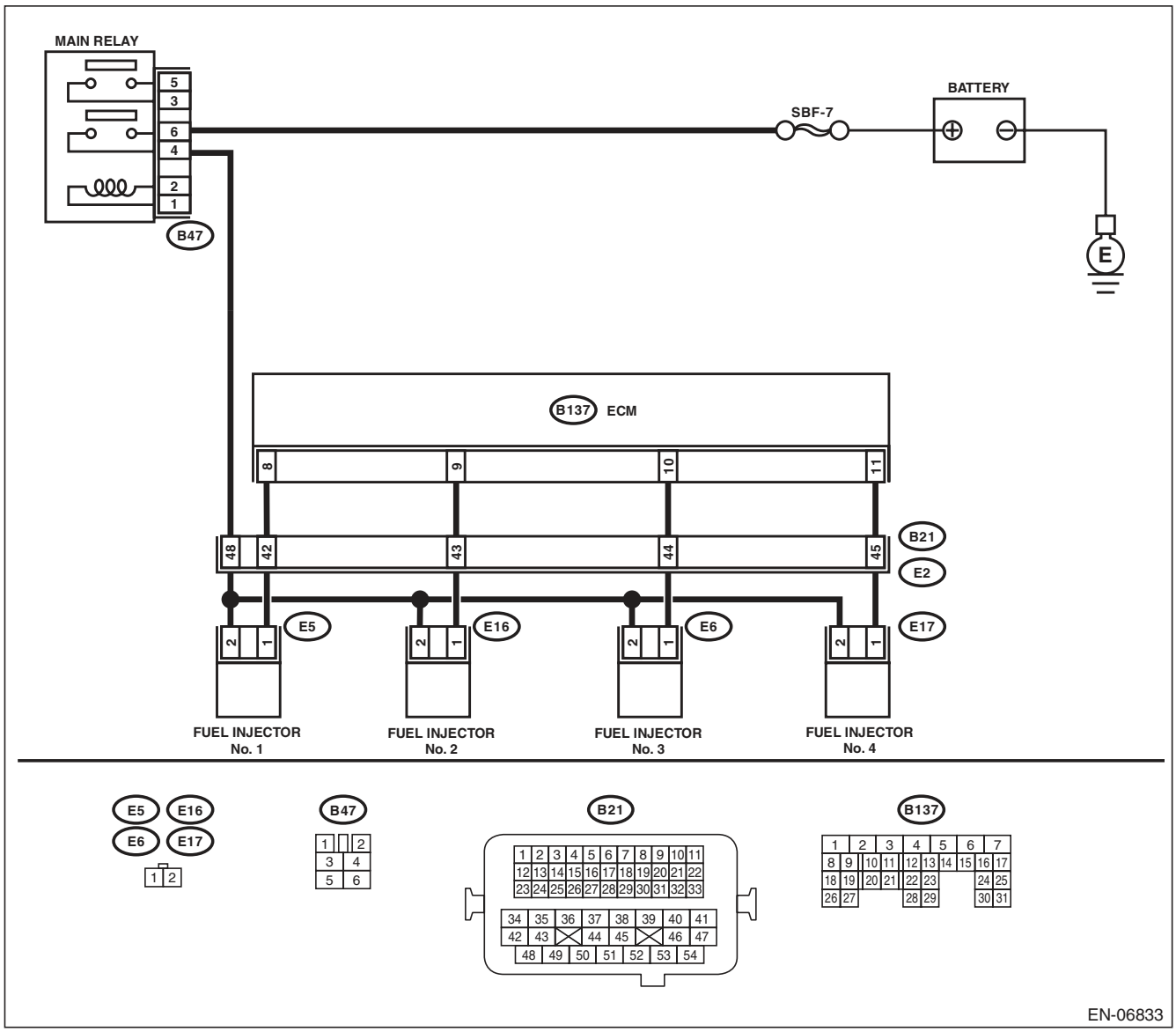

	Step	Check	Yes	No
1	**CHECK OUTPUT SIGNAL OF ECM.** 1) Turn the ignition switch to ON. 2) Measure the voltage between ECM and chassis ground on faulty cylinders. ***Connector & terminal*** ***#1 (B137) No. 8 (+) — Chassis ground (–):*** ***#2 (B137) No. 9 (+) — Chassis ground (–):*** ***#3 (B137) No. 10 (+) — Chassis ground (–):*** ***#4 (B137) No. 11 (+) — Chassis ground (–):***	Is the voltage 10 V or more?	Go to step **6**.	Go to step **2**.
2	**CHECK HARNESS BETWEEN ECM AND FUEL INJECTOR.** 1) Turn the ignition switch to OFF. 2) Disconnect the connector from fuel injector on faulty cylinders. 3) Measure the resistance between fuel injector connector and engine ground on faulty cylinders. ***Connector & terminal*** ***#1 (E5) No. 1 — Engine ground:*** ***#2 (E16) No. 1 — Engine ground:*** ***#3 (E6) No. 1 — Engine ground:*** ***#4 (E17) No. 1 — Engine ground:***	Is the resistance 1 MΩ or more?	Go to step **3**.	Repair the ground short circuit of harness between ECM and fuel injector.
3	**CHECK HARNESS BETWEEN ECM AND FUEL INJECTOR.** Measure the resistance of harness between ECM and fuel injector on faulty cylinders. ***Connector & terminal*** ***#1 (B137) No. 8 — (E5) No. 1:*** ***#2 (B137) No. 9 — (E16) No. 1:*** ***#3 (B137) No. 10 — (E6) No. 1:*** ***#4 (B137) No. 11 — (E17) No. 1:***	Is the resistance less than 1 Ω?	Go to step **4**.	Repair the harness and connector. NOTE: In this case, repair the following item: • Open circuit of harness between ECM and fuel injector connector • Poor contact of coupling connector
4	**CHECK FUEL INJECTOR.** Measure the resistance between fuel injector terminals on faulty cylinder. ***Terminals*** ***No. 1 — No. 2:***	Is the resistance between 5 — 20 Ω?	Go to step **5**.	Replace the faulty fuel injector. <Ref. to FU(H4SO)-30, Fuel Injector.>
5	**CHECK POWER SUPPLY LINE.** 1) Turn the ignition switch to ON. 2) Measure the voltage between fuel injector and engine ground on faulty cylinders. ***Connector & terminal*** ***#1 (E5) No. 2 (+) — Engine ground (–):*** ***#2 (E16) No. 2 (+) — Engine ground (–):*** ***#3 (E6) No. 2 (+) — Engine ground (–):*** ***#4 (E17) No. 2 (+) — Engine ground (–):***	Is the voltage 10 V or more?	Repair the poor contact of all connectors in fuel injector circuit.	Repair the harness and connector. NOTE: In this case, repair the following item: • Open circuit in harness between the main relay connector and fuel injector connector on faulty cylinders • Poor contact of coupling connector • Poor contact of main relay connector

	Step	Check	Yes	No
6	**CHECK HARNESS BETWEEN ECM AND FUEL INJECTOR.** 1) Turn the ignition switch to OFF. 2) Disconnect the connector from fuel injector on faulty cylinders. 3) Turn the ignition switch to ON. 4) Measure the voltage between ECM and chassis ground on faulty cylinders. ***Connector & terminal*** ***#1 (B137) No. 8 (+) — Chassis ground (–):*** ***#2 (B137) No. 9 (+) — Chassis ground (–):*** ***#3 (B137) No. 10 (+) — Chassis ground (–):*** ***#4 (B137) No. 11 (+) — Chassis ground (–):***	Is the voltage 10 V or more?	Repair the short circuit to power in harness between ECM and fuel injector connector.	Go to step **7**.
7	**CHECK FUEL INJECTOR.** 1) Turn the ignition switch to OFF. 2) Measure the resistance between fuel injector terminals on faulty cylinder. ***Terminals*** ***No. 1 — No. 2:***	Is the resistance less than 1 Ω?	Replace the faulty fuel injector. <Ref. to FU(H4SO)-30, Fuel Injector.>	Go to step **8**.
8	**CHECK INSTALLATION CONDITION OF CAMSHAFT POSITION SENSOR/CRANKSHAFT POSITION SENSOR.**	Is the camshaft position sensor or crankshaft position sensor loosely installed?	Tighten the camshaft position sensor or crankshaft position sensor.	Go to step **9**.
9	**CHECK CRANK SPROCKET.** Remove the timing belt cover. <Ref. to ME(H4SO)-43, REMOVAL, Timing Belt Cover.>	Is the crank sprocket rusted or does it have broken teeth?	Replace the crank sprocket. <Ref. to ME(H4SO)-50, Crank Sprocket.>	Go to step **10**.
10	**CHECK INSTALLATION CONDITION OF TIMING BELT.** Turn the crankshaft using ST, and align the alignment mark on crank sprocket with alignment mark on cylinder block. ST 499987500 CRANKSHAFT SOCKET	Is the timing belt dislocated from its proper position?	Repair the installation condition of timing belt. <Ref. to ME(H4SO)-44, Timing Belt.>	Go to step **11**.
11	**CHECK FUEL LEVEL.**	Is the fuel meter indication higher than the “Lower” level?	Go to step **12**.	Refill the fuel so that fuel meter indication is higher than the “Lower” level. After replenishing fuel, Go to step **12**.
12	**CHECK STATUS OF MALFUNCTION INDICATOR LIGHT.** 1) Clear the memory using the Subaru Select Monitor or general scan tool. <Ref. to EN(H4SO)(diag)-50, Clear Memory Mode.> NOTE: • SUBARU SELECT MONITOR <Ref. to EN(H4SO)(diag)-33, Subaru Select Monitor.> • General Scan Tool Refer to the general scan tool operation manual. 2) Start the engine, and drive the vehicle 10 minutes or more.	Does the malfunction indicator light illuminate or blink?	Go to step **14**.	Go to step **13**.

Step		Check	Yes	No
13	**CHECK CAUSE OF MISFIRE.**	Was the cause of misfire identified when the engine is running?	Finish diagnostics operation, if the engine has no abnormality.	Repair the poor contact of connector. NOTE: In this case, repair the following item: • Poor contact of ignition coil connector • Poor contact in fuel injector connector on faulty cylinders • Poor contact in ECM connector • Poor contact of coupling connector
14	**CHECK AIR INTAKE SYSTEM.**	Is there any fault in air intake system?	Repair the air intake system. NOTE: Check the following items. • Are there air leaks or air suction caused by loose or dislocated nuts and bolts? • Are there cracks or any disconnection of hoses?	Go to step **15**.
15	**CHECK MISFIRE SYMPTOM.** 1) Turn the ignition switch to ON. 2) Read the DTC. NOTE: • SUBARU SELECT MONITOR For detailed operation procedure, refer to “READ CURRENT DATA FOR ENGINE”. <Ref. to EN(H4SO)(diag)-33, Subaru Select Monitor.> • General Scan Tool For detailed operation procedures, refer to the general scan tool operation manual.	Does the Subaru Select Monitor or general scan tool indicate only one DTC?	Go to step **20**.	Go to step **16**.
16	**CHECK DTC.**	Are DTC P0301 and P0302 displayed on the Subaru Select Monitor or general scan tool?	Go to step **21**.	Go to step **17**.
17	**CHECK DTC.**	Are DTC P0303 and P0304 displayed on the Subaru Select Monitor or general scan tool?	Go to step **22**.	Go to step **18**.
18	**CHECK DTC.**	Are DTC P0301 and P0303 displayed on the Subaru Select Monitor or general scan tool?	Go to step **23**.	Go to step **19**.
19	**CHECK DTC.**	Are DTC P0302 and P0304 displayed on the Subaru Select Monitor or general scan tool?	Go to step **24**.	Go to step **25**.

Step		Check	Yes	No
20	**ONLY ONE CYLINDER.**	Is there any fault in the cylinder?	Repair or replace faulty parts. NOTE: Check the following items. • Spark plug • Spark plug cord • Fuel injector • Compression ratio	Go to DTC P0171. <Ref. to EN(H4SO)(diag)-155, DTC P0171 SYSTEM TOO LEAN (BANK 1), Diagnostic Procedure with Diagnostic Trouble Code (DTC).>
21	**GROUP OF #1 AND #2 CYLINDERS.**	Are there any faults in #1 and #2 cylinders?	Repair or replace faulty parts. NOTE: • Check the following items. • Spark plug • Fuel injector • Ignition coil • Compression ratio • If any fault are not found, check the "IGNITION CONTROL SYSTEM" of #1 and #2 cylinders side. <Ref. to EN(H4SO)(diag)-71, IGNITION CONTROL SYSTEM, Diagnostics for Engine Starting Failure.>	Go to DTC P0171. <Ref. to EN(H4SO)(diag)-155, DTC P0171 SYSTEM TOO LEAN (BANK 1), Diagnostic Procedure with Diagnostic Trouble Code (DTC).>
22	**GROUP OF #3 AND #4 CYLINDERS.**	Are there any faults in #3 and #4 cylinders?	Repair or replace faulty parts. NOTE: • Check the following items. • Spark plug • Fuel injector • Ignition coil • Compression ratio • If any fault are not found, check the "IGNITION CONTROL SYSTEM" of #3 and #4 cylinders side. <Ref. to EN(H4SO)(diag)-71, IGNITION CONTROL SYSTEM, Diagnostics for Engine Starting Failure.>	Go to DTC P0171. <Ref. to EN(H4SO)(diag)-155, DTC P0171 SYSTEM TOO LEAN (BANK 1), Diagnostic Procedure with Diagnostic Trouble Code (DTC).>

Step		Check	Yes	No
23	**GROUP OF #1 AND #3 CYLINDERS.**	Are there any faults in #1 and #3 cylinders?	Repair or replace faulty parts. NOTE: Check the following items. • Spark plug • Fuel injector • Compression ratio • Skipping timing belt teeth	Go to DTC P0171. <Ref. to EN(H4SO)(diag)-155, DTC P0171 SYSTEM TOO LEAN (BANK 1), Diagnostic Procedure with Diagnostic Trouble Code (DTC).>
24	**GROUP OF #2 AND #4 CYLINDERS.**	Are there any faults in #2 and #4 cylinders?	Repair or replace faulty parts. NOTE: Check the following items. • Spark plug • Fuel injector • Compression ratio • Skipping timing belt teeth	Go to DTC P0171. <Ref. to EN(H4SO)(diag)-155, DTC P0171 SYSTEM TOO LEAN (BANK 1), Diagnostic Procedure with Diagnostic Trouble Code (DTC).>
25	**CYLINDER AT RANDOM.**	Is the engine idle rough?	Go to DTC P0171. <Ref. to EN(H4SO)(diag)-155, DTC P0171 SYSTEM TOO LEAN (BANK 1), Diagnostic Procedure with Diagnostic Trouble Code (DTC).>	Repair or replace faulty parts. NOTE: Check the following items. • Spark plug • Fuel injector • Compression ratio

AX:DTC P0327 KNOCK SENSOR 1 CIRCUIT LOW (BANK 1 OR SINGLE SENSOR)

DTC DETECTING CONDITION:

- Immediately at fault recognition
- GENERAL DESCRIPTION <Ref. to GD(H4SO)-86, DTC P0327 KNOCK SENSOR 1 CIRCUIT LOW (BANK 1 OR SINGLE SENSOR), Diagnostic Trouble Code (DTC) Detecting Criteria.>

TROUBLE SYMPTOM:

- Poor driving performance
- Knocking occurs.

CAUTION:

After repair or replacement of faulty parts, perform Clear Memory Mode <Ref. to EN(H4SO)(diag)-50, OPERATION, Clear Memory Mode.>, and Inspection Mode <Ref. to EN(H4SO)(diag)-41, PROCEDURE, Inspection Mode.>.

WIRING DIAGRAM:

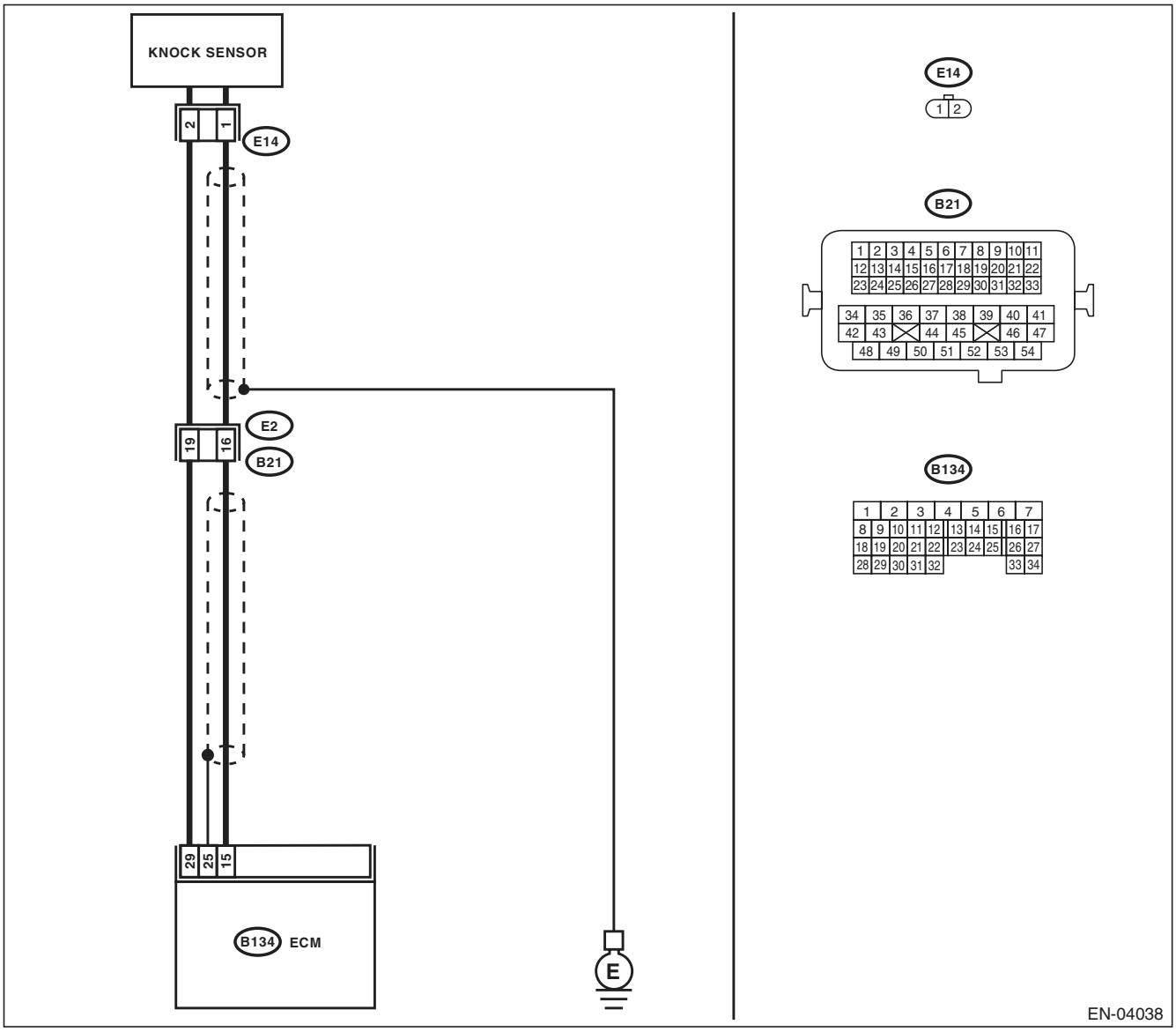

Step		Check	Yes	No
1	**CHECK HARNESS BETWEEN ECM AND KNOCK SENSOR.** 1) Turn the ignition switch to OFF. 2) Disconnect the connectors from ECM. 3) Measure the resistance between ECM connectors. ***Connector & terminal*** ***(B134) No. 15 — (B134) No. 29:***	Is the resistance 600 kΩ or more?	Go to step **2**.	Repair the poor contact of ECM connector.
2	**CHECK KNOCK SENSOR.** 1) Disconnect the connector from knock sensor. 2) Measure the resistance between knock sensor terminals. ***Terminals*** ***No. 1 — No. 2:***	Is the resistance 600 kΩ or more?	Replace the knock sensor. <Ref. to FU(H4SO)-25, Knock Sensor.>	Repair the harness and connector. NOTE: In this case, repair the following item: • Open circuit in harness between ECM and knock sensor connector • Poor contact of the knock sensor connector • Poor contact of coupling connector

AY:DTC P0328 KNOCK SENSOR 1 CIRCUIT HIGH (BANK 1 OR SINGLE SENSOR)

DTC DETECTING CONDITION:

- Immediately at fault recognition
- GENERAL DESCRIPTION <Ref. to GD(H4SO)-87, DTC P0328 KNOCK SENSOR 1 CIRCUIT HIGH (BANK 1 OR SINGLE SENSOR), Diagnostic Trouble Code (DTC) Detecting Criteria.>

TROUBLE SYMPTOM:

- Poor driving performance
- Knocking occurs.

CAUTION:

After repair or replacement of faulty parts, perform Clear Memory Mode <Ref. to EN(H4SO)(diag)-50, OPERATION, Clear Memory Mode.>, and Inspection Mode <Ref. to EN(H4SO)(diag)-41, PROCEDURE, Inspection Mode.>.

WIRING DIAGRAM:

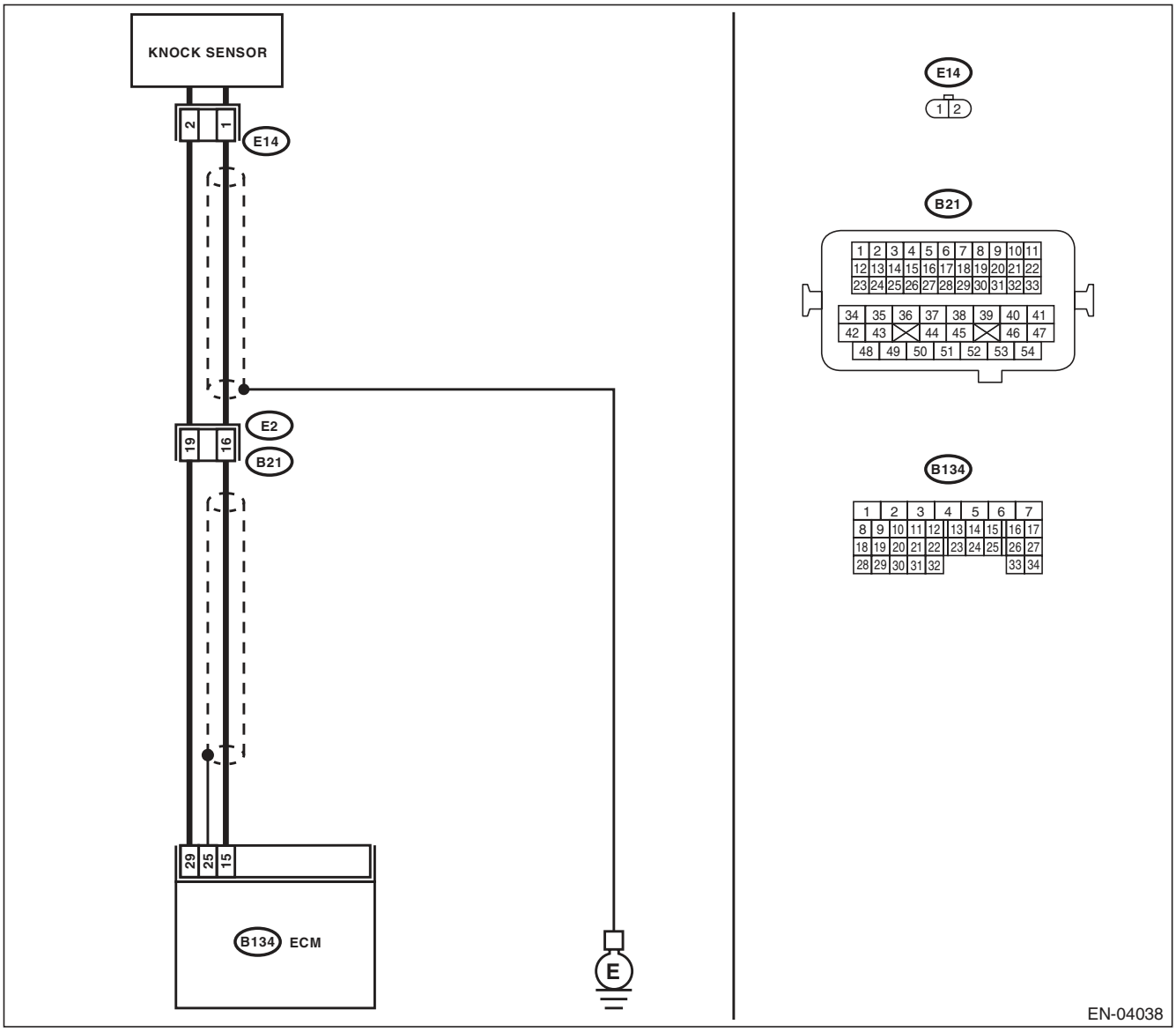

	Step	Check	Yes	No
1	**CHECK HARNESS BETWEEN ECM AND KNOCK SENSOR.** 1) Turn the ignition switch to OFF. 2) Disconnect the connectors from ECM. 3) Measure the resistance between ECM connectors. ***Connector & terminal*** ***(B134) No. 15 — (B134) No. 29:***	Is the resistance less than 500 kΩ?	Go to step **2**.	Go to step **3**.
2	**CHECK KNOCK SENSOR.** 1) Disconnect the connector from knock sensor. 2) Measure the resistance between knock sensor terminals. ***Terminals*** ***No. 1 — No. 2:***	Is the resistance less than 500 kΩ?	Replace the knock sensor. <Ref. to FU(H4SO)-25, Knock Sensor.>	Repair the short circuit to ground in harness between ECM and knock sensor connector. NOTE: The harness between both connectors are shielded. Remove the shield and repair the short circuit of harness.
3	**CHECK INPUT SIGNAL OF ECM.** 1) Connect the connector to ECM. 2) Turn the ignition switch to ON. 3) Measure the voltage between ECM and chassis ground. ***Connector & terminal*** ***(B134) No. 15 (+) — Chassis ground (–):***	Is the voltage 2 V or more?	Even if DTC is detected, the circuit has returned to a normal condition at this time. Reproduce the failure, and then perform the diagnosis again. NOTE: In this case, temporary poor contact of connector may be the cause.	Repair the poor contact of ECM connector.

AZ:DTC P0335 CRANKSHAFT POSITION SENSOR “A” CIRCUIT

DTC DETECTING CONDITION:

- Immediately at fault recognition
- GENERAL DESCRIPTION <Ref. to GD(H4SO)-88, DTC P0335 CRANKSHAFT POSITION SENSOR “A” CIRCUIT, Diagnostic Trouble Code (DTC) Detecting Criteria.>

TROUBLE SYMPTOM:

- Engine stalls.
- Failure of engine to start

CAUTION:

After repair or replacement of faulty parts, perform Clear Memory Mode <Ref. to EN(H4SO)(diag)-50, OPERATION, Clear Memory Mode.>, and Inspection Mode <Ref. to EN(H4SO)(diag)-41, PROCEDURE, Inspection Mode.>.

WIRING DIAGRAM:

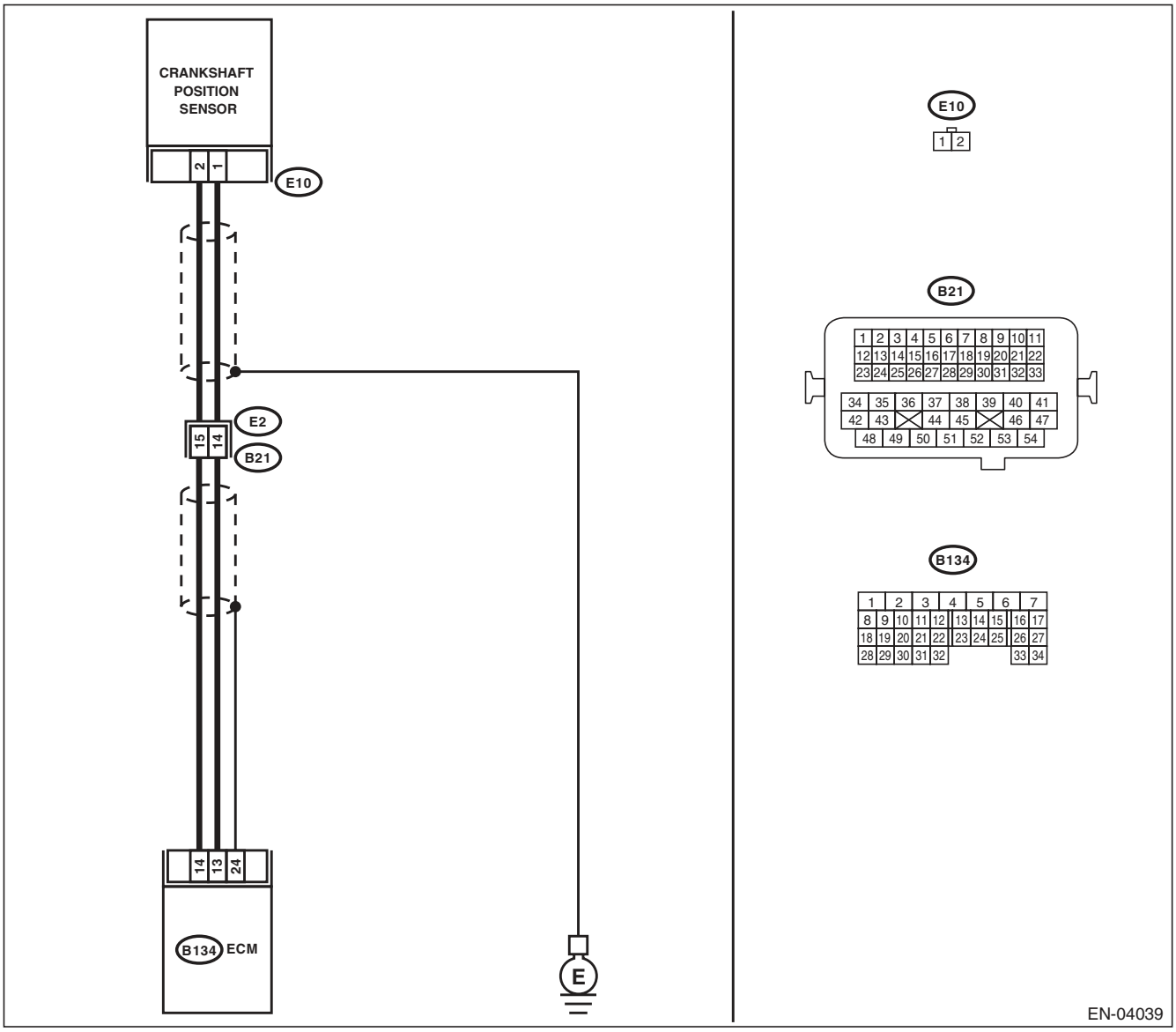

Step		Check	Yes	No
1	**CHECK INSTALLATION CONDITION OF CRANKSHAFT POSITION SENSOR.**	Is the crankshaft position sensor installation bolt tightened securely?	Go to step **2**.	Tighten the crankshaft position sensor installation bolt securely.
2	**CHECK CRANKSHAFT POSITION SENSOR.** 1) Turn the ignition switch to OFF. 2) Remove the crankshaft position sensor. 3) Measure the resistance between connector terminals of crankshaft position sensor. ***Terminals*** ***No. 1 — No. 2:***	Is the resistance between 1 and 4 kΩ?	Go to step **3**.	Replace the crankshaft position sensor. <Ref. to FU(H4SO)-23, Crankshaft Position Sensor.>
3	**CHECK HARNESS BETWEEN ECM AND CRANK SHAFT POSITION SENSOR.** 1) Disconnect the connectors from ECM. 2) Measure the resistance of harness between ECM and crankshaft position sensor connector. ***Connector & terminal*** ***(B134) No. 13 — (E10) No. 1:*** ***(B134) No. 14 — (E10) No. 2:***	Is the resistance less than 1 Ω?	Repair the poor contact of ECM and crankshaft position sensor connector.	Repair the harness and connector. NOTE: In this case, repair the following item: • Open circuit in harness between ECM and crankshaft position sensor connector • Poor contact of coupling connector

BA:DTC P0336 CRANKSHAFT POSITION SENSOR “A” CIRCUIT RANGE/ PERFORMANCE

DTC DETECTING CONDITION:

- Two consecutive driving cycles with fault
- GENERAL DESCRIPTION <Ref. to GD(H4SO)-90, DTC P0336 CRANKSHAFT POSITION SENSOR “A” CIRCUIT RANGE/PERFORMANCE, Diagnostic Trouble Code (DTC) Detecting Criteria.>

TROUBLE SYMPTOM:

- Engine stalls.
- Failure of engine to start

CAUTION:

After repair or replacement of faulty parts, perform Clear Memory Mode <Ref. to EN(H4SO)(diag)-50, OPERATION, Clear Memory Mode.>, and Inspection Mode <Ref. to EN(H4SO)(diag)-41, PROCEDURE, Inspection Mode.>.

WIRING DIAGRAM:

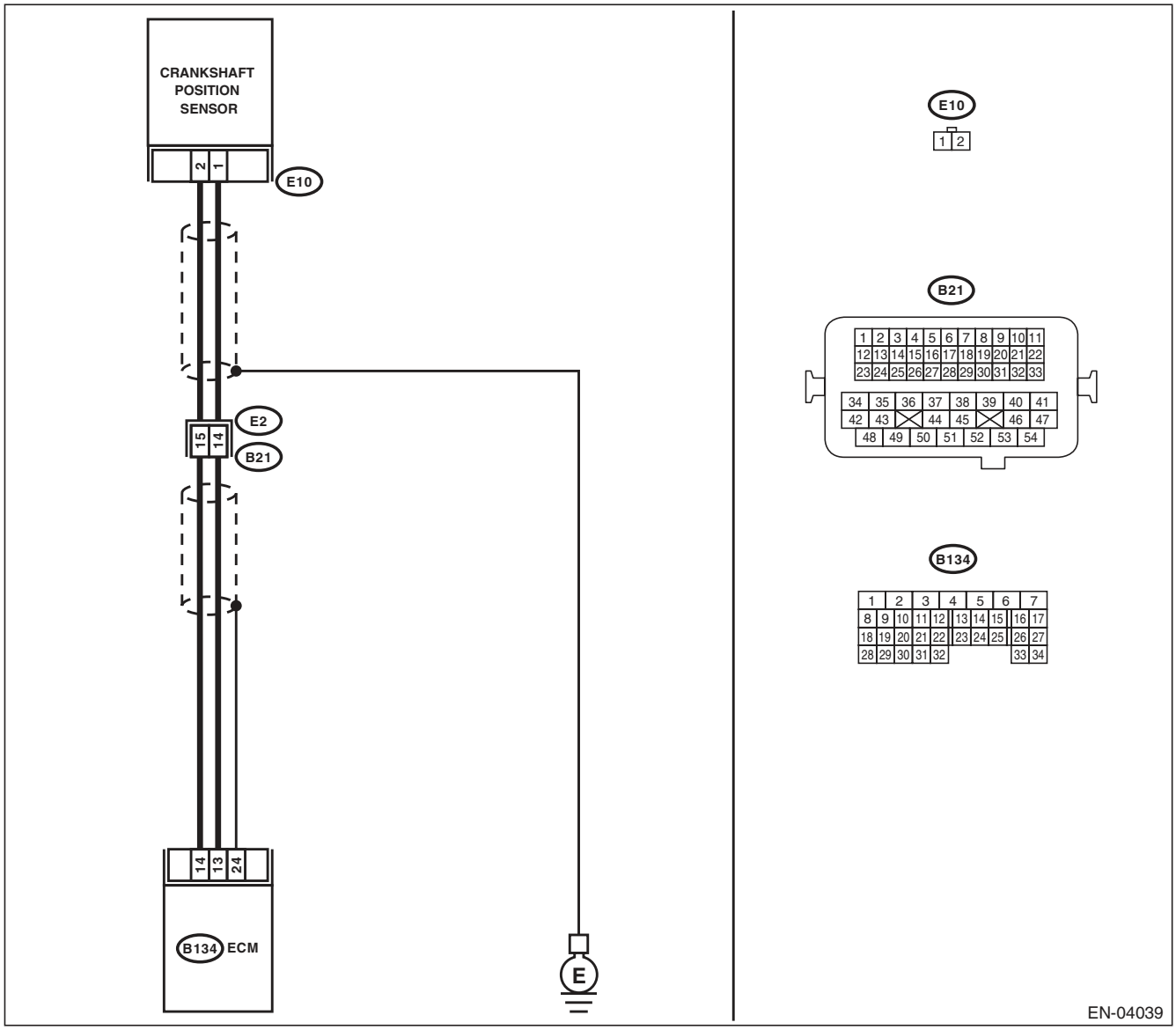

Step		Check	Yes	No
1	**CHECK CONDITION OF CRANKSHAFT POSITION SENSOR.** Turn the ignition switch to OFF.	Is the crankshaft position sensor installation bolt tightened securely?	Go to step **2**.	Tighten the crankshaft position sensor installation bolt securely.
2	**CHECK CRANK SPROCKET.** Remove the timing belt cover.	Are crank sprocket teeth cracked or damaged?	Replace the crank sprocket. <Ref. to ME(H4SO)-50, Crank Sprocket.>	Go to step **3**.
3	**CHECK INSTALLATION CONDITION OF TIMING BELT.** Turn the crankshaft, and align alignment mark on crank sprocket with alignment mark on cylinder block.	Is the timing belt dislocated from its proper position?	Repair the installation condition of timing belt. <Ref. to ME(H4SO)-44, Timing Belt.>	Replace the crankshaft position sensor. <Ref. to FU(H4SO)-23, Crankshaft Position Sensor.>

BB:DTC P0340 CAMSHAFT POSITION SENSOR “A” CIRCUIT (BANK 1 OR SINGLE SENSOR)

DTC DETECTING CONDITION:

- Immediately at fault recognition
- GENERAL DESCRIPTION <Ref. to GD(H4SO)-92, DTC P0340 CAMSHAFT POSITION SENSOR “A” CIRCUIT (BANK 1 OR SINGLE SENSOR), Diagnostic Trouble Code (DTC) Detecting Criteria.>

TROUBLE SYMPTOM:

- Engine stalls.
- Failure of engine to start

CAUTION:

After repair or replacement of faulty parts, perform Clear Memory Mode <Ref. to EN(H4SO)(diag)-50, OPERATION, Clear Memory Mode.>, and Inspection Mode <Ref. to EN(H4SO)(diag)-41, PROCEDURE, Inspection Mode.>.

WIRING DIAGRAM:

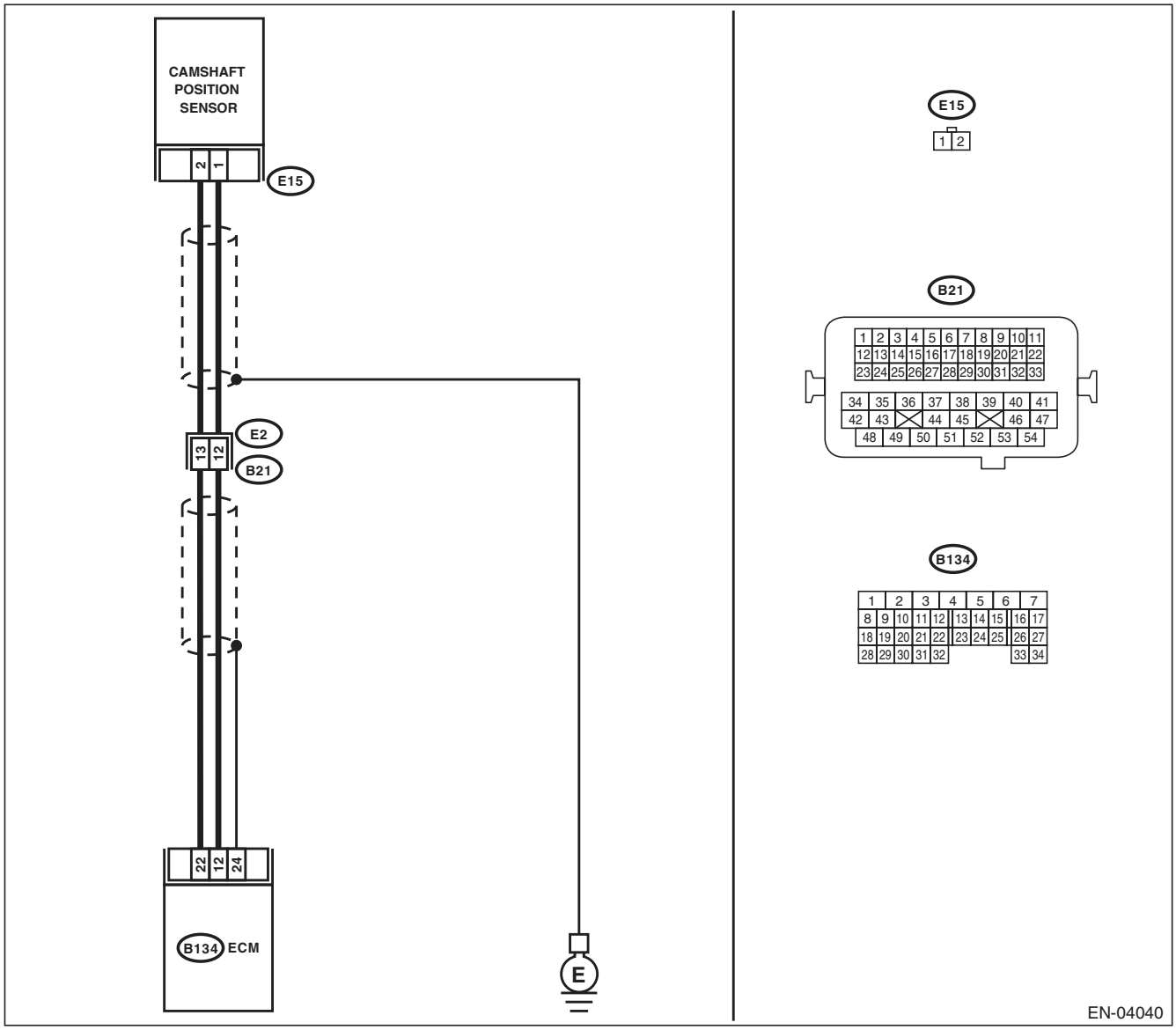

	Step	Check	Yes	No
1	**CHECK HARNESS BETWEEN ECM AND CAMSHAFT POSITION SENSOR.** 1) Turn the ignition switch to OFF. 2) Disconnect the connector from ECM and camshaft position sensor. 3) Measure the resistance of harness between ECM and camshaft position sensor connector. ***Connector & terminal*** ***(B134) No. 12 — (E15) No. 1:*** ***(B134) No. 22 — (E15) No. 2:***	Is the resistance less than 1 Ω?	Go to step **2**.	Repair the harness and connector. NOTE: In this case, repair the following item: • Open circuit in harness between the ECM and camshaft position sensor connector • Poor contact in ECM connector • Poor contact of coupling connector
2	**CHECK HARNESS BETWEEN ECM AND CAMSHAFT POSITION SENSOR.** Measure the resistance between camshaft position sensor connector and engine ground. ***Connector & terminal*** ***(E15) No. 1 — Engine ground:***	Is the resistance 1 MΩ or more?	Go to step **3**.	Repair the short circuit to ground in harness between ECM and camshaft position sensor. NOTE: The harness between both connectors are shielded. Remove the shield and repair the ground short circuit of the harness circuit.
3	**CHECK INSTALLATION CONDITION OF CAMSHAFT POSITION SENSOR.**	Is the camshaft position sensor installation bolt tightened securely?	Go to step **4**.	Tighten the camshaft position sensor installation bolt securely.
4	**CHECK CAMSHAFT POSITION SENSOR.** 1) Remove the camshaft position sensor. 2) Measure the resistance between connector terminals of camshaft position sensor. ***Terminals*** ***No. 1 — No. 2:***	Is the resistance between 1 and 4 kΩ?	Repair the poor contact of ECM or camshaft position sensor connector.	Replace the camshaft position sensor. <Ref. to FU(H4SO)-24, Camshaft Position Sensor.>

BC:DTC P0341 CAMSHAFT POSITION SENSOR “A” CIRCUIT RANGE/ PERFORMANCE (BANK 1 OR SINGLE SENSOR)

DTC DETECTING CONDITION:

- Two consecutive driving cycles with fault
- GENERAL DESCRIPTION <Ref. to GD(H4SO)-94, DTC P0341 CAMSHAFT POSITION SENSOR “A” CIRCUIT RANGE/PERFORMANCE (BANK 1 OR SINGLE SENSOR), Diagnostic Trouble Code (DTC) Detecting Criteria.>

TROUBLE SYMPTOM:

- Engine stalls.
- Failure of engine to start

CAUTION:

After repair or replacement of faulty parts, perform Clear Memory Mode <Ref. to EN(H4SO)(diag)-50, OPERATION, Clear Memory Mode.>, and Inspection Mode <Ref. to EN(H4SO)(diag)-41, PROCEDURE, Inspection Mode.>.

WIRING DIAGRAM:

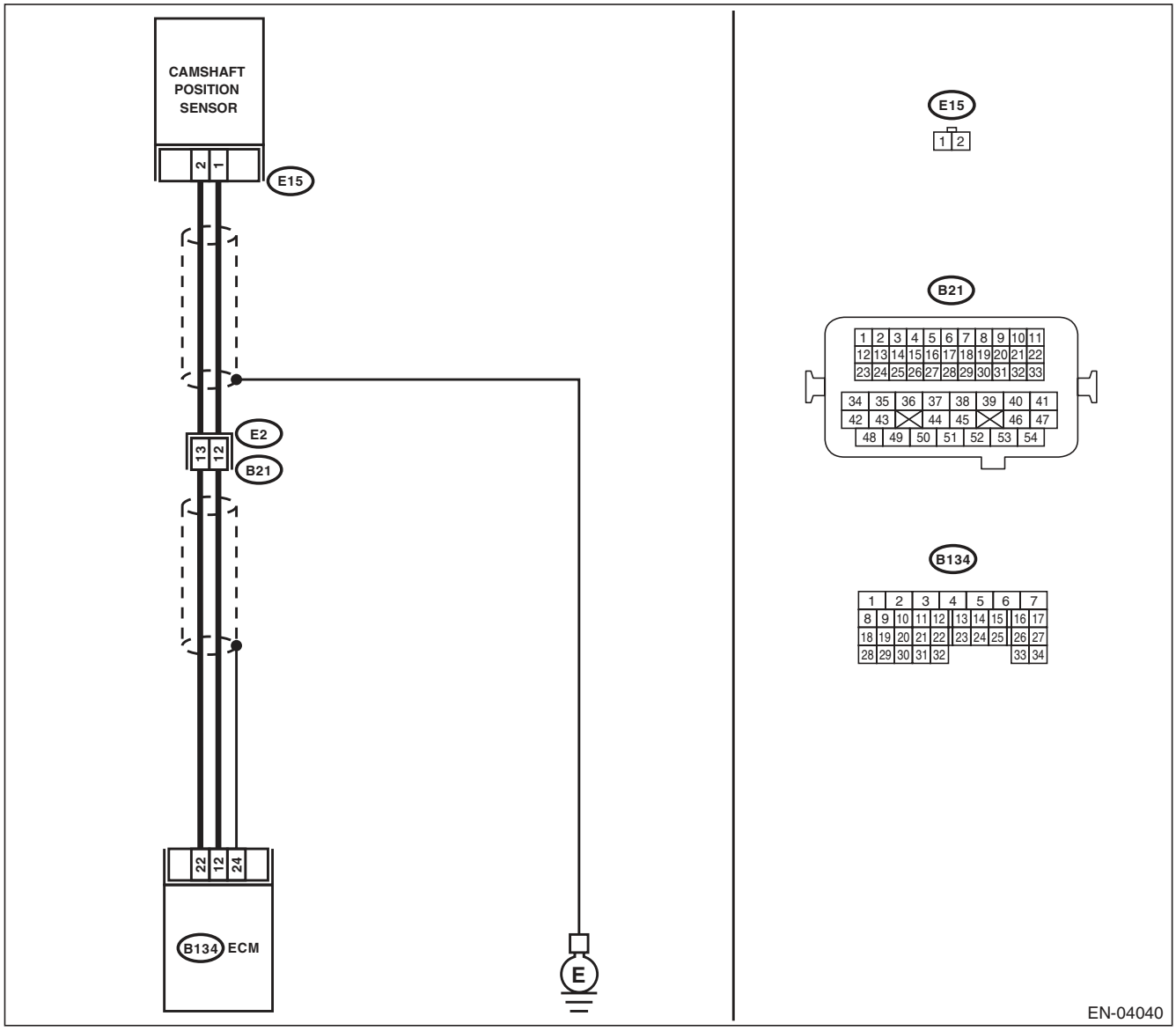

	Step	Check	Yes	No
1	**CHECK HARNESS BETWEEN ECM AND CAMSHAFT POSITION SENSOR.** 1) Turn the ignition switch to OFF. 2) Disconnect the connector from ECM and camshaft position sensor. 3) Measure the resistance of harness between ECM and camshaft position sensor connector. ***Connector & terminal*** ***(B134) No. 12 — (E15) No. 1:*** ***(B134) No. 22 — (E15) No. 2:***	Is the resistance less than 1 Ω?	Go to step **2**.	Repair the harness and connector. NOTE: In this case, repair the following item: • Open circuit in harness between the ECM and camshaft position sensor connector • Poor contact in ECM connector • Poor contact of coupling connector
2	**CHECK HARNESS BETWEEN ECM AND CAMSHAFT POSITION SENSOR.** Measure the resistance between camshaft position sensor connector and engine ground. ***Connector & terminal*** ***(E15) No. 1 — Engine ground:***	Is the resistance 1 MΩ or more?	Go to step **3**.	Repair the short circuit to ground in harness between ECM and camshaft position sensor. NOTE: The harness between both connectors are shielded. Remove the shield and repair the ground short circuit of the harness circuit.
3	**CHECK INSTALLATION CONDITION OF CAMSHAFT POSITION SENSOR.**	Is the camshaft position sensor installation bolt tightened securely?	Go to step **4**.	Tighten the camshaft position sensor installation bolt securely.
4	**CHECK CAMSHAFT POSITION SENSOR.** 1) Remove the camshaft position sensor. 2) Measure the resistance between connector terminals of camshaft position sensor. ***Terminals*** ***No. 1 — No. 2:***	Is the resistance between 1 and 4 kΩ?	Go to step **5**.	Replace the camshaft position sensor. <Ref. to FU(H4SO)-24, Camshaft Position Sensor.>
5	**CHECK CAM SPROCKET.** Remove the timing belt cover. <Ref. to ME(H4SO)-43, Timing Belt Cover.>	Are cam sprocket teeth cracked or damaged?	Replace the cam sprocket. <Ref. to ME(H4SO)-49, Cam Sprocket.>	Go to step **6**.
6	**CHECK INSTALLATION CONDITION OF TIMING BELT.** Turn the crankshaft using ST, and align alignment mark on cam sprocket with alignment mark on timing belt cover LH. ST 499987500 CRANKSHAFT SOCKET	Is the timing belt dislocated from its proper position?	Repair the installation condition of timing belt. <Ref. to ME(H4SO)-44, Timing Belt.>	Replace the camshaft position sensor. <Ref. to FU(H4SO)-24, Camshaft Position Sensor.>

BD:DTC P0400 EXHAUST GAS RECIRCULATION FLOW

DTC DETECTING CONDITION:

- Two consecutive driving cycles with fault
- GENERAL DESCRIPTION <Ref. to GD(H4SO)-96, DTC P0400 EXHAUST GAS RECIRCULATION FLOW, Diagnostic Trouble Code (DTC) Detecting Criteria.>

TROUBLE SYMPTOM:

- Movement performance problem when engine is low speed.
- Improper idling
- Movement performance problem

CAUTION:

After repair or replacement of faulty parts, perform Clear Memory Mode <Ref. to EN(H4SO)(diag)-50, OPERATION, Clear Memory Mode.>, and Inspection Mode <Ref. to EN(H4SO)(diag)-41, PROCEDURE, Inspection Mode.>.

WIRING DIAGRAM:

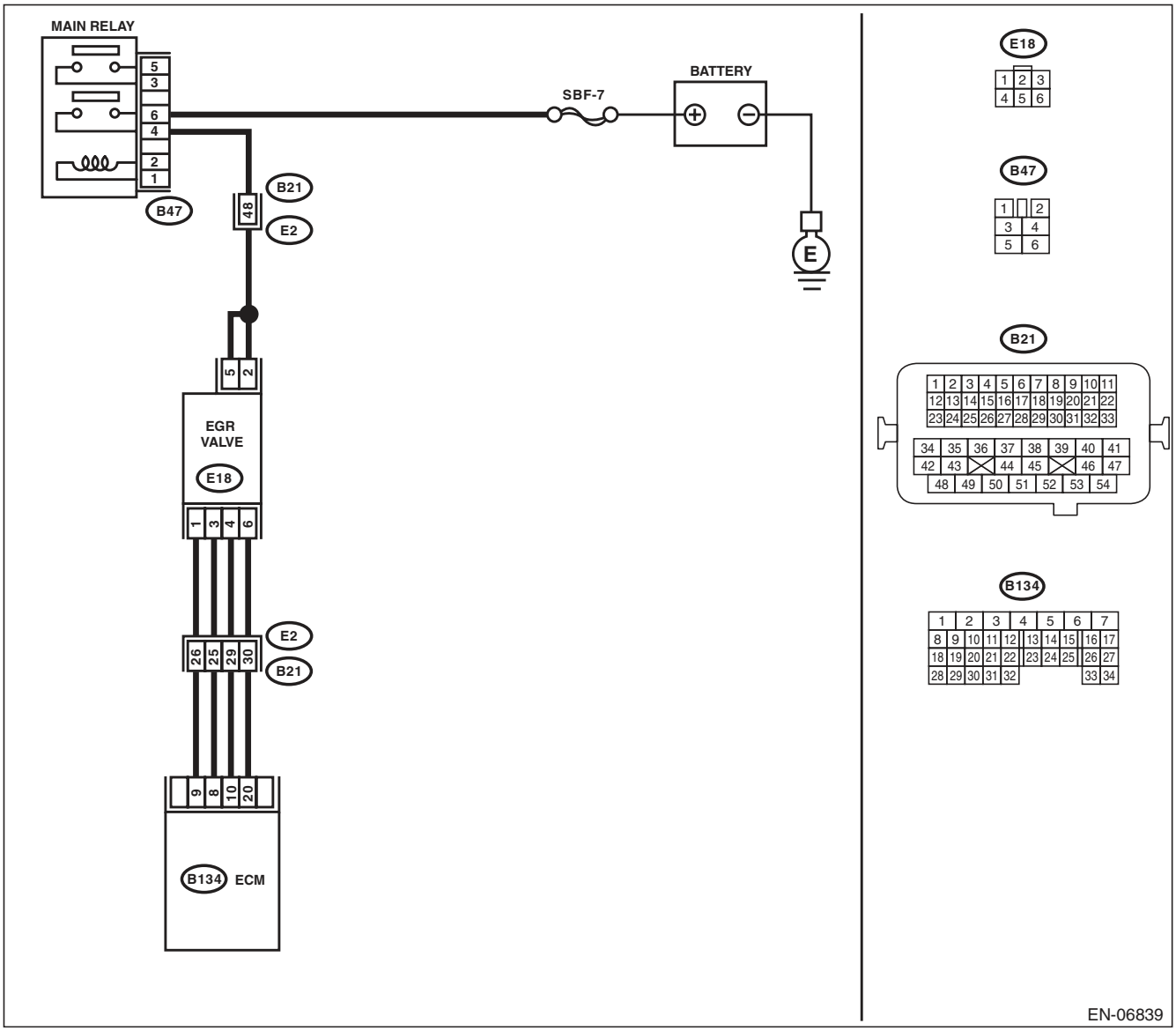

	Step	Check	Yes	No
1	**CHECK CURRENT DATA.** 1) Start the engine. 2) Read data of intake manifold absolute pressure signal using Subaru Select Monitor or general scan tool. NOTE: • SUBARU SELECT MONITOR For detailed operation procedure, refer to “READ CURRENT DATA FOR ENGINE”. <Ref. to EN(H4SO)(diag)-33, Subaru Select Monitor.> • General Scan Tool For detailed operation procedures, refer to the general scan tool operation manual.	Is the measured value 53.3 kPa (400 mmHg, 15.75 inHg) or more?	Make sure that the EGR valve, manifold absolute pressure sensor and throttle body are installed securely.	Go to step **2**.
2	**CHECK EGR VALVE.** Remove the EGR valve.	Are there holes, plugged piping or foreign objects caught in the EGR system?	Repair the EGR system.	Replace the EGR valve. <Ref. to FU(H4SO)-29, EGR Valve.>

BE:DTC P0420 CATALYST SYSTEM EFFICIENCY BELOW THRESHOLD (BANK 1)

DTC DETECTING CONDITION:

- Two consecutive driving cycles with fault
- GENERAL DESCRIPTION <Ref. to GD(H4SO)-99, DTC P0420 CATALYST SYSTEM EFFICIENCY BELOW THRESHOLD (BANK 1), Diagnostic Trouble Code (DTC) Detecting Criteria.>

TROUBLE SYMPTOM:

- Engine stalls.
- Idle mixture is out of specifications.

CAUTION:

After repair or replacement of faulty parts, perform Clear Memory Mode <Ref. to EN(H4SO)(diag)-50, OPERATION, Clear Memory Mode.>, and Inspection Mode <Ref. to EN(H4SO)(diag)-41, PROCEDURE, Inspection Mode.>.

WIRING DIAGRAM:

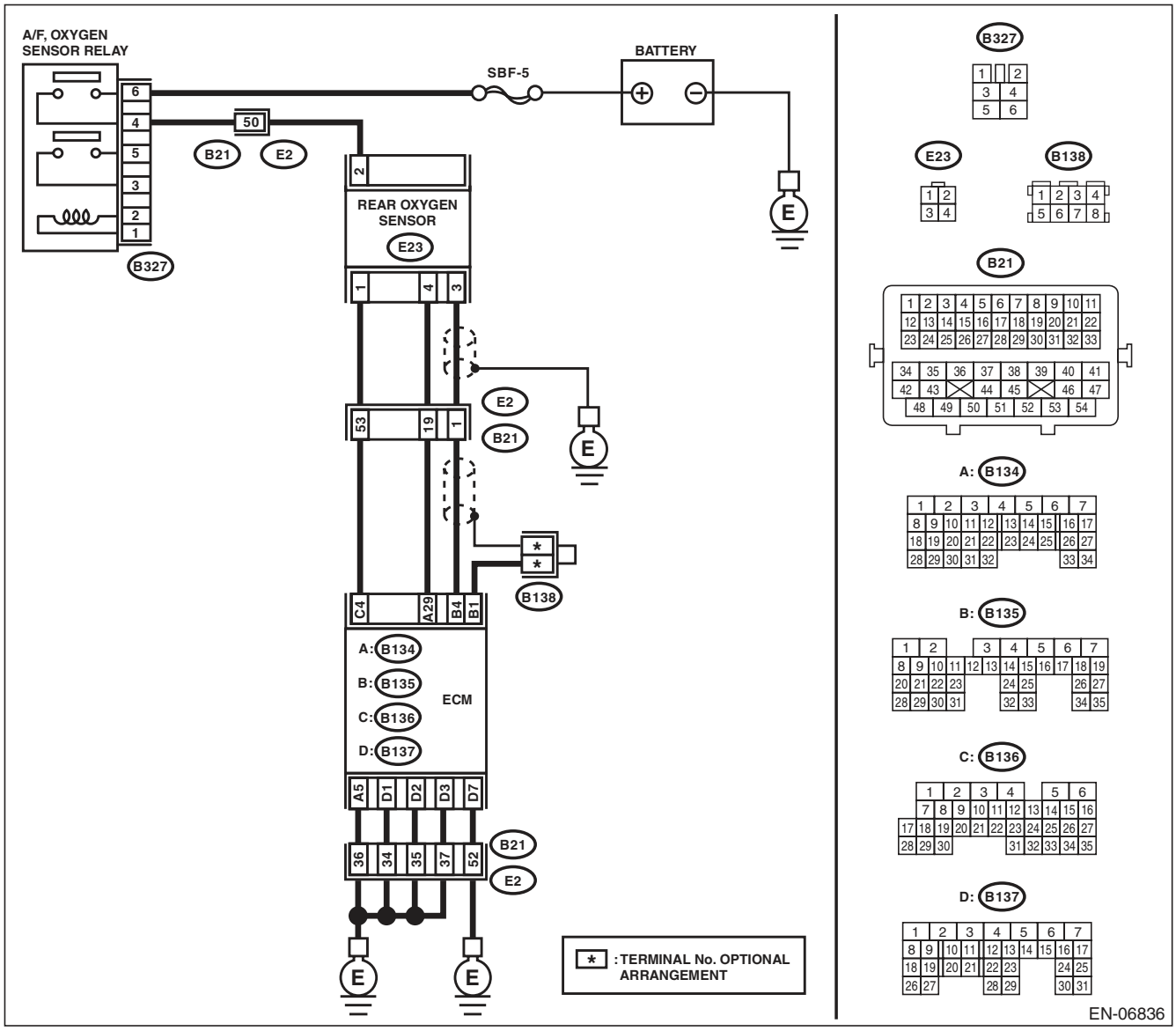

	Step	Check	Yes	No
1	**CHECK EXHAUST SYSTEM.** Check for gas leaks or air suction caused by loose or dislocated nuts and bolts, and open hole at exhaust pipes. NOTE: Check the following positions. • Between cylinder head and front exhaust pipe • Between front exhaust pipe and front catalytic converter • Between front catalytic converter and rear catalytic converter • Looseness and improper attachment of front oxygen (A/F) sensor or rear oxygen sensor	Is there any fault in exhaust system?	Repair or replace the exhaust system. <Ref. to EX(H4SO)-2, General Description.>	Go to step **2**.
2	**CHECK WAVEFORM DATA ON THE SUBARU SELECT MONITOR (WHILE DRIVING).** 1) Drive at a constant speed between 80 — 112 km/h (50 — 70 MPH). 2) After 5 minutes have elapsed in the condition of step 1), use the Subaru Select Monitor while still driving to read the waveform data. • At normal condition 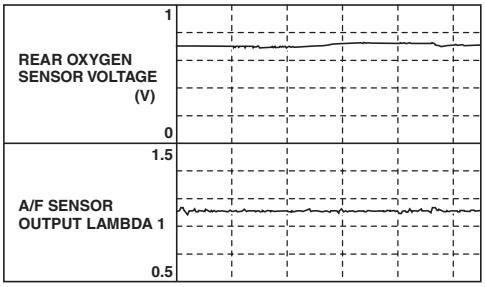 EN-06666 • At abnormal condition (numerous inversion) 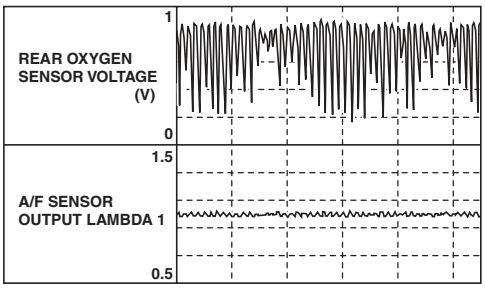 EN-06667	Is normal waveform pattern displayed?	Even if DTC is detected, the circuit has returned to a normal condition at this time. Reproduce the failure, and then perform the diagnosis again. NOTE: In this case, temporary poor contact of connector may be the cause.	Go to step **3**.

Step		Check	Yes	No
3	**CHECK WAVEFORM DATA ON THE SUBARU SELECT MONITOR (WHILE IDLING).** 1) Run the engine at idle. 2) In the condition of step 1), use the Subaru Select Monitor to read the waveform data. • At normal condition 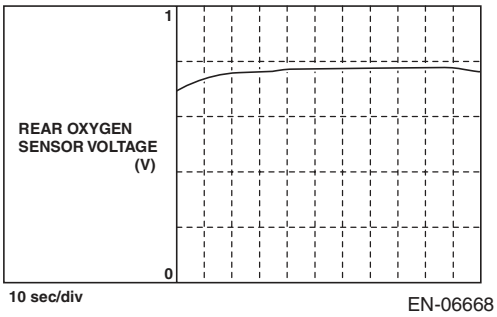 EN-06668 • At abnormal condition 1 (numerous inversion) 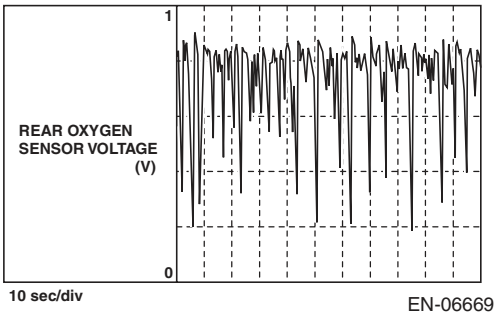 EN-06669 • At abnormal condition 2 (noise input) 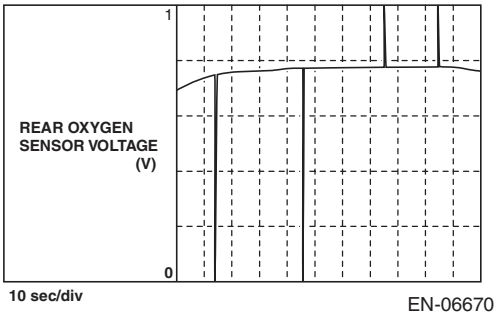 EN-06670	Is normal waveform pattern displayed?	Go to step **4**.	• The waveform is displayed at abnormal condition 1:Go to step **4**. • The waveform is displayed at abnormal condition 2:Go to step **5**.
4	**CHECK CATALYTIC CONVERTER.**	Is the catalytic converter damaged?	Replace the catalytic converter. <Ref. to EC(H4SO)-3, Front Catalytic Converter.>	Go to step **5**.
5	**CHECK REAR OXYGEN SENSOR CONNECTOR AND COUPLING CONNECTOR.**	Has water entered the connector?	Completely remove any water inside.	Go to step **6**.

	Step	Check	Yes	No
6	**CHECK HARNESS BETWEEN ECM AND REAR OXYGEN SENSOR CONNECTOR.** 1) Turn the ignition switch to OFF. 2) Disconnect the connectors from ECM and rear oxygen sensor. 3) Measure the resistance of harness between ECM and rear oxygen sensor connector. ***Connector & terminal*** ***(B135) No. 4 — (E23) No. 3:*** ***(B134) No. 29 — (E23) No. 4:***	Is the resistance less than 1 Ω?	Go to step **7**.	Repair the harness and connector. NOTE: In this case, repair the following item: • Open circuit in harness between ECM and rear oxygen sensor connector • Poor contact of coupling connector
7	**CHECK HARNESS BETWEEN ECM AND REAR OXYGEN SENSOR CONNECTOR.** 1) Turn the ignition switch to ON. 2) Measure the voltage between rear oxygen sensor connector and chassis ground. ***Connector & terminal*** ***(E23) No. 3 (+) — Chassis ground (–):***	Is the voltage 0.2 — 0.5 V?	Go to step **8**.	Repair the harness and connector. NOTE: Repair the following locations. • Open circuit in harness between ECM and rear oxygen sensor connector • Poor contact in ECM and rear oxygen sensor • Poor contact in ECM connector
8	**CHECK REAR OXYGEN SENSOR SHIELD.** 1) Turn the ignition switch to OFF. 2) Expose the rear oxygen sensor connector body side harness sensor shield. 3) Measure the resistance between the sensor shield and chassis ground.	Is the resistance less than 1 Ω?	Replace the rear oxygen sensor. <Ref. to FU(H4SO)-37, Rear Oxygen Sensor.>	Repair the open circuit in the rear oxygen sensor harness.

BF:DTC P0442 EVAPORATIVE EMISSION CONTROL SYSTEM LEAK DETECTED (SMALL LEAK)

DTC DETECTING CONDITION:

- Two consecutive driving cycles with fault
- GENERAL DESCRIPTION <Ref. to GD(H4SO)-101, DTC P0442 EVAPORATIVE EMISSION CONTROL SYSTEM LEAK DETECTED (SMALL LEAK), Diagnostic Trouble Code (DTC) Detecting Criteria.>

TROUBLE SYMPTOM:

- Fuel odor
- There is a hole of more than 1.0 mm (0.04 in) dia. in evaporation system or fuel tank.

CAUTION:

After repair or replacement of faulty parts, perform Clear Memory Mode <Ref. to EN(H4SO)(diag)-50, OPERATION, Clear Memory Mode.>, and Inspection Mode <Ref. to EN(H4SO)(diag)-41, PROCEDURE, Inspection Mode.>.

WIRING DIAGRAM:

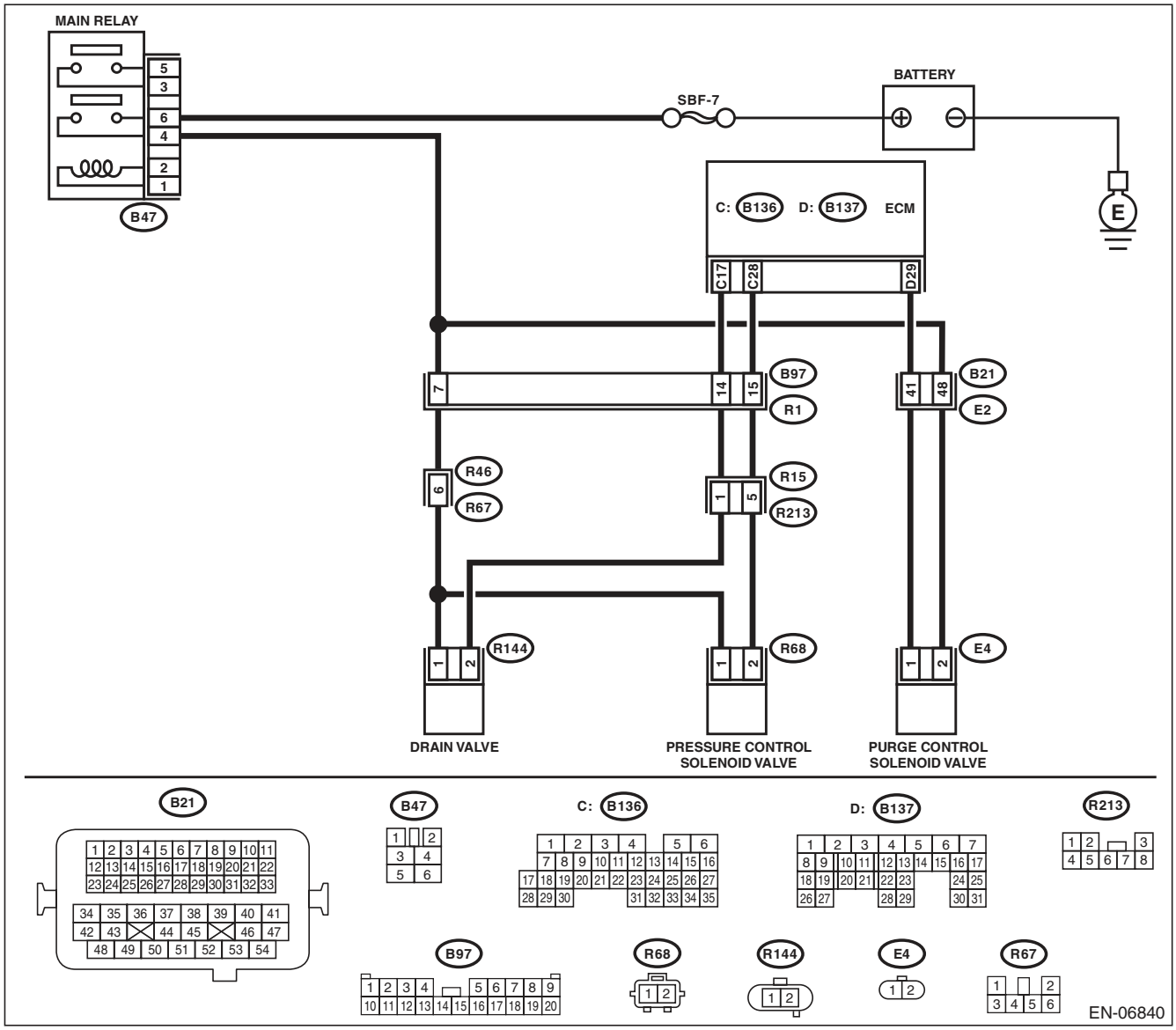

	Step	Check	Yes	No
1	**CHECK FUEL FILLER CAP.** 1) Turn the ignition switch to OFF. 2) Check the fuel filler cap. NOTE: The DTC is stored in memory if fuel filler cap is or was loose or if the cap chain has caught while tightening.	Is the fuel filler cap tightened securely?	Go to step **2**.	Tighten fuel filler cap securely.
2	**CHECK FUEL FILLER CAP.**	Is the fuel filler cap genuine?	Go to step **3**.	Replace with a genuine fuel filler cap.
3	**CHECK FUEL FILLER PIPE GASKET.**	Is there any damage to the seal between fuel filler cap and fuel filler pipe?	Repair or replace the fuel filler cap and fuel filler pipe. <Ref. to FU(H4SO)-52, Fuel Filler Pipe.>	Go to step **4**.
4	**CHECK DRAIN VALVE.** 1) Connect the delivery (test) mode connector. 2) Turn the ignition switch to ON. 3) Operate the drain valve using the Subaru Select Monitor. NOTE: The drain valve can be operated using Subaru Select Monitor. For the procedures, refer to “Compulsory Valve Operation Check Mode”. <Ref. to EN(H4SO)(diag)-51, Compulsory Valve Operation Check Mode.>	Does the drain valve operate?	Go to step **5**.	Replace the drain valve. <Ref. to EC(H4SO)-16, Drain Valve.>
5	**CHECK PURGE CONTROL SOLENOID VALVE.** Operate the purge control solenoid valve using the Subaru Select Monitor. NOTE: Purge control solenoid valve operation can be executed using Subaru Select Monitor. For the procedures, refer to “Compulsory Valve Operation Check Mode”. <Ref. to EN(H4SO)(diag)-51, Compulsory Valve Operation Check Mode.>	Does the purge control solenoid valve operate?	Go to step **6**.	Replace the purge control solenoid valve. <Ref. to EC(H4SO)-7, Purge Control Solenoid Valve.>
6	**CHECK PRESSURE CONTROL SOLENOID VALVE.** Operate the pressure control solenoid valve using the Subaru Select Monitor. NOTE: The pressure control solenoid valve operation can be executed using the Subaru Select Monitor. For the procedures, refer to “Compulsory Valve Operation Check Mode”. <Ref. to EN(H4SO)(diag)-51, Compulsory Valve Operation Check Mode.>	Does the pressure control solenoid valve operate?	Go to step **7**.	Replace the pressure control solenoid valve. <Ref. to EC(H4SO)-13, Pressure Control Solenoid Valve.>
7	**CHECK EVAPORATIVE EMISSION CONTROL SYSTEM LINE.** 1) Turn the ignition switch to OFF. 2) Disconnect the delivery (test) mode connector.	Is there any hole of more than 1.0 mm (0.04 in) dia. on evaporation line?	Repair or replace the evaporation line. <Ref. to FU(H4SO)-65, Fuel Delivery and Evaporation Lines.>	Go to step **8**.

Step		Check	Yes	No
8	**CHECK CANISTER.**	Is the canister damaged or is there a hole of more than 1.0 mm (0.04 in) dia. in it?	Repair or replace the canister. <Ref. to EC(H4SO)-5, Canister.>	Go to step **9**.
9	**CHECK FUEL TANK.** Remove the fuel tank. <Ref. to FU(H4SO)-45, Fuel Tank.>	Is the fuel tank damaged or is there any hole of more than 1.0 mm (0.04 in) dia. in it?	Repair or replace the fuel tank. <Ref. to FU(H4SO)-45, Fuel Tank.>	Go to step **10**.
10	**CHECK ANY OTHER MECHANICAL TROUBLE IN EVAPORATIVE EMISSION CONTROL SYSTEM.**	Is there any hole of more than 1.0 mm (0.04 in) dia., crack, clogging, or disconnections, bend, misconnection of hoses or pipes in evaporative emission control system?	Repair or replace the hoses or pipes.	Repair the poor contact of ECM connector.

BG:DTC P0447 EVAPORATIVE EMISSION CONTROL SYSTEM VENT CONTROL CIRCUIT OPEN

DTC DETECTING CONDITION:

- Immediately at fault recognition
- GENERAL DESCRIPTION <Ref. to GD(H4SO)-117, DTC P0447 EVAPORATIVE EMISSION CONTROL SYSTEM VENT CONTROL CIRCUIT OPEN, Diagnostic Trouble Code (DTC) Detecting Criteria.>

CAUTION:

After repair or replacement of faulty parts, perform Clear Memory Mode <Ref. to EN(H4SO)(diag)-50, OPERATION, Clear Memory Mode.>, and Inspection Mode <Ref. to EN(H4SO)(diag)-41, PROCEDURE, Inspection Mode.>.

WIRING DIAGRAM:

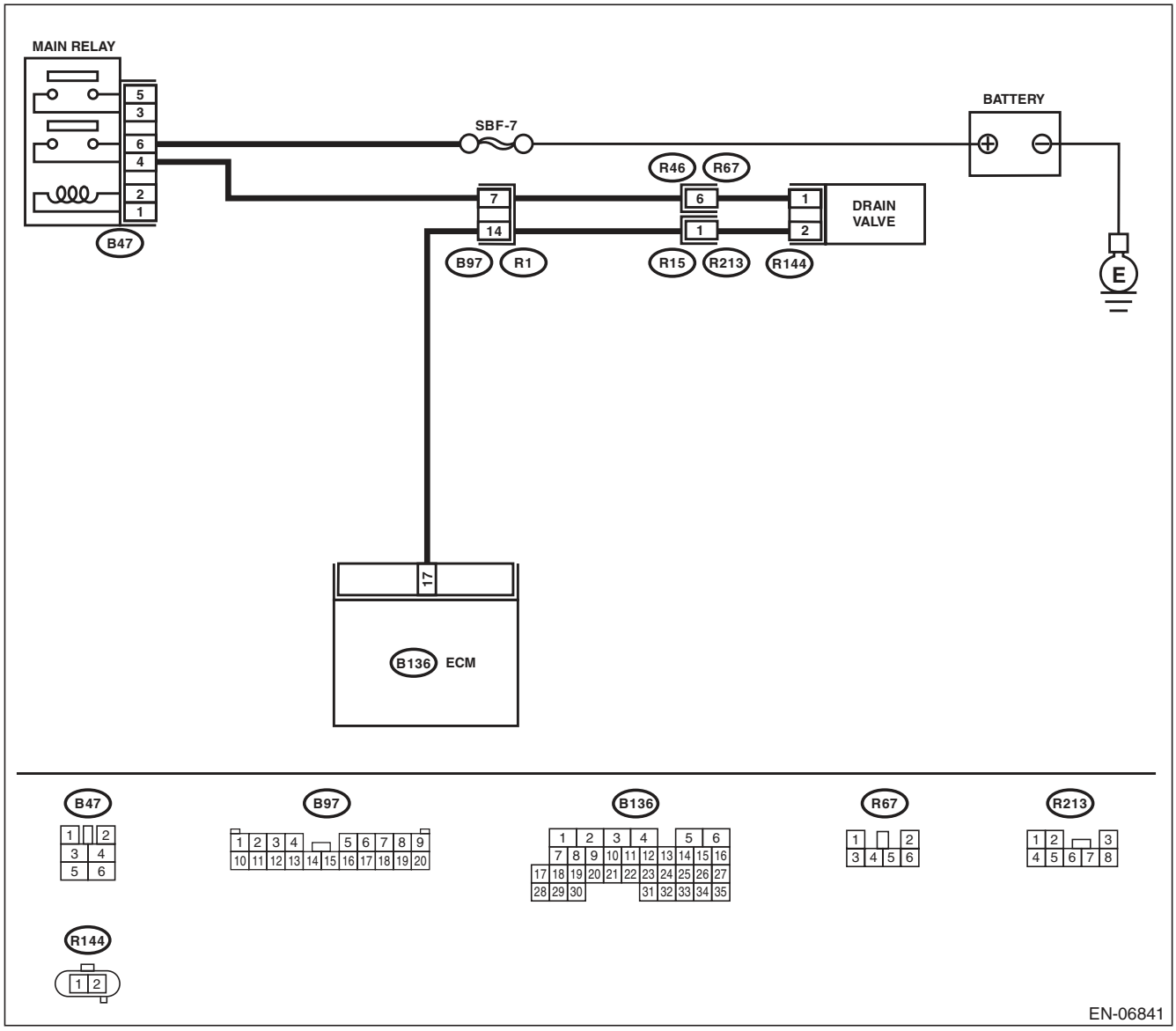

	Step	Check	Yes	No
1	**CHECK OUTPUT SIGNAL OF ECM.** 1) Turn the ignition switch to ON. 2) Measure the voltage between ECM and chassis ground. ***Connector & terminal*** ***(B136) No. 17 (+) — Chassis ground (–):***	Is the voltage 10 V or more?	Repair the poor contact of ECM connector.	Go to step **2**.
2	**CHECK HARNESS BETWEEN ECM AND DRAIN VALVE.** 1) Turn the ignition switch to OFF. 2) Disconnect the connectors from the ECM and drain valve. 3) Measure the resistance between the drain valve connector and chassis ground. ***Connector & terminal*** ***(R144) No. 2 — Chassis ground:***	Is the resistance 1 MΩ or more?	Go to step **3**.	Repair the ground short circuit of harness between ECM and drain valve connector.
3	**CHECK HARNESS BETWEEN ECM AND DRAIN VALVE.** Measure the resistance of harness between ECM and drain valve connector. ***Connector & terminal*** ***(B136) No. 17 — (R144) No. 2:***	Is the resistance less than 1 Ω?	Go to step **4**.	Repair the harness and connector. NOTE: In this case, repair the following item: • Open circuit in harness between ECM and drain valve connector • Poor contact of coupling connector
4	**CHECK DRAIN VALVE.** Measure the resistance between drain valve terminals. ***Terminals*** ***No. 1 — No. 2:***	Is the resistance between 10 — 100 Ω?	Go to step **5**.	Replace the drain valve. <Ref. to EC(H4SO)-16, Drain Valve.>
5	**CHECK POWER SUPPLY TO DRAIN VALVE.** 1) Turn the ignition switch to ON. 2) Measure the voltage between drain valve and chassis ground. ***Connector & terminal*** ***(R144) No. 1 (+) — Chassis ground (–):***	Is the voltage 10 V or more?	Repair poor contact of the drain valve connector.	Repair the harness and connector. NOTE: In this case, repair the following item: • Open circuit in harness between main relay connector and drain valve connector • Poor contact of coupling connector • Poor contact of main relay connector

BH:DTC P0448 EVAPORATIVE EMISSION CONTROL SYSTEM VENT CONTROL CIRCUIT SHORTED

DTC DETECTING CONDITION:

- Immediately at fault recognition
- GENERAL DESCRIPTION <Ref. to GD(H4SO)-119, DTC P0448 EVAPORATIVE EMISSION CONTROL SYSTEM VENT CONTROL CIRCUIT SHORTED, Diagnostic Trouble Code (DTC) Detecting Criteria.>

CAUTION:

After repair or replacement of faulty parts, perform Clear Memory Mode <Ref. to EN(H4SO)(diag)-50, OPERATION, Clear Memory Mode.>, and Inspection Mode <Ref. to EN(H4SO)(diag)-41, PROCEDURE, Inspection Mode.>.

WIRING DIAGRAM:

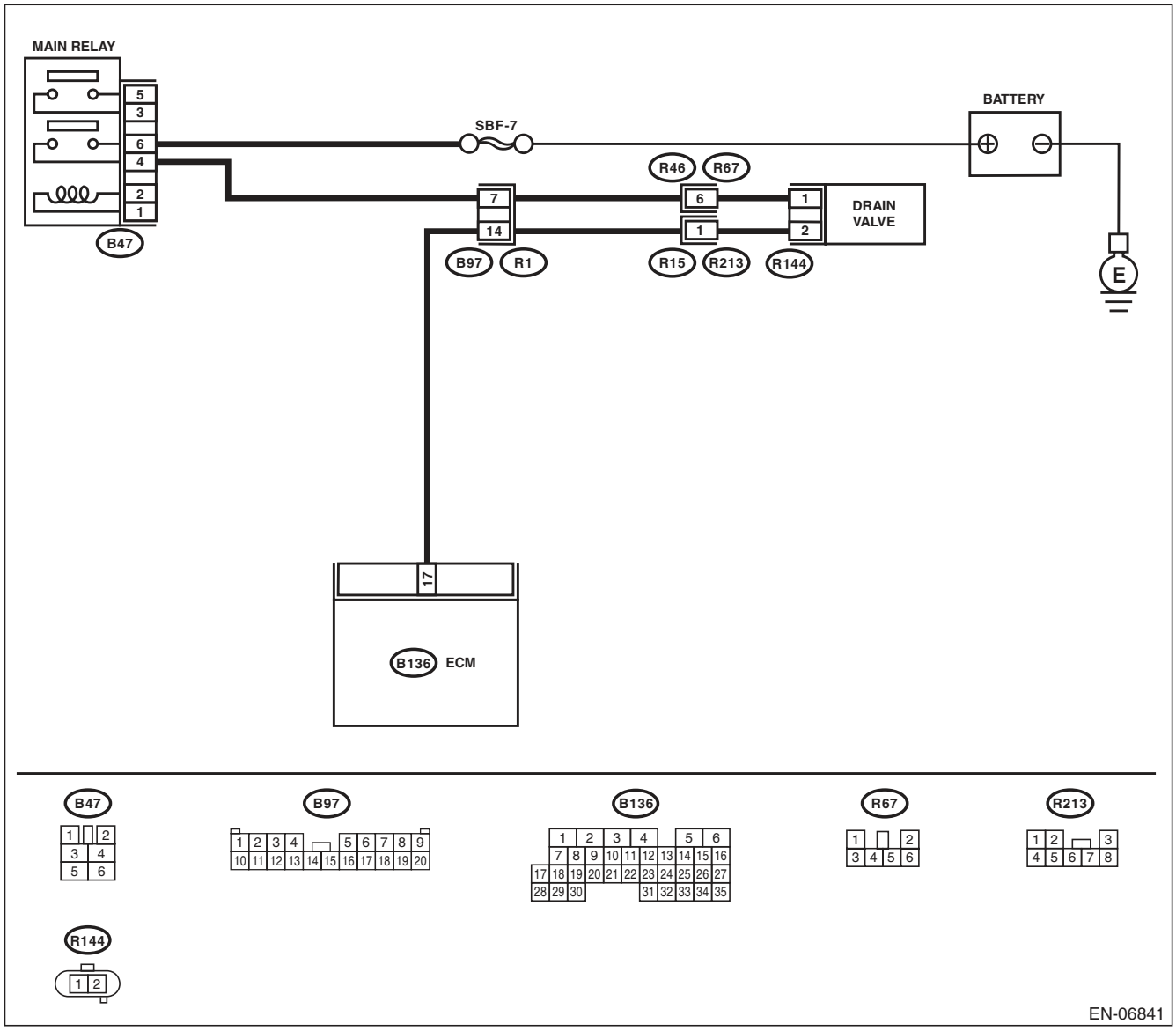

Step		Check	Yes	No
1	**CHECK HARNESS BETWEEN ECM AND DRAIN VALVE.** 1) Turn the ignition switch to OFF. 2) Disconnect the connectors from the ECM and drain valve. 3) Turn the ignition switch to ON. 4) Measure the voltage between ECM and chassis ground. ***Connector & terminal*** ***(B136) No. 17 (+) — Chassis ground (–):***	Is the voltage 10 V or more?	Repair the short circuit to the power supply in the harness between the ECM and drain valve connector.	Go to step **2**.
2	**CHECK DRAIN VALVE.** 1) Turn the ignition switch to OFF. 2) Measure the resistance between drain valve terminals. ***Terminals*** ***No. 1 — No. 2:***	Is the resistance less than 1 Ω?	Replace the drain valve. <Ref. to EC(H4SO)-16, Drain Valve.>	Repair the poor contact of ECM connector.

BI: DTC P0451 EVAPORATIVE EMISSION CONTROL SYSTEM PRESSURE SENSOR

DTC DETECTING CONDITION:

- Two consecutive driving cycles with fault
- GENERAL DESCRIPTION <Ref. to GD(H4SO)-121, DTC P0451 EVAPORATIVE EMISSION CONTROL SYSTEM PRESSURE SENSOR, Diagnostic Trouble Code (DTC) Detecting Criteria.>

CAUTION:

After repair or replacement of faulty parts, perform Clear Memory Mode <Ref. to EN(H4SO)(diag)-50, OPERATION, Clear Memory Mode.>, and Inspection Mode <Ref. to EN(H4SO)(diag)-41, PROCEDURE, Inspection Mode.>.

WIRING DIAGRAM:

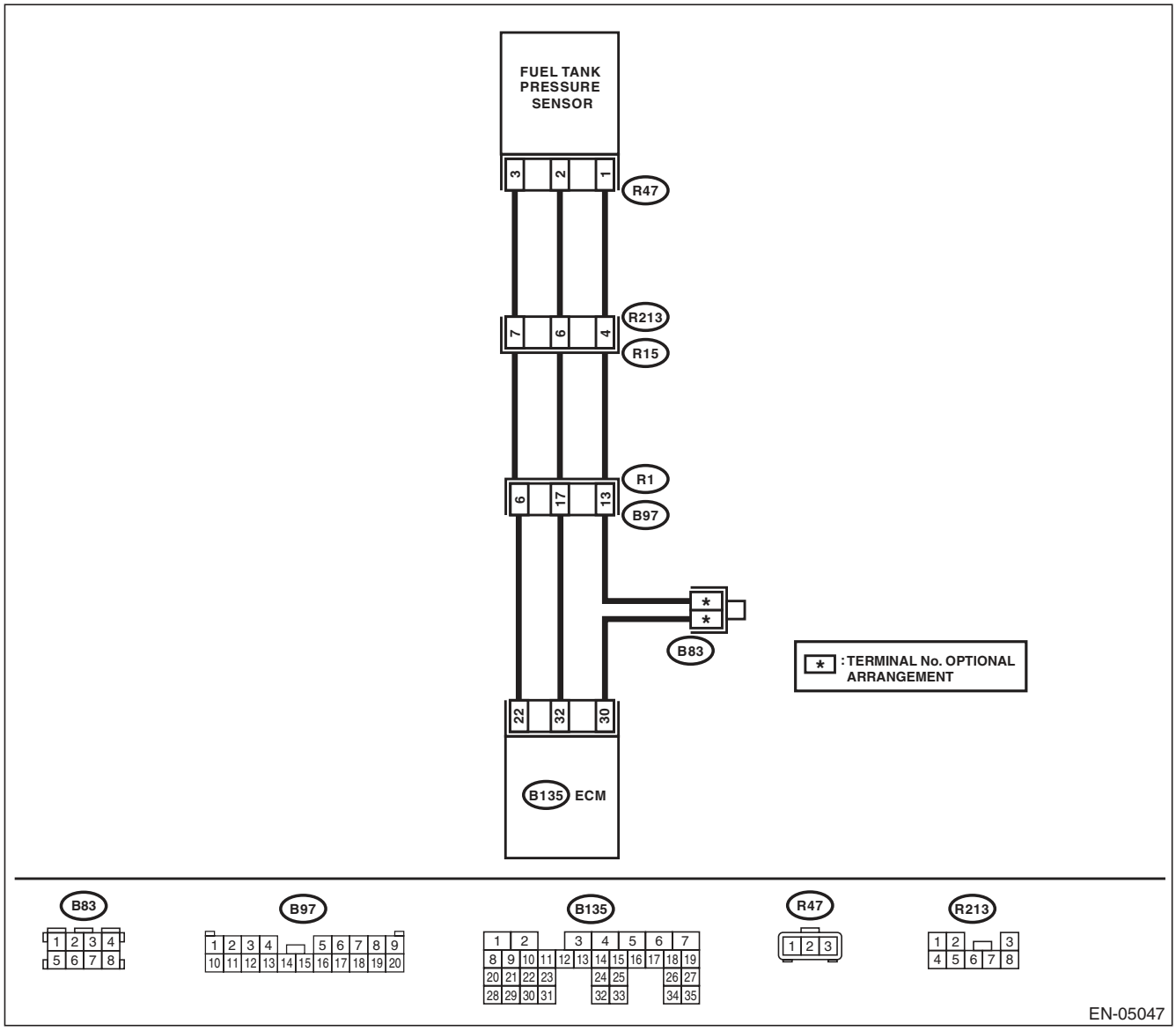

Step		Check	Yes	No
1	**CHECK FUEL FILLER CAP.** 1) Turn the ignition switch to OFF. 2) Open the fuel flap.	Is the fuel filler cap tightened securely?	Go to step **2**.	Tighten fuel filler cap securely.
2	**CHECK PRESSURE VACUUM LINE.** NOTE: Check the following items. • Disconnection, leakage and clogging of the vacuum hoses and pipes between fuel tank pressure sensor and fuel tank • Disconnection, leakage and clogging of the air ventilation hoses and pipes between fuel filler pipe and fuel tank	Is there any fault in pressure/ vacuum line?	Repair or replace the hoses and pipes.	Replace the fuel tank pressure sensor. <Ref. to EC(H4SO)-12, Fuel Tank Pressure Sensor.>

BJ:DTC P0452 EVAPORATIVE EMISSION CONTROL SYSTEM PRESSURE SENSOR LOW INPUT

DTC DETECTING CONDITION:

- Immediately at fault recognition
- GENERAL DESCRIPTION <Ref. to GD(H4SO)-123, DTC P0452 EVAPORATIVE EMISSION CONTROL SYSTEM PRESSURE SENSOR LOW INPUT, Diagnostic Trouble Code (DTC) Detecting Criteria.>

CAUTION:

After repair or replacement of faulty parts, perform Clear Memory Mode <Ref. to EN(H4SO)(diag)-50, OPERATION, Clear Memory Mode.>, and Inspection Mode <Ref. to EN(H4SO)(diag)-41, PROCEDURE, Inspection Mode.>.

WIRING DIAGRAM:

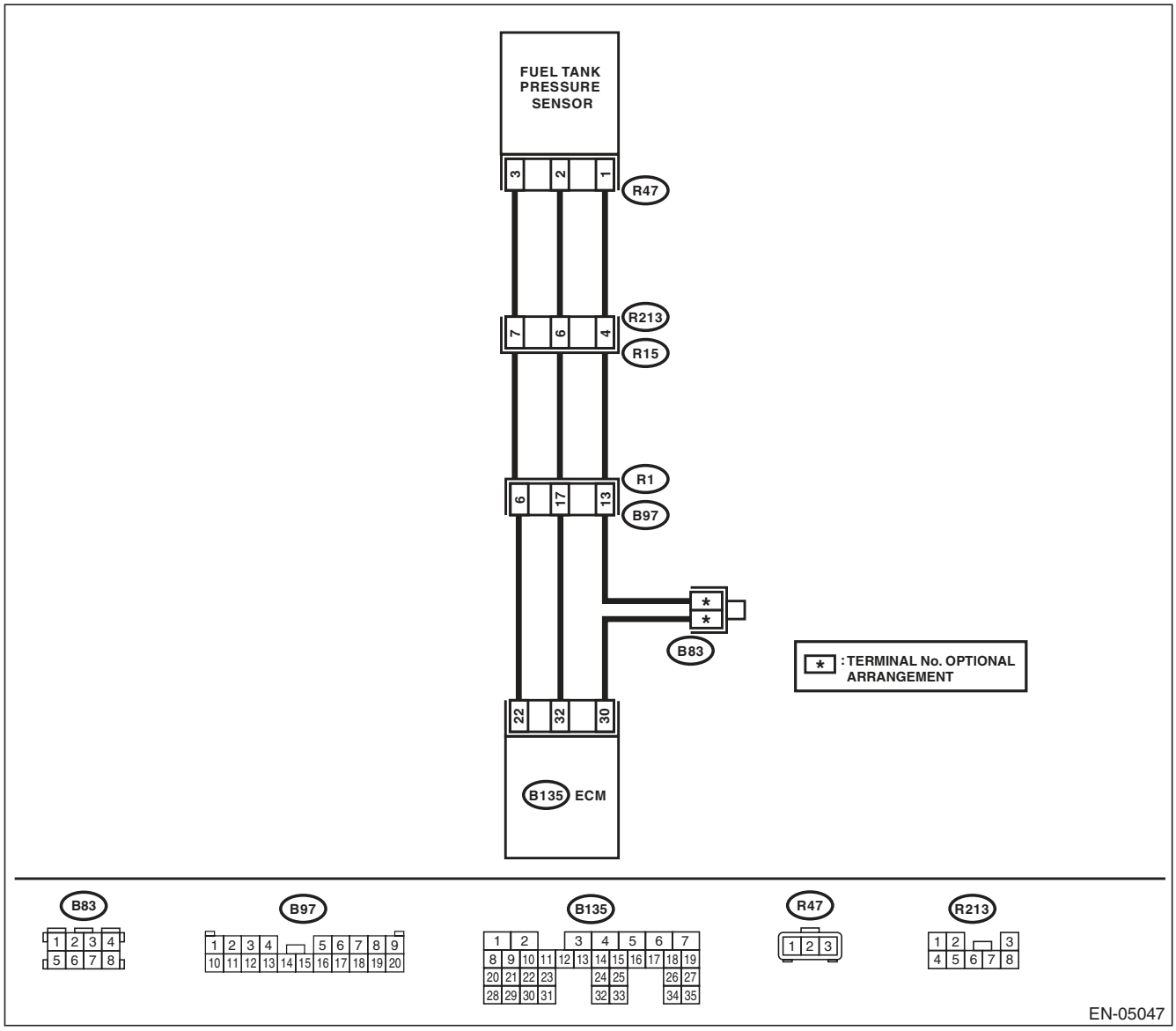

	Step	Check	Yes	No
1	**CHECK CURRENT DATA.** 1) Turn the ignition switch to ON. 2) Read the data of fuel tank pressure sensor signal using the Subaru Select Monitor or general scan tool. NOTE: • SUBARU SELECT MONITOR For detailed operation procedure, refer to "READ CURRENT DATA FOR ENGINE". <Ref. to EN(H4SO)(diag)-33, Subaru Select Monitor.> • General Scan Tool For detailed operation procedures, refer to the general scan tool operation manual.	Is the measured value less than –7.41 kPa (–55.6 mmHg, –2.19 inHg)?	Go to step **2**.	Even if DTC is detected, the circuit has returned to a normal condition at this time. Reproduce the failure, and then perform the diagnosis again. NOTE: In this case, temporary poor contact of connector may be the cause.
2	**CHECK FUEL TANK PRESSURE SENSOR POWER SOURCE.** 1) Turn the ignition switch to OFF. 2) Disconnect the connector from the fuel tank pressure sensor. 3) Turn the ignition switch to ON. 4) Measure the voltage between the fuel tank pressure sensor connector and chassis ground. ***Connector & terminal*** ***(R47) No. 3 (+) — Chassis ground (–):***	Is the voltage 4.5 V or more?	Go to step **3**.	Repair the harness and connector. NOTE: In this case, repair the following item: • Open circuit of harness between ECM and fuel tank pressure sensor connector • Poor contact in ECM connector • Poor contact of coupling connector
3	**CHECK HARNESS BETWEEN ECM AND FUEL TANK PRESSURE SENSOR CONNECTOR.** 1) Turn the ignition switch to OFF. 2) Disconnect the connectors from ECM. 3) Measure the resistance of harness between the ECM and fuel tank pressure sensor connector. ***Connector & terminal*** ***(B135) No. 32 — (R47) No. 2:***	Is the resistance less than 1 Ω?	Go to step **4**.	Repair the harness and connector. NOTE: In this case, repair the following item: • Open circuit of harness between ECM and fuel tank pressure sensor connector • Poor contact of coupling connector
4	**CHECK HARNESS BETWEEN ECM AND FUEL TANK PRESSURE SENSOR CONNECTOR.** Measure the resistance between ECM and chassis ground. ***Connector & terminal*** ***(B135) No. 32 — Chassis ground:***	Is the resistance 1 MΩ or more?	Go to step **5**.	Repair the ground short circuit of harness between ECM and fuel tank pressure sensor connector.
5	**CHECK POOR CONTACT.** Check for poor contact between the ECM and fuel tank pressure sensor connector.	Is there poor contact in the ECM or fuel tank pressure sensor connector?	Repair the poor contact in the ECM or fuel tank pressure sensor connector.	Replace the fuel tank pressure sensor. <Ref. to EC(H4SO)-12, Fuel Tank Pressure Sensor.>

BK:DTC P0453 EVAPORATIVE EMISSION CONTROL SYSTEM PRESSURE SENSOR HIGH INPUT

DTC DETECTING CONDITION:

- Immediately at fault recognition
- GENERAL DESCRIPTION <Ref. to GD(H4SO)-125, DTC P0453 EVAPORATIVE EMISSION CONTROL SYSTEM PRESSURE SENSOR HIGH INPUT, Diagnostic Trouble Code (DTC) Detecting Criteria.>

CAUTION:

After repair or replacement of faulty parts, perform Clear Memory Mode <Ref. to EN(H4SO)(diag)-50, OPERATION, Clear Memory Mode.>, and Inspection Mode <Ref. to EN(H4SO)(diag)-41, PROCEDURE, Inspection Mode.>.

WIRING DIAGRAM:

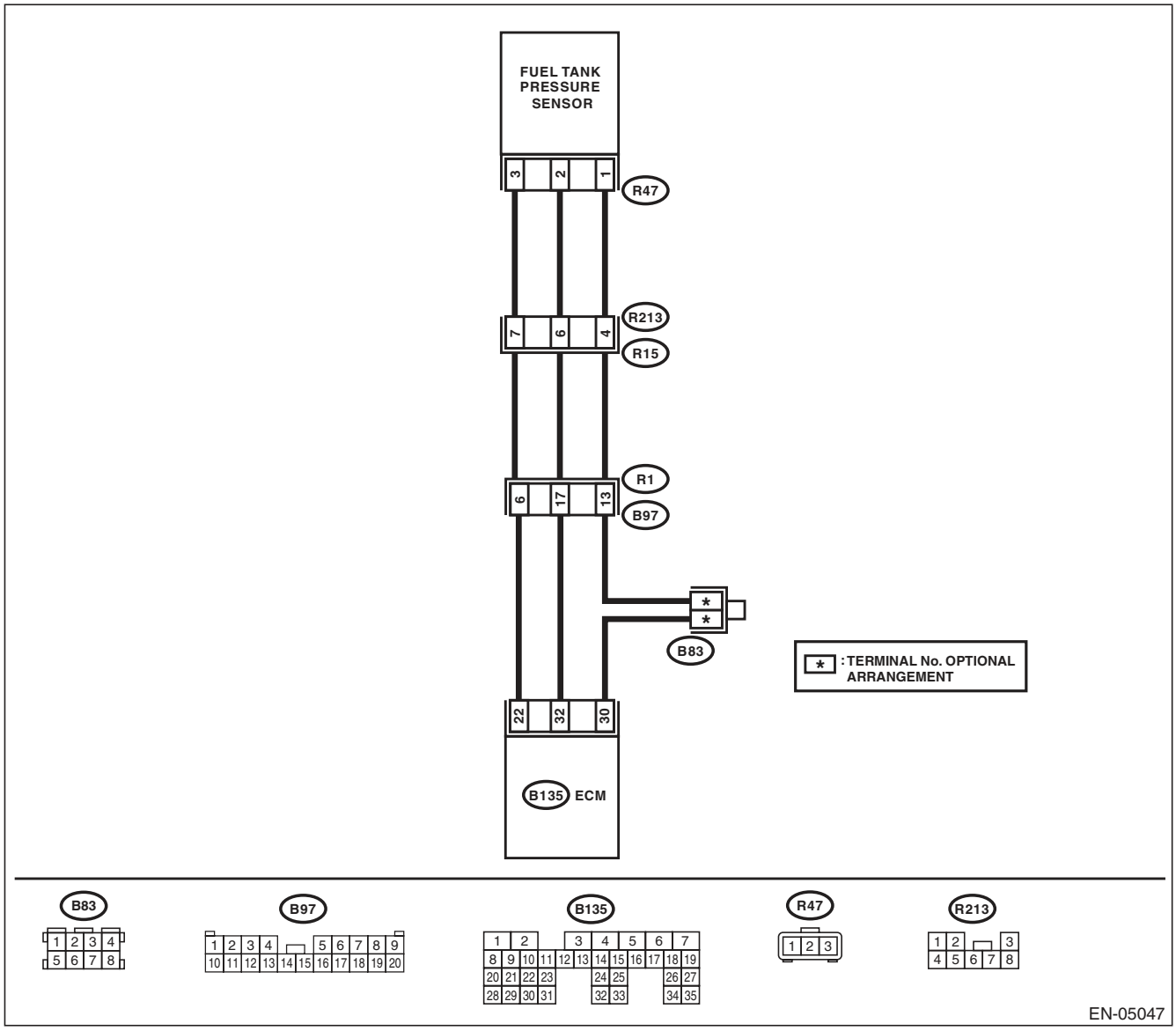

	Step	Check	Yes	No
1	**CHECK CURRENT DATA.** 1) Turn the ignition switch to ON. 2) Read the data of fuel tank pressure sensor signal using the Subaru Select Monitor or general scan tool. NOTE: • SUBARU SELECT MONITOR For detailed operation procedure, refer to "READ CURRENT DATA FOR ENGINE". <Ref. to EN(H4SO)(diag)-33, Subaru Select Monitor.> • General Scan Tool For detailed operation procedures, refer to the general scan tool operation manual.	Is the measured value 7.95 kPa (59.6 mmHg, 2.35 inHg) or more?	Go to step **2**.	Even if DTC is detected, the circuit has returned to a normal condition at this time. Reproduce the failure, and then perform the diagnosis again. NOTE: In this case, temporary poor contact of connector may be the cause.
2	**CHECK HARNESS BETWEEN ECM AND FUEL TANK PRESSURE SENSOR CONNECTOR.** 1) Turn the ignition switch to OFF. 2) Disconnect the connector from the fuel tank pressure sensor. 3) Turn the ignition switch to ON. 4) Read the data of fuel tank pressure sensor signal using the Subaru Select Monitor or general scan tool. NOTE: • SUBARU SELECT MONITOR For detailed operation procedure, refer to "READ CURRENT DATA FOR ENGINE". <Ref. to EN(H4SO)(diag)-33, Subaru Select Monitor.> • General Scan Tool For detailed operation procedures, refer to the general scan tool operation manual.	Is the measured value 7.95 kPa (59.6 mmHg, 2.35 inHg) or more?	Repair the short circuit to power supply in the harness between the ECM and fuel tank pressure sensor connector.	Go to step **3**.
3	**CHECK HARNESS BETWEEN ECM AND FUEL TANK PRESSURE SENSOR CONNECTOR.** 1) Turn the ignition switch to OFF. 2) Measure the resistance of harness between fuel tank pressure sensor connector and engine ground. ***Connector & terminal*** ***(R47) No. 1 — Engine ground:***	Is the resistance less than 5 Ω?	Go to step **4**.	Repair the harness and connector. NOTE: In this case, repair the following item: • Open circuit of harness between ECM and fuel tank pressure sensor connector • Poor contact in ECM connector • Poor contact of coupling connector
4	**CHECK POOR CONTACT.** Check for poor contact of the fuel tank pressure sensor connector.	Is there poor contact in fuel tank pressure sensor connector?	Repair the poor contact in the fuel tank pressure sensor connector.	Replace the fuel tank pressure sensor. <Ref. to EC(H4SO)-12, Fuel Tank Pressure Sensor.>

BL:DTC P0456 EVAPORATIVE EMISSION CONTROL SYSTEM LEAK DETECTED (VERY SMALL LEAK)

DTC DETECTING CONDITION:

- Two consecutive driving cycles with fault
- GENERAL DESCRIPTION <Ref. to GD(H4SO)-126, DTC P0456 EVAPORATIVE EMISSION CONTROL SYSTEM LEAK DETECTED (VERY SMALL LEAK), Diagnostic Trouble Code (DTC) Detecting Criteria.>

TROUBLE SYMPTOM:

- Fuel odor
- There is a hole of more than 0.5 mm (0.020 in) dia. in evaporation system or fuel tank.

CAUTION:

After repair or replacement of faulty parts, perform Clear Memory Mode <Ref. to EN(H4SO)(diag)-50, OPERATION, Clear Memory Mode.>, and Inspection Mode <Ref. to EN(H4SO)(diag)-41, PROCEDURE, Inspection Mode.>.

WIRING DIAGRAM:

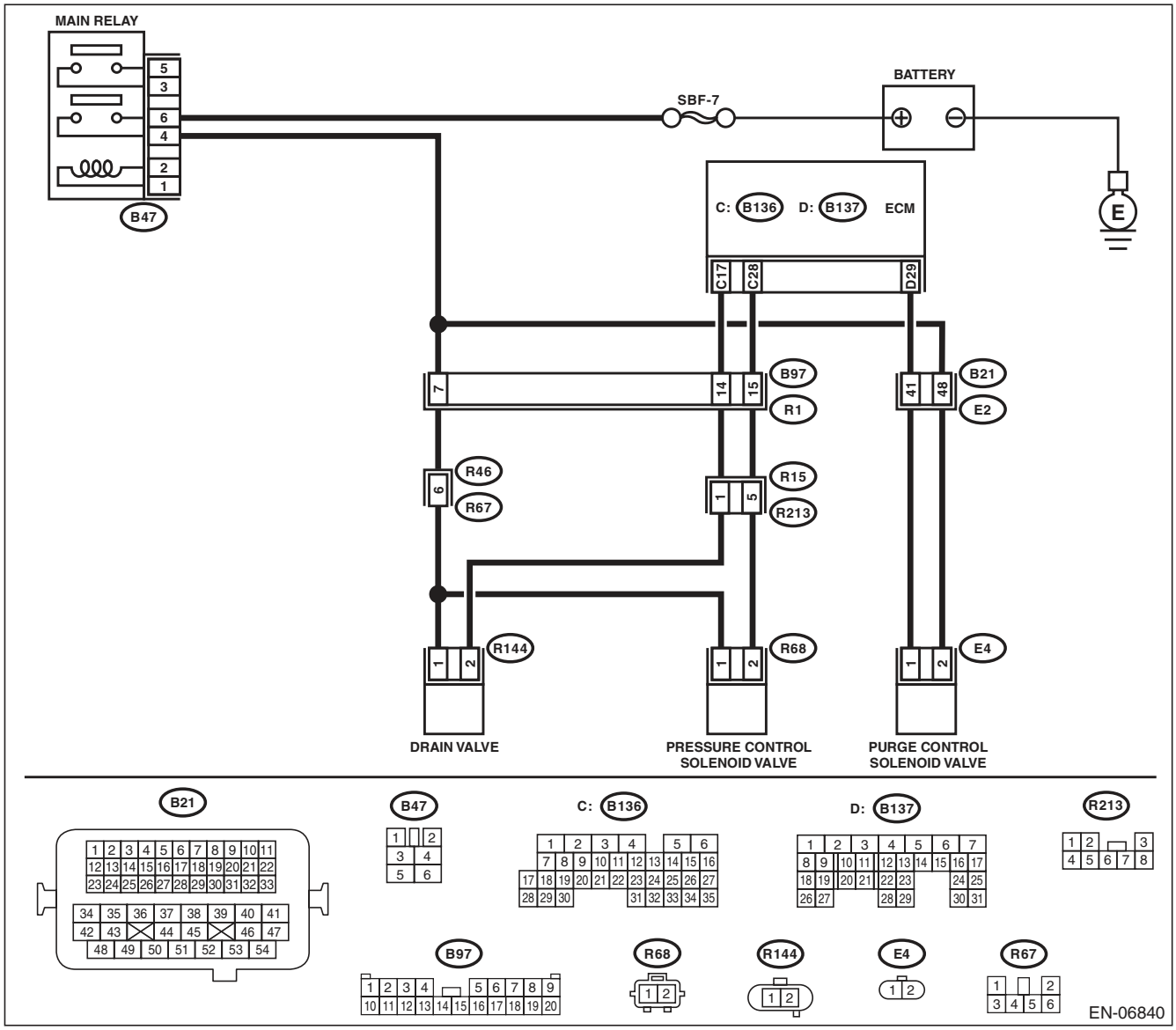

	Step	Check	Yes	No
1	**CHECK FUEL FILLER CAP.** 1) Turn the ignition switch to OFF. 2) Check the fuel filler cap. NOTE: The DTC is stored in memory if fuel filler cap is or was loose or if the cap chain has caught while tightening.	Is the fuel filler cap tightened securely?	Go to step **2**.	Tighten fuel filler cap securely.
2	**CHECK FUEL FILLER CAP.**	Is the fuel filler cap genuine?	Go to step **3**.	Replace with a genuine fuel filler cap.
3	**CHECK FUEL FILLER PIPE GASKET.**	Is there any damage to the seal between fuel filler cap and fuel filler pipe?	Repair or replace the fuel filler cap and fuel filler pipe. <Ref. to FU(H4SO)-52, Fuel Filler Pipe.>	Go to step **4**.
4	**CHECK DRAIN VALVE.** 1) Connect the delivery (test) mode connector. 2) Turn the ignition switch to ON. 3) Operate the drain valve using the Subaru Select Monitor. NOTE: Drain valve can be operated using the Subaru Select Monitor. For the procedures, refer to “Compulsory Valve Operation Check Mode”. <Ref. to EN(H4SO)(diag)-51, Compulsory Valve Operation Check Mode.>	Does the drain valve operate?	Go to step **5**.	Replace the drain valve. <Ref. to EC(H4SO)-16, Drain Valve.>
5	**CHECK PURGE CONTROL SOLENOID VALVE.** Operate the purge control solenoid valve using the Subaru Select Monitor. NOTE: Purge control solenoid valve operation can be executed using Subaru Select Monitor. For the procedures, refer to “Compulsory Valve Operation Check Mode”. <Ref. to EN(H4SO)(diag)-51, Compulsory Valve Operation Check Mode.>	Does the purge control solenoid valve operate?	Go to step **6**.	Replace the purge control solenoid valve. <Ref. to EC(H4SO)-7, Purge Control Solenoid Valve.>
6	**CHECK PRESSURE CONTROL SOLENOID VALVE.** Operate the pressure control solenoid valve using the Subaru Select Monitor. NOTE: The pressure control solenoid valve operation can be executed using the Subaru Select Monitor. For the procedures, refer to “Compulsory Valve Operation Check Mode”. <Ref. to EN(H4SO)(diag)-51, Compulsory Valve Operation Check Mode.>	Does the pressure control solenoid valve operate?	Go to step **7**.	Replace the pressure control solenoid valve. <Ref. to EC(H4SO)-13, Pressure Control Solenoid Valve.>
7	**CHECK EVAPORATIVE EMISSION CONTROL SYSTEM LINE.** 1) Turn the ignition switch to OFF. 2) Disconnect the delivery (test) mode connector.	Is there any hole of more than 0.5 mm (0.020 in) dia. on evaporation line?	Repair or replace the evaporation line. <Ref. to FU(H4SO)-65, Fuel Delivery and Evaporation Lines.>	Go to step **8**.

Step		Check	Yes	No
8	**CHECK CANISTER.**	Is the canister damaged or is there a hole of more than 0.5 mm (0.020 in) dia. in it?	Repair or replace the canister. <Ref. to EC(H4SO)-5, Canister.>	Go to step **9**.
9	**CHECK FUEL TANK.** Remove the fuel tank. <Ref. to FU(H4SO)-45, Fuel Tank.>	Is the fuel tank damaged or is there any hole of more than 0.5 mm (0.020 in) dia. in it?	Repair or replace the fuel tank. <Ref. to FU(H4SO)-45, Fuel Tank.>	Go to step **10**.
10	**CHECK ANY OTHER MECHANICAL TROUBLE IN EVAPORATIVE EMISSION CONTROL SYSTEM.**	Is there any hole of more than 0.5 mm (0.020 in) dia., crack, clogging, or disconnections, bend, misconnection of hoses or pipes in evaporative emission control system?	Repair or replace the hoses or pipes.	Repair the poor contact of ECM connector.

BM:DTC P0457 EVAPORATIVE EMISSION CONTROL SYSTEM LEAK DETECTED (FUEL CAP LOOSE/OFF)

DTC DETECTING CONDITION:

- Two consecutive driving cycles with fault
- GENERAL DESCRIPTION <Ref. to GD(H4SO)-126, DTC P0457 EVAPORATIVE EMISSION CONTROL SYSTEM LEAK DETECTED (FUEL CAP LOOSE/OFF), Diagnostic Trouble Code (DTC) Detecting Criteria.>

TROUBLE SYMPTOM:

- Fuel odor
- Fuel filler cap loose or lost

CAUTION:

After repair or replacement of faulty parts, perform Clear Memory Mode <Ref. to EN(H4SO)(diag)-50, OPERATION, Clear Memory Mode.>, and Inspection Mode <Ref. to EN(H4SO)(diag)-41, PROCEDURE, Inspection Mode.>.

WIRING DIAGRAM:

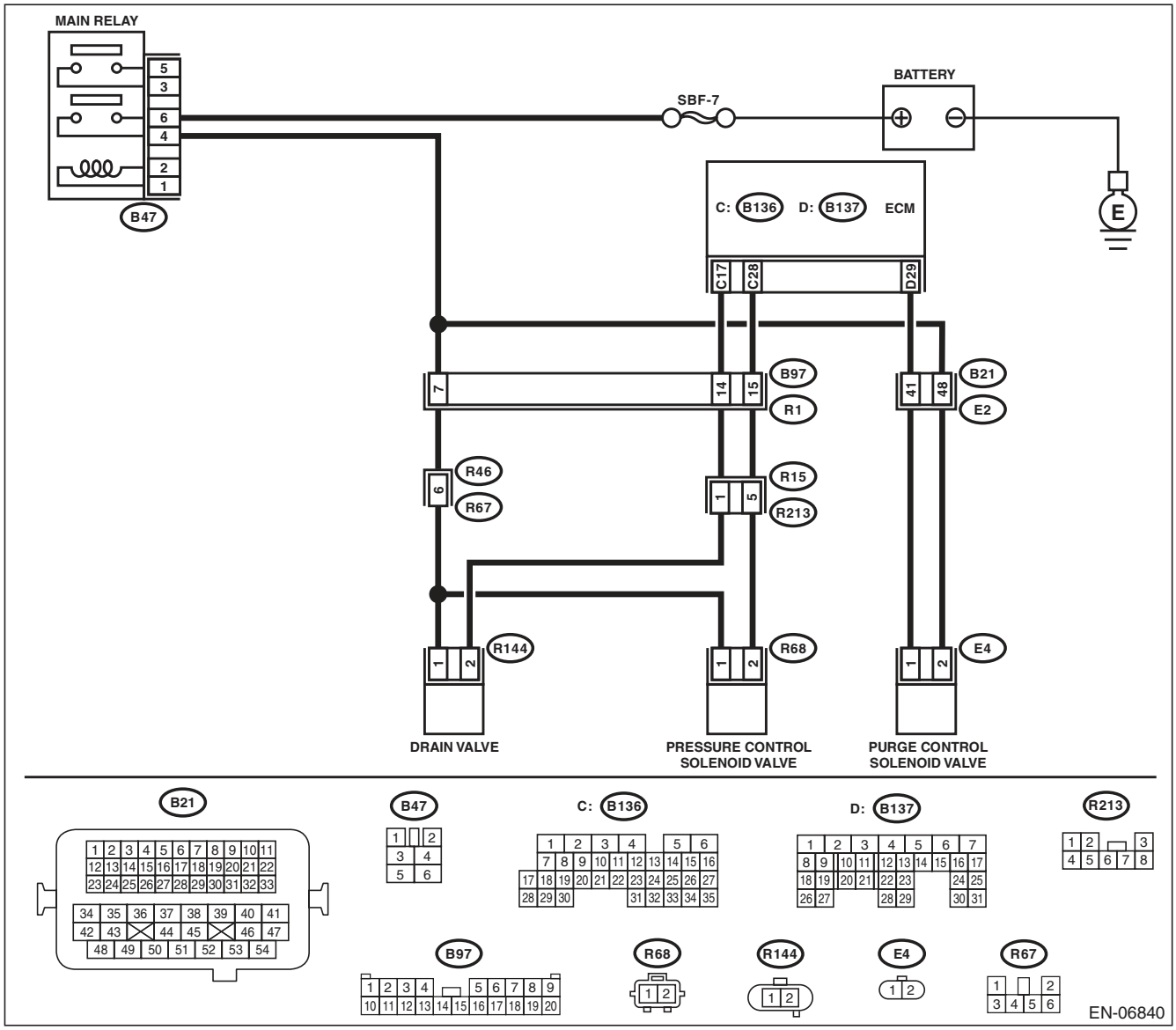

	Step	Check	Yes	No
1	**CHECK FUEL FILLER CAP.** 1) Turn the ignition switch to OFF. 2) Check the fuel filler cap. NOTE: The DTC is stored in memory if fuel filler cap is or was loose or if the cap chain has caught while tightening.	Is the fuel filler cap tightened securely?	Go to step **2**.	Tighten fuel filler cap securely.
2	**CHECK FUEL FILLER CAP.**	Is the fuel filler cap genuine?	Go to step **3**.	Replace with a genuine fuel filler cap.
3	**CHECK FUEL FILLER PIPE GASKET.**	Is there any damage to the seal between fuel filler cap and fuel filler pipe?	Repair or replace the fuel filler cap and fuel filler pipe. <Ref. to FU(H4SO)-52, Fuel Filler Pipe.>	Go to step **4**.
4	**CHECK DRAIN VALVE.** 1) Connect the delivery (test) mode connector. 2) Turn the ignition switch to ON. 3) Operate the drain valve using the Subaru Select Monitor. NOTE: Drain valve can be operated using the Subaru Select Monitor. For the procedures, refer to “Compulsory Valve Operation Check Mode”. <Ref. to EN(H4SO)(diag)-51, Compulsory Valve Operation Check Mode.>	Does the drain valve operate?	Go to step **5**.	Replace the drain valve. <Ref. to EC(H4SO)-16, Drain Valve.>
5	**CHECK PURGE CONTROL SOLENOID VALVE.** Operate the purge control solenoid valve using the Subaru Select Monitor. NOTE: Purge control solenoid valve operation can be executed using Subaru Select Monitor. For the procedures, refer to “Compulsory Valve Operation Check Mode”. <Ref. to EN(H4SO)(diag)-51, Compulsory Valve Operation Check Mode.>	Does the purge control solenoid valve operate?	Go to step **6**.	Replace the purge control solenoid valve. <Ref. to EC(H4SO)-7, Purge Control Solenoid Valve.>
6	**CHECK PRESSURE CONTROL SOLENOID VALVE.** Operate the pressure control solenoid valve using the Subaru Select Monitor. NOTE: The pressure control solenoid valve operation can be executed using the Subaru Select Monitor. For the procedures, refer to “Compulsory Valve Operation Check Mode”. <Ref. to EN(H4SO)(diag)-51, Compulsory Valve Operation Check Mode.>	Does the pressure control solenoid valve operate?	Go to step **7**.	Replace the pressure control solenoid valve. <Ref. to EC(H4SO)-13, Pressure Control Solenoid Valve.>
7	**CHECK EVAPORATIVE EMISSION CONTROL SYSTEM LINE.** 1) Turn the ignition switch to OFF. 2) Disconnect the delivery (test) mode connector.	Are there any disconnected, broken or clogged evaporation lines?	Repair or replace the evaporation line. <Ref. to FU(H4SO)-65, Fuel Delivery and Evaporation Lines.>	Go to step **8**.

Step		Check	Yes	No
8	**CHECK CANISTER.**	Is the canister damaged?	Repair or replace the canister. <Ref. to EC(H4SO)-5, Canister.>	Go to step **9**.
9	**CHECK FUEL TANK.** Remove the fuel tank. <Ref. to FU(H4SO)-45, Fuel Tank.>	Is the fuel tank damaged?	Repair or replace the fuel tank. <Ref. to FU(H4SO)-45, Fuel Tank.>	Go to step **10**.
10	**CHECK ANY OTHER MECHANICAL TROUBLE IN EVAPORATIVE EMISSION CONTROL SYSTEM.**	Are there holes, cracks, clogging, or disconnections, misconnection of hoses or pipes in evaporative emission control system?	Repair or replace the hoses or pipes.	Repair the poor contact of ECM connector.

BN:DTC P0458 EVAPORATIVE EMISSION SYSTEM PURGE CONTROL VALVE CIRCUIT LOW

DTC DETECTING CONDITION:

- Two consecutive driving cycles with fault
- GENERAL DESCRIPTION <Ref. to GD(H4SO)-127, DTC P0458 EVAPORATIVE EMISSION SYSTEM PURGE CONTROL VALVE CIRCUIT LOW, Diagnostic Trouble Code (DTC) Detecting Criteria.>

TROUBLE SYMPTOM:

Improper idling

CAUTION:

After repair or replacement of faulty parts, perform Clear Memory Mode <Ref. to EN(H4SO)(diag)-50, OPERATION, Clear Memory Mode.>, and Inspection Mode <Ref. to EN(H4SO)(diag)-41, PROCEDURE, Inspection Mode.>.

WIRING DIAGRAM:

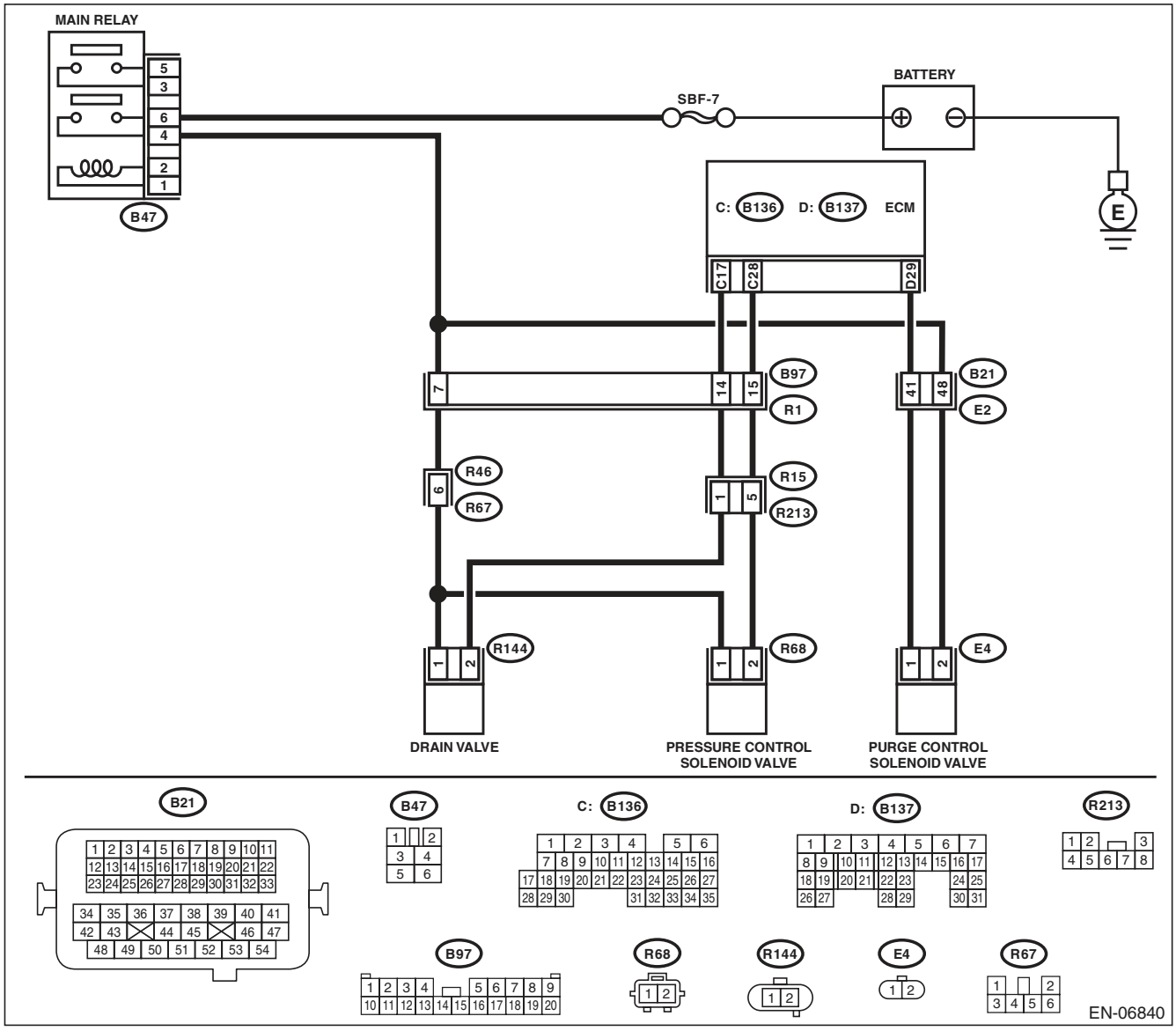

	Step	Check	Yes	No
1	**CHECK OUTPUT SIGNAL OF ECM.** 1) Turn the ignition switch to ON. 2) Measure the voltage between ECM and chassis ground. ***Connector & terminal*** ***(B137) No. 29 (+) — Chassis ground (–):***	Is the voltage 10 V or more?	Repair the poor contact of ECM connector.	Go to step **2**.
2	**CHECK HARNESS BETWEEN ECM AND PURGE CONTROL SOLENOID VALVE.** 1) Turn the ignition switch to OFF. 2) Disconnect the connectors from ECM and purge control solenoid valve. 3) Measure the resistance between the purge control solenoid valve connector and engine ground. ***Connector & terminal*** ***(E4) No. 1 — Engine ground:***	Is the resistance 1 MΩ or more?	Go to step **3**.	Repair the ground short circuit of harness between ECM and purge control solenoid valve connector.
3	**CHECK HARNESS BETWEEN ECM AND PURGE CONTROL SOLENOID VALVE.** Measure the resistance of harness between ECM and purge control solenoid valve connector. ***Connector & terminal*** ***(B137) No. 29 — (E4) No. 1:***	Is the resistance less than 1 Ω?	Go to step **4**.	Repair the harness and connector. NOTE: In this case, repair the following item: • Open circuit in harness between ECM and purge control solenoid valve connector • Poor contact of coupling connector
4	**CHECK PURGE CONTROL SOLENOID VALVE.** 1) Remove the purge control solenoid valve. 2) Measure the resistance between purge control solenoid valve terminals. ***Terminals*** ***No. 1 — No. 2:***	Is the resistance between 10 — 100 Ω?	Go to step **5**.	Replace the purge control solenoid valve. <Ref. to EC(H4SO)-7, Purge Control Solenoid Valve.>
5	**CHECK POWER SUPPLY TO PURGE CONTROL SOLENOID VALVE.** 1) Turn the ignition switch to ON. 2) Measure the voltage between purge control solenoid valve and engine ground. ***Connector & terminal*** ***(E4) No. 2 (+) — Engine ground (–):***	Is the voltage 10 V or more?	Repair the poor contact of purge control solenoid valve connector.	Repair the harness and connector. NOTE: In this case, repair the following item: • Open circuit in harness between main relay and purge control solenoid valve connector • Poor contact of coupling connector • Poor contact of main relay connector

BO:DTC P0459 EVAPORATIVE EMISSION SYSTEM PURGE CONTROL VALVE CIRCUIT HIGH

DTC DETECTING CONDITION:

- Two consecutive driving cycles with fault
- GENERAL DESCRIPTION <Ref. to GD(H4SO)-128, DTC P0459 EVAPORATIVE EMISSION SYSTEM PURGE CONTROL VALVE CIRCUIT HIGH, Diagnostic Trouble Code (DTC) Detecting Criteria.>

TROUBLE SYMPTOM:

Improper idling

CAUTION:

After repair or replacement of faulty parts, perform Clear Memory Mode <Ref. to EN(H4SO)(diag)-50, OPERATION, Clear Memory Mode.>, and Inspection Mode <Ref. to EN(H4SO)(diag)-41, PROCEDURE, Inspection Mode.>.

WIRING DIAGRAM:

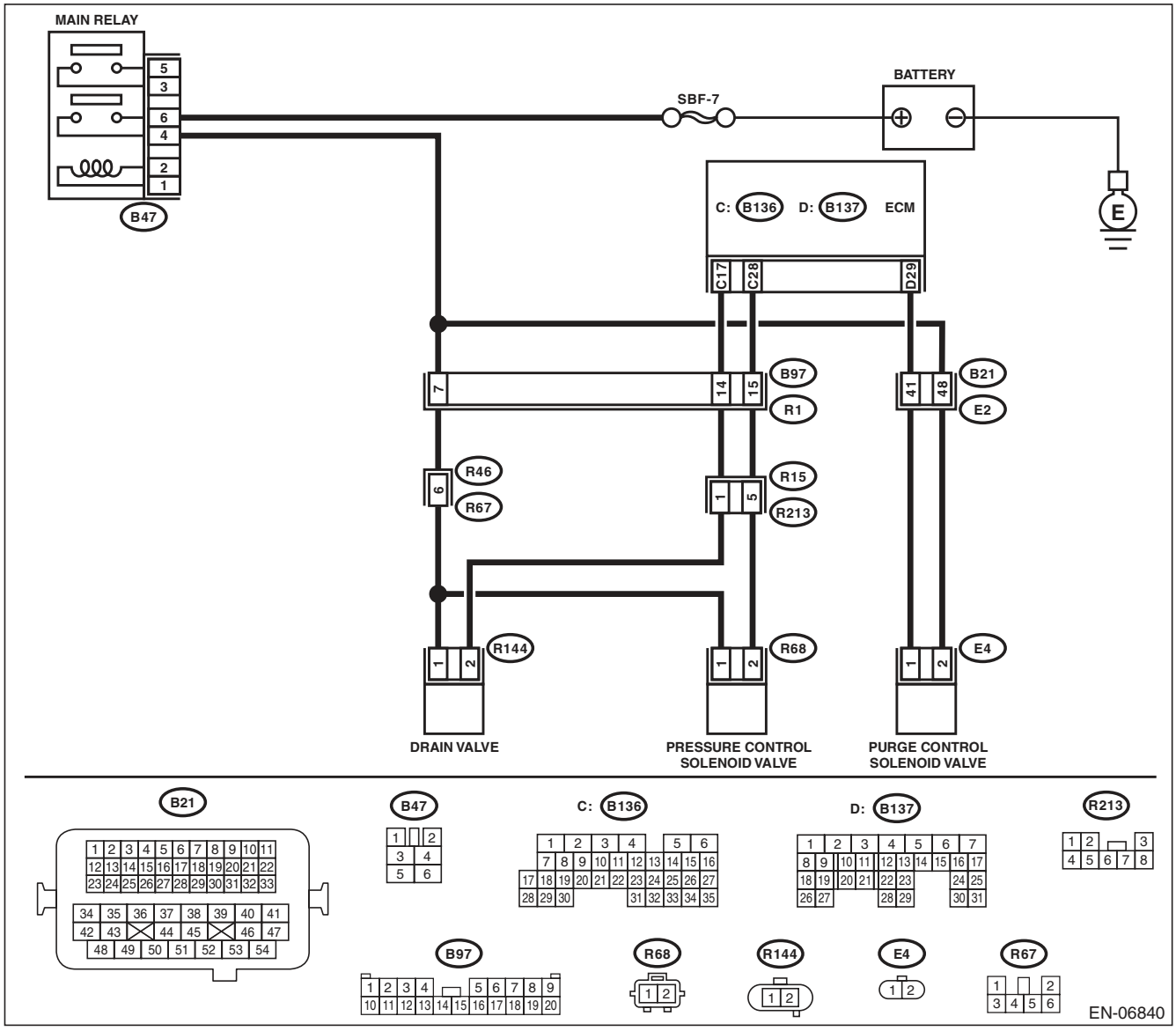

Step		Check	Yes	No
1	**CHECK HARNESS BETWEEN ECM AND PURGE CONTROL SOLENOID VALVE.** 1) Turn the ignition switch to OFF. 2) Disconnect the connectors from ECM and purge control solenoid valve. 3) Turn the ignition switch to ON. 4) Measure the voltage between ECM and chassis ground. ***Connector & terminal*** ***(B137) No. 29 (+) — Chassis ground (–):***	Is the voltage 10 V or more?	Repair the short circuit to power in the harness between ECM and purge control solenoid valve connector.	Go to step **2**.
2	**CHECK PURGE CONTROL SOLENOID VALVE.** 1) Turn the ignition switch to OFF. 2) Measure the resistance between purge control solenoid valve terminals. ***Terminals*** ***No. 1 — No. 2:***	Is the resistance less than 1 Ω?	Replace the purge control solenoid valve. <Ref. to EC(H4SO)-7, Purge Control Solenoid Valve.>	Repair the poor contact of ECM connector.

BP:DTC P0461 FUEL LEVEL SENSOR “A” CIRCUIT RANGE/PERFORMANCE

DTC DETECTING CONDITION:

- Two consecutive driving cycles with fault
- GENERAL DESCRIPTION <Ref. to GD(H4SO)-129, DTC P0461 FUEL LEVEL SENSOR “A” CIRCUIT RANGE/PERFORMANCE, Diagnostic Trouble Code (DTC) Detecting Criteria.>

CAUTION:

After repair or replacement of faulty parts, perform Clear Memory Mode <Ref. to EN(H4SO)(diag)-50, OPERATION, Clear Memory Mode.>, and Inspection Mode <Ref. to EN(H4SO)(diag)-41, PROCEDURE, Inspection Mode.>.

Step	Check	Yes	No
1 **CHECK FOR ANY OTHER DTC ON DISPLAY.**	Is any other DTC displayed?	Check the appropriate DTC using the “List of Diagnostic Trouble Code (DTC)”. <Ref. to EN(H4SO)(diag)-80, List of Diagnostic Trouble Code (DTC).>	Replace the fuel level sensor and fuel sub level sensor. <Ref. to FU(H4SO)-57, Fuel Level Sensor.> <Ref. to FU(H4SO)-58, Fuel Sub Level Sensor.>

BQ:DTC P0462 FUEL LEVEL SENSOR “A” CIRCUIT LOW

NOTE:
For the diagnostic procedure, refer to DTC P0463. <Ref. to EN(H4SO)(diag)-221, DTC P0463 FUEL LEVEL SENSOR “A” CIRCUIT HIGH, Diagnostic Procedure with Diagnostic Trouble Code (DTC).>

BR:DTC P0463 FUEL LEVEL SENSOR “A” CIRCUIT HIGH

DTC DETECTING CONDITION:

- Two consecutive driving cycles with fault
- GENERAL DESCRIPTION <Ref. to GD(H4SO)-133, DTC P0463 FUEL LEVEL SENSOR “A” CIRCUIT HIGH, Diagnostic Trouble Code (DTC) Detecting Criteria.>

CAUTION:

After repair or replacement of faulty parts, perform Clear Memory Mode <Ref. to EN(H4SO)(diag)-50, OPERATION, Clear Memory Mode.>, and Inspection Mode <Ref. to EN(H4SO)(diag)-41, PROCEDURE, Inspection Mode.>.

Step	Check	Yes	No
1 **CHECK FOR ANY OTHER DTC ON DISPLAY.**	Is DTC P0462 or P0463 displayed on the Subaru Select Monitor?	Check the combination meter. <Ref. to IDI-13, CHECK FUEL LEVEL SENSOR, INSPECTION, Combination Meter System.>	Even if DTC is detected, the circuit has returned to a normal condition at this time. Reproduce the failure, and then perform the diagnosis again. NOTE: In this case, temporary poor contact of connector may be the cause.

BS:DTC P0464 FUEL LEVEL SENSOR CIRCUIT INTERMITTENT

DTC DETECTING CONDITION:

- Two consecutive driving cycles with fault
- GENERAL DESCRIPTION <Ref. to GD(H4SO)-135, DTC P0464 FUEL LEVEL SENSOR CIRCUIT INTERMITTENT, Diagnostic Trouble Code (DTC) Detecting Criteria.>

CAUTION:

After repair or replacement of faulty parts, perform Clear Memory Mode <Ref. to EN(H4SO)(diag)-50, OPERATION, Clear Memory Mode.>, and Inspection Mode <Ref. to EN(H4SO)(diag)-41, PROCEDURE, Inspection Mode.>.

Step	Check	Yes	No
1 **CHECK FOR ANY OTHER DTC ON DISPLAY.**	Is DTC P0464 displayed on the display?	Check the combination meter. <Ref. to IDI-13, CHECK FUEL LEVEL SENSOR, INSPECTION, Combination Meter System.>	Even if DTC is detected, the circuit has returned to a normal condition at this time. Reproduce the failure, and then perform the diagnosis again. NOTE: In this case, temporary poor contact of connector may be the cause.

BT:DTC P0500 VEHICLE SPEED SENSOR “A”

DTC DETECTING CONDITION:

- Immediately at fault recognition
- GENERAL DESCRIPTION <Ref. to GD(H4SO)-138, DTC P0500 VEHICLE SPEED SENSOR “A”, Diagnostic Trouble Code (DTC) Detecting Criteria.>

CAUTION:

After repair or replacement of faulty parts, perform Clear Memory Mode <Ref. to EN(H4SO)(diag)-50, OPERATION, Clear Memory Mode.>, and Inspection Mode <Ref. to EN(H4SO)(diag)-41, PROCEDURE, Inspection Mode.>.

Step	Check	Yes	No
1 **CHECK DTC OF ABS.** Check DTC of ABS.	Is DTC of ABS displayed?	Perform the diagnosis according to DTC. <Ref. to ABS(diag)-29, List of Diagnostic Trouble Code (DTC).>	Repair the poor contact of ECM connector.

BU:DTC P0506 IDLE AIR CONTROL SYSTEM RPM LOWER THAN EXPECTED

DTC DETECTING CONDITION:

- Two consecutive driving cycles with fault
- GENERAL DESCRIPTION <Ref. to GD(H4SO)-139, DTC P0506 IDLE AIR CONTROL SYSTEM RPM LOWER THAN EXPECTED, Diagnostic Trouble Code (DTC) Detecting Criteria.>

TROUBLE SYMPTOM:

- Hard to start the engine.
- Engine does not start.
- Improper idling
- Engine stalls.

CAUTION:

After repair or replacement of faulty parts, perform Clear Memory Mode <Ref. to EN(H4SO)(diag)-50, OPERATION, Clear Memory Mode.>, and Inspection Mode <Ref. to EN(H4SO)(diag)-41, PROCEDURE, Inspection Mode.>.

WIRING DIAGRAM:

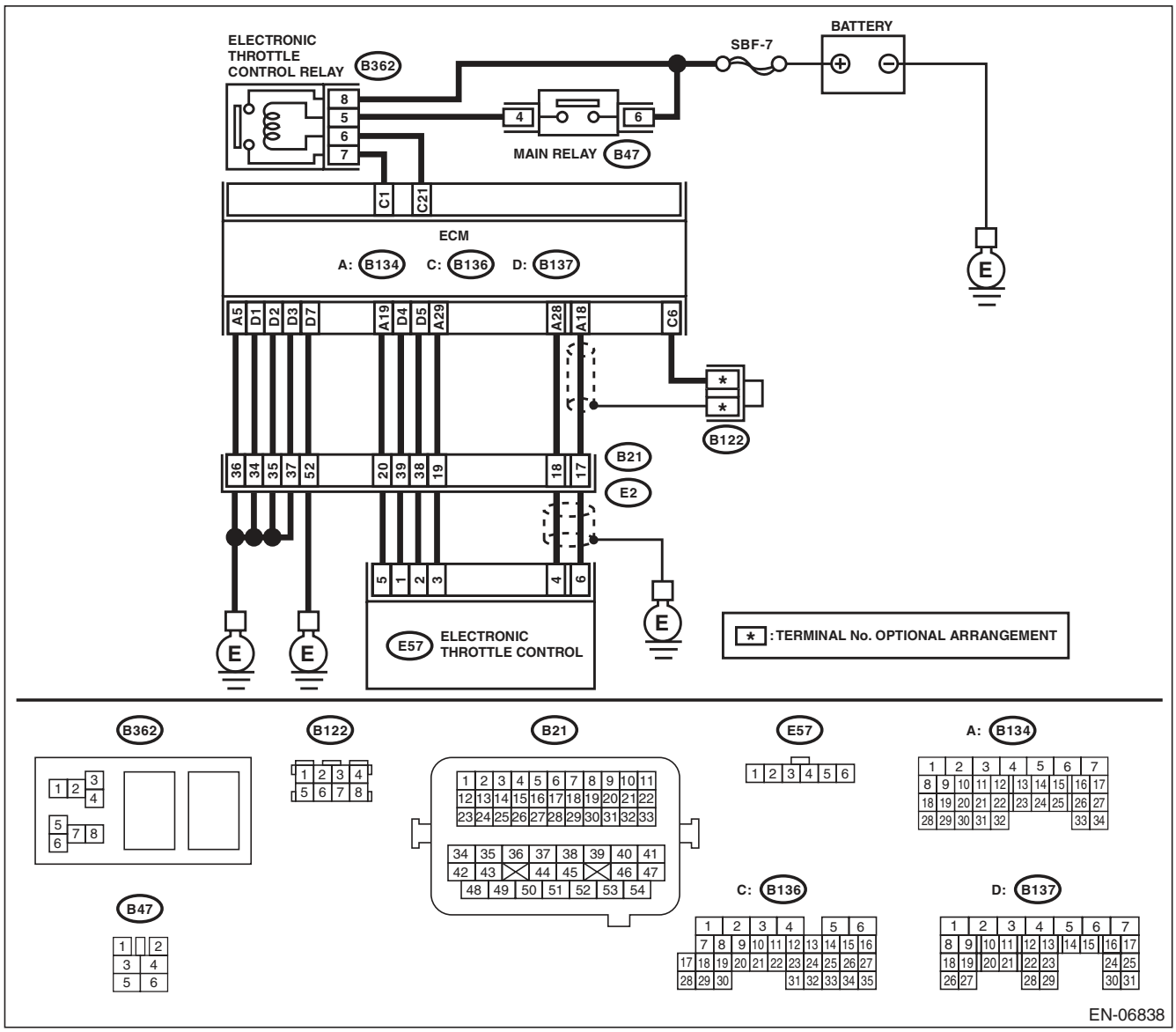

Step		Check	Yes	No
1	**CHECK FOR ANY OTHER DTC ON DISPLAY.**	Is any other DTC displayed?	Check the appropriate DTC using the “List of Diagnostic Trouble Code (DTC)”. <Ref. to EN(H4SO)(diag)-80, List of Diagnostic Trouble Code (DTC).>	Go to step **2**.
2	**CHECK AIR CLEANER ELEMENT.** 1) Turn the ignition switch to OFF. 2) Check the air cleaner element.	Is the air cleaner element excessively clogged?	Replace the air cleaner element. <Ref. to IN(H4SO)-4, Air Cleaner Element.>	Go to step **3**.
3	**CHECK ELECTRONIC THROTTLE CONTROL.** 1) Remove the electronic throttle control. 2) Check the electronic throttle control.	Are foreign matter found inside electronic throttle control?	Remove foreign matter from electronic throttle control.	Perform the diagnosis of DTC P2101. <Ref. to EN(H4SO)(diag)-276, DTC P2101 THROTTLE ACTUATOR CONTROL MOTOR CIRCUIT RANGE/PERFORMANCE, Diagnostic Procedure with Diagnostic Trouble Code (DTC).>

BV:DTC P0507 IDLE AIR CONTROL SYSTEM RPM HIGHER THAN EXPECTED

DTC DETECTING CONDITION:

- Two consecutive driving cycles with fault
- GENERAL DESCRIPTION <Ref. to GD(H4SO)-140, DTC P0507 IDLE AIR CONTROL SYSTEM RPM HIGHER THAN EXPECTED, Diagnostic Trouble Code (DTC) Detecting Criteria.>

TROUBLE SYMPTOM:

Engine keeps running at higher speed than specified idle speed.

CAUTION:

After repair or replacement of faulty parts, perform Clear Memory Mode <Ref. to EN(H4SO)(diag)-50, OPERATION, Clear Memory Mode.>, and Inspection Mode <Ref. to EN(H4SO)(diag)-41, PROCEDURE, Inspection Mode.>.

WIRING DIAGRAM:

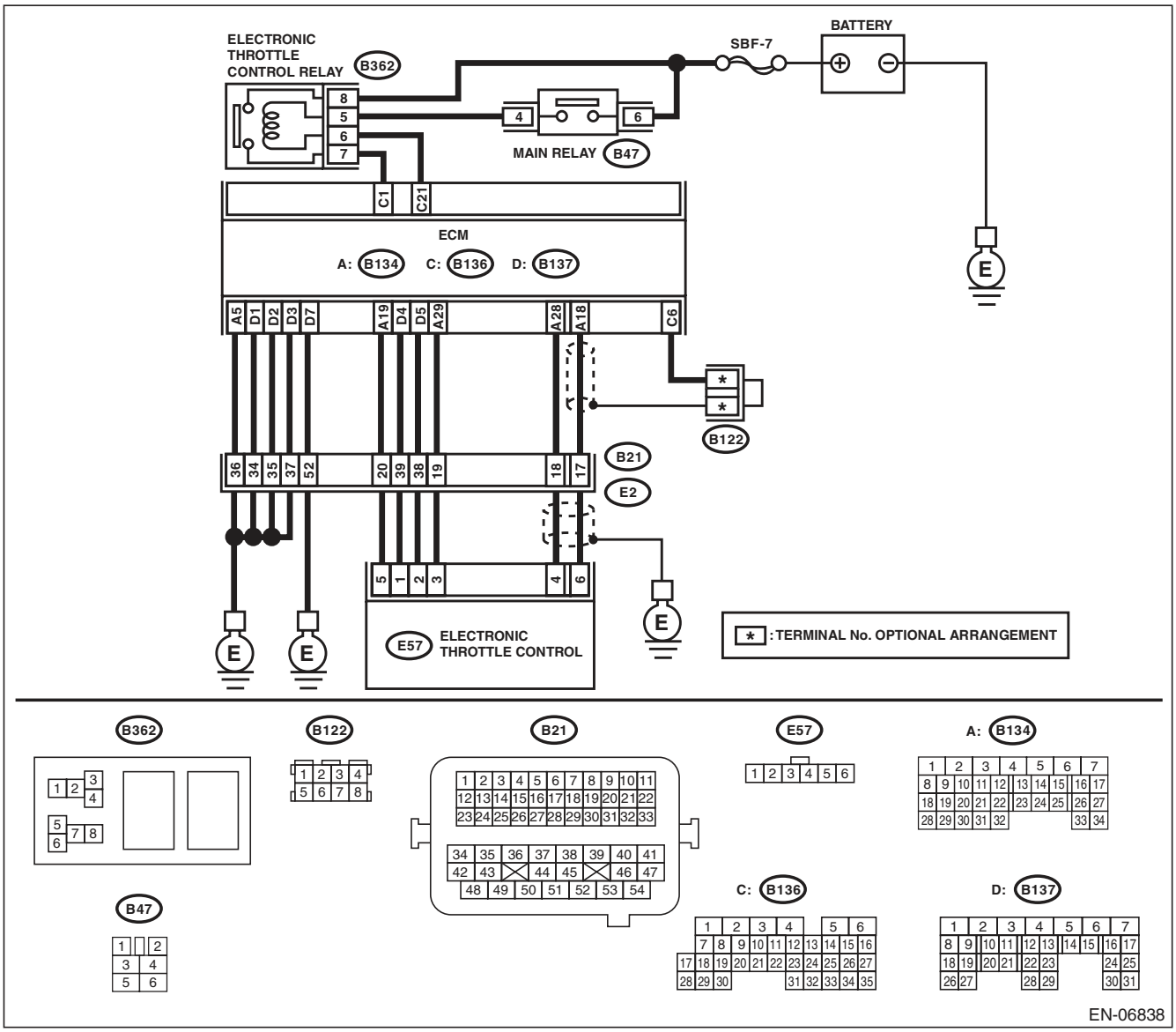

Step		Check	Yes	No
1	**CHECK FOR ANY OTHER DTC ON DISPLAY.**	Is any other DTC displayed?	Check the appropriate DTC using the “List of Diagnostic Trouble Code (DTC)”. <Ref. to EN(H4SO)(diag)-80, List of Diagnostic Trouble Code (DTC).>	Go to step **2**.
2	**CHECK AIR INTAKE SYSTEM.** 1) Start and idle the engine. 2) Check the following items. • Loose installation of intake manifold and throttle body • Cracks of intake manifold gasket and throttle body gasket • Disconnection of vacuum hoses	Is there any fault in air intake system?	Repair air suction and leaks.	Go to step **3**.
3	**CHECK ELECTRONIC THROTTLE CONTROL.** 1) Turn the ignition switch to OFF. 2) Remove the electronic throttle control. 3) Check the electronic throttle control.	Are foreign matter found inside electronic throttle control?	Remove foreign matter from electronic throttle control.	Perform the diagnosis of DTC P2101. <Ref. to EN(H4SO)(diag)-276, DTC P2101 THROTTLE ACTUATOR CONTROL MOTOR CIRCUIT RANGE/PERFORMANCE, Diagnostic Procedure with Diagnostic Trouble Code (DTC).>

BW:DTC P0512 STARTER REQUEST CIRCUIT

DTC DETECTING CONDITION:

- Immediately at fault recognition
- GENERAL DESCRIPTION <Ref. to GD(H4SO)-141, DTC P0512 STARTER REQUEST CIRCUIT, Diagnostic Trouble Code (DTC) Detecting Criteria.>

TROUBLE SYMPTOM:

Failure of engine to start

CAUTION:

After repair or replacement of faulty parts, perform Clear Memory Mode <Ref. to EN(H4SO)(diag)-50, OPERATION, Clear Memory Mode.>, and Inspection Mode <Ref. to EN(H4SO)(diag)-41, PROCEDURE, Inspection Mode.>.

WIRING DIAGRAM:

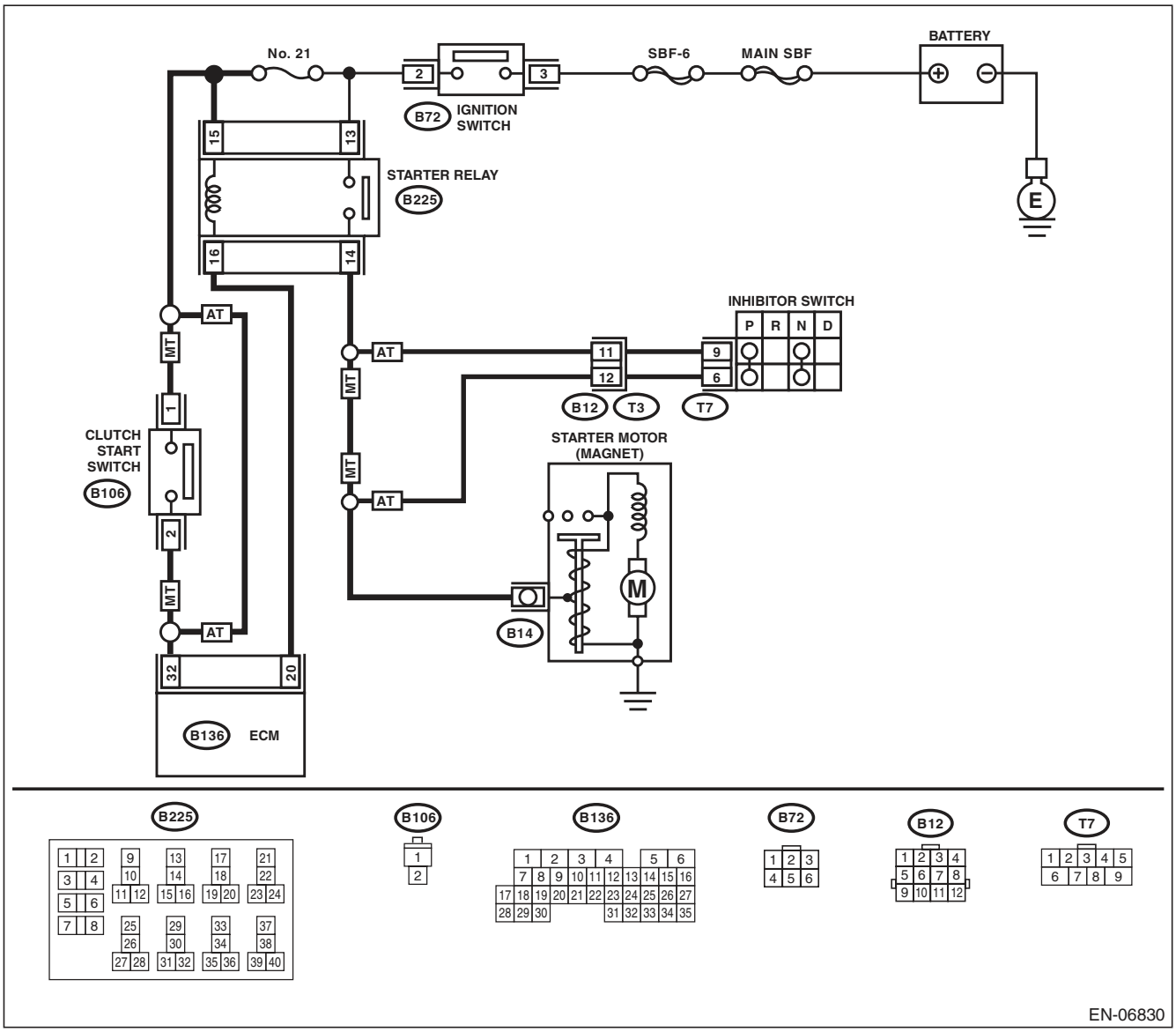

Step		Check	Yes	No
1	**CHECK FOR ANY OTHER DTC ON DISPLAY.**	Is any other DTC displayed?	Check the appropriate DTC using the “List of Diagnostic Trouble Code (DTC)”. <Ref. to EN(H4SO)(diag)-80, List of Diagnostic Trouble Code (DTC).>	Go to step **2**.
2	**CHECK HARNESS BETWEEN ECM AND IGNITION SWITCH.** 1) Turn the ignition switch to OFF. 2) Disconnect the connectors from ECM. 3) Turn the ignition switch to ON. 4) Measure the voltage between ECM and chassis ground. ***Connector & terminal*** ***(B136) No. 32 (+) — Chassis ground (–):***	Is the voltage 10 V or more?	Repair the short circuit to power in the harness between the ECM and ignition switch.	Repair the poor contact of ECM connector.

BX:DTC P0600 SERIAL COMMUNICATION LINK

NOTE:
For the diagnostic procedure, refer to LAN section. <Ref. to LAN(diag)-2, Basic Diagnostic Procedure.>

BY:DTC P0604 INTERNAL CONTROL MODULE RANDOM ACCESS MEMORY (RAM) ERROR

DTC DETECTING CONDITION:

- Immediately at fault recognition
- GENERAL DESCRIPTION <Ref. to GD(H4SO)-145, DTC P0604 INTERNAL CONTROL MODULE RANDOM ACCESS MEMORY (RAM) ERROR, Diagnostic Trouble Code (DTC) Detecting Criteria.>

TROUBLE SYMPTOM:

- Engine does not start.
- Engine stalls.

CAUTION:

After repair or replacement of faulty parts, perform Clear Memory Mode <Ref. to EN(H4SO)(diag)-50, OPERATION, Clear Memory Mode.>, and Inspection Mode <Ref. to EN(H4SO)(diag)-41, PROCEDURE, Inspection Mode.>.

WIRING DIAGRAM:

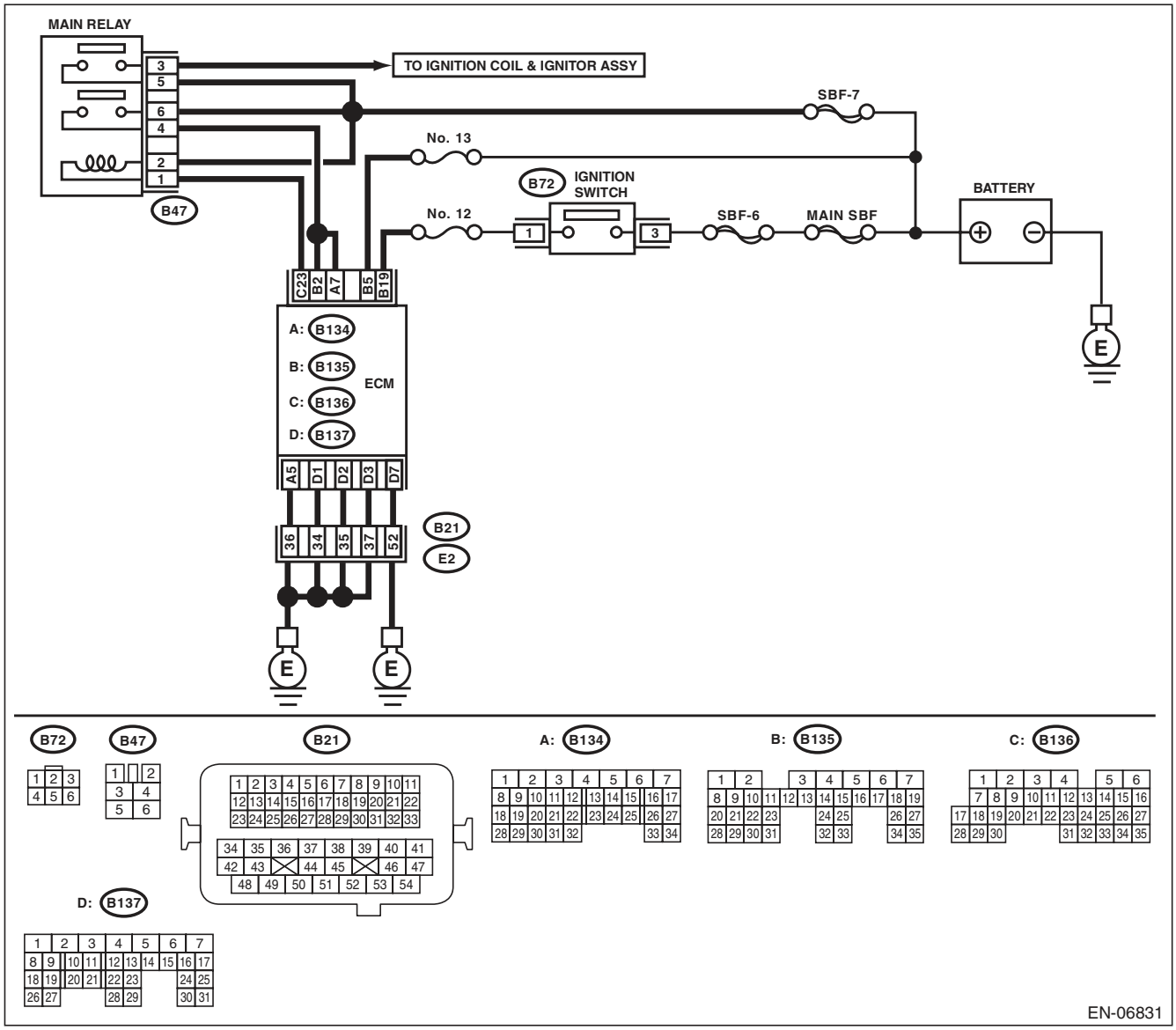

Step	Check	Yes	No
1 **CHECK FOR ANY OTHER DTC ON DISPLAY.**	Is any other DTC displayed?	Check the appropriate DTC using the “List of Diagnostic Trouble Code (DTC)”. <Ref. to EN(H4SO)(diag)-80, List of Diagnostic Trouble Code (DTC).>	Even if DTC is detected, the circuit has returned to a normal condition at this time. Reproduce the failure, and then perform the diagnosis again. NOTE: In this case, temporary poor contact of connector may be the cause.

BZ:DTC P0605 INTERNAL CONTROL MODULE READ ONLY MEMORY (ROM) ERROR

NOTE:
For the diagnostic procedure, refer to DTC P0607. <Ref. to EN(H4SO)(diag)-231, DTC P0607 THROTTLE CONTROL SYSTEM CIRCUIT RANGE/PERFORMANCE, Diagnostic Procedure with Diagnostic Trouble Code (DTC).>

CA:DTC P0607 THROTTLE CONTROL SYSTEM CIRCUIT RANGE/PERFORMANCE

DTC DETECTING CONDITION:

- Immediately at fault recognition
- GENERAL DESCRIPTION <Ref. to GD(H4SO)-147, DTC P0607 THROTTLE CONTROL SYSTEM CIRCUIT RANGE/PERFORMANCE, Diagnostic Trouble Code (DTC) Detecting Criteria.>

TROUBLE SYMPTOM:

- Improper idling
- Poor driving performance

CAUTION:

After repair or replacement of faulty parts, perform Clear Memory Mode <Ref. to EN(H4SO)(diag)-50, OPERATION, Clear Memory Mode.>, and Inspection Mode <Ref. to EN(H4SO)(diag)-41, PROCEDURE, Inspection Mode.>.

WIRING DIAGRAM:

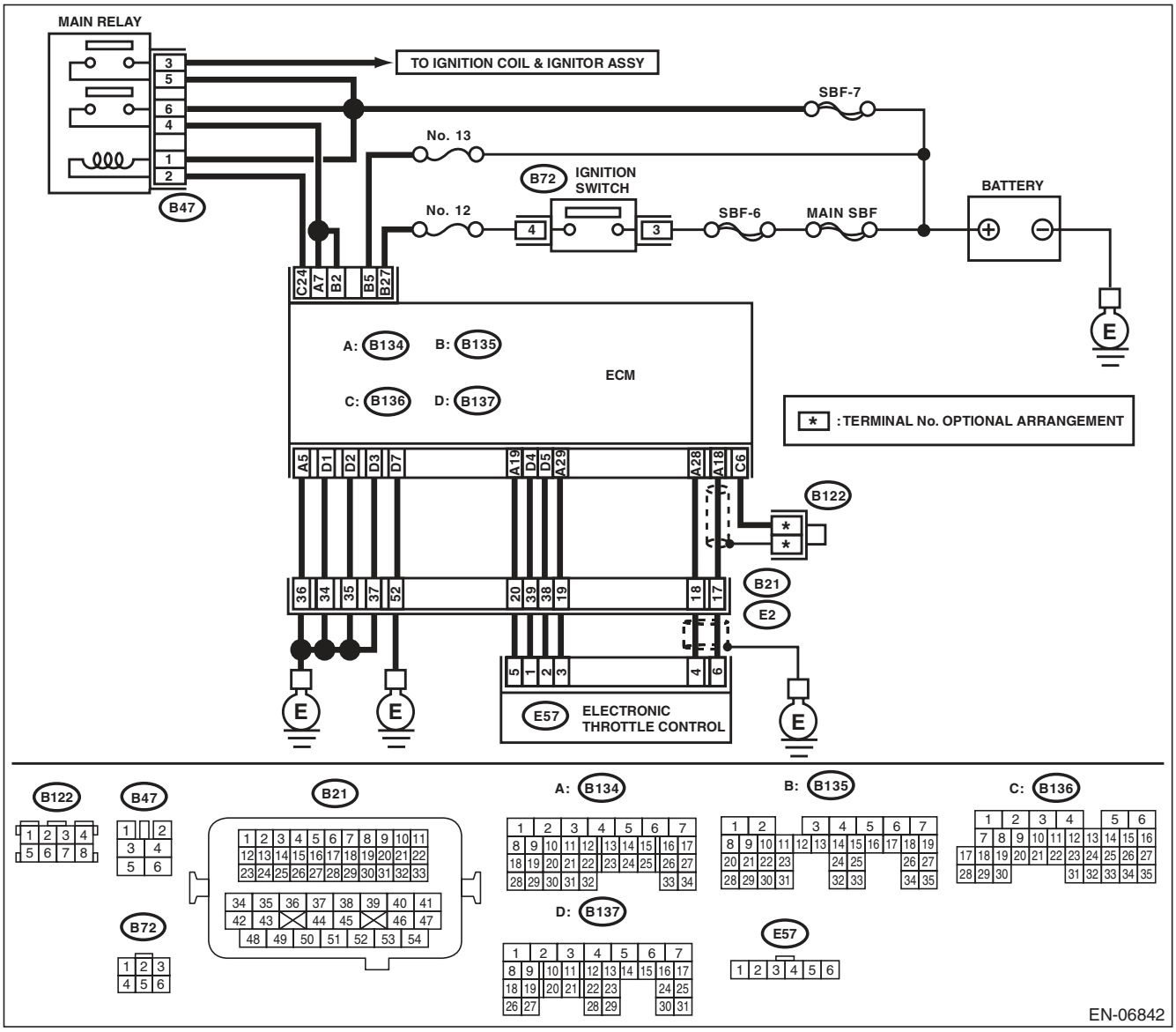

	Step	Check	Yes	No
1	**CHECK INPUT VOLTAGE OF ECM.** 1) Turn the ignition switch to ON. 2) Measure the voltage between ECM and chassis ground. ***Connector & terminal*** ***(B134) No. 7 (+) — Chassis ground (–):*** ***(B135) No. 2 (+) — Chassis ground (–):***	Is the voltage 10 — 13 V?	Go to step **2**.	Repair the open or ground short circuit of power supply circuit.
2	**CHECK INPUT VOLTAGE OF ECM.** 1) Start the engine. 2) Measure the voltage between ECM and chassis ground. ***Connector & terminal*** ***(B134) No. 7 (+) — Chassis ground (–):*** ***(B135) No. 2 (+) — Chassis ground (–):***	Is the voltage 13 — 15 V?	Go to step **3**.	Repair the open or ground short circuit of power supply circuit.
3	**CHECK HARNESS BETWEEN ECM AND ELECTRONIC THROTTLE CONTROL.** 1) Turn the ignition switch to OFF. 2) Disconnect the connectors from ECM and electronic throttle control. 3) Measure the resistance of harness between ECM and electronic throttle control connector. ***Connector & terminal*** ***(B134) No. 19 — (E57) No. 5:*** ***(B134) No. 29 — (E57) No. 3:***	Is the resistance less than 1 Ω?	Go to step **4**.	Repair the harness and connector. NOTE: In this case, repair the following item: • Open circuit in harness between ECM and electronic throttle control connector • Poor contact of coupling connector
4	**CHECK ECM GROUND HARNESS.** Measure the voltage between ECM and chassis ground. ***Connector & terminal*** ***(B134) No. 5 (+) — Chassis ground (–):*** ***(B137) No. 1 (+) — Chassis ground (–):*** ***(B137) No. 2 (+) — Chassis ground (–):*** ***(B137) No. 3 (+) — Chassis ground (–):*** ***(B137) No. 7 (+) — Chassis ground (–):***	Is the voltage less than 1 V?	Repair the poor contact of ECM connector.	Repair the following item. • Open circuit of ground circuit • Retightening of engine ground terminals • Poor contact of coupling connector

CB:DTC P0638 THROTTLE ACTUATOR CONTROL RANGE/PERFORMANCE (BANK 1)

NOTE:
For the diagnostic procedure, refer to DTC P2101. <Ref. to EN(H4SO)(diag)-276, DTC P2101 THROTTLE ACTUATOR CONTROL MOTOR CIRCUIT RANGE/PERFORMANCE, Diagnostic Procedure with Diagnostic Trouble Code (DTC).>

CC:DTC P0700 TRANSMISSION CONTROL SYSTEM (MIL REQUEST)

NOTE:
For the diagnostic procedure, refer to AT section. <Ref. to 4AT(diag)-2, Basic Diagnostic Procedure.>

CD:DTC P0851 PARK/NEUTRAL SWITCH INPUT CIRCUIT LOW (AT MODEL)

DTC DETECTING CONDITION:

- Two consecutive driving cycles with fault
- GENERAL DESCRIPTION <Ref. to GD(H4SO)-152, DTC P0851 PARK/NEUTRAL SWITCH INPUT CIRCUIT LOW (AT MODEL), Diagnostic Trouble Code (DTC) Detecting Criteria.>

TROUBLE SYMPTOM:

Improper idling

CAUTION:

After repair or replacement of faulty parts, perform Clear Memory Mode <Ref. to EN(H4SO)(diag)-50, OPERATION, Clear Memory Mode.>, and Inspection Mode <Ref. to EN(H4SO)(diag)-41, PROCEDURE, Inspection Mode.>.

WIRING DIAGRAM:

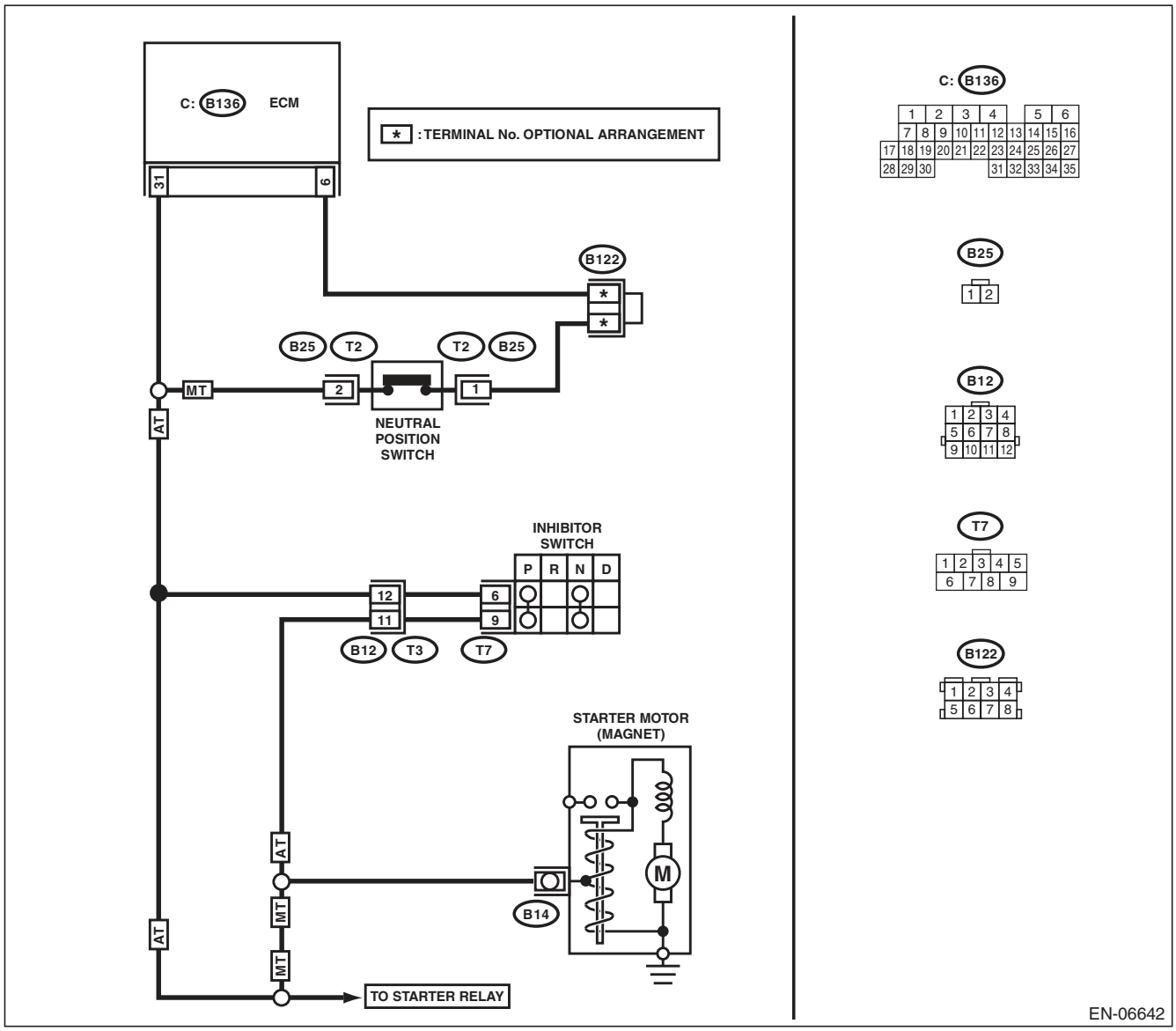

Step		Check	Yes	No
1	**CHECK SELECT CABLE.**	Are there any faults in the select cable?	Repair or adjust the select cable. <Ref. to CS-28, Select Cable.>	Go to step **2**.
2	**CHECK INPUT SIGNAL OF ECM.** 1) Turn the ignition switch to ON. 2) Place the select lever in other than “P” range and “N” range. 3) Measure the voltage between ECM and chassis ground. ***Connector & terminal*** ***(B136) No. 31 (+) — Chassis ground (–):***	Is the voltage 10 V or more?	Repair the poor contact of ECM connector.	Go to step **3**.
3	**CHECK HARNESS BETWEEN ECM AND TRANSMISSION HARNESS CONNECTOR.** 1) Turn the ignition switch to OFF. 2) Disconnect the connectors from ECM and transmission harness connector (T3). 3) Measure the resistance between ECM and chassis ground. ***Connector & terminal*** ***(B136) No. 31 — Chassis ground:***	Is the resistance 1 MΩ or more?	Go to step **4**.	Repair the ground short circuit of harness between ECM and transmission harness connector.
4	**CHECK TRANSMISSION HARNESS CONNECTOR.** 1) Disconnect the connector from inhibitor switch. 2) Measure the resistance between the transmission harness connector and engine ground. ***Connector & terminal*** ***(T3) No. 11 — Engine ground:***	Is the resistance 1 MΩ or more?	Replace the inhibitor switch. <Ref. to 4AT-46, Inhibitor Switch.>	Repair the ground short circuit of harness between transmission harness connector and inhibitor switch connector.

CE:DTC P0851 NEUTRAL SWITCH INPUT CIRCUIT LOW (MT MODEL)

DTC DETECTING CONDITION:

- Two consecutive driving cycles with fault
- GENERAL DESCRIPTION <Ref. to GD(H4SO)-153, DTC P0851 NEUTRAL SWITCH INPUT CIRCUIT LOW (MT MODEL), Diagnostic Trouble Code (DTC) Detecting Criteria.>

TROUBLE SYMPTOM:

Improper idling

CAUTION:

After repair or replacement of faulty parts, perform Clear Memory Mode <Ref. to EN(H4SO)(diag)-50, OPERATION, Clear Memory Mode.>, and Inspection Mode <Ref. to EN(H4SO)(diag)-41, PROCEDURE, Inspection Mode.>.

WIRING DIAGRAM:

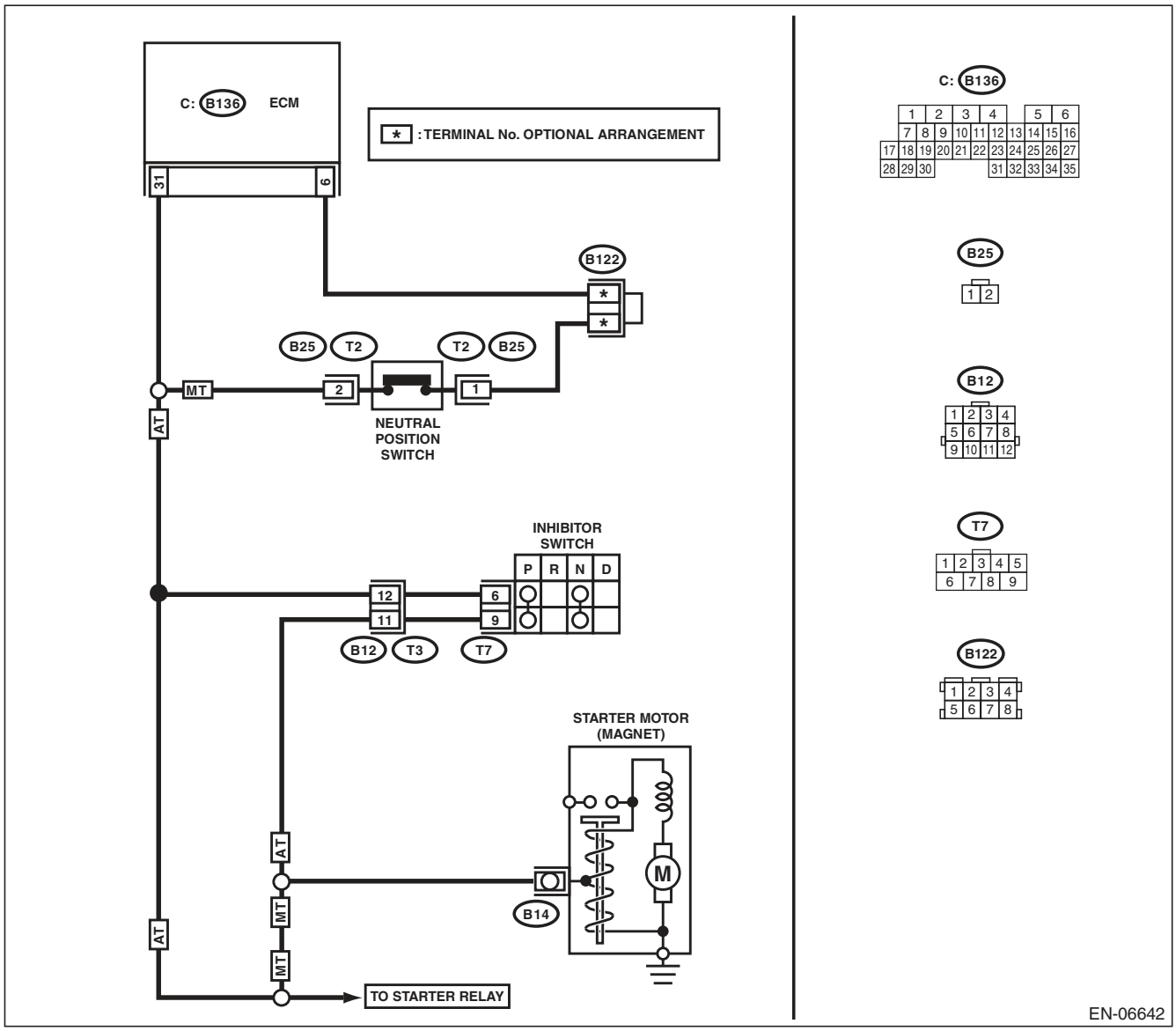

Step		Check	Yes	No
1	**CHECK INPUT SIGNAL OF ECM.** 1) Turn the ignition switch to ON. 2) Place the shift lever in a position other than neutral. 3) Measure the voltage between ECM and chassis ground. ***Connector & terminal*** ***(B136) No. 31 (+) — Chassis ground (–):***	Is the voltage 10 V or more?	Repair the poor contact of ECM connector.	Go to step **2**.
2	**CHECK HARNESS BETWEEN ECM AND NEUTRAL POSITION SWITCH CONNECTOR.** 1) Turn the ignition switch to OFF. 2) Disconnect the connectors from ECM and transmission harness connector (T2). 3) Measure the resistance between ECM and chassis ground. ***Connector & terminal*** ***(B136) No. 31 — Chassis ground:***	Is the resistance 1 MΩ or more?	Repair the short circuit of transmission harness or replace neutral position switch. <Ref. to 5MT-35, Switches and Harness.>	Repair the ground short circuit of harness between ECM and transmission harness connector.

CF:DTC P0852 PARK/NEUTRAL SWITCH INPUT CIRCUIT HIGH (AT MODEL)

DTC DETECTING CONDITION:

- Two consecutive driving cycles with fault
- GENERAL DESCRIPTION <Ref. to GD(H4SO)-154, DTC P0852 PARK/NEUTRAL SWITCH INPUT CIRCUIT HIGH (AT MODEL), Diagnostic Trouble Code (DTC) Detecting Criteria.>

TROUBLE SYMPTOM:

Improper idling

CAUTION:

After repair or replacement of faulty parts, perform Clear Memory Mode <Ref. to EN(H4SO)(diag)-50, OPERATION, Clear Memory Mode.>, and Inspection Mode <Ref. to EN(H4SO)(diag)-41, PROCEDURE, Inspection Mode.>.

WIRING DIAGRAM:

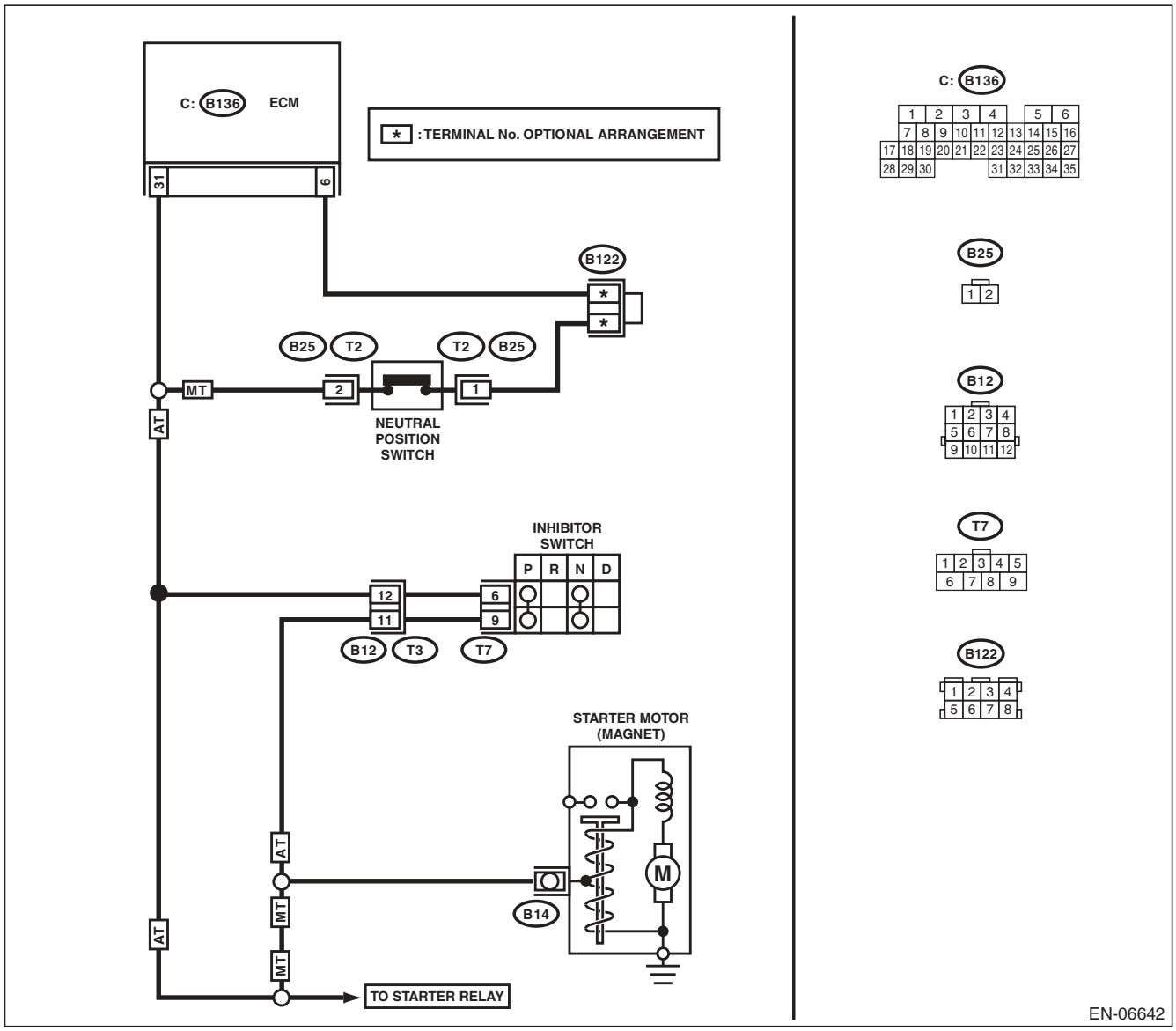

	Step	Check	Yes	No
1	**CHECK SELECT CABLE.**	Are there any faults in the select cable?	Repair or adjust the select cable. <Ref. to CS-28, Select Cable.>	Go to step **2**.
2	**CHECK INPUT SIGNAL OF ECM.** 1) Turn the ignition switch to ON. 2) Measure the voltage between ECM and chassis ground with select lever at "P" range and "N" range. ***Connector & terminal*** ***(B136) No. 31 (+) — Chassis ground (–):***	Is the voltage less than 1 V?	Repair the poor contact of ECM connector.	Go to step **3**.
3	**CHECK HARNESS BETWEEN ECM AND INHIBITOR SWITCH CONNECTOR.** 1) Turn the ignition switch to OFF. 2) Disconnect the connector from ECM and inhibitor switch. 3) Measure the resistance of harness between ECM and inhibitor switch connector. ***Connector & terminal*** ***(B136) No. 31 — (T7) No. 6:***	Is the resistance less than 1 Ω?	Go to step **4**.	Repair the harness and connector. NOTE: In this case, repair the following item: • Open circuit in harness between ECM and inhibitor switch connector • Poor contact of coupling connector
4	**CHECK INHIBITOR SWITCH GROUND LINE.** Measure the resistance of harness between inhibitor switch connector and engine ground. ***Connector & terminal*** ***(T7) No. 9 — Engine ground:***	Is the resistance less than 5 Ω?	Replace the inhibitor switch. <Ref. to 4AT-46, Inhibitor Switch.>	Repair the harness and connector. NOTE: In this case, repair the following item: • Open circuit in harness between inhibitor switch connector and starter motor ground line • Poor contact of coupling connector • Poor contact in starter motor connector • Poor contact in starter motor ground • Starter motor

CG:DTC P0852 NEUTRAL SWITCH INPUT CIRCUIT HIGH (MT MODEL)

DTC DETECTING CONDITION:

- Two consecutive driving cycles with fault
- GENERAL DESCRIPTION <Ref. to GD(H4SO)-155, DTC P0852 NEUTRAL SWITCH INPUT CIRCUIT HIGH (MT MODEL), Diagnostic Trouble Code (DTC) Detecting Criteria.>

TROUBLE SYMPTOM:

Improper idling

CAUTION:

After repair or replacement of faulty parts, perform Clear Memory Mode <Ref. to EN(H4SO)(diag)-50, OPERATION, Clear Memory Mode.>, and Inspection Mode <Ref. to EN(H4SO)(diag)-41, PROCEDURE, Inspection Mode.>.

WIRING DIAGRAM:

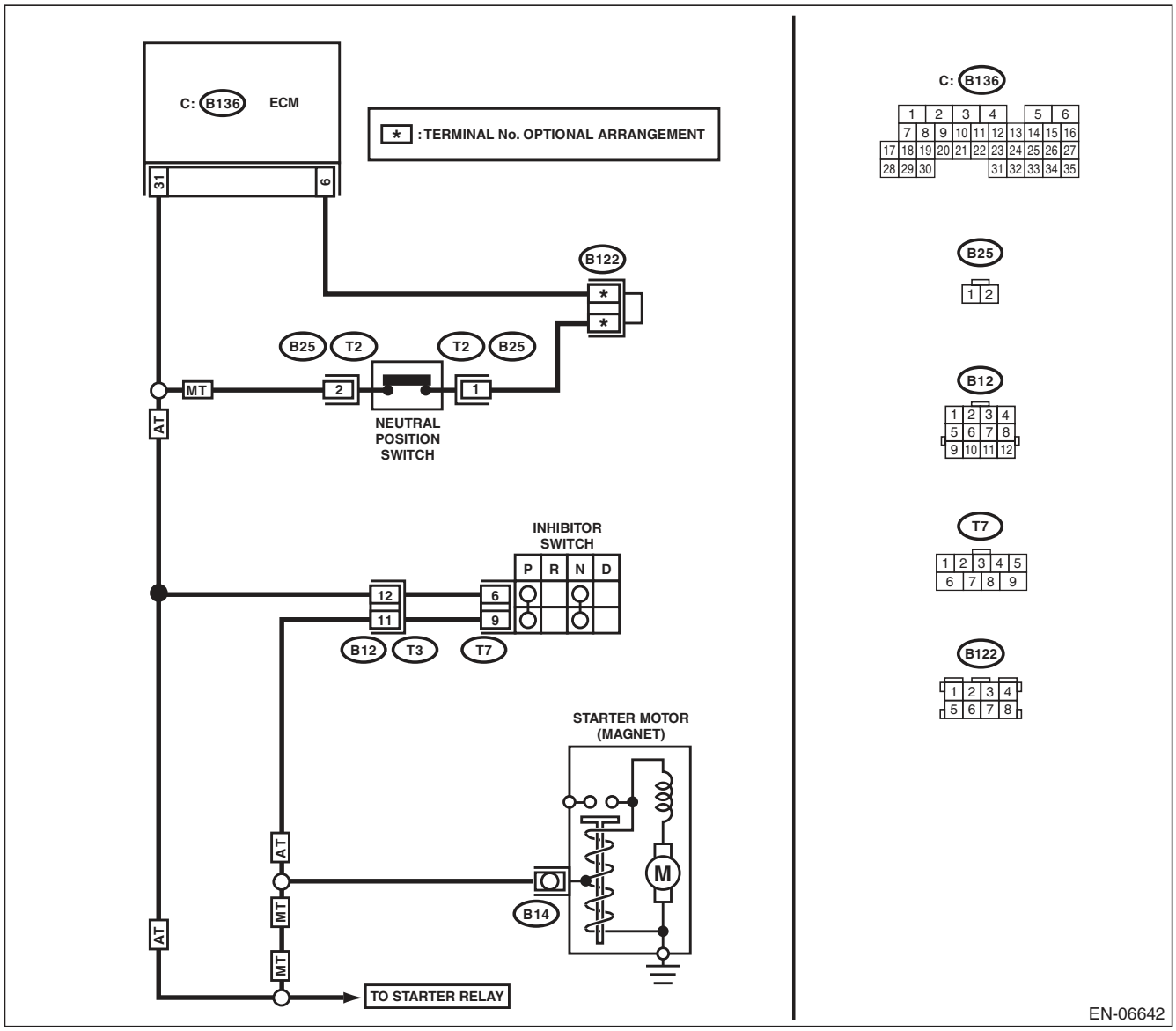

	Step	Check	Yes	No
1	**CHECK INPUT SIGNAL OF ECM.** 1) Turn the ignition switch to ON. 2) Place the shift lever in neutral. 3) Measure the voltage between ECM and chassis ground. ***Connector & terminal*** ***(B136) No. 31 (+) — Chassis ground (–):***	Is the voltage less than 1 V?	Repair the poor contact of ECM connector.	Go to step **2**.
2	**CHECK HARNESS BETWEEN ECM AND NEUTRAL POSITION SWITCH CONNECTOR.** 1) Turn the ignition switch to OFF. 2) Disconnect connectors from the ECM and transmission harness. 3) Measure the resistance of harness between ECM and transmission harness connector. ***Connector & terminal*** ***(B136) No. 31 — (T2) No. 2:***	Is the resistance less than 1 Ω?	Go to step **3**.	Repair the open circuit in harness between ECM and transmission harness connector.
3	**CHECK HARNESS BETWEEN ECM AND NEUTRAL POSITION SWITCH CONNECTOR.** Measure the resistance of harness between ECM and transmission harness connector. ***Connector & terminal*** ***(B136) No. 6 — (T2) No. 1:***	Is the resistance less than 5 Ω?	Go to step **4**.	Repair the harness and connector. NOTE: In this case, repair the following item: • Open circuit of harness between transmission harness connector and engine ground • Poor contact of coupling connector
4	**CHECK NEUTRAL POSITION SWITCH.** 1) Place the shift lever in neutral. 2) Measure the resistance between transmission harness connector terminals. ***Connector & terminal*** ***(T2) No. 1 — No. 2:***	Is the resistance less than 1 Ω?	Repair the poor contact of transmission harness connector.	Repair the open circuit of transmission harness or replace the neutral position switch. <Ref. to 5MT-35, Switches and Harness.>

CH:DTC P1152 O2 SENSOR CIRCUIT RANGE/PERFORMANCE (LOW) (BANK1 SENSOR1)

DTC DETECTING CONDITION:

- Two consecutive driving cycles with fault
- GENERAL DESCRIPTION <Ref. to GD(H4SO)-156, DTC P1152 O2 SENSOR CIRCUIT RANGE/PERFORMANCE (LOW) (BANK1 SENSOR1), Diagnostic Trouble Code (DTC) Detecting Criteria.>

CAUTION:

After repair or replacement of faulty parts, perform Clear Memory Mode <Ref. to EN(H4SO)(diag)-50, OPERATION, Clear Memory Mode.>, and Inspection Mode <Ref. to EN(H4SO)(diag)-41, PROCEDURE, Inspection Mode.>.

WIRING DIAGRAM:

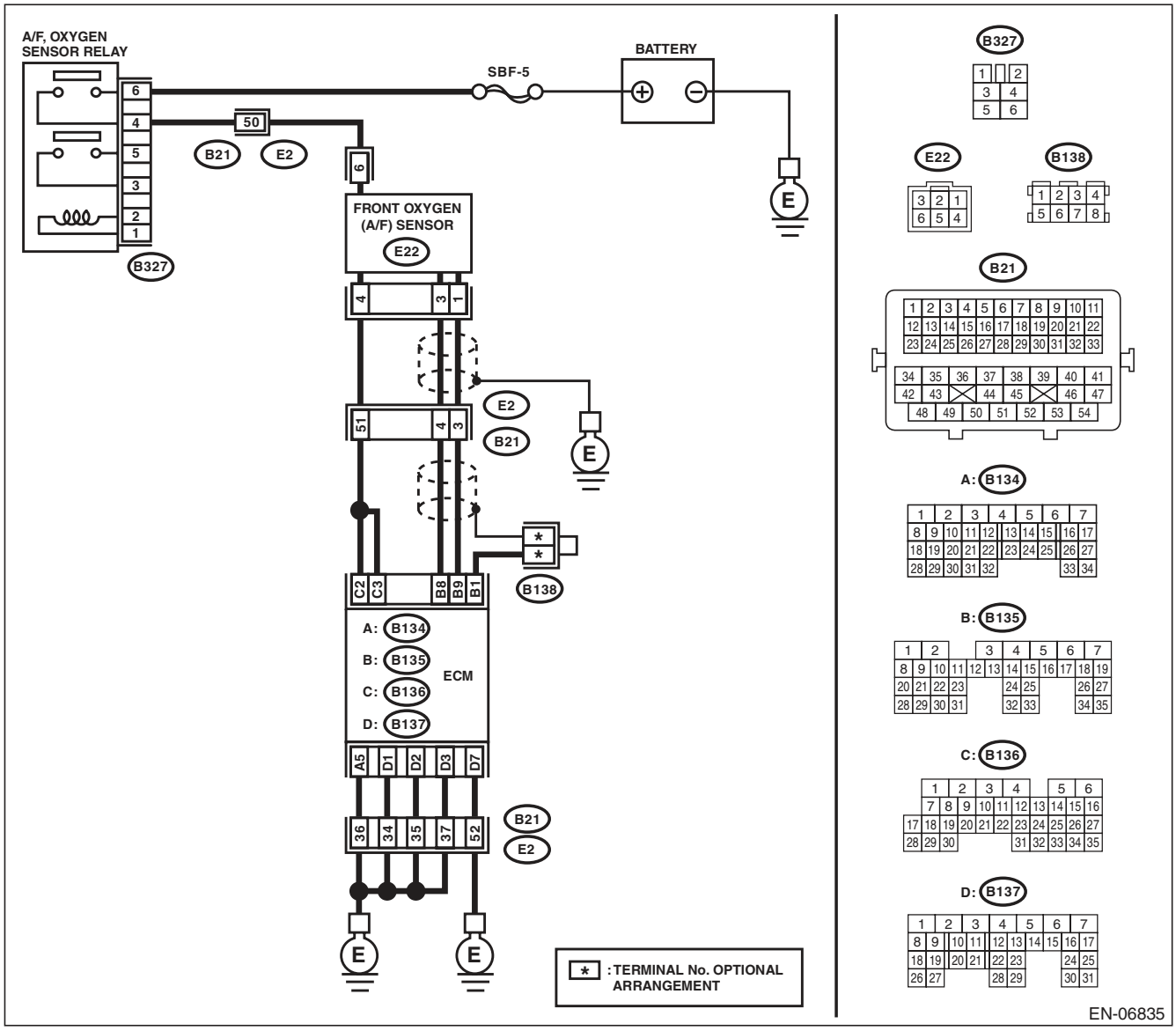

Step		Check	Yes	No
1	**CHECK FRONT OXYGEN (A/F) SENSOR CONNECTOR AND COUPLING CONNECTOR.**	Has water entered the connector?	Completely remove any water inside.	Go to step **2**.
2	**CHECK HARNESS BETWEEN ECM AND FRONT OXYGEN (A/F) SENSOR CONNECTOR.** 1) Turn the ignition switch to OFF. 2) Disconnect the connectors from ECM and front oxygen (A/F) sensor. 3) Measure the resistance of harness between ECM and front oxygen (A/F) sensor connector. ***Connector & terminal*** ***(B135) No. 9 — (E22) No. 1:*** ***(B135) No. 8 — (E22) No. 3:***	Is the resistance less than 1 Ω?	Go to step **3**.	Repair the harness and connector. NOTE: In this case, repair the following item: • Open circuit in harness between ECM and front oxygen (A/F) sensor connector • Poor contact of coupling connector
3	**CHECK POOR CONTACT.** Check for poor contact in the front oxygen (A/F) sensor connector.	Is there poor contact in front oxygen (A/F) sensor connector?	Repair the poor contact of the front oxygen (A/F) sensor connector.	Replace the front oxygen (A/F) sensor. <Ref. to FU(H4SO)-35, Front Oxygen (A/F) Sensor.>

CI: DTC P1153 O2 SENSOR CIRCUIT RANGE/PERFORMANCE (HIGH) (BANK1 SENSOR1)

DTC DETECTING CONDITION:

- Two consecutive driving cycles with fault
- GENERAL DESCRIPTION <Ref. to GD(H4SO)-158, DTC P1153 O2 SENSOR CIRCUIT RANGE/PERFORMANCE (HIGH) (BANK1 SENSOR1), Diagnostic Trouble Code (DTC) Detecting Criteria.>

CAUTION:

After repair or replacement of faulty parts, perform Clear Memory Mode <Ref. to EN(H4SO)(diag)-50, OPERATION, Clear Memory Mode.>, and Inspection Mode <Ref. to EN(H4SO)(diag)-41, PROCEDURE, Inspection Mode.>.

WIRING DIAGRAM:

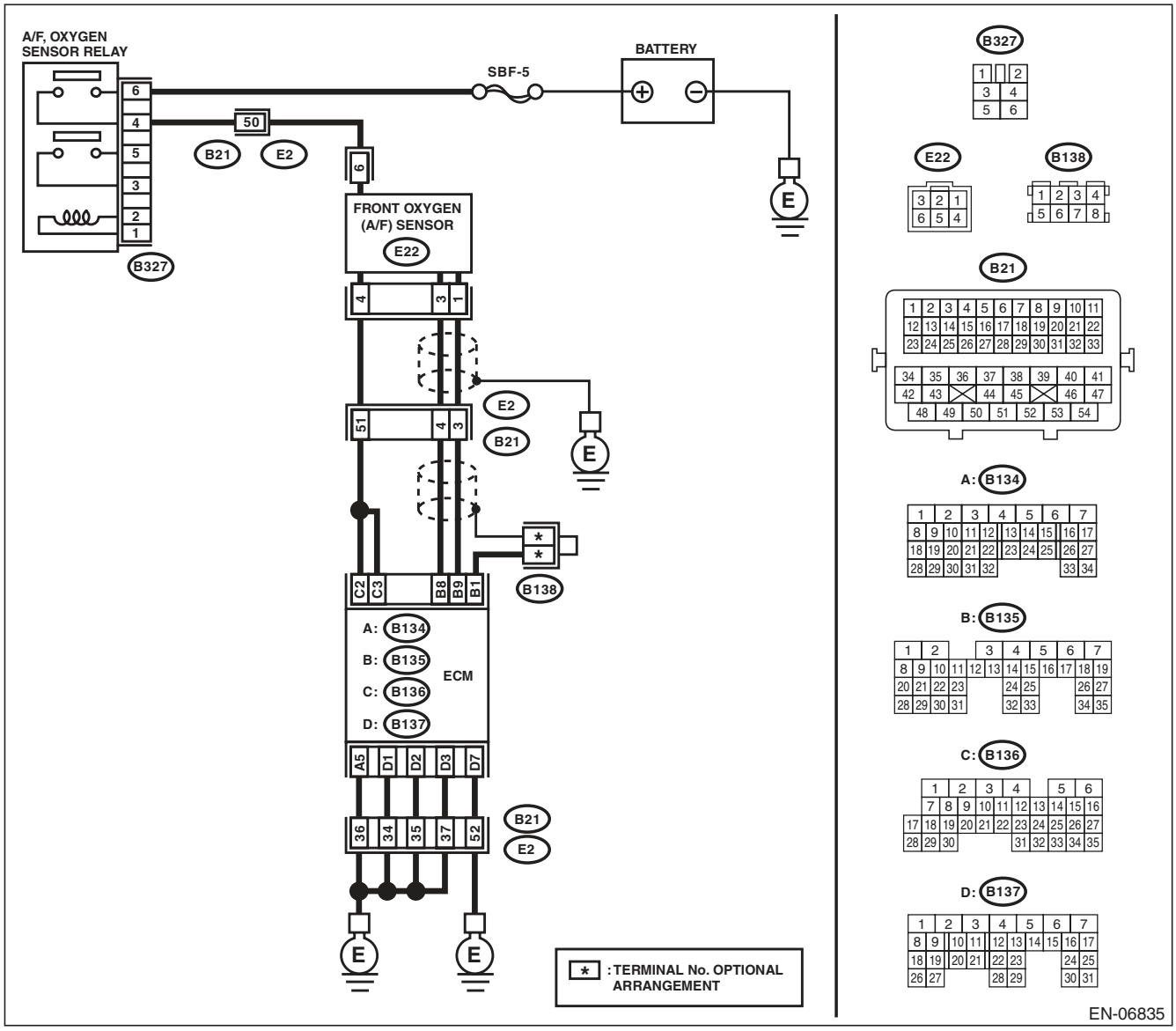

Step		Check	Yes	No
1	**CHECK FRONT OXYGEN (A/F) SENSOR CONNECTOR AND COUPLING CONNECTOR.**	Has water entered the connector?	Completely remove any water inside.	Go to step **2**.
2	**CHECK HARNESS BETWEEN ECM AND FRONT OXYGEN (A/F) SENSOR CONNECTOR.** 1) Turn the ignition switch to OFF. 2) Disconnect the connectors from ECM. 3) Measure the resistance between ECM and chassis ground. ***Connector & terminal*** ***(B135) No. 9 — Chassis ground:*** ***(B135) No. 8 — Chassis ground:***	Is the resistance 1 MΩ or more?	Go to step **3**.	Repair the ground short circuit of harness between ECM and front oxygen (A/F) sensor connector.
3	**CHECK OUTPUT SIGNAL FOR ECM.** 1) Connect the connector to ECM. 2) Turn the ignition switch to ON. 3) Measure the voltage between ECM and chassis ground. ***Connector & terminal*** ***(B135) No. 9 (+) — Chassis ground (–):***	Is the voltage 4.5 V or more?	Go to step **5**.	Go to step **4**.
4	**CHECK OUTPUT SIGNAL FOR ECM.** Measure the voltage between ECM and chassis ground. ***Connector & terminal*** ***(B135) No. 8 (+) — Chassis ground (–):***	Is the voltage 4.95 V or more?	Go to step **5**.	Replace the front oxygen (A/F) sensor. <Ref. to FU(H4SO)-35, Front Oxygen (A/F) Sensor.>
5	**CHECK OUTPUT SIGNAL FOR ECM.** Measure the voltage between ECM and chassis ground. ***Connector & terminal*** ***(B135) No. 9 (+) — Chassis ground (–):*** ***(B135) No. 8 (+) — Chassis ground (–):***	Is the voltage 8 V or more?	Repair the short circuit to power in the harness between ECM and front oxygen (A/F) sensor connector. After repair, replace the ECM. <Ref. to FU(H4SO)-39, Engine Control Module (ECM).>	Repair the poor contact of ECM connector.

CJ:DTC P1160 RETURN SPRING FAILURE

NOTE:
For the diagnostic procedure, refer to DTC P2101. <Ref. to EN(H4SO)(diag)-276, DTC P2101 THROTTLE ACTUATOR CONTROL MOTOR CIRCUIT RANGE/PERFORMANCE, Diagnostic Procedure with Diagnostic Trouble Code (DTC).>

CK:DTC P1400 FUEL TANK PRESSURE CONTROL SOLENOID VALVE CIRCUIT LOW

DTC DETECTING CONDITION:

- Two consecutive driving cycles with fault
- GENERAL DESCRIPTION <Ref. to GD(H4SO)-161, DTC P1400 FUEL TANK PRESSURE CONTROL SOLENOID VALVE CIRCUIT LOW, Diagnostic Trouble Code (DTC) Detecting Criteria.>

CAUTION:

After repair or replacement of faulty parts, perform Clear Memory Mode <Ref. to EN(H4SO)(diag)-50, OPERATION, Clear Memory Mode.>, and Inspection Mode <Ref. to EN(H4SO)(diag)-41, PROCEDURE, Inspection Mode.>.

WIRING DIAGRAM:

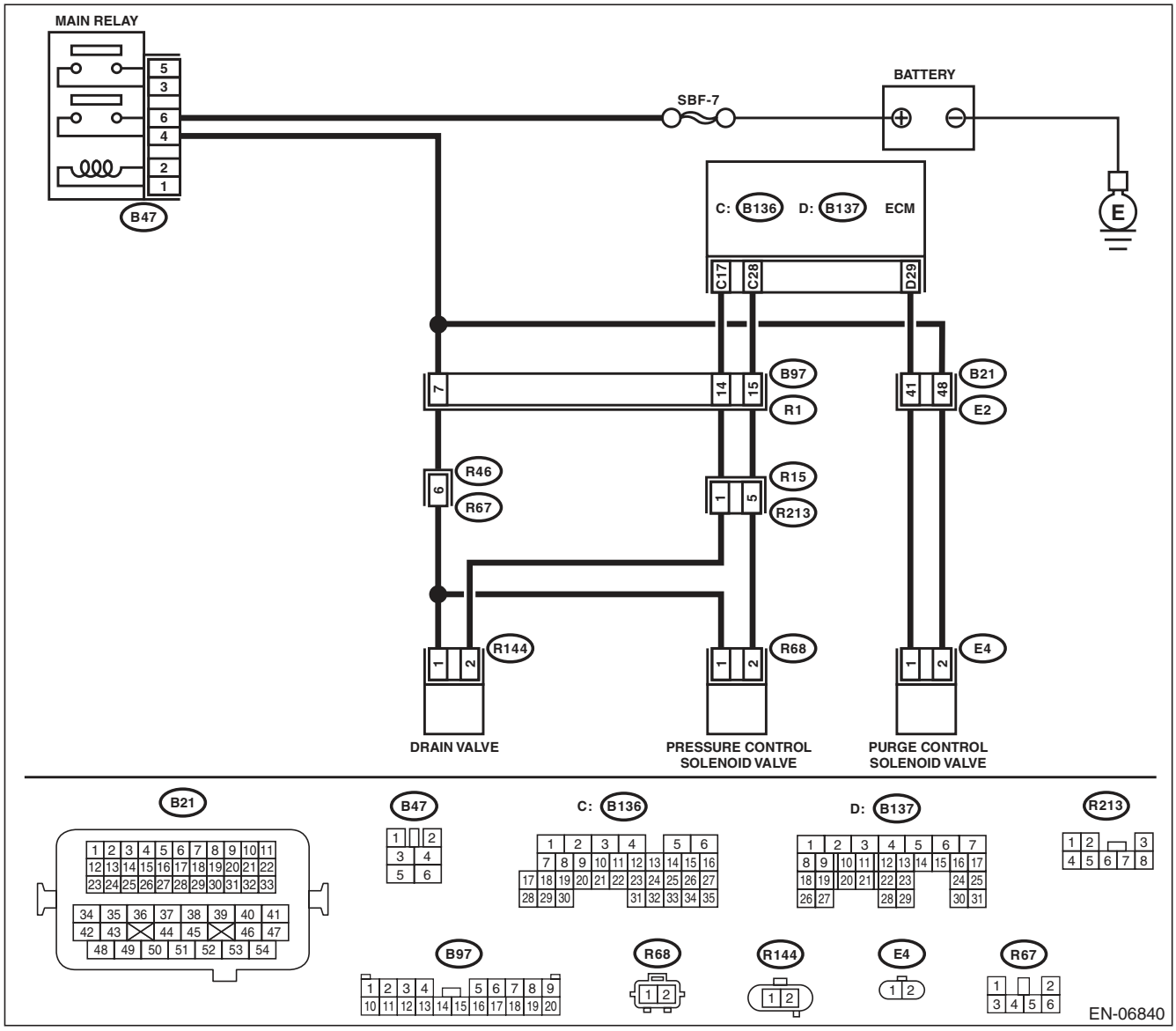

	Step	Check	Yes	No
1	**CHECK OUTPUT SIGNAL OF ECM.** 1) Turn the ignition switch to ON. 2) Measure the voltage between ECM and chassis ground. ***Connector & terminal*** ***(B136) No. 28 (+) — Chassis ground (–):***	Is the voltage 10 V or more?	Repair the poor contact of ECM connector.	Go to step **2**.
2	**CHECK HARNESS BETWEEN ECM AND PRESSURE CONTROL SOLENOID VALVE.** 1) Turn the ignition switch to OFF. 2) Disconnect the connector from the ECM and pressure control solenoid valve. 3) Measure the resistance between pressure control solenoid valve and chassis ground. ***Connector & terminal*** ***(R68) No. 2 — Chassis ground:***	Is the resistance 1 MΩ or more?	Go to step **3**.	Repair the ground short circuit of harness between ECM and pressure control solenoid valve connector.
3	**CHECK HARNESS BETWEEN ECM AND PRESSURE CONTROL SOLENOID VALVE.** Measure the resistance of harness between ECM and pressure control solenoid valve connector. ***Connector & terminal*** ***(B136) No. 28 — (R68) No. 2:***	Is the resistance less than 1 Ω?	Go to step **4**.	Repair the harness and connector. NOTE: In this case, repair the following item: • Open circuit in harness between ECM and pressure control solenoid valve connector • Poor contact of coupling connector
4	**CHECK PRESSURE CONTROL SOLENOID VALVE.** Measure the resistance between pressure control solenoid valve terminals. ***Terminals*** ***No. 1 — No. 2:***	Is the resistance between 10 — 100 Ω?	Go to step **5**.	Replace the pressure control solenoid valve. <Ref. to EC(H4SO)-13, Pressure Control Solenoid Valve.>
5	**CHECK POWER SUPPLY TO THE PRESSURE CONTROL SOLENOID VALVE.** 1) Turn the ignition switch to ON. 2) Measure the voltage between pressure control solenoid valve and chassis ground. ***Connector & terminal*** ***(R68) No. 1 (+) — Chassis ground (–):***	Is the voltage 10 V or more?	Repair the poor contact of pressure control solenoid valve connector.	Repair the harness and connector. NOTE: In this case, repair the following item: • Open circuit in harness between main relay and pressure control solenoid valve connector • Poor contact of coupling connector • Poor contact of main relay connector

CL:DTC P1420 FUEL TANK PRESSURE CONTROL SOL. VALVE CIRCUIT HIGH

DTC DETECTING CONDITION:

- Two consecutive driving cycles with fault
- GENERAL DESCRIPTION <Ref. to GD(H4SO)-163, DTC P1420 FUEL TANK PRESSURE CONTROL SOL. VALVE CIRCUIT HIGH, Diagnostic Trouble Code (DTC) Detecting Criteria.>

CAUTION:

After repair or replacement of faulty parts, perform Clear Memory Mode <Ref. to EN(H4SO)(diag)-50, OPERATION, Clear Memory Mode.>, and Inspection Mode <Ref. to EN(H4SO)(diag)-41, PROCEDURE, Inspection Mode.>.

WIRING DIAGRAM:

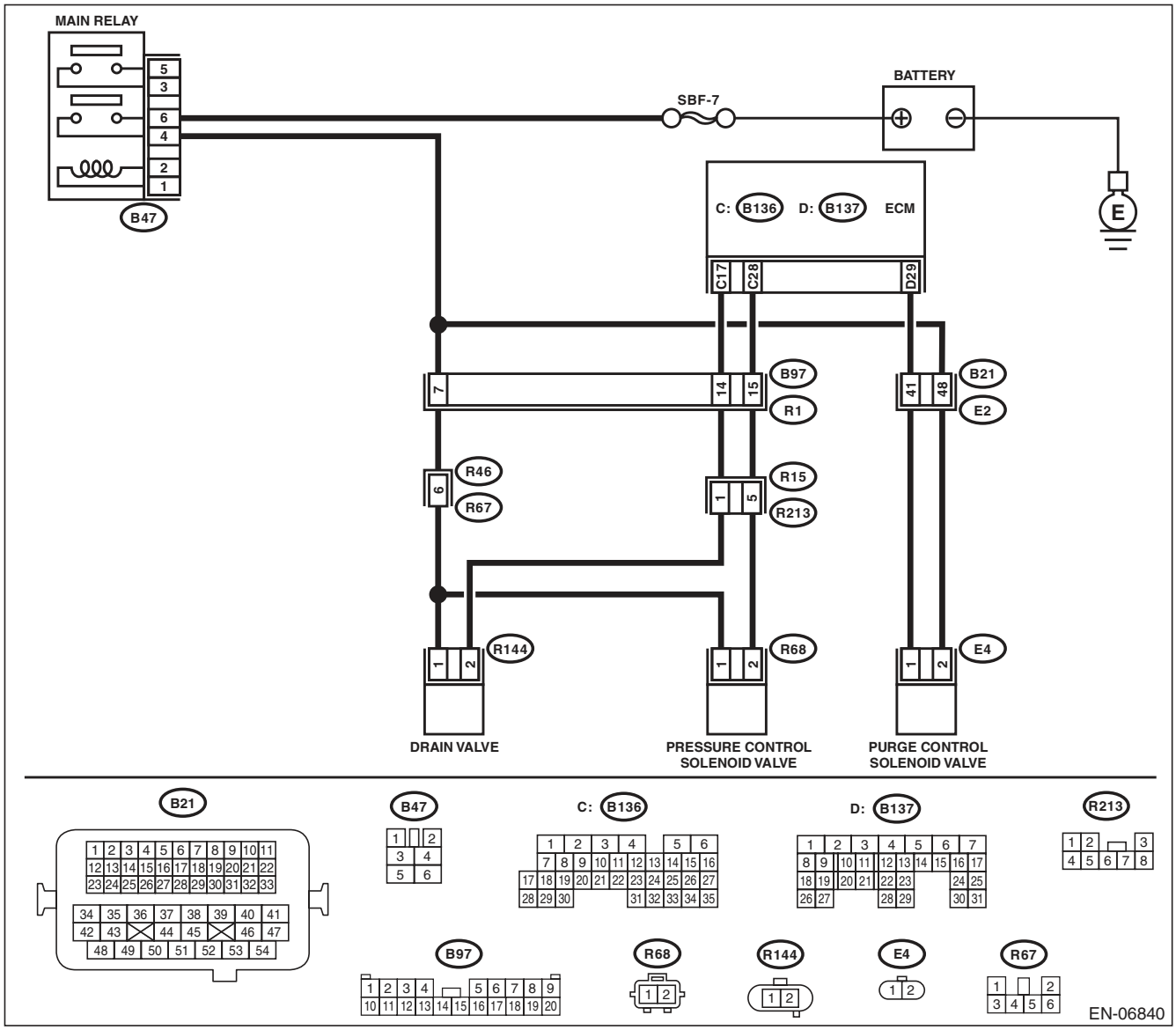

Step		Check	Yes	No
1	**CHECK HARNESS BETWEEN ECM AND PRESSURE CONTROL SOLENOID VALVE.** 1) Turn the ignition switch to OFF. 2) Disconnect the connector from the ECM and pressure control solenoid valve. 3) Turn the ignition switch to ON. 4) Measure the voltage between ECM and chassis ground. ***Connector & terminal*** ***(B136) No. 28 (+) — Chassis ground (–):***	Is the voltage 10 V or more?	Repair the short circuit to power supply in the harness between the ECM and pressure control solenoid valve connector.	Go to step **2**.
2	**CHECK PRESSURE CONTROL SOLENOID VALVE.** 1) Turn the ignition switch to OFF. 2) Measure the resistance between pressure control solenoid valve terminals. ***Terminals*** ***No. 1 — No. 2:***	Is the resistance less than 1 Ω?	Replace the pressure control solenoid valve. <Ref. to EC(H4SO)-13, Pressure Control Solenoid Valve.>	Repair the poor contact of ECM connector.

CM:DTC P1443 VENT CONTROL SOLENOID VALVE FUNCTION PROBLEM

DTC DETECTING CONDITION:

- Immediately at fault recognition
- GENERAL DESCRIPTION <Ref. to GD(H4SO)-165, DTC P1443 VENT CONTROL SOLENOID VALVE FUNCTION PROBLEM, Diagnostic Trouble Code (DTC) Detecting Criteria.>

TROUBLE SYMPTOM:

Improper fuel supply

CAUTION:

After repair or replacement of faulty parts, perform Clear Memory Mode <Ref. to EN(H4SO)(diag)-50, OPERATION, Clear Memory Mode.>, and Inspection Mode <Ref. to EN(H4SO)(diag)-41, PROCEDURE, Inspection Mode.>.

WIRING DIAGRAM:

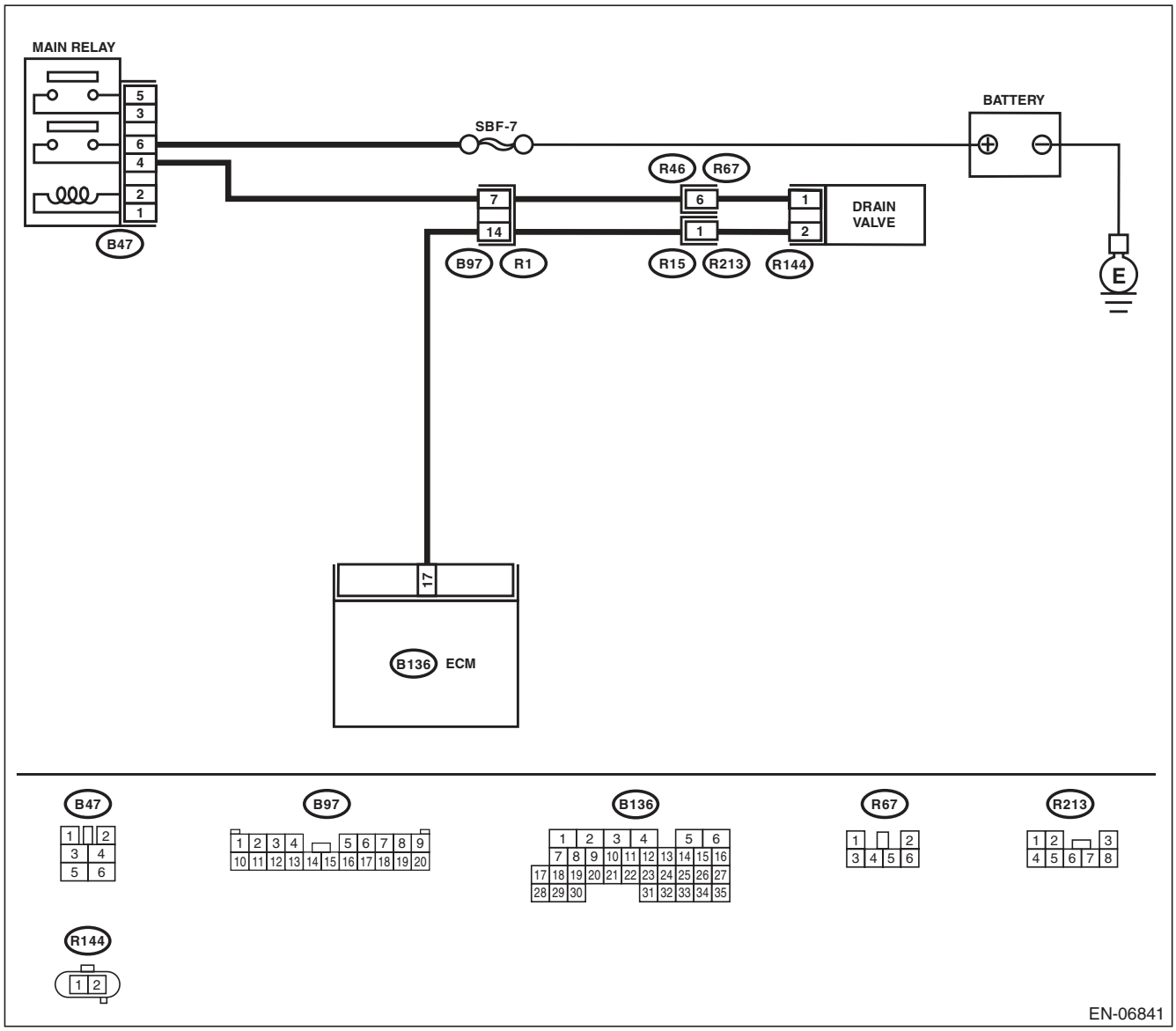

Step		Check	Yes	No
1	**CHECK FOR ANY OTHER DTC ON DISPLAY.**	Is any other DTC displayed?	Check the appropriate DTC using the “List of Diagnostic Trouble Code (DTC)”. <Ref. to EN(H4SO)(diag)-80, List of Diagnostic Trouble Code (DTC).>	Go to step **2**.
2	**CHECK DRAIN HOSE.** Check the drain hose for clogging.	Is there clogging in the drain hose?	Replace the drain hose.	Go to step **3**.
3	**CHECK DRAIN VALVE OPERATION.** 1) Turn the ignition switch to OFF. 2) Connect the delivery (test) mode connector at the lower portion of instrument panel (on the driver’s side). 3) Turn the ignition switch to ON. 4) Operate the drain valve. NOTE: Drain valve can be operated using the Subaru Select Monitor. For the procedures, refer to “Compulsory Valve Operation Check Mode”. <Ref. to EN(H4SO)(diag)-51, Compulsory Valve Operation Check Mode.>	Does the drain valve operate?	Repair the poor contact of ECM connector.	Replace the drain valve. <Ref. to EC(H4SO)-16, Drain Valve.>

CN:DTC P1491 POSITIVE CRANKCASE VENTILATION (BLOW-BY) FUNCTION PROBLEM

DTC DETECTING CONDITION:

- Immediately at fault recognition
- GENERAL DESCRIPTION <Ref. to GD(H4SO)-167, DTC P1491 POSITIVE CRANKCASE VENTILATION (BLOW-BY) FUNCTION PROBLEM, Diagnostic Trouble Code (DTC) Detecting Criteria.>

TROUBLE SYMPTOM:

Improper idling

CAUTION:

After repair or replacement of faulty parts, perform Clear Memory Mode <Ref. to EN(H4SO)(diag)-50, OPERATION, Clear Memory Mode.>, and Inspection Mode <Ref. to EN(H4SO)(diag)-41, PROCEDURE, Inspection Mode.>.

WIRING DIAGRAM:

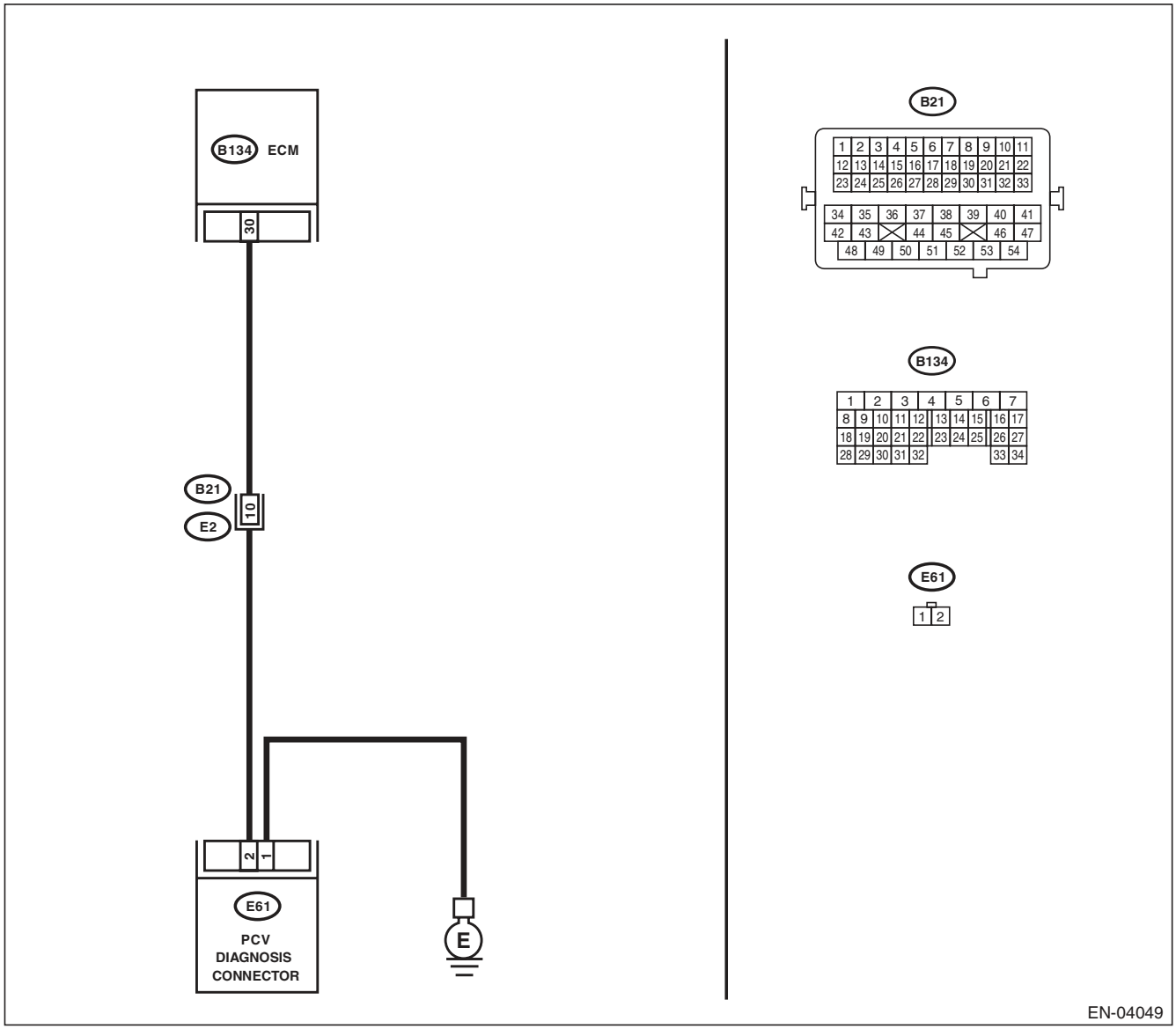

	Step	Check	Yes	No
1	**CHECK BLOW-BY HOSE.** Check the condition of the blow-by hose.	Is there any disconnection or crack in blow-by hose?	Repair or replace the blow-by hose.	Go to step **2**.
2	**CHECK HARNESS BETWEEN ECM AND PCV HOSE ASSEMBLY.** 1) Turn the ignition switch to OFF. 2) Disconnect the connectors from the ECM and PCV hose assembly. 3) Measure the resistance of harness between ECM and PCV hose assembly. ***Connector & terminal*** ***(B134) No. 30 — (E61) No. 2:***	Is the resistance less than 1 Ω?	Go to step **3**.	Repair the harness and connector. NOTE: In this case, repair the following item: • Open circuit in harness between ECM and PCV hose assembly • Poor contact of coupling connector
3	**CHECK HARNESS BETWEEN ECM AND PCV HOSE ASSEMBLY.** Measure the resistance between PCV hose assembly and chassis ground. ***Connector & terminal*** ***(B134) No. 30 — Chassis ground:***	Is the resistance 1 MΩ or more?	Go to step **4**.	Repair the ground short circuit of harness between ECM and PCV hose assembly.
4	**CHECK GROUND CIRCUIT OF PCV HOSE ASSEMBLY.** Measure the resistance of harness between PCV hose assembly and engine ground. ***Connector & terminal*** ***(E61) No. 1 — Engine ground:***	Is the resistance less than 5 Ω?	Go to step **5**.	Repair the open circuit of harness between PCV hose assembly and engine ground.
5	**CHECK THE PCV HOSE ASSEMBLY.** Measure the resistance between the PCV hose assembly terminals. ***Terminals*** ***No. 1 — No. 2:***	Is the resistance less than 1 Ω?	Repair the poor contact in ECM and PCV hose assembly connector.	Replace the PCV hose assembly.

CO:DTC P1492 EGR SOLENOID VALVE SIGNAL #1 CIRCUIT MALFUNCTION (LOW INPUT)

NOTE:
For the diagnostic procedure, refer to DTC P1498. <Ref. to EN(H4SO)(diag)-254, DTC P1498 EGR SOLENOID VALVE SIGNAL #4 CIRCUIT MALFUNCTION (LOW INPUT), Diagnostic Procedure with Diagnostic Trouble Code (DTC).>

CP:DTC P1493 EGR SOLENOID VALVE SIGNAL #1 CIRCUIT MALFUNCTION (HIGH INPUT)

NOTE:
For the diagnostic procedure, refer to DTC P1499. <Ref. to EN(H4SO)(diag)-257, DTC P1499 EGR SOLENOID VALVE SIGNAL #4 CIRCUIT MALFUNCTION (HIGH INPUT), Diagnostic Procedure with Diagnostic Trouble Code (DTC).>

CQ:DTC P1494 EGR SOLENOID VALVE SIGNAL #2 CIRCUIT MALFUNCTION (LOW INPUT)

NOTE:
For the diagnostic procedure, refer to DTC P1498. <Ref. to EN(H4SO)(diag)-254, DTC P1498 EGR SOLENOID VALVE SIGNAL #4 CIRCUIT MALFUNCTION (LOW INPUT), Diagnostic Procedure with Diagnostic Trouble Code (DTC).>

CR:DTC P1495 EGR SOLENOID VALVE SIGNAL #2 CIRCUIT MALFUNCTION (HIGH INPUT)

NOTE:
For the diagnostic procedure, refer to DTC P1499. <Ref. to EN(H4SO)(diag)-257, DTC P1499 EGR SOLENOID VALVE SIGNAL #4 CIRCUIT MALFUNCTION (HIGH INPUT), Diagnostic Procedure with Diagnostic Trouble Code (DTC).>

CS:DTC P1496 EGR SOLENOID VALVE SIGNAL #3 CIRCUIT MALFUNCTION (LOW INPUT)

NOTE:
For the diagnostic procedure, refer to DTC P1498. <Ref. to EN(H4SO)(diag)-254, DTC P1498 EGR SOLENOID VALVE SIGNAL #4 CIRCUIT MALFUNCTION (LOW INPUT), Diagnostic Procedure with Diagnostic Trouble Code (DTC).>

CT:DTC P1497 EGR SOLENOID VALVE SIGNAL #3 CIRCUIT MALFUNCTION (HIGH INPUT)

NOTE:
For the diagnostic procedure, refer to DTC P1499. <Ref. to EN(H4SO)(diag)-257, DTC P1499 EGR SOLENOID VALVE SIGNAL #4 CIRCUIT MALFUNCTION (HIGH INPUT), Diagnostic Procedure with Diagnostic Trouble Code (DTC).>

CU:DTC P1498 EGR SOLENOID VALVE SIGNAL #4 CIRCUIT MALFUNCTION (LOW INPUT)

DTC DETECTING CONDITION:

- Immediately at fault recognition
- GENERAL DESCRIPTION <Ref. to GD(H4SO)-169, DTC P1492 EGR SOLENOID VALVE SIGNAL #1 CIRCUIT MALFUNCTION (LOW INPUT), Diagnostic Trouble Code (DTC) Detecting Criteria.> <Ref. to GD(H4SO)-173, DTC P1494 EGR SOLENOID VALVE SIGNAL #2 CIRCUIT MALFUNCTION (LOW INPUT), Diagnostic Trouble Code (DTC) Detecting Criteria.> <Ref. to GD(H4SO)-173, DTC P1496 EGR SOLENOID VALVE SIGNAL #3 CIRCUIT MALFUNCTION (LOW INPUT), Diagnostic Trouble Code (DTC) Detecting Criteria.> <Ref. to GD(H4SO)-173, DTC P1498 EGR SOLENOID VALVE SIGNAL #4 CIRCUIT MALFUNCTION (LOW INPUT), Diagnostic Trouble Code (DTC) Detecting Criteria.>

TROUBLE SYMPTOM:

- Improper idling
- Poor driving performance
- Engine breathing

CAUTION:

After repair or replacement of faulty parts, perform Clear Memory Mode <Ref. to EN(H4SO)(diag)-50, OPERATION, Clear Memory Mode.>, and Inspection Mode <Ref. to EN(H4SO)(diag)-41, PROCEDURE, Inspection Mode.>.

WIRING DIAGRAM:

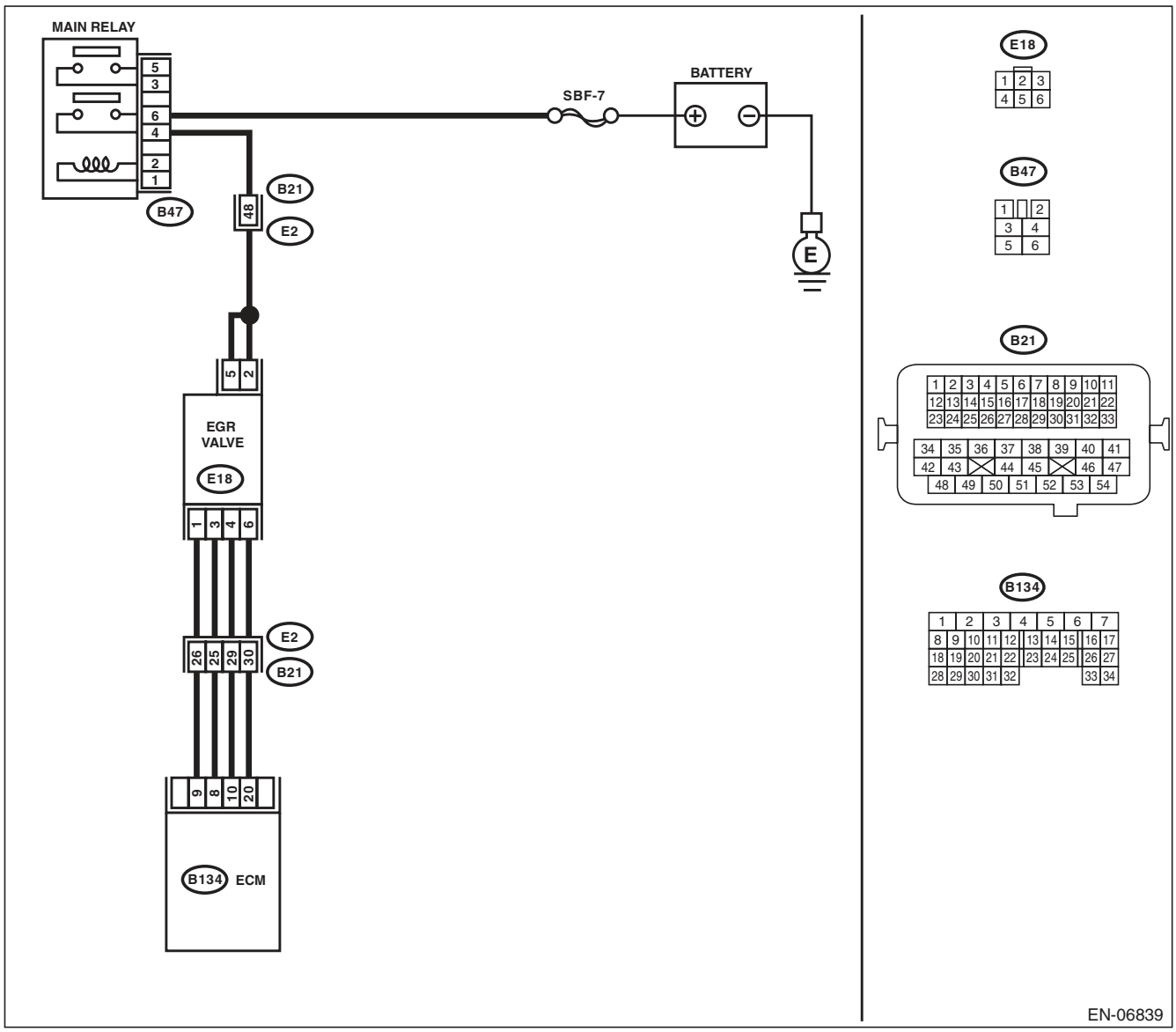

	Step	Check	Yes	No
1	**CHECK POWER SUPPLY TO EGR VALVE.** 1) Turn the ignition switch to OFF. 2) Disconnect the connector from EGR valve. 3) Turn the ignition switch to ON. 4) Measure the voltage between EGR valve connector and engine ground. ***Connector & terminal*** ***(E18) No. 2 (+) — Engine ground (–):*** ***(E18) No. 5 (+) — Engine ground (–):***	Is the voltage 10 V or more?	Go to step **2**.	Repair the harness and connector. NOTE: In this case, repair the following item: • Open circuit in harness between EGR valve and main relay connector • Poor contact of coupling connector
2	**CHECK HARNESS BETWEEN ECM AND EGR VALVE CONNECTOR.** 1) Turn the ignition switch to OFF. 2) Disconnect the connectors from ECM. 3) Measure the resistance between ECM and EGR valve connector. ***Connector & terminal*** ***DTC P1492; (B134) No. 8 — (E18) No. 3:*** ***DTC P1494; (B134) No. 9 — (E18) No. 1:*** ***DTC P1496; (B134) No. 10 — (E18) No. 4:*** ***DTC P1498; (B134) No. 20 — (E18) No. 6:***	Is the resistance less than 1 Ω?	Go to step **3**.	Repair the harness and connector. NOTE: In this case, repair the following item: • Open circuit in harness between ECM and EGR valve connector • Poor contact of coupling connector
3	**CHECK HARNESS BETWEEN ECM AND EGR VALVE CONNECTOR.** 1) Disconnect the connectors from ECM. 2) Measure the resistance between ECM and chassis ground. ***Connector & terminal*** ***DTC P1492; (B134) No. 8 — Chassis ground:*** ***DTC P1494; (B134) No. 9 — Chassis ground:*** ***DTC P1496; (B134) No. 10 — Chassis ground:*** ***DTC P1498; (B134) No. 20 — Chassis ground:***	Is the resistance 1 MΩ or more?	Go to step **4**.	Repair the ground short in harness between ECM and EGR valve connector.
4	**CHECK POOR CONTACT.** Check poor contact in ECM and EGR valve connector.	Is there poor contact in ECM or EGR valve connector?	Repair the poor contact in ECM or EGR valve connector.	Replace the EGR valve. <Ref. to FU(H4SO)-29, EGR Valve.>

CV:DTC P1499 EGR SOLENOID VALVE SIGNAL #4 CIRCUIT MALFUNCTION (HIGH INPUT)

DTC DETECTING CONDITION:

- Immediately at fault recognition
- GENERAL DESCRIPTION <Ref. to GD(H4SO)-171, DTC P1493 EGR SOLENOID VALVE SIGNAL #1 CIRCUIT MALFUNCTION (HIGH INPUT), Diagnostic Trouble Code (DTC) Detecting Criteria.> <Ref. to GD(H4SO)-173, DTC P1495 EGR SOLENOID VALVE SIGNAL #2 CIRCUIT MALFUNCTION (HIGH INPUT), Diagnostic Trouble Code (DTC) Detecting Criteria.> <Ref. to GD(H4SO)-173, DTC P1497 EGR SOLENOID VALVE SIGNAL #3 CIRCUIT MALFUNCTION (HIGH INPUT), Diagnostic Trouble Code (DTC) Detecting Criteria.> <Ref. to GD(H4SO)-173, DTC P1499 EGR SOLENOID VALVE SIGNAL #4 CIRCUIT MALFUNCTION (HIGH INPUT), Diagnostic Trouble Code (DTC) Detecting Criteria.>

TROUBLE SYMPTOM:

- Improper idling
- Poor driving performance
- Engine breathing

CAUTION:

After repair or replacement of faulty parts, perform Clear Memory Mode <Ref. to EN(H4SO)(diag)-50, OPERATION, Clear Memory Mode.>, and Inspection Mode <Ref. to EN(H4SO)(diag)-41, PROCEDURE, Inspection Mode.>.

WIRING DIAGRAM:

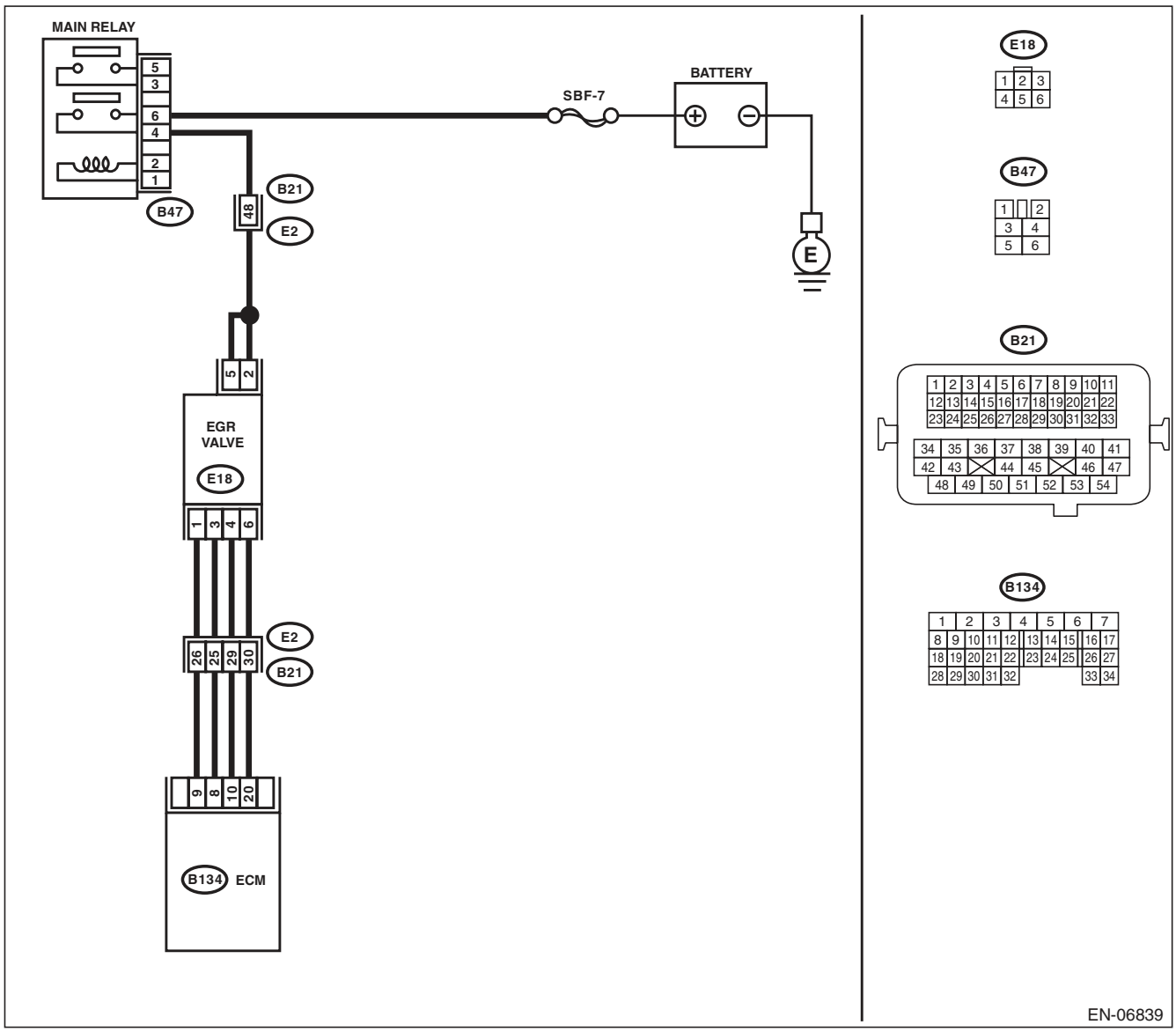

Step	Check	Yes	No
1 **CHECK HARNESS BETWEEN ECM AND EGR VALVE CONNECTOR.** 1) Turn the ignition switch to OFF. 2) Disconnect the connector from EGR valve. 3) Turn the ignition switch to ON. 4) Measure the voltage between ECM and chassis ground. ***Connector & terminal*** ***DTC P1493; (B134) No. 8 (+) — Chassis ground (–):*** ***DTC P1495; (B134) No. 9 (+) — Chassis ground (–):*** ***DTC P1497; (B134) No. 10 (+) — Chassis ground (–):*** ***DTC P1499; (B134) No. 20 (+) — Chassis ground (–):***	Is the voltage 10 V or more?	Repair the power supply short circuit of harness between ECM and EGR valve connector.	Repair the poor contact of ECM connector.

CW:DTC P1560 BACK-UP VOLTAGE CIRCUIT MALFUNCTION

DTC DETECTING CONDITION:

- Immediately at fault recognition
- GENERAL DESCRIPTION <Ref. to GD(H4SO)-174, DTC P1560 BACK-UP VOLTAGE CIRCUIT MALFUNCTION, Diagnostic Trouble Code (DTC) Detecting Criteria.>

CAUTION:

After repair or replacement of faulty parts, perform Clear Memory Mode <Ref. to EN(H4SO)(diag)-50, OPERATION, Clear Memory Mode.>, and Inspection Mode <Ref. to EN(H4SO)(diag)-41, PROCEDURE, Inspection Mode.>.

WIRING DIAGRAM:

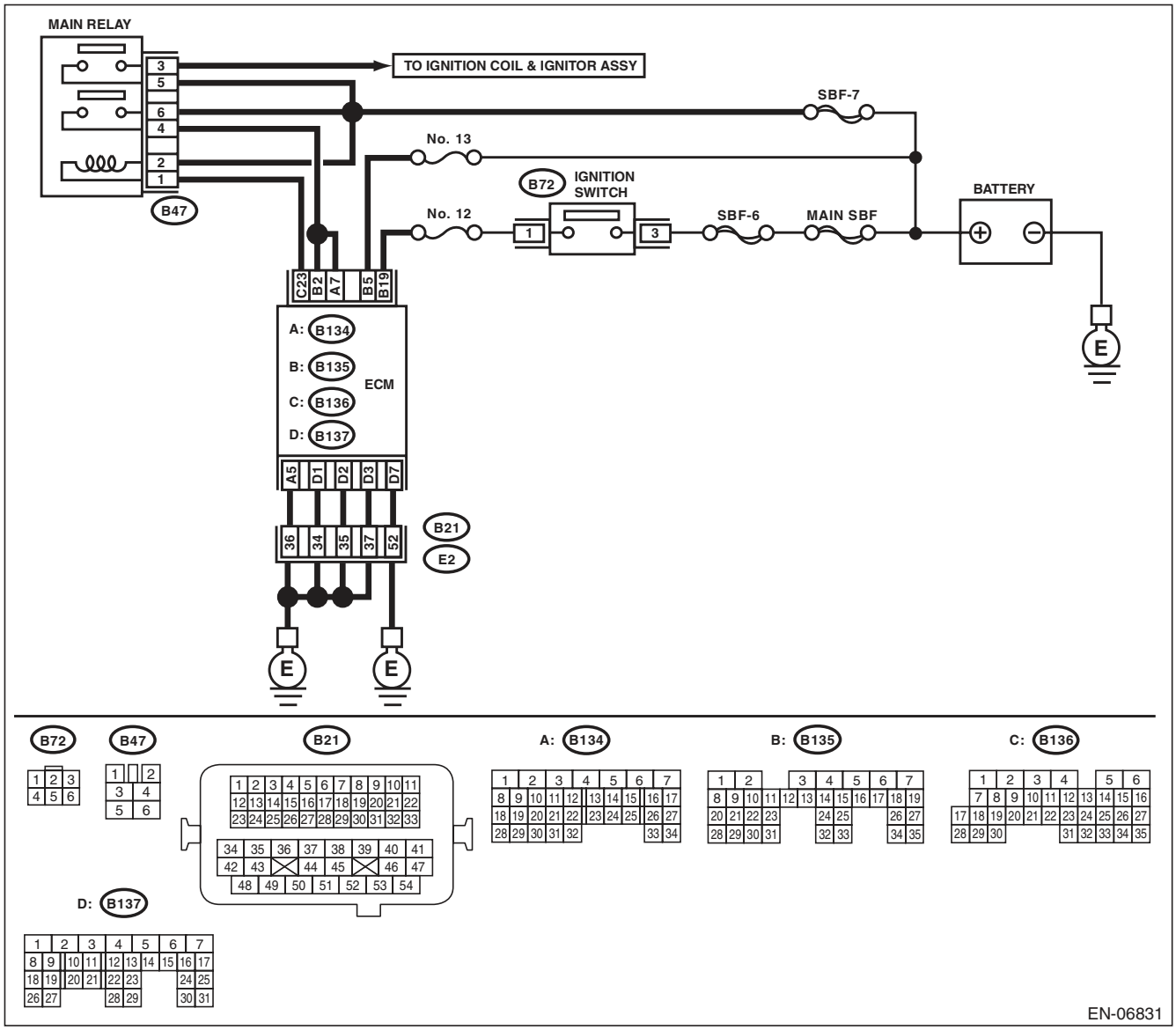

	Step	Check	Yes	No
1	**CHECK INPUT SIGNAL OF ECM.** 1) Turn the ignition switch to OFF. 2) Measure the voltage between ECM and chassis ground. ***Connector & terminal*** ***(B135) No. 5 (+) — Chassis ground (–):***	Is the voltage 10 V or more?	Repair the poor contact of ECM connector.	Go to step **2**.
2	**CHECK HARNESS BETWEEN ECM AND MAIN FUSE BOX CONNECTOR.** 1) Disconnect the connectors from ECM. 2) Measure the resistance between ECM and chassis ground. ***Connector & terminal*** ***(B135) No. 5 — Chassis ground:***	Is the resistance 1 MΩ or more?	Go to step **3**.	Repair the ground short circuit of harness between ECM and battery terminal.
3	**CHECK FUSE NO. 13 (IN MAIN FUSE BOX).**	Is the fuse blown out?	Replace the fuse.	Repair the harness and connector. NOTE: In this case, repair the following item: • Open circuit in harness between ECM and battery • Poor contact in ECM connector • Poor contact of battery terminal

CX:DTC P1602 CONTROL MODULE PROGRAMMING ERROR

DTC DETECTING CONDITION:

- Two consecutive driving cycles with fault
- GENERAL DESCRIPTION <Ref. to GD(H4SO)-176, DTC P1602 CONTROL MODULE PROGRAMMING ERROR, Diagnostic Trouble Code (DTC) Detecting Criteria.>

TROUBLE SYMPTOM:

- Engine keeps running at higher speed than specified idle speed.
- Engine keeps running at a lower speed than the specified idle speed.
- Engine stalls.

CAUTION:

After repair or replacement of faulty parts, perform Clear Memory Mode <Ref. to EN(H4SO)(diag)-50, OPERATION, Clear Memory Mode.>, and Inspection Mode <Ref. to EN(H4SO)(diag)-41, PROCEDURE, Inspection Mode.>.

WIRING DIAGRAM:

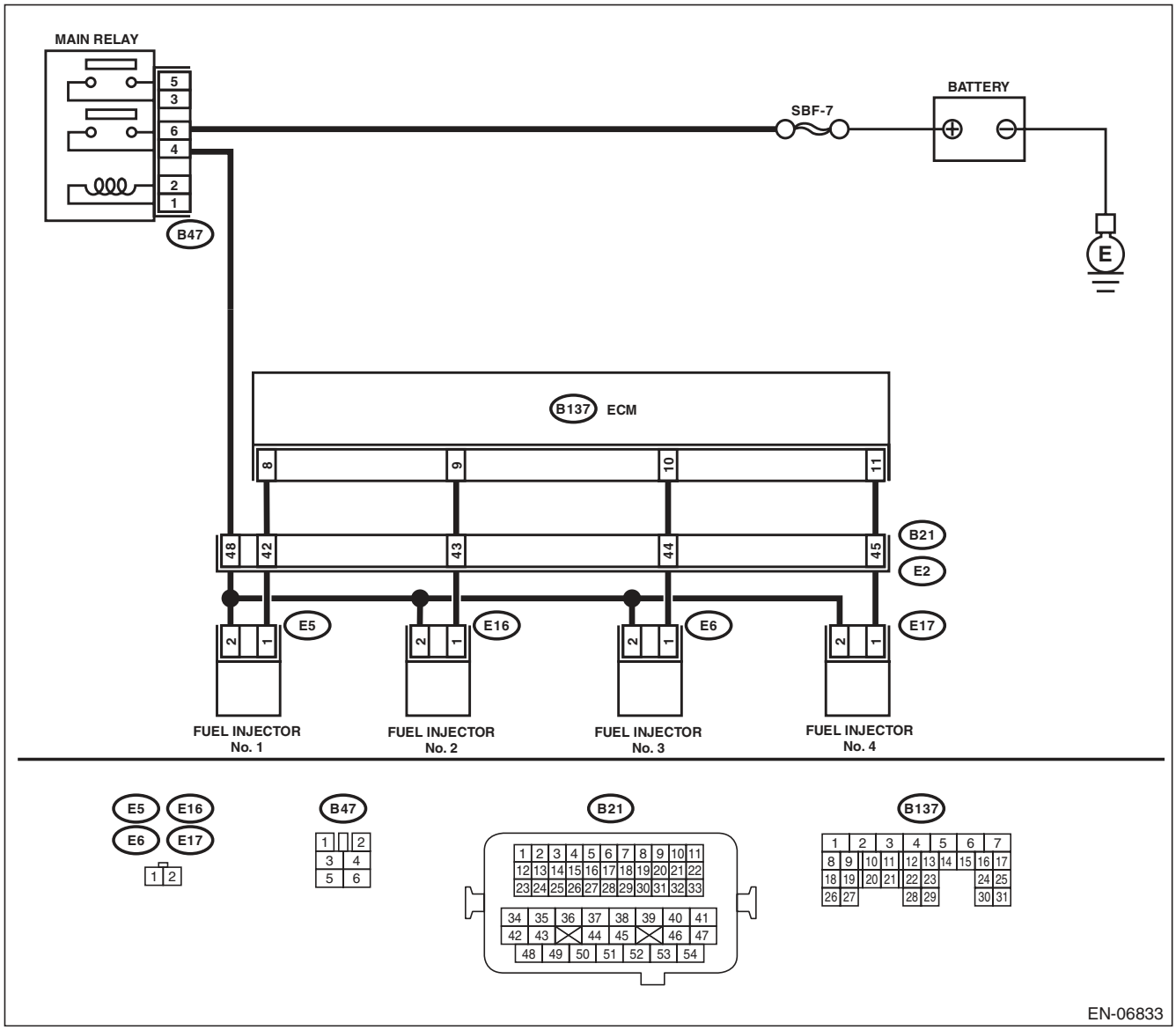

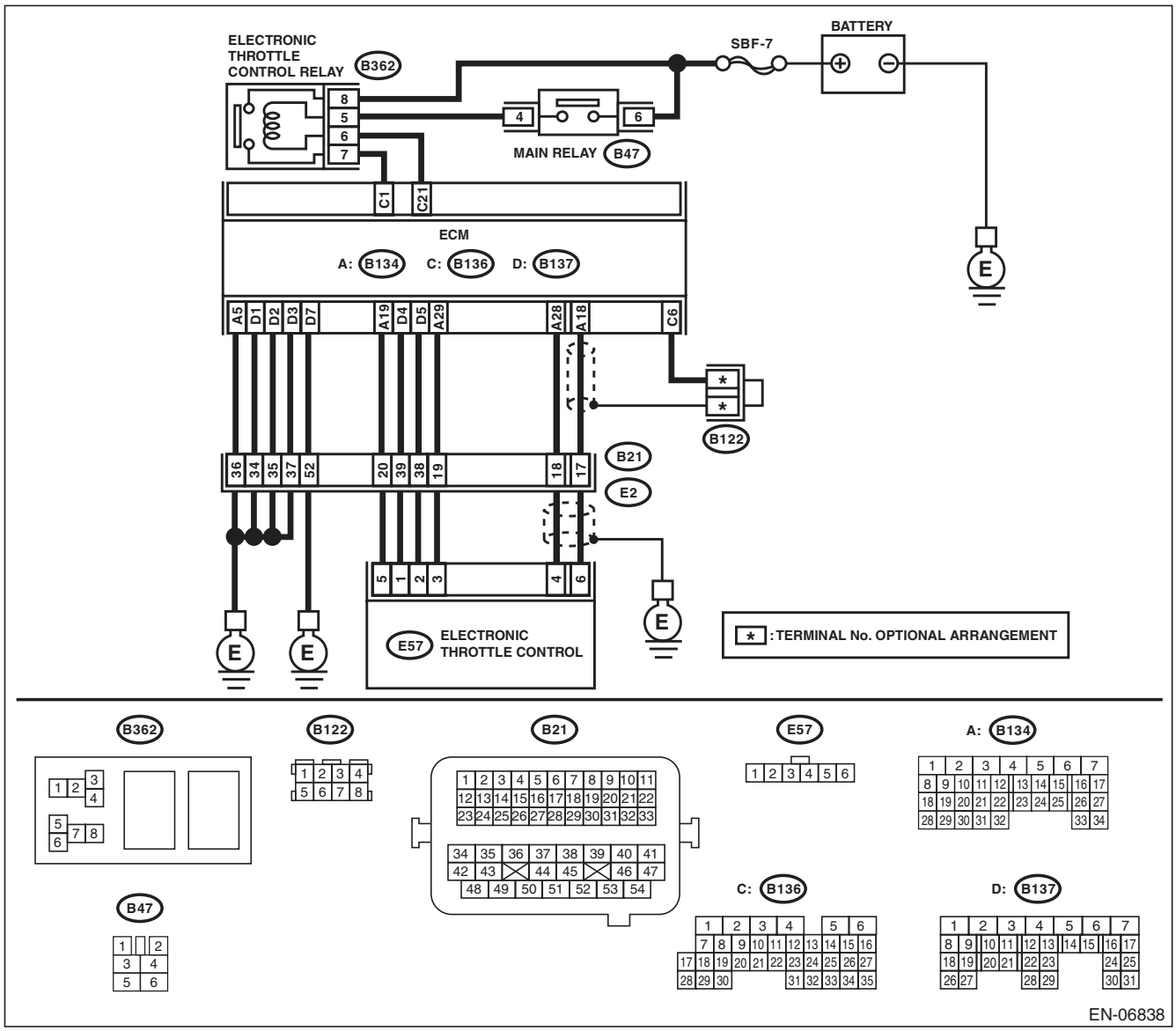
ELECTRONIC THROTTLE CONTROL RELAY
B362
8
5
6
7
SBF-7
BATTERY
4
6
MAIN RELAY
B47
C1
C21
ECM
A: B134
C: B136
D: B137
A5
D1
D2
D3
D7
A19
D4
D5
A29
A28
A18
C6
B122
36
34
35
37
52
20
39
38
19
18
17
B21
E2
5
1
2
3
4
6
E57
ELECTRONIC THROTTLE CONTROL
E
* : TERMINAL No. OPTIONAL ARRANGEMENT
B362
B122
B21
E57
A: B134
B47
C: B136
D: B137
EN-06838

	Step	Check	Yes	No
1	**CHECK FOR ANY OTHER DTC ON DISPLAY.**	Is any other DTC displayed?	Check the appropriate DTC using the "List of Diagnostic Trouble Code (DTC)". <Ref. to EN(H4SO)(diag)-80, List of Diagnostic Trouble Code (DTC).>	Go to step **2**.
2	**CHECK ENGINE OIL.**	Is there a proper amount of engine oil?	Go to step **3**.	Replace engine oil. <Ref. to LU(H4SO)-10, REPLACEMENT, Engine Oil.>
3	**CHECK EXHAUST SYSTEM.**	Are there holes or loose bolts on exhaust system?	Repair the exhaust system.	Go to step **4**.
4	**CHECK AIR INTAKE SYSTEM.**	Are there holes, loose bolts or disconnection of hose on air intake system?	Repair the air intake system.	Go to step **5**.
5	**CHECK FUEL PRESSURE.** **WARNING:** **Place "NO OPEN FLAMES" signs near the working area.** **CAUTION:** **Be careful not to spill fuel.** Measure the fuel pressure. <Ref. to ME(H4SO)-26, INSPECTION, Fuel Pressure.> **CAUTION:** **Release fuel pressure before removing the fuel pressure gauge.**	Is the measured value 339.5 — 360.5 kPa (3.5 — 3.7 kg/cm^2, 49 — 52 psi)?	Go to step **6**.	Repair the following item. Fuel pressure is too high: • Clogged fuel line or bent hose Fuel pressure is too low: • Improper fuel pump discharge • Clogged fuel line
6	**CHECK ENGINE COOLANT TEMPERATURE SENSOR.** 1) Start the engine and warm up completely. 2) Read the data of engine coolant temperature sensor signal using Subaru Select Monitor or general scan tool. NOTE: • SUBARU SELECT MONITOR For detailed operation procedure, refer to "READ CURRENT DATA FOR ENGINE". <Ref. to EN(H4SO)(diag)-33, Subaru Select Monitor.> • General Scan Tool For detailed operation procedures, refer to the general scan tool operation manual.	Is the engine coolant temperature 75°C (167°F) or higher?	Go to step **7**.	Replace the engine coolant temperature sensor. <Ref. to FU(H4SO)-22, Engine Coolant Temperature Sensor.>

	Step	Check	Yes	No
7	**CHECK MASS AIR FLOW AND INTAKE AIR TEMPERATURE SENSOR.** 1) Start the engine and warm up engine until coolant temperature is higher than 75°C (167°F). 2) For AT models, set the select lever to "P" range or "N" range, and for MT models, place the shift lever in the neutral position. 3) Turn the A/C switch to OFF. 4) Turn all the accessory switches to OFF. 5) Read the data of the mass air flow and intake air temperature sensor signal using Subaru Select Monitor or general scan tool. NOTE: • SUBARU SELECT MONITOR For detailed operation procedure, refer to "READ CURRENT DATA FOR ENGINE". <Ref. to EN(H4SO)(diag)-33, Subaru Select Monitor.> • General Scan Tool For detailed operation procedures, refer to the general scan tool operation manual.	Is the measured value 2.0 — 5.0 g/s (0.26 — 0.66 lb/m)?	Go to step **8**.	Replace the mass air flow and intake air temperature sensor. <Ref. to FU(H4SO)-28, Mass Air Flow and Intake Air Temperature Sensor.>
8	**CHECK MASS AIR FLOW AND INTAKE AIR TEMPERATURE SENSOR.** 1) Start the engine and warm up engine until coolant temperature is higher than 75°C (167°F). 2) For AT models, set the select lever to "P" range or "N" range, and for MT models, place the shift lever in the neutral position. 3) Turn the A/C switch to OFF. 4) Turn all the accessory switches to OFF. 5) Open the front hood. 6) Measure the ambient temperature. 7) Read the data of the mass air flow and intake air temperature sensor signal using Subaru Select Monitor or general scan tool. NOTE: • SUBARU SELECT MONITOR For detailed operation procedure, refer to "READ CURRENT DATA FOR ENGINE". <Ref. to EN(H4SO)(diag)-33, Subaru Select Monitor.> • General Scan Tool For detailed operation procedures, refer to the general scan tool operation manual.	Subtract ambient temperature from intake air temperature. Is the obtained value –10 — 50°C (–18 — 90°F)?	Go to step **9**.	Check the mass air flow and intake air temperature sensor. <Ref. to FU(H4SO)-28, Mass Air Flow and Intake Air Temperature Sensor.>
9	**CHECK OUTPUT SIGNAL OF ECM.** 1) Turn the ignition switch to ON. 2) Measure the voltage between ECM and chassis ground on faulty cylinders. ***Connector & terminal*** ***#1 (B137) No. 8 (+) — Chassis ground (–):*** ***#2 (B137) No. 9 (+) — Chassis ground (–):*** ***#3 (B137) No. 10 (+) — Chassis ground (–):*** ***#4 (B137) No. 11 (+) — Chassis ground (–):***	Is the voltage 10 V or more?	Go to step **14**.	Go to step **10**.

	Step	Check	Yes	No
10	**CHECK HARNESS BETWEEN ECM AND FUEL INJECTOR.** 1) Turn the ignition switch to OFF. 2) Disconnect the connector from fuel injector on faulty cylinders. 3) Measure the resistance between fuel injector connector and engine ground on faulty cylinders. ***Connector & terminal*** ***#1 (E5) No. 1 — Engine ground:*** ***#2 (E16) No. 1 — Engine ground:*** ***#3 (E6) No. 1 — Engine ground:*** ***#4 (E17) No. 1 — Engine ground:***	Is the resistance 1 MΩ or more?	Go to step **11**.	Repair the short circuit to ground in harness between ECM and fuel injector connector.
11	**CHECK HARNESS BETWEEN ECM AND FUEL INJECTOR.** Measure the resistance of harness between ECM and fuel injector on faulty cylinders. ***Connector & terminal*** ***#1 (B137) No. 8 — (E5) No. 1:*** ***#2 (B137) No. 9 — (E16) No. 1:*** ***#3 (B137) No. 10 — (E6) No. 1:*** ***#4 (B137) No. 11 — (E17) No. 1:***	Is the resistance less than 1 Ω?	Go to step **12**.	Repair the harness and connector. NOTE: In this case, repair the following item: • Open circuit of harness between ECM and fuel injector connector • Poor contact of coupling connector
12	**CHECK FUEL INJECTOR.** Measure the resistance between fuel injector terminals on faulty cylinder. ***Terminals*** ***No. 1 — No. 2:***	Is the resistance between 5 — 20 Ω?	Go to step **13**.	Replace the faulty fuel injector. <Ref. to FU(H4SO)-30, Fuel Injector.>
13	**CHECK POWER SUPPLY LINE.** 1) Turn the ignition switch to ON. 2) Measure the voltage between fuel injector and engine ground on faulty cylinders. ***Connector & terminal*** ***#1 (E5) No. 2 (+) — Engine ground (–):*** ***#2 (E16) No. 2 (+) — Engine ground (–):*** ***#3 (E6) No. 2 (+) — Engine ground (–):*** ***#4 (E17) No. 2 (+) — Engine ground (–):***	Is the voltage 10 V or more?	Repair the poor contact of all connectors in fuel injector circuit.	Repair the harness and connector. NOTE: In this case, repair the following item: • Open circuit in harness between the main relay connector and fuel injector connector on faulty cylinders • Poor contact of coupling connector • Poor contact of main relay connector
14	**CHECK HARNESS BETWEEN ECM AND FUEL INJECTOR.** 1) Turn the ignition switch to OFF. 2) Disconnect the connector from fuel injector on faulty cylinders. 3) Turn the ignition switch to ON. 4) Measure the voltage between ECM and chassis ground on faulty cylinders. ***Connector & terminal*** ***#1 (B137) No. 8 (+) — Chassis ground (–):*** ***#2 (B137) No. 9 (+) — Chassis ground (–):*** ***#3 (B137) No. 10 (+) — Chassis ground (–):*** ***#4 (B137) No. 11 (+) — Chassis ground (–):***	Is the voltage 10 V or more?	Repair the short circuit to power in the harness between the ECM and fuel injector.	Go to step **15**.

	Step	Check	Yes	No
15	**CHECK FUEL INJECTOR.** 1) Turn the ignition switch to OFF. 2) Measure the resistance between fuel injector terminals on faulty cylinder. ***Terminals*** ***No. 1 — No. 2:***	Is the resistance less than 1 Ω?	Replace the faulty fuel injector. <Ref. to FU(H4SO)-30, Fuel Injector.>	Go to step **16**.
16	**CHECK INSTALLATION CONDITION OF CAMSHAFT POSITION SENSOR/CRANKSHAFT POSITION SENSOR.**	Is the camshaft position sensor or crankshaft position sensor loosely installed?	Tighten the camshaft position sensor or crankshaft position sensor.	Go to step **17**.
17	**CHECK CRANK SPROCKET.** Remove the timing belt cover. <Ref. to ME(H4SO)-43, REMOVAL, Timing Belt Cover.>	Is the crank sprocket rusted or does it have broken teeth?	Replace the crank sprocket. <Ref. to ME(H4SO)-50, Crank Sprocket.>	Go to step **18**.
18	**CHECK INSTALLATION CONDITION OF TIMING BELT.** Turn the crankshaft using ST, and align the alignment mark on crank sprocket with alignment mark on cylinder block. ST 499987500 CRANKSHAFT SOCKET	Is the timing belt dislocated from its proper position?	Repair the installation condition of timing belt. <Ref. to ME(H4SO)-44, Timing Belt.>	Go to step **19**.
19	**CHECK ELECTRONIC THROTTLE CONTROL RELAY.** 1) Turn the ignition switch to OFF. 2) Remove the electronic throttle control relay. 3) Connect the battery to terminals No. 5 and No. 6 of electronic throttle control relay. 4) Measure the resistance between electronic throttle control relay terminals. ***Terminals*** ***No. 8 — No. 7:***	Is the resistance less than 1 Ω?	Go to step **20**.	Replace the electronic throttle control relay. <Ref. to FU(H4SO)-42, Electronic Throttle Control Relay.>
20	**CHECK POWER SUPPLY OF ELECTRONIC THROTTLE CONTROL RELAY.** Measure the voltage between electronic throttle control relay connector and chassis ground. ***Connector & terminal*** ***(B362) No. 8 (+) — Chassis ground (–):***	Is the voltage 10 V or more?	Go to step **21**.	Repair the open or ground short circuit of power supply circuit.
21	**CHECK HARNESS BETWEEN ECM AND ELECTRONIC THROTTLE CONTROL RELAY.** 1) Disconnect the connectors from ECM. 2) Turn the ignition switch to ON. 3) Measure the voltage between electronic throttle control relay connector and chassis ground. ***Connector & terminal*** ***(B362) No. 6 (+) — Chassis ground (–):***	Is the voltage 10 V or more?	Repair the short circuit to power in the harness between ECM and electronic throttle control relay connector.	Go to step **22**.
22	**CHECK HARNESS BETWEEN ECM AND ELECTRONIC THROTTLE CONTROL RELAY.** 1) Turn the ignition switch to OFF. 2) Measure the resistance between electronic throttle control relay connector and chassis ground. ***Connector & terminal*** ***(B362) No. 6 — Chassis ground:*** ***(B362) No. 7 — Chassis ground:***	Is the resistance 1 MΩ or more?	Go to step **23**.	Repair the short circuit in harness to ground between ECM and electronic throttle control relay connector.

	Step	Check	Yes	No
23	**CHECK HARNESS BETWEEN ECM AND ELECTRONIC THROTTLE CONTROL RELAY.** Measure the resistance between ECM and electronic throttle control relay connector. ***Connector & terminal*** ***(B136) No. 21 — (B362) No. 6:*** ***(B136) No. 1 — (B362) No. 7:***	Is the resistance less than 1 Ω?	Go to step **24**.	Repair the open circuit in harness between ECM and electronic throttle control relay connector.
24	**CHECK HARNESS BETWEEN ECM AND ELECTRONIC THROTTLE CONTROL.** 1) Turn the ignition switch to OFF. 2) Disconnect the connectors from ECM and electronic throttle control. 3) Measure the resistance between ECM and chassis ground. ***Connector & terminal*** ***(B134) No. 19 — Chassis ground:*** ***(B134) No. 18 — Chassis ground:*** ***(B134) No. 18 — (B136) No. 6:*** ***(B134) No. 28 — Chassis ground:***	Is the resistance 1 MΩ or more?	Go to step **25**.	Repair the short circuit to ground in harness between ECM and electronic throttle control connector.
25	**CHECK SHORT CIRCUIT INSIDE THE ECM.** 1) Connect the connector to ECM. 2) Measure the resistance between electronic throttle control connector and engine ground. ***Connector & terminal*** ***(E57) No. 6 — Engine ground:*** ***(E57) No. 4 — Engine ground:***	Is the resistance 1 MΩ or more?	Go to step **26**.	Repair the short circuit to ground in harness between ECM and electronic throttle control connector. Replace the ECM if defective. <Ref. to FU(H4SO)-39, Engine Control Module (ECM).>
26	**CHECK HARNESS BETWEEN ECM AND ELECTRONIC THROTTLE CONTROL.** 1) Disconnect the connectors from ECM. 2) Measure the resistance of harness between ECM and electronic throttle control connector. ***Connector & terminal*** ***(B134) No. 18 — (E57) No. 6:*** ***(B134) No. 28 — (E57) No. 4:*** ***(B134) No. 29 — (E57) No. 3:***	Is the resistance less than 1 Ω?	Go to step **27**.	Repair the harness and connector. NOTE: In this case, repair the following item: • Open circuit in harness between ECM and electronic throttle control connector • Poor contact of coupling connector
27	**CHECK HARNESS BETWEEN ECM AND ELECTRONIC THROTTLE CONTROL.** 1) Connect the connector to ECM. 2) Measure the resistance between electronic throttle control connector and engine ground. ***Connector & terminal*** ***(E57) No. 3 — Engine ground:***	Is the resistance less than 5 Ω?	Go to step **28**.	Repair the harness and connector. NOTE: In this case, repair the following item: • Open circuit of harness between ECM and engine ground • Poor contact in ECM connector • Poor contact of coupling connector

	Step	Check	Yes	No
28	**CHECK HARNESS BETWEEN ECM AND ELECTRONIC THROTTLE CONTROL.** 1) Turn the ignition switch to ON. 2) Measure the voltage between electronic throttle control connector and engine ground. ***Connector & terminal*** ***(E57) No. 6 (+) — Engine ground (–):*** ***(E57) No. 4 (+) — Engine ground (–):***	Is the voltage 4.85 V or more?	Repair the short circuit to power in the harness between ECM and electronic throttle control connector.	Go to step **29**.
29	**CHECK HARNESS BETWEEN ECM AND ELECTRONIC THROTTLE CONTROL.** 1) Turn the ignition switch to OFF. 2) Disconnect the connectors from ECM. 3) Measure the resistance between ECM connectors. ***Connector & terminal*** ***(B134) No. 19 — (B134) No. 18:*** ***(B134) No. 19 — (B134) No. 28:***	Is the resistance 1 MΩ or more?	Go to step **30**.	Repair the short circuit to power in the harness between ECM and electronic throttle control connector.
30	**CHECK SENSOR OUTPUT.** 1) Connect all connectors. 2) Turn the ignition switch to ON. 3) Read the data of main throttle sensor signal using Subaru Select Monitor. NOTE: For detailed operation procedure, refer to "READ CURRENT DATA FOR ENGINE". <Ref. to EN(H4SO)(diag)-33, Subaru Select Monitor.>	Is the voltage 0.81 — 0.87 V?	Go to step **31**.	Repair poor contact of the electronic throttle control connector. Replace the electronic throttle control if defective. <Ref. to FU(H4SO)-12, Throttle Body.>
31	**CHECK SENSOR OUTPUT.** Read the data of sub throttle sensor signal using Subaru Select Monitor. NOTE: SUBARU SELECT MONITOR For detailed operation procedure, refer to "READ CURRENT DATA FOR ENGINE". <Ref. to EN(H4SO)(diag)-33, Subaru Select Monitor.>	Is the voltage 1.64 — 1.70 V?	Go to step **32**.	Repair poor contact of the electronic throttle control connector. Replace the electronic throttle control if defective. <Ref. to FU(H4SO)-12, Throttle Body.>
32	**CHECK HARNESS BETWEEN ECM AND ELECTRONIC THROTTLE CONTROL MOTOR.** 1) Turn the ignition switch to OFF. 2) Disconnect the connectors from ECM and electronic throttle control. 3) Measure the resistance between ECM and electronic throttle control connector. ***Connector & terminal*** ***(B137) No. 5 — (E57) No. 2:*** ***(B137) No. 4 — (E57) No. 1:***	Is the resistance less than 1 Ω?	Go to step **33**.	Repair the harness and connector. NOTE: In this case, repair the following item: • Open circuit in harness between ECM and electronic throttle control connector • Poor contact of coupling connector
33	**CHECK HARNESS BETWEEN ECM AND ELECTRONIC THROTTLE CONTROL MOTOR.** 1) Connect the connector to ECM. 2) Turn the ignition switch to ON. 3) Measure the voltage between electronic throttle control connector and engine ground. ***Connector & terminal*** ***(E57) No. 2 (+) — Engine ground (–):*** ***(E57) No. 1 (+) — Engine ground (–):***	Is the voltage 5 V or more?	Repair the short circuit to power in the harness between ECM and electronic throttle control.	Go to step **34**.

Step		Check	Yes	No
34	**CHECK HARNESS BETWEEN ECM AND ELECTRONIC THROTTLE CONTROL MOTOR.** 1) Turn the ignition switch to OFF. 2) Disconnect the connectors from ECM. 3) Measure the resistance between electronic throttle control connector and engine ground. ***Connector & terminal*** ***(E57) No. 2 — Engine ground:*** ***(E57) No. 1 — Engine ground:***	Is the resistance 1 MΩ or more?	Go to step **35**.	Repair the short circuit to ground in harness between ECM and electronic throttle control connector.
35	**CHECK ELECTRONIC THROTTLE CONTROL MOTOR HARNESS.** Measure the resistance between the electronic throttle control connector terminals. ***Connector & terminal*** ***(E57) No. 2 — (E57) No. 1:***	Is the resistance 1 MΩ or more?	Go to step **36**.	Repair the short circuit of harness between ECM and electronic throttle control connector.
36	**CHECK ELECTRONIC THROTTLE CONTROL GROUND CIRCUIT.** Measure the resistance between ECM and chassis ground. ***Connector & terminal*** ***(B134) No. 5 — Chassis ground:*** ***(B137) No. 1 — Chassis ground:*** ***(B137) No. 2 — Chassis ground:*** ***(B137) No. 3 — Chassis ground:*** ***(B137) No. 7 — Chassis ground:***	Is the resistance less than 5 Ω?	Go to step **37**.	Repair the harness and connector. NOTE: In this case, repair the following item: • Open circuit of harness between ECM and engine ground • Poor contact of coupling connector
37	**CHECK ELECTRONIC THROTTLE CONTROL.** Measure the resistance between electronic throttle control terminals. ***Terminals*** ***No. 2 — No. 1:***	Is the resistance 50 Ω or less?	Go to step **38**.	Replace the electronic throttle control. <Ref. to FU(H4SO)-12, Throttle Body.>
38	**CHECK ELECTRONIC THROTTLE CONTROL.** Move the throttle valve to the fully open and fully closed positions with fingers. Check that the valve returns to the specified position when releasing fingers.	Does the valve return to the specified position? Standard value: 3 mm (0.12 in) from fully closed position	Repair the poor contact of ECM connector.	Replace the electronic throttle control. <Ref. to FU(H4SO)-12, Throttle Body.>

CY:DTC P2096 POST CATALYST FUEL TRIM SYSTEM TOO LEAN (BANK 1)

NOTE:
Refer to DTC P2097 for diagnostic procedure. <Ref. to EN(H4SO)(diag)-270, DTC P2097 POST CATALYST FUEL TRIM SYSTEM TOO RICH (BANK 1), Diagnostic Procedure with Diagnostic Trouble Code (DTC).>

CZ:DTC P2097 POST CATALYST FUEL TRIM SYSTEM TOO RICH (BANK 1)

DTC DETECTING CONDITION:

- Two consecutive driving cycles with fault
- GENERAL DESCRIPTION <Ref. to GD(H4SO)-180, DTC P2097 POST CATALYST FUEL TRIM SYSTEM TOO RICH (BANK 1), Diagnostic Trouble Code (DTC) Detecting Criteria.>

CAUTION:

After repair or replacement of faulty parts, perform Clear Memory Mode <Ref. to EN(H4SO)(diag)-50, OPERATION, Clear Memory Mode.>, and Inspection Mode <Ref. to EN(H4SO)(diag)-41, PROCEDURE, Inspection Mode.>.

WIRING DIAGRAM:

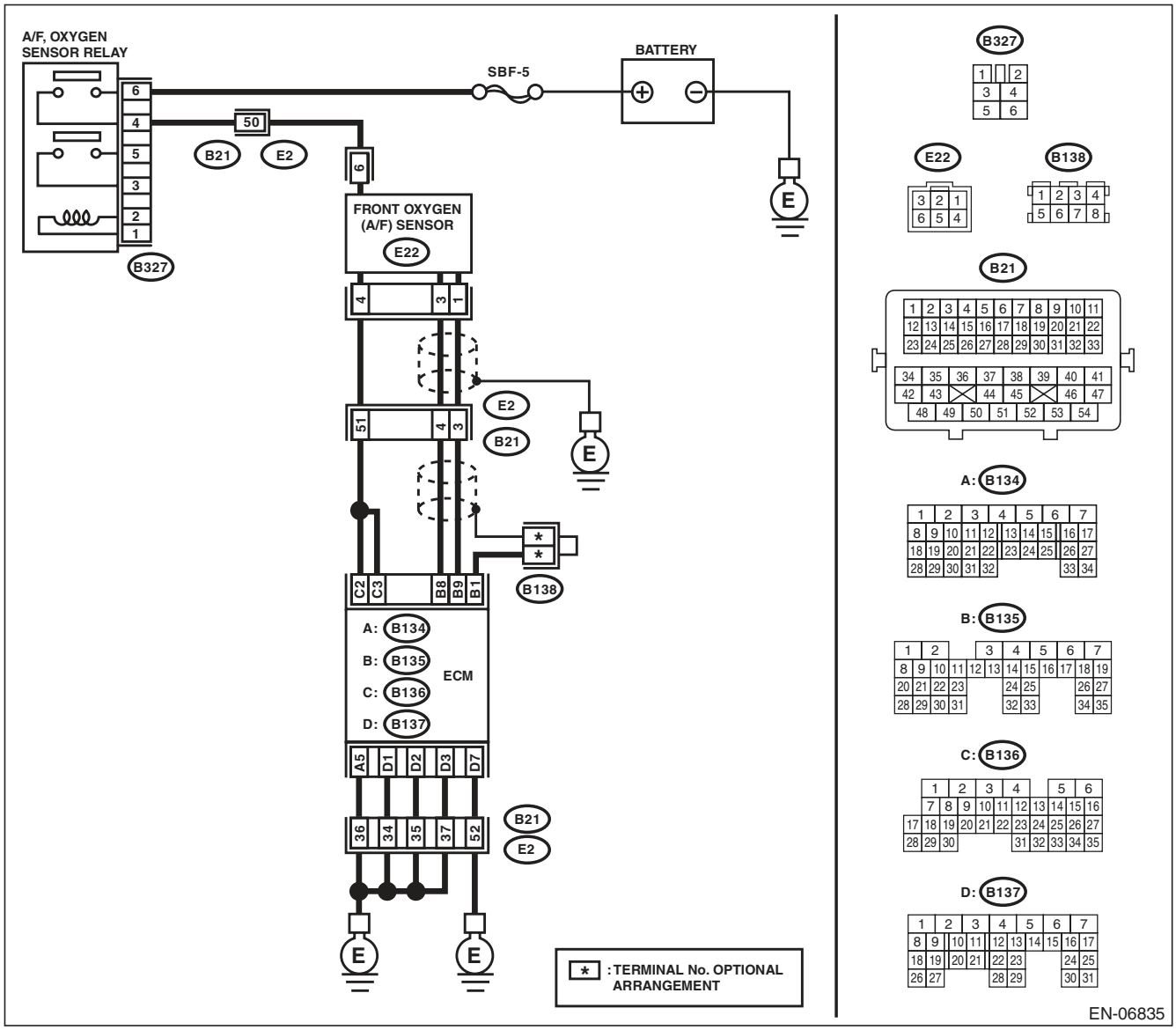

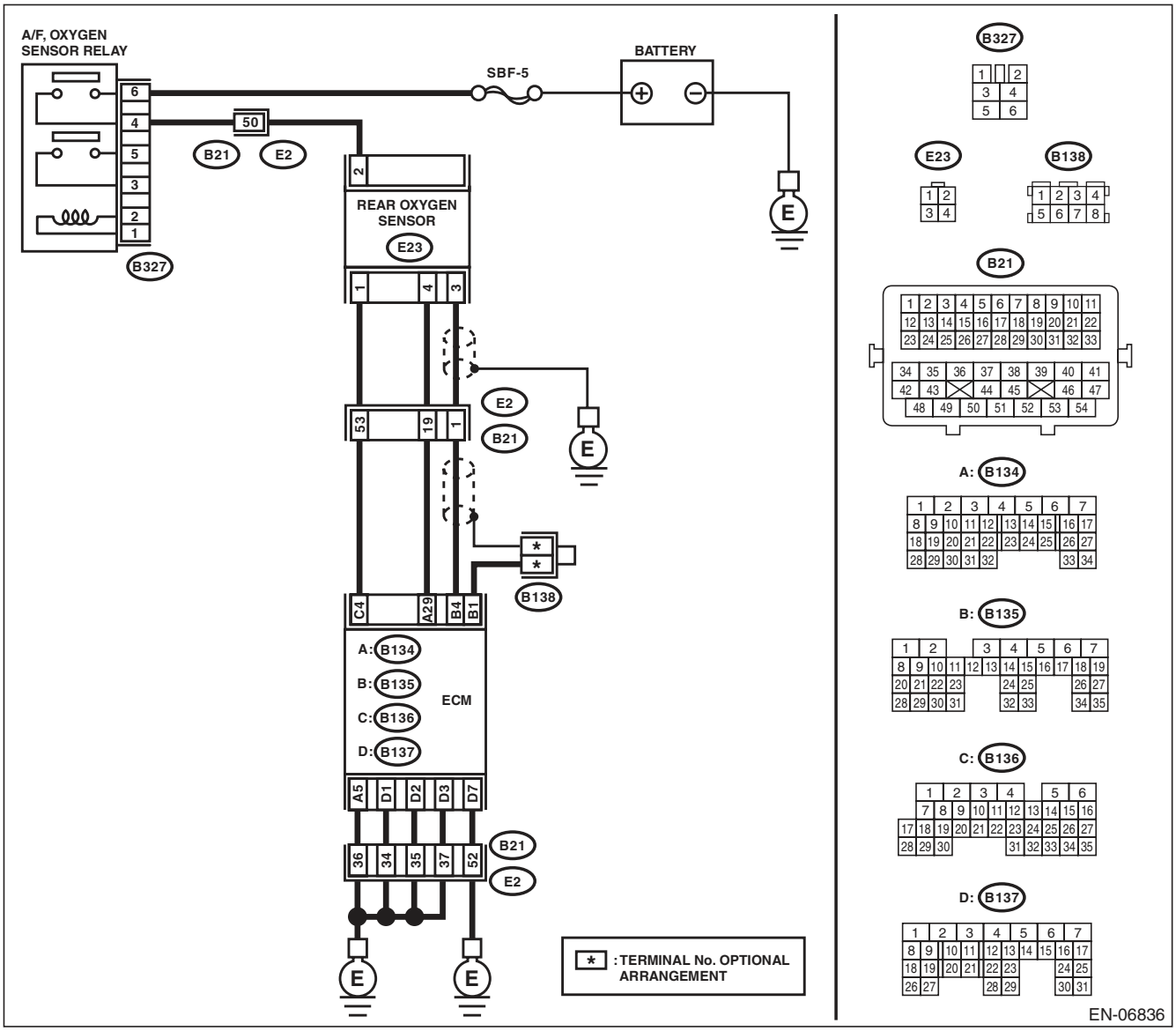
A/F, OXYGEN SENSOR RELAY
SBF-5
BATTERY
50
B21
E2
B327
REAR OXYGEN SENSOR
E23
E2
B21
B138
C4
A29
B4
B1
A: B134
B: B135
C: B136
D: B137
ECM
A5
D1
D2
D3
D7
36
34
35
37
52
B21
E2
E
* : TERMINAL No. OPTIONAL ARRANGEMENT
B327
E23
B138
B21
A: B134
B: B135
C: B136
D: B137
EN-06836

	Step	Check	Yes	No
1	**CHECK FOR ANY OTHER DTC ON DISPLAY.**	Is any other DTC displayed?	Check DTC using "List of Diagnostic Trouble Code (DTC)". <Ref. to EN(H4SO)(diag)-80, List of Diagnostic Trouble Code (DTC).>	Go to step **2**.
2	**CHECK FRONT OXYGEN (A/F) SENSOR CONNECTOR AND COUPLING CONNECTOR.**	Has water entered the connector?	Completely remove any water inside.	Go to step **3**.
3	**CHECK HARNESS BETWEEN ECM AND FRONT OXYGEN (A/F) SENSOR CONNECTOR.** 1) Turn the ignition switch to OFF. 2) Disconnect the connectors from ECM and front oxygen (A/F) sensor. 3) Measure the resistance of harness between ECM and front oxygen (A/F) sensor connector. ***Connector & terminal*** ***(B135) No. 9 — (E22) No. 1:*** ***(B135) No. 8 — (E22) No. 3:***	Is the resistance less than 1 Ω?	Go to step **4**.	Repair the harness and connector. NOTE: In this case, repair the following item: • Open circuit in harness between ECM and front oxygen (A/F) sensor connector • Poor contact of coupling connector
4	**CHECK HARNESS BETWEEN ECM AND FRONT OXYGEN (A/F) SENSOR CONNECTOR.** Measure the resistance between ECM and chassis ground. ***Connector & terminal*** ***(B135) No. 9 — Chassis ground:*** ***(B135) No. 8 — Chassis ground:***	Is the resistance 1 MΩ or more?	Go to step **5**.	Repair the ground short circuit of harness between ECM and front oxygen (A/F) sensor connector.
5	**CHECK OUTPUT SIGNAL FOR ECM.** 1) Connect the connector to ECM. 2) Turn the ignition switch to ON. 3) Measure the voltage between front oxygen (A/F) sensor connector and chassis ground. ***Connector & terminal*** ***(E22) No. 1 (+) — Chassis ground (–):***	Is the voltage 4.5 V or more?	Go to step **7**.	Go to step **6**.
6	**CHECK OUTPUT SIGNAL FOR ECM.** Measure the voltage between front oxygen (A/F) sensor connector and chassis ground. ***Connector & terminal*** ***(E22) No. 3 (+) — Chassis ground (–):***	Is the voltage 4.95 V or more?	Go to step **7**.	Go to step **8**.
7	**CHECK OUTPUT SIGNAL FOR ECM.** Measure the voltage between front oxygen (A/F) sensor connector and chassis ground. ***Connector & terminal*** ***(E22) No. 1 (+) — Chassis ground (–):*** ***(E22) No. 3 (+) — Chassis ground (–):***	Is the voltage 8 V or more?	Repair the short circuit to power in the harness between ECM and front oxygen (A/F) sensor connector. After repair, replace the ECM. <Ref. to FU(H4SO)-39, Engine Control Module (ECM).>	Repair the poor contact of ECM connector.
8	**CHECK EXHAUST SYSTEM.**	Are there holes or loose bolts on exhaust system?	Repair the exhaust system.	Go to step **9**.

	Step	Check	Yes	No
9	**CHECK AIR INTAKE SYSTEM.**	Are there holes, loose bolts or disconnection of hose on air intake system?	Repair the air intake system.	Go to step **10**.
10	**CHECK FUEL PRESSURE.** **WARNING:** **Place "NO OPEN FLAMES" signs near the working area.** **CAUTION:** **Be careful not to spill fuel.** 1) Connect the front oxygen (A/F) sensor connector. 2) Measure the fuel pressure. <Ref. to ME(H4SO)-26, INSPECTION, Fuel Pressure.> **CAUTION:** **Release fuel pressure before removing the fuel pressure gauge.**	Is the measured value 339.5 — 360.5 kPa (3.5 — 3.7 kg/cm^2, 49 — 52 psi)?	Go to step **11**.	Repair the following item. Fuel pressure is too high: • Clogged fuel line or bent hose Fuel pressure is too low: • Improper fuel pump discharge • Clogged fuel line
11	**CHECK ENGINE COOLANT TEMPERATURE SENSOR.** 1) Start the engine and warm up completely. 2) Read the data of engine coolant temperature sensor signal using Subaru Select Monitor or general scan tool. NOTE: • SUBARU SELECT MONITOR For detailed operation procedure, refer to "READ CURRENT DATA FOR ENGINE". <Ref. to EN(H4SO)(diag)-33, Subaru Select Monitor.> • General Scan Tool For detailed operation procedures, refer to the general scan tool operation manual.	Is the engine coolant temperature 75°C (167°F) or higher?	Go to step **12**.	Replace the engine coolant temperature sensor. <Ref. to FU(H4SO)-22, Engine Coolant Temperature Sensor.>
12	**CHECK MASS AIR FLOW AND INTAKE AIR TEMPERATURE SENSOR.** 1) Start the engine and warm up engine until coolant temperature is higher than 75°C (167°F). 2) For AT models, set the select lever to "P" range or "N" range, and for MT models, place the shift lever in the neutral position. 3) Turn the A/C switch to OFF. 4) Turn all the accessory switches to OFF. 5) Read the data of the mass air flow and intake air temperature sensor signal using Subaru Select Monitor or general scan tool. NOTE: • SUBARU SELECT MONITOR For detailed operation procedure, refer to "READ CURRENT DATA FOR ENGINE". <Ref. to EN(H4SO)(diag)-33, Subaru Select Monitor.> • General Scan Tool For detailed operation procedures, refer to the general scan tool operation manual.	Is the measured value 2.0 — 5.0 g/s (0.26 — 0.66 lb/m)?	Go to step **13**.	Replace the mass air flow and intake air temperature sensor. <Ref. to FU(H4SO)-28, Mass Air Flow and Intake Air Temperature Sensor.>

	Step	Check	Yes	No
13	**CHECK MASS AIR FLOW AND INTAKE AIR TEMPERATURE SENSOR.** 1) Start the engine and warm up engine until coolant temperature is higher than 75°C (167°F). 2) For AT models, set the select lever to “P” range or “N” range, and for MT models, place the shift lever in the neutral position. 3) Turn the A/C switch to OFF. 4) Turn all the accessory switches to OFF. 5) Open the front hood. 6) Measure the ambient temperature. 7) Read the data of the mass air flow and intake air temperature sensor signal using Subaru Select Monitor or general scan tool. NOTE: • SUBARU SELECT MONITOR For detailed operation procedure, refer to “READ CURRENT DATA FOR ENGINE”. <Ref. to EN(H4SO)(diag)-33, Subaru Select Monitor.> • General Scan Tool For detailed operation procedures, refer to the general scan tool operation manual.	Subtract ambient temperature from intake air temperature. Is the obtained value –10 — 50°C (–18 — 90°F)?	Go to step **14**.	Check the mass air flow and intake air temperature sensor. <Ref. to FU(H4SO)-28, Mass Air Flow and Intake Air Temperature Sensor.>
14	**CHECK REAR OXYGEN SENSOR DATA.** 1) Warm up the engine until engine coolant temperature is above 75°C (167°F), and keep the engine speed at 3,000 rpm. (for up to 2 minutes) 2) Read the data of rear oxygen sensor signal using Subaru Select Monitor or general scan tool. NOTE: • Depress the clutch pedal. (MT model) • SUBARU SELECT MONITOR For detailed operation procedure, refer to “READ CURRENT DATA FOR ENGINE”. <Ref. to EN(H4SO)(diag)-33, Subaru Select Monitor.> • General Scan Tool For detailed operation procedures, refer to the general scan tool operation manual.	Is the voltage 490 mV or more?	Go to step **15**.	Go to step **16**.
15	**CHECK REAR OXYGEN SENSOR DATA.** 1) Warm up the engine until engine coolant temperature is above 75°C (167°F), and rapidly reduce the engine speed from 3,000 rpm. 2) Read the data of rear oxygen sensor signal using Subaru Select Monitor or general scan tool. NOTE: • Depress the clutch pedal. (MT model) • SUBARU SELECT MONITOR For detailed operation procedure, refer to “READ CURRENT DATA FOR ENGINE”. <Ref. to EN(H4SO)(diag)-33, Subaru Select Monitor.> • General Scan Tool For detailed operation procedures, refer to the general scan tool operation manual.	Is the voltage 250 mV or less?	Go to step **17**.	Go to step **16**.

	Step	Check	Yes	No
16	**CHECK REAR OXYGEN SENSOR CONNECTOR AND COUPLING CONNECTOR.**	Has water entered the connector?	Completely remove any water inside.	Go to step **18**.
17	**CHECK FRONT OXYGEN (A/F) SENSOR AND REAR OXYGEN SENSOR DATA.** 1) Warm up the engine until engine coolant temperature is higher than 75°C (167°F), then keep the engine idling for 5 minutes or more. 2) Read the data of rear oxygen sensor signal using Subaru Select Monitor or general scan tool. NOTE: • SUBARU SELECT MONITOR For detailed operation procedure, refer to "READ CURRENT DATA FOR ENGINE". <Ref. to EN(H4SO)(diag)-33, Subaru Select Monitor.> • General Scan Tool For detailed operation procedures, refer to the general scan tool operation manual.	Is a voltage of 0.8 V or more maintained for 5 minutes or more?	Replace the front oxygen (A/F) sensor. <Ref. to FU(H4SO)-35, Front Oxygen (A/F) Sensor.>	Go to step **18**.
18	**CHECK HARNESS BETWEEN ECM AND REAR OXYGEN SENSOR CONNECTOR.** 1) Turn the ignition switch to OFF. 2) Disconnect the connectors from ECM and rear oxygen sensor. 3) Measure the resistance of harness between ECM and rear oxygen sensor connector. ***Connector & terminal*** ***(B135) No. 4 — (E23) No. 3:*** ***(B134) No. 29 — (E23) No. 4:***	Is the resistance less than 1 Ω?	Go to step **19**.	Repair the harness and connector. NOTE: In this case, repair the following item: • Open circuit in harness between ECM and rear oxygen sensor connector • Poor contact of coupling connector
19	**CHECK HARNESS BETWEEN ECM AND REAR OXYGEN SENSOR CONNECTOR.** 1) Connect the connector to ECM. 2) Turn the ignition switch to ON. 3) Measure the voltage between rear oxygen sensor connector and chassis ground. ***Connector & terminal*** ***(E23) No. 3 (+) — Chassis ground (–):***	Is the voltage 0.2 — 0.5 V?	Replace the rear oxygen sensor. <Ref. to FU(H4SO)-37, Rear Oxygen Sensor.>	Repair the harness and connector. NOTE: In this case, repair the following item: • Open circuit of harness between the ECM and rear oxygen sensor • Poor contact in ECM connector • Poor contact of coupling connector

DA:DTC P2101 THROTTLE ACTUATOR CONTROL MOTOR CIRCUIT RANGE/ PERFORMANCE

DTC DETECTING CONDITION:

- Immediately at fault recognition
- GENERAL DESCRIPTION <Ref. to GD(H4SO)-182, DTC P2101 THROTTLE ACTUATOR CONTROL MOTOR CIRCUIT RANGE/PERFORMANCE, Diagnostic Trouble Code (DTC) Detecting Criteria.>

TROUBLE SYMPTOM:

- Improper idling
- Poor driving performance
- Engine stalls.

CAUTION:

After repair or replacement of faulty parts, perform Clear Memory Mode <Ref. to EN(H4SO)(diag)-50, OPERATION, Clear Memory Mode.>, and Inspection Mode <Ref. to EN(H4SO)(diag)-41, PROCEDURE, Inspection Mode.>.

WIRING DIAGRAM:

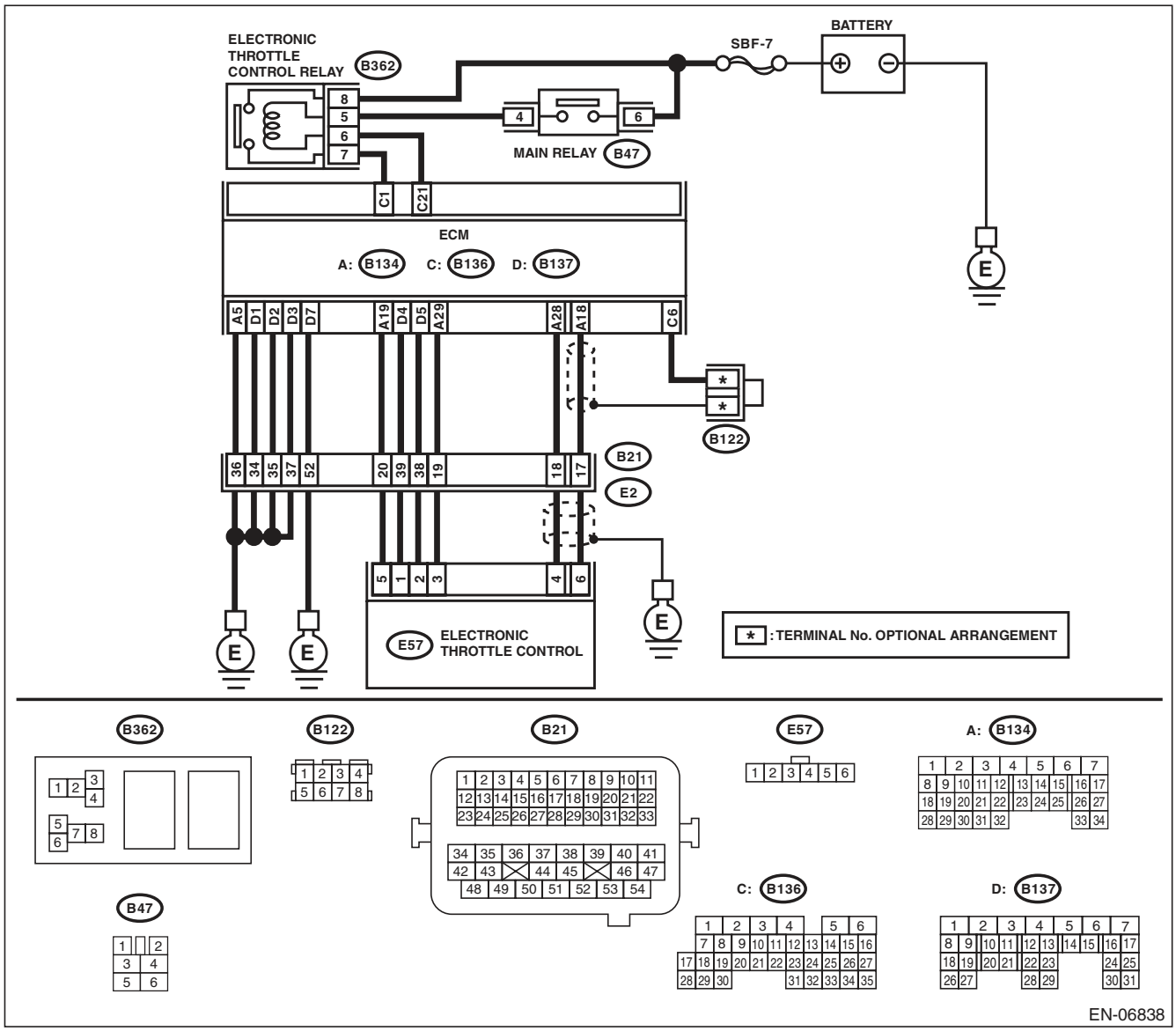

	Step	Check	Yes	No
1	**CHECK ELECTRONIC THROTTLE CONTROL RELAY.** 1) Turn the ignition switch to OFF. 2) Remove the electronic throttle control relay. 3) Connect the battery to terminals No. 5 and No. 6 of electronic throttle control relay. 4) Measure the resistance between electronic throttle control relay terminals. ***Terminals*** ***No. 8 — No. 7:***	Is the resistance less than 1 Ω?	Go to step **2**.	Replace the electronic throttle control relay. <Ref. to FU(H4SO)-42, Electronic Throttle Control Relay.>
2	**CHECK POWER SUPPLY OF ELECTRONIC THROTTLE CONTROL RELAY.** Measure the voltage between electronic throttle control relay connector and chassis ground. ***Connector & terminal*** ***(B362) No. 8 (+) — Chassis ground (–):***	Is the voltage 10 V or more?	Go to step **3**.	Repair the open or ground short circuit of power supply circuit.
3	**CHECK HARNESS BETWEEN ECM AND ELECTRONIC THROTTLE CONTROL RELAY.** 1) Disconnect the connectors from ECM. 2) Turn the ignition switch to ON. 3) Measure the voltage between electronic throttle control relay connector and chassis ground. ***Connector & terminal*** ***(B362) No. 6 (+) — Chassis ground (–):***	Is the voltage 10 V or more?	Repair the short circuit to power in harness between ECM and electronic throttle control relay.	Go to step **4**.
4	**CHECK HARNESS BETWEEN ECM AND ELECTRONIC THROTTLE CONTROL RELAY.** 1) Turn the ignition switch to OFF. 2) Measure the resistance between electronic throttle control relay connector and chassis ground. ***Connector & terminal*** ***(B362) No. 6 — Chassis ground:*** ***(B362) No. 7 — Chassis ground:***	Is the resistance 1 MΩ or more?	Go to step **5**.	Repair the short circuit in harness to ground between ECM and electronic throttle control relay connector.
5	**CHECK HARNESS BETWEEN ECM AND ELECTRONIC THROTTLE CONTROL RELAY.** Measure the resistance between ECM and electronic throttle control relay connector. ***Connector & terminal*** ***(B136) No. 21 — (B362) No. 6:*** ***(B136) No. 1 — (B362) No. 7:***	Is the resistance less than 1 Ω?	Go to step **6**.	Repair the open circuit in harness between ECM and electronic throttle control relay connector.
6	**CHECK HARNESS BETWEEN ECM AND ELECTRONIC THROTTLE CONTROL.** 1) Turn the ignition switch to OFF. 2) Disconnect the connectors from electronic throttle control. 3) Measure the resistance between ECM and chassis ground. ***Connector & terminal*** ***(B134) No. 19 — Chassis ground:*** ***(B134) No. 18 — Chassis ground:*** ***(B134) No. 18 — (B136) No. 6:*** ***(B134) No. 28 — Chassis ground:***	Is the resistance 1 MΩ or more?	Go to step **7**.	Repair the short circuit to ground in harness between ECM and electronic throttle control connector.

	Step	Check	Yes	No
7	**CHECK SHORT CIRCUIT INSIDE THE ECM.** 1) Connect the connector to ECM. 2) Measure the resistance between electronic throttle control connector and engine ground. ***Connector & terminal*** ***(E57) No. 6 — Engine ground:*** ***(E57) No. 4 — Engine ground:***	Is the resistance 1 MΩ or more?	Go to step **8**.	Repair the short circuit to ground in harness between ECM and electronic throttle control connector. Replace the ECM if defective. <Ref. to FU(H4SO)-39, Engine Control Module (ECM).>
8	**CHECK HARNESS BETWEEN ECM AND ELECTRONIC THROTTLE CONTROL.** 1) Disconnect the connectors from ECM. 2) Measure the resistance of harness between ECM and electronic throttle control connector. ***Connector & terminal*** ***(B134) No. 18 — (E57) No. 6:*** ***(B134) No. 28 — (E57) No. 4:*** ***(B134) No. 29 — (E57) No. 3:***	Is the resistance less than 1 Ω?	Go to step **9**.	Repair the harness and connector. NOTE: In this case, repair the following item: • Open circuit in harness between ECM and electronic throttle control connector • Poor contact of coupling connector
9	**CHECK HARNESS BETWEEN ECM AND ELECTRONIC THROTTLE CONTROL.** 1) Connect the connector to ECM. 2) Measure the resistance between electronic throttle control connector and engine ground. ***Connector & terminal*** ***(E57) No. 3 — Engine ground:***	Is the resistance less than 5 Ω?	Go to step **10**.	Repair the harness and connector. NOTE: In this case, repair the following item: • Open circuit of harness between ECM and engine ground • Poor contact in ECM connector • Poor contact of coupling connector
10	**CHECK HARNESS BETWEEN ECM AND ELECTRONIC THROTTLE CONTROL.** 1) Turn the ignition switch to ON. 2) Measure the voltage between electronic throttle control connector and engine ground. ***Connector & terminal*** ***(E57) No. 6 (+) — Engine ground (–):*** ***(E57) No. 4 (+) — Engine ground (–):***	Is the voltage 4.85 V or more?	Repair the short circuit to power in the harness between ECM and electronic throttle control connector.	Go to step **11**.
11	**CHECK HARNESS BETWEEN ECM AND ELECTRONIC THROTTLE CONTROL.** 1) Turn the ignition switch to OFF. 2) Disconnect the connectors from ECM. 3) Measure the resistance between ECM connectors. ***Connector & terminal*** ***(B134) No. 19 — (B134) No. 18:*** ***(B134) No. 19 — (B134) No. 28:***	Is the resistance 1 MΩ or more?	Go to step **12**.	Repair the short circuit to power in the harness between ECM and electronic throttle control connector.

	Step	Check	Yes	No
12	**CHECK SENSOR OUTPUT.** 1) Connect all connectors. 2) Turn the ignition switch to ON. 3) Read the data of main throttle sensor signal using Subaru Select Monitor. NOTE: For detailed operation procedure, refer to "READ CURRENT DATA FOR ENGINE". <Ref. to EN(H4SO)(diag)-33, Subaru Select Monitor.>	Is the voltage 0.81 — 0.87 V?	Go to step **13**.	Repair poor contact of the electronic throttle control connector. Replace the electronic throttle control if defective. <Ref. to FU(H4SO)-12, Throttle Body.>
13	**CHECK SENSOR OUTPUT.** Read the data of sub throttle sensor signal using Subaru Select Monitor. NOTE: SUBARU SELECT MONITOR For detailed operation procedure, refer to "READ CURRENT DATA FOR ENGINE". <Ref. to EN(H4SO)(diag)-33, Subaru Select Monitor.>	Is the voltage 1.64 — 1.70 V?	Go to step **14**.	Repair poor contact of the electronic throttle control connector. Replace the electronic throttle control if defective. <Ref. to FU(H4SO)-12, Throttle Body.>
14	**CHECK HARNESS BETWEEN ECM AND ELECTRONIC THROTTLE CONTROL MOTOR.** 1) Turn the ignition switch to OFF. 2) Disconnect the connectors from ECM and electronic throttle control. 3) Measure the resistance between ECM and electronic throttle control connector. ***Connector & terminal*** ***(B137) No. 5 — (E57) No. 2:*** ***(B137) No. 4 — (E57) No. 1:***	Is the resistance less than 1 Ω?	Go to step **15**.	Repair the harness and connector. NOTE: In this case, repair the following item: • Open circuit in harness between ECM and electronic throttle control connector • Poor contact of coupling connector
15	**CHECK HARNESS BETWEEN ECM AND ELECTRONIC THROTTLE CONTROL MOTOR.** 1) Connect the connector to ECM. 2) Turn the ignition switch to ON. 3) Measure the voltage between electronic throttle control connector and engine ground. ***Connector & terminal*** ***(E57) No. 2 (+) — Engine ground (–):*** ***(E57) No. 1 (+) — Engine ground (–):***	Is the voltage 5 V or more?	Repair the short circuit to power in the harness between ECM and electronic throttle control.	Go to step **16**.
16	**CHECK HARNESS BETWEEN ECM AND ELECTRONIC THROTTLE CONTROL MOTOR.** 1) Turn the ignition switch to OFF. 2) Disconnect the connectors from ECM. 3) Measure the resistance between electronic throttle control connector and engine ground. ***Connector & terminal*** ***(E57) No. 2 — Engine ground:*** ***(E57) No. 1 — Engine ground:***	Is the resistance 1 MΩ or more?	Go to step **17**.	Repair the short circuit to ground in harness between ECM and electronic throttle control.
17	**CHECK ELECTRONIC THROTTLE CONTROL MOTOR HARNESS.** Measure the resistance between the electronic throttle control connector terminals. ***Connector & terminal*** ***(E57) No. 2 — (E57) No. 1:***	Is the resistance 1 MΩ or more?	Go to step **18**.	Repair the short circuit of harness between ECM and electronic throttle control.

Step		Check	Yes	No
18	**CHECK ELECTRONIC THROTTLE CONTROL GROUND CIRCUIT.** Measure the resistance between ECM and chassis ground. ***Connector & terminal*** ***(B134) No. 5 — Chassis ground:*** ***(B137) No. 1 — Chassis ground:*** ***(B137) No. 2 — Chassis ground:*** ***(B137) No. 3 — Chassis ground:*** ***(B137) No. 7 — Chassis ground:***	Is the resistance less than 5 Ω?	Go to step **19**.	Repair the harness and connector. NOTE: In this case, repair the following item: • Open circuit of harness between ECM and engine ground • Poor contact of coupling connector
19	**CHECK ELECTRONIC THROTTLE CONTROL.** Measure the resistance between electronic throttle control terminals. ***Terminals*** ***No. 2 — No. 1:***	Is the resistance 50 Ω or less?	Go to step **20**.	Replace the electronic throttle control. <Ref. to FU(H4SO)-12, Throttle Body.>
20	**CHECK ELECTRONIC THROTTLE CONTROL.** Move the throttle valve to the fully open and fully closed positions with fingers. Check that the valve returns to the specified position when releasing fingers.	Does the valve return to the specified position? Standard value: 3 mm (0.12 in) from fully closed position	Repair the poor contact of ECM connector.	Replace the electronic throttle control. <Ref. to FU(H4SO)-12, Throttle Body.>

DB:DTC P2102 THROTTLE ACTUATOR CONTROL MOTOR CIRCUIT LOW

DTC DETECTING CONDITION:

- Immediately at fault recognition
- GENERAL DESCRIPTION <Ref. to GD(H4SO)-183, DTC P2102 THROTTLE ACTUATOR CONTROL MOTOR CIRCUIT LOW, Diagnostic Trouble Code (DTC) Detecting Criteria.>

TROUBLE SYMPTOM:

- Improper idling
- Poor driving performance
- Engine stalls.

CAUTION:

After repair or replacement of faulty parts, perform Clear Memory Mode <Ref. to EN(H4SO)(diag)-50, OPERATION, Clear Memory Mode.>, and Inspection Mode <Ref. to EN(H4SO)(diag)-41, PROCEDURE, Inspection Mode.>.

WIRING DIAGRAM:

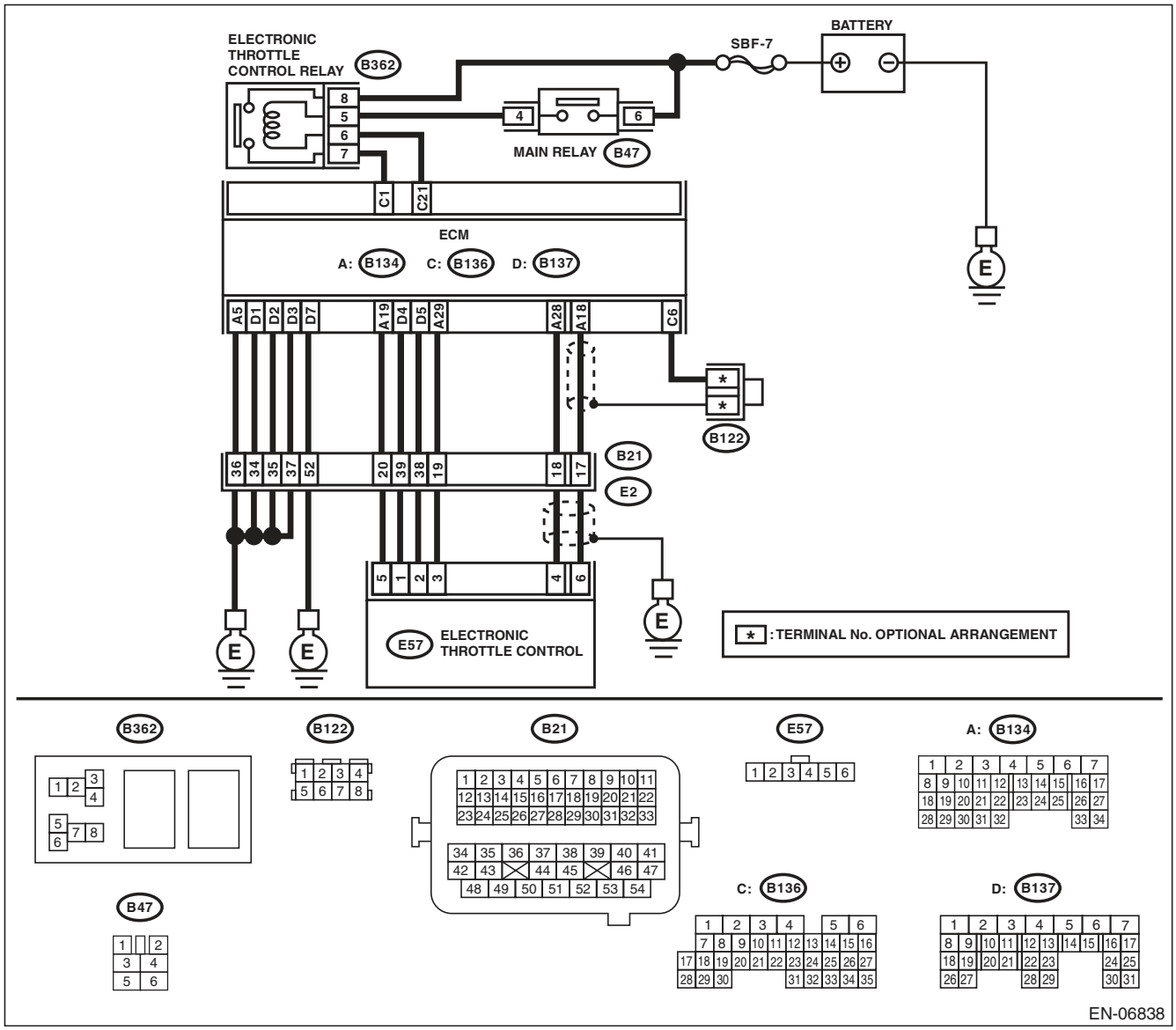

	Step	Check	Yes	No
1	**CHECK ELECTRONIC THROTTLE CONTROL RELAY.** 1) Turn the ignition switch to OFF. 2) Remove the electronic throttle control relay. 3) Connect the battery to terminals No. 5 and No. 6 of electronic throttle control relay. 4) Measure the resistance between electronic throttle control relay terminals. ***Terminals*** ***No. 8 — No. 7:***	Is the resistance less than 1 Ω?	Go to step **2**.	Replace the electronic throttle control relay. <Ref. to FU(H4SO)-42, Electronic Throttle Control Relay.>
2	**CHECK POWER SUPPLY OF ELECTRONIC THROTTLE CONTROL RELAY.** Measure the voltage between electronic throttle control relay connector and chassis ground. ***Connector & terminal*** ***(B362) No. 8 (+) — Chassis ground (–):***	Is the voltage 10 V or more?	Go to step **3**.	Repair the open or ground short circuit of power supply circuit.
3	**CHECK HARNESS BETWEEN ECM AND ELECTRONIC THROTTLE CONTROL RELAY.** 1) Disconnect the connectors from ECM. 2) Turn the ignition switch to ON. 3) Measure the voltage between electronic throttle control relay connector and chassis ground. ***Connector & terminal*** ***(B362) No. 6 (+) — Chassis ground (–):***	Is the voltage 10 V or more?	Repair the short circuit to power in the harness between ECM and electronic throttle control relay connector.	Go to step **4**.
4	**CHECK HARNESS BETWEEN ECM AND ELECTRONIC THROTTLE CONTROL RELAY.** 1) Turn the ignition switch to OFF. 2) Measure the resistance between electronic throttle control relay connector and chassis ground. ***Connector & terminal*** ***(B362) No. 6 — Chassis ground:*** ***(B362) No. 7 — Chassis ground:***	Is the resistance 1 MΩ or more?	Go to step **5**.	Repair the short circuit in harness to ground between ECM and electronic throttle control relay connector.
5	**CHECK HARNESS BETWEEN ECM AND ELECTRONIC THROTTLE CONTROL RELAY.** Measure the resistance between ECM and electronic throttle control relay connector. ***Connector & terminal*** ***(B136) No. 21 — (B362) No. 6:*** ***(B136) No. 1 — (B362) No. 7:***	Is the resistance less than 1 Ω?	Repair the poor contact of ECM connector.	Repair the open circuit in harness between ECM and electronic throttle control relay connector.

DC:DTC P2103 THROTTLE ACTUATOR CONTROL MOTOR CIRCUIT HIGH

DTC DETECTING CONDITION:

- Immediately at fault recognition
- GENERAL DESCRIPTION <Ref. to GD(H4SO)-184, DTC P2103 THROTTLE ACTUATOR CONTROL MOTOR CIRCUIT HIGH, Diagnostic Trouble Code (DTC) Detecting Criteria.>

CAUTION:

After repair or replacement of faulty parts, perform Clear Memory Mode <Ref. to EN(H4SO)(diag)-50, OPERATION, Clear Memory Mode.>, and Inspection Mode <Ref. to EN(H4SO)(diag)-41, PROCEDURE, Inspection Mode.>.

WIRING DIAGRAM:

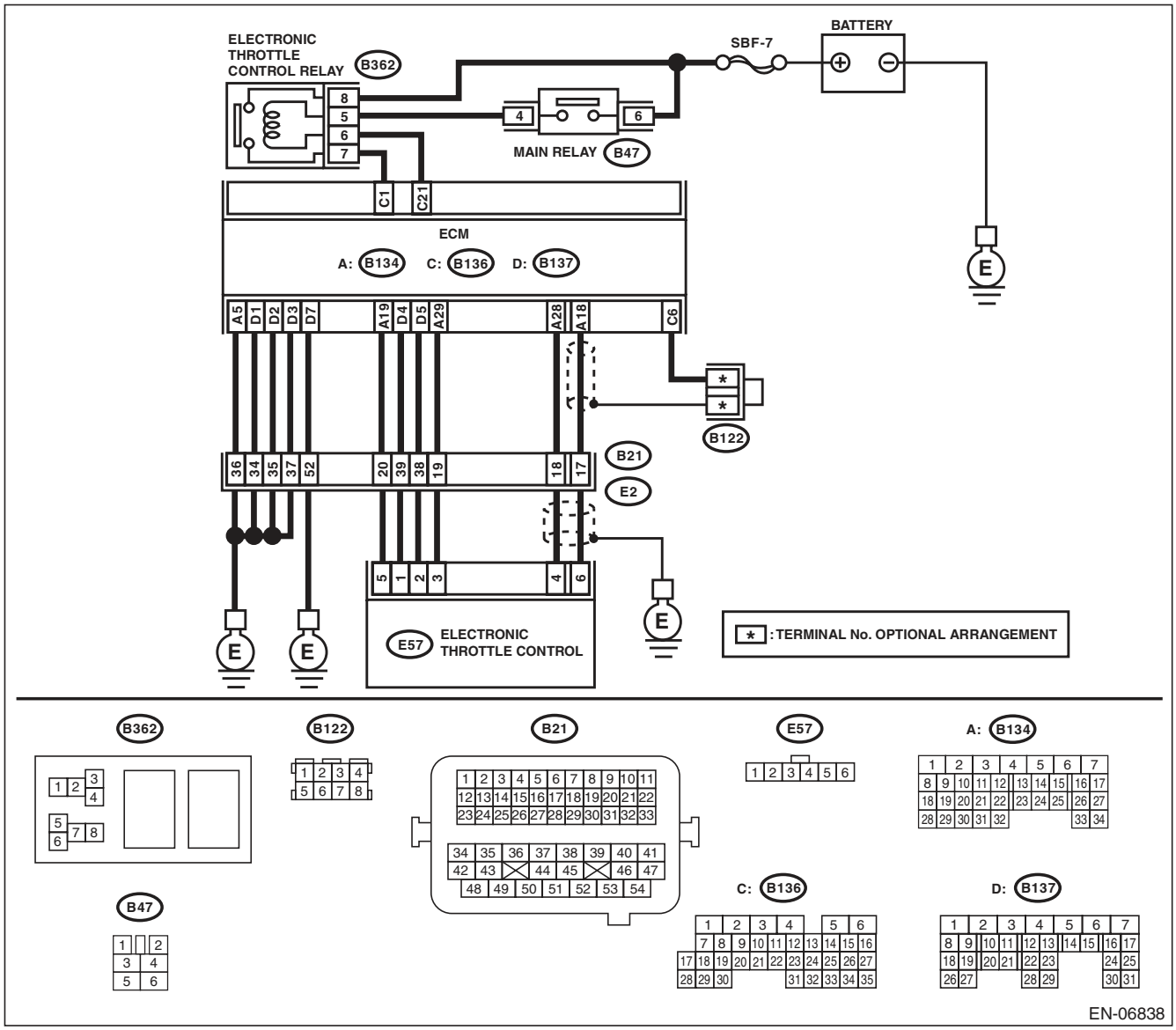

Step		Check	Yes	No
1	**CHECK ELECTRONIC THROTTLE CONTROL RELAY.** 1) Turn the ignition switch to OFF. 2) Remove the electronic throttle control relay. 3) Measure the resistance between electronic throttle control relay terminals. ***Terminals*** ***No. 8 — No. 7:***	Is the resistance 1 MΩ or more?	Go to step **2**.	Replace the electronic throttle control relay. <Ref. to FU(H4SO)-42, Electronic Throttle Control Relay.>
2	**CHECK SHORT CIRCUIT OF ELECTRONIC THROTTLE CONTROL RELAY POWER SUPPLY.** 1) Turn the ignition switch to ON. 2) Measure the voltage between electronic throttle control relay connector and chassis ground. ***Connector & terminal*** ***(B362) No. 7 (+) — Chassis ground (–):***	Is the voltage 10 V or more?	Repair the short circuit to power in the harness between ECM and electronic throttle control relay connector.	Go to step **3**.
3	**CHECK HARNESS BETWEEN ECM AND ELECTRONIC THROTTLE CONTROL RELAY.** 1) Turn the ignition switch to OFF. 2) Disconnect the connectors from ECM. 3) Measure the resistance between ECM and chassis ground. ***Connector & terminal*** ***(B136) No. 21 — Chassis ground:***	Is the resistance 1 MΩ or more?	Repair the poor contact of ECM connector.	Repair the short circuit in harness to ground between ECM and electronic throttle control relay connector.

DD:DTC P2109 THROTTLE/PEDAL POSITION SENSOR “A” MINIMUM STOP PERFORMANCE

NOTE:
For the diagnostic procedure, refer to DTC P2101. <Ref. to EN(H4SO)(diag)-276, DTC P2101 THROTTLE ACTUATOR CONTROL MOTOR CIRCUIT RANGE/PERFORMANCE, Diagnostic Procedure with Diagnostic Trouble Code (DTC).>

DE:DTC P2122 THROTTLE/PEDAL POSITION SENSOR/SWITCH “D” CIRCUIT LOW INPUT

DTC DETECTING CONDITION:

- Immediately at fault recognition
- GENERAL DESCRIPTION <Ref. to GD(H4SO)-186, DTC P2122 THROTTLE/PEDAL POSITION SENSOR/SWITCH “D” CIRCUIT LOW INPUT, Diagnostic Trouble Code (DTC) Detecting Criteria.>

TROUBLE SYMPTOM:

- Improper idling
- Poor driving performance

CAUTION:

After repair or replacement of faulty parts, perform Clear Memory Mode <Ref. to EN(H4SO)(diag)-50, OPERATION, Clear Memory Mode.>, and Inspection Mode <Ref. to EN(H4SO)(diag)-41, PROCEDURE, Inspection Mode.>.

WIRING DIAGRAM:

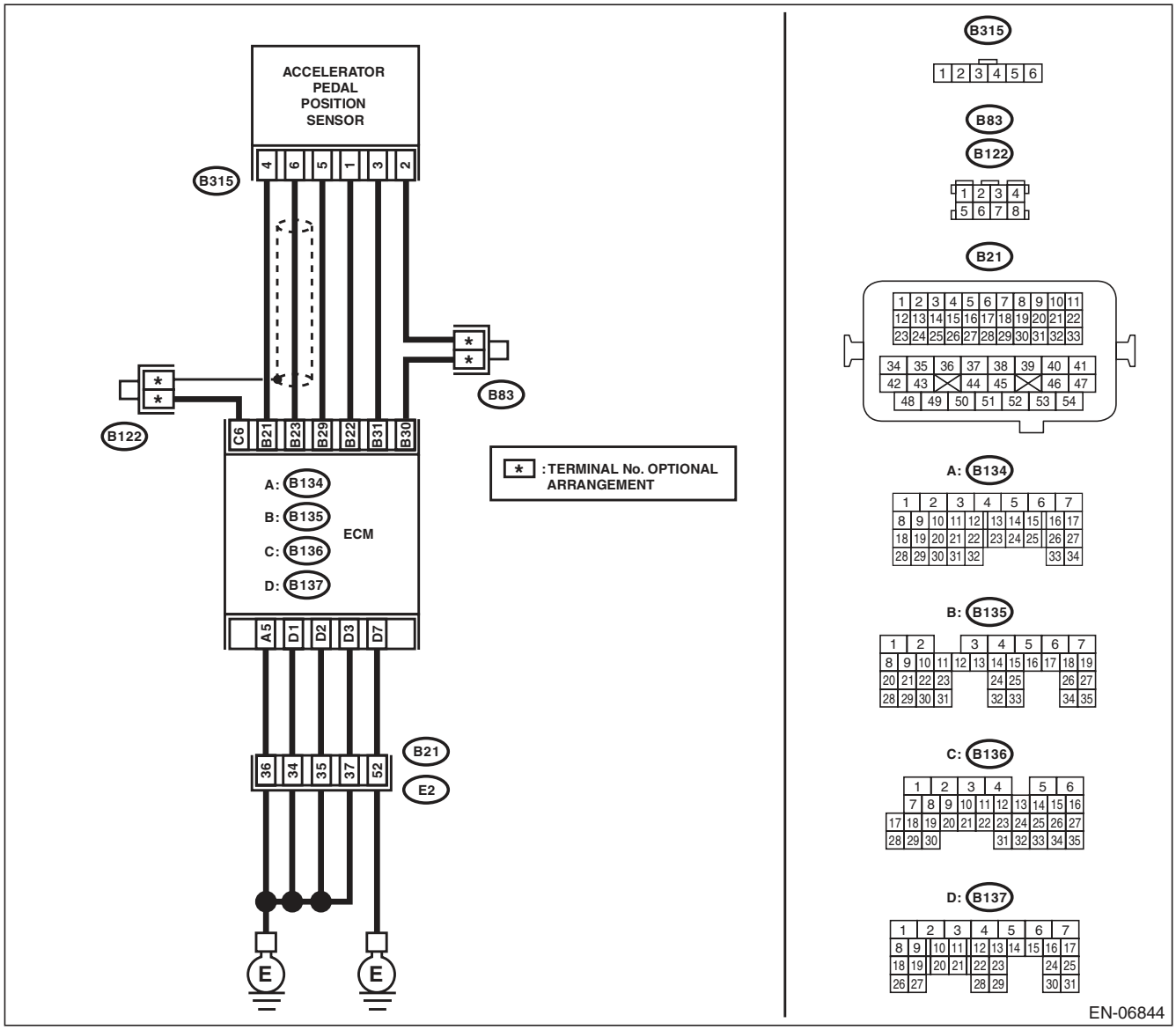

Step		Check	Yes	No
1	**CHECK HARNESS BETWEEN ECM AND ACCELERATOR PEDAL POSITION SENSOR.** 1) Turn the ignition switch to OFF. 2) Disconnect the connector from ECM and accelerator pedal position sensor. 3) Measure the resistance between ECM and chassis ground. ***Connector & terminal*** ***(B135) No. 21 — Chassis ground:*** ***(B135) No. 23 — Chassis ground:*** ***(B135) No. 23 — (B136) No. 6:***	Is the resistance 1 MΩ or more?	Go to step **2**.	Repair the ground short circuit of harness between ECM and accelerator pedal position sensor connector.
2	**CHECK SHORT CIRCUIT INSIDE THE ECM.** 1) Connect the connector to ECM. 2) Measure the resistance between accelerator pedal position sensor connector and chassis ground. ***Connector & terminal*** ***(B315) No. 6 — Chassis ground:***	Is the resistance 1 MΩ or more?	Replace the accelerator pedal. <Ref. to SP(H4SO)-3, Accelerator Pedal.>	Repair the ground short circuit of harness between ECM and accelerator pedal position sensor connector. Replace the ECM if defective. <Ref. to FU(H4SO)-39, Engine Control Module (ECM).>

DF:DTC P2123 THROTTLE/PEDAL POSITION SENSOR/SWITCH “D” CIRCUIT HIGH INPUT

DTC DETECTING CONDITION:

- Immediately at fault recognition
- GENERAL DESCRIPTION <Ref. to GD(H4SO)-188, DTC P2123 THROTTLE/PEDAL POSITION SENSOR/SWITCH “D” CIRCUIT HIGH INPUT, Diagnostic Trouble Code (DTC) Detecting Criteria.>

TROUBLE SYMPTOM:

- Improper idling
- Poor driving performance

CAUTION:

After repair or replacement of faulty parts, perform Clear Memory Mode <Ref. to EN(H4SO)(diag)-50, OPERATION, Clear Memory Mode.>, and Inspection Mode <Ref. to EN(H4SO)(diag)-41, PROCEDURE, Inspection Mode.>.

WIRING DIAGRAM:

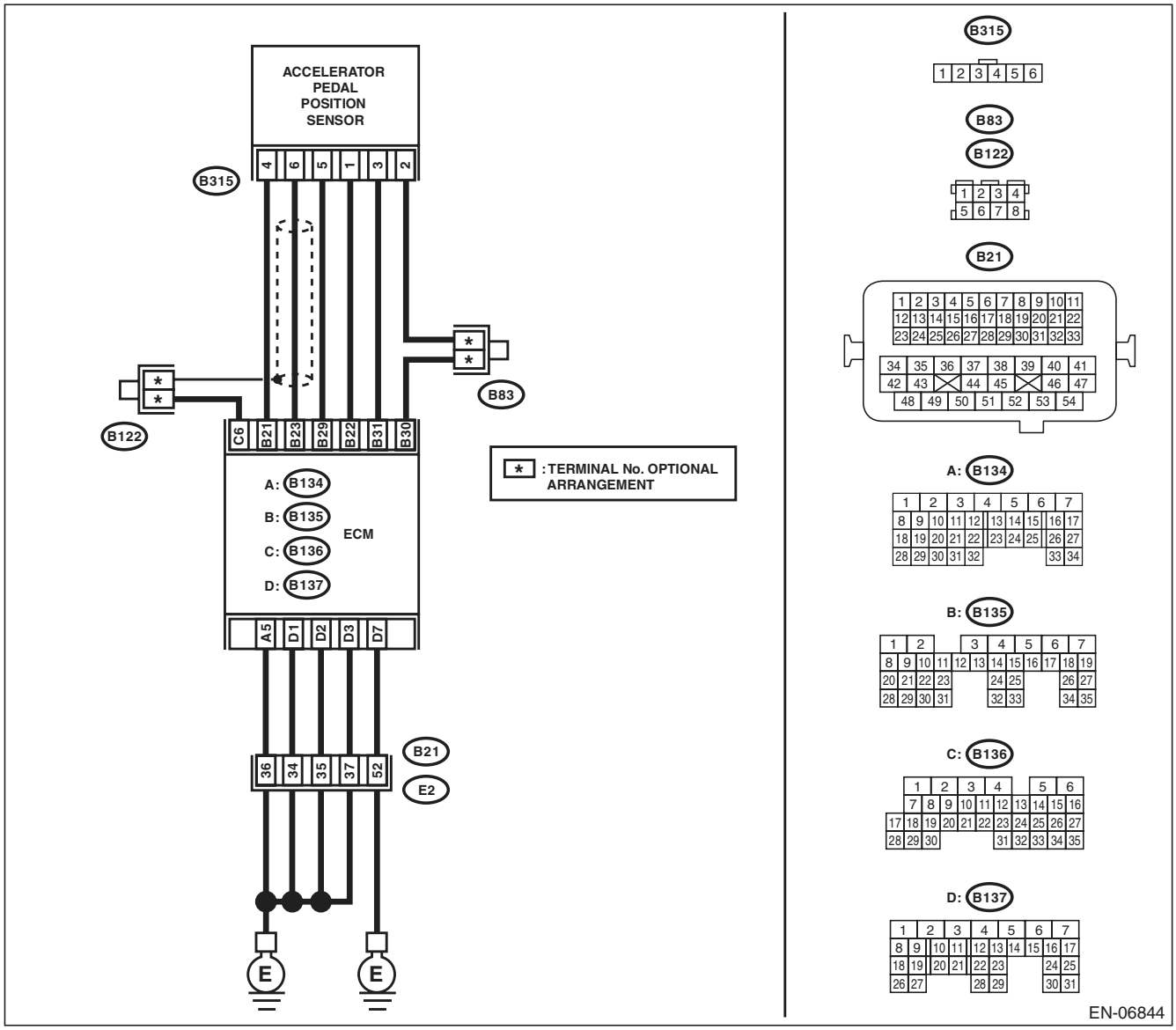

	Step	Check	Yes	No
1	**CHECK HARNESS BETWEEN ECM AND ACCELERATOR PEDAL POSITION SENSOR.** 1) Turn the ignition switch to OFF. 2) Disconnect the connector from ECM and accelerator pedal position sensor. 3) Measure the resistance of harness between ECM and accelerator pedal position sensor connector. ***Connector & terminal*** ***(B135) No. 23 — (B315) No. 6:*** ***(B135) No. 29 — (B315) No. 5:***	Is the resistance less than 1 Ω?	Go to step **2**.	Repair the open circuit in harness between ECM and accelerator pedal position sensor connector.
2	**CHECK HARNESS BETWEEN ECM AND ACCELERATOR PEDAL POSITION SENSOR.** 1) Connect the connector to ECM. 2) Measure the resistance between accelerator pedal position sensor connector and chassis ground. ***Connector & terminal*** ***(B315) No. 5 — Chassis ground:***	Is the resistance less than 5 Ω?	Go to step **3**.	Repair the harness and connector. NOTE: In this case, repair the following item: • Open circuit of harness between ECM and engine ground • Poor contact in ECM connector • Poor contact of coupling connector
3	**CHECK HARNESS BETWEEN ECM AND ACCELERATOR PEDAL POSITION SENSOR.** 1) Turn the ignition switch to ON. 2) Measure the voltage between accelerator pedal position sensor connector and chassis ground. ***Connector & terminal*** ***(B315) No. 6 (+) — Chassis ground (–):***	Is the voltage 4.85 V or more?	Repair the short circuit of harness to power supply between ECM and accelerator pedal position sensor connector.	Go to step **4**.
4	**CHECK HARNESS BETWEEN ECM AND ACCELERATOR PEDAL POSITION SENSOR.** 1) Turn the ignition switch to OFF. 2) Disconnect the connectors from ECM. 3) Measure the resistance between ECM connectors. ***Connector & terminal*** ***(B135) No. 21 — (B135) No. 23:***	Is the resistance 1 MΩ or more?	Repair the poor contact of accelerator pedal position sensor connector. Replace the accelerator pedal if defective. <Ref. to SP(H4SO)-3, Accelerator Pedal.>	Repair the short circuit of harness to power supply between ECM and accelerator pedal position sensor connector.

DG:DTC P2127 THROTTLE/PEDAL POSITION SENSOR/SWITCH “E” CIRCUIT LOW INPUT

DTC DETECTING CONDITION:

- Immediately at fault recognition
- GENERAL DESCRIPTION <Ref. to GD(H4SO)-190, DTC P2127 THROTTLE/PEDAL POSITION SENSOR/SWITCH “E” CIRCUIT LOW INPUT, Diagnostic Trouble Code (DTC) Detecting Criteria.>

TROUBLE SYMPTOM:

- Improper idling
- Poor driving performance

CAUTION:

After repair or replacement of faulty parts, perform Clear Memory Mode <Ref. to EN(H4SO)(diag)-50, OPERATION, Clear Memory Mode.>, and Inspection Mode <Ref. to EN(H4SO)(diag)-41, PROCEDURE, Inspection Mode.>.

WIRING DIAGRAM:

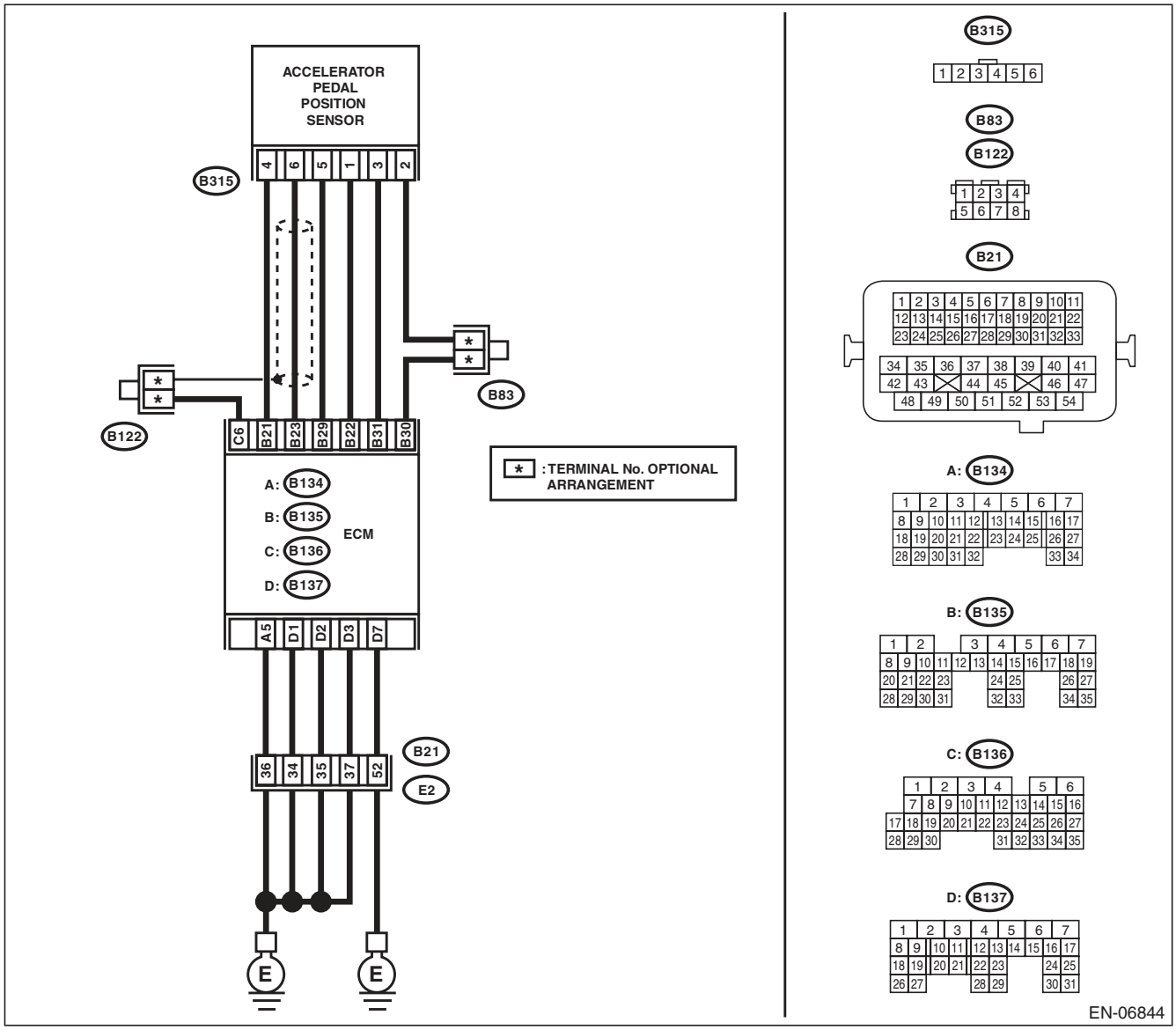

	Step	Check	Yes	No
1	**CHECK HARNESS BETWEEN ECM AND ACCELERATOR PEDAL POSITION SENSOR.** 1) Turn the ignition switch to OFF. 2) Disconnect the connector from ECM and accelerator pedal position sensor. 3) Measure the resistance between ECM and chassis ground. ***Connector & terminal*** ***(B135) No. 22 — Chassis ground:*** ***(B135) No. 31 — Chassis ground:***	Is the resistance 1 MΩ or more?	Go to step **2**.	Repair the ground short circuit of harness between ECM and accelerator pedal position sensor connector.
2	**CHECK SHORT CIRCUIT INSIDE THE ECM.** 1) Connect the connector to ECM. 2) Measure the resistance between accelerator pedal position sensor connector and chassis ground. ***Connector & terminal*** ***(B315) No. 3 — Chassis ground:***	Is the resistance 1 MΩ or more?	Replace the accelerator pedal. <Ref. to SP(H4SO)-3, Accelerator Pedal.>	Repair the ground short circuit of harness between ECM and accelerator pedal position sensor connector. Replace the ECM if defective. <Ref. to FU(H4SO)-39, Engine Control Module (ECM).>

DH:DTC P2128 THROTTLE/PEDAL POSITION SENSOR/SWITCH “E” CIRCUIT HIGH INPUT

DTC DETECTING CONDITION:

- Immediately at fault recognition
- GENERAL DESCRIPTION <Ref. to GD(H4SO)-192, DTC P2128 THROTTLE/PEDAL POSITION SENSOR/SWITCH “E” CIRCUIT HIGH INPUT, Diagnostic Trouble Code (DTC) Detecting Criteria.>

TROUBLE SYMPTOM:

- Improper idling
- Poor driving performance

CAUTION:

After repair or replacement of faulty parts, perform Clear Memory Mode <Ref. to EN(H4SO)(diag)-50, OPERATION, Clear Memory Mode.>, and Inspection Mode <Ref. to EN(H4SO)(diag)-41, PROCEDURE, Inspection Mode.>.

WIRING DIAGRAM:

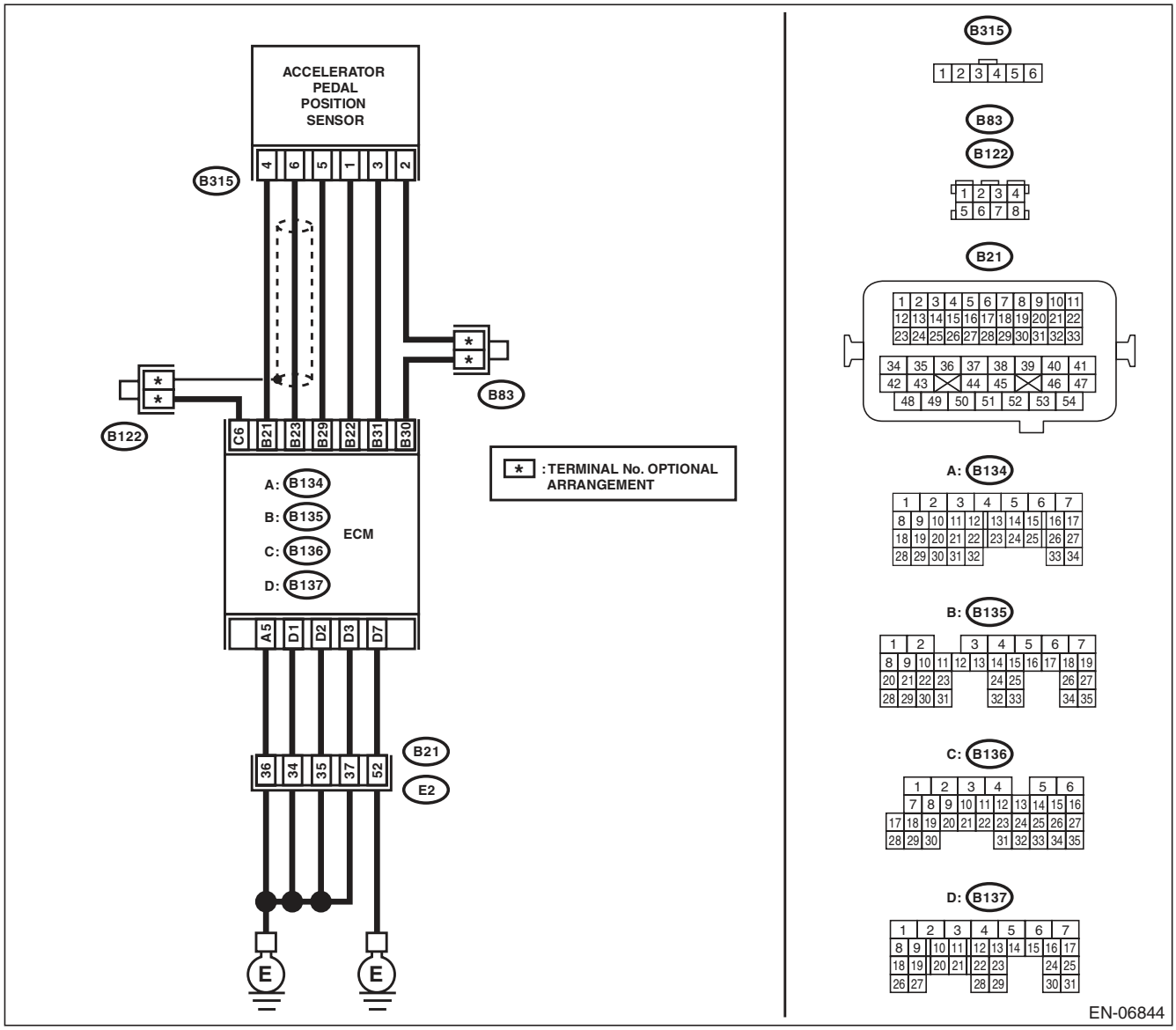

	Step	Check	Yes	No
1	**CHECK HARNESS BETWEEN ECM AND ACCELERATOR PEDAL POSITION SENSOR.** 1) Turn the ignition switch to OFF. 2) Disconnect the connector from ECM and accelerator pedal position sensor. 3) Measure the resistance of harness between ECM and accelerator pedal position sensor connector. ***Connector & terminal*** ***(B135) No. 31 — (B315) No. 3:*** ***(B135) No. 30 — (B315) No. 2:***	Is the resistance less than 1 Ω?	Go to step **2**.	Repair the harness and connector. NOTE: In this case, repair the following item: • Open circuit of harness between the ECM and accelerator pedal position sensor connector. • Poor contact in joint connector
2	**CHECK HARNESS BETWEEN ECM AND ACCELERATOR PEDAL POSITION SENSOR.** 1) Connect the connector to ECM. 2) Measure the resistance between accelerator pedal position sensor connector and chassis ground. ***Connector & terminal*** ***(B315) No. 2 — Chassis ground:***	Is the resistance less than 1 Ω?	Go to step **3**.	Repair the harness and connector. NOTE: In this case, repair the following item: • Open circuit of harness between ECM and engine ground • Poor contact in ECM connector • Poor contact of coupling connector
3	**CHECK HARNESS BETWEEN ECM AND ACCELERATOR PEDAL POSITION SENSOR.** 1) Turn the ignition switch to ON. 2) Measure the voltage between accelerator pedal position sensor connector and chassis ground. ***Connector & terminal*** ***(B315) No. 3 (+) — Chassis ground (–):***	Is the voltage 4.85 V or more?	Repair the short circuit of harness to power supply between ECM and accelerator pedal position sensor connector.	Go to step **4**.
4	**CHECK HARNESS BETWEEN ECM AND ACCELERATOR PEDAL POSITION SENSOR.** 1) Turn the ignition switch to OFF. 2) Disconnect the connectors from ECM. 3) Measure the resistance between ECM connectors. ***Connector & terminal*** ***(B135) No. 22 — (B135) No. 31:***	Is the resistance 1 MΩ or more?	Repair the poor contact of accelerator pedal position sensor connector. Replace the accelerator pedal if defective. <Ref. to SP(H4SO)-3, Accelerator Pedal.>	Repair the short circuit of harness to power supply between ECM and accelerator pedal position sensor connector.

DI: DTC P2135 THROTTLE/PEDAL POSITION SENSOR/SWITCH “A”/“B” VOLTAGE CORRELATION

DTC DETECTING CONDITION:

- Immediately at fault recognition
- GENERAL DESCRIPTION <Ref. to GD(H4SO)-194, DTC P2135 THROTTLE/PEDAL POSITION SENSOR/SWITCH “A”/“B” VOLTAGE CORRELATION, Diagnostic Trouble Code (DTC) Detecting Criteria.>

TROUBLE SYMPTOM:

- Improper idling
- Poor driving performance

CAUTION:

After repair or replacement of faulty parts, perform Clear Memory Mode <Ref. to EN(H4SO)(diag)-50, OPERATION, Clear Memory Mode.>, and Inspection Mode <Ref. to EN(H4SO)(diag)-41, PROCEDURE, Inspection Mode.>.

WIRING DIAGRAM:

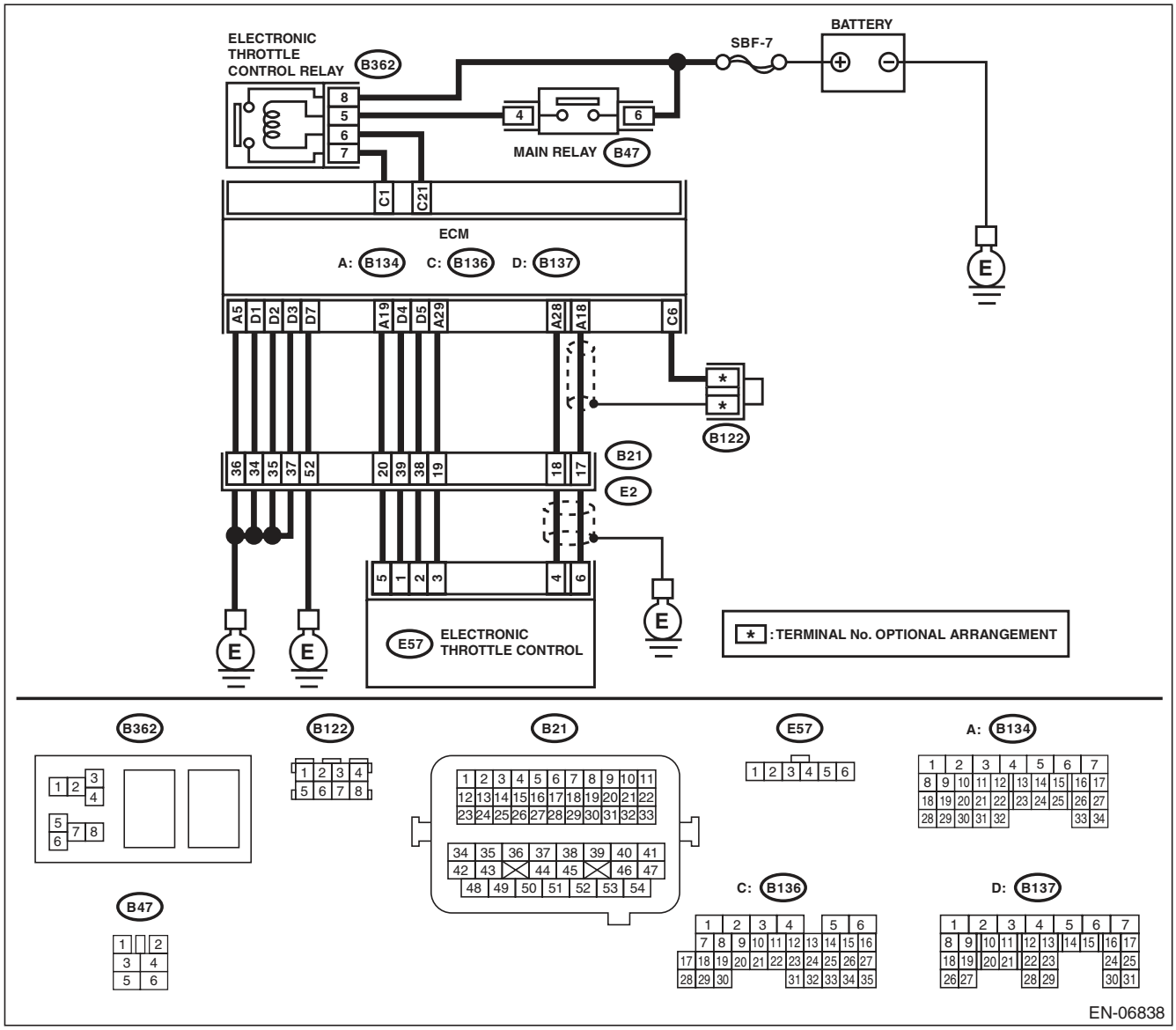

	Step	Check	Yes	No
1	**CHECK HARNESS BETWEEN ECM AND ELECTRONIC THROTTLE CONTROL.** 1) Turn the ignition switch to OFF. 2) Disconnect the connectors from ECM and electronic throttle control. 3) Measure the resistance between ECM and chassis ground. ***Connector & terminal*** ***(B134) No. 19 — Chassis ground:*** ***(B134) No. 18 — Chassis ground:*** ***(B134) No. 18 — (B136) No. 6:*** ***(B134) No. 28 — Chassis ground:***	Is the resistance 1 MΩ or more?	Go to step **2**.	Repair the short circuit to ground in harness between ECM and electronic throttle control connector.
2	**CHECK SHORT CIRCUIT INSIDE THE ECM.** 1) Connect the connector to ECM. 2) Measure the resistance between electronic throttle control connector and engine ground. ***Connector & terminal*** ***(E57) No. 6 — Engine ground:*** ***(E57) No. 4 — Engine ground:***	Is the resistance 1 MΩ or more?	Go to step **3**.	Repair the short circuit to ground in harness between ECM and electronic throttle control connector. Replace the ECM if defective. <Ref. to FU(H4SO)-39, Engine Control Module (ECM).>
3	**CHECK HARNESS BETWEEN ECM AND ELECTRONIC THROTTLE CONTROL.** 1) Disconnect the connectors from ECM. 2) Measure the resistance of harness between ECM and electronic throttle control connector. ***Connector & terminal*** ***(B134) No. 18 — (E57) No. 6:*** ***(B134) No. 28 — (E57) No. 4:*** ***(B134) No. 29 — (E57) No. 3:***	Is the resistance less than 1 Ω?	Go to step **4**.	Repair the harness and connector. NOTE: In this case, repair the following item: • Open circuit in harness between ECM and electronic throttle control connector • Poor contact of coupling connector
4	**CHECK HARNESS BETWEEN ECM AND ELECTRONIC THROTTLE CONTROL.** 1) Connect the connector to ECM. 2) Measure the resistance between electronic throttle control connector and engine ground. ***Connector & terminal*** ***(E57) No. 3 — Engine ground:***	Is the resistance less than 5 Ω?	Go to step **5**.	Repair the harness and connector. NOTE: In this case, repair the following item: • Open circuit of harness between ECM and engine ground • Poor contact in ECM connector • Poor contact of coupling connector
5	**CHECK HARNESS BETWEEN ECM AND ELECTRONIC THROTTLE CONTROL.** 1) Turn the ignition switch to ON. 2) Measure the voltage between electronic throttle control connector and engine ground. ***Connector & terminal*** ***(E57) No. 6 (+) — Engine ground (–):*** ***(E57) No. 4 (+) — Engine ground (–):***	Is the voltage 4.85 V or more?	Repair the short circuit to power in the harness between ECM and electronic throttle control connector.	Go to step **6**.

Step		Check	Yes	No
6	**CHECK HARNESS BETWEEN ECM AND ELECTRONIC THROTTLE CONTROL.** 1) Turn the ignition switch to OFF. 2) Disconnect the connectors from ECM. 3) Measure the resistance between ECM connectors. ***Connector & terminal*** ***(B134) No. 19 — (B134) No. 18:*** ***(B134) No. 19 — (B134) No. 28:***	Is the resistance 1 MΩ or more?	Repair poor contact of the electronic throttle control connector. Replace the electronic throttle control if defective. <Ref. to FU(H4SO)-12, Throttle Body.>	Repair the short circuit to power in the harness between ECM and electronic throttle control connector.

DJ:DTC P2138 THROTTLE/PEDAL POSITION SENSOR/SWITCH “D”/“E” VOLTAGE CORRELATION

DTC DETECTING CONDITION:

- Immediately at fault recognition
- GENERAL DESCRIPTION <Ref. to GD(H4SO)-196, DTC P2138 THROTTLE/PEDAL POSITION SENSOR/SWITCH “D”/“E” VOLTAGE CORRELATION, Diagnostic Trouble Code (DTC) Detecting Criteria.>

TROUBLE SYMPTOM:

- Improper idling
- Poor driving performance

CAUTION:

After repair or replacement of faulty parts, perform Clear Memory Mode <Ref. to EN(H4SO)(diag)-50, OPERATION, Clear Memory Mode.>, and Inspection Mode <Ref. to EN(H4SO)(diag)-41, PROCEDURE, Inspection Mode.>.

WIRING DIAGRAM:

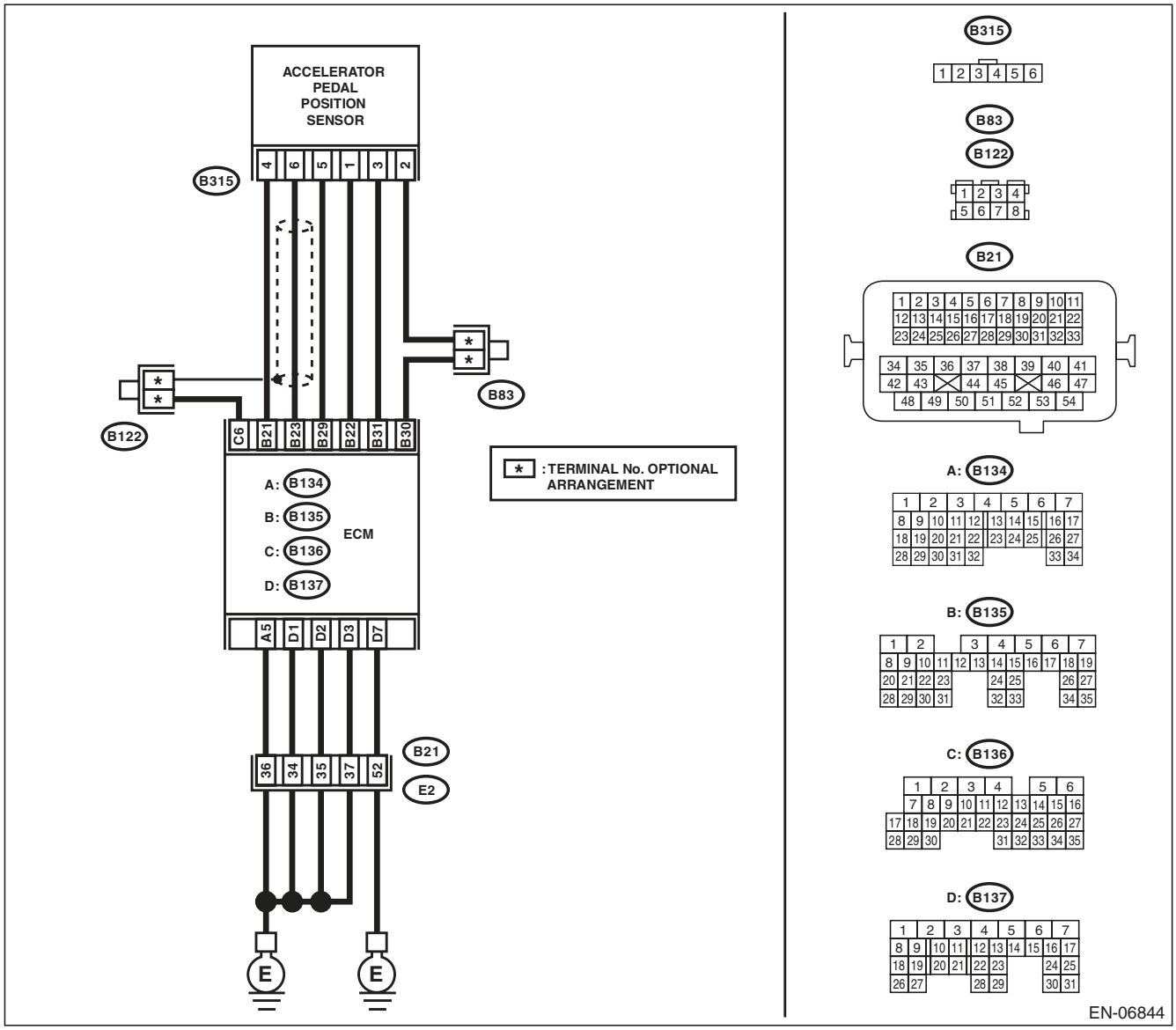

	Step	Check	Yes	No
1	**CHECK ACCELERATOR PEDAL POSITION SENSOR OUTPUT.** 1) Turn the ignition switch to ON. 2) Measure the voltage between ECM and chassis ground. ***Connector & terminal*** ***Main accelerator pedal position sensor signal*** ***(B135) No. 23 (+) — Chassis ground (–):*** ***Sub accelerator pedal position sensor signal*** ***(B135) No. 31 (+) — Chassis ground (–):***	Is the difference in measured values for the main accelerator pedal position sensor signal and the sub accelerator pedal position sensor signal 0 V?	Go to step **3**.	Go to step **2**.
2	**CHECK ACCELERATOR PEDAL POSITION SENSOR OUTPUT.** 1) Measure the voltage between accelerator pedal position sensor connector and chassis ground. ***Connector & terminal*** ***(B315) No. 6 (+) — Chassis ground (–):*** ***(B315) No. 3 (+) — Chassis ground (–):***	Is the difference in measured values for the main accelerator pedal position sensor signal and the sub accelerator pedal position sensor signal 0 V?	Replace the accelerator pedal. <Ref. to SP(H4SO)-3, Accelerator Pedal.>	Repair the harness and connector. NOTE: In this case, repair the following item: • Open circuit of harness between the ECM and accelerator pedal position sensor connector. • Short circuit to ground in harness between ECM and accelerator pedal position sensor connector. • Poor contact of coupling connector
3	**CHECK HARNESS BETWEEN ECM AND ACCELERATOR PEDAL POSITION SENSOR CONNECTOR.** Check the resistance of harness between the accelerator pedal position sensor connector and chassis ground. ***Connector & terminal*** ***(B315) No. 5 — Chassis ground:*** ***(B315) No. 2 — Chassis ground:***	Is the resistance less than 5 Ω?	Repair the poor contact of ECM connector.	Repair the harness and connector. NOTE: In this case, repair the following item: • Open circuit of harness between the ECM and accelerator pedal position sensor connector. • Open circuit of harness between ECM and engine ground • Poor contact in ECM connector • Poor contact of coupling connector

DK:DTC P2227 BAROMETRIC PRESSURE CIRCUIT RANGE/PERFORMANCE

DTC DETECTING CONDITION:

- Two consecutive driving cycles with fault
- GENERAL DESCRIPTION <Ref. to GD(H4SO)-198, DTC P2227 BAROMETRIC PRESSURE CIRCUIT RANGE/PERFORMANCE, Diagnostic Trouble Code (DTC) Detecting Criteria.>

CAUTION:

After repair or replacement of faulty parts, perform Clear Memory Mode <Ref. to EN(H4SO)(diag)-50, OPERATION, Clear Memory Mode.>, and Inspection Mode <Ref. to EN(H4SO)(diag)-41, PROCEDURE, Inspection Mode.>.

Step	Check	Yes	No
1 **CHECK FOR ANY OTHER DTC ON DISPLAY.**	Is any other DTC displayed?	Check DTC using "List of Diagnostic Trouble Code (DTC)". <Ref. to EN(H4SO)(diag)-80, List of Diagnostic Trouble Code (DTC).>	Replace the ECM. <Ref. to FU(H4SO)-39, Engine Control Module (ECM).> NOTE: The barometric pressure sensor is built into the ECM.

DL:DTC P2228 BAROMETRIC PRESSURE CIRCUIT LOW

DTC DETECTING CONDITION:

- Immediately at fault recognition
- GENERAL DESCRIPTION <Ref. to GD(H4SO)-199, DTC P2228 BAROMETRIC PRESSURE CIRCUIT LOW, Diagnostic Trouble Code (DTC) Detecting Criteria.>

CAUTION:

After repair or replacement of faulty parts, perform Clear Memory Mode <Ref. to EN(H4SO)(diag)-50, OPERATION, Clear Memory Mode.>, and Inspection Mode <Ref. to EN(H4SO)(diag)-41, PROCEDURE, Inspection Mode.>.

Step	Check	Yes	No
1 **CHECK FOR ANY OTHER DTC ON DISPLAY.**	Is any other DTC displayed?	Check DTC using "List of Diagnostic Trouble Code (DTC)". <Ref. to EN(H4SO)(diag)-80, List of Diagnostic Trouble Code (DTC).>	Replace the ECM. <Ref. to FU(H4SO)-39, Engine Control Module (ECM).> NOTE: The barometric pressure sensor is built into the ECM.

DM:DTC P2229 BAROMETRIC PRESSURE CIRCUIT HIGH

DTC DETECTING CONDITION:

- Immediately at fault recognition
- GENERAL DESCRIPTION <Ref. to GD(H4SO)-200, DTC P2229 BAROMETRIC PRESSURE CIRCUIT HIGH, Diagnostic Trouble Code (DTC) Detecting Criteria.>

CAUTION:

After repair or replacement of faulty parts, perform Clear Memory Mode <Ref. to EN(H4SO)(diag)-50, OPERATION, Clear Memory Mode.>, and Inspection Mode <Ref. to EN(H4SO)(diag)-41, PROCEDURE, Inspection Mode.>.

Step	Check	Yes	No
1 CHECK FOR ANY OTHER DTC ON DISPLAY.	Is any other DTC displayed?	Check DTC using "List of Diagnostic Trouble Code (DTC)". <Ref. to EN(H4SO)(diag)-80, List of Diagnostic Trouble Code (DTC).>	Replace the ECM. <Ref. to FU(H4SO)-39, Engine Control Module (ECM).> NOTE: The barometric pressure sensor is built into the ECM.

21. General Diagnostic Table

A: INSPECTION

1. ENGINE

NOTE:
Malfunction of parts other than those listed is also possible. <Ref. to ME(H4SO)-96, Engine Trouble in General.>

Symptoms	Problem parts
1. Engine stalls during idling.	1) Manifold absolute pressure sensor 2) Mass air flow and intake air temperature sensor 3) Ignition parts (*1) 4) Engine coolant temperature sensor (*2) 5) Crankshaft position sensor (*3) 6) Camshaft position sensor (*3) 7) Fuel injection parts (*4)
2. Rough idling	1) Manifold absolute pressure sensor 2) Mass air flow and intake air temperature sensor 3) Engine coolant temperature sensor (*2) 4) Ignition parts (*1) 5) Air intake system (*5) 6) Fuel injection parts (*4) 7) Electronic throttle control 8) Crankshaft position sensor (*3) 9) Camshaft position sensor (*3) 10) Oxygen sensor 11) Fuel pump and fuel pump relay 12) EGR valve
3. Engine does not return to idle.	1) Engine coolant temperature sensor 2) Electronic throttle control 3) Manifold absolute pressure sensor 4) Mass air flow and intake air temperature sensor 5) EGR valve
4. Poor acceleration	1) Manifold absolute pressure sensor 2) Mass air flow and intake air temperature sensor 3) Electronic throttle control 4) Fuel injection parts (*4) 5) Fuel pump and fuel pump relay 6) Engine coolant temperature sensor (*2) 7) Crankshaft position sensor (*3) 8) Camshaft position sensor (*3) 9) A/C switch and A/C cut relay 10) Engine torque control signal circuit 11) Ignition parts (*1) 12) EGR valve
5. Engine stalls, engine sags or hesitates at acceleration.	1) Manifold absolute pressure sensor 2) Mass air flow and intake air temperature sensor 3) Engine coolant temperature sensor (*2) 4) Crankshaft position sensor (*3) 5) Camshaft position sensor (*3) 6) Purge control solenoid valve 7) Fuel injection parts (*4) 8) Electronic throttle control 9) Fuel pump and fuel pump relay 10) EGR valve

Symptoms	Problem parts
6. Surging	1) Mass air flow and intake air temperature sensor 2) Manifold absolute pressure sensor 3) Engine coolant temperature sensor (*2) 4) Crankshaft position sensor (*3) 5) Camshaft position sensor (*3) 6) Fuel injection parts (*4) 7) Electronic throttle control 8) Fuel pump and fuel pump relay 9) EGR valve
7. Spark knock	1) Mass air flow and intake air temperature sensor 2) Manifold absolute pressure sensor 3) Engine coolant temperature sensor 4) Knock sensor 5) Fuel injection parts (*4) 6) Fuel pump and fuel pump relay 7) EGR valve
8. After-burn in exhaust system	1) Mass air flow and intake air temperature sensor 2) Manifold absolute pressure sensor 3) Engine coolant temperature sensor (*2) 4) Fuel injection parts (*4) 5) Fuel pump and fuel pump relay

*1: Check ignition coil and ignitor assembly and spark plug.
*2: Indicate the symptom occurring only in cold temperatures.
*3: Ensure the secure installation.
*4: Check fuel injector, fuel pressure regulator and fuel filter.
*5: Inspect air leak in air intake system.

1. List of Diagnostic Trouble Code (DTC)

A: LIST

DTC	Item	Note
P0026	Intake Valve Control Solenoid Circuit Range/Performance (Bank 1)	<Ref. to GD(H4SO)-8, DTC P0026 INTAKE VALVE CONTROL SOLENOID CIRCUIT RANGE/PERFORMANCE (BANK 1), Diagnostic Trouble Code (DTC) Detecting Criteria.>
P0028	Intake Valve Control Solenoid Circuit Range/Performance (Bank 2)	<Ref. to GD(H4SO)-10, DTC P0028 INTAKE VALVE CONTROL SOLENOID CIRCUIT RANGE/PERFORMANCE (BANK 2), Diagnostic Trouble Code (DTC) Detecting Criteria.>
P0030	HO2S Heater Control Circuit (Bank 1 Sensor 1)	<Ref. to GD(H4SO)-11, DTC P0030 HO2S HEATER CONTROL CIRCUIT (BANK 1 SENSOR 1), Diagnostic Trouble Code (DTC) Detecting Criteria.>
P0031	HO2S Heater Control Circuit Low (Bank 1 Sensor 1)	<Ref. to GD(H4SO)-13, DTC P0031 HO2S HEATER CONTROL CIRCUIT LOW (BANK 1 SENSOR 1), Diagnostic Trouble Code (DTC) Detecting Criteria.>
P0032	HO2S Heater Control Circuit High (Bank 1 Sensor 1)	<Ref. to GD(H4SO)-15, DTC P0032 HO2S HEATER CONTROL CIRCUIT HIGH (BANK 1 SENSOR 1), Diagnostic Trouble Code (DTC) Detecting Criteria.>
P0037	HO2S Heater Control Circuit Low (Bank 1 Sensor 2)	<Ref. to GD(H4SO)-17, DTC P0037 HO2S HEATER CONTROL CIRCUIT LOW (BANK 1 SENSOR 2), Diagnostic Trouble Code (DTC) Detecting Criteria.>
P0038	HO2S Heater Control Circuit High (Bank 1 Sensor 2)	<Ref. to GD(H4SO)-19, DTC P0038 HO2S HEATER CONTROL CIRCUIT HIGH (BANK 1 SENSOR 2), Diagnostic Trouble Code (DTC) Detecting Criteria.>
P0068	MAP/MAF - Throttle Position Correlation	<Ref. to GD(H4SO)-21, DTC P0068 MAP/MAF - THROTTLE POSITION CORRELATION, Diagnostic Trouble Code (DTC) Detecting Criteria.>
P0076	Intake Valve Control Solenoid Circuit Low (Bank 1)	<Ref. to GD(H4SO)-23, DTC P0076 INTAKE VALVE CONTROL SOLENOID CIRCUIT LOW (BANK 1), Diagnostic Trouble Code (DTC) Detecting Criteria.>
P0077	Intake Valve Control Solenoid Circuit High (Bank 1)	<Ref. to GD(H4SO)-24, DTC P0077 INTAKE VALVE CONTROL SOLENOID CIRCUIT HIGH (BANK 1), Diagnostic Trouble Code (DTC) Detecting Criteria.>
P0082	Intake Valve Control Solenoid Circuit Low (Bank 2)	<Ref. to GD(H4SO)-25, DTC P0082 INTAKE VALVE CONTROL SOLENOID CIRCUIT LOW (BANK 2), Diagnostic Trouble Code (DTC) Detecting Criteria.>
P0083	Intake Valve Control Solenoid Circuit High (Bank 2)	<Ref. to GD(H4SO)-25, DTC P0083 INTAKE VALVE CONTROL SOLENOID CIRCUIT HIGH (BANK 2), Diagnostic Trouble Code (DTC) Detecting Criteria.>
P0101	Mass or Volume Air Flow Circuit Range/Performance	<Ref. to GD(H4SO)-26, DTC P0101 MASS OR VOLUME AIR FLOW CIRCUIT RANGE/PERFORMANCE, Diagnostic Trouble Code (DTC) Detecting Criteria.>
P0102	Mass or Volume Air Flow Circuit Low Input	<Ref. to GD(H4SO)-28, DTC P0102 MASS OR VOLUME AIR FLOW CIRCUIT LOW INPUT, Diagnostic Trouble Code (DTC) Detecting Criteria.>
P0103	Mass or Volume Air Flow Circuit High Input	<Ref. to GD(H4SO)-29, DTC P0103 MASS OR VOLUME AIR FLOW CIRCUIT HIGH INPUT, Diagnostic Trouble Code (DTC) Detecting Criteria.>
P0107	Manifold Absolute Pressure/Barometric Pressure Circuit Low Input	<Ref. to GD(H4SO)-30, DTC P0107 MANIFOLD ABSOLUTE PRESSURE/ BAROMETRIC PRESSURE CIRCUIT LOW INPUT, Diagnostic Trouble Code (DTC) Detecting Criteria.>
P0108	Manifold Absolute Pressure/Barometric Pressure Circuit High Input	<Ref. to GD(H4SO)-31, DTC P0108 MANIFOLD ABSOLUTE PRESSURE/ BAROMETRIC PRESSURE CIRCUIT HIGH INPUT, Diagnostic Trouble Code (DTC) Detecting Criteria.>
P0111	Intake Air Temperature Sensor 1 Circuit Range/Performance	<Ref. to GD(H4SO)-32, DTC P0111 INTAKE AIR TEMPERATURE SENSOR 1 CIRCUIT RANGE/PERFORMANCE, Diagnostic Trouble Code (DTC) Detecting Criteria.>
P0112	Intake Air Temperature Sensor 1 Circuit Low	<Ref. to GD(H4SO)-34, DTC P0112 INTAKE AIR TEMPERATURE SENSOR 1 CIRCUIT LOW, Diagnostic Trouble Code (DTC) Detecting Criteria.>
P0113	Intake Air Temperature Sensor 1 Circuit High	<Ref. to GD(H4SO)-35, DTC P0113 INTAKE AIR TEMPERATURE SENSOR 1 CIRCUIT HIGH, Diagnostic Trouble Code (DTC) Detecting Criteria.>
P0117	Engine Coolant Temperature Circuit Low	<Ref. to GD(H4SO)-36, DTC P0117 ENGINE COOLANT TEMPERATURE CIRCUIT LOW, Diagnostic Trouble Code (DTC) Detecting Criteria.>

List of Diagnostic Trouble Code (DTC)

DTC	Item	Note
P0118	Engine Coolant Temperature Circuit High	<Ref. to GD(H4SO)-37, DTC P0118 ENGINE COOLANT TEMPERATURE CIRCUIT HIGH, Diagnostic Trouble Code (DTC) Detecting Criteria.>
P0122	Throttle/Pedal Position Sensor/ Switch “A” Circuit Low	<Ref. to GD(H4SO)-38, DTC P0122 THROTTLE/PEDAL POSITION SENSOR/SWITCH “A” CIRCUIT LOW, Diagnostic Trouble Code (DTC) Detecting Criteria.>
P0123	Throttle/Pedal Position Sensor/ Switch “A” Circuit High	<Ref. to GD(H4SO)-39, DTC P0123 THROTTLE/PEDAL POSITION SENSOR/SWITCH “A” CIRCUIT HIGH, Diagnostic Trouble Code (DTC) Detecting Criteria.>
P0125	Insufficient Coolant Temperature for Closed Loop Fuel Control	<Ref. to GD(H4SO)-40, DTC P0125 INSUFFICIENT COOLANT TEMPERATURE FOR CLOSED LOOP FUEL CONTROL, Diagnostic Trouble Code (DTC) Detecting Criteria.>
P0126	Insufficient Engine Coolant Temperature for Stable Operation	<Ref. to GD(H4SO)-42, DTC P0126 INSUFFICIENT ENGINE COOLANT TEMPERATURE FOR STABLE OPERATION, Diagnostic Trouble Code (DTC) Detecting Criteria.>
P0128	Coolant Thermostat (Engine Coolant Temperature Below Thermostat Regulating Temperature)	<Ref. to GD(H4SO)-44, DTC P0128 COOLANT THERMOSTAT (ENGINE COOLANT TEMPERATURE BELOW THERMOSTAT REGULATING TEMPERATURE), Diagnostic Trouble Code (DTC) Detecting Criteria.>
P0131	O2 Sensor Circuit Low Voltage (Bank 1 Sensor 1)	<Ref. to GD(H4SO)-46, DTC P0131 O2 SENSOR CIRCUIT LOW VOLTAGE (BANK 1 SENSOR 1), Diagnostic Trouble Code (DTC) Detecting Criteria.>
P0132	O2 Sensor Circuit High Voltage (Bank 1 Sensor 1)	<Ref. to GD(H4SO)-48, DTC P0132 O2 SENSOR CIRCUIT HIGH VOLTAGE (BANK 1 SENSOR 1), Diagnostic Trouble Code (DTC) Detecting Criteria.>
P0133	O2 Sensor Circuit Slow Response (Bank 1 Sensor 1)	<Ref. to GD(H4SO)-50, DTC P0133 O2 SENSOR CIRCUIT SLOW RESPONSE (BANK 1 SENSOR 1), Diagnostic Trouble Code (DTC) Detecting Criteria.>
P0134	O2 Sensor Circuit No Activity Detected (Bank 1 Sensor 1)	<Ref. to GD(H4SO)-53, DTC P0134 O2 SENSOR CIRCUIT NO ACTIVITY DETECTED (BANK 1 SENSOR 1), Diagnostic Trouble Code (DTC) Detecting Criteria.>
P0137	O2 Sensor Circuit Low Voltage (Bank 1 Sensor 2)	<Ref. to GD(H4SO)-55, DTC P0137 O2 SENSOR CIRCUIT LOW VOLTAGE (BANK 1 SENSOR 2), Diagnostic Trouble Code (DTC) Detecting Criteria.>
P0138	O2 Sensor Circuit High Voltage (Bank 1 Sensor 2)	<Ref. to GD(H4SO)-57, DTC P0138 O2 SENSOR CIRCUIT HIGH VOLTAGE (BANK 1 SENSOR 2), Diagnostic Trouble Code (DTC) Detecting Criteria.>
P0139	O2 Sensor Circuit Slow Response (Bank 1 Sensor 2)	<Ref. to GD(H4SO)-58, DTC P0139 O2 SENSOR CIRCUIT SLOW RESPONSE (BANK 1 SENSOR 2), Diagnostic Trouble Code (DTC) Detecting Criteria.>
P0140	O2 Sensor Circuit No Activity Detected (Bank 1 Sensor 2)	<Ref. to GD(H4SO)-63, DTC P0140 O2 SENSOR CIRCUIT NO ACTIVITY DETECTED (BANK1 SENSOR2), Diagnostic Trouble Code (DTC) Detecting Criteria.>
P0171	System Too Lean (Bank 1)	<Ref. to GD(H4SO)-65, DTC P0171 SYSTEM TOO LEAN (BANK 1), Diagnostic Trouble Code (DTC) Detecting Criteria.>
P0172	System Too Rich (Bank 1)	<Ref. to GD(H4SO)-67, DTC P0172 SYSTEM TOO RICH (BANK 1), Diagnostic Trouble Code (DTC) Detecting Criteria.>
P0181	Fuel Temperature Sensor “A” Circuit Range/Performance	<Ref. to GD(H4SO)-68, DTC P0181 FUEL TEMPERATURE SENSOR “A” CIRCUIT RANGE/PERFORMANCE, Diagnostic Trouble Code (DTC) Detecting Criteria.>
P0182	Fuel Temperature Sensor “A” Circuit Low Input	<Ref. to GD(H4SO)-71, DTC P0182 FUEL TEMPERATURE SENSOR “A” CIRCUIT LOW INPUT, Diagnostic Trouble Code (DTC) Detecting Criteria.>
P0183	Fuel Temperature Sensor “A” Circuit High Input	<Ref. to GD(H4SO)-72, DTC P0183 FUEL TEMPERATURE SENSOR “A” CIRCUIT HIGH INPUT, Diagnostic Trouble Code (DTC) Detecting Criteria.>
P0196	Engine Oil Temperature Sensor Circuit Range/Performance	<Ref. to GD(H4SO)-73, DTC P0196 ENGINE OIL TEMPERATURE SENSOR CIRCUIT RANGE/PERFORMANCE, Diagnostic Trouble Code (DTC) Detecting Criteria.>
P0197	Engine Oil Temperature Sensor Low	<Ref. to GD(H4SO)-75, DTC P0197 ENGINE OIL TEMPERATURE SENSOR LOW, Diagnostic Trouble Code (DTC) Detecting Criteria.>
P0198	Engine Oil Temperature Sensor High	<Ref. to GD(H4SO)-76, DTC P0198 ENGINE OIL TEMPERATURE SENSOR HIGH, Diagnostic Trouble Code (DTC) Detecting Criteria.>

List of Diagnostic Trouble Code (DTC)

DTC	Item	Note
P0222	Throttle/Pedal Position Sensor/ Switch “B” Circuit Low	<Ref. to GD(H4SO)-77, DTC P0222 THROTTLE/PEDAL POSITION SENSOR/SWITCH “B” CIRCUIT LOW, Diagnostic Trouble Code (DTC) Detecting Criteria.>
P0223	Throttle/Pedal Position Sensor/ Switch “B” Circuit High	<Ref. to GD(H4SO)-78, DTC P0223 THROTTLE/PEDAL POSITION SENSOR/SWITCH “B” CIRCUIT HIGH, Diagnostic Trouble Code (DTC) Detecting Criteria.>
P0301	Cylinder 1 Misfire Detected	<Ref. to GD(H4SO)-79, DTC P0301 CYLINDER 1 MISFIRE DETECTED, Diagnostic Trouble Code (DTC) Detecting Criteria.>
P0302	Cylinder 2 Misfire Detected	<Ref. to GD(H4SO)-85, DTC P0302 CYLINDER 2 MISFIRE DETECTED, Diagnostic Trouble Code (DTC) Detecting Criteria.>
P0303	Cylinder 3 Misfire Detected	<Ref. to GD(H4SO)-85, DTC P0303 CYLINDER 3 MISFIRE DETECTED, Diagnostic Trouble Code (DTC) Detecting Criteria.>
P0304	Cylinder 4 Misfire Detected	<Ref. to GD(H4SO)-85, DTC P0304 CYLINDER 4 MISFIRE DETECTED, Diagnostic Trouble Code (DTC) Detecting Criteria.>
P0327	Knock Sensor 1 Circuit Low (Bank 1 or Single Sensor)	<Ref. to GD(H4SO)-86, DTC P0327 KNOCK SENSOR 1 CIRCUIT LOW (BANK 1 OR SINGLE SENSOR), Diagnostic Trouble Code (DTC) Detecting Criteria.>
P0328	Knock Sensor 1 Circuit High (Bank 1 or Single Sensor)	<Ref. to GD(H4SO)-87, DTC P0328 KNOCK SENSOR 1 CIRCUIT HIGH (BANK 1 OR SINGLE SENSOR), Diagnostic Trouble Code (DTC) Detecting Criteria.>
P0335	Crankshaft Position Sensor “A” Circuit	<Ref. to GD(H4SO)-88, DTC P0335 CRANKSHAFT POSITION SENSOR “A” CIRCUIT, Diagnostic Trouble Code (DTC) Detecting Criteria.>
P0336	Crankshaft Position Sensor “A” Circuit Range/Performance	<Ref. to GD(H4SO)-90, DTC P0336 CRANKSHAFT POSITION SENSOR “A” CIRCUIT RANGE/PERFORMANCE, Diagnostic Trouble Code (DTC) Detecting Criteria.>
P0340	Camshaft Position Sensor “A” Circuit (Bank 1 or Single Sensor)	<Ref. to GD(H4SO)-92, DTC P0340 CAMSHAFT POSITION SENSOR “A” CIRCUIT (BANK 1 OR SINGLE SENSOR), Diagnostic Trouble Code (DTC) Detecting Criteria.>
P0341	Camshaft Position Sensor “A” Circuit Range/Performance (Bank 1 or Single Sensor)	<Ref. to GD(H4SO)-94, DTC P0341 CAMSHAFT POSITION SENSOR “A” CIRCUIT RANGE/PERFORMANCE (BANK 1 OR SINGLE SENSOR), Diagnostic Trouble Code (DTC) Detecting Criteria.>
P0400	Exhaust Gas Recirculation Flow	<Ref. to GD(H4SO)-96, DTC P0400 EXHAUST GAS RECIRCULATION FLOW, Diagnostic Trouble Code (DTC) Detecting Criteria.>
P0420	Catalyst System Efficiency below Threshold (Bank 1)	<Ref. to GD(H4SO)-99, DTC P0420 CATALYST SYSTEM EFFICIENCY BELOW THRESHOLD (BANK 1), Diagnostic Trouble Code (DTC) Detecting Criteria.>
P0442	Evaporative Emission Control System Leak Detected (Small Leak)	<Ref. to GD(H4SO)-101, DTC P0442 EVAPORATIVE EMISSION CONTROL SYSTEM LEAK DETECTED (SMALL LEAK), Diagnostic Trouble Code (DTC) Detecting Criteria.>
P0447	Evaporative Emission Control System Vent Control Circuit Open	<Ref. to GD(H4SO)-117, DTC P0447 EVAPORATIVE EMISSION CONTROL SYSTEM VENT CONTROL CIRCUIT OPEN, Diagnostic Trouble Code (DTC) Detecting Criteria.>
P0448	Evaporative Emission Control System Vent Control Circuit Shorted	<Ref. to GD(H4SO)-119, DTC P0448 EVAPORATIVE EMISSION CONTROL SYSTEM VENT CONTROL CIRCUIT SHORTED, Diagnostic Trouble Code (DTC) Detecting Criteria.>
P0451	Evaporative Emission Control System Pressure Sensor	<Ref. to GD(H4SO)-121, DTC P0451 EVAPORATIVE EMISSION CONTROL SYSTEM PRESSURE SENSOR, Diagnostic Trouble Code (DTC) Detecting Criteria.>
P0452	Evaporative Emission Control System Pressure Sensor Low Input	<Ref. to GD(H4SO)-123, DTC P0452 EVAPORATIVE EMISSION CONTROL SYSTEM PRESSURE SENSOR LOW INPUT, Diagnostic Trouble Code (DTC) Detecting Criteria.>
P0453	Evaporative Emission Control System Pressure Sensor High Input	<Ref. to GD(H4SO)-125, DTC P0453 EVAPORATIVE EMISSION CONTROL SYSTEM PRESSURE SENSOR HIGH INPUT, Diagnostic Trouble Code (DTC) Detecting Criteria.>

List of Diagnostic Trouble Code (DTC)

DTC	Item	Note
P0456	Evaporative Emission Control System Leak Detected (Very Small Leak)	<Ref. to GD(H4SO)-126, DTC P0456 EVAPORATIVE EMISSION CONTROL SYSTEM LEAK DETECTED (VERY SMALL LEAK), Diagnostic Trouble Code (DTC) Detecting Criteria.>
P0457	Evaporative Emission Control System Leak Detected (Fuel Cap Loose/Off)	<Ref. to GD(H4SO)-126, DTC P0457 EVAPORATIVE EMISSION CONTROL SYSTEM LEAK DETECTED (FUEL CAP LOOSE/OFF), Diagnostic Trouble Code (DTC) Detecting Criteria.>
P0458	Evaporative Emission System Purge Control Valve Circuit Low	<Ref. to GD(H4SO)-127, DTC P0458 EVAPORATIVE EMISSION SYSTEM PURGE CONTROL VALVE CIRCUIT LOW, Diagnostic Trouble Code (DTC) Detecting Criteria.>
P0459	Evaporative Emission System Purge Control Valve Circuit High	<Ref. to GD(H4SO)-128, DTC P0459 EVAPORATIVE EMISSION SYSTEM PURGE CONTROL VALVE CIRCUIT HIGH, Diagnostic Trouble Code (DTC) Detecting Criteria.>
P0461	Fuel Level Sensor “A” Circuit Range/Performance	<Ref. to GD(H4SO)-129, DTC P0461 FUEL LEVEL SENSOR “A” CIRCUIT RANGE/PERFORMANCE, Diagnostic Trouble Code (DTC) Detecting Criteria.>
P0462	Fuel Level Sensor “A” Circuit Low	<Ref. to GD(H4SO)-131, DTC P0462 FUEL LEVEL SENSOR “A” CIRCUIT LOW, Diagnostic Trouble Code (DTC) Detecting Criteria.>
P0463	Fuel Level Sensor “A” Circuit High	<Ref. to GD(H4SO)-133, DTC P0463 FUEL LEVEL SENSOR “A” CIRCUIT HIGH, Diagnostic Trouble Code (DTC) Detecting Criteria.>
P0464	Fuel Level Sensor Circuit Intermittent	<Ref. to GD(H4SO)-135, DTC P0464 FUEL LEVEL SENSOR CIRCUIT INTERMITTENT, Diagnostic Trouble Code (DTC) Detecting Criteria.>
P0500	Vehicle Speed Sensor “A”	<Ref. to GD(H4SO)-138, DTC P0500 VEHICLE SPEED SENSOR “A”, Diagnostic Trouble Code (DTC) Detecting Criteria.>
P0506	Idle Air Control System RPM Lower Than Expected	<Ref. to GD(H4SO)-139, DTC P0506 IDLE AIR CONTROL SYSTEM RPM LOWER THAN EXPECTED, Diagnostic Trouble Code (DTC) Detecting Criteria.>
P0507	Idle Air Control System RPM Higher Than Expected	<Ref. to GD(H4SO)-140, DTC P0507 IDLE AIR CONTROL SYSTEM RPM HIGHER THAN EXPECTED, Diagnostic Trouble Code (DTC) Detecting Criteria.>
P0512	Starter Request Circuit	<Ref. to GD(H4SO)-141, DTC P0512 STARTER REQUEST CIRCUIT, Diagnostic Trouble Code (DTC) Detecting Criteria.>
P0513	Incorrect Immobilizer Key	<Ref. to GD(H4SO)-142, DTC P0513 INCORRECT IMMOBILIZER KEY, Diagnostic Trouble Code (DTC) Detecting Criteria.>
P0600	Serial Communication Link	<Ref. to GD(H4SO)-143, DTC P0600 SERIAL COMMUNICATION LINK, Diagnostic Trouble Code (DTC) Detecting Criteria.>
P0604	Internal Control Module Random Access Memory (RAM) Error	<Ref. to GD(H4SO)-145, DTC P0604 INTERNAL CONTROL MODULE RANDOM ACCESS MEMORY (RAM) ERROR, Diagnostic Trouble Code (DTC) Detecting Criteria.>
P0605	Internal Control Module Read Only Memory (ROM) Error	<Ref. to GD(H4SO)-146, DTC P0605 INTERNAL CONTROL MODULE READ ONLY MEMORY (ROM) ERROR, Diagnostic Trouble Code (DTC) Detecting Criteria.>
P0607	Throttle Control System Circuit Range/Performance	<Ref. to GD(H4SO)-147, DTC P0607 THROTTLE CONTROL SYSTEM CIRCUIT RANGE/PERFORMANCE, Diagnostic Trouble Code (DTC) Detecting Criteria.>
P0638	Throttle Actuator Control Range/Performance (Bank 1)	<Ref. to GD(H4SO)-149, DTC P0638 THROTTLE ACTUATOR CONTROL RANGE/PERFORMANCE (BANK 1), Diagnostic Trouble Code (DTC) Detecting Criteria.>
P0700	Transmission Control System (Mil Request)	<Ref. to GD(H4SO)-151, DTC P0700 TRANSMISSION CONTROL SYSTEM (MIL REQUEST), Diagnostic Trouble Code (DTC) Detecting Criteria.>
P0851	Park/Neutral Switch Input Circuit Low (AT Model)	<Ref. to GD(H4SO)-152, DTC P0851 PARK/NEUTRAL SWITCH INPUT CIRCUIT LOW (AT MODEL), Diagnostic Trouble Code (DTC) Detecting Criteria.>
P0851	Neutral Switch Input Circuit Low (MT Model)	<Ref. to GD(H4SO)-153, DTC P0851 NEUTRAL SWITCH INPUT CIRCUIT LOW (MT MODEL), Diagnostic Trouble Code (DTC) Detecting Criteria.>
P0852	Park/Neutral Switch Input Circuit High (AT Model)	<Ref. to GD(H4SO)-154, DTC P0852 PARK/NEUTRAL SWITCH INPUT CIRCUIT HIGH (AT MODEL), Diagnostic Trouble Code (DTC) Detecting Criteria.>

List of Diagnostic Trouble Code (DTC)

DTC	Item	Note
P0852	Neutral Switch Input Circuit High (MT Model)	<Ref. to GD(H4SO)-155, DTC P0852 NEUTRAL SWITCH INPUT CIRCUIT HIGH (MT MODEL), Diagnostic Trouble Code (DTC) Detecting Criteria.>
P1152	O2 Sensor Circuit Range/Performance (Low) (Bank1 Sensor1)	<Ref. to GD(H4SO)-156, DTC P1152 O2 SENSOR CIRCUIT RANGE/PERFORMANCE (LOW) (BANK1 SENSOR1), Diagnostic Trouble Code (DTC) Detecting Criteria.>
P1153	O2 Sensor Circuit Range/Performance (High) (Bank1 Sensor1)	<Ref. to GD(H4SO)-158, DTC P1153 O2 SENSOR CIRCUIT RANGE/PERFORMANCE (HIGH) (BANK1 SENSOR1), Diagnostic Trouble Code (DTC) Detecting Criteria.>
P1160	Return Spring Failure	<Ref. to GD(H4SO)-160, DTC P1160 RETURN SPRING FAILURE, Diagnostic Trouble Code (DTC) Detecting Criteria.>
P1400	Exhaust Gas Recirculation Flow	<Ref. to GD(H4SO)-161, DTC P1400 FUEL TANK PRESSURE CONTROL SOLENOID VALVE CIRCUIT LOW, Diagnostic Trouble Code (DTC) Detecting Criteria.>
P1420	Fuel Tank Pressure Control Sol. Valve Circuit High	<Ref. to GD(H4SO)-163, DTC P1420 FUEL TANK PRESSURE CONTROL SOL. VALVE CIRCUIT HIGH, Diagnostic Trouble Code (DTC) Detecting Criteria.>
P1443	Vent Control Solenoid Valve Function Problem	<Ref. to GD(H4SO)-165, DTC P1443 VENT CONTROL SOLENOID VALVE FUNCTION PROBLEM, Diagnostic Trouble Code (DTC) Detecting Criteria.>
P1491	Positive Crankcase Ventilation (Blow-by) Function Problem	<Ref. to GD(H4SO)-167, DTC P1491 POSITIVE CRANKCASE VENTILATION (BLOW-BY) FUNCTION PROBLEM, Diagnostic Trouble Code (DTC) Detecting Criteria.>
P1492	EGR Solenoid Valve Signal #1 Circuit Malfunction (Low Input)	<Ref. to GD(H4SO)-169, DTC P1492 EGR SOLENOID VALVE SIGNAL #1 CIRCUIT MALFUNCTION (LOW INPUT), Diagnostic Trouble Code (DTC) Detecting Criteria.>
P1493	EGR Solenoid Valve Signal #1 Circuit Malfunction (High Input)	<Ref. to GD(H4SO)-171, DTC P1493 EGR SOLENOID VALVE SIGNAL #1 CIRCUIT MALFUNCTION (HIGH INPUT), Diagnostic Trouble Code (DTC) Detecting Criteria.>
P1494	EGR Solenoid Valve Signal #2 Circuit Malfunction (Low Input)	<Ref. to GD(H4SO)-173, DTC P1494 EGR SOLENOID VALVE SIGNAL #2 CIRCUIT MALFUNCTION (LOW INPUT), Diagnostic Trouble Code (DTC) Detecting Criteria.>
P1495	EGR Solenoid Valve Signal #2 Circuit Malfunction (High Input)	<Ref. to GD(H4SO)-173, DTC P1495 EGR SOLENOID VALVE SIGNAL #2 CIRCUIT MALFUNCTION (HIGH INPUT), Diagnostic Trouble Code (DTC) Detecting Criteria.>
P1496	EGR Solenoid Valve Signal #3 Circuit Malfunction (Low Input)	<Ref. to GD(H4SO)-173, DTC P1496 EGR SOLENOID VALVE SIGNAL #3 CIRCUIT MALFUNCTION (LOW INPUT), Diagnostic Trouble Code (DTC) Detecting Criteria.>
P1497	EGR Solenoid Valve Signal #3 Circuit Malfunction (High Input)	<Ref. to GD(H4SO)-173, DTC P1497 EGR SOLENOID VALVE SIGNAL #3 CIRCUIT MALFUNCTION (HIGH INPUT), Diagnostic Trouble Code (DTC) Detecting Criteria.>
P1498	EGR Solenoid Valve Signal #4 Circuit Malfunction (Low Input)	<Ref. to GD(H4SO)-173, DTC P1498 EGR SOLENOID VALVE SIGNAL #4 CIRCUIT MALFUNCTION (LOW INPUT), Diagnostic Trouble Code (DTC) Detecting Criteria.>
P1499	EGR Solenoid Valve Signal #4 Circuit Malfunction (High Input)	<Ref. to GD(H4SO)-173, DTC P1499 EGR SOLENOID VALVE SIGNAL #4 CIRCUIT MALFUNCTION (HIGH INPUT), Diagnostic Trouble Code (DTC) Detecting Criteria.>
P1560	Back-Up Voltage Circuit Malfunction	<Ref. to GD(H4SO)-174, DTC P1560 BACK-UP VOLTAGE CIRCUIT MALFUNCTION, Diagnostic Trouble Code (DTC) Detecting Criteria.>
P1570	Antenna	<Ref. to GD(H4SO)-175, DTC P1570 ANTENNA, Diagnostic Trouble Code (DTC) Detecting Criteria.>
P1571	Reference Code Incompatibility	<Ref. to GD(H4SO)-175, DTC P1571 REFERENCE CODE INCOMPATIBILITY, Diagnostic Trouble Code (DTC) Detecting Criteria.>
P1572	IMM Circuit Failure	<Ref. to GD(H4SO)-175, DTC P1572 IMM CIRCUIT FAILURE (EXCEPT ANTENNA CIRCUIT), Diagnostic Trouble Code (DTC) Detecting Criteria.>
P1574	Key Communication Failure	<Ref. to GD(H4SO)-175, DTC P1574 KEY COMMUNICATION FAILURE, Diagnostic Trouble Code (DTC) Detecting Criteria.>

DTC	Item	Note
P1576	EGI Control Module EEPROM	<Ref. to GD(H4SO)-175, DTC P1576 EGI CONTROL MODULE EEPROM, Diagnostic Trouble Code (DTC) Detecting Criteria.>
P1577	IMM Control Module EEPROM	<Ref. to GD(H4SO)-175, DTC P1577 IMM CONTROL MODULE EEPROM, Diagnostic Trouble Code (DTC) Detecting Criteria.>
P1578	Meter Failure	<Ref. to GD(H4SO)-175, DTC P1578 METER FAILURE, Diagnostic Trouble Code (DTC) Detecting Criteria.>
P1602	Control Module Programming Error	<Ref. to GD(H4SO)-176, DTC P1602 CONTROL MODULE PROGRAMMING ERROR, Diagnostic Trouble Code (DTC) Detecting Criteria.>
P2096	Post Catalyst Fuel Trim System Too Lean (Bank 1)	<Ref. to GD(H4SO)-178, DTC P2096 POST CATALYST FUEL TRIM SYSTEM TOO LEAN (BANK 1), Diagnostic Trouble Code (DTC) Detecting Criteria.>
P2097	Post Catalyst Fuel Trim System Too Rich (Bank 1)	<Ref. to GD(H4SO)-180, DTC P2097 POST CATALYST FUEL TRIM SYSTEM TOO RICH (BANK 1), Diagnostic Trouble Code (DTC) Detecting Criteria.>
P2101	Throttle Actuator Control Motor Circuit Range/Performance	<Ref. to GD(H4SO)-182, DTC P2101 THROTTLE ACTUATOR CONTROL MOTOR CIRCUIT RANGE/PERFORMANCE, Diagnostic Trouble Code (DTC) Detecting Criteria.>
P2102	Throttle Actuator Control Motor Circuit Low	<Ref. to GD(H4SO)-183, DTC P2102 THROTTLE ACTUATOR CONTROL MOTOR CIRCUIT LOW, Diagnostic Trouble Code (DTC) Detecting Criteria.>
P2103	Throttle Actuator Control Motor Circuit High	<Ref. to GD(H4SO)-184, DTC P2103 THROTTLE ACTUATOR CONTROL MOTOR CIRCUIT HIGH, Diagnostic Trouble Code (DTC) Detecting Criteria.>
P2109	Throttle/Pedal Position Sensor “A” Minimum Stop Performance	<Ref. to GD(H4SO)-185, DTC P2109 THROTTLE/PEDAL POSITION SENSOR “A” MINIMUM STOP PERFORMANCE, Diagnostic Trouble Code (DTC) Detecting Criteria.>
P2122	Throttle/Pedal Position Sensor/ Switch “D” Circuit Low Input	<Ref. to GD(H4SO)-186, DTC P2122 THROTTLE/PEDAL POSITION SENSOR/SWITCH “D” CIRCUIT LOW INPUT, Diagnostic Trouble Code (DTC) Detecting Criteria.>
P2123	Throttle/Pedal Position Sensor/ Switch “D” Circuit High Input	<Ref. to GD(H4SO)-188, DTC P2123 THROTTLE/PEDAL POSITION SENSOR/SWITCH “D” CIRCUIT HIGH INPUT, Diagnostic Trouble Code (DTC) Detecting Criteria.>
P2127	Throttle/Pedal Position Sensor/ Switch “E” Circuit Low Input	<Ref. to GD(H4SO)-190, DTC P2127 THROTTLE/PEDAL POSITION SENSOR/SWITCH “E” CIRCUIT LOW INPUT, Diagnostic Trouble Code (DTC) Detecting Criteria.>
P2128	Throttle/Pedal Position Sensor/ Switch “E” Circuit High Input	<Ref. to GD(H4SO)-192, DTC P2128 THROTTLE/PEDAL POSITION SENSOR/SWITCH “E” CIRCUIT HIGH INPUT, Diagnostic Trouble Code (DTC) Detecting Criteria.>
P2135	Throttle Position Sensor Circuit Range/Performance	<Ref. to GD(H4SO)-194, DTC P2135 THROTTLE/PEDAL POSITION SENSOR/SWITCH “A”/“B” VOLTAGE CORRELATION, Diagnostic Trouble Code (DTC) Detecting Criteria.>
P2138	Accelerator Position Sensor Circuit Range/Performance	<Ref. to GD(H4SO)-196, DTC P2138 THROTTLE/PEDAL POSITION SENSOR/SWITCH “D”/“E” VOLTAGE CORRELATION, Diagnostic Trouble Code (DTC) Detecting Criteria.>
P2227	Atmospheric Pressure Sensor Range/ Performance	<Ref. to GD(H4SO)-198, DTC P2227 BAROMETRIC PRESSURE CIRCUIT RANGE/PERFORMANCE, Diagnostic Trouble Code (DTC) Detecting Criteria.>
P2228	Barometric Pressure Circuit Low	<Ref. to GD(H4SO)-199, DTC P2228 BAROMETRIC PRESSURE CIRCUIT LOW, Diagnostic Trouble Code (DTC) Detecting Criteria.>
P2229	Barometric Pressure Circuit High	<Ref. to GD(H4SO)-200, DTC P2229 BAROMETRIC PRESSURE CIRCUIT HIGH, Diagnostic Trouble Code (DTC) Detecting Criteria.>

2. Diagnostic Trouble Code (DTC) Detecting Criteria

A: DTC P0026 INTAKE VALVE CONTROL SOLENOID CIRCUIT RANGE/ PERFORMANCE (BANK 1)

1. OUTLINE OF DIAGNOSIS

Judge as NG with either Low NG or High NG.
A variable valve lift diagnosis oil pressure switch is installed for diagnosis. It is possible to determine whether the intake valve is in high mode (increase the amount of lift) or in low mode (suppressing the amount of lift) when the variable valve lift diagnosis oil pressure switch is turned ON or OFF.

- **Normal**

Oil switching solenoid valve duty	Intake valve	Variable valve lift diagnosis oil pressure switch
Large	High mode	ON
Minimum	Low mode	OFF

- **Low NG**

When the variable valve lift diagnosis oil pressure switch remains OFF even though the intake valve tried to enter high mode (oil switching solenoid valve duty is large), this is judged as a Low NG.

- **High NG**

When the variable valve lift diagnosis oil pressure switch remains ON even though the intake valve tried to enter low mode (oil switching solenoid valve duty is small), this is judged as a High NG.

2. COMPONENT DESCRIPTION

The variable valve lift system optimizes the intake valve lift by switching between the low lift cam and the high lift cam according to the engine speed. The amount of intake valve lift is varied by controlling the oil switching solenoid valve duty according to signals from the ECM.

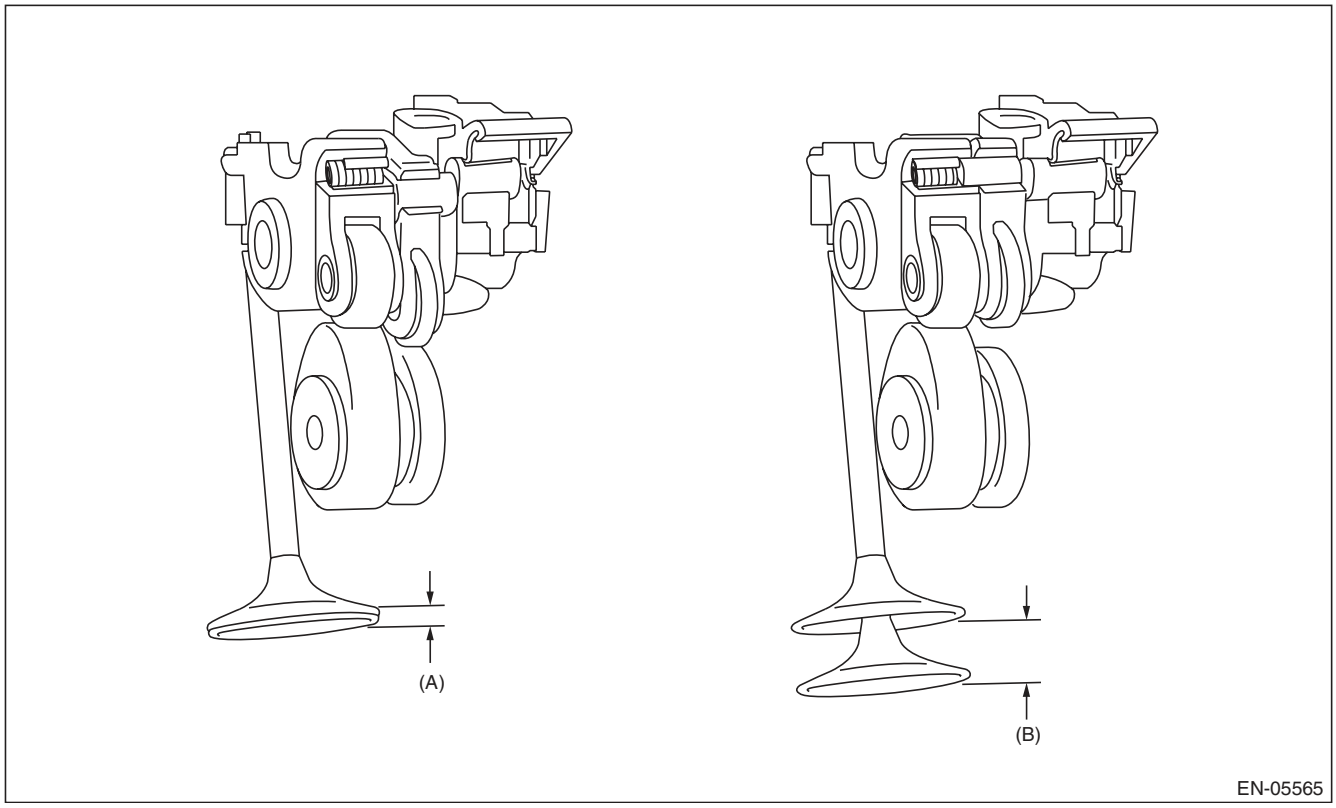

(A) Low lift (B) High lift

3. ENABLE CONDITION

Secondary Parameters	Enable Conditions
Battery voltage	≥ 10.9 V
After engine starting	≥ 6000 ms
Engine oil temperature	≥ 15 °C (59 °F)
Variable valve lift control	Operation

4. GENERAL DRIVING CYCLE

Perform the diagnosis continuously 6 seconds after engine start while variable valve lift is being controlled

5. DIAGNOSTIC METHOD

- **Abnormality Judgement**

If the duration of time while the following conditions are met is longer than the time indicated, judge as NG.

Judgement Value

Malfunction Criteria	Threshold Value
Low	
Duty ratio	≥ 62 %
Variable valve lift diagnosis oil pressure switch	OFF
High	
Duty ratio	< 33 %
Variable valve lift diagnosis oil pressure switch	ON

Time Needed for Diagnosis:
Low side: 784 ms
High side: 3000 ms
Malfunction Indicator Light Illumination: Illuminates as soon as a malfunction occurs.

- **Normality Judgement**

Judge as OK and clear the NG if the continuous time while the following conditions are established is more than the predetermined time.

Judgement Value

Malfunction Criteria	Threshold Value
Low	
Duty ratio	≥ 62 %
Variable valve lift diagnosis oil pressure switch	ON
High	
Duty ratio	< 33 %
Variable valve lift diagnosis oil pressure switch	OFF

Time Needed for Diagnosis:
Low side: 208 ms
High side: 3000 ms

B: DTC P0028 INTAKE VALVE CONTROL SOLENOID CIRCUIT RANGE/ PERFORMANCE (BANK 2)

1. OUTLINE OF DIAGNOSIS

NOTE:
For the detection standard, refer to DTC P0026. <Ref. to GD(H4SO)-8, DTC P0026 INTAKE VALVE CONTROL SOLENOID CIRCUIT RANGE/PERFORMANCE (BANK 1), Diagnostic Trouble Code (DTC) Detecting Criteria.>

C: DTC P0030 HO2S HEATER CONTROL CIRCUIT (BANK 1 SENSOR 1)

1. OUTLINE OF DIAGNOSIS

Detect functional errors of the front oxygen (A/F) sensor heater.
Judge as NG when it is determined that the front oxygen (A/F) sensor impedance is large when looking at engine status such as deceleration fuel cut.

2. COMPONENT DESCRIPTION

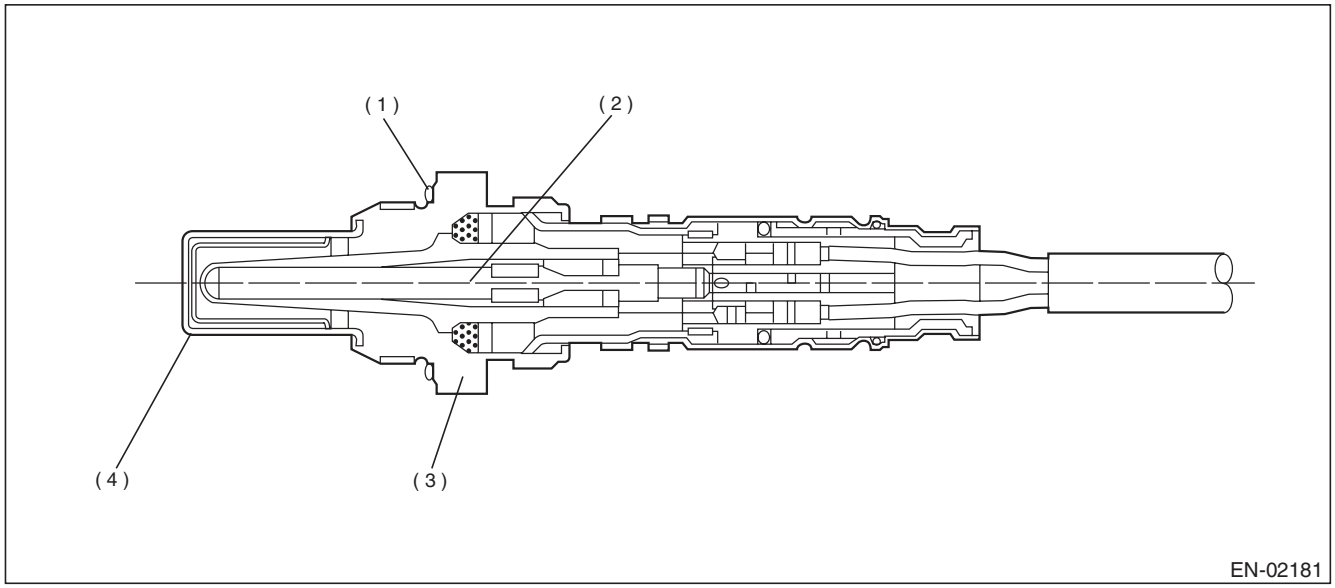

(1) Gasket
(2) Ceramic heater
(3) Sensor housing
(4) Protection tube

3. ENABLE CONDITION

Secondary Parameters	Enable Conditions
Condition established time	≥ 42000 ms
Battery voltage	≥ 10.9 V
Heater current	Permitted
Control duty ≥ 35 %	Experienced
After fuel cut	≥ 20000 ms

4. GENERAL DRIVING CYCLE

Perform the diagnosis continuously after 42000 ms or more have passed since the engine started.

5. DIAGNOSTIC METHOD

- **Abnormality Judgement**

If the duration of time while the following conditions are met is longer than the time indicated, judge as NG.

Judgement Value

Malfunction Criteria	Threshold Value
Front oxygen (A/F) sensor impedance	> 50 Ω

Time Needed for Diagnosis: 10000 ms
Malfunction Indicator Light Illumination: Illuminates when malfunction occurs in 2 continuous driving cycles.

- **Normality Judgement**

Judge as OK and clear the NG if the continuous time while the following conditions are established is more than the predetermined time.

Judgement Value

Malfunction Criteria	Threshold Value
Front oxygen (A/F) sensor impedance	≤ 50 Ω

Time Needed for Diagnosis: 10000 ms

D: DTC P0031 HO2S HEATER CONTROL CIRCUIT LOW (BANK 1 SENSOR 1)

1. OUTLINE OF DIAGNOSIS

Detect front oxygen (A/F) sensor heater open or short circuit.
The front oxygen (A/F) sensor heater performs duty control, and the output terminal voltage at ON is 0 V, and the output terminal voltage at OFF is the battery voltage.
Judge as NG when the terminal voltage remains Low.

2. COMPONENT DESCRIPTION

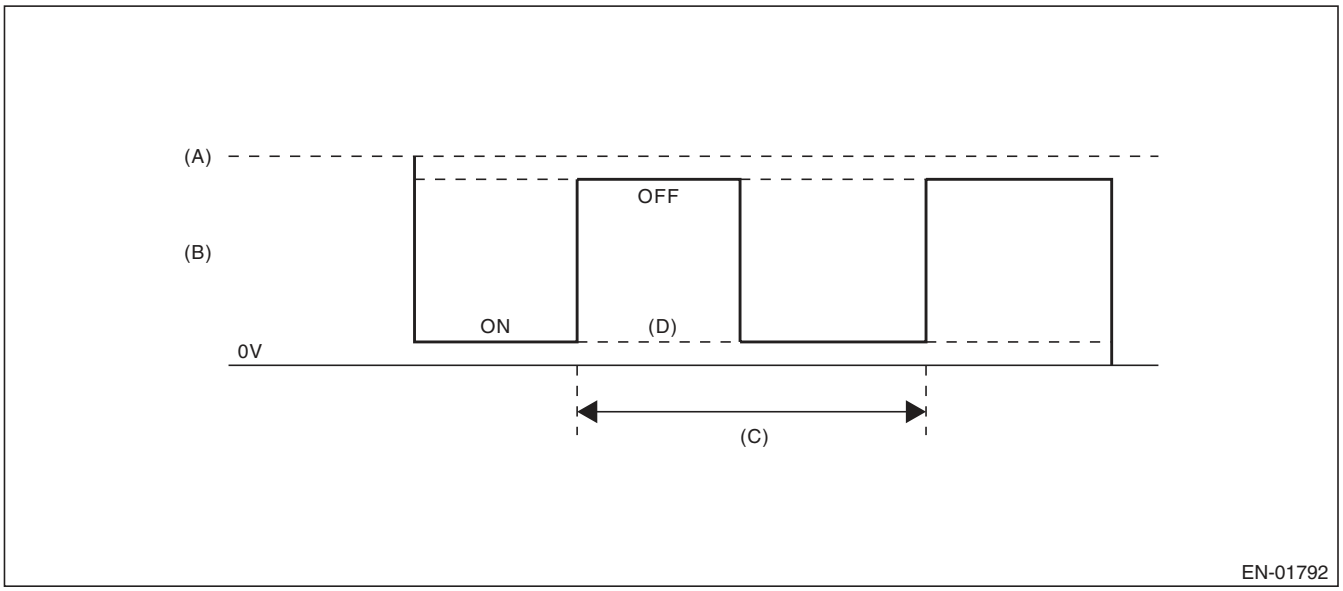

(A) Battery voltage
(B) Front oxygen (A/F) sensor heater output voltage
(C) 128 milliseconds
(D) Low error

3. ENABLE CONDITION

Secondary Parameters	Enable Conditions
Battery voltage	≥ 10.9 V

4. GENERAL DRIVING CYCLE

Always perform the diagnosis continuously.

5. DIAGNOSTIC METHOD

- **Abnormality Judgement**

If the duration of time while the following conditions are met is longer than the time indicated, judge as NG.

Judgement Value

Malfunction Criteria	Threshold Value
Output voltage level	Low
Front oxygen (A/F) sensor heater control duty	< 87.5 %

Time Needed for Diagnosis: 4 ms × 250 time(s)
Malfunction Indicator Light Illumination: Illuminates as soon as a malfunction occurs.

- **Normality Judgement**

Judge as OK and clear the NG if the continuous time while the following conditions are established is more than the predetermined time.

Judgement Value

Malfunction Criteria	Threshold Value
Output voltage level	High

Time Needed for Diagnosis: Less than 1 second

E: DTC P0032 HO2S HEATER CONTROL CIRCUIT HIGH (BANK 1 SENSOR 1)

1. OUTLINE OF DIAGNOSIS

Detect front oxygen (A/F) sensor heater open or short circuit.
The front oxygen (A/F) sensor heater performs duty control, and the output terminal voltage at ON is 0 V, and the output terminal voltage at OFF is the battery voltage.
Judge as NG when the terminal voltage remains High.

2. COMPONENT DESCRIPTION

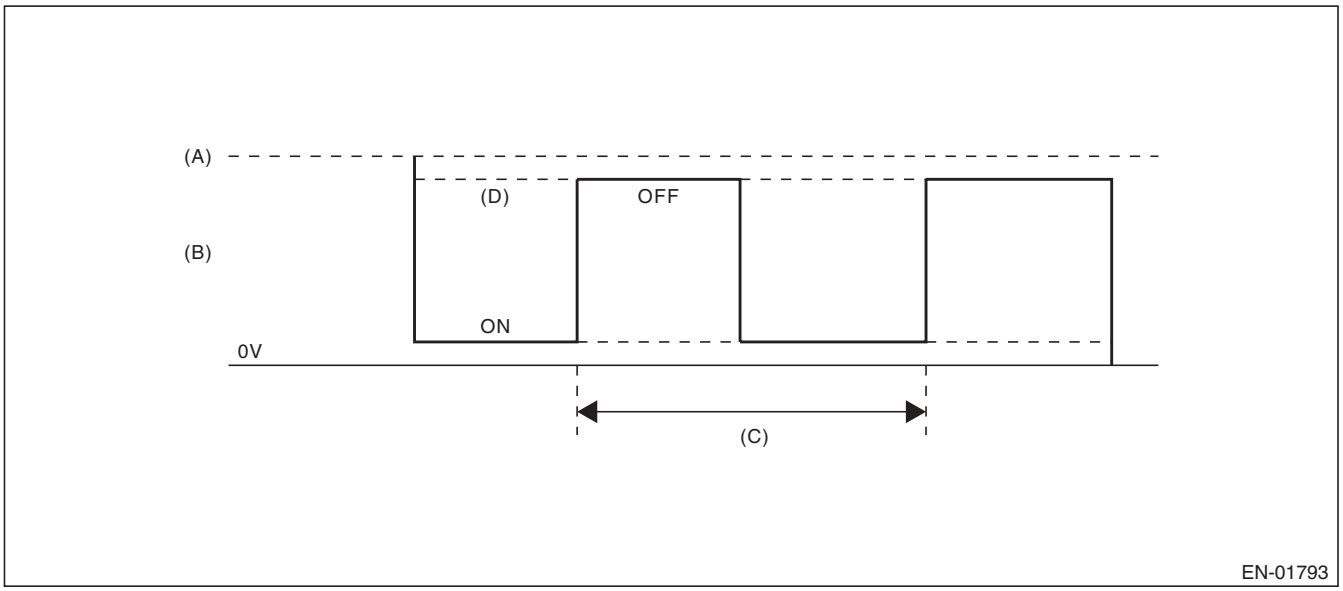

(A) Battery voltage
(B) Front oxygen (A/F) sensor heater output voltage
(C) 128 milliseconds
(D) High error

3. ENABLE CONDITION

Secondary Parameters	Enable Conditions
Battery voltage	≥ 10.9 V

4. GENERAL DRIVING CYCLE

Always perform the diagnosis continuously.

5. DIAGNOSTIC METHOD

- **Abnormality Judgement**

If the duration of time while the following conditions are met is longer than the time indicated, judge as NG.

Judgement Value

Malfunction Criteria	Threshold Value
Output voltage level	High
Front oxygen (A/F) sensor heater control duty	≥ 12.5 %

Time Needed for Diagnosis: 4 ms × 500 time(s)
Malfunction Indicator Light Illumination: Illuminates as soon as a malfunction occurs.

- **Normality Judgement**

Judge as OK and clear the NG if the continuous time while the following conditions are established is more than the predetermined time.

Judgement Value

Malfunction Criteria	Threshold Value
Output voltage level	Low

Time Needed for Diagnosis: Less than 1 second

F: DTC P0037 HO2S HEATER CONTROL CIRCUIT LOW (BANK 1 SENSOR 2)

1. OUTLINE OF DIAGNOSIS

Detect the rear oxygen sensor heater open or short circuit.
The rear oxygen sensor heater performs duty control, and the output terminal voltage at ON is 0 V, and the output terminal voltage at OFF is the battery voltage.
Judge as NG when the terminal voltage remains Low.

2. COMPONENT DESCRIPTION

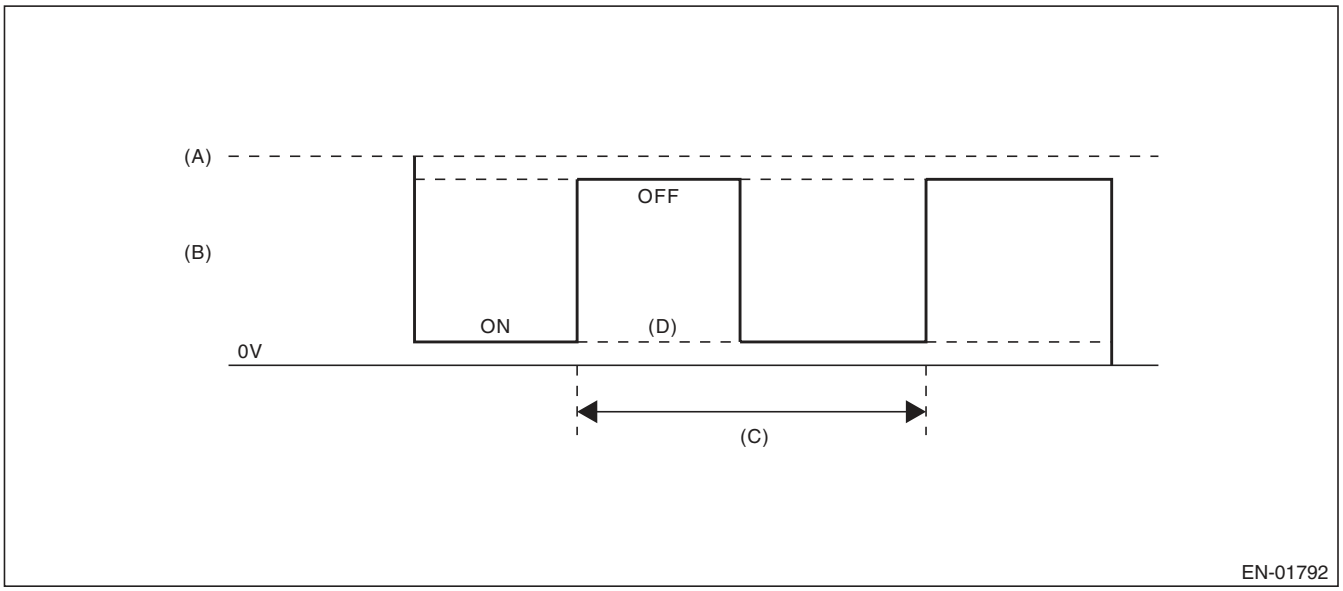

(A) Battery voltage
(B) Output voltage of the rear oxygen sensor heater
(C) 256 milliseconds (cycles)
(D) Low error

3. ENABLE CONDITION

Secondary Parameters	Enable Conditions
Battery voltage	≥ 10.9 V
Elapsed time after engine starting	≥ 1 second
Engine speed	< 8000 rpm

4. GENERAL DRIVING CYCLE

After starting the engine, perform the diagnosis continuously when engine is low speed.

5. DIAGNOSTIC METHOD

- **Abnormality Judgement**

If the duration of time while the following conditions are met is longer than the time indicated, judge as NG.

Judgement Value

Malfunction Criteria	Threshold Value
Output voltage level	Low
Rear oxygen sensor heater control duty	< 75 %

Time Needed for Diagnosis: 8 ms × 320 time(s)
Malfunction Indicator Light Illumination: Illuminates when malfunction occurs in 2 continuous driving cycles.

- **Normality Judgement**

Judge as OK and clear the NG if the continuous time while the following conditions are established is more than the predetermined time.

Judgement Value

Malfunction Criteria	Threshold Value
Output voltage level	High

Time Needed for Diagnosis: Less than 1 second

G: DTC P0038 HO2S HEATER CONTROL CIRCUIT HIGH (BANK 1 SENSOR 2)

1. OUTLINE OF DIAGNOSIS

Detect the rear oxygen sensor heater open or short circuit.
The rear oxygen sensor heater performs duty control, and the output terminal voltage at ON is 0 V, and the output terminal voltage at OFF is the battery voltage.
Judge as NG when the terminal voltage remains High.

2. COMPONENT DESCRIPTION

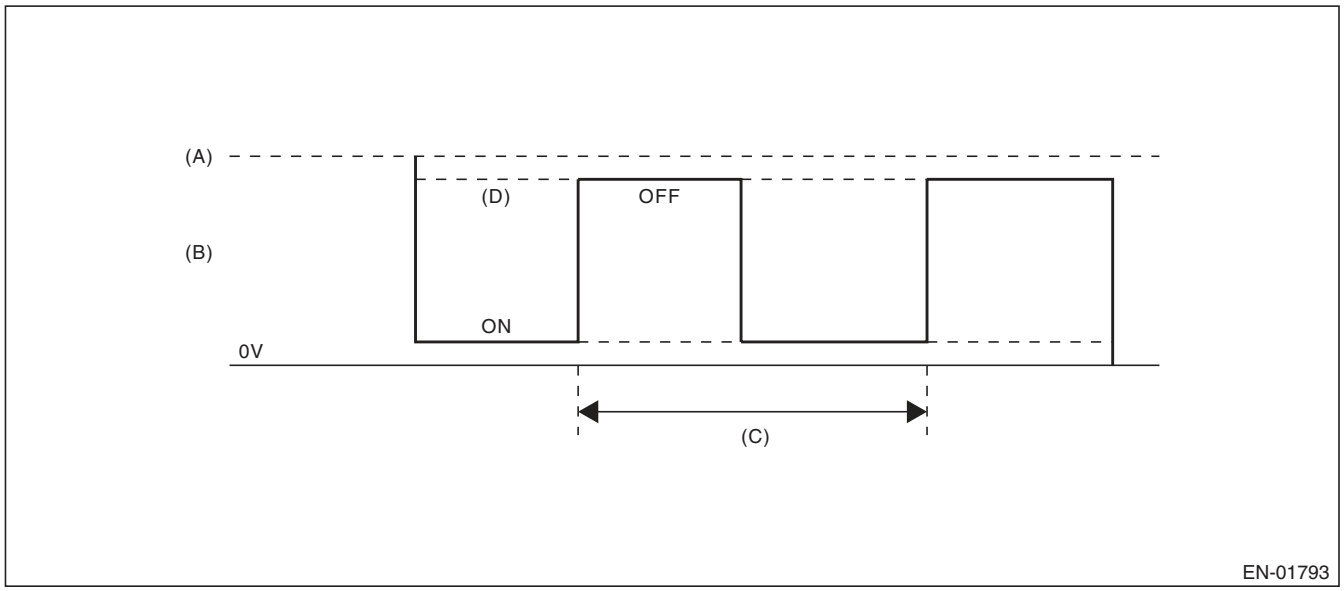

(A) Battery voltage
(B) Output voltage of the rear oxygen sensor heater
(C) 256 milliseconds (cycles)
(D) High error

3. ENABLE CONDITION

Secondary Parameters	Enable Conditions
Battery voltage	≥ 10.9 V
Elapsed time after engine starting	≥ 1 second
Engine speed	< 8000 rpm

4. GENERAL DRIVING CYCLE

After starting the engine, perform the diagnosis continuously when engine is low speed.

5. DIAGNOSTIC METHOD

- **Abnormality Judgement**

If the duration of time while the following conditions are met is longer than the time indicated, judge as NG.

Judgement Value

Malfunction Criteria	Threshold Value
Output voltage level	High
Rear oxygen sensor heater control duty	≥ 20 %

Time Needed for Diagnosis: 8 ms × 320 time(s)
Malfunction Indicator Light Illumination: Illuminates when malfunction occurs in 2 continuous driving cycles.

- **Normality Judgement**

Judge as OK and clear the NG if the continuous time while the following conditions are established is more than the predetermined time.

Judgement Value

Malfunction Criteria	Threshold Value
Output voltage level	Low

Time Needed for Diagnosis: Less than 1 second

H: DTC P0068 MAP/MAF - THROTTLE POSITION CORRELATION

1. OUTLINE OF DIAGNOSIS

Detect problems in the intake manifold pressure sensor output properties.
Judge as NG when the intake air pressure AD value is Low whereas it seemed to be High from the viewpoint of engine condition, or when it is High whereas it seemed to be Low from the engine condition.

2. COMPONENT DESCRIPTION

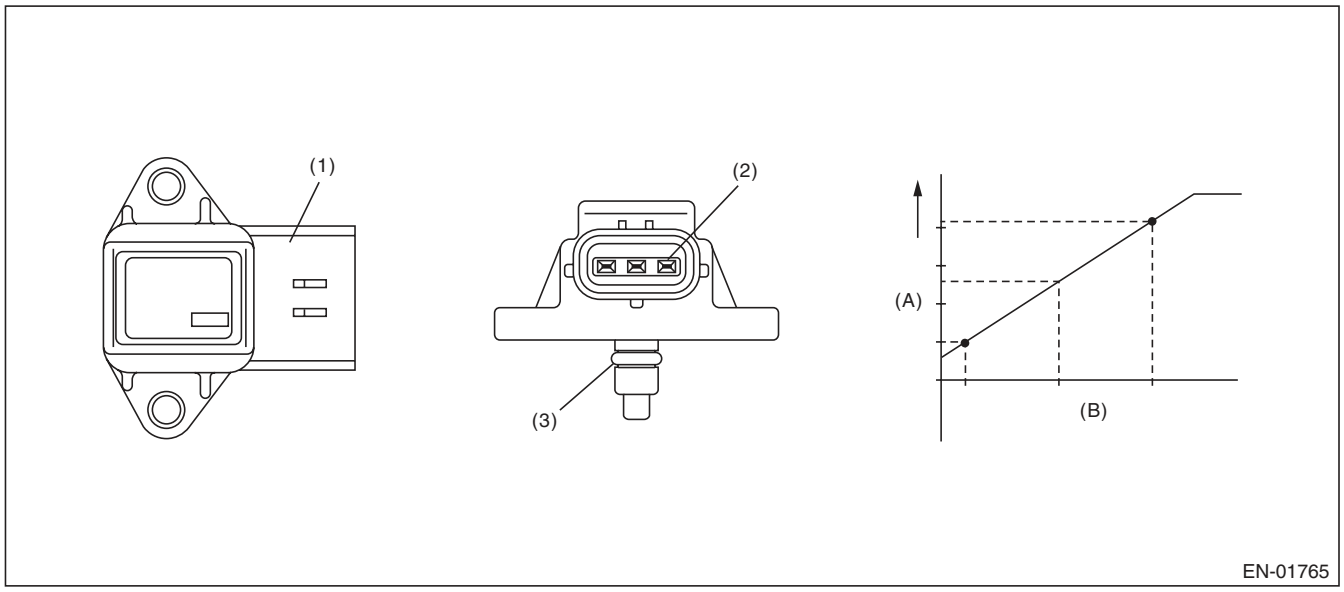

(A) Output voltage (B) Absolute pressure

(1) Connector (2) Terminals (3) O-ring

3. ENABLE CONDITION

Secondary Parameters	Enable Conditions
Engine coolant temperature	≥ 75 °C (167 °F)

4. GENERAL DRIVING CYCLE

Perform the diagnosis continuously after idling.

5. DIAGNOSTIC METHOD

- **Abnormality Judgement**

Judge as NG when Low side or High side becomes NG.
If the duration of time while the following conditions are met is longer than the time indicated, judge as NG.

Judgement Value

Malfunction Criteria	Threshold Value
Low	
Engine speed	< 2500 rpm
Throttle position	≥ 12 °
Output voltage	< 1.63 V
Engine load	> 0.6 g/rev (0.02 oz/rev)
High	
Engine speed	600 rpm — 900 rpm
Throttle position	< 2.44 °
Output voltage	≥ 3.4 V
Engine load	< 0.4 g/rev (0.01 oz/rev)

Time Needed for Diagnosis:
Low side: 3000 ms
High side: 7000 ms
Malfunction Indicator Light Illumination: Illuminates when malfunction occurs in 2 continuous driving cycles.

- **Normality Judgement**

Judge as OK and clear the NG when both Low side and High side become OK.
If the duration of time while the following conditions are met is longer than the time indicated, judge as OK.

Judgement Value

Malfunction Criteria	Threshold Value
Low	
Engine speed	< 2500 rpm
Throttle position	≥ 12 °
Output voltage	≥ 1.63 V
Engine load	> 0.6 g/rev (0.02 oz/rev)
High	
Engine speed	600 rpm — 900 rpm
Throttle position	< 2.44 °
Output voltage	< 3.4 V
Engine load	< 0.4 g/rev (0.01 oz/rev)

Time Needed for Diagnosis:
Low side: Less than 1 second
High side: Less than 1 second

I: DTC P0076 INTAKE VALVE CONTROL SOLENOID CIRCUIT LOW (BANK 1)

1. OUTLINE OF DIAGNOSIS

Detect the open circuit of the oil switching solenoid valve.
Judge as NG when the current is small even though the output duty is large.

2. ENABLE CONDITION

Secondary Parameters	Enable Conditions
Battery voltage	≥ 10.9 V

3. GENERAL DRIVING CYCLE

Always perform the diagnosis continuously.

4. DIAGNOSTIC METHOD

- **Abnormality Judgement**

If the duration of time while the following conditions are met is longer than the time indicated, judge as NG.

Judgement Value

Malfunction Criteria	Threshold Value
Duty ratio	≥ 30 %
Control current	< 0.026 A

Time Needed for Diagnosis: 2000 ms
Malfunction Indicator Light Illumination: Illuminates as soon as a malfunction occurs.

- **Normality Judgement**

Judge as OK and clear the NG if the continuous time while the following conditions are established is more than the predetermined time.

Judgement Value

Malfunction Criteria	Threshold Value
|Oil switching solenoid valve target current value – Oil switching solenoid valve current value|	< 0.08 A
Target current	≥ 0.11 A

Time Needed for Diagnosis: 2000 ms

J: DTC P0077 INTAKE VALVE CONTROL SOLENOID CIRCUIT HIGH (BANK 1)

1. OUTLINE OF DIAGNOSIS

Detect short circuits of the oil switching solenoid valve.
Judge as a short NG when the current is large even though the output duty is small.

2. ENABLE CONDITION

Secondary Parameters	Enable Conditions
Battery voltage	≥ 10.9 V

3. GENERAL DRIVING CYCLE

Always perform the diagnosis continuously.

4. DIAGNOSTIC METHOD

- **Abnormality Judgement**

If the duration of time while the following conditions are met is longer than the time indicated, judge as NG.

Judgement Value

Malfunction Criteria	Threshold Value
Duty ratio	< 7 %
Control current	≥ 0.465 A

Time Needed for Diagnosis: 2000 ms
Malfunction Indicator Light Illumination: Illuminates as soon as a malfunction occurs.

- **Normality Judgement**

Judge as OK and clear the NG if the continuous time while the following conditions are established is more than the predetermined time.

Judgement Value

Malfunction Criteria	Threshold Value
|Oil switching solenoid valve target current value – Oil switching solenoid valve current value|	< 0.08 A

Time Needed for Diagnosis: 2000 ms

K: DTC P0082 INTAKE VALVE CONTROL SOLENOID CIRCUIT LOW (BANK 2)

1. OUTLINE OF DIAGNOSIS

NOTE:
For the detection standard, refer to DTC P0076. <Ref. to GD(H4SO)-23, DTC P0076 INTAKE VALVE CONTROL SOLENOID CIRCUIT LOW (BANK 1), Diagnostic Trouble Code (DTC) Detecting Criteria.>

L: DTC P0083 INTAKE VALVE CONTROL SOLENOID CIRCUIT HIGH (BANK 2)

1. OUTLINE OF DIAGNOSIS

NOTE:
For the detection standard, refer to DTC P0077. <Ref. to GD(H4SO)-24, DTC P0077 INTAKE VALVE CONTROL SOLENOID CIRCUIT HIGH (BANK 1), Diagnostic Trouble Code (DTC) Detecting Criteria.>

M: DTC P0101 MASS OR VOLUME AIR FLOW CIRCUIT RANGE/PERFORMANCE

1. OUTLINE OF DIAGNOSIS

Detect the malfunction of air flow sensor output properties.
Judge as a low side NG when the air flow voltage indicates a small value regardless of running in a state where the air flow voltage increases. Judge as a high side NG when the air flow voltage indicates a large value regardless of running in a state where the air flow voltage decreases. Judge air flow sensor property NG when the Low side or High side becomes NG.

2. COMPONENT DESCRIPTION

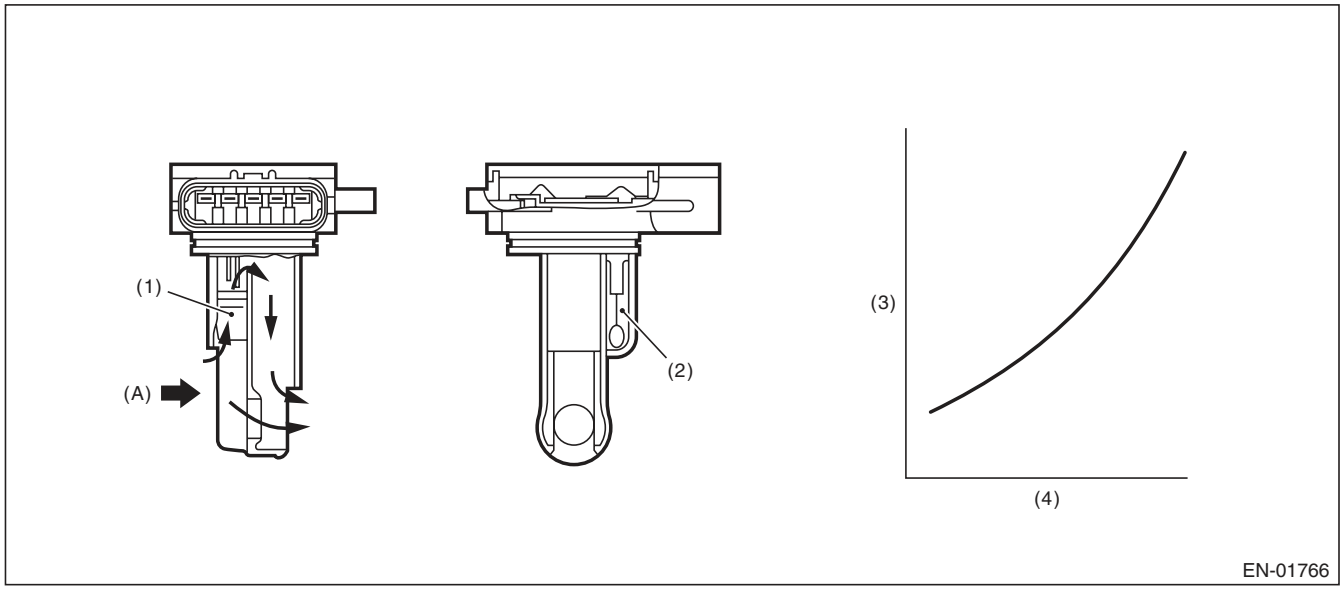

(A) Air

(1) Air flow sensor
(2) Intake air temperature sensor
(3) Voltage (V)
(4) Amount of intake air (kg (lb)/s)

3. ENABLE CONDITION

Secondary Parameters	Enable Conditions
Engine coolant temperature	≥ 75 °C (167 °F)

4. GENERAL DRIVING CYCLE

Perform the diagnosis continuously after idling.

5. DIAGNOSTIC METHOD

• Abnormality Judgement

Judge as NG when Low side or High side becomes NG.
If the duration of time while the following conditions are met is longer than the time indicated, judge as NG.

Judgement Value

Malfunction Criteria	Threshold Value
Low	
Output voltage	< 1.49 V
Engine speed	≥ 2000 rpm
Throttle opening angle	≥ 12 °
Intake manifold pressure	≥ 66.7 kPa (500 mmHg, 19.7 inHg)
High (1)	
Output voltage	≥ 2.66 V
Engine speed	600 rpm — 900 rpm
Throttle opening angle	< 2.44 °
Intake manifold pressure	≥ 40 kPa (300 mmHg, 11.8 inHg)
High (2)	
Output voltage	≥ 1.45 V
Engine speed	600 rpm — 900 rpm
Throttle opening angle	< 2.44 °
Intake manifold pressure	≥ 40 kPa (300 mmHg, 11.8 inHg)
Fuel system diagnosis	Rich side malfunction

Time Needed for Diagnosis:
Low: 5000 ms
High: 10000 ms
Malfunction Indicator Light Illumination: Illuminates when malfunction occurs in 2 continuous driving cycles.

• Normality Judgement

Judge as OK and clear the NG when both Low side and High side become OK.
Judge as OK and clear the NG if the continuous time while the following conditions are established is more than the predetermined time.

Judgement Value

Malfunction Criteria	Threshold Value
Low	
Output voltage	≥ 1.49 V
Engine speed	≥ 2000 rpm
Throttle opening angle	≥ 12 °
Intake manifold pressure	≥ 66.7 kPa (500 mmHg, 19.7 inHg)
High	
Output voltage	< 2.66 V
Engine speed	600 rpm — 900 rpm
Throttle opening angle	< 2.44 °
Intake manifold pressure	< 40 kPa (300 mmHg, 11.8 inHg)
Fuel system diagnosis	Rich side normal

Time Needed for Diagnosis:
Low: Less than 1 second
High: Less than 1 second

N: DTC P0102 MASS OR VOLUME AIR FLOW CIRCUIT LOW INPUT

1. OUTLINE OF DIAGNOSIS

Detect open or short circuits of the air flow sensor.
Judge as NG if out of specification.

2. COMPONENT DESCRIPTION

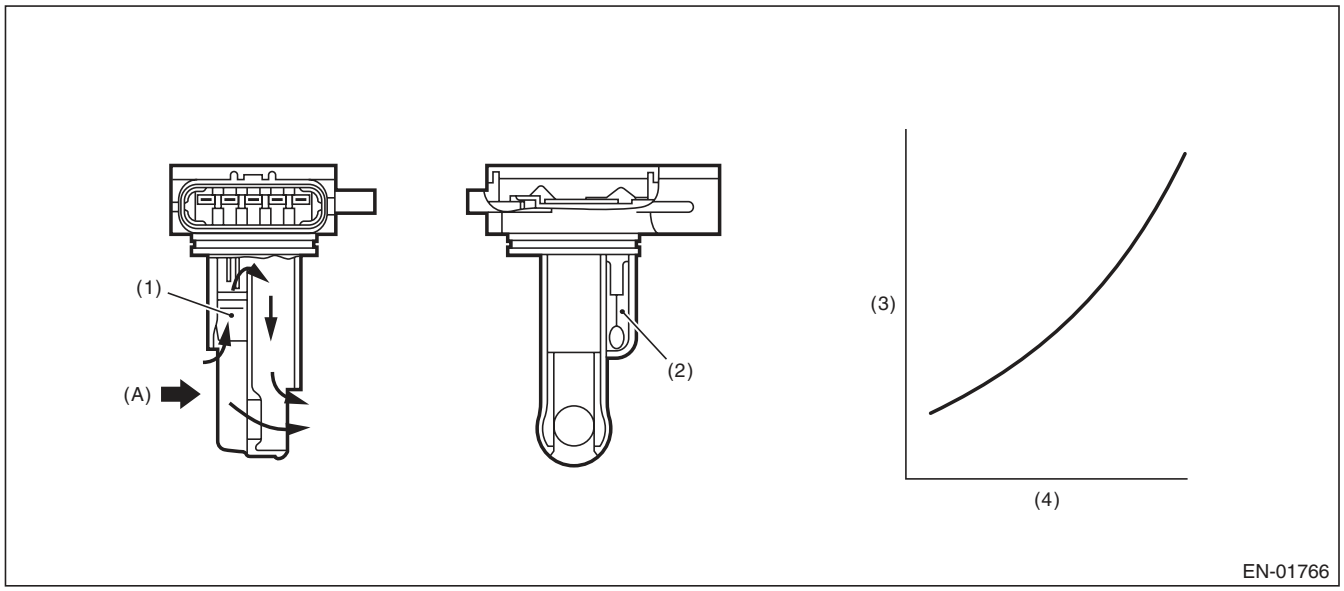

(A) Air

(1) Air flow sensor
(2) Intake air temperature sensor
(3) Voltage (V)
(4) Amount of intake air (kg (lb)/s)

3. ENABLE CONDITION

Secondary Parameters	Enable Conditions
None	

4. GENERAL DRIVING CYCLE

Always perform the diagnosis continuously.

5. DIAGNOSTIC METHOD

- **Abnormality Judgement**

If the duration of time while the following conditions are met is longer than the time indicated, judge as NG.

Judgement Value

Malfunction Criteria	Threshold Value
Output voltage	≤ 0.22 V

Time Needed for Diagnosis: 500 ms
Malfunction Indicator Light Illumination: Illuminates as soon as a malfunction occurs.

- **Normality Judgement**

Judge as OK and clear the NG if the continuous time while the following conditions are established is more than the predetermined time.

Judgement Value

Malfunction Criteria	Threshold Value
Output voltage	> 0.22 V

Time Needed for Diagnosis: Less than 1 second

O: DTC P0103 MASS OR VOLUME AIR FLOW CIRCUIT HIGH INPUT

1. OUTLINE OF DIAGNOSIS

Detect open or short circuits of the air flow sensor.
Judge as NG if out of specification.

2. COMPONENT DESCRIPTION

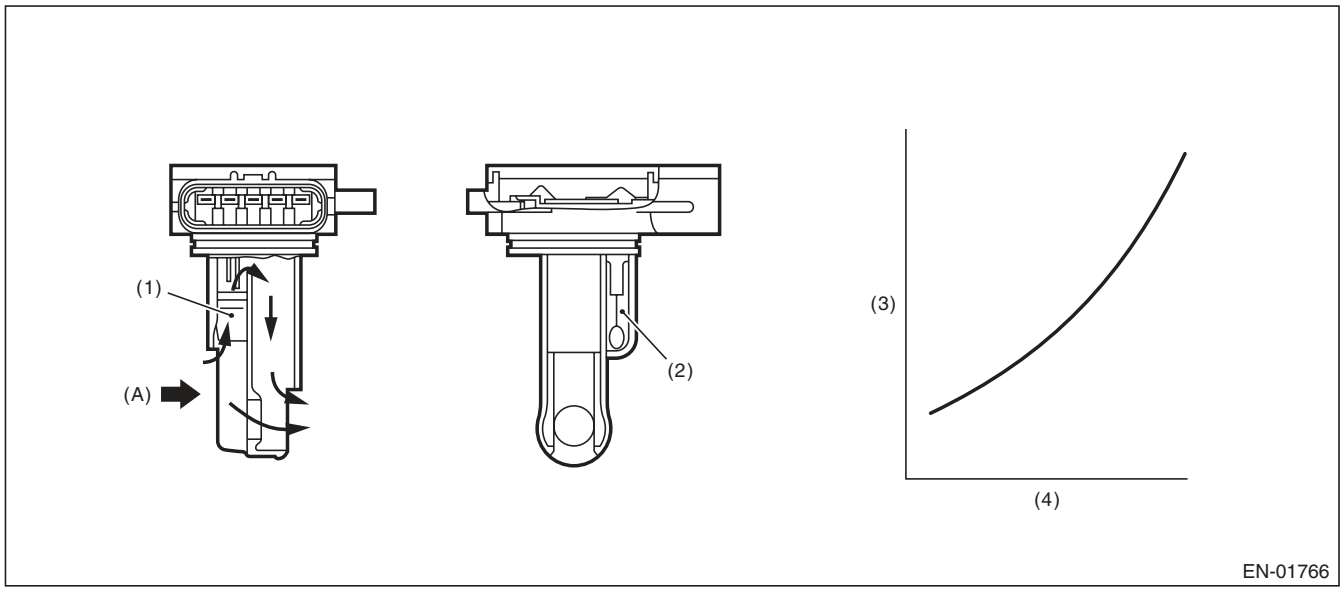

(A) Air

(1) Air flow sensor
(2) Intake air temperature sensor
(3) Voltage (V)
(4) Amount of intake air (kg (lb)/s)

3. ENABLE CONDITION

Secondary Parameters	Enable Conditions
None	

4. GENERAL DRIVING CYCLE

Always perform the diagnosis continuously.

5. DIAGNOSTIC METHOD

- **Abnormality Judgement**

If the duration of time while the following conditions are met is longer than the time indicated, judge as NG.

Judgement Value

Malfunction Criteria	Threshold Value
Output voltage	≥ 4.179943192 V

Time Needed for Diagnosis: 500 ms
Malfunction Indicator Light Illumination: Illuminates as soon as a malfunction occurs.

- **Normality Judgement**

Judge as OK and clear the NG if the continuous time while the following conditions are established is more than the predetermined time.

Judgement Value

Malfunction Criteria	Threshold Value
Output voltage	< 4.179943192 V

Time Needed for Diagnosis: Less than 1 second

P: DTC P0107 MANIFOLD ABSOLUTE PRESSURE/BAROMETRIC PRESSURE CIRCUIT LOW INPUT

1. OUTLINE OF DIAGNOSIS

Detect the open or short circuit of intake manifold pressure sensor.
Judge as NG if out of specification.

2. COMPONENT DESCRIPTION

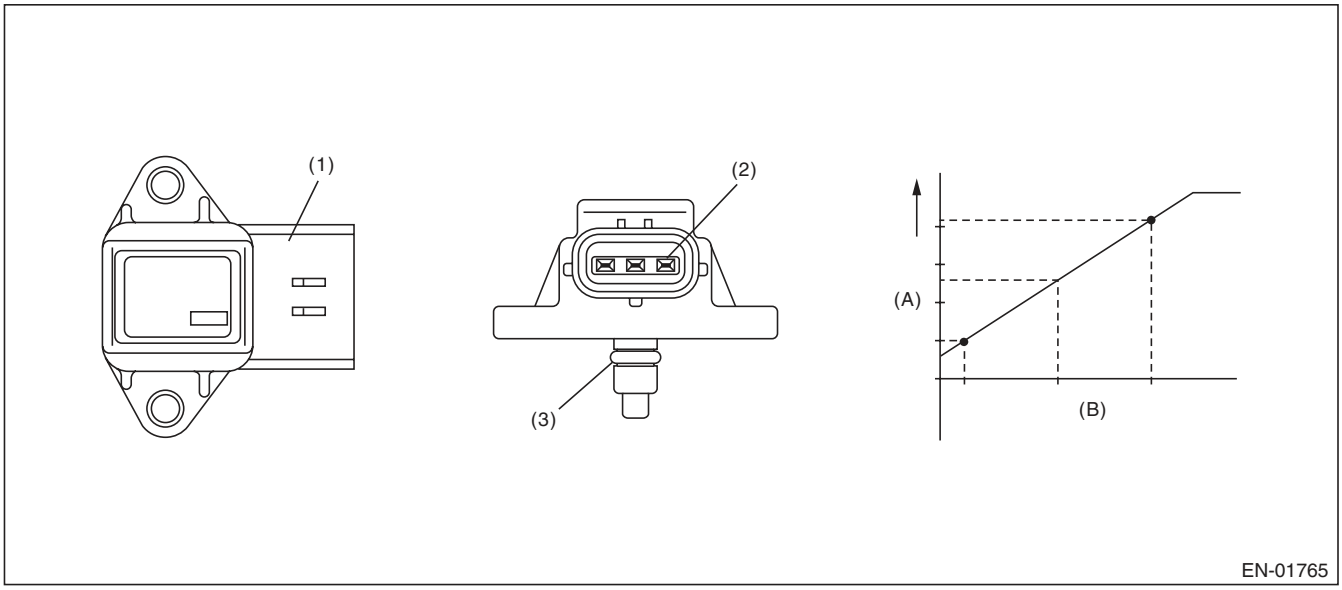

(A) Output voltage (B) Absolute pressure

(1) Connector (2) Terminals (3) O-ring

3. ENABLE CONDITION

Secondary Parameters	Enable Conditions
None	

4. GENERAL DRIVING CYCLE

Always perform the diagnosis continuously.

5. DIAGNOSTIC METHOD

- **Abnormality Judgement**

If the duration of time while the following conditions are met is longer than the time indicated, judge as NG.

Judgement Value

Malfunction Criteria	Threshold Value
Output voltage	≤ 0.573 V

Time Needed for Diagnosis: 500 ms
Malfunction Indicator Light Illumination: Illuminates as soon as a malfunction occurs.

- **Normality Judgement**

Judge as OK and clear the NG if the continuous time while the following conditions are established is more than the predetermined time.

Judgement Value

Malfunction Criteria	Threshold Value
Output voltage	> 0.573 V

Time Needed for Diagnosis: Less than 1 second

Q: DTC P0108 MANIFOLD ABSOLUTE PRESSURE/BAROMETRIC PRESSURE CIRCUIT HIGH INPUT

1. OUTLINE OF DIAGNOSIS

Detect the open or short circuit of intake manifold pressure sensor.
Judge as NG if out of specification.

2. COMPONENT DESCRIPTION

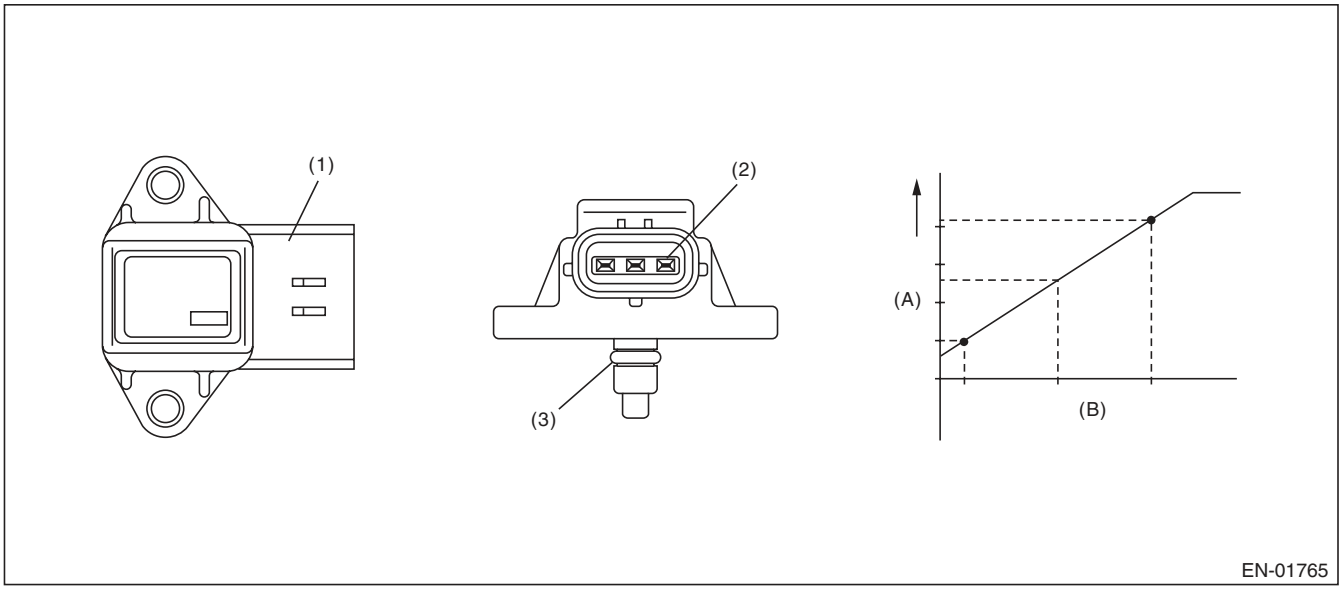

(A) Output voltage (B) Absolute pressure

(1) Connector (2) Terminals (3) O-ring

3. ENABLE CONDITION

Secondary Parameters	Enable Conditions
None	

4. GENERAL DRIVING CYCLE

Always perform the diagnosis continuously.

5. DIAGNOSTIC METHOD

- **Abnormality Judgement**

If the duration of time while the following conditions are met is longer than the time indicated, judge as NG.

Judgement Value

Malfunction Criteria	Threshold Value
Output voltage	≥ 4.38757221 V

Time Needed for Diagnosis: 500 ms
Malfunction Indicator Light Illumination: Illuminates as soon as a malfunction occurs.

- **Normality Judgement**

Judge as OK and clear the NG if the continuous time while the following conditions are established is more than the predetermined time.

Judgement Value

Malfunction Criteria	Threshold Value
Output voltage	< 4.38757221 V

Time Needed for Diagnosis: Less than 1 second

R: DTC P0111 INTAKE AIR TEMPERATURE SENSOR 1 CIRCUIT RANGE/ PERFORMANCE

1. OUTLINE OF DIAGNOSIS

Detect the malfunction of intake air temperature sensor output property.
Judge as NG when the intake air temperature is not varied whereas it seemed to be varied from the viewpoint of engine condition.

2. COMPONENT DESCRIPTION

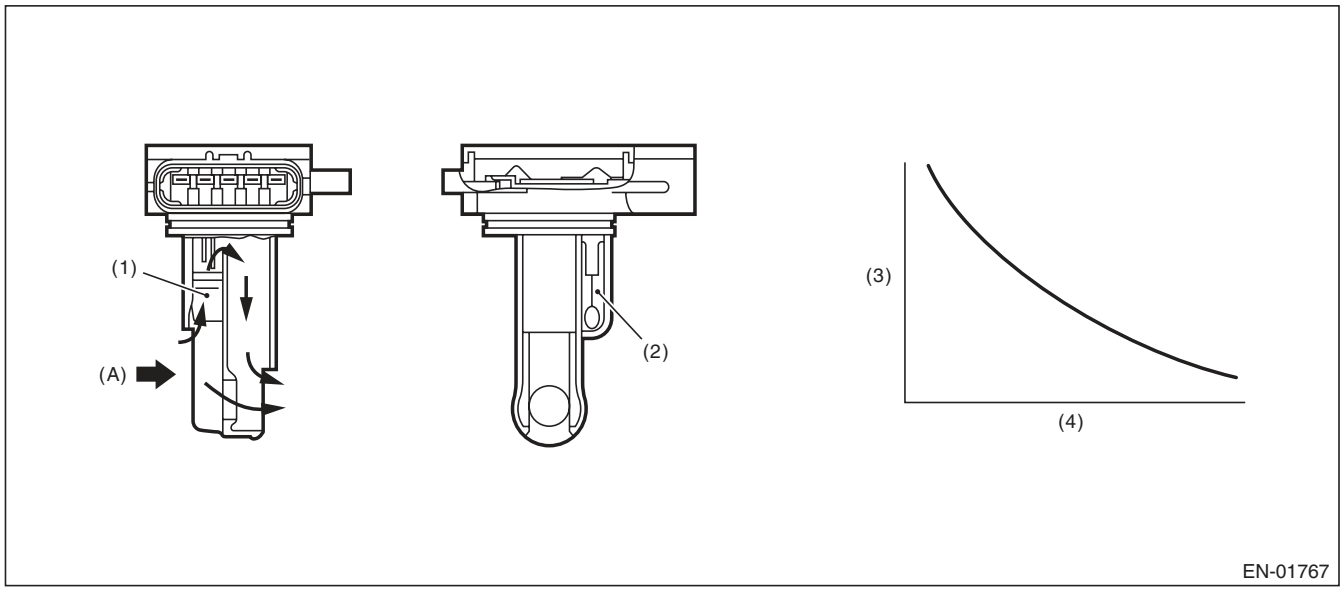

(A) Air

(1) Air flow sensor
(2) Intake air temperature sensor
(3) Resistance value (Ω)
(4) Intake air temperature °C (°F)

3. ENABLE CONDITION

Secondary Parameters	Enable Conditions
Engine coolant temperature at engine starting	< 30 °C (86 °F)
Engine coolant temperature	≥ 100 °C (212 °F)
Battery voltage	≥ 10.9 V
Continuous time when the vehicle speed is less than 60 km/h (37.3 MPH)	≥ 600 s

4. GENERAL DRIVING CYCLE

Perform the diagnosis when the vehicle speed condition is met after warming up from a cold condition.

5. DIAGNOSTIC METHOD

- **Abnormality Judgement**

Judge as NG when the following conditions are established.

Judgement Value

Malfunction Criteria	Threshold Value
Output voltage difference between Max. and Min.	< 0.02 V(Equivalent to approximately 0.5°C (0.9°F) near 25°C)

Time Needed for Diagnosis: Less than 1 second
Malfunction Indicator Light Illumination: Illuminates when malfunction occurs in 2 continuous driving cycles.

- **Normality Judgement**

Judge as OK and clear the NG if the following conditions are established.

Judgement Value

Malfunction Criteria	Threshold Value
Output voltage difference between Max. and Min.	≥ 0.02 V

Time Needed for Diagnosis: Less than 1 second

S: DTC P0112 INTAKE AIR TEMPERATURE SENSOR 1 CIRCUIT LOW

1. OUTLINE OF DIAGNOSIS

Detect open or short circuit of the intake air temperature sensor.
Judge as NG if out of specification.

2. COMPONENT DESCRIPTION

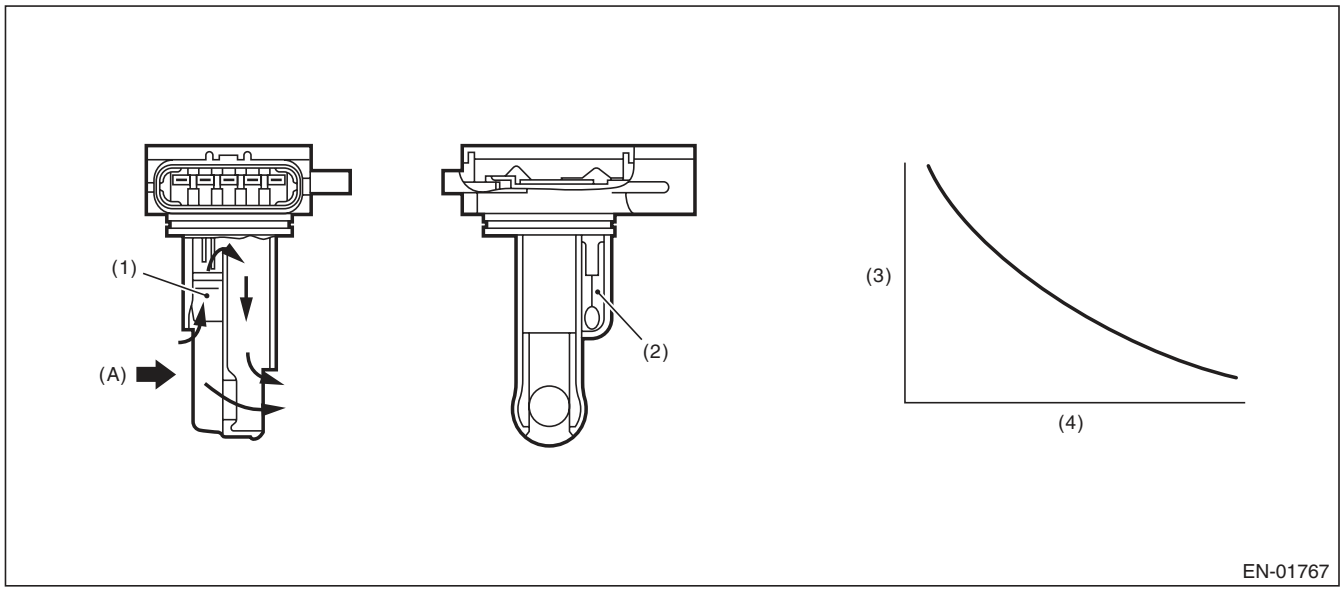

(A) Air

(1) Air flow sensor
(2) Intake air temperature sensor
(3) Resistance value (Ω)
(4) Intake air temperature °C (°F)

3. ENABLE CONDITION

Secondary Parameters	Enable Conditions
None	

4. GENERAL DRIVING CYCLE

Always perform the diagnosis continuously.

5. DIAGNOSTIC METHOD

- **Abnormality Judgement**

If the duration of time while the following conditions are met is longer than the time indicated, judge as NG.

Judgement Value

Malfunction Criteria	Threshold Value
Output voltage	< 0.230975449 V

Time Needed for Diagnosis: 500 ms
Malfunction Indicator Light Illumination: Illuminates as soon as a malfunction occurs.

- **Normality Judgement**

Judge as OK and clear the NG if the continuous time while the following conditions are established is more than the predetermined time.

Judgement Value

Malfunction Criteria	Threshold Value
Output voltage	≥ 0.230975449 V

Time Needed for Diagnosis: Less than 1 second

T: DTC P0113 INTAKE AIR TEMPERATURE SENSOR 1 CIRCUIT HIGH

1. OUTLINE OF DIAGNOSIS

Detect open or short circuit of the intake air temperature sensor.
Judge as NG if out of specification.

2. COMPONENT DESCRIPTION

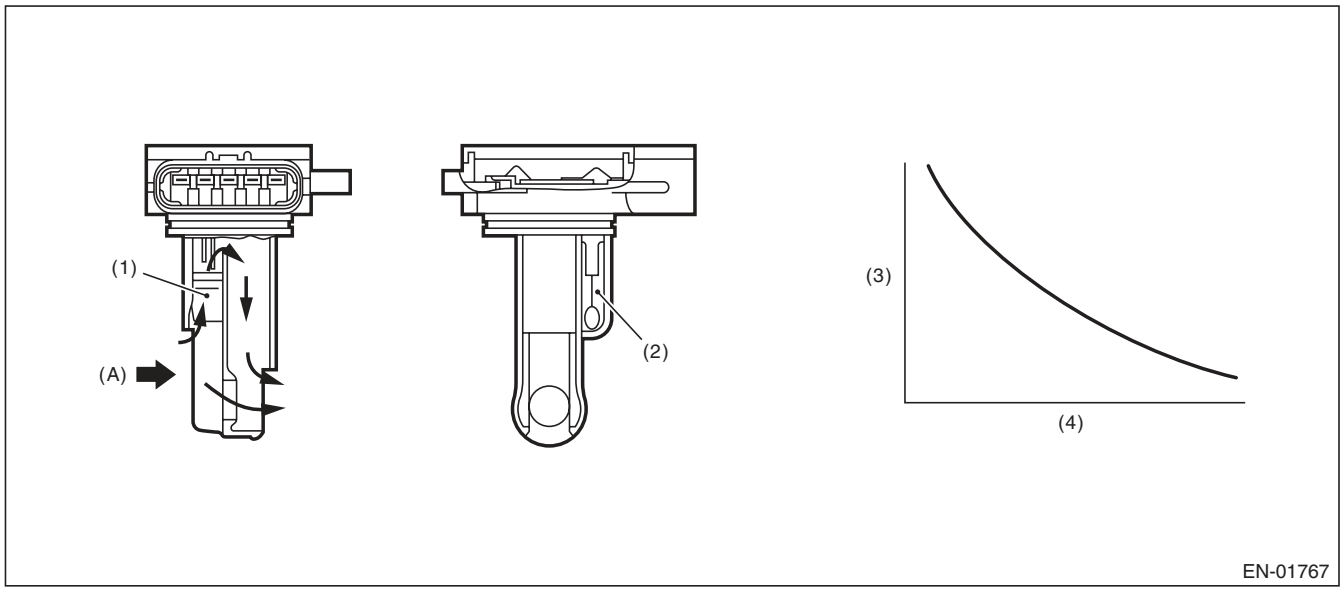

(A) Air

(1) Air flow sensor
(2) Intake air temperature sensor
(3) Resistance value (Ω)
(4) Intake air temperature °C (°F)

3. ENABLE CONDITION

Secondary Parameters	Enable Conditions
None	

4. GENERAL DRIVING CYCLE

Always perform the diagnosis continuously.

5. DIAGNOSTIC METHOD

- **Abnormality Judgement**

If the duration of time while the following conditions are met is longer than the time indicated, judge as NG.

Judgement Value

Malfunction Criteria	Threshold Value
Output voltage	≥ 4.716 V

Time Needed for Diagnosis: 500 ms
Malfunction Indicator Light Illumination: Illuminates as soon as a malfunction occurs.

- **Normality Judgement**

Judge as OK and clear the NG if the continuous time while the following conditions are established is more than the predetermined time.

Judgement Value

Malfunction Criteria	Threshold Value
Output voltage	< 4.716 V

Time Needed for Diagnosis: Less than 1 second

U: DTC P0117 ENGINE COOLANT TEMPERATURE CIRCUIT LOW

1. OUTLINE OF DIAGNOSIS

Detect the open or short circuit of the engine coolant temperature sensor.
Judge as NG if out of specification.

2. COMPONENT DESCRIPTION

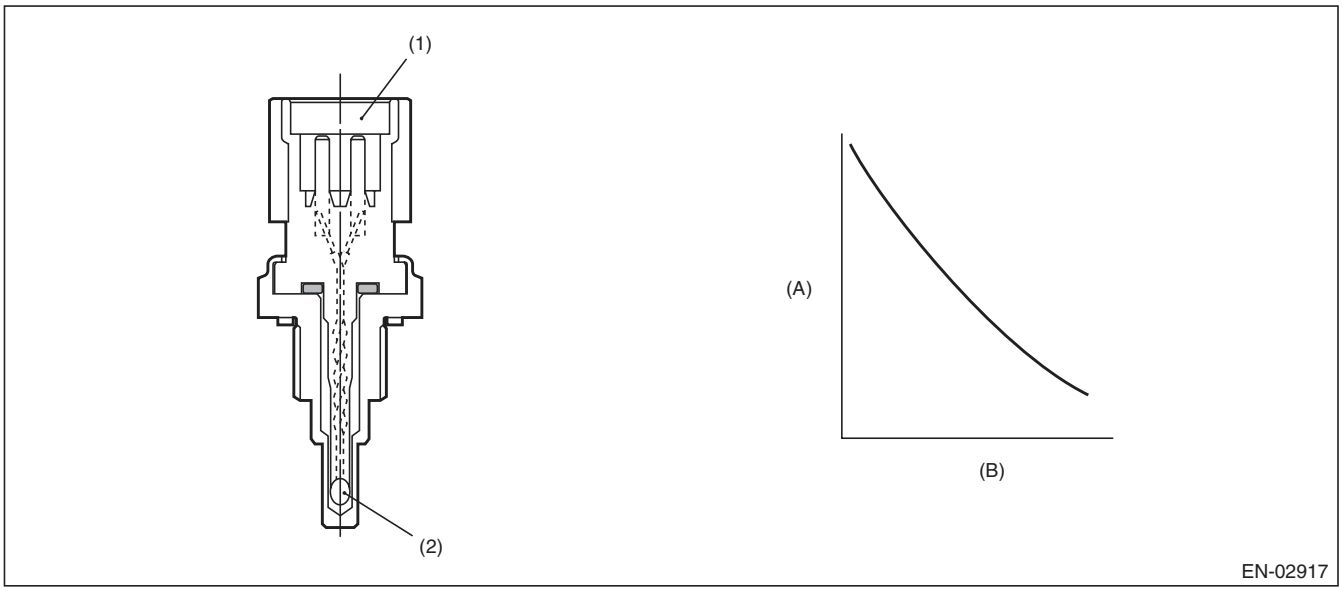

(A) Resistance value (kΩ) (B) Temperature °C (°F)

(1) Connector (2) Thermistor element

3. ENABLE CONDITION

Secondary Parameters	Enable Conditions
None	

4. GENERAL DRIVING CYCLE

Always perform the diagnosis continuously.

5. DIAGNOSTIC METHOD

- **Abnormality Judgement**

If the duration of time while the following conditions are met is longer than the time indicated, judge as NG.

Judgement Value

Malfunction Criteria	Threshold Value
Output voltage	< 0.264738528 V

Time Needed for Diagnosis: 500 ms
Malfunction Indicator Light Illumination: Illuminates as soon as a malfunction occurs.

- **Normality Judgement**

Judge as OK and clear the NG if the continuous time while the following conditions are established is more than the predetermined time.

Judgement Value

Malfunction Criteria	Threshold Value
Output voltage	≥ 0.264738528 V

Time Needed for Diagnosis: Less than 1 second

V: DTC P0118 ENGINE COOLANT TEMPERATURE CIRCUIT HIGH

1. OUTLINE OF DIAGNOSIS

Detect the open or short circuit of the engine coolant temperature sensor.
Judge as NG if out of specification.

2. COMPONENT DESCRIPTION

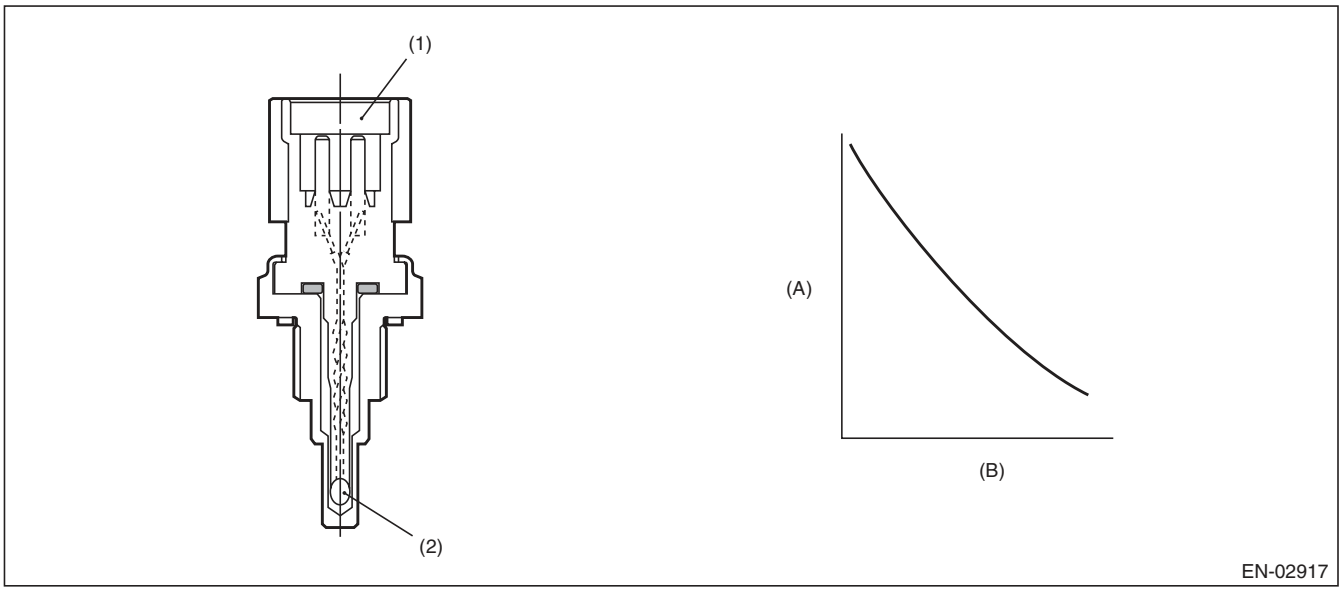

(A) Resistance value (kΩ) (B) Temperature °C (°F)

(1) Connector (2) Thermistor element

3. ENABLE CONDITION

Secondary Parameters	Enable Conditions
None	

4. GENERAL DRIVING CYCLE

Always perform the diagnosis continuously.

5. DIAGNOSTIC METHOD

- **Abnormality Judgement**

If the duration of time while the following conditions are met is longer than the time indicated, judge as NG.

Judgement Value

Malfunction Criteria	Threshold Value
Output voltage	≥ 4.716 V

Time Needed for Diagnosis: 500 ms
Malfunction Indicator Light Illumination: Illuminates as soon as a malfunction occurs.

- **Normality Judgement**

Judge as OK and clear the NG if the continuous time while the following conditions are established is more than the predetermined time.

Judgement Value

Malfunction Criteria	Threshold Value
Output voltage	< 4.716 V

Time Needed for Diagnosis: Less than 1 second

W: DTC P0122 THROTTLE/PEDAL POSITION SENSOR/SWITCH “A” CIRCUIT LOW

1. OUTLINE OF DIAGNOSIS

Detect the open or short circuit of throttle position sensor 1.
Judge as NG if out of specification.

2. COMPONENT DESCRIPTION

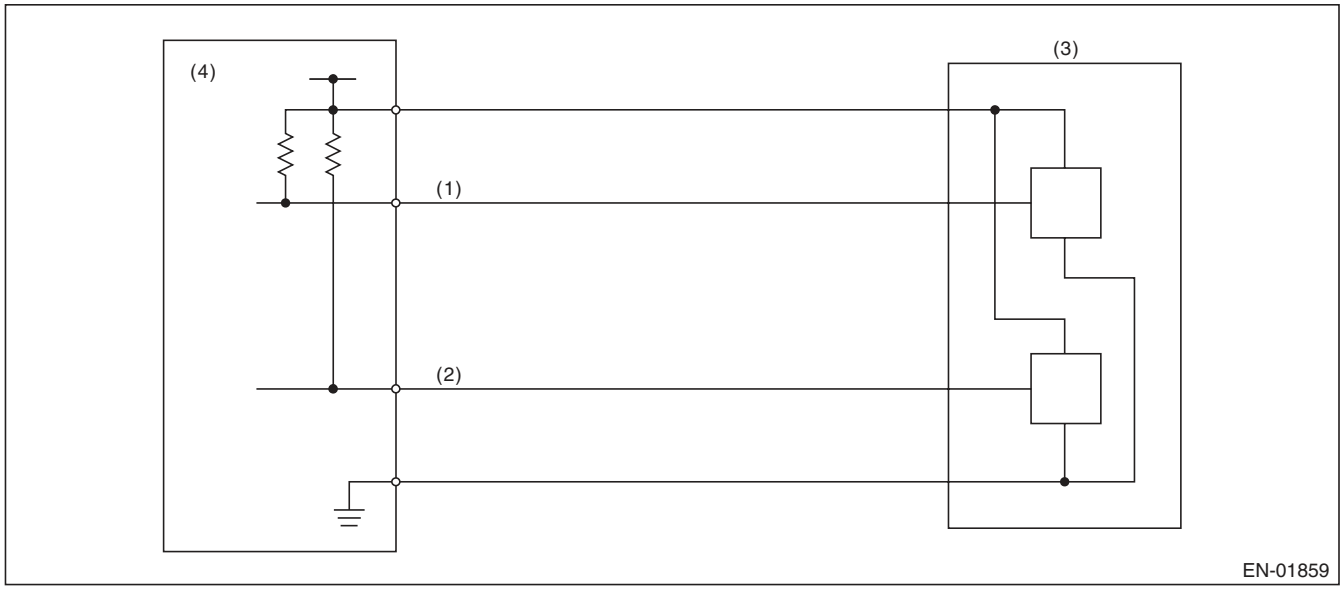

(1) Throttle position sensor 1 signal
(2) Throttle position sensor 2 signal
(3) Throttle position sensor
(4) Engine control module (ECM)

3. ENABLE CONDITION

Secondary Parameters	Enable Conditions
Ignition switch	ON
Battery voltage	≥ 6 V

4. GENERAL DRIVING CYCLE

Always perform the diagnosis continuously.

5. DIAGNOSTIC METHOD

- **Abnormality Judgement**

If the duration of time while the following conditions are met is longer than the time indicated, judge as NG.

Judgement Value

Malfunction Criteria	Threshold Value
Sensor 1 input voltage	≤ 0.217 V

Time Needed for Diagnosis: 24 ms
Malfunction Indicator Light Illumination: Illuminates as soon as a malfunction occurs.

- **Normality Judgement**

Judge as OK and clear the NG if the continuous time while the following conditions are established is more than the predetermined time.

Judgement Value

Malfunction Criteria	Threshold Value
Sensor 1 input voltage	> 0.217 V

Time Needed for Diagnosis: 24 ms

X: DTC P0123 THROTTLE/PEDAL POSITION SENSOR/SWITCH “A” CIRCUIT HIGH

1. OUTLINE OF DIAGNOSIS

Detect the open or short circuit of throttle position sensor 1.
Judge as NG if out of specification.

2. COMPONENT DESCRIPTION

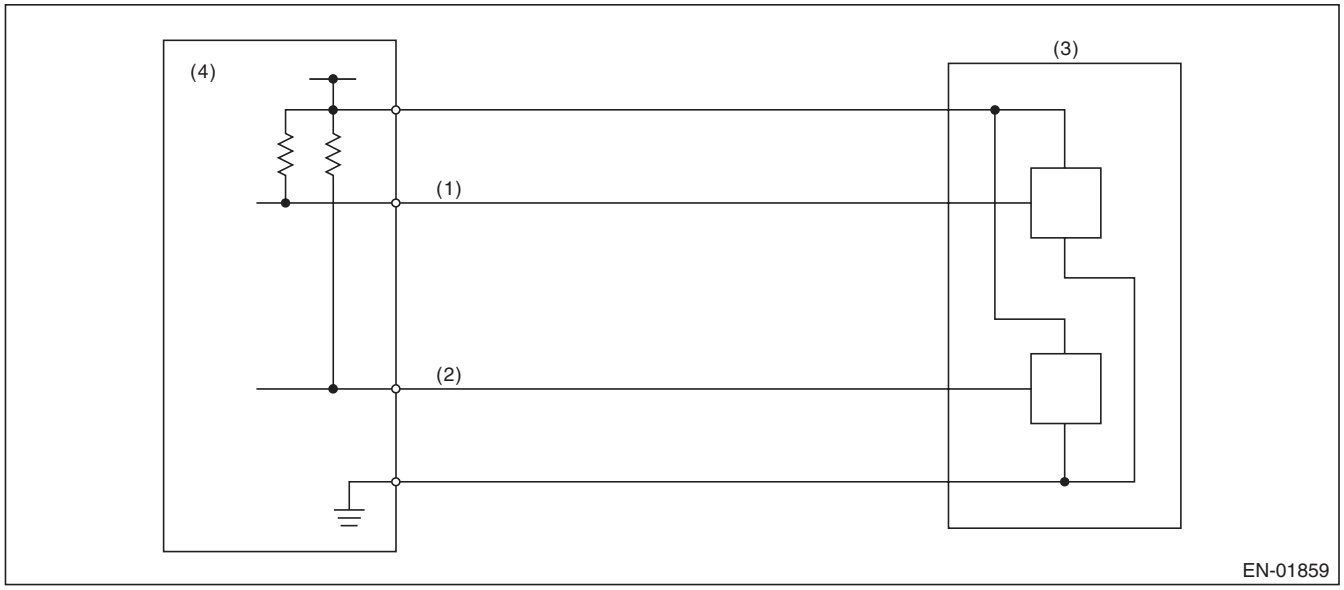

(1) Throttle position sensor 1 signal
(2) Throttle position sensor 2 signal
(3) Throttle position sensor
(4) Engine control module (ECM)

3. ENABLE CONDITION

Secondary Parameters	Enable Conditions
Ignition switch	ON
Battery voltage	≥ 6 V

4. GENERAL DRIVING CYCLE

Always perform the diagnosis continuously.

5. DIAGNOSTIC METHOD

- **Abnormality Judgement**

If the duration of time while the following conditions are met is longer than the time indicated, judge as NG.

Judgement Value

Malfunction Criteria	Threshold Value
Sensor 1 input voltage	≥ 4.858 V

Time Needed for Diagnosis: 24 ms
Malfunction Indicator Light Illumination: Illuminates as soon as a malfunction occurs.

- **Normality Judgement**

Judge as OK and clear the NG if the continuous time while the following conditions are established is more than the predetermined time.

Judgement Value

Malfunction Criteria	Threshold Value
Sensor 1 input voltage	< 4.858 V

Time Needed for Diagnosis: 24 ms

Y: DTC P0125 INSUFFICIENT COOLANT TEMPERATURE FOR CLOSED LOOP FUEL CONTROL

1. OUTLINE OF DIAGNOSIS

Detect the malfunction of engine coolant temperature output property.
Judge as NG when the engine coolant temperature does not rise in driving conditions where it should.

2. COMPONENT DESCRIPTION

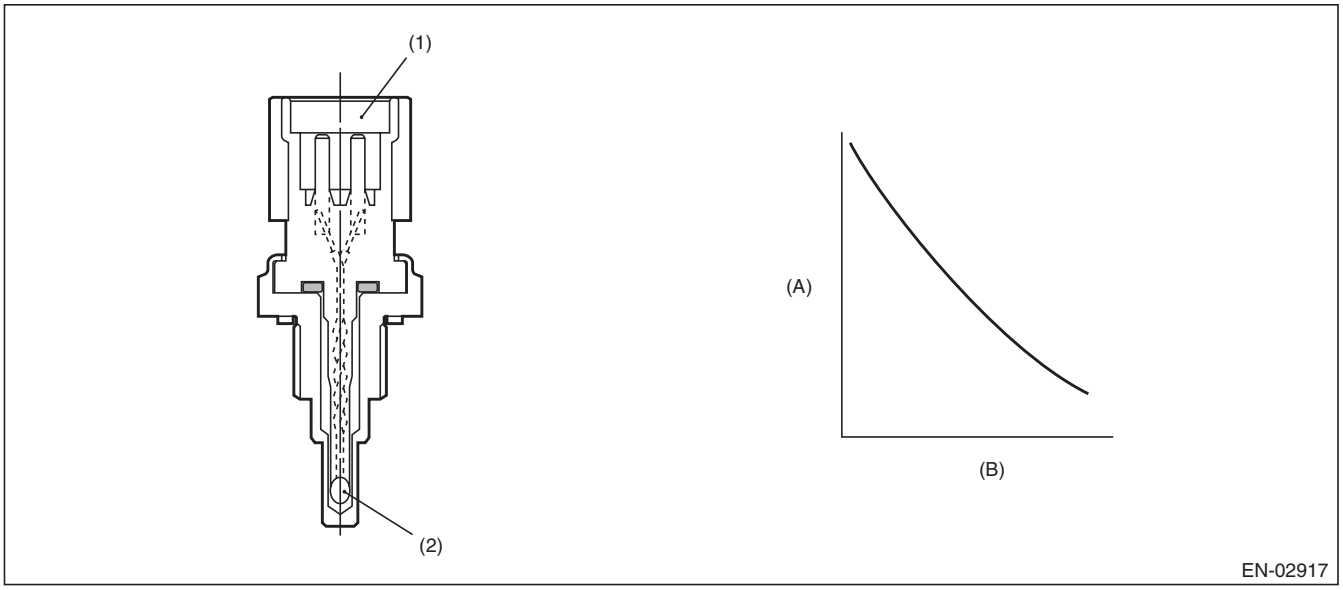

(A) Resistance value (kΩ) (B) Temperature °C (°F)

(1) Connector (2) Thermistor element

3. ENABLE CONDITION

Secondary Parameters	Enable Conditions
Engine speed	≥ Value from Map
Battery voltage	≥ 10.9 V

Map

Engine coolant temperature °C (°F)	–40 (–40)	–30 (–22)	–20 (–4)	–10 (14)	0 (32)	10 (50)	20 (68)	30 (86)
Engine speed rpm	500	500	500	500	500	500	500	500

Engine coolant temperature °C (°F)	40 (104)	50 (122)	60 (140)	70 (158)	80 (176)	90 (194)	100 (212)	110 (230)
Engine speed rpm	500	500	500	500	500	500	500	500

4. GENERAL DRIVING CYCLE

Perform the diagnosis only once after engine start.

5. DIAGNOSTIC METHOD

- **Abnormality Judgement**

Judge as NG if the criteria below are met.

Judgement Value

Malfunction Criteria	Threshold Value
Engine coolant temperature	< 20 °C (68 °F)
Timer for diagnosis after engine start	≥ Judgement value of timer after engine start

Timer for diagnosis after engine start
a. Timer stop at fuel cut
b. During the driving conditions except a) above, timer counts up as follows.
64 milliseconds + TWCNT milliseconds (the time of at 64 milliseconds)
TWCNT is defined as follows,
TWCNT = 0 at idle switch ON,
TWCNT show on the following table at idle switch OFF.

		Vehicle speed km/h (MPH)							
		0 (0)	8 (5)	16 (9.9)	24 (14.9)	32 (19.9)	40 (24.9)	48 (29.8)	56 (34.8)
Temperature °C (°F)	–20 (–4)	0 ms	32.076 ms	39.977 ms	47.879 ms	82.544 ms	117.209 ms	154.214 ms	185.26 ms
	–10 (14)	0 ms	25.704 ms	33.606 ms	41.508 ms	68.52 ms	95.532 ms	125.667 ms	155.802 ms
	0 (32)	0 ms	17.646 ms	25.548 ms	33.45 ms	53.652 ms	73.855 ms	97.12 ms	120.386 ms
	10 (50)	0 ms	7.901 ms	15.802 ms	23.704 ms	37.941 ms	52.177 ms	68.573 ms	82.538 ms
	20 (68)	0 ms	7.901 ms	15.802 ms	23.704 ms	37.941 ms	52.177 ms	68.573 ms	82.538 ms

Judgement value of timer after engine starting
$t = 573669 \text{ ms} - 33924 \text{ ms} \times Ti$
Ti : The lowest coolant temperature after engine start
Time Needed for Diagnosis: Less than 1 second
Malfunction Indicator Light Illumination: Illuminates when malfunction occurs in 2 continuous driving cycles.

- **Normality Judgement**

Judge as OK and clear the NG when the malfunction criteria below are met.

Judgement Value

Malfunction Criteria	Threshold Value
Engine coolant temperature	≥ 20 °C (68 °F)

Time Needed for Diagnosis: Less than 1 second

Z: DTC P0126 INSUFFICIENT ENGINE COOLANT TEMPERATURE FOR STABLE OPERATION

1. OUTLINE OF DIAGNOSIS

Detect the malfunction of the engine coolant temperature sensor characteristics.
Memorize the engine coolant temperature and fuel temperature at the last engine stop, and use them to judge as NG when the engine coolant temperature does not decrease when it should.

2. COMPONENT DESCRIPTION

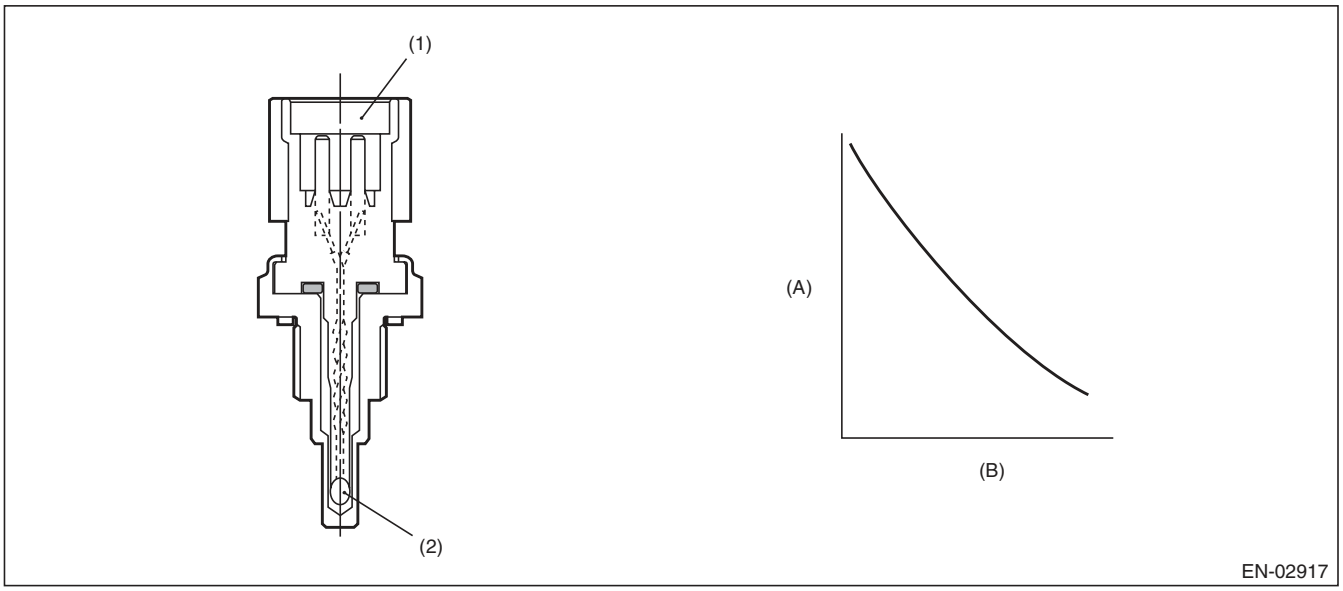

(A) Resistance value (kΩ) (B) Temperature °C (°F)

(1) Connector (2) Thermistor element

3. ENABLE CONDITION

Secondary Parameters	Enable Conditions
Battery voltage	≥ 10.9 V
Refueling from the last engine stop till the current engine start	None
Fuel level	≥ 15 ℓ (3.96 US gal, 3.3 Imp gal)
Engine coolant temperature at the last engine stop	≥ 75 °C (167 °F)

4. GENERAL DRIVING CYCLE

Perform the diagnosis only once after starting the engine.

5. DIAGNOSTIC METHOD

- **Abnormality Judgement**

If the duration of time while the following conditions are met is longer than the time indicated, judge as NG.

Judgement Value

Malfunction Criteria	Threshold Value
Engine coolant temperature at the last engine stop — Minimum engine coolant temperature after the engine start	< 2.5 °C (36.5 °F)
Fuel temperature at the last engine stop — fuel temperature	≥ 5 °C (41 °F)
Intake air temperature — fuel temperature	< 2.5 °C (36.5 °F)
Fuel temperature	< 35 °C (95 °F)

Time Needed for Diagnosis: 2500 ms
Malfunction Indicator Light Illumination: Illuminates when malfunction occurs in 2 continuous driving cycles.

- **Normality Judgement**

Judge as OK and clear the NG if the continuous time while the following conditions are established is more than the predetermined time.

Judgement Value

Malfunction Criteria	Threshold Value
Engine coolant temperature at the last engine stop — Minimum engine coolant temperature after the engine start	≥ 2.5 °C (36.5 °F)

Time Needed for Diagnosis: Less than 1 second

AA:DTC P0128 COOLANT THERMOSTAT (ENGINE COOLANT TEMPERATURE BELOW THERMOSTAT REGULATING TEMPERATURE)

1. OUTLINE OF DIAGNOSIS

Detect malfunctions of the thermostat function.
Judge as NG when the engine coolant temperature is lower than the estimated engine coolant temperature and the difference between them is large. Judge as OK when the engine coolant temperature becomes to 75°C (167°F), and the difference is small, before judging NG.

2. COMPONENT DESCRIPTION

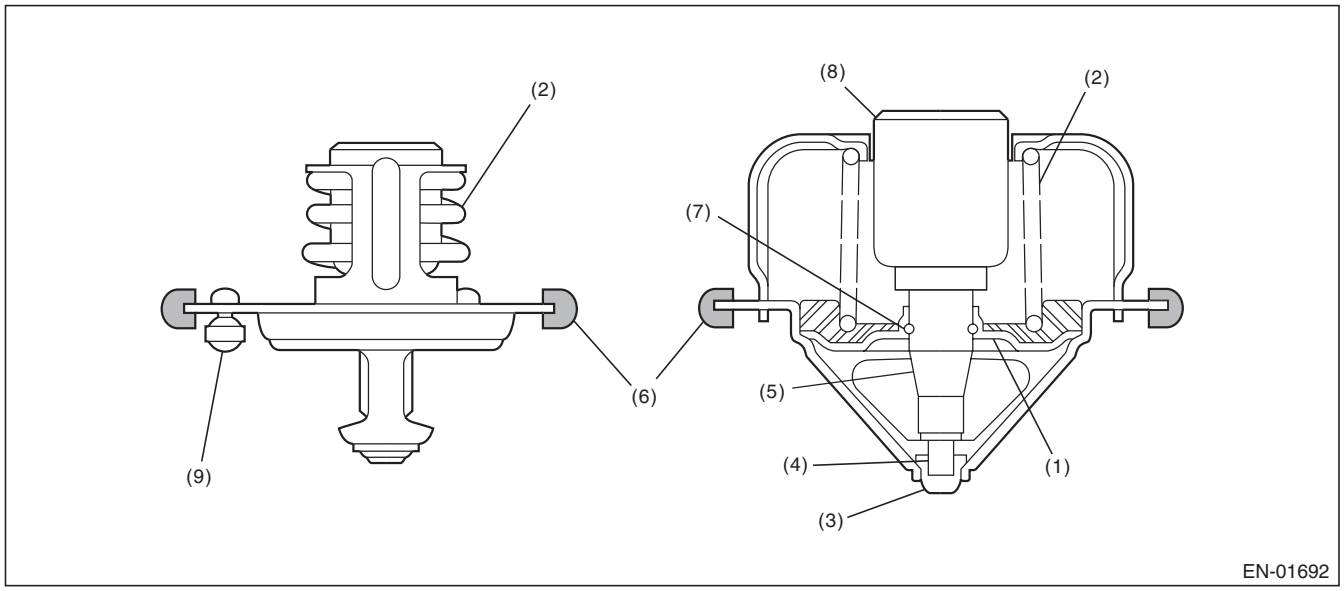

(1)	Valve	(4)	Piston	(7)	Stop ring
(2)	Spring	(5)	Guide	(8)	Wax element
(3)	Stopper	(6)	Rubber seal	(9)	Jiggle valve

3. ENABLE CONDITION

Secondary Parameters	Enable Conditions
None	

4. GENERAL DRIVING CYCLE

Always perform the diagnosis continuously.

5. DIAGNOSTIC METHOD

- **Abnormality Judgement**

If the duration of time while the following conditions are met is longer than the time indicated, judge as NG.

Judgement Value

Malfunction Criteria	Threshold Value
Battery voltage	≥ 10.9 V
Estimate ambient temperature	≥ –7 °C (19.4 °F)
Thermostat malfunction diagnosis	Incomplete
Engine coolant temperature at engine starting	< 55 °C (131 °F)
Estimated coolant temperature	≥ 75 °C (167 °F)
Engine coolant temperature	≤ 75 °C (167 °F)
(Estimated – Measured) Engine coolant temperature	> 30 °C (86 °F)
Vehicle speed	≥ 30 km/h (18.6 MPH)

Time Needed for Diagnosis:64 ms × 3 time(s) × 152 time(s)
Malfunction Indicator Light Illumination: Illuminates when malfunction occurs in 2 continuous driving cycles.

- **Normality Judgement**

Judge as OK and clear the NG if the continuous time while the following conditions are established is more than the predetermined time.

Judgement Value

Malfunction Criteria	Threshold Value
Battery voltage	≥ 10.9 V
Estimate ambient temperature	≥ –7 °C (19.4 °F)
Thermostat malfunction diagnosis	Incomplete
Engine coolant temperature at engine starting	< 55 °C (131 °F)
Engine coolant temperature	≥ 75 °C (167 °F)
(Estimated – Measured) Engine coolant temperature	≤ 30 °C (86 °F)

Time Needed for Diagnosis: Less than 1 second

AB:DTC P0131 O2 SENSOR CIRCUIT LOW VOLTAGE (BANK 1 SENSOR 1)

1. OUTLINE OF DIAGNOSIS

Detect the open or short circuit of sensor.
Judge as NG, when the element voltage is out of the specified range.

2. COMPONENT DESCRIPTION

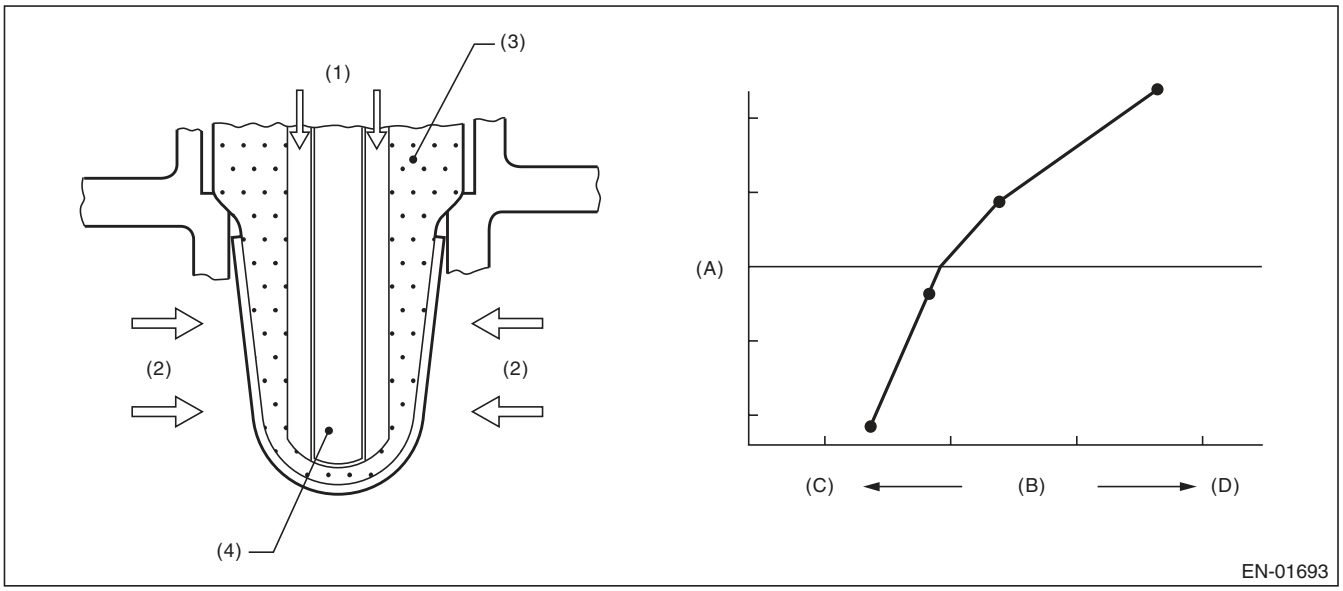

(A)	Electromotive force	(C)	Lean	(D)	Rich
(B)	Air fuel ratio				
(1)	Atmosphere	(3)	ZrO_2	(4)	Ceramic heater
(2)	Exhaust gas				

3. ENABLE CONDITION

Secondary Parameters	Enable Conditions
Battery voltage	≥ 10.9 V

4. GENERAL DRIVING CYCLE

Always perform the diagnosis continuously.

5. DIAGNOSTIC METHOD

- **Abnormality Judgement**

If the duration of time while the following conditions are met is longer than the time indicated, judge as NG.

Judgement Value

Malfunction Criteria	Threshold Value
Input voltage (+)	< 1.128 V
or	
Input voltage (–)	< 0.23 V
or	
|Input voltage (+) – Input voltage (–)|	< 0.644 V

Time Needed for Diagnosis:
Input voltage (+): 1000 ms
Input voltage (–): 1000 ms
|Input voltage (+) – Input voltage (–)|: 1000 ms
Malfunction Indicator Light Illumination: Illuminates as soon as a malfunction occurs.

- **Normality Judgement**

Judge as OK and clear the NG if the continuous time while the following conditions are established is more than the predetermined time.

Judgement Value

Malfunction Criteria	Threshold Value
Input voltage (+)	≥ 1.128 V
Input voltage (–)	≥ 0.23 V
|Input voltage (+) – Input voltage (–)|	≥ 0.644 V

Time Needed for Diagnosis: Less than 1 second

AC:DTC P0132 O2 SENSOR CIRCUIT HIGH VOLTAGE (BANK 1 SENSOR 1)

1. OUTLINE OF DIAGNOSIS

Detect the open or short circuit of sensor.
Judge as NG, when the element voltage is out of the specified range.

2. COMPONENT DESCRIPTION

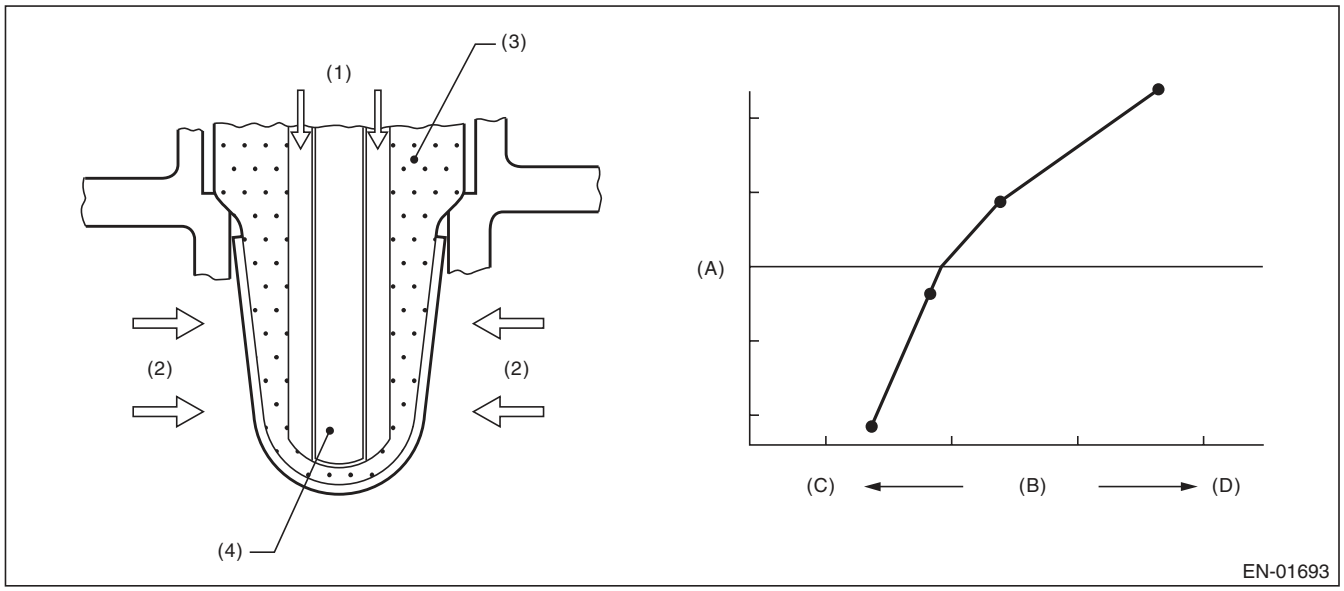

(A)	Electromotive force	(C)	Lean	(D)	Rich
(B)	Air fuel ratio				
(1)	Atmosphere	(3)	ZrO_2	(4)	Ceramic heater
(2)	Exhaust gas				

3. ENABLE CONDITION

Secondary Parameters	Enable Conditions
Battery voltage	≥ 10.9 V

4. GENERAL DRIVING CYCLE

Always perform the diagnosis continuously.

5. DIAGNOSTIC METHOD

- **Abnormality Judgement**

If the duration of time while the following conditions are met is longer than the time indicated, judge as NG.

Judgement Value

Malfunction Criteria	Threshold Value
Input voltage (+) or Input voltage (–)	> 3.589 V > 3.541 V

Time Needed for Diagnosis:
Input voltage (+): 1000 ms
Input voltage (–): 1000 ms
Malfunction Indicator Light Illumination: Illuminates as soon as a malfunction occurs.

- **Normality Judgement**

Judge as OK and clear the NG if the continuous time while the following conditions are established is more than the predetermined time.

Judgement Value

Malfunction Criteria	Threshold Value
Input voltage (+)	≤ 3.589 V
Input voltage (–)	≤ 3.541 V

Time Needed for Diagnosis: Less than 1 second

AD:DTC P0133 O2 SENSOR CIRCUIT SLOW RESPONSE (BANK 1 SENSOR 1)

1. OUTLINE OF DIAGNOSIS

Detect the slow response of front oxygen (A/F) sensor.
Front oxygen (A/F) sensor cover has some ventilation holes for exhaust gas. Clogged ventilation holes are diagnosed.
When the holes are clogged, the A/F output variation becomes slow comparing with the actual A/F variation because oxygen which reaches the zirconia layer is insufficient. Therefore, if the sensor cover holes are clogged, the rich to lean judgment in the ECM is delayed when the actual change from rich to lean occurs.
Judge as NG when the actual movement in comparison to the ECM control amount is slow.

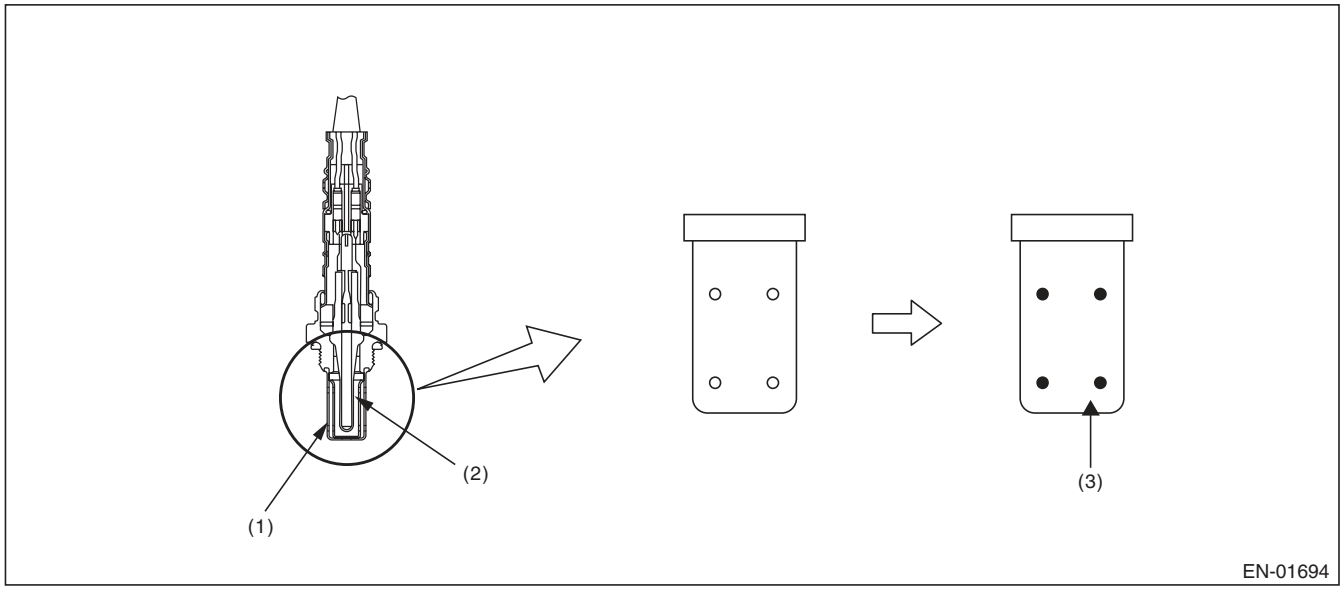

(1) Cover (2) Zirconia (3) Clogging

2. COMPONENT DESCRIPTION

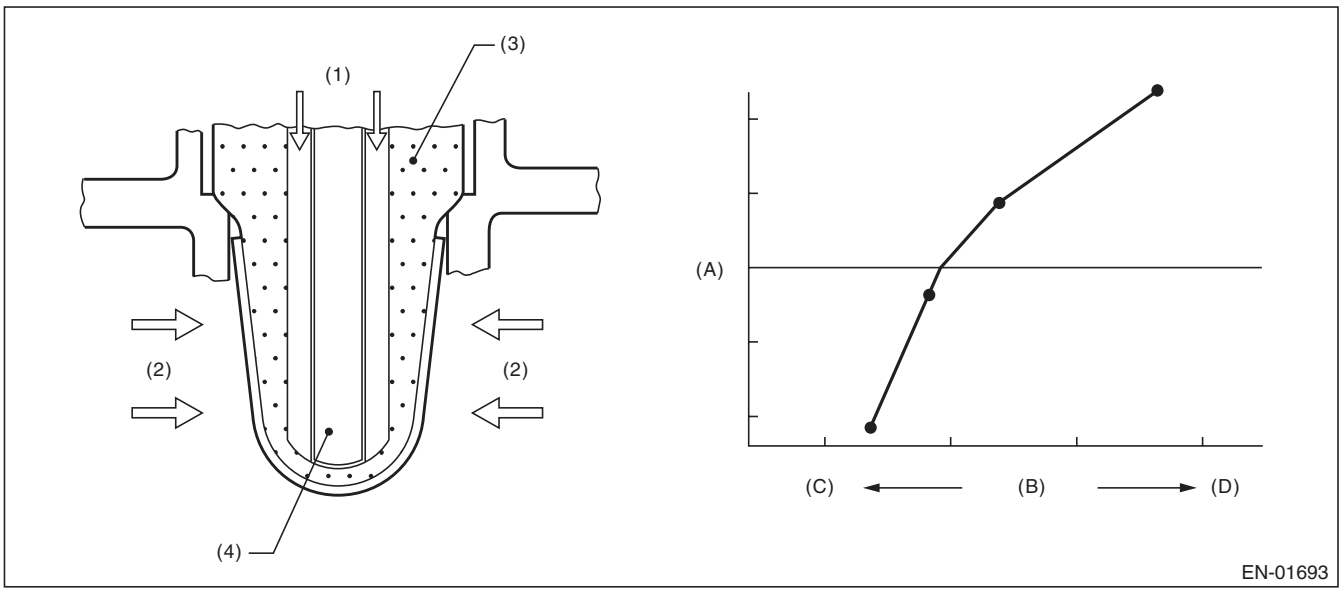

(A)	Electromotive force	(C)	Lean	(D)	Rich
(B)	Air fuel ratio				
(1)	Atmosphere	(3)	ZrO_2	(4)	Ceramic heater
(2)	Exhaust gas				

3. ENABLE CONDITION

Secondary Parameters	Enable Conditions
Time needed for all secondary parameters to be in enable conditions	≥ 1024 ms
Battery voltage	≥ 10.9 V
Barometric pressure	> 75 kPa (563 mmHg, 22.2 inHg)
Closed loop control with main feedback	Operation
Front oxygen (A/F) sensor impedance	0 Ω — 50 Ω
Elapsed time after starting the engine	≥ 120000 ms
Engine coolant temperature	≥ 75 °C (167 °F)
Engine speed	1000 rpm — 3200 rpm
Vehicle speed	10 km/h — 120 km/h (6.2 MPH — 74.6 MPH)
Amount of intake air	10 g/s — 40 g/s (0.35 oz/s — 1.41 oz/s)
Engine load	< 0.02 g/rev (0 oz/rev)
Learning value of EVAP conc. during purge	< 0.2
Total time of operating canister purge	≥ 19.9 s

4. GENERAL DRIVING CYCLE

Perform diagnosis only once at a constant speed of 10 km/h — 120 km/h (6.2 MPH — 74.6 MPH) 120000 ms or more after starting the engine.

5. DIAGNOSTIC METHOD

Calculate faf difference every 32ms × 4 , and the λ value difference. Calculate the diagnosis value after calculating 1640 time(s).

- **Abnormality Judgement**

If the duration of time while the following conditions are met is longer than the time indicated, judge as NG.

Judgement Value

Malfunction Criteria	Threshold Value
parafca = td2faf/td2lmd where, td2faf (N) = td2faf (n–1) + |d2faf (n)| td2lmd (N) = td2lmd (n–1) + |d2lmd (n)| add up to 32 ms × 4 × 1640 time(s). d2faf (n) = (faf (n) – faf (n–1)) – (faf (n–1) – faf (n–2)) d2lmd (n) = (lmd (n) – lmd (n–1)) – (lmd (n–1) – lmd (n–2)) faf = main feedback compensation coefficient every 128 milliseconds lmd = output lambda every 128 milliseconds	> 0.4 (U5 model) > 0.45 (Other than U5 model)

Time Needed for Diagnosis: 32 ms × 4 × 1640 time(s)
Malfunction Indicator Light Illumination: Illuminates when malfunction occurs in 2 continuous driving cycles.

- **Normality Judgement**

Judge as OK and clear the NG if the continuous time while the following conditions are established is more than the predetermined time.

Judgement Value

Malfunction Criteria	Threshold Value
parafca = td2faf/td2lmd where, td2faf (N) = td2faf (n–1) + |d2faf (n)| td2lmd (N) = td2lmd (n–1) + |d2lmd (n)| add up to 32 ms × 4 × 1640 time(s). d2faf (n) = (faf (n) – faf (n–1)) – (faf (n–1) – faf (n–2)) d2lmd (n) = (lmd (n) – lmd (n–1)) – (lmd (n–1) – lmd (n–2)) faf = main feedback compensation coefficient every 128 milliseconds lmd = output lambda every 128 milliseconds	≤ 0.4 (U5 model) ≤ 0.45 (Other than U5 model)

Time Needed for Diagnosis: 32 ms × 4 × 1640 time(s)

AE:DTC P0134 O2 SENSOR CIRCUIT NO ACTIVITY DETECTED (BANK 1 SENSOR 1)

1. OUTLINE OF DIAGNOSIS

Detect open circuits of the sensor.
Judge as NG when the impedance of the element is large.

2. COMPONENT DESCRIPTION

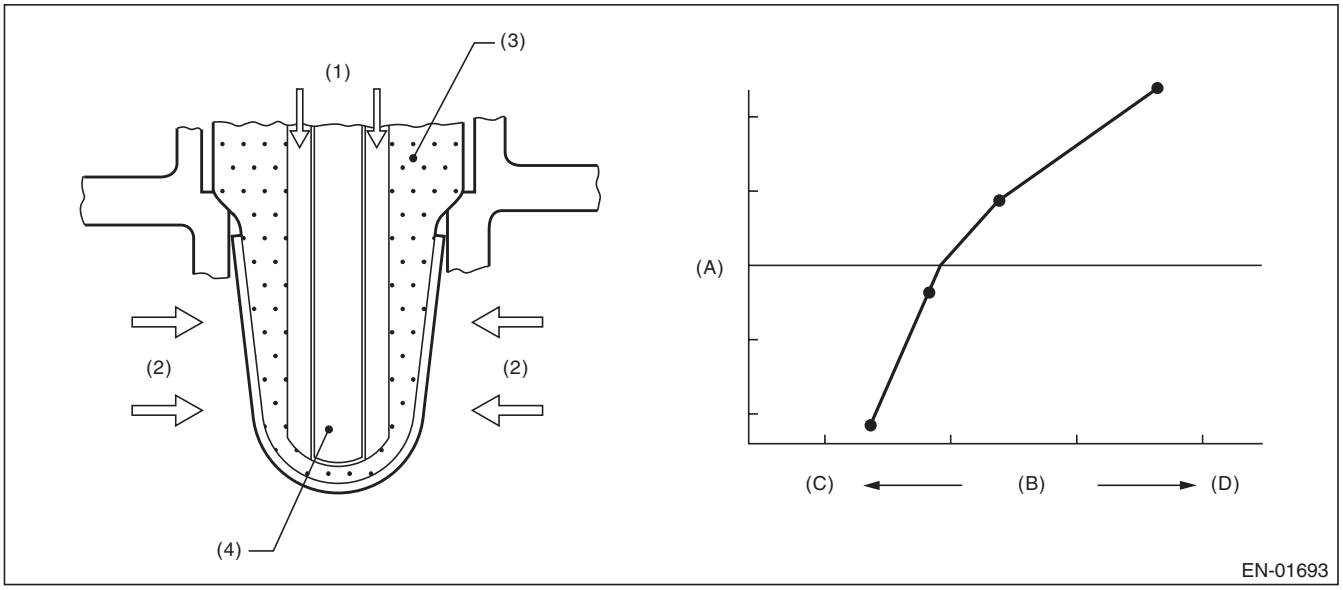

(A) Electromotive force
(B) Air fuel ratio
(C) Lean
(D) Rich

(1) Atmosphere
(2) Exhaust gas
(3) ZrO_2
(4) Ceramic heater

3. ENABLE CONDITION

Secondary Parameters	Enable Conditions
None	

4. GENERAL DRIVING CYCLE

Always perform the diagnosis continuously.

5. DIAGNOSTIC METHOD

- **Abnormality Judgement**

If the duration of time while the following conditions are met is longer than the time indicated, judge as NG.

Judgement Value

Malfunction Criteria	Threshold Value
Battery voltage	≥ 10.9 V
Time of heater control duty at 70 % or more	≥ 36000 ms
Front oxygen (A/F) sensor impedance.	> 500 Ω

Time Needed for Diagnosis: 5000 ms
Malfunction Indicator Light Illumination: Illuminates as soon as a malfunction occurs.

- **Normality Judgement**

Judge as OK and clear the NG if the continuous time while the following conditions are established is more than the predetermined time.

Judgement Value

Malfunction Criteria	Threshold Value
Battery voltage	≥ 10.9 V
Front oxygen (A/F) sensor impedance.	≤ 500 Ω

Time Needed for Diagnosis: Less than 1 second

AF:DTC P0137 O2 SENSOR CIRCUIT LOW VOLTAGE (BANK 1 SENSOR 2)

1. OUTLINE OF DIAGNOSIS

Detect continuity NG of the oxygen sensor. If the oxygen sensor voltage reading is not within the probable range considering the operating conditions, judge as NG.

2. COMPONENT DESCRIPTION

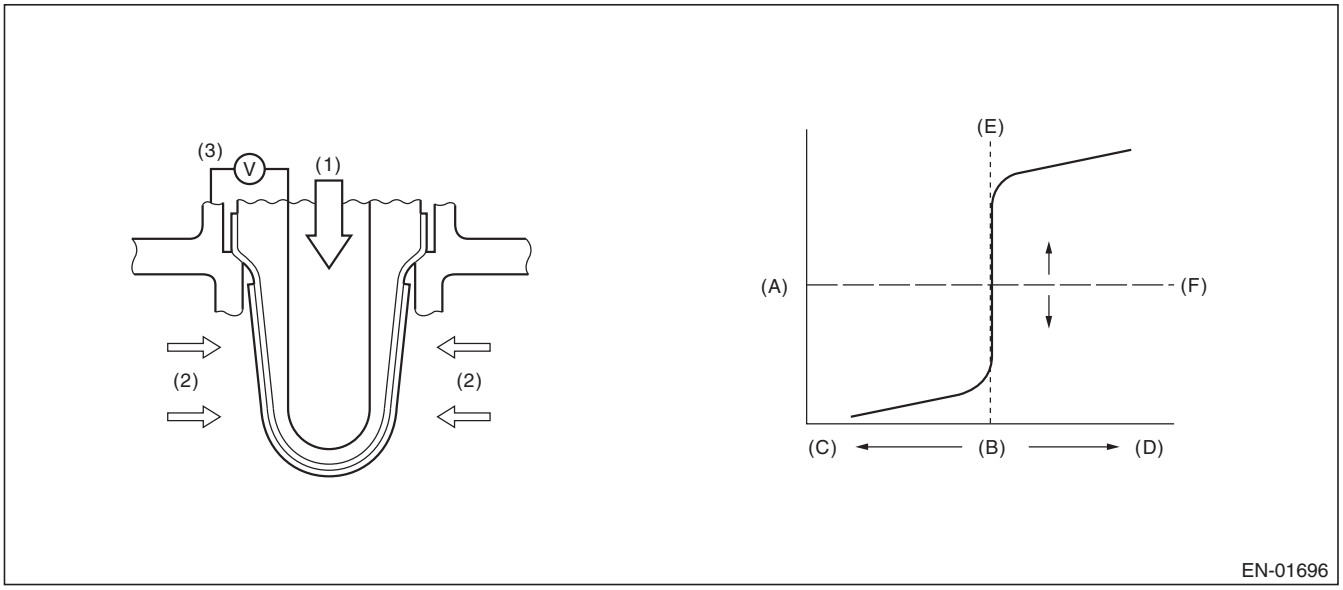

(A)	Electromotive force	(C)	Rich	(E)	Theoretical air fuel ratio
(B)	Air fuel ratio	(D)	Lean	(F)	Comparative voltage
(1)	Atmosphere	(2)	Exhaust gas	(3)	Electromotive force

3. ENABLE CONDITION

Used for abnormality judgment

Secondary Parameters	Enable Conditions
High	
Secondary air system	Not in operation
Closed loop control at the oxygen sensor	In operation
Misfire detection every 200 rotations	< 5 time(s)
Front oxygen (A/F) sensor compensation coefficient	Not in limit value
Battery voltage	≥ 10.9 V
Engine coolant temperature	≥ 75 °C (167 °F)
Low (1)	
Secondary air system	Not in operation
Closed loop control at the oxygen sensor	In operation
Misfire detection every 200 rotations	< 5 time(s)
Front oxygen (A/F) sensor compensation coefficient	Not in limit value
Battery voltage	≥ 10.9 V
Engine coolant temperature	≥ 75 °C (167 °F)
Amount of intake air	≥ 10 g/s (0.35 oz/s)
Low (2)	
Secondary air system	Not in operation
Closed loop control at the oxygen sensor	In operation
Misfire detection every 200 rotations	< 5 time(s)
Front oxygen (A/F) sensor compensation coefficient	Not in limit value
Battery voltage	≥ 10.9 V
Engine coolant temperature	≥ 75 °C (167 °F)
Amount of intake air	< 10 g/s (0.35 oz/s)
Current continuation time of the rear oxygen sensor heater	≥ 30000 ms
Low (3)	
Secondary air system	Not in operation
Closed loop control at the oxygen sensor	In operation
Misfire detection every 200 rotations	< 5 time(s)
Front oxygen (A/F) sensor compensation coefficient	Not in limit value
Battery voltage	≥ 10.9 V
Engine coolant temperature	≥ 75 °C (167 °F)
Amount of intake air	< 10 g/s (0.35 oz/s)
Current continuation time of the rear oxygen sensor heater	≥ 30000 ms
Fuel cut	Experienced

Used for normality judgment

Secondary Parameters	Enable Conditions
Secondary air system	Not in operation
Closed loop control at the oxygen sensor	In operation
Misfire detection every 200 rotations	< 5 time(s)
Front oxygen (A/F) sensor compensation coefficient	Not in limit value
Battery voltage	≥ 10.9 V
Engine coolant temperature	≥ 75 °C (167 °F)

4. GENERAL DRIVING CYCLE

After starting the engine, continuously perform the diagnosis with the same engine condition.

5. DIAGNOSTIC METHOD

• Abnormality Judgement

If the duration of time while the following conditions are met is longer than the time indicated, judge as NG.

Judgement Value

Malfunction Criteria	Threshold Value	DTC
High Sensor output voltage	> 1.2 V	P0138
Low Sensor output voltage	< 0.03 V	P0137

Time Needed for Diagnosis:

High: 2500 ms
Low (1): 20000 ms
Low (2): 40000 ms
Low (3): Value from Map

Map

Fuel Cut Time (millisecond)	0	2000	10000
Time needed for diagnosis (millisecond)	40000	40000	60000

Malfunction Indicator Light Illumination: Illuminates when malfunction occurs in 2 continuous driving cycles.

• Normality Judgement

Judge as OK and clear the NG if the continuous time while the following conditions are established is more than the predetermined time.

Judgement Value

Malfunction Criteria	Threshold Value	DTC
High Sensor output voltage	≤ 1.2 V	P0138
Low Sensor output voltage	≥ 0.03 V	P0137

Time Needed for Diagnosis:

High: Less than 1 second
Low (1): Less than 1 second
Low (2): Less than 1 second
Low (3): Less than 1 second

AG:DTC P0138 O2 SENSOR CIRCUIT HIGH VOLTAGE (BANK 1 SENSOR 2)

1. OUTLINE OF DIAGNOSIS

NOTE:
For the detection standard, refer to DTC P0137. <Ref. to GD(H4SO)-55, DTC P0137 O2 SENSOR CIRCUIT LOW VOLTAGE (BANK 1 SENSOR 2), Diagnostic Trouble Code (DTC) Detecting Criteria.>

AH:DTC P0139 O2 SENSOR CIRCUIT SLOW RESPONSE (BANK 1 SENSOR 2)

1. OUTLINE OF DIAGNOSIS

Detect the slow response of the oxygen sensor.
Judge as NG if either the rich to lean response diagnosis or lean to rich response diagnosis is NG, and Judge as OK if both are OK.
[Rich → lean diagnosis response]
1. Measure the response time for oxygen sensor output changes when the A/F ratio changes to rich to lean. If the measured response time is larger than the threshold value, it is NG. If it is smaller, it is OK.
2. Judge as NG when the oxygen sensor voltage is large (rich) when recovering from a deceleration fuel cut.
[Lean → rich diagnosis response]
1. Measure the response time for oxygen sensor output changes when the A/F ratio changes to lean to rich. If the measured response time is larger than the threshold value, it is NG.
2. Judge as NG when the oxygen sensor voltage remains small when recovering from a deceleration fuel cut.

Diagnostic method

Measure the response time of the output change of the oxygen sensor when the A/F ratio changes to rich to lean. And Judge as NG when the measured response time is larger than the threshold value.

2. COMPONENT DESCRIPTION

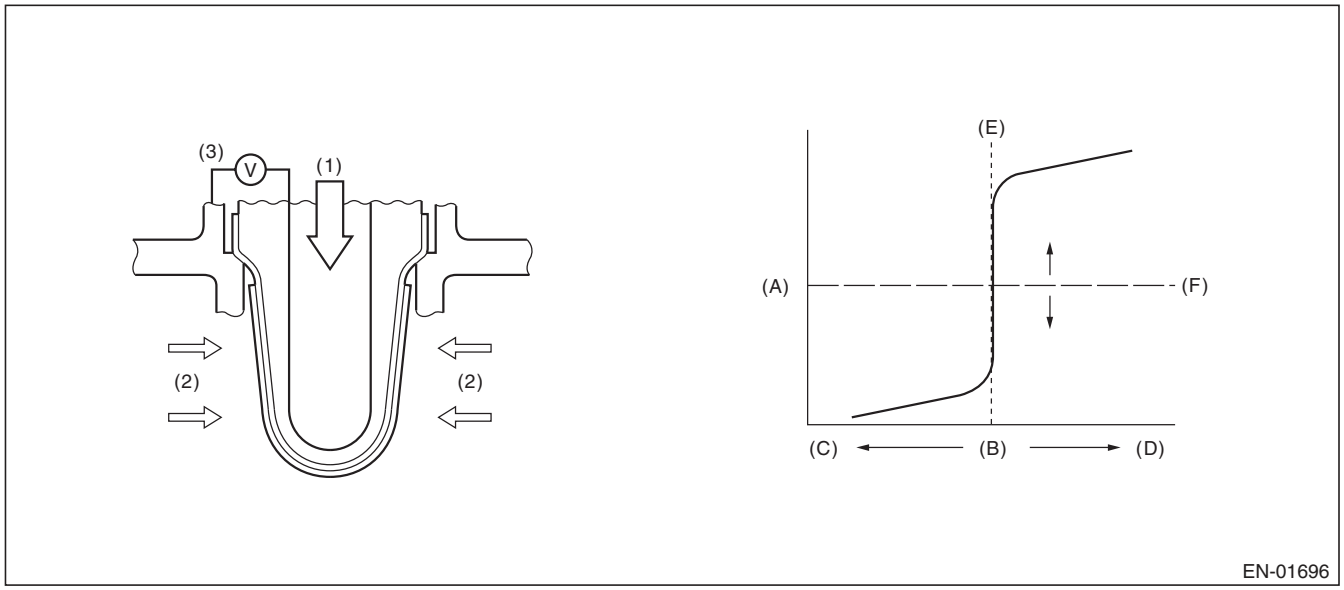

(A)	Electromotive force	(C)	Rich	(E)	Theoretical air fuel ratio
(B)	Air fuel ratio	(D)	Lean	(F)	Comparative voltage
(1)	Atmosphere	(2)	Exhaust gas	(3)	Electromotive force

3. ENABLE CONDITION

Rich → lean diagnosis response

Secondary Parameters	Enable Conditions
Battery voltage	≥ 10.9 V
A/F main feedback control condition	Completed
Deceleration fuel cut time is 6000 ms or more.	Experienced
After fuel cut	≥ 2000 ms
Current calculation time of the rear oxygen sensor heater	≥ 60000 ms
Current continuation time of the rear oxygen sensor heater	≥ 30000 ms
Estimated catalyst temperature	≥ 480 °C (896 °F)
Number of deceleration fuel cut	≥ 1 time(s)

4. GENERAL DRIVING CYCLE

Perform the diagnosis only once when deceleration fuel cut occurs after rapid acceleration. (Pay attention to the oxygen sensor voltage for the timing of the deceleration.)

5. DIAGNOSTIC METHOD

When the oxygen sensor output voltage changes from 0.55 V (rich) to 0.15 V (lean), calculate the minimum response time for output change between 0.5 V and 0.2 V for the judgment criteria.

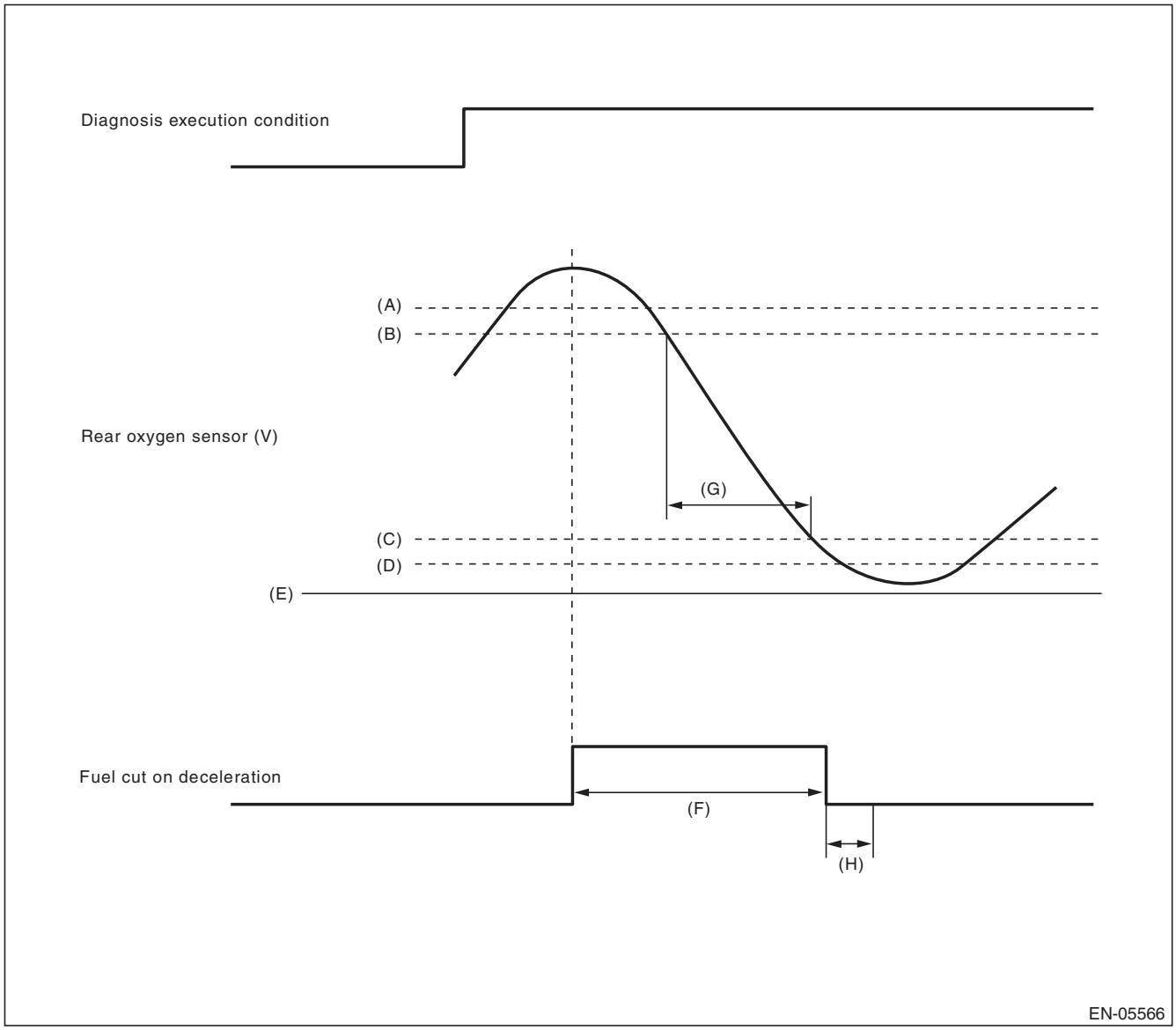

(A) 0.55 V
(B) 0.5 V
(C) 0.2 V
(D) 0.15 V
(E) 0 V
(F) More than 6000 ms
(G) Measure the response time.
(H) Execute the malfunction judgment in 2000 ms from the recovery of fuel cut on deceleration.

- **Abnormality Judgement**

1) Judge as NG when the judgment value is larger than the threshold value after deceleration fuel cut.
Response time (diagnosis value) > threshold value → abnormal

NOTE:
Variation time of rear oxygen sensor output voltage is short during fuel cut in deceleration. NG judgment should be performed after deceleration fuel cut. Even without deceleration fuel cut, judge as OK if the value is below the threshold.
When the deceleration fuel cut time is 6000 ms or more, judge as NG if the following criteria are met 2000 ms after recovering from the deceleration fuel cut.
2) Judge as NG when the oxygen sensor voltage at recovery from a deceleration fuel cut, is large.
If the fuel cut time in a deceleration fuel cut is long (6000 ms or more), and even after recovering from a deceleration fuel cut, the oxygen sensor voltage is high (0.55 V or more), judge as NG.

Judgement Value

Malfunction Criteria	Threshold Value
Shortest time change from rich (0.5 V O_2 output) to lean (0.2 V) when voltage reduces from 0.55 V to 0.15 V	> 491 ms
or	
Longest time over 0.55 V	≥ 2000 ms

Time Needed for Diagnosis: 1 time(s)
Malfunction Indicator Light Illumination: Illuminates when malfunction occurs in 2 continuous driving cycles.

- **Normality Judgement**

1) Regardless of a deceleration fuel cut, if the response time (diagnosis value) when the oxygen sensor voltage has changed from rich to lean is shorter than the threshold value (judgment value), judge as a normal condition.
Response time (diagnosis value) ≤ threshold value → normal
2) Do not judge as a normal condition.
Judge as OK and clear the NG if the following conditions are established.

Judgement Value

Malfunction Criteria	Threshold Value
Shortest time change from rich (0.5 V O_2 output) to lean (0.2 V) when voltage reduces from 0.55 V to 0.15 V	≤ 491 ms

Time Needed for Diagnosis: 1 time(s)

6. ENABLE CONDITION

Lean → rich response diagnosis

Secondary Parameters	Enable Conditions
Battery voltage	≥ 10.9 V
A/F main feedback control condition	Complete
Deceleration fuel cut time is 6000 ms or more.	Experienced
After fuel cut	≥ 2000 ms
Current calculation time of the rear oxygen sensor heater	≥ 60000 ms
Current continuation time of the rear oxygen sensor heater	≥ 30000 ms
Estimated catalyst temperature	≥ 450 °C (842 °F)
Number of deceleration fuel cut	≥ 1 time(s)

7. GENERAL DRIVING CYCLE

Perform the diagnosis only once when deceleration fuel cut occurs after rapid acceleration. (Pay attention to the oxygen sensor voltage for the timing of the deceleration.)

8. DIAGNOSTIC METHOD

When the oxygen sensor output voltage changes from 0.25 V (lean) to 0.55 V (rich), calculate the minimum response time for output change between 0.3 V and 0.5 V for the judgment criteria.

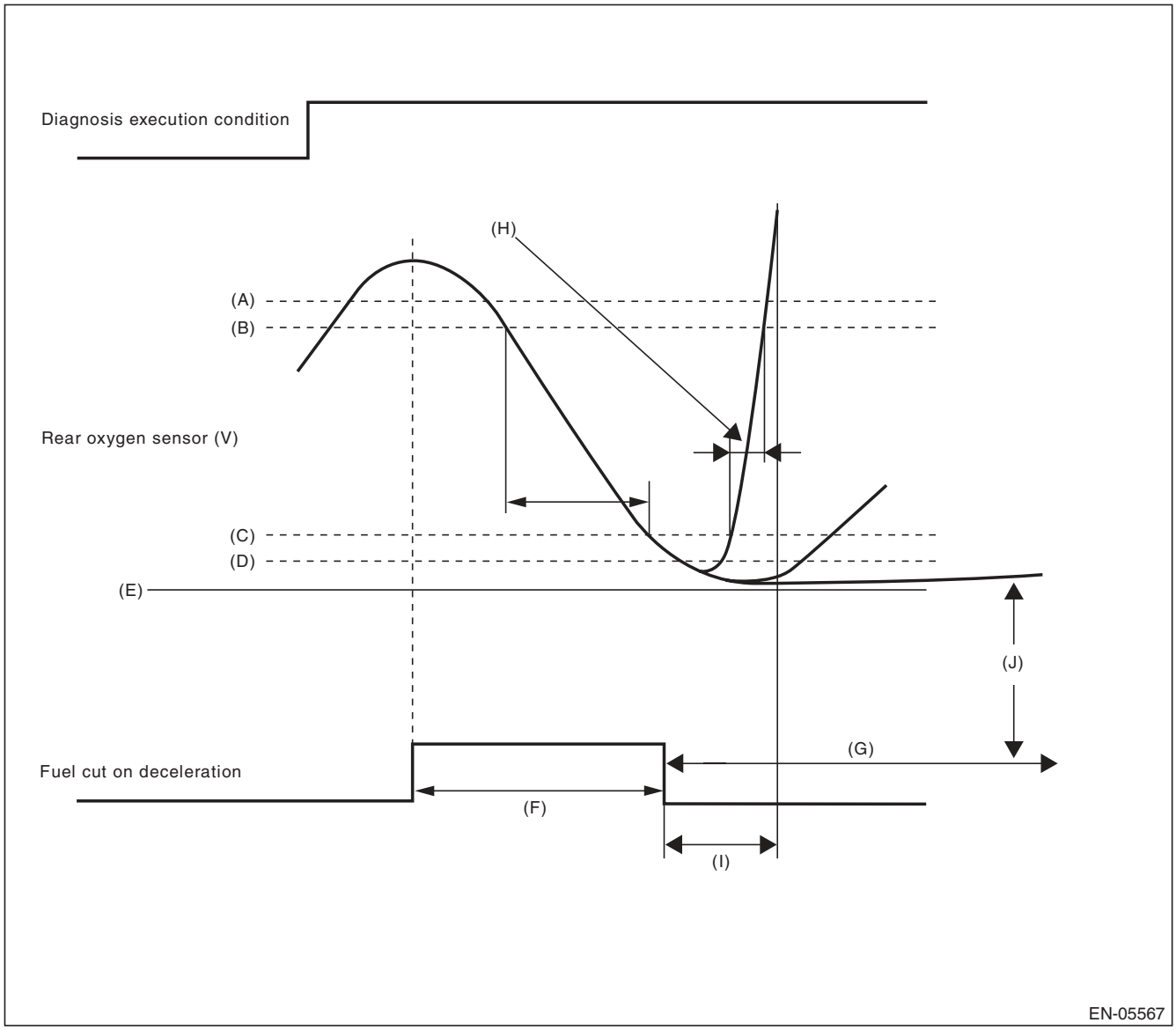

(A) 0.55 V
(B) 0.5 V
(C) 0.3 V
(D) 0.25 V
(E) 0 V
(F) More than 5 seconds
(G) More than 120000 ms
(H) Measure the response time (diagnostic value).
(I) Execute the malfunction judgment in 2000 ms from the recovery of fuel cut on deceleration.
(J) Judge NG when the voltage of rear oxygen sensor is 0.25 V or less for 120000 ms or more after recovery of fuel cut on deceleration.

- **Abnormality Judgement**

1) Judge as NG when the judgment value is larger than the threshold value after deceleration fuel cut.
Response time (diagnosis value) > threshold value → abnormal
2) If the oxygen sensor voltage is small after recovering from a deceleration fuel cut, and remains small, judge as NG.

Judgement Value

Malfunction Criteria	Threshold Value
Shortest time change from lean (0.3 V O_2 output) to rich (0.5 V) when voltage changes from 0.25 V to 0.55 V	> 2000 ms
or	
Longest time under 0.25 V	≥ 120000 ms

Time Needed for Diagnosis: 1 time(s)
Malfunction Indicator Light Illumination: Illuminates when malfunction occurs in 2 continuous driving cycles.

- **Normality Judgement**

1) Regardless of a deceleration fuel cut, if the response time (diagnosis value) when the oxygen sensor voltage has changed from rich to lean is shorter than the threshold value (judgment value), judge as a normal condition.
Response time (diagnosis value) ≤ threshold value → normal
2) Do not judge as a normal condition.
Judge as OK and clear the NG if the following conditions are established.

Judgement Value

Malfunction Criteria	Threshold Value
Shortest time change from lean (0.3 V O_2 output) to rich (0.5 V) when voltage changes from 0.25 V to 0.55 V	≤ 2000 ms

Time Needed for Diagnosis: 1 time(s)

AI: DTC P0140 O2 SENSOR CIRCUIT NO ACTIVITY DETECTED (BANK1 SENSOR2)

1. OUTLINE OF DIAGNOSIS

Detect the rear oxygen sensor open or short circuit. Judge as NG when the rear oxygen sensor voltage can be determined to be abnormal considering conditions such as intake air amount, engine coolant temperature, main feedback control and deceleration fuel cut.

2. COMPONENT DESCRIPTION

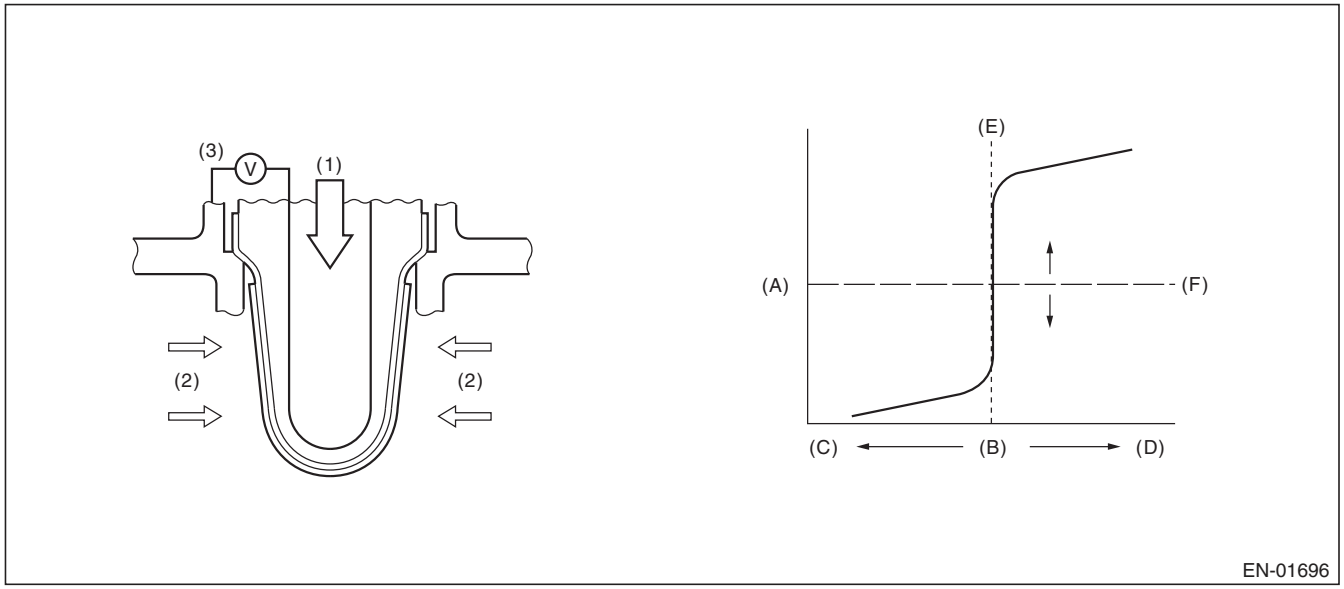

(A)	Electromotive force	(C)	Rich	(E)	Theoretical air fuel ratio
(B)	Air fuel ratio	(D)	Lean	(F)	Comparative voltage
(1)	Atmosphere	(2)	Exhaust gas	(3)	Electromotive force

3. ENABLE CONDITION (USED ONLY FOR MALFUNCTION JUDGMENT)

Secondary Parameters	Enable Conditions
Closed loop control at the rear oxygen sensor	In operation
Target output voltage of rear oxygen sensor	≥ 0.55 V + 0.05 V
Amount of intake air	≥ 10 g/s (0.35 oz/s)
Engine coolant temperature	≥ 75 °C (167 °F)
Misfire detection every 200 rotations	< 5 time(s)
Front oxygen (A/F) sensor compensation coefficient	Not in limit value
Battery voltage	≥ 10.9 V
Deceleration fuel cut of 6000 ms or more.	Experienced

4. GENERAL DRIVING CYCLE

Perform the diagnosis once after starting the engine.

5. DIAGNOSTIC METHOD

- **Abnormality Judgement**

If the duration of time while the following conditions are met is longer than the time indicated, judge as NG.

Judgement Value

Malfunction Criteria	Threshold Value
Minimum output voltage or Maximum output voltage	> 0.15 V < 0.55 V

Time Needed for Diagnosis: 200000 ms
Malfunction Indicator Light Illumination: Illuminates when malfunction occurs in 2 continuous driving cycles.

- **Normality Judgement**

Judge as OK and clear the NG if the following conditions are established.

Judgement Value

Malfunction Criteria	Threshold Value
Diagnosis of the rear oxygen sensor voltage low side	Incomplete
Minimum output voltage	≤ 0.15 V
Maximum output voltage	≥ 0.55 V

AJ:DTC P0171 SYSTEM TOO LEAN (BANK 1)

1. OUTLINE OF DIAGNOSIS

Detect fuel system malfunction by the amount of main feedback control.

Diagnostic method

Fuel system is diagnosed by comparing the target air fuel ratio calculated by ECM with the actual air fuel ratio measured by sensor.

2. ENABLE CONDITION

Secondary Parameters	Enable Conditions
A/F main learning system	In operation
Engine coolant temperature	≥ 75 °C (167 °F)
Engine load change	< 0.02 g/rev (0 oz/rev)
Engine load	≥ Value of Map 1

Map1

Engine speed (rpm)	Idling	650	1000	1500	2000	2500	3000	3500	4000	4500
Measured value (g(oz)/rev)	Non-turbo	0.208 (0.01)	0.201 (0.01)	0.185 (0.01)	0.183 (0.01)	0.193 (0.01)	0.206 (0.01)	0.206 (0.01)	0.225 (0.01)	0.245 (0.01)

3. GENERAL DRIVING CYCLE

Perform the diagnosis continuously at idling or at a constant speed after warming up the engine.

4. DIAGNOSTIC METHOD

- **Abnormality Judgement**

Compare the diagnosed value (fsobd) with the threshold value, and if a condition meeting the malfunction criteria below continues for 10 s × 5 time(s) or more, judge that there is a fault in the fuel system.

Judgement Value

Malfunction Criteria	Threshold Value
fsobd = (sglmd – tglmda) + faf + flaf In this case: sglmd = measured lambda tglmda = target lambda faf = main feedback compensation coefficient every 64 milliseconds flaf = main feedback learning compensation coefficient	≥ Value of Map 2

Map2

U5 MODEL

Amount of air (g (oz)/s)	0 (0)	3.2 (0.11)	6.4 (0.23)	9.6 (0.34)	12.8 (0.45)	16 (0.56)	19.2 (0.68)
fsobdL1 (%)	1.4	1.4	1.332	1.25	1.25	1.25	1.25

EXCEPT FOR U5 MODEL

Amount of air (g (oz)/s)	0 (0)	3.2 (0.11)	6.4 (0.23)	9.6 (0.34)	12.8 (0.45)	16 (0.56)	19.2 (0.68)
fsobdL1 (%)	1.4	1.4	1.332	1.265	1.265	1.265	1.265

Time Needed for Diagnosis: 10 s × 5 time(s)
Malfunction Indicator Light Illumination: Illuminates when malfunction occurs in 2 continuous driving cycles.

- **Normality Judgement**

Judge as OK and clear the NG if the continuous time while the following conditions are established is more than the predetermined time.

Judgement Value

Malfunction Criteria	Threshold Value
fsobd = (sglmd – tglmda) + faf + flaf	< 1.2

Time Needed for Diagnosis: 10 s

AK:DTC P0172 SYSTEM TOO RICH (BANK 1)

1. OUTLINE OF DIAGNOSIS

Detect fuel system malfunction by the amount of main feedback control.

Diagnostic method

Fuel system is diagnosed by comparing the target air fuel ratio calculated by ECM with the actual air fuel ratio measured by sensor.

2. ENABLE CONDITION

Secondary Parameters	Enable Conditions
A/F main learning system	In operation
Engine coolant temperature	≥ 75 °C (167 °F)
Engine load change	≤ 0.02 g/rev (0 oz/rev)
Learning value of EVAP conc.	< 0.15
Cumulative time of canister purge after engine start	≥ 20 s
Continuous period after canister purge starting	≥ 29884 ms
Engine load	≥ Value of Map 1

Map1

Engine speed (rpm)	Idling	650	1000	1500	2000	2500	3000	3500	4000	4500
Measured value (g(oz)/rev)	Non-turbo	0.208 (0.01)	0.201 (0.01)	0.185 (0.01)	0.183 (0.01)	0.193 (0.01)	0.206 (0.01)	0.206 (0.01)	0.225 (0.01)	0.245 (0.01)

3. GENERAL DRIVING CYCLE

Perform the diagnosis continuously at idling or at a constant speed after warming up the engine.

4. DIAGNOSTIC METHOD

- **Abnormality Judgement**

Compare the diagnosed value (fsobd) with the threshold value, and if a condition meeting the malfunction criteria below continues for 10 s × 5 time(s) or more, judge that there is a fault in the fuel system.

Judgement Value

Malfunction Criteria	Threshold Value
fsobd = (sglmd – tglmda) + faf + flaf In this case: sglmd = measured lambda tglmda = target lambda faf = main feedback compensation coefficient every 64 milliseconds flaf = main feedback learning compensation coefficient	< Value of Map 2

Map2

Amount of air (g (oz)/s)	0 (0)	3.2 (0.11)	6.4 (0.23)	9.6 (0.34)	12.8 (0.45)	16 (0.56)	19.2 (0.68)
fsobdL1 (%)	0.6	0.6	0.668	0.735	0.735	0.735	0.735

Time Needed for Diagnosis: 10 s × 5 time(s)
Malfunction Indicator Light Illumination: Illuminates when malfunction occurs in 2 continuous driving cycles.

- **Normality Judgement**

Judge as OK when the malfunction criteria below continues for 10 seconds.

Judgement Value

Malfunction Criteria	Threshold Value
fsobd = (sglmd – tglmda) + faf + flaf	≥ 0.8

Time Needed for Diagnosis: 10 s

AL:DTC P0181 FUEL TEMPERATURE SENSOR “A” CIRCUIT RANGE/ PERFORMANCE

1. OUTLINE OF DIAGNOSIS

Detect faults in the fuel temperature sensor output properties.
Diagnosis is performed in two methods (drift diagnosis and stuck diagnosis). If either is NG, judge as NG. If both are OK, Judge as OK and clear the NG.

Drift Diagnosis

Normally fuel temperature is lower than engine coolant temperature. When the fuel temperature becomes higher than the engine coolant temperature, the range is considered to be shifted, and judged as NG.

Stuck Diagnosis

As the engine warms up (cumulative amount of intake air after starting is large), if the fuel temperature which should rise does not, determine as being stuck and NG.

2. COMPONENT DESCRIPTION

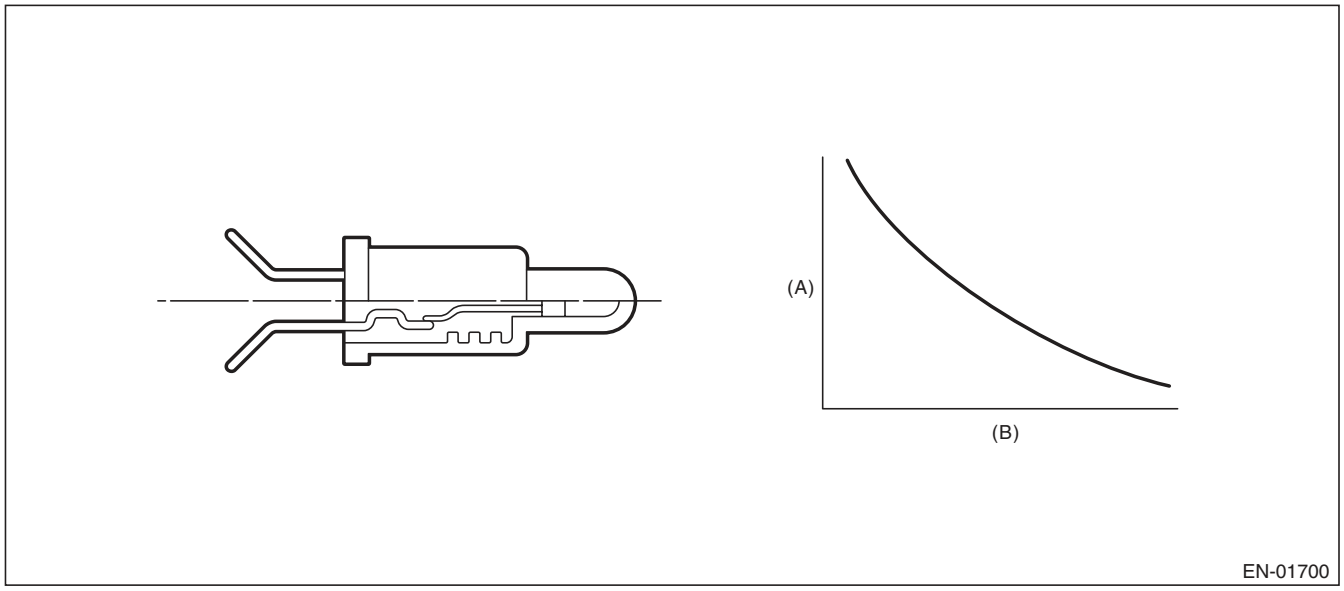

(A) Resistance value (Ω) (B) Fuel temperature °C (°F)

3. ENABLE CONDITION

DRIFT DIAGNOSIS

Secondary Parameters	Enable Conditions
None	

4. GENERAL DRIVING CYCLE

Always perform the diagnosis continuously.

5. DIAGNOSTIC METHOD

• Abnormality Judgement

If the duration of time while the following conditions are met is longer than the time indicated, judge as NG.

Judgement Value

Malfunction Criteria	Threshold Value
Fuel level	≥ 9.6 ℓ (2.54 US gal, 2.11 Imp gal)
Elapsed time after starting the engine	≥ 20 s
Engine coolant temperature – Engine coolant temperature at engine start	> 10 °C (50 °F)
Fuel temperature – Engine coolant temperature	≥ 10 °C (50 °F)
Battery voltage	≥ 10.9 V

Time Needed for Diagnosis: 120 s
Malfunction Indicator Light Illumination: Illuminates when malfunction occurs in 2 continuous driving cycles.

• Normality Judgement

Judge as OK and clear the NG if the continuous time while the following conditions are established is more than the predetermined time.

Judgement Value

Malfunction Criteria	Threshold Value
Fuel level	≥ 9.6 ℓ (2.54 US gal, 2.11 Imp gal)
Elapsed time after starting the engine	≥ 20 s
Engine coolant temperature – Engine coolant temperature at engine start	> 10 °C (50 °F)
Fuel temperature – Engine coolant temperature	< 10 °C (50 °F)
Battery voltage	≥ 10.9 V
Engine coolant temperature	< 75 °C (167 °F)

Time Needed for Diagnosis: Less than 1 second

6. ENABLE CONDITION

Stuck Diagnosis

Secondary Parameters	Enable Conditions
Elapsed time after starting the engine	≥ 20000 ms
Battery voltage	≥ 10.9 V

7. GENERAL DRIVING CYCLE

Always perform diagnosis after 20 seconds have passed since the engine started.

8. DIAGNOSTIC METHOD

- **Abnormality Judgement**

Judge as NG when the following conditions are established.

Judgement Value

Malfunction Criteria	Threshold Value
Accumulated amount of intake air	≥ 551043 g (19435.29 oz)
Fuel temperature difference between Max. and Min.	< 2 °C (35.6 °F)

Time Needed for Diagnosis: Less than 1 second
Malfunction Indicator Light Illumination: Illuminates when malfunction occurs in 2 continuous driving cycles.

- **Normality Judgement**

Judge as OK and clear the NG if the following conditions are established.

Judgement Value

Malfunction Criteria	Threshold Value
Fuel temperature difference between Max. and Min.	≥ 2 °C (35.6 °F)

Time Needed for Diagnosis: Less than 1 second

AM:DTC P0182 FUEL TEMPERATURE SENSOR “A” CIRCUIT LOW INPUT

1. OUTLINE OF DIAGNOSIS

Detect the open or short circuit of fuel temperature sensor.
Judge as NG if out of specification.

2. COMPONENT DESCRIPTION

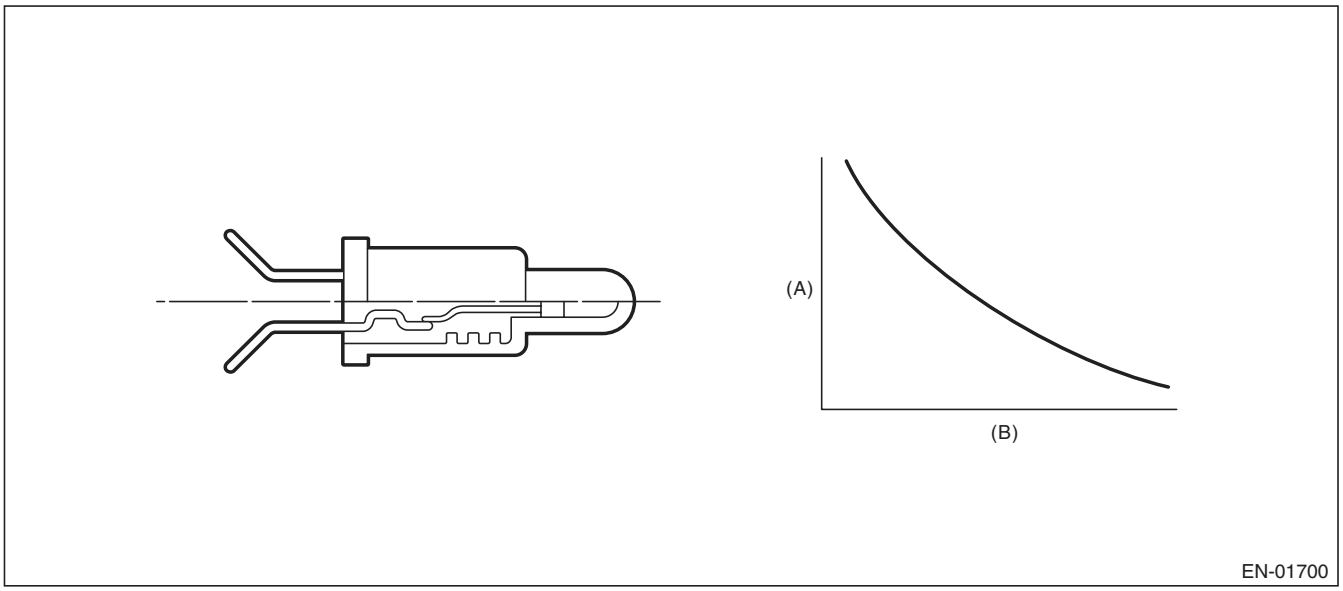

(A) Resistance value (Ω) (B) Fuel temperature °C (°F)

3. ENABLE CONDITION

Secondary Parameters	Enable Conditions
None	

4. GENERAL DRIVING CYCLE

Always perform the diagnosis continuously.

5. DIAGNOSTIC METHOD

- **Abnormality Judgement**

If the duration of time while the following conditions are met is longer than the time indicated, judge as NG.

Judgement Value

Malfunction Criteria	Threshold Value
Output voltage	< 0.343951474 V
Battery voltage	≥ 10.9 V

Time Needed for Diagnosis: 2500 ms
Malfunction Indicator Light Illumination: Illuminates as soon as a malfunction occurs.

- **Normality Judgement**

Judge as OK and clear the NG if the continuous time while the following conditions are established is more than the predetermined time.

Judgement Value

Malfunction Criteria	Threshold Value
Output voltage	≥ 0.343951474 V
Battery voltage	≥ 10.9 V

Time Needed for Diagnosis: Less than 1 second

AN:DTC P0183 FUEL TEMPERATURE SENSOR “A” CIRCUIT HIGH INPUT

1. OUTLINE OF DIAGNOSIS

Detect the open or short circuit of fuel temperature sensor.
Judge as NG if out of specification.

2. COMPONENT DESCRIPTION

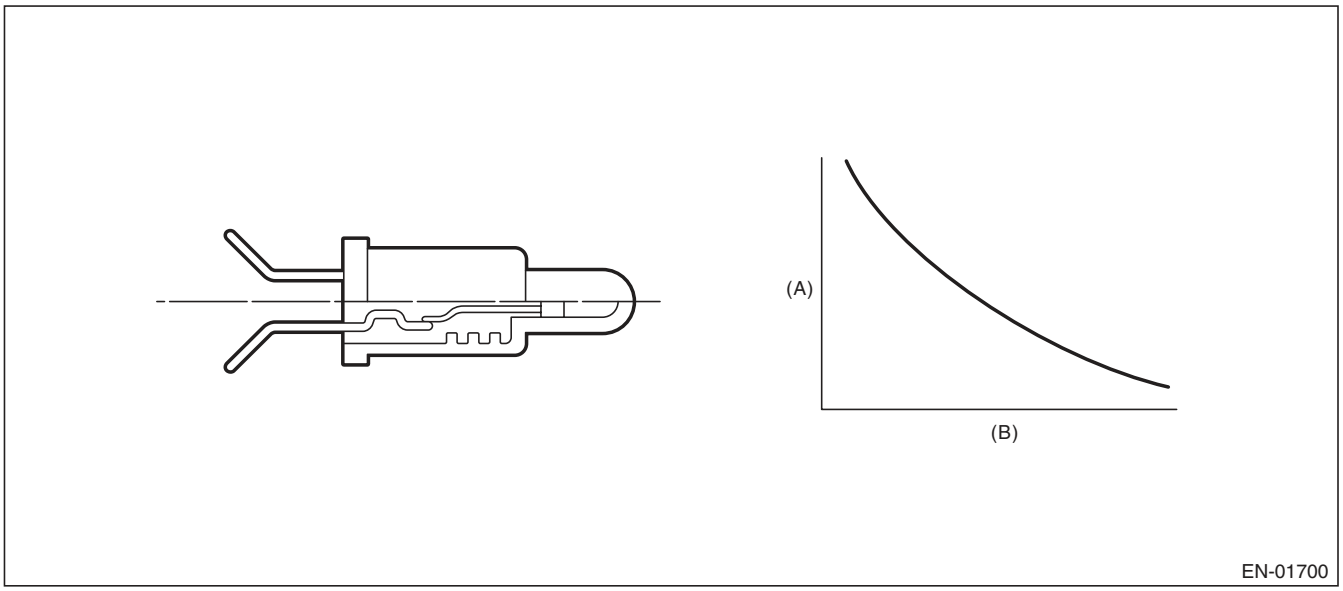

(A) Resistance value (Ω) (B) Fuel temperature °C (°F)

3. ENABLE CONDITION

Secondary Parameters	Enable Conditions
None	

4. GENERAL DRIVING CYCLE

Always perform the diagnosis continuously.

5. DIAGNOSTIC METHOD

- **Abnormality Judgement**

If the duration of time while the following conditions are met is longer than the time indicated, judge as NG.

Judgement Value

Malfunction Criteria	Threshold Value
Output voltage	≥ 4.716 V
Battery voltage	≥ 10.9 V

Time Needed for Diagnosis: 2500 ms
Malfunction Indicator Light Illumination: Illuminates as soon as a malfunction occurs.

- **Normality Judgement**

Judge as OK and clear the NG if the continuous time while the following conditions are established is more than the predetermined time.

Judgement Value

Malfunction Criteria	Threshold Value
Output voltage	< 4.716 V
Battery voltage	≥ 10.9 V

Time Needed for Diagnosis: Within 1 second

AO:DTC P0196 ENGINE OIL TEMPERATURE SENSOR CIRCUIT RANGE/ PERFORMANCE

1. OUTLINE OF DIAGNOSIS

Detect for abnormal values in the oil temperature sensor output properties.
Judge as NG when the oil temperature does not rise even though the engine is running under a condition where it should rise.

2. ENABLE CONDITION

Secondary Parameters	Enable Conditions
Battery voltage	≥ 10.9 V
Engine speed	≥ Value from Map

Map

Engine coolant temperature °C (°F)	–40 (–40)	–30 (–22)	–20 (–4)	–10 (14)	0 (32)	10 (50)	20 (68)	30 (86)
Engine speed rpm	500	500	500	500	500	500	500	500

Engine coolant temperature °C (°F)	40 (104)	50 (122)	60 (140)	70 (158)	80 (176)	90 (194)	100 (212)	110 (230)
Engine speed rpm	500	500	500	500	500	500	500	500

3. GENERAL DRIVING CYCLE

Perform the diagnosis continuously after starting the engine.

4. DIAGNOSTIC METHOD

- **Abnormality Judgement**

Judge as NG when the following conditions are established.

Judgement Value

Malfunction Criteria	Threshold Value
Engine oil temperature	< 15 °C (59 °F)
After engine start oil temperature sensor characteristic diagnosis timer.	≥ Judgement value for after engine start oil temperature sensor characteristic diagnosis timer

After engine start oil temperature sensor characteristic diagnosis timer (timer for diagnosis).
a. Timer stop at fuel cut
b. During the driving conditions except a) above, timer counts up as follows.
64 milliseconds + TOILCNT milliseconds (at the time of 64 milliseconds).
Where, TOILCNT is determined as follows,
TOILCNT = 0 at idle switch ON
For TOILCNT at Idle switch off, refer to the following table.

		Vehicle speed km/h (MPH)							
		0 (0)	8 (5)	16 (9.9)	24 (14.9)	32 (19.9)	40 (24.9)	48 (29.8)	56 (34.8)
Temperature °C (°F)	–30 (–22)	64 ms	73.2 ms	83.9 ms	96.3 ms	113.2 ms	133.9 ms	160.2 ms	194.6 ms
	–20 (–4)	64 ms	73.3 ms	84 ms	96.6 ms	113.7 ms	135 ms	162 ms	197.4 ms
	–10 (14)	64 ms	73.4 ms	84.2 ms	96.9 ms	114.5 ms	136.4 ms	164.4 ms	201.5 ms
	0 (32)	64 ms	73.5 ms	84.5 ms	97.4 ms	115.6 ms	138.5 ms	168 ms	207.6 ms
	10 (50)	102.2 ms	114.8 ms	129.4 ms	146.7 ms	171.7 ms	203.4 ms	245.1 ms	302.1 ms

After engine start oil temperature characteristic diagnosis timer judgment value (t).
$t = 1882940 \text{ ms} - 43302 \text{ ms} \times Ti \ (t \geq 2400000)$
Ti = The lowest coolant temperature after starting the engine.
Time Needed for Diagnosis: Less than 1 second
Malfunction Indicator Light Illumination: Illuminates when malfunction occurs in 2 continuous driving cycles.

- **Normality Judgement**

Judge as OK and clear the NG if the following conditions are established.

Judgement Value

Malfunction Criteria	Threshold Value
Engine oil temperature	≥ 15 °C (59 °F)

Time Needed for Diagnosis: Less than 1 second

AP:DTC P0197 ENGINE OIL TEMPERATURE SENSOR LOW

1. OUTLINE OF DIAGNOSIS

Detect the open or short circuit of the oil temperature sensor.
Judge as NG when outside of the judgment value.

2. ENABLE CONDITION

Secondary Parameters	Enable Conditions
None	

3. GENERAL DRIVING CYCLE

Always perform the diagnosis continuously.

4. DIAGNOSTIC METHOD

- **Abnormality Judgement**

If the duration of time while the following conditions are met is longer than the time indicated, judge as NG.

Judgement Value

Malfunction Criteria	Threshold Value
Output voltage	< 0.166 V

Time Needed for Diagnosis: 500 ms
Malfunction Indicator Light Illumination: Illuminates as soon as a malfunction occurs.

- **Normality Judgement**

Judge as OK and clear the NG if the continuous time while the following conditions are established is more than the predetermined time.

Judgement Value

Malfunction Criteria	Threshold Value
Output voltage	≥ 0.166 V

Time Needed for Diagnosis: Less than 1 second

AQ:DTC P0198 ENGINE OIL TEMPERATURE SENSOR HIGH

1. OUTLINE OF DIAGNOSIS

Detect the open or short circuit of the oil temperature sensor.
Judge as NG when outside of the judgment value.

2. ENABLE CONDITION

Secondary Parameters	Enable Conditions
None	

3. GENERAL DRIVING CYCLE

Always perform the diagnosis continuously.

4. DIAGNOSTIC METHOD

- **Abnormality Judgement**

If the duration of time while the following conditions are met is longer than the time indicated, judge as NG.

Judgement Value

Malfunction Criteria	Threshold Value
Output voltage	≥ 4.716 V

Time Needed for Diagnosis: 500 ms
Malfunction Indicator Light Illumination: Illuminates as soon as a malfunction occurs.

- **Normality Judgement**

Judge as OK and clear the NG if the continuous time while the following conditions are established is more than the predetermined time.

Judgement Value

Malfunction Criteria	Threshold Value
Output voltage	< 4.716 V

Time Needed for Diagnosis: Less than 1 second

AR:DTC P0222 THROTTLE/PEDAL POSITION SENSOR/SWITCH “B” CIRCUIT LOW

1. OUTLINE OF DIAGNOSIS

Detect the open or short circuit of throttle position sensor 2.
Judge as NG if out of specification.

2. COMPONENT DESCRIPTION

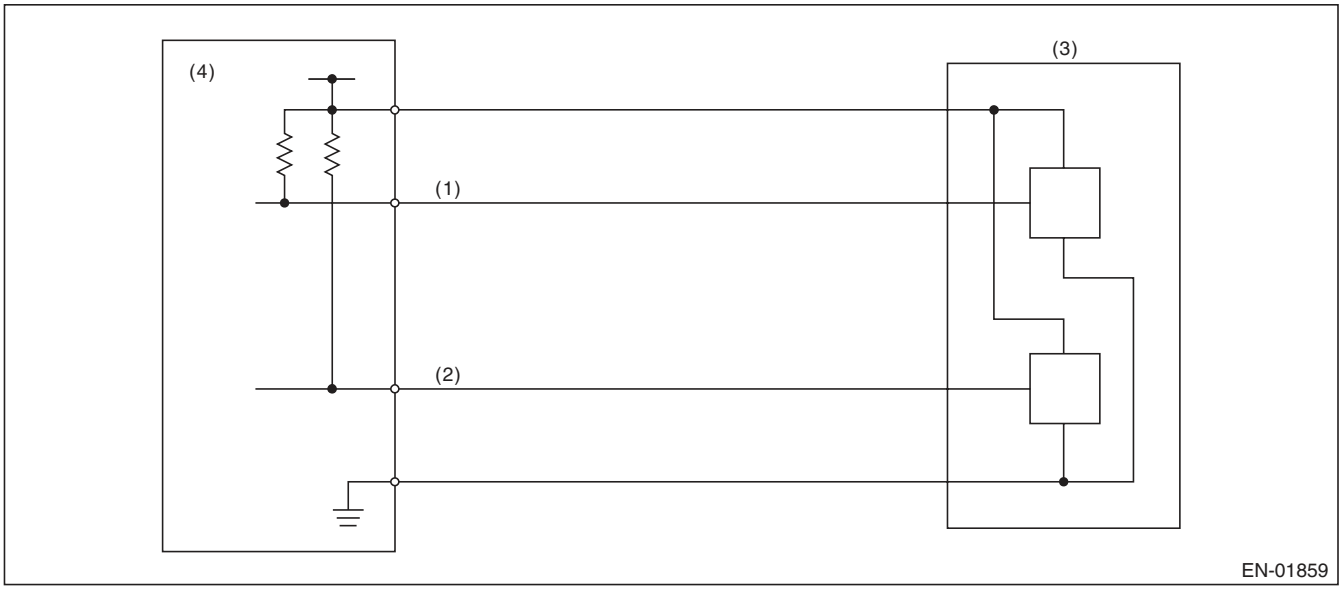

(1) Throttle position sensor 1 signal
(2) Throttle position sensor 2 signal
(3) Throttle position sensor
(4) Engine control module (ECM)

3. ENABLE CONDITION

Secondary Parameters	Enable Conditions
Ignition switch	ON
Battery voltage	≥ 6 V

4. GENERAL DRIVING CYCLE

Always perform the diagnosis continuously.

5. DIAGNOSTIC METHOD

- **Abnormality Judgement**

If the duration of time while the following conditions are met is longer than the time indicated, judge as NG.

Judgement Value

Malfunction Criteria	Threshold Value
Sensor 2 input voltage	≤ 0.926256 V

Time Needed for Diagnosis: 24 ms
Malfunction Indicator Light Illumination: Illuminates as soon as a malfunction occurs.

- **Normality Judgement**

Judge as OK and clear the NG if the continuous time while the following conditions are established is more than the predetermined time.

Judgement Value

Malfunction Criteria	Threshold Value
Sensor 2 input voltage	> 0.926256 V

Time Needed for Diagnosis: 24 ms

AS:DTC P0223 THROTTLE/PEDAL POSITION SENSOR/SWITCH “B” CIRCUIT HIGH

1. OUTLINE OF DIAGNOSIS

Detect the open or short circuit of throttle position sensor 2.
Judge as NG if out of specification.

2. COMPONENT DESCRIPTION

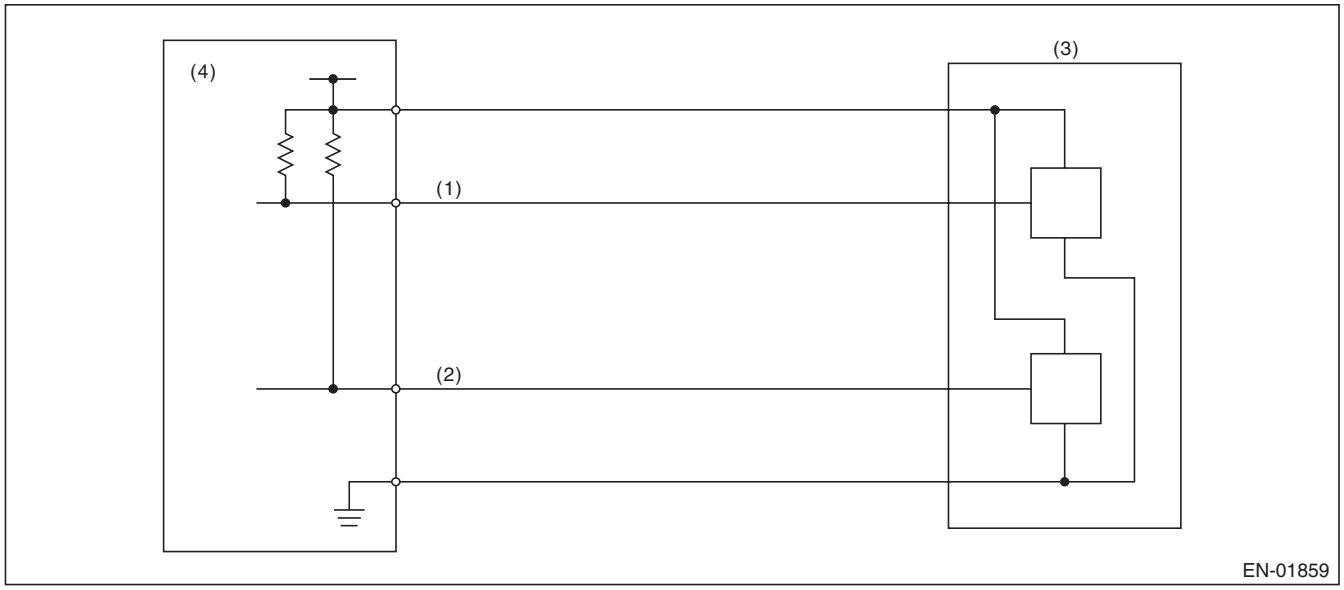

(1) Throttle position sensor 1 signal
(2) Throttle position sensor 2 signal
(3) Throttle position sensor
(4) Engine control module (ECM)

3. ENABLE CONDITION

Secondary Parameters	Enable Conditions
Ignition switch	ON
Battery voltage	≥ 6 V

4. GENERAL DRIVING CYCLE

Always perform the diagnosis continuously.

5. DIAGNOSTIC METHOD

- **Abnormality Judgement**

If the duration of time while the following conditions are met is longer than the time indicated, judge as NG.

Judgement Value

Malfunction Criteria	Threshold Value
Sensor 2 input voltage	≥ 4.858 V

Time Needed for Diagnosis: 24 ms
Malfunction Indicator Light Illumination: Illuminates as soon as a malfunction occurs.

- **Normality Judgement**

Judge as OK and clear the NG if the continuous time while the following conditions are established is more than the predetermined time.

Judgement Value

Malfunction Criteria	Threshold Value
Sensor 2 input voltage	< 4.858 V

Time Needed for Diagnosis: 24 ms

AT:DTC P0301 CYLINDER 1 MISFIRE DETECTED

1. OUTLINE OF DIAGNOSIS

Detect the presence of misfire occurrence. (Revolution fluctuation method)
Monitoring Misfire which influences exhaust deterioration (1.5 times of FTP) and catalyst damage is made obligatory by the law. Misfire affecting these two has two patterns below. :

- Intermittent misfire (The same cylinder misfires in random, or different cylinders misfire in random.) : FTP 1.5 times misfire
- Every time misfire (The same cylinder misfires every time.) : FTP 1.5 times misfire, Catalyst damage misfire

The following detecting methods are adopted for these detection.
1) Intermittent misfire: FTP 1.5 times misfire

- 180° Interval Difference Method (MT: 1,800 rpm or less; AT: None)
- 360° Interval Difference Method (whole range)
- 720° Interval Difference Method (3,000 rpm or more)

2) Misfire every time: FTP 1.5 times misfire, Catalyst damage misfire

- 360° Interval Difference Method

2. ENABLE CONDITION

Secondary Parameters	Enable Conditions
All secondary parameters enable conditions	≥ 1024 ms
Intake manifold pressure change at 180°CA	< Value of Map 1
Throttle position change during 16 milliseconds	< 21 °
Fuel shut-off function	Not in operation
Fuel level	≥ 9.6 ℓ (2.54 US gal, 2.11 Imp gal)
Vehicle dynamic control or AT torque control	Not in operation
Evaporative system leak check	Not in operation
Engine speed	460 rpm — 6300 rpm
Intake manifold pressure	≥ Value from Map 2
Battery voltage	≥ 8 V
Fuel parameter determination	Not extremely low volatility
Elapsed time after starting the engine	≥ 0 ms
Engine load change during 32 milliseconds	< 1000 rpm

Map1

- AT model

rpm	700	1000	1500	2000	2500	3000	3500	4000	4500	5000	5500	6000	6300
kPa (mmHg, inHg)	13.3 (100, 3.9)	13.3 (100, 3.9)	13.3 (100, 3.9)	13.3 (100, 3.9)	13.3 (100, 3.9)	13.3 (100, 3.9)	13.3 (100, 3.9)	13.3 (100, 3.9)	13.3 (100, 3.9)	13.3 (100, 3.9)	13.3 (100, 3.9)	13.3 (100, 3.9)	13.3 (100, 3.9)

- MT model

rpm	650	1000	1500	2000	2500	3000	3500	4000	4500	5000	5500	6000	6300
kPa (mmHg, inHg)	13.3 (100, 3.9)	13.3 (100, 3.9)	13.3 (100, 3.9)	13.3 (100, 3.9)	13.3 (100, 3.9)	13.3 (100, 3.9)	13.3 (100, 3.9)	13.3 (100, 3.9)	13.3 (100, 3.9)	13.3 (100, 3.9)	13.3 (100, 3.9)	13.3 (100, 3.9)	13.3 (100, 3.9)

Map2

- AT model

rpm	700	1000	1500	2000	2500	3000	3500	4000	4500	5000	5500	6000	6300
kPa (mmHg, inHg)	26 (195.0, 7.7)	23.9 (179.5, 7.1)	23.3 (174.7, 6.9)	23.1 (173.2, 6.8)	23.6 (176.8, 7)	25.1 (188.0, 7.4)	26.2 (196.9, 7.8)	26.6 (199.6, 7.9)	26.9 (201.5, 7.9)	30 (225.0, 8.9)	33.4 (250.4, 9.9)	37.8 (283.5, 11.2)	39.5 (296.0, 11.7)

- MT model

Vehicle speed < 64 km/h (39.8 MPH)

rpm	650	1000	1500	2000	2500	3000	3500	4000	4500	5000	5500	6000	6300
kPa (mmHg, inHg)	24.5 (184, 7.2)	22.7 (170.3, 6.7)	21.4 (160.2, 6.3)	21.5 (161.6, 6.4)	21.5 (161.4, 6.4)	23.2 (174.4, 6.9)	24.7 (185.5, 7.3)	25.8 (193.3, 7.6)	27.1 (203.2, 8)	28.8 (216.3, 8.5)	32.3 (242.2, 9.5)	36.3 (272, 10.7)	37.9 (284.5, 11.2)

Vehicle speed ≥ 68 km/h (42.3 MPH)

rpm	650	1000	1500	2000	2500	3000	3500	4000	4500	5000	5500	6000	6300
kPa (mmHg, inHg)	31.6 (237, 9.3)	31.6 (237, 9.3)	31.6 (237, 9.3)	31.1 (233, 9.2)	31.3 (235, 9.3)	33.1 (248, 9.8)	33.9 (254, 10)	28.8 (216, 8.5)	30.1 (226, 8.9)	33.3 (250, 9.8)	36.9 (277, 10.9)	40.1 (301, 11.9)	43.2 (324, 12.8)

3. GENERAL DRIVING CYCLE

- If conditions are met, it is possible to detect the misfires from idling to high engine speed. However, to avoid excessive load or harm to the engine, perform diagnosis at idle.
- Perform the diagnosis continuously.

4. DIAGNOSTIC METHOD

When a misfire occurs, the engine speed will decreased and the crankshaft position speed will change. Calculate the interval difference value (diagnostic value) from crankshaft position speed by the following formula, and judge whether a misfire is occurring or not comparing the calculated result with judgment value. Counting the number of misfires. If the misfire ratio is higher during 1000 revs. or 200 revs., Judge corresponding cylinders as NG.

Diagnostic value calculation (Calculate from angle speed) →	Misfire detection every single ignition (Compare diagnostic value with judgment value) →	NG judgment (Misfire occurrence judgment required by the law) (Compare number of misfire with judgment)
	• 180° Interval Difference Method • 360° Interval Difference Method • 720° Interval Difference Method	• FTP 1.5 times misfire NG judgment • Catalyst damage misfire NG judgment

As shown in the following figure, pick a cylinder as the standard and name it omg 0. And the former crankshaft position speed is named omg 1, the second former crankshaft position speed is named omg 2, the third is named omg 3, etc.

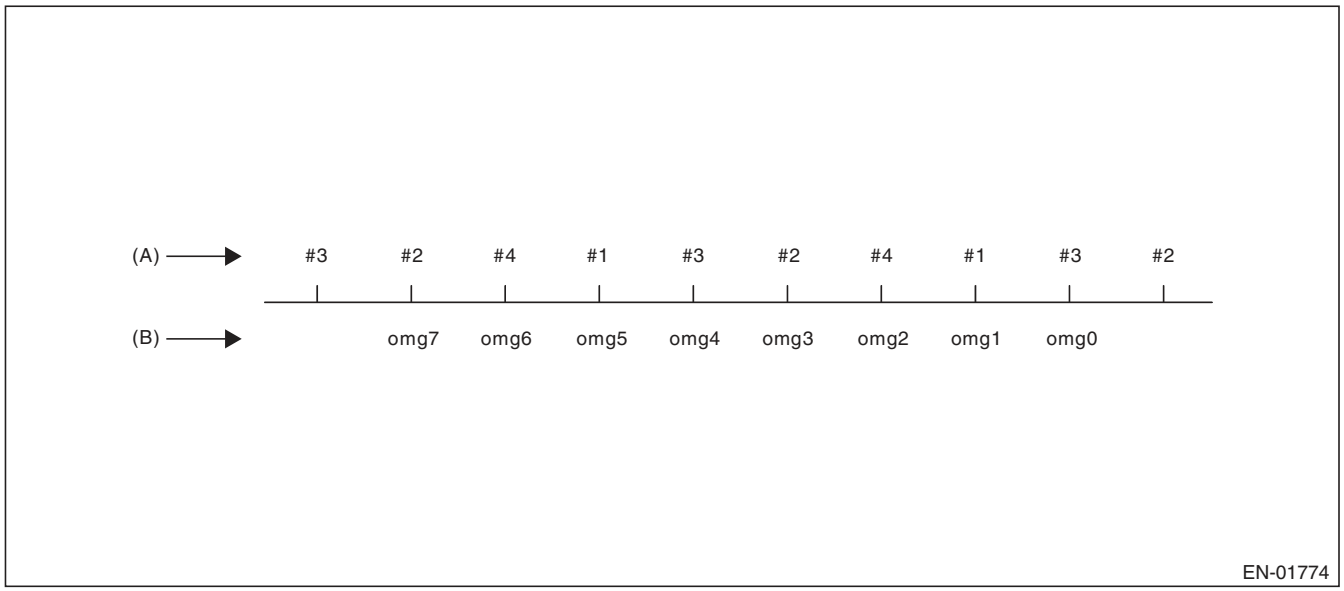

(A) Ignition order (B) Crankshaft position speed

180° Interval Difference Method

Diagnostic value	domg 180 = (omg 1 – omg 0) – (omg 5 – omg 1)/4
Judge as a misfire in the following cases. • domg 180 > judgment value of positive side • domg 180 ≤ judgment value of negative side (Judgement value before 180° CA)	

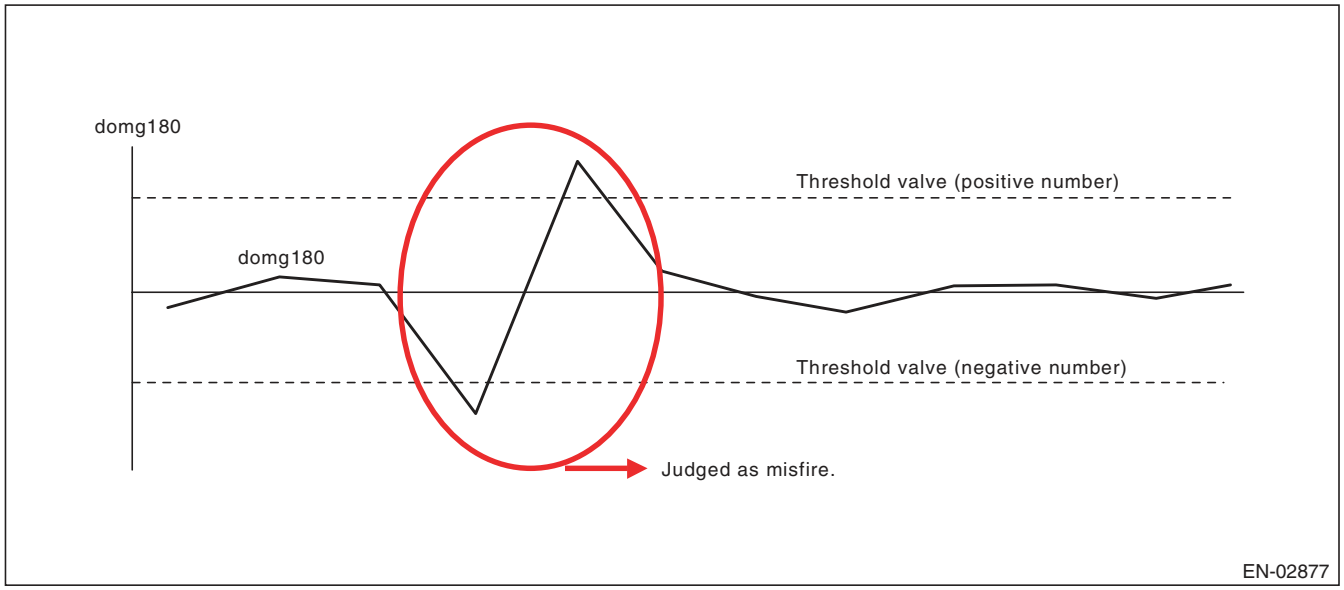

360° Interval Difference Method

Diagnostic value	domg 360 = (omg 1 – omg 0) – (omg 3 – omg 2)
Misfire judgment	domg 360 > Judgement value → Judge as misfire

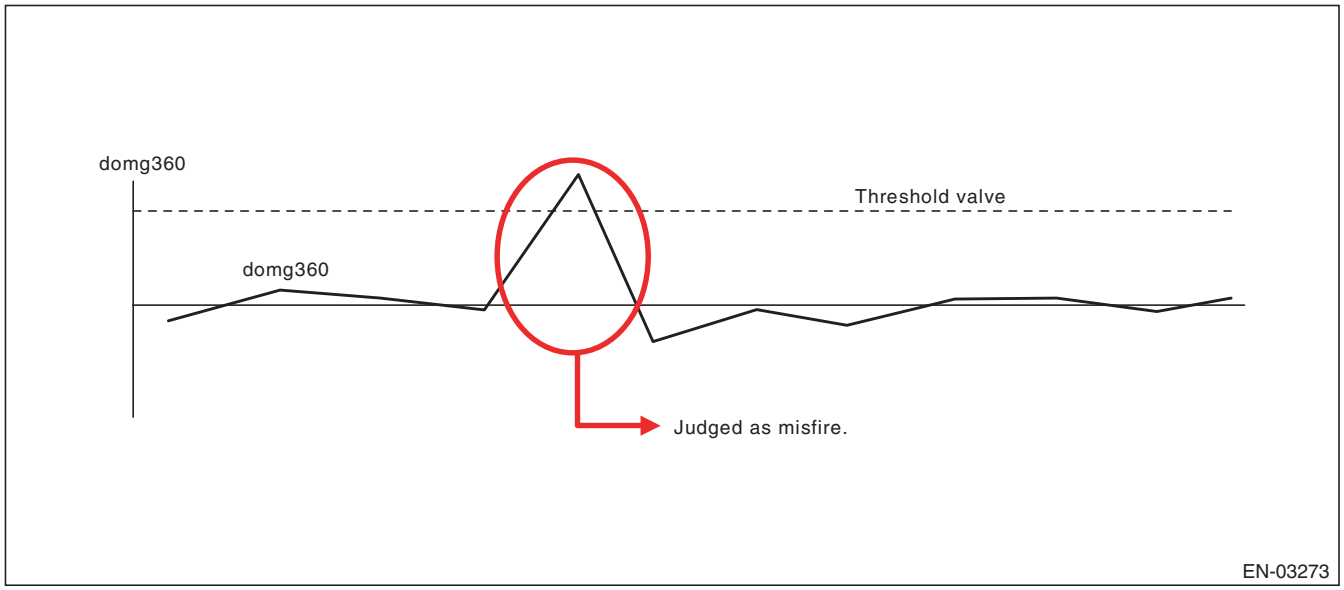

720° Interval Difference Method

Diagnostic value	domg 720 = (omg 1 – omg 0) – (omg 5 – omg 4)
Misfire judgment	domg 720 > Judgement value → Judge as misfire

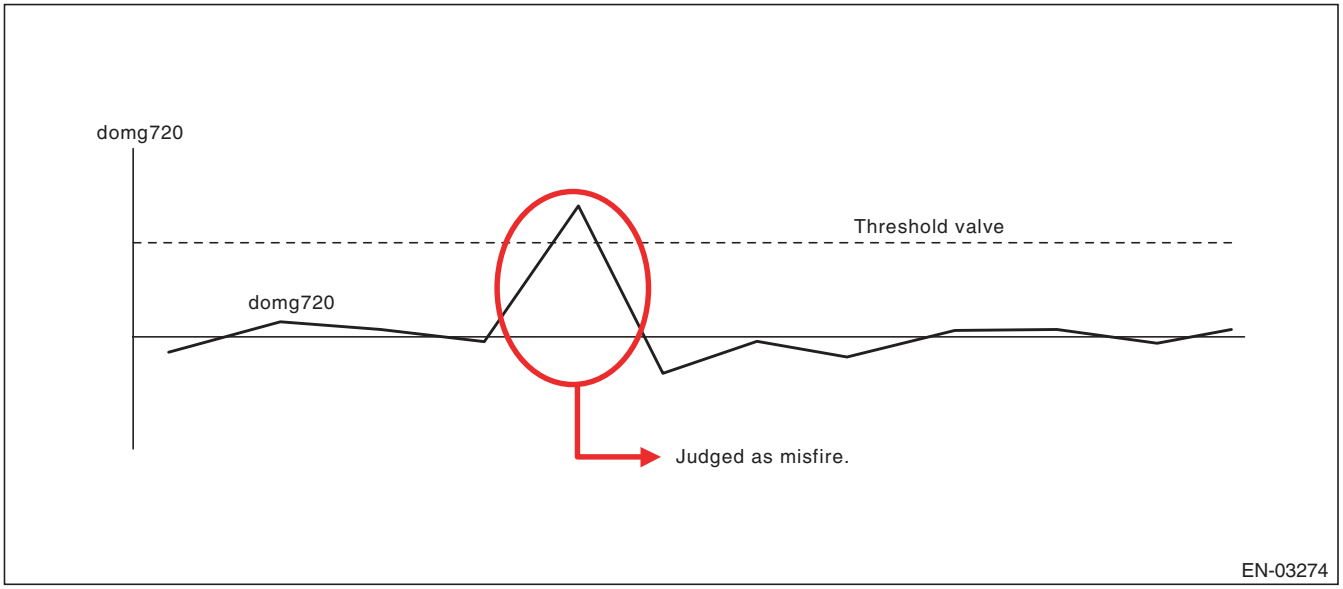

- **FTP 1.5 times misfire (Misfire occurrence level which influences exhaust gas)**
- **Abnormality Judgement**

Judgement Value (Judge that malfunction occurs when the misfire ratio is high in 1000 engine revs.)

Malfunction Criteria	Threshold Value
FTP emission judgment value	≥ 18 × 100/2000% in 1000 revs. (U5 model) ≥ 20 × 100/2000% in 1000 revs. (Except for U5 model)

Time Needed for Diagnosis: 1000 engine revs.
Malfunction Indicator Light Illumination: Illuminates when malfunction occurs in 2 continuous driving cycles.

- **Normality Judgement**

Judgement Value

Malfunction Criteria	Threshold Value
FTP emission judgment value	< 18 × 100/2000% in 1000 revs. (U5 model) < 20 × 100/2000% in 1000 revs. (Except for U5 model)

Time Needed for Diagnosis: 1000 engine revs.

- **Catalyst damage misfire (Misfire occurrence level damaging catalyst)**
- **Abnormality Judgement**

Judgement Value

Malfunction Criteria	Threshold Value
Catalyst damage misfire judgment value	≥ Value of Map 3

Map 3

U5 MODEL

		Intake air (g(oz)/rev)							
		0.16 (0.01)	0.28 (0.01)	0.4 (0.01)	0.52 (0.02)	0.64 (0.02)	0.76 (0.03)	0.92 (0.03)	1.1 (0.04)
Engine speed (rpm)	700	100	100	100	100	90	80	64	48
	1000	100	100	100	100	90	80	52	24
	1500	100	100	90	80	69	57	39	22
	2000	80	80	80	80	62	44	33	21
	2500	67	67	58	50	40	31	25	20
	3000	57	57	49	40	30	20	20	20
	3500	44	44	34	24	20	20	20	20
	4000	36	36	28	20	20	20	20	20
	4500	27	27	20	20	20	20	20	20
	5000	20	20	20	20	20	20	20	20
	5500	20	20	20	20	20	20	20	20
	6000	20	20	20	20	20	20	20	20
	6300	20	20	20	20	20	20	20	20

EXCEPT FOR U5 MODEL

		Intake air (g(oz)/rev)							
		0.16 (0.01)	0.28 (0.01)	0.4 (0.01)	0.52 (0.02)	0.64 (0.02)	0.76 (0.03)	0.92 (0.03)	1.1 (0.04)
Engine speed (rpm)	700	100	100	100	100	90	80	64	48
	1000	100	100	100	100	90	80	63	44
	1500	100	100	90	80	73	67	54	40
	2000	80	80	80	80	68	57	51	44
	2500	80	80	73	67	62	57	51	44
	3000	67	67	62	57	51	44	44	44
	3500	67	67	56	44	40	36	34	31
	4000	57	57	44	31	24	20	20	20
	4500	44	44	33	31	20	20	20	20
	5000	44	44	38	31	20	20	20	20
	5500	36	36	31	27	20	20	20	20
	6000	20	20	20	20	20	20	20	20
	6300	20	20	20	20	20	20	20	20

Time Needed for Diagnosis: 200 engine revs.
Malfunction Indicator Light Illumination: Illuminates as soon as a malfunction occurs.

- **Normality Judgement**

Judgement Value

Malfunction Criteria	Threshold Value
Catalyst damage misfire judgment value	< Value of Map 3

Time Needed for Diagnosis: 200 engine revs.

AU:DTC P0302 CYLINDER 2 MISFIRE DETECTED

1. OUTLINE OF DIAGNOSIS

NOTE:
For the detection standard, refer to DTC P0301. <Ref. to GD(H4SO)-79, DTC P0301 CYLINDER 1 MISFIRE DETECTED, Diagnostic Trouble Code (DTC) Detecting Criteria.>

AV:DTC P0303 CYLINDER 3 MISFIRE DETECTED

1. OUTLINE OF DIAGNOSIS

NOTE:
For the detection standard, refer to DTC P0301. <Ref. to GD(H4SO)-79, DTC P0301 CYLINDER 1 MISFIRE DETECTED, Diagnostic Trouble Code (DTC) Detecting Criteria.>

AW:DTC P0304 CYLINDER 4 MISFIRE DETECTED

1. OUTLINE OF DIAGNOSIS

NOTE:
For the detection standard, refer to DTC P0301. <Ref. to GD(H4SO)-79, DTC P0301 CYLINDER 1 MISFIRE DETECTED, Diagnostic Trouble Code (DTC) Detecting Criteria.>

AX:DTC P0327 KNOCK SENSOR 1 CIRCUIT LOW (BANK 1 OR SINGLE SENSOR)

1. OUTLINE OF DIAGNOSIS

Detect the open or short circuit of knock sensor.
Judge as NG if out of specification.

2. COMPONENT DESCRIPTION

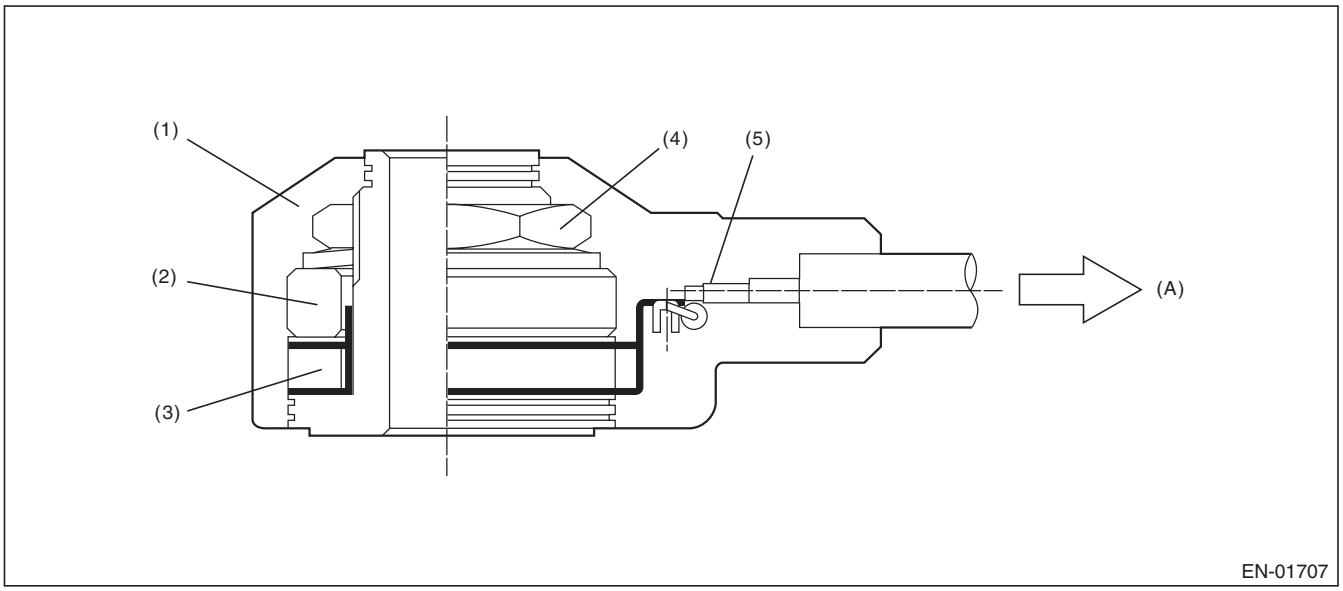

(A) To knock sensor harness

(1) Case
(2) Weight
(3) Piezoelectric element
(4) Nut
(5) Resistance

3. ENABLE CONDITION

Secondary Parameters	Enable Conditions
None	

4. GENERAL DRIVING CYCLE

Always perform the diagnosis continuously.

5. DIAGNOSTIC METHOD

- **Abnormality Judgement**

If the duration of time while the following conditions are met is longer than the time indicated, judge as NG.

Judgement Value

Malfunction Criteria	Threshold Value
Output voltage	< 0.243 V

Time Needed for Diagnosis: 1000 ms
Malfunction Indicator Light Illumination: Illuminates as soon as a malfunction occurs.

- **Normality Judgement**

Judge as OK and clear the NG if the continuous time while the following conditions are established is more than the predetermined time.

Judgement Value

Malfunction Criteria	Threshold Value
Output voltage	≥ 0.243 V

Time Needed for Diagnosis: Less than 1 second

AY:DTC P0328 KNOCK SENSOR 1 CIRCUIT HIGH (BANK 1 OR SINGLE SENSOR)

1. OUTLINE OF DIAGNOSIS

Detect the open or short circuit of knock sensor.
Judge as NG if out of specification.

2. COMPONENT DESCRIPTION

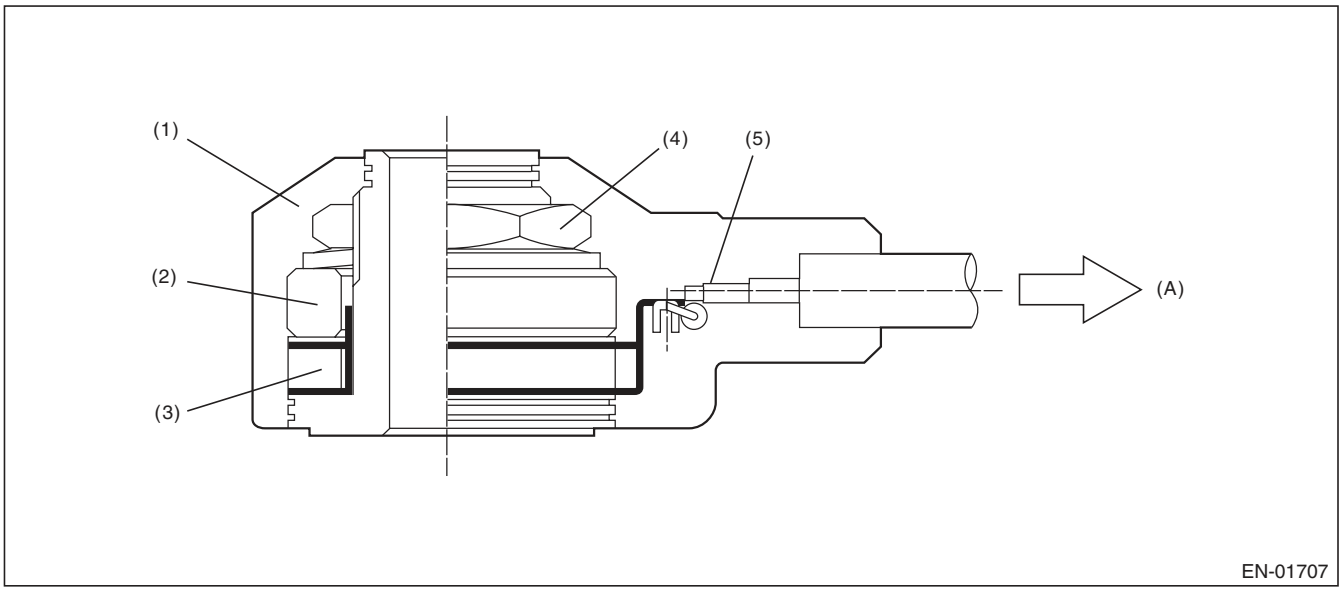

(A) To knock sensor harness

(1) Case
(2) Weight
(3) Piezoelectric element
(4) Nut
(5) Resistance

3. ENABLE CONDITION

Secondary Parameters	Enable Conditions
None	

4. GENERAL DRIVING CYCLE

Always perform the diagnosis continuously.

5. DIAGNOSTIC METHOD

- **Abnormality Judgement**

If the duration of time while the following conditions are met is longer than the time indicated, judge as NG.

Judgement Value

Malfunction Criteria	Threshold Value
Output voltage	≥ 4.709 V

Time Needed for Diagnosis: 1000 ms
Malfunction Indicator Light Illumination: Illuminates as soon as a malfunction occurs.

- **Normality Judgement**

Judge as OK and clear the NG if the continuous time while the following conditions are established is more than the predetermined time.

Judgement Value

Malfunction Criteria	Threshold Value
Output voltage	< 4.709 V

Time Needed for Diagnosis: Less than 1 second

AZ:DTC P0335 CRANKSHAFT POSITION SENSOR “A” CIRCUIT

1. OUTLINE OF DIAGNOSIS

Detect the open or short circuit of the crankshaft position sensor.
Judge as NG when the crank signal is not input even though the starter was rotated.

2. COMPONENT DESCRIPTION

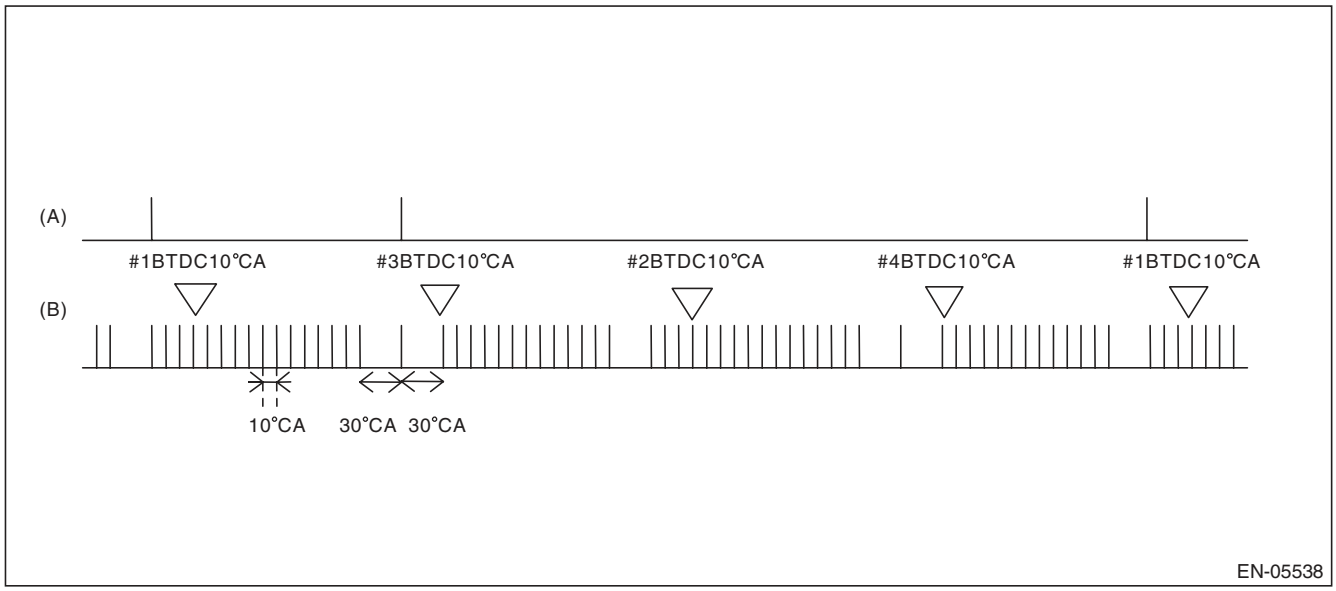

(A) Cam signal (B) Crankshaft signal

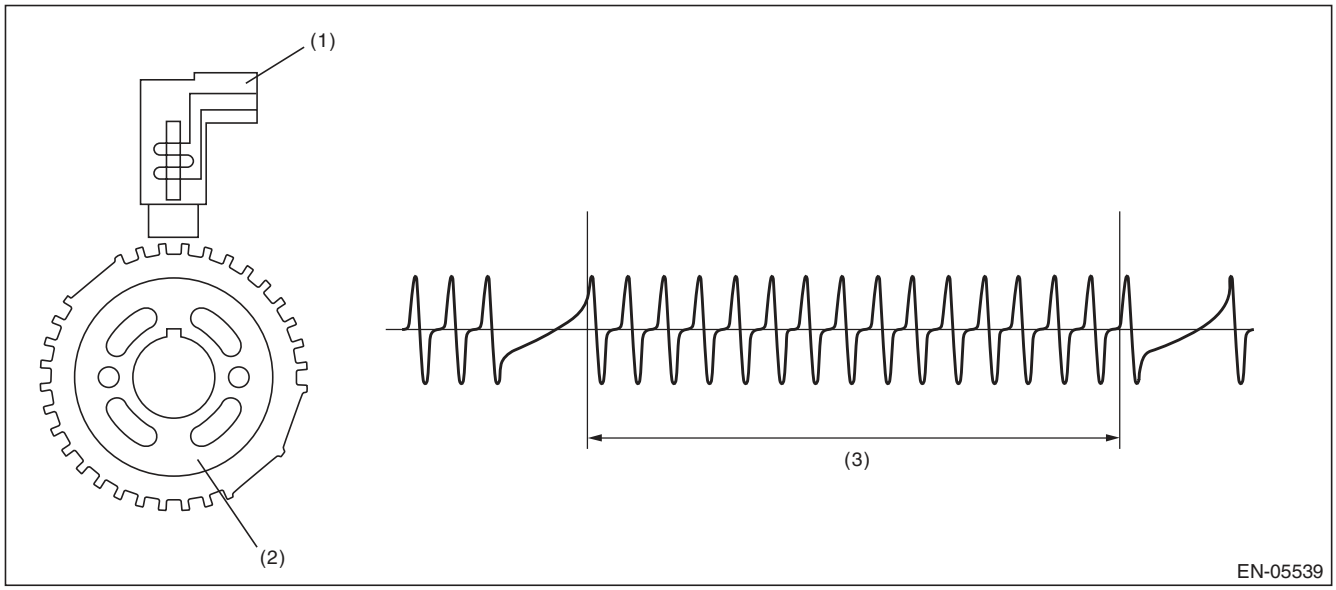

(1) Crankshaft position sensor (2) Crank sprocket (3) Crankshaft half-turn

3. ENABLE CONDITION

Secondary Parameters	Enable Conditions
None	

4. GENERAL DRIVING CYCLE

Always perform the diagnosis continuously.

5. DIAGNOSTIC METHOD

- **Abnormality Judgement**

If the duration of time while the following conditions are met is longer than the time indicated, judge as NG.

Judgement Value

Malfunction Criteria	Threshold Value
Starter switch	ON
Crankshaft position sensor signal	Not detected
Battery voltage	≥ 8 V

Time Needed for Diagnosis: 3000 ms
Malfunction Indicator Light Illumination: Illuminates as soon as a malfunction occurs.

- **Normality Judgement**

Judge as OK and clear the NG if the continuous time while the following conditions are established is more than the predetermined time.

Judgement Value

Malfunction Criteria	Threshold Value
Crankshaft position sensor signal	Input exists
Battery voltage	≥ 8 V

Time Needed for Diagnosis: Less than 1 second

BA:DTC P0336 CRANKSHAFT POSITION SENSOR “A” CIRCUIT RANGE/ PERFORMANCE

1. OUTLINE OF DIAGNOSIS

Detect for faults in crankshaft position sensor output properties.
Judge as NG when there is a problem in the number of crankshaft signals for every revolution.

2. COMPONENT DESCRIPTION

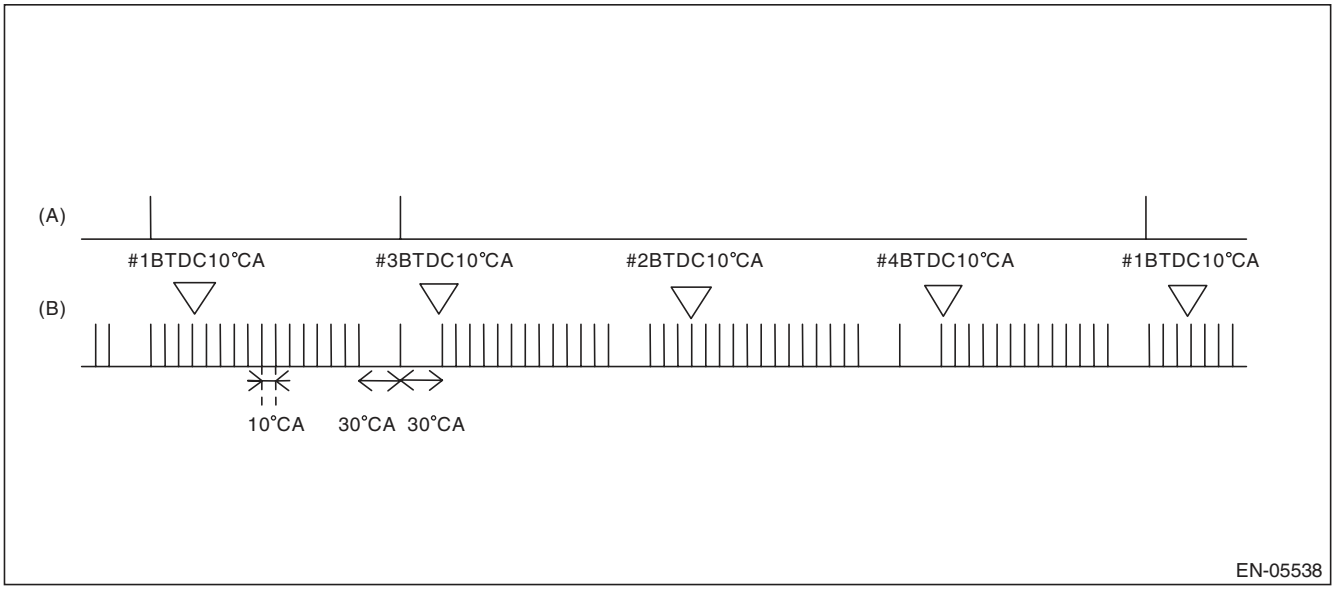

(A) Cam signal (B) Crankshaft signal

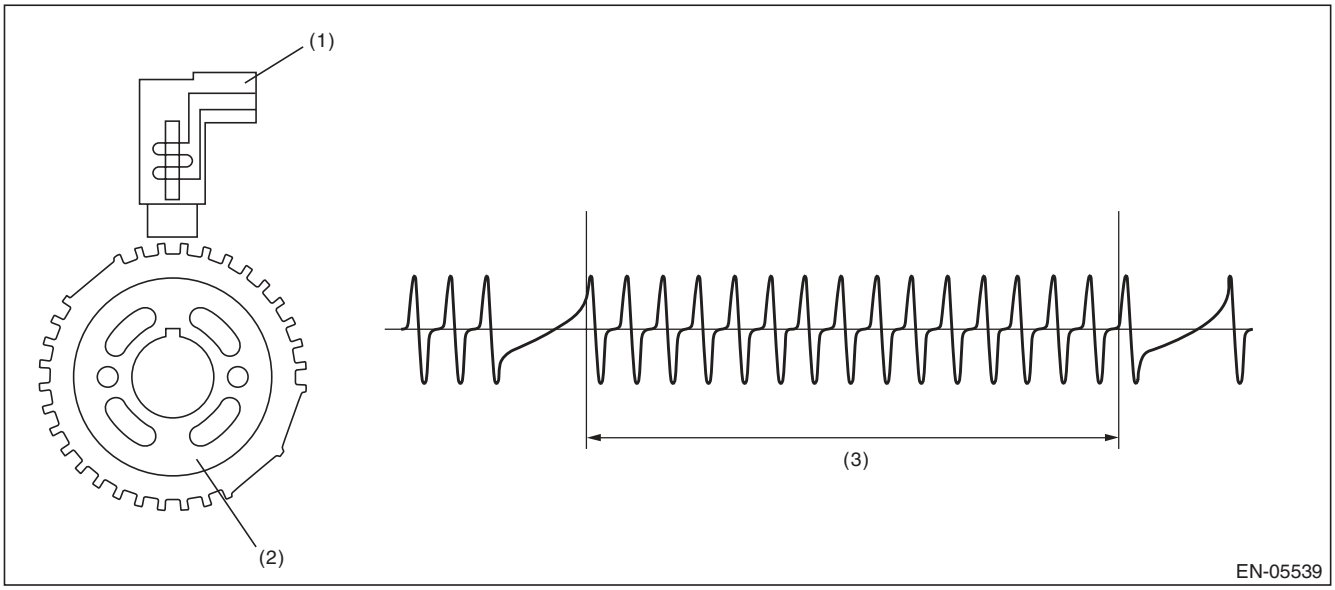

(1) Crankshaft position sensor (2) Crank sprocket (3) Crankshaft half-turn

3. ENABLE CONDITION

Secondary Parameters	Enable Conditions
Battery voltage	≥ 8 V
Engine speed	< 4000 rpm

4. GENERAL DRIVING CYCLE

Perform the diagnosis continuously under 3000 rpm engine speed.

5. DIAGNOSTIC METHOD

- **Abnormality Judgement**

Judge as NG when the following conditions are established.

Judgement Value

Malfunction Criteria	Threshold Value
Cylinder number identification	Completed
Amount of crank sensor signal during 1 rev.	Not = 30

Time Needed for Diagnosis: 10 engine revs.
Malfunction Indicator Light Illumination: Illuminates when malfunction occurs in 2 continuous driving cycles.

- **Normality Judgement**

Judge as OK and clear the NG if the continuous time while the following conditions are established is more than the predetermined time.

Judgement Value

Malfunction Criteria	Threshold Value
Cylinder number identification	Completed
Amount of crank sensor signal during 1 rev.	= 30

Time Needed for Diagnosis: Less than 1 second

BB:DTC P0340 CAMSHAFT POSITION SENSOR "A" CIRCUIT (BANK 1 OR SINGLE SENSOR)

1. OUTLINE OF DIAGNOSIS

Detect the open or short circuit of the camshaft position sensor.
Judge as NG when the number of camshaft signals remains abnormal.

2. COMPONENT DESCRIPTION

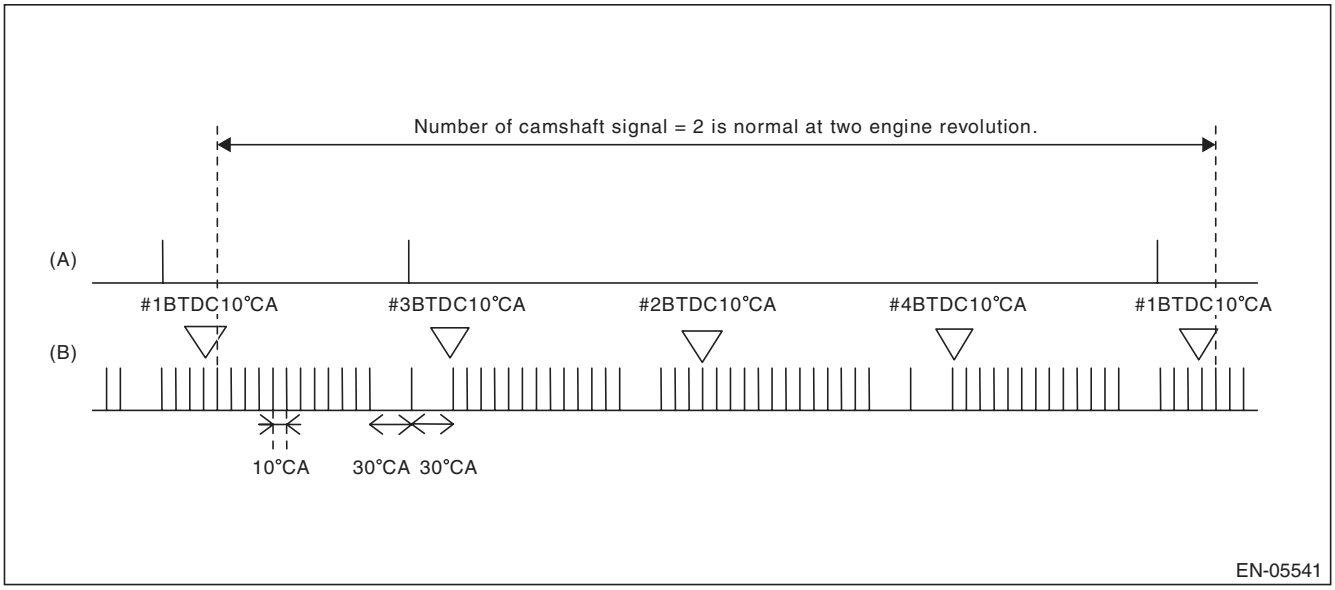

(A) Camshaft signal (B) Crankshaft signal

3. ENABLE CONDITION

Secondary Parameters	Enable Conditions
None	

4. GENERAL DRIVING CYCLE

Always perform the diagnosis continuously.

5. DIAGNOSTIC METHOD

Abnormality Judgement

If the duration of time while the following conditions are met is longer than the time indicated, judge as NG.

Judgement Value

Malfunction Criteria	Threshold Value
Battery voltage	≥ 8 V
Amount of camshaft sensor signal during 2 revs.	Not = 2

Time Needed for Diagnosis: Engine two revolutions × 4 time(s)
Malfunction Indicator Light Illumination: Illuminates as soon as a malfunction occurs.

Normality Judgement

Judge as OK and clear the NG if the continuous time while the following conditions are established is more than the predetermined time.

Judgement Value

Malfunction Criteria	Threshold Value
Voltage	≥ 8 V
Amount of camshaft sensor signal during 2 revs.	= 2

Time Needed for Diagnosis: Two engine revolutions

BC:DTC P0341 CAMSHAFT POSITION SENSOR “A” CIRCUIT RANGE/ PERFORMANCE (BANK 1 OR SINGLE SENSOR)

1. OUTLINE OF DIAGNOSIS

Detect the malfunction of camshaft position sensor output property.
Judge as NG when the camshaft line signal input timing is shifted from the crankshaft signal because of timing belt tooth chip etc.

2. COMPONENT DESCRIPTION

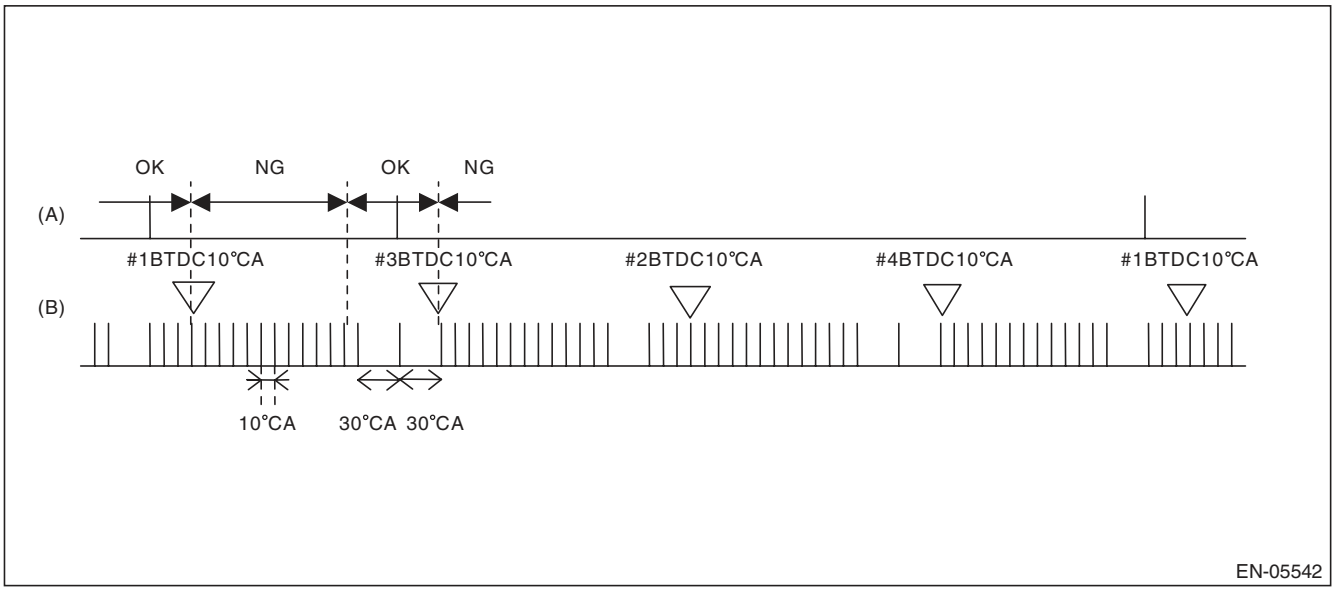

(A) Camshaft signal
(B) Crankshaft signal

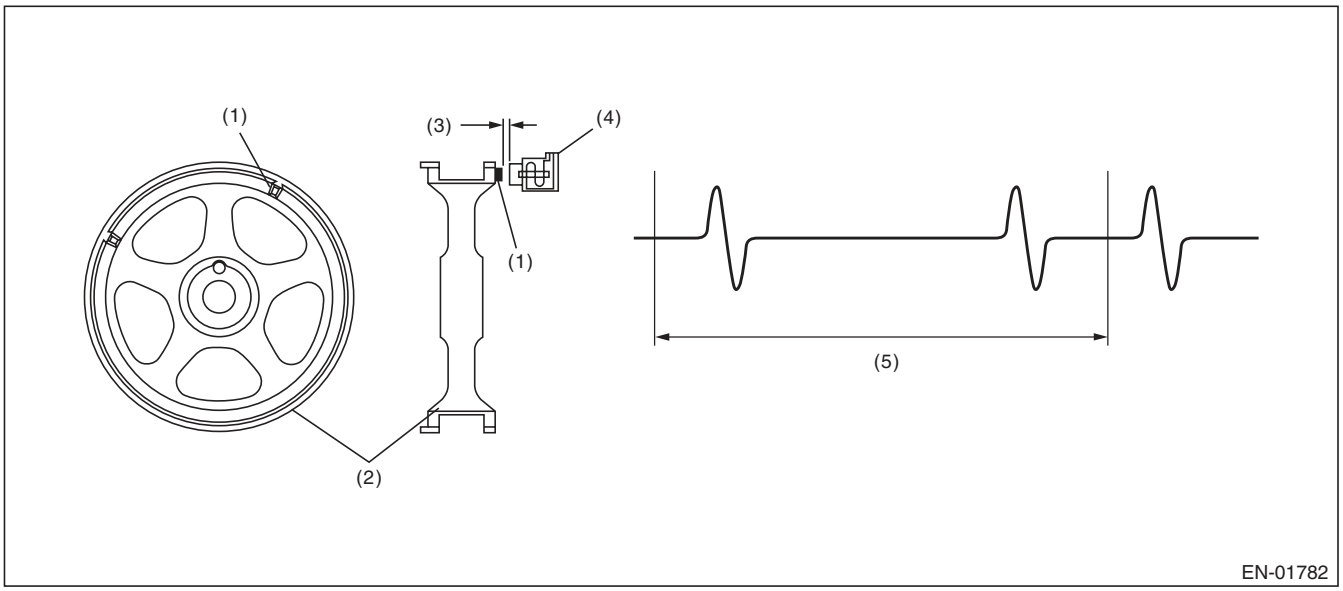

(1) Boss
(2) Cam sprocket
(3) Air gap
(4) Camshaft position sensor
(5) Camshaft one revolution (engine two revolutions)

3. ENABLE CONDITION

Secondary Parameters	Enable Conditions
Cylinder number identification	Completed
Battery voltage	≥ 8 V
Engine speed	550 rpm — 1000 rpm
Engine operation	Idling
Misfire	Not detected
Engine load change during 4 milliseconds	≤ 12799.8 rpm

4. GENERAL DRIVING CYCLE

Always perform the diagnosis continuously at idle speed.

5. DIAGNOSTIC METHOD

- **Abnormality Judgement**

If the duration of time while the following conditions are met is longer than the time indicated, judge as NG.

Judgement Value

Malfunction Criteria	Threshold Value
Position of camshaft position sensor signal	Not between BTDC 10°CA and BTDC 80°CA

Time Needed for Diagnosis: 10 engine revs. engine revs.
Malfunction Indicator Light Illumination: Illuminates when malfunction occurs in 2 continuous driving cycles.

- **Normality Judgement**

Judge as OK and clear the NG if the continuous time while the following conditions are established is more than the predetermined time.

Judgement Value

Malfunction Criteria	Threshold Value
Position of camshaft position sensor signal	Between BTDC 10°CA and BTDC 80°CA

Time Needed for Diagnosis: Two engine revolutions

BD:DTC P0400 EXHAUST GAS RECIRCULATION FLOW

1. OUTLINE OF DIAGNOSIS

Detect EGR system malfunction.
Intake manifold pressure (negative pressure) is constant because the throttle valve is fully closed during deceleration fuel cut. At this time, when the EGR valve is opened/closed, the intake manifold pressure will change. EGR System OK/NG is judged by the range of this change.

2. COMPONENT DESCRIPTION

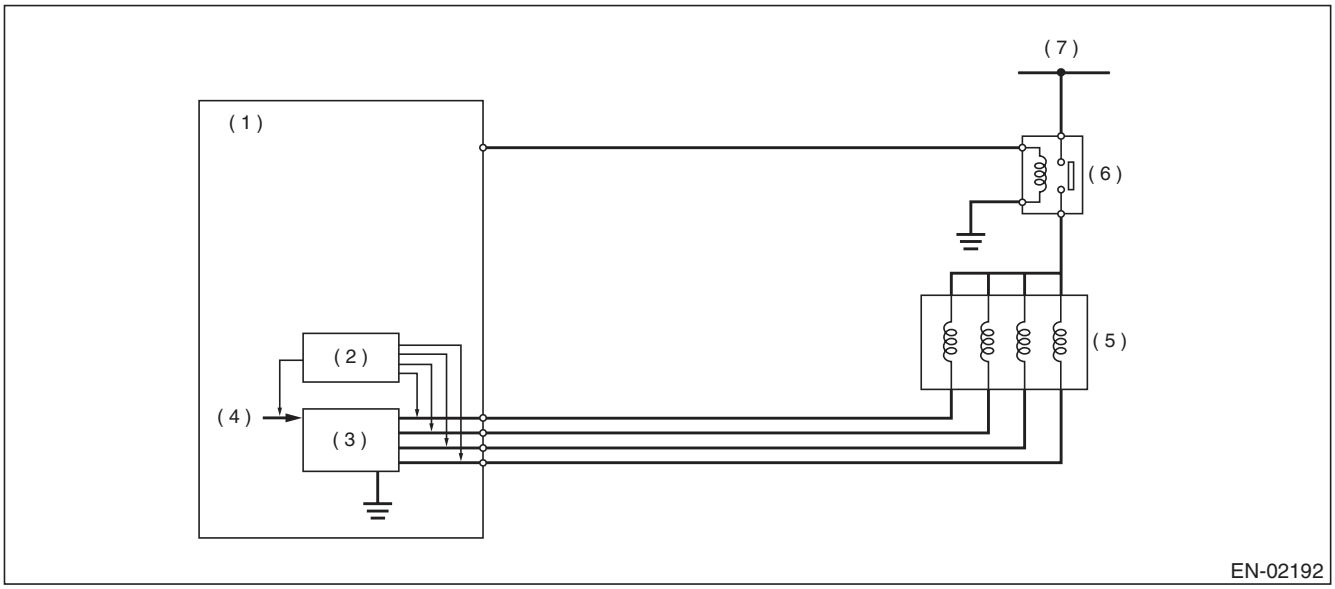

(1) ECM
(2) Detecting circuit
(3) Switching circuit
(4) CPU
(5) EGR valve
(6) Main relay
(7) Battery power supply

3. ENABLE CONDITION

Secondary Parameters	Enable Conditions
Elapsed time after starting the engine	≥ 40 s
Engine coolant temperature	≥ 75 °C(167 °F)
Engine speed	1200 rpm — 2950 rpm
Intake manifold pressure (absolute pressure)	< 44 kPa (330 mmHg, 13 inHg)
Ambient air temperature	≥ 5 °C(41 °F)
Throttle position	< 0.25 °
Battery voltage	≥ 10.9 V
Barometric pressure	≥ 75 kPa (563 mmHg, 22.2 inHg)
Vehicle speed	≥58 km/h (36 MPH)
Fuel shut-off function	In operation
Neutral switch	OFF
After neutral switch ON/OFF change	≥ Value from Map
No load change (A/C, power steering, lighting, rear defogger, heater fan and radiator fan)	≥ 5000 ms

Map

Engine coolant temperature °C (°F)	–40 (–40)	–30 (–22)	–20 (–4)	–10 (14)	0 (32)	10 (50)	20 (68)	30 (86)
After neutral switch change msec	0	0	0	0	0	0	0	0

Engine coolant temperature °C (°F)	40 (104)	50 (122)	60 (140)	70 (158)	80 (176)	90 (194)	100 (212)	110 (230)
After neutral switch change msec	0	0	0	0	0	0	0	0

4. GENERAL DRIVING CYCLE

During deceleration fuel cut from 53 km/h (approx. 33 MPH) or more, perform diagnosis once.
Be careful of vehicle speed and engine speed. (Diagnosis will not be completed if the vehicle speed and engine speed conditions become out of specification due to deceleration.)

5. DIAGNOSTIC METHOD

Measure the pressure values when the enable conditions are established, and perform diagnosis by calculating those results.
1. Label the intake manifold pressure value as PMOF1, which is observed when enable conditions are established, and set the EGR target step to 50 steps (nearly full open).
2. Label the intake manifold pressure value as PMON, which is observed after one second has passed since EGR target step was set to 50 steps (when the enable conditions were established), and set the EGR target step to 0.
3. Label the intake manifold pressure as PMOF2, which is observed after one second has passed since EGR target step was set to 0 (after two seconds have passed since the enable conditions were established).

- **Abnormality Judgement**

Judge as NG when the following conditions are established.

Judgement Value

Malfunction Criteria	Threshold Value
PMON – (PMOF1 + PMOF2)/2	< 2.5 kPa (18.63 mmHg, 0.7 inHg)

Time Needed for Diagnosis: 1 time
Malfunction Indicator Light Illumination: Illuminates when malfunction occurs in 2 continuous driving cycles.

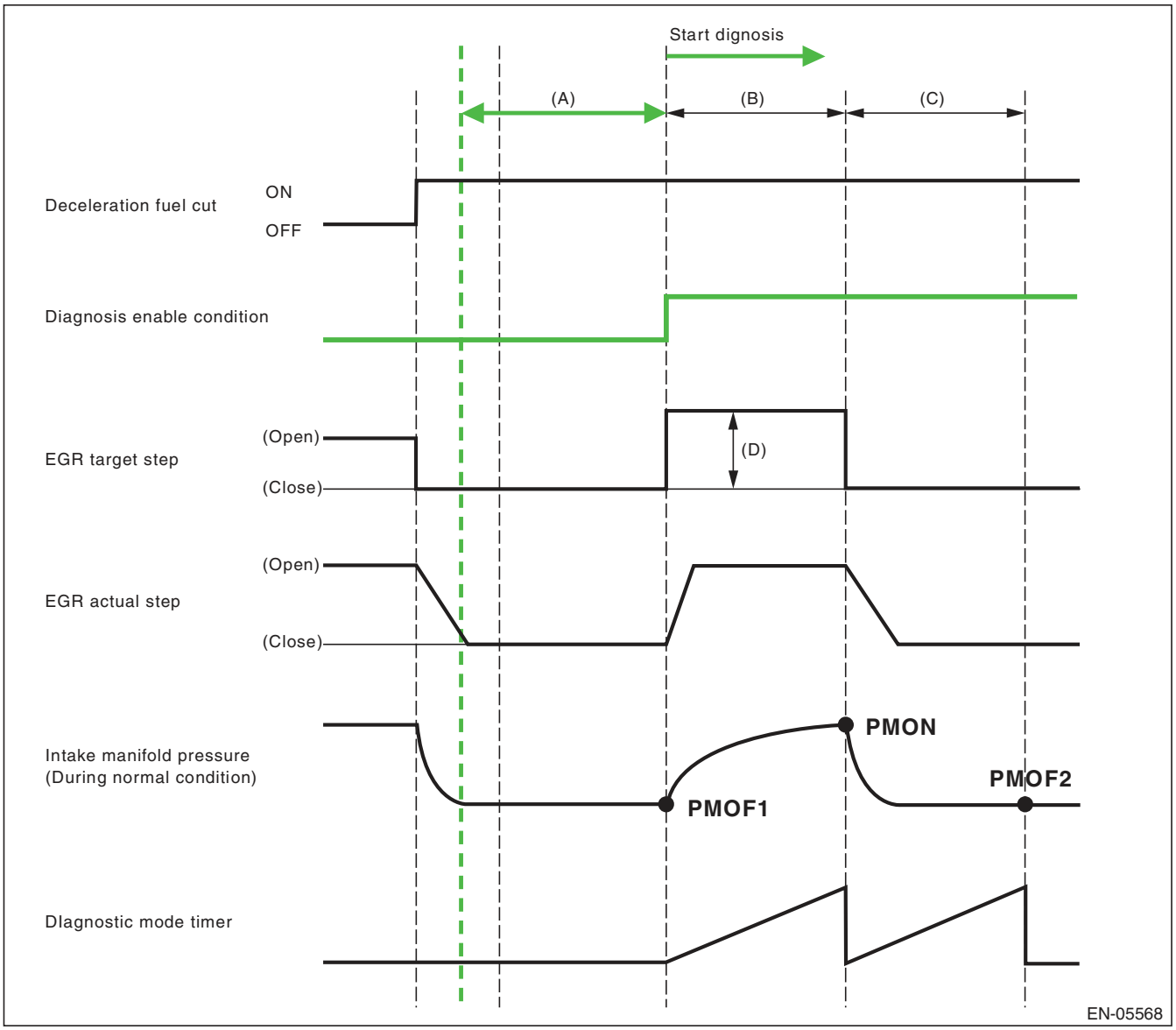

(A) 3000 ms
(B) 1000 ms
(C) 1000 ms
(D) 45 step(s)

- **Normality Judgement**

Judge as OK and clear the NG if the following conditions are established.

Judgement Value

Malfunction Criteria	Threshold Value
PMON – (PMOF1 + PMOF2)/2	≥ 2.5 kPa (18.63 mmHg, 0.7 inHg)

Time Needed for Diagnosis: 1 time

BE:DTC P0420 CATALYST SYSTEM EFFICIENCY BELOW THRESHOLD (BANK 1)

1. OUTLINE OF DIAGNOSIS

Detect the deterioration of the catalyst function.
Though the front oxygen sensor output would change slowly with a new catalyst, the sensor output with a deteriorated catalyst becomes high and the inversion time is shortened.
For this reason, the catalyst diagnosis is carried out by monitoring the front oxygen sensor output and comparing it with the front oxygen (A/F) sensor output.

2. COMPONENT DESCRIPTION

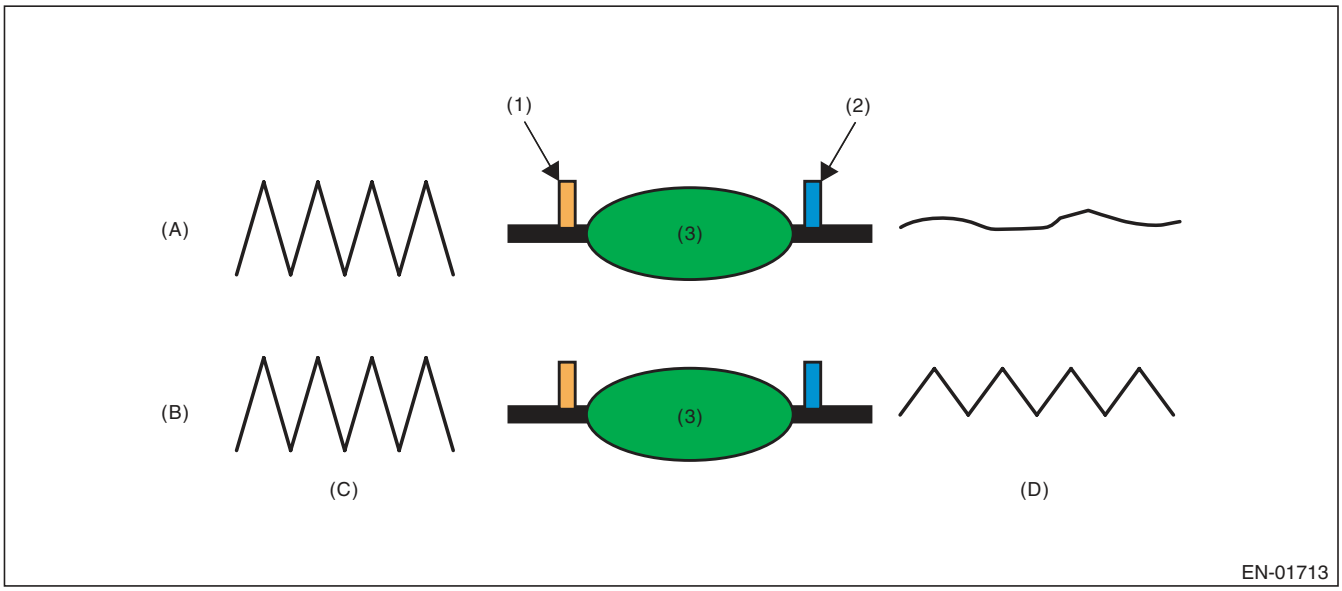

(A)	Normal	(C)	Output waveform from the front oxygen (A/F) sensor	(D)	Output waveform from the rear oxygen Sensor
(B)	Deterioration				
(1)	Front oxygen (A/F) sensor	(2)	Front oxygen sensor	(3)	Catalytic converter

3. ENABLE CONDITION

Secondary Parameters	Enable Conditions
Battery voltage	≥ 10.9 V
Atmospheric pressure	≥ 75 kPa (563 mmHg, 22.2 inHg)
Engine coolant temperature	≥ 70 °C (158 °F)
Estimated catalyst temperature	≥ 600 °C (1112 °F) (AT model) ≥ 585 °C (1085 °F) (MT model)
Misfire detection every 200 rotations	< 5 time(s)
Learning value of evaporation gas density	< 0.2
Sub feedback	In operation
Evaporative system diagnosis	Not in operation
Time of difference (< 0.10) between actual lambda and target lambda	≥ 1000 ms
Vehicle speed	> 70 km/h (43.5 MPH)
Amount of intake air	≥ 10 g/s (0.35 oz/s) and < 40 g/s (1.41 oz/s)
Engine load change every 0.5 engine speed.	< 0.02 g/rev (0 oz/rev)
Rear oxygen output change from 660 mV or less to 660 mV or more	Experienced after fuel cut
Elapsed time after starting the engine	≥ 205 s
Purge execution calculated time	≥ 0 s

4. GENERAL DRIVING CYCLE

Perform the diagnosis only once at a constant 70 km/h (43.5 MPH) or higher.

5. DIAGNOSTIC METHOD

After establishing the execution conditions, calculate the front oxygen (A/F) sensor lambda deviation cumulative value (Σ |(sglmd$_n$ – sglmd$_{n-1}$)|) and rear oxygen sensor output voltage deviation cumulative value (Σ |(ro2sad$_n$ – ro2sad$_{n-1}$)|) per 32 milliseconds × 4 , and when the front oxygen (A/F) sensor lambda deviation cumulative value (Σ |(sglmd$_n$ – sglmd$_{n-1}$)|) becomes the predetermined value or more, calculate the diagnostic value.

- **Abnormality Judgement**

If the duration of time while the following conditions are met is within the time indicated, judge as NG.

Judgement Value

Malfunction Criteria	Threshold Value
Σ |(ro2sad$_n$ – ro2sad$_{n-1}$)| / Σ |(sglmd$_n$ – sglmd$_{n-1}$)|	> 10 (U5 model) > 15.5 (Except for U5 model)

Time Needed for Diagnosis: 30 — 55 seconds
Malfunction Indicator Light Illumination: Illuminates when malfunction occurs in 2 continuous driving cycles.

- **Normality Judgement**

Judge as OK and clear the NG if the continuous time while the following conditions are established is within the predetermined time.

Judgement Value

Malfunction Criteria	Threshold Value
Σ |(ro2sad$_n$ – ro2sad$_{n-1}$)| / Σ |(sglmd$_n$ – sglmd$_{n-1}$)|	≤ 10 (U5 model) ≤ 15.5 (Except for U5 model)

Time Needed for Diagnosis: 30 — 55 seconds

BF:DTC P0442 EVAPORATIVE EMISSION CONTROL SYSTEM LEAK DETECTED (SMALL LEAK)

1. OUTLINE OF DIAGNOSIS

Check if there is a leakage in fuel system or not, and perform the function diagnosis of valve.

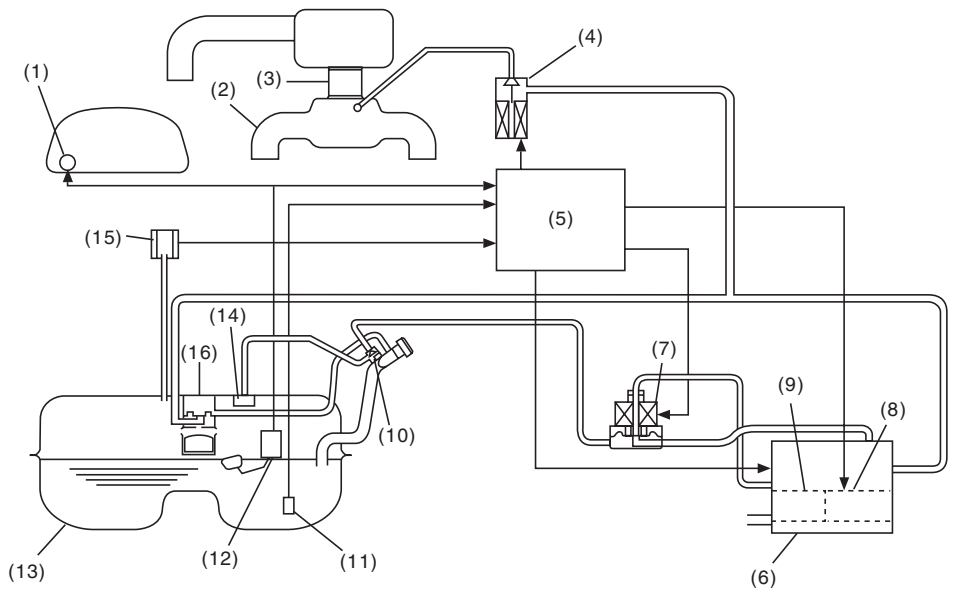

(1)	Fuel gauge	(7)	Pressure control valve	(12)	Fuel level sensor
(2)	Intake manifold	(8)	Drain valve	(13)	Fuel tank
(3)	Throttle body	(9)	Drain filter	(14)	Fuel cut valve
(4)	Purge control solenoid valve	(10)	Shut-off valve	(15)	Fuel tank pressure sensor
(5)	Engine control module (ECM)	(11)	Fuel temperature sensor	(16)	Vent valve
(6)	Canister				

In this system diagnosis, check for leakage and valve function is conducted by changing the fuel tank pressure and monitoring the pressure change using the fuel tank pressure sensor. When in 0.04 inch diagnosis, perform in the order of mode Z → mode A → mode B → mode C and mode D; When in 0.02 inch diagnosis, perform in the order of mode A → mode B → mode C → mode D and mode E.

0.04-inch Diagnosis

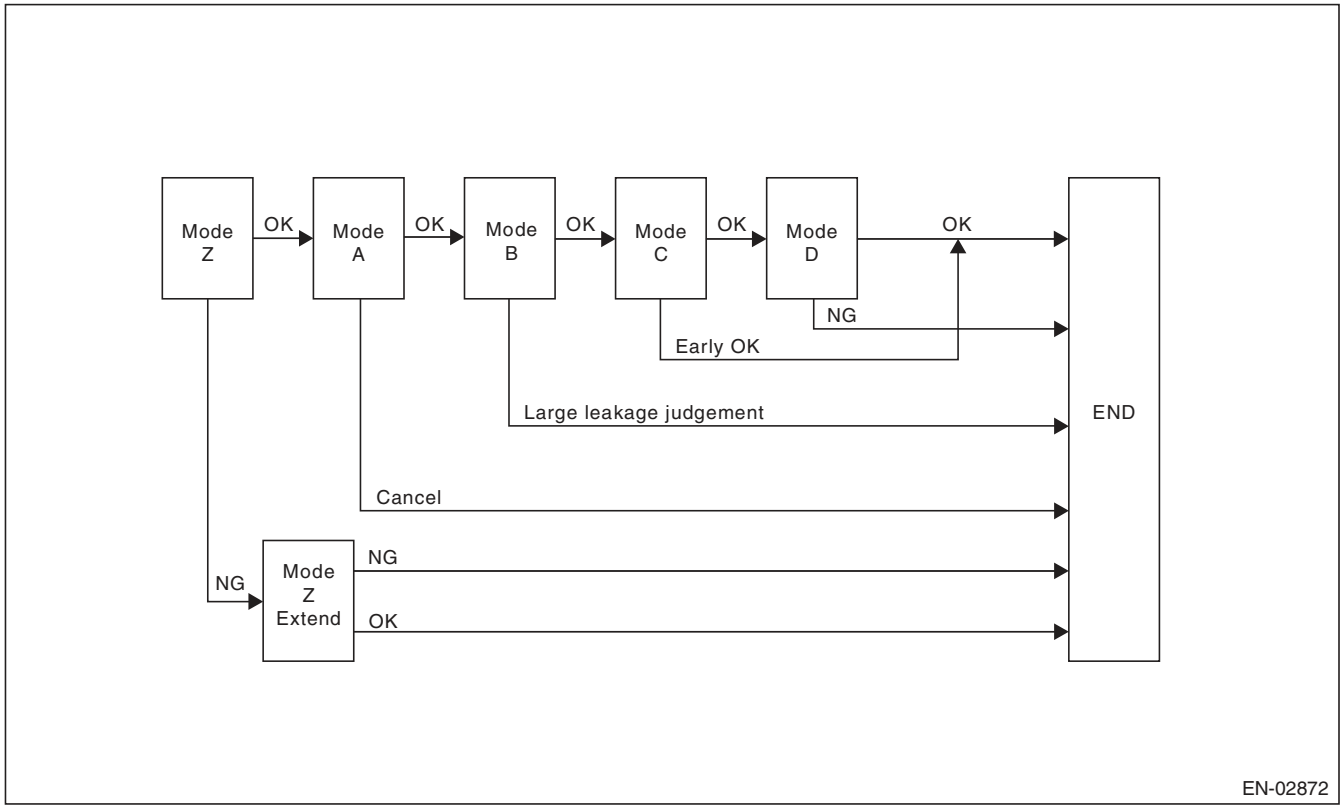

Mode	Mode Description	Diagnosis Period
Mode Z (Purge control solenoid valve opening failure diagnosis)	Perform purge control solenoid valve opening failure diagnosis from the size of tank pressure variation from diagnosis start.	0 ms + 3000 ms — 0 ms + 3000 ms + 13000 ms
Mode A (Estimated evaporation amount)	Calculate the tank pressure change amount (P1).	10000 ms
Mode B (Sealed negative pressure, large leakage judgment)	Decrease the pressure in the tank to the target value by introducing the intake manifold pressure to the fuel tank. If the tank pressure cannot be reduced, it is diagnosed as large leak.	0 — 10000 ms + 25000 ms
Mode C (Pressure increase check, advanced OK judgment)	Wait until the tank pressure returns to the target (start level of P2 calculation). If the tank pressure does not become the value, make advanced OK judgment.	0 — 18500 ms
Mode D (Negative pressure variation measurement, evaporation leakage diagnosis)	Calculate the tank pressure variation (P2), and obtain the diagnostic value using P1 found in Mode A. Perform the evaporation diagnosis using the diagnostic value.	0 ms + 10000 ms

Mode Table for Evaporative Emission Control System Diagnosis

Mode	Behavior of tank internal pressure under normal conditions	Diagnostic item	DTC
Mode Z	Roughly the same as barometric pressure (Same as 0 kPa (0 mmHg, 0 inHg))	Purge control solenoid valve is judged to be open.	P0457
Mode A	Pressure is in proportion to amount of evaporative emission.	—	None
Mode B	Negative pressure is formed due to intake manifold negative pressure	Large leak	P0457
Mode C	Reaches target pressure	—	None
Mode D	Pressure change is small.	EVAP system large leak determination. [1.0 mm (0.04 in)]	P0442

0.02-inch Diagnosis

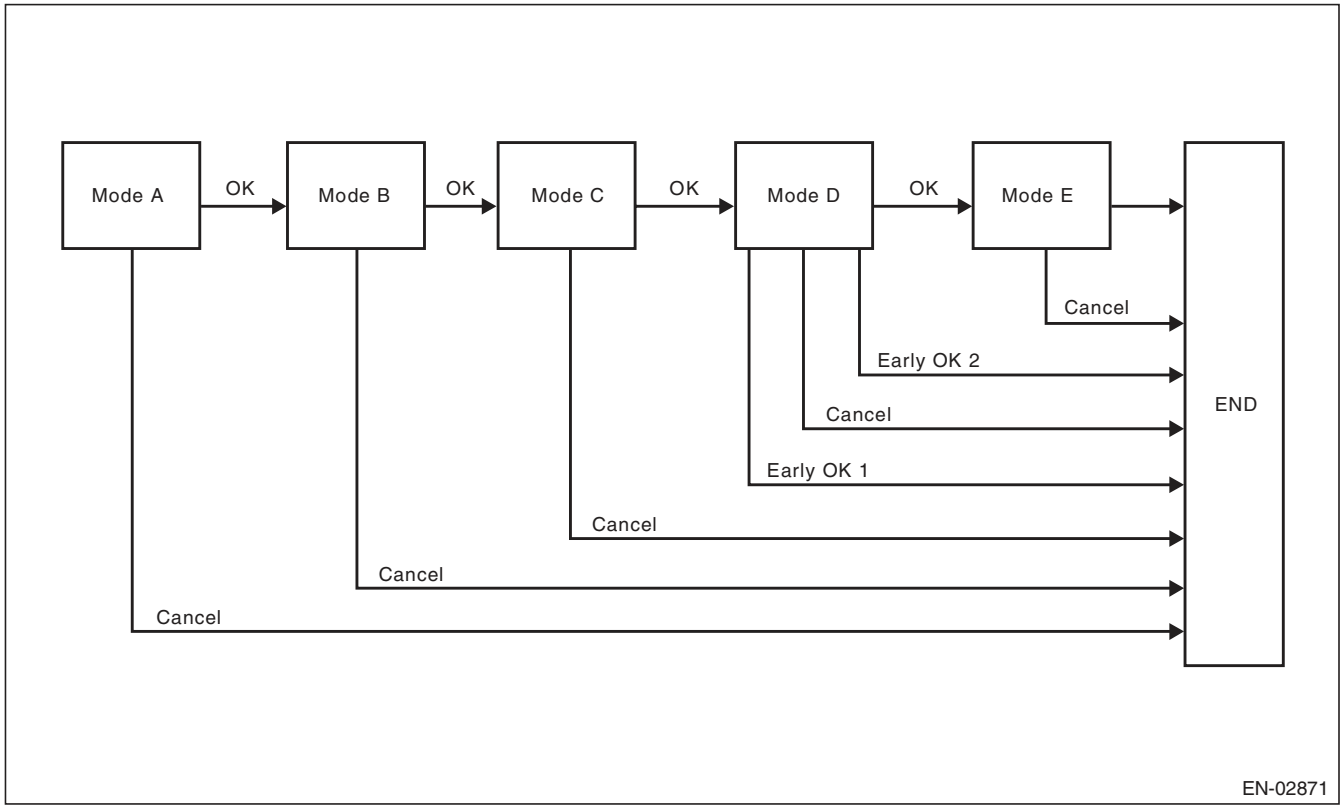

Mode	Mode Description	Diagnosis Period
Mode A (0 point compensation)	When the pressure in the tank is not near 0 mmHg, wait until it returns to 0 point (near 0 mmHg).	0 — Value of Map 1
Mode B (Negative pressure introduced)	Decrease the pressure in the tank to the target value by introducing the intake manifold pressure to the fuel tank.	0 — Value of Map 2
Mode C (Negative pressure maintained)	Wait until the tank pressure returns to the target (start level of P2 calculation).	0 — 20000 ms + 0 + Value of Map 2
Mode D (Negative pressure change calculated)	Calculate the time it takes for the tank pressure to change to the Mode E shifting pressure. If the tank pressure does not change to the Mode E shifting pressure, make advanced OK judgment.	0 — 0 ms + 200000 ms
Mode E (Evaporation generated amount calculation)	Calculate the amount of evaporation (P1).	0 — 0 ms + 200000 ms + Value of Map 3

Map1

Fuel level (ℓ , US gal, Imp gal)	0	10, 2.64, 2.2	20, 5.28, 4.4	30, 7.93, 6.6	40, 10.57, 8.8	50, 13.21, 11	60, 15.85, 13.2
Time Needed for Diagnosis (ms)	12000	12000	11000	10000	7500	5000	5000

Map2

Fuel level (ℓ , US gal, Imp gal)	0	10, 2.64, 2.2	20, 5.28, 4.4	30, 7.93, 6.6	40, 10.57, 8.8	50, 13.21, 11	60, 15.85, 13.2
Time Needed for Diagnosis (ms)	21000	21000	21500	22000	22000	22000	22000

Map 3

Fuel level (ℓ , US gal, Imp gal)	0	10, 2.64, 2.2	20, 5.28, 4.4	30, 7.93, 6.6	40, 10.57, 8.8	50, 13.21, 11	60, 15.85, 13.2
Time Needed for Diagnosis (ms)	60000	60000	60000	60000	60000	60000	60000

2. COMPONENT DESCRIPTION

Pressure control solenoid valve

PCV controls the fuel tank pressure to be equal to the atmospheric air pressure. Normally, the solenoid is set to OFF. The valve opens and closes mechanically in accordance with the pressure difference between tank and atmospheric air, or tank and canister.
The valve is forcibly opened by setting the solenoid to ON at the time of diagnosis.

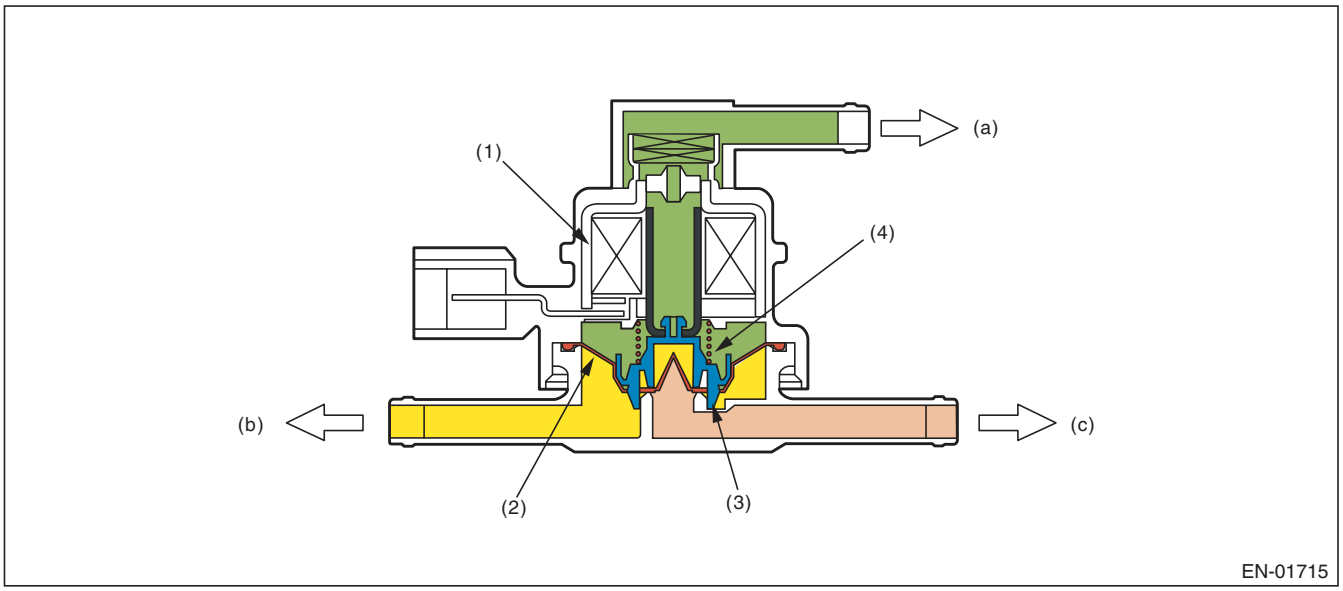

(a)	Barometric pressure	(b)	Fuel tank	(c)	Canister
(1)	Solenoid	(3)	Valve	(4)	Spring
(2)	Diaphragm				

Valve Operation and Air Flow

In the figure below, divided by the diaphragm, the part above X is charged with atmospheric air pressure, and the part below X is charged with tank pressure. Also, the part above Y is charged with tank pressure, and the part below Y is charged with canister pressure.
If the atmospheric air pressure port is A, tank pressure port is B, and canister pressure port is C, the air flows according to pressure difference from each port as shown in the table below.

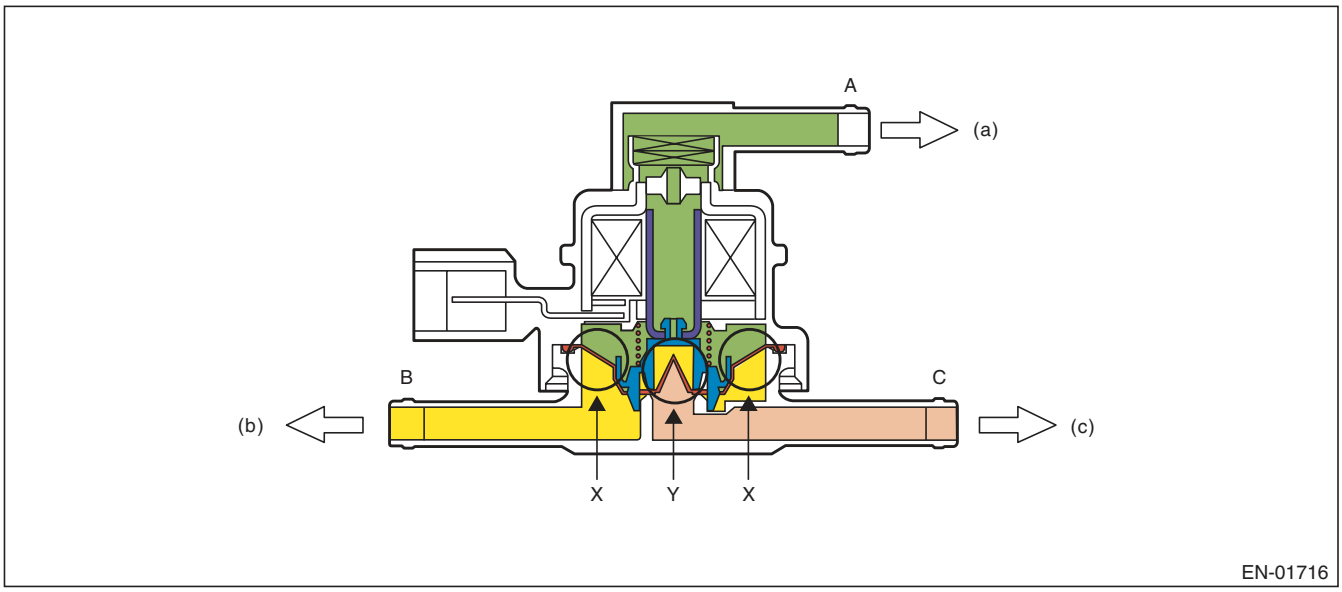

(a) Barometric pressure (b) Fuel tank (c) Canister

Condition of pressure	Flow
A < B (solenoid OFF)	B → C
B < C (solenoid OFF)	C → B
Solenoid ON	B ← → C

When A < B (solenoid OFF)

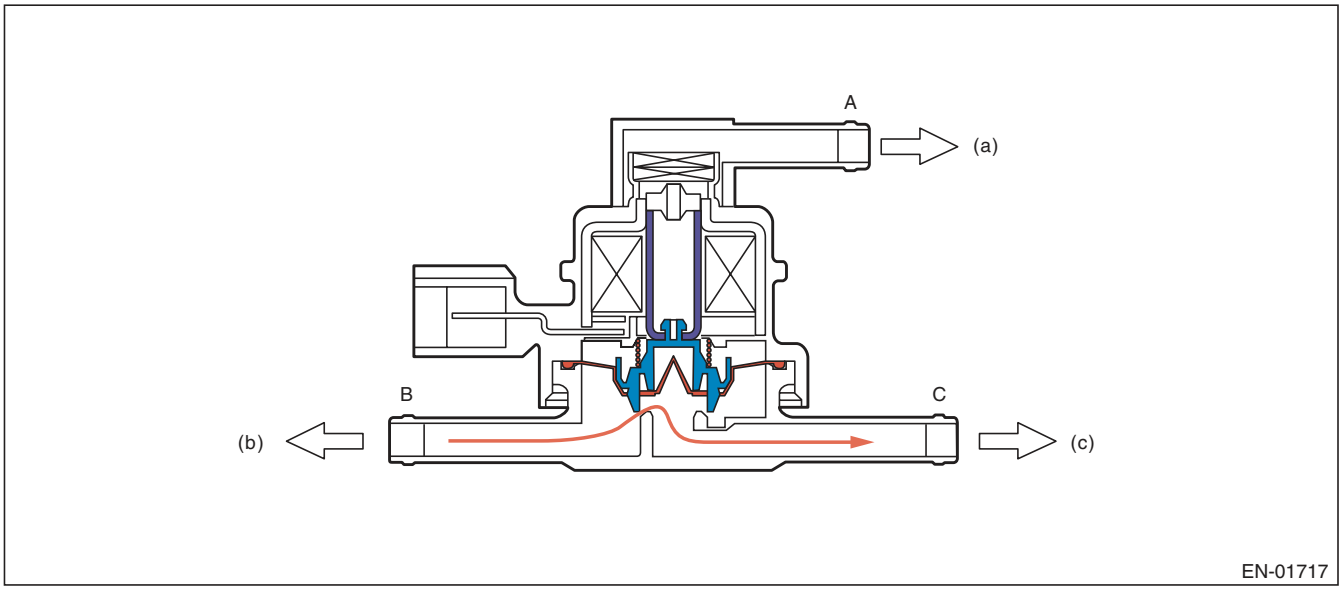

(a) Barometric pressure (b) Fuel tank (c) Canister

When B < C (solenoid OFF)

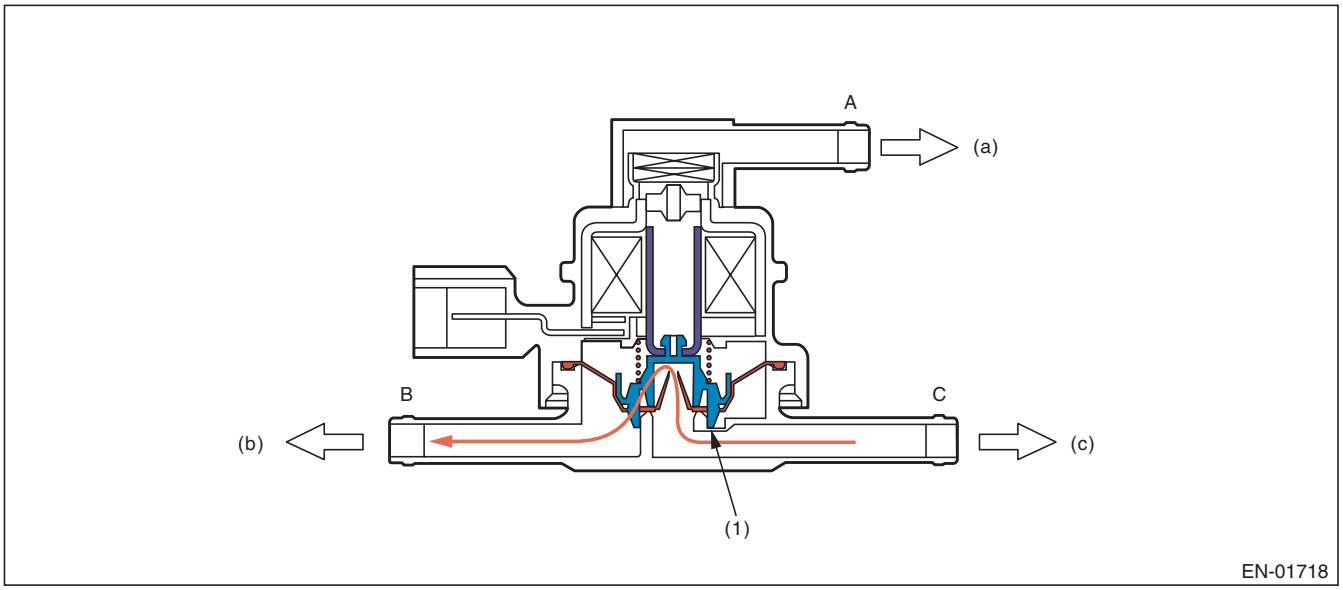

(a) Barometric pressure (b) Fuel tank (c) Canister

(1) Valve

When Solenoid is ON

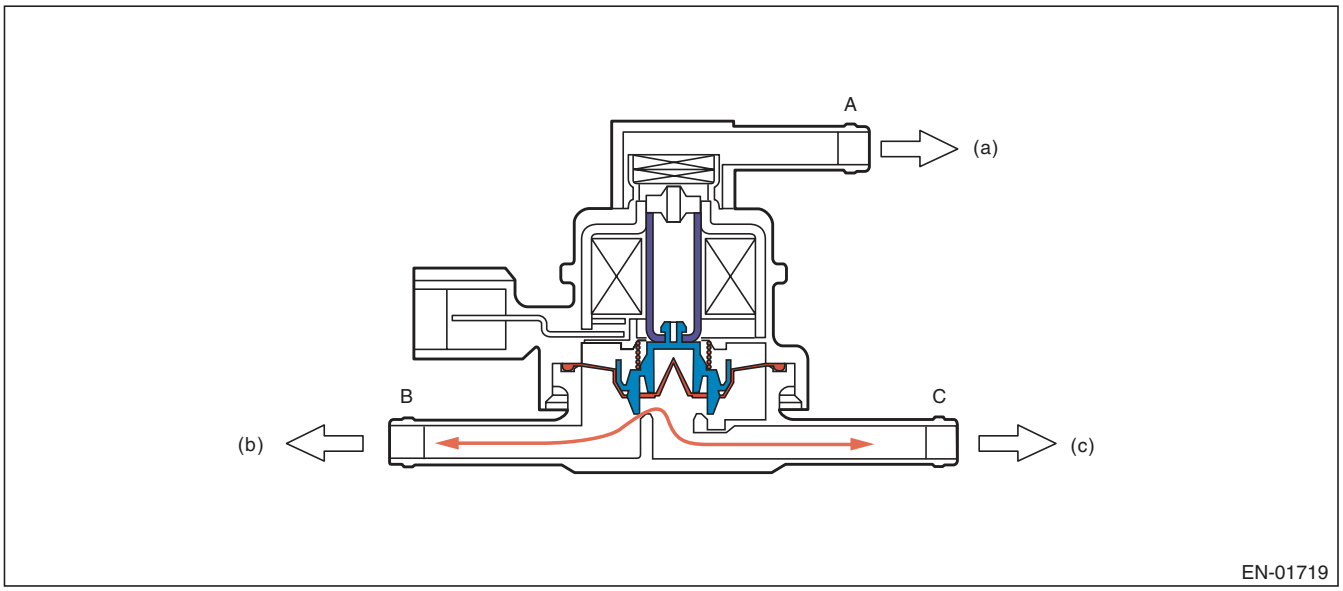

(a) Barometric pressure (b) Fuel tank (c) Canister

Drain valve

Drain valve controls the ambient air to be introduced to the canister.

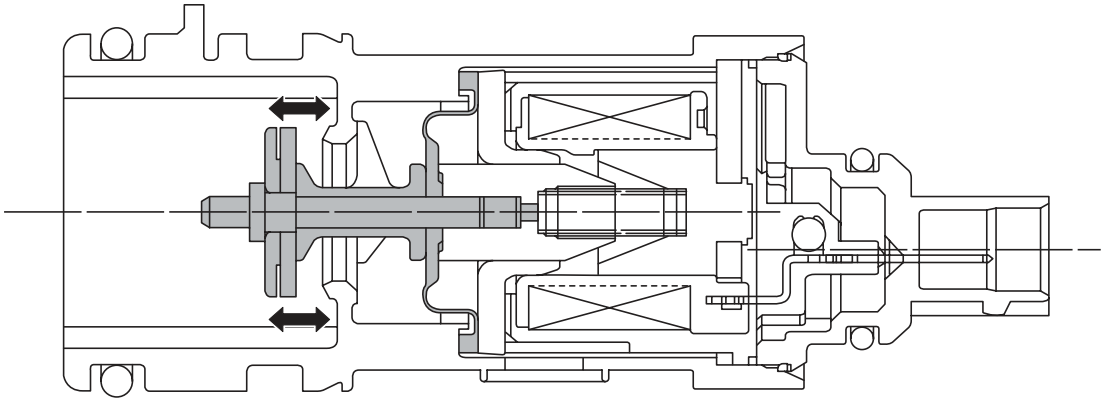

EN-02293

3. ENABLE CONDITION

0.04-inch Diagnosis

Secondary Parameters	Enable Conditions
Battery voltage	≥ 10.9 V
Barometric pressure	≥ 75 kPa (563 mmHg, 22.2 inHg)
Total time of canister purge operation	≥ 120000 ms
Elapsed time after starting the engine	≥ 856 s
Learning value of evaporation gas density	< 0.08
Engine speed	1050 rpm — 6000 rpm
Fuel tank pressure	≥ –4 kPa (–30 mmHg, –1.2 inHg)
Intake manifold relative vacuum (relative pressure)	≥ – 26.7 kPa (– 200 mmHg, – 7.9 inHg)
Vehicle speed	≥ 32 km/h (19.9 MPH)
Fuel level	9.6 ℓ (2.54 US gal, 2.11 Imp gal) — 54.4 ℓ (14.37 US gal, 11.97 Imp gal)
Closed air/fuel ratio control	In operation
Fuel temperature	–10 °C (14 °F) — 45 °C (113 °F)
Intake air temperature	≥ –10 °C (14 °F)
Pressure change every one second	< 1.7 mmHg (Mode A)
	< 1.7 mmHg (Mode D)
Minimum pressure change value every one second – Maximum pressure change value every one second	< 1.7 mmHg (Mode A)
	< 1.7 mmHg (Mode D)
Change of fuel level per 128 milliseconds	< 2 ℓ (0.53 US gal, 0.44 Imp gal)
Air fuel ratio	0.76 — 1.25

0.02-inch Diagnosis

Secondary Parameters	Enable Conditions
At starting a diagnosis	
Evap. diagnosis	Incomplete
Battery voltage	≥ 10.9 V
Barometric pressure	≥ 75 kPa (563 mmHg, 22.2 inHg)
Time since last incomplete 0.02-inch leakage diagnosis	
When cancelling in mode A	> 120000 ms
When cancelling in other than mode A	> 600000 ms
Total time of canister purge operation	≥ 120000 ms
Elapsed time after starting the engine	≥ 120 s
Fuel temperature	–10 °C (14 °F) — 55 °C (131 °F)
Fuel level	9.6 ℓ (2.54 US gal, 2.11 Imp gal) — 54.4 ℓ (14.37 US gal, 11.97 Imp gal)
Intake manifold relative vacuum (relative pressure)	≥ – 8 kPa (– 60 mmHg, – 2.4 inHg)
Fuel tank pressure	–0.7 kPa (–5 mmHg, –0.2 inHg) — 1.4 kPa (10.7 mmHg, 0.4 inHg)
Vehicle speed	50 km/h (31.1 MPH) — 510 km/h (316.9 MPH) continues for 125000 ms
Closed air/fuel ratio control	In operation
Engine speed	1050 rpm — 6000 rpm
During diagnosis	
Change of fuel level	≤ Value of Map 4
Pressure change every one second	< 0.1 kPa (0.44 mmHg, 0 inHg)
Minimum pressure change value every one second – Maximum pressure change value every one second	< 0.1 kPa (0.51 mmHg, 0 inHg) (Mode D)
| Pressure change in tank every second |	≤ 0.1 kPa (0.75 mmHg, 0 inHg)
Barometric pressure change	–0.5 kPa (–3.6 mmHg, –0.1 inHg) — 0.3 kPa (2.4 mmHg, 0.1 inHg) (Mode D) –0.3 kPa (–2.4 mmHg, –0.1 inHg) — 0.3 kPa (2.4 mmHg, 0.1 inHg) (Mode E)

Map4

Fuel level (ℓ , US gal, Imp gal)	0	10, 2.64, 2.2	20, 5.28, 4.4	30, 7.93, 6.6	40, 10.57, 8.8	50, 13.21, 11	60, 15.85, 13.2
Change (ℓ , US gal, Imp gal)	5, 1.32, 1.1	5, 1.32, 1.1	5, 1.32, 1.1	5, 1.32, 1.1	5, 1.32, 1.1	5, 1.32, 1.1	5, 1.32, 1.1

4. GENERAL DRIVING CYCLE

0.04-inch Diagnosis

- Perform the diagnosis only once in 856 seconds or more after starting the engine, at a constant speed of 32 km/h (20 MPH) or more.
- Pay attention to the fuel temperature and fuel level.

0.02-inch Diagnosis

- Perform the diagnosis 125 seconds or more at a constant engine speed of 50 km/h (31 MPH) or higher to judge as NG or OK.
- If judgement cannot be made, repeat the diagnosis.
- Pay attention to the fuel level.

5. DIAGNOSTIC METHOD

Purge control solenoid valve stuck open fault diagnosis

DTC
P0457 Evaporative Emission Control System Leak Detected (Fuel Cap Loose/Off)

Purpose of Mode Z

When performing the leakage diagnosis of EVAP system, the purge control solenoid valve must operate normally. Therefore, mode Z is used to diagnose the purge control solenoid valve stuck open condition. Note that if a purge control solenoid valve stuck open fault is detected, the EVAP system leakage diagnosis is cancelled.

Diagnostic method

Purge control solenoid valve functional diagnosis is performed by monitoring the tank pressure in mode Z.

- **Abnormality Judgement**

If OK judgment cannot be made, extend Mode Z, and Judge as NG when the following conditions are established after predetermined amount of time.

Judgement Value

Malfunction Criteria	Threshold Value	DTC
evptez – evptezha	> 0.9 kPa (6.5 mmHg, 0.3 inHg)	P0457
evptezini	≤ 1.4 kPa (10.7 mmHg, 0.4 inHg)	
Time of 2 ℓ (0.53 US gal, 0.44 Imp gal) or more fuel no sloshing	≥ 40000 ms	

Time Needed for Diagnosis: 0 ms + 3000 ms + 13000 ms

Malfunction Indicator Light Illumination: Illuminates when malfunction occurs in 2 continuous driving cycles.

When judgment for purge control solenoid valve stuck open NG is made, end the evaporative diagnosis.

Cancel the evaporative diagnosis when the OK/NG judgment for purge control solenoid valve stuck open cannot be made in Mode Z.

- **Normality Judgement**

Judge as OK and change to Mode A when the following conditions are established after predetermined time has passed since Mode Z started.

Judgement Value

Malfunction Criteria	Threshold Value	DTC
evptez – evptezha	≤ 0.4 kPa (3 mmHg, 0.1 inHg)	P0457

Normal

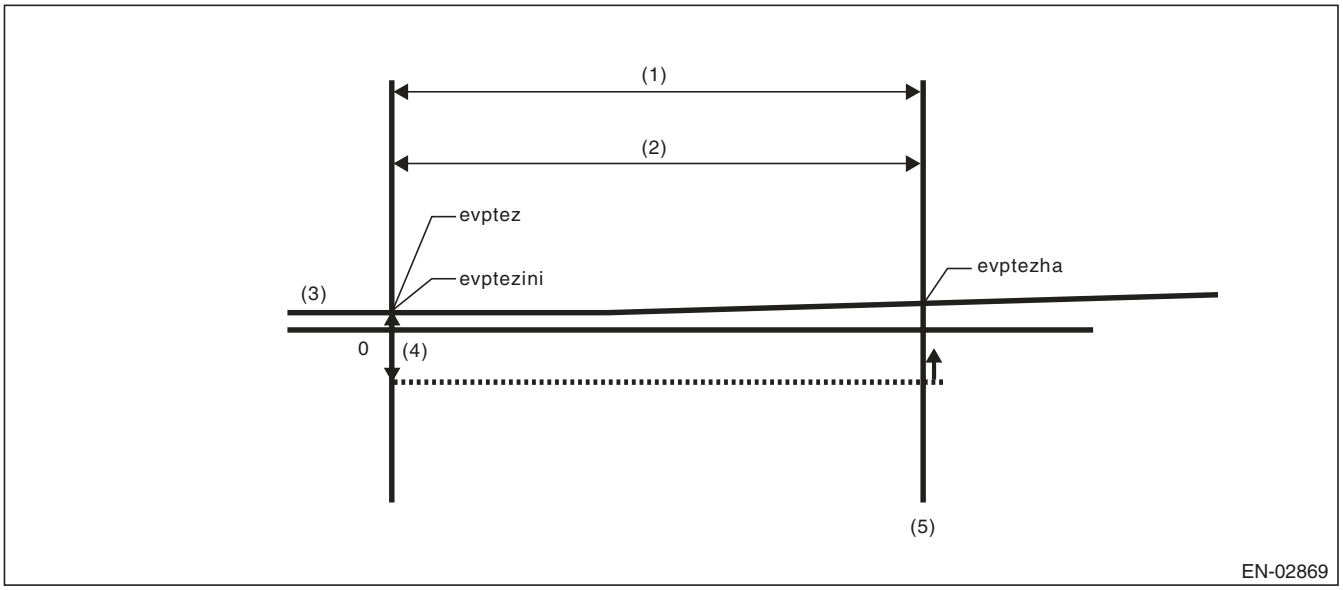

(1)	Mode Z	(3)	Fuel tank pressure	(5)	OK judgment
(2)	3000 ms	(4)	0.4 kPa (3 mmHg, 0.1 inHg)		

evptez – evptezha ≤ 0.4 kPa (3 mmHg, 0.1 inHg) Normal when above is established
Time Needed for Diagnosis: 0 ms + 3000 ms

Purge control solenoid valve Open Fixation

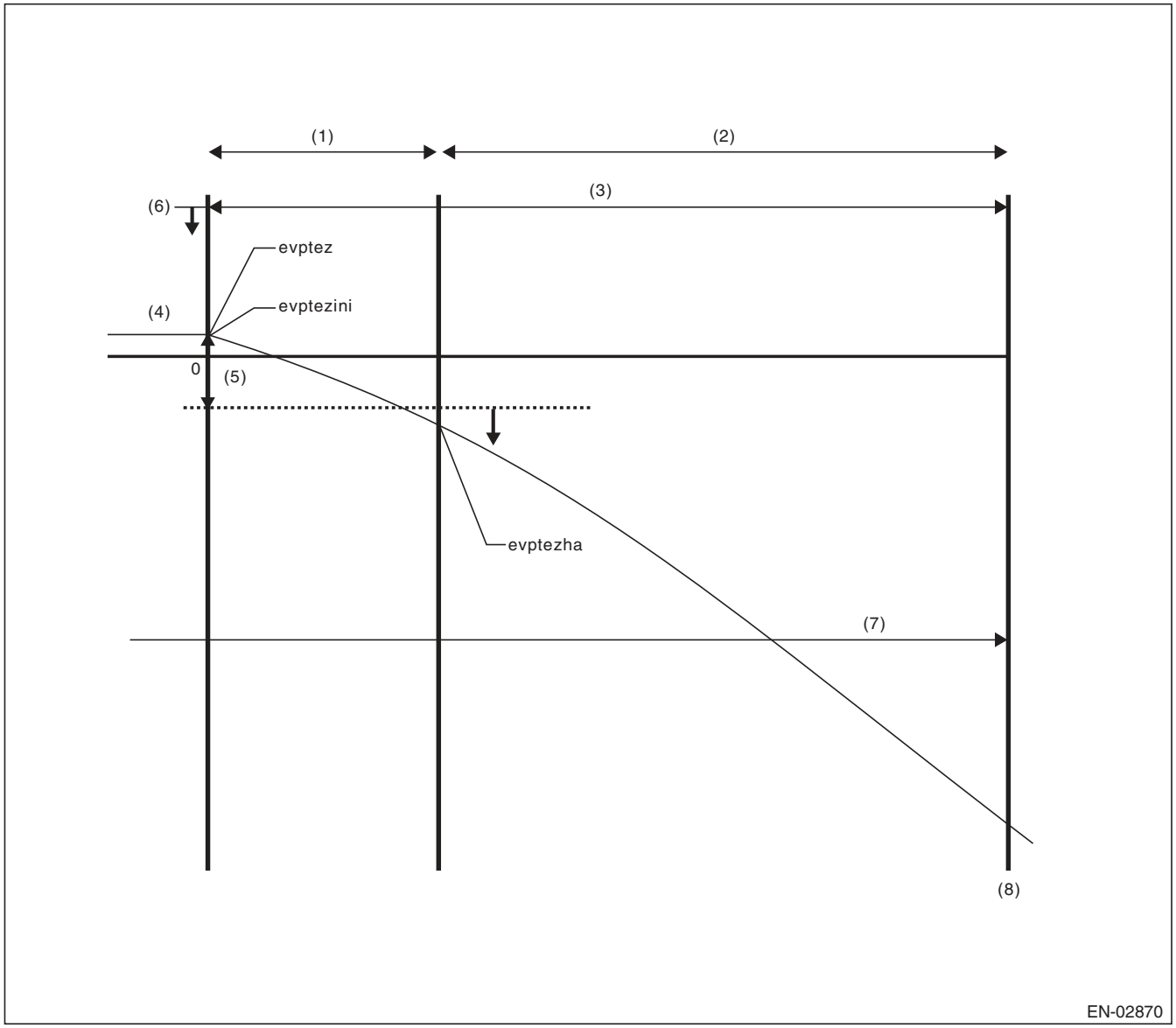

(1)	Mode Z	(4)	Fuel tank pressure	(7)	40000 ms no fuel sloshing
(2)	Extended mode Z	(5)	0.9 kPa (6.5 mmHg, 0.3 inHg)	(8)	NG judgment
(3)	3000 ms + 13000 ms	(6)	1.4 kPa (10.7 mmHg, 0.4 inHg)		

- evptezini ≤ 1.4 kPa (10.7 mmHg, 0.4 inHg)
- evptez – evptezha > 0.9 kPa (6.5 mmHg, 0.3 inHg)
- No fuel sloshing of over 2 ℓ (0.53 US gal, 0.44 Imp gal) lasts for more than 40000 ms.

Judge as abnormal when all are established.

Leak Diagnosis

DTC
P0442 Evaporative Emission Control System Leak Detected (Small Leak)
P0457 Evaporative Emission Control System Leak Detected (Fuel Cap Loose/Off)

- The diagnostic consists of creating a sealed vacuum in the fuel tank and then determining the presence of leakage from the speed at which the tank internal pressure returns to barometric pressure.
- The diagnosis is divided into the following five phases.

Mode A: (Estimated evaporation gas amount)
Calculate the tank pressure change amount (P1) when using mode A. After calculating P1, switch to mode B.
Mode B: (Negative pressure sealed)
Introduce negative pressure in the intake manifold to the tank.
Approx. 0 → –1.4 kPa (0 → –10.5 mmHg, 0 → –0.4 inHg)
When the pressure above (desired negative pressure) is reached, enters Mode C.
In this case, if the tank pressure does not reach the target negative pressure, judge that there is a large leakage in the system and terminate the evaporative emission control system diagnosis.
Abnormality Judgement
Judge as NG (large leakage) when the following conditions are established.
Judgement Value

Malfunction Criteria	Threshold Value	DTC
Time to reach target negative pressure	≥ 10000 ms + 25000 ms	P0457
or		
Mode B time	≥ 10000 ms	
(Min. pressure value in tank when in mode B) – (Tank pressure when mode B started)	> –0.3 kPa (–2.5 mmHg, –0.1 inHg)	

Time Needed for Diagnosis: 0 ms + 3000 ms + 10000 ms + 10000 ms + 25000 ms
Mode C: (Check pressure rise)
Stop the introduction of negative pressure. (Wait until the tank pressure returns to the start level of P2 calculation.)
Change to Mode D when the tank pressure returns to the start level of P2 calculation.
Judge immediate OK and change to Mode E when it does not return in spite of spending the specified time.

Tank pressure when starting calculation of P2	Time for advanced OK judgment
–1.3 kPa (–9.75 mmHg, –0.4 inHg)	18500 ms

Time Needed for Diagnosis: 0 ms + 3000 ms + 10000 ms + 10000 ms + 25000 ms + 18500 ms
Mode D: (Measure amount of negative pressure change)
Monitor the tank pressure change amount when using mode D. In this case, the tank pressure increases, (nears barometric pressure) because evaporation occurs. However, if any leakage exists, the pressure increases additionally in proportion to this leakage. The pressure variation of this tank is P2.
After calculating P2, perform a small leak diagnosis according to the items below.
When Mode D is ended
Assign tank variations measured in Mode A and Mode D, P1 and P2, to the formula below, judge small leaks in the system. If the measured judgment value exceeds the threshold value, it is judged to be a malfunction.

Abnormality Judgement

Judge as NG when the following conditions are established within the predetermined time. Judge as OK and clear the NG if the following conditions are not established within the predetermined time.

Judgement Value

Malfunction Criteria	Threshold Value	DTC
P2 – 1.5 – × P1 P2: Tank pressure that changes every 10000 ms in mode D P1: Tank pressure that changes every 10000 ms in mode A	> Value of Map 5	P0442

*1.5 –: Evaporation amount compensation value when below negative pressure (Amount of evaporation occurrence increases as a vacuum condition increases.)

Map 5 Malfunction criteria limit for evaporation diagnosis

Fuel temperature vs. Fuel level	25 °C (77 °F)	30 °C (86 °F)	35 °C (95 °F)	40 °C (104 °F)	45 °C (113 °F)
0 ℓ (0 US gal, 0 Imp gal)	0.3 kPa (2.1 mmHg, 0.1 inHg)	0.3 kPa (2.2 mmHg, 0.1 inHg)	0.3 kPa (2.3 mmHg, 0.1 inHg)	0.3 kPa (2.35 mmHg, 0.1 inHg)	0.3 kPa (2.4 mmHg, 0.1 inHg)
10 ℓ (2.64 US gal, 2.2 Imp gal)	0.3 kPa (2.1 mmHg, 0.1 inHg)	0.3 kPa (2.2 mmHg, 0.1 inHg)	0.3 kPa (2.3 mmHg, 0.1 inHg)	0.3 kPa (2.35 mmHg, 0.1 inHg)	0.3 kPa (2.4 mmHg, 0.1 inHg)
20 ℓ (5.28 US gal, 4.4 Imp gal)	0.3 kPa (2.3 mmHg, 0.1 inHg)	0.3 kPa (2.4 mmHg, 0.1 inHg)	0.3 kPa (2.5 mmHg, 0.1 inHg)	0.3 kPa (2.6 mmHg, 0.1 inHg)	0.4 kPa (2.7 mmHg, 0.1 inHg)
30 ℓ (7.93 US gal, 6.6 Imp gal)	0.4 kPa (2.9 mmHg, 0.1 inHg)	0.4 kPa (3.05 mmHg, 0.1 inHg)	0.4 kPa (3.15 mmHg, 0.1 inHg)	0.4 kPa (3.25 mmHg, 0.1 inHg)	0.4 kPa (3.35 mmHg, 0.1 inHg)
40 ℓ (10.57 US gal, 8.8 Imp gal)	0.4 kPa (2.9 mmHg, 0.1 inHg)	0.4 kPa (3.15 mmHg, 0.1 inHg)	0.4 kPa (3.3 mmHg, 0.1 inHg)	0.5 kPa (3.4 mmHg, 0.1 inHg)	0.5 kPa (3.5 mmHg, 0.1 inHg)
50 ℓ (13.21 US gal, 11 Imp gal)	0.4 kPa (3.2 mmHg, 0.1 inHg)	0.4 kPa (3.3 mmHg, 0.1 inHg)	0.5 kPa (3.5 mmHg, 0.1 inHg)	0.5 kPa (3.6 mmHg, 0.1 inHg)	0.5 kPa (3.7 mmHg, 0.1 inHg)
60 ℓ (15.85 US gal, 13.2 Imp gal)	0.4 kPa (3.2 mmHg, 0.1 inHg)	0.4 kPa (3.3 mmHg, 0.1 inHg)	0.5 kPa (3.5 mmHg, 0.1 inHg)	0.5 kPa (3.6 mmHg, 0.1 inHg)	0.5 kPa (3.7 mmHg, 0.1 inHg)

Time Needed for Diagnosis: 0 ms + 3000 ms + 10000 ms + 10000 ms + 25000 ms + 18500 ms + 10000 ms
Malfunction Indicator Light Illumination: Illuminates when malfunction occurs in 2 continuous driving cycles.

Leak Diagnosis

DTC
P0456 Evaporative Emission Control System Leak Detected (very small leak)

- The diagnostic consists of creating a sealed vacuum in the fuel tank and then determining the presence of leakage from the speed at which the tank internal pressure returns to barometric pressure.
- The diagnosis is divided into the following five phases.

Mode A: (0 point compensation)
When the pressure in the tank is not near 0 mmHg, wait until it returns to 0 point (near 0 mmHg). Shift to mode B when returned to the 0 point. Cancel the diagnosis when 0 point does not return in the specified time.
Mode B: (Negative pressure introduced)
Introduce negative pressure in the intake manifold to the tank.
Approx. 0 → –2 kPa (0 → –15 mmHg, 0 → –0.6 inHg)
When the pressure above (desired negative pressure) is reached, enters Mode C.
When the tank internal pressure does not reach the target negative pressure, the diagnosis is cancelled.
Mode C: (Negative pressure maintained)
Stop the introduction of negative pressure. (Wait until the tank pressure returns to the start level of P2 calculation.)
Change to Mode D either when the tank pressure returns to the start level of P2 calculation, or when the predetermined amount of time has passed.
Mode D: (Calculate the amount of negative pressure change)
Monitor the tank pressure in mode D, calculate (P2) the pressure change in the tank, and measure the time (evpdset) for the tank pressure to change to the Mode E shifting pressure. When the Mode E shifting pressure is reached, Mode E is entered. If it does not change to the Mode E shifting pressure after the predetermined amount of time has passed, make advanced OK judgment or cancel the diagnosis.
Normality Judgement
Judge as OK when the following conditions are established.

Judgement Value

Malfunction Criteria	Threshold Value
Advanced OK judgment 1	
Mode D time	≥ 0 ms + 20000 ms
Tank internal pressure	≤ Value of Map 6
Advanced OK judgment 2	
Mode D time	≥ 0 ms + 200000 ms
P2	≤ Value of Map 7

Map6

Fuel level (ℓ , US gal, Imp gal)	0, 0, 0	10, 2.64, 2.2	20, 5.28, 4.4	30, 7.93, 6.6	40, 10.57, 8.8	50, 13.21, 11	60, 15.85, 13.2
Tank pressure (kPa, mmHg, inHgl)	–1.9, –13.9, –0.5	–1.9, –13.9, –0.5	–1.8, –13.8, –0.5	–1.8, –13.7, –0.5	–1.8, –13.6, –0.5	–1.8, –13.5, –0.5	–1.8, –13.5, –0.5

Map7

Fuel level (ℓ , US gal, Imp gal)	0, 0, 0	10, 2.64, 2.2	20, 5.28, 4.4	30, 7.93, 6.6	40, 10.57, 8.8	50, 13.21, 11	60, 15.85, 13.2
Tank pressure (kPa, mmHg, inHgl)	0.9, 7, 0.3	0.9, 7, 0.3	0.9, 7.05, 0.3	0.9, 7.1, 0.3	1.1, 8.2, 0.3	1.3, 9.6, 0.4	1.3, 9.6, 0.4

Mode E: (Evaporation occurrence amount calculation)
Calculate the change of tank pressure with the time evpdset to judge as NG/OK according to the value of P1. (ambiguous determination acceptable).

- **Abnormality Judgement**

Judge as NG when the following conditions are established.

Judgement Value

Malfunction Criteria	Threshold Value
P1	< Value of Map 8

Map 8 Malfunction criteria limit for evaporation diagnosis

Time (evpdset) vs. Fuel level	0 ms	30000 ms	50000 ms	100000 ms	160000 ms	200000 ms
0 ℓ (0 US gal, 0 Imp gal)	0 kPa (0 mmHg, 0 inHg)	0.1 kPa (0.5 mmHg, 0 inHg)	0.2 kPa (1.7 mmHg, 0.1 inHg)	0.4 kPa (2.7 mmHg, 0.1 inHg)	0.4 kPa (2.7 mmHg, 0.1 inHg)	0.4 kPa (2.7 mmHg, 0.1 inHg)
10 ℓ (2.64 US gal, 2.2 Imp gal)	0 kPa (0 mmHg, 0 inHg)	0.1 kPa (0.5 mmHg, 0 inHg)	0.2 kPa (1.7 mmHg, 0.1 inHg)	0.4 kPa (2.7 mmHg, 0.1 inHg)	0.4 kPa (2.7 mmHg, 0.1 inHg)	0.4 kPa (2.7 mmHg, 0.1 inHg)
20 ℓ (5.28 US gal, 4.4 Imp gal)	0 kPa (0 mmHg, 0 inHg)	0.1 kPa (0.5 mmHg, 0 inHg)	0.2 kPa (1.7 mmHg, 0.1 inHg)	0.4 kPa (2.7 mmHg, 0.1 inHg)	0.4 kPa (2.7 mmHg, 0.1 inHg)	0.4 kPa (2.7 mmHg, 0.1 inHg)
30 ℓ (7.93 US gal, 6.6 Imp gal)	0 kPa (0 mmHg, 0 inHg)	0.1 kPa (0.5 mmHg, 0 inHg)	0.2 kPa (1.7 mmHg, 0.1 inHg)	0.4 kPa (2.7 mmHg, 0.1 inHg)	0.4 kPa (2.7 mmHg, 0.1 inHg)	0.4 kPa (2.7 mmHg, 0.1 inHg)
40 ℓ (10.57 US gal, 8.8 Imp gal)	0 kPa (0 mmHg, 0 inHg)	0.1 kPa (0.5 mmHg, 0 inHg)	0.2 kPa (1.85 mmHg, 0.1 inHg)	0.3 kPa (2.5 mmHg, 0.1 inHg)	0.3 kPa (2.5 mmHg, 0.1 inHg)	0.3 kPa (2.5 mmHg, 0.1 inHg)
50 ℓ (13.21 US gal, 11 Imp gal)	0 kPa (0 mmHg, 0 inHg)	0.1 kPa (0.5 mmHg, 0 inHg)	0.3 kPa (2 mmHg, 0.1 inHg)	0.3 kPa (2.3 mmHg, 0.1 inHg)	0.3 kPa (2.3 mmHg, 0.1 inHg)	0 kPa (0 mmHg, 0 inHg)
60 ℓ (15.85 US gal, 13.2 Imp gal)	0 kPa (0 mmHg, 0 inHg)	0.1 kPa (0.5 mmHg, 0 inHg)	0.3 kPa (2 mmHg, 0.1 inHg)	0.3 kPa (2.3 mmHg, 0.1 inHg)	0.3 kPa (2.3 mmHg, 0.1 inHg)	0 kPa (0 mmHg, 0 inHg)

Time Needed for Diagnosis: Value of Map1 + Value of Map2 + 20000 ms + 0 + Value of Map2 + 0 ms + 200000 ms + Value of Map3 + 0 ms + 200000 ms
Malfunction Indicator Light Illumination: Illuminates when malfunction occurs in 2 continuous driving cycles.

- **Normality Judgement**

Judge as OK when the following conditions are established.

Judgement Value

Malfunction Criteria	Threshold Value
P1	> Value of Map 9

Map 9 Malfunction criteria limit for evaporation diagnosis

Time (evpdset) vs. Fuel level	0 ms	30000 ms	50000 ms	100000 ms	160000 ms	200000 ms
0 ℓ (0 US gal, 0 Imp gal)	0.1 kPa (1 mmHg, 0 inHg)	0.5 kPa (3.5 mmHg, 0.1 inHg)	0.6 kPa (4.2 mmHg, 0.2 inHg)	0.6 kPa (4.2 mmHg, 0.2 inHg)	0.6 kPa (4.2 mmHg, 0.2 inHg)	0.6 kPa (4.2 mmHg, 0.2 inHg)
10 ℓ (2.64 US gal, 2.2 Imp gal)	0.1 kPa (1 mmHg, 0 inHg)	0.5 kPa (3.5 mmHg, 0.1 inHg)	0.6 kPa (4.2 mmHg, 0.2 inHg)	0.6 kPa (4.2 mmHg, 0.2 inHg)	0.6 kPa (4.2 mmHg, 0.2 inHg)	0.6 kPa (4.2 mmHg, 0.2 inHg)
20 ℓ (5.28 US gal, 4.4 Imp gal)	0.1 kPa (1 mmHg, 0 inHg)	0.4 kPa (3.25 mmHg, 0.1 inHg)	0.5 kPa (4.1 mmHg, 0.2 inHg)	0.5 kPa (4.1 mmHg, 0.2 inHg)	0.5 kPa (4.1 mmHg, 0.2 inHg)	0.5 kPa (4.1 mmHg, 0.2 inHg)
30 ℓ (7.93 US gal, 6.6 Imp gal)	0.1 kPa (1 mmHg, 0 inHg)	0.4 kPa (3 mmHg, 0.1 inHg)	0.5 kPa (3.9 mmHg, 0.2 inHg)	0.5 kPa (3.9 mmHg, 0.2 inHg)	0.5 kPa (3.9 mmHg, 0.2 inHg)	0.5 kPa (3.9 mmHg, 0.2 inHg)
40 ℓ (10.57 US gal, 8.8 Imp gal)	0.1 kPa (1 mmHg, 0 inHg)	0.3 kPa (2.25 mmHg, 0.1 inHg)	0.5 kPa (3.4 mmHg, 0.1 inHg)	0.5 kPa (3.4 mmHg, 0.1 inHg)	0.5 kPa (3.4 mmHg, 0.1 inHg)	0.5 kPa (3.4 mmHg, 0.1 inHg)
50 ℓ (13.21 US gal, 11 Imp gal)	0.1 kPa (1 mmHg, 0 inHg)	0.2 kPa (1.5 mmHg, 0.1 inHg)	0.4 kPa (2.9 mmHg, 0.1 inHg)	0.4 kPa (2.9 mmHg, 0.1 inHg)	0.4 kPa (2.9 mmHg, 0.1 inHg)	0.4 kPa (2.9 mmHg, 0.1 inHg)
60 ℓ (15.85 US gal, 13.2 Imp gal)	0.1 kPa (1 mmHg, 0 inHg)	0.2 kPa (1.5 mmHg, 0.1 inHg)	0.4 kPa (2.9 mmHg, 0.1 inHg)	0.4 kPa (2.9 mmHg, 0.1 inHg)	0.4 kPa (2.9 mmHg, 0.1 inHg)	0.4 kPa (2.9 mmHg, 0.1 inHg)

Time Needed for Diagnosis: Value of Map1 + Value of Map2 + 20000 ms + 0 + Value of Map2 + 0 ms + 200000 ms + Value of Map3 + 0 ms + 200000 ms

BG:DTC P0447 EVAPORATIVE EMISSION CONTROL SYSTEM VENT CONTROL CIRCUIT OPEN

1. OUTLINE OF DIAGNOSIS

Detect open or short circuit of the drain valve.
Judge as NG when the ECM output level differs from the actual terminal level.

2. COMPONENT DESCRIPTION

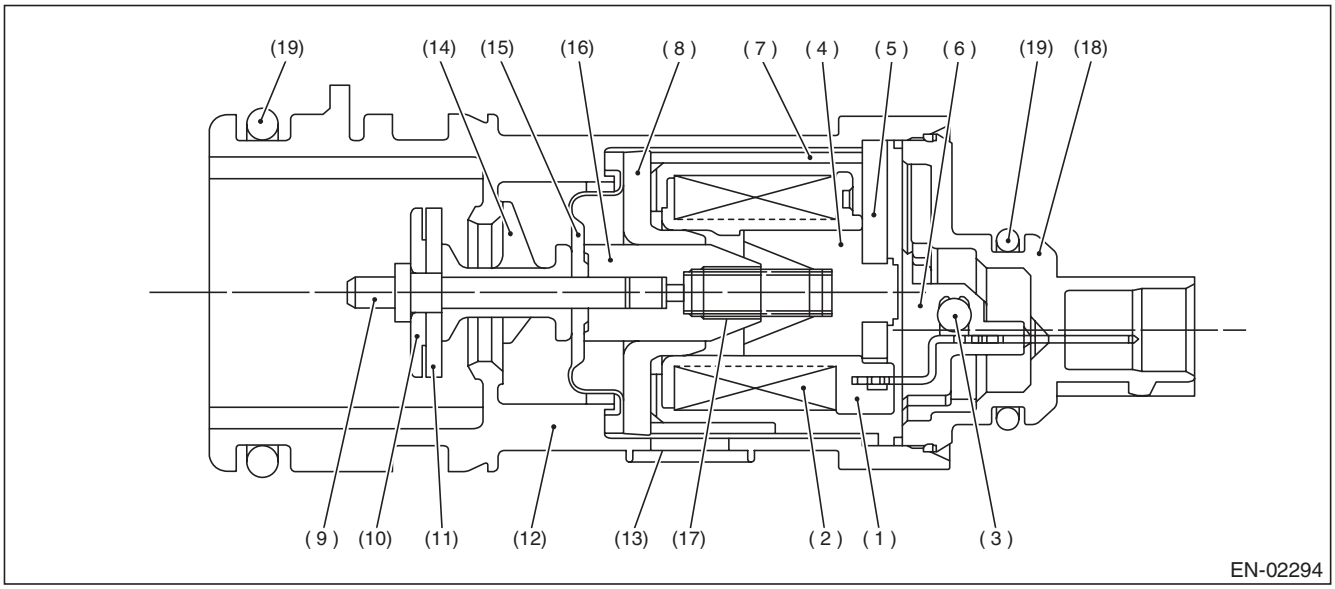

(1)	Bobbin	(8)	Magnetic plate	(14)	Retainer
(2)	Coil	(9)	Shaft	(15)	Diaphragm
(3)	Diode	(10)	Plate	(16)	Movable core
(4)	Stator core	(11)	Valve	(17)	Spring
(5)	End plate	(12)	Housing	(18)	Cover
(6)	Body	(13)	Filter	(19)	O-ring
(7)	Yoke				

3. ENABLE CONDITION

Secondary Parameters	Enable Conditions
None	

4. GENERAL DRIVING CYCLE

Always perform the diagnosis continuously.

5. DIAGNOSTIC METHOD

- **Abnormality Judgement**

If the duration of time while the following conditions are met is longer than the time indicated, judge as NG.

Judgement Value

Malfunction Criteria	Threshold Value
Battery voltage	≥ 10.9 V
Elapsed time after starting the engine	≥ 1 second
Terminal output voltage when ECM outputs OFF signal	Low

Time Needed for Diagnosis: 2500 ms
Malfunction Indicator Light Illumination: Illuminates as soon as a malfunction occurs.

- **Normality Judgement**

Judge as OK and clear the NG if the continuous time while the following conditions are established is more than the predetermined time.

Judgement Value

Malfunction Criteria	Threshold Value
Battery voltage	≥ 10.9 V
Elapsed time after starting the engine	≥ 1 second
Terminal output voltage when ECM outputs OFF signal	High

Time Needed for Diagnosis: Less than 1 second

BH:DTC P0448 EVAPORATIVE EMISSION CONTROL SYSTEM VENT CONTROL CIRCUIT SHORTED

1. OUTLINE OF DIAGNOSIS

Detect open or short circuit of the drain valve.
Judge as NG when the ECM output level differs from the actual terminal level.

2. COMPONENT DESCRIPTION

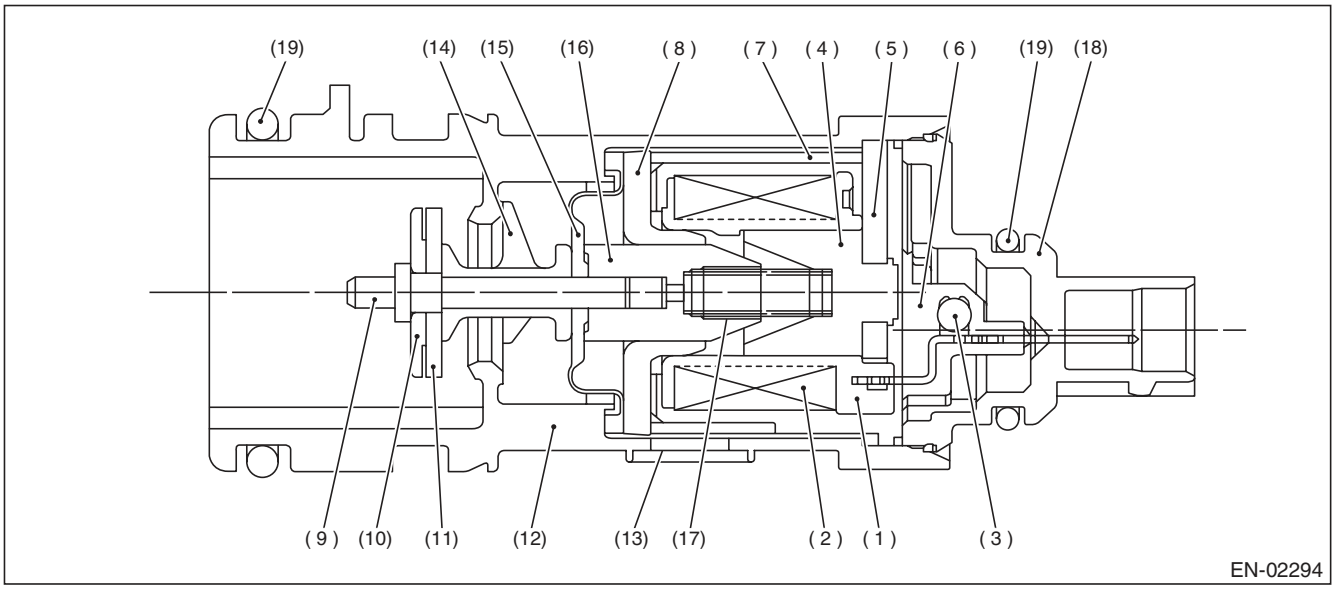

(1)	Bobbin	(8)	Magnetic plate	(14)	Retainer
(2)	Coil	(9)	Shaft	(15)	Diaphragm
(3)	Diode	(10)	Plate	(16)	Movable core
(4)	Stator core	(11)	Valve	(17)	Spring
(5)	End plate	(12)	Housing	(18)	Cover
(6)	Body	(13)	Filter	(19)	O-ring
(7)	Yoke				

3. ENABLE CONDITION

Secondary Parameters	Enable Conditions
None	

4. GENERAL DRIVING CYCLE

Always perform the diagnosis continuously.

5. DIAGNOSTIC METHOD

- **Abnormality Judgement**

If the duration of time while the following conditions are met is longer than the time indicated, judge as NG.

Judgement Value

Malfunction Criteria	Threshold Value
Battery voltage	≥ 10.9 V
Elapsed time after starting the engine	≥ 1 second
Terminal output voltage when ECM outputs ON signal	High

Time Needed for Diagnosis: 2500 ms
Malfunction Indicator Light Illumination: Illuminates as soon as a malfunction occurs.

- **Normality Judgement**

Judge as OK and clear the NG if the continuous time while the following conditions are established is more than the predetermined time.

Judgement Value

Malfunction Criteria	Threshold Value
Battery voltage	≥ 10.9 V
Elapsed time after starting the engine	≥ 1 second
Terminal output voltage when ECM outputs ON signal	Low

Time Needed for Diagnosis: Less than 1 second

BI: DTC P0451 EVAPORATIVE EMISSION CONTROL SYSTEM PRESSURE SENSOR

1. OUTLINE OF DIAGNOSIS

Detect the tank pressure sensor output property abnormality.
Judge as NG when there is no pressure variation, which should exist in the tank, considering the engine status.

2. COMPONENT DESCRIPTION

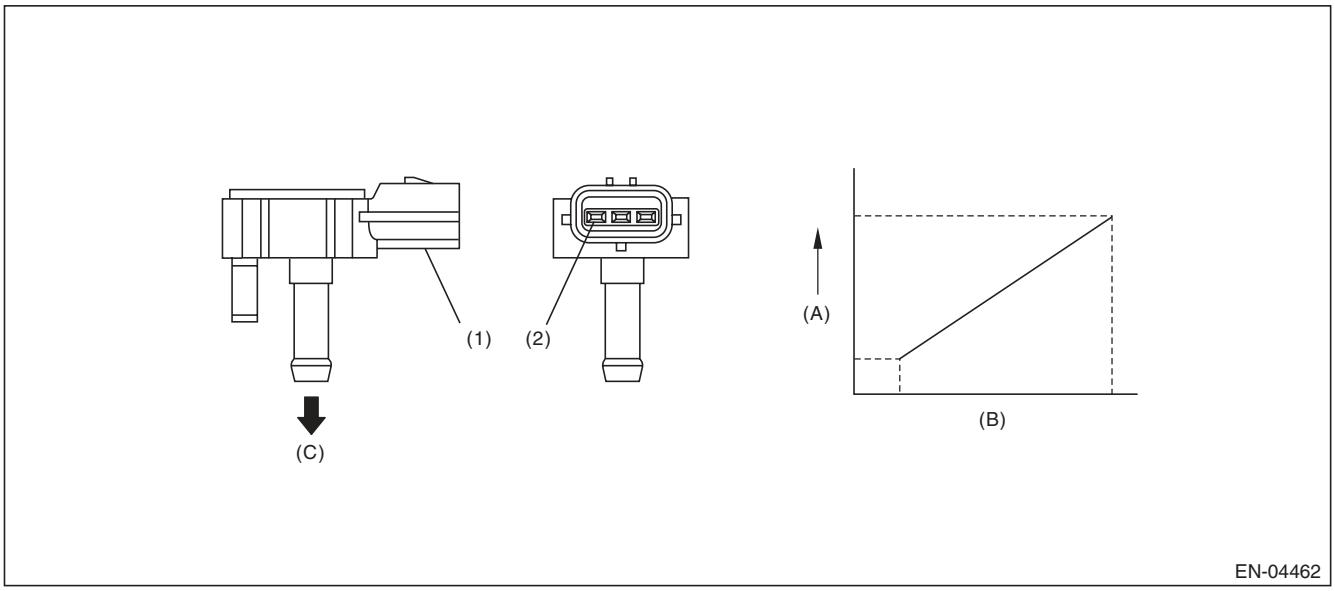

(A)	Output voltage	(B)	Input voltage	(C)	To fuel tank
(1)	Connector	(2)	Terminals		

3. ENABLE CONDITION

Secondary Parameters	Enable Conditions
Elapsed time after starting the engine	≥ 60 s
Fuel level	≥ 9.6 ℓ (2.54 US gal, 2.11 Imp gal)
Fuel temperature	< 35 °C (95 °F)
Battery voltage	≥ 10.9 V
Barometric pressure	≥ 75 kPa (563 mmHg, 22.2 inHg)

4. GENERAL DRIVING CYCLE

- Perform the diagnosis continuously after 60 s have passed since the engine started.
- Pay attention to the fuel level and temperature.

5. DIAGNOSTIC METHOD

• Abnormality Judgement

If the duration of time while the following conditions are met is longer than the time indicated, judge as NG.

Judgement Value

Malfunction Criteria	Threshold Value
Number of times that the difference between the Max. fuel level every 60 s and Min. fuel level every 60 s is 2 ℓ (0.53 US gal, 0.44 Imp gal) or more (with enable condition established)	≥ 16 time(s)
Maximum – Minimum tank pressure (with enable condition completed)	< 0 kPa (0.375 mmHg, 0 inHg)
Maximum – Minimum fuel temperature (with enable condition completed)	≥ 7 °C (44.6 °F)

If the difference between the Max. fuel level every 60 s and Min. fuel level every 60 s is less than 2 ℓ (0.53 US gal, 0.44 Imp gal), extend 60 s and make judgement with the Max. and Min. values for the fuel level in 60 s × 2. 60 s If a difference does not appear, extend the time (60 s × 3, 60 s × 4, 60 s × 5) and continue the judgement. If the difference between the Max. fuel level every 60 s and Min. fuel level every 60 s is 2 ℓ (0.53 US gal, 0.44 Imp gal) or more, the diagnosis counter counts up.

Time Needed for Diagnosis: 60 s × 16 time(s) or more

Malfunction Indicator Light Illumination: Illuminates when malfunction occurs in 2 continuous driving cycles.

• Normality Judgement

Judge as OK and clear the NG if the continuous time while the following conditions are established is more than the predetermined time.

Judgement Value

Malfunction Criteria	Threshold Value
Maximum — Minimum tank pressure	≥ 0 kPa (0.375 mmHg, 0 inHg)

Time Needed for Diagnosis: Less than 1 second

BJ:DTC P0452 EVAPORATIVE EMISSION CONTROL SYSTEM PRESSURE SENSOR LOW INPUT

1. OUTLINE OF DIAGNOSIS

Detect the open or short circuit of the fuel tank pressure sensor.
Judge as NG if out of specification.

2. COMPONENT DESCRIPTION

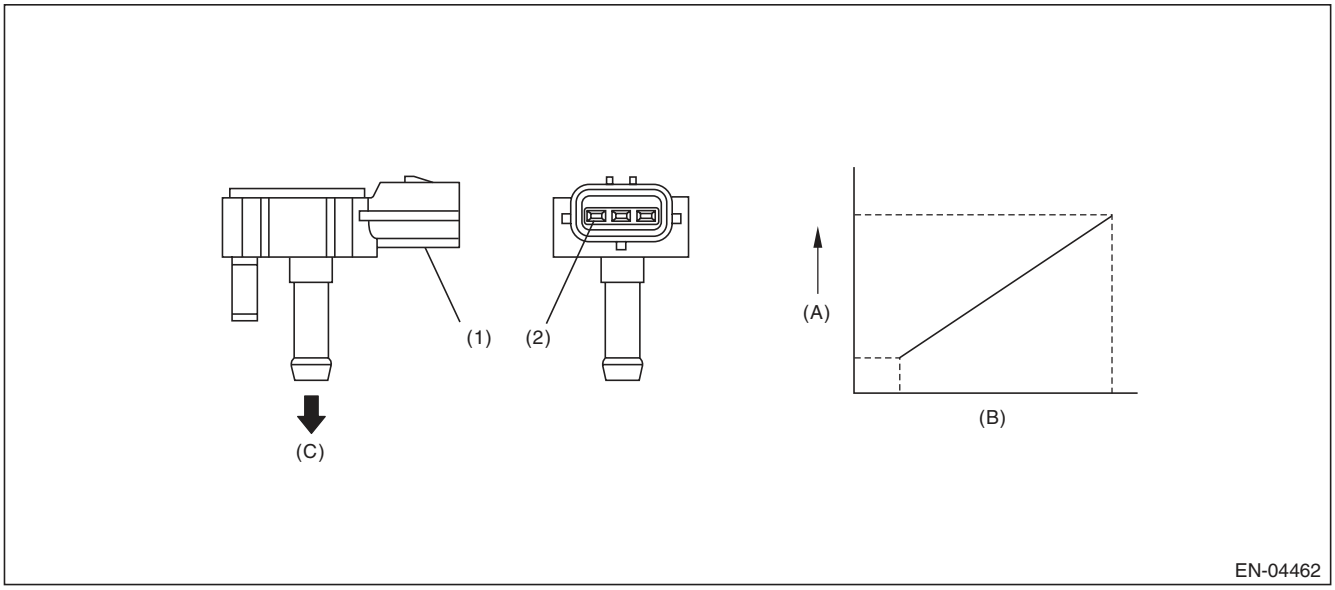

(A) Output voltage
(B) Input voltage
(C) To fuel tank
(1) Connector
(2) Terminals

3. ENABLE CONDITION

Secondary Parameters	Enable Conditions
None	

4. GENERAL DRIVING CYCLE

Always perform the diagnosis continuously.

5. DIAGNOSTIC METHOD

- **Abnormality Judgement**

If the duration of time while the following conditions are met is longer than the time indicated, judge as NG.

Judgement Value

Malfunction Criteria	Threshold Value
Fuel tank pressure	< –7.4 kPa (–55.6 mmHg, –2.2 inHg)
Battery voltage	≥ 10.9 V

Time Needed for Diagnosis: 15000 ms
Malfunction Indicator Light Illumination: Illuminates as soon as a malfunction occurs.

- **Normality Judgement**

Judge as OK and clear the NG if the continuous time while the following conditions are established is more than the predetermined time.

Judgement Value

Malfunction Criteria	Threshold Value
Fuel tank pressure	≥ –7.4 kPa (–55.6 mmHg, –2.2 inHg)
Battery voltage	≥ 10.9 V

Time Needed for Diagnosis: Less than 1 second

BK:DTC P0453 EVAPORATIVE EMISSION CONTROL SYSTEM PRESSURE SENSOR HIGH INPUT

1. OUTLINE OF DIAGNOSIS

Detect the open or short circuit of the fuel tank pressure sensor.
Judge as NG if out of specification.

2. COMPONENT DESCRIPTION

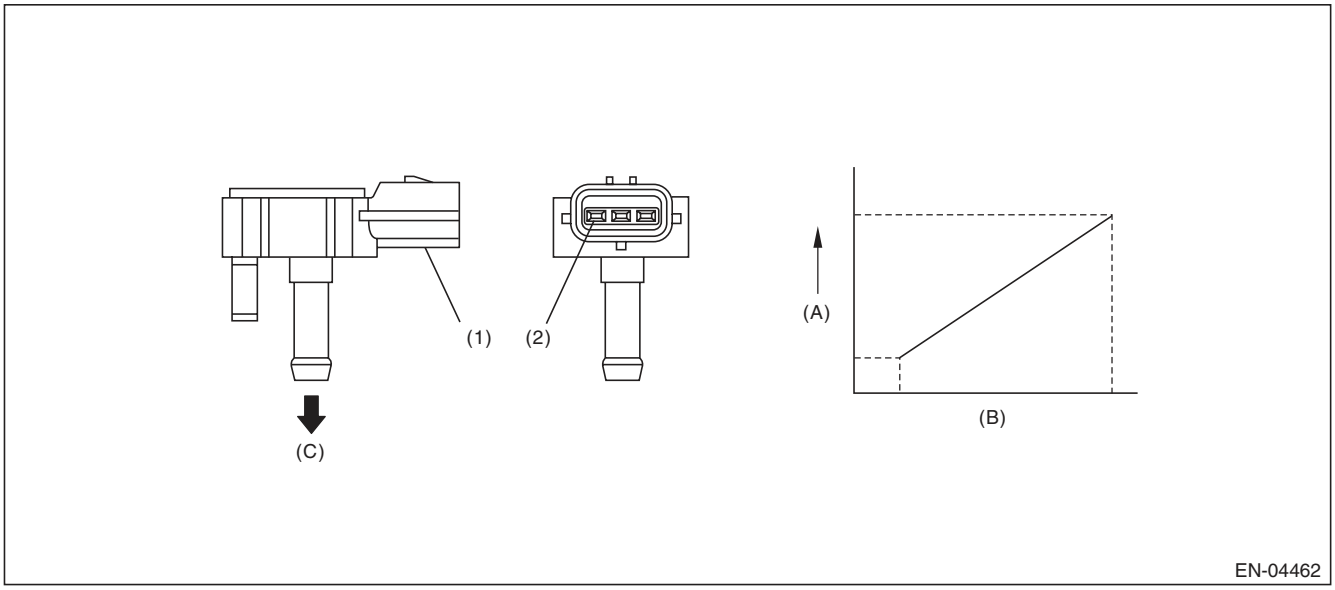

(A) Output voltage
(B) Input voltage
(C) To fuel tank

(1) Connector
(2) Terminals

3. ENABLE CONDITION

Secondary Parameters	Enable Conditions
Time needed for all secondary parameters to be in enable conditions	≥ 5000 ms
Vehicle speed	≥ 2 km/h (1.2 MPH)
All conditions of EVAP canister purge	Completed
Learning value of evaporation gas concentration (left and right)	< 0.08
Main feedback compensation coefficient (left and right)	≥ 0.9
Battery voltage	≥ 10.9 V

4. GENERAL DRIVING CYCLE

Perform the diagnosis when purging enable conditions are met without idling.

5. DIAGNOSTIC METHOD

- **Abnormality Judgement**

If the duration of time while the following conditions are met is longer than the time indicated, judge as NG.

Judgement Value

Malfunction Criteria	Threshold Value
Fuel tank pressure	≥ 7.9 kPa (59.6 mmHg, 2.3 inHg)
Fuel temperature	< 35 °C (95 °F)
Barometric pressure	≥ 75 kPa (563 mmHg, 22.2 inHg)

Time Needed for Diagnosis: 15000 ms
Malfunction Indicator Light Illumination: Illuminates as soon as a malfunction occurs.

- **Normality Judgement**

Judge as OK and clear the NG if the continuous time while the following conditions are established is more than the predetermined time.

Judgement Value

Malfunction Criteria	Threshold Value
Fuel tank pressure	< 7.9 kPa (59.6 mmHg, 2.3 inHg)

Time Needed for Diagnosis: Less than 1 second

BL:DTC P0456 EVAPORATIVE EMISSION CONTROL SYSTEM LEAK DETECTED (VERY SMALL LEAK)

1. OUTLINE OF DIAGNOSIS

NOTE:
For the detection standard, refer to DTC P0442. <Ref. to GD(H4SO)-101, DTC P0442 EVAPORATIVE EMISSION CONTROL SYSTEM LEAK DETECTED (SMALL LEAK), Diagnostic Trouble Code (DTC) Detecting Criteria.>

BM:DTC P0457 EVAPORATIVE EMISSION CONTROL SYSTEM LEAK DETECTED (FUEL CAP LOOSE/OFF)

1. OUTLINE OF DIAGNOSIS

NOTE:
For the detection standard, refer to DTC P0442. <Ref. to GD(H4SO)-101, DTC P0442 EVAPORATIVE EMISSION CONTROL SYSTEM LEAK DETECTED (SMALL LEAK), Diagnostic Trouble Code (DTC) Detecting Criteria.>

BN:DTC P0458 EVAPORATIVE EMISSION SYSTEM PURGE CONTROL VALVE CIRCUIT LOW

1. OUTLINE OF DIAGNOSIS

Detect open or short circuit of the purge control solenoid valve.
Judge as NG when the ECM output level differs from the actual terminal level.

2. COMPONENT DESCRIPTION

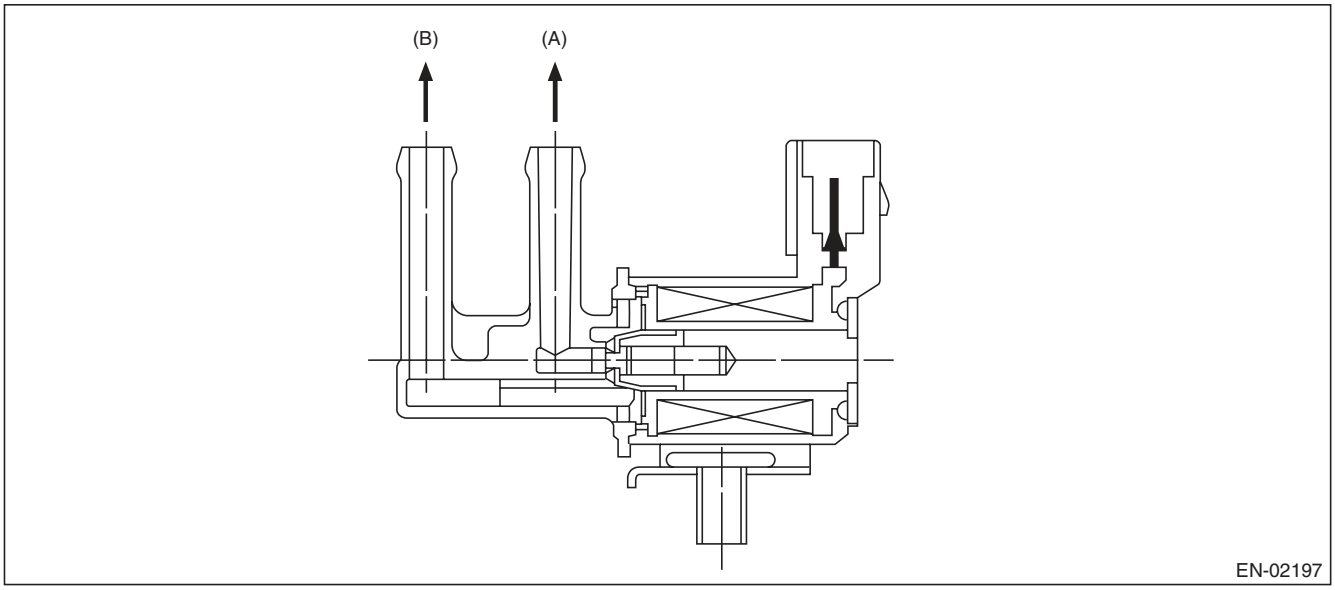

(A) To canister (B) To intake manifold

3. ENABLE CONDITION

Secondary Parameters	Enable Conditions
Battery voltage	≥ 10.9 V
Elapsed time after starting the engine	≥ 1 second

4. GENERAL DRIVING CYCLE

Always perform the diagnosis after starting the engine.

5. DIAGNOSTIC METHOD

- **Abnormality Judgement**

If the duration of time while the following conditions are met is longer than the time indicated, judge as NG.

Judgement Value

Malfunction Criteria	Threshold Value
Duty ratio of “ON”	< 0.75
Terminal output voltage	Low

Time Needed for Diagnosis: 2500 ms
Malfunction Indicator Light Illumination: Illuminates when malfunction occurs in 2 continuous driving cycles.

- **Normality Judgement**

Judge as OK and clear the NG if the continuous time while the following conditions are established is more than the predetermined time.

Judgement Value

Malfunction Criteria	Threshold Value
Terminal output voltage	High

Time Needed for Diagnosis: Less than 1 second

BO:DTC P0459 EVAPORATIVE EMISSION SYSTEM PURGE CONTROL VALVE CIRCUIT HIGH

1. OUTLINE OF DIAGNOSIS

Detect open or short circuit of the purge control solenoid valve.
Judge as NG when the ECM output level differs from the actual terminal level.

2. COMPONENT DESCRIPTION

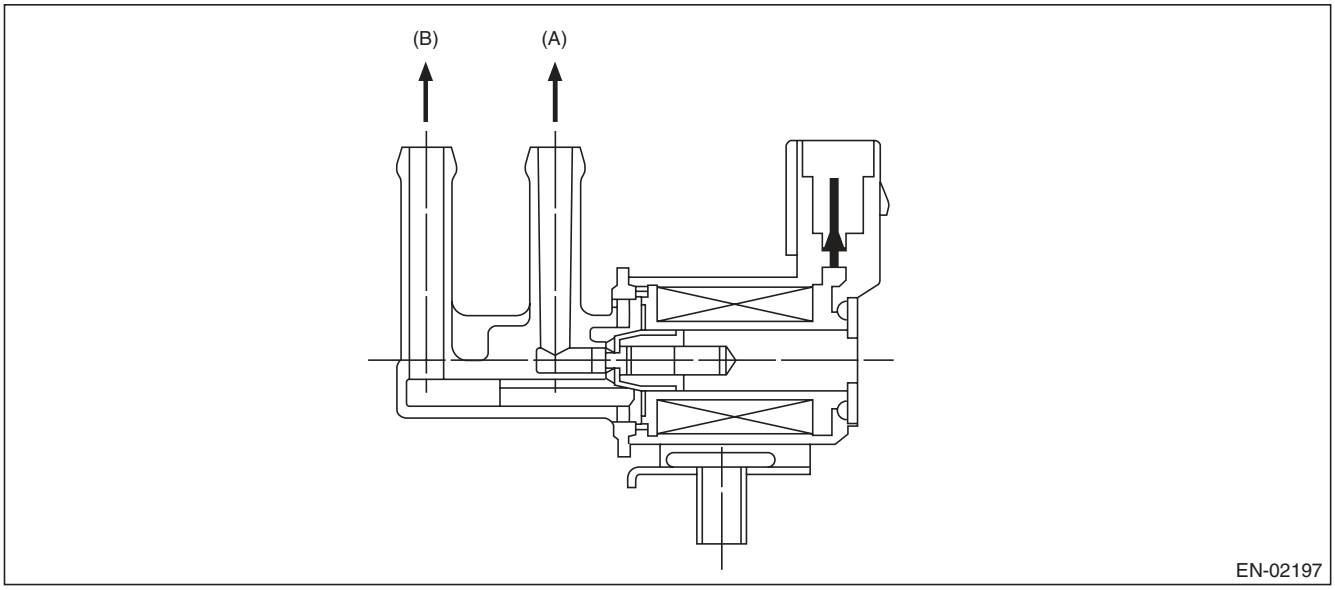

(A) To canister (B) To intake manifold

3. ENABLE CONDITION

Secondary Parameters	Enable Conditions
Battery voltage	≥ 10.9 V
Elapsed time after starting the engine	≥ 1 second

4. GENERAL DRIVING CYCLE

Always perform the diagnosis after starting the engine.

5. DIAGNOSTIC METHOD

- **Abnormality Judgement**

If the duration of time while the following conditions are met is longer than the time indicated, judge as NG.

Judgement Value

Malfunction Criteria	Threshold Value
Duty ratio of “ON”	≥ 0.25
Terminal output voltage	High

Time Needed for Diagnosis: 2500 ms
Malfunction Indicator Light Illumination: Illuminates when malfunction occurs in 2 continuous driving cycles.

- **Normality Judgement**

Judge as OK and clear the NG if the continuous time while the following conditions are established is more than the predetermined time.

Judgement Value

Malfunction Criteria	Threshold Value
Terminal output voltage	Low

Time Needed for Diagnosis: Less than 1 second

BP:DTC P0461 FUEL LEVEL SENSOR “A” CIRCUIT RANGE/PERFORMANCE

1. OUTLINE OF DIAGNOSIS

Detect malfunctions of the fuel level sensor output property.
If the fuel level does not vary in a particular driving condition / engine condition where it should, judge as NG.

2. COMPONENT DESCRIPTION

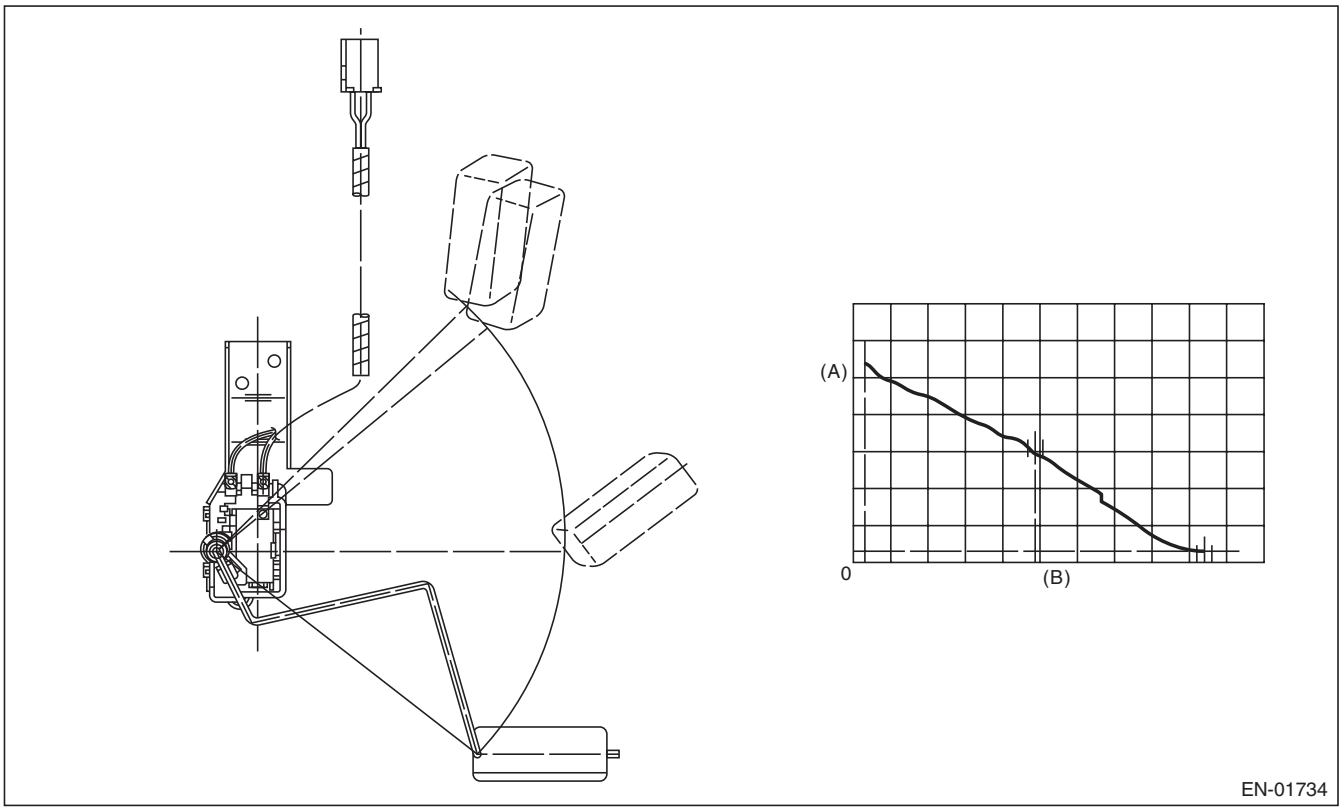

(A) Fuel level (B) Resistance

3. ENABLE CONDITION

Secondary Parameters	Enable Conditions
None	

4. GENERAL DRIVING CYCLE

Always perform the diagnosis continuously.

5. DIAGNOSTIC METHOD

- **Abnormality Judgement**

Judge as NG when the following conditions are established.

Judgement Value

Malfunction Criteria	Threshold Value
Accumulated amount of intake air	≥ 330957 g (11672.85 oz)
Max. – min. values of fuel level output	< 2.6 ℓ (0.69 US gal, 0.57 Imp gal)
Battery voltage	≥ 10.9 V
Engine speed	< 6000 rpm
Elapsed time after starting the engine	≥ 5000 ms

Time Needed for Diagnosis: Less than 1 second
Malfunction Indicator Light Illumination: Illuminates when malfunction occurs in 2 continuous driving cycles.

- **Normality Judgement**

Judge as OK and clear the NG if the following conditions are established.

Judgement Value

Malfunction Criteria	Threshold Value
Accumulated amount of intake air	≥ 330957 g (11672.85 oz)
Max. – min. values of fuel level output	≥ 2.6 ℓ (0.69 US gal, 0.57 Imp gal)
Battery voltage	≥ 10.9 V
Engine speed	< 6000 rpm
Elapsed time after starting the engine	≥ 5000 ms

Time Needed for Diagnosis: Less than 1 second

BQ:DTC P0462 FUEL LEVEL SENSOR “A” CIRCUIT LOW

1. OUTLINE OF DIAGNOSIS

Detect the open or short circuit of fuel level sensor. Judge as NG if out of specification.

2. COMPONENT DESCRIPTION

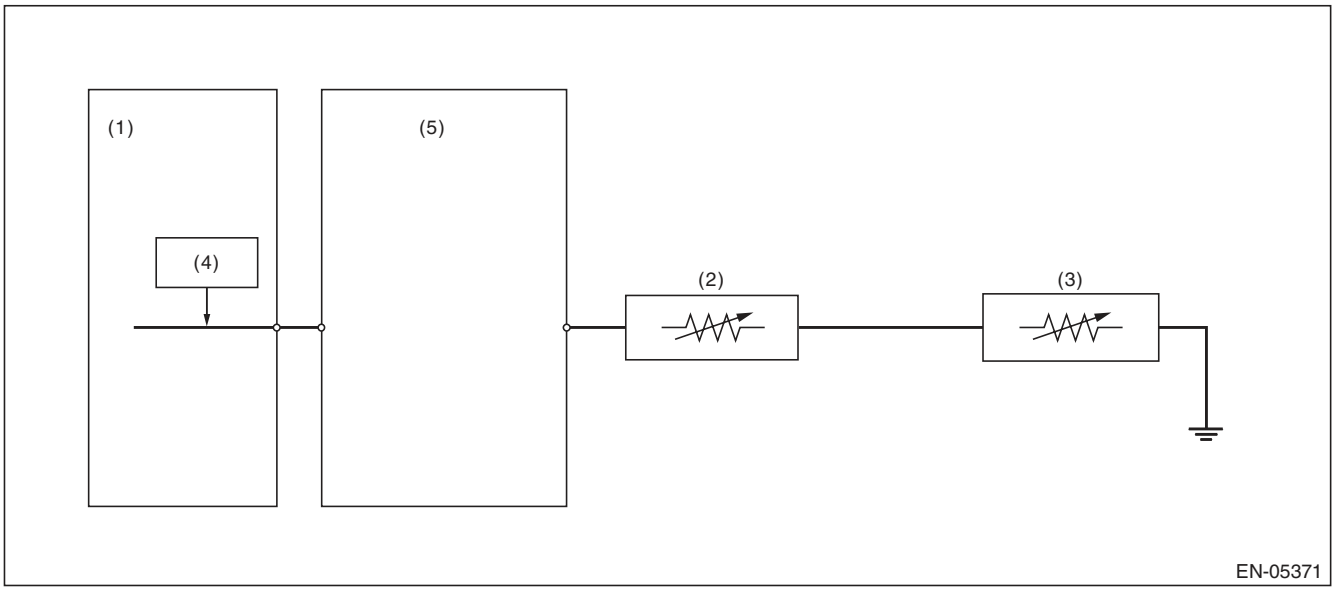

(1) Engine control module (ECM)
(2) Fuel level sensor
(3) Fuel sub level sensor
(4) Detecting circuit
(5) Body integrated unit

3. ENABLE CONDITION

Secondary Parameters	Enable Conditions
None	

4. GENERAL DRIVING CYCLE

Always perform the diagnosis continuously.

5. DIAGNOSTIC METHOD

- **Abnormality Judgement**

If the duration of time while the following conditions are met is longer than the time indicated, judge as NG.

Judgement Value

Malfunction Criteria	Threshold Value
Battery voltage	≥ 10.9 V
Elapsed time after starting the engine	≥ 3000 ms
Output voltage	< 0.173 V

Time Needed for Diagnosis: 2500 ms
Malfunction Indicator Light Illumination: Illuminates when malfunction occurs in 2 continuous driving cycles.

- **Normality Judgement**

Judge as OK and clear the NG if the continuous time while the following conditions are established is more than the predetermined time.

Judgement Value

Malfunction Criteria	Threshold Value
Battery voltage	≥ 10.9 V
Elapsed time after starting the engine	≥ 3000 ms
Output voltage	≥ 0.173 V

Time Needed for Diagnosis: Less than 1 second

BR:DTC P0463 FUEL LEVEL SENSOR “A” CIRCUIT HIGH

1. OUTLINE OF DIAGNOSIS

Detect the open or short circuit of fuel level sensor. Judge as NG if out of specification.

2. COMPONENT DESCRIPTION

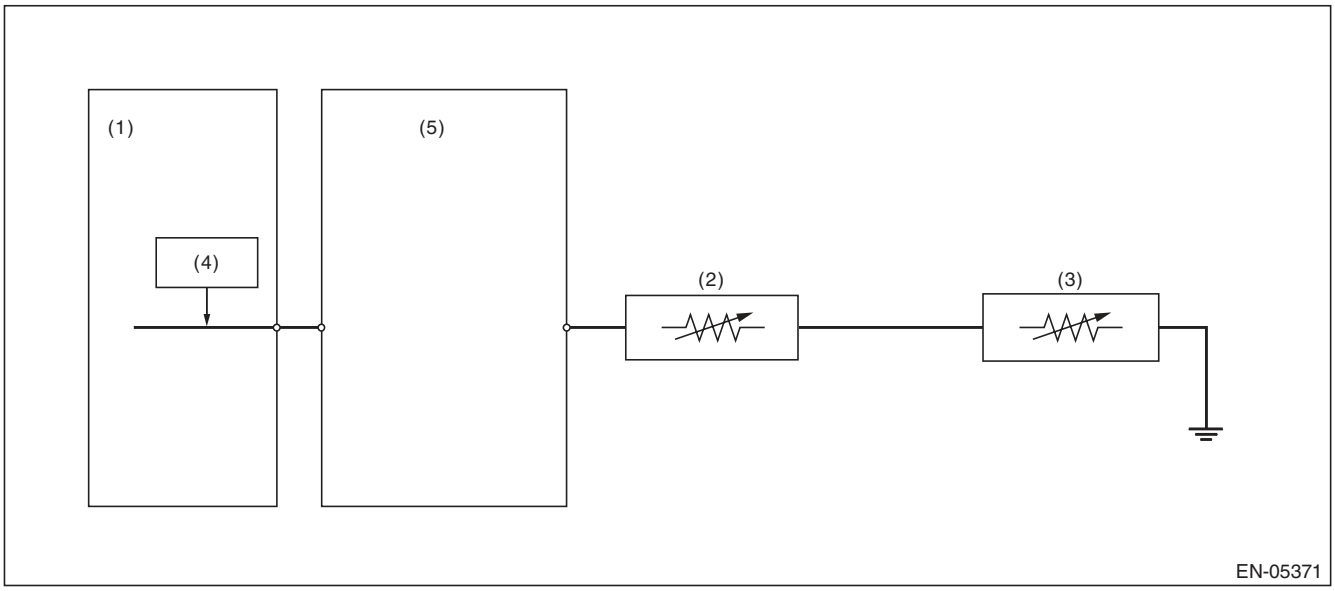

(1) Engine control module (ECM)
(2) Fuel level sensor
(3) Fuel sub level sensor
(4) Detecting circuit
(5) Body integrated unit

3. ENABLE CONDITION

Secondary Parameters	Enable Conditions
None	

4. GENERAL DRIVING CYCLE

Always perform the diagnosis continuously.

5. DIAGNOSTIC METHOD

- **Abnormality Judgement**

If the duration of time while the following conditions are met is longer than the time indicated, judge as NG.

Judgement Value

Malfunction Criteria	Threshold Value
Battery voltage	≥ 10.9 V
Elapsed time after starting the engine	≥ 3000 ms
Output voltage	≥ 7.212 V

Time Needed for Diagnosis: 1000 ms
Malfunction Indicator Light Illumination: Illuminates when malfunction occurs in 2 continuous driving cycles.

- **Normality Judgement**

Judge as OK and clear the NG if the continuous time while the following conditions are established is more than the predetermined time.

Judgement Value

Malfunction Criteria	Threshold Value
Battery voltage	≥ 10.9 V
Elapsed time after starting the engine	≥ 3000 ms
Output voltage	< 7.212 V

Time Needed for Diagnosis: Less than 1 second

BS:DTC P0464 FUEL LEVEL SENSOR CIRCUIT INTERMITTENT

1. OUTLINE OF DIAGNOSIS

Detect the unstable output faults from the fuel level sensor caused by noise. Judge as NG when the max. value and cumulative value of output voltage variation of the fuel level sensor is larger than the threshold value.

2. ENABLE CONDITION

Malfunction Criteria	Threshold Value
Engine speed	≥ 500 rpm
Elapsed time after starting the engine	≥ 1 second
Battery voltage	≥ 10.9 V
Idle switch	ON
Fuel level	≥ 9.6 ℓ (2.54 US gal, 2.11 Imp gal) and < 54.4 ℓ (14.37 US gal, 11.97 Imp gal)
Vehicle speed = 0 km/h (0 MPH)	≥ 10000 ms

3. GENERAL DRIVING CYCLE

- Always perform the diagnosis continuously at idle speed.
- Pay attention to the fuel level.

4. DIAGNOSTIC METHOD

Calculate the Max. value (DELFLMAX) and cumulative value (SUMFL) of output voltage variation of fuel level sensor during 12.2 seconds. Judge it normal when both max. and cumulative values are not over the threshold value. Otherwise, when either of them is over the threshold value, the diagnosis counter counts up. Judge as NG if the counter indicated 4 time(s).

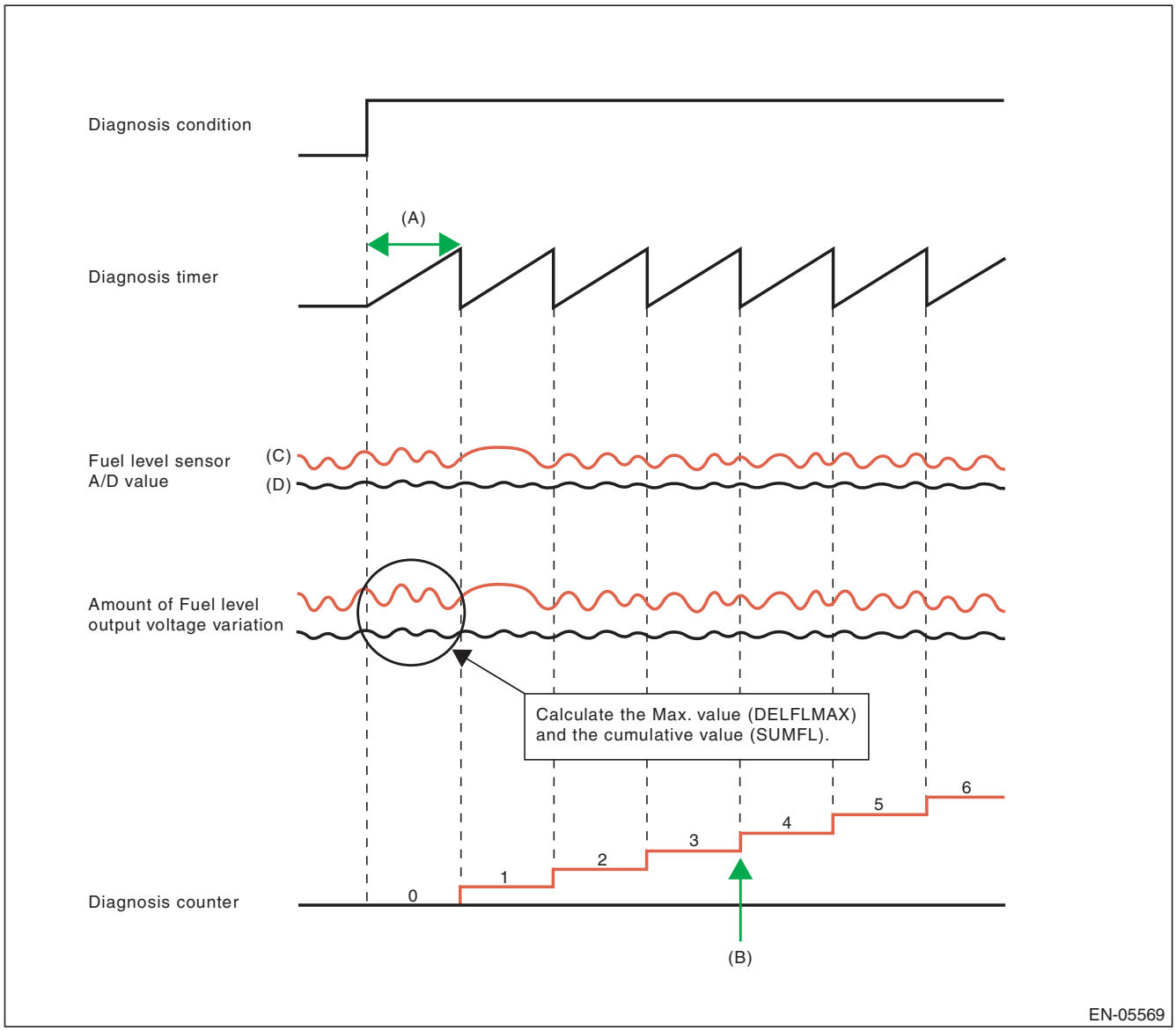

(A) 12288 ms
(B) NG at 4 time(s)
(C) Malfunction
(D) Normal

- **Abnormality Judgement**

If the duration of time while the following conditions are met is longer than the time indicated, judge as NG.

Judgement Value

Malfunction Criteria	Threshold Value
Integrated times of the condition reaching follows,	≥ 4 time(s)
DELFLMAX	≥ Value from Map
or	
SUMFL	≥ 25.92 V
At this time,	
DELFLMAX: Maximum difference of sensor output for 12288 ms	
SUMFL: Integrated value of the sensor output deviation for12288 ms	

Map

Fuel level (ℓ , US gal, Imp gal)	0, 0, 0	10, 2.64, 2.2	20, 5.28, 4.4	30, 7.93, 6.6	40, 10.57, 8.8	50, 13.21, 11	60, 15.85, 13.2
Measured voltage (V)	0.27	0.27	0.426	0.582	0.738	0.894	0.894

The diagnosis counter does not count up when the following conditions are completed within 12288 ms.

Maximum value – Minimum value of change of tank pressure for 12288 ms	≥ 0 kPa (0.375 mmHg, 0 inHg)
Maximum value – Minimum value of battery voltage for 12288 ms	≥ 0.609 V

Time Needed for Diagnosis: 12288 ms × 4 time(s)
Malfunction Indicator Light Illumination: Illuminates when malfunction occurs in 2 continuous driving cycles.

- **Normality Judgement**

Judge as OK and clear the NG if the continuous time while the following conditions are established is more than the predetermined time.

Judgement Value

Malfunction Criteria	Threshold Value
DELFLMAX	< Value from Map
SUMFL	< 25.92 V
At this time,	
DELFLMAX: Maximum difference of sensor output for 12288 ms	
SUMFL: Integrated value of the sensor output deviation for12288 ms	

Time Needed for Diagnosis: 12288 ms

BT:DTC P0500 VEHICLE SPEED SENSOR “A”

1. OUTLINE OF DIAGNOSIS

Judge as NG when outside of the judgment value.
Judge NG when the received data from ABSCM&H/U is abnormal vehicle speed, and the vehicle speed data is impossible.

2. COMPONENT DESCRIPTION

Vehicle speed signals are taken in to the ABS control module and hydraulic control unit, and normal/erroneous data of the ABS wheel speed sensor is received by CAN communication from the ABS control module and hydraulic control unit.

3. ENABLE CONDITION

Secondary Parameters	Enable Conditions
Battery voltage	≥ 10.9 V
Elapsed time after engine starting	≥ 2000 ms

4. GENERAL DRIVING CYCLE

Always perform diagnosis more than 2000 ms after starting the engine.

5. DIAGNOSTIC METHOD

- **Abnormality Judgement**

If the duration of time while the following conditions are met is longer than the time indicated, judge as NG.

Judgement Value

Malfunction Criteria	Threshold Value
Front ABS wheel speed sensor status	Malfunction
Either of the following is established	
Front left wheel speed	≥ 300 km/h (186.4 MPH)
Front right wheel speed	≥ 300 km/h (186.4 MPH)

Time Needed for Diagnosis: 2500 ms
Malfunction Indicator Light Illumination: Illuminates as soon as a malfunction occurs.

- **Normality Judgement**

Judge as OK and clear the NG if the continuous time while the following conditions are established is more than the predetermined time.

Judgement Value

Malfunction Criteria	Threshold Value
Front left wheel speed	> 0 km/h (0 MPH) and < 300 km/h (186.4 MPH)
Front right wheel speed	> 0 km/h (0 MPH) and < 300 km/h (186.4 MPH)

Time Needed for Diagnosis: 2500 ms

BU:DTC P0506 IDLE AIR CONTROL SYSTEM RPM LOWER THAN EXPECTED

1. OUTLINE OF DIAGNOSIS

Detect the malfunction that actual engine speed is not close to target engine speed during idling. Judge as NG when actual engine speed is not close to target engine speed during idling.

2. ENABLE CONDITION

Secondary Parameters	Enable Conditions
Engine coolant temperature	≥ 75 °C (167 °F)
Battery voltage	≥ 10.9 V
Atmospheric pressure	≥ 75 kPa (563 mmHg, 22.2 inHg)
Fuel level	≥ 9.6 ℓ (2.54 US gal, 2.11 Imp gal)
Elapsed time after starting the engine	≥ 10.49 s
Feedback of ISC	In operation
Lambda value (left and right)	≥ 0.81 and < 1.1
After switching air conditioner to ON/OFF	≥ 5.1 s
After intake manifold pressure changes by 4 kPa (30 mmHg, 1.2 inHg) or more.	> 5.1 s
Elapsed time after switching neutral position switch to ON/OFF	> 5.1 s
Vehicle speed	0 km/h (0 MPH)

3. GENERAL DRIVING CYCLE

Perform the diagnosis continuously at idling after warming up engine.

4. DIAGNOSTIC METHOD

- **Abnormality Judgement**

If the duration of time while the following conditions are met is longer than the time indicated, judge as NG.

Judgement Value

Malfunction Criteria	Threshold Value
Actual engine speed — Targeted engine speed	< –100 rpm
Feedback compensation for ISC	Max.

Time Needed for Diagnosis: 10 s × 3 time(s)
Malfunction Indicator Light Illumination: Illuminates when malfunction occurs in 2 continuous driving cycles.

- **Normality Judgement**

Judge as OK and clear the NG if the continuous time while the following conditions are established is more than the predetermined time.

Judgement Value

Malfunction Criteria	Threshold Value
Actual engine speed — Targeted engine speed	≥ –100 rpm

Time Needed for Diagnosis: 10 s

BV:DTC P0507 IDLE AIR CONTROL SYSTEM RPM HIGHER THAN EXPECTED

1. OUTLINE OF DIAGNOSIS

Detect the malfunction that actual engine speed is not close to target engine speed during idling. Judge as NG when actual engine speed is not close to target engine speed during idling.

2. ENABLE CONDITION

Secondary Parameters	Enable Conditions
Engine coolant temperature	≥ 75 °C (167 °F)
Battery voltage	≥ 10.9 V
Atmospheric pressure	≥ 75 kPa (563 mmHg, 22.2 inHg)
Fuel level	≥ 9.6 ℓ (2.54 US gal, 2.11 Imp gal)
Elapsed time after starting the engine	≥ 10.49 s
Feedback of ISC	In operation
Lambda value (left and right)	≥ 0.81 and < 1.1
After switching air conditioner to ON/OFF	≥ 5.1 s
After intake manifold pressure changes by 4 kPa (30 mmHg, 1.2 inHg) or more.	> 5.1 s
Elapsed time after switching neutral position switch to ON/OFF	> 5.1 s
Vehicle speed	0 km/h (0 MPH)

3. GENERAL DRIVING CYCLE

Perform the diagnosis continuously at idling after warming up engine.

4. DIAGNOSTIC METHOD

- **Abnormality Judgement**

If the duration of time while the following conditions are met is longer than the time indicated, judge as NG.

Judgement Value

Malfunction Criteria	Threshold Value
Actual – Target engine speed	≥ 200 rpm
Feedback value for ISC	Min.

Time Needed for Diagnosis: 10 s × 3 time(s)
Malfunction Indicator Light Illumination: Illuminates when malfunction occurs in 2 continuous driving cycles.

- **Normality Judgement**

Judge as OK and clear the NG if the continuous time while the following conditions are established is more than the predetermined time.

Judgement Value

Malfunction Criteria	Threshold Value
Actual – Target engine speed	< 200 rpm

Time Needed for Diagnosis: 10 s

BW:DTC P0512 STARTER REQUEST CIRCUIT

1. OUTLINE OF DIAGNOSIS

Detect the open or short circuit of starter SW.
Judge as ON NG when the starter SW signal remains ON.

2. ENABLE CONDITION

Secondary Parameters	Enable Conditions
None	

3. GENERAL DRIVING CYCLE

Always perform the diagnosis continuously.

4. DIAGNOSTIC METHOD

- **Abnormality Judgement**

If the duration of time while the following conditions are met is longer than the time indicated, judge as NG.

Judgement Value

Malfunction Criteria	Threshold Value
Engine condition	After engine starting
Starter OFF signal	Not detected
Battery voltage	≥ 8 V

Time Needed for Diagnosis: 180000 ms
Malfunction Indicator Light Illumination: Illuminates when malfunction occurs in 2 continuous driving cycles.

- **Normality Judgement**

Judge as OK and clear the NG if the continuous time while the following conditions are established is more than the predetermined time.

Judgement Value

Malfunction Criteria	Threshold Value
Starter OFF signal	Detected
Battery voltage	≥ 8 V

Time Needed for Diagnosis: Less than 1 second

BX:DTC P0513 INCORRECT IMMOBILIZER KEY

1. OUTLINE OF DIAGNOSIS

DTC	Item	Outline of Diagnosis
P0513	Incorrect Immobilizer Key	Incorrect immobilizer key (Use of unregistered key in body integrated unit)
P1570	Antenna	Faulty antenna
P1571	Reference Code Incompatibility	Reference code incompatibility between body integrated unit and ECM
P1572	IMM Circuit Failure (Except Antenna Circuit)	Communication failure between body integrated unit and ECM
P1574	Key Communication Failure	Failure of body integrated unit to verify key (transponder) ID code or transponder failure
P1576	EGI Control Module EEPROM	ECM malfunctioning
P1577	IMM Control Module EEPROM	Body integrated unit malfunctioning
P1578	Meter Failure	Reference code incompatibility between body integrated unit and combination meter

2. ENABLE CONDITION

When starting the engine.

3. GENERAL DRIVING CYCLE

Perform the diagnosis only after starting the engine.

4. DIAGNOSTIC METHOD

Judge as NG when the conditions for the outline of the diagnosis of the top are established.

BY:DTC P0600 SERIAL COMMUNICATION LINK

1. OUTLINE OF DIAGNOSIS

Detect malfunction of CAN communication.
When CAN communications is not possible, and CAN communications with TCM is not possible, judge as NG if data from the TCM is not normal.

2. COMPONENT DESCRIPTION

ECM and TCM are connected by high speed CAN.

(Common Specifications)
CAN Protocol 2.0 B (Active)
Frame Format: 11 Bit ID Frame (Standard Frame)

(High speed CAN)
Conforms to ISO11898
Communication Speed: 500 kbps

3. ENABLE CONDITION

Secondary Parameters	Enable Conditions
None	

4. GENERAL DRIVING CYCLE

Perform the diagnosis continuously after starting the engine.

5. DIAGNOSTIC METHOD

- **Abnormality Judgement**

Judge as NG when the following conditions are established.

Judgement Value

Malfunction Criteria	Threshold Value
Battery voltage	> 10.9 V
Starter switch	OFF
Engine	run
bus off flag or error warning flag	set (error)
or	
ID received from control module connected to driving system CAN	None during 500 milliseconds
or	
Data updated from control module connected to driving system CAN	None during 500 milliseconds

Time Needed for Diagnosis: Less than 1 second
Malfunction Indicator Light Illumination: Illuminates as soon as a malfunction occurs.

- **Normality Judgement**

Judge as OK and clear the NG if the continuous time while the following conditions are established is more than the predetermined time.

Judgement Value

Malfunction Criteria	Threshold Value
Battery voltage	> 10.9 V
Starter switch	OFF
Engine	run
bus off flag or error warning flag	clear (No error)
ID received from control module connected to driving system CAN	Yes
Data updated from control module connected to driving system CAN	Yes

Time Needed for Diagnosis: 1000 ms
Malfunction Indicator Light Illumination: Illuminates as soon as a malfunction occurs.

BZ:DTC P0604 INTERNAL CONTROL MODULE RANDOM ACCESS MEMORY (RAM) ERROR

1. OUTLINE OF DIAGNOSIS

Detect the malfunction of microcomputer (RAM).
When there is a problem in the main CPU normal RAM, or the sub CPU normal RAM, judge as NG. Judge as OK when both are operating properly.
If it is possible to write data to the whole area of RAM in the initial routine, and is possible to read the same data, it is judged as OK, and if not, NG.

2. ENABLE CONDITION

Secondary Parameters	Enable Conditions
None	

Diagnosis with the initial routine.

3. GENERAL DRIVING CYCLE

Perform the diagnosis as soon as the ignition switch is turned to ON.

4. DIAGNOSTIC METHOD

Abnormality Judgement

Judge as NG if the criteria below are met.

Judgement Value

Malfunction Criteria	Threshold Value
Main CPU normal RAM abnormal	
Write 5AA5A55A and then read. (Whole area of RAM)	5AA5A55A cannot be read.
Write A55A5AA5 and then read. (Whole area of RAM)	A55A5AA5 cannot be read.
Sub CPU normal RAM abnormal	
Write 5AA5 and then read. (Whole area of RAM)	5AA5 cannot be read.
Write A55A and then read. (Whole area of RAM)	A55A cannot be read.

Time Needed for Diagnosis: Undetermined
Malfunction Indicator Light Illumination: Illuminates as soon as a malfunction occurs.

Normality Judgement

Judge as OK and clear the NG when the malfunction criteria below are met.

Judgement Value

Malfunction Criteria	Threshold Value
Main CPU normal RAM abnormal	
Write 5AA5A55A and then read. (Whole area of RAM)	5AA5A55A can be read.
And write A55A5AA5 and then read. (Whole area of RAM)	A55A5AA5 can be read.
Sub CPU normal RAM abnormal	
Write 5AA5 and then read. (Whole area of RAM)	5AA5 can be read.
And write A55A and then read. (Whole area of RAM)	A55A can be read.

CA:DTC P0605 INTERNAL CONTROL MODULE READ ONLY MEMORY (ROM) ERROR

1. OUTLINE OF DIAGNOSIS

Judge as NG when SUM value of ROM is outside the standard value.

2. ENABLE CONDITION

Secondary Parameters	Enable Conditions
Ignition switch	ON

3. GENERAL DRIVING CYCLE

Always perform the diagnosis continuously.

4. DIAGNOSTIC METHOD

Abnormality Judgement

Judge as NG if the criteria below are met.

Judgement Value

Malfunction Criteria	Threshold Value
SUM value of ROM	Standard

Time Needed for Diagnosis: Undetermined
Malfunction Indicator Light Illumination: Illuminates as soon as a malfunction occurs.

CB:DTC P0607 THROTTLE CONTROL SYSTEM CIRCUIT RANGE/PERFORMANCE

1. OUTLINE OF DIAGNOSIS

Judge as NG when any one of the followings is established.
1) When the read value of throttle position sensor 1 signal is mismatched between main CPU and sub CPU.
2) When the read value of accelerator pedal position sensor 1 signal is mismatched between main CPU and sub CPU.
3) When the sub CPU operates abnormally.
4) When the communication between main CPU ←→ sub CPU is abnormal.
5) When the input amplifier circuit of throttle position sensor 1 is abnormal.
6) When the cruise control cannot be canceled correctly.
7) When the signal of brake SW1 and 2 is mismatched.

2. COMPONENT DESCRIPTION

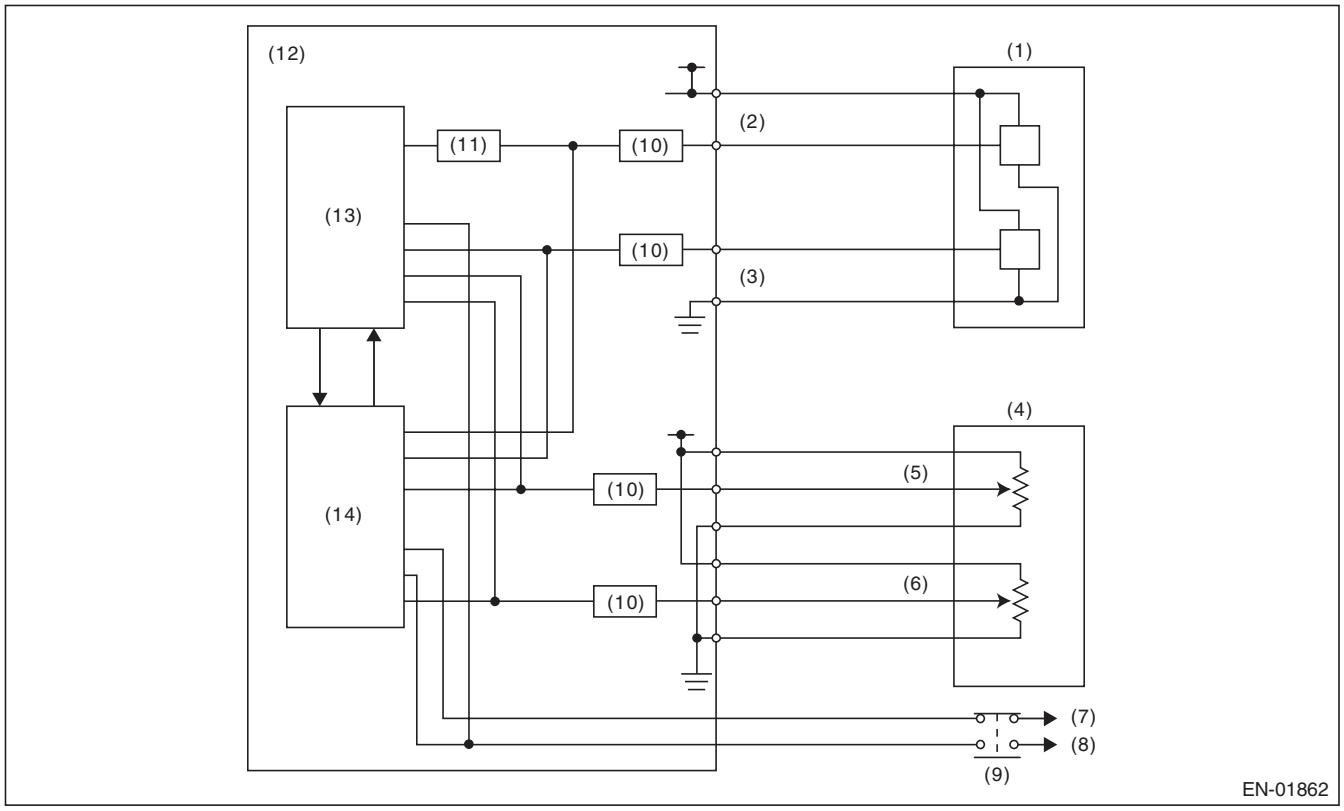

(1)	Throttle position sensor	(6)	Accelerator pedal position sensor 2	(11)	Amplifier circuit
(2)	Throttle position sensor 1	(7)	Battery	(12)	Engine control module (ECM)
(3)	Throttle position sensor 2	(8)	Stop light	(13)	Sub CPU
(4)	Accelerator pedal position sensor	(9)	Brake switch	(14)	Main CPU
(5)	Accelerator pedal position sensor 1	(10)	I/F circuit		

3. ENABLE CONDITION

Secondary Parameters	Enable Conditions
(1) Ignition switch	ON
(2) Ignition switch	ON
(3) None	—
(4) None	—
(5) Throttle opening angle	
(6) Brake switch (only with cruise control)	ON
(7) None	—

4. GENERAL DRIVING CYCLE

(1) — (4): Always perform the diagnosis continuously.
(5): Always perform the diagnosis continuously when idling.
(6): Perform the diagnosis when the brake pedal is depressed.
(7): Always perform the diagnosis continuously.
(8): Always perform the diagnosis continuously when the cruise control pedal is not operating.

5. DIAGNOSTIC METHOD

Judge as OK and clear the NG when the malfunction criteria below are met.

Judgement Value

Malfunction Criteria	Threshold Value
(1) Difference of CPU reading value of the throttle position sensor signal	≤ 0.0858 V
(2) Difference of CPU read value of the accelerator pedal position sensor signal	≤ 0.35 V
(3) WD pulse from sub CPU	WD pulse occur
(4) Communication between CPU	Possible to communicate
(5) |Throttle position sensor 1 opening angle — (Throttle position sensor 1 opening angle after passing amplifier) 1/4|	< 3°
(6) Cruise control cancel signal at brake ON	Cruise control cancel signal ON
(7) Brake switch 1, 2 signal	SW 1 and 2 are matched

Time Needed for Diagnosis:

1. 600 ms
2. 830 ms
3. 200 ms
4. 200 ms
5. 24 ms
6. 250 ms
7. 200 ms

Malfunction Indicator Light Illumination: Illuminates as soon as a malfunction occurs.

CC:DTC P0638 THROTTLE ACTUATOR CONTROL RANGE/PERFORMANCE (BANK 1)

1. OUTLINE OF DIAGNOSIS

Judge as NG when the target opening angle and actual opening angle is mismatched or the current to motor is the specified duty or more for specified time continuously.

2. COMPONENT DESCRIPTION

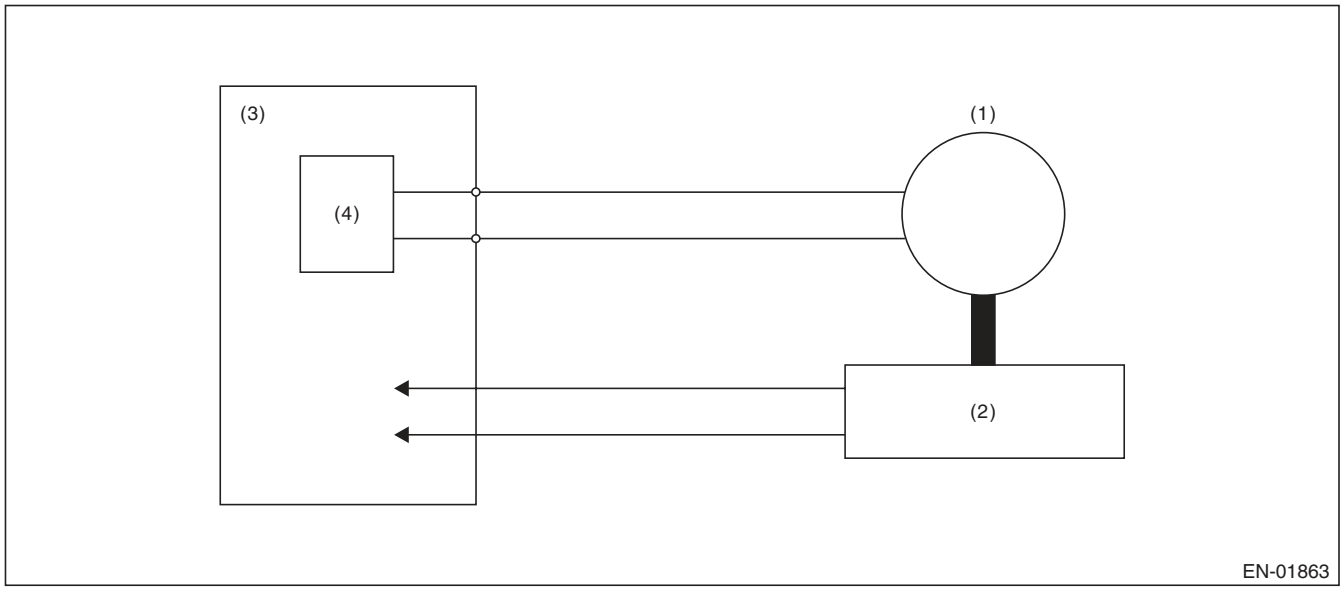

(1) Motor
(2) Throttle position sensor
(3) Engine control module (ECM)
(4) Drive circuit

3. ENABLE CONDITION

Secondary Parameters	Enable Conditions
Ignition switch	ON
Normal operation of electronic throttle control	ON

4. GENERAL DRIVING CYCLE

Always perform the diagnosis continuously when the electronic throttle control is operating.

5. DIAGNOSTIC METHOD

Judge as OK and clear the NG when the malfunction criteria below are met.

Judgement Value

Malfunction Criteria	Threshold Value
Difference between target opening angle and actual opening angle	3.5° or less
Output duty to drive circuit	95% or less

Time Needed for Diagnosis:

- Target opening angle and actual opening angle: 250 milliseconds (For NG) 2000 milliseconds (For OK)
- Output duty to drive circuit: 2000 milliseconds

Details of Judgement Value

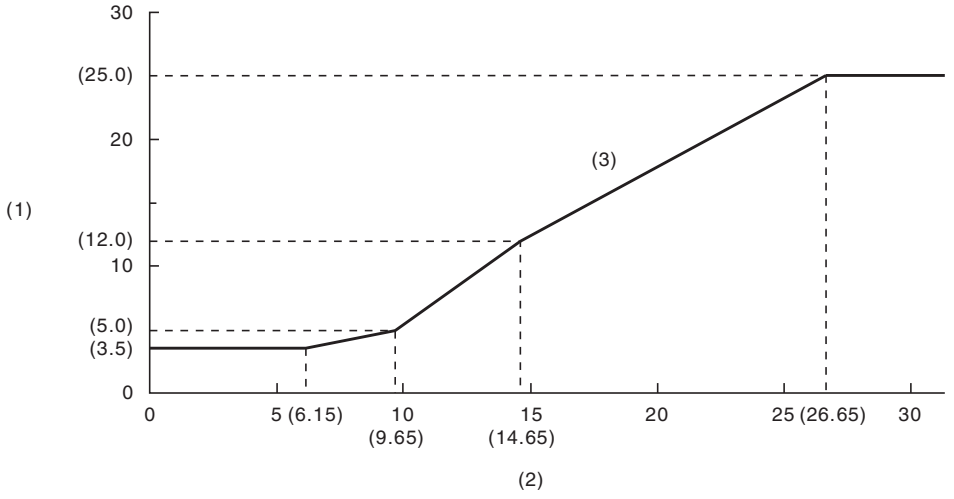

(1) Difference between target opening angle and actual opening angle (°)
(2) Target throttle opening angle (°)
(3) NG area

Details of Judgement time (The actual opening angle ≤ target opening angle is always 1000 milliseconds)

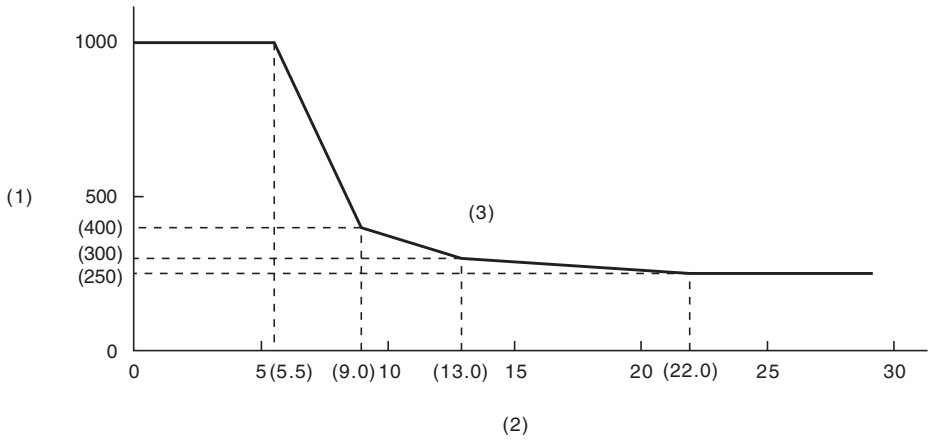

(1) Judgement time (milliseconds)
(2) Throttle position sensor 1 opening angle
(3) NG area

Malfunction Indicator Light Illumination: Illuminates as soon as a malfunction occurs.

CD:DTC P0700 TRANSMISSION CONTROL SYSTEM (MIL REQUEST)

1. OUTLINE OF DIAGNOSIS

Judge as NG when there is CAN communication with the TCM and there is a MIL lighting request.

2. ENABLE CONDITION

Secondary Parameters	Enable Conditions
None	

3. GENERAL DRIVING CYCLE

Always perform the diagnosis continuously.

4. DIAGNOSTIC METHOD

- **Abnormality Judgement**

If the duration of time while the following conditions are met is longer than the time indicated, judge as NG.

Judgement Value

Malfunction Criteria	Threshold Value
Battery voltage	≥ 10.9 V
MIL lighting request from TCM	Yes

Time Needed for Diagnosis: 2500 ms
Malfunction Indicator Light Illumination: Illuminates as soon as a malfunction occurs.

- **Normality Judgement**

If the duration of time while the following conditions are met is longer than the time indicated, judge as NG.

Judgement Value

Malfunction Criteria	Threshold Value
Battery voltage	≥ 10.9 V
MIL lighting request from TCM	None

Time Needed for Diagnosis: Less than 1 second

CE:DTC P0851 PARK/NEUTRAL SWITCH INPUT CIRCUIT LOW (AT MODEL)

1. OUTLINE OF DIAGNOSIS

Judge the open or short circuit of the neutral SW.
Judge as NG when the ECM neutral terminal input differs from the reception data from TCM.

2. ENABLE CONDITION

Secondary Parameters	Enable Conditions
Battery voltage	≥ 10.9 V
Starter relay	OFF

3. GENERAL DRIVING CYCLE

Perform the diagnosis continuously in 2 seconds after starting the engine.

4. DIAGNOSTIC METHOD

- **Abnormality Judgement**

If the duration of time while the following conditions are met is longer than the time indicated, judge as NG.

Judgement Value

Malfunction Criteria	Threshold Value
Neutral switch signal in ECM when “P”/ “N” range in TCM are “OFF” and when the other switches are “ON”	LOW (ON)

Time Needed for Diagnosis: 100 time(s)
Malfunction Indicator Light Illumination: Illuminates when malfunction occurs in 2 continuous driving cycles.

- **Normality Judgement**

Judge as OK and clear the NG if the continuous time while the following conditions are established is more than the predetermined time.

Judgement Value

Malfunction Criteria	Threshold Value
Neutral switch signal in ECM when “P”/ “N” range in TCM are “OFF” and when the other switches are “ON”	HIGH (OFF)

Time Needed for Diagnosis: Less than 1 second

CF:DTC P0851 NEUTRAL SWITCH INPUT CIRCUIT LOW (MT MODEL)

1. OUTLINE OF DIAGNOSIS

Detect the open or short circuit of neutral SW.
Judge as NG when there is no change in the neutral SW even if the driving shift was applied. (There is neutral SW ON/OFF inversion from the vehicle speed and engine speed.)

2. ENABLE CONDITION

Secondary Parameters	Enable Conditions
Battery voltage	≥ 10.9 V
Starter relay	OFF

3. GENERAL DRIVING CYCLE

Perform the diagnosis continuously in 2 seconds after starting the engine.

4. DIAGNOSTIC METHOD

- **Abnormality Judgement**

Judge NG when the malfunction criteria below are completed determined times or more after the neutral SW change.

Judgement Value

Malfunction Criteria	Threshold Value
Neutral switch signal (while changing from a to b below)	LOW (ON) continues.
Driving condition change	From a) to b)
a) Engine speed 600 rpm — 900 rpm & Vehicle speed = 0 km/h (0 MPH)	
b) Engine speed 1600 rpm — 900 rpm & Vehicle speed ≥ 0 km/h (0 MPH)	

Time Needed for Diagnosis: 3 time(s)
Malfunction Indicator Light Illumination: Illuminates when malfunction occurs in 2 continuous driving cycles.

- **Normality Judgement**

Judge as OK and clear NG when there is change in the neutral SW.

Judgement Value

Malfunction Criteria	Threshold Value
Neutral switch signal (while changing from a to b below)	Changes to HIGH (OFF).
Driving condition change	From a) to b)
a) Engine speed 600 rpm — 900 rpm & Vehicle speed = 0 km/h (0 MPH)	
b) Engine speed 1600 rpm — 900 rpm & Vehicle speed ≥ 0 km/h (0 MPH)	

Time Needed for Diagnosis: Less than 1 second

CG:DTC P0852 PARK/NEUTRAL SWITCH INPUT CIRCUIT HIGH (AT MODEL)

1. OUTLINE OF DIAGNOSIS

Judge the open or short circuit of the neutral SW.
Judge as NG when the ECM neutral terminal input differs from the reception data from TCM.

2. ENABLE CONDITION

Secondary Parameters	Enable Conditions
Battery voltage	≥ 10.9 V
Starter relay	OFF

3. GENERAL DRIVING CYCLE

Perform the diagnosis continuously in 2 seconds after starting the engine.

4. DIAGNOSTIC METHOD

- **Abnormality Judgement**

If the duration of time while the following conditions are met is longer than the time indicated, judge as NG.

Judgement Value

Malfunction Criteria	Threshold Value
Neutral switch signal in ECM when “P”/ “N” range in TCM are “ON” and when the other switches are “OFF”	HIGH (OFF)

Time Needed for Diagnosis: 100 time(s)
Malfunction Indicator Light Illumination: Illuminates when malfunction occurs in 2 continuous driving cycles.

- **Normality Judgement**

Judge as OK and clear the NG if the continuous time while the following conditions are established is more than the predetermined time.

Judgement Value

Malfunction Criteria	Threshold Value
Neutral switch signal in ECM when “P”/ “N” range in TCM are “ON” and when the other switches are “OFF”	LOW (ON)

Time Needed for Diagnosis: Less than 1 second

CH:DTC P0852 NEUTRAL SWITCH INPUT CIRCUIT HIGH (MT MODEL)

1. OUTLINE OF DIAGNOSIS

Detect the open or short circuit of neutral SW.
Judge as NG when there is no change in the neutral SW even if the driving shift was applied. (There is neutral SW ON/OFF inversion from the vehicle speed and engine speed.)

2. ENABLE CONDITION

Secondary Parameters	Enable Conditions
Battery voltage	≥ 10.9 V
Starter relay	OFF

3. GENERAL DRIVING CYCLE

Perform the diagnosis continuously in 2 seconds after starting the engine.

4. DIAGNOSTIC METHOD

- **Abnormality Judgement**

Judge NG when the malfunction criteria below are completed determined times or more after the neutral SW change.

Judgement Value

Malfunction Criteria	Threshold Value
Neutral switch signal (while changing from a to b below)	HIGH (OFF) continues.
Driving condition change	From a) to b)
a) Engine speed 600 rpm — 900 rpm & Vehicle speed = 0 km/h (0 MPH)	
b) Engine speed 1600 rpm — 900 rpm & Vehicle speed ≥ 0 km/h (0 MPH)	

Time Needed for Diagnosis: 3 time(s)
Malfunction Indicator Light Illumination: Illuminates when malfunction occurs in 2 continuous driving cycles.

- **Normality Judgement**

Judge as OK and clear NG when there is change in the neutral SW.

Judgement Value

Malfunction Criteria	Threshold Value
Neutral switch signal (while changing from a to b below)	Changes to LOW (ON).
Driving condition change	From a) to b)
a) Engine speed 600 rpm — 900 rpm & Vehicle speed = 0 km/h (0 MPH)	
b) Engine speed 1600 rpm — 900 rpm & Vehicle speed ≥ 0 km/h (0 MPH)	

Time Needed for Diagnosis: Less than 1 second

CI: DTC P1152 O2 SENSOR CIRCUIT RANGE/PERFORMANCE (LOW) (BANK1 SENSOR1)

1. OUTLINE OF DIAGNOSIS

Detect that λ value remains low.
Judge as NG when lambda value is abnormal in accordance with λ value of front oxygen (A/F) sensor and running conditions such as vehicle speed, amount of intake air, engine coolant temperature, sub feedback control, etc.

λ value = Actual air fuel ratio/Theoretical air fuel ratio
λ > 1: Lean
λ < 1: Rich

2. COMPONENT DESCRIPTION

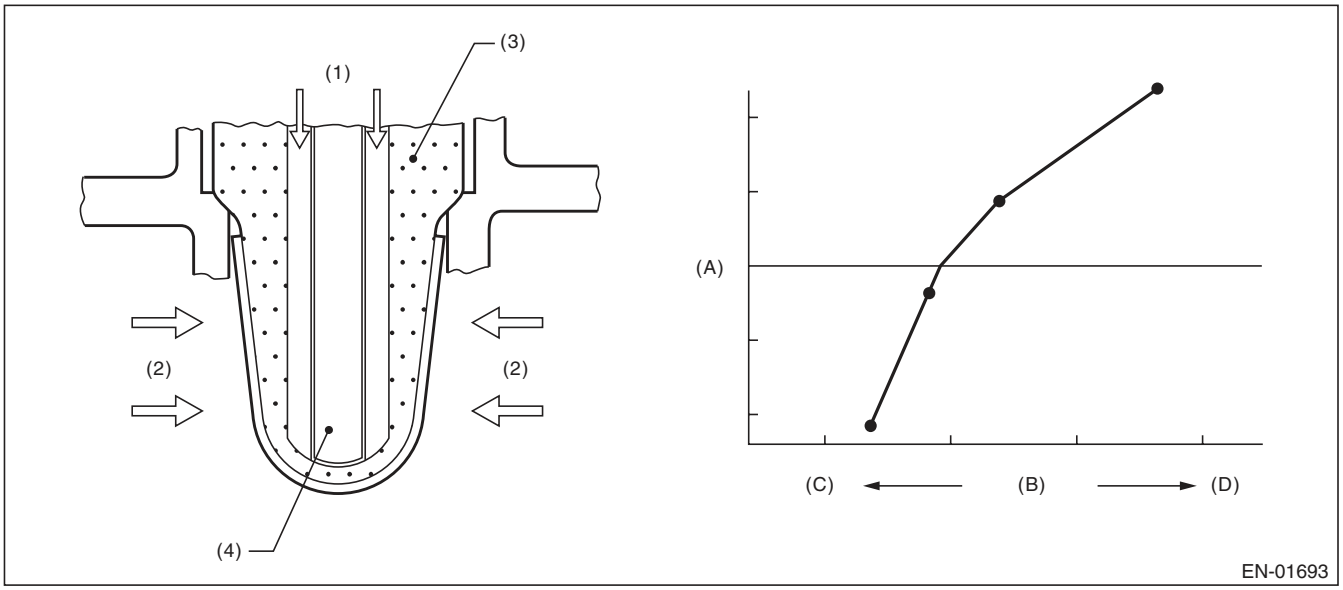

(A)	Electromotive force	(C)	Lean	(D)	Rich
(B)	Air fuel ratio				
(1)	Atmosphere	(3)	ZrO_2	(4)	Ceramic heater
(2)	Exhaust gas				

3. ENABLE CONDITION

Secondary Parameters	Enable Conditions
Time needed for all secondary parameters to be in enable conditions	≥ 4096 ms
Battery voltage	≥ 10.9 V
Barometric pressure	≥ 75 kPa (563 mmHg, 22.2 inHg)
Rear oxygen sensor sub feedback	Execution
Rear oxygen sensor output voltage – Feedback target voltage	–0.2 V — 0.1 V
or rear oxygen sensor sub feedback compensation coefficient	On Min.
or rear oxygen sensor sub feedback compensation coefficient	On Max.
Elapsed time after starting the engine	≥ 60000 ms
Engine coolant temperature	≥ 75 °C (167 °F)
Vehicle speed	≥ 20 km/h (12.4 MPH)
Amount of intake air	≥ 6 g/s (0.21 oz/s)
Load change at 180°CA	< 0.02 g/rev (0 oz/rev)
Front oxygen (A/F) sensor impedance	0 Ω — 50 Ω
Learning value of evaporation gas density	< 0.2
Total time of operating canister purge	≥ 19.9 s
Targeted lambda value load compensation coefficient	–0.03 — 0.000

4. GENERAL DRIVING CYCLE

Perform diagnosis continuously at a constant speed of 20 km/h (12.4 MPH) or more after 60000 ms have passed since the engine started.

5. DIAGNOSTIC METHOD

- **Abnormality Judgement**

If the duration of time while the following conditions are met is longer than the time indicated, judge as NG.

Judgement Value

Malfunction Criteria	Threshold Value
λ value	< 0.85

Time Needed for Diagnosis: 10000 ms
Malfunction Indicator Light Illumination: Illuminates when malfunction occurs in 2 continuous driving cycles.

- **Normality Judgement**

Judge as OK and clear the NG if the continuous time while the following conditions are established is more than the predetermined time.

Judgement Value

Malfunction Criteria	Threshold Value
λ value	≥ 0.85

Time Needed for Diagnosis: Less than 1 second

CJ:DTC P1153 O2 SENSOR CIRCUIT RANGE/PERFORMANCE (HIGH) (BANK1 SENSOR1)

1. OUTLINE OF DIAGNOSIS

Detect that λ value remains high.
Judge as NG when lambda value is abnormal in accordance with λ value of front oxygen (A/F) sensor and running conditions such as vehicle speed, amount of intake air, engine coolant temperature, sub feedback control, etc.

λ value = Actual air fuel ratio/Theoretical air fuel ratio
λ > 1: Lean
λ < 1: Rich

2. COMPONENT DESCRIPTION

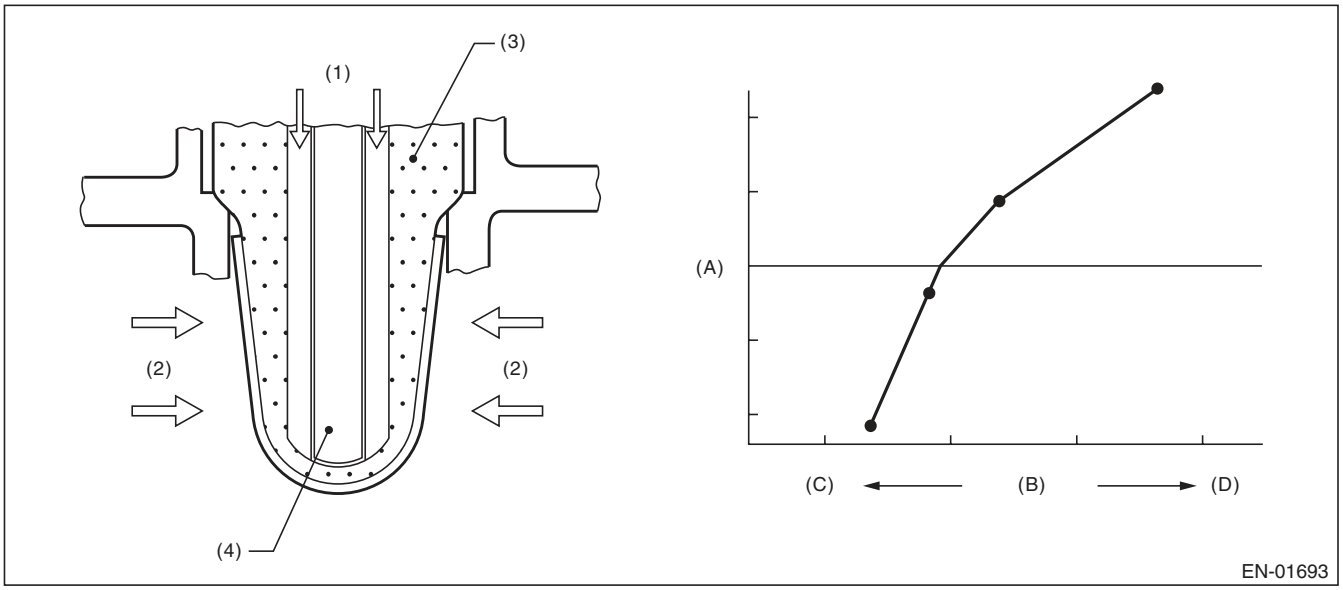

(A) Electromotive force
(B) Air fuel ratio
(C) Lean
(D) Rich

(1) Atmosphere
(2) Exhaust gas
(3) ZrO_2
(4) Ceramic heater

3. ENABLE CONDITION

Secondary Parameters	Enable Conditions
Time needed for all secondary parameters to be in enable conditions	≥ 4096 ms
Battery voltage	≥ 10.9 V
Barometric pressure	≥ 75 kPa (563 mmHg, 22.2 inHg)
Rear oxygen sensor sub feedback	Execution
Rear oxygen sensor output voltage – Feedback target voltage	–0.2 V — 0.1 V
or rear oxygen sensor sub feedback compensation coefficient	On Min.
or rear oxygen sensor sub feedback compensation coefficient	On Max.
Elapsed time after starting the engine	≥ 60000 ms
Engine coolant temperature	≥ 75 °C (167 °F)
Vehicle speed	≥ 20 km/h (12.4 MPH)
Amount of intake air	≥ 6 g/s (0.21 oz/s)
Load change at 180°CA	< 0.02 g/rev (0 oz/rev)
Front oxygen (A/F) sensor impedance	0 Ω — 50 Ω
Learning value of evaporation gas density	< 0.2
Total time of operating canister purge	≥ 19.9 s
Targeted lambda value load compensation coefficient	–0.03 — 0.000

4. GENERAL DRIVING CYCLE

Perform diagnosis continuously at a constant speed of 20 km/h (12.4 MPH) or more after 60000 ms have passed since the engine started.

5. DIAGNOSTIC METHOD

- **Abnormality Judgement**

If the duration of time while the following conditions are met is longer than the time indicated, judge as NG.

Judgement Value

Malfunction Criteria	Threshold Value
λ value	> 1.15

Time Needed for Diagnosis: 10000 ms
Malfunction Indicator Light Illumination: Illuminates when malfunction occurs in 2 continuous driving cycles.

- **Normality Judgement**

Judge as OK and clear the NG if the continuous time while the following conditions are established is more than the predetermined time.

Judgement Value

Malfunction Criteria	Threshold Value
λ value	≤ 1.15

Time Needed for Diagnosis: Less than 1 second

CK:DTC P1160 RETURN SPRING FAILURE

1. OUTLINE OF DIAGNOSIS

Judge as NG when the valve is opened more than the default opening angle, but does not move to the close direction with the motor power stopped.

2. COMPONENT DESCRIPTION

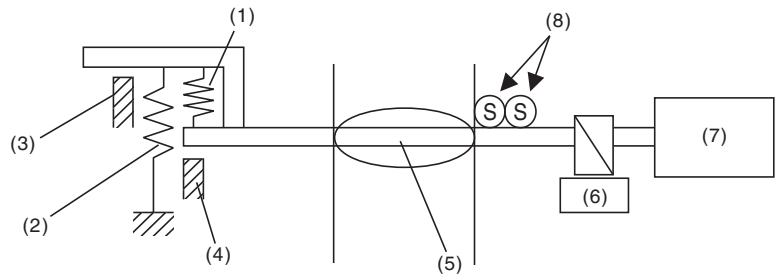

EN-01866

(1)	Opener spring	(4)	Full closed stopper	(7)	DC motor
(2)	Return spring	(5)	Throttle valve	(8)	Main and sub throttle sensor
(3)	Intermediate stopper	(6)	Gear		

3. ENABLE CONDITION

Secondary Parameters	Enable Conditions
Motor continuity	OFF

4. GENERAL DRIVING CYCLE

- Ignition switch ON → OFF
- Ignition switch OFF → ON (Only after clearing memory)

5. DIAGNOSTIC METHOD

Judge as OK and clear the NG when the malfunction criteria below are met.

Judgement Value

Malfunction Criteria	Threshold Value
Opening variation after continuity is set to OFF	≥ 2°

Time Needed for Diagnosis: 1880 milliseconds
Malfunction Indicator Light Illumination: Illuminates as soon as a malfunction occurs.

CL:DTC P1400 FUEL TANK PRESSURE CONTROL SOLENOID VALVE CIRCUIT LOW

1. OUTLINE OF DIAGNOSIS

Detect the open/short circuit of pressure control solenoid valve.
Judge as NG when ECM output level is different from actual terminal level.

2. COMPONENT DESCRIPTION

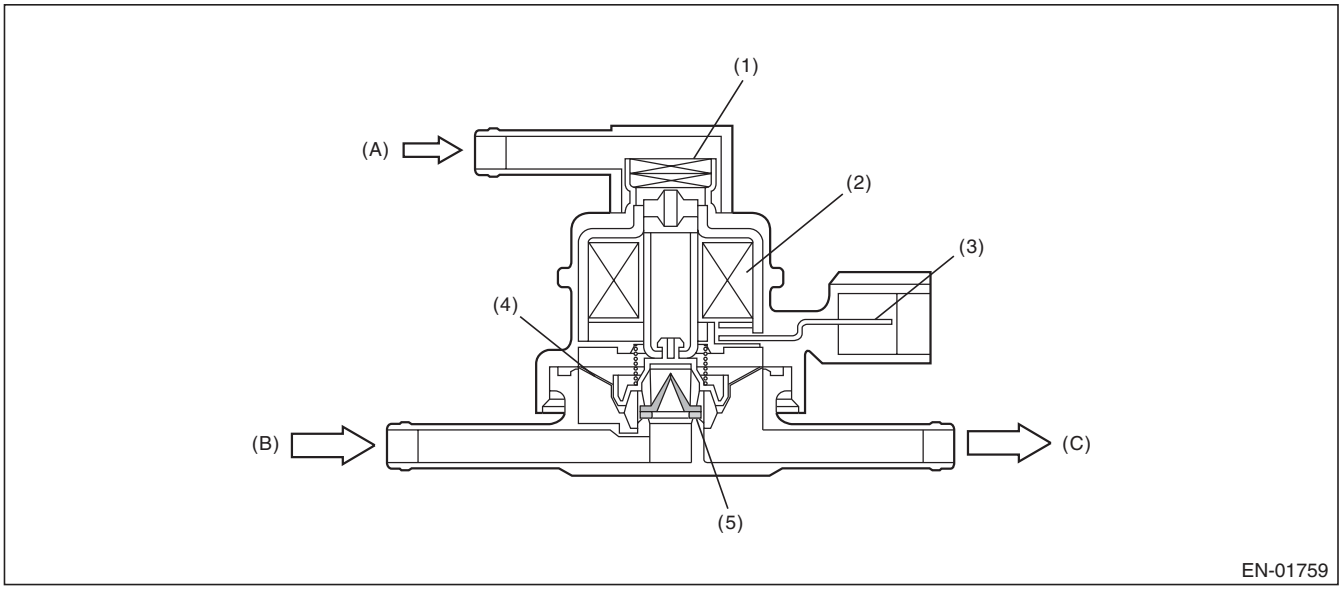

(A)	Barometric pressure	(B)	Shut-off valve	(C)	To fuel tank
(1)	Filter	(3)	Connector terminal	(5)	Valve
(2)	Coil	(4)	Diaphragm		

3. ENABLE CONDITION

Secondary Parameters	Enable Conditions
None	

4. GENERAL DRIVING CYCLE

Always perform the diagnosis after starting the engine.

5. DIAGNOSTIC METHOD

- **Abnormality Judgement**

If the duration of time while the following conditions are met is longer than the time indicated, judge as NG.

Judgement Value

Malfunction Criteria	Threshold Value
Battery voltage	≥ 10.9 V
Elapsed time after starting the engine	≥ 1 second
Terminal output voltage when ECM outputs OFF signal	Low

Time Needed for Diagnosis: 2500 ms
Malfunction Indicator Light Illumination: Illuminates when malfunction occurs in 2 continuous driving cycles.

- **Normality Judgement**

Judge as OK and clear the NG if the continuous time while the following conditions are established is more than the predetermined time.

Judgement Value

Malfunction Criteria	Threshold Value
Battery voltage	≥ 10.9 V
Elapsed time after starting the engine	≥ 1 second
Terminal output voltage when ECM outputs OFF signal	High

Time Needed for Diagnosis: Less than 1 second

CM:DTC P1420 FUEL TANK PRESSURE CONTROL SOL. VALVE CIRCUIT HIGH

1. OUTLINE OF DIAGNOSIS

Detect the open/short circuit of pressure control solenoid valve.
Judge as NG when ECM output level is different from actual terminal level.

2. COMPONENT DESCRIPTION

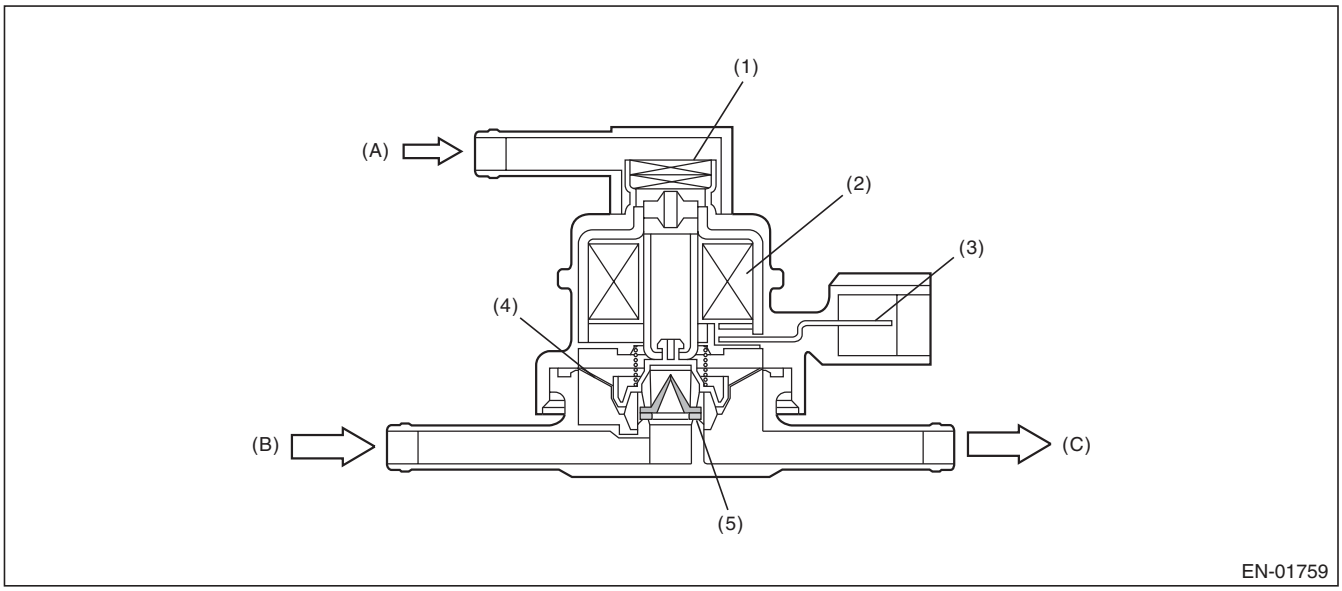

(A)	Barometric pressure	(B)	Shut-off valve	(C)	To fuel tank
(1)	Filter	(3)	Connector terminal	(5)	Valve
(2)	Coil	(4)	Diaphragm		

3. ENABLE CONDITION

Secondary Parameters	Enable Conditions
None	

4. GENERAL DRIVING CYCLE

Always perform the diagnosis after starting the engine.

5. DIAGNOSTIC METHOD

- **Abnormality Judgement**

If the duration of time while the following conditions are met is longer than the time indicated, judge as NG.

Judgement Value

Malfunction Criteria	Threshold Value
Battery voltage	≥ 10.9 V
Elapsed time after starting the engine	≥ 1 second
Terminal output voltage when ECM outputs ON signal	High

Time Needed for Diagnosis: 2500 ms
Malfunction Indicator Light Illumination: Illuminates when malfunction occurs in 2 continuous driving cycles.

- **Normality Judgement**

Judge as OK and clear the NG if the continuous time while the following conditions are established is more than the predetermined time.

Judgement Value

Malfunction Criteria	Threshold Value
Battery voltage	≥ 10.9 V
Elapsed time after starting the engine	≥ 1 second
Terminal output voltage when ECM outputs ON signal	Low

Time Needed for Diagnosis: Less than 1 second

CN:DTC P1443 VENT CONTROL SOLENOID VALVE FUNCTION PROBLEM

1. OUTLINE OF DIAGNOSIS

Detect the abnormal function (stuck closed) of the drain valve.
Judge as NG when fuel tank pressure is low.

2. COMPONENT DESCRIPTION

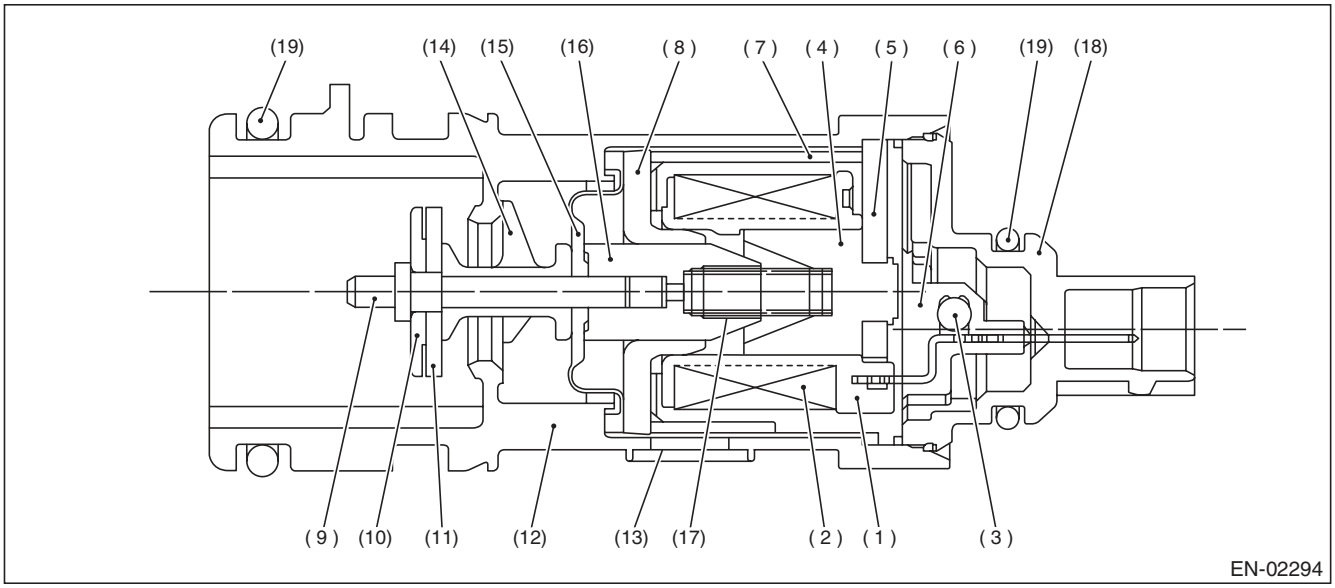

(1)	Bobbin	(8)	Magnetic plate	(14)	Retainer
(2)	Coil	(9)	Shaft	(15)	Diaphragm
(3)	Diode	(10)	Plate	(16)	Movable core
(4)	Stator core	(11)	Valve	(17)	Spring
(5)	End plate	(12)	Housing	(18)	Cover
(6)	Body	(13)	Filter	(19)	O-ring
(7)	Yoke				

3. ENABLE CONDITION

Secondary Parameters	Enable Conditions
Drain valve	Open
Battery voltage	≥ 10.9 V
Barometric pressure	≥ 75 kPa (563 mmHg, 22.2 inHg)
Tank pressure when starter is OFF → ON	–0.4 kPa (–3.2 mmHg, –0.1 inHg) and 1.4 kPa (10.7 mmHg, 0.4 inHg)

4. GENERAL DRIVING CYCLE

Always perform the diagnosis continuously.

5. DIAGNOSTIC METHOD

- **Abnormality Judgement**

If the duration of time while the following conditions are met is longer than the time indicated, judge as NG.

Judgement Value

Malfunction Criteria	Threshold Value
Fuel tank pressure	≤ –4 kPa (–30 mmHg, –1.2 inHg)

Time Needed for Diagnosis: 3000 s
Malfunction Indicator Light Illumination: Illuminates as soon as a malfunction occurs.

- **Normality Judgement**

Judge as OK and clear the NG if the continuous time while the following conditions are established is more than the predetermined time.

Judgement Value

Malfunction Criteria	Threshold Value
Fuel tank pressure	> –4 kPa (–30 mmHg, –1.2 inHg)
Cumulative time when all the malfunction criteria below are met.	≥ 30000 s
Purge control solenoid valve duty	Not = 0
Fuel temperature	–10 °C (14 °F) — 70 °C (158 °F)
Intake manifold relative pressure	≥ –26.7 kPa (–200 mmHg, –7.9 inHg)

Time Needed for Diagnosis: Less than 1 second

CO:DTC P1491 POSITIVE CRANKCASE VENTILATION (BLOW-BY) FUNCTION PROBLEM

1. OUTLINE OF DIAGNOSIS

Detect the blow-by hose release abnormality.
Judge as NG when the diagnosis terminal voltage is high.

2. COMPONENT DESCRIPTION

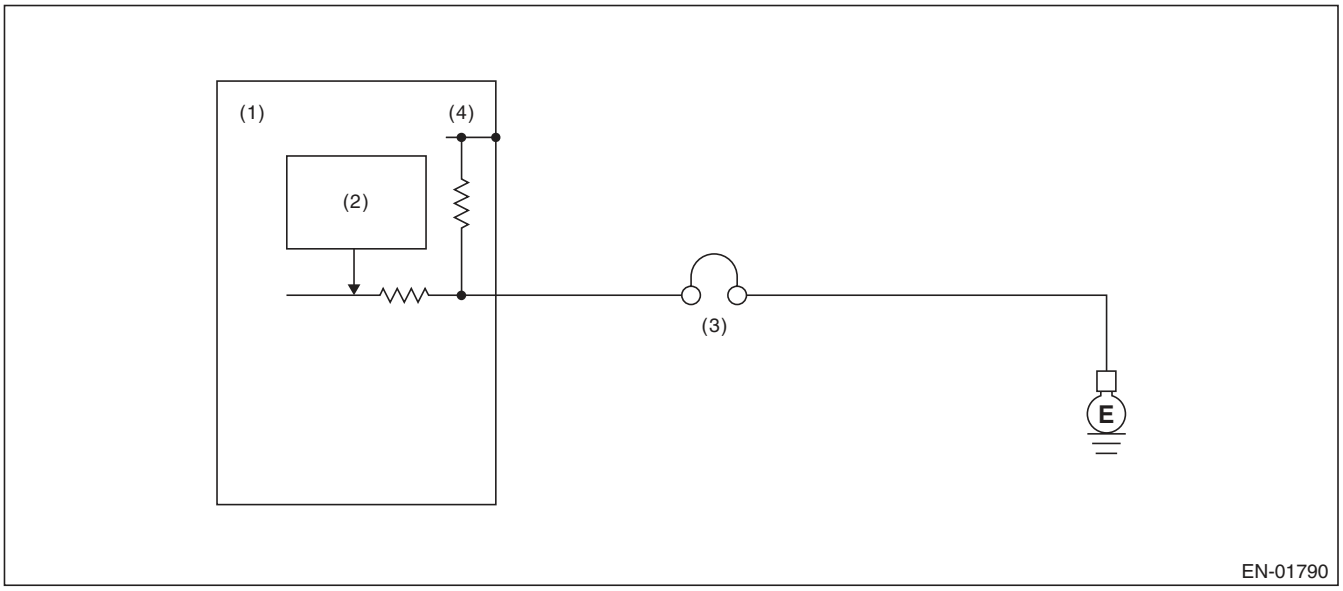

(1) Engine control module (ECM)
(2) Detecting circuit
(3) PCV diagnosis connector
(4) 5 V

3. ENABLE CONDITION

Secondary Parameters	Enable Conditions
None	

4. GENERAL DRIVING CYCLE

Always perform the diagnosis continuously.

5. DIAGNOSTIC METHOD

- **Abnormality Judgement**

If the duration of time while the following conditions are met is longer than the time indicated, judge as NG.

Judgement Value

Malfunction Criteria	Threshold Value
Battery voltage	≥ 10.9 V
Engine condition	After engine starting
Positive crankcase ventilation diagnosis voltage	High

Time Needed for Diagnosis: 2500 ms
Malfunction Indicator Light Illumination: Illuminates as soon as a malfunction occurs.

- **Normality Judgement**

Judge as OK and clear the NG if the continuous time while the following conditions are established is more than the predetermined time.

Judgement Value

Malfunction Criteria	Threshold Value
Battery voltage	≥ 10.9 V
Engine condition	After engine starting
Positive crankcase ventilation diagnosis voltage	Low

Time Needed for Diagnosis: Less than 1 second

CP:DTC P1492 EGR SOLENOID VALVE SIGNAL #1 CIRCUIT MALFUNCTION (LOW INPUT)

1. OUTLINE OF DIAGNOSIS

- Detects open or short circuit of EGR.
- Judge as NG when the ECM output level differs from the actual terminal level.

2. COMPONENT DESCRIPTION

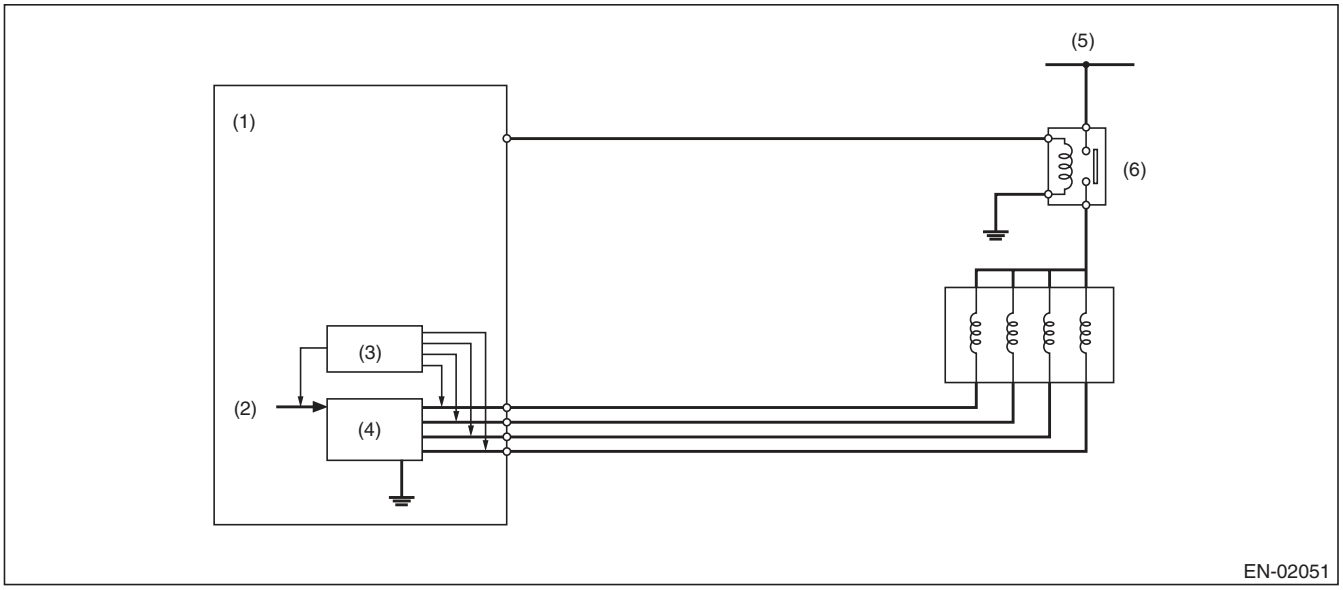

(1)	Engine control module (ECM)	(3)	Detecting circuit	(5)	Battery voltage
(2)	Computer unit (CPU)	(4)	Switch circuit	(6)	Main relay

3. ENABLE CONDITION

Secondary Parameters	Enable Conditions
Elapsed time after starting the engine	≥ 1 second
EGR valve target position	> 0 step
Battery voltage	≥ 10.9 V

4. GENERAL DRIVING CYCLE

Perform diagnosis continuously during EGR operation.

5. DIAGNOSTIC METHOD

- **Abnormality Judgement**

If the duration of time while the following conditions are met is longer than the time indicated, judge as NG.

Judgement Value

Malfunction Criteria	Threshold Value
Terminal voltage level when ECM outputs OFF signal or Terminal voltage level when EGR operates	Low level Low level

Time Needed for Diagnosis: 2500 ms
Malfunction Indicator Light: Illuminates as soon as a malfunction occurs.

- **Normality Judgement**

Judge as OK and clear the NG if the continuous time while the following conditions are established is more than the predetermined time.

Judgement Value

Malfunction Criteria	Threshold Value
Terminal voltage level when ECM outputs OFF signal Terminal voltage level when EGR operates	High level High level

Time Needed for Diagnosis: 128 ms

CQ:DTC P1493 EGR SOLENOID VALVE SIGNAL #1 CIRCUIT MALFUNCTION (HIGH INPUT)

1. OUTLINE OF DIAGNOSIS

- Detects open or short circuit of EGR.
- Judge as NG when the ECM output level differs from the actual terminal level.

2. COMPONENT DESCRIPTION

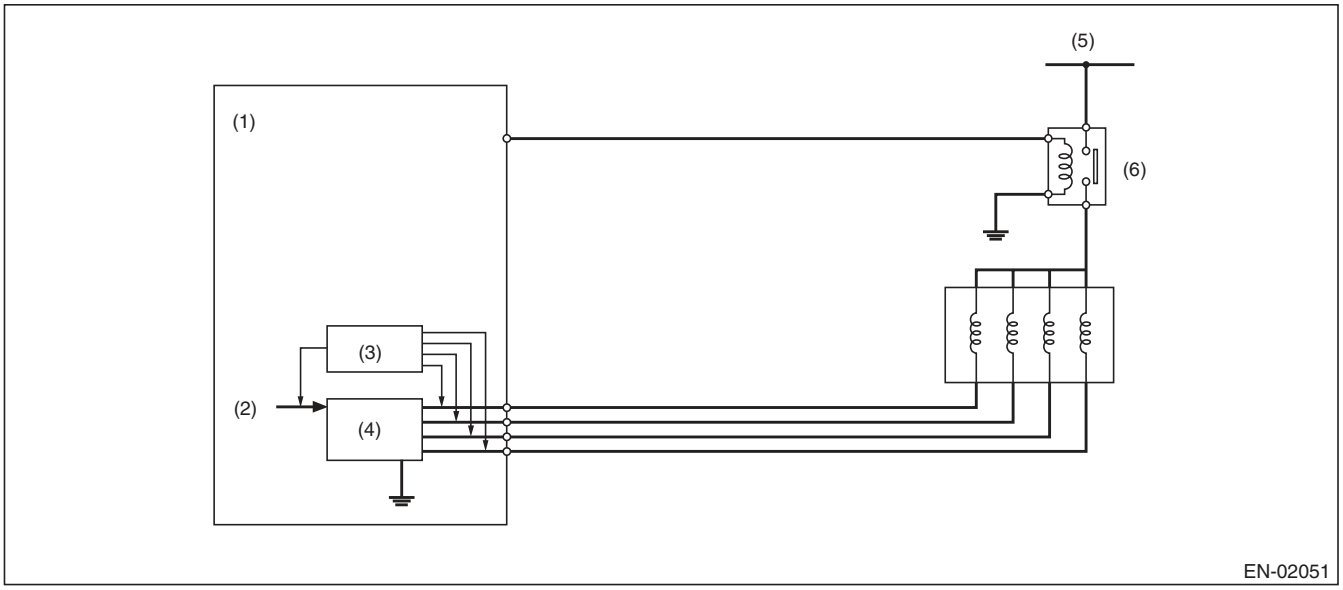

(1)	Engine control module (ECM)	(3)	Detecting circuit	(5)	Battery voltage
(2)	Computer unit (CPU)	(4)	Switch circuit	(6)	Main relay

3. ENABLE CONDITION

Secondary Parameters	Enable Conditions
Elapsed time after starting the engine	≥ 1 second
EGR valve target position	> 0 step
Battery voltage	≥ 10.9 V

4. GENERAL DRIVING CYCLE

Always perform the diagnosis continuously.

5. DIAGNOSTIC METHOD

- **Abnormality Judgement**

If the duration of time while the following conditions are met is longer than the time indicated, judge as NG.

Judgement Value

Malfunction Criteria	Threshold Value
Terminal voltage level when ECM outputs OFF signal	High level
or	
Terminal voltage level when EGR operates	High level

Time Needed for Diagnosis: 2500 ms
Malfunction Indicator Light: Illuminates as soon as a malfunction occurs.

- **Normality Judgement**

Judge as OK and clear the NG if the continuous time while the following conditions are established is more than the predetermined time.

Judgement Value

Malfunction Criteria	Threshold Value
Terminal voltage level when ECM outputs OFF signal	Low level
Terminal voltage level when EGR operates	Low level

Time Needed for Diagnosis: 128 ms

CR:DTC P1494 EGR SOLENOID VALVE SIGNAL #2 CIRCUIT MALFUNCTION (LOW INPUT)

1. OUTLINE OF DIAGNOSIS

NOTE:
For the detection standard, refer to DTC P1492. <Ref. to GD(H4SO)-169, DTC P1492 EGR SOLENOID VALVE SIGNAL #1 CIRCUIT MALFUNCTION (LOW INPUT), Diagnostic Trouble Code (DTC) Detecting Criteria.>

CS:DTC P1495 EGR SOLENOID VALVE SIGNAL #2 CIRCUIT MALFUNCTION (HIGH INPUT)

1. OUTLINE OF DIAGNOSIS

NOTE:
For the detection standard, refer to DTC P1493. <Ref. to GD(H4SO)-171, DTC P1493 EGR SOLENOID VALVE SIGNAL #1 CIRCUIT MALFUNCTION (HIGH INPUT), Diagnostic Trouble Code (DTC) Detecting Criteria.>

CT:DTC P1496 EGR SOLENOID VALVE SIGNAL #3 CIRCUIT MALFUNCTION (LOW INPUT)

1. OUTLINE OF DIAGNOSIS

NOTE:
For the detection standard, refer to DTC P1492. <Ref. to GD(H4SO)-169, DTC P1492 EGR SOLENOID VALVE SIGNAL #1 CIRCUIT MALFUNCTION (LOW INPUT), Diagnostic Trouble Code (DTC) Detecting Criteria.>

CU:DTC P1497 EGR SOLENOID VALVE SIGNAL #3 CIRCUIT MALFUNCTION (HIGH INPUT)

1. OUTLINE OF DIAGNOSIS

NOTE:
For the detection standard, refer to DTC P1493. <Ref. to GD(H4SO)-171, DTC P1493 EGR SOLENOID VALVE SIGNAL #1 CIRCUIT MALFUNCTION (HIGH INPUT), Diagnostic Trouble Code (DTC) Detecting Criteria.>

CV:DTC P1498 EGR SOLENOID VALVE SIGNAL #4 CIRCUIT MALFUNCTION (LOW INPUT)

1. OUTLINE OF DIAGNOSIS

NOTE:
For the detection standard, refer to DTC P1492. <Ref. to GD(H4SO)-169, DTC P1492 EGR SOLENOID VALVE SIGNAL #1 CIRCUIT MALFUNCTION (LOW INPUT), Diagnostic Trouble Code (DTC) Detecting Criteria.>

CW:DTC P1499 EGR SOLENOID VALVE SIGNAL #4 CIRCUIT MALFUNCTION (HIGH INPUT)

1. OUTLINE OF DIAGNOSIS

NOTE:
For the detection standard, refer to DTC P1493. <Ref. to GD(H4SO)-171, DTC P1493 EGR SOLENOID VALVE SIGNAL #1 CIRCUIT MALFUNCTION (HIGH INPUT), Diagnostic Trouble Code (DTC) Detecting Criteria.>

CX:DTC P1560 BACK-UP VOLTAGE CIRCUIT MALFUNCTION

1. OUTLINE OF DIAGNOSIS

Detect the open/short circuit of back-up power supply circuit.
Judge as NG when the backup power voltage is low.

2. ENABLE CONDITION

Secondary Parameters	Enable Conditions
None	

3. GENERAL DRIVING CYCLE

Always perform the diagnosis continuously.

4. DIAGNOSTIC METHOD

- **Abnormality Judgement**

If the duration of time while the following conditions are met is longer than the time indicated, judge as NG.

Judgement Value

Malfunction Criteria	Threshold Value
Voltage of back-up power supply	Low
Battery voltage	≥ 10.9 V
Engine condition	After engine starting

Time Needed for Diagnosis: 2500 ms
Malfunction Indicator Light Illumination: Illuminates as soon as a malfunction occurs.

- **Normality Judgement**

Judge as OK and clear the NG if the continuous time while the following conditions are established is more than the predetermined time.

Judgement Value

Malfunction Criteria	Threshold Value
Voltage of back-up power supply	High
Battery voltage	≥ 10.9 V
Engine condition	After engine starting

Time Needed for Diagnosis: Less than 1 second

CY:DTC P1570 ANTENNA

1. OUTLINE OF DIAGNOSIS

NOTE:
For the detection standard, refer to DTC P0513. <Ref. to GD(H4SO)-142, DTC P0513 INCORRECT IMMOBILIZER KEY, Diagnostic Trouble Code (DTC) Detecting Criteria.>

CZ:DTC P1571 REFERENCE CODE INCOMPATIBILITY

1. OUTLINE OF DIAGNOSIS

NOTE:
For the detection standard, refer to DTC P0513. <Ref. to GD(H4SO)-142, DTC P0513 INCORRECT IMMOBILIZER KEY, Diagnostic Trouble Code (DTC) Detecting Criteria.>

DA:DTC P1572 IMM CIRCUIT FAILURE (EXCEPT ANTENNA CIRCUIT)

1. OUTLINE OF DIAGNOSIS

NOTE:
For the detection standard, refer to DTC P0513. <Ref. to GD(H4SO)-142, DTC P0513 INCORRECT IMMOBILIZER KEY, Diagnostic Trouble Code (DTC) Detecting Criteria.>

DB:DTC P1574 KEY COMMUNICATION FAILURE

1. OUTLINE OF DIAGNOSIS

NOTE:
For the detection standard, refer to DTC P0513. <Ref. to GD(H4SO)-142, DTC P0513 INCORRECT IMMOBILIZER KEY, Diagnostic Trouble Code (DTC) Detecting Criteria.>

DC:DTC P1576 EGI CONTROL MODULE EEPROM

1. OUTLINE OF DIAGNOSIS

NOTE:
For the detection standard, refer to DTC P0513. <Ref. to GD(H4SO)-142, DTC P0513 INCORRECT IMMOBILIZER KEY, Diagnostic Trouble Code (DTC) Detecting Criteria.>

DD:DTC P1577 IMM CONTROL MODULE EEPROM

1. OUTLINE OF DIAGNOSIS

NOTE:
For the detection standard, refer to DTC P0513. <Ref. to GD(H4SO)-142, DTC P0513 INCORRECT IMMOBILIZER KEY, Diagnostic Trouble Code (DTC) Detecting Criteria.>

DE:DTC P1578 METER FAILURE

1. OUTLINE OF DIAGNOSIS

NOTE:
For the detection standard, refer to DTC P0513. <Ref. to GD(H4SO)-142, DTC P0513 INCORRECT IMMOBILIZER KEY, Diagnostic Trouble Code (DTC) Detecting Criteria.>

DF:DTC P1602 CONTROL MODULE PROGRAMMING ERROR

1. OUTLINE OF DIAGNOSIS

Detect malfunctions of the catalyst advanced idling retard angle control.
Judge as NG when ECM is not controlling the angle properly during catalyst advanced idling retard angle control.
Judge as NG if there is exhaust gas temperature diagnosis and idle speed diagnosis and if either of them is NG.

- Exhaust gas temperature diagnosis

Judge as NG when the estimated exhausted gas temperature in 14 seconds after the cold start is below the specified value.

- Idle speed diagnosis

Judge as NG when actual engine speed is not close to target engine speed after terminating the retard angle control.

2. ENABLE CONDITION

Secondary Parameters	Enable Conditions
Atmospheric pressure	≥ 75 kPa (563 mmHg, 22.2 inHg)
Battery voltage	≥ 10.9 V
Cold start diagnosis	Incomplete
Vehicle speed	< 2 km/h (1.2 MPH)
Misfire in 200 engine revs.	< 5
Time after starting	= 14 seconds

3. GENERAL DRIVING CYCLE

Perform the diagnosis at cold start.

4. DIAGNOSTIC METHOD

- **Exhaust temperature diagnosis**

Abnormality Judgement

When the diagnostic execution conditions are established, calculate the estimated exhaust temperature. Judge as NG when the following conditions are established after engine starting within the predetermined time.

Judgement Value

Malfunction Criteria	Threshold Value
Estimated exhaust gas temperature	< Value from Map

Map

- U5 model

Coolant temperature after starting the engine	–40 °C (–40 °F)	–30 °C (–22 °F)	–20 °C (–4 °F)	–10 °C (14 °F)	0 °C (32 °F)	10 °C (50 °F)	20 °C (68 °F)	30 °C (86 °F)	40 °C (104 °F)	50 °C (122 °F)
Threshold value (AT model)	220 °C (428 °F)	220 °C (428 °F)	220 °C (428 °F)	220 °C (428 °F)	220 °C (428 °F)	214 °C (417.2 °F)	206 °C (402.8 °F)	206 °C (402.8 °F)	184 °C (363.2 °F)	178 °C (352.4 °F)
Threshold value (MT model)	214 °C (417.2 °F)	214 °C (417.2 °F)	214 °C (417.2 °F)	214 °C (417.2 °F)	214 °C (417.2 °F)	214 °C (417.2 °F)	214 °C (417.2 °F)	198 °C (388.4 °F)	194 °C (381.2 °F)	190 °C (374 °F)

- Except for U5

Coolant temperature after starting the engine	–40 °C (–40 °F)	–30 °C (–22 °F)	–20 °C (–4 °F)	–10 °C (14 °F)	0 °C (32 °F)	10 °C (50 °F)	20 °C (68 °F)	30 °C (86 °F)	40 °C (104 °F)	50 °C (122 °F)
Threshold value (AT model)	162 °C (323.6 °F)	162 °C (323.6 °F)	162 °C (323.6 °F)	162 °C (323.6 °F)	162 °C (323.6 °F)	162 °C (323.6 °F)	162 °C (323.6 °F)	154 °C (309.2 °F)	142 °C (287.6 °F)	142 °C (287.6 °F)
Threshold value (MT model)	168 °C (334.4 °F)	168 °C (334.4 °F)	168 °C (334.4 °F)	168 °C (334.4 °F)	168 °C (334.4 °F)	168 °C (334.4 °F)	168 °C (334.4 °F)	160 °C (320 °F)	145 °C (293 °F)	145 °C (293 °F)

Time Needed for Diagnosis: 14 seconds
Malfunction Indicator Light Illumination: Illuminates when malfunction occurs in 2 continuous driving cycles.
Normality Judgement
Judge as OK and clear the NG if the following conditions are established.
Judgement Value

Malfunction Criteria	Threshold Value
Estimated exhaust gas temperature	≥ Value from Map

Time Needed for Diagnosis: Less than 1 second

- **Idle speed diagnosis**

Abnormality Judgement
Judge as NG when the following conditions are established after the predetermined time.
Judgement Value

Malfunction Criteria	Threshold Value
Continuous time of (Target engine speed – Actual engine speed > –200 rpm) (U5 model) Continuous time of (Target engine speed – Actual engine speed > –300 rpm) (Other than U5 model)	≥ 6000 ms
Continuous time of (actual retard amount > 30 °CA)	≥ 0 ms

Time Needed for Diagnosis: 14 seconds
Malfunction Indicator Light Illumination: Illuminates when malfunction occurs in 2 continuous driving cycles.
Normality Judgement
Judge as OK and clear the NG if the following conditions are established.
Judgement Value

Malfunction Criteria	Threshold Value
Continuous time of (Target engine speed – Actual engine speed > –200 rpm) (U5 model) Continuous time of (Target engine speed – Actual engine speed > –300 rpm) (Other than U5 model)	< 6000 ms
Continuous time of (actual retard amount > 30 °CA)	< 0 ms

Time Needed for Diagnosis: Less than 1 second

DG:DTC P2096 POST CATALYST FUEL TRIM SYSTEM TOO LEAN (BANK 1)

1. OUTLINE OF DIAGNOSIS

Detect the malfunction of fuel system from the size of the sub feedback learning value.
Control the sub feedback learning and judge as NG when the learning value is in the lean zone.

2. COMPONENT DESCRIPTION

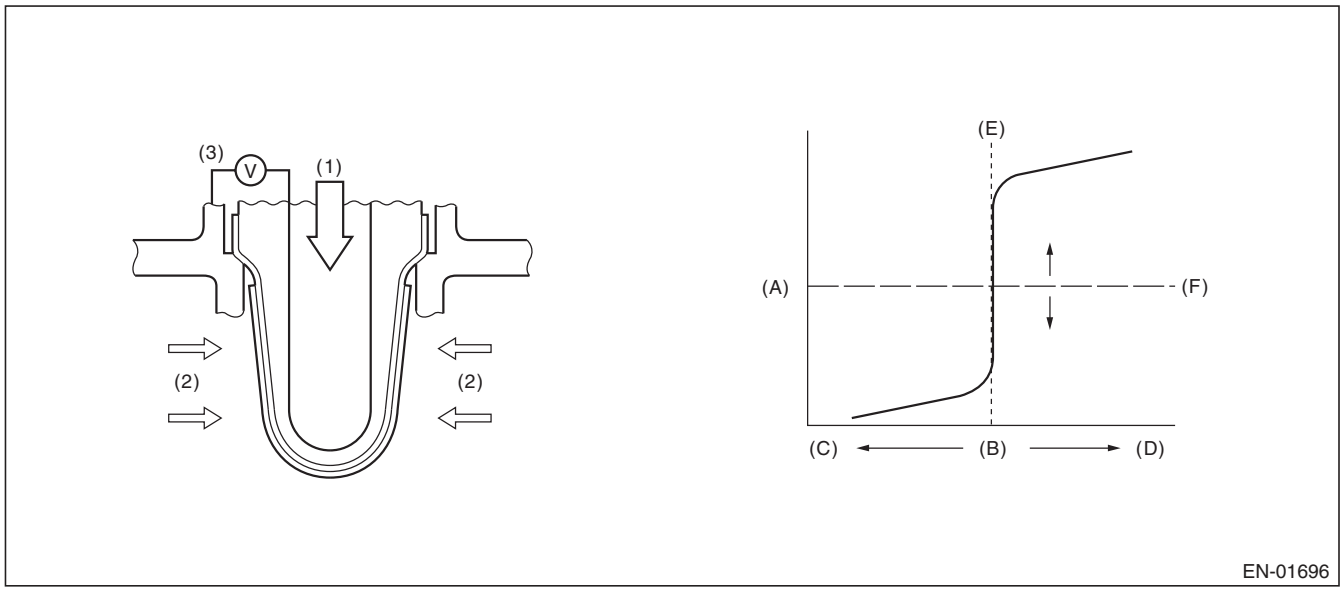

(A)	Electromotive force	(C)	Rich	(E)	Theoretical air fuel ratio
(B)	Air fuel ratio	(D)	Lean	(F)	Comparative voltage
(1)	Atmosphere	(2)	Exhaust gas	(3)	Electromotive force

3. ENABLE CONDITION

Secondary Parameters	Enable Conditions
Conditions for carrying out the sub feedback learning	Completed
Continuous time when all conditions are established.	≥ 1 s

4. GENERAL DRIVING CYCLE

Perform the diagnosis continuously when the vehicle is idling or running at a constant speed of 80 km/h (50 MPH) or more.

5. DIAGNOSTIC METHOD

- **Abnormality Judgement**

If the duration of time while the following conditions are met is longer than the time indicated, judge as NG.

Judgement Value

Malfunction Criteria	Threshold Value
Sub feedback learning value	< –0.04

Time Needed for Diagnosis: 5 s × 1 time(s)
Malfunction Indicator Light Illumination: Illuminates when malfunction occurs in 2 continuous driving cycles.

- **Normality Judgement**

Judge as OK and clear the NG if the continuous time while the following conditions are established is more than the predetermined time.

Judgement Value

Malfunction Criteria	Threshold Value
Sub feedback learning value	≥ –0.04 + 0

Time Needed for Diagnosis: 5 s

DH:DTC P2097 POST CATALYST FUEL TRIM SYSTEM TOO RICH (BANK 1)

1. OUTLINE OF DIAGNOSIS

Detect the malfunction of fuel system from the size of the sub feedback learning value.
Sub feedback learning is being performed. When the learning value goes to the rich side, judge as NG.

2. COMPONENT DESCRIPTION

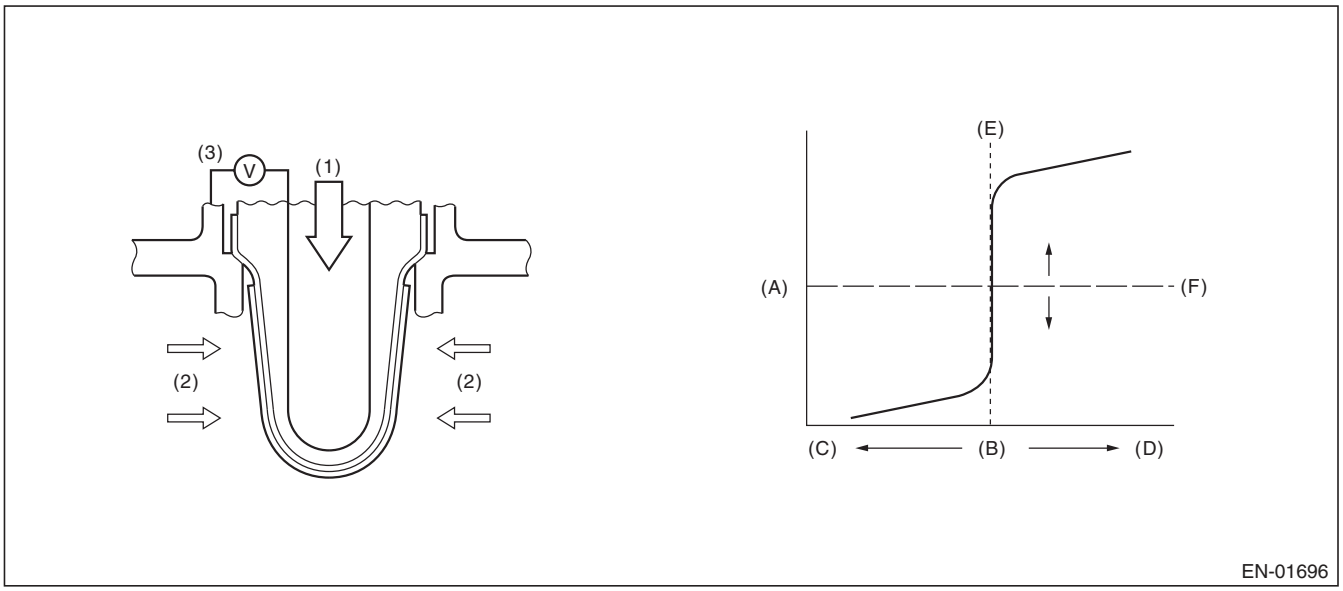

(A)	Electromotive force	(C)	Rich	(E)	Theoretical air fuel ratio
(B)	Air fuel ratio	(D)	Lean	(F)	Comparative voltage
(1)	Atmosphere	(2)	Exhaust gas	(3)	Electromotive force

3. ENABLE CONDITION

Secondary Parameters	Enable Conditions
Conditions for carrying out the sub feedback learning	Completed
Continuous time when all conditions are established.	≥ 1 s

4. GENERAL DRIVING CYCLE

Perform the diagnosis continuously when the vehicle is idling or running at a constant speed of 80 km/h (50 MPH) or more.

5. DIAGNOSTIC METHOD

- **Abnormality Judgement**

If the duration of time while the following conditions are met is longer than the time indicated, judge as NG.

Judgement Value

Malfunction Criteria	Threshold Value
Sub feedback learning value	≥ 0.03 (U5 model) ≥ 0.04 (Other than U5 model)

Time Needed for Diagnosis: 5 s × 1 time(s)
Malfunction Indicator Light Illumination: Illuminates when malfunction occurs in 2 continuous driving cycles.

- **Normality Judgement**

Judge as OK and clear the NG if the continuous time while the following conditions are established is more than the predetermined time.

Judgement Value

Malfunction Criteria	Threshold Value
Sub feedback learning value	< 0.03 + –0.002 (U5 model) < 0.04 + –0.002 (Other than U5 model)

Time Needed for Diagnosis: 5 s

DI: DTC P2101 THROTTLE ACTUATOR CONTROL MOTOR CIRCUIT RANGE/ PERFORMANCE

1. OUTLINE OF DIAGNOSIS

Judge as NG when the motor current becomes large or drive circuit is heated.

2. COMPONENT DESCRIPTION

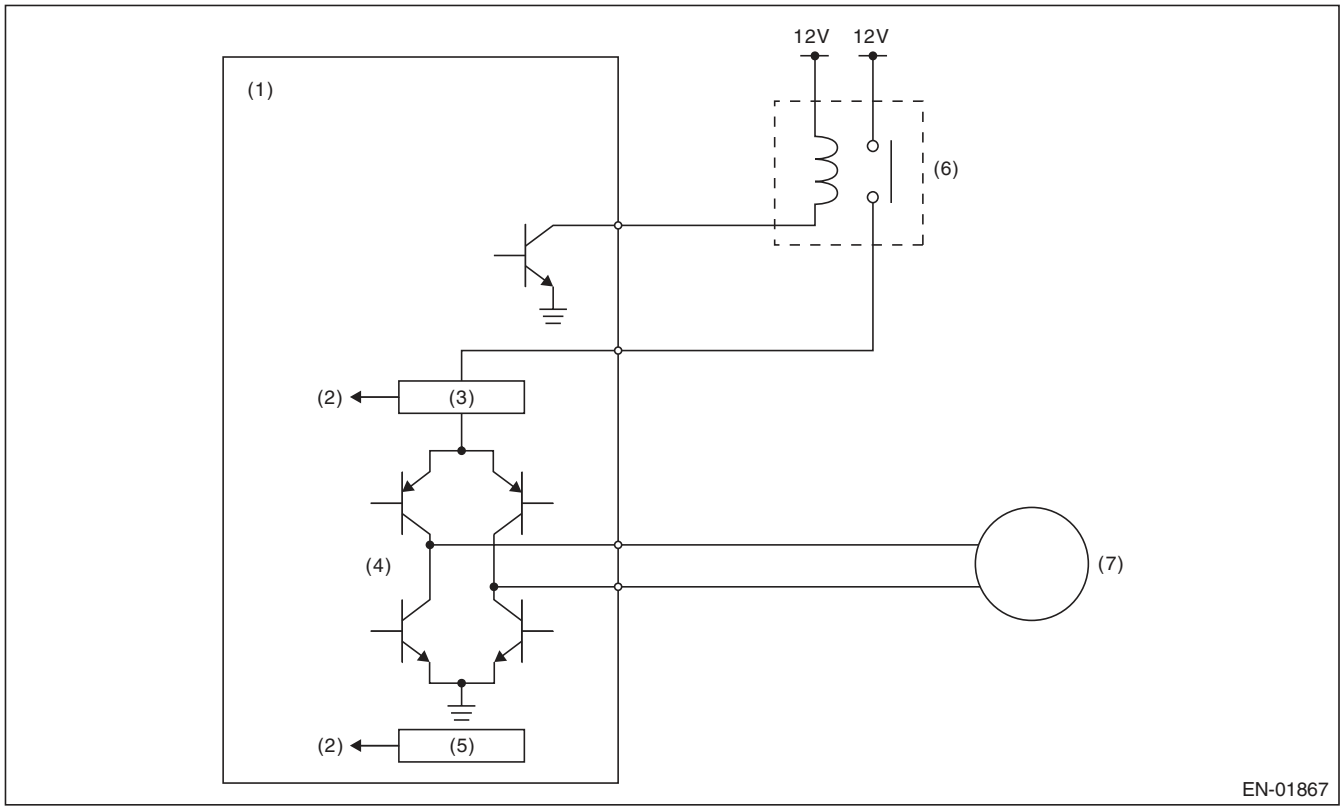

(1) Engine control module (ECM)
(2) Detecting circuit
(3) Overcurrent detection circuit
(4) Drive circuit
(5) Temperature detection circuit
(6) Electronic throttle control relay
(7) Motor

3. ENABLE CONDITION

Secondary Parameters	Enable Conditions
Under control of electronic throttle control	ON

4. GENERAL DRIVING CYCLE

Always perform the diagnosis continuously.

5. DIAGNOSTIC METHOD

Judge as OK and clear the NG when the malfunction criteria below are met.

Judgement Value

Malfunction Criteria	Threshold Value
Motor current	≤ 8 A
Drive circuit inner temperature	≤ 175°C (347°F)

Time Needed for Diagnosis:

- 500 milliseconds (For NG)
- 2000 milliseconds (For OK)

Malfunction Indicator Light Illumination: Illuminates as soon as a malfunction occurs.

DJ:DTC P2102 THROTTLE ACTUATOR CONTROL MOTOR CIRCUIT LOW

1. OUTLINE OF DIAGNOSIS

Judge as NG when the electronic throttle control power is not supplied even when ECM sets the electronic throttle control relay to ON.

2. COMPONENT DESCRIPTION

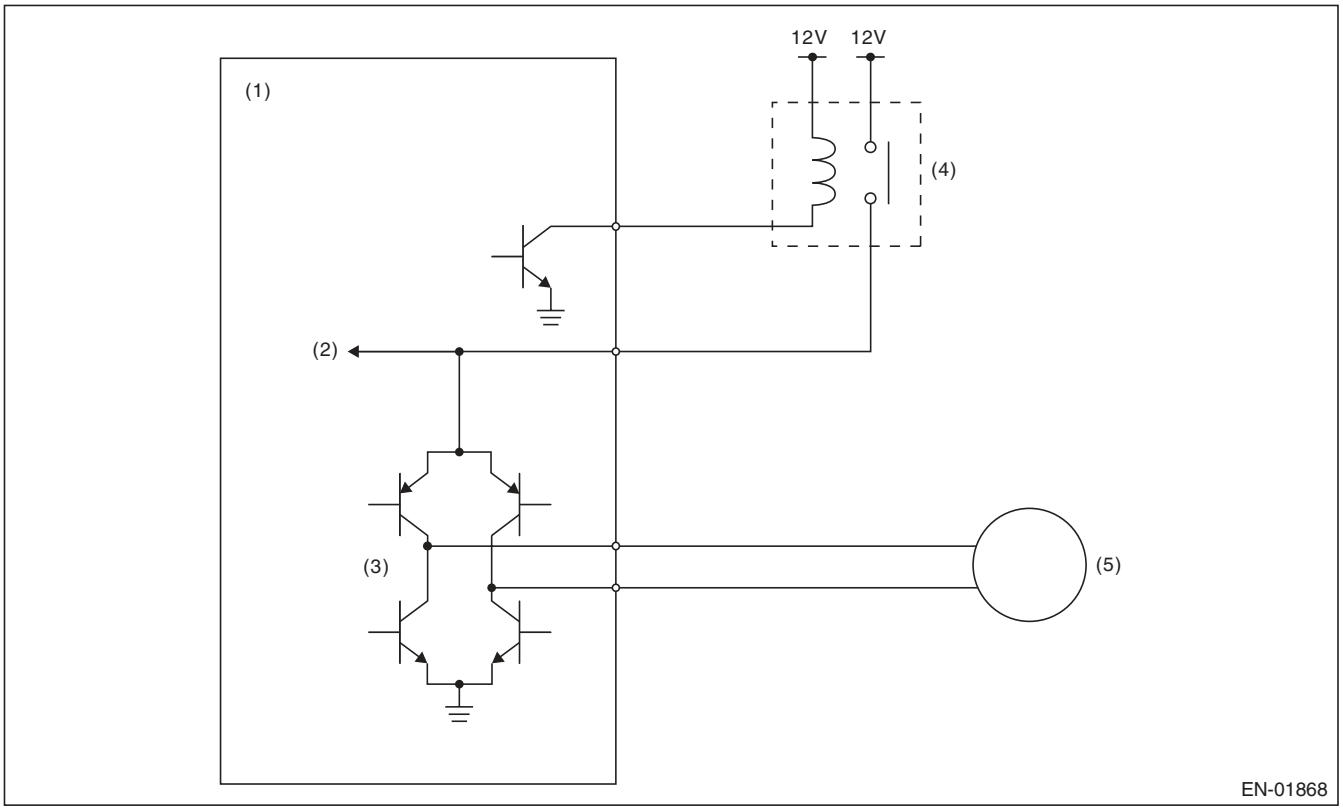

(1) Engine control module (ECM)
(2) Voltage detection circuit
(3) Drive circuit
(4) Electronic throttle control relay
(5) Motor

3. ENABLE CONDITION

Secondary Parameters	Enable Conditions
Electronic throttle control relay output	ON

4. GENERAL DRIVING CYCLE

Always perform the diagnosis continuously.

5. DIAGNOSTIC METHOD

Judge as OK and clear the NG when the malfunction criteria below are met.

Judgement Value

Malfunction Criteria	Threshold Value
Motor power voltage	≥ 5 V

Time Needed for Diagnosis:

- 400 milliseconds (For NG)
- 2000 milliseconds (For OK)

Malfunction Indicator Light Illumination: Illuminates as soon as a malfunction occurs.

DK:DTC P2103 THROTTLE ACTUATOR CONTROL MOTOR CIRCUIT HIGH

1. OUTLINE OF DIAGNOSIS

Judge as NG when the electronic throttle control power is supplied even when ECM sets the electronic throttle control relay to OFF.

2. COMPONENT DESCRIPTION

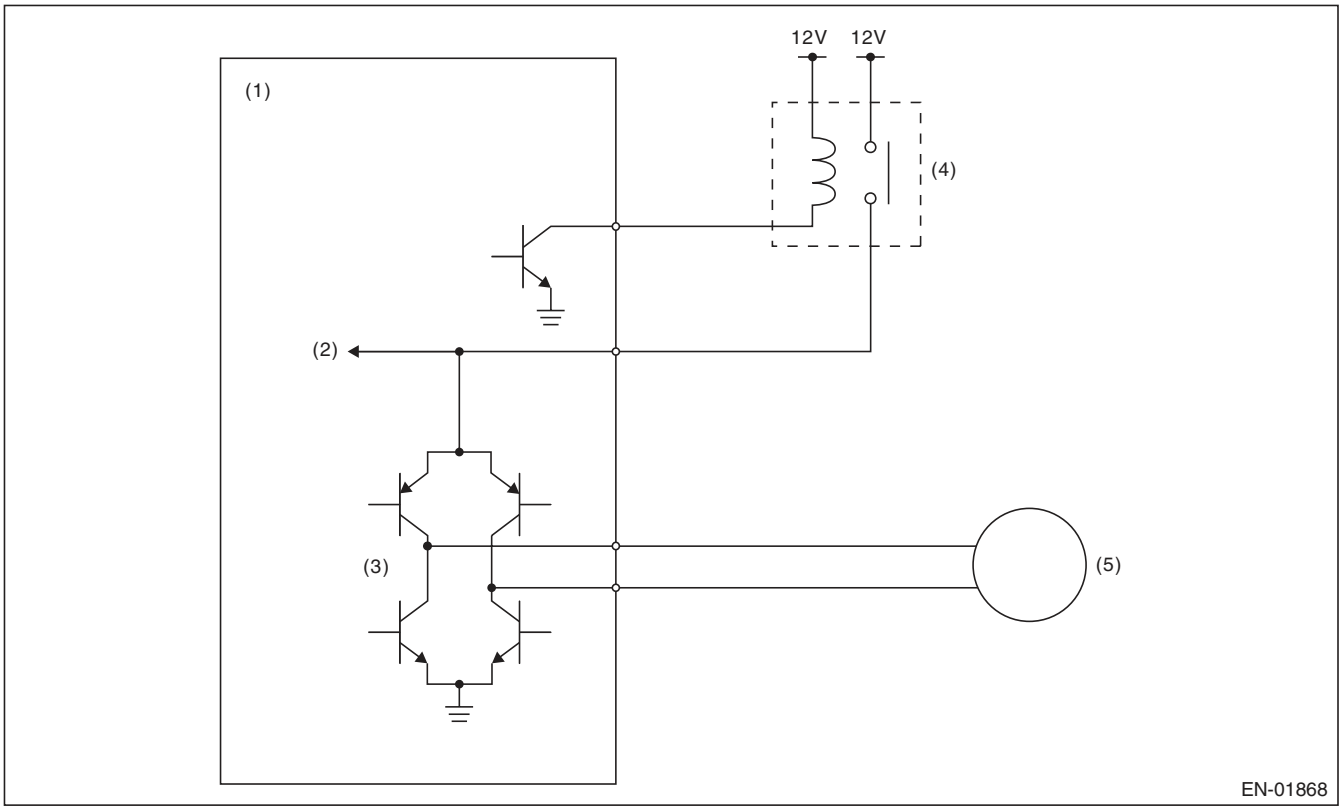

(1) Engine control module (ECM)
(2) Voltage detection circuit
(3) Drive circuit
(4) Electronic throttle control relay
(5) Motor

3. ENABLE CONDITION

Secondary Parameters	Enable Conditions
Electronic throttle control relay output	OFF

4. GENERAL DRIVING CYCLE

- When ignition switch ON → OFF
- Ignition switch OFF → ON (Only after clearing memory)

5. DIAGNOSTIC METHOD

Judge as OK and clear the NG when the malfunction criteria below are met.

Judgement Value

Malfunction Criteria	Threshold Value
Motor power voltage	≤ 5 V

Time Needed for Diagnosis:

- 600 milliseconds (For NG)
- 400 milliseconds (For OK)

Malfunction Indicator Light Illumination: Illuminates as soon as a malfunction occurs.

DL:DTC P2109 THROTTLE/PEDAL POSITION SENSOR “A” MINIMUM STOP PERFORMANCE

1. OUTLINE OF DIAGNOSIS

Judge as NG when full close point learning cannot conducted or abnormal value is detected.

2. COMPONENT DESCRIPTION

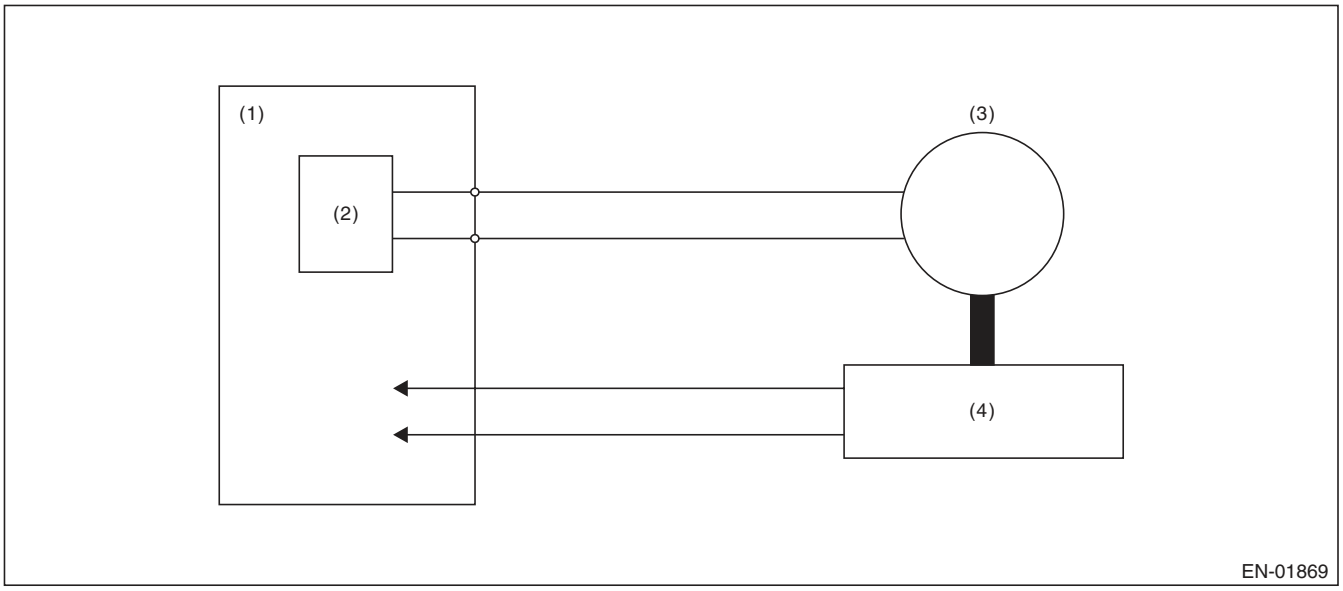

(1) Engine control module (ECM)
(2) Drive circuit
(3) Motor
(4) Throttle position sensor

3. ENABLE CONDITION

Secondary Parameters	Enable Conditions
Ignition switch	ON → OFF
Ignition switch (only after clear memory)	OFF → ON

4. GENERAL DRIVING CYCLE

Perform the diagnosis at full closed point learning.

5. DIAGNOSTIC METHOD

Judge as OK and clear the NG when the malfunction criteria below are met.

Judgement Value

Malfunction Criteria	Threshold Value
Throttle sensor opening angle at full close point learning	10.127° or more, 19.872° or less
Throttle opening angle when the ignition switch is ON – Throttle minimum stop position	≥ 1.683°

Time Needed for Diagnosis: 8 — 80 milliseconds
Malfunction Indicator Light Illumination: Illuminates as soon as a malfunction occurs.

DM:DTC P2122 THROTTLE/PEDAL POSITION SENSOR/SWITCH “D” CIRCUIT LOW INPUT

1. OUTLINE OF DIAGNOSIS

Detect the open or short circuit of accelerator pedal position sensor 1.
Judge as NG if out of specification.

2. COMPONENT DESCRIPTION

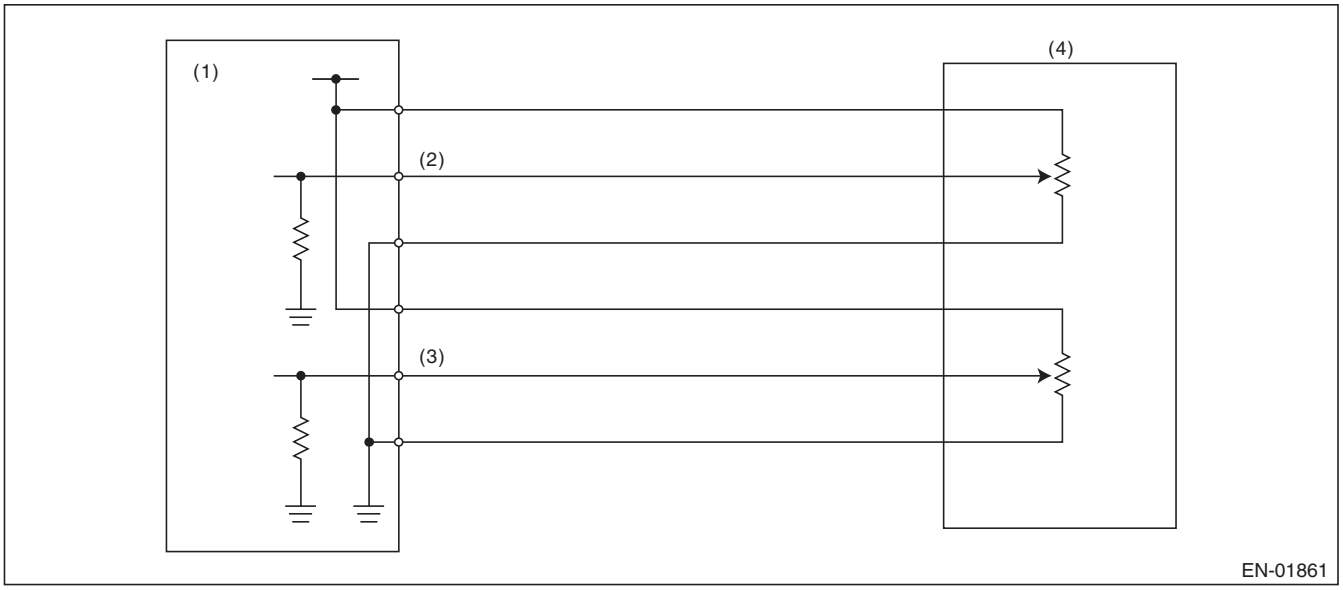

(1) Engine control module (ECM)
(2) Accelerator pedal position sensor 1 signal
(3) Accelerator pedal position sensor 2 signal
(4) Accelerator pedal position sensor

3. ENABLE CONDITION

Secondary Parameters	Enable Conditions
Ignition switch	ON
Battery voltage	≥ 6 V

4. GENERAL DRIVING CYCLE

Always perform the diagnosis continuously.

5. DIAGNOSTIC METHOD

- **Abnormality Judgement**

If the duration of time while the following conditions are met is longer than the time indicated, judge as NG.

Judgement Value

Malfunction Criteria	Threshold Value
Sensor 1 input voltage	< 0.217 V

Time Needed for Diagnosis: 100 ms
Malfunction Indicator Light Illumination: Illuminates as soon as a malfunction occurs.

- **Normality Judgement**

Judge as OK and clear the NG if the continuous time while the following conditions are established is more than the predetermined time.

Judgement Value

Malfunction Criteria	Threshold Value
Sensor 1 input voltage	≥ 0.217 V

Time Needed for Diagnosis: 100 ms

DN:DTC P2123 THROTTLE/PEDAL POSITION SENSOR/SWITCH “D” CIRCUIT HIGH INPUT

1. OUTLINE OF DIAGNOSIS

Detect the open or short circuit of accelerator pedal position sensor 1.
Judge as NG if out of specification.

2. COMPONENT DESCRIPTION

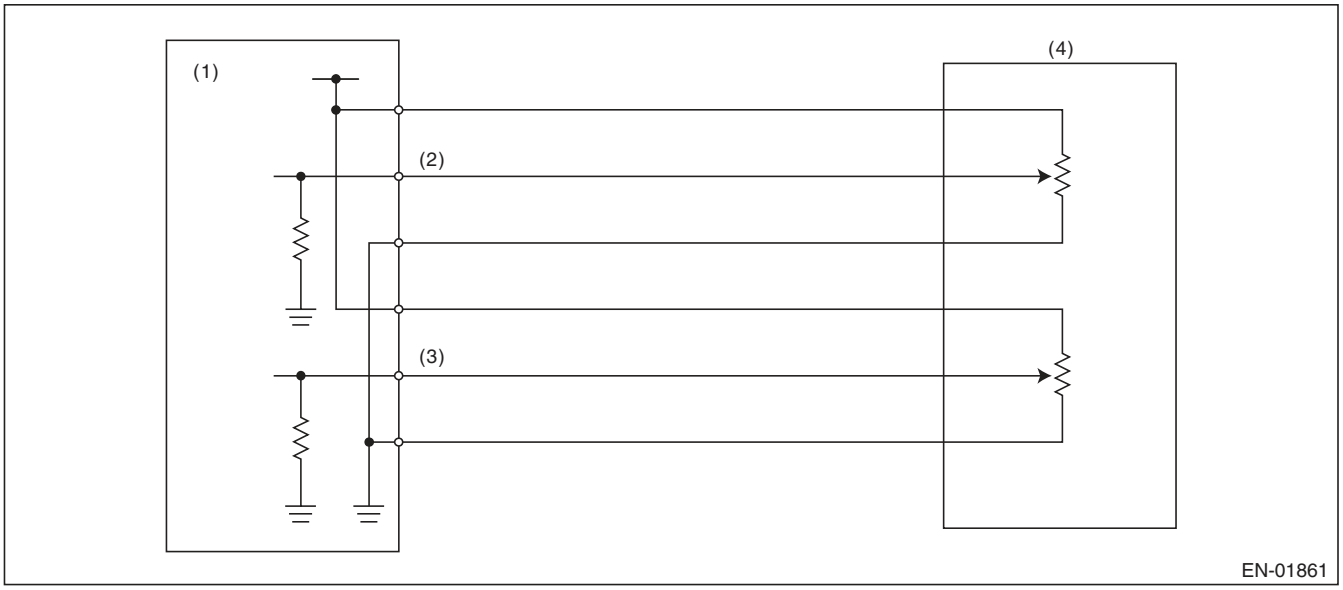

(1) Engine control module (ECM)
(2) Accelerator pedal position sensor 1 signal
(3) Accelerator pedal position sensor 2 signal
(4) Accelerator pedal position sensor

3. ENABLE CONDITION

Secondary Parameters	Enable Conditions
Ignition switch	ON
Battery voltage	≥ 6 V

4. GENERAL DRIVING CYCLE

Always perform the diagnosis continuously.

5. DIAGNOSTIC METHOD

- **Abnormality Judgement**

If the duration of time while the following conditions are met is longer than the time indicated, judge as NG.

Judgement Value

Malfunction Criteria	Threshold Value
Sensor 1 input voltage	≥ 4.783 V

Time Needed for Diagnosis: 32 ms
Malfunction Indicator Light Illumination: Illuminates as soon as a malfunction occurs.

- **Normality Judgement**

Judge as OK and clear the NG if the continuous time while the following conditions are established is more than the predetermined time.

Judgement Value

Malfunction Criteria	Threshold Value
Sensor 1 input voltage	< 4.783 V

Time Needed for Diagnosis: 32 ms

DO:DTC P2127 THROTTLE/PEDAL POSITION SENSOR/SWITCH “E” CIRCUIT LOW INPUT

1. OUTLINE OF DIAGNOSIS

Detect the open or short circuit of accelerator pedal position sensor 2.
Judge as NG if out of specification.

2. COMPONENT DESCRIPTION

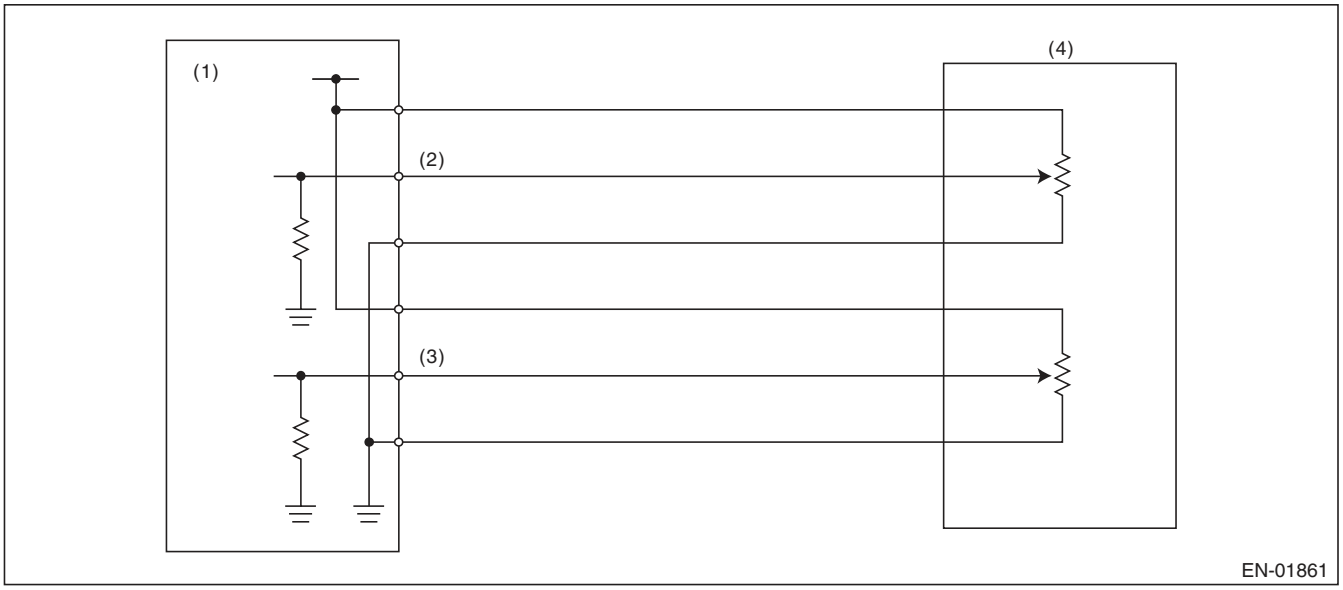

(1) Engine control module (ECM)
(2) Accelerator pedal position sensor 1 signal
(3) Accelerator pedal position sensor 2 signal
(4) Accelerator pedal position sensor

3. ENABLE CONDITION

Secondary Parameters	Enable Conditions
Ignition switch	ON
Battery voltage	≥ 6 V

4. GENERAL DRIVING CYCLE

Always perform the diagnosis continuously.

5. DIAGNOSTIC METHOD

- **Abnormality Judgement**

If the duration of time while the following conditions are met is longer than the time indicated, judge as NG.

Judgement Value

Malfunction Criteria	Threshold Value
Sensor 2 input voltage	< 0.217 V

Time Needed for Diagnosis: 100 ms
Malfunction Indicator Light Illumination: Illuminates as soon as a malfunction occurs.

- **Normality Judgement**

Judge as OK and clear the NG if the continuous time while the following conditions are established is more than the predetermined time.

Judgement Value

Malfunction Criteria	Threshold Value
Sensor 2 input voltage	≥ 0.217 V

Time Needed for Diagnosis: 100 ms

DP:DTC P2128 THROTTLE/PEDAL POSITION SENSOR/SWITCH “E” CIRCUIT HIGH INPUT

1. OUTLINE OF DIAGNOSIS

Detect the open or short circuit of accelerator pedal position sensor 2.
Judge as NG if out of specification.

2. COMPONENT DESCRIPTION

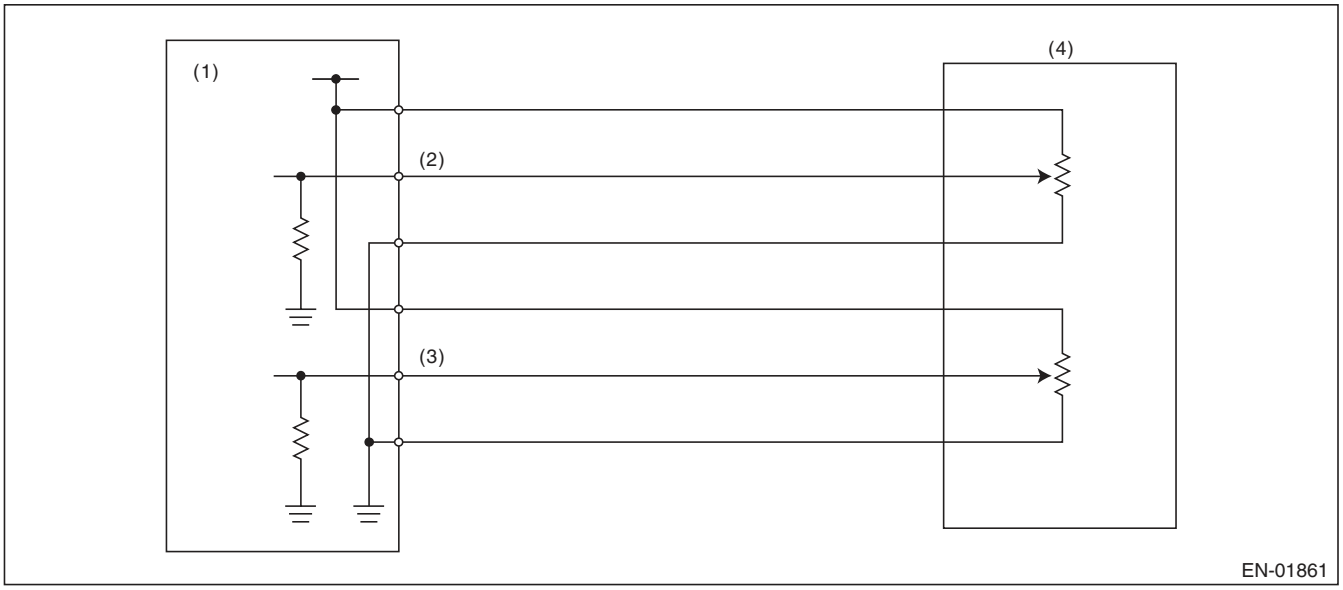

(1) Engine control module (ECM)
(2) Accelerator pedal position sensor 1 signal
(3) Accelerator pedal position sensor 2 signal
(4) Accelerator pedal position sensor

3. ENABLE CONDITION

Secondary Parameters	Enable Conditions
Ignition switch	ON
Battery voltage	≥ 6 V

4. GENERAL DRIVING CYCLE

Always perform the diagnosis continuously.

5. DIAGNOSTIC METHOD

- **Abnormality Judgement**

If the duration of time while the following conditions are met is longer than the time indicated, judge as NG.

Judgement Value

Malfunction Criteria	Threshold Value
Sensor 2 input voltage	≥ 4.783 V

Time Needed for Diagnosis: 100 ms
Malfunction Indicator Light Illumination: Illuminates as soon as a malfunction occurs.

- **Normality Judgement**

Judge as OK and clear the NG if the continuous time while the following conditions are established is more than the predetermined time.

Judgement Value

Malfunction Criteria	Threshold Value
Sensor 2 input voltage	< 4.783 V

Time Needed for Diagnosis: 100 ms

DQ:DTC P2135 THROTTLE/PEDAL POSITION SENSOR/SWITCH “A”/“B” VOLTAGE CORRELATION

1. OUTLINE OF DIAGNOSIS

Judge as NG when the signal level of throttle position sensor 1 is different from the throttle position sensor 2.

2. COMPONENT DESCRIPTION

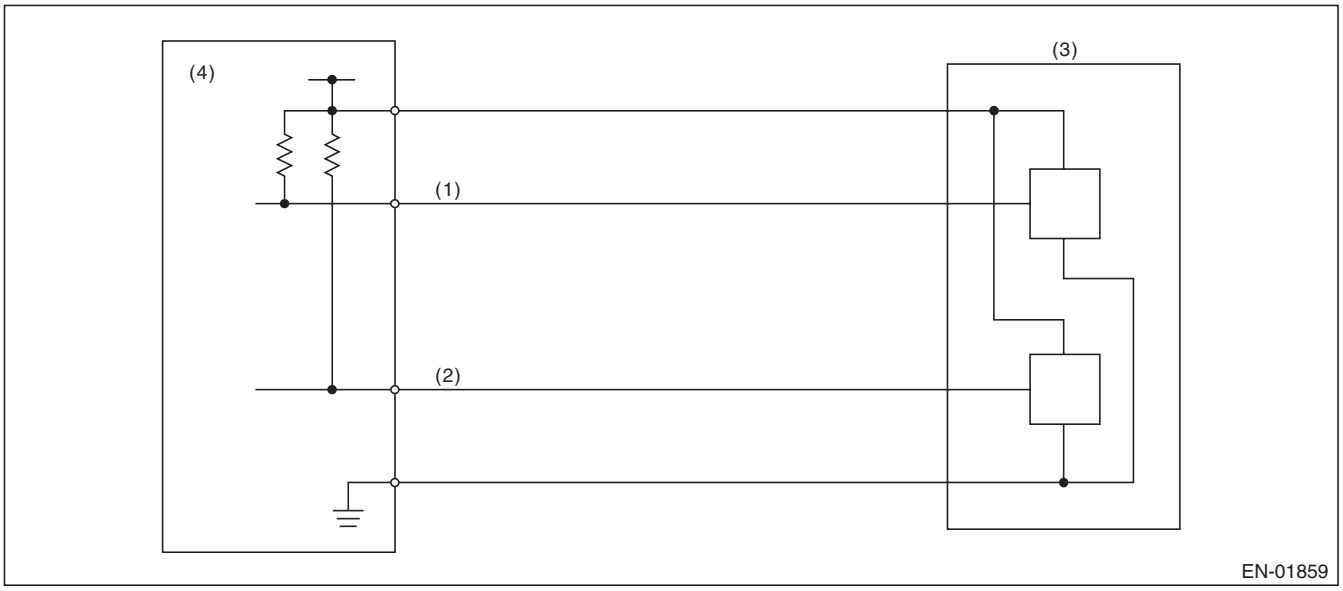

(1) Throttle position sensor 1 signal
(2) Throttle position sensor 2 signal
(3) Throttle position sensor
(4) Engine control module (ECM)

3. ENABLE CONDITION

Secondary Parameters	Enable Conditions
Ignition switch	ON
Battery voltage	≥ 6 V

4. GENERAL DRIVING CYCLE

Always perform the diagnosis continuously.

5. DIAGNOSTIC METHOD

- **Abnormality Judgement**

If the duration of time while the following conditions are met is longer than the time indicated, judge as NG.

Judgement Value

Malfunction Criteria	Threshold Value
Signal difference between two sensors	> Value from Map

Map

Throttle position sensor 1 opening angle (°) = d	0° ≤ d < 2.125 °	2.125 ° ≤ d < 4.25 °	4.25 ° ≤ d < 9 °	9 ° ≤ d < 31.625 °	31.625 ° ≤ d
Sensor output difference (°)	5.15 °	6.15 °	8.28 °	10.4 °	12.4 °

Time Needed for Diagnosis: 212 ms
Malfunction Indicator Light Illumination: Illuminates as soon as a malfunction occurs.

- **Normality Judgement**

Judge as OK and clear the NG if the continuous time while the following conditions are established is more than the predetermined time.

Judgement Value

Malfunction Criteria	Threshold Value
Signal difference between two sensors	≤ Value from Map

Time Needed for Diagnosis: 24 ms

DR:DTC P2138 THROTTLE/PEDAL POSITION SENSOR/SWITCH “D”/“E” VOLTAGE CORRELATION

1. OUTLINE OF DIAGNOSIS

Judge as NG when the signal level of throttle position sensor 1 is different from the throttle position sensor 2.

2. COMPONENT DESCRIPTION

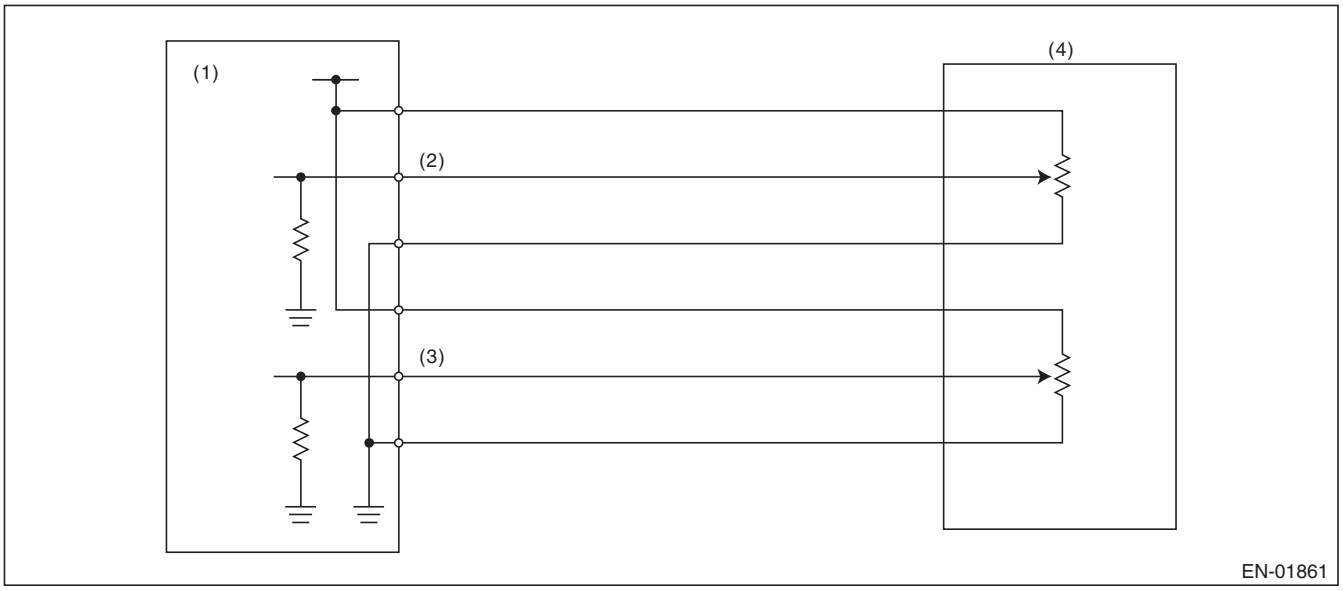

(1) Engine control module (ECM)
(2) Accelerator pedal position sensor 1 signal
(3) Accelerator pedal position sensor 2 signal
(4) Accelerator pedal position sensor

3. ENABLE CONDITION

Secondary Parameters	Enable Conditions
Ignition switch	ON
Battery voltage	≥ 6 V

4. GENERAL DRIVING CYCLE

Always perform the diagnosis continuously.

5. DIAGNOSTIC METHOD

- **Abnormality Judgement**

If the duration of time while the following conditions are met is longer than the time indicated, judge as NG.

Judgement Value

Malfunction Criteria	Threshold Value
Signal difference between two sensors	> Value from Map

Map

Throttle position sensor 1 opening angle (°) = d	0°≤ d < 0.6 °	0.6 ° ≤ d < 1.2 °	1.2 ° ≤ d < 2 °	2 ° ≤ d < 4 °	4 ° ≤ d
Sensor output difference (°)	1.465 °	1.597 °	1.663 °	2.455 °	3.116 °

Time Needed for Diagnosis: 116 ms
Malfunction Indicator Light Illumination: Illuminates as soon as a malfunction occurs.

- **Normality Judgement**

Judge as OK and clear the NG if the continuous time while the following conditions are established is more than the predetermined time.

Judgement Value

Malfunction Criteria	Threshold Value
Signal difference between two sensors	≤ Value from Map

Time Needed for Diagnosis: 116 ms

DS:DTC P2227 BAROMETRIC PRESSURE CIRCUIT RANGE/PERFORMANCE

1. OUTLINE OF DIAGNOSIS

Detect the malfunction of barometric pressure sensor output property.
Judge as NG when the barometric pressure sensor output is largely different from the intake manifold pressure at engine start.

2. COMPONENT DESCRIPTION

The barometric pressure sensor is built into the ECM.

3. ENABLE CONDITION

Secondary Parameters	Enable Conditions
Engine speed	< 300 rpm
Vehicle speed	< 1 km/h (0.6 MPH)

4. GENERAL DRIVING CYCLE

Perform the diagnosis once at ignition switch ON.

5. DIAGNOSTIC METHOD

- **Abnormality Judgement**

If the duration of time while the following conditions are met is longer than the time indicated, judge as NG.

Judgement Value

Malfunction Criteria	Threshold Value
|Barometric pressure – Intake manifold pressure|	≥ 26.7 kPa (200 mmHg, 7.9 inHg)
|Intake manifold pressure at engine start – Intake manifold pressure|	< 1.3 kPa (9.99 mmHg, 0.4 inHg)

Time Needed for Diagnosis: 328 ms
Malfunction Indicator Light Illumination: Illuminates when malfunction occurs in 2 continuous driving cycles.

- **Normality Judgement**

Judge as OK and clear the NG if the continuous time while the following conditions are established is more than the predetermined time.

Judgement Value

Malfunction Criteria	Threshold Value
|Barometric pressure – Intake manifold pressure|	< 26.7 kPa (200 mmHg, 7.9 inHg)

Time Needed for Diagnosis: 262 ms

DT:DTC P2228 BAROMETRIC PRESSURE CIRCUIT LOW

1. OUTLINE OF DIAGNOSIS

Detect the open/short circuit of the barometric pressure sensor.
Judge as NG if out of specification.

2. COMPONENT DESCRIPTION

The barometric pressure sensor is built into the ECM.

3. ENABLE CONDITION

Secondary Parameters	Enable Conditions
None	

4. GENERAL DRIVING CYCLE

Always perform the diagnosis continuously.

5. DIAGNOSTIC METHOD

- **Abnormality Judgement**

If the duration of time while the following conditions are met is longer than the time indicated, judge as NG.

Judgement Value

Malfunction Criteria	Threshold Value
Output voltage	< 1.706646812 V

Time Needed for Diagnosis: 500 ms
Malfunction Indicator Light Illumination: Illuminates as soon as a malfunction occurs.

- **Normality Judgement**

Judge as OK and clear the NG if the continuous time while the following conditions are established is more than the predetermined time.

Judgement Value

Malfunction Criteria	Threshold Value
Output voltage	≥ 1.706646812 V

Time Needed for Diagnosis: Less than 1 second

DU:DTC P2229 BAROMETRIC PRESSURE CIRCUIT HIGH

1. OUTLINE OF DIAGNOSIS

Detect the open/short circuit of the barometric pressure sensor.
Judge as NG if out of specification.

2. COMPONENT DESCRIPTION

The barometric pressure sensor is built into the ECM.

3. ENABLE CONDITION

Secondary Parameters	Enable Conditions
None	

4. GENERAL DRIVING CYCLE

Always perform the diagnosis continuously.

5. DIAGNOSTIC METHOD

- **Abnormality Judgement**

If the duration of time while the following conditions are met is longer than the time indicated, judge as NG.

Judgement Value

Malfunction Criteria	Threshold Value
Output voltage	≥ 4.233789985 V

Time Needed for Diagnosis: 500 ms
Malfunction Indicator Light Illumination: Illuminates as soon as a malfunction occurs.

- **Normality Judgement**

Judge as OK and clear the NG if the continuous time while the following conditions are established is more than the predetermined time.

Judgement Value

Malfunction Criteria	Threshold Value
Output voltage	< 4.233789985 V

Time Needed for Diagnosis: Less than 1 second

1. General Description

A: SPECIFICATION

Fuel tank	Capacity	64 ℓ (16.9 US gal, 14.1 Imp gal)
	Location	Under rear seat
Fuel pump	Type	Impeller
	Shutoff discharge pressure	550 — 850 kPa (5.61 — 8.67 kg/cm^2, 79.8 — 123.3 psi)
	Discharge rate	155 ℓ (40.9 US gal, 34.1 Imp gal)/h or more. [12 V at 300 kPa (3.06 kg/cm^2, 43.5 psi)]
Fuel filter		In-tank type

B: COMPONENT

1. INTAKE MANIFOLD

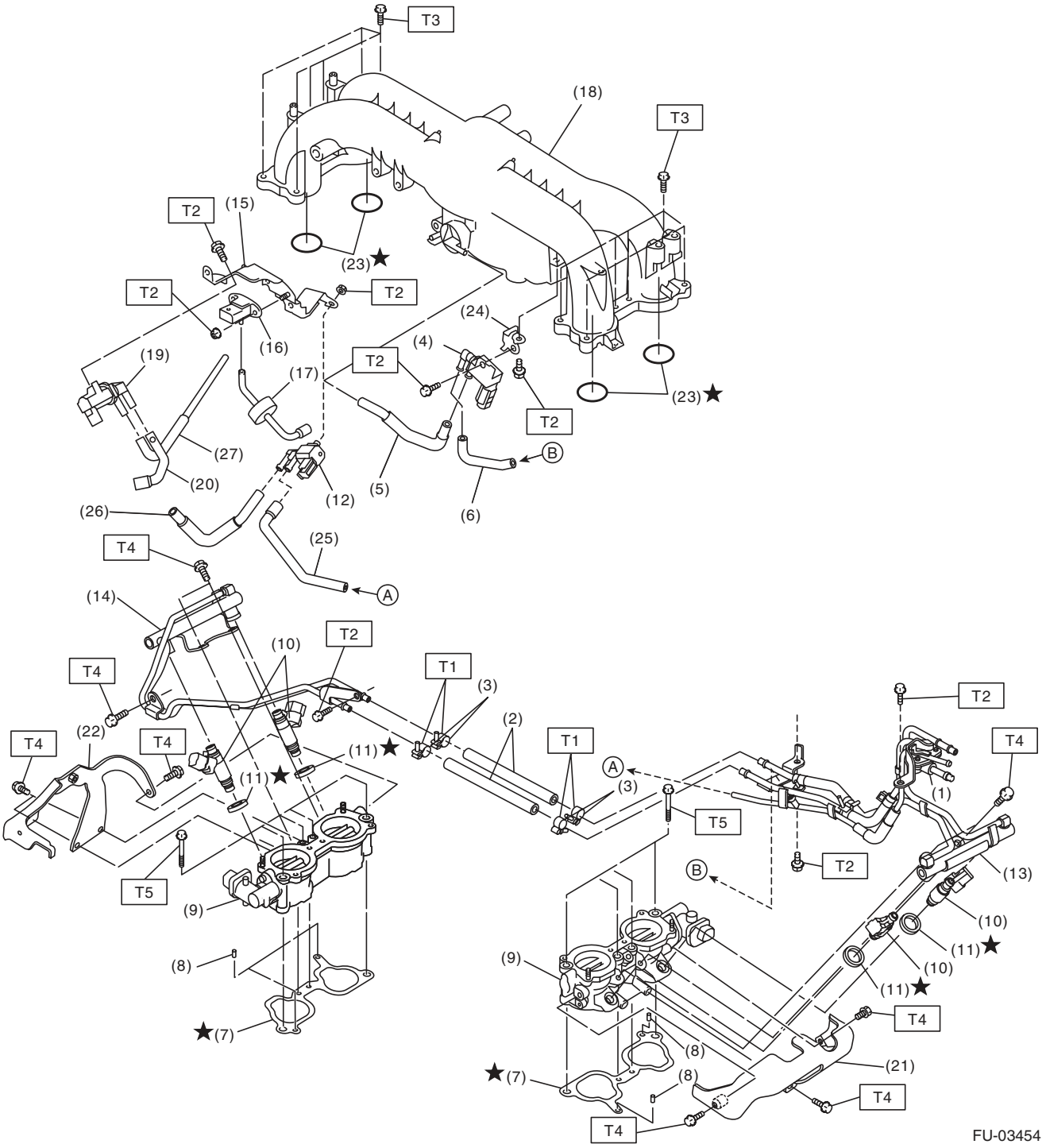

(1) Pressure regulator
(2) Fuel hose
(3) Clamp
(4) Purge control solenoid valve 1
(5) Vacuum hose D
(6) Vacuum hose C
(7) Intake manifold gasket
(8) Guide pin
(9) Tumble generator valve ASSY
(10) Fuel injector
(11) Seal ring
(12) Purge control solenoid valve 2
(13) Fuel injector pipe LH
(14) Fuel injector pipe RH
(15) Solenoid valve bracket
(16) Manifold absolute pressure sensor
(17) Filter
(18) Intake manifold
(19) Wastegate control solenoid valve ASSY
(20) Vacuum hose
(21) Fuel pipe protector LH
(22) Fuel pipe protector RH
(23) O-ring
(24) Solenoid valve bracket
(25) Vacuum hose B
(26) Vacuum hose A
(27) Air control hose

Tightening torque:N·m (kgf-m, ft-lb)
T1: 1.25 (0.1, 0.9)
T2: 6.4 (0.7, 4.7)
T3: 8.3 (0.8, 6.1)
T4: 19 (1.9, 14.0)
T5: 25 (2.5, 18.4)

2. AIR INTAKE SYSTEM

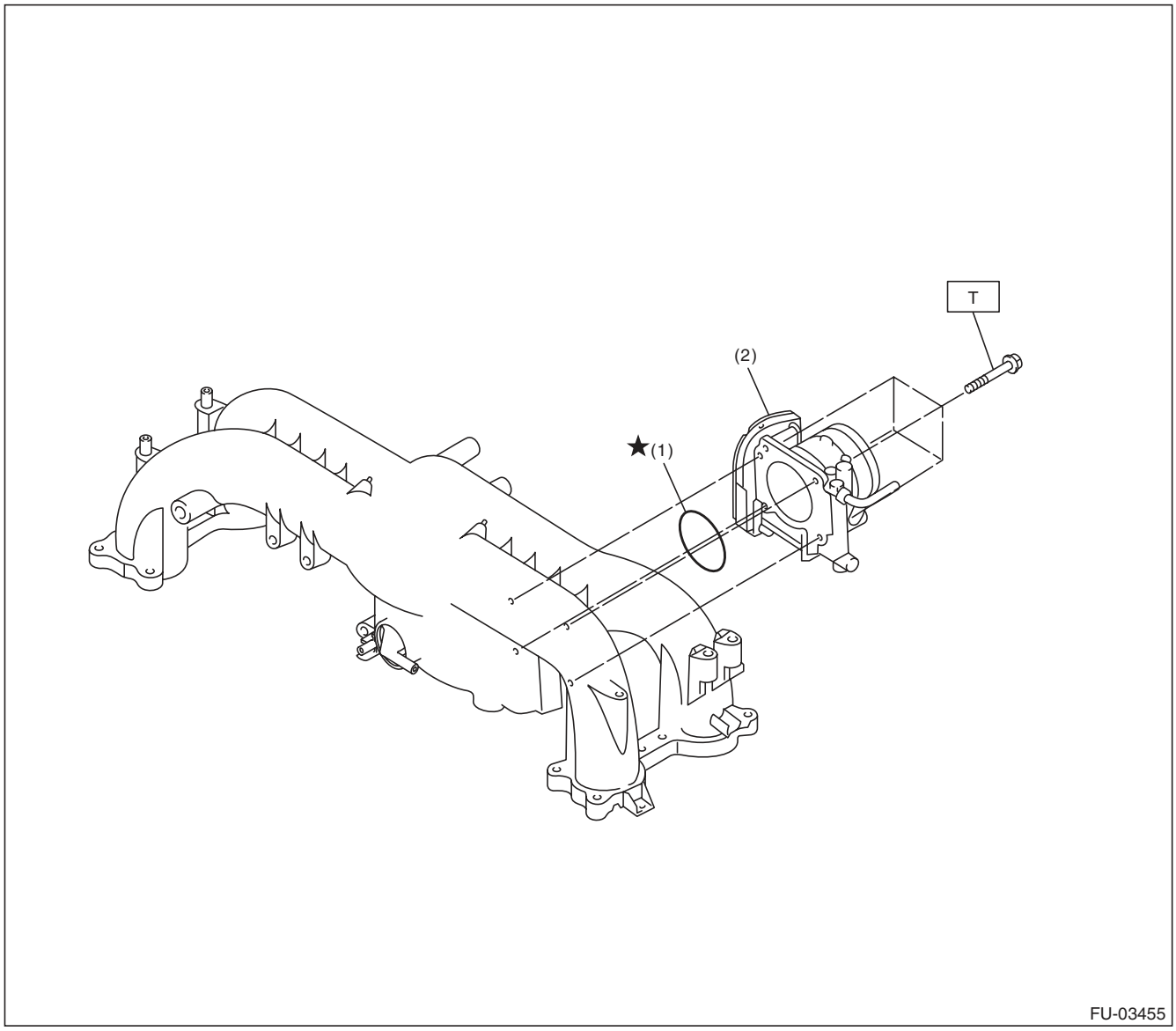

(1) O-ring
(2) Throttle body

Tightening torque:N·m (kgf-m, ft-lb)
T: 8 (0.8, 5.9)

3. CRANKSHAFT POSITION, CAMSHAFT POSITION AND KNOCK SENSORS

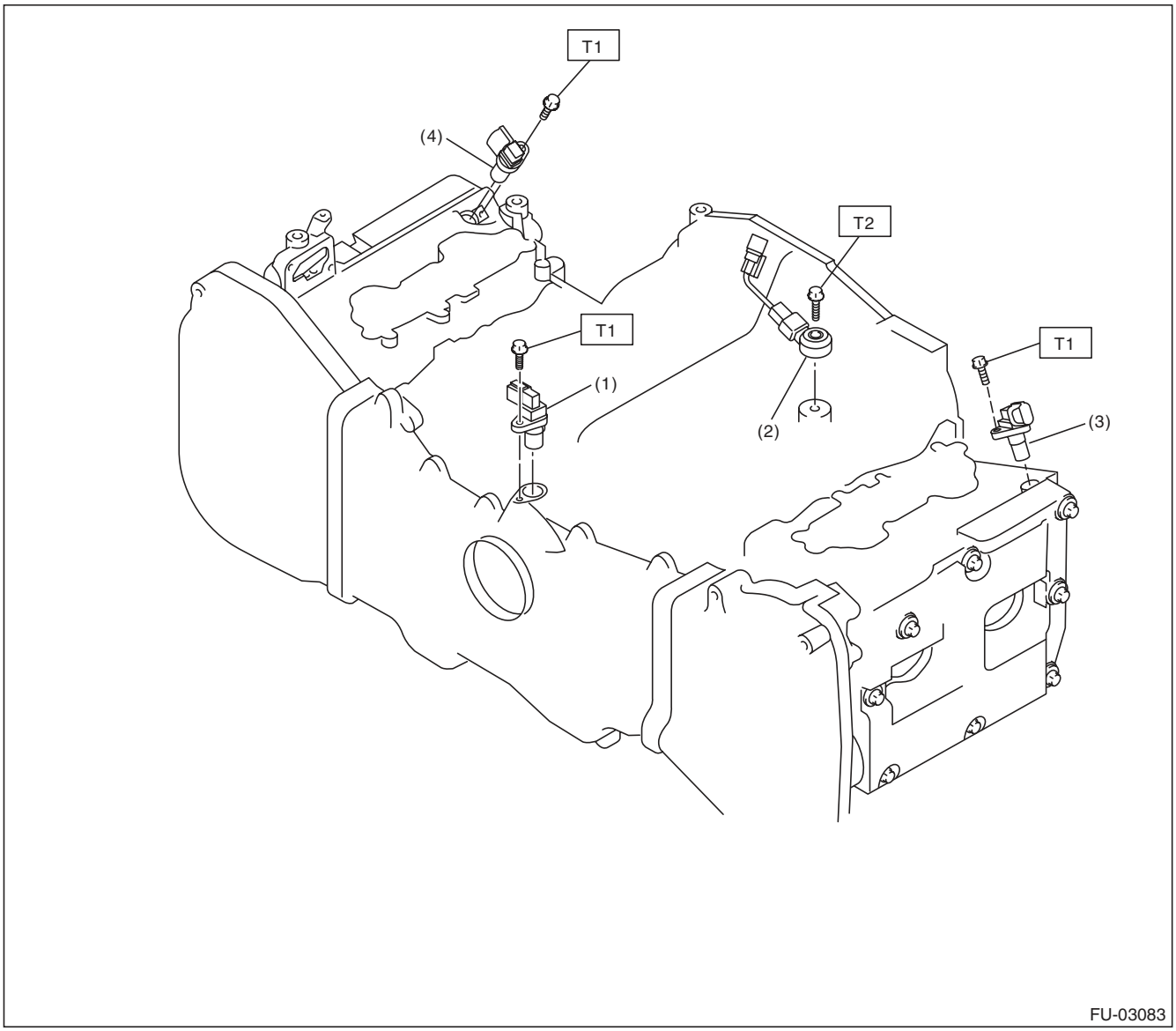

(1) Crankshaft position sensor
(2) Knock sensor
(3) Camshaft position sensor LH
(4) Camshaft position sensor RH

Tightening torque:N·m (kgf-m, ft-lb)
T1: 6.4 (0.7, 4.7)
T2: 24 (2.4, 17.7)

4. FUEL TANK

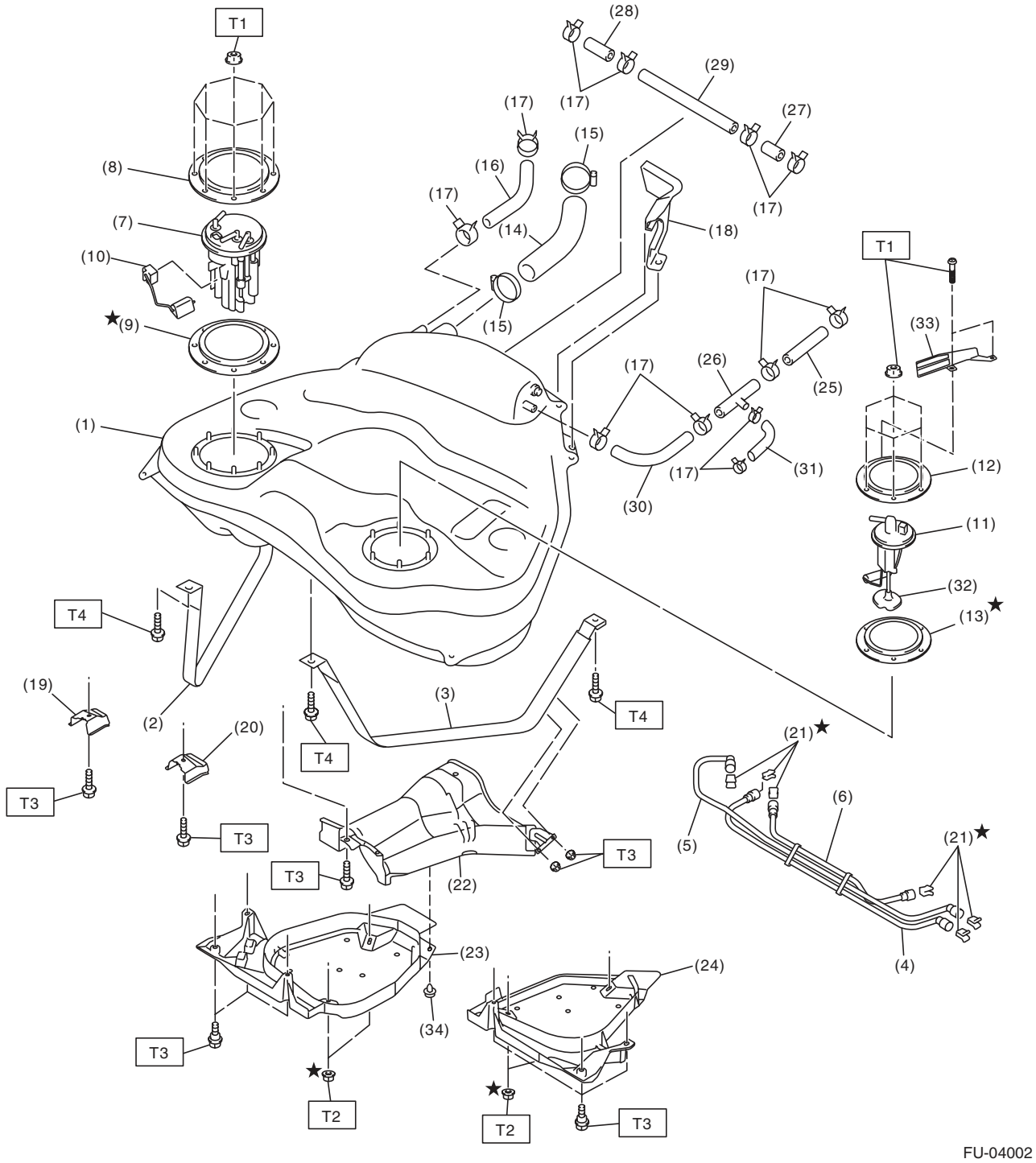
T1
(28)
(29)
(17)
(17)
(27)
(15)
(8)
(16)
(17)
(17)
(7)
(14)
(18)
(10)
T1
(17)
★(9)
(15)
(33)
(26)
(17)
(25)
(1)
(31)
(12)
(17)
(30)
(11)
(32)
T4
(13)★
(19)
(3)
T4
(2)
(20)
T4
(21)★
T3
(6)
T3
(5)
(21)★
T3
T3
(22)
(23)
(24)
(4)
(34)
T3
★
T2
★
T2
T3
FU-04002

(1) Fuel tank
(2) Fuel tank band RH
(3) Fuel tank band LH
(4) Fuel delivery tube
(5) Fuel return tube
(6) Jet pump tube
(7) Fuel pump assembly
(8) Fuel pump upper plate
(9) Fuel pump gasket
(10) Fuel level sensor
(11) Fuel sub level sensor
(12) Fuel sub level sensor upper plate
(13) Fuel sub level sensor gasket
(14) Fuel filler hose
(15) Clamp
(16) Evaporation hose A
(17) Clip
(18) Fuel tank protector LH (Rear)
(19) Stopper RH
(20) Stopper LH
(21) Retainer
(22) Heat shield cover
(23) Fuel tank protector RH (Front)
(24) Fuel tank protector LH (Front)
(25) Evaporation hose B
(26) Connector
(27) Evaporation hose C
(28) Evaporation hose D
(29) Evaporation pipe
(30) Evaporation hose E
(31) Evaporation hose F
(32) Fuel sub level sensor filter
(33) Fuel sub level sensor protector
(34) Clip

Tightening torque:N·m (kgf-m, ft-lb)	
T1:	***4.4 (0.4, 3.2)***
T2:	***9 (0.9, 6.6)***
T3:	***17.5 (1.8, 12.9)***
T4:	***33 (3.4, 24.3)***

5. FUEL LINE

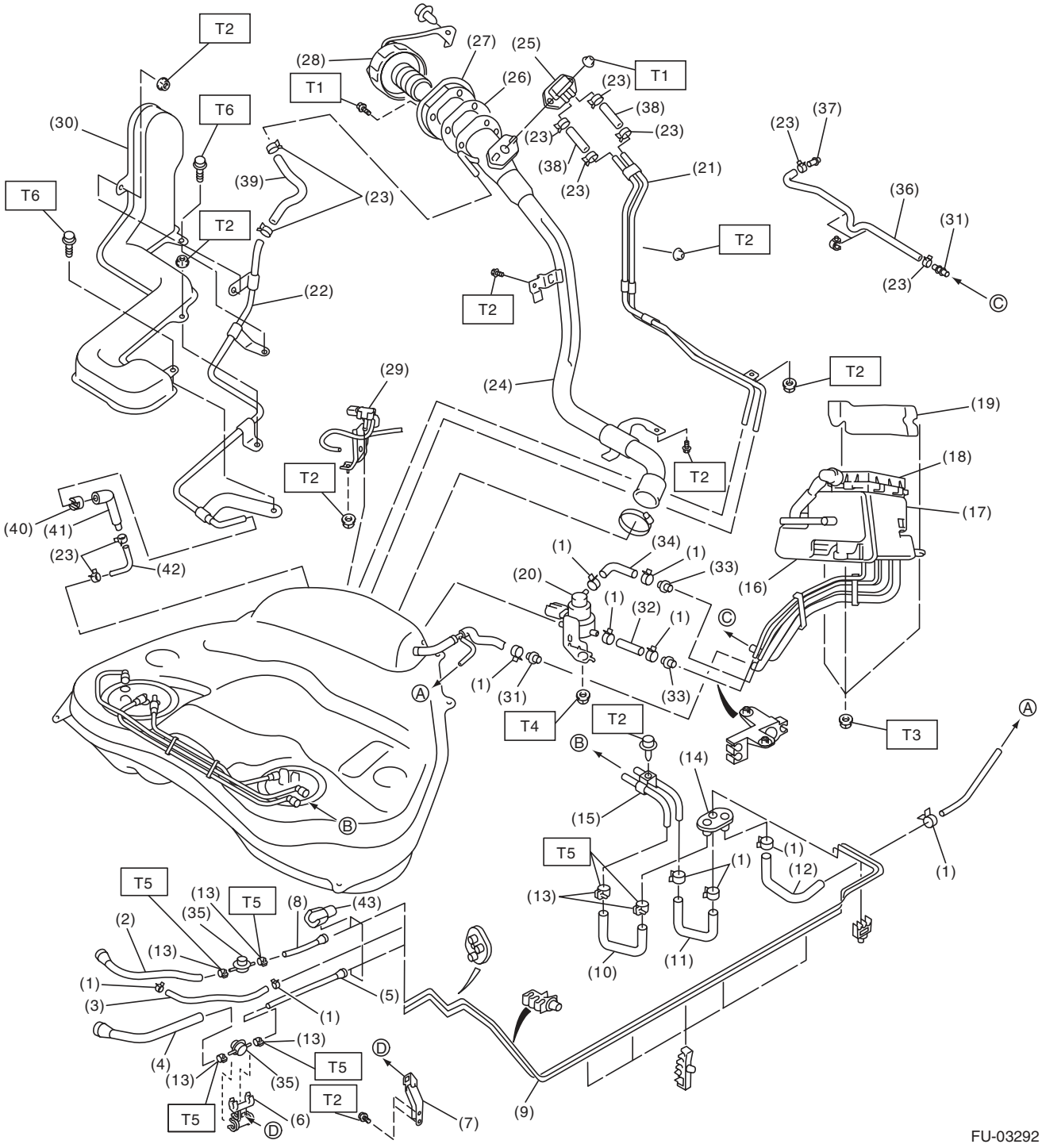
T2
T6
T1
(27)
(25)
(28)
(26)
(23)
(38)
(37)
(30)
(39)
(21)
(36)
(31)
(22)
(29)
(24)
(19)
(18)
(17)
(40)
(41)
(42)
(34)
(33)
(20)
(32)
(16)
(1)
(31)
(33)
T4
T3
(14)
(15)
T5
(12)
(13)
(10)
(11)
(2)
(8)
(43)
(35)
(3)
(5)
(4)
(6)
(7)
(9)
FU-03292

(1) Clip
(2) Fuel delivery hose A
(3) Evaporation hose A
(4) Fuel return hose A
(5) Fuel return hose B
(6) Fuel damper holder
(7) Fuel damper bracket
(8) Fuel delivery hose B
(9) Fuel pipe ASSY A
(10) Fuel delivery hose C
(11) Fuel return hose C
(12) Evaporation hose B
(13) Clamp
(14) Grommet
(15) Fuel pipe ASSY B
(16) Canister
(17) Drain valve
(18) Drain filter
(19) Canister protector
(20) Pressure control solenoid valve
(21) Evaporation pipe A
(22) Evaporation pipe B
(23) Clip
(24) Fuel filler pipe
(25) Shut valve
(26) Gasket
(27) Filler ring
(28) Fuel filler cap
(29) Fuel tank pressure sensor
(30) Evaporation pipe protector
(31) Connector A
(32) Canister hose A
(33) Connector B
(34) Canister hose B
(35) Fuel damper
(36) Drain hose
(37) Drain hose connector
(38) Evaporation hose C
(39) Evaporation hose D
(40) Retainer
(41) Evaporation tube
(42) Evaporation hose E
(43) Quick connector check cover

Tightening torque:N·m (kgf-m, ft-lb)

T1: 4.4 (0.4, 3.2)
T2: 7.5 (0.8, 5.5)
T3: 8 (0.8, 5.9)
T4: 17.5 (1.8, 12.9)
T5: 1.25 (0.1, 0.9)
T6: 1 (0.1, 0.7)

6. FUEL PUMP

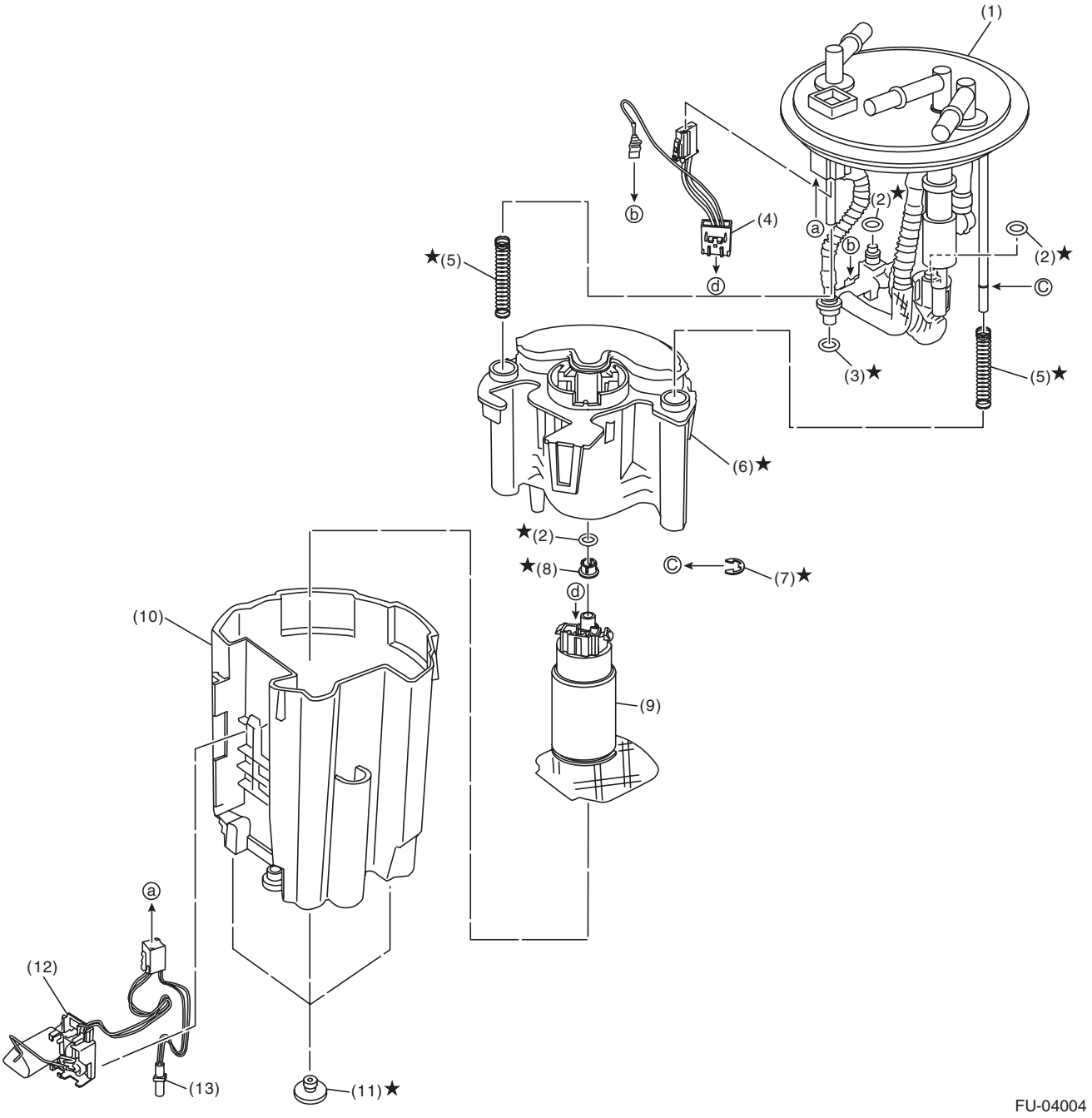

(1)	Sub tank bracket ASSY	(6)	Fuel filter	(10)	Sub tank
(2)	O-ring	(7)	Clip	(11)	Cushion
(3)	O-ring	(8)	Spacer	(12)	Fuel level sensor
(4)	Fuel pump harness	(9)	Pump ASSY	(13)	Fuel temperature sensor
(5)	Spring				

C: CAUTION

- Wear appropriate work clothing, including a cap, protective goggles and protective shoes when performing any work.
- Remove contamination including dirt and corrosion before removal, installation or disassembly.
- Keep the disassembled parts in order and protect them from dust and dirt.
- Before removal, installation or disassembly, be sure to clarify the failure. Avoid unnecessary removal, installation, disassembly and replacement.
- Vehicle components are extremely hot after driving. Be wary of receiving burns from heated parts.
- Be sure to tighten fasteners including bolts and nuts to the specified torque.
- Place shop jacks or rigid racks at the specified points.
- Before disconnecting connectors of sensors or units, be sure to disconnect the ground cable from the battery.
- Place “NO OPEN FLAMES” signs near the working area.
- Prepare a container and cloth to prevent scattering of fuels when performing work where fuels can be spilled. If the fuel spills, wipe it off immediately to prevent from penetrating into floor or flowing out for environmental protection.
- Follow all government and local regulations concerning disposal of refuse when disposing fuel.

D: PREPARATION TOOL

ILLUSTRATION	TOOL NUMBER	DESCRIPTION	REMARKS
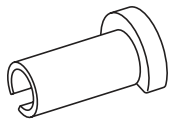 ST42099AE000	42099AE000	QUICK CONNECTOR RELEASE	Used for disconnecting quick connector on the fuel delivery hose side of the engine compartment.
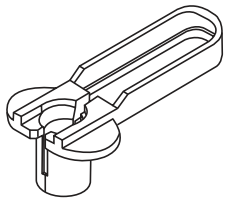 ST18371AA000	18371AA000	CONNECTOR REMOVER	Used for disconnecting the quick connector on the fuel return hose of the engine compartment.
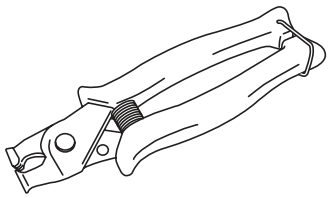 ST18353AA000	18353AA000	CLAMP PLIERS	• Used for removing and installing the PCV hose. • This is a general tool made by the French company CAILLAU. (code) 54.0.000.205 To make this easier to obtain, it has been provided with a tool number.
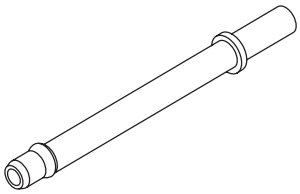 ST18471AA000	18471AA000	FUEL PIPE ADAPTER	Used for draining fuel.

ILLUSTRATION	TOOL NUMBER	DESCRIPTION	REMARKS
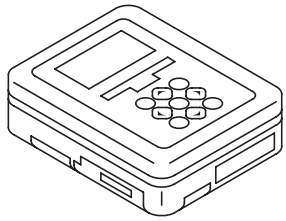 ST1B022XU0	1B022XU0	SUBARU SELECT MONITOR III KIT	Used for draining fuel.

2. Throttle Body

A: REMOVAL

1) Set the vehicle on a lift.
2) Remove the collector cover.
3) Disconnect the ground cable from battery.

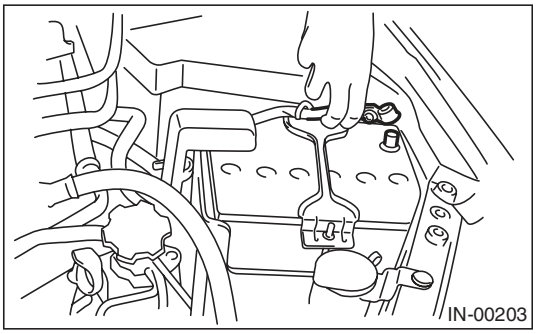

4) Lift up the vehicle.
5) Remove the under cover.
6) Drain approximately 3.0 ℓ (3.2 US qt, 2.6 Imp qt) of coolant. <Ref. to CO(H4DOTC)-14, DRAINING OF ENGINE COOLANT, REPLACEMENT, Engine Coolant.>
7) Remove the intercooler. <Ref. to IN(H4DOTC)-12, REMOVAL, Intercooler.>
8) Disconnect the connectors from the throttle position sensor.

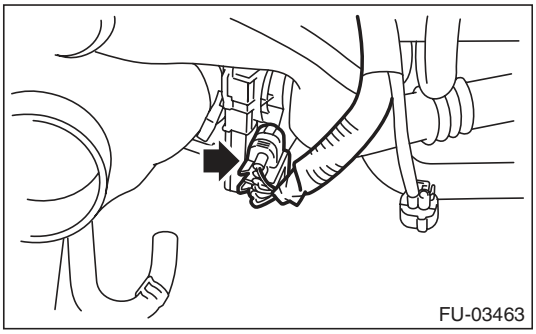

9) Remove the bolts which secure the air by-pass pipe and PCV pipe to the intake manifold, and loosen the clamp which connects the throttle body and duct.

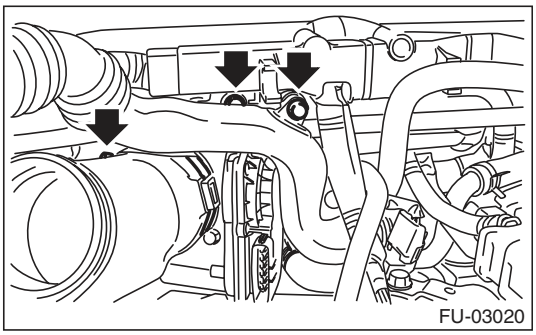

10) Remove the duct from the throttle body.

11) Disconnect the engine coolant hoses from the throttle body.

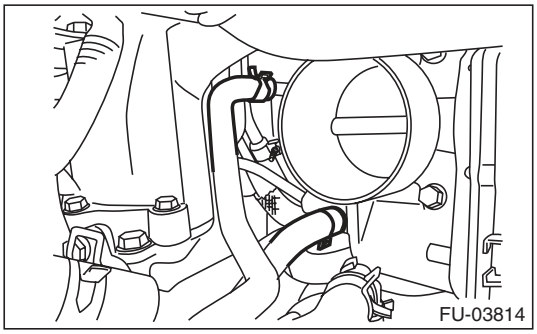

12) Remove the bolts which secure the throttle body to the intake manifold, and remove the throttle body.

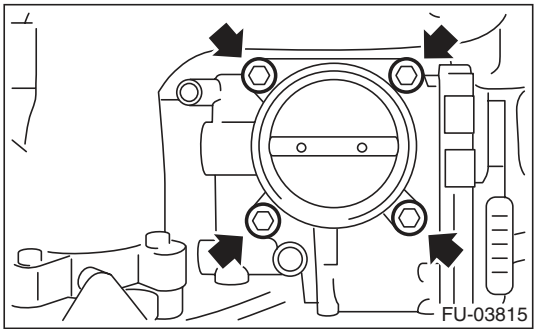

B: INSTALLATION

Install in the reverse order of removal.

NOTE:
Use new O-rings.

Tightening torque:
8 N·m (0.8 kgf-m, 5.9 ft-lb)

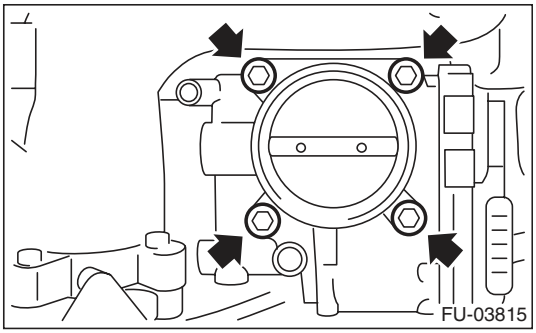

Tightening torque:
T1: 3 N·m (0.3 kgf-m, 2.2 ft-lb)
T2: 6.5 N·m (0.7 kgf-m, 4.8 ft-lb)

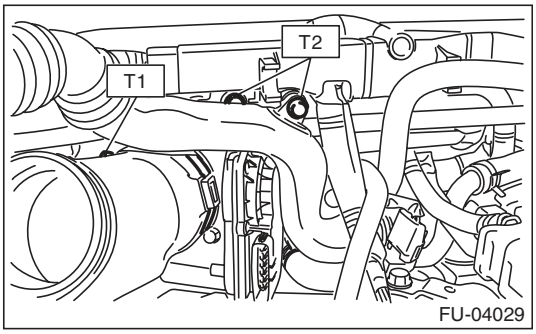

3. Intake Manifold

A: REMOVAL

1) Set the vehicle on a lift.
2) Remove the collector cover.
3) Collect the refrigerant from A/C system. <Ref. to AC-22, PROCEDURE, Refrigerant Recovery Procedure.>
4) Release the fuel pressure. <Ref. to FU(H4DOTC)-57, RELEASING OF FUEL PRESSURE, PROCEDURE, Fuel.>
5) Remove the battery. <Ref. to SC(H4SO)-20, REMOVAL, Battery.>
6) Open the fuel filler lid, and remove the fuel filler cap.
7) Lift up the vehicle.
8) Remove the under cover.
9) Drain approximately 3.0 ℓ (3.2 US qt, 2.6 Imp qt) of coolant. <Ref. to CO(H4DOTC)-14, DRAINING OF ENGINE COOLANT, REPLACEMENT, Engine Coolant.>
10) Remove the air intake duct and air cleaner case. <Ref. to IN(H4DOTC)-9, REMOVAL, Air Intake Duct.> <Ref. to IN(H4DOTC)-8, REMOVAL, Air Cleaner Case.>
11) Remove the intercooler. <Ref. to IN(H4DOTC)-12, REMOVAL, Intercooler.>
12) Remove the generator. <Ref. to SC(H4SO)-14, REMOVAL, Generator.>
13) Remove the coolant filler tank. <Ref. to CO(H4DOTC)-30, REMOVAL, Coolant Filler Tank.>
14) Disconnect the A/C pressure hoses from A/C compressor. <Ref. to AC-40, REMOVAL, Hose and Pipe.>
15) Disconnect the vacuum hose (A) and the connector (B) from the PCV hose assembly.

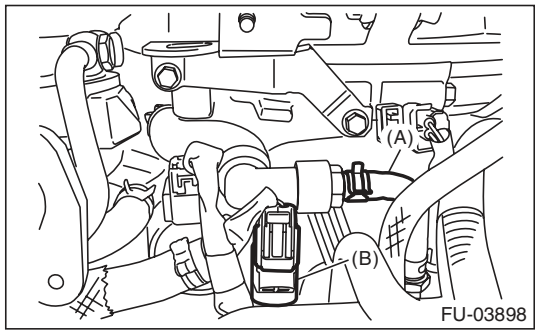

16) Remove the connector from the PCV hose assembly.

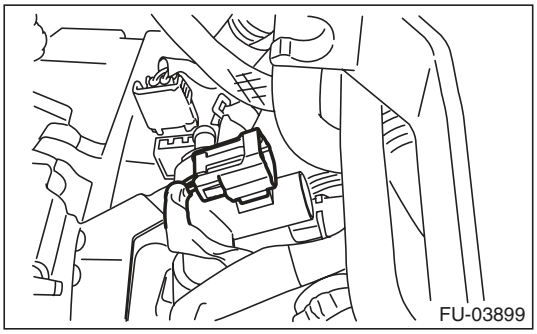

17) Remove the bolts which secure the air by-pass pipe and PCV pipe to the intake manifold, and loosen the clamp which connects the throttle body and duct.

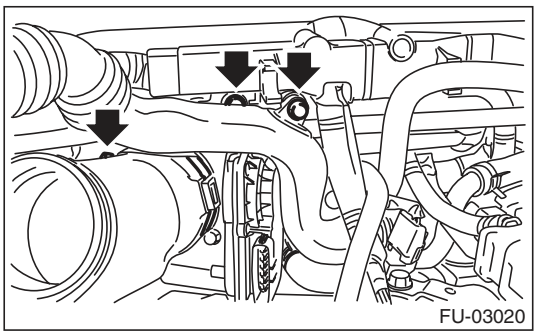

18) Remove the duct from the throttle body.
19) Disconnect the engine coolant hose from throttle body.

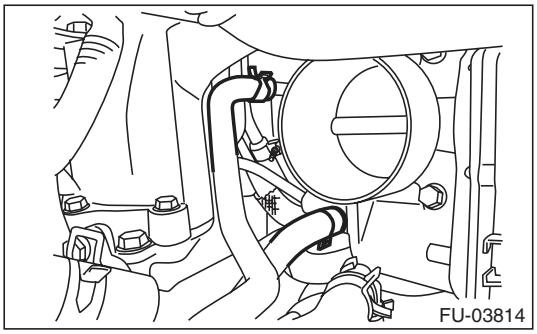

20) Disconnect the brake booster vacuum hose.

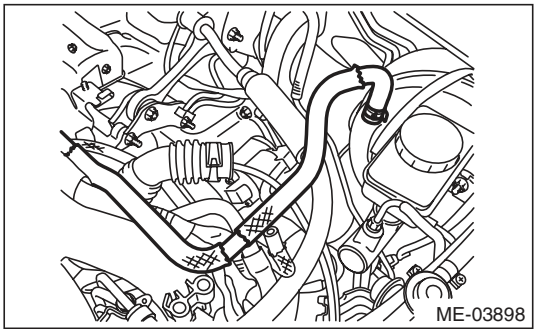

21) Disconnect the PCV hose from the rocker cover.

NOTE:
Fit the cut out in the ST with the protrusion on the clamp as shown in the figure, unlock the clamp, and disconnect the PCV hose fastened by the clamp.
ST 18353AA000 CLAMP PLIERS

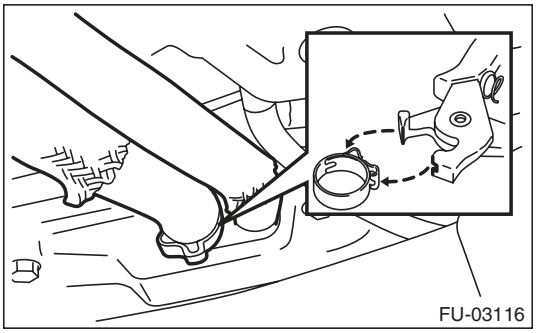

22) Disconnect the air control hose (A) from the wastegate actuator, and loosen the clamp that holds the turbocharger on the intake duct.

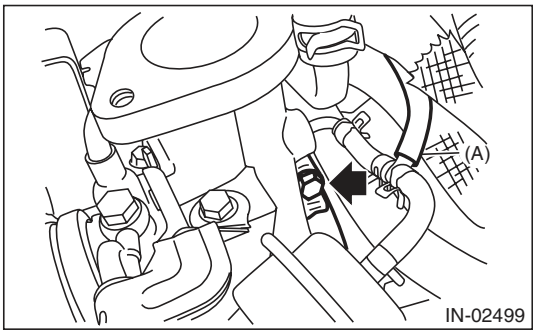

23) Disconnect the bulk head harness connectors from the engine harness connector.

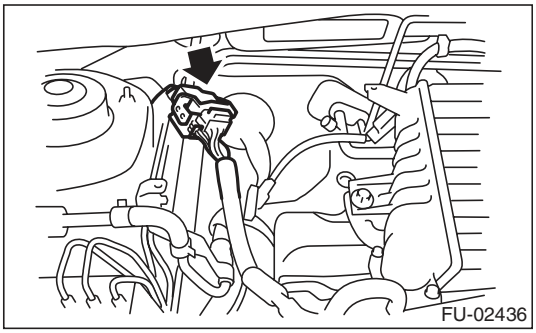

24) Remove the engine harness connector from the engine harness bracket.

25) Disconnect the connectors from the engine coolant temperature sensor (A), oil pressure switch (B) and crankshaft position sensor (C).

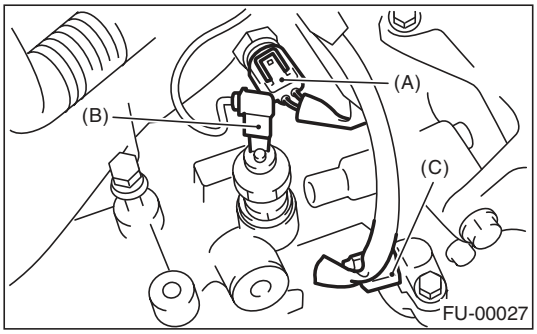

26) Disconnect the connector from power steering pump switch.

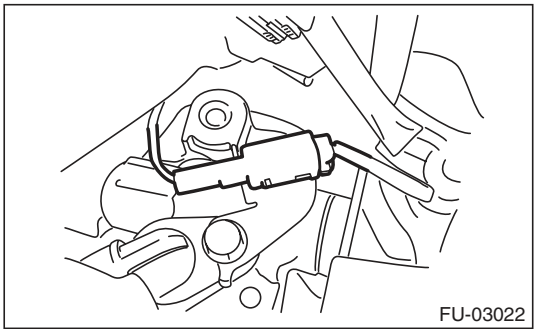

27) Disconnect the knock sensor connector.

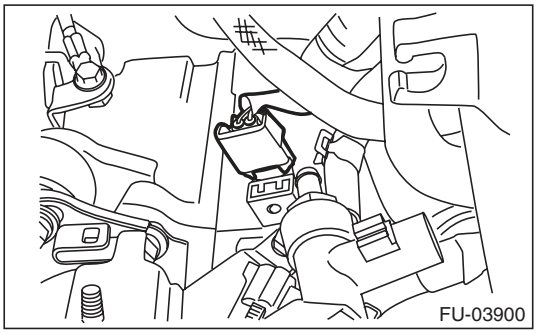

28) Disconnect the connector from the secondary air combination valve.

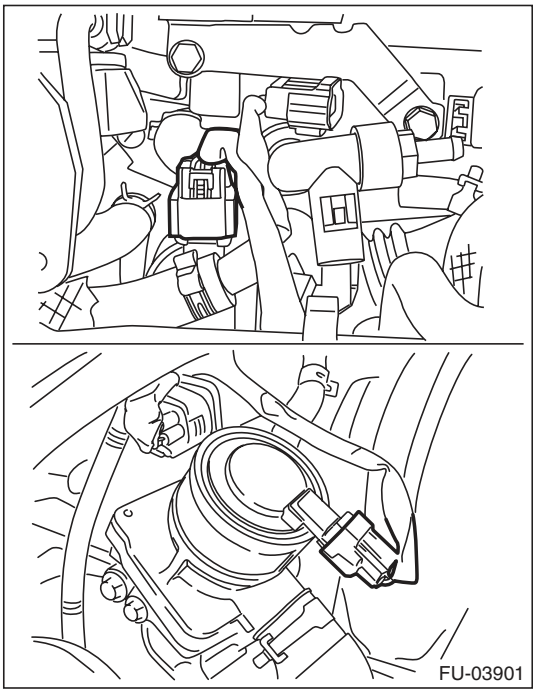

29) Disconnect the connector from the camshaft position sensor.

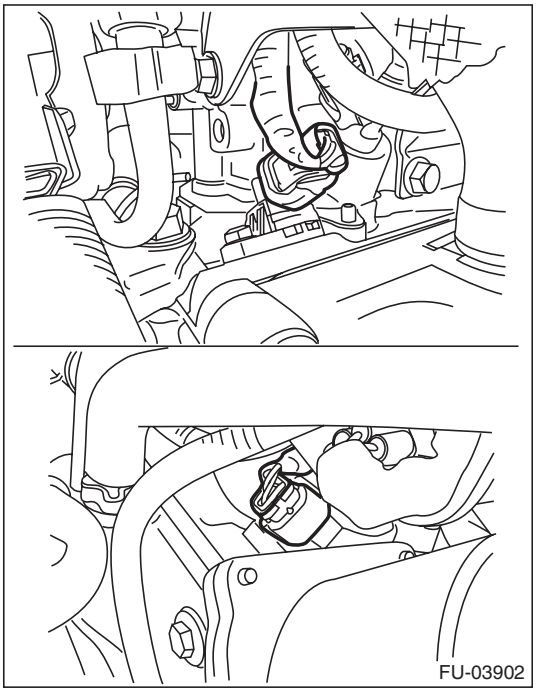

30) Disconnect the connector from the oil flow control solenoid valve.

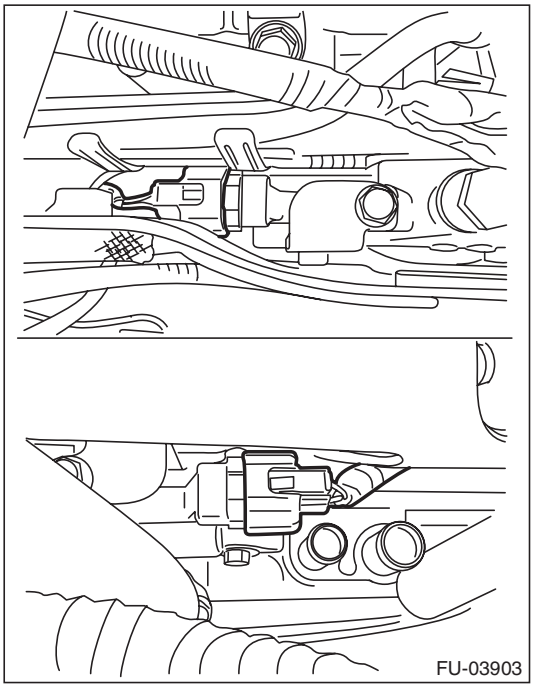

31) Disconnect the air duct from the secondary air pump, and remove the bolts that install the air duct on the rocker cover LH.

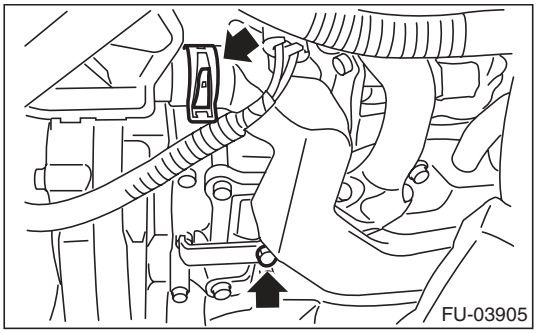

32) Disconnect the connector from ignition coil.

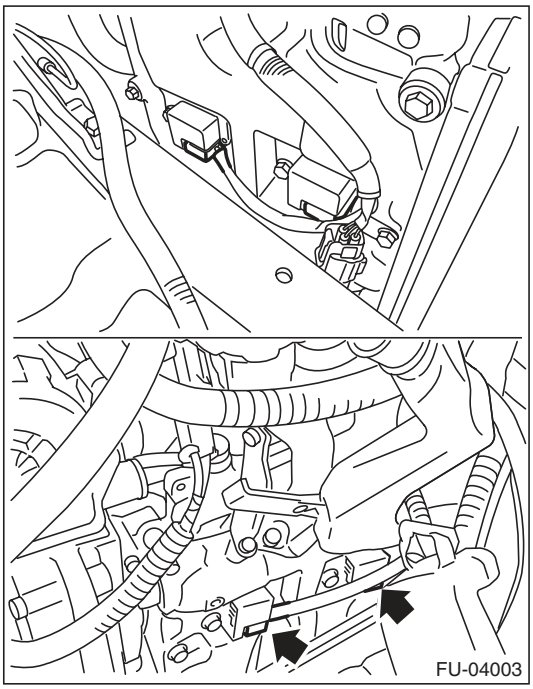

33) Disconnect the connector from the front oxygen (A/F) sensor, and remove the engine harness fixed by clip (A) from the rocker cover. (right side only)

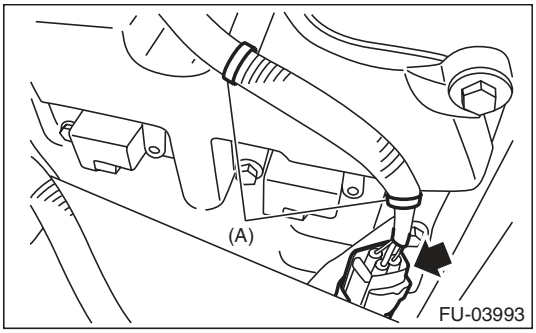

34) Attach ST to the fuel delivery pipe and push ST in the direction of arrow mark to disconnect the fuel delivery hose.

ST 42099AE000 QUICK CONNECTOR RELEASE

CAUTION:
- **Be careful not to spill fuel.**
- **Catch the fuel from hoses using a container or cloth.**

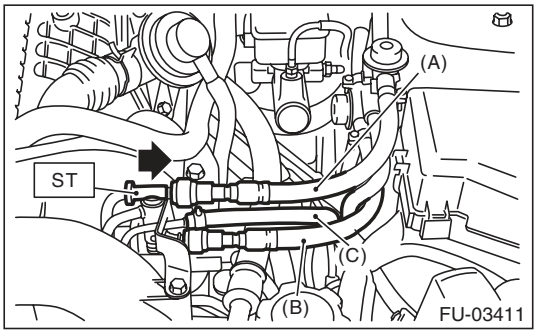

(A) Fuel delivery hose
(B) Fuel return hose
(C) Evaporation hose

35) Disconnect the fuel return hose using the ST.

ST 18371AA000 CONNECTOR REMOVER

CAUTION:
- **Be careful not to spill fuel.**
- **Catch the fuel from hoses using a container or cloth.**

(1) Attach ST to the fuel return pipe as shown in the figure.

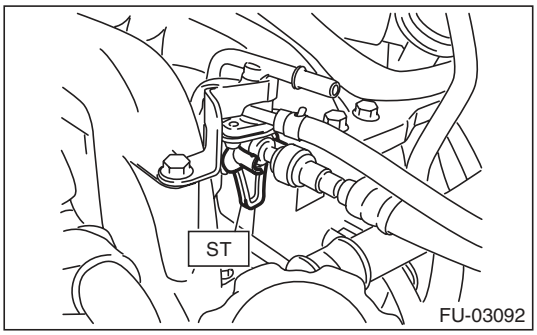

(2) Insert the front side of ST into the quick connector.

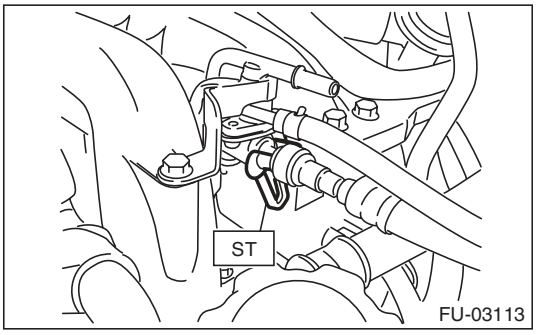

(3) Insert the back side of ST into the quick connector and push ST in the direction of arrow mark to disconnect the fuel return hose.

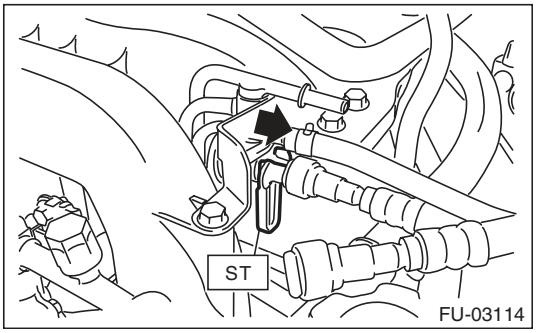

36) Remove the clip and disconnect the evaporation hose from the fuel pipe.

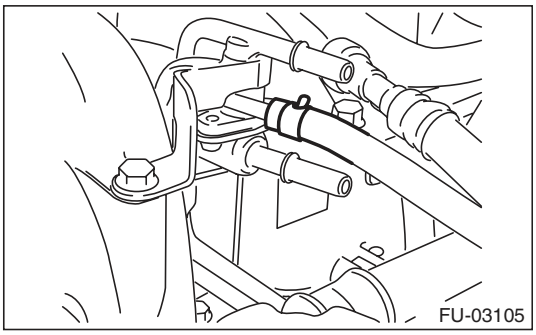

37) Remove the bolts which hold the tumble generator valve assembly onto the cylinder head.

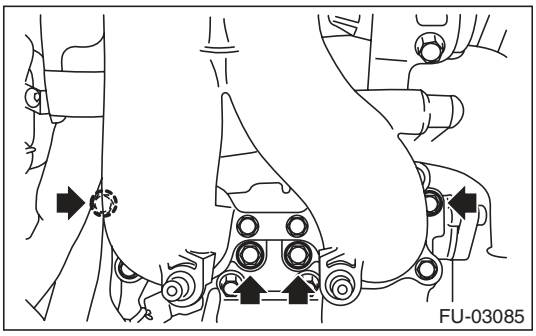

38) Remove the intake manifold.

B: INSTALLATION

1) Install the intake manifold onto cylinder heads.

NOTE:
Use a new gasket.

Tightening torque:
25 N·m (2.5 kgf-m, 18.4 ft-lb)

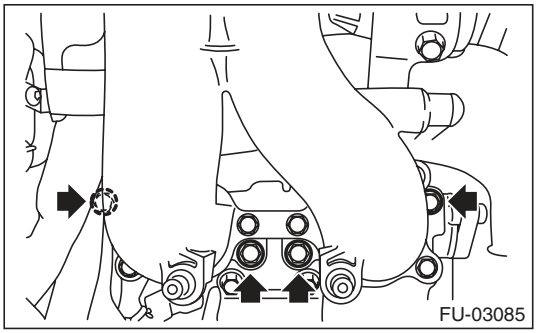

2) Connect the fuel delivery hose, fuel return hose, and evaporation hose. <Ref. to FU(H4DOTC)-81, INSTALLATION, Fuel Delivery, Return and Evaporation Lines.>

NOTE:
If fuel hoses or clamps are damaged, replace them with new parts.

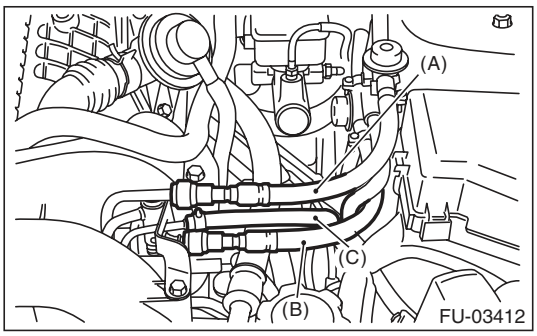

(A) Fuel delivery hose
(B) Fuel return hose
(C) Evaporation hose

3) Connect the connector to the oil flow control solenoid valve.

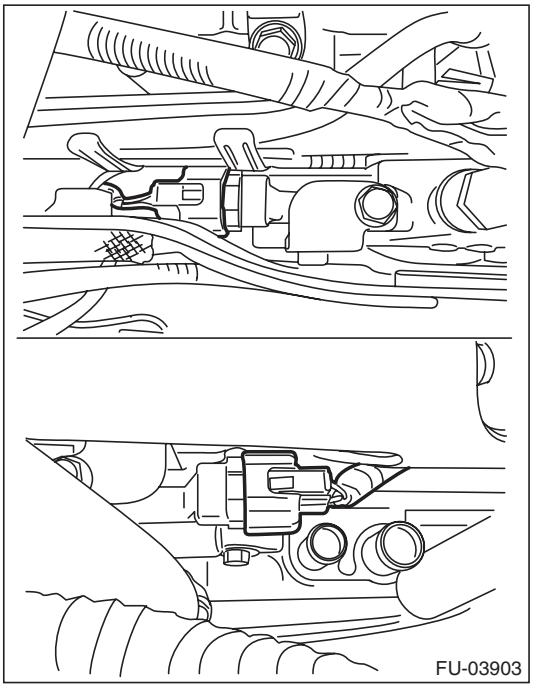

4) Connect the connector to the engine coolant temperature sensor (A), oil pressure switch (B) and crankshaft position sensor (C).

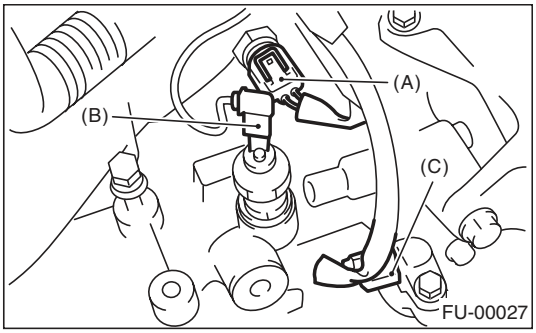

5) Connect the connector to the knock sensor.

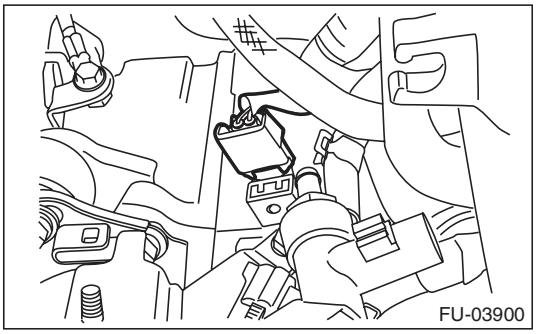

6) Connect the connector to the power steering pump switch.

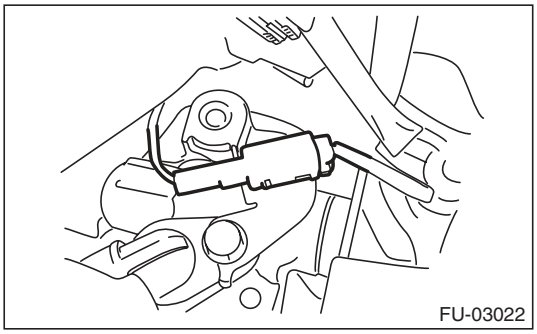

7) Connect the connectors to camshaft position sensor.

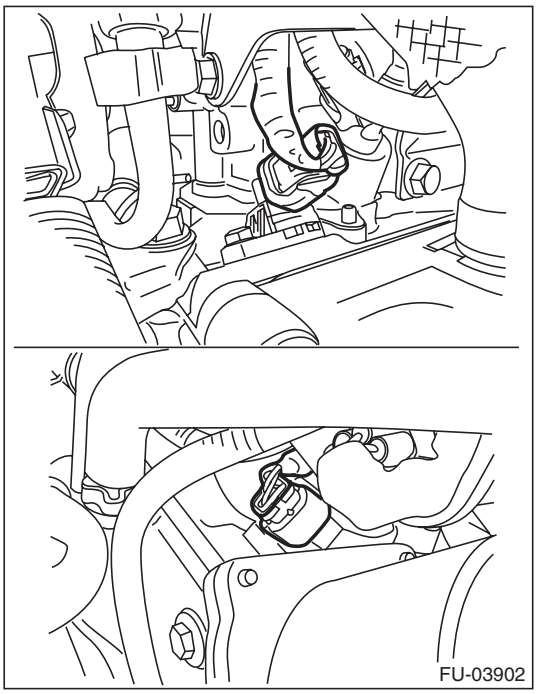

8) Connect the connector to the secondary air combination valve.

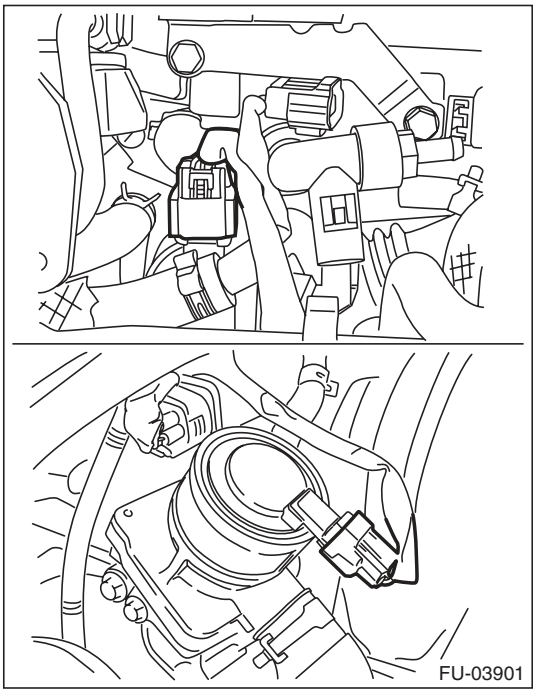

9) Connect the connector from the front oxygen (A/F) sensor, and install the engine harness with clip (A) to the rocker cover. (right side only)

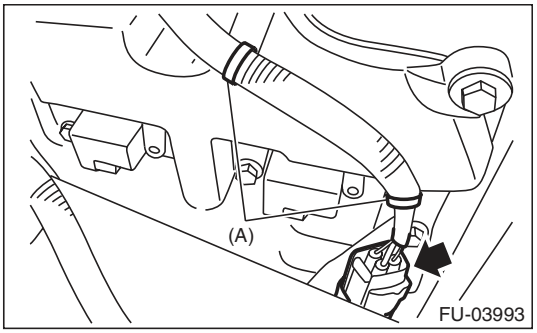

10) Connect the connector to the ignition coil.

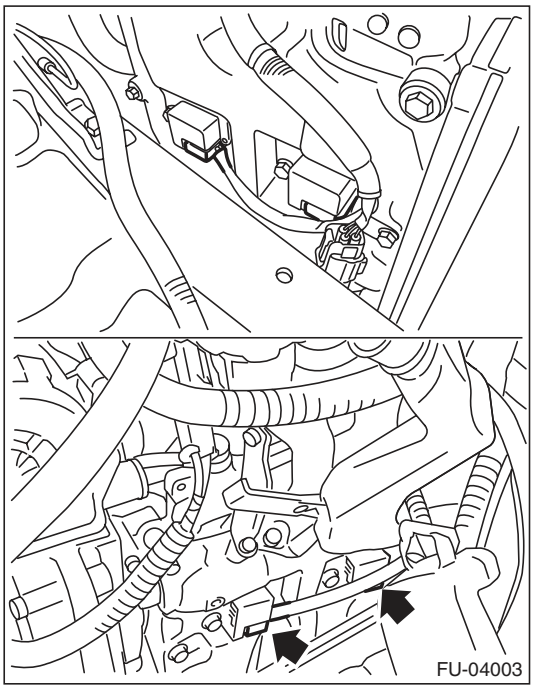

11) Connect the air duct to the secondary air pump, and install the air duct on the rocker cover.

Tightening torque:
9 N·m (0.9 kgf-m, 6.6 ft-lb)

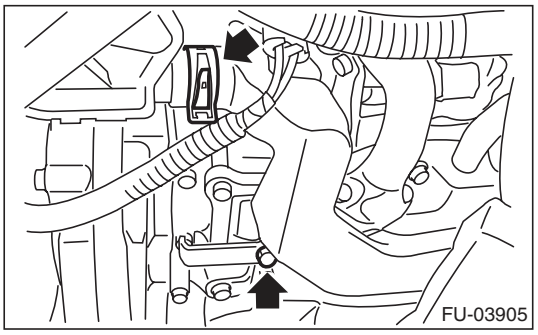

12) Install the engine harness connector to engine harness bracket, then connect the bulkhead harness connector to the engine harness connector.

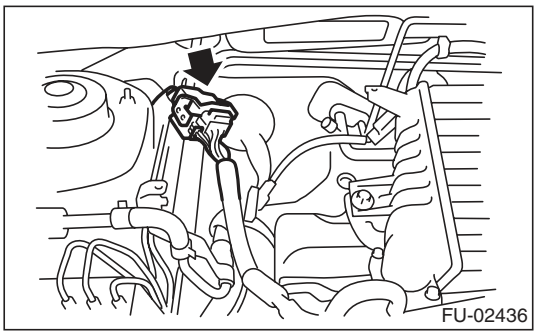

13) Connect the air control hose (A) to the waste-gate actuator, and tighten the clamp that holds the intake duct on the turbocharger.

Tightening torque:
3 N·m (0.3 kgf-m, 2.2 ft-lb)

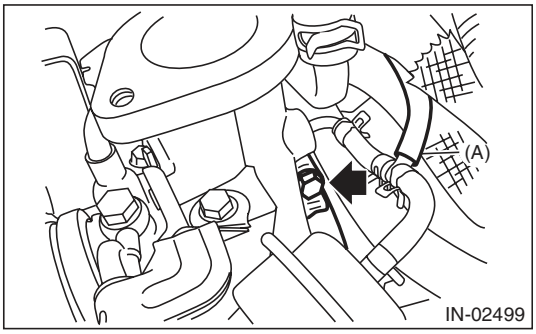

14) Connect the brake booster vacuum hose.

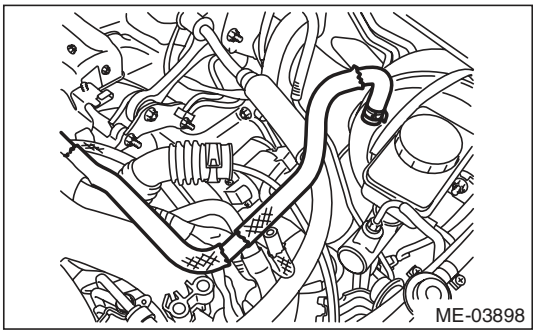

15) Connect the PCV hose to the rocker cover.

NOTE:
Use a new clamp for the PCV hose clamp, fit the cut out in the ST with the protrusion on the clamp as shown in the figure, and lock the clamp.
ST 18353AA000 CLAMP PLIERS

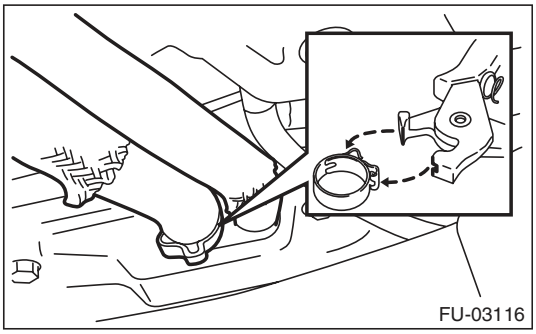

16) Connect the engine coolant hoses to throttle body.

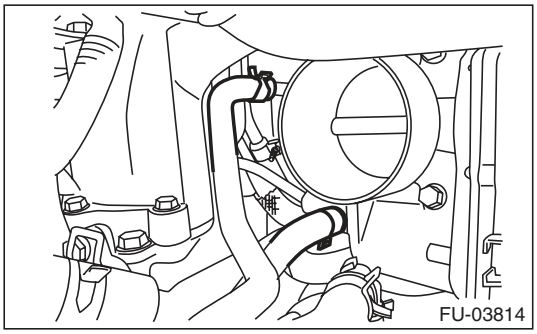

17) Install the duct to the throttle body.

Tightening torque:
3 N·m (0.3 kgf-m, 2.2 ft-lb)

18) Attach the bolts which secure the air by-pass pipe and PCV pipe to the intake manifold.

Tightening torque:
6.5 N·m (0.7 kgf-m, 4.8 ft-lb)

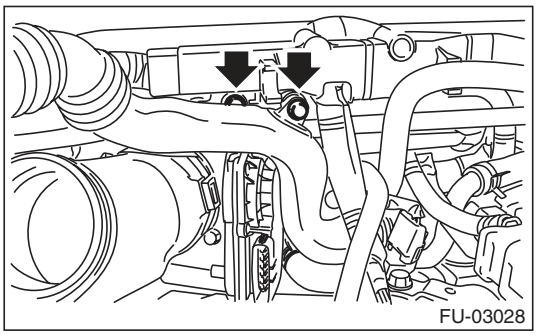

19) Attach the connector to the PCV hose assembly.

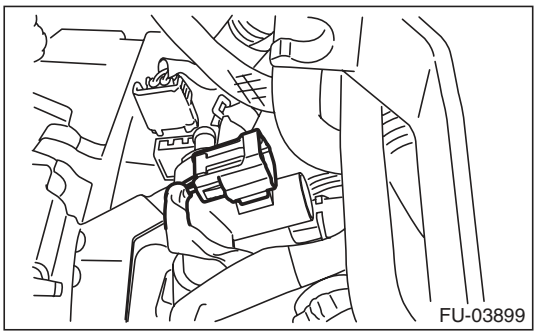

20) Connect the vacuum hose (A) and the connector (B) to the PCV hose assembly.

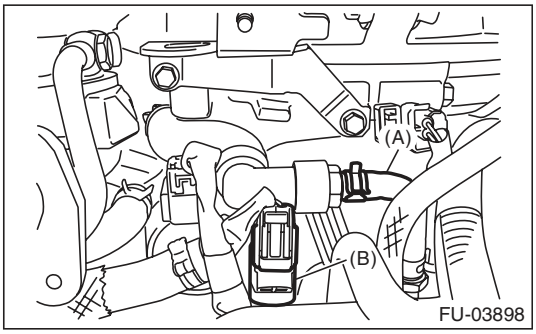

21) Install the A/C pressure hoses. <Ref. to AC-40, INSTALLATION, Hose and Pipe.>
22) Install the coolant filler tank. <Ref. to CO(H4DOTC)-30, INSTALLATION, Coolant Filler Tank.>
23) Install the generator. <Ref. to SC(H4SO)-14, INSTALLATION, Generator.>
24) Install the intercooler. <Ref. to IN(H4DOTC)-13, INSTALLATION, Intercooler.>
25) Install the air intake duct and air cleaner case. <Ref. to IN(H4DOTC)-8, INSTALLATION, Air Cleaner Case.> <Ref. to IN(H4DOTC)-9, INSTALLATION, Air Intake Duct.>
26) Install the battery. <Ref. to SC(H4SO)-20, INSTALLATION, Battery.>
27) Lift up the vehicle.
28) Install the under cover.
29) Lower the vehicle.
30) Fill engine coolant. <Ref. to CO(H4DOTC)-14, FILLING OF ENGINE COOLANT, REPLACEMENT, Engine Coolant.>
31) Charge the A/C system with refrigerant. <Ref. to AC-23, PROCEDURE, Refrigerant Charging Procedure.>
32) Install the collector cover.

C: DISASSEMBLY

1) Remove the engine ground terminal from the fuel pipe protector LH, and remove the fuel pipe protector LH from the intake manifold.

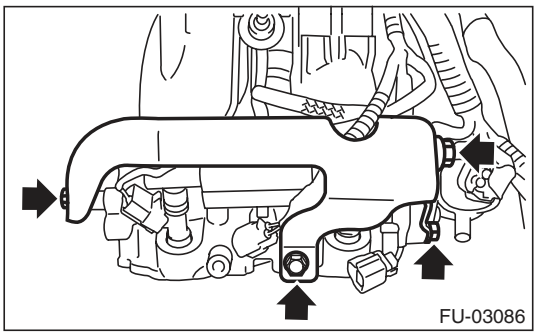

2) Remove the fuel pipe protector RH from the intake manifold.

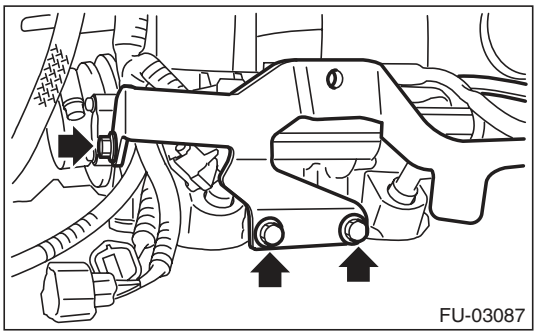

3) Disconnect the evaporation hose and the connector from the purge control solenoid valve 1, and remove the purge control solenoid valve 1 from the intake manifold.

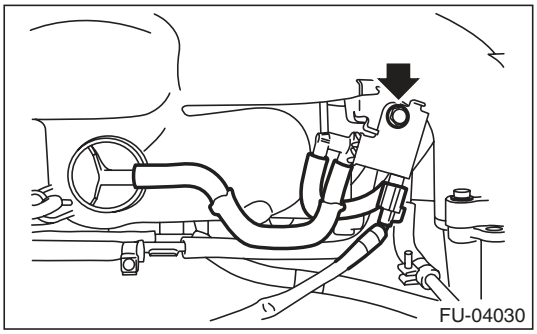

4) Disconnect the filter assembly.

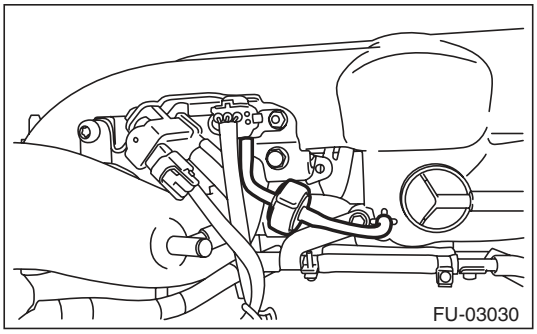

5) Remove the solenoid valve bracket assembly from the intake manifold, and disconnect the connector from the wastegate control solenoid valve, manifold absolute pressure sensor and purge control solenoid valve 2.

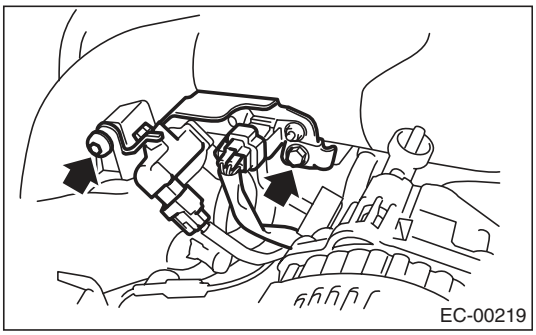

6) Disconnect the evaporation hose of the purge control solenoid valve 2 from the intake duct and fuel pipe assembly.
7) Disconnect the connectors from the throttle position sensor.

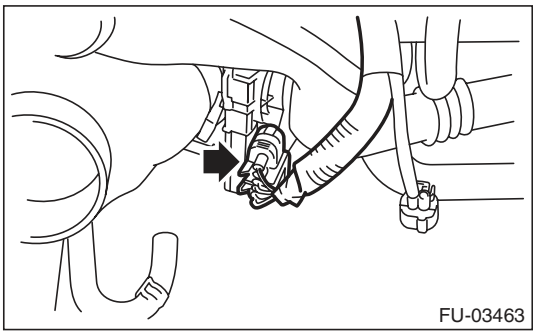

8) Remove the throttle body from the intake manifold.

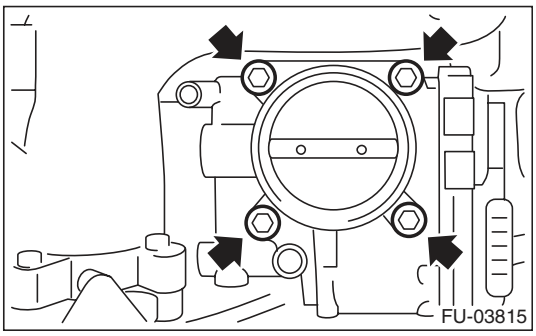

9) Disconnect the connector from the fuel injector and the tumble generator valve assembly.

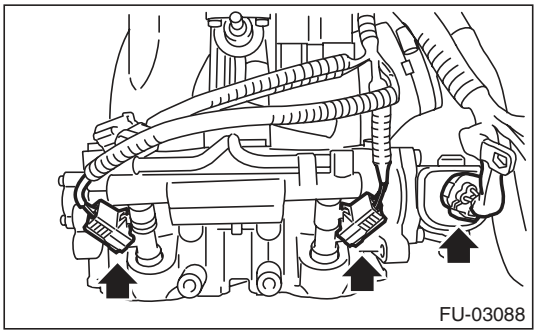

10) Remove the PCV pipe (A), harness assembly (B) and intake duct (C) from the intake manifold.

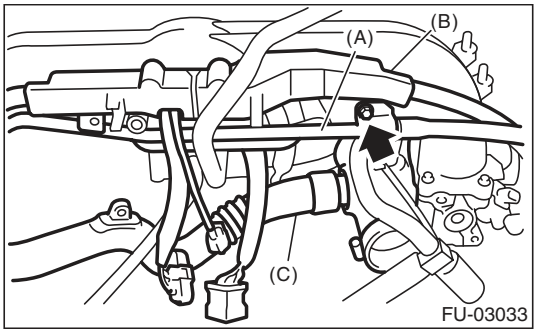

11) Remove the bolt which secures the fuel injector pipe LH onto the front side of intake manifold, and disconnect the pressure regulator vacuum hose from the intake manifold.

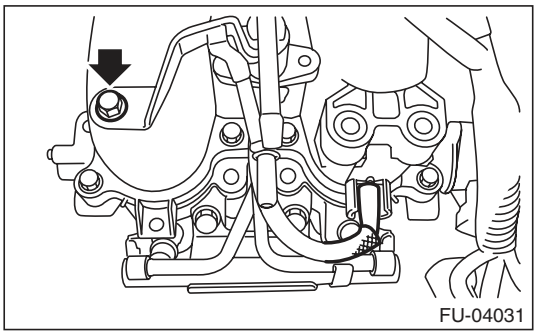

12) Remove the bolt which holds fuel injector pipe onto intake manifold.

- RH side

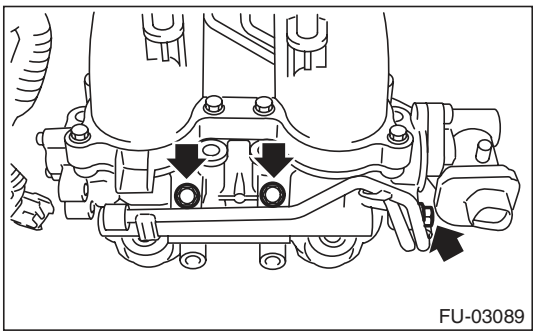

- LH side

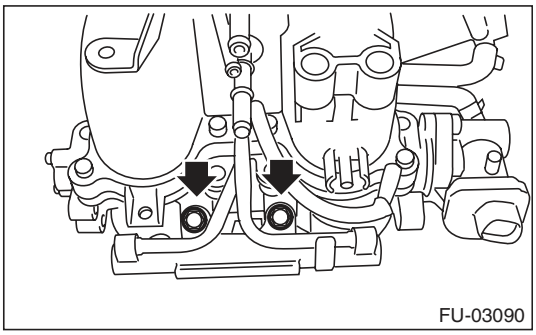

13) Remove the fuel injector.

- RH side

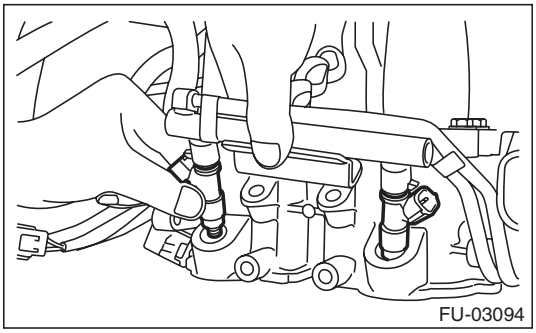

- LH side

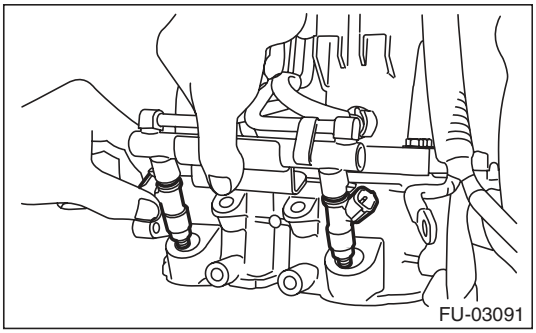

14) Remove the bolt which holds fuel injector pipe onto intake manifold.

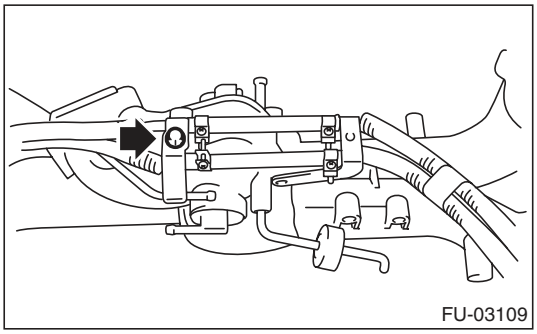

15) Remove the bolt which secures fuel injector pipe RH onto the lower side of the intake manifold.

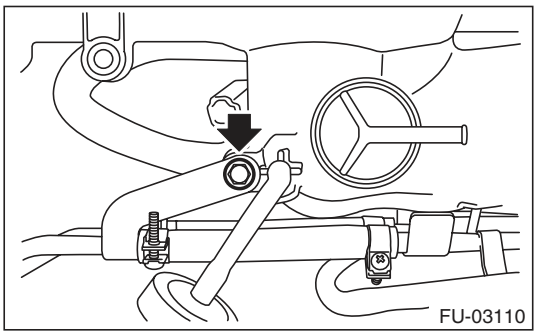

16) Loosen the clamp which holds the fuel hose to the fuel injector pipe, and then disconnect the fuel hose from pipe.

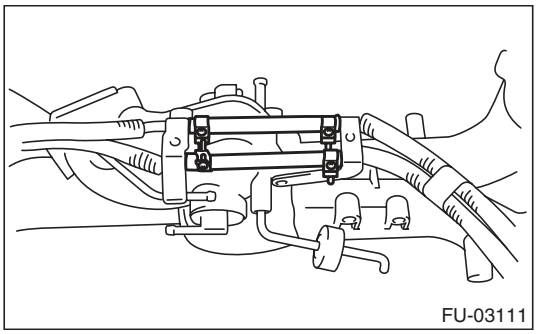

17) Remove the fuel injector pipe.

18) Remove the tumble generator valve assembly from the intake manifold.

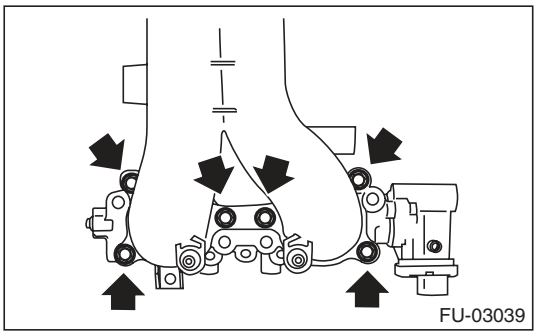

D: ASSEMBLY

1) Install the tumble generator valve assembly onto intake manifold.

NOTE:
Use new O-rings.

Tightening torque:
8.3 N·m (0.8 kgf-m, 6.1 ft-lb)

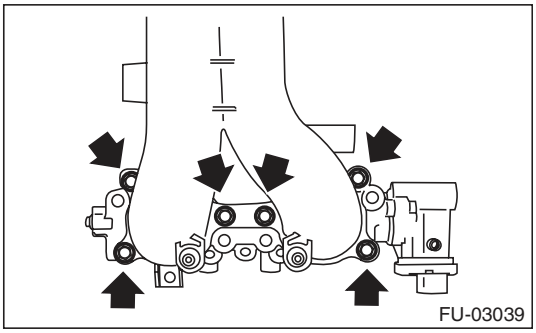

2) Install the fuel injector pipe.
3) Connect fuel hoses to fuel injector pipes on both sides, and secure them with the clamps.

Tightening torque:
1.25 N·m (0.1 kgf-m, 0.9 ft-lb)

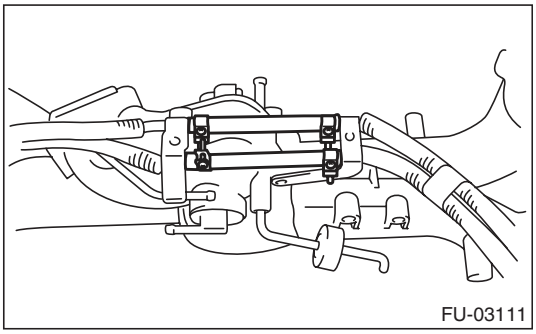

4) Tighten the bolts which secure the fuel injector pipe RH to the lower side of the intake manifold.

Tightening torque:
6.4 N·m (0.7 kgf-m, 4.7 ft-lb)

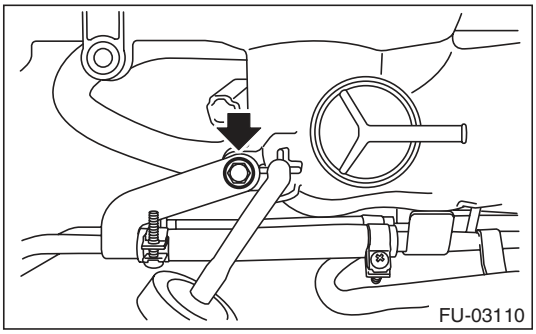

5) Tighten the bolts which secure fuel injector pipe onto intake manifold.

Tightening torque:
6.4 N·m (0.7 kgf-m, 4.7 ft-lb)

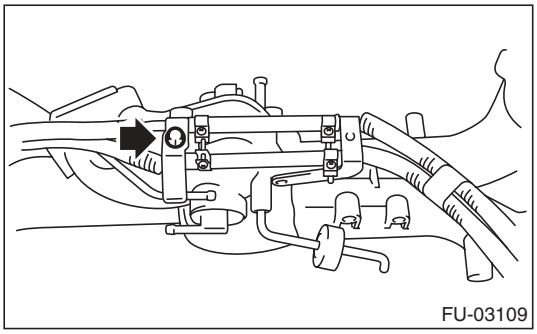

6) Install the fuel injector.
- RH side

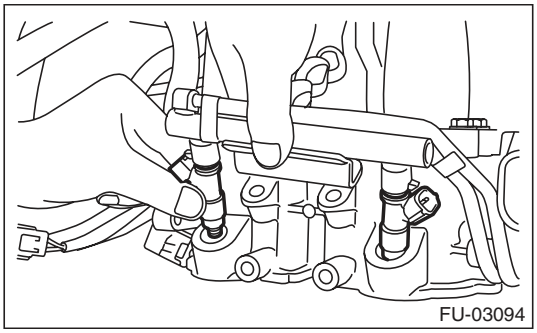

- LH side

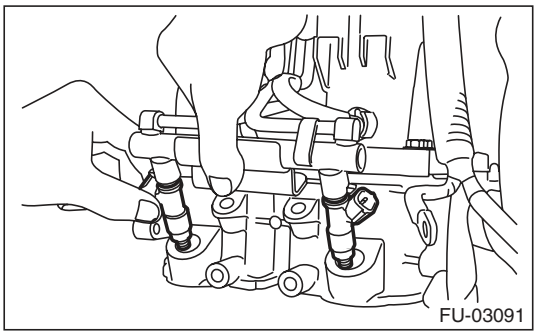

7) Tighten the bolts which secure fuel injector pipe onto intake manifold.

Tightening torque:
19 N·m (1.9 kgf-m, 14.0 ft-lb)

- LH side

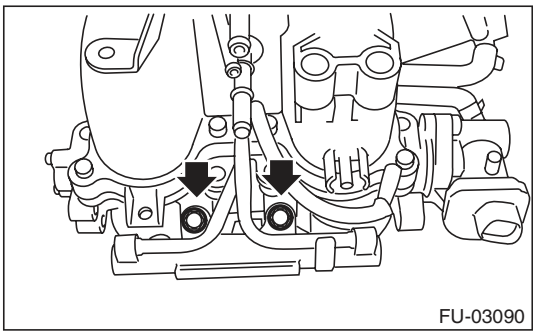

- RH side

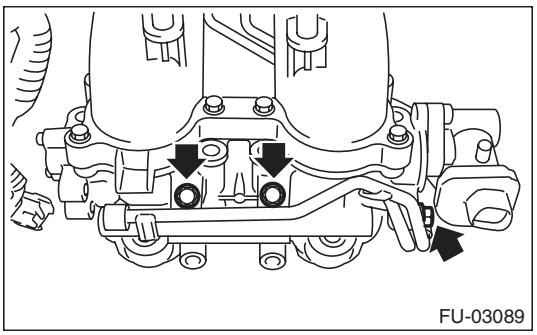

8) Tighten the bolt which holds the fuel injector pipe LH to the front side of the intake manifold, and connect the pressure regulator vacuum hose to the intake manifold.

Tightening torque:
6.4 N·m (0.7 kgf-m, 4.7 ft-lb)

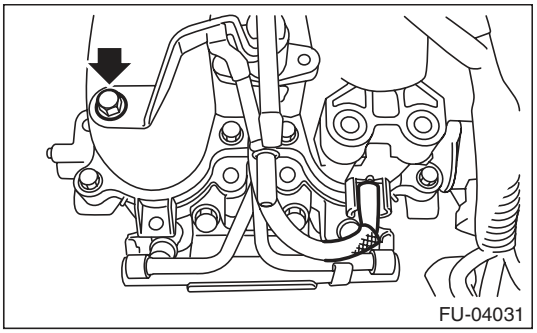

9) Install PCV pipe (A), harness assembly (B) and intake duct (C) to the intake manifold.

Tightening torque:
6.5 N·m (0.7 kgf-m, 4.8 ft-lb)

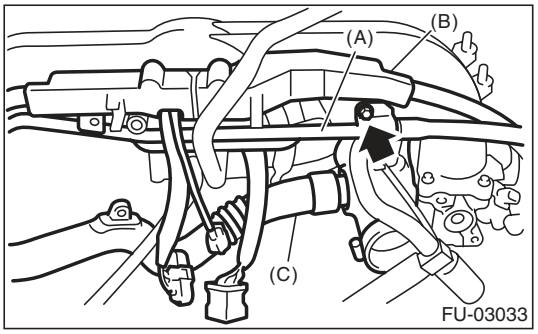

10) Connect the connector to the fuel injector and the tumble generator valve assembly.

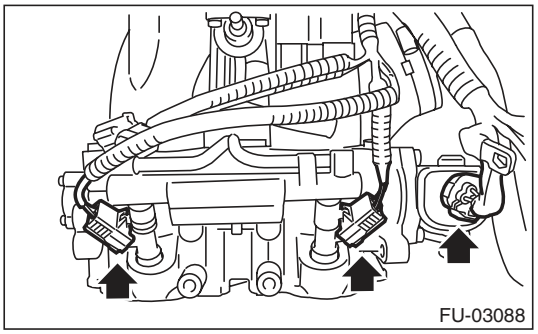

11) Install the throttle body to the intake manifold.

NOTE:
Use new O-rings.

Tightening torque:
8 N·m (0.8 kgf-m, 5.9 ft-lb)

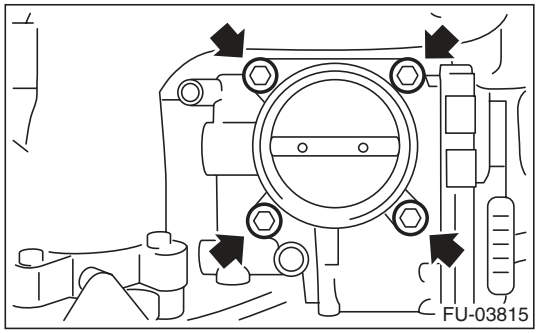

12) Connect the connector to the throttle position sensor.

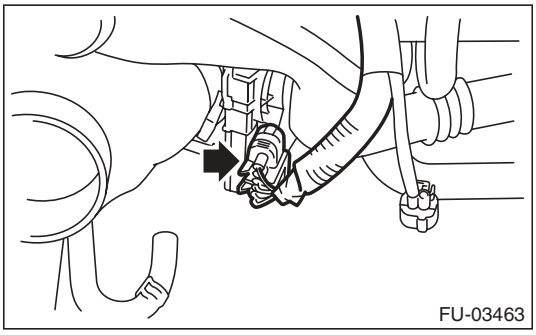

13) Connect the evaporation hose to the purge control solenoid valve 2.

NOTE:
Connect the evaporation hose as shown in the figure.

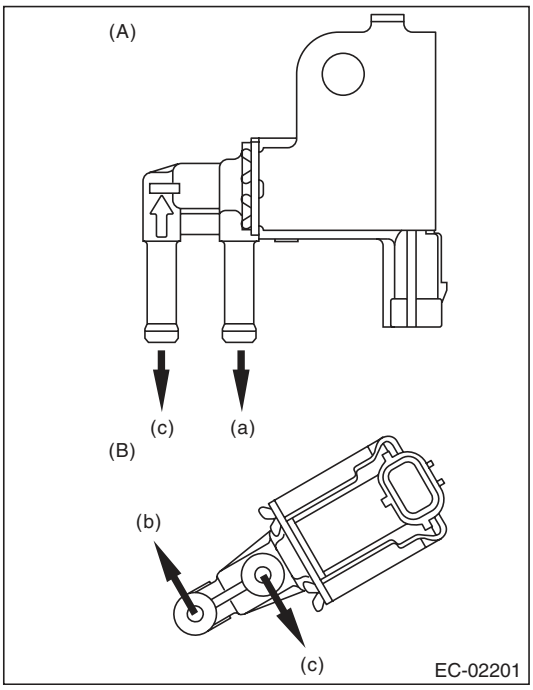

(A) Purge control solenoid valve 1
(B) Purge control solenoid valve 2
(a) To intake manifold
(b) To intake duct
(c) To fuel pipe

14) Connect the connectors to the wastegate control solenoid valve, manifold absolute pressure sensor and purge control solenoid valve 2, and install the solenoid valve bracket assembly to the intake manifold.

Tightening torque:
T1: 17 N·m (1.7 kgf-m, 12.5 ft-lb)
T2: 19 N·m (1.9 kgf-m, 14.0 ft-lb)

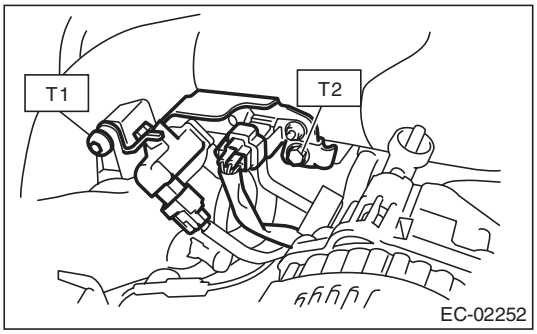

15) Connect the filter assembly.

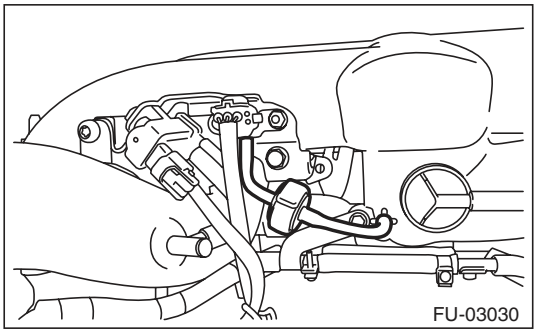

16) Connect the evaporation hose and the connector to the purge control solenoid valve 1, and install the purge control solenoid valve 1 to the intake manifold.

NOTE:
Connect the evaporation hose as shown in the figure.

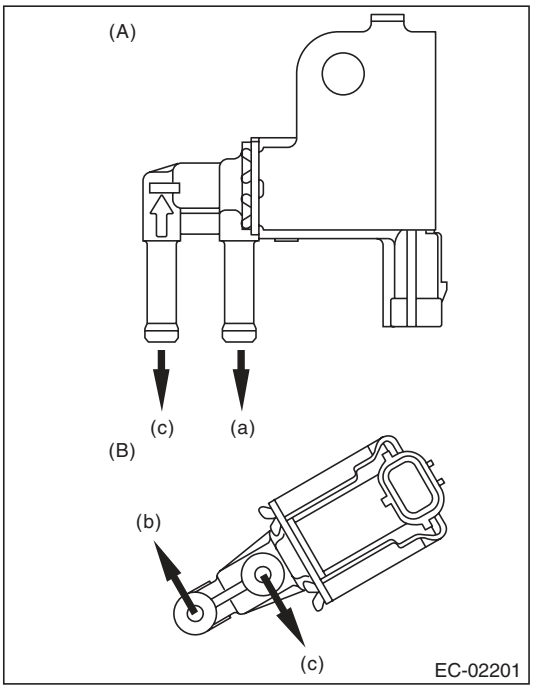

(A) Purge control solenoid valve 1
(B) Purge control solenoid valve 2
(a) To intake manifold
(b) To intake duct
(c) To fuel pipe

Tightening torque:
6.4 N·m (0.7 kgf-m, 4.7 ft-lb)

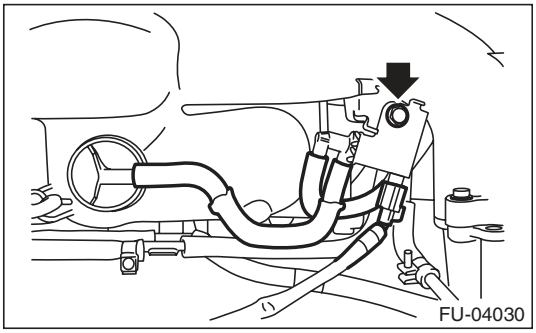

17) Install the fuel pipe protector RH to the intake manifold.

Tightening torque:
19 N·m (1.9 kgf-m, 14.0 ft-lb)

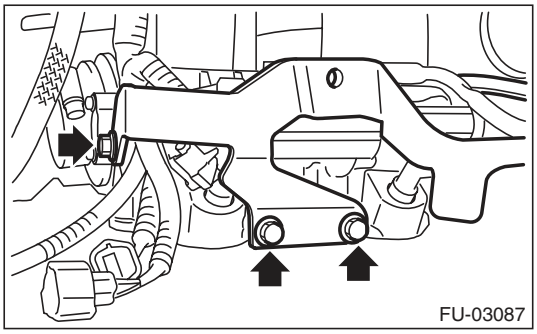

18) Install the fuel pipe protector LH to the intake manifold, and install the engine ground terminal to the fuel pipe protector LH.

Tightening torque:
19 N·m (1.9 kgf-m, 14.0 ft-lb)

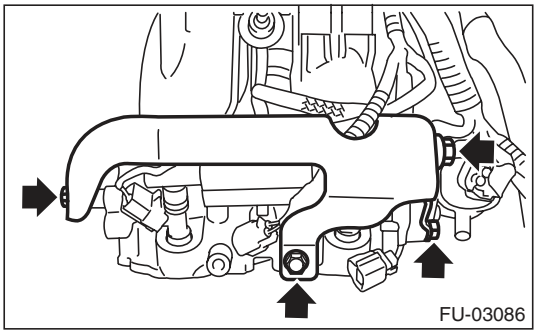

E: INSPECTION

Make sure that the fuel pipe and fuel hose are not cracked and that the connections are tight.

4. Engine Coolant Temperature Sensor

A: REMOVAL

1) Remove the collector cover.
2) Disconnect the ground cable from battery.

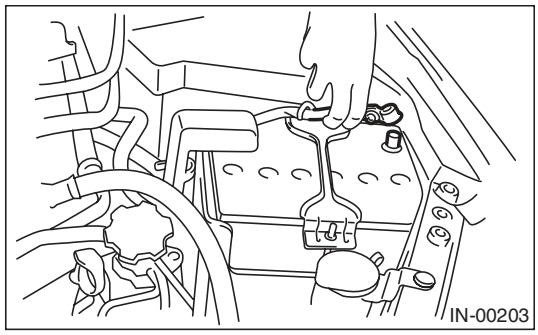

3) Remove the generator. <Ref. to SC(H4SO)-14, REMOVAL, Generator.>
4) Drain engine coolant. <Ref. to CO(H4DOTC)-14, DRAINING OF ENGINE COOLANT, REPLACEMENT, Engine Coolant.>
5) Disconnect the connectors from the engine coolant temperature sensor.

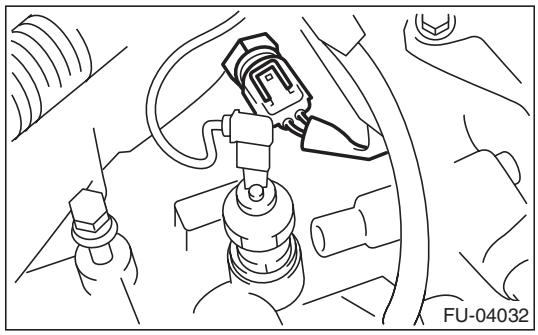

6) Remove the engine coolant temperature sensor.

B: INSTALLATION

Install in the reverse order of removal.

NOTE:
Use a new gasket.

Tightening torque:
18 N·m (1.8 kgf-m, 13.3 ft-lb)

5. Crankshaft Position Sensor

A: REMOVAL

1) Remove the collector cover.
2) Disconnect the ground cable from battery.

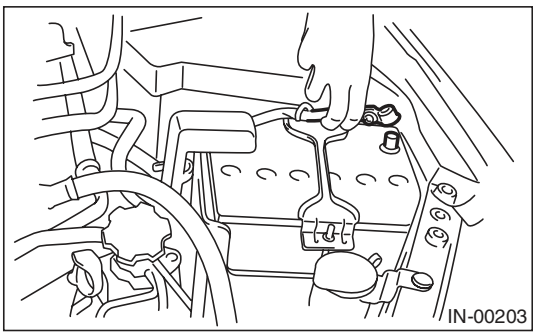

3) Remove the bolt which installs crankshaft position sensor to cylinder block.

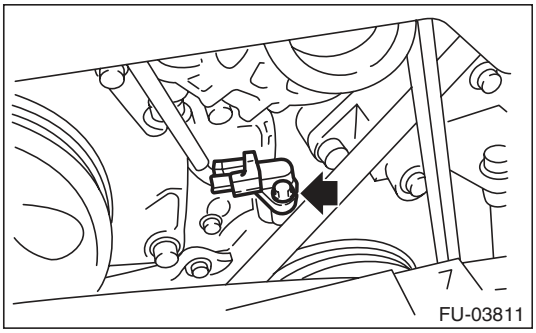

4) Remove the crankshaft position sensor, and then disconnect the connector from it.

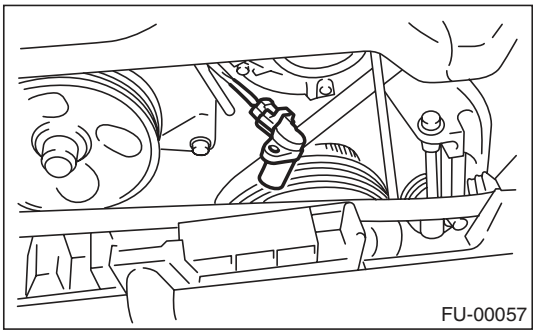

B: INSTALLATION

Install in the reverse order of removal.

Tightening torque:
6.4 N·m (0.7 kgf-m, 4.7 ft-lb)

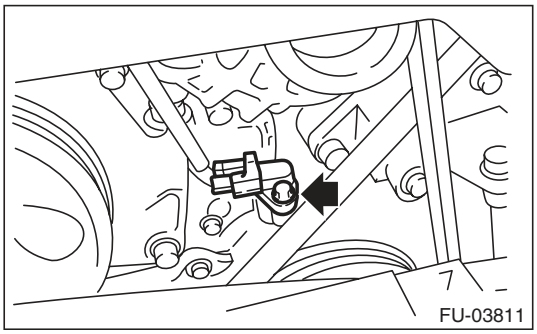

6. Camshaft Position Sensor

A: REMOVAL

1. CAMSHAFT POSITION SENSOR RH

1) Remove the collector cover.
2) Disconnect the ground cable from battery.

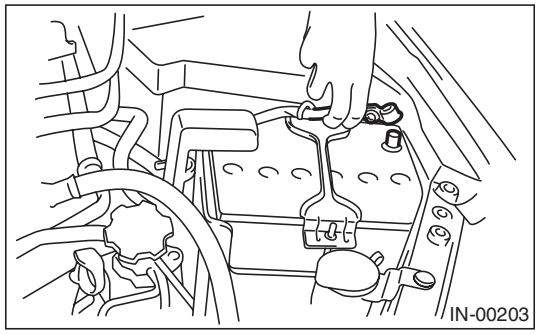

3) Disconnect the connector from camshaft position sensor RH.
4) Remove the camshaft position sensor RH from the rear side of the cylinder head.

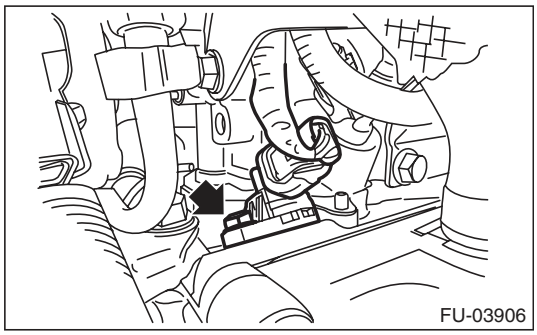

2. CAMSHAFT POSITION SENSOR LH

1) Disconnect the ground cable from battery.

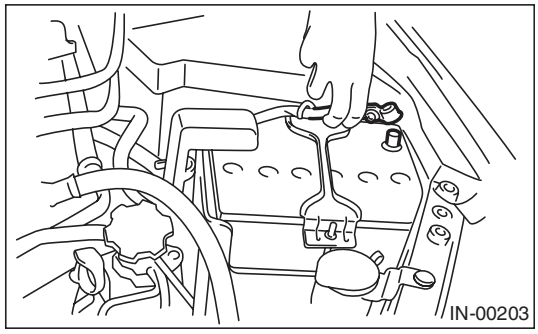

2) Remove the intake manifold. <Ref. to FU(H4DOTC)-16, REMOVAL, Intake Manifold.>

3) Remove the camshaft position sensor LH.

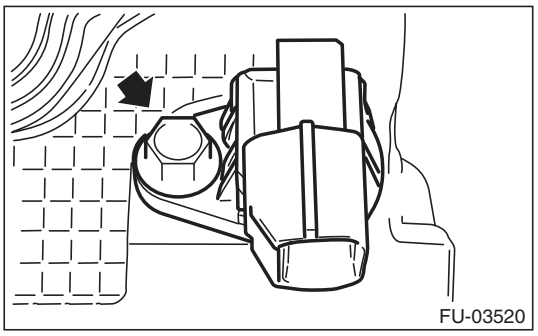

B: INSTALLATION

Install in the reverse order of removal.

Tightening torque:
6.4 N·m (0.7 kgf-m, 4.7 ft-lb)

7. Knock Sensor

A: REMOVAL

1) Remove the collector cover.
2) Disconnect the ground cable from battery.

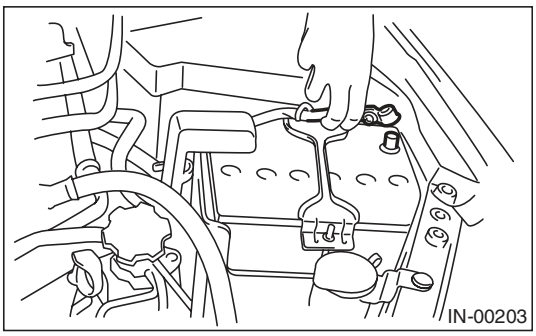

3) Remove the intercooler. <Ref. to IN(H4DOTC)-12, REMOVAL, Intercooler.>
4) Disconnect the knock sensor connector.

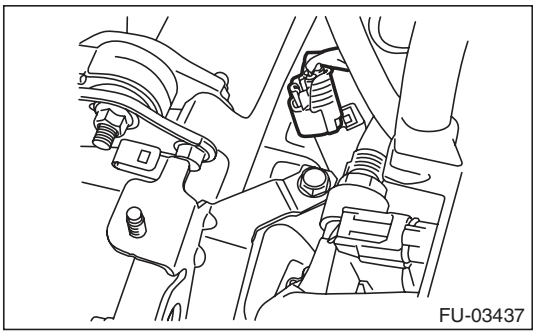

5) Remove the knock sensor from the cylinder block.

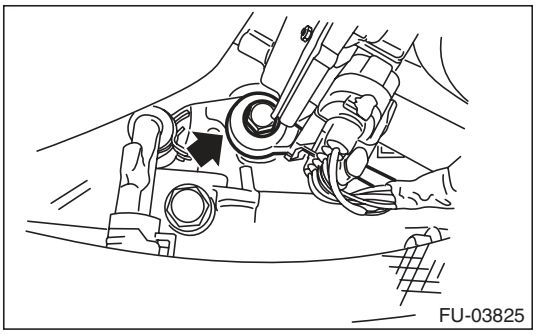

B: INSTALLATION

1) Install the knock sensor to the cylinder block.

NOTE:
The portion of the knock sensor cord that is pulled out must be positioned at a 60° angle relative to the engine rear.

Tightening torque:
24 N·m (2.4 kgf-m, 17.7 ft-lb)

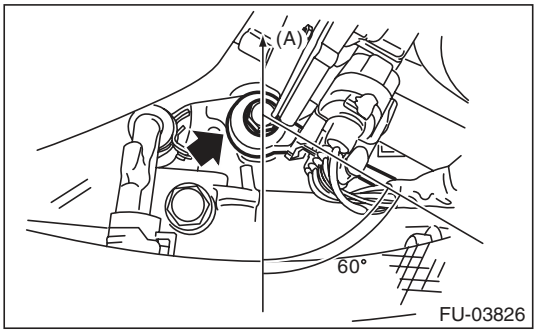

(A) Front side

2) Connect the knock sensor connector.

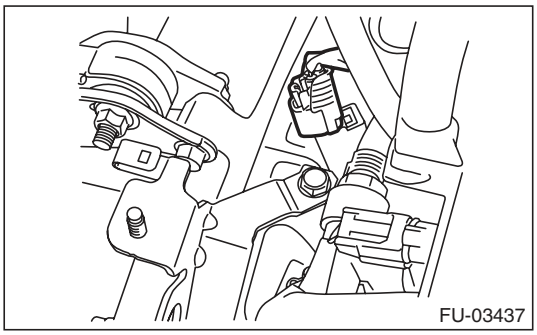

3) Install the intercooler. <Ref. to IN(H4DOTC)-13, INSTALLATION, Intercooler.>
4) Connect the ground cable to battery.

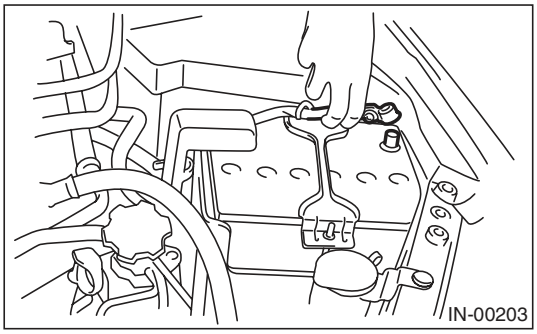

5) Install the collector cover.

8. Throttle Position Sensor

A: SPECIFICATION

Throttle body is a non-disassembled part, so do not remove the throttle position sensor from throttle body.
Refer to “Throttle Body” for removal and installation procedure. <Ref. to FU(H4DOTC)-14, REMOVAL, Throttle Body.> <Ref. to FU(H4DOTC)-15, INSTALLATION, Throttle Body.>

9. Mass Air Flow and Intake Air Temperature Sensor

A: REMOVAL

1) Disconnect the ground cable from battery.

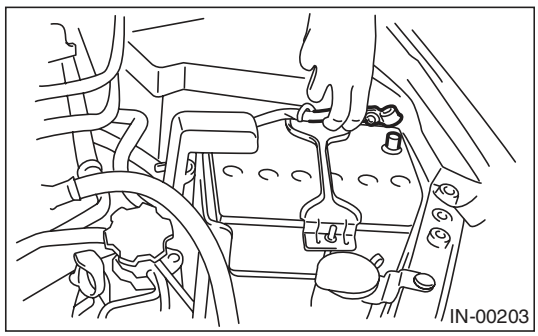

2) Disconnect the connector from the mass air flow and intake air temperature sensor, and remove the mass air flow and intake air temperature sensor.

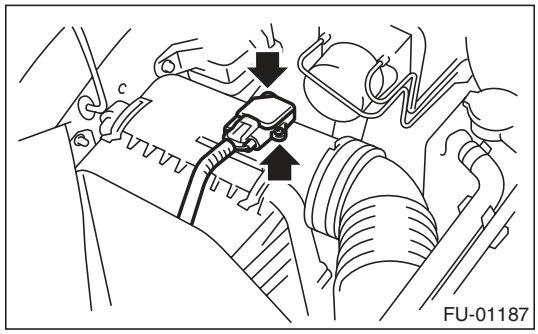

B: INSTALLATION

Install in the reverse order of removal.

Tightening torque:
1 N·m (0.1 kgf-m, 0.7 ft-lb)

10. Manifold Absolute Pressure Sensor

A: REMOVAL

1) Remove the collector cover.
2) Disconnect the ground cable from battery.

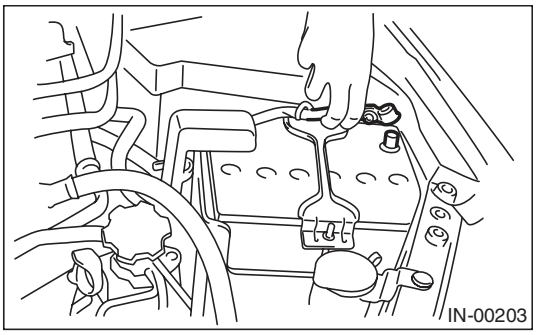

3) Disconnect the connector from manifold absolute pressure sensor (A), and remove the filter assembly (B) from intake manifold.
4) Remove the manifold absolute pressure sensor from the solenoid valve bracket.

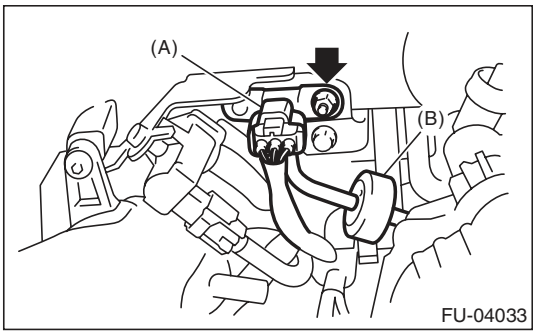

B: INSTALLATION

Install in the reverse order of removal.

Tightening torque:
6.4 N·m (0.7 kgf-m, 4.7 ft-lb)

11. Fuel Injector

A: REMOVAL

1. RH SIDE

1) Release the fuel pressure. <Ref. to FU(H4DOTC)-57, RELEASING OF FUEL PRESSURE, PROCEDURE, Fuel.>
2) Remove the collector cover.
3) Disconnect the ground cable from battery.

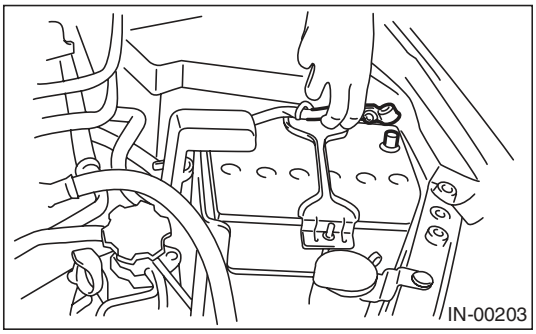

4) Open the fuel filler lid, and remove the fuel filler cap.
5) Remove the intake manifold.
<Ref. to FU(H4DOTC)-16, REMOVAL, Intake Manifold.>
6) Remove the fuel pipe protector RH from the intake manifold.

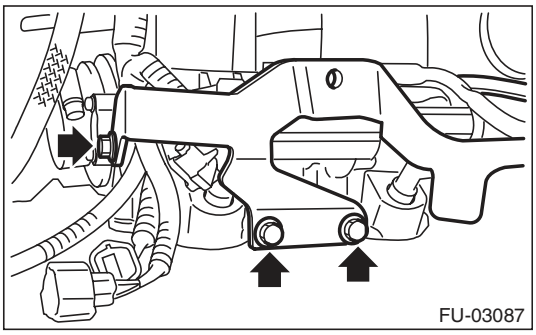

7) Disconnect the connector from fuel injector.
8) Remove the bolt which holds fuel injector pipe onto intake manifold.

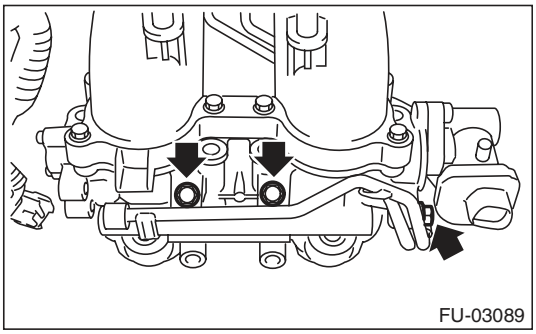

9) Remove the fuel injector.

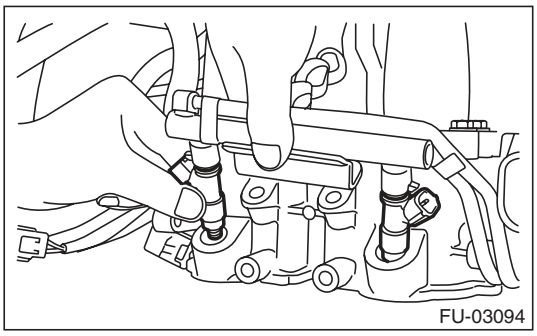

2. LH SIDE

1) Release the fuel pressure. <Ref. to FU(H4DOTC)-57, RELEASING OF FUEL PRESSURE, PROCEDURE, Fuel.>
2) Remove the collector cover.
3) Disconnect the ground cable from battery.

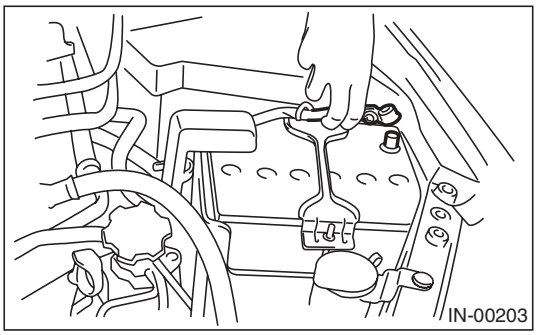

4) Open the fuel filler lid and remove the fuel filler cap.
5) Remove the intake manifold.
<Ref. to FU(H4DOTC)-16, REMOVAL, Intake Manifold.>
6) Remove the engine ground terminal from the fuel pipe protector LH and remove the fuel pipe protector LH from the intake manifold.

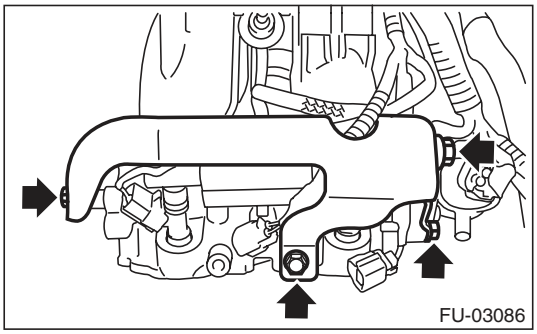

7) Disconnect the connector from fuel injector.

8) Remove the bolt which holds fuel injector pipe onto intake manifold.

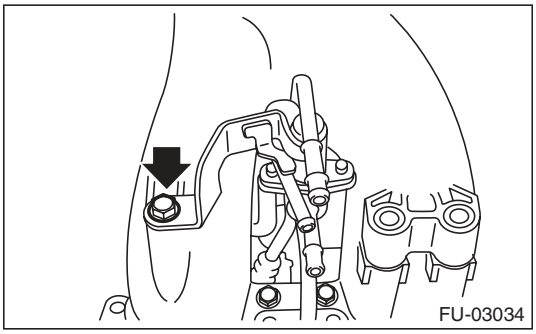

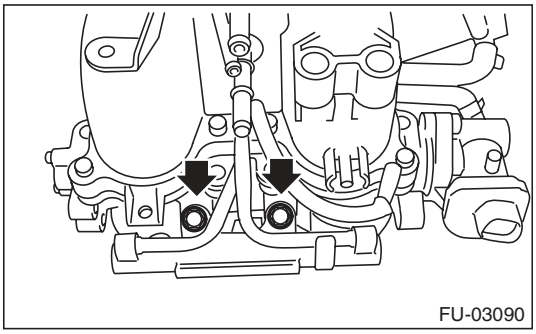

9) Remove the fuel injector.

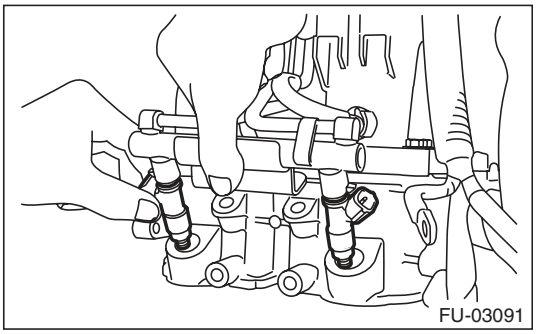

B: INSTALLATION

1. RH SIDE

Install in the reverse order of removal.

NOTE:
Use new O-rings.

Tightening torque:
19 N·m (1.9 kgf-m, 14.0 ft-lb)

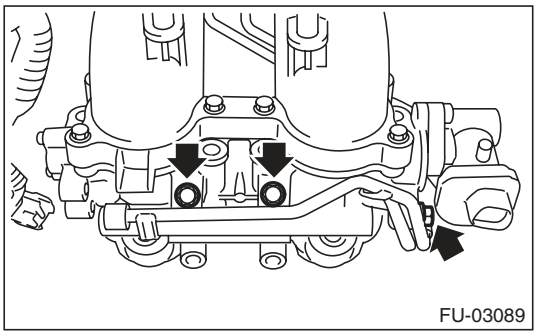

Tightening torque:
19 N·m (1.9 kgf-m, 14.0 ft-lb)

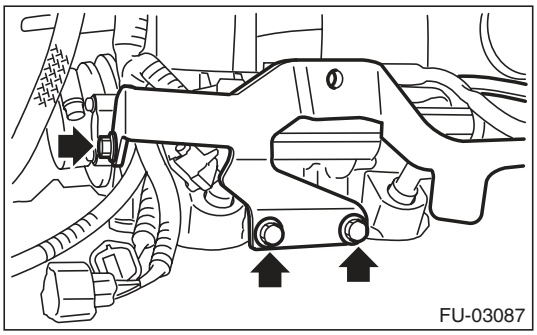

2. LH SIDE

Install in the reverse order of removal.

NOTE:
Use new O-rings.

Tightening torque:
19 N·m (1.9 kgf-m, 14.0 ft-lb)

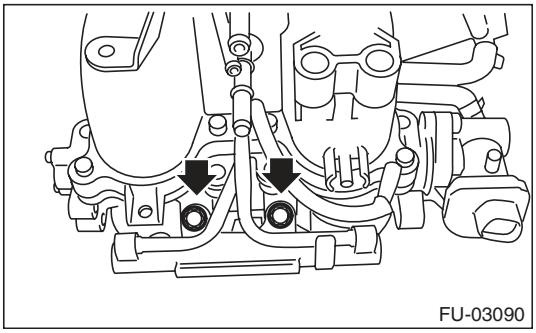

Tightening torque:
6.4 N·m (0.7 kgf-m, 4.7 ft-lb)

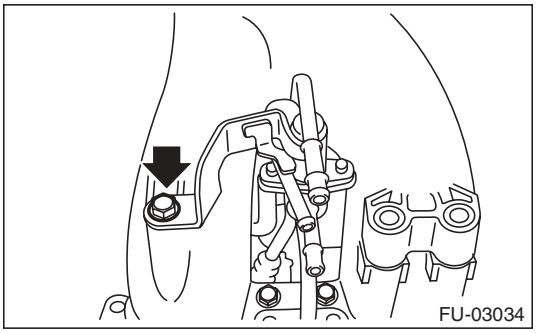

Tightening torque:
19 N·m (1.9 kgf-m, 14.0 ft-lb)

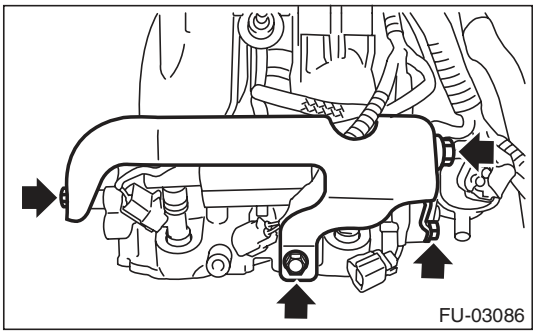

12. Tumble Generator Valve Assembly

A: REMOVAL

1) Release the fuel pressure. <Ref. to FU(H4DOTC)-57, RELEASING OF FUEL PRESSURE, PROCEDURE, Fuel.>
2) Remove the collector cover.
3) Disconnect the ground cable from battery.

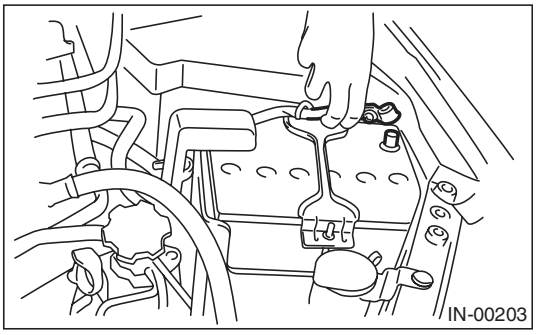

4) Open the fuel filler lid, and remove the fuel filler cap.
5) Remove the intake manifold.
<Ref. to FU(H4DOTC)-16, REMOVAL, Intake Manifold.>
6) Disconnect the connector from the tumble generator valve assembly.

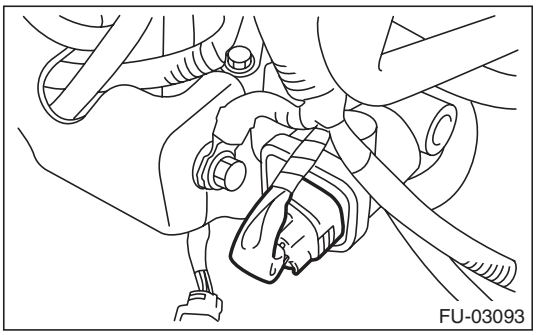

7) Remove the fuel injector.
<Ref. to FU(H4DOTC)-38, REMOVAL, Fuel Injector.>
8) Remove the tumble generator valve assembly from the intake manifold.

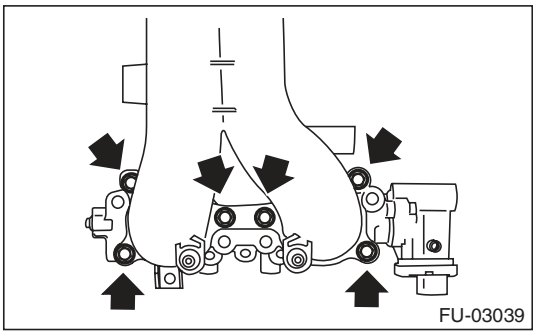

B: INSTALLATION

Install in the reverse order of removal.

NOTE:
Use a new gasket.

Tightening torque:
8.3 N·m (0.8 kgf-m, 6.1 ft-lb)

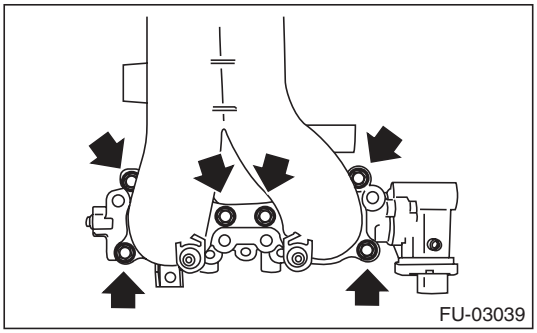

13. Tumble Generator Valve Actuator

A: SPECIFICATION

The tumble generator valve assembly cannot be disassembled.
Refer to “Tumble Generator Valve Assembly” for removal and installation procedures. <Ref. to FU(H4DOTC)-41, REMOVAL, Tumble Generator Valve Assembly.> <Ref. to FU(H4DOTC)-41, INSTALLATION, Tumble Generator Valve Assembly.>

14. Tumble Generator Valve Position Sensor

A: SPECIFICATION

The tumble generator valve assembly cannot be disassembled.
Refer to “Tumble Generator Valve Assembly” for removal and installation procedures. <Ref. to FU(H4DOTC)-41, REMOVAL, Tumble Generator Valve Assembly.> <Ref. to FU(H4DOTC)-41, INSTALLATION, Tumble Generator Valve Assembly.>

15. Oil Flow Control Solenoid Valve

A: REMOVAL

Oil flow control solenoid valve is a unit with front camshaft cap.
Refer to “Camshaft” for removal procedure. <Ref. to ME(H4DOTC)-58, REMOVAL, Camshaft.>

B: INSTALLATION

Refer to “Camshaft” for installation procedure. <Ref. to ME(H4DOTC)-59, INSTALLATION, Camshaft.>

C: DISASSEMBLY

1) Remove the 2 mounting bolts and remove the oil return cover and gasket.
2) Remove the mounting bolt and remove the oil flow control solenoid valve.

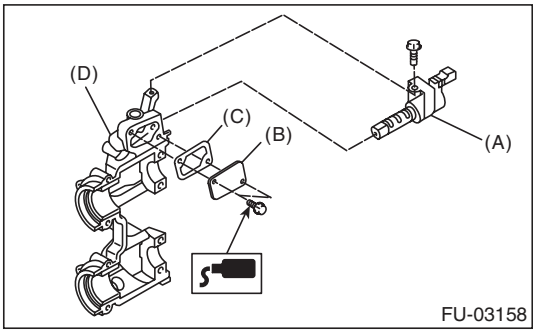

(A) Oil flow control solenoid valve
(B) Oil return cover
(C) Gasket
(D) Front camshaft cap

D: ASSEMBLY

1) Install the oil flow control solenoid valve.

Tightening torque:
8 N·m (0.8 kgf-m, 5.9 ft-lb)

2) Apply liquid gasket to the two bolts which secure the oil return cover.

Liquid gasket:
THREE BOND 1324 (Part No. 004403042) or equivalent

3) Attach the oil return cover and gasket.

Tightening torque:
8 N·m (0.8 kgf-m, 5.9 ft-lb)

NOTE:
Use a new gasket.

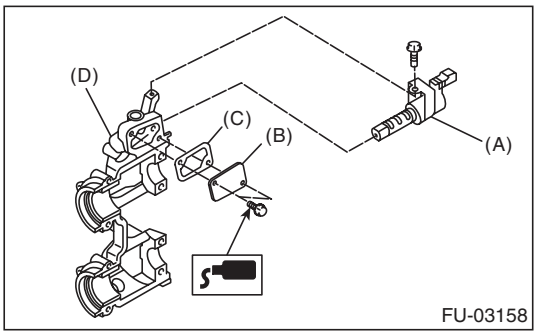

(A) Oil flow control solenoid valve
(B) Oil return cover
(C) Gasket
(D) Front camshaft cap

16. Wastegate Control Solenoid Valve

A: REMOVAL

1) Remove the collector cover.
2) Disconnect the ground cable from battery.

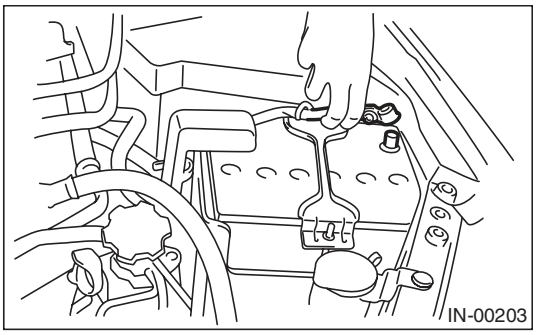

3) Disconnect the connector from the wastegate control solenoid valve (A).
4) Disconnect pressure hose (B) from the wastegate control solenoid valve.
5) Remove the wastegate control solenoid valve from the bracket

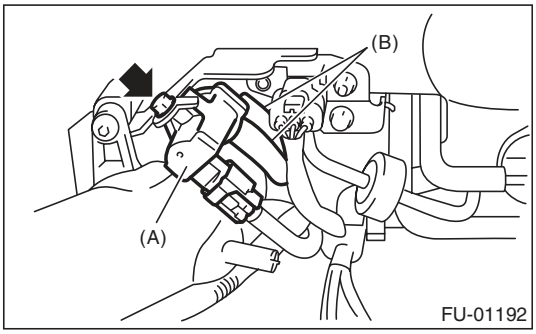

B: INSTALLATION

Install in the reverse order of removal.

Tightening torque:
6.4 N·m (0.7 kgf-m, 4.7 ft-lb)

17. Front Oxygen (A/F) Sensor

A: REMOVAL

1) Set the vehicle on a lift.
2) Remove the collector cover.
3) Disconnect the ground cable from battery.

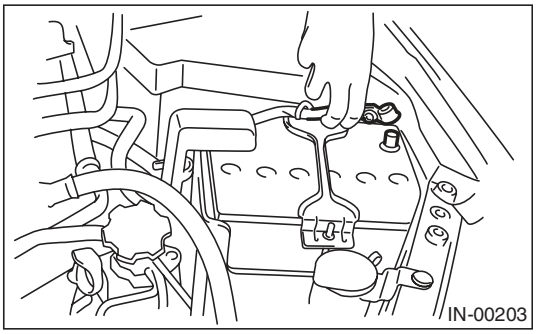

4) Remove the air intake duct and air cleaner case. <Ref. to IN(H4DOTC)-9, REMOVAL, Air Intake Duct.> <Ref. to IN(H4DOTC)-8, REMOVAL, Air Cleaner Case.>
5) Disconnect the connector from front oxygen (A/F) sensor.

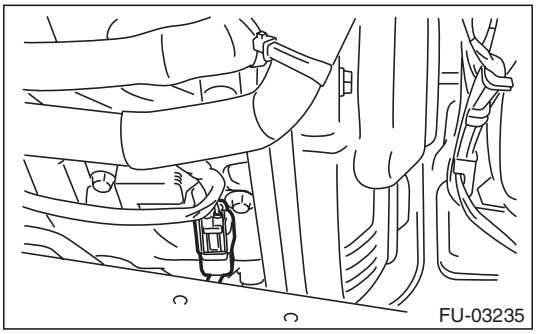

6) Lift up the vehicle.
7) Remove the under cover.
8) Apply spray-type lubricant or equivalent to the threaded portion of front oxygen (A/F) sensor, and leave it for one minute or more.
9) Remove the front oxygen (A/F) sensor.

CAUTION:
When removing the front oxygen (A/F) sensor, wait until exhaust pipe cools, otherwise it will damage the exhaust pipe.

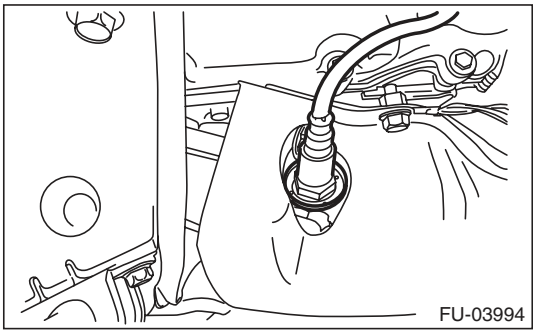

B: INSTALLATION

CAUTION:
If lubricant is spilt onto the exhaust pipe, wipe it off with cloth to avoid emission of smoke or causing a fire.

1) Before installing front oxygen (A/F) sensor, apply anti-seize compound only to the threaded portion of front oxygen (A/F) sensor to make the next removal easier.

CAUTION:
Never apply anti-seize compound to the protector of front oxygen (A/F) sensor.

Anti-seize compound:
NEVER-SEEZ NSN, JET LUBE SS-30 or equivalent

2) Install the front oxygen (A/F) sensor.

Tightening torque:
30 N·m (3.1 kgf-m, 22.1 ft-lb)

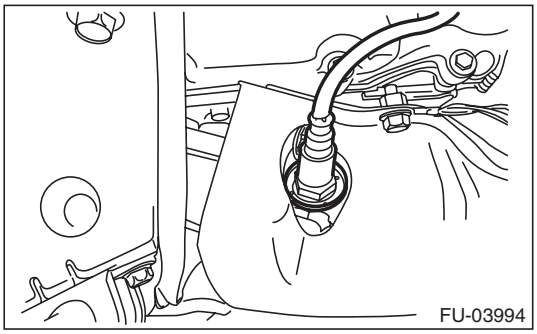

3) Install the under cover.
4) Lower the vehicle.
5) Connect the connector of front oxygen (A/F) sensor.

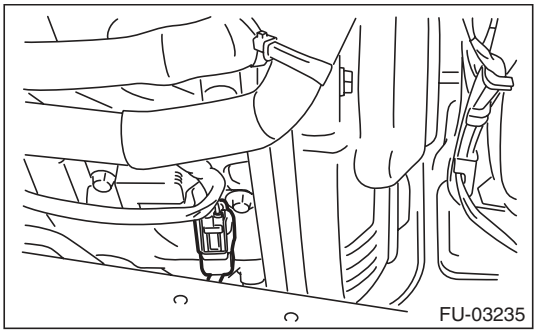

6) Install the air intake duct and air cleaner case. <Ref. to IN(H4DOTC)-8, INSTALLATION, Air Cleaner Case.> <Ref. to IN(H4DOTC)-9, INSTALLATION, Air Intake Duct.>

7) Connect the ground cable to battery.

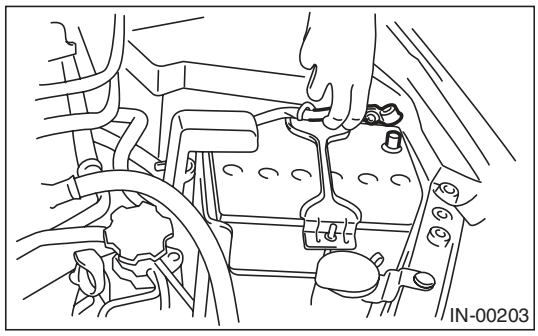

18. Rear Oxygen Sensor

A: REMOVAL

1) Set the vehicle on a lift.
2) Disconnect the ground cable from battery.

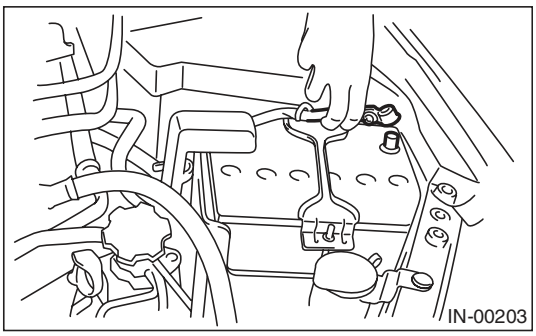

3) Lift up the vehicle.
4) Remove clip (A) holding the rear oxygen sensor harness. (AT model)
5) Disconnect the connector from the rear oxygen sensor.

- AT model

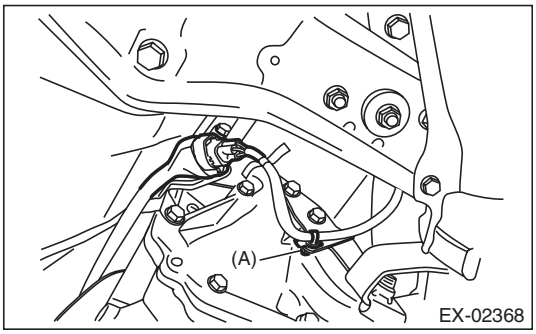

- MT model

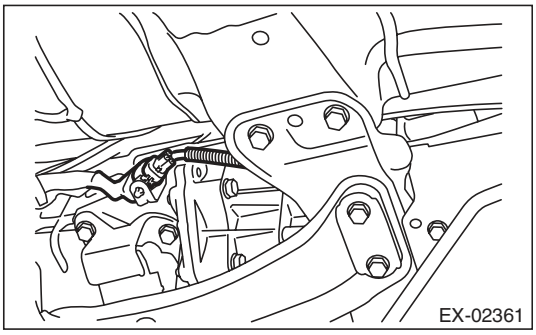

6) Apply spray-type lubricant or equivalent to the threaded portion of rear oxygen sensor, and leave it for one minute or more.

7) Remove the rear oxygen sensor.

CAUTION:
When removing the rear oxygen sensor, wait until exhaust pipe cools, otherwise it will damage the exhaust pipe.

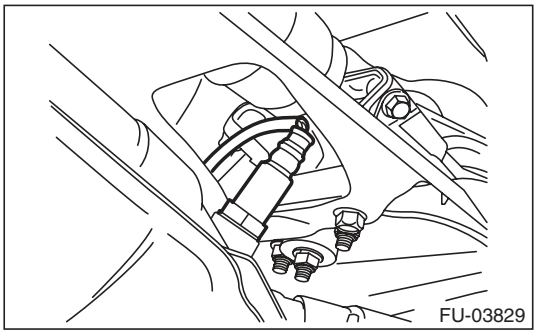

B: INSTALLATION

CAUTION:
If lubricant is spilt onto the exhaust pipe, wipe it off with cloth to avoid emission of smoke or causing a fire.

1) Before installing rear oxygen sensor, apply the anti-seize compound only to the threaded portion of rear oxygen sensor to make the next removal easier.

CAUTION:
Never apply anti-seize compound to the protector of rear oxygen sensor.

Anti-seize compound:
NEVER-SEEZ NSN, JET LUBE SS-30 or equivalent

2) Install the rear oxygen sensor.

Tightening torque:
21 N·m (2.1 kgf-m, 15.5 ft-lb)

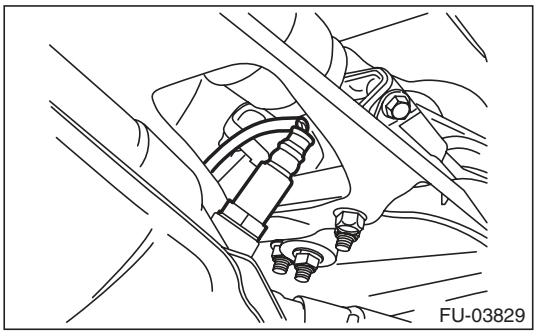

3) Affix the rear oxygen sensor with the clip (A). (AT model)

4) Connect the connector to rear oxygen sensor.

- AT model

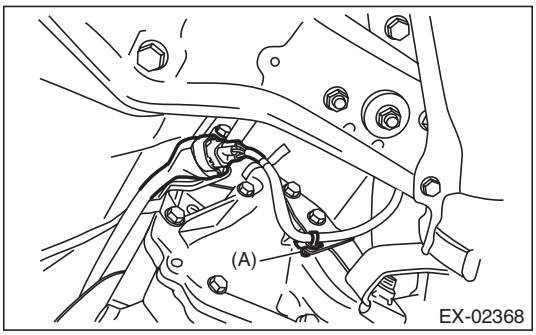

- MT model

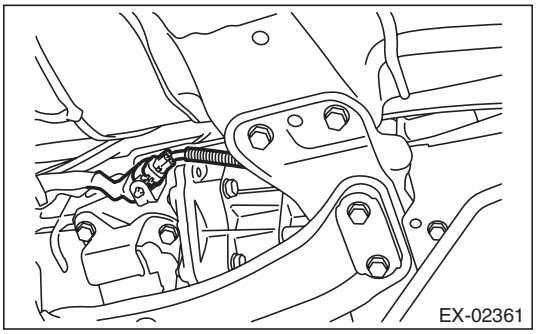

5) Lower the vehicle.
6) Connect the ground cable to battery.

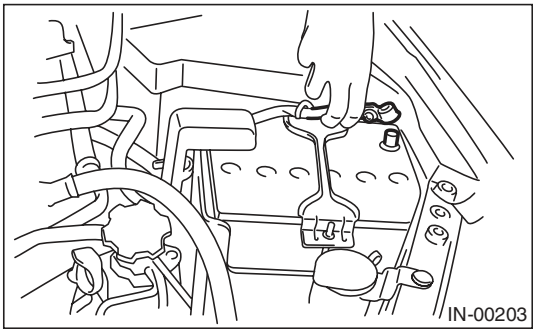

19. SI-DRIVE (SUBARU Intelligent Drive) Selector

A: REMOVAL

1) Disconnect the ground cable from battery.

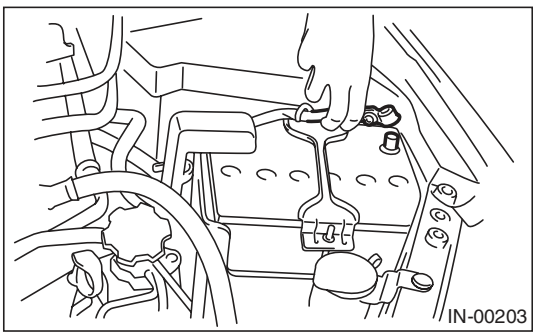

2) Remove the console box. <Ref. to EI-54, REMOVAL, Console Box.>

3) Disconnect the SI-DRIVE selector connector.

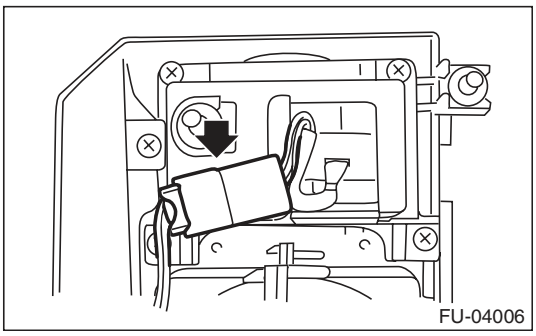

4) Remove the screws which secure the SI-DRIVE selector to the console box.

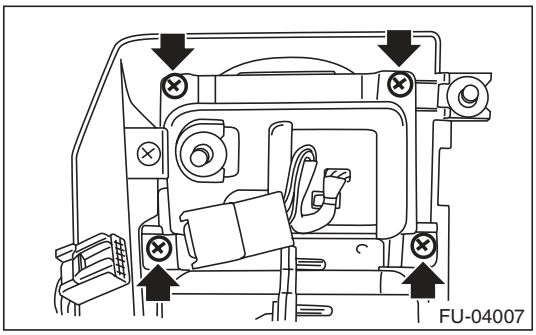

5) Disconnect the connector from SI-DRIVE selector cover, and remove the SI-DRIVE selector.

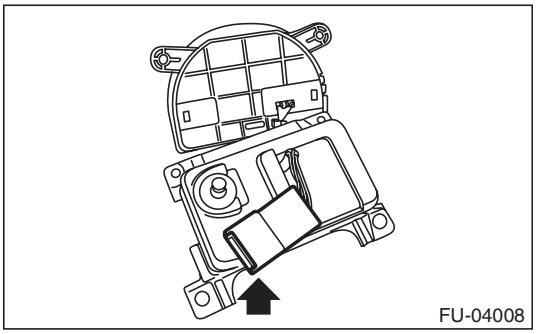

B: INSTALLATION

Install in the reverse order of removal.

C: INSPECTION

Measure the resistance between SI-DRIVE selector terminals.

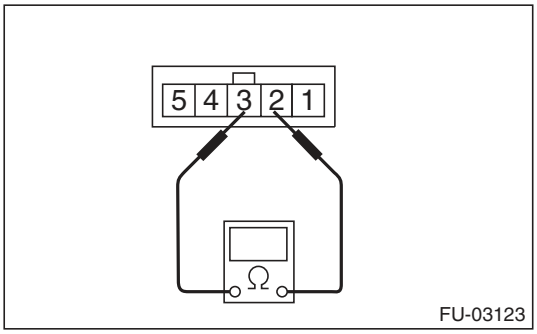

Switch position	Terminal No.	Standard
Sport (when turning the SI-DRIVE selector to the left)	2 and 3	Less than 10 Ω
Intelligent (when pushing the SI-DRIVE selector)		0.8 — 1.2 kΩ
Sport Sharp (when turning the SI-DRIVE selector to the right)		2.14 — 3.2 kΩ

20. SI-DRIVE (SUBARU Intelligent Drive) S# Switch

A: REMOVAL

1) Disconnect the ground cable from battery.

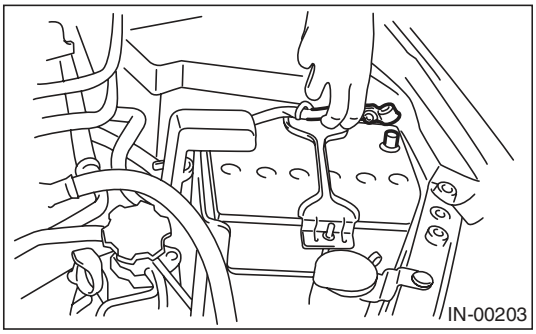

2) Remove the airbag module. <Ref. to AB-14, REMOVAL, Driver's Airbag Module.>

WARNING:
Always refer to "Airbag System" before performing service on the airbag modules. <Ref. to AB-4, CAUTION, General Description.>

3) Remove the screws which secure the SI-DRIVE S# switch to the steering wheel, and remove the SI-DRIVE S# switch.

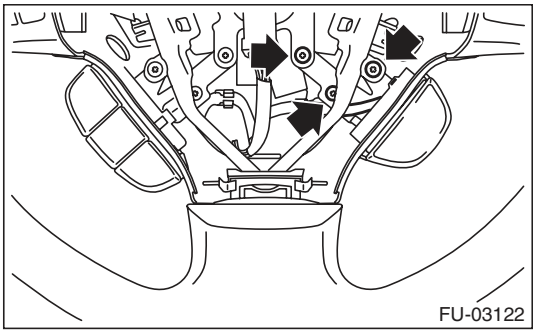

4) Disconnect the connectors from the SI-DRIVE S# switch.

B: INSTALLATION

Install in the reverse order of removal.

C: INSPECTION

Measure the resistance between SI-DRIVE S# switch terminals.

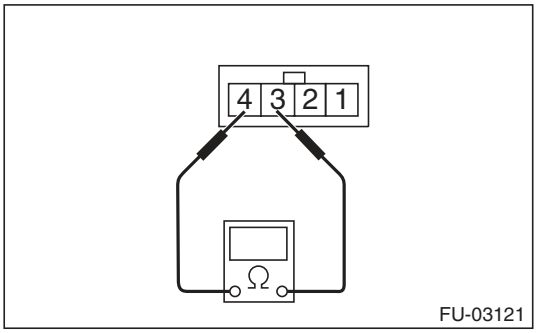

Switch position	Terminal No.	Standard value
ON (When the SI-DRIVE S# switch is pressed)	3 and 4	Less than 10 Ω
OFF		1 MΩ or more

21. Engine Control Module (ECM)

A: REMOVAL

1) Disconnect the ground cable from battery.

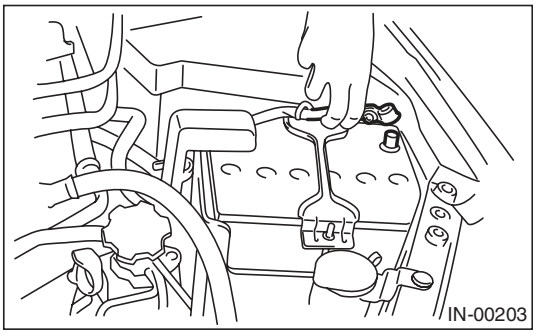

2) Remove the lower inner trim of passenger's side.
<Ref. to EI-61, REMOVAL, Lower Inner Trim.>
3) Detach the floor mat of passenger's seat.
4) Remove the protect cover.

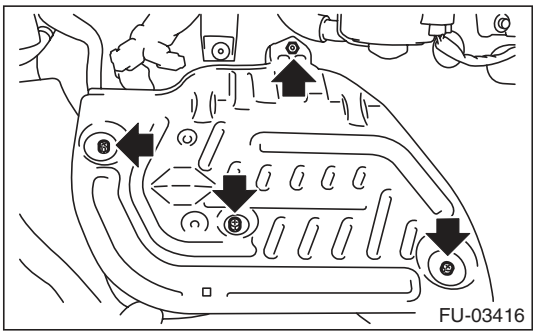

5) Remove the nuts and bolts which hold the ECM to the bracket.

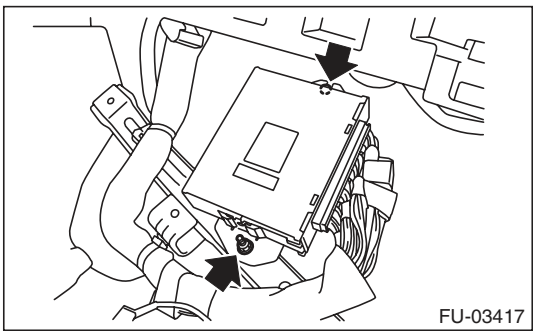

6) Disconnect the ECM connectors, and take out the ECM.

B: INSTALLATION

Install in the reverse order of removal.

CAUTION:
When the ECM of model with immobilizer has been replaced, be sure to perform the registration of immobilizer system. (Refer to the "PC application help for Subaru Select Monitor".)

NOTE:
When replacing the ECM, be careful not to use the wrong spec. ECM to avoid any damage on the fuel injection system.

Tightening torque:
7.5 N·m (0.8 kgf-m, 5.5 ft-lb)

22. Main Relay

A: REMOVAL

1) Disconnect the ground cable from battery.

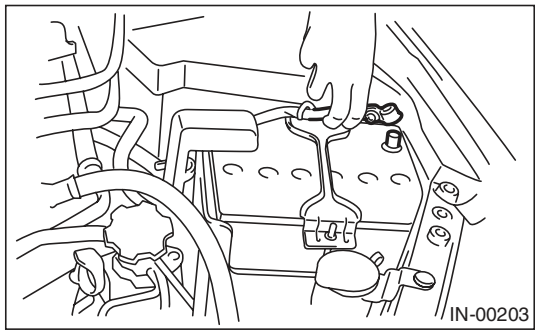

2) Remove the glove box. <Ref. to EI-52, REMOVAL, Glove Box.>
3) Remove the harness cover (A).

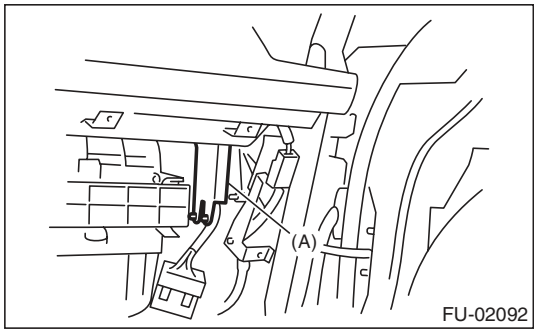

4) Disconnect the connectors from main relay.

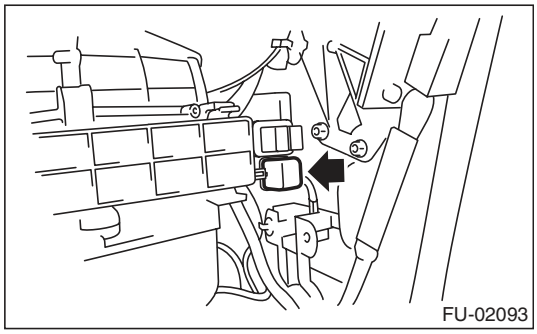

B: INSTALLATION

Install in the reverse order of removal.

23. Fuel Pump Relay

A: REMOVAL

1) Disconnect the ground cable from battery.

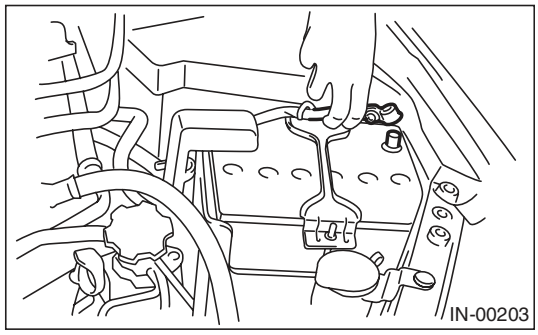

2) Remove the glove box. <Ref. to EI-52, REMOVAL, Glove Box.>
3) Remove the harness cover (A).

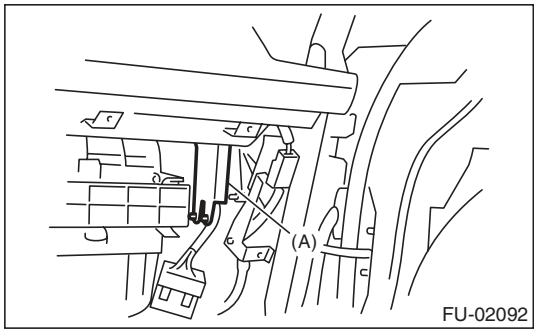

4) Disconnect the connector from fuel pump relay.

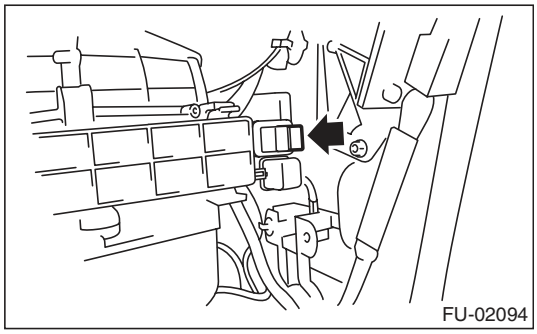

B: INSTALLATION

Install in the reverse order of removal.

24. Electronic Throttle Control Relay

A: REMOVAL

1) Disconnect the ground cable from battery.

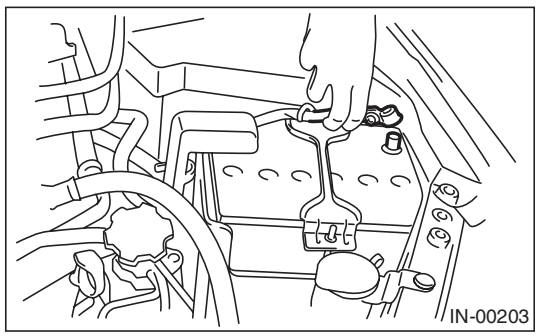

2) Remove the glove box. <Ref. to EI-52, REMOVAL, Glove Box.>
3) Remove the harness cover (A).

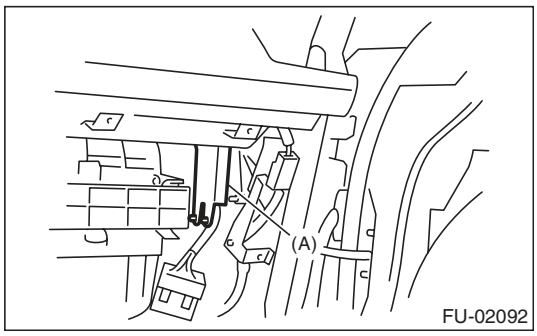

4) Disconnect the connector from electronic throttle control relay.

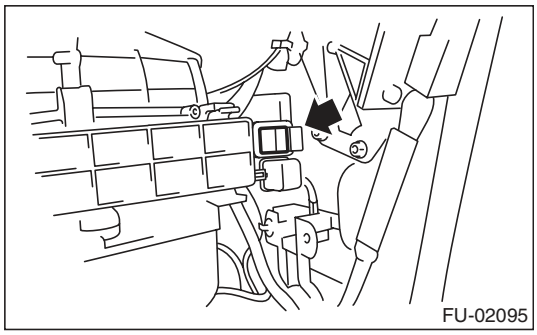

B: INSTALLATION

Install in the reverse order of removal.

25. Fuel Pump Control Unit

A: REMOVAL

1) Disconnect the ground cable from battery.

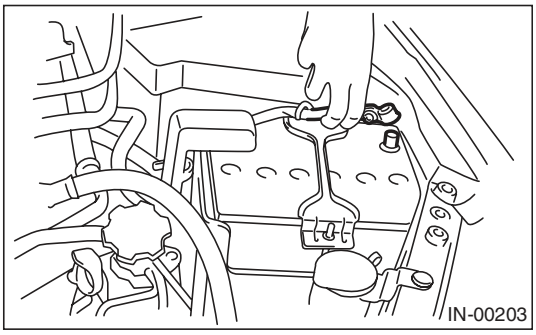

2) Remove the rear quarter trim of the left side. (Wagon model) <Ref. to EI-63, REMOVAL, Rear Quarter Trim.>
3) Peel the trunk side trim of the left side. (Sedan model)
4) Remove the fuel pump control unit.

- Wagon model

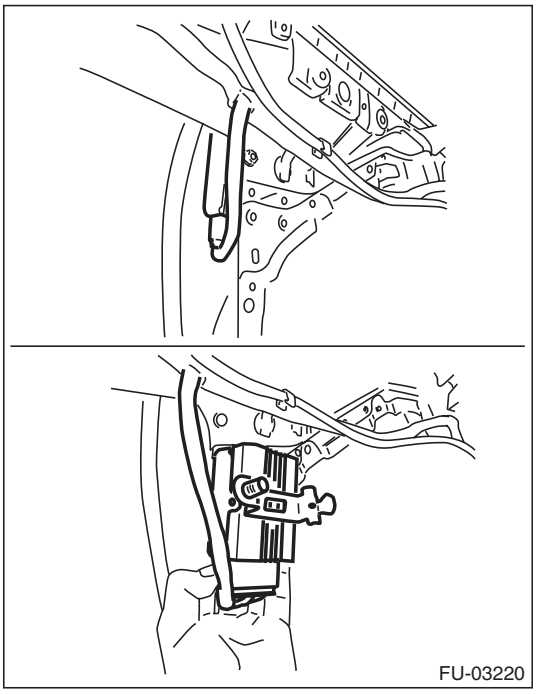

- Sedan model

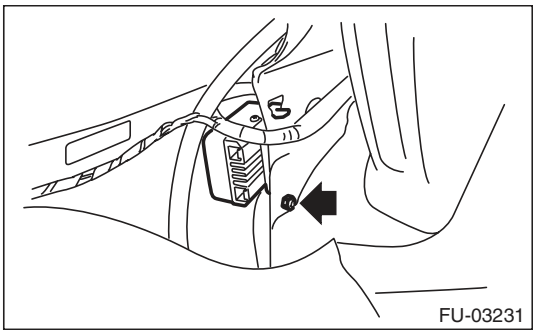

5) Disconnect the connector from fuel pump control unit.

B: INSTALLATION

Install in the reverse order of removal.

Tightening torque:
5 N·m (0.5 kgf-m, 3.7 ft-lb)

26. Fuel

A: PROCEDURE

1. RELEASING OF FUEL PRESSURE

WARNING:
Place "NO OPEN FLAMES" signs near the working area.

CAUTION:
Be careful not to spill fuel.

1) Remove the fuse of fuel pump from main fuse box.

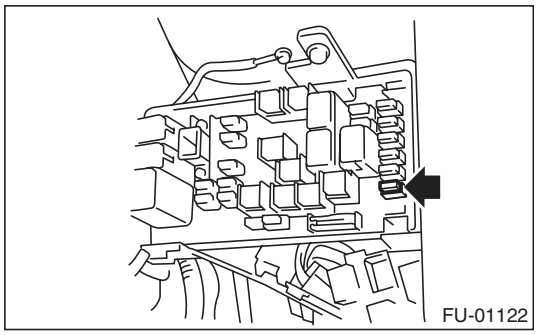

2) Start the engine and run it until it stalls.
3) After the engine stalls, crank it for five more seconds.
4) Turn the ignition switch to OFF.
5) Install the fuse of fuel pump to the main fuse box.

2. DRAINING FUEL (WITH SUBARU SELECT MONITOR)

WARNING:
Place "NO OPEN FLAMES" signs near the working area.

CAUTION:
Be careful not to spill fuel.

NOTE:
- If the fuel pump cannot be actuated, refer to DRAINING FUEL (THROUGH THE FUEL FILLER HOSE). <Ref. to FU(H4DOTC)-57, DRAINING FUEL (THROUGH THE FUEL FILLER HOSE), PROCEDURE, Fuel.>
- Be careful not to let the battery run-out.

1) Release the fuel pressure. <Ref. to FU(H4DOTC)-57, RELEASING OF FUEL PRESSURE, PROCEDURE, Fuel.>
2) Attach ST to the fuel delivery pipe and push ST in the direction of arrow mark to disconnect the fuel delivery hose.
ST 42099AE000 QUICK CONNECTOR RELEASE

CAUTION:
- **Be careful not to spill fuel.**
- **Catch the fuel from hoses using a container or cloth.**

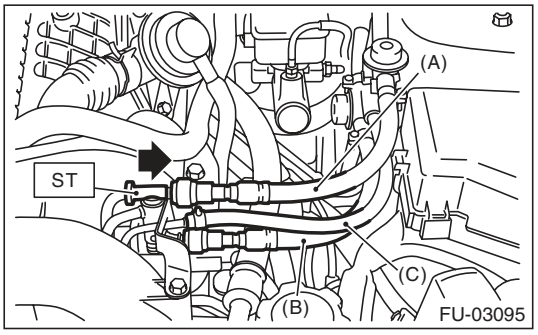

(A) Fuel delivery hose
(B) Fuel return hose
(C) Evaporation hose

3) Connect ST to the fuel delivery hose.
ST 18471AA000 FUEL PIPE ADAPTER
4) Connect the gasoline proof hose to ST and put the end of the hose in the container.
5) Drive the fuel pump and drain the fuel using Subaru Select Monitor. <Ref. to EN(H4DOTC)(diag)-55, FUEL PUMP CONTROL (ON/OFF DRIVE), OPERATION, System Operation Check Mode.>

CAUTION:
Be careful not to spill fuel.

3. DRAINING FUEL (THROUGH THE FUEL FILLER HOSE)

WARNING:
Place "NO OPEN FLAMES" signs near the working area.

CAUTION:
- **Be careful not to spill fuel.**
- **Fuel may remain in the fuel filler pipe. Draining the fuel from the fuel filler pipe through the fill opening using the gasoline proof pump and the gasoline proof hose (ø10 or less) before the operation.**

1) Set the vehicle on a lift.
2) Lift up the vehicle.
3) Remove the rear exhaust pipe and muffler. <Ref. to EX(H4DOTC)-12, REMOVAL, Rear Exhaust Pipe.> <Ref. to EX(H4DOTC)-14, REMOVAL, Muffler.>
4) Open the fuel filler lid, and remove the fuel filler cap.

5) Drain the fuel from the fuel filler pipe through the fill opening using the gasoline proof pump and the gasoline proof hose (ø10 or less).
6) Disconnect the fuel filler hose (A) from the fuel filler pipe.

CAUTION:
- **Be careful not to spill fuel.**
- **Catch the fuel from hoses using a container or cloth.**

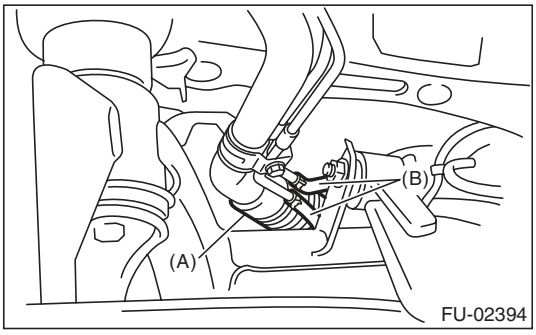

(A) Fuel filler hose
(B) Evaporation hose

7) Set the container under the vehicle and insert the gasoline proof hose (ø10 or less) into the fuel filler hose to drain the fuel.

CAUTION:
Be careful not to spill fuel.

27. Fuel Tank

A: REMOVAL

WARNING:
Place "NO OPEN FLAMES" signs near the working area.

CAUTION:
Be careful not to spill fuel.

1) Set the vehicle on a lift.
2) Release the fuel pressure. <Ref. to FU(H4DOTC)-57, RELEASING OF FUEL PRESSURE, PROCEDURE, Fuel.>
3) Drain fuel. <Ref. to FU(H4DOTC)-57, DRAINING FUEL (WITH SUBARU SELECT MONITOR), PROCEDURE, Fuel.>
4) Disconnect the ground cable from battery.

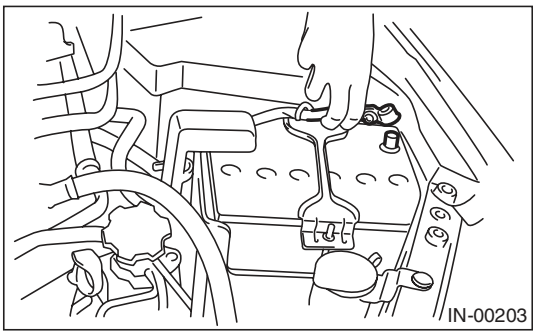

5) Remove the rear seat.
6) Remove the service hole cover of fuel pump.

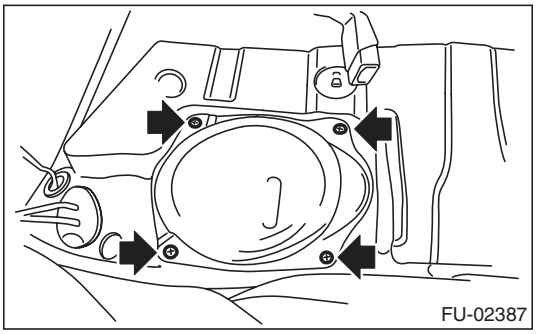

7) Disconnect the connector from fuel pump.

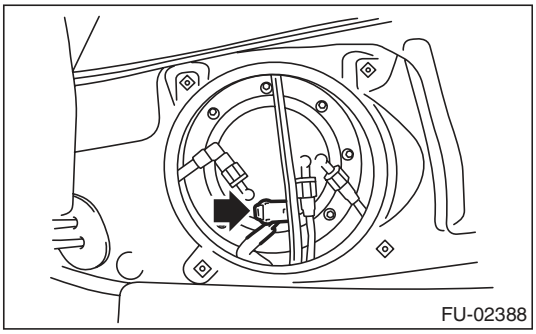

8) Remove the connector (A) and clip (B).

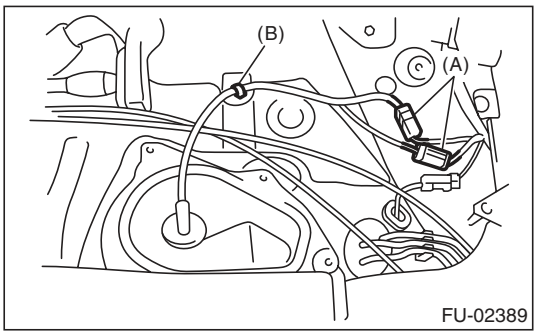

9) Remove the service hole cover of fuel sub level sensor.
   (1) Remove the bolt (A).
   (2) Push the grommet (B) down and remove the service hole cover.

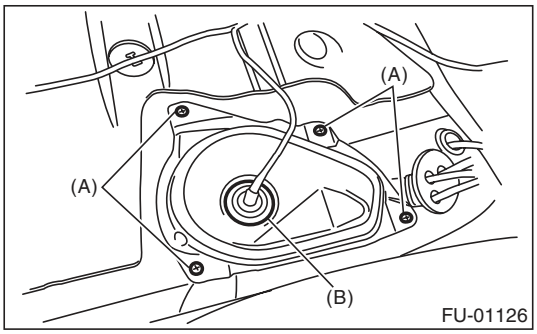

10) Disconnect connector (A) from fuel sub level sensor.
11) Disconnect the quick connector of fuel delivery tube (B) and fuel return tube (C). <Ref. to FU(H4DOTC)-80, REMOVAL, Fuel Delivery, Return and Evaporation Lines.>

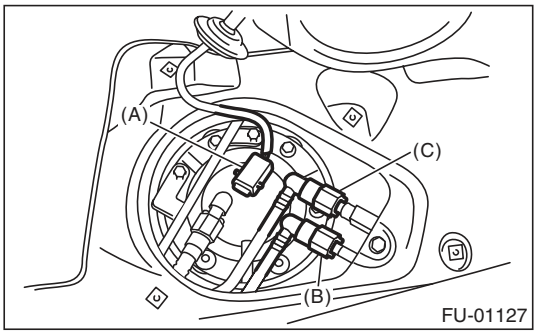

12) Remove the trunk room trim. (Sedan model) <Ref. to EI-70, REMOVAL, Trunk Room Trim.>
13) Remove the rear quarter trim. (Wagon model) <Ref. to EI-63, WAGON MODEL, REMOVAL, Rear Quarter Trim.>

14) Remove the pipe protector.

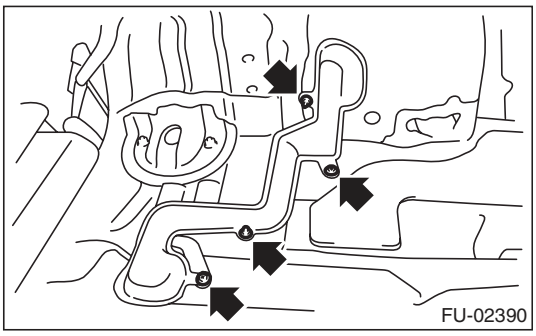

15) Remove the grommet and disconnect the quick connector of the evaporation pipe.
<Ref. to FU(H4DOTC)-80, REMOVAL, Fuel Delivery, Return and Evaporation Lines.>

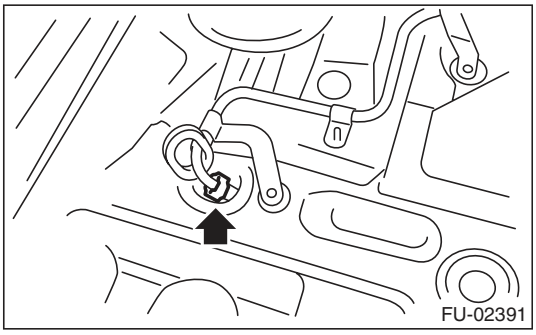

16) Remove the rear wheels.
17) Remove the bolts which secure the rear brake hose mounting bracket.

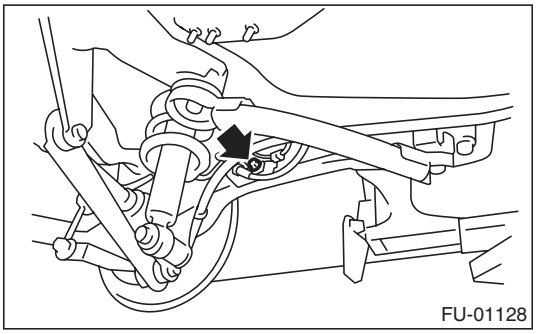

18) Remove the rear disc brake assembly and tie it to the body side of the vehicle.

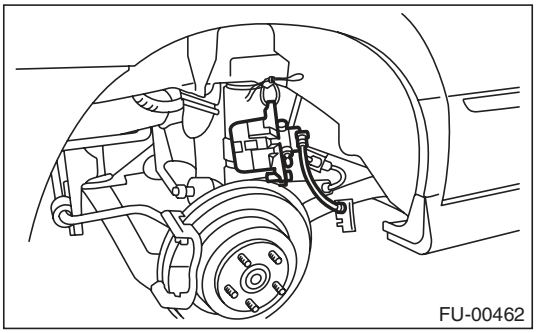

19) Remove the parking brake cable from the parking brake assembly. <Ref. to PB-6, REMOVAL, Parking Brake Assembly (Rear Disc Brake).>

20) Lift up the vehicle.
21) Remove the rear exhaust pipe. <Ref. to EX(H4DOTC)-12, REMOVAL, Rear Exhaust Pipe.>
22) Remove the propeller shaft. <Ref. to DS-10, REMOVAL, Propeller Shaft.>
23) Remove the heat shield cover and fuel tank protector.
24) Disconnect the connector from the rear ABS wheel speed sensor.

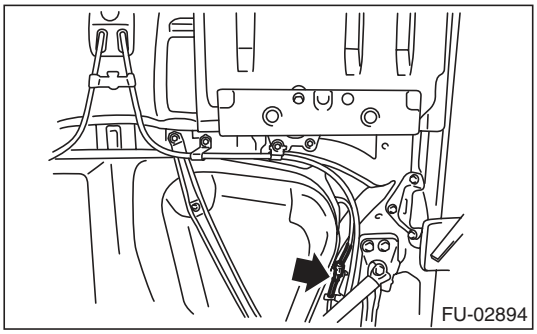

25) Remove the bolts securing the parking brake cable clamp.

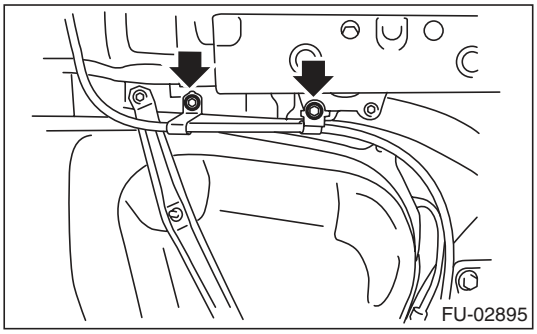

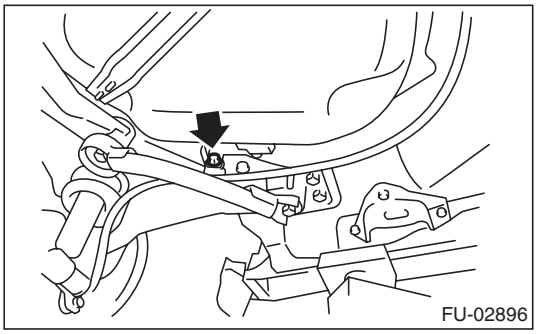

26) Remove the rear suspension assembly.

WARNING:
A helper is required to perform this work.

(1) Support the rear differential with the transmission jack.
(2) Remove the bolts which hold the rear shock absorber to the rear suspension arm.

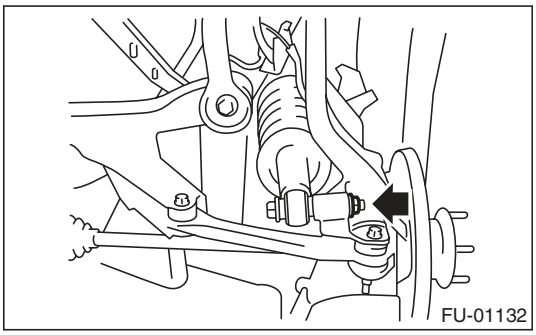
FU-01132

(3) Remove the bolts which secure the rear suspension assembly to the body.

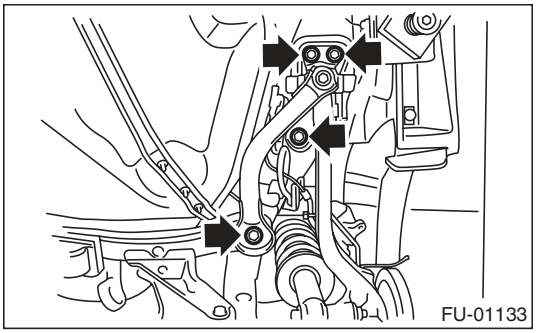
FU-01133

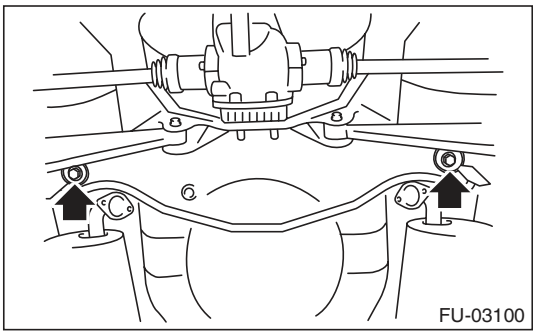
FU-03100

(4) Remove the rear suspension assembly.

27) Disconnect the connector.

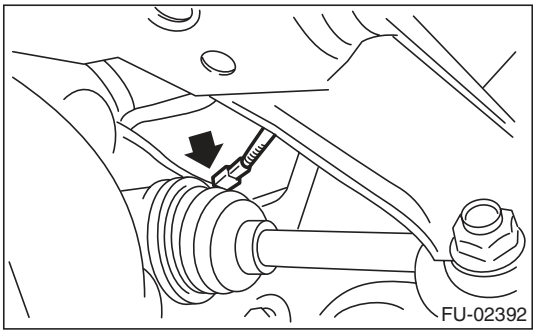
FU-02392

28) Disconnect the evaporation hose.

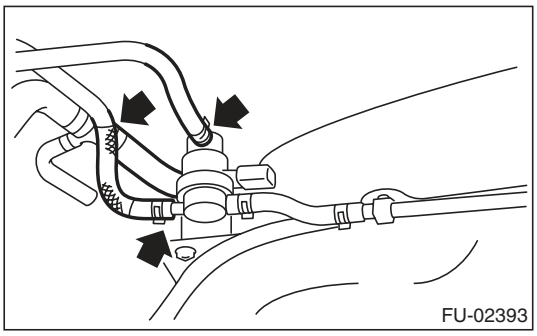
FU-02393

29) Disconnect the fuel filler hose (A) and evaporation hose (B).

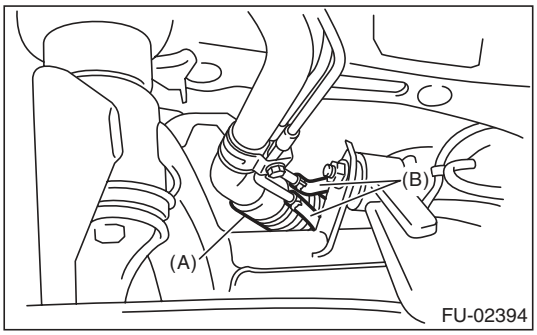

FU-02394

30) Support the fuel tank with a transmission jack, remove the bolts from the fuel tank band, and remove the fuel tank from the vehicle.

WARNING:
- **A helper is required to perform this work.**
- **Fuel may remain in the fuel tank. This will cause the left and right sides to be unbalanced. Be careful not to drop the fuel tank when removing.**

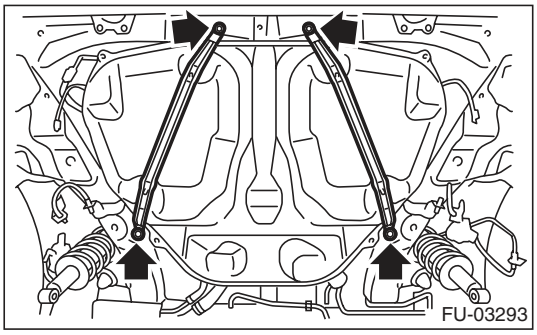
FU-03293

B: INSTALLATION

1) Support the fuel tank with a transmission jack, set the fuel tank in place, and temporarily tighten the bolts of the fuel tank band.

WARNING:
A helper is required to perform this work.

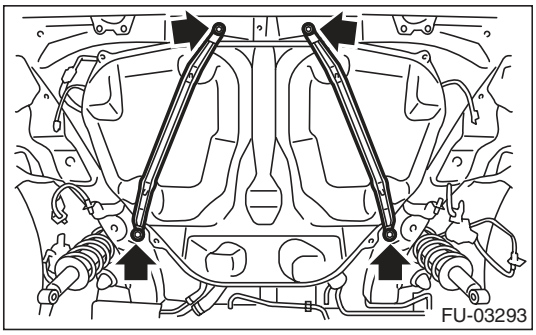

2) Securely insert the fuel filler hose (A) and evaporation hose (B) into the specified position, then tighten the clamp or clip as shown in the figure.

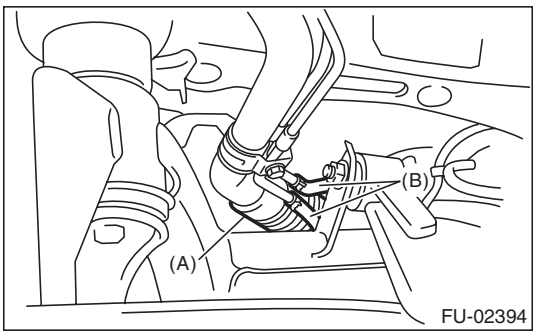

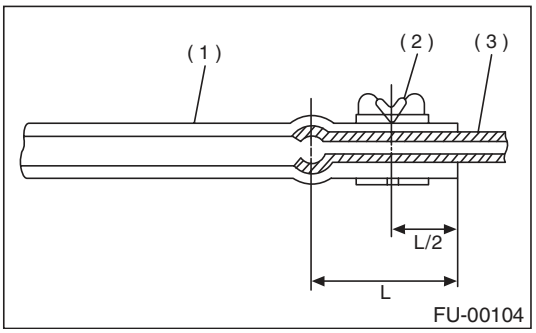

(1) Hose
(2) Clamp or clip
(3) Pipe

3) Connect the evaporation hose.

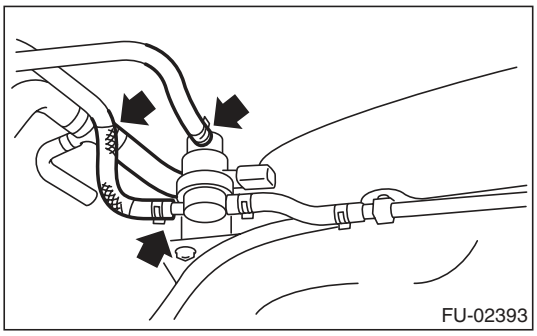

4) Tighten the fuel tank band bolts.

Tightening torque:
33 N·m (3.4 kgf-m, 24.3 ft-lb)

5) Connect the connector.

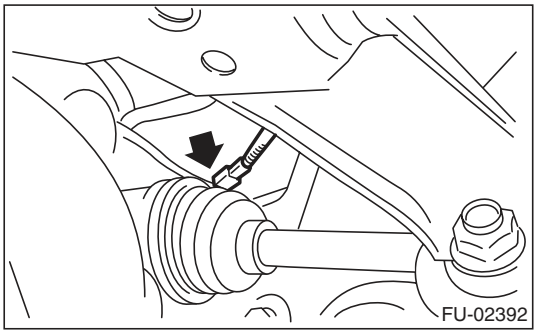

6) Install the rear suspension assembly.

CAUTION:
A helper is required to perform this work.

(1) Support the rear differential with the transmission jack.
(2) Support the rear suspension assembly, and tighten the bolts which secure the rear suspension assembly to the body.

Tightening torque:
T1: 125 N·m (12.7 kgf-m, 92.2 ft-lb)
T2: 175 N·m (17.8 kgf-m, 129.1 ft-lb)

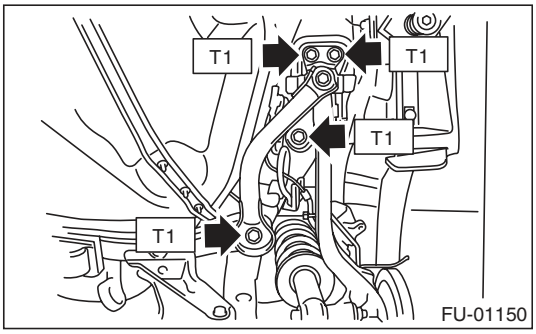

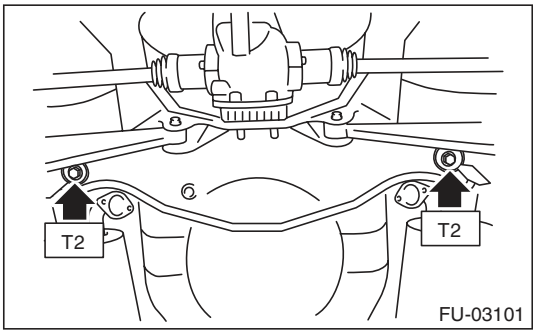

(3) Tighten the bolts which hold the rear shock absorber to the rear suspension arm. <Ref. to RS-10, INSTALLATION, Rear Arm.>

Tightening torque:
62 N·m (6.3 kgf-m, 45.7 ft-lb)

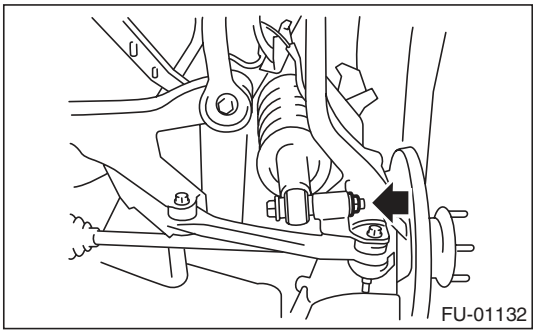

7) Tighten the bolts holding the parking brake cable clamp.

Tightening torque:
18 N·m (1.8 kgf-m, 13.3 ft-lb)

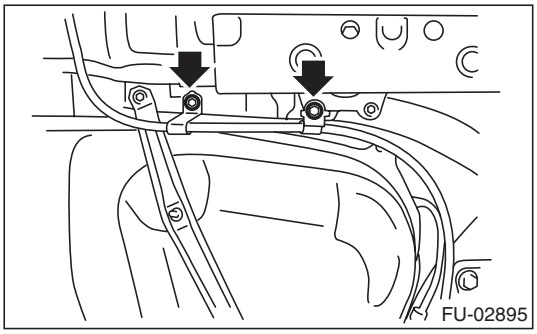

Tightening torque:
33 N·m (3.4 kgf-m, 24.3 ft-lb)

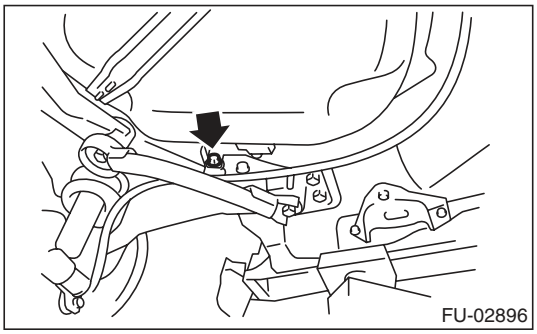

8) Connect the connector to the rear ABS wheel speed sensor.

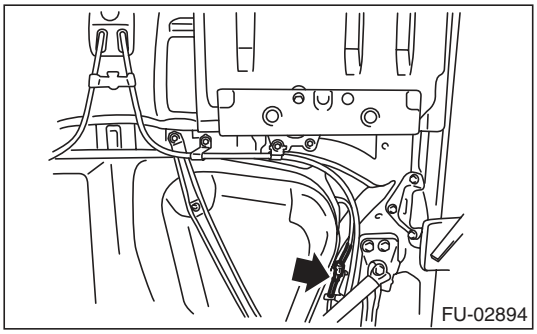

9) Install the heat shield cover.

Tightening torque:
17.5 N·m (1.8 kgf-m, 12.9 ft-lb)

10) Install the fuel tank protector.

Tightening torque:
Nut: 9 N·m (0.9 kgf-m, 6.6 ft-lb)
Bolt: 17.5 N·m (1.8 kgf-m, 12.9 ft-lb)

11) Install the propeller shaft. <Ref. to DS-11, INSTALLATION, Propeller Shaft.>
12) Install the rear exhaust pipe. <Ref. to EX(H4DOTC)-13, INSTALLATION, Rear Exhaust Pipe.>
13) Lower the vehicle.

14) Connect the parking brake cable to the parking brake assembly. <Ref. to PB-7, INSTALLATION, Parking Brake Assembly (Rear Disc Brake).>
15) Install the rear disc brake assembly.

Tightening torque:
66 N·m (6.7 kgf-m, 48.7 ft-lb)

16) Tighten the bolts which secure the rear brake hose mounting bracket.

Tightening torque:
33 N·m (3.4 kgf-m, 24.3 ft-lb)

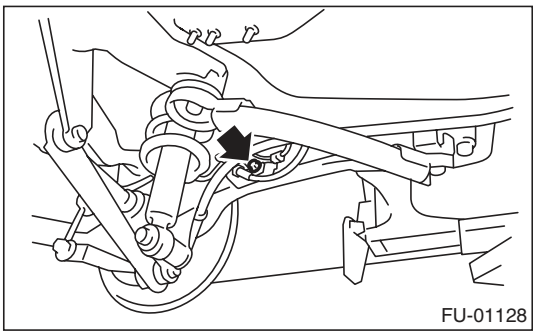

17) Install the rear wheels.

Tightening torque:
120 N·m (12.2 kgf-m, 88.5 ft-lb)

18) Connect the quick connector of the evaporation pipe. <Ref. to FU(H4DOTC)-81, INSTALLATION, Fuel Delivery, Return and Evaporation Lines.>

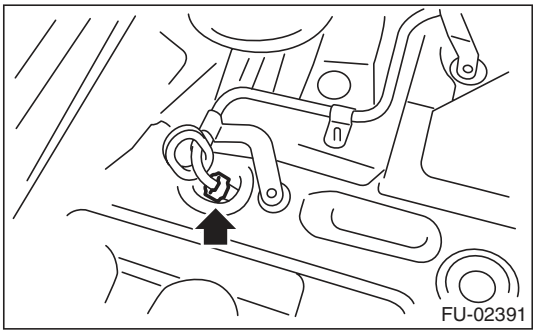

19) Install the pipe protector.

Tightening torque:
T1: 1 N·m (0.1 kgf-m, 0.7 ft-lb)
T2: 7.5 N·m (0.7 kgf-m, 5.5 ft-lb)

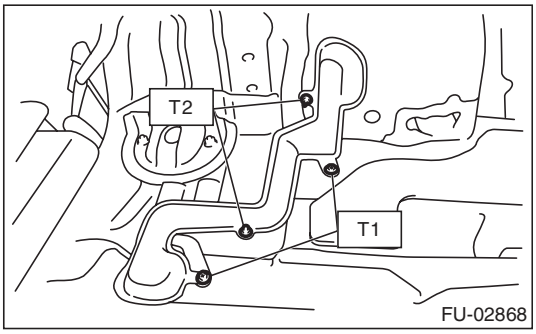

20) Install the trunk room trim. (Sedan model) <Ref. to EI-71, INSTALLATION, Trunk Room Trim.>
21) Install the rear quarter trim. (Wagon model) <Ref. to EI-64, INSTALLATION, Rear Quarter Trim.>
22) Connect connector (A) to the fuel sub level sensor.
23) Connect the quick connector of fuel delivery tube (B) and fuel return tube (C). <Ref. to FU(H4DOTC)-81, INSTALLATION, Fuel Delivery, Return and Evaporation Lines.>

NOTE:
When connecting, be careful not to reverse the delivery side and return side.

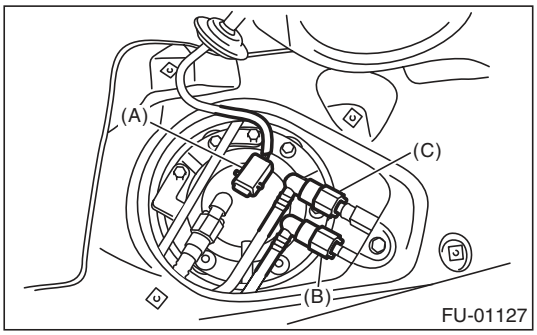

24) Install the service hole cover of fuel sub level sensor.

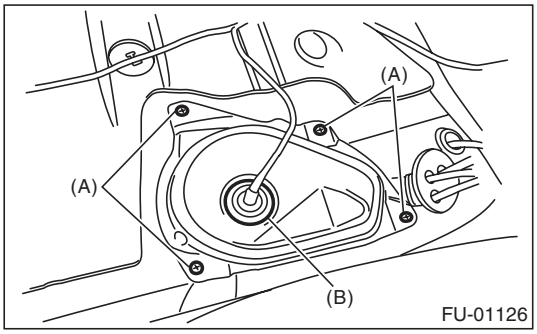

(A) Bolt
(B) Grommet

25) Connect connector (A), and install clip (B).

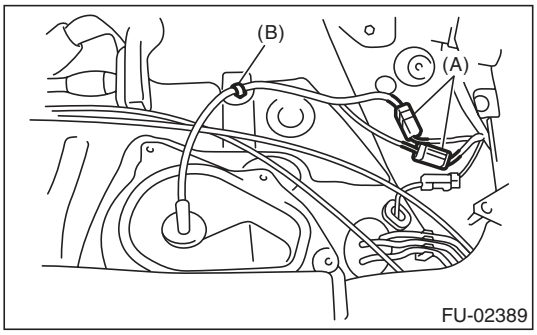

26) Connect the connector to the fuel pump.

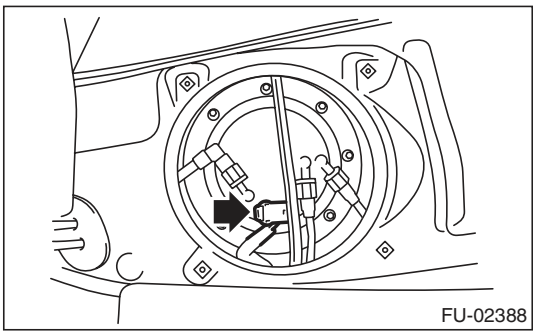

27) Install the service hole cover of fuel pump.

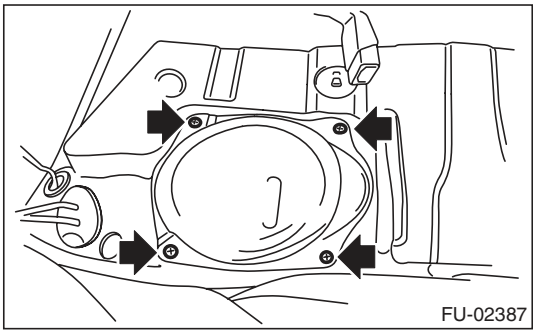

28) Install the rear seat.
29) Connect the ground cable to battery.

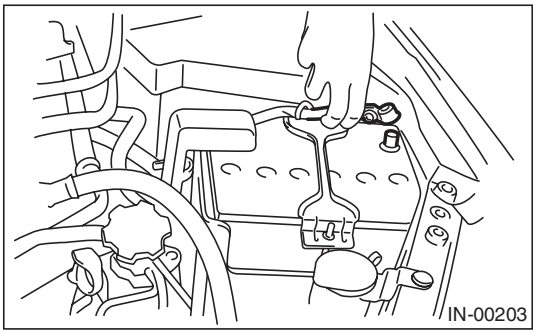

30) Inspect the wheel alignment and adjust if necessary.

C: INSPECTION

1) Check that the fuel tank does not have holes, cracks or is damaged in any other way.
2) Check that the fuel pipe and fuel hose are not cracked and those connections are tight.

28. Fuel Filler Pipe

A: REMOVAL

WARNING:
Place "NO OPEN FLAMES" signs near the working area.

CAUTION:
Be careful not to spill fuel.

1) Set the vehicle on a lift.
2) Release the fuel pressure. <Ref. to FU(H4DOTC)-57, RELEASING OF FUEL PRESSURE, PROCEDURE, Fuel.>
3) Drain fuel. <Ref. to FU(H4DOTC)-57, DRAINING FUEL (WITH SUBARU SELECT MONITOR), PROCEDURE, Fuel.>
4) Disconnect the ground cable from battery.

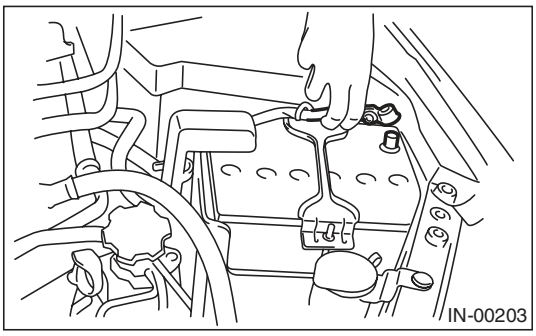

5) Open the fuel filler lid, and remove the fuel filler cap.
6) Remove the screws which secure gasket.

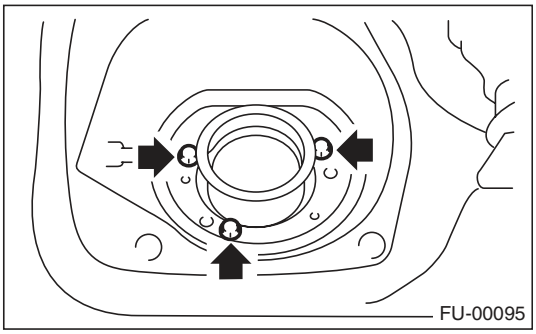

7) Remove the rear wheel RH.
8) Lift up the vehicle.
9) Remove the mud guard. <Ref. to EI-29, REMOVAL, Mud Guard.>
10) Remove the rear sub frame. <Ref. to RS-21, REMOVAL, Rear Sub Frame.>
11) Remove the bolts which hold fuel filler pipe bracket on the body.

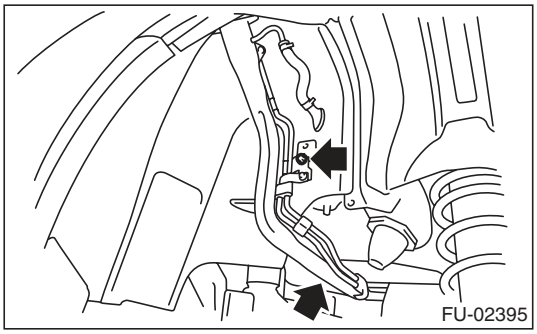

12) Disconnect the fuel filler hose (A) and evaporation hose (B) from the fuel filler pipe.

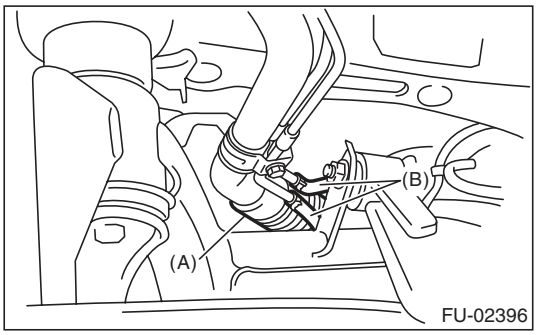

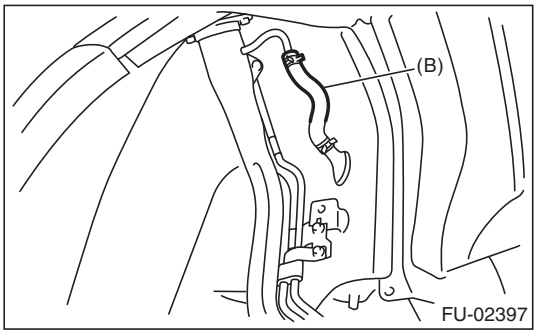

13) Remove the fuel filler pipe to the underside of the vehicle.

B: INSTALLATION

1) Open the fuel filler lid.
2) Set the fuel saucer (A) with rubber gasket (C), and insert the fuel filler pipe into hole from the inner side of apron.
3) Align the holes in fuel filler pipe neck and set the cup (B), and tighten the screws.

NOTE:
If the edges of rubber gasket are folded toward inside, straighten it with a flat tip screwdriver.

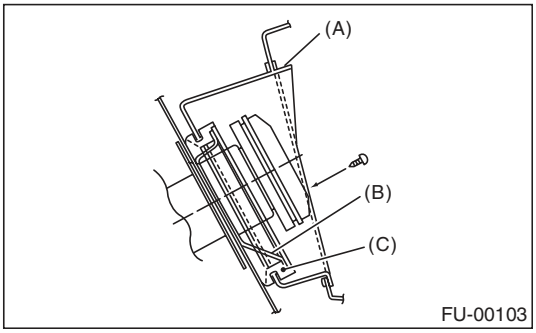

4) Securely insert the fuel filler hose (A) and evaporation hose (B) into the specified position, then attach the clamp or clip as shown in the figure.

Tightening torque:
2.5 N·m (0.3 kgf-m, 1.8 ft-lb)

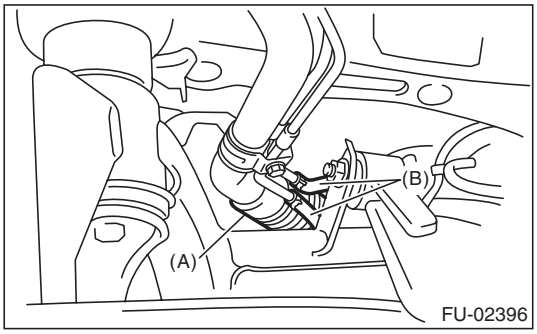

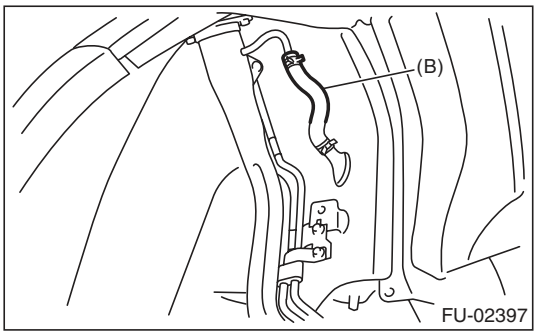

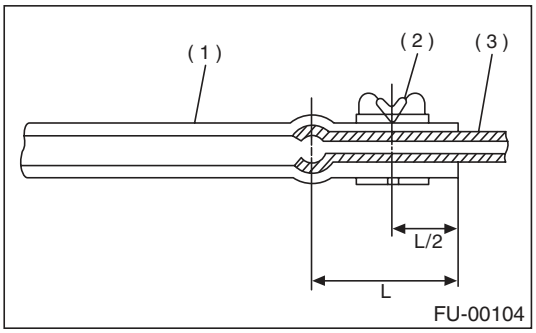

(1) Hose
(2) Clamp or clip
(3) Pipe

5) Tighten the bolts which hold fuel filler pipe bracket on the body.

Tightening torque:
7.5 N·m (0.8 kgf-m, 5.5 ft-lb)

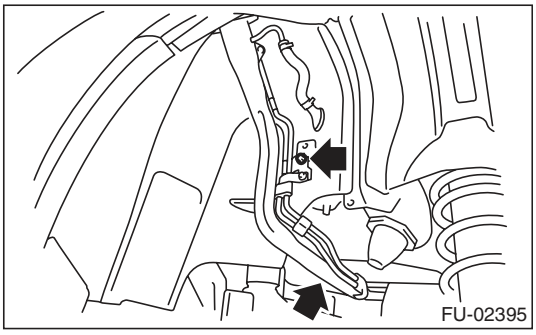

6) Install the rear sub frame. <Ref. to RS-21, INSTALLATION, Rear Sub Frame.>
7) Install the mud guard. <Ref. to EI-29, INSTALLATION, Mud Guard.>
8) Lower the vehicle.
9) Install the rear wheel RH.

Tightening torque:
120 N·m (12.2 kgf-m, 88.5 ft-lb)

10) Connect the ground cable to battery.

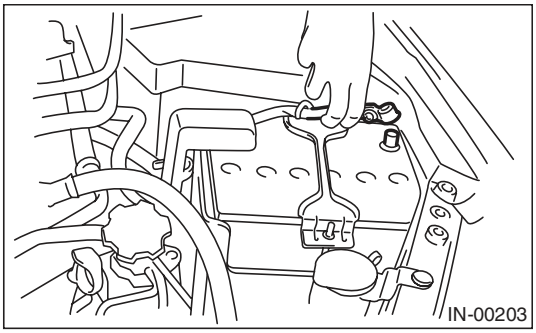

11) Inspect the wheel alignment and adjust if necessary.

C: INSPECTION

1) Check that the fuel filler pipe does not have holes or cracks, nor damaged in any way.
2) Make sure that the fuel hose is not cracked and that the connections are tight.

D: DISASSEMBLY

1) Move the clip and disconnect the evaporation hose from the shut valve.

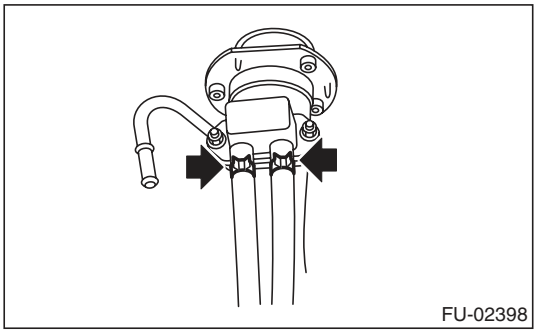

2) Remove the nut which holds the evaporation pipe assembly to the fuel filler pipe.

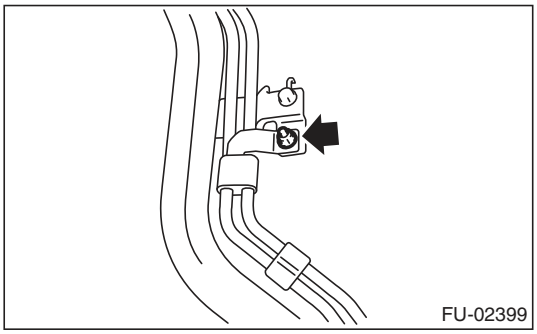

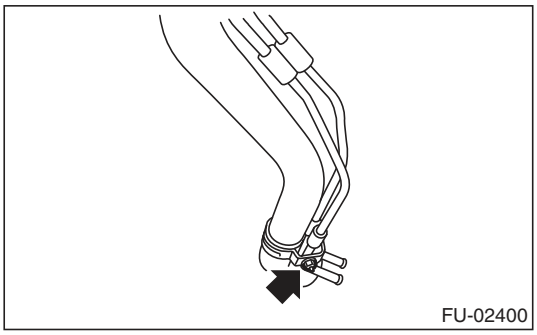

3) Remove the shut valve from the fuel filler pipe. <Ref. to EC(H4DOTC)-18, REMOVAL, Shut Valve.>

E: ASSEMBLY

1) Install the shut valve to the fuel filler pipe.
<Ref. to EC(H4DOTC)-18, INSTALLATION, Shut Valve.>
2) Tighten the nuts which secure the evaporation pipe assembly to the fuel filler pipe.

Tightening torque:
7.5 N·m (0.8 kgf-m, 5.5 ft-lb)

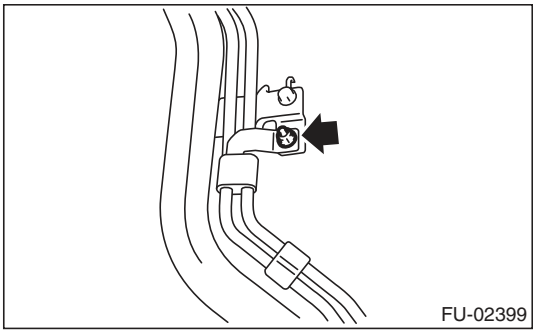

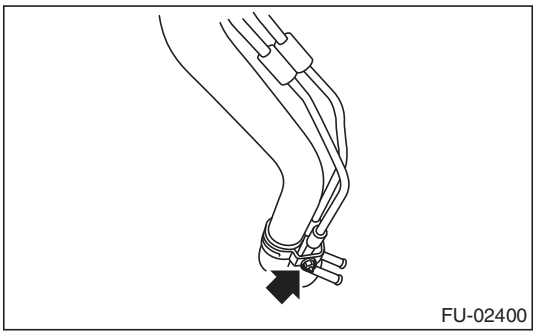

3) Connect the evaporation hose to the shut valve.

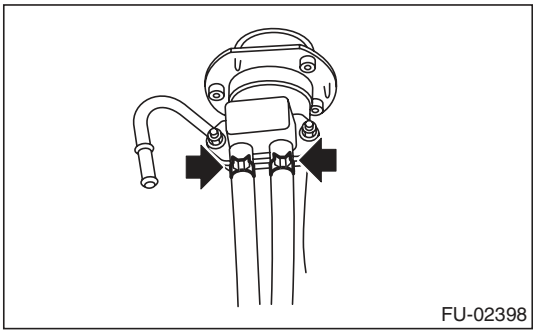

29. Fuel Pump

A: REMOVAL

WARNING:
Place "NO OPEN FLAMES" signs near the working area.

CAUTION:
- **Be careful not to spill fuel.**
- **If the fuel gauge indicates that two thirds or more of the fuel is remaining, be sure to drain fuel before starting work to avoid the fuel to spill.**

NOTE:
Fuel pump assembly consists of fuel pump, fuel filter and fuel level sensor.

1) Release the fuel pressure. <Ref. to FU(H4DOTC)-57, RELEASING OF FUEL PRESSURE, PROCEDURE, Fuel.>
2) Drain fuel. <Ref. to FU(H4DOTC)-57, DRAINING FUEL (WITH SUBARU SELECT MONITOR), PROCEDURE, Fuel.>
3) Disconnect the ground cable from battery.

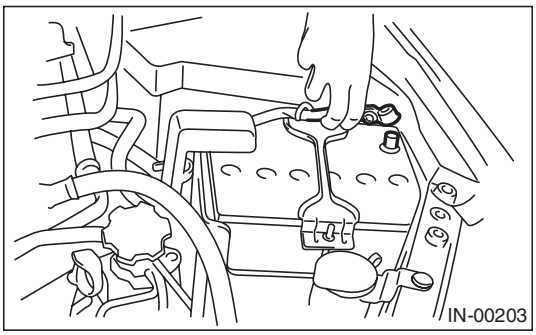

4) Remove the rear seat.
5) Remove the service hole cover.

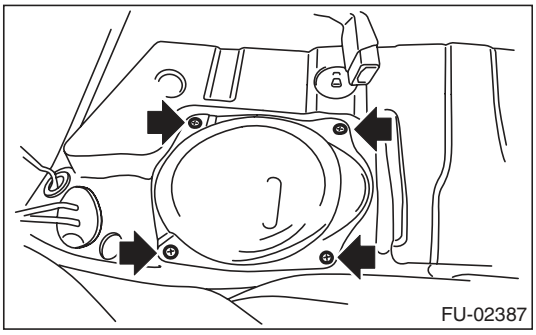

6) Disconnect the connector from fuel pump.

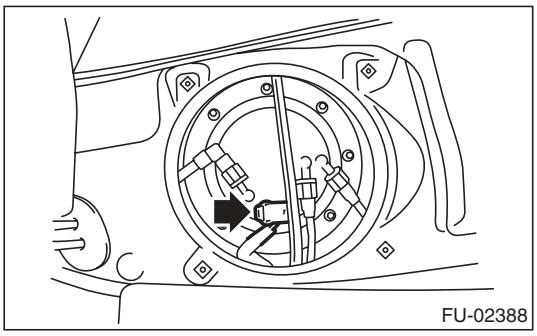

7) Disconnect the quick connector of fuel delivery tube, fuel return tube and jet pump tube. <Ref. to FU(H4DOTC)-80, REMOVAL, Fuel Delivery, Return and Evaporation Lines.>
8) Remove the nuts which install fuel pump assembly onto fuel tank.

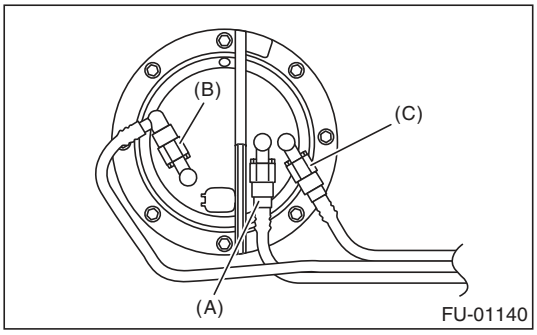

(A) Fuel delivery tube
(B) Fuel return tube
(C) Jet pump tube

9) Remove the fuel pump assembly from the fuel tank.

B: INSTALLATION

Install in the reverse order of removal while being careful of the following.
- Make sure the sealing portion is free from fuel or foreign matter before installation.
- Install with the protrusion (A) of gasket aimed at the front side of the vehicle.
- Insert the protrusion (B) of the gasket into the upper plate. (3 places)
- Align the protrusion (C) of the fuel pump assembly to the cutout in the upper plate.
- Tighten the nuts to the specified torque in the order as shown in the figure.

NOTE:
Use a new gasket and retainer.

Tightening torque:
4.4 N·m (0.4 kgf-m, 3.2 ft-lb)

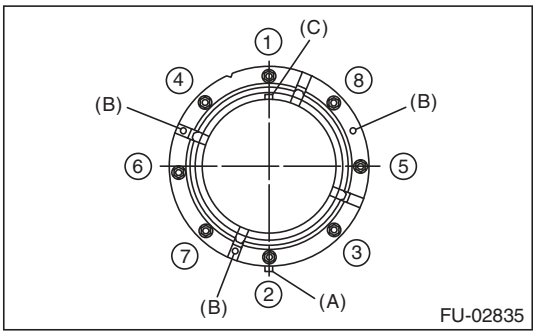

C: INSPECTION

Connect the lead harness to the connector terminal of fuel pump, and apply the battery power supply to check whether the pump operates.

WARNING:
- **Wipe off fuel completely.**
- **Keep the battery as far apart from fuel pump as possible.**
- **Be sure to perform the ON/OFF operation on the battery side.**
- **Do not run the fuel pump for a long time under non-load condition.**

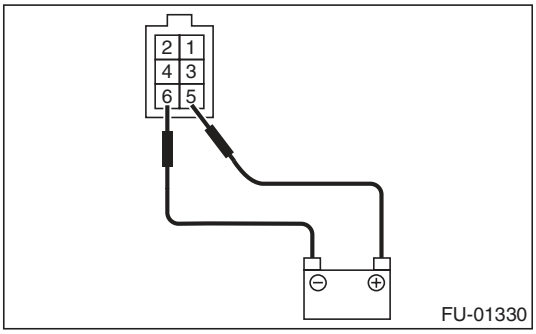

30. Fuel Level Sensor

A: REMOVAL

WARNING:
Place “NO OPEN FLAMES” signs near the working area.

CAUTION:
- **Be careful not to spill fuel.**
- **If the fuel gauge indicates that two thirds or more of the fuel is remaining, be sure to drain fuel before starting work to avoid the fuel to spill.**

NOTE:
The fuel level sensor is built in fuel pump assembly.
1) Remove the fuel pump assembly. <Ref. to FU(H4DOTC)-70, REMOVAL, Fuel Pump.>
2) Disconnect the connector from fuel pump bracket.
3) Remove the fuel level sensor and fuel temperature sensor.

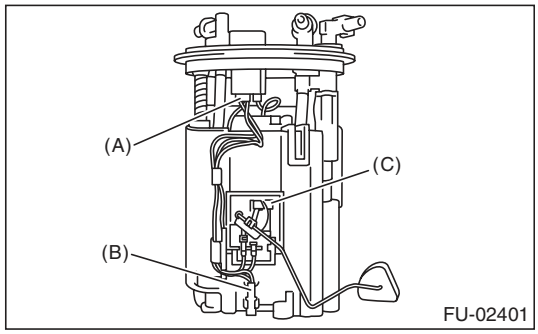

(A) Connector
(B) Fuel temperature sensor
(C) Fuel level sensor

B: INSTALLATION

Install in the reverse order of removal.

31.Fuel Sub Level Sensor

A: REMOVAL

WARNING:
Place "NO OPEN FLAMES" signs near the working area.

CAUTION:
- **Be careful not to spill fuel.**
- **If the fuel gauge indicates that two thirds or more of the fuel is remaining, be sure to drain fuel before starting work to avoid the fuel to spill.**

1) Release the fuel pressure. <Ref. to FU(H4DOTC)-57, RELEASING OF FUEL PRESSURE, PROCEDURE, Fuel.>
2) Drain fuel. <Ref. to FU(H4DOTC)-57, DRAINING FUEL (WITH SUBARU SELECT MONITOR), PROCEDURE, Fuel.>
3) Disconnect the ground cable from battery.

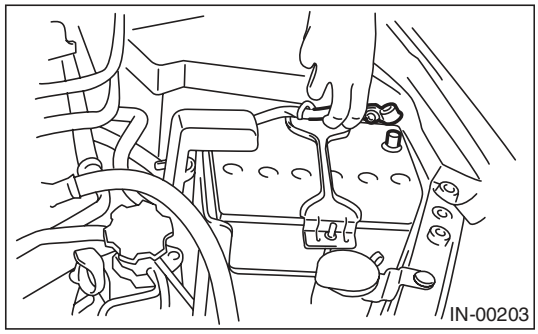

4) Remove the rear seat.
5) Remove the service hole cover.
   (1) Remove bolt (A).
   (2) Push the grommet (B) down and remove the service hole cover.

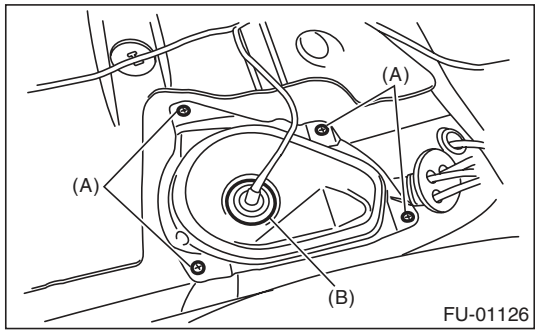

6) Disconnect the connector from the fuel sub level sensor.

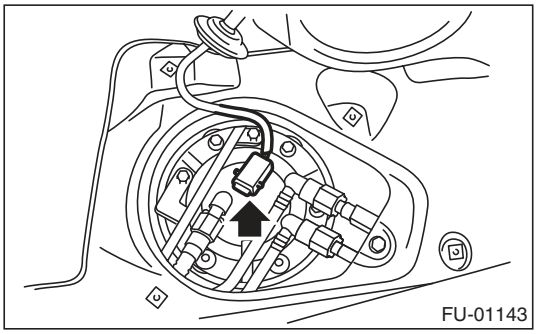

7) Disconnect the quick connector of fuel delivery tube, fuel return tube and jet pump tube. <Ref. to FU(H4DOTC)-80, REMOVAL, Fuel Delivery, Return and Evaporation Lines.>
8) Remove the nuts and bolts which install fuel sub level sensor on fuel tank.

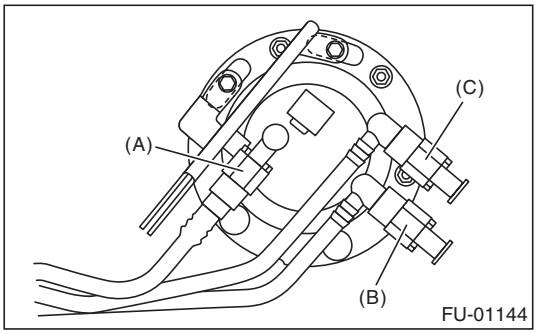

(A) Jet pump tube
(B) Fuel delivery tube
(C) Fuel return tube

9) Remove the fuel sub level sensor.

B: INSTALLATION

Install in the reverse order of removal while being careful of the following.

- Make sure the sealing portion is free from fuel or foreign matter before installation.
- Align protrusion (A) of the gasket to the position shown in the following figure.
- Align protrusion (B) of the fuel sub level sensor to the cut out in the fuel sublevel sensor upper plate.
- Tighten the nuts and bolts to the specified torque in the order as shown in the figure.

NOTE:
Use a new gasket and retainer.

Tightening torque:
4.4 N·m (0.4 kgf-m, 3.2 ft-lb)

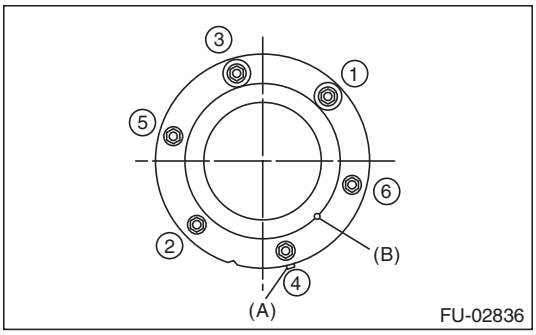

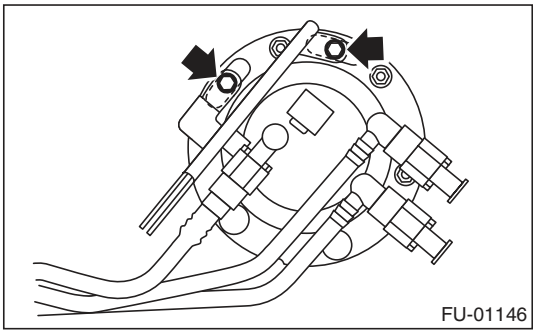

32. Fuel Filter

A: REMOVAL

WARNING:
Place "NO OPEN FLAMES" signs near the working area.

CAUTION:
- **Be careful not to spill fuel.**
- **If the fuel gauge indicates that two thirds or more of the fuel is remaining, be sure to drain fuel before starting work to avoid the fuel to spill.**
- **Be careful not to drop or apply any impact to the fuel pump during work. This may deteriorate its performance.**

NOTE:
The fuel filter is built in fuel pump assembly.

1) Remove the fuel pump assembly. <Ref. to FU(H4DOTC)-70, REMOVAL, Fuel Pump.>
2) Remove the fuel level sensor and fuel temperature sensor. <Ref. to FU(H4DOTC)-72, REMOVAL, Fuel Level Sensor.>
3) Disconnect the pump assembly connector from the sub tank bracket assembly.

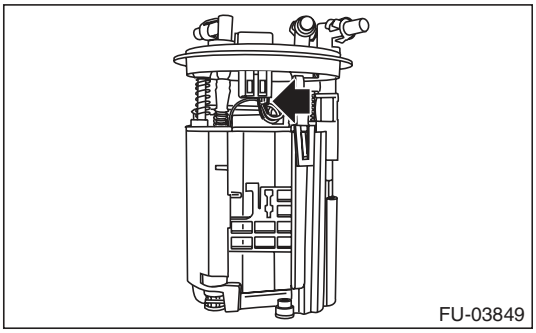
FU-03849

4) Cut off the tab holders connecting the sub tank bracket assembly and the sub tank in four locations, and separate the two.

CAUTION:
Be careful not to damage the sub tank.

NOTE:
If the O-ring is remaining on the subtank, remove.

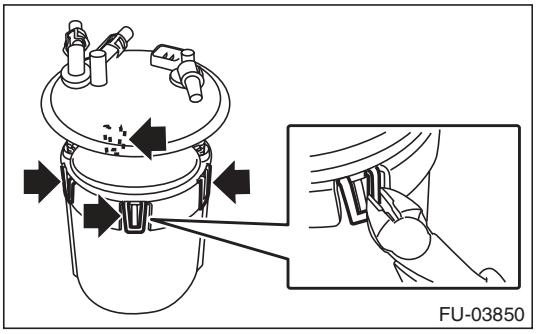
FU-03850

5) Disconnect the fuel piping connector from the fuel filter assembly in two locations.

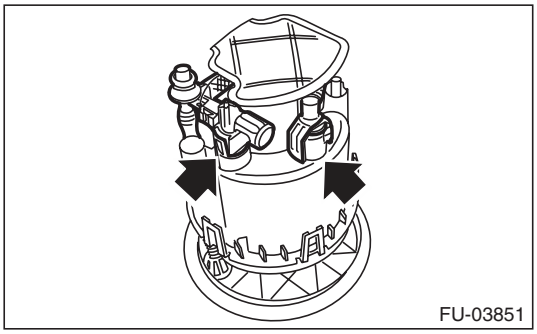
FU-03851

6) Push to compress the fuel filter assembly in the direction of the arrow, remove clip (A), and separate the sub tank bracket assembly and the fuel filter assembly.

CAUTION:
When separating the sub tank bracket assembly and the fuel filter assembly, be careful not to damage the ground wire.

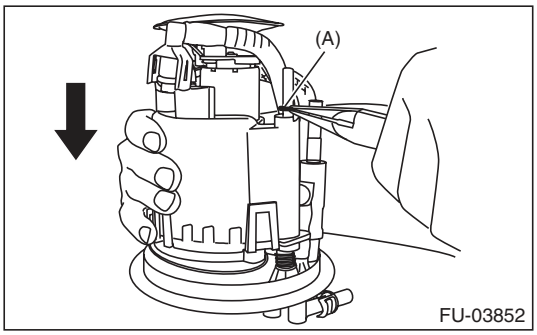

FU-03852

7) Disconnect the connector from the pump assembly.

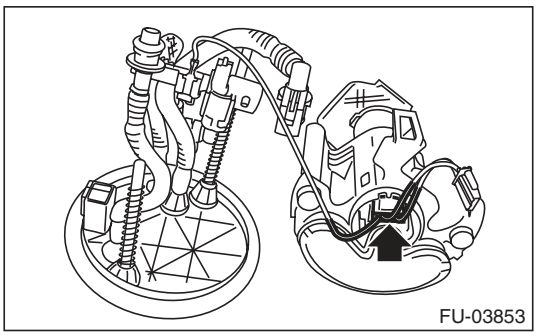
FU-03853

8) Lift the two tab holders connecting the pump assembly to the fuel filter using a flat tip screwdriver (with a shaft diameter of approx. 3 mm (0.12 in)), etc., and separate the fuel filter and pump assembly.

CAUTION:

- **To prevent damaging the tabs of the pump assembly, wrap the tip of flat tip screwdriver (A), etc. with tape (B).**

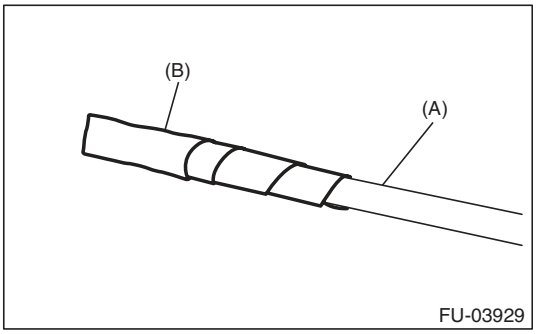

- **Be careful not to drop or apply any impact to the pump assembly.**

NOTE:
If the spacer and o-ring is remaining on the pump assembly, remove these.

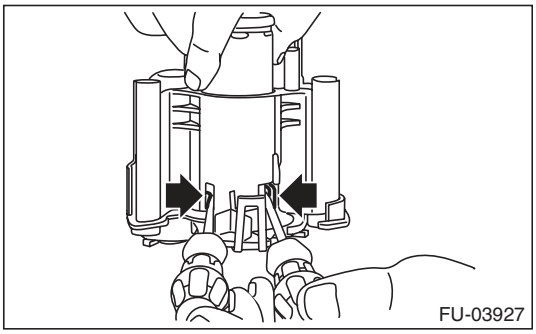

B: INSTALLATION

1) Assemble o-ring (A) and spacer (B) to the fuel pump, and attach the pump assembly to the fuel filter.

NOTE:
- Use new O-rings (8 mm (0.31 in) inner diameter).
- Use a new spacer.
- Apply gasoline to the o-ring.
- Insert the pump assembly until a click is heard.

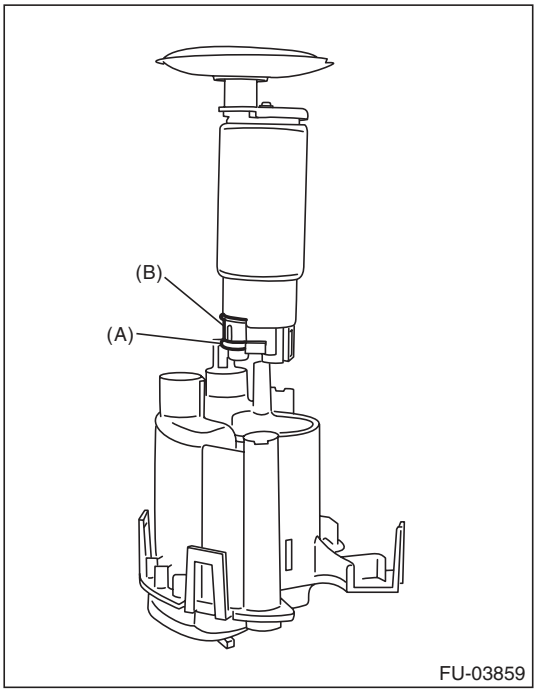

2) Connect the connector to the pump assembly.

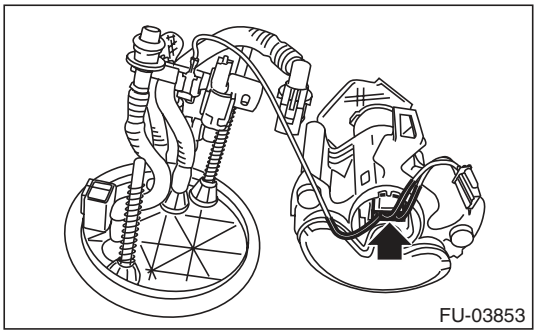

3) Attach spring (A) to the metal rod of the sub tank bracket assembly, and assemble the fuel filter assembly.

NOTE:
Use a new spring.

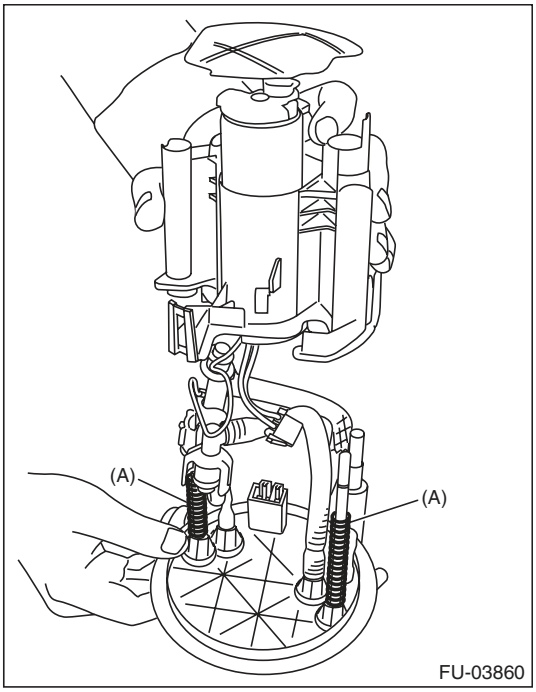

4) Push the fuel filter assembly in the direction of the arrow to compress, and attach clip (A).

NOTE:
Use a new clip.

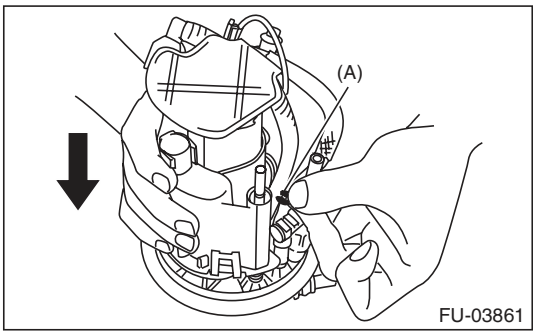

5) Connect the fuel piping connector to the fuel filter assembly.

NOTE:
- Use new O-rings.
- Apply gasoline to the o-ring.
- The O-rings of the black and white connectors are identified by a difference in diameter. Be careful not to confuse the two during assembly.

O-ring inner diameter:
Black connector O-ring [Approx. 7 mm (0.28 in)]
White connector O-ring [Approx. 8 mm (0.31 in)]

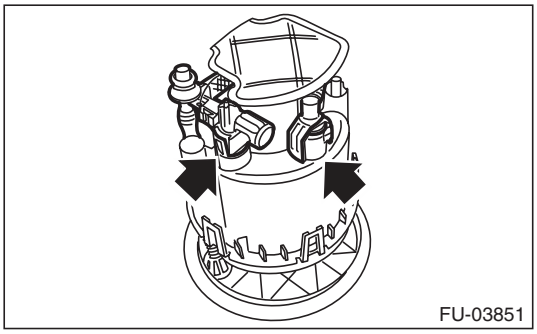

6) Attach the O-ring (A) to the fuel filter assembly, and attach the subtank to the sub tank bracket assembly.

NOTE:
- Use new O-rings (8 mm (0.31 in) inner diameter).
- Apply gasoline to the o-ring.
- Insert the pump assembly until a “pop” is heard.

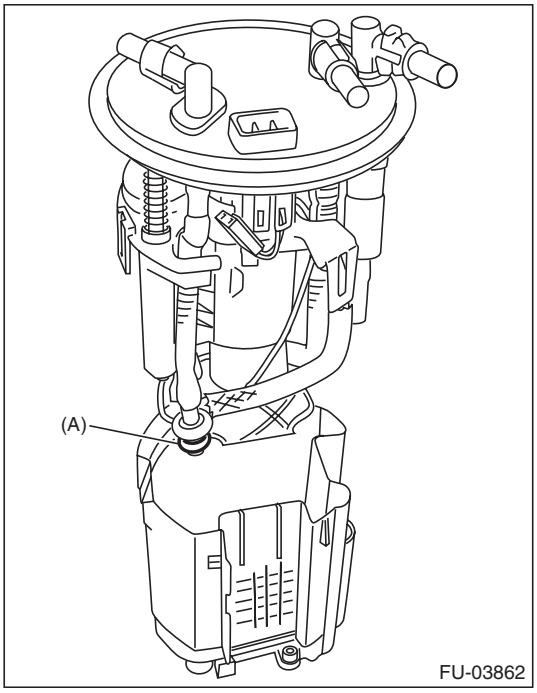

7) Replace the cushion on the rear face of the sub tank with a new cushion.

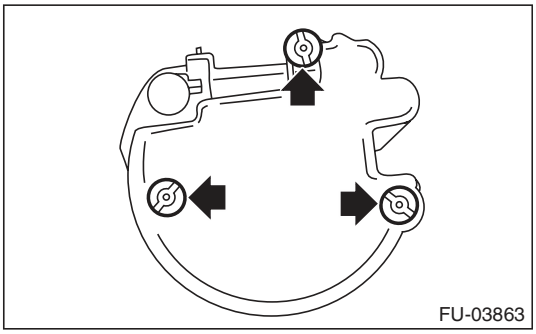

8) Connect the pump assembly connector to the sub tank bracket assembly.

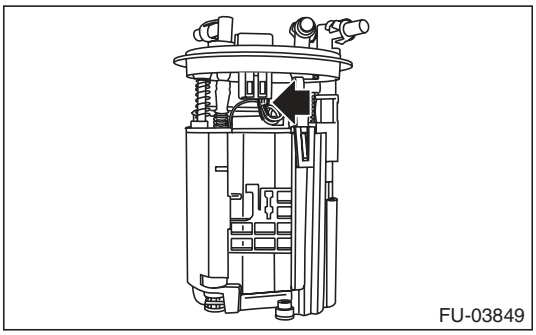

9) Install the fuel level sensor and fuel temperature sensor. <Ref. to FU(H4DOTC)-72, INSTALLATION, Fuel Level Sensor.> <Ref. to EC(H4DOTC)-13, INSTALLATION, Fuel Temperature Sensor.>
10) Install the fuel pump assembly. <Ref. to FU(H4DOTC)-71, INSTALLATION, Fuel Pump.>

33. Fuel Damper

A: REMOVAL

WARNING:
Place "NO OPEN FLAMES" signs near the working area.

CAUTION:
- **Be careful not to spill fuel.**
- **Catch the fuel from hoses using a container or cloth.**

1) Release the fuel pressure. <Ref. to FU(H4DOTC)-57, RELEASING OF FUEL PRESSURE, PROCEDURE, Fuel.>
2) Remove the fuel damper from fuel delivery hose (A) and fuel return hose (B).

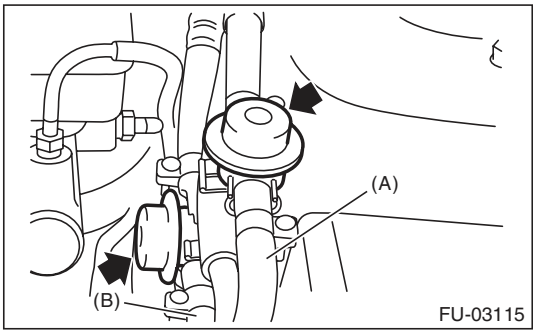

B: INSTALLATION

CAUTION:
If fuel hoses or clamps are damaged, replace them with new parts.
Install in the reverse order of removal.

Tightening torque:
1.25 N·m (0.1 kgf-m, 0.9 ft-lb)

34. Fuel Delivery, Return and Evaporation Lines

A: REMOVAL

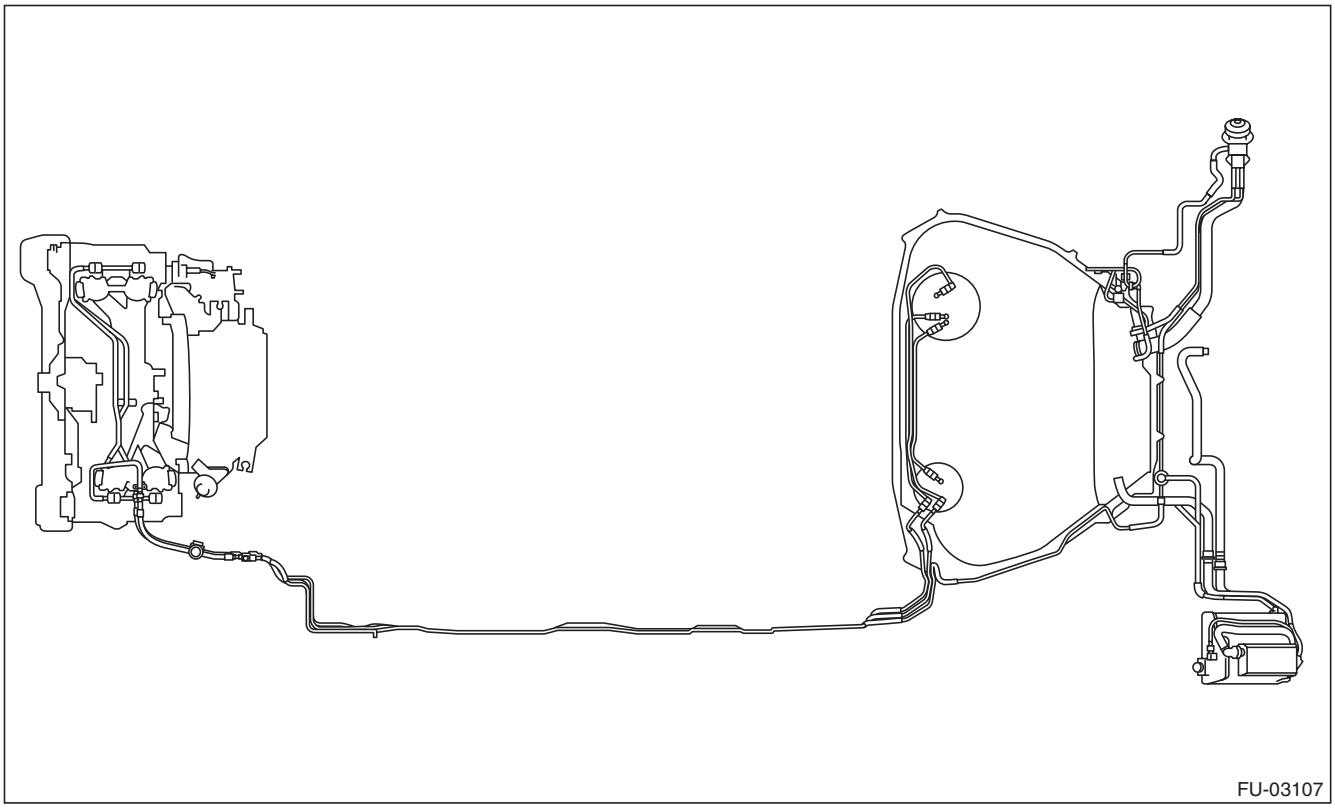

WARNING:
Place "NO OPEN FLAMES" signs near the working area.

CAUTION:
Be careful not to spill fuel.

1) Set the vehicle on a lift.
2) Release the fuel pressure. <Ref. to FU(H4DOTC)-57, RELEASING OF FUEL PRESSURE, PROCEDURE, Fuel.>
3) Open the fuel filler lid, and remove the fuel filler cap.
4) Remove the floor mat. <Ref. to EI-72, REMOVAL, Floor Mat.>
5) In the engine compartment, disconnect the fuel delivery hoses, fuel return hoses and evaporation hoses.
   (1) Disconnect the quick connector on the fuel delivery line and return line by pushing the ST in the direction of the arrow.

ST	42099AE000	QUICK CONNECTOR RELEASE

   (2) Remove the clip and disconnect the evaporation hose from the fuel pipe.

CAUTION:
- **Be careful not to spill fuel.**
- **Catch the fuel from hoses using a container or cloth.**

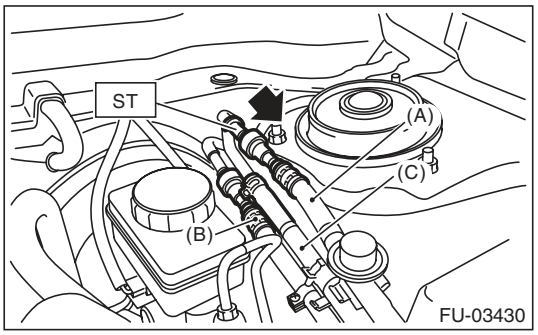

(A) Fuel delivery hose
(B) Fuel return hose
(C) Evaporation hose

6) Remove the canister. <Ref. to EC(H4DOTC)-7, REMOVAL, Canister.>
7) Remove the fuel tank. <Ref. to FU(H4DOTC)-59, REMOVAL, Fuel Tank.>
8) Remove the fuel pipe assembly.

9) Disconnect the quick connector, then disconnect the fuel delivery tube, fuel return tube and jet pump tube.

(1) Clean the pipe and connector, if they are covered with dust.

(2) To prevent from damaging or entering foreign matter, wrap the pipes and connectors with plastic bag etc.

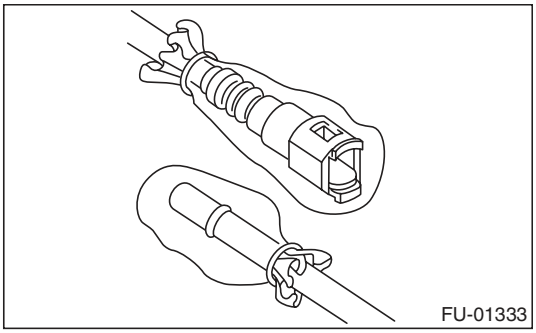

(3) Hold the connector (A) and push the retainer (B) down.

(4) Pull out the connector (A) from the retainer (B).

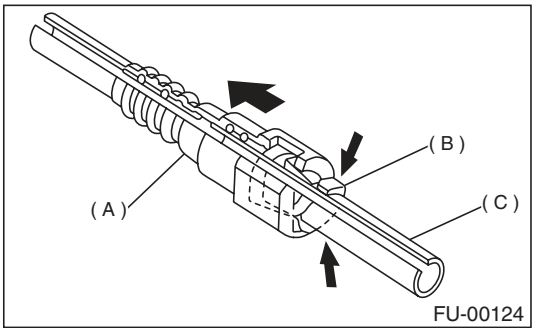

(A) Connector
(B) Retainer
(C) Pipe

B: INSTALLATION

Install in the reverse order of removal while being careful of the following.

1. CONNECTING THE FUEL LINE QUICK CONNECTOR

CAUTION:
Make sure there is no damage or dust on the connections. If necessary, clean seal surface of pipe.

NOTE:
Use a new retainer.

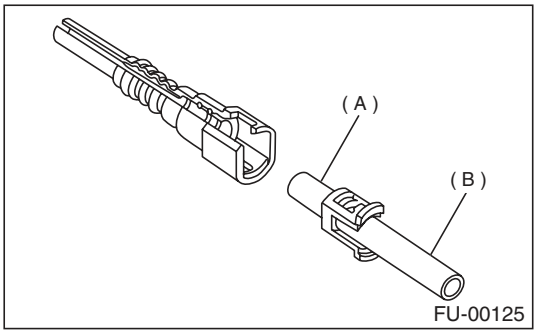

(A) Seal surface
(B) Pipe

1) Set the new retainer (B) to connector (A).

2) Push the pipe into the connector completely.

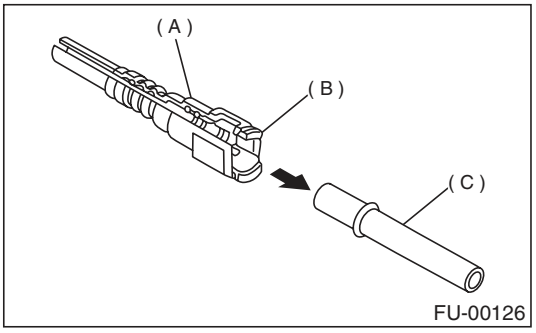

(A) Connector
(B) Retainer
(C) Pipe

CAUTION:
- **Pull the connector to ensure it is connected securely.**
- **Make sure the two retainer pawls are engaged in their mating positions in the connector.**
- **Be sure to inspect hoses and their connections for any leakage of fuel.**

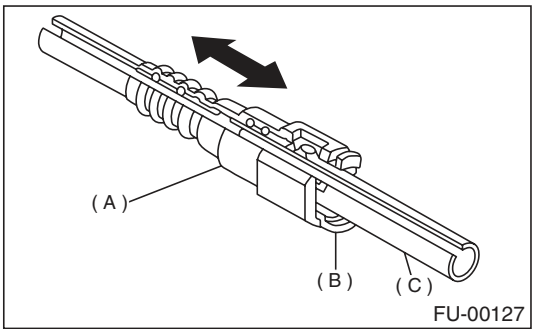

(A) Connector
(B) Retainer
(C) Pipe

2. CONNECT FUEL DELIVERY HOSE AND FUEL RETURN HOSE

Connect the fuel delivery hose and fuel return hose to the pipe with an overlap of 20 to 25 mm (0.79 to 0.98 in).
Type A: When the amount to be inserted is specified.
Type B: When the amount to be inserted is not specified.

L1: 2.5±1.5 mm (0.098±0.059 in)

L2: 22.5±2.5 mm (0.886±0.098 in)

CAUTION:
Be sure to inspect hoses and their connections for any leakage of fuel.

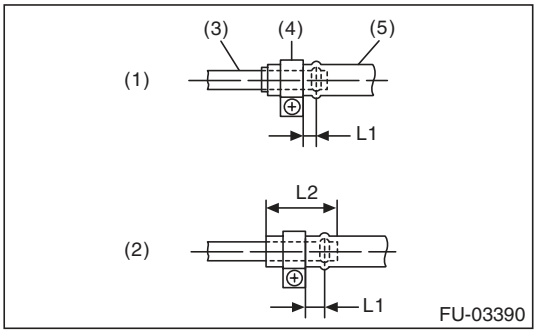

(1) Type A
(2) Type B
(3) Pipe
(4) Clamp
(5) Hose

3. CONNECTING THE EVAPORATION HOSE

Connect the evaporation hose to the pipe with an overlap of 15 to 20 mm (0.59 to 0.79 in).

L = 17.5±2.5 mm (0.689±0.098 in)

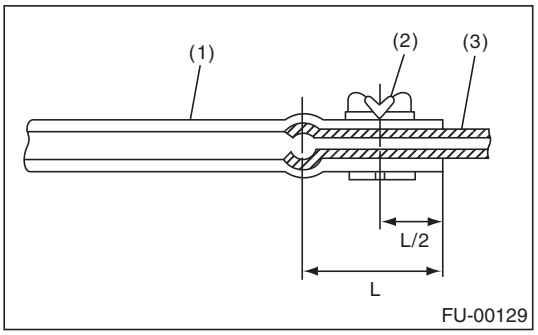

(1) Hose
(2) Clip
(3) Pipe

C: INSPECTION

1) Make sure that there are no cracks on the fuel pipes and fuel hoses.
2) Make sure the fuel pipe and fuel hose connections are tightened firmly.

35. Fuel System Trouble in General

A: INSPECTION

Trouble and possible cause		Corrective action
1. Insufficient fuel supply to injector		
1)	Fuel pump does not operate.	
	❍ Defective terminal contact	Inspect contact, especially ground, and tighten it securely.
	❍ Trouble in electromagnetic or electronic circuit parts	Replace the faulty parts.
2)	Decline of fuel pump function	Replace the fuel pump.
3)	Clogged fuel filter	Replace the fuel filter. Clean or replace the fuel tank if necessary.
4)	Clogged or bent fuel pipe or hose	Clean, correct or replace the fuel pipe or hose.
5)	Air is mixed in the fuel system.	Inspect or retighten each connection part.
6)	Clogged or bent air breather tube or pipe.	Clean, correct or replace the air breather tube or pipe.
7)	Damaged diaphragm of pressure regulator	Replace.
2. Leakage or blow out of fuel		
1)	Loose joints of the fuel pipe	Retighten.
2)	Cracked fuel pipe, hose and fuel tank	Replace.
3)	Defective welding part on the fuel tank	Replace.
4)	Clogged or bent air breather tube or air vent tube	Clean, correct or replace the air breather tube or air vent tube.
3. Gasoline smell inside of compartment		
1)	Loose joints at air breather tube, air vent tube and fuel filler pipe	Retighten.
2)	Defective gasket air tightness on the fuel saucer	Correct or replace the gasket.
3)	Inoperative fuel pump modulator or circuit	Replace.
4. Defective fuel meter indicator		
1)	Defective operation of fuel level sensor	Replace.
2)	Defective operation of fuel meter	Replace.
5. Noise		
1)	Large operation noise or vibration of fuel pump	Replace.

NOTE:
- When the vehicle is left unattended for an extended period of time, water may accumulate in the fuel tank. Fill the fuel tank fully to prevent this.
- In snow-covered areas, mountainous areas, skiing areas, etc. where ambient temperatures drop to 0°C (32°F) or less throughout the winter season, use a water removing agent in the fuel system to prevent freezing fuel system and accumulating water.
- When water is accumulated in fuel filter, fill the water removing agent in the fuel tank.
- Before using water removing agent, follow the cautions noted on the bottle.

1. General Description

A: COMPONENT

1. SECONDARY AIR PUMP

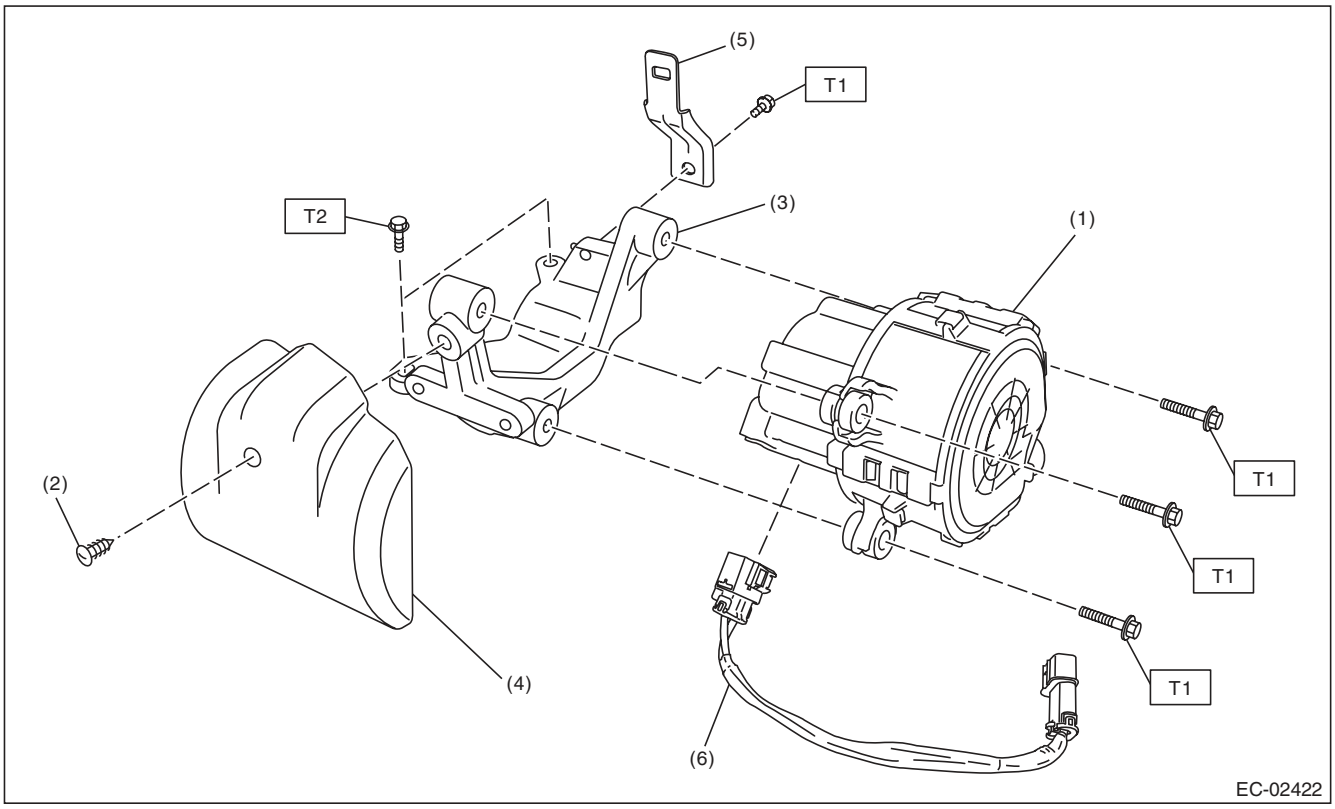

(1)	Secondary air pump	(4)	Secondary air pump cover	***Tightening torque:N·m (kgf-m, ft-lb)***
(2)	Clip	(5)	Harness stay	***T1: 6.4 (0.7, 4.7)***
(3)	Secondary air pump bracket	(6)	Secondary air pump harness	***T2: 19 (1.9, 14.0)***

2. SECONDARY AIR COMBINATION VALVE

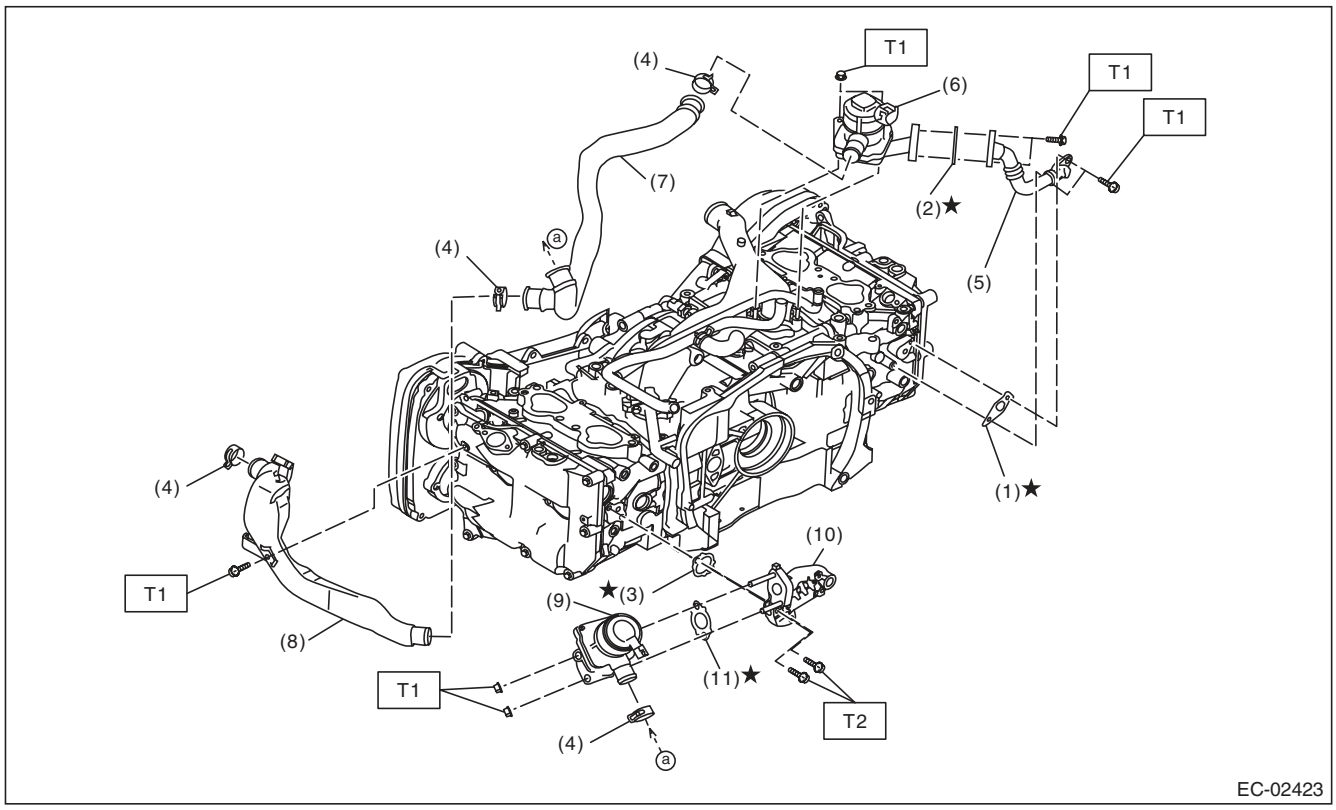

(1)	Gasket	(7)	Air duct A	(11)	Gasket
(2)	Gasket	(8)	Air duct B		
(3)	Gasket	(9)	Secondary air combination valve LH	***Tightening torque:N·m (kgf-m, ft-lb)***	
(4)	Clamp			***T1:***	***9 (0.9, 6.6)***
(5)	Secondary air pipe RH	(10)	Secondary air pipe LH	***T2:***	***19 (1.9, 14.0)***
(6)	Secondary air combination valve RH				

B: CAUTION

- Wear appropriate work clothing, including a cap, protective goggles and protective shoes when performing any work.
- Remove contamination including dirt and corrosion before removal, installation or disassembly.
- Keep the disassembled parts in order and protect them from dust and dirt.
- Before removal, installation or disassembly, be sure to clarify the failure. Avoid unnecessary removal, installation, disassembly and replacement.
- Vehicle components are extremely hot after driving. Be wary of receiving burns from heated parts.
- Be sure to tighten fasteners including bolts and nuts to the specified torque.
- Place shop jacks or rigid racks at the specified points.
- Before disconnecting connectors of sensors or units, be sure to disconnect the ground cable from the battery.

C: PREPARATION TOOL

1. SPECIAL TOOL

ILLUSTRATION	TOOL NUMBER	DESCRIPTION	REMARKS
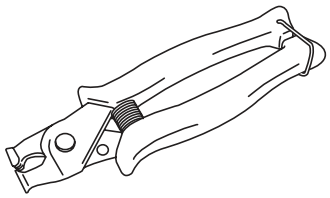 ST18353AA000	18353AA000	CLAMP PLIER	• Used for removing and installing the PCV hose. • This is a general tool made by the French company CAILLAU. (code) 54.0.000.205 To make this easier to obtain, it has been provided with a tool number.

2. Front Catalytic Converter

A: REMOVAL

The front catalytic converter is integrated into the center exhaust pipe (front). Refer to “Center Exhaust Pipe” for removal procedures.
<Ref. to EX(H4DOTC)-7, REMOVAL, Center Exhaust Pipe.>

B: INSTALLATION

The front catalytic converter is integrated into the center exhaust pipe (front). Refer to “Center Exhaust Pipe” for installation procedures.
<Ref. to EX(H4DOTC)-9, INSTALLATION, Center Exhaust Pipe.>

C: INSPECTION

1) Check the connections and welds for exhaust leaks.
2) Make sure there are no holes or rusting.

3. Rear Catalytic Converter

A: REMOVAL

The rear catalytic converter is integrated into the center exhaust pipe (rear). Refer to “Center Exhaust Pipe” for removal procedures.
<Ref. to EX(H4DOTC)-7, REMOVAL, Center Exhaust Pipe.>

B: INSTALLATION

The rear catalytic converter is integrated into the center exhaust pipe (rear). Refer to “Center Exhaust Pipe” for installation procedures.
<Ref. to EX(H4DOTC)-9, INSTALLATION, Center Exhaust Pipe.>

C: INSPECTION

1) Check the connections and welds for exhaust leaks.
2) Make sure there are no holes or rusting.

4. Canister

A: REMOVAL

1) Set the vehicle on a lift.
2) Disconnect the ground cable from battery.

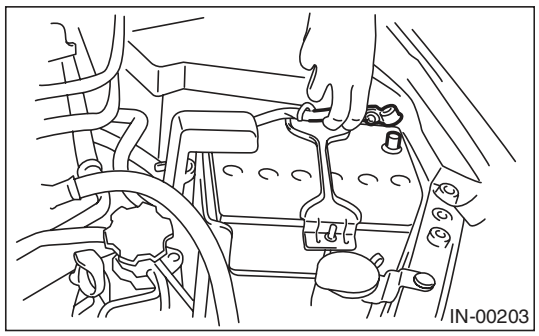

3) Lift up the vehicle.
4) Remove the rear wheel LH.
5) Remove the rear mud guard LH. <Ref. to EI-29, REAR MUD GUARD, REMOVAL, Mud Guard.>
6) Disconnect quick connector (A).
7) Disconnect the drain valve connector (B).
8) Remove clip (C).

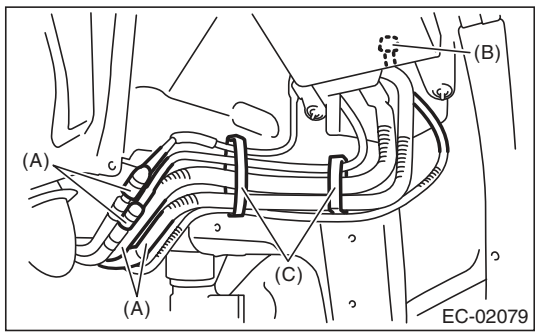

9) Remove the canister from body.

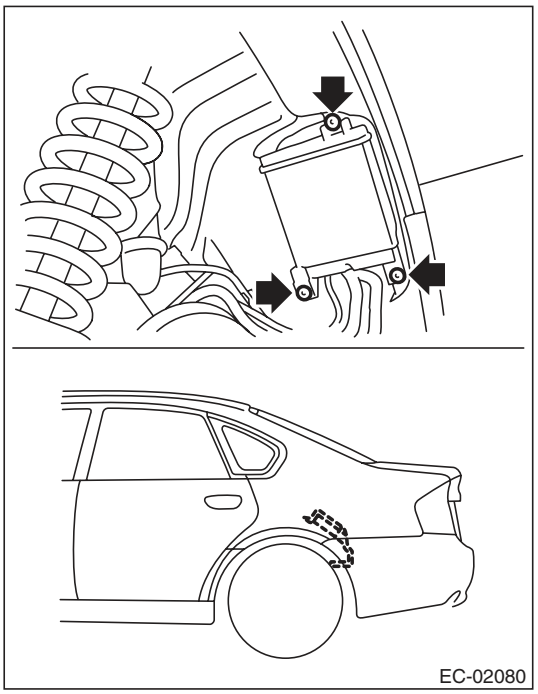

B: INSTALLATION

Install in the reverse order of removal.

NOTE:
Check that there is no damage or dust on the quick connector. If necessary, clean the seal surface of the pipe.

Tightening torque:
8 N·m (0.8 kgf-m, 5.9 ft-lb)

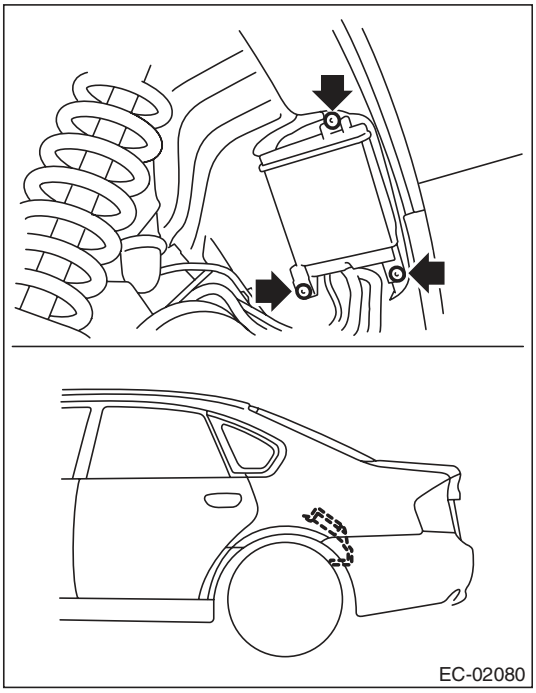

C: INSPECTION

Make sure the canister and canister hoses are not cracked or loose.

5. Purge Control Solenoid Valve

A: REMOVAL

1. PURGE CONTROL SOLENOID VALVE 1

1) Remove the collector cover.
2) Disconnect the ground cable from battery.

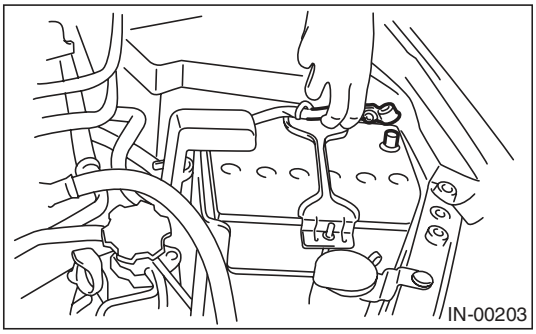

3) Remove the bolts which install purge control solenoid valve 1 to the intake manifold, and disconnect the connector from the purge control solenoid valve 1.

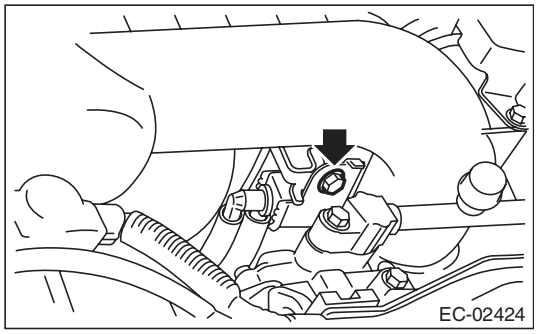

4) Disconnect the evaporation hose from the intake manifold and fuel pipe assembly.

2. PURGE CONTROL SOLENOID VALVE 2

1) Remove the collector cover.
2) Disconnect the ground cable from battery.

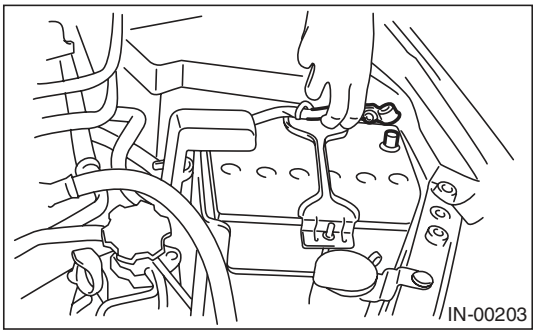

3) Remove the solenoid valve bracket assembly from intake manifold.

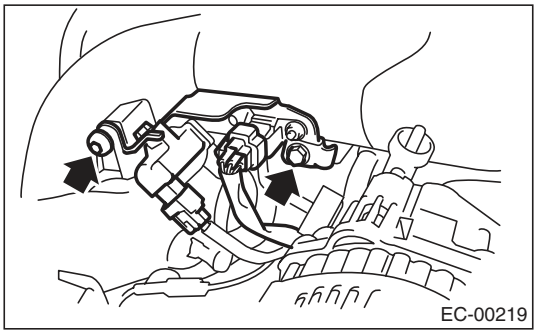

4) Disconnect the connector from purge control solenoid valve 2.
5) Disconnect the evaporation hose from the intake duct and fuel pipe assembly.
6) Remove the purge control solenoid valve 2 from the solenoid valve bracket assembly.

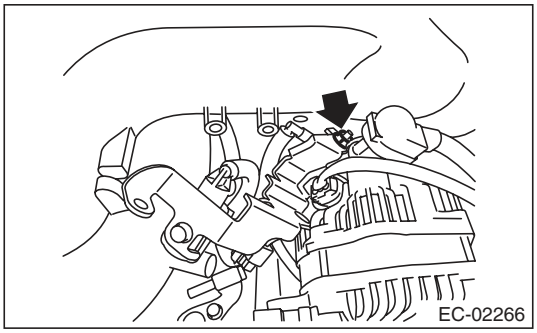

B: INSTALLATION

1. PURGE CONTROL SOLENOID VALVE 1

Install in the reverse order of removal.

NOTE:
Connect the evaporation hose as shown in the figure.

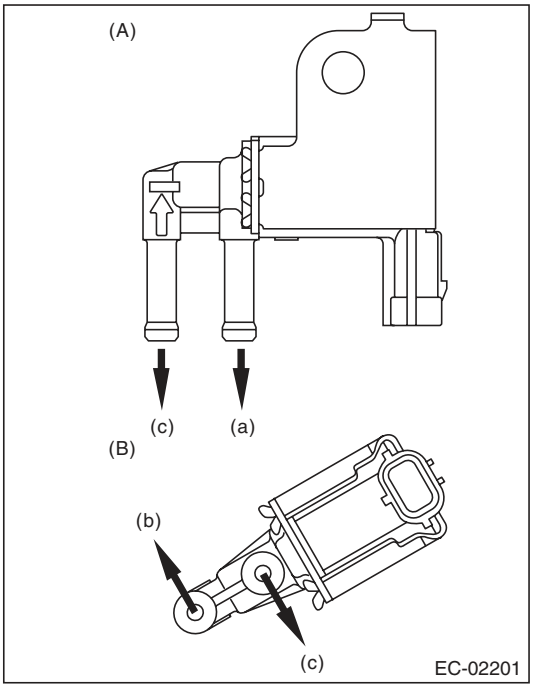

(A) Purge control solenoid valve 1
(B) Purge control solenoid valve 2
(a) To intake manifold
(b) To intake duct
(c) To fuel pipe

Tightening torque:
6.4 N·m (0.7 kgf-m, 4.7 ft-lb)

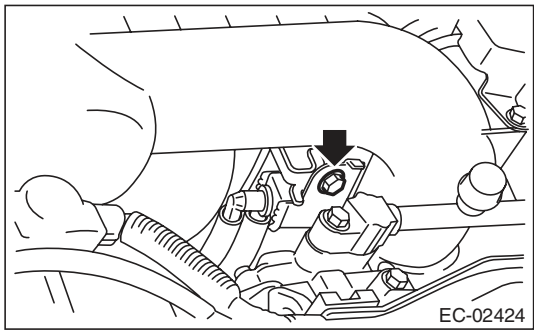

2. PURGE CONTROL SOLENOID VALVE 2

Install in the reverse order of removal.

NOTE:
Connect the evaporation hose as shown in the figure.

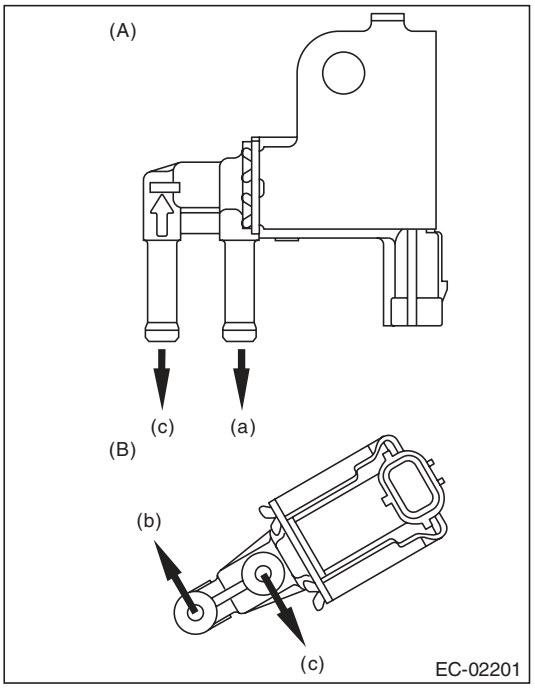

(A) Purge control solenoid valve 1
(B) Purge control solenoid valve 2
(a) To intake manifold
(b) To intake duct
(c) To fuel pipe

Tightening torque:
6.4 N·m (0.7 kgf-m, 4.7 ft-lb)

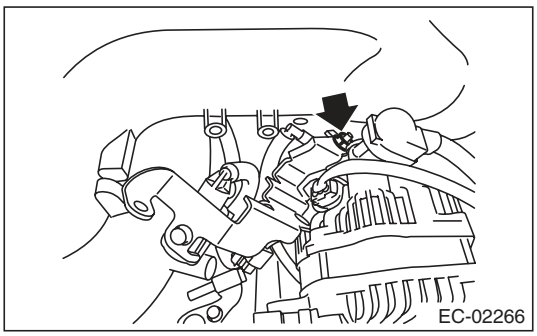

Tightening torque:
T1: 17 N·m (1.7 kgf-m, 12.5 ft-lb)
T2: 19 N·m (1.9 kgf-m, 14.0 ft-lb)

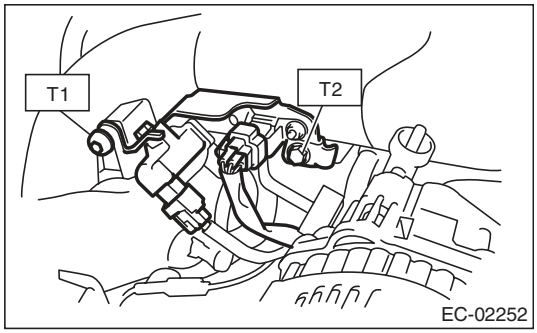

C: INSPECTION

Make sure the hoses are not cracked or loose.

6. Fuel Level Sensor

A: REMOVAL

For removal procedures, refer to the “FU (H4DOTC)” section. <Ref. to FU(H4DOTC)-72, REMOVAL, Fuel Level Sensor.>

B: INSTALLATION

For installation procedures, refer to the “FU (H4DOTC)” section. <Ref. to FU(H4DOTC)-72, INSTALLATION, Fuel Level Sensor.>

7. Fuel Temperature Sensor

A: REMOVAL

The fuel temperature sensor and fuel level sensor are integrated into one unit; therefore, refer to “Fuel Level Sensor” for removal procedure. <Ref. to FU(H4DOTC)-72, REMOVAL, Fuel Level Sensor.>

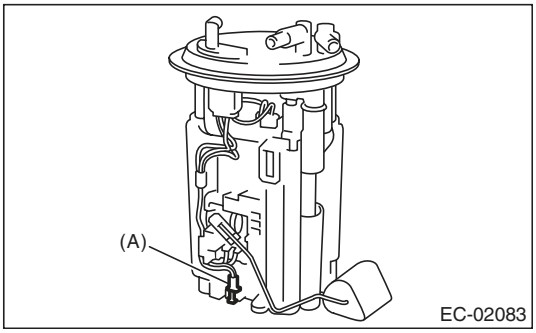

(A) Fuel temperature sensor

B: INSTALLATION

The fuel temperature sensor and fuel level sensor are integrated into one unit; therefore, refer to “Fuel Level Sensor” for installation procedure. <Ref. to FU(H4DOTC)-72, INSTALLATION, Fuel Level Sensor.>

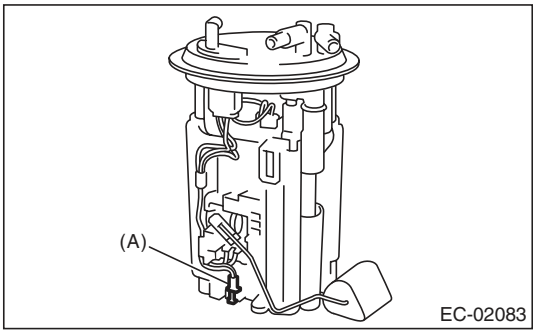

(A) Fuel temperature sensor

8. Fuel Sub Level Sensor

A: REMOVAL

For removal procedures, refer to the “FU (H4DOTC)” section. <Ref. to FU(H4DOTC)-73, REMOVAL, Fuel Sub Level Sensor.>

B: INSTALLATION

For installation procedures, refer to the “FU (H4DOTC)” section. <Ref. to FU(H4DOTC)-74, INSTALLATION, Fuel Sub Level Sensor.>

9. Fuel Tank Pressure Sensor

A: REMOVAL

WARNING:
Place "NO OPEN FLAMES" signs near the working area.

1) Set the vehicle on a lift.
2) Disconnect the ground cable from battery.

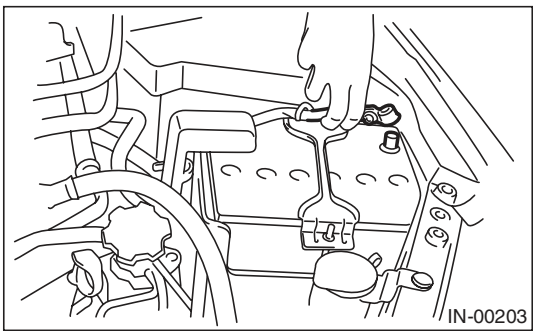

3) Open the fuel filler lid, and remove the fuel filler cap.
4) Lift up the vehicle.
5) Disconnect the connector from the fuel tank pressure sensor.
6) Disconnect the pressure hose from the fuel tank pressure sensor.
7) Remove the fuel tank pressure sensor along with the bracket.

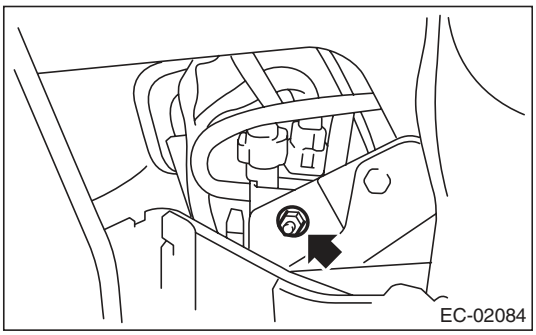

B: INSTALLATION

Install in the reverse order of removal.

Tightening torque:
7.4 N·m (0.8 kgf-m, 5.4 ft-lb)

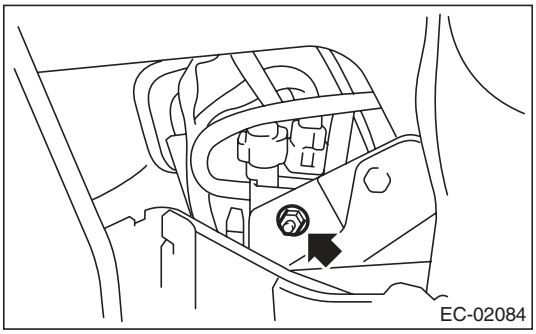

C: INSPECTION

Make sure the hoses are not cracked or loose.

10. Pressure Control Solenoid Valve

A: REMOVAL

1) Set the vehicle on a lift.
2) Disconnect the ground cable from the battery.

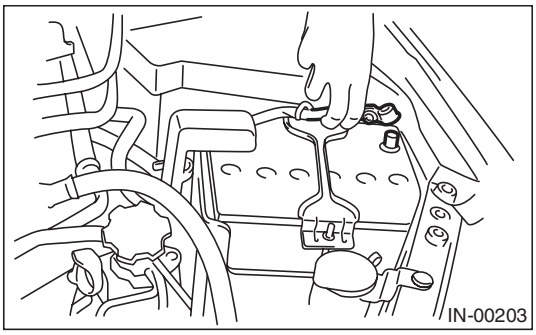

3) Lift up the vehicle.
4) Disconnect connector (A) from the pressure control solenoid valve.
5) Disconnect the evaporation hose (B) from the pressure control solenoid valve.
6) Remove the bolts (C) which secure the bracket to the fuel tank.

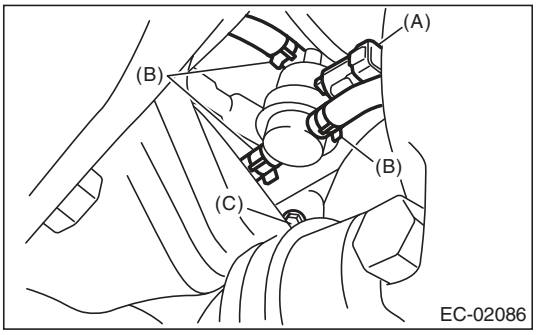

7) Remove the pressure control solenoid valve and bracket as a unit.
8) Remove the pressure control solenoid valve from the bracket.

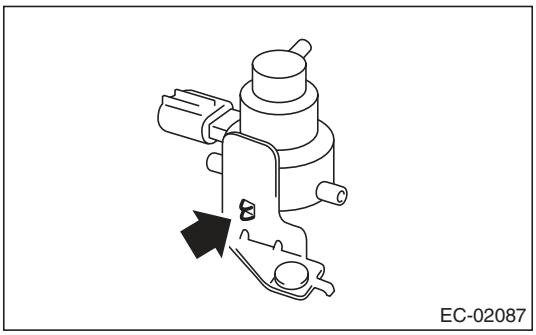

B: INSTALLATION

Install in the reverse order of removal.

Tightening torque:
7.35 N·m (0.7 kgf-m, 5.4 ft-lb)

C: INSPECTION

Make sure the hoses are not cracked or loose.

11. Drain Filter

A: SPECIFICATION

Canister is a non-disassembled part, so do not remove the drain filter from canister. Refer to “Canister” for removal and installation procedures. <Ref. to EC(H4DOTC)-7, REMOVAL, Canister.> <Ref. to EC(H4DOTC)-8, INSTALLATION, Canister.>

12.Shut Valve

A: REMOVAL

WARNING:
Place "NO OPEN FLAMES" signs near the working area.

CAUTION:
Be careful not to spill fuel.

1) Remove the fuel filler pipe.
<Ref. to FU(H4DOTC)-66, REMOVAL, Fuel Filler Pipe.>
2) Disconnect the evaporation hose from the shut valve.

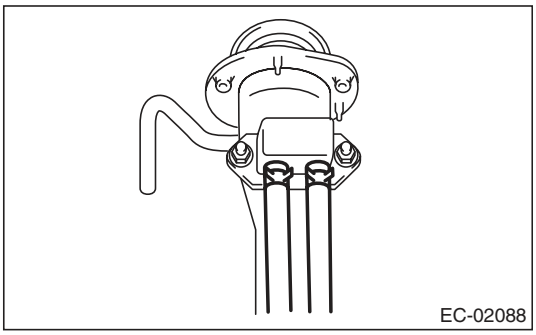

3) Remove the shut valve from the fuel filler pipe.

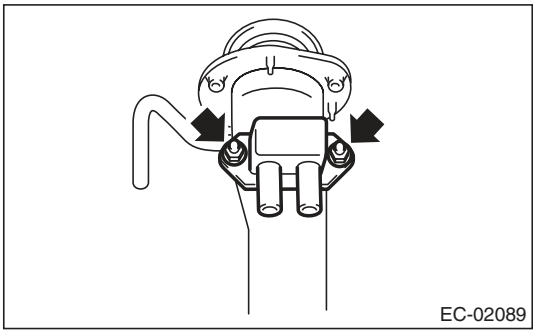

B: INSTALLATION

Install in the reverse order of removal.

Tightening torque:
4.5 N·m (0.5 kgf-m, 3.3 ft-lb)

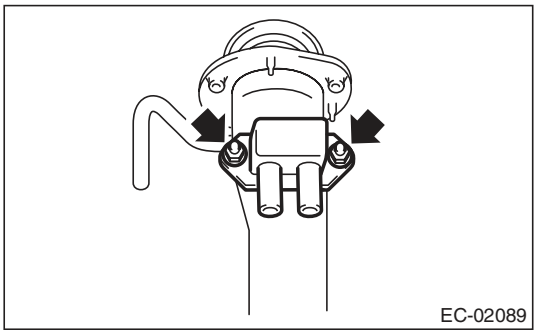

C: INSPECTION

Make sure the hoses are not cracked or loose.

13. Drain Valve

A: SPECIFICATION

Canister is a non-disassembled part, so do not remove the drain valve from canister.
Refer to “Canister” for removal and installation procedures. <Ref. to EC(H4DOTC)-7, REMOVAL, Canister.> <Ref. to EC(H4DOTC)-8, INSTALLATION, Canister.>

14. PCV Hose Assembly

A: REMOVAL

CAUTION:
Do not remove unless the PCV hose, diagnostics connector and PCV valve are damaged.

1) Remove the collector cover.
2) Remove the intake manifold. <Ref. to FU(H4DOTC)-16, REMOVAL, Intake Manifold.>
3) Remove the secondary air combination valve RH. <Ref. to EC(H4DOTC)-22, SECONDARY AIR COMBINATION VALVE RH, REMOVAL, Secondary Air Combination Valve.>
4) Fit the depression in the ST with the protrusion on the clamp to unlock.
5) Remove the PCV hose assembly.

ST 18353AA000 CLAMP PLIER

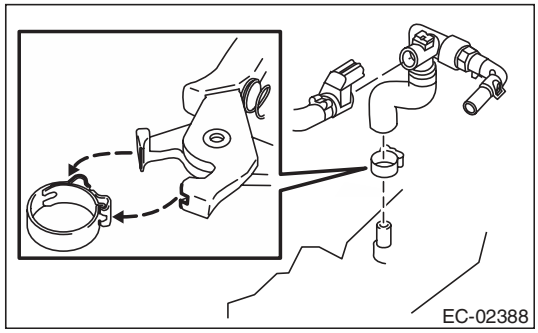

B: INSTALLATION

1) Install the PCV hose assembly, then lock by fitting the ST on the clamp protrusion.

NOTE:
Use a new clamp.

ST 18353AA000 CLAMP PLIER

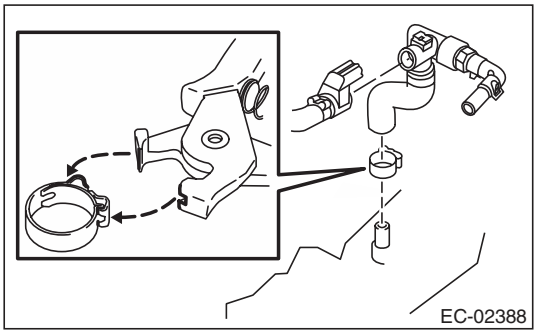

2) Install the secondary air combination valve RH. <Ref. to EC(H4DOTC)-23, SECONDARY AIR COMBINATION VALVE RH, INSTALLATION, Secondary Air Combination Valve.>
3) Install the intake manifold.
<Ref. to FU(H4DOTC)-20, INSTALLATION, Intake Manifold.>
4) Install the collector cover.

15.Secondary Air Pump

A: REMOVAL

1) Remove the collector cover.
2) Disconnect the ground cable from battery.

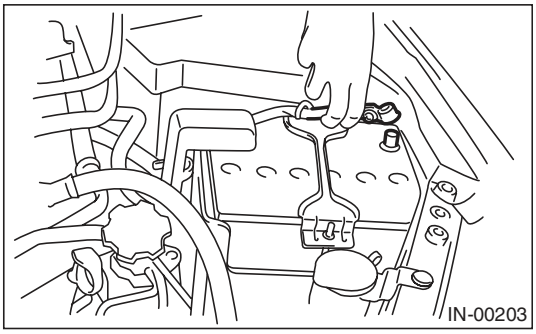

3) Disconnect the connector (A) and air duct (B) from secondary air pump.

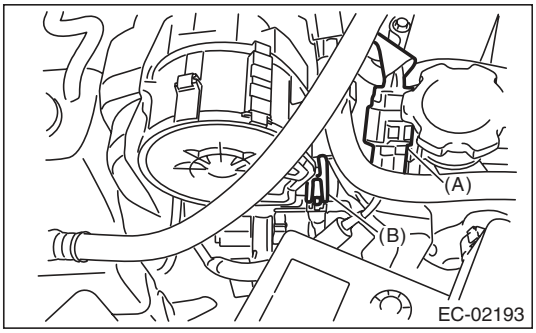

4) Remove the clip (A) which holds the harness on the harness stay and remove the bolts (B) which holds the secondary air pump on the vehicle.

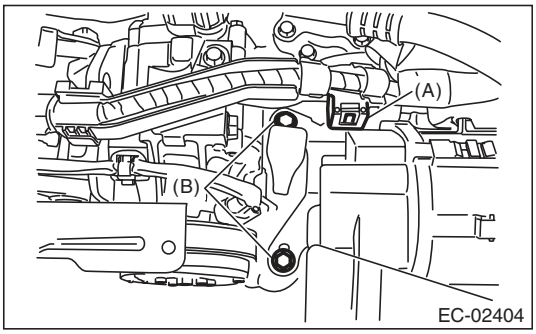

5) Remove the secondary air pump.

B: INSTALLATION

Install in the reverse order of removal.

Tightening torque:
19 N·m (1.9 kgf-m, 14.0 ft-lb)

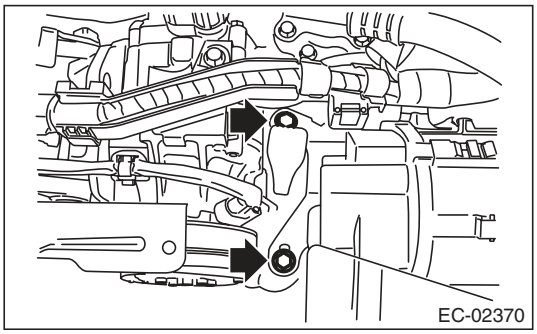

C: INSPECTION

Make sure the hoses are not cracked or loose.

16. Secondary Air Combination Valve

A: REMOVAL

1. SECONDARY AIR COMBINATION VALVE LH

1) Remove the collector cover.
2) Disconnect the ground cable from battery.

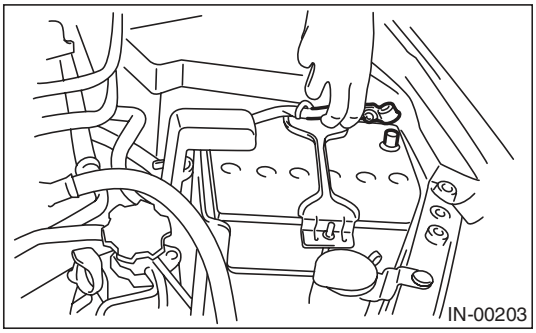

3) Remove the intercooler. <Ref. to IN(H4DOTC)-12, REMOVAL, Intercooler.>
4) Disconnect the connector from the secondary air combination valve LH.
5) Disconnect the air duct A.
6) Remove the secondary air pipe LH.
7) Remove the secondary air combination valve LH.

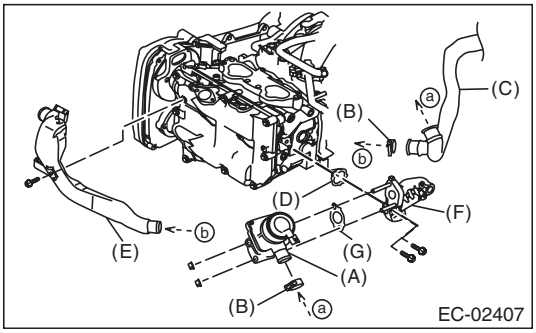

(A) Secondary air combination valve LH
(B) Clamp
(C) Air duct A
(D) Gasket
(E) Air duct B
(F) Secondary air pipe LH
(G) Gasket

2. SECONDARY AIR COMBINATION VALVE RH

1) Remove the collector cover.
2) Disconnect the ground cable from battery.

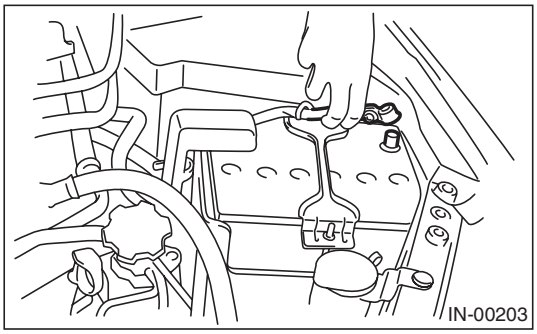

3) Remove the intercooler. <Ref. to IN(H4DOTC)-12, REMOVAL, Intercooler.>
4) Remove the intake manifold. <Ref. to FU(H4DOTC)-16, REMOVAL, Intake Manifold.>
5) Disconnect the air duct A.
6) Remove the secondary air pipe RH.
7) Remove the secondary air combination valve RH.

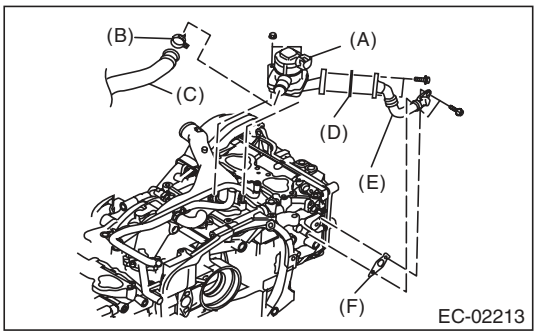

(A) Secondary air combination valve RH
(B) Clamp
(C) Air duct A
(D) Gasket
(E) Secondary air pipe RH
(F) Gasket

B: INSTALLATION

1. SECONDARY AIR COMBINATION VALVE LH

Install in the reverse order of removal.

NOTE:
Use a new gasket.

Tightening torque:
T1: 9 N·m (0.9 kgf-m, 6.6 ft-lb)
T2: 19 N·m (1.9 kgf-m, 14.0 ft-lb)

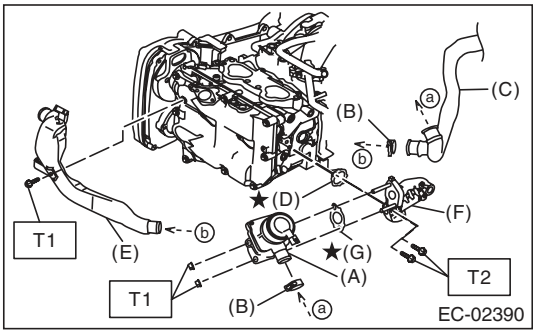

(A) Secondary air combination valve LH
(B) Clamp
(C) Air duct A
(D) Gasket
(E) Air duct B
(F) Secondary air pipe LH
(G) Gasket

2. SECONDARY AIR COMBINATION VALVE RH

Install in the reverse order of removal.

NOTE:
Use a new gasket.

Tightening torque:
T: 9 N·m (0.9 kgf-m, 6.6 ft-lb)

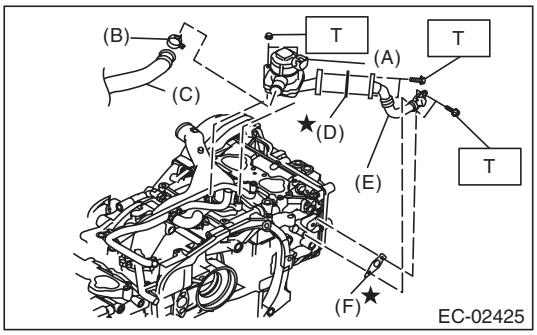

(A) Secondary air combination valve RH
(B) Clamp
(C) Air duct A
(D) Gasket
(E) Secondary air pipe RH
(F) Gasket

C: INSPECTION

Check the air duct and pipe for looseness.

1. General Description

A: COMPONENT

1. AIR CLEANER

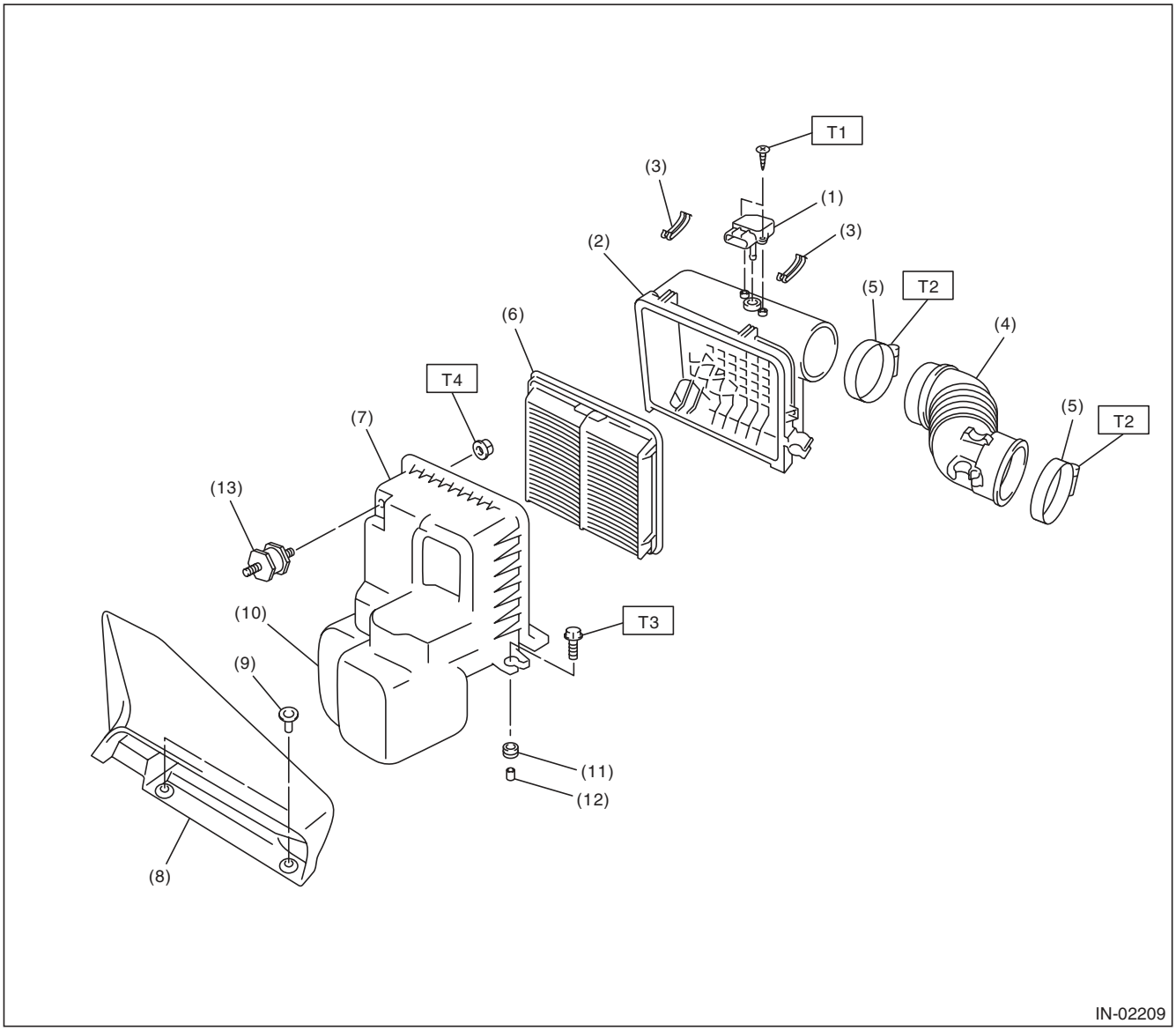

(1)	Mass air flow and intake air temperature sensor	(7)	Air cleaner case (front)	***Tightening torque:N·m (kgf-m, ft-lb)***
(2)	Air cleaner case (rear)	(8)	Air intake duct	***T1: 1 (0.1, 0.7)***
(3)	Clip	(9)	Clip	***T2: 2.5 (0.3, 1.8)***
(4)	Air intake boot	(10)	Resonator chamber	***T3: 6 (0.6, 4.4)***
(5)	Clamp	(11)	Cushion	***T4: 7.5 (0.8, 5.5)***
(6)	Air cleaner element	(12)	Spacer	
		(13)	Cushion	

2. INTAKE DUCT

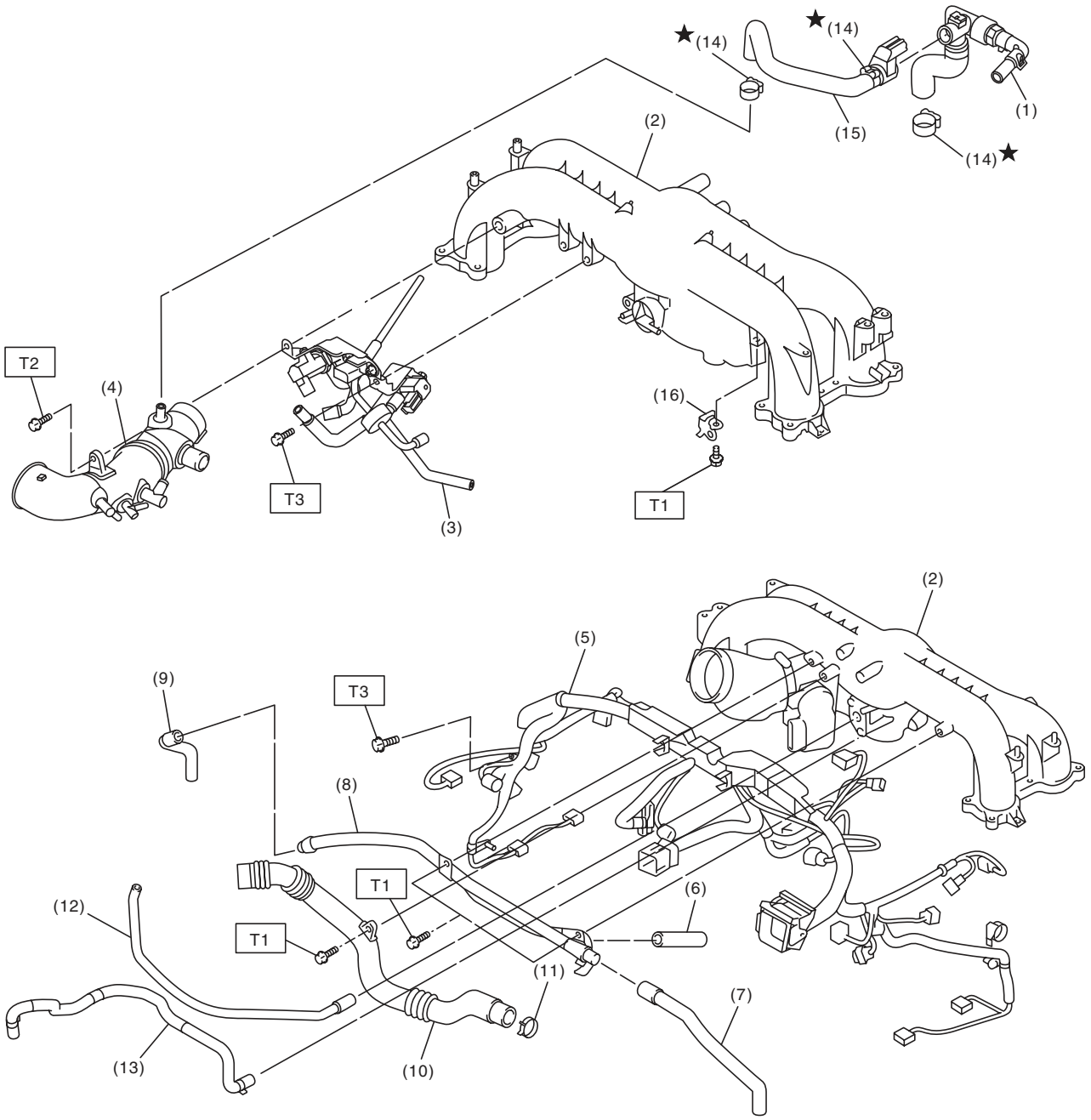

IN-02297

(1)	PCV hose ASSY A	(8)	PCV pipe	(15)	PCV hose ASSY B
(2)	Intake manifold	(9)	Vacuum hose	(16)	Solenoid valve bracket
(3)	Solenoid valve bracket ASSY	(10)	Air by-pass pipe		
(4)	Intake duct	(11)	Clamp		
(5)	Engine harness ASSY	(12)	Vacuum hose		
(6)	Vacuum hose	(13)	Brake booster vacuum hose		
(7)	Vacuum hose	(14)	Clamp		

Tightening torque:N·m (kgf-m, ft-lb)

T1: 6.5 (0.7, 4.8)

T2: 17 (1.7, 12.5)

T3: 19 (1.9, 14.0)

3. INTERCOOLER

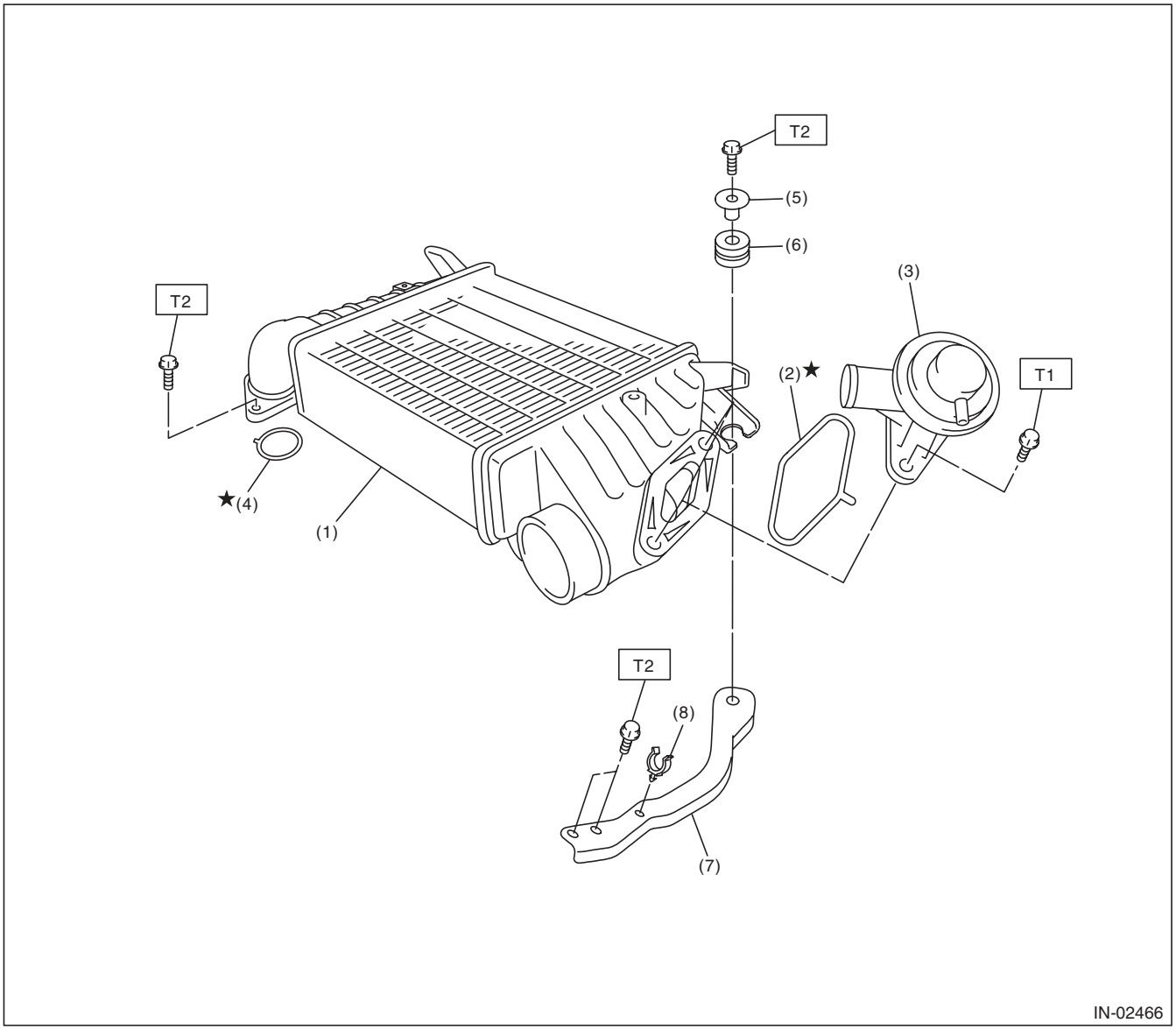

(1)	Intercooler	(5)	Spacer	***Tightening torque:N·m (kgf-m, ft-lb)***
(2)	O-ring	(6)	Cushion	***T1: 6.5 (0.7, 4.8)***
(3)	Air by-pass valve	(7)	Intercooler stay	***T2: 16 (1.6, 11.8)***
(4)	O-ring	(8)	Clip	

4. TURBOCHARGER

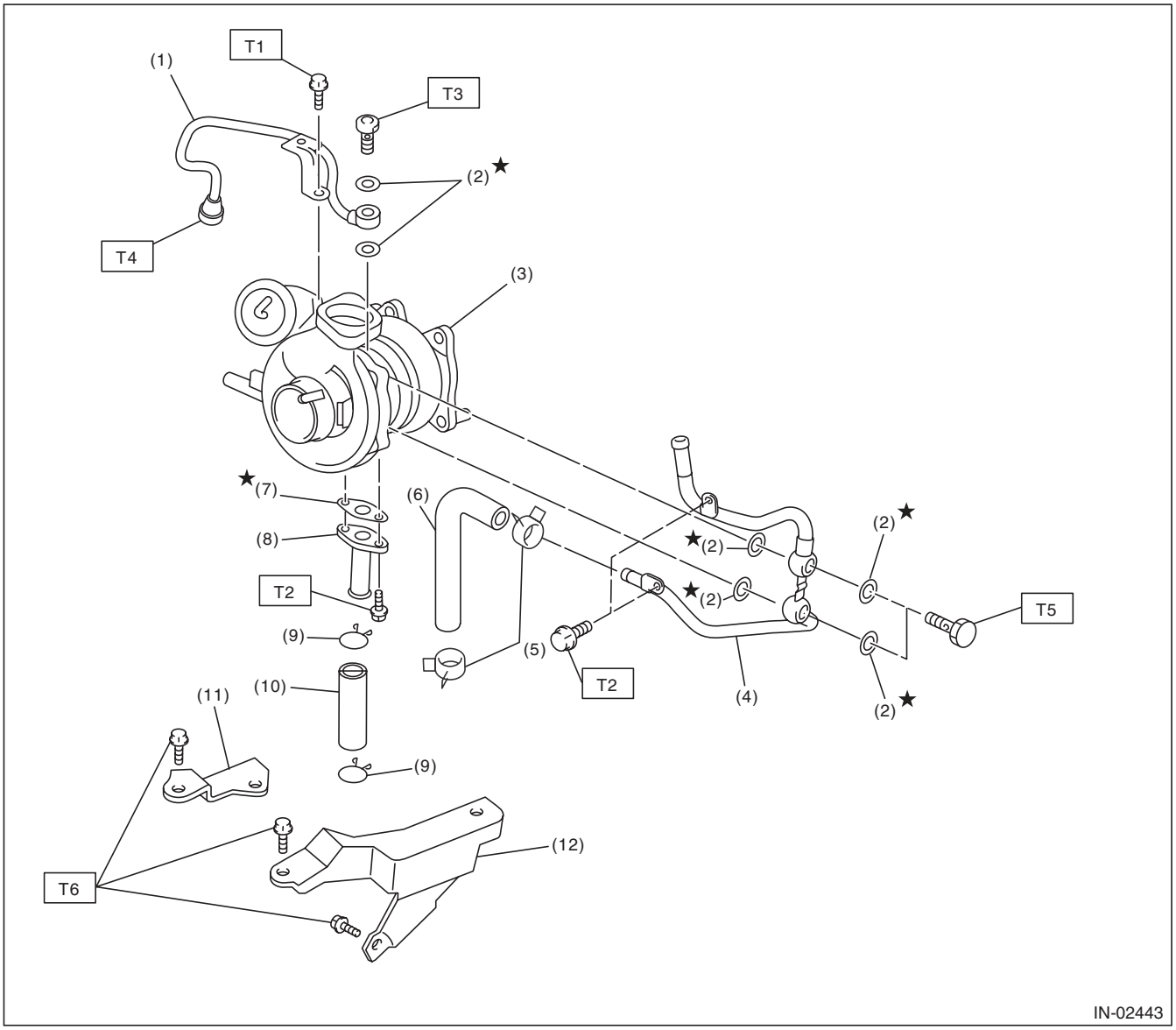

(1)	Oil inlet pipe	(8)	Oil outlet pipe
(2)	Metal gasket	(9)	Clip
(3)	Turbocharger	(10)	Oil outlet hose
(4)	Water pipe	(11)	Turbocharger bracket RH
(5)	Clip	(12)	Turbocharger bracket LH
(6)	Engine coolant hose		
(7)	Gasket		

Tightening torque:N·m (kgf-m, ft-lb)

T1: 5 (0.5, 3.7)
T2: 7.8 (0.8, 5.8)
T3: 16 (1.6, 11.8)
T4: 20 (2.0, 14.8)
T5: 23 (2.3, 17.0)
T6: 33 (3.4, 24.3)

B: CAUTION

- Wear appropriate work clothing, including a cap, protective goggles and protective shoes when performing any work.
- Remove contamination including dirt and corrosion before removal, installation or disassembly.
- Keep the disassembled parts in order and protect them from dust and dirt.
- Before removal, installation or disassembly, be sure to clarify the failure. Avoid unnecessary removal, installation, disassembly and replacement.
- Vehicle components are extremely hot after driving. Be wary of receiving burns from heated parts.
- Be sure to tighten fasteners including bolts and nuts to the specified torque.
- Place shop jacks or rigid racks at the specified points.
- Before disconnecting connectors of sensors or units, be sure to disconnect the ground cable from the battery.

2. Air Cleaner Element

A: REMOVAL

1) Disconnect the ground cable from battery.

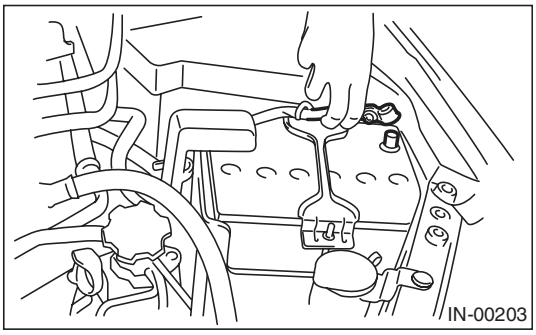

2) Remove the air intake duct. <Ref. to IN(H4DOTC)-9, REMOVAL, Air Intake Duct.>
3) Disconnect the connector (A) from mass air flow and intake air temperature sensor.
4) Remove the clip (B) from the air cleaner case.

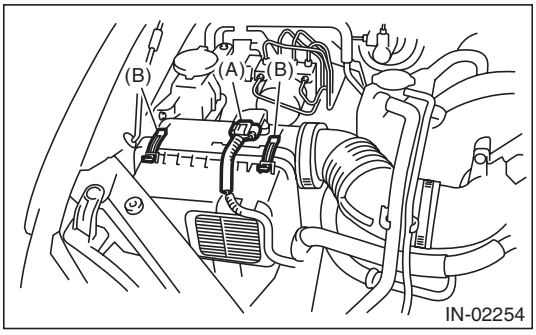

5) Open the air cleaner case, and remove the air cleaner element.

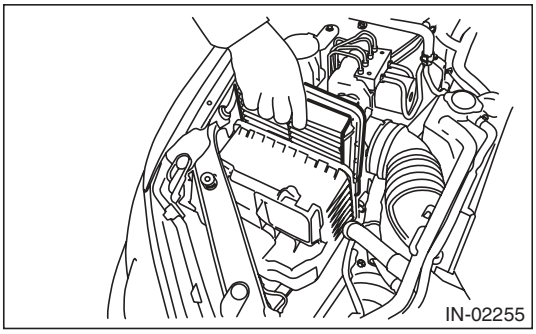

B: INSTALLATION

Install in the reverse order of removal.

CAUTION:
Be sure to use SUBARU genuine air cleaner element depending on the engine type when replacing the air cleaner elements. Using other air cleaner element may affect the engine performance.

NOTE:
Check that there are no foreign objects in the air cleaner case.

C: INSPECTION

Replace if excessively damaged or dirty.

3. Air Cleaner Case

A: REMOVAL

1) Remove the collector cover.
2) Disconnect the ground cable from battery.

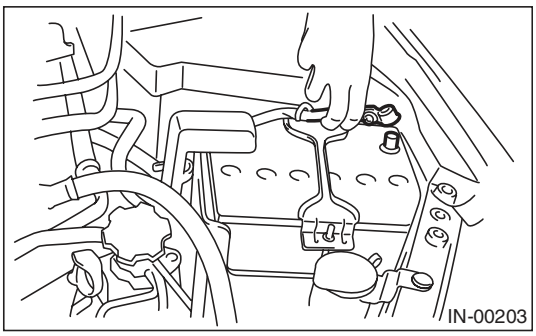

3) Remove the air intake duct. <Ref. to IN(H4DOTC)-9, REMOVAL, Air Intake Duct.>
4) Disconnect the connector (A) from mass air flow and intake air temperature sensor.
5) Loosen the clamp (B) which connects the air intake boot and intake duct.
6) Remove the clip (C) from the air cleaner case.

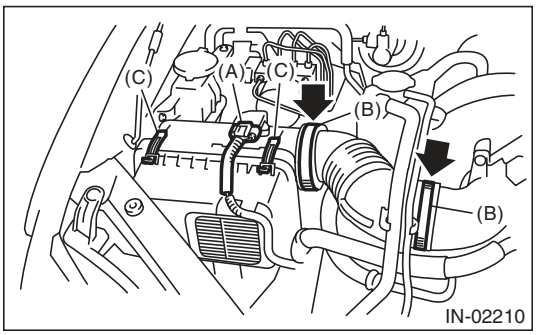

7) Remove the air cleaner case (rear) and air intake boot.
8) Remove the air cleaner element.
9) Remove the bolts (A) and nuts (B) which secure the air cleaner case (front) to the body.

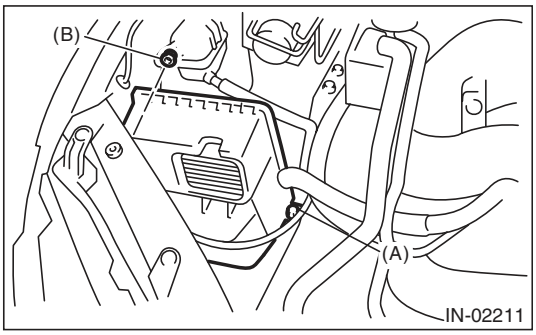

10) Remove the air cleaner case (front).

B: INSTALLATION

Install in the reverse order of removal.

NOTE:
When installing the air cleaner case (rear), align the protrusion of the air cleaner case (rear) to the hole on the air cleaner case (front) to install.

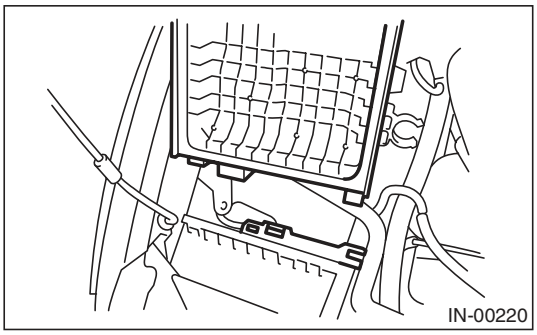

Tightening torque:
Bolt (A)
6 N·m (0.6 kgf-m, 4.4 ft-lb)
Nut (B)
7.5 N·m (0.8 kgf-m, 5.5 ft-lb)

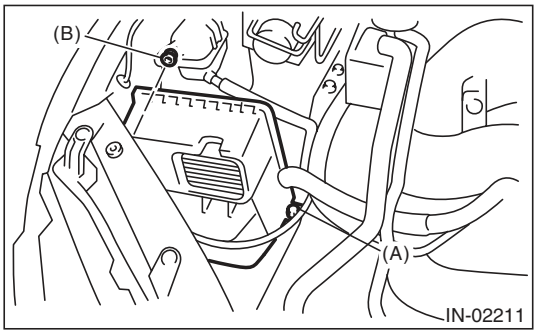

Tightening torque:
2.5 N·m (0.3 kgf-m, 1.8 ft-lb)

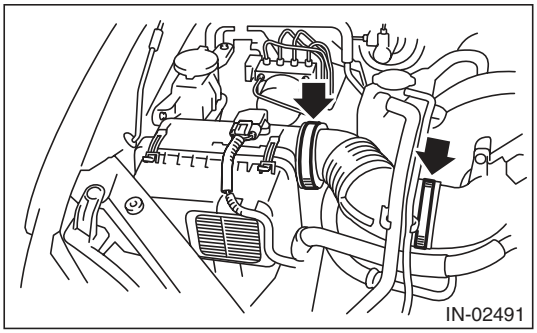

C: INSPECTION

Check for cracks or loose connections.

4. Air Intake Duct

A: REMOVAL

1) Remove the clip which installs the air intake duct on the front side of body.
2) Remove the air intake duct.

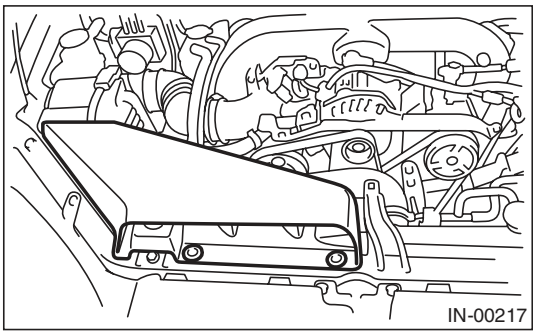

B: INSTALLATION

Install in the reverse order of removal.

C: INSPECTION

1) Check for cracks or loose connections.
2) Inspect that no foreign objects in the air intake duct.

5. Resonator Chamber

A: REMOVAL

The resonator chamber and air cleaner case are integrated into one unit; therefore, refer to “Air Cleaner Case” for removal procedure. <Ref. to IN(H4DOTC)-8, REMOVAL, Air Cleaner Case.>

B: INSTALLATION

The resonator chamber and air cleaner case are integrated into one unit; therefore, refer to “Air Cleaner Case” for installation procedure. <Ref. to IN(H4DOTC)-8, INSTALLATION, Air Cleaner Case.>

C: INSPECTION

Check for cracks or loose connections.

6. Intake Duct

A: REMOVAL

1) Remove the collector cover.
2) Disconnect the ground cable from battery.

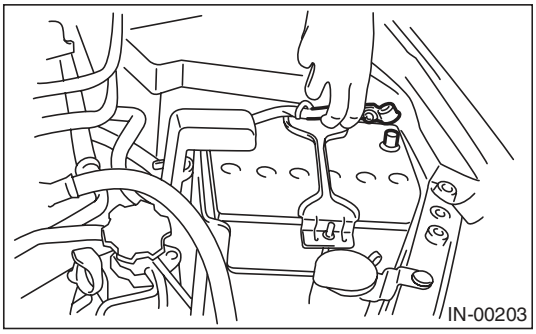

3) Remove the intake manifold. <Ref. to FU(H4DOTC)-16, REMOVAL, Intake Manifold.>
4) Remove the sensor, engine harness and fuel pipe attached to the intake manifold. <Ref. to FU(H4DOTC)-24, DISASSEMBLY, Intake Manifold.>
5) Remove the intake duct from intake manifold.

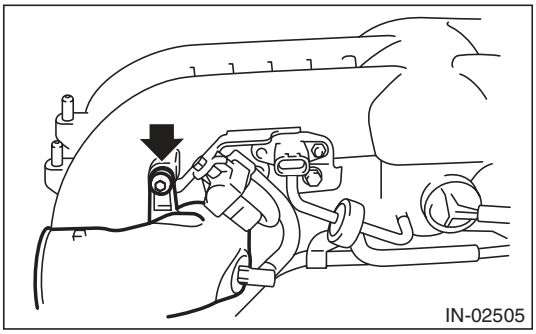

B: INSTALLATION

Install in the reverse order of removal.

Tightening torque:
17 N·m (1.7 kgf-m, 12.5 ft-lb)

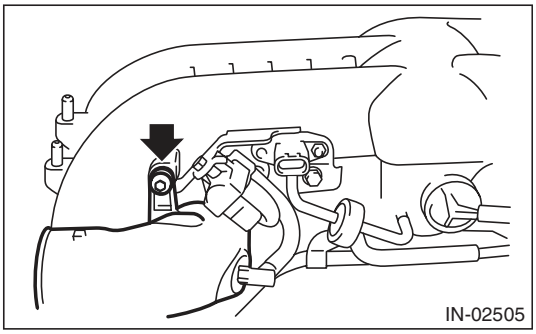

7. Intercooler

A: REMOVAL

1) Remove the collector cover.
2) Disconnect the air by-pass pipe (A) and vacuum hose (B) from the air by-pass valve.
3) Loosen the clamp (C) which connects the air intercooler and intake duct.

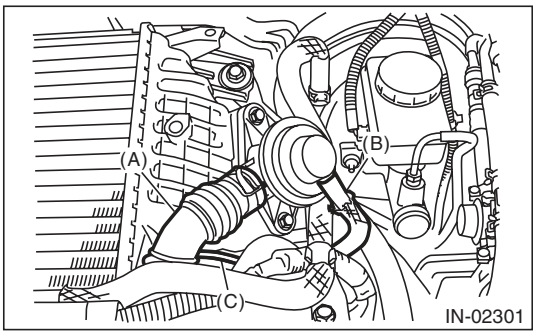

4) Remove the bolts which secure the intercooler to the turbocharger.

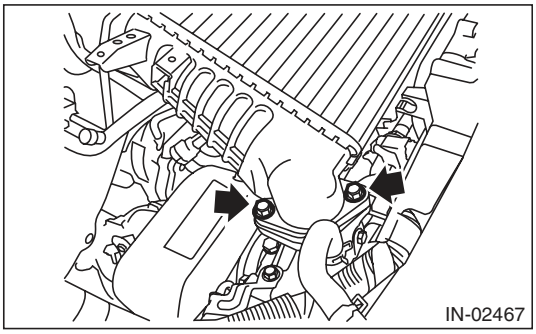

5) Remove the bolts which secure the intercooler to the intercooler stay, and remove the intercooler.

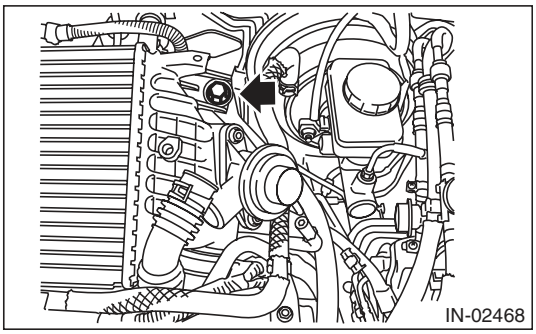

6) Remove the brake booster vacuum hose from the clip (A), and remove the intercooler stay.

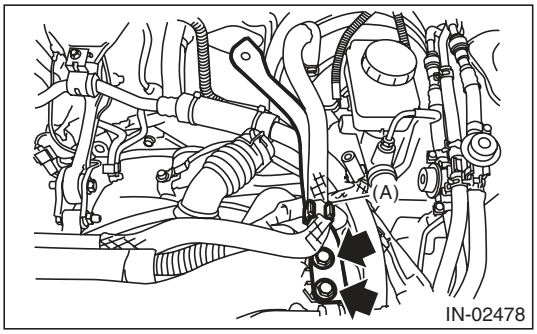

B: INSTALLATION

Install in the reverse order of removal.

NOTE:
- Use new O-rings.
- Be careful not to pinch the O-ring.

Tightening torque:
16 N·m (1.6 kgf-m, 11.8 ft-lb)

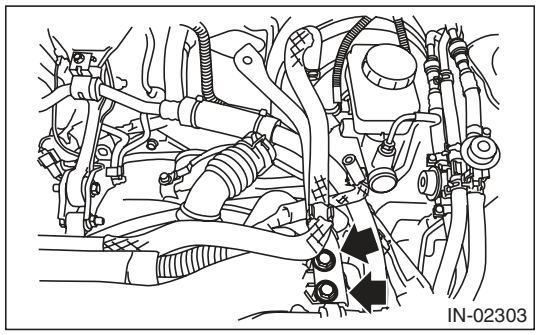

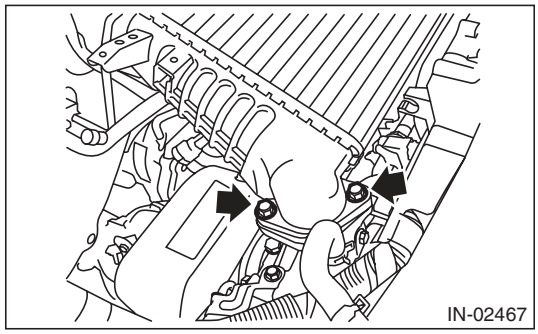

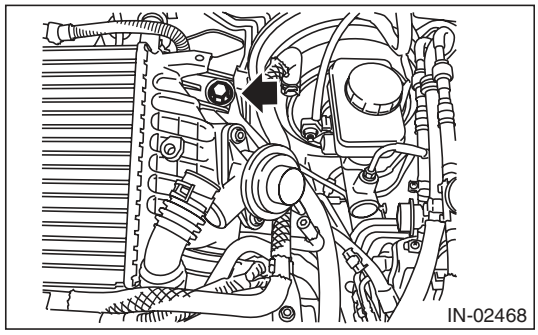

Tightening torque:
3 N·m (0.3 kgf-m, 2.2 ft-lb)

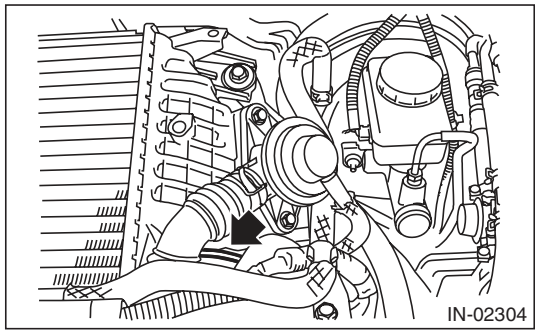

C: DISASSEMBLY

1) Remove the air by-pass valve from intercooler.

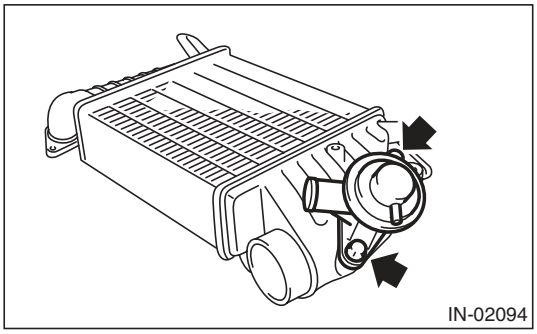

D: ASSEMBLY

Assemble in the reverse order of disassembly.

NOTE:
- Use new O-rings.
- Be careful not to pinch the O-ring.

Tightening torque:
6.5 N·m (0.7 kgf-m, 4.8 ft-lb)

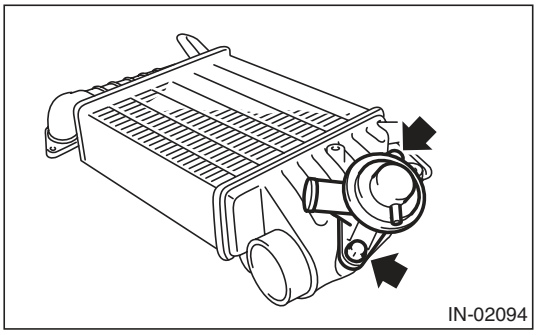

E: INSPECTION

Check for cracks or loose connections.

8. Turbocharger

A: REMOVAL

1) Set the vehicle on a lift.
2) Remove the collector cover.
3) Disconnect the ground cable from battery.

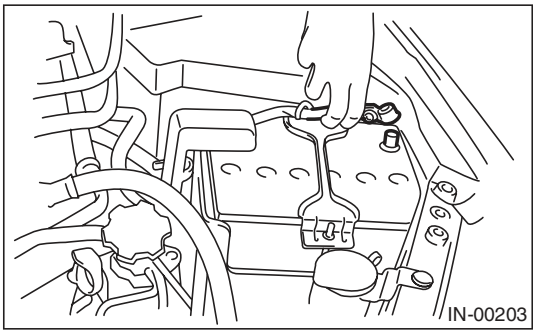

4) Lift up the vehicle.
5) Drain approximately 3.0 ℓ (3.2 US qt, 2.6 Imp qt) of coolant. <Ref. to CO(H4DOTC)-14, DRAINING OF ENGINE COOLANT, REPLACEMENT, Engine Coolant.>
6) Lower the vehicle.
7) Remove the intercooler. <Ref. to IN(H4DOTC)-12, REMOVAL, Intercooler.>
8) Remove the center exhaust pipe. <Ref. to EX(H4DOTC)-7, REMOVAL, Center Exhaust Pipe.>
9) Lower the vehicle.
10) Separate the turbocharger joint pipe from turbocharger.

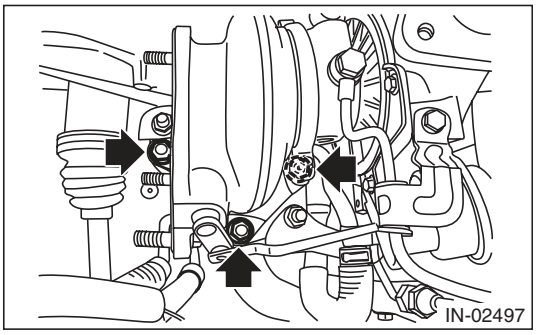

11) Disconnect the engine coolant hose which is connected to coolant filler tank.

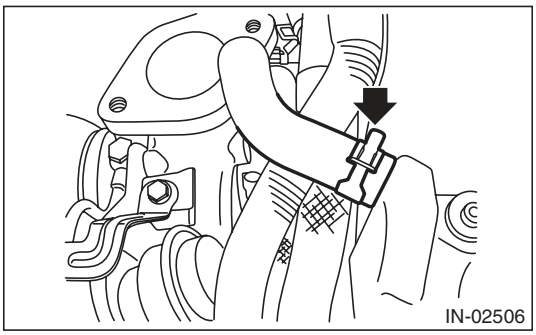

12) Disconnect the air control hose (A), and loosen the clamp holding the turbocharger to the intake duct.

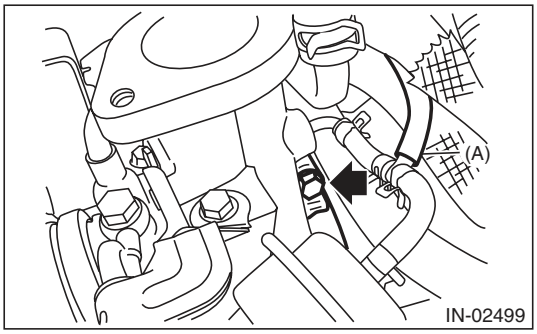

13) Remove the oil inlet pipe from the turbocharger.

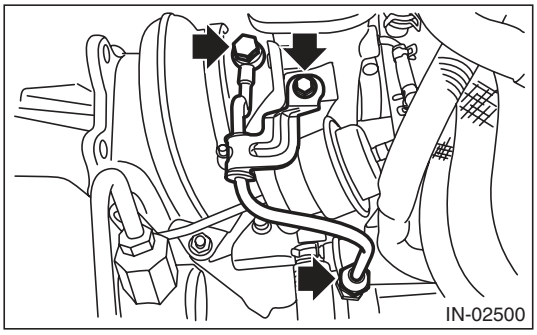

14) Disconnect the engine coolant hose from the water pipe.

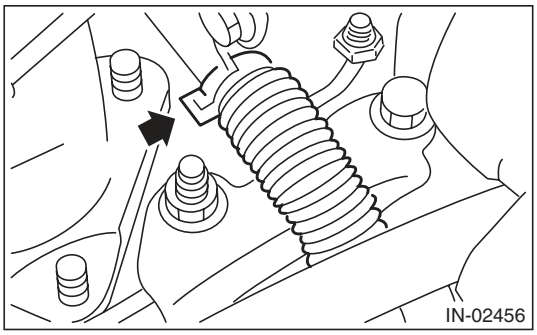

15) Disconnect the oil outlet hose from the oil outlet pipe.

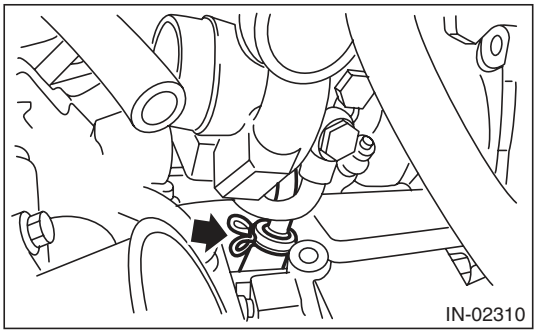

16) Take out the turbocharger from engine compartment.

17) Remove the turbocharger stay.

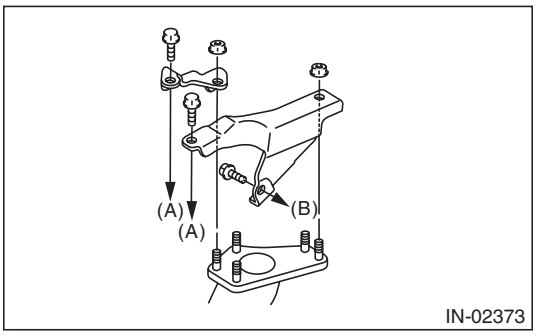

(A) To cylinder head RH
(B) To cylinder block RH

B: INSTALLATION

1) Install the turbocharger stay.

Tightening torque:
T1: 33 N·m (3.4 kgf-m, 24.3 ft-lb)
T2: 42.5 N·m (4.3 kgf-m, 31.3 ft-lb)

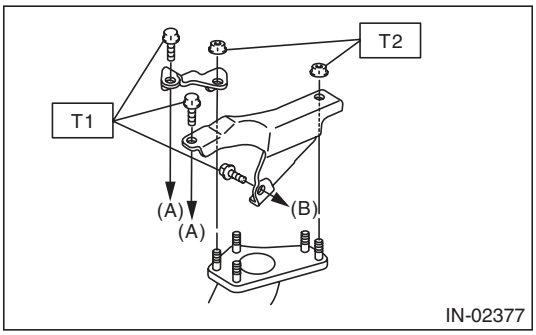

(A) To cylinder head RH
(B) To cylinder block RH

2) Connect the oil outlet hose to the oil outlet pipe.

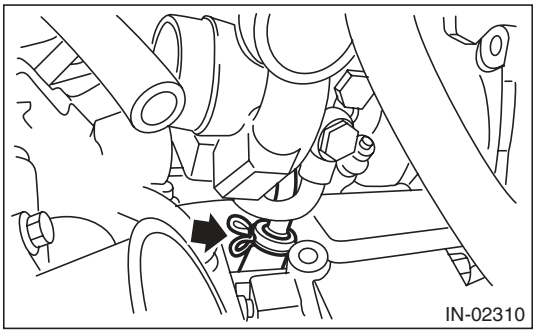

3) Connect the engine coolant hoses to the water pipe.

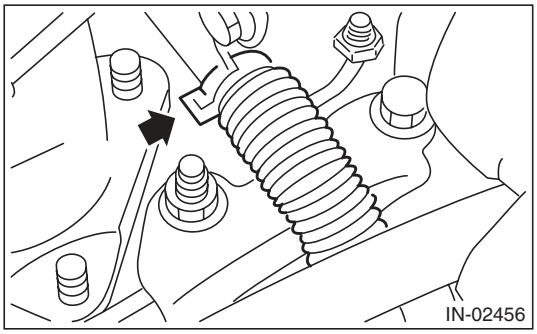

4) Install the oil inlet pipe to turbocharger.

Tightening torque:
T1: 5 N·m (0.5 kgf-m, 3.7 ft-lb)
T2: 16 N·m (1.6 kgf-m, 11.8 ft-lb)
T3: 20 N·m (2.0 kgf-m, 14.8 ft-lb)

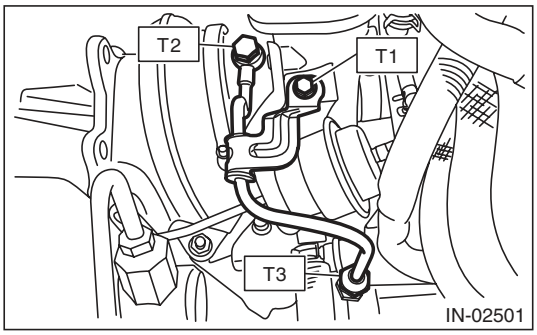

5) Connect the air control hose (A) and install the turbocharger to the intake duct.

Tightening torque:
3 N·m (0.3 kgf-m, 2.2 ft-lb)

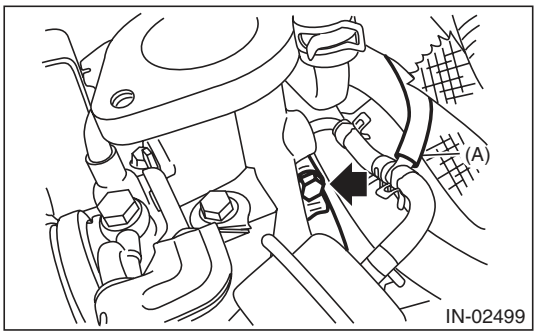

6) Connect the engine coolant hose which is connected to the coolant filler tank.

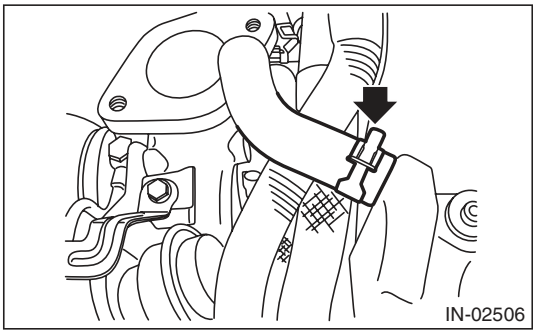

7) Install the joint pipe to turbocharger.

NOTE:
Replace the gasket with a new part.

Tightening torque:
42.5 N·m (4.3 kgf-m, 31.3 ft-lb)

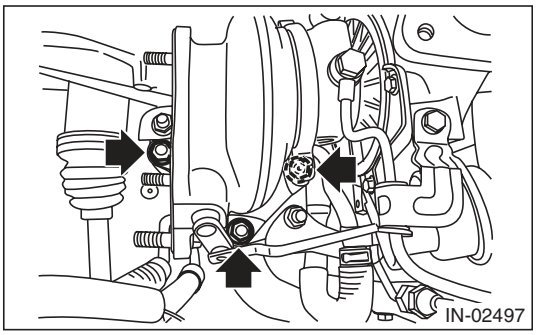

8) Lift up the vehicle.
9) Install the center exhaust pipe. <Ref. to EX(H4DOTC)-9, INSTALLATION, Center Exhaust Pipe.>
10) Lower the vehicle.
11) Install the intercooler. <Ref. to IN(H4DOTC)-13, INSTALLATION, Intercooler.>
12) Fill engine coolant. <Ref. to CO(H4DOTC)-14, FILLING OF ENGINE COOLANT, REPLACEMENT, Engine Coolant.>
13) Connect the ground cable to battery.

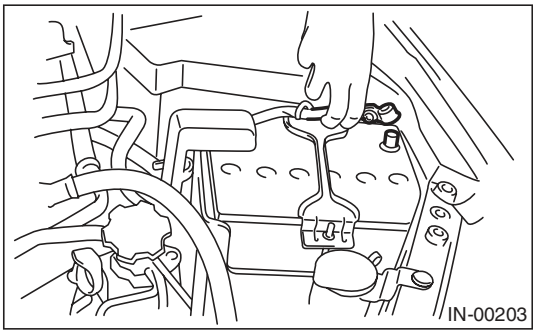

14) Install the collector cover.

C: INSPECTION

- Check that there are no oil leaks or water leaks from the pipe attachment section.
- Check for cracks or loose connections.

9. Air By-pass Valve

A: REMOVAL

1) Remove the collector cover.
2) Disconnect the air by-pass pipe (A) and vacuum hose (B) from the air by-pass valve (C).
3) Remove the air by-pass valve (C) from the inter-cooler.

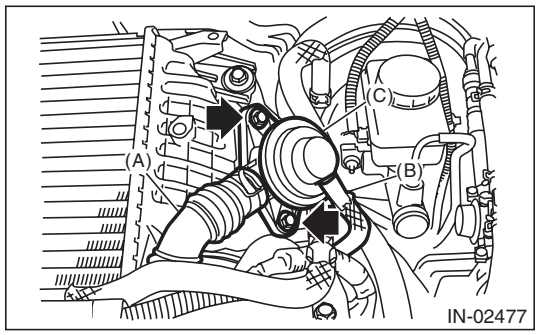

B: INSTALLATION

Install in the reverse order of removal.

NOTE:
- Use new O-rings.
- Be careful not to pinch the O-ring.

Tightening torque:
6.5 N·m (0.7 kgf-m, 4.8 ft-lb)

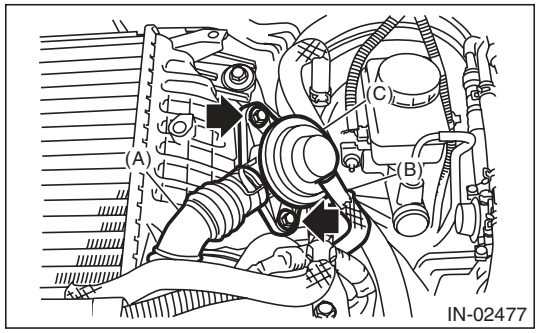

(A) Air by-pass pipe
(B) Vacuum hose
(C) Air by-pass valve

1. General Description

A: SPECIFICATION

Engine	Model			2.5 L
	Cylinder arrangement			Horizontally opposed, liquid cooled, 4-cylinder, 4-stroke gasoline engine
	Valve system mechanism			Belt driven, double overhead camshaft, 4-valve/cylinder
	Bore × Stroke mm (in)			99.5 × 79.0 (3.92 × 3.11)
	Displacement cm^3 (cu in)			2,457 (149.94)
	Compression ratio			8.4
	Compression pressure (at 200 — 300 rpm) kPa (kg/cm^2, psi)			981 — 1,177 (10 — 12, 142 — 171)
	Number of piston rings			Pressure ring: 2, Oil ring: 1
	Intake valve timing	Open	Max. retard	ATDC 5°
			Min. advance	BTDC 35°
		Close	Max. retard	ABDC 65°
			Min. advance	ABDC 25°
	Exhaust valve timing	Open		BBDC 55°
		Close		ATDC 5°
	Valve clearance mm (in)	Intake		0.20±0.02 (0.0079±0.0008)
		Exhaust		0.35±0.02 (0.0138±0.0008)
	Idling speed [at neutral position on MT, or “P” or “N” position on AT] rpm		No load	750±100
			A/C ON	800±100 (MT model) 825±100 (AT model)
	Ignition order			1 → 3 → 2 → 4
	Ignition timing BTDC/rpm	MT model		12°±10°/750
		AT model		17°±10°/750

NOTE:
OS: Oversize US: Undersize

Belt tension adjuster	Protrusion of adjuster rod mm (in)			5.2 — 6.2 (0.205 — 0.244)
Camshaft	Bending limit mm (in)			0.020 (0.00079) or less
	Thrust clearance mm (in)		Standard	0.068 — 0.116 (0.0027 — 0.0047)
	Cam lobe height mm (in)	Intake	Standard	46.55 — 46.65 (1.833 — 1.837)
		Exhaust	Standard	46.75 — 46.85 (1.841 — 1.844)
	Journal O.D. mm (in)	Standard	Front	37.946 — 37.963 (1.4939 — 1.4946)
			Center, rear	29.946 — 29.963 (1.1790 — 1.1796)
	Journal clearance mm (in)		Standard	0.037 — 0.072 (0.0015 — 0.0028)
Cylinder head	Surface warping limit (Mating surface with cylinder block) mm (in)			0.035 (0.0014)
	Grinding limit mm (in)			0.3 (0.012)
	Standard height mm (in)			127.5 (5.02)
Valve seat	Seating angle			90°
	Contacting width mm (in)	Intake	Standard	0.6 — 1.4 (0.024 — 0.055)
		Exhaust	Standard	1.2 — 1.8 (0.047 — 0.071)
Valve guide	Inside diameter mm (in)			6.000 — 6.012 (0.2362 — 0.2367)
	Protrusion above head mm (in)			15.8 — 16.2 (0.622 — 0.638)
Valve	Head edge thickness mm (in)	Intake	Standard	1.0 — 1.4 (0.039 — 0.055)
		Exhaust	Standard	1.3 — 1.7 (0.051 — 0.067)
	Stem outer diameter mm (in)	Intake		5.955 — 5.970 (0.2344 — 0.2350)
		Exhaust		5.945 — 5.960 (0.2341 — 0.2346)
	Valve stem gap mm (in)	Standard	Intake	0.030 — 0.057 (0.0012 — 0.0022)
			Exhaust	0.040 — 0.067 (0.0016 — 0.0026)
	Overall length mm (in)	Intake		104.4 (4.110)
		Exhaust		104.65 (4.1201)
Valve spring	Free length mm (in)			47.32 (1.863)
	Squareness			2.5°, 2.1 mm (0.083 in) or less
	Tension/spring height N (kgf, lb)/mm (in)		Set	205 — 235 (20.9 — 24.0, 46.1 — 52.8)/36.0 (1.417)
			Lift	426 — 490 (43.4 — 50.0, 95.8 — 110)/26.5 (1.043)
Valve lifter	Outer diameter mm (in)		Standard	34.959 — 34.975 (1.3763 — 1.3770)
	Inner diameter (cylinder head) mm (in)		Standard	34.994 — 35.016 (1.3777 — 1.3786)
	Valve lifter clearance mm (in)		Standard	0.019 — 0.057 (0.0007 — 0.0022)
Cylinder block	Surface warping limit (Mating surface with cylinder head) mm (in)			0.025 (0.0098)
	Grinding limit mm (in)			0.1 (0.004)
	Standard height mm (in)			201.0 (7.91)
	Cylinder inner diameter mm (in)	Standard	A	99.505 — 99.515 (3.9175 — 3.9179)
			B	99.495 — 99.505 (3.9171 — 3.9175)
	Taper mm (in)		Standard	0.015 (0.0006)
	Out-of-roundness mm (in)		Standard	0.010 (0.0004)
	Piston clearance mm (in)		Standard	–0.010 — 0.010 (–0.00039 — 0.00039)
	Cylinder inner diameter boring limit (diameter) mm (in)			To 100.005 (3.9372)
Piston	Outer diameter mm (in)	Standard	A	99.505 — 99.515 (3.9175 — 3.9179)
			B	99.495 — 99.505 (3.9171 — 3.9175)
		0.25 (0.0098) OS		99.745 — 99.765 (3.9270 — 3.9278)
		0.50 (0.0197) OS		99.995 — 100.015 (3.9368 — 3.9376)

Piston pin	Standard clearance between piston and piston pin mm (in)		Standard	0.004 — 0.008 (0.0002 — 0.0003)
	Degree of fit			Piston pin must be fitted into position with thumb at 20°C (68°F).
Piston ring	Ring closed gap mm (in)	Top ring	Standard	0.20 — 0.25 (0.0079 — 0.0098)
		Second ring	Standard	0.37 — 0.52 (0.015 — 0.0203)
		Oil ring	Standard	0.20 — 0.50 (0.0079 — 0.0197)
	Ring groove gap mm (in)	Top ring	Standard	0.040 — 0.080 (0.0016 — 0.0031)
		Second ring	Standard	0.030 — 0.070 (0.0012 — 0.0028)
Connecting rod	Bend or twist per 100 mm (3.94 in) in length mm (in)		Service limit	0.1 (0.0039)
	Thrust clearance mm (in)		Standard	0.070 — 0.330 (0.0028 — 0.0130)
Bearing of large end	Oil clearance mm (in)		Standard	0.017 — 0.045 (0.0007 — 0.0018)
	Bearing size (Thickness at center) mm (in)	Standard		1.490 — 1.502 (0.0587 — 0.0591)
		0.03 (0.0012) US		1.504 — 1.512 (0.0592 — 0.0595)
		0.05 (0.0020) US		1.514 — 1.522 (0.0596 — 0.0599)
		0.25 (0.0098) US		1.614 — 1.622 (0.0635 — 0.0639)
Bushing of small end	Clearance between piston pin and bushing mm (in)		Standard	0 — 0.022 (0 — 0.0009)
Crankshaft	Bending limit mm (in)			0.035 (0.0014)
	Crank pin	Out-of-roundness mm (in)		0.003 (0.0001)
		Cylindricality mm (in)		0.004 (0.0002)
		Grinding limit (dia.) mm (in)		To 51.750 (2.0374)
	Crank journal	Out-of-roundness mm (in)		0.005 (0.0002)
		Cylindricality mm (in)		0.006 (0.0002)
		Grinding limit (dia.) mm (in)		To 59.758 (2.3527)
	Crank pin outer diameter mm (in)	Standard		51.984 — 52.000 (2.0466 — 2.0472)
		0.03 (0.0012) US		51.954 — 51.970 (2.0454 — 2.0461)
		0.05 (0.0020) US		51.934 — 51.950 (2.0447 — 2.0453)
		0.25 (0.0098) US		51.734 — 51.750 (2.0368 — 2.0374)
	Crank journal outer diameter mm (in)	Standard		59.992 — 60.008 (2.3619 — 2.3625)
		0.03 (0.0012) US		59.962 — 59.978 (2.3607 — 2.3613)
		0.05 (0.0020) US		59.942 — 59.958 (2.3599 — 2.3605)
		0.25 (0.0098) US		59.742 — 59.758 (2.3520 — 2.3527)
	Thrust clearance mm (in)		Standard	0.030 — 0.115 (0.0012 — 0.0045)
	Oil clearance mm (in)		Standard	0.010 — 0.030 (0.0004 — 0.0012)
Main bearing	Bearing size (Thickness at center) mm (in)	#1, #3	Standard	1.998 — 2.011 (0.0787 — 0.0792)
			0.03 (0.0012) US	2.017 — 2.020 (0.0794 — 0.0795)
			0.05 (0.0020) US	2.027 — 2.030 (0.0798 — 0.0799)
			0.25 (0.0098) US	2.127 — 2.130 (0.0837 — 0.0839)
		#2, #4, #5	Standard	2.000 — 2.013 (0.0787 — 0.0793)
			0.03 (0.0012) US	2.019 — 2.022 (0.0795 — 0.0796)
			0.05 (0.0020) US	2.029 — 2.032 (0.0799 — 0.0800)
			0.25 (0.0098) US	2.129 — 2.132 (0.0838 — 0.0839)

B: COMPONENT

1. TIMING BELT

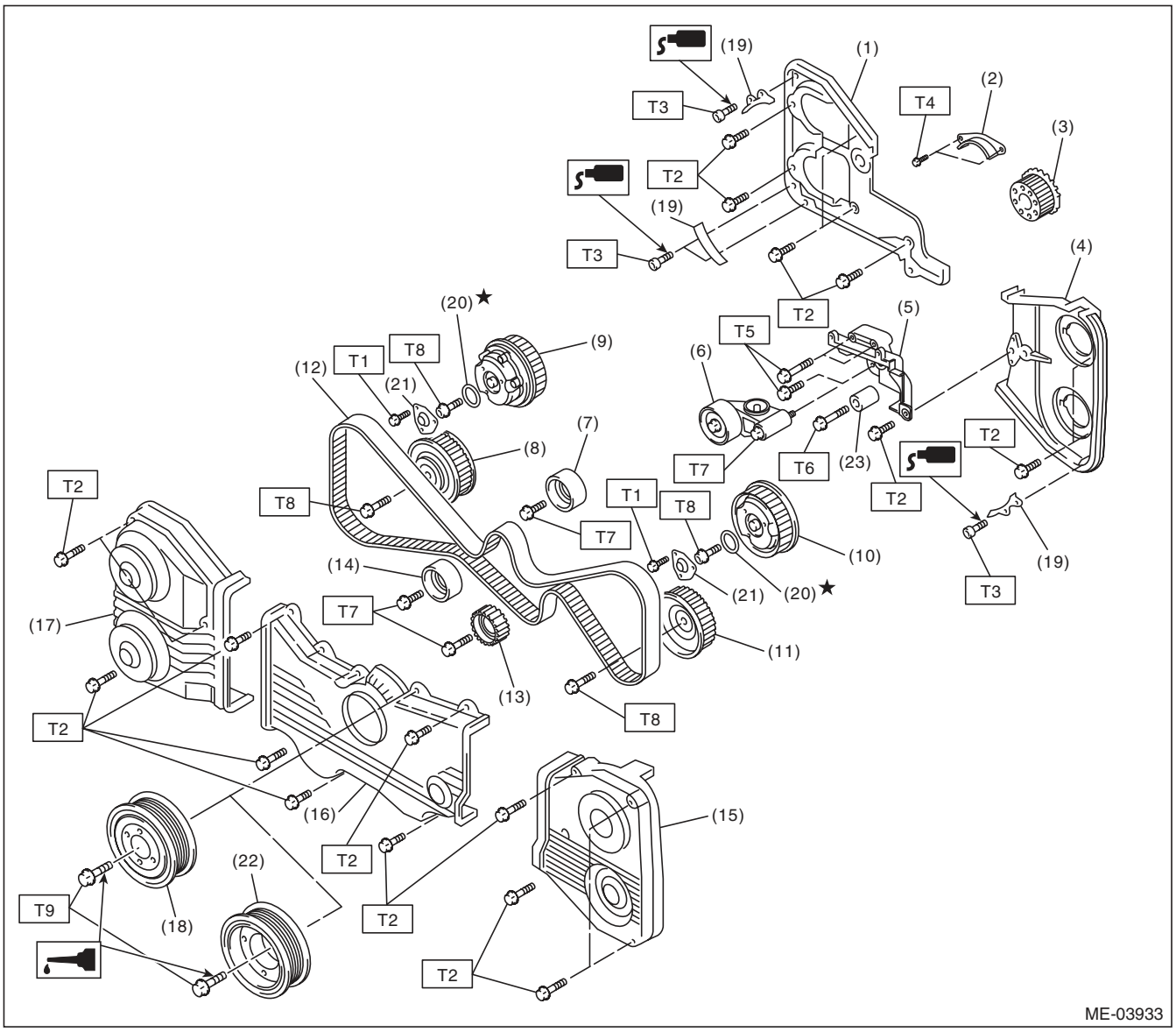

(1)	Timing belt cover No. 2 RH	(12)	Timing belt
(2)	Timing belt guide (MT model)	(13)	Belt idler No. 2
(3)	Crank sprocket	(14)	Belt idler (B)
(4)	Timing belt cover No. 2 LH	(15)	Timing belt cover LH
(5)	Tensioner bracket	(16)	Front belt cover
(6)	Automatic belt tension adjuster ASSY	(17)	Timing belt cover RH
		(18)	Crank pulley (MT model)
(7)	Belt idler (A)	(19)	Timing belt guide (MT model)
(8)	Exhaust cam sprocket RH	(20)	O-ring
(9)	Intake cam sprocket RH	(21)	Actuator cover
(10)	Intake cam sprocket LH	(22)	Crank pulley (AT model)
(11)	Exhaust cam sprocket LH	(23)	Belt idler (C)

Tightening torque:N·m (kgf-m, ft-lb)

- ***T1: 3.4 (0.3, 2.5)***
- ***T2: 5 (0.5, 3.7)***
- ***T3: 6.4 (0.7, 4.7)***
- ***T4: 9.75 (1.0, 7.2)***
- ***T5: 24.5 (2.5, 18.1)***
- ***T6: 25 (2.5, 18.4)***
- ***T7: 39 (4.0, 28.8)***
- ***T8: <Ref. to ME(H4DOTC)-56, INSTALLATION, Cam Sprocket.>***
- ***T9: <Ref. to ME(H4DOTC)-44, INSTALLATION, Crank Pulley.>***

2. CYLINDER HEAD AND CAMSHAFT

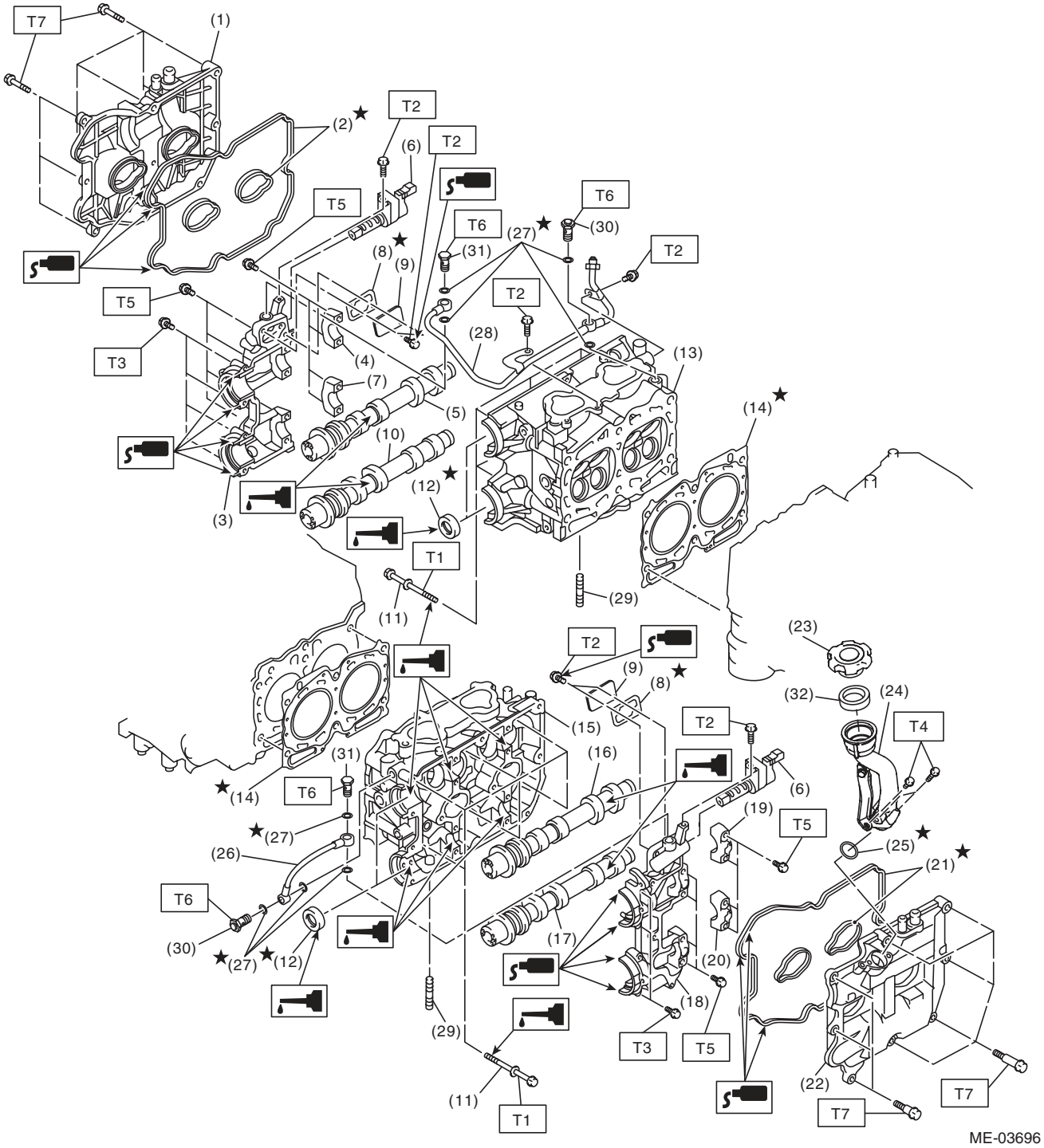

(1) Rocker cover RH
(2) Rocker cover gasket RH
(3) Front camshaft cap RH
(4) Intake camshaft cap RH
(5) Intake camshaft RH
(6) Oil flow control solenoid valve
(7) Exhaust camshaft cap RH
(8) Gasket
(9) Oil return cover
(10) Exhaust camshaft RH
(11) Cylinder head bolt
(12) Oil seal
(13) Cylinder head RH
(14) Cylinder head gasket
(15) Cylinder head LH
(16) Intake camshaft LH
(17) Exhaust camshaft LH
(18) Front camshaft cap LH
(19) Intake camshaft cap LH
(20) Exhaust camshaft cap LH
(21) Rocker cover gasket LH
(22) Rocker cover LH
(23) Oil filler cap
(24) Oil filler duct
(25) O-ring
(26) Oil pipe LH
(27) Gasket
(28) Oil pipe RH
(29) Stud bolt
(30) Union screw with filter (with protrusion)
(31) Union screw without filter (without protrusion)
(32) Gasket

Tightening torque:N·m (kgf-m, ft-lb)

T1: <Ref. to ME(H4DOTC)-65, INSTALLATION, Cylinder Head.>
T2: 8 (0.8, 5.9)
T3: <Ref. to ME(H4DOTC)-59, INSTALLATION, Camshaft.>
T4: 6.4 (0.7, 4.7)
T5: <Ref. to ME(H4DOTC)-59, INSTALLATION, Camshaft.>
T6: 29 (3.0, 21.4)
T7: <Ref. to ME(H4DOTC)-59, INSTALLATION, Camshaft.>

3. CYLINDER HEAD AND VALVE ASSEMBLY

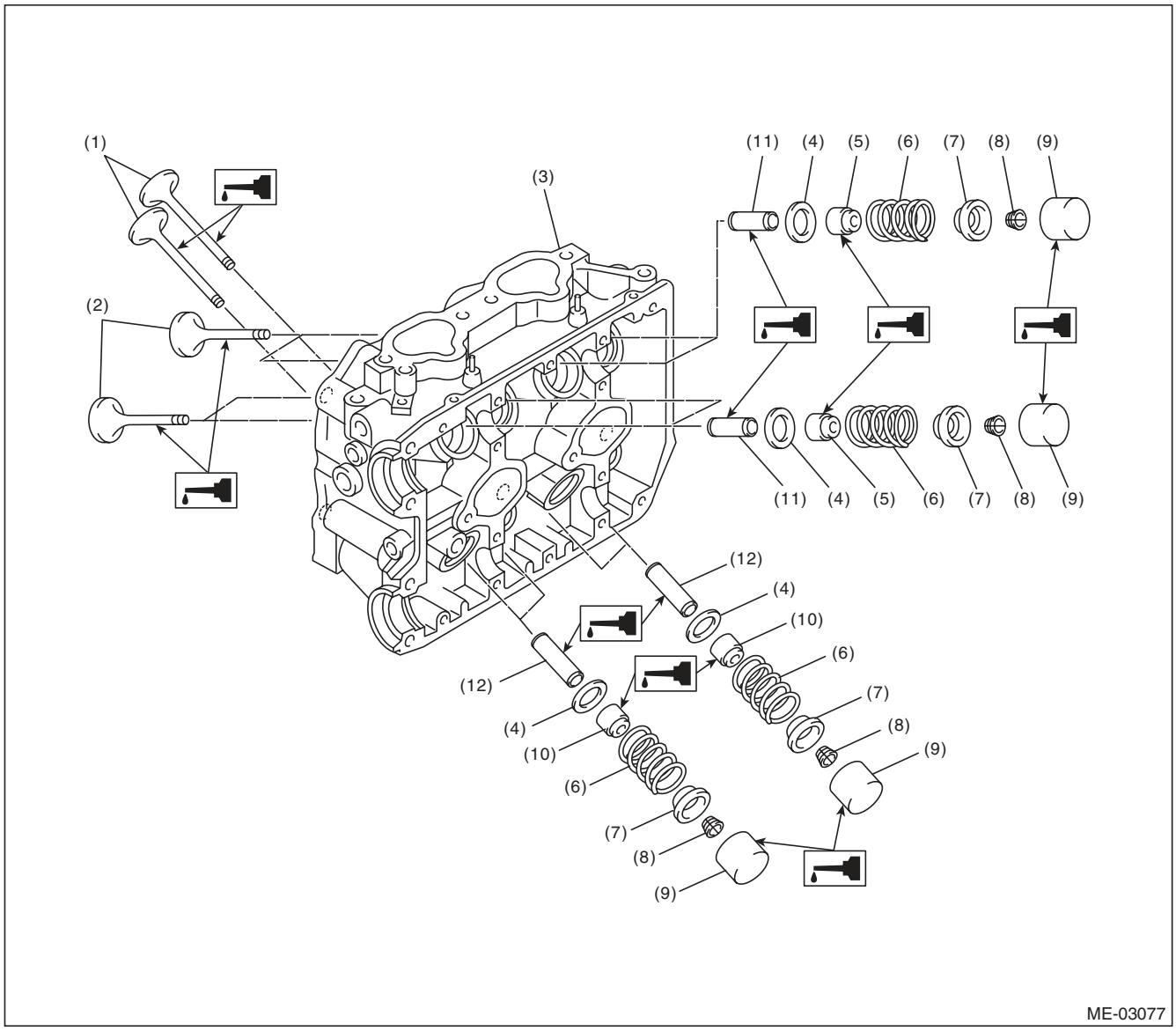

(1)	Exhaust valve	(5)	Intake valve oil seal	(9)	Valve lifter
(2)	Intake valve	(6)	Valve spring	(10)	Exhaust valve oil seal
(3)	Cylinder head	(7)	Retainer	(11)	Intake valve guide
(4)	Valve spring seat	(8)	Retainer key	(12)	Exhaust valve guide

4. CYLINDER BLOCK

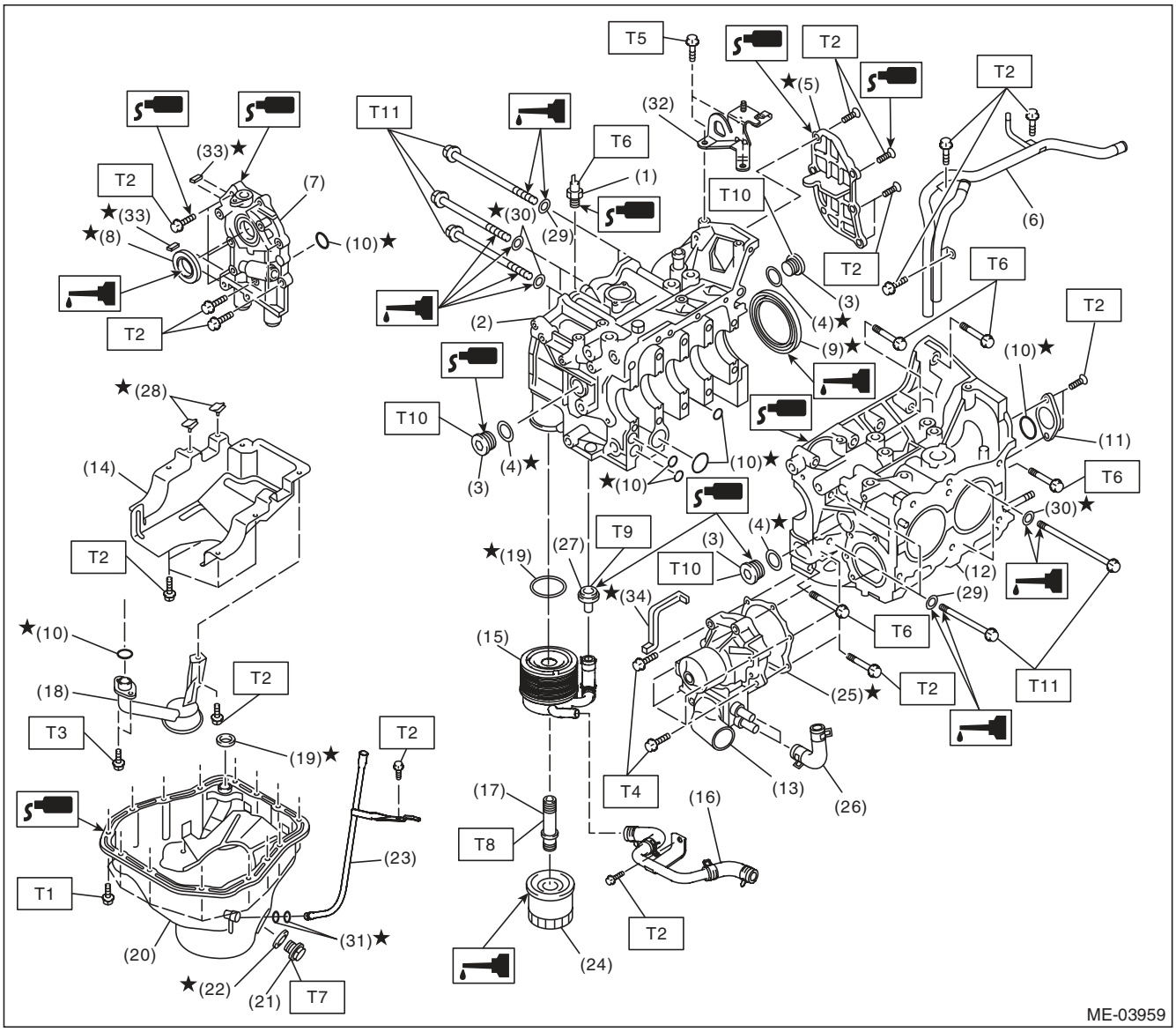

(1) Oil pressure switch
(2) Cylinder block RH
(3) Service hole plug
(4) Gasket
(5) Oil separator cover
(6) Water by-pass pipe
(7) Oil pump
(8) Front oil seal
(9) Rear oil seal
(10) O-ring
(11) Service hole cover
(12) Cylinder block LH
(13) Water pump
(14) Baffle plate
(15) Oil cooler
(16) Oil cooler pipe
(17) Connector
(18) Oil strainer
(19) Gasket
(20) Oil pan
(21) Drain plug
(22) Drain plug gasket
(23) Oil level gauge guide
(24) Oil filter
(25) Gasket
(26) Water pump hose
(27) Nipple
(28) Seal
(29) Washer
(30) Seal washer
(31) O-ring
(32) Engine rear hanger
(33) Oil pump seal
(34) Water pump sealing

Tightening torque:N·m (kgf-m, ft-lb)

T1: 5 (0.5, 3.7)
T2: 6.4 (0.7, 4.7)
T3: 10 (1.0, 7.2)
T4: First 12 (1.2, 8.9)
Second 12 (1.2, 8.9)
T5: 16 (1.6, 11.8)
T6: 25 (2.5, 18.4)
T7: 44 (4.5, 32.5)
T8: 54 (5.5, 40)
T9: 69 (7.0, 50.9)
T10: 70 (7.1, 51.6)
T11: <Ref. to ME(H4DOTC)-78, INSTALLATION, Cylinder Block.>

5. CRANKSHAFT AND PISTON

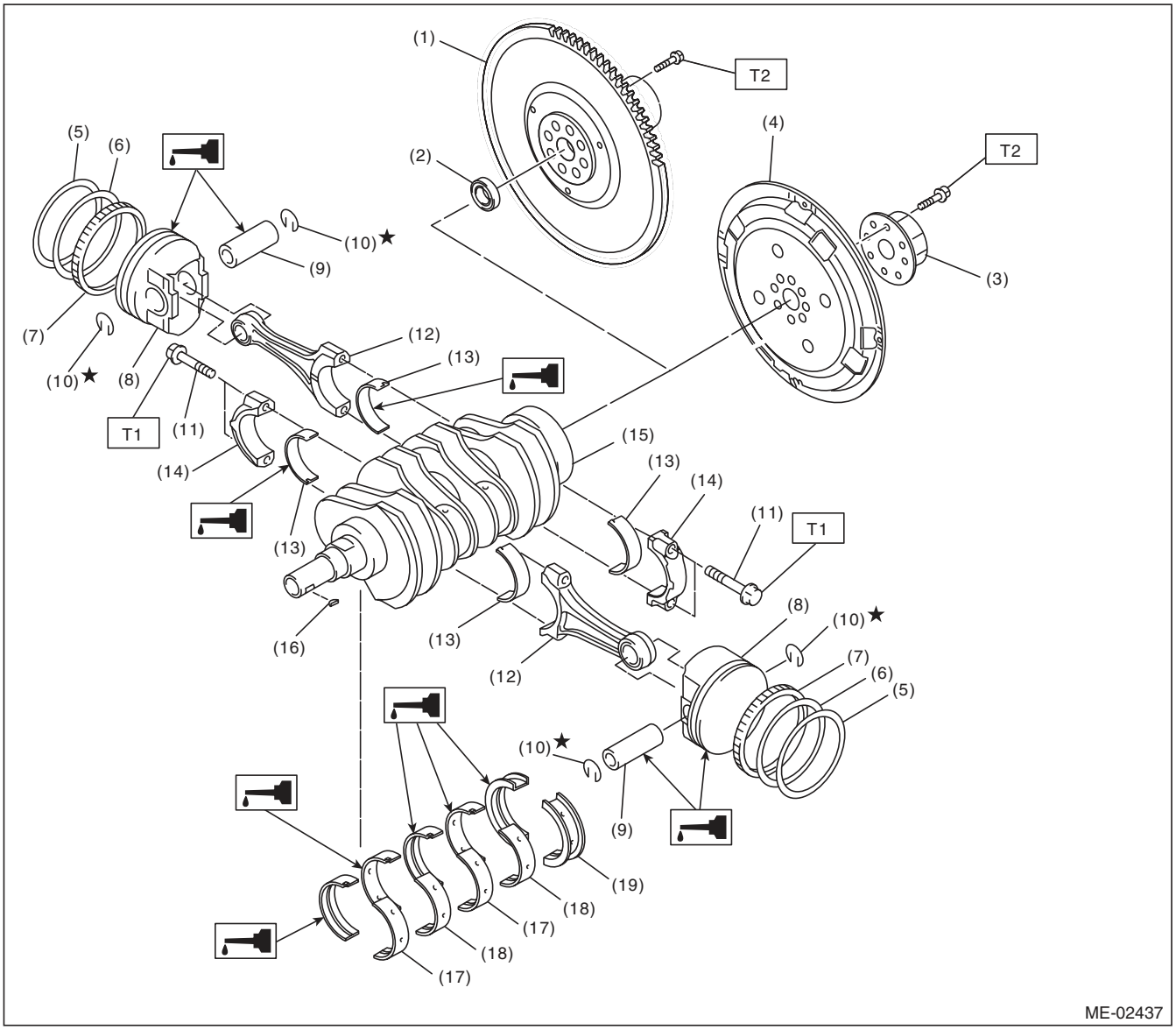

(1)	Flywheel (MT model)	(9)	Piston pin	(17)	Crankshaft bearing #1, #3
(2)	Ball bearing (MT model)	(10)	Snap ring	(18)	Crankshaft bearing #2, #4
(3)	Reinforcement (AT model)	(11)	Connecting rod bolt	(19)	Crankshaft bearing #5
(4)	Drive plate (AT model)	(12)	Connecting rod		
(5)	Top ring	(13)	Connecting rod bearing		
(6)	Second ring	(14)	Connecting rod cap		
(7)	Oil ring	(15)	Crankshaft		
(8)	Piston	(16)	Woodruff key		

Tightening torque:N·m (kgf-m, ft-lb)
T1: 52 (5.3, 38.4)
T2: 72 (7.3, 53.1)

6. ENGINE MOUNTING

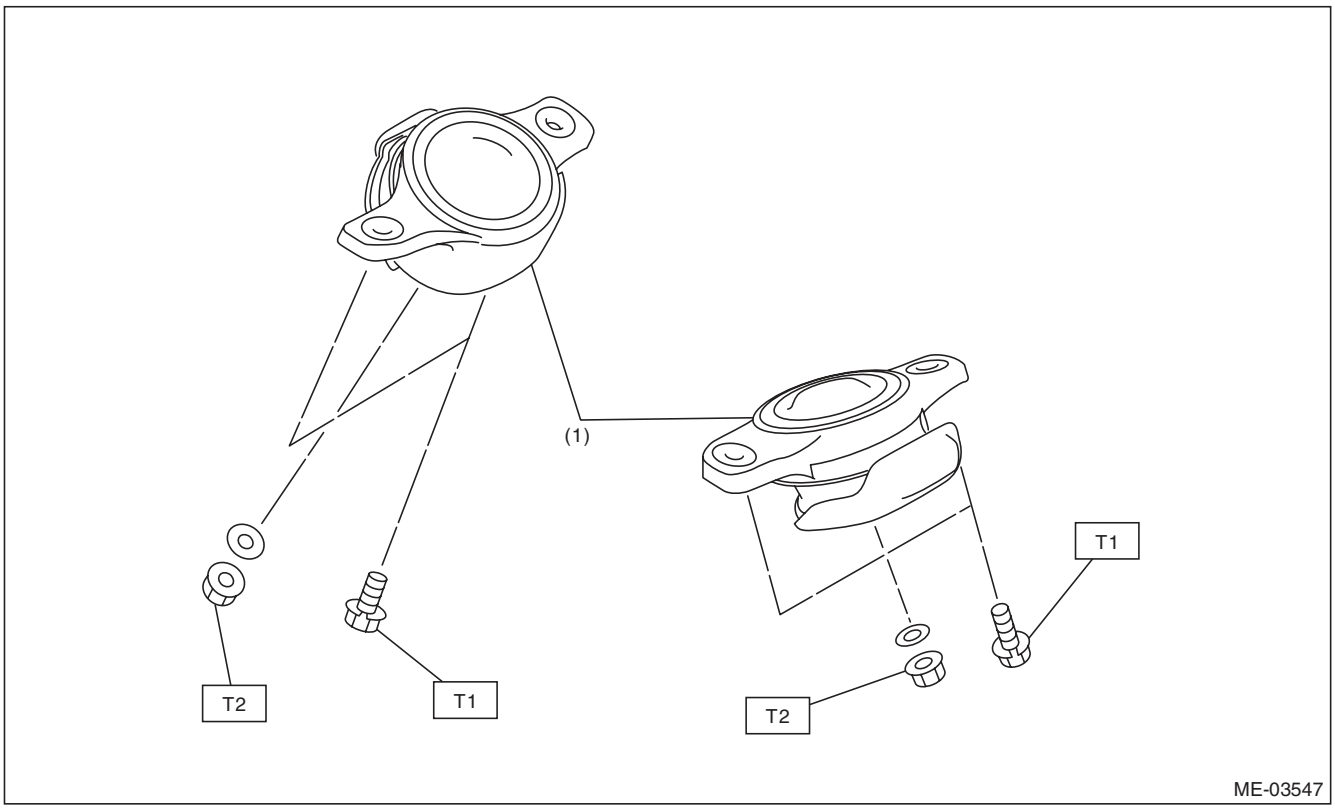

(1) Front cushion rubber

Tightening torque:N·m (kgf-m, ft-lb)

T1: 35 (3.6, 25.8)

T2: 75 (7.6, 55.3)

C: CAUTION

- Wear appropriate work clothing, including a cap, protective goggles and protective shoes when performing any work.
- Remove contamination including dirt and corrosion before removal, installation or disassembly.
- Keep the disassembled parts in order and protect them from dust and dirt.
- Before removal, installation or disassembly, be sure to clarify the failure. Avoid unnecessary removal, installation, disassembly and replacement.
- Vehicle components are extremely hot after driving. Be wary of receiving burns from heated parts.
- Be sure to tighten fasteners including bolts and nuts to the specified torque.
- Place shop jacks or rigid racks at the specified points.
- Before disconnecting connectors of sensors or units, be sure to disconnect the ground cable from the battery.
- All parts should be thoroughly cleaned, paying special attention to engine oil passages, pistons and bearings.
- Rotating parts and sliding parts such as piston, bearing and gear should be coated with oil prior to assembly.
- Be careful not to let oil, grease or engine coolant contact the timing belt, clutch disc and flywheel.
- All removed parts, if to be reused, should be reinstalled in the original positions and directions.
- Bolts, nuts and washers should be replaced with new parts as required.
- Even if necessary inspections have been made in advance, proceed with assembly work while making rechecks.
- Remove or install the engine in an area where chain hoists, lifting devices, etc. are available for ready use.
- Be sure not to damage coated surfaces of body panels with tools, or not to stain seats and windows with coolant or oil. Place a cover over fender, as required, for protection.
- Prior to starting work, prepare the following:

Service tools, clean cloth, containers to catch coolant and oil, wire ropes, chain hoist, transmission jacks, etc.

- Lift up or lower the vehicle when necessary. Make sure to support the correct positions.

D: PREPARATION TOOL

1. SPECIAL TOOL

ILLUSTRATION	TOOL NUMBER	DESCRIPTION	REMARKS
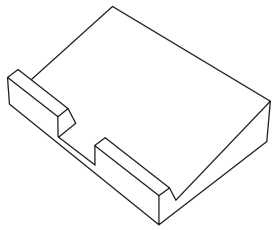 ST-498267600	498267600	CYLINDER HEAD TABLE	• Used for replacing valve guides. • Used for removing and installing valve spring.
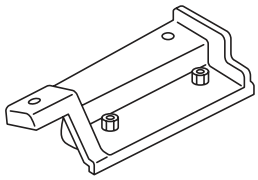 ST-498457000	498457000	ENGINE STAND ADAPTER RH	Used together with the ENGINE STAND (499817100).
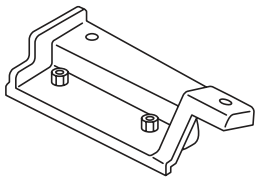 ST-498457100	498457100	ENGINE STAND ADAPTER LH	Used together with the ENGINE STAND (499817100).
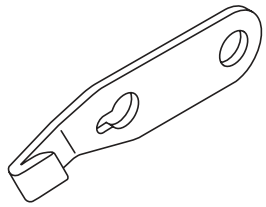 ST-498497100	498497100	CRANKSHAFT STOPPER	Used for removing and installing the flywheel and drive plate.

ILLUSTRATION	TOOL NUMBER	DESCRIPTION	REMARKS
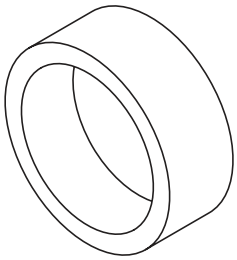 ST-498747300	498747300	PISTON GUIDE	Used for installing the cup to the wheel cylinder piston.
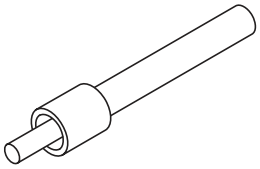 ST-498857100	498857100	VALVE OIL SEAL GUIDE	Used for press-fitting of intake and exhaust valve guide oil seals.
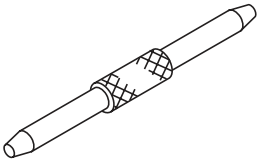 ST-499017100	499017100	PISTON PIN GUIDE	Used for installing piston pin, piston and connecting rod.
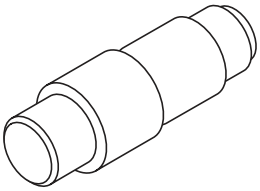 ST-499037100	499037100	CONNECTING ROD BUSHING REMOVER AND INSTALLER	Used for removing and installing connecting rod bushing.
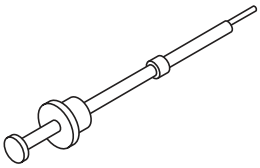 ST-499097700	499097700	PISTON PIN REMOVER ASSY	Used for removing piston pin.

ILLUSTRATION	TOOL NUMBER	DESCRIPTION	REMARKS
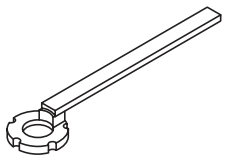 ST-499207400	499207400	CAM SPROCKET WRENCH	Used for removing and installing exhaust cam sprocket.
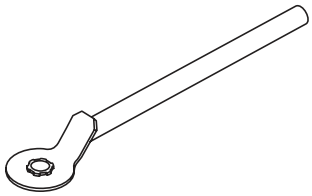 ST-499977500	499977500	CAM SPROCKET WRENCH	Used for removing and installing intake cam sprocket.
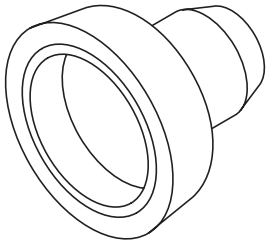 ST-499587200	499587200	CRANKSHAFT OIL SEAL INSTALLER	• Used for installing crankshaft oil seal. • Used together with the CRANKSHAFT OIL SEAL GUIDE (499597100).
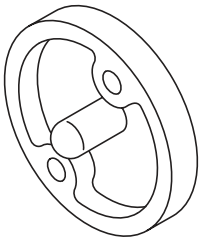 ST-499597100	499597100	CRANKSHAFT OIL SEAL GUIDE	• Used for installing crankshaft oil seal. • Used together with the CRANKSHAFT OIL SEAL INSTALLER (499587200).
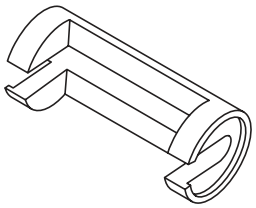 ST-499718000	499718000	VALVE SPRING REMOVER	Used for removing and installing valve spring.

ILLUSTRATION	TOOL NUMBER	DESCRIPTION	REMARKS
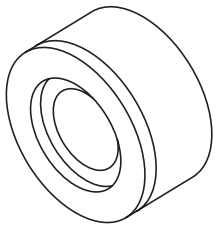 ST18251AA020	18251AA020	VALVE GUIDE ADJUSTER	Used for installing intake and exhaust valve guides.
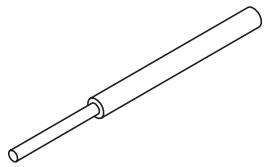 ST-499767200	499767200	VALVE GUIDE REMOVER	Used for removing valve guides.
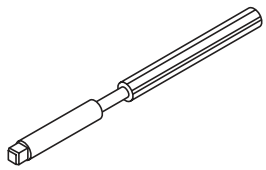 ST-499767400	499767400	VALVE GUIDE REAMER	Used for reaming valve guides.
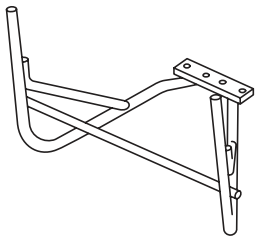 ST-499817100	499817100	ENGINE STAND	• Stand used for engine disassembly and assembly. • Used together with the ENGINE STAND ADAPTER RH (498457000) & LH (498457100).
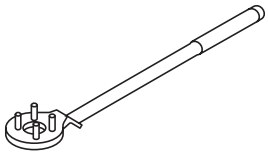 ST-499977100	499977100	CRANK PULLEY WRENCH	Used to stop rotation of the crank pulley when loosening or tightening crank pulley bolts. (MT model)

ILLUSTRATION	TOOL NUMBER	DESCRIPTION	REMARKS
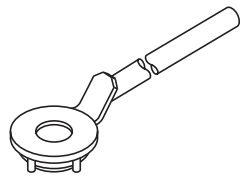 ST-499977400	499977400	CRANK PULLEY WRENCH	Used to stop rotation of the crank pulley when loosening or tightening crank pulley bolts. (AT model)
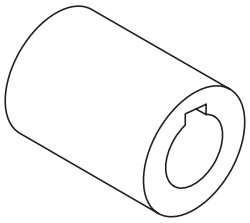 ST-499987500	499987500	CRANKSHAFT SOCKET	Used for rotating crankshaft.
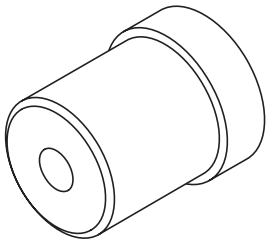 ST-499587100	499587100	OIL SEAL INSTALLER	Used for installing oil pump oil seal.
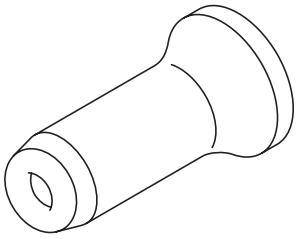 ST-499587600	499587600	OIL SEAL INSTALLER	Used for installing camshaft oil seal.
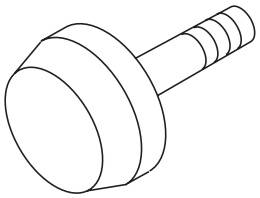 ST-499597200	499597200	OIL SEAL GUIDE	• Used for installing camshaft oil seal. • Used together with the OIL SEAL INSTALLER (499587600).

ILLUSTRATION	TOOL NUMBER	DESCRIPTION	REMARKS
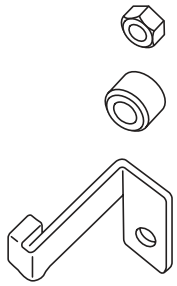 ST-498277200	498277200	STOPPER SET	Used for installing automatic transmission assembly to engine.
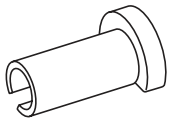 ST42099AE000	42099AE000	QUICK CONNECTOR RELEASE	Used for disconnecting quick connector of the engine compartment.
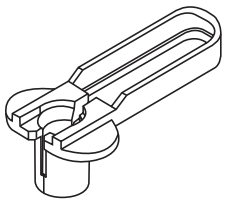 ST18371AA000	18371AA000	CONNECTOR REMOVER	Used for disconnecting the quick connector on the fuel return hose of the engine compartment.
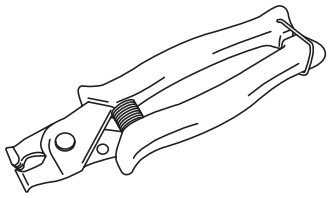 ST18353AA000	18353AA000	CLAMP PLIERS	• Used for removing and installing the PCV hose. • This tool is made by the French company CAILLAU. (code) 54.0.000.205 To make it easier to obtain, it has been provided with a tool number.
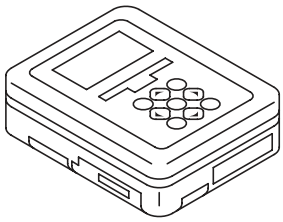 ST1B022XU0	1B022XU0	SUBARU SELECT MONITOR III KIT	Used for troubleshooting the electrical system.

2. GENERAL TOOL

TOOL NAME	REMARKS
Compression gauge	Used for measuring compression.
Timing light	Used for measuring ignition timing.
Vacuum gauge	Used for measuring intake manifold vacuum.
Oil pressure gauge	Used for measuring engine oil pressure.
Fuel pressure gauge	Used for measuring fuel pressure.

E: PROCEDURE

It is possible to conduct the following service procedures with engine on vehicle, however, the procedures described in this section are based on the condition that the engine is removed from vehicle.

- V-belt
- Timing belt
- Camshaft
- Cylinder head

2. Compression

A: INSPECTION

CAUTION:
After warming-up, engine becomes very hot. Be careful not to burn yourself during measurement.

1) Remove the collector cover.
2) After warming-up the engine, turn the ignition switch to OFF.
3) Make sure that the battery is fully charged.
4) Release the fuel pressure. <Ref. to FU(H4DOTC)-57, RELEASING OF FUEL PRESSURE, PROCEDURE, Fuel.>
5) Remove all the spark plugs.
<Ref. to IG(H4DOTC)-4, REMOVAL, Spark Plug.>
6) Fully open the throttle valve.
7) Check the starter motor for satisfactory performance and operation.
8) Secure the compression gauge tightly against the spark plug hole.

NOTE:
When using a screw-in type compression gauge, the screw should be less than 18 mm (0.71 in) long.

9) Crank the engine by the starter motor, and read the maximum value on the gauge when the needle of gauge is steady.

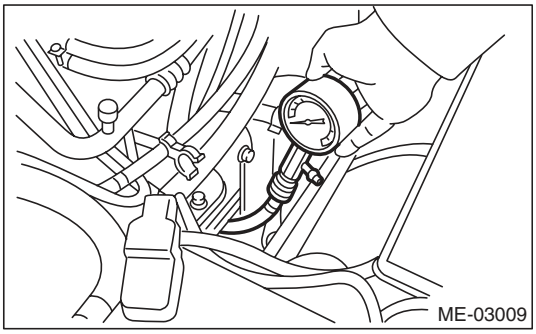

10) Perform at least two measurements per cylinder, and make sure that the values are correct.

Compression (fully open throttle):
Standard:
981 — 1,177 kPa
(10 — 12 kgf/cm^2, 142 — 171 psi)
Difference between cylinders:
49 kPa (0.5 kgf/cm^2, 7 psi) or less

11) After inspection, install the related parts in the reverse order of removal.

3. Idle Speed

A: INSPECTION

1) Before checking the idle speed, check the following item:
   (1) Check the air cleaner element is free from clogging, ignition timing is correct, spark plugs are in good condition, and hoses are connected properly.
   (2) Check the malfunction indicator light does not illuminate.
2) Warm up the engine.
3) Read the engine idle speed using Subaru Select Monitor. <Ref. to EN(H4DOTC)(diag)-35, READ CURRENT DATA FOR ENGINE (NORMAL MODE), OPERATION, Subaru Select Monitor.>
4) Check the idle speed when no-loaded. (Headlight, heater fan, rear defroster, radiator fan, A/C and etc. are OFF)

Idle speed [No load and gear in neutral, or "P", "N" range]:
750±100 rpm

5) Check the idle speed when loaded. (Turn the A/C switch to "ON" and operate the compressor for at least one minute before measurement.)

Idle speed [A/C ON and gear in neutral or "P" or "N" range]:
800±100 rpm (MT model)
825±100 rpm (AT model)

NOTE:
Idle speed cannot be adjusted manually, because the idle speed is automatically adjusted. If the prescribed idle speed cannot be maintained, refer to the General On-board Diagnosis Table under "Engine Control System". <Ref. to EN(H4DOTC)(diag)-2, Basic Diagnostic Procedure.>

4. Ignition Timing

A: INSPECTION

CAUTION:
After warming-up, engine becomes very hot. Be careful not to burn yourself at measurement.

1. METHOD WITH SUBARU SELECT MONITOR

1) Before checking the ignition timing, check the following item:
   (1) Check the air cleaner element is free from clogging, spark plugs are in good condition, and hoses are connected properly.
   (2) Check the malfunction indicator light does not illuminate.
2) Warm up the engine.
3) Read the ignition timing using Subaru Select Monitor. <Ref. to EN(H4DOTC)(diag)-35, READ CURRENT DATA FOR ENGINE (NORMAL MODE), OPERATION, Subaru Select Monitor.>

Ignition timing [BTDC/rpm]:
12°±10°/750 (MT model)
17°±10°/750 (AT model)

If the timing is not correct, check the ignition control system. Refer to “Engine Control System”. <Ref. to EN(H4DOTC)(diag)-2, Basic Diagnostic Procedure.>

2. METHOD WITH TIMING LIGHT

1) Before checking the ignition timing, check the following item:
   (1) Check the air cleaner element is free from clogging, spark plugs are in good condition, and hoses are connected properly.
   (2) Check the malfunction indicator light does not illuminate.
2) Warm up the engine.
3) Stop the engine, and turn the ignition switch to OFF.
4) Remove the air intake duct. <Ref. to IN(H4DOTC)-9, REMOVAL, Air Intake Duct.>
5) Disconnect the connectors of the mass air flow and intake air temperature sensor.
6) Remove the air cleaner case and element.
7) Connect the timing light to the power wire of #1 ignition coil.
8) Install the connectors of air cleaner case, element, and the mass air flow and intake air temperature sensor.
9) Start the engine, turn the timing light to the crank pulley, and check the ignition timing by means of crank pulley indicator.

Ignition timing [BTDC/rpm]:
12°±10°/750 (MT model)
17°±10°/750 (AT model)

If the timing is not correct, check the ignition control system. Refer to “Engine Control System”. <Ref. to EN(H4DOTC)(diag)-2, Basic Diagnostic Procedure.>

5. Intake Manifold Vacuum

A: INSPECTION

1) Remove the collector cover.
2) Warm up the engine.
3) Disconnect the brake booster vacuum hose from the intake manifold, and then install the vacuum gauge.
4) Keep the engine at idle speed and read the vacuum gauge indication.
By observing the gauge needle movement, the internal condition of the engine can be diagnosed as described below.

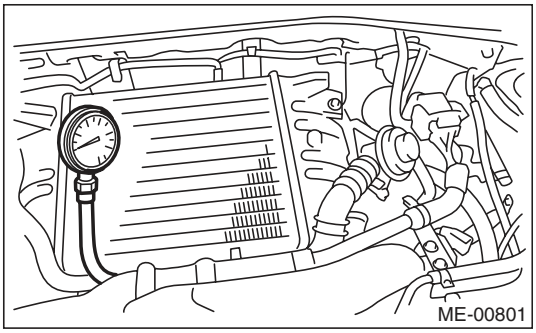

Vacuum pressure (at idling, A/C OFF):
Less than –70.6 kPa
(–530 mmHg, –20.85 inHg) (MT model)
Less than –68.0 kPa
(–510 mmHg, –20.08 inHg) (AT model)

Diagnosis of engine condition by measurement of intake manifold vacuum	
Vacuum gauge indication	Possible engine condition
1. Needle is steady but lower than normal position. This tendency becomes more evident as engine temperature rises.	Leakage around intake manifold gasket, or disconnected or damaged vacuum hose
2. Needle intermittently drops to position lower than normal position.	Leakage around cylinder
3. Needle drops suddenly and intermittently from normal position.	Sticky valve
4. When engine speed is gradually increased, needle begins to vibrate rapidly at certain speed, and then vibration increases as engine speed increases.	Weak or broken valve springs
5. Needle vibrates above and below normal position in narrow range.	Defective ignition system

6. Engine Oil Pressure

A: INSPECTION

1) Remove the collector cover.
2) Disconnect the ground cable from the battery.

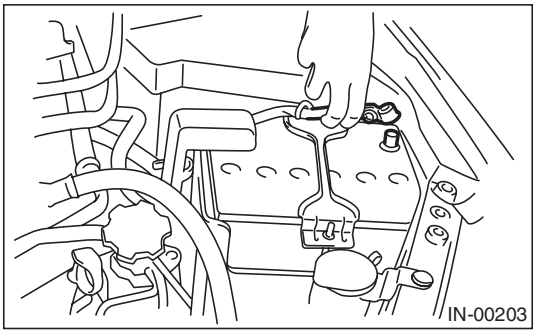

3) Remove the oil pressure switch. <Ref. to LU(H4SO)-20, REMOVAL, Oil Pressure Switch.>
4) Connect the oil pressure gauge to cylinder block.
5) Connect the ground cable to battery.

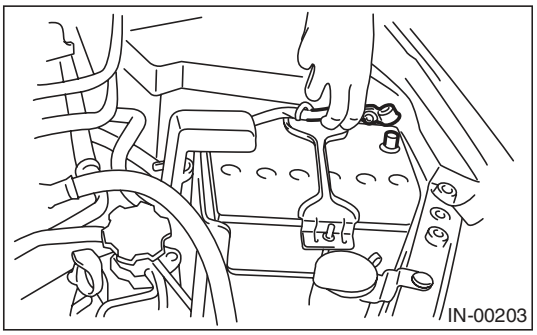

6) Start the engine, and measure the oil pressure.

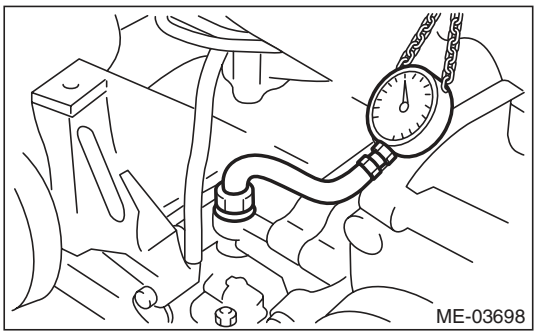

Oil pressure:
Standard
98 kPa (1.0 kgf/cm^2, 14 psi) or more (at 600 rpm)
294 kPa (3.0 kgf/cm^2, 43 psi) or more (at 5,000 rpm)

- If the oil pressure is out of specification, check oil pump, oil filter and lubrication line. <Ref. to LU(H4SO)-24, INSPECTION, Engine Lubrication System Trouble in General.>
- If the oil pressure warning light is ON and oil pressure is within specification, check the oil pressure switch. <Ref. to LU(H4SO)-24, INSPECTION, Engine Lubrication System Trouble in General.>

NOTE:
Standard value is based on an engine oil temperature of 80°C (176°F).

7) After measuring the oil pressure, install the oil pressure switch. <Ref. to LU(H4SO)-20, INSTALLATION, Oil Pressure Switch.>

7. Fuel Pressure

A: INSPECTION

CAUTION:
- **Before removing the fuel pressure gauge, release the fuel pressure.**
- **Be careful not to spill fuel.**
- **Catch the fuel from hoses using a container or cloth.**

NOTE:
If the fuel pressure is out of specification, check or replace the pressure regulator and pressure regulator vacuum hose.

1) Remove the collector cover.
2) Release the fuel pressure. <Ref. to FU(H4DOTC)-57, RELEASING OF FUEL PRESSURE, PROCEDURE, Fuel.>
3) Open the fuel filler lid and remove the fuel filler cap.
4) Disconnect the fuel delivery hose from the fuel damper, and connect the fuel pressure gauge.

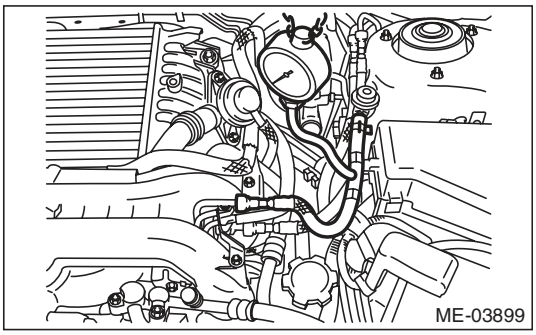

5) Start the engine.
6) Measure the fuel pressure while disconnecting pressure regulator vacuum hose from intake manifold.

NOTE:
The fuel pressure gauge registers 10 to 20 kPa (0.1 to 0.2 kgf/cm^2, 1 to 3 psi) higher than standard values during high-altitude operations.

Fuel pressure:
Standard
284 — 314 kPa
(2.9 — 3.2 kgf/cm^2, 41 — 46 psi)

7) After connecting the pressure regulator vacuum hose, measure the fuel pressure.

NOTE:
The fuel pressure gauge registers 10 to 20 kPa (0.1 to 0.2 kgf/cm^2, 1 to 3 psi) higher than standard values during high-altitude operations.

Fuel pressure:
Standard
230 — 260 kPa
(2.35 — 2.65 kgf/cm^2, 33 — 38 psi)

8. Valve Clearance

A: INSPECTION

NOTE:
Inspection and adjustment of valve clearance should be performed while engine is cold.

1) Set the vehicle on a lift.
2) Remove the collector cover.
3) Disconnect the ground cable from the battery.

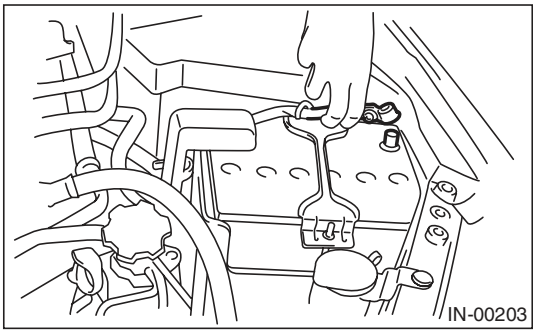

4) Remove the air intake duct. <Ref. to IN(H4DOTC)-9, REMOVAL, Air Intake Duct.>
5) Remove the bolt which secures timing belt cover RH.
6) Lift up the vehicle.
7) Remove the under cover.
8) Loosen the remaining bolts which secure timing belt cover RH, then remove the timing belt cover.
9) Lower the vehicle.
10) When inspecting #1 and #3 cylinders
    (1) Remove the air cleaner case. <Ref. to IN(H4DOTC)-8, REMOVAL, Air Cleaner Case.>
    (2) Remove the ignition coil. <Ref. to IG(H4DOTC)-7, REMOVAL, Ignition Coil.>
    (3) Place a suitable container under the vehicle.
    (4) Disconnect the PCV hose from the rocker cover RH.

NOTE:
For the PCV hose affixed with the clamp, fit the depression in the ST with the protrusion of the clamp as shown in the figure below, unlock the clamp and disconnect.
ST 18353AA000 CLAMP PLIERS

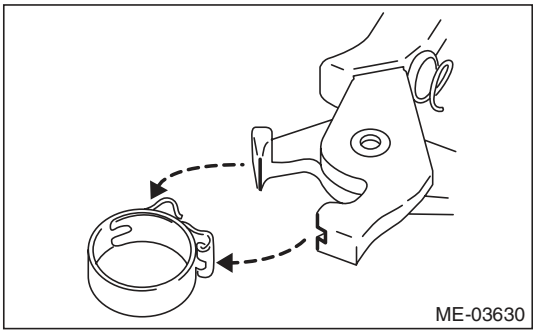

    (5) Remove the bolts, then remove the rocker cover RH.

11) When inspecting #2 and #4 cylinders
    (1) Remove the battery. <Ref. to SC(H4SO)-20, REMOVAL, Battery.>
    (2) Remove the secondary air pump. <Ref. to EC(H4DOTC)-21, REMOVAL, Secondary Air Pump.>
    (3) Remove the ignition coil. <Ref. to IG(H4DOTC)-7, REMOVAL, Ignition Coil.>
    (4) Place a suitable container under the vehicle.
    (5) Disconnect the PCV hose from the rocker cover LH.

NOTE:
For the PCV hose affixed with the clamp, fit the depression in the ST with the protrusion of the clamp as shown in the figure below, unlock the clamp and disconnect.
ST 18353AA000 CLAMP PLIERS

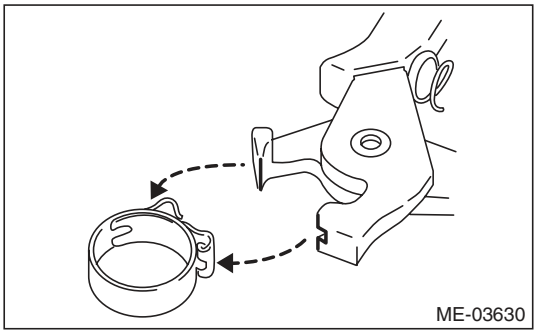

    (6) Remove the bolts, then remove the rocker cover LH.

12) Turn the crank pulley clockwise until the round mark and arrow mark on the cam sprocket are set to position shown in the figure.

NOTE:
Turn the crankshaft using socket wrench.

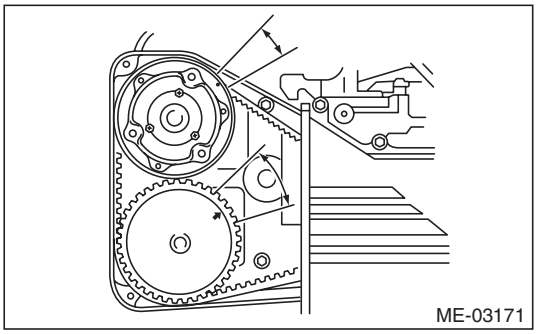

13) Measure the #1 cylinder intake valve and #3 cylinder exhaust valve clearance by using thickness gauge (A).

NOTE:
- Insert a thickness gauge in a direction as horizontal as possible with respect to the valve lifter.
- Lift up the vehicle, and then measure the exhaust valve clearances.
- If the measured value is not within specification, take notes of the value in order to adjust the valve clearance later on.

Valve clearance:
Intake
0.20±0.02 mm (0.0079±0.0008 in)
Exhaust
0.35±0.02 mm (0.0138±0.0008 in)

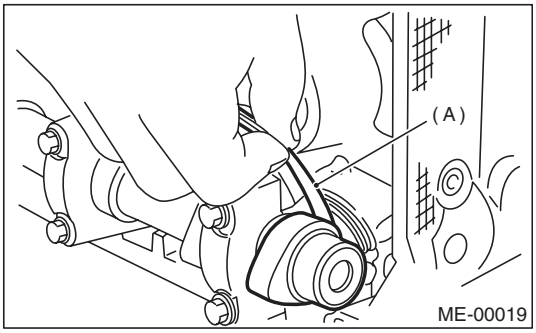

14) If necessary, adjust the valve clearance. <Ref. to ME(H4DOTC)-28, ADJUSTMENT, Valve Clearance.>

15) Further turn the crank pulley clockwise and then measure the valve clearances again.

(1) Set the round mark and arrow mark on cam sprocket to the position shown in the figure, and measure the #2 cylinder exhaust valve and #3 cylinder intake valve clearances.

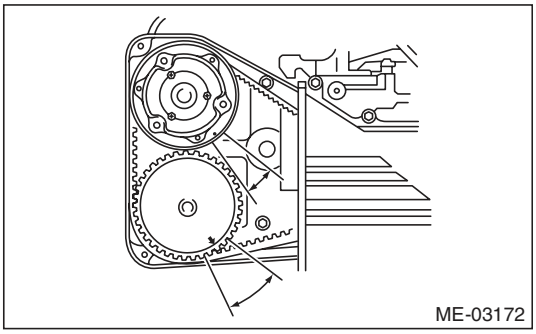

(2) Set the round mark and arrow mark on cam sprocket to the position shown in the figure, and measure the #2 cylinder intake valve and #4 cylinder exhaust valve clearances.

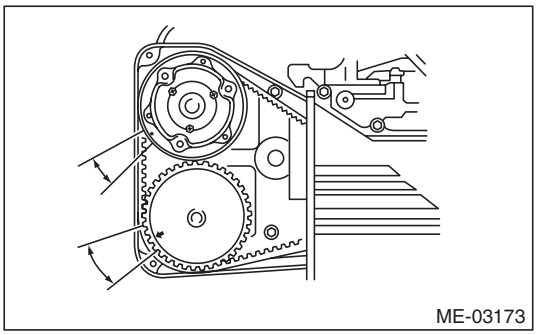

(3) Set the round mark and arrow mark on cam sprocket to the position shown in the figure, and measure the #1 cylinder exhaust valve and #4 cylinder intake valve clearances.

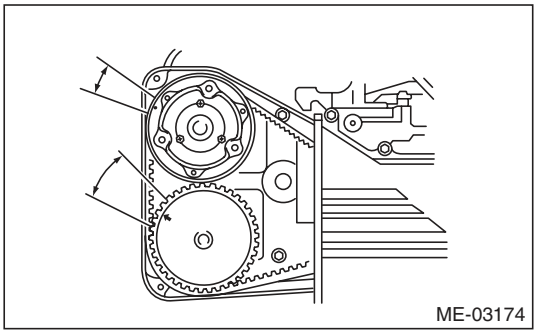

16) After inspection, install the related parts in the reverse order of removal.

NOTE:
- Use a new rocker cover gasket.
- Use a new clamp for the PCV hose clamp, fit the cut out in the ST with the protrusion on the clamp as shown in the figure, and lock the clamp.

ST 18353AA000 CLAMP PLIERS

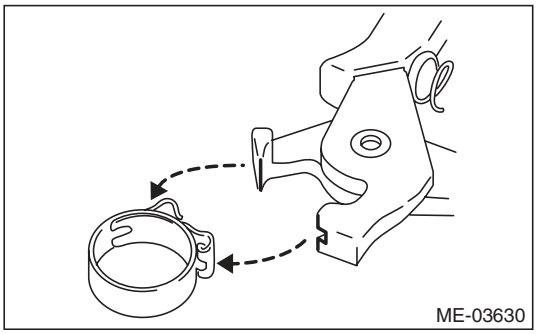

B: ADJUSTMENT

NOTE:
Adjustment of valve clearance should be performed while engine is cold.

1) Measure all the valve clearances. <Ref. to ME(H4DOTC)-26, INSPECTION, Valve Clearance.>

NOTE:
Record each valve clearance after measurement.

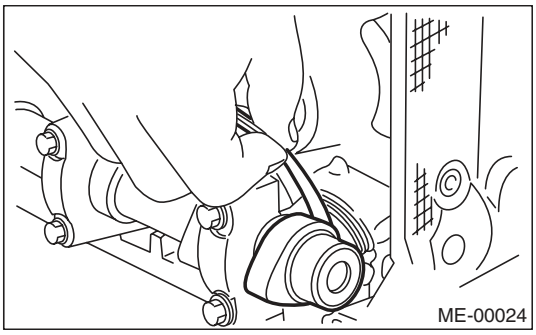

2) Remove the camshaft. <Ref. to ME(H4DOTC)-58, REMOVAL, Camshaft.>
3) Remove the valve lifter.
4) Measure the thickness of valve lifter using micrometer.

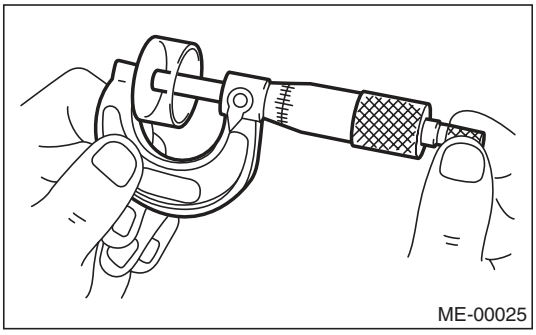

5) Select a valve lifter of suitable thickness from the following table using the measured valve clearance and valve lifter thickness, and install it.

NOTE:
Use a new valve lifter.

Unit: mm (in)
Intake valve: S = (V + T) – 0.20 (0.0079) Exhaust valve: S = (V + T) – 0.35 (0.0138)
S: Valve lifter thickness required V: Measured valve clearance T: Valve lifter thickness to be used

Part No.	Thickness mm (in)
13228 AB102	4.68 (0.1843)
13228 AB112	4.69 (0.1846)
13228 AB122	4.70 (0.1850)
13228 AB132	4.71 (0.1854)
13228 AB142	4.72 (0.1858)
13228 AB152	4.73 (0.1862)
13228 AB162	4.74 (0.1866)
13228 AB172	4.75 (0.1870)
13228 AB182	4.76 (0.1874)
13228 AB192	4.77 (0.1878)
13228 AB202	4.78 (0.1882)
13228 AB212	4.79 (0.1886)
13228 AB222	4.80 (0.1890)
13228 AB232	4.81 (0.1894)
13228 AB242	4.82 (0.1898)
13228 AB252	4.83 (0.1902)
13228 AB262	4.84 (0.1906)
13228 AB272	4.85 (0.1909)
13228 AB282	4.86 (0.1913)
13228 AB292	4.87 (0.1917)
13228 AB302	4.88 (0.1921)
13228 AB312	4.89 (0.1925)
13228 AB322	4.90 (0.1929)
13228 AB332	4.91 (0.1933)
13228 AB342	4.92 (0.1937)
13228 AB352	4.93 (0.1941)
13228 AB362	4.94 (0.1945)
13228 AB372	4.95 (0.1949)
13228 AB382	4.96 (0.1953)
13228 AB392	4.97 (0.1957)
13228 AB402	4.98 (0.1961)
13228 AB412	4.99 (0.1965)
13228 AB422	5.00 (0.1969)
13228 AB432	5.01 (0.1972)
13228 AB442	5.02 (0.1976)
13228 AB452	5.03 (0.1980)
13228 AB462	5.04 (0.1984)
13228 AB472	5.05 (0.1988)
13228 AB482	5.06 (0.1992)
13228 AB492	5.07 (0.1996)
13228 AB502	5.08 (0.2000)
13228 AB512	5.09 (0.2004)
13228 AB522	5.10 (0.2008)
13228 AB532	5.11 (0.2012)
13228 AB542	5.12 (0.2016)
13228 AB552	5.13 (0.2020)
13228 AB562	5.14 (0.2024)
13228 AB572	5.15 (0.2028)
13228 AB582	5.16 (0.2031)
13228 AB592	5.17 (0.2035)

Part No.	Thickness mm (in)
13228 AB602	5.18 (0.2039)
13228 AB612	5.19 (0.2043)
13228 AB622	5.20 (0.2047)
13228 AB632	5.21 (0.2051)
13228 AB642	5.22 (0.2055)
13228 AB652	5.23 (0.2059)
13228 AB662	5.24 (0.2063)
13228 AB672	5.25 (0.2067)
13228 AB682	5.26 (0.2071)
13228 AB692	5.27 (0.2075)
13228 AB702	4.38 (0.1724)
13228 AB712	4.40 (0.1732)
13228 AB722	4.42 (0.1740)
13228 AB732	4.44 (0.1748)
13228 AB742	4.46 (0.1756)
13228 AB752	4.48 (0.1764)
13228 AB762	4.50 (0.1771)
13228 AB772	4.52 (0.1780)
13228 AB782	4.54 (0.1787)
13228 AB792	4.56 (0.1795)
13228 AB802	4.58 (0.1803)
13228 AB812	4.60 (0.1811)
13228 AB822	4.62 (0.1819)
13228 AB832	4.64 (0.1827)
13228 AB842	4.66 (0.1835)
13228 AB852	5.29 (0.2083)
13228 AB862	5.31 (0.2091)
13228 AB872	5.33 (0.2098)
13228 AB882	5.35 (0.2106)
13228 AB892	5.37 (0.2114)
13228 AB902	5.39 (0.2122)
13228 AB912	5.41 (0.2123)
13228 AB922	5.43 (0.2138)
13228 AB932	5.45 (0.2146)
13228 AB942	5.47 (0.2154)
13228 AB952	5.49 (0.2161)
13228 AB962	5.51 (0.2169)
13228 AB972	5.53 (0.2177)
13228 AB982	5.55 (0.2185)
13228 AB992	5.57 (0.2193)
13228 AC002	5.59 (0.2201)
13228 AC012	5.61 (0.2209)
13228 AC022	5.63 (0.2217)
13228 AC032	5.65 (0.2224)

6) Install the camshaft. <Ref. to ME(H4DOTC)-59, INSTALLATION, Camshaft.>
7) Install the cam sprocket. <Ref. to ME(H4DOTC)-56, INSTALLATION, Cam Sprocket.>
8) Install the timing belt. <Ref. to ME(H4DOTC)-50, TIMING BELT, INSTALLATION, Timing Belt.>
9) Measure all valves for valve clearance again at this time. If the valve clearance is not correct, repeat the procedure over again from the first step.
10) After measuring, install the related parts in the reverse order of removal.

NOTE:
- Use a new rocker cover gasket.
- Use a new clamp for the PCV hose clamp, fit the cut out in the ST with the protrusion on the clamp as shown in the figure, and lock the clamp.

ST 18353AA000 CLAMP PLIERS

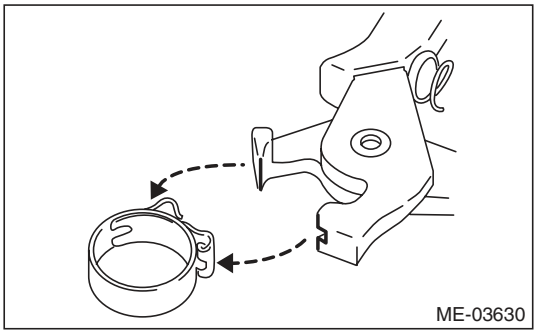

9. Engine Assembly

A: REMOVAL

1) Set the vehicle on a lift.
2) Open the front hood fully and support with the front hood stay.
3) Remove the collector cover.
4) Collect the refrigerant from A/C system. <Ref. to AC-22, Refrigerant Recovery Procedure.>
5) Release the fuel pressure. <Ref. to FU(H4DOTC)-57, RELEASING OF FUEL PRESSURE, PROCEDURE, Fuel.>
6) Remove the battery. <Ref. to SC(H4SO)-20, REMOVAL, Battery.>
7) Open the fuel filler lid, and remove the fuel filler cap.
8) Remove the air intake duct and air cleaner case. <Ref. to IN(H4DOTC)-9, REMOVAL, Air Intake Duct.> <Ref. to IN(H4DOTC)-8, REMOVAL, Air Cleaner Case.>
9) Remove the intercooler. <Ref. to IN(H4DOTC)-12, REMOVAL, Intercooler.>
10) Remove the radiator from vehicle. <Ref. to CO(H4DOTC)-20, REMOVAL, Radiator.>
11) Remove the coolant filler tank. <Ref. to CO(H4DOTC)-30, REMOVAL, Coolant Filler Tank.>
12) Disconnect the A/C pressure hoses from A/C compressor. <Ref. to AC-40, REMOVAL, Hose and Pipe.>
13) Disconnect the bulkhead harness connectors from the engine harness connectors.

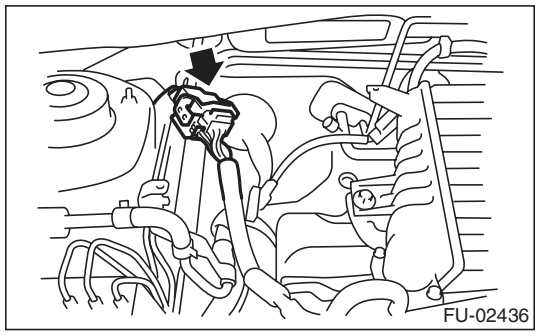

14) Remove the engine harness connectors from the engine harness brackets.

15) Disconnect the following connectors and terminals.
(1) Generator connector and terminal

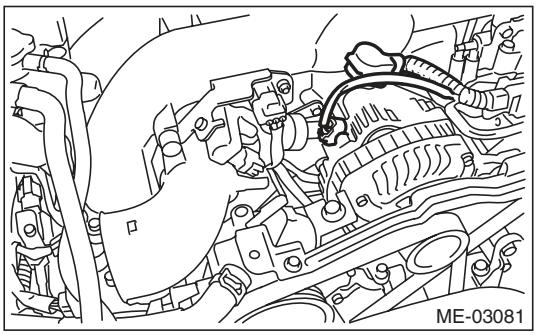

(2) A/C compressor connector

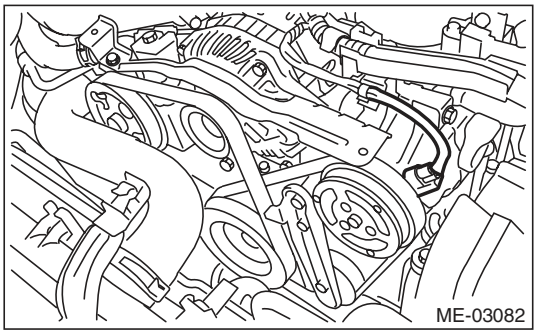

(3) Secondary air pump connector

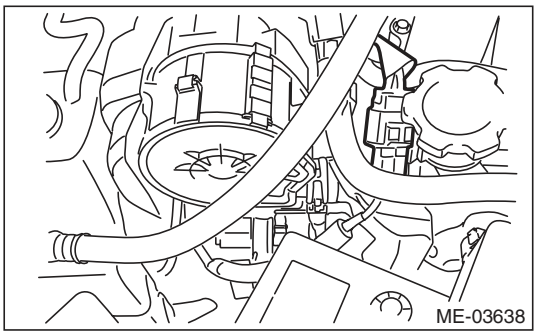

16) Disconnect the following hoses.
(1) Brake booster vacuum hose

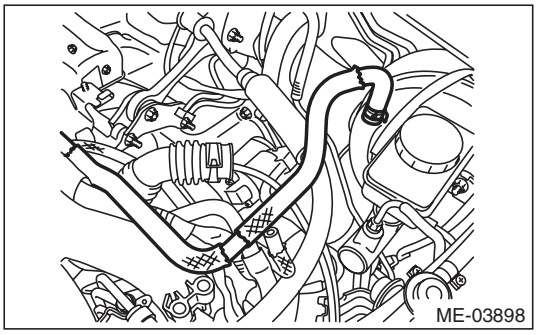

(2) Heater inlet and outlet hoses

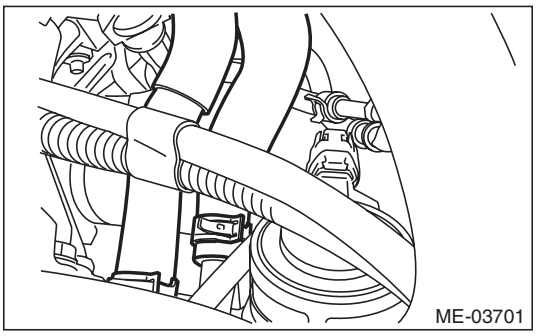

17) Remove the power steering pump.

(1) Remove the front side belts. <Ref. to ME(H4DOTC)-41, FRONT SIDE BELT, REMOVAL, V-belt.>

(2) Disconnect the power steering pump switch connector.

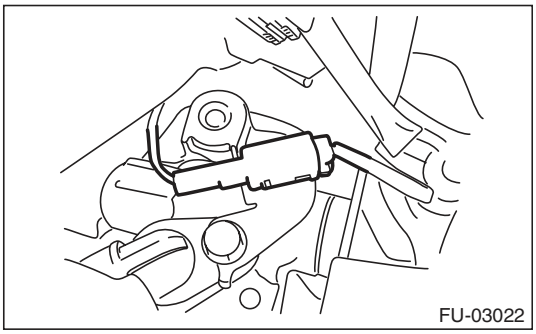

(3) Remove the power steering pump from the engine. <Ref. to PS-44, REMOVAL, Oil Pump.>

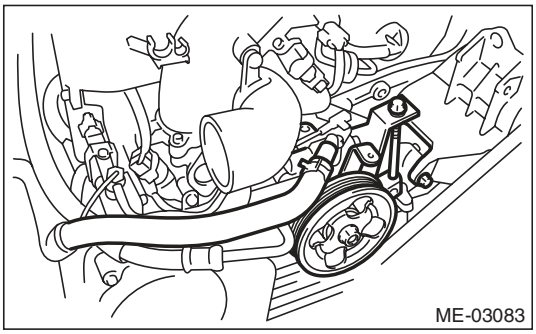

(4) Place the power steering pump on the right side wheel apron.

18) Lift up the vehicle.

19) Remove the center exhaust pipe. <Ref. to EX(H4DOTC)-7, REMOVAL, Center Exhaust Pipe.>

20) Remove the turbocharger. <Ref. to IN(H4DOTC)-14, REMOVAL, Turbocharger.>

21) Remove the joint pipe and front exhaust pipe. <Ref. to EX(H4DOTC)-11, REMOVAL, Joint Pipe.> <Ref. to EX(H4DOTC)-5, REMOVAL, Front Exhaust Pipe.>

22) Lift up the vehicle.

23) Disconnect the ground cable on the engine side.

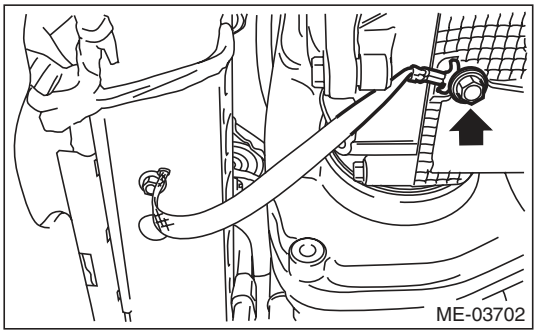

24) Remove the bolts and nuts which hold the lower side of transmission to the engine.

- AT model

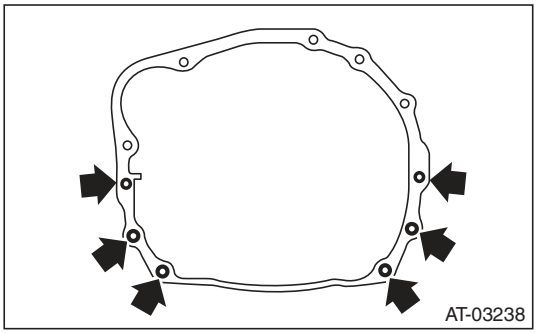

- MT model

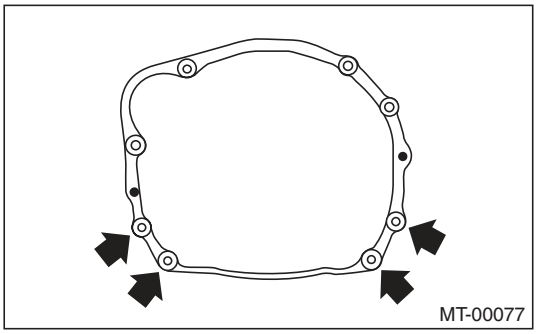

25) Remove the nuts which hold the engine mount to the front crossmember.

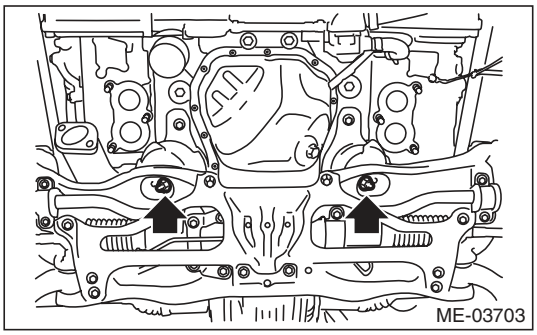

26) Lower the vehicle.

27) Separate the clutch release fork from the release bearing. (6MT model)

(1) Remove the clutch operating cylinder from the transmission.

(2) Remove the plug using a 10 mm hexagon wrench.

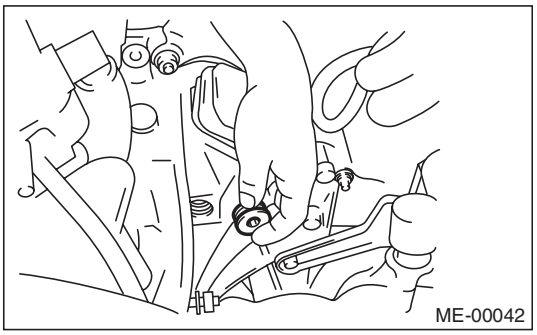

(3) Screw-in the 6 mm dia. bolt into the release fork shaft to remove.

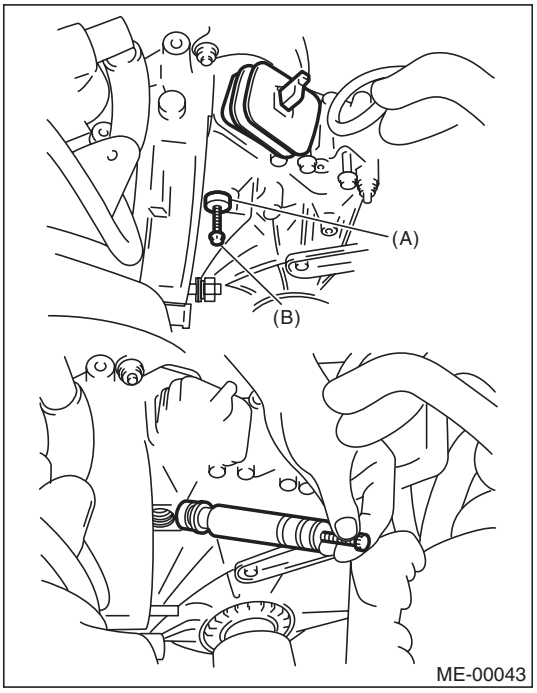

(A) Release fork shaft
(B) Bolt

(4) Raise the release fork, unlock the release bearing tab, then remove the release fork.

NOTE:
Step (4) is required to avoid interference with the engine when removing the engine from the transmission.

28) Separate the torque converter clutch from drive plate. (AT model)

(1) Remove the service hole plug.

(2) Insert the wrench into the crank pulley bolt and rotate the crank pulley to remove the bolts which hold torque converter clutch to drive plate.

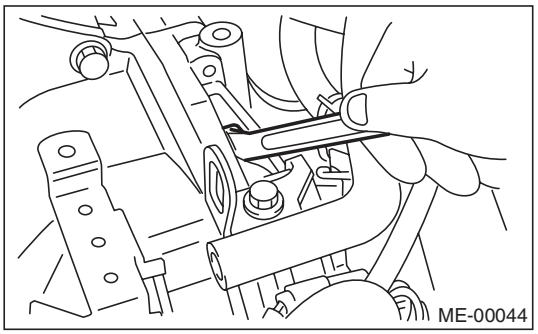

29) Remove the pitching stopper.

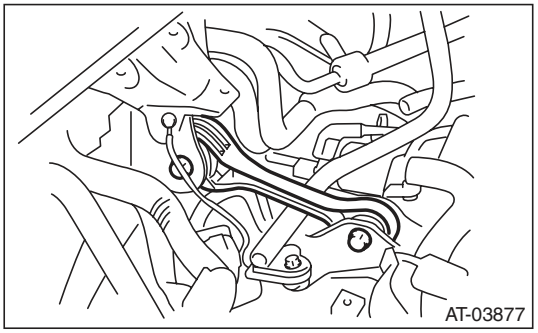

30) Attach ST to the fuel delivery pipe and push ST in the direction of arrow mark to disconnect the fuel delivery hose.

ST 42099AE000 QUICK CONNECTOR RELEASE

CAUTION:
- **Be careful not to spill fuel.**
- **Catch the fuel from hoses using a container or cloth.**

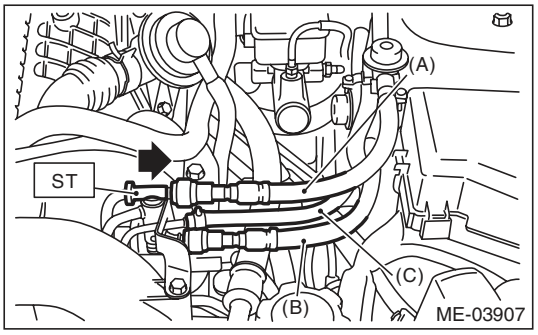

(A) Fuel delivery hose
(B) Fuel return hose
(C) Evaporation hose

31) Disconnect the fuel return hose using the ST.
ST 18371AA000 CONNECTOR REMOVER

CAUTION:
- **Be careful not to spill fuel.**
- **Catch the fuel from hoses using a container or cloth.**

(1) Attach ST to the fuel return pipe as shown in the figure.

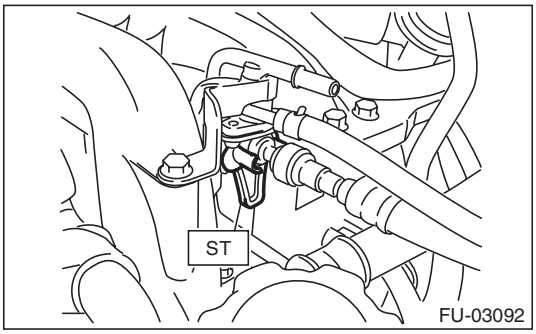

(2) Insert the front side of ST into the quick connector.

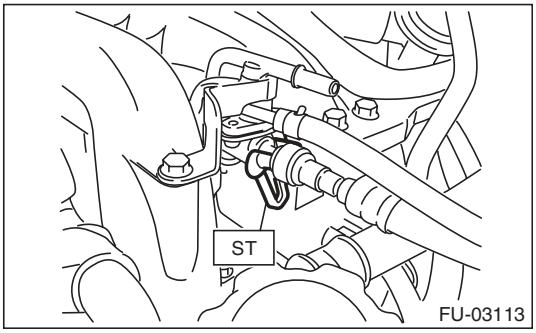

(3) Insert the back side of ST into the quick connector and push ST in the direction of arrow mark to disconnect the fuel return hose.

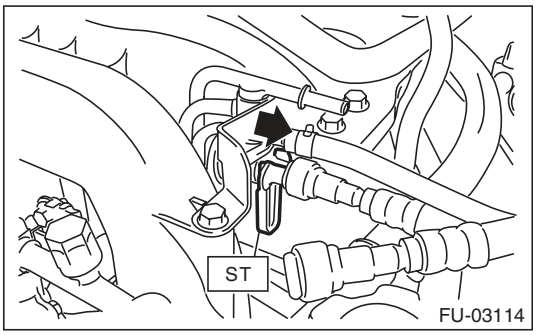

32) Remove the clip and disconnect the evaporation hose from the fuel pipe.

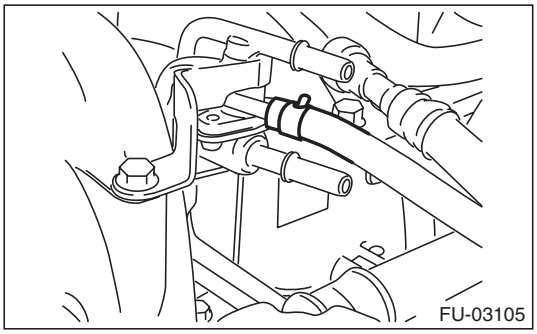

33) Support the engine with a lifting device and wire ropes.

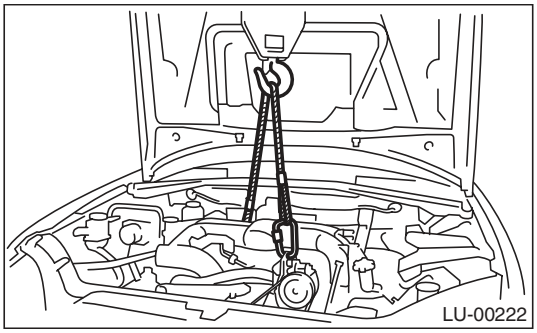

34) Support the transmission with a garage jack.

CAUTION:
Be sure to perform this procedure to prevent the transmission from lowering by its own weight.

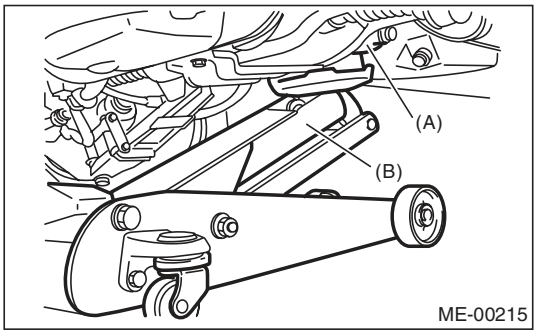

(A) Transmission
(B) Garage jack

35) Separation of engine and transmission

CAUTION:
Before removing the engine away from transmission, check to be sure no work has been overlooked.

(1) Remove the starter. <Ref. to SC(H4SO)-6, REMOVAL, Starter.>
(2) Attach the ST to the torque converter clutch case. (AT model)

ST 498277200 STOPPER SET

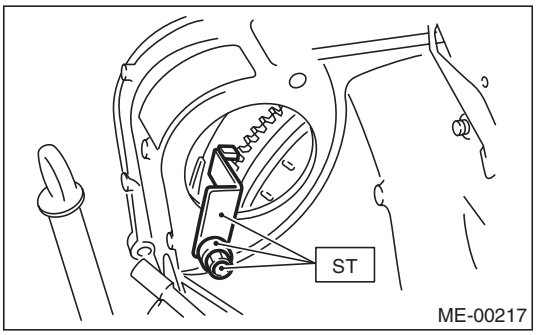

(3) Remove the bolts which hold the upper side of the transmission to the engine.

- AT model

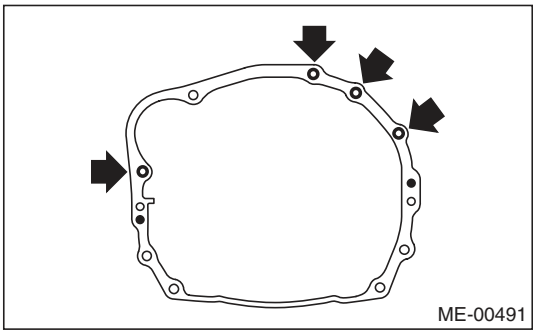

- MT model

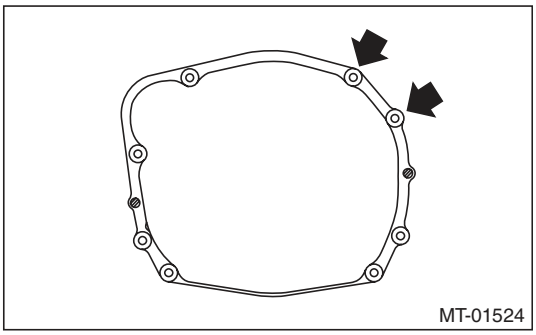

36) Remove the engine from vehicle.
(1) Slightly raise the engine.
(2) Raise the transmission with garage jack.
(3) Move the engine horizontally until main shaft is withdrawn from clutch cover. (MT model)
(4) Slowly move the engine away from engine compartment.

NOTE:
Be careful not to damage adjacent parts or body panels with crank pulley, oil level gauge, etc.

37) Remove the engine mounting from the engine.

B: INSTALLATION

1) Install the clutch release fork and bearing to the transmission. (6MT model)
(1) Use a flat tip screwdriver to remove the release bearing from the clutch cover.

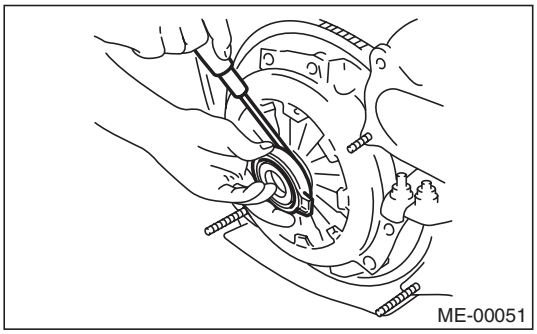

(2) Install the release bearing to the transmission.
(3) Install the release fork into the release bearing tab.

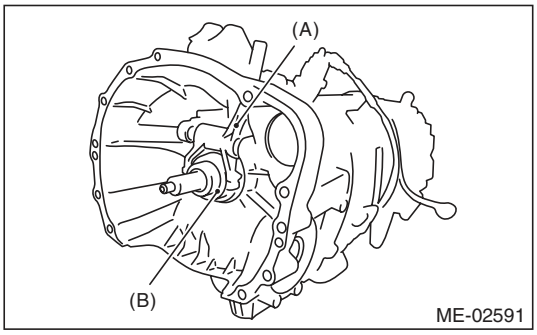

(A) Release fork
(B) Release bearing

(4) Apply grease to the specified areas.

Grease:
Spline part
NICHIMOLY N-130 or equivalent
Shaft part
KOPR-KOTE or equivalent

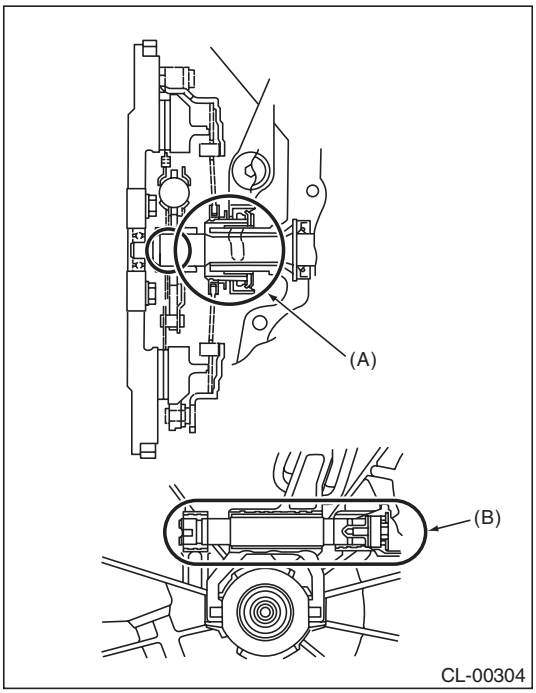

(A) Spline
(B) Shaft

(5) Insert the release shaft to release fork.

NOTE:
Allow the cutout portion of release shaft to come into contact with the spring pin.

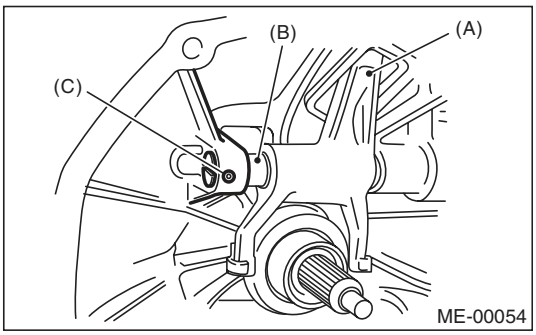

(A) Release fork
(B) Release shaft
(C) Spring pin

(6) Tighten the plugs.

Tightening torque:
44 N·m (4.5 kgf-m, 32.5 ft-lb)

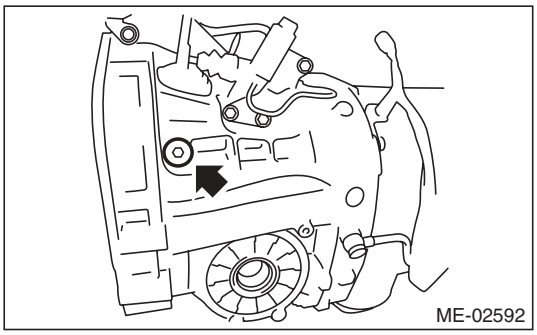

2) Install the engine mounting onto the engine.

Tightening torque:
35 N·m (3.6 kgf-m, 25.8 ft-lb)

3) Apply a small amount of grease to splines of main shaft. (MT model)

Grease:
NICHIMOLY N-130 or equivalent

4) Position the engine in engine compartment and align it with transmission.

NOTE:
Be careful not to damage adjacent parts or body panels with crank pulley, oil level gauge, etc.

5) Tighten the bolts which hold upper side of transmission to engine.

Tightening torque:
50 N·m (5.1 kgf-m, 36.9 ft-lb)

- AT model

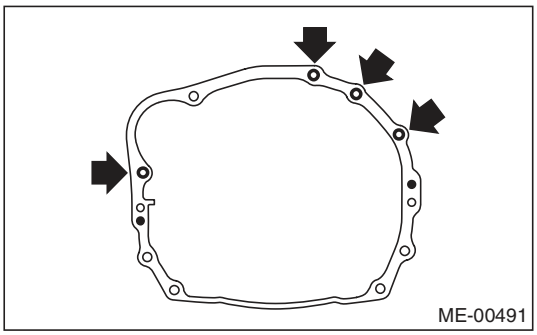

- MT model

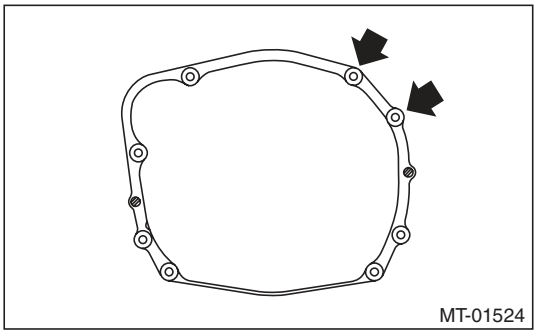

6) Remove the lifting device and wire ropes.

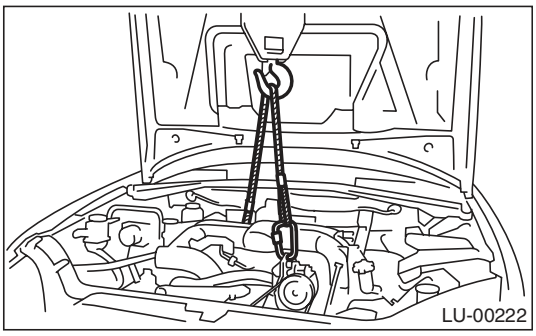

7) Remove the garage jack.
8) Install the pitching stopper.

Tightening torque:
T1: 50 N·m (5.1 kgf-m, 36.9 ft-lb)
T2: 58 N·m (5.9 kgf-m, 42.8 ft-lb)

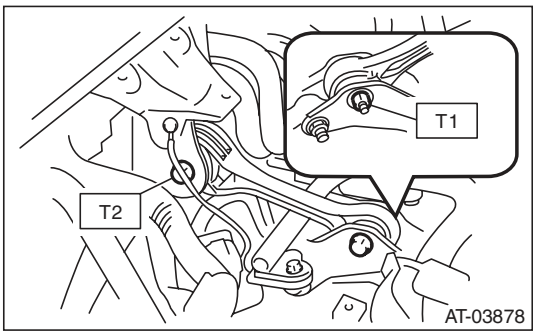

9) Remove the ST from the torque converter clutch case. (AT model)

NOTE:
Be careful not to drop the ST into the torque converter clutch case when removing the ST.
ST 498277200 STOPPER SET

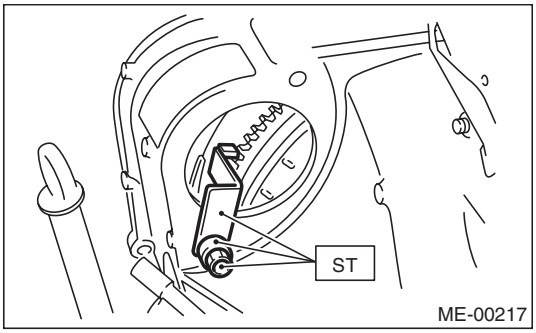

10) Install the starter. <Ref. to SC(H4SO)-6, INSTALLATION, Starter.>

11) Install the torque converter clutch to drive plate. (AT model)
(1) Insert the wrench into the crank pulley bolt and rotate the crank pulley to tighten the bolts which hold torque converter clutch to drive plate.

NOTE:
Be careful not to drop bolts into the torque converter clutch case.

Tightening torque:
25 N·m (2.5 kgf-m, 18.4 ft-lb)

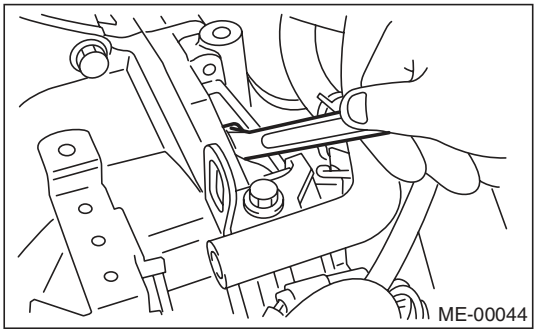

(2) Fit the plug to service hole.
12) Install the power steering pump.
(1) Install the power steering pump.

Tightening torque:
Refer to "COMPONENT" of "Power Steering" for the tightening torque. <Ref. to PS-3, COMPONENT, General Description.>

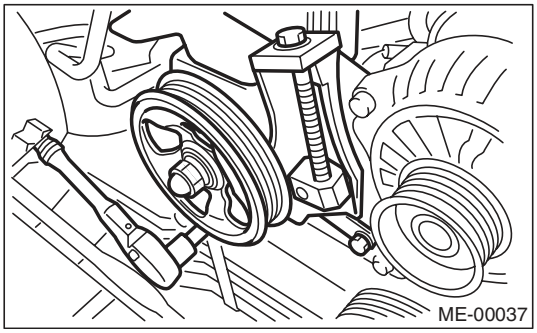

(2) Connect the power steering pump switch connector.

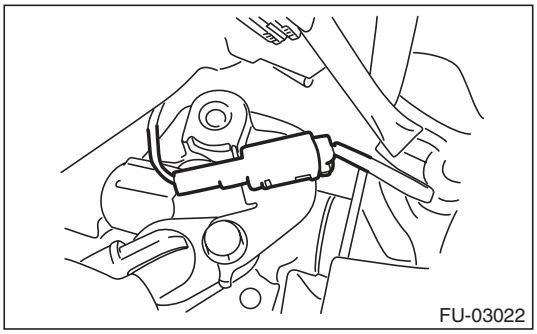

(3) Install and adjust the front side belt. <Ref. to ME(H4DOTC)-42, FRONT SIDE BELT, INSTALLATION, V-belt.>

13) Lift up the vehicle.
14) Tighten the bolts and nuts which hold lower side of the transmission to engine.

Tightening torque:
50 N·m (5.1 kgf-m, 36.9 ft-lb)

- AT model

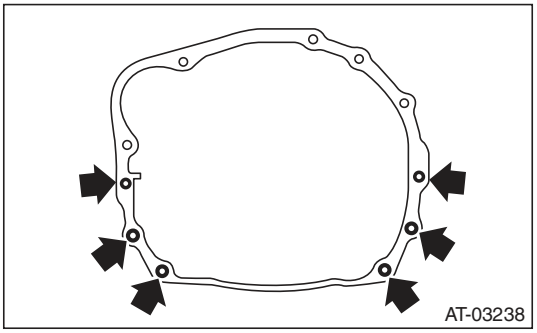

- MT model

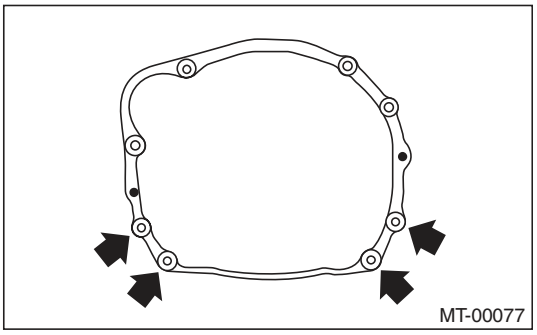

15) Tighten the nuts which hold the engine mount to the crossmember.

NOTE:
Make sure that the engine mount nuts (A) and locator (B) are securely installed.

Tightening torque:
75 N·m (7.6 kgf-m, 55.3 ft-lb)

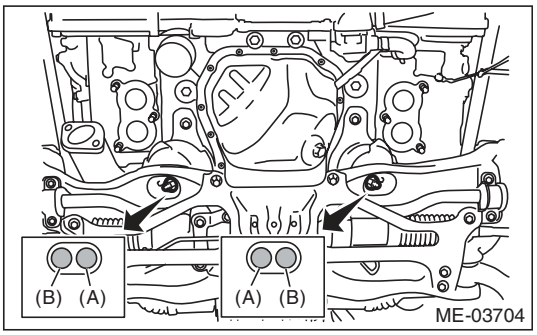

16) Install the joint pipe and front exhaust pipe. <Ref. to EX(H4DOTC)-6, INSTALLATION, Front Exhaust Pipe.> <Ref. to EX(H4DOTC)-11, INSTALLATION, Joint Pipe.>
17) Install the turbocharger. <Ref. to IN(H4DOTC)-15, INSTALLATION, Turbocharger.>
18) Install the center exhaust pipe. <Ref. to EX(H4DOTC)-9, INSTALLATION, Center Exhaust Pipe.>
19) Connect the ground cable.

Tightening torque:
7.5 N·m (0.8 kgf-m, 5.5 ft-lb)

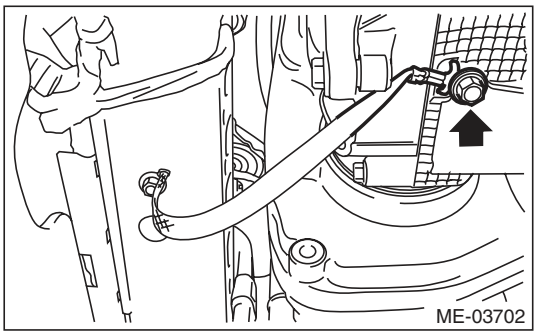

20) Lower the vehicle.
21) Connect the following hoses.
(1) Fuel delivery hose, fuel return hose and evaporation hose
(2) Heater inlet and outlet hoses
(3) Brake booster vacuum hose
22) Connect the following connectors and terminals.
(1) Generator connector and terminal

Tightening torque:
15 N·m (1.5 kgf-m, 11.1 ft-lb)

(2) A/C compressor connector
(3) Secondary air pump connector
23) Install the engine harness connector to engine harness bracket, then connect the bulkhead harness connector to the engine harness connector.

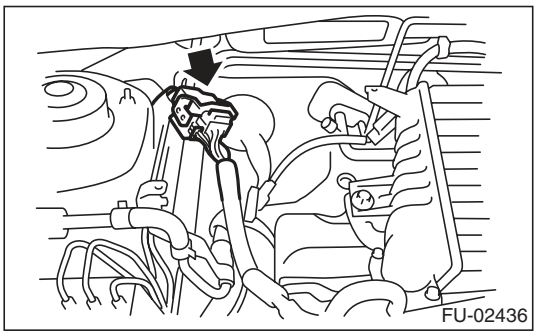

24) Install the intercooler. <Ref. to IN(H4DOTC)-13, INSTALLATION, Intercooler.>
25) Install the A/C pressure hoses. <Ref. to AC-40, INSTALLATION, Hose and Pipe.>
26) Install the radiator. <Ref. to CO(H4DOTC)-21, INSTALLATION, Radiator.>
27) Install the coolant filler tank. <Ref. to CO(H4DOTC)-30, INSTALLATION, Coolant Filler Tank.>

28) Install the air cleaner case and air intake duct. <Ref. to IN(H4DOTC)-8, INSTALLATION, Air Cleaner Case.> <Ref. to IN(H4DOTC)-9, INSTALLATION, Air Intake Duct.>
29) Install the battery. <Ref. to SC(H4SO)-20, INSTALLATION, Battery.>
30) Fill engine coolant. <Ref. to CO(H4DOTC)-14, FILLING OF ENGINE COOLANT, REPLACEMENT, Engine Coolant.>
31) Charge the A/C system with refrigerant. <Ref. to AC-23, PROCEDURE, Refrigerant Charging Procedure.>
32) Check the ATF level and replenish it if necessary. (AT model) <Ref. to 5AT-28, INSPECTION, Automatic Transmission Fluid.>
33) Install the collector cover.
34) Remove the front hood stay, and close the front hood.
35) Lower the vehicle from lift.

C: INSPECTION

1) Check that pipes, hoses, connectors and clamps are installed firmly.
2) Check that the engine coolant is at specified level.
3) Check that the ATF is at specified level. (AT model)
4) Start the engine and check for exhaust gas, engine coolant, leaks of fuel, etc. Also check for noise and vibrations.

10. Engine Mounting

A: REMOVAL

1) Remove the engine unit. <Ref. to ME(H4DOTC)-30, REMOVAL, Engine Assembly.>
2) Remove the engine mounting from engine assembly.

B: INSTALLATION

Install in the reverse order of removal.

Tightening torque:
35 N·m (3.6 kgf-m, 25.8 ft-lb)

C: INSPECTION

Make sure that no crack or other damages do not exist.

11. Preparation for Overhaul

A: PROCEDURE

1) After removing the engine from body, secure it to ST in the following procedure.

ST1	498457000	ENGINE STAND ADAPTER RH
ST2	498457100	ENGINE STAND ADAPTER LH
ST3	499817100	ENGINE STAND

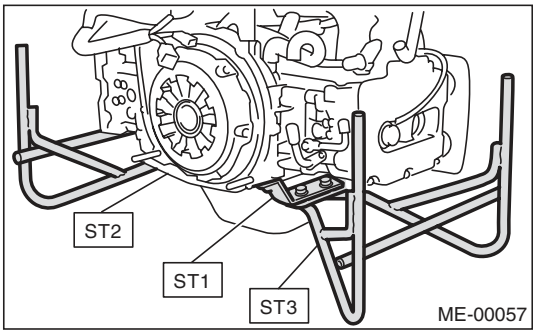

2) In this section the procedures described under each index are all connected and stated in order. The procedure for overhauling of the engine will be completed when you go through all steps in the process.
Therefore, in this section, to conduct the particular procedure within the flow of a section, you need to go back and conduct the procedure described previously in order to do that particular procedure.

12. V-belt

A: REMOVAL

NOTE:
Perform the work with the engine installed to body when replacing a single part.

1. FRONT SIDE BELT

1) Remove the collector cover.
2) Remove the air intake duct. <Ref. to IN(H4DOTC)-9, REMOVAL, Air Intake Duct.>
3) Remove the collector cover bracket.

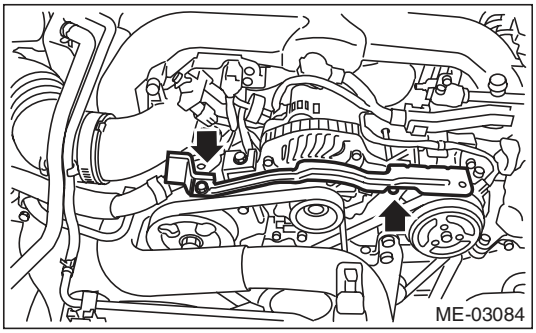

4) Loosen the bolt (A).
5) Loosen the slider bolt (B).
6) Remove the front side belt (C).

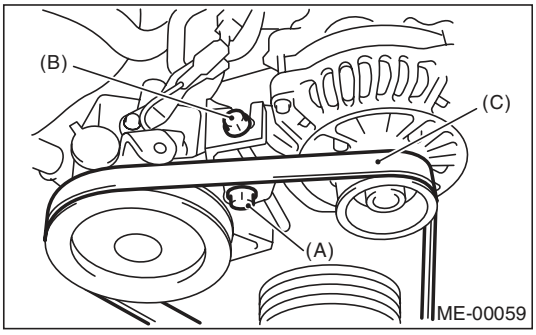

2. REAR SIDE BELT

1) Remove the front side belts. <Ref. to ME(H4DOTC)-41, FRONT SIDE BELT, REMOVAL, V-belt.>
2) Loosen the lock nut (A).
3) Loosen the slider bolt (B).

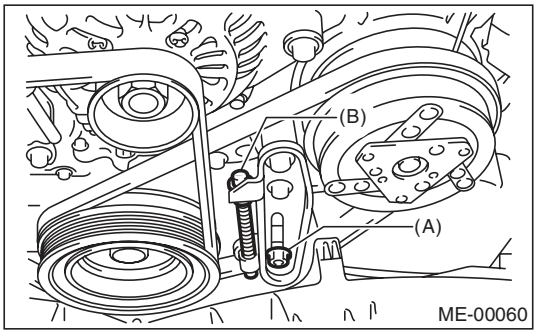

4) Remove the rear side belt.
5) Remove the belt tensioner.

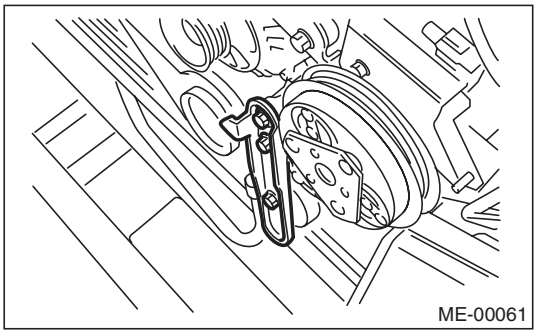

B: INSTALLATION

1. FRONT SIDE BELT

CAUTION:
- **When reusing the front side belt, wipe off dust and water with cloth.**
- **Do not use the front side belt if there is any oil, grease or coolant on the belt.**
- **Be careful not to rub the belt end surface with bare hands; exposed core may cause injury.**

1) Wipe off any dust, oil and water on the groove of each pulley with cloth.
2) Install the front side belt (C), and adjust the slider bolt (B) so as to obtain the specified belt tension. <Ref. to ME(H4DOTC)-43, INSPECTION, V-belt.>
3) Tighten the bolt (A).
4) Tighten the slider bolt (B).

Tightening torque:
Bolt (A):
25 N·m (2.5 kgf-m, 18.4 ft-lb)
Slider bolt (B):
8 N·m (0.8 kgf-m, 5.9 ft-lb)

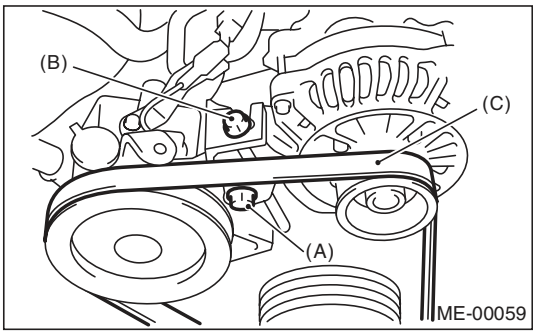

5) Install the collector cover bracket.
T1: 8.5 N·m (0.9 kgf-m, 6.3 ft-lb)
T2: 25 N·m (2.5 kgf-m, 18.4 ft-lb)

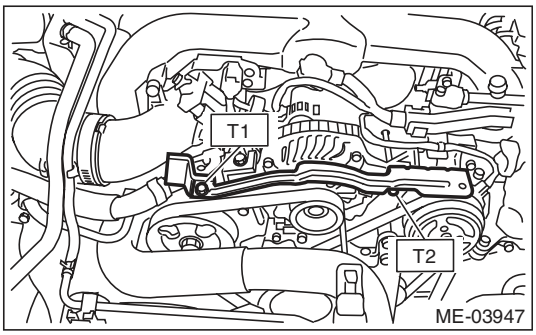

6) Install the air intake duct. <Ref. to IN(H4DOTC)-9, INSTALLATION, Air Intake Duct.>
7) Install the collector cover.

2. REAR SIDE BELT

CAUTION:
- **When reusing the rear side belt, wipe off dust and water with cloth.**
- **Do not use the rear side belt if there is any oil, grease or coolant on the belt.**
- **Be careful not to rub the belt end surface with bare hands; exposed core may cause injury.**

1) Wipe off any dust, oil and water on the groove of each pulley with cloth.
2) Install the belt tensioner.
3) Install a rear side belt, and tighten the slider bolt (B) so as to obtain the specified belt tension. <Ref. to ME(H4DOTC)-43, INSPECTION, V-belt.>
4) Tighten the lock nut (A).

Tightening torque:
Lock nut (A):
23 N·m (2.3 kgf-m, 17.0 ft-lb)

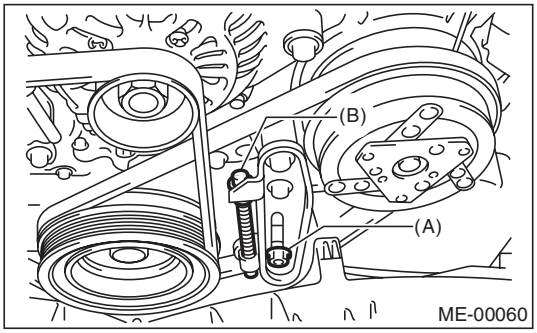

5) Install the front side belt. <Ref. to ME(H4DOTC)-42, FRONT SIDE BELT, INSTALLATION, V-belt.>

C: INSPECTION

1) Replace the belts, if crack, fraying or wear is found.
2) Check the belt tension and adjust it if necessary by changing the generator installing position and idler pulley installing position.

Belt tension (with belt tension gauge):

(A)
When installing new parts:
640 — 780 N (65 — 80 kgf, 144 — 175 lbf)
At inspection:
490 — 640 N (50 — 65 kgf, 110 — 144 lbf)

(B)
When installing new parts:
650 — 750 N (66 — 76 kgf, 146 — 169 lbf)
At inspection:
350 — 450 N (36 — 46 kgf, 78 — 101 lbf)

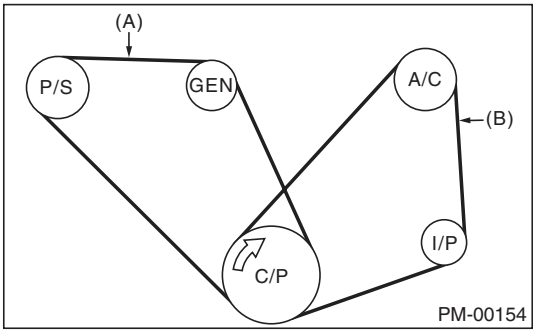

(A) Front side belt
(B) Rear side belt
C/P Crank pulley
GEN Generator pulley
P/S Power steering oil pump pulley
A/C A/C compressor pulley
I/P Idler pulley

Belt tension (without belt tension gauge)

(A)
When installing new parts:
7 — 9 mm (0.276 — 0.354 in)
At inspection:
9 — 11 mm (0.354 — 0.433 in)

(B)
When installing new parts:
7.5 — 8.5 mm (0.295 — 0.335 in)
At inspection:
9.0 — 10.0 mm (0.354 — 0.394 in)

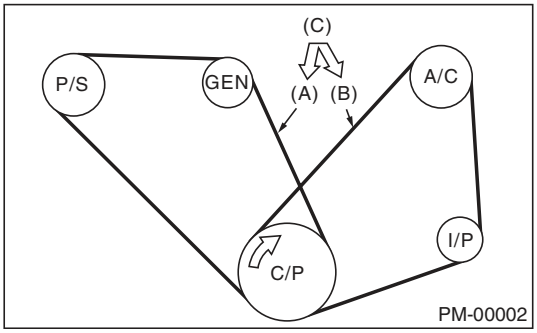

(A) Front side belt
(B) Rear side belt
(C) 98 N (10 kgf, 22 lbf)
C/P Crank pulley
GEN Generator pulley
P/S Power steering oil pump pulley
A/C A/C compressor pulley
I/P Idler pulley

13. Crank Pulley

A: REMOVAL

NOTE:
When replacing the single part, perform the work with the engine installed to body.

1) Remove the V-belts. <Ref. to ME(H4DOTC)-41, REMOVAL, V-belt.>

2) Use the ST to lock the crank pulley, and remove the crank pulley bolts.

ST 499977100 CRANK PULLEY WRENCH (MT MODEL)

ST 499977400 CRANK PULLEY WRENCH (AT MODEL)

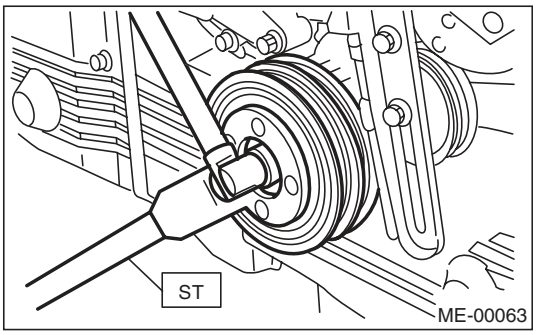

3) Remove the crank pulley.

B: INSTALLATION

1. AT MODEL

1) Install the crank pulley.

2) Use the ST to lock the crank pulley, and install the crank pulley bolt.

ST 499977400 CRANK PULLEY WRENCH

(1) Clean the crankshaft thread using compressed air.

(2) Apply engine oil to the crank pulley bolt seat and thread.

(3) Tighten the bolts temporarily with tightening torque of 44 N·m (4.5 kgf-m, 32.5 ft-lb).

(4) Tighten the crank pulley bolts.

Tightening torque:
130 N·m (13.3 kgf-m, 95.9 ft-lb)

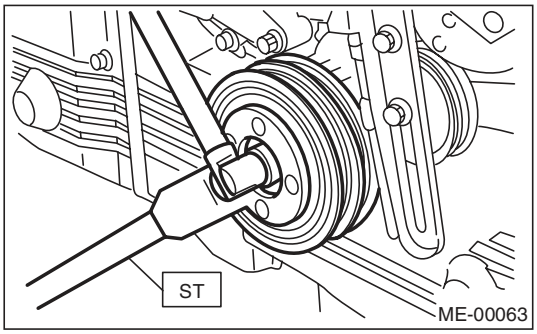

3) Check that the tightening angle of the crank pulley bolt is 45° or more. Perform the following procedure when less than 45°.

CAUTION:
If the tightening angle of crank pulley bolt is less than 45°, the bolt is damaged. In this case, the bolt must be replaced.

(1) Replace the crank pulley bolts and clean them.

Crank pulley bolt:
Part No. 12369AA011

(2) Clean the crankshaft thread using compressed air.

(3) Apply engine oil to the crank pulley bolt seat and thread.

(4) Tighten the bolts temporarily with tightening torque of 44 N·m (4.5 kgf-m, 32.5 ft-lb).

(5) Tighten the crank pulley bolts by 45° to 60°.

NOTE:
Conduct the tightening procedures by confirming the turning angle of crank pulley bolt referring to the gauge indicated on timing belt cover.

4) Install the V-belts. <Ref. to ME(H4DOTC)-42, INSTALLATION, V-belt.>

2. MT MODEL

1) Install the crank pulley.
2) Use the ST to lock the crank pulley, and install the crank pulley bolt.
ST 499977100 CRANK PULLEY WRENCH
(1) Clean the crankshaft thread using compressed air.
(2) Apply engine oil to the crank pulley bolt seat and thread.
(3) Tighten the bolts temporarily with tightening torque of 44 N·m (4.5 kgf-m, 32.5 ft-lb).
(4) Tighten the crank pulley bolts.

Tightening torque:
180 N·m (18.4 kgf-m, 132.8 ft-lb)

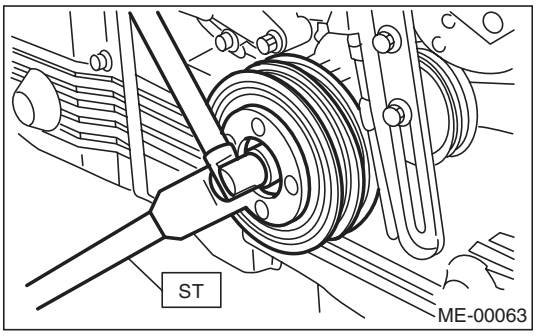

3) Check that the tightening angle of the crank pulley bolt is 65° or more. Perform the following procedure when less than 65°.

CAUTION:
If the tightening angle of crank pulley bolt is less than 65°, the bolt is damaged. In this case, the bolt must be replaced.
(1) Replace the crank pulley bolts and clean them.

Crank pulley bolt:
Part No. 12369AA011
(2) Clean the crankshaft thread using compressed air.
(3) Apply engine oil to the crank pulley bolt seat and thread.
(4) Tighten the bolts temporarily with tightening torque of 44 N·m (4.5 kgf-m, 32.5 ft-lb).
(5) Tighten the crank pulley bolts by 65° to 75°.

NOTE:
Conduct the tightening procedures by confirming the turning angle of crank pulley bolt referring to the gauge indicated on timing belt cover.
4) Install the V-belts. <Ref. to ME(H4DOTC)-42, INSTALLATION, V-belt.>

C: INSPECTION

1) Make sure the belt is not worn or otherwise damaged.
2) Check the tension of the belt. <Ref. to ME(H4DOTC)-43, INSPECTION, V-belt.>

14. Timing Belt Cover

A: REMOVAL

NOTE:
When replacing the single part, perform the work with the engine installed to body.

1) Remove the secondary air pump. <Ref. to EC(H4DOTC)-21, REMOVAL, Secondary Air Pump.>
2) Remove the V-belts. <Ref. to ME(H4DOTC)-41, REMOVAL, V-belt.>
3) Remove the crank pulley. <Ref. to ME(H4DOTC)-44, REMOVAL, Crank Pulley.>
4) Remove the timing belt cover LH (A).
5) Remove the timing belt cover RH (B).
6) Remove the front timing belt cover (C).

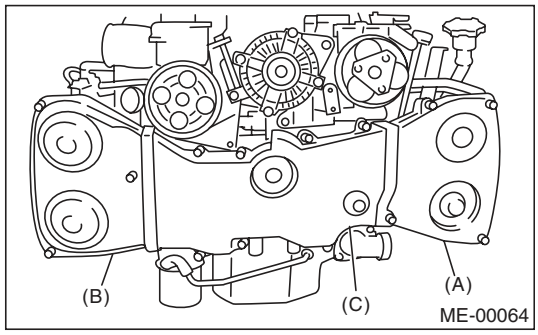

B: INSTALLATION

1) Install the front timing belt cover (C).

Tightening torque:
5 N·m (0.5 kgf-m, 3.7 ft-lb)

2) Install the timing belt cover RH (B).

Tightening torque:
5 N·m (0.5 kgf-m, 3.7 ft-lb)

3) Install the timing belt cover LH (A).

Tightening torque:
5 N·m (0.5 kgf-m, 3.7 ft-lb)

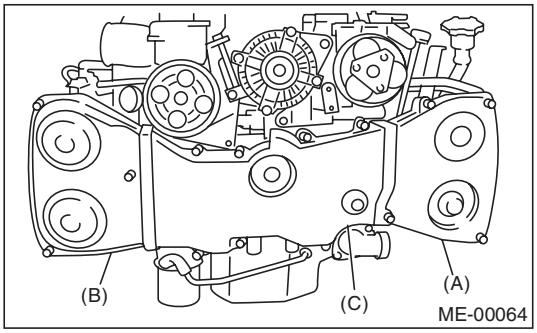

4) Install the crank pulley. <Ref. to ME(H4DOTC)-44, INSTALLATION, Crank Pulley.>
5) Install the V-belts. <Ref. to ME(H4DOTC)-42, INSTALLATION, V-belt.>
6) Install the secondary air pump. <Ref. to EC(H4DOTC)-21, INSTALLATION, Secondary Air Pump.>

C: INSPECTION

Check the timing belt cover for damage.

15. Timing Belt

A: REMOVAL

NOTE:
When replacing the single part, perform the work with the engine installed to body. For operation procedures, refer to “Timing Belt” in the PM section. <Ref. to PM-20, Timing Belt.>

1. TIMING BELT

1) Remove the V-belts. <Ref. to ME(H4DOTC)-41, REMOVAL, V-belt.>
2) Remove the crank pulley. <Ref. to ME(H4DOTC)-44, REMOVAL, Crank Pulley.>
3) Remove the timing belt cover. <Ref. to ME(H4DOTC)-46, REMOVAL, Timing Belt Cover.>
4) Remove the timing belt guide. (MT model)

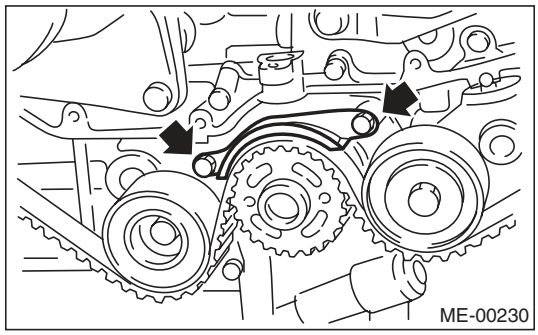

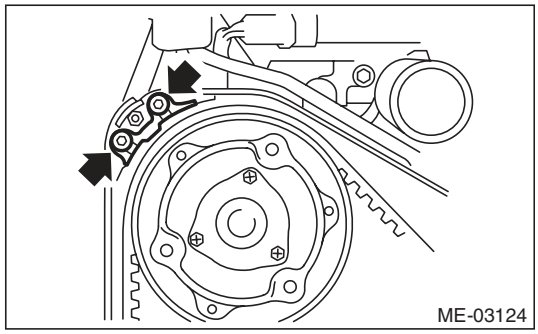

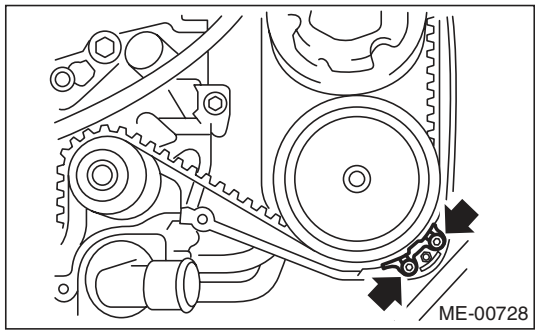

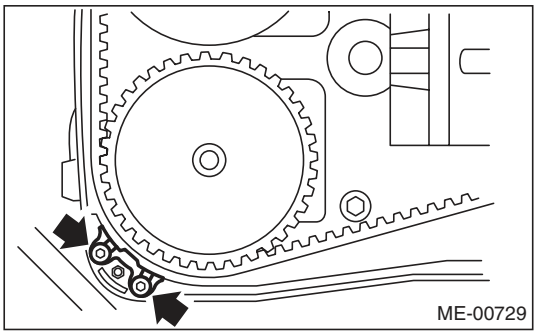

5) If the alignment mark or arrow mark (which indicates the direction of rotation) on timing belt fade away, put new marks before removing the timing belt as shown in procedures below.
   (1) Turn the crankshaft using ST, and align the alignment marks on crank sprocket, intake cam sprocket LH, exhaust cam sprocket LH, intake cam sprocket RH and exhaust cam sprocket RH with marks on oil pump and notches of timing belt cover.

ST 499987500 CRANKSHAFT SOCKET

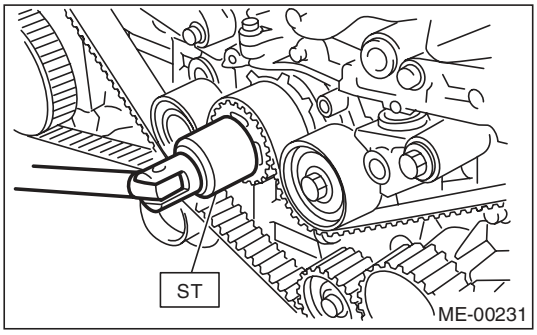

(2) Using white paint, put an alignment mark or an arrow mark on timing belts in relation to the crank sprocket and cam sprockets.

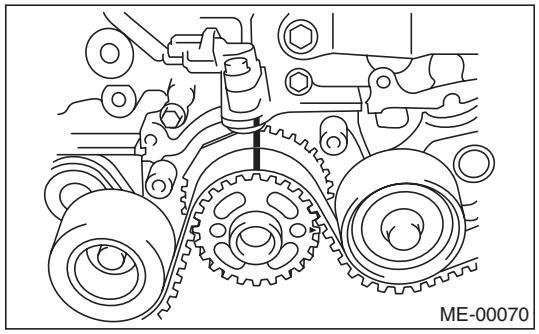

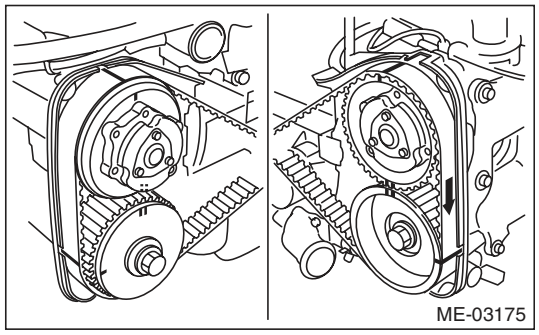

Z_1: 54.5 teeth
Z_2: 51 teeth
Z_3: 28 teeth

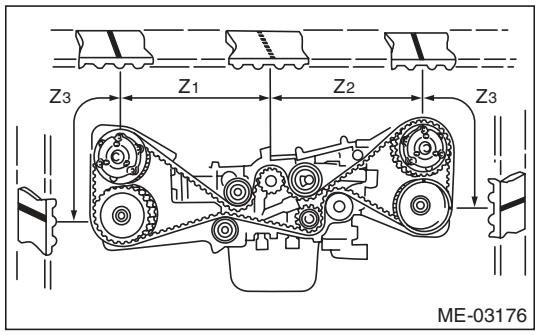

6) Remove the belt idler (A).

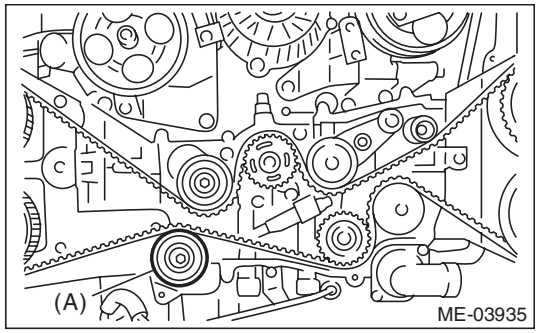

7) Remove the timing belt.

CAUTION:
After the timing belt has been removed, never rotate the intake and exhaust sprocket. If the cam sprocket is rotated, the intake and exhaust valve heads strike together and valve stems are bent.

2. AUTOMATIC BELT TENSION ADJUSTER ASSEMBLY AND BELT IDLER

1) Remove the belt idler (A) and (B).

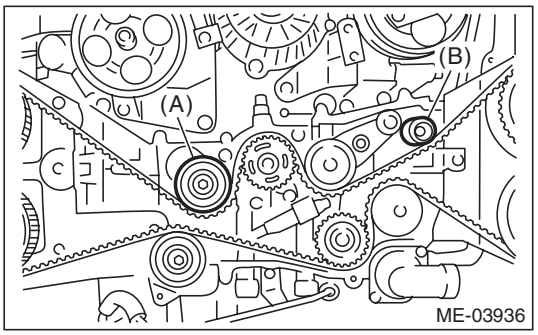

2) Remove the belt idler No. 2.

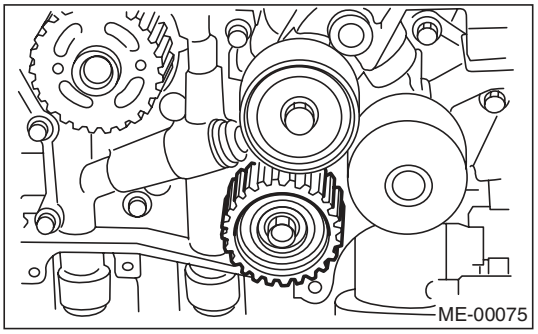

3) Remove the automatic belt tension adjuster assembly.

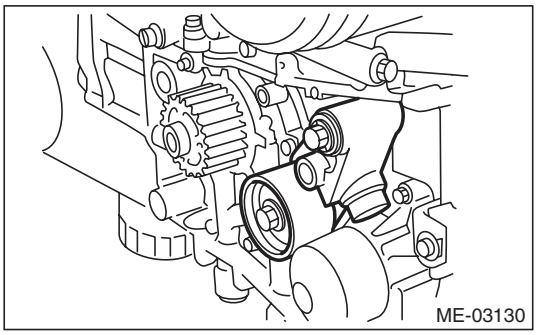

B: INSTALLATION

1. AUTOMATIC BELT TENSION ADJUSTER ASSEMBLY AND BELT IDLER

1) Prepare for installation of the automatic belt tension adjuster assembly.

CAUTION:
- **Always use a vertical type pressing tool to move the adjuster rod down.**
- **Do not use a lateral type vise.**
- **Push the adjuster rod vertically.**
- **Press-in the push adjuster rod gradually taking three minutes or more.**
- **Do not allow press pressure to exceed 9,807 N (1,000 kgf, 2,205 lbf).**
- **Push in the adjuster rod to the end face of the cylinder. However, do not press the adjuster rod below the end face of the cylinder. Doing so may damage the cylinder.**
- **Do not release the press pressure until stopper pin is completely inserted.**

(1) Attach the automatic belt tension adjuster assembly to vertical pressing tool.

(2) Slowly push in the adjuster rod with a pressure of 165 N (16.8 kgf, 37.1 lbf) or more until the adjuster rod is aligned with the stopper pin hole in the cylinder.

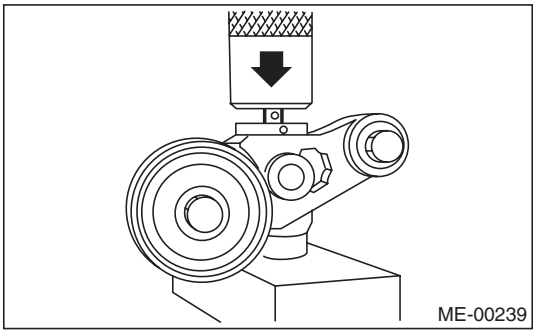

(3) With a 2 mm (0.08 in) dia. stopper pin or a 2 mm (0.08 in) (nominal) dia. hex wrench inserted into the stopper pin hole in cylinder, secure the adjuster rod.

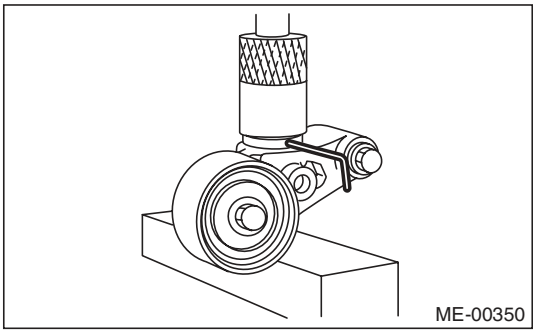

2) Install the automatic belt tension adjuster assembly.

Tightening torque:
39 N·m (4.0 kgf-m, 28.8 ft-lb)

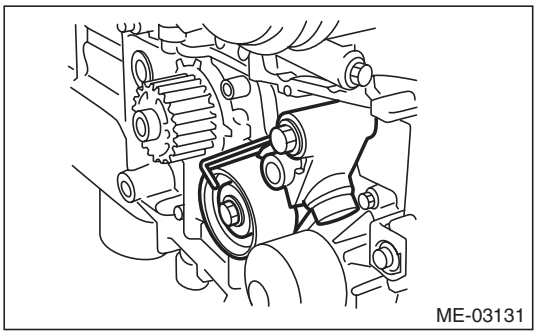

3) Install the belt idler No. 2.

Tightening torque:
39 N·m (4.0 kgf-m, 28.8 ft-lb)

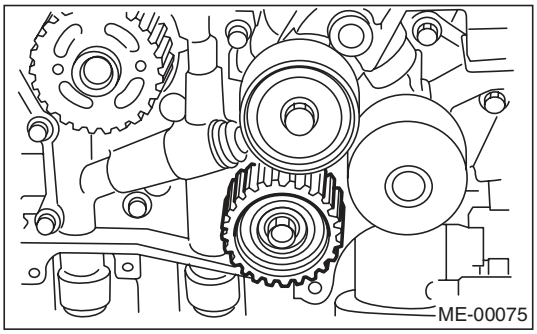

4) Install the belt idlers.

Tightening torque:
39 N·m (4.0 kgf-m, 28.8 ft-lb)

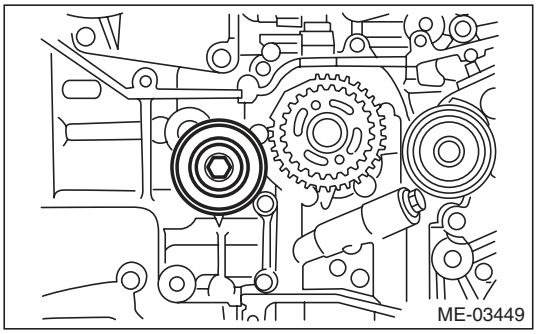

Tightening torque:
25 N·m (2.5 kgf-m, 18.4 ft-lb)

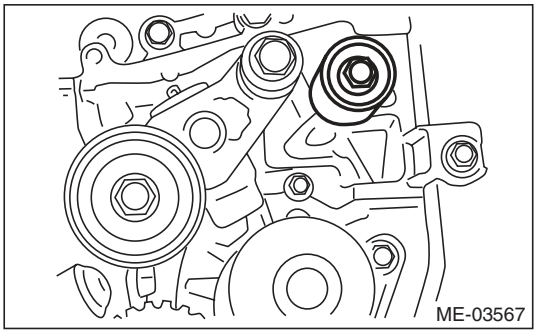

2. TIMING BELT

1) Prepare for installation of the automatic belt tension adjuster assembly. <Ref. to ME(H4DOTC)-49, AUTOMATIC BELT TENSION ADJUSTER ASSEMBLY AND BELT IDLER, INSTALLATION, Timing Belt.>

2) Align the mark (A) on crank sprocket with the mark (B) on oil pump.

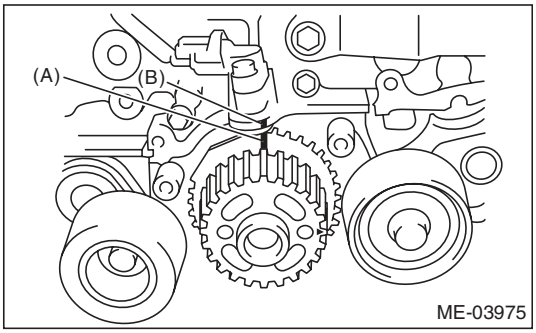

3) Align single line mark (A) on the exhaust cam sprocket RH with notch (B) on timing belt cover.

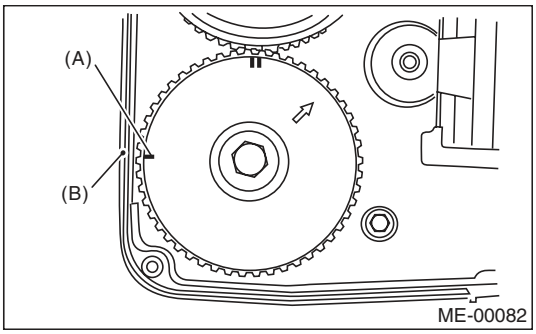

4) Align single line mark (A) on the intake cam sprocket RH with notch (B) on timing belt cover. Make sure that the double line marks (C) on intake and exhaust cam sprockets are aligned.

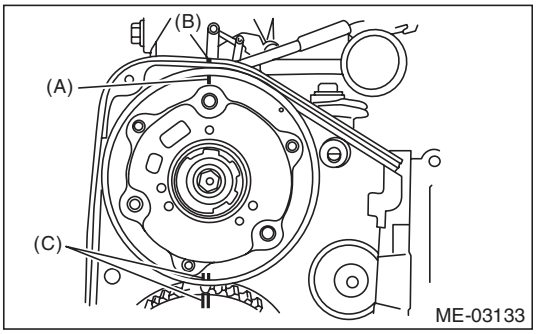

5) Align the single line mark (A) on exhaust cam sprocket LH with notch (B) on the timing belt cover by turning the sprocket counterclockwise (as viewed from front of engine).

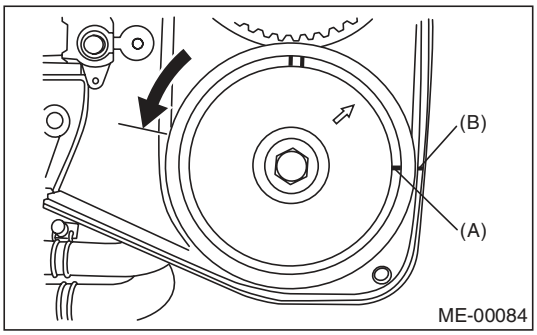

6) Align the single line mark (A) on intake cam sprocket LH with notch (B) on the timing belt cover by turning the sprocket clockwise (as viewed from front of engine). Make sure the double line marks (C) on the intake and exhaust cam sprockets are aligned.

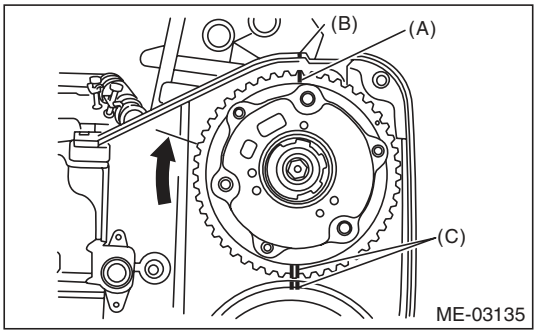

7) Make sure that the cam and crank sprockets are positioned properly.

CAUTION:

• Intake and exhaust camshafts for this DOHC engine can be independently rotated with the timing belts removed. As can be seen from the figure, if the intake and exhaust valves are lifted simultaneously, the valve heads will interfere with each other, resulting in bent valves.

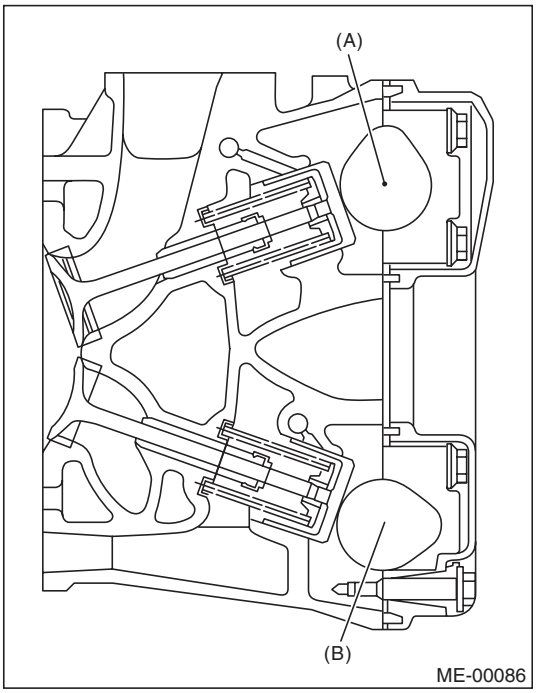

(A) Intake camshaft
(B) Exhaust camshaft

• When the timing belts are not installed, four camshafts are held at the "zero-lift" position, where all cams on camshafts are not pushing down on the intake and exhaust valves. (Under this condition, all valves remain unlifted.)

• When the camshafts are rotated to install the timing belts, #2 intake and #4 exhaust cam of camshaft LH are held, pushing their corresponding valves down. (Under this condition, these valves are held lifted.) Camshaft RH are held so that their cams do not push the valves down.

• Camshafts LH must be rotated from the zero-lift position to the position where the timing belt is to be installed with the smallest possible angle, in order to prevent mutual interference of intake and exhaust valve heads.

• Do not allow the camshafts to rotate in the direction shown in the upper figure. Doing this may cause both the intake and exhaust valves to lift simultaneously, resulting in mutual interference of heads.

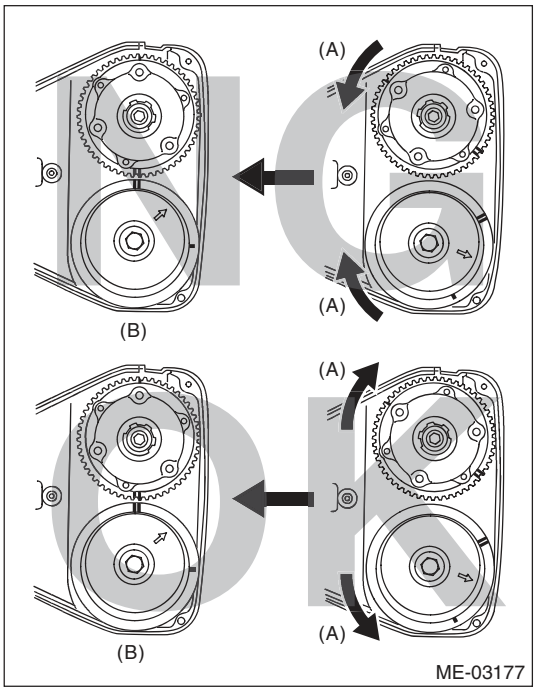

(A) Direction of rotation
(B) Timing belt installation position

8) Install the timing belt.
Align the alignment mark on the timing belt with marks on the sprockets in the alphabetical order shown in the figure. While aligning marks, position the timing belt properly.

CAUTION:
- **Disengagement of more than three timing belt teeth may result in interference between the valve and piston.**
- **Make sure that the direction of belt rotation is correct.**

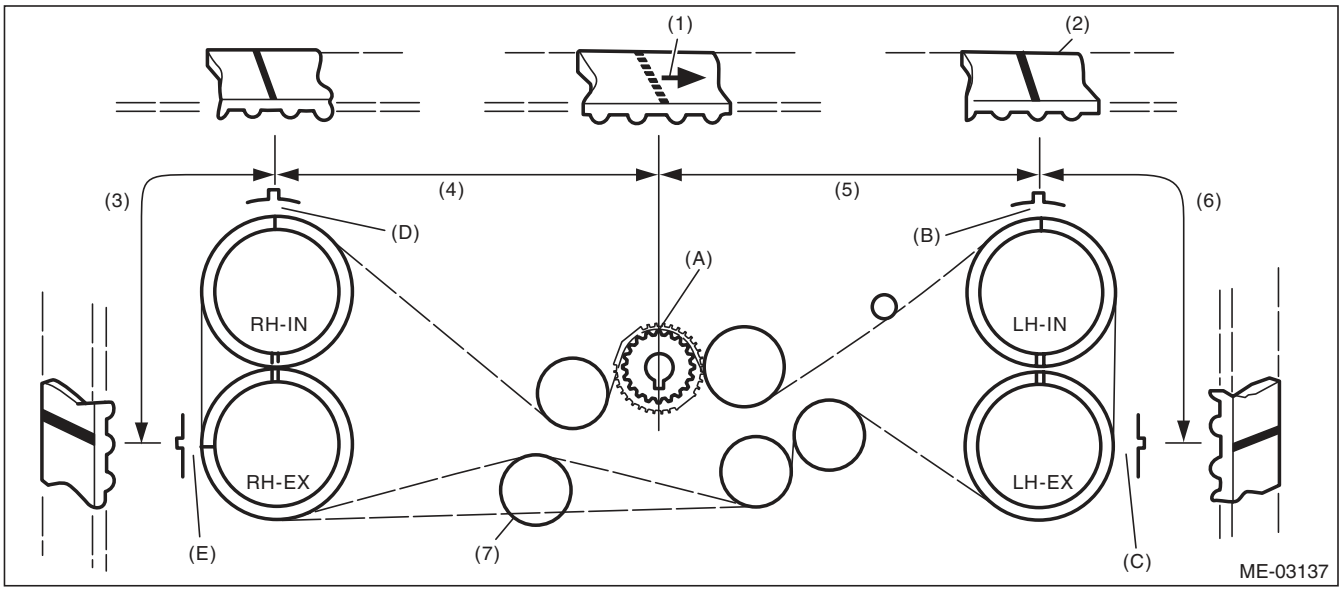

(1)	Arrow mark	(4)	54.5-teeth length	(6)	28-teeth length
(2)	Timing belt	(5)	51-teeth length	(7)	Install it in the end
(3)	28-teeth length				

9) Install the belt idlers.

Tightening torque:
39 N·m (4.0 kgf-m, 28.8 ft-lb)

NOTE:
Make sure that the marks on the timing belt and sprockets are aligned.

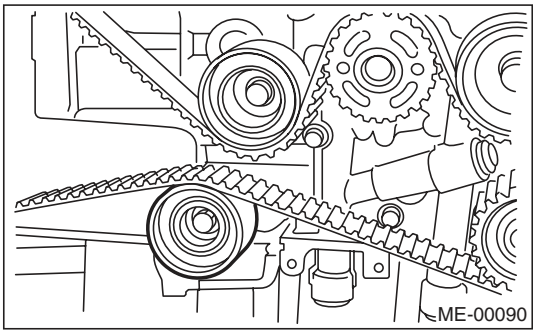

10) After ensuring that the marks on the timing belt and sprockets are aligned, remove the stopper pin from tensioner adjuster.

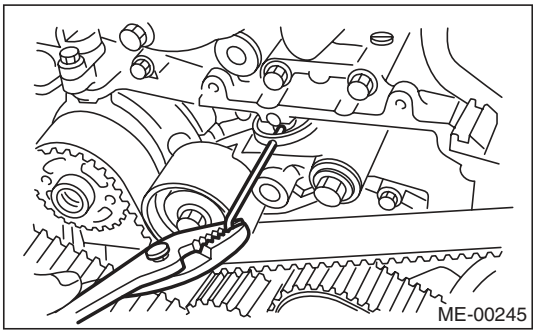

11) Install the timing belt guide. (MT model)
(1) Temporarily tighten the bolts mounting the timing belt guide.

NOTE:
• Before installing bolts, clean the bolt holes of timing belt cover.
• Apply liquid gasket to the threaded portion of cam sprocket. (when reusing bolts)

Liquid gasket:
THREE BOND 1324 (Part No. 004403042) or equivalent

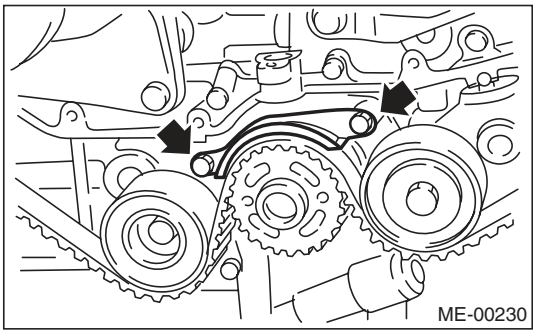

(2) Check and adjust the clearance between timing belt and timing belt guide using a thickness gauge.

Clearance:
1.0±0.5 mm (0.039±0.020 in)

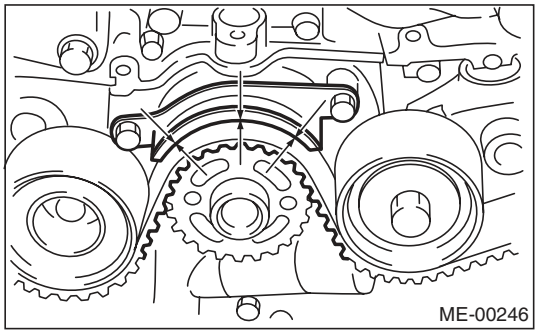

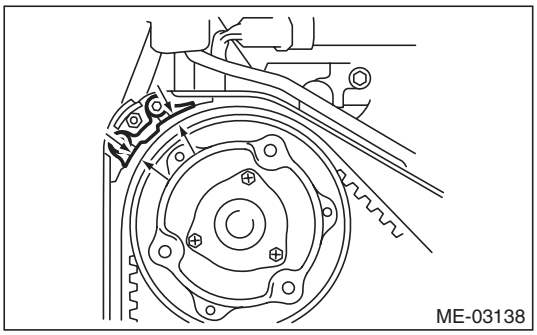

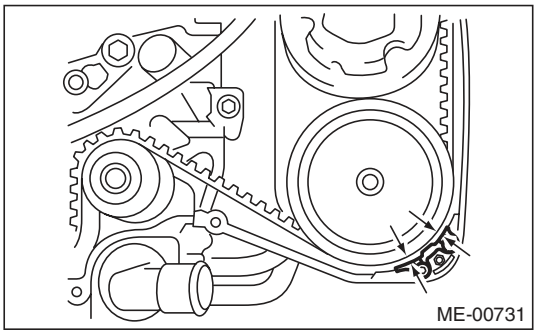

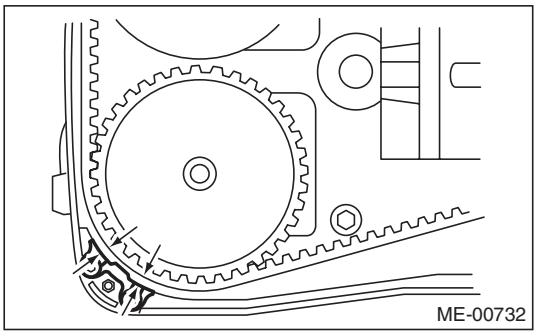

(3) Tighten the bolts mounting the timing belt guide.

Tightening torque:
9.75 N·m (1.0 kgf-m, 7.2 ft-lb)

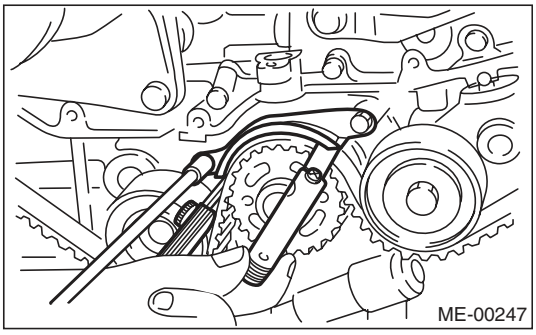

Tightening torque:
6.4 N·m (0.7 kgf-m, 4.7 ft-lb)

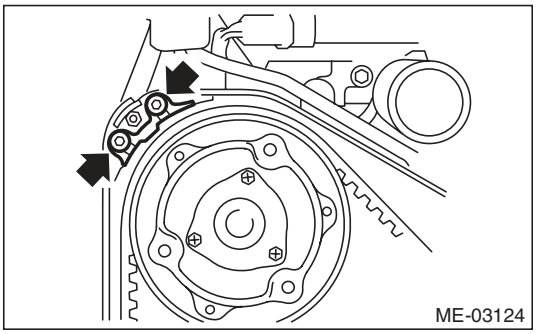

Tightening torque:
6.4 N·m (0.7 kgf-m, 4.7 ft-lb)

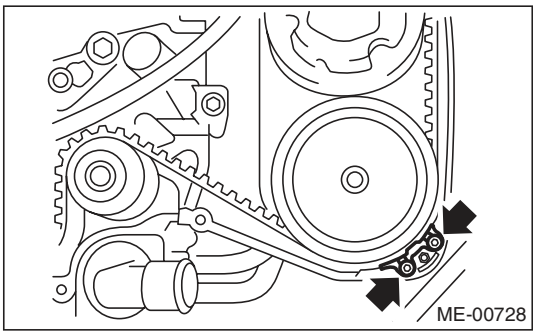

Tightening torque:
6.4 N·m (0.7 kgf-m, 4.7 ft-lb)

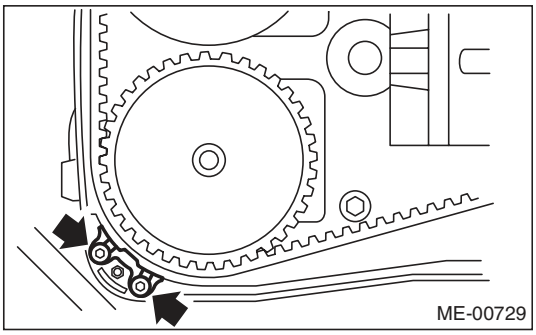

12) Install the timing belt cover. <Ref. to ME(H4DOTC)-46, INSTALLATION, Timing Belt Cover.>
13) Install the crank pulley. <Ref. to ME(H4DOTC)-44, INSTALLATION, Crank Pulley.>
14) Install the V-belts. <Ref. to ME(H4DOTC)-42, INSTALLATION, V-belt.>

C: INSPECTION

1. TIMING BELT

1) Check the timing belt teeth for breaks, cracks or wear. If any fault is found, replace the timing belt.
2) Check the condition on the back surface of the timing belt. If cracks are found, replace the timing belt.

CAUTION:
- **Be careful not to let oil, grease or coolant contact the timing belt. Remove quickly and thoroughly if this happens.**
- **Do not bend the timing belt sharply.**

In radial diameter h:
60 mm (2.36 in) or more

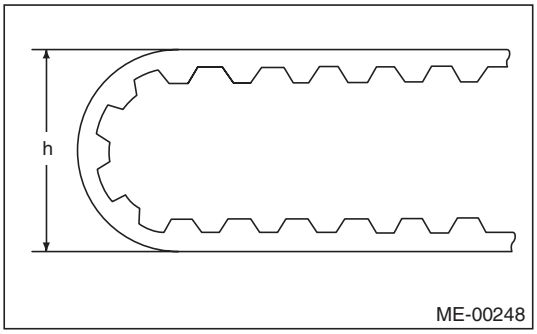

2. AUTOMATIC BELT TENSION ADJUSTER

1) Visually check the oil seals for leaks, and rod ends for abnormal wear and scratches. If necessary, replace the automatic belt tension adjuster assembly.

NOTE:
Slight traces of oil on the oil seal of the rod does not indicate a problem.

2) Check that the adjuster rod does not move when a pressure of 165 N (16.8 kgf, 37.1 lbf) is applied to it. This is to check adjuster rod stiffness.

3) If the adjuster rod is not stiff and moves freely when applying 165 N (16.8 kgf, 37.1 lbf), check it using the following procedures:

(1) Slowly press the adjuster rod down to the end surface of cylinder. Repeat this operation two to three times.

(2) With the adjuster rod moved all the way up, apply a pressure of 165 N (16.8 kgf, 37.1 lbf) to it, and check the adjuster rod stiffness.

(3) If the adjuster rod is not stiff and moves down, replace the automatic belt tension adjuster assembly with a new part.

CAUTION:
- **Always use a vertical type pressing tool to move the adjuster rod down.**
- **Do not use a lateral type vise.**
- **Push the adjuster rod vertically.**
- **Press-in the push adjuster rod gradually taking three minutes or more.**
- **Do not allow press pressure to exceed 9,807 N (1,000 kgf, 2,205 lbf).**
- **Push in the adjuster rod to the end face of the cylinder. However, do not press the adjuster rod below the end face of the cylinder. Doing so may damage the cylinder.**

4) Measure the amount of rod protrusion “H” from the end surface of the body. If it is not within specifications, replace the automatic belt tension adjuster assembly with a new part.

Amount of rod protrusion H:
5.2 — 6.2 mm (0.205 — 0.244 in)

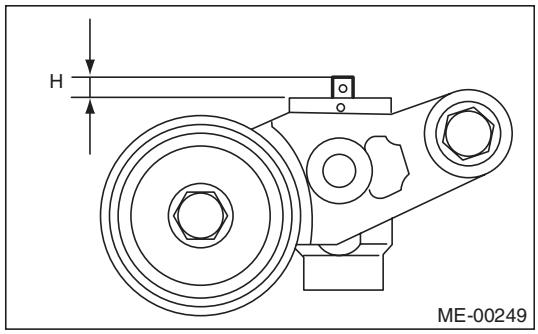

3. BELT TENSION PULLEY

1) Check the mating surfaces of timing belt and contact point of adjuster rod for abnormal wear or scratches. Replace the automatic belt tension adjuster assembly with a new part if faulty.

2) Check the belt tension pulley for smooth rotation. Replace the automatic belt tension adjuster assembly with a new part if abnormal noise or excessive play occurs.

3) Check the belt tension pulley for grease leakage.

4. BELT IDLER

1) Check the belt idler for smooth rotation. Replace if noise or excessive play occurs.

2) Check the outer contacting surfaces of idler pulley for abnormal wear and scratches.

3) Check the belt idler for grease leakage.

16.Cam Sprocket

A: REMOVAL

NOTE:
When replacing the single part, perform the work with the engine installed to body.

1) Remove the V-belts. <Ref. to ME(H4DOTC)-41, REMOVAL, V-belt.>
2) Remove the crank pulley. <Ref. to ME(H4DOTC)-44, REMOVAL, Crank Pulley.>
3) Remove the timing belt cover. <Ref. to ME(H4DOTC)-46, REMOVAL, Timing Belt Cover.>
4) Remove the timing belt. <Ref. to ME(H4DOTC)-47, REMOVAL, Timing Belt.>
5) Remove the actuator cover of the intake cam sprocket.
6) Fasten the cam sprocket and remove from the cam shaft using ST.

ST 499207400 CAM SPROCKET WRENCH

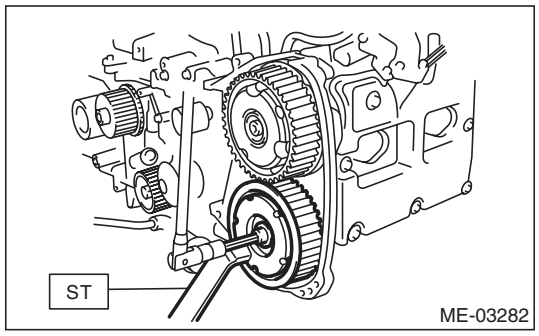

ST 499977500 CAM SPROCKET WRENCH

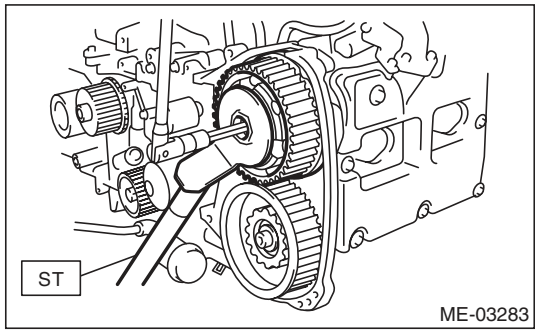

B: INSTALLATION

1) Fasten the cam sprocket and install to the cam shaft using ST.

NOTE:
Do not confuse the cam sprockets (LH) and (RH) during installation.

ST 499207400 CAM SPROCKET WRENCH

Tightening torque:
Tighten to 30 N·m (3.1 kgf-m, 22.1 ft-lb) of torque, and then tighten further by 45°.

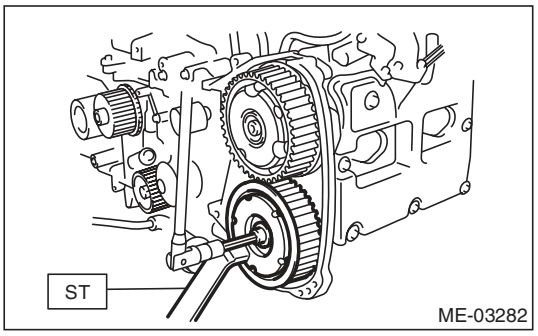

ST 499977500 CAM SPROCKET WRENCH

Tightening torque:
Tighten to 30 N·m (3.1 kgf-m, 22.1 ft-lb) of torque, and then tighten further by 45°.

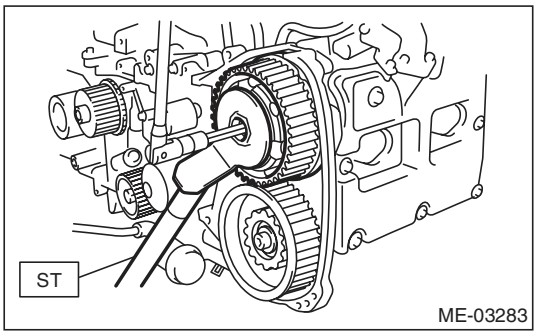

2) Attach the actuator cover of the intake cam sprocket.

NOTE:
Use new O-rings.

Tightening torque:
3.4 N·m (0.3 kgf-m, 2.5 ft-lb)

3) Install the timing belt. <Ref. to ME(H4DOTC)-49, INSTALLATION, Timing Belt.>
4) Install the timing belt cover. <Ref. to ME(H4DOTC)-46, INSTALLATION, Timing Belt Cover.>
5) Install the crank pulley. <Ref. to ME(H4DOTC)-44, INSTALLATION, Crank Pulley.>
6) Install the V-belts. <Ref. to ME(H4DOTC)-42, INSTALLATION, V-belt.>

C: INSPECTION

1) Check the cam sprocket teeth for abnormal wear and scratches.
2) Make sure there is no free play between cam sprocket and key.

17. Crank Sprocket

A: REMOVAL

NOTE:
When replacing the single part, perform the work with the engine installed to body.

1) Remove the V-belts. <Ref. to ME(H4DOTC)-41, REMOVAL, V-belt.>
2) Remove the crank pulley. <Ref. to ME(H4DOTC)-44, REMOVAL, Crank Pulley.>
3) Remove the timing belt cover. <Ref. to ME(H4DOTC)-46, REMOVAL, Timing Belt Cover.>
4) Remove the timing belt. <Ref. to ME(H4DOTC)-47, REMOVAL, Timing Belt.>
5) Remove the crank sprocket.

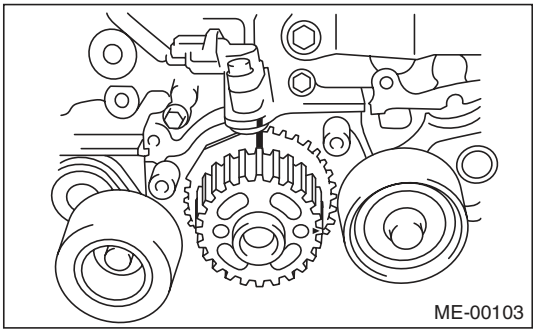

B: INSTALLATION

1) Install the crank sprocket.

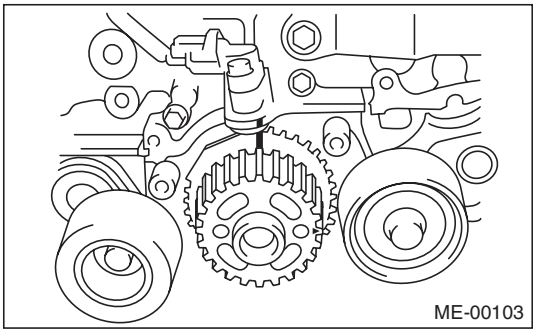

2) Install the timing belt. <Ref. to ME(H4DOTC)-49, INSTALLATION, Timing Belt.>
3) Install the timing belt cover. <Ref. to ME(H4DOTC)-46, INSTALLATION, Timing Belt Cover.>
4) Install the crank pulley. <Ref. to ME(H4DOTC)-44, INSTALLATION, Crank Pulley.>
5) Install the V-belts. <Ref. to ME(H4DOTC)-42, INSTALLATION, V-belt.>

C: INSPECTION

1) Check the crank sprocket teeth for abnormal wear and scratches.
2) Make sure there is no free play between crank sprocket and key.
3) Check the crank sprocket protrusion used for sensor for damage and contamination of foreign matter.

18.Camshaft

A: REMOVAL

NOTE:
When replacing the single part, perform the work with the engine installed to body. Refer to “Valve Clearance” for preparation procedures. <Ref. to ME(H4DOTC)-26, INSPECTION, Valve Clearance.>

1) Remove the V-belts. <Ref. to ME(H4DOTC)-41, REMOVAL, V-belt.>
2) Remove the crank pulley. <Ref. to ME(H4DOTC)-44, REMOVAL, Crank Pulley.>
3) Remove the timing belt cover. <Ref. to ME(H4DOTC)-46, REMOVAL, Timing Belt Cover.>
4) Remove the timing belt. <Ref. to ME(H4DOTC)-47, REMOVAL, Timing Belt.>
5) Remove the cam sprocket. <Ref. to ME(H4DOTC)-56, REMOVAL, Cam Sprocket.>
6) Disconnect the oil flow control solenoid valve assembly connector.

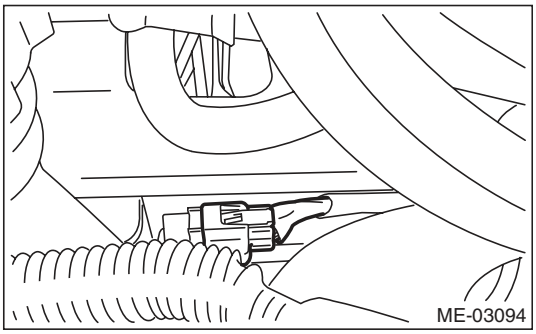

7) Remove the timing belt cover No. 2 LH.

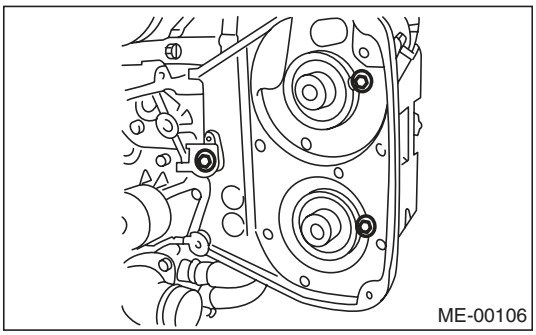

8) Remove the timing belt cover No. 2 RH.

NOTE:
Do not damage or lose the seal rubber when removing the timing belt covers.

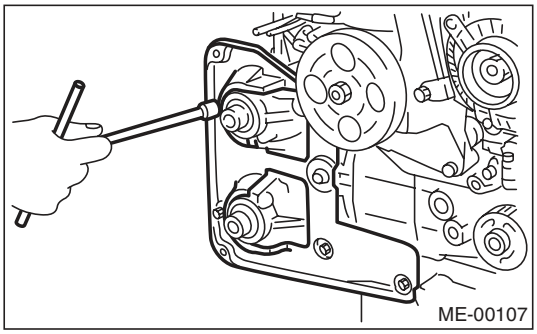

9) Remove the tensioner bracket.

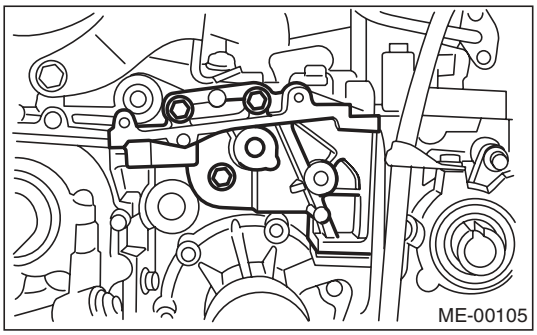

10) Remove the ignition coil. <Ref. to IG(H4DOTC)-7, REMOVAL, Ignition Coil.>
11) Disconnect the PCV hose from the rocker cover.

NOTE:
For the PCV hose affixed with the clamp, fit the depression in the ST with the protrusion of the clamp as shown in the figure below, unlock the clamp and disconnect.
ST 18353AA000 CLAMP PLIERS

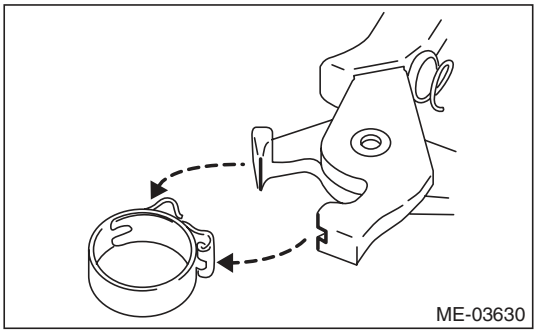

12) Remove the rocker cover and gasket.

13) Remove the union screw without filter (without protrusion) which secures the oil pipe to the front camshaft cap.

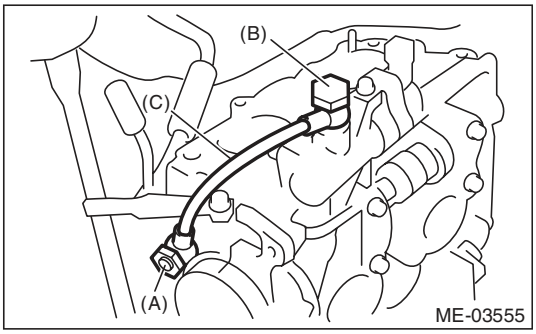

(A) Union screw with filter (with protrusion)
(B) Union screw without filter (without protrusion)
(C) Oil pipe

14) Loosen the front camshaft cap upper area and intake camshaft cap bolts equally, a little at a time in alphabetical order as shown in the figure.

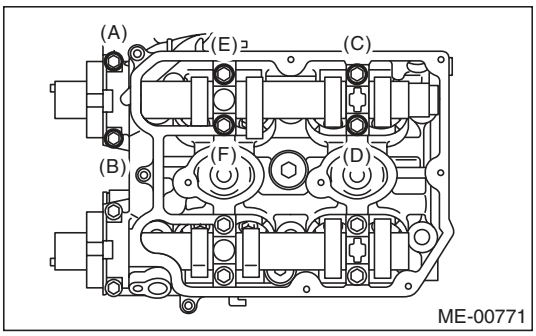

15) Loosen the front camshaft cap lower area and exhaust camshaft cap bolts equally, a little at a time in alphabetical order as shown in the figure.

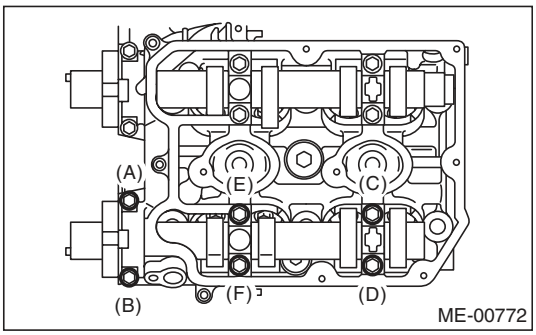

16) Remove the front camshaft cap.
17) Remove the intake camshaft caps and the intake camshaft.
18) Remove the exhaust camshaft caps and the exhaust camshaft.

NOTE:
Arrange camshaft caps in order so that they can be installed in their original positions.

19) Remove the oil seal.

CAUTION:
Do not scratch the journal surface when removing the oil seal.

20) Similarly, remove the camshaft RH and related parts.

B: INSTALLATION

1) Install the camshaft.
Apply engine oil to the cylinder head at camshaft journal installation location before installing the camshaft. Install the camshaft so that each valve is close to or in contact with base circle of the cam lobe.

NOTE:
- Set the camshaft to the position shown in the figure.
- When set at the position shown in the figure, it is not necessary to rotate the camshaft RH when installing the timing belt, but it is necessary to rotate the camshaft LH slightly.

Intake camshaft LH:
Rotate 80° clockwise.

Exhaust camshaft LH:
Rotate 45° counterclockwise.

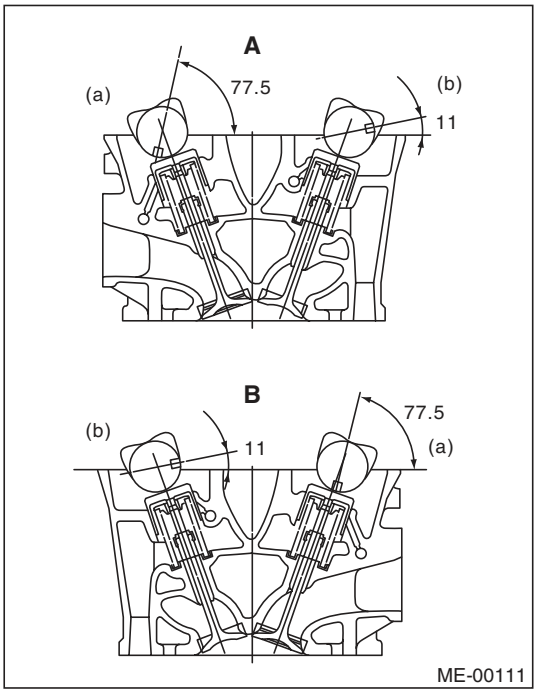

A Cylinder head LH
B Cylinder head RH
(a) Intake camshaft
(b) Exhaust camshaft

2) Install the camshaft cap.
(1) Apply small amount of liquid gasket to the mating surface of cap.

NOTE:
- Install within 5 minutes after applying liquid gasket.
- Do not apply liquid gasket excessively. Applying excessively may cause excess gasket to come out and flow toward oil seal, resulting in oil leak.

Liquid gasket:
THREE BOND 1217G (Part No. K0877Y0100) or equivalent

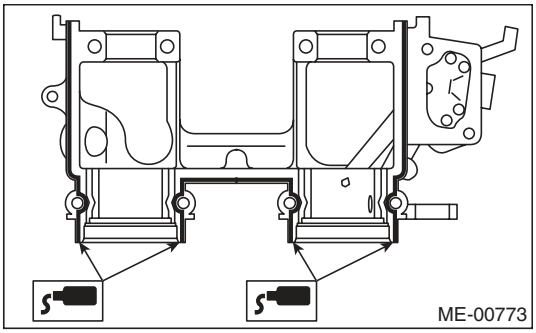

(2) Apply a thin coat of engine oil to the cap journal surface, and install the camshaft cap to the camshaft.
(3) Gradually tighten the camshaft cap in at least two stages in alphabetical order shown in the figure, and then tighten to specified torque.

Tightening torque:
T1: 9.75 N·m (1.0 kgf-m, 7.2 ft-lb)
T2: 20 N·m (2.0 kgf-m, 14.8 ft-lb)

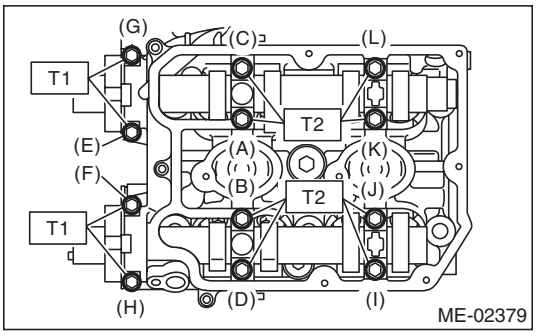

(4) After tightening the camshaft cap, ensure the camshaft rotates only slightly while holding it at base circle.

3) Apply a coat of engine oil to the camshaft oil seal periphery and oil seal lips, then install the oil seal on the camshaft using ST1 and ST2.

NOTE:
Use a new oil seal.

ST1	499587600	OIL SEAL INSTALLER
ST2	499597200	OIL SEAL GUIDE

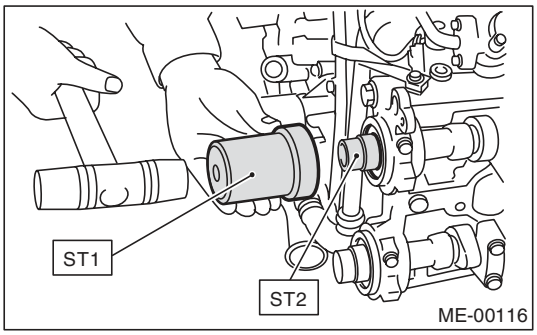

4) Install the oil pipe to the front camshaft cap using the union screw without filter (without protrusion).

Tightening torque:
29 N·m (3.0 kgf-m, 21.4 ft-lb)

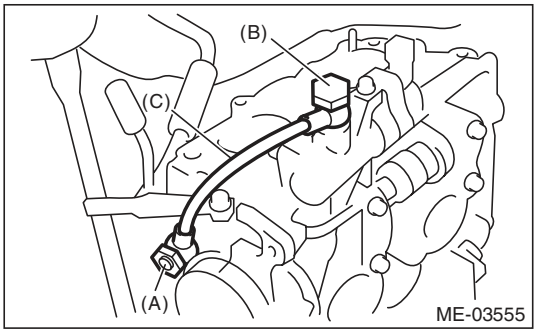

(A) Union screw with filter (with protrusion)
(B) Union screw without filter (without protrusion)
(C) Oil pipe

5) Similarly, install the parts on right-hand side.
6) Install the tensioner bracket.

Tightening torque:
24.5 N·m (2.5 kgf-m, 18.1 ft-lb)

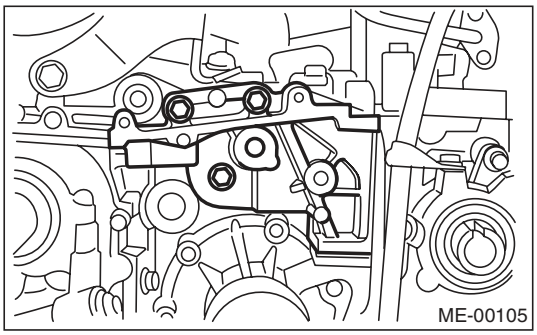

7) Install the timing belt cover No. 2 RH.

Tightening torque:
5 N·m (0.5 kgf-m, 3.7 ft-lb)

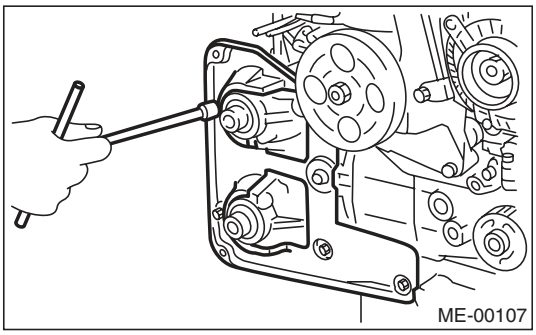

8) Install the timing belt cover No. 2 LH.

Tightening torque:
5 N·m (0.5 kgf-m, 3.7 ft-lb)

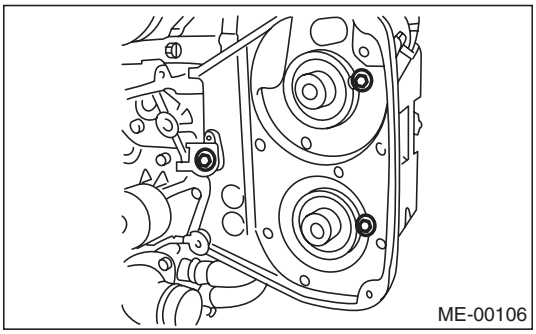

9) Install the cam sprocket. <Ref. to ME(H4DOTC)-56, INSTALLATION, Cam Sprocket.>
10) Install the timing belt. <Ref. to ME(H4DOTC)-49, INSTALLATION, Timing Belt.>
11) Adjust the valve clearance. <Ref. to ME(H4DOTC)-28, ADJUSTMENT, Valve Clearance.>

12) Install the rocker cover.
(1) Install the rocker cover gasket to the rocker cover. (Outer periphery and ignition coil section)

NOTE:
Use a new rocker cover gasket.

(2) Apply liquid gasket to the specified point of the cylinder head.

NOTE:
Install within 5 minutes after applying liquid gasket.

Liquid gasket:
THREE BOND 1217G (Part No. K0877Y0100) or equivalent

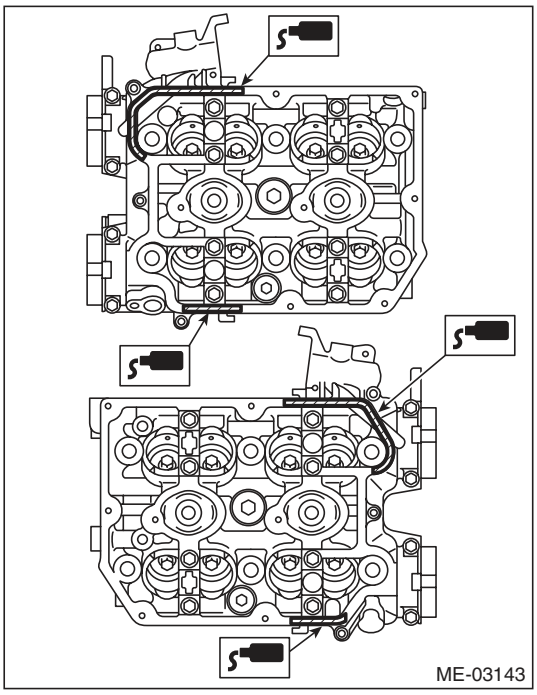

(3) Install the rocker cover on cylinder head. Ensure the gasket is properly positioned during installation.
(4) Temporarily tighten the rocker cover tightening bolts in alphabetical order shown in the figure, and then tighten to specified torque in alphabetical order.

Tightening torque:
6.4 N·m (0.7 kgf-m, 4.7 ft-lb)

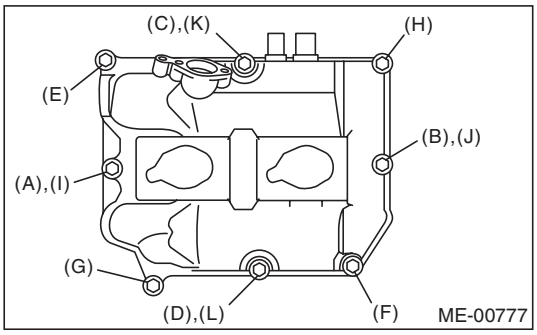

13) Connect the PCV hose to the rocker cover.

NOTE:
Use a new clamp for the PCV hose clamp, fit the cut out in the ST with the protrusion on the clamp as shown in the figure, and lock the clamp.
ST 18353AA000 CLAMP PLIERS

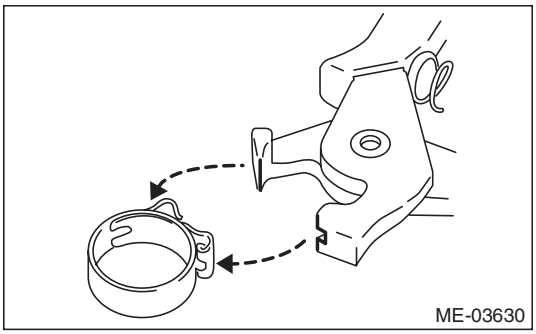

14) Connect the connector to the oil flow control solenoid valve.

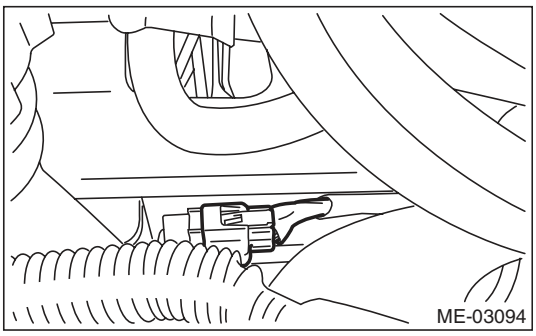

15) Tighten the ignition coil. <Ref. to IG(H4DOTC)-7, INSTALLATION, Ignition Coil.>
16) Install the timing belt cover. <Ref. to ME(H4DOTC)-46, INSTALLATION, Timing Belt Cover.>
17) Install the crank pulley. <Ref. to ME(H4DOTC)-44, INSTALLATION, Crank Pulley.>
18) Install the V-belts. <Ref. to ME(H4DOTC)-42, INSTALLATION, V-belt.>

C: INSPECTION

1) Measure the bend, and repair or replace if necessary.

Service limit:
0.020 mm (0.00079 in) or less

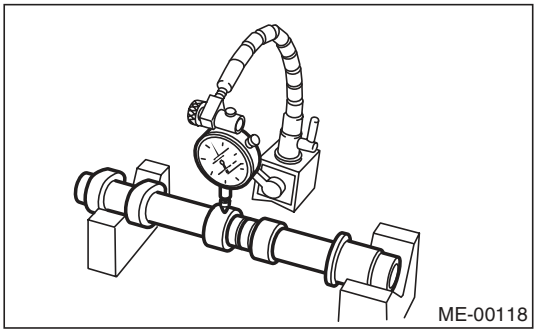

2) Check the journal for damage and wear. Replace if faulty.
3) Check the cutout portion used for camshaft sensor for damage. Replace if faulty.
4) Measure the outside diameter of camshaft journal. If the journal diameter is not within the standard, check the oil clearance.

	Camshaft journal	
	Front	Center, rear
Standard mm (in)	37.946 — 37.963 (1.4939 — 1.4946)	29.946 — 29.963 (1.1790 — 1.1796)

5) Measure the camshaft journal oil clearance.
(1) Clean the camshaft cap and cylinder head camshaft journal.
(2) Place the camshaft on the cylinder head. (Without installing the valve lifter.)
(3) Place a plastigauge across each camshaft journals.
(4) Gradually tighten the camshaft cap in at least two stages in alphabetical order shown in the figure, and then tighten to specified torque. Do not turn the camshaft.

Tightening torque:
T1: 9.75 N·m (1.0 kgf-m, 7.2 ft-lb)
T2: 20 N·m (2.0 kgf-m, 14.8 ft-lb)

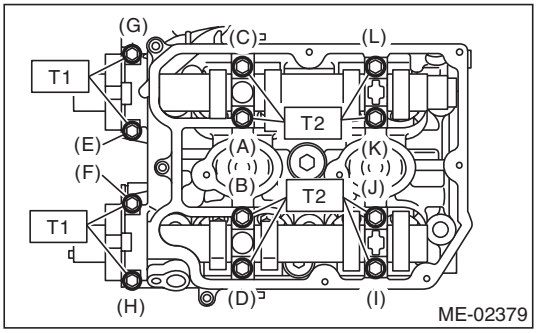

(5) Remove the camshaft cap.
(6) Measure the widest point of the plastigauge on each journal. If oil clearance exceeds the standard, replace the camshaft. If necessary, replace the camshaft caps and cylinder head as a set.

Standard:
0.037 — 0.072 mm (0.0015 — 0.0028 in)

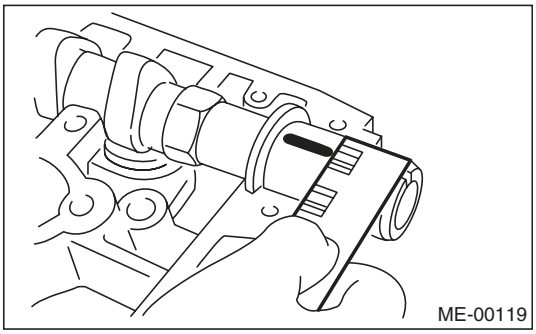

(7) Completely remove the plastigauge.

6) Check the cam face condition; remove the minor faults by grinding with oil stone. Measure the cam height H. If it exceeds the standard or offset wear occurs, replace it.

Cam height H:

Standard
Intake
46.55 — 46.65 mm (1.833 — 1.837 in)
Exhaust
46.75 — 46.85 mm (1.841 — 1.844 in)

Cam base circle diameter A:
37.0 mm (1.457 in)

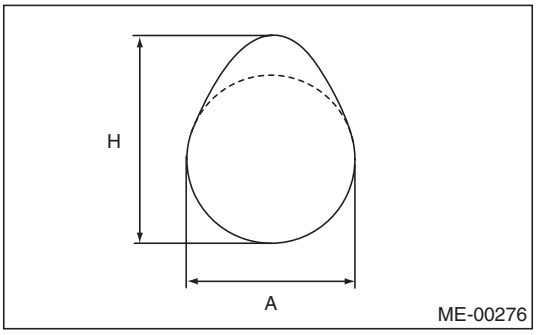

7) Measure the thrust clearance of camshaft with setting the dial gauge at end of camshaft. If the thrust clearance exceeds the standard or there is offset wear, replace the camshaft caps and cylinder head as a set. If necessary replace the camshaft.

Standard:
0.068 — 0.116 mm (0.0027 — 0.0047 in)

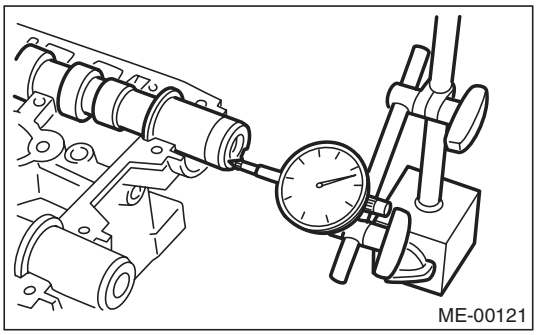

19. Cylinder Head

A: REMOVAL

NOTE:
- When replacing the single part, perform the work with the engine installed to body. Refer to “Valve Clearance” for preparation procedures. <Ref. to ME(H4DOTC)-26, INSPECTION, Valve Clearance.>
- When performing the work with the engine installed to body, the following parts must also be removed/installed.
  - Center exhaust pipe <Ref. to EX(H4DOTC)-7, REMOVAL, Center Exhaust Pipe.> <Ref. to EX(H4DOTC)-9, INSTALLATION, Center Exhaust Pipe.>
  - Turbocharger <Ref. to IN(H4DOTC)-14, REMOVAL, Turbocharger.> <Ref. to IN(H4DOTC)-15, INSTALLATION, Turbocharger.>
  - Joint pipe <Ref. to EX(H4DOTC)-11, REMOVAL, Joint Pipe.> <Ref. to EX(H4DOTC)-11, INSTALLATION, Joint Pipe.>
  - Front exhaust pipe <Ref. to EX(H4DOTC)-5, REMOVAL, Front Exhaust Pipe.> <Ref. to EX(H4DOTC)-6, INSTALLATION, Front Exhaust Pipe.>

1) Remove the V-belts. <Ref. to ME(H4DOTC)-41, REMOVAL, V-belt.>
2) Remove the intake manifold. <Ref. to FU(H4DOTC)-16, REMOVAL, Intake Manifold.>
3) Remove the crank pulley. <Ref. to ME(H4DOTC)-44, REMOVAL, Crank Pulley.>
4) Remove the timing belt cover. <Ref. to ME(H4DOTC)-46, REMOVAL, Timing Belt Cover.>
5) Remove the timing belt. <Ref. to ME(H4DOTC)-47, REMOVAL, Timing Belt.>
6) Remove the cam sprocket. <Ref. to ME(H4DOTC)-56, REMOVAL, Cam Sprocket.>
7) Remove the bolt which installs the A/C compressor bracket on cylinder head.
8) Remove the secondary air combination valve. <Ref. to EC(H4DOTC)-22, REMOVAL, Secondary Air Combination Valve.>
9) Remove the oil pipe.

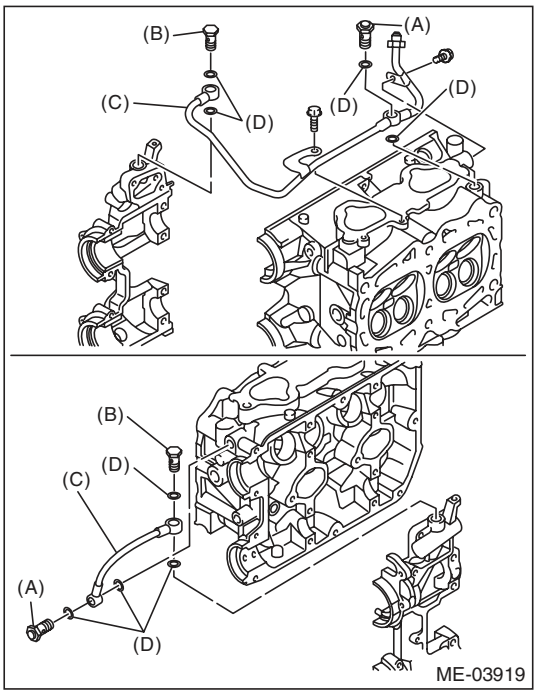

(A) Union screw with filter (with protrusion)
(B) Union screw without filter (without protrusion)
(C) Oil pipe
(D) Gasket

10) Remove the camshaft. <Ref. to ME(H4DOTC)-58, REMOVAL, Camshaft.>
11) Remove the oil level gauge guide. (LH side only)
12) Remove the cylinder head bolts in alphabetical order shown in the figure.

NOTE:
Leave the bolts (A) and (D) engaged by three or four threads to prevent the cylinder head from falling.

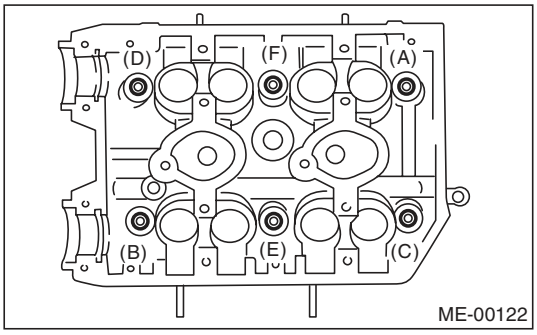

13) While tapping the cylinder head with a plastic hammer, separate it from cylinder block. Remove the bolts (A) and (D) to remove cylinder head.

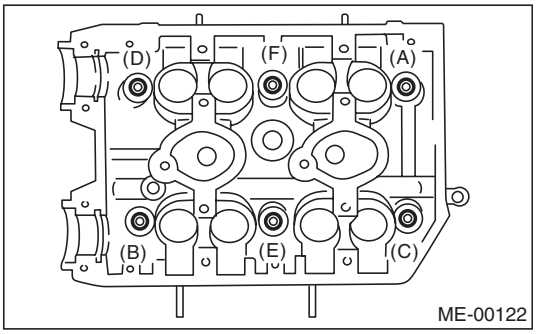

14) Remove the cylinder head gasket.

CAUTION:
Be careful not to scratch the mating surface of cylinder head and cylinder block.

15) Similarly, remove the right side cylinder head.

B: INSTALLATION

1) Install the cylinder head and gaskets on cylinder block.

CAUTION:
Be careful not to scratch the mating surface of cylinder head and cylinder block.

NOTE:
Use a new cylinder head gasket.

2) Tighten the cylinder head bolts.
   (1) Apply a thin coat of engine oil to washer and bolt thread.
   (2) Tighten all bolts to 29 N·m (3.0 kgf-m, 21.4 ft-lb) in alphabetical order.
   (3) Further tighten all bolts to 69 N·m (7.0 kgf-m, 50.9 ft-lb) in alphabetical order.
   (4) Loosen all the bolts by 180° in the reverse order of installing, and loosen them further by 180°.
   (5) Tighten all bolts to 49 N·m (5.0 kgf-m, 36.1 ft-lb) in alphabetical order.
   (6) Tighten all bolts by 80 to 90° in alphabetical order.
   (7) Tighten all bolts again by 40 to 45° in alphabetical order.

CAUTION:
The tightening angle of the bolt should not exceed 45°.

   (8) Further tighten the bolts (A) and (B) by 40 — 45°.

CAUTION:
Make sure the total "re-tightening angle" of the step (7) and (8) does not exceed 90°.

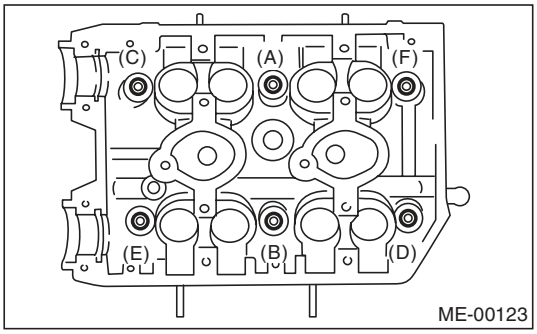

3) Install the oil level gauge guide. (LH side only)

Tightening torque:
6.4 N·m (0.7 kgf-m, 4.7 ft-lb)

4) Install the camshaft. <Ref. to ME(H4DOTC)-59, INSTALLATION, Camshaft.>

5) Install the oil pipe.

NOTE:
Make sure not to mix up the union screws with filter and without filter as their installation positions are different.

Tightening torque:
T1: 8 N·m (0.8 kgf-m, 5.9 ft-lb)
T2: 29 N·m (3.0 kgf-m, 21.4 ft-lb)

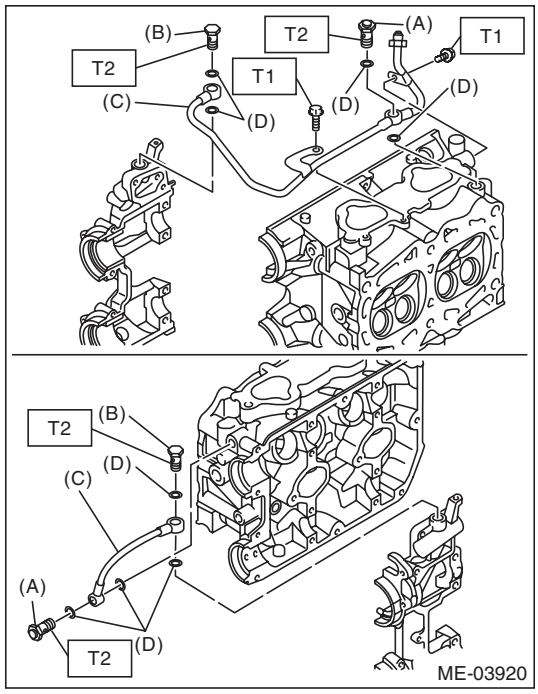

(A) Union screw with filter (with protrusion)
(B) Union screw without filter (without protrusion)
(C) Oil pipe
(D) Gasket

6) Install the secondary air combination valve. <Ref. to EC(H4DOTC)-23, INSTALLATION, Secondary Air Combination Valve.>
7) Install the A/C compressor bracket on cylinder head.

Tightening torque:
36 N·m (3.7 kgf-m, 26.6 ft-lb)

8) Install the cam sprocket. <Ref. to ME(H4DOTC)-56, INSTALLATION, Cam Sprocket.>
9) Install the timing belt. <Ref. to ME(H4DOTC)-49, INSTALLATION, Timing Belt.>
10) Adjust the valve clearance. <Ref. to ME(H4DOTC)-28, ADJUSTMENT, Valve Clearance.>
11) Install the rocker cover.
(1) Install the rocker cover gasket to the rocker cover. (Outer periphery and ignition coil section)

NOTE:
Use a new rocker cover gasket.

(2) Apply liquid gasket to the specified point of the cylinder head.

NOTE:
Install within 5 minutes after applying liquid gasket.

Liquid gasket:
THREE BOND 1217G (Part No. K0877Y0100) or equivalent

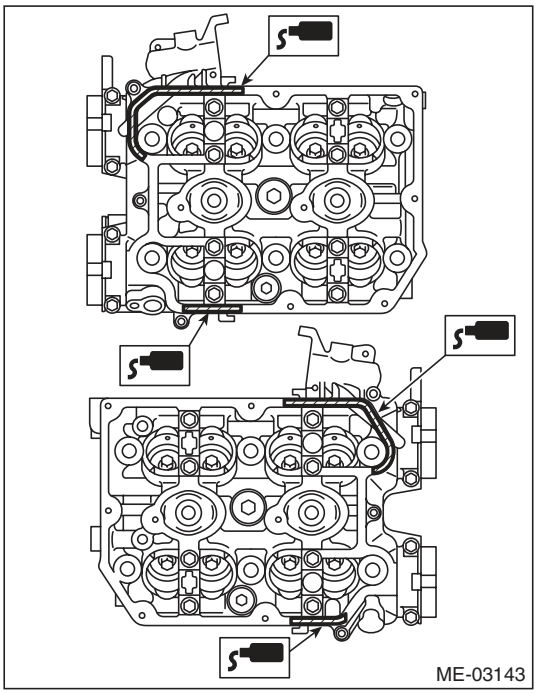

(3) Install the rocker cover on cylinder head. Ensure the gasket is properly positioned during installation.

(4) Temporarily tighten the rocker cover tightening bolts in alphabetical order shown in the figure, and then tighten to specified torque in alphabetical order.

Tightening torque:
6.4 N·m (0.7 kgf-m, 4.7 ft-lb)

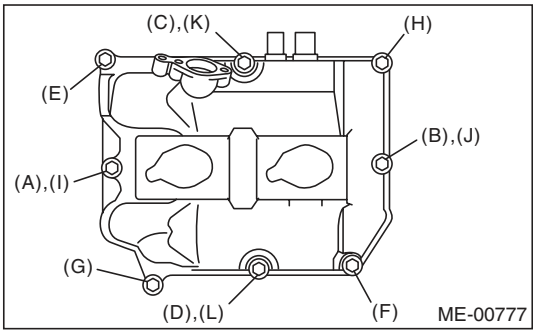

12) Install the timing belt cover. <Ref. to ME(H4DOTC)-46, INSTALLATION, Timing Belt Cover.>
13) Install the crank pulley. <Ref. to ME(H4DOTC)-44, INSTALLATION, Crank Pulley.>
14) Install the intake manifold. <Ref. to FU(H4DOTC)-20, INSTALLATION, Intake Manifold.>
15) Install the V-belts. <Ref. to ME(H4DOTC)-42, INSTALLATION, V-belt.>

C: DISASSEMBLY

1) Remove the valve lifter.
2) Place the cylinder head on ST1.
ST1 498267600 CYLINDER HEAD TABLE
3) Using ST2, compress the valve spring and remove the valve spring retainer key. Remove each valve and valve spring.
ST2 499718000 VALVE SPRING REMOVER

NOTE:
- Mark each valve to prevent confusion.
- Pay careful attention not to damage the lips of intake valve oil seals and exhaust valve oil seals.
- Keep all the removed parts in order for re-installing in their original positions.
- For removal and installation procedures of the valve guide, intake valve oil seal and exhaust valve oil seal, refer to “Inspection”. <Ref. to ME(H4DOTC)-70, VALVE GUIDE, INSPECTION, Cylinder Head.> <Ref. to ME(H4DOTC)-73, INTAKE AND EXHAUST VALVE OIL SEAL, INSPECTION, Cylinder Head.>

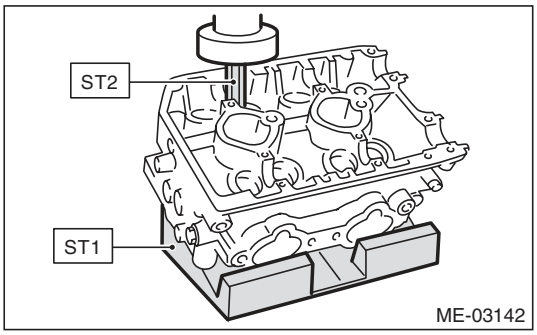

D: ASSEMBLY

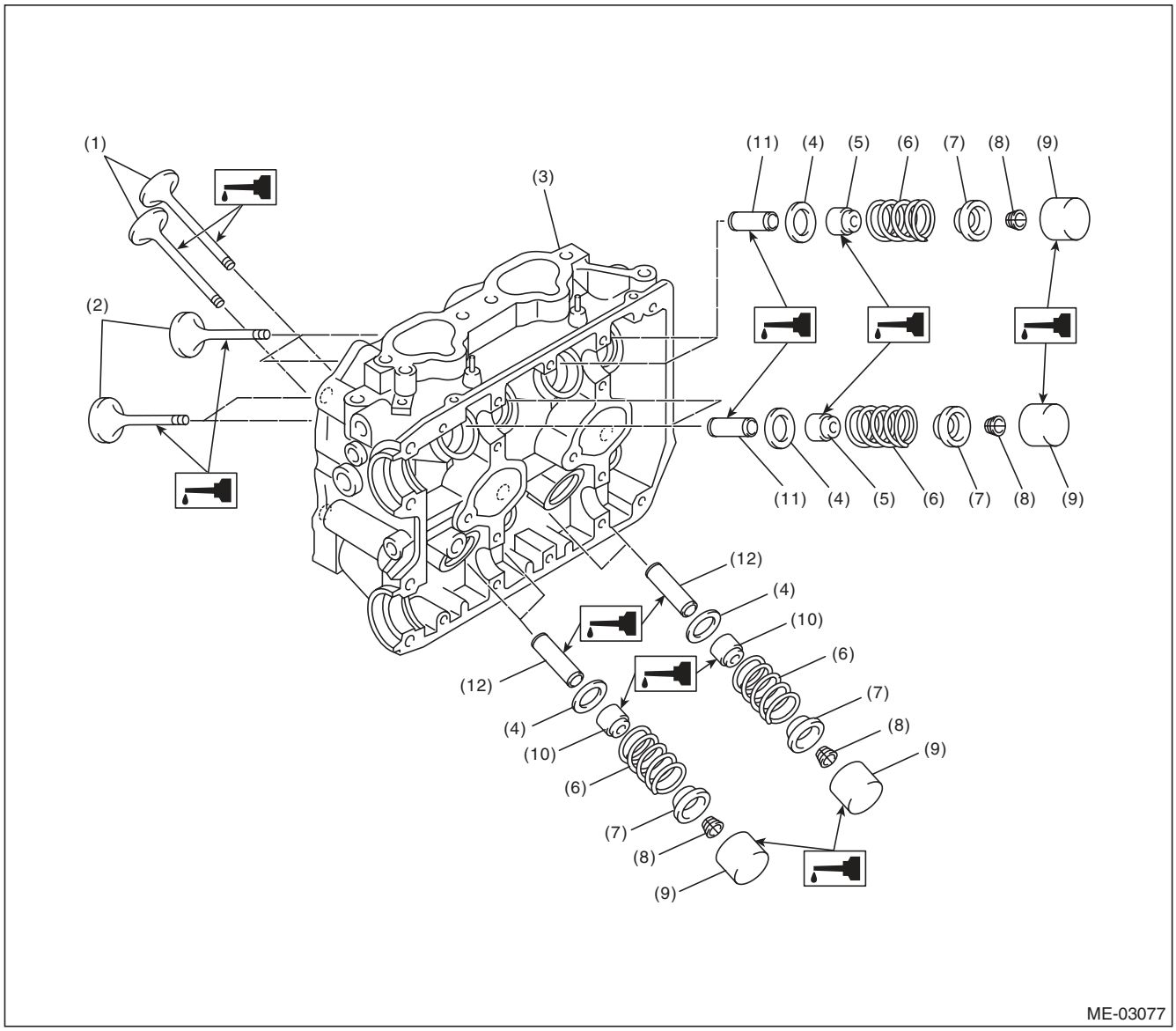

(1)	Exhaust valve	(5)	Intake valve oil seal	(9)	Valve lifter
(2)	Intake valve	(6)	Valve spring	(10)	Exhaust valve oil seal
(3)	Cylinder head	(7)	Retainer	(11)	Intake valve guide
(4)	Valve spring seat	(8)	Retainer key	(12)	Exhaust valve guide

1) Install the valve spring and valve.
   (1) Coat the stem of each valve with engine oil and insert the valve into the valve guide.

NOTE:
When inserting the valve into valve guide, use special care not to damage the oil seal lip.

   (2) Set the cylinder head on ST1.

ST1 498267600 CYLINDER HEAD TABLE

   (3) Install the valve spring and retainer.

NOTE:
Be sure to install the valve spring with its close-coiled end facing the seat on cylinder head.

   (4) Set the ST2 on valve spring.

ST2 499718000 VALVE SPRING REMOVER

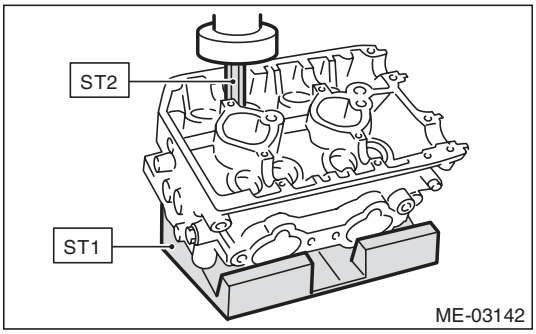

   (5) Compress the valve spring and fit the valve spring retainer key.
   (6) After installing, tap the valve spring retainers lightly with a plastic hammer for better seating.
2) Apply oil to the surface of valve lifter.
3) Install the valve lifter.

E: INSPECTION

1. CYLINDER HEAD

1) Check for cracks or damage. Use liquid penetrant tester on the important sections to check for fissures. Check that there are no marks of gas leaking or water leaking on gasket installing surface.
2) Measure the warping of the cylinder head surface that mates with cylinder block using a straight edge (A) and thickness gauge (B).
If the warping exceeds the limit, correct the surface by grinding it with a surface grinder.

Warping limit:
0.035 mm (0.0014 in)

Grinding limit:
0.3 mm (0.012 in)

Standard height of cylinder head:
127.5 mm (5.02 in)

NOTE:
Uneven torque for the cylinder head bolts can cause warping. When reinstalling, pay special attention to the torque so as to tighten evenly.

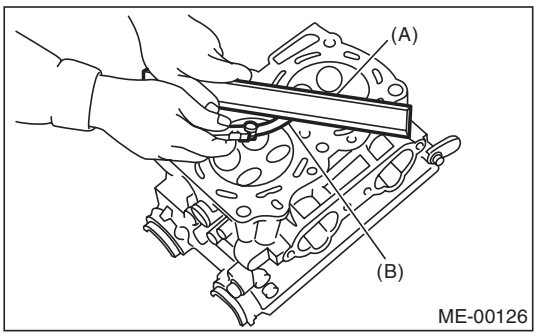

2. VALVE SEAT

Inspect the intake and exhaust valve seats, and correct the contact surfaces with a valve seat cutter if they are defective or when valve guides are replaced.

Valve seat width W:

Standard
Intake
0.6 — 1.4 mm (0.024 — 0.055 in)
Exhaust
1.2 — 1.8 mm (0.047 — 0.071 in)

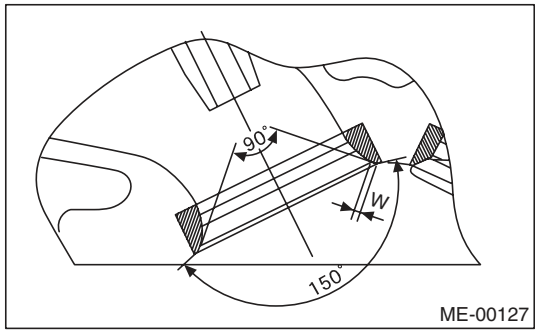

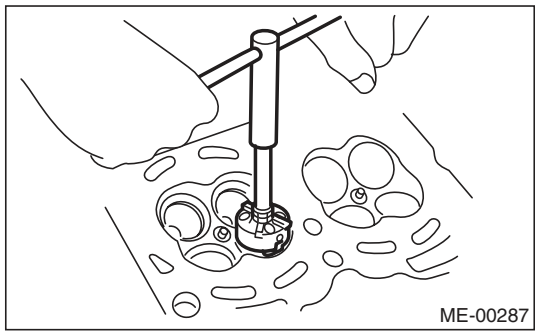

3. VALVE GUIDE

1) Check the clearance between valve guide and valve stem. The clearance can be checked by measuring respectively the outer diameter of valve stem with a micrometer and the inner diameter of valve guide with a caliper gauge.

Clearance between the valve guide and valve stem:

Standard
Intake
0.030 — 0.057 mm (0.0012 — 0.0022 in)
Exhaust
0.040 — 0.067 mm (0.0016 — 0.0026 in)

2) If the clearance between valve guide and valve stem exceeds the standard, replace the valve guide or valve itself, whichever shows the greater amount of wear or damage. See the following procedure for valve guide replacement.

Valve guide inner diameter:
6.000 — 6.012 mm (0.2362 — 0.2367 in)

Valve stem outer diameters:
Intake
5.955 — 5.970 mm (0.2344 — 0.2350 in)
Exhaust
5.945 — 5.960 mm (0.2341 — 0.2346 in)

(1) Place the cylinder head on ST1 with the combustion chamber upward so that valve guides fit the holes in ST1.
(2) Insert the ST2 into valve guide and press it down to remove the valve guide.

ST1	498267600	CYLINDER HEAD TABLE
ST2	499767200	VALVE GUIDE REMOVER

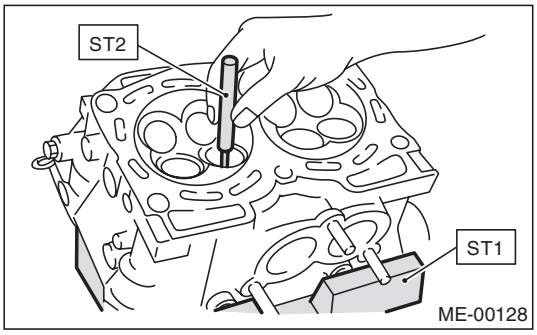

(3) Turn the cylinder head upside down and place the ST as shown in the figure.

ST 18251AA020 VALVE GUIDE ADJUSTER

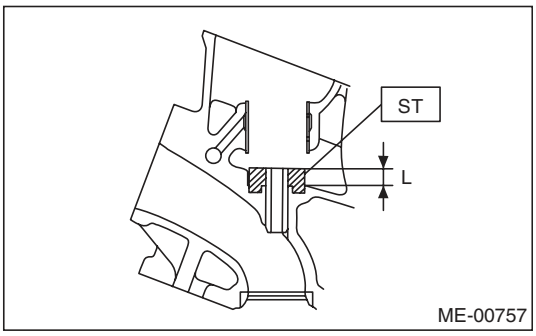

(4) Before installing a new valve guide, make sure that neither scratches nor damages exist on the inner surface of valve guide holes in cylinder head.

(5) Put a new valve guide, coated with sufficient oil, in the cylinder head, and insert the ST1 into valve guide. Press in until the valve guide upper end is flush with the upper surface of ST2.

ST1 499767200 VALVE GUIDE REMOVER
ST2 18251AA020 VALVE GUIDE ADJUSTER

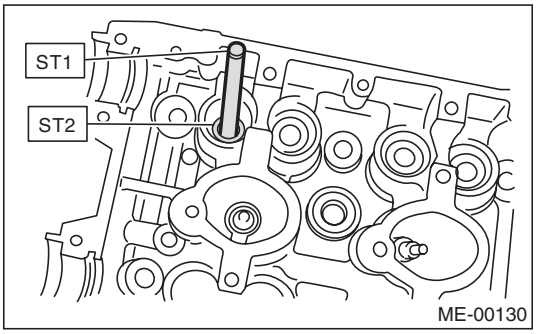

(6) Check the valve guide protrusion.

Valve guide protrusion L:
15.8 — 16.2 mm (0.622 — 0.638 in)

(7) Ream the inside of valve guide using ST. Put the ST in valve guide, and rotate the ST slowly clockwise while pushing it lightly. Bring the ST back while rotating it clockwise.

NOTE:
- Apply engine oil to the ST when reaming.
- If the inner surface of valve guide is damaged, the edge of ST should be slightly ground with oil stone.
- If the inner surface of valve guide becomes lustrous and the ST does not chip, use a new ST or remedy the ST.

ST 499767400 VALVE GUIDE REAMER

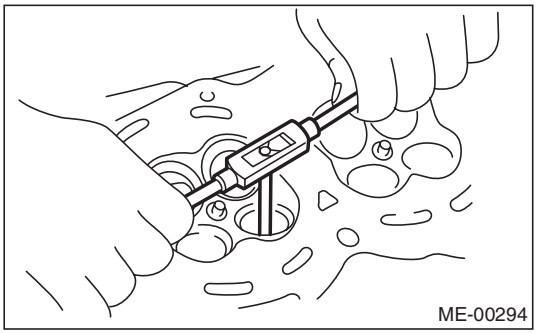

(8) After reaming, clean the valve guide to remove chips.

(9) Recheck the contact condition between valve and valve seat after replacing the valve guide.

4. INTAKE AND EXHAUST VALVE

1) Inspect the flange and stem of valve, and replace the valve with a new part if damaged, worn, deformed, or if “H” exceeds the specified limit.

Head edge thickness H:

Standard
Intake (A)
1.0 — 1.4 mm (0.039 — 0.055 in)
Exhaust (B)
1.3 — 1.7 mm (0.051 — 0.067 in)

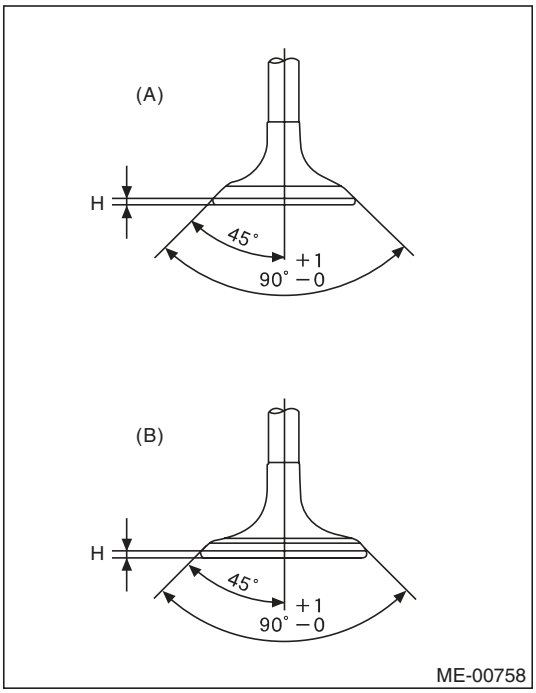

2) Put a small amount of grinding compound on the seat surface, and lap the valve and seat surface. Replace with a new valve oil seal after lapping.

NOTE:
It is possible to differentiate between the intake valve and the exhaust valve by their overall length.

Valve overall length:
Intake
104.4 mm (4.110 in)
Exhaust
104.65 mm (4.1201 in)

5. VALVE SPRING

1) Check the valve springs for damage, free length, and tension. Replace the valve spring if it is not within the standard value presented in the table.
2) To measure the squareness of the valve spring, stand the valve spring on a surface plate and measure its deflection at the top of the spring using a try square.

Free length	mm (in)	47.32 (1.863)
Tension/spring height N (kgf, lbf)/mm (in)	Set	205 — 235 (20.9 — 24.0, 46.1 — 52.8)/36.0 (1.417)
	Lift	426 — 490 (43.4 — 50.0, 95.8 — 110)/26.50 (1.041)
Squareness		2.5°, 2.1 mm (0.083 in) or less

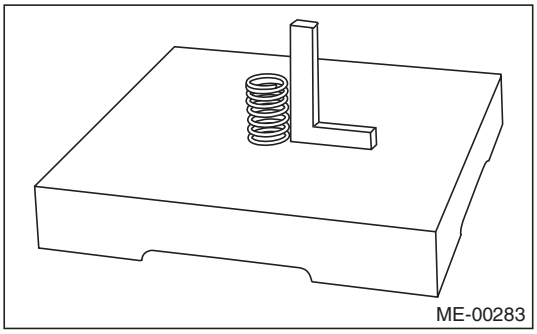

6. INTAKE AND EXHAUST VALVE OIL SEAL

1) For the following, replace the oil seal with a new part. See the procedure 2) and subsequent for replacement procedures.
- When the lip is damaged.
- When the spring is out of the specified position.
- When readjusting the surfaces of valve and valve seat.
- When replacing the valve guide.

2) Place the cylinder head on ST1, and use ST2 to press-fit the oil seal.

ST1 498267600 CYLINDER HEAD TABLE
ST2 498857100 VALVE OIL SEAL GUIDE

NOTE:
- Apply engine oil to oil seal before press-fitting.
- When press-fitting the oil seal, do not use a hammer, etc. or strike in.
- The intake valve oil seals and exhaust valve oil seals are distinguished by their colors.

Color of rubber part:
Intake [Gray]
Exhaust [Green]

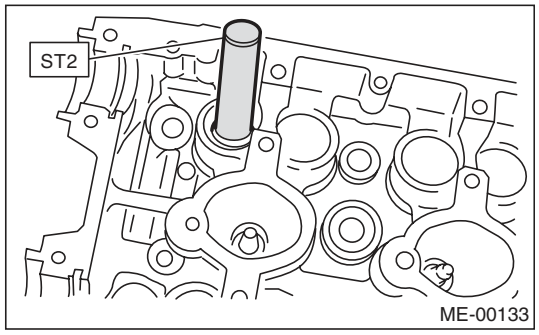

7. VALVE LIFTER

1) Check the valve lifter visually.
2) Measure the outer diameter of valve lifter.

Outer diameter:
34.959 — 34.975 mm (1.3763 — 1.3770 in)

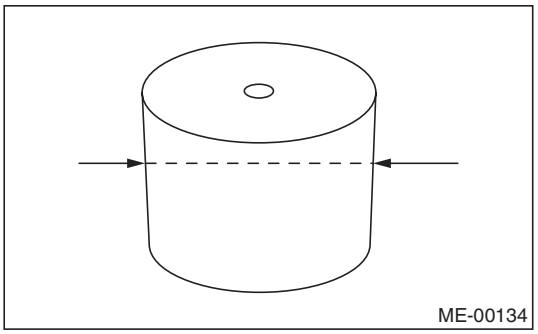

3) Measure the inner diameter of valve lifter mating surface on cylinder head.

Inner diameter:
34.994 — 35.016 mm (1.3777 — 1.3786 in)

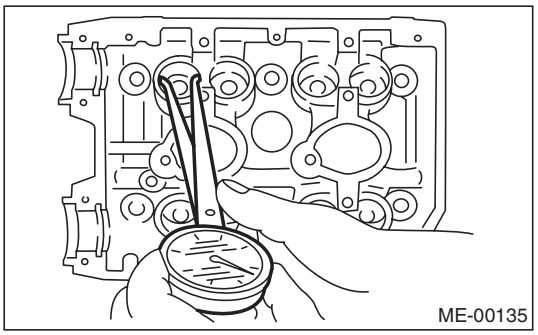

NOTE:
If difference between outer diameter of valve lifter and inner diameter of its mating surface is not within the standard or there is uneven wear, replace the cylinder head.

Standard:
0.019 — 0.057 mm (0.0007 — 0.0022 in)

20. Cylinder Block

A: REMOVAL

NOTE:
Before conducting this procedure, drain the engine oil completely.

1) Remove the V-belts. <Ref. to ME(H4DOTC)-41, REMOVAL, V-belt.>
2) Remove the intake manifold. <Ref. to FU(H4DOTC)-16, REMOVAL, Intake Manifold.>
3) Remove the crank pulley. <Ref. to ME(H4DOTC)-44, REMOVAL, Crank Pulley.>
4) Remove the timing belt cover. <Ref. to ME(H4DOTC)-46, REMOVAL, Timing Belt Cover.>
5) Remove the timing belt. <Ref. to ME(H4DOTC)-47, REMOVAL, Timing Belt.>
6) Remove the cam sprocket. <Ref. to ME(H4DOTC)-56, REMOVAL, Cam Sprocket.>
7) Remove the crank sprocket. <Ref. to ME(H4DOTC)-57, REMOVAL, Crank Sprocket.>
8) Remove the generator and A/C compressor with their brackets.
9) Remove the camshaft. <Ref. to ME(H4DOTC)-58, REMOVAL, Camshaft.>
10) Remove the cylinder head. <Ref. to ME(H4DOTC)-64, REMOVAL, Cylinder Head.>
11) Remove the clutch disc and cover. (MT model) <Ref. to CL-13, REMOVAL, Clutch Disc and Cover.>
12) Remove the flywheel. (MT model) <Ref. to CL-16, REMOVAL, Flywheel.>
13) Use the ST to lock the crankshaft, and remove the drive plate. (AT model)
ST 498497100 CRANKSHAFT STOPPER

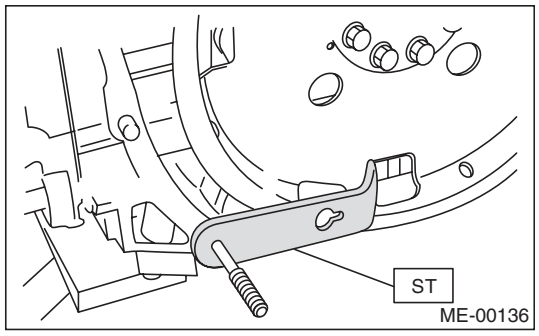

14) Remove the oil separator cover.
15) Remove the water by-pass pipe for heater.
16) Remove the oil filter. <Ref. to LU(H4SO)-23, REMOVAL, Engine Oil Filter.>
17) Remove the oil cooler. <Ref. to LU(H4SO)-22, REMOVAL, Engine Oil Cooler.>
18) Remove the water pump. <Ref. to CO(H4DOTC)-16, REMOVAL, Water Pump.>
19) Remove the bolts which install oil pump onto cylinder block.

NOTE:
When disassembling and checking the oil pump, loosen the relief valve plug before removing the oil pump.

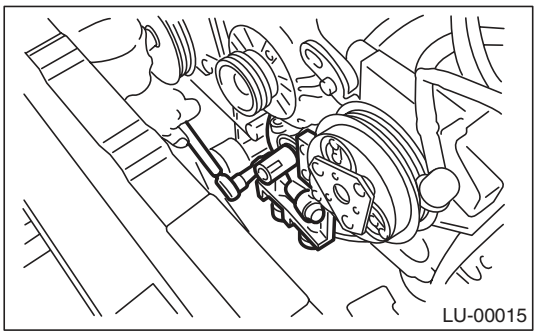

20) Remove the oil pump from cylinder block using a flat tip screwdriver.

CAUTION:
Be careful not to scratch the mating surface of cylinder block and oil pump.

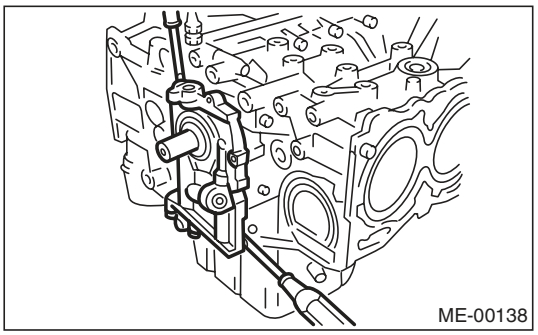

21) Remove the front oil seal from the oil pump.
22) Remove the oil pan.
    (1) Set the part so that the cylinder block LH is on the upper side.
    (2) Remove the bolts which secure oil pan to cylinder block.
    (3) Insert an oil pan cutter blade between cylinder block-to-oil pan clearance and remove the oil pan.

CAUTION:
Do not use a screwdriver or similar tools in place of oil pan cutter.

23) Remove the oil strainer.
24) Remove the baffle plate.
25) Remove the water tank pipe assembly.

26) Remove the water pipe assembly.

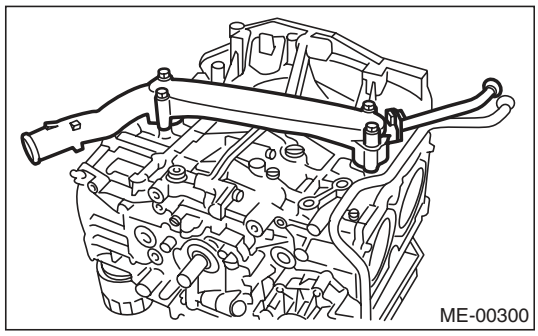

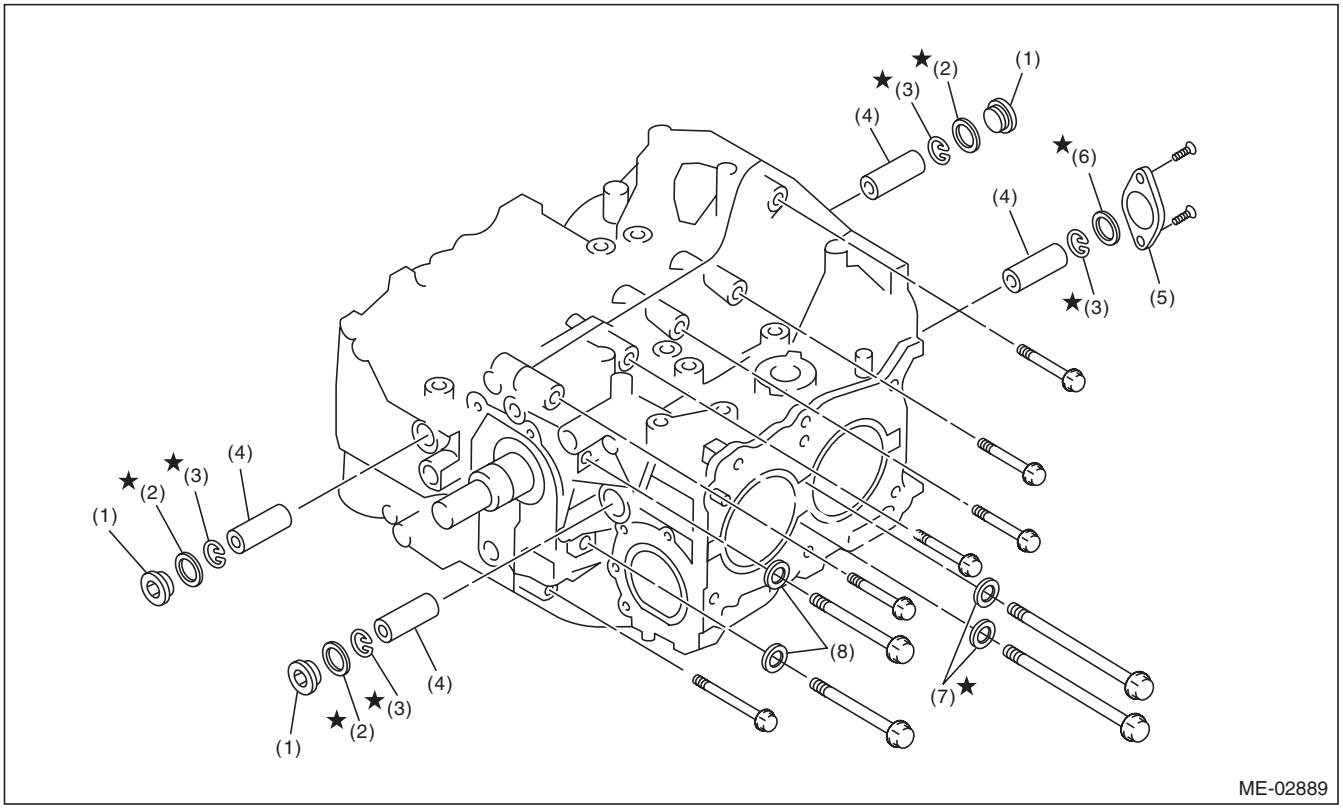

(1)	Service hole plug	(4)	Piston pin	(7)	Seal washer
(2)	Gasket	(5)	Service hole cover	(8)	Washer
(3)	Snap ring	(6)	O-ring		

27) Remove the service hole plugs using a hexagon wrench [14 mm].

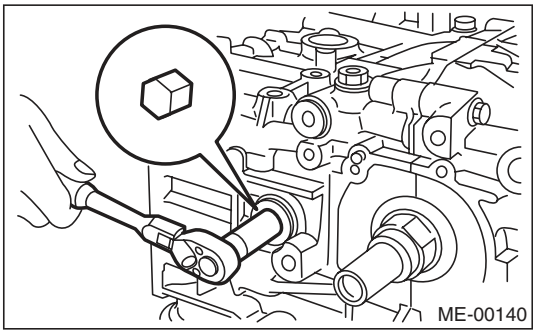

28) Remove the service hole cover.
29) Rotate the crankshaft to bring #1 and #2 pistons to bottom dead center position, then remove the piston snap ring through service hole of #1 and #2 cylinders.

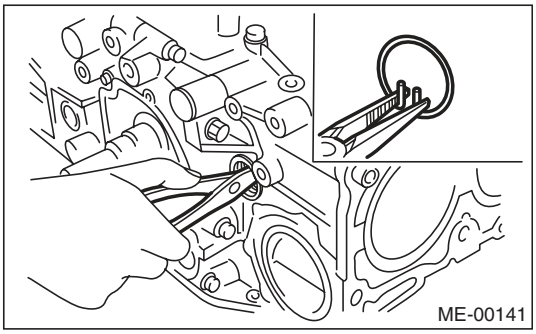

30) Draw out the piston pin from #1 and #2 pistons using ST.
ST 499097700 PISTON PIN REMOVER

NOTE:
Be careful not to confuse the original combination of piston, piston pin and cylinder.

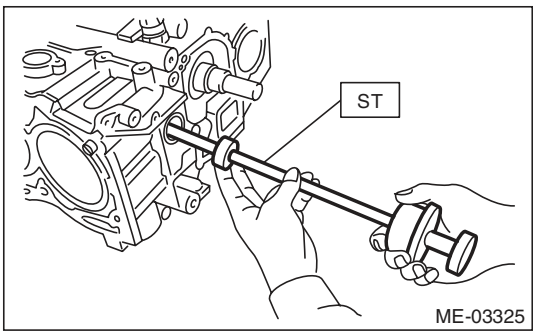

31) Similarly draw out the piston pins from #3 and #4 pistons.
32) Remove the cylinder block connecting bolt on the RH side.
33) Loosen the cylinder block connecting bolt on the LH side by 2 to 3 turns.
34) Set the part so that the cylinder block LH is on the upper side, and remove the cylinder block connecting bolt.

35) Separate the cylinder block LH and RH.

NOTE:
When separating the cylinder block, do not allow the connecting rod to fall or damage the cylinder block.

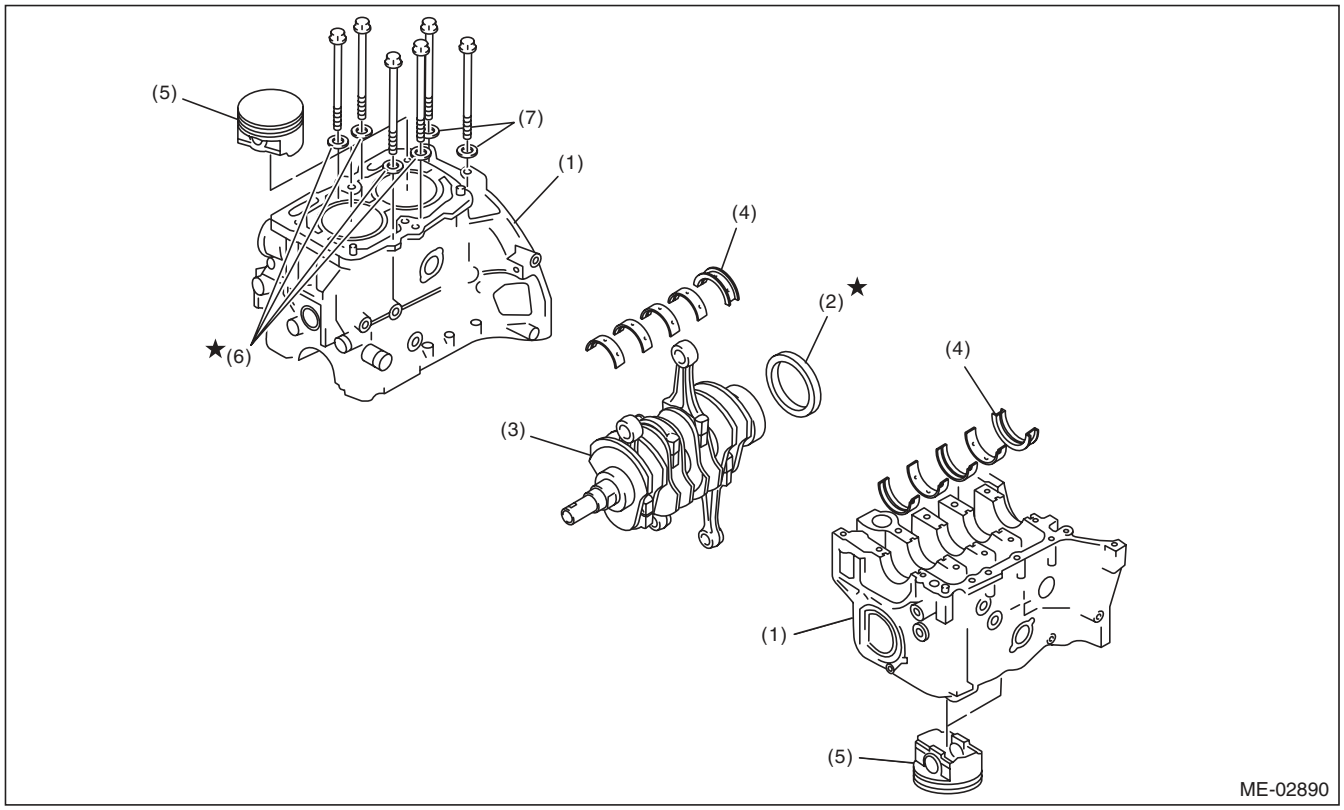

(1)	Cylinder block	(4)	Crankshaft bearing	(6)	Seal washer
(2)	Rear oil seal	(5)	Piston	(7)	Washer
(3)	Crankshaft				

36) Remove the rear oil seal.
37) Remove the crankshaft together with connecting rod.
38) Remove the crankshaft bearings from cylinder block using a hammer handle.

NOTE:
- Press the crankshaft bearing at the end opposite to locking lip to remove.
- Be careful not to confuse the crankshaft bearing combination.

39) Draw out each piston from cylinder block using wooden bar or hammer handle.

NOTE:
Be careful not to confuse the original combination of piston and cylinder.

B: INSTALLATION

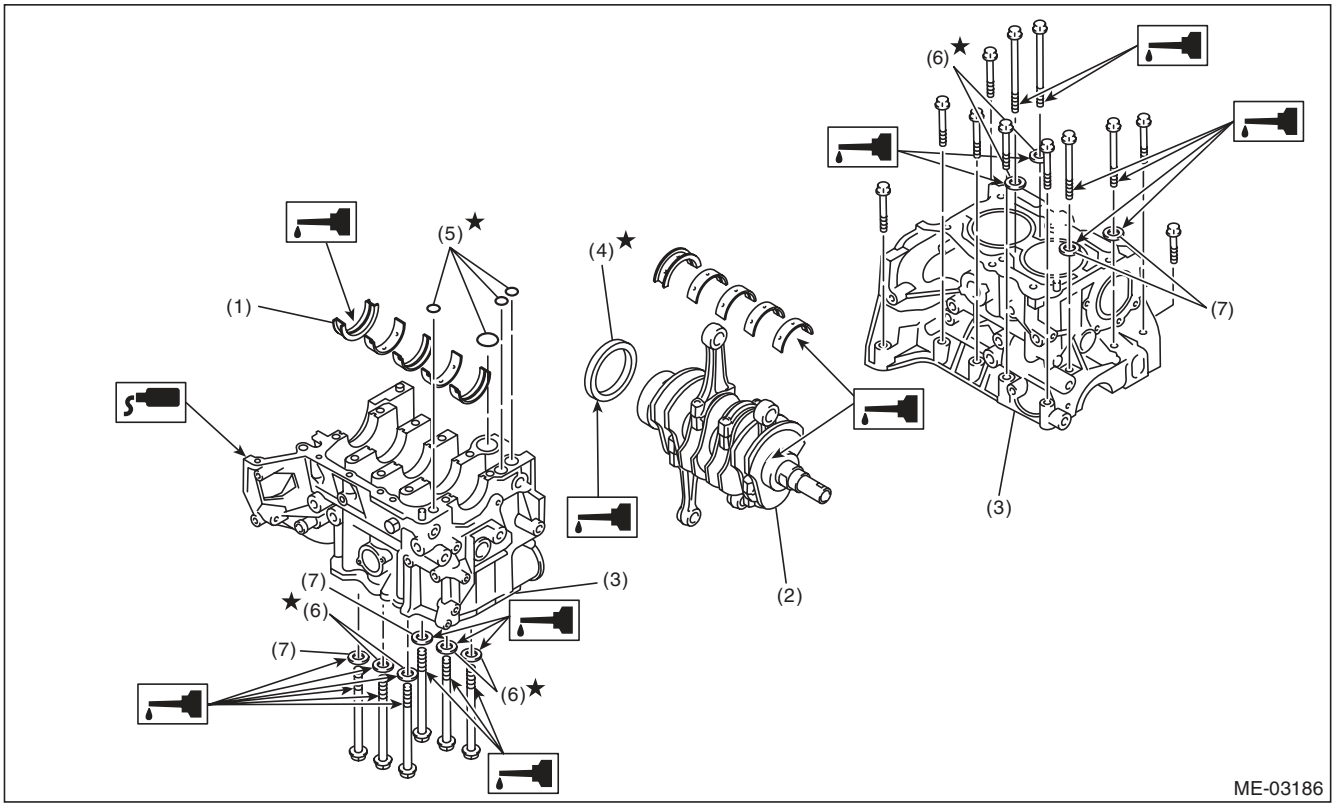

(1)	Crankshaft bearing	(4)	Rear oil seal	(6)	Seal washer
(2)	Crankshaft	(5)	O-ring	(7)	Washer
(3)	Cylinder block				

1) Remove oil on the mating surface of cylinder block before installation. Apply a coat of engine oil to the bearing and crankshaft journal.
2) Position the crankshaft and O-ring on the cylinder block RH.

NOTE:
Use new O-rings.

3) Apply liquid gasket to the mating surfaces of cylinder block RH, and position the cylinder block LH.

NOTE:
- Install within 5 minutes after applying liquid gasket.
- Do not allow liquid gasket to jut into O-ring grooves, oil passages, bearing grooves, etc.

Liquid gasket:
THREE BOND 1217G (Part No. K0877Y0100) or equivalent

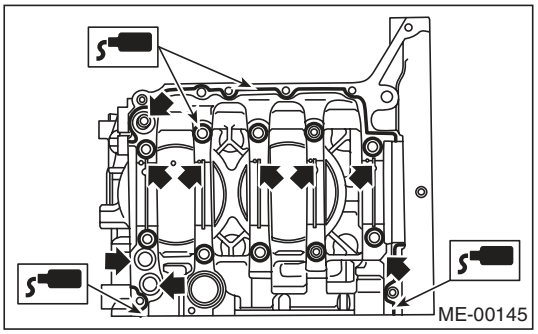

4) Apply a coat of engine oil to the washer and bolt thread.

NOTE:
Use new seal washer.

5) Tighten the 10 mm cylinder block connecting bolts on the LH side (A — D) in alphabetical order.

Tightening torque:
10 N·m (1.0 kgf-m, 7.2 ft-lb)

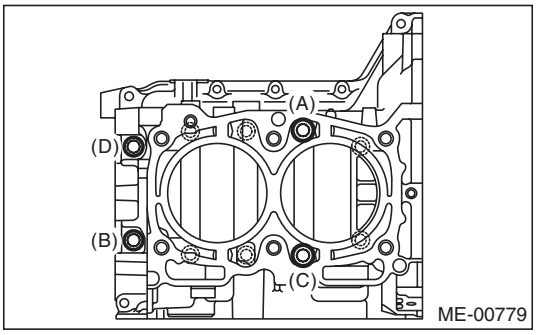

6) Tighten the 10 mm cylinder block connecting bolts on the RH side (E — J) in alphabetical order.

Tightening torque:
10 N·m (1.0 kgf-m, 7.2 ft-lb)

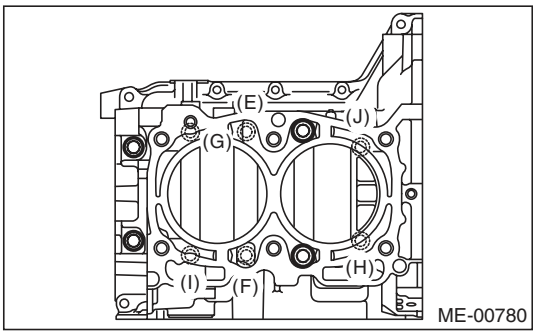

7) Tighten the LH side cylinder block connecting bolts (A — D) further in alphabetical order.

Tightening torque:
18 N·m (1.8 kgf-m, 13.3 ft-lb)

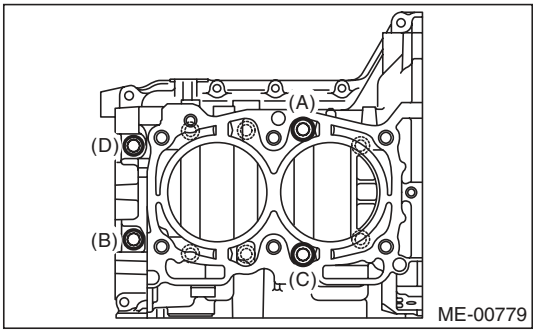

8) Tighten the RH side cylinder block connecting bolts (E — J) further in alphabetical order.

Tightening torque:
18 N·m (1.8 kgf-m, 13.3 ft-lb)

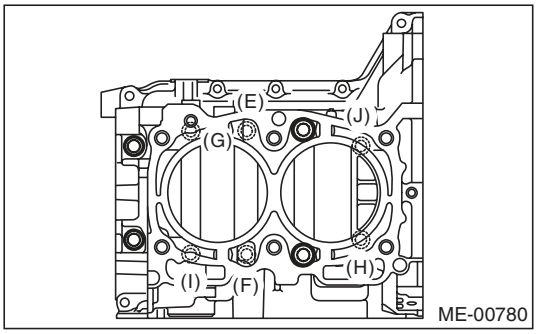

9) Tighten the LH side cylinder block connecting bolts (A — D) further in alphabetical order.

- (A), (C): Angle tightening

Tightening angle:
90°

- (B), (D): Torque tightening

Tightening torque:
40 N·m (4.1 kgf-m, 29.5 ft-lb)

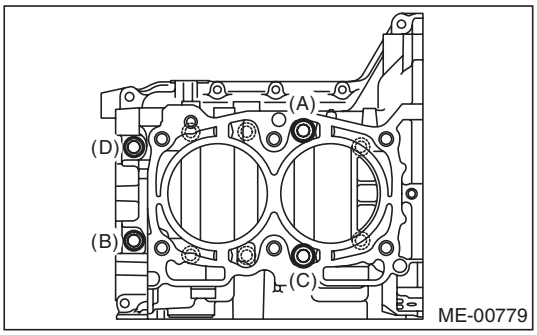

10) Tighten the RH side cylinder block connecting bolts (E — J) further in alphabetical order.

Tightening angle:
90°

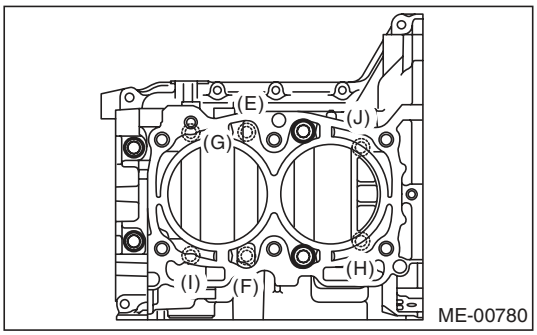

11) Tighten the 8 mm and 6 mm cylinder block connecting bolts on the LH side (A — H) in alphabetical order.

Tightening torque:
(A) — (G): 25 N·m (2.5 kgf-m, 18.4 ft-lb)
(H): 6.4 N·m (0.7 kgf-m, 4.7 ft-lb)

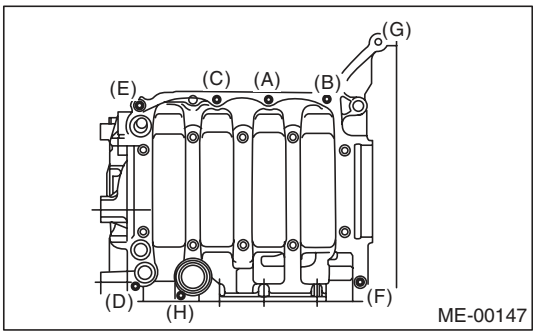

12) Apply a coat of engine oil to the oil seal periphery, then install the rear oil seal using ST1 and ST2.

NOTE:
Use new rear oil seal.

ST1	499597100	CRANKSHAFT OIL SEAL GUIDE
ST2	499587200	CRANKSHAFT OIL SEAL INSTALLER

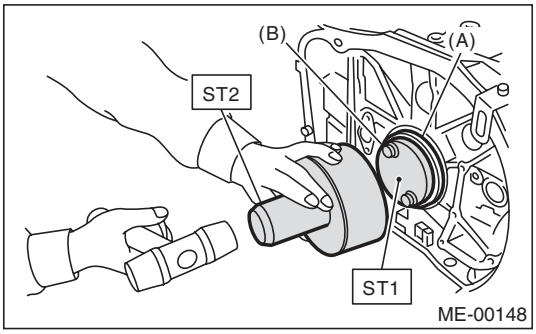

(A) Rear oil seal
(B) Flywheel attaching bolt

13) Position the top ring gap at (A) or (B) in the figure.
14) Position the second ring gap at 180° on the reverse side the top ring gap.

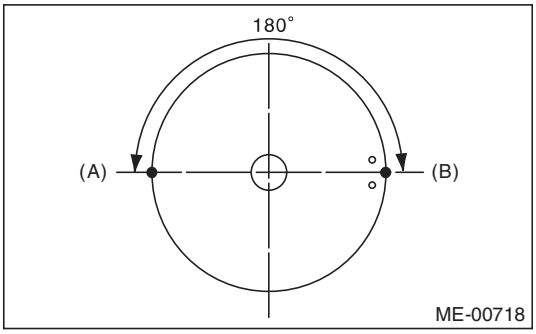

15) Position the upper rail gap at (C) in the figure.

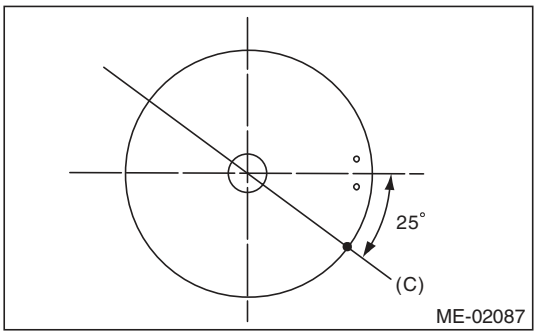

16) Align the upper rail spin stopper (E) to the side hole (D) on the piston.

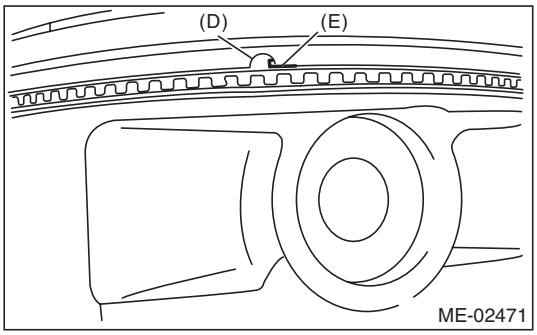

17) Position the expander gap at (F) in the figure on the 180° opposite direction of (C).

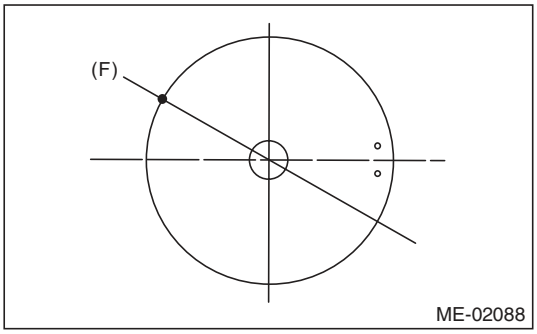

18) Set the lower rail gap at position (G), located 120° clockwise from (C) in the figure.

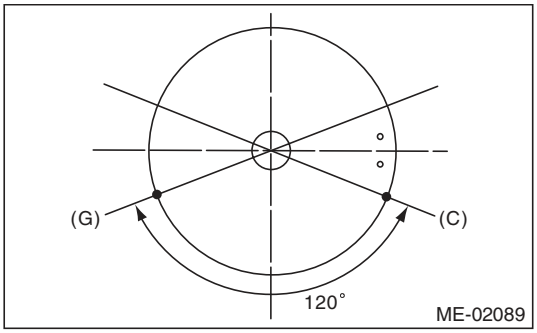

NOTE:
- Make sure ring gaps do not face the same direction.
- Make sure ring gaps are not within the piston skirt area.

19) Install the snap ring.
Before positioning the piston on the cylinder block, attach the snap ring in the service hole of the cylinder block, and the piston hole on the opposite side.

NOTE:
Use new snap rings.

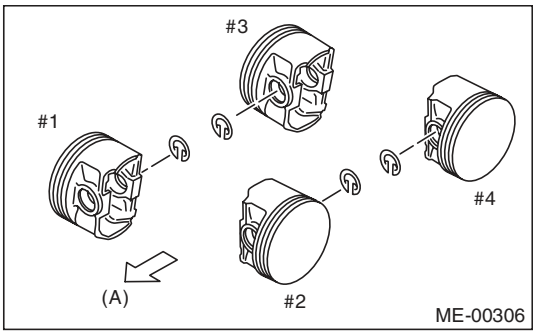

(A) Front side

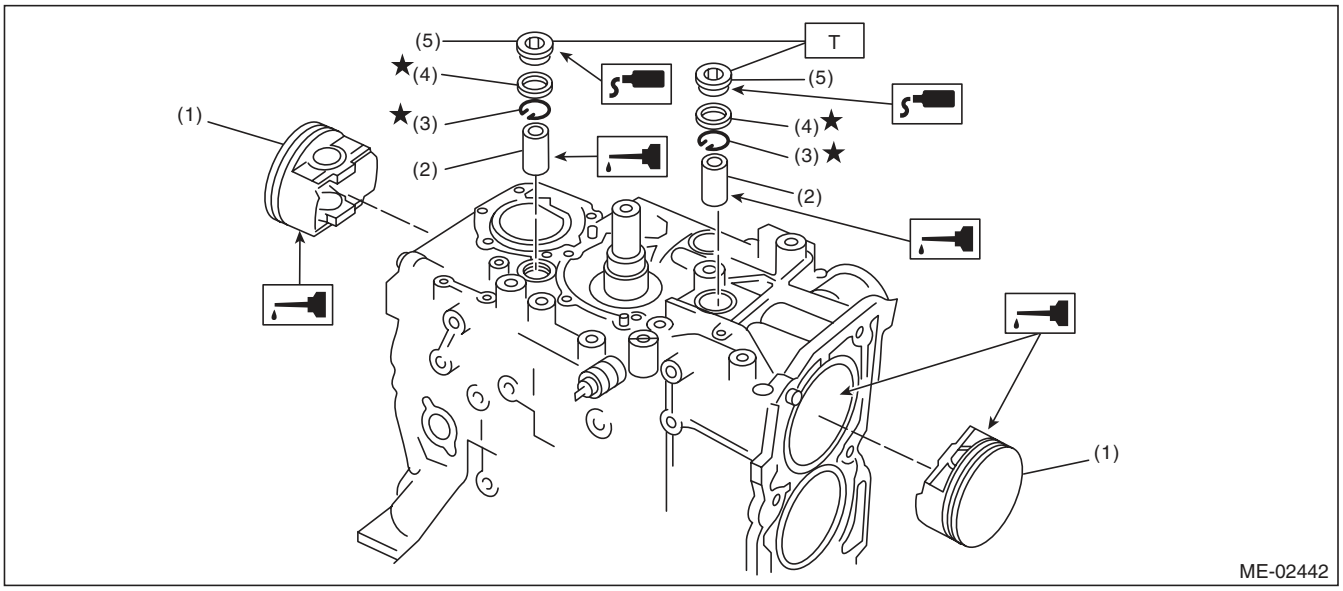

(1) Piston
(2) Piston pin
(3) Snap ring
(4) Gasket
(5) Service hole plug

Tightening torque:N·m (kgf-m, ft-lb)
T: 70 (7.1, 51.6)

20) Install the piston.
(1) Set the parts so that the #1 and #2 cylinders are on the upper side.
(2) Using the ST1, turn the crankshaft so that #1 and #2 connecting rods are set at bottom dead center.

ST1 499987500 CRANKSHAFT SOCKET

(3) Apply a coat of engine oil to the pistons and cylinders and insert pistons in their cylinders using ST2.

ST2 498747300 PISTON GUIDE

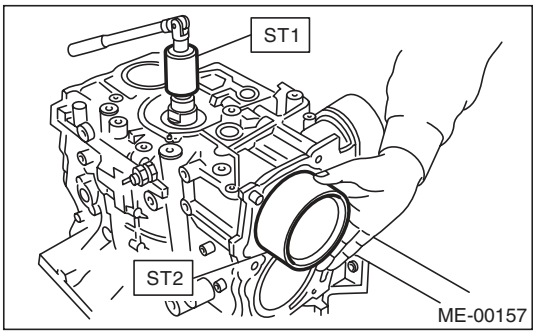

NOTE:
Face the piston front mark towards the front of the engine.

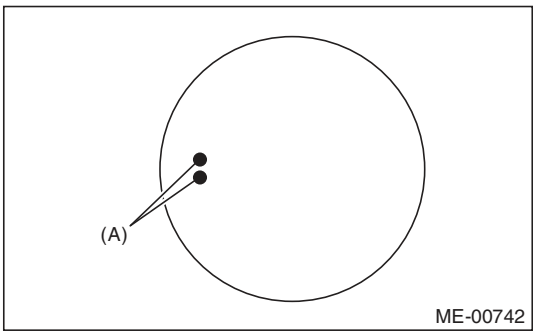

(A) Front mark

21) Install the piston pin.
(1) Apply a coat of engine oil to ST3.
(2) Insert ST3 into the service hole to align the piston pin hole and the connecting rod small end.

ST3 499017100 PISTON PIN GUIDE

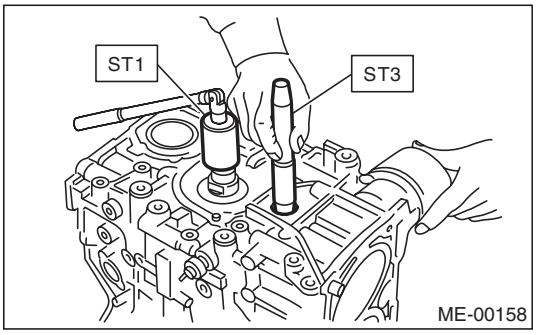

(3) Apply a coat of engine oil to piston pin, and insert the piston pin into piston and connecting rod through service hole.
(4) Install the snap ring.

NOTE:
Use new snap rings.

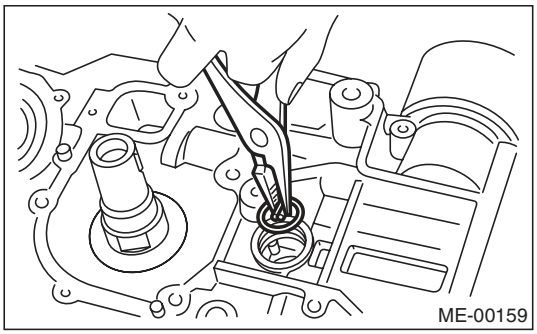

(5) Apply liquid gasket to the threaded portion of the service hole plug.

Liquid gasket:
THREE BOND 1105 (Part No. 004403010) or equivalent

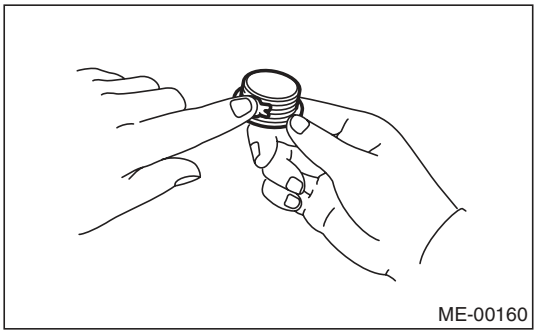

(6) Install the service hole plug and gasket.

NOTE:
Use a new gasket.

Tightening torque:
70 N·m (7.1 kgf-m, 51.6 ft-lb)

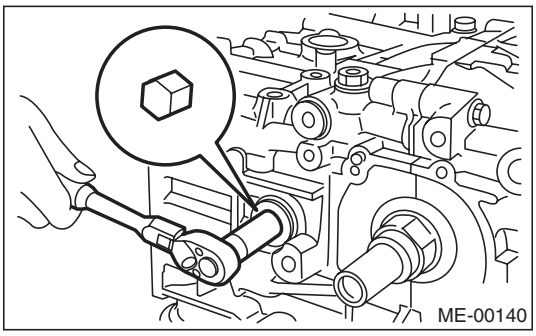

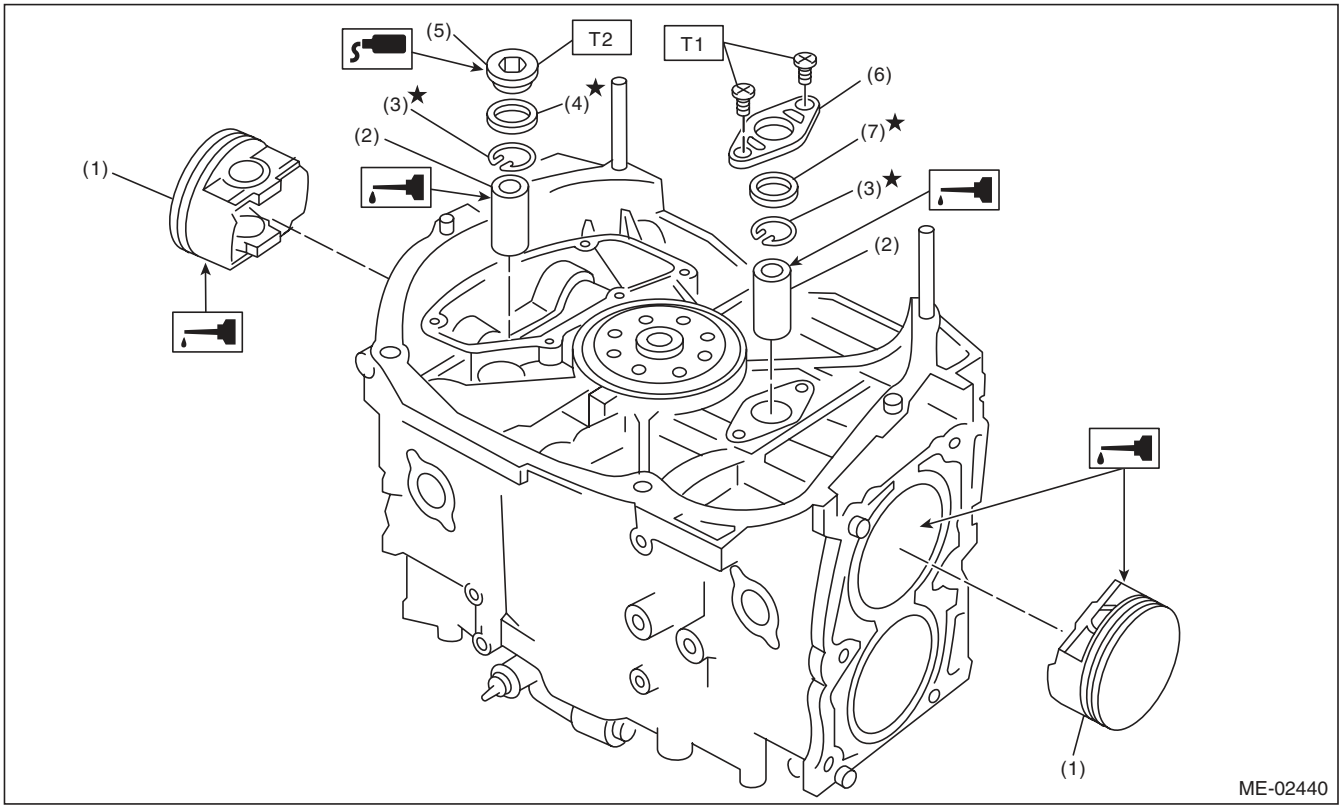

(1)	Piston	(5)	Service hole plug	***Tightening torque:N·m (kgf-m, ft-lb)***
(2)	Piston pin	(6)	Service hole cover	***T1: 6.4 (0.7, 4.7)***
(3)	Snap ring	(7)	O-ring	***T2: 70 (7.1, 51.6)***
(4)	Gasket			

(7) Set the parts so that the #3 and #4 cylinders are on the upper side. Following the same procedures as used for #1 and #2 cylinders, install the pistons and piston pins.
(8) Install the service hole cover.

NOTE:
Use new O-rings.

Tightening torque:
6.4 N·m (0.7 kgf-m, 4.7 ft-lb)

22) Install the water pipe assembly.

NOTE:
Use new O-rings.

Tightening torque:
6.4 N·m (0.7 kgf-m, 4.7 ft-lb)

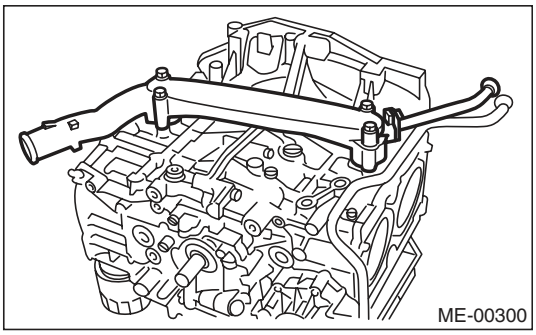

23) Install the water tank pipe assembly.

Tightening torque:
6.4 N·m (0.7 kgf-m, 4.7 ft-lb)

24) Install the baffle plate.

Tightening torque:
6.4 N·m (0.7 kgf-m, 4.7 ft-lb)

25) Install the oil strainer.

NOTE:
Use new O-rings.

Tightening torque:
10 N·m (1.0 kgf-m, 7.2 ft-lb)

26) Tighten the oil strainer stay together with the baffle plate.

Tightening torque:
6.4 N·m (0.7 kgf-m, 4.7 ft-lb)

27) Apply liquid gasket to the mating surfaces of oil pan, and install the oil pan.

NOTE:
Install within 5 minutes after applying liquid gasket.

Liquid gasket:
THREE BOND 1217G (Part No. K0877Y0100) or equivalent

Tightening torque:
5 N·m (0.5 kgf-m, 3.7 ft-lb)

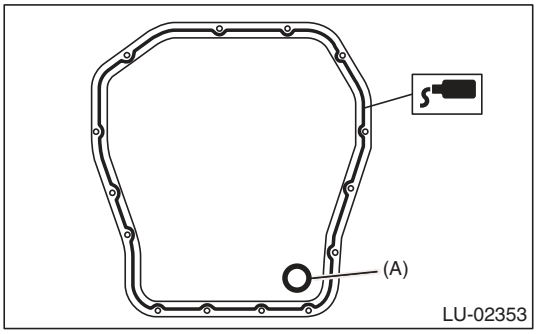

(A) Gasket

28) Apply liquid gasket to the mating surfaces of the oil separator cover and the threaded portion of bolt (A) shown in the figure (when reusing the bolt), and then install the oil separator cover.

NOTE:
- Install within 5 minutes after applying liquid gasket.
- Use new oil separator cover.

Liquid gasket:
Mating surface
THREE BOND 1217G (Part No. K0877Y0100) or equivalent
Bolt thread (A) (when reusing the bolt)
THREE BOND 1324 (Part No. 004403042) or equivalent

Tightening torque:
6.4 N·m (0.7 kgf-m, 4.7 ft-lb)

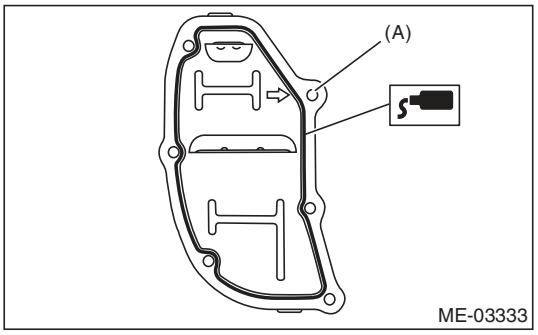

29) Use the ST to lock the crankshaft, and install the drive plate. (AT model)
ST 498497100 CRANKSHAFT STOPPER

Tightening torque:
72 N·m (7.3 kgf-m, 53.1 ft-lb)

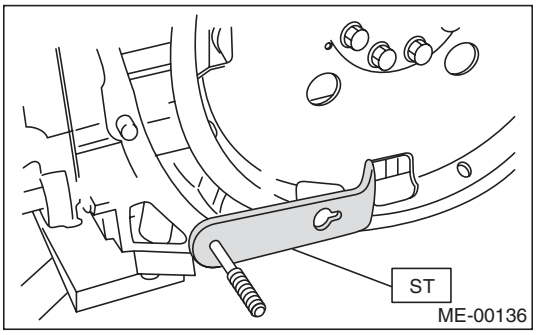

30) Install the flywheel. (MT model) <Ref. to CL-16, INSTALLATION, Flywheel.>
31) Install the clutch disc and cover. (MT model) <Ref. to CL-13, INSTALLATION, Clutch Disc and Cover.>
32) Install the oil pump.
(1) Install the front oil seal using the ST.
ST 499587100 OIL SEAL INSTALLER

NOTE:
Use a new front oil seal.

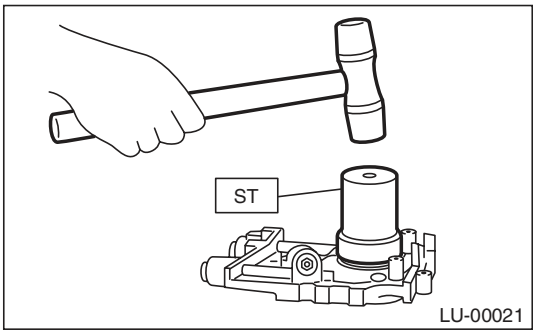

(2) Apply liquid gasket to the matching surface of oil pump.

NOTE:
Install within 5 minutes after applying liquid gasket.

Liquid gasket:
THREE BOND 1217G (Part No. K0877Y0100) or equivalent

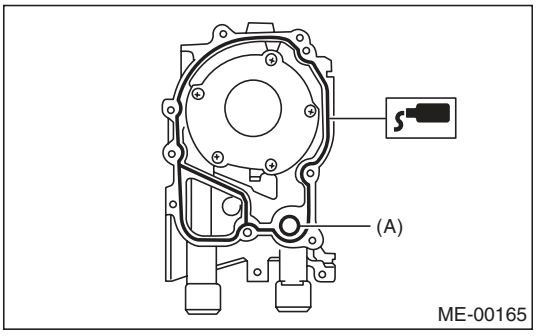

(A) O-ring

(3) Apply a coat of engine oil to the inside of oil seal.

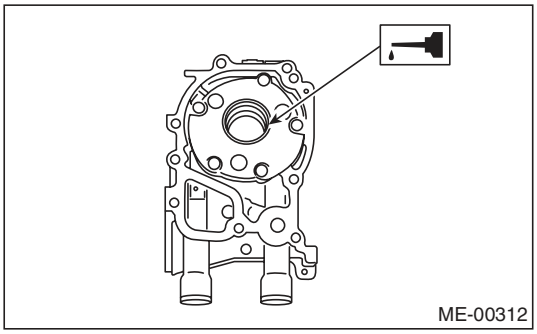

(4) Install the oil pump to cylinder block. Be careful not to damage the oil seal during installation.

NOTE:
- Make sure the oil seal lip is not folded.
- Align the flat surface of oil pump's inner rotor with crankshaft before installation.
- Use new O-rings and oil seals.
- Do not forget to assemble O-rings.

(5) Apply liquid gasket to the three bolts thread shown in figure. (when reusing bolts)

Liquid gasket:
THREE BOND 1324 (Part No. 004403042) or equivalent

Tightening torque:
6.4 N·m (0.7 kgf-m, 4.7 ft-lb)

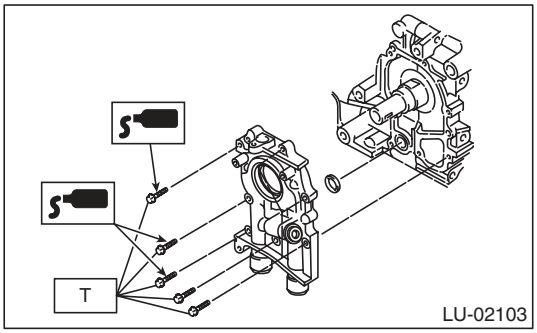

33) Install the water pump and gasket.

NOTE:
- When installing the water pump, tighten bolts in two stages in alphabetical sequence as shown in the figure.
- Use a new gasket.

Tightening torque:
First: 12 N·m (1.2 kgf-m, 8.9 ft-lb)
Second: 12 N·m (1.2 kgf-m, 8.9 ft-lb)

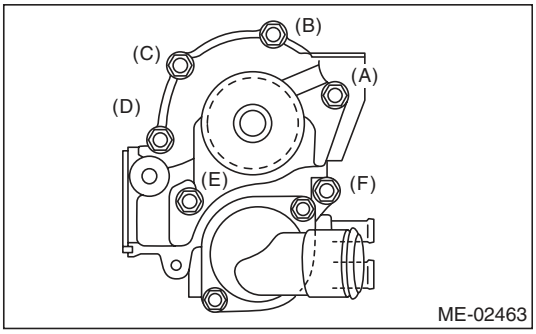

34) Install the water by-pass pipe for heater.

Tightening torque:
6.4 N·m (0.7 kgf-m, 4.7 ft-lb)

35) Install the oil cooler. <Ref. to LU(H4SO)-22, INSTALLATION, Engine Oil Cooler.>
36) Install the oil filter. <Ref. to LU(H4SO)-23, INSTALLATION, Engine Oil Filter.>
37) Install the cylinder head. <Ref. to ME(H4DOTC)-65, INSTALLATION, Cylinder Head.>
38) Install the camshaft. <Ref. to ME(H4DOTC)-59, INSTALLATION, Camshaft.>
39) Install the generator and A/C compressor with their brackets.

Tightening torque:
36 N·m (3.7 kgf-m, 26.6 ft-lb)

40) Install the crank sprocket. <Ref. to ME(H4DOTC)-57, INSTALLATION, Crank Sprocket.>
41) Install the cam sprocket. <Ref. to ME(H4DOTC)-56, INSTALLATION, Cam Sprocket.>
42) Install the timing belt. <Ref. to ME(H4DOTC)-49, INSTALLATION, Timing Belt.>
43) Adjust the valve clearance. <Ref. to ME(H4DOTC)-28, ADJUSTMENT, Valve Clearance.>
44) Install the rocker cover.
(1) Install the rocker cover gasket to the rocker cover. (Outer periphery and ignition coil section)

NOTE:
Use a new rocker cover gasket.

(2) Apply liquid gasket to the specified point of the cylinder head.

NOTE:
Install within 5 minutes after applying liquid gasket.

Liquid gasket:
THREE BOND 1217G (Part No. K0877Y0100) or equivalent

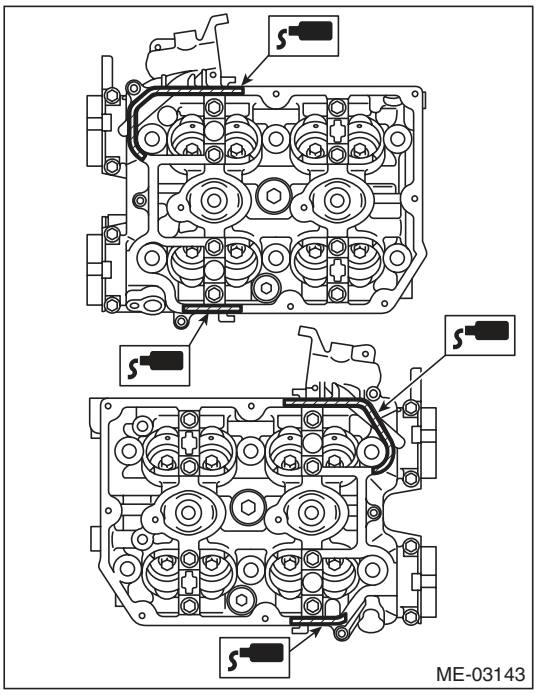

(3) Install the rocker cover on cylinder head. Ensure the gasket is properly positioned during installation.
(4) Temporarily tighten the rocker cover tightening bolts in alphabetical order shown in the figure, and then tighten to specified torque in alphabetical order.

Tightening torque:
6.4 N·m (0.7 kgf-m, 4.7 ft-lb)

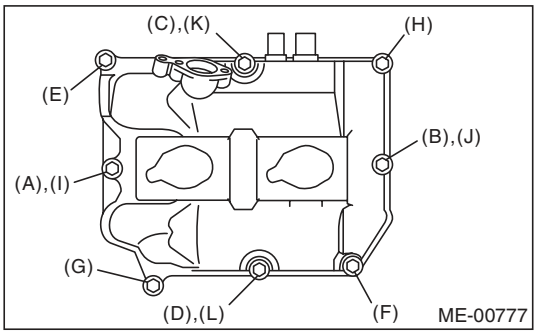

45) Install the timing belt cover. <Ref. to ME(H4DOTC)-46, INSTALLATION, Timing Belt Cover.>
46) Install the crank pulley. <Ref. to ME(H4DOTC)-44, INSTALLATION, Crank Pulley.>
47) Install the intake manifold. <Ref. to FU(H4DOTC)-20, INSTALLATION, Intake Manifold.>
48) Install the V-belts. <Ref. to ME(H4DOTC)-42, INSTALLATION, V-belt.>

C: DISASSEMBLY

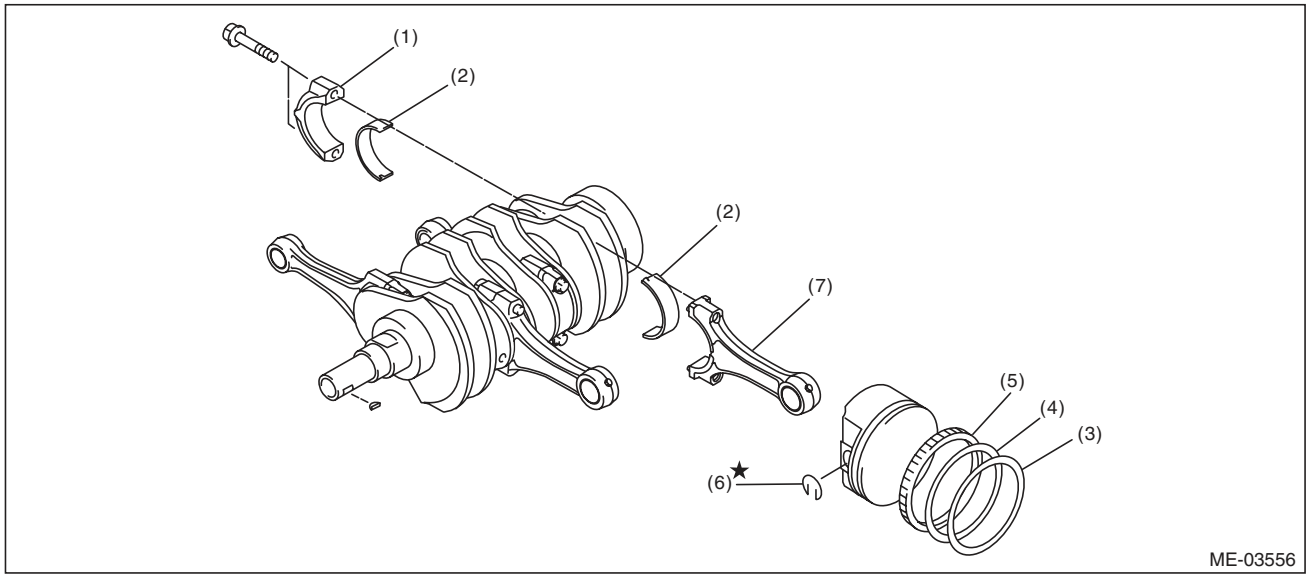

(1)	Connecting rod cap	(4)	Second ring	(6)	Snap ring
(2)	Connecting rod bearing	(5)	Oil ring	(7)	Connecting rod
(3)	Top ring				

1) Remove the connecting rod cap.
2) Remove the connecting rod bearing.

NOTE:
Keep the removed connecting rods, connecting rod caps and bearings in order so that they are kept in their original combinations/groups, and not mixed together.

3) Remove the piston rings using piston ring expander.
4) Remove the oil ring by hand.

NOTE:
Arrange the removed piston rings in proper order, to prevent confusion.

5) Remove the snap ring.

D: ASSEMBLY

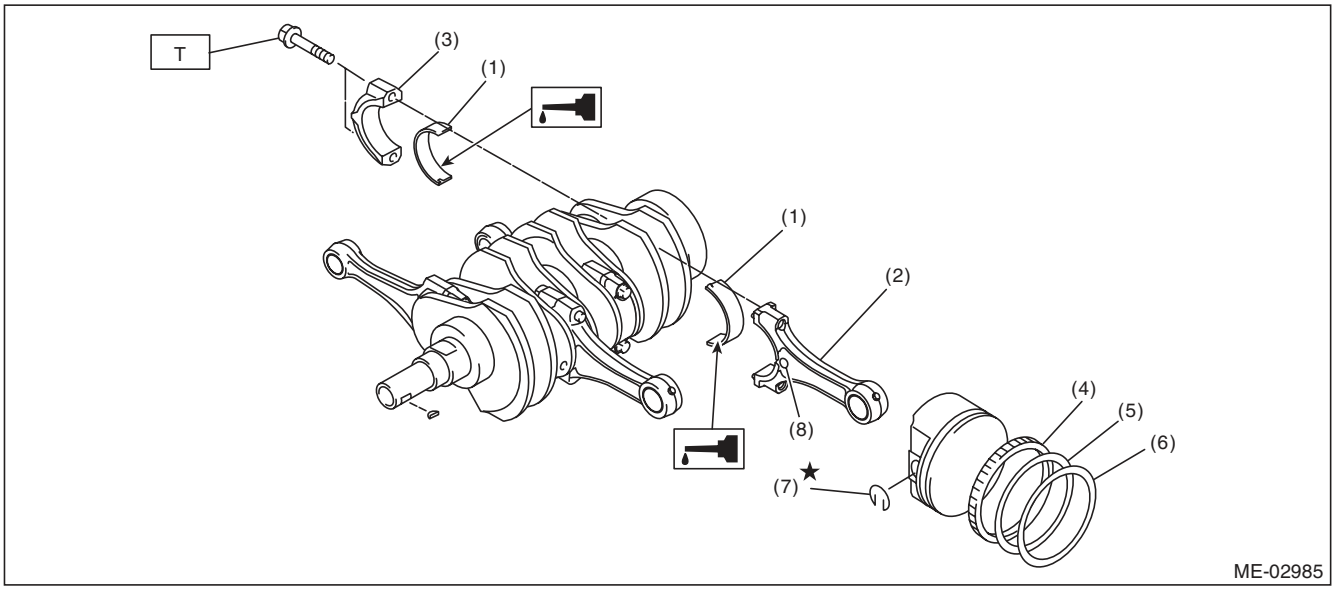

(1)	Connecting rod bearing	(5)	Second ring
(2)	Connecting rod	(6)	Top ring
(3)	Connecting rod cap	(7)	Snap ring
(4)	Oil ring	(8)	Side mark

Tightening torque:N·m (kgf-m, ft-lb)
T: 52 (5.3, 38.4)

1) Apply oil to the surface of the connecting rod bearings, and install the connecting rod bearings on connecting rods and connecting rod caps.
2) Position each connecting rod with a side mark facing forward, and install it.
3) Attach the connecting rod cap, and tighten with the connecting rod bolt. Make sure the arrow mark on connecting rod cap facing front during installation.

NOTE:
- Each connecting rod has its own mating cap. Make sure that they are assembled correctly by checking their matching number.
- When tightening the connecting rod nuts, apply oil on the threads.

Tightening torque:
52 N·m (5.3 kgf-m, 38.4 ft-lb)

4) Install the oil ring upper rail, expander and lower rail by hand.
5) Install the second ring and top ring using piston ring expander.

NOTE:
Assemble so that the piston ring mark “R” faces the top side of the piston.

E: INSPECTION

1. CYLINDER BLOCK

1) Check for cracks or damage. Use liquid penetrant tester on the important sections to check for fissures. Check that there are no marks of gas leaking or water leaking on gasket installing surface.
2) Check the oil passages for clogging.
3) Inspect the cylinder block surface that mates with cylinder head for warping by using a straight edge, and correct by grinding if necessary.

Warping limit:
0.025 mm (0.00098 in)

Grinding limit:
0.1 mm (0.004 in)

Standard height of cylinder block:
201.0 mm (7.91 in)

2. CYLINDER AND PISTON

1) The cylinder bore size is stamped on the front upper face of the cylinder block.

NOTE:
- Measurement should be performed at a temperature of 20°C (68°F).
- Standard sized pistons are classified into two grades, “A” and “B”. These grades should be used as guide lines in selecting a standard piston.

Standard diameter:
A: 99.505 — 99.515 mm (3.9175 — 3.9179 in)
B: 99.495 — 99.505 mm (3.9171 — 3.9175 in)

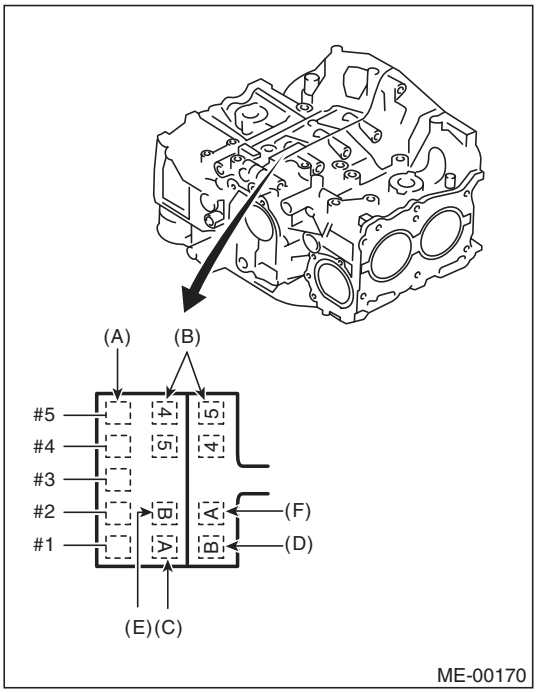

(A) Main journal size mark
(B) Cylinder block (RH) – (LH) combination mark
(C) #1 cylinder bore size mark
(D) #2 cylinder bore size mark
(E) #3 cylinder bore size mark
(F) #4 cylinder bore size mark

2) Measure inner diameter of each cylinder.
Measure the inner diameter of each cylinder in both the thrust and piston pin directions at the heights as shown in the figure, using a cylinder bore gauge.

NOTE:
Measurement should be performed at a temperature of 20°C (68°F).

Taper:
Standard
0.015 mm (0.0006 in)

Out-of-roundness:
Standard
0.010 mm (0.0004 in)

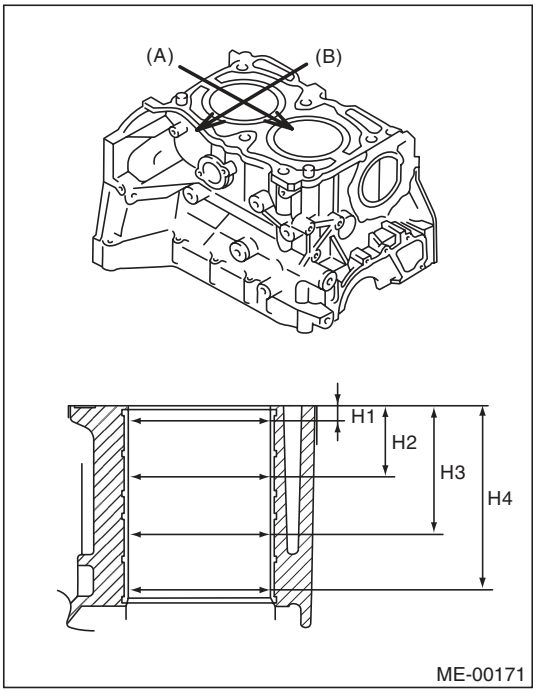

(A) Piston pin direction
(B) Thrust direction
H1: 10 mm (0.39 in)
H2: 45 mm (1.77 in)
H3: 80 mm (3.15 in)
H4: 115 mm (4.53 in)

3) When the piston is to be replaced due to general or cylinder wear, select a suitable sized piston by measuring the piston clearance.

4) Measure outer diameter of each cylinder.
Measure the outer diameter of each piston at the height as shown in the figure. (Thrust direction)

NOTE:
Measurement should be performed at a temperature of 20°C (68°F).

Piston grade point H:
38.2 mm (1.50 in)

Piston outer diameter:
Standard
A: 99.505 — 99.515 mm (3.9175 — 3.9179 in)
B: 99.495 — 99.505 mm (3.9171 — 3.9175 in)
0.25 mm (0.0098 in) oversize
99.745 — 99.765 mm (3.9270 — 3.9278 in)
0.50 mm (0.0197 in) oversize
99.995 — 100.015 mm (3.9368 — 3.9376 in)

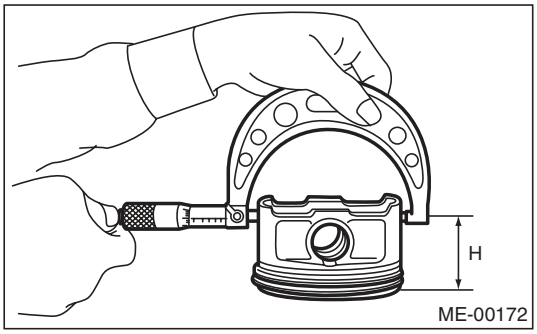

5) Calculate the clearance between cylinder and piston.

NOTE:
Measurement should be performed at a temperature of 20°C (68°F).

Cylinder to piston clearance at 20°C (68°F):
Standard
–0.010 — 0.010 mm (–0.00039 — 0.00039 in)

6) Boring and honing
(1) If any of the measured value of taper, out-of-roundness or cylinder-to-piston clearance is out of standard or if there is any damage on the cylinder wall, rebore it to replace with an oversize piston.

CAUTION:
When any of the cylinders needs reboring, all other cylinders must be bored at the same time, and replaced with oversize pistons.

(2) If the cylinder inner diameter exceeds the limit after boring and honing, replace the cylinder block.

NOTE:
Immediately after reboring, the cylinder diameter may differ from its real diameter due to temperature rise. Thus, when measuring the cylinder diameter, wait until it has cooled to room temperature.

Cylinder inner diameter boring limit (diameter):
100.005 mm (3.9372 in)

3. PISTON AND PISTON PIN

1) Check the piston and piston pin for breaks, cracks or wear. Replace if faulty.
2) Check the piston ring groove for wear and damage. Replace if faulty.
3) Make sure that the piston pin can be inserted into the piston pin hole with a thumb at 20°C (68°F). Replace if faulty.

Standard clearance between piston pin and hole in piston:
Standard
0.004 — 0.008 mm (0.0002 — 0.0003 in)

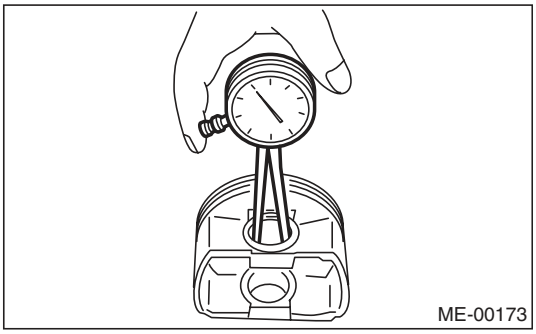

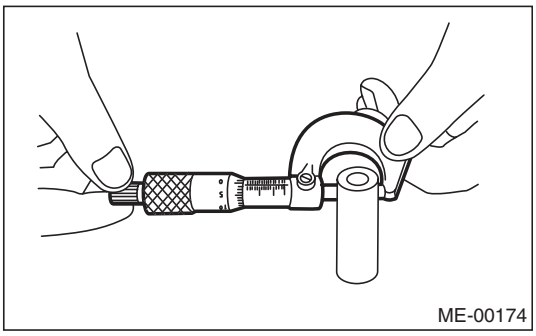

4) Check the snap ring installation groove (A) on the piston for burr. If necessary, remove burr from the groove so that the piston pin can lightly move.

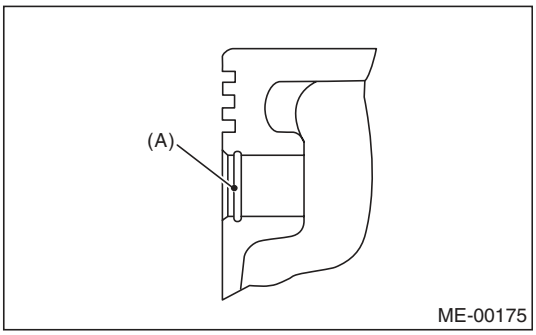

5) Check the piston pin snap ring for distortion, cracks and wear.

4. PISTON RING

1) If the piston ring is broken, damaged or worn, or if its tension is insufficient, or when the piston is replaced, replace the piston ring with a new part of the same size as piston.

NOTE:
- The top ring and second ring have the mark to determine the direction for installing. When installing the ring to piston, face this mark to the top side.
- Oil ring consists of the upper rail, expander and lower rail. When installing oil ring on piston, be careful of the direction of each rail.

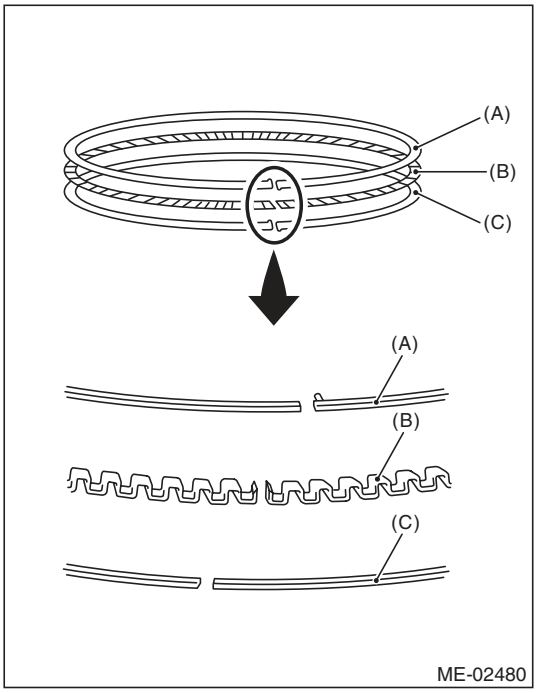

(A) Upper rail
(B) Expander
(C) Lower rail

2) Using the piston, insert the piston ring and oil ring into the cylinder so that they are perpendicular to the cylinder wall, and measure the piston ring gap with a thickness gauge.

		Standard mm (in)
Piston ring gap	Top ring	0.20 — 0.25 (0.0079 — 0.0098)
	Second ring	0.37 — 0.52 (0.015 — 0.020)
	Oil ring rail	0.20 — 0.50 (0.0079 — 0.0197)

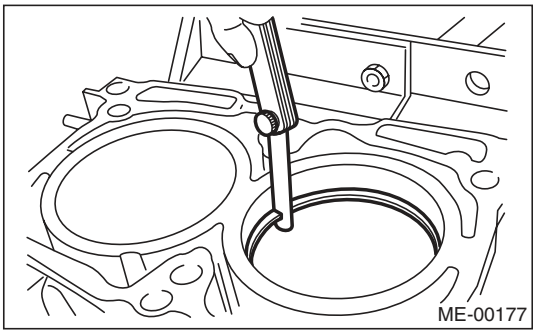

3) Fit the piston ring straight into the piston ring groove, then measure the clearance between piston ring and piston ring groove with a thickness gauge.

NOTE:
Before measuring the clearance, clean the piston ring groove and piston ring.

		Standard mm (in)
Clearance between piston ring and piston ring groove	Top ring	0.040 — 0.080 (0.0016 — 0.0031)
	Second ring	0.030 — 0.070 (0.0012 — 0.0028)

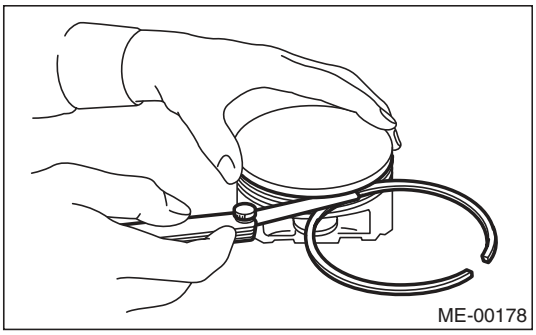

5. CONNECTING ROD

1) Replace the connecting rod, if the large or small end thrust surface is damaged.
2) Check for bend or twist using a connecting rod aligner. Replace the connecting rod if the bend or twist exceeds the limit.

Limit of bend or twist per 100 mm (3.94 in) in length:
0.10 mm (0.0039 in)

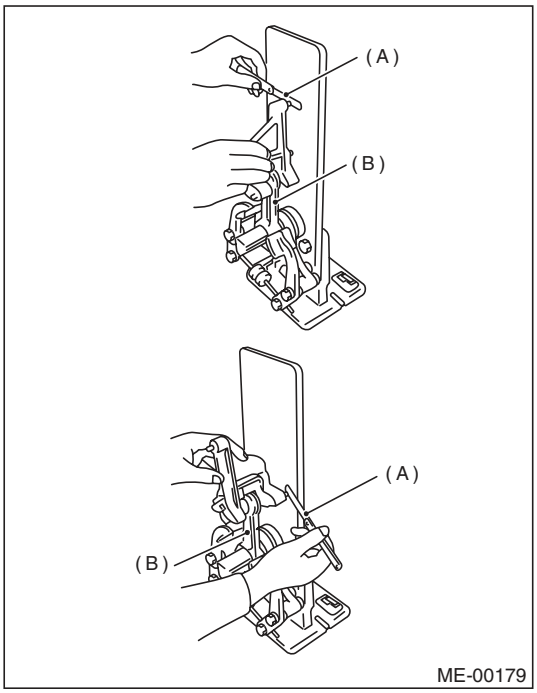

(A) Thickness gauge
(B) Connecting rod

3) Install the connecting rod fitted with bearing to the crankshaft, and measure the thrust clearance using a thickness gauge. If the thrust clearance exceeds the standard or uneven wear is found, replace the connecting rod.

Connecting rod thrust clearance:
Standard
0.070 — 0.330 mm (0.0028 — 0.0130 in)

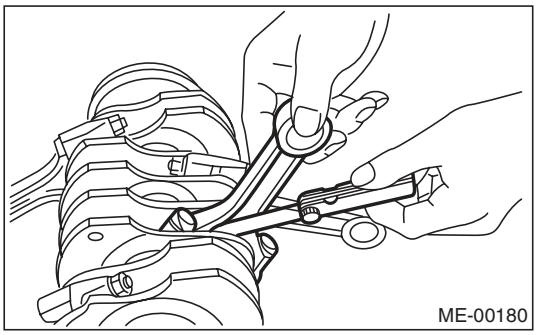

4) Inspect the connecting rod bearing for scar, peeling, seizure, melting, wear, etc.

5) Measure the oil clearance on each connecting rod bearing using plastigauge. If any oil clearance is not within the standard, replace the defective bearing with a new part of standard size or undersize as necessary.

Connecting rod oil clearance:
Standard
0.017 — 0.045 mm (0.0007 — 0.0018 in)

Unit: mm (in)

Bearing	Bearing size (Thickness at center)	Outer diameter of crank pin
Standard	1.490 — 1.502 (0.0587 — 0.0591)	51.984 — 52.000 (2.0466 — 2.0472)
0.03 (0.0012) undersize	1.504 — 1.512 (0.0592 — 0.0595)	51.954 — 51.970 (2.0454 — 2.0461)
0.05 (0.0020) undersize	1.514 — 1.522 (0.0596 — 0.0599)	51.934 — 51.950 (2.0447 — 2.0453)
0.25 (0.0098) undersize	1.614 — 1.622 (0.0635 — 0.0639)	51.734 — 51.750 (2.0368 — 2.0374)

6) Inspect the bushing at connecting rod small end, and replace with a new part if worn or damaged.
7) Measure the piston pin clearance at connecting rod small end. If the measured value is not within the standard, replace it with a new part.

Clearance between piston pin and bushing:
Standard
0 — 0.022 mm (0 — 0.0009 in)

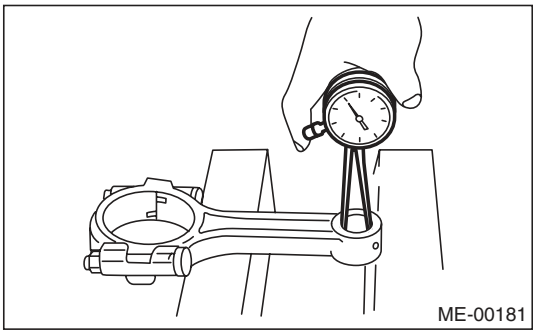
ME-00181

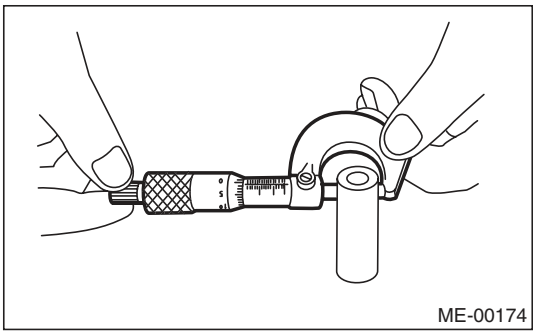
ME-00174

8) The replacement procedure for the connecting rod small end bushing is as follows.
(1) Remove the bushing from connecting rod with ST and press.
(2) Press the bushing with the ST after applying oil on the periphery of new bushing.

ST 499037100 CONNECTING ROD BUSHING REMOVER AND INSTALLER

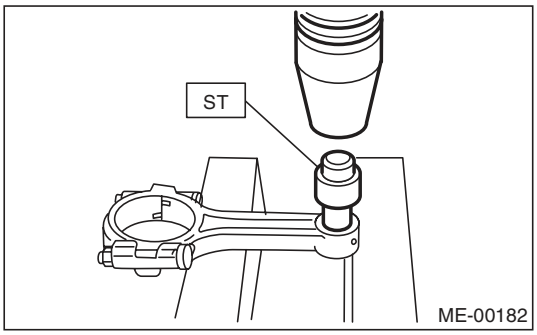

ME-00182

(3) Make two 3 mm (0.12 in) holes in the pressed bushing by aligning with the pre-manufactured holes on the connecting rod, and ream the inside of the bushing.
(4) After completion of reaming, clean the bushing to remove chips.

6. CRANKSHAFT AND CRANKSHAFT BEARING

1) Clean the crankshaft completely, and check it for cracks using liquid penetrant tester. If defective, replace the crankshaft.
2) Measure warping of the crankshaft. If it exceeds the limit, correct or replace it.

NOTE:
If a suitable V-block is not available, using just the #1 and #5 crankshaft bearings on cylinder block, position the crankshaft on cylinder block. Then, measure the crankshaft bend using a dial gauge.

Crankshaft bend limit:
0.035 mm (0.0014 in)

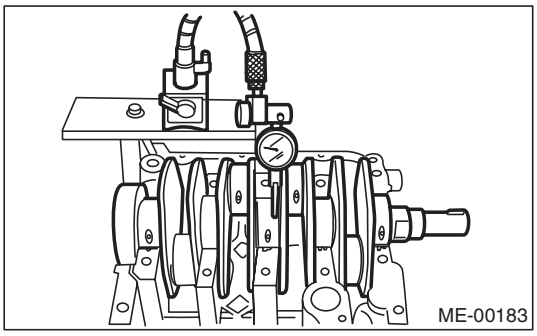
ME-00183

3) Inspect the crank journal and crank pin for wear. If they are not within the standard, replace the bearing with a suitable (undersize) one, and replace or grind to correct the crankshaft as necessary. When grinding the crank journal or crank pin, finish them to the specified dimensions according to the undersize bearing to be used.

Crank pin:
Out-of-roundness
0.003 mm (0.0001 in)
Cylindricality
0.004 mm (0.0002 in)
Grinding limit (dia.)
To 51.750 mm (2.0374 in)

Crank journal:
Out-of-roundness
0.005 mm (0.0002 in)
Cylindricality
0.006 mm (0.0002 in)
Grinding limit (dia.)
To 59.758 mm (2.3527 in)

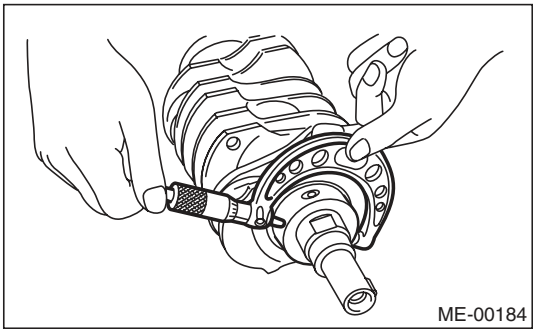

Unit: mm (in)

		Crank journal diameter		Crank pin outer diameter
		#1, #3	#2, #4, #5	
Standard	Journal O.D.	59.992 — 60.008 (2.3619 — 2.3625)	59.992 — 60.008 (2.3619 — 2.3625)	51.984 — 52.000 (2.0466 — 2.0472)
	Bearing size (Thickness at center)	1.998 — 2.011 (0.0787 — 0.0792)	2.000 — 2.013 (0.0787 — 0.0793)	1.490 — 1.502 (0.0587 — 0.0591)
0.03 (0.0012) Undersize	Journal O.D.	59.962 — 59.978 (2.3607 — 2.3613)	59.962 — 59.978 (2.3607 — 2.3613)	51.954 — 51.970 (2.0454 — 2.0461)
	Bearing size (Thickness at center)	2.017 — 2.020 (0.0794 — 0.0795)	2.019 — 2.022 (0.0795 — 0.0796)	1.504 — 1.512 (0.0592 — 0.0595)
0.05 (0.0020) Undersize	Journal O.D.	59.942 — 59.958 (2.3599 — 2.3605)	59.942 — 59.958 (2.3599 — 2.3605)	51.934 — 51.950 (2.0447 — 2.0453)
	Bearing size (Thickness at center)	2.027 — 2.030 (0.0798 — 0.0799)	2.029 — 2.032 (0.0799 — 0.0800)	1.514 — 1.522 (0.0596 — 0.0599)
0.25 (0.0098) Undersize	Journal O.D.	59.742 — 59.758 (2.3520 — 2.3527)	59.742 — 59.758 (2.3520 — 2.3527)	51.734 — 51.750 (2.0368 — 2.0374)
	Bearing size (Thickness at center)	2.127 — 2.130 (0.0837 — 0.0839)	2.129 — 2.132 (0.0838 — 0.0839)	1.614 — 1.622 (0.0635 — 0.0639)

4) Use a thickness gauge to measure the thrust clearance of crankshaft at #5 crank journal bearing. If clearance exceeds the standard, replace the bearing.

Crankshaft thrust clearance:
Standard
0.030 — 0.115 mm (0.0012 — 0.0045 in)

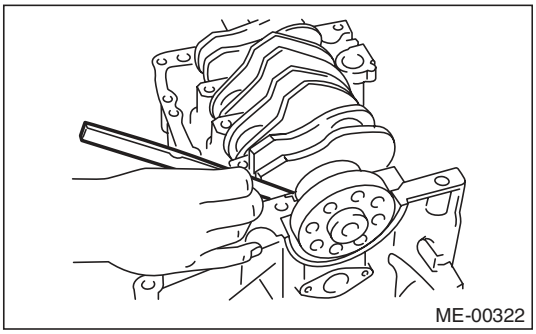

5) Inspect individual crankshaft bearings for signs of flaking, seizure, melting and wear.
6) Measure the oil clearance on each crankshaft bearing using plastigauge. If the measured value is out of standard, replace the defective bearing with an undersize one, and replace or grind to correct the crankshaft as necessary.

Crankshaft oil clearance:
Standard
0.010 — 0.030 mm (0.0004 — 0.0012 in)

21.Intake and Exhaust Valve

A: SPECIFICATION

Refer to “Cylinder Head” for removal and installation procedures of the intake and exhaust valves. <Ref. to ME(H4DOTC)-64, REMOVAL, Cylinder Head.> <Ref. to ME(H4DOTC)-65, INSTALLATION, Cylinder Head.>

22. Piston

A: SPECIFICATION

Refer to “Cylinder Block” for removal and installation procedures of pistons. <Ref. to ME(H4DOTC)-74, REMOVAL, Cylinder Block.> <Ref. to ME(H4DOTC)-78, INSTALLATION, Cylinder Block.>

23. Connecting Rod

A: SPECIFICATION

Refer to “Cylinder Block” for removal and installation procedures of connecting rods.
<Ref. to ME(H4DOTC)-74, REMOVAL, Cylinder Block.> <Ref. to ME(H4DOTC)-78, INSTALLATION, Cylinder Block.>

24. Crankshaft

A: SPECIFICATION

Refer to “Cylinder Block” for removal and installation procedures of the crankshaft. <Ref. to ME(H4DOTC)-74, REMOVAL, Cylinder Block.> <Ref. to ME(H4DOTC)-78, INSTALLATION, Cylinder Block.>

25. Engine Trouble in General

A: INSPECTION

NOTE:
The “RANK” shown in the chart shows the possibilities of the cause of trouble in order from “Very often” to “Rarely”.
A — Very often
B — Sometimes
C — Rarely

Symptoms	Problem parts etc.	Possible cause	RANK
1. Engine does not start.			
1) Starter does not turn.	Starter	Defective battery-to-starter harness	B
		Defective starter switch	C
		Defective inhibitor switch	C
		Defective starter	B
	Battery	Improper connection of the terminal	A
		Run-down battery	A
		Defective charging system	B
	Friction	Seizure of crankshaft and connecting rod bearing	C
		Seized camshaft	C
		Seized or stuck piston and cylinder	C
2) Initial combustion does not occur.	Starter	Defective starter	C
	Engine control system <Ref. to EN(H4DOTC)(diag)-2, Basic Diagnostic Procedure.>		A
	Fuel line	Defective fuel pump and relay	A
		Clogged fuel line	C
		Lack of or insufficient fuel	B
	Timing belt	Degradation, etc.	B
		Defective timing	B
	Compression	Incorrect valve clearance	C
		Loosened spark plug or defective gasket	C
		Loosened cylinder head bolt or defective gasket	C
		Improper valve sealing	C
		Defective valve stem	C
		Worn or broken valve spring	B
		Worn or stuck piston rings, cylinder and piston	C
		Incorrect valve timing	B
		Improper engine oil (low viscosity)	B

Symptoms	Problem parts etc.	Possible cause	RANK
3) Initial combustion occurs.	Engine control system <Ref. to EN(H4DOTC)(diag)-2, Basic Diagnostic Procedure.>		A
	Intake system	Defective intake manifold gasket	B
		Defective throttle body gasket	B
	Fuel line	Defective fuel pump and relay	C
		Clogged fuel line	C
		Lack of or insufficient fuel	B
	Timing belt	Degradation, etc.	B
		Defective timing	B
	Compression	Incorrect valve clearance	C
		Loosened spark plug or defective gasket	C
		Loosened cylinder head bolt or defective gasket	C
		Improper valve sealing	C
		Defective valve stem	C
		Worn or broken valve spring	B
		Worn or stuck piston rings, cylinder and piston	C
		Incorrect valve timing	B
		Improper engine oil (low viscosity)	B
4) Engine stalls after initial combustion.	Engine control system <Ref. to EN(H4DOTC)(diag)-2, Basic Diagnostic Procedure.>		A
	Intake system	Loosened or cracked intake duct	B
		Loosened or cracked PCV hose	C
		Loosened or cracked vacuum hose	C
		Defective intake manifold gasket	B
		Defective throttle body gasket	B
		Dirty air cleaner element	C
	Fuel line	Clogged fuel line	C
		Lack of or insufficient fuel	B
	Timing belt	Degradation, etc.	B
		Defective timing	B
	Compression	Incorrect valve clearance	C
		Loosened spark plug or defective gasket	C
		Loosened cylinder head bolt or defective gasket	C
		Improper valve sealing	C
		Defective valve stem	C
		Worn or broken valve spring	B
		Worn or stuck piston rings, cylinder and piston	C
		Incorrect valve timing	B
		Improper engine oil (low viscosity)	B

Symptoms	Problem parts etc.	Possible cause	RANK
2. Rough idle and engine stall	Engine control system <Ref. to EN(H4DOTC)(diag)-2, Basic Diagnostic Procedure.>		A
	Intake system	Loosened or cracked intake duct	A
		Loosened or cracked PCV hose	A
		Loosened or cracked vacuum hose	A
		Defective intake manifold gasket	B
		Defective throttle body gasket	B
		Defective PCV valve	C
		Loosened oil filler cap	B
		Dirty air cleaner element	C
	Fuel line	Defective fuel pump and relay	C
		Clogged fuel line	C
		Lack of or insufficient fuel	B
	Timing belt	Defective timing	C
	Compression	Incorrect valve clearance	B
		Loosened spark plug or defective gasket	B
		Loosened cylinder head bolt or defective gasket	B
		Improper valve sealing	B
		Defective valve stem	C
		Worn or broken valve spring	B
		Worn or stuck piston rings, cylinder and piston	B
		Incorrect valve timing	A
		Improper engine oil (low viscosity)	B
	Lubrication system	Incorrect oil pressure	B
		Defective rocker cover gasket	C
	Cooling system	Over-heating	C
	Others	Evaporative emission control system malfunction	A
		Stuck or damaged throttle valve	B

Symptoms	Problem parts etc.	Possible cause	RANK
3. Low output, hesitation and poor acceleration	Engine control system <Ref. to EN(H4DOTC)(diag)-2, Basic Diagnostic Procedure.>		A
	Intake system	Loosened or cracked intake duct	A
		Loosened or cracked PCV hose	A
		Loosened or cracked vacuum hose	B
		Defective intake manifold gasket	B
		Defective throttle body gasket	B
		Defective PCV valve	B
		Loosened oil filler cap	B
		Dirty air cleaner element	A
	Fuel line	Defective fuel pump and relay	B
		Clogged fuel line	B
		Lack of or insufficient fuel	C
	Timing belt	Defective timing	B
	Compression	Incorrect valve clearance	B
		Loosened spark plug or defective gasket	B
		Loosened cylinder head bolt or defective gasket	B
		Improper valve sealing	B
		Defective valve stem	C
		Worn or broken valve spring	B
		Worn or stuck piston rings, cylinder and piston	C
		Incorrect valve timing	A
		Improper engine oil (low viscosity)	B
	Lubrication system	Incorrect oil pressure	B
	Cooling system	Over-heating	C
		Over-cooling	C
	Others	Evaporative emission control system malfunction	A
4. Surging	Engine control system <Ref. to EN(H4DOTC)(diag)-2, Basic Diagnostic Procedure.>		A
	Intake system	Loosened or cracked intake duct	A
		Loosened or cracked PCV hose	A
		Loosened or cracked vacuum hose	A
		Defective intake manifold gasket	B
		Defective throttle body gasket	B
		Defective PCV valve	B
		Loosened oil filler cap	B
		Dirty air cleaner element	B
	Fuel line	Defective fuel pump and relay	B
		Clogged fuel line	B
		Lack of or insufficient fuel	C
	Timing belt	Defective timing	B
	Compression	Incorrect valve clearance	B
		Loosened spark plug or defective gasket	C
		Loosened cylinder head bolt or defective gasket	C
		Improper valve sealing	C
		Defective valve stem	C
		Worn or broken valve spring	C
		Worn or stuck piston rings, cylinder and piston	C
		Incorrect valve timing	A
		Improper engine oil (low viscosity)	B
	Cooling system	Over-heating	B
	Others	Evaporative emission control system malfunction	C

Symptoms	Problem parts etc.	Possible cause	RANK
5. Engine does not return to idle.	Engine control system <Ref. to EN(H4DOTC)(diag)-2, Basic Diagnostic Procedure.>		A
	Intake system	Loosened or cracked vacuum hose	A
	Others	Stuck or damaged throttle valve	A
6. Dieseling (Run-on)	Engine control system <Ref. to EN(H4DOTC)(diag)-2, Basic Diagnostic Procedure.>		A
	Cooling system	Over-heating	B
	Others	Evaporative emission control system malfunction	B
7. After burning in exhaust system	Engine control system <Ref. to EN(H4DOTC)(diag)-2, Basic Diagnostic Procedure.>		A
	Intake system	Loosened or cracked intake duct	C
		Loosened or cracked PCV hose	C
		Loosened or cracked vacuum hose	B
		Defective PCV valve	B
		Loosened oil filler cap	C
	Timing belt	Defective timing	B
	Compression	Incorrect valve clearance	B
		Loosened spark plug or defective gasket	C
		Loosened cylinder head bolt or defective gasket	C
		Improper valve sealing	B
		Defective valve stem	C
		Worn or broken valve spring	C
		Worn or stuck piston rings, cylinder and piston	C
		Incorrect valve timing	A
	Lubrication system	Incorrect oil pressure	C
	Cooling system	Over-cooling	C
	Others	Evaporative emission control system malfunction	C
8. Knocking	Engine control system <Ref. to EN(H4DOTC)(diag)-2, Basic Diagnostic Procedure.>		A
	Intake system	Loosened oil filler cap	B
	Timing belt	Defective timing	B
	Compression	Incorrect valve clearance	C
		Incorrect valve timing	B
	Cooling system	Over-heating	A
9. Excessive engine oil consumption	Intake system	Loosened or cracked PCV hose	A
		Defective PCV valve	B
		Loosened oil filler cap	C
	Compression	Defective valve stem	A
		Worn or stuck piston rings, cylinder and piston	A
	Lubrication system	Loosened oil pump attaching bolts and defective gasket	B
		Defective oil filter gasket	B
		Defective crankshaft oil seal	B
		Defective rocker cover gasket	B
		Loosened oil drain plug or defective gasket	B
		Loosened oil pan fitting bolts or defective oil pan	B

Symptoms	Problem parts etc.	Possible cause	RANK
10. Excessive fuel consumption	Engine control system <Ref. to EN(H4DOTC)(diag)-2, Basic Diagnostic Procedure.>		A
	Intake system	Dirty air cleaner element	A
	Timing belt	Defective timing	B
	Compression	Incorrect valve clearance	B
		Loosened spark plug or defective gasket	C
		Loosened cylinder head bolt or defective gasket	C
		Improper valve sealing	B
		Defective valve stem	C
		Worn or broken valve spring	C
		Worn or stuck piston rings, cylinder and piston	B
		Incorrect valve timing	B
	Lubrication system	Incorrect oil pressure	C
	Cooling system	Over-cooling	C

26. Engine Noise

A: INSPECTION

Type of sound	Condition	Possible cause
Regular clicking sound	Sound increases as engine speed increases.	• Valve mechanism is defective. • Incorrect valve clearance • Worn camshaft • Broken valve spring
Heavy and dull clank	Oil pressure is low.	• Worn crankshaft main bearing • Worn connecting rod bearing (large end)
	Oil pressure is normal.	• Loosened flywheel mounting bolt • Damaged engine mounting
High-pitched clank	Sound is noticeable when accelerating with an overload condition.	• Ignition timing advanced • Accumulation of carbon inside combustion chamber • Wrong heat range of spark plug • Improper octane value of gasoline
Clank when engine speed is between 1,000 and 2,000 rpm.	Noise is reduced when fuel injector connector of noisy cylinder is disconnected. (NOTE*)	• Worn crankshaft main bearing • Worn connecting rod bearing (large end)
Knocking sound when engine is operating under idling speed and engine is warm	Noise is reduced when fuel injector connector of noisy cylinder is disconnected. (NOTE*)	• Worn cylinder liner and piston ring • Broken or stuck piston ring • Worn piston pin and hole at piston end of connecting rod
	Sound is not reduced if each fuel injector connector is disconnected in turn. (NOTE*)	• Unusually worn valve lifter • Worn cam sprocket • Worn camshaft journal bore in cylinder head
Squeaky sound	—	Insufficient generator lubrication
Rubbing sound	—	Poor contact of generator brush and rotor
Gear scream when starting engine	—	• Defective ignition starter switch • Worn gear and starter pinion
Sound like polishing glass with a dry cloth	—	• Loose V-belt • Defective water pump shaft
Hissing sound	—	• Insufficient compression • Air leakage in air intake system, hose, connection or manifold
Timing belt noise	—	• Loose timing belt • Timing belt contacting with adjacent part
Valve noise	—	Incorrect valve clearance

NOTE*)
When disconnecting the fuel injector connector, the malfunction indicator light illuminates and DTC is stored in ECM memory. Therefore, perform the Clear Memory Mode <Ref. to EN(H4DOTC)(diag)-52, OPERATION, Clear Memory Mode.> and Inspection Mode <Ref. to EN(H4DOTC)(diag)-43, PROCEDURE, Inspection Mode.> after connecting the fuel injector connector.

1. General Description

A: COMPONENT

1. FRONT EXHAUST PIPE

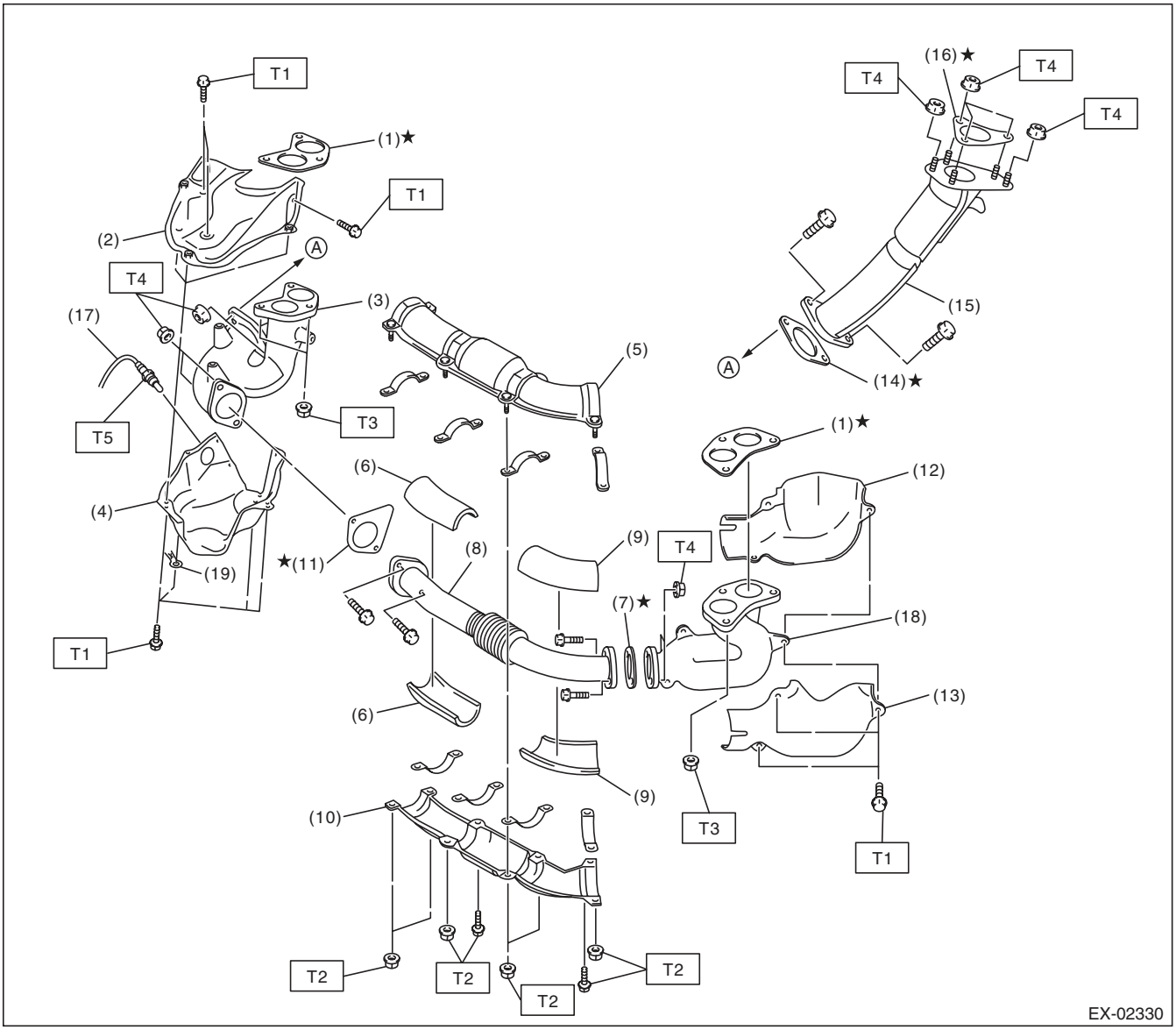

(1)	Gasket	(11)	Gasket
(2)	Exhaust manifold RH upper cover	(12)	Exhaust manifold LH inner cover
(3)	Exhaust manifold RH	(13)	Exhaust manifold LH outer cover
(4)	Exhaust manifold RH lower cover	(14)	Gasket
(5)	Front exhaust pipe upper cover	(15)	Turbocharger joint pipe
(6)	Front exhaust pipe insulator RH	(16)	Gasket
(7)	Gasket	(17)	Front oxygen (A/F) sensor
(8)	Front exhaust pipe	(18)	Exhaust manifold LH
(9)	Front exhaust pipe insulator LH	(19)	Ground cable
(10)	Front exhaust pipe lower cover		

Tightening torque:N·m (kgf-m, ft-lb)

T1: 19 (1.9, 14.0)
T2: 25 (2.5, 18.4)
T3: 40 (4.1, 29.5)
T4: 42.5 (4.3, 31.3)
T5: <Ref. to FU(H4DOTC)-46, INSTALLATION, Front Oxygen (A/F) Sensor.>

2. CENTER AND REAR EXHAUST PIPE, AND MUFFLER

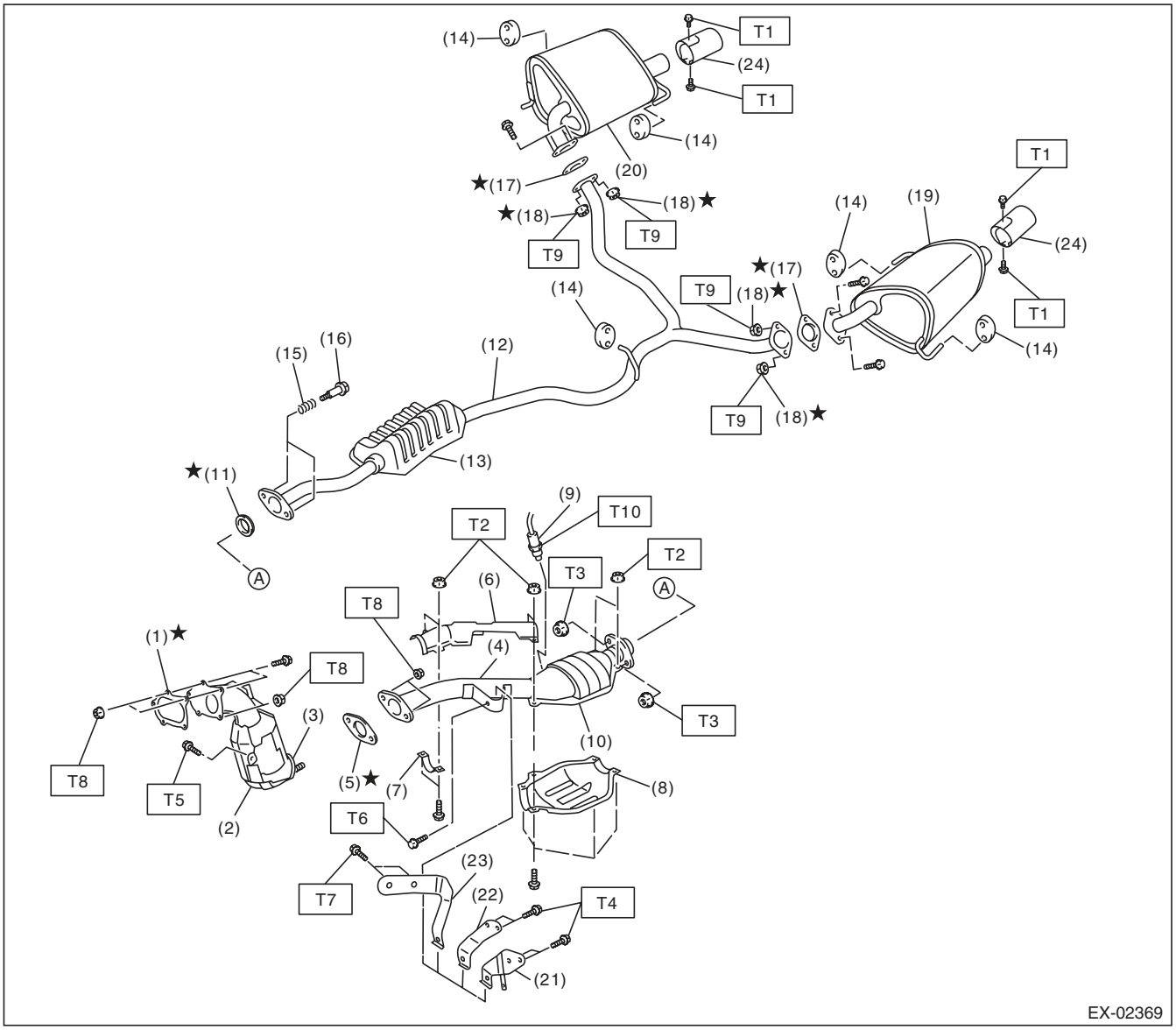

(1)	Gasket	(13)	Chamber
(2)	Front catalytic converter	(14)	Cushion rubber
(3)	Center exhaust pipe (Front)	(15)	Spring
(4)	Center exhaust pipe (Rear)	(16)	Bolt
(5)	Gasket	(17)	Gasket
(6)	Center pipe upper cover (Rear)	(18)	Self-locking nut
(7)	Clamp	(19)	Muffler LH
(8)	Rear catalytic converter lower cover	(20)	Muffler RH
		(21)	Hanger bracket (AT model)
(9)	Rear oxygen sensor	(22)	Hanger bracket (5MT model)
(10)	Rear catalytic converter	(23)	Hanger bracket (6MT model)
(11)	Gasket	(24)	Muffler cutter
(12)	Rear exhaust pipe		

Tightening torque:N·m (kgf-m, ft-lb)

T1: 7.5 (0.8, 5.5)
T2: 13 (1.3, 9.6)
T3: 18 (1.8, 13.3)
T4: 23 (2.3, 17.0)
T5: 30 (3.1, 22.1)
T6: 35 (3.6, 25.8)
T7: 40 (4.1, 29.5)
T8: 42.5 (4.3, 31.3)
T9: 48 (4.9, 35.4)
T10: <Ref. to FU(H4DOTC)-48, INSTALLATION, Rear Oxygen Sensor.>

B: CAUTION

- Wear appropriate work clothing, including a cap, protective goggles and protective shoes when performing any work.
- Remove contamination including dirt and corrosion before removal, installation or disassembly.
- Keep the disassembled parts in order and protect them from dust and dirt.
- Before removal, installation or disassembly, be sure to clarify the failure. Avoid unnecessary removal, installation, disassembly and replacement.
- Vehicle components are extremely hot after driving. Be wary of receiving burns from heated parts.
- Be sure to tighten fasteners including bolts and nuts to the specified torque.
- Place shop jacks or rigid racks at the specified points.
- Before disconnecting connectors of sensors or units, be sure to disconnect the ground cable from the battery.
- If any fat adheres to the exhaust pipe, wipe it off. Otherwise a fire may happen.

2. Front Exhaust Pipe

A: REMOVAL

CAUTION:
Vehicle components are extremely hot after driving. Be wary of receiving burns from heated parts.

1) Set the vehicle on a lift.
2) Disconnect the ground cable from battery.

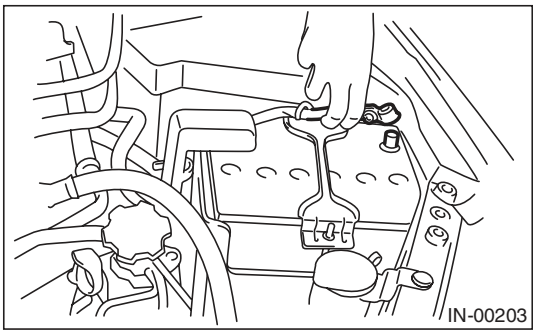

3) Lift up the vehicle.
4) Remove the under cover.
5) Remove the front oxygen (A/F) sensor. <Ref. to FU(H4DOTC)-46, REMOVAL, Front Oxygen (A/F) Sensor.>
6) Remove the exhaust manifold RH lower cover and exhaust manifold LH cover.

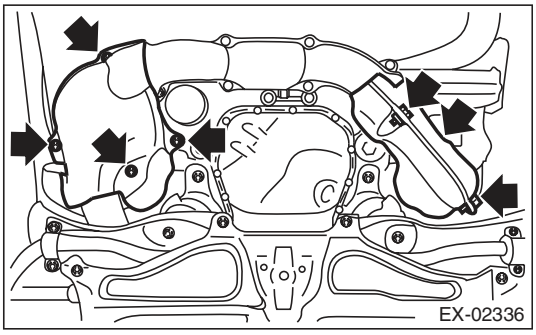

7) Remove the bolts and nuts which hold front exhaust pipe assembly onto turbocharger joint pipe.

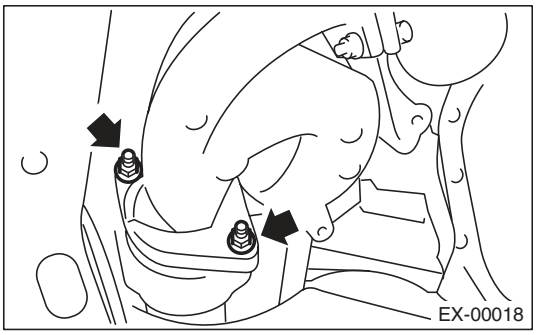

8) While holding the front exhaust pipe assembly with one hand, remove the nuts which hold the front exhaust pipe assembly to cylinder head exhaust port.

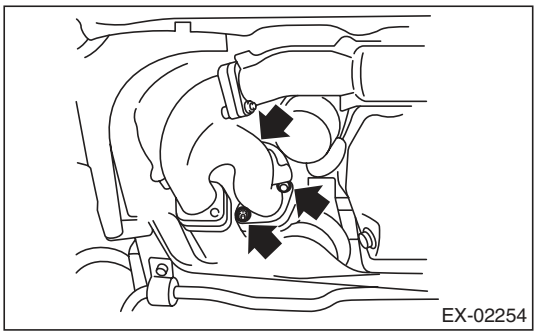

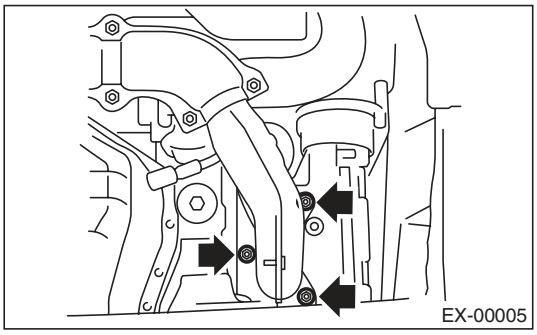

9) Remove the front exhaust pipe assembly.
10) Remove the exhaust manifold RH upper cover and the front exhaust pipe cover.
11) Separate the front exhaust pipe from exhaust manifolds.

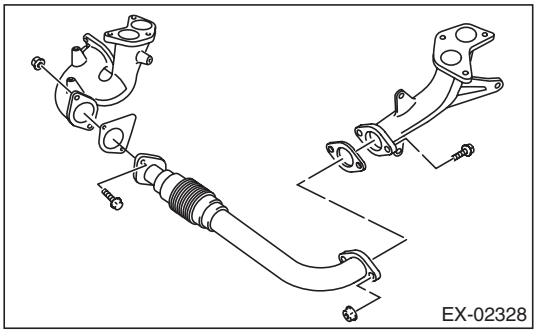

B: INSTALLATION

1) Install the front exhaust pipe and the exhaust manifold.

NOTE:
Use a new gasket.

Tightening torque:
42.5 N·m (4.3 kgf-m, 31.3 ft-lb)

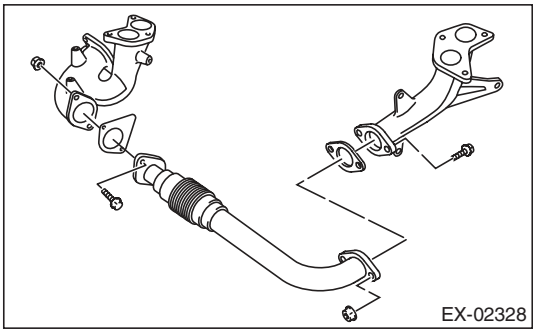

2) Install the front exhaust pipe cover.

Tightening torque:
25 N·m (2.5 kgf-m, 18.4 ft-lb)

3) Install the exhaust manifold RH upper cover.

Tightening torque:
19 N·m (1.9 kgf-m, 14.0 ft-lb)

4) Install the front exhaust pipe assembly.

NOTE:
Use a new gasket.

Tightening torque:
40 N·m (4.1 kgf-m, 29.5 ft-lb)

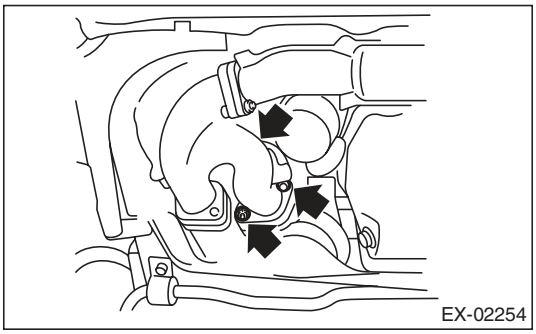

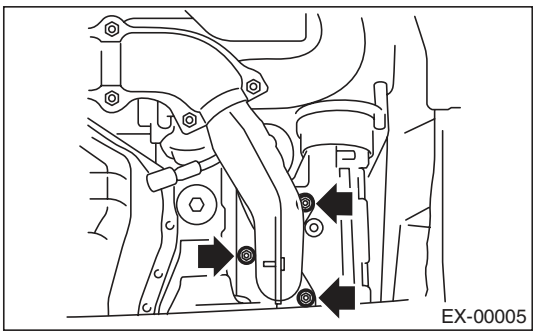

5) Connect the exhaust manifold RH to the turbo-charger joint pipe.

NOTE:
Use a new gasket.

Tightening torque:
42.5 N·m (4.3 kgf-m, 31.3 ft-lb)

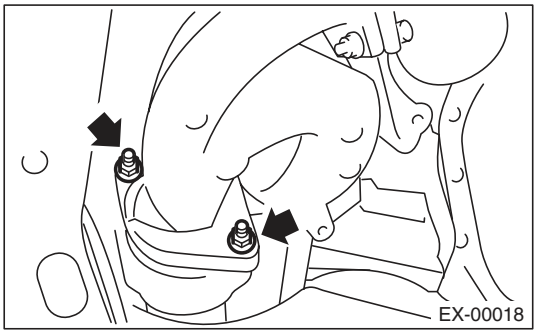

6) Install the exhaust manifold RH lower cover and exhaust manifold LH cover.

Tightening torque:
19 N·m (1.9 kgf-m, 14.0 ft-lb)

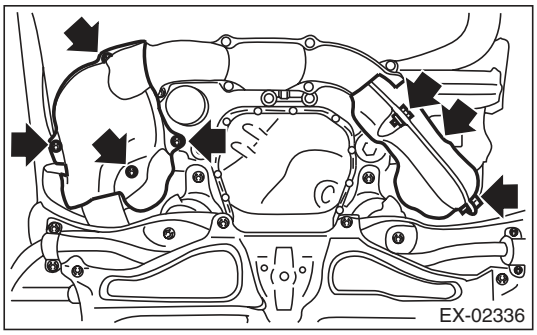

7) Install the front oxygen (A/F) sensor. <Ref. to FU(H4DOTC)-46, INSTALLATION, Front Oxygen (A/F) Sensor.>
8) Install the under cover.
9) Lower the vehicle.
10) Connect the ground cable to battery.

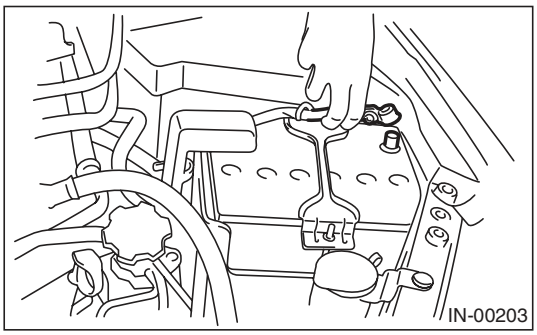

C: INSPECTION

1) Check the connections and welds for exhaust leaks.
2) Make sure there are no holes or rusting.

3. Center Exhaust Pipe

A: REMOVAL

CAUTION:
Vehicle components are extremely hot after driving. Be wary of receiving burns from heated parts.

1) Set the vehicle on a lift.
2) Remove the collector cover.
3) Disconnect the ground cable from battery.

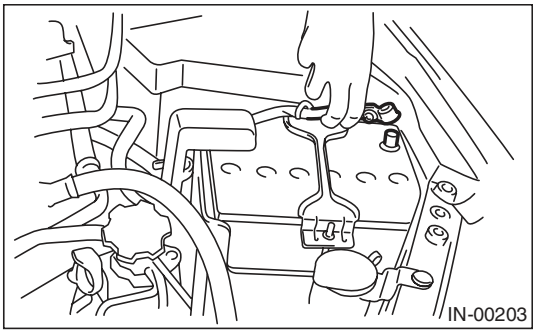

4) Remove the intercooler. <Ref. to IN(H4DOTC)-12, REMOVAL, Intercooler.>
5) Lift up the vehicle.
6) Remove the bolts which hold the lower side of the turbocharger lower cover.

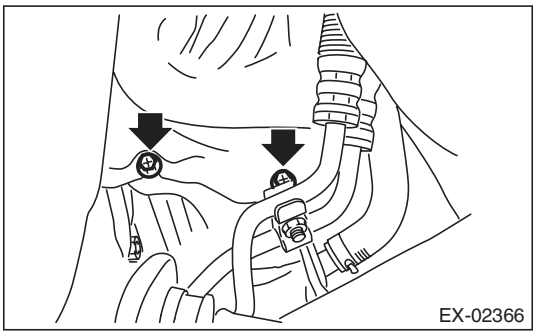

7) Lower the vehicle.
8) Remove the turbocharger upper cover.

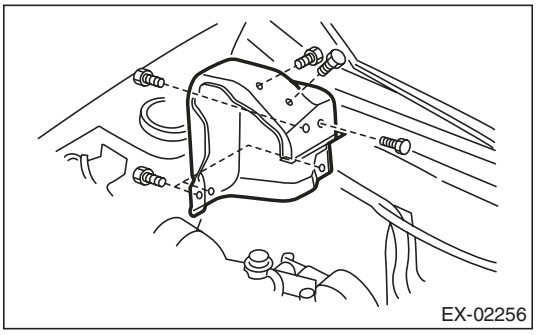

9) Remove the bolts which secure the upper side of the turbocharger lower cover.

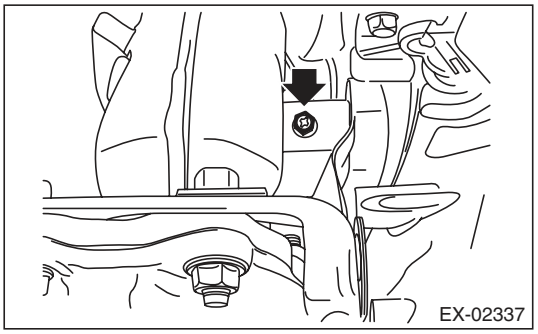

10) Remove the upper side bolts and nuts that hold the center exhaust pipe on the turbocharger, and remove the turbocharger cover stay (A).

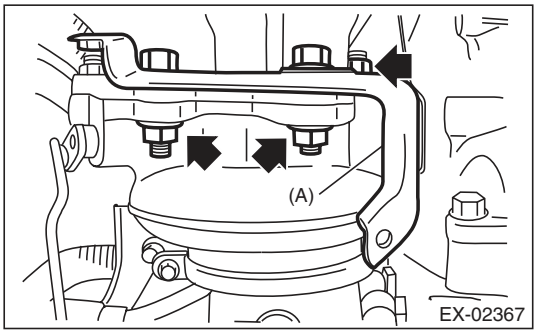

11) Lift up the vehicle.
12) Remove the lower side nuts (two places) that hold the center exhaust pipe on the turbocharger.

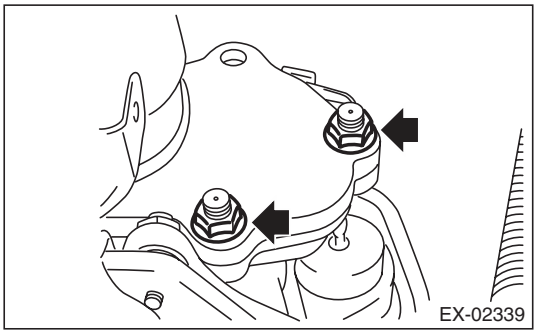

13) Remove clip (A) holding the rear oxygen sensor harness. (AT model)

14) Disconnect the connector from rear oxygen sensor.

- AT model

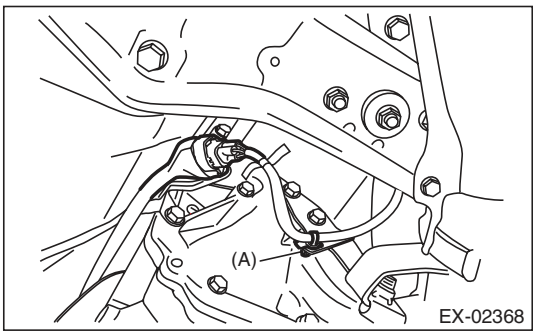

- MT model

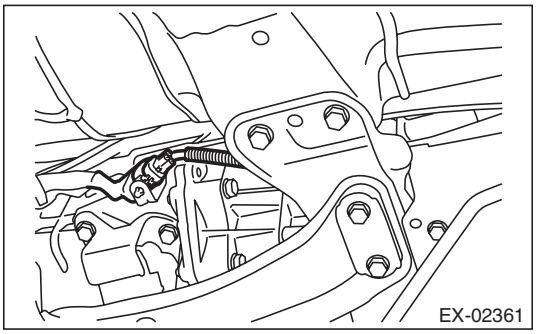

15) Separate the center exhaust pipe from rear exhaust pipe.

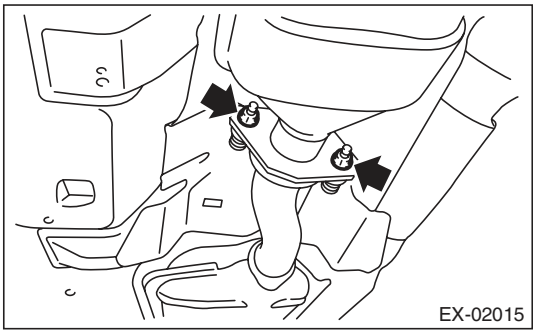

16) Remove the bolt which holds center exhaust pipe bracket to transmission.

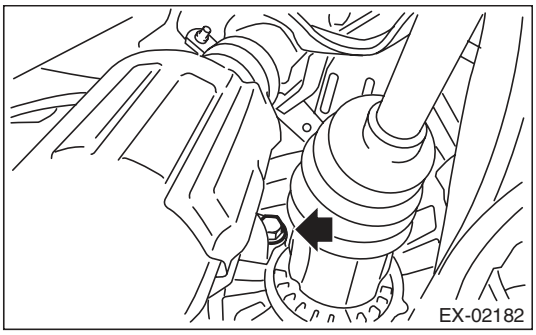

17) Remove the bolt which holds center exhaust pipe to hanger bracket, and remove the center exhaust pipe.

CAUTION:
Be careful not to drop the center exhaust pipe.

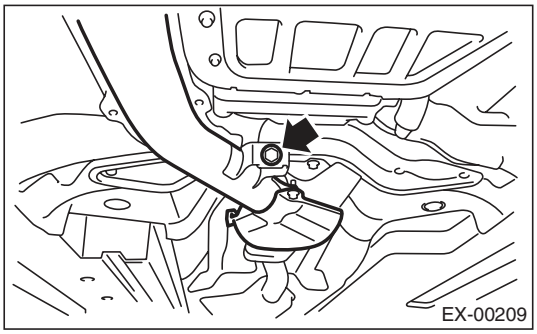

18) Remove the turbocharger lower cover.

19) Separate the center exhaust pipe (front) and center exhaust pipe (rear).

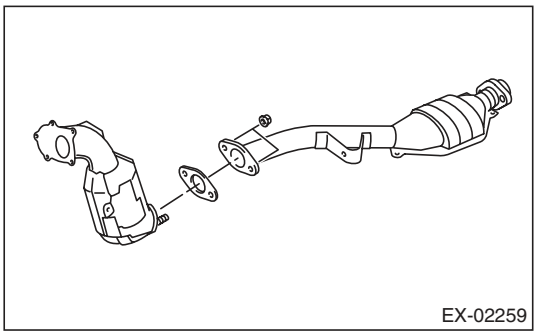

B: INSTALLATION

1) Assemble the center exhaust pipe (front) and center exhaust pipe (rear).

NOTE:
Use a new gasket.

Tightening torque:
42.5 N·m (4.3 kgf-m, 31.3 ft-lb)

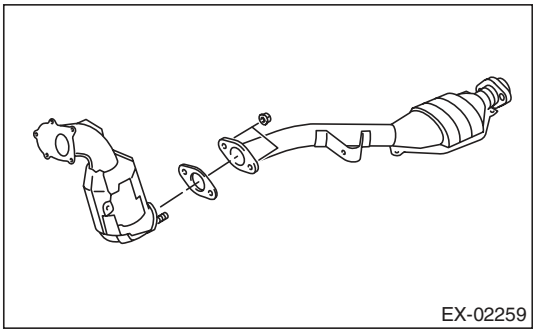

2) Set the turbocharger lower cover and temporarily tighten the bolts which hold the lower side of the turbocharger lower cover.
3) Install the center exhaust pipe and temporarily tighten the bolt which holds center exhaust pipe to hanger bracket.
4) Temporarily tighten the bolt which holds the center exhaust pipe to the transmission.
5) Connect the center exhaust pipe along with turbocharger cover stay (A) to the turbocharger.

NOTE:
Use a new gasket.

Tightening torque:
42.5 N·m (4.3 kgf-m, 31.3 ft-lb)

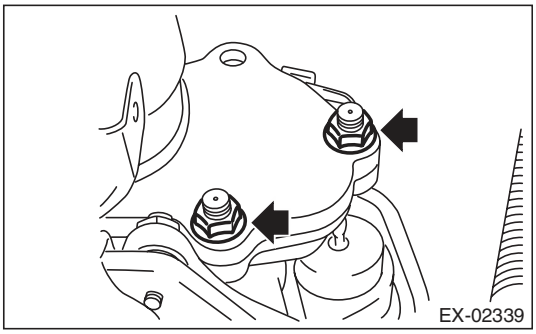

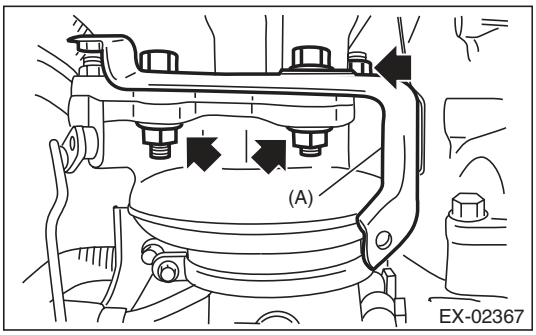

6) Install the center exhaust pipe to rear exhaust pipe.

NOTE:
Use a new gasket.

Tightening torque:
18 N·m (1.8 kgf-m, 13.3 ft-lb)

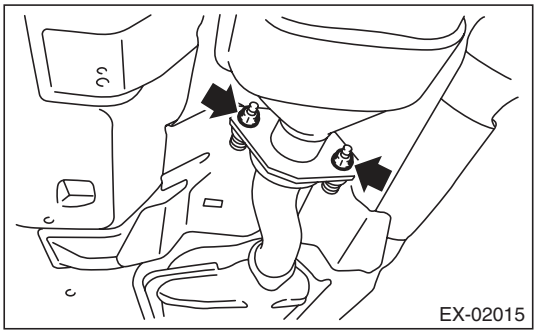

7) Affix the rear oxygen sensor with the clip (A). (AT model)
8) Connect the rear oxygen sensor connector.

- AT model

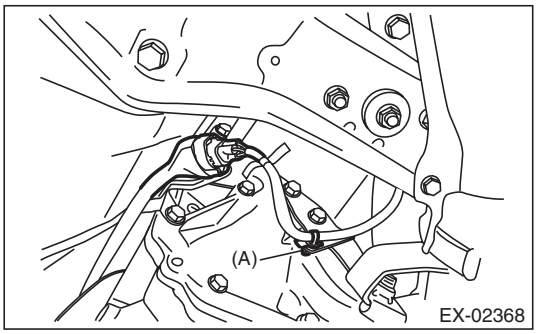

- MT model

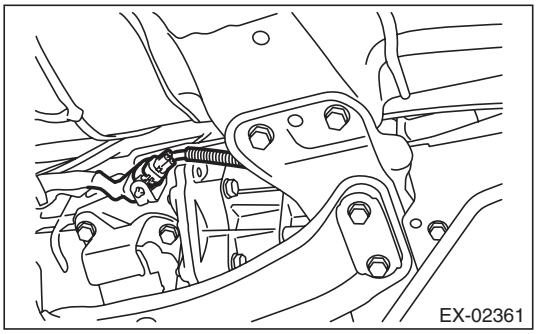

9) Tighten the bolt which holds center exhaust pipe bracket to transmission.

Tightening torque:
30 N·m (3.1 kgf-m, 22.1 ft-lb)

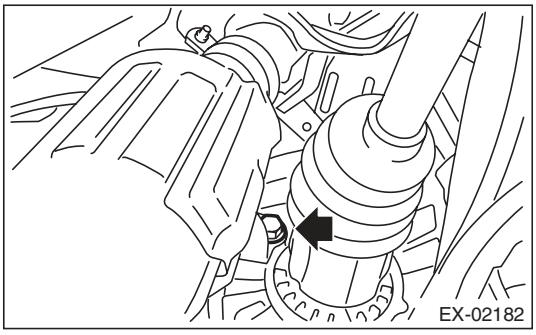

10) Tighten the bolt which holds center exhaust pipe to hanger bracket.

Tightening torque:
35 N·m (3.6 kgf-m, 25.8 ft-lb)

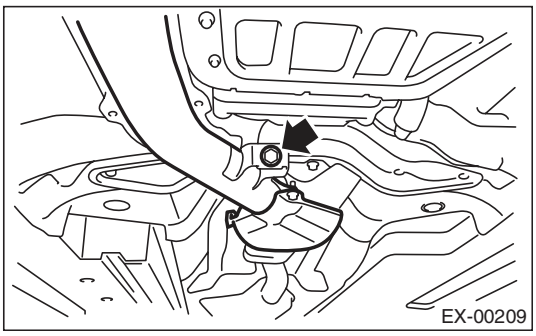

11) Lower the vehicle.
12) Attach the bolt which holds the upper side of the turbocharger lower cover.

Tightening torque:
7.5 N·m (0.8 kgf-m, 5.5 ft-lb)

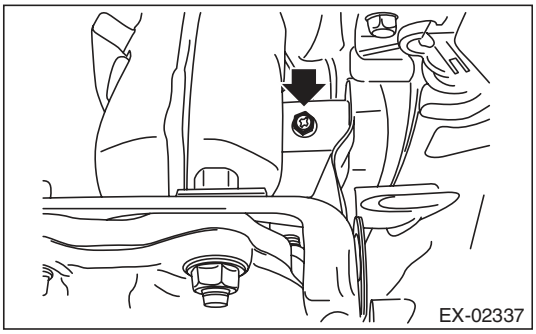

13) Install the turbocharger upper cover.

Tightening torque:
7.5 N·m (0.8 kgf-m, 5.5 ft-lb)

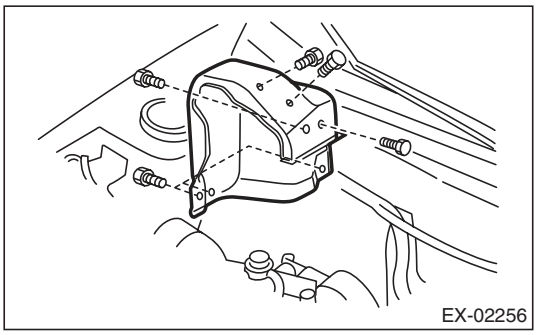

14) Lift up the vehicle.
15) Tighten the bolts which hold the lower side of the turbocharger lower cover.

Tightening torque:
7.5 N·m (0.8 kgf-m, 5.5 ft-lb)

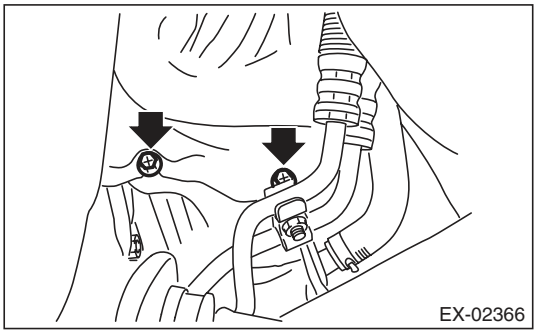

16) Lower the vehicle.
17) Install the intercooler. <Ref. to IN(H4DOTC)-13, INSTALLATION, Intercooler.>
18) Connect the ground cable to battery.

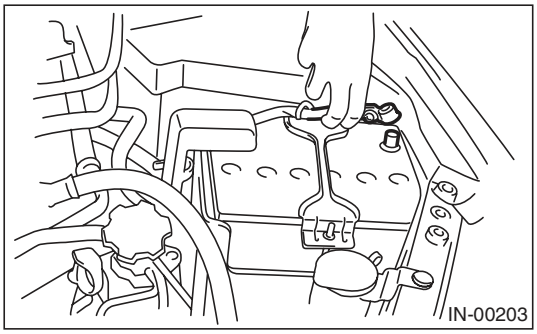

19) Install the collector cover.

C: INSPECTION

1) Check the connections and welds for exhaust leaks.
2) Make sure there are no holes or rusting.

4. Joint Pipe

A: REMOVAL

CAUTION:
Vehicle components are extremely hot after driving. Be wary of receiving burns from heated parts.

1) Set the vehicle on a lift.
2) Remove the collector cover.
3) Disconnect the ground cable from battery.

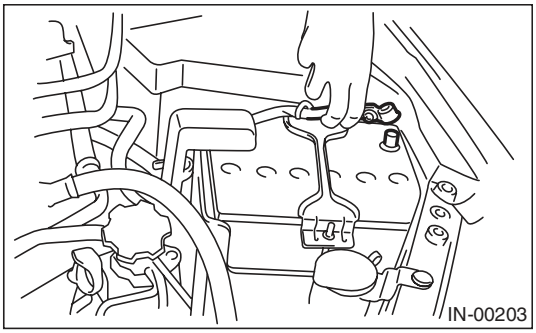

4) Lift up the vehicle.
5) Remove the under cover.
6) Remove the front oxygen (A/F) sensor. <Ref. to FU(H4DOTC)-46, REMOVAL, Front Oxygen (A/F) Sensor.>
7) Remove the exhaust manifold RH lower cover.

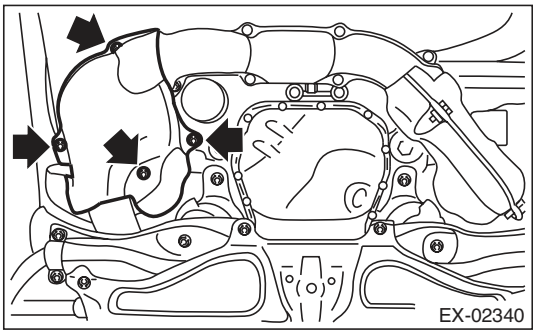

8) Remove the bolts and nuts which hold the front exhaust manifold to joint pipe.

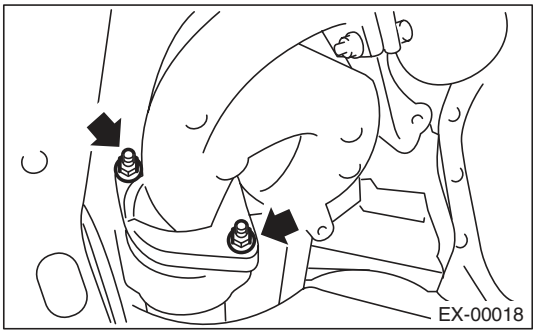

9) Remove the center exhaust pipe. <Ref. to EX(H4DOTC)-7, REMOVAL, Center Exhaust Pipe.>
10) Remove the turbocharger. <Ref. to IN(H4DOTC)-14, REMOVAL, Turbocharger.>
11) Take off the joint pipe in the upward direction.

B: INSTALLATION

Install in the reverse order of removal.

NOTE:
Use a new gasket.

Tightening torque:
42.5 N·m (4.3 kgf-m, 31.3 ft-lb)

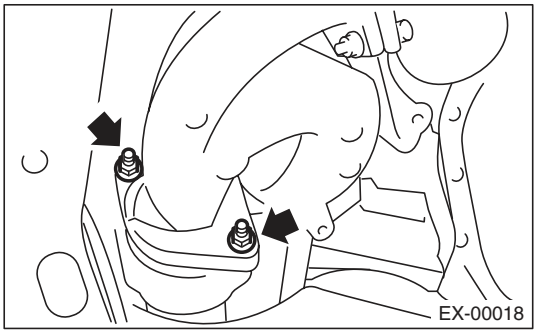

Tightening torque:
19 N·m (1.9 kgf-m, 14.0 ft-lb)

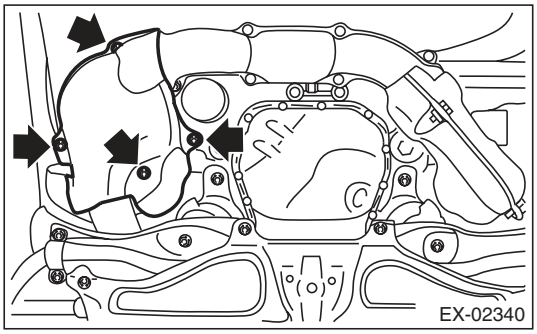

C: INSPECTION

1) Check the connections and welds for exhaust leaks.
2) Make sure there are no holes or rusting.

5. Rear Exhaust Pipe

A: REMOVAL

CAUTION:
Vehicle components are extremely hot after driving. Be wary of receiving burns from heated parts.

1) Set the vehicle on a lift.
2) Lift up the vehicle.
3) Separate the rear exhaust pipe from center exhaust pipe.

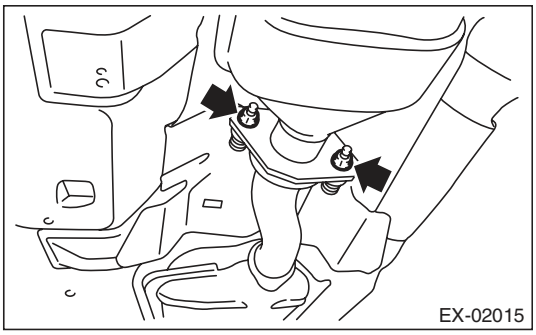

4) Separate the rear exhaust pipe from muffler.

CAUTION:
Be careful not to drop the rear exhaust pipe.

- LH side

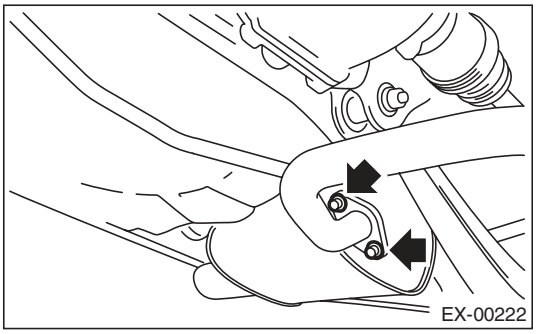

- RH side

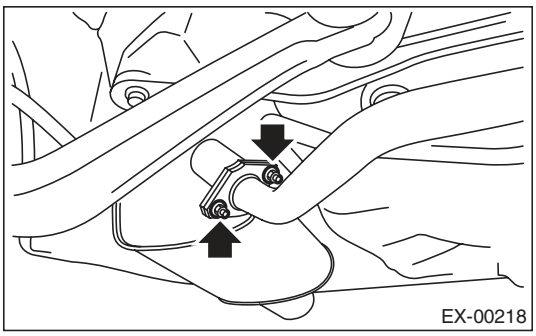

5) Apply a coat of spray type lubricant to the mating area of cushion rubber.

6) Remove the rear exhaust pipe bracket from cushion rubber.

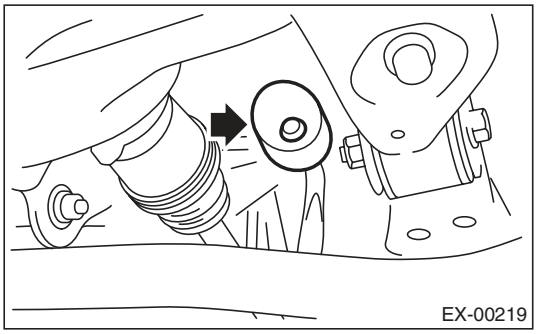

7) Remove the rear exhaust pipe.

B: INSTALLATION

1) Apply a coat of spray type lubricant to the mating area of cushion rubber.
2) Install the rear exhaust pipe bracket to cushion rubber.

NOTE:
After assembling, degrease the lubricant which was applied to the cushion rubber while removing/installing.

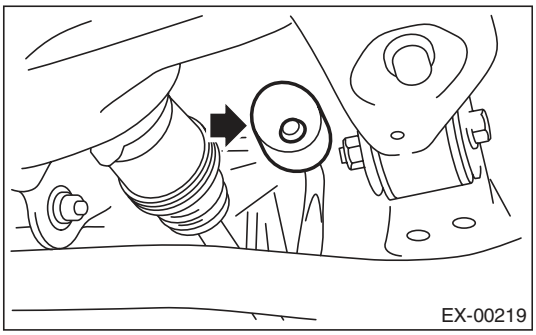

3) Install the rear exhaust pipe to muffler.

NOTE:
Use a new gasket and self-locking nut.

Tightening torque:
48 N·m (4.9 kgf-m, 35.4 ft-lb)

- LH side

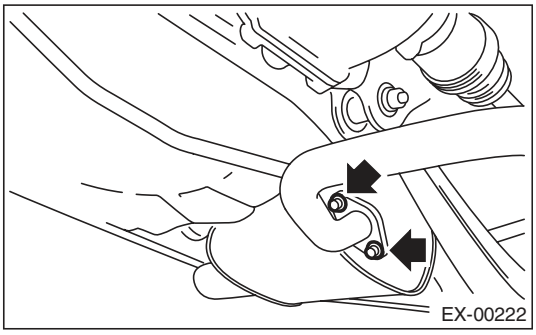

- RH side

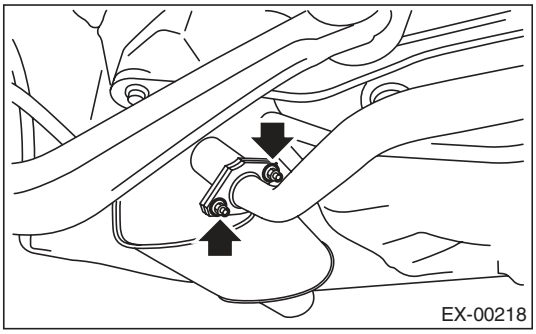

4) Install the rear exhaust pipe to center exhaust pipe.

NOTE:
Use a new gasket.

Tightening torque:
18 N·m (1.8 kgf-m, 13.3 ft-lb)

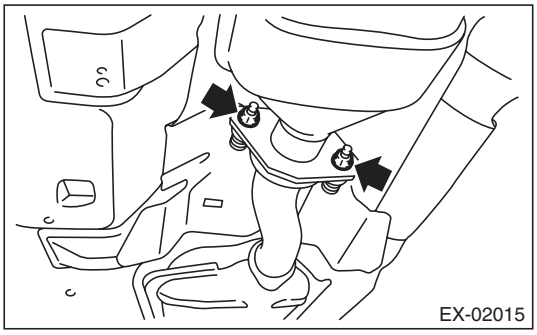

5) Lower the vehicle.

C: INSPECTION

1) Check the connections and welds for exhaust leaks.
2) Make sure there are no holes or rusting.
3) Check the cushion rubber for wear or crack.

6. Muffler

A: REMOVAL

CAUTION:
Vehicle components are extremely hot after driving. Be wary of receiving burns from heated parts.

1) Set the vehicle on a lift.
2) Lift up the vehicle.
3) Separate the muffler from rear exhaust pipe.

- LH side

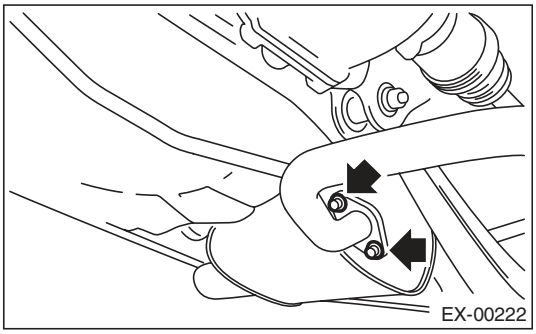

- RH side

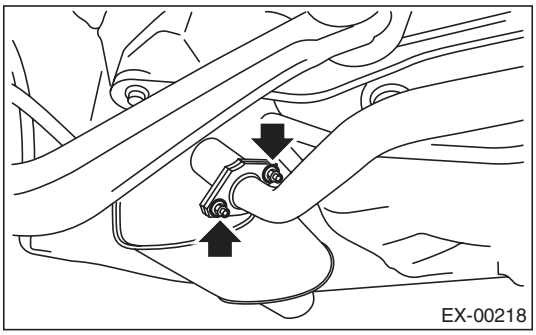

4) Apply a coat of spray type lubricant to the mating area of cushion rubber.
5) Remove the cushion rubber, and remove the muffler.

CAUTION:
Be careful not to drop the muffler during removal.

- LH side

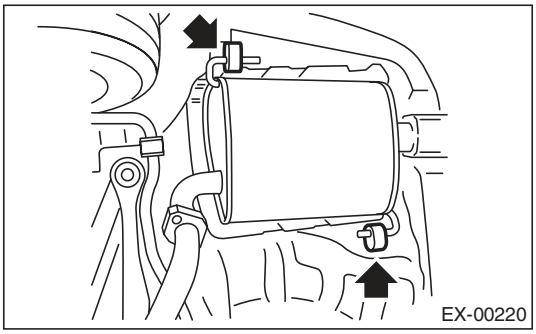

- RH side

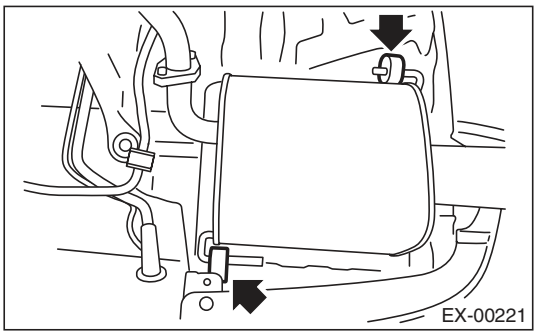

B: INSTALLATION

Install in the reverse order of removal.

NOTE:
- Use a new gasket and self-locking nut.
- After assembling, degrease the lubricant which was applied to the cushion rubber while removing/installing.

Tightening torque:
48 N·m (4.9 kgf-m, 35.4 ft-lb)

- LH side

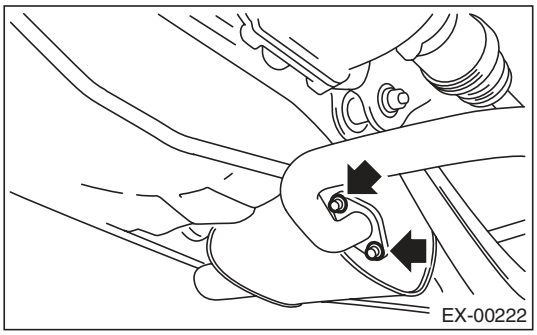

- RH side

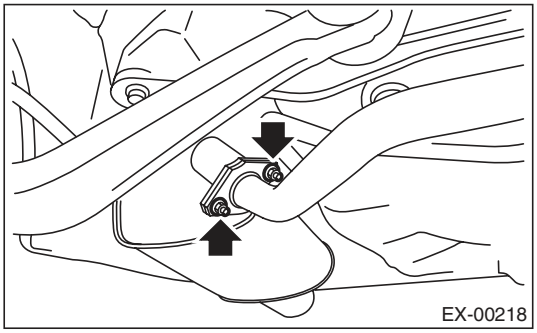

C: INSPECTION

1) Check the connections and welds for exhaust leaks.
2) Make sure there are no holes or rusting.
3) Check the cushion rubber for wear or crack.

1. General Description

A: SPECIFICATION

Cooling system			Electric fan + Forced engine coolant circulation system
Total engine coolant capacity		ℓ (US qt, Imp qt)	AT: approx. 7.2 (7.6, 6.3) MT: approx. 7.3 (7.7, 6.4)
Water pump	Type		Centrifugal impeller type
	Discharge performance I	Discharge rate ℓ (US gal, Imp gal) /min.	20 (5.3, 4.4)
		Pump speed — Discharge pressure	760 rpm — 2.9 kPa (0.3 mAq)
		Engine coolant temperature	80°C (176°F)
	Discharge performance II	Discharge rate ℓ (US gal, Imp gal) /min.	100 (26.4, 22.0)
		Pump speed — Discharge pressure	3,000 rpm — 49.0 kPa (5.0 mAq)
		Engine coolant temperature	80°C (176°F)
	Discharge performance III	Discharge rate ℓ (US gal, Imp gal) /min.	200 (52.8, 44.0)
		Pump speed — Discharge pressure	6,000 rpm — 225.4 kPa (23.0 mAq)
		Engine coolant temperature	80°C (176°F)
	Impeller diameter	mm (in)	76 (2.99)
	Number of impeller vanes		8
	Pump pulley diameter	mm (in)	60 (2.36)
	Clearance between impeller and case	Standard mm (in)	0.5 — 1.5 (0.020 — 0.059)
Thermostat	Type		Wax pellet type
	Starting temperature to open		76 — 80°C (169 — 176°F)
	Fully opens		91°C (196°F)
	Valve lift	mm (in)	9.0 (0.354) or more
	Valve bore	mm (in)	35 (1.38)
Radiator fan	Motor input	Main fan W	120
		Sub fan W	120
	Fan diameter / Blade	Main fan	320 mm (12.6 in)/5
		Sub fan	320 mm (12.6 in)/7
Radiator	Type		Down flow
	Core dimensions	Width × Height × Thickness mm (in)	687.4 × 340 × 16 (27.06 × 13.39 × 0.63)
	Pressure range in which cap valve is open	Coolant filler tank side kPa (kg/cm^2, psi)	Above: 108±14.7 (1.1±0.15, 16±2.1) Below: –1.0 to –4.9 (–0.01 — –0.05, –0.1 — –0.7)
		Radiator side kPa (kg/cm^2, psi)	Above only: 137±14.7 (1.40±0.15, 20±2.1)
	Fins		Corrugated fin type
Reservoir tank	Capacity	ℓ (US qt, Imp qt)	0.45 (0.48, 0.40)

	Recommended materials	Item number	Alternative
Coolant	SUBARU SUPER COOLANT (Concentrated type)	—	—
	SUBARU SUPER COOLANT (Diluted type)	K0670Y0000	
Water for dilution	Distilled water	—	Soft water or tap water
Cooling system protective agent	Cooling system conditioner	SOA345001	—

B: COMPONENT

1. WATER PUMP

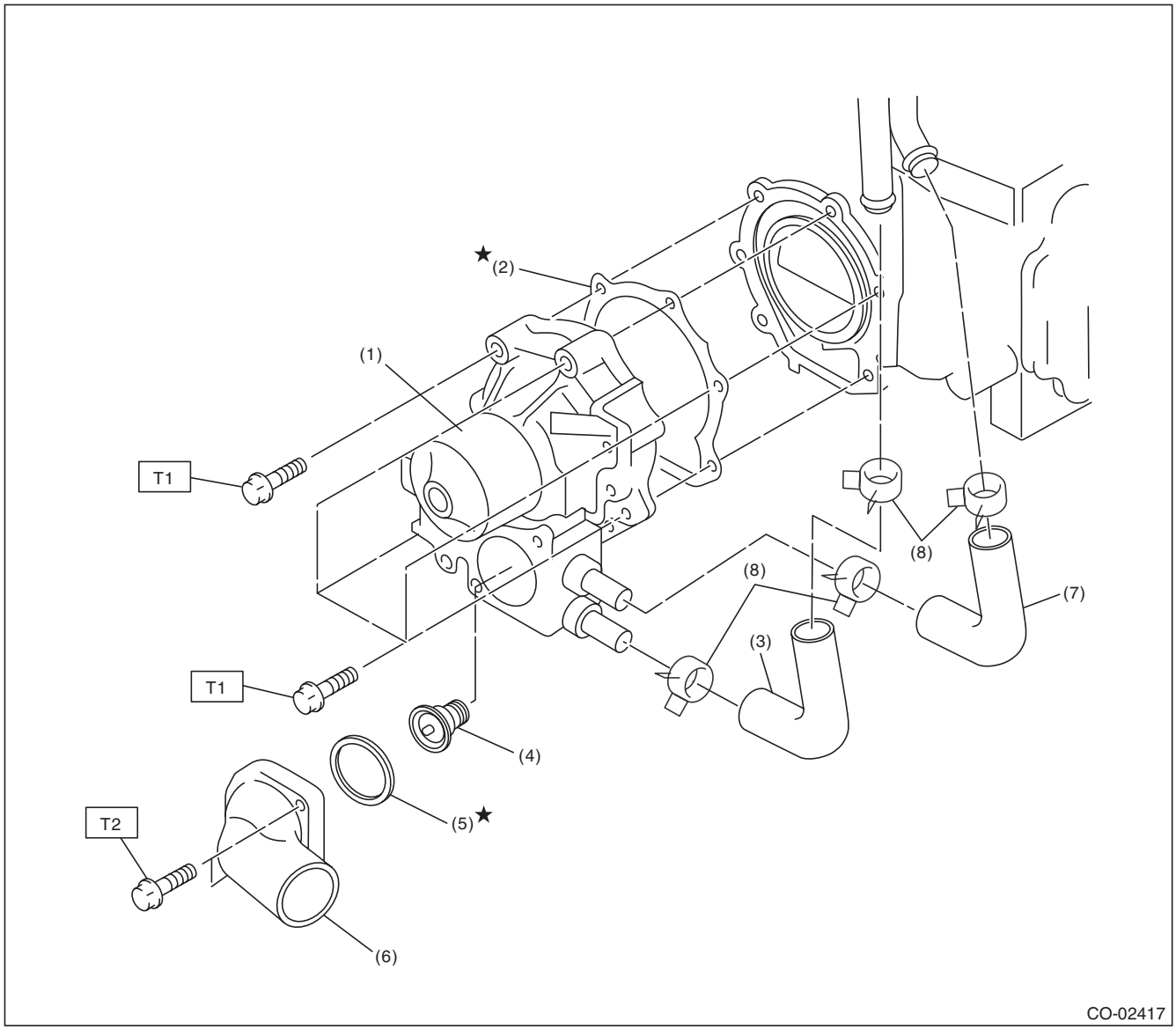

(1)	Water pump ASSY	(5)	Gasket	***Tightening torque:N·m (kgf-m, ft-lb)***
(2)	Gasket	(6)	Thermostat cover	***T1: First 12 (1.2, 8.9)***
(3)	Heater by-pass hose	(7)	Coolant filler by-pass hose	***Second 12 (1.2, 8.9)***
(4)	Thermostat	(8)	Clip	***T2: 12 (1.2, 8.9)***

2. RADIATOR AND RADIATOR FAN

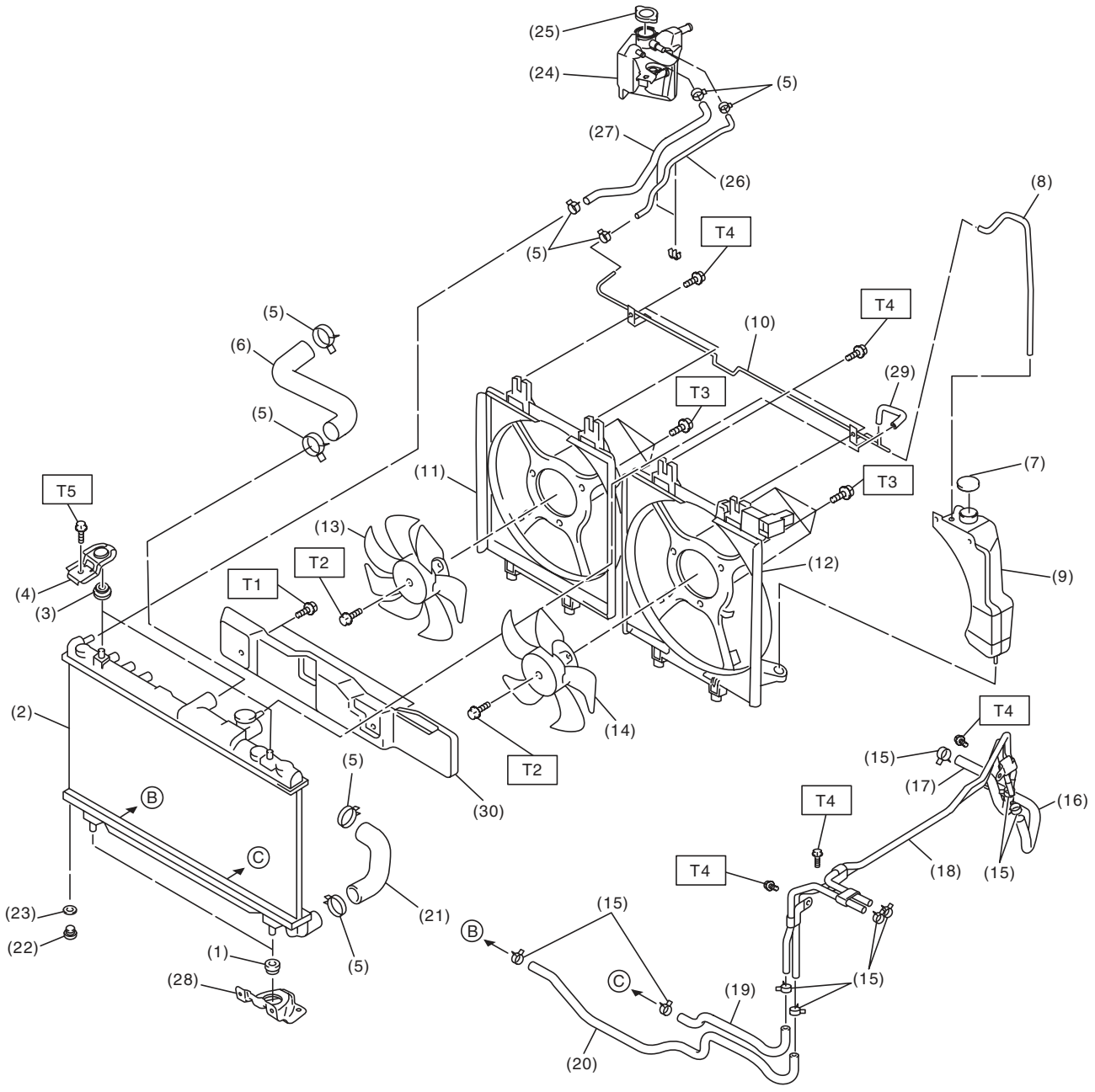

CO-02499

(1) Radiator lower cushion
(2) Radiator
(3) Radiator upper cushion
(4) Radiator upper bracket
(5) Clip
(6) Radiator inlet hose
(7) Engine coolant reservoir tank cap
(8) Over flow hose A
(9) Engine coolant reservoir tank
(10) Over flow pipe
(11) Radiator sub fan shroud
(12) Radiator main fan shroud
(13) Radiator sub fan ASSY
(14) Radiator main fan ASSY
(15) ATF hose clip (AT model)
(16) ATF hose A (AT model)
(17) ATF hose B (AT model)
(18) ATF pipe (AT model)
(19) ATF hose C (AT model)
(20) ATF hose D (AT model)
(21) Radiator outlet hose
(22) Radiator drain plug
(23) O-ring
(24) Engine coolant filler tank
(25) Radiator cap
(Engine coolant filler tank cap)
(26) Coolant filler tank hose A
(27) Coolant filler tank hose B
(28) Radiator lower bracket
(29) Over flow hose B
(30) Heat shield cover (AT model)

Tightening torque:N·m (kgf-m, ft-lb)	
T1:	***3 (0.3, 2.2)***
T2:	***3.4 (0.3, 2.5)***
T3:	***5 (0.5, 3.7)***
T4:	***7.5 (0.8, 5.5)***
T5:	***12 (1.2, 8.9)***

C: CAUTION

- Wear appropriate work clothing, including a cap, protective goggles and protective shoes when performing any work.
- Remove contamination including dirt and corrosion before removal, installation or disassembly.
- Keep the disassembled parts in order and protect them from dust and dirt.
- Before removal, installation or disassembly, be sure to clarify the failure. Avoid unnecessary removal, installation, disassembly and replacement.
- Vehicle components are extremely hot after driving. Be wary of receiving burns from heated parts.
- Be sure to tighten fasteners including bolts and nuts to the specified torque.
- Place shop jacks or rigid racks at the specified points.
- Before disconnecting connectors of sensors or units, be sure to disconnect the ground cable from battery.
- Prepare a container and cloth to prevent scattering of engine coolant when performing work where engine coolant can be spilled. If the fuel spills, wipe it off immediately to prevent from penetrating into floor or flowing out for environmental protection.
- Follow all government and local regulations concerning disposal of refuse when disposing engine coolant.

D: PREPARATION TOOL

1. SPECIAL TOOL

ILLUSTRATION	TOOL NUMBER	DESCRIPTION	REMARKS
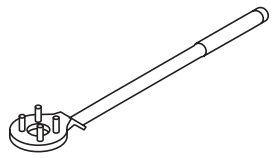 ST-499977100	499977100	CRANK PULLEY WRENCH	Used to stop rotation of the crank pulley when loosening or tightening crank pulley bolts. (MT model)
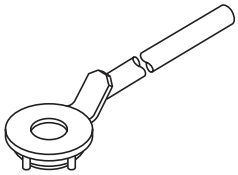 ST-499977400	499977400	CRANK PULLEY WRENCH	Used to stop rotation of the crank pulley when loosening or tightening crank pulley bolts. (AT model)
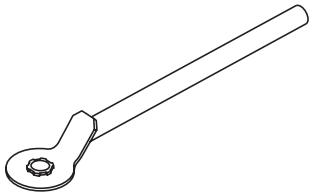 ST-499977500	499977500	CAM SPROCKET WRENCH	Used for removing and installing intake cam sprocket.
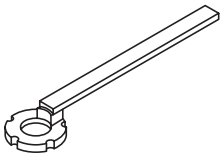 ST-499207400	499207400	CAM SPROCKET WRENCH	Used for removing and installing exhaust cam sprocket.

ILLUSTRATION	TOOL NUMBER	DESCRIPTION	REMARKS
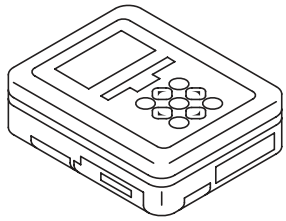 ST1B022XU0	1B022XU0	SUBARU SELECT MONITOR III KIT	Used for troubleshooting the electrical system.

2. GENERAL TOOL

TOOL NAME	REMARKS
Radiator cap tester	Used for checking radiator and radiator cap.

2. Radiator Fan System

A: WIRING DIAGRAM

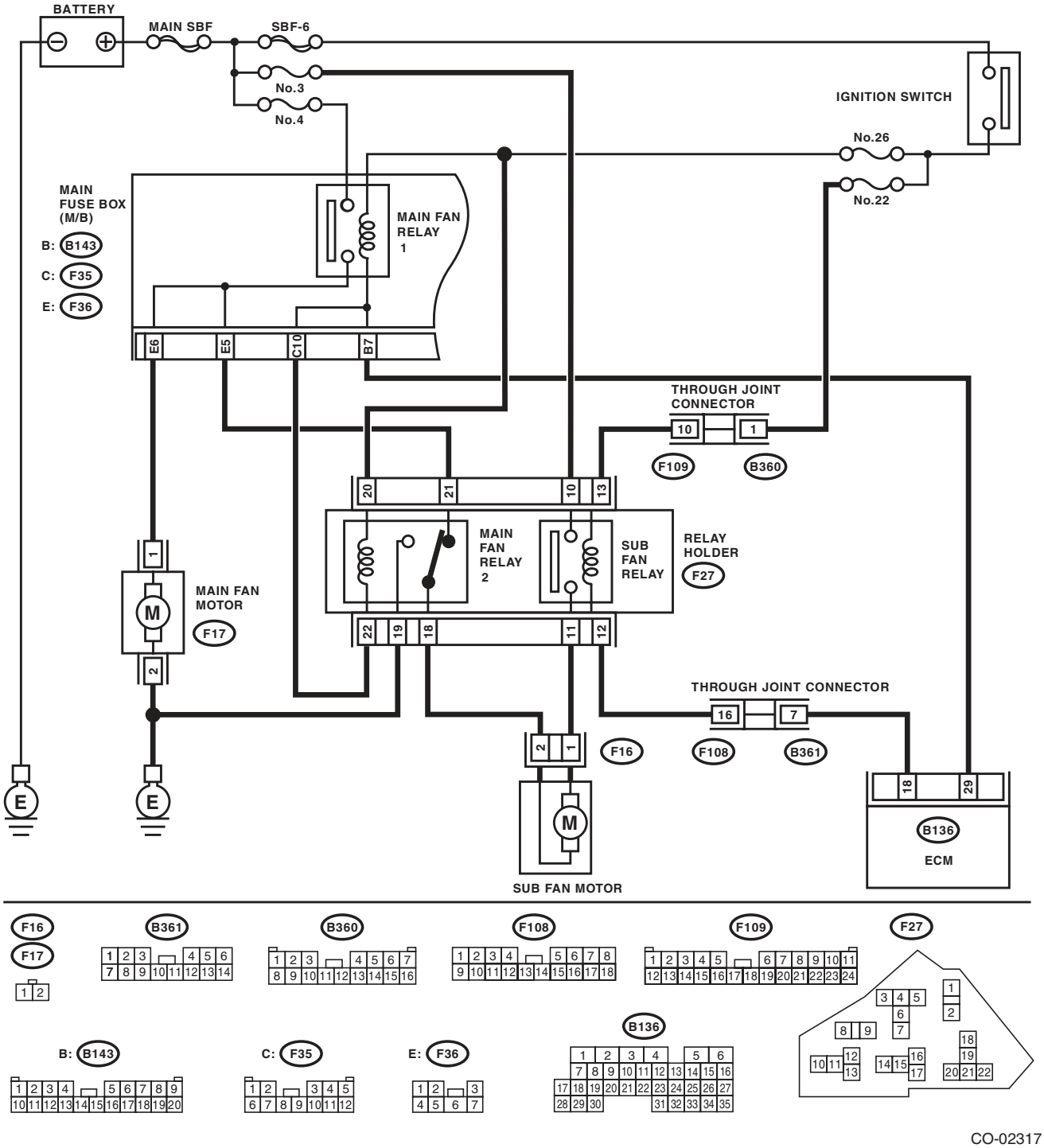

B: INSPECTION

Operating condition:

Vehicle speed	A/C compressor load	Engine coolant temperature		
		Increase: 94°C (201°F) or less Decrease: 91°C (196°F) or less	Increase: 95 — 96°C (203 — 205°F) Decrease: 92 — 94°C (198 — 201°F)	Increase: 97°C (207°F) or more Decrease: 95°C (203°F) or more
		Radiator fan operation	Radiator fan operation	Radiator fan operation
During acceleration: 19 km/h (12 MPH) or less During deceleration: 10 km/h (6 MPH) or less	OFF	OFF	Low-Speed	High-Speed
	Low	Low-Speed	Low-Speed	High-Speed
	High	High-Speed	High-Speed	High-Speed
During acceleration: 20 — 69 km/h (12 — 43 MPH) During deceleration: 11 — 64 km/h (7 — 40 MPH)	OFF	OFF	Low-Speed	High-Speed
	Low	High-Speed	High-Speed	High-Speed
	High	High-Speed	High-Speed	High-Speed
During acceleration: 70 — 105 km/h (43 — 65 MPH) During deceleration: 65 — 103 km/h (40 — 64 MPH)	OFF	OFF	Low-Speed	High-Speed
	Low	High-Speed	High-Speed	High-Speed
	High	High-Speed	High-Speed	High-Speed
During acceleration: 106 km/h (66 MPH) or more During deceleration: 104 km/h (65 MPH) or more	OFF	OFF	High-Speed	High-Speed
	Low	High-Speed	High-Speed	High-Speed
	High	High-Speed	High-Speed	High-Speed

DIAGNOSIS:
Radiator main fan and radiator sub fans do not rotate under the above operating conditions.

	Step	Check	Yes	No
1	**CHECK OPERATION OF RADIATOR FAN.** 1) Connect the delivery (test) mode connector. 2) Turn the ignition switch to ON. 3) Using the Subaru Select Monitor, check the forced operation of the radiator fan relay. NOTE: • When performing a forced operation radiator fan relay check using the Subaru Select Monitor, the radiator main fan and radiator sub fan will repeat low speed revolution → high speed revolution → OFF in this order. • Subaru Select Monitor Refer to "Compulsory Valve Operation Check Mode" for detailed procedures. <Ref. to EN(H4DOTC)(diag)-53, Compulsory Valve Operation Check Mode.>	Do the radiator main fans and radiator sub fans rotate at low speed?	Go to step **2**.	Go to step **3**.
2	**CHECK OPERATION OF RADIATOR FAN.** 1) Connect the delivery (test) mode connector. 2) Turn the ignition switch to ON. 3) Perform the compulsory operation check for the radiator fan relay using Subaru Select Monitor. NOTE: • When performing a forced operation radiator fan relay check using the Subaru Select Monitor, the radiator main fan and radiator sub fan will repeat low speed revolution → high speed revolution → OFF in this order. • Subaru Select Monitor Refer to "Compulsory Valve Operation Check Mode" for detailed procedures. <Ref. to EN(H4DOTC)(diag)-53, Compulsory Valve Operation Check Mode.>	Do the radiator main fans and radiator sub fans rotate at high speed?	Radiator main fan system is normal.	Go to step **27**.
3	**CHECK POWER SUPPLY TO SUB FAN RELAY.** 1) Turn the ignition switch to OFF. 2) Remove the sub fan relay from the relay holder. 3) Measure the voltage between the sub fan relay terminal and chassis ground. ***Connector & terminal*** ***(F27) No. 10 (+) — Chassis ground (–):***	Is the voltage 10 V or more?	Go to step **4**.	Go to step **5**.
4	**CHECK POWER SUPPLY TO SUB FAN RELAY.** 1) Turn the ignition switch to ON. 2) Measure the voltage between the sub fan relay terminal and chassis ground. ***Connector & terminal*** ***(F27) No. 13 (+) — Chassis ground (–):***	Is the voltage 10 V or more?	Go to step **7**.	Go to step **6**.
5	**CHECK FUSE.** 1) Turn the ignition switch to OFF. 2) Remove the fuse No. 3. 3) Check the condition of fuse.	Is the fuse blown out?	Replace the fuse.	Repair the power supply line.
6	**CHECK FUSE.** 1) Turn the ignition switch to OFF. 2) Remove the fuse No. 22. 3) Check the condition of fuse.	Is the fuse blown out?	Replace the fuse.	Repair the power supply line.

	Step	Check	Yes	No
7	**CHECK SUB FAN RELAY.** 1) Turn the ignition switch to OFF. 2) Measure the resistance between sub fan relay terminals. ***Terminals*** ***No. 10 — No. 11:***	Is the resistance 1 MΩ or more?	Go to step **8**.	Replace the sub fan relay.
8	**CHECK SUB FAN RELAY.** 1) Connect the battery to terminals No. 12 and No. 13 of the sub fan relay. 2) Measure the resistance between sub fan relay terminals. ***Terminals*** ***No. 10 — No. 11:***	Is the resistance less than 1 Ω?	Go to step **9**.	Replace the sub fan relay.
9	**CHECK HARNESS BETWEEN SUB FAN RELAY TERMINAL AND SUB FAN MOTOR CONNECTOR.** 1) Disconnect the connector from the sub fan motor. 2) Measure the resistance of harness between the sub fan relay terminal and sub fan motor connector. ***Connector & terminal*** ***(F16) No. 1 — (F27) No. 11:***	Is the resistance less than 1 Ω?	Go to step **10**.	Repair the open circuit of harness between sub fan relay terminal and sub fan motor connector.
10	**CHECK HARNESS BETWEEN SUB FAN MOTOR CONNECTOR AND MAIN FAN RELAY 2 CONNECTOR.** 1) Remove main fan relay 2 from the relay holder. 2) Measure the resistance of harness between sub fan motor connector and main fan relay 2 connector. ***Connector & terminal*** ***(F16) No. 2 — (F27) No. 18:***	Is the resistance less than 1 Ω?	Go to step **11**.	Repair the open circuit of the harness between sub fan motor connector and main fan relay 2 connector.
11	**CHECK POOR CONTACT.** Check poor contact of sub fan motor connector.	Is there poor contact in the sub fan motor connector?	Repair the poor contact of sub fan motor connector.	Go to step **12**.
12	**CHECK SUB FAN MOTOR.** Connect the battery positive (+) terminal to terminal No. 1 of the sub fan motor, and the ground (–) terminal to terminal No. 2.	Does the radiator sub fan rotate?	Go to step **13**.	Replace the sub fan motor.
13	**CHECK MAIN FAN RELAY 2.** Measure the resistance of main fan relay 2. ***Terminals*** ***No. 21 — No. 18:***	Is the resistance less than 1 Ω?	Go to step **14**.	Replace the main fan relay 2.
14	**CHECK HARNESS BETWEEN MAIN FAN RELAY 2 AND MAIN FAN MOTOR CONNECTOR.** 1) Disconnect the connector from the main fan motor. 2) Measure the resistance of the harness between main fan relay 2 terminal and main fan motor connector. ***Connector & terminal*** ***(F17) No. 1 — (F27) No. 2:***	Is the resistance less than 1 Ω?	Go to step **15**.	Repair the open circuit of the harness between main fan relay 2 terminal and main fan motor connector.

	Step	Check	Yes	No
15	**CHECK MAIN FAN MOTOR AND GROUND CIRCUIT.** Measure the resistance between main fan motor connector and chassis ground. ***Connector & terminal*** ***(F17) No. 2 — Chassis ground:***	Is the resistance less than 5 Ω?	Go to step **16**.	Repair the open circuit of the harness between main fan motor connector and chassis ground.
16	**CHECK POOR CONTACT.** Check poor contact of main fan motor connector.	Is there poor contact in the main fan motor connector?	Repair the poor contact of main fan motor connector.	Go to step **17**.
17	**CHECK MAIN FAN MOTOR.** Connect the battery positive (+) terminal to terminal No. 1 of the main fan motor, and the ground (–) terminal to terminal No. 2.	Does the radiator main fan rotate?	Go to step **18**.	Replace the main fan motor.
18	**CHECK HARNESS BETWEEN SUB FAN RELAY AND ECM.** 1) Disconnect the connectors from ECM. 2) Measure the resistance between the sub fan relay terminal and ECM connector. ***Connector & terminal*** ***(B136) No. 18 — (F27) No. 12:***	Is the resistance less than 1 Ω?	Go to step **19**.	Repair the open circuit of harness between sub fan relay terminal and ECM.
19	**CHECK POOR CONTACT.** Check for poor contact of the ECM connector.	Is there poor contact in ECM connector?	Repair the poor contact of ECM connector.	Check the DTC. Repair the trouble cause. <Ref. to EN(H4DOTC)(diag)-42, Read Diagnostic Trouble Code (DTC).>
20	**CHECK MAIN FAN RELAY 1.** 1) Turn the ignition switch to OFF. 2) Remove main fan relay 1 from the main fuse box. 3) Measure the resistance of terminal in main fan relay 1 switch.	Is the resistance 1 MΩ or more?	Go to step **21**.	Replace the main fan relay 1.
21	**CHECK MAIN FAN RELAY 1.** 1) Connect the main fan relay 1 coil side terminal to the battery. 2) Measure the resistance between terminals of main fan relay 1 switch.	Is the resistance less than 1 Ω?	Go to step **22**.	Replace the main fan relay 1.
22	**CHECK HARNESS BETWEEN MAIN FAN RELAY 1 AND MAIN FAN MOTOR CONNECTOR.** 1) Disconnect the connector from the main fan motor. 2) Measure the resistance of the harness between main fan relay 1 terminal and main fan motor connector. ***Connector & terminal*** ***(F17) No. 1 — (F36) No. 6:***	Is the resistance less than 1 Ω?	Go to step **23**.	Repair the open circuit of the harness between main fan relay 1 terminal and main fan motor connector.
23	**CHECK HARNESS BETWEEN MAIN FAN RELAY 1 AND ECM.** 1) Disconnect the connectors from ECM. 2) Measure the resistance between main fan relay 1 terminal and ECM connector. ***Connector & terminal*** ***(B136) No. 29 — (B143) No. 7:***	Is the resistance less than 1 Ω?	Go to step **24**.	Repair the open circuit of the harness between main fan relay 1 terminal and ECM.

	Step	Check	Yes	No
24	**CHECK HARNESS BETWEEN MAIN FAN RELAY 2 AND ECM.** Measure the resistance between main fan relay 2 terminal and ECM connector. ***Connector & terminal*** ***(B136) No. 29 — (F27) No. 22:***	Is the resistance less than 1 Ω?	Go to step **25**.	Repair the open circuit of the harness between main fan relay 2 terminal and ECM.
25	**CHECK FUSE.** 1) Turn the ignition switch to OFF. 2) Remove the fuse No. 4 and 26. 3) Check the condition of fuse.	Is the fuse blown out?	Replace the fuse.	Go to step **26**.
26	**CHECK POOR CONTACT.** Check for poor contact of the ECM connector.	Is there poor contact in ECM connector?	Repair the poor contact of ECM connector.	Repair the power supply circuit to the main fuse box.
27	**CHECK OPERATION OF RADIATOR FAN.** If the both fans do not rotate at high speed in the condition of step 2, check whether the radiator sub fan is rotating.	Does the radiator sub fan rotate?	Go to step **20**.	Go to step **28**.
28	**CHECK GROUND CIRCUIT OF MAIN FAN RELAY 2.** 1) Remove the main fan relay 2 from the relay holder. 2) Measure the resistance between main fan relay 2 terminal and chassis ground. ***Connector & terminal*** ***(F27) No. 19 — Chassis ground:***	Is the resistance less than 1 Ω?	Go to step **29**.	Repair the open circuit of harness between main fan relay 2 and chassis ground.
29	**CHECK POWER SUPPLY TO MAIN FAN RELAY 2.** 1) Turn the ignition switch to ON. 2) Measure the voltage between main fan relay 2 terminal and chassis ground. ***Connector & terminal*** ***(F27) No. 20 (+) — Chassis ground (–):***	Is the voltage 10 V or more?	Go to step **30**.	Repair the power supply line.
30	**CHECK MAIN FAN RELAY 2.** 1) Turn the ignition switch to OFF. 2) Remove the main fan relay 2. 3) Measure the resistance of main fan relay 2. ***Terminals*** ***(F27) No. 18 — (F27) No. 19:***	Is the resistance 1 MΩ or more?	Go to step **31**.	Replace the main fan relay 2.
31	**CHECK MAIN FAN RELAY 2.** 1) Connect the battery to terminals No. 20 and No. 22 of the main fan relay 2. 2) Measure the resistance of main fan relay 2. ***Terminals*** ***(F27) No. 18 — (F27) No. 19:***	Is the resistance less than 1 Ω?	Go to step **23**.	Replace the main fan relay 2.

3. Engine Coolant

A: REPLACEMENT

1. DRAINING OF ENGINE COOLANT

1) Set the vehicle on a lift.
2) Lift up the vehicle.
3) Remove the under cover.
4) Remove the drain plug to drain engine coolant into container.

NOTE:
Remove the coolant filler tank cap so that engine coolant will drain faster.

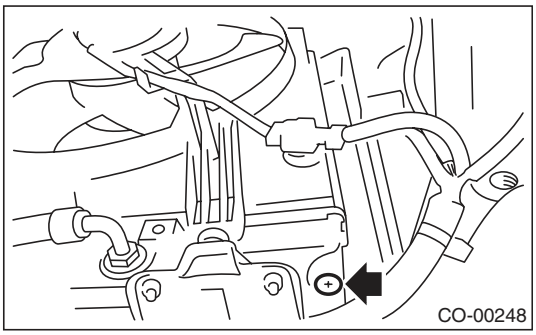

5) Install the drain plug.
6) Install the under cover.

2. FILLING OF ENGINE COOLANT

1) Pour cooling system conditioner through the filler neck.

Cooling system protective agent:
Refer to "SPECIFICATION" for the cooling system protective agent. <Ref. to CO(H4DOTC)-2, SPECIFICATION, General Description.>

2) Fill the engine coolant into coolant filler tank up to the filler neck position.

Recommended engine coolant:
Refer to "SPECIFICATION" for the recommended engine coolant. <Ref. to CO(H4DOTC)-2, SPECIFICATION, General Description.>

Coolant level:
Refer to "SPECIFICATION" for the amount of engine coolant. <Ref. to CO(H4DOTC)-2, SPECIFICATION, General Description.>

Engine coolant concentration:
Refer to "ADJUSTMENT" for the engine coolant concentration. <Ref. to CO(H4DOTC)-15, ADJUSTMENT, Engine Coolant.>

CAUTION:
Do not confuse the cap of coolant filler tank and cap of radiator.

NOTE:
• When pouring the engine coolant, the radiator side cap must not be removed.
• The SUBARU Super Coolant containing anti-freeze and anti-rust agents is especially made for SUBARU engine, which has an aluminum cylinder block. Always use SUBARU Super Coolant, since other coolant may cause corrosion.

3) Fill engine coolant into the reservoir tank up to "FULL" level.

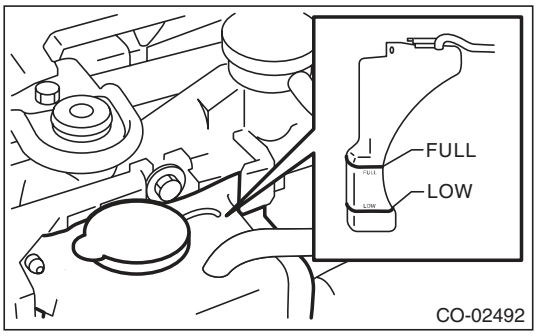

4) Close the coolant filler tank cap, and start the engine. Race 5 to 6 times at 3,000 rpm or less, then stop the engine. (Complete this operation within 40 seconds.)
5) Wait for one minute after the engine stops, then open the coolant filler tank cap. If the engine coolant level drops, add engine coolant into the coolant filler tank up to the filler neck position.
6) Perform the procedures 4) and 5) again.
7) Install the coolant filler tank cap and reservoir tank cap properly.
8) Start the engine and operate the heater at maximum hot position and the blower speed setting to "LO".
9) Run the engine at 2,000 rpm or less until radiator fan starts and stops.

NOTE:
Be careful with the engine coolant temperature gauge to prevent overheating.

10) Stop the engine and wait until the engine coolant temperature lowers to 30°C (86°F) or less.
11) Open the coolant filler tank cap. If the engine coolant level drops, add engine coolant into the coolant filler tank up to the filler neck position and into the reservoir tank up to the "FULL" level.
12) Install the coolant filler tank cap and reservoir tank cap properly.
13) Set the heater setting to maximum hot position and the blower speed setting to "LO" and start the engine. Perform racing at 3,000 rpm or less. If the flowing sound is heard from heater core, repeat the procedures from step 9).

B: ADJUSTMENT

1. PROCEDURE TO ADJUST THE SUBARU SUPER COOLANT CONCENTRATION

CAUTION:
SUBARU Super Coolant concentration must be used from 50 to 60% to assure the best performance of the anti-freeze and anti-rust agents.
To adjust the concentration of SUBARU Super Coolant according to temperature, find the proper SUBARU Super Coolant concentration in the table, and add diluting water to the SUBARU Super Coolant (concentrated type) until it reaches the proper dilution.

Relationship of SUBARU Super Coolant concentration and freezing temperature			
SUBARU Super Coolant concentration	50%	55%	60%
Freezing temperature	–36°C (–33°F)	–41°C (–42°F)	–50°C (–58°F)

Recommended engine coolant and water for dilution:
Refer to "SPECIFICATION" for the recommended engine coolant and diluting water. <Ref. to CO(H4DOTC)-2, SPECIFICATION, General Description.>

4. Water Pump

A: REMOVAL

1) Remove the collector cover.
2) Remove the radiator. <Ref. to CO(H4DOTC)-20, REMOVAL, Radiator.>
3) Remove the V-belts. <Ref. to ME(H4DOTC)-41, REMOVAL, V-belt.>
4) Remove the crank pulley.
<Ref. to ME(H4DOTC)-44, REMOVAL, Crank Pulley.>
5) Remove the timing belt cover. <Ref. to ME(H4DOTC)-46, REMOVAL, Timing Belt Cover.>
6) Remove the timing belt. <Ref. to ME(H4DOTC)-47, REMOVAL, Timing Belt.>
7) Remove the automatic belt tension adjuster (A).
8) Remove the belt idler (B).
9) Remove the belt idler No. 2 (C).

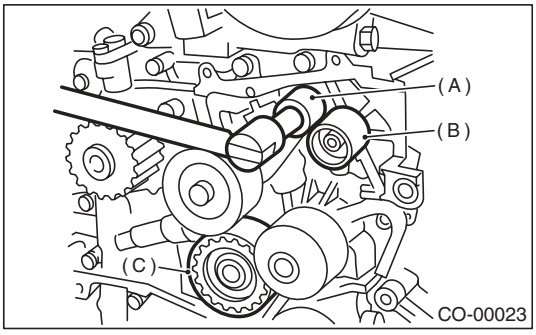

10) Remove the cam sprocket LH. <Ref. to ME(H4DOTC)-56, REMOVAL, Cam Sprocket.>
11) Remove the belt cover No. 2 LH.

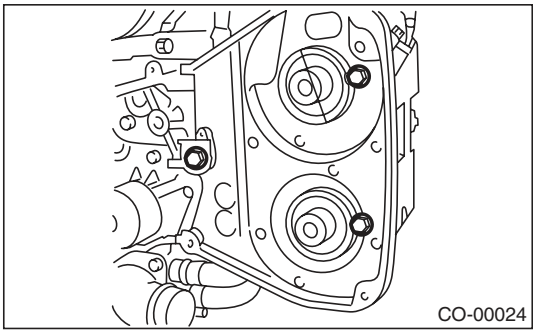

12) Remove the tensioner bracket.

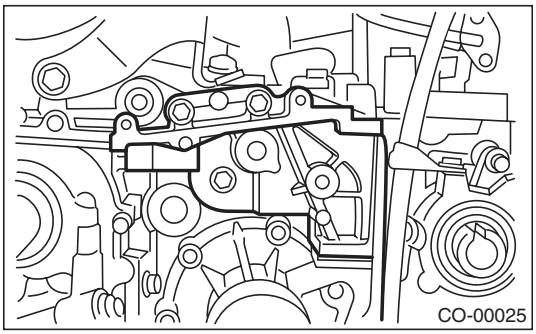

13) Disconnect the hose from water pump.
14) Remove the water pump.

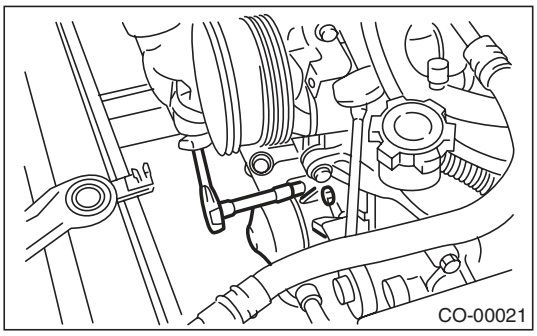

B: INSTALLATION

1) Install the water pump onto cylinder block LH.

NOTE:
- Use a new gasket.
- When installing the water pump, tighten the bolts in two stages in alphabetical sequence as shown in figure.

Tightening torque:
First:
12 N·m (1.2 kgf-m, 8.9 ft-lb)
Second:
12 N·m (1.2 kgf-m, 8.9 ft-lb)

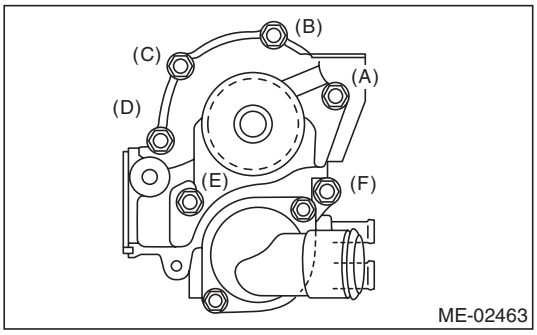

2) Install the hose to water pump.
3) Install the tensioner bracket.

Tightening torque:
24.5 N·m (2.5 kgf-m, 18.1 ft-lb)

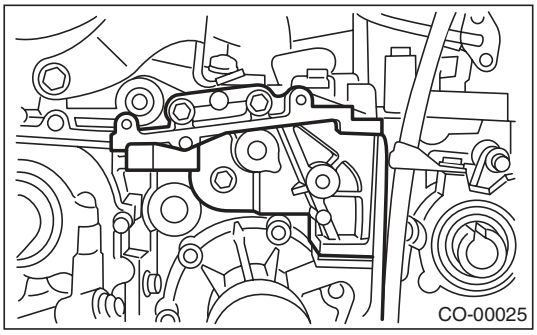

4) Install the belt cover No. 2 LH.

Tightening torque:
5 N·m (0.5 kgf-m, 3.7 ft-lb)

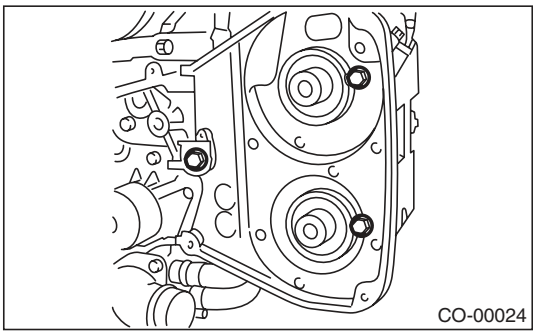

5) Install the cam sprocket LH. <Ref. to ME(H4DOTC)-56, INSTALLATION, Cam Sprocket.>
6) Install the belt idler No. 2 (C).

Tightening torque:
39 N·m (4.0 kgf-m, 28.8 ft-lb)
7) Install the belt idler (B).

Tightening torque:
25 N·m (2.5 kgf-m, 18.4 ft-lb)
8) Install an automatic belt tension adjuster (A) with the tension rod held by a pin. <Ref. to ME(H4DOTC)-49, AUTOMATIC BELT TENSION ADJUSTER ASSEMBLY AND BELT IDLER, INSTALLATION, Timing Belt.>

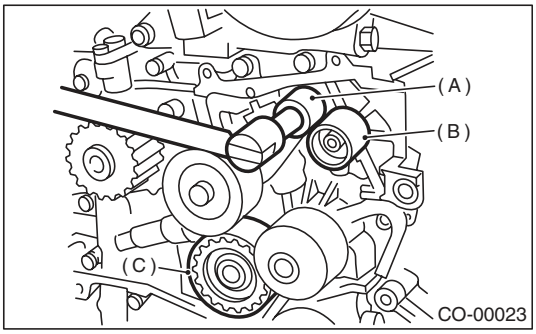

9) Install the timing belt. <Ref. to ME(H4DOTC)-50, TIMING BELT, INSTALLATION, Timing Belt.>
10) Install the timing belt cover. <Ref. to ME(H4DOTC)-46, INSTALLATION, Timing Belt Cover.>
11) Install the crank pulley. <Ref. to ME(H4DOTC)-44, INSTALLATION, Crank Pulley.>
12) Install the V-belts. <Ref. to ME(H4DOTC)-42, INSTALLATION, V-belt.>
13) Install the radiator. <Ref. to CO(H4DOTC)-21, INSTALLATION, Radiator.>
14) Install the collector cover.

C: INSPECTION

1) Check the water pump bearing for smooth rotation.
2) Check the water pump pulley for abnormalities.
3) Make sure the impeller is not abnormally deformed or damaged.
4) Inspect the clearance between impeller and pump case.

Clearance between impeller and pump case:
Standard
0.5 — 1.5 mm (0.020 — 0.059 in)

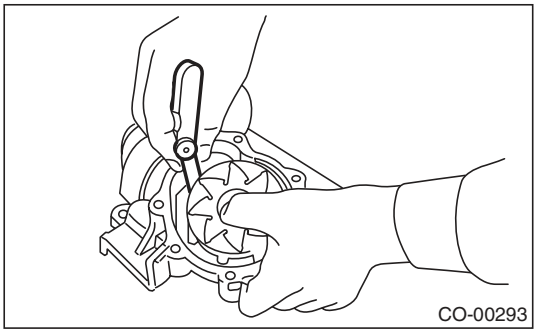

5) After water pump installation, check pulley shaft for engine coolant leaks or noise. If leaks or noise are noted, replace the water pump assembly.

5. Thermostat

A: REMOVAL

1) Set the vehicle on a lift.
2) Lift up the vehicle.
3) Remove the under cover.
4) Drain engine coolant completely. <Ref. to CO(H4DOTC)-14, DRAINING OF ENGINE COOLANT, REPLACEMENT, Engine Coolant.>
5) Disconnect the radiator outlet hose from thermostat cover.

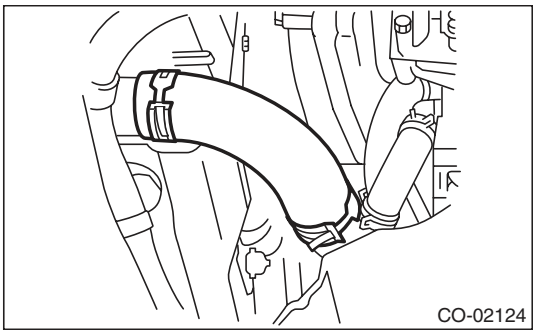

6) Remove the thermostat cover, and then remove the gasket and thermostat.

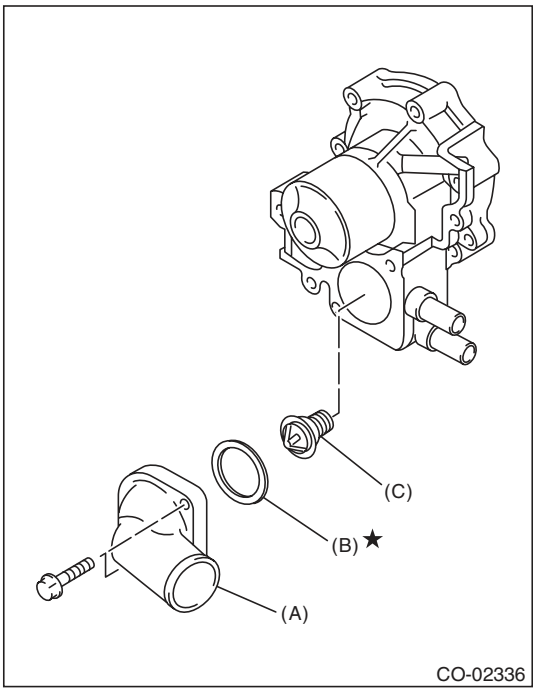

(A) Thermostat cover
(B) Gasket
(C) Thermostat

B: INSTALLATION

1) Install a gasket to thermostat.

NOTE:
Use a new gasket.

2) Install the thermostat and thermostat cover.

NOTE:
Install with the jiggle pin facing upward.

Tightening torque:
12 N·m (1.2 kgf-m, 8.9 ft-lb)

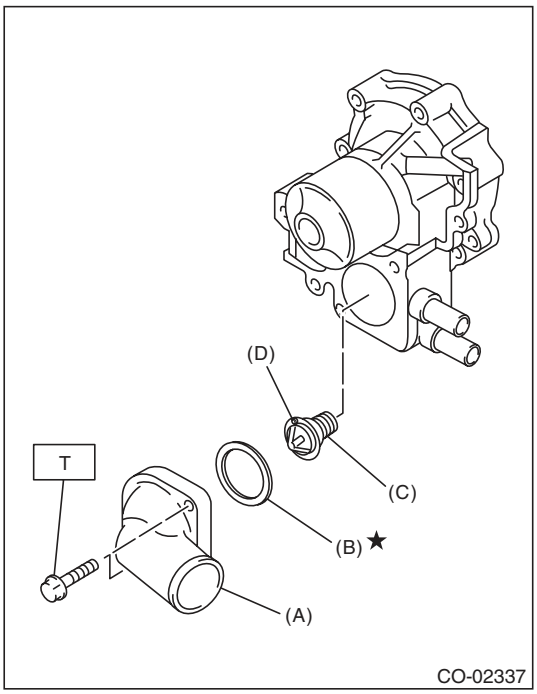

(A) Thermostat cover
(B) Gasket
(C) Thermostat
(D) Jiggle pin

3) Connect the radiator outlet hose to thermostat cover.
4) Install the under cover.
5) Lower the vehicle.
6) Fill engine coolant. <Ref. to CO(H4DOTC)-14, FILLING OF ENGINE COOLANT, REPLACEMENT, Engine Coolant.>

C: INSPECTION

Replace the thermostat if the valve does not close completely at an ambient temperature or if the following test shows unsatisfactory results.

- Inspection method

Immerse the thermostat and a thermometer in water. Raise water temperature gradually, and measure the temperature and valve lift when the valve begins to open and when the valve is fully opened. During the test, agitate the water for even temperature distribution. The measured value should meet the specification.

NOTE:

- Leave the thermostat in the boiling water for five minutes or more before measuring the valve lift.
- Hold the thermostat with a wire or the like to avoid contacting with container bottom.

Opening start temperature:
76 — 80°C (169 — 176°F)

Full open temperature:
91°C (196°F)

Total valve lift:
9.0 mm (0.354 in) or more

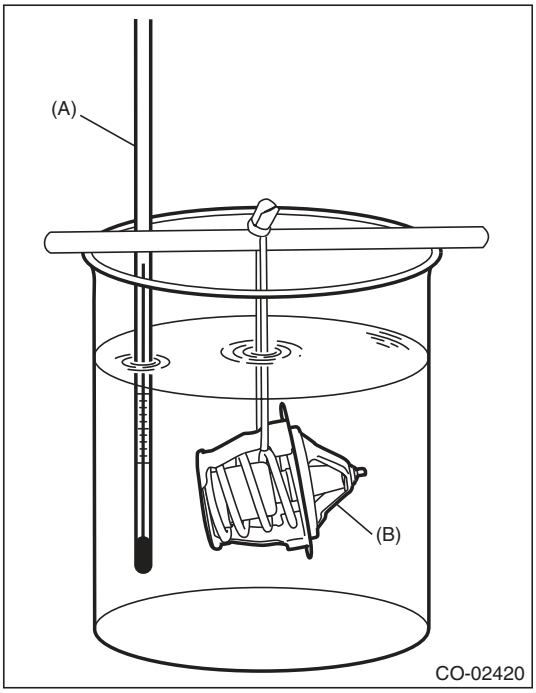

(A) Thermometer
(B) Thermostat

6. Radiator

A: REMOVAL

CAUTION:
The radiator is pressurized. Wait until engine cools down before working on the radiator.

1) Set the vehicle on a lift.
2) Remove the collector cover.
3) Disconnect the ground cable from battery.

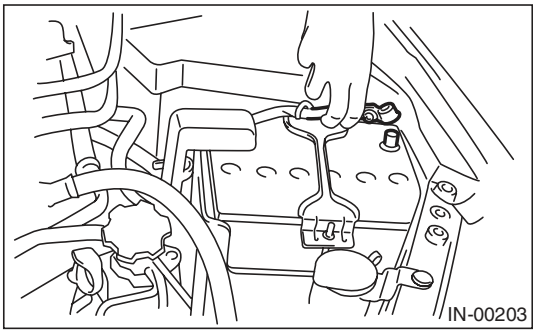

4) Lift up the vehicle.
5) Remove the under cover.
6) Remove the heat shield cover from radiator. (AT model)

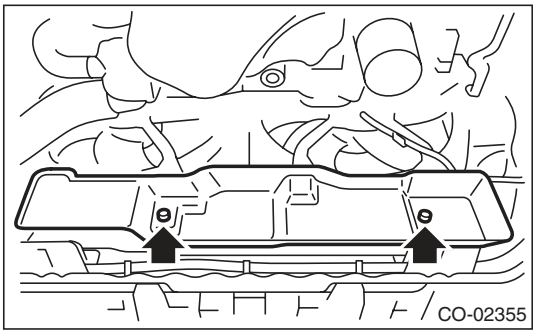

7) Drain engine coolant completely. <Ref. to CO(H4DOTC)-14, DRAINING OF ENGINE COOLANT, REPLACEMENT, Engine Coolant.>

8) Disconnect the connectors of main fan motor connector (A) and sub fan motor connector (B).

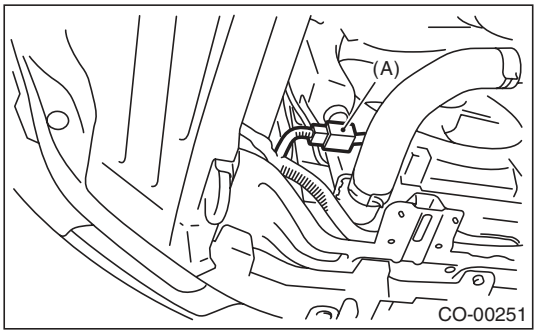

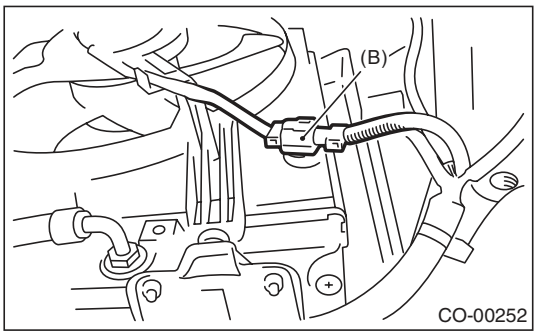

9) Disconnect the radiator outlet hose from thermostat cover.

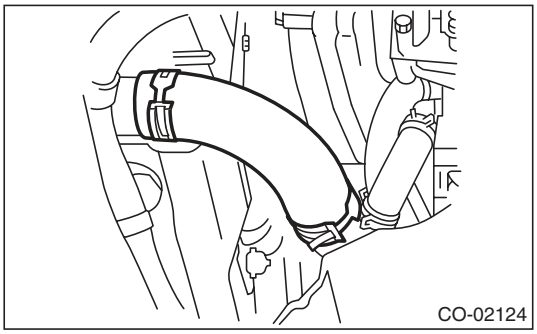

10) Disconnect the ATF cooler hoses from ATF pipes. (AT model)

NOTE:
Plug the ATF pipe to prevent ATF from leaking.

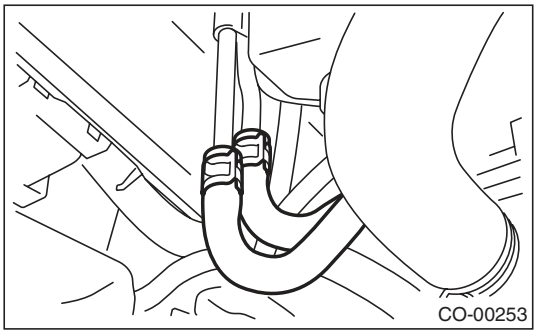

11) Lower the vehicle.
12) Remove the air intake duct. <Ref. to IN(H4DOTC)-9, REMOVAL, Air Intake Duct.>
13) Remove the reservoir tank. <Ref. to CO(H4DOTC)-29, REMOVAL, Reservoir Tank.>

14) Disconnect the radiator inlet hose (A) from the radiator.
15) Remove the hood stay holder (B).

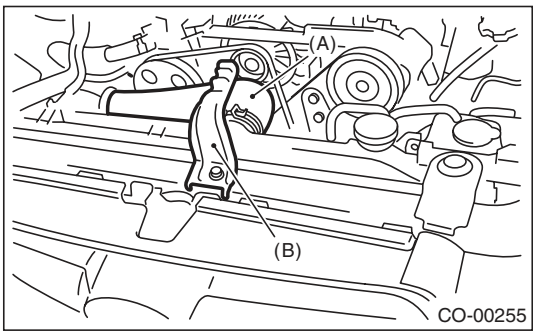

16) Disconnect the two coolant filler tank hoses from the radiator.

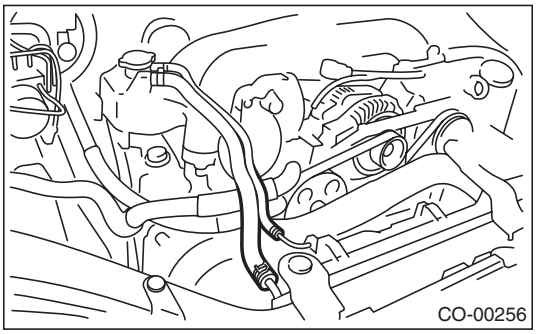

17) Remove the radiator upper brackets.

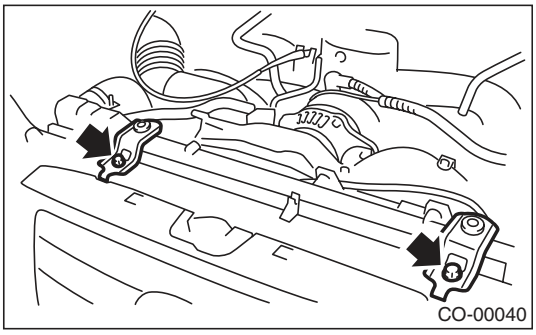

18) Move the radiator to the left while lifting it upward.
19) Lift the radiator up and away from vehicle.

B: INSTALLATION

1) Attach the radiator lower cushion to the hole on the radiator lower bracket.

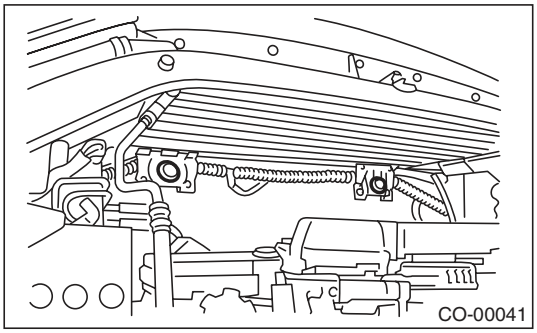

2) Install the radiator to vehicle.

NOTE:
Make pins on the lower side of radiator be fitted into the radiator lower cushions on body side.
3) Install the radiator upper brackets and tighten the bolts.

Tightening torque:
12 N·m (1.2 kgf-m, 8.9 ft-lb)

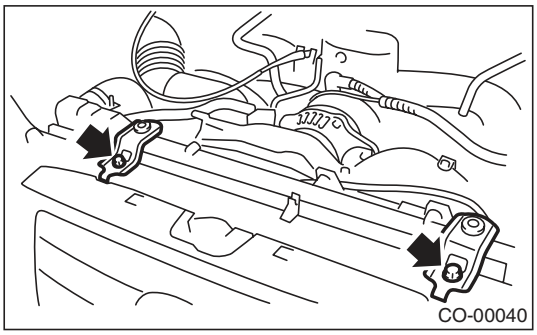

4) Connect the two coolant filler tank hoses to the radiator.

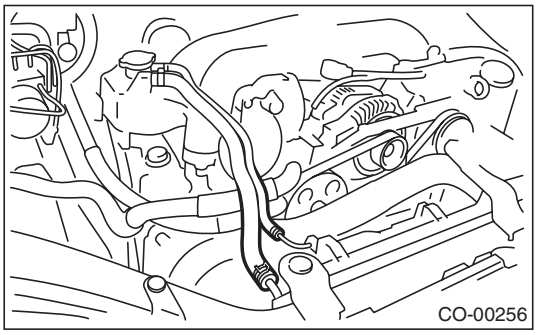

5) Connect the radiator inlet hose (A).

6) Install the hood stay holder (B).

Tightening torque:
7.5 N·m (0.8 kgf-m, 5.5 ft-lb)

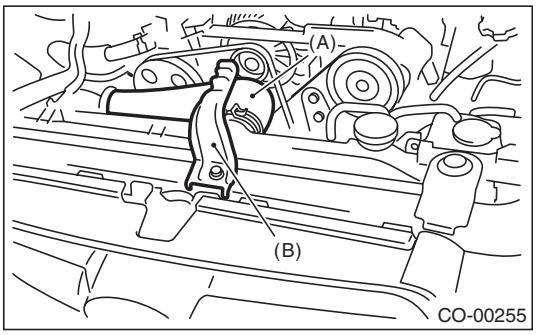

7) Install the reservoir tank. <Ref. to CO(H4DOTC)-29, INSTALLATION, Reservoir Tank.>
8) Install the air intake duct. <Ref. to IN(H4DOTC)-9, INSTALLATION, Air Intake Duct.>
9) Lift up the vehicle.
10) Connect the ATF cooler hoses. (AT model)

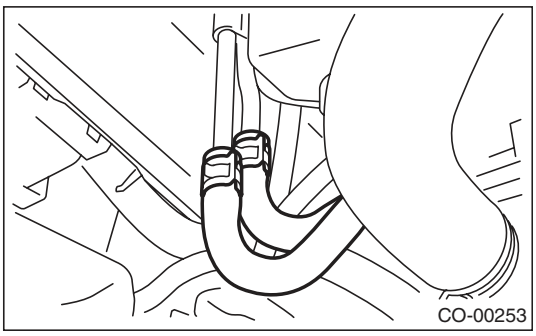

11) Connect the radiator outlet hose.

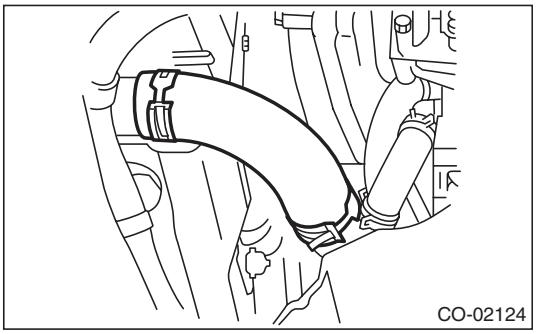

12) Connect the connectors of main fan motor connector (A) and sub fan motor connector (B).

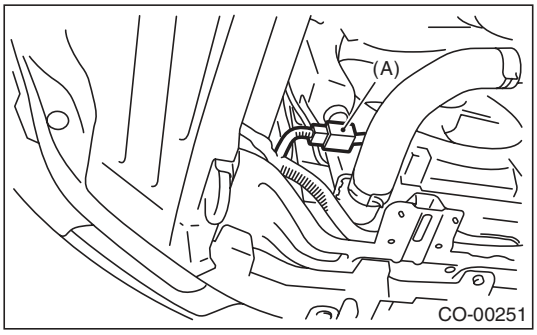

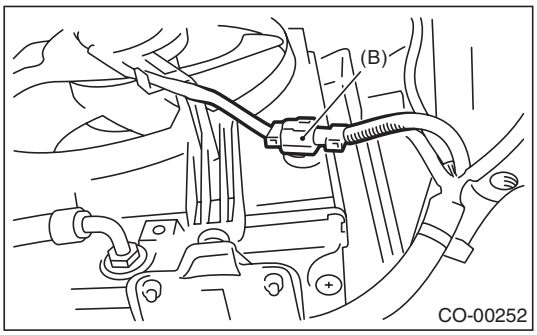

13) Install the heat shield cover to the radiator. (AT model)

Tightening torque:
3 N·m (0.3 kgf-m, 2.2 ft-lb)

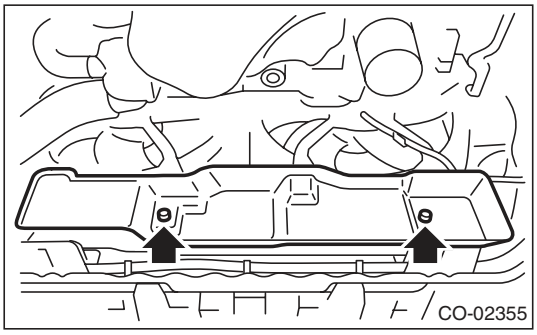

14) Install the under cover.
15) Lower the vehicle.
16) Connect the ground cable to battery.

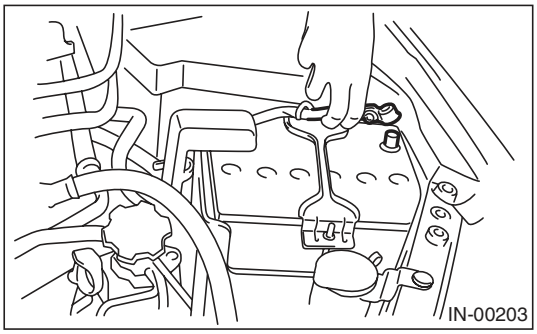

17) Fill engine coolant. <Ref. to CO(H4DOTC)-14, FILLING OF ENGINE COOLANT, REPLACEMENT, Engine Coolant.>

18) Check the ATF level. (AT model) <Ref. to 5AT-28, INSPECTION, Automatic Transmission Fluid.>
19) Install the collector cover.

C: INSPECTION

1) Remove the coolant filler tank cap, fill the coolant filler tank with engine coolant, then install the tester to the installation position of the cap.

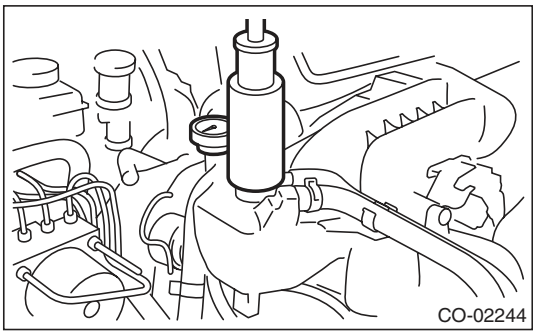

2) Apply a pressure of 122 kPa (1.2 kg/cm^2, 18 psi) to the radiator and check the following points:
- Leakage from the radiator or its vicinity
- Leakage from the hose or its connections

CAUTION:
- **Inspection must be carried out at the side of coolant filler tank, not at the side of radiator.**
- **Engine should be turned off.**
- **Wipe engine coolant from check points in advance.**
- **Be careful of the spurt of engine coolant when removing the tester.**
- **Be careful not to deform the filler neck of the coolant filler tank when installing and removing the tester.**

7. Radiator Cap

A: INSPECTION

1) Attach the radiator cap to tester.

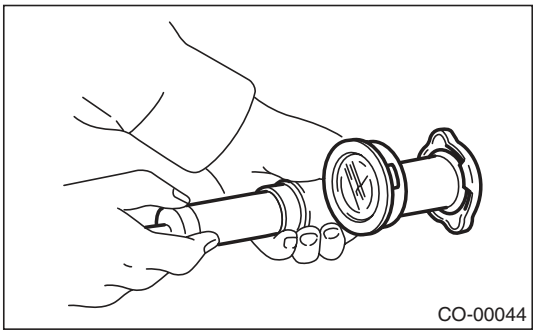

2) Increase pressure until the tester gauge pointer stops. Radiator cap is functioning properly if it holds the service limit pressure for five to six seconds. Remove the cap if it is opened under a pressure less than the service limit value

Coolant filler tank side
Specification:
93 — 123 kPa (0.95 — 1.25 kg/cm^2, 14 — 18 psi)
Service limit:
83 kPa (0.85 kg/cm^2, 12 psi)

Radiator side
Specification:
122 — 152 kPa (1.24 — 1.55 kg/cm^2, 18 — 22 psi)
Service limit:
112 kPa (1.14 kg/cm^2, 16 psi)

CAUTION:
- **Be sure to remove foreign matter and rust from the cap in advance. Otherwise, results of pressure test will be incorrect.**
- **Do not confuse the cap of coolant filler tank and cap of radiator.**

8. Radiator Main Fan and Fan Motor

A: REMOVAL

1) Set the vehicle on a lift.
2) Remove the collector cover.
3) Disconnect the ground cable from battery.

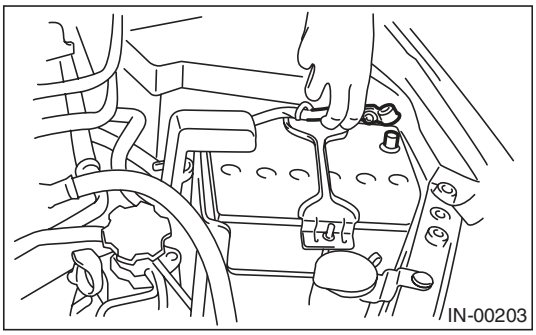

4) Lift up the vehicle.
5) Remove the under cover.
6) Disconnect the main fan motor connector (A).

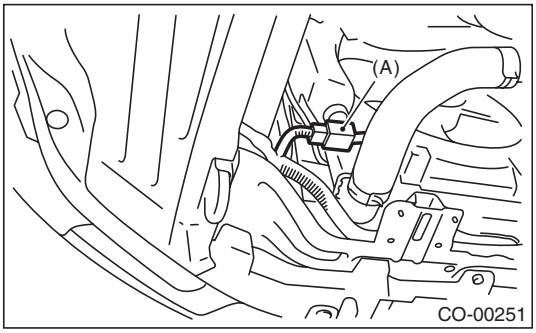

7) Remove the heat shield cover from radiator. (AT model)

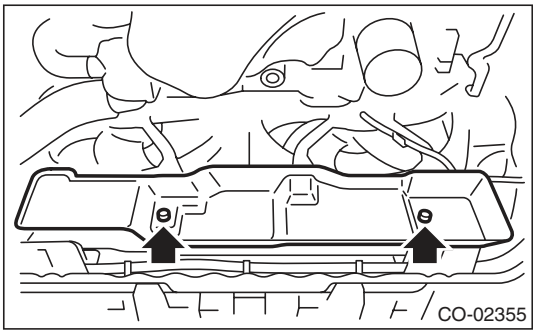

8) Drain approximately 3.0 ℓ (3.2 US qt, 2.6 Imp qt) of coolant. <Ref. to CO(H4DOTC)-14, DRAINING OF ENGINE COOLANT, REPLACEMENT, Engine Coolant.>

9) Remove the ATF hose from the hose clip of the radiator main fan motor assembly. (AT model)

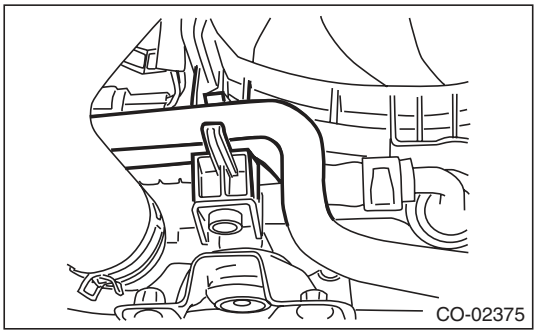

10) Lower the vehicle.
11) Remove the air intake duct. <Ref. to IN(H4DOTC)-9, REMOVAL, Air Intake Duct.>
12) Remove the reservoir tank. <Ref. to CO(H4DOTC)-29, REMOVAL, Reservoir Tank.>
13) Remove the bolts that hold the radiator main fan motor assembly and the over flow pipe.

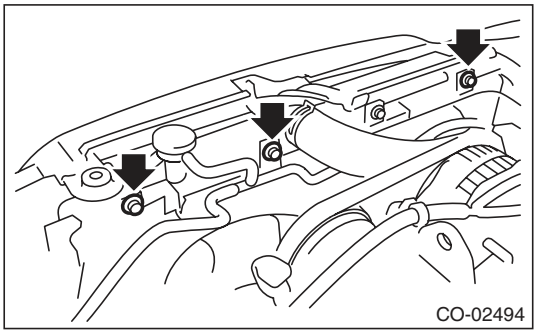

14) Disconnect the radiator inlet hose (A) from the radiator.
15) Remove the hood stay holder (B).

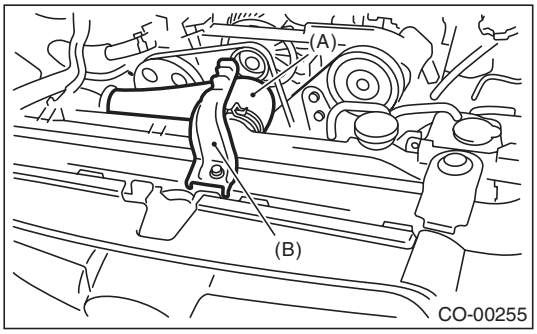

16) Remove the radiator main fan motor assembly from the upper side of the vehicle.

B: INSTALLATION

Install in the reverse order of removal.

Tightening torque:
7.5 N·m (0.8 kgf-m, 5.5 ft-lb)

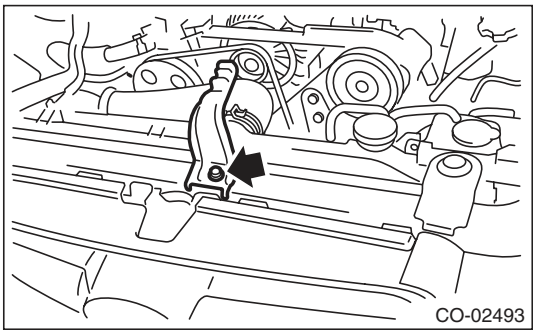

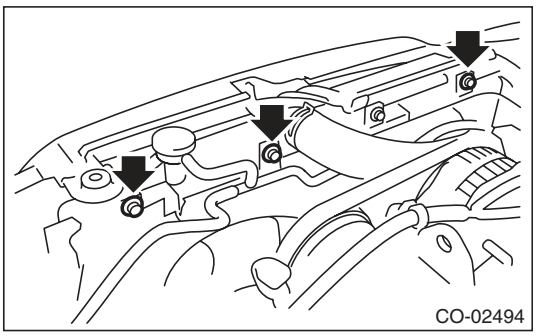

Tightening torque:
3 N·m (0.3 kgf-m, 2.2 ft-lb)

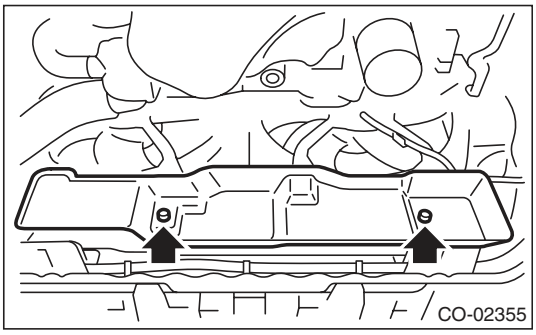

C: DISASSEMBLY

1) Remove the clip holding the main fan motor connector on the radiator main fan shroud.
2) Remove the nuts holding the radiator main fan to the main fan motor.

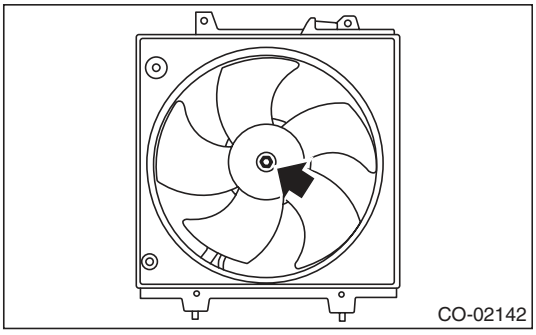

3) Remove the bolts holding the main fan motor onto the radiator main fan shroud.

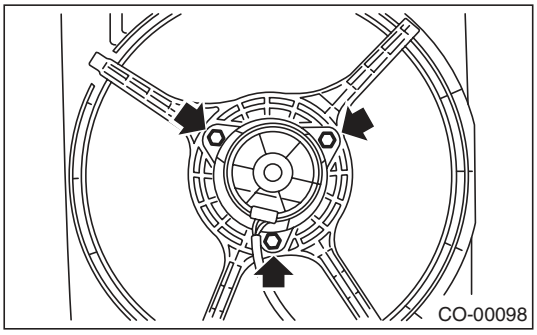

D: ASSEMBLY

Assemble in the reverse order of disassembly.

Tightening torque:
5 N·m (0.5 kgf-m, 3.7 ft-lb)

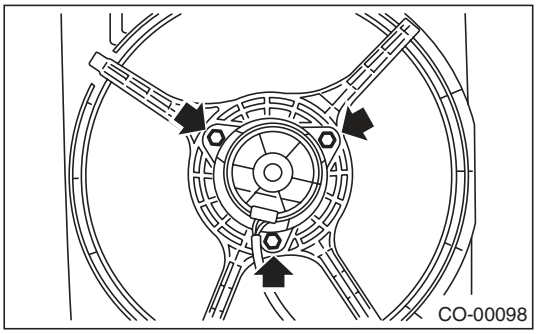

Tightening torque:
3.4 N·m (0.3 kgf-m, 2.5 ft-lb)

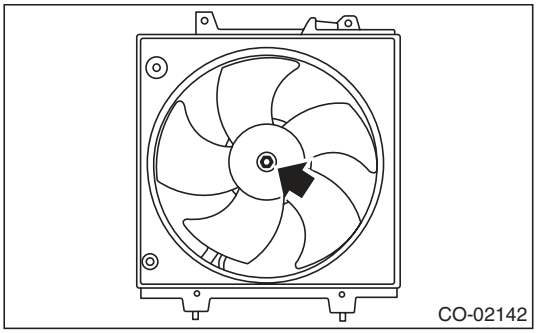

9. Radiator Sub Fan and Fan Motor

A: REMOVAL

1) Set the vehicle on a lift.
2) Remove the collector cover.
3) Disconnect the ground cable from battery.

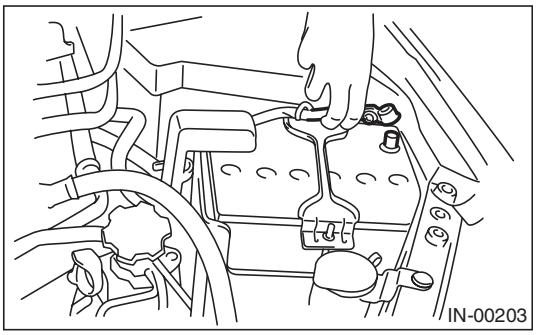

4) Lift up the vehicle.
5) Remove the under cover.
6) Disconnect the sub fan motor connector (B).

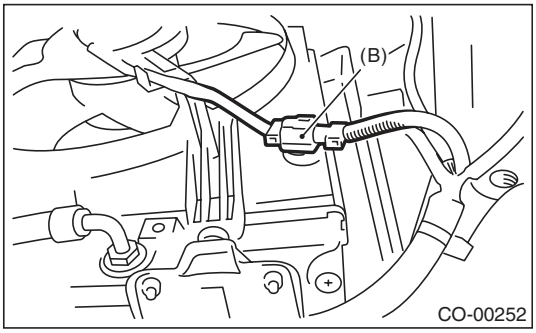

7) Remove the heat shield cover from radiator. (AT model)

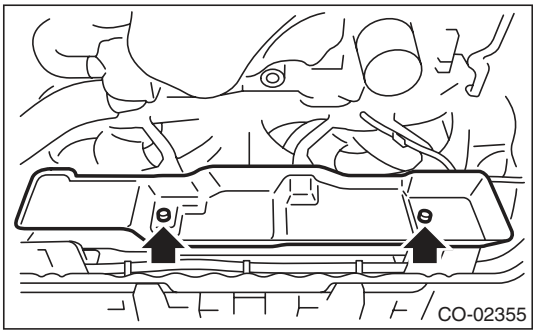

8) Drain approximately 3.0 ℓ (3.2 US qt, 2.6 Imp qt) of coolant. <Ref. to CO(H4DOTC)-14, DRAINING OF ENGINE COOLANT, REPLACEMENT, Engine Coolant.>
9) Lower the vehicle.
10) Remove the air intake duct. <Ref. to IN(H4DOTC)-9, REMOVAL, Air Intake Duct.>
11) Remove the bolts that hold the radiator sub fan motor assembly and the over flow pipe.

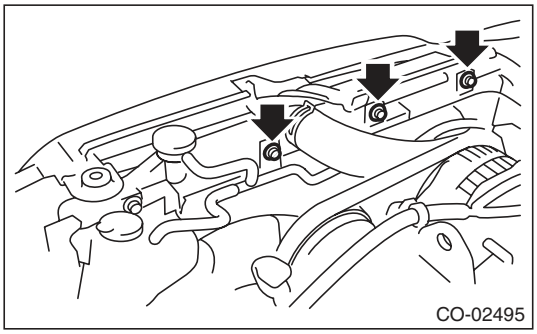

12) Disconnect the radiator inlet hose (A) from the radiator.
13) Remove the hood stay holder (B).

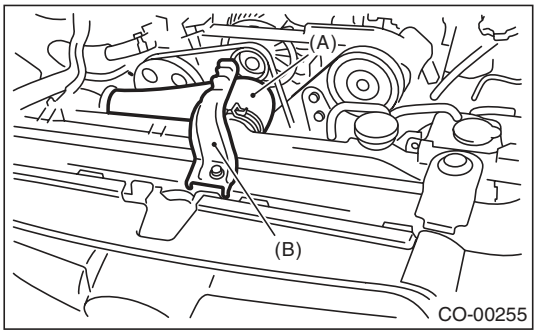

14) Remove the radiator sub fan motor assembly from the vehicle.

B: INSTALLATION

Install in the reverse order of removal.

Tightening torque:
7.5 N·m (0.8 kgf-m, 5.5 ft-lb)

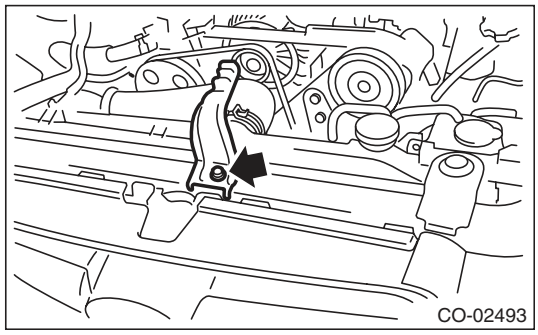

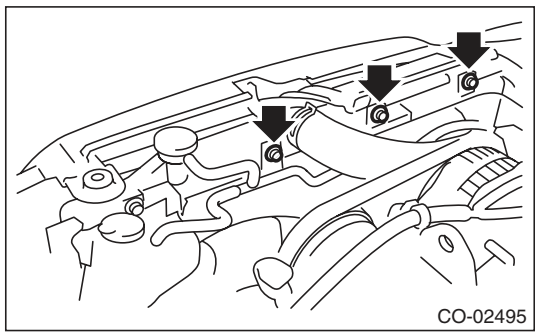

Tightening torque:
3 N·m (0.3 kgf-m, 2.2 ft-lb)

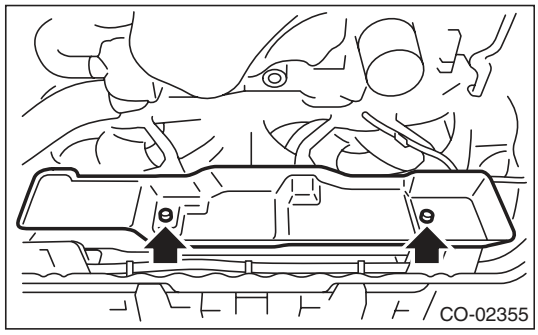

C: DISASSEMBLY

1) Remove the clip holding the sub fan motor connector on the radiator sub fan shroud.
2) Remove the nuts holding the radiator sub fan to the sub fan motor.

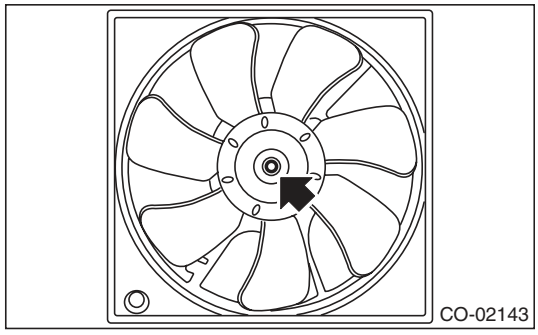

3) Remove the bolts holding the sub fan motor to the radiator sub fan shroud.

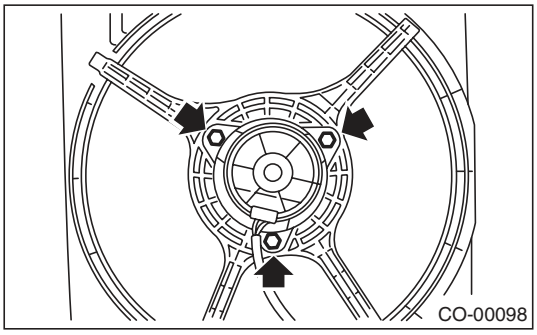

D: ASSEMBLY

Assemble in the reverse order of disassembly.

Tightening torque:
5 N·m (0.5 kgf-m, 3.7 ft-lb)

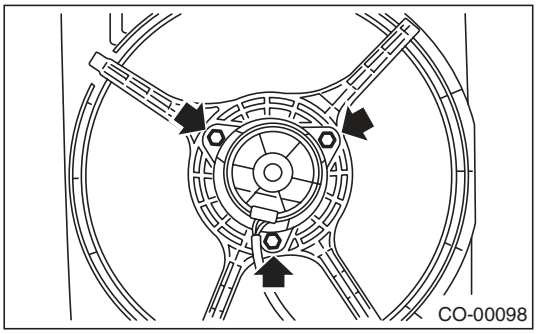

Tightening torque:
3.4 N·m (0.3 kgf-m, 2.5 ft-lb)

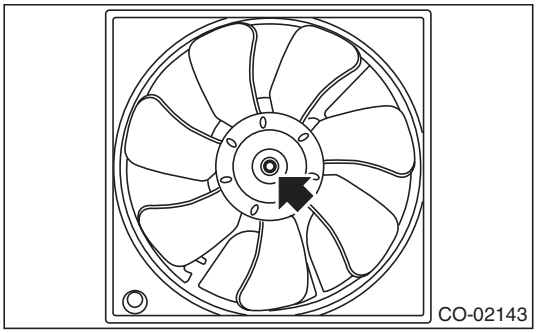

10. Reservoir Tank

A: REMOVAL

1) Pull out the over flow hose (A).
2) Pull out the reservoir tank to the arrow direction while pushing the claw (B).

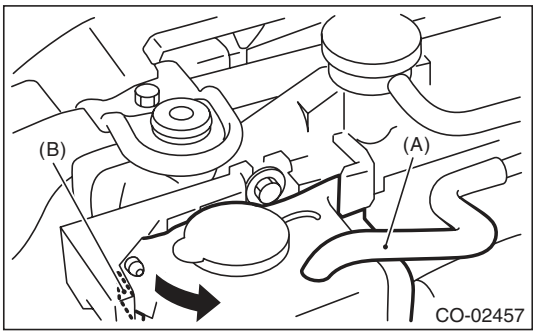

B: INSTALLATION

Install in the reverse order of removal.

C: INSPECTION

Make sure the engine coolant level is between “FULL” and “LOW”.

11. Coolant Filler Tank

A: REMOVAL

WARNING:
The radiator is pressurized. Wait until engine cools down before working on the radiator.

1) Remove the collector cover.
2) Drain approximately 3.0 ℓ (3.2 US qt, 2.6 Imp qt) of coolant. <Ref. to CO(H4DOTC)-14, DRAINING OF ENGINE COOLANT, REPLACEMENT, Engine Coolant.>
3) Disconnect the engine coolant hoses from coolant filler tank.
4) Remove the bolts which install the coolant filler tank.

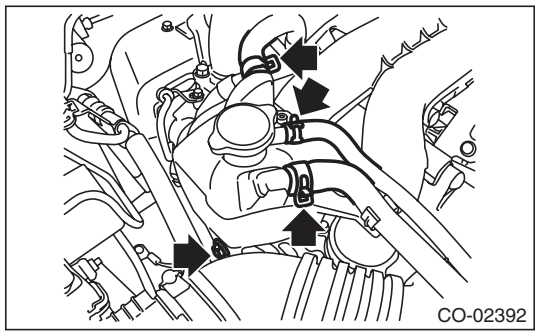

5) Disconnect the engine coolant hose which connects the under side of coolant filler tank.
6) Remove the coolant filler tank.

B: INSTALLATION

Install in the reverse order of removal.

Tightening torque:
16 N·m (1.6 kgf-m, 11.8 ft-lb)

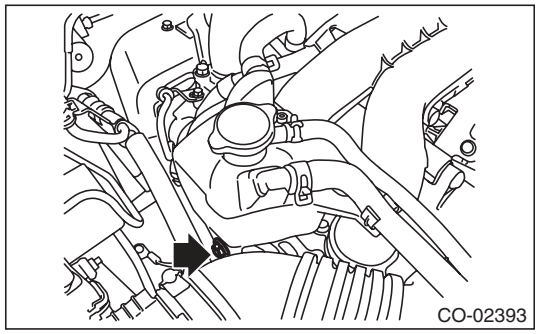

12. Engine Cooling System Trouble in General

A: INSPECTION

Trouble	Possible cause	Corrective action
Overheating	a. Insufficient engine coolant	Replenish engine coolant, inspect for leakage, and repair it if necessary.
	b. Loose timing belt	Repair or replace timing belt tensioner.
	c. Oil on drive belt	Replace.
	d. Malfunction of thermostat	Replace.
	e. Malfunction of water pump	Replace.
	f. Clogged engine coolant passage	Clean.
	g. Improper ignition timing	Inspect and repair ignition control system. <Ref. to EN(H4DOTC)(diag)-2, PROCEDURE, Basic Diagnostic Procedure.>
	h. Clogged or leaking radiator	Clean, repair or replace.
	i. Engine oil mixed in engine coolant	Replace engine coolant. If there is no improvement, check, repair and replace the engine.
	j. Air/fuel mixture ratio too lean	Inspect and repair the fuel injection system. <Ref. to EN(H4DOTC)(diag)-2, PROCEDURE, Basic Diagnostic Procedure.>
	k. Excessive back pressure in exhaust system	Clean or replace.
	l. Insufficient clearance between piston and cylinder	Adjust or replace.
	m. Slipping clutch	Repair or replace.
	n. Dragging brake	Adjust.
	o. Defective radiator fan	Inspect the radiator fan relay, engine coolant temperature sensor or fan motor and replace them.
Over-cooling	a. Ambient temperature extremely low	Partly cover radiator front area.
	b. Defective thermostat	Replace.
Engine coolant leaks	a. Loosened or damaged connecting units on hoses	Repair or replace.
	b. Leakage from water pump	Replace.
	c. Leakage from water pipe	Repair or replace.
	d. Leakage around cylinder head gasket	Retighten cylinder head bolts or replace gasket.
	e. Damaged or cracked cylinder head and cylinder block	Repair or replace.
	f. Damaged or cracked thermostat cover	Repair or replace.
	g. Leakage from radiator	Repair or replace.
Noise	a. Timing belt problem	Replace.
	b. Defective radiator fan	Replace.
	c. Defective water pump bearing	Replace water pump.
	d. Defective water pump mechanical seal	Replace water pump.

1. General Description

A: SPECIFICATION

Specifications for the turbo model are included in the LU (H4SO) section. <Ref. to LU(H4SO)-2, General Description.>

1. General Description

A: SPECIFICATION

Specifications for the turbo model are the same as the SOHC model. <Ref. to SP(H4SO)-2, General Description.>

1. General Description

A: SPECIFICATION

Item		Specification
Ignition coil	Type	FK0334
	Ignition system	Independent ignition coil
	Manufacturer	Diamond Electric
Spark plug	Manufacturer and type	NGK: SILFR6A
	Thread size (diameter, pitch, length) mm	14, 1.25, 26.5
	Spark plug gap mm (in)	0.7 — 0.8 (0.028 — 0.031)
	Electrode	Iridium

B: COMPONENT

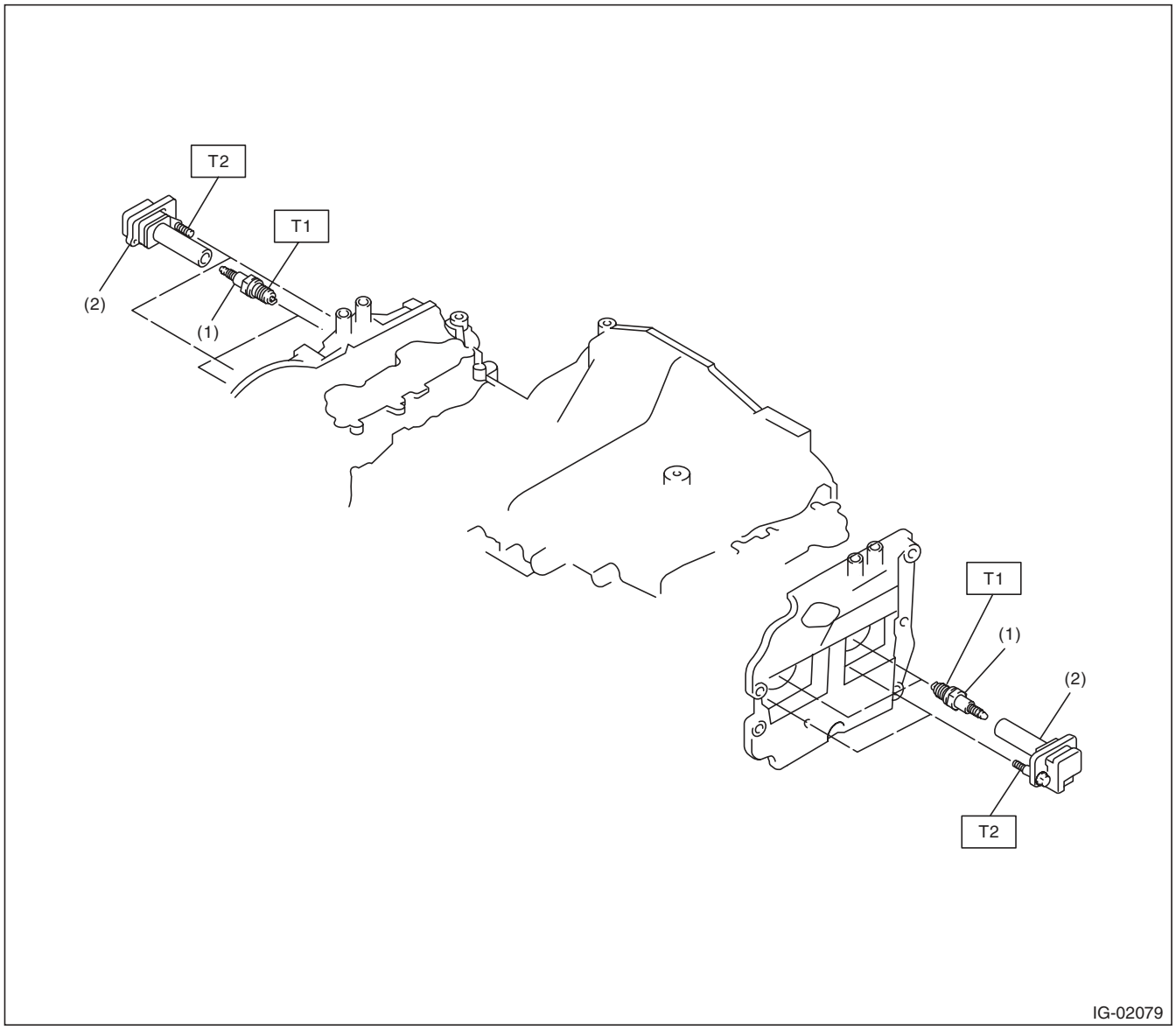

(1) Spark plug

(2) Ignition coil

Tightening torque:N·m (kgf-m, ft-lb)
T1: 21 (2.1, 15.5)
T2: 16 (1.6, 11.8)

C: CAUTION

- Wear appropriate work clothing, including a cap, protective goggles and protective shoes when performing any work.
- Remove contamination including dirt and corrosion before removal, installation or disassembly.
- Keep the disassembled parts in order and protect them from dust and dirt.
- Before removal, installation or disassembly, be sure to clarify the failure. Avoid unnecessary removal, installation, disassembly and replacement.
- Vehicle components are extremely hot after driving. Be wary of receiving burns from heated parts.
- Be sure to tighten fasteners including bolts and nuts to the specified torque.
- Place shop jacks or rigid racks at the specified points.
- Before disconnecting connectors of sensors or units, be sure to disconnect the ground cable from the battery.

2. Spark Plug

A: REMOVAL

Spark plug:
Refer to "SPECIFICATION" for the spark plug. <Ref. to IG(H4DOTC)-2, SPECIFICATION, General Description.>

1. RH SIDE

1) Remove the collector cover.
2) Disconnect the ground cable from battery.

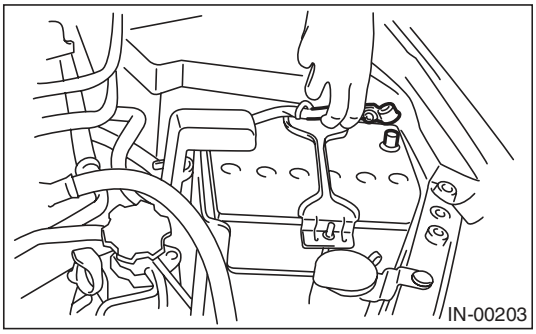

3) Remove the air cleaner case. <Ref. to IN(H4DOTC)-8, REMOVAL, Air Cleaner Case.>
4) Disconnect the connector from ignition coil.
5) Remove the ignition coil.

NOTE:
Turn #3 ignition coil by 180 degrees to remove it.

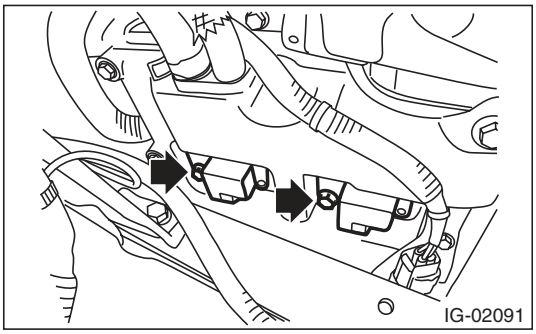

6) Remove the spark plug with a spark plug socket.

2. LH SIDE

1) Remove the collector cover.
2) Remove the battery. <Ref. to SC(H4SO)-20, REMOVAL, Battery.>
3) Disconnect the air duct from the secondary air pump.
4) Remove the bolts attaching the air duct to the rocker cover LH and raise the air duct.

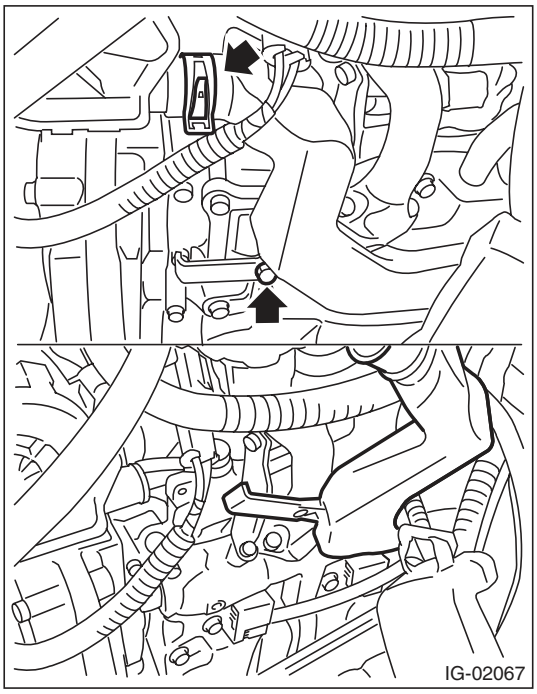

5) Disconnect the connector from ignition coil.
6) Remove the ignition coil.

NOTE:
Turn #4 ignition coil by 180 degrees to remove it.

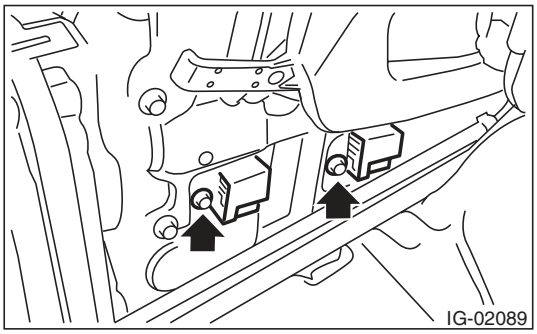

7) Remove the spark plug with a spark plug socket.

B: INSTALLATION

1. RH SIDE

Install in the reverse order of removal.

Tightening torque (Spark plug):
21 N·m (2.1 kgf-m, 15.5 ft-lb)

Tightening torque (Ignition coil):
16 N·m (1.6 kgf-m, 11.8 ft-lb)

2. LH SIDE

Install in the reverse order of removal.

Tightening torque (Spark plug):
21 N·m (2.1 kgf-m, 15.5 ft-lb)

Tightening torque (Ignition coil):
16 N·m (1.6 kgf-m, 11.8 ft-lb)

Tightening torque (Air duct):
9 N·m (0.9 kgf-m, 6.6 ft-lb)

C: INSPECTION

Check the electrodes and inner and outer ceramic insulator of plugs, noting the type of deposits and the degree of electrode erosion.

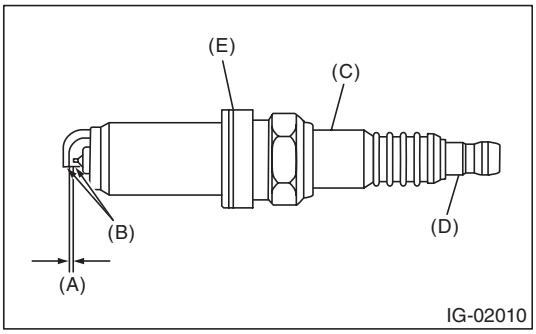

(A) Spark plug gap
(B) Carbon accumulation or wear
(C) Crack
(D) Damage
(E) Damaged gasket

1) Normal:
Brown to grayish-tan deposits and slight electrode wear indicate correct spark plug heat range.

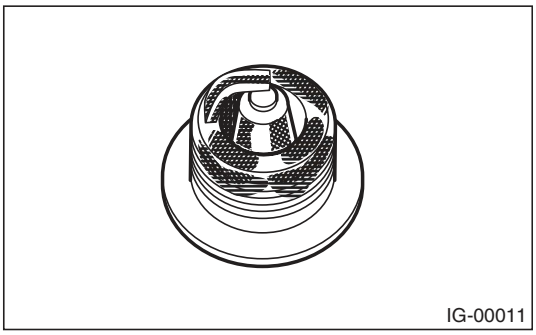

2) Carbon fouled:
Dry fluffy carbon deposits on insulator and electrode are mostly caused by slow speed driving in the city, weak ignition, too rich fuel mixture and dirty air cleaner.

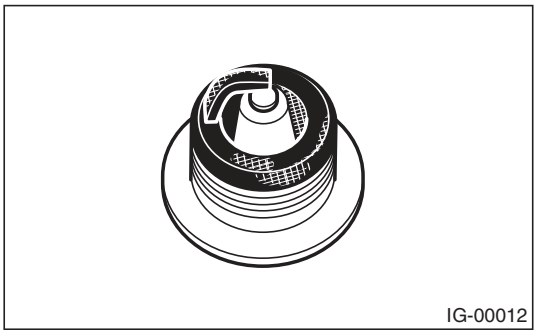

3) Oil fouled:
Wet black deposits show oil entrance into the combustion chamber through worn rings and excessive clearance between valve guides and stems.

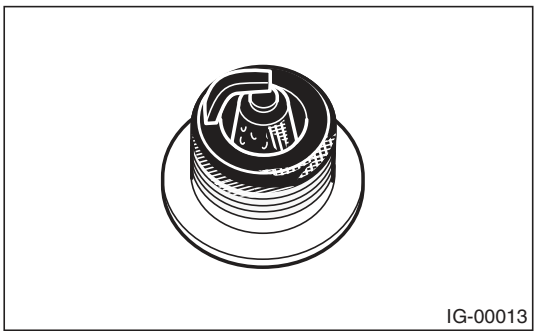

4) Overheating:
White or light gray insulator with black or brown spots and bluish burnt electrodes indicate engine overheating, incorrect ignition timing, wrong selection of fuel, and loose spark plugs.

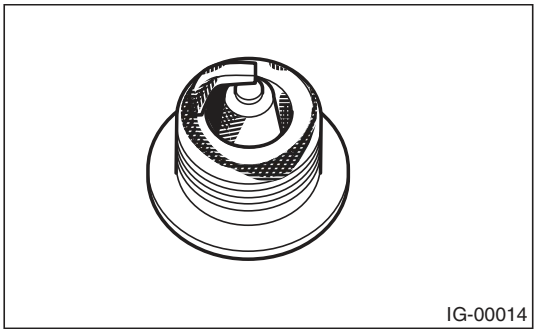

D: ADJUSTMENT

Clean up the spark plug using nylon brush or equivalent. Clean and remove the carbon or oxide deposits. If deposits are too stubborn, replace the spark plugs. After cleaning the spark plugs, measure the spark plug gap using a gap gauge.

NOTE:
- Never use a plug cleaner.
- Never use a metal brush because it makes insulator worn.

Spark plug gap : L
0.7 — 0.8 mm (0.028 — 0.031 in)

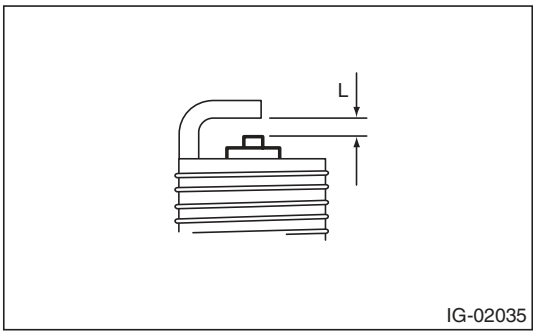

3. Ignition Coil

A: REMOVAL

Direct ignition type has been adopted. Refer to “Spark Plug”, “REMOVAL” for removal procedures. <Ref. to IG(H4DOTC)-4, REMOVAL, Spark Plug.>

B: INSTALLATION

Install in the reverse order of removal.

Tightening torque:
16 N·m (1.6 kgf-m, 11.8 ft-lb)

C: INSPECTION

For inspection procedure, refer to “Diagnostics for Engine Starting Failure”. <Ref. to EN(H4DOTC)(diag)-73, IGNITION CONTROL SYSTEM, Diagnostics for Engine Starting Failure.>

1. General Description

A: SPECIFICATION

Specifications for the turbo model are included in the SC (H4SO) section. <Ref. to SC(H4SO)-2, General Description.>

1. Basic Diagnostic Procedure

A: PROCEDURE

1. ENGINE

	Step	Check	Yes	No
1	**CHECK ENGINE START FAILURE.** 1) Ask the customer when and how the trouble occurred using the interview checklist. <Ref. to EN(H4DOTC)(diag)-3, CHECK, Check List for Interview.> 2) Start the engine.	Does the engine start?	Go to step **2**.	Inspection using Diagnostics for Engine Start Failure. <Ref. to EN(H4DOTC)(diag)-66, Diagnostics for Engine Starting Failure.>
2	**CHECK ILLUMINATION OF MALFUNCTION INDICATOR LIGHT.**	Does the malfunction indicator light illuminate?	Go to step **3**.	Inspection using "General Diagnostic Table" <Ref. to EN(H4DOTC)(diag)-370, General Diagnostic Table.>
3	**CHECK THE COMMUNICATION STATUS.** 1) Turn the ignition switch to OFF. 2) Connect the Subaru Select Monitor or general scan tool to the data link connector. 3) Turn the ignition switch to ON, and run the Subaru Select Monitor or general scan tool. NOTE: • SUBARU SELECT MONITOR For detailed procedures, refer to "Subaru Select Monitor". <Ref. to EN(H4DOTC)(diag)-34, Subaru Select Monitor.> • General scan tool For detailed operation procedures, refer to the general scan tool operation manual.	Does Subaru select monitor or general scan tool communicate with vehicle normally?	Go to step **4**.	Inspection using "Diagnostics Procedure for Subaru Select Monitor Communication". <Ref. to EN(H4DOTC)(diag)-79, Diagnostic Procedure for Subaru Select Monitor Communication.>
4	**CHECK DTC.** Read DTC using Subaru Select Monitor or general scan tool. NOTE: • SUBARU SELECT MONITOR Refer to "Read Diagnostic Trouble Code" for detailed operation procedure. <Ref. to EN(H4DOTC)(diag)-42, Read Diagnostic Trouble Code (DTC).> • General scan tool For detailed operation procedures, refer to the general scan tool operation manual.	Is DTC displayed on the Subaru Select Monitor or general scan tool?	Record the DTC. Repair the trouble cause. <Ref. to EN(H4DOTC)(diag)-81, List of Diagnostic Trouble Code (DTC).> Go to step **5**.	Repair the related parts. NOTE: If DTC is not shown on display although the malfunction indicator light illuminates, perform the diagnosis of malfunction indicator light circuit or combination meter. <Ref. to EN(H4DOTC)(diag)-57, Malfunction Indicator Light.>
5	**PERFORM DIAGNOSIS.** 1) Perform the Clear Memory Mode. <Ref. to EN(H4DOTC)(diag)-52, Clear Memory Mode.> 2) Perform the Inspection Mode. <Ref. to EN(H4DOTC)(diag)-43, Inspection Mode.>	Is DTC displayed on the Subaru Select Monitor or general scan tool?	Inspect using "Diagnostic Procedure with Diagnostic Trouble Code (DTC)"<Ref. to EN(H4DOTC)(diag)-89, Diagnostic Procedure with Diagnostic Trouble Code (DTC).>	Finish the diagnosis.

2. Check List for Interview

A: CHECK

1. CHECK LIST NO. 1

Check the following item when problem has occurred.

NOTE:
Use copies of this page for interviewing customers.

Customer's name		Engine No.	
Date of purchase		Fuel brand	
Date of repair		Odometer reading	km
V.I.N.			miles
Weather	❑ Fine ❑ Cloudy ❑ Rainy ❑ Snowy ❑ Various/Others:		
Ambient air temperature	°C (°F)		
	❑ Hot ❑ Warm ❑ Cool ❑ Cold		
Place	❑ Highway ❑ Suburbs ❑ Inner city ❑ Uphill ❑ Downhill ❑ Rough road ❑ Others:		
Engine temperature	❑ Cold ❑ Warming-up ❑ After warming-up ❑ Any temperature ❑ Others:		
Engine speed	rpm		
Vehicle speed	km/h (MPH)		
Driving conditions	❑ Not affected ❑ At starting ❑ While idling ❑ At racing ❑ While accelerating ❑ While cruising ❑ While decelerating ❑ While turning (RH/LH)		
Headlight	❑ ON/❑ OFF	Rear defogger	❑ ON/❑ OFF
Blower	❑ ON/❑ OFF	Audio	❑ ON/❑ OFF
A/C compressor	❑ ON/❑ OFF	CD/Cassette	❑ ON/❑ OFF
Radiator fan	❑ ON/❑ OFF	Car phone	❑ ON/❑ OFF
Front wiper	❑ ON/❑ OFF	Wireless device	❑ ON/❑ OFF
Rear wiper	❑ ON/❑ OFF		

2. CHECK LIST NO. 2

Check the following item about the vehicle's state when malfunction indicator light illuminates.

NOTE:
Use copies of this page for interviewing customers.

a) Other warning lights or indicators turn on. ❑ Yes / ❑ No
❑ Low fuel warning light ❑ Charge indicator light ❑ Engine coolant temperature indicator light ❑ Oil pressure warning light ❑ ATF temperature indicator light or SPORT indicator light ❑ Drivers control center differential indicator light ❑ ABS warning light ❑ VDC warning light ❑ Cruise indicator light ❑ SI-CRUISE warning light ❑ Immobilizer indicator light ❑ STEERING indicator light ❑ Glow indicator ❑ Sedimentor warning light ❑ Others:
b) Fuel level
• Lack of gasoline: ❑ Yes / ❑ No • Indicator position of fuel gauge: • Experienced running out of fuel: ❑ Yes / ❑ No
c) Intentional connecting or disconnecting of harness connectors or spark plug cords: ❑ Yes / ❑ No
• What:
d) Intentional connecting or disconnecting of hoses: ❑ Yes / ❑ No
• What:
e) Installing of parts other than genuine parts: ❑ Yes / ❑ No
• What: • Where:
f) Occurrence of noise: ❑ Yes / ❑ No
• From where: • What kind:
g) Occurrence of smell: ❑ Yes / ❑ No
• From where: • What kind:
h) Intrusion of water into engine compartment or passenger compartment: ❑ Yes / ❑ No
i) Troubles occurred
❑ Engine does not start. ❑ Engine stalls during idling. ❑ Engine stalls while driving. ❑ Engine speed decreases. ❑ Engine speed does not decrease. ❑ Rough idling ❑ Poor acceleration ❑ Back fire ❑ After fire ❑ Does not shift. ❑ Excessive shift shock

3. General Description

A: CAUTION

1) Airbag system wiring harness is routed near the ECM, main relay and fuel pump relay.

CAUTION:
- **Do not use the electrical test equipment on airbag system circuits.**
- **Be careful not to damage the airbag system wiring harness when servicing the ECM, TCM, main relay and fuel pump relay.**

2) Never connect the battery in reverse polarity. Failure to do so will damage the ECM instantly, and other parts will also be damaged.
3) Do not disconnect the battery terminals while the engine is running. A large counter electromotive force will be generated in the generator, and this voltage may damage electronic parts such as ECM etc.
4) Before disconnecting the connectors of each sensor and ECM, be sure to turn the ignition switch to OFF. Perform the Clear Memory Mode after connecting the connectors. <Ref. to EN(H4DOTC)(diag)-52, Clear Memory Mode.>
5) When measuring the voltage or resistance of individual sensor or all electrical control modules, use a tapered pin with a diameter of less than 0.6 mm (0.024 in). Do not insert the pin 4 mm (0.16 in) or more into the part.

CAUTION:
When replacing the ECM, be careful not to use the wrong spec. ECM to avoid any damage on the fuel injection system.

NOTE:
When replacing the ECM of the models with Immobilizer, immobilizer system must be registered. To do so, all ignition keys and ID cards need to be prepared. Refer to the “PC application help for Subaru Select Monitor”.
6) Take care not to allow water to get into the connector when servicing the vehicle in rainy weather or when washing the vehicle. Avoid exposure to water even if the connectors are waterproof.
7) Use ECM mounting stud bolts at the body side grounding point when measuring voltage and resistance inside the passenger compartment.

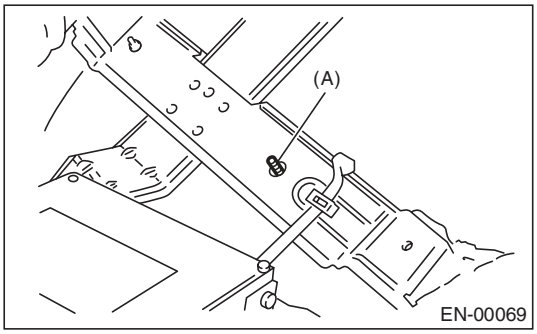

(A) Stud bolt

8) Use the engine ground terminal or engine assembly for the grounding point to chassis when measuring the voltage and resistance in engine compartment.

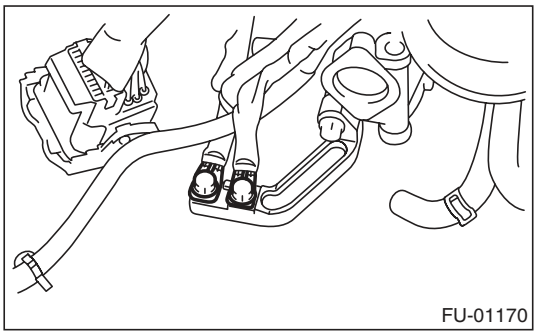

9) Every engine control system-related part is a precision part. Do not drop them.
10) Observe the following cautions when installing a radio in vehicle.

CAUTION:
- **The antenna must be kept as far apart as possible from control module. (ECM is installed under the passenger's side floor mat.)**
- **The antenna feeder must be placed as far apart as possible from the ECM and engine control system harness.**
- **Carefully adjust the antenna for correct matching.**
- **When mounting a large power type radio, pay special attention to the three items mentioned above.**
- **Incorrect installation of the radio may affect the operation of ECM.**

11) When disconnecting the fuel hose, release the fuel pressure. <Ref. to FU(H4DOTC)-57, RELEASING OF FUEL PRESSURE, PROCEDURE, Fuel.>

12) For the model with ABS, the ABS warning light may illuminate when performing driving test with jacked-up or lifted-up condition, but this is not a system malfunction. The reason for this is the speed difference between the front and rear wheels. After diagnosis of engine control system, perform the ABS memory clear procedure of self-diagnosis function.

B: INSPECTION

Before performing diagnostics, check the following item which might affect engine problems.

1. BATTERY

1) Measure the battery voltage and specific gravity of the electrolyte.

Standard voltage: 12 V

Specific gravity: 1.260 or more

2) Check the condition of the main and other fuses, and harnesses and connectors. Also check for proper grounding.

2. ENGINE GROUND

Check if the engine ground terminal is properly connected to engine.

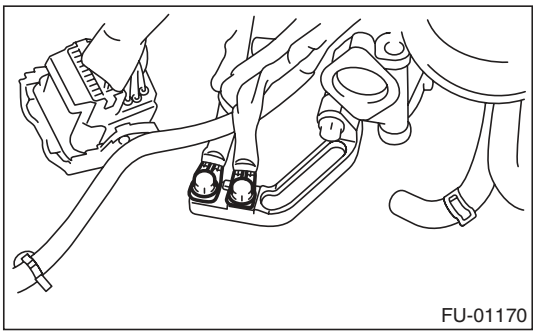

C: NOTE

- The on-board diagnostic (OBD) system detects and indicates a fault in various inputs and outputs of the complex electronic control. Malfunction indicator light in the combination meter indicates occurrence of a fault or trouble.
- Further, against such a failure or sensors as may disable the drive, the fail-safe function is provided to ensure the minimal drivability.
- The OBD system incorporated with the vehicles within this type of engine complies with OBD-II regulations. The OBD system monitors the components and the system malfunction listed in “Engine Section” which affects on emissions.
- When the system decides that a malfunction occurs, malfunction indicator light illuminates. At the same time of the malfunction indicator light illumination or blinking, a DTC and a freeze frame engine conditions are stored into on-board computer.
- The OBD system stores freeze frame engine condition data (engine load, engine coolant temperature, fuel trim, engine speed and vehicle speed, etc.) into on-board computer when it detects a malfunction.
- Freeze frame engine condition data are stored until the DTCs are cleared. However when such malfunctions as fuel trim fault and misfire are detected with the freeze frame engine condition data stored, they are rewritten into those related to the fuel trim fault and misfire.
- When the malfunction does not occur again for three consecutive driving cycles, malfunction indicator light is turned off, but DTC remains at on-board computer.
- When troubleshooting the vehicle which complies with OBD-II regulations, connect the Subaru Select Monitor or general scan tool to the vehicle.

D: PREPARATION TOOL

ILLUSTRATION	TOOL NUMBER	DESCRIPTION	REMARKS
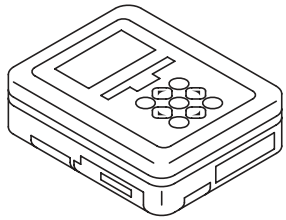 ST1B022XU0	1B022XU0	SUBARU SELECT MONITOR III KIT	Used for troubleshooting the electrical system.
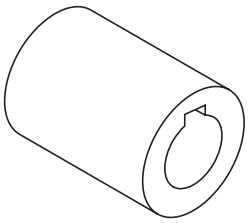 ST-499987500	499987500	CRANKSHAFT SOCKET	Used for rotating crankshaft.

4. Electrical Component Location

A: LOCATION

1. CONTROL MODULE

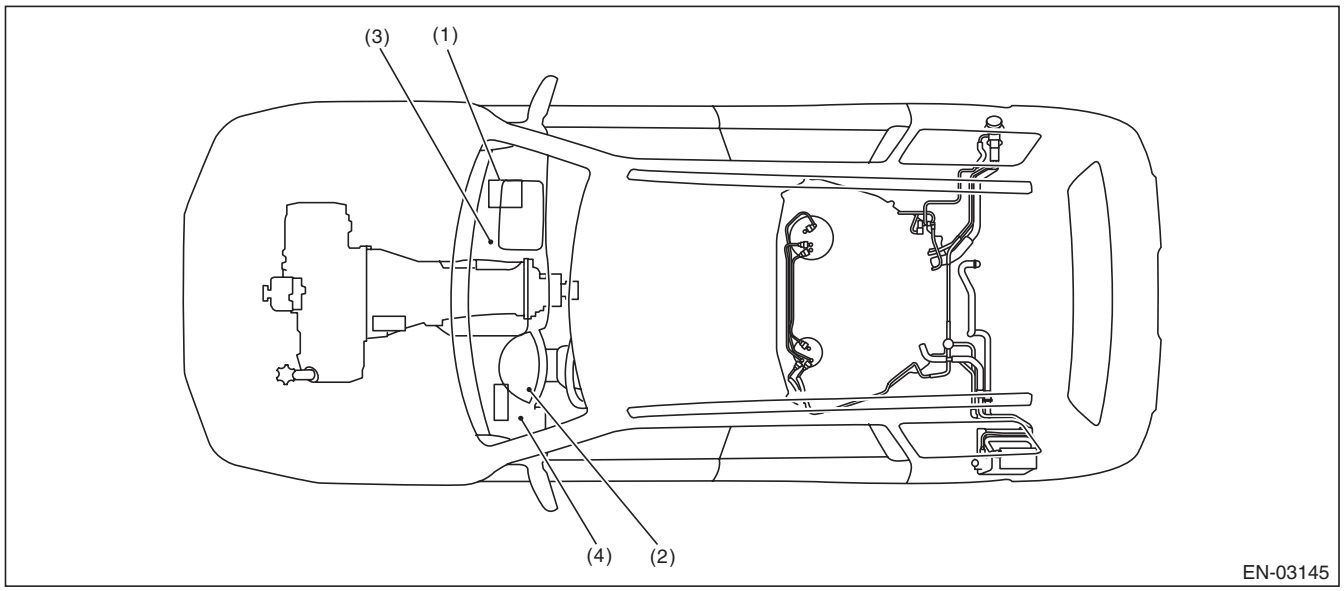

(1) Engine control module (ECM)
(2) Malfunction indicator light
(3) Delivery (test) mode connector
(4) Data link connector

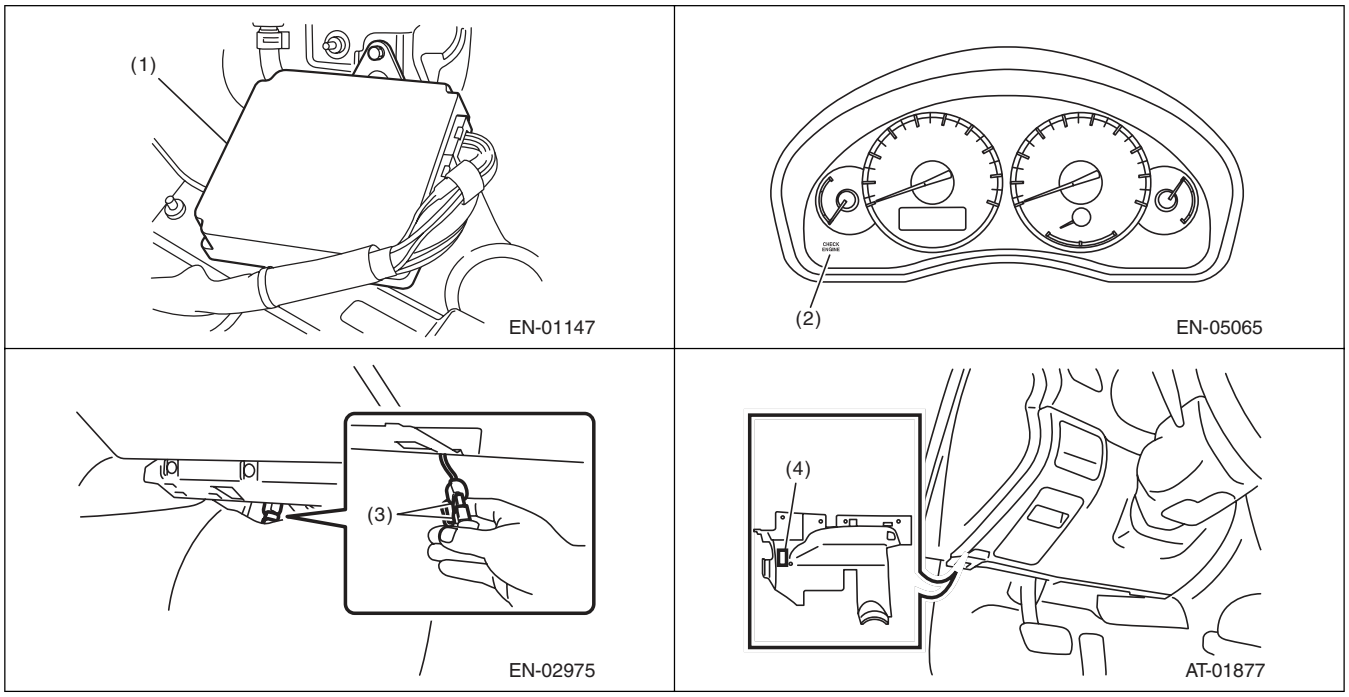

2. SENSOR

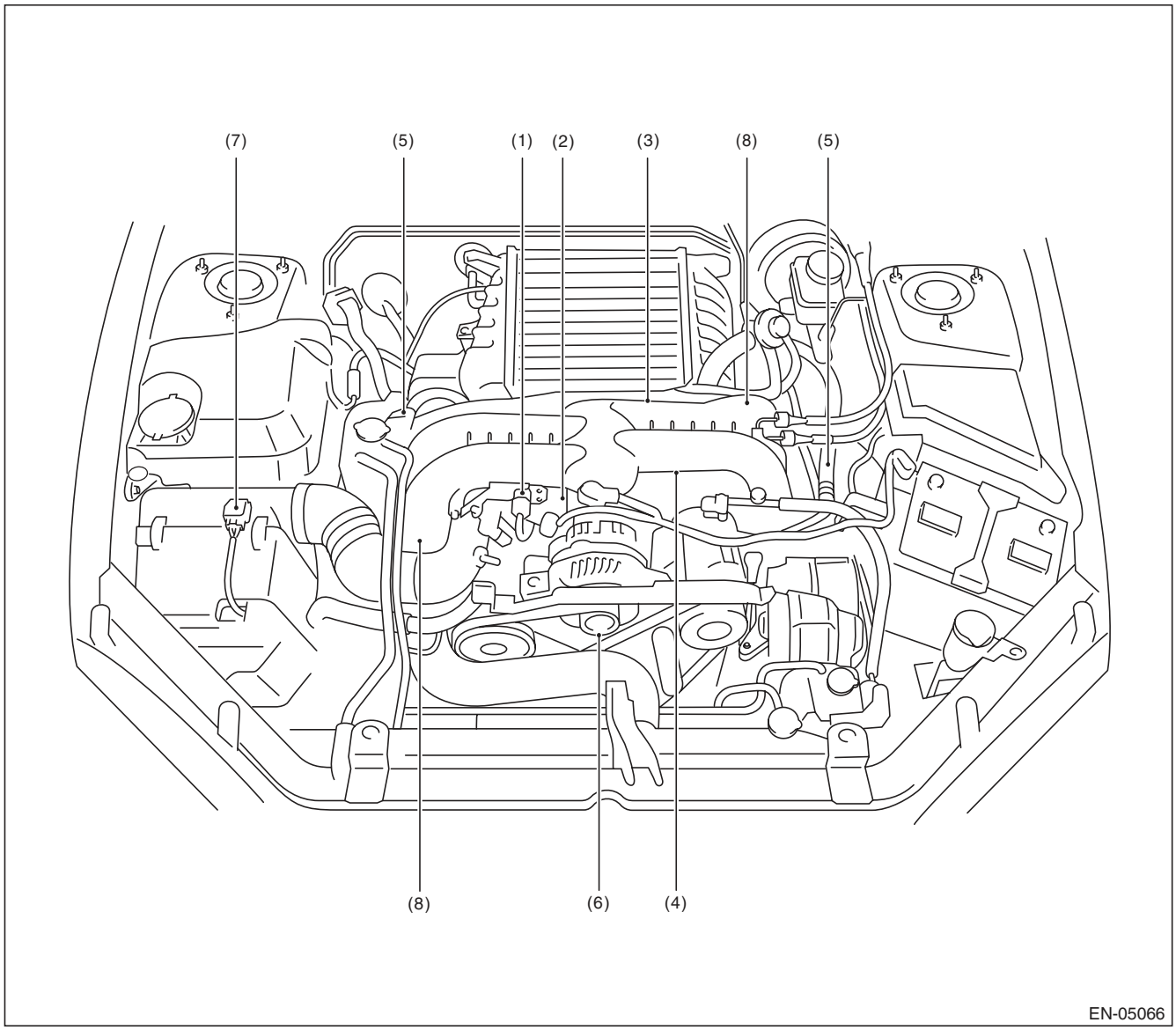

(1) Manifold absolute pressure sensor
(2) Engine coolant temperature sensor
(3) Electronic throttle control
(4) Knock sensor
(5) Intake camshaft position sensor
(6) Crankshaft position sensor
(7) Mass air flow and intake air temperature sensor
(8) Tumble generator valve ASSY

Electrical Component Location

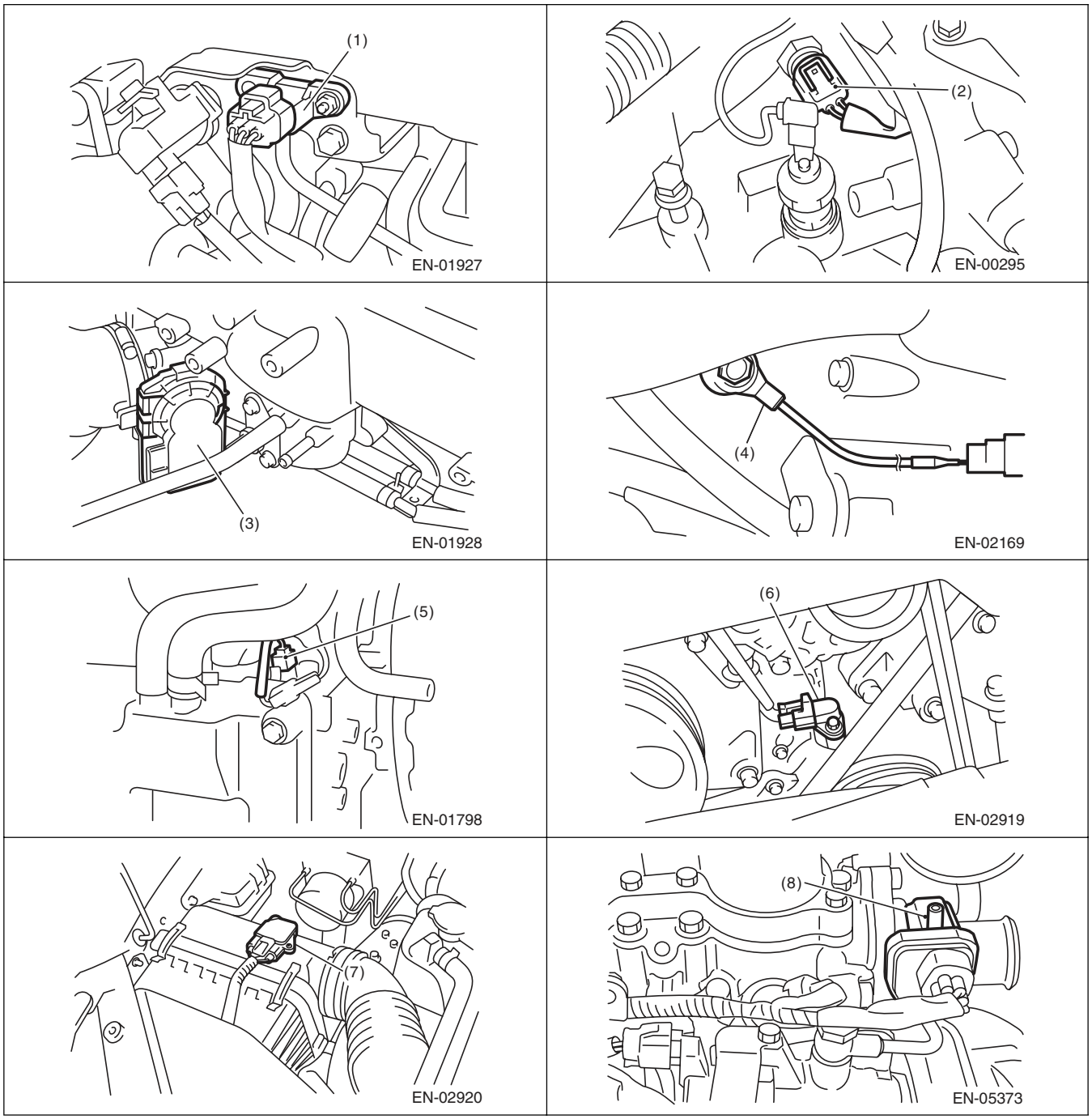

Electrical Component Location

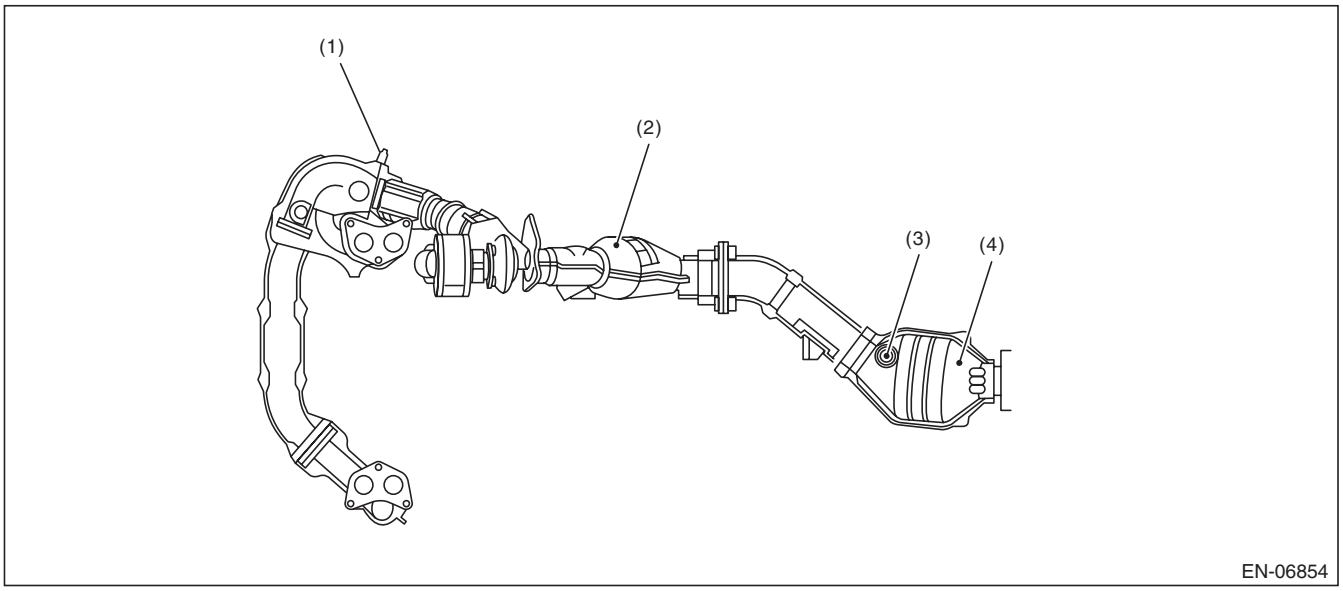

(1) Front oxygen (A/F) sensor
(2) Front catalytic converter
(3) Rear oxygen sensor
(4) Rear catalytic converter

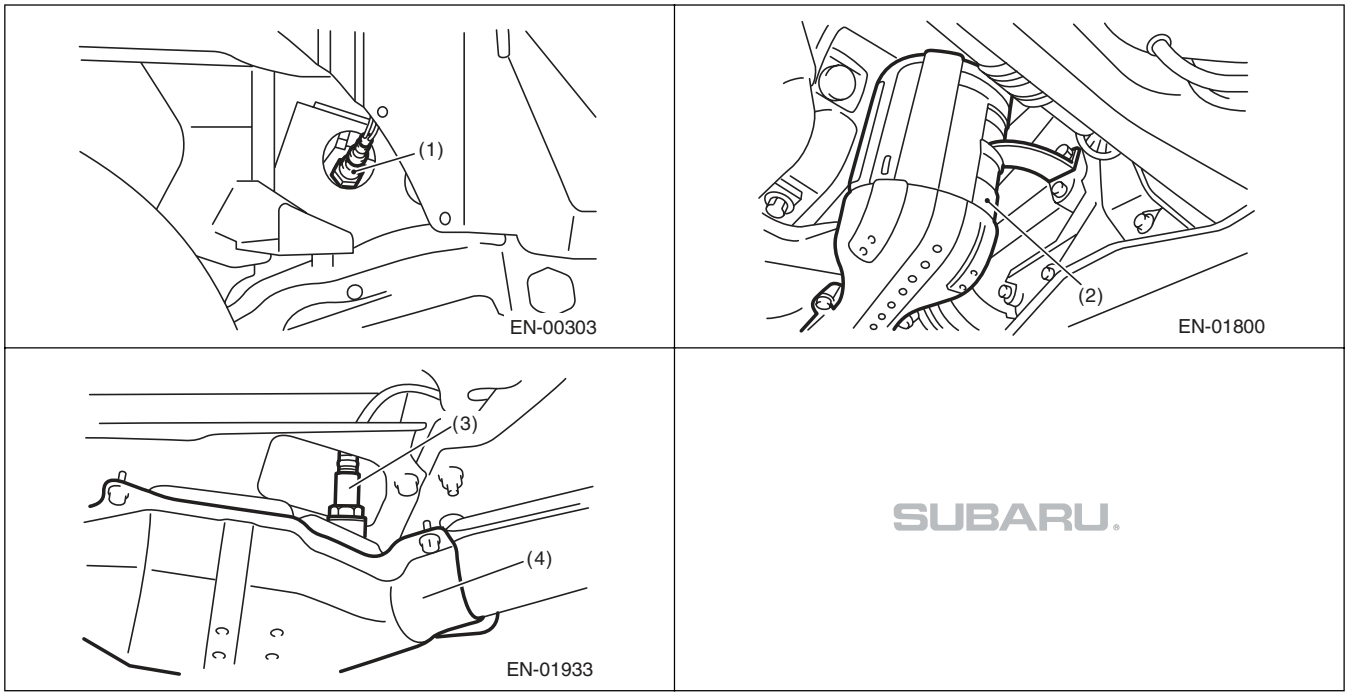

Electrical Component Location

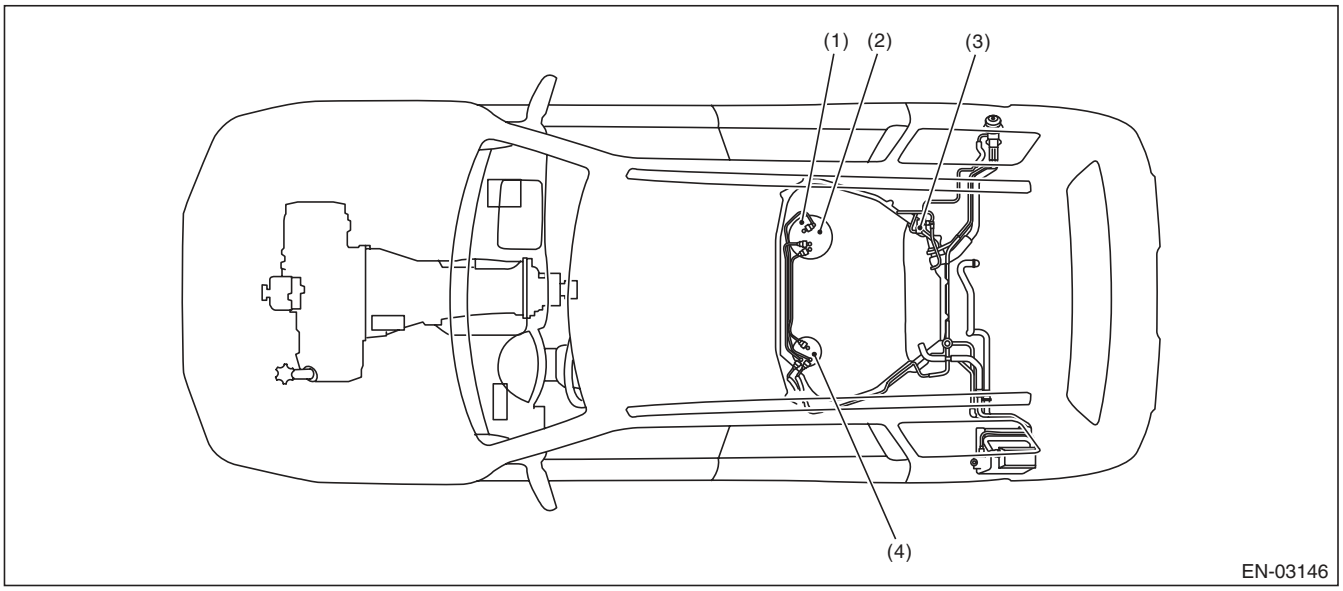

(1) Fuel level sensor
(2) Fuel temperature sensor
(3) Fuel tank pressure sensor
(4) Fuel sub level sensor

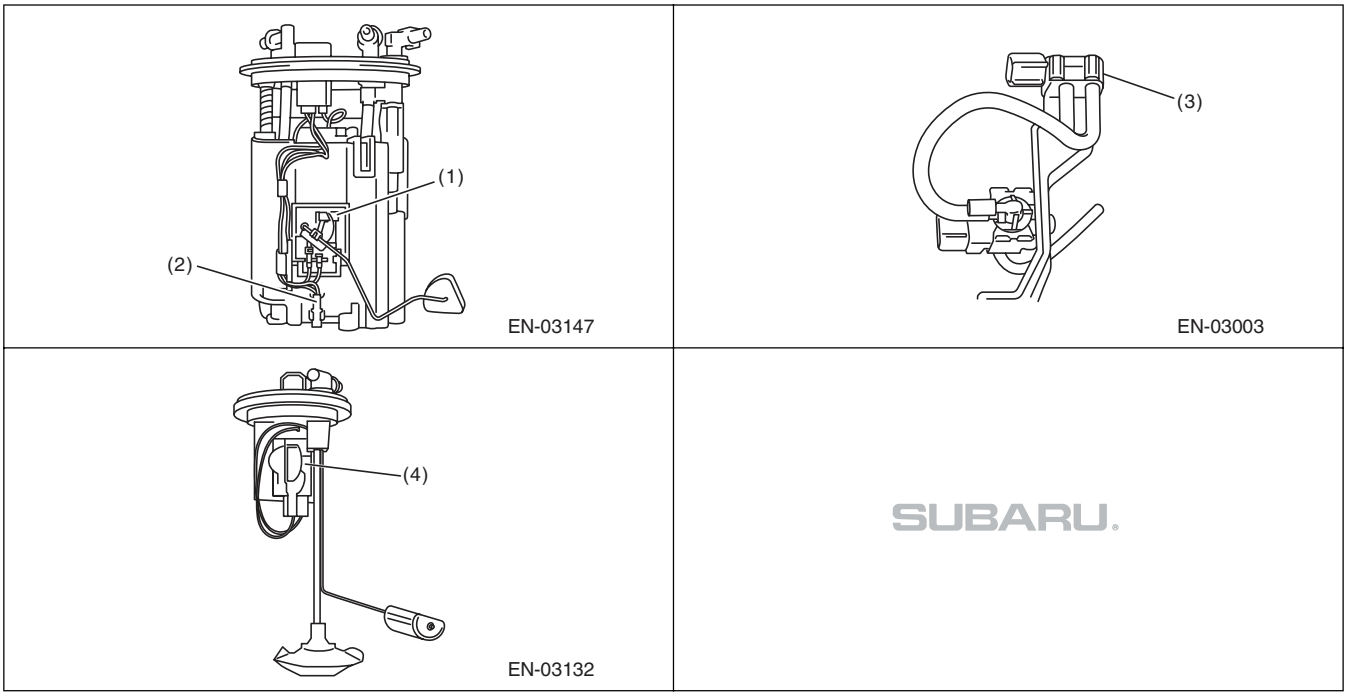

3. SOLENOID VALVE, ACTUATOR, EMISSION CONTROL SYSTEM PARTS AND IGNITION SYSTEM PARTS

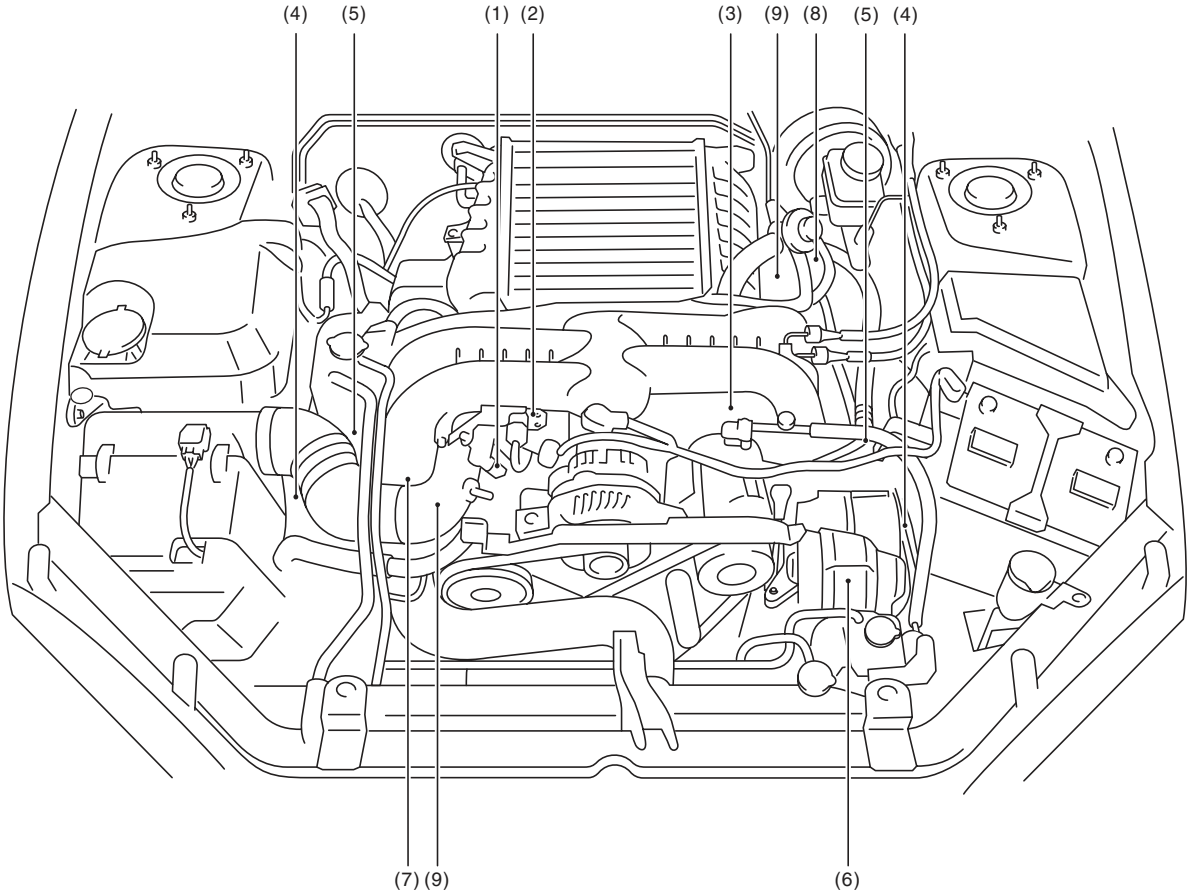

EN-05068

(1)	Wastegate control solenoid valve	(4)	Ignition coil	(7)	Secondary air combination valve RH
(2)	Purge control solenoid valve 2	(5)	Intake oil flow control solenoid valve	(8)	Secondary air combination valve LH
(3)	Purge control solenoid valve 1	(6)	Secondary air pump	(9)	Tumble generator valve ASSY

Electrical Component Location

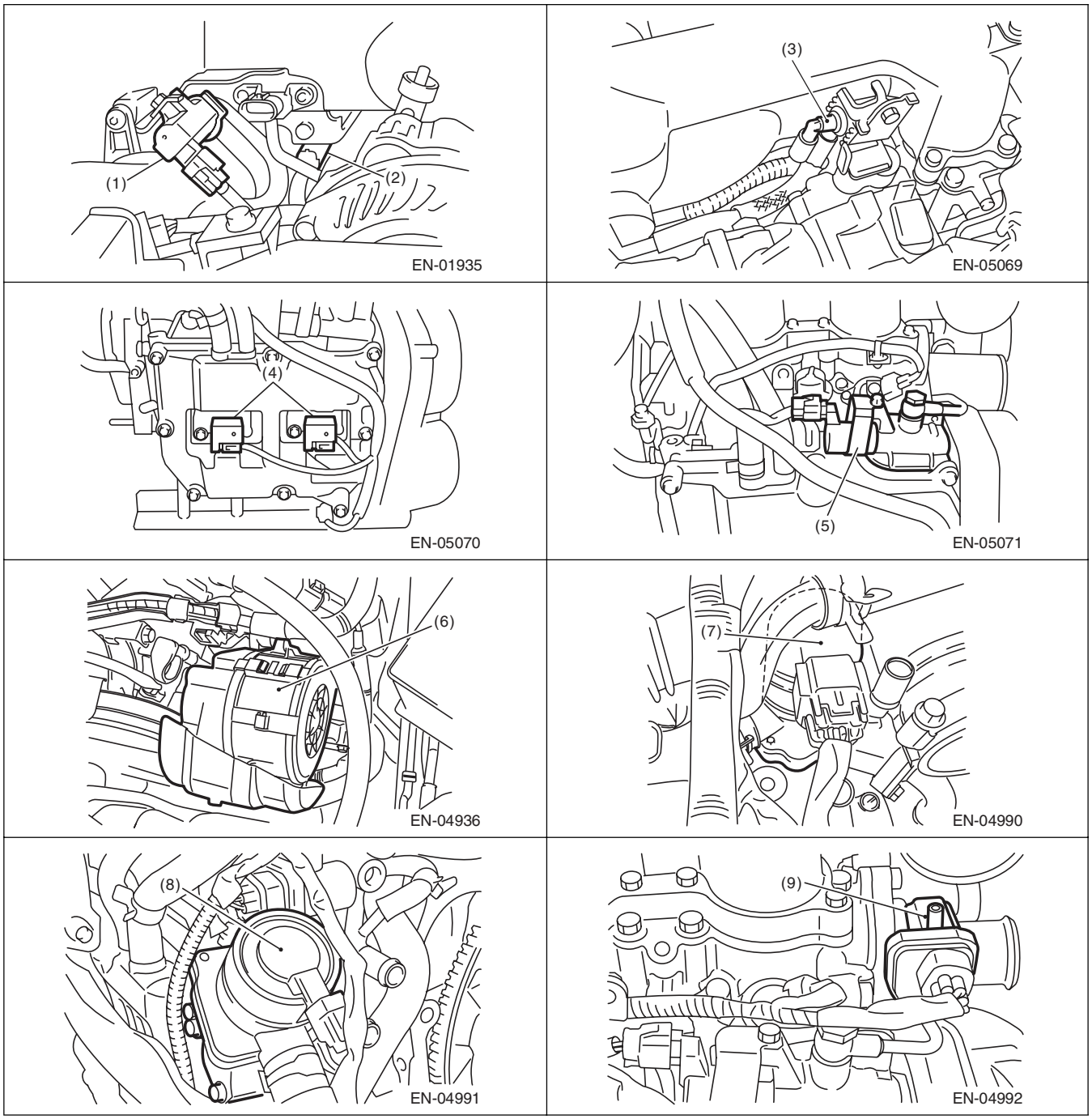

Electrical Component Location

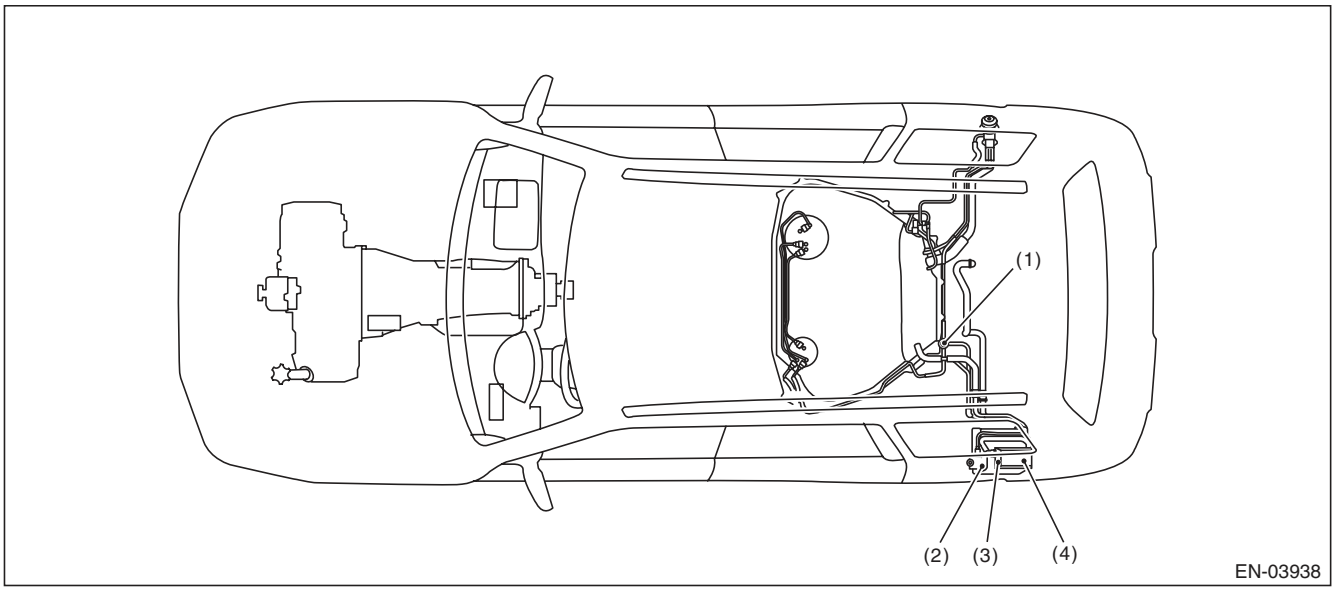

(1) Pressure control solenoid valve
(2) Canister
(3) Drain valve
(4) Drain filter

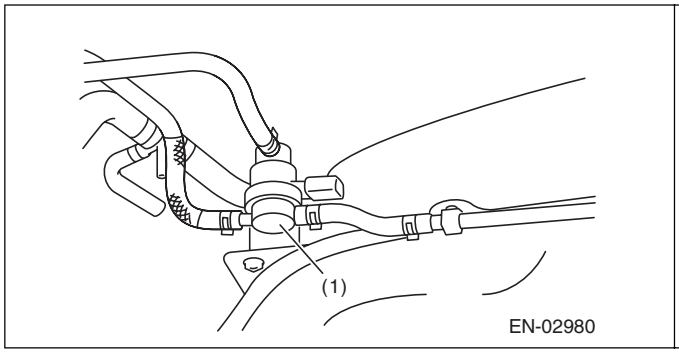

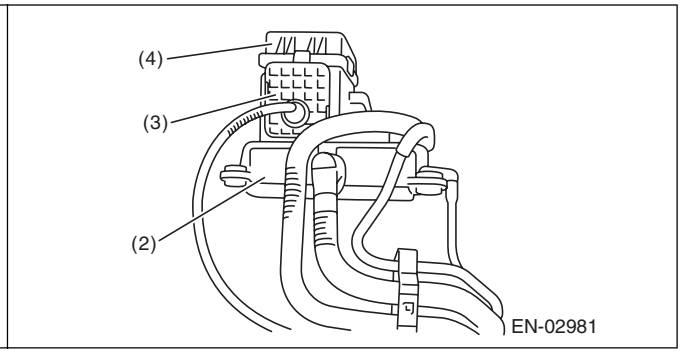

Electrical Component Location

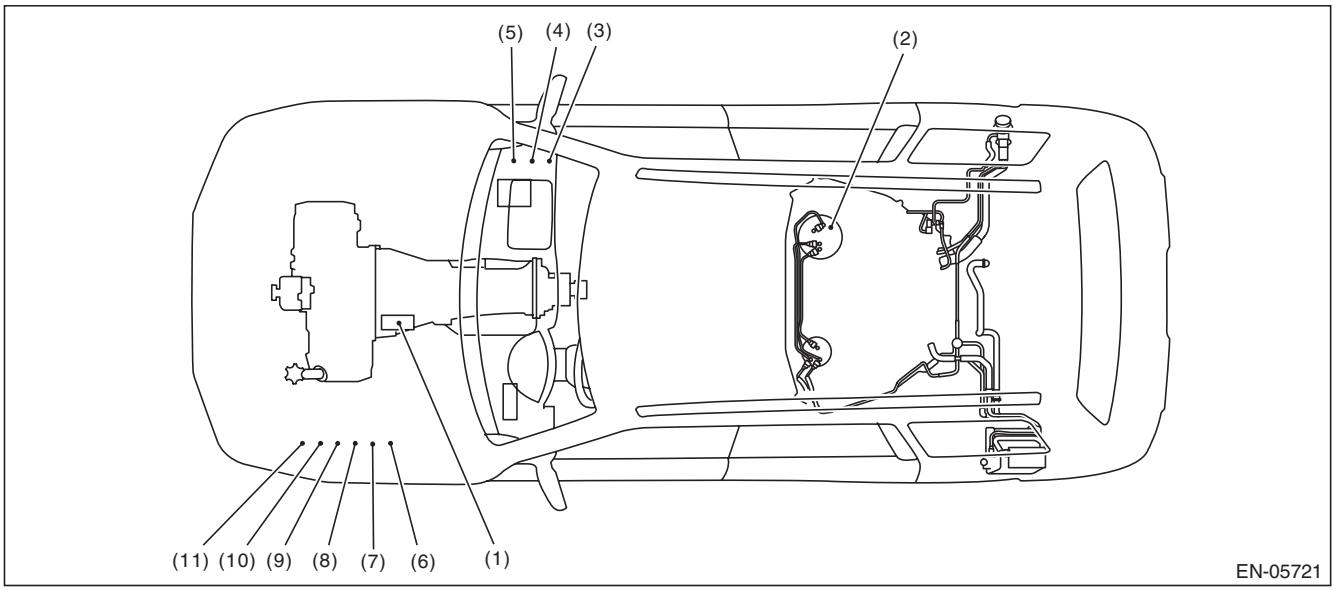

(1) Starter
(2) Fuel pump
(3) Main relay
(4) Fuel pump relay
(5) Electronic throttle control relay
(6) Radiator main fan relay 1
(7) Radiator sub fan relay
(8) Radiator main fan relay 2
(9) Secondary air combination valve relay 1
(10) Secondary air combination valve relay 2
(11) Secondary air pump relay

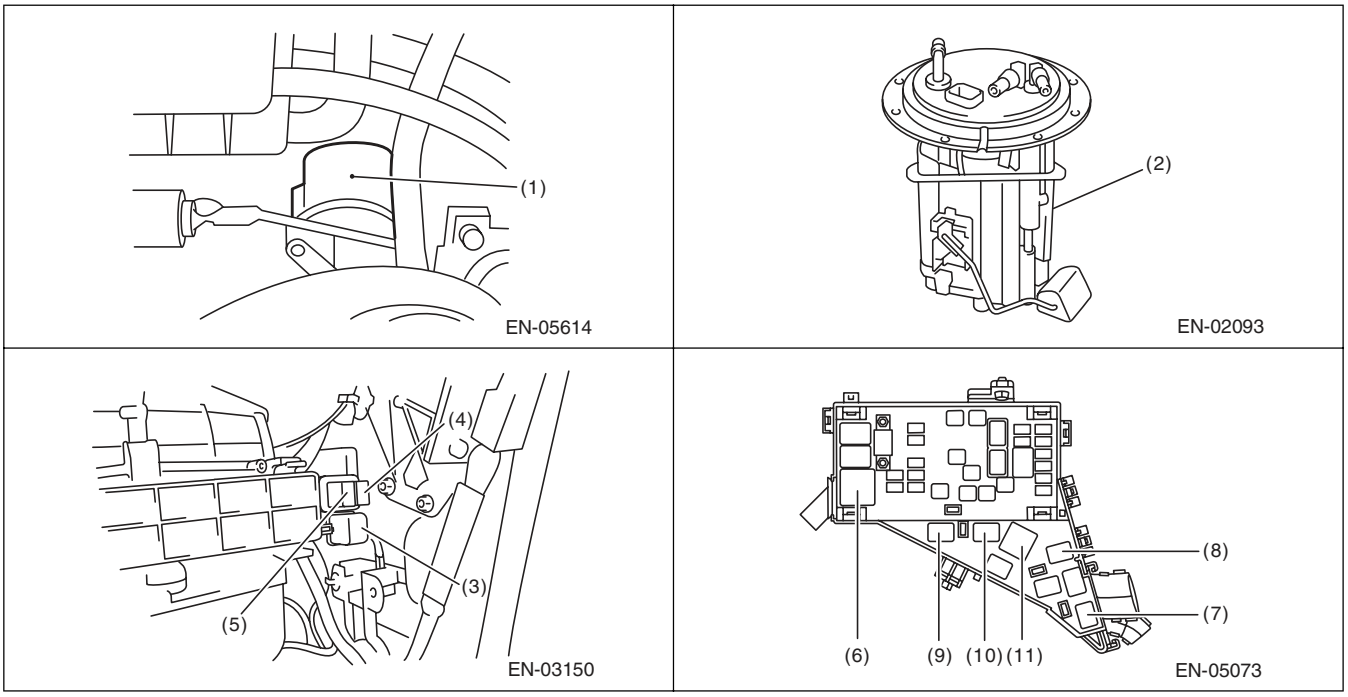

5. Engine Control Module (ECM) I/O Signal

A: ELECTRICAL SPECIFICATION

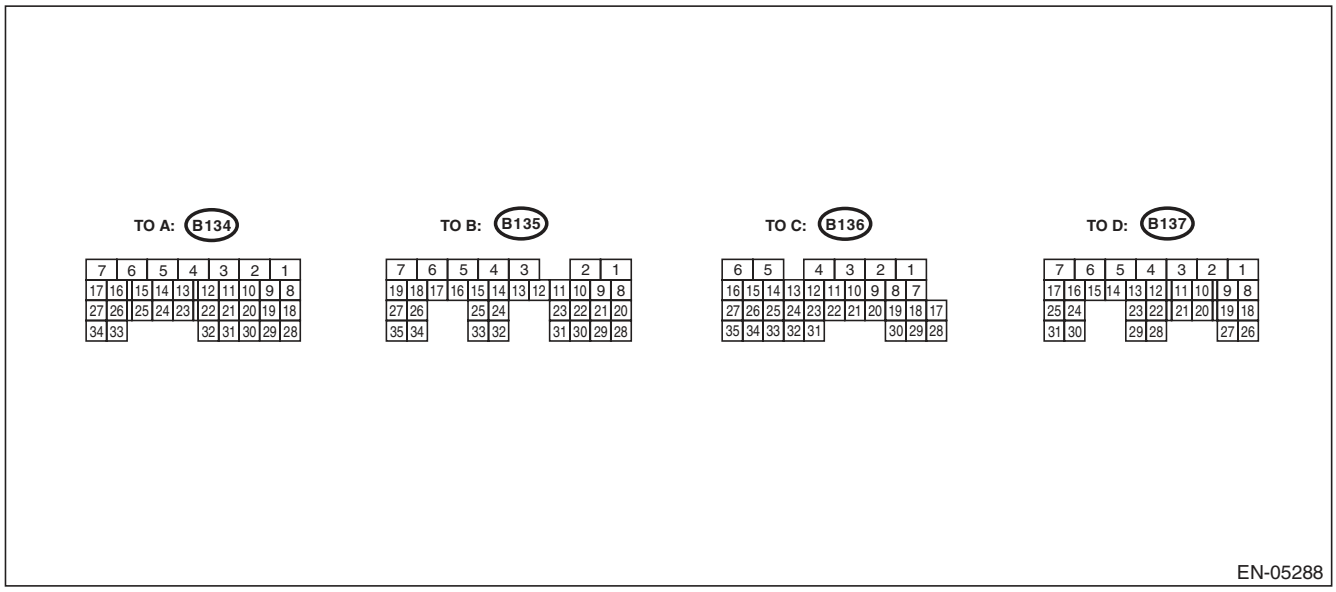

Contents		Connector No.	Terminal No.	Signal (V)		Note
				Ignition SW ON (engine OFF)	Engine ON (idling)	
Crankshaft position sensor	Signal (+)	B134	13	0	–7 — +7	Waveform
	Signal (–)	B134	14	0	0	—
	Shield	B134	24	0	0	—
Rear oxygen sensor	Signal	B135	4	0	0 — 0.9	—
	Shield	B135	1	0	0	—
	Ground (sensor)	B135	30	0	0	—
Front oxygen (A/F) sensor heater	Signal 1	B136	3	—	—	Waveform
	Signal 2	B136	2	—	—	Waveform
Rear oxygen sensor heater signal		B136	4	0 — 13	12 — 14	Waveform
Engine coolant temperature sensor	Signal	B134	34	1.0 — 1.4	1.0 — 1.4	After engine is warmed up.
	Ground (sensor)	B134	29	0	0	After engine is warmed up.
Air flow sensor	Signal	B135	26	—	0.3 — 4.5	—
	Shield	B135	35	0	0	—
	Ground	B135	34	0	0	—
Intake air temperature sensor signal		B135	18	0.3 — 4.6	0.3 — 4.6	—
Wastegate control solenoid valve		B137	27	0 or 10 — 13	0 or 12 — 14	Waveform
Starter switch		B136	32	0	0	Cranking: 8 — 14
A/C switch		B136	24	ON: 10 — 13 OFF: 0	ON: 12 — 14 OFF: 0	—
Ignition switch		B135	19	10 — 13	12 — 14	—
Neutral position switch (AT / MT)		B136	31	ON: 0 OFF: 10 — 13	ON: 0 OFF: 12 — 14	—
Delivery (test) mode connector		B135	27	10 — 13	13 — 14	When connected: 0

Engine Control Module (ECM) I/O Signal

Contents		Connector No.	Terminal No.	Signal (V)		Note
				Ignition SW ON (engine OFF)	Engine ON (idling)	
Knock sensor	Signal	B134	15	2.8	2.8	—
	Shield	B134	25	0	0	—
Back-up power supply		B135	5	10 — 13	12 — 14	Ignition switch “OFF”: 10 — 13
Control module power supply		B134	7	10 — 13	12 — 14	—
		B135	2	10 — 13	12 — 14	—
Sensor power supply		B134	19	5	5	—
Ignition control	#1	B137	18	0	12 — 14	Waveform
	#2	B137	19	0	12 — 14	Waveform
	#3	B137	20	0	12 — 14	Waveform
	#4	B137	21	0	12 — 14	Waveform
Fuel injector	#1	B137	8	10 — 13	1 — 14	Waveform
	#2	B137	9	10 — 13	1 — 14	Waveform
	#3	B137	10	10 — 13	1 — 14	Waveform
	#4	B137	11	10 — 13	1 — 14	Waveform
Fuel pump control unit	Signal 1	B135	33	10 — 13	12 — 14	—
	Signal 2	B136	12	0 or 5	0 or 5	Waveform
A/C relay control		B136	9	ON: 0.5 or less OFF: 10 — 13	ON: 0.5 or less OFF: 12 — 14	—
Radiator fan relay 1 control		B136	18	ON: 0.5 or less OFF: 10 — 13	ON: 0.5 or less OFF: 12 — 14	—
Radiator fan relay 2 control		B136	29	ON: 0.5 or less OFF: 10 — 13	ON: 0.5 or less OFF: 12 — 14	Model with A/C only
Malfunction indicator light		B136	11	—	—	Light “ON”: 1 or less Light “OFF”: 10 — 14
Engine speed output		B136	22	—	0 — 13 or more	Waveform
Purge control solenoid valve 1		B137	29	ON: 1 or less OFF: 10 — 13	ON: 1 or less OFF: 12 — 14	Waveform
Purge control solenoid valve 2		B136	7	ON: 1 or less OFF: 10 — 13	ON: 1 or less OFF: 12 — 14	Waveform
Manifold absolute pressure sensor	Signal	B134	6	1.7 — 2.4	1.1 — 1.6	—
	Power supply	B134	19	5	5	
	Ground (sensor)	B134	29	0	0	
Power steering oil pressure switch		B134	33	10 — 13	ON: 0 OFF: 12 — 14	—
Front oxygen (A/F) sensor signal (+)		B135	9	2.8 — 3.2	2.8 — 3.2	—
Front oxygen (A/F) sensor signal (–)		B135	8	2.4 — 2.7	2.4 — 2.7	—
Front oxygen (A/F) sensor shield		B135	1	0	0	—
SSM communication line		B136	16	1 or less ←→ 4 or more	1 or less ←→ 4 or more	—
Intake camshaft position sensor (LH)		B134	21	0 or 5	0 or 5	Waveform
Intake camshaft position sensor (RH)		B134	11	0 or 5	0 or 5	Waveform
Intake camshaft position sensor ground		B134	22	0	0	—

Engine Control Module (ECM) I/O Signal

Contents		Connector No.	Terminal No.	Signal (V)		Note
				Ignition SW ON (engine OFF)	Engine ON (idling)	
Electric throttle control	Main	B134	18	0.64 — 0.72 Fully opened: 3.96	0.64 — 0.72 (After engine is warmed up.)	Fully closed: 0.6 Fully opened: 3.96
	Sub	B134	28	1.51 — 1.58 Fully opened: 4.17	1.51 — 1.58 (After engine is warmed up.)	Fully closed: 1.48 Fully opened: 4.17
	Power supply	B134	19	5	5	—
	Ground (sensor)	B134	29	0	0	—
Electronic throttle control motor (+)		B137	5	Duty waveform	Duty waveform	Drive frequency: 500 Hz
Electronic throttle control motor (–)		B137	4	Duty waveform	Duty waveform	Drive frequency: 500 Hz
Electronic throttle control motor power supply		B136	1	10 — 13	12 — 14	—
Electronic throttle control motor relay		B136	21	ON: 0 OFF: 10 — 13	ON: 0 OFF: 12 — 14	When ignition switch is turned to ON: ON
Intake AVCS solenoid (LH)	Signal (+)	B137	15	ON: 10 — 13 OFF: 0	ON: 12 — 14 OFF: 0	—
	Signal (–)	B137	14	0	0	—
Intake AVCS solenoid (RH)	Signal (+)	B137	17	ON: 10 — 13 OFF: 0	ON: 12 — 14 OFF: 0	—
	Signal (–)	B137	16	0	0	—
Accelerator pedal position sensor	Main sensor signal	B135	23	Fully closed: 1 Fully opened: 3.3	Fully closed: 1 Fully opened: 3.3	—
	Main power supply	B135	21	5	5	—
	Ground (main sensor)	B135	29	0	0	—
	Shield	B136	6	0	0	—
	Sub sensor signal	B135	31	Fully closed: 1 Fully opened: 3.3	Fully closed: 1 Fully opened: 3.3	—
	Sub power supply	B135	22	5	5	—
	Ground (sub sensor)	B135	30	0	0	—
Starter relay		B136	20	ON: 0 OFF: 10 — 13	ON: 0 OFF: 12 — 14	ON: cranking
A/C middle pressure switch		B136	33	ON: 0 OFF: 10 — 13	ON: 0 OFF: 12 — 14	—
Clutch switch		B136	25	When clutch pedal is depressed: 0 When clutch pedal is released: 10 — 13	When clutch pedal is depressed: 0 When clutch pedal is released: 12 — 14	—
Brake switch 1		B135	20	When brake pedal is depressed: 0 When brake pedal is released: 10 — 13	When brake pedal is depressed: 0 When brake pedal is released: 12 — 14	—
Brake switch 2		B135	28	When brake pedal is depressed: 10 — 13 When brake pedal is released: 0	When brake pedal is depressed: 12 — 14 When brake pedal is released: 0	—

Engine Control Module (ECM) I/O Signal

Contents		Connector No.	Terminal No.	Signal (V)		Note
				Ignition SW ON (engine OFF)	Engine ON (idling)	
Cruise control command switch		B135	24	When not operating: 3.5 — 4.5 When operating RES/ACC: 2.5 — 3.5 When operating SET/COAST: 0.5 — 1.5 When operating CANCEL 0 — 0.5	When not operating: 3.5 — 4.5 When operating RES/ACC: 2.5 — 3.5 When operating SET/COAST: 0.5 — 1.5 When operating CANCEL: 0 — 0.5	—
Cruise control main switch		B135	12	ON: 0 OFF: 5	ON: 0 OFF: 5	—
Fuel tank pressure sensor		B135	32	2.3 — 2.7	2.3 — 2.7	—
Pressure control solenoid valve		B136	28	ON: 1 or less OFF: 10 — 13	ON: 1 or less OFF: 12 — 14	—
Drain valve		B136	17	ON: 1 or less OFF: 10 — 13	ON: 1 or less OFF: 12 — 14	—
Fuel temperature sensor		B135	17	2.5 — 3.8	2.5 — 3.8	Ambient temperature: 25°C (77°F)
Immobilizer	Signal 1	B136	26	—	—	—
	Signal 2	B136	34	—	—	—
CAN communication (+)		B136	27	—	—	—
CAN communication (–)		B136	35	—	—	—
AT/MT identification		B136	15	0	0	—
Blow-by leak diagnosis signal		B134	30	0	0	At the time of open circuit (fault): 5
Tumble generator valve position sensor signal (RH)		B134	26	Fully closed: 0.4 — 1.2 Fully opened: 2.8 — 4.6	Fully closed: 0.4 — 1.2 Fully opened: 2.8 — 4.6	—
Tumble generator valve position sensor signal (LH)		B134	16	Fully closed: 0.4 — 1.2 Fully opened: 2.8 — 4.6	Fully closed: 0.4 — 1.2 Fully opened: 2.8 — 4.6	—
Tumble generator valve RH (closed)		B137	23	0 or 10 — 13	0 or 12 — 14	—
Tumble generator valve LH (closed)		B137	13	0 or 10 — 13	0 or 12 — 14	—
Tumble generator valve RH (open)		B137	22	0 or 10 — 13	0 or 12 — 14	—
Tumble generator valve LH (open)		B137	12	0 or 10 — 13	0 or 12 — 14	—
Secondary air pipe pressure sensor	Signal	B134	27	2.2 — 2.8	2.2 — 2.8	When secondary air is inducted: 3.2 — 4.9
	Power supply	B134	19	5.12	5.12	—
	GND (sensor)	B134	29	0	0	—
Secondary air combination valve relay 1		B136	30	ON: 0 OFF: 10 — 13	ON: 0 OFF: 12 — 14	—
Secondary air combination valve relay 2		B136	19	ON: 0 OFF: 10 — 13	ON: 0 OFF: 12 — 14	—
Secondary air pump relay		B136	8	ON: 0 OFF: 10 — 13	ON: 0 OFF: 12 — 14	—
Self-shutoff control		B136	23	10 — 13	12 — 14	—
Ground (ignition system)		B137	26	0	0	—
		B137	6	0	0	—

Engine Control Module (ECM) I/O Signal

Contents	Connector No.	Terminal No.	Signal (V)		Note
			Ignition SW ON (engine OFF)	Engine ON (idling)	
Ground (engine 1)	B134	5	0	0	—
Ground (engine 2)	B137	7	0	0	—
Ground (engine 3)	B137	2	0	0	—
Ground (engine 4)	B137	1	0	0	—
Ground (engine 5)	B137	3	0	0	—
Ground (body)	B136	6	0	0	—

Input/output name	Measuring condition	Waveform
1. Crankshaft position sensor	At idling	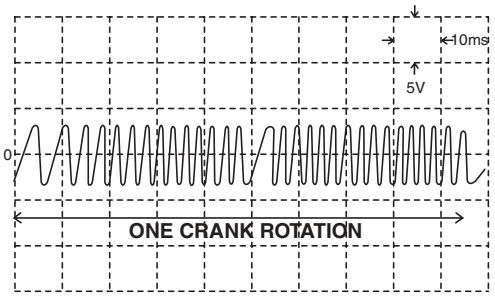 EN-05322
2. Camshaft position sensor	At idling	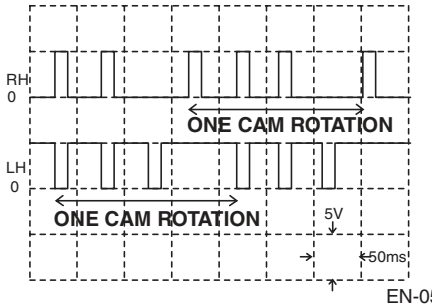 EN-05359

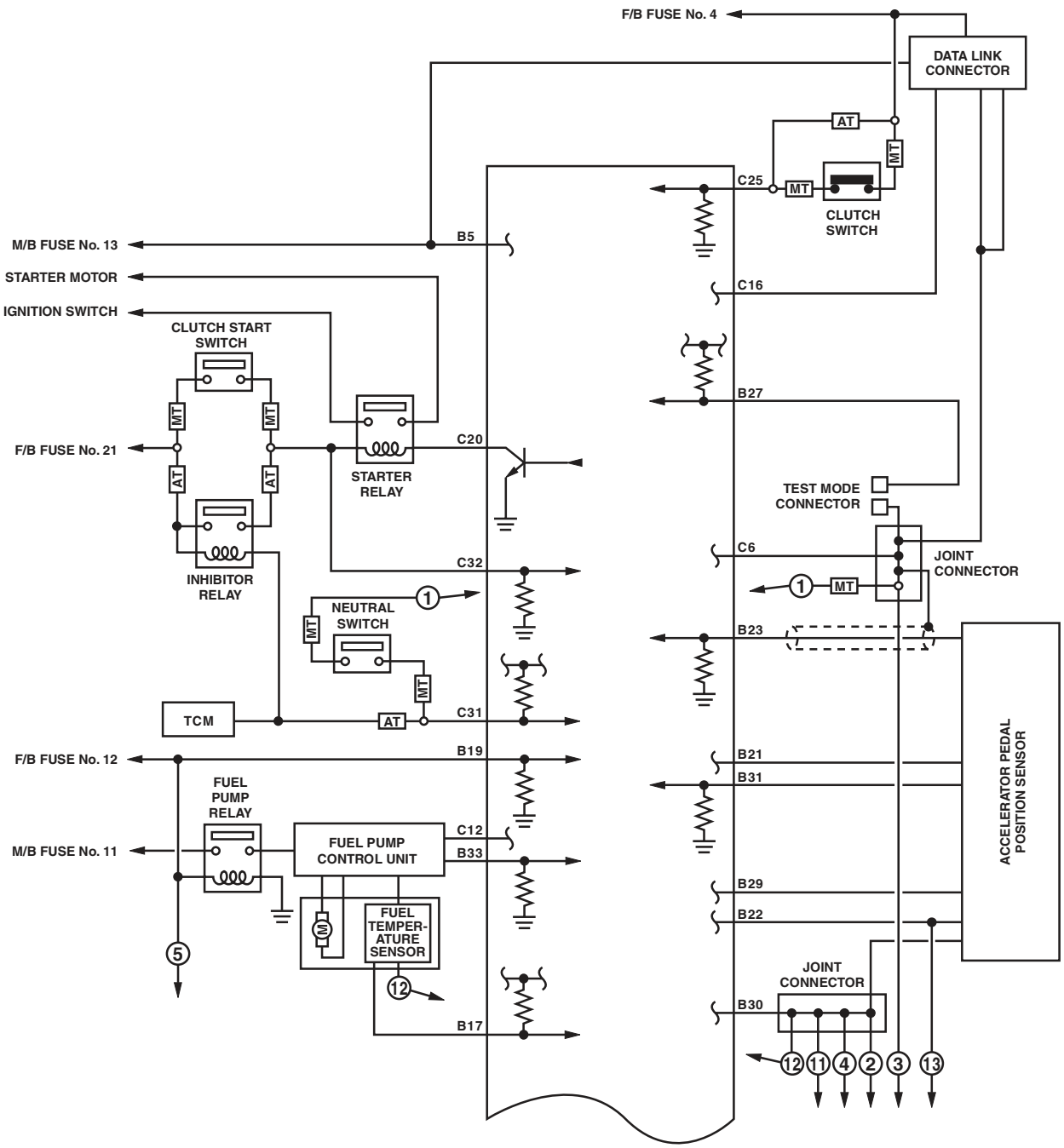
F/B FUSE No. 4
DATA LINK CONNECTOR
AT
MT
C25
CLUTCH SWITCH
M/B FUSE No. 13
B5
STARTER MOTOR
C16
IGNITION SWITCH
CLUTCH START SWITCH
B27
F/B FUSE No. 21
C20
STARTER RELAY
TEST MODE CONNECTOR
C6
JOINT CONNECTOR
INHIBITOR RELAY
C32
NEUTRAL SWITCH
B23
TCM
C31
F/B FUSE No. 12
B19
B21
B31
FUEL PUMP RELAY
M/B FUSE No. 11
FUEL PUMP CONTROL UNIT
C12
B33
FUEL TEMPER-ATURE SENSOR
B29
B22
ACCELERATOR PEDAL POSITION SENSOR
JOINT CONNECTOR
B30
B17

EN-06976

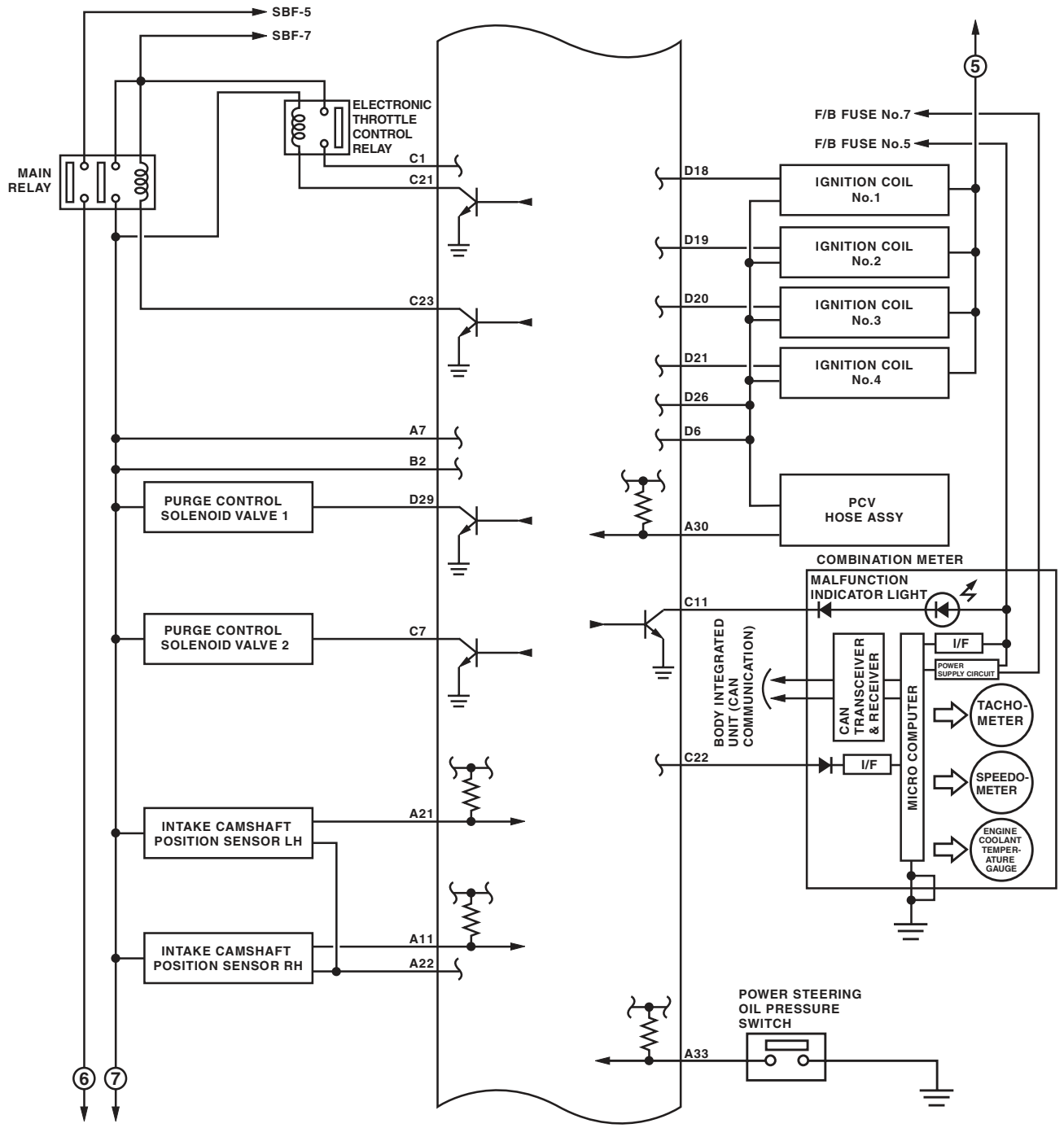
SBF-5
SBF-7
MAIN RELAY
ELECTRONIC THROTTLE CONTROL RELAY
C1
C21
C23
A7
B2
PURGE CONTROL SOLENOID VALVE 1
D29
PURGE CONTROL SOLENOID VALVE 2
C7
INTAKE CAMSHAFT POSITION SENSOR LH
A21
INTAKE CAMSHAFT POSITION SENSOR RH
A11
A22
6
7
5
F/B FUSE No.7
F/B FUSE No.5
D18
D19
D20
D21
D26
D6
IGNITION COIL No.1
IGNITION COIL No.2
IGNITION COIL No.3
IGNITION COIL No.4
PCV HOSE ASSY
A30
COMBINATION METER
MALFUNCTION INDICATOR LIGHT
C11
BODY INTEGRATED UNIT (CAN COMMUNICATION)
CAN TRANSCEIVER & RECEIVER
I/F
POWER SUPPLY CIRCUIT
MICRO COMPUTER
TACHO-METER
SPEEDO-METER
ENGINE COOLANT TEMPER-ATURE GAUGE
C22
POWER STEERING OIL PRESSURE SWITCH
A33

EN-05715

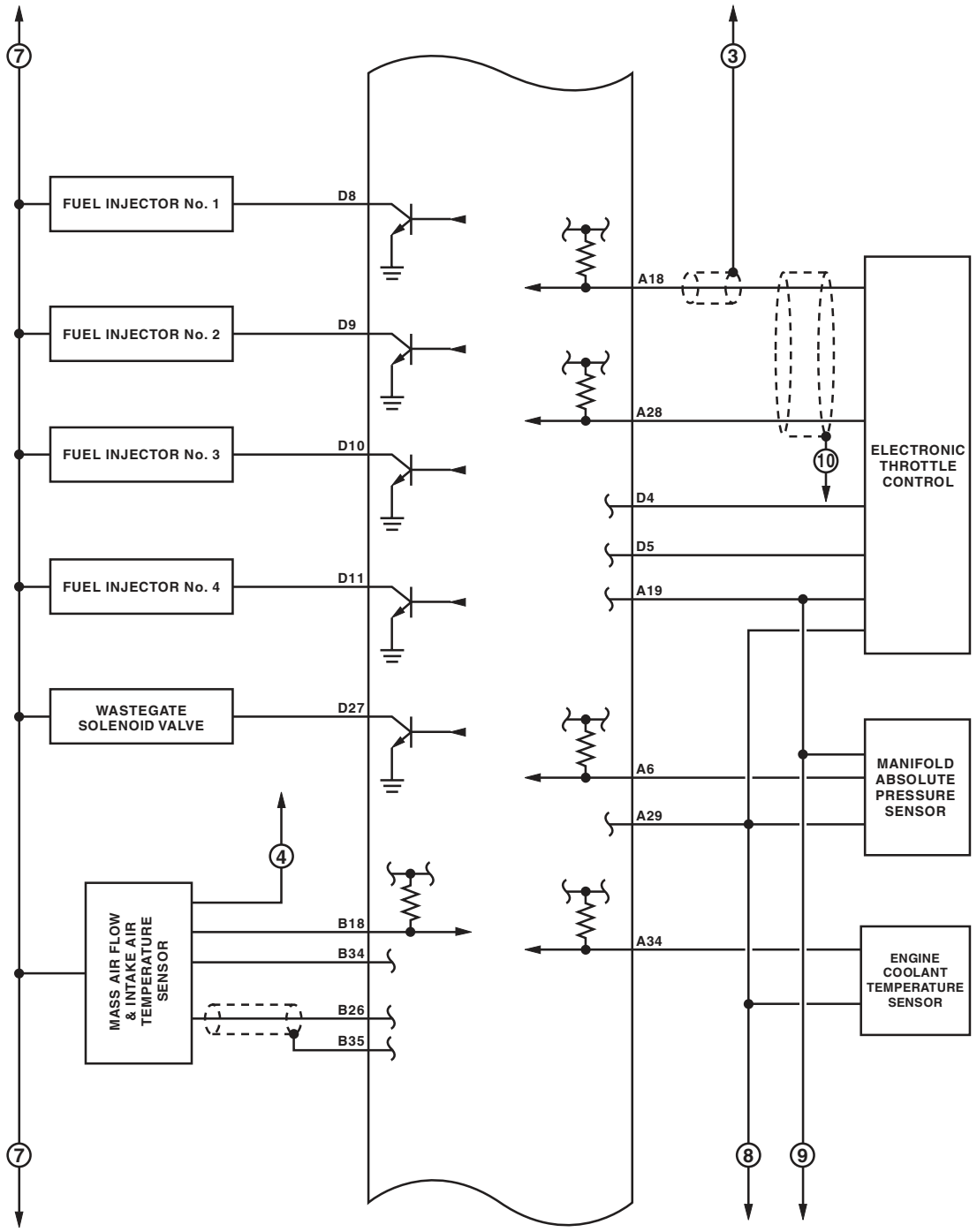
7
3
FUEL INJECTOR No. 1
D8
FUEL INJECTOR No. 2
D9
FUEL INJECTOR No. 3
D10
FUEL INJECTOR No. 4
D11
WASTEGATE SOLENOID VALVE
D27
A18
A28
10
ELECTRONIC THROTTLE CONTROL
D4
D5
A19
A6
A29
MANIFOLD ABSOLUTE PRESSURE SENSOR
4
MASS AIR FLOW & INTAKE AIR TEMPERATURE SENSOR
B18
B34
B26
B35
A34
ENGINE COOLANT TEMPERATURE SENSOR
7
8
9

EN-06126

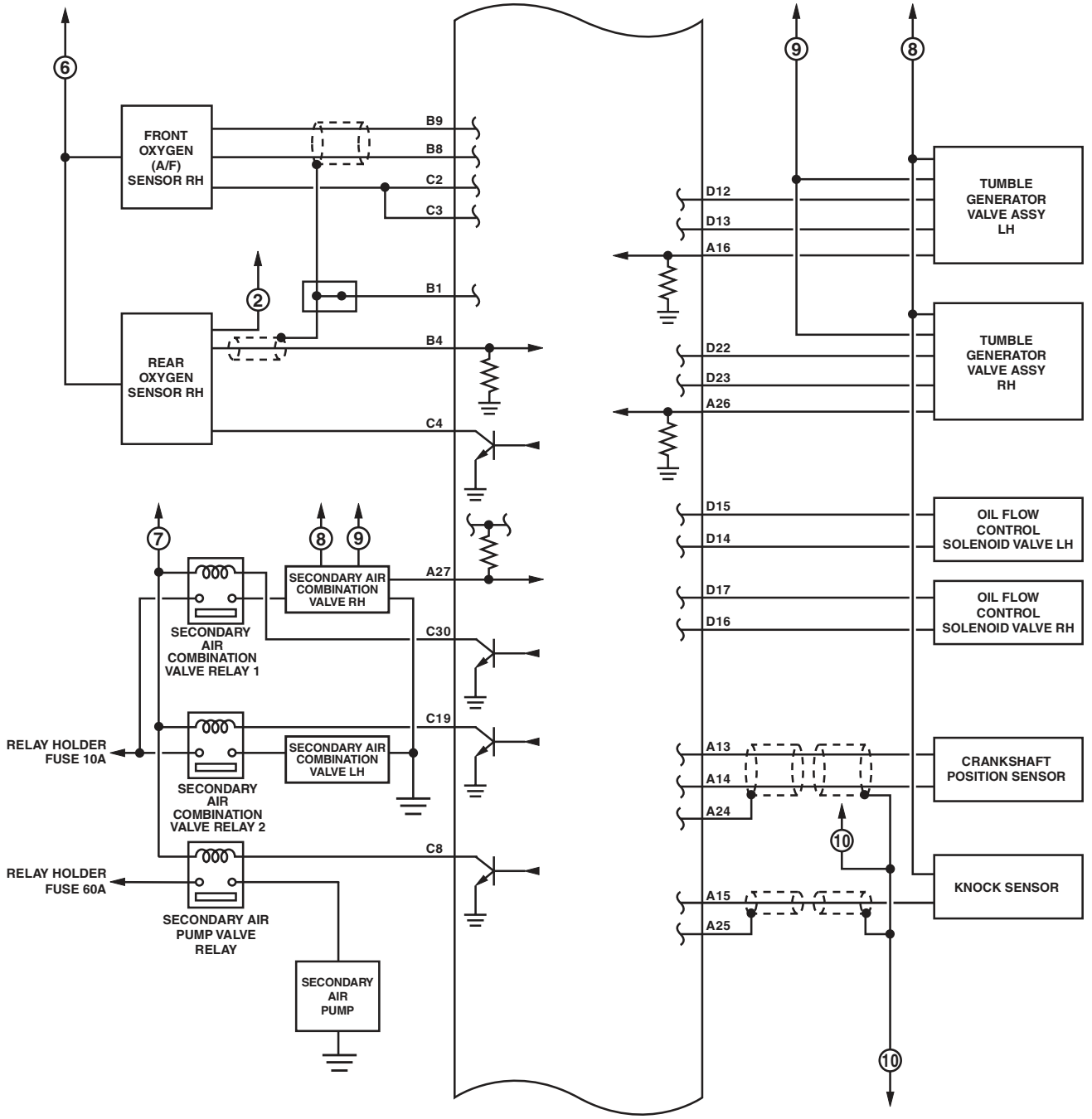
6
FRONT OXYGEN (A/F) SENSOR RH
B9
B8
C2
C3
2
B1
REAR OXYGEN SENSOR RH
B4
C4
7
8
9
SECONDARY AIR COMBINATION VALVE RH
A27
SECONDARY AIR COMBINATION VALVE RELAY 1
C30
C19
RELAY HOLDER FUSE 10A
SECONDARY AIR COMBINATION VALVE LH
SECONDARY AIR COMBINATION VALVE RELAY 2
C8
RELAY HOLDER FUSE 60A
SECONDARY AIR PUMP VALVE RELAY
SECONDARY AIR PUMP
D12
D13
A16
TUMBLE GENERATOR VALVE ASSY LH
D22
D23
A26
TUMBLE GENERATOR VALVE ASSY RH
D15
D14
OIL FLOW CONTROL SOLENOID VALVE LH
D17
D16
OIL FLOW CONTROL SOLENOID VALVE RH
A13
A14
A24
CRANKSHAFT POSITION SENSOR
10
A15
A25
KNOCK SENSOR
EN-06950

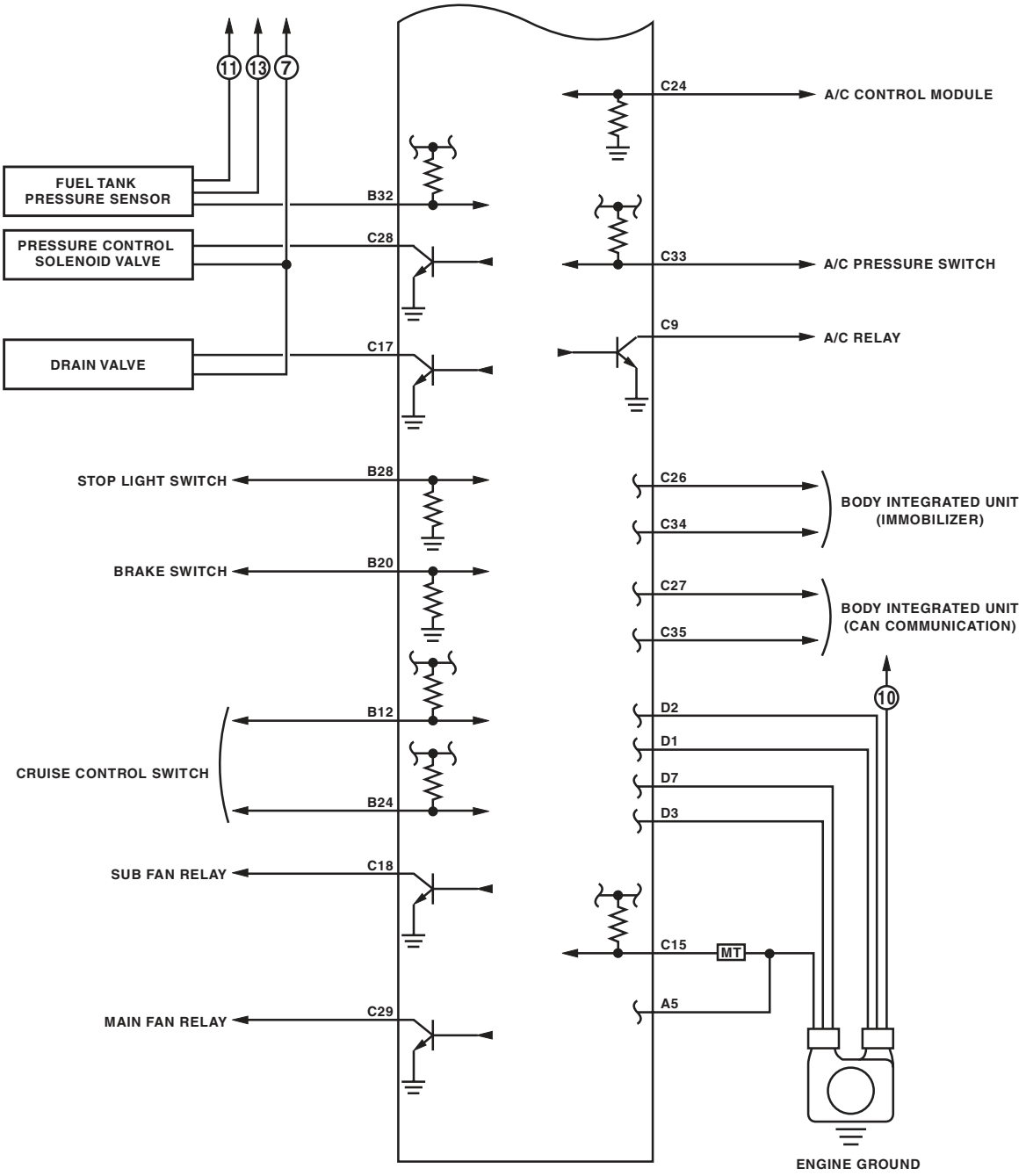
11
13
7
FUEL TANK PRESSURE SENSOR
PRESSURE CONTROL SOLENOID VALVE
DRAIN VALVE
B32
C28
C17
STOP LIGHT SWITCH
B28
BRAKE SWITCH
B20
CRUISE CONTROL SWITCH
B12
B24
SUB FAN RELAY
C18
MAIN FAN RELAY
C29
C24
A/C CONTROL MODULE
C33
A/C PRESSURE SWITCH
C9
A/C RELAY
C26
C34
BODY INTEGRATED UNIT (IMMOBILIZER)
C27
C35
BODY INTEGRATED UNIT (CAN COMMUNICATION)
10
D2
D1
D7
D3
C15
MT
A5
ENGINE GROUND

EN-05718

6. Engine Condition Data

A: ELECTRICAL SPECIFICATION

Contents	Specification
Engine Load	17.6 — 35.64 (%): Idling
	13.2 — 26.73 (%): 2,500 rpm racing

Measuring condition:
- After engine is warmed up.
- Set the select lever in “P” range or “N” range, or the shift lever in neutral.
- Turn the A/C to OFF.
- Turn all the accessory switches to OFF.

7. Data Link Connector

A: NOTE

This connector is used for Subaru Select Monitor.

CAUTION:
Do not connect any scan tools except Subaru Select Monitor or general scan tool because the circuit for Subaru Select Monitor may be damaged.

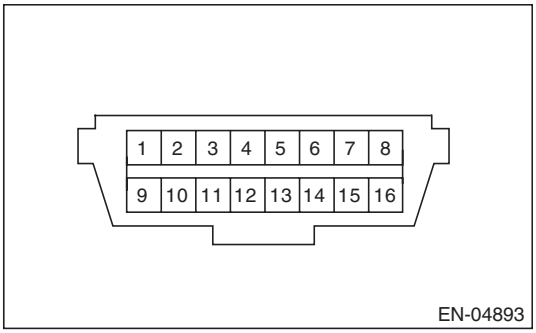

Terminal No.	Contents	Terminal No.	Contents
1	Power supply	9	Blank
2	Blank	10	Blank
3	Blank	11	Blank
4	Ground	12	Blank
5	Ground	13	Blank
6	CAN communication (+)	14	CAN communication (–)
7	Subaru Select Monitor signal	15	Blank
8	Blank	16	Power supply

8. General Scan Tool

A: OPERATION

1. HOW TO USE GENERAL SCAN TOOL

1) Prepare a scan tool (general scan tool) required by SAE J1978.
2) Open the cover and connect the general scan tool to the data link connector located in the lower area of instrument panel (on the driver's side).

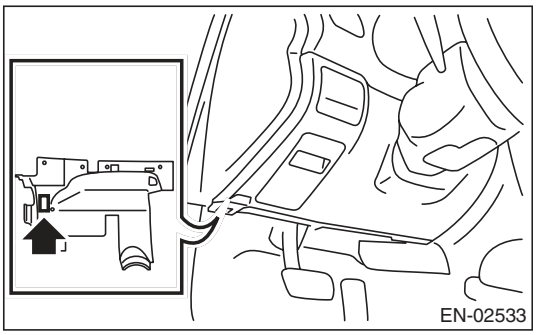

3) Using the general scan tool, call up DTC and freeze frame data. General scan tool functions consist of:
   (1) MODE $01: Current powertrain diagnostic data
   (2) MODE $02: Powertrain freeze frame data
   (3) MODE $03: Emission-related powertrain DTC
   (4) MODE $04: Clear/Reset emission-related diagnostic information
   (5) MODE $06: Request on-board monitoring test results for intermittently monitored systems
   (6) MODE $07: Request on-board monitoring test results for continuously monitored systems
   (7) MODE $09: Request vehicle information

Read out the data according to repair procedures. (For detailed operation procedure, refer to the general scan tool operation manual.)

NOTE:
For details concerning DTC, refer to "List of Diagnostic Trouble Code (DTC)". <Ref. to EN(H4DOTC)(diag)-81, List of Diagnostic Trouble Code (DTC).>

2. MODE $01 (CURRENT POWERTRAIN DIAGNOSTIC DATA)

Refer to data denoting the current operating condition of analog input/output, digital input/output or the powertrain system.
A list of the support data and PID (Parameter Identification) codes are shown in the following table.

PID	Data	Unit of measure
$01	Number of emission-related powertrain DTC, and malfunction indicator light status and diagnosis support information	—
$03	Fuel system control status	—
$04	Calculated engine load value	%
$05	Engine coolant temperature	°C
$06	Short term fuel trim	%
$07	Long term fuel trim	%
$0B	Intake manifold absolute pressure	kPa
$0C	Engine speed	rpm
$0D	Vehicle speed	MPH
$0E	Ignition timing advance	°
$0F	Intake air temperature	°C
$10	Air flow rate from the mass air flow sensor	g/s
$11	Throttle valve absolute opening angle	%
$12	Secondary air control status	—
$13	Check whether oxygen sensor is installed.	—
$15	Oxygen sensor output voltage and short term fuel trim associated with oxygen sensor	V and %
$1C	Supporting OBD system	—
$1F	Elapsed time after starting the engine	sec
$21	Running distance after MIL turns on	miles
$24	A/F value and A/F sensor output voltage	– and V
$2E	Evaporative purge	%
$2F	Fuel level	%
$30	Number of warm ups after DTC clear	—
$31	Travel distance after DTC clear	miles
$32	Tank pressure	Pa
$33	Atmospheric pressure	kPa
$34	A/F sensor λ value, current	– and mA
$3C	Catalyzer temperature	°C
$41	Diagnosis monitoring per drive cycle	—
$42	ECM power supply voltage	V
$43	Absolute load	%
$44	A/F target lambda	—
$45	Relative throttle opening angle	%
$46	Ambient temperature	°C
$47	Absolute throttle opening angle 2	%
$49	Absolute accelerator opening angle 1	%
$4A	Absolute accelerator opening angle 2	%
$4C	Target throttle opening angle	%
$4D	Engine operation time during MIL on	min
$4E	Elapsed time after DTC clear	min
$51	Fuel used	—
$5A	Relative accelerator opening angle	%

NOTE:
Refer to general scan tool manufacturer's instruction manual to access generic OBD-II PIDs (MODE $01).

3. MODE $02 (POWERTRAIN FREEZE FRAME DATA)

Refer to data denoting the operating condition when trouble is sensed by the on-board diagnosis system. A list of the support data and PID (Parameter Identification) codes are shown in the following table.

PID	Data	Unit of measure
$02	DTC that caused the freeze frame data storage required by CARB	—
$03	Fuel system control status	—
$04	Calculated engine load value	%
$05	Engine coolant temperature	°C
$06	Short term fuel trim	%
$07	Long term fuel trim	%
$0B	Intake manifold absolute pressure	kPa
$0C	Engine speed	rpm
$0D	Vehicle speed	MPH
$0E	Ignition timing advance	°
$0F	Intake air temperature	°C
$10	Air flow rate from the mass air flow sensor	gm/s
$11	Throttle valve absolute opening angle	%
$12	Secondary air control status	—
$13	Air fuel ratio sensor	—
$15	Rear oxygen sensor voltage, compensation value	V and %
$1C	Supporting OBD system	—
$1F	Elapsed time after starting the engine	sec
$2E	Evaporative purge	%
$2F	Fuel level	%
$32	Tank pressure	Pa
$33	Atmospheric pressure	kPa
$42	ECM power supply voltage	V
$43	Absolute load	%
$44	A/F target lambda	—
$45	Relative throttle opening angle	%
$46	Ambient temperature	°C
$47	Absolute throttle opening angle 2	%
$49	Absolute accelerator opening angle 1	%
$4A	Absolute accelerator opening angle 2	%
$4C	Target throttle opening angle	%

NOTE:
Refer to general scan tool manufacturer's operation manual to access freeze frame data (MODE $02).

4. MODE $03 (EMISSION-RELATED POWERTRAIN DTC)

Refer to "List of Diagnostic Trouble Code (DTC)" for information about data denoting emission-related powertrain DTC. <Ref. to EN(H4DOTC)(diag)-81, List of Diagnostic Trouble Code (DTC).>

5. MODE $04 (CLEAR/RESET EMISSION-RELATED DIAGNOSTIC INFORMATION)

Refer to the mode used to clear or reset emission-related diagnostic information (OBD-II trouble diagnostic information).

NOTE:
Refer to general scan tool manufacturer's instruction manual to clear the emission-related diagnostic information (MODE $04).

6. MODE $06

Refer to test value of troubleshooting and data of test limit indicated on the support data bit sequence table. A list of the support data is shown in the following table.

OBDMID	TID	SID	Diagnostic item
$01	$81	$0A	A/F sensor conduction abnormal (Bank 1 Sensor 1)
	$82	$8D	
	$83	$14	
	$84	$1E	A/F sensor range failure (Bank 1 Sensor 1)
	$85	$1E	
	$86	$20	A/F sensor response failure (Bank 1 Sensor 1)
$02	$87	$0B	Oxygen sensor circuit abnormal (Bank 1 Sensor 2)
	$88	$0B	
	$07	$0B	Oxygen sensor drop failure (Bank 1 Sensor 2)
	$08	$0B	
	$A5	$0B	
	$05	$10	Oxygen sensor response failure (Bank 1 Sensor 2)
	$06	$10	
$21	$89	$20	Catalyst degradation diagnosis (B1)
$39	$93	$FE	Evaporative emission control system leak detected (Fuel filler cap off)
$3B	$94	$FE	Evaporative emission control system (0.04 inch leak)
	$95	$FE	
$3C	$96	$FE	Evaporative emission control system (0.02 inch leak)
	$97	$FE	
$3D	$98	$FE	Evaporative emission control system (purge flow)
$41	$99	$24	A/F sensor heater failure (Bank 1 Sensor 1)
	$9A	$24	
	$9B	$14	A/F sensor heater characteristics failure (Bank 1 Sensor 1)
$42	$9C	$24	Oxygen sensor heater abnormal (Bank 1 Sensor 2)
	$9D	$24	
$71	$9E	$17	Secondary air system (whole system)
	$9F	$0B	
	$A0	$0B	
	$B0	$17	Secondary air system (relay 2 — combination valve 2)
	$B1	$0B	
	$B1	$17	
	$B2	$0B	
	$B2	$17	
	$B3	$0B	
	$B4	$0B	
	$B5	$0B	
	$B6	$31	
	$B7	$31	
$A1	$0B	$24	Misfire monitoring (All cylinders)
	$0C	$24	
$A2	$0B	$24	Misfire monitoring (#1 cylinder)
	$0C	$24	
$A3	$0B	$24	Misfire monitoring (#2 cylinder)
	$0C	$24	
$A4	$0B	$24	Misfire monitoring (#3 cylinder)
	$0C	$24	
$A5	$0B	$24	Misfire monitoring (#4 cylinder)
	$0C	$24	
$E1	$A6	$FE	Purge control solenoid valve 2 close seized

7. MODE $07

Refer to the data of DTC (pending code) for troubleshooting result about emission in the first time.

8. MODE $09

Refer to the data of vehicle specification (V.I.N., calibration ID, etc.).

9. Subaru Select Monitor

A: OPERATION

1. HOW TO USE THE SUBARU SELECT MONITOR

1) Prepare the Subaru Select Monitor kit. <Ref. to EN(H4DOTC)(diag)-7, PREPARATION TOOL, General Description.>

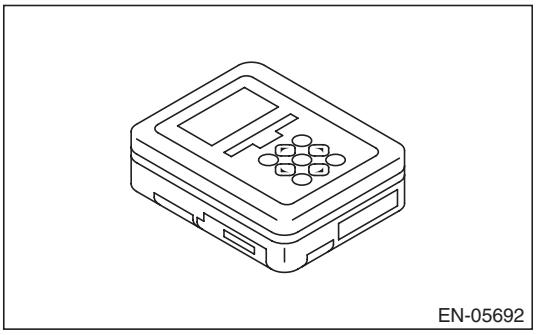

2) Prepare PC with Subaru Select Monitor installed.
3) Connect the USB cable between SDI (Subaru Diagnosis Interface) and USB port on the personal computer (dedicated port for the Subaru Select Monitor).

NOTE:
The dedicated port for the Subaru Select Monitor means the USB port which was used to install the Subaru Select Monitor.
4) Connect the diagnosis cable to SDI.
5) Connect SDI to data link connector located in the lower portion of the instrument panel (on the driver's side).

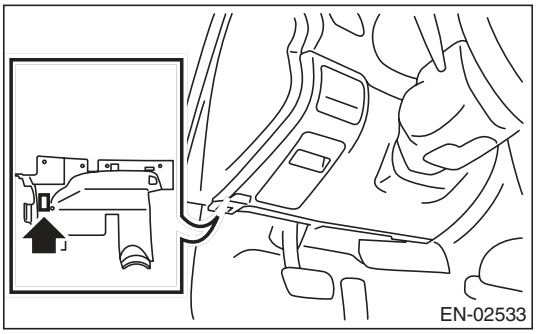

CAUTION:
Do not connect the scan tools except for Subaru Select Monitor and general scan tool.
6) Start the PC.
7) Turn the ignition switch to ON (engine OFF) and run the "PC application for Subaru Select Monitor".
8) Call up DTC and data, then record them.

NOTE:
For detailed operation procedures, refer to the "PC application help for Subaru Select Monitor".

2. READ CURRENT DATA FOR ENGINE (NORMAL MODE)

1) On the «Main Menu» display screen, select the {Each System Check}.
2) On the «System Selection Menu» display screen, select the {Engine Control System}.
3) Click the [OK] button after the information of engine type has been displayed.
4) On the «Engine Diagnosis» display screen, select the {Current Data Display & Save}.
5) On the «Current Data Display & Save» display screen, select the {Normal sampling}.
6) Using the scroll key, scroll the display screen up or down until the desired data is shown.

- A list of the support data is shown in the following table.

Contents	Display	Unit of measure	Note (at idling)
Engine Load	Engine Load	%	21.0%
Engine coolant temperature signal	Coolant Temp.	°C or °F	80 — 100°C or 176 — 212°F
A/F correction 1	A/F Correction #1	%	–10 — +10%
A/F learning 1	A/F Learning #1	%	–15 — +15%
Intake manifold absolute pressure	Mani. Absolute Pressure	mmHg, kPa, inHg or psig	220 — 275 mmHg, 29.5 — 37 kPa, 8.7 — 10 inHg or 4.2 — 5.3 psig
Engine speed signal	Engine Speed	rpm	630 — 770 rpm (Agree with the tachometer indication)
Meter vehicle speed signal	Vehicle Speed	km/h or MPH	0 km/h or 0 MPH (at parking)
Ignition timing signal	Ignition Timing	deg	10 — 15 deg
Intake air temperature signal	Intake Air Temp.	°C or °F	20 — 50°C or 68 — 122°F
Intake air amount	Mass Air Flow	g/s or lb/m	2.1 — 3.1 g/s or 0.35 — 0.40 lb/m
Throttle opening angle signal	Throttle Opening Angle	%	2.0 — 2.4%
Rear oxygen sensor voltage	Rear O2 Sensor	V	0 — 1.0 V
Battery voltage	Battery Voltage	V	12 — 15 V
Mass air flow voltage	Air Flow Sensor Voltage	V	1.0 — 1.7 V
Injection 1 pulse width	Fuel Injection #1 Pulse	ms	1.2 — 2.2 ms
Atmospheric pressure	Atmosphere Pressure	mmHg, kPa, inHg or psig	—
Intake manifold relative pressure	Mani. Relative Pressure	mmHg, kPa, inHg or psig	(Intake manifold absolute pressure — atmospheric pressure)
Ignition timing learning value	Learned Ignition Timing	deg	0 deg
Acceleration opening angle signal	Accel. Opening Angle	%	0.0%
Fuel temperature signal	Fuel Temp.	°C or °F	+28°C or 82°F
Primary supercharged pressure control signal	Primary Control	%	0.0%
Purge control solenoid duty ratio	CPC Valve Duty Ratio	%	0 — 25%
Tumble generator valve RH opening signal	TGV Position Sensor R	V	0.81 V
Tumble generator valve LH opening signal	TGV Position Sensor L	V	0.81 V
Fuel pump duty ratio	Fuel Pump Duty	%	30 — 40%
AVCS advance angle amount RH	VVT Adv. Ang. Amount R	deg	5 deg
AVCS advance angle amount LH	VVT Adv. Ang. Amount L	deg	5 deg
Oil flow control solenoid valve duty RH (AVCS)	OCV Duty R	%	0 — 20%
Oil flow control solenoid valve duty LH (AVCS)	OCV Duty L	%	0 — 20%
Oil flow control solenoid valve current RH	OCV Current R	mA	40 — 100 mA
Oil flow control solenoid valve current LH	OCV Current L	mA	40 — 100 mA
A/F sensor current value 1	A/F Sensor #1 Current	mA	–20 — 20 mA

Contents	Display	Unit of measure	Note (at idling)
A/F sensor resistance value 1	A/F Sensor #1 Resistance	Ω	27 — 35 mA
A/F sensor output lambda 1	A/F Sensor #1	—	1.0
A/F correction 3	A/F Correction #3	%	0.00%
A/F learning 3	A/F Learning #3	%	0.00%
SI drive mode	SI Drive mode	—	I, S or S#
Throttle motor duty	Throttle Motor Duty	%	–5%
Throttle power supply voltage	Throttle Motor Voltage	V	12 — 15 V
Sub throttle sensor voltage	Sub-Throttle Sensor	V	1.5 V
Main throttle sensor voltage	Main-Throttle Sensor	V	0.6 V
Sub accelerator sensor voltage	Sub-Accelerator Sensor	V	1.1 V
Main acceleration sensor voltage	Main-Accelerator Sensor	V	1.0 V
Secondary air supply piping pressure signal	Sec. Air Piping Pressure	mmHg, kPa, inHg or psig	765 mmHg, 102 kPa, 30.1 inHg or 14.8 psig
Secondary airflow signal	Sec. Air Flow	g/s or lb/m	0.00 g/s or 0.00 lb/m
Memory vehicle speed	Memorized Cruise Speed	km/h or MPH	—
Fuel level sensor resistance	Fuel level resistance	Ω	4 — 96 Ω
Odd Meter	Odometer	km	—
#1 cylinder roughness monitor	Roughness Monitor #1	—	0
#2 cylinder roughness monitor	Roughness Monitor #2	—	0
#3 cylinder roughness monitor	Roughness Monitor #3	—	0
#4 cylinder roughness monitor	Roughness Monitor #4	—	0
Knock sensor correction	Knocking Correction	deg	0.0 deg
Fuel tank pressure signal	Fuel Tank Pressure	mmHg, kPa, inHg or psig	+8.8 mmHg, +1.2 kPa, +0.4 inHg or +0.2 psig
AT/MT identification terminal	AT Vehicle ID Signal	—	AT vehicle/MT vehicle
Delivery (test) mode terminal	Test Mode Signal	—	OFF
D check request flag	D-check Require Flag	—	OFF
Delivery (test) mode terminal	Delivery Mode Connector (Test Mode Connector)	—	OFF
Neutral position switch signal	Neutral Position Switch	—	ON
Soft idle switch signal	Idle Switch Signal	—	ON
Ignition switch signal	Ignition Switch	—	ON
Power steering switch signal	P/S Switch Signal	—	OFF input (When OFF)
Air conditioning switch signal	A/C Switch	—	OFF input (When OFF)
Starter switch signal	Starter Switch	—	OFF
Rear oxygen monitor	Rear O2 Rich Signal	—	Rich/Lean
Knocking signal	Knocking Signal	—	None
Crankshaft position sensor signal	Crankshaft Position Sig.	—	ON
Camshaft position sensor signal	Camshaft Position Sig.	—	ON
Rear defogger switch signal	Rear Defogger SW	—	OFF input (When OFF)
Blower fan switch signal	Blower Fan SW	—	OFF input (When OFF)
Light switch signal	Light Switch	—	OFF input (When OFF)
A/C middle pressure switch signal	A/C Mid Pressure Switch	—	OFF input (When OFF)
Air conditioner compressor relay output signal	A/C Compressor Signal	—	OFF output (when OFF)
Radiator fan relay 1 signal	Radiator Fan Relay #1	—	OFF output (when OFF)
Radiator fan relay 2 signal	Radiator Fan Relay #2	—	OFF output (when OFF)
PCV hose assembly diagnosis signal	Blow-by leak Connector	—	Connected
Pressure control solenoid valve signal	PCV Solenoid Valve	—	OFF output (when OFF)
Tumble generator valve output signal	TGV Output	—	None
Tumble generator valve driving signal	TGV Drive	—	Opening direction

Contents	Display	Unit of measure	Note (at idling)
Drain valve signal	Vent. Solenoid Valve	—	OFF output (when OFF)
Purge control solenoid valve 2 signal	CPC Solenoid 2	—	OFF (when OFF)
AT coordinate retard angle demand signal	Retard Signal from AT	—	None
AT coordinate fuel cut demand signal	Fuel Cut signal from AT	—	None
Vehicle dynamics control (VDC) torque down prohibition output	Ban of Torque Down	—	Permission
Vehicle dynamics control (VDC) torque down demand	Request Torque Down VDC	—	None
Torque control permission signal	Torque Permission Signal	—	ON/OFF
ETC motor relay signal	ETC Motor Relay	—	ON
Clutch switch signal	Clutch Switch	—	OFF (when OFF)
Stop light switch signal	Stop Light Switch	—	OFF (when OFF)
SET/COAST switch signal	“SET/COAST” Switch	—	OFF (when OFF)
RES/ACC switch signal	“RESUME/ACCEL” Switch	—	OFF (when OFF)
Brake switch signal	Brake Switch	—	OFF (when OFF)
Main switch signal	Main Switch	—	OFF (when OFF)
Body integrated unit data reception	Body Int. Unit Data	—	ON
Body integrated unit counter update	Body Int. Unit Count	—	ON
Secondary air combination valve relay 2 signal	Sec. Air Combi V Relay 2	—	OFF (when OFF)
Secondary air pump relay signal	Secondary Air Pump Relay	—	OFF (when OFF)
Secondary air combination valve relay 1 signal	Sec. Air Combi V Relay 1	—	OFF (when OFF)
Cruise control cancel switch signal	CC Cancel SW	—	OFF (when OFF)
Malfunction indicator light signal	MIL On Flag	—	Off (when unlit)

NOTE:
For detailed operation procedures, refer to the “PC application help for Subaru Select Monitor”.

3. READ CURRENT DATA FOR ENGINE (OBD MODE)

1) On the «Main Menu» display screen, select the {Each System Check}.
2) On the «System Selection Menu» display screen, select the {Engine Control System}.
3) Click the [OK] button after the information of engine type has been displayed.
4) On the «Engine Diagnosis» display screen, select the {OBD System}.
5) On the «OBD Menu» display screen, select the {Current Data Display & Save}.
6) On the «Current Data Display & Save» display screen, select the {All data display}.
7) Using the scroll key, scroll the display screen up or down until the desired data is shown.

- A list of the support data is shown in the following table.

Contents	Display	Referential value (at idling)	Unit of measure
Number of diagnosis code	Number of Diag. Code:	0	—
Condition of malfunction indicator light	MI(MIL)	OFF	—
Monitoring test of misfire	Misfire monitoring (Supp)	YES	—
Monitoring test of misfire	Misfire monitoring (Rdy)	YES	—
Monitoring test of fuel system	Fuel system monitoring (Supp)	YES	—
Monitoring test of fuel system	Fuel system monitoring (Rdy)	YES	—
Monitoring test of comprehensive component	Component monitoring (Supp)	YES	—
Monitoring test of comprehensive component	Component monitoring (Rdy)	YES	—
Test of catalyst	Catalyst Diagnosis (Supp)	YES	—
Test of catalyst	Catalyst Diagnosis (Rdy)	NO	—
Test of heating-type catalyst	Heated catalyst (Supp)	NO	—
Test of heating-type catalyst	Heated catalyst (Rdy)	N/A	—
Test of evaporative emission purge control system	Evaporative purge system (Supp)	YES	—
Test of evaporative emission purge control system	Evaporative purge system (Rdy)	NO	—
Secondary air system test	Secondary air system (Supp)	YES	—
Secondary air system test	Secondary air system (Rdy)	NO	—
Test of air conditioning system refrigerant	A/C system refrigerant (Supp)	NO	—
Test of air conditioning system refrigerant	A/C system refrigerant (Rdy)	N/A	—
Test of oxygen sensor	Oxygen sensor (Supp)	YES	—
Test of oxygen sensor	Oxygen sensor (Rdy)	NO	—
Test of oxygen sensor heater	O2 Heater Diagnosis (Supp)	YES	—
Test of oxygen sensor heater	O2 Heater Diagnosis (Rdy)	YES	—
Test of EGR system	EGR system (Supp)	NO	—
Test of EGR system	EGR system (Rdy)	N/A	—
Air fuel ratio control system for bank 1	Fuel system for Bank 1	Cl_normal	—
Engine load data	Calculated load value	19.2	%
Engine coolant temperature signal	Coolant Temp.	96	°C
Short term fuel trim by front oxygen (A/F) sensor (Bank 1)	Short term fuel trim B1	17.2	%
Long term fuel trim by front oxygen (A/F) sensor (Bank 1)	Long term fuel trim B1	5.5	%
Intake manifold absolute pressure signal	Mani. Absolute Pressure	248	mmHg

Contents	Display	Referential value (at idling)	Unit of measure
Engine speed signal	Engine Speed	846	rpm
Vehicle speed signal	Vehicle Speed	0	km/h
#1 Cylinder ignition timing	Ignition timing adv. #1	13.5	°
Intake air temperature signal	Intake Air Temp.	44	°C
Intake air amount	Mass Air Flow	3.6	g/s
Throttle position signal	Throttle Opening Angle	13	%
Secondary air control status	Secondary air system	Stop	—
Oxygen sensor (Bank 1 Sensor 2)	Oxygen sensor #12	0.1 — 0.7	V
A/F correction (Bank 1 Sensor 2)	Short term fuel trim #12	0.0	%
On-board diagnostic system	OBD System	OBD/OBD2	—
Front oxygen (A/F) sensor (bank 1 sensor 1)	Oxygen sensor #11	Support	—
Oxygen sensor (Bank 1 Sensor 2)	Oxygen sensor #12	Support	—
Elapsed time after engine start	Time Since Engine Start	—	sec
Travel distance after the malfunction indicator light illuminates	Lighted MI lamp history	—	km
A/F lambda signal (Bank 1 Sensor 1)	A/F Sensor #11	0.951	—
A/F sensor output signal (Bank 1 Sensor 1)	A/F Sensor #11	2.468	V
Evaporative purge	Commanded Evap Purge	0	%
Fuel level signal	Fuel Level	—	%
Number of warm ups after DTC clear	Number of warm-ups	—	—
Travel distance after DTC clear	Meter since DTC cleared	—	km
Fuel tank pressure signal	Fuel Tank Pressure	9.664	mmHg
Atmospheric pressure signal	Atmosphere Pressure	Atmospheric pressure	mmHg
A/F lambda signal (Bank 1 Sensor 1)	A/F Sensor #11	0.957	—
A/F sensor output signal (Bank 1 Sensor 1)	A/F Sensor #11	–0.18	mA
Catalytic temperature #1	Catalyst Temperature #11	—	°C
Monitoring test of misfire	Misfire monitoring (Enable)	YES	—
Monitoring test of misfire	Misfire monitoring (Comp)	YES	—
Monitoring test of fuel system	Fuel system monitoring (Enable)	YES	—
Monitoring test of fuel system	Fuel system monitoring (Comp)	NO	—
Monitoring test of comprehensive component	Component monitoring (Enable)	NO	—
Monitoring test of comprehensive component	Component monitoring (Comp)	NO	—
Test of catalyst	Catalyst Diagnosis (Enable)	YES	—
Test of catalyst	Catalyst Diagnosis (Comp)	NO	—
Test of heating-type catalyst	Heated catalyst (Enable)	N/A	—
Test of heating-type catalyst	Heated catalyst (Comp)	N/A	—
Test of evaporative emission purge control system	Evaporative purge system (Enable)	YES	—
Test of evaporative emission purge control system	Evaporative purge system (Comp)	NO	—
Secondary air system test	Secondary air system (Enable)	YES	—
Secondary air system test	Secondary air system (Comp)	NO	—

Contents	Display	Referential value (at idling)	Unit of measure
Test of air conditioning system refrigerant	A/C system refrigerant (Enable)	N/A	—
Test of air conditioning system refrigerant	A/C system refrigerant (Comp)	N/A	—
Test of oxygen sensor	Oxygen sensor (Enable)	YES	—
Test of oxygen sensor	Oxygen sensor (Comp)	NO	—
Test of oxygen sensor heater	O2 Heater Diagnosis (Enable)	YES	—
Test of oxygen sensor heater	O2 Heater Diagnosis (Comp)	YES	—
Test of EGR system	EGR system (Enable)	N/A	—
Test of EGR system	EGR system (Comp)	N/A	—
ECM power supply voltage	Control module voltage	13.848	V
Absolute load	Absolute Load Value	21	%
A/F target lambda	Target Equivalence Ratio	0.993	—
Relative throttle opening angle	Relative Throttle Pos.	2	%
Ambient temperature	Ambient Temperature	Ambient temperature	°C
Absolute throttle opening angle 2	Absolute Throttle Pos.#2	31	%
Absolute accelerator opening angle 1	Accelerator Pedal Pos.#1	13	%
Absolute accelerator opening angle 2	Accelerator Pedal Pos.#2	13	%
Target throttle opening angle	Target Throt. Act. Cont.	0	%
Engine operating time while malfunction indicator light lit	Time while MIL lighted	—	min
Elapsed time after DTC clear	Time since DTC cleared	—	min
Fuel used	Type of fuel	GAS	—
Relative accelerator opening angle	Relative Accelera. Pos.	0	%

NOTE:
For detailed operation procedures, refer to the “PC application help for Subaru Select Monitor”.

4. READ FREEZE FRAME DATA FOR ENGINE (OBD MODE)

1) On the «Main Menu» display screen, select the {Each System Check}.
2) On the «System Selection Menu» display screen, select the {Engine Control System}.
3) Click the [OK] button after the information of engine type has been displayed.
4) On the «Engine Diagnosis» display screen, select the {OBD System}.
5) On the «OBD Menu» display screen, select the {Freeze Frame Data Display}.

- A list of the support data is shown in the following table.

Contents	Display	Unit of measure
DTC of freeze frame data	Freeze frame data	DTC
Air fuel ratio control system for bank 1	Fuel system for Bank 1	—
Engine load data	Calculated load value	%
Engine coolant temperature signal	Coolant Temp.	°C or °F
Short term fuel trim by front oxygen (A/F) sensor (Bank 1)	Short term fuel trim B1	%
Long term fuel trim by front oxygen (A/F) sensor (Bank 1)	Long term fuel trim B1	%
Intake manifold absolute pressure signal	Mani. Absolute Pressure	mmHg, kPa, inHg or psi
Engine speed signal	Engine Speed	rpm
Vehicle speed signal	Vehicle Speed	km/h or MPH
Ignition timing adv. #1	Ignition timing adv. #1	°
Intake air temperature	Intake Air Temp.	°C
Amount of intake air	Mass Air Flow	g/s
Throttle opening angle	Throttle Opening Angle	%
Secondary air control status	Secondary air system	—
Oxygen sensor #12	Oxygen sensor #12	V
A/F correction #12	Short term fuel trim #12	%
OBD system	OBD System	—
Oxygen sensor #11	Oxygen sensor #11	Support
Oxygen sensor #12	Oxygen sensor #12	Support
Elapsed time after starting the engine	Time Since Engine Start	sec
Evaporative purge	Commanded Evap Purge	%
Fuel level	Fuel Level	%
Tank pressure	Fuel Tank Pressure	mmHg, kPa, inHg or psig
Atmospheric pressure	Atmosphere Pressure	mmHg, kPa, inHg or psig
ECM power supply voltage	Control module voltage	V
Absolute load	Absolute Load Value	%
A/F target lambda	Target Equivalence Ratio	—
Relative throttle opening angle	Relative Throttle Pos.	%
Ambient temperature	Ambient Temperature	°C or °F
Absolute throttle opening angle 2	Absolute Throttle Pos.#2	%
Absolute accelerator opening angle 1	Accelerator Pedal Pos.#1	%
Absolute accelerator opening angle 2	Accelerator Pedal Pos.#2	%
Target throttle opening angle	Target Throt. Act. Cont.	%

NOTE:
For detailed operation procedures, refer to the “PC application help for Subaru Select Monitor”.

5. V.I.N. REGISTRATION

1) On the «Main Menu» display screen, select the {Each System Check}.
2) On the «System Selection Menu» display screen, select the {Engine Control System}.
3) Click the [OK] button after the information of engine type has been displayed.
4) On the «Engine Diagnosis» display screen, select the {Entry VIN}.
5) Perform the procedures shown on the display screen.

NOTE:
For detailed operation procedures, refer to the “PC application help for Subaru Select Monitor”.

10. Read Diagnostic Trouble Code (DTC)

A: OPERATION

1. SUBARU SELECT MONITOR (NORMAL MODE)

1) On the «Main Menu» display screen, select the {Each System Check}.
2) On the «System Selection Menu» display screen, select the {Engine Control System}.
3) Click the [OK] button after the information of engine type has been displayed.
4) On the «Engine Diagnosis» display screen, select the {Diagnostic Code(s) Display}.
5) On the «Diagnostic Code(s) Display» display, select the {Temporary Diagnostic Code(s)} or {Memorized Diagnostic Code(s)}.

NOTE:
- For detailed operation procedures, refer to the “PC application help for Subaru Select Monitor”.
- For details concerning DTC, refer to “List of Diagnostic Trouble Code (DTC)”. <Ref. to EN(H4DOTC)(diag)-81, List of Diagnostic Trouble Code (DTC).>

2. SUBARU SELECT MONITOR (OBD MODE)

1) On the «Main Menu» display screen, select the {Each System Check}.
2) On the «System Selection Menu» display screen, select the {Engine Control System}.
3) Click the [OK] button after the information of engine type has been displayed.
4) On the «Engine Diagnosis» display screen, select the {OBD System}.
5) On the «OBD Menu» display screen, select the {Diagnostic Code(s) Display}.
6) Make sure DTC is shown on the screen.

NOTE:
- For detailed operation procedures, refer to the “PC application help for Subaru Select Monitor”.
- For details concerning DTC, refer to “List of Diagnostic Trouble Code (DTC)”. <Ref. to EN(H4DOTC)(diag)-81, List of Diagnostic Trouble Code (DTC).>

3. GENERAL SCAN TOOL

Refer to data denoting emission-related powertrain DTC.
For details concerning DTC, refer to “List of Diagnostic Trouble Code (DTC)”. <Ref. to EN(H4DOTC)(diag)-81, List of Diagnostic Trouble Code (DTC).>

NOTE:
Refer to general scan tool manufacturer’s instruction manual to access powertrain DTC (MODE $03).

11.Inspection Mode

A: PROCEDURE

Perform the diagnosis shown in the following DTC table.
When performing the diagnosis not listed in “List of Diagnostic Trouble Code (DTC)”, refer to the item on the drive cycle. <Ref. to EN(H4DOTC)(diag)-48, Drive Cycle.>

DTC	Item	Condition
P0011	Intake Camshaft Position - Timing Over-Advanced or System Performance (Bank 1)	—
P0016	Crankshaft Position - Camshaft Position Correlation (Bank1)	—
P0018	Crankshaft Position - Camshaft Position Correlation (Bank2)	—
P0021	Intake Camshaft Position - Timing Over-Advanced or System Performance (Bank 2)	—
P0031	HO2S Heater Control Circuit Low (Bank 1 Sensor 1)	—
P0032	HO2S Heater Control Circuit High (Bank 1 Sensor 1)	—
P0037	HO2S Heater Control Circuit Low (Bank 1 Sensor 2)	—
P0038	HO2S Heater Control Circuit High (Bank 1 Sensor 2)	—
P0102	Mass or Volume Air Flow Circuit Low Input	—
P0103	Mass or Volume Air Flow Circuit High Input	—
P0107	Manifold Absolute Pressure/Barometric Pressure Circuit Low Input	—
P0108	Manifold Absolute Pressure/Barometric Pressure Circuit High Input	—
P0112	Intake Air Temperature Sensor 1 Circuit Low	—
P0113	Intake Air Temperature Sensor 1 Circuit High	—
P0117	Engine Coolant Temperature Circuit Low	—
P0118	Engine Coolant Temperature Circuit High	—
P0122	Throttle/Pedal Position Sensor/Switch “A” Circuit Low	—
P0123	Throttle/Pedal Position Sensor/Switch “A” Circuit High	—
P0131	O2 Sensor Circuit Low Voltage (Bank 1 Sensor 1)	—
P0132	O2 Sensor Circuit High Voltage (Bank 1 Sensor 1)	—
P0137	O2 Sensor Circuit Low Voltage (Bank 1 Sensor 2)	—
P0138	O2 Sensor Circuit High Voltage (Bank 1 Sensor 2)	—
P0140	O2 Sensor Circuit No Activity Detected (Bank 1 Sensor 2)	—
P0182	Fuel Temperature Sensor “A” Circuit Low Input	—
P0183	Fuel Temperature Sensor “A” Circuit High Input	—
P0222	Throttle/Pedal Position Sensor/Switch “B” Circuit Low	—
P0223	Throttle/Pedal Position Sensor/Switch “B” Circuit High	—
P0230	Fuel Pump Primary Circuit	—
P0245	Turbo/Super Charger Wastegate Solenoid “A” Low	—
P0327	Knock Sensor 1 Circuit Low (Bank 1 or Single Sensor)	—
P0328	Knock Sensor 1 Circuit High (Bank 1 or Single Sensor)	—
P0335	Crankshaft Position Sensor “A” Circuit	—
P0336	Crankshaft Position Sensor “A” Circuit Range/Performance	—
P0340	Camshaft Position Sensor “A” Circuit (Bank 1 or Single Sensor)	—
P0345	Camshaft Position Sensor “A” Circuit (Bank 2)	—
P0413	Secondary Air Injection System Switching Valve “A” Circuit Open	—
P0416	Secondary Air Injection System Switching Valve “B“ Circuit	—
P0418	Secondary Air Injection System Control “A” Circuit	—
P0447	Evaporative Emission Control System Vent Control Circuit Open	—
P0448	Evaporative Emission Control System Vent Control Circuit Shorted	—
P0452	Evaporative Emission Control System Pressure Sensor Low Input	—
P0453	Evaporative Emission Control System Pressure Sensor High Input	—
P0458	Evaporative Emission System Purge Control Valve Circuit Low	—
P0462	Fuel Level Sensor “A” Circuit Low	—

DTC	Item	Condition
P0463	Fuel Level Sensor “A” Circuit High	—
P0500	Vehicle Speed Sensor “A”	—
P0512	Starter Request Circuit	—
P0513	Incorrect Immobilizer Key	—
P0600	Serial Communication Link	—
P0604	Internal Control Module Random Access Memory (RAM) Error	—
P0605	Internal Control Module Read Only Memory (ROM) Error	—
P0607	Throttle Control System Circuit Range/Performance	—
P0638	Throttle Actuator Control Range/Performance (Bank 1)	—
P0700	Transmission Control System (MIL Request)	—
P0851	Park/Neutral Switch Input Circuit Low	—
P0852	Park/Neutral Switch Input Circuit High	—
P1152	O2 Sensor Circuit Range/Performance (Low) (Bank1 Sensor1)	—
P1153	O2 Sensor Circuit Range/Performance (High) (Bank1 Sensor1)	—
P1160	Return Spring Failure	—
P1400	Fuel Tank Pressure Control Solenoid Valve Circuit Low	—
P1410	Secondary Air Injection System Switching Valve Stuck Open	—
P1420	Fuel Tank Pressure Control Sol. Valve Circuit High	—
P1491	Positive Crankcase Ventilation (Blow-By) Function Problem	—
P1560	Back-Up Voltage Circuit Malfunction	—
P1570	Antenna	—
P1571	Reference Code Incompatibility	—
P1572	IMM Circuit Failure	—
P1574	Key Communication Failure	—
P1576	EGI Control Module EEPROM	—
P1577	IMM Control Module EEPROM	—
P1578	Meter Failure	—
P2006	Intake Manifold Runner Control Stuck Closed (Bank 1)	—
P2007	Intake Manifold Runner Control Stuck Closed (Bank 2)	—
P2008	Intake Manifold Runner Control Circuit / Open (Bank 1)	—
P2009	Intake Manifold Runner Control Circuit Low (Bank 1)	—
P2011	Intake Manifold Runner Control Circuit / Open (Bank 2)	—
P2012	Intake Manifold Runner Control Circuit Low (Bank 2)	—
P2016	Intake Manifold Runner Position Sensor / Switch Circuit Low (Bank 1)	—
P2017	Intake Manifold Runner Position Sensor / Switch Circuit High (Bank 1)	—
P2021	Intake Manifold Runner Position Sensor / Switch Circuit Low (Bank 2)	—
P2022	Intake Manifold Runner Position Sensor / Switch Circuit High (Bank 2)	—
P2088	Intake Camshaft Position Actuator Control Circuit Low (Bank 1)	—
P2089	Intake Camshaft Position Actuator Control Circuit High (Bank 1)	—
P2092	Intake Camshaft Position Actuator Control Circuit Low (Bank 2)	—
P2093	Intake Camshaft Position Actuator Control Circuit High (Bank 2)	—
P2101	Throttle Actuator Control Motor Circuit Range/Performance	—
P2102	Throttle Actuator Control Motor Circuit Low	—
P2109	Throttle/Pedal Position Sensor “A” Minimum Stop Performance	—
P2122	Throttle/Pedal Position Sensor/Switch “D” Circuit Low Input	—
P2123	Throttle/Pedal Position Sensor/Switch “D” Circuit High Input	—
P2127	Throttle/Pedal Position Sensor/Switch “E” Circuit Low Input	—
P2128	Throttle/Pedal Position Sensor/Switch “E” Circuit High Input	—
P2135	Throttle/Pedal Position Sensor/Switch “A”/“B” Voltage Correlation	—
P2138	Throttle/Pedal Position Sensor/Switch “D”/“E” Voltage Correlation	—

DTC	Item	Condition
P2419	Evaporative Emission System Switching Valve Control Circuit Low	—
P2420	Evaporative Emission System Switching Valve Control Circuit High	—
P2431	Secondary Air Injection System Air Flow /Pressure Sensor Circuit Range/Performance	—
P2432	Secondary Air Injection System Air Flow /Pressure Sensor Circuit Low	—
P2433	Secondary Air Injection System Air Flow /Pressure Sensor Circuit High	—
P2444	Secondary Air Injection System Pump Stuck On	—

1. PREPARATION FOR THE INSPECTION MODE

1) Check that the battery voltage is 12 V or more and fuel remains approx. half [20 — 40 ℓ (5.3 — 10.6 US gal, 4.4 — 8.8 Imp gal)].
2) Lift up the vehicle using a garage jack and place it on rigid racks, or drive the vehicle onto free rollers.

WARNING:
- **Before lifting up the vehicle, ensure parking brakes are applied.**
- **Do not use a pantograph jack in place of a rigid rack.**
- **Secure a rope or wire to the front or rear towing hooks to prevent the lateral runout of front wheels.**
- **Before rotating the wheels, make sure that there is no one in front of the vehicle. Besides while the wheels are rotating, make sure that no one approaches the vehicle front side.**
- **Make sure that there is nothing around the wheels. For AWD model, pay special attention to all four wheels.**
- **While servicing, do not depress or release the clutch pedal or accelerator pedal quickly regardless of the engine speed. Quick operation may cause the vehicle to drop off the free roller.**
- **To prevent the vehicle from slipping due to vibration, do not place anything between rigid rack and the vehicle.**

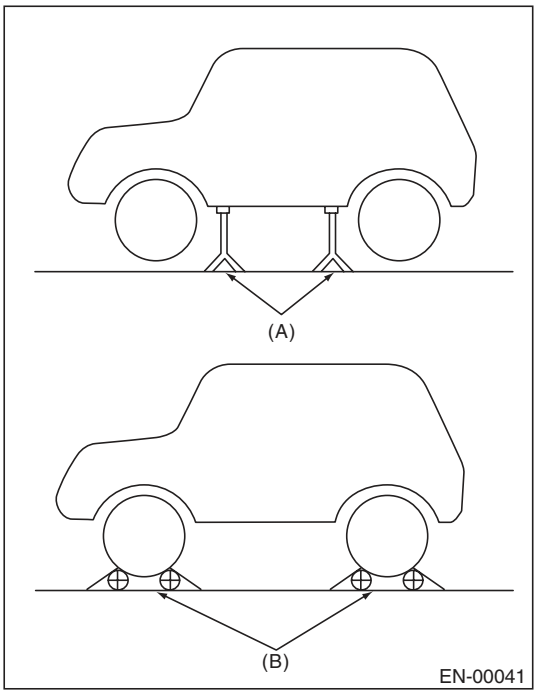

(A) Rigid rack
(B) Free roller

2. SUBARU SELECT MONITOR

1) Check that no DTC remains after clearing memory. <Ref. to EN(H4DOTC)(diag)-52, Clear Memory Mode.>
2) Warm up the engine.
3) Prepare the Subaru Select Monitor kit. <Ref. to EN(H4DOTC)(diag)-7, PREPARATION TOOL, General Description.>

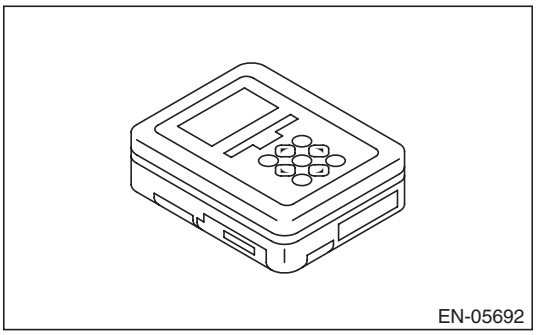

4) Prepare PC with Subaru Select Monitor installed.
5) Connect the USB cable between SDI (Subaru Diagnosis Interface) and USB port on the personal computer (dedicated port for the Subaru Select Monitor).

NOTE:
The dedicated port for the Subaru Select Monitor means the USB port which was used to install the Subaru Select Monitor.

6) Connect the diagnosis cable to SDI.
7) Connect the delivery (test) mode connector (A) located under the glove box.

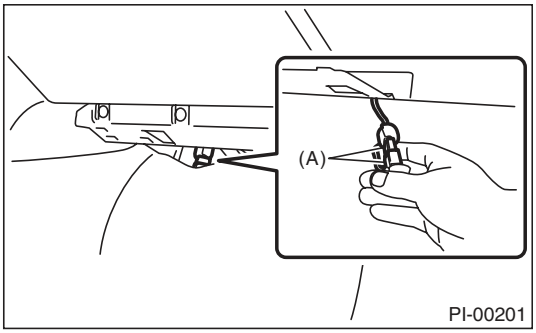

8) Connect SDI to data link connector located in the lower portion of the instrument panel (on the driver's side).

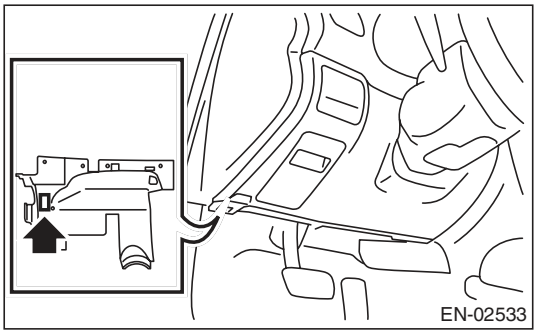

CAUTION:
Do not connect the scan tools except for Subaru Select Monitor and general scan tool.

9) Start the PC.
10) Turn the ignition switch to ON (engine OFF) and run the "PC application for Subaru Select Monitor".
11) On the «Main Menu» display screen, select the {Each System Check}.
12) On the «System Selection Menu» display screen, select the {Engine Control System}.
13) Click the [OK] button after the information of engine type has been displayed.
14) On the «Engine Diagnosis» display screen, select the {Dealer Check Mode Procedure}.
15) When the «Perform Inspection (Dealer Check) Mode?» is shown on the screen, click the [Next] button.
16) Perform subsequent procedures as instructed on the display screen.

- If trouble still remains in the memory, the corresponding DTC appears on the display screen.

NOTE:
- For detailed operation procedures, refer to the "PC application help for Subaru Select Monitor".
- For details concerning DTC, refer to "List of Diagnostic Trouble Code (DTC)".
  <Ref. to EN(H4DOTC)(diag)-81, List of Diagnostic Trouble Code (DTC).>
- Release the parking brake.
- The speed difference between front and rear wheels may light the ABS warning light, but this does not indicate a malfunction. When engine control diagnosis is finished, perform the ABS memory clearance procedure of the self-diagnosis system. <Ref. to ABS(diag)-20, Clear Memory Mode.>

3. GENERAL SCAN TOOL

1) Check that no DTC remains after clearing memory. <Ref. to EN(H4DOTC)(diag)-52, Clear Memory Mode.>
2) Warm up the engine.
3) Connect the delivery (test) mode connector (A) located under the glove box.

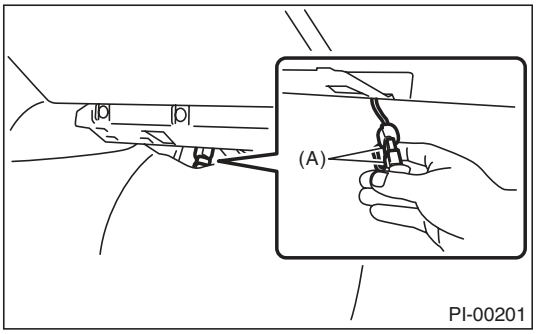

4) Connect the general scan tool to the data link connector located in the lower portion of the instrument panel (on the driver' side).

CAUTION:
Do not connect the scan tools except for Subaru Select Monitor and general scan tool.

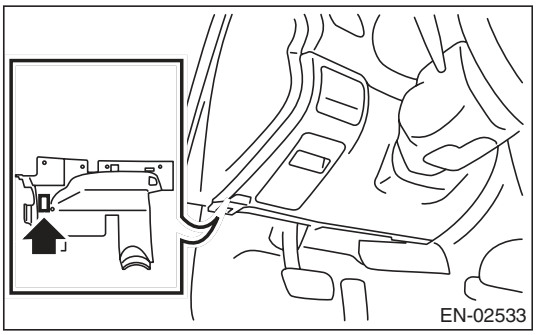

5) Start the engine.

NOTE:
- Make sure the select lever is placed in the "P" position before starting. (AT model)
- Depress the clutch pedal when starting engine. (MT model)

6) Turn the neutral position switch to ON using select lever or shift lever.
7) Depress the brake pedal to turn the brake switch ON. (AT model)
8) Keep the engine speed in 2,500 — 3,000 rpm range for 40 seconds.
9) Place the select lever or shift lever in "D" position (AT model) or "1st gear" (MT model) and drive the vehicle at 5 to 10 km/h (3 to 6 MPH).

NOTE:
- For AWD model, release the parking brake.
- The speed difference between front and rear wheels may light the ABS warning light, but this indicates no malfunctions. When engine control diagnosis is finished, perform the ABS memory clearance procedure of self-diagnosis system. <Ref. to ABS(diag)-20, Clear Memory Mode.>

10) Using the general scan tool, check DTC and record the result(s).

NOTE:
- For detailed operation procedures, refer to the general scan tool operation manual.
- For details concerning DTC, refer to "List of Diagnostic Trouble Code (DTC)".

<Ref. to EN(H4DOTC)(diag)-81, List of Diagnostic Trouble Code (DTC).>

12. Drive Cycle

A: PROCEDURE

For the troubleshooting, there are driving patterns described below. Driving in the specified pattern allows to diagnose malfunctioning items listed below. After the repair of the following trouble items, be sure to drive the vehicle with the specified drive patterns to check whether the function is resumed correctly.

1. PREPARATION FOR DRIVE CYCLE

1) Check that the battery voltage is 12 V or more and fuel remains approx. half [20 — 40 ℓ (5.3 — 10.6 US gal, 4.4 — 8.8 Imp gal)].
2) After performing the diagnostics and clearing the memory, check that no DTC remains. <Ref. to EN(H4DOTC)(diag)-52, Clear Memory Mode.>
3) Disconnect the delivery (test) mode connector.

NOTE:
- Except for the water temperature specified at starting, be sure to carry out the diagnosis after the engine is warmed up.
- Perform the diagnosis twice if the DTC marked with *. After completing the first diagnosis, stop the engine and perform second diagnosis in same condition.

2. DRIVE CYCLE A — DRIVE THE VEHICLE WITH 80 KM/H (50 MPH) FOR 20 MINUTES, AND THEN IDLE THE ENGINE FOR A MINUTE)

DTC	Item	Condition
*P0125	Insufficient Coolant Temperature for Closed Loop Fuel Control	Engine coolant temperature at engine start is less than 20°C (68°F).
*P0126	Insufficient Engine Coolant Temperature For Stable Operation	—
*P0128	Coolant Thermostat (Engine Coolant Temperature Below Thermostat Regulating Temperature)	Engine coolant temperature at engine start is less than 55°C (131°F).
*P0133	O2 Sensor Circuit Slow Response (Bank 1 Sensor 1)	—
*P0171	System Too Lean (Bank 1)	Complete diagnosis with drive cycle B or C as well.
*P0172	System Too Rich (Bank 2)	Complete diagnosis with drive cycle B or C as well.
*P0301	Cylinder 1 Misfire Detected	Complete diagnosis with drive cycle B or C as well.
*P0302	Cylinder 2 Misfire Detected	Complete diagnosis with drive cycle B or C as well.
*P0303	Cylinder 3 Misfire Detected	Complete diagnosis with drive cycle B or C as well.
*P0304	Cylinder 4 Misfire Detected	Complete diagnosis with drive cycle B or C as well.
*P0420	Catalyst System Efficiency below Threshold (Bank 1)	—
*P0441	Evaporative Emission Cont. System Incorrect Purge Flow	—
*P0442	Evaporative Emission Control System Leak Detected (Small Leak)	Engine coolant temperature at engine start is less than 25°C (77°F).
*P0451	Evaporative Emission Control System Pressure Sensor	—
*P0456	Evaporative Emission Control System Leak Detected (Very Small Leak)	Engine coolant temperature at engine start is less than 25°C (77°F).
*P0457	Evaporative Emission Control System Leak Detected (Fuel Cap Loose/Off)	Engine coolant temperature at engine start is less than 25°C (77°F).
*P0459	Evaporative Emission System Purge Control Valve Circuit High	—
P1443	Vent Control Solenoid Valve Function Problem	—
*P2096	Post Catalyst Fuel Trim System Too Lean (Bank 1)	Complete diagnosis with drive cycle B or C as well.
*P2097	Post Catalyst Fuel Trim System Too Rich (Bank 1)	Complete diagnosis with drive cycle B or C as well.
P2103	Throttle Actuator Control Motor Circuit High	Complete diagnosis with drive cycle B or C as well.

3. DRIVE CYCLE B — 10 MINUTES IDLING

NOTE:
Drive the vehicle at 10 km/h (6 MPH) or faster before diagnosis.

DTC	Item	Condition
*P0171	System Too Lean (Bank 1)	Complete diagnosis with drive cycle A or C as well.
*P0172	System Too Rich (Bank 2)	Complete diagnosis with drive cycle A or C as well.
*P0301	Cylinder 1 Misfire Detected	Complete diagnosis with drive cycle A or C as well.
*P0302	Cylinder 2 Misfire Detected	Complete diagnosis with drive cycle A or C as well.
*P0303	Cylinder 3 Misfire Detected	Complete diagnosis with drive cycle A or C as well.
*P0304	Cylinder 4 Misfire Detected	Complete diagnosis with drive cycle A or C as well.
*P0464	Fuel Level Sensor Circuit Intermittent	—
*P0506	Idle Air Control System RPM Lower Than Expected	—
*P0507	Idle Air Control System RPM Higher Than Expected	—
*P2096	Post Catalyst Fuel Trim System Too Lean (Bank 1)	Complete diagnosis with drive cycle A or C as well.
*P2097	Post Catalyst Fuel Trim System Too Rich (Bank 1)	Complete diagnosis with drive cycle A or C as well.
P2103	Throttle Actuator Control Motor Circuit High	Complete diagnosis with drive cycle A or C as well.

4. DRIVE CYCLE C — DRIVE THE VEHICLE WITH FOLLOWING DRIVE PATTERNS

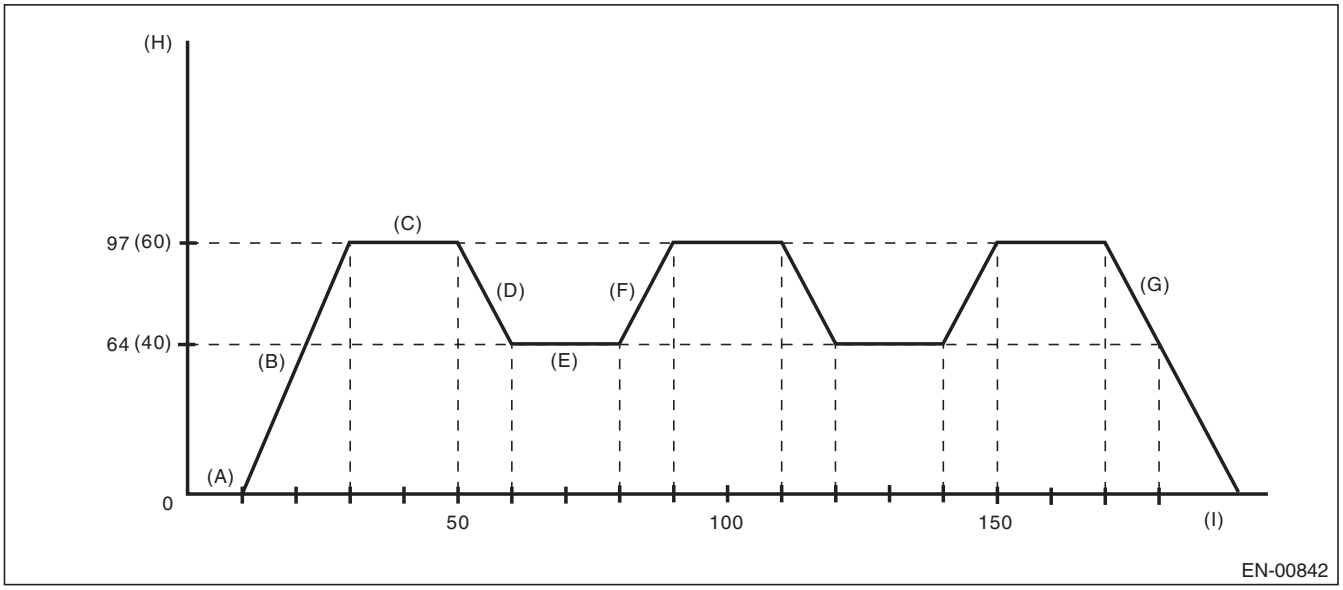

(A) Idle the engine for 10 seconds or more.
(B) Accelerate the vehicle to 97 km/h (60 MPH) within 20 seconds.
(C) Drive the vehicle at 97 km/h (60 MPH) for 20 seconds.
(D) Decelerate the vehicle to 64 km/h (40 MPH) with throttle fully closed.
(E) Drive the vehicle at 64 km/h (40 MPH) for 20 seconds.
(F) Accelerate the vehicle to 97 km/h (60 MPH) within 10 seconds.
(G) Stop the vehicle with throttle fully closed.
(H) Vehicle speed km/h (MPH)
(I) Sec.

DTC	Item	Condition
*P0030	HO2S Heater Control Circuit (Bank 1 Sensor 1)	—
*P0068	MAP/MAF - Throttle Position Correlation	—
*P0101	Mass or Volume Air Flow Circuit Range/Performance	—
P0134	O2 Sensor Circuit No Activity Detected (Bank 1 Sensor 1)	—
*P0139	O2 Sensor Circuit Slow Response (Bank 1 Sensor 2)	—
*P0171	System Too Lean (Bank 1)	Complete diagnosis with drive cycle A or B as well.
*P0172	System Too Rich (Bank 2)	Complete diagnosis with drive cycle A or B as well.
P0244	Turbo/Super Charger Wastegate Solenoid “A” Range/Performance	—
P0246	Turbo/Super Charger Wastegate Solenoid “A” High	—
*P0301	Cylinder 1 Misfire Detected	Complete diagnosis with drive cycle A or B as well.
*P0302	Cylinder 2 Misfire Detected	Complete diagnosis with drive cycle A or B as well.
*P0303	Cylinder 3 Misfire Detected	Complete diagnosis with drive cycle A or B as well.
*P0304	Cylinder 4 Misfire Detected	Complete diagnosis with drive cycle A or B as well.
P2004	Intake Manifold Runner Control Stuck Open (Bank 1)	—
P2005	Intake Manifold Runner Control Stuck Open (Bank 2)	—
*P2096	Post Catalyst Fuel Trim System Too Lean (Bank 1)	Complete diagnosis with drive cycle A or B as well.
*P2097	Post Catalyst Fuel Trim System Too Rich (Bank 1)	Complete diagnosis with drive cycle A or B as well.
P2103	Throttle Actuator Control Motor Circuit High	Complete diagnosis with drive cycle A or B as well.

5. DRIVE CYCLE D

DRIFT DIAGNOSIS

1) Make sure that the engine coolant temperature at engine starting is less than 30°C (86°F).
2) Make sure that fuel remains 10 ℓ (2.6 US gal, 2.2 Imp gal) or more and the battery voltage is 10.9 V or more.
3) Start the engine, and check that the engine coolant temperature increases by 10°C (18°F) or more, and reaches 75°C (167°F) or more, when the engine is warmed up.
4) After the engine has reached the state of procedure 3), idle the engine for 120 seconds or more.

STUCK DIAGNOSIS

1) Make sure that the battery voltage is 10.9 V or more.
2) Perform the Clear Memory Mode. <Ref. to EN(H4DOTC)(diag)-52, Clear Memory Mode.>
3) Drive for approximately 50 ℓ (13.2 US gal, 11 Imp gal) of fuel.

NOTE:
- It is acceptable to drive the vehicle intermittently.
- Do not disconnect the battery terminals while diagnosing. (Data will be cleared by disconnecting the battery terminals.)

DTC	Item	Condition
*P0181	Fuel Temperature Sensor “A” Circuit Range/Performance	—

6. DRIVE CYCLE E

1) Make sure that the battery voltage is 10.9 V or more.
2) Perform the Clear Memory Mode. <Ref. to EN(H4DOTC)(diag)-52, Clear Memory Mode.>
3) Drive for approximately 30 ℓ (7.9 US gal, 6.6 Imp gal) of fuel.

NOTE:
- It is acceptable to drive the vehicle intermittently.
- Do not disconnect the battery terminals while diagnosing. (Data will be cleared by disconnecting the battery terminals.)

DTC	Item	Condition
*P0461	Fuel Level Sensor “A” Circuit Range/Performance	—

7. DRIVE CYCLE F

1) Make sure that the engine coolant temperature at engine starting is less than 30°C (86°F).
2) Start the engine, and warm it up until engine coolant temperature increases over 95°C (203°F).
3) Idle the engine for more than 10 minutes in the condition of step 2.

NOTE:
Do not disconnect the battery terminals while diagnosing. (Data will be cleared by disconnecting the battery terminals.)

DTC	Item	Condition
*P0111	Intake Air Temperature Sensor 1 Circuit Range/Performance	—

8. DRIVE CYCLE G

1) Disconnect the battery negative terminal, and reconnect after 10 seconds has passed.
2) Start the engine and warm up engine until coolant temperature is 80°C (176°F).
3) Turn OFF the engine and wait until the coolant temperature drop to 40°C (104°F) or less.

NOTE:
Do not let engine coolant temperature drop to 5°C (41°F) or less.
4) Start the engine and warm up engine until coolant temperature is 80°C (176°F).
5) Turn OFF the engine and wait until the coolant temperature drop to 40°C (104°F) or less.

NOTE:
Do not let engine coolant temperature drop to 5°C (41°F) or less.
6) Start and idle the engine.

DTC	Item	Condition
*P0410	Secondary Air Injection System	—
*P0411	Secondary Air Injection System Incorrect Flow Detected	—
P0414	Secondary Air Injection System Switching Valve “A” Circuit Shorted	—
P0417	Secondary Air Injection System Switching Valve “B” Circuit Shorted	—
P1418	Secondary Air Injection System Control “A” Circuit Shorted	—
*P2440	Secondary Air Injection System Switching Valve Stuck Open (Bank 1)	—
*P2441	Secondary Air Injection System Switching Valve Stuck Closed (Bank 1)	—
*P2442	Secondary Air Injection System Switching Valve Stuck Open (Bank2)	—
*P2443	Secondary Air Injection System Switching Valve Stuck Closed (Bank2)	—

9. DRIVE CYCLE H

1) Perform the Clear Memory Mode. <Ref. to EN(H4DOTC)(diag)-52, Clear Memory Mode.>
2) With the ignition switch ON, read the engine coolant temperature, intake air temperature and fuel temperature. <Ref. to EN(H4DOTC)(diag)-35, READ CURRENT DATA FOR ENGINE (NORMAL MODE), OPERATION, Subaru Select Monitor.>
3) If the values from step 2) satisfy the following two conditions, start the engine.

Condition:
|Engine coolant temperature — intake air temperature | ≤ 5°C (41°F)
|Engine coolant temperature — fuel temperature | ≤ 2°C (36°F)

NOTE:
- If the conditions are not satisfied, turn the ignition switch to OFF and wait until the parameters are satisfied.
- Start AT vehicles in the “P” range, and MT vehicles in the neutral position.

4) Idle the engine for 1 minute under the conditions in step 3).

DTC	Item	Condition
*P1602	Control Module Programming Error	—

13. Clear Memory Mode

A: OPERATION

NOTE:
When Clear Memory Mode is performed in OBD mode of Subaru Select Monitor, only DTCs are cleared.

1. SUBARU SELECT MONITOR (NORMAL MODE)

1) On the «Main Menu» display screen, select the {Each System Check}.
2) On the «System Selection Menu» display screen, select the {Engine Control System}.
3) Click the [OK] button after the information of engine type has been displayed.
4) On the «Engine Diagnosis» display screen, select the {Clearing Memory}.
5) When the “Clear Memory?” is shown on the screen, click the [Yes] button.
6) When “Done” and “Turn off the ignition switch.” are shown on the display screen, turn the ignition switch to OFF.

NOTE:
• Initial diagnosis of electronic throttle control is performed after memory clearance. Wait for 10 seconds or more after turning the ignition switch to ON, and then start the engine.
• For detailed operation procedures, refer to the “PC application help for Subaru Select Monitor”.

2. SUBARU SELECT MONITOR (OBD MODE)

1) On the «Main Menu» display screen, select the {Each System Check}.
2) On the «System Selection Menu» display screen, select the {Engine Control System}.
3) Click the [OK] button after the information of engine type has been displayed.
4) On the «Engine Diagnosis» display screen, select the {OBD System}.
5) On the «OBD Menu» display screen, select the {Clear Diagnostic Code}.
6) When the “Clear Diagnostic Code?” is shown on the screen, click the [Yes] button.
7) When “Done” and “Turn off the ignition switch.” is shown on the display screen, turn the ignition switch to OFF.

NOTE:
• Initial diagnosis of electronic throttle control is performed after memory clearance. Wait for 10 seconds or more after turning the ignition switch to ON, and then start the engine.
• For detailed operation procedures, refer to the “PC application help for Subaru Select Monitor”.

3. GENERAL SCAN TOOL

For procedures clearing memory using the general scan tool, refer to the general scan tool operation manual.

NOTE:
Initial diagnosis of electronic throttle control is performed after memory clearance. For this reason, start the engine after 10 seconds or more have elapsed since the ignition switch was turned to ON.

14. Compulsory Valve Operation Check Mode

A: OPERATION

1) Prepare the Subaru Select Monitor kit. <Ref. to EN(H4DOTC)(diag)-7, PREPARATION TOOL, General Description.>

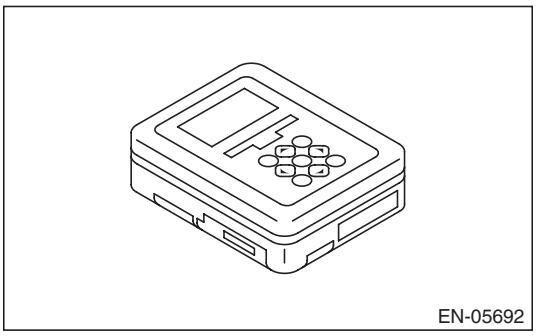

2) Prepare PC with Subaru Select Monitor installed.
3) Connect the USB cable between SDI (Subaru Diagnosis Interface) and USB port on the personal computer (dedicated port for the Subaru Select Monitor).

NOTE:
The dedicated port for the Subaru Select Monitor means the USB port which was used to install the Subaru Select Monitor.

4) Connect the diagnosis cable to SDI.
5) Connect the delivery (test) mode connector (A) located under the glove box.

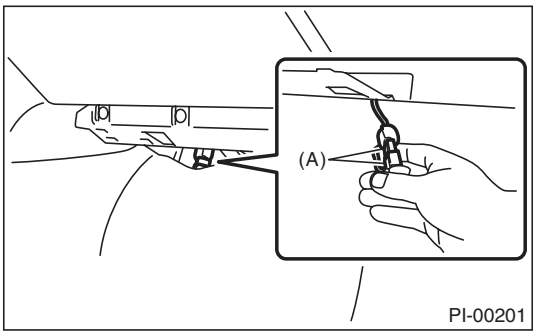

6) Connect SDI to data link connector located in the lower portion of the instrument panel (on the driver's side).

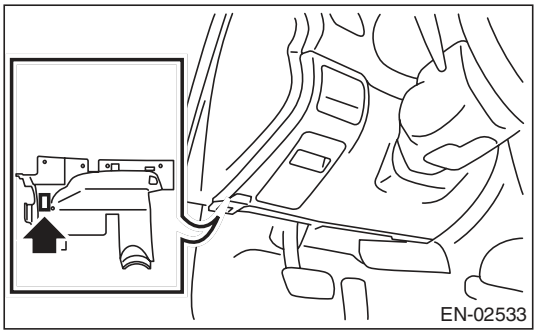

CAUTION:
Do not connect the scan tools except for Subaru Select Monitor and general scan tool.

7) Start the PC.
8) Turn the ignition switch to ON (engine OFF) and run the "PC application for Subaru Select Monitor".
9) On the «Main Menu» display screen, select the {Each System Check}.
10) On the «System Selection Menu» display screen, select the {Engine Control System}.
11) Click the [OK] button after the information of engine type has been displayed.
12) On the «Engine Diagnosis» display screen, select the {System Operation Check Mode}.
13) On the «System Operation Check Mode» display screen, select the {Actuator ON/OFF Dr.}.
14) Select the desired compulsory actuator on the «Actuator ON/OFF Operation» display screen and click the [Next] button.

15) Clicking the [Finished] button completes the compulsory valve operation check mode. The display will then return to the «Actuator ON/OFF Operation» screen.

- A list of the support data is shown in the following table.

Description	Display
Compulsory fuel pump relay operation check	Fuel Pump Relay
Compulsory purge control solenoid valve operation check	CPC Solenoid Valve
Compulsory purge control solenoid valve 2 operation check	CPC Solenoid 2
Compulsory radiator fan relay operation check	Radiator Fan Relay
Compulsory air conditioning relay operation check	A/C Compressor Relay
Compulsory wastegate control solenoid valve operation check	Turbocharger Wastegate Solenoid
Compulsory pressure control solenoid valve operation check	PCV Solenoid Valve
Compulsory drain valve operation check	Vent. Solenoid Valve
Compulsory secondary air combination valve 1 operation check	Secondary Air Combi Valve 1
Compulsory secondary air combination valve 2 operation check	Secondary Air Combi Valve 2
Compulsory secondary air pump relay operation check	Secondary Air Pump Relay

NOTE:

- The following parts will be displayed but not functional.

Display
EGR Solenoid Valve
ASV Solenoid Valve
FICD Solenoid
Pressure Switching Sol.1
Pressure Switching Sol.2
AAI Solenoid Valve
Tank Sensor Cntl Valve
EXH. Bypass Control Permit Flag

- For detailed operation procedures, refer to the “PC application help for Subaru Select Monitor”.

15. System Operation Check Mode

A: OPERATION

1) Prepare the Subaru Select Monitor kit. <Ref. to EN(H4DOTC)(diag)-7, PREPARATION TOOL, General Description.>

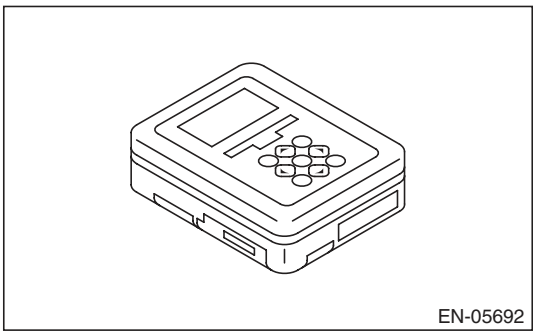

2) Prepare PC with Subaru Select Monitor installed.
3) Connect the USB cable between SDI (Subaru Diagnosis Interface) and USB port on the personal computer (dedicated port for the Subaru Select Monitor).

NOTE:
The dedicated port for the Subaru Select Monitor means the USB port which was used to install the Subaru Select Monitor.

4) Connect the diagnosis cable to SDI.
5) Connect SDI to data link connector located in the lower portion of the instrument panel (on the driver's side).

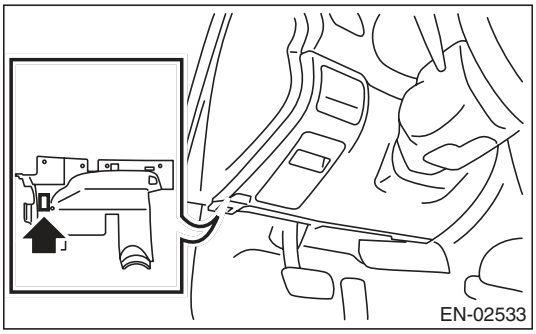

CAUTION:
Do not connect the scan tools except for Subaru Select Monitor and general scan tool.

6) Start the PC.
7) Turn the ignition switch to ON (engine OFF) and run the "PC application for Subaru Select Monitor".
8) On the «Main Menu» display screen, select the {Each System Check}.
9) On the «System Selection Menu» display screen, select the {Engine Control System}.
10) Click the [OK] button after the information of engine type has been displayed.
11) On the «Engine Diagnosis» display screen, select the {System Operation Check Mode}.
12) The following items are displayed on the monitor.

Display
Actuator ON/OFF Operation
Immobilizer System
Fuel Pump Control
Fixed Idle Ignition Timing
Idle Speed Control
Injector Control

1. FUEL PUMP CONTROL (OFF DRIVE)

CAUTION:
After executing the system operation check mode, execute the Clear Memory Mode. <Ref. to EN(H4DOTC)(diag)-52, OPERATION, Clear Memory Mode.>

1) On the «System Operation Check Mode» display screen, select the {Fuel Pump Control}.
2) On the «Fuel Pump Control» display screen, select the {OFF Operation}.
3) On the «Start the Engine» display screen, start the engine and click the [OK] button.
4) On the «OFF Drive» display screen, click the [Execution] button and execute the OFF drive.
5) Click the [Cancel] button to stop the OFF drive.
6) Click the [F12 Exit] button to end the OFF drive. The screen will return to the «Fuel Pump Control» screen.

NOTE:
For detailed operation procedures, refer to the "PC application help for Subaru Select Monitor".

2. FUEL PUMP CONTROL (ON/OFF DRIVE)

CAUTION:
After executing the system operation check mode, execute the Clear Memory Mode. <Ref. to EN(H4DOTC)(diag)-52, OPERATION, Clear Memory Mode.>

1) On the «System Operation Check Mode» display screen, select the {Fuel Pump Control}.
2) On the «Fuel Pump Control» display screen, select the {ON/OFF Dr.}.
3) On the «Turn Ignition Switch ON with Engine OFF» display screen, turn the ignition switch to ON and click the [OK] button.
4) On the «ON/OFF Dr.» display screen, click the [Execution] button and execute the ON/OFF drive.
5) Click the [Cancel] button to stop the ON/OFF drive.
6) Click the [F12 Exit] button to end the ON/OFF drive. The screen will return to the «Fuel Pump Control» screen.

NOTE:
For detailed operation procedures, refer to the "PC application help for Subaru Select Monitor".

3. IDLING IGNITION TIMING FIXED

CAUTION:
After executing the system operation check mode, execute the Clear Memory Mode. <Ref. to EN(H4DOTC)(diag)-52, OPERATION, Clear Memory Mode.>

1) On the «System Operation Check Mode» display screen, select the {Fixed Idle Ignition Timing}.
2) On the «Start the Engine» display screen, start the engine and click the [OK] button.
3) On the «Fixed Idle Ignition Timing» display screen, click the [Execution] button and execute the idling ignition timing fixed.
4) Click the [Cancel] button to stop the idling ignition timing fixed.
5) Click the [F12 Exit] button to end the idling ignition timing fixed. The display will then return to the «System Operation Check Mode» screen.

NOTE:
For detailed operation procedures, refer to the "PC application help for Subaru Select Monitor".

4. IDLE SPEED CONTROL

CAUTION:
After executing the system operation check mode, execute the Clear Memory Mode. <Ref. to EN(H4DOTC)(diag)-52, OPERATION, Clear Memory Mode.>

1) On the «System Operation Check Mode» display screen, select the {Idle Speed Control}.
2) On the «Start the Engine» display screen, start the engine and click the [OK] button.
3) In the «Idle Speed Control» display screen, click the [△] button or the [▽] button to change the setting values, then click the [OK] button.
Setting is possible in a range between 500 rpm — 2,000 rpm, in increments of 50 rpm. However, the engine speed that can actually be controlled will vary depending on the vehicle.
4) Click the [Cancel] button to stop the idle speed control.
5) Click the [F12 Exit] button to end the idle speed control. The display will then return to the «System Operation Check Mode» screen.

NOTE:
For detailed operation procedures, refer to the "PC application help for Subaru Select Monitor".

5. INJECTOR CONTROL. (INJECTION STOP MODE)

CAUTION:
After executing the system operation check mode, execute the Clear Memory Mode. <Ref. to EN(H4DOTC)(diag)-52, OPERATION, Clear Memory Mode.>

1) On the «System Operation Check Mode» display screen, select the {Injector Control}.
2) On the «Injector Control» display screen, select the {Injection Stop Mode}.
3) On the «Injection Stop Mode» display screen, select the fuel injector to be stopped.
4) On the «Start the Engine» display screen, start the engine and click the [OK] button.
5) On the «Fuel Injector #» display screen, click the [Execution] button and execute the injection stop mode.
6) Click the [Cancel] button to stop the injection stop mode.
7) Click the [F12 Exit] button to return the «Injection Stop Mode» display screen.
8) On the «Injection Stop Mode» display screen, click the [Return] button to end the «Injection Stop Mode». The screen will return to the «Injector Control» screen.

NOTE:
For detailed operation procedures, refer to the "PC application help for Subaru Select Monitor".

6. INJECTOR CONTROL. (INJECTION QUANTITY CONTROL)

CAUTION:
After executing the system operation check mode, execute the Clear Memory Mode. <Ref. to EN(H4DOTC)(diag)-52, OPERATION, Clear Memory Mode.>

1) On the «System Operation Check Mode» display screen, select the {Injector Control}.
2) On the «Injector Control» display screen, select the {Injection Quantity Control}.
3) On the «Start the Engine» display screen, start the engine and click the [OK] button.
4) In the «Injection Quantity Control» display screen, click the [△] button or the [▽] button to change the setting values, then click the [OK] button.
Setting is possible in a range between 0 — 20%, in increments of 1%.
5) Click the [Cancel] button to stop the injection quantity control.
6) Click the [F12 Exit] button to end the injection quantity control. The screen will return to the «Injector Control» screen.

NOTE:
For detailed operation procedures, refer to the "PC application help for Subaru Select Monitor".

16. Malfunction Indicator Light

A: PROCEDURE

1. Activation of malfunction indicator light. <Ref. to EN(H4DOTC)(diag)-58, ACTIVATION OF MALFUNCTION INDICATOR LIGHT, Malfunction Indicator Light.>
↓
2. Malfunction indicator light does not come on. <Ref. to EN(H4DOTC)(diag)-59, MALFUNCTION INDICATOR LIGHT DOES NOT COME ON, Malfunction Indicator Light.>
↓
3. Malfunction indicator light does not go off. <Ref. to EN(H4DOTC)(diag)-61, MALFUNCTION INDICATOR LIGHT DOES NOT GO OFF, Malfunction Indicator Light.>
↓
4. Malfunction indicator light does not blink. <Ref. to EN(H4DOTC)(diag)-62, MALFUNCTION INDICATOR LIGHT DOES NOT BLINK, Malfunction Indicator Light.>
↓
5. Malfunction indicator light remains blinking. <Ref. to EN(H4DOTC)(diag)-64, MALFUNCTION INDICATOR LIGHT REMAINS BLINKING, Malfunction Indicator Light.>

B: ACTIVATION OF MALFUNCTION INDICATOR LIGHT

1) When the ignition switch is turned to ON (engine OFF), the malfunction indicator light (A) in the combination meter illuminates.

NOTE:
If the malfunction indicator light does not illuminate, perform diagnostics of the malfunction indicator light circuit or the combination meter circuit. <Ref. to EN(H4DOTC)(diag)-59, MALFUNCTION INDICATOR LIGHT DOES NOT COME ON, Malfunction Indicator Light.>

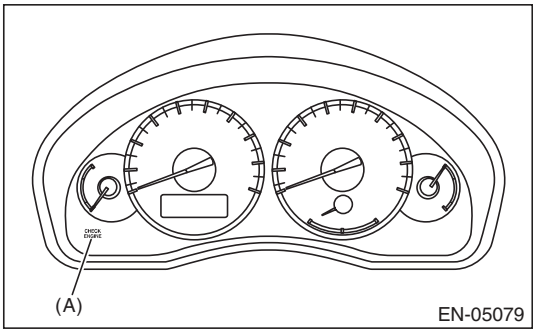

2) After starting the engine, the malfunction indicator light goes out. If it does not go off, either the engine or emission control system has malfunction.

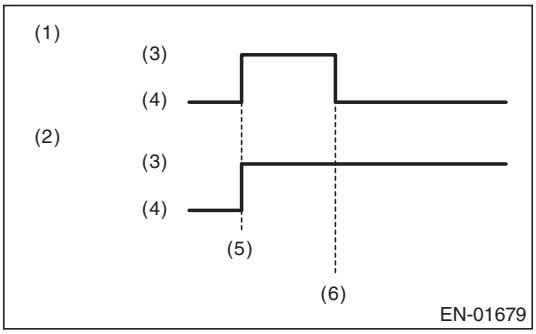

(1) No DTC
(2) Trouble occurs
(3) ON
(4) OFF
(5) Ignition switch ON
(6) Engine start

3) Turn the ignition switch to OFF and connect the delivery (test) mode connector.

(1) When the ignition switch is turned to ON (engine OFF), the malfunction indicator light illuminates.
(2) After the engine starts, malfunction indicator light blinks in a cycle of 0.5 Hz. (During diagnosis)
(3) Malfunction indicator light blinks at a cycle of 3 Hz after diagnosis if there is no trouble. Malfunction indicator light illuminates if faulty.

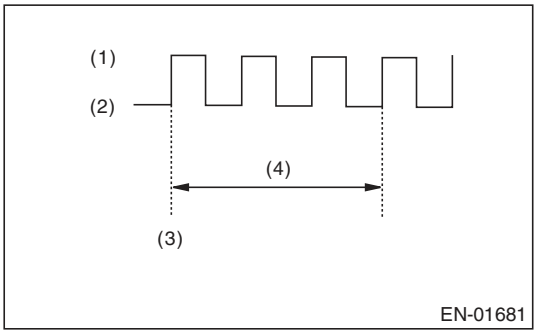

(1) ON
(2) OFF
(3) Ignition switch ON
(4) 1 second

C: MALFUNCTION INDICATOR LIGHT DOES NOT COME ON

DIAGNOSIS:

The malfunction indicator light circuit is open or shorted.

TROUBLE SYMPTOM:

When the ignition switch is turned to ON (engine OFF), malfunction indicator light does not illuminate.

WIRING DIAGRAM:

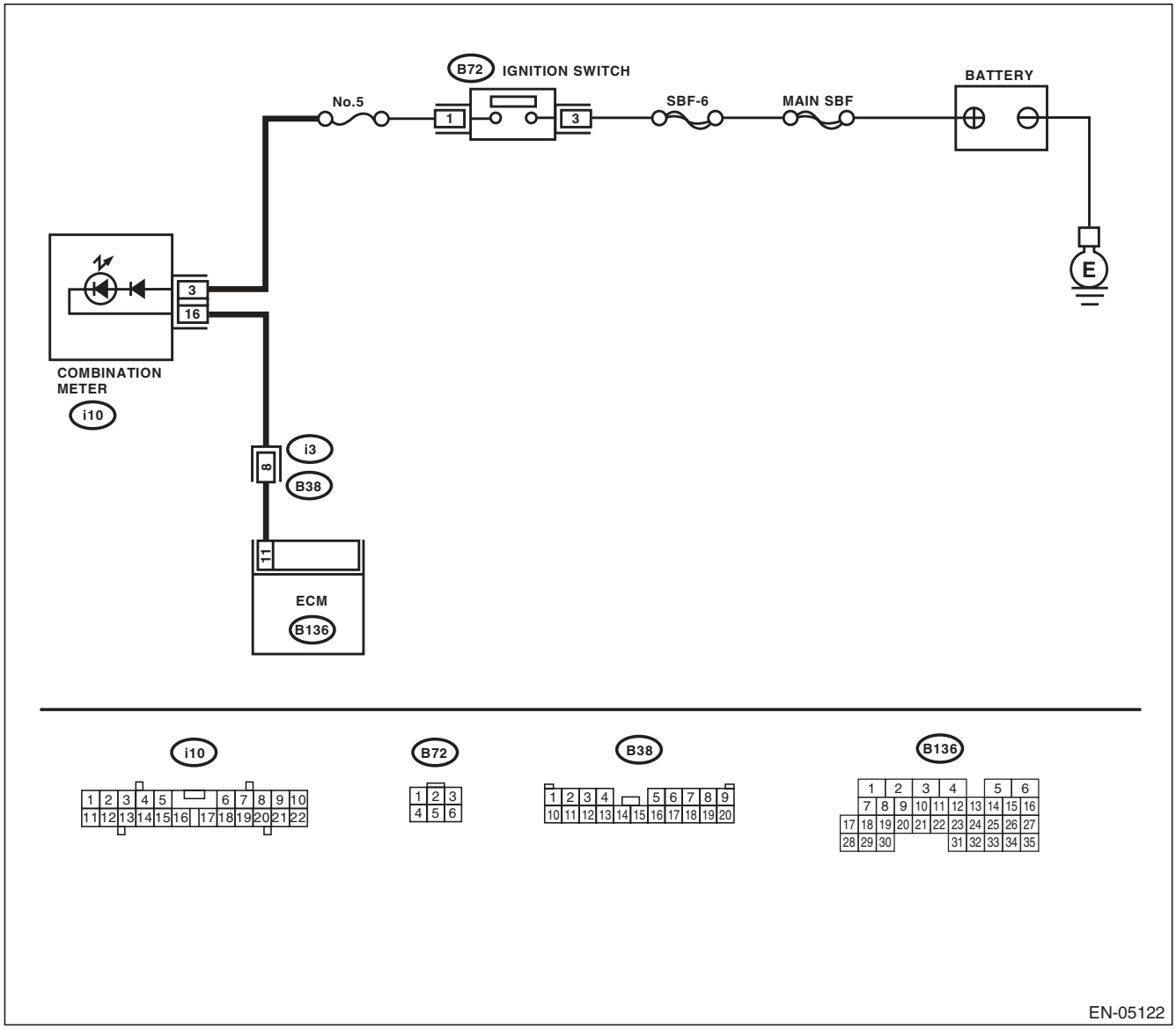

	Step	Check	Yes	No
1	**CHECK OUTPUT SIGNAL OF ECM.** 1) Turn the ignition switch to ON. 2) Measure the voltage between ECM and chassis ground. ***Connector & terminal*** ***(B136) No. 11 (+) — Chassis ground (–):***	Is the voltage 10 V or more?	Go to step **5**.	Go to step **2**.
2	**CHECK HARNESS BETWEEN ECM AND COMBINATION METER CONNECTOR.** 1) Turn the ignition switch to OFF. 2) Remove the combination meter. <Ref. to IDI-22, Combination Meter.> 3) Disconnect the connector from the ECM and combination meter. 4) Measure the resistance of harness between ECM and combination meter connector. ***Connector & terminal*** ***(B136) No. 11 — (i10) No. 16:***	Is the resistance less than 1 Ω?	Go to step **3**.	Repair the harness and connector. NOTE: In this case, repair the following item: • Open circuit of harness between ECM and combination meter connector • Poor contact of coupling connector
3	**CHECK POOR CONTACT.** Check for poor contact of combination meter connector.	Is there poor contact in combination meter connector?	Repair the poor contact of combination meter connector.	Go to step **4**.
4	**CHECK HARNESS BETWEEN COMBINATION METER AND IGNITION SWITCH CONNECTOR.** 1) Turn the ignition switch to ON. 2) Measure the voltage between combination meter connector and chassis ground. ***Connector & terminal*** ***(i10) No. 3 (+) — Chassis ground (–):***	Is the voltage 10 V or more?	Replace the combination meter board. <Ref. to IDI-22, Combination Meter.>	Check the following item and repair if necessary. NOTE: • Blown out of fuse (No. 5) • Open or short circuit in harness between fuse (No. 5) and battery terminal • Poor contact in ignition switch connector
5	**CHECK POOR CONTACT.** Check for poor connection by shaking or pulling ECM connector and harness.	Does the malfunction indicator light illuminate?	Repair the poor contact of ECM connector.	Go to step **6**.
6	**CHECK ECM CONNECTOR.** Check the connection of ECM connector.	Is the ECM connector correctly connected?	Replace the ECM. <Ref. to FU(H4DOTC)-52, Engine Control Module (ECM).>	Repair the connection of ECM connector.

D: MALFUNCTION INDICATOR LIGHT DOES NOT GO OFF

DIAGNOSIS:

The malfunction indicator light circuit is shorted.

TROUBLE SYMPTOM:

Although malfunction indicator light comes on when the engine runs, DTC is not shown on the Subaru Select Monitor display.

WIRING DIAGRAM:

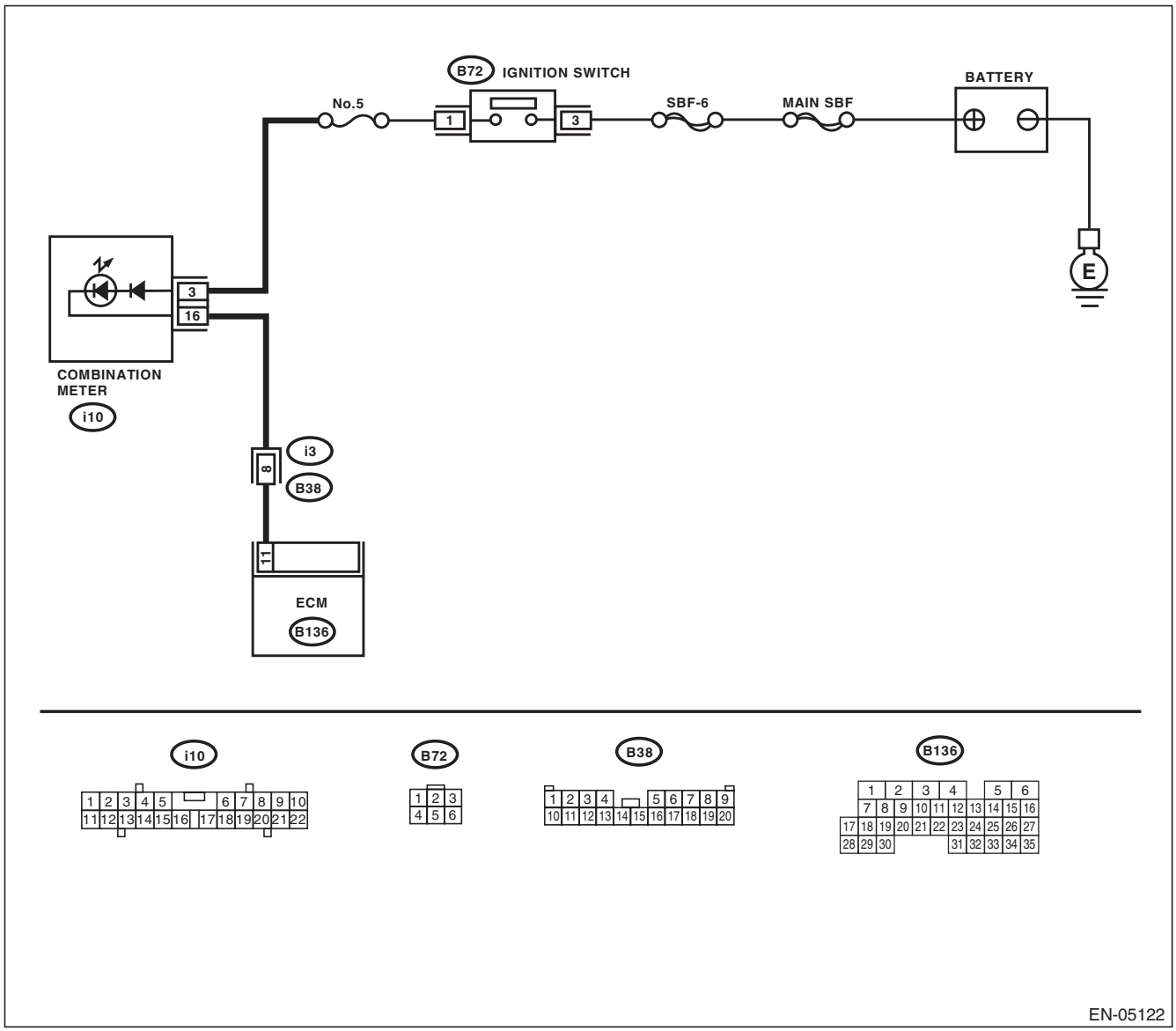

Step		Check	Yes	No
1	**CHECK HARNESS BETWEEN ECM AND COMBINATION METER CONNECTOR.** 1) Turn the ignition switch to OFF. 2) Disconnect the connectors from ECM. 3) Turn the ignition switch to ON.	Does the malfunction indicator light illuminate?	Repair the short circuit of harness between ECM and combination meter connector.	Replace the ECM. <Ref. to FU(H4DOTC)-52, Engine Control Module (ECM).>

E: MALFUNCTION INDICATOR LIGHT DOES NOT BLINK

DIAGNOSIS:

- The malfunction indicator light circuit is open or shorted.
- The delivery (test) mode connector circuit is open.

TROUBLE SYMPTOM:

Malfunction indicator light does not blink during Inspection Mode.

WIRING DIAGRAM:

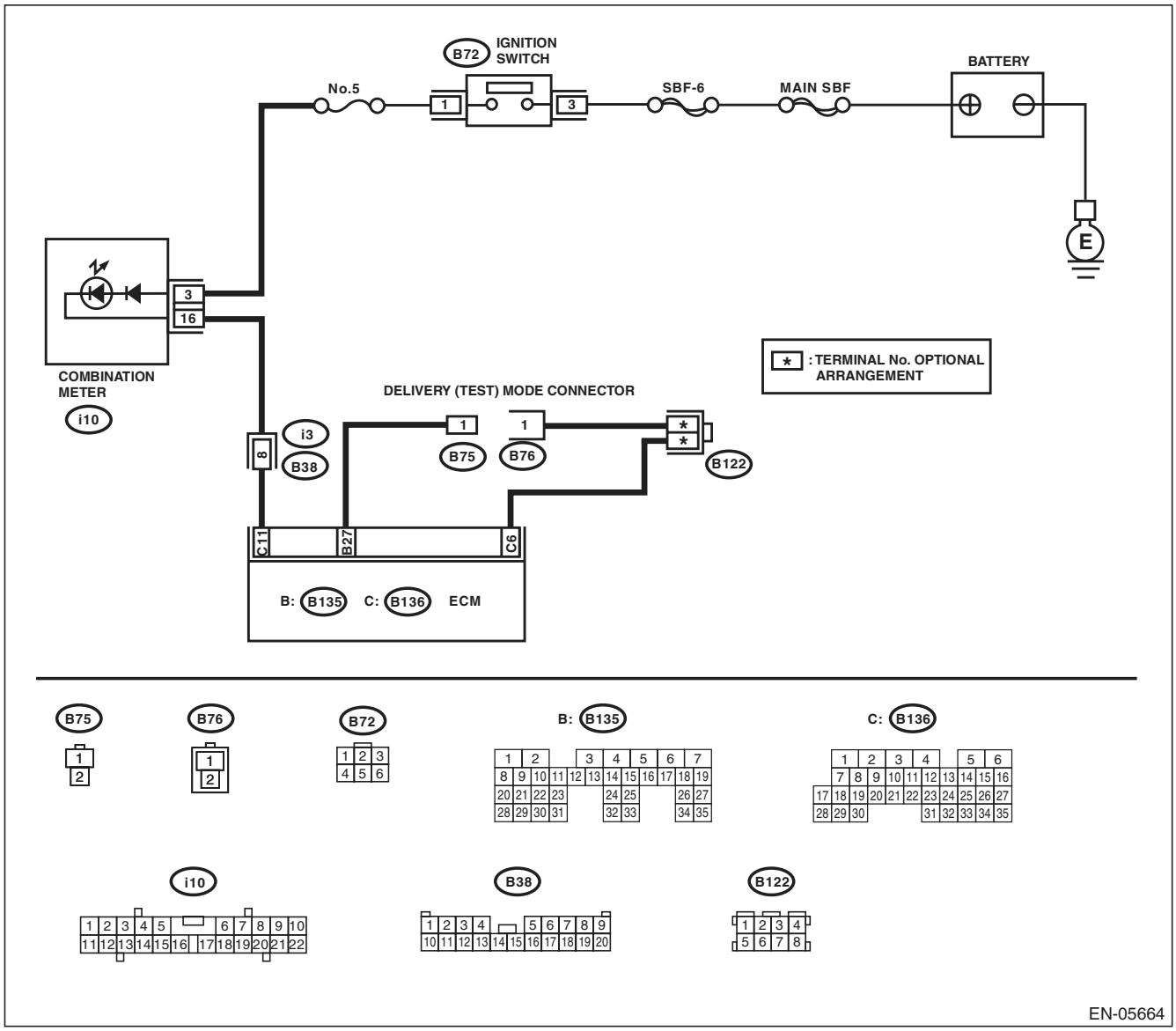

	Step	Check	Yes	No
1	**CHECK STATUS OF MALFUNCTION INDICATOR LIGHT.** 1) Turn the ignition switch to OFF. 2) Disconnect the delivery (test) mode connector. 3) Turn the ignition switch to ON. (engine OFF)	Does the malfunction indicator light illuminate?	Go to step **2**.	Repair the malfunction indicator light circuit. <Ref. to EN(H4DOTC)(diag)-59, MALFUNCTION INDICATOR LIGHT DOES NOT COME ON, Malfunction Indicator Light.>
2	**CHECK HARNESS BETWEEN ECM AND COMBINATION METER CONNECTOR.** 1) Turn the ignition switch to OFF. 2) Disconnect the connectors from ECM. 3) Turn the ignition switch to ON.	Does the malfunction indicator light illuminate?	Repair the ground short circuit of harness between ECM and combination meter connector.	Go to step **3**.
3	**CHECK HARNESS BETWEEN ECM AND DELIVERY (TEST) MODE CONNECTOR.** 1) Turn the ignition switch to OFF. 2) Disconnect the connectors from ECM. 3) Measure the resistance of harness between ECM and delivery (test) mode connector. ***Connector & terminal*** ***(B76) No. 1 — (B136) No. 6:*** ***(B75) No. 1 — (B135) No. 27:***	Is the resistance less than 1 Ω?	Go to step **4**.	Repair the harness and connector. NOTE: In this case, repair the following item: • Open circuit of harness between ECM and delivery (test) mode connector • Poor contact in joint connector
4	**CHECK POOR CONTACT.** Check for poor contact of the ECM connector.	Is there poor contact in ECM connector?	Repair the poor contact of ECM connector.	Replace the ECM. <Ref. to FU(H4DOTC)-52, Engine Control Module (ECM).>

F: MALFUNCTION INDICATOR LIGHT REMAINS BLINKING

DIAGNOSIS:

The delivery (test) mode connector circuit is shorted.

TROUBLE SYMPTOM:

Malfunction indicator light blinks when delivery (test) mode connector is not connected.

WIRING DIAGRAM:

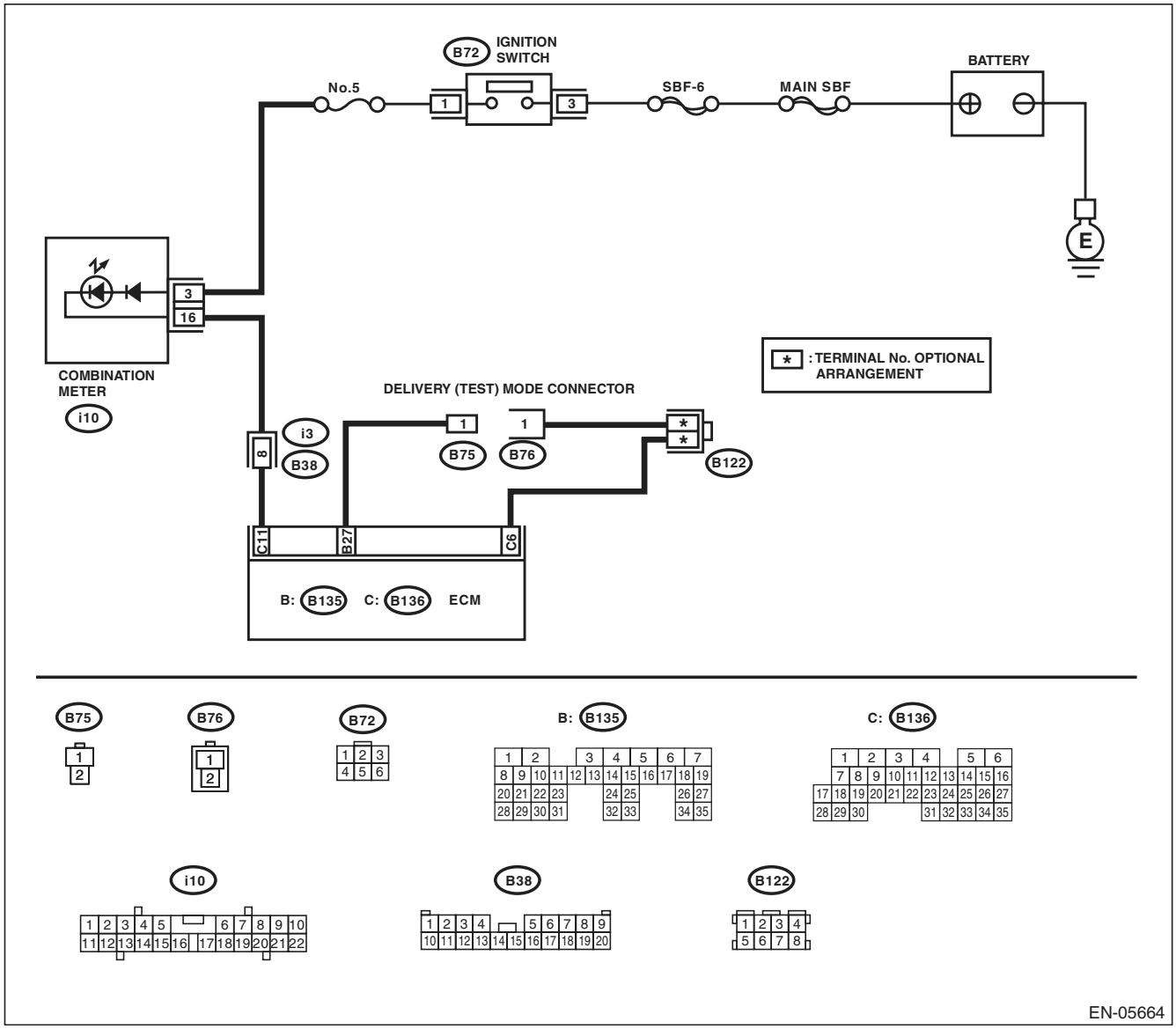

Step		Check	Yes	No
1	**CHECK DELIVERY (TEST) MODE CONNECTOR.** 1) Disconnect the delivery (test) mode connector. 2) Turn the ignition switch to ON.	Does the malfunction indicator light blink?	Go to step **2**.	System is normal. NOTE: Malfunction indicator light blinks when delivery (test) mode connector is connected.
2	**CHECK HARNESS BETWEEN ECM AND CHASSIS GROUND TERMINAL.** 1) Turn the ignition switch to OFF. 2) Disconnect the connectors from ECM. 3) Measure the resistance of harness between ECM and chassis ground. ***Connector & terminal*** ***(B135) No. 27 — Chassis ground:***	Is the resistance less than 5 Ω?	Repair the short circuit of harness between ECM and delivery (test) mode connector.	Replace the ECM. <Ref. to FU(H4DOTC)-52, Engine Control Module (ECM).>

17. Diagnostics for Engine Starting Failure

A: PROCEDURE

1. Check of the fuel amount
↓
2. Inspection of starter motor circuit. <Ref. to EN(H4DOTC)(diag)-67, STARTER MOTOR CIRCUIT, Diagnostics for Engine Starting Failure.>
↓
3. Inspection of ECM power supply and ground line. <Ref. to EN(H4DOTC)(diag)-71, CHECK POWER SUPPLY AND GROUND LINE OF ENGINE CONTROL MODULE (ECM), Diagnostics for Engine Starting Failure.>
↓
4. Inspection of ignition control system. <Ref. to EN(H4DOTC)(diag)-73, IGNITION CONTROL SYSTEM, Diagnostics for Engine Starting Failure.>
↓
5. Inspection of fuel pump circuit. <Ref. to EN(H4DOTC)(diag)-76, FUEL PUMP CIRCUIT, Diagnostics for Engine Starting Failure.>
↓
6. Inspection of fuel injector circuit. <Ref. to EN(H4DOTC)(diag)-77, FUEL INJECTOR CIRCUIT, Diagnostics for Engine Starting Failure.>

B: STARTER MOTOR CIRCUIT

CAUTION:

After repair or replacement of faulty parts, perform Clear Memory Mode <Ref. to EN(H4DOTC)(diag)-52, OPERATION, Clear Memory Mode.>, and Inspection Mode <Ref. to EN(H4DOTC)(diag)-43, PROCEDURE, Inspection Mode.>.

WIRING DIAGRAM:

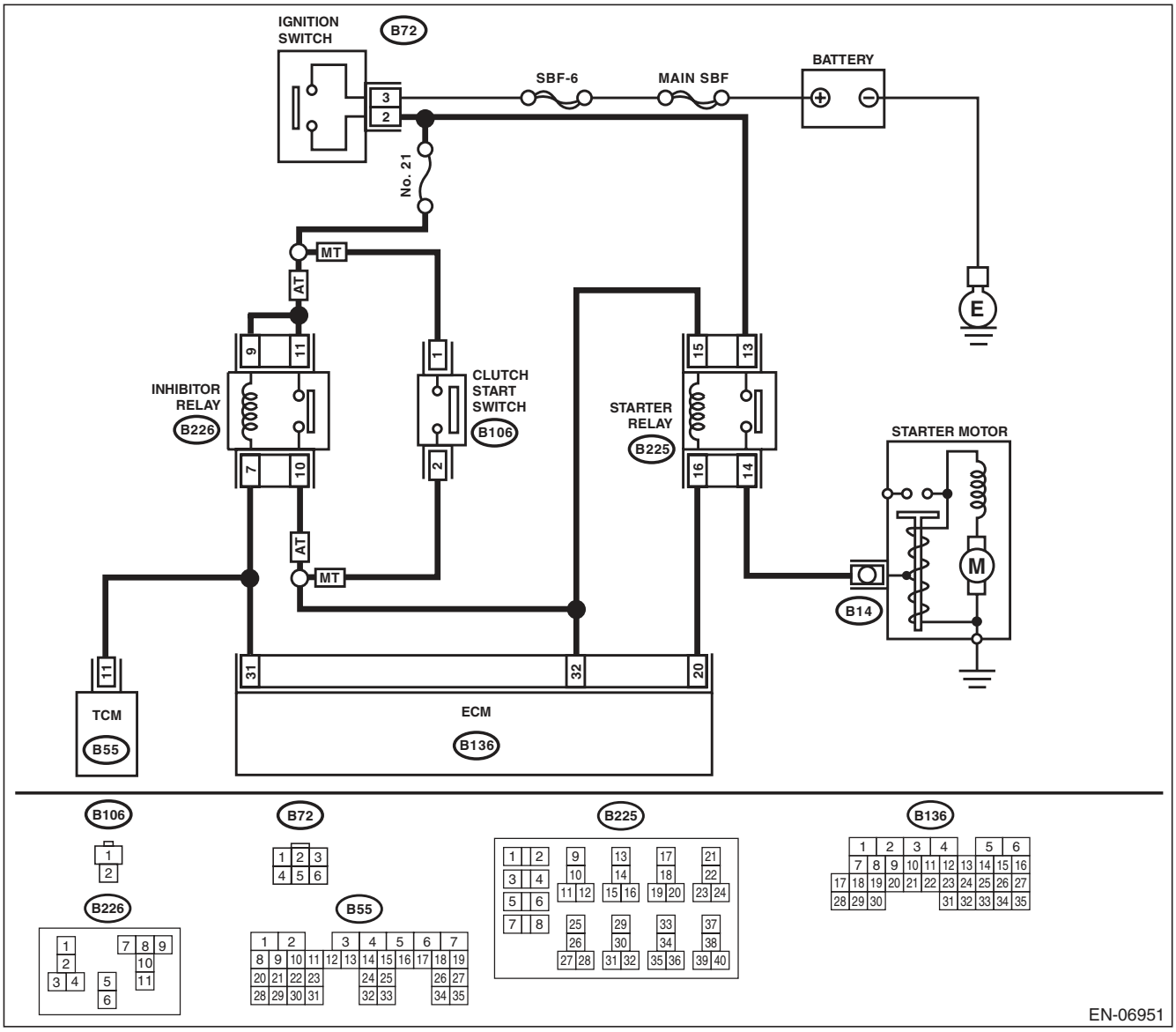

Diagnostics for Engine Starting Failure

Step		Check	Yes	No
1	**CHECK BATTERY.** Check the battery voltage.	Is the voltage 12 V or more?	Go to step **2**.	Charge or replace the battery.
2	**CHECK OPERATION OF STARTER MOTOR.**	Does the starter motor operate?	Go to step **3**.	Go to step **4**.
3	**CHECK DTC.**	Is DTC displayed? <Ref. to EN(H4DOTC)(diag)-42, OPERATION, Read Diagnostic Trouble Code (DTC).>	Check the appropriate DTC using the "List of Diagnostic Trouble Code (DTC)". <Ref. to EN(H4DOTC)(diag)-81, List of Diagnostic Trouble Code (DTC).>	The circuit has returned to a normal condition at this time. Reproduce the failure, and then perform the diagnosis again. NOTE: In this case, temporary poor contact of connector may be the cause.
4	**CHECK INPUT SIGNAL FOR STARTER MOTOR.** 1) Turn the ignition switch to OFF. 2) Disconnect the connector from starter motor. 3) On AT models, set the select lever to the "P" range or "N" range, and on MT models, depress the clutch pedal. 4) Turn the ignition switch to START. 5) Measure the voltage between the starter motor connector and the engine ground. ***Connector & terminal*** ***(B14) No. 1 (+) — Engine ground (–):***	Is the voltage 10 V or more?	Check the starter motor. <Ref. to SC(H4SO)-6, Starter.>	Go to step **5**.
5	**CHECK INPUT SIGNAL FOR STARTER MOTOR.** 1) On AT models, set the select lever to the "P" range or "N" range, and on MT models, depress the clutch pedal. 2) Turn the ignition switch to START. 3) Measure the voltage between starter relay connector and chassis ground. ***Connector & terminal*** ***(B225) No. 14 (+) — Chassis ground (–):***	Is the voltage 10 V or more?	Repair the open circuit of the harness between starter relay connector and starter motor.	Go to step **6**.
6	**CHECK HARNESS BETWEEN BATTERY AND IGNITION SWITCH CONNECTOR.** 1) Turn the ignition switch to OFF. 2) Disconnect the connector from ignition switch. 3) Measure the voltage between ignition switch connector and chassis ground. ***Connector & terminal*** ***(B72) No. 3 (+) — Chassis ground (–):***	Is the voltage 10 V or more?	Go to step **7**.	Check the following item and repair if necessary. • Blown out of fuse • Open or ground short circuit of harness between ignition switch connector and battery
7	**CHECK IGNITION SWITCH.** Measure the resistance between ignition switch terminals after turning the ignition switch to START position. ***Terminals*** ***No. 2 — No. 3:***	Is the resistance less than 1 Ω?	Go to step **8**.	Replace the ignition switch. <Ref. to SL-49, REPLACEMENT, Ignition Key Lock.>

Step		Check	Yes	No
8	**CHECK INPUT VOLTAGE OF STARTER RELAY.** 1) Remove the starter relay. 2) Connect the connector to ignition switch. 3) Turn the ignition switch to START. 4) Measure the voltage between starter relay connector and chassis ground. ***Connector & terminal*** ***(B225) No. 13 (+) — Chassis ground (–):***	Is the voltage 10 V or more?	Go to step **9**.	Repair the open circuit of harness between starter relay connector and ignition switch connector.
9	**CHECK STARTER RELAY.** 1) Connect the battery to starter relay terminals No. 15 and No. 16. 2) Measure the resistance between starter relay terminals. ***Terminals*** ***No. 13 — No. 14:***	Is the resistance less than 1 Ω?	Go to step **10**.	Replace the starter relay.
10	**CHECK HARNESS BETWEEN ECM AND STARTER RELAY CONNECTOR.** 1) Turn the ignition switch to OFF. 2) Disconnect the connectors from ECM. 3) Measure the resistance of harness between ECM and starter relay connector. ***Connector & terminal*** ***(B136) No. 20 — (B225) No. 16:***	Is the resistance less than 1 Ω?	Go to step **11**.	Repair the open circuit of harness between ECM and starter relay connector.
11	**CHECK TRANSMISSION TYPE.**	Is the transmission type AT?	Go to step **16**.	Go to step **12**.
12	**CHECK INPUT VOLTAGE OF STARTER RELAY.** 1) Depress the clutch pedal. 2) Turn the ignition switch to START. 3) Measure the voltage between starter relay connector and chassis ground. ***Connector & terminal*** ***(B225) No. 15 (+) — Chassis ground (–):***	Is the voltage 10 V or more?	Go to step **13**.	Go to step **14**.
13	**CHECK HARNESS BETWEEN ECM AND CLUTCH START SWITCH CONNECTOR.** 1) Turn the ignition switch to OFF. 2) Disconnect the clutch start switch connector. 3) Measure the resistance of harness between ECM and clutch start switch connector. ***Connector & terminal*** ***(B136) No. 32 — (B106) No. 2:***	Is the resistance less than 1 Ω?	Check the ECM power supply and ground line. <Ref. to EN(H4DOTC)(diag)-71, CHECK POWER SUPPLY AND GROUND LINE OF ENGINE CONTROL MODULE (ECM), Diagnostics for Engine Starting Failure.>	Repair the open circuit of harness between ECM and clutch start switch connector.
14	**CHECK INPUT VOLTAGE OF CLUTCH START SWITCH.** 1) Turn the ignition switch to OFF. 2) Disconnect the clutch start switch connector. 3) Turn the ignition switch to START. 4) Measure the voltage between the clutch start switch connector and chassis ground. ***Connector & terminal*** ***(B106) No. 1 (+) — Chassis ground (–):***	Is the voltage 10 V or more?	Go to step **15**.	Check the following item and repair if necessary. • Blown out of fuse • Open or ground short circuit of harness between ignition switch connector and clutch start switch connector

Step		Check	Yes	No
15	**CHECK CLUTCH START SWITCH.** Measure the resistance between clutch start switch terminals while depressing the clutch pedal. ***Terminals*** ***No. 1 — No. 2:***	Is the resistance less than 1 Ω?	Repair the open circuit of harness between clutch start switch connector and starter relay connector.	Replace the clutch start switch. <Ref. to CL-37, Clutch Switch.>
16	**CHECK INPUT VOLTAGE OF STARTER RELAY.** 1) Connect the connector to ECM. 2) Place the select lever in “P” range or “N” range. 3) Turn the ignition switch to START. 4) Measure the voltage between starter relay connector and chassis ground. ***Connector & terminal*** ***(B225) No. 15 (+) — Chassis ground (–):***	Is the voltage 10 V or more?	Go to step **17**.	Go to step **18**.
17	**CHECK HARNESS BETWEEN ECM AND INHIBITOR RELAY CONNECTOR.** 1) Turn the ignition switch to OFF. 2) Disconnect the inhibitor relay connector. 3) Measure the resistance of harness between ECM and inhibitor relay connector. ***Connector & terminal*** ***(B136) No. 31 — (B226) No. 7:*** ***(B136) No. 32 — (B226) No. 10:***	Is the resistance less than 1 Ω?	Check the ECM power supply and ground line. <Ref. to EN(H4DOTC)(diag)-71, CHECK POWER SUPPLY AND GROUND LINE OF ENGINE CONTROL MODULE (ECM), Diagnostics for Engine Starting Failure.>	Repair the open circuit of harness between ECM and inhibitor relay connector.
18	**CHECK INPUT VOLTAGE OF INHIBITOR RELAY.** 1) Turn the ignition switch to OFF. 2) Disconnect the inhibitor relay connector. 3) Turn the ignition switch to START. 4) Measure the voltage between inhibitor relay connector and chassis ground. ***Connector & terminal*** ***(B226) No. 9 (+) — Chassis ground (–):*** ***(B226) No. 11 (+) — Chassis ground (–):***	Is the voltage 10 V or more?	Go to step **19**.	Check the following item and repair if necessary. • Blown out of fuse • Open or ground short circuit of harness between ignition switch connector and inhibitor relay connector
19	**CHECK INHIBITOR RELAY.** 1) Connect the battery to inhibitor relay terminals No. 7 and No. 9. 2) Measure the resistance between inhibitor relay terminals. ***Terminals*** ***No. 10 — No. 11:***	Is the resistance less than 1 Ω?	Go to step **20**.	Replace the inhibitor relay.
20	**CHECK HARNESS BETWEEN INHIBITOR RELAY CONNECTOR AND STARTER RELAY CONNECTOR.** 1) Turn the ignition switch to OFF. 2) Measure the resistance of harness between inhibitor relay connector and starter relay connector. ***Connector & terminal*** ***(B226) No. 10 — (B225) No. 15:***	Is the resistance less than 1 Ω?	Repair the open circuit of harness between TCM and inhibitor relay connector.	Repair the open circuit of harness between inhibitor relay connector and starter relay connector.

C: CHECK POWER SUPPLY AND GROUND LINE OF ENGINE CONTROL MODULE (ECM)

CAUTION:
After repair or replacement of faulty parts, perform Clear Memory Mode <Ref. to EN(H4DOTC)(diag)-52, OPERATION, Clear Memory Mode.>, and Inspection Mode <Ref. to EN(H4DOTC)(diag)-43, PROCEDURE, Inspection Mode.>.
WIRING DIAGRAM:

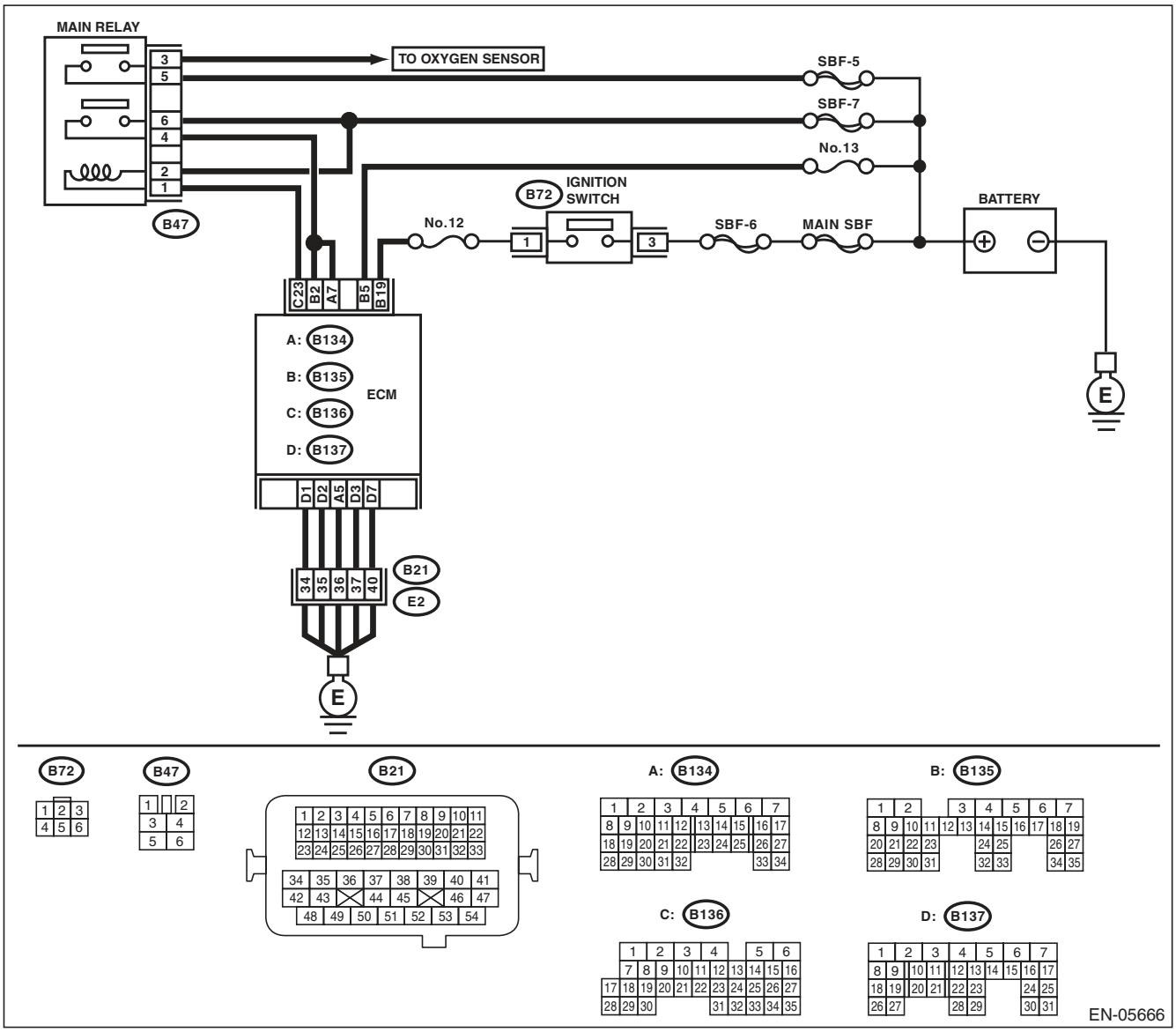

Diagnostics for Engine Starting Failure

	Step	Check	Yes	No
1	**CHECK MAIN RELAY.** 1) Turn the ignition switch to OFF. 2) Remove the main relay. 3) Connect the battery to main relay terminals No. 1 and No. 2. 4) Measure the resistance between main relay terminals. ***Terminals*** ***No. 3 — No. 5:*** ***No. 4 — No. 6:***	Is the resistance less than 1 Ω?	Go to step **2**.	Replace the main relay. <Ref. to EN(H4DOTC)(diag) -8, Electrical Component Location.>
2	**CHECK GROUND CIRCUIT FOR ECM.** 1) Disconnect the connectors from ECM. 2) Measure the resistance of harness between ECM and chassis ground. ***Connector & terminal*** ***(B134) No. 5 — Chassis ground:*** ***(B137) No. 1 — Chassis ground:*** ***(B137) No. 2 — Chassis ground:*** ***(B137) No. 3 — Chassis ground:*** ***(B137) No. 7 — Chassis ground:***	Is the resistance less than 5 Ω?	Go to step **3**.	Repair the harness and connector. NOTE: In this case, repair the following item: • Open circuit in harness between ECM and engine ground terminal • Poor contact of coupling connector
3	**CHECK INPUT VOLTAGE OF ECM.** 1) Turn the ignition switch to ON. 2) Measure the voltage between ECM and chassis ground. ***Connector & terminal*** ***(B135) No. 5 (+) — Chassis ground (–):*** ***(B135) No. 19 (+) — Chassis ground (–):***	Is the voltage 10 V or more?	Go to step **4**.	Repair the open or ground short circuit of harness of power supply circuit.
4	**CHECK INPUT VOLTAGE OF MAIN RELAY.** Measure the voltage between main relay connector and chassis ground. ***Connector & terminal*** ***(B47) No. 2 (+) — Chassis ground (–):*** ***(B47) No. 5 (+) — Chassis ground (–):*** ***(B47) No. 6 (+) — Chassis ground (–):***	Is the voltage 10 V or more?	Go to step **5**.	Repair the open or ground short circuit of harness of power supply circuit.
5	**CHECK INPUT VOLTAGE OF ECM.** 1) Turn the ignition switch to OFF. 2) Install the main relay. 3) Turn the ignition switch to ON. 4) Measure the voltage between ECM and chassis ground. ***Connector & terminal*** ***(B136) No. 23 (+) — Chassis ground (–):***	Is the voltage 10 V or more?	Go to step **6**.	Repair the open or ground short circuit of harness between ECM and main relay connector.
6	**CHECK INPUT VOLTAGE OF ECM.** 1) Turn the ignition switch to OFF. 2) Connect the connector to ECM. 3) Turn the ignition switch to ON. 4) Measure the voltage between ECM and chassis ground. ***Connector & terminal*** ***(B134) No. 7 (+) — Chassis ground (–):*** ***(B135) No. 2 (+) — Chassis ground (–):***	Is the voltage 10 V or more?	Check ignition control system. <Ref. to EN(H4DOTC)(diag) -73, IGNITION CONTROL SYSTEM, Diagnostics for Engine Starting Failure.>	Repair the harness and connector. NOTE: In this case, repair the following item: • Open circuit in harness between ECM and main relay connector • Poor contact of main relay connector

D: IGNITION CONTROL SYSTEM

CAUTION:

After repair or replacement of faulty parts, perform Clear Memory Mode <Ref. to EN(H4DOTC)(diag)-52, OPERATION, Clear Memory Mode.>, and Inspection Mode <Ref. to EN(H4DOTC)(diag)-43, PROCEDURE, Inspection Mode.>.

WIRING DIAGRAM:

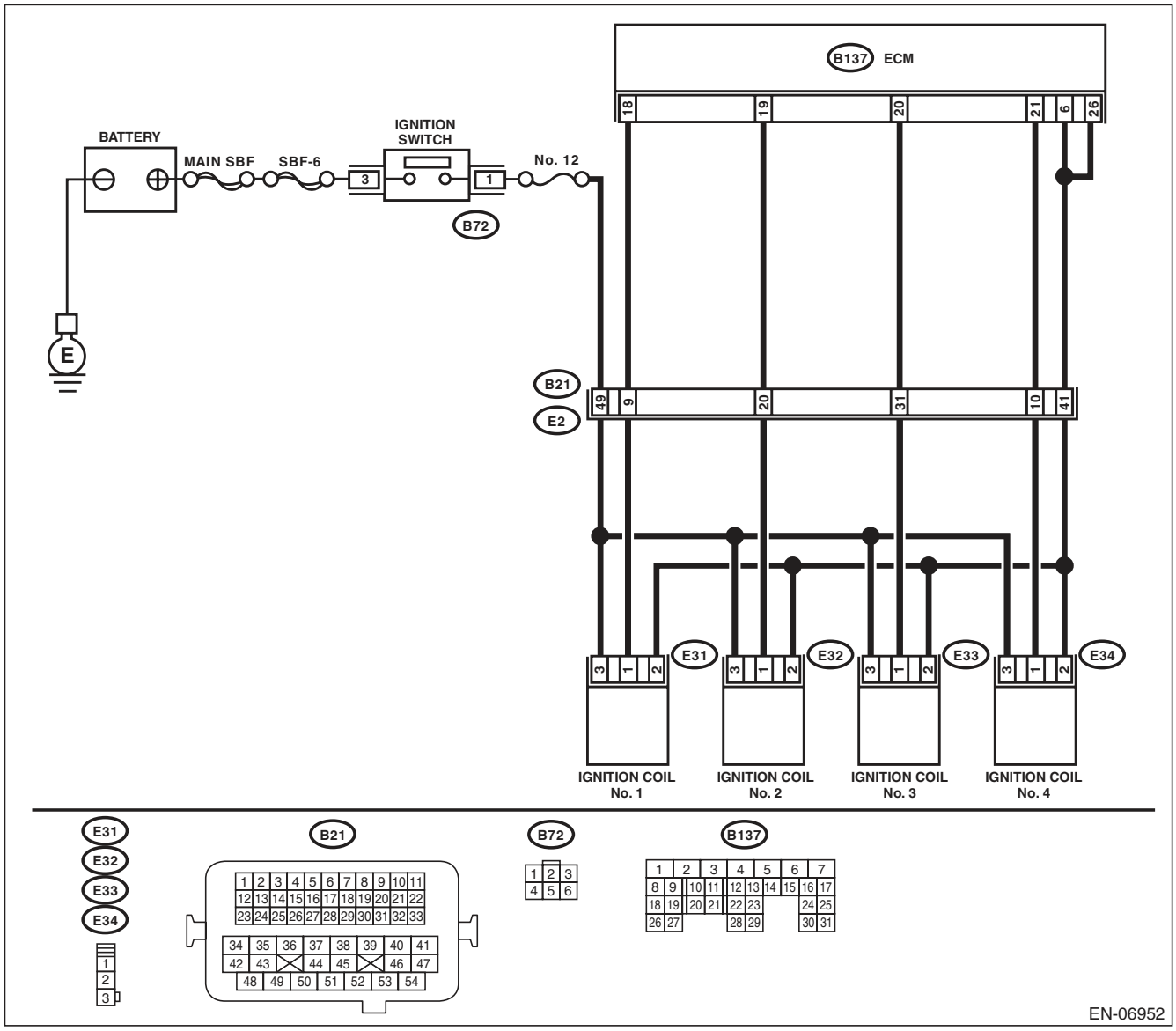

	Step	Check	Yes	No
1	**CHECK SPARK PLUG CONDITION.** 1) Remove the spark plug. <Ref. to IG(H4DOTC)-4, REMOVAL, Spark Plug.> 2) Check the spark plug condition. <Ref. to IG(H4DOTC)-5, INSPECTION, Spark Plug.>	Is the spark plug condition normal?	Go to step **2**.	Replace the spark plug. <Ref. to IG(H4DOTC)-4, Spark Plug.>
2	**CHECK IGNITION SYSTEM FOR SPARKS.** 1) Connect the spark plug to ignition coil. 2) Release the fuel pressure. <Ref. to FU(H4DOTC)-57, RELEASING OF FUEL PRESSURE, PROCEDURE, Fuel.> 3) Contact the spark plug's thread portion to the engine. 4) While opening the throttle valve fully, crank the engine to check that spark occurs at each cylinder.	Does spark occur at each cylinder?	Check fuel pump system. <Ref. to EN(H4DOTC)(diag)-76, FUEL PUMP CIRCUIT, Diagnostics for Engine Starting Failure.>	Go to step **3**.
3	**CHECK POWER SUPPLY CIRCUIT OF IGNITION COIL.** 1) Turn the ignition switch to OFF. 2) Disconnect the connector from ignition coil. 3) Turn the ignition switch to ON. 4) Measure the voltage between ignition coil connector and engine ground. ***Connector & terminal*** ***(E31) No. 3 (+) — Engine ground (–):*** ***(E32) No. 3 (+) — Engine ground (–):*** ***(E33) No. 3 (+) — Engine ground (–):*** ***(E34) No. 3 (+) — Engine ground (–):***	Is the voltage 10 V or more?	Go to step **4**.	Repair the harness and connector. NOTE: In this case, repair the following item: • Open harness between ignition coil and ignition switch connector • Poor contact of coupling connector
4	**CHECK HARNESS OF IGNITION COIL GROUND CIRCUIT.** 1) Turn the ignition switch to OFF. 2) Measure the resistance of harness between ignition coil connector and engine ground. ***Connector & terminal*** ***(E31) No. 2 — Engine ground:*** ***(E32) No. 2 — Engine ground:*** ***(E33) No. 2 — Engine ground:*** ***(E34) No. 2 — Engine ground:***	Is the resistance less than 5 Ω?	Go to step **5**.	Repair the harness and connector. NOTE: In this case, repair the following item: • Open circuit of harness between ECM and ignition coil connector • Open circuit in harness between ECM and engine ground terminal • Poor contact of coupling connector
5	**CHECK HARNESS BETWEEN ECM AND IGNITION COIL CONNECTOR.** 1) Disconnect the connectors from ECM. 2) Measure the resistance of harness between ECM and ignition coil connector. ***Connector & terminal*** ***(B137) No. 18 — (E31) No. 1:*** ***(B137) No. 19 — (E32) No. 1:*** ***(B137) No. 20 — (E33) No. 1:*** ***(B137) No. 21 — (E34) No. 1:***	Is the resistance less than 1 Ω?	Go to step **6**.	Repair the harness and connector. NOTE: In this case, repair the following item: • Open circuit of harness between ECM and ignition coil connector • Poor contact of coupling connector

Step		Check	Yes	No
6	**CHECK HARNESS BETWEEN ECM AND IGNITION COIL CONNECTOR.** Measure the resistance of harness between ECM and engine ground. ***Connector & terminal*** ***(B137) No. 18 — Engine ground:*** ***(B137) No. 19 — Engine ground:*** ***(B137) No. 20 — Engine ground:*** ***(B137) No. 21 — Engine ground:***	Is the resistance 1 MΩ or more?	Go to step **7**.	Repair the ground short circuit of harness between ECM and ignition coil connector.
7	**CHECK POOR CONTACT.** Check for poor contact of the ECM connector.	Is there poor contact in ECM connector?	Repair the poor contact of ECM connector.	Replace the ignition coil. <Ref. to IG(H4DOTC)-7, Ignition Coil.>

E: FUEL PUMP CIRCUIT

CAUTION:
After repair or replacement of faulty parts, perform Clear Memory Mode <Ref. to EN(H4DOTC)(diag)-52, OPERATION, Clear Memory Mode.>, and Inspection Mode <Ref. to EN(H4DOTC)(diag)-43, PROCEDURE, Inspection Mode.>.
WIRING DIAGRAM:

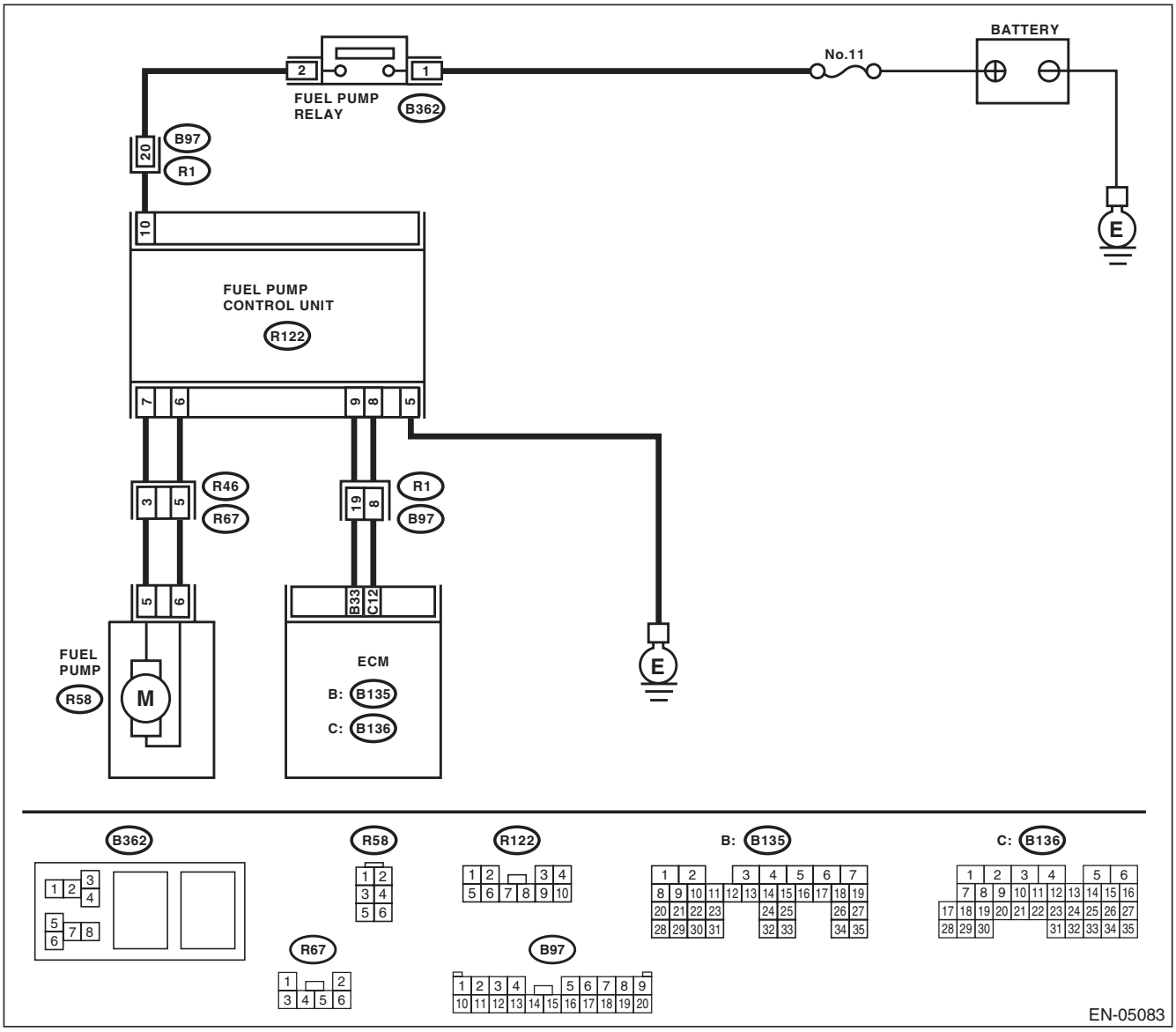

Step		Check	Yes	No
1	**CHECK OPERATING SOUND OF FUEL PUMP.** Make sure that the fuel pump operates for two seconds when turning the ignition switch to ON. NOTE: Fuel pump operation can be executed using the Subaru Select Monitor. For the procedures, refer to “Compulsory Valve Operation Check Mode”. <Ref. to EN(H4DOTC)(diag)-53, Compulsory Valve Operation Check Mode.>	Does the fuel pump emit operating sound?	Check the fuel injector circuit. <Ref. to EN(H4DOTC)(diag)-77, FUEL INJECTOR CIRCUIT, Diagnostics for Engine Starting Failure.>	Display the DTC. <Ref. to EN(H4DOTC)(diag)-42, OPERATION, Read Diagnostic Trouble Code (DTC).>

F: FUEL INJECTOR CIRCUIT

CAUTION:

- **Check or repair only faulty parts.**
- **After repair or replacement of faulty parts, perform Clear Memory Mode <Ref. to EN(H4DOTC)(diag)-52, OPERATION, Clear Memory Mode.>, and Inspection Mode <Ref. to EN(H4DOTC)(diag)-43, PROCEDURE, Inspection Mode.>.**

WIRING DIAGRAM:

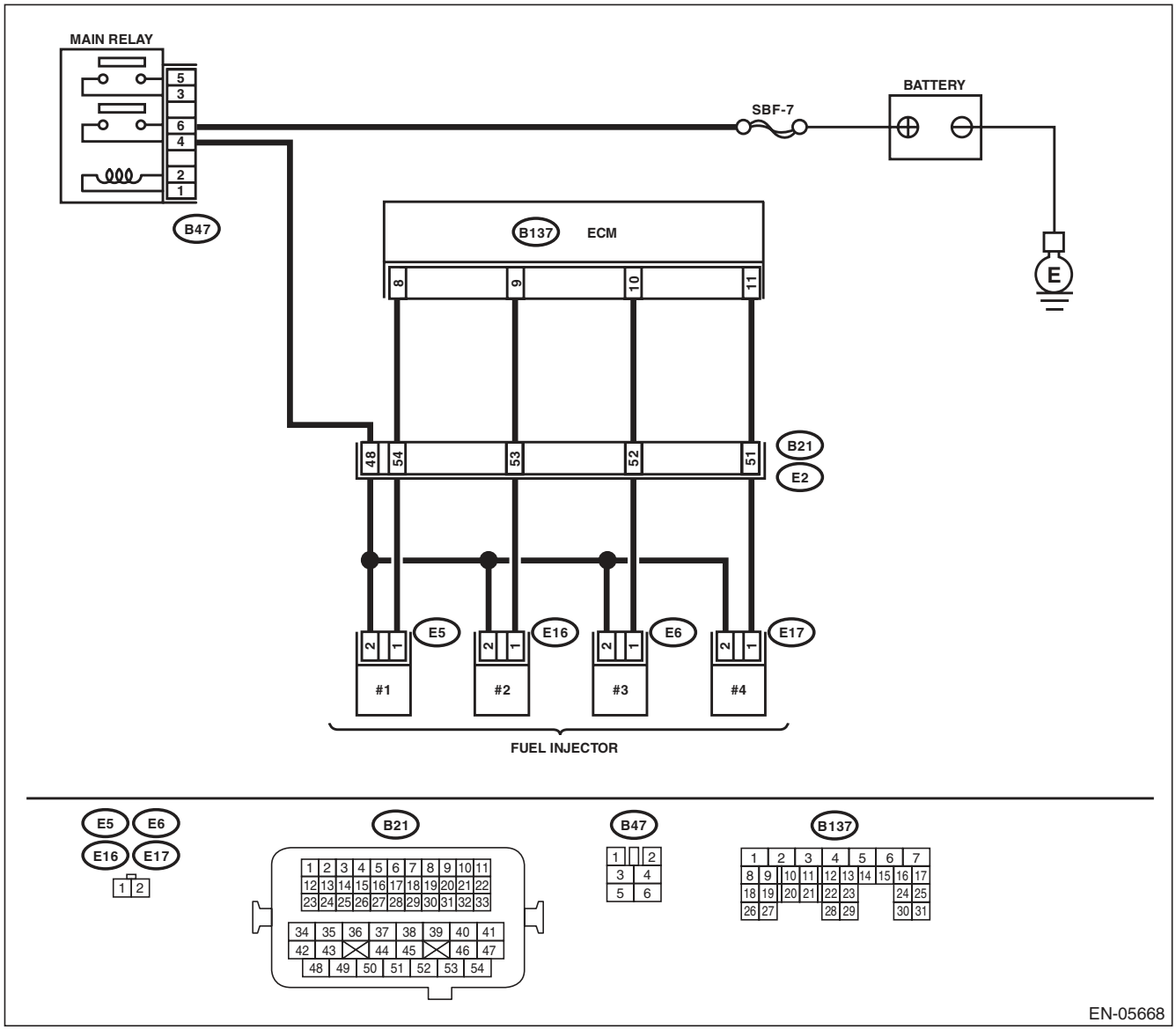

Diagnostics for Engine Starting Failure

	Step	Check	Yes	No
1	**CHECK OPERATION OF EACH FUEL INJECTOR.** While cranking the engine, check each fuel injector emits operating sound. Use a sound scope or attach a screwdriver to the injector for this check.	Does the fuel injector emit operating sound?	Check the fuel pressure. <Ref. to ME(H4DOTC)-25, INSPECTION, Fuel Pressure.>	Go to step **2**.
2	**CHECK POWER SUPPLY TO EACH FUEL INJECTOR.** 1) Turn the ignition switch to OFF. 2) Disconnect the connector from fuel injector. 3) Turn the ignition switch to ON. 4) Measure the voltage between fuel injector connector and the engine ground. ***Connector & terminal*** ***#1 (E5) No. 2 (+) — Engine ground (–):*** ***#2 (E16) No. 2 (+) — Engine ground (–):*** ***#3 (E6) No. 2 (+) — Engine ground (–):*** ***#4 (E17) No. 2 (+) — Engine ground (–):***	Is the voltage 10 V or more?	Go to step **3**.	Repair the harness and connector. NOTE: In this case, repair the following item: • Open circuit in harness between main relay and fuel injector connector • Poor contact of main relay connector • Poor contact of coupling connector
3	**CHECK HARNESS BETWEEN ECM AND FUEL INJECTOR CONNECTOR.** 1) Disconnect the connectors from ECM. 2) Measure the resistance of harness between ECM and fuel injector connector. ***Connector & terminal*** ***(B137) No. 8 — (E5) No. 1:*** ***(B137) No. 9 — (E16) No. 1:*** ***(B137) No. 10 — (E6) No. 1:*** ***(B137) No. 11 — (E17) No. 1:***	Is the resistance less than 1 Ω?	Go to step **4**.	Repair the harness and connector. NOTE: In this case, repair the following item: • Open circuit of harness between ECM and fuel injector connector • Poor contact of coupling connector
4	**CHECK HARNESS BETWEEN ECM AND FUEL INJECTOR CONNECTOR.** Measure the resistance between ECM and chassis ground. ***Connector & terminal*** ***(B137) No. 8 — Chassis ground:*** ***(B137) No. 9 — Chassis ground:*** ***(B137) No. 10 — Chassis ground:*** ***(B137) No. 11 — Chassis ground:***	Is the resistance 1 MΩ or more?	Go to step **5**.	Repair the short circuit to ground in harness between ECM and fuel injector connector.
5	**CHECK EACH FUEL INJECTOR.** Measure the resistance between each fuel injector terminals. ***Terminals*** ***No. 1 — No. 2:***	Is the resistance between 5 — 20 Ω?	Go to step **6**.	Replace the faulty fuel injector. <Ref. to FU(H4DOTC)-38, Fuel Injector.>
6	**CHECK POOR CONTACT.** Check for poor contact of the ECM connector.	Is there poor contact in ECM connector?	Repair the poor contact of ECM connector.	Inspection using "General Diagnostic Table" <Ref. to EN(H4DOTC)(diag)-370, INSPECTION, General Diagnostic Table.>

18. Diagnostic Procedure for Subaru Select Monitor Communication

A: COMMUNICATION FOR INITIALIZING IMPOSSIBLE

DIAGNOSIS:
Open or short circuit in data link connector
TROUBLE SYMPTOM:
Subaru Select Monitor communication failure
WIRING DIAGRAM:

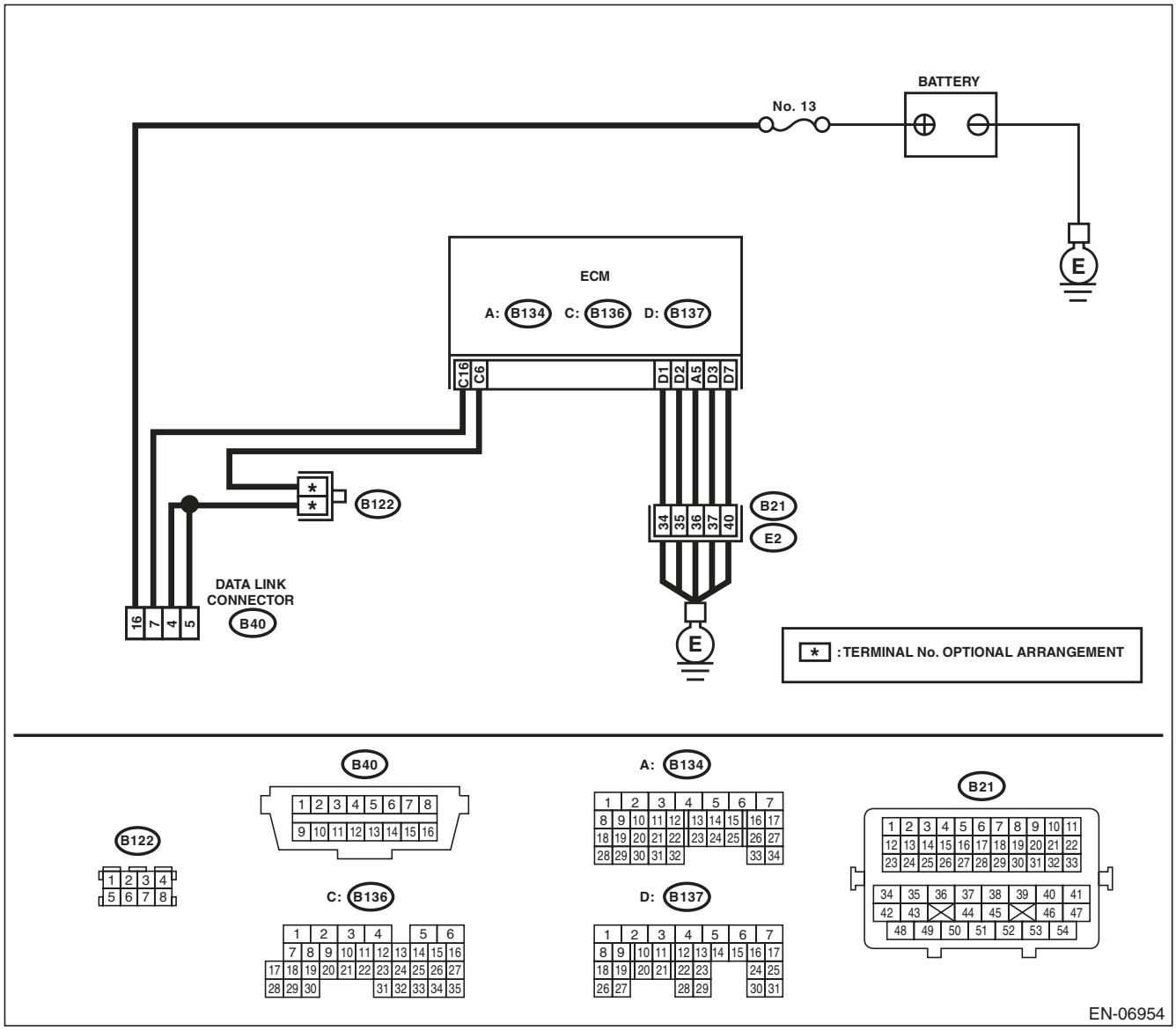

	Step	Check	Yes	No
1	**CHECK POWER SUPPLY CIRCUIT.** Connect the SDI (Subaru Diagnosis Interface) or general scan tool to data link connector.	Does SDI or general scan tool turn ON?	Go to step **4**.	Go to step **2**.
2	**CHECK POWER SUPPLY CIRCUIT.** Measure the voltage between data link connector and chassis ground. ***Connector & terminal*** ***(B40) No. 16 (+) — Chassis ground (–):***	Is the voltage 10 V or more?	Go to step **3**.	Repair the power supply circuit. NOTE: In this case, repair the following item: • Open or ground short circuit of harness between battery and data link connector • Blown out of fuse (M/B No. 13)
3	**CHECK HARNESS BETWEEN DATA LINK CONNECTOR AND CHASSIS GROUND.** 1) Turn the ignition switch to OFF. 2) Measure the resistance of harness between data link connector and chassis ground. ***Connector & terminal*** ***(B40) No. 4 — Chassis ground:*** ***(B40) No. 5 — Chassis ground:***	Is the resistance less than 5 Ω?	Repair the poor contact of data link connector.	Repair the harness and connector. NOTE: In this case, repair the following item: • Open circuit of harness between ECM and data link connector • Open circuit of harness between ECM and engine ground • Poor contact in ECM connector • Poor contact of coupling connector
4	**CHECK HARNESS BETWEEN ECM AND DATA LINK CONNECTOR.** 1) Disconnect the connector from ECM, TCM, VDC CU, airbag CM and body integrated unit. **CAUTION:** **When disconnecting the connector from airbag control module, always follow the precautions on AB section. <Ref. to AB-4, CAUTION, General Description.>** 2) Measure the resistance of harness between ECM and data link connector. ***Connector & terminal*** ***(B136) No. 16 — (B40) No. 7:***	Is the resistance less than 1 Ω?	Go to step **5**.	Repair the open circuit of harness between ECM and data link connector.
5	**CHECK HARNESS BETWEEN ECM AND DATA LINK CONNECTOR.** Measure the resistance between data link connector and chassis ground. ***Connector & terminal*** ***(B40) No. 7 — Chassis ground:***	Is the resistance 1 MΩ or more?	Repair the poor contact in the ECM or data link connector.	Repair the ground short circuit of harness between ECM and data link connector.

19. List of Diagnostic Trouble Code (DTC)

A: LIST

DTC	Item	Reference
P0011	Intake Camshaft Position - Timing Over-Advanced or System Performance (Bank 1)	<Ref. to EN(H4DOTC)(diag)-89, DTC P0011 INTAKE CAMSHAFT POSITION - TIMING OVER-ADVANCED OR SYSTEM PERFORMANCE (BANK 1), Diagnostic Procedure with Diagnostic Trouble Code (DTC).>
P0016	Crankshaft Position - Camshaft Position Correlation (Bank1)	<Ref. to EN(H4DOTC)(diag)-90, DTC P0016 CRANKSHAFT POSITION - CAMSHAFT POSITION CORRELATION (BANK1), Diagnostic Procedure with Diagnostic Trouble Code (DTC).>
P0018	Crankshaft Position - Camshaft Position Correlation (Bank2)	<Ref. to EN(H4DOTC)(diag)-91, DTC P0018 CRANKSHAFT POSITION - CAMSHAFT POSITION CORRELATION (BANK2), Diagnostic Procedure with Diagnostic Trouble Code (DTC).>
P0021	Intake Camshaft Position - Timing Over-Advanced or System Performance (Bank 2)	<Ref. to EN(H4DOTC)(diag)-92, DTC P0021 INTAKE CAMSHAFT POSITION - TIMING OVER-ADVANCED OR SYSTEM PERFORMANCE (BANK 2), Diagnostic Procedure with Diagnostic Trouble Code (DTC).>
P0030	HO2S Heater Control Circuit (Bank 1 Sensor 1)	<Ref. to EN(H4DOTC)(diag)-93, DTC P0030 HO2S HEATER CONTROL CIRCUIT (BANK 1 SENSOR 1), Diagnostic Procedure with Diagnostic Trouble Code (DTC).>
P0031	HO2S Heater Control Circuit Low (Bank 1 Sensor 1)	<Ref. to EN(H4DOTC)(diag)-95, DTC P0031 HO2S HEATER CONTROL CIRCUIT LOW (BANK 1 SENSOR 1), Diagnostic Procedure with Diagnostic Trouble Code (DTC).>
P0032	HO2S Heater Control Circuit High (Bank 1 Sensor 1)	<Ref. to EN(H4DOTC)(diag)-97, DTC P0032 HO2S HEATER CONTROL CIRCUIT HIGH (BANK 1 SENSOR 1), Diagnostic Procedure with Diagnostic Trouble Code (DTC).>
P0037	HO2S Heater Control Circuit Low (Bank 1 Sensor 2)	<Ref. to EN(H4DOTC)(diag)-99, DTC P0037 HO2S HEATER CONTROL CIRCUIT LOW (BANK 1 SENSOR 2), Diagnostic Procedure with Diagnostic Trouble Code (DTC).>
P0038	HO2S Heater Control Circuit High (Bank 1 Sensor 2)	<Ref. to EN(H4DOTC)(diag)-101, DTC P0038 HO2S HEATER CONTROL CIRCUIT HIGH (BANK 1 SENSOR 2), Diagnostic Procedure with Diagnostic Trouble Code (DTC).>
P0068	MAP/MAF - Throttle Position Correlation	<Ref. to EN(H4DOTC)(diag)-103, DTC P0068 MAP/MAF - THROTTLE POSITION CORRELATION, Diagnostic Procedure with Diagnostic Trouble Code (DTC).>
P0101	Mass or Volume Air Flow Circuit Range/Performance	<Ref. to EN(H4DOTC)(diag)-105, DTC P0101 MASS OR VOLUME AIR FLOW CIRCUIT RANGE/PERFORMANCE, Diagnostic Procedure with Diagnostic Trouble Code (DTC).>
P0102	Mass or Volume Air Flow Circuit Low Input	<Ref. to EN(H4DOTC)(diag)-107, DTC P0102 MASS OR VOLUME AIR FLOW CIRCUIT LOW INPUT, Diagnostic Procedure with Diagnostic Trouble Code (DTC).>
P0103	Mass or Volume Air Flow Circuit High Input	<Ref. to EN(H4DOTC)(diag)-109, DTC P0103 MASS OR VOLUME AIR FLOW CIRCUIT HIGH INPUT, Diagnostic Procedure with Diagnostic Trouble Code (DTC).>
P0107	Manifold Absolute Pressure/Barometric Pressure Circuit Low Input	<Ref. to EN(H4DOTC)(diag)-111, DTC P0107 MANIFOLD ABSOLUTE PRESSURE/BAROMETRIC PRESSURE CIRCUIT LOW INPUT, Diagnostic Procedure with Diagnostic Trouble Code (DTC).>
P0108	Manifold Absolute Pressure/Barometric Pressure Circuit High Input	<Ref. to EN(H4DOTC)(diag)-113, DTC P0108 MANIFOLD ABSOLUTE PRESSURE/BAROMETRIC PRESSURE CIRCUIT HIGH INPUT, Diagnostic Procedure with Diagnostic Trouble Code (DTC).>
P0111	Intake Air Temperature Sensor 1 Circuit Range/Performance	<Ref. to EN(H4DOTC)(diag)-115, DTC P0111 INTAKE AIR TEMPERATURE SENSOR 1 CIRCUIT RANGE/PERFORMANCE, Diagnostic Procedure with Diagnostic Trouble Code (DTC).>
P0112	Intake Air Temperature Sensor 1 Circuit Low	<Ref. to EN(H4DOTC)(diag)-117, DTC P0112 INTAKE AIR TEMPERATURE SENSOR 1 CIRCUIT LOW, Diagnostic Procedure with Diagnostic Trouble Code (DTC).>

DTC	Item	Reference
P0113	Intake Air Temperature Sensor 1 Circuit High	<Ref. to EN(H4DOTC)(diag)-119, DTC P0113 INTAKE AIR TEMPERATURE SENSOR 1 CIRCUIT HIGH, Diagnostic Procedure with Diagnostic Trouble Code (DTC).>
P0117	Engine Coolant Temperature Circuit Low	<Ref. to EN(H4DOTC)(diag)-121, DTC P0117 ENGINE COOLANT TEMPERATURE CIRCUIT LOW, Diagnostic Procedure with Diagnostic Trouble Code (DTC).>
P0118	Engine Coolant Temperature Circuit High	<Ref. to EN(H4DOTC)(diag)-123, DTC P0118 ENGINE COOLANT TEMPERATURE CIRCUIT HIGH, Diagnostic Procedure with Diagnostic Trouble Code (DTC).>
P0122	Throttle/Pedal Position Sensor/ Switch “A” Circuit Low	<Ref. to EN(H4DOTC)(diag)-125, DTC P0122 THROTTLE/PEDAL POSITION SENSOR/SWITCH “A” CIRCUIT LOW, Diagnostic Procedure with Diagnostic Trouble Code (DTC).>
P0123	Throttle/Pedal Position Sensor/ Switch “A” Circuit High	<Ref. to EN(H4DOTC)(diag)-127, DTC P0123 THROTTLE/PEDAL POSITION SENSOR/SWITCH “A” CIRCUIT HIGH, Diagnostic Procedure with Diagnostic Trouble Code (DTC).>
P0125	Insufficient Coolant Temperature for Closed Loop Fuel Control	<Ref. to EN(H4DOTC)(diag)-129, DTC P0125 INSUFFICIENT COOLANT TEMPERATURE FOR CLOSED LOOP FUEL CONTROL, Diagnostic Procedure with Diagnostic Trouble Code (DTC).>
P0126	Insufficient Engine Coolant Temperature For Stable Operation	<Ref. to EN(H4DOTC)(diag)-130, DTC P0126 INSUFFICIENT ENGINE COOLANT TEMPERATURE FOR STABLE OPERATION, Diagnostic Procedure with Diagnostic Trouble Code (DTC).>
P0128	Coolant Thermostat (Engine Coolant Temperature Below Thermostat Regulating Temperature)	<Ref. to EN(H4DOTC)(diag)-132, DTC P0128 COOLANT THERMOSTAT (ENGINE COOLANT TEMPERATURE BELOW THERMOSTAT REGULATING TEMPERATURE), Diagnostic Procedure with Diagnostic Trouble Code (DTC).>
P0131	O2 Sensor Circuit Low Voltage (Bank 1 Sensor 1)	<Ref. to EN(H4DOTC)(diag)-133, DTC P0131 O2 SENSOR CIRCUIT LOW VOLTAGE (BANK 1 SENSOR 1), Diagnostic Procedure with Diagnostic Trouble Code (DTC).>
P0132	O2 Sensor Circuit High Voltage (Bank 1 Sensor 1)	<Ref. to EN(H4DOTC)(diag)-135, DTC P0132 O2 SENSOR CIRCUIT HIGH VOLTAGE (BANK 1 SENSOR 1), Diagnostic Procedure with Diagnostic Trouble Code (DTC).>
P0133	O2 Sensor Circuit Slow Response (Bank 1 Sensor 1)	<Ref. to EN(H4DOTC)(diag)-137, DTC P0133 O2 SENSOR CIRCUIT SLOW RESPONSE (BANK 1 SENSOR 1), Diagnostic Procedure with Diagnostic Trouble Code (DTC).>
P0134	O2 Sensor Circuit No Activity Detected (Bank 1 Sensor 1)	<Ref. to EN(H4DOTC)(diag)-139, DTC P0134 O2 SENSOR CIRCUIT NO ACTIVITY DETECTED (BANK 1 SENSOR 1), Diagnostic Procedure with Diagnostic Trouble Code (DTC).>
P0137	O2 Sensor Circuit Low Voltage (Bank 1 Sensor 2)	<Ref. to EN(H4DOTC)(diag)-141, DTC P0137 O2 SENSOR CIRCUIT LOW VOLTAGE (BANK 1 SENSOR 2), Diagnostic Procedure with Diagnostic Trouble Code (DTC).>
P0138	O2 Sensor Circuit High Voltage (Bank 1 Sensor 2)	<Ref. to EN(H4DOTC)(diag)-143, DTC P0138 O2 SENSOR CIRCUIT HIGH VOLTAGE (BANK 1 SENSOR 2), Diagnostic Procedure with Diagnostic Trouble Code (DTC).>
P0139	O2 Sensor Circuit Slow Response (Bank 1 Sensor 2)	<Ref. to EN(H4DOTC)(diag)-145, DTC P0139 O2 SENSOR CIRCUIT SLOW RESPONSE (BANK 1 SENSOR 2), Diagnostic Procedure with Diagnostic Trouble Code (DTC).>
P0140	O2 Sensor Circuit No Activity Detected (Bank 1 Sensor 2)	<Ref. to EN(H4DOTC)(diag)-147, DTC P0140 O2 SENSOR CIRCUIT NO ACTIVITY DETECTED (BANK1 SENSOR2), Diagnostic Procedure with Diagnostic Trouble Code (DTC).>
P0171	System Too Lean (Bank 1)	<Ref. to EN(H4DOTC)(diag)-149, DTC P0171 SYSTEM TOO LEAN (BANK 1), Diagnostic Procedure with Diagnostic Trouble Code (DTC).>
P0172	System Too Rich (Bank 1)	<Ref. to EN(H4DOTC)(diag)-150, DTC P0172 SYSTEM TOO RICH (BANK 1), Diagnostic Procedure with Diagnostic Trouble Code (DTC).>
P0181	Fuel Temperature Sensor “A” Circuit Range/Performance	<Ref. to EN(H4DOTC)(diag)-152, DTC P0181 FUEL TEMPERATURE SENSOR “A” CIRCUIT RANGE/PERFORMANCE, Diagnostic Procedure with Diagnostic Trouble Code (DTC).>

DTC	Item	Reference
P0182	Fuel Temperature Sensor “A” Circuit Low Input	<Ref. to EN(H4DOTC)(diag)-154, DTC P0182 FUEL TEMPERATURE SENSOR “A” CIRCUIT LOW INPUT, Diagnostic Procedure with Diagnostic Trouble Code (DTC).>
P0183	Fuel Temperature Sensor “A” Circuit High Input	<Ref. to EN(H4DOTC)(diag)-156, DTC P0183 FUEL TEMPERATURE SENSOR “A” CIRCUIT HIGH INPUT, Diagnostic Procedure with Diagnostic Trouble Code (DTC).>
P0222	Throttle/Pedal Position Sensor/ Switch “B” Circuit Low	<Ref. to EN(H4DOTC)(diag)-158, DTC P0222 THROTTLE/PEDAL POSITION SENSOR/SWITCH “B” CIRCUIT LOW, Diagnostic Procedure with Diagnostic Trouble Code (DTC).>
P0223	Throttle/Pedal Position Sensor/ Switch “B” Circuit High	<Ref. to EN(H4DOTC)(diag)-160, DTC P0223 THROTTLE/PEDAL POSITION SENSOR/SWITCH “B” CIRCUIT HIGH, Diagnostic Procedure with Diagnostic Trouble Code (DTC).>
P0230	Fuel Pump Primary Circuit	<Ref. to EN(H4DOTC)(diag)-162, DTC P0230 FUEL PUMP PRIMARY CIRCUIT, Diagnostic Procedure with Diagnostic Trouble Code (DTC).>
P0244	Turbo/Super Charger Wastegate Solenoid “A” Range/Performance	<Ref. to EN(H4DOTC)(diag)-165, DTC P0244 TURBO/SUPER CHARGER WASTEGATE SOLENOID “A” RANGE/PERFORMANCE, Diagnostic Procedure with Diagnostic Trouble Code (DTC).>
P0245	Turbo/Super Charger Wastegate Solenoid “A” Low	<Ref. to EN(H4DOTC)(diag)-167, DTC P0245 TURBO/SUPER CHARGER WASTEGATE SOLENOID “A” LOW, Diagnostic Procedure with Diagnostic Trouble Code (DTC).>
P0246	Turbo/Super Charger Wastegate Solenoid “A” High	<Ref. to EN(H4DOTC)(diag)-169, DTC P0246 TURBO/SUPER CHARGER WASTEGATE SOLENOID “A” HIGH, Diagnostic Procedure with Diagnostic Trouble Code (DTC).>
P0301	Cylinder 1 Misfire Detected	<Ref. to EN(H4DOTC)(diag)-170, DTC P0301 CYLINDER 1 MISFIRE DETECTED, Diagnostic Procedure with Diagnostic Trouble Code (DTC).>
P0302	Cylinder 2 Misfire Detected	<Ref. to EN(H4DOTC)(diag)-170, DTC P0302 CYLINDER 2 MISFIRE DETECTED, Diagnostic Procedure with Diagnostic Trouble Code (DTC).>
P0303	Cylinder 3 Misfire Detected	<Ref. to EN(H4DOTC)(diag)-170, DTC P0303 CYLINDER 3 MISFIRE DETECTED, Diagnostic Procedure with Diagnostic Trouble Code (DTC).>
P0304	Cylinder 4 Misfire Detected	<Ref. to EN(H4DOTC)(diag)-171, DTC P0304 CYLINDER 4 MISFIRE DETECTED, Diagnostic Procedure with Diagnostic Trouble Code (DTC).>
P0327	Knock Sensor 1 Circuit Low (Bank 1 or Single Sensor)	<Ref. to EN(H4DOTC)(diag)-177, DTC P0327 KNOCK SENSOR 1 CIRCUIT LOW (BANK 1 OR SINGLE SENSOR), Diagnostic Procedure with Diagnostic Trouble Code (DTC).>
P0328	Knock Sensor 1 Circuit High (Bank 1 or Single Sensor)	<Ref. to EN(H4DOTC)(diag)-179, DTC P0328 KNOCK SENSOR 1 CIRCUIT HIGH (BANK 1 OR SINGLE SENSOR), Diagnostic Procedure with Diagnostic Trouble Code (DTC).>
P0335	Crankshaft Position Sensor “A” Circuit	<Ref. to EN(H4DOTC)(diag)-181, DTC P0335 CRANKSHAFT POSITION SENSOR “A” CIRCUIT, Diagnostic Procedure with Diagnostic Trouble Code (DTC).>
P0336	Crankshaft Position Sensor “A” Circuit Range/Performance	<Ref. to EN(H4DOTC)(diag)-183, DTC P0336 CRANKSHAFT POSITION SENSOR “A” CIRCUIT RANGE/PERFORMANCE, Diagnostic Procedure with Diagnostic Trouble Code (DTC).>
P0340	Camshaft Position Sensor “A” Circuit (Bank 1 or Single Sensor)	<Ref. to EN(H4DOTC)(diag)-185, DTC P0340 CAMSHAFT POSITION SENSOR “A” CIRCUIT (BANK 1 OR SINGLE SENSOR), Diagnostic Procedure with Diagnostic Trouble Code (DTC).>
P0345	Camshaft Position Sensor “A” Circuit (Bank 2)	<Ref. to EN(H4DOTC)(diag)-187, DTC P0345 CAMSHAFT POSITION SENSOR “A” CIRCUIT (BANK 2), Diagnostic Procedure with Diagnostic Trouble Code (DTC).>
P0410	Secondary Air Injection System	<Ref. to EN(H4DOTC)(diag)-189, DTC P0410 SECONDARY AIR INJECTION SYSTEM, Diagnostic Procedure with Diagnostic Trouble Code (DTC).>
P0411	Secondary Air Injection System Incorrect Flow Detected	<Ref. to EN(H4DOTC)(diag)-193, DTC P0411 SECONDARY AIR INJECTION SYSTEM INCORRECT FLOW DETECTED, Diagnostic Procedure with Diagnostic Trouble Code (DTC).>

DTC	Item	Reference
P0413	Secondary Air Injection System Switching Valve “A” Circuit Open	<Ref. to EN(H4DOTC)(diag)-196, DTC P0413 SECONDARY AIR INJECTION SYSTEM SWITCHING VALVE “A“ CIRCUIT OPEN, Diagnostic Procedure with Diagnostic Trouble Code (DTC).>
P0414	Secondary Air Injection System Switching Valve “A” Circuit Shorted	<Ref. to EN(H4DOTC)(diag)-199, DTC P0414 SECONDARY AIR INJECTION SYSTEM SWITCHING VALVE “A“ CIRCUIT SHORTED, Diagnostic Procedure with Diagnostic Trouble Code (DTC).>
P0416	Secondary Air Injection System Switching Valve “B“ Circuit Open	<Ref. to EN(H4DOTC)(diag)-202, DTC P0416 SECONDARY AIR INJECTION SYSTEM SWITCHING VALVE “B“ CIRCUIT OPEN, Diagnostic Procedure with Diagnostic Trouble Code (DTC).>
P0417	Secondary Air Injection System Switching Valve “B“ Circuit Shorted	<Ref. to EN(H4DOTC)(diag)-205, DTC P0417 SECONDARY AIR INJECTION SYSTEM SWITCHING VALVE “B“ CIRCUIT SHORTED, Diagnostic Procedure with Diagnostic Trouble Code (DTC).>
P0418	Secondary Air Injection System Control “A” Circuit	<Ref. to EN(H4DOTC)(diag)-208, DTC P0418 SECONDARY AIR INJECTION SYSTEM CONTROL “A“ CIRCUIT OPEN, Diagnostic Procedure with Diagnostic Trouble Code (DTC).>
P0420	Catalyst System Efficiency below Threshold (Bank 1)	<Ref. to EN(H4DOTC)(diag)-211, DTC P0420 CATALYST SYSTEM EFFICIENCY BELOW THRESHOLD (BANK 1), Diagnostic Procedure with Diagnostic Trouble Code (DTC).>
P0441	Evaporative Emission Cont. Sys. Incorrect Purge Flow	<Ref. to EN(H4DOTC)(diag)-215, DTC P0441 EVAPORATIVE EMISSION SYSTEM INCORRECT PURGE FLOW, Diagnostic Procedure with Diagnostic Trouble Code (DTC).>
P0442	Evaporative Emission Control System Leak Detected (Small Leak)	<Ref. to EN(H4DOTC)(diag)-216, DTC P0442 EVAPORATIVE EMISSION CONTROL SYSTEM LEAK DETECTED (SMALL LEAK), Diagnostic Procedure with Diagnostic Trouble Code (DTC).>
P0447	Evaporative Emission Control System Vent Control Circuit Open	<Ref. to EN(H4DOTC)(diag)-219, DTC P0447 EVAPORATIVE EMISSION CONTROL SYSTEM VENT CONTROL CIRCUIT OPEN, Diagnostic Procedure with Diagnostic Trouble Code (DTC).>
P0448	Evaporative Emission Control System Vent Control Circuit Shorted	<Ref. to EN(H4DOTC)(diag)-221, DTC P0448 EVAPORATIVE EMISSION CONTROL SYSTEM VENT CONTROL CIRCUIT SHORTED, Diagnostic Procedure with Diagnostic Trouble Code (DTC).>
P0451	Evaporative Emission Control System Pressure Sensor	<Ref. to EN(H4DOTC)(diag)-223, DTC P0451 EVAPORATIVE EMISSION CONTROL SYSTEM PRESSURE SENSOR, Diagnostic Procedure with Diagnostic Trouble Code (DTC).>
P0452	Evaporative Emission Control System Pressure Sensor Low Input	<Ref. to EN(H4DOTC)(diag)-225, DTC P0452 EVAPORATIVE EMISSION CONTROL SYSTEM PRESSURE SENSOR LOW INPUT, Diagnostic Procedure with Diagnostic Trouble Code (DTC).>
P0453	Evaporative Emission Control System Pressure Sensor High Input	<Ref. to EN(H4DOTC)(diag)-227, DTC P0453 EVAPORATIVE EMISSION CONTROL SYSTEM PRESSURE SENSOR HIGH INPUT, Diagnostic Procedure with Diagnostic Trouble Code (DTC).>
P0456	Evaporative Emission Control System Leak Detected (Very Small Leak)	<Ref. to EN(H4DOTC)(diag)-229, DTC P0456 EVAPORATIVE EMISSION CONTROL SYSTEM LEAK DETECTED (VERY SMALL LEAK), Diagnostic Procedure with Diagnostic Trouble Code (DTC).>
P0457	Evaporative Emission Control System Leak Detected (Fuel Cap Loose/Off)	<Ref. to EN(H4DOTC)(diag)-232, DTC P0457 EVAPORATIVE EMISSION CONTROL SYSTEM LEAK DETECTED (FUEL CAP LOOSE/OFF), Diagnostic Procedure with Diagnostic Trouble Code (DTC).>
P0458	Evaporative Emission System Purge Control Valve Circuit Low	<Ref. to EN(H4DOTC)(diag)-235, DTC P0458 EVAPORATIVE EMISSION SYSTEM PURGE CONTROL VALVE CIRCUIT LOW, Diagnostic Procedure with Diagnostic Trouble Code (DTC).>
P0459	Evaporative Emission System Purge Control Valve Circuit High	<Ref. to EN(H4DOTC)(diag)-237, DTC P0459 EVAPORATIVE EMISSION SYSTEM PURGE CONTROL VALVE CIRCUIT HIGH, Diagnostic Procedure with Diagnostic Trouble Code (DTC).>
P0461	Fuel Level Sensor “A” Circuit Range/Performance	<Ref. to EN(H4DOTC)(diag)-239, DTC P0461 FUEL LEVEL SENSOR “A” CIRCUIT RANGE/PERFORMANCE, Diagnostic Procedure with Diagnostic Trouble Code (DTC).>
P0462	Fuel Level Sensor “A” Circuit Low	<Ref. to EN(H4DOTC)(diag)-239, DTC P0462 FUEL LEVEL SENSOR “A” CIRCUIT LOW, Diagnostic Procedure with Diagnostic Trouble Code (DTC).>

List of Diagnostic Trouble Code (DTC)

DTC	Item	Reference
P0463	Fuel Level Sensor “A” Circuit High	<Ref. to EN(H4DOTC)(diag)-239, DTC P0463 FUEL LEVEL SENSOR “A” CIRCUIT HIGH, Diagnostic Procedure with Diagnostic Trouble Code (DTC).>
P0464	Fuel Level Sensor Circuit Intermittent	<Ref. to EN(H4DOTC)(diag)-240, DTC P0464 FUEL LEVEL SENSOR CIRCUIT INTERMITTENT, Diagnostic Procedure with Diagnostic Trouble Code (DTC).>
P0500	Vehicle Speed Sensor “A”	<Ref. to EN(H4DOTC)(diag)-240, DTC P0500 VEHICLE SPEED SENSOR “A”, Diagnostic Procedure with Diagnostic Trouble Code (DTC).>
P0506	Idle Air Control System RPM Lower Than Expected	<Ref. to EN(H4DOTC)(diag)-241, DTC P0506 IDLE AIR CONTROL SYSTEM RPM LOWER THAN EXPECTED, Diagnostic Procedure with Diagnostic Trouble Code (DTC).>
P0507	Idle Air Control System RPM Higher Than Expected	<Ref. to EN(H4DOTC)(diag)-243, DTC P0507 IDLE AIR CONTROL SYSTEM RPM HIGHER THAN EXPECTED, Diagnostic Procedure with Diagnostic Trouble Code (DTC).>
P0512	Starter Request Circuit	<Ref. to EN(H4DOTC)(diag)-245, DTC P0512 STARTER REQUEST CIRCUIT, Diagnostic Procedure with Diagnostic Trouble Code (DTC).>
P0513	Incorrect Immobilizer Key	<Ref. to IM(diag)-16, DTC P0513 INCORRECT IMMOBILIZER KEY, Diagnostic Procedure with Diagnostic Trouble Code (DTC).>
P0600	Serial Communication Link	<Ref. to EN(H4DOTC)(diag)-246, DTC P0600 SERIAL COMMUNICATION LINK, Diagnostic Procedure with Diagnostic Trouble Code (DTC).>
P0604	Internal Control Module Random Access Memory (RAM) Error	<Ref. to EN(H4DOTC)(diag)-247, DTC P0604 INTERNAL CONTROL MODULE RANDOM ACCESS MEMORY (RAM) ERROR, Diagnostic Procedure with Diagnostic Trouble Code (DTC).>
P0605	Internal Control Module Read Only Memory (ROM) Error	<Ref. to EN(H4DOTC)(diag)-248, DTC P0605 INTERNAL CONTROL MODULE READ ONLY MEMORY (ROM) ERROR, Diagnostic Procedure with Diagnostic Trouble Code (DTC).>
P0607	Throttle Control System Circuit Range/Performance	<Ref. to EN(H4DOTC)(diag)-249, DTC P0607 THROTTLE CONTROL SYSTEM CIRCUIT RANGE/PERFORMANCE, Diagnostic Procedure with Diagnostic Trouble Code (DTC).>
P0638	Throttle Actuator Control Range/ Performance (Bank 1)	<Ref. to EN(H4DOTC)(diag)-250, DTC P0638 THROTTLE ACTUATOR CONTROL RANGE/PERFORMANCE (BANK 1), Diagnostic Procedure with Diagnostic Trouble Code (DTC).>
P0700	Transmission Control System (MIL Request)	<Ref. to EN(H4DOTC)(diag)-250, DTC P0700 TRANSMISSION CONTROL SYSTEM (MIL REQUEST), Diagnostic Procedure with Diagnostic Trouble Code (DTC).>
P0851	Park/Neutral Switch Input Circuit Low (AT Model)	<Ref. to 5AT(diag)-2, Basic Diagnostic Procedure.>
P0851	Neutral Switch Input Circuit Low (MT Model)	<Ref. to EN(H4DOTC)(diag)-251, DTC P0851 NEUTRAL SWITCH INPUT CIRCUIT LOW (MT MODEL), Diagnostic Procedure with Diagnostic Trouble Code (DTC).>
P0852	Park/Neutral Switch Input Circuit High (AT Model)	<Ref. to 5AT(diag)-2, Basic Diagnostic Procedure.>
P0852	Neutral Switch Input Circuit High (MT Model)	<Ref. to EN(H4DOTC)(diag)-253, DTC P0852 NEUTRAL SWITCH INPUT CIRCUIT HIGH (MT MODEL), Diagnostic Procedure with Diagnostic Trouble Code (DTC).>
P1152	O2 Sensor Circuit Range/Performance (Low) (Bank1 Sensor1)	<Ref. to EN(H4DOTC)(diag)-255, DTC P1152 O2 SENSOR CIRCUIT RANGE/PERFORMANCE (LOW) (BANK1 SENSOR1), Diagnostic Procedure with Diagnostic Trouble Code (DTC).>
P1153	O2 Sensor Circuit Range/Performance (High) (Bank1 Sensor1)	<Ref. to EN(H4DOTC)(diag)-257, DTC P1153 O2 SENSOR CIRCUIT RANGE/PERFORMANCE (HIGH) (BANK1 SENSOR1), Diagnostic Procedure with Diagnostic Trouble Code (DTC).>
P1160	Return Spring Failure	<Ref. to EN(H4DOTC)(diag)-258, DTC P1160 RETURN SPRING FAILURE, Diagnostic Procedure with Diagnostic Trouble Code (DTC).>
P1400	Fuel Tank Pressure Control Solenoid Valve Circuit Low	<Ref. to EN(H4DOTC)(diag)-259, DTC P1400 FUEL TANK PRESSURE CONTROL SOLENOID VALVE CIRCUIT LOW, Diagnostic Procedure with Diagnostic Trouble Code (DTC).>

DTC	Item	Reference
P1410	Secondary Air Injection System Switching Valve Stuck Open	<Ref. to EN(H4DOTC)(diag)-261, DTC P1410 SECONDARY AIR INJECTION SYSTEM SWITCHING VALVE STUCK OPEN, Diagnostic Procedure with Diagnostic Trouble Code (DTC).>
P1418	Secondary Air Injection System Control “A” Circuit Shorted	<Ref. to EN(H4DOTC)(diag)-264, DTC P1418 SECONDARY AIR INJECTION SYSTEM CONTROL “A“ CIRCUIT SHORTED, Diagnostic Procedure with Diagnostic Trouble Code (DTC).>
P1420	Fuel Tank Pressure Control Sol. Valve Circuit High	<Ref. to EN(H4DOTC)(diag)-267, DTC P1420 FUEL TANK PRESSURE CONTROL SOL. VALVE CIRCUIT HIGH, Diagnostic Procedure with Diagnostic Trouble Code (DTC).>
P1443	Vent Control Solenoid Valve Function Problem	<Ref. to EN(H4DOTC)(diag)-269, DTC P1443 VENT CONTROL SOLENOID VALVE FUNCTION PROBLEM, Diagnostic Procedure with Diagnostic Trouble Code (DTC).>
P1491	Positive Crankcase Ventilation (Blow-by) Function Problem	<Ref. to EN(H4DOTC)(diag)-271, DTC P1491 POSITIVE CRANKCASE VENTILATION (BLOW-BY) FUNCTION PROBLEM, Diagnostic Procedure with Diagnostic Trouble Code (DTC).>
P1560	Back-Up Voltage Circuit Malfunction	<Ref. to EN(H4DOTC)(diag)-273, DTC P1560 BACK-UP VOLTAGE CIRCUIT MALFUNCTION, Diagnostic Procedure with Diagnostic Trouble Code (DTC).>
P1570	Antenna	<Ref. to IM(diag)-17, DTC P1570 ANTENNA, Diagnostic Procedure with Diagnostic Trouble Code (DTC).>
P1571	Reference Code Incompatibility	<Ref. to IM(diag)-19, DTC P1571 REFERENCE CODE INCOMPATIBILITY, Diagnostic Procedure with Diagnostic Trouble Code (DTC).>
P1572	IMM Circuit Failure (Except Antenna Circuit)	<Ref. to IM(diag)-20, DTC P1572 IMM CIRCUIT FAILURE (EXCEPT ANTENNA CIRCUIT), Diagnostic Procedure with Diagnostic Trouble Code (DTC).>
P1574	Key Communication Failure	<Ref. to IM(diag)-23, DTC P1574 KEY COMMUNICATION FAILURE, Diagnostic Procedure with Diagnostic Trouble Code (DTC).>
P1576	EGI Control Module EEPROM	<Ref. to IM(diag)-23, DTC P1576 EGI CONTROL MODULE EEPROM, Diagnostic Procedure with Diagnostic Trouble Code (DTC).>
P1577	IMM Control Module EEPROM	<Ref. to IM(diag)-24, DTC P1577 IMM CONTROL MODULE EEPROM, Diagnostic Procedure with Diagnostic Trouble Code (DTC).>
P1578	Meter Failure	<Ref. to IM(diag)-24, DTC P1578 METER FAILURE, Diagnostic Procedure with Diagnostic Trouble Code (DTC).>
P1602	Control Module Programming Error	<Ref. to EN(H4DOTC)(diag)-275, DTC P1602 CONTROL MODULE PROGRAMMING ERROR, Diagnostic Procedure with Diagnostic Trouble Code (DTC).>
P2004	Intake Manifold Runner Control Stuck Open (Bank 1)	<Ref. to EN(H4DOTC)(diag)-284, DTC P2004 INTAKE MANIFOLD RUNNER CONTROL STUCK OPEN (BANK 1), Diagnostic Procedure with Diagnostic Trouble Code (DTC).>
P2005	Intake Manifold Runner Control Stuck Open (Bank 2)	<Ref. to EN(H4DOTC)(diag)-284, DTC P2005 INTAKE MANIFOLD RUNNER CONTROL STUCK OPEN (BANK 2), Diagnostic Procedure with Diagnostic Trouble Code (DTC).>
P2006	Intake Manifold Runner Control Stuck Closed (Bank 1)	<Ref. to EN(H4DOTC)(diag)-285, DTC P2006 INTAKE MANIFOLD RUNNER CONTROL STUCK CLOSED (BANK 1), Diagnostic Procedure with Diagnostic Trouble Code (DTC).>
P2007	Intake Manifold Runner Control Stuck Closed (Bank 2)	<Ref. to EN(H4DOTC)(diag)-286, DTC P2007 INTAKE MANIFOLD RUNNER CONTROL STUCK CLOSED (BANK 2), Diagnostic Procedure with Diagnostic Trouble Code (DTC).>
P2008	Intake Manifold Runner Control Circuit / Open (Bank 1)	<Ref. to EN(H4DOTC)(diag)-287, DTC P2008 INTAKE MANIFOLD RUNNER CONTROL CIRCUIT / OPEN (BANK 1), Diagnostic Procedure with Diagnostic Trouble Code (DTC).>
P2009	Intake Manifold Runner Control Circuit Low (Bank 1)	<Ref. to EN(H4DOTC)(diag)-289, DTC P2009 INTAKE MANIFOLD RUNNER CONTROL CIRCUIT LOW (BANK 1), Diagnostic Procedure with Diagnostic Trouble Code (DTC).>

DTC	Item	Reference
P2011	Intake Manifold Runner Control Circuit / Open (Bank 2)	<Ref. to EN(H4DOTC)(diag)-291, DTC P2011 INTAKE MANIFOLD RUNNER CONTROL CIRCUIT / OPEN (BANK 2), Diagnostic Procedure with Diagnostic Trouble Code (DTC).>
P2012	Intake Manifold Runner Control Circuit Low (Bank 2)	<Ref. to EN(H4DOTC)(diag)-293, DTC P2012 INTAKE MANIFOLD RUNNER CONTROL CIRCUIT LOW (BANK 2), Diagnostic Procedure with Diagnostic Trouble Code (DTC).>
P2016	Intake Manifold Runner Position Sensor / Switch Circuit Low (Bank 1)	<Ref. to EN(H4DOTC)(diag)-295, DTC P2016 INTAKE MANIFOLD RUNNER POSITION SENSOR / SWITCH CIRCUIT LOW (BANK 1), Diagnostic Procedure with Diagnostic Trouble Code (DTC).>
P2017	Intake Manifold Runner Position Sensor / Switch Circuit High (Bank 1)	<Ref. to EN(H4DOTC)(diag)-297, DTC P2017 INTAKE MANIFOLD RUNNER POSITION SENSOR / SWITCH CIRCUIT HIGH (BANK 1), Diagnostic Procedure with Diagnostic Trouble Code (DTC).>
P2021	Intake Manifold Runner Position Sensor / Switch Circuit Low (Bank 2)	<Ref. to EN(H4DOTC)(diag)-299, DTC P2021 INTAKE MANIFOLD RUNNER POSITION SENSOR / SWITCH CIRCUIT LOW (BANK 2), Diagnostic Procedure with Diagnostic Trouble Code (DTC).>
P2022	Intake Manifold Runner Position Sensor / Switch Circuit High (Bank 2)	<Ref. to EN(H4DOTC)(diag)-301, DTC P2022 INTAKE MANIFOLD RUNNER POSITION SENSOR / SWITCH CIRCUIT HIGH (BANK 2), Diagnostic Procedure with Diagnostic Trouble Code (DTC).>
P2088	Intake Camshaft Position Actuator Control Circuit Low (Bank 1)	<Ref. to EN(H4DOTC)(diag)-303, DTC P2088 INTAKE CAMSHAFT POSITION ACTUATOR CONTROL CIRCUIT LOW (BANK 1), Diagnostic Procedure with Diagnostic Trouble Code (DTC).>
P2089	Intake Camshaft Position Actuator Control Circuit High (Bank 1)	<Ref. to EN(H4DOTC)(diag)-305, DTC P2089 INTAKE CAMSHAFT POSITION ACTUATOR CONTROL CIRCUIT HIGH (BANK 1), Diagnostic Procedure with Diagnostic Trouble Code (DTC).>
P2092	Intake Camshaft Position Actuator Control Circuit Low (Bank 2)	<Ref. to EN(H4DOTC)(diag)-307, DTC P2092 INTAKE CAMSHAFT POSITION ACTUATOR CONTROL CIRCUIT LOW (BANK 2), Diagnostic Procedure with Diagnostic Trouble Code (DTC).>
P2093	Intake Camshaft Position Actuator Control Circuit High (Bank 2)	<Ref. to EN(H4DOTC)(diag)-309, DTC P2093 INTAKE CAMSHAFT POSITION ACTUATOR CONTROL CIRCUIT HIGH (BANK 2), Diagnostic Procedure with Diagnostic Trouble Code (DTC).>
P2096	Post Catalyst Fuel Trim System Too Lean (Bank1)	<Ref. to EN(H4DOTC)(diag)-310, DTC P2096 POST CATALYST FUEL TRIM SYSTEM TOO LEAN (BANK 1), Diagnostic Procedure with Diagnostic Trouble Code (DTC).>
P2097	Post Catalyst Fuel Trim System Too Rich (Bank1)	<Ref. to EN(H4DOTC)(diag)-311, DTC P2097 POST CATALYST FUEL TRIM SYSTEM TOO RICH (BANK 1), Diagnostic Procedure with Diagnostic Trouble Code (DTC).>
P2101	Throttle Actuator Control Motor Circuit Range/Performance	<Ref. to EN(H4DOTC)(diag)-318, DTC P2101 THROTTLE ACTUATOR CONTROL MOTOR CIRCUIT RANGE/PERFORMANCE, Diagnostic Procedure with Diagnostic Trouble Code (DTC).>
P2102	Throttle Actuator Control Motor Circuit Low	<Ref. to EN(H4DOTC)(diag)-323, DTC P2102 THROTTLE ACTUATOR CONTROL MOTOR CIRCUIT LOW, Diagnostic Procedure with Diagnostic Trouble Code (DTC).>
P2103	Throttle Actuator Control Motor Circuit High	<Ref. to EN(H4DOTC)(diag)-325, DTC P2103 THROTTLE ACTUATOR CONTROL MOTOR CIRCUIT HIGH, Diagnostic Procedure with Diagnostic Trouble Code (DTC).>
P2109	Throttle/Pedal Position Sensor “A” Minimum Stop Performance	<Ref. to EN(H4DOTC)(diag)-326, DTC P2109 THROTTLE/PEDAL POSITION SENSOR “A” MINIMUM STOP PERFORMANCE, Diagnostic Procedure with Diagnostic Trouble Code (DTC).>
P2122	Throttle/Pedal Position Sensor/ Switch “D” Circuit Low Input	<Ref. to EN(H4DOTC)(diag)-327, DTC P2122 THROTTLE/PEDAL POSITION SENSOR/SWITCH “D” CIRCUIT LOW INPUT, Diagnostic Procedure with Diagnostic Trouble Code (DTC).>
P2123	Throttle/Pedal Position Sensor/ Switch “D” Circuit High Input	<Ref. to EN(H4DOTC)(diag)-329, DTC P2123 THROTTLE/PEDAL POSITION SENSOR/SWITCH “D” CIRCUIT HIGH INPUT, Diagnostic Procedure with Diagnostic Trouble Code (DTC).>
P2127	Throttle/Pedal Position Sensor/ Switch “E” Circuit Low Input	<Ref. to EN(H4DOTC)(diag)-331, DTC P2127 THROTTLE/PEDAL POSITION SENSOR/SWITCH “E” CIRCUIT LOW INPUT, Diagnostic Procedure with Diagnostic Trouble Code (DTC).>

DTC	Item	Reference
P2128	Throttle/Pedal Position Sensor/ Switch “E” Circuit High Input	<Ref. to EN(H4DOTC)(diag)-333, DTC P2128 THROTTLE/PEDAL POSITION SENSOR/SWITCH “E” CIRCUIT HIGH INPUT, Diagnostic Procedure with Diagnostic Trouble Code (DTC).>
P2135	Throttle/Pedal Position Sensor/ Switch “A”/“B” Voltage Correlation	<Ref. to EN(H4DOTC)(diag)-335, DTC P2135 THROTTLE/PEDAL POSITION SENSOR/SWITCH “A”/“B” VOLTAGE CORRELATION, Diagnostic Procedure with Diagnostic Trouble Code (DTC).>
P2138	Throttle/Pedal Position Sensor/ Switch “D”/“E” Voltage Correlation	<Ref. to EN(H4DOTC)(diag)-338, DTC P2138 THROTTLE/PEDAL POSITION SENSOR/SWITCH “D”/“E” VOLTAGE CORRELATION, Diagnostic Procedure with Diagnostic Trouble Code (DTC).>
P2419	Evaporative Emission System Switching Valve Control Circuit Low	<Ref. to EN(H4DOTC)(diag)-340, DTC P2419 EVAPORATIVE EMISSION SYSTEM SWITCHING VALVE CONTROL CIRCUIT LOW, Diagnostic Procedure with Diagnostic Trouble Code (DTC).>
P2420	Evaporative Emission System Switching Valve Control Circuit High	<Ref. to EN(H4DOTC)(diag)-342, DTC P2420 EVAPORATIVE EMISSION SYSTEM SWITCHING VALVE CONTROL CIRCUIT HIGH, Diagnostic Procedure with Diagnostic Trouble Code (DTC).>
P2431	Secondary Air Injection System Air Flow /Pressure Sensor Circuit Range/Performance	<Ref. to EN(H4DOTC)(diag)-344, DTC P2431 SECONDARY AIR INJECTION SYSTEM AIR FLOW /PRESSURE SENSOR CIRCUIT RANGE/PERFORMANCE, Diagnostic Procedure with Diagnostic Trouble Code (DTC).>
P2432	Secondary Air Injection System Air Flow /Pressure Sensor Circuit Low	<Ref. to EN(H4DOTC)(diag)-347, DTC P2432 SECONDARY AIR INJECTION SYSTEM AIR FLOW /PRESSURE SENSOR CIRCUIT LOW, Diagnostic Procedure with Diagnostic Trouble Code (DTC).>
P2433	Secondary Air Injection System Air Flow /Pressure Sensor Circuit High	<Ref. to EN(H4DOTC)(diag)-350, DTC P2433 SECONDARY AIR INJECTION SYSTEM AIR FLOW /PRESSURE SENSOR CIRCUIT HIGH, Diagnostic Procedure with Diagnostic Trouble Code (DTC).>
P2440	Secondary Air Injection System Switching Valve Stuck Open (Bank1)	<Ref. to EN(H4DOTC)(diag)-353, DTC P2440 SECONDARY AIR INJECTION SYSTEM SWITCHING VALVE STUCK OPEN (BANK1), Diagnostic Procedure with Diagnostic Trouble Code (DTC).>
P2441	Secondary Air Injection System Switching Valve Stuck Closed (Bank1)	<Ref. to EN(H4DOTC)(diag)-357, DTC P2441 SECONDARY AIR INJECTION SYSTEM SWITCHING VALVE STUCK CLOSED (BANK1), Diagnostic Procedure with Diagnostic Trouble Code (DTC).>
P2442	Secondary Air Injection System Switching Valve Stuck Open (Bank2)	<Ref. to EN(H4DOTC)(diag)-358, DTC P2442 SECONDARY AIR INJECTION SYSTEM SWITCHING VALVE STUCK OPEN (BANK2), Diagnostic Procedure with Diagnostic Trouble Code (DTC).>
P2443	Secondary Air Injection System Switching Valve Stuck Closed (Bank2)	<Ref. to EN(H4DOTC)(diag)-362, DTC P2443 SECONDARY AIR INJECTION SYSTEM SWITCHING VALVE STUCK CLOSED (BANK2), Diagnostic Procedure with Diagnostic Trouble Code (DTC).>
P2444	Secondary Air Injection System Pump Stuck On	<Ref. to EN(H4DOTC)(diag)-363, DTC P2444 SECONDARY AIR INJECTION SYSTEM PUMP STUCK ON, Diagnostic Procedure with Diagnostic Trouble Code (DTC).>

20. Diagnostic Procedure with Diagnostic Trouble Code (DTC)

A: DTC P0011 INTAKE CAMSHAFT POSITION - TIMING OVER-ADVANCED OR SYSTEM PERFORMANCE (BANK 1)

DTC DETECTING CONDITION:
- Two consecutive driving cycles with fault
- GENERAL DESCRIPTION <Ref. to GD(H4DOTC)-10, DTC P0011 INTAKE CAMSHAFT POSITION - TIMING OVER-ADVANCED OR SYSTEM PERFORMANCE (BANK 1), Diagnostic Trouble Code (DTC) Detecting Criteria.>

TROUBLE SYMPTOM:
- Engine stalls.
- Improper idling

CAUTION:
After repair or replacement of faulty parts, perform Clear Memory Mode <Ref. to EN(H4DOTC)(diag)-52, OPERATION, Clear Memory Mode.>, and Inspection Mode <Ref. to EN(H4DOTC)(diag)-43, PROCEDURE, Inspection Mode.>.

	Step	Check	Yes	No
1	**CHECK CURRENT DATA.** 1) Start the engine and let it idle. 2) Measure the AVCS system operating angle using the Subaru Select Monitor or general scan tool. NOTE: • Subaru Select Monitor For detailed operation procedure, refer to “READ CURRENT DATA FOR ENGINE”. <Ref. to EN(H4DOTC)(diag)-34, Subaru Select Monitor.> • General scan tool For detailed operation procedures, refer to the general scan tool operation manual.	Is the AVCS system operating angle approx. 0°?	Go to step **2**.	Check the following item and repair or replace if necessary. • Oil pipe (clog) • Oil flow control solenoid valve (clogged or dirty oil passages, spring settings) • Intake camshaft (dirt, damage of camshaft)
2	**CHECK CURRENT DATA.** 1) Drive with acceleration and deceleration at 80 km/h (50 MPH) or less. NOTE: Drive to an extent that the duty output of oil flow control solenoid valve increases. 2) Measure the AVCS system operating angle and oil flow control solenoid valve duty output using Subaru Select Monitor or general scan tool. NOTE: • Subaru Select Monitor For detailed operation procedure, refer to “READ CURRENT DATA FOR ENGINE”. <Ref. to EN(H4DOTC)(diag)-34, Subaru Select Monitor.> • General scan tool For detailed operation procedures, refer to the general scan tool operation manual.	When the oil flow control solenoid valve duty output exceeds 10%, is the AVCS system operating angle approx. 0°?	Check the following item and repair or replace if necessary. • Oil pipe (clog) • Oil flow control solenoid valve (clogged or dirty oil passages, spring settings) • Intake camshaft (dirt, damage of camshaft)	Perform the following procedures, and clean the oil routing. Replace the engine oil and idle the engine for 5 minutes, and then replace the oil filter and engine oil. <Ref. to LU(H4SO)-10, REPLACEMENT, Engine Oil.> <Ref. to LU(H4SO)-23, Engine Oil Filter.>

B: DTC P0016 CRANKSHAFT POSITION - CAMSHAFT POSITION CORRELATION (BANK1)

DTC DETECTING CONDITION:
- Two consecutive driving cycles with fault
- GENERAL DESCRIPTION <Ref. to GD(H4DOTC)-12, DTC P0016 CRANKSHAFT POSITION - CAMSHAFT POSITION CORRELATION (BANK1), Diagnostic Trouble Code (DTC) Detecting Criteria.>

TROUBLE SYMPTOM:
- Engine stalls.
- Improper idling

CAUTION:
After repair or replacement of faulty parts, perform Clear Memory Mode <Ref. to EN(H4DOTC)(diag)-52, OPERATION, Clear Memory Mode.>, and Inspection Mode <Ref. to EN(H4DOTC)(diag)-43, PROCEDURE, Inspection Mode.>.

	Step	Check	Yes	No
1	**CHECK CURRENT DATA.** 1) Start the engine and let it idle. 2) Measure the AVCS system operating angle and oil flow control solenoid valve duty output using Subaru Select Monitor or general scan tool. NOTE: • Subaru Select Monitor For detailed operation procedure, refer to “READ CURRENT DATA FOR ENGINE”. <Ref. to EN(H4DOTC)(diag)-34, Subaru Select Monitor.> • General scan tool For detailed operation procedures, refer to the general scan tool operation manual.	Is the AVCS system operating angle approx. 0°, and oil flow control solenoid valve duty output approx. 10%?	Perform the following procedures, and clean the oil routing. Replace the engine oil and idle the engine for 5 minutes, and then replace the oil filter and engine oil. <Ref. to LU(H4SO)-10, REPLACEMENT, Engine Oil.> <Ref. to LU(H4SO)-23, Engine Oil Filter.>	Check the following item and repair or replace if necessary. • Oil pipe (clog) • Oil flow control solenoid valve (clogged or dirty oil passages, spring settings) • Intake camshaft (dirt, damage of camshaft) • Timing belt (matching of timing mark)

C: DTC P0018 CRANKSHAFT POSITION - CAMSHAFT POSITION CORRELATION (BANK2)

DTC DETECTING CONDITION:
- Two consecutive driving cycles with fault
- GENERAL DESCRIPTION <Ref. to GD(H4DOTC)-13, DTC P0018 CRANKSHAFT POSITION - CAMSHAFT POSITION CORRELATION (BANK2), Diagnostic Trouble Code (DTC) Detecting Criteria.>

TROUBLE SYMPTOM:
- Engine stalls.
- Improper idling

CAUTION:
After repair or replacement of faulty parts, perform Clear Memory Mode <Ref. to EN(H4DOTC)(diag)-52, OPERATION, Clear Memory Mode.>, and Inspection Mode <Ref. to EN(H4DOTC)(diag)-43, PROCEDURE, Inspection Mode.>.

	Step	Check	Yes	No
1	**CHECK CURRENT DATA.** 1) Start the engine and let it idle. 2) Measure the AVCS system operating angle and oil flow control solenoid valve duty output using Subaru Select Monitor or general scan tool. NOTE: • Subaru Select Monitor For detailed operation procedure, refer to “READ CURRENT DATA FOR ENGINE”. <Ref. to EN(H4DOTC)(diag)-34, Subaru Select Monitor.> • General scan tool For detailed operation procedures, refer to the general scan tool operation manual.	Is the AVCS system operating angle approx. 0°, and oil flow control solenoid valve duty output approx. 10%?	Perform the following procedures, and clean the oil routing. Replace the engine oil and idle the engine for 5 minutes, and then replace the oil filter and engine oil. <Ref. to LU(H4SO)-10, REPLACEMENT, Engine Oil.> <Ref. to LU(H4SO)-23, Engine Oil Filter.>	Check the following item and repair or replace if necessary. • Oil pipe (clog) • Oil flow control solenoid valve (clogged or dirty oil passages, spring settings) • Intake camshaft (dirt, damage of camshaft) • Timing belt (matching of timing mark)

D: DTC P0021 INTAKE CAMSHAFT POSITION - TIMING OVER-ADVANCED OR SYSTEM PERFORMANCE (BANK 2)

DTC DETECTING CONDITION:

- Two consecutive driving cycles with fault
- GENERAL DESCRIPTION <Ref. to GD(H4DOTC)-13, DTC P0021 INTAKE CAMSHAFT POSITION - TIMING OVER-ADVANCED OR SYSTEM PERFORMANCE (BANK 2), Diagnostic Trouble Code (DTC) Detecting Criteria.>

TROUBLE SYMPTOM:

- Engine stalls.
- Improper idling

CAUTION:

After repair or replacement of faulty parts, perform Clear Memory Mode <Ref. to EN(H4DOTC)(diag)-52, OPERATION, Clear Memory Mode.>, and Inspection Mode <Ref. to EN(H4DOTC)(diag)-43, PROCEDURE, Inspection Mode.>.

	Step	Check	Yes	No
1	**CHECK CURRENT DATA.** 1) Start the engine and let it idle. 2) Measure the AVCS system operating angle using the Subaru Select Monitor or general scan tool. NOTE: • Subaru Select Monitor For detailed operation procedure, refer to “READ CURRENT DATA FOR ENGINE”. <Ref. to EN(H4DOTC)(diag)-34, Subaru Select Monitor.> • General scan tool For detailed operation procedures, refer to the general scan tool operation manual.	Is the AVCS system operating angle approx. 0°?	Go to step **2**.	Check the following item and repair or replace if necessary. • Oil pipe (clog) • Oil flow control solenoid valve (clogged or dirty oil passages, spring settings) • Intake camshaft (dirt, damage of camshaft)
2	**CHECK CURRENT DATA.** 1) Drive with acceleration and deceleration at 80 km/h (50 MPH) or less. NOTE: Drive to an extent that the duty output of oil flow control solenoid valve increases. 2) Measure the AVCS system operating angle and oil flow control solenoid valve duty output using Subaru Select Monitor or general scan tool. NOTE: • Subaru Select Monitor For detailed operation procedure, refer to “READ CURRENT DATA FOR ENGINE”. <Ref. to EN(H4DOTC)(diag)-34, Subaru Select Monitor.> • General scan tool For detailed operation procedures, refer to the general scan tool operation manual.	When the oil flow control solenoid valve duty output exceeds 10%, is the AVCS system operating angle approx. 0°?	Check the following item and repair or replace if necessary. • Oil pipe (clog) • Oil flow control solenoid valve (clogged or dirty oil passages, spring settings) • Intake camshaft (dirt, damage of camshaft)	Perform the following procedures, and clean the oil routing. Replace the engine oil and idle the engine for 5 minutes, and then replace the oil filter and engine oil. <Ref. to LU(H4SO)-10, REPLACEMENT, Engine Oil.> <Ref. to LU(H4SO)-23, Engine Oil Filter.>

E: DTC P0030 HO2S HEATER CONTROL CIRCUIT (BANK 1 SENSOR 1)

DTC DETECTING CONDITION:

- Two consecutive driving cycles with fault
- GENERAL DESCRIPTION <Ref. to GD(H4DOTC)-14, DTC P0030 HO2S HEATER CONTROL CIRCUIT (BANK 1 SENSOR 1), Diagnostic Trouble Code (DTC) Detecting Criteria.>

CAUTION:

After repair or replacement of faulty parts, perform Clear Memory Mode <Ref. to EN(H4DOTC)(diag)-52, OPERATION, Clear Memory Mode.>, and Inspection Mode <Ref. to EN(H4DOTC)(diag)-43, PROCEDURE, Inspection Mode.>.

WIRING DIAGRAM:

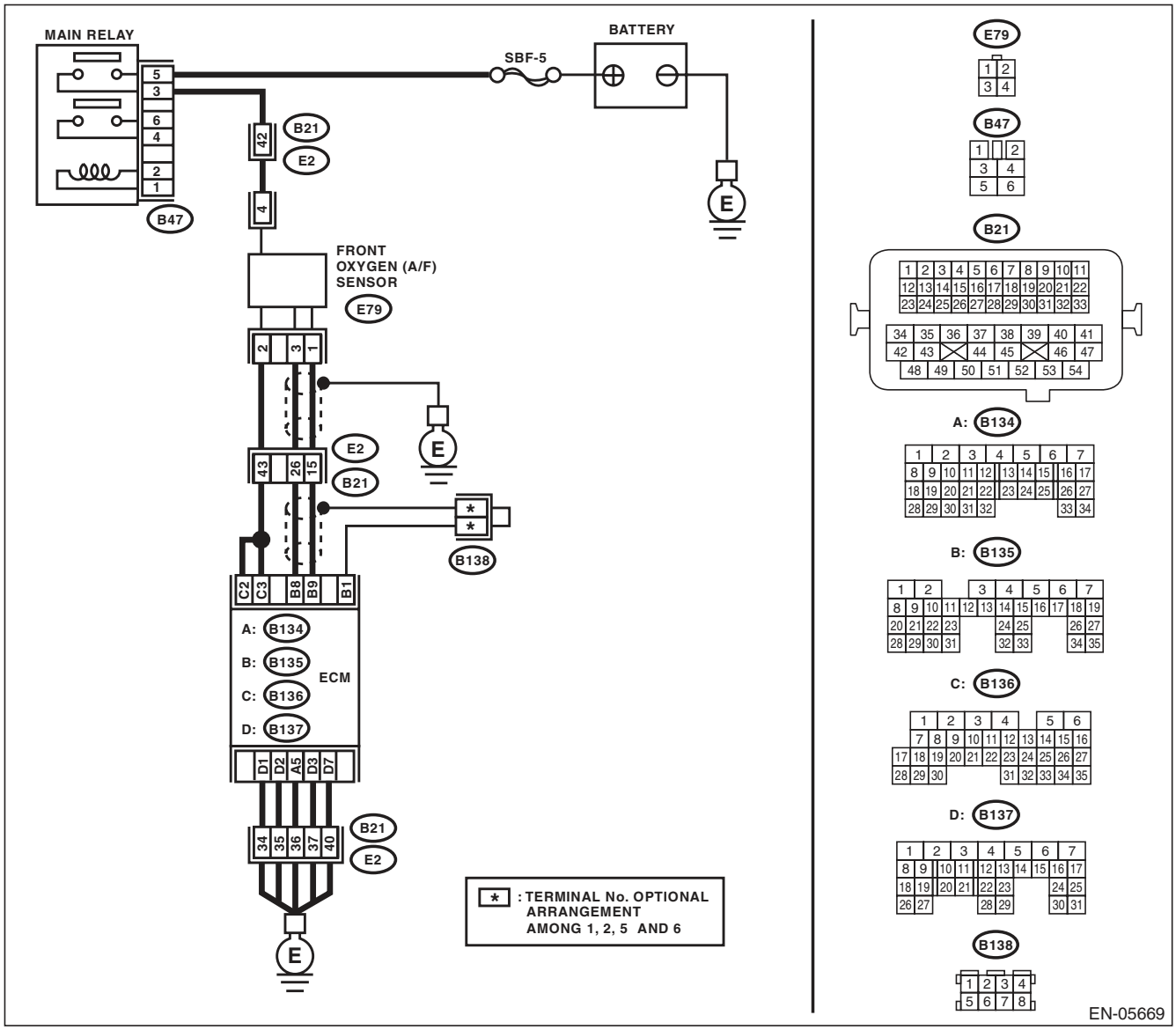

	Step	Check	Yes	No
1	**CHECK HARNESS BETWEEN ECM AND FRONT OXYGEN (A/F) SENSOR CONNECTOR.** 1) Start and warm up engine. 2) Turn the ignition switch to OFF. 3) Disconnect the connectors from ECM and front oxygen (A/F) sensor. 4) Measure the resistance of harness between ECM and front oxygen (A/F) sensor connector. ***Connector & terminal*** ***(B136) No. 3 — (E79) No. 2:*** ***(B136) No. 2 — (E79) No. 2:***	Is the resistance less than 1 Ω?	Go to step **2**.	Repair the harness and connector. NOTE: In this case, repair the following item: • Open circuit in harness between ECM and front oxygen (A/F) sensor connector • Poor contact of coupling connector
2	**CHECK HARNESS BETWEEN ECM AND FRONT OXYGEN (A/F) SENSOR CONNECTOR.** Measure the resistance of harness between ECM and front oxygen (A/F) sensor connector. ***Connector & terminal*** ***(B135) No. 9 — (E79) No. 1:*** ***(B135) No. 8 — (E79) No. 3:***	Is the resistance less than 1 Ω?	Go to step **3**.	Repair the harness and connector. NOTE: In this case, repair the following item: • Open circuit in harness between ECM and front oxygen (A/F) sensor connector • Poor contact of coupling connector
3	**CHECK FRONT OXYGEN (A/F) SENSOR.** Measure the resistance between front oxygen (A/F) sensor connector terminals. ***Terminals*** ***No. 4 — No. 2:***	Is the resistance less than 2 — 3 Ω?	Go to step **4**.	Replace the front oxygen (A/F) sensor. <Ref. to FU(H4DOTC)-46, Front Oxygen (A/F) Sensor.>
4	**CHECK POOR CONTACT.** Check for poor contact of ECM and front oxygen (A/F) sensor connector.	Is there poor contact in ECM or front oxygen (A/F) sensor connector?	Repair the poor contact in ECM or front oxygen (A/F) sensor connector.	Replace the front oxygen (A/F) sensor. <Ref. to FU(H4DOTC)-46, Front Oxygen (A/F) Sensor.>

F: DTC P0031 HO2S HEATER CONTROL CIRCUIT LOW (BANK 1 SENSOR 1)

DTC DETECTING CONDITION:

- Immediately at fault recognition
- GENERAL DESCRIPTION <Ref. to GD(H4DOTC)-16, DTC P0031 HO2S HEATER CONTROL CIRCUIT LOW (BANK 1 SENSOR 1), Diagnostic Trouble Code (DTC) Detecting Criteria.>

CAUTION:

After repair or replacement of faulty parts, perform Clear Memory Mode <Ref. to EN(H4DOTC)(diag)-52, OPERATION, Clear Memory Mode.>, and Inspection Mode <Ref. to EN(H4DOTC)(diag)-43, PROCEDURE, Inspection Mode.>.

WIRING DIAGRAM:

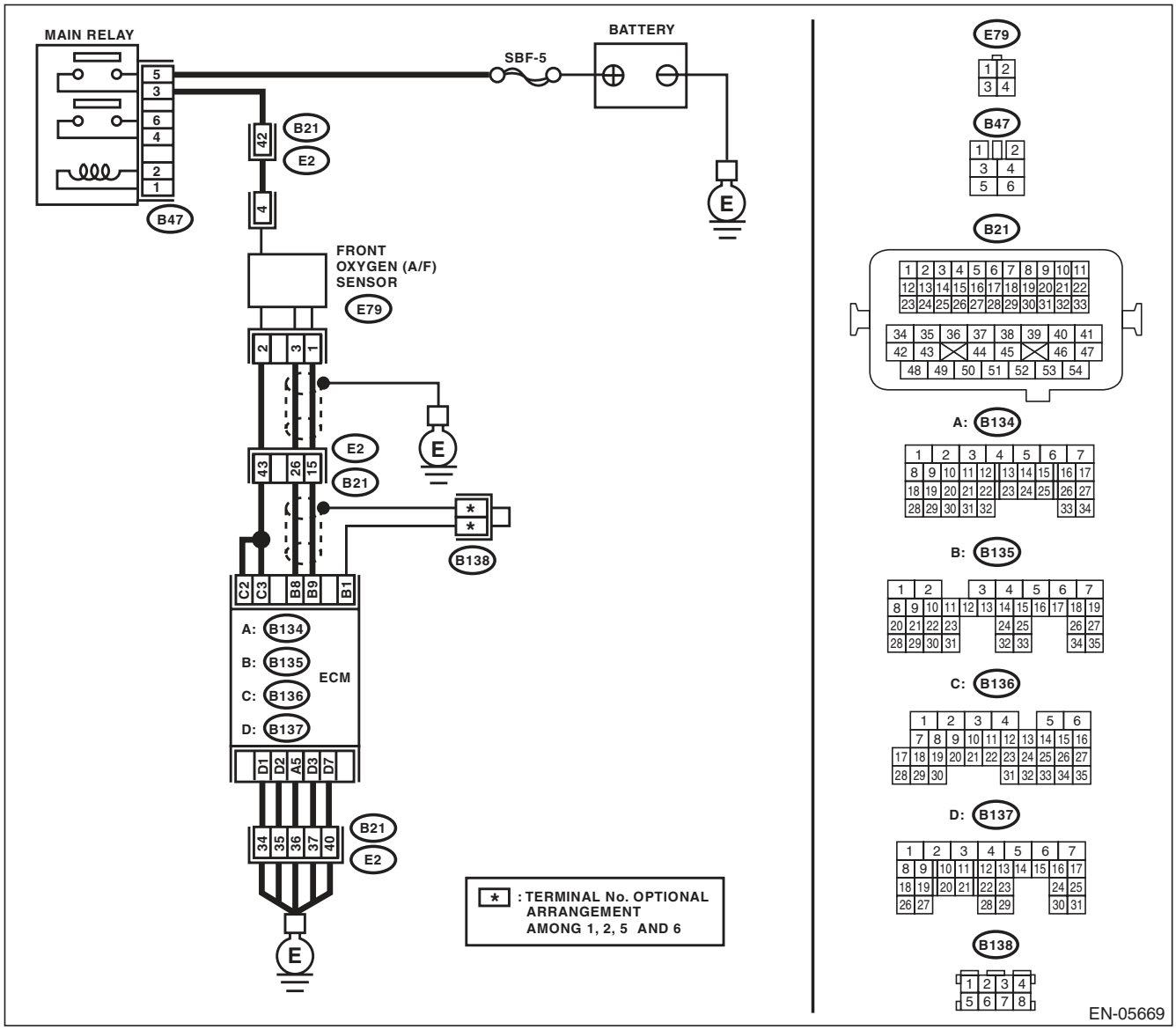

	Step	Check	Yes	No
1	**CHECK POWER SUPPLY TO FRONT OXYGEN (A/F) SENSOR.** 1) Turn the ignition switch to OFF. 2) Disconnect the connector from front oxygen (A/F) sensor. 3) Turn the ignition switch to ON. 4) Measure the voltage between front oxygen (A/F) sensor connector and engine ground. ***Connector & terminal*** ***(E79) No. 4 (+) — Engine ground (–):***	Is the voltage 10 V or more?	Go to step **2**.	Repair the power supply line. NOTE: In this case, repair the following item: • Open circuit of harness between main relay and front oxygen (A/F) sensor connector • Poor contact of main relay connector • Poor contact of coupling connector • Malfunction of main relay
2	**CHECK HARNESS BETWEEN ECM AND FRONT OXYGEN (A/F) SENSOR.** 1) Turn the ignition switch to OFF. 2) Disconnect the connectors from ECM. 3) Measure the resistance between ECM and front oxygen (A/F) sensor connector. ***Connector & terminal*** ***(B136) No. 3 — (E79) No. 2:*** ***(B136) No. 2 — (E79) No. 2:***	Is the resistance less than 1 Ω?	Go to step **3**.	Repair the harness and connector. NOTE: In this case, repair the following item: • Open circuit in harness between ECM and front oxygen (A/F) sensor • Poor contact of coupling connector
3	**CHECK GROUND CIRCUIT FOR ECM.** Measure the resistance of harness between ECM and chassis ground. ***Connector & terminal*** ***(B134) No. 5 — Chassis ground:*** ***(B137) No. 1 — Chassis ground:*** ***(B137) No. 2 — Chassis ground:*** ***(B137) No. 3 — Chassis ground:*** ***(B137) No. 7 — Chassis ground:***	Is the resistance less than 5 Ω?	Go to step **4**.	Repair the harness and connector. NOTE: In this case, repair the following item: • Open circuit of harness between ECM and engine ground • Poor contact in ECM connector • Poor contact of coupling connector
4	**CHECK FRONT OXYGEN (A/F) SENSOR.** Measure the resistance between front oxygen (A/F) sensor connector terminals. ***Terminals*** ***No. 2 — No. 4:***	Is the resistance between 2 — 3 Ω?	Repair the poor contact of ECM connector.	Replace the front oxygen (A/F) sensor. <Ref. to FU(H4DOTC)-46, Front Oxygen (A/F) Sensor.>

G: DTC P0032 HO2S HEATER CONTROL CIRCUIT HIGH (BANK 1 SENSOR 1)

DTC DETECTING CONDITION:

- Immediately at fault recognition
- GENERAL DESCRIPTION <Ref. to GD(H4DOTC)-18, DTC P0032 HO2S HEATER CONTROL CIRCUIT HIGH (BANK 1 SENSOR 1), Diagnostic Trouble Code (DTC) Detecting Criteria.>

CAUTION:

After repair or replacement of faulty parts, perform Clear Memory Mode <Ref. to EN(H4DOTC)(diag)-52, OPERATION, Clear Memory Mode.>, and Inspection Mode <Ref. to EN(H4DOTC)(diag)-43, PROCEDURE, Inspection Mode.>.

WIRING DIAGRAM:

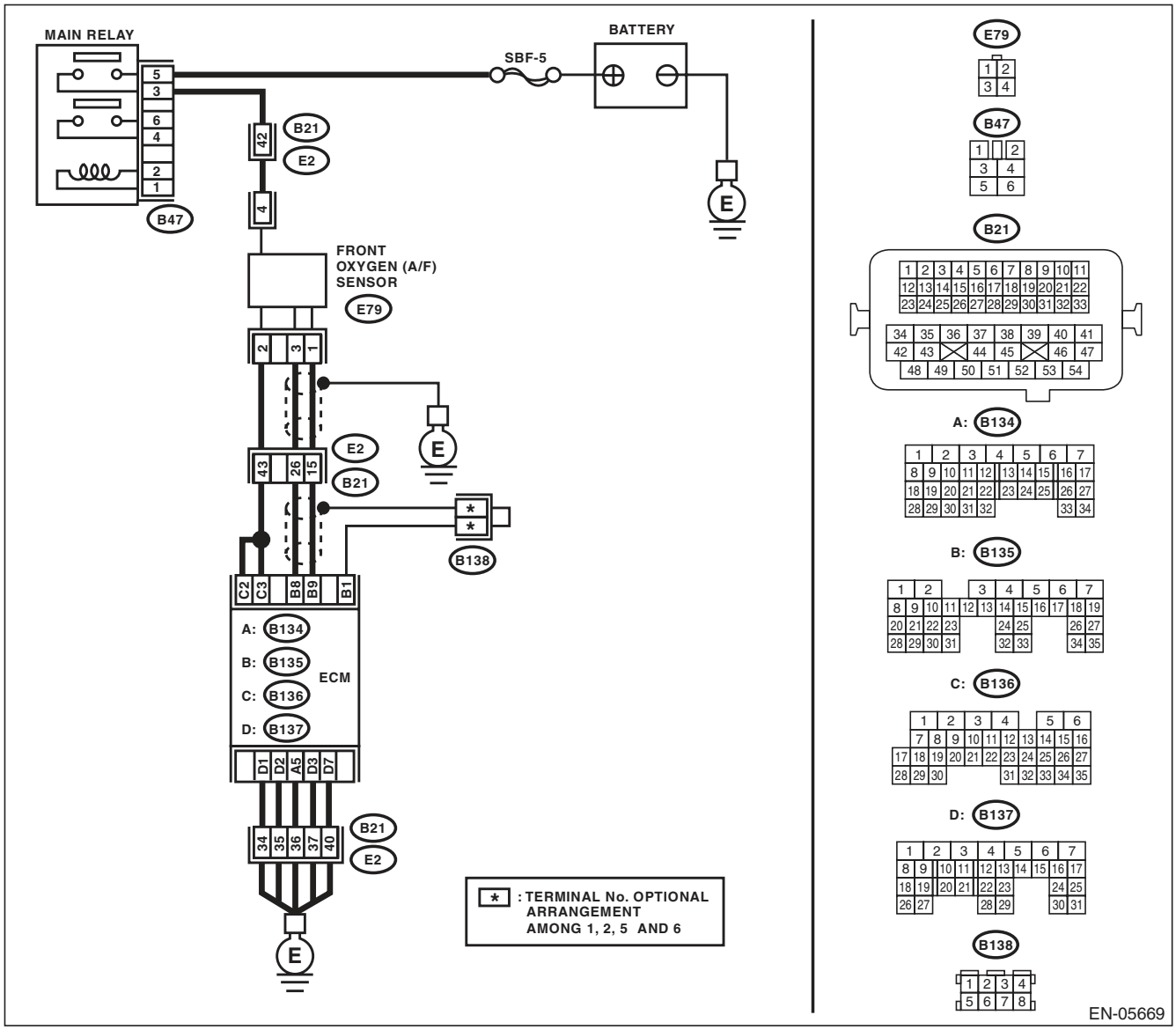

	Step	Check	Yes	No
1	**CHECK HARNESS BETWEEN ECM AND FRONT OXYGEN (A/F) SENSOR.** 1) Turn the ignition switch to OFF. 2) Measure the voltage between ECM and chassis ground. ***Connector & terminal*** ***(B136) No. 3 (+) — Chassis ground (–):*** ***(B136) No. 2 (+) — Chassis ground (–):***	Is the voltage 10 V or more?	Repair the short circuit to power in the harness between ECM and front oxygen (A/F) sensor connector.	Go to step **2**.
2	**CHECK GROUND CIRCUIT FOR ECM.** 1) Disconnect the connectors from ECM. 2) Measure the resistance between ECM and chassis ground. ***Connector & terminal*** ***(B134) No. 5 — Chassis ground:*** ***(B137) No. 1 — Chassis ground:*** ***(B137) No. 2 — Chassis ground:*** ***(B137) No. 3 — Chassis ground:*** ***(B137) No. 7 — Chassis ground:***	Is the resistance less than 5 Ω?	Repair the poor contact of ECM connector.	Repair the harness and connector. NOTE: In this case, repair the following item: • Open circuit of harness between ECM and engine ground • Poor contact of coupling connector

H: DTC P0037 HO2S HEATER CONTROL CIRCUIT LOW (BANK 1 SENSOR 2)

DTC DETECTING CONDITION:

- Two consecutive driving cycles with fault
- GENERAL DESCRIPTION <Ref. to GD(H4DOTC)-20, DTC P0037 HO2S HEATER CONTROL CIRCUIT LOW (BANK 1 SENSOR 2), Diagnostic Trouble Code (DTC) Detecting Criteria.>

CAUTION:

After repair or replacement of faulty parts, perform Clear Memory Mode <Ref. to EN(H4DOTC)(diag)-52, OPERATION, Clear Memory Mode.>, and Inspection Mode <Ref. to EN(H4DOTC)(diag)-43, PROCEDURE, Inspection Mode.>.

WIRING DIAGRAM:

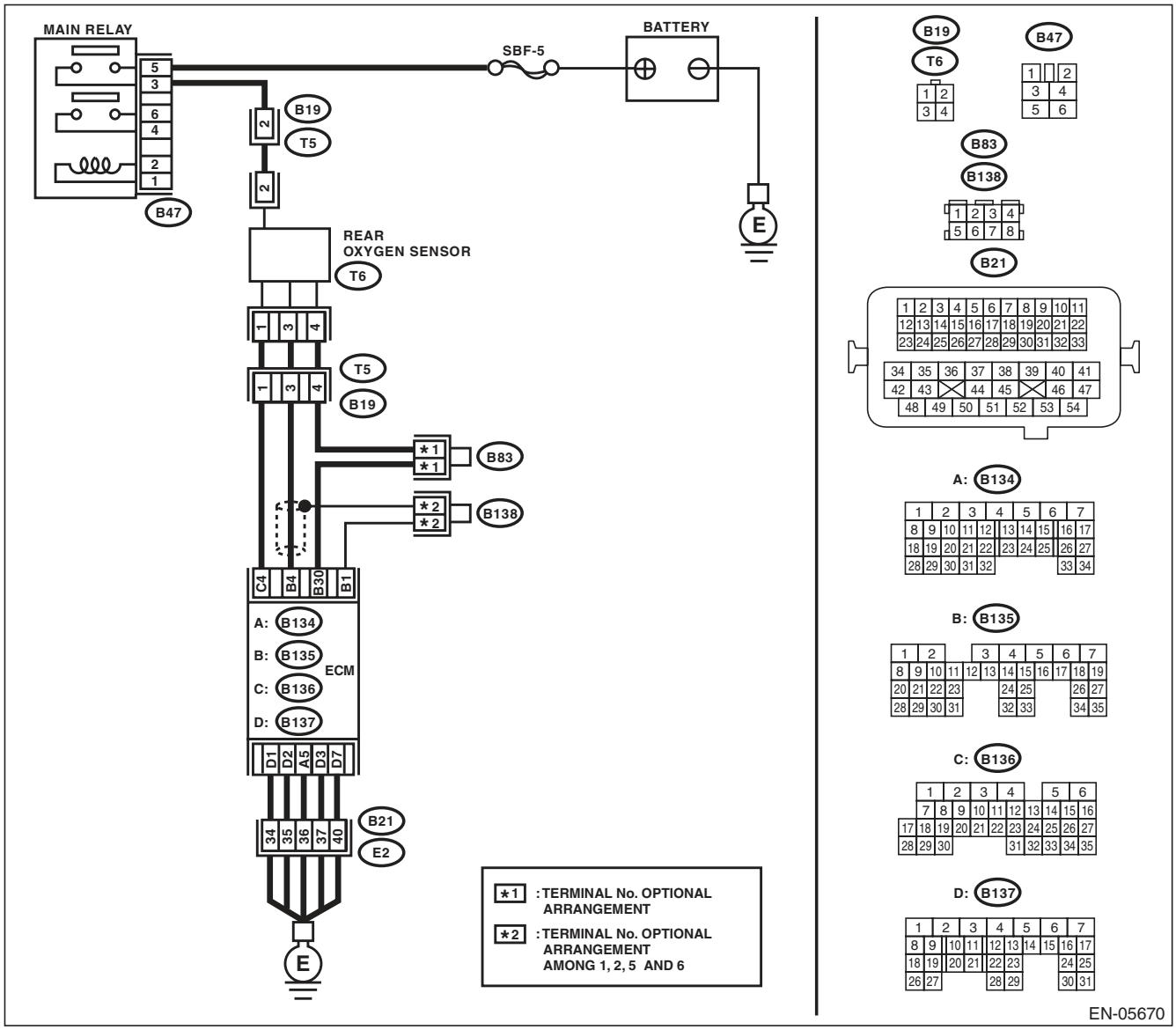

	Step	Check	Yes	No
1	**CHECK POWER SUPPLY TO REAR OXYGEN SENSOR.** 1) Turn the ignition switch to OFF. 2) Disconnect the connector from rear oxygen sensor. 3) Turn the ignition switch to ON. 4) Measure the voltage between rear oxygen sensor connector and engine ground. ***Connector & terminal*** ***(T6) No. 2 (+) — Engine ground (–):***	Is the voltage 10 V or more?	Go to step **2**.	Repair the power supply line. NOTE: In this case, repair the following item: • Open circuit of harness between main relay and rear oxygen sensor • Poor contact of main relay connector • Poor contact of coupling connector • Malfunction of main relay
2	**CHECK HARNESS BETWEEN ECM AND REAR OXYGEN SENSOR.** 1) Turn the ignition switch to OFF. 2) Disconnect the connectors from ECM. 3) Measure the resistance between the ECM and oxygen sensor connector. ***Connector & terminal*** ***(B136) No. 4 — (T6) No. 1:***	Is the resistance less than 1 Ω?	Go to step **3**.	Repair the harness and connector. NOTE: In this case, repair the following item: • Open circuit of harness between the ECM and rear oxygen sensor • Poor contact of coupling connector
3	**CHECK GROUND CIRCUIT FOR ECM.** Measure the resistance of harness between ECM and chassis ground. ***Connector & terminal*** ***(B134) No. 5 — Chassis ground:*** ***(B137) No. 1 — Chassis ground:*** ***(B137) No. 2 — Chassis ground:*** ***(B137) No. 3 — Chassis ground:*** ***(B137) No. 7 — Chassis ground:***	Is the resistance less than 5 Ω?	Go to step **4**.	Repair the harness and connector. NOTE: In this case, repair the following item: • Open circuit of harness between ECM and engine ground • Poor contact in ECM connector • Poor contact of coupling connector
4	**CHECK REAR OXYGEN SENSOR.** Measure the resistance between rear oxygen sensor connector terminals. ***Terminals*** ***No. 1 — No. 2:***	Is the resistance between 5 — 7 Ω?	Repair the poor contact of ECM connector.	Replace the rear oxygen sensor. <Ref. to FU(H4DOTC)-48, Rear Oxygen Sensor.>

I: DTC P0038 HO2S HEATER CONTROL CIRCUIT HIGH (BANK 1 SENSOR 2)

DTC DETECTING CONDITION:

- Two consecutive driving cycles with fault
- GENERAL DESCRIPTION <Ref. to GD(H4DOTC)-22, DTC P0038 HO2S HEATER CONTROL CIRCUIT HIGH (BANK 1 SENSOR 2), Diagnostic Trouble Code (DTC) Detecting Criteria.>

CAUTION:

After repair or replacement of faulty parts, perform Clear Memory Mode <Ref. to EN(H4DOTC)(diag)-52, OPERATION, Clear Memory Mode.>, and Inspection Mode <Ref. to EN(H4DOTC)(diag)-43, PROCEDURE, Inspection Mode.>.

WIRING DIAGRAM:

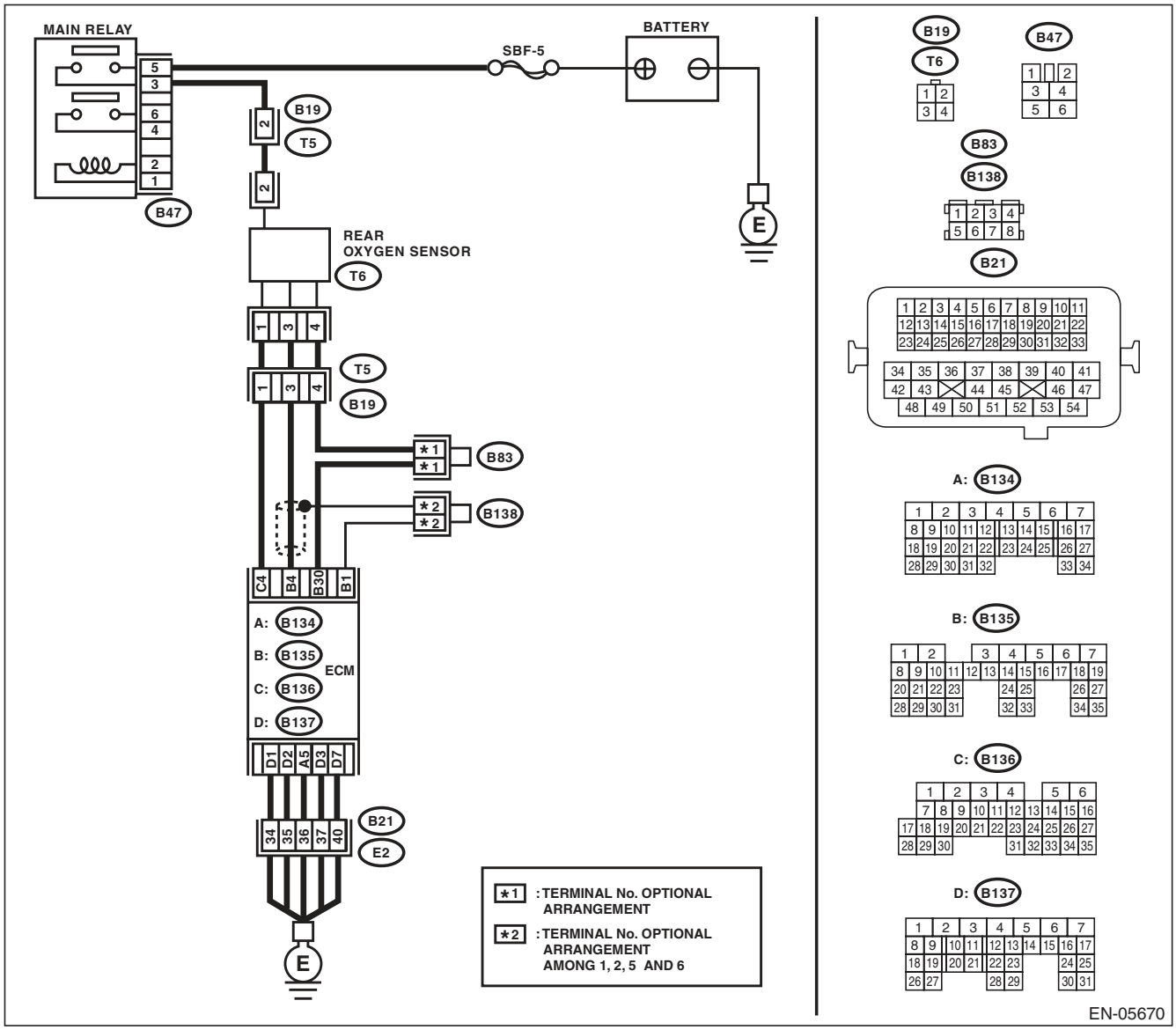

Step		Check	Yes	No
1	**CHECK HARNESS BETWEEN ECM AND REAR OXYGEN SENSOR.** 1) Turn the ignition switch to OFF. 2) Measure the voltage between ECM and chassis ground. ***Connector & terminal*** ***(B136) No. 4 (+) — Chassis ground (–):***	Is the voltage 10 V or more?	Repair the short circuit to power in the harness between ECM and rear oxygen sensor connector.	Go to step **2**.
2	**CHECK GROUND CIRCUIT FOR ECM.** 1) Disconnect the connectors from ECM. 2) Measure the resistance between ECM and chassis ground. ***Connector & terminal*** ***(B134) No. 5 — Chassis ground:*** ***(B137) No. 1 — Chassis ground:*** ***(B137) No. 2 — Chassis ground:*** ***(B137) No. 3 — Chassis ground:*** ***(B137) No. 7 — Chassis ground:***	Is the resistance less than 5 Ω?	Repair the poor contact of ECM connector.	Repair the harness and connector. NOTE: In this case, repair the following item: • Open circuit of harness between ECM and engine ground • Poor contact of coupling connector

J: DTC P0068 MAP/MAF - THROTTLE POSITION CORRELATION

DTC DETECTING CONDITION:

- Two consecutive driving cycles with fault
- GENERAL DESCRIPTION <Ref. to GD(H4DOTC)-24, DTC P0068 MAP/MAF - THROTTLE POSITION CORRELATION, Diagnostic Trouble Code (DTC) Detecting Criteria.>

CAUTION:

After repair or replacement of faulty parts, perform Clear Memory Mode <Ref. to EN(H4DOTC)(diag)-52, OPERATION, Clear Memory Mode.>, and Inspection Mode <Ref. to EN(H4DOTC)(diag)-43, PROCEDURE, Inspection Mode.>.

WIRING DIAGRAM:

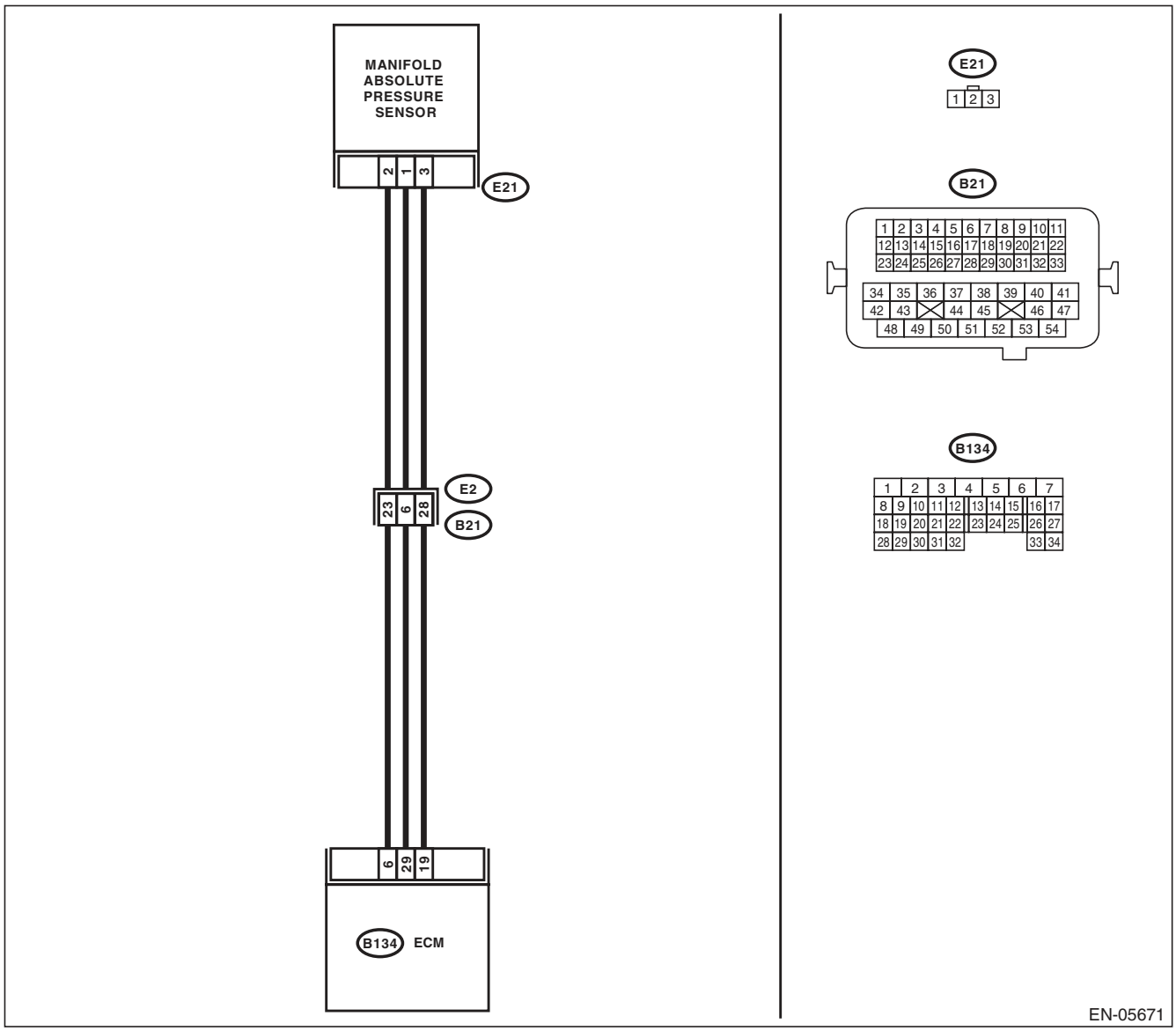

	Step	Check	Yes	No
1	**CHECK AIR INTAKE SYSTEM.**	Are there holes, loose bolts or disconnection of hose on air intake system?	Repair the air intake system.	Go to step **2**.
2	**CHECK MANIFOLD ABSOLUTE PRESSURE SENSOR.** 1) Start the engine and warm up engine until coolant temperature is higher than 75°C (167°F). 2) For AT models, set the select lever to "P" range or "N" range, and for MT models, place the shift lever in the neutral position. 3) Turn the A/C switch to OFF. 4) Turn all the accessory switches to OFF. 5) Read the data of intake manifold pressure sensor signal using Subaru Select Monitor or general scan tool. NOTE: • Subaru Select Monitor For detailed operation procedure, refer to "READ CURRENT DATA FOR ENGINE". <Ref. to EN(H4DOTC)(diag)-34, Subaru Select Monitor.> • General scan tool For detailed operation procedures, refer to the "General Scan Tool Instruction Manual".	Is the measured value 73.3 — 106.6 kPa (550 — 800 mmHg, 21.65 — 31.50 inHg) when the ignition is turned ON, and 20.0 — 46.7 kPa (150 — 350 mmHg, 5.91 — 13.78 inHg) during idling?	Go to step **3**.	Replace the manifold absolute pressure sensor. <Ref. to FU(H4DOTC)-37, Manifold Absolute Pressure Sensor.>
3	**CHECK THROTTLE OPENING ANGLE.** Read the data of throttle position signal using Subaru Select Monitor or general scan tool. NOTE: • Subaru Select Monitor For detailed operation procedure, refer to "READ CURRENT DATA FOR ENGINE". <Ref. to EN(H4DOTC)(diag)-34, Subaru Select Monitor.> • General scan tool For detailed operation procedures, refer to the "General Scan Tool Instruction Manual".	Is the measured value less than 5% when throttle is fully closed?	Go to step **4**.	Replace the electronic throttle control. <Ref. to FU(H4DOTC)-14, Throttle Body.>
4	**CHECK THROTTLE OPENING ANGLE.**	Is the measured value 85% or more when throttle is fully open?	Replace the manifold absolute pressure sensor. <Ref. to FU(H4DOTC)-37, Manifold Absolute Pressure Sensor.>	Replace the electronic throttle control. <Ref. to FU(H4DOTC)-14, Throttle Body.>

K: DTC P0101 MASS OR VOLUME AIR FLOW CIRCUIT RANGE/PERFORMANCE

DTC DETECTING CONDITION:

- Two consecutive driving cycles with fault
- GENERAL DESCRIPTION <Ref. to GD(H4DOTC)-26, DTC P0101 MASS OR VOLUME AIR FLOW CIRCUIT RANGE/PERFORMANCE, Diagnostic Trouble Code (DTC) Detecting Criteria.>

TROUBLE SYMPTOM:

- Improper idling
- Engine stalls.
- Poor driving performance

CAUTION:

After repair or replacement of faulty parts, perform Clear Memory Mode <Ref. to EN(H4DOTC)(diag)-52, OPERATION, Clear Memory Mode.>, and Inspection Mode <Ref. to EN(H4DOTC)(diag)-43, PROCEDURE, Inspection Mode.>.

WIRING DIAGRAM:

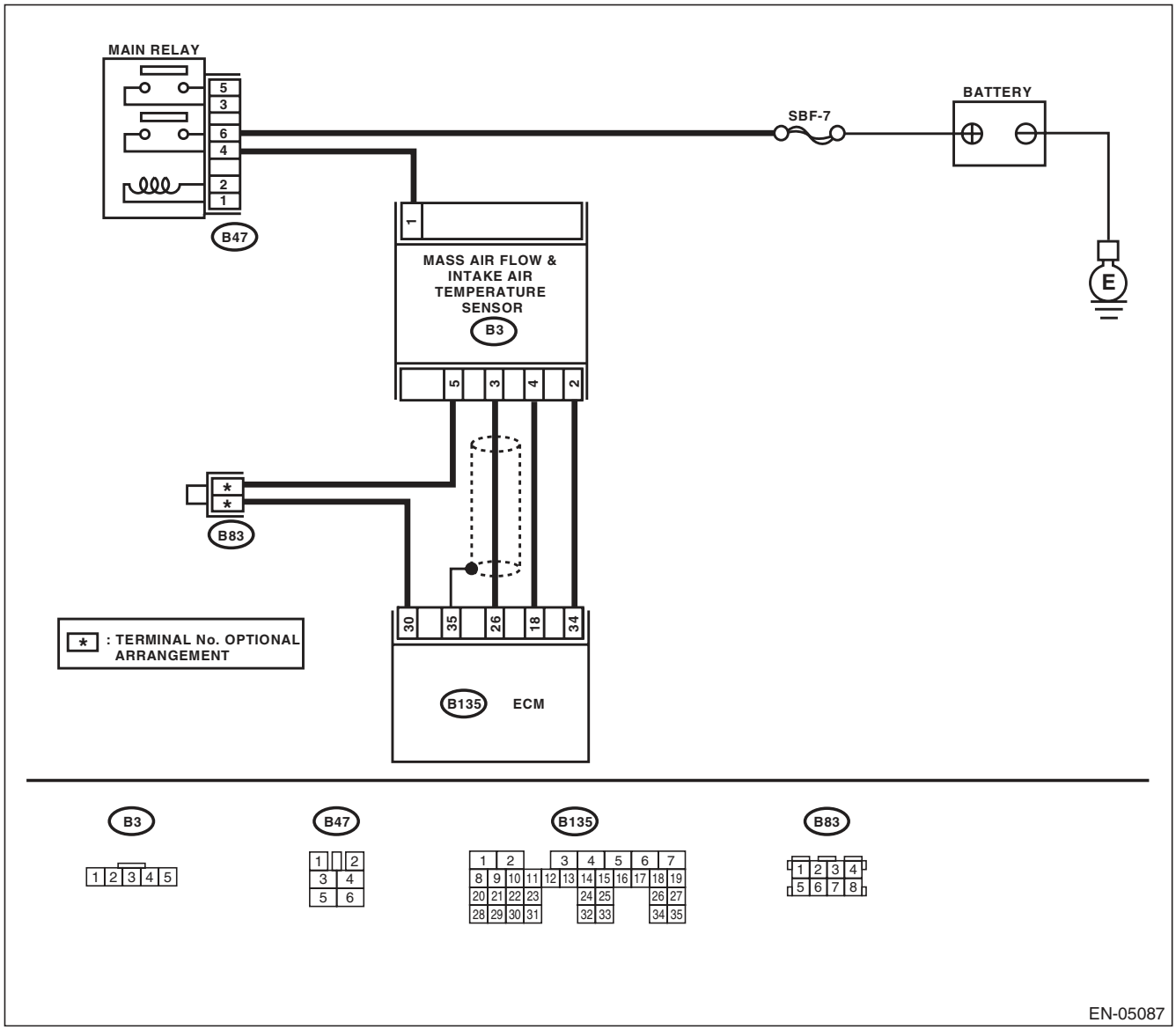

Step	Check	Yes	No
1 CHECK FOR ANY OTHER DTC ON DISPLAY.	Is any other DTC displayed?	Check the appropriate DTC using the “List of Diagnostic Trouble Code (DTC)”. <Ref. to EN(H4DOTC)(diag)-81, List of Diagnostic Trouble Code (DTC).>	Replace the mass air flow and intake air temperature sensor. <Ref. to FU(H4DOTC)-36, Mass Air Flow and Intake Air Temperature Sensor.>

L: DTC P0102 MASS OR VOLUME AIR FLOW CIRCUIT LOW INPUT

DTC DETECTING CONDITION:

- Immediately at fault recognition
- GENERAL DESCRIPTION <Ref. to GD(H4DOTC)-28, DTC P0102 MASS OR VOLUME AIR FLOW CIRCUIT LOW INPUT, Diagnostic Trouble Code (DTC) Detecting Criteria.>

TROUBLE SYMPTOM:

- Improper idling
- Engine stalls.
- Poor driving performance

CAUTION:

After repair or replacement of faulty parts, perform Clear Memory Mode <Ref. to EN(H4DOTC)(diag)-52, OPERATION, Clear Memory Mode.>, and Inspection Mode <Ref. to EN(H4DOTC)(diag)-43, PROCEDURE, Inspection Mode.>.

WIRING DIAGRAM:

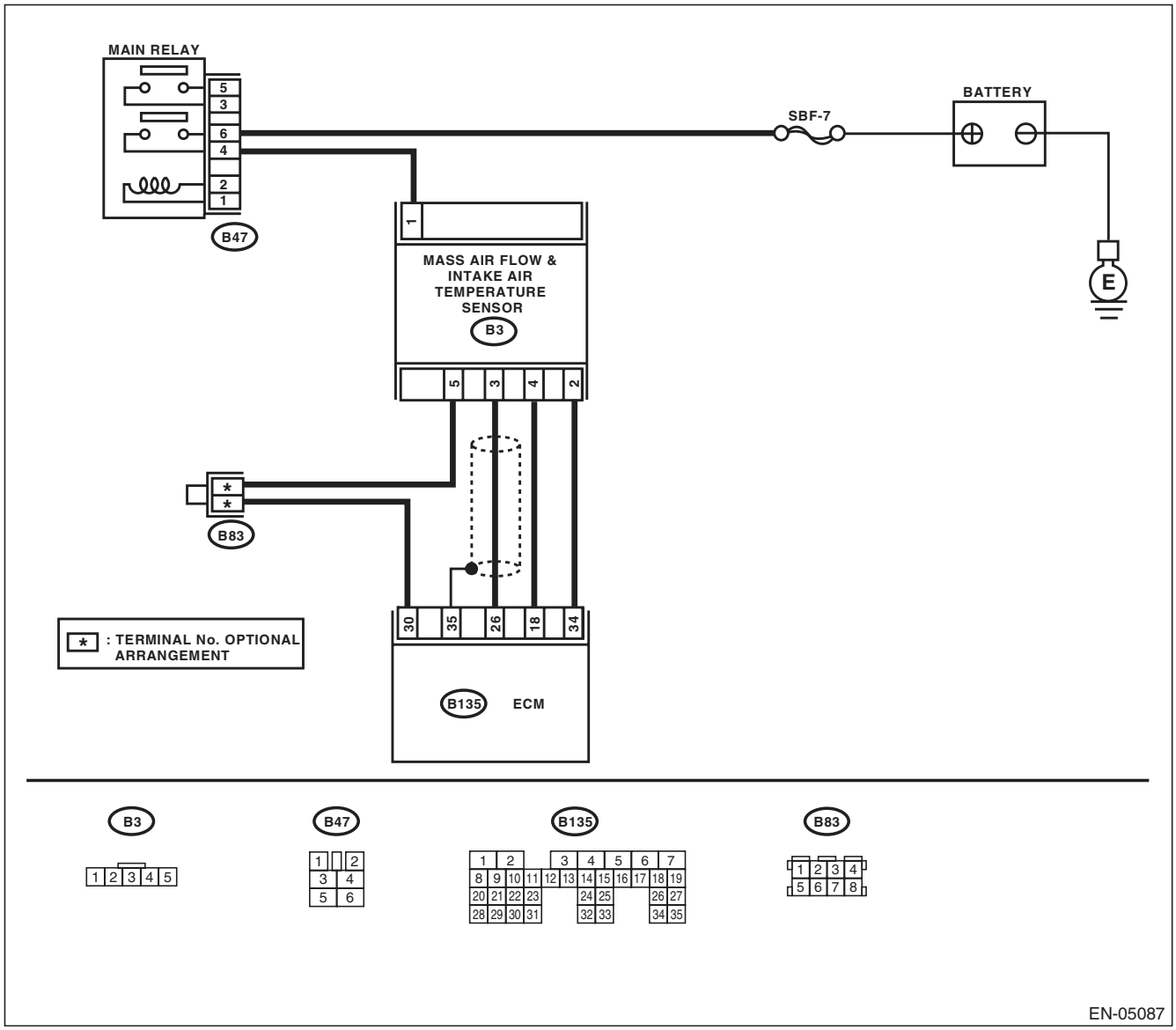

EN-05087

	Step	Check	Yes	No
1	**CHECK CURRENT DATA.** 1) Start the engine. 2) Read the data of air flow sensor signal using Subaru Select Monitor or general scan tool. NOTE: • Subaru Select Monitor For detailed operation procedure, refer to "READ CURRENT DATA FOR ENGINE". <Ref. to EN(H4DOTC)(diag)-34, Subaru Select Monitor.> • General scan tool For detailed operation procedures, refer to the general scan tool operation manual.	Is the voltage less than 0.2 V?	Go to step **2**.	Even if DTC is detected, the circuit has returned to a normal condition at this time. Reproduce the failure, and then perform the diagnosis again. NOTE: In this case, temporary poor contact of connector may be the cause.
2	**CHECK POWER SUPPLY OF MASS AIR FLOW AND INTAKE AIR TEMPERATURE SENSOR.** 1) Turn the ignition switch to OFF. 2) Disconnect the connector from the mass air flow and intake air temperature sensor. 3) Turn the ignition switch to ON. 4) Measure the voltage between mass air flow and intake air temperature sensor connector and engine ground. ***Connector & terminal*** ***(B3) No. 1 (+) — Engine ground (–):***	Is the voltage 10 V or more?	Go to step **3**.	Repair the harness and connector. NOTE: In this case, repair the following item: • Open circuit in harness between main relay and mass air flow and intake air temperature sensor connector • Poor contact of main relay connector
3	**CHECK HARNESS BETWEEN ECM AND MASS AIR FLOW AND INTAKE AIR TEMPERATURE SENSOR CONNECTOR.** 1) Turn the ignition switch to OFF. 2) Disconnect the connectors from ECM. 3) Measure the resistance of harness between ECM and mass air flow and intake air temperature sensor connectors. ***Connector & terminal*** ***(B135) No. 26 — (B3) No. 3:***	Is the resistance less than 1 Ω?	Go to step **4**.	Repair the open circuit of harness between ECM and mass air flow and intake air temperature sensor connector.
4	**CHECK HARNESS BETWEEN ECM AND MASS AIR FLOW AND INTAKE AIR TEMPERATURE SENSOR CONNECTOR.** Measure the resistance between ECM and chassis ground. ***Connector & terminal*** ***(B135) No. 26 — Chassis ground:***	Is the resistance 1 MΩ or more?	Go to step **5**.	Repair the ground short circuit of harness between the ECM and the mass air flow and intake air temperature sensor connectors.
5	**CHECK POOR CONTACT.** Check for any poor contact in the ECM or the mass air flow or intake air temperature sensor connector.	Is there poor contact in the ECM or the mass air flow and intake air temperature sensor connector?	Repair any poor contact in the ECM or the mass air flow and intake air temperature sensor connector.	Replace the mass air flow and intake air temperature sensor. <Ref. to FU(H4DOTC)-36, Mass Air Flow and Intake Air Temperature Sensor.>

M: DTC P0103 MASS OR VOLUME AIR FLOW CIRCUIT HIGH INPUT

DTC DETECTING CONDITION:

- Immediately at fault recognition
- GENERAL DESCRIPTION <Ref. to GD(H4DOTC)-29, DTC P0103 MASS OR VOLUME AIR FLOW CIRCUIT HIGH INPUT, Diagnostic Trouble Code (DTC) Detecting Criteria.>

TROUBLE SYMPTOM:

- Improper idling
- Engine stalls.
- Poor driving performance

CAUTION:

After repair or replacement of faulty parts, perform Clear Memory Mode <Ref. to EN(H4DOTC)(diag)-52, OPERATION, Clear Memory Mode.>, and Inspection Mode <Ref. to EN(H4DOTC)(diag)-43, PROCEDURE, Inspection Mode.>.

WIRING DIAGRAM:

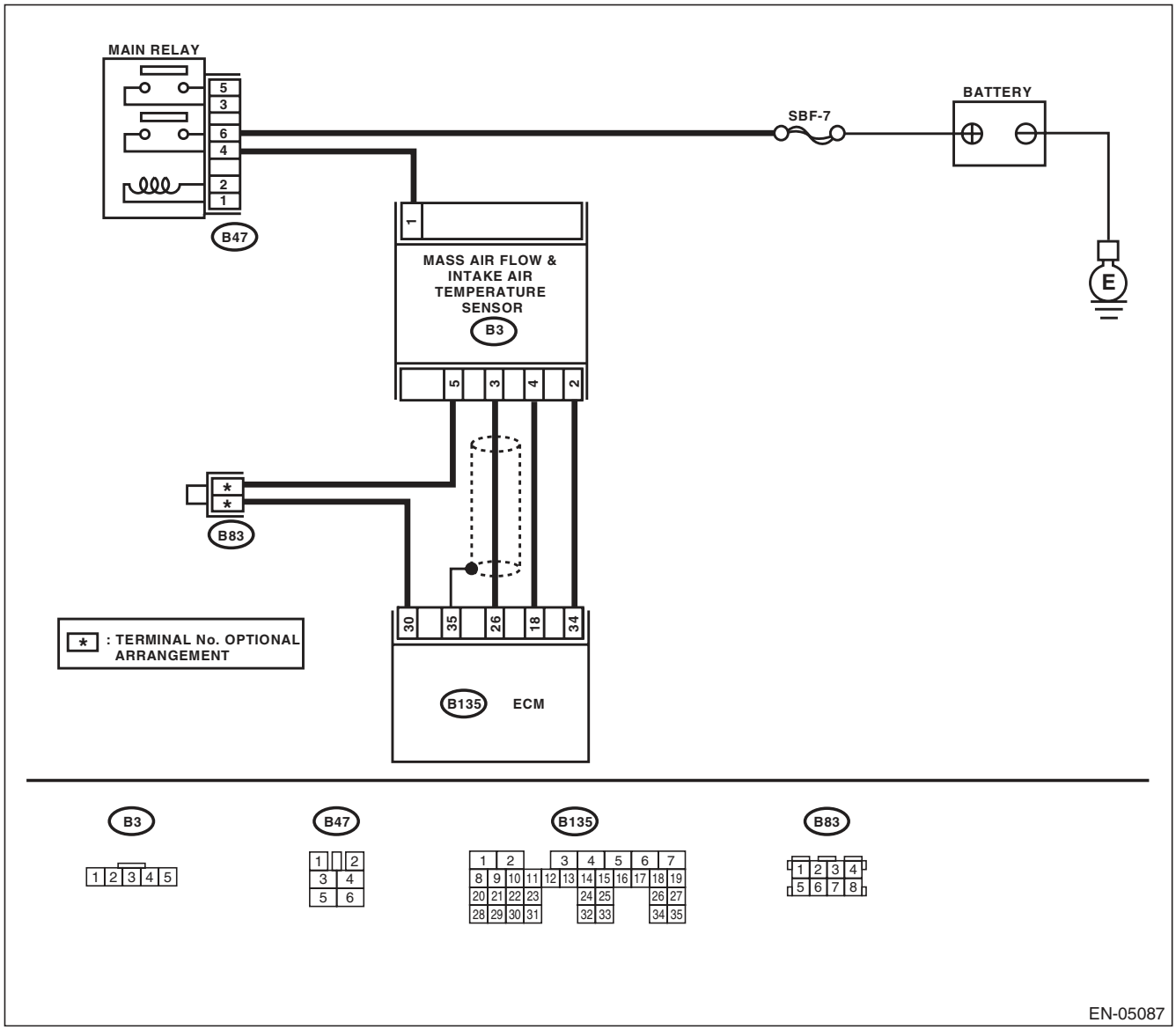

	Step	Check	Yes	No
1	**CHECK CURRENT DATA.** 1) Start the engine. 2) Read the data of air flow sensor signal using Subaru Select Monitor or general scan tool. NOTE: • Subaru Select Monitor For detailed operation procedure, refer to "READ CURRENT DATA FOR ENGINE". <Ref. to EN(H4DOTC)(diag)-34, Subaru Select Monitor.> • General scan tool For detailed operation procedures, refer to the general scan tool operation manual.	Is the voltage 5 V or more?	Go to step **2**.	Even if DTC is detected, the circuit has returned to a normal condition at this time. Reproduce the failure, and then perform the diagnosis again. NOTE: In this case, temporary poor contact of connector may be the cause.
2	**CHECK HARNESS BETWEEN ECM AND MASS AIR FLOW AND INTAKE AIR TEMPERATURE SENSOR CONNECTOR.** 1) Turn the ignition switch to OFF. 2) Disconnect the connector from the mass air flow and intake air temperature sensor. 3) Start the engine. 4) Read the data of air flow sensor signal using Subaru Select Monitor or general scan tool. NOTE: • Subaru Select Monitor For detailed operation procedure, refer to "READ CURRENT DATA FOR ENGINE". <Ref. to EN(H4DOTC)(diag)-34, Subaru Select Monitor.> • General scan tool For detailed operation procedures, refer to the general scan tool operation manual.	Is the voltage 5 V or more?	Repair the short circuit to power in the harness between the ECM and the mass air flow and intake air temperature sensor connector.	Go to step **3**.
3	**CHECK HARNESS BETWEEN ECM AND MASS AIR FLOW AND INTAKE AIR TEMPERATURE SENSOR CONNECTOR.** 1) Turn the ignition switch to OFF. 2) Measure the resistance of harness between mass air flow and intake air temperature sensor connector and engine ground. ***Connector & terminal*** ***(B3) No. 2 — Engine ground:***	Is the resistance less than 5 Ω?	Go to step **4**.	Repair the harness and connector. NOTE: In this case, repair the following item: • pen circuit of harness between ECM and the mass air flow and intake air temperature sensor connector. • Poor contact in ECM connector
4	**CHECK POOR CONTACT.** Check for any poor contact in the mass air flow and intake air temperature sensor connector.	Is there poor contact in the mass air flow and intake air temperature sensor connector?	Repair any poor contact of the mass air flow and intake air temperature sensor connector.	Replace the mass air flow and intake air temperature sensor. <Ref. to FU(H4DOTC)-36, Mass Air Flow and Intake Air Temperature Sensor.>

N: DTC P0107 MANIFOLD ABSOLUTE PRESSURE/BAROMETRIC PRESSURE CIRCUIT LOW INPUT

DTC DETECTING CONDITION:

- Immediately at fault recognition
- GENERAL DESCRIPTION <Ref. to GD(H4DOTC)-30, DTC P0107 MANIFOLD ABSOLUTE PRESSURE/ BAROMETRIC PRESSURE CIRCUIT LOW INPUT, Diagnostic Trouble Code (DTC) Detecting Criteria.>

CAUTION:

After repair or replacement of faulty parts, perform Clear Memory Mode <Ref. to EN(H4DOTC)(diag)-52, OPERATION, Clear Memory Mode.>, and Inspection Mode <Ref. to EN(H4DOTC)(diag)-43, PROCEDURE, Inspection Mode.>.

WIRING DIAGRAM:

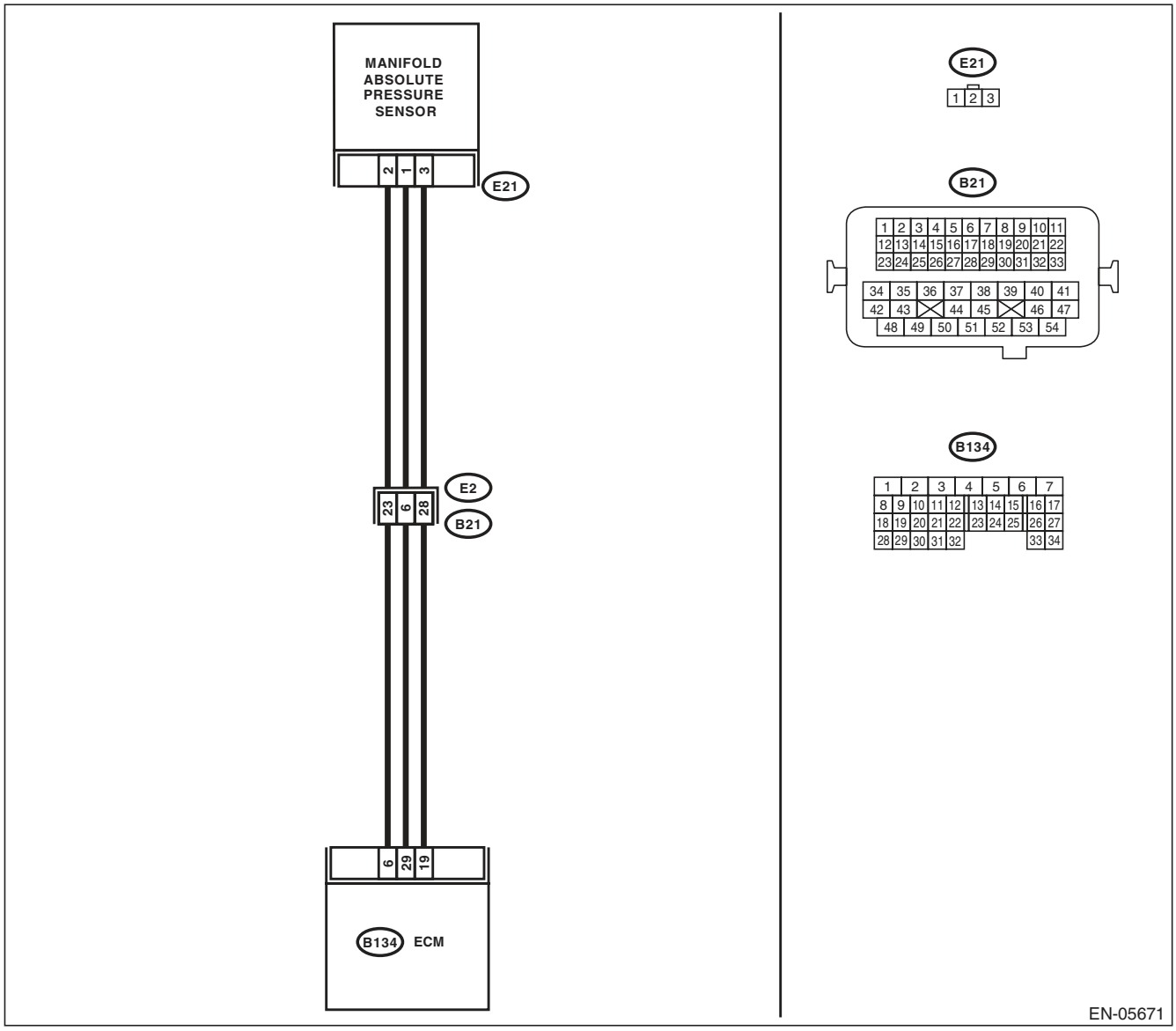

	Step	Check	Yes	No
1	**CHECK CURRENT DATA.** 1) Start the engine. 2) Read the data of intake manifold absolute pressure signal using Subaru Select Monitor or general scan tool. NOTE: • Subaru Select Monitor For detailed operation procedure, refer to "READ CURRENT DATA FOR ENGINE". <Ref. to EN(H4DOTC)(diag)-34, Subaru Select Monitor.> • General scan tool For detailed operation procedures, refer to the general scan tool operation manual.	Is the measured value less than 13.3 kPa (100 mmHg, 3.94 inHg)?	Go to step **2**.	Even if DTC is detected, the circuit has returned to a normal condition at this time. Reproduce the failure, and then perform the diagnosis again. NOTE: In this case, temporary poor contact of connector may be the cause.
2	**CHECK POWER SUPPLY OF MANIFOLD ABSOLUTE PRESSURE SENSOR.** 1) Turn the ignition switch to OFF. 2) Disconnect the connector from manifold absolute pressure sensor. 3) Turn the ignition switch to ON. 4) Measure the voltage between manifold absolute pressure sensor connector and engine ground. ***Connector & terminal*** ***(E21) No. 3 (+) — Engine ground (–):***	Is the voltage 4.5 V or more?	Go to step **3**.	Repair the harness and connector. NOTE: In this case, repair the following item: • Open circuit of harness between ECM and manifold absolute pressure sensor connector. • Poor contact in ECM connector • Poor contact of coupling connector
3	**CHECK HARNESS BETWEEN ECM AND MANIFOLD ABSOLUTE PRESSURE SENSOR CONNECTOR.** 1) Turn the ignition switch to OFF. 2) Disconnect the connectors from ECM. 3) Measure the resistance of harness between ECM and manifold absolute pressure sensor connector. ***Connector & terminal*** ***(B134) No. 6 — (E21) No. 2:***	Is the resistance less than 1 Ω?	Go to step **4**.	Repair the harness and connector. NOTE: In this case, repair the following item: • Open circuit of harness between ECM and manifold absolute pressure sensor connector. • Poor contact of coupling connector
4	**CHECK HARNESS BETWEEN ECM AND MANIFOLD ABSOLUTE PRESSURE SENSOR CONNECTOR.** Measure the resistance between ECM and chassis ground. ***Connector & terminal*** ***(B134) No. 6 — Chassis ground:***	Is the resistance 1 MΩ or more?	Go to step **5**.	Repair ground short circuit of harness between ECM and manifold absolute pressure sensor connector.
5	**CHECK POOR CONTACT.** Check for poor contact in ECM and manifold absolute pressure sensor connector.	Is there poor contact in ECM or manifold absolute pressure sensor connector?	Repair the poor contact in ECM or manifold absolute pressure sensor connector.	Replace the manifold absolute pressure sensor. <Ref. to FU(H4DOTC)-37, Manifold Absolute Pressure Sensor.>

O: DTC P0108 MANIFOLD ABSOLUTE PRESSURE/BAROMETRIC PRESSURE CIRCUIT HIGH INPUT

DTC DETECTING CONDITION:

- Immediately at fault recognition
- GENERAL DESCRIPTION <Ref. to GD(H4DOTC)-31, DTC P0108 MANIFOLD ABSOLUTE PRESSURE/ BAROMETRIC PRESSURE CIRCUIT HIGH INPUT, Diagnostic Trouble Code (DTC) Detecting Criteria.>

CAUTION:

After repair or replacement of faulty parts, perform Clear Memory Mode <Ref. to EN(H4DOTC)(diag)-52, OPERATION, Clear Memory Mode.>, and Inspection Mode <Ref. to EN(H4DOTC)(diag)-43, PROCEDURE, Inspection Mode.>.

WIRING DIAGRAM:

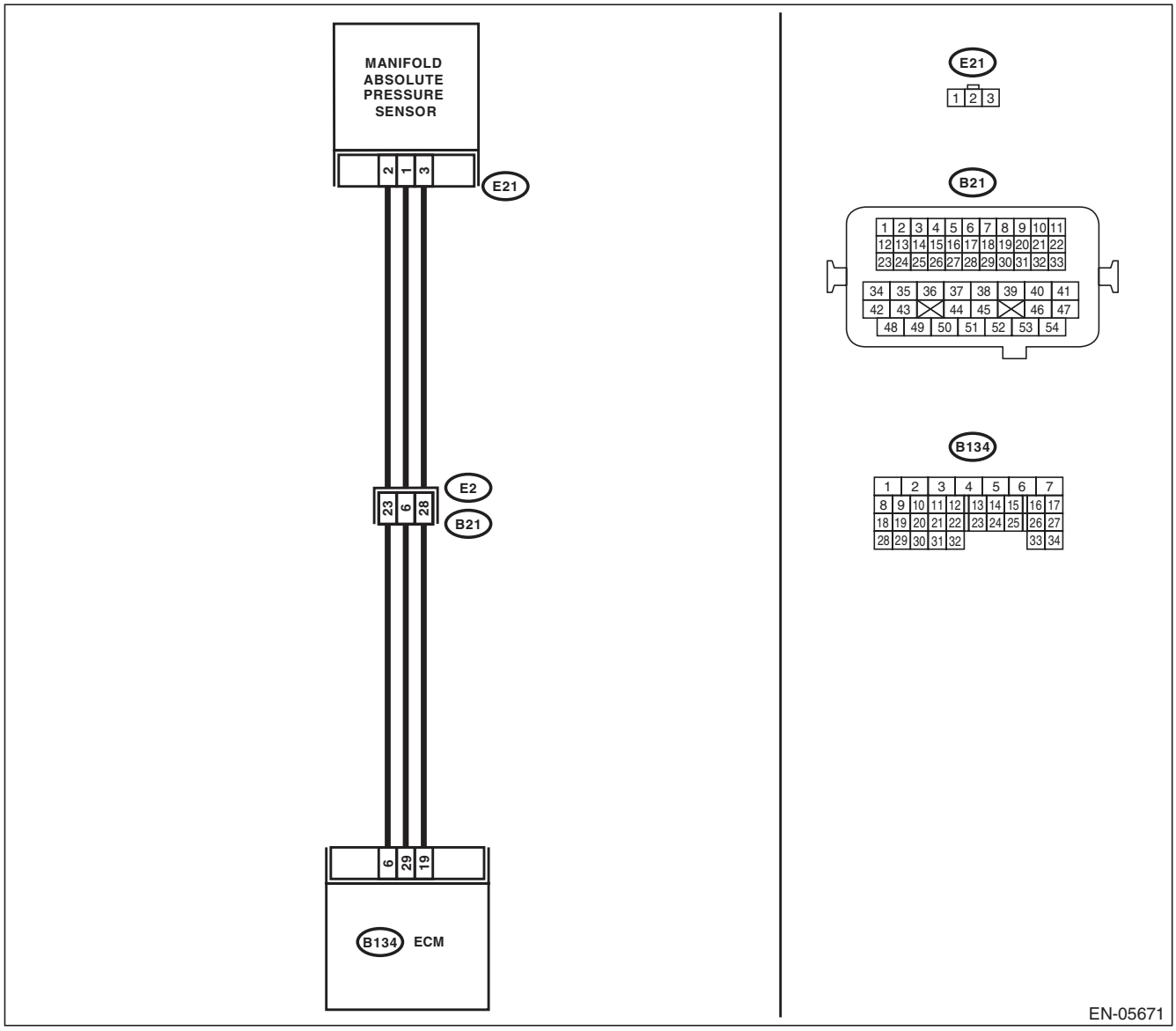

	Step	Check	Yes	No
1	**CHECK CURRENT DATA.** 1) Start the engine. 2) Read the data of intake manifold absolute pressure signal using Subaru Select Monitor or general scan tool. NOTE: • Subaru Select Monitor For detailed operation procedure, refer to "READ CURRENT DATA FOR ENGINE". <Ref. to EN(H4DOTC)(diag)-34, Subaru Select Monitor.> • General scan tool For detailed operation procedures, refer to the general scan tool operation manual.	Is the measured value 119.5 kPa (896.5 mmHg, 35.29 inHg) or more?	Go to step **2**.	Even if DTC is detected, the circuit has returned to a normal condition at this time. Reproduce the failure, and then perform the diagnosis again. NOTE: In this case, temporary poor contact of connector may be the cause.
2	**CHECK HARNESS BETWEEN ECM AND MANIFOLD ABSOLUTE PRESSURE SENSOR CONNECTOR.** 1) Turn the ignition switch to OFF. 2) Disconnect the connector from manifold absolute pressure sensor. 3) Start the engine. 4) Read the data of intake manifold absolute pressure signal using Subaru Select Monitor or general scan tool. NOTE: • Subaru Select Monitor For detailed operation procedure, refer to "READ CURRENT DATA FOR ENGINE". <Ref. to EN(H4DOTC)(diag)-34, Subaru Select Monitor.> • General scan tool For detailed operation procedures, refer to the general scan tool operation manual.	Is the measured value 119.5 kPa (896.5 mmHg, 35.29 inHg) or more?	Repair the short circuit to power in harness between ECM and manifold absolute pressure sensor connector.	Go to step **3**.
3	**CHECK HARNESS BETWEEN ECM AND MANIFOLD ABSOLUTE PRESSURE SENSOR CONNECTOR.** 1) Turn the ignition switch to OFF. 2) Measure the resistance of harness between manifold absolute pressure sensor connector and engine ground. ***Connector & terminal*** ***(E21) No. 1 — Engine ground:***	Is the resistance less than 5 Ω?	Go to step **4**.	Repair the harness and connector. NOTE: In this case, repair the following item: • Open circuit of harness between ECM and manifold absolute pressure sensor connector. • Poor contact in ECM connector • Poor contact of coupling connector
4	**CHECK POOR CONTACT.** Check for poor contact in manifold absolute pressure sensor connector.	Is there poor contact in manifold absolute pressure sensor connector?	Repair the poor contact of manifold absolute pressure sensor connector.	Replace the manifold absolute pressure sensor. <Ref. to FU(H4DOTC)-37, Manifold Absolute Pressure Sensor.>

P: DTC P0111 INTAKE AIR TEMPERATURE SENSOR 1 CIRCUIT RANGE/ PERFORMANCE

DTC DETECTING CONDITION:

- Two consecutive driving cycles with fault
- GENERAL DESCRIPTION <Ref. to GD(H4DOTC)-32, DTC P0111 INTAKE AIR TEMPERATURE SENSOR 1 CIRCUIT RANGE/PERFORMANCE, Diagnostic Trouble Code (DTC) Detecting Criteria.>

TROUBLE SYMPTOM:

- Improper idling
- Poor driving performance

CAUTION:

After repair or replacement of faulty parts, perform Clear Memory Mode <Ref. to EN(H4DOTC)(diag)-52, OPERATION, Clear Memory Mode.>, and Inspection Mode <Ref. to EN(H4DOTC)(diag)-43, PROCEDURE, Inspection Mode.>.

WIRING DIAGRAM:

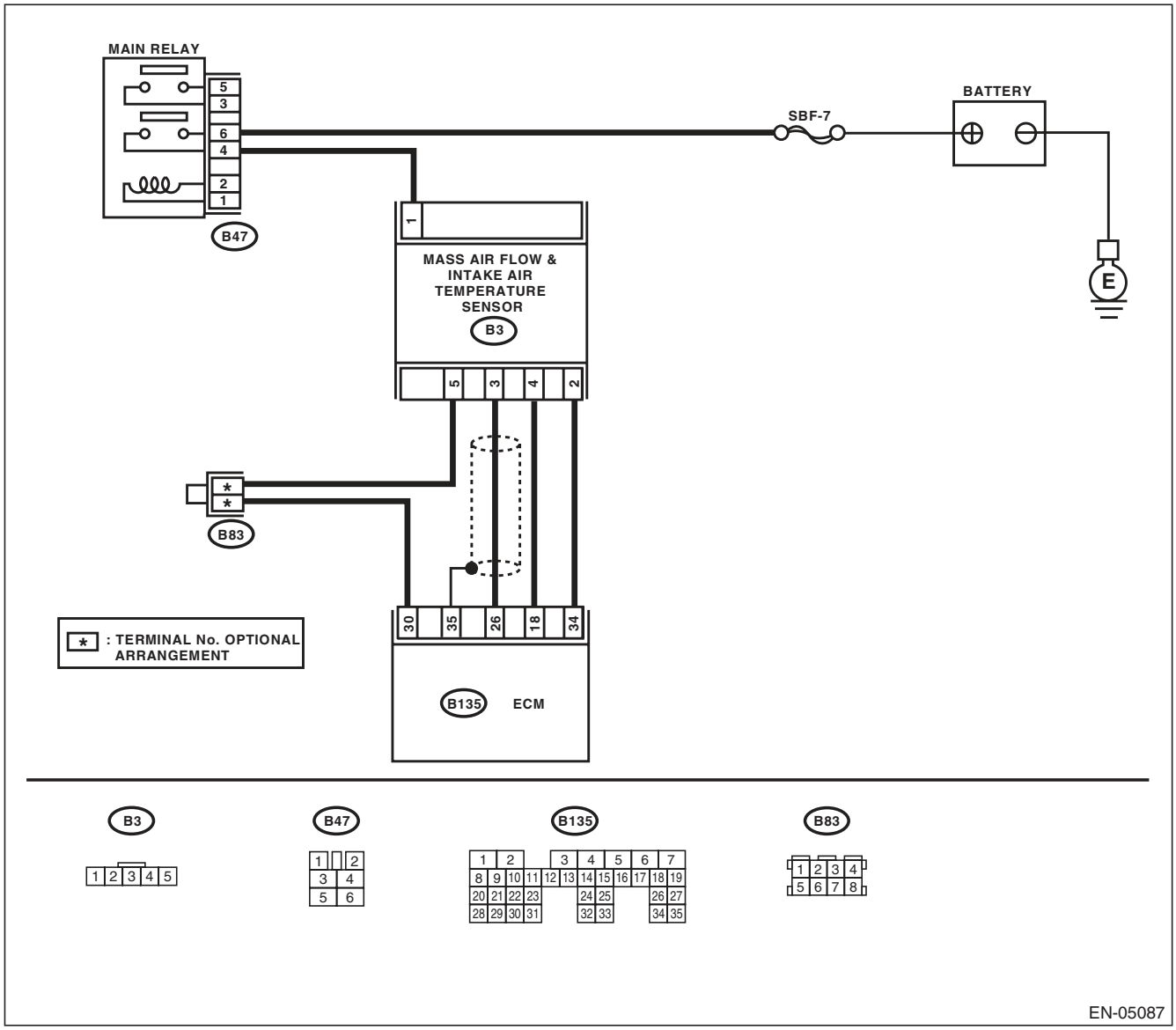

Step		Check	Yes	No
1	**CHECK ENGINE COOLANT TEMPERATURE.** 1) Start the engine and warm up completely. 2) Measure the engine coolant temperature using the Subaru Select Monitor or general scan tool. NOTE: • Subaru Select Monitor For detailed operation procedure, refer to “READ CURRENT DATA FOR ENGINE”. <Ref. to EN(H4DOTC)(diag)-34, Subaru Select Monitor.> • General scan tool For detailed operation procedures, refer to the general scan tool operation manual.	Is the engine coolant temperature 75°C (167°F) or higher?	Replace the mass air flow and intake air temperature sensor. <Ref. to FU(H4DOTC)-36, Mass Air Flow and Intake Air Temperature Sensor.>	Check DTC P0125 using “List of Diagnostic Trouble Code (DTC)”. <Ref. to EN(H4DOTC)(diag)-81, List of Diagnostic Trouble Code (DTC).>

Q: DTC P0112 INTAKE AIR TEMPERATURE SENSOR 1 CIRCUIT LOW

DTC DETECTING CONDITION:

- Immediately at fault recognition
- GENERAL DESCRIPTION <Ref. to GD(H4DOTC)-34, DTC P0112 INTAKE AIR TEMPERATURE SENSOR 1 CIRCUIT LOW, Diagnostic Trouble Code (DTC) Detecting Criteria.>

TROUBLE SYMPTOM:

- Improper idling
- Poor driving performance

CAUTION:

After repair or replacement of faulty parts, perform Clear Memory Mode <Ref. to EN(H4DOTC)(diag)-52, OPERATION, Clear Memory Mode.>, and Inspection Mode <Ref. to EN(H4DOTC)(diag)-43, PROCEDURE, Inspection Mode.>.

WIRING DIAGRAM:

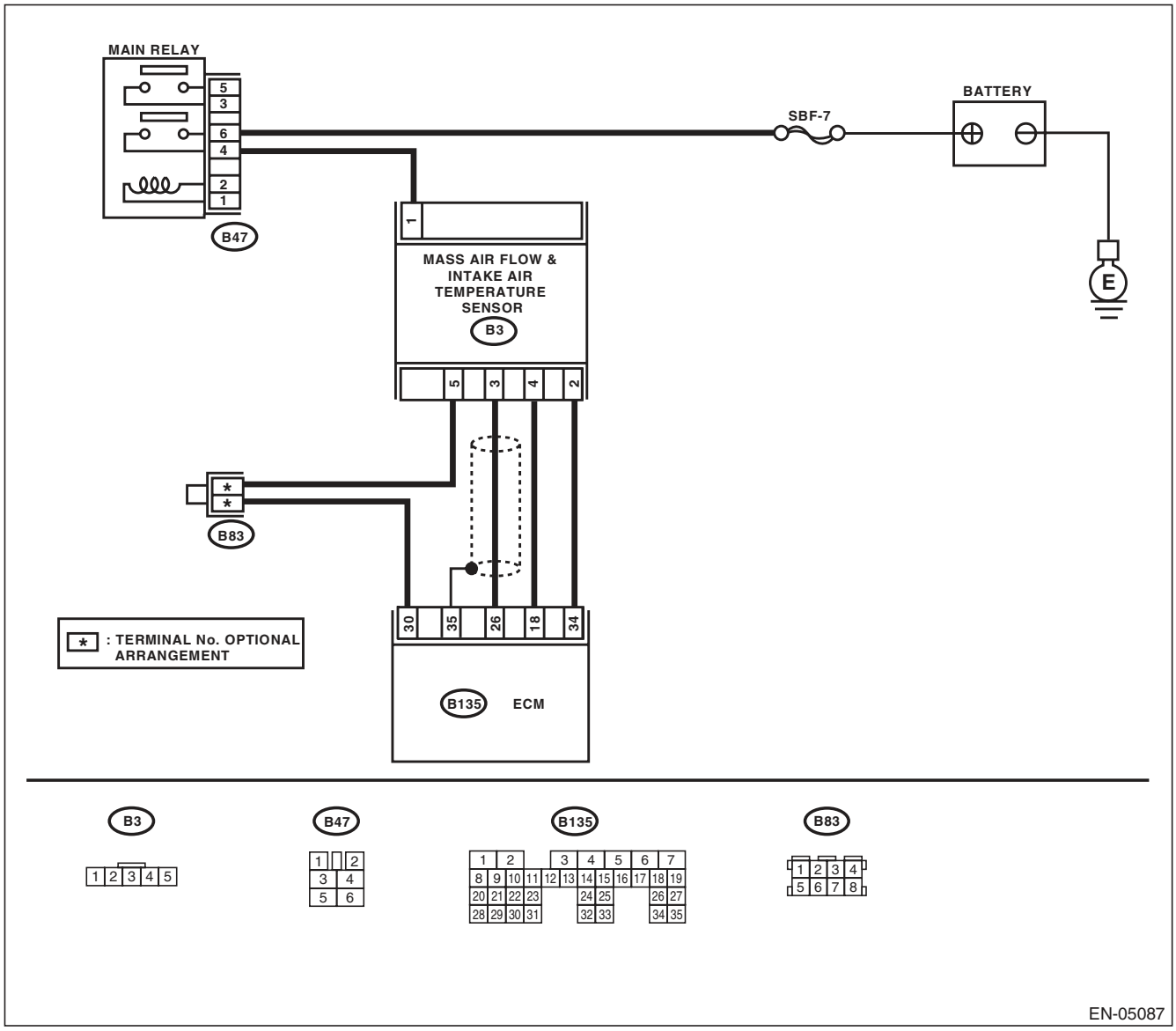

	Step	Check	Yes	No
1	**CHECK CURRENT DATA.** 1) Start the engine. 2) Read the data of intake air temperature sensor signal using Subaru Select Monitor or general scan tool. NOTE: • Subaru Select Monitor For detailed operation procedure, refer to "READ CURRENT DATA FOR ENGINE". <Ref. to EN(H4DOTC)(diag)-34, Subaru Select Monitor.> • General scan tool For detailed operation procedures, refer to the general scan tool operation manual.	Is the intake air temperature 120°C (248°F) or higher?	Go to step **2**.	Even if DTC is detected, the circuit has returned to a normal condition at this time. Reproduce the failure, and then perform the diagnosis again. NOTE: In this case, temporary poor contact of connector may be the cause.
2	**CHECK HARNESS BETWEEN ECM AND MASS AIR FLOW AND INTAKE AIR TEMPERATURE SENSOR CONNECTOR.** 1) Turn the ignition switch to OFF. 2) Disconnect the connector from ECM and mass air flow and intake air temperature sensor. 3) Measure the resistance between ECM and chassis ground. ***Connector & terminal*** ***(B135) No. 18 — Chassis ground:***	Is the resistance 1 MΩ or more?	Replace the mass air flow and intake air temperature sensor. <Ref. to FU(H4DOTC)-36, Mass Air Flow and Intake Air Temperature Sensor.>	Repair the ground short circuit of harness between the ECM and the mass air flow and intake air temperature sensor connectors.

R: DTC P0113 INTAKE AIR TEMPERATURE SENSOR 1 CIRCUIT HIGH

DTC DETECTING CONDITION:

- Immediately at fault recognition
- GENERAL DESCRIPTION <Ref. to GD(H4DOTC)-35, DTC P0113 INTAKE AIR TEMPERATURE SENSOR 1 CIRCUIT HIGH, Diagnostic Trouble Code (DTC) Detecting Criteria.>

TROUBLE SYMPTOM:

- Improper idling
- Poor driving performance

CAUTION:

After repair or replacement of faulty parts, perform Clear Memory Mode <Ref. to EN(H4DOTC)(diag)-52, OPERATION, Clear Memory Mode.>, and Inspection Mode <Ref. to EN(H4DOTC)(diag)-43, PROCEDURE, Inspection Mode.>.

WIRING DIAGRAM:

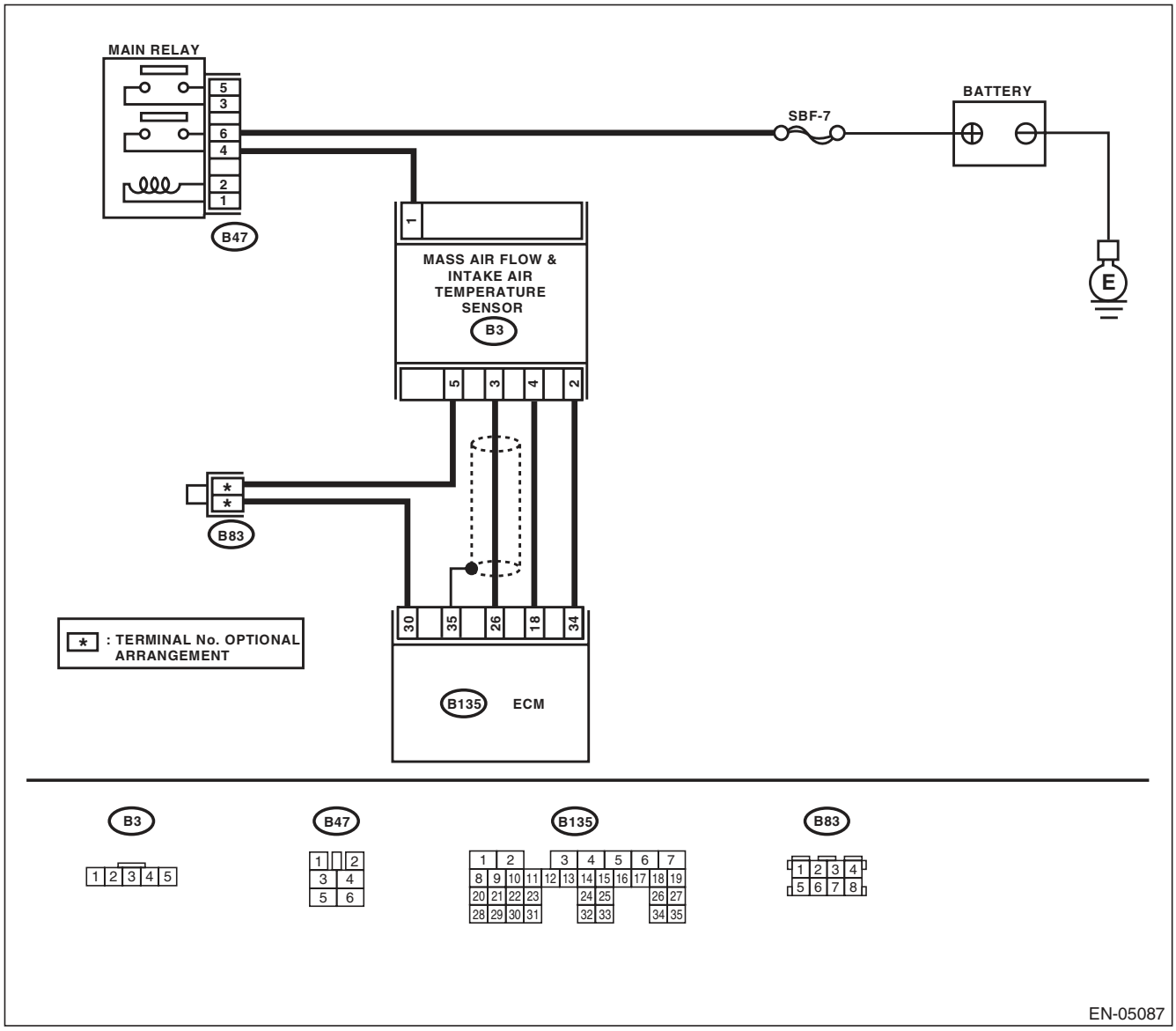

	Step	Check	Yes	No
1	**CHECK CURRENT DATA.** 1) Start the engine. 2) Read the data of intake air temperature sensor signal using Subaru Select Monitor or general scan tool. NOTE: • Subaru Select Monitor For detailed operation procedure, refer to "READ CURRENT DATA FOR ENGINE". <Ref. to EN(H4DOTC)(diag)-34, Subaru Select Monitor.> • General scan tool For detailed operation procedures, refer to the general scan tool operation manual.	Is the intake air temperature less than –40°C (–40°F) ?	Go to step **2**.	Even if DTC is detected, the circuit has returned to a normal condition at this time. Reproduce the failure, and then perform the diagnosis again. NOTE: In this case, temporary poor contact of connector may be the cause.
2	**CHECK POOR CONTACT.** Check for poor contact in the ECM or the mass air flow and intake air temperature sensor connector.	Is there poor contact in the ECM or the mass air flow and intake air temperature sensor connector?	Repair any poor contact in the ECM or the mass air flow and intake air temperature sensor connector.	Go to step **3**.
3	**CHECK HARNESS BETWEEN ECM AND MASS AIR FLOW AND INTAKE AIR TEMPERATURE SENSOR CONNECTOR.** 1) Turn the ignition switch to OFF. 2) Disconnect the connector from ECM and mass air flow and intake air temperature sensor. 3) Measure the resistance of harness between ECM and mass air flow and intake air temperature sensor connectors. ***Connector & terminal*** ***(B135) No. 18 — (B3) No. 4:*** ***(B135) No. 30 — (B3) No. 5:***	Is the resistance less than 1 Ω?	Go to step **4**.	Repair the open circuit of harness between ECM and mass air flow and intake air temperature sensor connector.
4	**CHECK HARNESS BETWEEN ECM AND MASS AIR FLOW AND INTAKE AIR TEMPERATURE SENSOR CONNECTOR.** 1) Connect all connectors. 2) Turn the ignition switch to OFF. 3) Measure the voltage between ECM and chassis ground. ***Connector & terminal*** ***(B135) No. 18 (+) — Chassis ground (–):***	Is the voltage 5 V or more?	Repair the short circuit to power in the harness between the ECM and the mass air flow and intake air temperature sensor connector.	Replace the mass air flow and intake air temperature sensor. <Ref. to FU(H4DOTC)-36, Mass Air Flow and Intake Air Temperature Sensor.>

S: DTC P0117 ENGINE COOLANT TEMPERATURE CIRCUIT LOW

DTC DETECTING CONDITION:

- Immediately at fault recognition
- GENERAL DESCRIPTION <Ref. to GD(H4DOTC)-36, DTC P0117 ENGINE COOLANT TEMPERATURE CIRCUIT LOW, Diagnostic Trouble Code (DTC) Detecting Criteria.>

TROUBLE SYMPTOM:

- Hard to start
- Improper idling
- Poor driving performance

CAUTION:

After repair or replacement of faulty parts, perform Clear Memory Mode <Ref. to EN(H4DOTC)(diag)-52, OPERATION, Clear Memory Mode.>, and Inspection Mode <Ref. to EN(H4DOTC)(diag)-43, PROCEDURE, Inspection Mode.>.

WIRING DIAGRAM:

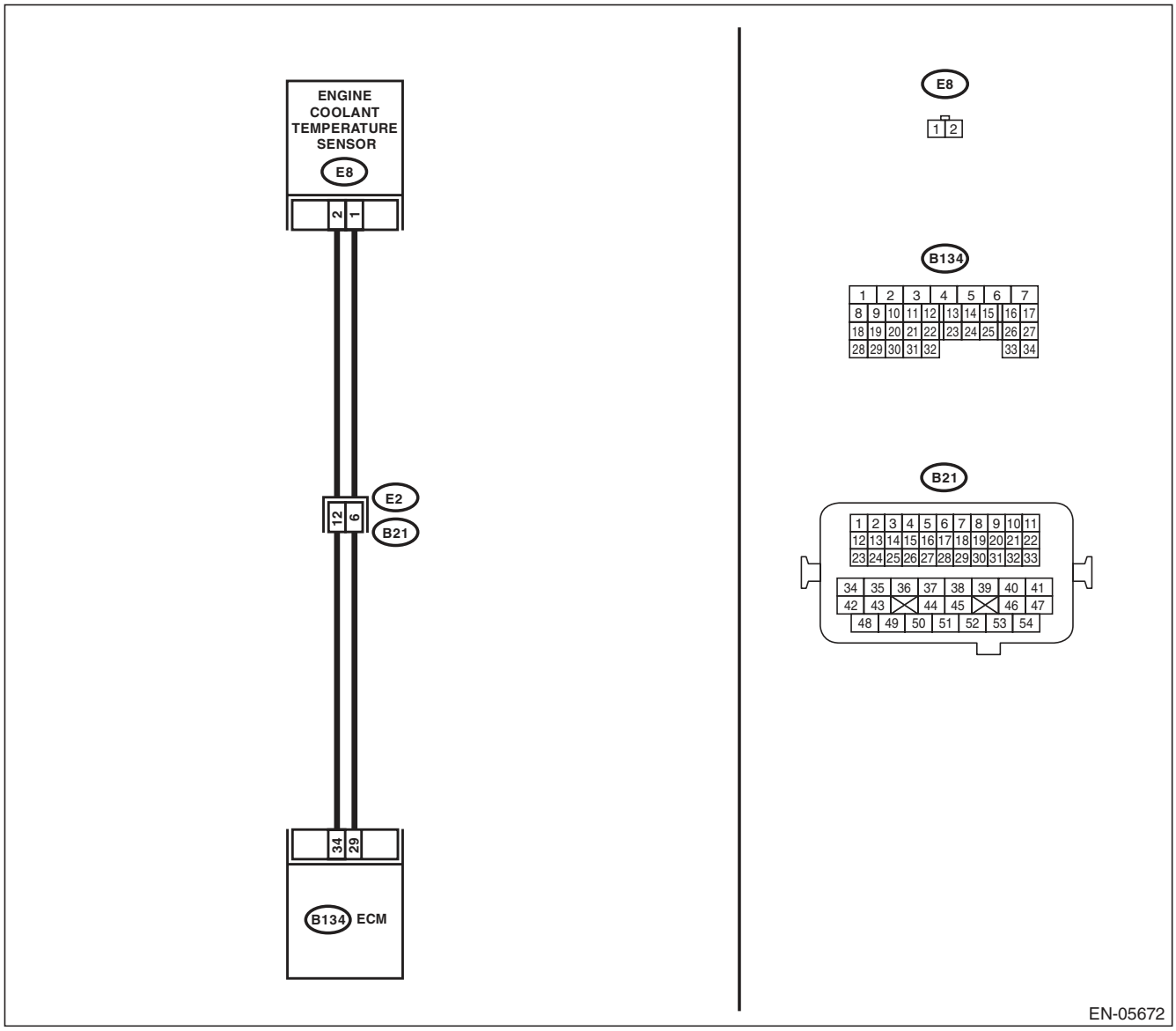

	Step	Check	Yes	No
1	**CHECK CURRENT DATA.** 1) Start the engine. 2) Read the data of engine coolant temperature sensor signal using Subaru Select Monitor or general scan tool. NOTE: • Subaru Select Monitor For detailed operation procedure, refer to "READ CURRENT DATA FOR ENGINE". <Ref. to EN(H4DOTC)(diag)-34, Subaru Select Monitor.> • General scan tool For detailed operation procedures, refer to the general scan tool operation manual.	Is the engine coolant temperature 150°C (302°F) or higher?	Go to step **2**.	Even if DTC is detected, the circuit has returned to a normal condition at this time. Reproduce the failure, and then perform the diagnosis again. NOTE: In this case, temporary poor contact of connector may be the cause.
2	**CHECK HARNESS BETWEEN ECM AND ENGINE COOLANT TEMPERATURE SENSOR CONNECTOR.** 1) Turn the ignition switch to OFF. 2) Disconnect the connectors from ECM and engine coolant temperature sensor. 3) Measure the resistance between ECM and chassis ground. ***Connector & terminal*** ***(B134) No. 34 — Chassis ground:***	Is the resistance 1 MΩ or more?	Replace the engine coolant temperature sensor. <Ref. to FU(H4DOTC)-31, Engine Coolant Temperature Sensor.>	Repair the short circuit to ground in harness between ECM and engine coolant temperature sensor.

T: DTC P0118 ENGINE COOLANT TEMPERATURE CIRCUIT HIGH

DTC DETECTING CONDITION:

- Immediately at fault recognition
- GENERAL DESCRIPTION <Ref. to GD(H4DOTC)-37, DTC P0118 ENGINE COOLANT TEMPERATURE CIRCUIT HIGH, Diagnostic Trouble Code (DTC) Detecting Criteria.>

TROUBLE SYMPTOM:

- Hard to start
- Improper idling
- Poor driving performance

CAUTION:

After repair or replacement of faulty parts, perform Clear Memory Mode <Ref. to EN(H4DOTC)(diag)-52, OPERATION, Clear Memory Mode.>, and Inspection Mode <Ref. to EN(H4DOTC)(diag)-43, PROCEDURE, Inspection Mode.>.

WIRING DIAGRAM:

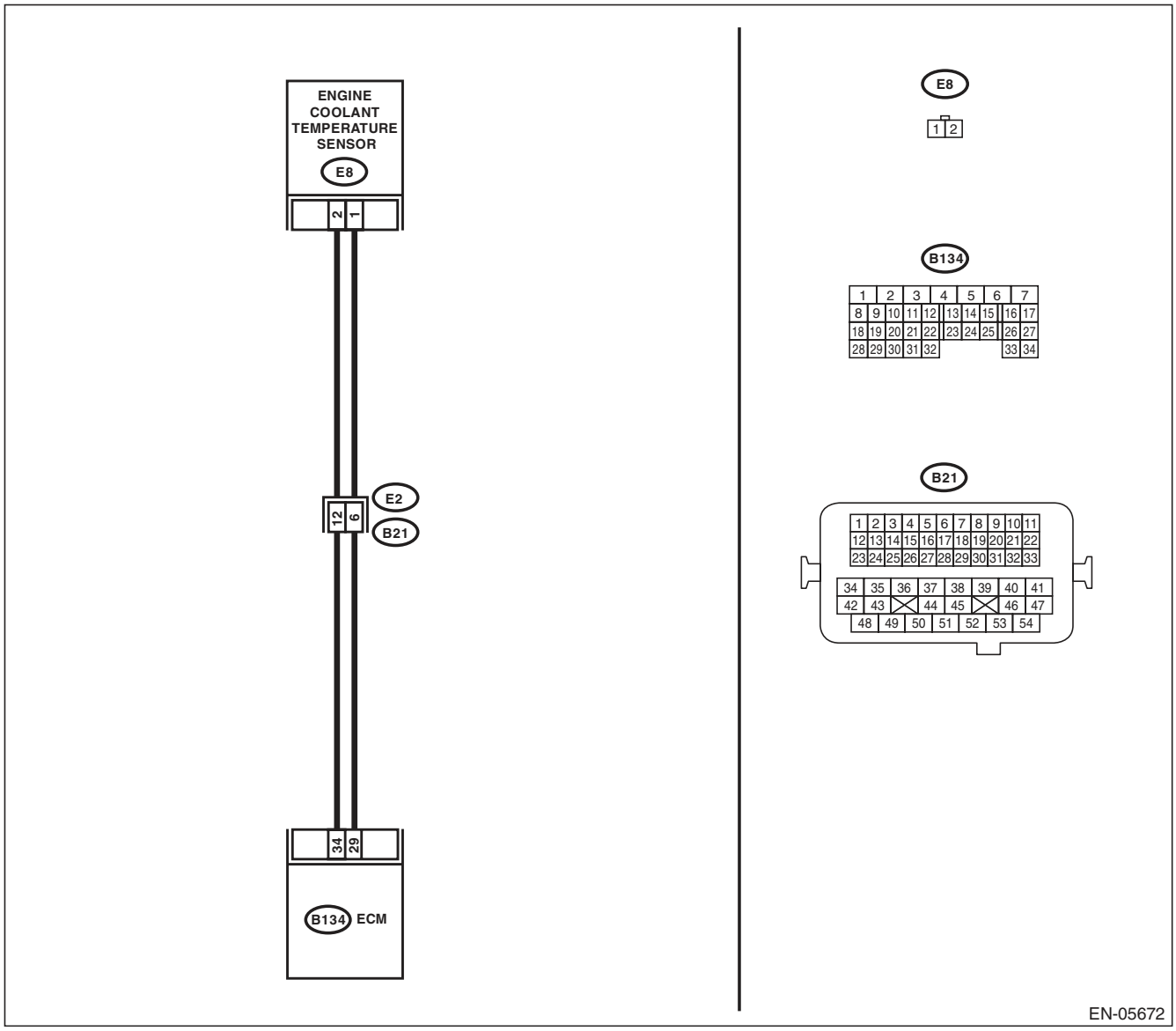

	Step	Check	Yes	No
1	**CHECK CURRENT DATA.** 1) Start the engine. 2) Read the data of engine coolant temperature sensor signal using Subaru Select Monitor or general scan tool. NOTE: • Subaru Select Monitor For detailed operation procedure, refer to "READ CURRENT DATA FOR ENGINE". <Ref. to EN(H4DOTC)(diag)-34, Subaru Select Monitor.> • General scan tool For detailed operation procedures, refer to the general scan tool operation manual.	Is the engine coolant temperature less than –40°C (–40°F) ?	Go to step **2**.	Even if DTC is detected, the circuit has returned to a normal condition at this time. Reproduce the failure, and then perform the diagnosis again. NOTE: In this case, temporary poor contact of connector may be the cause.
2	**CHECK POOR CONTACT.** Check for poor contact in ECM and engine coolant temperature sensor connector.	Is there poor contact in ECM or engine coolant temperature sensor connector?	Repair the poor contact in ECM or engine coolant temperature sensor connector.	Go to step **3**.
3	**CHECK HARNESS BETWEEN ECM AND ENGINE COOLANT TEMPERATURE SENSOR CONNECTOR.** 1) Turn the ignition switch to OFF. 2) Disconnect the connectors from ECM and engine coolant temperature sensor. 3) Measure the resistance of harness between ECM and engine coolant temperature sensor connector. ***Connector & terminal*** ***(B134) No. 34 — (E8) No. 2:*** ***(B134) No. 29 — (E8) No. 1:***	Is the resistance less than 1 Ω?	Go to step **4**.	Repair the harness and connector. NOTE: In this case, repair the following item: • Open circuit in harness between ECM and engine coolant temperature sensor connector • Poor contact of coupling connector
4	**CHECK HARNESS BETWEEN ECM AND ENGINE COOLANT TEMPERATURE SENSOR CONNECTOR.** 1) Connect all connectors. 2) Turn the ignition switch to ON. 3) Measure the voltage between ECM and chassis ground. ***Connector & terminal*** ***(B134) No. 34 (+) — Chassis ground (–):***	Is the voltage 5 V or more?	Repair the short circuit to power in harness between ECM and engine coolant temperature sensor connector.	Replace the engine coolant temperature sensor. <Ref. to FU(H4DOTC)-31, Engine Coolant Temperature Sensor.>

U: DTC P0122 THROTTLE/PEDAL POSITION SENSOR/SWITCH “A” CIRCUIT LOW

DTC DETECTING CONDITION:

- Immediately at fault recognition
- GENERAL DESCRIPTION <Ref. to GD(H4DOTC)-38, DTC P0122 THROTTLE/PEDAL POSITION SENSOR/SWITCH “A” CIRCUIT LOW, Diagnostic Trouble Code (DTC) Detecting Criteria.>

TROUBLE SYMPTOM:

- Improper idling
- Engine stalls.
- Poor driving performance

CAUTION:

After repair or replacement of faulty parts, perform Clear Memory Mode <Ref. to EN(H4DOTC)(diag)-52, OPERATION, Clear Memory Mode.>, and Inspection Mode <Ref. to EN(H4DOTC)(diag)-43, PROCEDURE, Inspection Mode.>.

WIRING DIAGRAM:

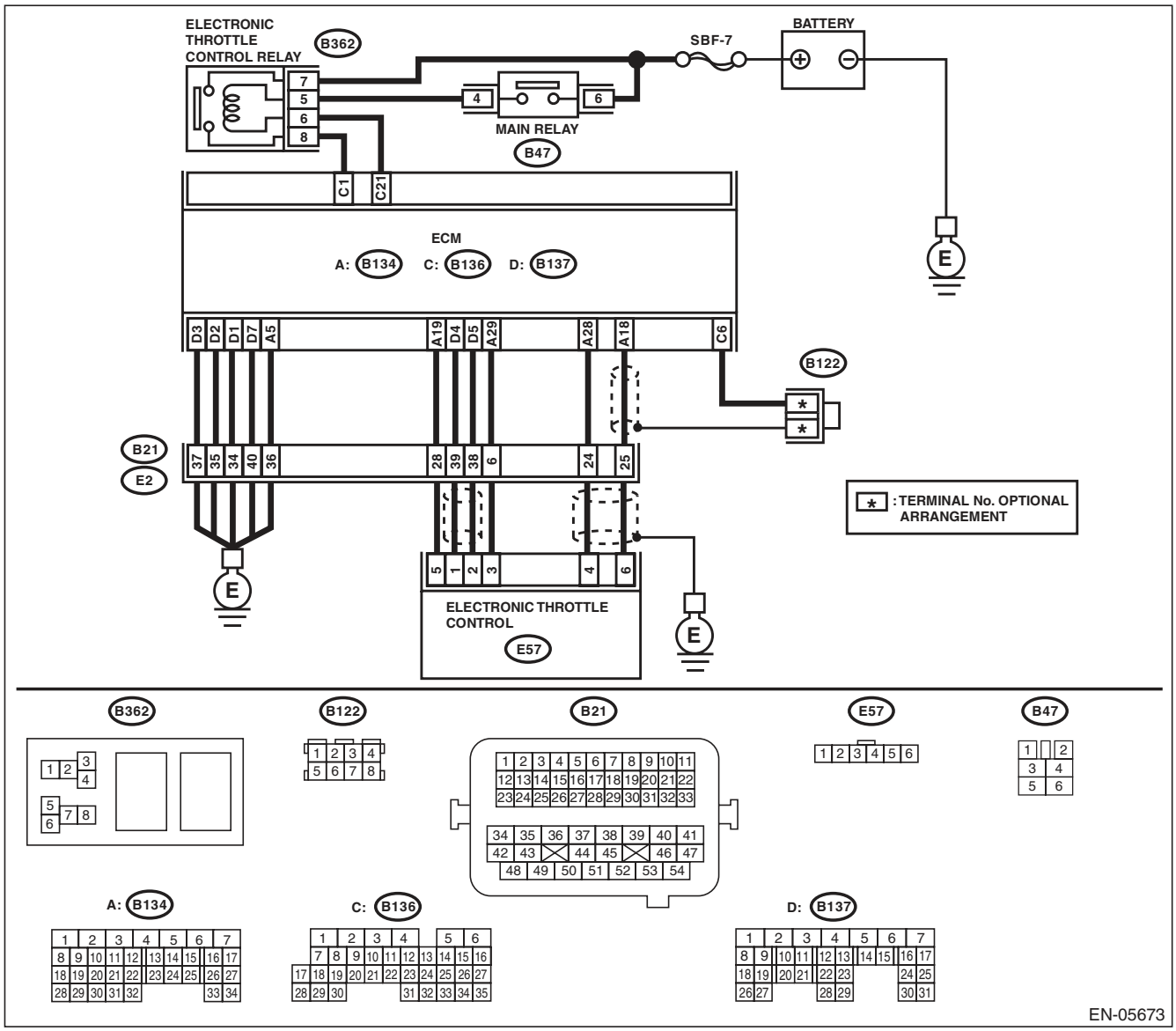

Step		Check	Yes	No
1	**CHECK HARNESS BETWEEN ECM AND ELECTRONIC THROTTLE CONTROL.** 1) Turn the ignition switch to OFF. 2) Disconnect the connectors from ECM and electronic throttle control. 3) Measure the resistance between ECM and chassis ground. ***Connector & terminal*** ***(B134) No. 19 — Chassis ground:*** ***(B134) No. 18 — Chassis ground:*** ***(B134) No. 18 — (B136) No. 6:***	Is the resistance 1 MΩ or more?	Go to step **2**.	Repair the short circuit to ground in harness between ECM and electronic throttle control connector.
2	**CHECK SHORT CIRCUIT INSIDE THE ECM.** 1) Connect the ECM. 2) Measure the resistance between electronic throttle control connector and engine ground. ***Connector & terminal*** ***(E57) No. 6 — Engine ground:***	Is the resistance 1 MΩ or more?	Replace the electronic throttle control. <Ref. to FU(H4DOTC)-14, Throttle Body.>	Repair the short circuit to ground in harness between ECM and electronic throttle control connector. Replace the ECM if defective. <Ref. to FU(H4DOTC)-52, Engine Control Module (ECM).>

V: DTC P0123 THROTTLE/PEDAL POSITION SENSOR/SWITCH “A” CIRCUIT HIGH

DTC DETECTING CONDITION:

- Immediately at fault recognition
- GENERAL DESCRIPTION <Ref. to GD(H4DOTC)-39, DTC P0123 THROTTLE/PEDAL POSITION SENSOR/SWITCH “A” CIRCUIT HIGH, Diagnostic Trouble Code (DTC) Detecting Criteria.>

TROUBLE SYMPTOM:

- Improper idling
- Engine stalls.
- Poor driving performance

CAUTION:

After repair or replacement of faulty parts, perform Clear Memory Mode <Ref. to EN(H4DOTC)(diag)-52, OPERATION, Clear Memory Mode.>, and Inspection Mode <Ref. to EN(H4DOTC)(diag)-43, PROCEDURE, Inspection Mode.>.

WIRING DIAGRAM:

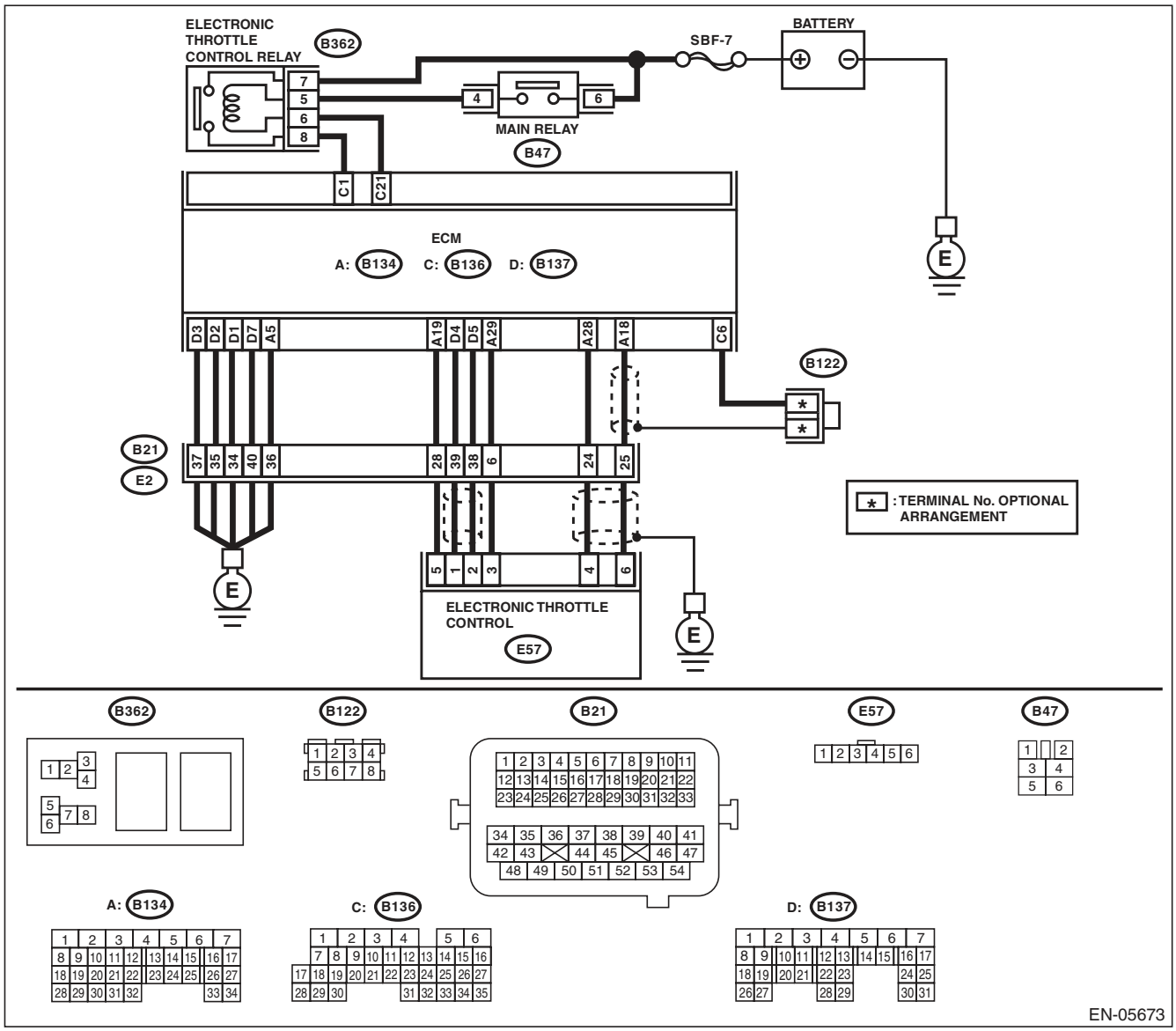

	Step	Check	Yes	No
1	**CHECK HARNESS BETWEEN ECM AND ELECTRONIC THROTTLE CONTROL.** 1) Turn the ignition switch to OFF. 2) Disconnect the connectors from ECM and electronic throttle control. 3) Measure the resistance of harness between ECM and electronic throttle control connector. ***Connector & terminal*** ***(B134) No. 18 — (E57) No. 6:*** ***(B134) No. 29 — (E57) No. 3:***	Is the resistance less than 1 Ω?	Go to step **2**.	Repair the open circuit of harness between ECM and electronic throttle control connector.
2	**CHECK HARNESS BETWEEN ECM AND ELECTRONIC THROTTLE CONTROL.** 1) Connect the ECM. 2) Measure the resistance between electronic throttle control connector and engine ground. ***Connector & terminal*** ***(E57) No. 3 — Engine ground:***	Is the resistance less than 5 Ω?	Go to step **3**.	Repair the harness and connector. NOTE: In this case, repair the following item: • Open circuit of harness between ECM and engine ground • Poor contact in ECM connector • Poor contact of coupling connector
3	**CHECK HARNESS BETWEEN ECM AND ELECTRONIC THROTTLE CONTROL.** 1) Turn the ignition switch to ON. 2) Measure the voltage between electronic throttle control connector and engine ground. ***Connector & terminal*** ***(E57) No. 6 (+) — Engine ground (–):***	Is the voltage 4.85 V or more?	Repair the short circuit to power in the harness between ECM and electronic throttle control connector.	Go to step **4**.
4	**CHECK HARNESS BETWEEN ECM AND ELECTRONIC THROTTLE CONTROL.** 1) Turn the ignition switch to OFF. 2) Disconnect the connectors from ECM. 3) Measure the resistance between ECM connectors. ***Connector & terminal*** ***(B134) No. 19 — (B134) No. 18:***	Is the resistance 1 MΩ or more?	Repair poor contact of the electronic throttle control connector. Replace the electronic throttle control if defective. <Ref. to FU(H4DOTC)-14, Throttle Body.>	Repair the short circuit to power in the harness between ECM and electronic throttle control connector.

W: DTC P0125 INSUFFICIENT COOLANT TEMPERATURE FOR CLOSED LOOP FUEL CONTROL

DTC DETECTING CONDITION:

- Two consecutive driving cycles with fault
- GENERAL DESCRIPTION <Ref. to GD(H4DOTC)-40, DTC P0125 INSUFFICIENT COOLANT TEMPERATURE FOR CLOSED LOOP FUEL CONTROL, Diagnostic Trouble Code (DTC) Detecting Criteria.>

TROUBLE SYMPTOM:

Engine does not return to idle.

CAUTION:

After repair or replacement of faulty parts, perform Clear Memory Mode <Ref. to EN(H4DOTC)(diag)-52, OPERATION, Clear Memory Mode.>, and Inspection Mode <Ref. to EN(H4DOTC)(diag)-43, PROCEDURE, Inspection Mode.>.

Step		Check	Yes	No
1	**CHECK TIRE SIZE.**	Is the tire size as specified and the same size as three other wheels?	Go to step **2**.	Replace the tire.
2	**CHECK ENGINE COOLANT.** Check the following items: • Amount of engine coolant • Engine coolant freeze • Contamination of engine coolant	Is the engine coolant normal?	Go to step **3**.	Fill or replace the engine coolant. <Ref. to CO(H4DOTC)-14, REPLACEMENT, Engine Coolant.>
3	**CHECK THERMOSTAT.**	Does the thermostat remain opened?	Replace the thermostat. <Ref. to CO(H4DOTC)-18, Thermostat.>	Replace the engine coolant temperature sensor. <Ref. to FU(H4DOTC)-31, Engine Coolant Temperature Sensor.>

X: DTC P0126 INSUFFICIENT ENGINE COOLANT TEMPERATURE FOR STABLE OPERATION

DTC DETECTING CONDITION:

- Two consecutive driving cycles with fault
- GENERAL DESCRIPTION <Ref. to GD(H4DOTC)-42, DTC P0126 INSUFFICIENT ENGINE COOLANT TEMPERATURE FOR STABLE OPERATION, Diagnostic Trouble Code (DTC) Detecting Criteria.>

TROUBLE SYMPTOM:

- Hard to start
- Improper idling
- Poor driving performance

CAUTION:

After repair or replacement of faulty parts, perform Clear Memory Mode <Ref. to EN(H4DOTC)(diag)-52, OPERATION, Clear Memory Mode.>, and Inspection Mode <Ref. to EN(H4DOTC)(diag)-43, PROCEDURE, Inspection Mode.>.

WIRING DIAGRAM:

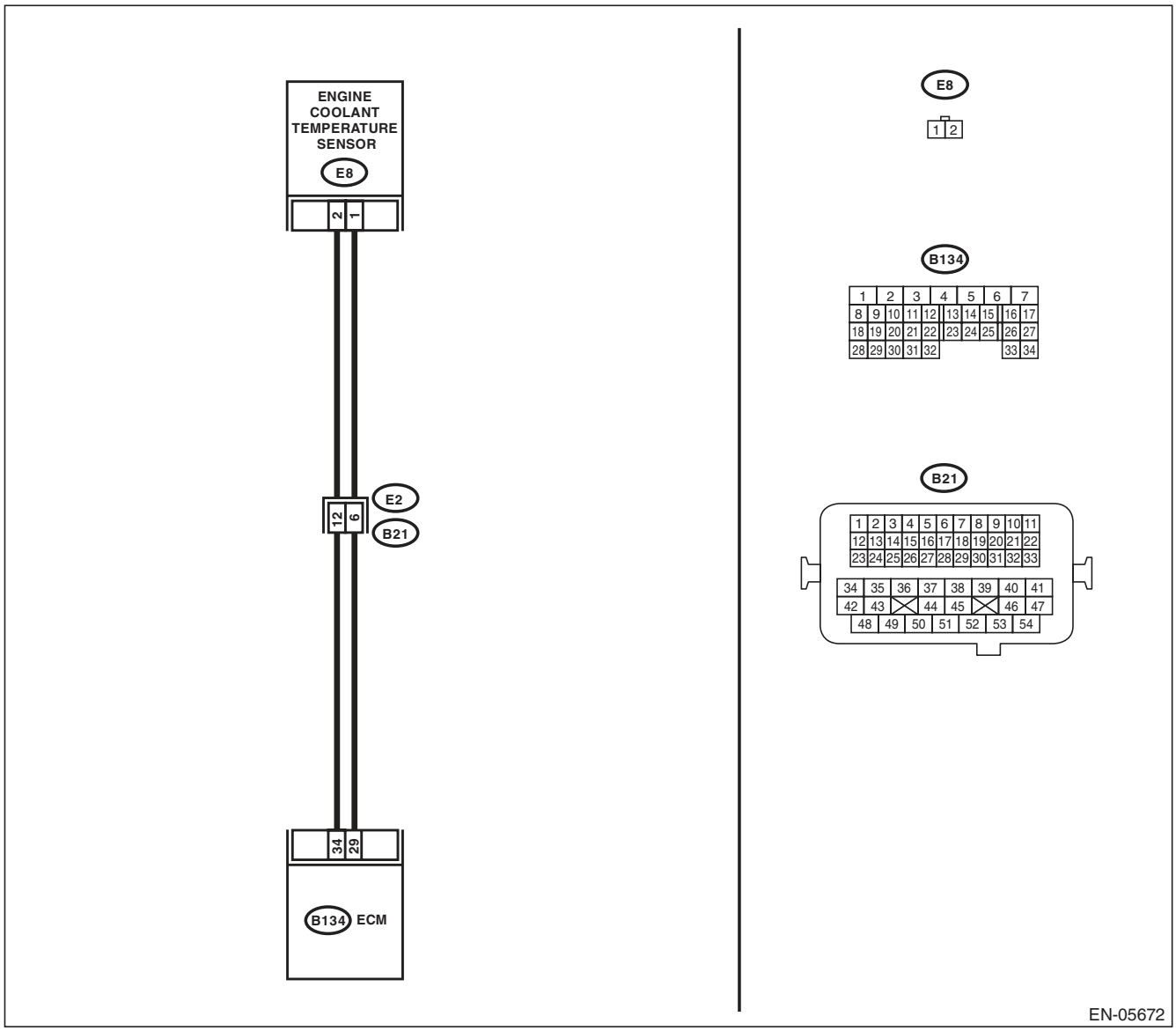

Step		Check	Yes	No
1	**CHECK ENGINE COOLANT TEMPERATURE SENSOR.** Measure the resistance between engine coolant temperature sensor terminals when the engine coolant is cold and after warmed up. ***Terminals*** ***No. 1 — No. 2:***	Is the resistance of engine coolant temperature sensor different between when engine coolant is cold and after warmed up?	Repair the poor contact of ECM connector.	Replace the engine coolant temperature sensor. <Ref. to FU(H4DOTC)-31, Engine Coolant Temperature Sensor.>

Y: DTC P0128 COOLANT THERMOSTAT (ENGINE COOLANT TEMPERATURE BELOW THERMOSTAT REGULATING TEMPERATURE)

DTC DETECTING CONDITION:

- Two consecutive driving cycles with fault
- GENERAL DESCRIPTION <Ref. to GD(H4DOTC)-44, DTC P0128 COOLANT THERMOSTAT (ENGINE COOLANT TEMPERATURE BELOW THERMOSTAT REGULATING TEMPERATURE), Diagnostic Trouble Code (DTC) Detecting Criteria.>

TROUBLE SYMPTOM:

Thermostat remains open.

CAUTION:

After repair or replacement of faulty parts, perform Clear Memory Mode <Ref. to EN(H4DOTC)(diag)-52, OPERATION, Clear Memory Mode.>, and Inspection Mode <Ref. to EN(H4DOTC)(diag)-43, PROCEDURE, Inspection Mode.>.

Step		Check	Yes	No
1	**CHECK ENGINE COOLANT.**	Are the coolant level and mixture ratio of engine coolant to anti-freeze solution correct?	Go to step **2**.	Replace the engine coolant. <Ref. to CO(H4DOTC)-14, REPLACEMENT, Engine Coolant.>
2	**CHECK RADIATOR FAN.** 1) Start the engine. 2) Check the radiator fan operation.	Does the radiator fan continuously rotate for 3 minutes or more during idling?	Repair radiator fan circuit. <Ref. to CO(H4DOTC)-25, Radiator Main Fan and Fan Motor.> and <Ref. to CO(H4DOTC)-27, Radiator Sub Fan and Fan Motor.>	Replace the thermostat. <Ref. to CO(H4DOTC)-18, Thermostat.>

Z: DTC P0131 O2 SENSOR CIRCUIT LOW VOLTAGE (BANK 1 SENSOR 1)

DTC DETECTING CONDITION:

- Immediately at fault recognition
- GENERAL DESCRIPTION <Ref. to GD(H4DOTC)-46, DTC P0131 O2 SENSOR CIRCUIT LOW VOLTAGE (BANK 1 SENSOR 1), Diagnostic Trouble Code (DTC) Detecting Criteria.>

CAUTION:

After repair or replacement of faulty parts, perform Clear Memory Mode <Ref. to EN(H4DOTC)(diag)-52, OPERATION, Clear Memory Mode.>, and Inspection Mode <Ref. to EN(H4DOTC)(diag)-43, PROCEDURE, Inspection Mode.>.

WIRING DIAGRAM:

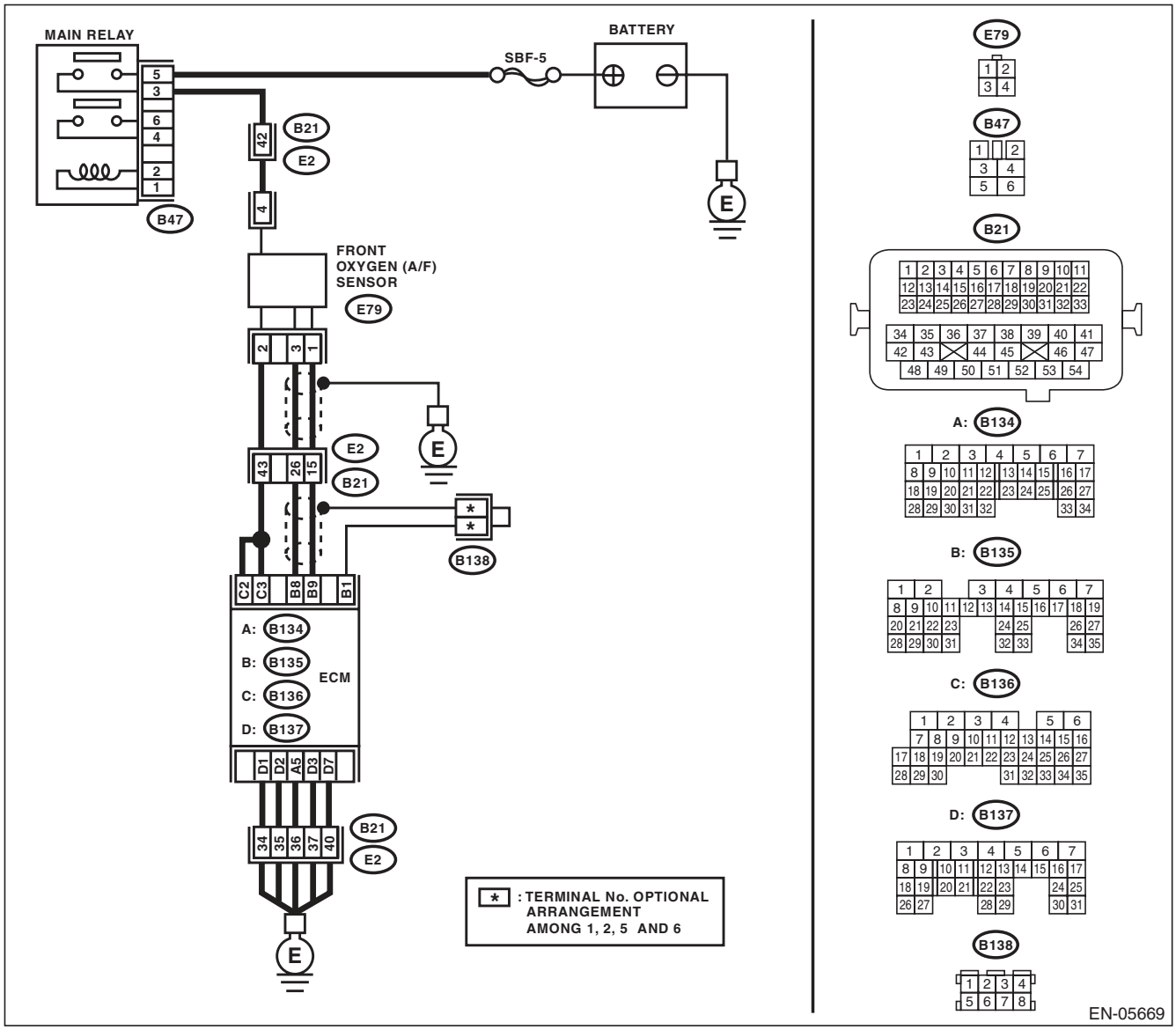

Step		Check	Yes	No
1	**CHECK FRONT OXYGEN (A/F) SENSOR CONNECTOR AND COUPLING CONNECTOR.**	Has water entered the connector?	Completely remove any water inside.	Go to step **2**.
2	**CHECK HARNESS BETWEEN ECM AND FRONT OXYGEN (A/F) SENSOR CONNECTOR.** 1) Turn the ignition switch to OFF. 2) Disconnect the connectors from ECM and front oxygen (A/F) sensor connector. 3) Measure the resistance between ECM and chassis ground. ***Connector & terminal*** ***(B135) No. 9 — Chassis ground:*** ***(B135) No. 8 — Chassis ground:***	Is the resistance 1 MΩ or more?	Go to step **3**.	Repair the ground short circuit of harness between ECM and front oxygen (A/F) sensor connector.
3	**CHECK POOR CONTACT.** Check for poor contact in the front oxygen (A/F) sensor connector.	Is there poor contact in front oxygen (A/F) sensor connector?	Repair the poor contact of the front oxygen (A/F) sensor connector.	Replace the front oxygen (A/F) sensor. <Ref. to FU(H4DOTC)-46, Front Oxygen (A/F) Sensor.>

AA:DTC P0132 O2 SENSOR CIRCUIT HIGH VOLTAGE (BANK 1 SENSOR 1)

DTC DETECTING CONDITION:

- Immediately at fault recognition
- GENERAL DESCRIPTION <Ref. to GD(H4DOTC)-48, DTC P0132 O2 SENSOR CIRCUIT HIGH VOLTAGE (BANK 1 SENSOR 1), Diagnostic Trouble Code (DTC) Detecting Criteria.>

CAUTION:

After repair or replacement of faulty parts, perform Clear Memory Mode <Ref. to EN(H4DOTC)(diag)-52, OPERATION, Clear Memory Mode.>, and Inspection Mode <Ref. to EN(H4DOTC)(diag)-43, PROCEDURE, Inspection Mode.>.

WIRING DIAGRAM:

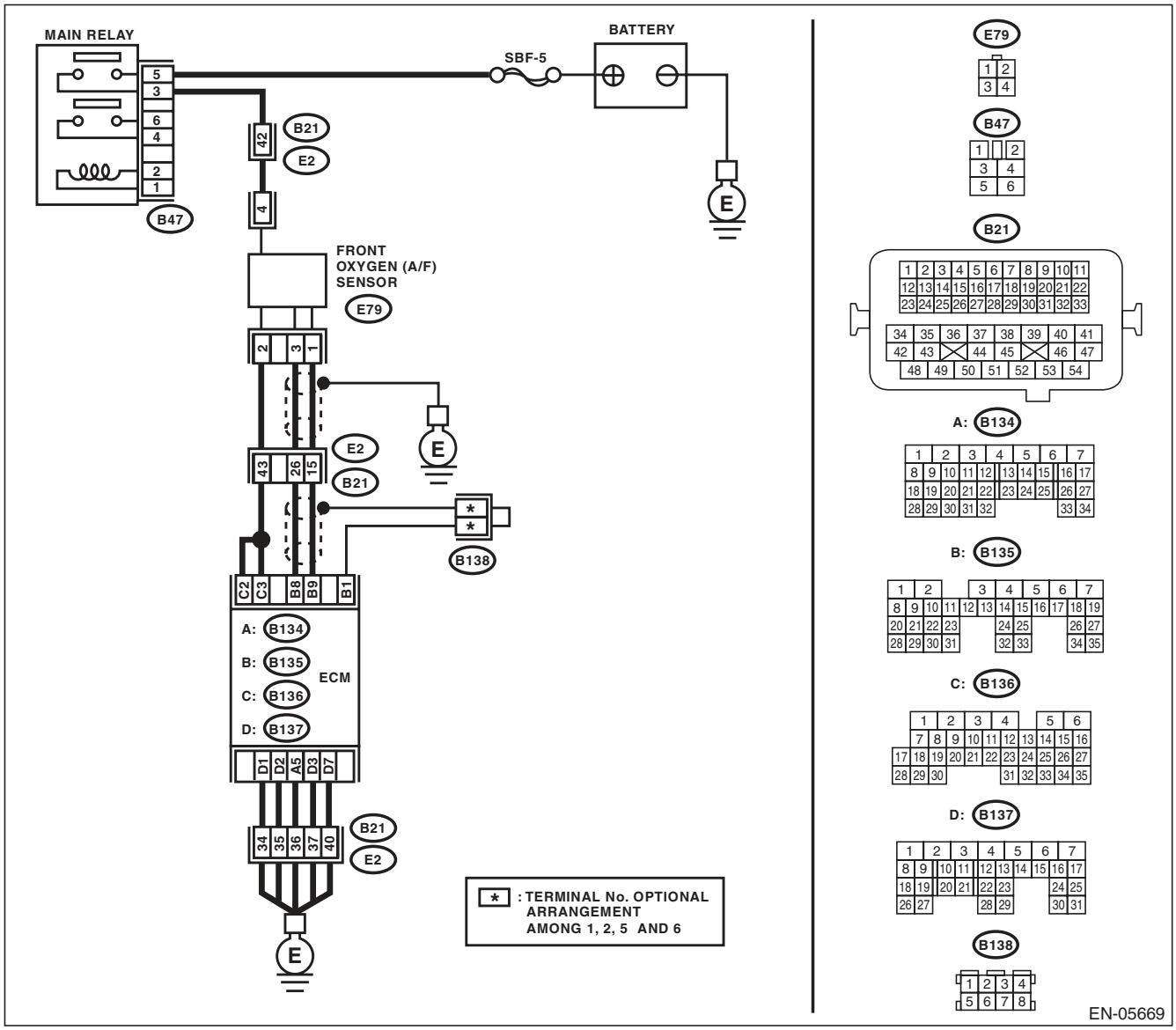

Step		Check	Yes	No
1	**CHECK FRONT OXYGEN (A/F) SENSOR CONNECTOR AND COUPLING CONNECTOR.**	Has water entered the connector?	Completely remove any water inside.	Go to step **2**.
2	**CHECK HARNESS BETWEEN ECM AND FRONT OXYGEN (A/F) SENSOR CONNECTOR.** 1) Turn the ignition switch to OFF. 2) Disconnect the connector from front oxygen (A/F) sensor. 3) Turn the ignition switch to ON. 4) Measure the voltage between ECM and chassis ground. ***Connector & terminal*** ***(B135) No. 9 (+) — Chassis ground (–):*** ***(B135) No. 8 (+) — Chassis ground (–):***	Is the voltage 8 V or more?	Repair the short circuit to power in the harness between ECM and front oxygen (A/F) sensor connector.	Replace the front oxygen (A/F) sensor. <Ref. to FU(H4DOTC)-46, Front Oxygen (A/F) Sensor.>

AB:DTC P0133 O2 SENSOR CIRCUIT SLOW RESPONSE (BANK 1 SENSOR 1)

DTC DETECTING CONDITION:

- Two consecutive driving cycles with fault
- GENERAL DESCRIPTION <Ref. to GD(H4DOTC)-50, DTC P0133 O2 SENSOR CIRCUIT SLOW RESPONSE (BANK 1 SENSOR 1), Diagnostic Trouble Code (DTC) Detecting Criteria.>

CAUTION:

After repair or replacement of faulty parts, perform Clear Memory Mode <Ref. to EN(H4DOTC)(diag)-52, OPERATION, Clear Memory Mode.>, and Inspection Mode <Ref. to EN(H4DOTC)(diag)-43, PROCEDURE, Inspection Mode.>.

WIRING DIAGRAM:

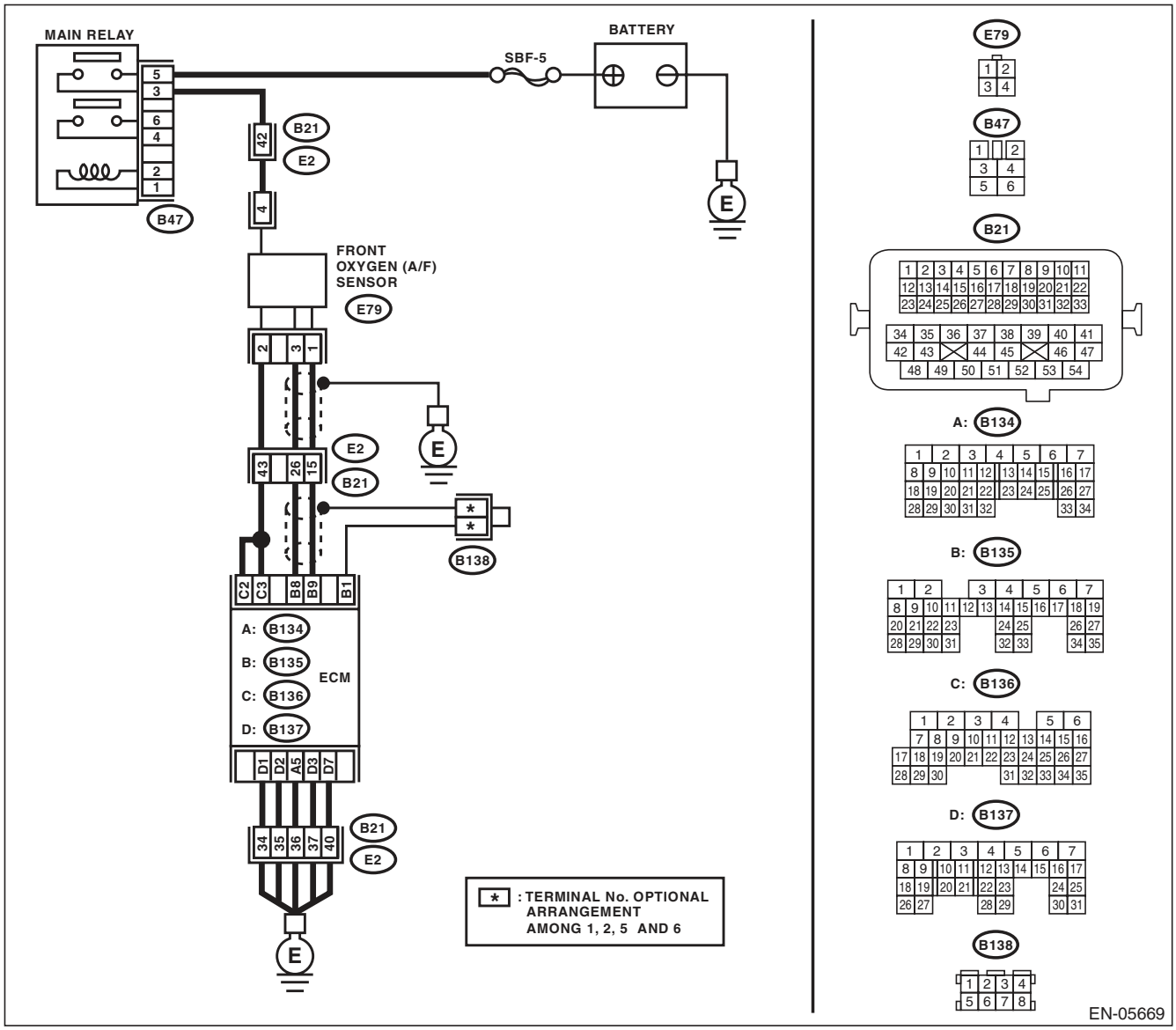

Step		Check	Yes	No
1	**CHECK EXHAUST SYSTEM.** NOTE: Check the following items. • Loose installation of front portion of exhaust pipe onto cylinder heads • Loose connection between front exhaust pipe and front catalytic converter • Damage of exhaust pipe resulting in a hole	Is there any fault in exhaust system?	Repair the exhaust system.	Replace the front oxygen (A/F) sensor. <Ref. to FU(H4DOTC)-46, Front Oxygen (A/F) Sensor.>

AC:DTC P0134 O2 SENSOR CIRCUIT NO ACTIVITY DETECTED (BANK 1 SENSOR 1)

DTC DETECTING CONDITION:

- Immediately at fault recognition
- GENERAL DESCRIPTION <Ref. to GD(H4DOTC)-53, DTC P0134 O2 SENSOR CIRCUIT NO ACTIVITY DETECTED (BANK 1 SENSOR 1), Diagnostic Trouble Code (DTC) Detecting Criteria.>

CAUTION:

After repair or replacement of faulty parts, perform Clear Memory Mode <Ref. to EN(H4DOTC)(diag)-52, OPERATION, Clear Memory Mode.>, and Inspection Mode <Ref. to EN(H4DOTC)(diag)-43, PROCEDURE, Inspection Mode.>.

WIRING DIAGRAM:

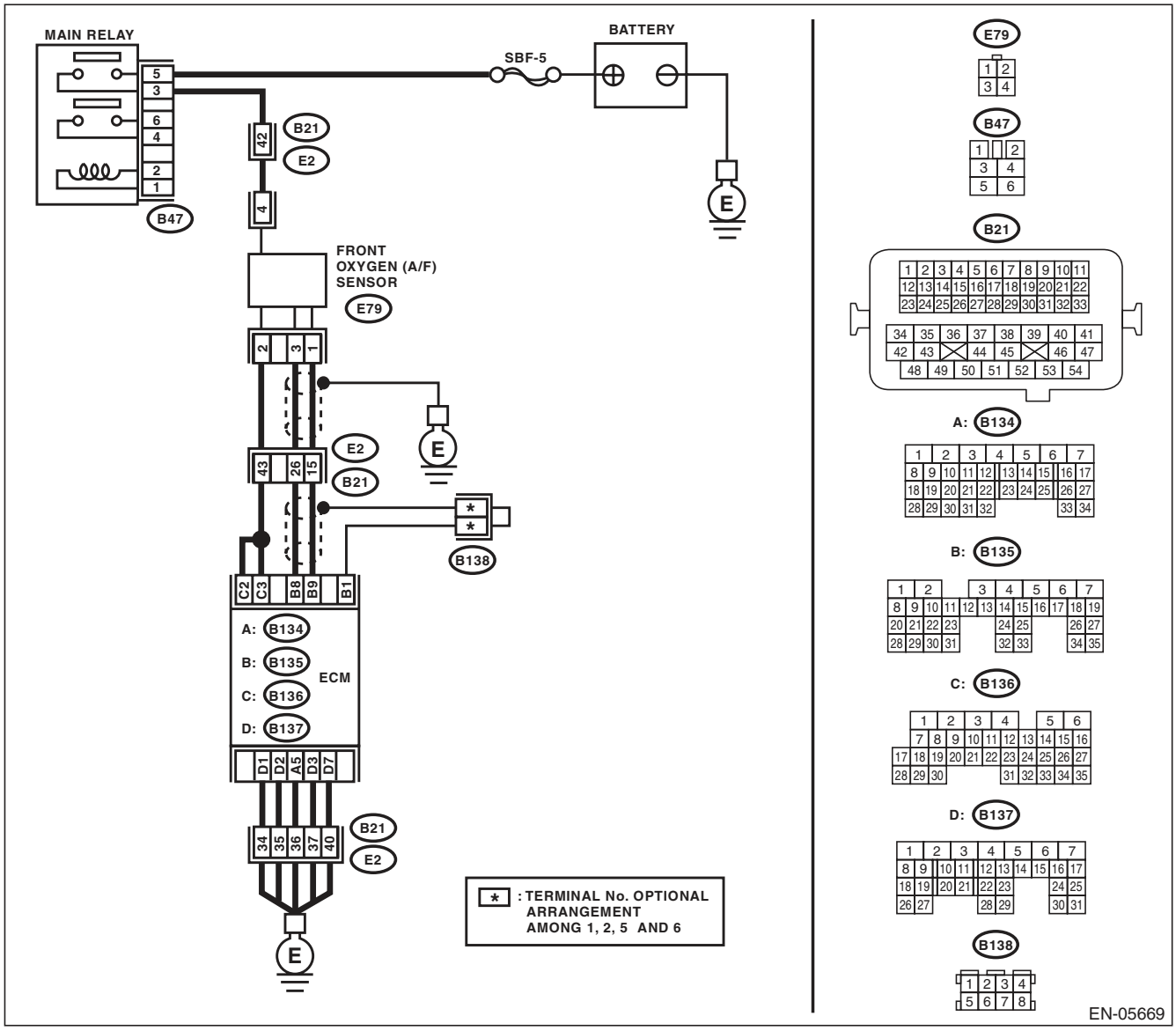

Step		Check	Yes	No
1	**CHECK HARNESS BETWEEN ECM AND FRONT OXYGEN (A/F) SENSOR CONNECTOR.** 1) Turn the ignition switch to OFF. 2) Disconnect the connectors from ECM and front oxygen (A/F) sensor connector. 3) Measure the resistance of harness between ECM and front oxygen (A/F) sensor connector. ***Connector & terminal*** ***(B135) No. 9 — (E79) No. 1:*** ***(B135) No. 8 — (E79) No. 3:***	Is the resistance less than 1 Ω?	Go to step **2**.	Repair the harness and connector. NOTE: In this case, repair the following item: • Open circuit in harness between ECM and front oxygen (A/F) sensor connector • Poor contact of coupling connector
2	**CHECK POOR CONTACT.** Check for poor contact of ECM and front oxygen (A/F) sensor connector.	Is there poor contact in ECM or front oxygen (A/F) sensor connector?	Repair the poor contact in ECM or front oxygen (A/F) sensor connector.	Replace the front oxygen (A/F) sensor. <Ref. to FU(H4DOTC)-46, Front Oxygen (A/F) Sensor.>

AD:DTC P0137 O2 SENSOR CIRCUIT LOW VOLTAGE (BANK 1 SENSOR 2)

DTC DETECTING CONDITION:

- Two consecutive driving cycles with fault
- GENERAL DESCRIPTION <Ref. to GD(H4DOTC)-55, DTC P0137 O2 SENSOR CIRCUIT LOW VOLTAGE (BANK 1 SENSOR 2), Diagnostic Trouble Code (DTC) Detecting Criteria.>

CAUTION:

After repair or replacement of faulty parts, perform Clear Memory Mode <Ref. to EN(H4DOTC)(diag)-52, OPERATION, Clear Memory Mode.>, and Inspection Mode <Ref. to EN(H4DOTC)(diag)-43, PROCEDURE, Inspection Mode.>.

WIRING DIAGRAM:

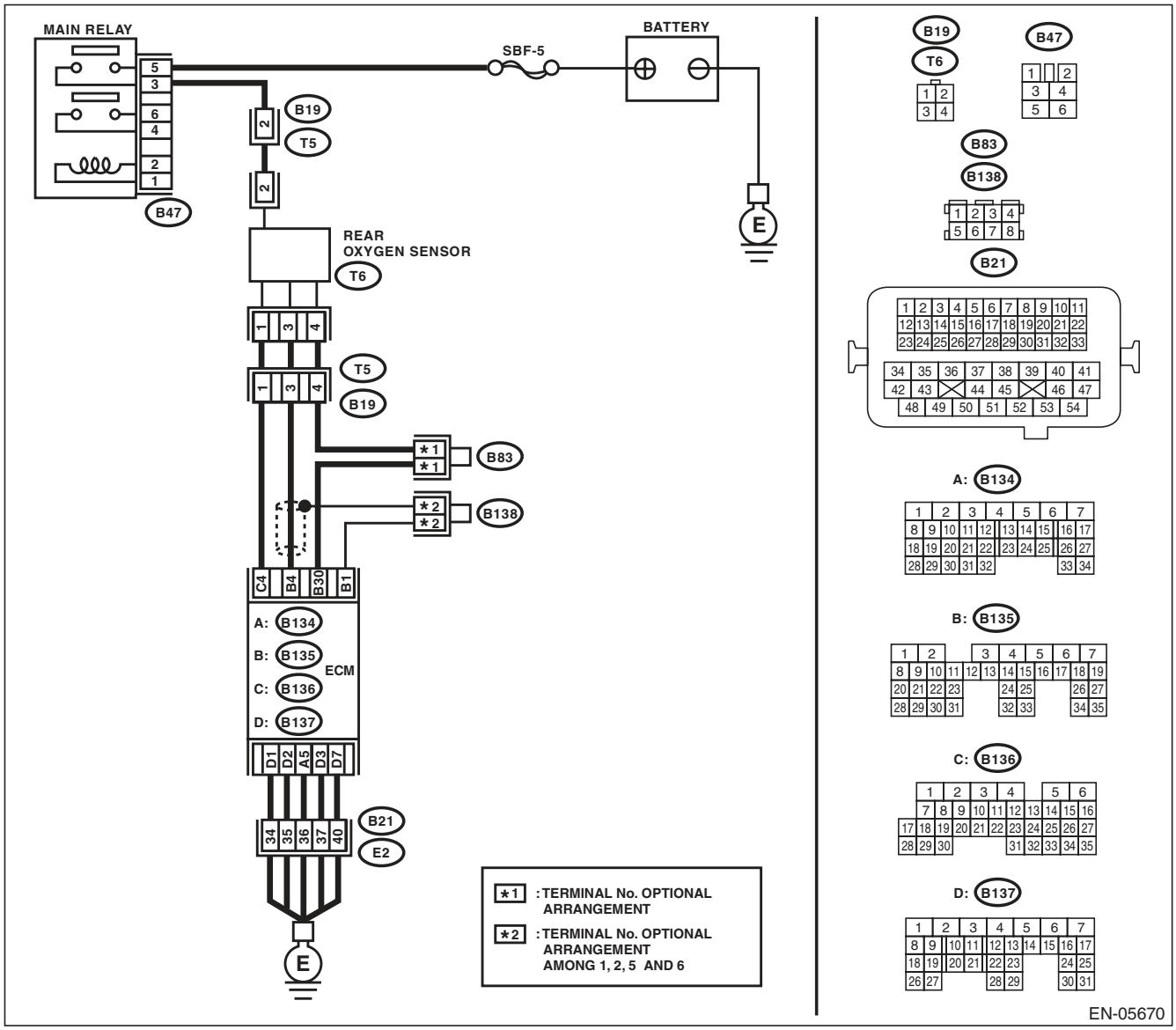

	Step	Check	Yes	No
1	**CHECK REAR OXYGEN SENSOR DATA.** 1) Warm up the engine until engine coolant temperature is above 75°C (167°F), and keep the engine speed at 3,000 rpm. (for up to 2 minutes) 2) Read the data of rear oxygen sensor signal using Subaru Select Monitor or general scan tool. NOTE: • Subaru Select Monitor For detailed operation procedure, refer to "READ CURRENT DATA FOR ENGINE". <Ref. to EN(H4DOTC)(diag)-34, Subaru Select Monitor.> • General scan tool For detailed operation procedures, refer to the general scan tool operation manual.	Is the voltage 490 mV or more?	Go to step **5**.	Go to step **2**.
2	**CHECK REAR OXYGEN SENSOR CONNECTOR AND COUPLING CONNECTOR.**	Has water entered the connector?	Completely remove any water inside.	Go to step **3**.
3	**CHECK HARNESS BETWEEN ECM AND REAR OXYGEN SENSOR CONNECTOR.** 1) Turn the ignition switch to OFF. 2) Disconnect the connectors from ECM and rear oxygen sensor. 3) Measure the resistance of harness between ECM and rear oxygen sensor connector. ***Connector & terminal*** ***(B135) No. 4 — (T6) No. 3:*** ***(B135) No. 30 — (T6) No. 4:***	Is the resistance less than 1 Ω?	Go to step **4**.	Repair the harness and connector. NOTE: In this case, repair the following item: • Open circuit in harness between ECM and rear oxygen sensor connector • Poor contact of coupling connector
4	**CHECK HARNESS BETWEEN ECM AND REAR OXYGEN SENSOR.** 1) Turn the ignition switch to OFF. 2) Disconnect the connector from rear oxygen sensor. 3) Turn the ignition switch to ON. 4) Measure the voltage between rear oxygen sensor connector and chassis ground. ***Connector & terminal*** ***(T6) No. 3 (+) — Chassis ground (–):***	Is the voltage 0.2 — 0.5 V?	Replace the rear oxygen sensor. <Ref. to FU(H4DOTC)-48, Rear Oxygen Sensor.>	Repair the harness and connector. NOTE: In this case, repair the following item: • Open circuit of harness between the ECM and rear oxygen sensor • Poor contact of the rear oxygen sensor connector • Poor contact in ECM connector
5	**CHECK EXHAUST SYSTEM.** Check exhaust system parts. NOTE: Check the following items. • Looseness and improper attachment of exhaust system parts • Damage (crack, hole etc.) of parts • Looseness and improper attachment of parts between front oxygen (A/F) sensor and rear oxygen sensor	Is there any fault in exhaust system?	Repair or replace faulty parts.	Replace the rear oxygen sensor. <Ref. to FU(H4DOTC)-48, Rear Oxygen Sensor.>

AE:DTC P0138 O2 SENSOR CIRCUIT HIGH VOLTAGE (BANK 1 SENSOR 2)

DTC DETECTING CONDITION:

- Two consecutive driving cycles with fault
- GENERAL DESCRIPTION <Ref. to GD(H4DOTC)-57, DTC P0138 O2 SENSOR CIRCUIT HIGH VOLTAGE (BANK 1 SENSOR 2), Diagnostic Trouble Code (DTC) Detecting Criteria.>

CAUTION:

After repair or replacement of faulty parts, perform Clear Memory Mode <Ref. to EN(H4DOTC)(diag)-52, OPERATION, Clear Memory Mode.>, and Inspection Mode <Ref. to EN(H4DOTC)(diag)-43, PROCEDURE, Inspection Mode.>.

WIRING DIAGRAM:

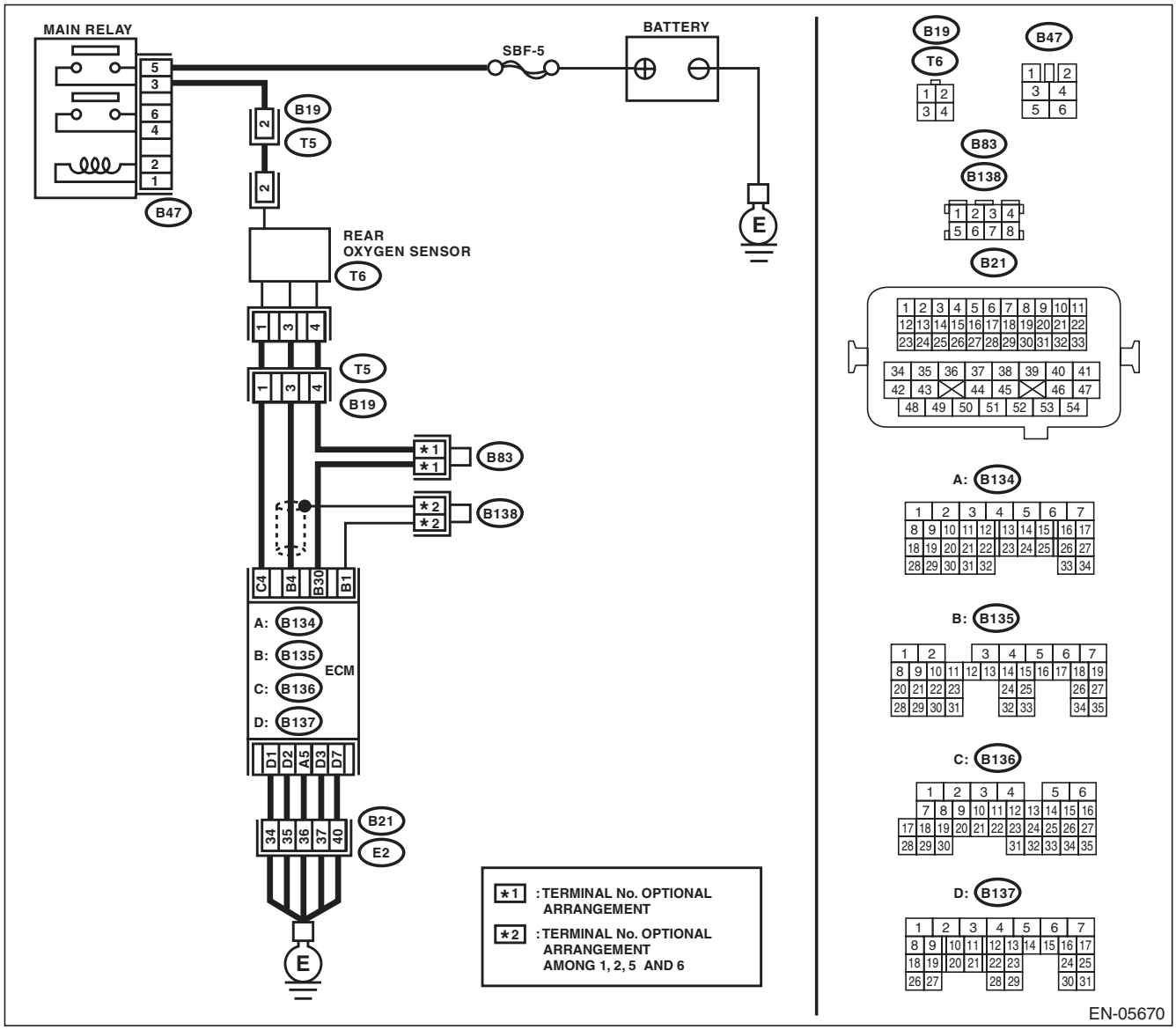

	Step	Check	Yes	No
1	**CHECK REAR OXYGEN SENSOR DATA.** 1) Warm up the engine until engine coolant temperature is above 75°C (167°F), and rapidly reduce the engine speed from 3,000 rpm. 2) Read the data of rear oxygen sensor signal using Subaru Select Monitor or general scan tool. NOTE: • Subaru Select Monitor For detailed operation procedure, refer to "READ CURRENT DATA FOR ENGINE". <Ref. to EN(H4DOTC)(diag)-34, Subaru Select Monitor.> • General scan tool For detailed operation procedures, refer to the general scan tool operation manual.	Is the voltage 250 mV or less?	Go to step **5**.	Go to step **2**.
2	**CHECK REAR OXYGEN SENSOR CONNECTOR AND COUPLING CONNECTOR.**	Has water entered the connector?	Completely remove any water inside.	Go to step **3**.
3	**CHECK HARNESS BETWEEN ECM AND REAR OXYGEN SENSOR CONNECTOR.** 1) Turn the ignition switch to OFF. 2) Disconnect the connectors from ECM and rear oxygen sensor. 3) Measure the resistance of harness between ECM and rear oxygen sensor connector. ***Connector & terminal*** ***(B135) No. 4 — (T6) No. 3:*** ***(B135) No. 30 — (T6) No. 4:***	Is the resistance less than 1 Ω?	Go to step **4**.	Repair the harness and connector. NOTE: In this case, repair the following item: • Open circuit in harness between ECM and rear oxygen sensor connector • Poor contact of coupling connector
4	**CHECK HARNESS BETWEEN ECM AND REAR OXYGEN SENSOR.** 1) Turn the ignition switch to OFF. 2) Disconnect the connector from rear oxygen sensor. 3) Turn the ignition switch to ON. 4) Measure the voltage between rear oxygen sensor connector and chassis ground. ***Connector & terminal*** ***(T6) No. 3 (+) — Chassis ground (–):***	Is the voltage 0.2 — 0.5 V?	Replace the rear oxygen sensor. <Ref. to FU(H4DOTC)-48, Rear Oxygen Sensor.>	Repair the harness and connector. NOTE: In this case, repair the following item: • Open circuit of harness between the ECM and rear oxygen sensor • Poor contact of the rear oxygen sensor connector • Poor contact in ECM connector
5	**CHECK EXHAUST SYSTEM.** Check exhaust system parts. NOTE: Check the following items. • Looseness and improper attachment of exhaust system parts • Damage (crack, hole etc.) of parts • Looseness and improper attachment of parts between front oxygen (A/F) sensor and rear oxygen sensor	Is there any fault in exhaust system?	Repair or replace faulty parts.	Replace the rear oxygen sensor. <Ref. to FU(H4DOTC)-48, Rear Oxygen Sensor.>

AF:DTC P0139 O2 SENSOR CIRCUIT SLOW RESPONSE (BANK 1 SENSOR 2)

DTC DETECTING CONDITION:

- Two consecutive driving cycles with fault
- GENERAL DESCRIPTION <Ref. to GD(H4DOTC)-58, DTC P0139 O2 SENSOR CIRCUIT SLOW RESPONSE (BANK 1 SENSOR 2), Diagnostic Trouble Code (DTC) Detecting Criteria.>

CAUTION:

After repair or replacement of faulty parts, perform Clear Memory Mode <Ref. to EN(H4DOTC)(diag)-52, OPERATION, Clear Memory Mode.>, and Inspection Mode <Ref. to EN(H4DOTC)(diag)-43, PROCEDURE, Inspection Mode.>.

WIRING DIAGRAM:

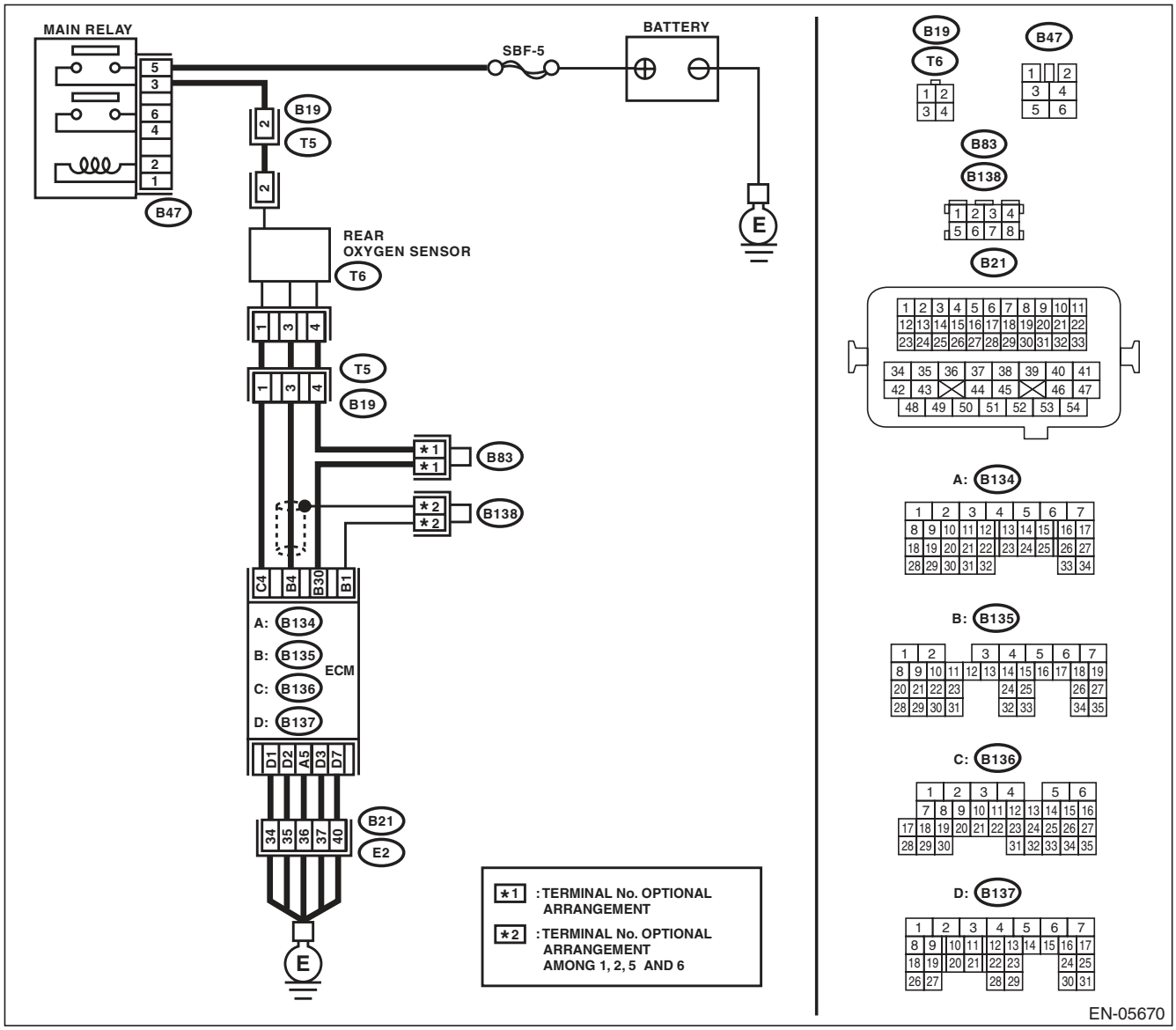

	Step	Check	Yes	No
1	**CHECK HARNESS BETWEEN ECM AND REAR OXYGEN SENSOR CONNECTOR.** 1) Turn the ignition switch to OFF. 2) Disconnect the connectors from ECM and rear oxygen sensor. 3) Measure the resistance of harness between ECM and rear oxygen sensor connector. ***Connector & terminal*** ***(B135) No. 4 — (T6) No. 3:***	Is the resistance less than 1 Ω?	Go to step **2**.	Repair the harness and connector. NOTE: In this case, repair the following item: • Open circuit in harness between ECM and rear oxygen sensor connector • Poor contact of coupling connector
2	**CHECK HARNESS BETWEEN ECM AND REAR OXYGEN SENSOR CONNECTOR.** Measure the resistance between rear oxygen sensor connector and chassis ground. ***Connector & terminal*** ***(T6) No. 3 — Chassis ground:***	Is the resistance 1 MΩ or more?	Go to step **3**.	Repair the ground short circuit of harness between ECM and rear oxygen sensor connector.
3	**CHECK REAR OXYGEN SENSOR.** Measure the resistance between rear oxygen sensor terminals. ***Terminals*** ***No. 3 — No. 4***	Is the resistance less than 1 Ω?	Replace the rear oxygen sensor. <Ref. to FU(H4DOTC)-48, Rear Oxygen Sensor.>	Even if DTC is detected, the circuit has returned to a normal condition at this time. Reproduce the failure, and then perform the diagnosis again. NOTE: In this case, temporary poor contact of connector may be the cause.

AG:DTC P0140 O2 SENSOR CIRCUIT NO ACTIVITY DETECTED (BANK1 SENSOR2)

DTC DETECTING CONDITION:

- Two consecutive driving cycles with fault
- GENERAL DESCRIPTION <Ref. to GD(H4DOTC)-63, DTC P0140 O2 SENSOR CIRCUIT NO ACTIVITY DETECTED (BANK1 SENSOR2), Diagnostic Trouble Code (DTC) Detecting Criteria.>

CAUTION:

After repair or replacement of faulty parts, perform Clear Memory Mode <Ref. to EN(H4DOTC)(diag)-52, OPERATION, Clear Memory Mode.>, and Inspection Mode <Ref. to EN(H4DOTC)(diag)-43, PROCEDURE, Inspection Mode.>.

WIRING DIAGRAM:

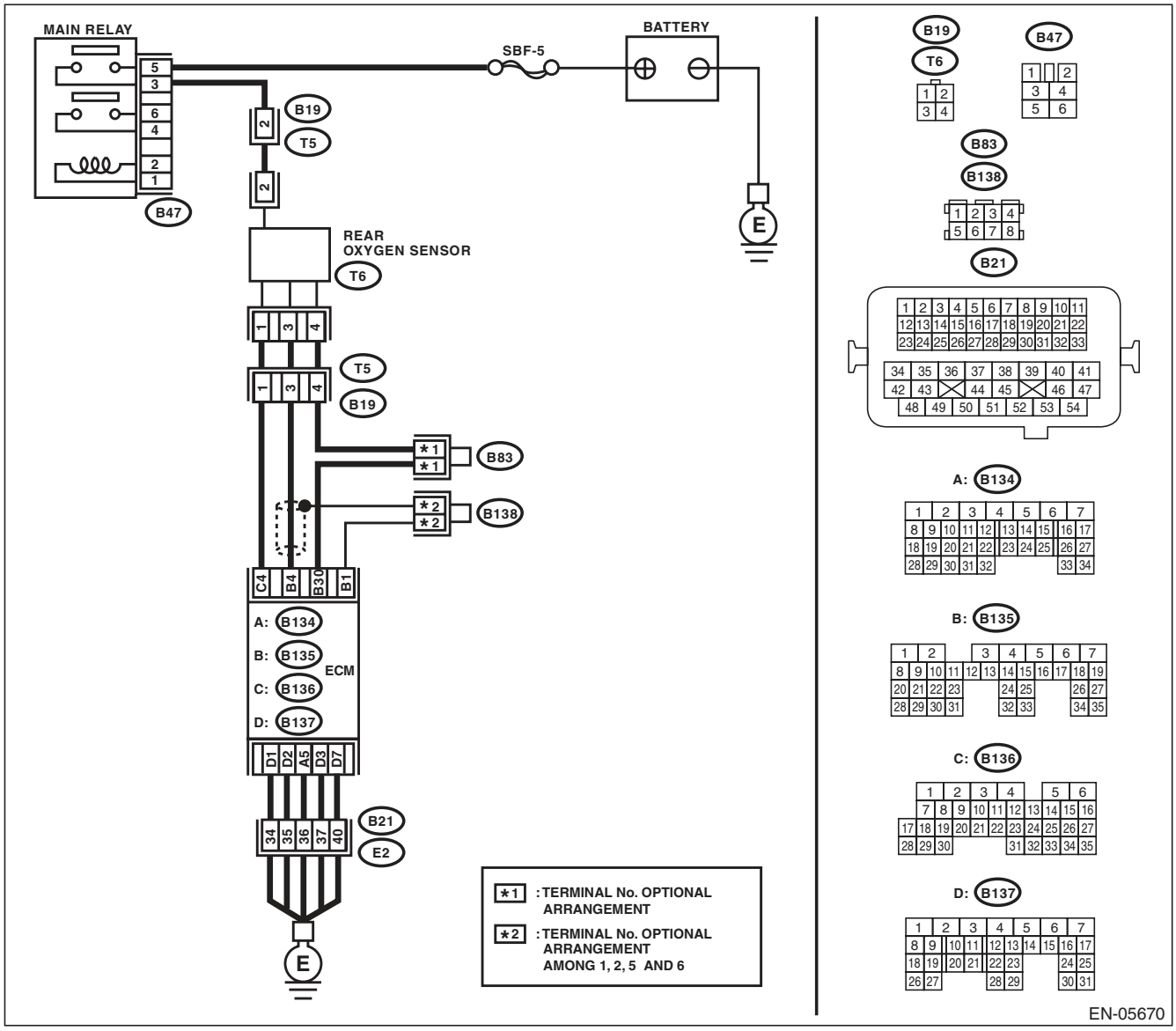

	Step	Check	Yes	No
1	**CHECK REAR OXYGEN SENSOR DATA.** 1) Warm up the engine until engine coolant temperature is above 75°C (167°F), and keep the engine speed at 3,000 rpm. (for up to 2 minutes) 2) Read the data of rear oxygen sensor signal using Subaru Select Monitor or general scan tool. NOTE: • Subaru Select Monitor For detailed operation procedure, refer to "READ CURRENT DATA FOR ENGINE". <Ref. to EN(H4DOTC)(diag)-34, Subaru Select Monitor.> • General scan tool For detailed operation procedures, refer to the general scan tool operation manual.	Is the voltage 490 mV or more?	Go to step **6**.	Go to step **2**.
2	**CHECK REAR OXYGEN SENSOR DATA.** 1) Warm up the engine until engine coolant temperature is above 75°C (167°F), and rapidly reduce the engine speed from 3,000 rpm. 2) Read the data of rear oxygen sensor signal using Subaru Select Monitor or general scan tool. NOTE: • Subaru Select Monitor For detailed operation procedure, refer to "READ CURRENT DATA FOR ENGINE". <Ref. to EN(H4DOTC)(diag)-34, Subaru Select Monitor.> • General scan tool For detailed operation procedures, refer to the general scan tool operation manual.	Is the voltage 250 mV or less?	Go to step **6**.	Go to step **3**.
3	**CHECK REAR OXYGEN SENSOR CONNECTOR AND COUPLING CONNECTOR.**	Has water entered the connector?	Completely remove any water inside.	Go to step **4**.
4	**CHECK HARNESS BETWEEN ECM AND REAR OXYGEN SENSOR CONNECTOR.** 1) Turn the ignition switch to OFF. 2) Disconnect the connectors from ECM and rear oxygen sensor. 3) Measure the resistance of harness between ECM and rear oxygen sensor connector. ***Connector & terminal*** ***(B135) No. 4 — (T6) No. 3:*** ***(B135) No. 30 — (T6) No. 4:***	Is the resistance less than 1 Ω?	Go to step **5**.	Repair the harness and connector. NOTE: In this case, repair the following item: • Open circuit in harness between ECM and rear oxygen sensor connector • Poor contact of coupling connector

	Step	Check	Yes	No
5	**CHECK HARNESS BETWEEN ECM AND REAR OXYGEN SENSOR.** 1) Turn the ignition switch to OFF. 2) Disconnect the connector from rear oxygen sensor. 3) Turn the ignition switch to ON. 4) Measure the voltage between rear oxygen sensor connector and chassis ground. ***Connector & terminal*** ***(T6) No. 3 (+) — Chassis ground (–):***	Is the voltage 0.2 — 0.5 V?	Replace the rear oxygen sensor. <Ref. to FU(H4DOTC)-48, Rear Oxygen Sensor.>	Repair the harness and connector. NOTE: In this case, repair the following item: • Open circuit of harness between the ECM and rear oxygen sensor • Poor contact of the rear oxygen sensor connector • Poor contact in ECM connector
6	**CHECK EXHAUST SYSTEM.** Check exhaust system parts. NOTE: Check the following items. • Looseness and improper attachment of exhaust system parts • Damage (crack, hole etc.) of parts • Looseness and improper attachment of parts between front oxygen (A/F) sensor and rear oxygen sensor	Is there any fault in exhaust system?	Repair or replace faulty parts.	Replace the rear oxygen sensor. <Ref. to FU(H4DOTC)-48, Rear Oxygen Sensor.>

AH:DTC P0171 SYSTEM TOO LEAN (BANK 1)

Refer to DTC P0172 for diagnostic procedure. <Ref. to EN(H4DOTC)(diag)-150, DTC P0172 SYSTEM TOO RICH (BANK 1), Diagnostic Procedure with Diagnostic Trouble Code (DTC).>

AI: DTC P0172 SYSTEM TOO RICH (BANK 1)

DTC DETECTING CONDITION:

- Two consecutive driving cycles with fault
- GENERAL DESCRIPTION <Ref. to GD(H4DOTC)-66, DTC P0172 SYSTEM TOO RICH (BANK 1), Diagnostic Trouble Code (DTC) Detecting Criteria.>

TROUBLE SYMPTOM:

- Improper idling
- Engine stalls.
- Poor driving performance

CAUTION:
After repair or replacement of faulty parts, perform Clear Memory Mode <Ref. to EN(H4DOTC)(diag)-52, OPERATION, Clear Memory Mode.>, and Inspection Mode <Ref. to EN(H4DOTC)(diag)-43, PROCEDURE, Inspection Mode.>.

	Step	Check	Yes	No
1	**CHECK EXHAUST SYSTEM.**	Are there holes or loose bolts on exhaust system?	Repair the exhaust system.	Go to step **2**.
2	**CHECK AIR INTAKE SYSTEM.**	Are there holes, loose bolts or disconnection of hose on air intake system?	Repair the air intake system.	Go to step **3**.
3	**CHECK FUEL PRESSURE.** **WARNING:** **Place "NO OPEN FLAMES" signs near the working area.** **CAUTION:** **Be careful not to spill fuel.** Measure the fuel pressure while disconnecting pressure regulator vacuum hose from intake manifold. <Ref. to ME(H4DOTC)-25, INSPECTION, Fuel Pressure.> **CAUTION:** **Release fuel pressure before removing the fuel pressure gauge.** NOTE: If fuel pressure does not increase, squeeze the fuel return hose 2 to 3 times, then measure fuel pressure again.	Is the measured value 284 — 314 kPa (2.9 — 3.2 kg/cm^2, 41 — 46 psi)?	Go to step **4**.	Repair the following item. Fuel pressure is too high: • Clogged fuel return line or bent hose Fuel pressure is too low: • Improper fuel pump discharge • Clogged fuel supply line
4	**CHECK FUEL PRESSURE.** After connecting the pressure regulator vacuum hose, measure fuel pressure. <Ref. to ME(H4DOTC)-25, INSPECTION, Fuel Pressure.> **CAUTION:** **Release fuel pressure before removing the fuel pressure gauge.** NOTE: • If fuel pressure does not increase, squeeze fuel return hose 2 to 3 times, then measure fuel pressure again. • If the measured value at this step is out of specification, check or replace pressure regulator and pressure regulator vacuum hose.	Is the measured value 230 — 260 kPa (2.35 — 2.65 kg/cm^2, 33 — 38 psi)?	Go to step **5**.	Repair the following item. Fuel pressure is too high: • Faulty pressure regulator • Clogged fuel return line or bent hose Fuel pressure is too low: • Faulty pressure regulator • Improper fuel pump discharge • Clogged fuel supply line

	Step	Check	Yes	No
5	**CHECK ENGINE COOLANT TEMPERATURE SENSOR.** 1) Start the engine and warm up completely. 2) Read the data of engine coolant temperature sensor signal using Subaru Select Monitor or general scan tool. NOTE: • Subaru Select Monitor For detailed operation procedure, refer to "READ CURRENT DATA FOR ENGINE". <Ref. to EN(H4DOTC)(diag)-34, Subaru Select Monitor.> • General scan tool For detailed operation procedures, refer to the general scan tool operation manual.	Is the engine coolant temperature 75°C (167°F) or higher?	Go to step **6**.	Replace the engine coolant temperature sensor. <Ref. to FU(H4DOTC)-31, Engine Coolant Temperature Sensor.>
6	**CHECK MASS AIR FLOW AND INTAKE AIR TEMPERATURE SENSOR.** 1) Start the engine and warm up engine until coolant temperature is higher than 75°C (167°F). 2) For AT models, set the select lever to "P" range or "N" range, and for MT models, place the shift lever in the neutral position. 3) Turn the A/C switch to OFF. 4) Turn all the accessory switches to OFF. 5) Read the data of the mass air flow and intake air temperature sensor signal using Subaru Select Monitor or general scan tool. NOTE: • Subaru Select Monitor For detailed operation procedure, refer to "READ CURRENT DATA FOR ENGINE". <Ref. to EN(H4DOTC)(diag)-34, Subaru Select Monitor.> • General scan tool For detailed operation procedures, refer to the general scan tool operation manual.	Is the measured value 2.0 — 5.0 g/s (0.26 — 0.66 lb/m)?	Go to step **7**.	Replace the mass air flow and intake air temperature sensor. <Ref. to FU(H4DOTC)-36, Mass Air Flow and Intake Air Temperature Sensor.>
7	**CHECK MASS AIR FLOW AND INTAKE AIR TEMPERATURE SENSOR.** 1) Start the engine and warm up engine until coolant temperature is higher than 75°C (167°F). 2) For AT models, set the select lever to "P" range or "N" range, and for MT models, place the shift lever in the neutral position. 3) Turn the A/C switch to OFF. 4) Turn all the accessory switches to OFF. 5) Open the front hood. 6) Measure the ambient temperature. 7) Read the data of the mass air flow and intake air temperature sensor signal using Subaru Select Monitor or general scan tool. NOTE: • Subaru Select Monitor For detailed operation procedure, refer to "READ CURRENT DATA FOR ENGINE". <Ref. to EN(H4DOTC)(diag)-34, Subaru Select Monitor.> • General scan tool For detailed operation procedures, refer to the general scan tool operation manual.	Subtract ambient temperature from intake air temperature. Is the obtained value –10 — 50°C (–18 — 90°F)?	Repair the poor contact of ECM connector.	Check the mass air flow and intake air temperature sensor. <Ref. to FU(H4DOTC)-36, Mass Air Flow and Intake Air Temperature Sensor.>

AJ:DTC P0181 FUEL TEMPERATURE SENSOR “A” CIRCUIT RANGE/ PERFORMANCE

DTC DETECTING CONDITION:

- Two consecutive driving cycles with fault
- GENERAL DESCRIPTION <Ref. to GD(H4DOTC)-67, DTC P0181 FUEL TEMPERATURE SENSOR “A” CIRCUIT RANGE/PERFORMANCE, Diagnostic Trouble Code (DTC) Detecting Criteria.>

CAUTION:

After repair or replacement of faulty parts, perform Clear Memory Mode <Ref. to EN(H4DOTC)(diag)-52, OPERATION, Clear Memory Mode.>, and Inspection Mode <Ref. to EN(H4DOTC)(diag)-43, PROCEDURE, Inspection Mode.>.

WIRING DIAGRAM:

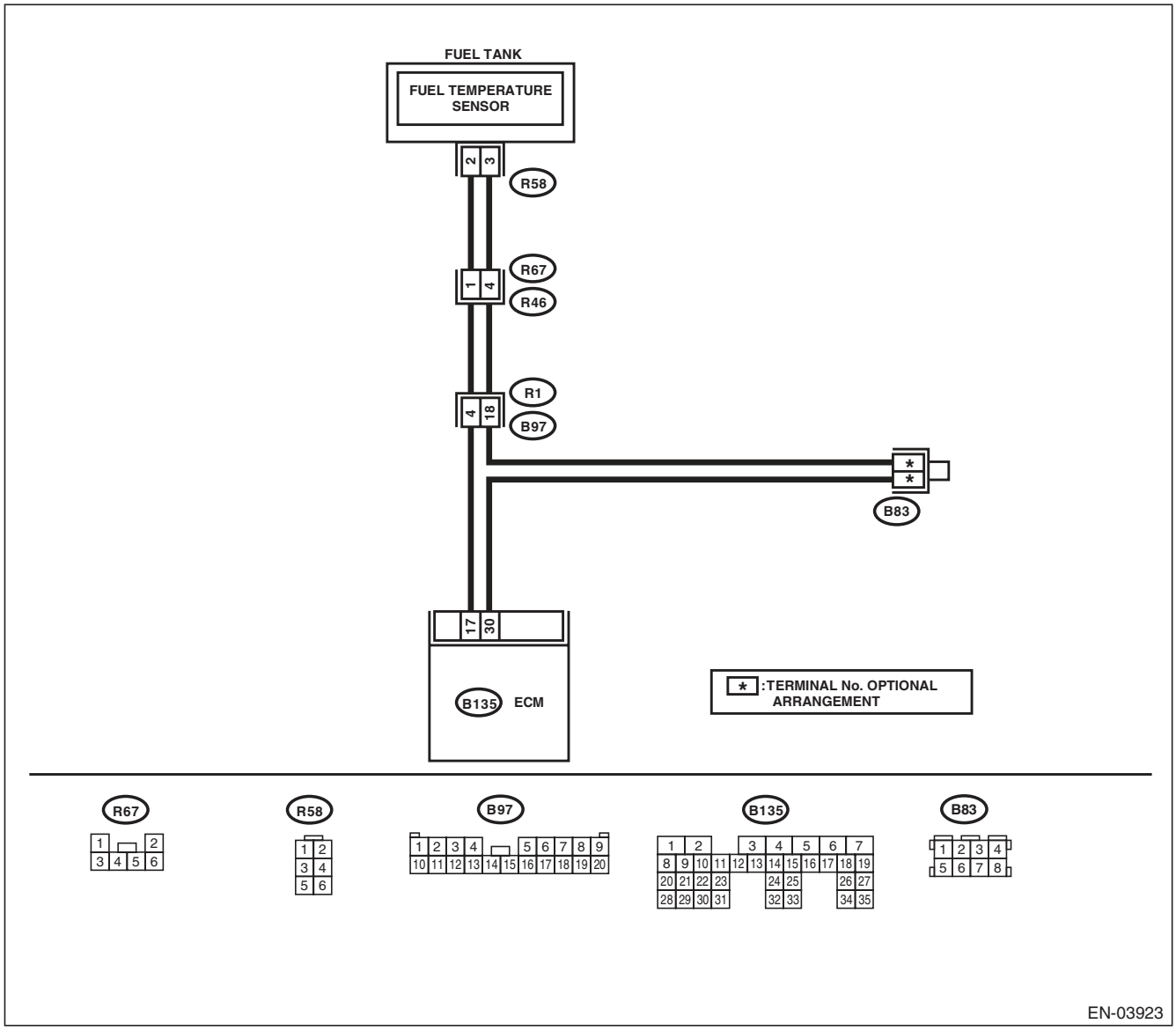

Step	Check	Yes	No
1 CHECK FOR ANY OTHER DTC ON DISPLAY.	Is any other DTC displayed?	Check the appropriate DTC using the “List of Diagnostic Trouble Code (DTC)”. <Ref. to EN(H4DOTC)(diag)-81, List of Diagnostic Trouble Code (DTC).>	Replace the fuel temperature sensor. <Ref. to EC(H4DOTC)-13, Fuel Temperature Sensor.>

AK:DTC P0182 FUEL TEMPERATURE SENSOR “A” CIRCUIT LOW INPUT

DTC DETECTING CONDITION:

- Immediately at fault recognition
- GENERAL DESCRIPTION <Ref. to GD(H4DOTC)-70, DTC P0182 FUEL TEMPERATURE SENSOR “A” CIRCUIT LOW INPUT, Diagnostic Trouble Code (DTC) Detecting Criteria.>

CAUTION:

After repair or replacement of faulty parts, perform Clear Memory Mode <Ref. to EN(H4DOTC)(diag)-52, OPERATION, Clear Memory Mode.>, and Inspection Mode <Ref. to EN(H4DOTC)(diag)-43, PROCEDURE, Inspection Mode.>.

WIRING DIAGRAM:

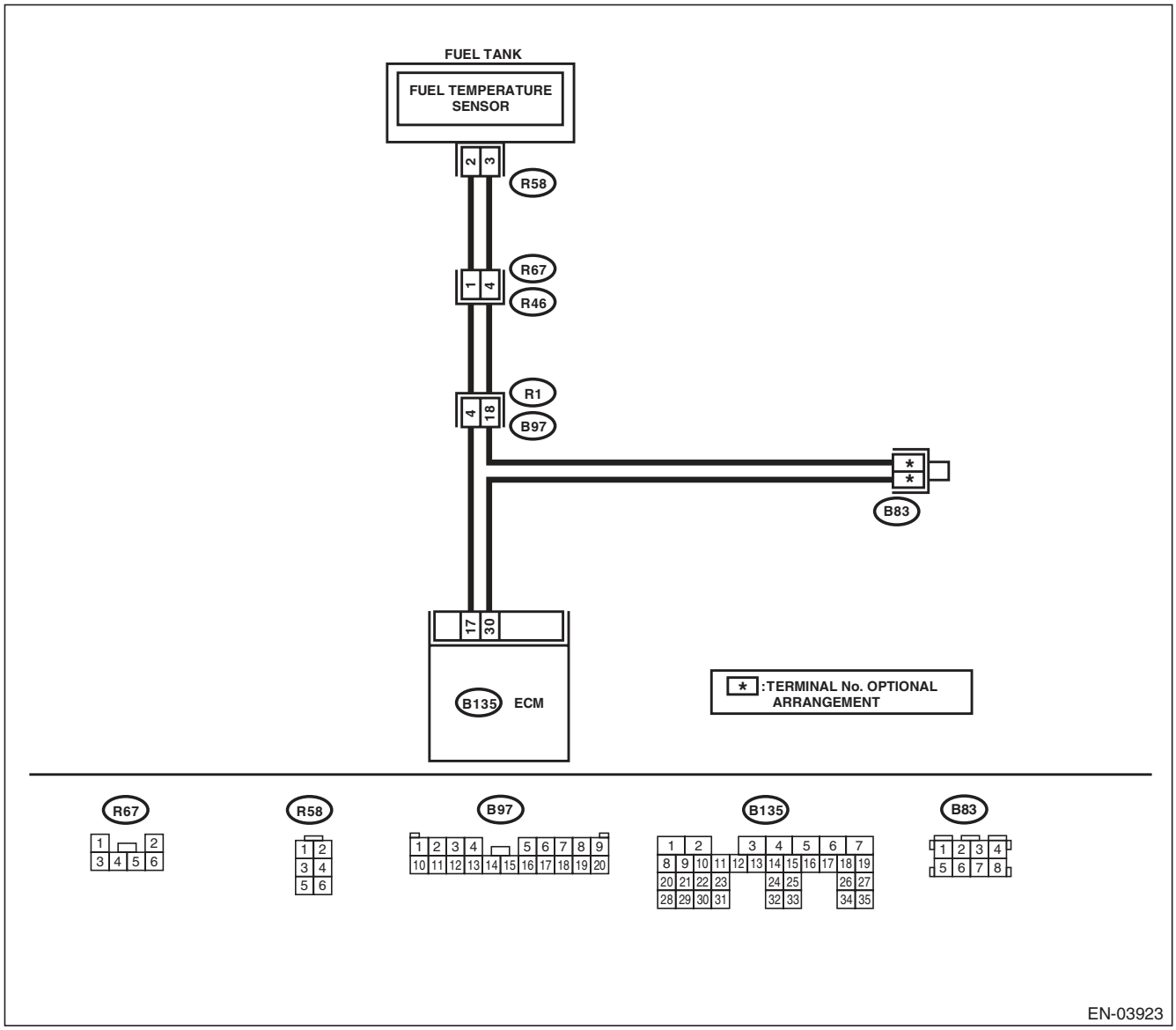

	Step	Check	Yes	No
1	**CHECK CURRENT DATA.** 1) Start the engine. 2) Read the data of fuel temperature sensor signal using Subaru Select Monitor. NOTE: For detailed operation procedure, refer to “READ CURRENT DATA FOR ENGINE”. <Ref. to EN(H4DOTC)(diag)-34, Subaru Select Monitor.>	Is the temperature 120°C (248°F) or higher?	Go to step **2**.	Even if DTC is detected, the circuit has returned to a normal condition at this time. Reproduce the failure, and then perform the diagnosis again. NOTE: In this case, temporary poor contact of connector may be the cause.
2	**CHECK HARNESS BETWEEN ECM AND FUEL TEMPERATURE SENSOR CONNECTOR.** 1) Turn the ignition switch to OFF. 2) Disconnect the connector from ECM and fuel temperature sensor. 3) Measure the resistance between ECM and chassis ground. ***Connector & terminal*** ***(B135) No. 17 — Chassis ground:***	Is the resistance 1 MΩ or more?	Replace the fuel temperature sensor. <Ref. to EC(H4DOTC)-13, Fuel Temperature Sensor.>	Repair the ground short circuit of harness between ECM and fuel pump.

AL:DTC P0183 FUEL TEMPERATURE SENSOR “A” CIRCUIT HIGH INPUT

DTC DETECTING CONDITION:

- Immediately at fault recognition
- GENERAL DESCRIPTION <Ref. to GD(H4DOTC)-71, DTC P0183 FUEL TEMPERATURE SENSOR “A” CIRCUIT HIGH INPUT, Diagnostic Trouble Code (DTC) Detecting Criteria.>

CAUTION:

After repair or replacement of faulty parts, perform Clear Memory Mode <Ref. to EN(H4DOTC)(diag)-52, OPERATION, Clear Memory Mode.>, and Inspection Mode <Ref. to EN(H4DOTC)(diag)-43, PROCEDURE, Inspection Mode.>.

WIRING DIAGRAM:

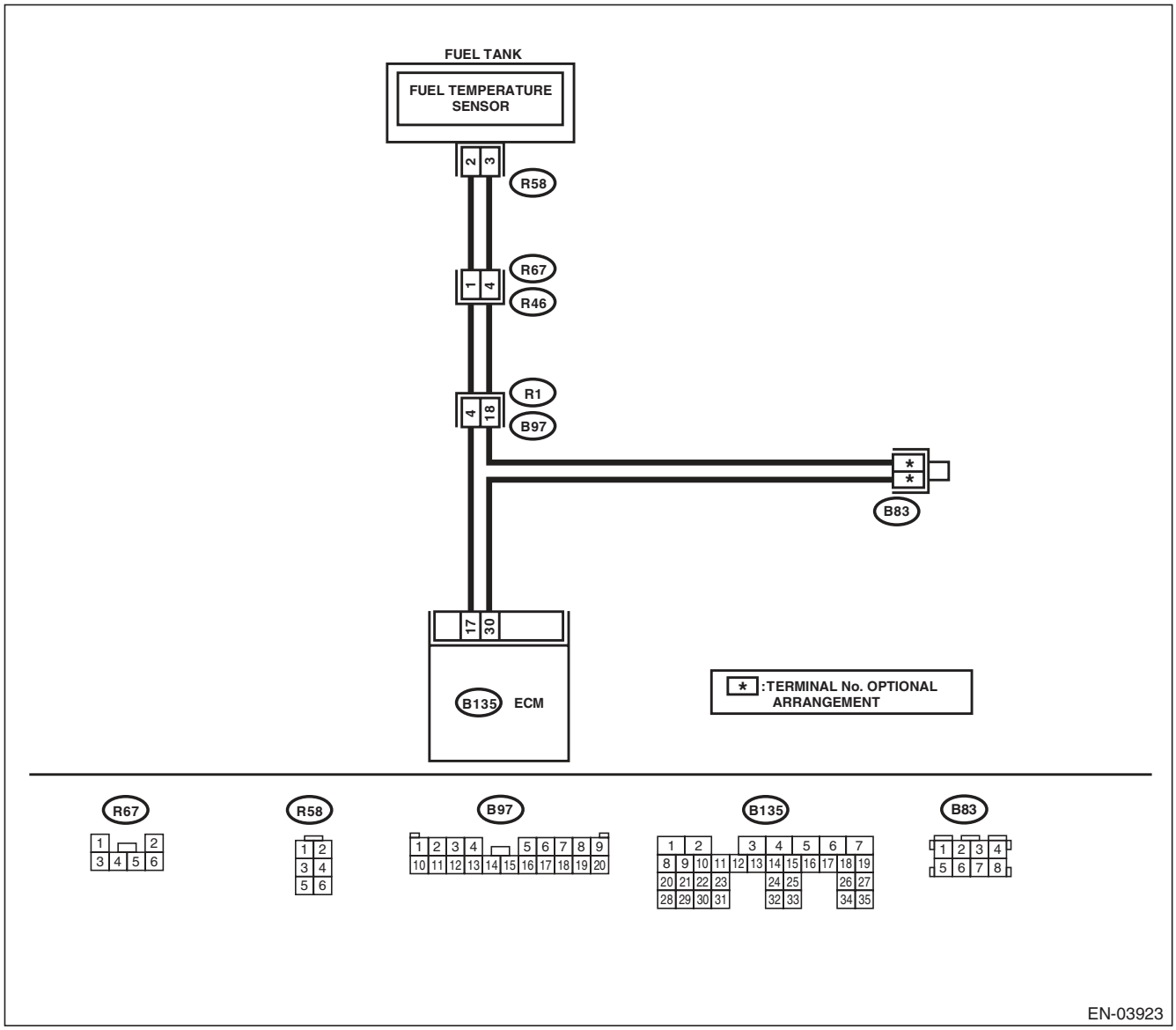

	Step	Check	Yes	No
1	**CHECK CURRENT DATA.** 1) Start the engine. 2) Read the data of fuel temperature sensor signal using Subaru Select Monitor. NOTE: For detailed operation procedure, refer to "READ CURRENT DATA FOR ENGINE". <Ref. to EN(H4DOTC)(diag)-34, Subaru Select Monitor.>	Is the temperature less than –40°C (–40°F)?	Go to step **2**.	Even if DTC is detected, the circuit has returned to a normal condition at this time. Reproduce the failure, and then perform the diagnosis again. NOTE: In this case, temporary poor contact of connector may be the cause.
2	**CHECK POOR CONTACT.** Repair any poor contact between the ECM and fuel temperature sensor connectors.	Is there poor contact in the ECM or fuel temperature sensor connectors?	Repair any poor contact between the ECM and fuel temperature sensor connectors.	Go to step **3**.
3	**CHECK HARNESS BETWEEN ECM AND FUEL TEMPERATURE SENSOR CONNECTOR.** 1) Turn the ignition switch to OFF. 2) Disconnect the connector from ECM and fuel temperature sensor. 3) Measure the resistance of the harness between the ECM and fuel temperature sensor connector. ***Connector & terminal*** ***(B135) No. 17 — (R58) No. 2:*** ***(B135) No. 30 — (R58) No. 3:***	Is the resistance less than 1 Ω?	Go to step **4**.	Repair the harness and connector. NOTE: In this case, repair the following item: • Open circuit in harness between ECM and fuel temperature sensor connector • Poor contact of coupling connector
4	**CHECK HARNESS BETWEEN ECM AND FUEL TEMPERATURE SENSOR CONNECTOR.** 1) Connect all connectors. 2) Turn the ignition switch to ON. 3) Measure the voltage between ECM and chassis ground. ***Connector & terminal*** ***(B135) No. 17 (+) — Chassis ground (–):***	Is the voltage 5 V or more?	Repair the short circuit to power in the harness between the ECM and fuel temperature sensor connector.	Replace the fuel temperature sensor. <Ref. to EC(H4DOTC)-13, Fuel Temperature Sensor.>

AM:DTC P0222 THROTTLE/PEDAL POSITION SENSOR/SWITCH “B” CIRCUIT LOW

DTC DETECTING CONDITION:

- Immediately at fault recognition
- GENERAL DESCRIPTION <Ref. to GD(H4DOTC)-72, DTC P0222 THROTTLE/PEDAL POSITION SENSOR/SWITCH “B” CIRCUIT LOW, Diagnostic Trouble Code (DTC) Detecting Criteria.>

TROUBLE SYMPTOM:

- Improper idling
- Poor driving performance
- Engine stalls.

CAUTION:

After repair or replacement of faulty parts, perform Clear Memory Mode <Ref. to EN(H4DOTC)(diag)-52, OPERATION, Clear Memory Mode.>, and Inspection Mode <Ref. to EN(H4DOTC)(diag)-43, PROCEDURE, Inspection Mode.>.

WIRING DIAGRAM:

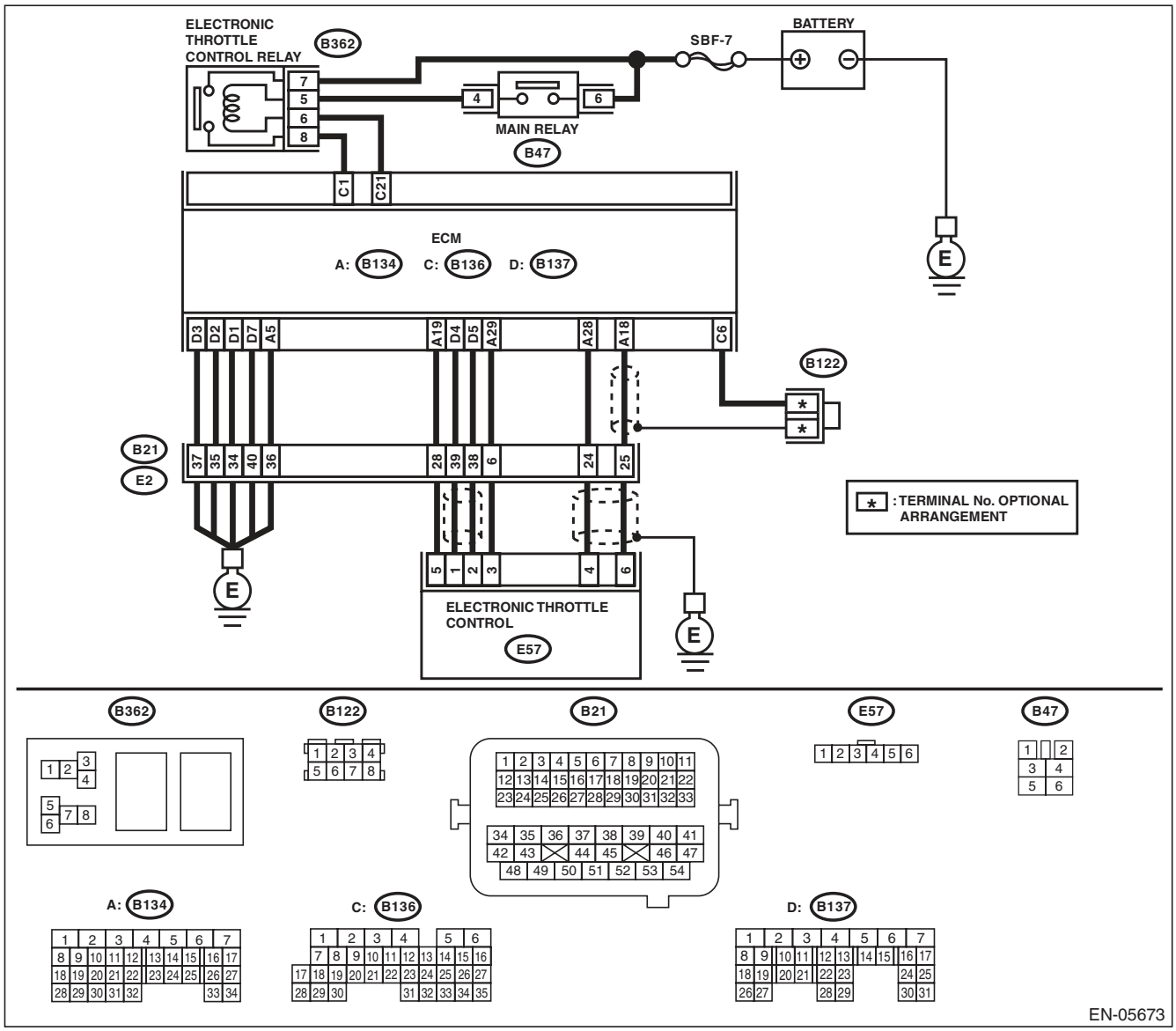

	Step	Check	Yes	No
1	**CHECK HARNESS BETWEEN ECM AND ELECTRONIC THROTTLE CONTROL.** 1) Turn the ignition switch to OFF. 2) Disconnect the connectors from ECM and electronic throttle control. 3) Measure the resistance between ECM and chassis ground. ***Connector & terminal*** ***(B134) No. 19 — Chassis ground:*** ***(B134) No. 28 — Chassis ground:***	Is the resistance 1 MΩ or more?	Go to step **2**.	Repair the short circuit to ground in harness between ECM and electronic throttle control connector.
2	**CHECK SHORT CIRCUIT INSIDE THE ECM.** 1) Connect the ECM. 2) Measure the resistance between electronic throttle control connector and engine ground. ***Connector & terminal*** ***(E57) No. 4 — Engine ground:***	Is the resistance 1 MΩ or more?	Replace the electronic throttle control. <Ref. to FU(H4DOTC)-14, Throttle Body.>	Repair the short circuit to ground in harness between ECM and electronic throttle control connector. Replace the ECM if defective. <Ref. to FU(H4DOTC)-52, Engine Control Module (ECM).>

AN:DTC P0223 THROTTLE/PEDAL POSITION SENSOR/SWITCH “B” CIRCUIT HIGH

DTC DETECTING CONDITION:

- Immediately at fault recognition
- GENERAL DESCRIPTION <Ref. to GD(H4DOTC)-73, DTC P0223 THROTTLE/PEDAL POSITION SENSOR/SWITCH “B” CIRCUIT HIGH, Diagnostic Trouble Code (DTC) Detecting Criteria.>

TROUBLE SYMPTOM:

- Improper idling
- Poor driving performance
- Engine stalls.

CAUTION:

After repair or replacement of faulty parts, perform Clear Memory Mode <Ref. to EN(H4DOTC)(diag)-52, OPERATION, Clear Memory Mode.>, and Inspection Mode <Ref. to EN(H4DOTC)(diag)-43, PROCEDURE, Inspection Mode.>.

WIRING DIAGRAM:

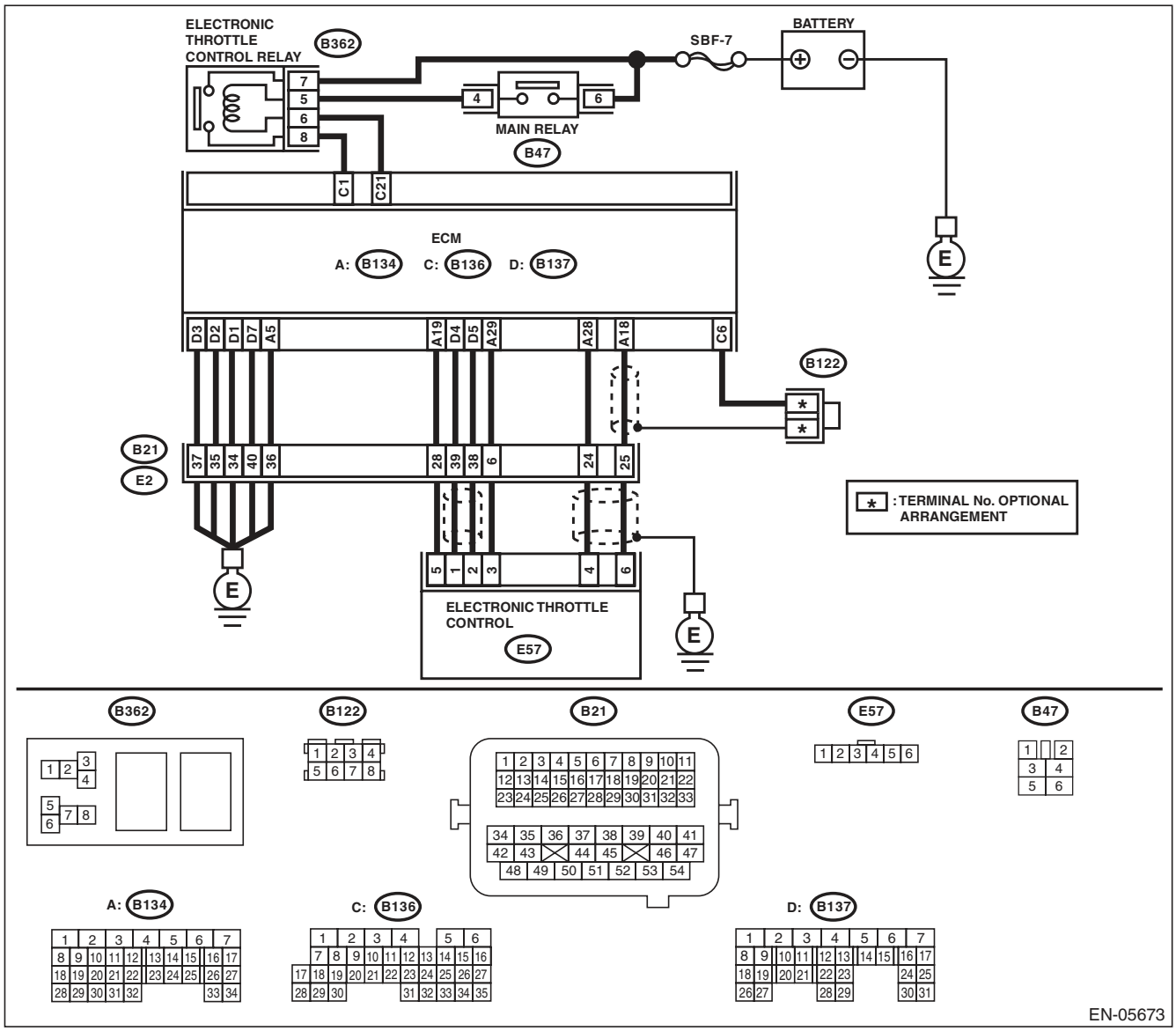

	Step	Check	Yes	No
1	**CHECK HARNESS BETWEEN ECM AND ELECTRONIC THROTTLE CONTROL.** 1) Turn the ignition switch to OFF. 2) Disconnect the connectors from ECM and electronic throttle control. 3) Measure the resistance of harness between ECM and electronic throttle control connector. ***Connector & terminal*** ***(B134) No. 28 — (E57) No. 4:*** ***(B134) No. 29 — (E57) No. 3:***	Is the resistance less than 1 Ω?	Go to step **2**.	Repair the harness and connector. NOTE: In this case, repair the following item: • Open circuit in harness between ECM and electronic throttle control connector • Poor contact of coupling connector
2	**CHECK HARNESS BETWEEN ECM AND ELECTRONIC THROTTLE CONTROL.** 1) Connect the ECM. 2) Measure the resistance between electronic throttle control connector and engine ground. ***Connector & terminal*** ***(E57) No. 3 — Engine ground:***	Is the resistance less than 5 Ω?	Go to step **3**.	Repair the harness and connector. NOTE: In this case, repair the following item: • Open circuit of harness between ECM and engine ground • Poor contact in ECM connector • Poor contact of coupling connector
3	**CHECK HARNESS BETWEEN ECM AND ELECTRONIC THROTTLE CONTROL.** 1) Turn the ignition switch to ON. 2) Measure the voltage between electronic throttle control connector and engine ground. ***Connector & terminal*** ***(E57) No. 4 (+) — Engine ground (–):***	Is the voltage 4.85 V or more?	Repair the short circuit to power in the harness between ECM and electronic throttle control connector.	Go to step **4**.
4	**CHECK HARNESS BETWEEN ECM AND ELECTRONIC THROTTLE CONTROL.** 1) Turn the ignition switch to OFF. 2) Disconnect the connectors from ECM. 3) Measure the resistance between ECM connectors. ***Connector & terminal*** ***(B134) No. 19 — (B134) No. 28:***	Is the resistance 1 MΩ or more?	Repair poor contact of the electronic throttle control connector. Replace the electronic throttle control if defective. <Ref. to FU(H4DOTC)-14, Throttle Body.>	Repair the short circuit to power in the harness between ECM and electronic throttle control connector.

AO:DTC P0230 FUEL PUMP PRIMARY CIRCUIT

DTC DETECTING CONDITION:

- Two consecutive driving cycles with fault
- GENERAL DESCRIPTION <Ref. to GD(H4DOTC)-74, DTC P0230 FUEL PUMP PRIMARY CIRCUIT, Diagnostic Trouble Code (DTC) Detecting Criteria.>

CAUTION:

After repair or replacement of faulty parts, perform Clear Memory Mode <Ref. to EN(H4DOTC)(diag)-52, OPERATION, Clear Memory Mode.>, and Inspection Mode <Ref. to EN(H4DOTC)(diag)-43, PROCEDURE, Inspection Mode.>.

WIRING DIAGRAM:

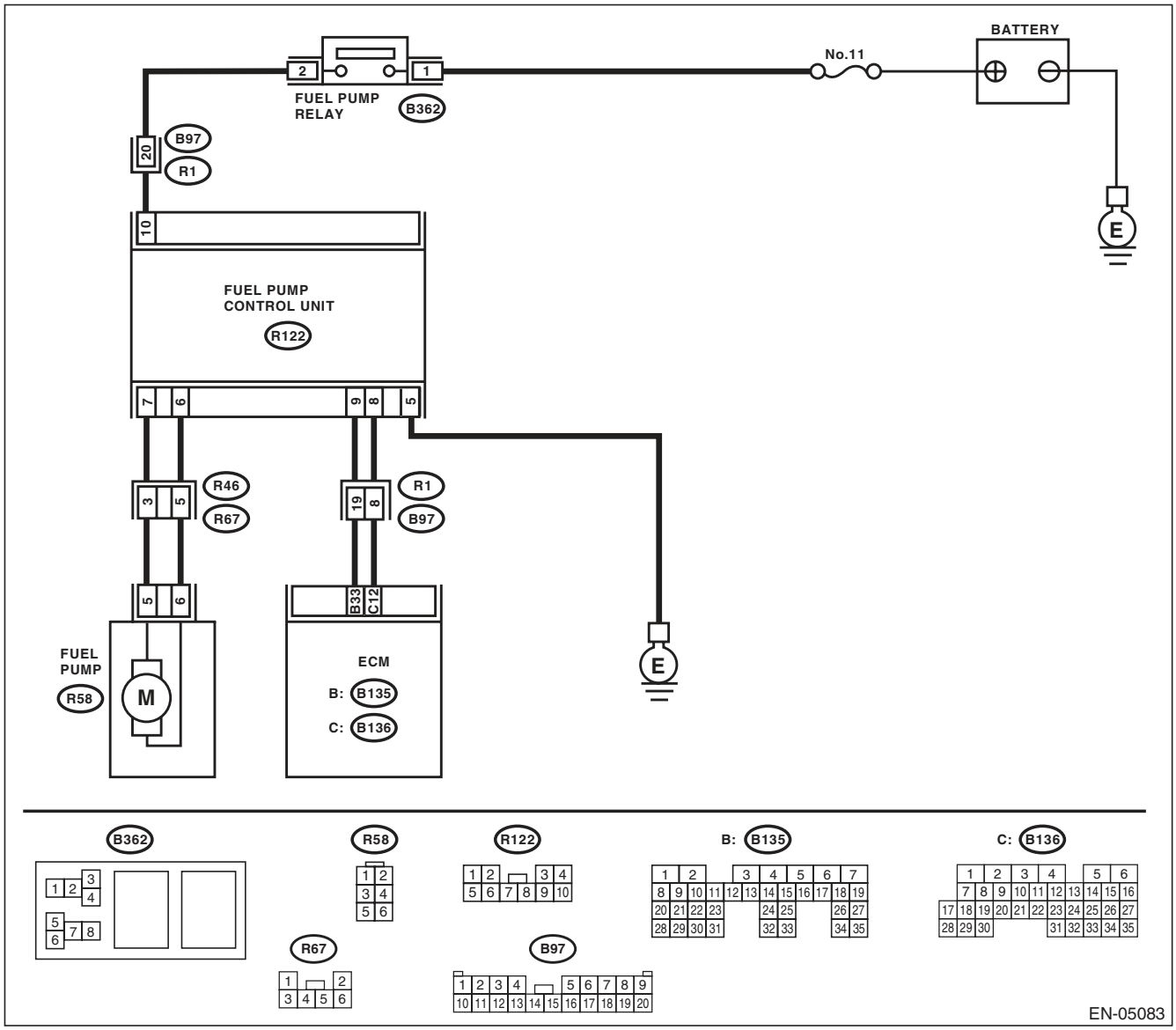

	Step	Check	Yes	No
1	**CHECK POWER SUPPLY CIRCUIT TO FUEL PUMP CONTROL UNIT.** 1) Turn the ignition switch to OFF. 2) Disconnect the connector from fuel pump control unit. 3) Turn the ignition switch to ON. 4) Measure the voltage between fuel pump control unit and chassis ground. ***Connector & terminal*** ***(R122) No. 10 (+) — Chassis ground (–):***	Is the voltage 10 V or more?	Go to step **2**.	Repair the power supply circuit. NOTE: In this case, repair the following item: • Open or ground short circuit of harness between fuel pump relay and fuel pump control unit • Poor contact of fuel pump control unit connector • Poor contact of fuel pump relay connector
2	**CHECK GROUND CIRCUIT OF FUEL PUMP CONTROL UNIT.** 1) Turn the ignition switch to OFF. 2) Measure the resistance of harness between fuel pump control unit and chassis ground. ***Connector & terminal*** ***(R122) No. 5 — Chassis ground:***	Is the resistance less than 5 Ω?	Go to step **3**.	Repair the harness and connector. NOTE: In this case, repair the following item: • Open circuit between fuel pump control unit and chassis ground • Poor contact of fuel pump control unit connector
3	**CHECK HARNESS BETWEEN FUEL PUMP CONTROL UNIT AND FUEL PUMP CONNECTOR.** 1) Disconnect the connector from fuel pump. 2) Measure the resistance of harness between fuel pump control unit and fuel pump connector. ***Connector & terminal*** ***(R122) No. 7 — (R58) No. 5:*** ***(R122) No. 6 — (R58) No. 6:***	Is the resistance less than 1 Ω?	Go to step **4**.	Repair the harness and connector. NOTE: In this case, repair the following item: • Open circuit in harness between fuel pump control unit and fuel pump • Poor contact of coupling connector
4	**CHECK HARNESS BETWEEN FUEL PUMP CONTROL UNIT AND FUEL PUMP CONNECTOR.** Measure the resistance between fuel pump control unit and chassis ground. ***Connector & terminal*** ***(R122) No. 7 — Chassis ground:*** ***(R122) No. 6 — Chassis ground:***	Is the resistance 1 MΩ or more?	Go to step **5**.	Repair the ground short circuit of harness between fuel pump control unit and fuel pump.
5	**CHECK HARNESS BETWEEN ECM AND FUEL PUMP CONTROL UNIT.** 1) Disconnect the connectors from ECM. 2) Measure the resistance of harness between ECM and fuel pump control unit. ***Connector & terminal*** ***(B135) No. 33 — (R122) No. 9:*** ***(B136) No. 12 — (R122) No. 8:***	Is the resistance less than 1 Ω?	Go to step **6**.	Repair the harness and connector. NOTE: In this case, repair the following item: • Open circuit between ECM and fuel pump control unit • Poor contact of coupling connector

Step		Check	Yes	No
6	**CHECK HARNESS BETWEEN ECM AND FUEL PUMP CONTROL UNIT.** Measure the resistance between fuel pump control unit and chassis ground. ***Connector & terminal*** ***(R122) No. 9 — Chassis ground:*** ***(R122) No. 8 — Chassis ground:***	Is the resistance 1 MΩ or more?	Go to step **7**.	Repair the ground short circuit of harness between ECM and fuel pump control unit.
7	**CHECK POOR CONTACT.** Check for poor contact of ECM and fuel pump control unit connector.	Is there poor contact in ECM or fuel pump control unit connector?	Repair the poor contact of ECM or fuel pump control unit connector.	Go to step **8**.
8	**CHECK EXPERIENCE OF RUNNING OUT OF FUEL.**	Has the vehicle experienced running out of fuel?	Finish the diagnosis. NOTE: DTC may be recorded as a result of fuel pump idling while running out of fuel.	Replace the fuel pump control unit. <Ref. to FU(H4DOTC)-56, Fuel Pump Control Unit.>

AP:DTC P0244 TURBO/SUPER CHARGER WASTEGATE SOLENOID “A” RANGE/PERFORMANCE

DTC DETECTING CONDITION:

- Immediately at fault recognition
- GENERAL DESCRIPTION <Ref. to GD(H4DOTC)-76, DTC P0244 TURBO/SUPER CHARGER WASTEGATE SOLENOID “A” RANGE/PERFORMANCE, Diagnostic Trouble Code (DTC) Detecting Criteria.>

TROUBLE SYMPTOM:

Poor driving performance

CAUTION:

After repair or replacement of faulty parts, perform Clear Memory Mode <Ref. to EN(H4DOTC)(diag)-52, OPERATION, Clear Memory Mode.>, and Inspection Mode <Ref. to EN(H4DOTC)(diag)-43, PROCEDURE, Inspection Mode.>.

WIRING DIAGRAM:

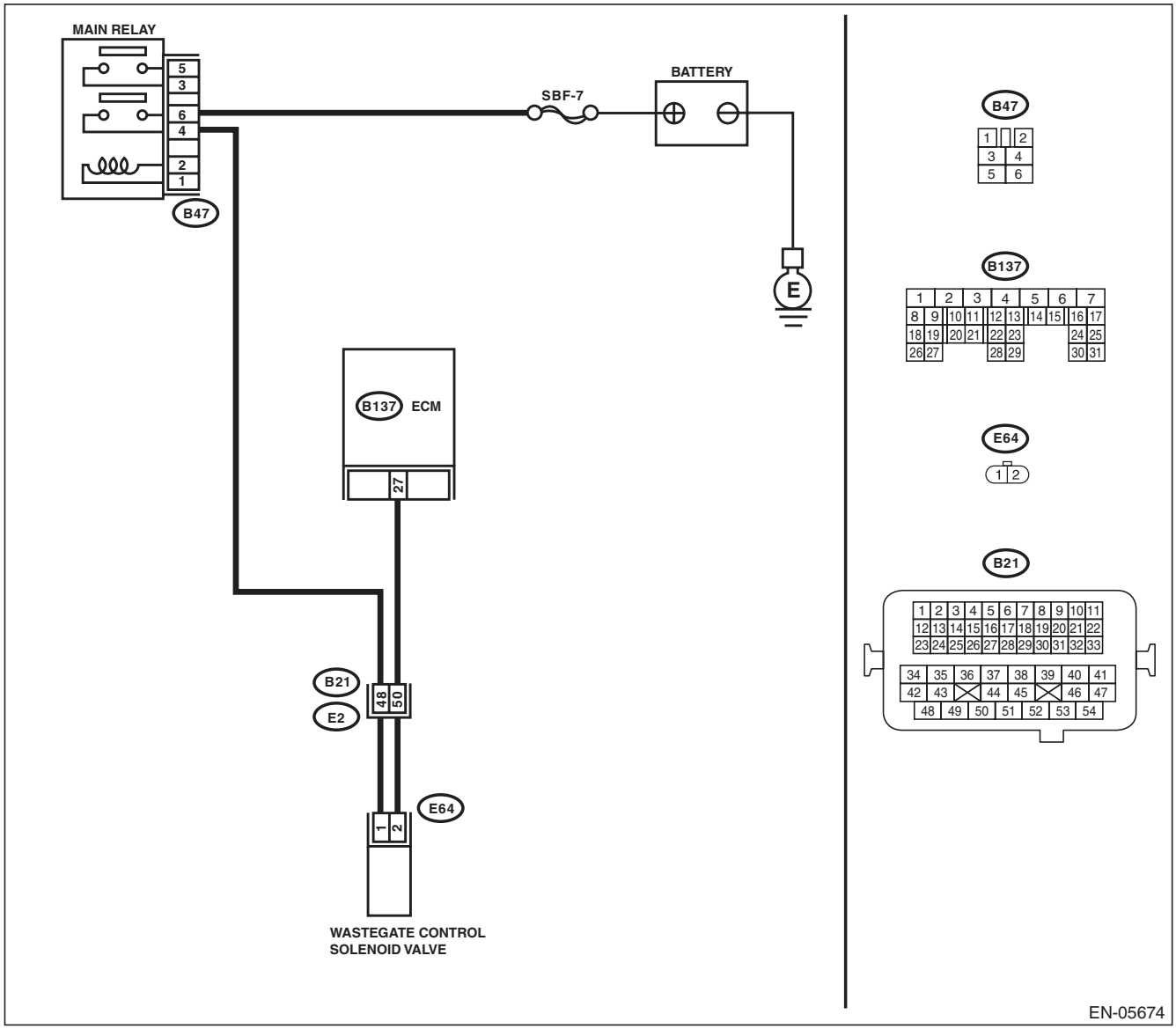

Step	Check	Yes	No
1 CHECK FOR ANY OTHER DTC ON DISPLAY.	Is any other DTC displayed?	Check the appropriate DTC using the “List of Diagnostic Trouble Code (DTC)”. <Ref. to EN(H4DOTC)(diag)-81, List of Diagnostic Trouble Code (DTC).>	Replace the wastegate control solenoid valve. <Ref. to FU(H4DOTC)-45, Wastegate Control Solenoid Valve.>

AQ:DTC P0245 TURBO/SUPER CHARGER WASTEGATE SOLENOID “A” LOW

DTC DETECTING CONDITION:

- Immediately at fault recognition
- GENERAL DESCRIPTION <Ref. to GD(H4DOTC)-78, DTC P0245 TURBO/SUPER CHARGER WASTEGATE SOLENOID “A” LOW, Diagnostic Trouble Code (DTC) Detecting Criteria.>

TROUBLE SYMPTOM:

Poor driving performance

CAUTION:

After repair or replacement of faulty parts, perform Clear Memory Mode <Ref. to EN(H4DOTC)(diag)-52, OPERATION, Clear Memory Mode.>, and Inspection Mode <Ref. to EN(H4DOTC)(diag)-43, PROCEDURE, Inspection Mode.>.

WIRING DIAGRAM:

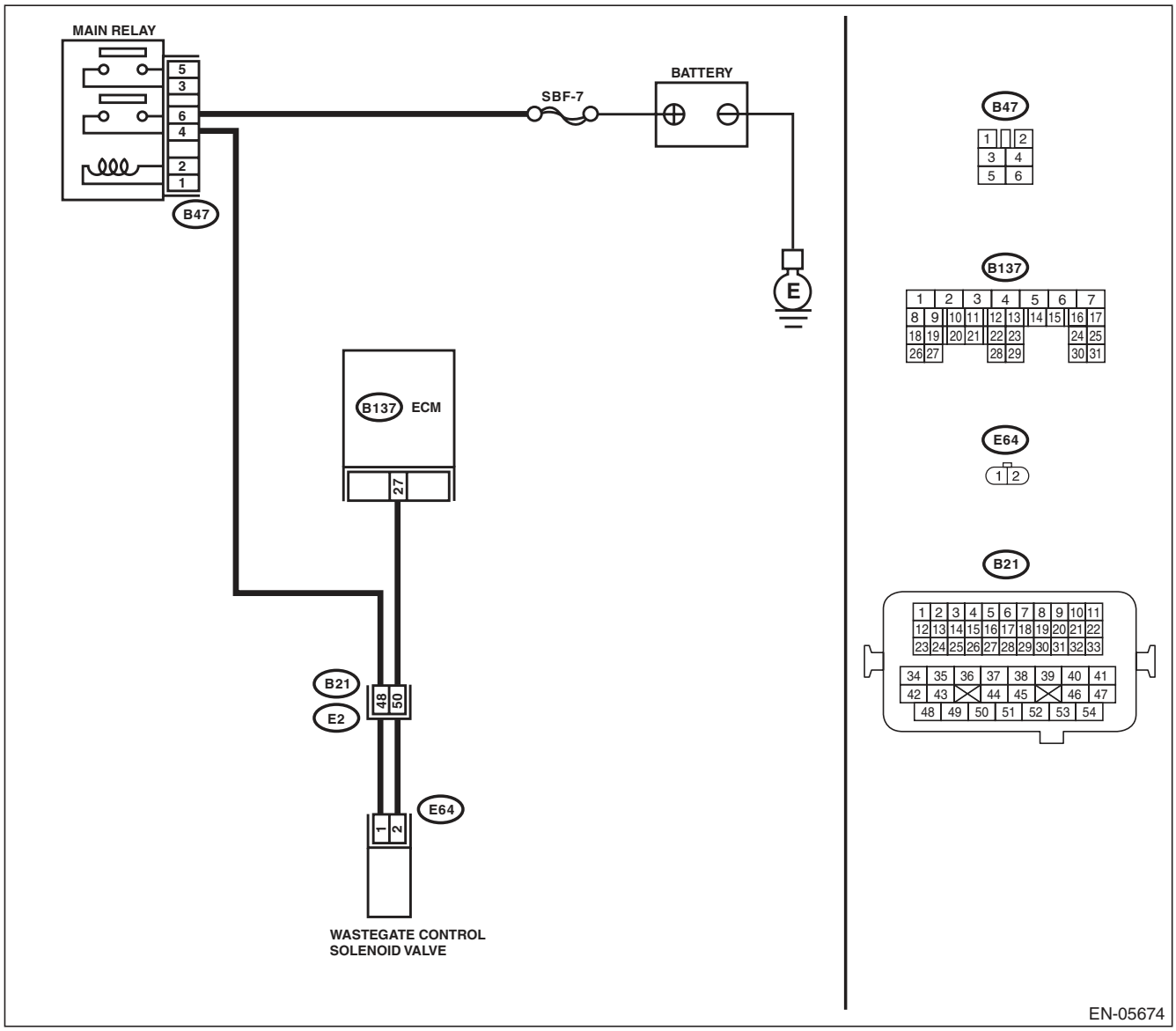

	Step	Check	Yes	No
1	**CHECK OUTPUT SIGNAL OF ECM.** 1) Turn the ignition switch to ON. 2) Measure the voltage between ECM and chassis ground. ***Connector & terminal*** ***(B137) No. 27 (+) — Chassis ground (–):***	Is the voltage 10 V or more?	Repair the poor contact of ECM connector.	Go to step **2**.
2	**CHECK HARNESS BETWEEN ECM AND WASTEGATE CONTROL SOLENOID VALVE.** 1) Turn the ignition switch to OFF. 2) Disconnect the connector from ECM and wastegate control solenoid valve. 3) Measure the resistance between wastegate control solenoid valve connector and engine ground. ***Connector & terminal*** ***(E64) No. 2 — Engine ground:***	Is the resistance 1 MΩ or more?	Go to step **3**.	Repair ground short circuit of harness between ECM and wastegate control solenoid valve connector.
3	**CHECK HARNESS BETWEEN ECM AND WASTEGATE CONTROL SOLENOID VALVE.** Measure the resistance of harness between ECM and wastegate control solenoid valve connector. ***Connector & terminal*** ***(B137) No. 27 — (E64) No. 2:***	Is the resistance less than 1 Ω?	Go to step **4**.	Repair the harness and connector. NOTE: In this case, repair the following item: • Open circuit of harness between ECM and wastegate control solenoid valve connector • Poor contact of coupling connector
4	**CHECK WASTEGATE CONTROL SOLENOID VALVE.** 1) Remove the wastegate control solenoid valve. 2) Measure the resistance between wastegate control solenoid valve terminals. ***Terminals*** ***No. 1 — No. 2:***	Is the resistance between 10 — 100 Ω?	Go to step **5**.	Replace the wastegate control solenoid valve. <Ref. to FU(H4DOTC)-45, Wastegate Control Solenoid Valve.>
5	**CHECK POWER SUPPLY TO WASTEGATE CONTROL SOLENOID VALVE.** 1) Turn the ignition switch to ON. 2) Measure the voltage between wastegate control solenoid valve and engine ground. ***Connector & terminal*** ***(E64) No. 1 (+) — Engine ground (–):***	Is the voltage 10 V or more?	Repair poor contact in wastegate control solenoid valve connector.	Repair the harness and connector. NOTE: In this case, repair the following item: • Open circuit of harness between main relay and wastegate control solenoid valve connector • Poor contact of coupling connector • Poor contact of main relay connector

AR:DTC P0246 TURBO/SUPER CHARGER WASTEGATE SOLENOID “A” HIGH

DTC DETECTING CONDITION:

- Immediately at fault recognition
- GENERAL DESCRIPTION <Ref. to GD(H4DOTC)-79, DTC P0246 TURBO/SUPER CHARGER WASTEGATE SOLENOID “A” HIGH, Diagnostic Trouble Code (DTC) Detecting Criteria.>

TROUBLE SYMPTOM:

Poor driving performance

CAUTION:

After repair or replacement of faulty parts, perform Clear Memory Mode <Ref. to EN(H4DOTC)(diag)-52, OPERATION, Clear Memory Mode.>, and Inspection Mode <Ref. to EN(H4DOTC)(diag)-43, PROCEDURE, Inspection Mode.>.

WIRING DIAGRAM:

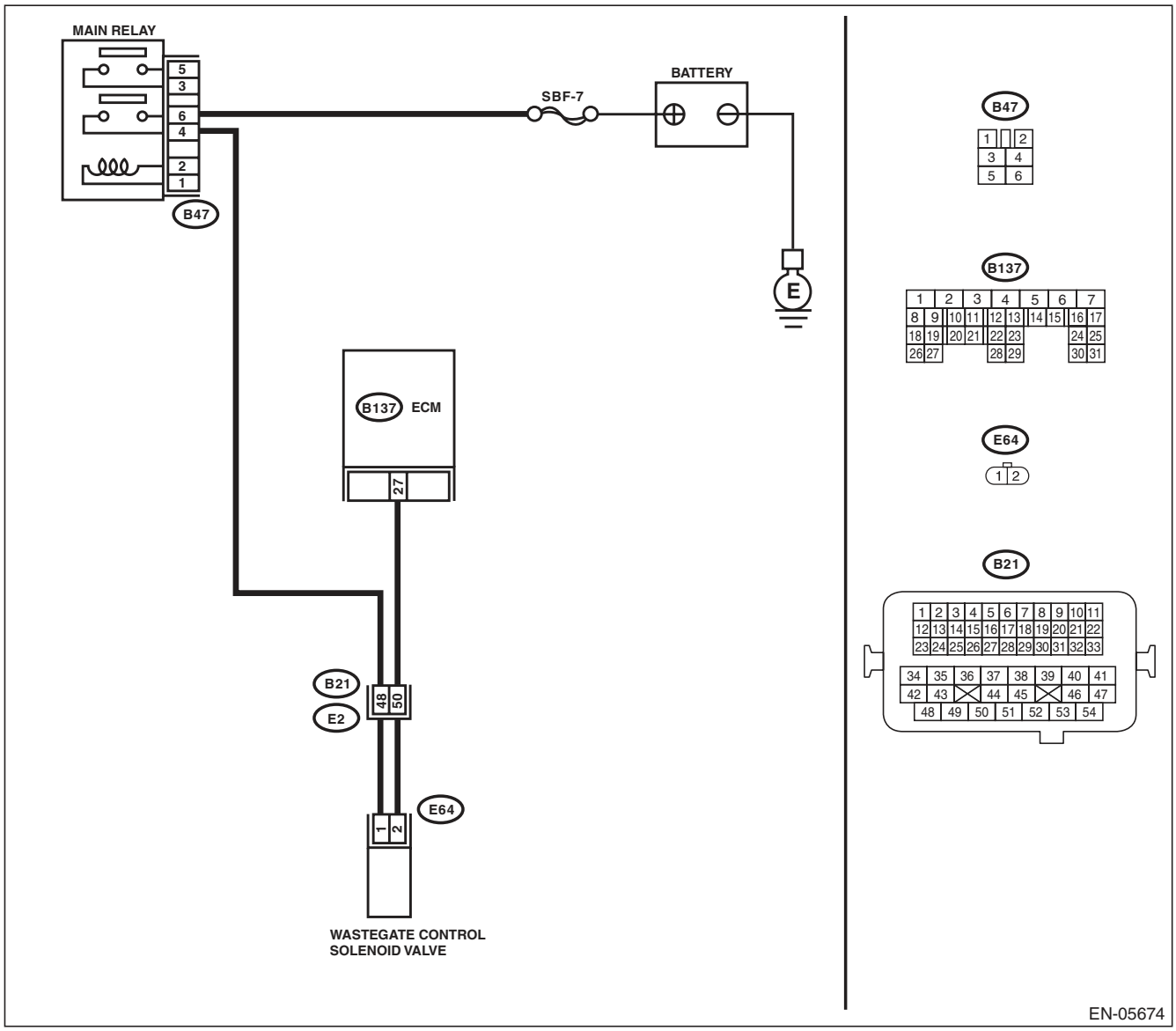

Step		Check	Yes	No
1	**CHECK HARNESS BETWEEN ECM AND WASTEGATE CONTROL SOLENOID VALVE.** 1) Turn the ignition switch to OFF. 2) Disconnect the connector from ECM and wastegate control solenoid valve. 3) Turn the ignition switch to ON. 4) Measure the voltage between ECM and chassis ground. ***Connector & terminal*** ***(B137) No. 27 (+) — Chassis ground (–):***	Is the voltage 10 V or more?	Repair short circuit of the harness to power supply between ECM and wastegate control solenoid valve connector.	Go to step **2**.
2	**CHECK WASTEGATE CONTROL SOLENOID VALVE.** 1) Turn the ignition switch to OFF. 2) Measure the resistance between wastegate control solenoid valve terminals. ***Terminals*** ***No. 1 — No. 2:***	Is the resistance less than 1 Ω?	Replace the wastegate control solenoid valve. <Ref. to FU(H4DOTC)-45, Wastegate Control Solenoid Valve.>	Repair the poor contact of ECM connector.

AS:DTC P0301 CYLINDER 1 MISFIRE DETECTED

NOTE:
For the diagnostic procedure, refer to DTC P0304. <Ref. to EN(H4DOTC)(diag)-171, DTC P0304 CYLINDER 4 MISFIRE DETECTED, Diagnostic Procedure with Diagnostic Trouble Code (DTC).>

AT:DTC P0302 CYLINDER 2 MISFIRE DETECTED

NOTE:
For the diagnostic procedure, refer to DTC P0304. <Ref. to EN(H4DOTC)(diag)-171, DTC P0304 CYLINDER 4 MISFIRE DETECTED, Diagnostic Procedure with Diagnostic Trouble Code (DTC).>

AU:DTC P0303 CYLINDER 3 MISFIRE DETECTED

NOTE:
For the diagnostic procedure, refer to DTC P0304. <Ref. to EN(H4DOTC)(diag)-171, DTC P0304 CYLINDER 4 MISFIRE DETECTED, Diagnostic Procedure with Diagnostic Trouble Code (DTC).>

AV:DTC P0304 CYLINDER 4 MISFIRE DETECTED

DTC DETECTING CONDITION:

- Two consecutive driving cycles with fault
- Immediately at fault recognition (A misfire which could damage catalyst occurs.)
- GENERAL DESCRIPTION <Ref. to GD(H4DOTC)-85, DTC P0304 CYLINDER 4 MISFIRE DETECTED, Diagnostic Trouble Code (DTC) Detecting Criteria.>

TROUBLE SYMPTOM:

- Engine stalls.
- Improper idling
- Rough driving

CAUTION:

After repair or replacement of faulty parts, perform Clear Memory Mode <Ref. to EN(H4DOTC)(diag)-52, OPERATION, Clear Memory Mode.>, and Inspection Mode <Ref. to EN(H4DOTC)(diag)-43, PROCEDURE, Inspection Mode.>.

WIRING DIAGRAM:

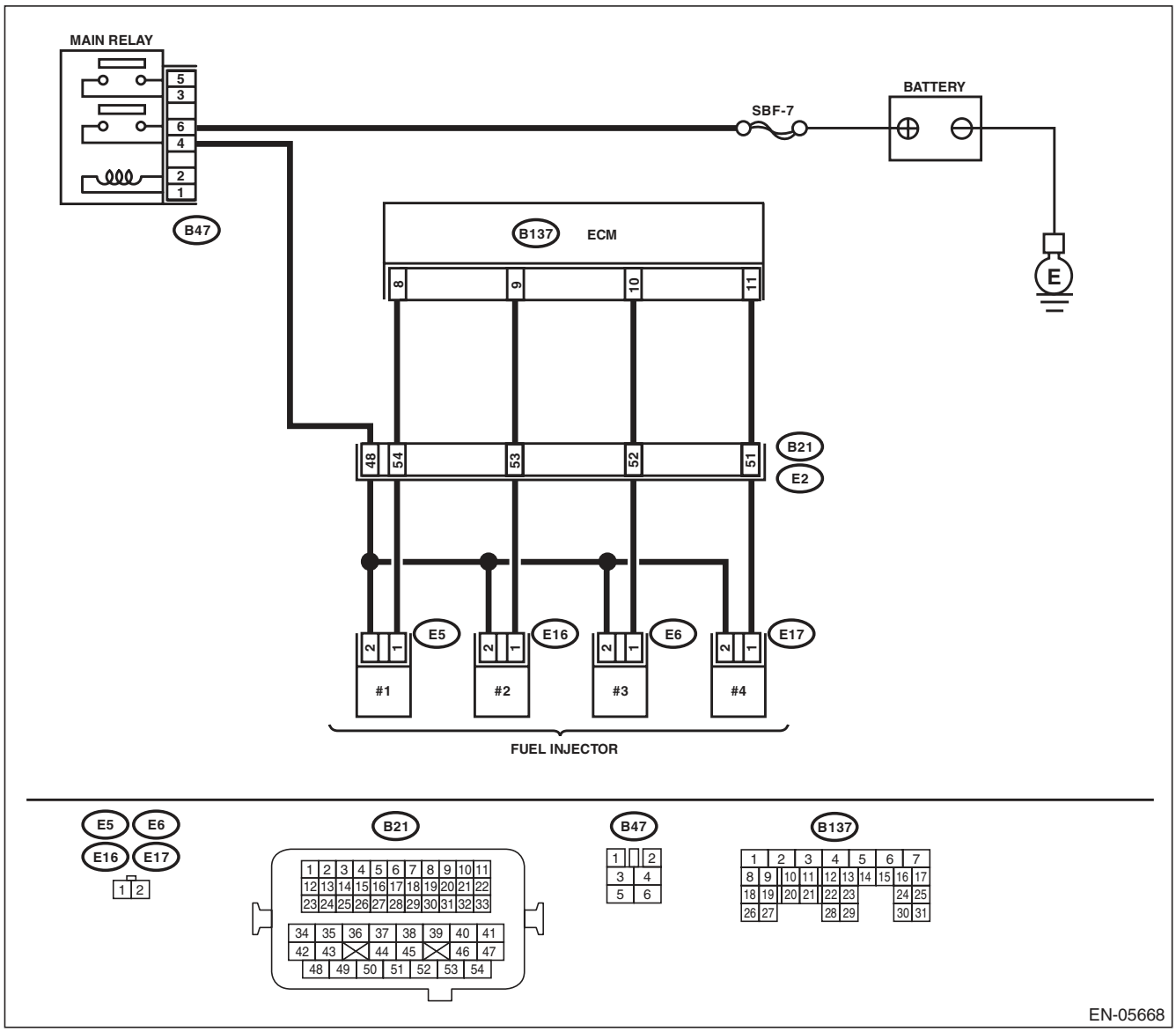

	Step	Check	Yes	No
1	**CHECK OUTPUT SIGNAL OF ECM.** 1) Turn the ignition switch to ON. 2) Measure the voltage between ECM and chassis ground on faulty cylinders. ***Connector & terminal*** ***#1 (B137) No. 8 (+) — Chassis ground (–):*** ***#2 (B137) No. 9 (+) — Chassis ground (–):*** ***#3 (B137) No. 10 (+) — Chassis ground (–):*** ***#4 (B137) No. 11 (+) — Chassis ground (–):***	Is the voltage 10 V or more?	Go to step **6**.	Go to step **2**.
2	**CHECK HARNESS BETWEEN ECM AND FUEL INJECTOR.** 1) Turn the ignition switch to OFF. 2) Disconnect the connector from fuel injector on faulty cylinders. 3) Measure the resistance between fuel injector connector and engine ground on faulty cylinders. ***Connector & terminal*** ***#1 (E5) No. 1 — Engine ground:*** ***#2 (E16) No. 1 — Engine ground:*** ***#3 (E6) No. 1 — Engine ground:*** ***#4 (E17) No. 1 — Engine ground:***	Is the resistance 1 MΩ or more?	Go to step **3**.	Repair the ground short circuit of harness between ECM and fuel injector.
3	**CHECK HARNESS BETWEEN ECM AND FUEL INJECTOR.** Measure the resistance of harness between ECM and fuel injector on faulty cylinders. ***Connector & terminal*** ***#1 (B137) No. 8 — (E5) No. 1:*** ***#2 (B137) No. 9 — (E16) No. 1:*** ***#3 (B137) No. 10 — (E6) No. 1:*** ***#4 (B137) No. 11 — (E17) No. 1:***	Is the resistance less than 1 Ω?	Go to step **4**.	Repair the harness and connector. NOTE: In this case, repair the following item: • Open circuit of harness between ECM and fuel injector connector • Poor contact of coupling connector
4	**CHECK FUEL INJECTOR.** Measure the resistance between fuel injector terminals on faulty cylinder. ***Terminals*** ***No. 1 — No. 2:***	Is the resistance between 5 — 20 Ω?	Go to step **5**.	Replace the faulty fuel injector. <Ref. to FU(H4DOTC)-38, Fuel Injector.>
5	**CHECK POWER SUPPLY LINE.** 1) Turn the ignition switch to ON. 2) Measure the voltage between fuel injector and engine ground on faulty cylinders. ***Connector & terminal*** ***#1 (E5) No. 2 (+) — Engine ground (–):*** ***#2 (E16) No. 2 (+) — Engine ground (–):*** ***#3 (E6) No. 2 (+) — Engine ground (–):*** ***#4 (E17) No. 2 (+) — Engine ground (–):***	Is the voltage 10 V or more?	Repair the poor contact of all connectors in fuel injector circuit.	Repair the harness and connector. NOTE: In this case, repair the following item: • Open circuit in harness between the main relay and fuel injector connector on faulty cylinders • Poor contact of coupling connector • Poor contact of main relay connector

	Step	Check	Yes	No
6	**CHECK HARNESS BETWEEN ECM AND FUEL INJECTOR.** 1) Turn the ignition switch to OFF. 2) Disconnect the connector from fuel injector on faulty cylinders. 3) Turn the ignition switch to ON. 4) Measure the voltage between ECM and chassis ground on faulty cylinders. ***Connector & terminal*** ***#1 (B137) No. 8 (+) — Chassis ground (–):*** ***#2 (B137) No. 9 (+) — Chassis ground (–):*** ***#3 (B137) No. 10 (+) — Chassis ground (–):*** ***#4 (B137) No. 11 (+) — Chassis ground (–):***	Is the voltage 10 V or more?	Repair the short circuit to power in the harness between the ECM and fuel injector.	Go to step **7**.
7	**CHECK FUEL INJECTOR.** 1) Turn the ignition switch to OFF. 2) Measure the resistance between fuel injector terminals on faulty cylinder. ***Terminals*** ***No. 1 — No. 2:***	Is the resistance less than 1 Ω?	Replace the faulty fuel injector. <Ref. to FU(H4DOTC)-38, Fuel Injector.>	Go to step **8**.
8	**CHECK INSTALLATION OF CAMSHAFT POSITION SENSOR/CRANKSHAFT POSITION SENSOR.**	Is the camshaft position sensor or crankshaft position sensor loosely installed?	Tighten the camshaft position sensor or crankshaft position sensor.	Go to step **9**.
9	**CHECK CRANK SPROCKET.** Remove the timing belt cover. <Ref. to ME(H4DOTC)-46, REMOVAL, Timing Belt Cover.>	Is the crank sprocket rusted or does it have broken teeth?	Replace the crank sprocket. <Ref. to ME(H4DOTC)-57, Crank Sprocket.>	Go to step **10**.
10	**CHECK INSTALLATION CONDITION OF TIMING BELT.** Turn the crankshaft using ST, and align the alignment mark on crank sprocket with alignment mark on cylinder block. ST 499987500 CRANKSHAFT SOCKET	Is the timing belt dislocated from its proper position?	Repair the installation condition of timing belt. <Ref. to ME(H4DOTC)-47, Timing Belt.>	Go to step **11**.
11	**CHECK FUEL LEVEL.**	Is the fuel meter indication higher than the “Lower” level?	Go to step **12**.	Refill the fuel so that fuel meter indication is higher than the “Lower” level. After replenishing fuel, Go to step **12**.
12	**CHECK STATUS OF MALFUNCTION INDICATOR LIGHT.** 1) Clear the memory using the Subaru Select Monitor or general scan tool. <Ref. to EN(H4DOTC)(diag)-52, Clear Memory Mode.> 2) Start the engine, and drive the vehicle 10 minutes or more.	Does the malfunction indicator light illuminate or blink?	Go to step **14**.	Go to step **13**.

Step		Check	Yes	No
13	**CHECK CAUSE OF MISFIRE.**	Was the cause of misfire identified when the engine is running?	Finish diagnostics operation, if the engine has no abnormality.	Repair the poor contact of connector. NOTE: In this case, repair the following item: • Poor contact of ignition coil connector • Poor contact in fuel injector connector on faulty cylinders • Poor contact in ECM connector • Poor contact of coupling connector
14	**CHECK AIR INTAKE SYSTEM.**	Is there any fault in air intake system?	Repair the air intake system. NOTE: Check the following items. • Are there air leaks or air suction caused by loose or dislocated nuts and bolts? • Are there cracks or any disconnection of hoses?	Go to step **15**.
15	**CHECK MISFIRE SYMPTOM.** 1) Turn the ignition switch to ON. 2) Read the DTC. NOTE: • Subaru Select Monitor For detailed operation procedure, refer to “READ CURRENT DATA FOR ENGINE”. <Ref. to EN(H4DOTC)(diag)-34, Subaru Select Monitor.> • General scan tool For detailed operation procedures, refer to the general scan tool operation manual.	Does the Subaru Select Monitor or general scan tool indicate only one DTC?	Go to step **20**.	Go to step **16**.
16	**CHECK DTC.**	Are DTC P0301 and P0302 displayed on the Subaru Select Monitor or general scan tool?	Go to step **21**.	Go to step **17**.
17	**CHECK DTC.**	Are DTC P0303 and P0304 displayed on the Subaru Select Monitor or general scan tool?	Go to step **22**.	Go to step **18**.
18	**CHECK DTC.**	Are DTC P0301 and P0303 displayed on the Subaru Select Monitor or general scan tool?	Go to step **23**.	Go to step **19**.
19	**CHECK DTC.**	Are DTC P0302 and P0304 displayed on the Subaru Select Monitor or general scan tool?	Go to step **24**.	Go to step **25**.

Step		Check	Yes	No
20	**ONLY ONE CYLINDER.**	Is there any fault in the cylinder?	Repair or replace faulty parts. NOTE: Check the following items. • Spark plug • Spark plug cord • Fuel injector • Compression ratio	Go to DTC P0171. <Ref. to EN(H4DOTC)(diag)-149, DTC P0171 SYSTEM TOO LEAN (BANK 1), Diagnostic Procedure with Diagnostic Trouble Code (DTC).>
21	**GROUP OF #1 AND #2 CYLINDERS.**	Are there any faults in #1 and #2 cylinders?	Repair or replace faulty parts. NOTE: • Check the following items. • Spark plug • Fuel injector • Ignition coil • Compression ratio • If any fault is not found, check the "IGNITION CONTROL SYSTEM" of #1 and #2 cylinders side. <Ref. to EN(H4DOTC)(diag)-73, IGNITION CONTROL SYSTEM, Diagnostics for Engine Starting Failure.>	Go to DTC P0171. <Ref. to EN(H4DOTC)(diag)-149, DTC P0171 SYSTEM TOO LEAN (BANK 1), Diagnostic Procedure with Diagnostic Trouble Code (DTC).>
22	**GROUP OF #3 AND #4 CYLINDERS.**	Are there any faults in #3 and #4 cylinders?	Repair or replace faulty parts. NOTE: • Check the following items. • Spark plug • Fuel injector • Ignition coil • Compression ratio • If any fault is not found, check the "IGNITION CONTROL SYSTEM" of #3 and #4 cylinders side. <Ref. to EN(H4DOTC)(diag)-73, IGNITION CONTROL SYSTEM, Diagnostics for Engine Starting Failure.>	Go to DTC P0171. <Ref. to EN(H4DOTC)(diag)-149, DTC P0171 SYSTEM TOO LEAN (BANK 1), Diagnostic Procedure with Diagnostic Trouble Code (DTC).>

Step		Check	Yes	No
23	**GROUP OF #1 AND #3 CYLINDERS.**	Are there any faults in #1 and #3 cylinders?	Repair or replace faulty parts. NOTE: Check the following items. • Spark plug • Fuel injector • Compression ratio • Skipping timing belt teeth	Go to DTC P0171. <Ref. to EN(H4DOTC)(diag)-149, DTC P0171 SYSTEM TOO LEAN (BANK 1), Diagnostic Procedure with Diagnostic Trouble Code (DTC).>
24	**GROUP OF #2 AND #4 CYLINDERS.**	Are there any faults in #2 and #4 cylinders?	Repair or replace faulty parts. NOTE: Check the following items. • Spark plug • Fuel injector • Compression ratio • Skipping timing belt teeth	Go to DTC P0171. <Ref. to EN(H4DOTC)(diag)-149, DTC P0171 SYSTEM TOO LEAN (BANK 1), Diagnostic Procedure with Diagnostic Trouble Code (DTC).>
25	**CYLINDER AT RANDOM.**	Is the engine idle rough?	Go to DTC P0171. <Ref. to EN(H4DOTC)(diag)-149, DTC P0171 SYSTEM TOO LEAN (BANK 1), Diagnostic Procedure with Diagnostic Trouble Code (DTC).>	Repair or replace faulty parts. NOTE: Check the following items. • Spark plug • Fuel injector • Compression ratio

AW:DTC P0327 KNOCK SENSOR 1 CIRCUIT LOW (BANK 1 OR SINGLE SENSOR)

DTC DETECTING CONDITION:

- Immediately at fault recognition
- GENERAL DESCRIPTION <Ref. to GD(H4DOTC)-86, DTC P0327 KNOCK SENSOR 1 CIRCUIT LOW (BANK 1 OR SINGLE SENSOR), Diagnostic Trouble Code (DTC) Detecting Criteria.>

TROUBLE SYMPTOM:

- Poor driving performance
- Knocking occurs.

CAUTION:

After repair or replacement of faulty parts, perform Clear Memory Mode <Ref. to EN(H4DOTC)(diag)-52, OPERATION, Clear Memory Mode.>, and Inspection Mode <Ref. to EN(H4DOTC)(diag)-43, PROCEDURE, Inspection Mode.>.

WIRING DIAGRAM:

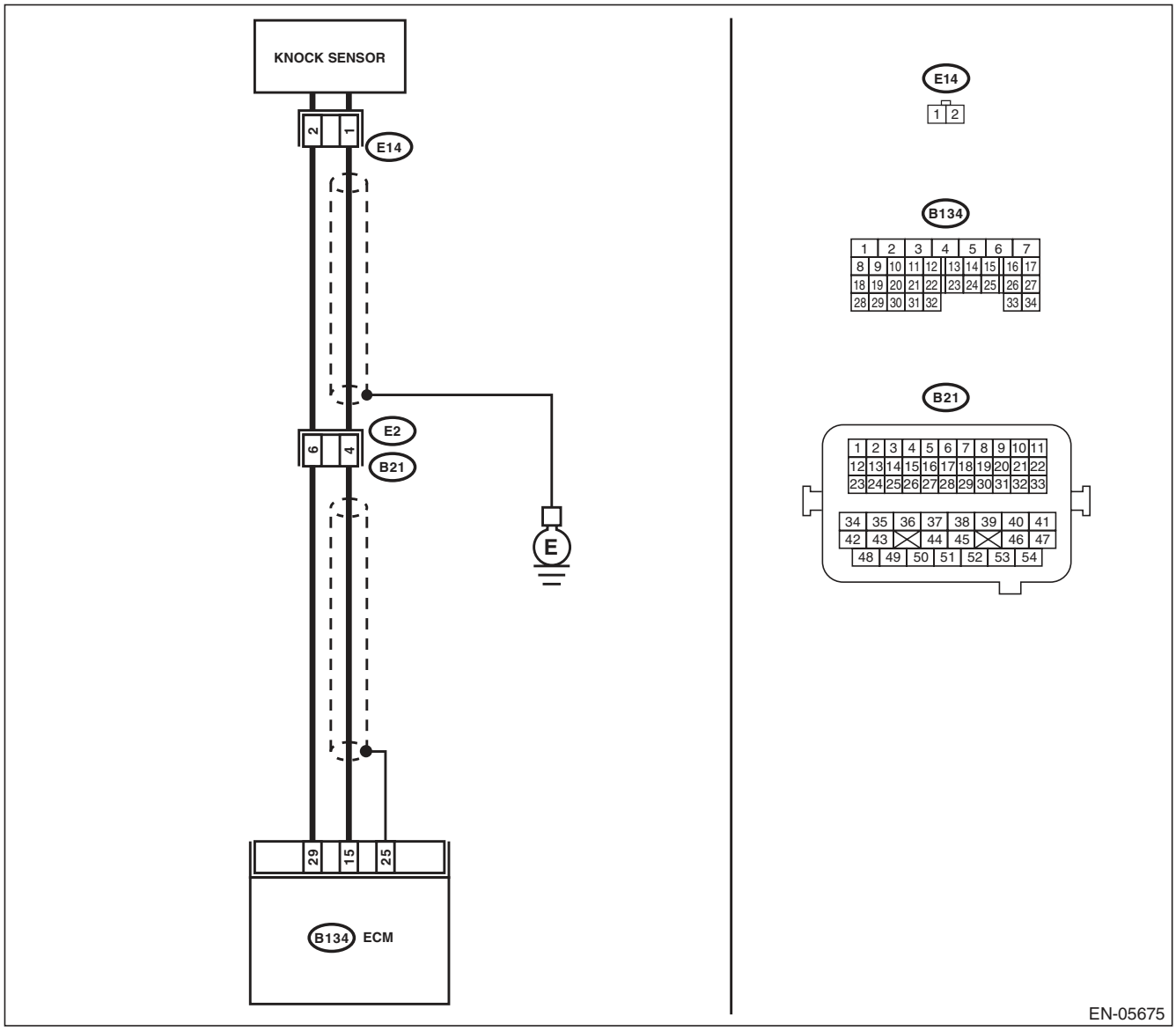

Step		Check	Yes	No
1	**CHECK HARNESS BETWEEN ECM AND KNOCK SENSOR.** 1) Turn the ignition switch to OFF. 2) Disconnect the connectors from ECM. 3) Measure the resistance between ECM connectors. ***Connector & terminal*** ***(B134) No. 15 — (B134) No. 29:***	Is the resistance 600 kΩ or more?	Go to step **2**.	Repair the poor contact of ECM connector.
2	**CHECK KNOCK SENSOR.** 1) Disconnect the connector from knock sensor. 2) Measure the resistance between knock sensor terminals. ***Terminals*** ***No. 1 — No. 2:***	Is the resistance 600 kΩ or more?	Replace the knock sensor. <Ref. to FU(H4DOTC)-34, Knock Sensor.>	Repair the harness and connector. NOTE: In this case, repair the following item: • Open circuit of harness between ECM and knock sensor • Poor contact of the knock sensor connector • Poor contact of coupling connector

AX:DTC P0328 KNOCK SENSOR 1 CIRCUIT HIGH (BANK 1 OR SINGLE SENSOR)

DTC DETECTING CONDITION:

- Immediately at fault recognition
- GENERAL DESCRIPTION <Ref. to GD(H4DOTC)-87, DTC P0328 KNOCK SENSOR 1 CIRCUIT HIGH (BANK 1 OR SINGLE SENSOR), Diagnostic Trouble Code (DTC) Detecting Criteria.>

TROUBLE SYMPTOM:

- Poor driving performance
- Knocking occurs.

CAUTION:

After repair or replacement of faulty parts, perform Clear Memory Mode <Ref. to EN(H4DOTC)(diag)-52, OPERATION, Clear Memory Mode.>, and Inspection Mode <Ref. to EN(H4DOTC)(diag)-43, PROCEDURE, Inspection Mode.>.

WIRING DIAGRAM:

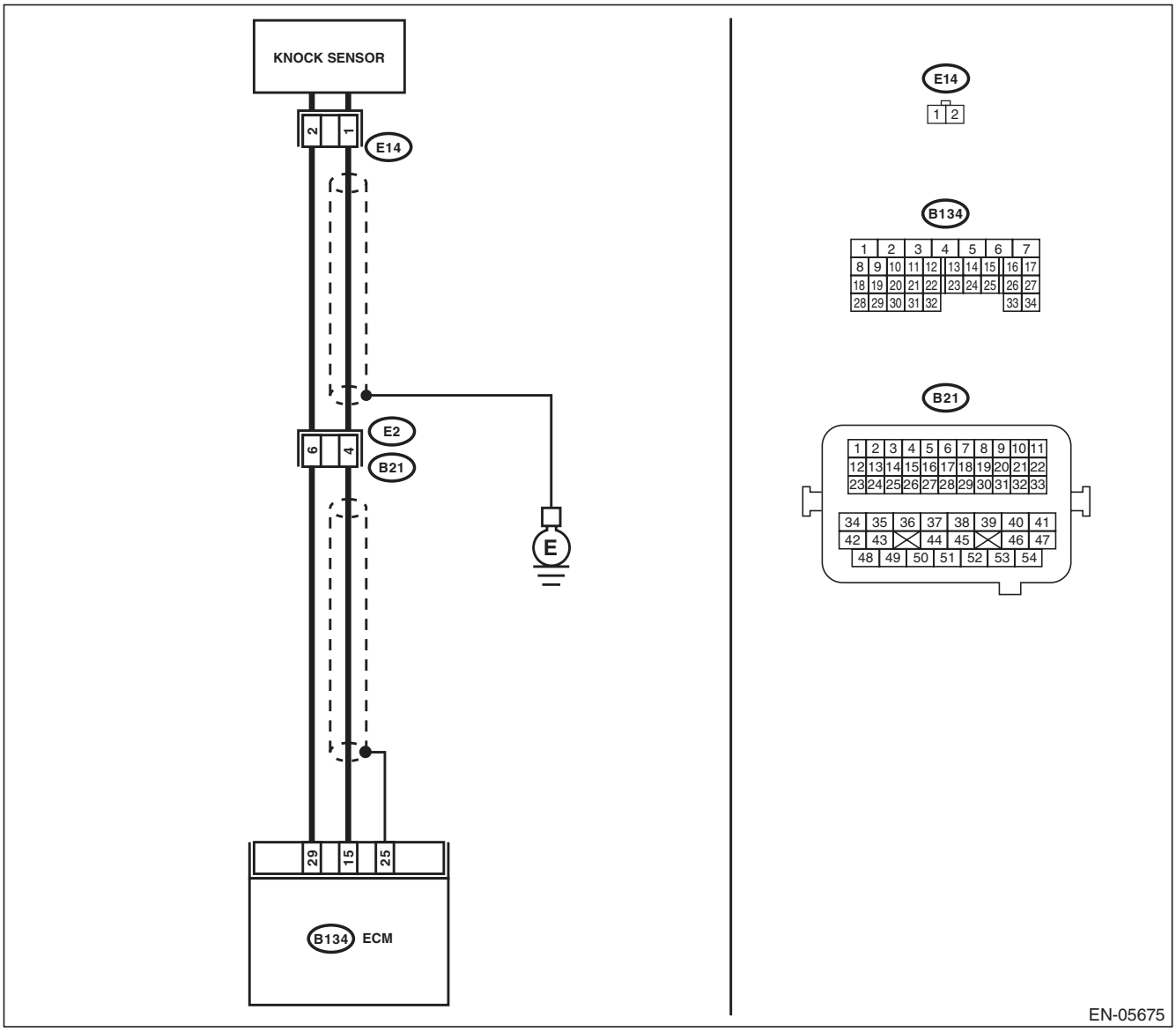

	Step	Check	Yes	No
1	**CHECK HARNESS BETWEEN ECM AND KNOCK SENSOR.** 1) Turn the ignition switch to OFF. 2) Disconnect the connectors from ECM. 3) Measure the resistance between ECM connectors. ***Connector & terminal*** ***(B134) No. 15 — (B134) No. 29:***	Is the resistance less than 500 kΩ?	Go to step **2**.	Go to step **3**.
2	**CHECK KNOCK SENSOR.** 1) Disconnect the connector from knock sensor. 2) Measure the resistance between knock sensor connectors. ***Terminals*** ***No. 1 — No. 2:***	Is the resistance less than 500 kΩ?	Replace the knock sensor. <Ref. to FU(H4DOTC)-34, Knock Sensor.>	Repair the short circuit to ground in harness between ECM and knock sensor connector. NOTE: The harness between both connectors are shielded. Remove the shield and repair the short circuit of harness.
3	**CHECK INPUT SIGNAL OF ECM.** 1) Connect the ECM. 2) Turn the ignition switch to ON. 3) Measure the voltage between ECM and chassis ground. ***Connector & terminal*** ***(B134) No. 15 (+) — Chassis ground (–):***	Is the voltage 2 V or more?	Even if DTC is detected, the circuit has returned to a normal condition at this time. Reproduce the failure, and then perform the diagnosis again. NOTE: In this case, temporary poor contact of connector may be the cause.	Repair the poor contact of ECM connector.

AY:DTC P0335 CRANKSHAFT POSITION SENSOR “A” CIRCUIT

DTC DETECTING CONDITION:

- Immediately at fault recognition
- GENERAL DESCRIPTION <Ref. to GD(H4DOTC)-88, DTC P0335 CRANKSHAFT POSITION SENSOR “A” CIRCUIT, Diagnostic Trouble Code (DTC) Detecting Criteria.>

TROUBLE SYMPTOM:

- Engine stalls.
- Failure of engine to start

CAUTION:

After repair or replacement of faulty parts, perform Clear Memory Mode <Ref. to EN(H4DOTC)(diag)-52, OPERATION, Clear Memory Mode.>, and Inspection Mode <Ref. to EN(H4DOTC)(diag)-43, PROCEDURE, Inspection Mode.>.

WIRING DIAGRAM:

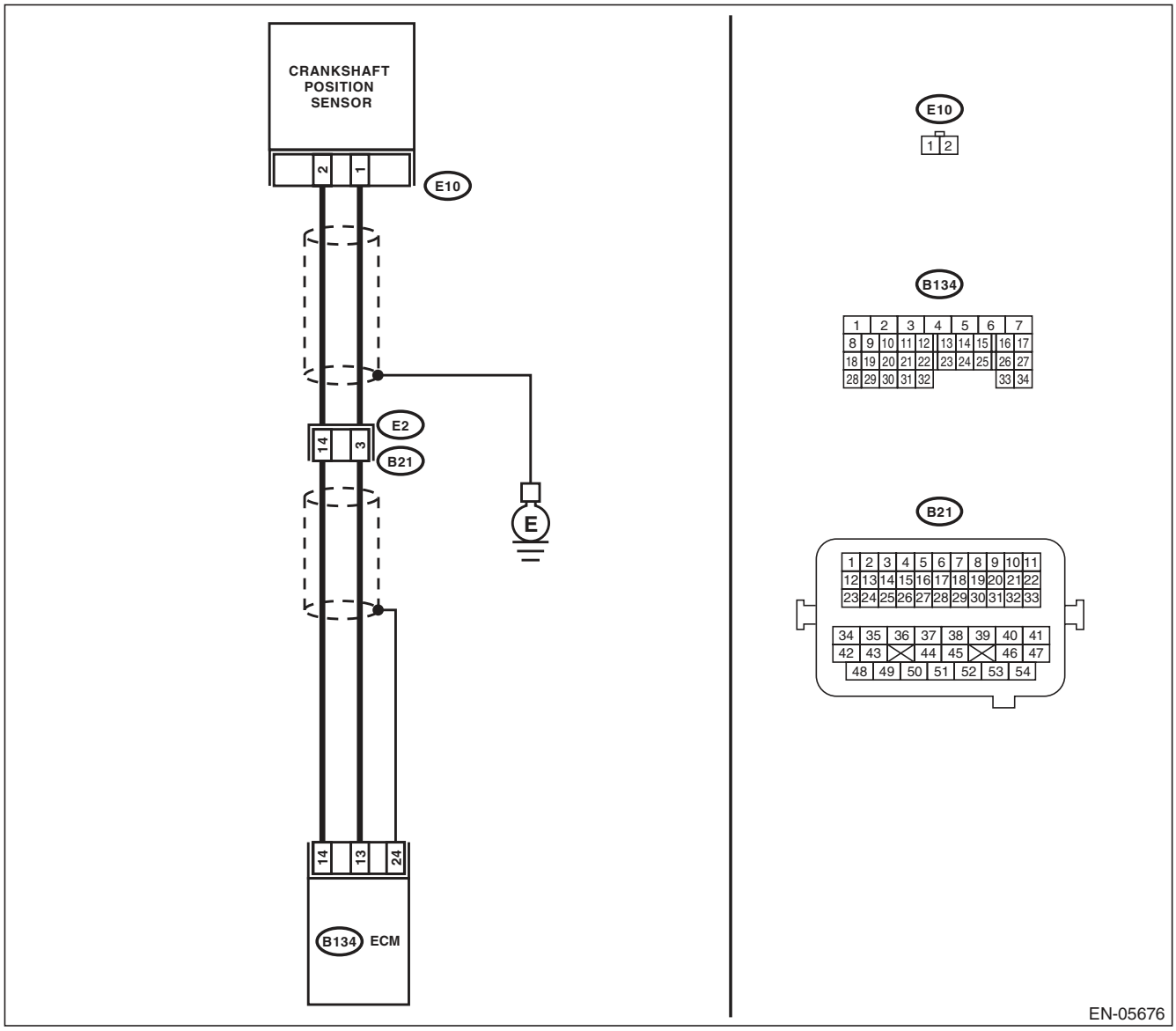

Step		Check	Yes	No
1	**CHECK CONDITION OF CRANKSHAFT POSITION SENSOR.**	Is the crankshaft position sensor installation bolt tightened securely?	Go to step **2**.	Tighten the crankshaft position sensor installation bolt securely.
2	**CHECK CRANKSHAFT POSITION SENSOR.** 1) Turn the ignition switch to OFF. 2) Remove the crankshaft position sensor. 3) Measure the resistance between connector terminals of crankshaft position sensor. ***Terminals*** ***No. 1 — No. 2:***	Is the resistance between 1 and 4 kΩ?	Go to step **3**.	Replace the crankshaft position sensor. <Ref. to FU(H4DOTC)-32, Crankshaft Position Sensor.>
3	**CHECK HARNESS BETWEEN ECM AND CRANK SHAFT POSITION SENSOR.** 1) Disconnect the connectors from ECM. 2) Measure the resistance of harness between ECM and crankshaft position sensor connector. ***Connector & terminal*** ***(B134) No. 13 — (E10) No. 1:*** ***(B134) No. 14 — (E10) No. 2:***	Is the resistance less than 1 Ω?	Repair the poor contact of ECM and crankshaft position sensor connector.	Repair the harness and connector. NOTE: In this case, repair the following item: • Open circuit in harness between ECM and crankshaft position sensor connector • Poor contact of coupling connector

AZ:DTC P0336 CRANKSHAFT POSITION SENSOR “A” CIRCUIT RANGE/ PERFORMANCE

DTC DETECTING CONDITION:

- Two consecutive driving cycles with fault
- GENERAL DESCRIPTION <Ref. to GD(H4DOTC)-90, DTC P0336 CRANKSHAFT POSITION SENSOR “A” CIRCUIT RANGE/PERFORMANCE, Diagnostic Trouble Code (DTC) Detecting Criteria.>

TROUBLE SYMPTOM:

- Engine stalls.
- Failure of engine to start

CAUTION:

After repair or replacement of faulty parts, perform Clear Memory Mode <Ref. to EN(H4DOTC)(diag)-52, OPERATION, Clear Memory Mode.>, and Inspection Mode <Ref. to EN(H4DOTC)(diag)-43, PROCEDURE, Inspection Mode.>.

WIRING DIAGRAM:

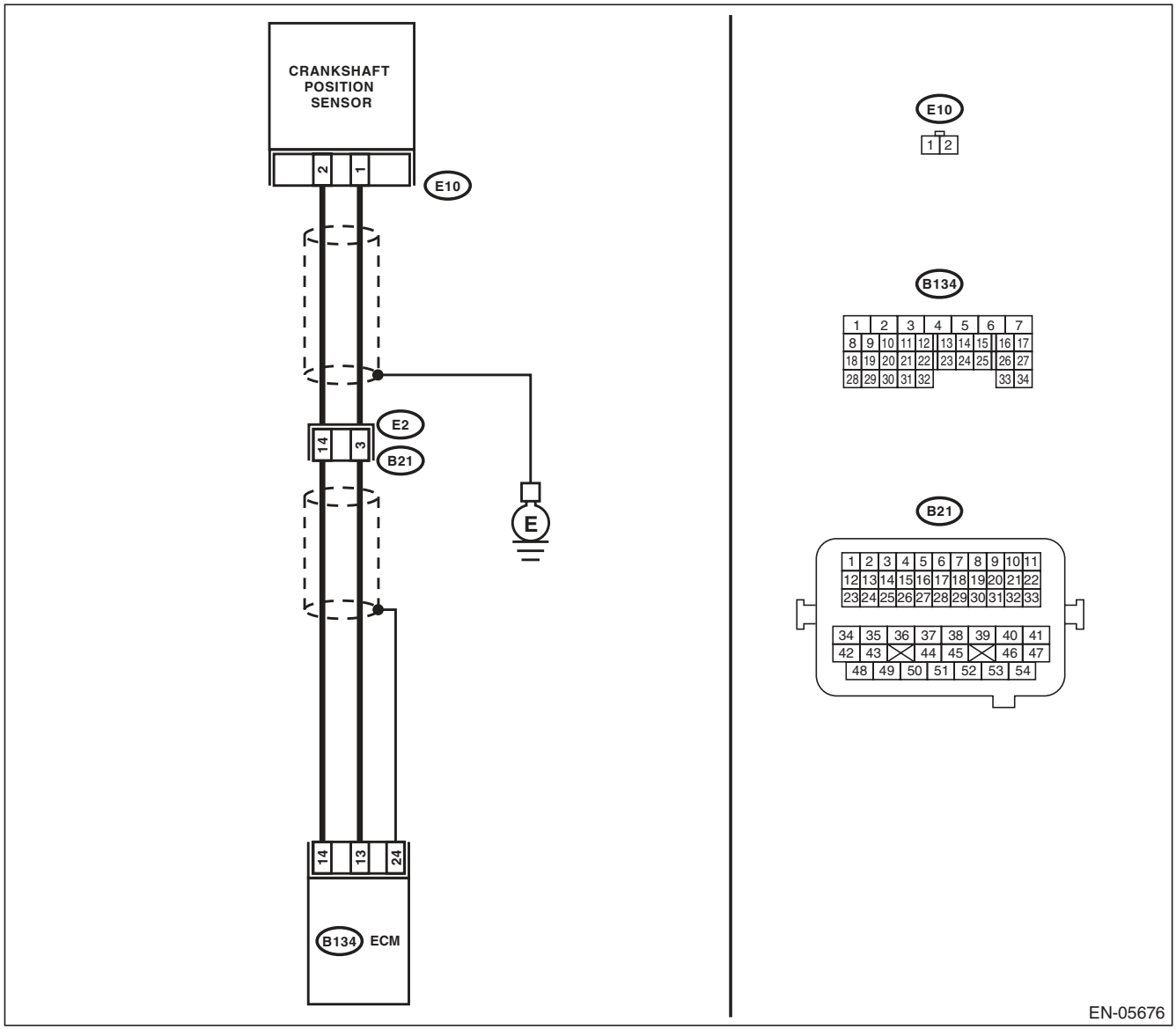

	Step	Check	Yes	No
1	**CHECK CONDITION OF CRANKSHAFT POSITION SENSOR.** Turn the ignition switch to OFF.	Is the crankshaft position sensor installation bolt tightened securely?	Go to step **2**.	Tighten the crankshaft position sensor installation bolt securely.
2	**CHECK CRANK SPROCKET.** Remove the timing belt cover. <Ref. to ME(H4DOTC)-46, REMOVAL, Timing Belt Cover.>	Are crank sprocket teeth cracked or damaged?	Replace the crank sprocket. <Ref. to ME(H4DOTC)-57, Crank Sprocket.>	Go to step **3**.
3	**CHECK INSTALLATION CONDITION OF TIMING BELT.** Turn the crankshaft using ST, and align the alignment mark on crank sprocket with alignment mark on cylinder block. ST 499987500 CRANKSHAFT SOCKET	Is the timing belt dislocated from its proper position?	Repair the installation condition of timing belt. <Ref. to ME(H4DOTC)-47, Timing Belt.>	Replace the crankshaft position sensor. <Ref. to FU(H4DOTC)-32, Crankshaft Position Sensor.>

BA:DTC P0340 CAMSHAFT POSITION SENSOR “A” CIRCUIT (BANK 1 OR SINGLE SENSOR)

DTC DETECTING CONDITION:

- Immediately at fault recognition
- GENERAL DESCRIPTION <Ref. to GD(H4DOTC)-92, DTC P0340 CAMSHAFT POSITION SENSOR “A” CIRCUIT (BANK 1 OR SINGLE SENSOR), Diagnostic Trouble Code (DTC) Detecting Criteria.>

TROUBLE SYMPTOM:

- Engine stalls.
- Failure of engine to start

CAUTION:

After repair or replacement of faulty parts, perform Clear Memory Mode <Ref. to EN(H4DOTC)(diag)-52, OPERATION, Clear Memory Mode.>, and Inspection Mode <Ref. to EN(H4DOTC)(diag)-43, PROCEDURE, Inspection Mode.>.

WIRING DIAGRAM:

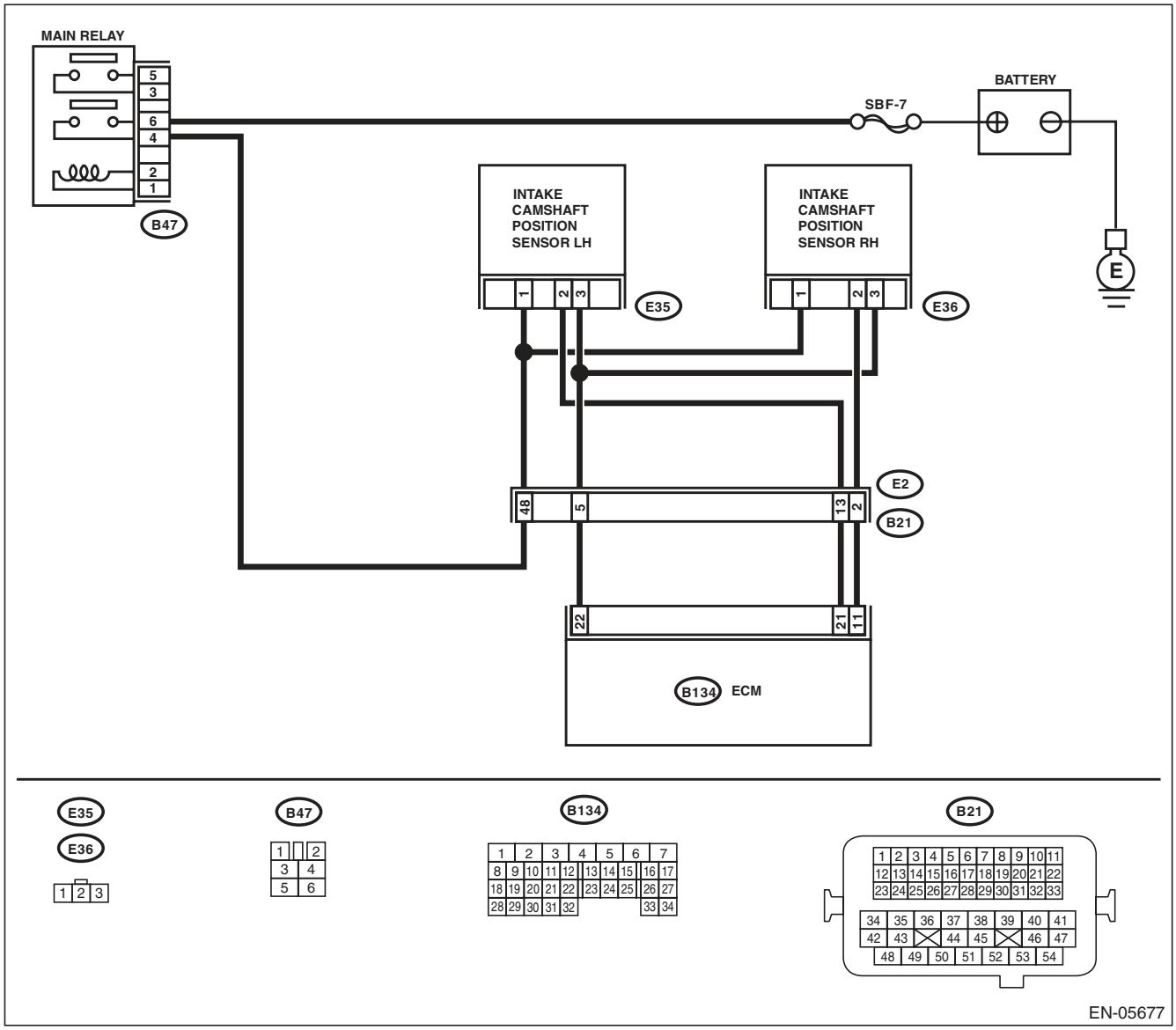

	Step	Check	Yes	No
1	**CHECK POWER SUPPLY OF CAMSHAFT POSITION SENSOR.** 1) Turn the ignition switch to OFF. 2) Disconnect the connector from the camshaft position sensor. 3) Turn the ignition switch to ON. 4) Measure the voltage between camshaft position sensor connector and engine ground. ***Connector & terminal*** ***(E36) No. 1 (+) — Engine ground (–):***	Is the voltage 10 V or more?	Go to step **2**.	Repair the harness and connector. NOTE: In this case, repair the following item: • Open circuit or short circuit to ground in harness between main relay connector and camshaft position sensor connector • Poor contact of coupling connector
2	**CHECK HARNESS BETWEEN ECM AND CAMSHAFT POSITION SENSOR CONNECTOR.** 1) Turn the ignition switch to OFF. 2) Disconnect the connectors from ECM. 3) Measure the resistance between the ECM and camshaft position sensor connector. ***Connector & terminal*** ***(B134) No. 11 — (E36) No. 2:*** ***(B134) No. 22 — (E36) No. 3:***	Is the resistance less than 1 Ω?	Go to step **3**.	Repair the harness and connector. NOTE: In this case, repair the following item: • Open circuit of the harness between the ECM and camshaft position sensor • Poor contact of coupling connector
3	**CHECK HARNESS BETWEEN ECM AND CAMSHAFT POSITION SENSOR CONNECTOR.** Measure the resistance between camshaft position sensor connector and engine ground. ***Connector & terminal*** ***(E36) No. 2 — Engine ground:***	Is the resistance 1 MΩ or more?	Go to step **4**.	Repair the short circuit to ground in harness between ECM and camshaft position sensor.
4	**CHECK HARNESS BETWEEN ECM AND CAMSHAFT POSITION SENSOR CONNECTOR.** Measure the voltage between camshaft position sensor connector and engine ground. ***Connector & terminal*** ***(E36) No. 2 (+) — Engine ground (–):***	Is the voltage 5 V or more?	Repair the short circuit to power in harness between ECM and camshaft position sensor.	Go to step **5**.
5	**CHECK CONDITION OF CAMSHAFT POSITION SENSOR.**	Is the camshaft position sensor installation bolt tightened securely?	Go to step **6**.	Tighten the camshaft position sensor installation bolt securely.
6	**CHECK CAMSHAFT POSITION SENSOR.** Check the waveform of the camshaft position sensor. <Ref. to EN(H4DOTC)(diag)-17, Engine Control Module (ECM) I/O Signal.>	Is there any abnormality in waveform?	Replace the camshaft position sensor. <Ref. to FU(H4DOTC)-33, Camshaft Position Sensor.>	Repair the following item. • Poor contact in ECM connector • Poor contact of camshaft position sensor connector • Poor contact of coupling connector

BB:DTC P0345 CAMSHAFT POSITION SENSOR “A” CIRCUIT (BANK 2)

DTC DETECTING CONDITION:

- Immediately at fault recognition
- GENERAL DESCRIPTION <Ref. to GD(H4DOTC)-93, DTC P0345 CAMSHAFT POSITION SENSOR “A” CIRCUIT (BANK 2), Diagnostic Trouble Code (DTC) Detecting Criteria.>

TROUBLE SYMPTOM:

- Engine stalls.
- Failure of engine to start

CAUTION:

After repair or replacement of faulty parts, perform Clear Memory Mode <Ref. to EN(H4DOTC)(diag)-52, OPERATION, Clear Memory Mode.>, and Inspection Mode <Ref. to EN(H4DOTC)(diag)-43, PROCEDURE, Inspection Mode.>.

WIRING DIAGRAM:

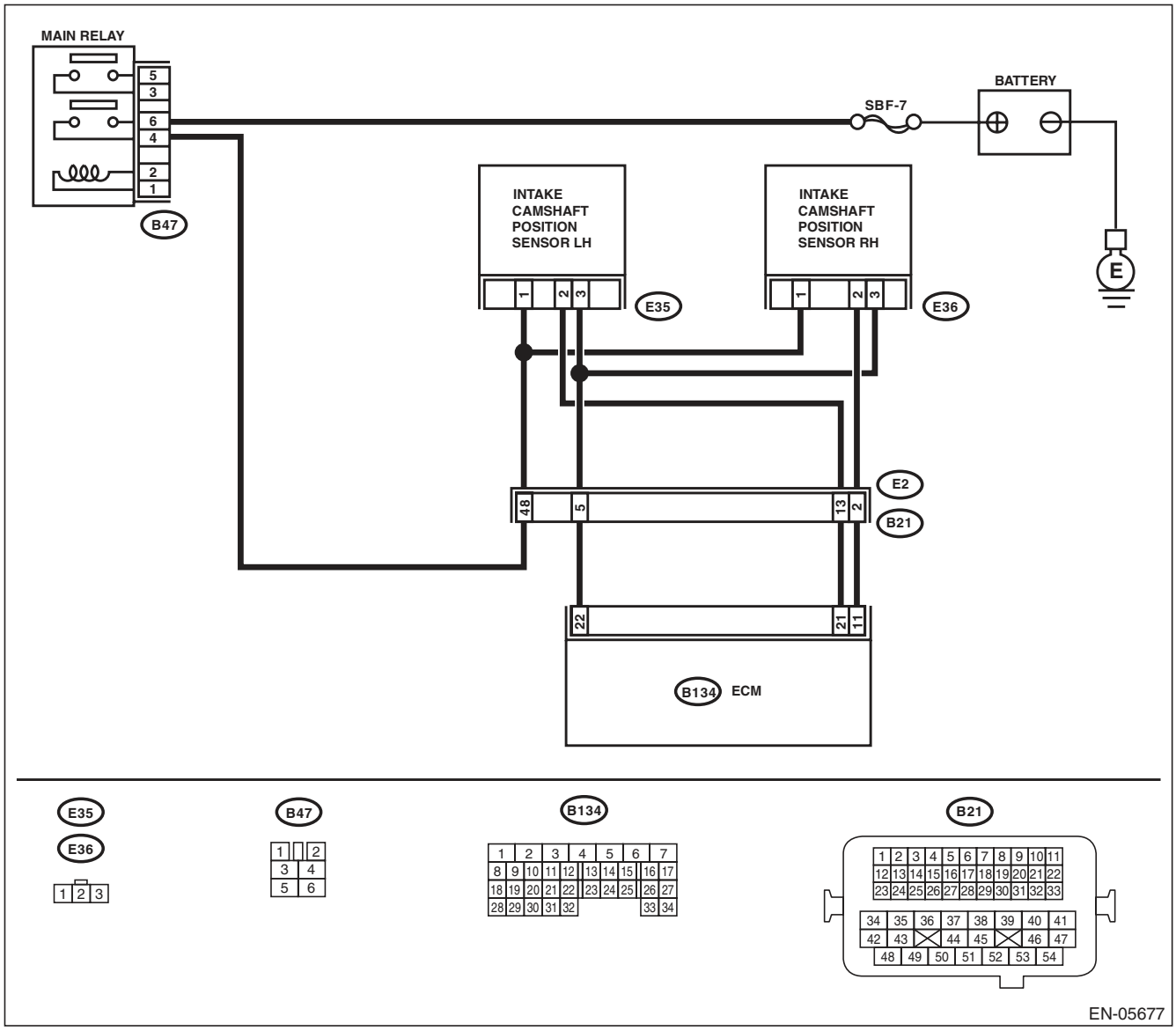

	Step	Check	Yes	No
1	**CHECK POWER SUPPLY OF CAMSHAFT POSITION SENSOR.** 1) Turn the ignition switch to OFF. 2) Disconnect the connector from the camshaft position sensor. 3) Turn the ignition switch to ON. 4) Measure the voltage between camshaft position sensor connector and engine ground. ***Connector & terminal*** ***(E35) No. 1 (+) — Engine ground (–):***	Is the voltage 10 V or more?	Go to step **2**.	Repair the harness and connector. NOTE: In this case, repair the following item: • Open circuit or short circuit to ground in harness between main relay connector and camshaft position sensor connector • Poor contact of coupling connector
2	**CHECK HARNESS BETWEEN ECM AND CAMSHAFT POSITION SENSOR CONNECTOR.** 1) Turn the ignition switch to OFF. 2) Disconnect the connectors from ECM. 3) Measure the resistance between the ECM and camshaft position sensor connector. ***Connector & terminal*** ***(B134) No. 21 — (E35) No. 2:*** ***(B134) No. 22 — (E35) No. 3:***	Is the resistance less than 1 Ω?	Go to step **3**.	Repair the harness and connector. NOTE: In this case, repair the following item: • Open circuit of the harness between the ECM and camshaft position sensor • Poor contact of coupling connector
3	**CHECK HARNESS BETWEEN ECM AND CAMSHAFT POSITION SENSOR CONNECTOR.** Measure the resistance between camshaft position sensor connector and engine ground. ***Connector & terminal*** ***(E35) No. 2 — Engine ground:***	Is the resistance 1 MΩ or more?	Go to step **4**.	Repair the short circuit to ground in harness between ECM and camshaft position sensor.
4	**CHECK HARNESS BETWEEN ECM AND CAMSHAFT POSITION SENSOR CONNECTOR.** Measure the voltage between camshaft position sensor connector and engine ground. ***Connector & terminal*** ***(E35) No. 2 (+) — Engine ground (–):***	Is the voltage 5 V or more?	Repair the short circuit to power in harness between ECM and camshaft position sensor.	Go to step **5**.
5	**CHECK CONDITION OF CAMSHAFT POSITION SENSOR.**	Is the camshaft position sensor installation bolt tightened securely?	Go to step **6**.	Tighten the camshaft position sensor installation bolt securely.
6	**CHECK CAMSHAFT POSITION SENSOR.** Check the waveform of the camshaft position sensor. <Ref. to EN(H4DOTC)(diag)-17, Engine Control Module (ECM) I/O Signal.>	Is there any abnormality in waveform?	Replace the camshaft position sensor. <Ref. to FU(H4DOTC)-33, Camshaft Position Sensor.>	Repair the following item. • Poor contact in ECM connector • Poor contact of camshaft position sensor connector • Poor contact of coupling connector

BC:DTC P0410 SECONDARY AIR INJECTION SYSTEM

DTC DETECTING CONDITION:

- Two consecutive driving cycles with fault
- GENERAL DESCRIPTION <Ref. to GD(H4DOTC)-94, DTC P0410 SECONDARY AIR INJECTION SYSTEM, Diagnostic Trouble Code (DTC) Detecting Criteria.>

CAUTION:

After repair or replacement of faulty parts, perform Clear Memory Mode <Ref. to EN(H4DOTC)(diag)-52, OPERATION, Clear Memory Mode.>, and Inspection Mode <Ref. to EN(H4DOTC)(diag)-43, PROCEDURE, Inspection Mode.>.

WIRING DIAGRAM:

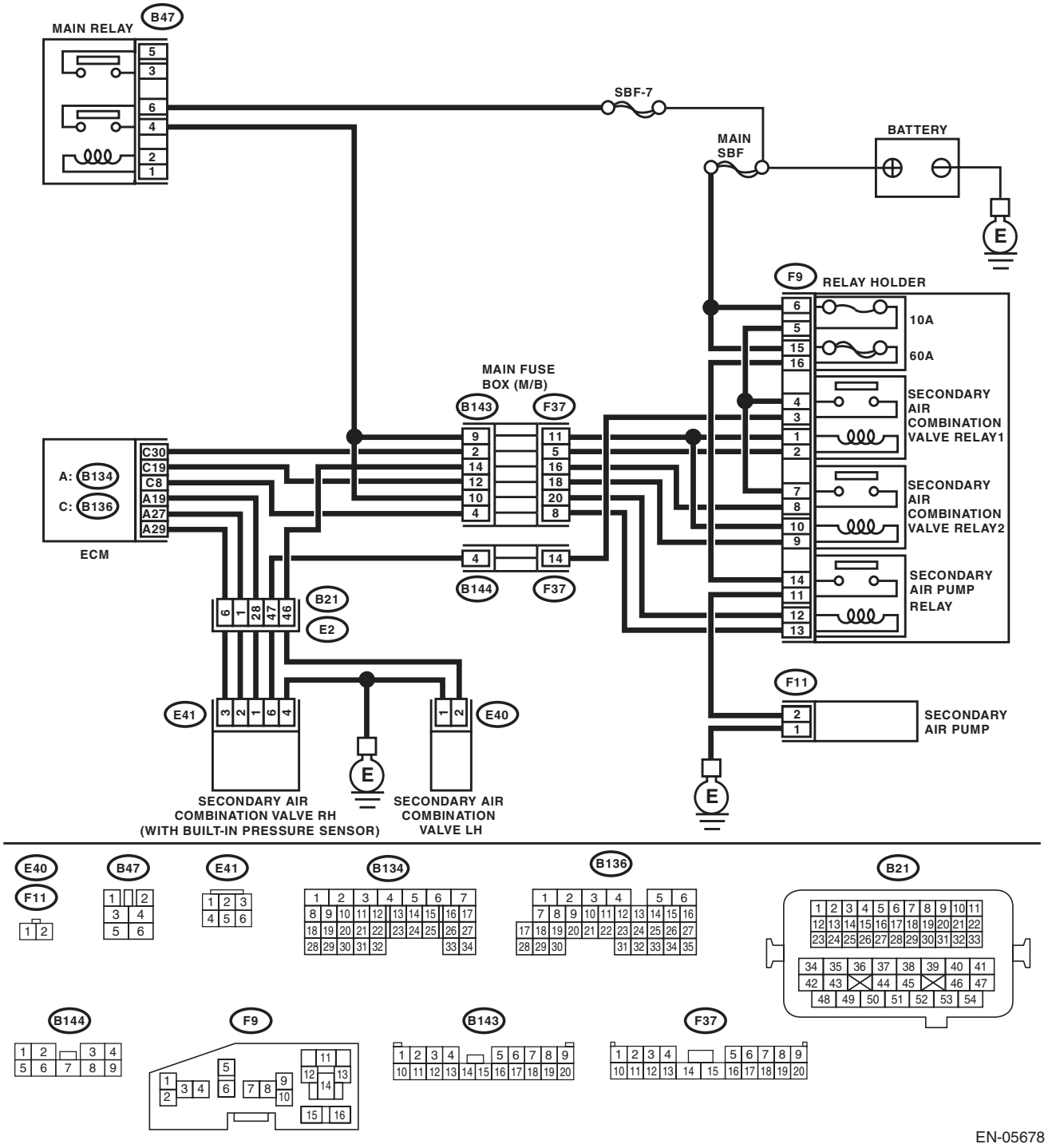

EN-05678

	Step	Check	Yes	No
1	**CHECK SECONDARY AIR PUMP FUSE.** Check if the secondary air pump fuse (60 A) is blown out.	Is the fuse blown out?	Go to step **2**.	Go to step **3**.
2	**CHECK HARNESS BETWEEN FUSE BOX AND SECONDARY AIR PUMP.** 1) Remove the secondary air pump fuse from the fuse box. 2) Disconnect the secondary air pump connector. 3) Measure resistance between the secondary air pump fuse and secondary air pump connector, and chassis ground. ***Connector & terminal*** ***(F9) No. 16 — Chassis ground:*** ***(F11) No. 2 — Chassis ground:***	Is the resistance 1 MΩ or more?	Replace the fuse with a new part, and then connect the secondary air pump connector. Go to step **3**.	Repair ground short of the harness between the fuse box and the secondary air pump.
3	**CHECK SECONDARY AIR PUMP OPERATION.** 1) Connect the delivery (test) mode connector. 2) Turn the ignition switch to ON. 3) Perform the Clear Memory Mode. 4) Perform operation check for the secondary air pump using the Subaru Select Monitor. NOTE: • Subaru Select Monitor For detailed operation procedure, refer to “Clear Memory Mode”<Ref. to EN(H4DOTC)(diag)-52, Clear Memory Mode.> and “Compulsory Valve Operation Check Mode”<Ref. to EN(H4DOTC)(diag)-53, Compulsory Valve Operation Check Mode.>. • The compulsory operation using the Subaru Select Monitor is performed only for 5 seconds in order to protect the secondary air pump. When operating again, perform the Clear Memory Mode.	Does the secondary air pump operate?	Go to step **4**.	Go to step **5**.
4	**CHECK DUCT BETWEEN SECONDARY AIR PUMP AND COMBINATION VALVE.** Check the duct between the secondary air pump and combination valve.	Is there damage, clog or disconnection of the duct?	Replace, clean or connect the duct.	Replace the secondary air combination valve RH. <Ref. to EC(H4DOTC)-22, Secondary Air Combination Valve.>
5	**CHECK POWER SUPPLY TO SECONDARY AIR PUMP.** 1) Perform the Clear Memory Mode. 2) Turn the ignition switch to OFF. 3) Disconnect the secondary air pump connector. 4) In the condition of step 3, measure the voltage between the secondary air pump connector and the chassis ground. NOTE: For detailed procedure, refer to “Clear Memory Mode”. <Ref. to EN(H4DOTC)(diag)-52, Clear Memory Mode.> ***Connector & terminal*** ***(F11) No. 2 (+) — Chassis ground (–):***	Is the voltage 10 V or more?	Replace the secondary air pump. <Ref. to EC(H4DOTC)-21, Secondary Air Pump.>	Go to step **6**.

	Step	Check	Yes	No
6	**CHECK HARNESS BETWEEN SECONDARY AIR PUMP RELAY AND SECONDARY AIR PUMP CONNECTOR.** 1) Turn the ignition switch to OFF. 2) Remove the secondary air pump relay. 3) Measure the resistance between the secondary air pump relay and secondary air pump connector. ***Connector & terminal*** ***(F9) No. 11 — (F11) No. 2:***	Is the resistance less than 1 Ω?	Go to step **7**.	Repair the open circuit between secondary air pump relay and secondary air pump connector.
7	**CHECK HARNESS BETWEEN SECONDARY AIR PUMP CONNECTOR AND CHASSIS GROUND.** Measure the resistance of the harness between secondary air pump connector and chassis ground. ***Connector & terminal*** ***(F11) No. 1 — Chassis ground:***	Is the resistance less than 5 Ω?	Go to step **8**.	Repair the open circuit of the harness between secondary air pump connector and chassis ground.
8	**CHECK SECONDARY AIR PUMP RELAY.** 1) Connect the battery to terminals No. 12 and No. 13 of the secondary air pump relay. 2) Measure the resistance between secondary air pump relay terminals. ***Terminals*** ***No. 14 — No. 11:***	Is the resistance less than 1 Ω?	Go to step **9**.	Replace the secondary air pump relay. <Ref. to EN(H4DOTC)(diag)-8, Electrical Component Location.>
9	**CHECK SECONDARY AIR PUMP RELAY POWER SOURCE.** 1) Turn the ignition switch to ON. 2) Measure the voltage between the secondary air pump relay connector and chassis ground. ***Connector & terminal*** ***(F9) No. 14 (+) — Chassis ground (–):*** ***(F9) No. 12 (+) — Chassis ground (–):***	Is the voltage 10 V or more?	Go to step **10**.	Repair the open or ground short circuit of power supply circuit.
10	**CHECK HARNESS BETWEEN ECM AND SECONDARY AIR PUMP RELAY CONNECTOR.** 1) Turn the ignition switch to OFF. 2) Disconnect the connector of ECM. 3) Measure the resistance of harness between ECM and secondary air pump relay connector. ***Connector & terminal*** ***(B136) No. 8 — (F9) No. 13:***	Is the resistance less than 1 Ω?	Repair the poor contact of ECM connector.	Repair the harness and connector. NOTE: In this case, repair the following item: • Open circuit of harness between ECM and secondary air pump relay connector. • Poor contact of coupling connector

BD:DTC P0411 SECONDARY AIR INJECTION SYSTEM INCORRECT FLOW DETECTED

DTC DETECTING CONDITION:

- Two consecutive driving cycles with fault
- GENERAL DESCRIPTION <Ref. to GD(H4DOTC)-101, DTC P0411 SECONDARY AIR INJECTION SYSTEM INCORRECT FLOW DETECTED, Diagnostic Trouble Code (DTC) Detecting Criteria.>

CAUTION:

After repair or replacement of faulty parts, perform Clear Memory Mode <Ref. to EN(H4DOTC)(diag)-52, OPERATION, Clear Memory Mode.>, and Inspection Mode <Ref. to EN(H4DOTC)(diag)-43, PROCEDURE, Inspection Mode.>.

WIRING DIAGRAM:

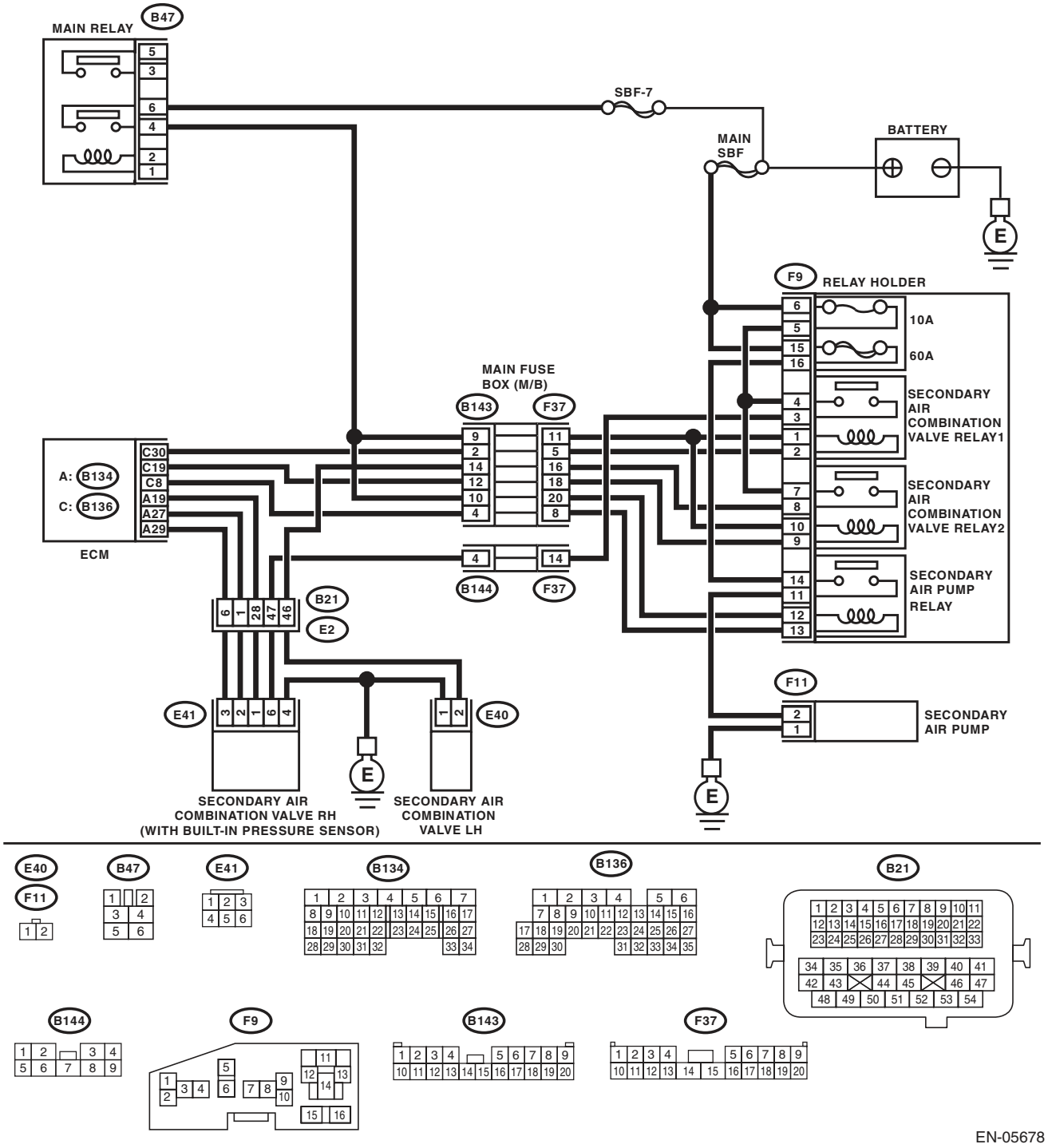

EN-05678

Step		Check	Yes	No
1	**CHECK SECONDARY AIR COMBINATION VALVE.** Check the pipe between the secondary air combination valve and cylinder head.	Is there damage or disconnection of the pipe?	Replace the pipe between secondary air combination valve and cylinder head.	Go to step **2**.
2	**CHECK SECONDARY AIR COMBINATION VALVE.** Race the engine at 2,000 rpm to check whether or not the exhaust leak is heard.	Is there any exhaust leak?	Replace the pipe between secondary air combination valve and cylinder head.	Repair the poor contact of ECM connector.

BE:DTC P0413 SECONDARY AIR INJECTION SYSTEM SWITCHING VALVE “A“ CIRCUIT OPEN

DTC DETECTING CONDITION:

- Immediately at fault recognition
- GENERAL DESCRIPTION <Ref. to GD(H4DOTC)-102, DTC P0413 SECONDARY AIR INJECTION SYSTEM SWITCHING VALVE “A“ CIRCUIT OPEN, Diagnostic Trouble Code (DTC) Detecting Criteria.>

CAUTION:

After repair or replacement of faulty parts, perform Clear Memory Mode <Ref. to EN(H4DOTC)(diag)-52, OPERATION, Clear Memory Mode.>, and Inspection Mode <Ref. to EN(H4DOTC)(diag)-43, PROCEDURE, Inspection Mode.>.

WIRING DIAGRAM:

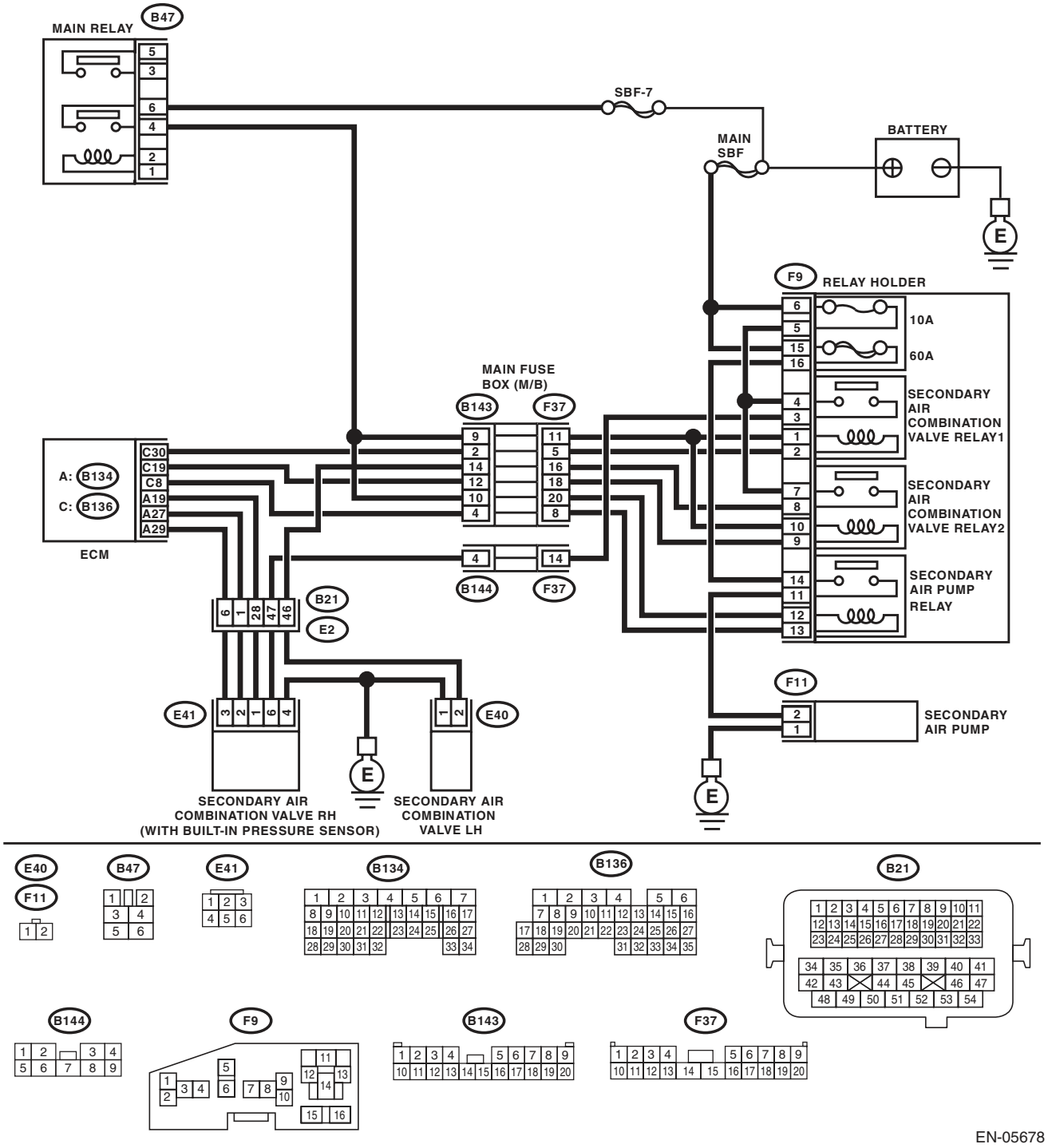

Step		Check	Yes	No
1	**CHECK HARNESS BETWEEN ECM AND SECONDARY AIR COMBINATION VALVE RELAY 1.** 1) Turn the ignition switch to OFF. 2) Disconnect the connector from ECM and secondary air combination valve relay 1. 3) Measure the resistance of harness between ECM and secondary air combination valve relay 1. ***Connector & terminal*** ***(B136) No. 30 — (F9) No. 2:***	Is the resistance less than 1 Ω?	Go to step **2**.	Repair the harness and connector. NOTE: In this case, repair the following item: • Open circuit in harness between ECM and secondary air combination valve relay 1 • Poor contact of coupling connector
2	**CHECK HARNESS BETWEEN ECM AND SECONDARY AIR COMBINATION VALVE RELAY 1.** Measure the resistance between ECM and chassis ground. ***Connector & terminal*** ***(B136) No. 30 — Chassis ground:***	Is the resistance 1 MΩ or more?	Even if DTC is detected, the circuit has returned to a normal condition at this time. Reproduce the failure, and then perform the diagnosis again. NOTE: In this case, temporary poor contact of connector may be the cause.	Repair the ground short circuit of harness between ECM and secondary air combination valve relay 1.

BF:DTC P0414 SECONDARY AIR INJECTION SYSTEM SWITCHING VALVE “A“ CIRCUIT SHORTED

DTC DETECTING CONDITION:

- Immediately at fault recognition
- GENERAL DESCRIPTION <Ref. to GD(H4DOTC)-103, DTC P0414 SECONDARY AIR INJECTION SYSTEM SWITCHING VALVE “A“ CIRCUIT SHORTED, Diagnostic Trouble Code (DTC) Detecting Criteria.>

CAUTION:

After repair or replacement of faulty parts, perform Clear Memory Mode <Ref. to EN(H4DOTC)(diag)-52, OPERATION, Clear Memory Mode.>, and Inspection Mode <Ref. to EN(H4DOTC)(diag)-43, PROCEDURE, Inspection Mode.>.

WIRING DIAGRAM:

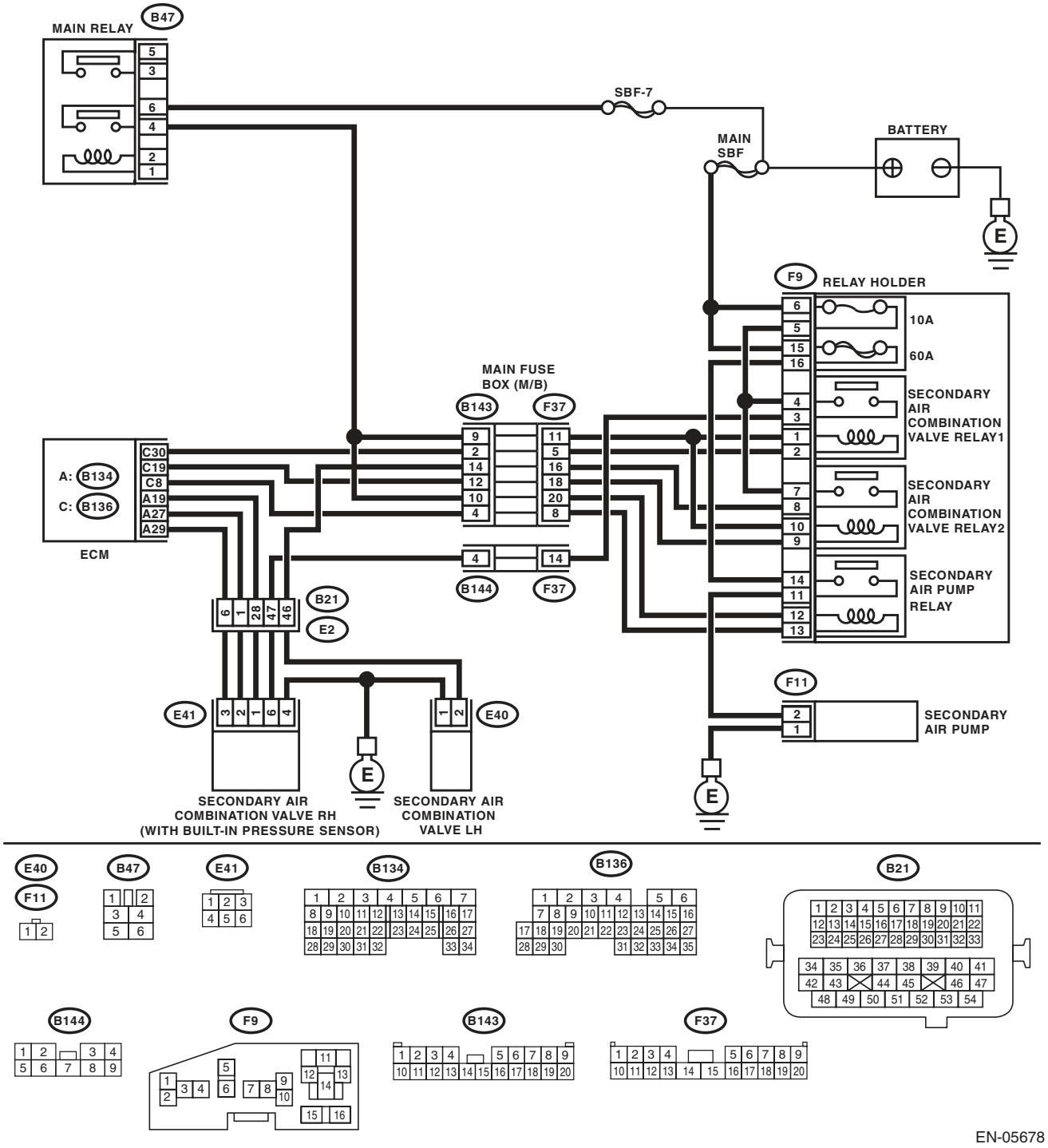

Step		Check	Yes	No
1	**CHECK HARNESS BETWEEN ECM AND SECONDARY AIR COMBINATION VALVE RELAY 1.** 1) Turn the ignition switch to OFF. 2) Disconnect the connector from ECM and secondary air combination valve relay 1. 3) Measure the voltage between ECM and chassis ground. ***Connector & terminal*** ***(B136) No. 30 (+) — Chassis ground (–):***	Is the voltage 10 V or more?	Repair the short circuit to power in the harness between ECM and secondary air combination valve relay 1.	Repair the poor contact of ECM connector.

BG:DTC P0416 SECONDARY AIR INJECTION SYSTEM SWITCHING VALVE “B“ CIRCUIT OPEN

DTC DETECTING CONDITION:

- Immediately at fault recognition
- GENERAL DESCRIPTION <Ref. to GD(H4DOTC)-103, DTC P0416 SECONDARY AIR INJECTION SYSTEM SWITCHING VALVE “B“ CIRCUIT OPEN, Diagnostic Trouble Code (DTC) Detecting Criteria.>

CAUTION:

After repair or replacement of faulty parts, perform Clear Memory Mode <Ref. to EN(H4DOTC)(diag)-52, OPERATION, Clear Memory Mode.>, and Inspection Mode <Ref. to EN(H4DOTC)(diag)-43, PROCEDURE, Inspection Mode.>.

WIRING DIAGRAM:

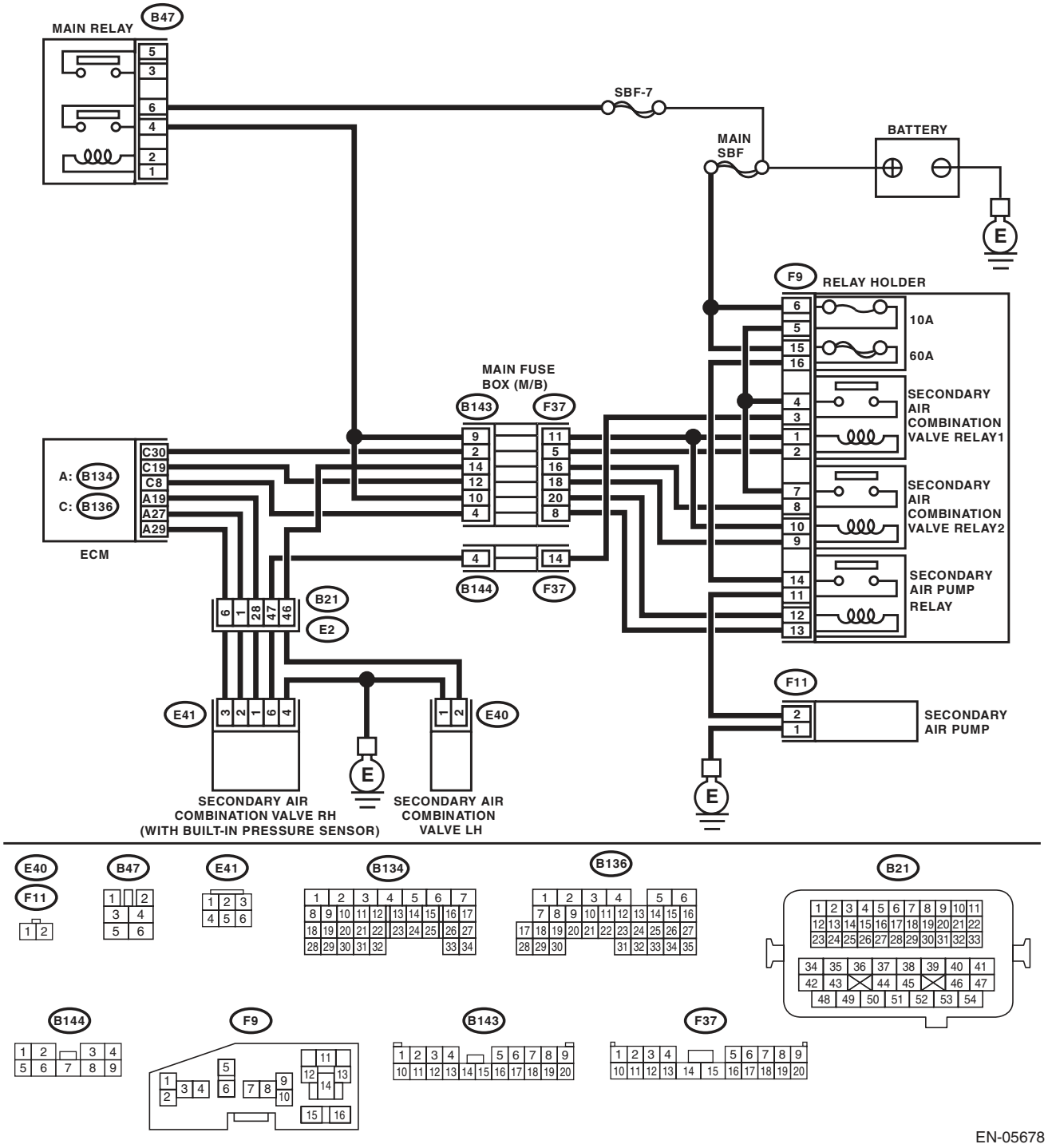

Step		Check	Yes	No
1	**CHECK HARNESS BETWEEN ECM AND SECONDARY AIR COMBINATION VALVE RELAY 2.** 1) Turn the ignition switch to OFF. 2) Disconnect the connector from ECM and secondary air combination valve relay 2. 3) Measure the resistance of harness between ECM and secondary air combination valve relay 2. ***Connector & terminal*** ***(B136) No. 19 — (F9) No. 9:***	Is the resistance less than 1 Ω?	Go to step **2**.	Repair the harness and connector. NOTE: In this case, repair the following item: • Open circuit in harness between ECM and secondary air combination valve relay 2 • Poor contact of coupling connector
2	**CHECK HARNESS BETWEEN ECM AND SECONDARY AIR COMBINATION VALVE RELAY 2.** Measure the resistance between ECM and chassis ground. ***Connector & terminal*** ***(B136) No. 19 — Chassis ground:***	Is the resistance 1 MΩ or more?	Even if DTC is detected, the circuit has returned to a normal condition at this time. Reproduce the failure, and then perform the diagnosis again. NOTE: In this case, temporary poor contact of connector may be the cause.	Repair the ground short circuit of harness between ECM and secondary air combination valve relay 2.

BH:DTC P0417 SECONDARY AIR INJECTION SYSTEM SWITCHING VALVE “B“ CIRCUIT SHORTED

DTC DETECTING CONDITION:

- Immediately at fault recognition
- GENERAL DESCRIPTION <Ref. to GD(H4DOTC)-103, DTC P0417 SECONDARY AIR INJECTION SYSTEM SWITCHING VALVE “B“ CIRCUIT SHORTED, Diagnostic Trouble Code (DTC) Detecting Criteria.>

CAUTION:

After repair or replacement of faulty parts, perform Clear Memory Mode <Ref. to EN(H4DOTC)(diag)-52, OPERATION, Clear Memory Mode.>, and Inspection Mode <Ref. to EN(H4DOTC)(diag)-43, PROCEDURE, Inspection Mode.>.

WIRING DIAGRAM:

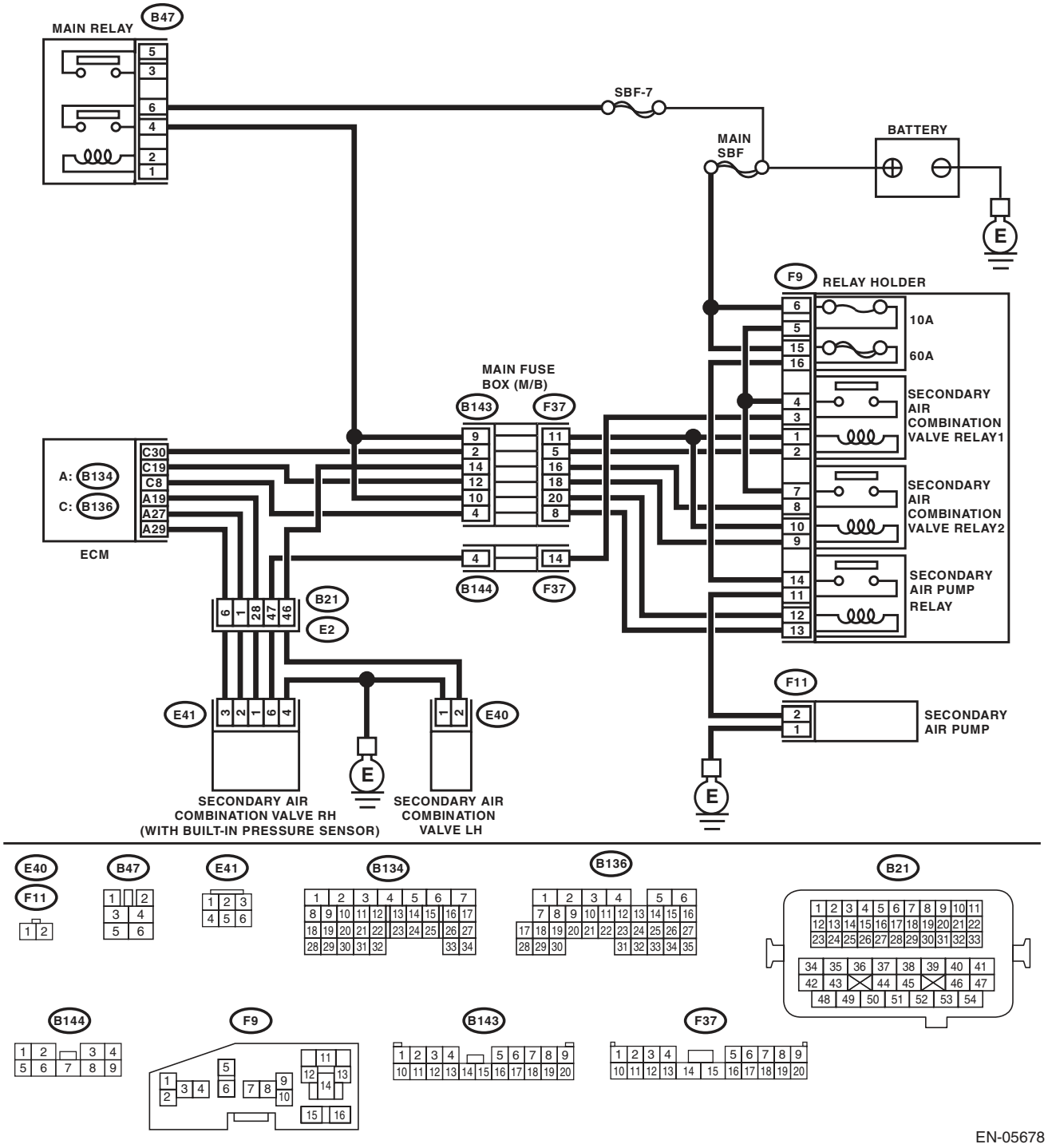

Step		Check	Yes	No
1	**CHECK HARNESS BETWEEN ECM AND SECONDARY AIR COMBINATION VALVE RELAY 2.** 1) Turn the ignition switch to OFF. 2) Disconnect the connector from ECM and secondary air combination valve relay 2. 3) Measure the voltage between ECM and chassis ground. ***Connector & terminal*** ***(B136) No. 19 (+) — Chassis ground (–):***	Is the voltage 10 V or more?	Repair the short circuit to power in the harness between ECM and secondary air combination valve relay 2.	Repair the poor contact of ECM connector.

BI: DTC P0418 SECONDARY AIR INJECTION SYSTEM CONTROL “A“ CIRCUIT OPEN

DTC DETECTING CONDITION:

- Immediately at fault recognition
- GENERAL DESCRIPTION <Ref. to GD(H4DOTC)-104, DTC P0418 SECONDARY AIR INJECTION SYSTEM CONTROL “A“ CIRCUIT OPEN, Diagnostic Trouble Code (DTC) Detecting Criteria.>

CAUTION:

After repair or replacement of faulty parts, perform Clear Memory Mode <Ref. to EN(H4DOTC)(diag)-52, OPERATION, Clear Memory Mode.>, and Inspection Mode <Ref. to EN(H4DOTC)(diag)-43, PROCEDURE, Inspection Mode.>.

WIRING DIAGRAM:

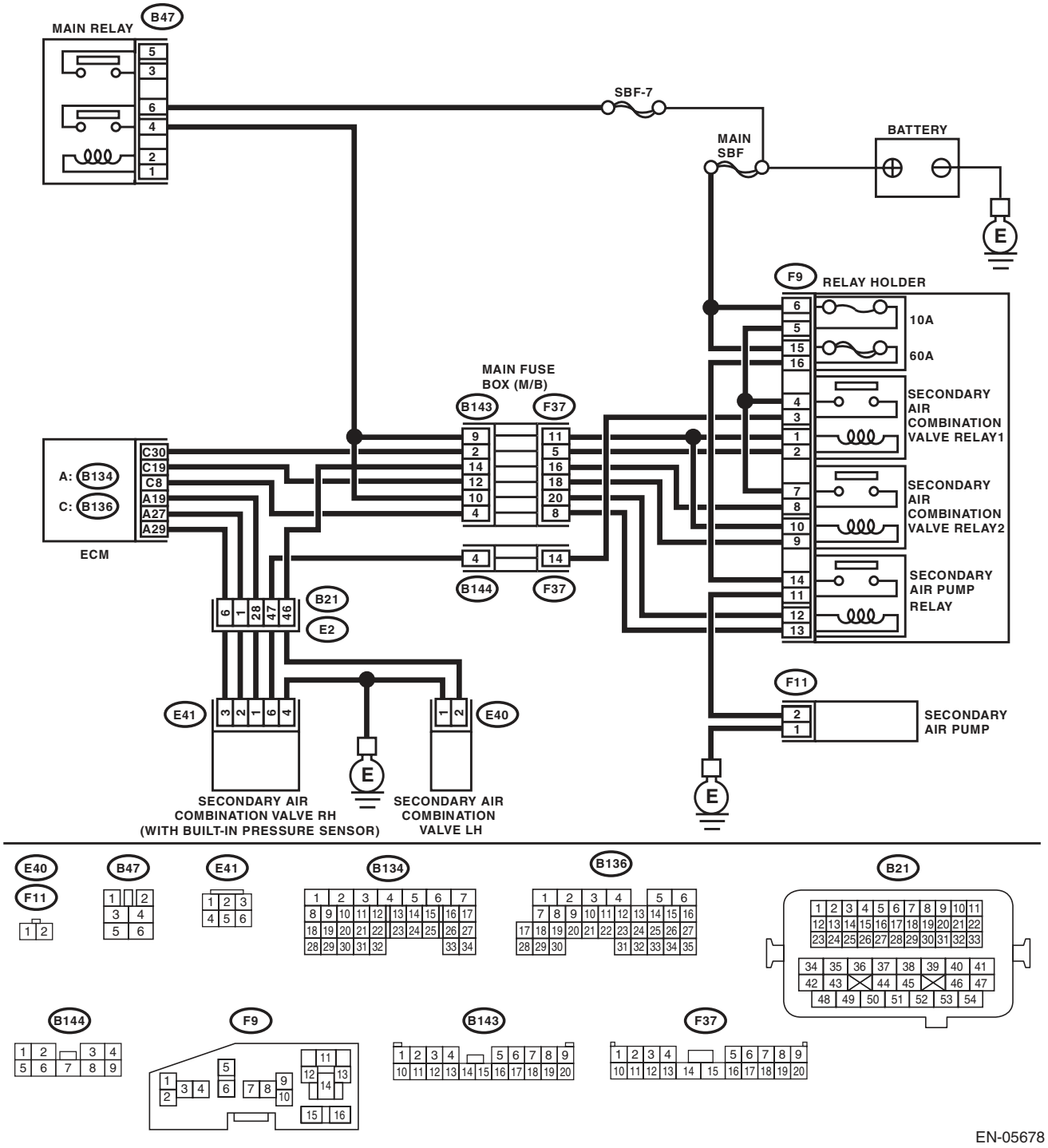

Step		Check	Yes	No
1	**CHECK HARNESS BETWEEN ECM AND SECONDARY AIR PUMP RELAY.** 1) Turn the ignition switch to OFF. 2) Disconnect the connector from the ECM and secondary air pump relay. 3) Measure the resistance of the harness between the ECM and secondary air pump relay. ***Connector & terminal*** ***(B136) No. 8 — (F9) No. 13:***	Is the resistance less than 1 Ω?	Go to step **2**.	Repair the harness and connector. NOTE: In this case, repair the following item: • Open circuit in harness between ECM and secondary air pump relay • Poor contact of coupling connector
2	**CHECK HARNESS BETWEEN ECM AND SECONDARY AIR PUMP RELAY.** Measure the resistance between ECM and chassis ground. ***Connector & terminal*** ***(B136) No. 8 — Chassis ground:***	Is the resistance 1 MΩ or more?	Even if DTC is detected, the circuit has returned to a normal condition at this time. Reproduce the failure, and then perform the diagnosis again. NOTE: In this case, temporary poor contact of connector may be the cause.	Repair ground short circuit of the harness between the ECM and secondary air pump relay.

BJ:DTC P0420 CATALYST SYSTEM EFFICIENCY BELOW THRESHOLD (BANK 1)

DTC DETECTING CONDITION:

- Two consecutive driving cycles with fault
- GENERAL DESCRIPTION <Ref. to GD(H4DOTC)-105, DTC P0420 CATALYST SYSTEM EFFICIENCY BELOW THRESHOLD (BANK 1), Diagnostic Trouble Code (DTC) Detecting Criteria.>

TROUBLE SYMPTOM:

- Engine stalls.
- Idle mixture is out of specifications.

CAUTION:

After repair or replacement of faulty parts, perform Clear Memory Mode <Ref. to EN(H4DOTC)(diag)-52, OPERATION, Clear Memory Mode.>, and Inspection Mode <Ref. to EN(H4DOTC)(diag)-43, PROCEDURE, Inspection Mode.>.

WIRING DIAGRAM:

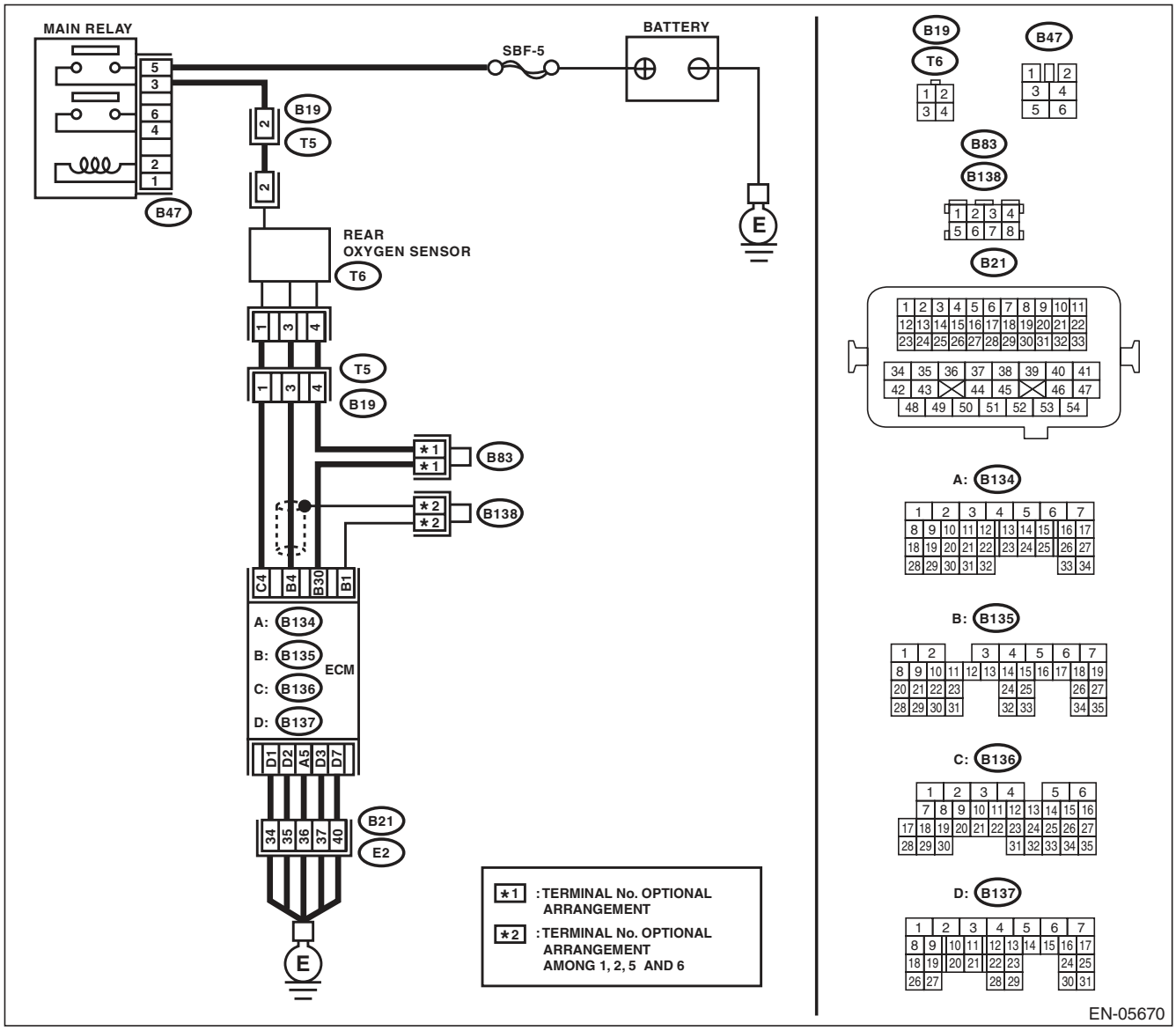

	Step	Check	Yes	No
1	**CHECK EXHAUST SYSTEM.** Check for gas leaks or air suction caused by loose or dislocated nuts and bolts, and open hole at exhaust pipes. NOTE: Check the following positions. • Between cylinder head and front exhaust pipe • Between front exhaust pipe and front catalytic converter • Between front catalytic converter and rear catalytic converter • Looseness and improper attachment of front oxygen (A/F) sensor or rear oxygen sensor	Is there any fault in exhaust system?	Repair or replace the exhaust system. <Ref. to EX(H4DOTC)-2, General Description.>	Go to step **2**.
2	**CHECK WAVEFORM DATA ON THE SUBARU SELECT MONITOR (WHILE DRIVING).** 1) Drive at a constant speed between 80 — 112 km/h (50 — 70 MPH). 2) After 5 minutes have elapsed in the condition of step 1), use the Subaru Select Monitor while still driving to read the waveform data. • At normal condition 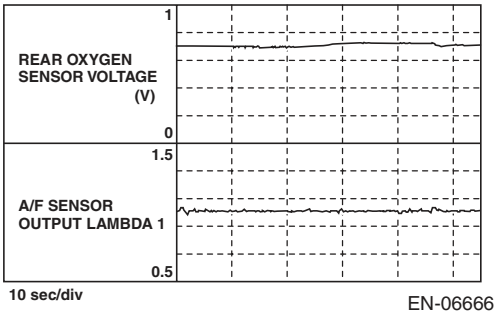 EN-06666 • At abnormal condition (numerous inversion) 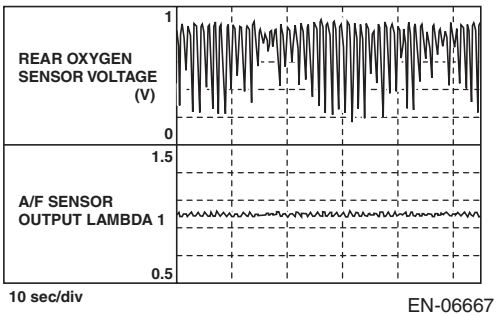 EN-06667	Is normal waveform pattern displayed?	Even if DTC is detected, the circuit has returned to a normal condition at this time. Reproduce the failure, and then perform the diagnosis again. NOTE: In this case, temporary poor contact of connector may be the cause.	Go to step **3**.

Step		Check	Yes	No
3	**CHECK WAVEFORM DATA ON THE SUBARU SELECT MONITOR (WHILE IDLING).** 1) Run the engine at idle. 2) In the condition of step 1), use the Subaru Select Monitor to read the waveform data. • At normal condition 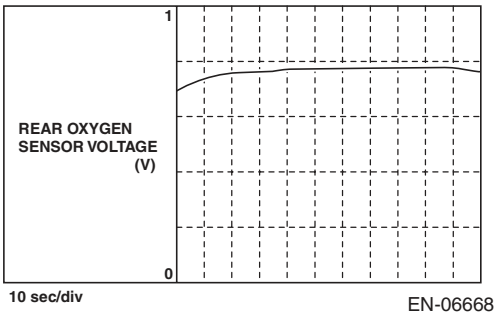 EN-06668 • At abnormal condition 1 (numerous inversion) 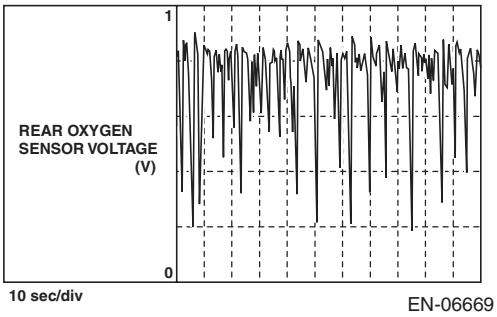 EN-06669 • At abnormal condition 2 (noise input) 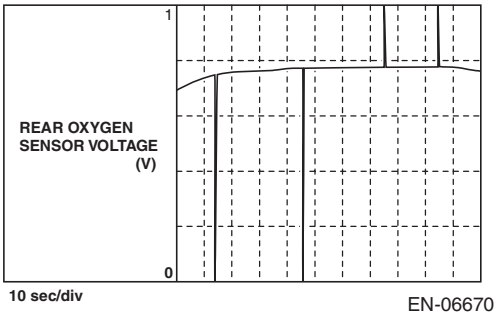 EN-06670	Is normal waveform pattern displayed?	Go to step **4**.	• The waveform is displayed at abnormal condition 1:Go to step **4**. • The waveform is displayed at abnormal condition 2:Go to step **5**.
4	**CHECK CATALYTIC CONVERTER.**	Is the catalytic converter damaged?	Replace the catalytic converter. <Ref. to EC(H4DOTC)-5, Front Catalytic Converter.>	Go to step **5**.
5	**CHECK REAR OXYGEN SENSOR CONNECTOR AND COUPLING CONNECTOR.**	Has water entered the connector?	Completely remove any water inside.	Go to step **6**.

	Step	Check	Yes	No
6	**CHECK HARNESS BETWEEN ECM AND REAR OXYGEN SENSOR CONNECTOR.** 1) Turn the ignition switch to OFF. 2) Disconnect the connectors from ECM and rear oxygen sensor. 3) Measure the resistance of harness between ECM and rear oxygen sensor connector. ***Connector & terminal*** ***(B135) No. 4 — (T6) No. 3:*** ***(B135) No. 30 — (T6) No. 4:***	Is the resistance less than 1 Ω?	Go to step **7**.	Repair the harness and connector. NOTE: Repair the following locations. • Open circuit in harness between ECM and rear oxygen sensor connector • Poor contact of coupling connector
7	**CHECK HARNESS BETWEEN ECM AND REAR OXYGEN SENSOR CONNECTOR.** 1) Turn the ignition switch to ON. 2) Measure the voltage between rear oxygen sensor connector and chassis ground. ***Connector & terminal*** ***(T6) No. 3 (+) — Chassis ground (–):***	Is the voltage 0.2 — 0.5 V?	Go to step **8**.	Repair the harness and connector. NOTE: Repair the following locations. • Open circuit of harness between the ECM and rear oxygen sensor • Poor contact in ECM and rear oxygen sensor • Poor contact in ECM connector
8	**CHECK REAR OXYGEN SENSOR SHIELD.** 1) Turn the ignition switch to OFF. 2) Expose the rear oxygen sensor connector body side harness sensor shield. 3) Measure the resistance between the sensor shield and chassis ground.	Is the resistance less than 1 Ω?	Replace the rear oxygen sensor. <Ref. to FU(H4DOTC)-48, Rear Oxygen Sensor.>	Repair the open circuit in the rear oxygen sensor harness.

BK:DTC P0441 EVAPORATIVE EMISSION SYSTEM INCORRECT PURGE FLOW

DTC DETECTING CONDITION:

- Two consecutive driving cycles with fault
- GENERAL DESCRIPTION <Ref. to GD(H4DOTC)-107, DTC P0441 EVAPORATIVE EMISSION SYSTEM INCORRECT PURGE FLOW, Diagnostic Trouble Code (DTC) Detecting Criteria.>

CAUTION:

After repair or replacement of faulty parts, perform Clear Memory Mode <Ref. to EN(H4DOTC)(diag)-52, OPERATION, Clear Memory Mode.>, and Inspection Mode <Ref. to EN(H4DOTC)(diag)-43, PROCEDURE, Inspection Mode.>.

Step		Check	Yes	No
1	**CHECK FOR ANY OTHER DTC ON DISPLAY.**	Is any other DTC displayed?	Check the appropriate DTC using the “List of Diagnostic Trouble Code (DTC)”. <Ref. to EN(H4DOTC)(diag)-81, List of Diagnostic Trouble Code (DTC).>	Go to step **2**.
2	**CHECK PURGE LINE OF THE PURGE CONTROL SOLENOID VALVE 2.**	Is there any clogging, flattened part or bent in the purge line of purge control solenoid valve 2?	Repair or replace the purge line of purge control solenoid valve 2.	Go to step **3**.
3	**CHECK PURGE CONTROL SOLENOID VALVE 2.** 1) Connect the delivery (test) mode connector. 2) Turn the ignition switch to ON. 3) Operate the purge control solenoid valve 2 using the Subaru Select Monitor. NOTE: Purge control solenoid valve 2 can be operated using the Subaru Select Monitor. For the procedures, refer to “Compulsory Valve Operation Check Mode”. <Ref. to EN(H4DOTC)(diag)-53, Compulsory Valve Operation Check Mode.>	Does the purge control solenoid valve 2 operate?	Repair the poor contact of ECM connector.	Replace the purge control solenoid valve 2. <Ref. to EC(H4DOTC)-9, Purge Control Solenoid Valve.>

BL:DTC P0442 EVAPORATIVE EMISSION CONTROL SYSTEM LEAK DETECTED (SMALL LEAK)

DTC DETECTING CONDITION:

- Two consecutive driving cycles with fault
- GENERAL DESCRIPTION <Ref. to GD(H4DOTC)-108, DTC P0442 EVAPORATIVE EMISSION CONTROL SYSTEM LEAK DETECTED (SMALL LEAK), Diagnostic Trouble Code (DTC) Detecting Criteria.>

TROUBLE SYMPTOM:

- Fuel odor
- There is a hole of more than 1.0 mm (0.04 in) dia. in evaporation system or fuel tank.

CAUTION:

After repair or replacement of faulty parts, perform Clear Memory Mode <Ref. to EN(H4DOTC)(diag)-52, OPERATION, Clear Memory Mode.>, and Inspection Mode <Ref. to EN(H4DOTC)(diag)-43, PROCEDURE, Inspection Mode.>.

WIRING DIAGRAM:

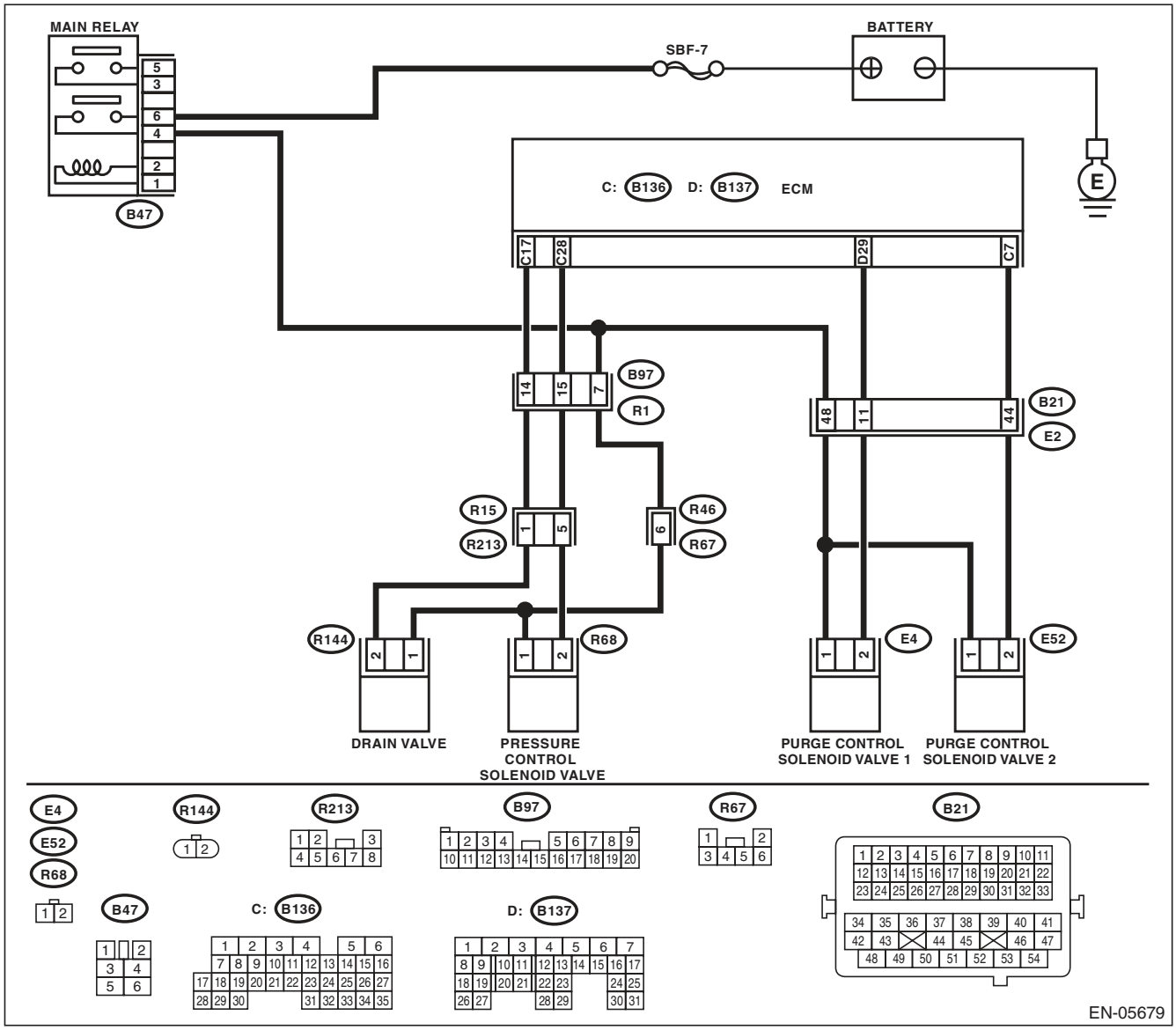

	Step	Check	Yes	No
1	**CHECK FUEL FILLER CAP.** 1) Turn the ignition switch to OFF. 2) Check the fuel filler cap. NOTE: The DTC is stored in memory if fuel filler cap is or was loose or if the cap chain has caught while tightening.	Is the fuel filler cap tightened securely?	Go to step **2**.	Tighten fuel filler cap securely.
2	**CHECK FUEL FILLER CAP.**	Is the fuel filler cap genuine?	Go to step **3**.	Replace with a genuine fuel filler cap.
3	**CHECK FUEL FILLER PIPE GASKET.**	Is there any damage to the seal between fuel filler cap and fuel filler pipe?	Repair or replace the fuel filler cap and fuel filler pipe. <Ref. to FU(H4DOTC)-66, Fuel Filler Pipe.>	Go to step **4**.
4	**CHECK DRAIN VALVE.** 1) Connect the delivery (test) mode connector. 2) Turn the ignition switch to ON. 3) Operate the drain valve using the Subaru Select Monitor. NOTE: The drain valve can be operated using Subaru Select Monitor. For the procedures, refer to “Compulsory Valve Operation Check Mode”. <Ref. to EN(H4DOTC)(diag)-53, Compulsory Valve Operation Check Mode.>	Does the drain valve operate?	Go to step **5**.	Replace the drain valve. <Ref. to EC(H4DOTC)-19, Drain Valve.>
5	**CHECK PURGE CONTROL SOLENOID VALVE.** Operate the purge control solenoid valve using the Subaru Select Monitor. NOTE: Purge control solenoid valve operation can be executed using Subaru Select Monitor. For the procedures, refer to “Compulsory Valve Operation Check Mode”. <Ref. to EN(H4DOTC)(diag)-53, Compulsory Valve Operation Check Mode.>	Does the purge control solenoid valve operate?	Go to step **6**.	Replace the purge control solenoid valve. <Ref. to EC(H4DOTC)-9, Purge Control Solenoid Valve.>
6	**CHECK PRESSURE CONTROL SOLENOID VALVE.** Operate the pressure control solenoid valve using the Subaru Select Monitor. NOTE: The pressure control solenoid valve operation can be executed using the Subaru Select Monitor. For the procedures, refer to “Compulsory Valve Operation Check Mode”. <Ref. to EN(H4DOTC)(diag)-53, Compulsory Valve Operation Check Mode.>	Does the pressure control solenoid valve operate?	Go to step **7**.	Replace the pressure control solenoid valve. <Ref. to EC(H4DOTC)-16, Pressure Control Solenoid Valve.>
7	**CHECK EVAPORATIVE EMISSION CONTROL SYSTEM LINE.** 1) Turn the ignition switch to OFF. 2) Disconnect the delivery (test) mode connector.	Is there any hole of more than 1.0 mm (0.04 in) dia. on evaporation line?	Repair or replace the evaporation line. <Ref. to FU(H4DOTC)-80, Fuel Delivery, Return and Evaporation Lines.>	Go to step **8**.

Step		Check	Yes	No
8	**CHECK CANISTER.**	Is the canister damaged or is there a hole of more than 1.0 mm (0.04 in) dia. in it?	Repair or replace the canister. <Ref. to EC(H4DOTC)-7, Canister.>	Go to step **9**.
9	**CHECK FUEL TANK.** Remove the fuel tank. <Ref. to FU(H4DOTC)-59, Fuel Tank.>	Is the fuel tank damaged or is there any hole of more than 1.0 mm (0.04 in) dia. in it?	Repair or replace the fuel tank. <Ref. to FU(H4DOTC)-59, Fuel Tank.>	Go to step **10**.
10	**CHECK ANY OTHER MECHANICAL TROUBLE IN EVAPORATIVE EMISSION CONTROL SYSTEM.**	Is there any hole of more than 1.0 mm (0.04 in) dia., crack, clogging, or disconnections, bend, misconnection of hoses or pipes in evaporative emission control system?	Repair or replace the hoses or pipes.	Repair the poor contact of ECM connector.

BM:DTC P0447 EVAPORATIVE EMISSION CONTROL SYSTEM VENT CONTROL CIRCUIT OPEN

DTC DETECTING CONDITION:

- Immediately at fault recognition
- GENERAL DESCRIPTION <Ref. to GD(H4DOTC)-124, DTC P0447 EVAPORATIVE EMISSION CONTROL SYSTEM VENT CONTROL CIRCUIT OPEN, Diagnostic Trouble Code (DTC) Detecting Criteria.>

CAUTION:

After repair or replacement of faulty parts, perform Clear Memory Mode <Ref. to EN(H4DOTC)(diag)-52, OPERATION, Clear Memory Mode.>, and Inspection Mode <Ref. to EN(H4DOTC)(diag)-43, PROCEDURE, Inspection Mode.>.

WIRING DIAGRAM:

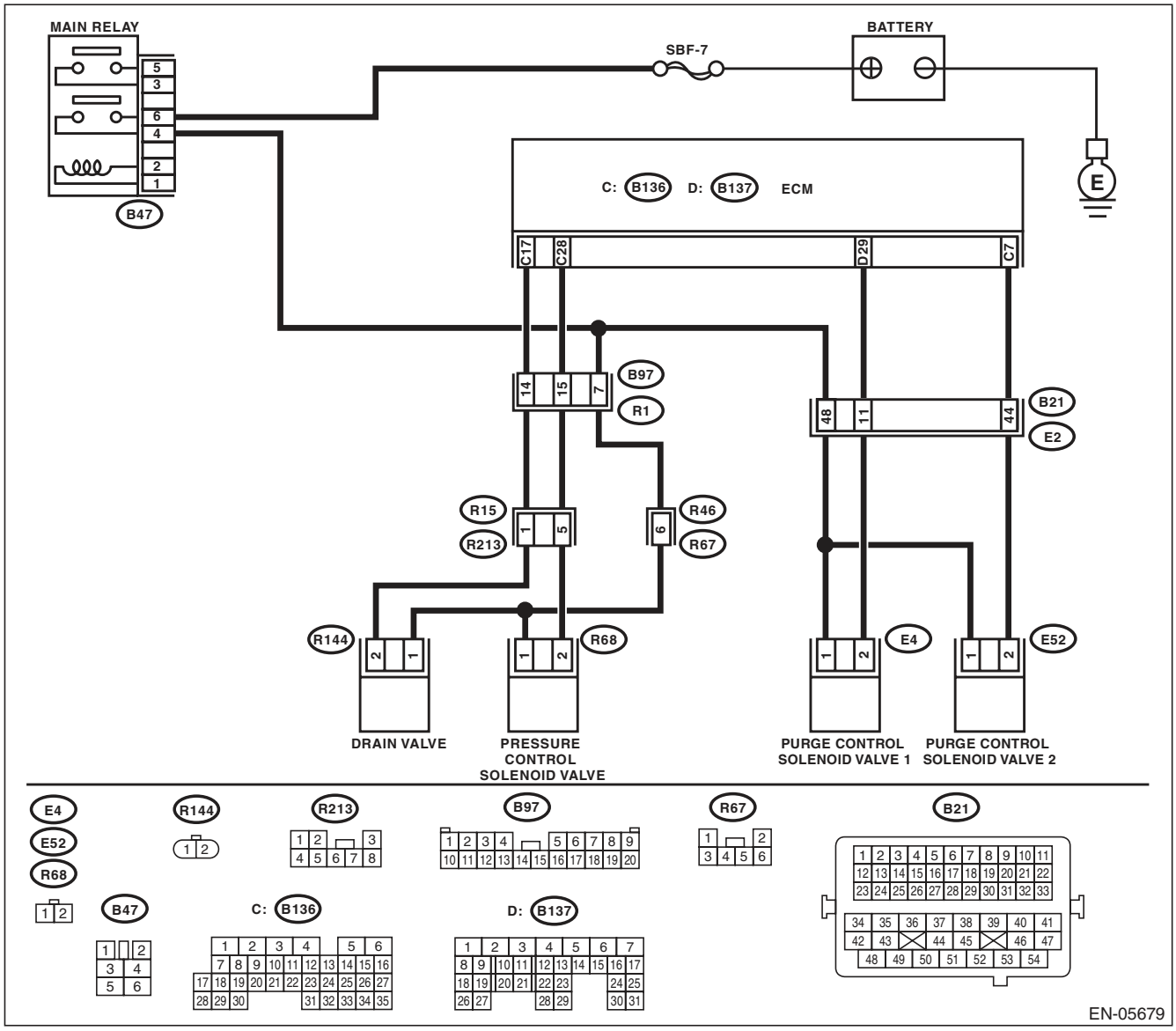

	Step	Check	Yes	No
1	**CHECK OUTPUT SIGNAL OF ECM.** 1) Turn the ignition switch to ON. 2) Measure the voltage between ECM and chassis ground. ***Connector & terminal*** ***(B136) No. 17 (+) — Chassis ground (–):***	Is the voltage 10 V or more?	Repair the poor contact of ECM connector.	Go to step **2**.
2	**CHECK HARNESS BETWEEN ECM AND DRAIN VALVE.** 1) Turn the ignition switch to OFF. 2) Disconnect the connectors from the ECM and drain valve. 3) Measure the resistance between the drain valve connector and chassis ground. ***Connector & terminal*** ***(R144) No. 2 — Chassis ground:***	Is the resistance 1 MΩ or more?	Go to step **3**.	Repair the ground short circuit of harness between ECM and drain valve connector.
3	**CHECK HARNESS BETWEEN ECM AND DRAIN VALVE.** Measure the resistance of harness between ECM and drain valve connector. ***Connector & terminal*** ***(B136) No. 17 — (R144) No. 2:***	Is the resistance less than 1 Ω?	Go to step **4**.	Repair the harness and connector. NOTE: In this case, repair the following item: • Open circuit in harness between ECM and drain valve connector • Poor contact of coupling connector
4	**CHECK DRAIN VALVE.** Measure the resistance between drain valve terminals. ***Terminals*** ***No. 1 — No. 2:***	Is the resistance between 10 — 100 Ω?	Go to step **5**.	Replace the drain valve. <Ref. to EC(H4DOTC)-19, Drain Valve.>
5	**CHECK POWER SUPPLY TO DRAIN VALVE.** 1) Turn the ignition switch to ON. 2) Measure the voltage between drain valve and chassis ground. ***Connector & terminal*** ***(R144) No. 1 (+) — Chassis ground (–):***	Is the voltage 10 V or more?	Repair poor contact of the drain valve connector.	Repair the harness and connector. NOTE: In this case, repair the following item: • Open circuit of harness between main relay and drain valve • Poor contact of coupling connector • Poor contact of main relay connector

BN:DTC P0448 EVAPORATIVE EMISSION CONTROL SYSTEM VENT CONTROL CIRCUIT SHORTED

DTC DETECTING CONDITION:

- Immediately at fault recognition
- GENERAL DESCRIPTION <Ref. to GD(H4DOTC)-126, DTC P0448 EVAPORATIVE EMISSION CONTROL SYSTEM VENT CONTROL CIRCUIT SHORTED, Diagnostic Trouble Code (DTC) Detecting Criteria.>

CAUTION:

After repair or replacement of faulty parts, perform Clear Memory Mode <Ref. to EN(H4DOTC)(diag)-52, OPERATION, Clear Memory Mode.>, and Inspection Mode <Ref. to EN(H4DOTC)(diag)-43, PROCEDURE, Inspection Mode.>.

WIRING DIAGRAM:

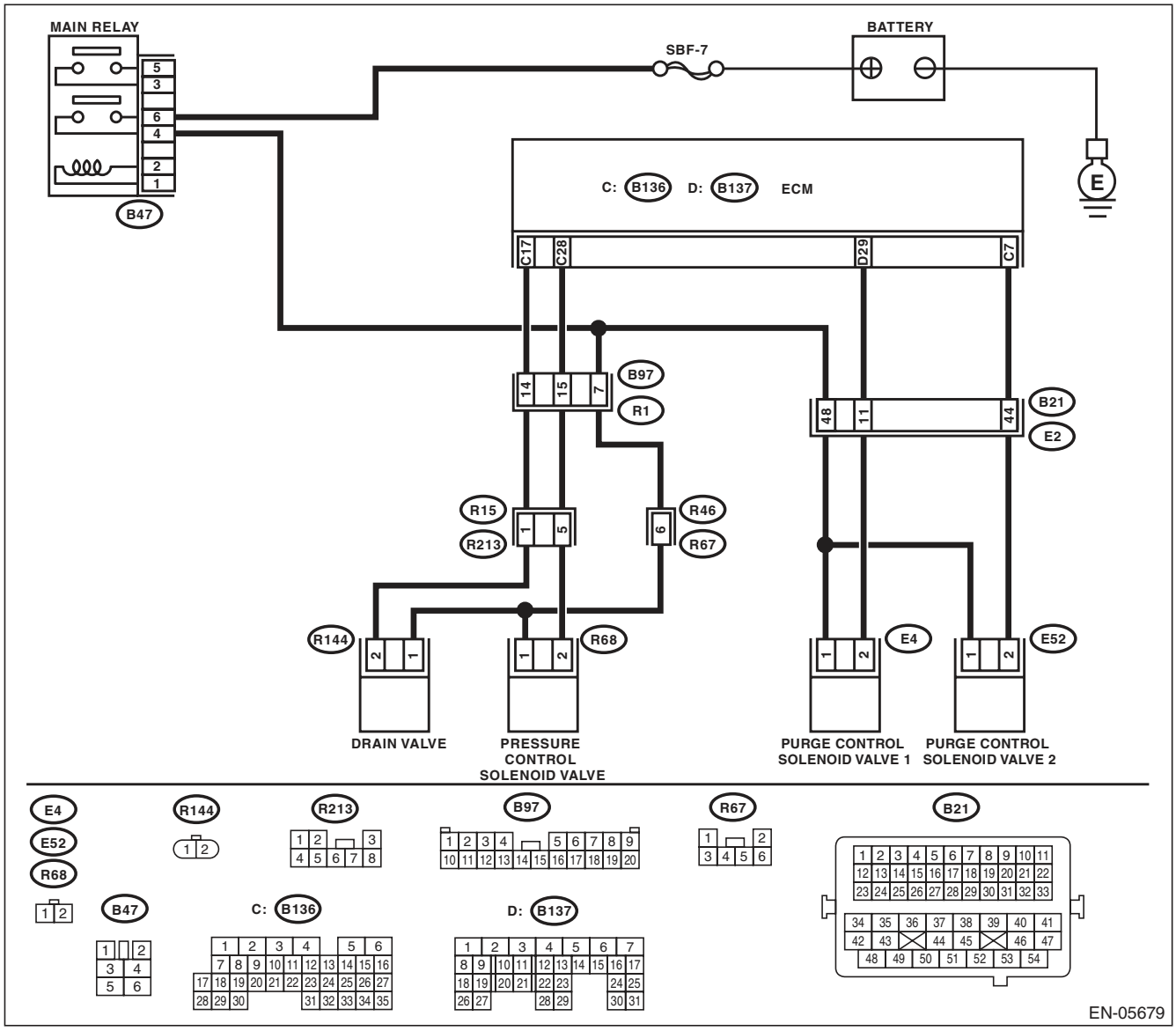

Step		Check	Yes	No
1	**CHECK HARNESS BETWEEN ECM AND DRAIN VALVE.** 1) Turn the ignition switch to OFF. 2) Disconnect the connectors from the ECM and drain valve. 3) Turn the ignition switch to ON. 4) Measure the voltage between ECM and chassis ground. ***Connector & terminal*** ***(B136) No. 17 (+) — Chassis ground (–):***	Is the voltage 10 V or more?	Repair the short circuit to the power supply in the harness between the ECM and drain valve connector.	Go to step **2**.
2	**CHECK DRAIN VALVE.** 1) Turn the ignition switch to OFF. 2) Measure the resistance between drain valve terminals. ***Terminals*** ***No. 1 — No. 2:***	Is the resistance less than 1 Ω?	Replace the drain valve. <Ref. to EC(H4DOTC)-19, Drain Valve.>	Repair the poor contact of ECM connector.

BO:DTC P0451 EVAPORATIVE EMISSION CONTROL SYSTEM PRESSURE SENSOR

DTC DETECTING CONDITION:

- Two consecutive driving cycles with fault
- GENERAL DESCRIPTION <Ref. to GD(H4DOTC)-128, DTC P0451 EVAPORATIVE EMISSION CONTROL SYSTEM PRESSURE SENSOR, Diagnostic Trouble Code (DTC) Detecting Criteria.>

CAUTION:

After repair or replacement of faulty parts, perform Clear Memory Mode <Ref. to EN(H4DOTC)(diag)-52, OPERATION, Clear Memory Mode.>, and Inspection Mode <Ref. to EN(H4DOTC)(diag)-43, PROCEDURE, Inspection Mode.>.

WIRING DIAGRAM:

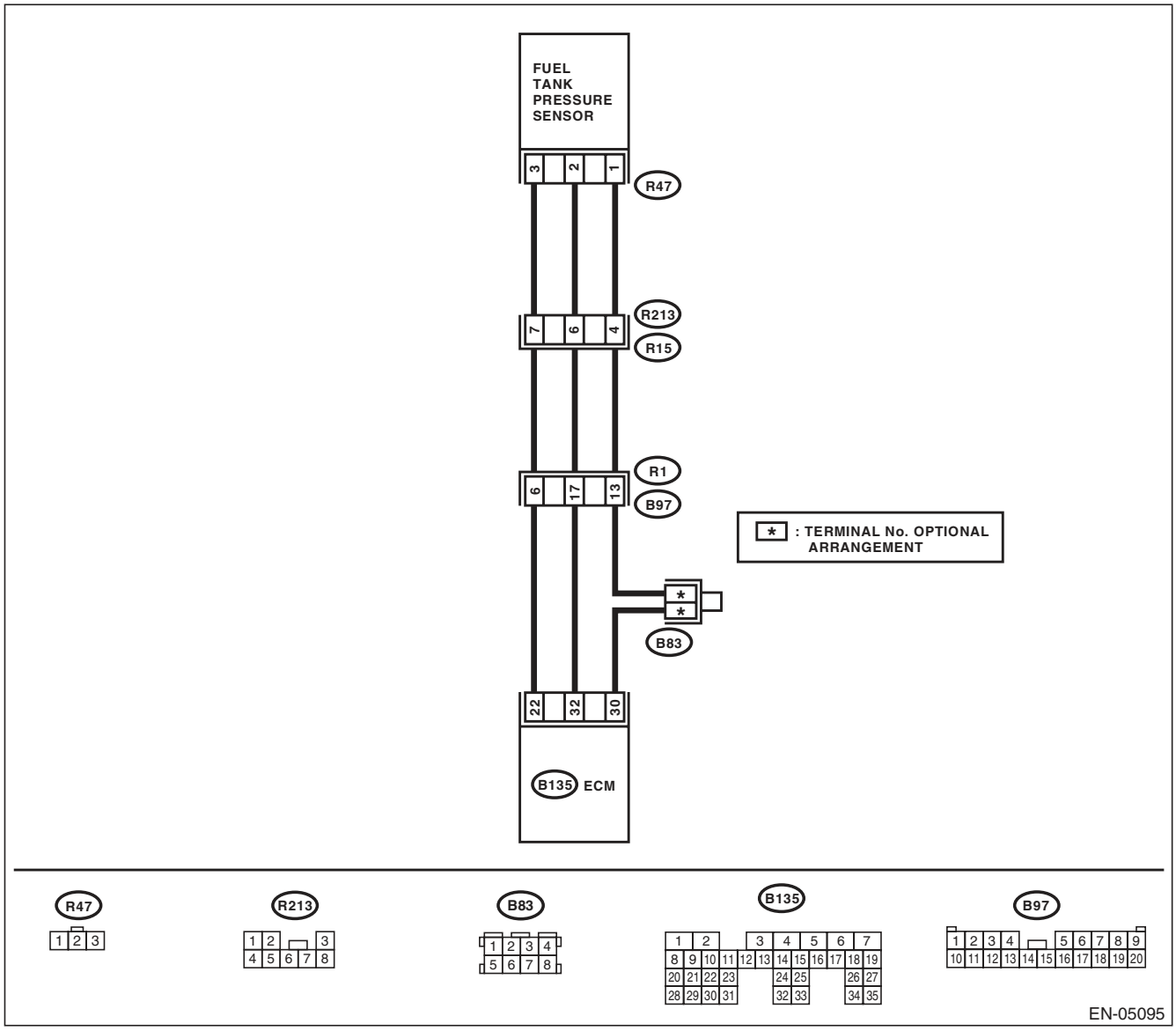

Step		Check	Yes	No
1	**CHECK FUEL FILLER CAP.** 1) Turn the ignition switch to OFF. 2) Open the fuel flap.	Is the fuel filler cap tightened securely?	Go to step **2**.	Tighten fuel filler cap securely.
2	**CHECK PRESSURE VACUUM LINE.** NOTE: Check the following items. • Disconnection, leakage and clogging of the vacuum hoses and pipes between fuel tank pressure sensor and fuel tank • Disconnection, leakage and clogging of the air ventilation hoses and pipes between fuel filler pipe and fuel tank	Is there any fault in pressure/ vacuum line?	Repair or replace the hoses and pipes.	Replace the fuel tank pressure sensor. <Ref. to EC(H4DOTC)-15, Fuel Tank Pressure Sensor.>

BP:DTC P0452 EVAPORATIVE EMISSION CONTROL SYSTEM PRESSURE SENSOR LOW INPUT

DTC DETECTING CONDITION:

- Immediately at fault recognition
- GENERAL DESCRIPTION <Ref. to GD(H4DOTC)-130, DTC P0452 EVAPORATIVE EMISSION CONTROL SYSTEM PRESSURE SENSOR LOW INPUT, Diagnostic Trouble Code (DTC) Detecting Criteria.>

CAUTION:

After repair or replacement of faulty parts, perform Clear Memory Mode <Ref. to EN(H4DOTC)(diag)-52, OPERATION, Clear Memory Mode.>, and Inspection Mode <Ref. to EN(H4DOTC)(diag)-43, PROCEDURE, Inspection Mode.>.

WIRING DIAGRAM:

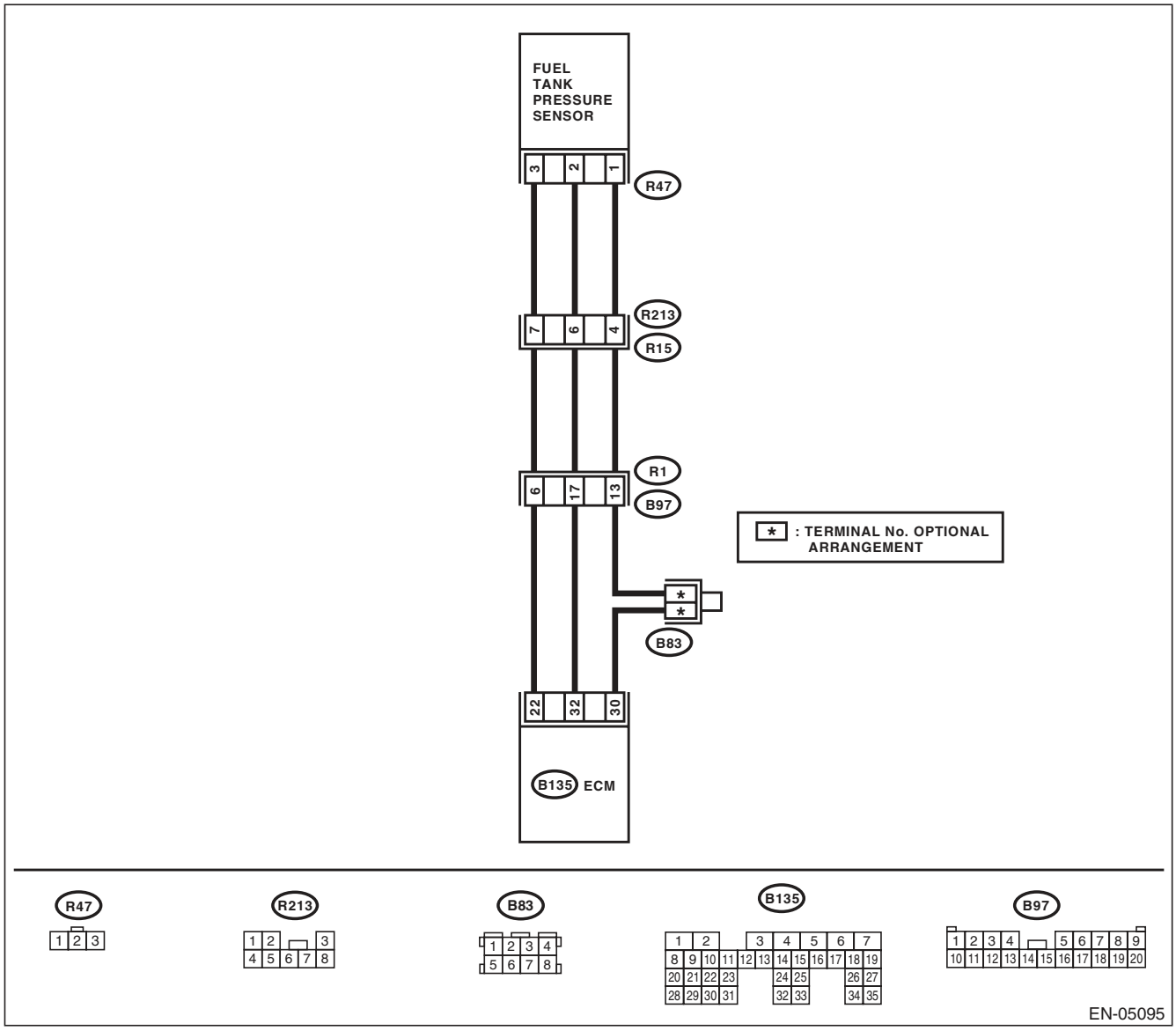

	Step	Check	Yes	No
1	**CHECK CURRENT DATA.** 1) Turn the ignition switch to ON. 2) Read the data of fuel tank pressure sensor signal using the Subaru Select Monitor or general scan tool. NOTE: • Subaru Select Monitor For detailed operation procedure, refer to "READ CURRENT DATA FOR ENGINE". <Ref. to EN(H4DOTC)(diag)-34, Subaru Select Monitor.> • General scan tool For detailed operation procedures, refer to the general scan tool operation manual.	Is the measured value less than –7.45 kPa (–55.89 mmHg, –2.2003 inHg) ?	Go to step **2**.	Even if DTC is detected, the circuit has returned to a normal condition at this time. Reproduce the failure, and then perform the diagnosis again. NOTE: In this case, temporary poor contact of connector may be the cause.
2	**CHECK FUEL TANK PRESSURE SENSOR POWER SOURCE.** 1) Turn the ignition switch to OFF. 2) Disconnect the connector from the fuel tank pressure sensor. 3) Turn the ignition switch to ON. 4) Measure the voltage between the fuel tank pressure sensor connector and chassis ground. ***Connector & terminal*** ***(R47) No. 3 (+) — Chassis ground (–):***	Is the voltage 4.5 V or more?	Go to step **3**.	Repair the harness and connector. NOTE: In this case, repair the following item: • Open circuit of harness between ECM and fuel tank pressure sensor connector • Poor contact in ECM connector • Poor contact of coupling connector
3	**CHECK HARNESS BETWEEN ECM AND FUEL TANK PRESSURE SENSOR CONNECTOR.** 1) Turn the ignition switch to OFF. 2) Disconnect the connectors from ECM. 3) Measure the resistance of harness between the ECM and fuel tank pressure sensor connector. ***Connector & terminal*** ***(B135) No. 32 — (R47) No. 2:***	Is the resistance less than 1 Ω?	Go to step **4**.	Repair the harness and connector. NOTE: In this case, repair the following item: • Open circuit of harness between ECM and fuel tank pressure sensor connector • Poor contact of coupling connector
4	**CHECK HARNESS BETWEEN ECM AND FUEL TANK PRESSURE SENSOR CONNECTOR.** Measure the resistance between ECM and chassis ground. ***Connector & terminal*** ***(B135) No. 32 — Chassis ground:***	Is the resistance 1 MΩ or more?	Go to step **5**.	Repair the ground short circuit of harness between ECM and fuel tank pressure sensor connector.
5	**CHECK POOR CONTACT.** Check for poor contact between the ECM and fuel tank pressure sensor connector.	Is there poor contact in the ECM or fuel tank pressure sensor connector?	Repair the poor contact in the ECM or fuel tank pressure sensor connector.	Replace the fuel tank pressure sensor. <Ref. to EC(H4DOTC)-15, Fuel Tank Pressure Sensor.>

BQ:DTC P0453 EVAPORATIVE EMISSION CONTROL SYSTEM PRESSURE SENSOR HIGH INPUT

DTC DETECTING CONDITION:

- Immediately at fault recognition
- GENERAL DESCRIPTION <Ref. to GD(H4DOTC)-132, DTC P0453 EVAPORATIVE EMISSION CONTROL SYSTEM PRESSURE SENSOR HIGH INPUT, Diagnostic Trouble Code (DTC) Detecting Criteria.>

CAUTION:

After repair or replacement of faulty parts, perform Clear Memory Mode <Ref. to EN(H4DOTC)(diag)-52, OPERATION, Clear Memory Mode.>, and Inspection Mode <Ref. to EN(H4DOTC)(diag)-43, PROCEDURE, Inspection Mode.>.

WIRING DIAGRAM:

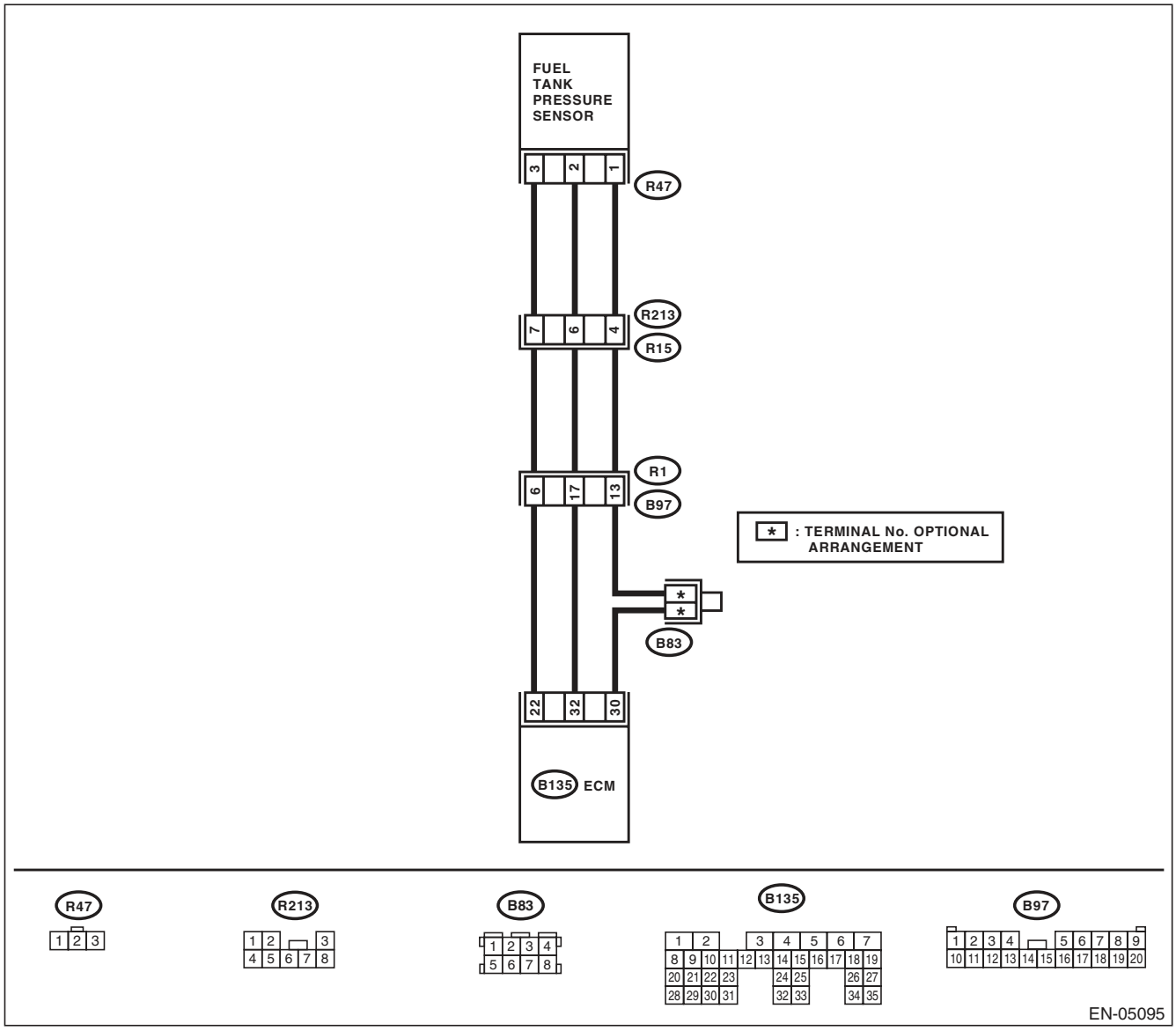

	Step	Check	Yes	No
1	**CHECK CURRENT DATA.** 1) Turn the ignition switch to ON. 2) Read the data of fuel tank pressure sensor signal using the Subaru Select Monitor or general scan tool. NOTE: • Subaru Select Monitor For detailed operation procedure, refer to "READ CURRENT DATA FOR ENGINE". <Ref. to EN(H4DOTC)(diag)-34, Subaru Select Monitor.> • General scan tool For detailed operation procedures, refer to the general scan tool operation manual.	Is the measured value 7.98 kPa (59.86 mmHg, 2.357 inHg) or more?	Go to step **2**.	Even if DTC is detected, the circuit has returned to a normal condition at this time. Reproduce the failure, and then perform the diagnosis again. NOTE: In this case, temporary poor contact of connector may be the cause.
2	**CHECK HARNESS BETWEEN ECM AND FUEL TANK PRESSURE SENSOR CONNECTOR.** 1) Turn the ignition switch to OFF. 2) Disconnect the connector from the fuel tank pressure sensor. 3) Turn the ignition switch to ON. 4) Read the data of fuel tank pressure sensor signal using the Subaru Select Monitor or general scan tool. NOTE: • Subaru Select Monitor For detailed operation procedure, refer to "READ CURRENT DATA FOR ENGINE". <Ref. to EN(H4DOTC)(diag)-34, Subaru Select Monitor.> • General scan tool For detailed operation procedures, refer to the general scan tool operation manual.	Is the measured value 7.98 kPa (59.86 mmHg, 2.357 inHg) or more?	Repair the short circuit to power supply in the harness between the ECM and fuel tank pressure sensor connector.	Go to step **3**.
3	**CHECK HARNESS BETWEEN ECM AND FUEL TANK PRESSURE SENSOR CONNECTOR.** 1) Turn the ignition switch to OFF. 2) Measure the resistance of harness between fuel tank pressure sensor connector and engine ground. ***Connector & terminal*** ***(R47) No. 1 — Engine ground:***	Is the resistance less than 5 Ω?	Go to step **4**.	Repair the harness and connector. NOTE: In this case, repair the following item: • Open circuit of harness between ECM and fuel tank pressure sensor connector • Poor contact in ECM connector • Poor contact of coupling connector
4	**CHECK POOR CONTACT.** Check for poor contact of the fuel tank pressure sensor connector.	Is there poor contact in fuel tank pressure sensor connector?	Repair the poor contact in the fuel tank pressure sensor connector.	Replace the fuel tank pressure sensor. <Ref. to EC(H4DOTC)-15, Fuel Tank Pressure Sensor.>

BR:DTC P0456 EVAPORATIVE EMISSION CONTROL SYSTEM LEAK DETECTED (VERY SMALL LEAK)

DTC DETECTING CONDITION:

- Two consecutive driving cycles with fault
- GENERAL DESCRIPTION <Ref. to GD(H4DOTC)-133, DTC P0456 EVAPORATIVE EMISSION CONTROL SYSTEM LEAK DETECTED (VERY SMALL LEAK), Diagnostic Trouble Code (DTC) Detecting Criteria.>

TROUBLE SYMPTOM:

- Fuel odor
- There is a hole of more than 0.5 mm (0.020 in) dia. in evaporation system or fuel tank.

CAUTION:

After repair or replacement of faulty parts, perform Clear Memory Mode <Ref. to EN(H4DOTC)(diag)-52, OPERATION, Clear Memory Mode.>, and Inspection Mode <Ref. to EN(H4DOTC)(diag)-43, PROCEDURE, Inspection Mode.>.

WIRING DIAGRAM:

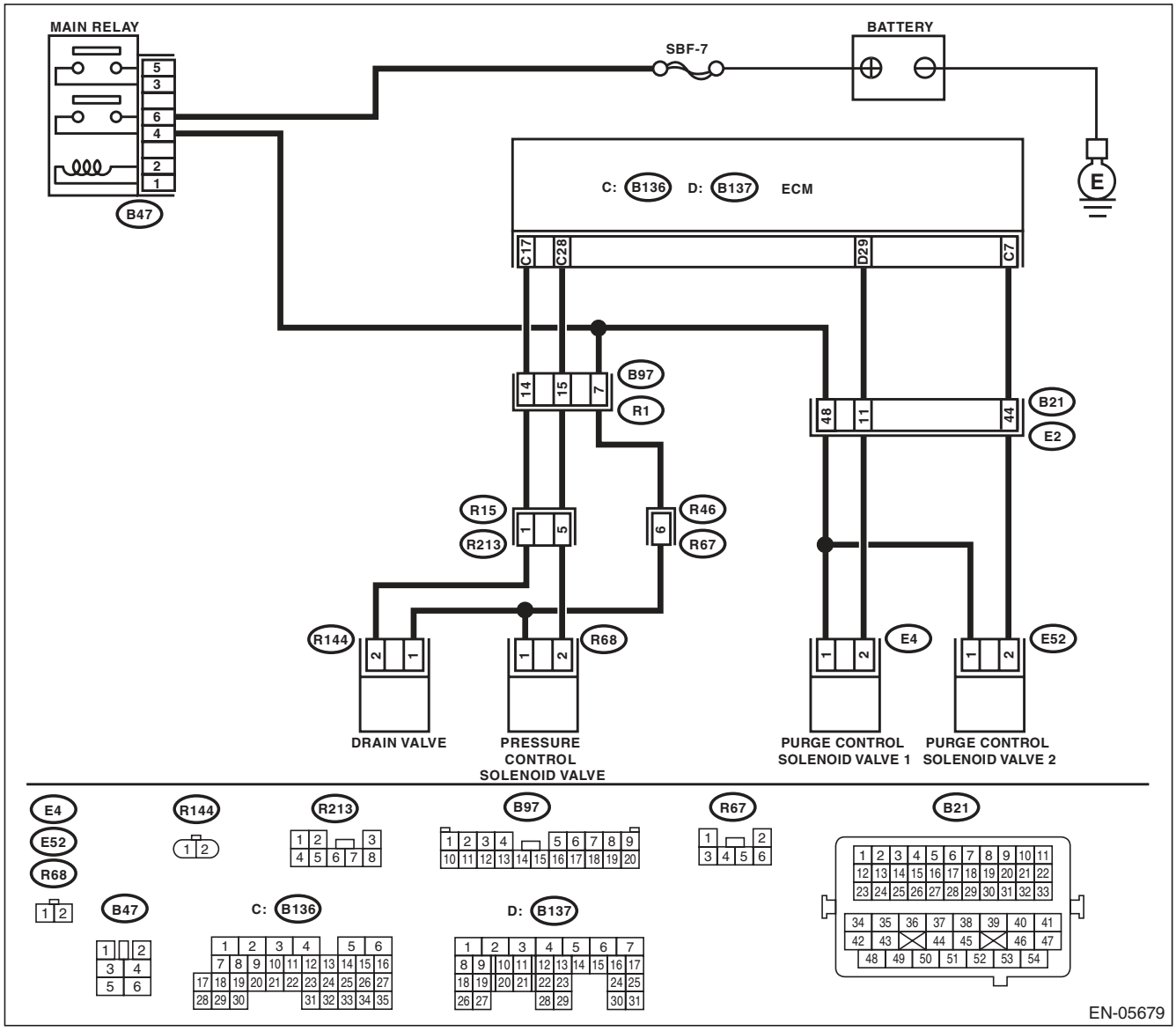

	Step	Check	Yes	No
1	**CHECK FUEL FILLER CAP.** 1) Turn the ignition switch to OFF. 2) Check the fuel filler cap. NOTE: The DTC is stored in memory if fuel filler cap is or was loose or if the cap chain has caught while tightening.	Is the fuel filler cap tightened securely?	Go to step **2**.	Tighten fuel filler cap securely.
2	**CHECK FUEL FILLER CAP.**	Is the fuel filler cap genuine?	Go to step **3**.	Replace with a genuine fuel filler cap.
3	**CHECK FUEL FILLER PIPE GASKET.**	Is there any damage to the seal between fuel filler cap and fuel filler pipe?	Repair or replace the fuel filler cap and fuel filler pipe. <Ref. to FU(H4DOTC)-66, Fuel Filler Pipe.>	Go to step **4**.
4	**CHECK DRAIN VALVE.** 1) Connect the delivery (test) mode connector. 2) Turn the ignition switch to ON. 3) Operate the drain valve using the Subaru Select Monitor. NOTE: Drain valve can be operated using the Subaru Select Monitor. For the procedures, refer to “Compulsory Valve Operation Check Mode”. <Ref. to EN(H4DOTC)(diag)-53, Compulsory Valve Operation Check Mode.>	Does the drain valve operate?	Go to step **5**.	Replace the drain valve. <Ref. to EC(H4DOTC)-19, Drain Valve.>
5	**CHECK PURGE CONTROL SOLENOID VALVE.** Operate the purge control solenoid valve using the Subaru Select Monitor. NOTE: Purge control solenoid valve operation can be executed using Subaru Select Monitor. For the procedures, refer to “Compulsory Valve Operation Check Mode”. <Ref. to EN(H4DOTC)(diag)-53, Compulsory Valve Operation Check Mode.>	Does the purge control solenoid valve operate?	Go to step **6**.	Replace the purge control solenoid valve. <Ref. to EC(H4DOTC)-9, Purge Control Solenoid Valve.>
6	**CHECK PRESSURE CONTROL SOLENOID VALVE.** Operate the pressure control solenoid valve using the Subaru Select Monitor. NOTE: The pressure control solenoid valve operation can be executed using the Subaru Select Monitor. For the procedures, refer to “Compulsory Valve Operation Check Mode”. <Ref. to EN(H4DOTC)(diag)-53, Compulsory Valve Operation Check Mode.>	Does the pressure control solenoid valve operate?	Go to step **7**.	Replace the pressure control solenoid valve. <Ref. to EC(H4DOTC)-16, Pressure Control Solenoid Valve.>
7	**CHECK EVAPORATIVE EMISSION CONTROL SYSTEM LINE.** 1) Turn the ignition switch to OFF. 2) Disconnect the delivery (test) mode connector.	Is there any hole of more than 0.5 mm (0.020 in) dia. on evaporation line?	Repair or replace the evaporation line. <Ref. to FU(H4DOTC)-80, Fuel Delivery, Return and Evaporation Lines.>	Go to step **8**.

Step		Check	Yes	No
8	**CHECK CANISTER.**	Is the canister damaged or is there a hole of more than 0.5 mm (0.020 in) dia. in it?	Repair or replace the canister. <Ref. to EC(H4DOTC)-7, Canister.>	Go to step **9**.
9	**CHECK FUEL TANK.** Remove the fuel tank. <Ref. to FU(H4DOTC)-59, Fuel Tank.>	Is the fuel tank damaged or is there any hole of more than 0.5 mm (0.020 in) dia. in it?	Repair or replace the fuel tank. <Ref. to FU(H4DOTC)-59, Fuel Tank.>	Go to step **10**.
10	**CHECK ANY OTHER MECHANICAL TROUBLE IN EVAPORATIVE EMISSION CONTROL SYSTEM.**	Is there any hole of more than 0.5 mm (0.020 in) dia., crack, clogging, or disconnections, bend, misconnection of hoses or pipes in evaporative emission control system?	Repair or replace the hoses or pipes.	Repair the poor contact of ECM connector.

BS:DTC P0457 EVAPORATIVE EMISSION CONTROL SYSTEM LEAK DETECTED (FUEL CAP LOOSE/OFF)

DTC DETECTING CONDITION:

- Two consecutive driving cycles with fault
- GENERAL DESCRIPTION <Ref. to GD(H4DOTC)-133, DTC P0457 EVAPORATIVE EMISSION CONTROL SYSTEM LEAK DETECTED (FUEL CAP LOOSE/OFF), Diagnostic Trouble Code (DTC) Detecting Criteria.>

TROUBLE SYMPTOM:

- Fuel odor
- Fuel filler cap loose or lost

CAUTION:

After repair or replacement of faulty parts, perform Clear Memory Mode <Ref. to EN(H4DOTC)(diag)-52, OPERATION, Clear Memory Mode.>, and Inspection Mode <Ref. to EN(H4DOTC)(diag)-43, PROCEDURE, Inspection Mode.>.

WIRING DIAGRAM:

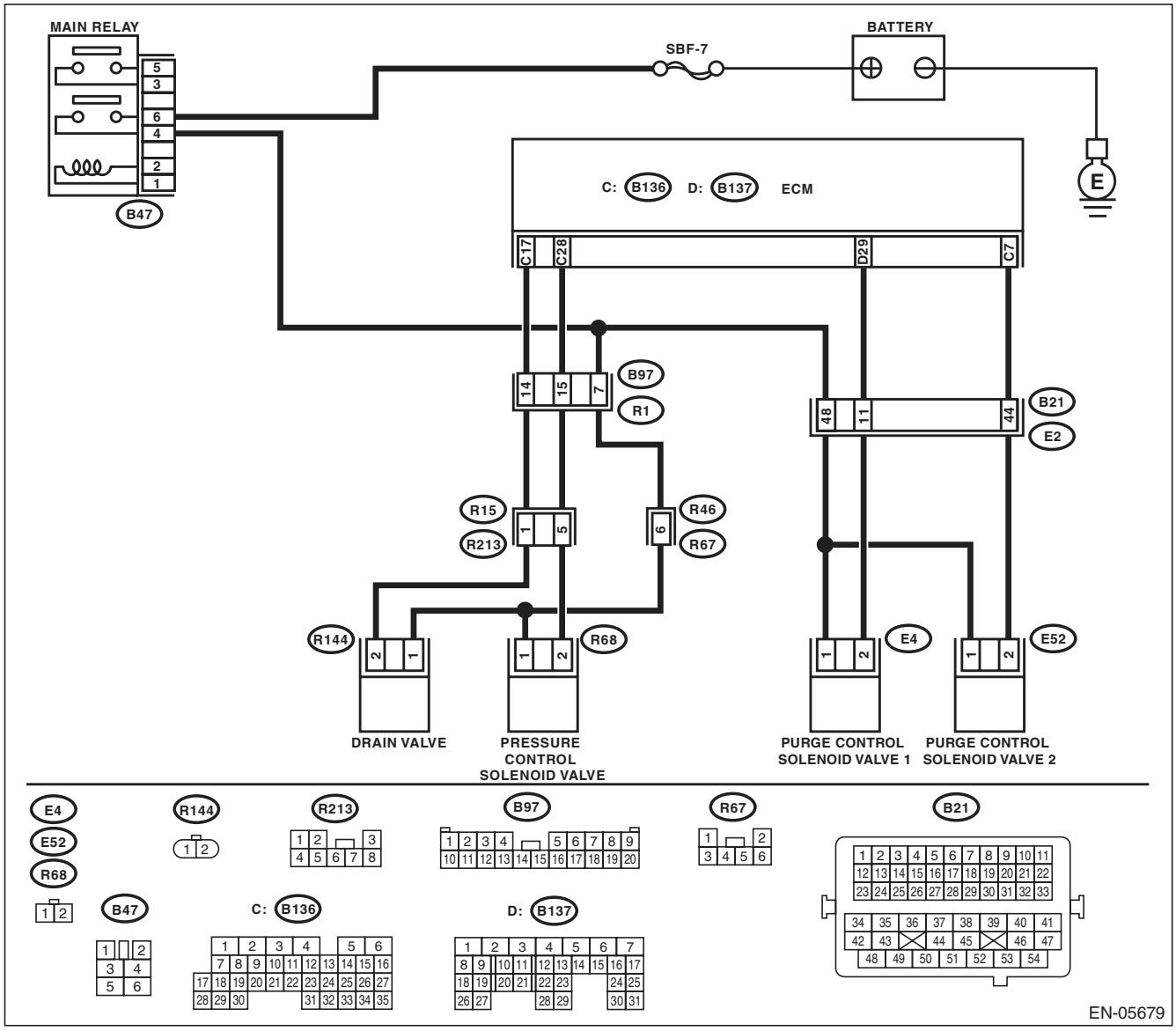

	Step	Check	Yes	No
1	**CHECK FUEL FILLER CAP.** 1) Turn the ignition switch to OFF. 2) Check the fuel filler cap. NOTE: The DTC is stored in memory if fuel filler cap is or was loose or if the cap chain has caught while tightening.	Is the fuel filler cap tightened securely?	Go to step **2**.	Tighten fuel filler cap securely.
2	**CHECK FUEL FILLER CAP.**	Is the fuel filler cap genuine?	Go to step **3**.	Replace with a genuine fuel filler cap.
3	**CHECK FUEL FILLER PIPE GASKET.**	Is there any damage to the seal between fuel filler cap and fuel filler pipe?	Repair or replace the fuel filler cap and fuel filler pipe. <Ref. to FU(H4DOTC)-66, Fuel Filler Pipe.>	Go to step **4**.
4	**CHECK DRAIN VALVE.** 1) Connect the delivery (test) mode connector. 2) Turn the ignition switch to ON. 3) Operate the drain valve using the Subaru Select Monitor. NOTE: Drain valve can be operated using the Subaru Select Monitor. For the procedures, refer to “Compulsory Valve Operation Check Mode”. <Ref. to EN(H4DOTC)(diag)-53, Compulsory Valve Operation Check Mode.>	Does the drain valve operate?	Go to step **5**.	Replace the drain valve. <Ref. to EC(H4DOTC)-19, Drain Valve.>
5	**CHECK PURGE CONTROL SOLENOID VALVE.** Operate the purge control solenoid valve using the Subaru Select Monitor. NOTE: Purge control solenoid valve operation can be executed using Subaru Select Monitor. For the procedures, refer to “Compulsory Valve Operation Check Mode”. <Ref. to EN(H4DOTC)(diag)-53, Compulsory Valve Operation Check Mode.>	Does the purge control solenoid valve operate?	Go to step **6**.	Replace the purge control solenoid valve. <Ref. to EC(H4DOTC)-9, Purge Control Solenoid Valve.>
6	**CHECK PRESSURE CONTROL SOLENOID VALVE.** Operate the pressure control solenoid valve using the Subaru Select Monitor. NOTE: The pressure control solenoid valve operation can be executed using the Subaru Select Monitor. For the procedures, refer to “Compulsory Valve Operation Check Mode”. <Ref. to EN(H4DOTC)(diag)-53, Compulsory Valve Operation Check Mode.>	Does the pressure control solenoid valve operate?	Go to step **7**.	Replace the pressure control solenoid valve. <Ref. to EC(H4DOTC)-16, Pressure Control Solenoid Valve.>
7	**CHECK EVAPORATIVE EMISSION CONTROL SYSTEM LINE.** 1) Turn the ignition switch to OFF. 2) Disconnect the delivery (test) mode connector.	Are there any disconnected, broken or clogged evaporation lines?	Repair or replace the evaporation line. <Ref. to FU(H4DOTC)-80, Fuel Delivery, Return and Evaporation Lines.>	Go to step **8**.

Step		Check	Yes	No
8	**CHECK CANISTER.**	Is the canister damaged?	Repair or replace the canister. <Ref. to EC(H4DOTC)-7, Canister.>	Go to step **9**.
9	**CHECK FUEL TANK.** Remove the fuel tank. <Ref. to FU(H4DOTC)-59, Fuel Tank.>	Is the fuel tank damaged?	Repair or replace the fuel tank. <Ref. to FU(H4DOTC)-59, Fuel Tank.>	Go to step **10**.
10	**CHECK ANY OTHER MECHANICAL TROUBLE IN EVAPORATIVE EMISSION CONTROL SYSTEM.**	Are there holes, cracks, clogging, or disconnections, misconnection of hoses or pipes in evaporative emission control system?	Repair or replace the hoses or pipes.	Repair the poor contact of ECM connector.

BT:DTC P0458 EVAPORATIVE EMISSION SYSTEM PURGE CONTROL VALVE CIRCUIT LOW

DTC DETECTING CONDITION:

- Two consecutive driving cycles with fault
- GENERAL DESCRIPTION <Ref. to GD(H4DOTC)-134, DTC P0458 EVAPORATIVE EMISSION SYSTEM PURGE CONTROL VALVE CIRCUIT LOW, Diagnostic Trouble Code (DTC) Detecting Criteria.>

TROUBLE SYMPTOM:

Improper idling

CAUTION:

After repair or replacement of faulty parts, perform Clear Memory Mode <Ref. to EN(H4DOTC)(diag)-52, OPERATION, Clear Memory Mode.>, and Inspection Mode <Ref. to EN(H4DOTC)(diag)-43, PROCEDURE, Inspection Mode.>.

WIRING DIAGRAM:

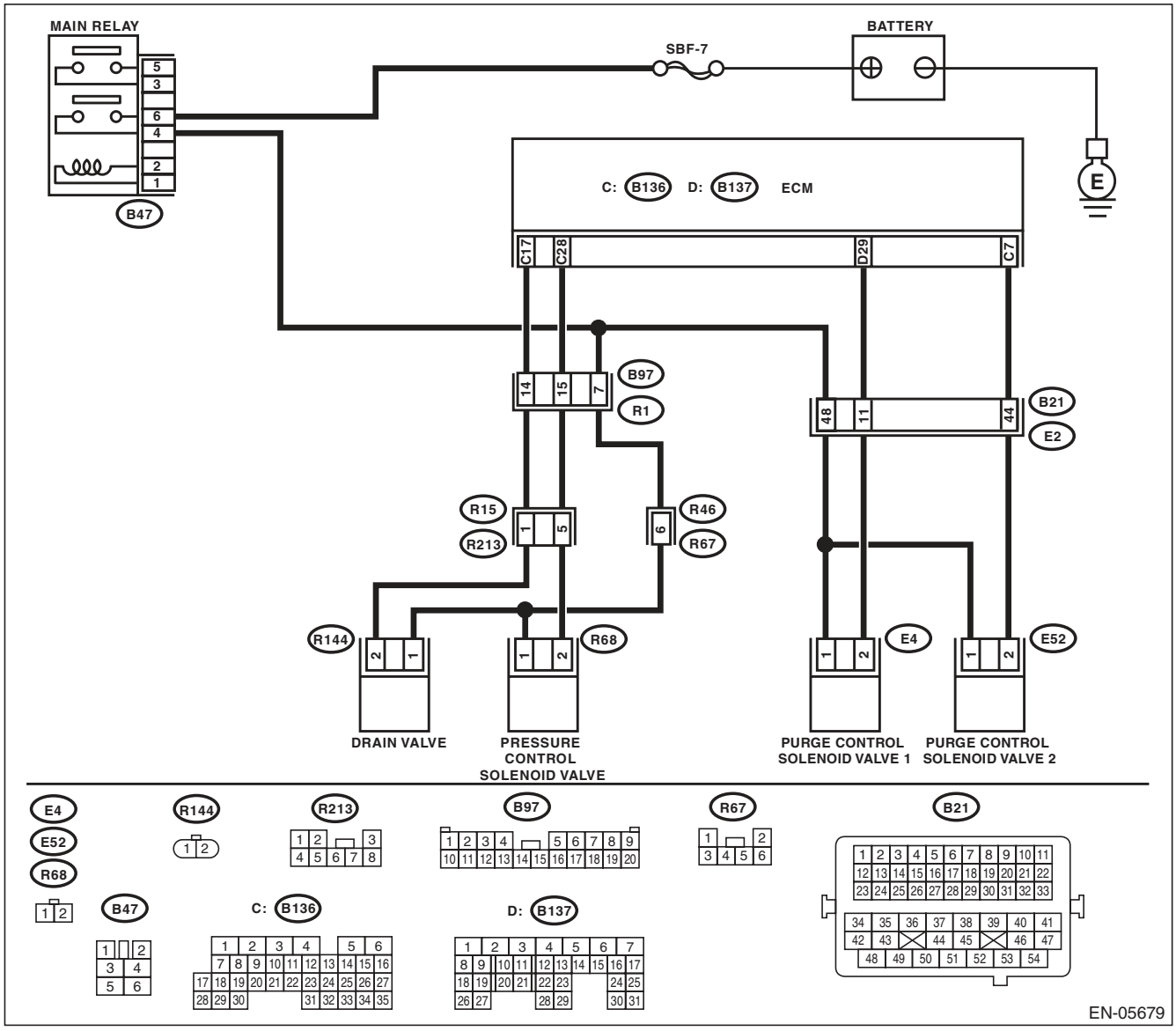

	Step	Check	Yes	No
1	**CHECK OUTPUT SIGNAL OF ECM.** 1) Turn the ignition switch to ON. 2) Measure the voltage between ECM and chassis ground. ***Connector & terminal*** ***(B137) No. 29 (+) — Chassis ground (–):***	Is the voltage 10 V or more?	Repair the poor contact of ECM connector.	Go to step **2**.
2	**OPEN CIRCUIT IN HARNESS BETWEEN ECM AND PURGE CONTROL SOLENOID VALVE.** 1) Turn the ignition switch to OFF. 2) Disconnect the connectors from ECM and purge control solenoid valve. 3) Measure the resistance between the purge control solenoid valve connector and engine ground. ***Connector & terminal*** ***(E4) No. 2 — Engine ground:***	Is the resistance 1 MΩ or more?	Go to step **3**.	Repair the ground short circuit of harness between ECM and purge control solenoid valve connector.
3	**OPEN CIRCUIT IN HARNESS BETWEEN ECM AND PURGE CONTROL SOLENOID VALVE.** Measure the resistance of harness between ECM and purge control solenoid valve connector. ***Connector & terminal*** ***(B137) No. 29 — (E4) No. 2:***	Is the resistance less than 1 Ω?	Go to step **4**.	Repair the harness and connector. NOTE: In this case, repair the following item: • Open circuit in harness between ECM and purge control solenoid valve connector • Poor contact of coupling connector
4	**CHECK PURGE CONTROL SOLENOID VALVE.** 1) Remove the purge control solenoid valve. 2) Measure the resistance between purge control solenoid valve terminals. ***Terminals*** ***No. 1 — No. 2:***	Is the resistance between 10 — 100 Ω?	Go to step **5**.	Replace the purge control solenoid valve. <Ref. to EC(H4DOTC)-9, Purge Control Solenoid Valve.>
5	**CHECK POWER SUPPLY TO PURGE CONTROL SOLENOID VALVE.** 1) Turn the ignition switch to ON. 2) Measure the voltage between purge control solenoid valve and engine ground. ***Connector & terminal*** ***(E4) No. 1 (+) — Engine ground (–):***	Is the voltage 10 V or more?	Repair the poor contact of purge control solenoid valve connector.	Repair the harness and connector. NOTE: In this case, repair the following item: • Open circuit in harness between main relay and purge control solenoid valve connector • Poor contact of coupling connector • Poor contact of main relay connector

BU:DTC P0459 EVAPORATIVE EMISSION SYSTEM PURGE CONTROL VALVE CIRCUIT HIGH

DTC DETECTING CONDITION:

- Two consecutive driving cycles with fault
- GENERAL DESCRIPTION <Ref. to GD(H4DOTC)-136, DTC P0459 EVAPORATIVE EMISSION SYSTEM PURGE CONTROL VALVE CIRCUIT HIGH, Diagnostic Trouble Code (DTC) Detecting Criteria.>

TROUBLE SYMPTOM:

Improper idling

CAUTION:

After repair or replacement of faulty parts, perform Clear Memory Mode <Ref. to EN(H4DOTC)(diag)-52, OPERATION, Clear Memory Mode.>, and Inspection Mode <Ref. to EN(H4DOTC)(diag)-43, PROCEDURE, Inspection Mode.>.

WIRING DIAGRAM:

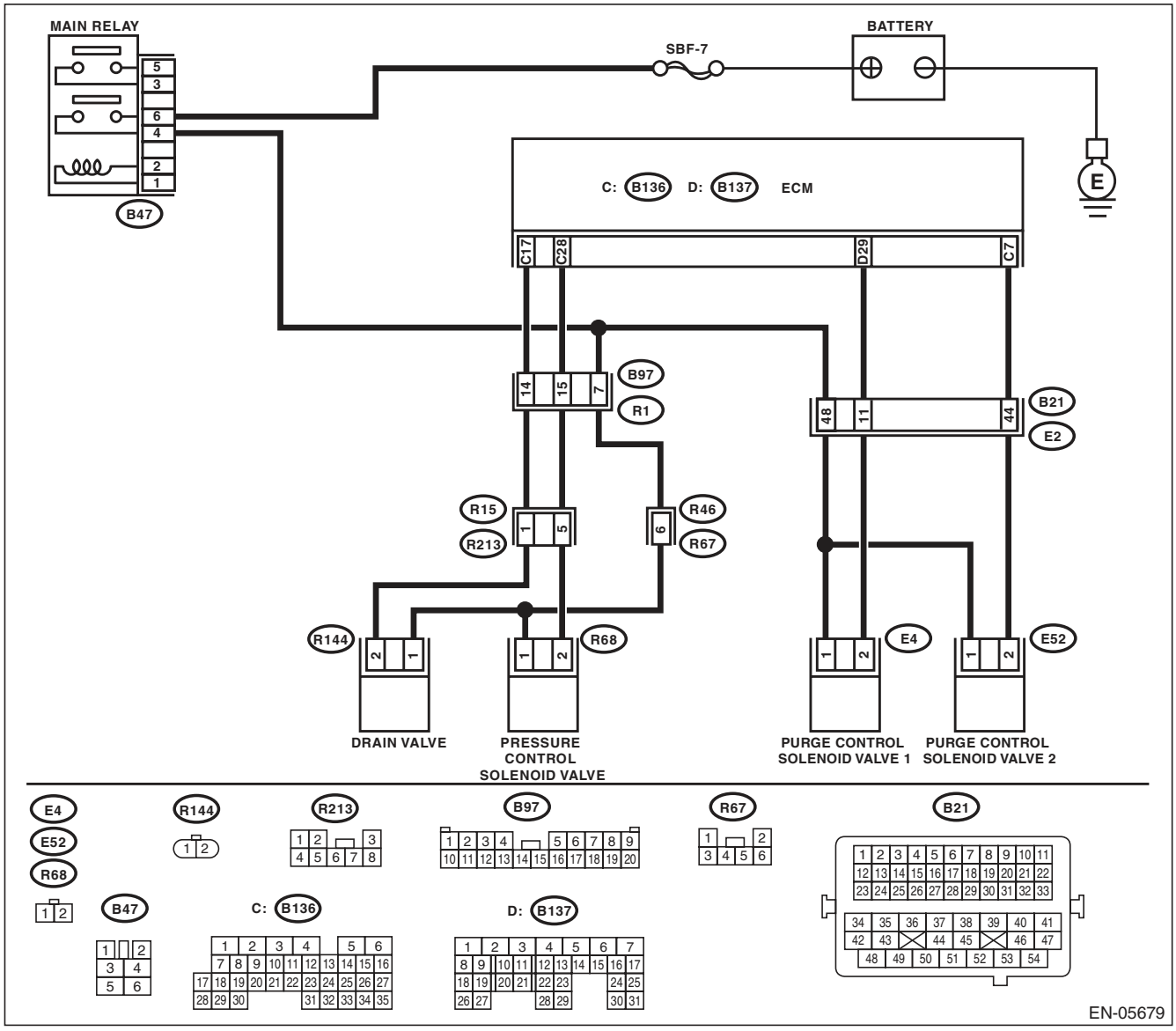

Step		Check	Yes	No
1	**OPEN CIRCUIT IN HARNESS BETWEEN ECM AND PURGE CONTROL SOLENOID VALVE.** 1) Turn the ignition switch to OFF. 2) Disconnect the connectors from ECM and purge control solenoid valve. 3) Turn the ignition switch to ON. 4) Measure the voltage between ECM and chassis ground. ***Connector & terminal*** ***(B137) No. 29 (+) — Chassis ground (–):***	Is the voltage 10 V or more?	Repair the short circuit to power in the harness between ECM and purge control solenoid valve connector.	Go to step **2**.
2	**CHECK PURGE CONTROL SOLENOID VALVE.** 1) Turn the ignition switch to OFF. 2) Measure the resistance between purge control solenoid valve terminals. ***Terminals*** ***No. 1 — No. 2:***	Is the resistance less than 1 Ω?	Replace the purge control solenoid valve. <Ref. to EC(H4DOTC)-9, Purge Control Solenoid Valve.>	Repair the poor contact of ECM connector.

BV:DTC P0461 FUEL LEVEL SENSOR “A” CIRCUIT RANGE/PERFORMANCE

DTC DETECTING CONDITION:

- Two consecutive driving cycles with fault
- GENERAL DESCRIPTION <Ref. to GD(H4DOTC)-138, DTC P0461 FUEL LEVEL SENSOR “A” CIRCUIT RANGE/PERFORMANCE, Diagnostic Trouble Code (DTC) Detecting Criteria.>

CAUTION:

After repair or replacement of faulty parts, perform Clear Memory Mode <Ref. to EN(H4DOTC)(diag)-52, OPERATION, Clear Memory Mode.>, and Inspection Mode <Ref. to EN(H4DOTC)(diag)-43, PROCEDURE, Inspection Mode.>.

Step	Check	Yes	No
1 **CHECK FOR ANY OTHER DTC ON DISPLAY.**	Is any other DTC displayed?	Check the appropriate DTC using the “List of Diagnostic Trouble Code (DTC)”. <Ref. to EN(H4DOTC)(diag)-81, List of Diagnostic Trouble Code (DTC).>	Replace the fuel level sensor and fuel sub level sensor. <Ref. to FU(H4DOTC)-72, Fuel Level Sensor.> <Ref. to FU(H4DOTC)-73, Fuel Sub Level Sensor.>

BW:DTC P0462 FUEL LEVEL SENSOR “A” CIRCUIT LOW

NOTE:
For the diagnostic procedure, refer to DTC P0463. <Ref. to EN(H4DOTC)(diag)-239, DTC P0463 FUEL LEVEL SENSOR “A” CIRCUIT HIGH, Diagnostic Procedure with Diagnostic Trouble Code (DTC).>

BX:DTC P0463 FUEL LEVEL SENSOR “A” CIRCUIT HIGH

DTC DETECTING CONDITION:

- Two consecutive driving cycles with fault
- GENERAL DESCRIPTION <Ref. to GD(H4DOTC)-142, DTC P0463 FUEL LEVEL SENSOR “A” CIRCUIT HIGH, Diagnostic Trouble Code (DTC) Detecting Criteria.>

CAUTION:

After repair or replacement of faulty parts, perform Clear Memory Mode <Ref. to EN(H4DOTC)(diag)-52, OPERATION, Clear Memory Mode.>, and Inspection Mode <Ref. to EN(H4DOTC)(diag)-43, PROCEDURE, Inspection Mode.>.

Step	Check	Yes	No
1 **CHECK FOR ANY OTHER DTC ON DISPLAY.**	Is DTC P0462 or P0463 displayed on the Subaru Select Monitor?	Check the combination meter. <Ref. to IDI-13, CHECK FUEL LEVEL SENSOR, INSPECTION, Combination Meter System.>	Even if DTC is detected, the circuit has returned to a normal condition at this time. Reproduce the failure, and then perform the diagnosis again. NOTE: In this case, temporary poor contact of connector may be the cause.

BY:DTC P0464 FUEL LEVEL SENSOR CIRCUIT INTERMITTENT

DTC DETECTING CONDITION:

- Two consecutive driving cycles with fault
- GENERAL DESCRIPTION <Ref. to GD(H4DOTC)-144, DTC P0464 FUEL LEVEL SENSOR CIRCUIT INTERMITTENT, Diagnostic Trouble Code (DTC) Detecting Criteria.>

CAUTION:

After repair or replacement of faulty parts, perform Clear Memory Mode <Ref. to EN(H4DOTC)(diag)-52, OPERATION, Clear Memory Mode.>, and Inspection Mode <Ref. to EN(H4DOTC)(diag)-43, PROCEDURE, Inspection Mode.>.

Step	Check	Yes	No
1 **CHECK FOR ANY OTHER DTC ON DISPLAY.**	Is DTC P0464 displayed on the display?	Check the combination meter. <Ref. to IDI-13, CHECK FUEL LEVEL SENSOR, INSPECTION, Combination Meter System.>	Even if DTC is detected, the circuit has returned to a normal condition at this time. Reproduce the failure, and then perform the diagnosis again. NOTE: In this case, temporary poor contact of connector may be the cause.

BZ:DTC P0500 VEHICLE SPEED SENSOR “A”

DTC DETECTING CONDITION:

- Immediately at fault recognition
- GENERAL DESCRIPTION <Ref. to GD(H4DOTC)-147, DTC P0500 VEHICLE SPEED SENSOR “A”, Diagnostic Trouble Code (DTC) Detecting Criteria.>

CAUTION:

After repair or replacement of faulty parts, perform Clear Memory Mode <Ref. to EN(H4DOTC)(diag)-52, OPERATION, Clear Memory Mode.>, and Inspection Mode <Ref. to EN(H4DOTC)(diag)-43, PROCEDURE, Inspection Mode.>.

Step	Check	Yes	No
1 **CHECK DTC OF ABS OR VDC.** Check DTC of ABS or VDC.	Is DTC of ABS or VDC displayed?	Perform the diagnosis according to DTC. <Ref. to ABS(diag)-29, List of Diagnostic Trouble Code (DTC).> <Ref. to VDC(diag)-34, List of Diagnostic Trouble Code (DTC).>	Repair the poor contact of ECM connector.

CA:DTC P0506 IDLE AIR CONTROL SYSTEM RPM LOWER THAN EXPECTED

DTC DETECTING CONDITION:

- Two consecutive driving cycles with fault
- GENERAL DESCRIPTION <Ref. to GD(H4DOTC)-148, DTC P0506 IDLE AIR CONTROL SYSTEM RPM LOWER THAN EXPECTED, Diagnostic Trouble Code (DTC) Detecting Criteria.>

TROUBLE SYMPTOM:

- Hard to start the engine.
- Engine does not start.
- Improper idling
- Engine stalls.

CAUTION:

After repair or replacement of faulty parts, perform Clear Memory Mode <Ref. to EN(H4DOTC)(diag)-52, OPERATION, Clear Memory Mode.>, and Inspection Mode <Ref. to EN(H4DOTC)(diag)-43, PROCEDURE, Inspection Mode.>.

WIRING DIAGRAM:

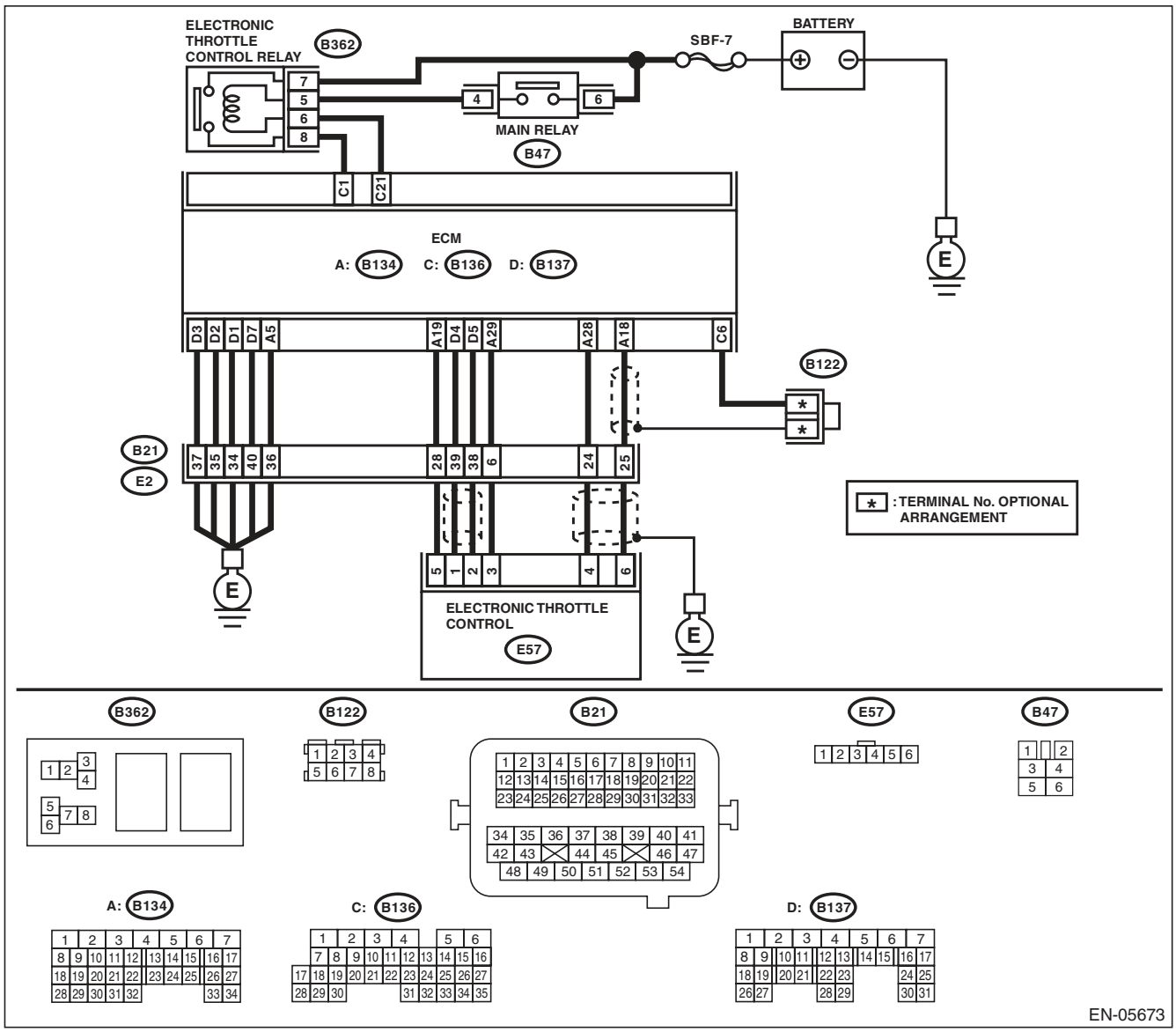

Step		Check	Yes	No
1	**CHECK FOR ANY OTHER DTC ON DISPLAY.**	Is any other DTC displayed?	Check the appropriate DTC using the “List of Diagnostic Trouble Code (DTC)”. <Ref. to EN(H4DOTC)(diag)-81, List of Diagnostic Trouble Code (DTC).>	Go to step **2**.
2	**CHECK AIR CLEANER ELEMENT.** 1) Turn the ignition switch to OFF. 2) Check the air cleaner element.	Is the air cleaner element excessively clogged?	Replace the air cleaner element. <Ref. to IN(H4DOTC)-7, Air Cleaner Element.>	Go to step **3**.
3	**CHECK ELECTRONIC THROTTLE CONTROL.** 1) Remove the electronic throttle control. <Ref. to FU(H4DOTC)-14, REMOVAL, Throttle Body.> 2) Check the electronic throttle control.	Are foreign matter found inside electronic throttle control?	Remove foreign matter from electronic throttle control.	Perform the diagnosis of DTC P2101. <Ref. to EN(H4DOTC)(diag)-318, DTC P2101 THROTTLE ACTUATOR CONTROL MOTOR CIRCUIT RANGE/PERFORMANCE, Diagnostic Procedure with Diagnostic Trouble Code (DTC).>

CB:DTC P0507 IDLE AIR CONTROL SYSTEM RPM HIGHER THAN EXPECTED

DTC DETECTING CONDITION:

- Two consecutive driving cycles with fault
- GENERAL DESCRIPTION <Ref. to GD(H4DOTC)-149, DTC P0507 IDLE AIR CONTROL SYSTEM RPM HIGHER THAN EXPECTED, Diagnostic Trouble Code (DTC) Detecting Criteria.>

TROUBLE SYMPTOM:

Engine keeps running at higher speed than specified idle speed.

CAUTION:

After repair or replacement of faulty parts, perform Clear Memory Mode <Ref. to EN(H4DOTC)(diag)-52, OPERATION, Clear Memory Mode.>, and Inspection Mode <Ref. to EN(H4DOTC)(diag)-43, PROCEDURE, Inspection Mode.>.

WIRING DIAGRAM:

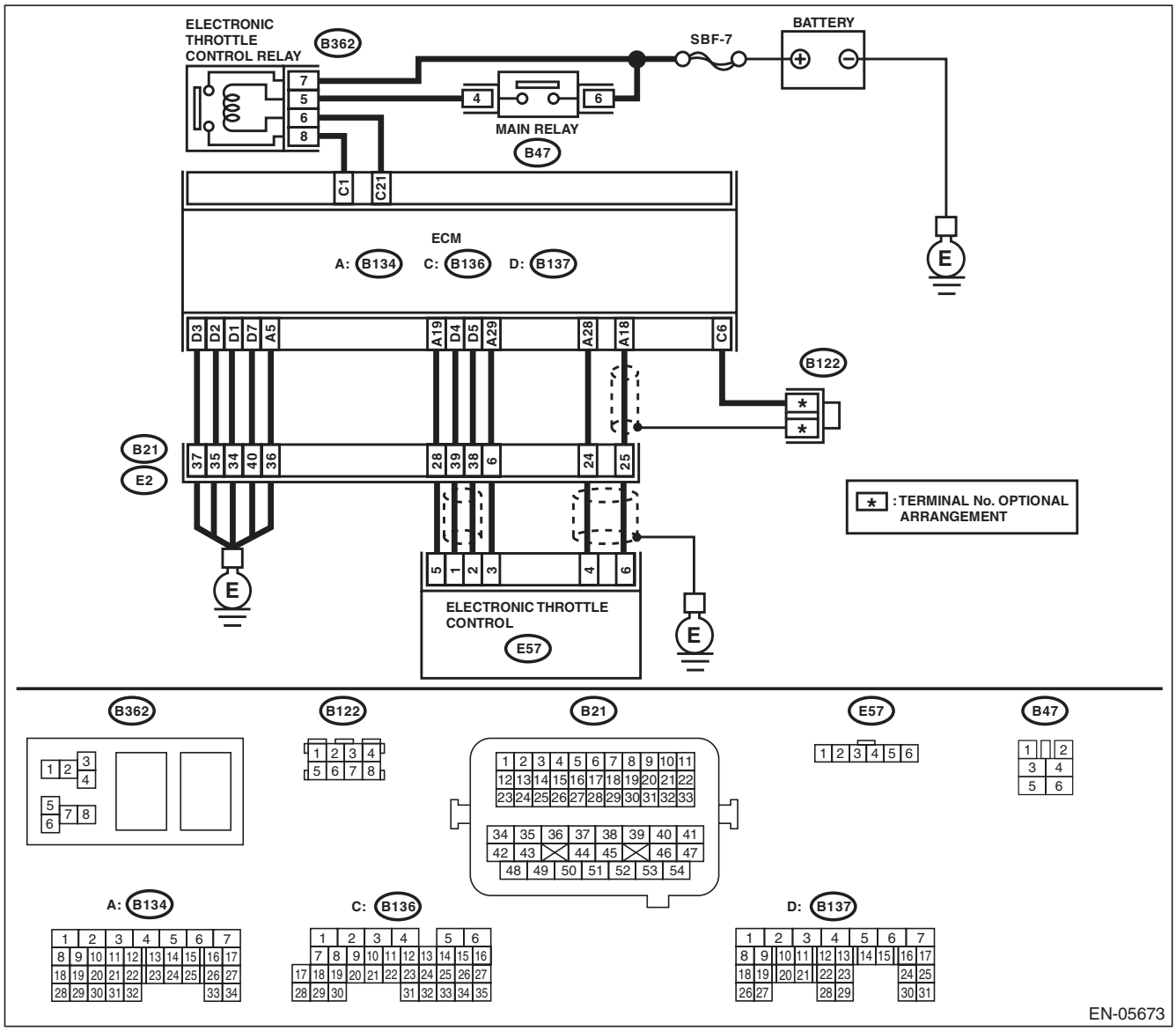

Step		Check	Yes	No
1	**CHECK FOR ANY OTHER DTC ON DISPLAY.**	Is any other DTC displayed?	Check the appropriate DTC using the “List of Diagnostic Trouble Code (DTC)”. <Ref. to EN(H4DOTC)(diag)-81, List of Diagnostic Trouble Code (DTC).>	Go to step **2**.
2	**CHECK AIR INTAKE SYSTEM.** 1) Start and idle the engine. 2) Check the following items. • Loose installation of intake manifold and throttle body • Cracks of intake manifold gasket and throttle body gasket • Disconnection of vacuum hoses	Is there any fault in air intake system?	Repair air suction and leaks.	Go to step **3**.
3	**CHECK ELECTRONIC THROTTLE CONTROL.** 1) Turn the ignition switch to OFF. 2) Remove the electronic throttle control. <Ref. to FU(H4DOTC)-14, REMOVAL, Throttle Body.> 3) Check the electronic throttle control.	Are foreign matter found inside electronic throttle control?	Remove foreign matter from electronic throttle control.	Perform the diagnosis of DTC P2101. <Ref. to EN(H4DOTC)(diag)-318, DTC P2101 THROTTLE ACTUATOR CONTROL MOTOR CIRCUIT RANGE/PERFORMANCE, Diagnostic Procedure with Diagnostic Trouble Code (DTC).>

CC:DTC P0512 STARTER REQUEST CIRCUIT

DTC DETECTING CONDITION:

- Immediately at fault recognition
- GENERAL DESCRIPTION <Ref. to GD(H4DOTC)-150, DTC P0512 STARTER REQUEST CIRCUIT, Diagnostic Trouble Code (DTC) Detecting Criteria.>

TROUBLE SYMPTOM:

Failure of engine to start

CAUTION:

After repair or replacement of faulty parts, perform Clear Memory Mode <Ref. to EN(H4DOTC)(diag)-52, OPERATION, Clear Memory Mode.>, and Inspection Mode <Ref. to EN(H4DOTC)(diag)-43, PROCEDURE, Inspection Mode.>.

WIRING DIAGRAM:

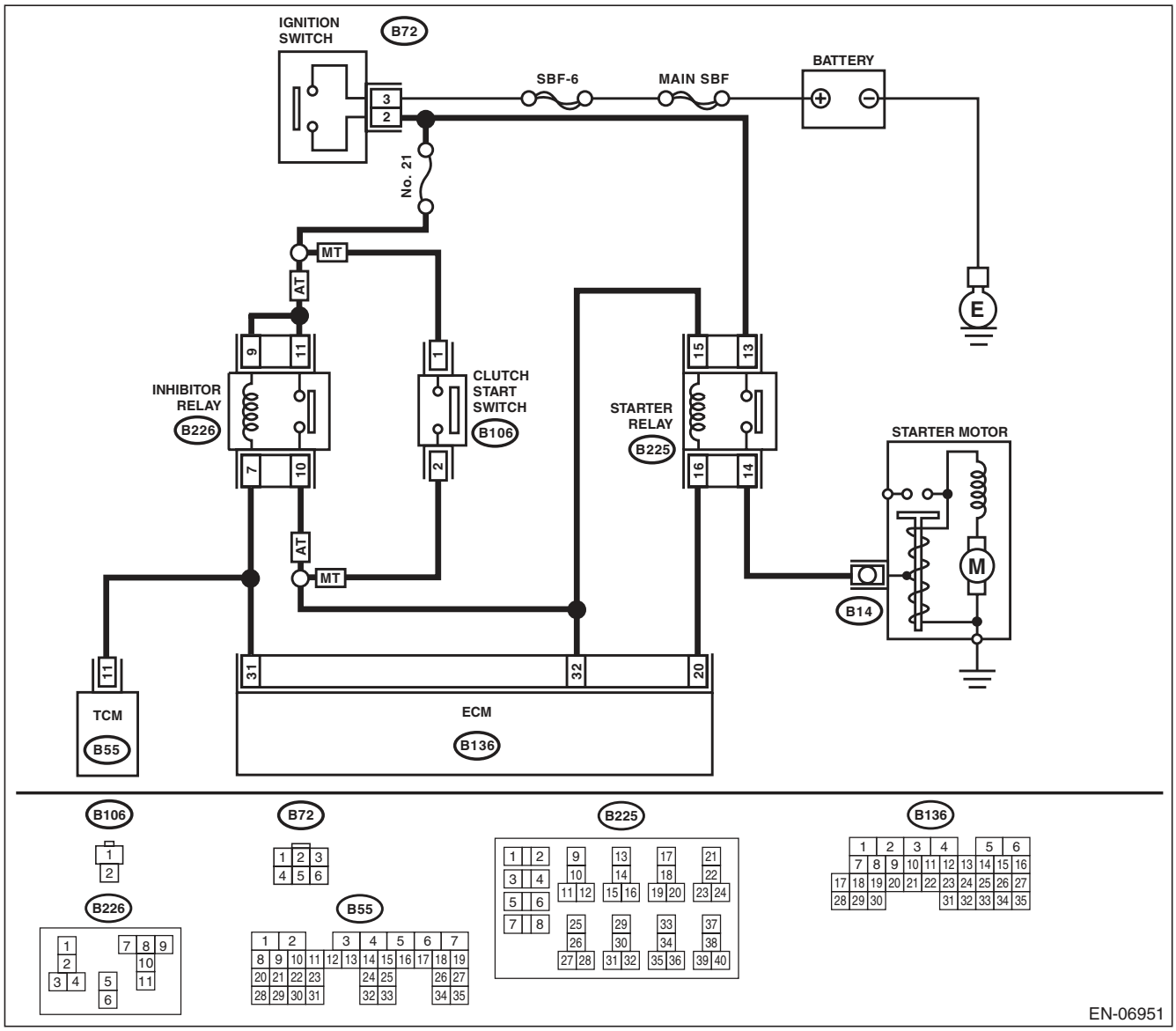

Step		Check	Yes	No
1	**CHECK FOR ANY OTHER DTC ON DISPLAY.**	Is any other DTC displayed?	Check the appropriate DTC using the “List of Diagnostic Trouble Code (DTC)”. <Ref. to EN(H4DOTC)(diag)-81, List of Diagnostic Trouble Code (DTC).>	Go to step **2**.
2	**CHECK HARNESS BETWEEN ECM AND IGNITION SWITCH.** 1) Turn the ignition switch to OFF. 2) Disconnect the connectors from ECM. 3) Turn the ignition switch to ON. 4) Measure the voltage between ECM and chassis ground. ***Connector & terminal*** ***(B136) No. 32 (+) — Chassis ground (–):***	Is the voltage 10 V or more?	Repair the short circuit to power in the harness between the ECM and ignition switch.	Repair the poor contact of ECM connector.

CD:DTC P0600 SERIAL COMMUNICATION LINK

NOTE:
For the diagnostic procedure, refer to LAN section. <Ref. to LAN(diag)-2, Basic Diagnostic Procedure.>

CE:DTC P0604 INTERNAL CONTROL MODULE RANDOM ACCESS MEMORY (RAM) ERROR

DTC DETECTING CONDITION:

- Immediately at fault recognition
- GENERAL DESCRIPTION <Ref. to GD(H4DOTC)-154, DTC P0604 INTERNAL CONTROL MODULE RANDOM ACCESS MEMORY (RAM) ERROR, Diagnostic Trouble Code (DTC) Detecting Criteria.>

TROUBLE SYMPTOM:

- Engine does not start.
- Engine stalls.

CAUTION:

After repair or replacement of faulty parts, perform Clear Memory Mode <Ref. to EN(H4DOTC)(diag)-52, OPERATION, Clear Memory Mode.>, and Inspection Mode <Ref. to EN(H4DOTC)(diag)-43, PROCEDURE, Inspection Mode.>.

WIRING DIAGRAM:

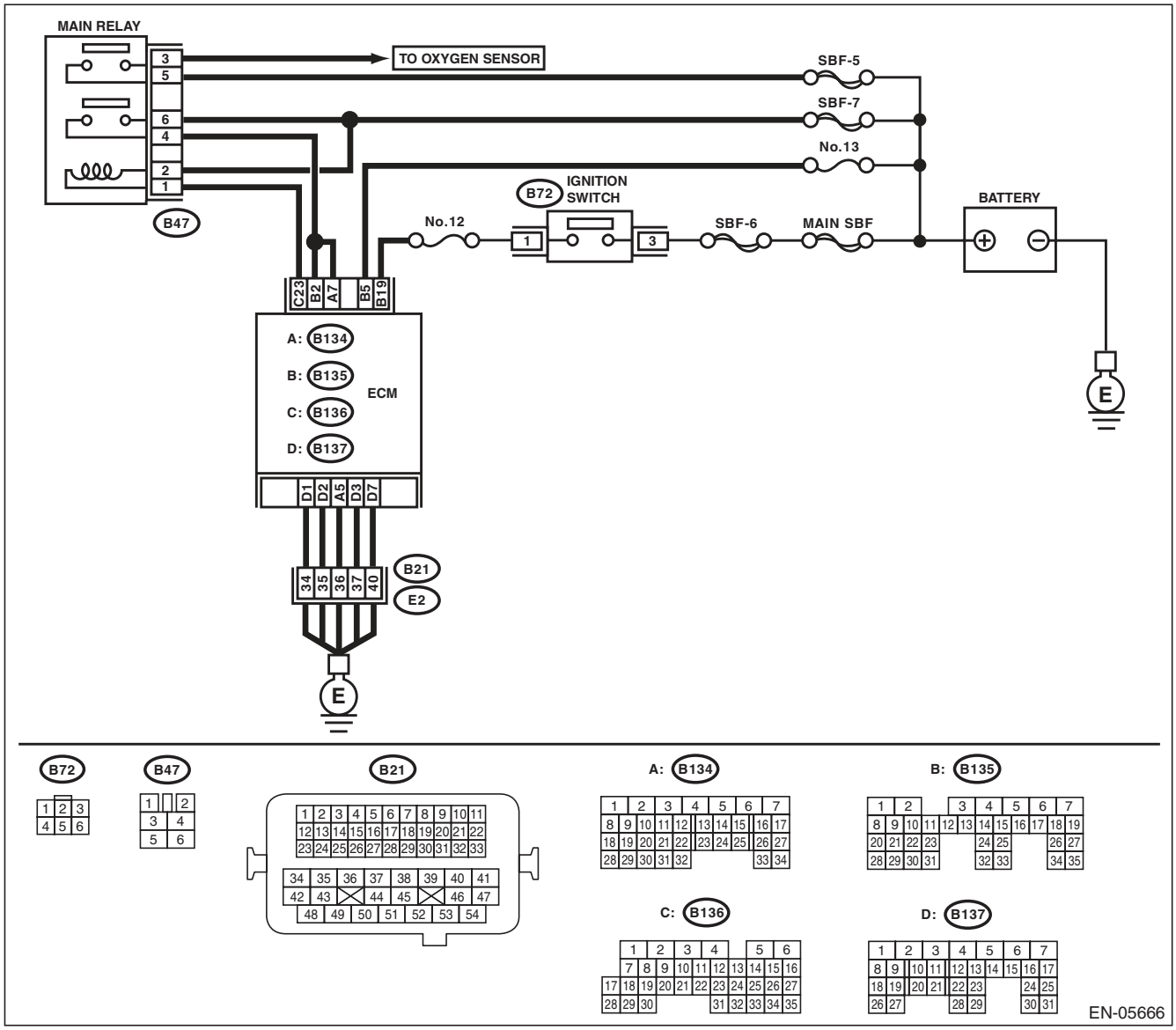

Step	Check	Yes	No
1 CHECK FOR ANY OTHER DTC ON DISPLAY.	Is any other DTC displayed?	Check the appropriate DTC using the “List of Diagnostic Trouble Code (DTC)”. <Ref. to EN(H4DOTC)(diag)-81, List of Diagnostic Trouble Code (DTC).>	Even if DTC is detected, the circuit has returned to a normal condition at this time. Reproduce the failure, and then perform the diagnosis again. NOTE: In this case, temporary poor contact of connector may be the cause.

CF:DTC P0605 INTERNAL CONTROL MODULE READ ONLY MEMORY (ROM) ERROR

NOTE:
For the diagnostic procedure, refer to DTC P0607. <Ref. to EN(H4DOTC)(diag)-249, DTC P0607 THROTTLE CONTROL SYSTEM CIRCUIT RANGE/PERFORMANCE, Diagnostic Procedure with Diagnostic Trouble Code (DTC).>

CG:DTC P0607 THROTTLE CONTROL SYSTEM CIRCUIT RANGE/PERFORMANCE

DTC DETECTING CONDITION:

- Immediately at fault recognition
- GENERAL DESCRIPTION <Ref. to GD(H4DOTC)-156, DTC P0607 THROTTLE CONTROL SYSTEM CIRCUIT RANGE/PERFORMANCE, Diagnostic Trouble Code (DTC) Detecting Criteria.>

TROUBLE SYMPTOM:

- Improper idling
- Poor driving performance

CAUTION:

After repair or replacement of faulty parts, perform Clear Memory Mode <Ref. to EN(H4DOTC)(diag)-52, OPERATION, Clear Memory Mode.>, and Inspection Mode <Ref. to EN(H4DOTC)(diag)-43, PROCEDURE, Inspection Mode.>.

WIRING DIAGRAM:

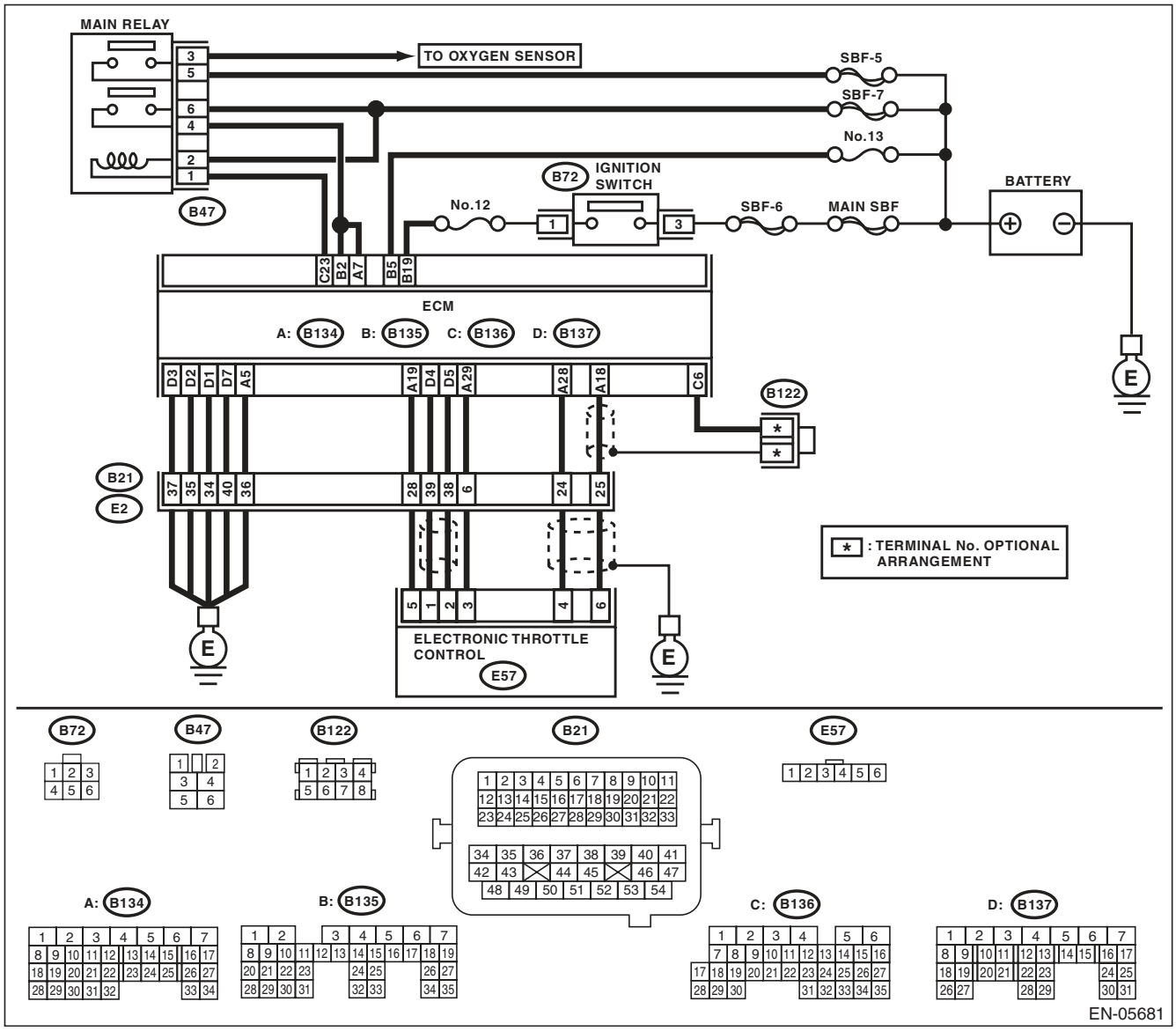

Step		Check	Yes	No
1	**CHECK INPUT VOLTAGE OF ECM.** 1) Turn the ignition switch to ON. 2) Measure the voltage between ECM and chassis ground. ***Connector & terminal*** ***(B134) No. 7 (+) — Chassis ground (–):*** ***(B135) No. 2 (+) — Chassis ground (–):***	Is the voltage 10 — 13 V?	Go to step **2**.	Repair the open or ground short circuit of power supply circuit.
2	**CHECK INPUT VOLTAGE OF ECM.** 1) Start the engine. 2) Measure the voltage between ECM and chassis ground. ***Connector & terminal*** ***(B134) No. 7 (+) — Chassis ground (–):*** ***(B135) No. 2 (+) — Chassis ground (–):***	Is the voltage 13 — 15 V?	Go to step **3**.	Repair the open or ground short circuit of power supply circuit.
3	**CHECK HARNESS BETWEEN ECM AND ELECTRONIC THROTTLE CONTROL.** 1) Turn the ignition switch to OFF. 2) Disconnect the connectors from ECM and electronic throttle control. 3) Measure the resistance of harness between ECM and electronic throttle control connector. ***Connector & terminal*** ***(B134) No. 19 — (E57) No. 5:*** ***(B134) No. 29 — (E57) No. 3:***	Is the resistance less than 1 Ω?	Go to step **4**.	Repair the open circuit of harness between ECM and electronic throttle control connector.
4	**CHECK ECM GROUND HARNESS.** 1) Connect all connectors. 2) Turn the ignition switch to ON. 3) Measure the voltage between ECM and chassis ground. ***Connector & terminal*** ***(B134) No. 5 (+) — Chassis ground (–):*** ***(B137) No. 1 (+) — Chassis ground (–):*** ***(B137) No. 2 (+) — Chassis ground (–):*** ***(B137) No. 3 (+) — Chassis ground (–):*** ***(B137) No. 7 (+) — Chassis ground (–):***	Is the voltage less than 1 V?	Repair the poor contact of ECM connector.	Repair the following item. • Open circuit of ground circuit • Retightening of engine ground terminals • Poor contact of coupling connector

CH:DTC P0638 THROTTLE ACTUATOR CONTROL RANGE/PERFORMANCE (BANK 1)

NOTE:
For the diagnostic procedure, refer to DTC P2101. <Ref. to EN(H4DOTC)(diag)-318, DTC P2101 THROTTLE ACTUATOR CONTROL MOTOR CIRCUIT RANGE/PERFORMANCE, Diagnostic Procedure with Diagnostic Trouble Code (DTC).>

CI: DTC P0700 TRANSMISSION CONTROL SYSTEM (MIL REQUEST)

NOTE:
For the diagnostic procedure, refer to AT section. <Ref. to 5AT(diag)-2, Basic Diagnostic Procedure.>

CJ:DTC P0851 PARK/NEUTRAL SWITCH INPUT CIRCUIT LOW (AT MODEL)

NOTE:
For the diagnostic procedure, refer to AT section. <Ref. to 5AT(diag)-2, Basic Diagnostic Procedure.>

CK:DTC P0851 NEUTRAL SWITCH INPUT CIRCUIT LOW (MT MODEL)

DTC DETECTING CONDITION:

- Two consecutive driving cycles with fault
- GENERAL DESCRIPTION <Ref. to GD(H4DOTC)-163, DTC P0851 NEUTRAL SWITCH INPUT CIRCUIT LOW (MT MODEL), Diagnostic Trouble Code (DTC) Detecting Criteria.>

TROUBLE SYMPTOM:

Improper idling

CAUTION:

After repair or replacement of faulty parts, perform Clear Memory Mode <Ref. to EN(H4DOTC)(diag)-52, OPERATION, Clear Memory Mode.>, and Inspection Mode <Ref. to EN(H4DOTC)(diag)-43, PROCEDURE, Inspection Mode.>.

WIRING DIAGRAM:

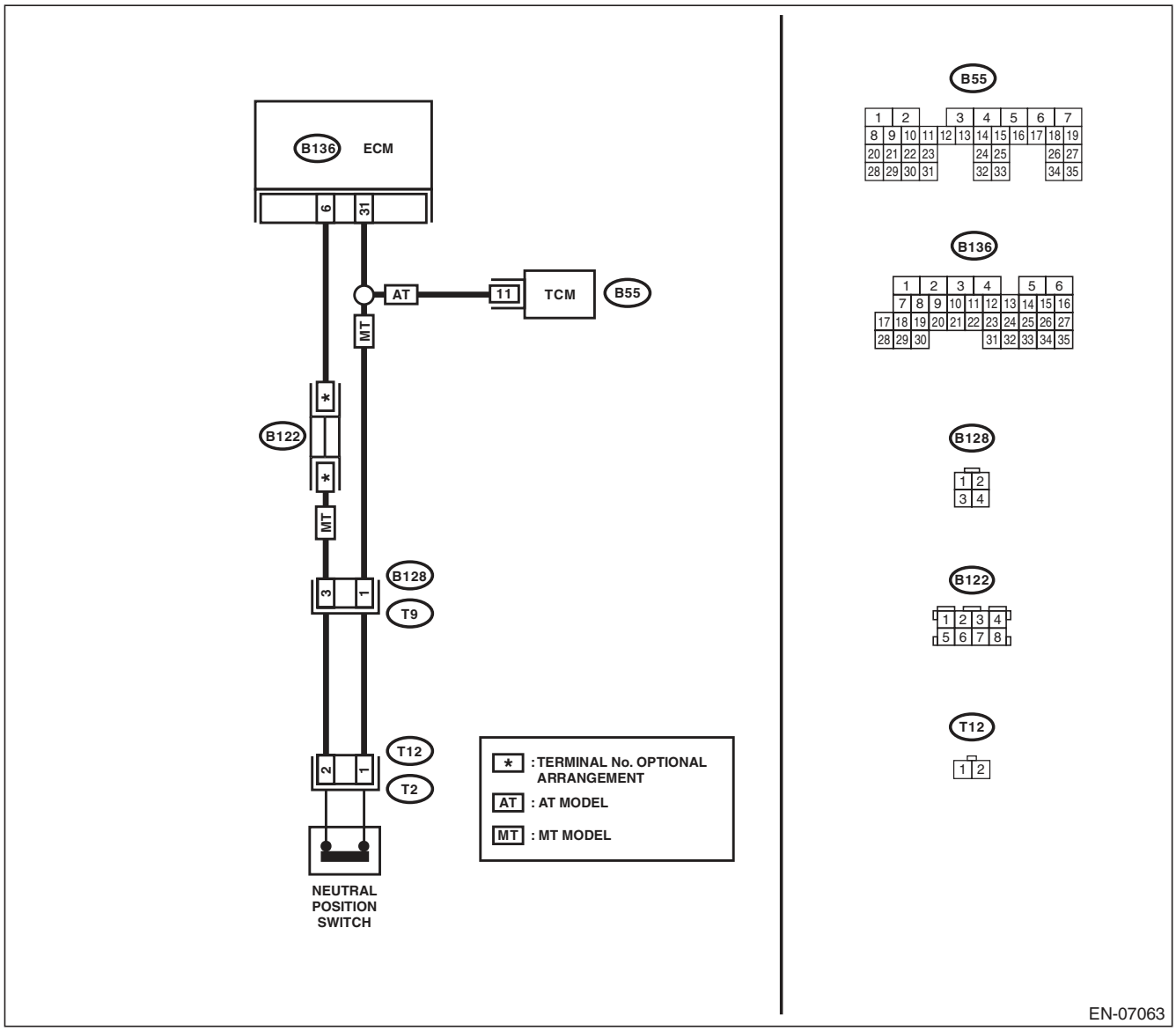

Step		Check	Yes	No
1	**CHECK INPUT SIGNAL OF ECM.** 1) Turn the ignition switch to ON. 2) Place the shift lever in a position other than neutral. 3) Measure the voltage between ECM and chassis ground. ***Connector & terminal*** ***(B136) No. 31 (+) — Chassis ground (–):***	Is the voltage 10 V or more?	Repair the poor contact of ECM connector.	Go to step **2**.
2	**CHECK HARNESS BETWEEN ECM AND NEUTRAL POSITION SWITCH CONNECTOR.** 1) Turn the ignition switch to OFF. 2) Disconnect connectors from the ECM and transmission harness connector (T9). 3) Measure the resistance between ECM and chassis ground. ***Connector & terminal*** ***(B136) No. 31 — Chassis ground:***	Is the resistance 1 MΩ or more?	Repair the short circuit of transmission harness or replace neutral position switch. <Ref. to 5MT-35, Switches and Harness.> <Ref. to 6MT-41, Neutral Position Switch.>	Repair the ground short circuit of harness between ECM and transmission harness connector.

CL:DTC P0852 PARK/NEUTRAL SWITCH INPUT CIRCUIT HIGH (AT MODEL)

NOTE:
For the diagnostic procedure, refer to AT section. <Ref. to 5AT(diag)-2, Basic Diagnostic Procedure.>

CM:DTC P0852 NEUTRAL SWITCH INPUT CIRCUIT HIGH (MT MODEL)

DTC DETECTING CONDITION:

- Two consecutive driving cycles with fault
- GENERAL DESCRIPTION <Ref. to GD(H4DOTC)-165, DTC P0852 NEUTRAL SWITCH INPUT CIRCUIT HIGH (MT MODEL), Diagnostic Trouble Code (DTC) Detecting Criteria.>

TROUBLE SYMPTOM:

Improper idling

CAUTION:

After repair or replacement of faulty parts, perform Clear Memory Mode <Ref. to EN(H4DOTC)(diag)-52, OPERATION, Clear Memory Mode.>, and Inspection Mode <Ref. to EN(H4DOTC)(diag)-43, PROCEDURE, Inspection Mode.>.

WIRING DIAGRAM:

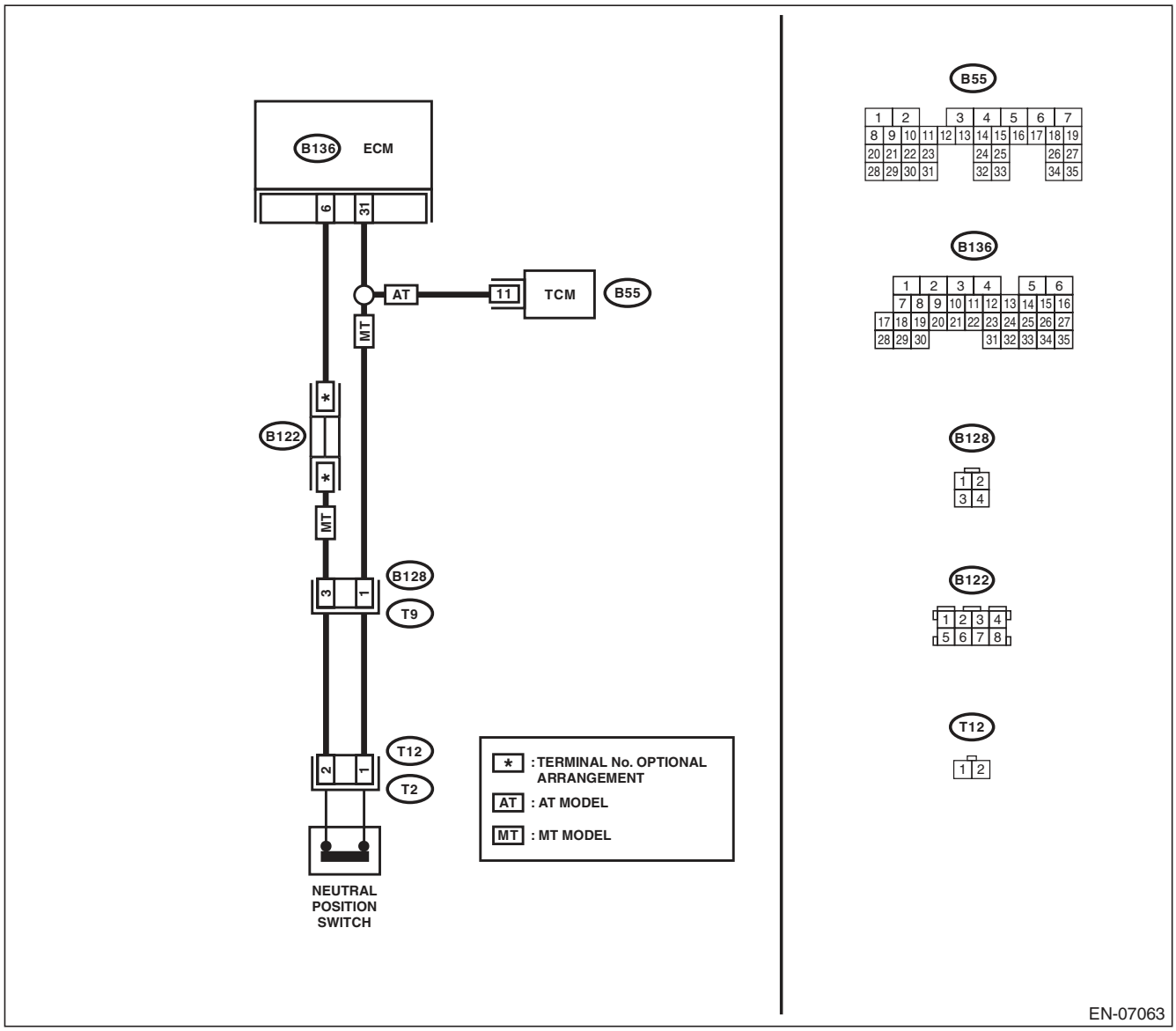

	Step	Check	Yes	No
1	**CHECK INPUT SIGNAL OF ECM.** 1) Turn the ignition switch to ON. 2) Place the shift lever in neutral. 3) Measure the voltage between ECM and chassis ground. ***Connector & terminal*** ***(B136) No. 31 (+) — Chassis ground (–):***	Is the voltage less than 1 V?	Repair the poor contact of ECM connector.	Go to step **2**.
2	**CHECK HARNESS BETWEEN ECM AND NEUTRAL POSITION SWITCH CONNECTOR.** 1) Turn the ignition switch to OFF. 2) Disconnect the connectors from ECM and transmission harness connector (T9). 3) Measure the resistance of harness between ECM and transmission harness connector. ***Connector & terminal*** ***(B136) No. 31 — (B128) No. 1:***	Is the resistance less than 1 Ω?	Go to step **3**.	Repair the open circuit in harness between ECM and transmission harness connector.
3	**CHECK HARNESS BETWEEN ECM AND NEUTRAL POSITION SWITCH CONNECTOR.** Measure the resistance of harness between ECM and transmission harness connector. ***Connector & terminal*** ***(B128) No. 3 — (B136) No. 6:***	Is the resistance less than 5 Ω?	Go to step **4**.	Repair the harness and connector. NOTE: In this case, repair the following item: • Open circuit in harness between ECM and transmission harness connector • Poor contact of coupling connector
4	**CHECK NEUTRAL POSITION SWITCH.** 1) Place the shift lever in neutral. 2) Measure the resistance between transmission harness connector terminals. ***Connector & terminal*** ***(T9) No. 1 — No. 3:***	Is the resistance less than 1 Ω?	Repair the poor contact of transmission harness connector.	Repair the open circuit of transmission harness or replace the neutral position switch. <Ref. to 5MT-35, Switches and Harness.> <Ref. to 6MT-41, Neutral Position Switch.>

CN:DTC P1152 O2 SENSOR CIRCUIT RANGE/PERFORMANCE (LOW) (BANK1 SENSOR1)

DTC DETECTING CONDITION:

- Two consecutive driving cycles with fault
- GENERAL DESCRIPTION <Ref. to GD(H4DOTC)-166, DTC P1152 O2 SENSOR CIRCUIT RANGE/ PERFORMANCE (LOW) (BANK1 SENSOR1), Diagnostic Trouble Code (DTC) Detecting Criteria.>

CAUTION:

After repair or replacement of faulty parts, perform Clear Memory Mode <Ref. to EN(H4DOTC)(diag)-52, OPERATION, Clear Memory Mode.>, and Inspection Mode <Ref. to EN(H4DOTC)(diag)-43, PROCEDURE, Inspection Mode.>.

WIRING DIAGRAM:

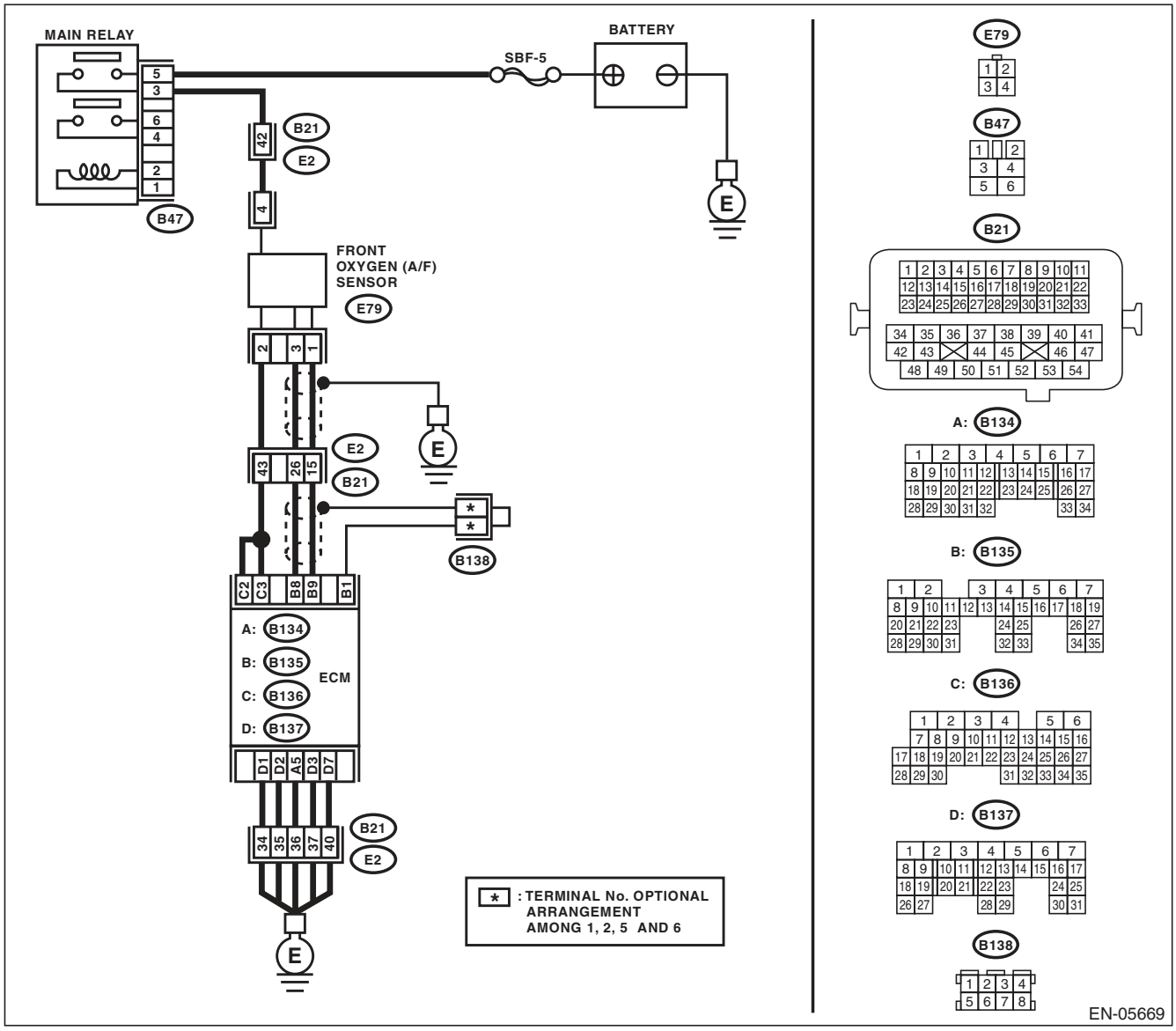

Step		Check	Yes	No
1	**CHECK FRONT OXYGEN (A/F) SENSOR CONNECTOR AND COUPLING CONNECTOR.**	Has water entered the connector?	Completely remove any water inside.	Go to step **2**.
2	**CHECK HARNESS BETWEEN ECM AND FRONT OXYGEN (A/F) SENSOR CONNECTOR.** 1) Turn the ignition switch to OFF. 2) Disconnect the connectors from ECM and front oxygen (A/F) sensor. 3) Measure the resistance of harness between ECM and front oxygen (A/F) sensor connector. ***Connector & terminal*** ***(B135) No. 9 — (E79) No. 1:*** ***(B135) No. 8 — (E79) No. 3:***	Is the resistance less than 1 Ω?	Go to step **3**.	Repair the harness and connector. NOTE: In this case, repair the following item: • Open circuit in harness between ECM and front oxygen (A/F) sensor connector • Poor contact of coupling connector
3	**CHECK POOR CONTACT.** Check for poor contact in the front oxygen (A/F) sensor connector.	Is there poor contact in front oxygen (A/F) sensor connector?	Repair the poor contact of the front oxygen (A/F) sensor connector.	Replace the front oxygen (A/F) sensor. <Ref. to FU(H4DOTC)-46, Front Oxygen (A/F) Sensor.>

CO:DTC P1153 O2 SENSOR CIRCUIT RANGE/PERFORMANCE (HIGH) (BANK1 SENSOR1)

DTC DETECTING CONDITION:

- Two consecutive driving cycles with fault
- GENERAL DESCRIPTION <Ref. to GD(H4DOTC)-168, DTC P1153 O2 SENSOR CIRCUIT RANGE/ PERFORMANCE (HIGH) (BANK1 SENSOR1), Diagnostic Trouble Code (DTC) Detecting Criteria.>

CAUTION:

After repair or replacement of faulty parts, perform Clear Memory Mode <Ref. to EN(H4DOTC)(diag)-52, OPERATION, Clear Memory Mode.>, and Inspection Mode <Ref. to EN(H4DOTC)(diag)-43, PROCEDURE, Inspection Mode.>.

WIRING DIAGRAM:

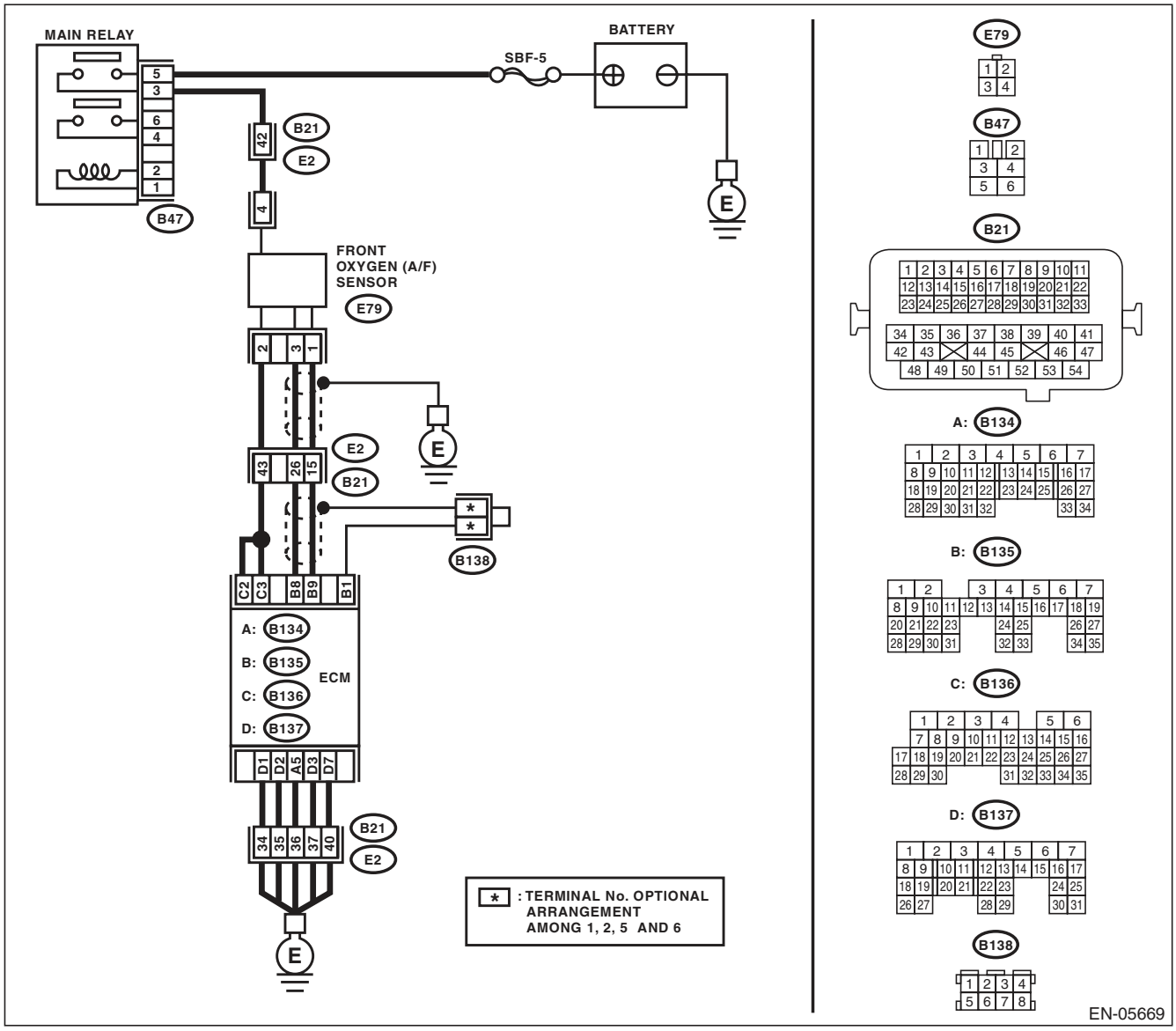

Step		Check	Yes	No
1	**CHECK FRONT OXYGEN (A/F) SENSOR CONNECTOR AND COUPLING CONNECTOR.**	Has water entered the connector?	Completely remove any water inside.	Go to step **2**.
2	**CHECK HARNESS BETWEEN ECM AND FRONT OXYGEN (A/F) SENSOR CONNECTOR.** 1) Turn the ignition switch to OFF. 2) Disconnect the connectors from ECM. 3) Measure the resistance between ECM and chassis ground. ***Connector & terminal*** ***(B135) No. 9 — Chassis ground:*** ***(B135) No. 8 — Chassis ground:***	Is the resistance 1 MΩ or more?	Go to step **3**.	Repair the ground short circuit of harness between ECM and front oxygen (A/F) sensor connector.
3	**CHECK OUTPUT SIGNAL FOR ECM.** 1) Connect the connector to ECM. 2) Turn the ignition switch to ON. 3) Measure the voltage between ECM and chassis ground. ***Connector & terminal*** ***(B135) No. 9 (+) — Chassis ground (–):***	Is the voltage 4.5 V or more?	Go to step **5**.	Go to step **4**.
4	**CHECK OUTPUT SIGNAL FOR ECM.** Measure the voltage between ECM and chassis ground. ***Connector & terminal*** ***(B135) No. 8 (+) — Chassis ground (–):***	Is the voltage 4.95 V or more?	Go to step **5**.	Replace the front oxygen (A/F) sensor. <Ref. to FU(H4DOTC)-46, Front Oxygen (A/F) Sensor.>
5	**CHECK OUTPUT SIGNAL FOR ECM.** Measure the voltage between ECM and chassis ground. ***Connector & terminal*** ***(B135) No. 9 (+) — Chassis ground (–):*** ***(B135) No. 8 (+) — Chassis ground (–):***	Is the voltage 8 V or more?	Repair the short circuit to power in the harness between ECM and front oxygen (A/F) sensor connector. After repair, replace the ECM. <Ref. to FU(H4DOTC)-52, Engine Control Module (ECM).>	Repair the poor contact of ECM connector.

CP:DTC P1160 RETURN SPRING FAILURE

NOTE:
For the diagnostic procedure, refer to DTC P2101. <Ref. to EN(H4DOTC)(diag)-318, DTC P2101 THROTTLE ACTUATOR CONTROL MOTOR CIRCUIT RANGE/PERFORMANCE, Diagnostic Procedure with Diagnostic Trouble Code (DTC).>

CQ:DTC P1400 FUEL TANK PRESSURE CONTROL SOLENOID VALVE CIRCUIT LOW

DTC DETECTING CONDITION:

- Two consecutive driving cycles with fault
- GENERAL DESCRIPTION <Ref. to GD(H4DOTC)-172, DTC P1400 FUEL TANK PRESSURE CONTROL SOLENOID VALVE CIRCUIT LOW, Diagnostic Trouble Code (DTC) Detecting Criteria.>

CAUTION:

After repair or replacement of faulty parts, perform Clear Memory Mode <Ref. to EN(H4DOTC)(diag)-52, OPERATION, Clear Memory Mode.>, and Inspection Mode <Ref. to EN(H4DOTC)(diag)-43, PROCEDURE, Inspection Mode.>.

WIRING DIAGRAM:

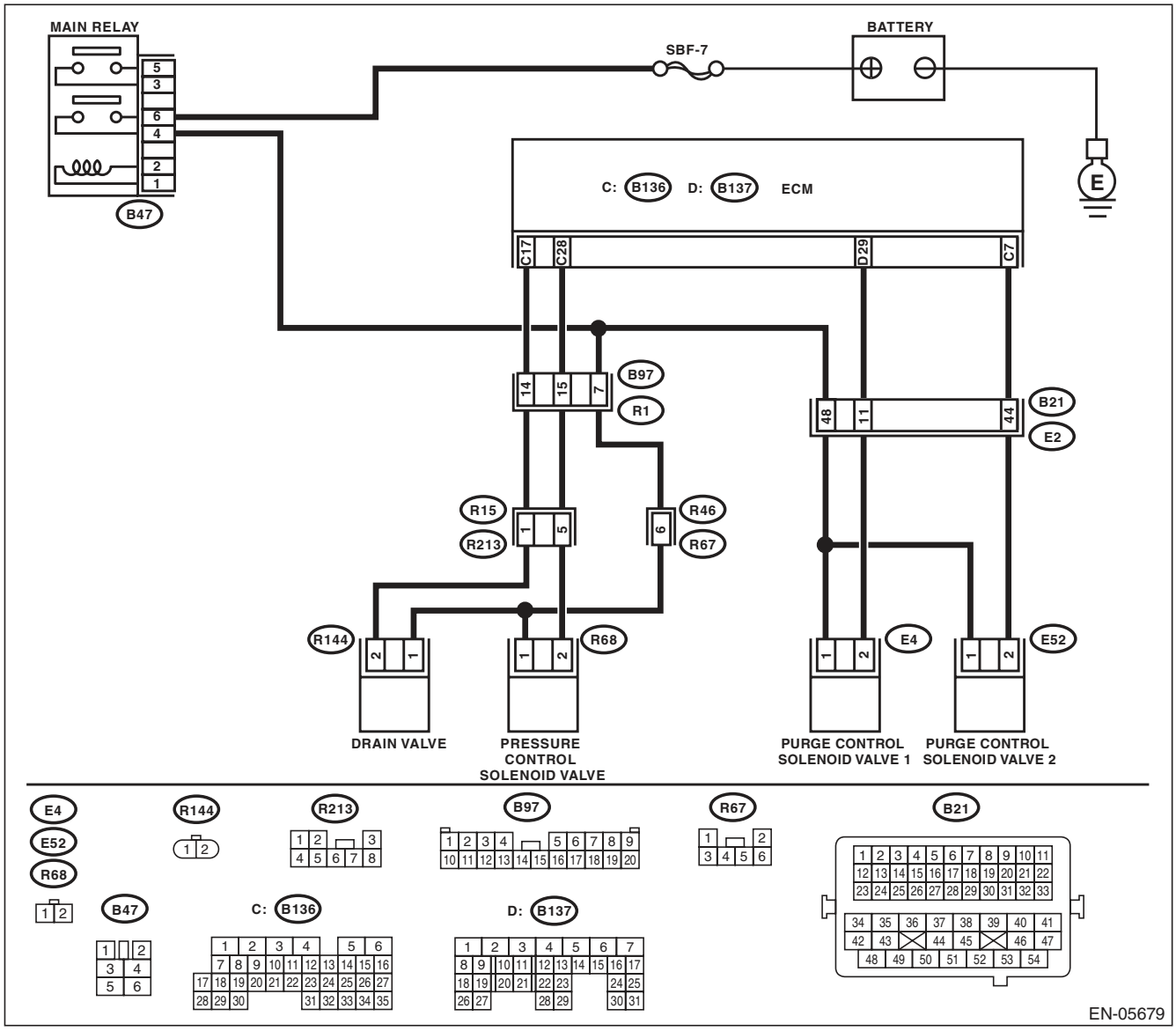

	Step	Check	Yes	No
1	**CHECK OUTPUT SIGNAL OF ECM.** 1) Turn the ignition switch to ON. 2) Measure the voltage between ECM and chassis ground. ***Connector & terminal*** ***(B136) No. 28 (+) — Chassis ground (–):***	Is the voltage 10 V or more?	Repair the poor contact of ECM connector.	Go to step **2**.
2	**CHECK HARNESS BETWEEN ECM AND PRESSURE CONTROL SOLENOID VALVE.** 1) Turn the ignition switch to OFF. 2) Disconnect the connector from the ECM and pressure control solenoid valve. 3) Measure the resistance between pressure control solenoid valve and chassis ground. ***Connector & terminal*** ***(R68) No. 2 — Chassis ground:***	Is the resistance 1 MΩ or more?	Go to step **3**.	Repair the ground short circuit of harness between ECM and pressure control solenoid valve connector.
3	**CHECK HARNESS BETWEEN ECM AND PRESSURE CONTROL SOLENOID VALVE.** Measure the resistance of harness between ECM and pressure control solenoid valve connector. ***Connector & terminal*** ***(B136) No. 28 — (R68) No. 2:***	Is the resistance less than 1 Ω?	Go to step **4**.	Repair the harness and connector. NOTE: In this case, repair the following item: • Open circuit in harness between ECM and pressure control solenoid valve connector • Poor contact of coupling connector
4	**CHECK PRESSURE CONTROL SOLENOID VALVE.** Measure the resistance between pressure control solenoid valve terminals. ***Terminals*** ***No. 1 — No. 2:***	Is the resistance between 10 — 100 Ω?	Go to step **5**.	Replace the pressure control solenoid valve. <Ref. to EC(H4DOTC)-16, Pressure Control Solenoid Valve.>
5	**CHECK POWER SUPPLY TO THE PRESSURE CONTROL SOLENOID VALVE.** 1) Turn the ignition switch to ON. 2) Measure the voltage between pressure control solenoid valve and chassis ground. ***Connector & terminal*** ***(R68) No. 1 (+) — Chassis ground (–):***	Is the voltage 10 V or more?	Repair the poor contact of pressure control solenoid valve connector.	Repair the harness and connector. NOTE: In this case, repair the following item: • Open circuit in harness between main relay and pressure control solenoid valve connector • Poor contact of coupling connector • Poor contact of main relay connector

CR:DTC P1410 SECONDARY AIR INJECTION SYSTEM SWITCHING VALVE STUCK OPEN

DTC DETECTING CONDITION:

- Immediately at fault recognition
- GENERAL DESCRIPTION <Ref. to GD(H4DOTC)-174, DTC P1410 SECONDARY AIR INJECTION SYSTEM SWITCHING VALVE STUCK OPEN, Diagnostic Trouble Code (DTC) Detecting Criteria.>

CAUTION:

After repair or replacement of faulty parts, perform Clear Memory Mode <Ref. to EN(H4DOTC)(diag)-52, OPERATION, Clear Memory Mode.>, and Inspection Mode <Ref. to EN(H4DOTC)(diag)-43, PROCEDURE, Inspection Mode.>.

WIRING DIAGRAM:

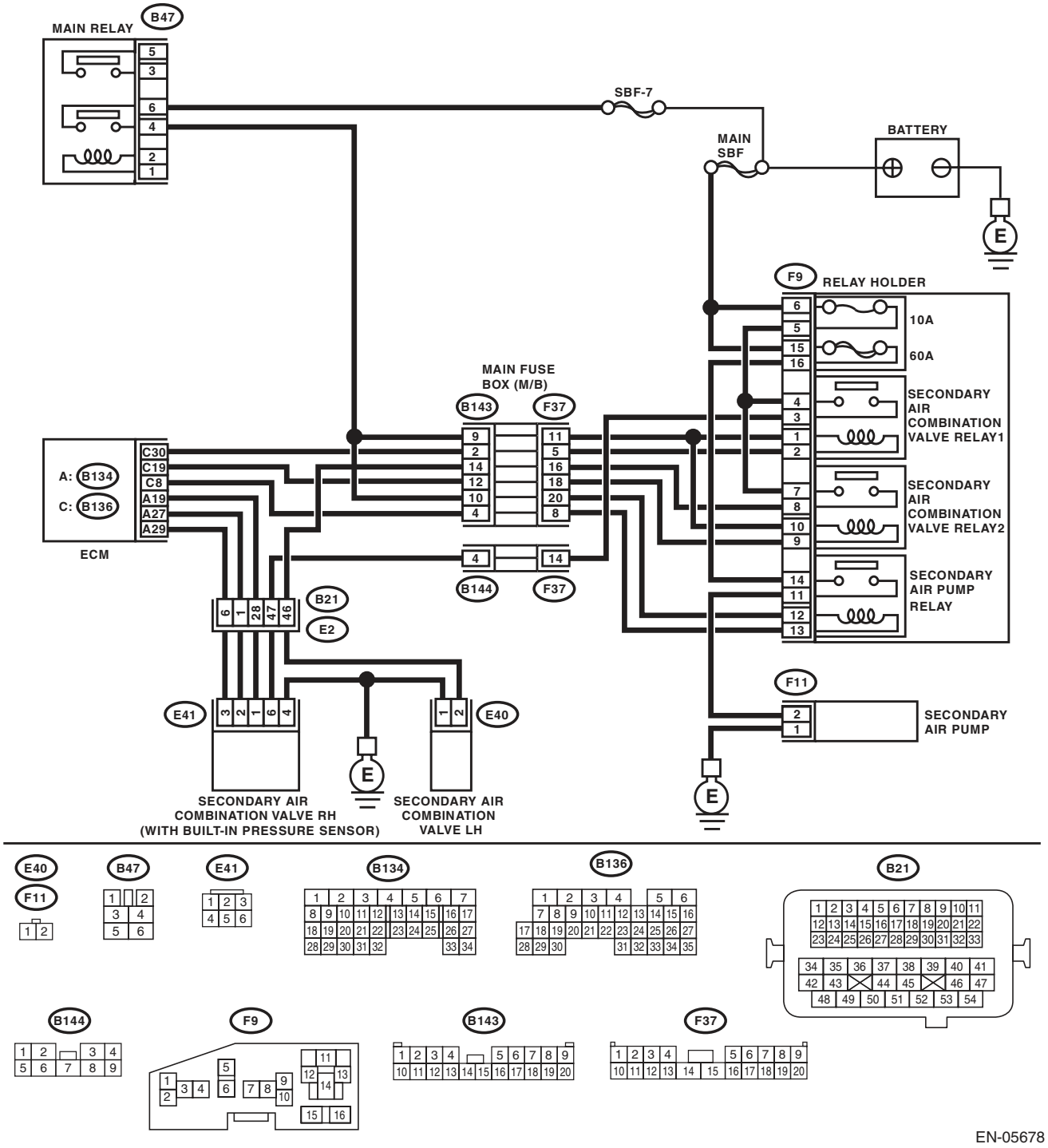

EN-05678

Step		Check	Yes	No
1	**CHECK SECONDARY AIR COMBINATION VALVE.** 1) Remove the secondary air combination valve. <Ref. to EC(H4DOTC)-22, Secondary Air Combination Valve.> 2) Blow air from the secondary air combination valve air inlet, and check whether there are leaks at the pipe connections.	Are there air leaks from the pipe connections?	Replace the secondary air combination valve on the side with the air leak. <Ref. to EC(H4DOTC)-22, Secondary Air Combination Valve.>	Even if DTC is detected, the circuit has returned to a normal condition at this time. Reproduce the failure, and then perform the diagnosis again. NOTE: In this case, temporary poor contact of connector may be the cause.

CS:DTC P1418 SECONDARY AIR INJECTION SYSTEM CONTROL “A“ CIRCUIT SHORTED

DTC DETECTING CONDITION:

- Immediately at fault recognition
- GENERAL DESCRIPTION <Ref. to GD(H4DOTC)-176, DTC P1418 SECONDARY AIR INJECTION SYSTEM CONTROL “A“ CIRCUIT SHORTED, Diagnostic Trouble Code (DTC) Detecting Criteria.>

CAUTION:

After repair or replacement of faulty parts, perform Clear Memory Mode <Ref. to EN(H4DOTC)(diag)-52, OPERATION, Clear Memory Mode.>, and Inspection Mode <Ref. to EN(H4DOTC)(diag)-43, PROCEDURE, Inspection Mode.>.

WIRING DIAGRAM:

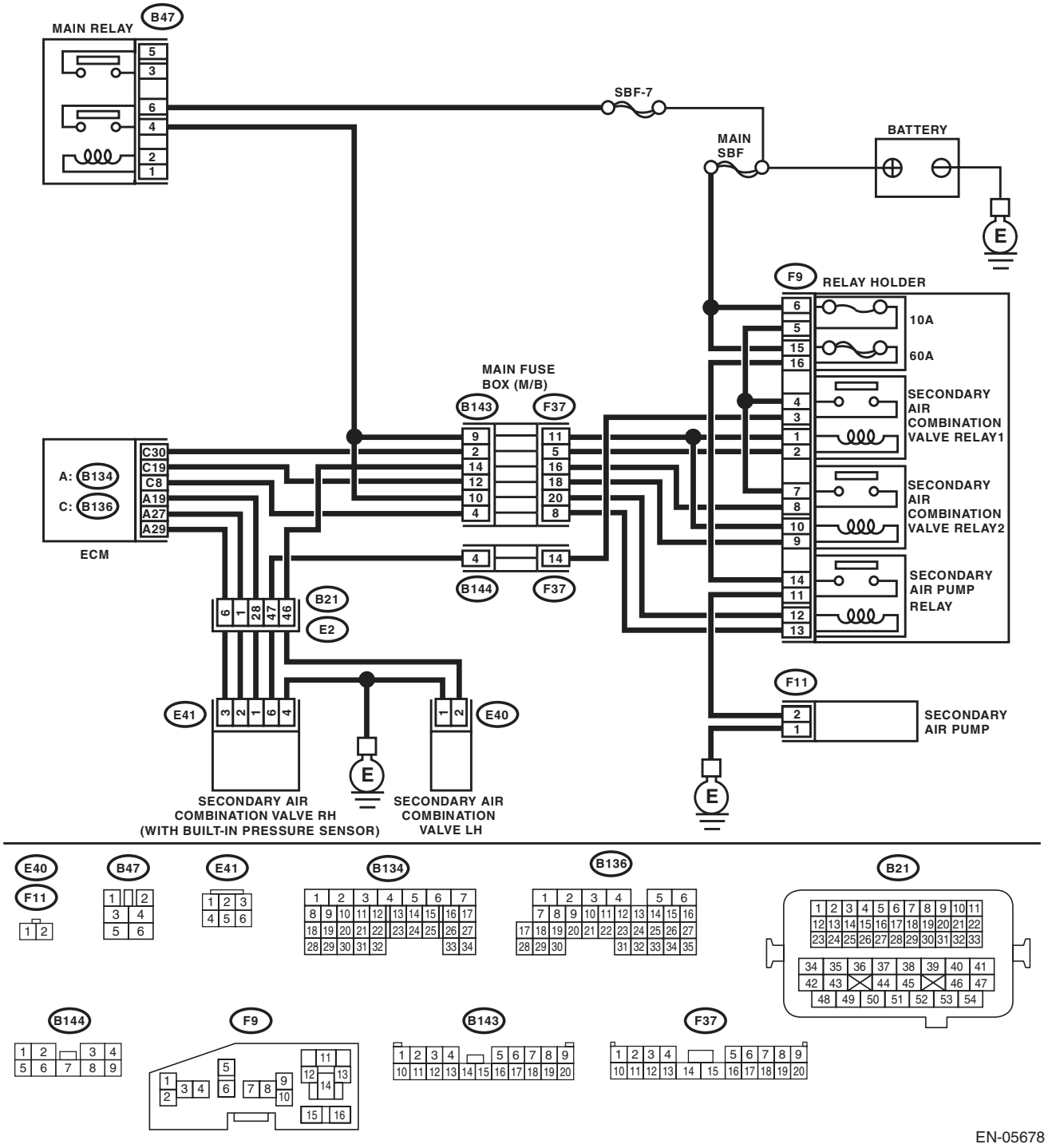

Step		Check	Yes	No
1	**CHECK HARNESS BETWEEN ECM AND SECONDARY AIR PUMP RELAY.** 1) Turn the ignition switch to OFF. 2) Disconnect the connector from the ECM and secondary air pump relay. 3) Measure the voltage between ECM and chassis ground. ***Connector & terminal*** ***(B136) No. 8 (+) — Chassis ground (–):***	Is the voltage 10 V or more?	Repair short circuit of the harness to power supply between the ECM and secondary air pump relay.	Even if DTC is detected, the circuit has returned to a normal condition at this time. Reproduce the failure, and then perform the diagnosis again. NOTE: In this case, temporary poor contact of connector may be the cause.

CT:DTC P1420 FUEL TANK PRESSURE CONTROL SOL. VALVE CIRCUIT HIGH

DTC DETECTING CONDITION:

- Two consecutive driving cycles with fault
- GENERAL DESCRIPTION <Ref. to GD(H4DOTC)-177, DTC P1420 FUEL TANK PRESSURE CONTROL SOL. VALVE CIRCUIT HIGH, Diagnostic Trouble Code (DTC) Detecting Criteria.>

CAUTION:

After repair or replacement of faulty parts, perform Clear Memory Mode <Ref. to EN(H4DOTC)(diag)-52, OPERATION, Clear Memory Mode.>, and Inspection Mode <Ref. to EN(H4DOTC)(diag)-43, PROCEDURE, Inspection Mode.>.

WIRING DIAGRAM:

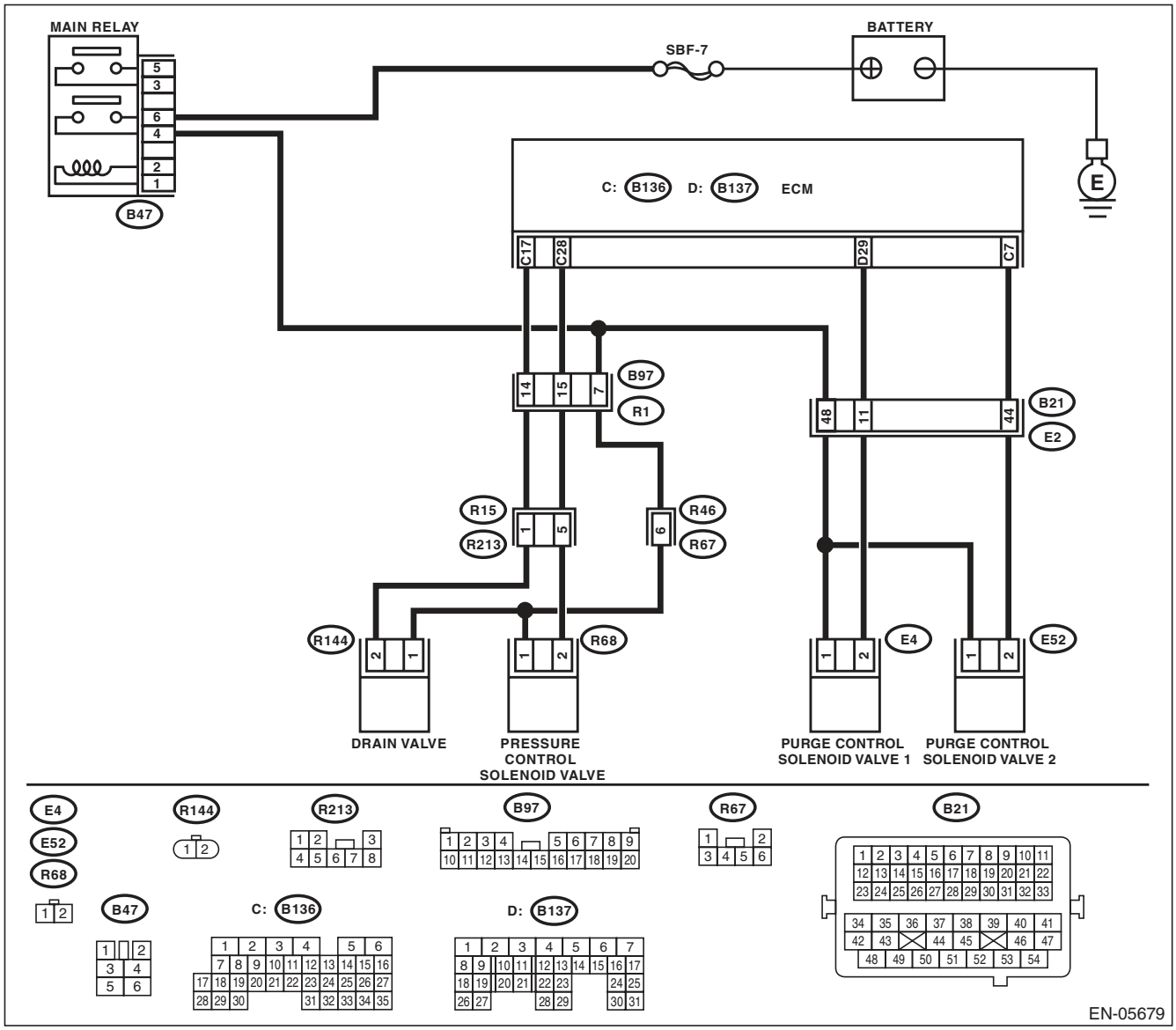

Step		Check	Yes	No
1	**CHECK HARNESS BETWEEN ECM AND PRESSURE CONTROL SOLENOID VALVE.** 1) Turn the ignition switch to OFF. 2) Disconnect the connector from the ECM and pressure control solenoid valve. 3) Turn the ignition switch to ON. 4) Measure the voltage between ECM and chassis ground. ***Connector & terminal*** ***(B136) No. 28 (+) — Chassis ground (–):***	Is the voltage 10 V or more?	Repair the short circuit to power supply in the harness between the ECM and pressure control solenoid valve connector.	Go to step **2**.
2	**CHECK PRESSURE CONTROL SOLENOID VALVE.** 1) Turn the ignition switch to OFF. 2) Measure the resistance between pressure control solenoid valve terminals. ***Terminals*** ***No. 1 — No. 2:***	Is the resistance less than 1 Ω?	Replace the pressure control solenoid valve. <Ref. to EC(H4DOTC)-16, Pressure Control Solenoid Valve.>	Repair the poor contact of ECM connector.

CU:DTC P1443 VENT CONTROL SOLENOID VALVE FUNCTION PROBLEM

DTC DETECTING CONDITION:

- Immediately at fault recognition
- GENERAL DESCRIPTION <Ref. to GD(H4DOTC)-179, DTC P1443 VENT CONTROL SOLENOID VALVE FUNCTION PROBLEM, Diagnostic Trouble Code (DTC) Detecting Criteria.>

TROUBLE SYMPTOM:

Improper fuel supply

CAUTION:

After repair or replacement of faulty parts, perform Clear Memory Mode <Ref. to EN(H4DOTC)(diag)-52, OPERATION, Clear Memory Mode.>, and Inspection Mode <Ref. to EN(H4DOTC)(diag)-43, PROCEDURE, Inspection Mode.>.

WIRING DIAGRAM:

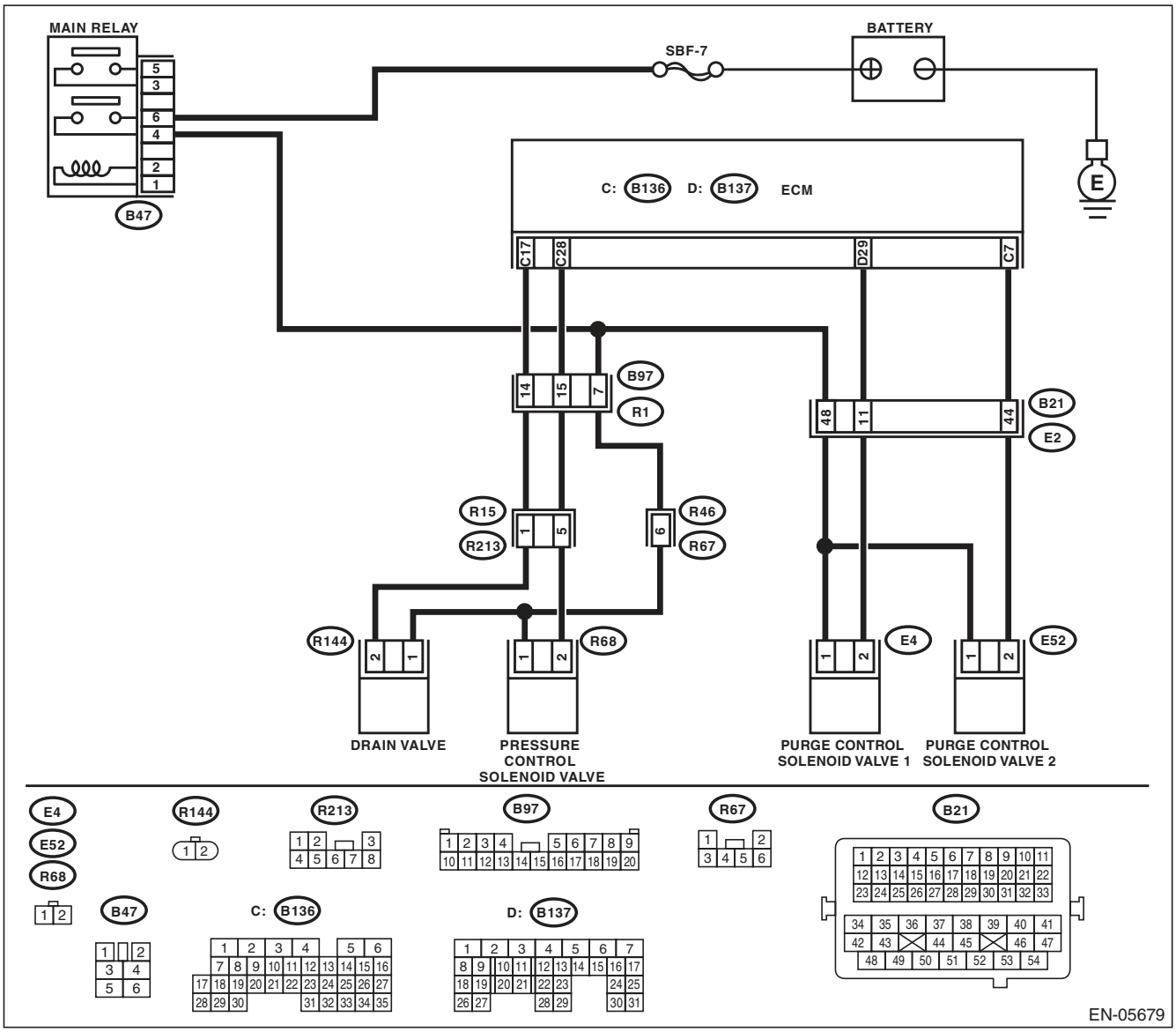

Step		Check	Yes	No
1	**CHECK FOR ANY OTHER DTC ON DISPLAY.**	Is any other DTC displayed?	Check the appropriate DTC using the “List of Diagnostic Trouble Code (DTC)”. <Ref. to EN(H4DOTC)(diag)-81, List of Diagnostic Trouble Code (DTC).>	Go to step **2**.
2	**CHECK DRAIN HOSE.** Check the drain hose for clogging.	Is there clogging in the drain hose?	Replace the drain hose.	Go to step **3**.
3	**CHECK DRAIN VALVE OPERATION.** 1) Turn the ignition switch to OFF. 2) Connect the delivery (test) mode connector at the lower portion of instrument panel (on the driver’s side). 3) Turn the ignition switch to ON. 4) Operate the drain valve. NOTE: Drain valve can be operated using the Subaru Select Monitor. For the procedures, refer to “Compulsory Valve Operation Check Mode”. <Ref. to EN(H4DOTC)(diag)-53, Compulsory Valve Operation Check Mode.>	Does the drain valve operate?	Repair the poor contact of ECM connector.	Replace the drain valve. <Ref. to EC(H4DOTC)-19, Drain Valve.>

CV:DTC P1491 POSITIVE CRANKCASE VENTILATION (BLOW-BY) FUNCTION PROBLEM

DTC DETECTING CONDITION:

- Immediately at fault recognition
- GENERAL DESCRIPTION <Ref. to GD(H4DOTC)-181, DTC P1491 POSITIVE CRANKCASE VENTILATION (BLOW-BY) FUNCTION PROBLEM, Diagnostic Trouble Code (DTC) Detecting Criteria.>

TROUBLE SYMPTOM:

Improper idling

CAUTION:

After repair or replacement of faulty parts, perform Clear Memory Mode <Ref. to EN(H4DOTC)(diag)-52, OPERATION, Clear Memory Mode.>, and Inspection Mode <Ref. to EN(H4DOTC)(diag)-43, PROCEDURE, Inspection Mode.>.

WIRING DIAGRAM:

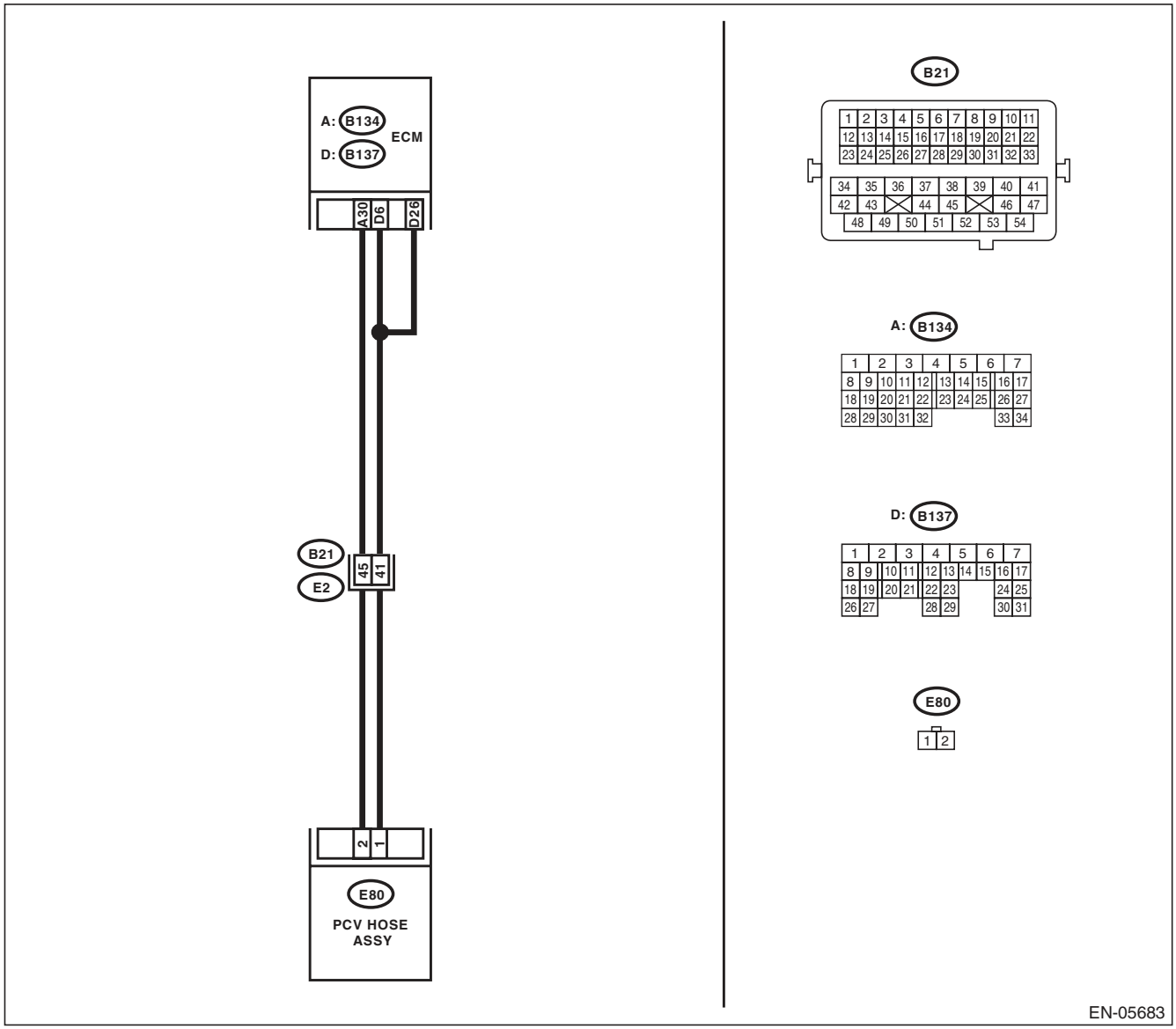

	Step	Check	Yes	No
1	**CHECK BLOW-BY HOSE.** Check the condition of the blow-by hose.	Is there any disconnection or crack in blow-by hose?	Repair or replace the blow-by hose.	Go to step **2**.
2	**CHECK HARNESS BETWEEN ECM AND PCV HOSE ASSEMBLY.** 1) Turn the ignition switch to OFF. 2) Disconnect the connectors from the ECM and PCV hose assembly. 3) Measure the resistance of harness between ECM and PCV hose assembly. ***Connector & terminal*** ***(B134) No. 30 — (E80) No. 2:***	Is the resistance less than 1 Ω?	Go to step **3**.	Repair the harness and connector. NOTE: In this case, repair the following item: • Open circuit in harness between ECM and PCV hose assembly • Poor contact of coupling connector
3	**CHECK HARNESS BETWEEN ECM AND PCV HOSE ASSEMBLY.** Measure the resistance between PCV hose assembly and chassis ground. ***Connector & terminal*** ***(B134) No. 30 — Chassis ground:***	Is the resistance 1 MΩ or more?	Go to step **4**.	Repair the ground short circuit of harness between ECM and PCV hose assembly.
4	**CHECK GROUND CIRCUIT OF PCV HOSE ASSEMBLY.** Measure the resistance of harness between PCV hose assembly and engine ground. ***Connector & terminal*** ***(E80) No. 1 — Engine ground:***	Is the resistance less than 5 Ω?	Go to step **5**.	Repair the open circuit of harness between PCV hose assembly and engine ground.
5	**CHECK THE PCV HOSE ASSEMBLY.** Measure the resistance between the PCV hose assembly terminals. ***Terminals*** ***No. 1 — No. 2:***	Is the resistance less than 1 Ω?	Repair the poor contact in ECM and PCV hose assembly connector.	Replace the PCV hose assembly.

CW:DTC P1560 BACK-UP VOLTAGE CIRCUIT MALFUNCTION

DTC DETECTING CONDITION:

- Immediately at fault recognition
- GENERAL DESCRIPTION <Ref. to GD(H4DOTC)-183, DTC P1560 BACK-UP VOLTAGE CIRCUIT MALFUNCTION, Diagnostic Trouble Code (DTC) Detecting Criteria.>

CAUTION:

After repair or replacement of faulty parts, perform Clear Memory Mode <Ref. to EN(H4DOTC)(diag)-52, OPERATION, Clear Memory Mode.>, and Inspection Mode <Ref. to EN(H4DOTC)(diag)-43, PROCEDURE, Inspection Mode.>.

WIRING DIAGRAM:

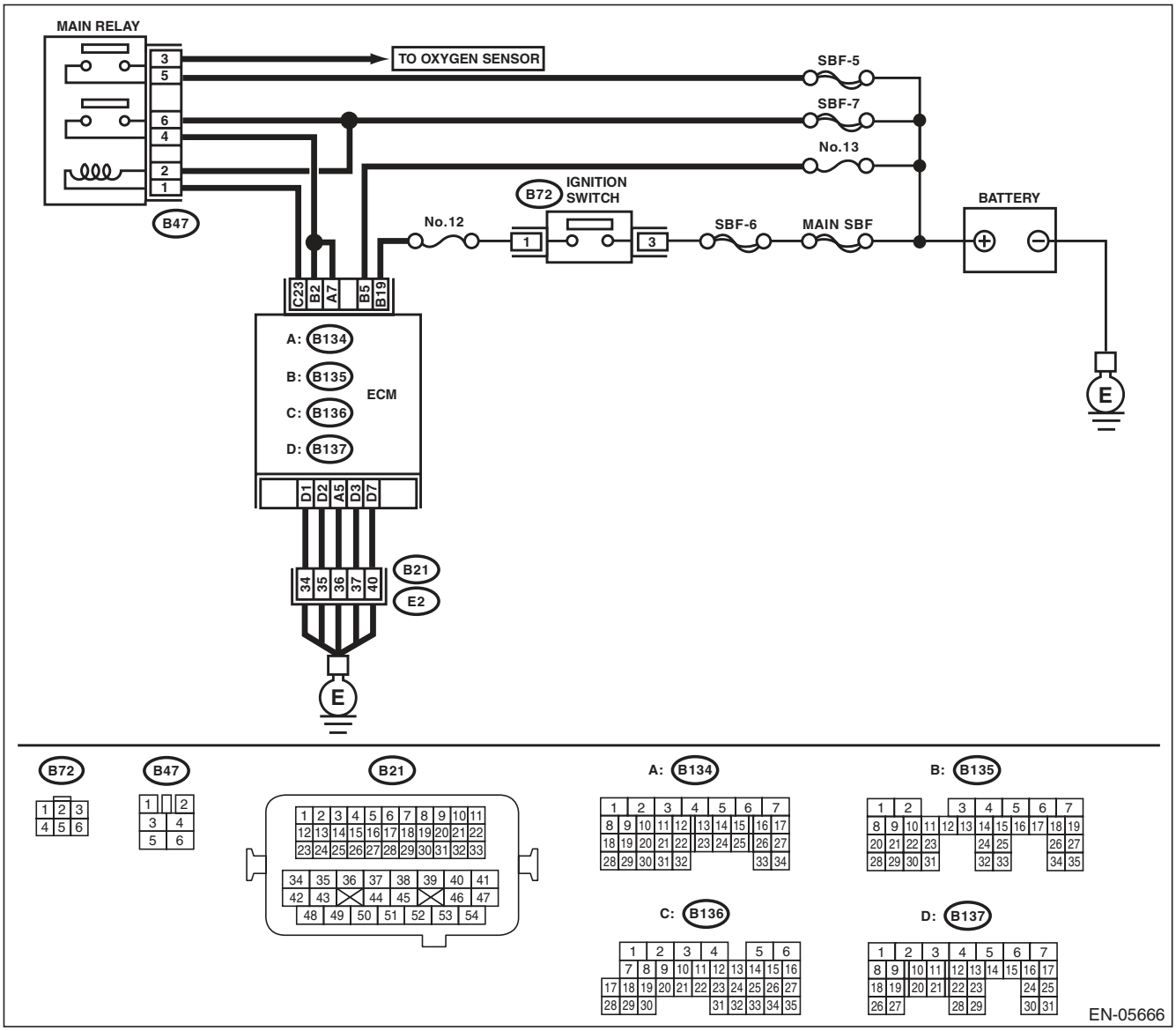

Step		Check	Yes	No
1	**CHECK INPUT SIGNAL OF ECM.** 1) Turn the ignition switch to OFF. 2) Measure the voltage between ECM and chassis ground. ***Connector & terminal*** ***(B135) No. 5 (+) — Chassis ground (–):***	Is the voltage 10 V or more?	Repair the poor contact of ECM connector.	Go to step **2**.
2	**CHECK HARNESS BETWEEN ECM AND MAIN FUSE BOX CONNECTOR.** 1) Disconnect the connectors from ECM. 2) Measure the resistance between ECM and chassis ground. ***Connector & terminal*** ***(B135) No. 5 — Chassis ground:***	Is the resistance 1 MΩ or more?	Go to step **3**.	Repair the ground short circuit of harness between ECM and battery terminal.
3	**CHECK FUSE NO. 13.**	Is the fuse blown out?	Replace the fuse.	Repair the harness and connector. NOTE: In this case, repair the following item: • Open circuit in harness between ECM and battery • Poor contact in ECM connector • Poor contact of battery terminal

CX:DTC P1602 CONTROL MODULE PROGRAMMING ERROR

DTC DETECTING CONDITION:

- Two consecutive driving cycles with fault
- GENERAL DESCRIPTION <Ref. to GD(H4DOTC)-185, DTC P1602 CONTROL MODULE PROGRAMMING ERROR, Diagnostic Trouble Code (DTC) Detecting Criteria.>

TROUBLE SYMPTOM:

- Engine keeps running at higher speed than specified idle speed.
- Engine keeps running at a lower speed than the specified idle speed.
- Engine stalls.

CAUTION:

After repair or replacement of faulty parts, perform Clear Memory Mode <Ref. to EN(H4DOTC)(diag)-52, OPERATION, Clear Memory Mode.>, and Inspection Mode <Ref. to EN(H4DOTC)(diag)-43, PROCEDURE, Inspection Mode.>.

WIRING DIAGRAM:

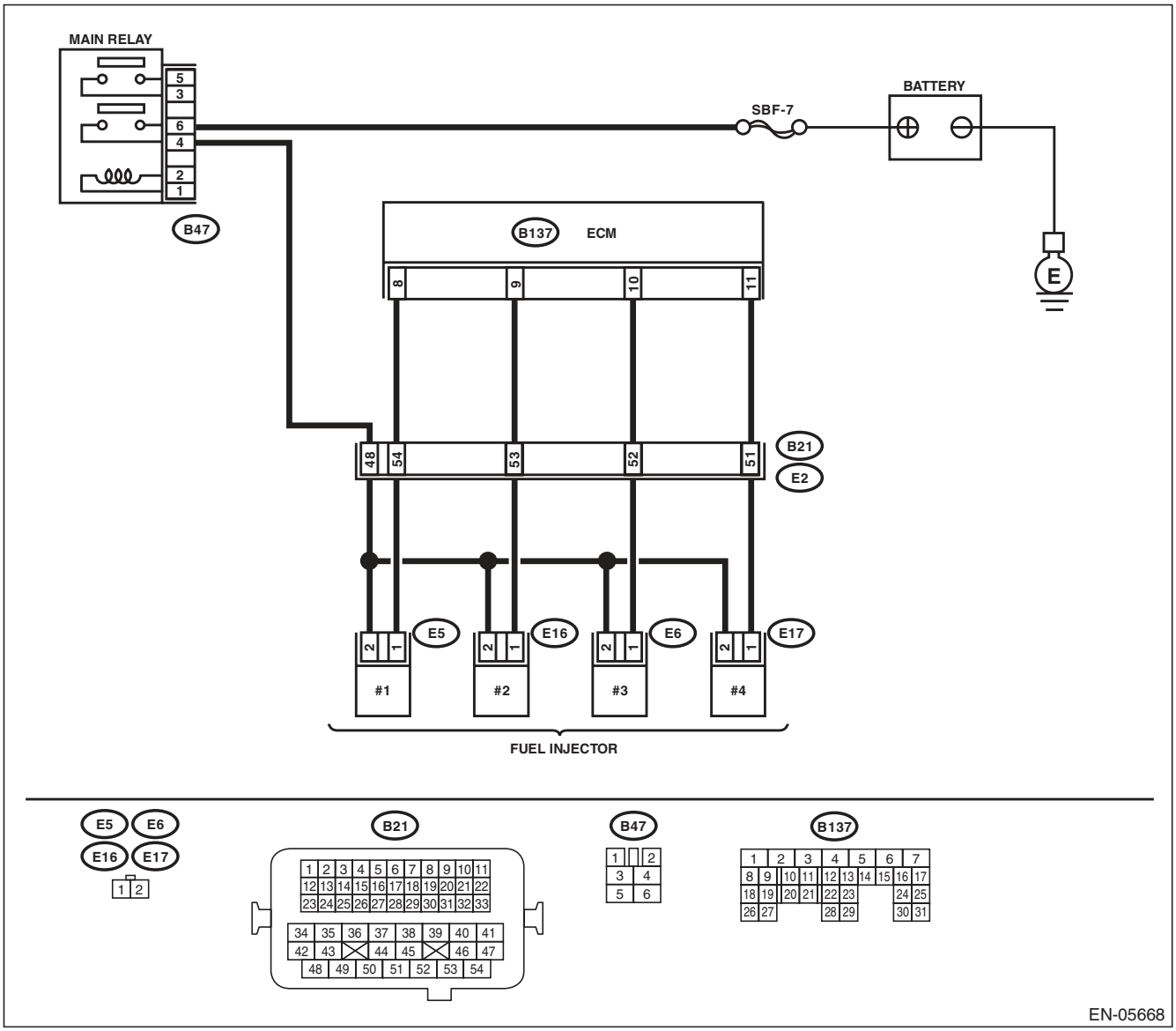

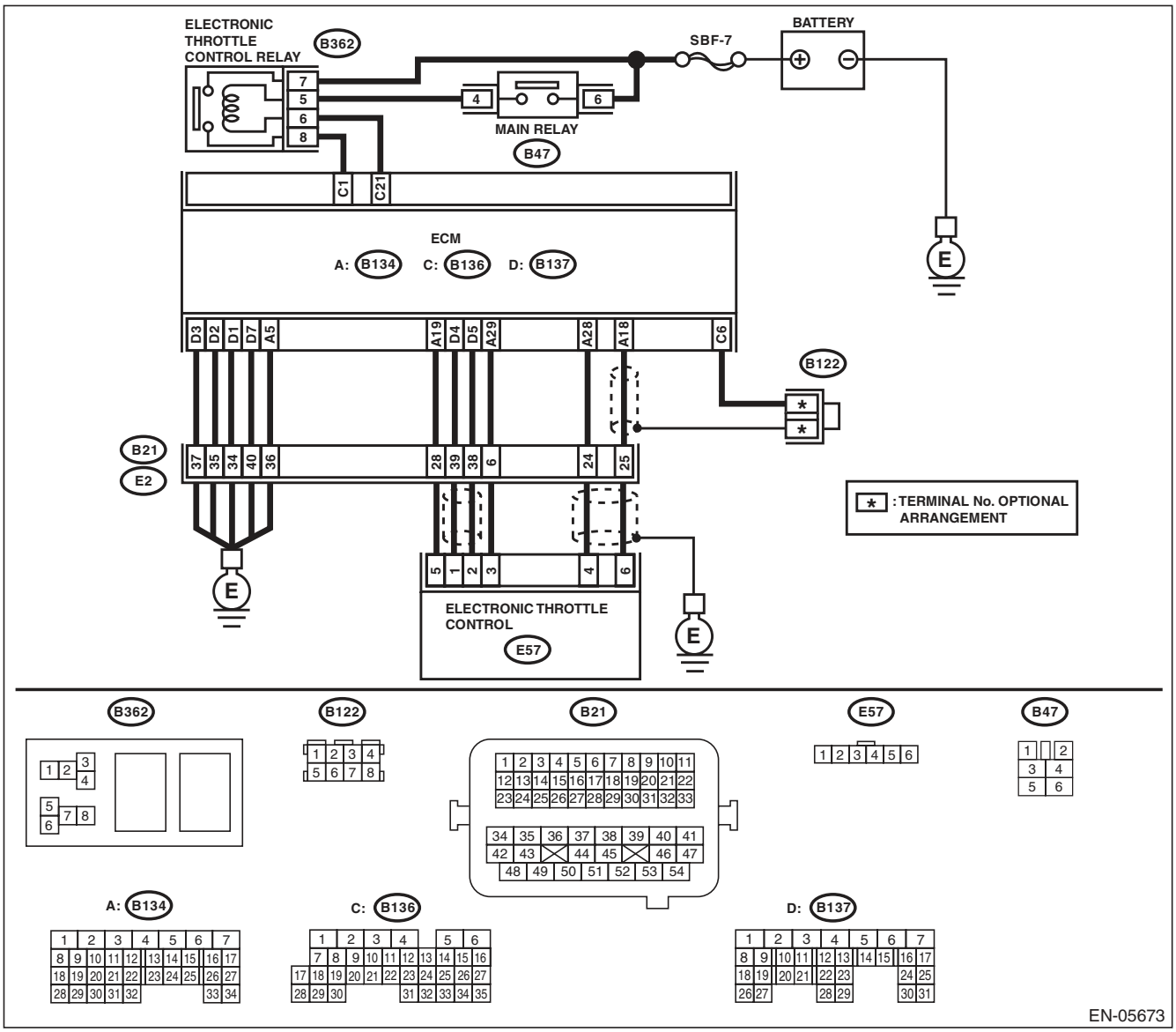
ELECTRONIC THROTTLE CONTROL RELAY
B362
BATTERY
SBF-7
MAIN RELAY
B47
ECM
A: B134
C: B136
D: B137
B122
B21
E2
ELECTRONIC THROTTLE CONTROL
E57
* : TERMINAL No. OPTIONAL ARRANGEMENT
EN-05673

	Step	Check	Yes	No
1	**CHECK FOR ANY OTHER DTC ON DISPLAY.**	Is any other DTC displayed?	Check the appropriate DTC using the "List of Diagnostic Trouble Code (DTC)". <Ref. to EN(H4DOTC)(diag)-81, List of Diagnostic Trouble Code (DTC).>	Go to step **2**.
2	**CHECK ENGINE OIL.**	Is there a proper amount of engine oil?	Go to step **3**.	Replace engine oil. <Ref. to LU(H4SO)-10, REPLACEMENT, Engine Oil.>
3	**CHECK EXHAUST SYSTEM.**	Are there holes or loose bolts on exhaust system?	Repair the exhaust system.	Go to step **4**.
4	**CHECK AIR INTAKE SYSTEM.**	Are there holes, loose bolts or disconnection of hose on air intake system?	Repair the air intake system.	Go to step **5**.
5	**CHECK FUEL PRESSURE.** **WARNING:** **Place "NO OPEN FLAMES" signs near the working area.** **CAUTION:** **Be careful not to spill fuel.** Measure the fuel pressure while disconnecting pressure regulator vacuum hose from intake manifold. <Ref. to ME(H4DOTC)-25, INSPECTION, Fuel Pressure.> **CAUTION:** **Release fuel pressure before removing the fuel pressure gauge.** NOTE: If fuel pressure does not increase, squeeze the fuel return hose 2 to 3 times, then measure fuel pressure again.	Is the measured value 284 — 314 kPa (2.9 — 3.2 kg/cm^2, 41 — 46 psi)?	Go to step **6**.	Repair the following item. Fuel pressure is too high: • Clogged fuel return line or bent hose Fuel pressure is too low: • Improper fuel pump discharge • Clogged fuel supply line
6	**CHECK FUEL PRESSURE.** After connecting the pressure regulator vacuum hose, measure fuel pressure. <Ref. to ME(H4DOTC)-25, INSPECTION, Fuel Pressure.> **CAUTION:** **Release fuel pressure before removing the fuel pressure gauge.** NOTE: • If fuel pressure does not increase, squeeze fuel return hose 2 to 3 times, then measure fuel pressure again. • If the measured value at this step is out of specification, check or replace pressure regulator and pressure regulator vacuum hose.	Is the measured value 230 — 260 kPa (2.35 — 2.65 kg/cm^2, 33 — 38 psi)?	Go to step **7**.	Repair the following item. Fuel pressure is too high: • Faulty pressure regulator • Clogged fuel return line or bent hose Fuel pressure is too low: • Faulty pressure regulator • Improper fuel pump discharge • Clogged fuel supply line

	Step	Check	Yes	No
7	**CHECK ENGINE COOLANT TEMPERATURE SENSOR.** 1) Start the engine and warm up completely. 2) Read the data of engine coolant temperature sensor signal using Subaru Select Monitor or general scan tool. NOTE: • Subaru Select Monitor For detailed operation procedure, refer to "READ CURRENT DATA FOR ENGINE". <Ref. to EN(H4DOTC)(diag)-34, Subaru Select Monitor.> • General scan tool For detailed operation procedures, refer to the general scan tool operation manual.	Is the engine coolant temperature 75°C (167°F) or higher?	Go to step **8**.	Replace the engine coolant temperature sensor. <Ref. to FU(H4DOTC)-31, Engine Coolant Temperature Sensor.>
8	**CHECK MASS AIR FLOW AND INTAKE AIR TEMPERATURE SENSOR.** 1) Start the engine and warm up engine until coolant temperature is higher than 70°C (158°F). 2) For AT models, set the select lever to "P" range or "N" range, and for MT models, place the shift lever in the neutral position. 3) Turn the A/C switch to OFF. 4) Turn all the accessory switches to OFF. 5) Read the data of the mass air flow and intake air temperature sensor signal using Subaru Select Monitor or general scan tool. NOTE: • Subaru Select Monitor For detailed operation procedure, refer to "READ CURRENT DATA FOR ENGINE". <Ref. to EN(H4DOTC)(diag)-34, Subaru Select Monitor.> • General scan tool For detailed operation procedures, refer to the general scan tool operation manual.	Is the measured value 2.0 — 5.0 g/s (0.26 — 0.66 lb/m)?	Go to step **9**.	Replace the mass air flow and intake air temperature sensor. <Ref. to FU(H4DOTC)-36, Mass Air Flow and Intake Air Temperature Sensor.>
9	**CHECK MASS AIR FLOW AND INTAKE AIR TEMPERATURE SENSOR.** 1) Start the engine and warm up engine until coolant temperature is higher than 70°C (158°F). 2) For AT models, set the select lever to "P" range or "N" range, and for MT models, place the shift lever in the neutral position. 3) Turn the A/C switch to OFF. 4) Turn all the accessory switches to OFF. 5) Open the front hood. 6) Measure the ambient temperature. 7) Read the data of the mass air flow and intake air temperature sensor signal using Subaru Select Monitor or general scan tool. NOTE: • Subaru Select Monitor For detailed operation procedure, refer to "READ CURRENT DATA FOR ENGINE". <Ref. to EN(H4DOTC)(diag)-34, Subaru Select Monitor.> • General scan tool For detailed operation procedures, refer to the general scan tool operation manual.	Subtract ambient temperature from intake air temperature. Is the obtained value –10 — 50°C (–18 — 90°F)?	Go to step **10**.	Check the mass air flow and intake air temperature sensor. <Ref. to FU(H4DOTC)-36, Mass Air Flow and Intake Air Temperature Sensor.>

	Step	Check	Yes	No
10	**CHECK OUTPUT SIGNAL OF ECM.** 1) Turn the ignition switch to ON. 2) Measure the voltage between ECM and chassis ground on faulty cylinders. ***Connector & terminal*** ***#1 (B137) No. 8 (+) — Chassis ground (–):*** ***#2 (B137) No. 9 (+) — Chassis ground (–):*** ***#3 (B137) No. 10 (+) — Chassis ground (–):*** ***#4 (B137) No. 11 (+) — Chassis ground (–):***	Is the voltage 10 V or more?	Go to step **15**.	Go to step **11**.
11	**CHECK HARNESS BETWEEN ECM AND FUEL INJECTOR.** 1) Turn the ignition switch to OFF. 2) Disconnect the connector from fuel injector on faulty cylinders. 3) Measure the resistance between fuel injector connector and engine ground on faulty cylinders. ***Connector & terminal*** ***#1 (E5) No. 1 — Engine ground:*** ***#2 (E16) No. 1 — Engine ground:*** ***#3 (E6) No. 1 — Engine ground:*** ***#4 (E17) No. 1 — Engine ground:***	Is the resistance 1 MΩ or more?	Go to step **12**.	Repair the ground short circuit of harness between ECM and fuel injector.
12	**CHECK HARNESS BETWEEN ECM AND FUEL INJECTOR.** Measure the resistance of harness between ECM and fuel injector on faulty cylinders. ***Connector & terminal*** ***#1 (B137) No. 8 — (E5) No. 1:*** ***#2 (B137) No. 9 — (E16) No. 1:*** ***#3 (B137) No. 10 — (E6) No. 1:*** ***#4 (B137) No. 11 — (E17) No. 1:***	Is the resistance less than 1 Ω?	Go to step **13**.	Repair the harness and connector. NOTE: In this case, repair the following item: • Open circuit of harness between ECM and fuel injector connector • Poor contact of coupling connector
13	**CHECK FUEL INJECTOR.** Measure the resistance between fuel injector terminals on faulty cylinder. ***Terminals*** ***No. 1 — No. 2:***	Is the resistance between 5 — 20 Ω?	Go to step **14**.	Replace the faulty fuel injector. <Ref. to FU(H4DOTC)-38, Fuel Injector.>
14	**CHECK POWER SUPPLY LINE.** 1) Turn the ignition switch to ON. 2) Measure the voltage between fuel injector and engine ground on faulty cylinders. ***Connector & terminal*** ***#1 (E5) No. 2 (+) — Engine ground (–):*** ***#2 (E16) No. 2 (+) — Engine ground (–):*** ***#3 (E6) No. 2 (+) — Engine ground (–):*** ***#4 (E17) No. 2 (+) — Engine ground (–):***	Is the voltage 10 V or more?	Repair the poor contact of all connectors in fuel injector circuit.	Repair the harness and connector. NOTE: In this case, repair the following item: • Open circuit in harness between main relay and fuel injector connector on faulty cylinders • Poor contact of coupling connector • Poor contact of main relay connector

	Step	Check	Yes	No
15	**CHECK HARNESS BETWEEN ECM AND FUEL INJECTOR.** 1) Turn the ignition switch to OFF. 2) Disconnect the connector from fuel injector on faulty cylinders. 3) Turn the ignition switch to ON. 4) Measure the voltage between ECM and chassis ground on faulty cylinders. ***Connector & terminal*** ***#1 (B137) No. 8 (+) — Chassis ground (–):*** ***#2 (B137) No. 9 (+) — Chassis ground (–):*** ***#3 (B137) No. 10 (+) — Chassis ground (–):*** ***#4 (B137) No. 11 (+) — Chassis ground (–):***	Is the voltage 10 V or more?	Repair the short circuit to power in the harness between the ECM and fuel injector.	Go to step **16**.
16	**CHECK FUEL INJECTOR.** 1) Turn the ignition switch to OFF. 2) Measure the resistance between fuel injector terminals on faulty cylinder. ***Terminals*** ***No. 1 — No. 2:***	Is the resistance less than 1 Ω?	Replace the faulty fuel injector. <Ref. to FU(H4DOTC)-38, Fuel Injector.>	Go to step **17**.
17	**CHECK INSTALLATION OF CAMSHAFT POSITION SENSOR/CRANKSHAFT POSITION SENSOR.**	Is the camshaft position sensor or crankshaft position sensor loosely installed?	Tighten the camshaft position sensor or crankshaft position sensor.	Go to step **18**.
18	**CHECK CRANK SPROCKET.** Remove the timing belt cover. <Ref. to ME(H4DOTC)-46, REMOVAL, Timing Belt Cover.>	Is the crank sprocket rusted or does it have broken teeth?	Replace the crank sprocket. <Ref. to ME(H4DOTC)-57, Crank Sprocket.>	Go to step **19**.
19	**CHECK INSTALLATION CONDITION OF TIMING BELT.** Turn the crankshaft using ST, and align the alignment mark on crank sprocket with alignment mark on cylinder block. ST 499987500 CRANKSHAFT SOCKET	Is the timing belt dislocated from its proper position?	Repair the installation condition of timing belt. <Ref. to ME(H4DOTC)-47, Timing Belt.>	Go to step **20**.
20	**CHECK ELECTRONIC THROTTLE CONTROL RELAY.** 1) Turn the ignition switch to OFF. 2) Remove the electronic throttle control relay. 3) Connect the battery to terminals No. 5 and No. 6 of electronic throttle control relay. 4) Measure the resistance between electronic throttle control relay terminals. ***Terminals*** ***No. 7 — No. 8:***	Is the resistance less than 1 Ω?	Go to step **21**.	Replace the electronic throttle control relay. <Ref. to FU(H4DOTC)-55, Electronic Throttle Control Relay.>
21	**CHECK POWER SUPPLY OF ELECTRONIC THROTTLE CONTROL RELAY.** Measure the voltage between electronic throttle control relay connector and chassis ground. ***Connector & terminal*** ***(E362) No. 7 (+) — Chassis ground (–):***	Is the voltage 10 V or more?	Go to step **22**.	Repair the open or ground short circuit of power supply circuit.
22	**CHECK HARNESS BETWEEN ECM AND ELECTRONIC THROTTLE CONTROL RELAY.** 1) Disconnect the connectors from ECM. 2) Turn the ignition switch to ON. 3) Measure the voltage between electronic throttle control relay connector and chassis ground. ***Connector & terminal*** ***(B362) No. 6 (+) — Chassis ground (–):***	Is the voltage 10 V or more?	Repair the short circuit to power in harness between ECM and electronic throttle control relay.	Go to step **23**.

	Step	Check	Yes	No
23	**CHECK HARNESS BETWEEN ECM AND ELECTRONIC THROTTLE CONTROL RELAY.** 1) Turn the ignition switch to OFF. 2) Measure the resistance between electronic throttle control relay connector and chassis ground. ***Connector & terminal*** ***(B362) No. 6 — Chassis ground:*** ***(B362) No. 8 — Chassis ground:***	Is the resistance 1 MΩ or more?	Go to step **24**.	Repair the ground short circuit of harness between ECM and electronic throttle control relay.
24	**CHECK HARNESS BETWEEN ECM AND ELECTRONIC THROTTLE CONTROL RELAY.** Measure the resistance between ECM and electronic throttle control relay connector. ***Connector & terminal*** ***(B136) No. 21 — (B362) No. 6:*** ***(B136) No. 1 — (B362) No. 8:***	Is the resistance less than 1 Ω?	Go to step **25**.	Repair the open circuit of harness between ECM and electronic throttle control relay.
25	**CHECK HARNESS BETWEEN ECM AND ELECTRONIC THROTTLE CONTROL.** 1) Turn the ignition switch to OFF. 2) Disconnect the connectors from ECM and electronic throttle control. 3) Measure the resistance between ECM and chassis ground. ***Connector & terminal*** ***(B134) No. 19 — Chassis ground:*** ***(B134) No. 18 — Chassis ground:*** ***(B134) No. 18 — (B136) No. 6:*** ***(B134) No. 28 — Chassis ground:***	Is the resistance 1 MΩ or more?	Go to step **26**.	Repair the short circuit to ground in harness between ECM and electronic throttle control connector.
26	**CHECK SHORT CIRCUIT INSIDE THE ECM.** 1) Connect the connector to ECM. 2) Measure the resistance between electronic throttle control connector and engine ground. ***Connector & terminal*** ***(E57) No. 6 — Engine ground:*** ***(E57) No. 4 — Engine ground:***	Is the resistance 1 MΩ or more?	Go to step **27**.	Repair the short circuit to ground in harness between ECM and electronic throttle control connector. Replace the ECM if defective. <Ref. to FU(H4DOTC)-52, Engine Control Module (ECM).>
27	**CHECK HARNESS BETWEEN ECM AND ELECTRONIC THROTTLE CONTROL.** 1) Disconnect the connectors from ECM. 2) Measure the resistance of harness between ECM and electronic throttle control connector. ***Connector & terminal*** ***(B134) No. 18 — (E57) No. 6:*** ***(B134) No. 28 — (E57) No. 4:*** ***(B134) No. 29 — (E57) No. 3:***	Is the resistance less than 1 Ω?	Go to step **28**.	Repair the open circuit of harness between ECM and electronic throttle control connector.

	Step	Check	Yes	No
28	**CHECK HARNESS BETWEEN ECM AND ELECTRONIC THROTTLE CONTROL.** 1) Connect the ECM. 2) Measure the resistance between electronic throttle control connector and engine ground. ***Connector & terminal*** ***(E57) No. 3 — Engine ground:***	Is the resistance less than 5 Ω?	Go to step **29**.	Repair the harness and connector. NOTE: In this case, repair the following item: • Open circuit of harness between ECM and engine ground • Poor contact in ECM connector • Poor contact of coupling connector
29	**CHECK HARNESS BETWEEN ECM AND ELECTRONIC THROTTLE CONTROL.** 1) Turn the ignition switch to ON. 2) Measure the voltage between electronic throttle control connector and engine ground. ***Connector & terminal*** ***(E57) No. 6 (+) — Engine ground (–):*** ***(E57) No. 4 (+) — Engine ground (–):***	Is the voltage 4.85 V or more?	Repair the short circuit to power in the harness between ECM and electronic throttle control connector.	Go to step **30**.
30	**CHECK HARNESS BETWEEN ECM AND ELECTRONIC THROTTLE CONTROL.** 1) Turn the ignition switch to OFF. 2) Disconnect the connectors from ECM. 3) Measure the resistance between ECM connectors. ***Connector & terminal*** ***(B134) No. 19 — (B134) No. 18:*** ***(B134) No. 19 — (B134) No. 28:***	Is the resistance 1 MΩ or more?	Go to step **31**.	Repair the short circuit to power in the harness between ECM and electronic throttle control connector.
31	**CHECK SENSOR OUTPUT.** 1) Connect all connectors. 2) Turn the ignition switch to ON. 3) Read the data of main throttle sensor signal using Subaru Select Monitor. NOTE: For detailed operation procedure, refer to "READ CURRENT DATA FOR ENGINE". <Ref. to EN(H4DOTC)(diag)-34, Subaru Select Monitor.>	Is the voltage 0.81 — 0.87 V?	Go to step **32**.	Repair poor contact of the electronic throttle control connector. Replace the electronic throttle control if defective. <Ref. to FU(H4DOTC)-14, Throttle Body.>
32	**CHECK SENSOR OUTPUT.** Read the data of sub throttle sensor signal using Subaru Select Monitor. NOTE: Subaru Select Monitor For detailed operation procedure, refer to "READ CURRENT DATA FOR ENGINE". <Ref. to EN(H4DOTC)(diag)-34, Subaru Select Monitor.>	Is the voltage 1.64 — 1.70 V?	Go to step **33**.	Repair poor contact of the electronic throttle control connector. Replace the electronic throttle control if defective. <Ref. to FU(H4DOTC)-14, Throttle Body.>

	Step	Check	Yes	No
33	**CHECK HARNESS BETWEEN ECM AND ELECTRONIC THROTTLE CONTROL MOTOR.** 1) Turn the ignition switch to OFF. 2) Disconnect the connectors from ECM and electronic throttle control. 3) Measure the resistance between ECM and electronic throttle control connector. ***Connector & terminal*** ***(B137) No. 5 — (E57) No. 2:*** ***(B137) No. 4 — (E57) No. 1:***	Is the resistance less than 1 Ω?	Go to step **34**.	Repair the harness and connector. NOTE: In this case, repair the following item: • Open circuit in harness between ECM and electronic throttle control • Poor contact of coupling connector
34	**CHECK HARNESS BETWEEN ECM AND ELECTRONIC THROTTLE CONTROL MOTOR.** 1) Connect the connector to ECM. 2) Turn the ignition switch to ON. 3) Measure the voltage between electronic throttle control connector and engine ground. ***Connector & terminal*** ***(E57) No. 2 (+) — Engine ground (–):*** ***(E57) No. 1 (+) — Engine ground (–):***	Is the voltage 5 V or more?	Repair the short circuit to power in the harness between ECM and electronic throttle control.	Go to step **35**.
35	**CHECK HARNESS BETWEEN ECM AND ELECTRONIC THROTTLE CONTROL MOTOR.** 1) Turn the ignition switch to OFF. 2) Disconnect the connectors from ECM. 3) Measure the resistance between electronic throttle control connector and engine ground. ***Connector & terminal*** ***(E57) No. 2 — Engine ground:*** ***(E57) No. 1 — Engine ground:***	Is the resistance 1 MΩ or more?	Go to step **36**.	Repair the short circuit to ground in harness between ECM and electronic throttle control.
36	**CHECK ELECTRONIC THROTTLE CONTROL MOTOR HARNESS.** Measure the resistance between the electronic throttle control connector terminals. ***Connector & terminal*** ***(E57) No. 2 — (E57) No. 1:***	Is the resistance 1 MΩ or more?	Go to step **37**.	Repair the short circuit of harness between ECM and electronic throttle control.
37	**CHECK ELECTRONIC THROTTLE CONTROL GROUND CIRCUIT.** Measure the resistance between ECM and chassis ground. ***Connector & terminal*** ***(B134) No. 5 — Chassis ground:*** ***(B137) No. 1 — Chassis ground:*** ***(B137) No. 2 — Chassis ground:*** ***(B137) No. 3 — Chassis ground:*** ***(B137) No. 7 — Chassis ground:***	Is the resistance less than 5 Ω?	Go to step **38**.	Repair the open circuit in harness between ECM and engine ground.
38	**CHECK ELECTRONIC THROTTLE CONTROL.** Measure the resistance between electronic throttle control terminals. ***Terminals*** ***No. 1 — No. 2:***	Is the resistance 50 Ω or less?	Go to step **39**.	Replace the electronic throttle control. <Ref. to FU(H4DOTC)-14, Throttle Body.>
39	**CHECK ELECTRONIC THROTTLE CONTROL.** Move the throttle valve to the fully open and fully closed positions with fingers. Check that the valve returns to the specified position when releasing fingers.	Does the valve return to the specified position? Standard value: 3 mm (0.12 in) from fully closed position	Repair the poor contact of ECM connector.	Replace the electronic throttle control. <Ref. to FU(H4DOTC)-14, Throttle Body.>

CY:DTC P2004 INTAKE MANIFOLD RUNNER CONTROL STUCK OPEN (BANK 1)

DTC DETECTING CONDITION:

- Immediately at fault recognition
- GENERAL DESCRIPTION <Ref. to GD(H4DOTC)-187, DTC P2004 INTAKE MANIFOLD RUNNER CONTROL STUCK OPEN (BANK 1), Diagnostic Trouble Code (DTC) Detecting Criteria.>

CAUTION:

After repair or replacement of faulty parts, perform Clear Memory Mode <Ref. to EN(H4DOTC)(diag)-52, OPERATION, Clear Memory Mode.>, and Inspection Mode <Ref. to EN(H4DOTC)(diag)-43, PROCEDURE, Inspection Mode.>.

Step		Check	Yes	No
1	**CHECK FOR ANY OTHER DTC ON DISPLAY.**	Is any other DTC displayed?	Check the appropriate DTC using the “List of Diagnostic Trouble Code (DTC)”. <Ref. to EN(H4DOTC)(diag)-81, List of Diagnostic Trouble Code (DTC).>	Go to step **2**.
2	**CHECK TUMBLE GENERATOR VALVE RH.** 1) Remove the tumble generator valve assembly RH. 2) Check the tumble generator valve body.	Is there any dirt or clogging with foreign objects in the tumble generator valve?	Clean the tumble generator valve.	Replace the tumble generator valve assembly RH. <Ref. to FU(H4DOTC)-41, Tumble Generator Valve Assembly.>

CZ:DTC P2005 INTAKE MANIFOLD RUNNER CONTROL STUCK OPEN (BANK 2)

DTC DETECTING CONDITION:

- Immediately at fault recognition
- GENERAL DESCRIPTION <Ref. to GD(H4DOTC)-188, DTC P2005 INTAKE MANIFOLD RUNNER CONTROL STUCK OPEN (BANK 2), Diagnostic Trouble Code (DTC) Detecting Criteria.>

CAUTION:

After repair or replacement of faulty parts, perform Clear Memory Mode <Ref. to EN(H4DOTC)(diag)-52, OPERATION, Clear Memory Mode.>, and Inspection Mode <Ref. to EN(H4DOTC)(diag)-43, PROCEDURE, Inspection Mode.>.

Step		Check	Yes	No
1	**CHECK FOR ANY OTHER DTC ON DISPLAY.**	Is any other DTC displayed?	Check the appropriate DTC using the “List of Diagnostic Trouble Code (DTC)”. <Ref. to EN(H4DOTC)(diag)-81, List of Diagnostic Trouble Code (DTC).>	Go to step **2**.
2	**CHECK TUMBLE GENERATOR VALVE LH.** 1) Remove the tumble generator valve assembly LH. 2) Check the tumble generator valve body.	Is there any dirt or clogging with foreign objects in the tumble generator valve?	Clean the tumble generator valve.	Replace the tumble generator valve assembly LH. <Ref. to FU(H4DOTC)-41, Tumble Generator Valve Assembly.>

DA:DTC P2006 INTAKE MANIFOLD RUNNER CONTROL STUCK CLOSED (BANK 1)

DTC DETECTING CONDITION:

- Immediately at fault recognition
- GENERAL DESCRIPTION <Ref. to GD(H4DOTC)-189, DTC P2006 INTAKE MANIFOLD RUNNER CONTROL STUCK CLOSED (BANK 1), Diagnostic Trouble Code (DTC) Detecting Criteria.>

CAUTION:

After repair or replacement of faulty parts, perform Clear Memory Mode <Ref. to EN(H4DOTC)(diag)-52, OPERATION, Clear Memory Mode.>, and Inspection Mode <Ref. to EN(H4DOTC)(diag)-43, PROCEDURE, Inspection Mode.>.

	Step	Check	Yes	No
1	**CHECK FOR ANY OTHER DTC ON DISPLAY.**	Is any other DTC displayed?	Check the appropriate DTC using the “List of Diagnostic Trouble Code (DTC)”. <Ref. to EN(H4DOTC)(diag)-81, List of Diagnostic Trouble Code (DTC).>	Go to step **2**.
2	**CHECK TUMBLE GENERATOR VALVE RH.** 1) Remove the tumble generator valve assembly RH. 2) Check the tumble generator valve body.	Is there any dirt or clogging with foreign objects in the tumble generator valve?	Clean the tumble generator valve.	Replace the tumble generator valve assembly RH. <Ref. to FU(H4DOTC)-41, Tumble Generator Valve Assembly.>

DB:DTC P2007 INTAKE MANIFOLD RUNNER CONTROL STUCK CLOSED (BANK 2)

DTC DETECTING CONDITION:

- Immediately at fault recognition
- GENERAL DESCRIPTION <Ref. to GD(H4DOTC)-190, DTC P2007 INTAKE MANIFOLD RUNNER CONTROL STUCK CLOSED (BANK 2), Diagnostic Trouble Code (DTC) Detecting Criteria.>

CAUTION:

After repair or replacement of faulty parts, perform Clear Memory Mode <Ref. to EN(H4DOTC)(diag)-52, OPERATION, Clear Memory Mode.>, and Inspection Mode <Ref. to EN(H4DOTC)(diag)-43, PROCEDURE, Inspection Mode.>.

	Step	Check	Yes	No
1	**CHECK FOR ANY OTHER DTC ON DISPLAY.**	Is any other DTC displayed?	Check the appropriate DTC using the “List of Diagnostic Trouble Code (DTC)”. <Ref. to EN(H4DOTC)(diag)-81, List of Diagnostic Trouble Code (DTC).>	Go to step **2**.
2	**CHECK TUMBLE GENERATOR VALVE LH.** 1) Remove the tumble generator valve assembly LH. 2) Check the tumble generator valve body.	Is there any dirt or clogging with foreign objects in the tumble generator valve?	Clean the tumble generator valve.	Replace the tumble generator valve assembly LH. <Ref. to FU(H4DOTC)-41, Tumble Generator Valve Assembly.>

DC:DTC P2008 INTAKE MANIFOLD RUNNER CONTROL CIRCUIT / OPEN (BANK 1)

DTC DETECTING CONDITION:

- Immediately at fault recognition
- GENERAL DESCRIPTION <Ref. to GD(H4DOTC)-191, DTC P2008 INTAKE MANIFOLD RUNNER CONTROL CIRCUIT / OPEN (BANK 1), Diagnostic Trouble Code (DTC) Detecting Criteria.>

CAUTION:

After repair or replacement of faulty parts, perform Clear Memory Mode <Ref. to EN(H4DOTC)(diag)-52, OPERATION, Clear Memory Mode.>, and Inspection Mode <Ref. to EN(H4DOTC)(diag)-43, PROCEDURE, Inspection Mode.>.

WIRING DIAGRAM:

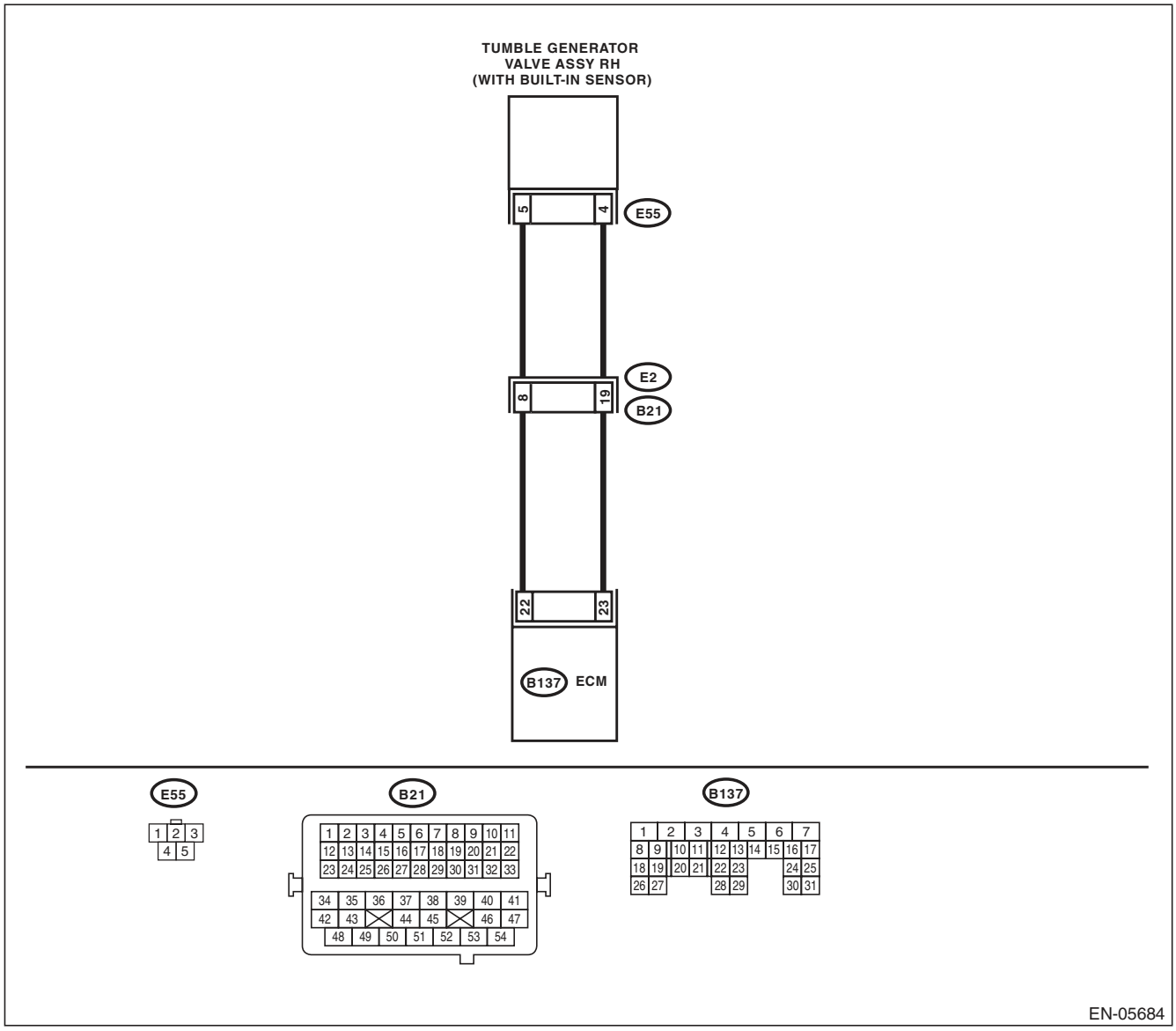

	Step	Check	Yes	No
1	**CHECK HARNESS BETWEEN ECM AND TUMBLE GENERATOR VALVE ASSEMBLY RH CONNECTOR.** 1) Turn the ignition switch to OFF. 2) Disconnect the connectors from the ECM and tumble generator valve assembly RH. 3) Measure the resistance of harness between ECM and tumble generator valve assembly RH. ***Connector & terminal*** ***(B137) No. 22 — (E55) No. 5:*** ***(B137) No. 23 — (E55) No. 4:***	Is the resistance less than 1 Ω?	Go to step **2**.	Repair the harness and connector. NOTE: In this case, repair the following item: • Open circuit in harness between ECM and tumble generator valve assembly RH connector • Poor contact of coupling connector
2	**CHECK HARNESS BETWEEN ECM AND TUMBLE GENERATOR VALVE ASSEMBLY RH CONNECTOR.** Measure the resistance between ECM and chassis ground. ***Connector & terminal*** ***(B137) No. 22 — Chassis ground:*** ***(B137) No. 23 — Chassis ground:***	Is the resistance 1 MΩ or more?	Go to step **3**.	Repair the short circuit to ground in harness between ECM and tumble generator valve assembly RH connector.
3	**CHECK POOR CONTACT.** Check for poor contact of tumble generator valve assembly RH connector.	Is there poor contact in the tumble generator valve assembly RH connector?	Repair the poor contact of tumble generator valve assembly RH connector.	Replace the tumble generator valve assembly RH. <Ref. to FU(H4DOTC)-41, Tumble Generator Valve Assembly.>

DD:DTC P2009 INTAKE MANIFOLD RUNNER CONTROL CIRCUIT LOW (BANK 1)

DTC DETECTING CONDITION:

- Immediately at fault recognition
- GENERAL DESCRIPTION <Ref. to GD(H4DOTC)-192, DTC P2009 INTAKE MANIFOLD RUNNER CONTROL CIRCUIT LOW (BANK 1), Diagnostic Trouble Code (DTC) Detecting Criteria.>

CAUTION:

After repair or replacement of faulty parts, perform Clear Memory Mode <Ref. to EN(H4DOTC)(diag)-52, OPERATION, Clear Memory Mode.>, and Inspection Mode <Ref. to EN(H4DOTC)(diag)-43, PROCEDURE, Inspection Mode.>.

WIRING DIAGRAM:

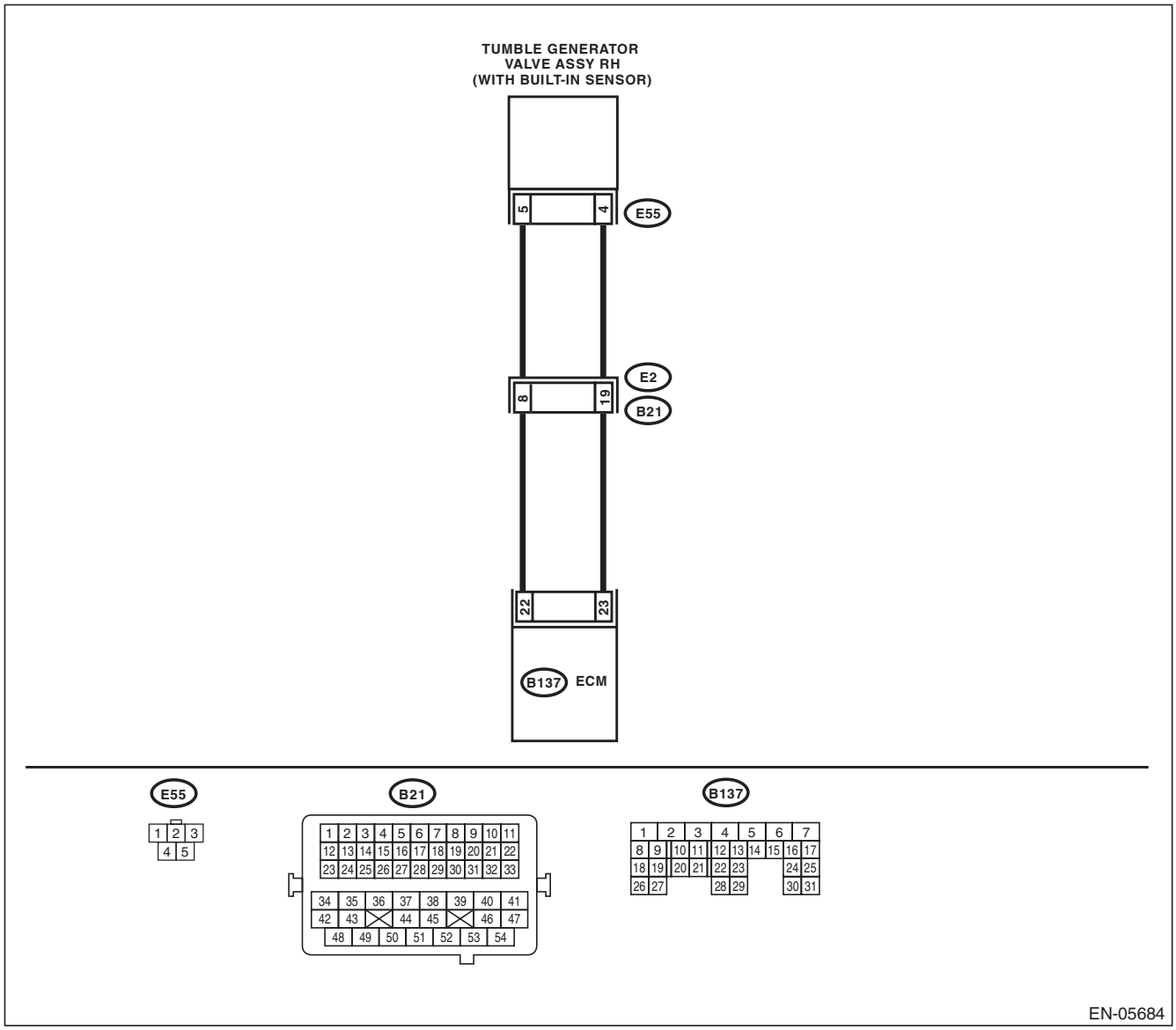

Step		Check	Yes	No
1	**CHECK HARNESS BETWEEN ECM AND TUMBLE GENERATOR VALVE ASSEMBLY RH CONNECTOR.** 1) Turn the ignition switch to OFF. 2) Disconnect the connectors from ECM. 3) Measure the voltage between ECM and chassis ground. ***Connector & terminal*** ***(B137) No. 22 (+) — Chassis ground (–):*** ***(B137) No. 23 (+) — Chassis ground (–):***	Is the voltage 5 V or more?	Repair the short circuit to power in the harness between ECM and tumble generator valve assembly RH.	Replace the tumble generator valve assembly RH. <Ref. to FU(H4DOTC)-41, Tumble Generator Valve Assembly.>

DE:DTC P2011 INTAKE MANIFOLD RUNNER CONTROL CIRCUIT / OPEN (BANK 2)

DTC DETECTING CONDITION:

- Immediately at fault recognition
- GENERAL DESCRIPTION <Ref. to GD(H4DOTC)-193, DTC P2011 INTAKE MANIFOLD RUNNER CONTROL CIRCUIT / OPEN (BANK 2), Diagnostic Trouble Code (DTC) Detecting Criteria.>

CAUTION:

After repair or replacement of faulty parts, perform Clear Memory Mode <Ref. to EN(H4DOTC)(diag)-52, OPERATION, Clear Memory Mode.>, and Inspection Mode <Ref. to EN(H4DOTC)(diag)-43, PROCEDURE, Inspection Mode.>.

WIRING DIAGRAM:

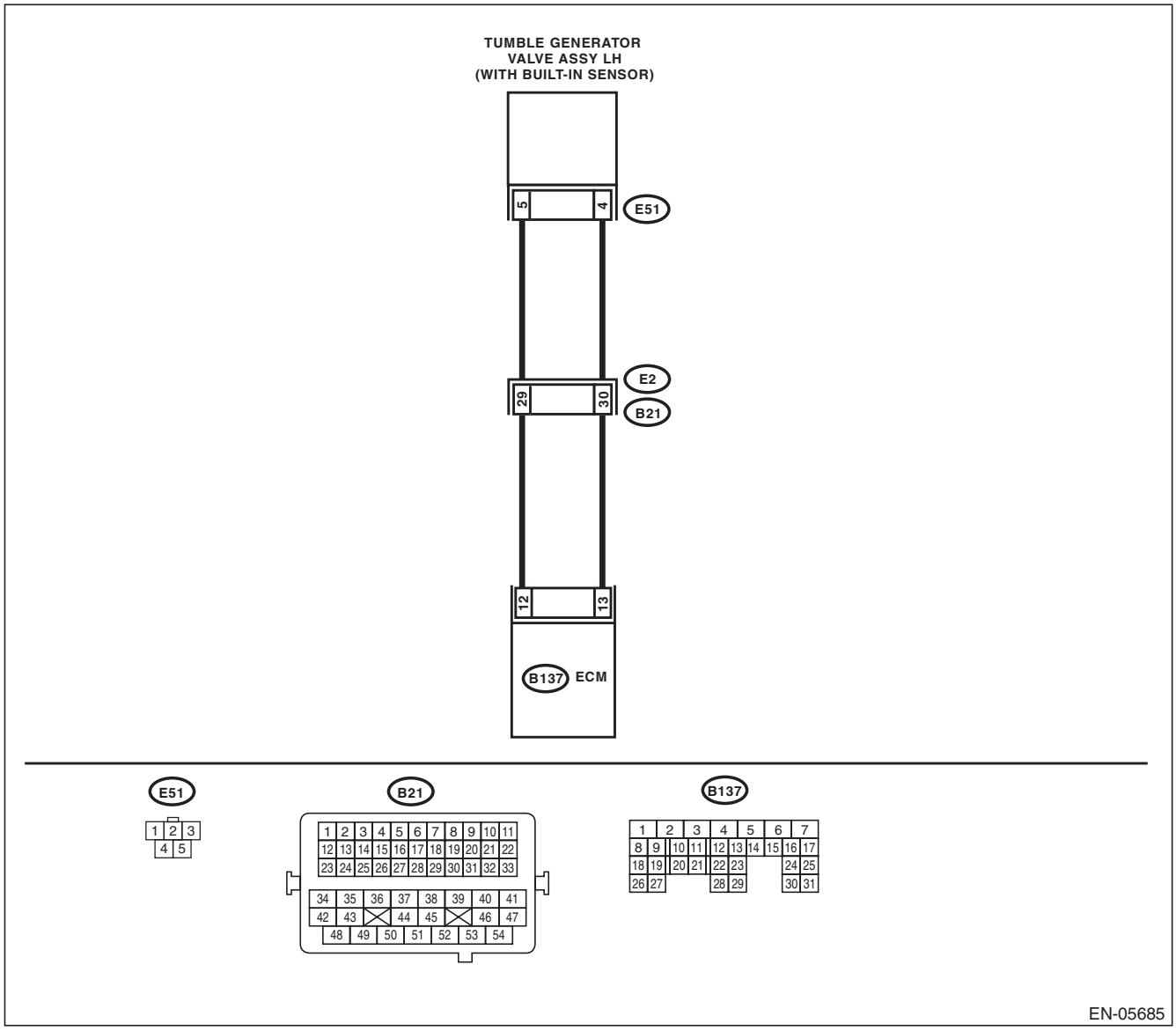

Step		Check	Yes	No
1	**CHECK HARNESS BETWEEN ECM AND TUMBLE GENERATOR VALVE ASSEMBLY LH CONNECTOR.** 1) Turn the ignition switch to OFF. 2) Disconnect the connectors from ECM and tumble generator valve assembly LH. 3) Measure the resistance of harness between ECM and tumble generator valve assembly LH. ***Connector & terminal*** ***(B137) No. 12 — (E51) No. 5:*** ***(B137) No. 13 — (E51) No. 4:***	Is the resistance less than 1 Ω?	Go to step **2**.	Repair the harness and connector. NOTE: In this case, repair the following item: • Open circuit in harness between ECM and tumble generator valve assembly LH connector • Poor contact of coupling connector
2	**CHECK HARNESS BETWEEN ECM AND TUMBLE GENERATOR VALVE ASSEMBLY LH CONNECTOR.** Measure the resistance between ECM and chassis ground. ***Connector & terminal*** ***(B137) No. 12 — Chassis ground:*** ***(B137) No. 13 — Chassis ground:***	Is the resistance 1 MΩ or more?	Go to step **3**.	Repair the short circuit to ground in harness between ECM and tumble generator valve assembly LH connector.
3	**CHECK POOR CONTACT.** Check for poor contact of tumble generator valve assembly LH connector.	Is there poor contact in the tumble generator valve assembly LH connector?	Repair the poor contact of tumble generator valve assembly LH connector.	Replace the tumble generator valve assembly LH. <Ref. to FU(H4DOTC)-41, Tumble Generator Valve Assembly.>

DF:DTC P2012 INTAKE MANIFOLD RUNNER CONTROL CIRCUIT LOW (BANK 2)

DTC DETECTING CONDITION:

- Immediately at fault recognition
- GENERAL DESCRIPTION <Ref. to GD(H4DOTC)-194, DTC P2012 INTAKE MANIFOLD RUNNER CONTROL CIRCUIT LOW (BANK 2), Diagnostic Trouble Code (DTC) Detecting Criteria.>

CAUTION:

After repair or replacement of faulty parts, perform Clear Memory Mode <Ref. to EN(H4DOTC)(diag)-52, OPERATION, Clear Memory Mode.>, and Inspection Mode <Ref. to EN(H4DOTC)(diag)-43, PROCEDURE, Inspection Mode.>.

WIRING DIAGRAM:

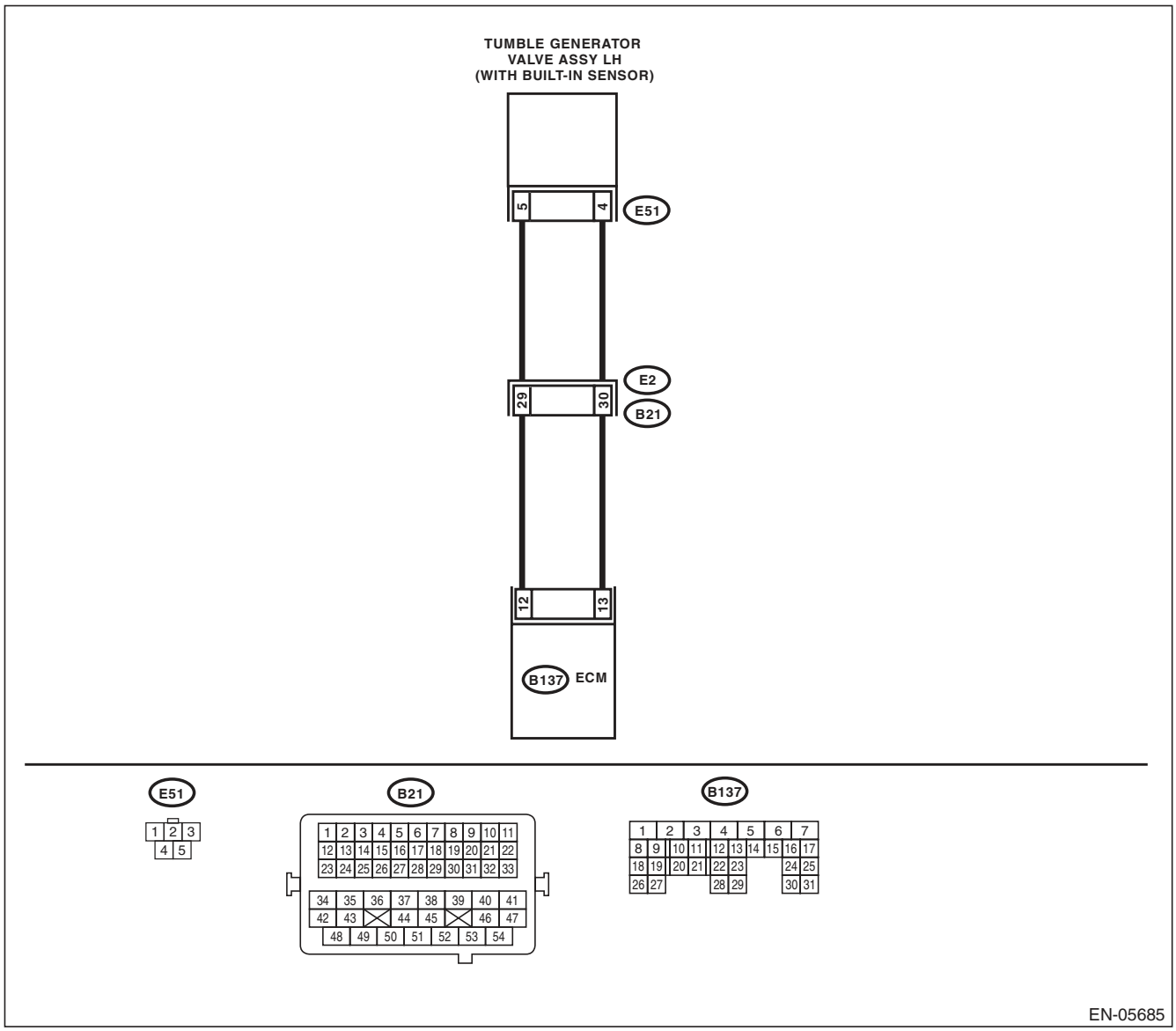

Step		Check	Yes	No
1	**CHECK HARNESS BETWEEN ECM AND TUMBLE GENERATOR VALVE ASSEMBLY LH CONNECTOR.** 1) Turn the ignition switch to OFF. 2) Disconnect the connectors from ECM. 3) Measure the voltage between ECM and chassis ground. ***Connector & terminal*** ***(B137) No. 12 (+) — Chassis ground (–):*** ***(B137) No. 13 (+) — Chassis ground (–):***	Is the voltage 5 V or more?	Repair the short circuit to power in the harness between ECM and tumble generator valve assembly LH.	Replace the tumble generator valve assembly LH. <Ref. to FU(H4DOTC)-41, Tumble Generator Valve Assembly.>

DG:DTC P2016 INTAKE MANIFOLD RUNNER POSITION SENSOR / SWITCH CIRCUIT LOW (BANK 1)

DTC DETECTING CONDITION:

- Immediately at fault recognition
- GENERAL DESCRIPTION <Ref. to GD(H4DOTC)-195, DTC P2016 INTAKE MANIFOLD RUNNER POSITION SENSOR / SWITCH CIRCUIT LOW (BANK 1), Diagnostic Trouble Code (DTC) Detecting Criteria.>

TROUBLE SYMPTOM:

- Improper idling
- Engine stalls.
- Poor driving performance

CAUTION:

After repair or replacement of faulty parts, perform Clear Memory Mode <Ref. to EN(H4DOTC)(diag)-52, OPERATION, Clear Memory Mode.>, and Inspection Mode <Ref. to EN(H4DOTC)(diag)-43, PROCEDURE, Inspection Mode.>.

WIRING DIAGRAM:

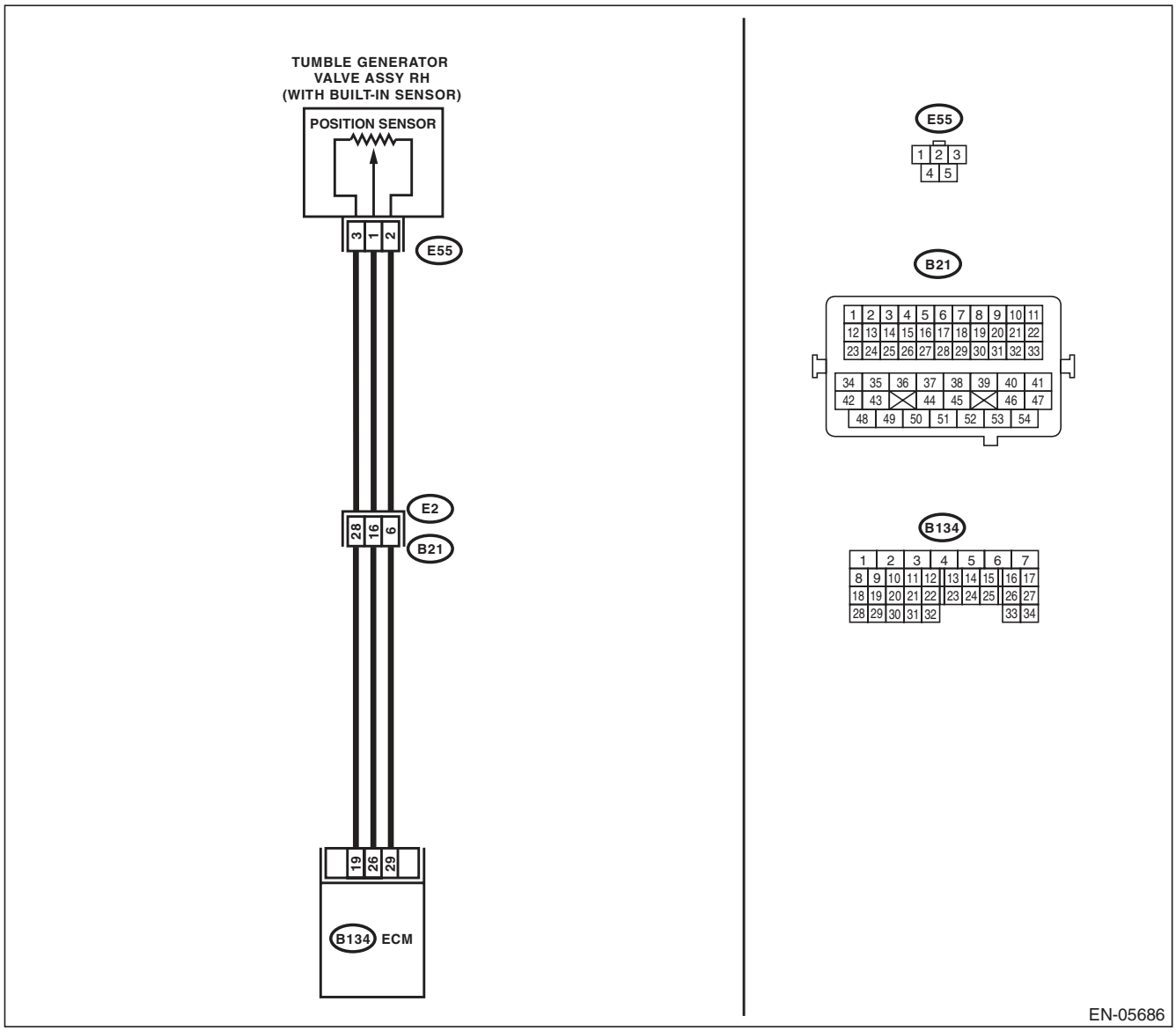

	Step	Check	Yes	No
1	**CHECK CURRENT DATA.** 1) Start the engine. 2) Read the data of tumble generator valve position sensor signal (RH) using Subaru Select Monitor or general scan tool. NOTE: • Subaru Select Monitor For detailed operation procedure, refer to "READ CURRENT DATA FOR ENGINE". <Ref. to EN(H4DOTC)(diag)-34, Subaru Select Monitor.> • General scan tool For detailed operation procedures, refer to the general scan tool operation manual.	Is the voltage less than 0.2 V?	Go to step **2**.	Even if DTC is detected, the circuit has returned to a normal condition at this time. Reproduce the failure, and then perform the diagnosis again. NOTE: In this case, temporary poor contact of connector may be the cause.
2	**CHECK POWER SUPPLY OF TUMBLE GENERATOR VALVE ASSEMBLY RH.** 1) Turn the ignition switch to OFF. 2) Disconnect the connector from tumble generator valve assembly RH. 3) Turn the ignition switch to ON. 4) Measure the voltage between tumble generator valve assembly RH connector and engine ground. ***Connector & terminal*** ***(E55) No. 3 (+) — Engine ground (–):***	Is the voltage 4.5 V or more?	Go to step **3**.	Repair the harness and connector. NOTE: In this case, repair the following item: • Open circuit in harness between ECM and tumble generator valve assembly RH connector • Poor contact in ECM connector • Poor contact of coupling connector
3	**CHECK HARNESS BETWEEN ECM AND TUMBLE GENERATOR VALVE ASSEMBLY RH CONNECTOR.** 1) Turn the ignition switch to OFF. 2) Disconnect the connectors from ECM. 3) Measure the resistance of harness between ECM and tumble generator valve assembly RH. ***Connector & terminal*** ***(B134) No. 26 — (E55) No. 1:***	Is the resistance less than 1 Ω?	Go to step **4**.	Repair the harness and connector. NOTE: In this case, repair the following item: • Open circuit in harness between ECM and tumble generator valve assembly RH connector • Poor contact of coupling connector
4	**CHECK HARNESS BETWEEN ECM AND TUMBLE GENERATOR VALVE ASSEMBLY RH CONNECTOR.** Measure the resistance between ECM and chassis ground. ***Connector & terminal*** ***(B134) No. 26 — Chassis ground:***	Is the resistance 1 MΩ or more?	Go to step **5**.	Repair the short circuit to ground in harness between ECM and tumble generator valve assembly RH connector.
5	**CHECK POOR CONTACT.** Check for poor contact of tumble generator valve assembly RH connector.	Is there poor contact in ECM or the tumble generator valve assembly RH connector?	Repair the poor contact in ECM or tumble generator valve assembly RH connector.	Replace the tumble generator valve assembly RH. <Ref. to FU(H4DOTC)-41, Tumble Generator Valve Assembly.>

DH:DTC P2017 INTAKE MANIFOLD RUNNER POSITION SENSOR / SWITCH CIRCUIT HIGH (BANK 1)

DTC DETECTING CONDITION:

- Immediately at fault recognition
- GENERAL DESCRIPTION <Ref. to GD(H4DOTC)-196, DTC P2017 INTAKE MANIFOLD RUNNER POSITION SENSOR / SWITCH CIRCUIT HIGH (BANK 1), Diagnostic Trouble Code (DTC) Detecting Criteria.>

TROUBLE SYMPTOM:

- Improper idling
- Engine stalls.
- Poor driving performance

CAUTION:

After repair or replacement of faulty parts, perform Clear Memory Mode <Ref. to EN(H4DOTC)(diag)-52, OPERATION, Clear Memory Mode.>, and Inspection Mode <Ref. to EN(H4DOTC)(diag)-43, PROCEDURE, Inspection Mode.>.

WIRING DIAGRAM:

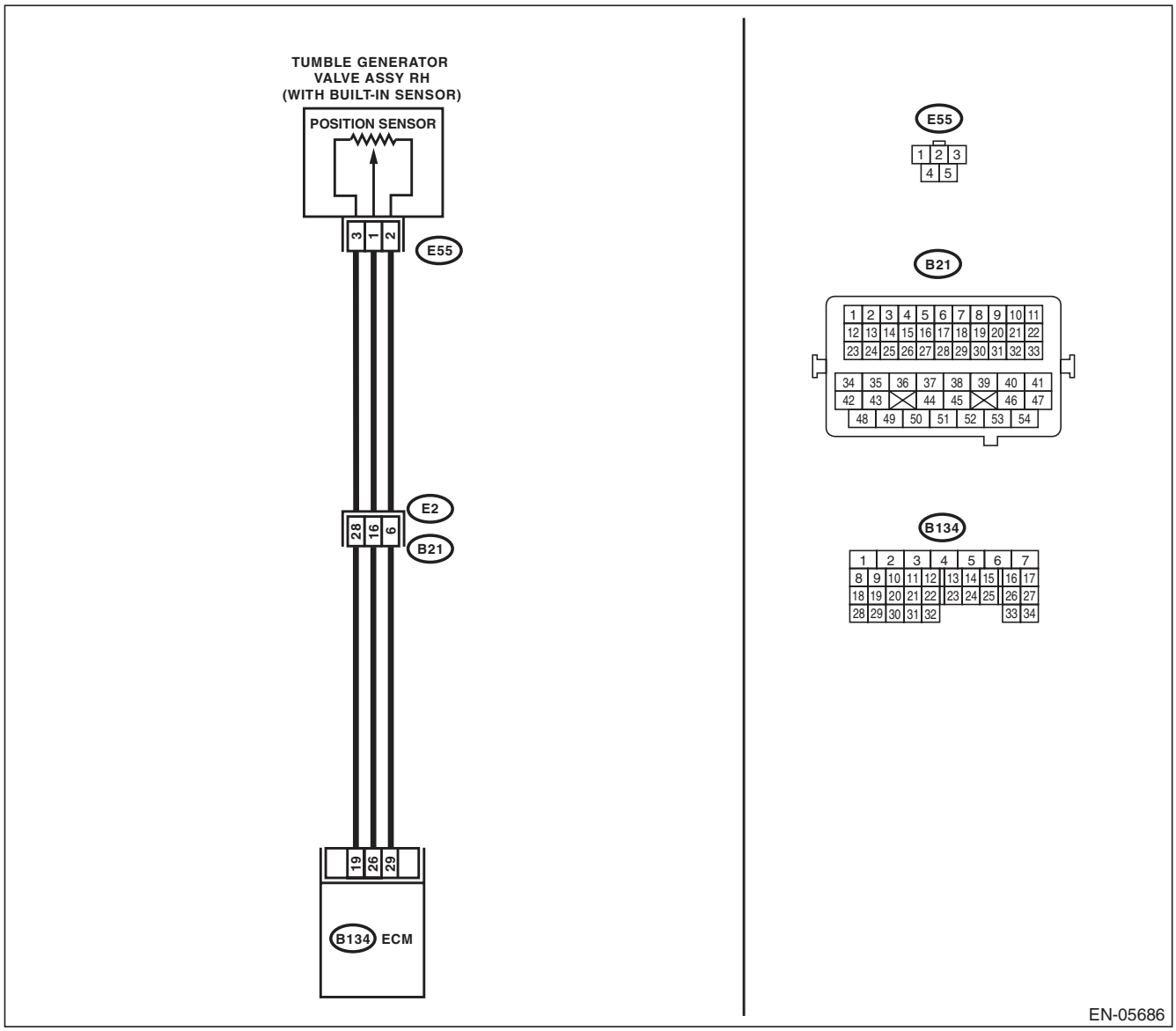

	Step	Check	Yes	No
1	**CHECK CURRENT DATA.** 1) Start the engine. 2) Read the data of tumble generator valve position sensor signal (RH) using Subaru Select Monitor or general scan tool. NOTE: • Subaru Select Monitor For detailed operation procedure, refer to "READ CURRENT DATA FOR ENGINE". <Ref. to EN(H4DOTC)(diag)-34, Subaru Select Monitor.> • General scan tool For detailed operation procedures, refer to the general scan tool operation manual.	Is the voltage 5 V or more?	Go to step **2**.	Even if DTC is detected, the circuit has returned to a normal condition at this time. Reproduce the failure, and then perform the diagnosis again. NOTE: In this case, temporary poor contact of connector may be the cause.
2	**CHECK HARNESS BETWEEN ECM AND TUMBLE GENERATOR VALVE ASSEMBLY RH CONNECTOR.** 1) Turn the ignition switch to OFF. 2) Disconnect the connector from tumble generator valve assembly RH. 3) Start the engine. 4) Read the data of tumble generator valve position sensor signal (RH) using Subaru Select Monitor or general scan tool. NOTE: • Subaru Select Monitor For detailed operation procedure, refer to "READ CURRENT DATA FOR ENGINE". <Ref. to EN(H4DOTC)(diag)-34, Subaru Select Monitor.> • General scan tool For detailed operation procedures, refer to the general scan tool operation manual.	Is the voltage 5 V or more?	Repair the short circuit to power in harness between ECM and tumble generator valve assembly RH connector.	Go to step **3**.
3	**CHECK HARNESS BETWEEN ECM AND TUMBLE GENERATOR VALVE ASSEMBLY RH CONNECTOR.** 1) Turn the ignition switch to OFF. 2) Measure the resistance of harness between tumble generator valve assembly RH connector and engine ground. ***Connector & terminal*** ***(E55) No. 2 — Engine ground:***	Is the resistance less than 5 Ω?	Go to step **4**.	Repair the harness and connector. NOTE: In this case, repair the following item: • Open circuit in harness between ECM and tumble generator valve assembly RH connector • Poor contact in ECM connector • Poor contact of coupling connector
4	**CHECK POOR CONTACT.** Check for poor contact of tumble generator valve assembly RH connector.	Is there poor contact in the tumble generator valve assembly RH connector?	Repair the poor contact of tumble generator valve assembly RH connector.	Replace the tumble generator valve assembly RH. <Ref. to FU(H4DOTC)-41, Tumble Generator Valve Assembly.>

DI: DTC P2021 INTAKE MANIFOLD RUNNER POSITION SENSOR / SWITCH CIRCUIT LOW (BANK 2)

DTC DETECTING CONDITION:

- Immediately at fault recognition
- GENERAL DESCRIPTION <Ref. to GD(H4DOTC)-197, DTC P2021 INTAKE MANIFOLD RUNNER POSITION SENSOR / SWITCH CIRCUIT LOW (BANK 2), Diagnostic Trouble Code (DTC) Detecting Criteria.>

TROUBLE SYMPTOM:

- Improper idling
- Engine stalls.
- Poor driving performance

CAUTION:

After repair or replacement of faulty parts, perform Clear Memory Mode <Ref. to EN(H4DOTC)(diag)-52, OPERATION, Clear Memory Mode.>, and Inspection Mode <Ref. to EN(H4DOTC)(diag)-43, PROCEDURE, Inspection Mode.>.

WIRING DIAGRAM:

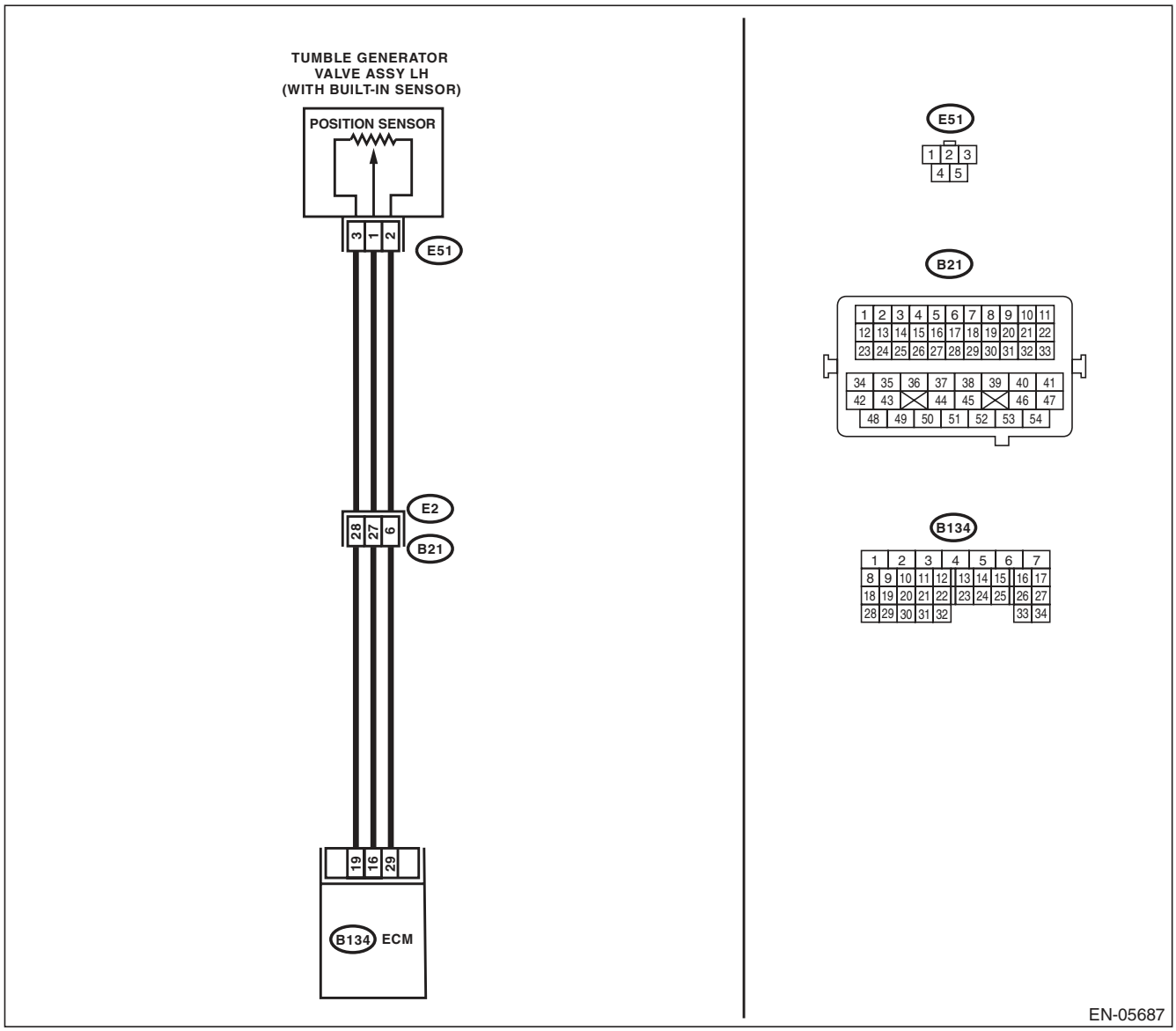

	Step	Check	Yes	No
1	**CHECK CURRENT DATA.** 1) Start the engine. 2) Read the data of tumble generator valve position sensor signal (LH) using Subaru Select Monitor or general scan tool. NOTE: • Subaru Select Monitor For detailed operation procedure, refer to "READ CURRENT DATA FOR ENGINE". <Ref. to EN(H4DOTC)(diag)-34, Subaru Select Monitor.> • General scan tool For detailed operation procedures, refer to the general scan tool operation manual.	Is the voltage less than 0.2 V?	Go to step **2**.	Even if DTC is detected, the circuit has returned to a normal condition at this time. Reproduce the failure, and then perform the diagnosis again. NOTE: In this case, temporary poor contact of connector may be the cause.
2	**CHECK POWER SUPPLY OF TUMBLE GENERATOR VALVE ASSEMBLY LH.** 1) Turn the ignition switch to OFF. 2) Disconnect the connector from tumble generator valve assembly LH. 3) Turn the ignition switch to ON. 4) Measure the voltage between tumble generator valve assembly LH connector and engine ground. ***Connector & terminal*** ***(E51) No. 3 (+) — Engine ground (–):***	Is the voltage 4.5 V or more?	Go to step **3**.	Repair the harness and connector. NOTE: In this case, repair the following item: • Open circuit in harness between ECM and tumble generator valve assembly LH connector • Poor contact in ECM connector • Poor contact of coupling connector
3	**CHECK HARNESS BETWEEN ECM AND TUMBLE GENERATOR VALVE ASSEMBLY LH CONNECTOR.** 1) Turn the ignition switch to OFF. 2) Disconnect the connectors from ECM. 3) Measure the resistance of harness between ECM and tumble generator valve assembly LH. ***Connector & terminal*** ***(B134) No. 16 — (E51) No. 1:***	Is the resistance less than 1 Ω?	Go to step **4**.	Repair the harness and connector. NOTE: In this case, repair the following item: • Open circuit in harness between ECM and tumble generator valve assembly LH connector • Poor contact of coupling connector
4	**CHECK HARNESS BETWEEN ECM AND TUMBLE GENERATOR VALVE ASSEMBLY LH CONNECTOR.** Measure the resistance between ECM and chassis ground. ***Connector & terminal*** ***(B134) No. 16 — Chassis ground:***	Is the resistance 1 MΩ or more?	Go to step **5**.	Repair the short circuit to ground in harness between ECM and tumble generator valve assembly LH connector.
5	**CHECK POOR CONTACT.** Check for poor contact of tumble generator valve assembly LH connector.	Is there poor contact in ECM or the tumble generator valve assembly LH connector?	Repair the poor contact in ECM or tumble generator valve assembly LH connector.	Replace the tumble generator valve assembly LH. <Ref. to FU(H4DOTC)-41, Tumble Generator Valve Assembly.>

DJ:DTC P2022 INTAKE MANIFOLD RUNNER POSITION SENSOR / SWITCH CIRCUIT HIGH (BANK 2)

DTC DETECTING CONDITION:

- Immediately at fault recognition
- GENERAL DESCRIPTION <Ref. to GD(H4DOTC)-198, DTC P2022 INTAKE MANIFOLD RUNNER POSITION SENSOR / SWITCH CIRCUIT HIGH (BANK 2), Diagnostic Trouble Code (DTC) Detecting Criteria.>

TROUBLE SYMPTOM:

- Improper idling
- Engine stalls.
- Poor driving performance

CAUTION:

After repair or replacement of faulty parts, perform Clear Memory Mode <Ref. to EN(H4DOTC)(diag)-52, OPERATION, Clear Memory Mode.>, and Inspection Mode <Ref. to EN(H4DOTC)(diag)-43, PROCEDURE, Inspection Mode.>.

WIRING DIAGRAM:

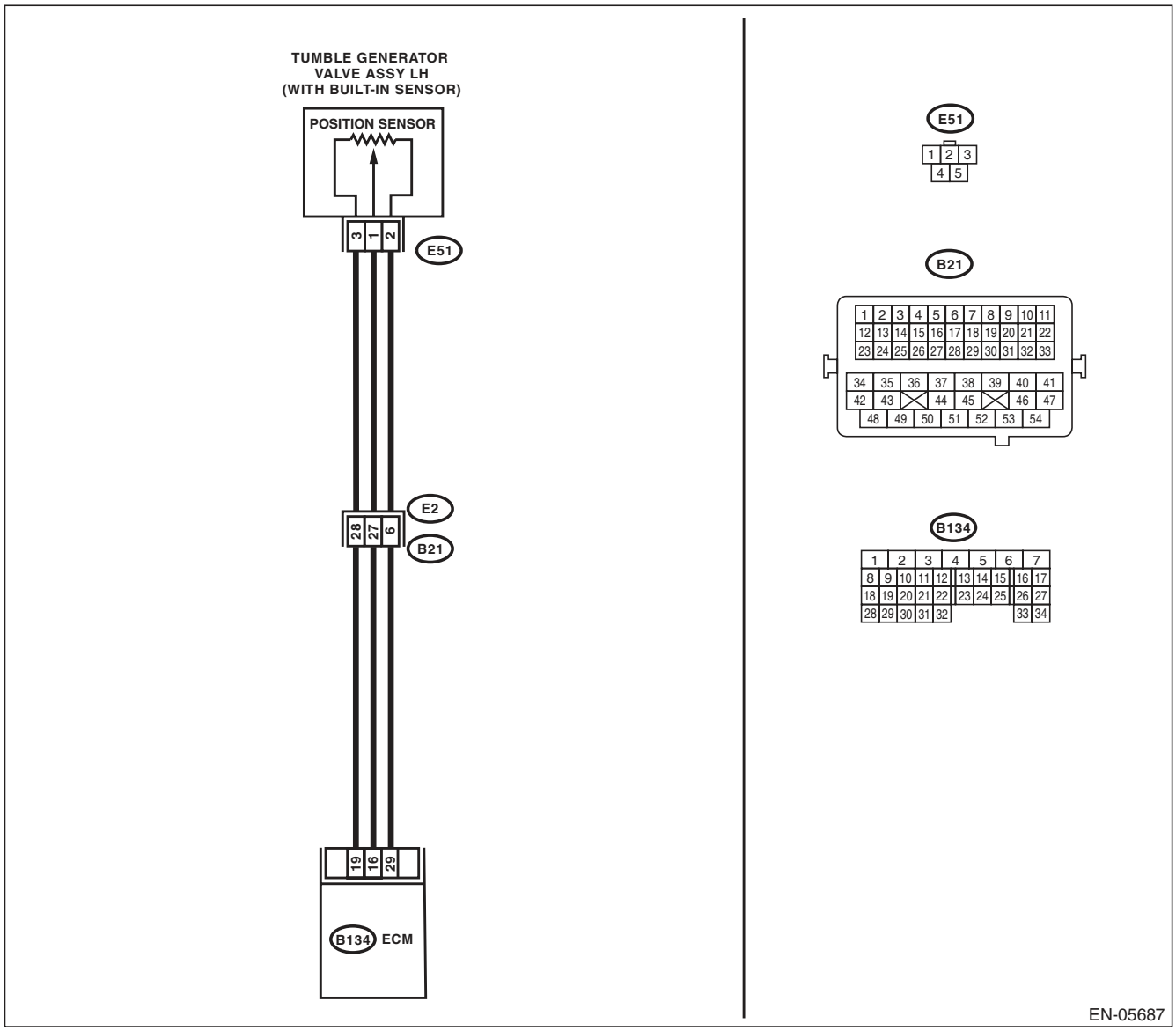

	Step	Check	Yes	No
1	**CHECK CURRENT DATA.** 1) Start the engine. 2) Read the data of tumble generator valve position sensor signal (LH) using Subaru Select Monitor or general scan tool. NOTE: • Subaru Select Monitor For detailed operation procedure, refer to "READ CURRENT DATA FOR ENGINE". <Ref. to EN(H4DOTC)(diag)-34, Subaru Select Monitor.> • General scan tool For detailed operation procedures, refer to the general scan tool operation manual.	Is the voltage 5 V or more?	Go to step **2**.	Even if DTC is detected, the circuit has returned to a normal condition at this time. Reproduce the failure, and then perform the diagnosis again. NOTE: In this case, temporary poor contact of connector may be the cause.
2	**CHECK HARNESS BETWEEN ECM AND TUMBLE GENERATOR VALVE ASSEMBLY LH CONNECTOR.** 1) Turn the ignition switch to OFF. 2) Disconnect the connector from tumble generator valve assembly LH. 3) Start the engine. 4) Read the data of tumble generator valve position sensor signal (LH) using Subaru Select Monitor or general scan tool. NOTE: • Subaru Select Monitor For detailed operation procedure, refer to "READ CURRENT DATA FOR ENGINE". <Ref. to EN(H4DOTC)(diag)-34, Subaru Select Monitor.> • General scan tool For detailed operation procedures, refer to the general scan tool operation manual.	Is the voltage 5 V or more?	Repair the short circuit to power in harness between ECM and tumble generator valve assembly LH connector.	Go to step **3**.
3	**CHECK HARNESS BETWEEN ECM AND TUMBLE GENERATOR VALVE ASSEMBLY LH CONNECTOR.** 1) Turn the ignition switch to OFF. 2) Measure the resistance of harness between tumble generator valve assembly LH connector and engine ground. ***Connector & terminal*** ***(E51) No. 2 — Engine ground:***	Is the resistance less than 5 Ω?	Go to step **4**.	Repair the harness and connector. NOTE: In this case, repair the following item: • Open circuit in harness between ECM and tumble generator valve assembly LH connector • Poor contact in ECM connector • Poor contact of coupling connector
4	**CHECK POOR CONTACT.** Check for poor contact of tumble generator valve assembly LH connector.	Is there poor contact in the tumble generator valve assembly LH connector?	Repair the poor contact of tumble generator valve assembly LH connector.	Replace the tumble generator valve assembly LH. <Ref. to FU(H4DOTC)-41, Tumble Generator Valve Assembly.>

DK:DTC P2088 INTAKE CAMSHAFT POSITION ACTUATOR CONTROL CIRCUIT LOW (BANK 1)

DTC DETECTING CONDITION:

- Immediately at fault recognition
- GENERAL DESCRIPTION <Ref. to GD(H4DOTC)-199, DTC P2088 INTAKE CAMSHAFT POSITION ACTUATOR CONTROL CIRCUIT LOW (BANK 1), Diagnostic Trouble Code (DTC) Detecting Criteria.>

TROUBLE SYMPTOM:

Improper idling

CAUTION:

After repair or replacement of faulty parts, perform Clear Memory Mode <Ref. to EN(H4DOTC)(diag)-52, OPERATION, Clear Memory Mode.>, and Inspection Mode <Ref. to EN(H4DOTC)(diag)-43, PROCEDURE, Inspection Mode.>.

WIRING DIAGRAM:

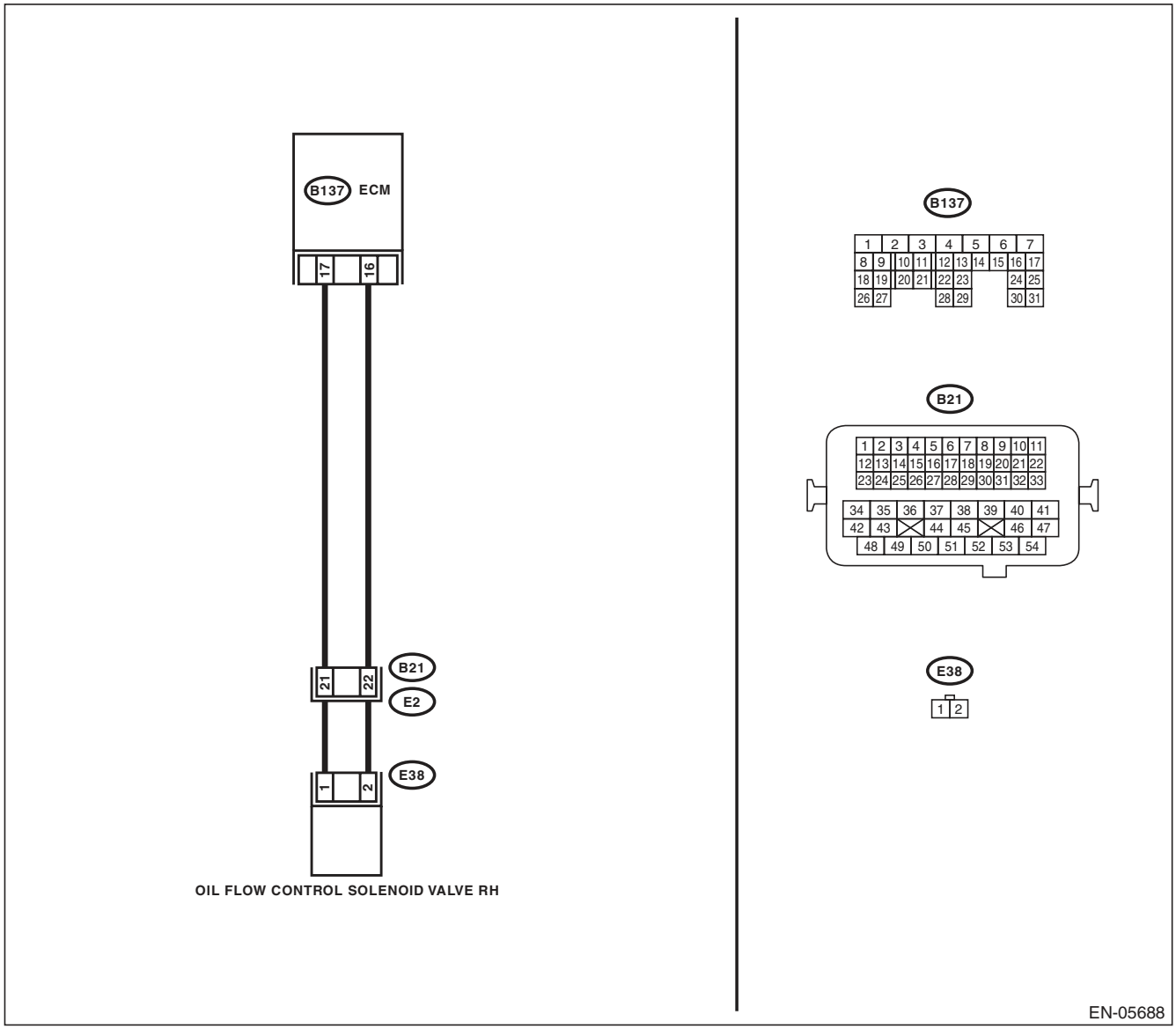

	Step	Check	Yes	No
1	**CHECK HARNESS BETWEEN ECM AND OIL FLOW CONTROL SOLENOID VALVE.** 1) Turn the ignition switch to OFF. 2) Disconnect the connectors from ECM and oil flow control solenoid valve. 3) Measure the resistance of harness between ECM and oil flow control solenoid valve. ***Connector & terminal*** ***(B137) No. 17 — (E38) No. 1:*** ***(B137) No. 16 — (E38) No. 2:***	Is the resistance less than 1 Ω?	Go to step **2**.	Repair the harness and connector. NOTE: In this case, repair the following item: • Open circuit of the harness between the ECM and oil flow control solenoid valve connector • Poor contact of coupling connector
2	**CHECK HARNESS BETWEEN ECM AND OIL FLOW CONTROL SOLENOID VALVE.** Measure the resistance between ECM and chassis ground. ***Connector & terminal*** ***(B137) No. 17 — Chassis ground:*** ***(B137) No. 16 — Chassis ground:***	Is the resistance 1 MΩ or more?	Go to step **3**.	Repair the short circuit to ground in harness between ECM and oil flow control solenoid valve connector.
3	**CHECK OIL FLOW CONTROL SOLENOID VALVE.** Measure the resistance between oil flow control solenoid valve terminals. ***Terminals*** ***No. 1 — No. 2:***	Is the resistance between 6 — 12 Ω?	Repair the poor contact of ECM and oil flow control solenoid valve connector.	Replace the oil flow control solenoid valve. <Ref. to ME(H4DOTC)-58, Camshaft.>

DL:DTC P2089 INTAKE CAMSHAFT POSITION ACTUATOR CONTROL CIRCUIT HIGH (BANK 1)

DTC DETECTING CONDITION:

- Immediately at fault recognition
- GENERAL DESCRIPTION <Ref. to GD(H4DOTC)-200, DTC P2089 INTAKE CAMSHAFT POSITION ACTUATOR CONTROL CIRCUIT HIGH (BANK 1), Diagnostic Trouble Code (DTC) Detecting Criteria.>

TROUBLE SYMPTOM:

Improper idling

CAUTION:

After repair or replacement of faulty parts, perform Clear Memory Mode <Ref. to EN(H4DOTC)(diag)-52, OPERATION, Clear Memory Mode.>, and Inspection Mode <Ref. to EN(H4DOTC)(diag)-43, PROCEDURE, Inspection Mode.>.

WIRING DIAGRAM:

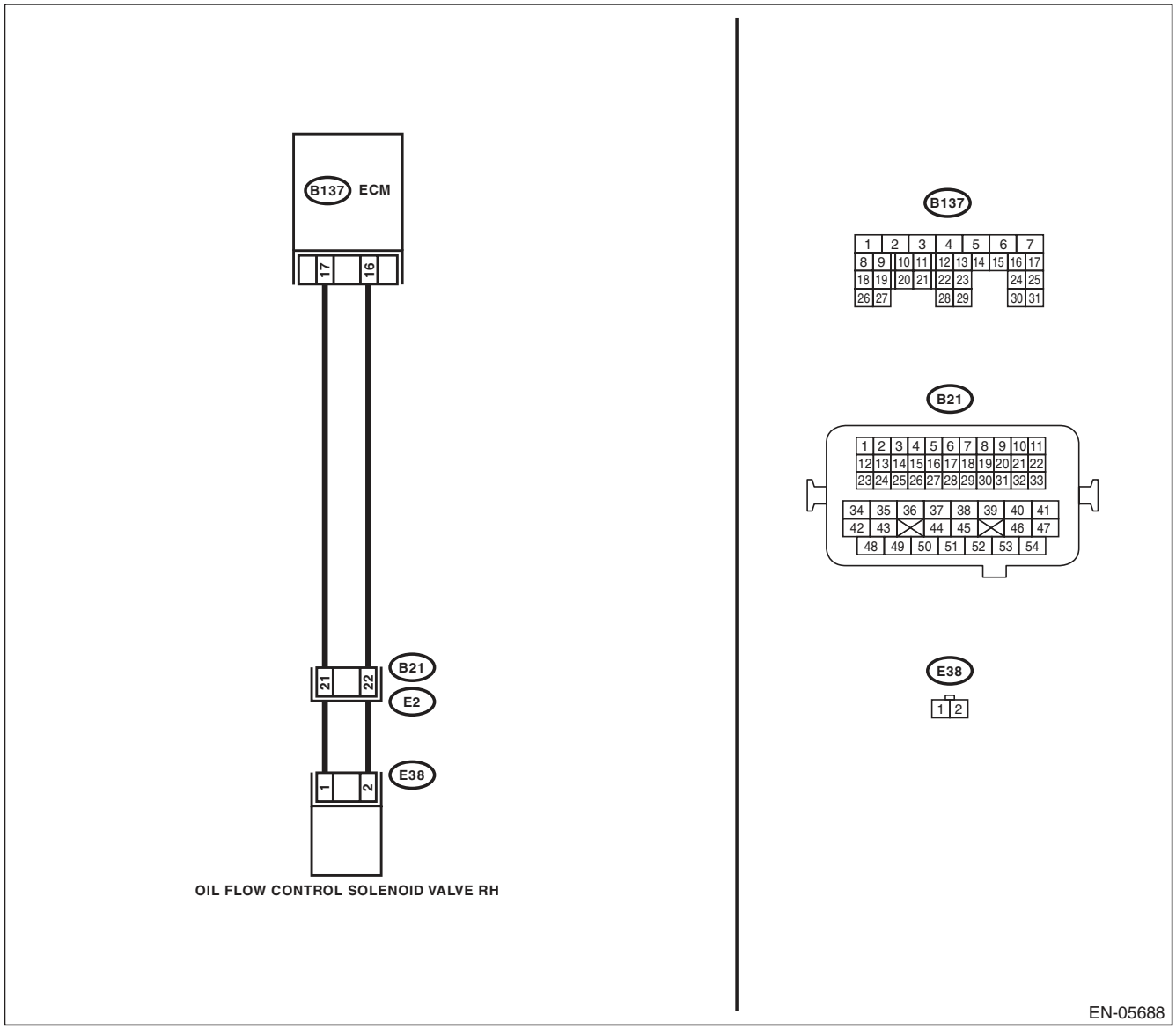

	Step	Check	Yes	No
1	**CHECK HARNESS BETWEEN ECM AND OIL FLOW CONTROL SOLENOID VALVE.** 1) Turn the ignition switch to OFF. 2) Disconnect the connectors from ECM and oil flow control solenoid valve. 3) Measure the voltage between ECM and chassis ground. ***Connector & terminal*** ***(B137) No. 17 (+) — Chassis ground (–):*** ***(B137) No. 16 (+) — Chassis ground (–):***	Is the voltage less than 1 V?	Go to step **2**.	Repair the short circuit to power in harness between ECM and oil flow control solenoid valve connector.
2	**CHECK HARNESS BETWEEN ECM AND OIL FLOW CONTROL SOLENOID VALVE.** Measure the resistance of harness between ECM and oil flow control solenoid valve connector. ***Connector & terminal*** ***(B137) No. 17 — (E38) No. 1:*** ***(B137) No. 16 — (E38) No. 2:***	Is the resistance less than 1 Ω?	Go to step **3**.	Repair the harness and connector. NOTE: In this case, repair the following item: • Open circuit of the harness between the ECM and oil flow control solenoid valve connector • Poor contact of coupling connector
3	**CHECK OIL FLOW CONTROL SOLENOID VALVE.** Measure the resistance between oil flow control solenoid valve terminals. ***Terminals*** ***No. 1 — No. 2:***	Is the resistance between 6 — 12 Ω?	Repair the poor contact of ECM and oil flow control solenoid valve connector.	Replace the oil flow control solenoid valve. <Ref. to ME(H4DOTC)-58, Camshaft.>

DM:DTC P2092 INTAKE CAMSHAFT POSITION ACTUATOR CONTROL CIRCUIT LOW (BANK 2)

DTC DETECTING CONDITION:

- Immediately at fault recognition
- GENERAL DESCRIPTION <Ref. to GD(H4DOTC)-201, DTC P2092 INTAKE CAMSHAFT POSITION ACTUATOR CONTROL CIRCUIT LOW (BANK 2), Diagnostic Trouble Code (DTC) Detecting Criteria.>

TROUBLE SYMPTOM:

Improper idling

CAUTION:

After repair or replacement of faulty parts, perform Clear Memory Mode <Ref. to EN(H4DOTC)(diag)-52, OPERATION, Clear Memory Mode.>, and Inspection Mode <Ref. to EN(H4DOTC)(diag)-43, PROCEDURE, Inspection Mode.>.

WIRING DIAGRAM:

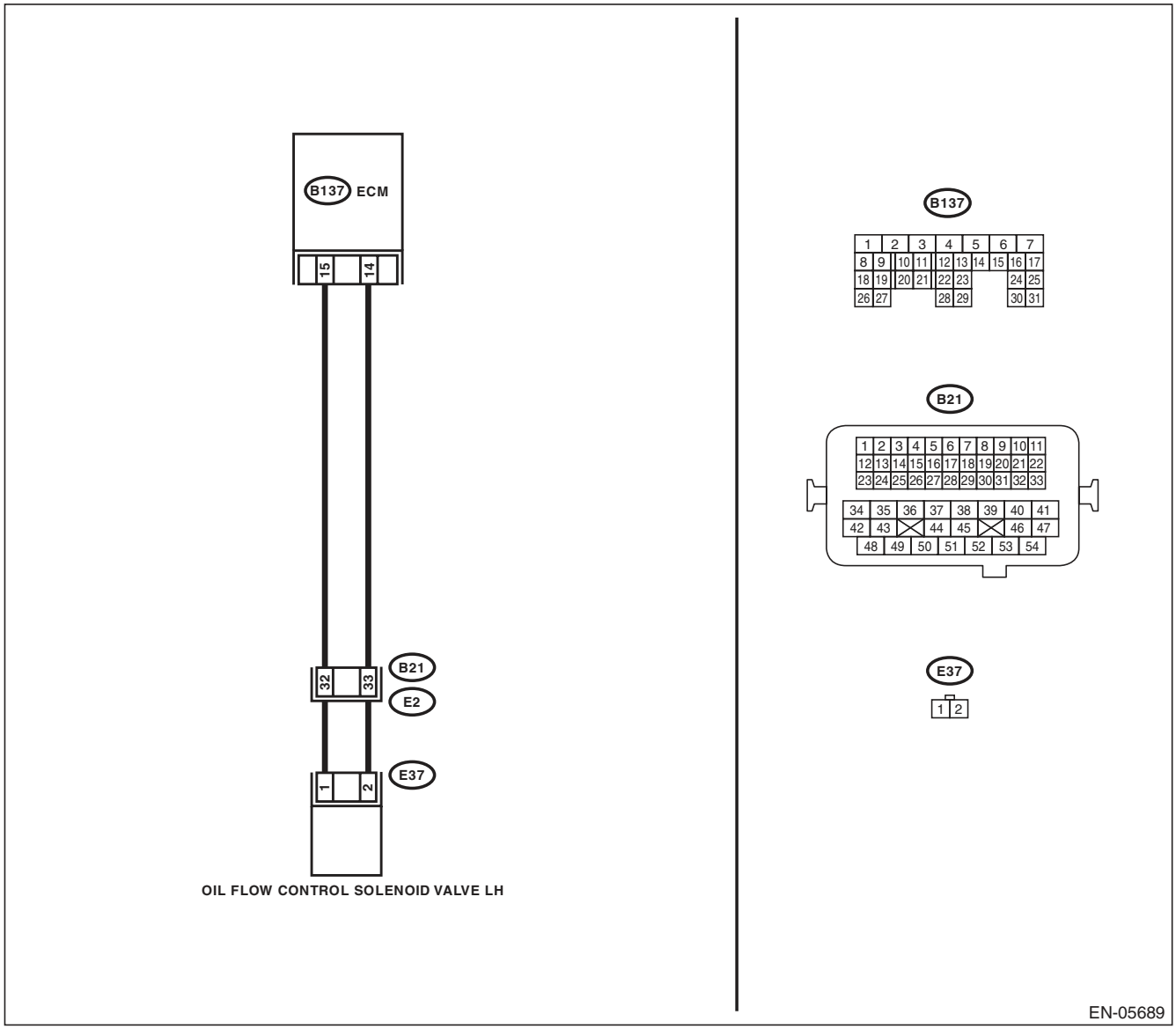

	Step	Check	Yes	No
1	**CHECK HARNESS BETWEEN ECM AND OIL FLOW CONTROL SOLENOID VALVE.** 1) Turn the ignition switch to OFF. 2) Disconnect the connectors from ECM and oil flow control solenoid valve. 3) Measure the resistance of harness between ECM and oil flow control solenoid valve. ***Connector & terminal*** ***(B137) No. 15 — (E37) No. 1:*** ***(B137) No. 14 — (E37) No. 2:***	Is the resistance less than 1 Ω?	Go to step **2**.	Repair the harness and connector. NOTE: In this case, repair the following item: • Open circuit of the harness between the ECM and oil flow control solenoid valve connector • Poor contact of coupling connector
2	**CHECK HARNESS BETWEEN ECM AND OIL FLOW CONTROL SOLENOID VALVE.** Measure the resistance between ECM and chassis ground. ***Connector & terminal*** ***(B137) No. 15 — Chassis ground:*** ***(B137) No. 14 — Chassis ground:***	Is the resistance 1 MΩ or more?	Go to step **3**.	Repair the short circuit to ground in harness between ECM and oil flow control solenoid valve connector.
3	**CHECK OIL FLOW CONTROL SOLENOID VALVE.** Measure the resistance between oil flow control solenoid valve terminals. ***Terminals*** ***No. 1 — No. 2:***	Is the resistance between 6 — 12 Ω?	Repair the poor contact of ECM and oil flow control solenoid valve connector.	Replace the oil flow control solenoid valve. <Ref. to ME(H4DOTC)-58, Camshaft.>

DN:DTC P2093 INTAKE CAMSHAFT POSITION ACTUATOR CONTROL CIRCUIT HIGH (BANK 2)

DTC DETECTING CONDITION:

- Immediately at fault recognition
- GENERAL DESCRIPTION <Ref. to GD(H4DOTC)-201, DTC P2093 INTAKE CAMSHAFT POSITION ACTUATOR CONTROL CIRCUIT HIGH (BANK 2), Diagnostic Trouble Code (DTC) Detecting Criteria.>

TROUBLE SYMPTOM:

Improper idling

CAUTION:

After repair or replacement of faulty parts, perform Clear Memory Mode <Ref. to EN(H4DOTC)(diag)-52, OPERATION, Clear Memory Mode.>, and Inspection Mode <Ref. to EN(H4DOTC)(diag)-43, PROCEDURE, Inspection Mode.>.

WIRING DIAGRAM:

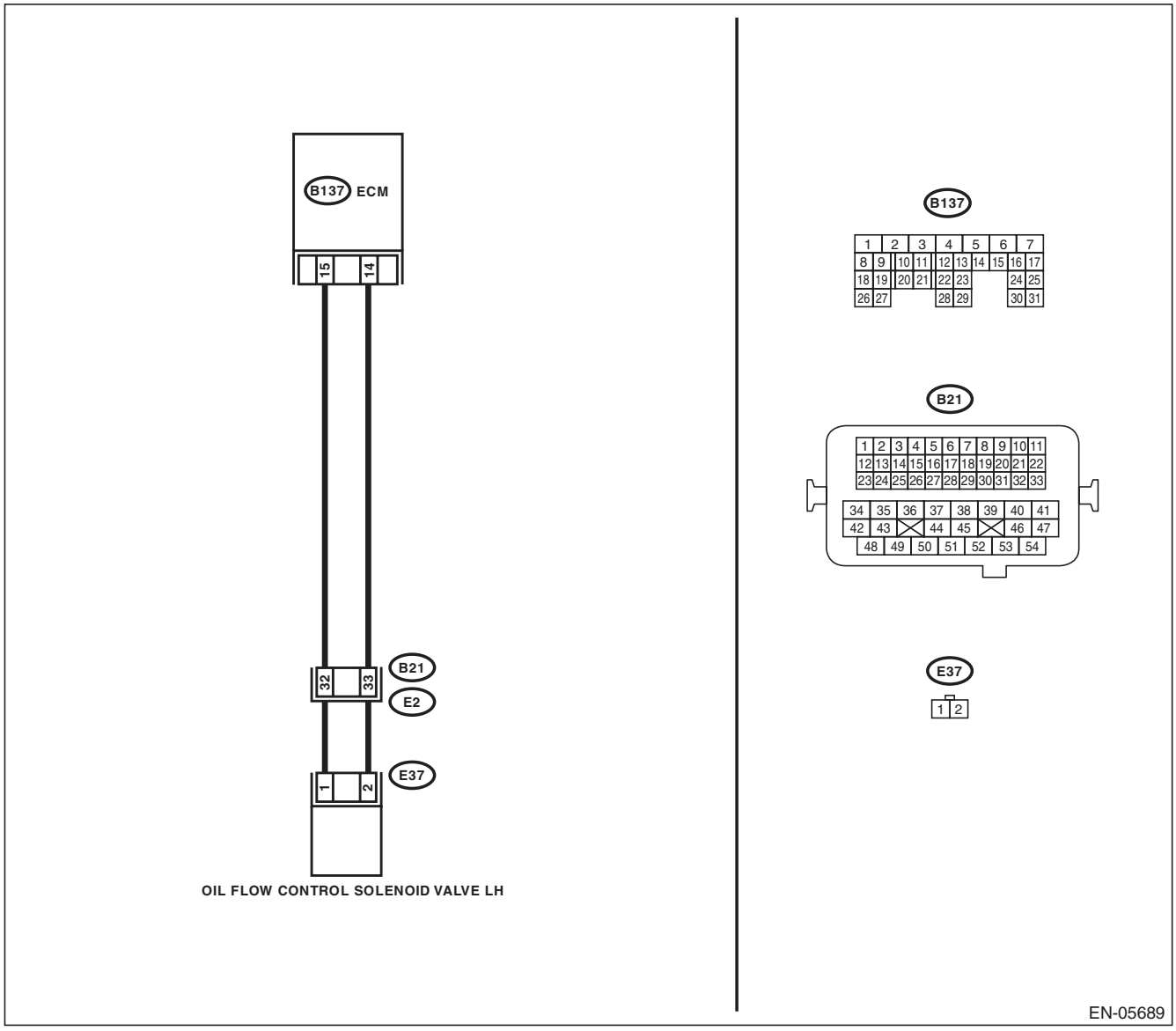

Step		Check	Yes	No
1	**CHECK HARNESS BETWEEN ECM AND OIL FLOW CONTROL SOLENOID VALVE.** 1) Turn the ignition switch to OFF. 2) Disconnect the connectors from ECM and oil flow control solenoid valve. 3) Measure the voltage between ECM and chassis ground. ***Connector & terminal*** ***(B137) No. 15 (+) — Chassis ground (–):*** ***(B137) No. 14 (+) — Chassis ground (–):***	Is the voltage less than 1 V?	Go to step **2**.	Repair the short circuit to power in harness between ECM and oil flow control solenoid valve connector.
2	**CHECK HARNESS BETWEEN ECM AND OIL FLOW CONTROL SOLENOID VALVE.** Measure the resistance of harness between ECM and oil flow control solenoid valve connector. ***Connector & terminal*** ***(B137) No. 15 — (E37) No. 1:*** ***(B137) No. 14 — (E37) No. 2:***	Is the resistance less than 1 Ω?	Go to step **3**.	Repair the harness and connector. NOTE: In this case, repair the following item: • Open circuit of the harness between the ECM and oil flow control solenoid valve connector • Poor contact of coupling connector
3	**CHECK OIL FLOW CONTROL SOLENOID VALVE.** Measure the resistance between oil flow control solenoid valve terminals. ***Terminals*** ***No. 1 — No. 2:***	Is the resistance between 6 — 12 Ω?	Repair the poor contact of ECM and oil flow control solenoid valve connector.	Replace the oil flow control solenoid valve. <Ref. to ME(H4DOTC)-58, Camshaft.>

DO:DTC P2096 POST CATALYST FUEL TRIM SYSTEM TOO LEAN (BANK 1)

NOTE:
Refer to DTC P2097 for diagnostic procedure. <Ref. to EN(H4DOTC)(diag)-311, DTC P2097 POST CATALYST FUEL TRIM SYSTEM TOO RICH (BANK 1), Diagnostic Procedure with Diagnostic Trouble Code (DTC).>

DP:DTC P2097 POST CATALYST FUEL TRIM SYSTEM TOO RICH (BANK 1)

DTC DETECTING CONDITION:

- Two consecutive driving cycles with fault
- GENERAL DESCRIPTION <Ref. to GD(H4DOTC)-204, DTC P2097 POST CATALYST FUEL TRIM SYSTEM TOO RICH (BANK 1), Diagnostic Trouble Code (DTC) Detecting Criteria.>

CAUTION:

After repair or replacement of faulty parts, perform Clear Memory Mode <Ref. to EN(H4DOTC)(diag)-52, OPERATION, Clear Memory Mode.>, and Inspection Mode <Ref. to EN(H4DOTC)(diag)-43, PROCEDURE, Inspection Mode.>.

WIRING DIAGRAM:

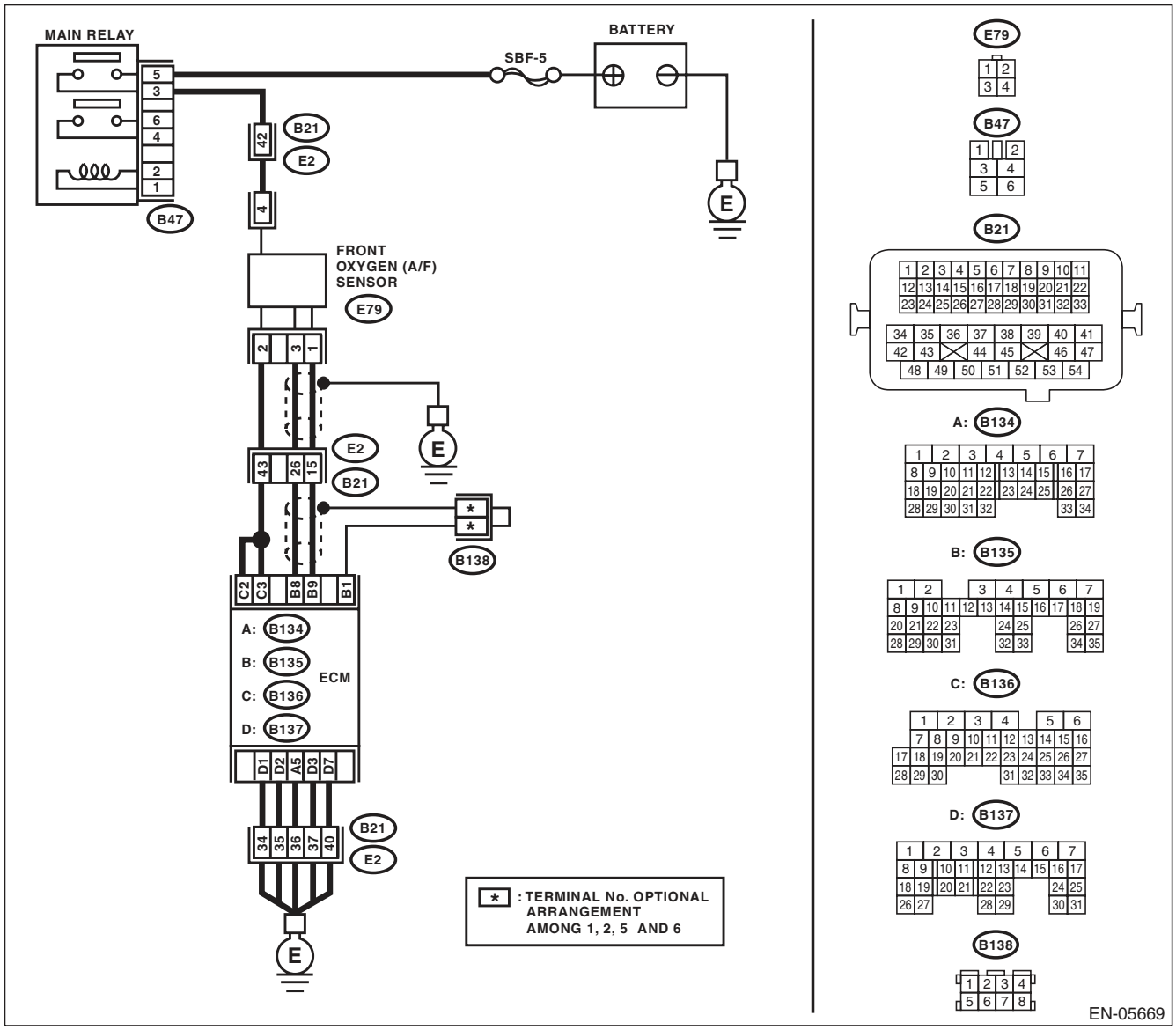

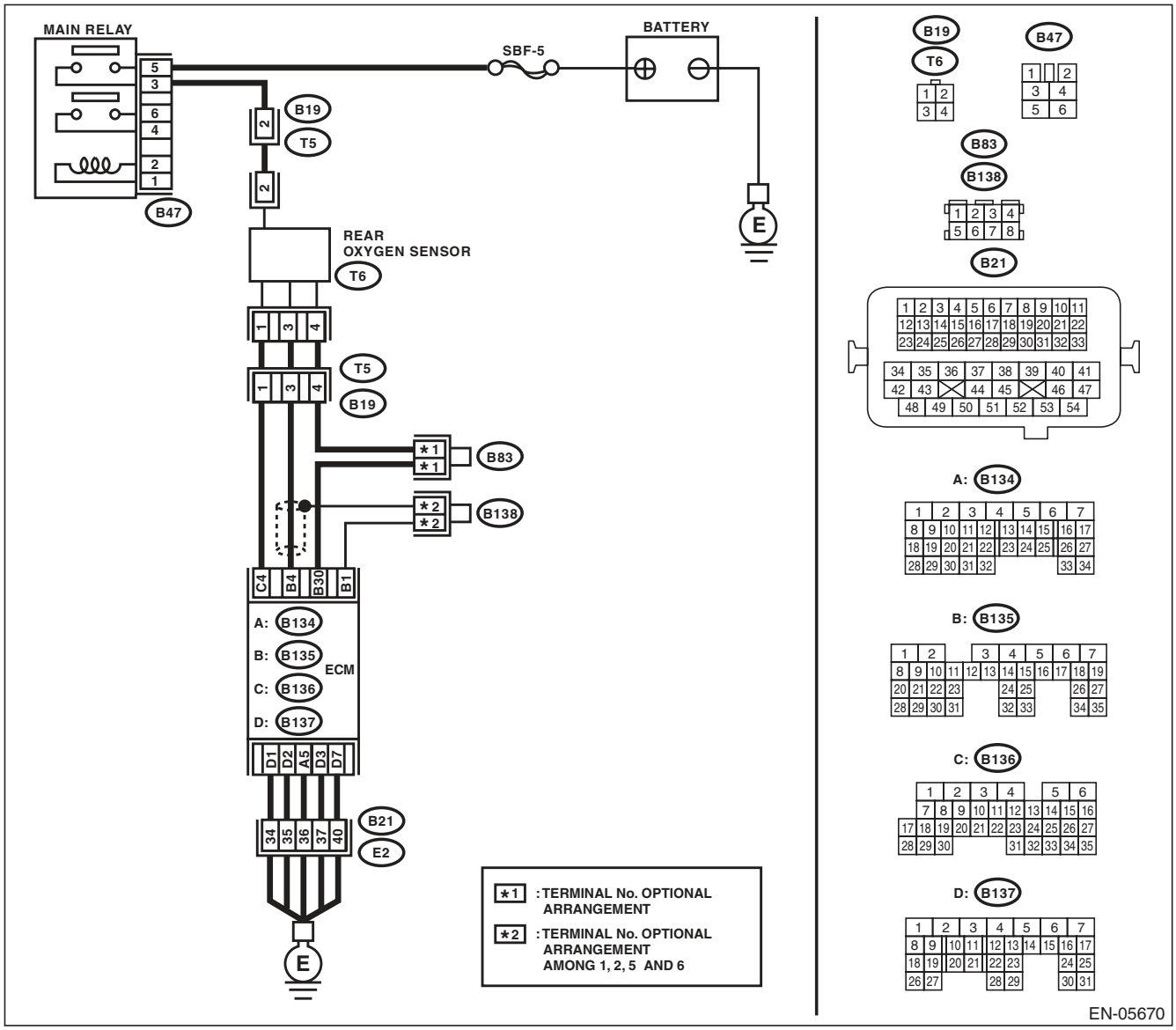
MAIN RELAY
BATTERY
SBF-5
B19
T5
B47
REAR
OXYGEN SENSOR
T6
E
B83
B138
C4
B4
B30
B1
A: B134
B: B135
C: B136
D: B137
ECM
D1
D2
A5
D3
D7
B21
E2
*1 :TERMINAL No. OPTIONAL ARRANGEMENT
*2 :TERMINAL No. OPTIONAL ARRANGEMENT AMONG 1, 2, 5 AND 6
EN-05670

	Step	Check	Yes	No
1	**CHECK FOR ANY OTHER DTC ON DISPLAY.**	Is any other DTC displayed?	Check DTC using "List of Diagnostic Trouble Code (DTC)". <Ref. to EN(H4DOTC)(diag)-81, List of Diagnostic Trouble Code (DTC).>	Go to step **2**.
2	**CHECK FRONT OXYGEN (A/F) SENSOR CONNECTOR AND COUPLING CONNECTOR.**	Has water entered the connector?	Completely remove any water inside.	Go to step **3**.
3	**CHECK HARNESS BETWEEN ECM AND FRONT OXYGEN (A/F) SENSOR CONNECTOR.** 1) Turn the ignition switch to OFF. 2) Disconnect the connectors from ECM and front oxygen (A/F) sensor. 3) Measure the resistance of harness between ECM and front oxygen (A/F) sensor connector. ***Connector & terminal*** ***(B135) No. 9 — (E79) No. 1:*** ***(B135) No. 8 — (E79) No. 3:***	Is the resistance less than 1 Ω?	Go to step **4**.	Repair the harness and connector. NOTE: In this case, repair the following item: • Open circuit in harness between ECM and front oxygen (A/F) sensor connector • Poor contact of coupling connector
4	**CHECK HARNESS BETWEEN ECM AND FRONT OXYGEN (A/F) SENSOR CONNECTOR.** Measure the resistance between ECM and chassis ground. ***Connector & terminal*** ***(B135) No. 9 — Chassis ground:*** ***(B135) No. 8 — Chassis ground:***	Is the resistance 1 MΩ or more?	Go to step **5**.	Repair the ground short circuit of harness between ECM and front oxygen (A/F) sensor connector.
5	**CHECK OUTPUT SIGNAL FOR ECM.** 1) Connect the ECM. 2) Turn the ignition switch to ON. 3) Measure the voltage between front oxygen (A/F) sensor connector and chassis ground. ***Connector & terminal*** ***(E79) No. 1 (+) — Chassis ground (–):***	Is the voltage 4.5 V or more?	Go to step **7**.	Go to step **6**.
6	**CHECK OUTPUT SIGNAL FOR ECM.** Measure the voltage between front oxygen (A/F) sensor connector and chassis ground. ***Connector & terminal*** ***(E79) No. 3 (+) — Chassis ground (–):***	Is the voltage 4.95 V or more?	Go to step **7**.	Go to step **8**.
7	**CHECK OUTPUT SIGNAL FOR ECM.** Measure the voltage between front oxygen (A/F) sensor connector and chassis ground. ***Connector & terminal*** ***(E79) No. 1 (+) — Chassis ground (–):*** ***(E79) No. 3 (+) — Chassis ground (–):***	Is the voltage 8 V or more?	Repair the short circuit to power in the harness between ECM and front oxygen (A/F) sensor connector. After repair, replace the ECM. <Ref. to FU(H4DOTC)-52, Engine Control Module (ECM).>	Repair the poor contact of ECM connector.
8	**CHECK EXHAUST SYSTEM.**	Are there holes or loose bolts on exhaust system?	Repair the exhaust system.	Go to step **9**.

	Step	Check	Yes	No
9	**CHECK AIR INTAKE SYSTEM.**	Are there holes, loose bolts or disconnection of hose on air intake system?	Repair the air intake system.	Go to step **10**.
10	**CHECK FUEL PRESSURE.** **WARNING:** **Place "NO OPEN FLAMES" signs near the working area.** **CAUTION:** **Be careful not to spill fuel.** 1) Connect the front oxygen (A/F) sensor connector. 2) Measure the fuel pressure while disconnecting pressure regulator vacuum hose from intake manifold. <Ref. to ME(H4DOTC)-25, INSPECTION, Fuel Pressure.> **CAUTION:** **Release fuel pressure before removing the fuel pressure gauge.** NOTE: If fuel pressure does not increase, squeeze the fuel return hose 2 to 3 times, then measure fuel pressure again.	Is the measured value 284 — 314 kPa (2.9 — 3.2 kgf/cm^2, 41 — 46 psi)?	Go to step **11**.	Repair the following item. Fuel pressure is too high: • Clogged fuel return line or bent hose Fuel pressure is too low: • Improper fuel pump discharge • Clogged fuel supply line
11	**CHECK FUEL PRESSURE.** After connecting the pressure regulator vacuum hose, measure fuel pressure. <Ref. to ME(H4DOTC)-25, INSPECTION, Fuel Pressure.> **CAUTION:** **Release fuel pressure before removing the fuel pressure gauge.** NOTE: • If fuel pressure does not increase, squeeze fuel return hose 2 to 3 times, then measure fuel pressure again. • If the measured value at this step is out of specification, check or replace pressure regulator and pressure regulator vacuum hose.	Is the measured value 230 — 260 kPa (2.35 — 2.65 kgf/cm^2, 33 — 38 psi)?	Go to step **12**.	Repair the following item. Fuel pressure is too high: • Faulty pressure regulator • Clogged fuel return line or bent hose Fuel pressure is too low: • Faulty pressure regulator • Improper fuel pump discharge • Clogged fuel supply line
12	**CHECK ENGINE COOLANT TEMPERATURE SENSOR.** 1) Start the engine and warm up completely. 2) Read the data of engine coolant temperature sensor signal using Subaru Select Monitor or general scan tool. NOTE: • Subaru Select Monitor For detailed operation procedure, refer to "READ CURRENT DATA FOR ENGINE". <Ref. to EN(H4DOTC)(diag)-34, Subaru Select Monitor.> • General scan tool For detailed operation procedures, refer to the general scan tool operation manual.	Is the engine coolant temperature 75°C (167°F) or higher?	Go to step **13**.	Replace the engine coolant temperature sensor. <Ref. to FU(H4DOTC)-31, Engine Coolant Temperature Sensor.>

	Step	Check	Yes	No
13	**CHECK MASS AIR FLOW AND INTAKE AIR TEMPERATURE SENSOR.** 1) Start the engine and warm up engine until coolant temperature is higher than 75°C (167°F). 2) For AT models, set the select lever to "P" range or "N" range, and for MT models, place the shift lever in the neutral position. 3) Turn the A/C switch to OFF. 4) Turn all the accessory switches to OFF. 5) Read the data of the mass air flow and intake air temperature sensor signal using Subaru Select Monitor or general scan tool. NOTE: • Subaru Select Monitor For detailed operation procedure, refer to "READ CURRENT DATA FOR ENGINE". <Ref. to EN(H4DOTC)(diag)-34, Subaru Select Monitor.> • General scan tool For detailed operation procedures, refer to the general scan tool operation manual.	Is the measured value 2.0 — 5.0 g/s (0.26 — 0.66 lb/s) ?	Go to step **14**.	Replace the mass air flow and intake air temperature sensor. <Ref. to FU(H4DOTC)-36, Mass Air Flow and Intake Air Temperature Sensor.>
14	**CHECK MASS AIR FLOW AND INTAKE AIR TEMPERATURE SENSOR.** 1) Start the engine and warm up engine until coolant temperature is higher than 75°C (167°F). 2) For AT models, set the select lever to "P" range or "N" range, and for MT models, place the shift lever in the neutral position. 3) Turn the A/C switch to OFF. 4) Turn all the accessory switches to OFF. 5) Open the front hood. 6) Measure the ambient temperature. 7) Read the data of the mass air flow and intake air temperature sensor signal using Subaru Select Monitor or general scan tool. NOTE: • Subaru Select Monitor For detailed operation procedure, refer to "READ CURRENT DATA FOR ENGINE". <Ref. to EN(H4DOTC)(diag)-34, Subaru Select Monitor.> • General scan tool For detailed operation procedures, refer to the general scan tool operation manual.	Subtract ambient temperature from intake air temperature. Is the obtained value –10 — 50°C (–18 — 90°F)?	Go to step **15**.	Check the mass air flow and intake air temperature sensor. <Ref. to FU(H4DOTC)-36, Mass Air Flow and Intake Air Temperature Sensor.>

	Step	Check	Yes	No
15	**CHECK REAR OXYGEN SENSOR DATA.** 1) Warm up the engine until engine coolant temperature is above 75°C (167°F), and keep the engine speed at 3,000 rpm. (for up to 2 minutes) 2) Read the data of rear oxygen sensor signal using Subaru Select Monitor or general scan tool. NOTE: • Depress the clutch pedal. (MT model) • Subaru Select Monitor For detailed operation procedure, refer to "READ CURRENT DATA FOR ENGINE". <Ref. to EN(H4DOTC)(diag)-34, Subaru Select Monitor.> • General scan tool For detailed operation procedures, refer to the general scan tool operation manual.	Is the voltage 490 mV or more?	Go to step **16**.	Go to step **17**.
16	**CHECK REAR OXYGEN SENSOR DATA.** 1) Warm up the engine until engine coolant temperature is above 75°C (167°F), and rapidly reduce the engine speed from 3,000 rpm. 2) Read the data of rear oxygen sensor signal using Subaru Select Monitor or general scan tool. NOTE: • Depress the clutch pedal. (MT model) • Subaru Select Monitor For detailed operation procedure, refer to "READ CURRENT DATA FOR ENGINE". <Ref. to EN(H4DOTC)(diag)-34, Subaru Select Monitor.> • General scan tool For detailed operation procedures, refer to the general scan tool operation manual.	Is the voltage 250 mV or less?	Go to step **18**.	Go to step **17**.
17	**CHECK REAR OXYGEN SENSOR CONNECTOR AND COUPLING CONNECTOR.**	Has water entered the connector?	Completely remove any water inside.	Go to step **19**.
18	**CHECK FRONT OXYGEN (A/F) SENSOR AND REAR OXYGEN SENSOR DATA.** 1) Warm up the engine until engine coolant temperature is higher than 75°C (167°F), then keep the engine idling for 5 minutes or more. 2) Read the data of rear oxygen sensor signal using Subaru Select Monitor or general scan tool. NOTE: • Subaru Select Monitor For detailed operation procedure, refer to "READ CURRENT DATA FOR ENGINE". <Ref. to EN(H4DOTC)(diag)-34, Subaru Select Monitor.> • General scan tool For detailed operation procedures, refer to the general scan tool operation manual.	Is a voltage of 0.8 V or more maintained for 5 minutes or more?	Replace the front oxygen (A/F) sensor. <Ref. to FU(H4DOTC)-46, Front Oxygen (A/F) Sensor.>	Go to step **19**.

Step		Check	Yes	No
19	**CHECK HARNESS BETWEEN ECM AND REAR OXYGEN SENSOR CONNECTOR.** 1) Turn the ignition switch to OFF. 2) Disconnect the connectors from ECM and rear oxygen sensor. 3) Measure the resistance of harness between ECM and rear oxygen sensor connector. ***Connector & terminal*** ***(B135) No. 4 — (T6) No. 3:*** ***(B135) No. 30 — (T6) No. 4:***	Is the resistance less than 1 Ω?	Go to step **20**.	Repair the harness and connector. NOTE: In this case, repair the following item: • Open circuit in harness between ECM and rear oxygen sensor connector • Poor contact of coupling connector
20	**CHECK HARNESS BETWEEN ECM AND REAR OXYGEN SENSOR CONNECTOR.** 1) Connect the connector to ECM. 2) Turn the ignition switch to ON. 3) Measure the voltage between rear oxygen sensor connector and chassis ground. ***Connector & terminal*** ***(T6) No. 3 (+) — Chassis ground (–):***	Is the voltage 0.2 — 0.5 V?	Replace the rear oxygen sensor. <Ref. to FU(H4DOTC)-48, Rear Oxygen Sensor.>	Repair the harness and connector. NOTE: In this case, repair the following item: • Open circuit of harness between the ECM and rear oxygen sensor • Poor contact in ECM connector • Poor contact of coupling connector

DQ:DTC P2101 THROTTLE ACTUATOR CONTROL MOTOR CIRCUIT RANGE/ PERFORMANCE

DTC DETECTING CONDITION:

- Immediately at fault recognition
- GENERAL DESCRIPTION <Ref. to GD(H4DOTC)-206, DTC P2101 THROTTLE ACTUATOR CONTROL MOTOR CIRCUIT RANGE/PERFORMANCE, Diagnostic Trouble Code (DTC) Detecting Criteria.>

TROUBLE SYMPTOM:

- Improper idling
- Poor driving performance
- Engine stalls.

CAUTION:

After repair or replacement of faulty parts, perform Clear Memory Mode <Ref. to EN(H4DOTC)(diag)-52, OPERATION, Clear Memory Mode.>, and Inspection Mode <Ref. to EN(H4DOTC)(diag)-43, PROCEDURE, Inspection Mode.>.

WIRING DIAGRAM:

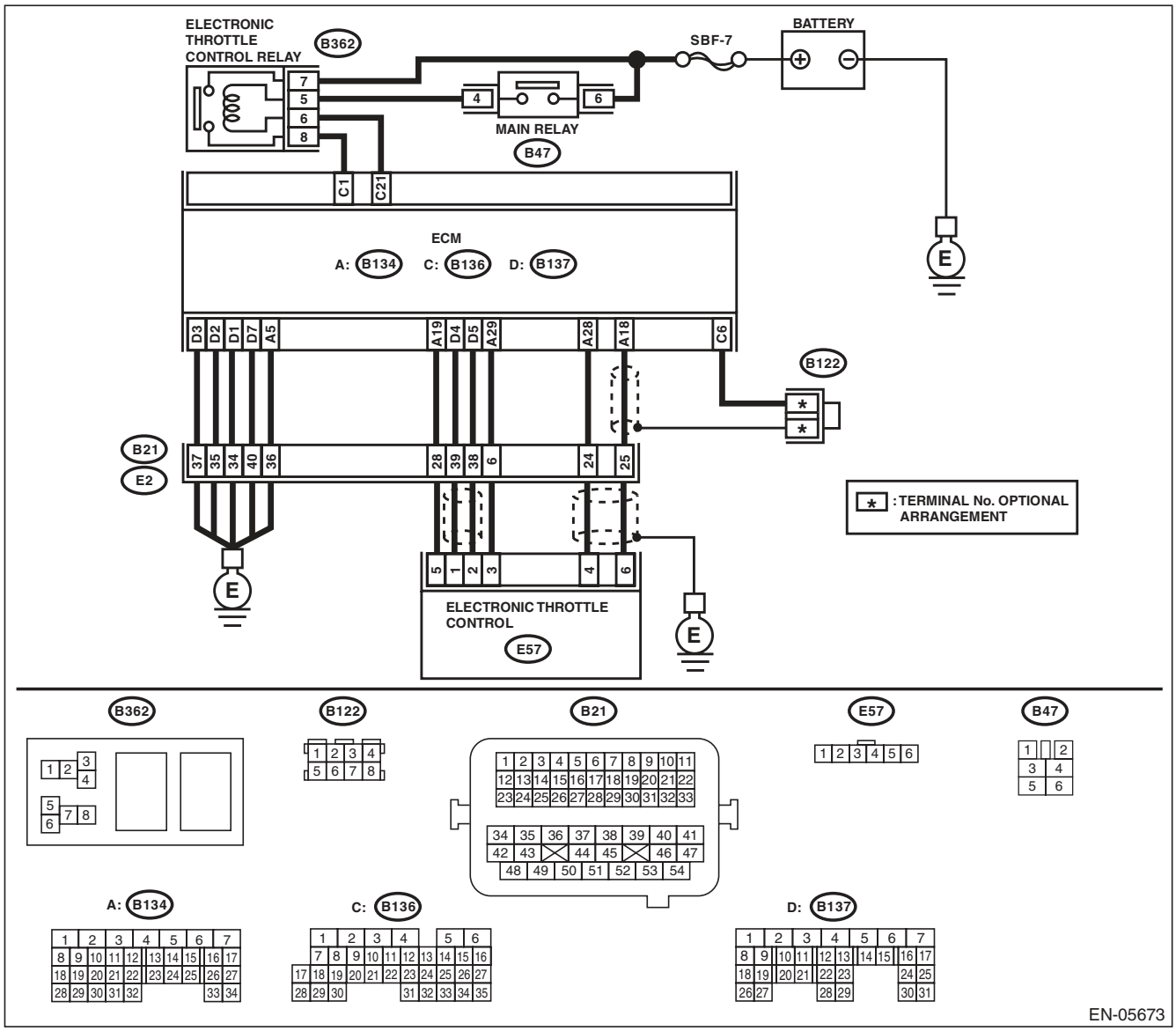

	Step	Check	Yes	No
1	**CHECK ELECTRONIC THROTTLE CONTROL RELAY.** 1) Turn the ignition switch to OFF. 2) Remove the electronic throttle control relay. 3) Connect the battery to terminals No. 5 and No. 6 of electronic throttle control relay. 4) Measure the resistance between electronic throttle control relay terminals. ***Terminals*** ***No. 7 — No. 8:***	Is the resistance less than 1 Ω?	Go to step **2**.	Replace the electronic throttle control relay. <Ref. to FU(H4DOTC)-55, Electronic Throttle Control Relay.>
2	**CHECK POWER SUPPLY OF ELECTRONIC THROTTLE CONTROL RELAY.** Measure the voltage between electronic throttle control relay connector and chassis ground. ***Connector & terminal*** ***(B362) No. 7 (+) — Chassis ground (–):***	Is the voltage 10 V or more?	Go to step **3**.	Repair the open or ground short circuit of power supply circuit.
3	**CHECK HARNESS BETWEEN ECM AND ELECTRONIC THROTTLE CONTROL RELAY.** 1) Disconnect the connectors from ECM. 2) Turn the ignition switch to ON. 3) Measure the voltage between electronic throttle control relay connector and chassis ground. ***Connector & terminal*** ***(B362) No. 6 (+) — Chassis ground (–):***	Is the voltage 10 V or more?	Repair the short circuit to power in harness between ECM and electronic throttle control relay.	Go to step **4**.
4	**CHECK HARNESS BETWEEN ECM AND ELECTRONIC THROTTLE CONTROL RELAY.** 1) Turn the ignition switch to OFF. 2) Measure the resistance between electronic throttle control relay connector and chassis ground. ***Connector & terminal*** ***(B362) No. 6 — Chassis ground:*** ***(B362) No. 8 — Chassis ground:***	Is the resistance 1 MΩ or more?	Go to step **5**.	Repair the ground short circuit of harness between ECM and electronic throttle control relay.
5	**CHECK HARNESS BETWEEN ECM AND ELECTRONIC THROTTLE CONTROL RELAY.** Measure the resistance between ECM and electronic throttle control relay connector. ***Connector & terminal*** ***(B136) No. 21 — (B362) No. 6:*** ***(B136) No. 1 — (B362) No. 8:***	Is the resistance less than 1 Ω?	Go to step **6**.	Repair the open circuit of harness between ECM and electronic throttle control relay.
6	**CHECK HARNESS BETWEEN ECM AND ELECTRONIC THROTTLE CONTROL.** 1) Turn the ignition switch to OFF. 2) Disconnect the connectors from electronic throttle control. 3) Measure the resistance between ECM and chassis ground. ***Connector & terminal*** ***(B134) No. 19 — Chassis ground:*** ***(B134) No. 18 — Chassis ground:*** ***(B134) No. 18 — (B136) No. 6:*** ***(B134) No. 28 — Chassis ground:***	Is the resistance 1 MΩ or more?	Go to step **7**.	Repair the short circuit to ground in harness between ECM and electronic throttle control connector.

	Step	Check	Yes	No
7	**CHECK SHORT CIRCUIT INSIDE THE ECM.** 1) Connect the ECM. 2) Measure the resistance between electronic throttle control connector and engine ground. ***Connector & terminal*** ***(E57) No. 6 — Engine ground:*** ***(E57) No. 4 — Engine ground:***	Is the resistance 1 MΩ or more?	Go to step **8**.	Repair the short circuit to ground in harness between ECM and electronic throttle control connector. Replace the ECM if defective. <Ref. to FU(H4DOTC)-52, Engine Control Module (ECM).>
8	**CHECK HARNESS BETWEEN ECM AND ELECTRONIC THROTTLE CONTROL.** 1) Disconnect the connectors from ECM. 2) Measure the resistance of harness between ECM and electronic throttle control connector. ***Connector & terminal*** ***(B134) No. 18 — (E57) No. 6:*** ***(B134) No. 28 — (E57) No. 4:*** ***(B134) No. 29 — (E57) No. 3:***	Is the resistance less than 1 Ω?	Go to step **9**.	Repair the harness and connector. NOTE: In this case, repair the following item: • Open circuit in harness between ECM and electronic throttle control connector • Poor contact of coupling connector
9	**CHECK HARNESS BETWEEN ECM AND ELECTRONIC THROTTLE CONTROL.** 1) Connect the ECM. 2) Measure the resistance between electronic throttle control connector and engine ground. ***Connector & terminal*** ***(E57) No. 3 — Engine ground:***	Is the resistance less than 5 Ω?	Go to step **10**.	Repair the harness and connector. NOTE: In this case, repair the following item: • Open circuit of harness between ECM and engine ground • Poor contact in ECM connector • Poor contact of coupling connector
10	**CHECK HARNESS BETWEEN ECM AND ELECTRONIC THROTTLE CONTROL.** 1) Turn the ignition switch to ON. 2) Measure the voltage between electronic throttle control connector and engine ground. ***Connector & terminal*** ***(E57) No. 6 (+) — Engine ground (–):*** ***(E57) No. 4 (+) — Engine ground (–):***	Is the voltage 4.85 V or more?	Repair the short circuit to power in the harness between ECM and electronic throttle control connector.	Go to step **11**.
11	**CHECK HARNESS BETWEEN ECM AND ELECTRONIC THROTTLE CONTROL.** 1) Turn the ignition switch to OFF. 2) Disconnect the connectors from ECM. 3) Measure the resistance between ECM connectors. ***Connector & terminal*** ***(B134) No. 19 — (B134) No. 18:*** ***(B134) No. 19 — (B134) No. 28:***	Is the resistance 1 MΩ or more?	Go to step **12**.	Repair the short circuit to power in the harness between ECM and electronic throttle control connector.

	Step	Check	Yes	No
12	**CHECK SENSOR OUTPUT.** 1) Connect all connectors. 2) Turn the ignition switch to ON. 3) Read the data of main throttle sensor signal using Subaru Select Monitor. NOTE: For detailed operation procedure, refer to "READ CURRENT DATA FOR ENGINE". <Ref. to EN(H4DOTC)(diag)-34, Subaru Select Monitor.>	Is the voltage 0.81 — 0.87 V?	Go to step **13**.	Repair poor contact of the electronic throttle control connector. Replace the electronic throttle control if defective. <Ref. to FU(H4DOTC)-14, Throttle Body.>
13	**CHECK SENSOR OUTPUT.** Read the data of sub throttle sensor signal using Subaru Select Monitor. NOTE: Subaru Select Monitor For detailed operation procedure, refer to "READ CURRENT DATA FOR ENGINE". <Ref. to EN(H4DOTC)(diag)-34, Subaru Select Monitor.>	Is the voltage 1.64 — 1.70 V?	Go to step **14**.	Repair poor contact of the electronic throttle control connector. Replace the electronic throttle control if defective. <Ref. to FU(H4DOTC)-14, Throttle Body.>
14	**CHECK HARNESS BETWEEN ECM AND ELECTRONIC THROTTLE CONTROL MOTOR.** 1) Turn the ignition switch to OFF. 2) Disconnect the connectors from ECM and electronic throttle control. 3) Measure the resistance between ECM and electronic throttle control connector. ***Connector & terminal*** ***(B137) No. 5 — (E57) No. 2:*** ***(B137) No. 4 — (E57) No. 1:***	Is the resistance less than 1 Ω?	Go to step **15**.	Repair the harness and connector. NOTE: In this case, repair the following item: • Open circuit in harness between ECM and electronic throttle control • Poor contact of coupling connector
15	**CHECK HARNESS BETWEEN ECM AND ELECTRONIC THROTTLE CONTROL MOTOR.** 1) Connect the ECM. 2) Turn the ignition switch to ON. 3) Measure the voltage between electronic throttle control connector and engine ground. ***Connector & terminal*** ***(E57) No. 2 (+) — Engine ground (–):*** ***(E57) No. 1 (+) — Engine ground (–):***	Is the voltage 5 V or more?	Repair the short circuit to power in the harness between ECM and electronic throttle control.	Go to step **16**.
16	**CHECK HARNESS BETWEEN ECM AND ELECTRONIC THROTTLE CONTROL MOTOR.** 1) Turn the ignition switch to OFF. 2) Disconnect the connectors from ECM. 3) Measure the resistance between electronic throttle control connector and engine ground. ***Connector & terminal*** ***(E57) No. 2 — Engine ground:*** ***(E57) No. 1 — Engine ground:***	Is the resistance 1 MΩ or more?	Go to step **17**.	Repair the short circuit to ground in harness between ECM and electronic throttle control.
17	**CHECK ELECTRONIC THROTTLE CONTROL MOTOR HARNESS.** Measure the resistance between the electronic throttle control connector terminals. ***Connector & terminal*** ***(E57) No. 2 — (E57) No. 1:***	Is the resistance 1 MΩ or more?	Go to step **18**.	Repair the short circuit of harness between ECM and electronic throttle control.

Step		Check	Yes	No
18	**CHECK ELECTRONIC THROTTLE CONTROL GROUND CIRCUIT.** Measure the resistance between ECM and chassis ground. ***Connector & terminal*** ***(B134) No. 5 — Chassis ground:*** ***(B137) No. 1 — Chassis ground:*** ***(B137) No. 2 — Chassis ground:*** ***(B137) No. 3 — Chassis ground:*** ***(B137) No. 7 — Chassis ground:***	Is the resistance less than 5 Ω?	Go to step **19**.	Repair the open circuit in harness between ECM and engine ground.
19	**CHECK ELECTRONIC THROTTLE CONTROL.** Measure the resistance between electronic throttle control terminals. ***Terminals*** ***No. 2 — No. 1:***	Is the resistance 50 Ω or less?	Go to step **20**.	Replace the electronic throttle control. <Ref. to FU(H4DOTC)-14, Throttle Body.>
20	**CHECK ELECTRONIC THROTTLE CONTROL.** Move the throttle valve to the fully open and fully closed positions with fingers. Check that the valve returns to the specified position when releasing fingers.	Does the valve return to the specified position? Standard value: 3 mm (0.12 in) from fully closed position	Repair the poor contact of ECM connector.	Replace the electronic throttle control. <Ref. to FU(H4DOTC)-14, Throttle Body.>

DR:DTC P2102 THROTTLE ACTUATOR CONTROL MOTOR CIRCUIT LOW

DTC DETECTING CONDITION:

- Immediately at fault recognition
- GENERAL DESCRIPTION <Ref. to GD(H4DOTC)-208, DTC P2102 THROTTLE ACTUATOR CONTROL MOTOR CIRCUIT LOW, Diagnostic Trouble Code (DTC) Detecting Criteria.>

TROUBLE SYMPTOM:

- Improper idling
- Poor driving performance
- Engine stalls.

CAUTION:

After repair or replacement of faulty parts, perform Clear Memory Mode <Ref. to EN(H4DOTC)(diag)-52, OPERATION, Clear Memory Mode.>, and Inspection Mode <Ref. to EN(H4DOTC)(diag)-43, PROCEDURE, Inspection Mode.>.

WIRING DIAGRAM:

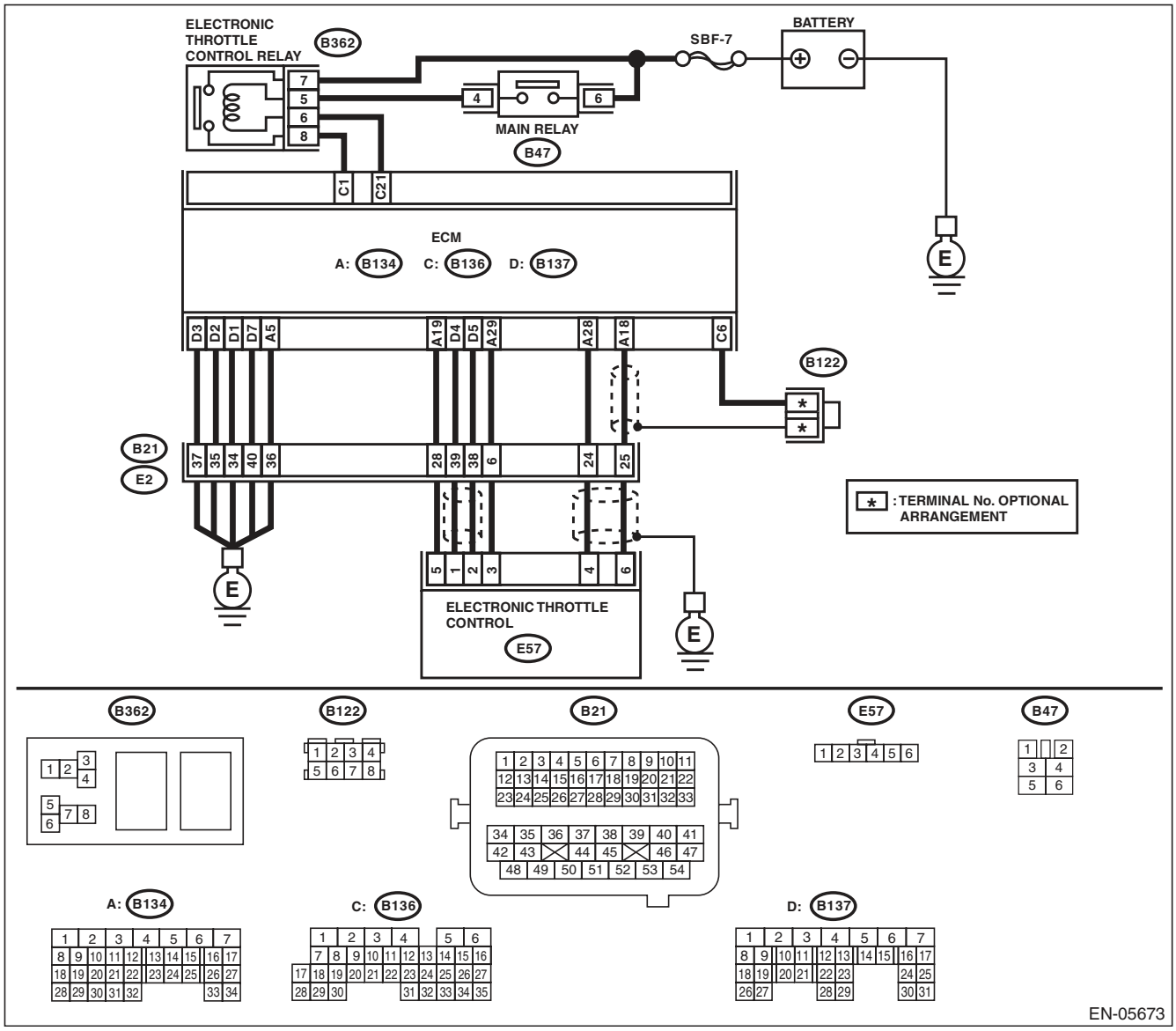

	Step	Check	Yes	No
1	**CHECK ELECTRONIC THROTTLE CONTROL RELAY.** 1) Turn the ignition switch to OFF. 2) Remove the electronic throttle control relay. 3) Connect the battery to terminals No. 5 and No. 6 of electronic throttle control relay. 4) Measure the resistance between electronic throttle control relay terminals. ***Terminals*** ***No. 7 — No. 8:***	Is the resistance less than 1 Ω?	Go to step **2**.	Replace the electronic throttle control relay. <Ref. to FU(H4DOTC)-55, Electronic Throttle Control Relay.>
2	**CHECK POWER SUPPLY OF ELECTRONIC THROTTLE CONTROL RELAY.** Measure the voltage between electronic throttle control relay connector and chassis ground. ***Connector & terminal*** ***(B362) No. 7 (+) — Chassis ground (–):***	Is the voltage 10 V or more?	Go to step **3**.	Repair the open or ground short circuit of power supply circuit.
3	**CHECK HARNESS BETWEEN ECM AND ELECTRONIC THROTTLE CONTROL RELAY.** 1) Disconnect the connectors from ECM. 2) Turn the ignition switch to ON. 3) Measure the voltage between electronic throttle control relay connector and chassis ground. ***Connector & terminal*** ***(B362) No. 6 (+) — Chassis ground (–):***	Is the voltage 10 V or more?	Repair the short circuit to power in harness between ECM and electronic throttle control relay.	Go to step **4**.
4	**CHECK HARNESS BETWEEN ECM AND ELECTRONIC THROTTLE CONTROL RELAY.** 1) Turn the ignition switch to OFF. 2) Measure the resistance between electronic throttle control relay connector and chassis ground. ***Connector & terminal*** ***(B362) No. 6 — Chassis ground:*** ***(B362) No. 8 — Chassis ground:***	Is the resistance 1 MΩ or more?	Go to step **5**.	Repair the ground short circuit of harness between ECM and electronic throttle control relay.
5	**CHECK HARNESS BETWEEN ECM AND ELECTRONIC THROTTLE CONTROL RELAY.** Measure the resistance between ECM and electronic throttle control relay connector. ***Connector & terminal*** ***(B136) No. 21 — (B362) No. 6:*** ***(B136) No. 1 — (B362) No. 8:***	Is the resistance less than 1 Ω?	Repair the poor contact of ECM connector.	Repair the open circuit of harness between ECM and electronic throttle control relay.

DS:DTC P2103 THROTTLE ACTUATOR CONTROL MOTOR CIRCUIT HIGH

DTC DETECTING CONDITION:

- Immediately at fault recognition
- GENERAL DESCRIPTION <Ref. to GD(H4DOTC)-210, DTC P2103 THROTTLE ACTUATOR CONTROL MOTOR CIRCUIT HIGH, Diagnostic Trouble Code (DTC) Detecting Criteria.>

CAUTION:

After repair or replacement of faulty parts, perform Clear Memory Mode <Ref. to EN(H4DOTC)(diag)-52, OPERATION, Clear Memory Mode.>, and Inspection Mode <Ref. to EN(H4DOTC)(diag)-43, PROCEDURE, Inspection Mode.>.

WIRING DIAGRAM:

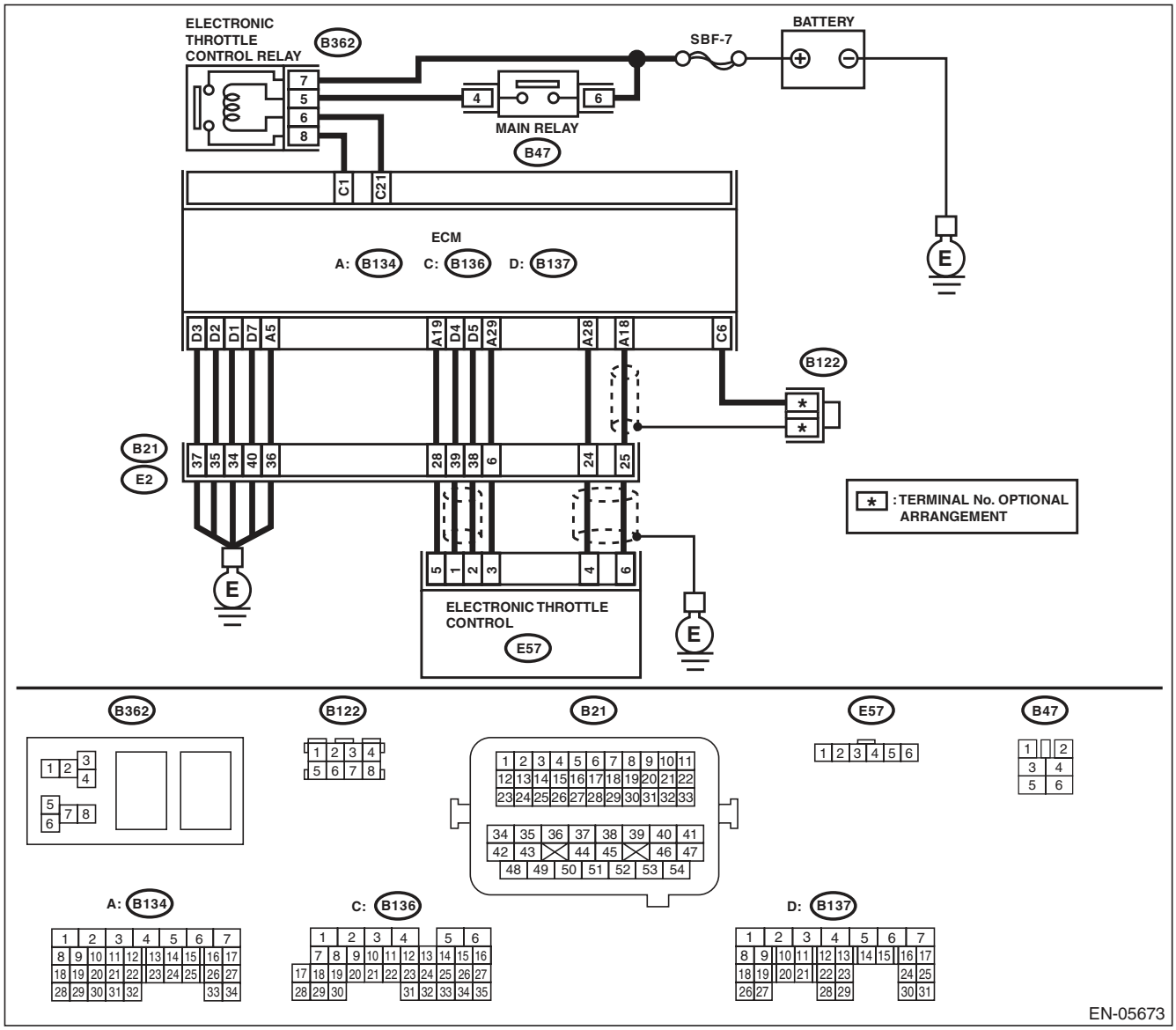

Step		Check	Yes	No
1	**CHECK ELECTRONIC THROTTLE CONTROL RELAY.** 1) Turn the ignition switch to OFF. 2) Remove the electronic throttle control relay. 3) Measure the resistance between electronic throttle control relay terminals. ***Terminals*** ***No. 7 — No. 8:***	Is the resistance 1 MΩ or more?	Go to step **2**.	Replace the electronic throttle control relay. <Ref. to FU(H4DOTC)-55, Electronic Throttle Control Relay.>
2	**CHECK SHORT CIRCUIT OF ELECTRONIC THROTTLE CONTROL RELAY POWER SUPPLY.** 1) Turn the ignition switch to ON. 2) Measure the voltage between electronic throttle control relay connector and chassis ground. ***Connector & terminal*** ***(B362) No. 8 (+) — Chassis ground (–):***	Is the voltage 10 V or more?	Repair the short circuit to power in harness between ECM and electronic throttle control relay.	Go to step **3**.
3	**CHECK HARNESS BETWEEN ECM AND ELECTRONIC THROTTLE CONTROL RELAY.** 1) Turn the ignition switch to OFF. 2) Disconnect the connectors from ECM. 3) Measure the resistance between ECM and chassis ground. ***Connector & terminal*** ***(B136) No. 21 — Chassis ground:***	Is the resistance 1 MΩ or more?	Repair the poor contact of ECM connector.	Repair the ground short circuit of harness between ECM and electronic throttle control relay.

DT:DTC P2109 THROTTLE/PEDAL POSITION SENSOR “A” MINIMUM STOP PERFORMANCE

NOTE:
For the diagnostic procedure, refer to DTC P2101. <Ref. to EN(H4DOTC)(diag)-318, DTC P2101 THROTTLE ACTUATOR CONTROL MOTOR CIRCUIT RANGE/PERFORMANCE, Diagnostic Procedure with Diagnostic Trouble Code (DTC).>

DU:DTC P2122 THROTTLE/PEDAL POSITION SENSOR/SWITCH “D” CIRCUIT LOW INPUT

DTC DETECTING CONDITION:

- Immediately at fault recognition
- GENERAL DESCRIPTION <Ref. to GD(H4DOTC)-214, DTC P2122 THROTTLE/PEDAL POSITION SENSOR/SWITCH “D” CIRCUIT LOW INPUT, Diagnostic Trouble Code (DTC) Detecting Criteria.>

TROUBLE SYMPTOM:

- Improper idling
- Poor driving performance

CAUTION:

After repair or replacement of faulty parts, perform Clear Memory Mode <Ref. to EN(H4DOTC)(diag)-52, OPERATION, Clear Memory Mode.>, and Inspection Mode <Ref. to EN(H4DOTC)(diag)-43, PROCEDURE, Inspection Mode.>.

WIRING DIAGRAM:

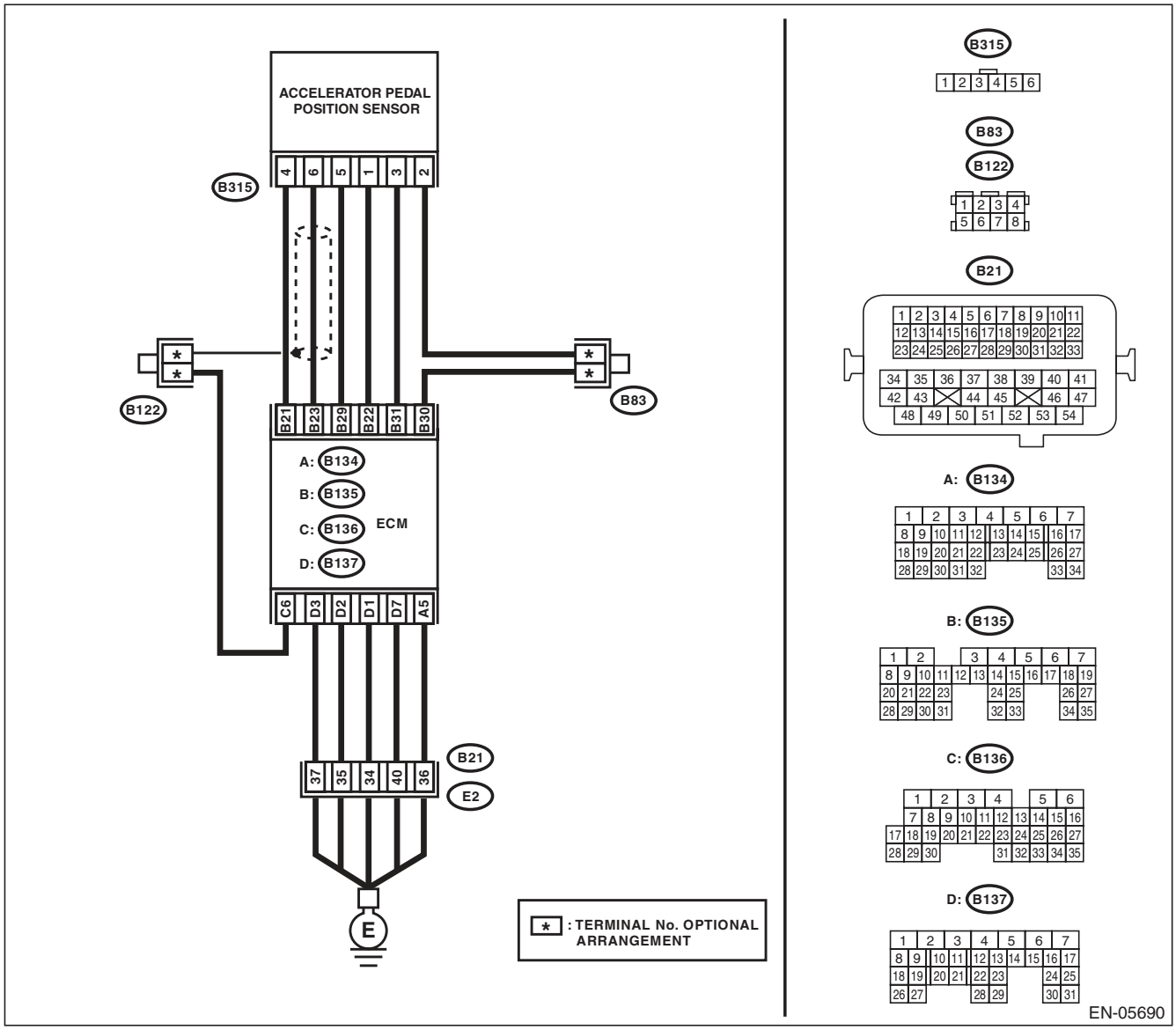

Step		Check	Yes	No
1	**CHECK HARNESS BETWEEN ECM AND ACCELERATOR PEDAL POSITION SENSOR.** 1) Turn the ignition switch to OFF. 2) Disconnect the connector from ECM and accelerator pedal position sensor. 3) Measure the resistance between ECM and chassis ground. ***Connector & terminal*** ***(B135) No. 21 — Chassis ground:*** ***(B135) No. 23 — Chassis ground:*** ***(B135) No. 23 — (B136) No. 6:***	Is the resistance 1 MΩ or more?	Go to step **2**.	Repair the ground short circuit of harness between ECM and accelerator pedal position sensor connector.
2	**CHECK SHORT CIRCUIT INSIDE THE ECM.** 1) Connect the ECM. 2) Measure the resistance between accelerator pedal position sensor connector and chassis ground. ***Connector & terminal*** ***(B315) No. 6 — Chassis ground:***	Is the resistance 1 MΩ or more?	Replace the accelerator pedal. <Ref. to SP(H4SO)-3, Accelerator Pedal.>	Repair the ground short circuit of harness between ECM and accelerator pedal position sensor connector. Replace the ECM if defective. <Ref. to FU(H4DOTC)-52, Engine Control Module (ECM).>

DV:DTC P2123 THROTTLE/PEDAL POSITION SENSOR/SWITCH “D” CIRCUIT HIGH INPUT

DTC DETECTING CONDITION:

- Immediately at fault recognition
- GENERAL DESCRIPTION <Ref. to GD(H4DOTC)-216, DTC P2123 THROTTLE/PEDAL POSITION SENSOR/SWITCH “D” CIRCUIT HIGH INPUT, Diagnostic Trouble Code (DTC) Detecting Criteria.>

TROUBLE SYMPTOM:

- Improper idling
- Poor driving performance

CAUTION:

After repair or replacement of faulty parts, perform Clear Memory Mode <Ref. to EN(H4DOTC)(diag)-52, OPERATION, Clear Memory Mode.>, and Inspection Mode <Ref. to EN(H4DOTC)(diag)-43, PROCEDURE, Inspection Mode.>.

WIRING DIAGRAM:

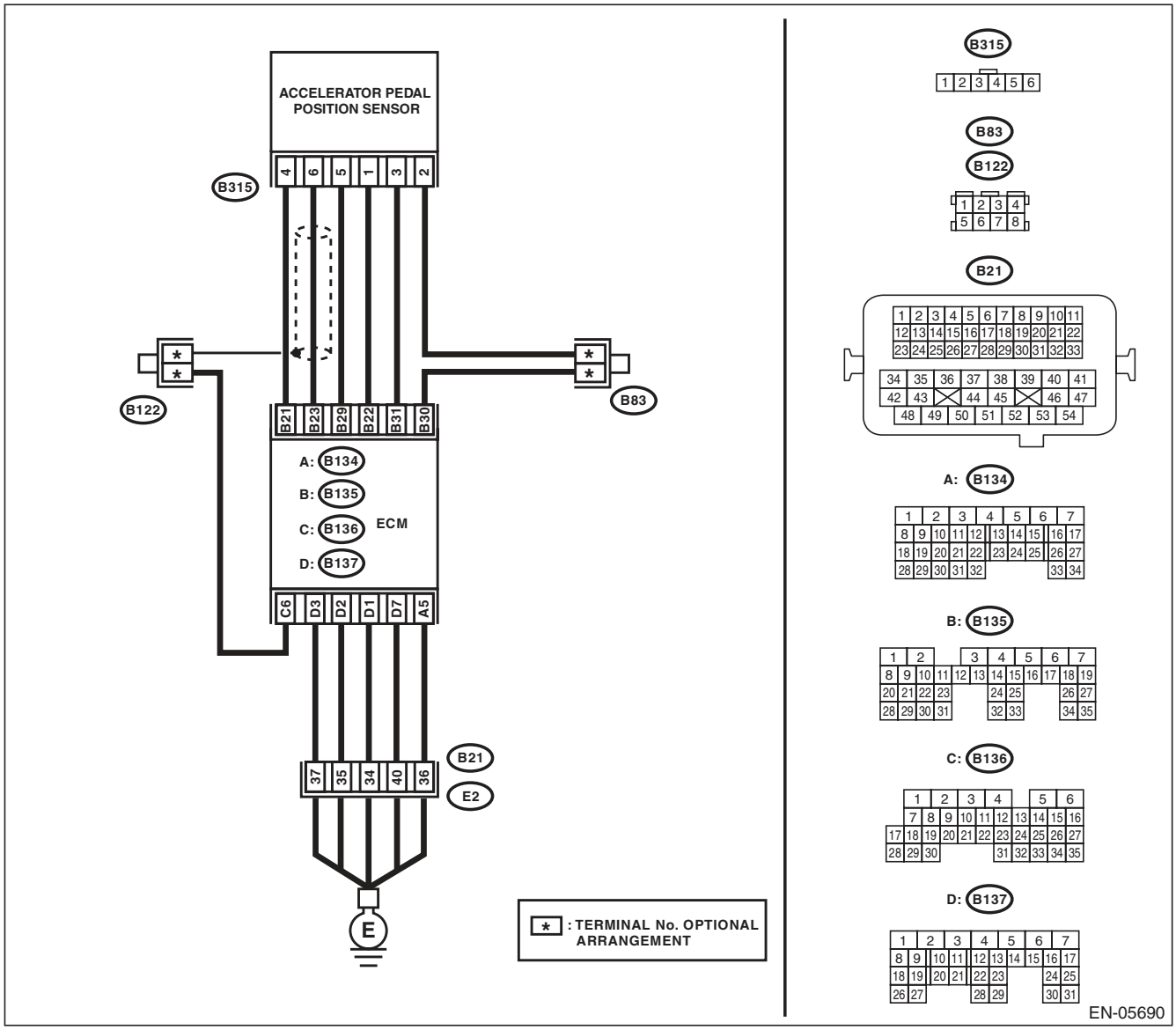

	Step	Check	Yes	No
1	**CHECK HARNESS BETWEEN ECM AND ACCELERATOR PEDAL POSITION SENSOR.** 1) Turn the ignition switch to OFF. 2) Disconnect the connector from ECM and accelerator pedal position sensor. 3) Measure the resistance of harness between ECM and accelerator pedal position sensor connector. ***Connector & terminal*** ***(B135) No. 23 — (B315) No. 6:*** ***(B135) No. 29 — (B315) No. 5:***	Is the resistance less than 1 Ω?	Go to step **2**.	Repair the open circuit in harness between ECM and accelerator pedal position sensor connector.
2	**CHECK HARNESS BETWEEN ECM AND ACCELERATOR PEDAL POSITION SENSOR.** 1) Connect the ECM. 2) Measure the resistance between accelerator pedal position sensor connector and chassis ground. ***Connector & terminal*** ***(B315) No. 5 — Chassis ground:***	Is the resistance less than 5 Ω?	Go to step **3**.	Repair the harness and connector. NOTE: In this case, repair the following item: • Open circuit of harness between ECM and engine ground • Poor contact in ECM connector • Poor contact of coupling connector
3	**CHECK HARNESS BETWEEN ECM AND ACCELERATOR PEDAL POSITION SENSOR.** 1) Turn the ignition switch to ON. 2) Measure the voltage between accelerator pedal position sensor connector and chassis ground. ***Connector & terminal*** ***(B315) No. 6 (+) — Chassis ground (–):***	Is the voltage 4.85 V or more?	Repair the short circuit of harness to power supply between ECM and accelerator pedal position sensor connector.	Go to step **4**.
4	**CHECK HARNESS BETWEEN ECM AND ACCELERATOR PEDAL POSITION SENSOR.** 1) Turn the ignition switch to OFF. 2) Disconnect the connectors from ECM. 3) Measure the resistance between ECM connectors. ***Connector & terminal*** ***(B135) No. 21 — (B135) No. 23:***	Is the resistance 1 MΩ or more?	Repair the poor contact of accelerator pedal position sensor connector. Replace the accelerator pedal if defective. <Ref. to SP(H4SO)-3, Accelerator Pedal.>	Repair the short circuit of harness to power supply between ECM and accelerator pedal position sensor connector.

DW:DTC P2127 THROTTLE/PEDAL POSITION SENSOR/SWITCH “E” CIRCUIT LOW INPUT

DTC DETECTING CONDITION:

- Immediately at fault recognition
- GENERAL DESCRIPTION <Ref. to GD(H4DOTC)-218, DTC P2127 THROTTLE/PEDAL POSITION SENSOR/SWITCH “E” CIRCUIT LOW INPUT, Diagnostic Trouble Code (DTC) Detecting Criteria.>

TROUBLE SYMPTOM:

- Improper idling
- Poor driving performance

CAUTION:

After repair or replacement of faulty parts, perform Clear Memory Mode <Ref. to EN(H4DOTC)(diag)-52, OPERATION, Clear Memory Mode.>, and Inspection Mode <Ref. to EN(H4DOTC)(diag)-43, PROCEDURE, Inspection Mode.>.

WIRING DIAGRAM:

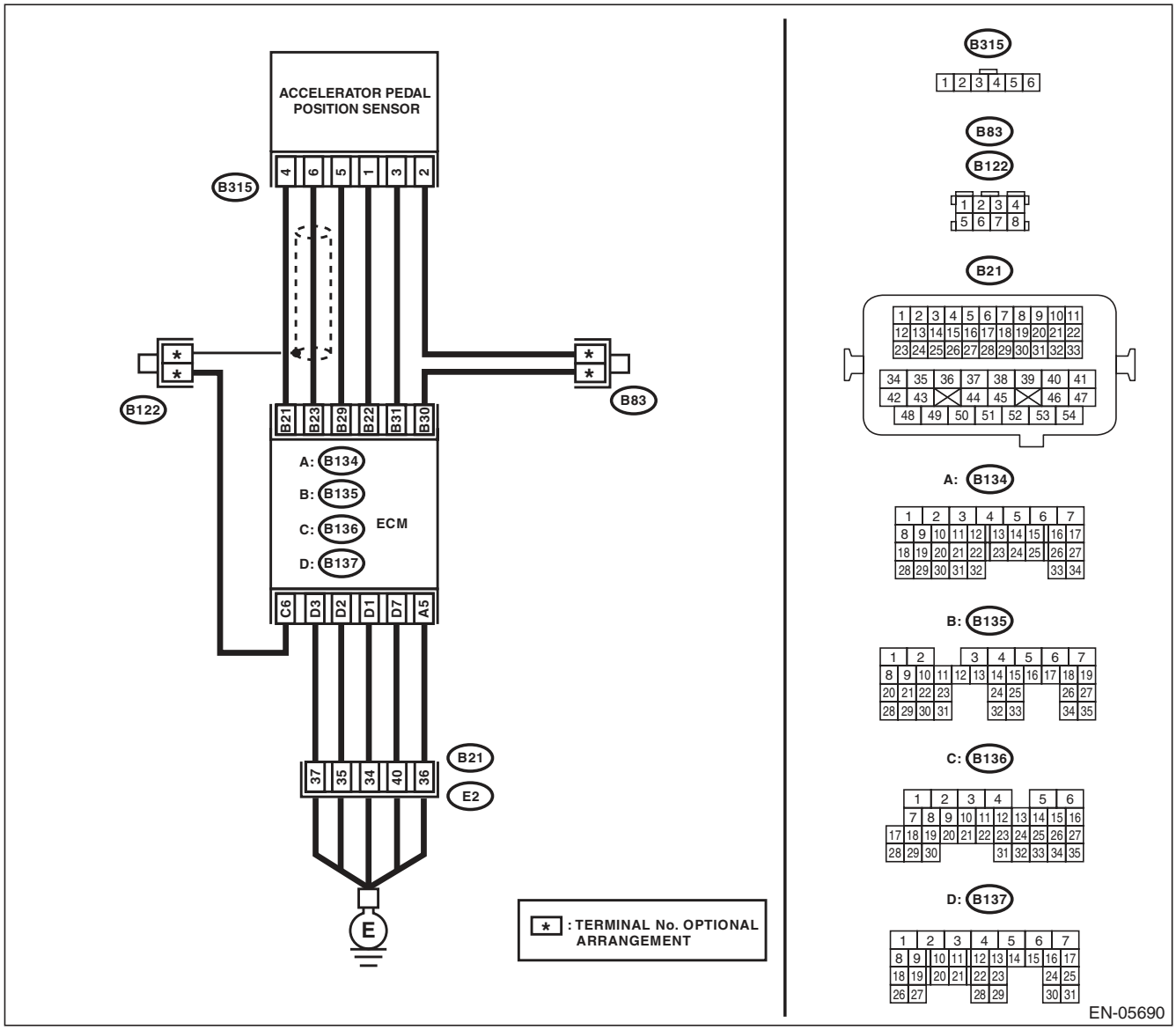

	Step	Check	Yes	No
1	**CHECK HARNESS BETWEEN ECM AND ACCELERATOR PEDAL POSITION SENSOR.** 1) Turn the ignition switch to OFF. 2) Disconnect the connector from ECM and accelerator pedal position sensor. 3) Measure the resistance between ECM and chassis ground. ***Connector & terminal*** ***(B135) No. 22 — Chassis ground:*** ***(B135) No. 31 — Chassis ground:***	Is the resistance 1 MΩ or more?	Go to step **2**.	Repair the ground short circuit of harness between ECM and accelerator pedal position sensor connector.
2	**CHECK SHORT CIRCUIT INSIDE THE ECM.** 1) Connect the ECM. 2) Measure the resistance between accelerator pedal position sensor connector and chassis ground. ***Connector & terminal*** ***(B315) No. 3 — Chassis ground:***	Is the resistance 1 MΩ or more?	Replace the accelerator pedal. <Ref. to SP(H4SO)-3, Accelerator Pedal.>	Repair the ground short circuit of harness between ECM and accelerator pedal position sensor connector. Replace the ECM if defective. <Ref. to FU(H4DOTC)-52, Engine Control Module (ECM).>

DX:DTC P2128 THROTTLE/PEDAL POSITION SENSOR/SWITCH “E” CIRCUIT HIGH INPUT

DTC DETECTING CONDITION:

- Immediately at fault recognition
- GENERAL DESCRIPTION <Ref. to GD(H4DOTC)-220, DTC P2128 THROTTLE/PEDAL POSITION SENSOR/SWITCH “E” CIRCUIT HIGH INPUT, Diagnostic Trouble Code (DTC) Detecting Criteria.>

TROUBLE SYMPTOM:

- Improper idling
- Poor driving performance

CAUTION:

After repair or replacement of faulty parts, perform Clear Memory Mode <Ref. to EN(H4DOTC)(diag)-52, OPERATION, Clear Memory Mode.>, and Inspection Mode <Ref. to EN(H4DOTC)(diag)-43, PROCEDURE, Inspection Mode.>.

WIRING DIAGRAM:

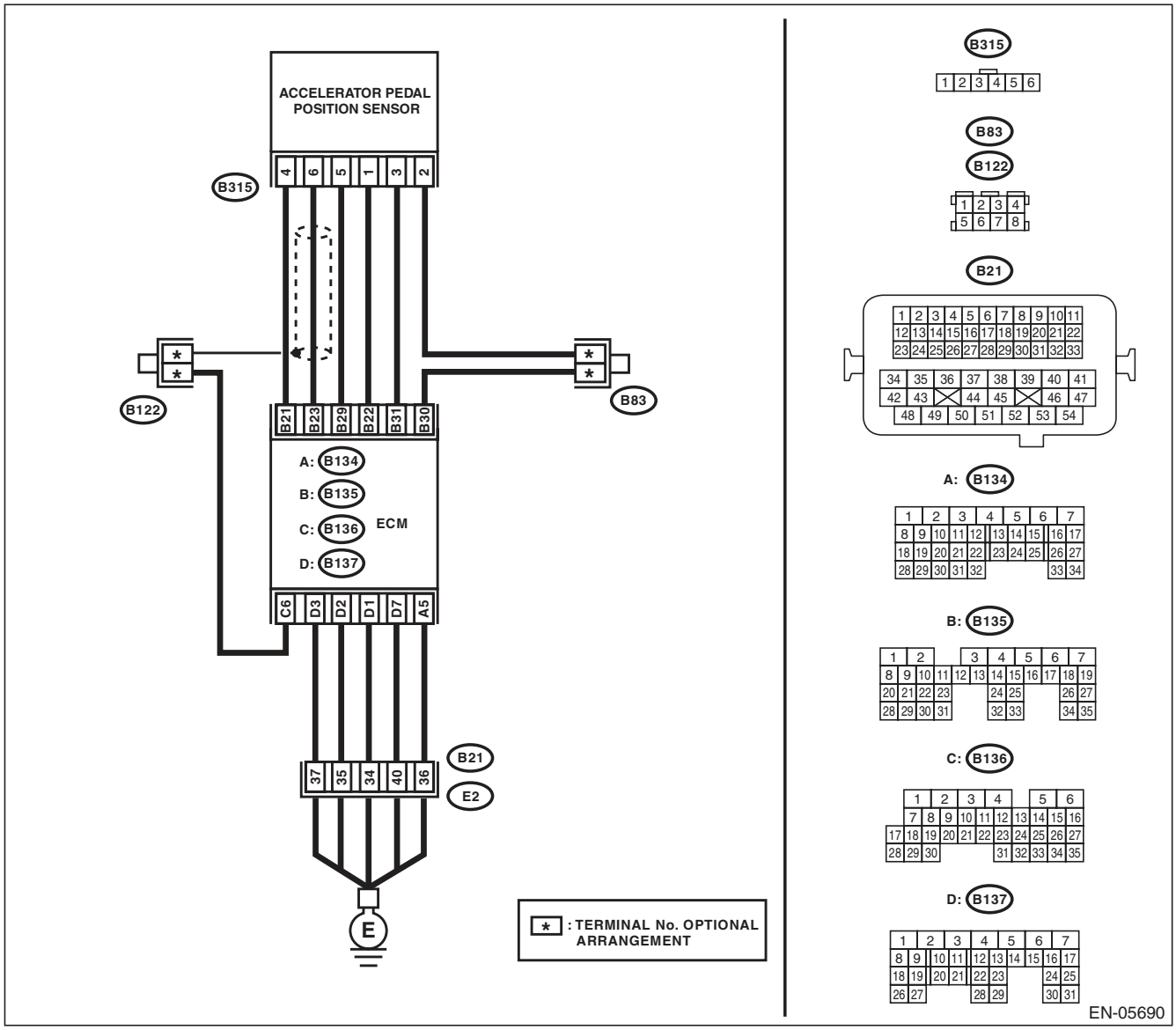

	Step	Check	Yes	No
1	**CHECK HARNESS BETWEEN ECM AND ACCELERATOR PEDAL POSITION SENSOR.** 1) Turn the ignition switch to OFF. 2) Disconnect the connector from ECM and accelerator pedal position sensor. 3) Measure the resistance of harness between ECM and accelerator pedal position sensor connector. ***Connector & terminal*** ***(B135) No. 31 — (B315) No. 3:*** ***(B135) No. 30 — (B315) No. 2:***	Is the resistance less than 1 Ω?	Go to step **2**.	Repair the open circuit in harness between ECM and accelerator pedal position sensor connector.
2	**CHECK HARNESS BETWEEN ECM AND ACCELERATOR PEDAL POSITION SENSOR.** 1) Connect the ECM. 2) Measure the resistance between accelerator pedal position sensor connector and chassis ground. ***Connector & terminal*** ***(B315) No. 2 — Chassis ground:***	Is the resistance less than 1 Ω?	Go to step **3**.	Repair the harness and connector. NOTE: In this case, repair the following item: • Open circuit of harness between ECM and engine ground • Poor contact in ECM connector • Poor contact of coupling connector
3	**CHECK HARNESS BETWEEN ECM AND ACCELERATOR PEDAL POSITION SENSOR.** 1) Turn the ignition switch to ON. 2) Measure the voltage between accelerator pedal position sensor connector and chassis ground. ***Connector & terminal*** ***(B315) No. 3 (+) — Chassis ground (–):***	Is the voltage 4.85 V or more?	Repair the short circuit of harness to power supply between ECM and accelerator pedal position sensor connector.	Go to step **4**.
4	**CHECK HARNESS BETWEEN ECM AND ACCELERATOR PEDAL POSITION SENSOR.** 1) Turn the ignition switch to OFF. 2) Disconnect the connectors from ECM. 3) Measure the resistance between ECM connectors. ***Connector & terminal*** ***(B135) No. 22 — (B135) No. 31:***	Is the resistance 1 MΩ or more?	Repair the poor contact of accelerator pedal position sensor connector. Replace the accelerator pedal if defective. <Ref. to SP(H4SO)-3, Accelerator Pedal.>	Repair the short circuit of harness to power supply between ECM and accelerator pedal position sensor connector.

DY:DTC P2135 THROTTLE/PEDAL POSITION SENSOR/SWITCH “A”/“B” VOLTAGE CORRELATION

DTC DETECTING CONDITION:

- Immediately at fault recognition
- GENERAL DESCRIPTION <Ref. to GD(H4DOTC)-222, DTC P2135 THROTTLE/PEDAL POSITION SENSOR/SWITCH “A”/“B” VOLTAGE CORRELATION, Diagnostic Trouble Code (DTC) Detecting Criteria.>

TROUBLE SYMPTOM:

- Improper idling
- Poor driving performance

CAUTION:

After repair or replacement of faulty parts, perform Clear Memory Mode <Ref. to EN(H4DOTC)(diag)-52, OPERATION, Clear Memory Mode.>, and Inspection Mode <Ref. to EN(H4DOTC)(diag)-43, PROCEDURE, Inspection Mode.>.

WIRING DIAGRAM:

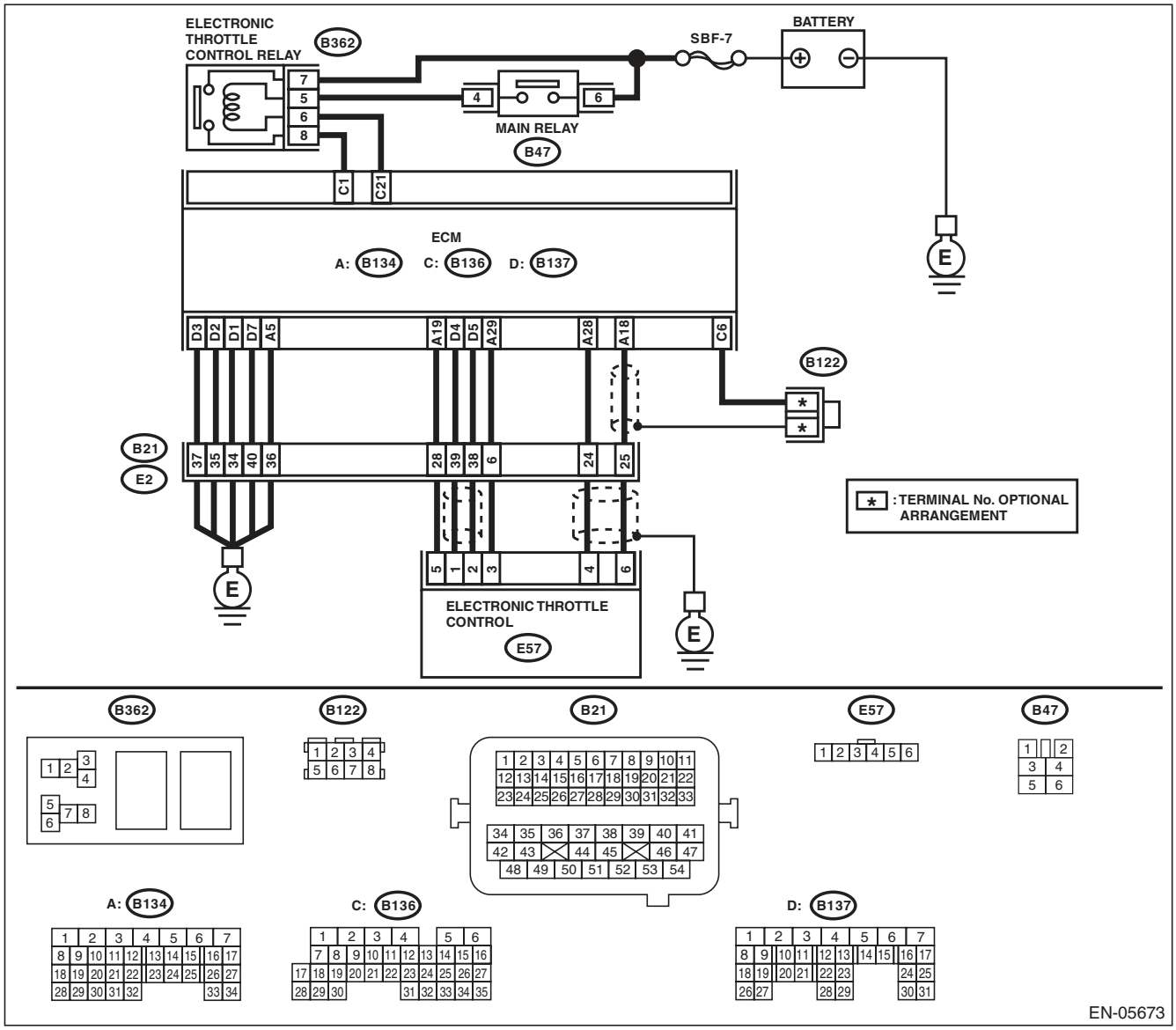

	Step	Check	Yes	No
1	**CHECK HARNESS BETWEEN ECM AND ELECTRONIC THROTTLE CONTROL.** 1) Turn the ignition switch to OFF. 2) Disconnect the connectors from ECM and electronic throttle control. 3) Measure the resistance between ECM and chassis ground. ***Connector & terminal*** ***(B134) No. 19 — Chassis ground:*** ***(B134) No. 18 — Chassis ground:*** ***(B134) No. 18 — (B136) No. 6:*** ***(B134) No. 28 — Chassis ground:***	Is the resistance 1 MΩ or more?	Go to step **2**.	Repair the short circuit to ground in harness between ECM and electronic throttle control connector.
2	**CHECK SHORT CIRCUIT INSIDE THE ECM.** 1) Connect the ECM. 2) Measure the resistance between electronic throttle control connector and engine ground. ***Connector & terminal*** ***(E57) No. 6 — Engine ground:*** ***(E57) No. 4 — Engine ground:***	Is the resistance 1 MΩ or more?	Go to step **3**.	Repair the short circuit to ground in harness between ECM and electronic throttle control connector. Replace the ECM if defective. <Ref. to FU(H4DOTC)-52, Engine Control Module (ECM).>
3	**CHECK HARNESS BETWEEN ECM AND ELECTRONIC THROTTLE CONTROL.** 1) Disconnect the connectors from ECM. 2) Measure the resistance of harness between ECM and electronic throttle control connector. ***Connector & terminal*** ***(B134) No. 18 — (E57) No. 6:*** ***(B134) No. 28 — (E57) No. 4:*** ***(B134) No. 29 — (E57) No. 3:***	Is the resistance less than 1 Ω?	Go to step **4**.	Repair the harness and connector. NOTE: In this case, repair the following item: • Open circuit in harness between ECM and electronic throttle control connector • Poor contact of coupling connector
4	**CHECK HARNESS BETWEEN ECM AND ELECTRONIC THROTTLE CONTROL.** 1) Connect the ECM. 2) Measure the resistance between electronic throttle control connector and engine ground. ***Connector & terminal*** ***(E57) No. 3 — Engine ground:***	Is the resistance less than 5 Ω?	Go to step **5**.	Repair the harness and connector. NOTE: In this case, repair the following item: • Open circuit of harness between ECM and engine ground • Poor contact in ECM connector • Poor contact of coupling connector
5	**CHECK HARNESS BETWEEN ECM AND ELECTRONIC THROTTLE CONTROL.** 1) Turn the ignition switch to ON. 2) Measure the voltage between electronic throttle control connector and engine ground. ***Connector & terminal*** ***(E57) No. 6 (+) — Engine ground (–):*** ***(E57) No. 4 (+) — Engine ground (–):***	Is the voltage 4.85 V or more?	Repair the short circuit to power in the harness between ECM and electronic throttle control connector.	Go to step **6**.

Step		Check	Yes	No
6	**CHECK HARNESS BETWEEN ECM AND ELECTRONIC THROTTLE CONTROL.** 1) Turn the ignition switch to OFF. 2) Disconnect the connectors from ECM. 3) Measure the resistance between ECM connectors. ***Connector & terminal*** ***(B134) No. 19 — (B134) No. 18:*** ***(B134) No. 19 — (B134) No. 28:***	Is the resistance 1 MΩ or more?	Repair poor contact of the electronic throttle control connector. Replace the electronic throttle control if defective. <Ref. to FU(H4DOTC)-14, Throttle Body.>	Repair the short circuit to power in the harness between ECM and electronic throttle control connector.

DZ:DTC P2138 THROTTLE/PEDAL POSITION SENSOR/SWITCH “D”/“E” VOLTAGE CORRELATION

DTC DETECTING CONDITION:

- Immediately at fault recognition
- GENERAL DESCRIPTION <Ref. to GD(H4DOTC)-224, DTC P2138 THROTTLE/PEDAL POSITION SENSOR/SWITCH “D”/“E” VOLTAGE CORRELATION, Diagnostic Trouble Code (DTC) Detecting Criteria.>

TROUBLE SYMPTOM:

- Improper idling
- Poor driving performance

CAUTION:

After repair or replacement of faulty parts, perform Clear Memory Mode <Ref. to EN(H4DOTC)(diag)-52, OPERATION, Clear Memory Mode.>, and Inspection Mode <Ref. to EN(H4DOTC)(diag)-43, PROCEDURE, Inspection Mode.>.

WIRING DIAGRAM:

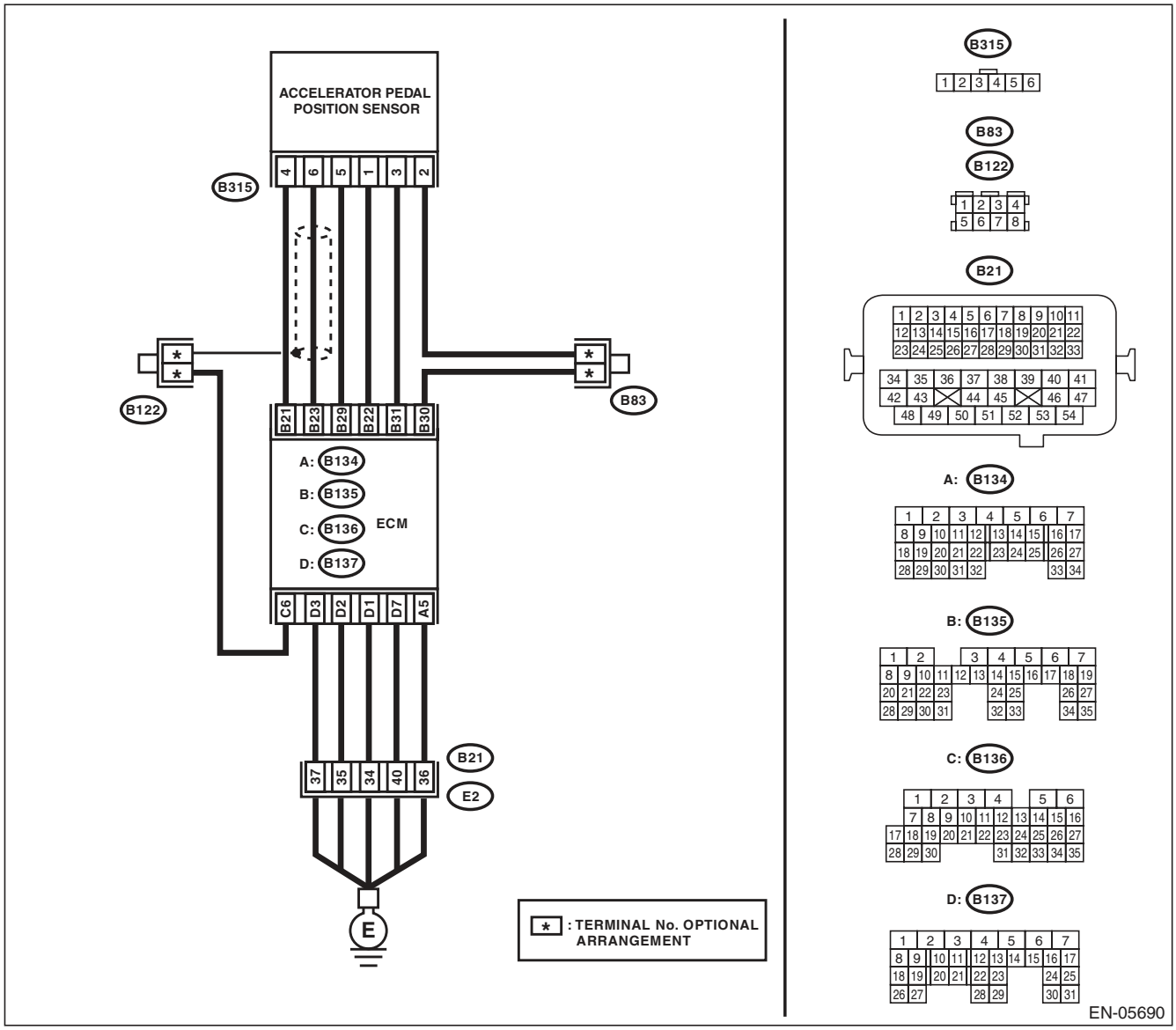

	Step	Check	Yes	No
1	**CHECK ACCELERATOR PEDAL POSITION SENSOR OUTPUT.** 1) Turn the ignition switch to ON. 2) Measure the voltage between ECM and chassis ground. ***Connector & terminal*** ***Main accelerator pedal position sensor signal*** ***(B135) No. 23 (+) — Chassis ground (–):*** ***Sub accelerator pedal position sensor signal*** ***(B135) No. 31 (+) — Chassis ground (–):***	Is the difference in measured values for the main accelerator pedal position sensor signal and the sub accelerator pedal position sensor signal 0 V?	Go to step **3**.	Go to step **2**.
2	**CHECK ACCELERATOR PEDAL POSITION SENSOR OUTPUT.** 1) Measure the voltage between accelerator pedal position sensor connector and chassis ground. ***Connector & terminal*** ***(B315) No. 6 (+) — Chassis ground (–):*** ***(B315) No. 3 (+) — Chassis ground (–):***	Is the difference in measured values for the main accelerator pedal position sensor signal and the sub accelerator pedal position sensor signal 0 V?	Replace the accelerator pedal. <Ref. to SP(H4SO)-3, Accelerator Pedal.>	Repair the harness and connector. NOTE: In this case, repair the following item: • Open circuit of harness between the ECM and accelerator pedal position sensor connector. • Short circuit to ground in harness between ECM and accelerator pedal position sensor connector.
3	**CHECK HARNESS BETWEEN ECM AND ACCELERATOR PEDAL POSITION SENSOR CONNECTOR.** Check the resistance of harness between the accelerator pedal position sensor connector and chassis ground. ***Connector & terminal*** ***(B315) No. 5 — Chassis ground:*** ***(B315) No. 2 — Chassis ground:***	Is the resistance less than 5 Ω?	Repair the poor contact of ECM connector.	Repair the harness and connector. NOTE: In this case, repair the following item: • Open circuit of harness between the ECM and accelerator pedal position sensor connector. • Open circuit of harness between ECM and engine ground • Poor contact in ECM connector • Poor contact of coupling connector

EA:DTC P2419 EVAPORATIVE EMISSION SYSTEM SWITCHING VALVE CONTROL CIRCUIT LOW

DTC DETECTING CONDITION:

- Two consecutive driving cycles with fault
- GENERAL DESCRIPTION <Ref. to GD(H4DOTC)-226, DTC P2419 EVAPORATIVE EMISSION SYSTEM SWITCHING VALVE CONTROL CIRCUIT LOW, Diagnostic Trouble Code (DTC) Detecting Criteria.>

TROUBLE SYMPTOM:

Improper idling

CAUTION:

After repair or replacement of faulty parts, perform Clear Memory Mode <Ref. to EN(H4DOTC)(diag)-52, OPERATION, Clear Memory Mode.>, and Inspection Mode <Ref. to EN(H4DOTC)(diag)-43, PROCEDURE, Inspection Mode.>.

WIRING DIAGRAM:

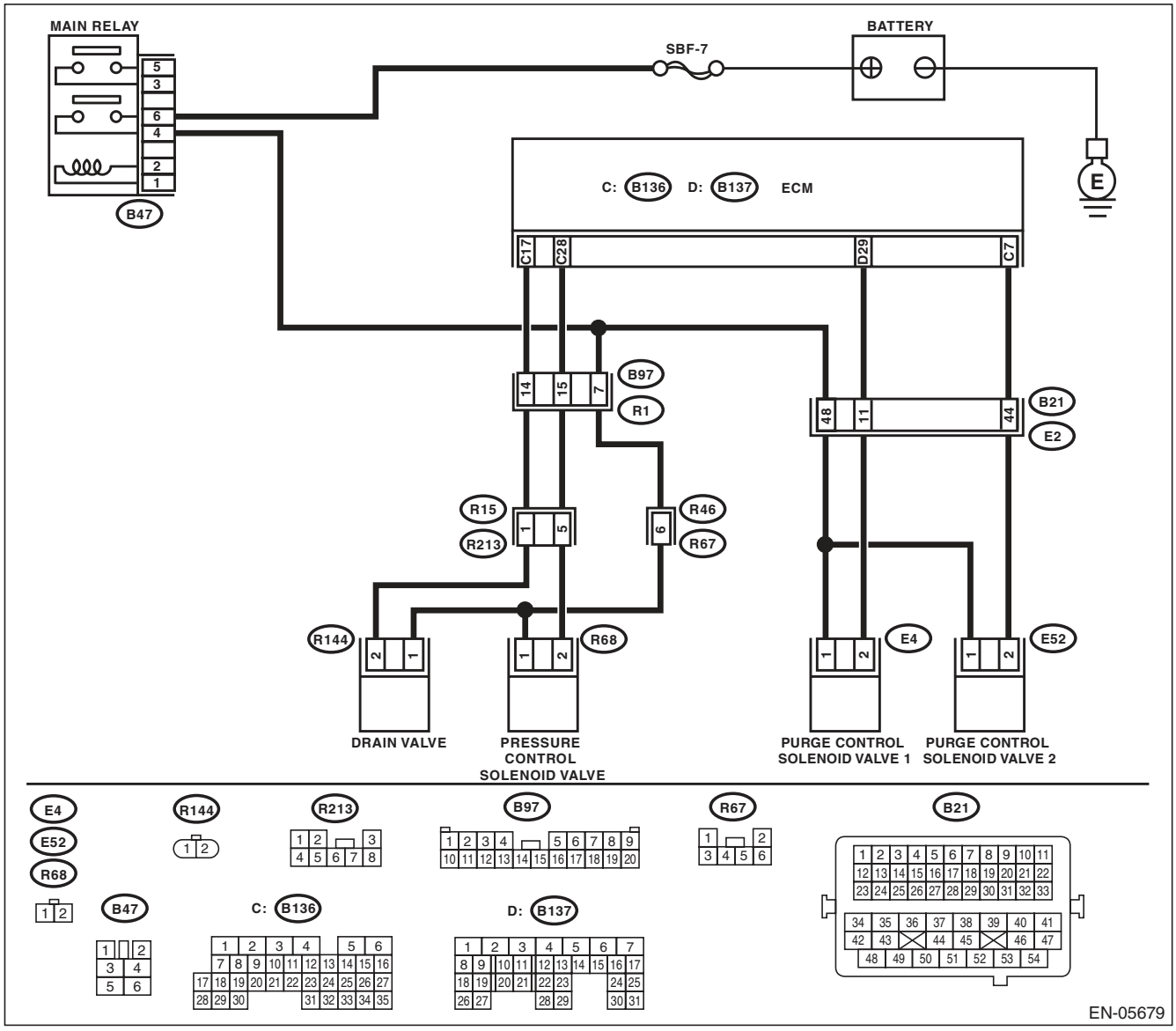

	Step	Check	Yes	No
1	**CHECK OUTPUT SIGNAL OF ECM.** 1) Turn the ignition switch to ON. 2) Measure the voltage between ECM and chassis ground. ***Connector & terminal*** ***(B136) No. 7 (+) — Chassis ground (–):***	Is the voltage 10 V or more?	Repair the poor contact of ECM connector.	Go to step **2**.
2	**CHECK HARNESS BETWEEN ECM AND PURGE CONTROL SOLENOID VALVE 2.** 1) Turn the ignition switch to OFF. 2) Disconnect the connectors from ECM and purge control solenoid valve 2. 3) Measure the resistance between the purge control solenoid valve 2 connector and engine ground. ***Connector & terminal*** ***(E52) No. 2 — Engine ground:***	Is the resistance 1 MΩ or more?	Go to step **3**.	Repair the ground short circuit of harness between ECM and purge control solenoid valve 2 connector.
3	**CHECK HARNESS BETWEEN ECM AND PURGE CONTROL SOLENOID VALVE 2.** Measure the resistance of harness between ECM and purge control solenoid valve 2. ***Connector & terminal*** ***(B136) No. 7 — (E52) No. 2:***	Is the resistance less than 1 Ω?	Go to step **4**.	Repair the harness and connector. NOTE: In this case, repair the following item: • Open circuit of harness between ECM and purge control solenoid valve 2 connector • Poor contact of coupling connector
4	**CHECK PURGE CONTROL SOLENOID VALVE 2.** 1) Remove the purge control solenoid valve 2. 2) Measure the resistance between purge control solenoid valve 2 terminals. ***Terminals*** ***No. 1 — No. 2:***	Is the resistance between 10 — 100 Ω?	Go to step **5**.	Replace the purge control solenoid valve 2. <Ref. to EC(H4DOTC)-9, Purge Control Solenoid Valve.>
5	**CHECK POWER SUPPLY TO PURGE CONTROL SOLENOID VALVE 2.** 1) Turn the ignition switch to ON. 2) Measure the voltage between purge control solenoid valve 2 and engine ground. ***Connector & terminal*** ***(E52) No. 1 (+) — Engine ground (–):***	Is the voltage 10 V or more?	Repair the poor contact in the purge control solenoid valve 2 connector.	Repair the harness and connector. NOTE: In this case, repair the following item: • Open circuit of harness between the main relay and purge control solenoid valve 2 • Poor contact of coupling connector • Poor contact of main relay connector

EB:DTC P2420 EVAPORATIVE EMISSION SYSTEM SWITCHING VALVE CONTROL CIRCUIT HIGH

DTC DETECTING CONDITION:

- Two consecutive driving cycles with fault
- GENERAL DESCRIPTION <Ref. to GD(H4DOTC)-227, DTC P2420 EVAPORATIVE EMISSION SYSTEM SWITCHING VALVE CONTROL CIRCUIT HIGH, Diagnostic Trouble Code (DTC) Detecting Criteria.>

TROUBLE SYMPTOM:

Improper idling

CAUTION:

After repair or replacement of faulty parts, perform Clear Memory Mode <Ref. to EN(H4DOTC)(diag)-52, OPERATION, Clear Memory Mode.>, and Inspection Mode <Ref. to EN(H4DOTC)(diag)-43, PROCEDURE, Inspection Mode.>.

WIRING DIAGRAM:

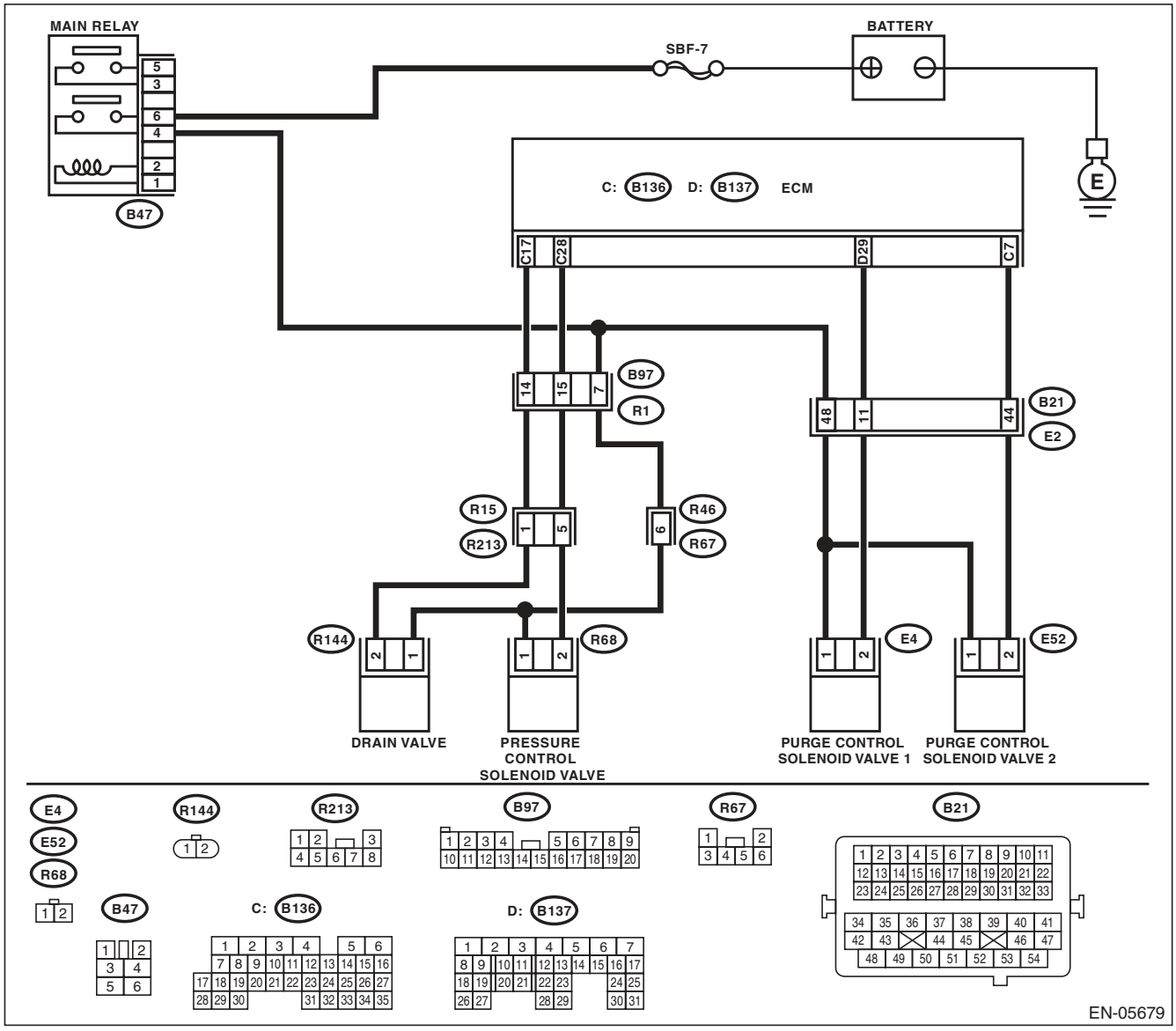

	Step	Check	Yes	No
1	**CHECK HARNESS BETWEEN ECM AND PURGE CONTROL SOLENOID VALVE 2.** 1) Turn the ignition switch to OFF. 2) Disconnect the connectors from ECM and purge control solenoid valve 2. 3) Turn the ignition switch to ON. 4) Measure the voltage between ECM and chassis ground. ***Connector & terminal*** ***(B136) No. 7 (+) — Chassis ground (–):***	Is the voltage 10 V or more?	Repair the short to power in the harness between ECM and purge control solenoid valve 2 connector.	Go to step **2**.
2	**CHECK PURGE CONTROL SOLENOID VALVE 2.** 1) Turn the ignition switch to OFF. 2) Measure the resistance between purge control solenoid valve 2 terminals. ***Terminals*** ***No. 1 — No. 2:***	Is the resistance less than 1 Ω?	Replace the purge control solenoid valve 2. <Ref. to EC(H4DOTC)-9, Purge Control Solenoid Valve.>	Repair the poor contact of ECM connector.

EC:DTC P2431 SECONDARY AIR INJECTION SYSTEM AIR FLOW /PRESSURE SENSOR CIRCUIT RANGE/PERFORMANCE

DTC DETECTING CONDITION:

- Two consecutive driving cycles with fault
- GENERAL DESCRIPTION <Ref. to GD(H4DOTC)-228, DTC P2431 SECONDARY AIR INJECTION SYSTEM AIR FLOW /PRESSURE SENSOR CIRCUIT RANGE/PERFORMANCE, Diagnostic Trouble Code (DTC) Detecting Criteria.>

CAUTION:

After repair or replacement of faulty parts, perform Clear Memory Mode <Ref. to EN(H4DOTC)(diag)-52, OPERATION, Clear Memory Mode.>, and Inspection Mode <Ref. to EN(H4DOTC)(diag)-43, PROCEDURE, Inspection Mode.>.

WIRING DIAGRAM:

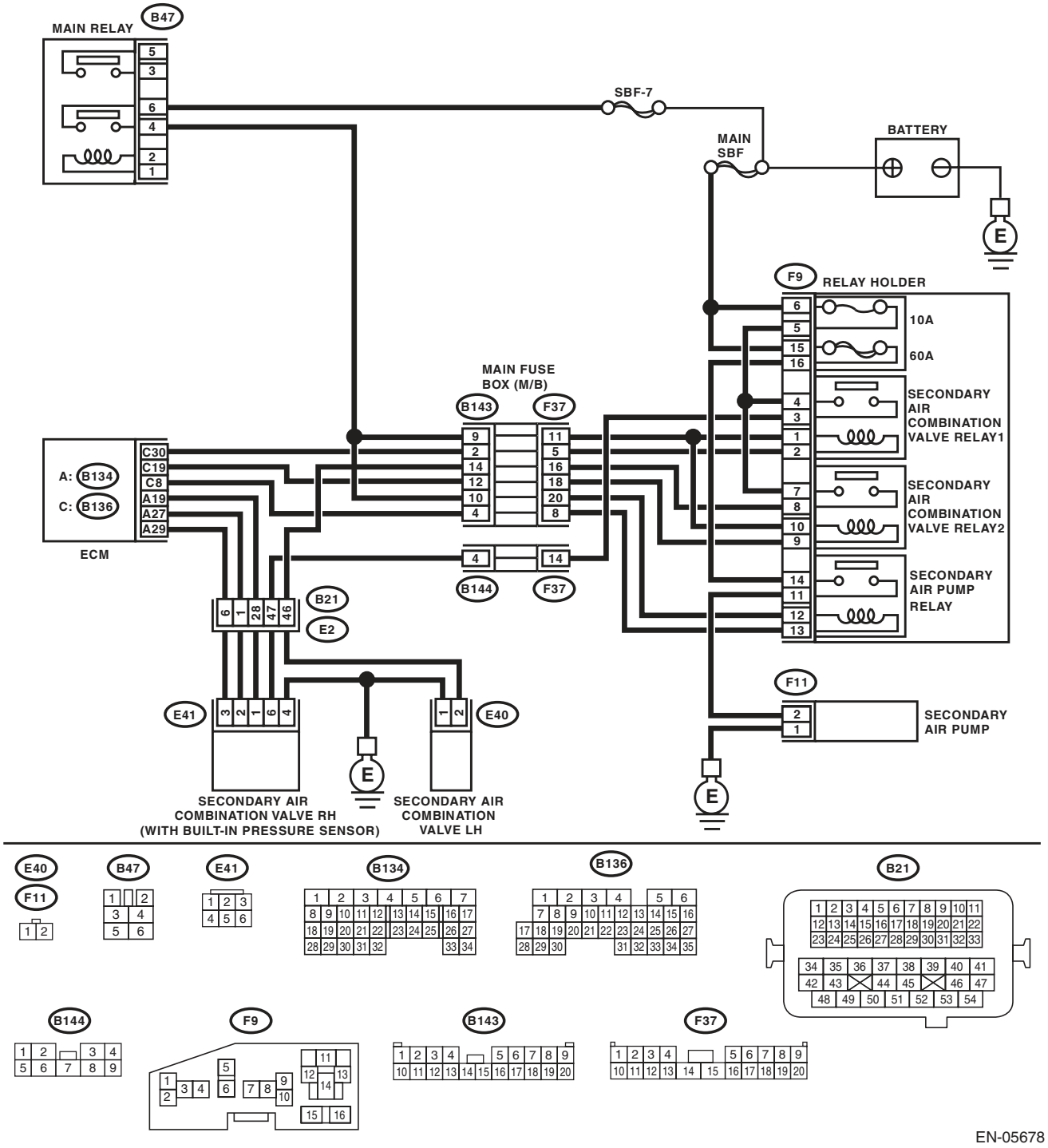

EN-05678

Step		Check	Yes	No
1	**CHECK FOR ANY OTHER DTC ON DISPLAY.**	Is any other DTC displayed?	Check the appropriate DTC using the “List of Diagnostic Trouble Code (DTC)”. <Ref. to EN(H4DOTC)(diag)-81, List of Diagnostic Trouble Code (DTC).>	Go to step **2**.
2	**CHECK CURRENT DATA.** 1) Turn the ignition switch to ON (engine OFF). 2) Using the Subaru Select Monitor, read secondary air piping pressure, intake pipe absolute pressure and atmospheric pressure, and compare with the actual atmospheric pressure. NOTE: For detailed operation procedure, refer to “READ CURRENT DATA FOR ENGINE”. <Ref. to EN(H4DOTC)(diag)-34, Subaru Select Monitor.>	Is the actual difference with atmospheric pressure 200 mmHg (27 kPa, 8 inHg, 3.9 psig) or more?	Replace the secondary air combination valve RH. <Ref. to EC(H4DOTC)-22, Secondary Air Combination Valve.>	Even if DTC is detected, the circuit has returned to a normal condition at this time. Reproduce the failure, and then perform the diagnosis again. NOTE: In this case, temporary poor contact of connector may be the cause.

ED:DTC P2432 SECONDARY AIR INJECTION SYSTEM AIR FLOW /PRESSURE SENSOR CIRCUIT LOW

DTC DETECTING CONDITION:

- Immediately at fault recognition
- GENERAL DESCRIPTION <Ref. to GD(H4DOTC)-229, DTC P2432 SECONDARY AIR INJECTION SYSTEM AIR FLOW /PRESSURE SENSOR CIRCUIT LOW, Diagnostic Trouble Code (DTC) Detecting Criteria.>

CAUTION:

After repair or replacement of faulty parts, perform Clear Memory Mode <Ref. to EN(H4DOTC)(diag)-52, OPERATION, Clear Memory Mode.>, and Inspection Mode <Ref. to EN(H4DOTC)(diag)-43, PROCEDURE, Inspection Mode.>.

WIRING DIAGRAM:

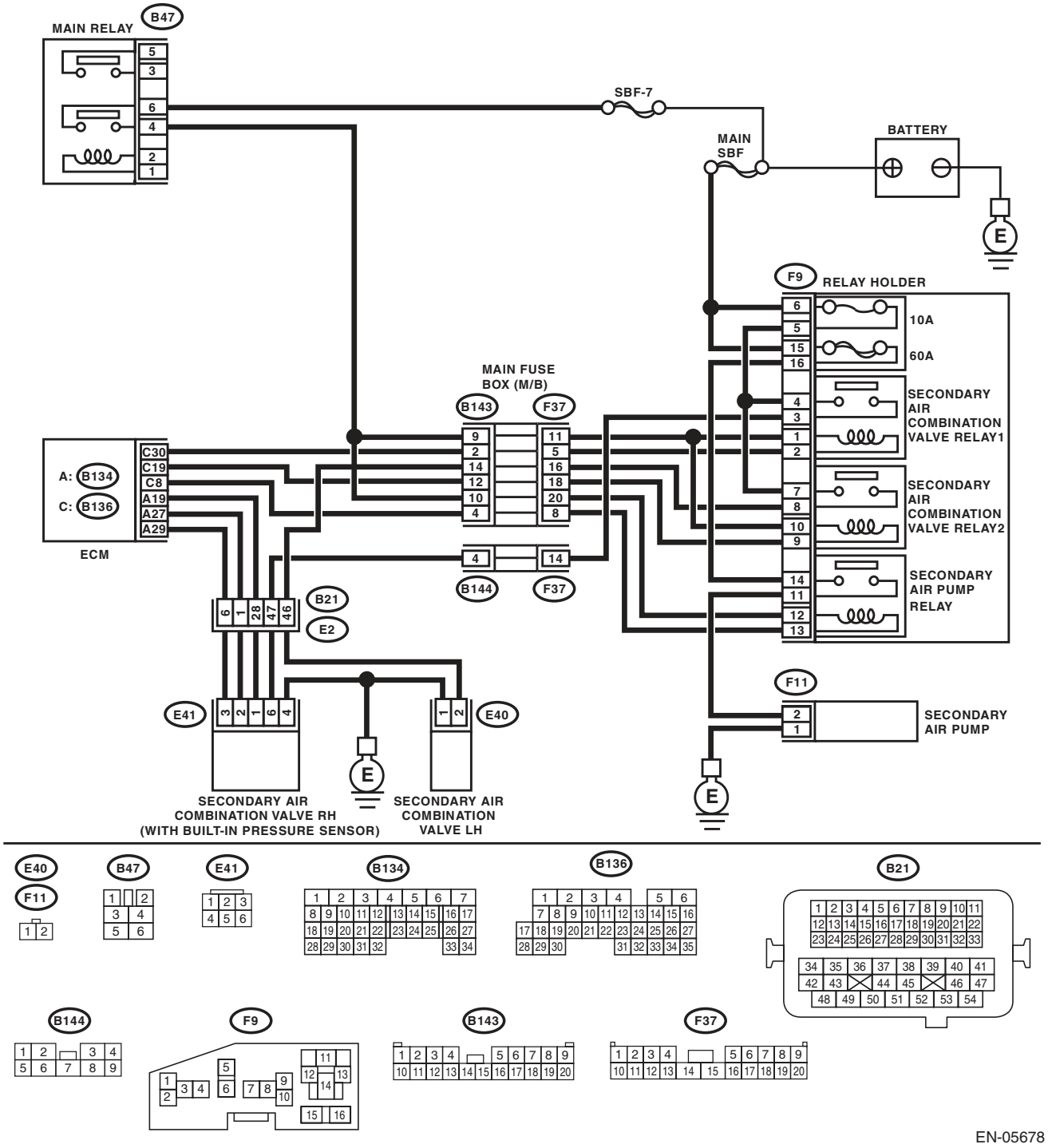

	Step	Check	Yes	No
1	**CHECK CURRENT DATA.** 1) Turn the ignition switch to ON. 2) Read the data of secondary air piping pressure signal using Subaru Select Monitor or general scan tool. NOTE: • Subaru Select Monitor For detailed operation procedure, refer to "READ CURRENT DATA FOR ENGINE". <Ref. to EN(H4DOTC)(diag)-34, Subaru Select Monitor.> • General scan tool For detailed operation procedures, refer to the general scan tool operation manual.	Is the measured value less than 53.3 kPa (400 mmHg, 15.8 inHg)?	Go to step **2**.	Even if DTC is detected, the circuit has returned to a normal condition at this time. Reproduce the failure, and then perform the diagnosis again. NOTE: In this case, temporary poor contact of connector may be the cause.
2	**CHECK POWER SUPPLY OF SECONDARY AIR COMBINATION VALVE RH.** 1) Turn the ignition switch to OFF. 2) Disconnect the connector from the secondary air combination valve RH. 3) Turn the ignition switch to ON. 4) Measure the voltage between the secondary air combination valve RH connector and chassis ground. ***Connector & terminal*** ***(E41) No. 1 (+) — Chassis ground (–):***	Is the voltage 4.5 V or more?	Go to step **3**.	Repair the harness and connector. NOTE: In this case, repair the following item: • Open circuit in harness between ECM and secondary air combination valve RH connector • Poor contact in ECM connector • Poor contact of coupling connector
3	**CHECK HARNESS BETWEEN ECM AND SECONDARY AIR COMBINATION VALVE RH CONNECTOR.** 1) Turn the ignition switch to OFF. 2) Disconnect the connectors from ECM. 3) Measure the resistance of the harness between the ECM and secondary air combination valve RH connector. ***Connector & terminal*** ***(B134) No. 27 — (E41) No. 2:***	Is the resistance less than 1 Ω?	Go to step **4**.	Repair the harness and connector. NOTE: In this case, repair the following item: • Open circuit in harness between ECM and secondary air combination valve RH connector • Poor contact of coupling connector
4	**CHECK HARNESS BETWEEN ECM AND SECONDARY AIR COMBINATION VALVE RH CONNECTOR.** Measure the resistance between ECM and chassis ground. ***Connector & terminal*** ***(B134) No. 27 — Chassis ground:***	Is the resistance 1 MΩ or more?	Go to step **5**.	Repair the ground short circuit of harness between ECM and secondary air combination valve RH connector.
5	**CHECK POOR CONTACT.** Check for poor contact in the ECM and secondary air combination valve RH connector.	Is there poor contact in the ECM or secondary air combination valve RH connector?	Repair the poor contact in the ECM or secondary air combination valve RH connector.	Replace the secondary air combination valve RH. <Ref. to EC(H4DOTC)-22, Secondary Air Combination Valve.>

EE:DTC P2433 SECONDARY AIR INJECTION SYSTEM AIR FLOW /PRESSURE SENSOR CIRCUIT HIGH

DTC DETECTING CONDITION:

- Immediately at fault recognition
- GENERAL DESCRIPTION <Ref. to GD(H4DOTC)-230, DTC P2433 SECONDARY AIR INJECTION SYSTEM AIR FLOW /PRESSURE SENSOR CIRCUIT HIGH, Diagnostic Trouble Code (DTC) Detecting Criteria.>

CAUTION:

After repair or replacement of faulty parts, perform Clear Memory Mode <Ref. to EN(H4DOTC)(diag)-52, OPERATION, Clear Memory Mode.>, and Inspection Mode <Ref. to EN(H4DOTC)(diag)-43, PROCEDURE, Inspection Mode.>.

WIRING DIAGRAM:

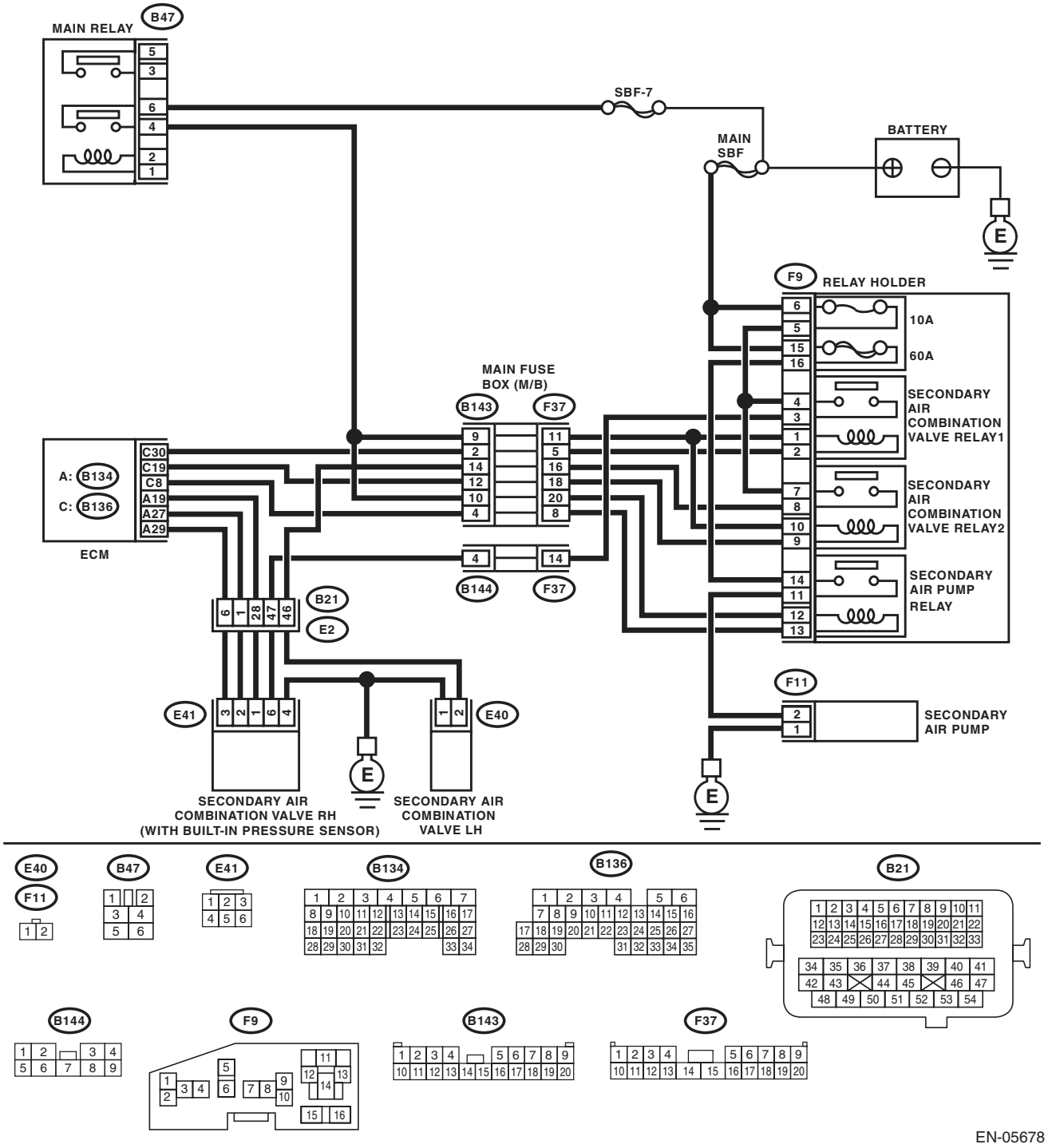

	Step	Check	Yes	No
1	**CHECK CURRENT DATA.** 1) Turn the ignition switch to ON. 2) Read the data of secondary air piping pressure signal using Subaru Select Monitor or general scan tool. NOTE: • Subaru Select Monitor For detailed operation procedure, refer to "READ CURRENT DATA FOR ENGINE". <Ref. to EN(H4DOTC)(diag)-34, Subaru Select Monitor.> • General scan tool For detailed operation procedures, refer to the general scan tool operation manual.	Is the measured value 133.3 kPa (1000 mmHg, 39.4 inHg) or more?	Go to step **2**.	Even if DTC is detected, the circuit has returned to a normal condition at this time. Reproduce the failure, and then perform the diagnosis again. NOTE: In this case, temporary poor contact of connector may be the cause.
2	**CHECK HARNESS BETWEEN ECM AND SECONDARY AIR COMBINATION VALVE RH CONNECTOR.** 1) Turn the ignition switch to OFF. 2) Disconnect the connector from the secondary air combination valve RH. 3) Turn the ignition switch to ON. 4) Read the data of secondary air piping pressure signal using Subaru Select Monitor or general scan tool. NOTE: • Subaru Select Monitor For detailed operation procedure, refer to "READ CURRENT DATA FOR ENGINE". <Ref. to EN(H4DOTC)(diag)-34, Subaru Select Monitor.> • General scan tool For detailed operation procedures, refer to the general scan tool operation manual.	Is the measured value 133.3 kPa (1000 mmHg, 39.4 inHg) or more?	Repair the short circuit to power in the harness between ECM and secondary air combination valve RH connectors.	Go to step **3**.
3	**CHECK HARNESS BETWEEN ECM AND SECONDARY AIR COMBINATION VALVE RH CONNECTOR.** 1) Turn the ignition switch to OFF. 2) Measure the resistance of the harness between the secondary air combination valve RH connector and engine ground. ***Connector & terminal*** ***(E41) No. 3 — Engine ground:***	Is the resistance less than 5 Ω?	Go to step **4**.	Repair the harness and connector. NOTE: In this case, repair the following item: • Open circuit in harness between ECM and secondary air combination valve RH connector • Poor contact in ECM connector • Poor contact of coupling connector
4	**CHECK POOR CONTACT.** Check for poor contact of the secondary air combination valve RH connector.	Is there poor contact of the secondary air combination valve RH connector?	Repair the poor contact of the secondary air combination valve RH connector.	Replace the secondary air combination valve RH. <Ref. to EC(H4DOTC)-22, Secondary Air Combination Valve.>

EF:DTC P2440 SECONDARY AIR INJECTION SYSTEM SWITCHING VALVE STUCK OPEN (BANK1)

DTC DETECTING CONDITION:

- Two consecutive driving cycles with fault
- GENERAL DESCRIPTION <Ref. to GD(H4DOTC)-231, DTC P2440 SECONDARY AIR INJECTION SYSTEM SWITCHING VALVE STUCK OPEN (BANK1), Diagnostic Trouble Code (DTC) Detecting Criteria.>

CAUTION:

After repair or replacement of faulty parts, perform Clear Memory Mode <Ref. to EN(H4DOTC)(diag)-52, OPERATION, Clear Memory Mode.>, and Inspection Mode <Ref. to EN(H4DOTC)(diag)-43, PROCEDURE, Inspection Mode.>.

WIRING DIAGRAM:

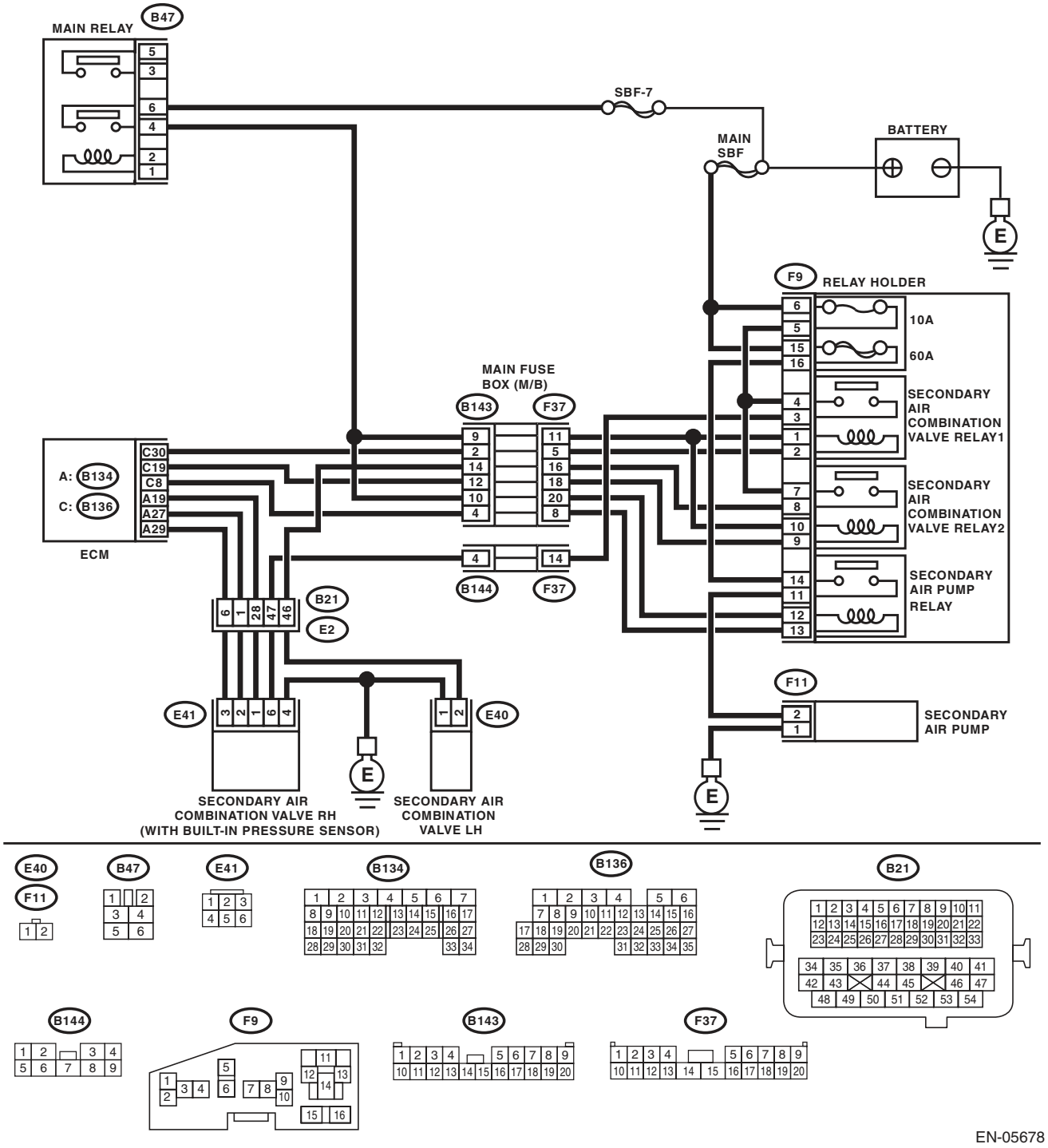

	Step	Check	Yes	No
1	**CHECK SECONDARY AIR COMBINATION VALVE FUSE.** Check if the secondary air combination valve fuse (10 A) is blown out.	Is the fuse blown out?	Go to step **2**.	Go to step **3**.
2	**CHECK HARNESS BETWEEN FUSE BOX AND SECONDARY AIR COMBINATION VALVE RH.** 1) Remove the secondary air combination valve fuse (10 A) from the fuse box. 2) Disconnect the connector from the secondary air combination valve RH. 3) Measure the resistance between the secondary air combination valve fuse and secondary air combination valve RH connector, and chassis ground. ***Connector & terminal*** ***(F9) No. 5 — Chassis ground:*** ***(E41) No. 6 — Chassis ground:***	Is the resistance 1 MΩ or more?	Replace the fuse with a new part, and connect the secondary air combination valve RH connector. Go to step **3**.	Repair the ground short circuit of harness between the fuse box and the secondary air combination valve RH.
3	**CHECK SECONDARY AIR COMBINATION VALVE RH OPERATION.** 1) Connect the delivery (test) mode connector. 2) Turn the ignition switch to ON. 3) Perform operation check for the secondary air combination valve RH using the Subaru Select Monitor. NOTE: Refer to “Compulsory Valve Operation Check Mode” for more operation procedures. <Ref. to EN(H4DOTC)(diag)-53, Compulsory Valve Operation Check Mode.>	Does the secondary air combination valve RH repeatedly switch to ON and OFF?	Go to step **4**.	Go to step **6**.
4	**CHECK DUCT BETWEEN SECONDARY AIR PUMP AND SECONDARY AIR COMBINATION VALVE RH.** Check the duct between the secondary air pump and secondary air combination valve RH.	Is there damage, clog or disconnection of the duct?	Replace, clean or connect the duct.	Go to step **5**.
5	**CHECK PIPE BETWEEN SECONDARY AIR COMBINATION VALVE RH AND CYLINDER HEAD.** Check the pipe between the secondary air combination valve RH and cylinder head.	Is there damage, clog or disconnection of the pipe?	Replace, clean or connect the pipe.	Even if DTC is detected, the circuit has returned to a normal condition at this time. Reproduce the failure, and then perform the diagnosis again. NOTE: In this case, temporary poor contact of connector may be the cause.
6	**CHECK POWER SUPPLY TO SECONDARY AIR COMBINATION VALVE RH.** 1) Disconnect the connector from the secondary air combination valve RH. 2) In the condition of step 3, measure the voltage between the secondary air combination valve RH and the chassis ground. ***Connector & terminal*** ***(E41) No. 6 (+) — Chassis ground (–):***	Does the voltage repeatedly change between 10 V and 0 V?	Replace the secondary air combination valve RH. <Ref. to EC(H4DOTC)-22, Secondary Air Combination Valve.>	Go to step **7**.

Step		Check	Yes	No
7	**CHECK HARNESS BETWEEN SECONDARY AIR COMBINATION VALVE RH AND CHASSIS GROUND.** Measure the resistance between the secondary air combination valve RH connector and chassis ground. ***Connector & terminal*** ***(E41) No. 4 — Chassis ground:***	Is the resistance less than 5 Ω?	Go to step **8**.	Repair the open circuit of harness between secondary air combination valve RH and chassis ground.
8	**CHECK HARNESS BETWEEN SECONDARY AIR COMBINATION VALVE RELAY 1 AND SECONDARY AIR COMBINATION VALVE RH CONNECTOR.** 1) Turn the ignition switch to OFF. 2) Remove the secondary air combination valve relay 1 from the relay box. 3) Measure the resistance of the harness between the secondary air combination valve relay 1 and secondary air combination valve RH connector. ***Connector & terminal*** ***(F9) No. 3 — (E41) No. 6:***	Is the resistance less than 1 Ω?	Go to step **9**.	Repair the open circuit of the harness between the secondary air combination valve relay 1 and secondary air combination valve RH connector.
9	**CHECK SECONDARY AIR COMBINATION VALVE RELAY 1.** 1) Connect the battery to terminals No. 1 and No. 2 of the secondary air combination valve relay 1. 2) Measure the resistance between the secondary air combination valve relay 1 terminals. ***Terminals*** ***No. 3 — No. 4:***	Is the resistance less than 1 Ω?	Go to step **10**.	Replace the secondary air combination valve relay 1. <Ref. to EN(H4DOTC)(diag)-8, Electrical Component Location.>
10	**CHECK SECONDARY AIR COMBINATION VALVE RELAY 1.** Measure the resistance between the secondary air combination valve relay 1 terminals with the battery disconnected. ***Terminals*** ***No. 3 — No. 4:***	Is the resistance 1 MΩ or more?	Go to step **11**.	Replace the secondary air combination valve relay 1. <Ref. to EN(H4DOTC)(diag)-8, Electrical Component Location.>
11	**CHECK SECONDARY AIR COMBINATION VALVE RELAY 1 POWER SOURCE.** 1) Turn the ignition switch to ON. 2) Measure the voltage between the secondary air combination valve relay 1 connector and chassis ground. ***Connector & terminal*** ***(F9) No. 4 (+) — Chassis ground (–):*** ***(F9) No. 1 (+) — Chassis ground (–):***	Is the voltage 10 V or more?	Go to step **12**.	Repair the open or ground short circuit of power supply circuit.
12	**CHECK HARNESS BETWEEN ECM AND SECONDARY AIR COMBINATION VALVE RELAY 1 CONNECTOR.** 1) Turn the ignition switch to OFF. 2) Disconnect the connector of ECM. 3) Measure the resistance of harness between ECM and secondary air combination valve relay 1 connector. ***Connector & terminal*** ***(B136) No. 30 — (F9) No. 2:***	Is the resistance less than 1 Ω?	Go to step **13**.	Repair the open circuit of harness between ECM and secondary air combination valve relay 1 connector.

Step		Check	Yes	No
13	**CHECK HARNESS BETWEEN ECM AND SECONDARY AIR COMBINATION VALVE RELAY 1 CONNECTOR.** Measure the resistance between the secondary air combination valve relay 1 connector and chassis ground. ***Connector & terminal*** ***(F9) No. 2 — Chassis ground:***	Is the resistance 1 MΩ or more?	Repair the poor contact of ECM connector.	Repair the ground short circuit of harness between ECM and secondary air combination valve relay 1 connector.

EG:DTC P2441 SECONDARY AIR INJECTION SYSTEM SWITCHING VALVE STUCK CLOSED (BANK1)

NOTE:
For the diagnostic procedure, refer to DTC P2440. <Ref. to EN(H4DOTC)(diag)-353, DTC P2440 SECONDARY AIR INJECTION SYSTEM SWITCHING VALVE STUCK OPEN (BANK1), Diagnostic Procedure with Diagnostic Trouble Code (DTC).>

EH:DTC P2442 SECONDARY AIR INJECTION SYSTEM SWITCHING VALVE STUCK OPEN (BANK2)

DTC DETECTING CONDITION:

- Two consecutive driving cycles with fault
- GENERAL DESCRIPTION <Ref. to GD(H4DOTC)-231, DTC P2442 SECONDARY AIR INJECTION SYSTEM SWITCHING VALVE STUCK OPEN (BANK2), Diagnostic Trouble Code (DTC) Detecting Criteria.>

CAUTION:

After repair or replacement of faulty parts, perform Clear Memory Mode <Ref. to EN(H4DOTC)(diag)-52, OPERATION, Clear Memory Mode.>, and Inspection Mode <Ref. to EN(H4DOTC)(diag)-43, PROCEDURE, Inspection Mode.>.

WIRING DIAGRAM:

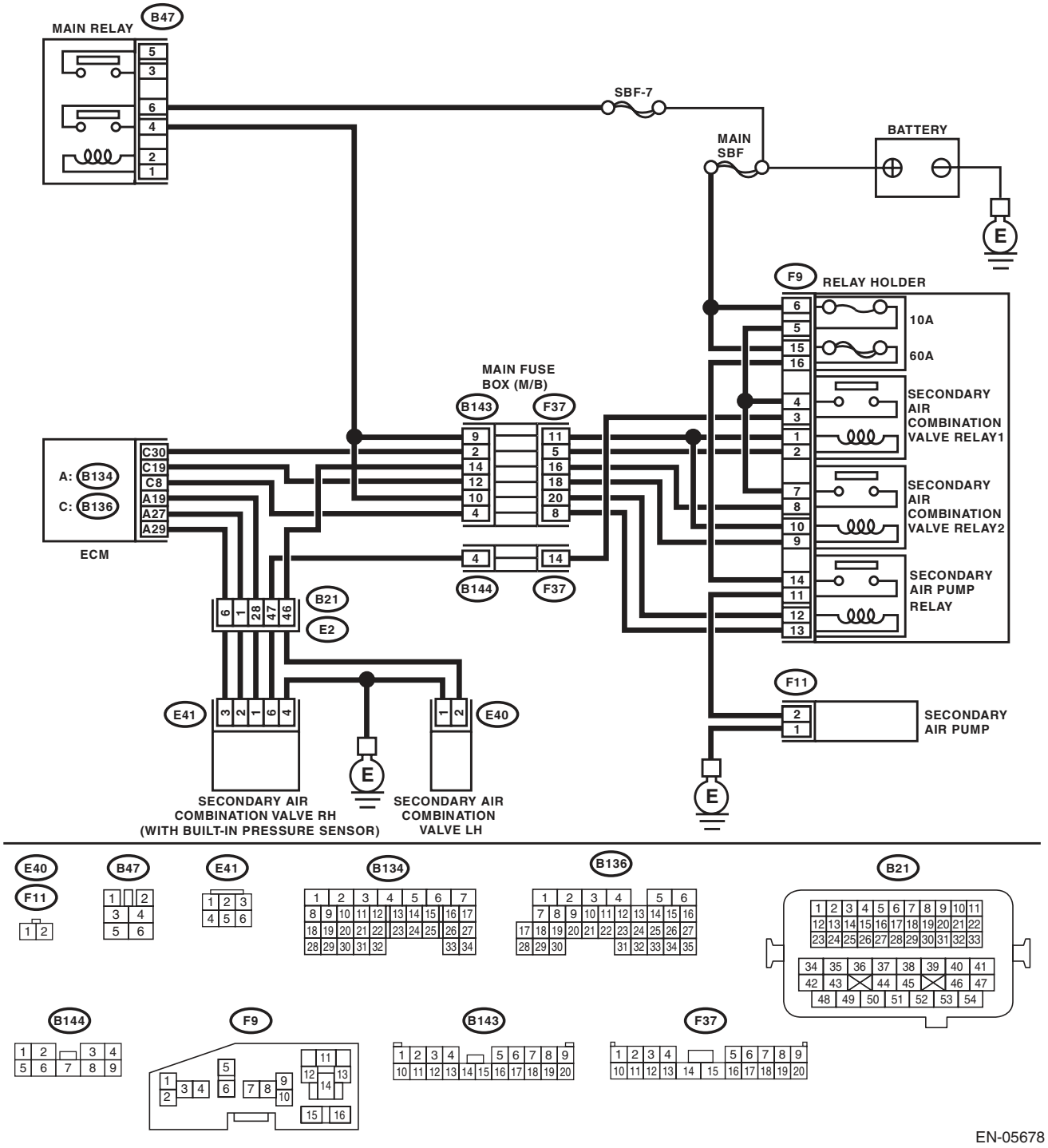

	Step	Check	Yes	No
1	**CHECK SECONDARY AIR COMBINATION VALVE FUSE.** Check if the secondary air combination valve fuse (10 A) is blown out.	Is the fuse blown out?	Go to step **2**.	Go to step **3**.
2	**CHECK HARNESS BETWEEN FUSE BOX AND SECONDARY AIR COMBINATION VALVE LH.** 1) Remove the secondary air combination valve fuse (10 A) from the fuse box. 2) Disconnect the connector from the secondary air combination valve LH. 3) Measure the resistance between the secondary air combination valve fuse and secondary air combination valve LH connector, and chassis ground. ***Connector & terminal*** ***(F9) No. 5 — Chassis ground:*** ***(E40) No. 2 — Chassis ground:***	Is the resistance 1 MΩ or more?	Replace the fuse with a new part, and connect the secondary air combination valve LH connector. Go to step **3**.	Repair the ground short circuit of harness between the fuse box and the secondary air combination valve LH.
3	**CHECK SECONDARY AIR COMBINATION VALVE LH OPERATION.** 1) Connect the delivery (test) mode connector. 2) Turn the ignition switch to ON. 3) Perform operation check for the secondary air combination valve LH using the Subaru Select Monitor. NOTE: Refer to “Compulsory Valve Operation Check Mode” for more operation procedures. <Ref. to EN(H4DOTC)(diag)-53, Compulsory Valve Operation Check Mode.>	Does the secondary air combination valve LH repeatedly switch to ON and OFF?	Go to step **4**.	Go to step **6**.
4	**CHECK DUCT BETWEEN SECONDARY AIR PUMP AND SECONDARY AIR COMBINATION VALVE LH.** Check the duct between the secondary air pump and secondary air combination valve LH.	Is there damage, clog or disconnection of the duct?	Replace, clean or connect the duct.	Go to step **5**.
5	**CHECK PIPE BETWEEN SECONDARY AIR COMBINATION VALVE LH AND CYLINDER HEAD.** Check the pipe between the secondary air combination valve LH and cylinder head.	Is there damage, clog or disconnection of the pipe?	Replace, clean or connect the pipe.	Even if DTC is detected, the circuit has returned to a normal condition at this time. Reproduce the failure, and then perform the diagnosis again. NOTE: In this case, temporary poor contact of connector may be the cause.
6	**CHECK POWER SUPPLY TO SECONDARY AIR COMBINATION VALVE LH.** 1) Disconnect the connector from the secondary air combination valve LH. 2) In the condition of step 3, measure the voltage between the secondary air combination valve LH and the chassis ground. ***Connector & terminal*** ***(E40) No. 2 (+) — Chassis ground (–):***	Does the voltage repeatedly change between 10 V and 0 V?	Replace the secondary air combination valve LH. <Ref. to EC(H4DOTC)-22, Secondary Air Combination Valve.>	Go to step **7**.

	Step	Check	Yes	No
7	**CHECK HARNESS BETWEEN SECONDARY AIR COMBINATION VALVE LH AND CHASSIS GROUND.** Measure the resistance between the secondary air combination valve LH connector and chassis ground. ***Connector & terminal*** ***(E40) No. 1 — Chassis ground:***	Is the resistance less than 5 Ω?	Go to step **8**.	Repair the open circuit of harness between secondary air combination valve LH and chassis ground.
8	**CHECK HARNESS BETWEEN SECONDARY AIR COMBINATION VALVE RELAY 2 AND SECONDARY AIR COMBINATION VALVE LH CONNECTOR.** 1) Turn the ignition switch to OFF. 2) Remove the secondary air combination valve relay 2 from the relay box. 3) Measure the resistance of the harness between the secondary air combination valve relay 2 and secondary air combination valve LH connector. ***Connector & terminal*** ***(F9) No. 8 — (E40) No. 2:***	Is the resistance less than 1 Ω?	Go to step **9**.	Repair the open circuit of the harness between the secondary air combination valve relay 2 and secondary air combination valve LH connector.
9	**CHECK SECONDARY AIR COMBINATION VALVE RELAY 2.** 1) Connect the battery to terminals No. 10 and No. 9 of the secondary air combination valve relay 2. 2) Measure the resistance between the secondary air combination valve relay 2 terminals. ***Terminals*** ***No. 7 — No. 8:***	Is the resistance less than 1 Ω?	Go to step **10**.	Replace the secondary air combination valve relay 2. <Ref. to EN(H4DOTC)(diag)-8, Electrical Component Location.>
10	**CHECK SECONDARY AIR COMBINATION VALVE RELAY 2.** Measure the resistance between the secondary air combination valve relay 2 terminals with the battery disconnected. ***Terminals*** ***No. 7 — No. 8:***	Is the resistance 1 MΩ or more?	Go to step **11**.	Replace the secondary air combination valve relay 2. <Ref. to EN(H4DOTC)(diag)-8, Electrical Component Location.>
11	**CHECK SECONDARY AIR COMBINATION VALVE RELAY 2 POWER SOURCE.** 1) Turn the ignition switch to ON. 2) Measure the voltage between the secondary air combination valve relay 2 connector and chassis ground. ***Connector & terminal*** ***(F9) No. 7 (+) — Chassis ground (–):*** ***(F9) No. 10 (+) — Chassis ground (–):***	Is the voltage 10 V or more?	Go to step **12**.	Repair the open or ground short circuit of power supply circuit.
12	**CHECK HARNESS BETWEEN ECM AND SECONDARY AIR COMBINATION VALVE RELAY 2 CONNECTOR.** 1) Turn the ignition switch to OFF. 2) Disconnect the connector of ECM. 3) Measure the resistance of harness between ECM and secondary air combination valve relay 2 connector. ***Connector & terminal*** ***(B136) No. 19 — (F9) No. 9:***	Is the resistance less than 1 Ω?	Go to step **13**.	Repair the open circuit of harness between ECM and secondary air combination valve relay 2 connector.

Step		Check	Yes	No
13	**CHECK HARNESS BETWEEN ECM AND SECONDARY AIR COMBINATION VALVE RELAY 2 CONNECTOR.** Measure the resistance between the secondary air combination valve relay 2 connector and chassis ground. ***Connector & terminal*** ***(F9) No. 9 — Chassis ground:***	Is the resistance 1 MΩ or more?	Repair the poor contact of ECM connector.	Repair the ground short circuit of harness between ECM and secondary air combination valve relay 2 connector.

EI: DTC P2443 SECONDARY AIR INJECTION SYSTEM SWITCHING VALVE STUCK CLOSED (BANK2)

NOTE:
For the diagnostic procedure, refer to DTC P2442. <Ref. to EN(H4DOTC)(diag)-358, DTC P2442 SECONDARY AIR INJECTION SYSTEM SWITCHING VALVE STUCK OPEN (BANK2), Diagnostic Procedure with Diagnostic Trouble Code (DTC).>

EJ: DTC P2444 SECONDARY AIR INJECTION SYSTEM PUMP STUCK ON

DTC DETECTING CONDITION:

- Immediately at fault recognition
- GENERAL DESCRIPTION <Ref. to GD(H4DOTC)-232, DTC P2444 SECONDARY AIR INJECTION SYSTEM PUMP STUCK ON, Diagnostic Trouble Code (DTC) Detecting Criteria.>

CAUTION:

After repair or replacement of faulty parts, perform Clear Memory Mode <Ref. to EN(H4DOTC)(diag)-52, OPERATION, Clear Memory Mode.>, and Inspection Mode <Ref. to EN(H4DOTC)(diag)-43, PROCEDURE, Inspection Mode.>.

WIRING DIAGRAM:

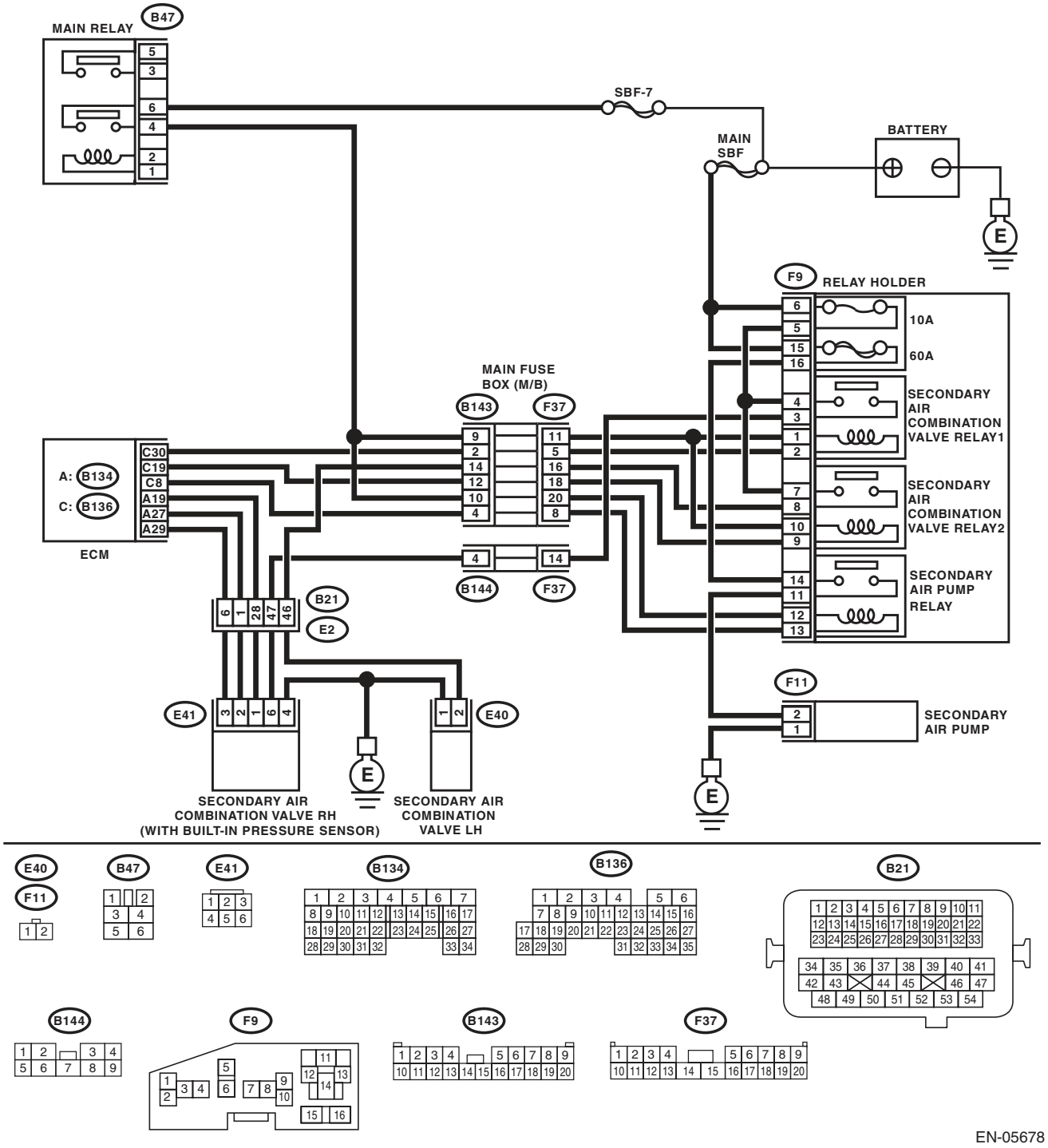

EN-05678

	Step	Check	Yes	No
1	**CHECK SECONDARY AIR PIPING PRESSURE.** 1) Turn the ignition switch to ON. 2) Using the Subaru Select Monitor, read secondary air piping pressure data, and compare with the actual atmospheric pressure. NOTE: For detailed operation procedure, refer to "READ CURRENT DATA FOR ENGINE". <Ref. to EN(H4DOTC)(diag)-34, Subaru Select Monitor.>	Is the actual difference with barometric pressure 50 mmHg (6.7 kPa, 2.0 inHg, 0.97 psig) or more?	Go to step **2**.	Even if DTC is detected, the circuit has returned to a normal condition at this time. Reproduce the failure, and then perform the diagnosis again. NOTE: In this case, temporary poor contact of connector may be the cause.
2	**CHECK SECONDARY AIR PUMP.** 1) Start the engine and warm up engine until coolant temperature is higher than 75°C (167°F). 2) Check whether the secondary air pump is operating.	Is the secondary air pump operating?	Go to step **3**.	Replace the secondary air combination valve LH. <Ref. to EC(H4DOTC)-22, Secondary Air Combination Valve.>
3	**CHECK HARNESS BETWEEN ECM AND SECONDARY AIR PUMP RELAY CONNECTOR.** 1) Turn the ignition switch to OFF. 2) Remove the secondary air pump relay from the relay box. 3) Measure the resistance between the secondary air pump relay connector and engine ground terminals. ***Connector & terminal*** ***(F9) No. 13 — Engine ground:***	Is the resistance 1 MΩ or more?	Go to step **4**.	Repair the ground short circuit of harness between ECM and secondary air pump relay connector.
4	**CHECK SECONDARY AIR PUMP RELAY.** Measure the resistance between the secondary air pump relay terminals. ***Terminals*** ***No. 14 — No. 11:***	Is the resistance 1 MΩ or more?	Repair the short circuit of harness to power supply between secondary air pump relay and secondary air pump connector.	Replace the secondary air pump relay. <Ref. to EN(H4DOTC)(diag)-8, Electrical Component Location.>

21. Diagnostic Procedure without Diagnostic Trouble Code (DTC)

A: CHECK SI-DRIVE (SUBARU INTELLIGENT DRIVE) SYSTEM

DIAGNOSIS:
SI-DRIVE mode will not change.

CAUTION:
Note that the SI-DRIVE system performs the following control when changing modes.
1. When the engine is cold, the low coolant temperature display will light in the multi-information display meter. In this case, it will not be possible to change to the S# (sports sharp) mode.
2. If the engine is stopped in the S# (sports sharp) mode, it will be in the S (sports) mode when the engine is restarted.
3. If the engine is stopped in the S (sports) or I (intelligent) mode, then restarted, it will enter the mode it was on before stopping the engine.
4. If the malfunction indicator light becomes lit while the engine is running, it will enter the S (sports) mode. In this case, it will not be possible to change to the S# (sports sharp) or I (intelligent) mode.
5. If there is a possible engine coolant temperature overheat condition, it will not be possible to switch to the S# (sports sharp) mode. When driving in the S# (sports sharp) mode, it will enter the S (sports) mode.

1. EVEN WHEN THE SI-DRIVE MODE IS CHANGED, THE MULTI INFORMATION DISPLAY DOES NOT CHANGE, AND THE MODE DOES NOT SWITCH

WIRING DIAGRAM:

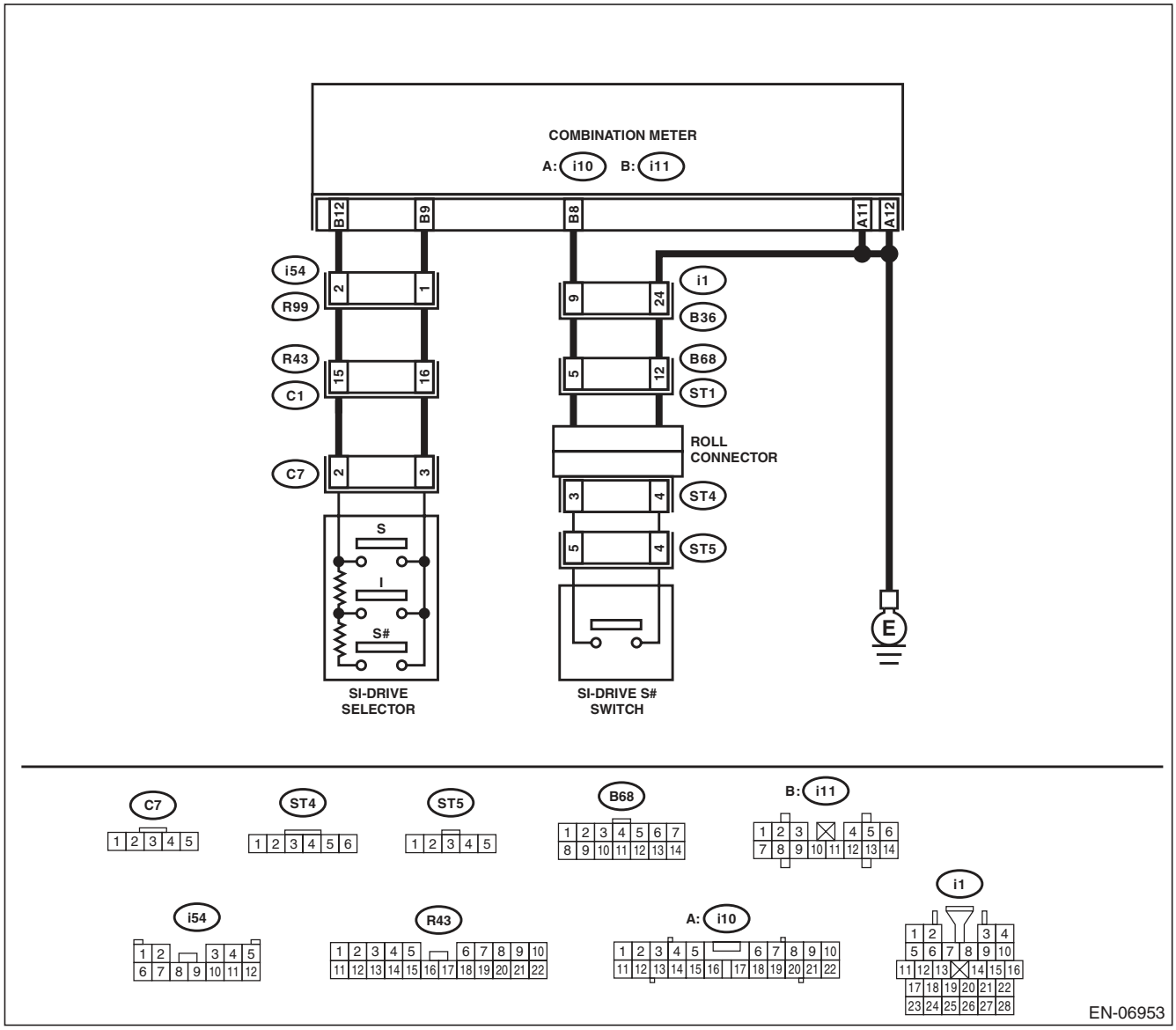

Step		Check	Yes	No
1	**CHECK SI-DRIVE SELECTOR.** 1) Disconnect the connector from the multi-information display meter. 2) Measure the resistance between connectors when the SI-DRIVE selector is operated. ***Connector & terminal*** ***(i11) No. 9 — (i11) No. 12:***	Does the resistance change as shown below? S#: 2.14 — 3.2 kΩ I: 0.8 — 1.2 kΩ S: Less than 10 Ω	Go to step **2**.	Go to step **5**.
2	**CHECK SI-DRIVE S# SWITCH.** 1) Hold down the SI- DRIVE S# switch on the steering wheel. 2) Measure the resistance of harness between the multi-information display meter connector and chassis ground. ***Connector & terminal*** ***(i11) No. 8 — Chassis ground:***	Is the resistance less than 10 Ω?	Go to step **3**.	Go to step **6**.

Step		Check	Yes	No
3	**CHECK POOR CONTACT.** Check the following items. • Cracked or improperly connected connector • Broken connector pin • Disconnection connector terminal	Is there any abnormal condition?	Correct the cause of trouble.	Go to step **4**.
4	**RECHECK FAULT.** 1) Connect all connectors. 2) Change the SI-DRIVE mode.	Is there any abnormal condition?	Replace the multi-information display meter. <Ref. to IDI-22, Combination Meter.>	The circuit has returned to a normal condition at this time. Reproduce the failure, and then perform the diagnosis again. NOTE: In this case, temporary poor contact of connector may be the cause.
5	**CHECK SI-DRIVE SELECTOR HARNESS AND CONNECTOR.** Check the following items. • Short or open circuit in the harness • Improperly connected or loose terminal in the SI-DRIVE selector connector • Improperly connected or loose terminal in coupling connector	Is there any abnormal condition?	Correct the cause of trouble.	Go to step **7**.
6	**CHECK SI-DRIVE S# SWITCH HARNESS AND CONNECTOR.** Check the following items. • Short or open circuit in the harness • Improperly connected or loose terminal in steering roll connector • Improperly connected or loose terminal in coupling connector	Is there any abnormal condition?	Correct the cause of trouble.	Go to step **7**.
7	**RECHECK FAULT.** 1) Connect all connectors. 2) Change the SI-DRIVE mode.	Is there any abnormal condition?	Replace the SI-DRIVE selector or SI-DRIVE S# switch. <Ref. to FU(H4DOTC)-50, SI-DRIVE (SUBARU Intelligent Drive) Selector.> <Ref. to FU(H4DOTC)-51, SI-DRIVE (SUBARU Intelligent Drive) S# Switch.>	The circuit has returned to a normal condition at this time. Reproduce the failure, and then perform the diagnosis again. NOTE: In this case, temporary poor contact of connector may be the cause.

2. WHEN THE SI-DRIVE MODE IS CHANGED, “MODE CHANGE ERROR” APPEARS IN THE MULTI INFORMATION DISPLAY APPROXIMATELY 5 SECONDS LATER

Step		Check	Yes	No
1	**CHECK DTC.**	Is DTC displayed?	Check the corresponding DTC using the “List of Diagnostic Trouble Code (DTC)” for each unit.	Go to step **2**.
2	**CHECK DISPLAY OF MULTI-INFORMATION DISPLAY METER.** Check whether there are other errors displayed other than the “Mode Change Error”. Examples: • “Err” is displayed in the external temperature or fuel consumption displays. • FUEL gauge, TEMP gauge or ECO gauge does not move.	Is there other errors displayed other than the “Mode Change Error”?	For the diagnostic procedure, refer to LAN section. <Ref. to LAN(diag)-2, Basic Diagnostic Procedure.>	Go to step **3**.
3	**CHECK MULTI-INFORMATION DISPLAY METER AND ECM.**	Is the multi-information display meter and ECM part numbers correct?	Replace the multi-information display meter. <Ref. to IDI-22, Combination Meter.>	Replace the multi-information display meter or ECM to that of the correct part number. <Ref. to IDI-22, Combination Meter.> or <Ref. to FU(H4DOTC)-52, Engine Control Module (ECM).>

3. WHEN THE SI-DRIVE MODE IS CHANGED, “MODE CHANGE ERROR” IS NOT DISPLAYED IN MULTI INFORMATION DISPLAY, AND “S#”, “I”, “S” FLASHES

NOTE:
In this case, there may be a problem outside the SI-DRIVE system.

Step		Check	Yes	No
1	**CHECK MALFUNCTION INDICATOR LIGHT.** 1) Start the engine. 2) Check whether the malfunction indicator light is lit or not.	Does the malfunction indicator light illuminate?	Check the appropriate DTC using the “List of Diagnostic Trouble Code (DTC)”. <Ref. to EN(H4DOTC)(diag)-81, List of Diagnostic Trouble Code (DTC).>	Go to step **2**.
2	**CHECK ENGINE COOLANT TEMPERATURE GAUGE.** 1) Turn the ignition switch to ON. 2) Check the engine coolant temperature gauge.	Is it overheating?	Investigate and repair the cause of overheating.	Go to step **3**.
3	**CHECK DISPLAY OF MULTI-INFORMATION DISPLAY.** 1) Turn the ignition switch to ON. 2) Change the SI-DRIVE mode. 3) Check the display of the multi-information display.	Do the displays “S#”, “I”, “S” of the multi-information display flash?	Replace the multi-information display meter. <Ref. to IDI-22, Combination Meter.>	Perform test operation, and check the malfunction indicator and the coolant temperature gauge. If they are operating normally, end the diagnosis.

22. General Diagnostic Table

A: INSPECTION

1. ENGINE

NOTE:
Malfunction of parts other than those listed is also possible. <Ref. to ME(H4DOTC)-100, Engine Trouble in General.>

Symptoms	Problem parts
1. Engine stalls during idling.	1) Electronic throttle control 2) Manifold absolute pressure sensor 3) Mass air flow and intake air temperature sensor 4) Ignition parts (*1) 5) Engine coolant temperature sensor (*2) 6) Crankshaft position sensor (*3) 7) Camshaft position sensor (*3) 8) Fuel injection parts (*4)
2. Rough idling	1) Electronic throttle control 2) Manifold absolute pressure sensor 3) Mass air flow and intake air temperature sensor 4) Engine coolant temperature sensor (*2) 5) Ignition parts (*1) 6) Air intake system (*5) 7) Fuel injection parts (*4) 8) Crankshaft position sensor (*3) 9) Camshaft position sensor (*3) 10) Oxygen sensor 11) Fuel pump and fuel pump relay
3. Engine does not return to idle.	1) Electronic throttle control 2) Engine coolant temperature sensor 3) Manifold absolute pressure sensor 4) Mass air flow sensor
4. Poor acceleration	1) Manifold absolute pressure sensor 2) Mass air flow and intake air temperature sensor 3) Electronic throttle control 4) Fuel injection parts (*4) 5) Fuel pump and fuel pump relay 6) Engine coolant temperature sensor (*2) 7) Crankshaft position sensor (*3) 8) Camshaft position sensor (*3) 9) A/C switch and A/C cut relay 10) Engine torque control signal circuit 11) Ignition parts (*1)
5. Engine stalls, engine sags or hesitates at acceleration.	1) Manifold absolute pressure sensor 2) Mass air flow and intake air temperature sensor 3) Engine coolant temperature sensor (*2) 4) Crankshaft position sensor (*3) 5) Camshaft position sensor (*3) 6) Purge control solenoid valve 7) Fuel injection parts (*4) 8) Fuel pump and fuel pump relay
6. Surging	1) Manifold absolute pressure sensor 2) Mass air flow and intake air temperature sensor 3) Engine coolant temperature sensor (*2) 4) Crankshaft position sensor (*3) 5) Camshaft position sensor (*3) 6) Fuel injection parts (*4) 7) Throttle position sensor 8) Fuel pump and fuel pump relay

Symptoms	Problem parts
7. Spark knock	1) Manifold absolute pressure sensor 2) Mass air flow and intake air temperature sensor 3) Engine coolant temperature sensor 4) Knock sensor 5) Fuel injection parts (*4) 6) Fuel pump and fuel pump relay
8. After-burn in exhaust system	1) Manifold absolute pressure sensor 2) Mass air flow and intake air temperature sensor 3) Engine coolant temperature sensor (*2) 4) Fuel injection parts (*4) 5) Fuel pump and fuel pump relay

*1: Check ignition coil and spark plug.
*2: Indicate the symptom occurring only in cold temperatures.
*3: Ensure the secure installation.
*4: Check fuel injector, fuel pressure regulator and fuel filter.
*5: Inspect air leak in air intake system.

1. List of Diagnostic Trouble Code (DTC)

A: LIST

DTC	Item	Index
P0011	Intake Camshaft Position - Timing Over-Advanced or System Performance (Bank 1)	<Ref. to GD(H4DOTC)-10, DTC P0011 INTAKE CAMSHAFT POSITION - TIMING OVER-ADVANCED OR SYSTEM PERFORMANCE (BANK 1), Diagnostic Trouble Code (DTC) Detecting Criteria.>
P0016	Crankshaft Position - Camshaft Position Correlation (Bank1)	<Ref. to GD(H4DOTC)-12, DTC P0016 CRANKSHAFT POSITION - CAMSHAFT POSITION CORRELATION (BANK1), Diagnostic Trouble Code (DTC) Detecting Criteria.>
P0018	Crankshaft Position - Camshaft Position Correlation (Bank2)	<Ref. to GD(H4DOTC)-13, DTC P0018 CRANKSHAFT POSITION - CAMSHAFT POSITION CORRELATION (BANK2), Diagnostic Trouble Code (DTC) Detecting Criteria.>
P0021	Intake Camshaft Position - Timing Over-Advanced or System Performance (Bank 2)	<Ref. to GD(H4DOTC)-13, DTC P0021 INTAKE CAMSHAFT POSITION - TIMING OVER-ADVANCED OR SYSTEM PERFORMANCE (BANK 2), Diagnostic Trouble Code (DTC) Detecting Criteria.>
P0030	HO2S Heater Control Circuit (Bank 1 Sensor 1)	<Ref. to GD(H4DOTC)-14, DTC P0030 HO2S HEATER CONTROL CIRCUIT (BANK 1 SENSOR 1), Diagnostic Trouble Code (DTC) Detecting Criteria.>
P0031	HO2S Heater Control Circuit Low (Bank 1 Sensor 1)	<Ref. to GD(H4DOTC)-16, DTC P0031 HO2S HEATER CONTROL CIRCUIT LOW (BANK 1 SENSOR 1), Diagnostic Trouble Code (DTC) Detecting Criteria.>
P0032	HO2S Heater Control Circuit High (Bank 1 Sensor 1)	<Ref. to GD(H4DOTC)-18, DTC P0032 HO2S HEATER CONTROL CIRCUIT HIGH (BANK 1 SENSOR 1), Diagnostic Trouble Code (DTC) Detecting Criteria.>
P0037	HO2S Heater Control Circuit Low (Bank 1 Sensor 2)	<Ref. to GD(H4DOTC)-20, DTC P0037 HO2S HEATER CONTROL CIRCUIT LOW (BANK 1 SENSOR 2), Diagnostic Trouble Code (DTC) Detecting Criteria.>
P0038	HO2S Heater Control Circuit High (Bank 1 Sensor 2)	<Ref. to GD(H4DOTC)-22, DTC P0038 HO2S HEATER CONTROL CIRCUIT HIGH (BANK 1 SENSOR 2), Diagnostic Trouble Code (DTC) Detecting Criteria.>
P0068	MAP/MAF - Throttle Position Correlation	<Ref. to GD(H4DOTC)-24, DTC P0068 MAP/MAF - THROTTLE POSITION CORRELATION, Diagnostic Trouble Code (DTC) Detecting Criteria.>
P0101	Mass or Volume Air Flow Circuit Range/Performance	<Ref. to GD(H4DOTC)-26, DTC P0101 MASS OR VOLUME AIR FLOW CIRCUIT RANGE/PERFORMANCE, Diagnostic Trouble Code (DTC) Detecting Criteria.>
P0102	Mass or Volume Air Flow Circuit Low Input	<Ref. to GD(H4DOTC)-28, DTC P0102 MASS OR VOLUME AIR FLOW CIRCUIT LOW INPUT, Diagnostic Trouble Code (DTC) Detecting Criteria.>
P0103	Mass or Volume Air Flow Circuit High Input	<Ref. to GD(H4DOTC)-29, DTC P0103 MASS OR VOLUME AIR FLOW CIRCUIT HIGH INPUT, Diagnostic Trouble Code (DTC) Detecting Criteria.>
P0107	Manifold Absolute Pressure/Barometric Pressure Circuit Low Input	<Ref. to GD(H4DOTC)-30, DTC P0107 MANIFOLD ABSOLUTE PRESSURE/ BAROMETRIC PRESSURE CIRCUIT LOW INPUT, Diagnostic Trouble Code (DTC) Detecting Criteria.>
P0108	Manifold Absolute Pressure/Barometric Pressure Circuit High Input	<Ref. to GD(H4DOTC)-31, DTC P0108 MANIFOLD ABSOLUTE PRESSURE/ BAROMETRIC PRESSURE CIRCUIT HIGH INPUT, Diagnostic Trouble Code (DTC) Detecting Criteria.>
P0111	Intake Air Temperature Sensor 1 Circuit Range/Performance	<Ref. to GD(H4DOTC)-32, DTC P0111 INTAKE AIR TEMPERATURE SENSOR 1 CIRCUIT RANGE/PERFORMANCE, Diagnostic Trouble Code (DTC) Detecting Criteria.>
P0112	Intake Air Temperature Sensor 1 Circuit Low	<Ref. to GD(H4DOTC)-34, DTC P0112 INTAKE AIR TEMPERATURE SENSOR 1 CIRCUIT LOW, Diagnostic Trouble Code (DTC) Detecting Criteria.>
P0113	Intake Air Temperature Sensor 1 Circuit High	<Ref. to GD(H4DOTC)-35, DTC P0113 INTAKE AIR TEMPERATURE SENSOR 1 CIRCUIT HIGH, Diagnostic Trouble Code (DTC) Detecting Criteria.>
P0117	Engine Coolant Temperature Circuit Low	<Ref. to GD(H4DOTC)-36, DTC P0117 ENGINE COOLANT TEMPERATURE CIRCUIT LOW, Diagnostic Trouble Code (DTC) Detecting Criteria.>
P0118	Engine Coolant Temperature Circuit High	<Ref. to GD(H4DOTC)-37, DTC P0118 ENGINE COOLANT TEMPERATURE CIRCUIT HIGH, Diagnostic Trouble Code (DTC) Detecting Criteria.>

List of Diagnostic Trouble Code (DTC)

DTC	Item	Index
P0122	Throttle/Pedal Position Sensor/ Switch “A” Circuit Low	<Ref. to GD(H4DOTC)-38, DTC P0122 THROTTLE/PEDAL POSITION SENSOR/SWITCH “A” CIRCUIT LOW, Diagnostic Trouble Code (DTC) Detecting Criteria.>
P0123	Throttle/Pedal Position Sensor/ Switch “A” Circuit High	<Ref. to GD(H4DOTC)-39, DTC P0123 THROTTLE/PEDAL POSITION SENSOR/SWITCH “A” CIRCUIT HIGH, Diagnostic Trouble Code (DTC) Detecting Criteria.>
P0125	Insufficient Coolant Temperature for Closed Loop Fuel Control	<Ref. to GD(H4DOTC)-40, DTC P0125 INSUFFICIENT COOLANT TEMPERATURE FOR CLOSED LOOP FUEL CONTROL, Diagnostic Trouble Code (DTC) Detecting Criteria.>
P0126	Insufficient Engine Coolant Temperature For Stable Operation	<Ref. to GD(H4DOTC)-42, DTC P0126 INSUFFICIENT ENGINE COOLANT TEMPERATURE FOR STABLE OPERATION, Diagnostic Trouble Code (DTC) Detecting Criteria.>
P0128	Coolant Thermostat (Engine Coolant Temperature Below Thermostat Regulating Temperature)	<Ref. to GD(H4DOTC)-44, DTC P0128 COOLANT THERMOSTAT (ENGINE COOLANT TEMPERATURE BELOW THERMOSTAT REGULATING TEMPERATURE), Diagnostic Trouble Code (DTC) Detecting Criteria.>
P0131	O2 Sensor Circuit Low Voltage (Bank 1 Sensor 1)	<Ref. to GD(H4DOTC)-46, DTC P0131 O2 SENSOR CIRCUIT LOW VOLTAGE (BANK 1 SENSOR 1), Diagnostic Trouble Code (DTC) Detecting Criteria.>
P0132	O2 Sensor Circuit High Voltage (Bank 1 Sensor 1)	<Ref. to GD(H4DOTC)-48, DTC P0132 O2 SENSOR CIRCUIT HIGH VOLTAGE (BANK 1 SENSOR 1), Diagnostic Trouble Code (DTC) Detecting Criteria.>
P0133	O2 Sensor Circuit Slow Response (Bank 1 Sensor 1)	<Ref. to GD(H4DOTC)-50, DTC P0133 O2 SENSOR CIRCUIT SLOW RESPONSE (BANK 1 SENSOR 1), Diagnostic Trouble Code (DTC) Detecting Criteria.>
P0134	O2 Sensor Circuit No Activity Detected (Bank 1 Sensor 1)	<Ref. to GD(H4DOTC)-53, DTC P0134 O2 SENSOR CIRCUIT NO ACTIVITY DETECTED (BANK 1 SENSOR 1), Diagnostic Trouble Code (DTC) Detecting Criteria.>
P0137	O2 Sensor Circuit Low Voltage (Bank 1 Sensor 2)	<Ref. to GD(H4DOTC)-55, DTC P0137 O2 SENSOR CIRCUIT LOW VOLTAGE (BANK 1 SENSOR 2), Diagnostic Trouble Code (DTC) Detecting Criteria.>
P0138	O2 Sensor Circuit High Voltage (Bank 1 Sensor 2)	<Ref. to GD(H4DOTC)-57, DTC P0138 O2 SENSOR CIRCUIT HIGH VOLTAGE (BANK 1 SENSOR 2), Diagnostic Trouble Code (DTC) Detecting Criteria.>
P0139	O2 Sensor Circuit Slow Response (Bank 1 Sensor 2)	<Ref. to GD(H4DOTC)-58, DTC P0139 O2 SENSOR CIRCUIT SLOW RESPONSE (BANK 1 SENSOR 2), Diagnostic Trouble Code (DTC) Detecting Criteria.>
P0140	O2 Sensor Circuit No Activity Detected (Bank1 Sensor2)	<Ref. to GD(H4DOTC)-63, DTC P0140 O2 SENSOR CIRCUIT NO ACTIVITY DETECTED (BANK1 SENSOR2), Diagnostic Trouble Code (DTC) Detecting Criteria.>
P0171	System Too Lean (Bank 1)	<Ref. to GD(H4DOTC)-65, DTC P0171 SYSTEM TOO LEAN (BANK 1), Diagnostic Trouble Code (DTC) Detecting Criteria.>
P0172	System Too Rich (Bank 1)	<Ref. to GD(H4DOTC)-66, DTC P0172 SYSTEM TOO RICH (BANK 1), Diagnostic Trouble Code (DTC) Detecting Criteria.>
P0181	Fuel Temperature Sensor “A” Circuit Range/Performance	<Ref. to GD(H4DOTC)-67, DTC P0181 FUEL TEMPERATURE SENSOR “A” CIRCUIT RANGE/PERFORMANCE, Diagnostic Trouble Code (DTC) Detecting Criteria.>
P0182	Fuel Temperature Sensor “A” Circuit Low Input	<Ref. to GD(H4DOTC)-70, DTC P0182 FUEL TEMPERATURE SENSOR “A” CIRCUIT LOW INPUT, Diagnostic Trouble Code (DTC) Detecting Criteria.>
P0183	Fuel Temperature Sensor “A” Circuit High Input	<Ref. to GD(H4DOTC)-71, DTC P0183 FUEL TEMPERATURE SENSOR “A” CIRCUIT HIGH INPUT, Diagnostic Trouble Code (DTC) Detecting Criteria.>
P0222	Throttle/Pedal Position Sensor/ Switch “B” Circuit Low	<Ref. to GD(H4DOTC)-72, DTC P0222 THROTTLE/PEDAL POSITION SENSOR/SWITCH “B” CIRCUIT LOW, Diagnostic Trouble Code (DTC) Detecting Criteria.>
P0223	Throttle/Pedal Position Sensor/ Switch “B” Circuit High	<Ref. to GD(H4DOTC)-73, DTC P0223 THROTTLE/PEDAL POSITION SENSOR/SWITCH “B” CIRCUIT HIGH, Diagnostic Trouble Code (DTC) Detecting Criteria.>

List of Diagnostic Trouble Code (DTC)

DTC	Item	Index
P0230	Fuel Pump Primary Circuit	<Ref. to GD(H4DOTC)-74, DTC P0230 FUEL PUMP PRIMARY CIRCUIT, Diagnostic Trouble Code (DTC) Detecting Criteria.>
P0244	Turbo/Super Charger Wastegate Solenoid “A” Range/Performance	<Ref. to GD(H4DOTC)-76, DTC P0244 TURBO/SUPER CHARGER WASTEGATE SOLENOID “A” RANGE/PERFORMANCE, Diagnostic Trouble Code (DTC) Detecting Criteria.>
P0245	Turbo/Super Charger Wastegate Solenoid “A” Low	<Ref. to GD(H4DOTC)-78, DTC P0245 TURBO/SUPER CHARGER WASTEGATE SOLENOID “A” LOW, Diagnostic Trouble Code (DTC) Detecting Criteria.>
P0246	Turbo/Super Charger Wastegate Solenoid “A” High	<Ref. to GD(H4DOTC)-79, DTC P0246 TURBO/SUPER CHARGER WASTEGATE SOLENOID “A” HIGH, Diagnostic Trouble Code (DTC) Detecting Criteria.>
P0301	Cylinder 1 Misfire Detected	<Ref. to GD(H4DOTC)-80, DTC P0301 CYLINDER 1 MISFIRE DETECTED, Diagnostic Trouble Code (DTC) Detecting Criteria.>
P0302	Cylinder 2 Misfire Detected	<Ref. to GD(H4DOTC)-85, DTC P0302 CYLINDER 2 MISFIRE DETECTED, Diagnostic Trouble Code (DTC) Detecting Criteria.>
P0303	Cylinder 3 Misfire Detected	<Ref. to GD(H4DOTC)-85, DTC P0303 CYLINDER 3 MISFIRE DETECTED, Diagnostic Trouble Code (DTC) Detecting Criteria.>
P0304	Cylinder 4 Misfire Detected	<Ref. to GD(H4DOTC)-85, DTC P0304 CYLINDER 4 MISFIRE DETECTED, Diagnostic Trouble Code (DTC) Detecting Criteria.>
P0327	Knock Sensor 1 Circuit Low (Bank 1 or Single Sensor)	<Ref. to GD(H4DOTC)-86, DTC P0327 KNOCK SENSOR 1 CIRCUIT LOW (BANK 1 OR SINGLE SENSOR), Diagnostic Trouble Code (DTC) Detecting Criteria.>
P0328	Knock Sensor 1 Circuit High (Bank 1 or Single Sensor)	<Ref. to GD(H4DOTC)-87, DTC P0328 KNOCK SENSOR 1 CIRCUIT HIGH (BANK 1 OR SINGLE SENSOR), Diagnostic Trouble Code (DTC) Detecting Criteria.>
P0335	Crankshaft Position Sensor “A” Circuit	<Ref. to GD(H4DOTC)-88, DTC P0335 CRANKSHAFT POSITION SENSOR “A” CIRCUIT, Diagnostic Trouble Code (DTC) Detecting Criteria.>
P0336	Crankshaft Position Sensor “A” Circuit Range/Performance	<Ref. to GD(H4DOTC)-90, DTC P0336 CRANKSHAFT POSITION SENSOR “A” CIRCUIT RANGE/PERFORMANCE, Diagnostic Trouble Code (DTC) Detecting Criteria.>
P0340	Camshaft Position Sensor “A” Circuit (Bank 1 or Single Sensor)	<Ref. to GD(H4DOTC)-92, DTC P0340 CAMSHAFT POSITION SENSOR “A” CIRCUIT (BANK 1 OR SINGLE SENSOR), Diagnostic Trouble Code (DTC) Detecting Criteria.>
P0345	Camshaft Position Sensor “A” Circuit (Bank 2)	<Ref. to GD(H4DOTC)-93, DTC P0345 CAMSHAFT POSITION SENSOR “A” CIRCUIT (BANK 2), Diagnostic Trouble Code (DTC) Detecting Criteria.>
P0410	Secondary Air Injection System	<Ref. to GD(H4DOTC)-94, DTC P0410 SECONDARY AIR INJECTION SYSTEM, Diagnostic Trouble Code (DTC) Detecting Criteria.>
P0411	Secondary Air Injection System Incorrect Flow Detected	<Ref. to GD(H4DOTC)-101, DTC P0411 SECONDARY AIR INJECTION SYSTEM INCORRECT FLOW DETECTED, Diagnostic Trouble Code (DTC) Detecting Criteria.>
P0413	Secondary Air Injection System Switching Valve “A” Circuit Open	<Ref. to GD(H4DOTC)-102, DTC P0413 SECONDARY AIR INJECTION SYSTEM SWITCHING VALVE “A” CIRCUIT OPEN, Diagnostic Trouble Code (DTC) Detecting Criteria.>
P0414	Secondary Air Injection System Switching Valve “A” Circuit Shorted	<Ref. to GD(H4DOTC)-103, DTC P0414 SECONDARY AIR INJECTION SYSTEM SWITCHING VALVE “A” CIRCUIT SHORTED, Diagnostic Trouble Code (DTC) Detecting Criteria.>
P0416	Secondary Air Injection System Switching Valve “B” Circuit Open	<Ref. to GD(H4DOTC)-103, DTC P0416 SECONDARY AIR INJECTION SYSTEM SWITCHING VALVE “B” CIRCUIT OPEN, Diagnostic Trouble Code (DTC) Detecting Criteria.>
P0417	Secondary Air Injection System Switching Valve “B” Circuit Shorted	<Ref. to GD(H4DOTC)-103, DTC P0417 SECONDARY AIR INJECTION SYSTEM SWITCHING VALVE “B” CIRCUIT SHORTED, Diagnostic Trouble Code (DTC) Detecting Criteria.>
P0418	Secondary Air Injection System Control “A” Circuit Open	<Ref. to GD(H4DOTC)-104, DTC P0418 SECONDARY AIR INJECTION SYSTEM CONTROL “A” CIRCUIT OPEN, Diagnostic Trouble Code (DTC) Detecting Criteria.>

DTC	Item	Index
P0420	Catalyst System Efficiency Below Threshold (Bank 1)	<Ref. to GD(H4DOTC)-105, DTC P0420 CATALYST SYSTEM EFFICIENCY BELOW THRESHOLD (BANK 1), Diagnostic Trouble Code (DTC) Detecting Criteria.>
P0441	Evaporative Emission System Incorrect Purge Flow	<Ref. to GD(H4DOTC)-107, DTC P0441 EVAPORATIVE EMISSION SYSTEM INCORRECT PURGE FLOW, Diagnostic Trouble Code (DTC) Detecting Criteria.>
P0442	Evaporative Emission Control System Leak Detected (Small Leak)	<Ref. to GD(H4DOTC)-108, DTC P0442 EVAPORATIVE EMISSION CONTROL SYSTEM LEAK DETECTED (SMALL LEAK), Diagnostic Trouble Code (DTC) Detecting Criteria.>
P0447	Evaporative Emission Control System Vent Control Circuit Open	<Ref. to GD(H4DOTC)-124, DTC P0447 EVAPORATIVE EMISSION CONTROL SYSTEM VENT CONTROL CIRCUIT OPEN, Diagnostic Trouble Code (DTC) Detecting Criteria.>
P0448	Evaporative Emission Control System Vent Control Circuit Shorted	<Ref. to GD(H4DOTC)-126, DTC P0448 EVAPORATIVE EMISSION CONTROL SYSTEM VENT CONTROL CIRCUIT SHORTED, Diagnostic Trouble Code (DTC) Detecting Criteria.>
P0451	Evaporative Emission Control System Pressure Sensor	<Ref. to GD(H4DOTC)-128, DTC P0451 EVAPORATIVE EMISSION CONTROL SYSTEM PRESSURE SENSOR, Diagnostic Trouble Code (DTC) Detecting Criteria.>
P0452	Evaporative Emission Control System Pressure Sensor Low Input	<Ref. to GD(H4DOTC)-130, DTC P0452 EVAPORATIVE EMISSION CONTROL SYSTEM PRESSURE SENSOR LOW INPUT, Diagnostic Trouble Code (DTC) Detecting Criteria.>
P0453	Evaporative Emission Control System Pressure Sensor High Input	<Ref. to GD(H4DOTC)-132, DTC P0453 EVAPORATIVE EMISSION CONTROL SYSTEM PRESSURE SENSOR HIGH INPUT, Diagnostic Trouble Code (DTC) Detecting Criteria.>
P0456	Evaporative Emission Control System Leak Detected (Very Small Leak)	<Ref. to GD(H4DOTC)-133, DTC P0456 EVAPORATIVE EMISSION CONTROL SYSTEM LEAK DETECTED (VERY SMALL LEAK), Diagnostic Trouble Code (DTC) Detecting Criteria.>
P0457	Evaporative Emission Control System Leak Detected (Fuel Cap Loose/Off)	<Ref. to GD(H4DOTC)-133, DTC P0457 EVAPORATIVE EMISSION CONTROL SYSTEM LEAK DETECTED (FUEL CAP LOOSE/OFF), Diagnostic Trouble Code (DTC) Detecting Criteria.>
P0458	Evaporative Emission System Purge Control Valve Circuit Low	<Ref. to GD(H4DOTC)-134, DTC P0458 EVAPORATIVE EMISSION SYSTEM PURGE CONTROL VALVE CIRCUIT LOW, Diagnostic Trouble Code (DTC) Detecting Criteria.>
P0459	Evaporative Emission System Purge Control Valve Circuit High	<Ref. to GD(H4DOTC)-136, DTC P0459 EVAPORATIVE EMISSION SYSTEM PURGE CONTROL VALVE CIRCUIT HIGH, Diagnostic Trouble Code (DTC) Detecting Criteria.>
P0461	Fuel Level Sensor “A” Circuit Range/Performance	<Ref. to GD(H4DOTC)-138, DTC P0461 FUEL LEVEL SENSOR “A” CIRCUIT RANGE/PERFORMANCE, Diagnostic Trouble Code (DTC) Detecting Criteria.>
P0462	Fuel Level Sensor “A” Circuit Low	<Ref. to GD(H4DOTC)-140, DTC P0462 FUEL LEVEL SENSOR “A” CIRCUIT LOW, Diagnostic Trouble Code (DTC) Detecting Criteria.>
P0463	Fuel Level Sensor “A” Circuit High	<Ref. to GD(H4DOTC)-142, DTC P0463 FUEL LEVEL SENSOR “A” CIRCUIT HIGH, Diagnostic Trouble Code (DTC) Detecting Criteria.>
P0464	Fuel Level Sensor Circuit Intermittent	<Ref. to GD(H4DOTC)-144, DTC P0464 FUEL LEVEL SENSOR CIRCUIT INTERMITTENT, Diagnostic Trouble Code (DTC) Detecting Criteria.>
P0500	Vehicle Speed Sensor “A”	<Ref. to GD(H4DOTC)-147, DTC P0500 VEHICLE SPEED SENSOR “A”, Diagnostic Trouble Code (DTC) Detecting Criteria.>
P0506	Idle Air Control System RPM Lower Than Expected	<Ref. to GD(H4DOTC)-148, DTC P0506 IDLE AIR CONTROL SYSTEM RPM LOWER THAN EXPECTED, Diagnostic Trouble Code (DTC) Detecting Criteria.>
P0507	Idle Air Control System RPM Higher Than Expected	<Ref. to GD(H4DOTC)-149, DTC P0507 IDLE AIR CONTROL SYSTEM RPM HIGHER THAN EXPECTED, Diagnostic Trouble Code (DTC) Detecting Criteria.>
P0512	Starter Request Circuit	<Ref. to GD(H4DOTC)-150, DTC P0512 STARTER REQUEST CIRCUIT, Diagnostic Trouble Code (DTC) Detecting Criteria.>

List of Diagnostic Trouble Code (DTC)

DTC	Item	Index
P0513	Incorrect Immobilizer Key	<Ref. to GD(H4DOTC)-151, DTC P0513 INCORRECT IMMOBILIZER KEY, Diagnostic Trouble Code (DTC) Detecting Criteria.>
P0600	Serial Communication Link	<Ref. to GD(H4DOTC)-152, DTC P0600 SERIAL COMMUNICATION LINK, Diagnostic Trouble Code (DTC) Detecting Criteria.>
P0604	Internal Control Module Random Access Memory (RAM) Error	<Ref. to GD(H4DOTC)-154, DTC P0604 INTERNAL CONTROL MODULE RANDOM ACCESS MEMORY (RAM) ERROR, Diagnostic Trouble Code (DTC) Detecting Criteria.>
P0605	Internal Control Module Read Only Memory (ROM) Error	<Ref. to GD(H4DOTC)-155, DTC P0605 INTERNAL CONTROL MODULE READ ONLY MEMORY (ROM) ERROR, Diagnostic Trouble Code (DTC) Detecting Criteria.>
P0607	Throttle Control System Circuit Range/Performance	<Ref. to GD(H4DOTC)-156, DTC P0607 THROTTLE CONTROL SYSTEM CIRCUIT RANGE/PERFORMANCE, Diagnostic Trouble Code (DTC) Detecting Criteria.>
P0638	Throttle Actuator Control Range/ Performance (Bank 1)	<Ref. to GD(H4DOTC)-159, DTC P0638 THROTTLE ACTUATOR CONTROL RANGE/PERFORMANCE (BANK 1), Diagnostic Trouble Code (DTC) Detecting Criteria.>
P0700	Transmission Control System (MIL Request)	<Ref. to GD(H4DOTC)-161, DTC P0700 TRANSMISSION CONTROL SYSTEM (MIL REQUEST), Diagnostic Trouble Code (DTC) Detecting Criteria.>
P0851	Park/Neutral Switch Input Circuit Low (AT Model)	<Ref. to GD(H4DOTC)-162, DTC P0851 PARK/NEUTRAL SWITCH INPUT CIRCUIT LOW (AT MODEL), Diagnostic Trouble Code (DTC) Detecting Criteria.>
P0851	Neutral Switch Input Circuit Low (MT Model)	<Ref. to GD(H4DOTC)-163, DTC P0851 NEUTRAL SWITCH INPUT CIRCUIT LOW (MT MODEL), Diagnostic Trouble Code (DTC) Detecting Criteria.>
P0852	Park/Neutral Switch Input Circuit High (AT Model)	<Ref. to GD(H4DOTC)-164, DTC P0852 PARK/NEUTRAL SWITCH INPUT CIRCUIT HIGH (AT MODEL), Diagnostic Trouble Code (DTC) Detecting Criteria.>
P0852	Neutral Switch Input Circuit High (MT Model)	<Ref. to GD(H4DOTC)-165, DTC P0852 NEUTRAL SWITCH INPUT CIRCUIT HIGH (MT MODEL), Diagnostic Trouble Code (DTC) Detecting Criteria.>
P1152	O2 Sensor Circuit Range/Performance (Low) (Bank1 Sensor1)	<Ref. to GD(H4DOTC)-166, DTC P1152 O2 SENSOR CIRCUIT RANGE/ PERFORMANCE (LOW) (BANK1 SENSOR1), Diagnostic Trouble Code (DTC) Detecting Criteria.>
P1153	O2 Sensor Circuit Range/Performance (High) (Bank1 Sensor1)	<Ref. to GD(H4DOTC)-168, DTC P1153 O2 SENSOR CIRCUIT RANGE/ PERFORMANCE (HIGH) (BANK1 SENSOR1), Diagnostic Trouble Code (DTC) Detecting Criteria.>
P1160	Return Spring Failure	<Ref. to GD(H4DOTC)-170, DTC P1160 RETURN SPRING FAILURE, Diagnostic Trouble Code (DTC) Detecting Criteria.>
P1400	Fuel Tank Pressure Control Solenoid Valve Circuit Low	<Ref. to GD(H4DOTC)-172, DTC P1400 FUEL TANK PRESSURE CONTROL SOLENOID VALVE CIRCUIT LOW, Diagnostic Trouble Code (DTC) Detecting Criteria.>
P1410	Secondary Air Injection System Switching Valve Stuck Open	<Ref. to GD(H4DOTC)-174, DTC P1410 SECONDARY AIR INJECTION SYSTEM SWITCHING VALVE STUCK OPEN, Diagnostic Trouble Code (DTC) Detecting Criteria.>
P1418	Secondary Air Injection System Control “A” Circuit Shorted	<Ref. to GD(H4DOTC)-176, DTC P1418 SECONDARY AIR INJECTION SYSTEM CONTROL “A” CIRCUIT SHORTED, Diagnostic Trouble Code (DTC) Detecting Criteria.>
P1420	Fuel Tank Pressure Control Sol. Valve Circuit High	<Ref. to GD(H4DOTC)-177, DTC P1420 FUEL TANK PRESSURE CONTROL SOL. VALVE CIRCUIT HIGH, Diagnostic Trouble Code (DTC) Detecting Criteria.>
P1443	Vent Control Solenoid Valve Function Problem	<Ref. to GD(H4DOTC)-179, DTC P1443 VENT CONTROL SOLENOID VALVE FUNCTION PROBLEM, Diagnostic Trouble Code (DTC) Detecting Criteria.>
P1491	Positive Crankcase Ventilation (Blow-By) Function Problem	<Ref. to GD(H4DOTC)-181, DTC P1491 POSITIVE CRANKCASE VENTILATION (BLOW-BY) FUNCTION PROBLEM, Diagnostic Trouble Code (DTC) Detecting Criteria.>
P1560	Back-Up Voltage Circuit Malfunction	<Ref. to GD(H4DOTC)-183, DTC P1560 BACK-UP VOLTAGE CIRCUIT MALFUNCTION, Diagnostic Trouble Code (DTC) Detecting Criteria.>

DTC	Item	Index
P1570	Antenna	<Ref. to GD(H4DOTC)-184, DTC P1570 ANTENNA, Diagnostic Trouble Code (DTC) Detecting Criteria.>
P1571	Reference Code Incompatibility	<Ref. to GD(H4DOTC)-184, DTC P1571 REFERENCE CODE INCOMPATIBILITY, Diagnostic Trouble Code (DTC) Detecting Criteria.>
P1572	IMM Circuit Failure	<Ref. to GD(H4DOTC)-184, DTC P1572 IMM CIRCUIT FAILURE (EXCEPT ANTENNA CIRCUIT), Diagnostic Trouble Code (DTC) Detecting Criteria.>
P1574	Key Communication Failure	<Ref. to GD(H4DOTC)-184, DTC P1574 KEY COMMUNICATION FAILURE, Diagnostic Trouble Code (DTC) Detecting Criteria.>
P1576	EGI Control Module EEPROM	<Ref. to GD(H4DOTC)-184, DTC P1576 EGI CONTROL MODULE EEPROM, Diagnostic Trouble Code (DTC) Detecting Criteria.>
P1577	IMM Control Module EEPROM	<Ref. to GD(H4DOTC)-184, DTC P1577 IMM CONTROL MODULE EEPROM, Diagnostic Trouble Code (DTC) Detecting Criteria.>
P1578	Meter Failure	<Ref. to GD(H4DOTC)-184, DTC P1578 METER FAILURE, Diagnostic Trouble Code (DTC) Detecting Criteria.>
P1602	Control Module Programming Error	<Ref. to GD(H4DOTC)-185, DTC P1602 CONTROL MODULE PROGRAMMING ERROR, Diagnostic Trouble Code (DTC) Detecting Criteria.>
P2004	Intake Manifold Runner Control Stuck Open (Bank 1)	<Ref. to GD(H4DOTC)-187, DTC P2004 INTAKE MANIFOLD RUNNER CONTROL STUCK OPEN (BANK 1), Diagnostic Trouble Code (DTC) Detecting Criteria.>
P2005	Intake Manifold Runner Control Stuck Open (Bank 2)	<Ref. to GD(H4DOTC)-188, DTC P2005 INTAKE MANIFOLD RUNNER CONTROL STUCK OPEN (BANK 2), Diagnostic Trouble Code (DTC) Detecting Criteria.>
P2006	Intake Manifold Runner Control Stuck Closed (Bank 1)	<Ref. to GD(H4DOTC)-189, DTC P2006 INTAKE MANIFOLD RUNNER CONTROL STUCK CLOSED (BANK 1), Diagnostic Trouble Code (DTC) Detecting Criteria.>
P2007	Intake Manifold Runner Control Stuck Closed (Bank 2)	<Ref. to GD(H4DOTC)-190, DTC P2007 INTAKE MANIFOLD RUNNER CONTROL STUCK CLOSED (BANK 2), Diagnostic Trouble Code (DTC) Detecting Criteria.>
P2008	Intake Manifold Runner Control Circuit / Open (Bank 1)	<Ref. to GD(H4DOTC)-191, DTC P2008 INTAKE MANIFOLD RUNNER CONTROL CIRCUIT / OPEN (BANK 1), Diagnostic Trouble Code (DTC) Detecting Criteria.>
P2009	Intake Manifold Runner Control Circuit Low (Bank 1)	<Ref. to GD(H4DOTC)-192, DTC P2009 INTAKE MANIFOLD RUNNER CONTROL CIRCUIT LOW (BANK 1), Diagnostic Trouble Code (DTC) Detecting Criteria.>
P2011	Intake Manifold Runner Control Circuit / Open (Bank 2)	<Ref. to GD(H4DOTC)-193, DTC P2011 INTAKE MANIFOLD RUNNER CONTROL CIRCUIT / OPEN (BANK 2), Diagnostic Trouble Code (DTC) Detecting Criteria.>
P2012	Intake Manifold Runner Control Circuit Low (Bank 2)	<Ref. to GD(H4DOTC)-194, DTC P2012 INTAKE MANIFOLD RUNNER CONTROL CIRCUIT LOW (BANK 2), Diagnostic Trouble Code (DTC) Detecting Criteria.>
P2016	Intake Manifold Runner Position Sensor / Switch Circuit Low (Bank 1)	<Ref. to GD(H4DOTC)-195, DTC P2016 INTAKE MANIFOLD RUNNER POSITION SENSOR / SWITCH CIRCUIT LOW (BANK 1), Diagnostic Trouble Code (DTC) Detecting Criteria.>
P2017	Intake Manifold Runner Position Sensor / Switch Circuit High (Bank 1)	<Ref. to GD(H4DOTC)-196, DTC P2017 INTAKE MANIFOLD RUNNER POSITION SENSOR / SWITCH CIRCUIT HIGH (BANK 1), Diagnostic Trouble Code (DTC) Detecting Criteria.>
P2021	Intake Manifold Runner Position Sensor / Switch Circuit Low (Bank 2)	<Ref. to GD(H4DOTC)-197, DTC P2021 INTAKE MANIFOLD RUNNER POSITION SENSOR / SWITCH CIRCUIT LOW (BANK 2), Diagnostic Trouble Code (DTC) Detecting Criteria.>
P2022	Intake Manifold Runner Position Sensor / Switch Circuit High (Bank 2)	<Ref. to GD(H4DOTC)-198, DTC P2022 INTAKE MANIFOLD RUNNER POSITION SENSOR / SWITCH CIRCUIT HIGH (BANK 2), Diagnostic Trouble Code (DTC) Detecting Criteria.>
P2088	Intake Camshaft Position Actuator Control Circuit Low (Bank 1)	<Ref. to GD(H4DOTC)-199, DTC P2088 INTAKE CAMSHAFT POSITION ACTUATOR CONTROL CIRCUIT LOW (BANK 1), Diagnostic Trouble Code (DTC) Detecting Criteria.>

List of Diagnostic Trouble Code (DTC)

DTC	Item	Index
P2089	Intake Camshaft Position Actuator Control Circuit High (Bank 1)	<Ref. to GD(H4DOTC)-200, DTC P2089 INTAKE CAMSHAFT POSITION ACTUATOR CONTROL CIRCUIT HIGH (BANK 1), Diagnostic Trouble Code (DTC) Detecting Criteria.>
P2092	Intake Camshaft Position Actuator Control Circuit Low (Bank 2)	<Ref. to GD(H4DOTC)-201, DTC P2092 INTAKE CAMSHAFT POSITION ACTUATOR CONTROL CIRCUIT LOW (BANK 2), Diagnostic Trouble Code (DTC) Detecting Criteria.>
P2093	Intake Camshaft Position Actuator Control Circuit High (Bank 2)	<Ref. to GD(H4DOTC)-201, DTC P2093 INTAKE CAMSHAFT POSITION ACTUATOR CONTROL CIRCUIT HIGH (BANK 2), Diagnostic Trouble Code (DTC) Detecting Criteria.>
P2096	Post Catalyst Fuel Trim System Too Lean (Bank 1)	<Ref. to GD(H4DOTC)-202, DTC P2096 POST CATALYST FUEL TRIM SYSTEM TOO LEAN (BANK 1), Diagnostic Trouble Code (DTC) Detecting Criteria.>
P2097	Post Catalyst Fuel Trim System Too Rich (Bank 1)	<Ref. to GD(H4DOTC)-204, DTC P2097 POST CATALYST FUEL TRIM SYSTEM TOO RICH (BANK 1), Diagnostic Trouble Code (DTC) Detecting Criteria.>
P2101	Throttle Actuator Control Motor Circuit Range/Performance	<Ref. to GD(H4DOTC)-206, DTC P2101 THROTTLE ACTUATOR CONTROL MOTOR CIRCUIT RANGE/PERFORMANCE, Diagnostic Trouble Code (DTC) Detecting Criteria.>
P2102	Throttle Actuator Control Motor Circuit Low	<Ref. to GD(H4DOTC)-208, DTC P2102 THROTTLE ACTUATOR CONTROL MOTOR CIRCUIT LOW, Diagnostic Trouble Code (DTC) Detecting Criteria.>
P2103	Throttle Actuator Control Motor Circuit High	<Ref. to GD(H4DOTC)-210, DTC P2103 THROTTLE ACTUATOR CONTROL MOTOR CIRCUIT HIGH, Diagnostic Trouble Code (DTC) Detecting Criteria.>
P2109	Throttle/Pedal Position Sensor “A” Minimum Stop Performance	<Ref. to GD(H4DOTC)-212, DTC P2109 THROTTLE/PEDAL POSITION SENSOR “A” MINIMUM STOP PERFORMANCE, Diagnostic Trouble Code (DTC) Detecting Criteria.>
P2122	Throttle/Pedal Position Sensor/ Switch “D” Circuit Low Input	<Ref. to GD(H4DOTC)-214, DTC P2122 THROTTLE/PEDAL POSITION SENSOR/SWITCH “D” CIRCUIT LOW INPUT, Diagnostic Trouble Code (DTC) Detecting Criteria.>
P2123	Throttle/Pedal Position Sensor/ Switch “D” Circuit High Input	<Ref. to GD(H4DOTC)-216, DTC P2123 THROTTLE/PEDAL POSITION SENSOR/SWITCH “D” CIRCUIT HIGH INPUT, Diagnostic Trouble Code (DTC) Detecting Criteria.>
P2127	Throttle/Pedal Position Sensor/ Switch “E” Circuit Low Input	<Ref. to GD(H4DOTC)-218, DTC P2127 THROTTLE/PEDAL POSITION SENSOR/SWITCH “E” CIRCUIT LOW INPUT, Diagnostic Trouble Code (DTC) Detecting Criteria.>
P2128	Throttle/Pedal Position Sensor/ Switch “E” Circuit High Input	<Ref. to GD(H4DOTC)-220, DTC P2128 THROTTLE/PEDAL POSITION SENSOR/SWITCH “E” CIRCUIT HIGH INPUT, Diagnostic Trouble Code (DTC) Detecting Criteria.>
P2135	Throttle/Pedal Position Sensor/ Switch “A”/“B” Voltage Correlation	<Ref. to GD(H4DOTC)-222, DTC P2135 THROTTLE/PEDAL POSITION SENSOR/SWITCH “A”/“B” VOLTAGE CORRELATION, Diagnostic Trouble Code (DTC) Detecting Criteria.>
P2138	Throttle/Pedal Position Sensor/ Switch “D”/“E” Voltage Correlation	<Ref. to GD(H4DOTC)-224, DTC P2138 THROTTLE/PEDAL POSITION SENSOR/SWITCH “D”/“E” VOLTAGE CORRELATION, Diagnostic Trouble Code (DTC) Detecting Criteria.>
P2419	Evaporative Emission System Switching Valve Control Circuit Low	<Ref. to GD(H4DOTC)-226, DTC P2419 EVAPORATIVE EMISSION SYSTEM SWITCHING VALVE CONTROL CIRCUIT LOW, Diagnostic Trouble Code (DTC) Detecting Criteria.>
P2420	Evaporative Emission System Switching Valve Control Circuit High	<Ref. to GD(H4DOTC)-227, DTC P2420 EVAPORATIVE EMISSION SYSTEM SWITCHING VALVE CONTROL CIRCUIT HIGH, Diagnostic Trouble Code (DTC) Detecting Criteria.>
P2431	Secondary Air Injection System Air Flow /Pressure Sensor Circuit Range/ Performance	<Ref. to GD(H4DOTC)-228, DTC P2431 SECONDARY AIR INJECTION SYSTEM AIR FLOW /PRESSURE SENSOR CIRCUIT RANGE/PERFORMANCE, Diagnostic Trouble Code (DTC) Detecting Criteria.>
P2432	Secondary Air Injection System Air Flow /Pressure Sensor Circuit Low	<Ref. to GD(H4DOTC)-229, DTC P2432 SECONDARY AIR INJECTION SYSTEM AIR FLOW /PRESSURE SENSOR CIRCUIT LOW, Diagnostic Trouble Code (DTC) Detecting Criteria.>

DTC	Item	Index
P2433	Secondary Air Injection System Air Flow /Pressure Sensor Circuit High	<Ref. to GD(H4DOTC)-230, DTC P2433 SECONDARY AIR INJECTION SYSTEM AIR FLOW /PRESSURE SENSOR CIRCUIT HIGH, Diagnostic Trouble Code (DTC) Detecting Criteria.>
P2440	Secondary Air Injection System Switching Valve Stuck Open (Bank1)	<Ref. to GD(H4DOTC)-231, DTC P2440 SECONDARY AIR INJECTION SYSTEM SWITCHING VALVE STUCK OPEN (BANK1), Diagnostic Trouble Code (DTC) Detecting Criteria.>
P2441	Secondary Air Injection System Switching Valve Stuck Closed (Bank1)	<Ref. to GD(H4DOTC)-231, DTC P2441 SECONDARY AIR INJECTION SYSTEM SWITCHING VALVE STUCK CLOSED (BANK1), Diagnostic Trouble Code (DTC) Detecting Criteria.>
P2442	Secondary Air Injection System Switching Valve Stuck Open (Bank2)	<Ref. to GD(H4DOTC)-231, DTC P2442 SECONDARY AIR INJECTION SYSTEM SWITCHING VALVE STUCK OPEN (BANK2), Diagnostic Trouble Code (DTC) Detecting Criteria.>
P2443	Secondary Air Injection System Switching Valve Stuck Closed (Bank2)	<Ref. to GD(H4DOTC)-231, DTC P2443 SECONDARY AIR INJECTION SYSTEM SWITCHING VALVE STUCK CLOSED (BANK2), Diagnostic Trouble Code (DTC) Detecting Criteria.>
P2444	Secondary Air Injection System Pump Stuck On	<Ref. to GD(H4DOTC)-232, DTC P2444 SECONDARY AIR INJECTION SYSTEM PUMP STUCK ON, Diagnostic Trouble Code (DTC) Detecting Criteria.>

2. Diagnostic Trouble Code (DTC) Detecting Criteria

A: DTC P0011 INTAKE CAMSHAFT POSITION - TIMING OVER-ADVANCED OR SYSTEM PERFORMANCE (BANK 1)

1. OUTLINE OF DIAGNOSIS

Detect the AVCS system malfunction.
Judge NG when the amount of AVCS actual timing advance does not approach to the amount of AVCS target timing advance.

2. COMPONENT DESCRIPTION

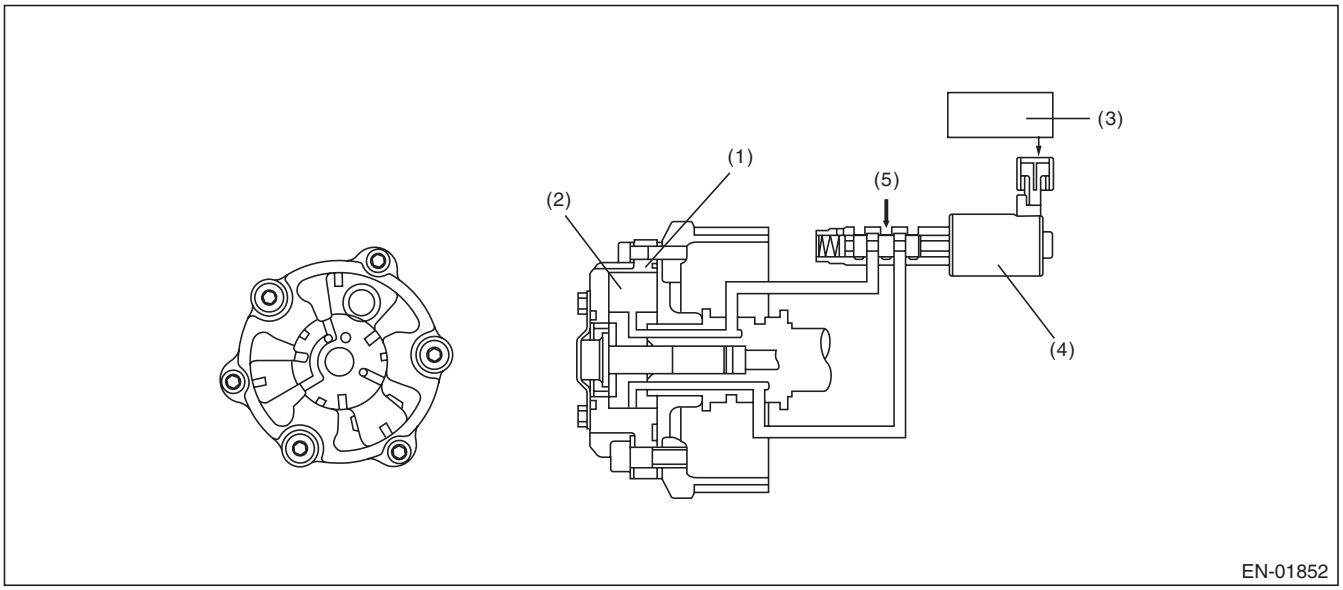

(1) AVCS timing controller
(2) Vane
(3) Engine control module (ECM)
(4) Oil flow control solenoid valve
(5) Oil pressure

3. ENABLE CONDITION

Secondary Parameters	Enable Conditions
Time of establishing all secondary parameter conditions	≥ 3000 ms
Battery voltage	≥ 10.9 V
Engine speed	≥ 1300 rpm
Engine coolant temperature	≥ 60 °C (140 °F)
AVCS control	Operation
Target advance angle	≥ 0 °CA
Target timing advance change amount (per 64 ms)	< 1.07 °CA

4. GENERAL DRIVING CYCLE

Perform the diagnosis continuously after warming up when the engine speed increases and AVCS operates.

5. DIAGNOSTIC METHOD

1) When the conditions during which the differences of AVCS target timing advance amount and AVCS actual timing advance amount is large continues for certain amount of time.
2) When the differences of target timing advance amount and actual timing advance amount is calculated during AVCS control, and the difference per predetermined time is the specified value or larger.

- **Abnormality Judgement**

Judge as NG when the following conditions are established within the predetermined time.

Judgement Value

Malfunction Criteria	Threshold Value
Σ(Target position – Actual position)	> 8000 °CA (AT model) (Bank 1) > 8000 °CA (AT model) (Bank 2) > 5300 °CA (MT model) (Bank 1) > 5300 °CA (MT model) (Bank 2)
or	
Σ(Target position – Actual position)	< –8000 °CA (AT model) (Bank 1) < –8000 °CA (AT model) (Bank 2) < –5300 °CA (MT model) (Bank 1) < –5300 °CA (MT model) (Bank 2)

Time Needed for Diagnosis:
- AT model: 30000 ms
- MT model: 20000 ms

Malfunction Indicator Light Illumination: Illuminates when malfunction occurs in 2 continuous driving cycles.

- **Normality Judgement**

Judge as OK and clear the NG if the following conditions are established within the predetermined time.

Judgement Value

Malfunction Criteria	Threshold Value
Σ(Target position – Actual position)	≤ 8000 °CA (AT model) (Bank 1) ≤ 8000 °CA (AT model) (Bank 2) ≤ 5300 °CA (MT model) (Bank 1) ≤ 5300 °CA (MT model) (Bank 2) and ≥ –8000 °CA (AT model) (Bank 1) ≥ –8000 °CA (AT model) (Bank 2) ≥ –5300 °CA (MT model) (Bank 1) ≥ –5300 °CA (MT model) (Bank 2)

Time Needed for Diagnosis:
- AT model: 30000 ms
- MT model: 20000 ms

B: DTC P0016 CRANKSHAFT POSITION - CAMSHAFT POSITION CORRELATION (BANK1)

1. OUTLINE OF DIAGNOSIS

Detect the AVCS system malfunction.
Judge as NG when the timing advance is outside the normal range.

2. COMPONENT DESCRIPTION

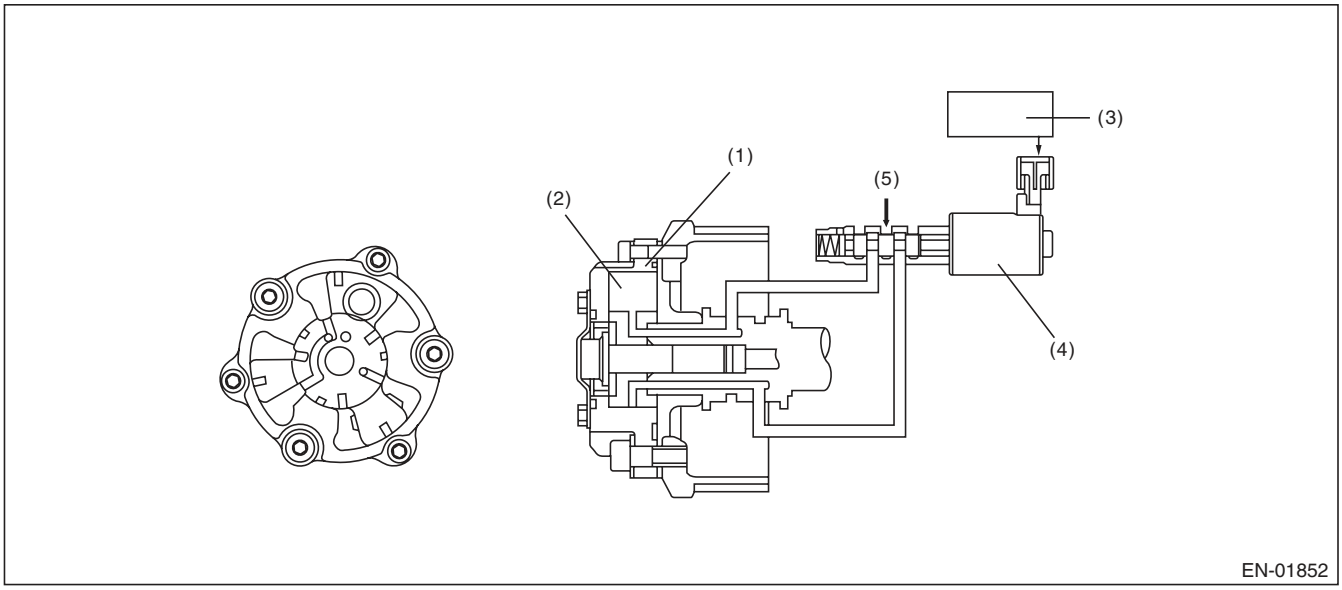

(1) AVCS timing controller
(2) Vane
(3) Engine control module (ECM)
(4) Oil flow control solenoid valve
(5) Oil pressure

3. ENABLE CONDITION

Secondary Parameters	Enable Conditions
Battery voltage	≥ 10.9 V
Engine speed	≥ 500 rpm
Engine coolant temperature	≥ 60 °C (140 °F)
AVCS control	Not in operation
Target timing advance	0°CA

4. GENERAL DRIVING CYCLE

Perform the diagnosis continuously after starting engine and while AVCS is not operating.

5. DIAGNOSTIC METHOD

Judge as NG when the camshaft sensor input position is not within the normal range.

- **Abnormality Judgement**

If the duration of time while the following conditions are met is longer than the time indicated, judge as NG.

Judgement Value

Malfunction Criteria	Threshold Value
Crankshaft position when camshaft position sensor signal is input	< BTDC 17 °CA (Bank 1) < BTDC 17 °CA (Bank 2) or > BTDC 55 °CA (Bank 1) > BTDC 55 °CA (Bank 2)

Time Needed for Diagnosis: 20000 ms
Malfunction Indicator Light Illumination: Illuminates when malfunction occurs in 2 continuous driving cycles.

- **Normality Judgement**

Judge as OK and clear the NG if the continuous time while the following conditions are established is more than the predetermined time.

Judgement Value

Malfunction Criteria	Threshold Value
Crankshaft position when camshaft position sensor signal is input	≥ BTDC 17 °CA (Bank 1) ≥ BTDC 17 °CA (Bank 2) and ≤ BTDC 55 °CA (Bank 1) ≤ BTDC 55 °CA (Bank 2)

Time Needed for Diagnosis: 1000 ms

C: DTC P0018 CRANKSHAFT POSITION - CAMSHAFT POSITION CORRELATION (BANK2)

1. OUTLINE OF DIAGNOSIS

NOTE:
For the detection standard, refer to DTC P0016. <Ref. to GD(H4DOTC)-12, DTC P0016 CRANKSHAFT POSITION - CAMSHAFT POSITION CORRELATION (BANK1), Diagnostic Trouble Code (DTC) Detecting Criteria.>

D: DTC P0021 INTAKE CAMSHAFT POSITION - TIMING OVER-ADVANCED OR SYSTEM PERFORMANCE (BANK 2)

1. OUTLINE OF DIAGNOSIS

NOTE:
For the detection standard, refer to DTC P0011. <Ref. to GD(H4DOTC)-10, DTC P0011 INTAKE CAMSHAFT POSITION - TIMING OVER-ADVANCED OR SYSTEM PERFORMANCE (BANK 1), Diagnostic Trouble Code (DTC) Detecting Criteria.>

E: DTC P0030 HO2S HEATER CONTROL CIRCUIT (BANK 1 SENSOR 1)

1. OUTLINE OF DIAGNOSIS

Detect functional errors of the front oxygen (A/F) sensor heater.
Judge as NG when it is determined that the front oxygen (A/F) sensor impedance is large when looking at engine status such as deceleration fuel cut.

2. COMPONENT DESCRIPTION

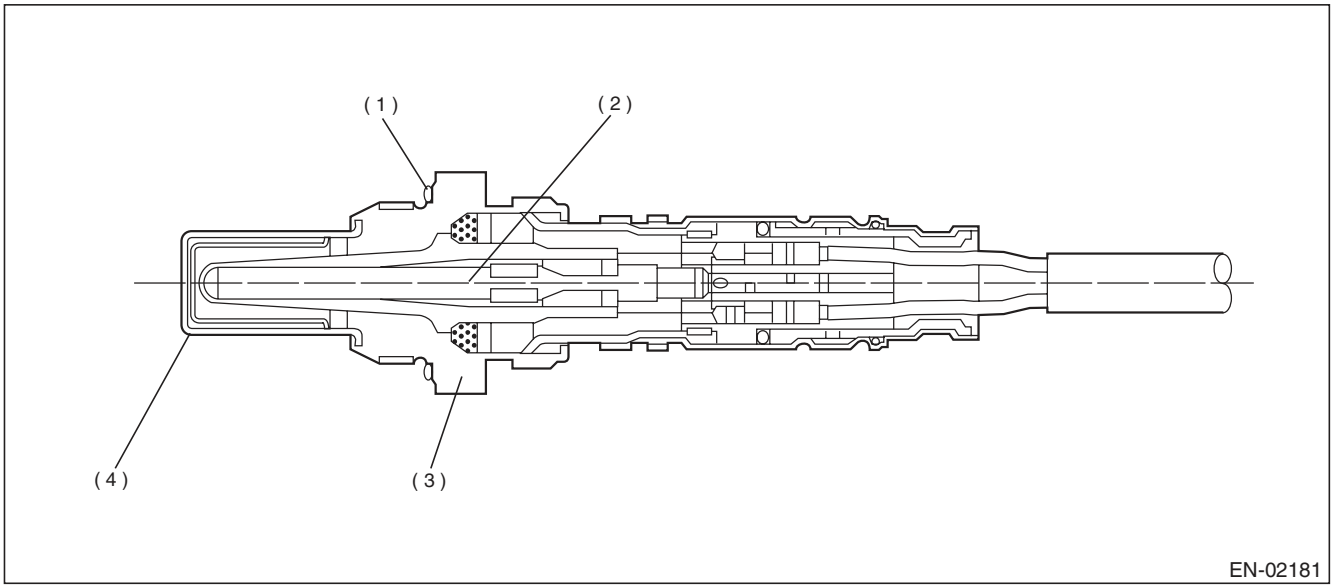

(1) Gasket
(2) Ceramic heater
(3) Sensor housing
(4) Protection tube

3. ENABLE CONDITION

Secondary Parameters	Enable Conditions
Condition established time	≥ 42000 ms
Battery voltage	≥ 10.9 V
Heater current	Permitted
Control duty ≥ 35 %	Experienced
After fuel cut	≥ 20000 ms

4. GENERAL DRIVING CYCLE

Perform the diagnosis continuously after 42000 ms or more have passed since the engine started.

5. DIAGNOSTIC METHOD

- **Abnormality Judgement**

If the duration of time while the following conditions are met is longer than the time indicated, judge as NG.

Judgement Value

Malfunction Criteria	Threshold Value
Front oxygen (A/F) sensor impedance	> 50 Ω

Time Needed for Diagnosis: 10000 ms
Malfunction Indicator Light Illumination: Illuminates when malfunction occurs in 2 continuous driving cycles.

- **Normality Judgement**

Judge as OK and clear the NG if the continuous time while the following conditions are established is more than the predetermined time.

Judgement Value

Malfunction Criteria	Threshold Value
Front oxygen (A/F) sensor impedance	≤ 50 Ω

Time Needed for Diagnosis: 10000 ms

F: DTC P0031 HO2S HEATER CONTROL CIRCUIT LOW (BANK 1 SENSOR 1)

1. OUTLINE OF DIAGNOSIS

Detect front oxygen (A/F) sensor heater open or short circuit.
The front oxygen (A/F) sensor heater performs duty control, and the output terminal voltage at ON is 0 V, and the output terminal voltage at OFF is the battery voltage.
Judge as NG when the terminal voltage remains Low.

2. COMPONENT DESCRIPTION

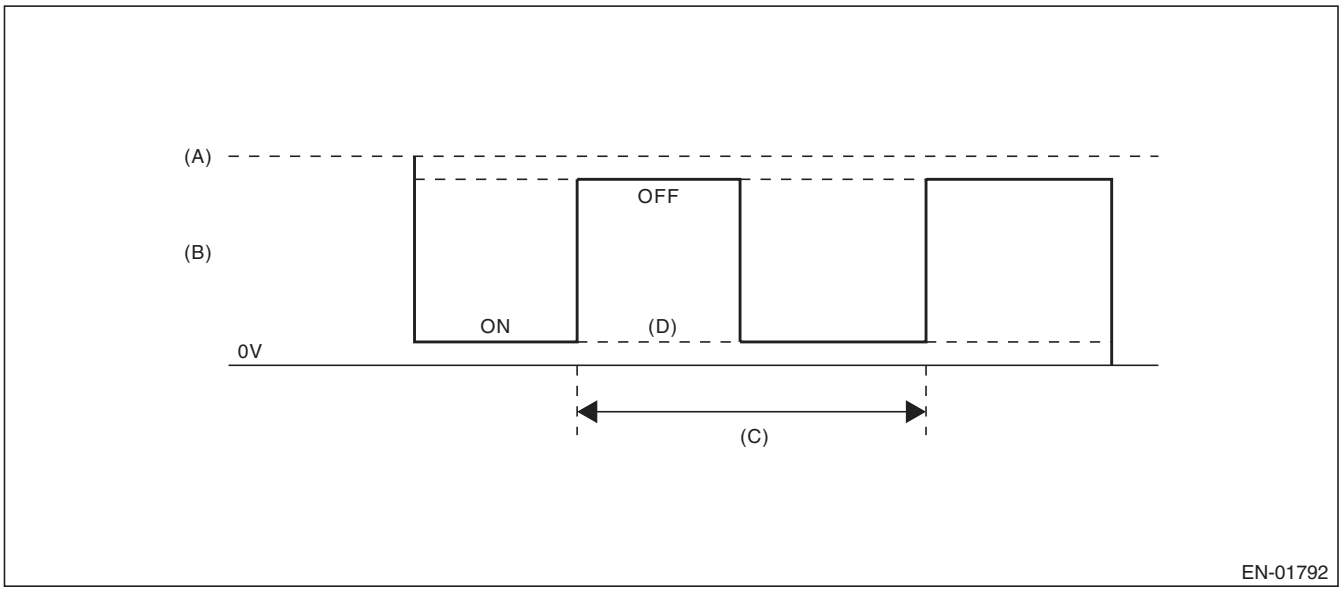

(A) Battery voltage
(B) Front oxygen (A/F) sensor heater output voltage
(C) 128 milliseconds
(D) Low error

3. ENABLE CONDITION

Secondary Parameters	Enable Conditions
Battery voltage	≥ 10.9 V

4. GENERAL DRIVING CYCLE

Always perform the diagnosis continuously.

5. DIAGNOSTIC METHOD

- **Abnormality Judgement**

If the duration of time while the following conditions are met is longer than the time indicated, judge as NG.

Judgement Value

Malfunction Criteria	Threshold Value
Output voltage level	Low
Front oxygen (A/F) sensor heater control duty	< 87.5 %

Time Needed for Diagnosis: 4 ms × 250 time(s)
Malfunction Indicator Light Illumination: Illuminates as soon as a malfunction occurs.

- **Normality Judgement**

Judge as OK and clear the NG if the continuous time while the following conditions are established is more than the predetermined time.

Judgement Value

Malfunction Criteria	Threshold Value
Output voltage level	High

Time Needed for Diagnosis: Less than 1 second

G: DTC P0032 HO2S HEATER CONTROL CIRCUIT HIGH (BANK 1 SENSOR 1)

1. OUTLINE OF DIAGNOSIS

Detect front oxygen (A/F) sensor heater open or short circuit.
The front oxygen (A/F) sensor heater performs duty control, and the output terminal voltage at ON is 0 V, and the output terminal voltage at OFF is the battery voltage.
Judge as NG when the terminal voltage remains High.

2. COMPONENT DESCRIPTION

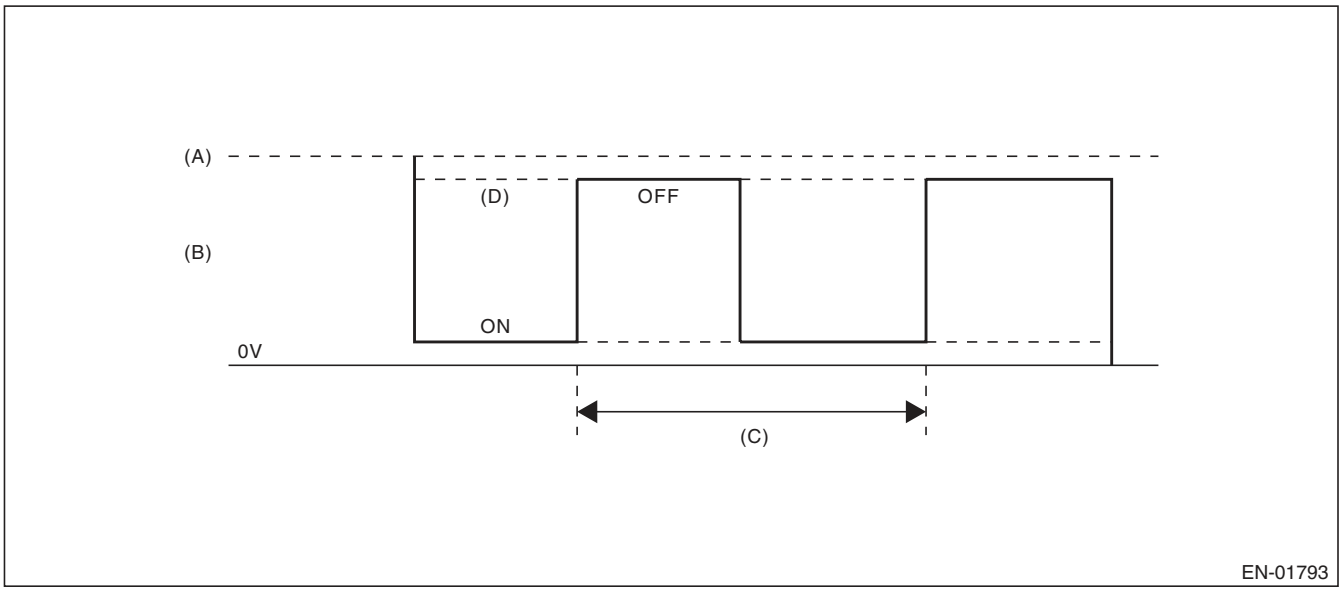

(A) Battery voltage
(B) Front oxygen (A/F) sensor heater output voltage
(C) 128 milliseconds
(D) High error

3. ENABLE CONDITION

Secondary Parameters	Enable Conditions
Battery voltage	≥ 10.9 V

4. GENERAL DRIVING CYCLE

Always perform the diagnosis continuously.

5. DIAGNOSTIC METHOD

- **Abnormality Judgement**

If the duration of time while the following conditions are met is longer than the time indicated, judge as NG.

Judgement Value

Malfunction Criteria	Threshold Value
Output voltage level	High
Front oxygen (A/F) sensor heater control duty	≥ 12.5 %

Time Needed for Diagnosis: 4 ms × 500 time(s)
Malfunction Indicator Light Illumination: Illuminates as soon as a malfunction occurs.

- **Normality Judgement**

Judge as OK and clear the NG if the continuous time while the following conditions are established is more than the predetermined time.

Judgement Value

Malfunction Criteria	Threshold Value
Output voltage level	Low

Time Needed for Diagnosis: Less than 1 second

H: DTC P0037 HO2S HEATER CONTROL CIRCUIT LOW (BANK 1 SENSOR 2)

1. OUTLINE OF DIAGNOSIS

Detect the rear oxygen sensor heater open or short circuit.
The rear oxygen sensor heater performs duty control, and the output terminal voltage at ON is 0 V, and the output terminal voltage at OFF is the battery voltage.
Judge as NG when the terminal voltage remains Low.

2. COMPONENT DESCRIPTION

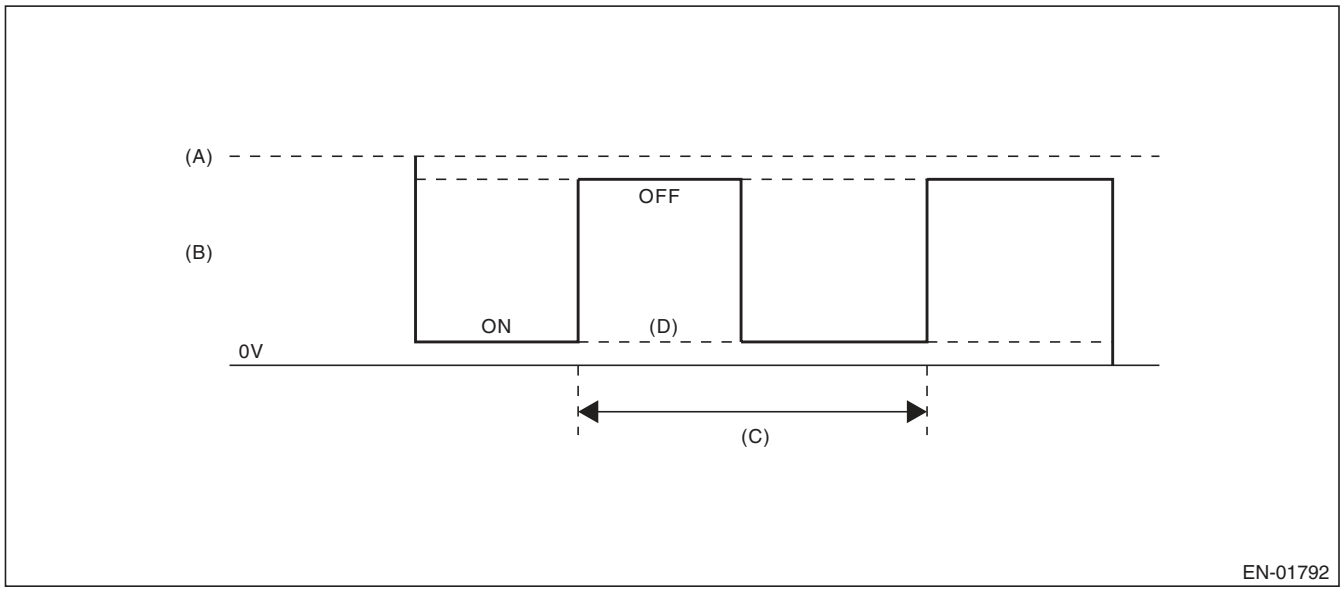

(A) Battery voltage
(B) Output voltage of the rear oxygen sensor heater
(C) 256 milliseconds (cycles)
(D) Low error

3. ENABLE CONDITION

Secondary Parameters	Enable Conditions
Battery voltage	≥ 10.9 V
Elapsed time after engine starting	≥ 1 second
Engine speed	< 8000 rpm

4. GENERAL DRIVING CYCLE

After starting the engine, perform the diagnosis continuously when engine is low speed.

5. DIAGNOSTIC METHOD

- **Abnormality Judgement**

If the duration of time while the following conditions are met is longer than the time indicated, judge as NG.

Judgement Value

Malfunction Criteria	Threshold Value
Output voltage level	Low
Rear oxygen sensor heater control duty	< 75 %

Time Needed for Diagnosis: 8 ms × 320 time(s)
Malfunction Indicator Light Illumination: Illuminates when malfunction occurs in 2 continuous driving cycles.

- **Normality Judgement**

Judge as OK and clear the NG if the continuous time while the following conditions are established is more than the predetermined time.

Judgement Value

Malfunction Criteria	Threshold Value
Output voltage level	High

Time Needed for Diagnosis: Less than 1 second

I: DTC P0038 HO2S HEATER CONTROL CIRCUIT HIGH (BANK 1 SENSOR 2)

1. OUTLINE OF DIAGNOSIS

Detect the rear oxygen sensor heater open or short circuit.
The rear oxygen sensor heater performs duty control, and the output terminal voltage at ON is 0 V, and the output terminal voltage at OFF is the battery voltage.
Judge as NG when the terminal voltage remains High.

2. COMPONENT DESCRIPTION

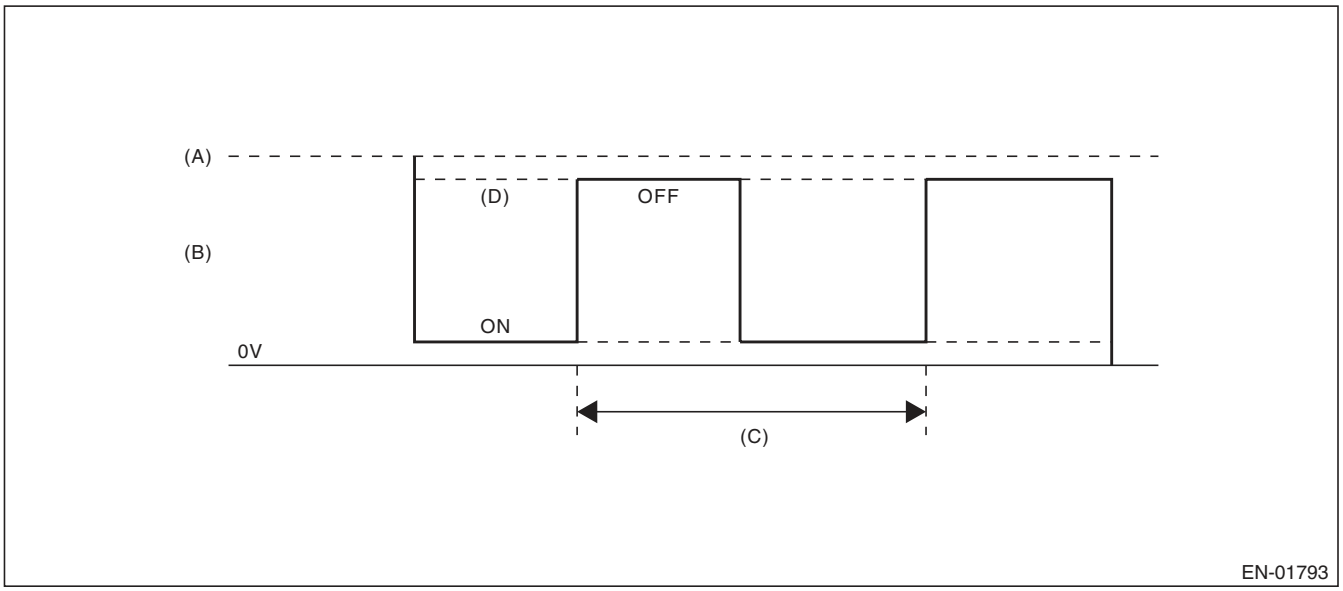

(A) Battery voltage
(B) Output voltage of the rear oxygen sensor heater
(C) 256 milliseconds (cycles)
(D) High error

3. ENABLE CONDITION

Secondary Parameters	Enable Conditions
Battery voltage	≥ 10.9 V
Elapsed time after engine starting	≥ 1 second
Engine speed	< 8000 rpm

4. GENERAL DRIVING CYCLE

After starting the engine, perform the diagnosis continuously when engine is low speed.

5. DIAGNOSTIC METHOD

- **Abnormality Judgement**

If the duration of time while the following conditions are met is longer than the time indicated, judge as NG.

Judgement Value

Malfunction Criteria	Threshold Value
Output voltage level	High
Rear oxygen sensor heater control duty	≥ 25 %

Time Needed for Diagnosis: 8 ms × 320 time(s)
Malfunction Indicator Light Illumination: Illuminates when malfunction occurs in 2 continuous driving cycles.

- **Normality Judgement**

Judge as OK and clear the NG if the continuous time while the following conditions are established is more than the predetermined time.

Judgement Value

Malfunction Criteria	Threshold Value
Output voltage level	Low

Time Needed for Diagnosis: Less than 1 second

J: DTC P0068 MAP/MAF - THROTTLE POSITION CORRELATION

1. OUTLINE OF DIAGNOSIS

Detect problems in the intake manifold pressure sensor output properties.
Judge as NG when the intake air pressure AD value is Low whereas it seemed to be High from the viewpoint of engine condition, or when it is High whereas it seemed to be Low from the engine condition.

2. COMPONENT DESCRIPTION

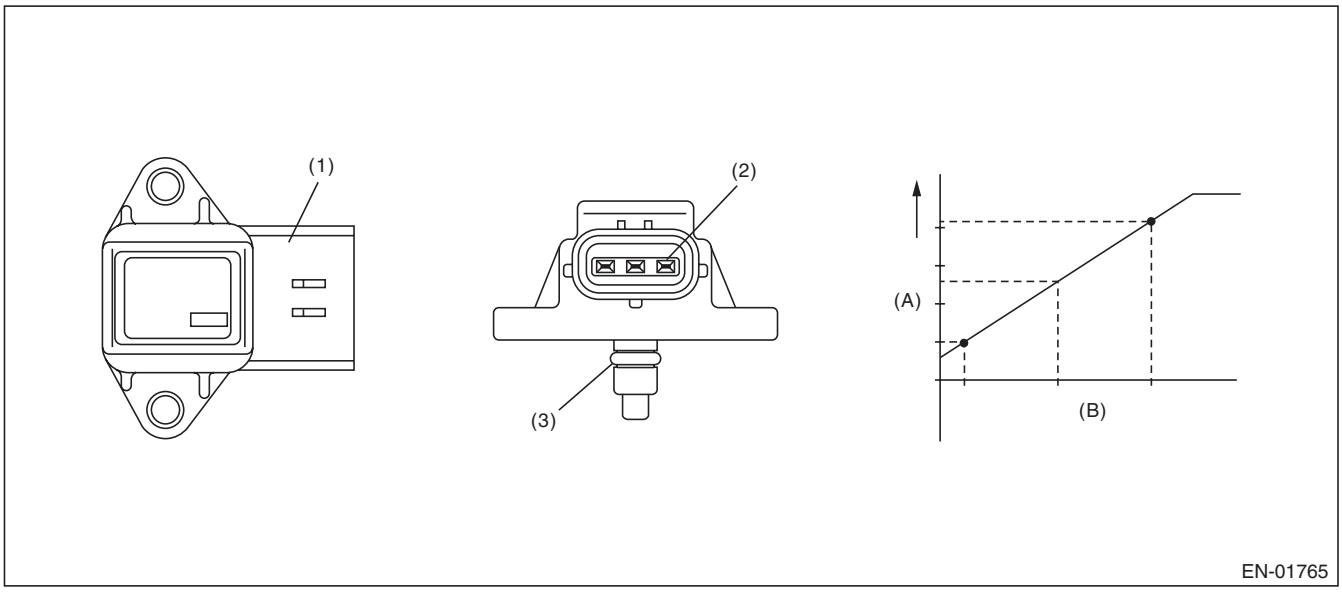

(A) Output voltage (B) Absolute pressure

(1) Connector (2) Terminals (3) O-ring

3. ENABLE CONDITION

Secondary Parameters	Enable Conditions
Engine coolant temperature	≥ 70 °C (158 °F)

4. GENERAL DRIVING CYCLE

Perform the diagnosis continuously after idling.

5. DIAGNOSTIC METHOD

• Abnormality Judgement

Judge as NG when Low side or High side becomes NG.
If the duration of time while the following conditions are met is longer than the time indicated, judge as NG.

Judgement Value

Malfunction Criteria	Threshold Value
Low	
Engine speed	< 2500 rpm
Throttle position	≥ 10 °
Output voltage	< 1 V
Engine load	> 1.356 g/rev (0.05 oz/rev)
High	
Engine speed	600 rpm — 900 rpm
Throttle position	< 2.75 °
Output voltage	≥ 2.36 V
Engine load	< 0.4 g/rev (0.01 oz/rev)

Time Needed for Diagnosis:
Low side: 3000 ms
High side: 3000 ms
Malfunction Indicator Light Illumination: Illuminates when malfunction occurs in 2 continuous driving cycles.

• Normality Judgement

Judge as OK and clear the NG when both Low side and High side become OK.
If the duration of time while the following conditions are met is longer than the time indicated, judge as OK.

Judgement Value

Malfunction Criteria	Threshold Value
Low	
Engine speed	< 2500 rpm
Throttle position	≥ 10 °
Output voltage	≥ 1 V
Engine load	> 1.356 g/rev (0.05 oz/rev)
High	
Engine speed	600 rpm — 900 rpm
Throttle position	< 2.75 °
Output voltage	< 2.36 V
Engine load	< 0.4 g/rev (0.01 oz/rev)

Time Needed for Diagnosis:
Low side: Less than 1 second
High side: Less than 1 second

K: DTC P0101 MASS OR VOLUME AIR FLOW CIRCUIT RANGE/PERFORMANCE

1. OUTLINE OF DIAGNOSIS

Detect the malfunction of air flow sensor output properties.
Judge as a low side NG when the air flow voltage indicates a small value regardless of running in a state where the air flow voltage increases. Judge as a high side NG when the air flow voltage indicates a large value regardless of running in a state where the air flow voltage decreases. Judge air flow sensor property NG when the Low side or High side becomes NG.

2. COMPONENT DESCRIPTION

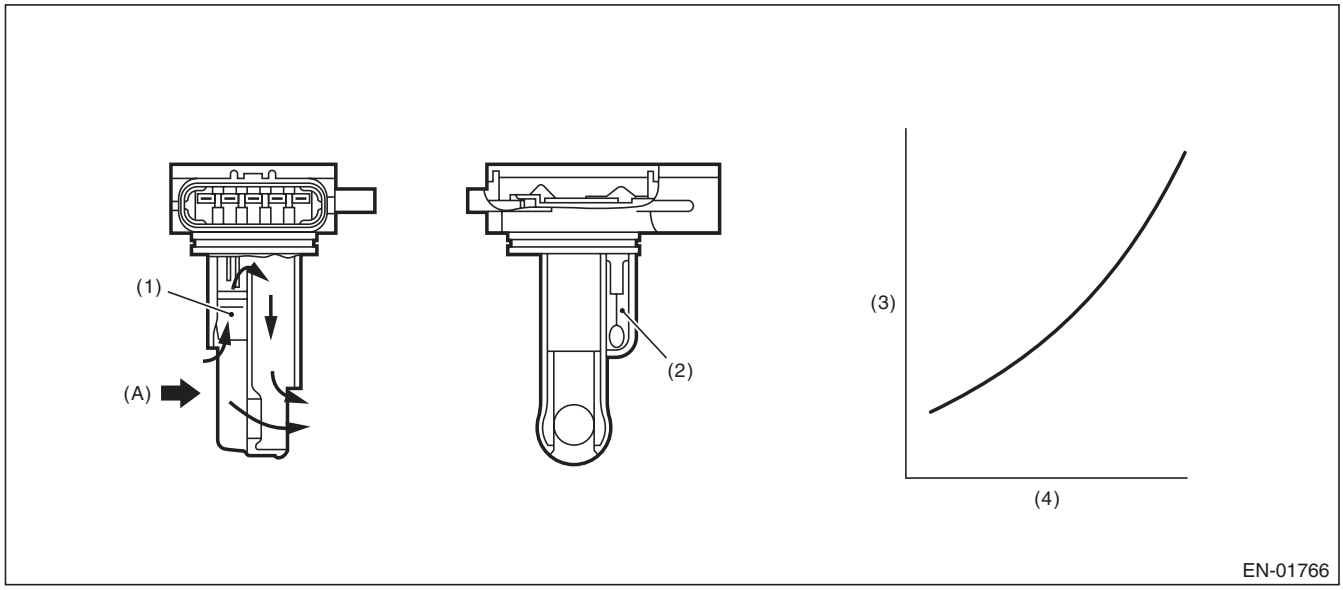

(A) Air

(1) Air flow sensor
(2) Intake air temperature sensor
(3) Voltage (V)
(4) Amount of intake air (kg (lb)/s)

3. ENABLE CONDITION

Secondary Parameters	Enable Conditions
Engine coolant temperature	≥ 70 °C (158 °F)

4. GENERAL DRIVING CYCLE

Perform the diagnosis continuously after idling.

5. DIAGNOSTIC METHOD

• Abnormality Judgement

Judge as NG when Low side or High side becomes NG.
If the duration of time while the following conditions are met is longer than the time indicated, judge as NG.

Judgement Value

Malfunction Criteria	Threshold Value
Low	
Output voltage	< 1.5 V
Engine speed	≥ 2500 rpm
Throttle opening angle	≥ 15 °
Intake manifold pressure	≥ 53.3 kPa (400 mmHg, 15.7 inHg)
High (1)	
Output voltage	≥ 1.95 V
Engine speed	600 rpm — 900 rpm
Throttle opening angle	< 4.1 °
Intake manifold pressure	≥ 52.7 kPa (395 mmHg, 15.6 inHg)
High (2)	
Output voltage	≥ 1.70 V
Engine speed	600 rpm — 900 rpm
Throttle opening angle	< 4.1 °
Intake manifold pressure	≥ 52.7 kPa (395 mmHg, 15.6 inHg)
Fuel system diagnosis	Rich side malfunction

Time Needed for Diagnosis:
Low: 3000 ms
High: 10000 ms
Malfunction Indicator Light Illumination: Illuminates when malfunction occurs in 2 continuous driving cycles.

• Normality Judgement

Judge as OK and clear the NG when both Low side and High side become OK.
Judge as OK and clear the NG if the continuous time while the following conditions are established is more than the predetermined time.

Judgement Value

Malfunction Criteria	Threshold Value
Low	
Output voltage	≥ 1.5 V
Engine speed	≥ 2500 rpm
Throttle opening angle	≥ 15 °
Intake manifold pressure	≥ 53.3 kPa (400 mmHg, 15.7 inHg)
High	
Output voltage	< 1.95 V
Engine speed	600 rpm — 900 rpm
Throttle opening angle	< 4.1 °
Intake manifold pressure	< 52.7 kPa (395 mmHg, 15.6 inHg)
Fuel system diagnosis	Rich side normal

Time Needed for Diagnosis:
Low: Less than 1 second
High: Less than 1 second

L: DTC P0102 MASS OR VOLUME AIR FLOW CIRCUIT LOW INPUT

1. OUTLINE OF DIAGNOSIS

Detect open or short circuits of the air flow sensor.
Judge as NG if out of specification.

2. COMPONENT DESCRIPTION

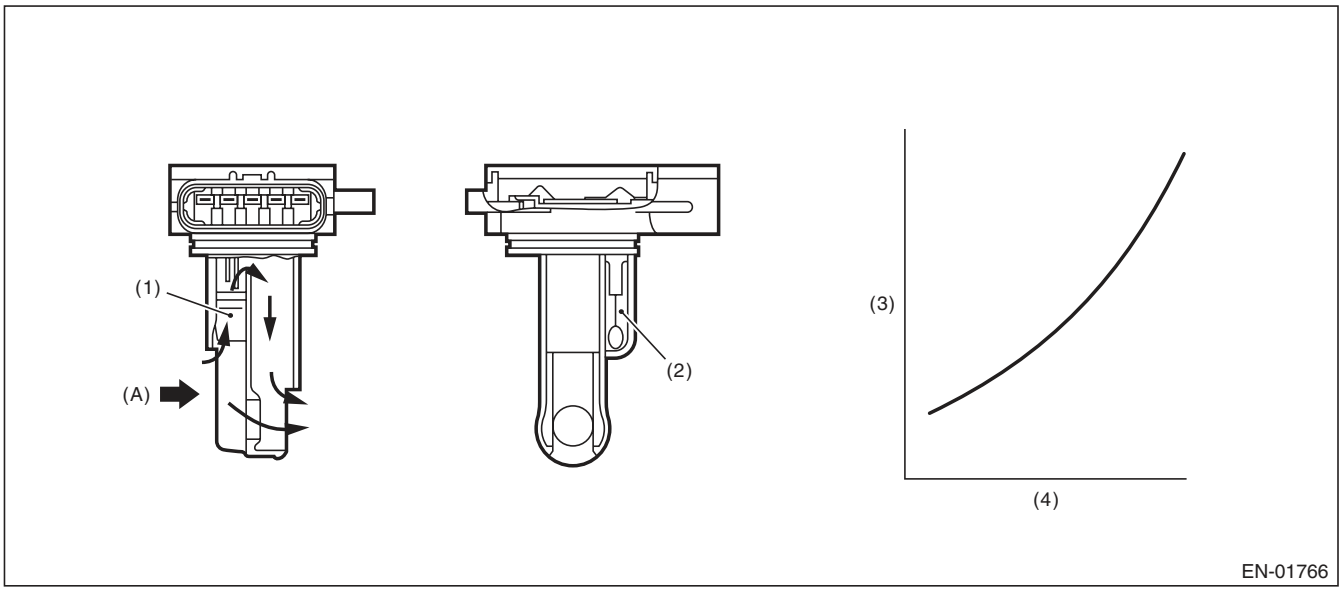

(A) Air

(1) Air flow sensor
(2) Intake air temperature sensor
(3) Voltage (V)
(4) Amount of intake air (kg (lb)/s)

3. ENABLE CONDITION

Secondary Parameters	Enable Conditions
None	

4. GENERAL DRIVING CYCLE

Always perform the diagnosis continuously.

5. DIAGNOSTIC METHOD

- **Abnormality Judgement**

If the duration of time while the following conditions are met is longer than the time indicated, judge as NG.

Judgement Value

Malfunction Criteria	Threshold Value
Output voltage	≤ 0.2 V

Time Needed for Diagnosis: 500 ms
Malfunction Indicator Light Illumination: Illuminates as soon as a malfunction occurs.

- **Normality Judgement**

Judge as OK and clear the NG if the continuous time while the following conditions are established is more than the predetermined time.

Judgement Value

Malfunction Criteria	Threshold Value
Output voltage	> 0.2 V

Time Needed for Diagnosis: Less than 1 second

M: DTC P0103 MASS OR VOLUME AIR FLOW CIRCUIT HIGH INPUT

1. OUTLINE OF DIAGNOSIS

Detect open or short circuits of the air flow sensor.
Judge as NG if out of specification.

2. COMPONENT DESCRIPTION

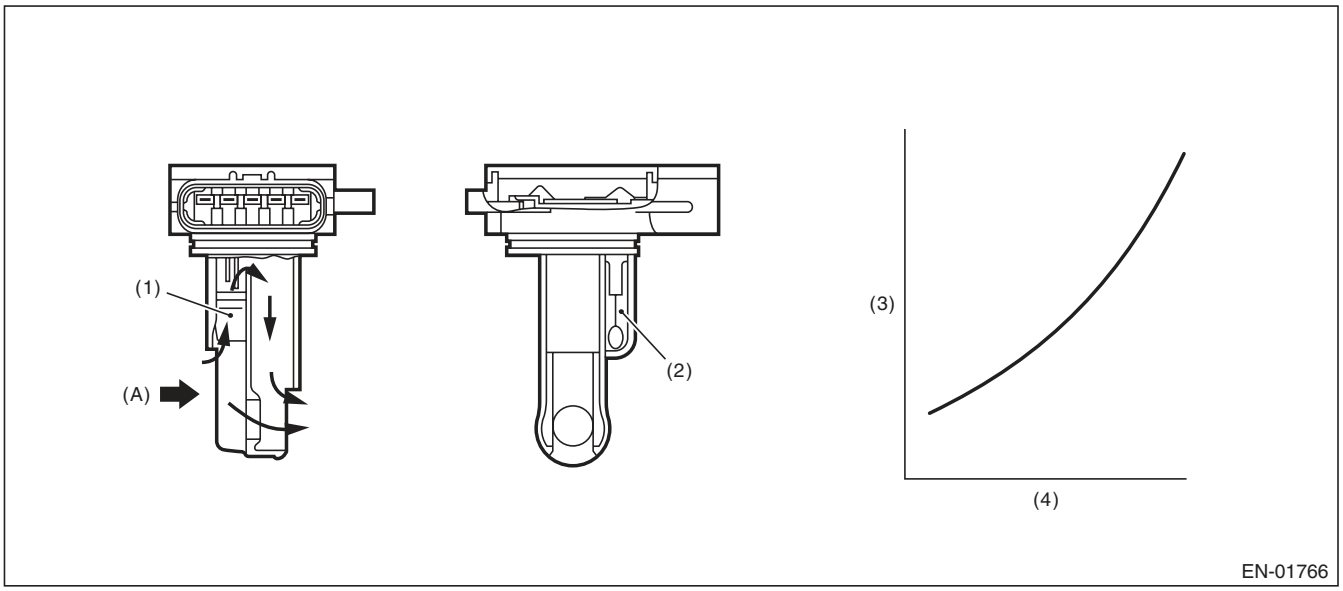

(A) Air

(1) Air flow sensor
(2) Intake air temperature sensor
(3) Voltage (V)
(4) Amount of intake air (kg (lb)/s)

3. ENABLE CONDITION

Secondary Parameters	Enable Conditions
None	

4. GENERAL DRIVING CYCLE

Always perform the diagnosis continuously.

5. DIAGNOSTIC METHOD

- **Abnormality Judgement**

If the duration of time while the following conditions are met is longer than the time indicated, judge as NG.

Judgement Value

Malfunction Criteria	Threshold Value
Output voltage	≥ 4.985 V

Time Needed for Diagnosis: 500 ms
Malfunction Indicator Light Illumination: Illuminates as soon as a malfunction occurs.

- **Normality Judgement**

Judge as OK and clear the NG if the continuous time while the following conditions are established is more than the predetermined time.

Judgement Value

Malfunction Criteria	Threshold Value
Output voltage	< 4.985 V

Time Needed for Diagnosis: Less than 1 second

N: DTC P0107 MANIFOLD ABSOLUTE PRESSURE/BAROMETRIC PRESSURE CIRCUIT LOW INPUT

1. OUTLINE OF DIAGNOSIS

Detect the open or short circuit of intake manifold pressure sensor.
Judge as NG if out of specification.

2. COMPONENT DESCRIPTION

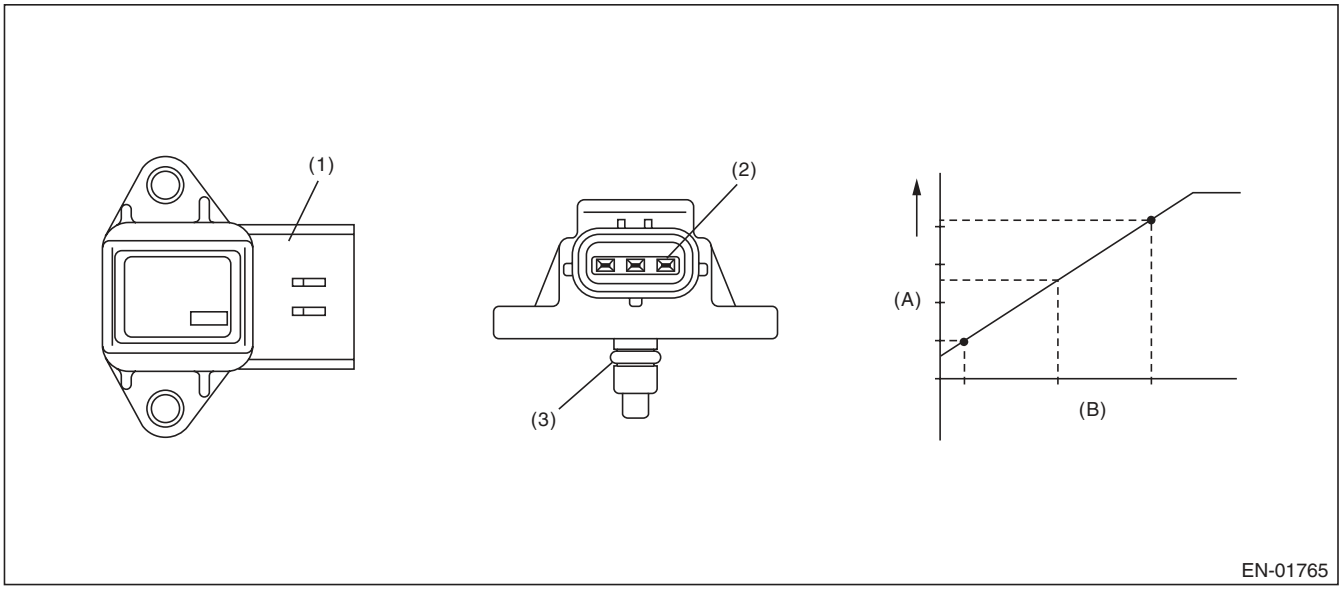

(A) Output voltage (B) Absolute pressure

(1) Connector (2) Terminals (3) O-ring

3. ENABLE CONDITION

Secondary Parameters	Enable Conditions
None	

4. GENERAL DRIVING CYCLE

Always perform the diagnosis continuously.

5. DIAGNOSTIC METHOD

- **Abnormality Judgement**

If the duration of time while the following conditions are met is longer than the time indicated, judge as NG.

Judgement Value

Malfunction Criteria	Threshold Value
Output voltage	≤ 0.568 V

Time Needed for Diagnosis: 500 ms
Malfunction Indicator Light Illumination: Illuminates as soon as a malfunction occurs.

- **Normality Judgement**

Judge as OK and clear the NG if the continuous time while the following conditions are established is more than the predetermined time.

Judgement Value

Malfunction Criteria	Threshold Value
Output voltage	> 0.568 V

Time Needed for Diagnosis: Less than 1 second

O: DTC P0108 MANIFOLD ABSOLUTE PRESSURE/BAROMETRIC PRESSURE CIRCUIT HIGH INPUT

1. OUTLINE OF DIAGNOSIS

Detect the open or short circuit of intake manifold pressure sensor.
Judge as NG if out of specification.

2. COMPONENT DESCRIPTION

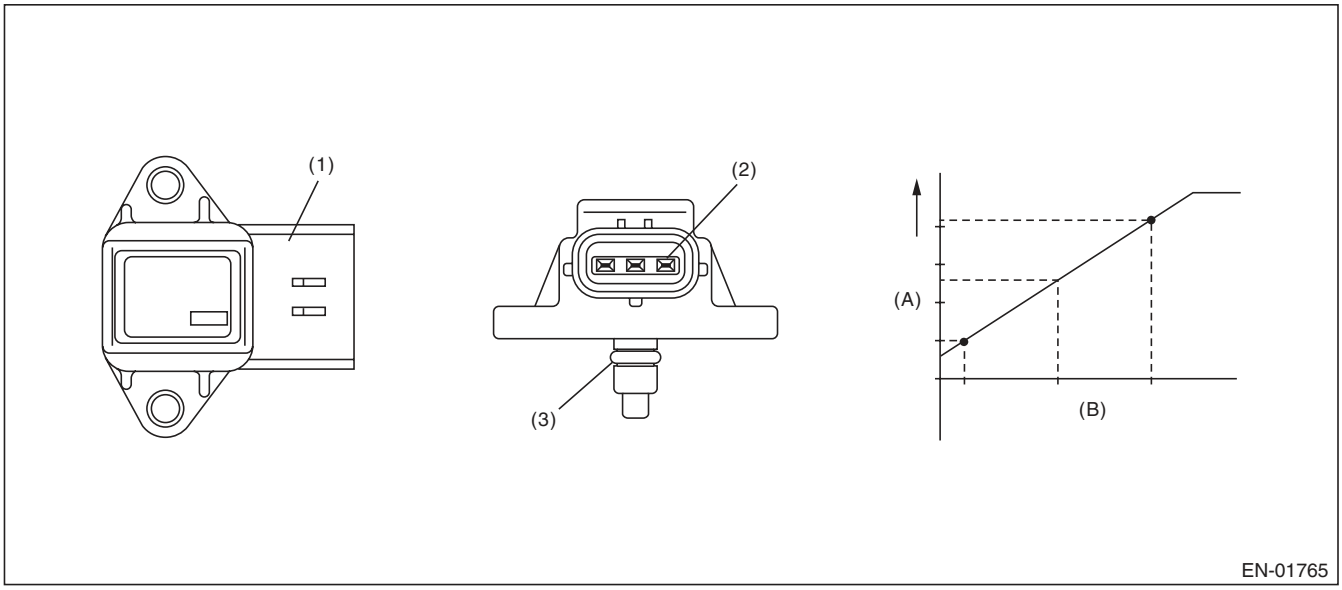

(A) Output voltage (B) Absolute pressure

(1) Connector (2) Terminals (3) O-ring

3. ENABLE CONDITION

Secondary Parameters	Enable Conditions
None	

4. GENERAL DRIVING CYCLE

Always perform the diagnosis continuously.

5. DIAGNOSTIC METHOD

- **Abnormality Judgement**

If the duration of time while the following conditions are met is longer than the time indicated, judge as NG.

Judgement Value

Malfunction Criteria	Threshold Value
Output voltage	≥ 4.590499682 V

Time Needed for Diagnosis: 500 ms
Malfunction Indicator Light Illumination: Illuminates as soon as a malfunction occurs.

- **Normality Judgement**

Judge as OK and clear the NG if the continuous time while the following conditions are established is more than the predetermined time.

Judgement Value

Malfunction Criteria	Threshold Value
Output voltage	< 4.590499682 V

Time Needed for Diagnosis: Less than 1 second

P: DTC P0111 INTAKE AIR TEMPERATURE SENSOR 1 CIRCUIT RANGE/ PERFORMANCE

1. OUTLINE OF DIAGNOSIS

Detect the malfunction of intake air temperature sensor output property.
Judge as NG when the intake air temperature is not varied whereas it seemed to be varied from the viewpoint of engine condition.

2. COMPONENT DESCRIPTION

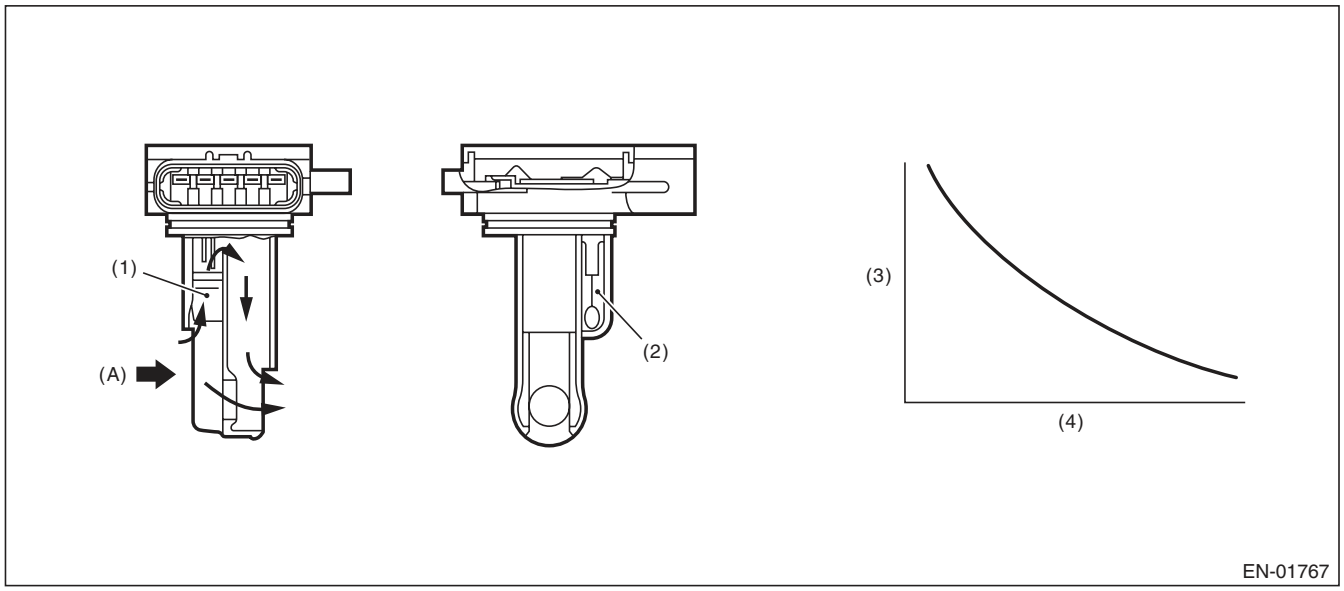

(A) Air

(1) Air flow sensor
(2) Intake air temperature sensor
(3) Resistance value (Ω)
(4) Intake air temperature °C (°F)

3. ENABLE CONDITION

Secondary Parameters	Enable Conditions
Engine coolant temperature at engine starting	< 30 °C (86 °F)
Engine coolant temperature	≥ 95 °C (203 °F)
Battery voltage	≥ 10.9 V
Continuous time when the vehicle speed is less than 60 km/h (37.3 MPH	≥ 600 s

4. GENERAL DRIVING CYCLE

Perform the diagnosis when the vehicle speed condition is met after warming up from a cold condition.

5. DIAGNOSTIC METHOD

- **Abnormality Judgement**

Judge as NG when the following conditions are established.

Judgement Value

Malfunction Criteria	Threshold Value
Output voltage difference between Max. and Min.	< 0.02 V(Equivalent to approximately 0.5°C (0.9°F) near 25°C)

Time Needed for Diagnosis: Less than 1 second
Malfunction Indicator Light Illumination: Illuminates when malfunction occurs in 2 continuous driving cycles.

- **Normality Judgement**

Judge as OK and clear the NG if the following conditions are established.

Judgement Value

Malfunction Criteria	Threshold Value
Output voltage difference between Max. and Min.	≥ 0.02 V

Time Needed for Diagnosis: Less than 1 second

Q: DTC P0112 INTAKE AIR TEMPERATURE SENSOR 1 CIRCUIT LOW

1. OUTLINE OF DIAGNOSIS

Detect open or short circuit of the intake air temperature sensor.
Judge as NG if out of specification.

2. COMPONENT DESCRIPTION

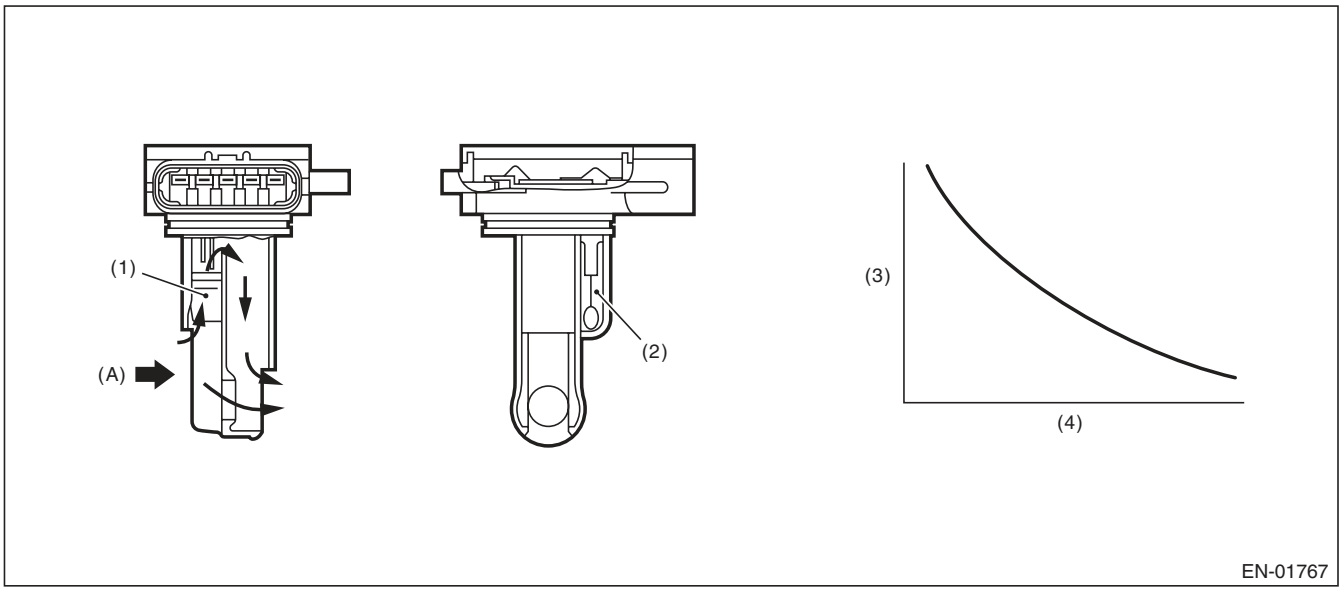

(A) Air

(1) Air flow sensor
(2) Intake air temperature sensor
(3) Resistance value (Ω)
(4) Intake air temperature °C (°F)

3. ENABLE CONDITION

Secondary Parameters	Enable Conditions
None	

4. GENERAL DRIVING CYCLE

Always perform the diagnosis continuously.

5. DIAGNOSTIC METHOD

- **Abnormality Judgement**

If the duration of time while the following conditions are met is longer than the time indicated, judge as NG.

Judgement Value

Malfunction Criteria	Threshold Value
Output voltage	< 0.230975449 V

Time Needed for Diagnosis: 500 ms
Malfunction Indicator Light Illumination: Illuminates as soon as a malfunction occurs.

- **Normality Judgement**

Judge as OK and clear the NG if the continuous time while the following conditions are established is more than the predetermined time.

Judgement Value

Malfunction Criteria	Threshold Value
Output voltage	≥ 0.230975449 V

Time Needed for Diagnosis: Less than 1 second

R: DTC P0113 INTAKE AIR TEMPERATURE SENSOR 1 CIRCUIT HIGH

1. OUTLINE OF DIAGNOSIS

Detect open or short circuit of the intake air temperature sensor.
Judge as NG if out of specification.

2. COMPONENT DESCRIPTION

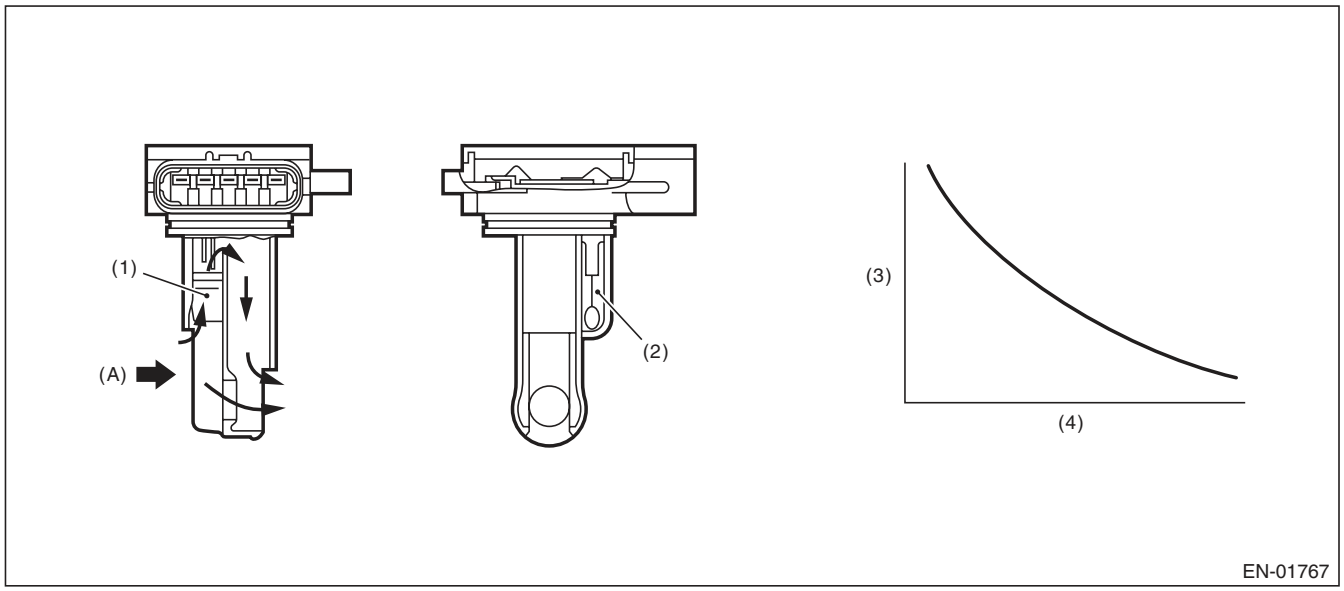

(A) Air

(1) Air flow sensor
(2) Intake air temperature sensor
(3) Resistance value (Ω)
(4) Intake air temperature °C (°F)

3. ENABLE CONDITION

Secondary Parameters	Enable Conditions
None	

4. GENERAL DRIVING CYCLE

Always perform the diagnosis continuously.

5. DIAGNOSTIC METHOD

- **Abnormality Judgement**

If the duration of time while the following conditions are met is longer than the time indicated, judge as NG.

Judgement Value

Malfunction Criteria	Threshold Value
Output voltage	≥ 4.716 V

Time Needed for Diagnosis: 500 ms
Malfunction Indicator Light Illumination: Illuminates as soon as a malfunction occurs.

- **Normality Judgement**

Judge as OK and clear the NG if the continuous time while the following conditions are established is more than the predetermined time.

Judgement Value

Malfunction Criteria	Threshold Value
Output voltage	< 4.716 V

Time Needed for Diagnosis: Less than 1 second

S: DTC P0117 ENGINE COOLANT TEMPERATURE CIRCUIT LOW

1. OUTLINE OF DIAGNOSIS

Detect the open or short circuit of the engine coolant temperature sensor.
Judge as NG if out of specification.

2. COMPONENT DESCRIPTION

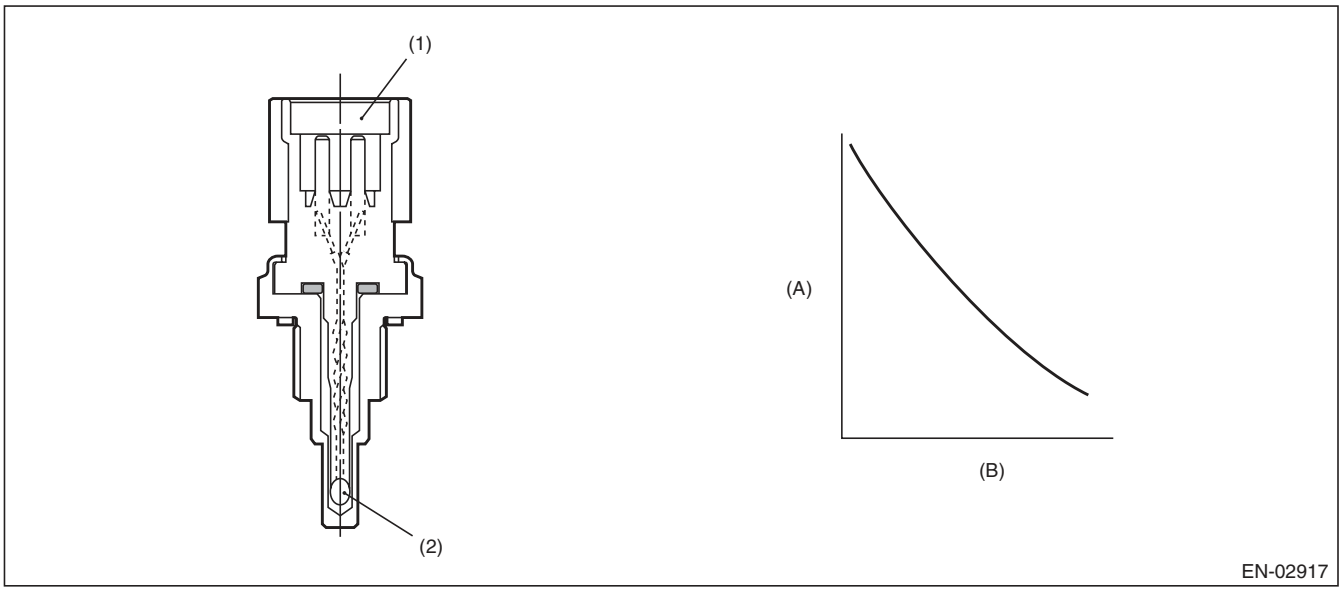

(A) Resistance value (kΩ) (B) Temperature °C (°F)

(1) Connector (2) Thermistor element

3. ENABLE CONDITION

Secondary Parameters	Enable Conditions
None	

4. GENERAL DRIVING CYCLE

Always perform the diagnosis continuously.

5. DIAGNOSTIC METHOD

- **Abnormality Judgement**

If the duration of time while the following conditions are met is longer than the time indicated, judge as NG.

Judgement Value

Malfunction Criteria	Threshold Value
Output voltage	< 0.264738528 V

Time Needed for Diagnosis: 500 ms
Malfunction Indicator Light Illumination: Illuminates as soon as a malfunction occurs.

- **Normality Judgement**

Judge as OK and clear the NG if the continuous time while the following conditions are established is more than the predetermined time.

Judgement Value

Malfunction Criteria	Threshold Value
Output voltage	≥ 0.264738528 V

Time Needed for Diagnosis: Less than 1 second

T: DTC P0118 ENGINE COOLANT TEMPERATURE CIRCUIT HIGH

1. OUTLINE OF DIAGNOSIS

Detect the open or short circuit of the engine coolant temperature sensor.
Judge as NG if out of specification.

2. COMPONENT DESCRIPTION

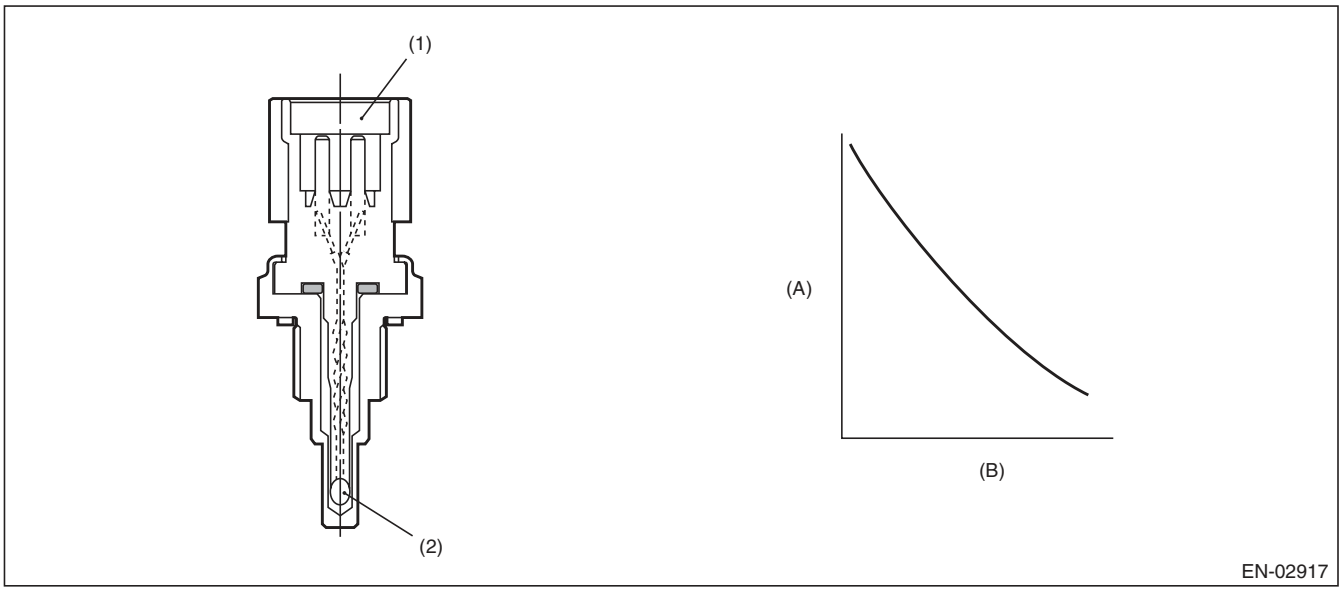

(A) Resistance value (kΩ) (B) Temperature °C (°F)

(1) Connector (2) Thermistor element

3. ENABLE CONDITION

Secondary Parameters	Enable Conditions
None	

4. GENERAL DRIVING CYCLE

Always perform the diagnosis continuously.

5. DIAGNOSTIC METHOD

- **Abnormality Judgement**

If the duration of time while the following conditions are met is longer than the time indicated, judge as NG.

Judgement Value

Malfunction Criteria	Threshold Value
Output voltage	≥ 4.716 V

Time Needed for Diagnosis: 500 ms
Malfunction Indicator Light Illumination: Illuminates as soon as a malfunction occurs.

- **Normality Judgement**

Judge as OK and clear the NG if the continuous time while the following conditions are established is more than the predetermined time.

Judgement Value

Malfunction Criteria	Threshold Value
Output voltage	< 4.716 V

Time Needed for Diagnosis: Less than 1 second

U: DTC P0122 THROTTLE/PEDAL POSITION SENSOR/SWITCH “A” CIRCUIT LOW

1. OUTLINE OF DIAGNOSIS

Detect the open or short circuit of throttle position sensor 1.
Judge as NG if out of specification.

2. COMPONENT DESCRIPTION

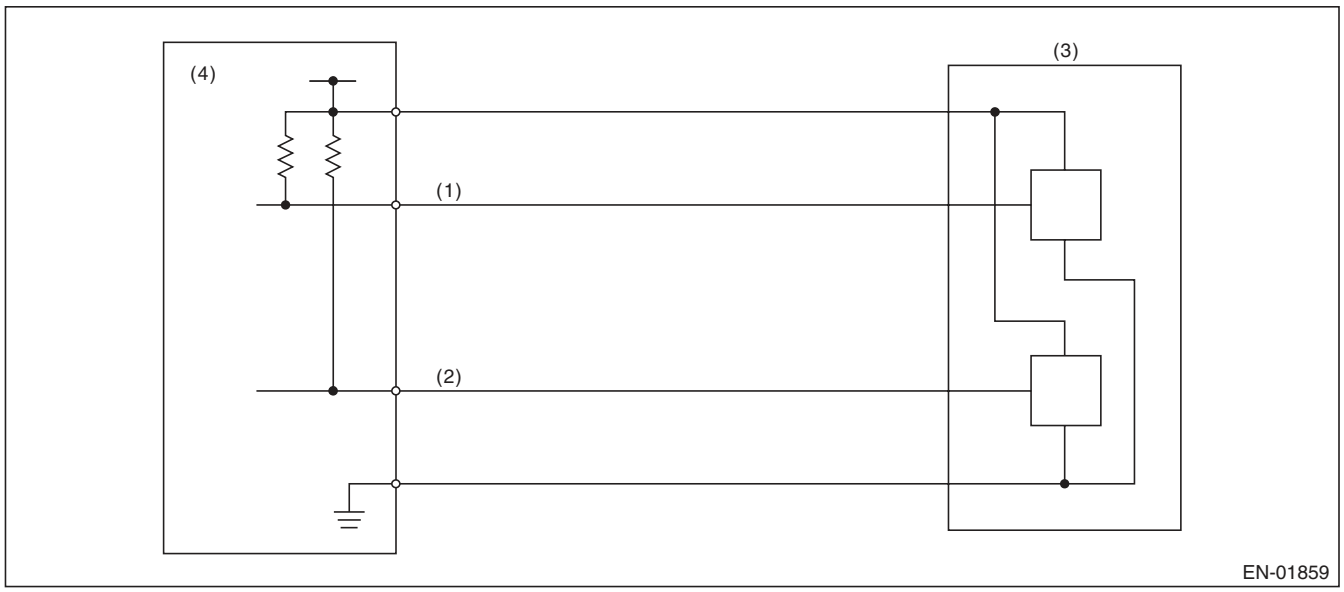

(1) Throttle position sensor 1 signal
(2) Throttle position sensor 2 signal
(3) Throttle position sensor
(4) Engine control module (ECM)

3. ENABLE CONDITION

Secondary Parameters	Enable Conditions
Ignition switch	ON
Battery voltage	≥ 6 V

4. GENERAL DRIVING CYCLE

Always perform the diagnosis continuously.

5. DIAGNOSTIC METHOD

- **Abnormality Judgement**

If the duration of time while the following conditions are met is longer than the time indicated, judge as NG.

Judgement Value

Malfunction Criteria	Threshold Value
Sensor 1 input voltage	≤ 0.224 V

Time Needed for Diagnosis: 24 ms
Malfunction Indicator Light Illumination: Illuminates as soon as a malfunction occurs.

- **Normality Judgement**

Judge as OK and clear the NG if the continuous time while the following conditions are established is more than the predetermined time.

Judgement Value

Malfunction Criteria	Threshold Value
Sensor 1 input voltage	> 0.224 V

Time Needed for Diagnosis: 24 ms

V: DTC P0123 THROTTLE/PEDAL POSITION SENSOR/SWITCH “A” CIRCUIT HIGH

1. OUTLINE OF DIAGNOSIS

Detect the open or short circuit of throttle position sensor 1.
Judge as NG if out of specification.

2. COMPONENT DESCRIPTION

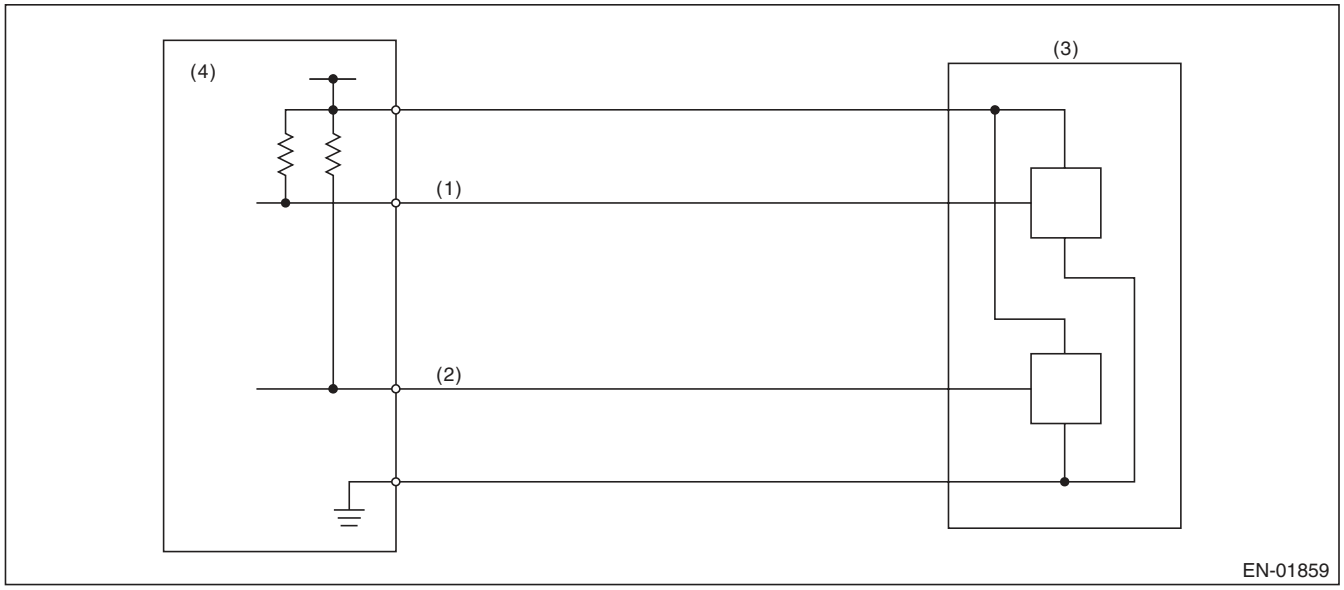

(1) Throttle position sensor 1 signal
(2) Throttle position sensor 2 signal
(3) Throttle position sensor
(4) Engine control module (ECM)

3. ENABLE CONDITION

Secondary Parameters	Enable Conditions
Ignition switch	ON
Battery voltage	≥ 6 V

4. GENERAL DRIVING CYCLE

Always perform the diagnosis continuously.

5. DIAGNOSTIC METHOD

- **Abnormality Judgement**

If the duration of time while the following conditions are met is longer than the time indicated, judge as NG.

Judgement Value

Malfunction Criteria	Threshold Value
Sensor 1 input voltage	≥ 4.851 V

Time Needed for Diagnosis: 24 ms
Malfunction Indicator Light Illumination: Illuminates as soon as a malfunction occurs.

- **Normality Judgement**

Judge as OK and clear the NG if the continuous time while the following conditions are established is more than the predetermined time.

Judgement Value

Malfunction Criteria	Threshold Value
Sensor 1 input voltage	< 4.851 V

Time Needed for Diagnosis: 24 ms

W: DTC P0125 INSUFFICIENT COOLANT TEMPERATURE FOR CLOSED LOOP FUEL CONTROL

1. OUTLINE OF DIAGNOSIS

Detect the malfunction of engine coolant temperature output property.
Judge as NG when the engine coolant temperature does not rise in driving conditions where it should.

2. COMPONENT DESCRIPTION

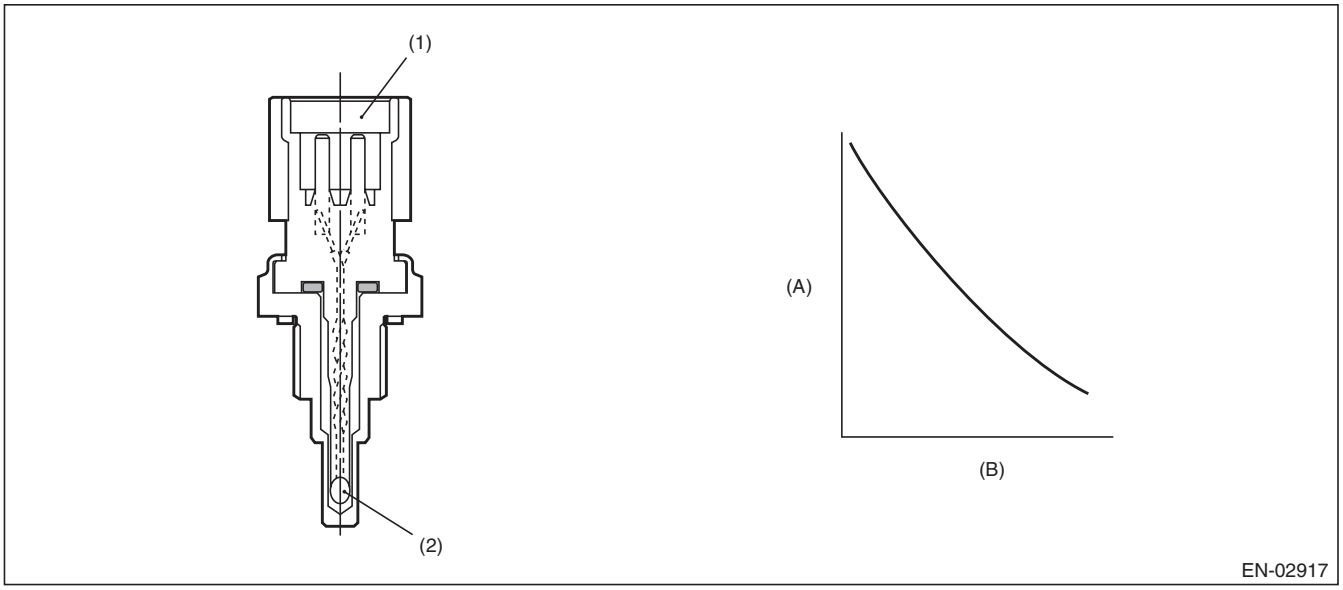

(A) Resistance value (kΩ) (B) Temperature °C (°F)

(1) Connector (2) Thermistor element

3. ENABLE CONDITION

Secondary Parameters	Enable Conditions
Engine speed	≥ 500 rpm
Battery voltage	≥ 10.9 V

4. GENERAL DRIVING CYCLE

Perform the diagnosis only once after engine start.

5. DIAGNOSTIC METHOD

- **Abnormality Judgement**

Judge as NG if the criteria below are met.

Judgement Value

Malfunction Criteria	Threshold Value
Engine coolant temperature	< 20 °C (68 °F)
Timer for diagnosis after engine start	≥ Judgement value of timer after engine start

Timer for diagnosis after engine start
a. Timer stop at fuel cut
b. During the driving conditions except a) above, timer counts up as follows.
64 milliseconds + TWCNT milliseconds (the time of at 64 milliseconds)
TWCNT is defined as follows,
TWCNT = 0 at idle switch ON,
TWCNT show on the following table at idle switch OFF.

		Vehicle speed km/h (MPH)							
		0 (0)	8 (5)	16 (9.9)	24 (14.9)	32 (19.9)	40 (24.9)	48 (29.8)	56 (34.8)
Temperature °C (°F)	–20 (–4)	0.000 ms	37.136 ms	74.272 ms	111.41 ms	126.66 ms	141.91 ms	163.59 ms	185.26 ms
	–10 (14)	0.000 ms	27.391 ms	54.782 ms	82.173 ms	99.65 ms	117.13 ms	135.96 ms	154.8 ms
	0 (32)	0.000 ms	17.646 ms	35.292 ms	52.938 ms	72.64 ms	92.341 ms	108.34 ms	124.33 ms
	10 (50)	0.000 ms	7.9012 ms	15.802 ms	23.704 ms	45.63 ms	67.556 ms	80.711 ms	93.867 ms
	20 (68)	0.000 ms	7.9012 ms	15.802 ms	23.704 ms	45.63 ms	67.556 ms	80.711 ms	93.867 ms

Judgement value of timer after engine starting
t = 451056 ms – 25870 ms × Ti
Ti : The lowest coolant temperature after engine start
Time Needed for Diagnosis: Less than 1 second
Malfunction Indicator Light Illumination: Illuminates when malfunction occurs in 2 continuous driving cycles.

- **Normality Judgement**

Judge as OK and clear the NG when the malfunction criteria below are met.

Judgement Value

Malfunction Criteria	Threshold Value
Engine coolant temperature	≥ 20 °C (68 °F)

Time Needed for Diagnosis: Less than 1 second

X: DTC P0126 INSUFFICIENT ENGINE COOLANT TEMPERATURE FOR STABLE OPERATION

1. OUTLINE OF DIAGNOSIS

Detect the malfunction of the engine coolant temperature sensor characteristics.
Memorize the engine coolant temperature and fuel temperature at the last engine stop, and use them to judge as NG when the engine coolant temperature does not decrease when it should.

2. COMPONENT DESCRIPTION

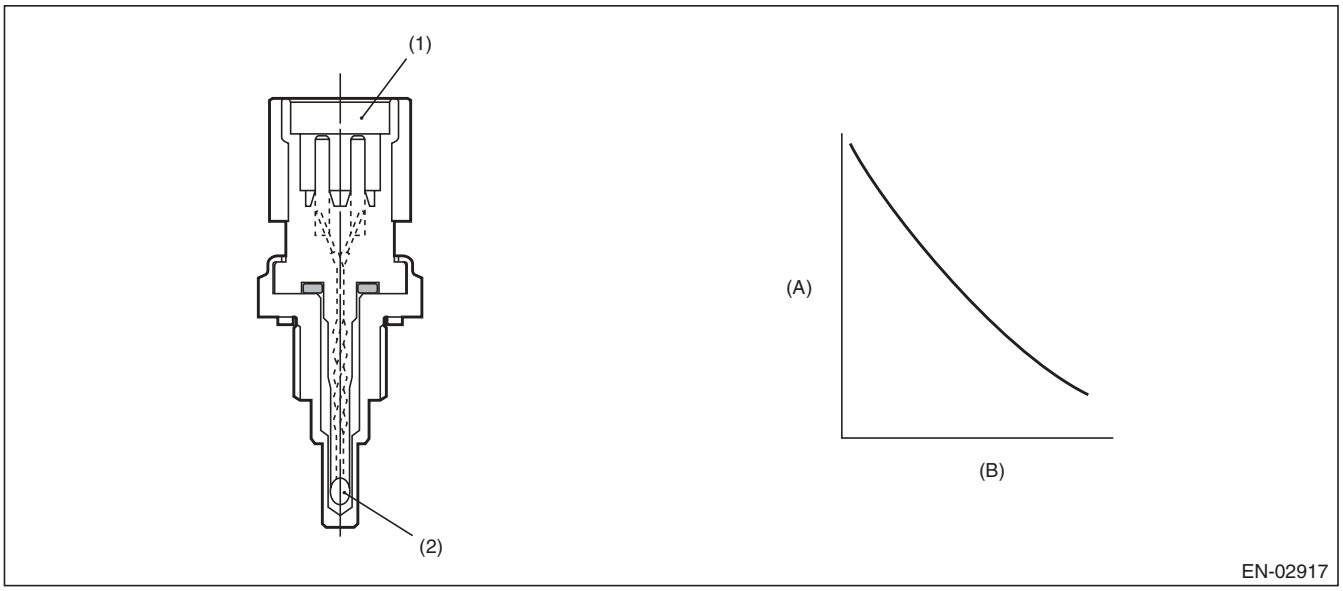

(A) Resistance value (kΩ) (B) Temperature °C (°F)

(1) Connector (2) Thermistor element

3. ENABLE CONDITION

Secondary Parameters	Enable Conditions
Battery voltage	≥ 10.9 V
Refueling from the last engine stop till the current engine start	None
Fuel level	≥ 15 ℓ (3.96 US gal, 3.3 Imp gal)
Engine coolant temperature at the last engine stop	≥ 70 °C (158 °F)

4. GENERAL DRIVING CYCLE

Perform the diagnosis only once after starting the engine.

5. DIAGNOSTIC METHOD

- **Abnormality Judgement**

If the duration of time while the following conditions are met is longer than the time indicated, judge as NG.

Judgement Value

Malfunction Criteria	Threshold Value
Engine coolant temperature at the last engine stop — Minimum engine coolant temperature after the engine start	< 2.5 °C (36.5 °F)
Fuel temperature at the last engine stop — fuel temperature	≥ 5 °C (41 °F)
Intake air temperature — fuel temperature	< 2.5 °C (36.5 °F)
Fuel temperature	< 35 °C (95 °F)

Time Needed for Diagnosis: 2500 ms
Malfunction Indicator Light Illumination: Illuminates when malfunction occurs in 2 continuous driving cycles.

- **Normality Judgement**

Judge as OK and clear the NG if the continuous time while the following conditions are established is more than the predetermined time.

Judgement Value

Malfunction Criteria	Threshold Value
Engine coolant temperature at the last engine stop — Minimum engine coolant temperature after the engine start	≥ 2.5 °C (36.5 °F)

Time Needed for Diagnosis: Less than 1 second

Y: DTC P0128 COOLANT THERMOSTAT (ENGINE COOLANT TEMPERATURE BELOW THERMOSTAT REGULATING TEMPERATURE)

1. OUTLINE OF DIAGNOSIS

Detect malfunctions of the thermostat function.
Judge as NG when the engine coolant temperature is lower than the estimated engine coolant temperature and the difference between them is large. Judge as OK when the engine coolant temperature becomes to 75°C (167°F), and the difference is small, before judging NG.

2. COMPONENT DESCRIPTION

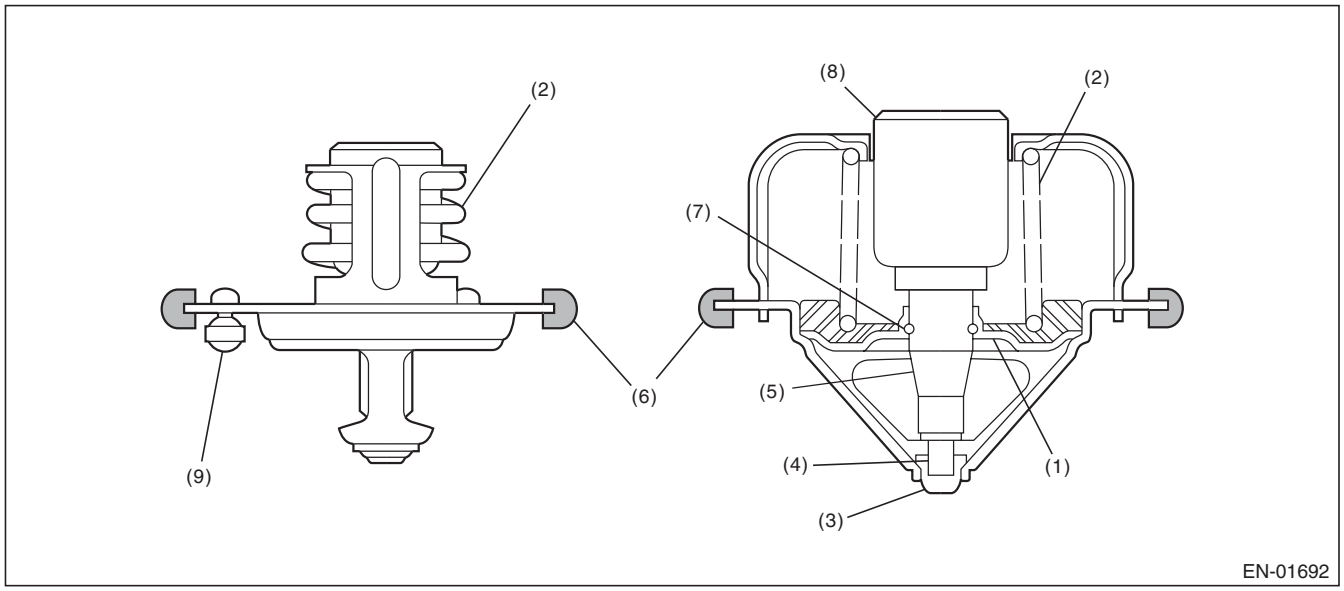

(1)	Valve	(4)	Piston	(7)	Stop ring
(2)	Spring	(5)	Guide	(8)	Wax element
(3)	Stopper	(6)	Rubber seal	(9)	Jiggle valve

3. ENABLE CONDITION

Secondary Parameters	Enable Conditions
None	

4. GENERAL DRIVING CYCLE

Always perform the diagnosis continuously.

5. DIAGNOSTIC METHOD

- **Abnormality Judgement**

If the duration of time while the following conditions are met is longer than the time indicated, judge as NG.

Judgement Value

Malfunction Criteria	Threshold Value
Battery voltage	≥ 10.9 V
Estimate ambient temperature	≥ –7 °C (19.4 °F)
Thermostat malfunction diagnosis	Incomplete
Engine coolant temperature at engine starting	< 55 °C (131 °F)
Estimated coolant temperature	≥ 70 °C (158 °F)
Engine coolant temperature	≤ 70 °C (158 °F)
(Estimated – Measured) Engine coolant temperature	> 30 °C (86 °F)
Vehicle speed	≥ 30 km/h (18.6 MPH)

Time Needed for Diagnosis: 64 ms × 3 time(s) × 152 time(s)
Malfunction Indicator Light Illumination: Illuminates when malfunction occurs in 2 continuous driving cycles.

- **Normality Judgement**

Judge as OK and clear the NG if the continuous time while the following conditions are established is more than the predetermined time.

Judgement Value

Malfunction Criteria	Threshold Value
Battery voltage	≥ 10.9 V
Estimate ambient temperature	≥ –7 °C (19.4 °F)
Thermostat malfunction diagnosis	Incomplete
Engine coolant temperature at engine starting	< 55 °C (131 °F)
Engine coolant temperature	≥ 70 °C (158 °F)
(Estimated – Measured) Engine coolant temperature	≤ 30 °C (86 °F)

Time Needed for Diagnosis: Less than 1 second

Z: DTC P0131 O2 SENSOR CIRCUIT LOW VOLTAGE (BANK 1 SENSOR 1)

1. OUTLINE OF DIAGNOSIS

Detect the open or short circuit of sensor.
Judge as NG when the element applied voltage is out of range, or the element current is out of range.

2. COMPONENT DESCRIPTION

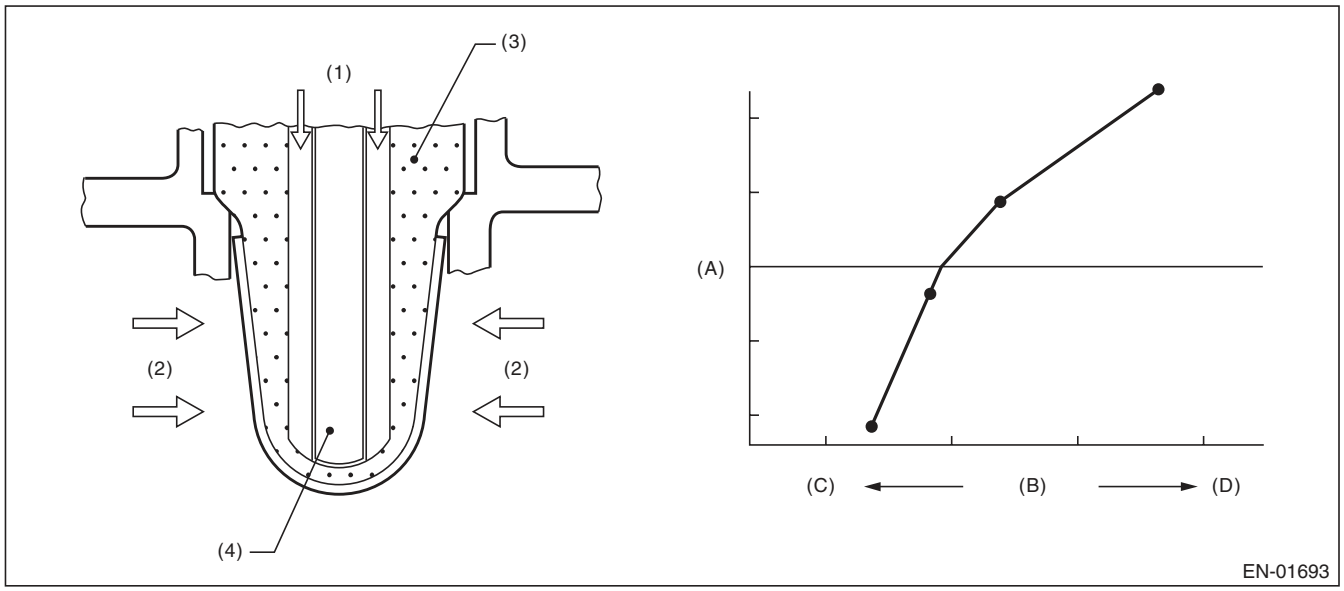

(A) Electromotive force
(B) Air fuel ratio
(C) Lean
(D) Rich

(1) Atmosphere
(2) Exhaust gas
(3) ZrO_2
(4) Ceramic heater

3. ENABLE CONDITION

Secondary Parameters	Enable Conditions
Battery voltage	≥ 10.9 V

4. GENERAL DRIVING CYCLE

Always perform the diagnosis continuously.

5. DIAGNOSTIC METHOD

- **Abnormality Judgement**

If the duration of time while the following conditions are met is longer than the time indicated, judge as NG.

Judgement Value

Malfunction Criteria	Threshold Value
Input voltage or Input current	< 1.8 V < –0.01 A

Time Needed for Diagnosis: 1000 ms
Malfunction Indicator Light Illumination: Illuminates as soon as a malfunction occurs.

- **Normality Judgement**

Judge as OK and clear the NG if the continuous time while the following conditions are established is more than the predetermined time.

Judgement Value

Malfunction Criteria	Threshold Value
Input voltage	≥ 1.8 V
Input current	≥ –0.01 A

Time Needed for Diagnosis: Less than 1 second

AA:DTC P0132 O2 SENSOR CIRCUIT HIGH VOLTAGE (BANK 1 SENSOR 1)

1. OUTLINE OF DIAGNOSIS

Detect the open or short circuit of sensor.
Judge as NG when the element applied voltage is out of range, or the element current is out of range.

2. COMPONENT DESCRIPTION

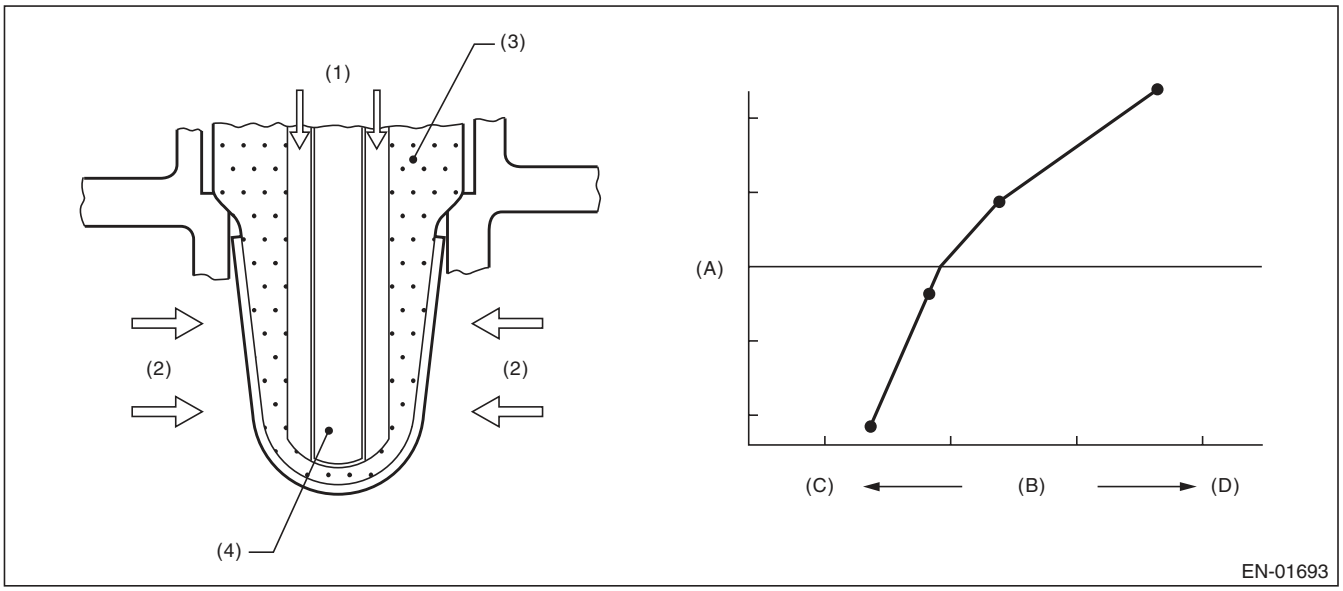

(A) Electromotive force
(B) Air fuel ratio
(C) Lean
(D) Rich
(1) Atmosphere
(2) Exhaust gas
(3) ZrO_2
(4) Ceramic heater

3. ENABLE CONDITION

Secondary Parameters	Enable Conditions
Battery voltage	≥ 10.9 V

4. GENERAL DRIVING CYCLE

Always perform the diagnosis continuously.

5. DIAGNOSTIC METHOD

- **Abnormality Judgement**

If the duration of time while the following conditions are met is longer than the time indicated, judge as NG.

Judgement Value

Malfunction Criteria	Threshold Value
Input voltage or Input current	> 3.8 V > 0.01 A

Time Needed for Diagnosis: 1000 ms
Malfunction Indicator Light Illumination: Illuminates as soon as a malfunction occurs.

- **Normality Judgement**

Judge as OK and clear the NG if the continuous time while the following conditions are established is more than the predetermined time.

Judgement Value

Malfunction Criteria	Threshold Value
Input voltage	≤ 3.8 V
Input current	≤ 0.01 A

Time Needed for Diagnosis: Less than 1 second

AB:DTC P0133 O2 SENSOR CIRCUIT SLOW RESPONSE (BANK 1 SENSOR 1)

1. OUTLINE OF DIAGNOSIS

Detect the slow response of front oxygen (A/F) sensor.
Front oxygen (A/F) sensor cover has some ventilation holes for exhaust gas. Clogged ventilation holes are diagnosed.
When the holes are clogged, the A/F output variation becomes slow comparing with the actual A/F variation because oxygen which reaches the zirconia layer is insufficient. Therefore, if the sensor cover holes are clogged, the rich to lean judgment in the ECM is delayed when the actual change from rich to lean occurs.
Judge as NG when the actual movement in comparison to the ECM control amount is slow.

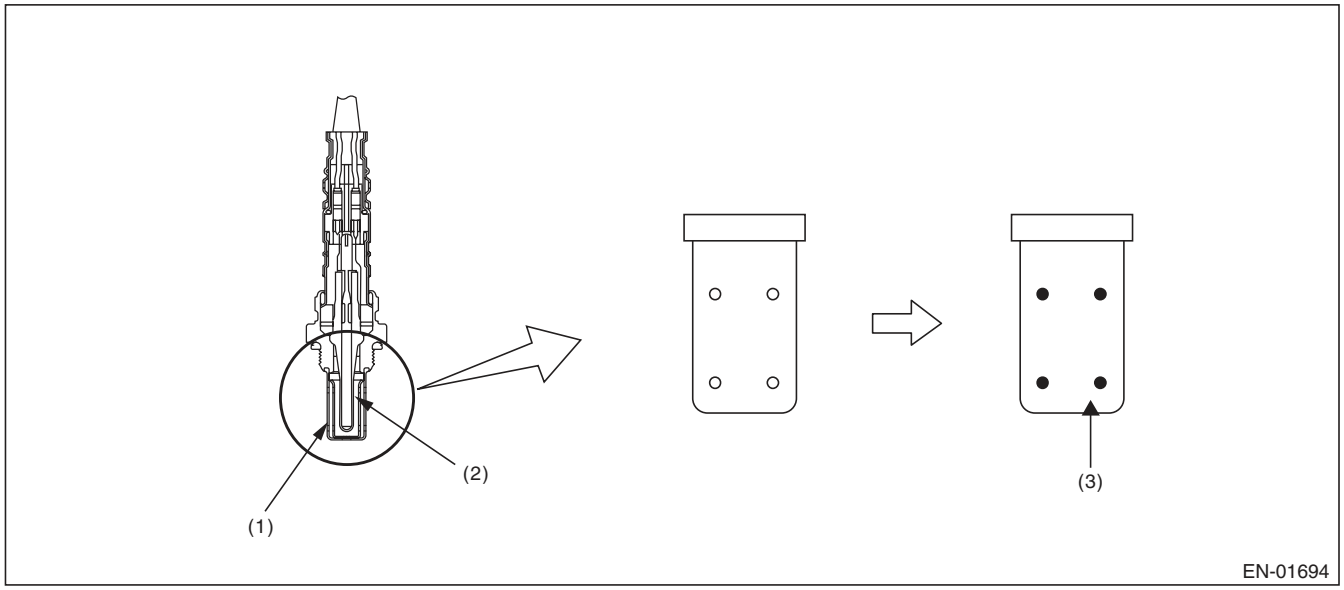

(1) Cover (2) Zirconia (3) Clogging

2. COMPONENT DESCRIPTION

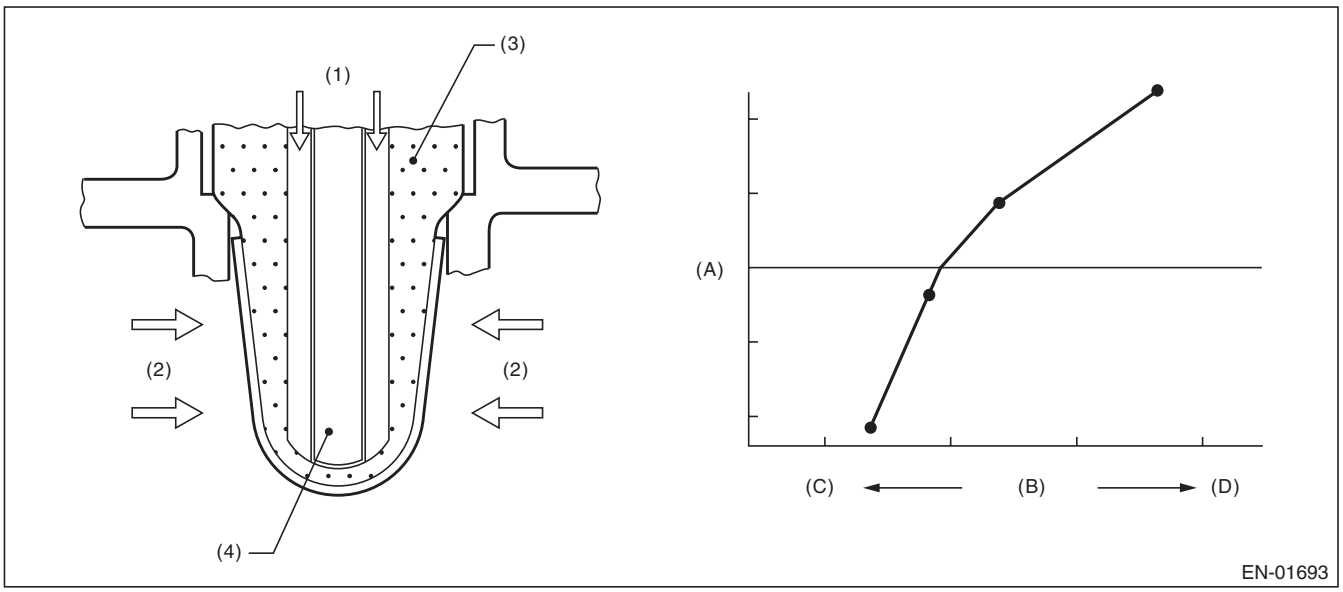

(A) Electromotive force
(B) Air fuel ratio
(C) Lean
(D) Rich
(1) Atmosphere
(2) Exhaust gas
(3) ZrO_2
(4) Ceramic heater

3. ENABLE CONDITION

Secondary Parameters	Enable Conditions
Time needed for all secondary parameters to be in enable conditions	≥ 1024 ms
Battery voltage	≥ 10.9 V
Barometric pressure	> 75 kPa (563 mmHg, 22.2 inHg)
Closed loop control with main feedback	Operation
Front oxygen (A/F) sensor impedance	0 Ω — 50 Ω
Elapsed time after starting the engine	≥ 120000 ms
Engine coolant temperature	≥ 70 °C (158 °F)
Engine speed	1000 rpm — 3200 rpm
Vehicle speed	10 km/h — 120 km/h (6.2 MPH — 74.6 MPH)
Amount of intake air	10 g/s — 31 g/s (0.35 oz/s — 1.09 oz/s)
Engine load	< 0.02 g/rev (0 oz/rev)
Learning value of EVAP conc. during purge	< 0.2
Total time of operating canister purge	≥ 19.9 s

4. GENERAL DRIVING CYCLE

Perform diagnosis only once at a constant speed of 10 km/h — 120 km/h (6.2 MPH — 74.6 MPH) 120000 ms or more after starting the engine.

5. DIAGNOSTIC METHOD

Calculate faf difference every 32ms × 4 , and the λ value difference. Calculate the diagnosis value after calculating 1640 time(s).

- **Abnormality Judgement**

If the duration of time while the following conditions are met is longer than the time indicated, judge as NG.

Judgement Value

Malfunction Criteria	Threshold Value
parafca = td2faf/td2lmd where, td2faf (N) = td2faf (n–1) + |d2faf (n)| td2lmd (N) = td2lmd (n–1) + |d2lmd (n)| add up to 32 ms × 4 × 1640 time(s). d2faf (n) = (faf (n) – faf (n–1)) – (faf (n–1) – faf (n–2)) d2lmd (n) = (lmd (n) – lmd (n–1)) – (lmd (n–1) – lmd (n–2)) faf = main feedback compensation coefficient every 128 milliseconds lmd = output lambda every 128 milliseconds	> 0.644 (AT model) > 0.444 (MT model)

Time Needed for Diagnosis: 32 ms × 4 × 1640 time(s)
Malfunction Indicator Light Illumination: Illuminates when malfunction occurs in 2 continuous driving cycles.

- **Normality Judgement**

Judge as OK and clear the NG if the continuous time while the following conditions are established is more than the predetermined time.

Judgement Value

Malfunction Criteria	Threshold Value
parafca = td2faf/td2lmd where, td2faf (N) = td2faf (n–1) + |d2faf (n)| td2lmd (N) = td2lmd (n–1) + |d2lmd (n)| add up to 32 ms × 4 × 1640 time(s). d2faf (n) = (faf (n) – faf (n–1)) – (faf (n–1) – faf (n–2)) d2lmd (n) = (lmd (n) – lmd (n–1)) – (lmd (n–1) – lmd (n–2)) faf = main feedback compensation coefficient every 128 milliseconds lmd = output lambda every 128 milliseconds	≤ 0.644 (AT model) ≤ 0.444 (MT model)

Time Needed for Diagnosis: 32 ms × 4 × 1640 time(s)

AC:DTC P0134 O2 SENSOR CIRCUIT NO ACTIVITY DETECTED (BANK 1 SENSOR 1)

1. OUTLINE OF DIAGNOSIS

Detect open circuits of the sensor.
Judge as NG when the impedance of the element is large.

2. COMPONENT DESCRIPTION

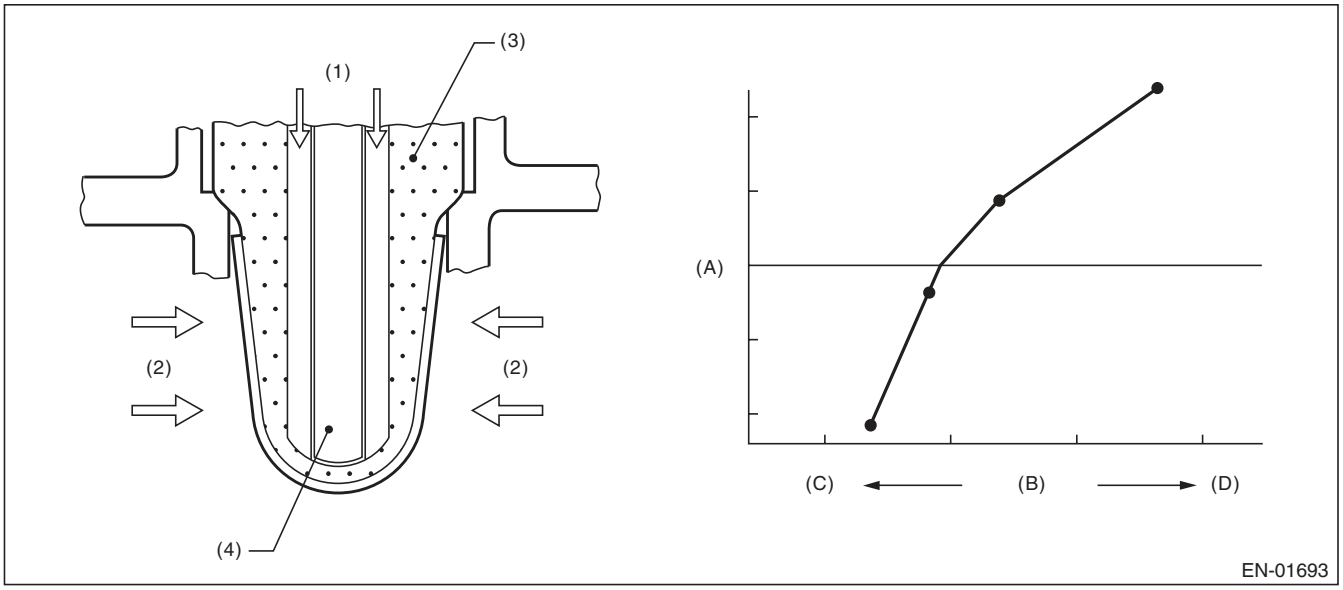

(A)	Electromotive force	(C)	Lean	(D)	Rich
(B)	Air fuel ratio				
(1)	Atmosphere	(3)	ZrO_2	(4)	Ceramic heater
(2)	Exhaust gas				

3. ENABLE CONDITION

Secondary Parameters	Enable Conditions
None	

4. GENERAL DRIVING CYCLE

Always perform the diagnosis continuously.

5. DIAGNOSTIC METHOD

- **Abnormality Judgement**

If the duration of time while the following conditions are met is longer than the time indicated, judge as NG.

Judgement Value

Malfunction Criteria	Threshold Value
Battery voltage	≥ 10.9 V
Time of heater control duty at 70 % or more	≥ 36000 ms
Front oxygen (A/F) sensor impedance.	> 500 Ω

Time Needed for Diagnosis: 5000 ms
Malfunction Indicator Light Illumination: Illuminates as soon as a malfunction occurs.

- **Normality Judgement**

Judge as OK and clear the NG if the continuous time while the following conditions are established is more than the predetermined time.

Judgement Value

Malfunction Criteria	Threshold Value
Battery voltage	≥ 10.9 V
Front oxygen (A/F) sensor impedance.	≤ 500 Ω

Time Needed for Diagnosis: Less than 1 second

AD:DTC P0137 O2 SENSOR CIRCUIT LOW VOLTAGE (BANK 1 SENSOR 2)

1. OUTLINE OF DIAGNOSIS

Detect continuity NG of the oxygen sensor. If the oxygen sensor voltage reading is not within the probable range considering the operating conditions, judge as NG.

2. COMPONENT DESCRIPTION

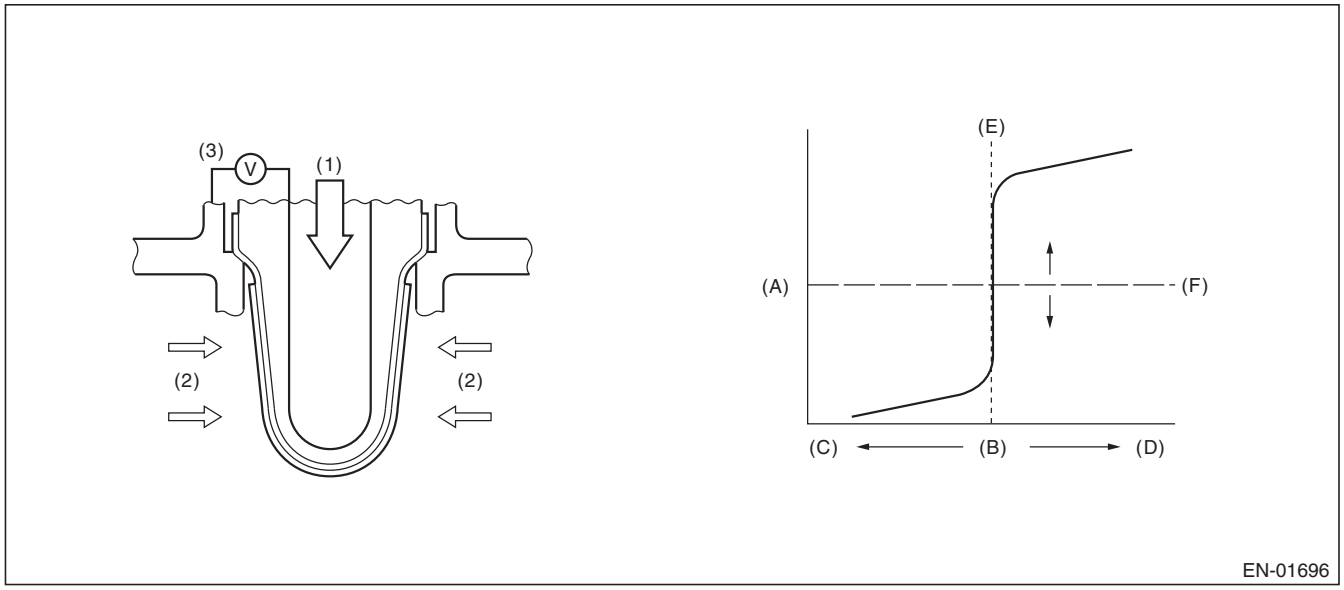

(A)	Electromotive force	(C)	Rich	(E)	Theoretical air fuel ratio
(B)	Air fuel ratio	(D)	Lean	(F)	Comparative voltage
(1)	Atmosphere	(2)	Exhaust gas	(3)	Electromotive force

3. ENABLE CONDITION

Used for abnormality judgment

Secondary Parameters	Enable Conditions
High	
Secondary air system	Not in operation
Closed loop control at the oxygen sensor	In operation
Misfire detection every 200 rotations	< 5 time(s)
Front oxygen (A/F) sensor compensation coefficient	Not in limit value
Battery voltage	≥ 10.9 V
Engine coolant temperature	≥ 70 °C (158 °F)
Low (1)	
Secondary air system	Not in operation
Closed loop control at the oxygen sensor	In operation
Misfire detection every 200 rotations	< 5 time(s)
Front oxygen (A/F) sensor compensation coefficient	Not in limit value
Battery voltage	≥ 10.9 V
Engine coolant temperature	≥ 70 °C (158 °F)
Amount of intake air	≥ 10 g/s (0.35 oz/s)
Low (2)	
Secondary air system	Not in operation
Closed loop control at the oxygen sensor	In operation
Misfire detection every 200 rotations	< 5 time(s)
Front oxygen (A/F) sensor compensation coefficient	Not in limit value
Battery voltage	≥ 10.9 V
Engine coolant temperature	≥ 70 °C (158 °F)
Amount of intake air	< 10 g/s (0.35 oz/s)
Current continuation time of the rear oxygen sensor heater	≥ 25000 ms
Low (3)	
Secondary air system	Not in operation
Closed loop control at the oxygen sensor	In operation
Misfire detection every 200 rotations	< 5 time(s)
Front oxygen (A/F) sensor compensation coefficient	Not in limit value
Battery voltage	≥ 10.9 V
Engine coolant temperature	≥ 70 °C (158 °F)
Amount of intake air	< 10 g/s (0.35 oz/s)
Current continuation time of the rear oxygen sensor heater	≥ 25000 ms
Fuel cut	Experienced

Used for normality judgment

Secondary Parameters	Enable Conditions
Secondary air system	Not in operation
Closed loop control at the oxygen sensor	In operation
Misfire detection every 200 rotations	< 5 time(s)
Front oxygen (A/F) sensor compensation coefficient	Not in limit value
Battery voltage	≥ 10.9 V
Engine coolant temperature	≥ 70 °C (158 °F)

4. GENERAL DRIVING CYCLE

After starting the engine, continuously perform the diagnosis with the same engine condition.

5. DIAGNOSTIC METHOD

• Abnormality Judgement

If the duration of time while the following conditions are met is longer than the time indicated, judge as NG.

Judgement Value

Malfunction Criteria	Threshold Value	DTC
High Sensor output voltage	> 1.2 V	P0138
Low Sensor output voltage	< 0.03 V	P0137

Time Needed for Diagnosis:

High: 2500 ms
Low (1): 20000 ms
Low (2): 150000 ms
Low (3): Value from Map

Map

Fuel Cut Time (millisecond)	0	2000	10000
Time needed for diagnosis (millisecond)	150000	150000	150000

Malfunction Indicator Light Illumination: Illuminates when malfunction occurs in 2 continuous driving cycles.

• Normality Judgement

Judge as OK and clear the NG if the continuous time while the following conditions are established is more than the predetermined time.

Judgement Value

Malfunction Criteria	Threshold Value	DTC
High Sensor output voltage	≤ 1.2 V	P0138
Low Sensor output voltage	≥ 0.03 V	P0137

Time Needed for Diagnosis:

High: Less than 1 second
Low (1): Less than 1 second
Low (2): Less than 1 second
Low (3): Less than 1 second

AE:DTC P0138 O2 SENSOR CIRCUIT HIGH VOLTAGE (BANK 1 SENSOR 2)

1. OUTLINE OF DIAGNOSIS

NOTE:
For the detection standard, refer to DTC P0137. <Ref. to GD(H4DOTC)-55, DTC P0137 O2 SENSOR CIRCUIT LOW VOLTAGE (BANK 1 SENSOR 2), Diagnostic Trouble Code (DTC) Detecting Criteria.>

AF:DTC P0139 O2 SENSOR CIRCUIT SLOW RESPONSE (BANK 1 SENSOR 2)

1. OUTLINE OF DIAGNOSIS

Detect the slow response of the oxygen sensor.
Judge as NG if either the rich to lean response diagnosis or lean to rich response diagnosis is NG, and Judge as OK if both are OK.
[Rich → lean diagnosis response]
1. Measure the response time for oxygen sensor output changes when the A/F ratio changes to rich to lean. If the measured response time is larger than the threshold value, it is NG. If it is smaller, it is OK.
2. Judge as NG when the oxygen sensor voltage is large (rich) when recovering from a deceleration fuel cut.
[Lean → rich diagnosis response]
1. Measure the response time for oxygen sensor output changes when the A/F ratio changes to lean to rich. If the measured response time is larger than the threshold value, it is NG.
2. Judge as NG when the oxygen sensor voltage remains small when recovering from a deceleration fuel cut.

DIAGNOSTIC METHOD

Measure the response time of the output change of the oxygen sensor when the A/F ratio changes to rich to lean. And Judge as NG when the measured response time is larger than the threshold value.

2. COMPONENT DESCRIPTION

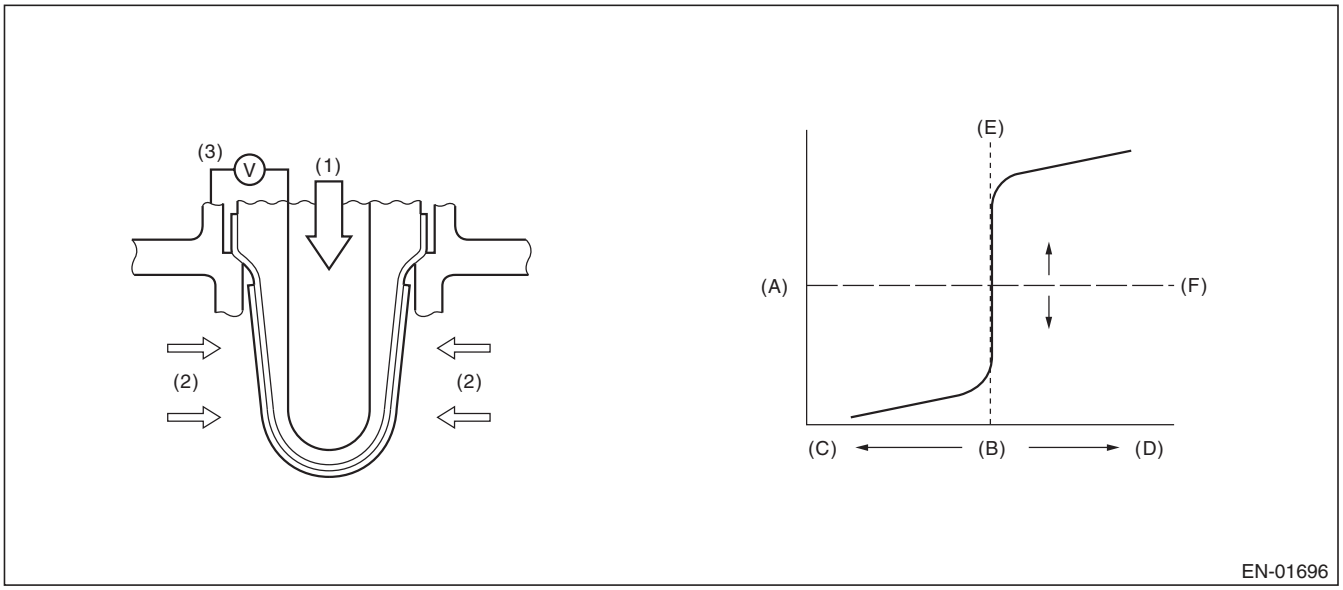

(A)	Electromotive force	(C)	Rich	(E)	Theoretical air fuel ratio
(B)	Air fuel ratio	(D)	Lean	(F)	Comparative voltage
(1)	Atmosphere	(2)	Exhaust gas	(3)	Electromotive force

3. ENABLE CONDITION

Rich → lean diagnosis response

Secondary Parameters	Enable Conditions
Battery voltage	≥ 10.9 V
A/F main feedback control condition	Completed
Deceleration fuel cut time is 5000 ms or more.	Experienced
After fuel cut	≥ 2000 ms
Current calculation time of the rear oxygen sensor heater	≥ 60000 ms
Current continuation time of the rear oxygen sensor heater	≥ 30000 ms
Estimated catalyst temperature	≥ 400 °C (752 °F)
Number of deceleration fuel cut	≥ 1 time(s)

4. GENERAL DRIVING CYCLE

Perform the diagnosis only once when deceleration fuel cut occurs after rapid acceleration. (Pay attention to the oxygen sensor voltage for the timing of the deceleration.)

5. DIAGNOSTIC METHOD

When the oxygen sensor output voltage changes from 0.55 V (rich) to 0.15 V (lean), calculate the minimum response time for output change between 0.5 V and 0.2 V for the judgment criteria.

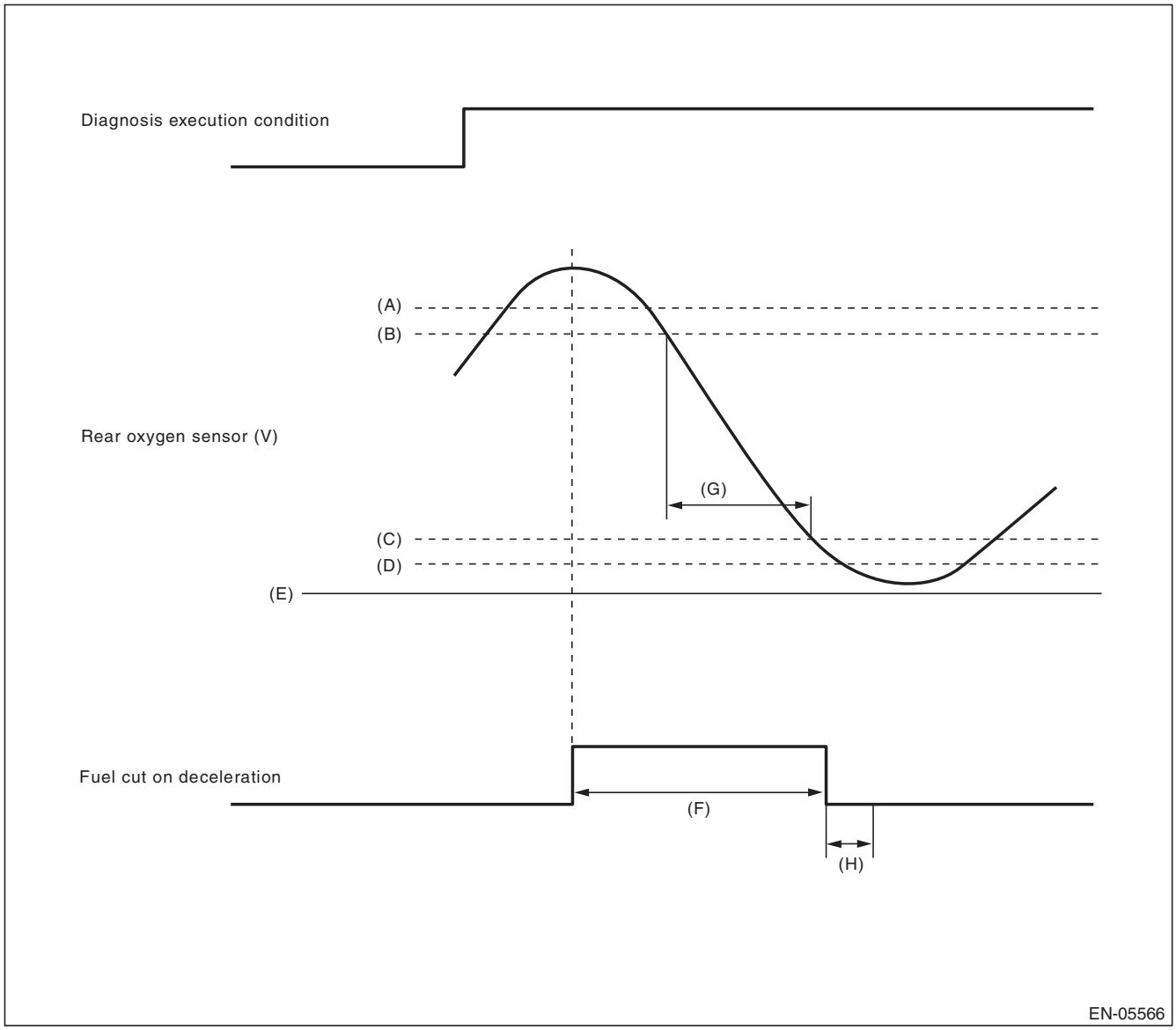

(A) 0.55 V
(B) 0.5 V
(C) 0.2 V
(D) 0.15 V
(E) 0 V
(F) More than 5000 ms
(G) Measure the response time.
(H) Execute the malfunction judgment in 2000 ms from the recovery of fuel cut on deceleration.

- **Abnormality Judgement**

1) Judge as NG when the judgment value is larger than the threshold value after deceleration fuel cut.
Response time (diagnosis value) > threshold value → abnormal

NOTE:
Variation time of rear oxygen sensor output voltage is short during fuel cut in deceleration. NG judgment should be performed after deceleration fuel cut. Even without deceleration fuel cut, judge as OK if the value is below the threshold.
When the deceleration fuel cut time is 5000 ms or more, judge as NG if the following criteria are met 2000 ms after recovering from the deceleration fuel cut.
2) Judge as NG when the oxygen sensor voltage at recovery from a deceleration fuel cut, is large.
If the fuel cut time in a deceleration fuel cut is long (5000 ms or more), and even after recovering from a deceleration fuel cut, the oxygen sensor voltage is high (0.55 V or more), judge as NG.

Judgement Value

Malfunction Criteria	Threshold Value
Shortest time change from rich (0.5 V O_2 output) to lean (0.2 V) when voltage reduces from 0.55 V to 0.15 V	> 837 ms
or	
Longest time over 0.55 V	≥ 2000 ms

Time Needed for Diagnosis: 1 time(s)
Malfunction Indicator Light Illumination: Illuminates when malfunction occurs in 2 continuous driving cycles.

- **Normality Judgement**

1) Regardless of a deceleration fuel cut, if the response time (diagnosis value) when the oxygen sensor voltage has changed from rich to lean is shorter than the threshold value (judgment value), judge as a normal condition.
Response time (diagnosis value) ≤ threshold value → normal
2) Do not judge as a normal condition.
Judge as OK and clear the NG if the following conditions are established.

Judgement Value

Malfunction Criteria	Threshold Value
Shortest time change from rich (0.5 V O_2 output) to lean (0.2 V) when voltage reduces from 0.55 V to 0.15 V	≤ 837 ms

Time Needed for Diagnosis: 1 time(s)

6. ENABLE CONDITION

Lean → rich response diagnosis

Secondary Parameters	Enable Conditions
Battery voltage	≥ 10.9 V
A/F main feedback control condition	Completed
Deceleration fuel cut time is 6000 ms or more.	Experienced
After fuel cut	≥ 2000 ms
Current calculation time of the rear oxygen sensor heater	≥ 0 ms
Current continuation time of the rear oxygen sensor heater	≥ 0 ms
Estimated catalyst temperature	≥ 0 °C (32 °F)
Number of deceleration fuel cut	≥ 1 time(s)

7. GENERAL DRIVING CYCLE

Perform the diagnosis only once when deceleration fuel cut occurs after rapid acceleration. (Pay attention to the oxygen sensor voltage for the timing of the deceleration.)

8. DIAGNOSTIC METHOD

When the oxygen sensor output voltage changes from 0.25 V (lean) to 0.55 V (rich), calculate the minimum response time for output change between 0.3 V and 0.5 V for the judgment criteria.

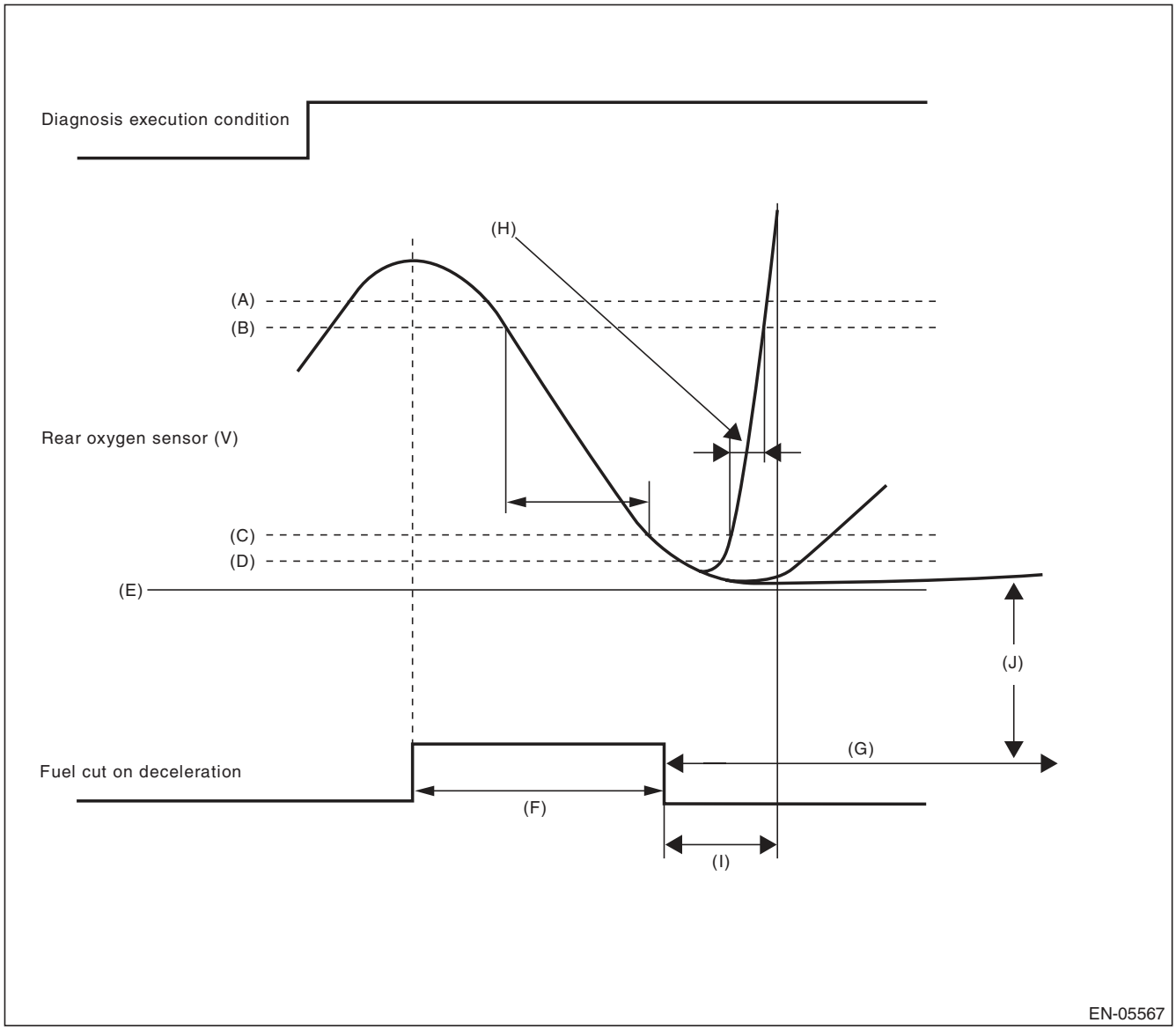

(A) 0.55 V
(B) 0.5 V
(C) 0.3 V
(D) 0.25 V
(E) 0 V
(F) More than 5 seconds
(G) More than 120000 ms
(H) Measure the response time (diagnostic value).
(I) Execute the malfunction judgment in 2000 ms from the recovery of fuel cut on deceleration.
(J) Judge NG when the voltage of rear oxygen sensor is 0.25 V or less for 120000 ms or more after recovery of fuel cut on deceleration.

- **Abnormality Judgement**

1) Judge as NG when the judgment value is larger than the threshold value after deceleration fuel cut.
Response time (diagnosis value) > threshold value → abnormal
2) If the oxygen sensor voltage is small after recovering from a deceleration fuel cut, and remains small, judge as NG.

Judgement Value

Malfunction Criteria	Threshold Value
Shortest time change from lean (0.3 V O_2 output) to rich (0.5 V) when voltage changes from 0.25 V to 0.55 V	> 2000 ms
or	
Longest time under 0.25 V	≥ 120000 ms

Time Needed for Diagnosis: 1 time(s)
Malfunction Indicator Light Illumination: Illuminates when malfunction occurs in 2 continuous driving cycles.

- **Normality Judgement**

1) Regardless of a deceleration fuel cut, if the response time (diagnosis value) when the oxygen sensor voltage has changed from rich to lean is shorter than the threshold value (judgment value), judge as a normal condition.
Response time (diagnosis value) ≤ threshold value → normal
2) Do not judge as a normal condition.
Judge as OK and clear the NG if the following conditions are established.

Judgement Value

Malfunction Criteria	Threshold Value
Shortest time change from lean (0.3 V O_2 output) to rich (0.5 V) when voltage changes from 0.25 V to 0.55 V	≤ 2000 ms

Time Needed for Diagnosis: 1 time(s)

AG:DTC P0140 O2 SENSOR CIRCUIT NO ACTIVITY DETECTED (BANK1 SENSOR2)

1. OUTLINE OF DIAGNOSIS

Detect the rear oxygen sensor open or short circuit. Judge as NG when the rear oxygen sensor voltage can be determined to be abnormal considering conditions such as intake air amount, engine coolant temperature, main feedback control and deceleration fuel cut.

2. COMPONENT DESCRIPTION

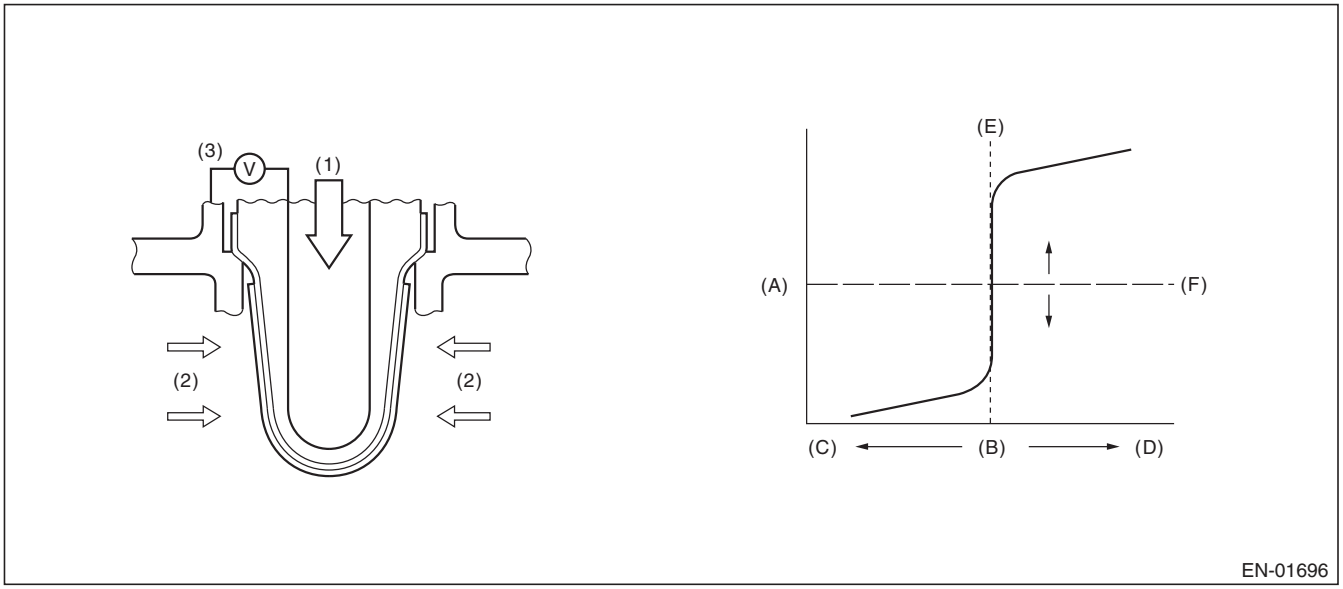

(A)	Electromotive force	(C)	Rich	(E)	Theoretical air fuel ratio
(B)	Air fuel ratio	(D)	Lean	(F)	Comparative voltage
(1)	Atmosphere	(2)	Exhaust gas	(3)	Electromotive force

3. ENABLE CONDITION (USED ONLY FOR MALFUNCTION JUDGMENT)

Secondary Parameters	Enable Conditions
Closed loop control at the rear oxygen sensor	In operation
Target output voltage of rear oxygen sensor	≥ 0.55 V + 0.05 V
Amount of intake air	≥ 10 g/s (0.35 oz/s)
Engine coolant temperature	≥ 70 °C (158 °F)
Misfire detection every 200 rotations	< 5 time(s)
Front oxygen (A/F) sensor compensation coefficient	Not in limit value
Battery voltage	≥ 10.9 V
Deceleration fuel cut of 5000 ms or more.	Experienced

4. GENERAL DRIVING CYCLE

Perform the diagnosis once after starting the engine.

5. DIAGNOSTIC METHOD

- **Abnormality Judgement**

If the duration of time while the following conditions are met is longer than the time indicated, judge as NG.

Judgement Value

Malfunction Criteria	Threshold Value
Minimum output voltage or Maximum output voltage	> 0.15 V < 0.55 V

Time Needed for Diagnosis: 200000 ms
Malfunction Indicator Light Illumination: Illuminates when malfunction occurs in 2 continuous driving cycles.

- **Normality Judgement**

Judge as OK and clear the NG if the following conditions are established.

Judgement Value

Malfunction Criteria	Threshold Value
Diagnosis of the rear oxygen sensor voltage low side	Incomplete
Minimum output voltage	≤ 0.15 V
Maximum output voltage	≥ 0.55 V

AH:DTC P0171 SYSTEM TOO LEAN (BANK 1)

1. OUTLINE OF DIAGNOSIS

Detect fuel system malfunction by the amount of main feedback control.

DIAGNOSTIC METHOD

Fuel system is diagnosed by comparing the target air fuel ratio calculated by ECM with the actual air fuel ratio measured by sensor.

2. ENABLE CONDITION

Secondary Parameters	Enable Conditions
A/F main learning system	In operation
Engine coolant temperature	≥ 70 °C (158 °F)
Engine load change	< 0.02 g/rev (0 oz/rev)
Engine load	≥ Value of Map 1

Map1

Engine speed (rpm)	Idling	800	1200	1600	2000	2400	2800	3200	3600	4000	4400
Measured value (g(oz)/rev)	Non-turbo	0.228 (0.01)	0.22 (0.01)	0.22 (0.01)	0.22 (0.01)	0.228 (0.01)	0.23 (0.01)	0.234 (0.01)	0.242 (0.01)	0.25 (0.01)	0.25 (0.01)

3. GENERAL DRIVING CYCLE

Perform the diagnosis continuously at idling or at a constant speed after warming up the engine.

4. DIAGNOSTIC METHOD

- **Abnormality Judgement**

Compare the diagnosed value (fsobd) with the threshold value, and if a condition meeting the malfunction criteria below continues for 10 s × 5 time(s) or more, judge that there is a fault in the fuel system.

Judgement Value

Malfunction Criteria	Threshold Value
fsobd = (sglmd – tglmda) + faf + flaf In this case: sglmd = measured lambda tglmda = target lambda faf = main feedback compensation coefficient every 64 milliseconds flaf = main feedback learning compensation coefficient	≥ Value of Map 2

Map2

Amount of air (g (oz)/s)	0 (0)	2.34375 (0.08)	4.6875 (0.17)	7.03125 (0.25)	9.375 (0.33)	11.71875 (0.41)	14.0625 (0.5)
fsobdL1 (%)	1.4	1.4	1.368623	1.319185	1.26975	1.265	1.265

Time Needed for Diagnosis: 10 s × 5 time(s)
Malfunction Indicator Light Illumination: Illuminates when malfunction occurs in 2 continuous driving cycles.

- **Normality Judgement**

Judge as OK and clear the NG if the continuous time while the following conditions are established is more than the predetermined time.

Judgement Value

Malfunction Criteria	Threshold Value
fsobd = (sglmd – tglmda) + faf + flaf	< 1.2

Time Needed for Diagnosis: 10 s

AI: DTC P0172 SYSTEM TOO RICH (BANK 1)

1. OUTLINE OF DIAGNOSIS

Detect fuel system malfunction by the amount of main feedback control.

Diagnostic method

Fuel system is diagnosed by comparing the target air fuel ratio calculated by ECM with the actual air fuel ratio measured by sensor.

2. ENABLE CONDITION

Secondary Parameters	Enable Conditions
A/F main learning system	In operation
Engine coolant temperature	≥ 70 °C (158 °F)
Engine load change	≤ 0.02 g/rev (0 oz/rev)
Learning value of EVAP conc.	< 0.1
Cumulative time of canister purge after engine start	≥ 20 s
Continuous period after canister purge starting	≥ 29884 ms
Engine load	≥ Value of Map 1

Map1

Engine speed (rpm)	Idling	800	1200	1600	2000	2400	2800	3200	3600	4000	4400
Measured value (g(oz)/rev)	Non-turbo	0.228 (0.01)	0.22 (0.01)	0.22 (0.01)	0.22 (0.01)	0.228 (0.01)	0.23 (0.01)	0.234 (0.01)	0.242 (0.01)	0.25 (0.01)	0.25 (0.01)

3. GENERAL DRIVING CYCLE

Perform the diagnosis continuously at idling or at a constant speed after warming up the engine.

4. DIAGNOSTIC METHOD

- **Abnormality Judgement**

Compare the diagnosed value (fsobd) with the threshold value, and if a condition meeting the malfunction criteria below continues for 10 s × 5 time(s) or more, judge that there is a fault in the fuel system.

Judgement Value

Malfunction Criteria	Threshold Value
fsobd = (sglmd – tglmda) + faf + flaf In this case: sglmd = measured lambda tglmda = target lambda faf = main feedback compensation coefficient every 64 milliseconds flaf = main feedback learning compensation coefficient	< Value of Map 2

Map2

Amount of air (g (oz)/s)	0 (0)	2.34375 (0.08)	4.6875 (0.17)	7.03125 (0.25)	9.375 (0.33)	11.7187 5 (0.41)	14.0625 (0.5)
fsobdL1 (%)	0.6	0.6	0.63137	0.68082	0.73025	0.73025	0.73025

Time Needed for Diagnosis: 10 s × 5 time(s)
Malfunction Indicator Light Illumination: Illuminates when malfunction occurs in 2 continuous driving cycles.

- **Normality Judgement**

Judge as OK when the malfunction criteria below continues for 10 seconds.

Judgement Value

Malfunction Criteria	Threshold Value
fsobd = (sglmd – tglmda) + faf + flaf	≥ 0.8

Time Needed for Diagnosis: 10 s

AJ:DTC P0181 FUEL TEMPERATURE SENSOR “A” CIRCUIT RANGE/ PERFORMANCE

1. OUTLINE OF DIAGNOSIS

Detect faults in the fuel temperature sensor output properties.
Diagnosis is performed in two methods (drift diagnosis and stuck diagnosis). If either is NG, judge as NG. If both are OK, Judge as OK and clear the NG.

Drift Diagnosis

Normally fuel temperature is lower than engine coolant temperature. When the fuel temperature becomes higher than the engine coolant temperature, the range is considered to be shifted, and judged as NG.

Stuck Diagnosis

As the engine warms up (cumulative amount of intake air after starting is large), if the fuel temperature which should rise does not, determine as being stuck and NG.

2. COMPONENT DESCRIPTION

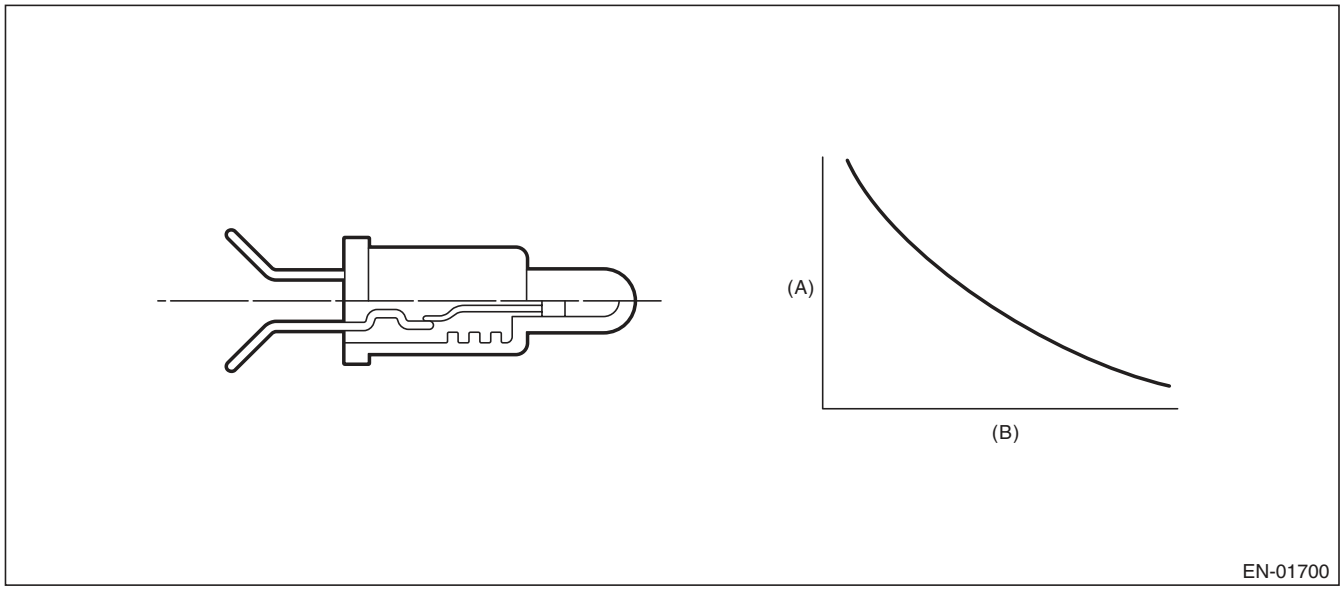

(A) Resistance value (Ω) (B) Fuel temperature °C (°F)

3. ENABLE CONDITION

DRIFT DIAGNOSIS

Secondary Parameters	Enable Conditions
None	

4. GENERAL DRIVING CYCLE

Always perform the diagnosis continuously.

5. DIAGNOSTIC METHOD

• Abnormality Judgement

If the duration of time while the following conditions are met is longer than the time indicated, judge as NG.

Judgement Value

Malfunction Criteria	Threshold Value
Fuel level	≥ 9.6 ℓ (2.54 US gal, 2.11 Imp gal)
Elapsed time after starting the engine	≥ 20 s
Engine coolant temperature – Engine coolant temperature at engine start	> 10 °C (50 °F)
Fuel temperature – Engine coolant temperature	≥ 10 °C (50 °F)
Battery voltage	≥ 10.9 V

Time Needed for Diagnosis: 120 s
Malfunction Indicator Light Illumination: Illuminates when malfunction occurs in 2 continuous driving cycles.

• Normality Judgement

Judge as OK and clear the NG if the continuous time while the following conditions are established is more than the predetermined time.

Judgement Value

Malfunction Criteria	Threshold Value
Fuel level	≥ 9.6 ℓ (2.54 US gal, 2.11 Imp gal)
Elapsed time after starting the engine	≥ 20 s
Engine coolant temperature – Engine coolant temperature at engine start	> 10 °C (50 °F)
Fuel temperature – Engine coolant temperature	< 10 °C (50 °F)
Battery voltage	≥ 10.9 V
Engine coolant temperature	< 70 °C (158 °F)

Time Needed for Diagnosis: Less than 1 second

6. ENABLE CONDITION

Stuck Diagnosis

Secondary Parameters	Enable Conditions
Elapsed time after starting the engine	≥ 20000 ms
Battery voltage	≥ 10.9 V

7. GENERAL DRIVING CYCLE

Always perform diagnosis after 20 seconds have passed since the engine started.

8. DIAGNOSTIC METHOD

- **Abnormality Judgement**

Judge as NG when the following conditions are established.

Judgement Value

Malfunction Criteria	Threshold Value
Accumulated amount of intake air	≥ 551043 g (19435.29 oz)
Fuel temperature difference between Max. and Min.	< 2 °C (35.6 °F)

Time Needed for Diagnosis: Less than 1 second
Malfunction Indicator Light Illumination: Illuminates when malfunction occurs in 2 continuous driving cycles.

- **Normality Judgement**

Judge as OK and clear the NG if the following conditions are established.

Judgement Value

Malfunction Criteria	Threshold Value
Fuel temperature difference between Max. and Min.	≥ 2 °C (35.6 °F)

Time Needed for Diagnosis: Less than 1 second

AK:DTC P0182 FUEL TEMPERATURE SENSOR “A” CIRCUIT LOW INPUT

1. OUTLINE OF DIAGNOSIS

Detect the open or short circuit of fuel temperature sensor.
Judge as NG if out of specification.

2. COMPONENT DESCRIPTION

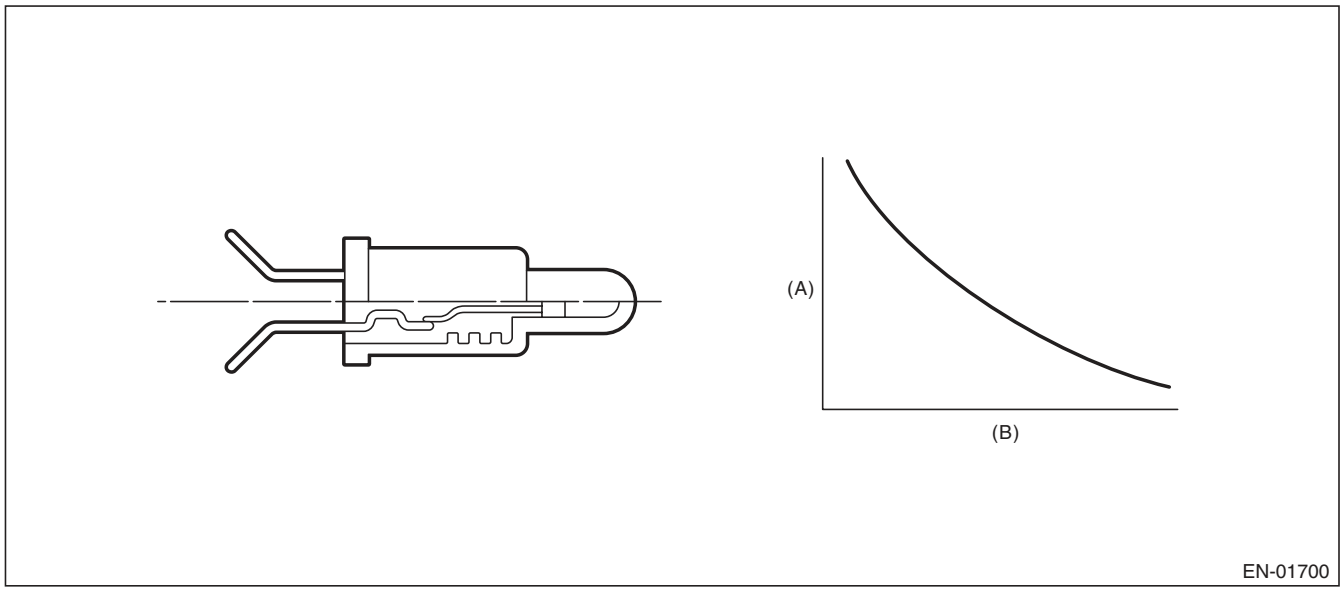

(A) Resistance value (Ω) (B) Fuel temperature °C (°F)

3. ENABLE CONDITION

Secondary Parameters	Enable Conditions
None	

4. GENERAL DRIVING CYCLE

Always perform the diagnosis continuously.

5. DIAGNOSTIC METHOD

- **Abnormality Judgement**

If the duration of time while the following conditions are met is longer than the time indicated, judge as NG.

Judgement Value

Malfunction Criteria	Threshold Value
Output voltage	< 0.343951474 V
Battery voltage	≥ 10.9 V

Time Needed for Diagnosis: 2500 ms
Malfunction Indicator Light Illumination: Illuminates as soon as a malfunction occurs.

- **Normality Judgement**

Judge as OK and clear the NG if the continuous time while the following conditions are established is more than the predetermined time.

Judgement Value

Malfunction Criteria	Threshold Value
Output voltage	≥ 0.343951474 V
Battery voltage	≥ 10.9 V

Time Needed for Diagnosis: Less than 1 second

AL:DTC P0183 FUEL TEMPERATURE SENSOR “A” CIRCUIT HIGH INPUT

1. OUTLINE OF DIAGNOSIS

Detect the open or short circuit of fuel temperature sensor.
Judge as NG if out of specification.

2. COMPONENT DESCRIPTION

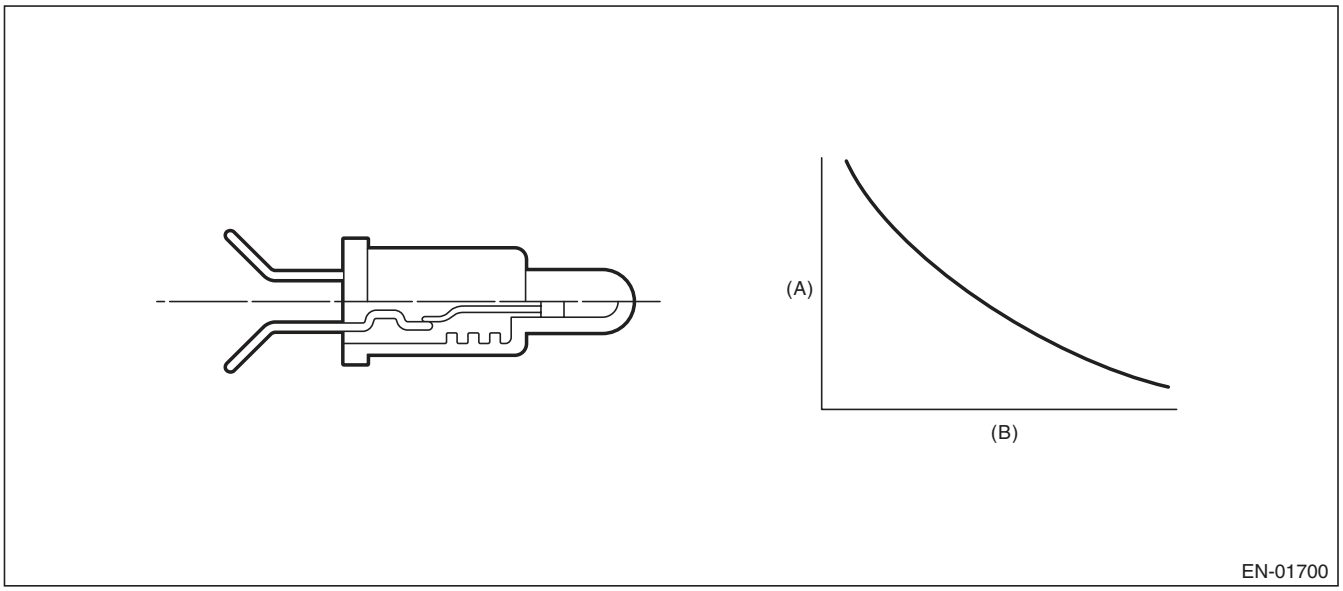

(A) Resistance value (Ω) (B) Fuel temperature °C (°F)

3. ENABLE CONDITION

Secondary Parameters	Enable Conditions
None	

4. GENERAL DRIVING CYCLE

Always perform the diagnosis continuously.

5. DIAGNOSTIC METHOD

- **Abnormality Judgement**

If the duration of time while the following conditions are met is longer than the time indicated, judge as NG.

Judgement Value

Malfunction Criteria	Threshold Value
Output voltage	≥ 4.716 V
Battery voltage	≥ 10.9 V

Time Needed for Diagnosis: 2500 ms
Malfunction Indicator Light Illumination: Illuminates as soon as a malfunction occurs.

- **Normality Judgement**

Judge as OK and clear the NG if the continuous time while the following conditions are established is more than the predetermined time.

Judgement Value

Malfunction Criteria	Threshold Value
Output voltage	< 4.716 V
Battery voltage	≥ 10.9 V

Time Needed for Diagnosis: Within 1 second

AM:DTC P0222 THROTTLE/PEDAL POSITION SENSOR/SWITCH “B” CIRCUIT LOW

1. OUTLINE OF DIAGNOSIS

Detect the open or short circuit of throttle position sensor 2.
Judge as NG if out of specification.

2. COMPONENT DESCRIPTION

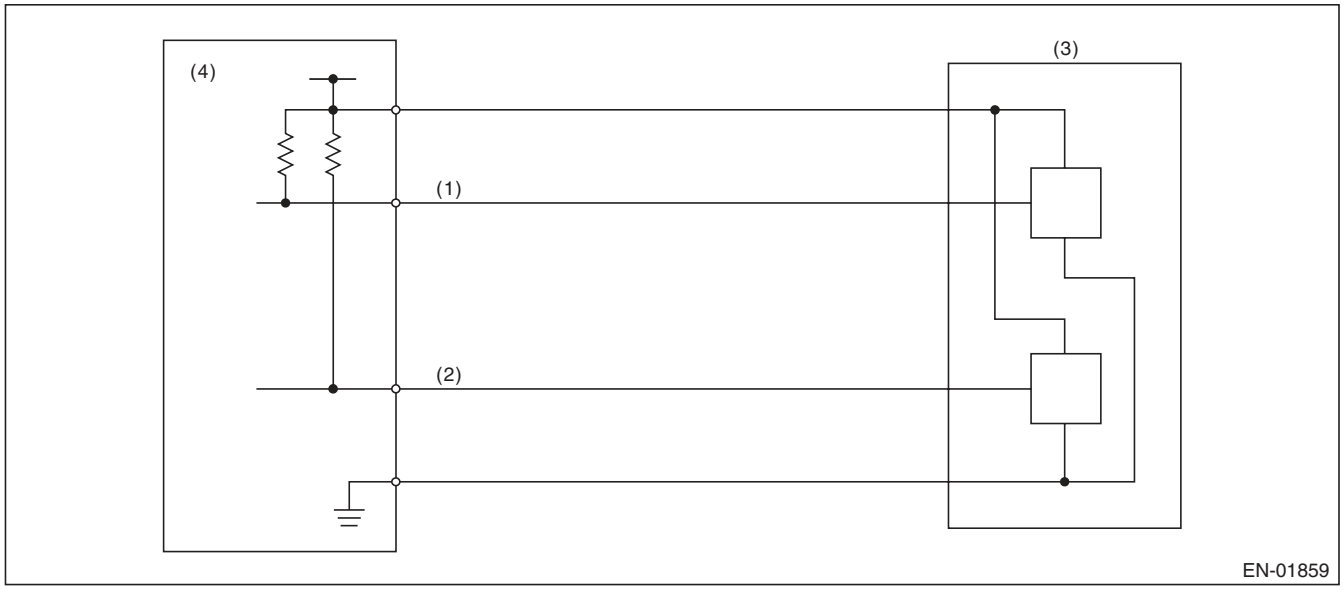

(1) Throttle position sensor 1 signal
(2) Throttle position sensor 2 signal
(3) Throttle position sensor
(4) Engine control module (ECM)

3. ENABLE CONDITION

Secondary Parameters	Enable Conditions
Ignition switch	ON
Battery voltage	≥ 6 V

4. GENERAL DRIVING CYCLE

Always perform the diagnosis continuously.

5. DIAGNOSTIC METHOD

- **Abnormality Judgement**

If the duration of time while the following conditions are met is longer than the time indicated, judge as NG.

Judgement Value

Malfunction Criteria	Threshold Value
Sensor 2 input voltage	≤ 0.920256 V

Time Needed for Diagnosis: 24 ms
Malfunction Indicator Light Illumination: Illuminates as soon as a malfunction occurs.

- **Normality Judgement**

Judge as OK and clear the NG if the continuous time while the following conditions are established is more than the predetermined time.

Judgement Value

Malfunction Criteria	Threshold Value
Sensor 2 input voltage	> 0.920256 V

Time Needed for Diagnosis: 24 ms

AN:DTC P0223 THROTTLE/PEDAL POSITION SENSOR/SWITCH “B” CIRCUIT HIGH

1. OUTLINE OF DIAGNOSIS

Detect the open or short circuit of throttle position sensor 2.
Judge as NG if out of specification.

2. COMPONENT DESCRIPTION

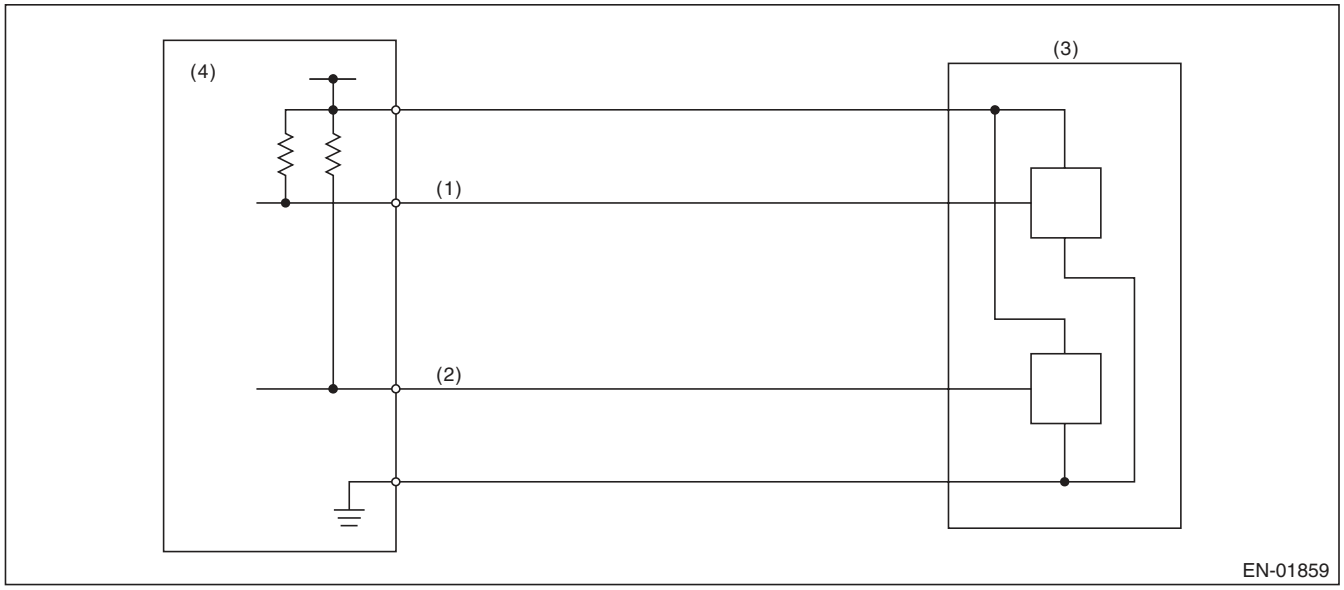

(1) Throttle position sensor 1 signal
(2) Throttle position sensor 2 signal
(3) Throttle position sensor
(4) Engine control module (ECM)

3. ENABLE CONDITION

Secondary Parameters	Enable Conditions
Ignition switch	ON
Battery voltage	≥ 6 V

4. GENERAL DRIVING CYCLE

Always perform the diagnosis continuously.

5. DIAGNOSTIC METHOD

- **Abnormality Judgement**

If the duration of time while the following conditions are met is longer than the time indicated, judge as NG.

Judgement Value

Malfunction Criteria	Threshold Value
Sensor 2 input voltage	≥ 4.851 V

Time Needed for Diagnosis: 24 ms
Malfunction Indicator Light Illumination: Illuminates as soon as a malfunction occurs.

- **Normality Judgement**

Judge as OK and clear the NG if the continuous time while the following conditions are established is more than the predetermined time.

Judgement Value

Malfunction Criteria	Threshold Value
Sensor 2 input voltage	< 4.851 V

Time Needed for Diagnosis: 24 ms

AO:DTC P0230 FUEL PUMP PRIMARY CIRCUIT

1. OUTLINE OF DIAGNOSIS

Detect the malfunction of fuel pump control unit.
Judge as NG when the NG signal is sent through a diagnostic line coming from the fuel pump control unit.
Fuel pump control unit detects the open or short circuit malfunction for each line, and then sends NG signals if one of them is found NG.

2. COMPONENT DESCRIPTION

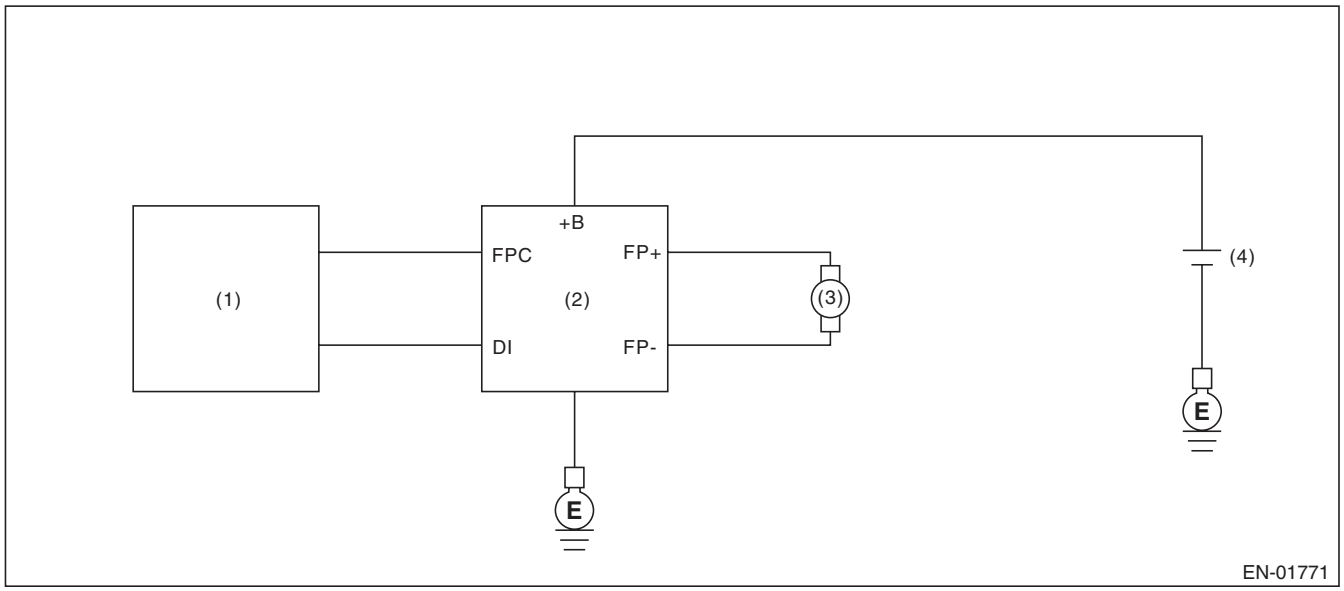

(1) Engine control module (ECM)
(2) Fuel pump control unit
(3) Fuel pump
(4) Battery

3. ENABLE CONDITION

Secondary Parameters	Enable Conditions
None	

4. GENERAL DRIVING CYCLE

Always perform the diagnosis continuously.

5. DIAGNOSTIC METHOD

- **Abnormality Judgement**

If the duration of time while the following conditions are met is longer than the time indicated, judge as NG.

Judgement Value

Malfunction Criteria	Threshold Value
Battery voltage	≥ 8 V
Elapsed time after starting the engine	≥ 180000 ms
Fuel pump control	ON
Fuel pump control unit output diagnosis signal	Low
Fuel level	≥ 10 ℓ (2.64 US gal, 2.2 Imp gal)

Time Needed for Diagnosis: 2500 ms
Malfunction Indicator Light Illumination: Illuminates when malfunction occurs in 2 continuous driving cycles.

- **Normality Judgement**

Judge as OK and clear the NG if the continuous time while the following conditions are established is more than the predetermined time.

Judgement Value

Malfunction Criteria	Threshold Value
Battery voltage	≥ 8 V
Elapsed time after starting the engine	≥ 180000 ms
Fuel pump control	ON
Fuel pump control unit output diagnosis signal	High
Fuel level	≥ 10 ℓ (2.64 US gal, 2.2 Imp gal)

Time Needed for Diagnosis: Less than 1 second

AP:DTC P0244 TURBO/SUPER CHARGER WASTEGATE SOLENOID “A” RANGE/PERFORMANCE

1. OUTLINE OF DIAGNOSIS

Detect the malfunction of wastegate control solenoid valve function.
Judge as NG when becoming high wastegate pressure.

2. COMPONENT DESCRIPTION

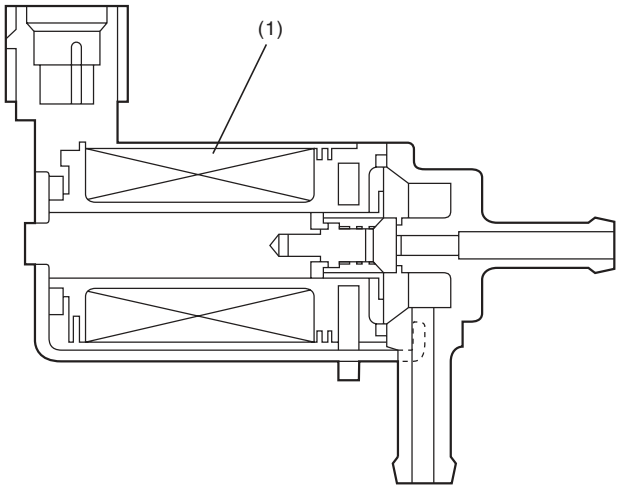

EN-01772

(1) Coil

3. ENABLE CONDITIONS

Secondary Parameters	Enable Conditions
None	

4. GENERAL DRIVING CYCLE

Always perform the diagnosis continuously.

5. DIAGNOSTIC METHOD

- **Abnormality Judgement**

If the duration of time while the following conditions are met is longer than the time indicated, judge as NG.

Judgement Value

Malfunction Criteria	Threshold Value
Intake manifold pressure	≥ Value from Map

Map

Pa (kPa (mmHg, inHg))	58.7 kPa (440 mmHg, 17.3 inHg)	77.3 kPa (580 mmHg, 22.8 inHg)	89.3 kPa (670 mmHg, 26.4 inHg)	96 kPa (720 mmHg, 28.3 inHg)	98.6 kPa (740 mmHg, 29.1 inHg)	101.3 kPa (760 mmHg, 29.9 inHg)
Abnormal threshold (kPa (mmHg, inHg))	143.4 kPa (1076 mmHg, 42.4 inHg)	172.6 kPa (1295 mmHg, 51 inHg)	204.5 kPa (1534 mmHg, 60.4 inHg)	216.2 kPa (1622 mmHg, 63.9 inHg)	221.3 kPa (1660 mmHg, 65.4 inHg)	221.3 kPa (1660 mmHg, 65.4 inHg)

Time Needed for Diagnosis: 2000 ms
Malfunction Indicator Light Illumination: Illuminates as soon as a malfunction occurs.

- **Normality Judgement**

Judge as OK and clear the NG if the continuous time while the following conditions are established is more than the predetermined time.

Judgement Value

Malfunction Criteria	Threshold Value
Intake manifold pressure	< Value from Map – 22.4 kPa (168 mmHg, 6.6 inHg)

Time Needed for Diagnosis: Less than 1 second

AQ:DTC P0245 TURBO/SUPER CHARGER WASTEGATE SOLENOID “A” LOW

1. OUTLINE OF DIAGNOSIS

Detect open or short circuit of the wastegate control solenoid valve.
Judge as NG when the terminal output voltage remains Low during outputting the duty signal.

2. COMPONENT DESCRIPTION

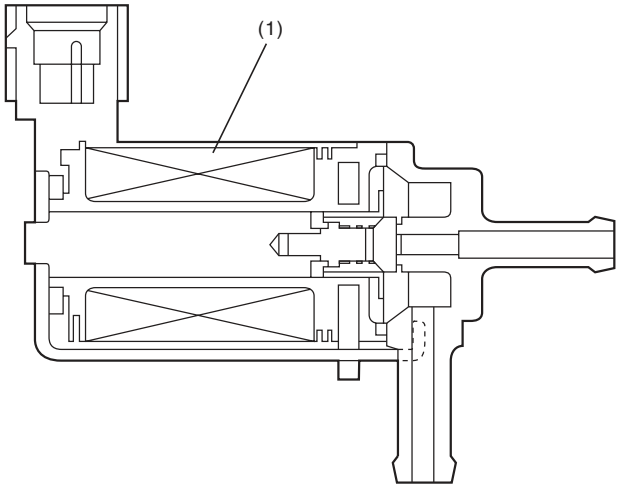

(1) Coil

3. ENABLE CONDITION

Secondary Parameters	Enable Conditions
Battery voltage	≥ 10.9 V
Elapsed time after starting the engine	≥ 1 second

4. GENERAL DRIVING CYCLE

Perform the diagnosis continuously after starting the engine.

5. DIAGNOSTIC METHOD

Abnormality Judgement

If the duration of time while the following conditions are met is longer than the time indicated, judge as NG.

Judgement Value

Malfunction Criteria	Threshold Value
Terminal output voltage	Low
Duty ratio of wastegate control	< 75%

Time Needed for Diagnosis: 4 ms × 160 time(s)
Malfunction Indicator Light Illumination: Illuminates as soon as a malfunction occurs.

Normality Judgement

Judge as OK and clear the NG if the continuous time while the following conditions are established is more than the predetermined time.

Judgement Value

Malfunction Criteria	Threshold Value
Terminal output voltage	High

Time Needed for Diagnosis: Less than 1 second

AR:DTC P0246 TURBO/SUPER CHARGER WASTEGATE SOLENOID “A” HIGH

1. OUTLINE OF DIAGNOSIS

Detect open or short circuit of the wastegate control solenoid valve.
Judge as NG when the terminal output voltage remains Low or High during outputting the duty signal.

2. COMPONENT DESCRIPTION

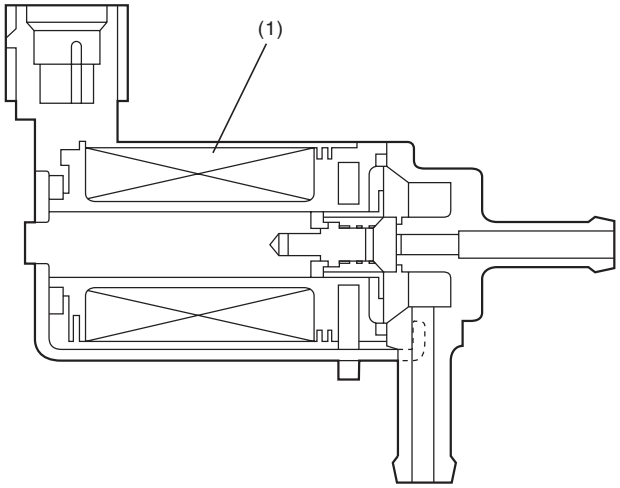

EN-01772

(1) Coil

3. ENABLE CONDITION

Secondary Parameters	Enable Conditions
Battery voltage	≥ 10.9 V
Elapsed time after starting the engine	≥ 1 second

4. GENERAL DRIVING CYCLE

Perform the diagnosis continuously after starting the engine.

5. DIAGNOSTIC METHOD

Abnormality Judgement

If the duration of time while the following conditions are met is longer than the time indicated, judge as NG.

Judgement Value

Malfunction Criteria	Threshold Value
Terminal output voltage	High
Duty ratio of wastegate control	≥ 25%

Time Needed for Diagnosis: 4 ms × 160 time(s)
Malfunction Indicator Light Illumination: Illuminates as soon as a malfunction occurs.

Normality Judgement

Judge as OK and clear the NG if the continuous time while the following conditions are established is more than the predetermined time.

Judgement Value

Malfunction Criteria	Threshold Value
Terminal output voltage	Low

Time Needed for Diagnosis: Less than 1 second

AS:DTC P0301 CYLINDER 1 MISFIRE DETECTED

1. OUTLINE OF DIAGNOSIS

Detect the presence of misfire occurrence. (Revolution fluctuation method)
Monitoring Misfire which influences exhaust deterioration (1.5 times of FTP) and catalyst damage is made obligatory by the law. Misfire affecting these two has two patterns below. :

- Intermittent misfire (The same cylinder misfires in random, or different cylinders misfire in random.): FTP 1.5 times misfire
- Every time misfire (The same cylinder misfires every time.): FTP 1.5 times misfire, Catalyst damage misfire

The following detecting methods are adopted for these detection.
1) Intermittent misfire: FTP 1.5 times misfire

- 180° Interval Difference Method (MT: 1,800 rpm or less, AT: None)
- 360° Interval Difference Method (whole range)
- 720° Interval Difference Method (3,000 rpm or more)

2) Misfire every time: FTP 1.5 times misfire, Catalyst damage misfire

- 360° Interval Difference Method

2. ENABLE CONDITION

Secondary Parameters	Enable Conditions
All secondary parameters enable conditions	≥ 1024 ms
Intake manifold pressure change at 180°CA	< Value of Map 1
Throttle position change during 16 milliseconds	< 14 °
Fuel shut-off function	Not in operation
Fuel level	≥ 9.6 ℓ (2.54 US gal, 2.11 Imp gal)
Vehicle dynamic control or AT torque control	Not in operation
Evaporative system leak check	Not in operation
Engine speed	500 rpm — 6500 rpm
Intake manifold pressure	≥ Value from Map 2
Battery voltage	≥ 8 V
Fuel parameter determination	Not extremely low volatility
Elapsed time after starting the engine	≥ 0 ms
Engine load change during 32 milliseconds	< 1000 rpm

Map1

- AT model

rpm	700	1000	1500	2000	2500	3000	3500	4000	4500	5000	5500	6000	6500	6700
kPa (mmHg, inHg)	26.7 (200, 7.9)	26.7 (200, 7.9)	26.7 (200, 7.9)	26.7 (200, 7.9)	26.7 (200, 7.9)	26.7 (200, 7.9)	26.7 (200, 7.9)	26.7 (200, 7.9)	26.7 (200, 7.9)	26.7 (200, 7.9)	26.7 (200, 7.9)	26.7 (200, 7.9)	26.7 (200, 7.9)	26.7 (200, 7.9)

- MT model

rpm	700	1000	1500	2000	2500	3000	3500	4000	4500	5000	5500	6000	6500	6700
kPa (mmHg, inHg)	13.3 (100, 3.9)	13.3 (100, 3.9)	13.3 (100, 3.9)	13.3 (100, 3.9)	13.3 (100, 3.9)	13.3 (100, 3.9)	13.3 (100, 3.9)	13.3 (100, 3.9)	13.3 (100, 3.9)	13.3 (100, 3.9)	13.3 (100, 3.9)	13.3 (100, 3.9)	13.3 (100, 3.9)	13.3 (100, 3.9)

Map2

- AT model (Tumble generator valve open)

rpm	700	1000	1500	2000	2500	3000	3500	4000	4500	5000	5500	6000	6500	6700
kPa (mmHg, inHg)	29.3 (220, 8.7)	26.7 (200, 7.9)	26.7 (200, 7.9)	26.7 (200, 7.9)	27.3 (205, 8.1)	28 (210, 8.3)	29.5 (221.5, 8.7)	31.3 (235, 9.3)	32.7 (245.5, 9.7)	34.1 (256, 10.1)	38.2 (286.5, 11.3)	44 (330, 13)	49.5 (371.5, 14.6)	53.3 (400, 15.7)

- AT model (Tumble generator valve closed)

rpm	700	1000	1500	2000	2500	3000	3500	4000	4500	5000	5500	6000	6500	6700
kPa (mmHg, inHg)	29.3 (220, 8.7)	26.7 (200, 7.9)	26.7 (200, 7.9)	26.7 (200, 7.9)	27.3 (205, 8.1)	28 (210, 8.3)	29.5 (221.5, 8.7)	31.3 (235, 9.3)	32.7 (245.5, 9.7)	34.1 (256, 10.1)	38.2 (286.5, 11.3)	44 (330, 13)	49.5 (371.5, 14.6)	53.3 (400, 15.7)

- MT model (Tumble generator valve open)

Vehicle speed < 64 km/h (39.8 MPH)

rpm	700	1000	1500	2000	2500	3000	3500	4000	4500	5000	5500	6000	6500	6700
kPa (mmHg, inHg)	27.3 (205, 8.1)	23.3 (175, 6.9)	23.6 (177, 7)	23.3 (175, 6.9)	24 (180, 7.1)	24.4 (183, 7.2)	28.8 (216, 8.5)	30 (225, 8.9)	31.6 (237, 9.3)	32.5 (244, 9.6)	37.1 (278, 10.9)	41.9 (314, 12.4)	46.9 (352, 13.9)	51.1 (383, 15.1)

Vehicle speed ≥ 68 km/h (42.3 MPH)

rpm	700	1000	1500	2000	2500	3000	3500	4000	4500	5000	5500	6000	6500	6700
kPa (mmHg, inHg)	25.1 (188, 7.4)	24.8 (186, 7.3)	25.6 (192, 7.6)	40 (300, 11.8)	40.8 (306, 12)	42.1 (316, 12.4)	44 (330, 13)	44.5 (334, 13.1)	47.3 (355, 14)	54.7 (410, 16.1)	54.7 (410, 16.1)	54.7 (410, 16.1)	54.7 (410, 16.1)	54.7 (410, 16.1)

- MT model (Tumble generator valve closed)

Vehicle speed < 64 km/h (39.8 MPH)

rpm	700	1000	1500	2000	2500	3000	3500	4000	4500	5000	5500	6000	6500	6700
kPa (mmHg, inHg)	27.3 (205, 8.1)	23.3 (175, 6.9)	23.6 (177, 7)	23.3 (175, 6.9)	24 (180, 7.1)	24.4 (183, 7.2)	28.8 (216, 8.5)	30 (225, 8.9)	31.6 (237, 9.3)	32.5 (244, 9.6)	37.1 (278, 10.9)	41.9 (314, 12.4)	46.9 (352, 13.9)	51.1 (383, 15.1)

Vehicle speed ≥ 68 km/h (42.3 MPH)

rpm	700	1000	1500	2000	2500	3000	3500	4000	4500	5000	5500	6000	6500	6700
kPa (mmHg, inHg)	25.1 (188, 7.4)	24.8 (186, 7.3)	25.6 (192, 7.6)	40 (300, 11.8)	40.8 (306, 12)	42.1 (316, 12.4)	44 (330, 13)	44.5 (334, 13.1)	47.3 (355, 14)	54.7 (410, 16.1)	54.7 (410, 16.1)	54.7 (410, 16.1)	54.7 (410, 16.1)	54.7 (410, 16.1)

3. GENERAL DRIVING CYCLE

- If conditions are met, it is possible to detect the misfires from idling to high engine speed. However, to avoid excessive load or harm to the engine, perform diagnosis at idle.
- Perform the diagnosis continuously.

4. DIAGNOSTIC METHOD

When a misfire occurs, the engine speed will decreased and the crankshaft position speed will change. Calculate the interval difference value (diagnostic value) from crankshaft position speed by the following formula, and judge whether a misfire is occurring or not comparing the calculated result with judgment value. Counting the number of misfires. If the misfire ratio is higher during 1000 revs. or 200 revs., Judge corresponding cylinders as NG.

Diagnostic value calculation (Calculate from angle speed) →	Misfire detection every single ignition (Compare diagnostic value with judgment value) →	NG judgment (Misfire occurrence judgment required by the law) (Compare number of misfire with judgment)
	• 180° Interval Difference Method • 360° Interval Difference Method • 720° Interval Difference Method	• FTP 1.5 times misfire NG judgment • Catalyst damage misfire NG judgment

As shown in the following figure, pick a cylinder as the standard and name it omg 0. And the former crankshaft position speed is named omg 1, the second former crankshaft position speed is named omg 2, the third is named omg 3, etc.

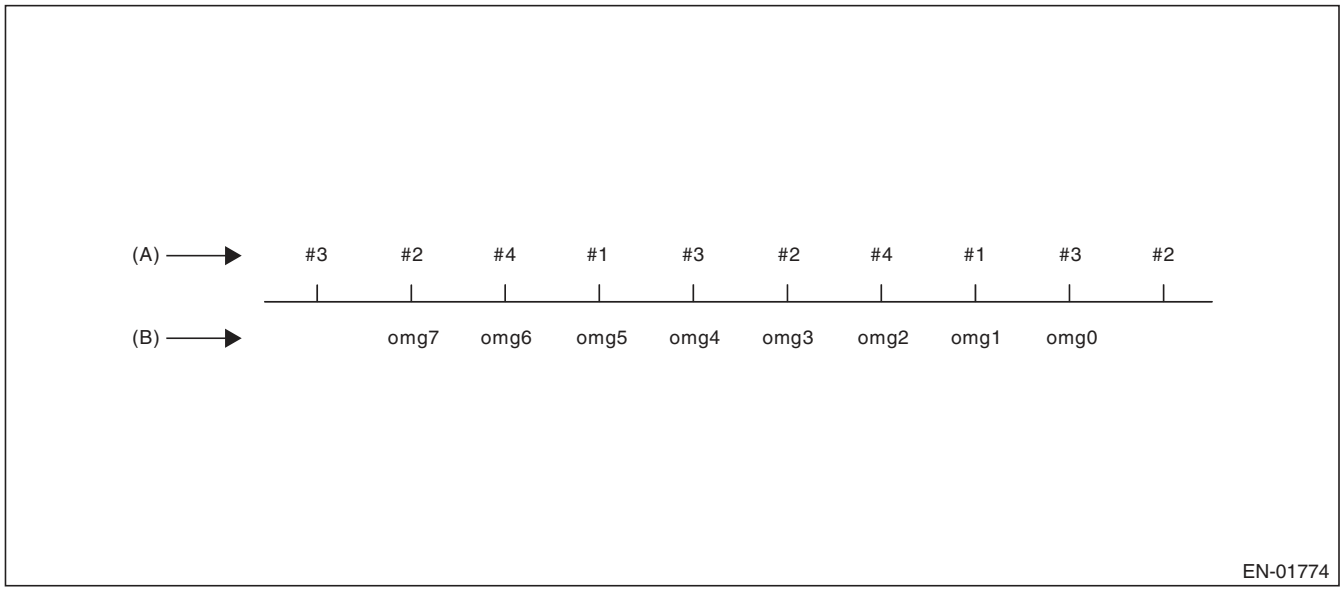

(A) Ignition order (B) Crankshaft position speed

180° Interval Difference Method

Diagnostic value	domg 180 = (omg 1 – omg 0) – (omg 5 – omg 1)/4
Judge as a misfire in the following cases. • domg 180 > judgment value of positive side • domg 180 ≤ judgment value of negative side (Judgement value before 180° CA)	

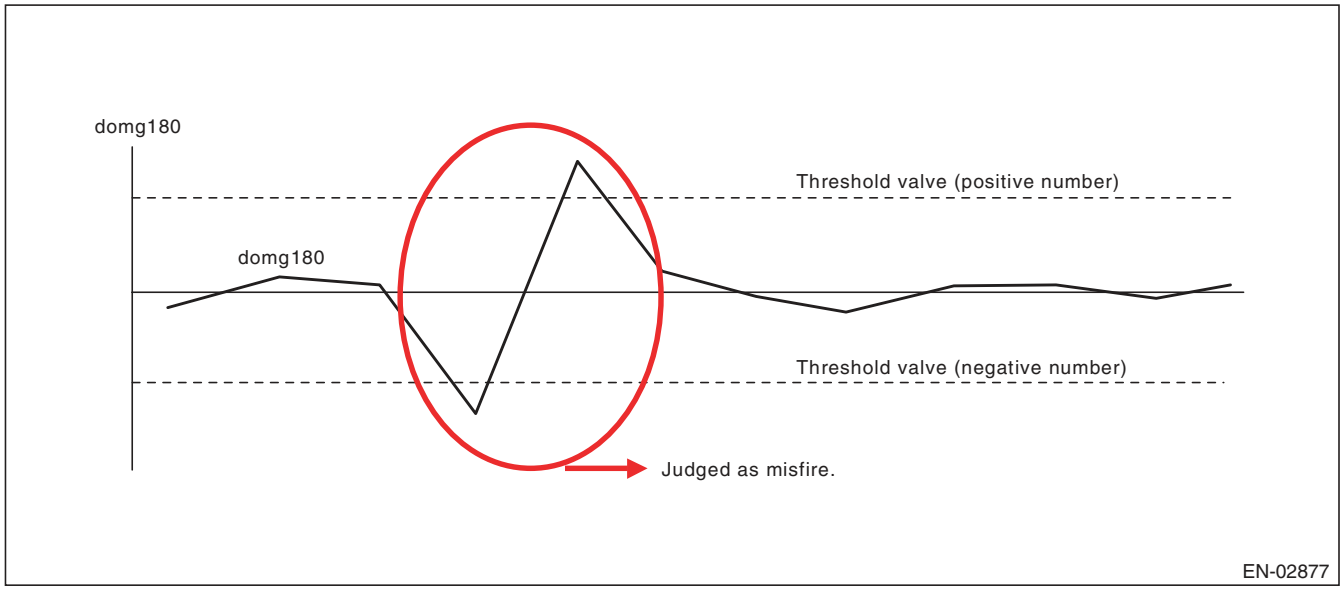

360° Interval Difference Method

Diagnostic value	domg 360 = (omg 1 – omg 0) – (omg 3 – omg 2)
Misfire judgment	domg 360 > Judgement value → Judge as misfire

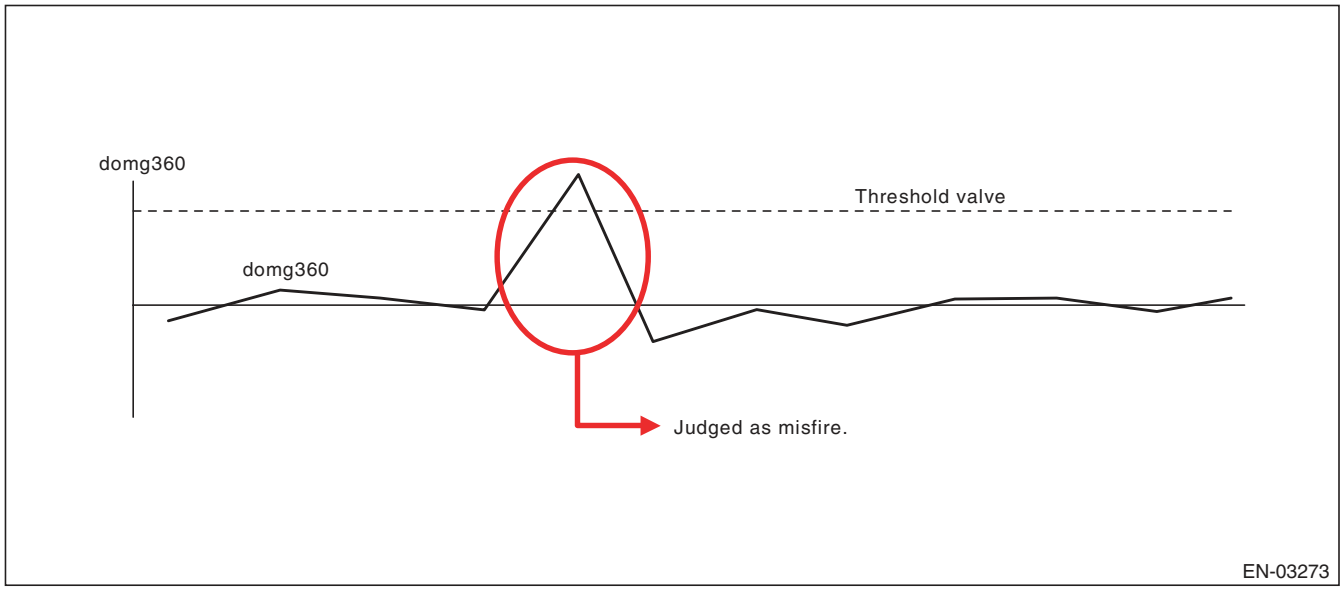

720° Interval Difference Method

Diagnostic value	domg 720 = (omg 1 – omg 0) – (omg 5 – omg 4)
Misfire judgment	domg 720 > Judgement value → Judge as misfire

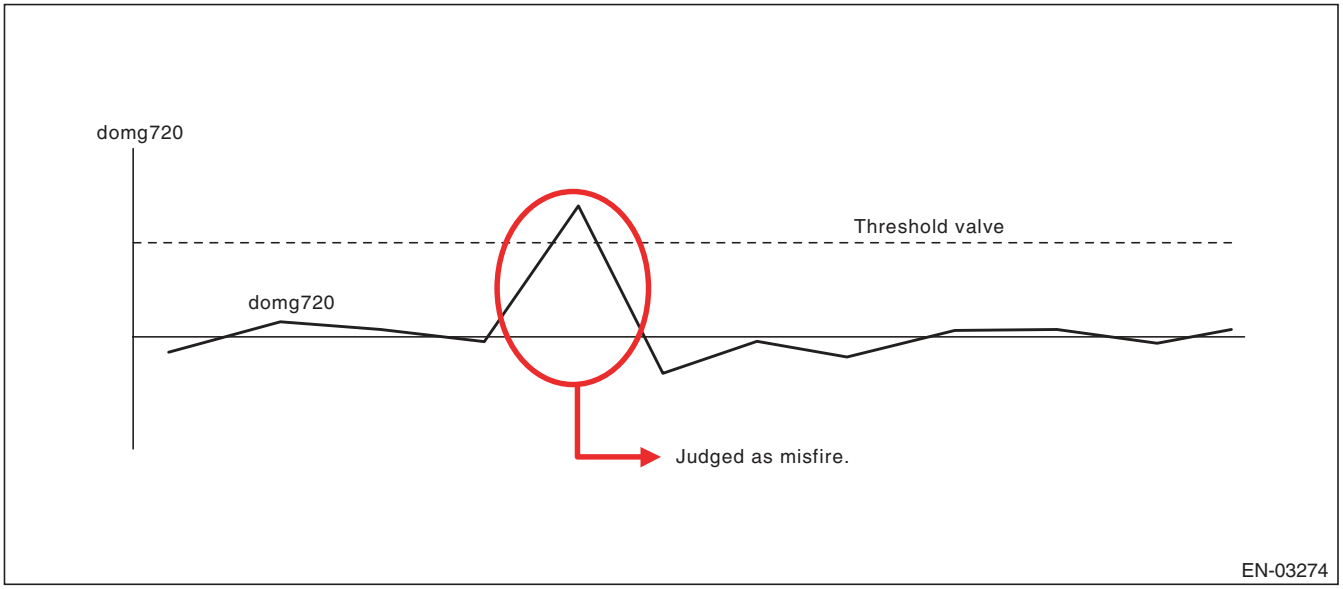

- **FTP 1.5 times misfire (Misfire occurrence level which influences exhaust gas)**
- **Abnormality Judgement**

Judgement Value (Judge that malfunction occurs when the misfire ratio is high in 1000 engine revs.)

Malfunction Criteria	Threshold Value
FTP emission judgment value	≥ 20 × 100/2000% in 1000 revs.

Time Needed for Diagnosis: 1000 engine revs.
Malfunction Indicator Light Illumination: Illuminates when malfunction occurs in 2 continuous driving cycles.

- **Normality Judgement**

Judgement Value

Malfunction Criteria	Threshold Value
FTP emission judgment value	< 20 × 100/2000% in 1000 revs.

Time Needed for Diagnosis: 1000 engine revs.

- **Catalyst damage misfire (Misfire occurrence level damaging catalyst)**
- **Abnormality Judgement**

Judgement Value

Malfunction Criteria	Threshold Value
Catalyst damage misfire judgment value	≥ Value from Map 3

Map 3

		Intake air (g(oz)/rev)									
		0.2 (0.01)	0.4 (0.01)	0.6 (0.02)	0.8 (0.03)	1 (0.04)	1.2 (0.04)	1.4 (0.05)	1.6 (0.06)	1.8 (0.06)	2 (0.07)
Engine speed (rpm)	700	148	128	116	106	100	90	90	90	90	90
	1000	148	128	114	104	92	85	85	85	85	85
	1500	140	118	102	90	85	85	85	72	72	72
	2000	128	90	90	73	58	43	40	36	32	20
	2500	116	87	57	45	39	36	34	32	30	20
	3000	108	87	58	39	36	36	32	30	28	20
	3500	98	74	43	27	23	22	20	20	20	20
	4000	69	61	40	27	22	20	20	20	20	20
	4500	60	55	34	25	20	20	20	20	20	20
	5000	55	55	34	23	20	20	20	20	20	20
	5500	54	54	33	22	20	20	20	20	20	20
	6000	52	52	32	21	20	20	20	20	20	20
	6500	50	50	30	20	20	20	20	20	20	20
	6700	50	50	30	20	20	20	20	20	20	20

Time Needed for Diagnosis: 200 engine revs.
Malfunction Indicator Light Illumination: Illuminates as soon as a malfunction occurs.

- **Normality Judgement**

Judgement Value

Malfunction Criteria	Threshold Value
Catalyst damage misfire judgment value	< Value from Map 3

Time Needed for Diagnosis: 200 engine revs.

AT:DTC P0302 CYLINDER 2 MISFIRE DETECTED

1. OUTLINE OF DIAGNOSIS

NOTE:
For the detection standard, refer to DTC P0301. <Ref. to GD(H4DOTC)-80, DTC P0301 CYLINDER 1 MISFIRE DETECTED, Diagnostic Trouble Code (DTC) Detecting Criteria.>

AU:DTC P0303 CYLINDER 3 MISFIRE DETECTED

1. OUTLINE OF DIAGNOSIS

NOTE:
For the detection standard, refer to DTC P0301. <Ref. to GD(H4DOTC)-80, DTC P0301 CYLINDER 1 MISFIRE DETECTED, Diagnostic Trouble Code (DTC) Detecting Criteria.>

AV:DTC P0304 CYLINDER 4 MISFIRE DETECTED

1. OUTLINE OF DIAGNOSIS

NOTE:
For the detection standard, refer to DTC P0301. <Ref. to GD(H4DOTC)-80, DTC P0301 CYLINDER 1 MISFIRE DETECTED, Diagnostic Trouble Code (DTC) Detecting Criteria.>

AW:DTC P0327 KNOCK SENSOR 1 CIRCUIT LOW (BANK 1 OR SINGLE SENSOR)

1. OUTLINE OF DIAGNOSIS

Detect the open or short circuit of knock sensor.
Judge as NG if out of specification.

2. COMPONENT DESCRIPTION

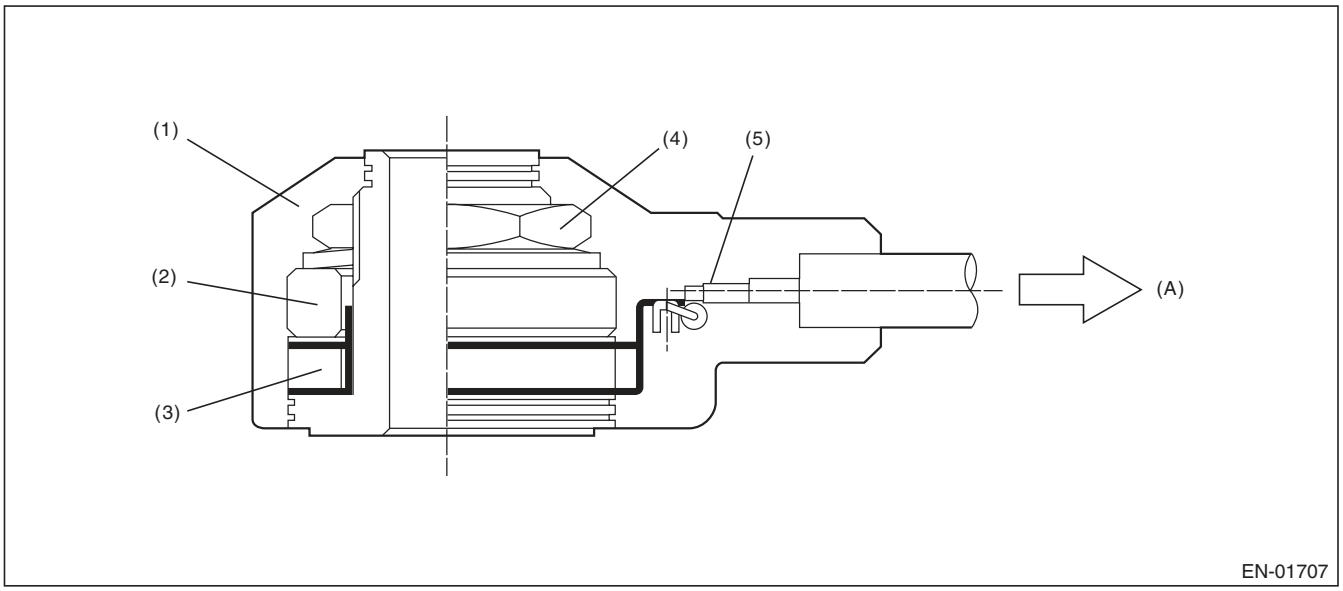

(A) To knock sensor harness

(1) Case
(2) Weight
(3) Piezoelectric element
(4) Nut
(5) Resistance

3. ENABLE CONDITION

Secondary Parameters	Enable Conditions
None	

4. GENERAL DRIVING CYCLE

Always perform the diagnosis continuously.

5. DIAGNOSTIC METHOD

- **Abnormality Judgement**

If the duration of time while the following conditions are met is longer than the time indicated, judge as NG.

Judgement Value

Malfunction Criteria	Threshold Value
Output voltage	< 0.238 V

Time Needed for Diagnosis: 1000 ms
Malfunction Indicator Light Illumination: Illuminates as soon as a malfunction occurs.

- **Normality Judgement**

Judge as OK and clear the NG if the continuous time while the following conditions are established is more than the predetermined time.

Judgement Value

Malfunction Criteria	Threshold Value
Output voltage	≥ 0.238 V

Time Needed for Diagnosis: Less than 1 second

AX:DTC P0328 KNOCK SENSOR 1 CIRCUIT HIGH (BANK 1 OR SINGLE SENSOR)

1. OUTLINE OF DIAGNOSIS

Detect the open or short circuit of knock sensor.
Judge as NG if out of specification.

2. COMPONENT DESCRIPTION

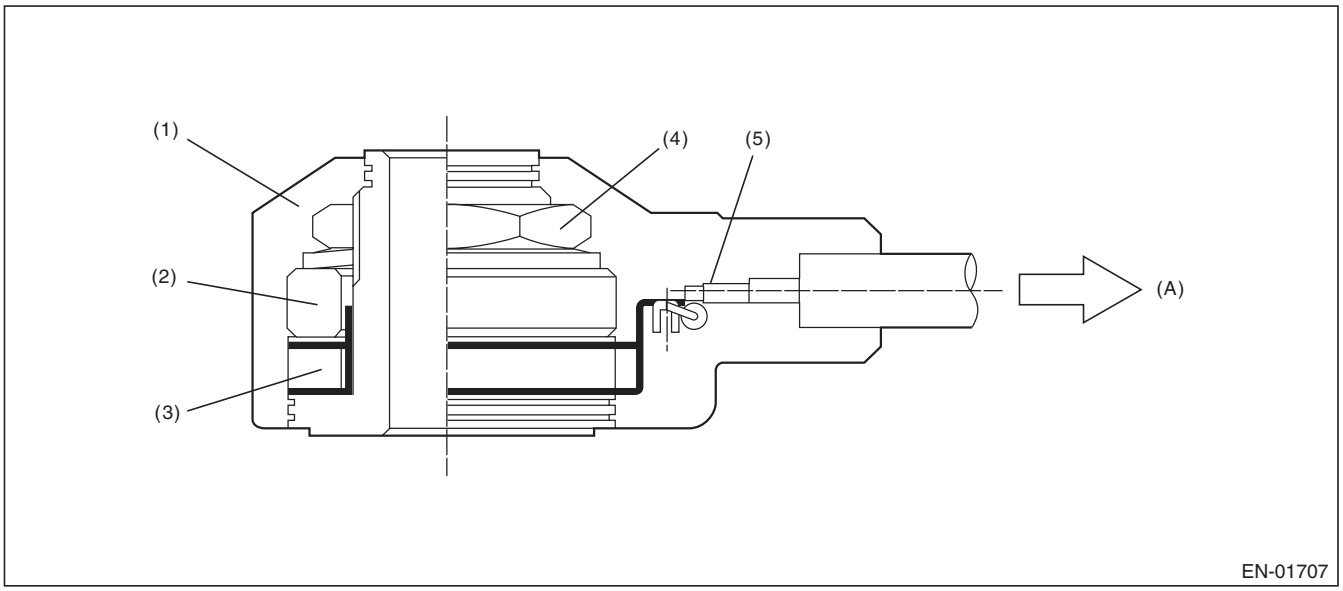

(A) To knock sensor harness

(1) Case
(2) Weight
(3) Piezoelectric element
(4) Nut
(5) Resistance

3. ENABLE CONDITION

Secondary Parameters	Enable Conditions
None	

4. GENERAL DRIVING CYCLE

Always perform the diagnosis continuously.

5. DIAGNOSTIC METHOD

- **Abnormality Judgement**

If the duration of time while the following conditions are met is longer than the time indicated, judge as NG.

Judgement Value

Malfunction Criteria	Threshold Value
Output voltage	≥ 4.714 V

Time Needed for Diagnosis: 1000 ms
Malfunction Indicator Light Illumination: Illuminates as soon as a malfunction occurs.

- **Normality Judgement**

Judge as OK and clear the NG if the continuous time while the following conditions are established is more than the predetermined time.

Judgement Value

Malfunction Criteria	Threshold Value
Output voltage	< 4.714 V

Time Needed for Diagnosis: Less than 1 second

AY:DTC P0335 CRANKSHAFT POSITION SENSOR “A” CIRCUIT

1. OUTLINE OF DIAGNOSIS

Detect the open or short circuit of the crankshaft position sensor.
Judge as NG when the crank signal is not input even though the starter was rotated.

2. COMPONENT DESCRIPTION

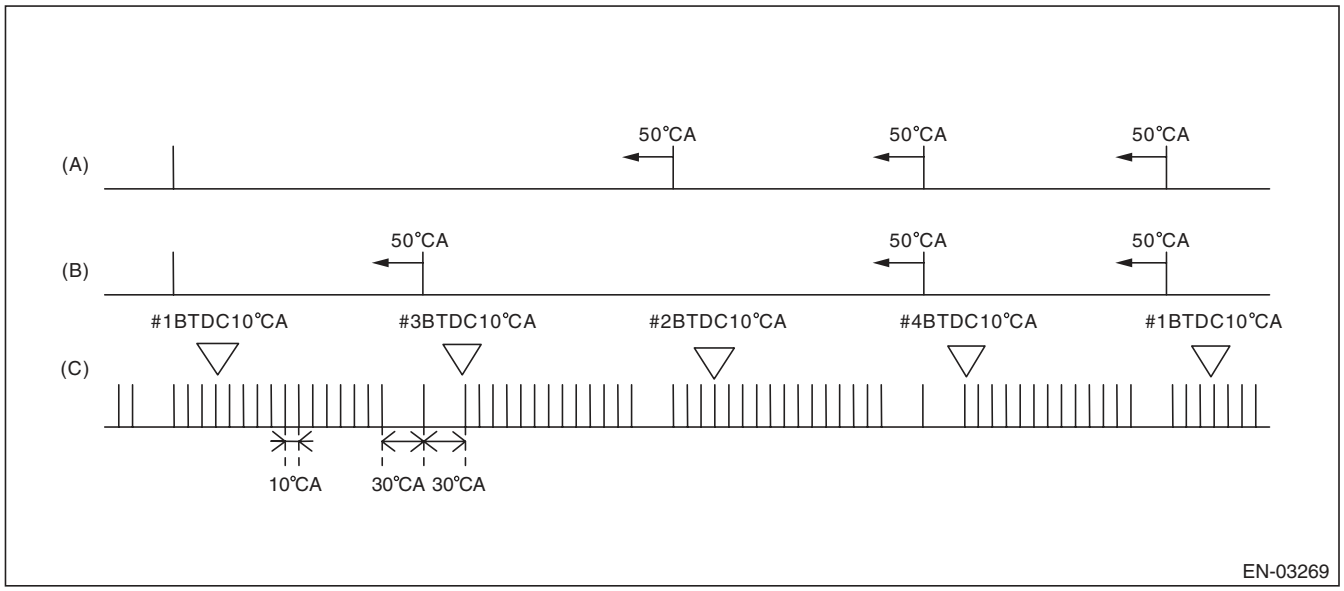

(A) Camshaft signal (RH) (B) Camshaft signal (LH) (C) Crankshaft signal

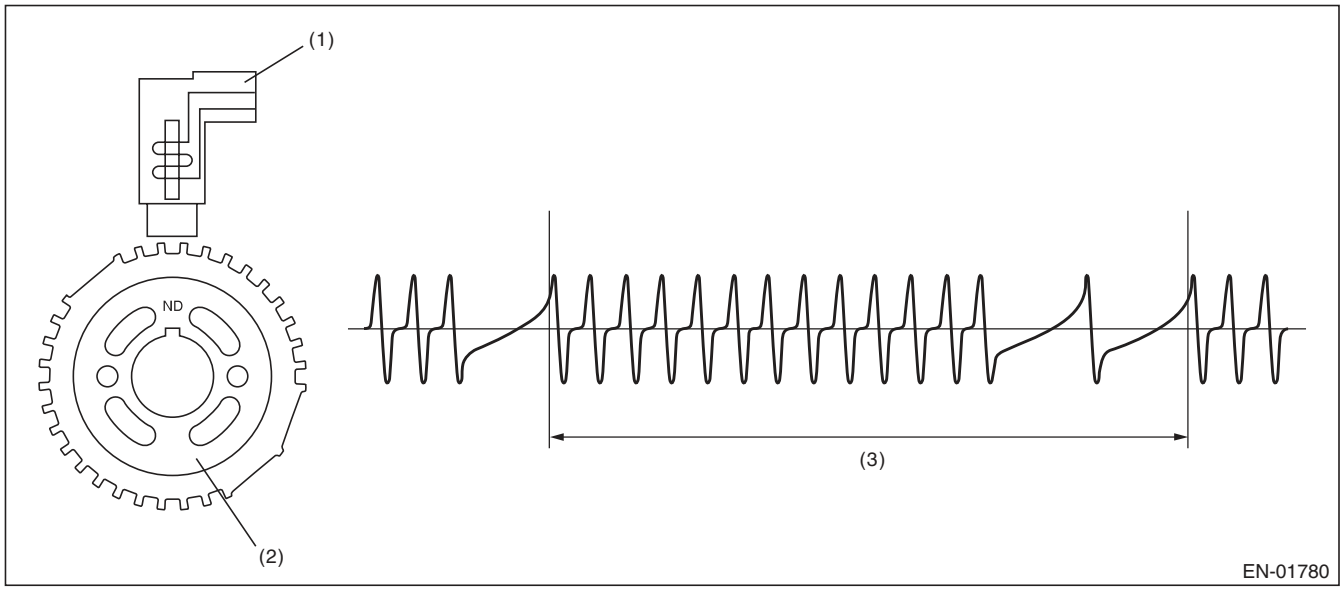

(1) Crankshaft position sensor (2) Crank sprocket (3) Crankshaft half-turn

3. ENABLE CONDITION

Secondary Parameters	Enable Conditions
None	

4. GENERAL DRIVING CYCLE

Always perform the diagnosis continuously.

5. DIAGNOSTIC METHOD

- **Abnormality Judgement**

If the duration of time while the following conditions are met is longer than the time indicated, judge as NG.

Judgement Value

Malfunction Criteria	Threshold Value
Starter switch	ON
Crankshaft position sensor signal	Not detected
Battery voltage	≥ 8 V

Time Needed for Diagnosis: 3000 ms
Malfunction Indicator Light Illumination: Illuminates as soon as a malfunction occurs.

- **Normality Judgement**

Judge as OK and clear the NG if the continuous time while the following conditions are established is more than the predetermined time.

Judgement Value

Malfunction Criteria	Threshold Value
Crankshaft position sensor signal	Input exists
Battery voltage	≥ 8 V

Time Needed for Diagnosis: Less than 1 second

AZ:DTC P0336 CRANKSHAFT POSITION SENSOR “A” CIRCUIT RANGE/ PERFORMANCE

1. OUTLINE OF DIAGNOSIS

Detect for faults in crankshaft position sensor output properties.
Judge as NG when there is a problem in the number of crankshaft signals for every revolution.

2. COMPONENT DESCRIPTION

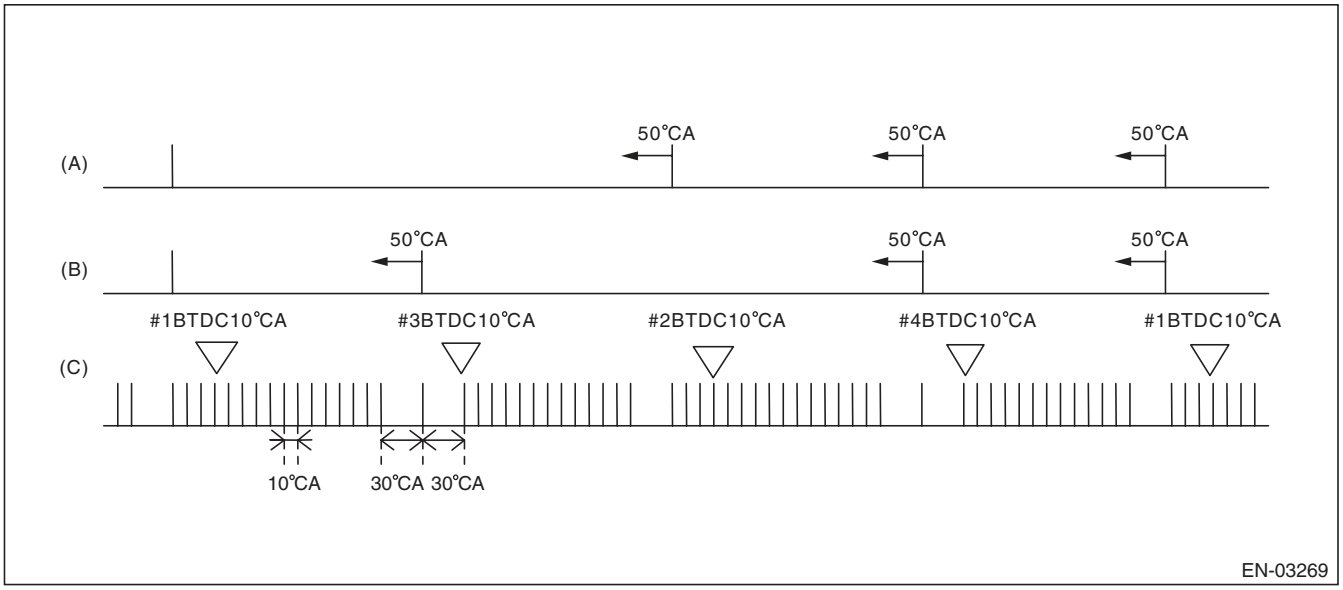

(A) Camshaft signal (RH) (B) Camshaft signal (LH) (C) Crankshaft signal

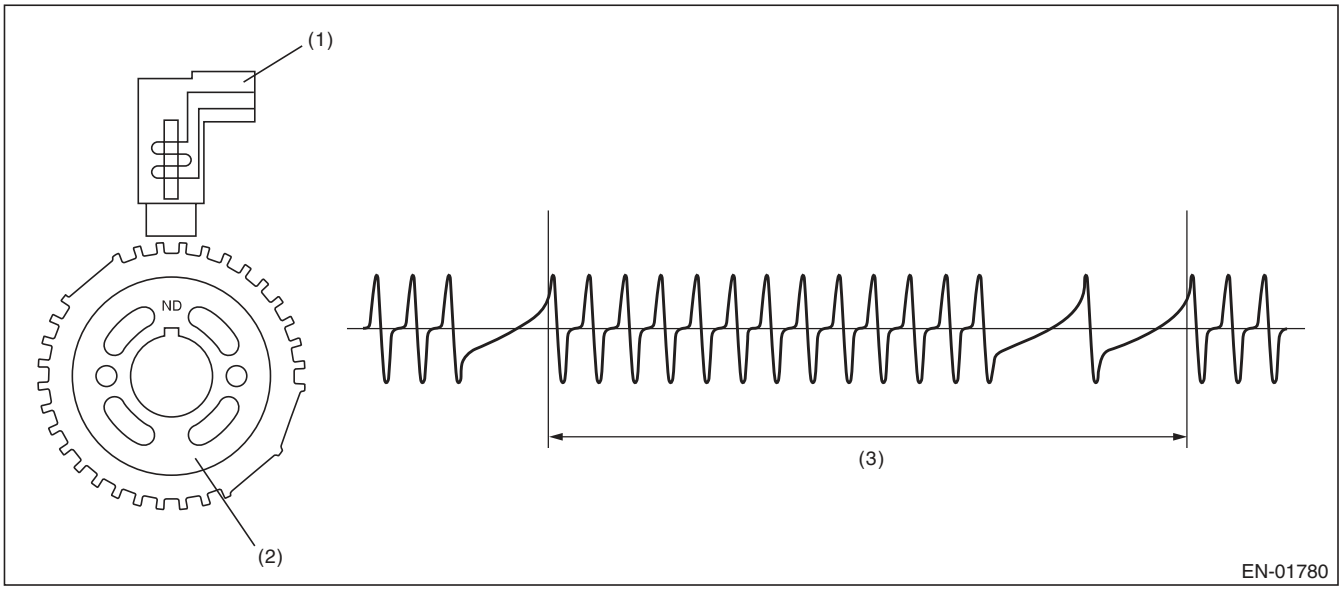

(1) Crankshaft position sensor (2) Crank sprocket (3) Crankshaft half-turn

3. ENABLE CONDITION

Secondary Parameters	Enable Conditions
Battery voltage	≥ 8 V
Engine speed	< 3000 rpm

4. GENERAL DRIVING CYCLE

Perform the diagnosis continuously under 3000 rpm engine speed.

5. DIAGNOSTIC METHOD

- **Abnormality Judgement**

Judge as NG when the following conditions are established.

Judgement Value

Malfunction Criteria	Threshold Value
Cylinder number identification	Completed
Amount of crank sensor signal during 1 rev.	Not = 30

Time Needed for Diagnosis: 10 engine revs.
Malfunction Indicator Light Illumination: Illuminates when malfunction occurs in 2 continuous driving cycles.

- **Normality Judgement**

Judge as OK and clear the NG if the continuous time while the following conditions are established is more than the predetermined time.

Judgement Value

Malfunction Criteria	Threshold Value
Cylinder number identification	Completed
Amount of crank sensor signal during 1 rev.	= 30

Time Needed for Diagnosis: Less than 1 second

BA:DTC P0340 CAMSHAFT POSITION SENSOR "A" CIRCUIT (BANK 1 OR SINGLE SENSOR)

1. OUTLINE OF DIAGNOSIS

Detect the open or short circuit of the camshaft position sensor.
Judge as NG when the number of camshaft signals remains abnormal.

2. COMPONENT DESCRIPTION

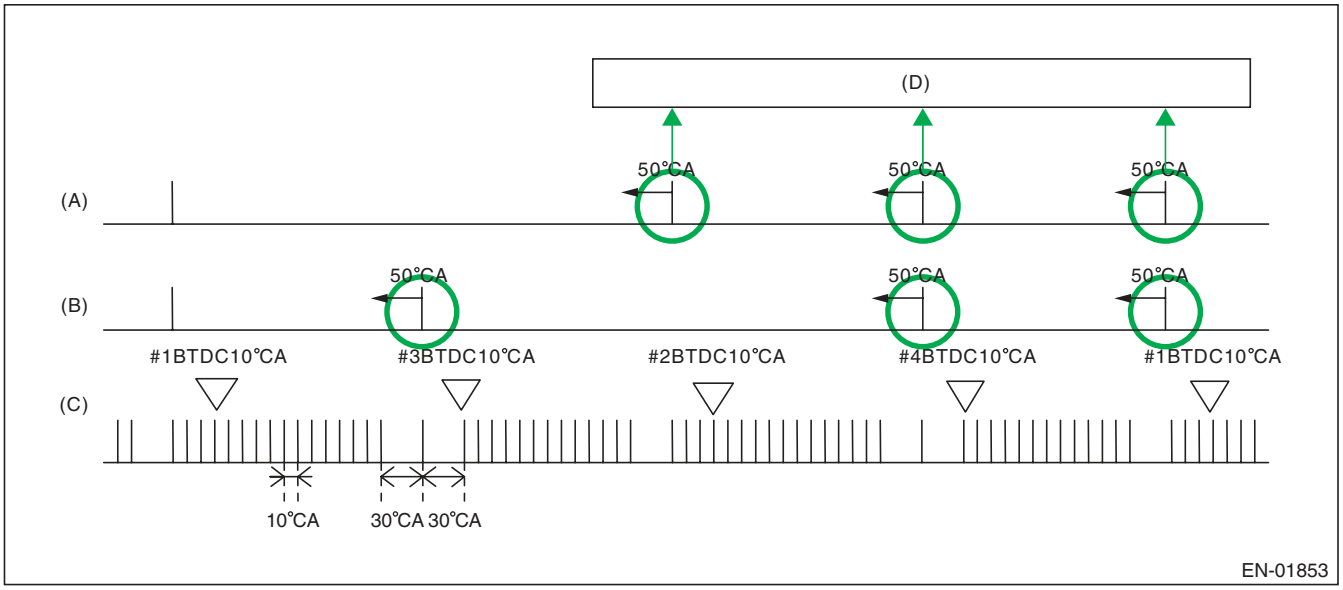

(A) Camshaft signal (RH)
(B) Camshaft signal (LH)
(C) Crankshaft signal
(D) Number of camshaft position signals = When normal, there will be 3 cam signals for every 2 engine revolutions.

3. ENABLE CONDITION

Secondary Parameters	Enable Conditions
Battery voltage	≥ 8 V

4. GENERAL DRIVING CYCLE

Always perform the diagnosis continuously.

5. DIAGNOSTIC METHOD

- **Abnormality Judgement 1**

Judge as NG when the condition where the number of camshaft position sensor signals are less than 3 time(s) during 2 engine revs. continues.

Judgement Value

Malfunction Criteria	Threshold Value
Amount of camshaft sensor signal during 2 revs.	< 3 time(s)

Time Needed for Diagnosis: Two engine revolutions × 50 time(s)
Malfunction Indicator Light Illumination: Illuminates as soon as a malfunction occurs.

- **Normality Judgement 1**

Judge as OK and clear the NG when the malfunction criteria below are met.

Judgement Value

Malfunction Criteria	Threshold Value
Camshaft position sensor signal	≥ 3 time(s)

Time Needed for Diagnosis: Two engine revolutions

- **Abnormality Judgement 2**

If the duration of time while the following conditions are met is longer than the time indicated, judge as NG.

Judgement Value

Malfunction Criteria	Threshold Value
Starter	ON
Camshaft position sensor signal	No input

Time Needed for Diagnosis: 3000 ms

- **Normality Judgement 2**

Judge as OK and clear the NG if the continuous time while the following conditions are established is more than the predetermined time.

Judgement Value

Malfunction Criteria	Threshold Value
Camshaft position sensor signal	Input exists

Time Needed for Diagnosis: Less than 1 second

BB:DTC P0345 CAMSHAFT POSITION SENSOR “A” CIRCUIT (BANK 2)

1. OUTLINE OF DIAGNOSIS

NOTE:
For the detection standard, refer to DTC P0340. <Ref. to GD(H4DOTC)-92, DTC P0340 CAMSHAFT POSITION SENSOR “A” CIRCUIT (BANK 1 OR SINGLE SENSOR), Diagnostic Trouble Code (DTC) Detecting Criteria.>

BC:DTC P0410 SECONDARY AIR INJECTION SYSTEM

1. OUTLINE OF DIAGNOSIS

Detect NG judging from secondary air delivery pipe pressure, pulse of secondary air delivery pipe pressure and secondary air pipe airflow amount.

2. ENABLE CONDITION

Secondary Parameters	Enable Conditions
Pump supply pressure check	
Estimate ambient temperature	≥ 4.4 °C
Battery voltage	≥ 10.9 V
Barometric pressure	≥ 75 kPa (563 mmHg, 22.2 inHg)
Engine	In operation
Amount of intake air	≥ 2 g/s (0.07 oz/s)
Secondary air pump	Operating
Combination valve	Bank open (Except with both banks closed)
Combination valve both closed pulse diagnosis	
Estimate ambient temperature	≥ 4.4 °C
Battery voltage	≥ 10.9 V
Barometric pressure	≥ 75 kPa (563 mmHg, 22.2 inHg)
Engine	In operation
Engine load	≥ 0.2 g/rev (0.01 oz/rev)
After fuel cut	≥ 1000 ms
Combination valve changeover pressure diagnosis	
Estimate ambient temperature	≥ 4.4 °C
Battery voltage	≥ 10.9 V
Barometric pressure	≥ 75 kPa (563 mmHg, 22.2 inHg)
Engine	In operation
Amount of intake air	> 2 g/s (0.07 oz/s) and < 25 g/s (0.88 oz/s)
Engine speed	< 4000 rpm
After fuel cut	≥ 1000 ms
Overflow diagnosis	
Estimate ambient temperature	≥ 4.4 °C
Battery voltage	≥ 10.9 V
Barometric pressure	≥ 75 kPa (563 mmHg, 22.2 inHg)
Engine	In operation

3. GENERAL DRIVING CYCLE

Perform diagnosis during secondary air pump operation

4. DIAGNOSTIC METHOD

Measure secondary air delivery pipe pressure, pulse of secondary air delivery pipe pressure and secondary air pipe airflow amount.

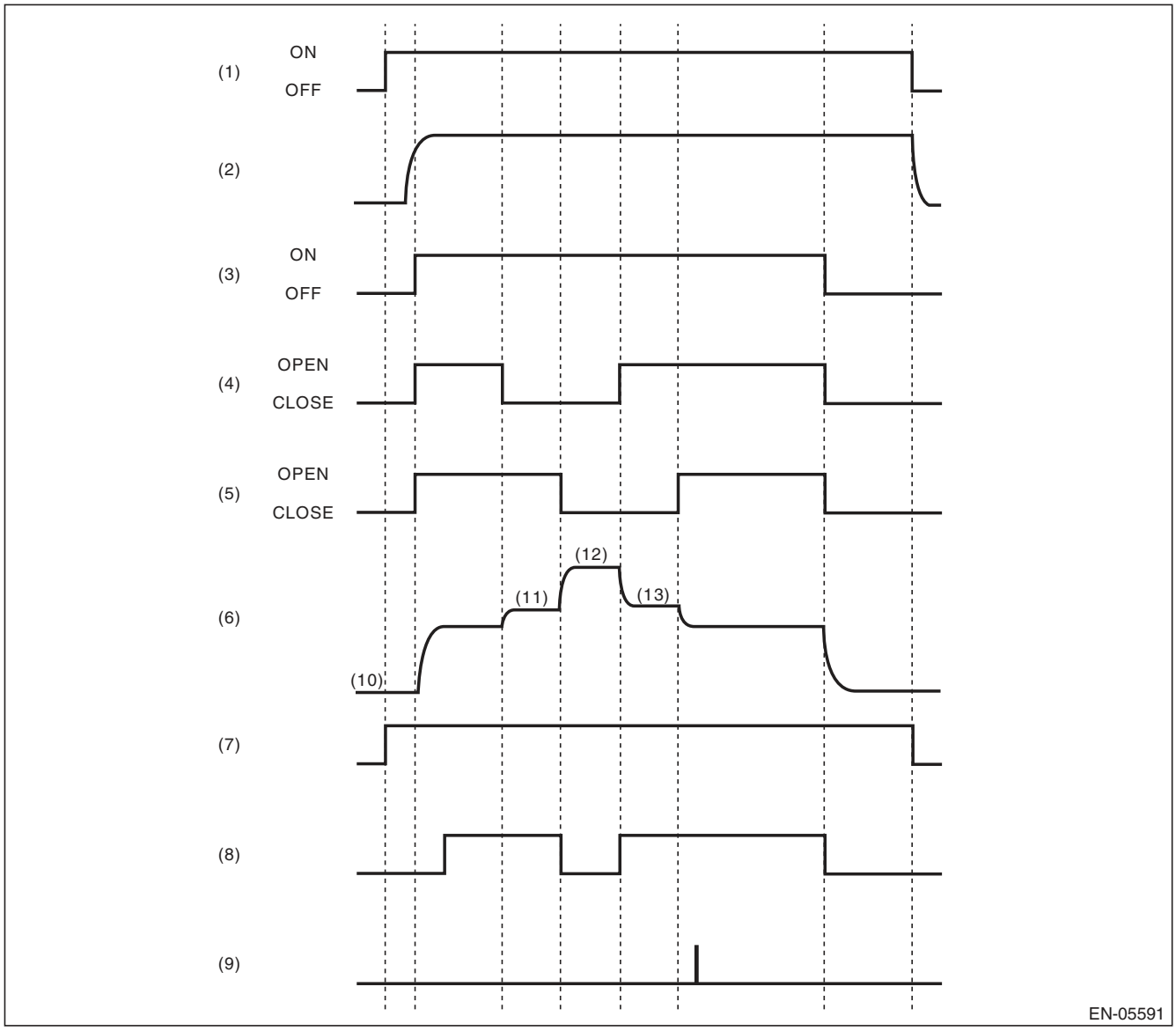

(1) IG
(2) Ne
(3) Secondary air pump operating status
(4) E-COMB valve (right hand) status
(5) E-COMB valve (left hand) status
(6) Secondary air delivery pipe pressure (psi)
(7) Diagnosis enable condition
(8) Pump supply pressure check (judgment)
(9) Flow amount check (judgment)
(10) Barometric pressure (Pas) measurement before secondary air control
(11) Right bank all closed pressure (POR) measurement
(12) Both banks all closed pressure (PORL) measurement
(13) Left bank all closed pressure (POL) measurement

Pump supply pressure check

Perform the system function diagnosis with how much the pressure rises when the secondary air pump is turned from OFF to ON.
Judge as NG if delivery pipe pressure does not rise though it should when the secondary air pump turns OFF → ON.

- **Abnormality Judgement**

If the duration of time while the following conditions are met is longer than the time indicated, judge as NG.

Judgement Value

Malfunction Criteria	Threshold Value	DTC
Secondary air supply pipe pressure (after barometric pressure compensation)	< 0.9 kPa (7 mmHg, 0.3 inHg)	P0410

Time Needed for Diagnosis: 1984 ms + 2816 ms
Malfunction Indicator Light Illumination: Illuminates when malfunction occurs in 2 continuous driving cycles.

- **Normality Judgement**

Judge as OK and clear the NG if the continuous time while the following conditions are established is more than the predetermined time.

Judgement Value

Malfunction Criteria	Threshold Value	DTC
Secondary air supply pipe pressure (after barometric pressure compensation)	≥ 0.9 kPa (7 mmHg, 0.3 inHg)	P0410

Time Needed for Diagnosis: 1984 ms + 2816 ms

Combination valve both closed pulse diagnosis

Perform open stuck diagnosis of both combination valves using delivery pipe pressure pulse when both combination valves are closed. Determine which side of valves is stuck open by comparing secondary air flow amount when RH combination valve is closed with that when LH combination valve is closed.
Calculate voltage pulse of the pump supply pipe pressure when both combination valves are closed. The calculation should be small because there is no pulse from supply pipe pressure with both combination valves closed. When the calculation is large, determine that either of the combination valves is stuck open.
Determine which side of valves is stuck open by comparing secondary air flow amount when the RH combination valve is closed with that when the LH combination valve is closed. Air flow amount is larger on the open stuck valve.

- **Abnormality Judgement**

If the duration of time while the following conditions are met is longer than the time indicated, judge as NG.

Judgement Value

Malfunction Criteria	Threshold Value	DTC
Pulse calculation value when both combination valves are closed Air flow amount when the right bank is closed (value from Map 2)	> Value of Map 1 ≥ Air flow amount when the left bank is closed (value from Map 3)	P2440
Pulse calculation value when both combination valves are closed Air flow amount when the left bank is closed (value from Map 3)	> Value of Map 1 > Air flow amount when the right bank is closed (value from Map 2)	P2442

Time Needed for Diagnosis: 4000 ms + 992 ms + 992 ms + 992 ms
Malfunction Indicator Light Illumination: Illuminates when malfunction occurs in 2 continuous driving cycles.

- **Normality Judgement**

Judge as OK and clear the NG if the continuous time while the following conditions are established is more than the predetermined time.

Judgement Value

Malfunction Criteria	Threshold Value	DTC
Pulse calculation value when both combination valves are closed	≤ Value of Map 1	P2440, P2442

Time Needed for Diagnosis: 4000 ms + 992 ms + 992 ms + 992 ms

Combination valve changeover pressure diagnosis

Perform the RH combination valve stuck closed diagnosis with the variation of delivery pipe pressure when the RH combination valve turns closed → open.

Delivery pipe pressure should vary when the RH combination valve turns closed → open. When the variation is small, determine that the RH combination valve is stuck closed.

- **Abnormality Judgement**

If the duration of time while the following conditions are met is longer than the time indicated, judge as NG.

Judgement Value

Malfunction Criteria	Threshold Value	DTC
Pressure variation value when the RH combination valve is switched	< Value of Map 4	P2441

Time Needed for Diagnosis: 4000 ms + 992 ms + 992 ms + 992 ms

Malfunction Indicator Light Illumination: Illuminates when malfunction occurs in 2 continuous driving cycles.

- **Normality Judgement**

Judge as OK and clear the NG if the continuous time while the following conditions are established is more than the predetermined time.

Judgement Value

Malfunction Criteria	Threshold Value	DTC
Pressure variation value when the RH combination valve is switched	≥ Value of Map 4	P2441

Time Needed for Diagnosis: 4000 ms + 992 ms + 992 ms + 992 ms

Perform the LH combination valve stuck closed diagnosis with the variation of delivery pipe pressure when the LH combination valve turns open → closed.

Delivery pipe pressure should vary when the LH combination valve turns open → closed. When the variation is small, determine that the LH combination valve is stuck closed.

- **Abnormality Judgement**

If the duration of time while the following conditions are met is longer than the time indicated, judge as NG.

Judgement Value

Malfunction Criteria	Threshold Value	DTC
Pressure variation value when the LH combination valve is switched	< Value of Map 5	P2443

Time Needed for Diagnosis: 4000 ms + 992 ms + 992 ms + 992 ms

Malfunction Indicator Light Illumination: Illuminates when malfunction occurs in 2 continuous driving cycles.

- **Normality Judgement**

Judge as OK and clear the NG if the continuous time while the following conditions are established is more than the predetermined time.

Judgement Value

Malfunction Criteria	Threshold Value	DTC
Pressure variation value when the LH combination valve is switched	≥ Value of Map 5	P2443

Time Needed for Diagnosis: 4000 ms + 992 ms + 992 ms + 992 ms

Overflow diagnosis

Perform secondary air system flow abnormality diagnosis using both sides of combination valves secondary air amount when both are closed.
Judge as secondary air system flow abnormality either if there is excessive secondary air flow amount with the RH combination valve closed, or if there is excessive secondary air flow amount with the LH combination valve closed.

- **Abnormality Judgement**

If the duration of time while the following conditions are met is longer than the time indicated, judge as NG.

Judgement Value

Malfunction Criteria	Threshold Value	DTC
Air flow amount when the right bank is closed (value from Map 2)	> Value of Map 6	P0411
or		
Air flow amount when the left bank is closed (value from Map 3)	> Value of Map 7	
Voltage at PORL measurement – Voltage at POR measurement	≤ 4 V	
Voltage at PORL measurement – Voltage at POL measurement	≤ 4 V	

PORL: Both banks all closed pressure
POR: Right bank all closed pressure
POL: Left bank all closed pressure

Time Needed for Diagnosis: 4000 ms + 992 ms + 992 ms + 992 ms

Malfunction Indicator Light Illumination: Illuminates when malfunction occurs in 2 continuous driving cycles.

- **Normality Judgement**

Judge as OK and clear the NG if the continuous time while the following conditions are established is more than the predetermined time.

Judgement Value

Malfunction Criteria	Threshold Value	DTC
Air flow amount when the right bank is closed (value from Map 2)	≤ Value of Map 6	P0411
or		
Air flow amount when the left bank is closed (value from Map 3)	≤ Value of Map 7	
Voltage at PORL measurement – Voltage at POR measurement	≤ 4 V	
Voltage at PORL measurement – Voltage at POL measurement	≤ 4 V	

PORL: Both banks all closed pressure
POR: Right bank all closed pressure
POL: Left bank all closed pressure

Time Needed for Diagnosis: 4000 ms + 992 ms + 992 ms + 992 ms

Map1

Intake air (g (oz)/rev)	0.1 (0)	0.25 (0.01)	0.3 (0.01)	1 (0.04)
Threshold value (V)	13	13	3.25	3.25

Map2

Secondary air pressure in the pipe when both comb. valve is closing kPa (mmHg, inHg) Secondary air pressure in the pipe when LH comb. valve is closing kPa (mmHg, inHg)	69.3 (520, 20.5)	74.6 (560, 22)	80 (600, 23.6)	85.3 (640, 25.2)	90.6 (680, 26.8)	96 (720, 28.3)	101.3 (760, 29.9)	106.6 (800, 31.5)	112 (840, 33.1)	117.3 (880, 34.6)	122.6 (920, 36.2)	128 (960, 37.8)	133.3 (1000, 39.4)	138.6 (1040, 40.9)	144 (1080, 42.5)	149.3 (1120, 44.1)
69.3 (520, 20.5)	0	200	400	600	800	1000	1200	1400	1600	1800	2000	2200	2400	2400	2400	2400
74.6 (560, 22)	–200	0	200	400	600	800	1000	1200	1400	1600	1800	2000	2200	2400	2400	2400
80 (600, 23.6)	–400	–200	0	200	400	600	800	1000	1200	1400	1600	1800	2000	2200	2400	2400
85.3 (640, 25.2)	–600	–400	–200	0	200	400	600	800	1000	1200	1400	1600	1800	2000	2200	2400
90.6 (680, 26.8)	–800	–600	–400	–200	0	200	400	600	800	1000	1200	1400	1600	1800	2000	2200
96 (720, 28.3)	–1000	–800	–600	–400	–200	0	200	400	600	800	1000	1200	1400	1600	1800	2000
101.3 (760, 29.9)	–1200	–1000	–800	–600	–400	–200	0	200	400	600	800	1000	1200	1400	1600	1800
106.6 (800, 31.5)	–1400	–1200	–1000	–800	–600	–400	–200	0	200	400	600	800	1000	1200	1400	1600
112 (840, 33.1)	–1600	–1400	–1200	–1000	–800	–600	–400	–200	0	200	400	600	800	1000	1200	1400
117.3 (880, 34.6)	–1800	–1600	–1400	–1200	–1000	–800	–600	–400	–200	0	200	400	600	800	1000	1200
122.6 (920, 36.2)	–2000	–1800	–1600	–1400	–1200	–1000	–800	–600	–400	–200	0	200	400	600	800	1000
128 (960, 37.8)	–2200	–2000	–1800	–1600	–1400	–1200	–1000	–800	–600	–400	–200	0	200	400	600	800
133.3 (1000, 39.4)	–2400	–2200	–2000	–1800	–1600	–1400	–1200	–1000	–800	–600	–400	–200	0	200	400	600
138.6 (1040, 40.9)	–2400	–2400	–2200	–2000	–1800	–1600	–1400	–1200	–1000	–800	–600	–400	–200	0	200	400
144 (1080, 42.5)	–2400	–2400	–2400	–2200	–2000	–1800	–1600	–1400	–1200	–1000	–800	–600	–400	–200	0	200
149.3 (1120, 44.1)	–2400	–2400	–2400	–2400	–2200	–2000	–1800	–1600	–1400	–1200	–1000	–800	–600	–400	–200	0

(L/min)

Map 3

Secondary air pressure in the pipe when both comb. valve is closing kPa (mmHg, inHg) Secondary air pressure in the pipe when RH comb. valve is closing kPa (mmHg, inHg)	69.3 (520, 20.5)	74.6 (560, 22)	80 (600, 23.6)	85.3 (640, 25.2)	90.6 (680, 26.8)	96 (720, 28.3)	101.3 (760, 29.9)	106.6 (800, 31.5)	112 (840, 33.1)	117.3 (880, 34.6)	122.6 (920, 36.2)	128 (960, 37.8)	133.3 (1000, 39.4)	138.6 (1040, 40.9)	144 (1080, 42.5)	149.3 (1120, 44.1)
69.3 (520, 20.5)	0	200	400	600	800	1000	1200	1400	1600	1800	2000	2200	2400	2400	2400	2400
74.6 (560, 22)	–200	0	200	400	600	800	1000	1200	1400	1600	1800	2000	2200	2400	2400	2400
80 (600, 23.6)	–400	–200	0	200	400	600	800	1000	1200	1400	1600	1800	2000	2200	2400	2400
85.3 (640, 25.2)	–600	–400	–200	0	200	400	600	800	1000	1200	1400	1600	1800	2000	2200	2400
90.6 (680, 26.8)	–800	–600	–400	–200	0	200	400	600	800	1000	1200	1400	1600	1800	2000	2200
96 (720, 28.3)	–1000	–800	–600	–400	–200	0	200	400	600	800	1000	1200	1400	1600	1800	2000
101.3 (760, 29.9)	–1200	–1000	–800	–600	–400	–200	0	200	400	600	800	1000	1200	1400	1600	1800
106.6 (800, 31.5)	–1400	–1200	–1000	–800	–600	–400	–200	0	200	400	600	800	1000	1200	1400	1600
112 (840, 33.1)	–1600	–1400	–1200	–1000	–800	–600	–400	–200	0	200	400	600	800	1000	1200	1400
117.3 (880, 34.6)	–1800	–1600	–1400	–1200	–1000	–800	–600	–400	–200	0	200	400	600	800	1000	1200
122.6 (920, 36.2)	–2000	–1800	–1600	–1400	–1200	–1000	–800	–600	–400	–200	0	200	400	600	800	1000
128 (960, 37.8)	–2200	–2000	–1800	–1600	–1400	–1200	–1000	–800	–600	–400	–200	0	200	400	600	800
133.3 (1000, 39.4)	–2400	–2200	–2000	–1800	–1600	–1400	–1200	–1000	–800	–600	–400	–200	0	200	400	600
138.6 (1040, 40.9)	–2400	–2400	–2200	–2000	–1800	–1600	–1400	–1200	–1000	–800	–600	–400	–200	0	200	400
144 (1080, 42.5)	–2400	–2400	–2400	–2200	–2000	–1800	–1600	–1400	–1200	–1000	–800	–600	–400	–200	0	200
149.3 (1120, 44.1)	–2400	–2400	–2400	–2400	–2200	–2000	–1800	–1600	–1400	–1200	–1000	–800	–600	–400	–200	0
(L/min)																

Map4

Amount of intake air when RH comb. valve switches (g (oz)/s) Battery voltage when RH comb. valve switches (V)	10 (0.35)	15 (0.53)	20 (0.71)	25 (0.88)	26 (0.92)
11	0.025	0.025	0.025	0.005	0
12	0.035	0.035	0.035	0.015	0
13	0.05	0.05	0.05	0.025	0
14	0.05	0.05	0.05	0.025	0
					(V)

Map 5

Amount of intake air when LH comb. valve switches (g (oz)/s) Battery voltage when LH comb. valve switches (V)	10 (0.35)	15 (0.53)	20 (0.71)	25 (0.88)	26 (0.92)
11	0.025	0.025	0.025	0.005	0
12	0.035	0.035	0.035	0.015	0
13	0.05	0.05	0.05	0.025	0
14	0.05	0.05	0.05	0.025	0
					(V)

Map6

Amount of intake air when P0R is measuring (g (oz)/s) Battery voltage when P0R measuring (V)	2 (0.07)	25 (0.88)
11.5	345	345
12.5	345	345
13.5	345	345
14.5	390	390
15.5	420	420
		(L/min)

Map7

Amount of intake air when P0L is measuring (g (oz)/s) Battery voltage when P0L measuring (V)	2 (0.07)	25 (0.88)
11.5	345	345
12.5	345	345
13.5	345	345
14.5	390	390
15.5	420	420
		(L/min)

BD:DTC P0411 SECONDARY AIR INJECTION SYSTEM INCORRECT FLOW DETECTED

1. OUTLINE OF DIAGNOSIS

NOTE:
For the detection standard, refer to DTC P0410. <Ref. to GD(H4DOTC)-94, DTC P0410 SECONDARY AIR INJECTION SYSTEM, Diagnostic Trouble Code (DTC) Detecting Criteria.>

BE:DTC P0413 SECONDARY AIR INJECTION SYSTEM SWITCHING VALVE “A” CIRCUIT OPEN

1. OUTLINE OF DIAGNOSIS

Judge as NG when the ECM output level differs from the actual terminal level.

2. ENABLE CONDITIONS

Secondary Parameters	Enable Conditions
None	

3. GENERAL DRIVING CYCLE

Always perform the diagnosis continuously.

4. DIAGNOSTIC METHOD

- **Abnormality Judgement**

If the duration of time while the following conditions are met is longer than the time indicated, judge as NG.

Judgement Value

Malfunction Criteria	Threshold Value
Battery voltage	≥ 10.9 V
Ignition	ON
Terminal output voltage when ECM outputs OFF signal	LOW

Time Needed for Diagnosis: 2500 ms
Malfunction Indicator Light Illumination: Illuminates as soon as a malfunction occurs.

- **Normality Judgement**

Judge as OK and clear the NG if the continuous time while the following conditions are established is more than the predetermined time.

Judgement Value

Malfunction Criteria	Threshold Value
Battery voltage	≥ 10.9 V
Ignition	ON
Terminal output voltage when ECM outputs OFF signal	HIGH

Time Needed for Diagnosis: Less than 1 second

BF:DTC P0414 SECONDARY AIR INJECTION SYSTEM SWITCHING VALVE “A” CIRCUIT SHORTED

1. OUTLINE OF DIAGNOSIS

Judge as NG when the ECM output level differs from the actual terminal level.

2. ENABLE CONDITIONS

Secondary Parameters	Enable Conditions
None	

3. GENERAL DRIVING CYCLE

Always perform the diagnosis continuously.

4. DIAGNOSTIC METHOD

- **Abnormality Judgement**

If the duration of time while the following conditions are met is longer than the time indicated, judge as NG.

Judgement Value

Malfunction Criteria	Threshold Value
Battery voltage	≥ 10.9 V
Ignition	ON
Terminal output voltage when ECM outputs ON signal	HIGH

Time Needed for Diagnosis: 2500 ms
Malfunction Indicator Light Illumination: Illuminates as soon as a malfunction occurs.

- **Normality Judgement**

Judge as OK and clear the NG if the continuous time while the following conditions are established is more than the predetermined time.

Judgement Value

Malfunction Criteria	Threshold Value
Battery voltage	≥ 10.9 V
Ignition	ON
Terminal output voltage when ECM outputs ON signal	LOW

Time Needed for Diagnosis: Less than 1 second

BG:DTC P0416 SECONDARY AIR INJECTION SYSTEM SWITCHING VALVE “B” CIRCUIT OPEN

1. OUTLINE OF DIAGNOSIS

NOTE:
For the detection standard, refer to DTC P0413. <Ref. to GD(H4DOTC)-102, DTC P0413 SECONDARY AIR INJECTION SYSTEM SWITCHING VALVE “A“ CIRCUIT OPEN, Diagnostic Trouble Code (DTC) Detecting Criteria.>

BH:DTC P0417 SECONDARY AIR INJECTION SYSTEM SWITCHING VALVE “B” CIRCUIT SHORTED

1. OUTLINE OF DIAGNOSIS

NOTE:
For the detection standard, refer to DTC P0414. <Ref. to GD(H4DOTC)-103, DTC P0414 SECONDARY AIR INJECTION SYSTEM SWITCHING VALVE “A“ CIRCUIT SHORTED, Diagnostic Trouble Code (DTC) Detecting Criteria.>

BI: DTC P0418 SECONDARY AIR INJECTION SYSTEM CONTROL “A” CIRCUIT OPEN

1. OUTLINE OF DIAGNOSIS

Judge as NG when the ECM output level differs from the actual terminal level.

2. ENABLE CONDITIONS

Secondary Parameters	Enable Conditions
None	

3. GENERAL DRIVING CYCLE

Always perform the diagnosis continuously.

4. DIAGNOSTIC METHOD

- **Abnormality Judgement**

If the duration of time while the following conditions are met is longer than the time indicated, judge as NG.

Judgement Value

Malfunction Criteria	Threshold Value
Battery voltage	≥ 10.9 V
Ignition	ON
Terminal output voltage when ECM outputs OFF signal	LOW

Time Needed for Diagnosis: 2500 ms
Malfunction Indicator Light Illumination: Illuminates as soon as a malfunction occurs.

- **Normality Judgement**

Judge as OK and clear the NG if the continuous time while the following conditions are established is more than the predetermined time.

Judgement Value

Malfunction Criteria	Threshold Value
Battery voltage	≥ 10.9 V
Ignition	ON
Terminal output voltage when ECM outputs OFF signal	HIGH

Time Needed for Diagnosis: Less than 1 second

BJ:DTC P0420 CATALYST SYSTEM EFFICIENCY BELOW THRESHOLD (BANK 1)

1. OUTLINE OF DIAGNOSIS

Detect the deterioration of the catalyst function.
Though the front oxygen sensor output would change slowly with a new catalyst, the sensor output with a deteriorated catalyst becomes high and the inversion time is shortened.
For this reason, the catalyst diagnosis is carried out by monitoring the front oxygen sensor output and comparing it with the front oxygen (A/F) sensor output.

2. COMPONENT DESCRIPTION

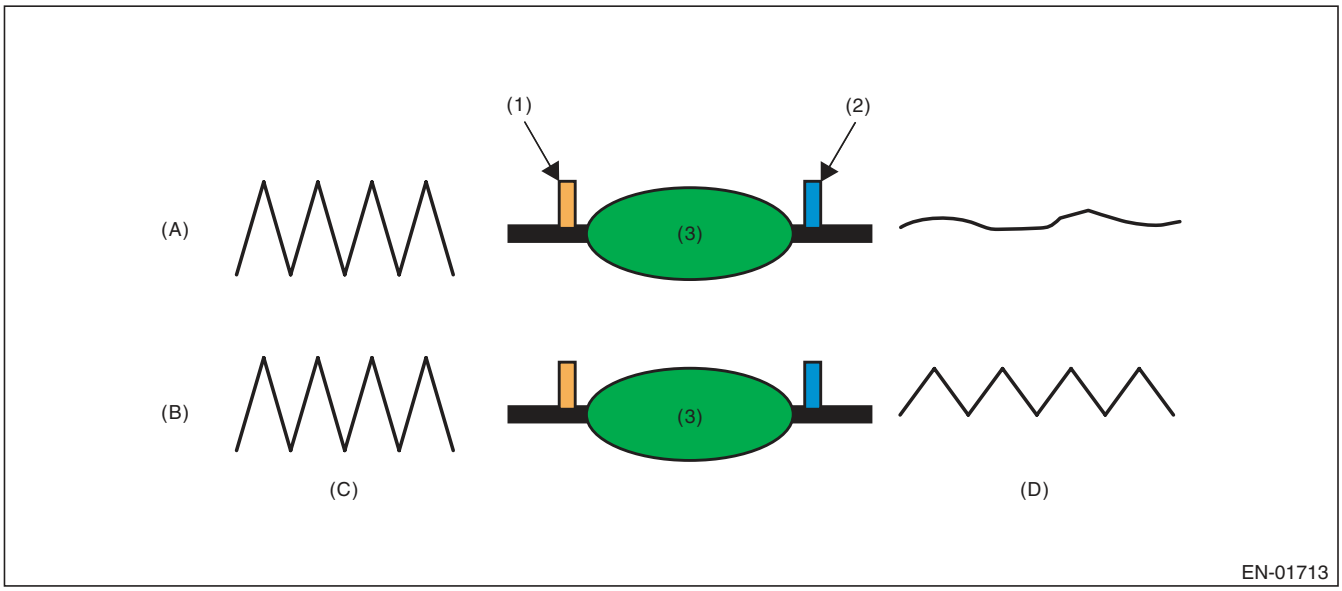

(A)	Normal	(C)	Output waveform from the front oxygen (A/F) sensor	(D)	Output waveform from the front oxygen sensor
(B)	Deterioration				
(1)	Front oxygen (A/F) sensor	(2)	Front oxygen sensor	(3)	Catalytic converter

3. ENABLE CONDITION

Secondary Parameters	Enable Conditions
Battery voltage	≥ 10.9 V
Atmospheric pressure	≥ 75 kPa (563 mmHg, 22.2 inHg)
Engine coolant temperature	≥ 70 °C (158 °F)
Estimated catalyst temperature	≥ 500 °C (932 °F)
Misfire detection every 200 rotations	< 5 time(s)
Learning value of evaporation gas density	< 0.2
Sub feedback	In operation
Evaporative system diagnosis	Not in operation
Time of difference (< 0.10) between actual lambda and target lambda	≥ 1000 ms
Vehicle speed	> 60 km/h (37.3 MPH)
Amount of intake air	≥ 10 g/s (0.35 oz/s) and < 40 g/s (1.41 oz/s)
Engine load change every 0.5 engine revs.	< 0.02 g/rev (0 oz/rev)
Rear oxygen output change from 660 mV or less to 660 mV or more	Experienced after fuel cut
Elapsed time after starting the engine	≥ 200 s
Purge execution calculated time	≥ 5 s

4. GENERAL DRIVING CYCLE

Perform the diagnosis only once at a constant 60 km/h (37.3 MPH) or higher.

5. DIAGNOSTIC METHOD

After establishing the execution conditions, calculate the front oxygen (A/F) sensor lambda deviation cumulative value (Σ |(sglmd$_n$ – sglmd$_{n-1}$)|) and rear oxygen sensor output voltage deviation cumulative value (Σ |(ro2sad$_n$ – ro2sad$_{n-1}$)|) per 32 milliseconds × 4 , and when the front oxygen (A/F) sensor lambda deviation cumulative value (Σ |(sglmd$_n$ – sglmd$_{n-1}$)|) becomes the predetermined value or more, calculate the diagnostic value.

- **Abnormality Judgement**

If the duration of time while the following conditions are met is within the time indicated, judge as NG.

Judgement Value

Malfunction Criteria	Threshold Value
Σ |(ro2sad$_n$ – ro2sad$_{n-1}$)| / Σ |(sglmd$_n$ – sglmd$_{n-1}$)|	> 11 (AT model) > 9 (MT model)

Time Needed for Diagnosis: 30 — 55 seconds
Malfunction Indicator Light Illumination: Illuminates when malfunction occurs in 2 continuous driving cycles.

- **Normality Judgement**

Judge as OK and clear the NG if the continuous time while the following conditions are established is within the predetermined time.

Judgement Value

Malfunction Criteria	Threshold Value
Σ |(ro2sad$_n$ – ro2sad$_{n-1}$)| / Σ |(sglmd$_n$ – sglmd$_{n-1}$)|	≤ 11 (AT model) ≤ 9 (MT model)

Time Needed for Diagnosis: 30 — 55 seconds

BK:DTC P0441 EVAPORATIVE EMISSION SYSTEM INCORRECT PURGE FLOW

1. OUTLINE OF DIAGNOSIS

NOTE:
For the detection standard, refer to DTC P0442. <Ref. to GD(H4DOTC)-108, DTC P0442 EVAPORATIVE EMISSION CONTROL SYSTEM LEAK DETECTED (SMALL LEAK), Diagnostic Trouble Code (DTC) Detecting Criteria.>

BL:DTC P0442 EVAPORATIVE EMISSION CONTROL SYSTEM LEAK DETECTED (SMALL LEAK)

1. OUTLINE OF DIAGNOSIS

Check if there is a leakage in fuel system or not, and perform the function diagnosis of valve.

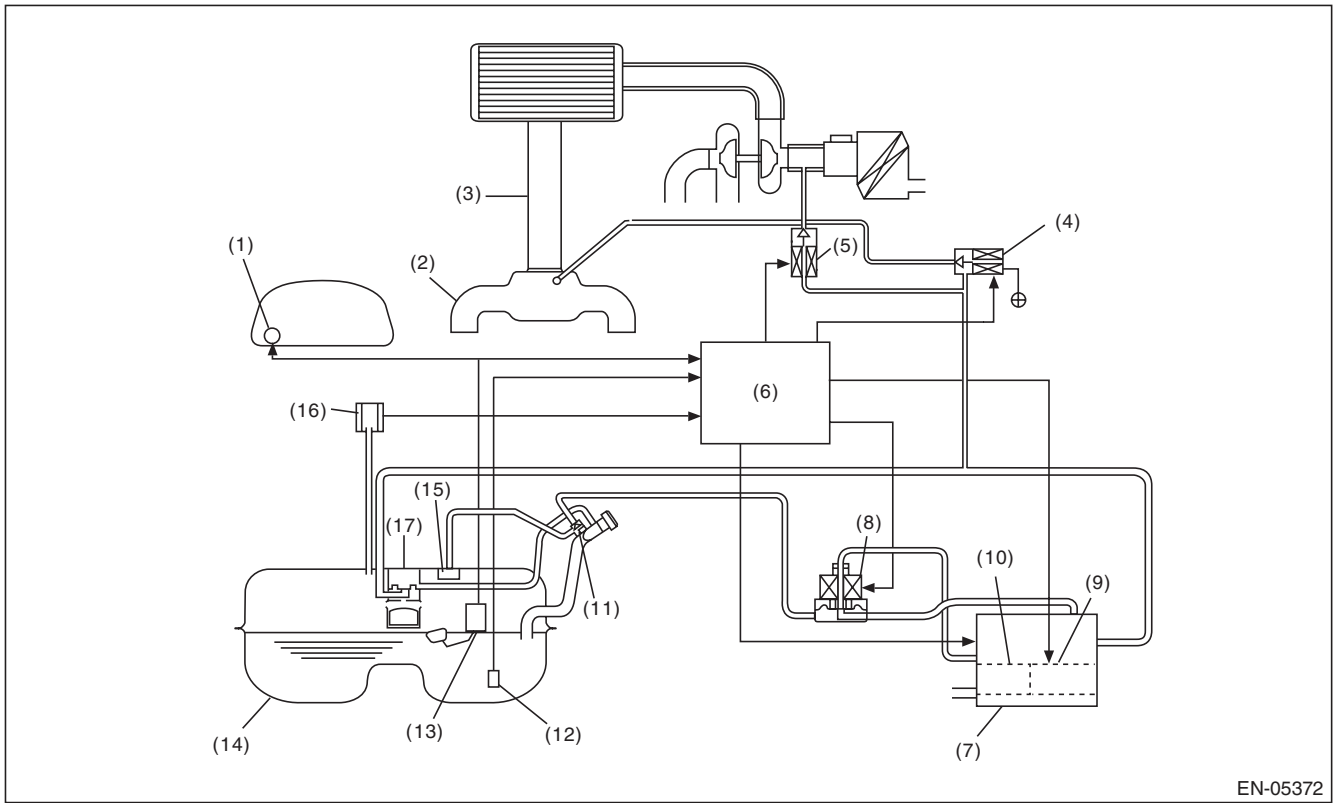

(1)	Fuel gauge	(7)	Canister	(13)	Fuel level sensor
(2)	Intake manifold	(8)	Pressure control valve	(14)	Fuel tank
(3)	Throttle body	(9)	Drain valve	(15)	Fuel cut valve
(4)	Purge control solenoid valve	(10)	Drain filter	(16)	Fuel tank pressure sensor
(5)	Purge control solenoid valve 2	(11)	Shut-off valve	(17)	Vent valve
(6)	Engine control module (ECM)	(12)	Fuel temperature sensor		

In this system diagnosis, check for leakage and valve function is conducted by changing the fuel tank pressure and monitoring the pressure change using the fuel tank pressure sensor. When in 0.04 inch diagnosis, perform in the order of mode Z → mode A → mode B → mode C and mode D; When in 0.02 inch diagnosis, perform in the order of mode A → mode B → mode C → mode D and mode E.

0.04-inch Diagnosis

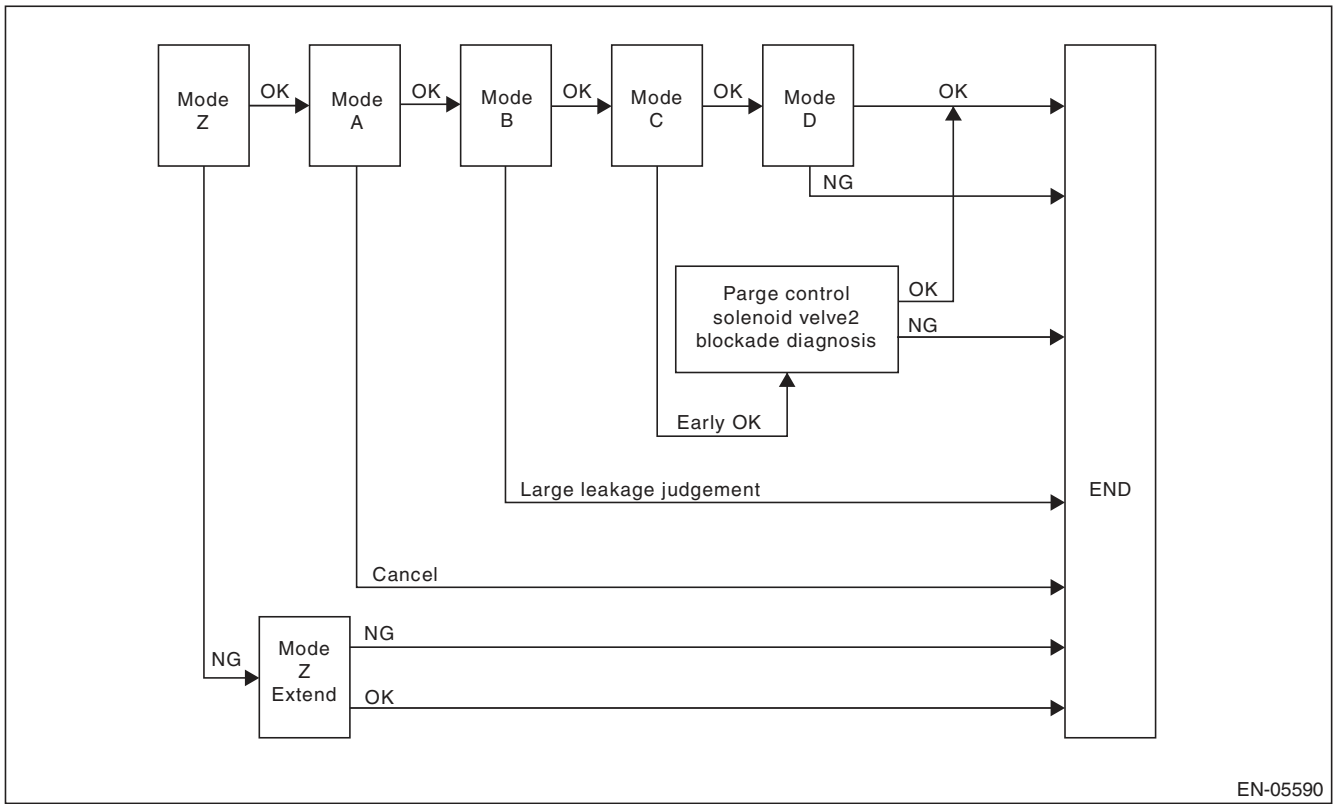

Mode	Mode Description	Diagnosis Period
Mode Z (Purge control solenoid valve opening failure diagnosis)	Perform purge control solenoid valve opening failure diagnosis from the size of tank pressure variation from diagnosis start.	0 ms + 3000 ms — 0 ms + 3000 ms + 13000 ms
Mode A (Estimated evaporation amount)	Calculate the tank pressure change amount (P1).	10000 ms
Mode B (Sealed negative pressure, large leakage judgement)	Decrease the pressure in the tank to the target value by introducing the intake manifold pressure to the fuel tank. If the tank pressure cannot be reduced, it is diagnosed as large leak.	0 — 10000 ms + 25000 ms
Mode C (Pressure increase check, advanced OK judgement)	Wait until the tank pressure returns to the target (start level of P2 calculation). If the tank pressure does not become the value, make advanced OK judgement.	0 — 17000 ms
Mode D (Negative pressure variation measurement, evaporation leakage diagnosis)	Calculate the tank pressure variation (P2), and obtain the diagnostic value using P1 found in Mode A. Perform the evaporation diagnosis using the diagnostic value.	0 ms + 10000 ms

Mode Table for Evaporative Emission Control System Diagnosis

Mode	Behavior of tank internal pressure under normal conditions	Diagnostic item	DTC
Mode Z	Roughly the same as barometric pressure (Same as 0 kPa (0 mmHg, 0 inHg))	Purge control solenoid valve is judged to be open.	P0457
Mode A	Pressure is in proportion to amount of evaporative emission.	—	None
Mode B	Negative pressure is formed due to intake manifold negative pressure	Large leak	P0457
Mode C	Reaches target pressure	—	None
Mode D	Pressure change is small.	EVAP system large leak determination. [1.0 mm (0.04 in)]	P0442

0.02-inch Diagnosis

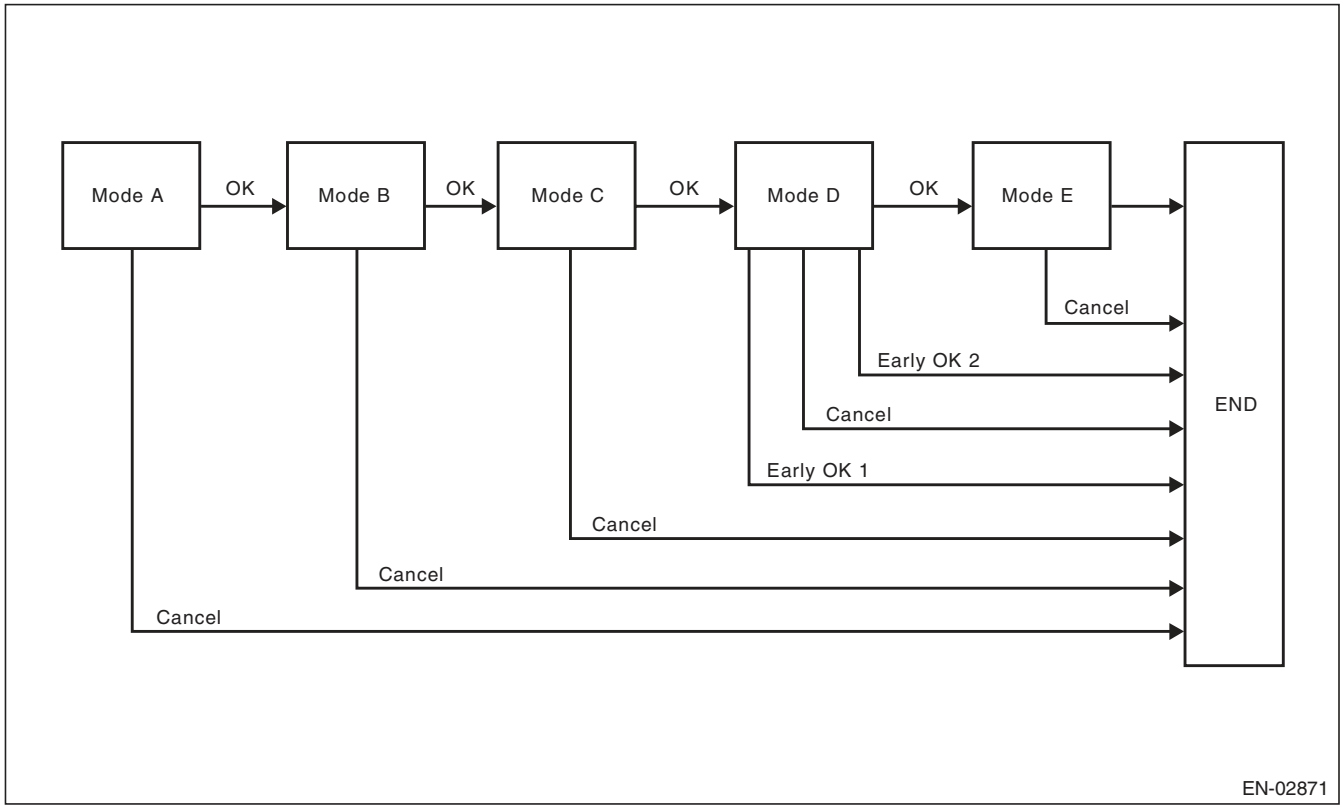

Mode	Mode Description	Diagnosis Period
Mode A (0 point compensation)	When the pressure in the tank is not near 0 mmHg, wait until it returns to 0 point (near 0 mmHg).	0 — Value of Map 1
Mode B (Negative pressure introduced)	Decrease the pressure in the tank to the target value by introducing the intake manifold pressure to the fuel tank.	0 — Value of Map 2
Mode C (Negative pressure maintained)	Wait until the tank pressure returns to the target (start level of P2 calculation).	0 — 20000 ms + 0 + Value from Map 2
Mode D (Negative pressure change calculated)	Calculate the time it takes for the tank pressure to change to the Mode E shifting pressure. If the tank pressure does not change to the Mode E shifting pressure, make advanced OK judgement.	0 — 0 ms + 200000 ms
Mode E (Evaporation generated amount calculation)	Calculate the amount of evaporation (P1).	0 — 0 ms + 200000 ms + Value from Map 3

Map1

Fuel level (ℓ , US gal, Imp gal)	0	10, 2.64, 2.2	20, 5.28, 4.4	30, 7.93, 6.6	40, 10.57, 8.8	50, 13.21, 11	60, 15.85, 13.2
Time Needed for Diagnosis (ms)	12000	12000	11000	10000	7500	5000	5000

Map2

Fuel level (ℓ , US gal, Imp gal)	0	10, 2.64, 2.2	20, 5.28, 4.4	30, 7.93, 6.6	40, 10.57, 8.8	50, 13.21, 11	60, 15.85, 13.2
Time Needed for Diagnosis (ms)	21500	21500	22250	23000	23500	24000	24000

Map 3

Fuel level (ℓ , US gal, Imp gal)	0	10, 2.64, 2.2	20, 5.28, 4.4	30, 7.93, 6.6	40, 10.57, 8.8	50, 13.21, 11	60, 15.85, 13.2
Time Needed for Diagnosis (ms)	60000	60000	60000	60000	60000	60000	60000

2. COMPONENT DESCRIPTION

Pressure control solenoid valve

PCV controls the fuel tank pressure to be equal to the atmospheric air pressure. Normally, the solenoid is set to OFF. The valve opens and closes mechanically in accordance with the pressure difference between tank and atmospheric air, or tank and canister.
The valve is forcibly opened by setting the solenoid to ON at the time of diagnosis.

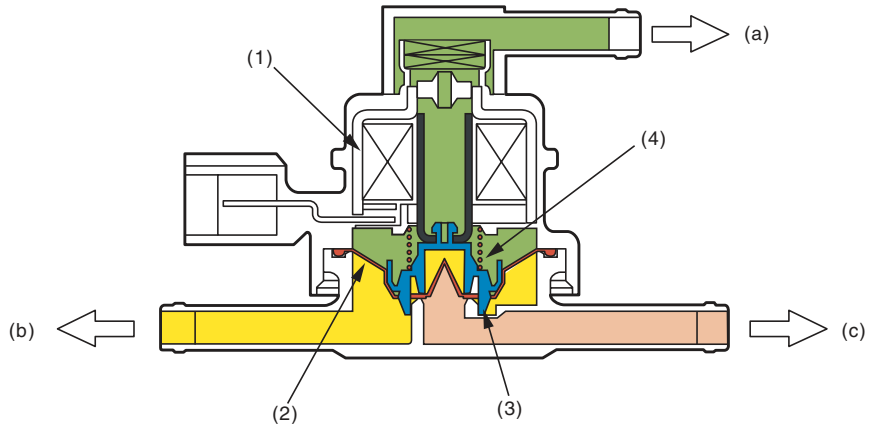

(a)	Barometric pressure	(b)	Fuel tank	(c)	Canister
(1)	Solenoid	(3)	Valve	(4)	Spring
(2)	Diaphragm				

Valve Operation and Air Flow

In the figure below, divided by the diaphragm, the part above X is charged with atmospheric air pressure, and the part below X is charged with tank pressure. Also, the part above Y is charged with tank pressure, and the part below Y is charged with canister pressure.
If the atmospheric air pressure port is A, tank pressure port is B, and canister pressure port is C, the air flows according to pressure difference from each port as shown in the table below.

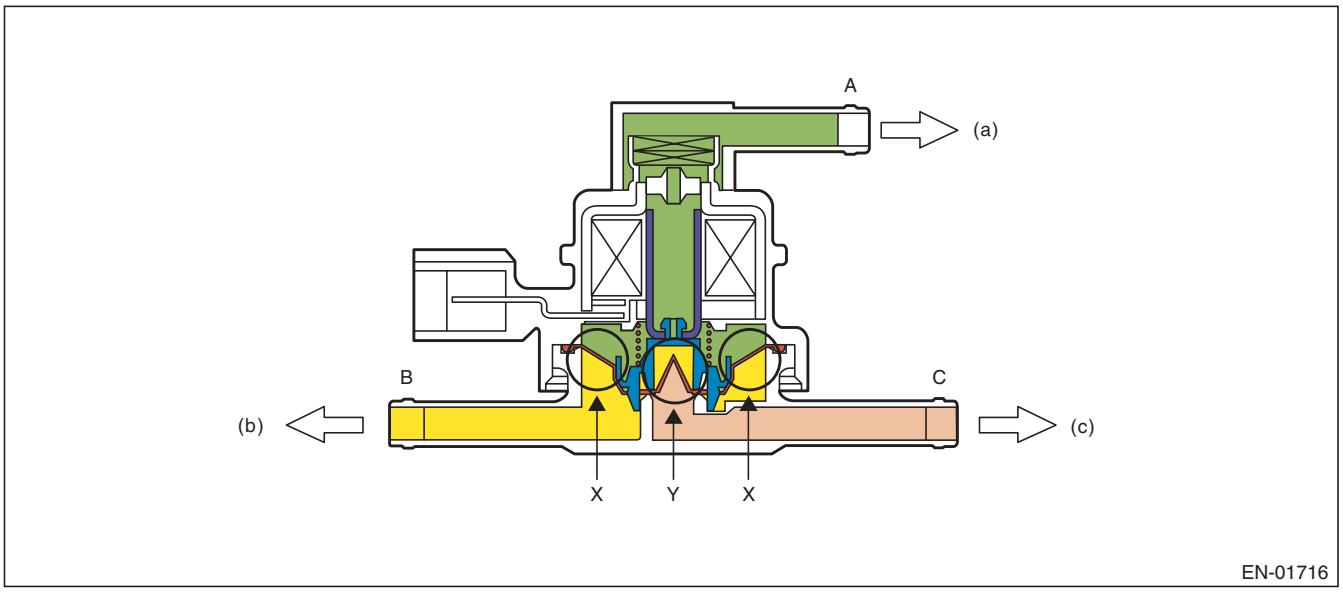

(a) Barometric pressure (b) Fuel tank (c) Canister

Condition of pressure	Flow
A < B (solenoid OFF)	B → C
B < C (solenoid OFF)	C → B
Solenoid ON	B ← → C

When A < B (solenoid OFF)

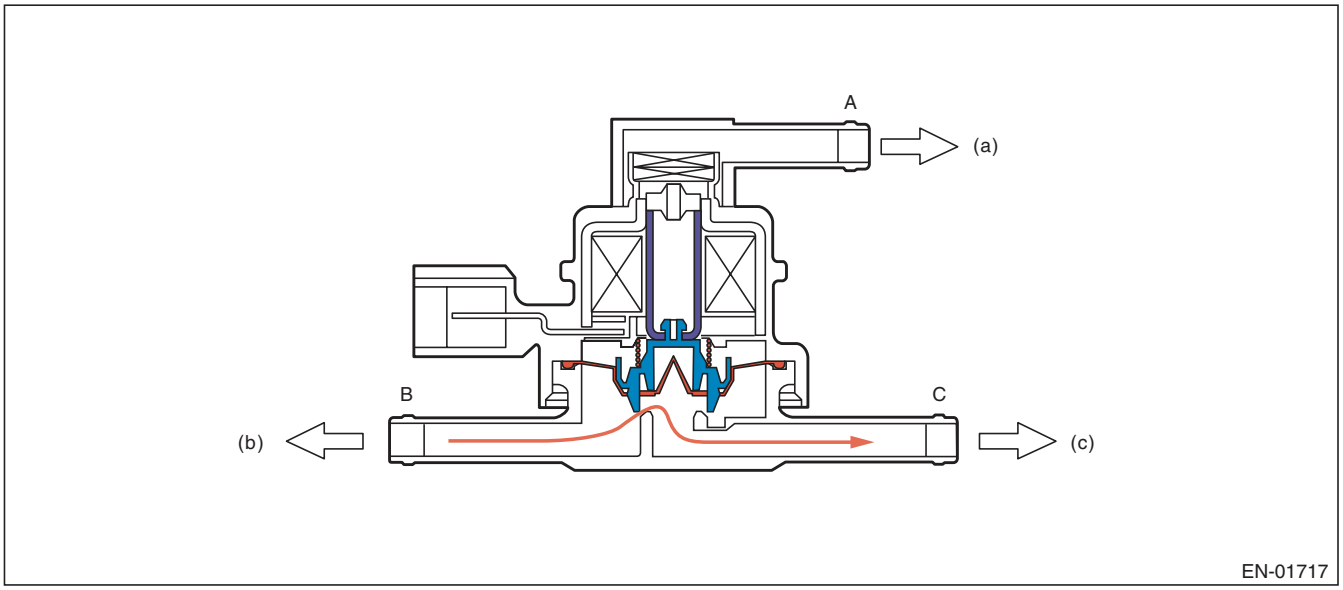

(a) Barometric pressure (b) Fuel tank (c) Canister

When B < C (solenoid OFF)

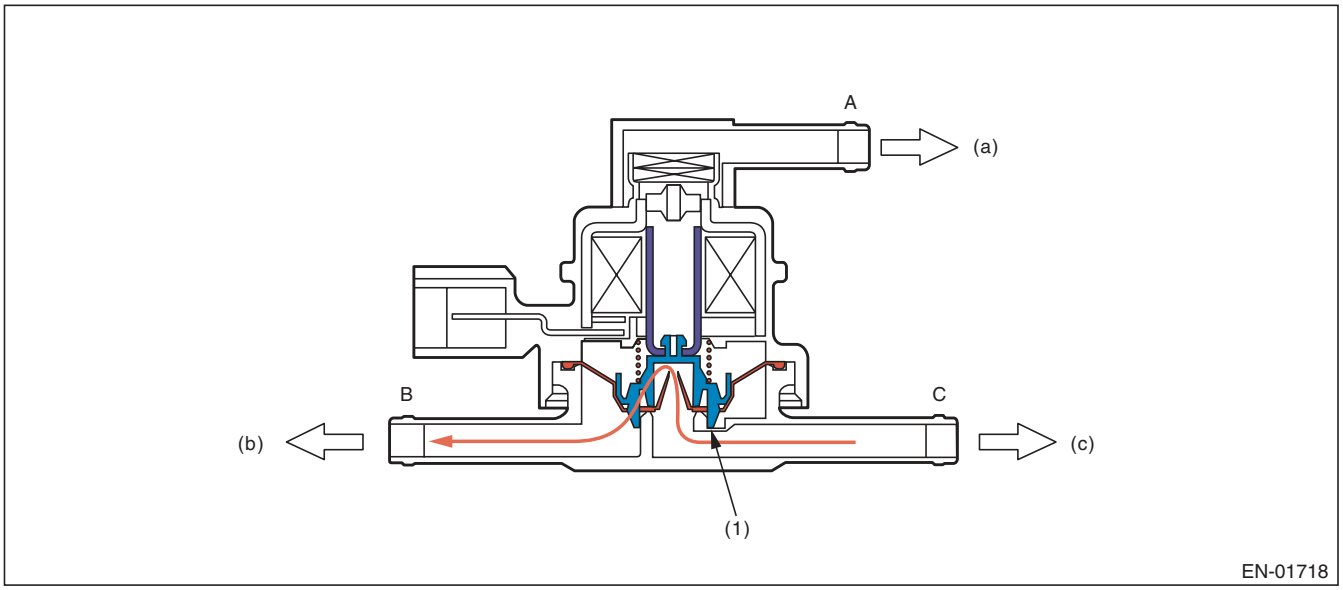

(a) Barometric pressure (b) Fuel tank (c) Canister

(1) Valve

When Solenoid is ON

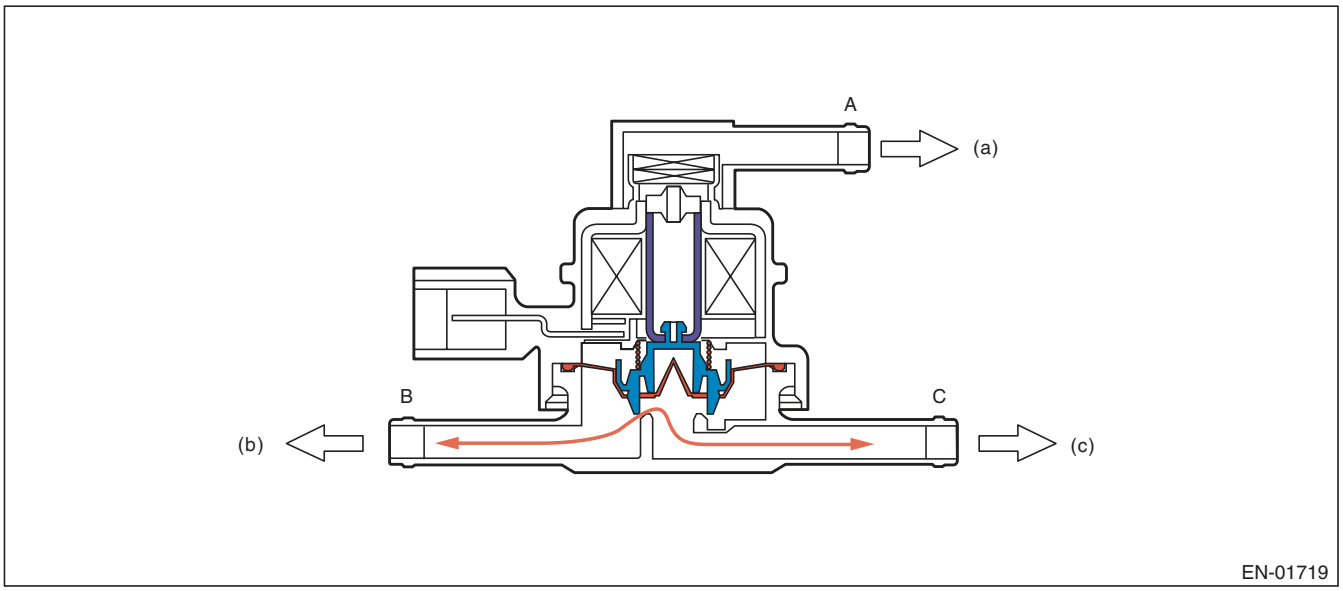

(a) Barometric pressure (b) Fuel tank (c) Canister

Drain valve

Drain valve controls the ambient air to be introduced to the canister.

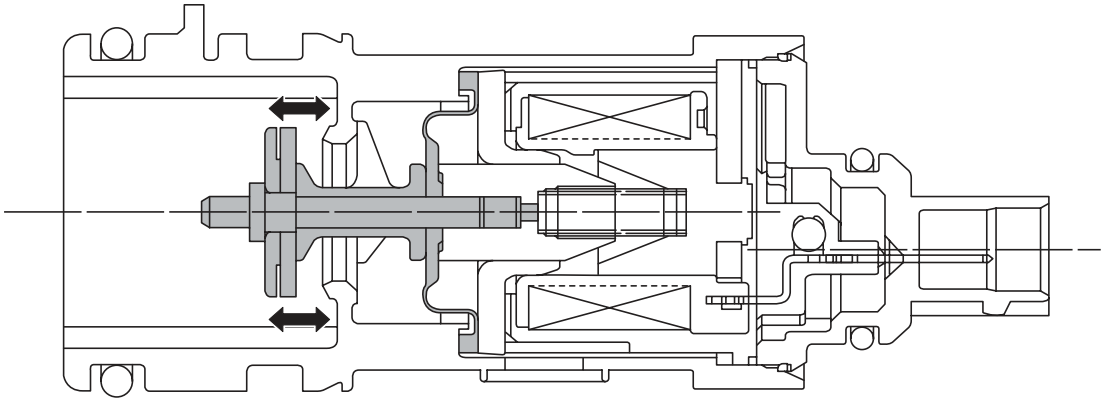

EN-02293

3. ENABLE CONDITION

0.04-inch Diagnosis

Secondary Parameters	Enable Conditions
Battery voltage	≥ 10.9 V
Barometric pressure	≥ 75 kPa (563 mmHg, 22.2 inHg)
Total time of canister purge operation	≥ 120000 ms
Elapsed time after starting the engine	≥ 856 s
Learning value of evaporation gas density	< 0.08
Engine speed	1050 rpm — 6500 rpm
Fuel tank pressure	≥ –4 kPa (–30 mmHg, –1.2 inHg)
Intake manifold relative vacuum (relative pressure)	≥ – 13.3 kPa (– 100 mmHg, – 3.9 inHg)
Vehicle speed	≥ 32 km/h (19.9 MPH)
Fuel level	9.6 ℓ (2.54 US gal, 2.11 Imp gal) — 54.4 ℓ (14.37 US gal, 11.97 Imp gal)
Closed air/fuel ratio control	In operation
Fuel temperature	–10 °C (14 °F) — 45 °C (113 °F)
Intake air temperature	≥ –10 °C (14 °F)
Pressure change every one second	< 1.7 mmHg (Mode A)
	< 1.7 mmHg (Mode D)
Minimum pressure change value every one second – Maximum pressure change value every one second	< 1.7 mmHg (Mode A)
	< 1.7 mmHg (Mode D)
Change of fuel level per 128 milliseconds	< 2 ℓ (0.53 US gal, 0.44 Imp gal)
Air fuel ratio	0.76 — 1.25

0.02-inch Diagnosis

Secondary Parameters	Enable Conditions
At starting a diagnosis	
Evap. diagnosis	Incomplete
Battery voltage	≥ 10.9 V
Barometric pressure	≥ 75 kPa (563 mmHg, 22.2 inHg)
Time since last incomplete 0.02-inch leakage diagnosis	
When cancelling in mode A	> 120000 ms
When cancelling in other than mode A	> 600000 ms
Total time of canister purge operation	≥ 120000 ms
Elapsed time after starting the engine	≥ 120 s
Fuel temperature	–10 °C (14 °F) — 55 °C (131 °F)
Fuel level	9.6 ℓ (2.54 US gal, 2.11 Imp gal) — 54.4 ℓ (14.37 US gal, 11.97 Imp gal)
Intake manifold relative vacuum (relative pressure)	≥ – 13.3 kPa (– 100 mmHg, – 3.9 inHg)
Fuel tank pressure	–0.4 kPa (–3.2 mmHg, –0.1 inHg) — 1.4 kPa (10.7 mmHg, 0.4 inHg)
Vehicle speed	50 km/h (31.1 MPH) — 510 km/h (316.9 MPH) continues for 125000 ms
Closed air/fuel ratio control	In operation
Engine speed	1050 rpm — 6000 rpm
During diagnosis	
Change of fuel level	≤ Value of Map 4
Pressure change every one second	< 0.1 kPa (0.44 mmHg, 0 inHg)
Minimum pressure change value every one second – Maximum pressure change value every one second	< 0.1 kPa (0.51 mmHg, 0 inHg) (Mode D)
| Pressure change in tank every second |	≤ 0.1 kPa (0.75 mmHg, 0 inHg)
Barometric pressure change	–0.5 kPa (–3.6 mmHg, –0.1 inHg) — 0.3 kPa (2.4 mmHg, 0.1 inHg) (Mode D) –0.3 kPa (–2.4 mmHg, –0.1 inHg) — 0.3 kPa (2.4 mmHg, 0.1 inHg) (Mode E)

Map4

Fuel level (ℓ , US gal, Imp gal)	0	10, 2.64, 2.2	20, 5.28, 4.4	30, 7.93, 6.6	40, 10.57, 8.8	50, 13.21, 11	60, 15.85, 13.2
Change (ℓ , US gal, Imp gal)	5, 1.32, 1.1	5, 1.32, 1.1	5, 1.32, 1.1	5, 1.32, 1.1	5, 1.32, 1.1	5, 1.32, 1.1	5, 1.32, 1.1

4. GENERAL DRIVING CYCLE

0.04-inch Diagnosis

- Perform the diagnosis only once in 856 seconds or more after starting the engine, at a constant speed of 32 km/h (20 MPH) or more.
- Pay attention to the fuel temperature and fuel level.

0.02-inch Diagnosis

- Perform the diagnosis 125 seconds or more at a constant engine speed of 50 km/h (31 MPH) or higher to judge as NG or OK.
- If judgement cannot be made, repeat the diagnosis.
- Pay attention to the fuel level.

5. DIAGNOSTIC METHOD

Purge control solenoid valve stuck open fault diagnosis

DTC
P0457 Evaporative Emission Control System Leak Detected (Fuel Cap Loose/Off)

Purpose of Mode Z

When performing the leakage diagnosis of EVAP system, the purge control solenoid valve must operate normally. Therefore, mode Z is used to diagnose the purge control solenoid valve stuck open condition. Note that if a purge control solenoid valve stuck open fault is detected, the EVAP system leakage diagnosis is cancelled.

Diagnostic method

Purge control solenoid valve functional diagnosis is performed by monitoring the tank pressure in mode Z.

- **Abnormality Judgement**

If OK judgement cannot be made, extend Mode Z, and Judge as NG when the following conditions are established after predetermined amount of time.

Judgement Value

Malfunction Criteria	Threshold Value	DTC
evptez – evptezha	> 0.6 kPa (4.5 mmHg, 0.2 inHg)	P0457
evptezini	≤ 1.4 kPa (10.7 mmHg, 0.4 inHg)	
Time of 2 ℓ (0.53 US gal, 0.44 Imp gal) or more fuel no sloshing	≥ 40000 ms	

Time Needed for Diagnosis: 0 ms + 3000 ms + 13000 ms

Malfunction Indicator Light Illumination: Illuminates when malfunction occurs in 2 continuous driving cycles.

When judgement for purge control solenoid valve stuck open NG is made, end the evaporative diagnosis.
Cancel the evaporative diagnosis when the OK/NG judgement for purge control solenoid valve stuck open cannot be made in Mode Z.

- **Normality Judgement**

Judge as OK and change to Mode A when the following conditions are established after predetermined time has passed since Mode Z started.

Judgement Value

Malfunction Criteria	Threshold Value	DTC
evptez – evptezha	≤ 0.4 kPa (3 mmHg, 0.1 inHg)	P0457

Normal

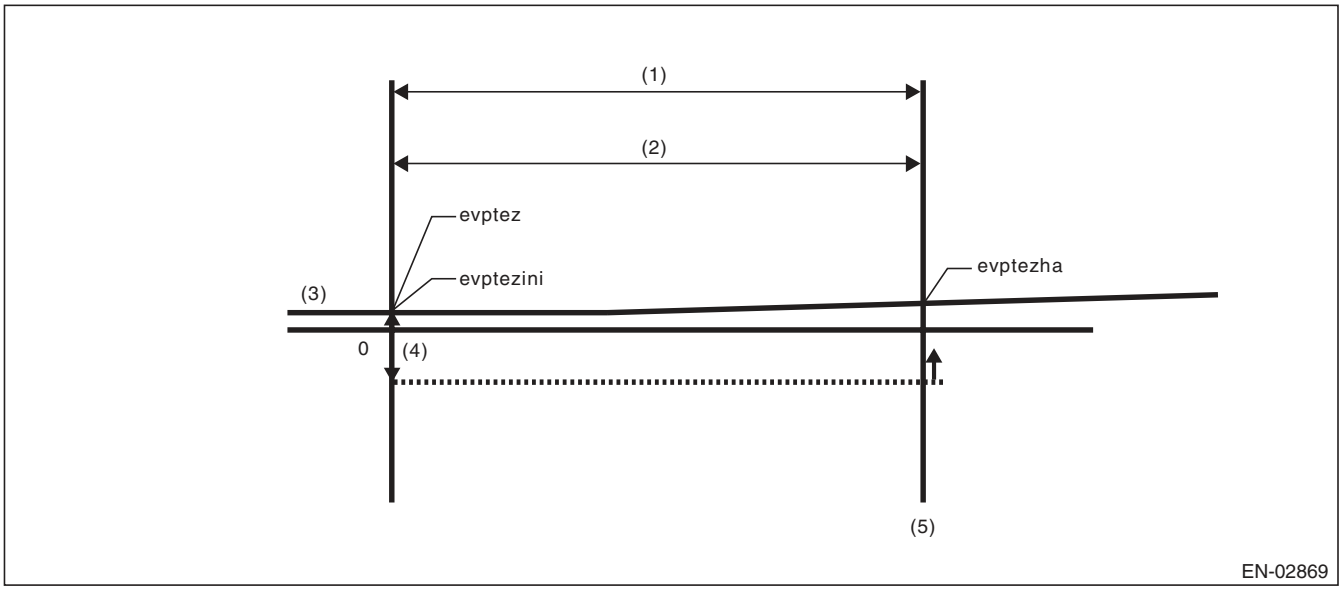

(1)	Mode Z	(3)	Fuel tank pressure	(5)	OK judgement
(2)	3000 ms	(4)	0.4 kPa (3 mmHg, 0.1 inHg)		

evptez – evptezha ≤ 0.4 kPa (3 mmHg, 0.1 inHg) Normal when above is established
Time Needed for Diagnosis: 0 ms + 3000 ms

Purge control solenoid valve Open Fixation

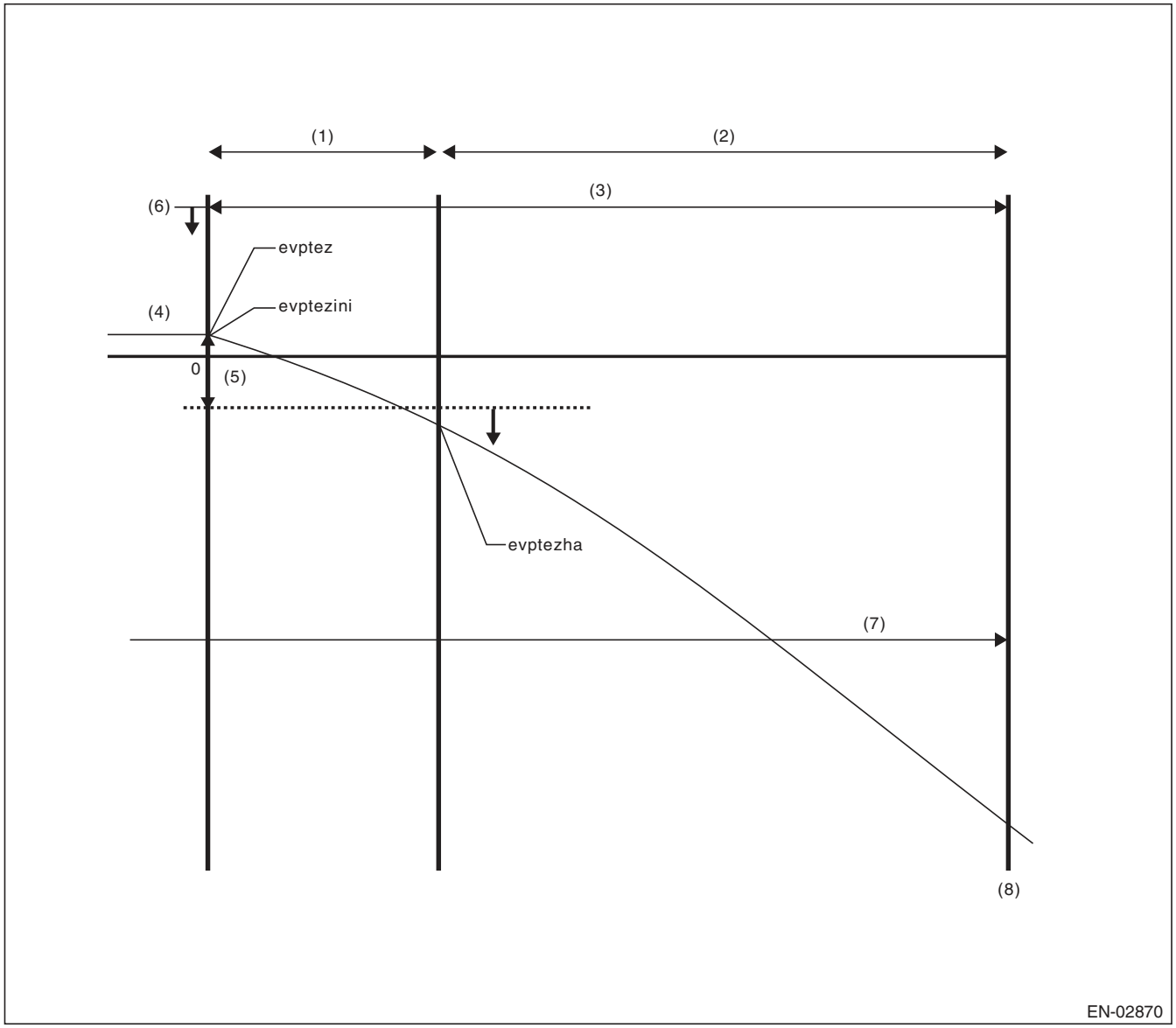

(1)	Mode Z	(4)	Fuel tank pressure	(7)	40000 ms no fuel sloshing
(2)	Extended mode Z	(5)	0.6 kPa (4.5 mmHg, 0.2 inHg)	(8)	NG judgement
(3)	3000 ms + 13000 ms	(6)	1.4 kPa (10.7 mmHg, 0.4 inHg)		

- evptezini ≤ 1.4 kPa (10.7 mmHg, 0.4 inHg)
- evptez – evptezha > 0.6 kPa (4.5 mmHg, 0.2 inHg)
- No fuel sloshing of over 2 ℓ (0.53 US gal, 0.44 Imp gal) lasts for more than 40000 ms.

Judge as abnormal when all are established.

Leak Diagnosis

DTC
P0441 Evaporative emission system incorrect purge flow
P0442 Evaporative Emission Control System Leak Detected (Small Leak)
P0457 Evaporative Emission Control System Leak Detected (Fuel Cap Loose/Off)

- The diagnostic consists of creating a sealed vacuum in the fuel tank and then determining the presence of leakage from the speed at which the tank internal pressure returns to barometric pressure.
- The diagnosis is divided into the following five phases.

Mode A: (Estimated evaporation gas amount)
Calculate the tank pressure change amount (P1) when using mode A. After calculating P1, switch to mode B.
Mode B: (Negative pressure sealed)
Introduce negative pressure in the intake manifold to the tank.
Approx. 0 → –1.4 kPa (0 → –10.5 mmHg, 0 → –0.4 inHg)
When the pressure above (desired negative pressure) is reached, enters Mode C.
In this case, if the tank pressure does not reach the target negative pressure, judge that there is a large leakage in the system and terminate the evaporative emission control system diagnosis.
Abnormality Judgement
Judge as NG (large leakage) when the following conditions are established.
Judgement Value

Malfunction Criteria	Threshold Value	DTC
Time to reach target negative pressure	≥ 10000 ms + 25000 ms	P0457
or		
Mode B time	≥ 10000 ms	
(Min. pressure value in tank when in mode B) – (Tank pressure when mode B started)	> –0.3 kPa (–2.5 mmHg, –0.1 inHg)	

Time Needed for Diagnosis: 0 ms + 3000 ms + 10000 ms + 10000 ms + 25000 ms
Mode C: (Check pressure rise)
Stop the introduction of negative pressure. (Wait until the tank pressure returns to the start level of P2 calculation.)
Change to Mode D when the tank pressure returns to the start level of P2 calculation.
Judge immediate OK and change to Mode E when it does not return in spite of spending the specified time.

Tank pressure when starting calculation of P2	Time for advanced OK judgement
–1.3 kPa (–9.75 mmHg, –0.4 inHg)	17000 ms

Time Needed for Diagnosis: 0 ms + 3000 ms + 10000 ms + 10000 ms + 25000 ms + 17000 ms
Mode D: (Measure amount of negative pressure change)
Monitor the tank pressure change amount when using mode D. In this case, the tank pressure increases, (nears barometric pressure) because evaporation occurs. However, if any leakage exists, the pressure increases additionally in proportion to this leakage. The pressure variation of this tank is P2.
After calculating P2, perform a small leak diagnosis according to the items below.
When Mode D is ended
Assign tank variations measured in Mode A and Mode D, P1 and P2, to the formula below, judge small leaks in the system. If the measured judgement value exceeds the threshold value, it is judged to be a malfunction.

Abnormality Judgement

Judge as NG when the following conditions are established within the predetermined time. Judge as OK and clear the NG if the following conditions are not established within the predetermined time.

Judgement Value

Malfunction Criteria	Threshold Value	DTC
P2 – 1.5 – × P1 P2: Tank pressure that changes every 10000 ms in mode D P1: Tank pressure that changes every 10000 ms in mode A	> Value of Map 5	P0442

*1.5 –: Evaporation amount compensation value when below negative pressure (Amount of evaporation occurrence increases as a vacuum condition increases.)

Map 5 Malfunction criteria limit for evaporation diagnosis

Fuel temperature vs. Fuel level	25 °C (77 °F)	30 °C (86 °F)	35 °C (95 °F)	40 °C (104 °F)	45 °C (113 °F)
0 ℓ (0 US gal, 0 Imp gal)	0.3 kPa (2.1 mmHg, 0.1 inHg)	0.3 kPa (2.2 mmHg, 0.1 inHg)	0.3 kPa (2.3 mmHg, 0.1 inHg)	0.3 kPa (2.35 mmHg, 0.1 inHg)	0.3 kPa (2.4 mmHg, 0.1 inHg)
10 ℓ (2.64 US gal, 2.2 Imp gal)	0.3 kPa (2.1 mmHg, 0.1 inHg)	0.3 kPa (2.2 mmHg, 0.1 inHg)	0.3 kPa (2.3 mmHg, 0.1 inHg)	0.3 kPa (2.35 mmHg, 0.1 inHg)	0.3 kPa (2.4 mmHg, 0.1 inHg)
20 ℓ (5.28 US gal, 4.4 Imp gal)	0.3 kPa (2.3 mmHg, 0.1 inHg)	0.3 kPa (2.4 mmHg, 0.1 inHg)	0.3 kPa (2.5 mmHg, 0.1 inHg)	0.3 kPa (2.6 mmHg, 0.1 inHg)	0.4 kPa (2.7 mmHg, 0.1 inHg)
30 ℓ (7.93 US gal, 6.6 Imp gal)	0.4 kPa (2.9 mmHg, 0.1 inHg)	0.4 kPa (3.05 mmHg, 0.1 inHg)	0.4 kPa (3.15 mmHg, 0.1 inHg)	0.4 kPa (3.25 mmHg, 0.1 inHg)	0.4 kPa (3.35 mmHg, 0.1 inHg)
40 ℓ (10.57 US gal, 8.8 Imp gal)	0.4 kPa (2.9 mmHg, 0.1 inHg)	0.4 kPa (3.15 mmHg, 0.1 inHg)	0.4 kPa (3.3 mmHg, 0.1 inHg)	0.5 kPa (3.4 mmHg, 0.1 inHg)	0.5 kPa (3.5 mmHg, 0.1 inHg)
50 ℓ (13.21 US gal, 11 Imp gal)	0.4 kPa (3.2 mmHg, 0.1 inHg)	0.4 kPa (3.3 mmHg, 0.1 inHg)	0.5 kPa (3.5 mmHg, 0.1 inHg)	0.5 kPa (3.6 mmHg, 0.1 inHg)	0.5 kPa (3.7 mmHg, 0.1 inHg)
60 ℓ (15.85 US gal, 13.2 Imp gal)	0.4 kPa (3.2 mmHg, 0.1 inHg)	0.4 kPa (3.3 mmHg, 0.1 inHg)	0.5 kPa (3.5 mmHg, 0.1 inHg)	0.5 kPa (3.6 mmHg, 0.1 inHg)	0.5 kPa (3.7 mmHg, 0.1 inHg)

Purge control solenoid valve 2 stuck close diagnosis

Perform purge control solenoid valve 2 stuck close diagnosis using the variation gap between the tank pressure at the end of mode C and after mode C.

Malfunction Criteria	Threshold Value	DTC
Elapsed time after completion of mode C advanced OK judgement	= 3500 ms	P0441
Tank pressure variation after completion of mode C advanced OK judgement	< 0.758 mmHg	

Time Needed for Diagnosis: 0 ms + 3000 ms + 10000 ms + 10000 ms + 25000 ms + 17000 ms + 10000 ms
Malfunction Indicator Light Illumination: Illuminates when malfunction occurs in 2 continuous driving cycles.

Leak Diagnosis

DTC
P0456 Evaporative Emission Control System Leak Detected (very small leak)

- The diagnostic consists of creating a sealed vacuum in the fuel tank and then determining the presence of leakage from the speed at which the tank internal pressure returns to barometric pressure.
- The diagnosis is divided into the following five phases.

Mode A: (0 point compensation)
When the pressure in the tank is not near 0 mmHg, wait until it returns to 0 point (near 0 mmHg). Shift to mode B when returned to the 0 point. Cancel the diagnosis when 0 point does not return in the specified time.
Mode B: (Negative pressure introduced)
Introduce negative pressure in the intake manifold to the tank.
Approx. 0 → –2 kPa (0 → –15 mmHg, 0 → –0.6 inHg)
When the pressure above (desired negative pressure) is reached, enters Mode C.
When the tank internal pressure does not reach the target vacuum pressure, the diagnosis is cancelled.
Mode C: (Negative pressure maintained)
Stop the introduction of negative pressure. (Wait until the tank pressure returns to the start level of P2 calculation.)
Change to Mode D either when the tank pressure returns to the start level of P2 calculation, or when the predetermined amount of time has passed.
Mode D: (Calculate the amount of negative pressure change)
Monitor the tank pressure in mode D, calculate (P2) the pressure change in the tank, and measure the time (evpdset) for the tank pressure to change to the Mode E shifting pressure. When the Mode E shifting pressure is reached, Mode E is entered. If it does not change to the Mode E shifting pressure after the predetermined amount of time has passed, make advanced OK judgement or cancel the diagnosis.
Normality Judgement
Judge as OK when the following conditions are established.

Judgement Value

Malfunction Criteria	Threshold Value
Advanced OK judgement 1	
Mode D time	≥ 0 ms + 20000 ms
Tank internal pressure	≤ Value of Map 6
Advanced OK judgement 2	
Mode D time	≥ 0 ms + 200000 ms
P2	≤ Value of Map 7

Map6

Fuel level (ℓ , US gal, Imp gal)	0, 0, 0	10, 2.64, 2.2	20, 5.28, 4.4	30, 7.93, 6.6	40, 10.57, 8.8	50, 13.21, 11	60, 15.85, 13.2
Tank pressure (kPa, mmHg, inHgl)	–1.9, –13.9, –0.5	–1.9, –13.9, –0.5	–1.8, –13.8, –0.5	–1.8, –13.7, –0.5	–1.8, –13.6, –0.5	–1.8, –13.5, –0.5	–1.8, –13.5, –0.5

Map7

Fuel level (ℓ , US gal, Imp gal)	0, 0, 0	10, 2.64, 2.2	20, 5.28, 4.4	30, 7.93, 6.6	40, 10.57, 8.8	50, 13.21, 11	60, 15.85, 13.2
Tank pressure (kPa, mmHg, inHgl)	0.9, 7, 0.3	0.9, 7, 0.3	0.9, 7.05, 0.3	0.9, 7.1, 0.3	1.1, 8.2, 0.3	1.3, 9.6, 0.4	1.3, 9.6, 0.4

Mode E: (Evaporation occurrence amount calculation)
Calculate the change of tank pressure with the time evpdset to judge as NG/OK according to the value of P1. (ambiguous determination acceptable).

- **Abnormality Judgement**

Judge as NG when the following conditions are established.

Judgement Value

Malfunction Criteria	Threshold Value
P1	< Value of Map 8

Map 8 Fault criteria limit for Evaporative emission control system diagnosis

Time (evpdset) vs Fuel level	0 ms	30000 ms	50000 ms	100000 ms	160000 ms	200000 ms
0 ℓ (0 US gal, 0 Imp gal)	0 kPa (0 mmHg, 0 inHg)	0.1 kPa (0.5 mmHg, 0 inHg)	0.2 kPa (1.7 mmHg, 0.1 inHg)	0.4 kPa (2.7 mmHg, 0.1 inHg)	0.4 kPa (2.7 mmHg, 0.1 inHg)	0.4 kPa (2.7 mmHg, 0.1 inHg)
10 ℓ (2.64 US gal, 2.2 Imp gal)	0 kPa (0 mmHg, 0 inHg)	0.1 kPa (0.5 mmHg, 0 inHg)	0.2 kPa (1.7 mmHg, 0.1 inHg)	0.4 kPa (2.7 mmHg, 0.1 inHg)	0.4 kPa (2.7 mmHg, 0.1 inHg)	0.4 kPa (2.7 mmHg, 0.1 inHg)
20 ℓ (5.28 US gal, 4.4 Imp gal)	0 kPa (0 mmHg, 0 inHg)	0.1 kPa (0.5 mmHg, 0 inHg)	0.2 kPa (1.7 mmHg, 0.1 inHg)	0.4 kPa (2.7 mmHg, 0.1 inHg)	0.4 kPa (2.7 mmHg, 0.1 inHg)	0.4 kPa (2.7 mmHg, 0.1 inHg)
30 ℓ (7.93 US gal, 6.6 Imp gal)	0 kPa (0 mmHg, 0 inHg)	0.1 kPa (0.5 mmHg, 0 inHg)	0.2 kPa (1.7 mmHg, 0.1 inHg)	0.4 kPa (2.7 mmHg, 0.1 inHg)	0.4 kPa (2.7 mmHg, 0.1 inHg)	0.4 kPa (2.7 mmHg, 0.1 inHg)
40 ℓ (10.57 US gal, 8.8 Imp gal)	0 kPa (0 mmHg, 0 inHg)	0.1 kPa (0.5 mmHg, 0 inHg)	0.2 kPa (1.85 mmHg, 0.1 inHg)	0.3 kPa (2.5 mmHg, 0.1 inHg)	0.3 kPa (2.5 mmHg, 0.1 inHg)	0.3 kPa (2.5 mmHg, 0.1 inHg)
50 ℓ (13.21 US gal, 11 Imp gal)	0 kPa (0 mmHg, 0 inHg)	0.1 kPa (0.5 mmHg, 0 inHg)	0.3 kPa (2 mmHg, 0.1 inHg)	0.3 kPa (2.3 mmHg, 0.1 inHg)	0.3 kPa (2.3 mmHg, 0.1 inHg)	0 kPa (0 mmHg, 0 inHg)
60 ℓ (15.85 US gal, 13.2 Imp gal)	0 kPa (0 mmHg, 0 inHg)	0.1 kPa (0.5 mmHg, 0 inHg)	0.3 kPa (2 mmHg, 0.1 inHg)	0.3 kPa (2.3 mmHg, 0.1 inHg)	0.3 kPa (2.3 mmHg, 0.1 inHg)	0 kPa (0 mmHg, 0 inHg)

Time Needed for Diagnosis: Value of Map1+ Value of Map2 + 20000 ms + 0 + Value of Map2 + 0 ms + 200000 ms + Value of Map3 + 0 ms + 200000 ms

Malfunction Indicator Light Illumination: Illuminates when malfunction occurs in 2 continuous driving cycles.

- **Normality Judgement**

Judge as OK when the following conditions are established.

Judgement Value

Malfunction Criteria	Threshold Value
P1	> Value of Map 9

Map 9 Malfunction criteria limit for evaporation diagnosis

Time (evpdset) vs Fuel level	0 ms	30000 ms	50000 ms	100000 ms	160000 ms	200000 ms
0 ℓ (0 US gal, 0 Imp gal)	0.1 kPa (1 mmHg, 0 inHg)	0.5 kPa (3.5 mmHg, 0.1 inHg)	0.6 kPa (4.2 mmHg, 0.2 inHg)	0.6 kPa (4.2 mmHg, 0.2 inHg)	0.6 kPa (4.2 mmHg, 0.2 inHg)	0.6 kPa (4.2 mmHg, 0.2 inHg)
10 ℓ (2.64 US gal, 2.2 Imp gal)	0.1 kPa (1 mmHg, 0 inHg)	0.5 kPa (3.5 mmHg, 0.1 inHg)	0.6 kPa (4.2 mmHg, 0.2 inHg)	0.6 kPa (4.2 mmHg, 0.2 inHg)	0.6 kPa (4.2 mmHg, 0.2 inHg)	0.6 kPa (4.2 mmHg, 0.2 inHg)
20 ℓ (5.28 US gal, 4.4 Imp gal)	0.1 kPa (1 mmHg, 0 inHg)	0.4 kPa (3.25 mmHg, 0.1 inHg)	0.5 kPa (4.1 mmHg, 0.2 inHg)	0.5 kPa (4.1 mmHg, 0.2 inHg)	0.5 kPa (4.1 mmHg, 0.2 inHg)	0.5 kPa (4.1 mmHg, 0.2 inHg)
30 ℓ (7.93 US gal, 6.6 Imp gal)	0.1 kPa (1 mmHg, 0 inHg)	0.4 kPa (3 mmHg, 0.1 inHg)	0.5 kPa (3.9 mmHg, 0.2 inHg)	0.5 kPa (3.9 mmHg, 0.2 inHg)	0.5 kPa (3.9 mmHg, 0.2 inHg)	0.5 kPa (3.9 mmHg, 0.2 inHg)
40 ℓ (10.57 US gal, 8.8 Imp gal)	0.1 kPa (1 mmHg, 0 inHg)	0.3 kPa (2.25 mmHg, 0.1 inHg)	0.5 kPa (3.4 mmHg, 0.1 inHg)	0.5 kPa (3.4 mmHg, 0.1 inHg)	0.5 kPa (3.4 mmHg, 0.1 inHg)	0.5 kPa (3.4 mmHg, 0.1 inHg)
50 ℓ (13.21 US gal, 11 Imp gal)	0.1 kPa (1 mmHg, 0 inHg)	0.2 kPa (1.5 mmHg, 0.1 inHg)	0.4 kPa (2.9 mmHg, 0.1 inHg)	0.4 kPa (2.9 mmHg, 0.1 inHg)	0.4 kPa (2.9 mmHg, 0.1 inHg)	0.4 kPa (2.9 mmHg, 0.1 inHg)
60 ℓ (15.85 US gal, 13.2 Imp gal)	0.1 kPa (1 mmHg, 0 inHg)	0.2 kPa (1.5 mmHg, 0.1 inHg)	0.4 kPa (2.9 mmHg, 0.1 inHg)	0.4 kPa (2.9 mmHg, 0.1 inHg)	0.4 kPa (2.9 mmHg, 0.1 inHg)	0.4 kPa (2.9 mmHg, 0.1 inHg)

Time Needed for Diagnosis: Value of Map1+ Value of Map2 + 20000 ms + 0 + Value of Map2 + 0 ms + 200000 ms + Value of Map3 + 0 ms + 200000 ms

BM:DTC P0447 EVAPORATIVE EMISSION CONTROL SYSTEM VENT CONTROL CIRCUIT OPEN

1. OUTLINE OF DIAGNOSIS

Detect open or short circuit of the drain valve.
Judge as NG when the ECM output level differs from the actual terminal level.

2. COMPONENT DESCRIPTION

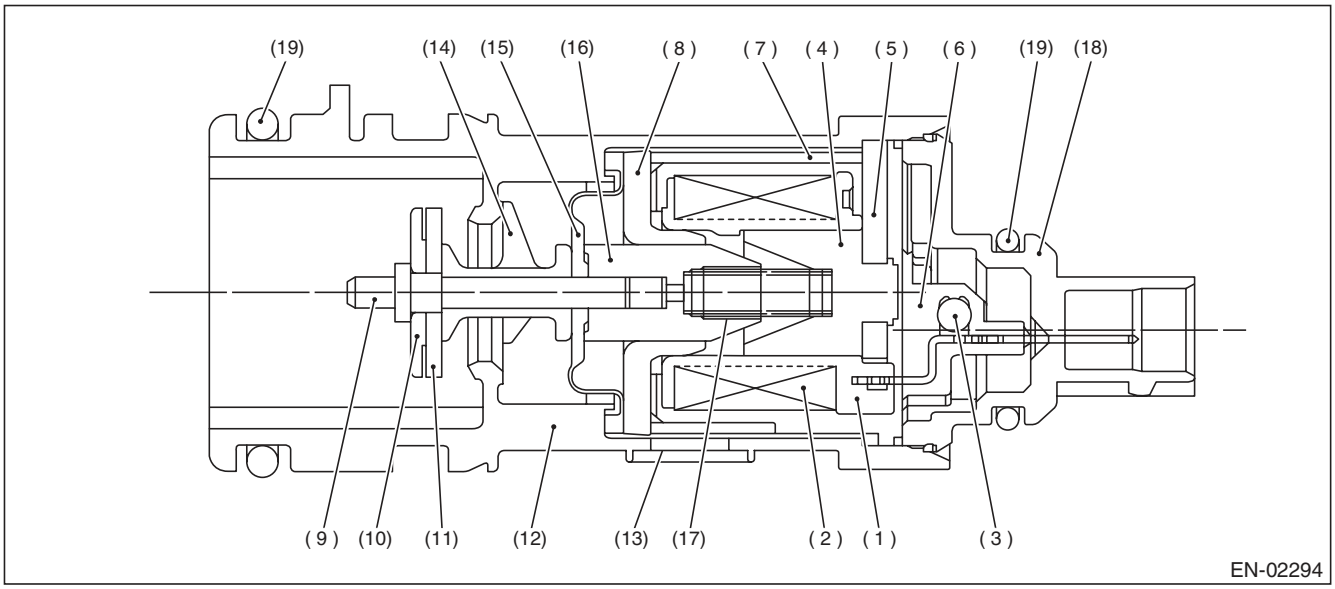

(1)	Bobbin	(8)	Magnetic plate	(14)	Retainer
(2)	Coil	(9)	Shaft	(15)	Diaphragm
(3)	Diode	(10)	Plate	(16)	Movable core
(4)	Stator core	(11)	Valve	(17)	Spring
(5)	End plate	(12)	Housing	(18)	Cover
(6)	Body	(13)	Filter	(19)	O-ring
(7)	Yoke				

3. ENABLE CONDITION

Secondary Parameters	Enable Conditions
None	

4. GENERAL DRIVING CYCLE

Always perform the diagnosis continuously.

5. DIAGNOSTIC METHOD

- **Abnormality Judgement**

If the duration of time while the following conditions are met is longer than the time indicated, judge as NG.

Judgement Value

Malfunction Criteria	Threshold Value
Battery voltage	≥ 10.9 V
Elapsed time after starting the engine	≥ 1 second
Terminal output voltage when ECM outputs OFF signal	Low

Time Needed for Diagnosis: 2500 ms
Malfunction Indicator Light Illumination: Illuminates as soon as a malfunction occurs.

- **Normality Judgement**

Judge as OK and clear the NG if the continuous time while the following conditions are established is more than the predetermined time.

Judgement Value

Malfunction Criteria	Threshold Value
Battery voltage	≥ 10.9 V
Elapsed time after starting the engine	≥ 1 second
Terminal output voltage when ECM outputs OFF signal	High

Time Needed for Diagnosis: Less than 1 second

BN:DTC P0448 EVAPORATIVE EMISSION CONTROL SYSTEM VENT CONTROL CIRCUIT SHORTED

1. OUTLINE OF DIAGNOSIS

Detect open or short circuit of the drain valve.
Judge as NG when the ECM output level differs from the actual terminal level.

2. COMPONENT DESCRIPTION

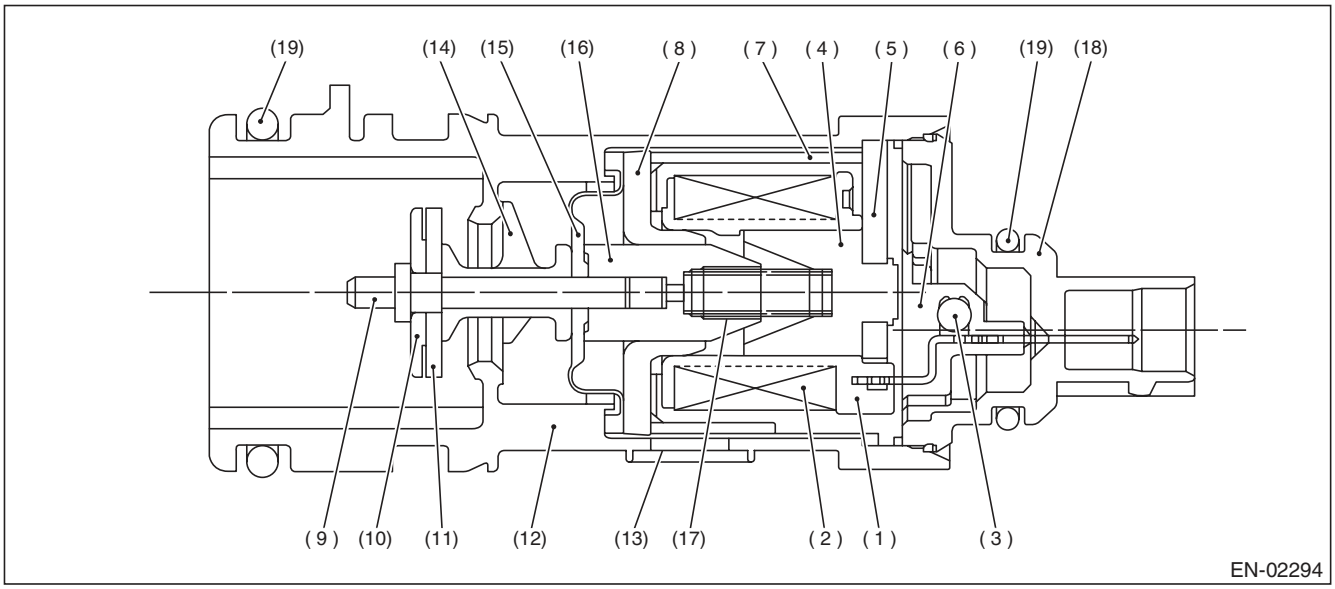

(1)	Bobbin	(8)	Magnetic plate	(14)	Retainer
(2)	Coil	(9)	Shaft	(15)	Diaphragm
(3)	Diode	(10)	Plate	(16)	Movable core
(4)	Stator core	(11)	Valve	(17)	Spring
(5)	End plate	(12)	Housing	(18)	Cover
(6)	Body	(13)	Filter	(19)	O-ring
(7)	Yoke				

3. ENABLE CONDITION

Secondary Parameters	Enable Conditions
None	

4. GENERAL DRIVING CYCLE

Always perform the diagnosis continuously.

5. DIAGNOSTIC METHOD

- **Abnormality Judgement**

If the duration of time while the following conditions are met is longer than the time indicated, judge as NG.

Judgement Value

Malfunction Criteria	Threshold Value
Battery voltage	≥ 10.9 V
Elapsed time after starting the engine	≥ 1 second
Terminal output voltage when ECM outputs ON signal	High

Time Needed for Diagnosis: 2500 ms
Malfunction Indicator Light Illumination: Illuminates as soon as a malfunction occurs.

- **Normality Judgement**

Judge as OK and clear the NG if the continuous time while the following conditions are established is more than the predetermined time.

Judgement Value

Malfunction Criteria	Threshold Value
Battery voltage	≥ 10.9 V
Elapsed time after starting the engine	≥ 1 second
Terminal output voltage when ECM outputs ON signal	Low

Time Needed for Diagnosis: Less than 1 second

BO:DTC P0451 EVAPORATIVE EMISSION CONTROL SYSTEM PRESSURE SENSOR

1. OUTLINE OF DIAGNOSIS

Detect the tank pressure sensor output property abnormality.
Judge as NG when there is no pressure variation, which should exist in the tank, considering the engine status.

2. COMPONENT DESCRIPTION

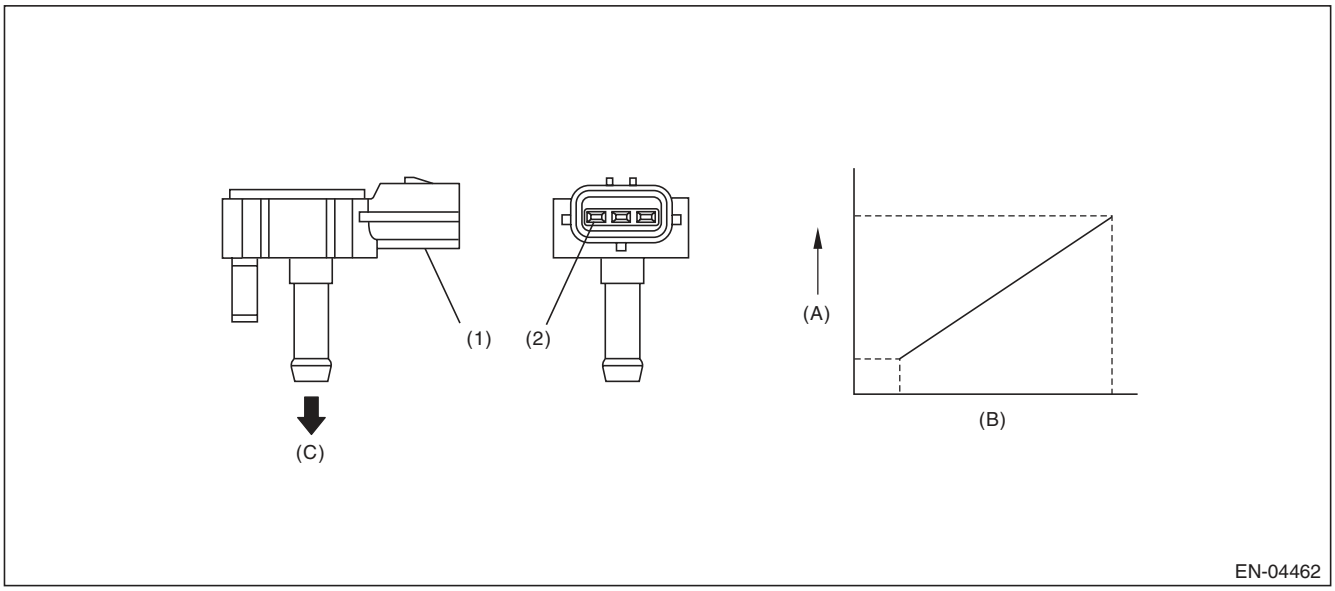

(A)	Output voltage	(B)	Input voltage	(C)	To fuel tank
(1)	Connector	(2)	Terminals		

3. ENABLE CONDITION

Secondary Parameters	Enable Conditions
Elapsed time after starting the engine	≥ 60 s
Fuel level	≥ 9.6 ℓ (2.54 US gal, 2.11 Imp gal)
Fuel temperature	< 35 °C (95 °F)
Battery voltage	≥ 10.9 V
Barometric pressure	≥ 75 kPa (563 mmHg, 22.2 inHg)

4. GENERAL DRIVING CYCLE

- Perform the diagnosis continuously after 60 s have passed since the engine started.
- Pay attention to the fuel level and temperature.

5. DIAGNOSTIC METHOD

• Abnormality Judgement

If the duration of time while the following conditions are met is longer than the time indicated, judge as NG.

Judgement Value

Malfunction Criteria	Threshold Value
Number of times that the difference between the Max. fuel level every 60 s and Min. fuel level every 60 s is 2 ℓ (0.53 US gal, 0.44 Imp gal) or more (with enable condition established)	≥ 16 time(s)
Maximum – Minimum tank pressure (with enable condition completed)	< 0 kPa (0.375 mmHg, 0 inHg)
Maximum – Minimum fuel temperature (with enable condition completed)	≥ 7 °C (44.6 °F)

If the difference between the Max. fuel level every 60 s and Min. fuel level every 60 s is less than 2 ℓ (0.53 US gal, 0.44 Imp gal), extend 60 s and make judgement with the Max. and Min. values for the fuel level in 60 s × 2. 60 s If a difference does not appear, extend the time (60 s × 3, 60 s × 4, 60 s × 5) and continue the judgement. If the difference between the Max. fuel level every 60 s and Min. fuel level every 60 s is 2 ℓ (0.53 US gal, 0.44 Imp gal) or more, the diagnosis counter counts up.

Time Needed for Diagnosis: 60 s × 16 time(s) or more

Malfunction Indicator Light Illumination: Illuminates when malfunction occurs in 2 continuous driving cycles.

• Normality Judgement

Judge as OK and clear the NG if the continuous time while the following conditions are established is more than the predetermined time.

Judgement Value

Malfunction Criteria	Threshold Value
Maximum — Minimum tank pressure	≥ 0 kPa (0.375 mmHg, 0 inHg)

Time Needed for Diagnosis: Less than 1 second

BP:DTC P0452 EVAPORATIVE EMISSION CONTROL SYSTEM PRESSURE SENSOR LOW INPUT

1. OUTLINE OF DIAGNOSIS

Detect the open or short circuit of the fuel tank pressure sensor.
Judge as NG if out of specification.

2. COMPONENT DESCRIPTION

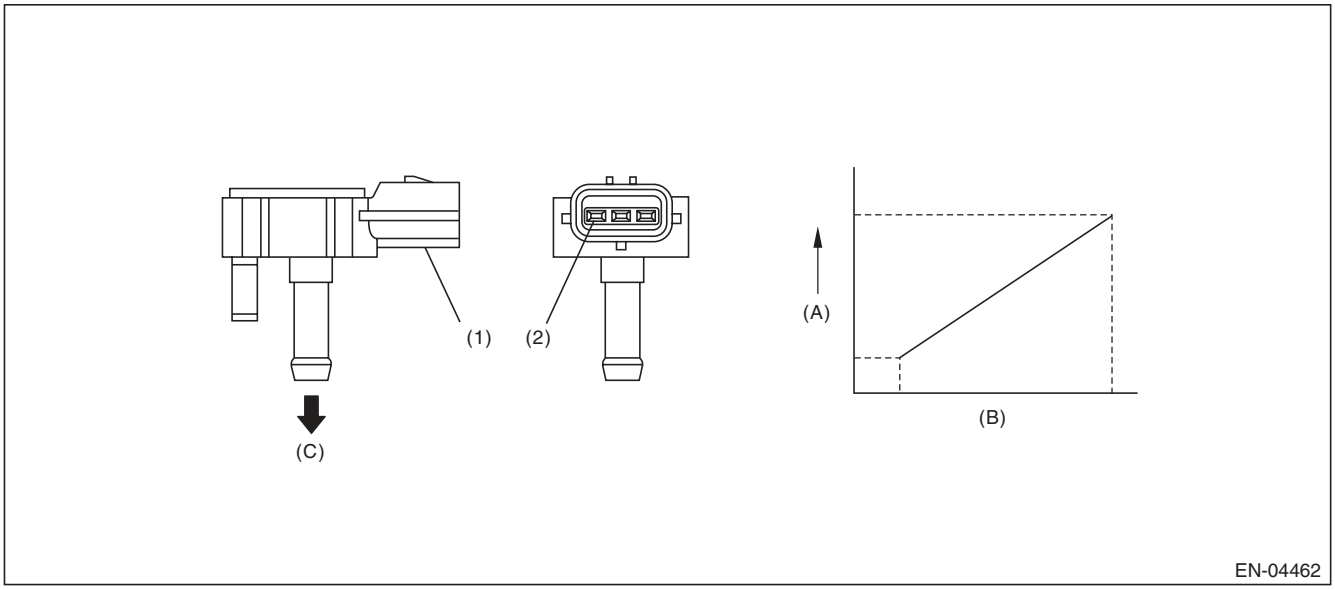

(A) Output voltage
(B) Input voltage
(C) To fuel tank
(1) Connector
(2) Terminals

3. ENABLE CONDITION

Secondary Parameters	Enable Conditions
None	

4. GENERAL DRIVING CYCLE

Always perform the diagnosis continuously.

5. DIAGNOSTIC METHOD

- **Abnormality Judgement**

If the duration of time while the following conditions are met is longer than the time indicated, judge as NG.

Judgement Value

Malfunction Criteria	Threshold Value
Fuel tank pressure	< –7.4 kPa (–55.85 mmHg, –2.2 inHg)
Battery voltage	≥ 10.9 V

Time Needed for Diagnosis: 15000 ms
Malfunction Indicator Light Illumination: Illuminates as soon as a malfunction occurs.

- **Normality Judgement**

Judge as OK and clear the NG if the continuous time while the following conditions are established is more than the predetermined time.

Judgement Value

Malfunction Criteria	Threshold Value
Fuel tank pressure	≥ –7.4 kPa (–55.85 mmHg, –2.2 inHg)
Battery voltage	≥ 10.9 V

Time Needed for Diagnosis: Less than 1 second

BQ:DTC P0453 EVAPORATIVE EMISSION CONTROL SYSTEM PRESSURE SENSOR HIGH INPUT

1. OUTLINE OF DIAGNOSIS

Detect the open or short circuit of the fuel tank pressure sensor.
Judge as NG if out of specification.

2. COMPONENT DESCRIPTION

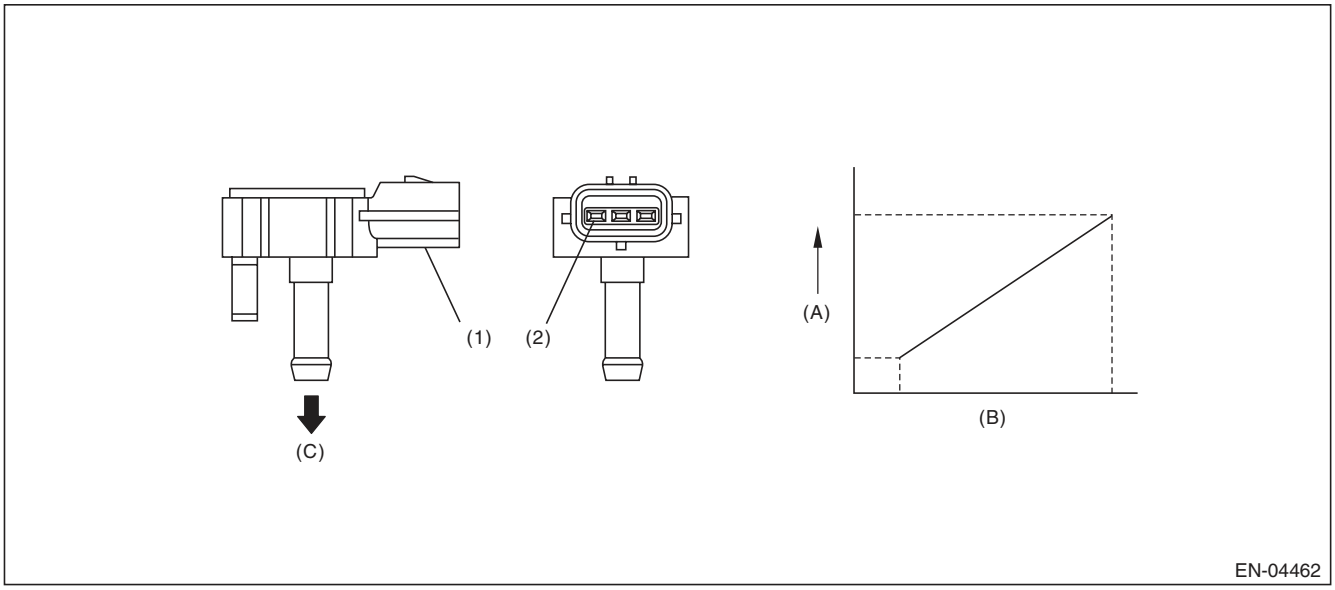

(A) Output voltage (B) Input voltage (C) To fuel tank

(1) Connector (2) Terminals

3. ENABLE CONDITION

Secondary Parameters	Enable Conditions
Time needed for all secondary parameters to be in enable conditions	≥ 5000 ms
Vehicle speed	≥ 2 km/h (1.2 MPH)
All conditions of EVAP canister purge	Completed
Learning value of evaporation gas concentration (left and right)	< 0.08
Main feedback compensation coefficient (left and right)	≥ 0.9
Battery voltage	≥ 10.9 V

4. GENERAL DRIVING CYCLE

Perform the diagnosis when purging enable conditions are met without idling.

5. DIAGNOSTIC METHOD

- **Abnormality Judgement**

If the duration of time while the following conditions are met is longer than the time indicated, judge as NG.

Judgement Value

Malfunction Criteria	Threshold Value
Fuel tank pressure	≥ 8 kPa (59.85 mmHg, 2.4 inHg)
Fuel temperature	< 35 °C (95 °F)
Barometric pressure	≥ 75 kPa (563 mmHg, 22.2 inHg)

Time Needed for Diagnosis: 15000 ms
Malfunction Indicator Light Illumination: Illuminates as soon as a malfunction occurs.

- **Normality Judgement**

Judge as OK and clear the NG if the continuous time while the following conditions are established is more than the predetermined time.

Judgement Value

Malfunction Criteria	Threshold Value
Fuel tank pressure	< 8 kPa (59.85 mmHg, 2.4 inHg)

Time Needed for Diagnosis: Less than 1 second

BR:DTC P0456 EVAPORATIVE EMISSION CONTROL SYSTEM LEAK DETECTED (VERY SMALL LEAK)

1. OUTLINE OF DIAGNOSIS

NOTE:
For the detection standard, refer to DTC P0442. <Ref. to GD(H4DOTC)-108, DTC P0442 EVAPORATIVE EMISSION CONTROL SYSTEM LEAK DETECTED (SMALL LEAK), Diagnostic Trouble Code (DTC) Detecting Criteria.>

BS:DTC P0457 EVAPORATIVE EMISSION CONTROL SYSTEM LEAK DETECTED (FUEL CAP LOOSE/OFF)

1. OUTLINE OF DIAGNOSIS

NOTE:
For the detection standard, refer to DTC P0442. <Ref. to GD(H4DOTC)-108, DTC P0442 EVAPORATIVE EMISSION CONTROL SYSTEM LEAK DETECTED (SMALL LEAK), Diagnostic Trouble Code (DTC) Detecting Criteria.>

BT:DTC P0458 EVAPORATIVE EMISSION SYSTEM PURGE CONTROL VALVE CIRCUIT LOW

1. OUTLINE OF DIAGNOSIS

Detect open or short circuit of the purge control solenoid valve.
Judge as NG when the ECM output level differs from the actual terminal level.

2. COMPONENT DESCRIPTION

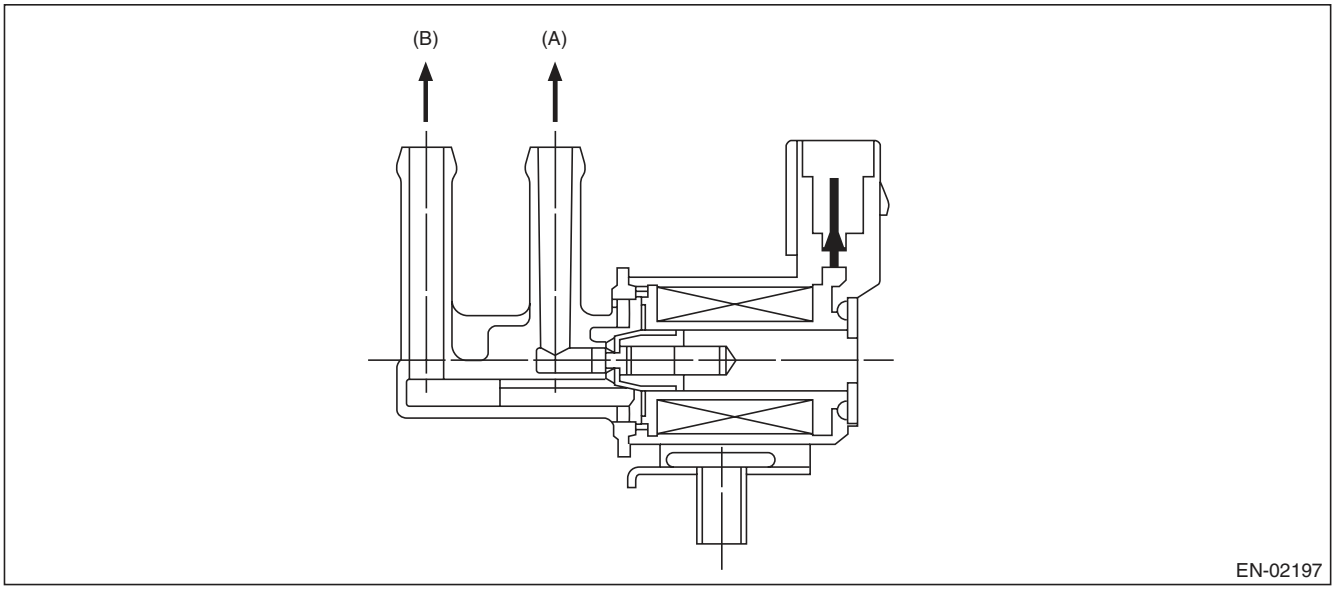

(A) To canister (B) To intake manifold

3. ENABLE CONDITION

Secondary Parameters	Enable Conditions
Battery voltage	≥ 10.9 V
Elapsed time after starting the engine	≥ 1 second

4. GENERAL DRIVING CYCLE

Always perform the diagnosis after starting the engine.

5. DIAGNOSTIC METHOD

- **Abnormality Judgement**

If the duration of time while the following conditions are met is longer than the time indicated, judge as NG.

Judgement Value

Malfunction Criteria	Threshold Value
Duty ratio of “ON”	< 0.75
Terminal output voltage	Low

Time Needed for Diagnosis: 2500 ms
Malfunction Indicator Light Illumination: Illuminates when malfunction occurs in 2 continuous driving cycles.

- **Normality Judgement**

Judge as OK and clear the NG if the continuous time while the following conditions are established is more than the predetermined time.

Judgement Value

Malfunction Criteria	Threshold Value
Terminal output voltage	High

Time Needed for Diagnosis: Less than 1 second

BU:DTC P0459 EVAPORATIVE EMISSION SYSTEM PURGE CONTROL VALVE CIRCUIT HIGH

1. OUTLINE OF DIAGNOSIS

Detect open or short circuit of the purge control solenoid valve.
Judge as NG when the ECM output level differs from the actual terminal level.

2. COMPONENT DESCRIPTION

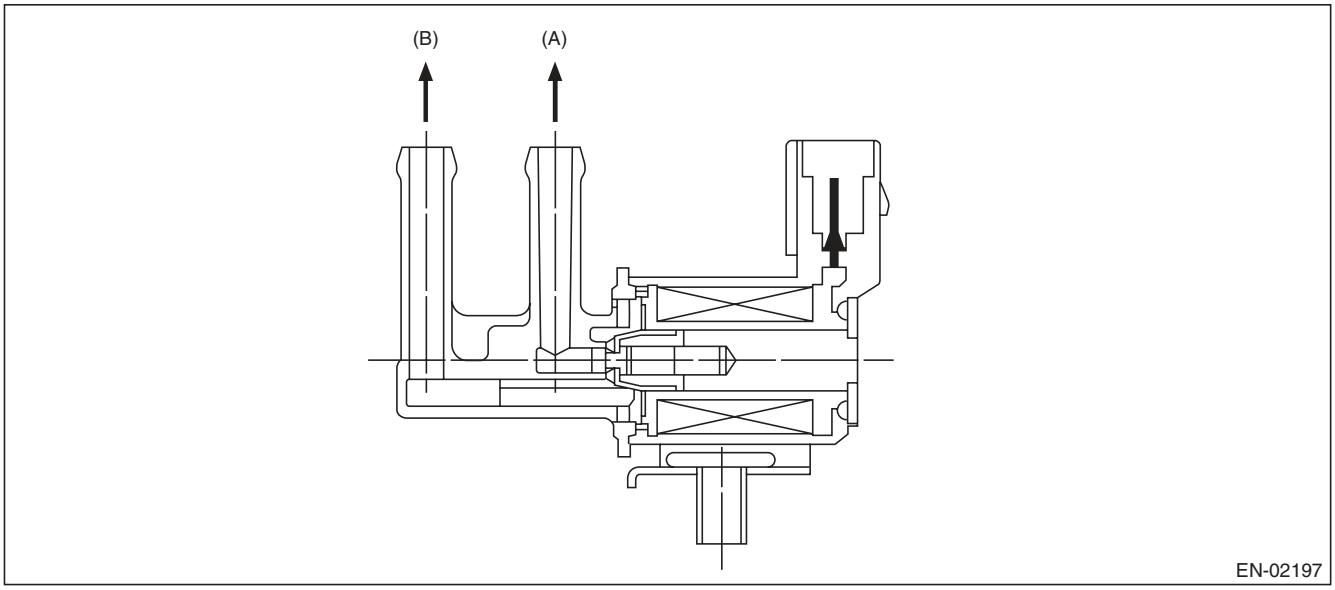

(A) To canister (B) To intake manifold

3. ENABLE CONDITION

Secondary Parameters	Enable Conditions
Battery voltage	≥ 10.9 V
Elapsed time after starting the engine	≥ 1 second

4. GENERAL DRIVING CYCLE

Always perform the diagnosis after starting the engine.

5. DIAGNOSTIC METHOD

- **Abnormality Judgement**

If the duration of time while the following conditions are met is longer than the time indicated, judge as NG.

Judgement Value

Malfunction Criteria	Threshold Value
Duty ratio of “ON”	≥ 0.25
Terminal output voltage	High

Time Needed for Diagnosis: 2500 ms
Malfunction Indicator Light Illumination: Illuminates when malfunction occurs in 2 continuous driving cycles.

- **Normality Judgement**

Judge as OK and clear the NG if the continuous time while the following conditions are established is more than the predetermined time.

Judgement Value

Malfunction Criteria	Threshold Value
Terminal output voltage	Low

Time Needed for Diagnosis: Less than 1 second

BV:DTC P0461 FUEL LEVEL SENSOR “A” CIRCUIT RANGE/PERFORMANCE

1. OUTLINE OF DIAGNOSIS

Detect malfunctions of the fuel level sensor output property.
If the fuel level does not vary in a particular driving condition / engine condition where it should, judge as NG.

2. COMPONENT DESCRIPTION

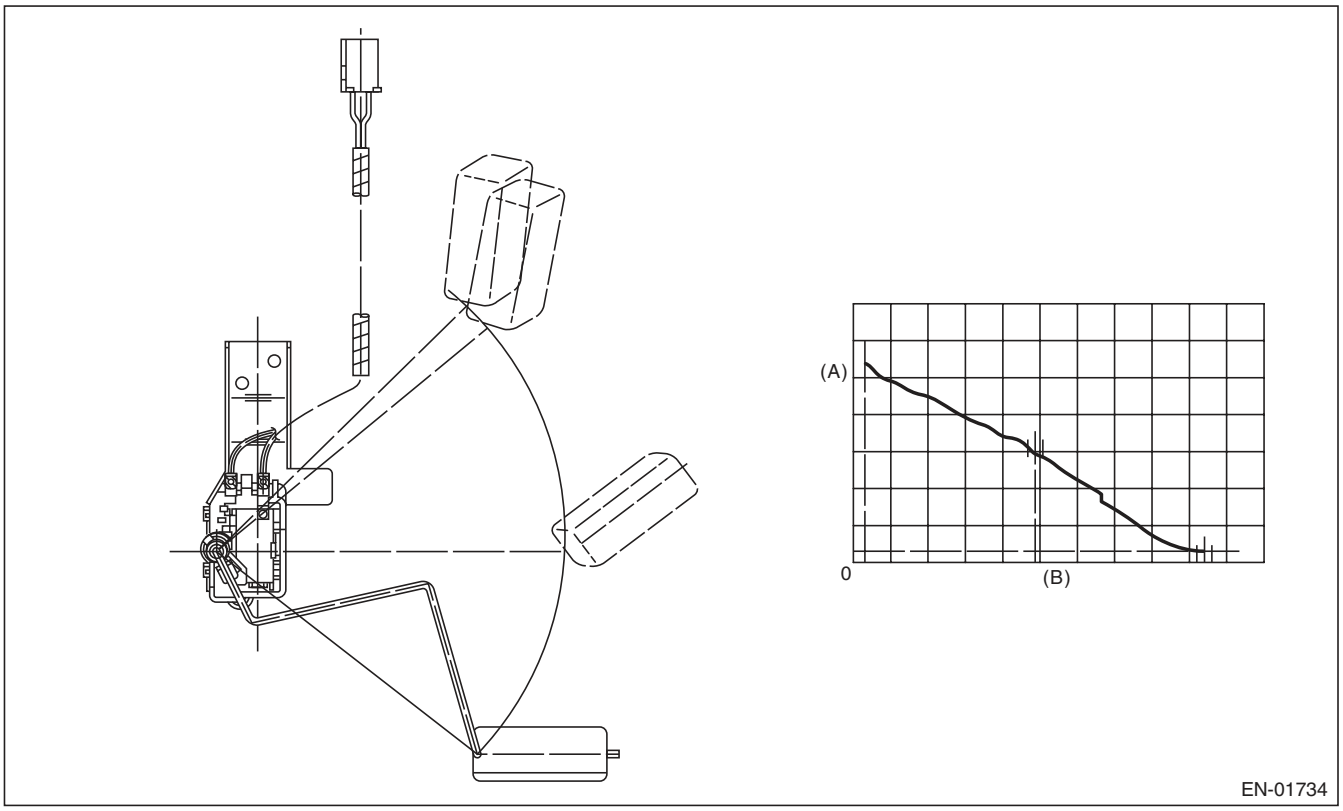

(A) Fuel level (B) Resistance

3. ENABLE CONDITION

Secondary Parameters	Enable Conditions
None	

4. GENERAL DRIVING CYCLE

Always perform the diagnosis continuously.

5. DIAGNOSTIC METHOD

- **Abnormality Judgement**

Judge as NG when the following conditions are established.

Judgement Value

Malfunction Criteria	Threshold Value
Accumulated amount of intake air	≥ 330957 g (11672.85 oz)
Max. – min. values of fuel level output	< 2.6 ℓ (0.69 US gal, 0.57 Imp gal)
Battery voltage	≥ 10.9 V
Engine speed	< 6500 rpm
Elapsed time after starting the engine	≥ 5000 ms

Time Needed for Diagnosis: Less than 1 second
Malfunction Indicator Light Illumination: Illuminates when malfunction occurs in 2 continuous driving cycles.

- **Normality Judgement**

Judge as OK and clear the NG if the following conditions are established.

Judgement Value

Malfunction Criteria	Threshold Value
Accumulated amount of intake air	≥ 330957 g (11672.85 oz)
Max. – min. values of fuel level output	≥ 2.6 ℓ (0.69 US gal, 0.57 Imp gal)
Battery voltage	≥ 10.9 V
Engine speed	< 6500 rpm
Elapsed time after starting the engine	≥ 5000 ms

Time Needed for Diagnosis: Less than 1 second

BW:DTC P0462 FUEL LEVEL SENSOR “A” CIRCUIT LOW

1. OUTLINE OF DIAGNOSIS

Detect the open or short circuit of fuel level sensor. Judge as NG if out of specification.

2. COMPONENT DESCRIPTION

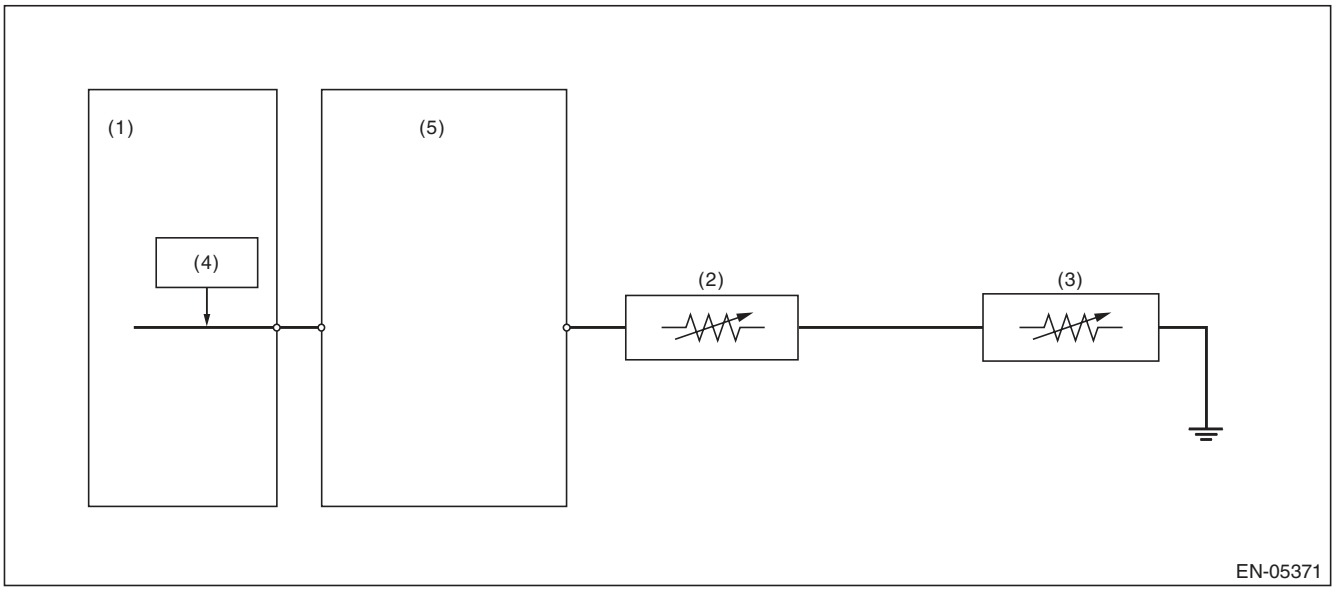

(1) Engine control module (ECM)
(2) Fuel level sensor
(3) Fuel sub level sensor
(4) Detecting circuit
(5) Body integrated unit

3. ENABLE CONDITION

Secondary Parameters	Enable Conditions
None	

4. GENERAL DRIVING CYCLE

Always perform the diagnosis continuously.

5. DIAGNOSTIC METHOD

- **Abnormality Judgement**

If the duration of time while the following conditions are met is longer than the time indicated, judge as NG.

Judgement Value

Malfunction Criteria	Threshold Value
Battery voltage	≥ 10.9 V
Elapsed time after starting the engine	≥ 3000 ms
Output voltage	< 0.173 V

Time Needed for Diagnosis: 2500 ms
Malfunction Indicator Light Illumination: Illuminates when malfunction occurs in 2 continuous driving cycles.

- **Normality Judgement**

Judge as OK and clear the NG if the continuous time while the following conditions are established is more than the predetermined time.

Judgement Value

Malfunction Criteria	Threshold Value
Battery voltage	≥ 10.9 V
Elapsed time after starting the engine	≥ 3000 ms
Output voltage	≥ 0.173 V

Time Needed for Diagnosis: Less than 1 second

BX:DTC P0463 FUEL LEVEL SENSOR “A” CIRCUIT HIGH

1. OUTLINE OF DIAGNOSIS

Detect the open or short circuit of fuel level sensor. Judge as NG if out of specification.

2. COMPONENT DESCRIPTION

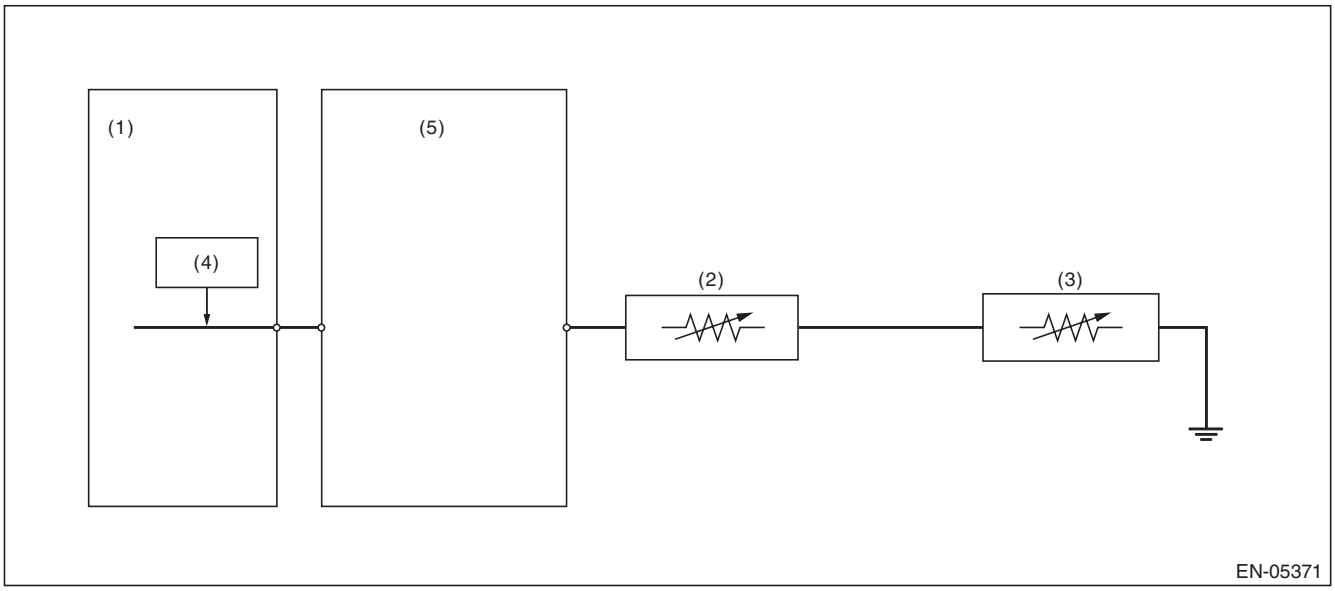

(1) Engine control module (ECM)
(2) Fuel level sensor
(3) Fuel sub level sensor
(4) Detecting circuit
(5) Body integrated unit

3. ENABLE CONDITION

Secondary Parameters	Enable Conditions
None	

4. GENERAL DRIVING CYCLE

Always perform the diagnosis continuously.

5. DIAGNOSTIC METHOD

- **Abnormality Judgement**

If the duration of time while the following conditions are met is longer than the time indicated, judge as NG.

Judgement Value

Malfunction Criteria	Threshold Value
Battery voltage	≥ 10.9 V
Elapsed time after starting the engine	≥ 3000 ms
Output voltage	≥ 7.212 V

Time Needed for Diagnosis: 1000 ms
Malfunction Indicator Light Illumination: Illuminates when malfunction occurs in 2 continuous driving cycles.

- **Normality Judgement**

Judge as OK and clear the NG if the continuous time while the following conditions are established is more than the predetermined time.

Judgement Value

Malfunction Criteria	Threshold Value
Battery voltage	≥ 10.9 V
Elapsed time after starting the engine	≥ 3000 ms
Output voltage	< 7.212 V

Time Needed for Diagnosis: Less than 1 second

BY:DTC P0464 FUEL LEVEL SENSOR CIRCUIT INTERMITTENT

1. OUTLINE OF DIAGNOSIS

Detect the unstable output faults from the fuel level sensor caused by noise. Judge as NG when the max. value and cumulative value of output voltage variation of the fuel level sensor is larger than the threshold value.

2. ENABLE CONDITION

Malfunction Criteria	Threshold Value
Engine speed	≥ 500 rpm
Elapsed time after starting the engine	≥ 1 second
Battery voltage	≥ 10.9 V
Idle switch	ON
Fuel level	≥ 9.6 ℓ (2.54 US gal, 2.11 Imp gal) and < 54.4 ℓ (14.37 US gal, 11.97 Imp gal)
Vehicle speed = 0 km/h (0 MPH)	≥ 10000 ms

3. GENERAL DRIVING CYCLE

- Always perform the diagnosis continuously at idle speed.
- Pay attention to the fuel level.

4. DIAGNOSTIC METHOD

Calculate the Max. value (DELFLMAX) and cumulative value (SUMFL) of output voltage variation of fuel level sensor during 12.2 seconds. Judge it normal when both max. and cumulative values are not over the threshold value. Otherwise, when either of them is over the threshold value, the diagnosis counter counts up. Judge as NG if the counter indicated 4 time(s).

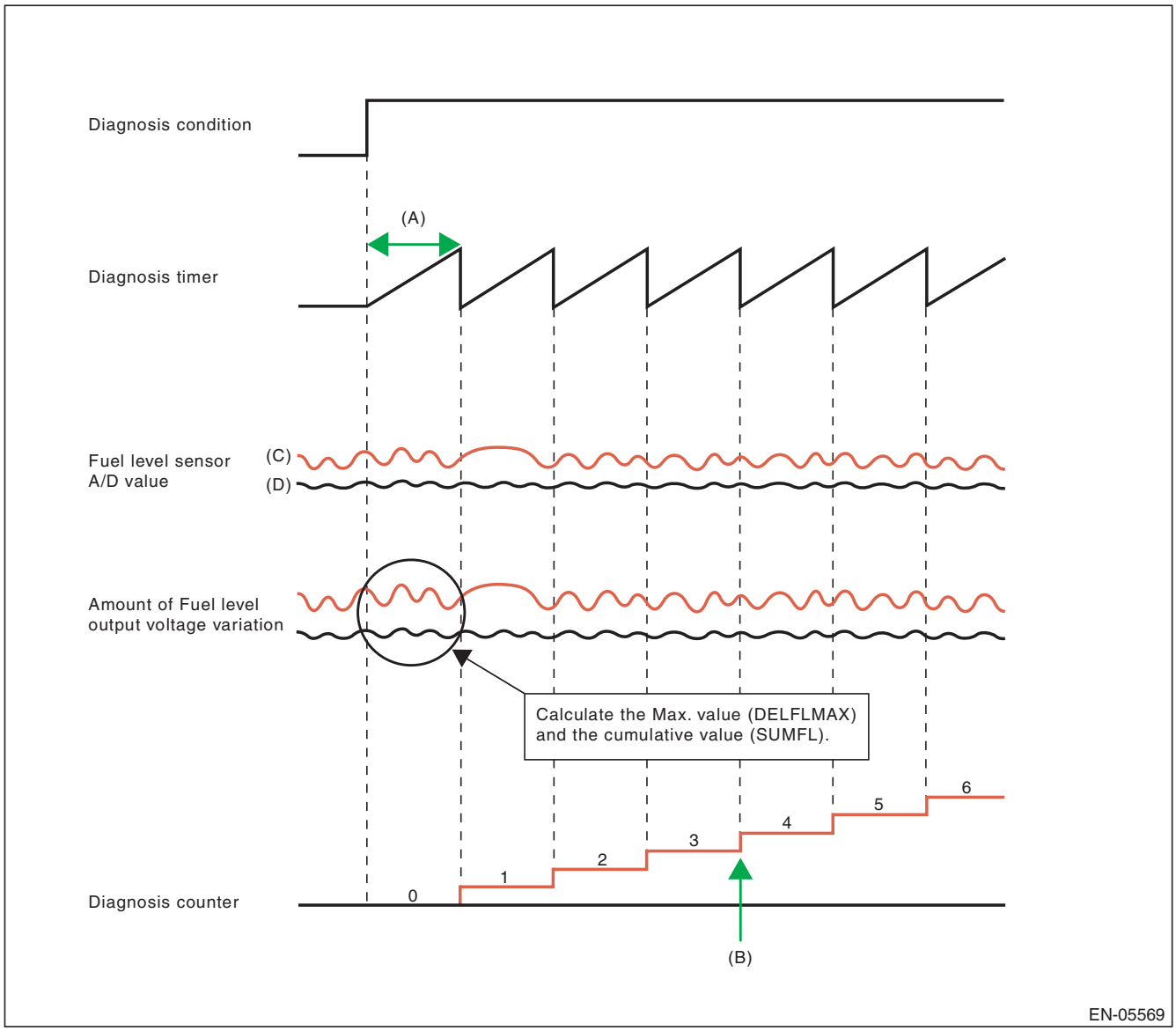

(A) 12288 ms
(B) NG at 4 time(s)
(C) Malfunction
(D) Normal

- **Abnormality Judgement**

If the duration of time while the following conditions are met is longer than the time indicated, judge as NG.

Judgement Value

Malfunction Criteria	Threshold Value
Integrated times of the condition reaching follows,	≥ 4 time(s)
DELFLMAX	≥ Value from Map
or	
SUMFL	≥ 25.92 V
At this time,	
DELFLMAX: Maximum difference of sensor output for 12288 ms	
SUMFL: Integrated value of the sensor output deviation for12288 ms	

Map

Fuel level (ℓ , US gal, Imp gal)	0, 0, 0	10, 2.64, 2.2	20, 5.28, 4.4	30, 7.93, 6.6	40, 10.57, 8.8	50, 13.21, 11	60, 15.85, 13.2
Measured voltage (V)	0.27	0.27	0.426	0.582	0.738	0.894	0.894

The diagnosis counter does not count up when the following conditions are completed within 12288 ms.

Maximum value – Minimum value of change of tank pressure for 12288 ms	≥ 0 kPa (0.375 mmHg, 0 inHg)
Maximum value – Minimum value of battery voltage for12288 ms	≥ 0.969 V

Time Needed for Diagnosis: 12288 ms × 4 time(s)
Malfunction Indicator Light Illumination: Illuminates when malfunction occurs in 2 continuous driving cycles.

- **Normality Judgement**

Judge as OK and clear the NG if the continuous time while the following conditions are established is more than the predetermined time.

Judgement Value

Malfunction Criteria	Threshold Value
DELFLMAX	< Value from Map
SUMFL	< 25.92 V
At this time,	
DELFLMAX: Maximum difference of sensor output for 12288 ms	
SUMFL: Integrated value of the sensor output deviation for12288 ms	

Time Needed for Diagnosis: 12288 ms

BZ:DTC P0500 VEHICLE SPEED SENSOR “A”

1. OUTLINE OF DIAGNOSIS

Judge as NG when outside of the judgment value.
Judge NG when the received data from ABSCM&H/U is abnormal vehicle speed, and the vehicle speed data is impossible.

2. COMPONENT DESCRIPTION

Vehicle speed signals are taken in to the ABS control module and hydraulic control unit, and normal/erroneous data of the ABS wheel speed sensor is received by CAN communication from the ABS control module and hydraulic control unit.

3. ENABLE CONDITION

Secondary Parameters	Enable Conditions
Battery voltage	≥ 10.9 V
Elapsed time after engine starting	≥ 2000 ms

4. GENERAL DRIVING CYCLE

Always perform diagnosis more than 2000 ms after starting the engine.

5. DIAGNOSTIC METHOD

- **Abnormality Judgement**

If the duration of time while the following conditions are met is longer than the time indicated, judge as NG.

Judgement Value

Malfunction Criteria	Threshold Value
Front ABS wheel speed sensor status	Malfunction
Either of the following is established	
Front left wheel speed	≥ 300 km/h (186.4 MPH)
Front right wheel speed	≥ 300 km/h (186.4 MPH)

Time Needed for Diagnosis: 512 ms
Malfunction Indicator Light Illumination: Illuminates as soon as a malfunction occurs.

- **Normality Judgement**

Judge as OK and clear the NG if the continuous time while the following conditions are established is more than the predetermined time.

Judgement Value

Malfunction Criteria	Threshold Value
Front left wheel speed	> 0 km/h (0 MPH) and < 300 km/h (186.4 MPH)
Front right wheel speed	> 0 km/h (0 MPH) and < 300 km/h (186.4 MPH)

Time Needed for Diagnosis: 512 ms

CA:DTC P0506 IDLE AIR CONTROL SYSTEM RPM LOWER THAN EXPECTED

1. OUTLINE OF DIAGNOSIS

Detect the malfunction that actual engine speed is not close to target engine speed during idling. Judge as NG when actual engine speed is not close to target engine speed during idling.

2. ENABLE CONDITION

Secondary Parameters	Enable Conditions
Engine coolant temperature	≥ 70 °C (158 °F)
Battery voltage	≥ 10.9 V
Atmospheric pressure	≥ 75 kPa (563 mmHg, 22.2 inHg)
Fuel level	≥ 9.6 ℓ (2.54 US gal, 2.11 Imp gal)
Elapsed time after starting the engine	≥ 10.49 s
Feedback of ISC	In operation
Lambda value (left and right)	≥ 0.9 and < 1.1
After switching air conditioner to ON/OFF	≥ 5.1 s
After intake manifold pressure changes by 4 kPa (30 mmHg, 1.2 inHg) or more.	> 5.1 s
Elapsed time after switching neutral position switch to ON/OFF	> 5.1 s
Vehicle speed	0 km/h (0 MPH)

3. GENERAL DRIVING CYCLE

Perform the diagnosis continuously at idling after warming up engine.

4. DIAGNOSTIC METHOD

- **Abnormality Judgement**

If the duration of time while the following conditions are met is longer than the time indicated, judge as NG.

Judgement Value

Malfunction Criteria	Threshold Value
Actual engine speed — Targeted engine speed	< –100 rpm
Feedback compensation for ISC	Max.

Time Needed for Diagnosis: 10 s × 3 time(s)
Malfunction Indicator Light Illumination: Illuminates when malfunction occurs in 2 continuous driving cycles.

- **Normality Judgement**

Judge as OK and clear the NG if the continuous time while the following conditions are established is more than the predetermined time.

Judgement Value

Malfunction Criteria	Threshold Value
Actual engine speed — Targeted engine speed	≥ –100 rpm

Time Needed for Diagnosis: 10 s

CB:DTC P0507 IDLE AIR CONTROL SYSTEM RPM HIGHER THAN EXPECTED

1. OUTLINE OF DIAGNOSIS

Detect the malfunction that actual engine speed is not close to target engine speed during idling. Judge as NG when actual engine speed is not close to target engine speed during idling.

2. ENABLE CONDITION

Secondary Parameters	Enable Conditions
Engine coolant temperature	≥ 70 °C (158 °F)
Battery voltage	≥ 10.9 V
Atmospheric pressure	≥ 75 kPa (563 mmHg, 22.2 inHg)
Fuel level	≥ 9.6 ℓ (2.54 US gal, 2.11 Imp gal)
Elapsed time after starting the engine	≥ 10.49 s
Feedback of ISC	In operation
Lambda value (left and right)	≥ 0.9 and < 1.1
After switching air conditioner to ON/OFF	≥ 5.1 s
After intake manifold pressure changes by 4 kPa (30 mmHg, 1.2 inHg) or more.	> 5.1 s
Elapsed time after switching neutral position switch to ON/OFF	> 5.1 s
Vehicle speed	0 km/h (0 MPH)

3. GENERAL DRIVING CYCLE

Perform the diagnosis continuously at idling after warming up engine.

4. DIAGNOSTIC METHOD

- **Abnormality Judgement**

If the duration of time while the following conditions are met is longer than the time indicated, judge as NG.

Judgement Value

Malfunction Criteria	Threshold Value
Actual – Target engine speed	≥ 200 rpm
Feedback value for ISC	Min.

Time Needed for Diagnosis: 10 s × 3 time(s)
Malfunction Indicator Light Illumination: Illuminates when malfunction occurs in 2 continuous driving cycles.

- **Normality Judgement**

Judge as OK and clear the NG if the continuous time while the following conditions are established is more than the predetermined time.

Judgement Value

Malfunction Criteria	Threshold Value
Actual – Target engine speed	< 200 rpm

Time Needed for Diagnosis: 10 s

CC:DTC P0512 STARTER REQUEST CIRCUIT

1. OUTLINE OF DIAGNOSIS

Detect the open or short circuit of starter SW.
Judge as ON NG when the starter SW signal remains ON.

2. ENABLE CONDITION

Secondary Parameters	Enable Conditions
None	

3. GENERAL DRIVING CYCLE

Always perform the diagnosis continuously.

4. DIAGNOSTIC METHOD

- **Abnormality Judgement**

If the duration of time while the following conditions are met is longer than the time indicated, judge as NG.

Judgement Value

Malfunction Criteria	Threshold Value
Engine condition	After engine starting
Starter OFF signal	Not detected
Battery voltage	≥ 8 V

Time Needed for Diagnosis: 180000 ms
Malfunction Indicator Light Illumination: Illuminates when malfunction occurs in 2 continuous driving cycles.

- **Normality Judgement**

Judge as OK and clear the NG if the continuous time while the following conditions are established is more than the predetermined time.

Judgement Value

Malfunction Criteria	Threshold Value
Starter OFF signal	Detected
Battery voltage	≥ 8 V

Time Needed for Diagnosis: Less than 1 second

CD:DTC P0513 INCORRECT IMMOBILIZER KEY

1. OUTLINE OF DIAGNOSIS

DTC	Item	Outline of Diagnosis
P0513	Incorrect Immobilizer Key	Incorrect immobilizer key (Use of unregistered key in body integrated unit)
P1570	Antenna	Faulty antenna
P1571	Reference Code Incompatibility	Reference code incompatibility between body integrated unit and ECM
P1572	IMM Circuit Failure (Except Antenna Circuit)	Communication failure between body integrated unit and ECM
P1574	Key Communication Failure	Failure of body integrated unit to verify key (transponder) ID code or transponder failure
P1576	EGI Control Module EEPROM	ECM malfunctioning
P1577	IMM Control Module EEPROM	Body integrated unit malfunctioning
P1578	Meter Failure	Reference code incompatibility between body integrated unit and combination meter

2. ENABLE CONDITION

When starting the engine.

3. GENERAL DRIVING CYCLE

Perform the diagnosis only after starting the engine.

4. DIAGNOSTIC METHOD

Judge as NG when the conditions for the outline of the diagnosis of the top are established.

CE:DTC P0600 SERIAL COMMUNICATION LINK

1. OUTLINE OF DIAGNOSIS

Detect malfunction of CAN communication.
When CAN communications is not possible, and CAN communications with TCM is not possible, judge as NG if data from the TCM is not normal.

2. COMPONENT DESCRIPTION

ECM and TCM are connected by high speed CAN.

(Common Specifications)
CAN Protocol 2.0 B (Active)
Frame Format: 11 Bit ID Frame (Standard Frame)

(High speed CAN)
Conforms to ISO11898
Communication Speed: 500 kbps

3. ENABLE CONDITION

Secondary Parameters	Enable Conditions
None	

4. GENERAL DRIVING CYCLE

Perform the diagnosis continuously after starting the engine.

5. DIAGNOSTIC METHOD

- **Abnormality Judgement**

Judge as NG when the following conditions are established.

Judgement Value

Malfunction Criteria	Threshold Value
Battery voltage	> 10.9 V
Starter switch	OFF
Engine	run
bus off flag or error warning flag	set (error)
or	
ID received from control module connected to driving system CAN	None during 500 milliseconds
or	
Data updated from control module connected to driving system CAN	None during 500 milliseconds

Time Needed for Diagnosis: Less than 1 second
Malfunction Indicator Light Illumination: Illuminates as soon as a malfunction occurs.

- **Normality Judgement**

Judge as OK and clear the NG if the continuous time while the following conditions are established is more than the predetermined time.

Judgement Value

Malfunction Criteria	Threshold Value
Battery voltage	> 10.9 V
Starter switch	OFF
Engine	run
bus off flag or error warning flag	clear (No error)
ID received from control module connected to driving system CAN	Yes
Data updated from control module connected to driving system CAN	Yes

Time Needed for Diagnosis: 1000 ms
Malfunction Indicator Light Illumination: Illuminates as soon as a malfunction occurs.

CF:DTC P0604 INTERNAL CONTROL MODULE RANDOM ACCESS MEMORY (RAM) ERROR

1. OUTLINE OF DIAGNOSIS

Detect the malfunction of microcomputer (RAM).
When there is a problem in the main CPU normal RAM, or the sub CPU normal RAM, judge as NG. Judge as OK when both are operating properly.
If it is possible to write data to the whole area of RAM in the initial routine, and is possible to read the same data, it is judged as OK, and if not, NG.

2. ENABLE CONDITION

Secondary Parameters	Enable Conditions
None	

Diagnosis with the initial routine.

3. GENERAL DRIVING CYCLE

Perform the diagnosis as soon as the ignition switch is turned to ON.

4. DIAGNOSTIC METHOD

- **Abnormality Judgement**

Judge as NG when the following conditions are established.

Judgement Value

Malfunction Criteria	Threshold Value
Write the specified value to RAM and then read.	The written value cannot be read.

Time Needed for Diagnosis: Less than 1 second
Malfunction Indicator Light Illumination: Illuminates as soon as a malfunction occurs.

- **Normality Judgement**

Judge as OK and clear the NG if the following conditions are established.

Judgement Value

Malfunction Criteria	Threshold Value
Write the specified value to RAM and then read.	The written value can be read.

Time Needed for Diagnosis: Less than 1 second

CG:DTC P0605 INTERNAL CONTROL MODULE READ ONLY MEMORY (ROM) ERROR

1. OUTLINE OF DIAGNOSIS

Judge as NG when SUM value of ROM is outside the standard value.

2. ENABLE CONDITION

Secondary Parameters	Enable Conditions
Ignition switch	ON

3. GENERAL DRIVING CYCLE

Always perform the diagnosis continuously.

4. DIAGNOSTIC METHOD

• Abnormality Judgement

Judge as NG when the following conditions are established.

Judgement Value

Malfunction Criteria	Threshold Value
SUM value of ROM	Standard

Time Needed for Diagnosis:
- Main CPU: 16 milliseconds × 32 time(s)
- Sub CPU: 16 milliseconds × 2 time(s)

Malfunction Indicator Light Illumination: Illuminates as soon as a malfunction occurs.

• Normality Judgement

Judge as OK and clear the NG if the following conditions are established.

Judgement Value

Malfunction Criteria	Threshold Value
SUM value of ROM	Standard

Time Needed for Diagnosis:
- Main CPU: 16 milliseconds × 125 time(s)
- Sub CPU: 16 milliseconds × 2 time(s)

CH:DTC P0607 THROTTLE CONTROL SYSTEM CIRCUIT RANGE/PERFORMANCE

1. OUTLINE OF DIAGNOSIS

Judge as NG when any one of the followings is established.
(1) When the read value of throttle position sensor 1 signal is mismatched between main CPU and sub CPU.
(2) When the read value of accelerator pedal position sensor 1 signal is mismatched between main CPU and sub CPU.
(3) When the sub CPU operates abnormally.
(4) When the communication between main CPU ← → sub CPU is abnormal.
(5) When the input amplifier circuit of throttle position sensor 1 is abnormal.
(6) When the cruise control cannot be canceled correctly.
(7) When the signal of brake SW1 and 2 is mismatched.

2. COMPONENT DESCRIPTION

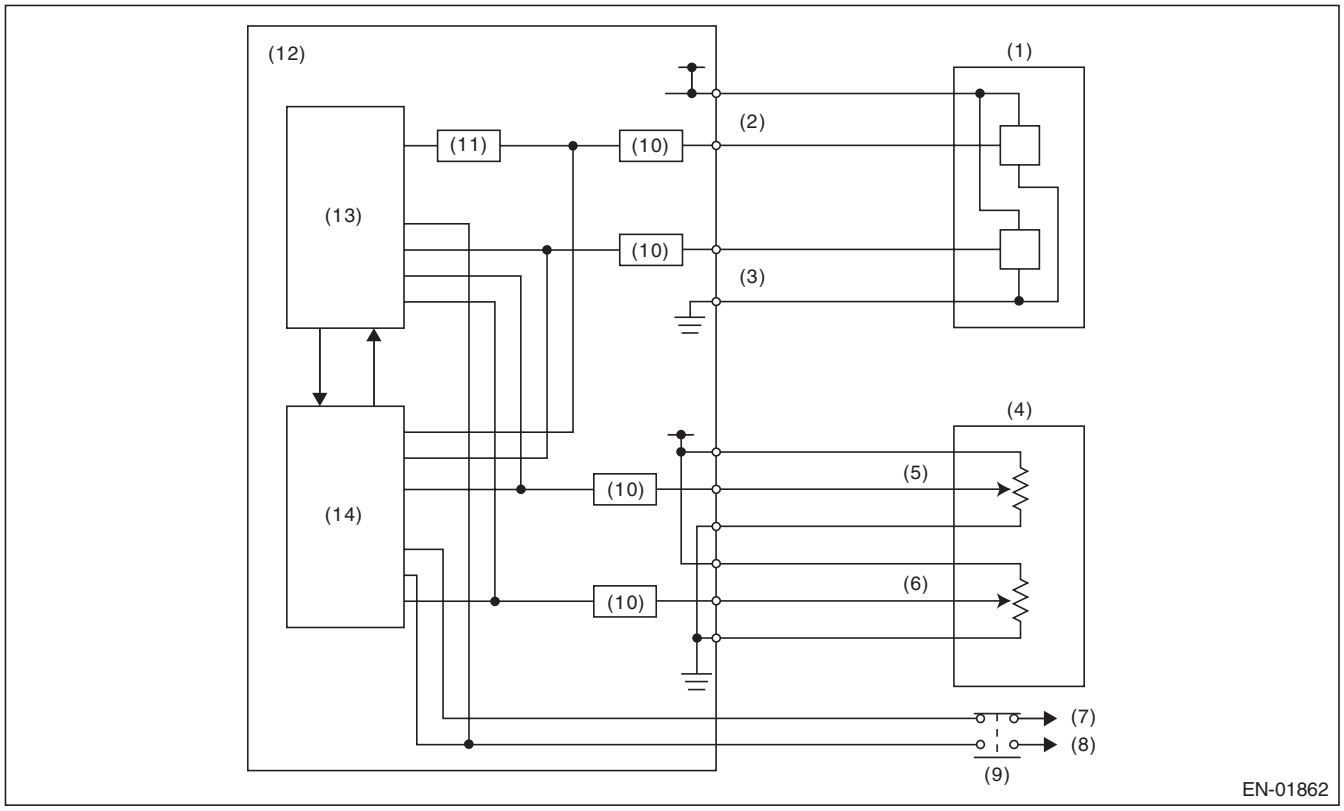

(1)	Throttle position sensor	(6)	Accelerator pedal position sensor 2	(11)	Amplifier circuit
(2)	Throttle position sensor 1	(7)	Battery	(12)	Engine control module (ECM)
(3)	Throttle position sensor 2	(8)	Stop light	(13)	Sub CPU
(4)	Accelerator pedal position sensor	(9)	Brake switch	(14)	Main CPU
(5)	Accelerator pedal position sensor 1	(10)	I/F circuit		

3. ENABLE CONDITION

Secondary Parameters	Enable Conditions
(1) Ignition switch	ON
(1) Battery voltage	≥ 6 V
(2) Ignition switch	ON
(2) Battery voltage	≥ 6 V
(3) Ignition switch	ON
(3) Battery voltage	≥ 6 V
(4) Ignition switch	ON
(4) Battery voltage	≥ 6 V
(5) Throttle opening angle	
(5) Ignition switch	ON
(5) Battery voltage	≥ 6 V
(6) Brake switch (only with cruise control)	ON
(6) Ignition switch	ON
(6) Battery voltage	≥ 6 V
(7) Ignition switch	ON
(7) Battery voltage	≥ 6 V

4. GENERAL DRIVING CYCLE

(1) — (4): Always perform the diagnosis continuously.
(5): Always perform the diagnosis continuously when idling.
(6): Perform the diagnosis when the brake pedal is depressed.
(7): Always perform the diagnosis continuously.

5. DIAGNOSTIC METHOD

- **Abnormality Judgement**

Judge as NG when the following conditions are established.

Judgement Value

Malfunction Criteria	Threshold Value
(1) Difference of CPU reading value of the throttle position sensor signal	≥ 0.4058 V
(2) Difference of CPU read value of the accelerator pedal position sensor signal	≥ 0.127542424 V
(3) WD pulse from sub CPU	No WD pulse occur
(4) Communication between CPU	Not possible to communicate
(5) |Throttle position sensor 1 opening angle — (Throttle position sensor 1 opening angle after passing amplifier) 1/4|	≥ 3 °
(6) Cruise control cancel signal at brake ON	Cruise control cancel signal OFF
(7) Brake switch 1, 2 signal	SW 1 and 2 are not matched

Time Needed for Diagnosis:
(1): 600 ms
(2): 830 ms
(3): 200 ms
(4): 200 ms
(5): 24 ms
(6): 250 ms
(7): 200 ms

Malfunction Indicator Light Illumination: Illuminates as soon as a malfunction occurs.

- **Normality Judgement**

Judge as OK and clear the NG if the following conditions are established.

Judgement Value

Malfunction Criteria	Threshold Value
(1) Difference of CPU reading value of the throttle position sensor signal	< 0.4058 V
(2) Difference of CPU read value of the accelerator pedal position sensor signal	< 0.127542424 V
(3) WD pulse from sub CPU	WD pulse occur
(4) Communication between CPU	Possible to communicate
(5) |Throttle position sensor 1 opening angle — (Throttle position sensor 1 opening angle after passing amplifier) 1/4|	< 3 °
(6) Cruise control cancel signal at brake ON	Cruise control cancel signal ON
(7) Brake switch 1, 2 signal	SW 1 and 2 are matched

Time Needed for Diagnosis:

(1): 2000 ms
(2): 2000 ms
(3): 2000 ms
(4): 2000 ms
(5): 24 ms
(6): 2000 ms
(7): 2000 ms

CI: DTC P0638 THROTTLE ACTUATOR CONTROL RANGE/PERFORMANCE (BANK 1)

1. OUTLINE OF DIAGNOSIS

Judge as NG when the target opening angle and actual opening angle is mismatched or the current to motor is the specified duty or more for specified time continuously.

2. COMPONENT DESCRIPTION

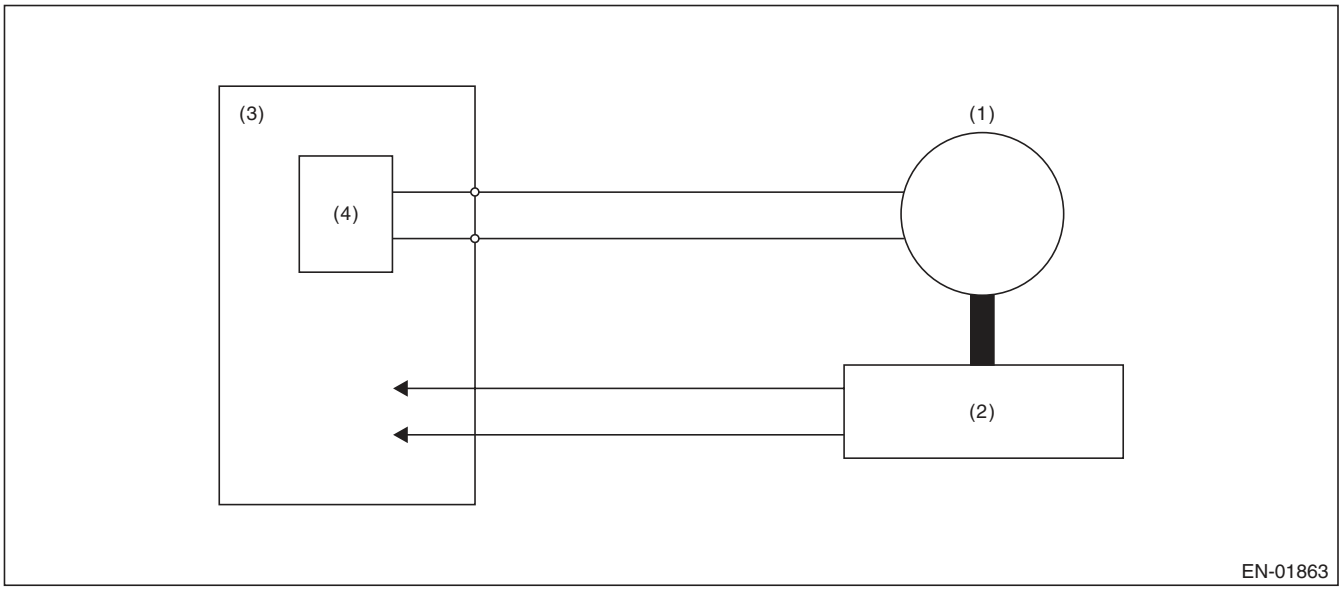

(1) Motor
(2) Throttle position sensor
(3) Engine control module (ECM)
(4) Drive circuit

3. ENABLE CONDITION

Secondary Parameters	Enable Conditions
Normal operation of electronic throttle control	ON

4. GENERAL DRIVING CYCLE

Always perform the diagnosis continuously when the electronic throttle control is operating.

5. DIAGNOSTIC METHOD

• Abnormality Judgement

Judge as NG when the following conditions are established.

Judgement Value

Malfunction Criteria	Threshold Value
Difference between target opening angle and actual opening angle	≥ Value of Map 1
Output duty to drive circuit	≥ 95%

Map1

Target throttle opening angle (°) = d	0 ≤ d < 6.15	6.15 ≤ d < 9.65	9.65 ≤ d < 14.65	14.65 ≤ d < 26.65	26.65 ≤ d
Difference between target opening angle and actual opening angle (°)	3.5	5	12	25	25

Time Needed for Diagnosis:

- Difference between target opening angle and actual opening angle: 1000 milliseconds (when target opening angle > actual opening angle) or value of Map 2 (when target opening angle ≤ actual opening angle)
- Output duty to drive circuit: value of Map 3

Map2

Throttle position sensor 1 opening angle (°) = d	0 ≤ d < 5.5	5.5 ≤ d < 9	9 ≤ d < 13	13 ≤ d < 22	22 ≤ d
Judgement time (milliseconds)	1000	400	300	250	250

Map 3

Voltage to drive circuit (V)	6	8	10	12	14	16
Judgement time (milliseconds)	2000	2000	2000	2000	2000	2000

• Normality Judgement

Judge as OK and clear the NG if the following conditions are established.

Judgement Value

Malfunction Criteria	Threshold Value
Difference between target opening angle and actual opening angle	< Value of Map 1
Output duty to drive circuit	< 95%

Time Needed for Diagnosis:

- Difference between target opening angle and actual opening angle: 2000 ms
- Output duty to drive circuit: 2000 ms

Malfunction Indicator Light Illumination: Illuminates as soon as a malfunction occurs.

CJ:DTC P0700 TRANSMISSION CONTROL SYSTEM (MIL REQUEST)

1. OUTLINE OF DIAGNOSIS

Judge as NG when there is CAN communication with the TCM and there is a MIL lighting request.

2. ENABLE CONDITION

Secondary Parameters	Enable Conditions
None	

3. GENERAL DRIVING CYCLE

Always perform the diagnosis continuously.

4. DIAGNOSTIC METHOD

- **Abnormality Judgement**

If the duration of time while the following conditions are met is longer than the time indicated, judge as NG.

Judgement Value

Malfunction Criteria	Threshold Value
Battery voltage	≥ 10.9 V
MIL lighting request from TCM	Yes

Time Needed for Diagnosis: 2500 ms
Malfunction Indicator Light Illumination: Illuminates as soon as a malfunction occurs.

- **Normality Judgement**

If the duration of time while the following conditions are met is longer than the time indicated, judge as NG.

Judgement Value

Malfunction Criteria	Threshold Value
Battery voltage	≥ 10.9 V
MIL lighting request from TCM	None

Time Needed for Diagnosis: Less than 1 second

CK:DTC P0851 PARK/NEUTRAL SWITCH INPUT CIRCUIT LOW (AT MODEL)

1. OUTLINE OF DIAGNOSIS

Detect the open or short circuit of neutral SW.
Judge as NG when the neutral terminal input in ECM differs from the received data from TCM.

2. ENABLE CONDITION

Secondary Parameters	Enable Conditions
Battery voltage	≥ 10.9 V
Starter relay	OFF

3. GENERAL DRIVING CYCLE

Perform the diagnosis continuously after two seconds have passed since the engine started.

4. DIAGNOSTIC METHOD

- **Abnormality Judgement**

If the duration of time while the following conditions are met is longer than the time indicated, judge as NG.

Judgement Value

Malfunction Criteria	Threshold Value
Neutral switch signal in ECM when “P”/ “N” range in TCM are “OFF” and when the other switches are “ON”	LOW (ON)

Time Needed for Diagnosis: 100 time(s)
Malfunction Indicator Light Illumination: Illuminates when malfunction occurs in 2 continuous driving cycles.

- **Normality Judgement**

Judge as OK and clear the NG if the continuous time while the following conditions are established is more than the predetermined time.

Judgement Value

Malfunction Criteria	Threshold Value
Neutral switch signal in ECM when “P”/ “N” range in TCM are “OFF” and when the other switches are “ON”	HIGH (OFF)

Time Needed for Diagnosis: Less than 1 second

CL:DTC P0851 NEUTRAL SWITCH INPUT CIRCUIT LOW (MT MODEL)

1. OUTLINE OF DIAGNOSIS

Detect the open or short circuit of neutral SW.
Judge as NG when there is no change in the neutral SW even if the driving shift was applied. (There is neutral SW ON/OFF inversion from the vehicle speed and engine speed.)

2. ENABLE CONDITION

Secondary Parameters	Enable Conditions
Battery voltage	≥ 10.9 V
Starter relay	OFF

3. GENERAL DRIVING CYCLE

Perform the diagnosis continuously in 2 seconds after starting the engine.

4. DIAGNOSTIC METHOD

- **Abnormality Judgement**

Judge NG when the malfunction criteria below are completed determined times or more after the neutral SW change.

Judgement Value

Malfunction Criteria	Threshold Value
Neutral switch signal (while changing from a to b below)	LOW (ON) continues.
Driving condition change	From a) to b)
a) Engine speed 600 rpm — 900 rpm & Vehicle speed = 0 km/h (0 MPH)	
b) Engine speed 1600 rpm — 900 rpm & Vehicle speed ≥ 0 km/h (0 MPH)	

Time Needed for Diagnosis: 3 time(s)
Malfunction Indicator Light Illumination: Illuminates when malfunction occurs in 2 continuous driving cycles.

- **Normality Judgement**

Judge as OK and clear NG when there is change in the neutral SW.

Judgement Value

Malfunction Criteria	Threshold Value
Neutral switch signal (while changing from a to b below)	Changes to HIGH (OFF).
Driving condition change	From a) to b)
a) Engine speed 600 rpm — 900 rpm & Vehicle speed = 0 km/h (0 MPH)	
b) Engine speed 1600 rpm — 900 rpm & Vehicle speed ≥ 0 km/h (0 MPH)	

Time Needed for Diagnosis: Less than 1 second

CM:DTC P0852 PARK/NEUTRAL SWITCH INPUT CIRCUIT HIGH (AT MODEL)

1. OUTLINE OF DIAGNOSIS

Judge the open or short circuit of the neutral SW.
Judge as NG when the ECM neutral terminal input differs from the reception data from TCM.

2. ENABLE CONDITION

Secondary Parameters	Enable Conditions
Battery voltage	≥ 10.9 V
Starter relay	OFF

3. GENERAL DRIVING CYCLE

Perform the diagnosis continuously in 2 seconds after starting the engine.

4. DIAGNOSTIC METHOD

- **Abnormality Judgement**

If the duration of time while the following conditions are met is longer than the time indicated, judge as NG.

Judgement Value

Malfunction Criteria	Threshold Value
Neutral switch signal in ECM when “P”/ “N” range in TCM are “ON” and when the other switches are “OFF”	HIGH (OFF)

Time Needed for Diagnosis: 100 time(s)
Malfunction Indicator Light Illumination: Illuminates when malfunction occurs in 2 continuous driving cycles.

- **Normality Judgement**

Judge as OK and clear the NG if the continuous time while the following conditions are established is more than the predetermined time.

Judgement Value

Malfunction Criteria	Threshold Value
Neutral switch signal in ECM when “P”/ “N” range in TCM are “ON” and when the other switches are “OFF”	LOW (ON)

Time Needed for Diagnosis: Less than 1 second

CN:DTC P0852 NEUTRAL SWITCH INPUT CIRCUIT HIGH (MT MODEL)

1. OUTLINE OF DIAGNOSIS

Detect the open or short circuit of neutral SW.
Judge as NG when there is no change in the neutral SW even if the driving shift was applied. (There is neutral SW ON/OFF inversion from the vehicle speed and engine speed.)

2. ENABLE CONDITION

Secondary Parameters	Enable Conditions
Battery voltage	≥ 10.9 V
Starter relay	OFF

3. GENERAL DRIVING CYCLE

Perform the diagnosis continuously in 2 seconds after starting the engine.

4. DIAGNOSTIC METHOD

- **Abnormality Judgement**

Judge NG when the malfunction criteria below are completed determined times or more after the neutral SW change.

Judgement Value

Malfunction Criteria	Threshold Value
Neutral switch signal (while changing from a to b below)	HIGH (OFF) continues.
Driving condition change	From a) to b)
a) Engine speed 600 rpm — 900 rpm & Vehicle speed = 0 km/h (0 MPH)	
b) Engine speed 1600 rpm — 900 rpm & Vehicle speed ≥ 0 km/h (0 MPH)	

Time Needed for Diagnosis: 3 time(s)
Malfunction Indicator Light Illumination: Illuminates when malfunction occurs in 2 continuous driving cycles.

- **Normality Judgement**

Judge as OK and clear NG when there is change in the neutral SW.

Judgement Value

Malfunction Criteria	Threshold Value
Neutral switch signal (while changing from a to b below)	Changes to LOW (ON).
Driving condition change	From a) to b)
a) Engine speed 600 rpm — 900 rpm & Vehicle speed = 0 km/h (0 MPH)	
b) Engine speed 1600 rpm — 900 rpm & Vehicle speed ≥ 0 km/h (0 MPH)	

Time Needed for Diagnosis: Less than 1 second

CO:DTC P1152 O2 SENSOR CIRCUIT RANGE/PERFORMANCE (LOW) (BANK1 SENSOR1)

1. OUTLINE OF DIAGNOSIS

Detect that λ value remains low.
Judge as NG when lambda value is abnormal in accordance with λ value of front oxygen (A/F) sensor and running conditions such as vehicle speed, amount of intake air, engine coolant temperature, sub feedback control, etc.

λ value = Actual air fuel ratio/Theoretical air fuel ratio
λ > 1: Lean
λ < 1: Rich

2. COMPONENT DESCRIPTION

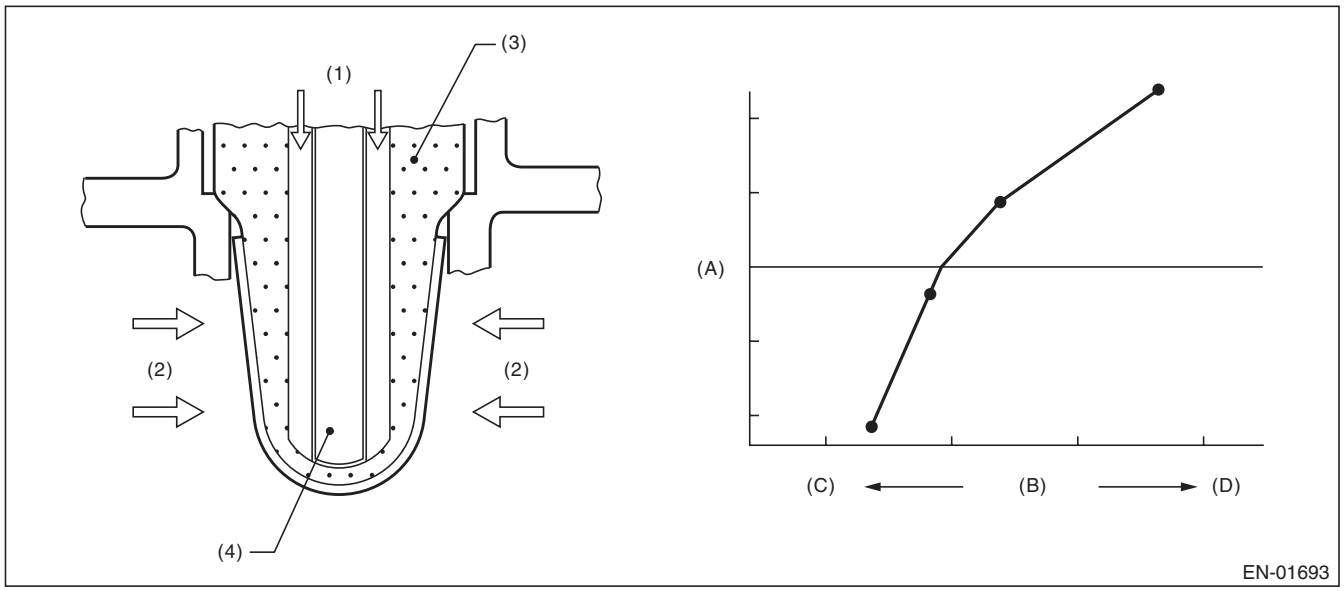

(A)	Electromotive force	(C)	Lean	(D)	Rich
(B)	Air fuel ratio				
(1)	Atmosphere	(3)	ZrO_2	(4)	Ceramic heater
(2)	Exhaust gas				

3. ENABLE CONDITION

Secondary Parameters	Enable Conditions
Time needed for all secondary parameters to be in enable conditions	≥ 4096 ms
Battery voltage	≥ 10.9 V
Barometric pressure	≥ 75 kPa (563 mmHg, 22.2 inHg)
Rear oxygen sensor sub feedback	Execution
Rear oxygen sensor output voltage – Feedback target voltage	–0.2 V — 0.1 V
or rear oxygen sensor sub feedback compensation coefficient	On Min.
or rear oxygen sensor sub feedback compensation coefficient	On Max.
Elapsed time after starting the engine	≥ 60000 ms
Engine coolant temperature	≥ 70 °C (158 °F)
Vehicle speed	≥ 20 km/h (12.4 MPH)
Amount of intake air	≥ 6 g/s (0.21 oz/s)
Load change at 180°CA	< 0.02 g/rev (0 oz/rev)
Front oxygen (A/F) sensor impedance	0 Ω — 50 Ω
Learning value of evaporation gas density	< 0.2
Total time of operating canister purge	≥ 19.9 s
Targeted lambda value load compensation coefficient	–1 — 1

4. GENERAL DRIVING CYCLE

Perform diagnosis continuously at a constant speed of 20 km/h (12.4 MPH) or more after 60000 ms have passed since the engine started.

5. DIAGNOSTIC METHOD

- **Abnormality Judgement**

If the duration of time while the following conditions are met is longer than the time indicated, judge as NG.

Judgement Value

Malfunction Criteria	Threshold Value
λ value	< 0.85

Time Needed for Diagnosis: 10000 ms
Malfunction Indicator Light Illumination: Illuminates when malfunction occurs in 2 continuous driving cycles.

- **Normality Judgement**

Judge as OK and clear the NG if the continuous time while the following conditions are established is more than the predetermined time.

Judgement Value

Malfunction Criteria	Threshold Value
λ value	≥ 0.85

Time Needed for Diagnosis: Less than 1 second

CP:DTC P1153 O2 SENSOR CIRCUIT RANGE/PERFORMANCE (HIGH) (BANK1 SENSOR1)

1. OUTLINE OF DIAGNOSIS

Detect that λ value remains high.
Judge as NG when lambda value is abnormal in accordance with λ value of front oxygen (A/F) sensor and running conditions such as vehicle speed, amount of intake air, engine coolant temperature, sub feedback control, etc.

λ value = Actual air fuel ratio/Theoretical air fuel ratio
λ > 1: Lean
λ < 1: Rich

2. COMPONENT DESCRIPTION

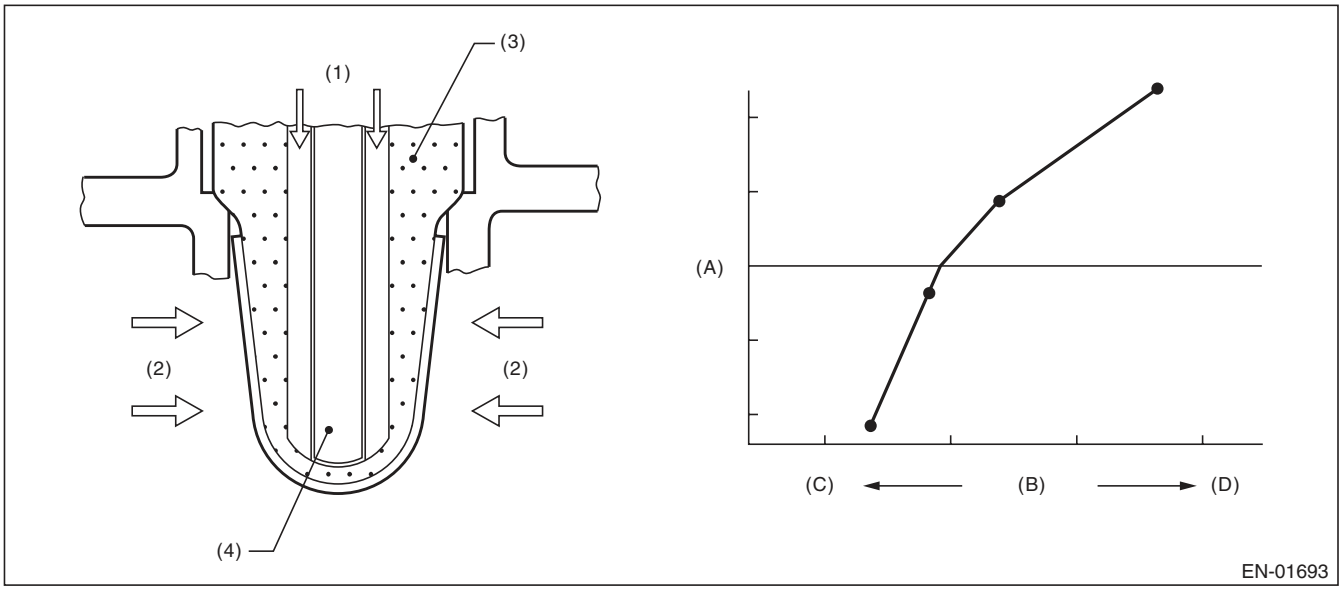

(A) Electromotive force
(B) Air fuel ratio
(C) Lean
(D) Rich

(1) Atmosphere
(2) Exhaust gas
(3) ZrO_2
(4) Ceramic heater

3. ENABLE CONDITION

Secondary Parameters	Enable Conditions
Time needed for all secondary parameters to be in enable conditions	≥ 4096 ms
Battery voltage	≥ 10.9 V
Barometric pressure	≥ 75 kPa (563 mmHg, 22.2 inHg)
Rear oxygen sensor sub feedback	Execution
Rear oxygen sensor output voltage – Feedback target voltage	–0.2 V — 0.1 V
or rear oxygen sensor sub feedback compensation coefficient	On Min.
or rear oxygen sensor sub feedback compensation coefficient	On Max.
Elapsed time after starting the engine	≥ 60000 ms
Engine coolant temperature	≥ 70 °C (158 °F)
Vehicle speed	≥ 20 km/h (12.4 MPH)
Amount of intake air	≥ 6 g/s (0.21 oz/s)
Load change at 180°CA	< 0.02 g/rev (0 oz/rev)
Front oxygen (A/F) sensor impedance	0 Ω — 50 Ω
Learning value of evaporation gas density	< 0.2
Total time of operating canister purge	≥ 19.9 s
Targeted lambda value load compensation coefficient	–1 — 1

4. GENERAL DRIVING CYCLE

Perform diagnosis continuously at a constant speed of 20 km/h (12.4 MPH) or more after 60000 ms have passed since the engine started.

5. DIAGNOSTIC METHOD

- **Abnormality Judgement**

If the duration of time while the following conditions are met is longer than the time indicated, judge as NG.

Judgement Value

Malfunction Criteria	Threshold Value
λ value	> 1.15

Time Needed for Diagnosis: 10000 ms
Malfunction Indicator Light Illumination: Illuminates when malfunction occurs in 2 continuous driving cycles.

- **Normality Judgement**

Judge as OK and clear the NG if the continuous time while the following conditions are established is more than the predetermined time.

Judgement Value

Malfunction Criteria	Threshold Value
λ value	≤ 1.15

Time Needed for Diagnosis: Less than 1 second

CQ:DTC P1160 RETURN SPRING FAILURE

1. OUTLINE OF DIAGNOSIS

Judge as NG when the valve is opened more than the default opening angle, but does not move to the close direction with the motor power stopped.

2. COMPONENT DESCRIPTION

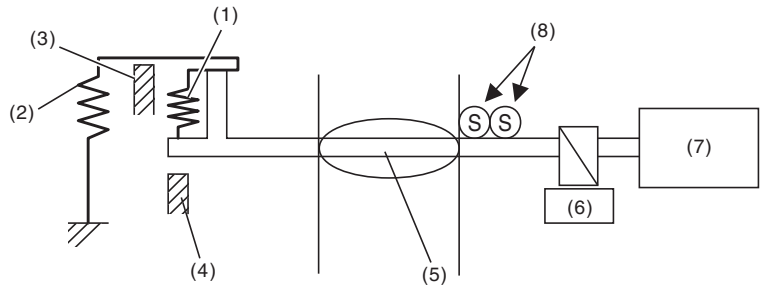

(1) Opener spring
(2) Return spring
(3) Intermediate stopper
(4) Full closed stopper
(5) Throttle valve
(6) Gear
(7) DC motor
(8) Main and sub throttle position sensor

3. ENABLE CONDITION

Secondary Parameters	Enable Conditions
Battery voltage	≥ 6 V
Throttle position sensor	Normal

4. GENERAL DRIVING CYCLE

- Ignition switch ON → OFF
- Ignition switch OFF → ON (Only after clearing memory)

5. DIAGNOSTIC METHOD

- **Abnormality Judgement**

Judge as NG when the following conditions are established.

Judgement Value

Malfunction Criteria	Threshold Value
Opening variation after continuity is set to OFF	< 2 °

Time Needed for Diagnosis: 24 ms
Malfunction Indicator Light Illumination: Illuminates as soon as a malfunction occurs.

- **Normality Judgement**

Judge as OK and clear the NG if the following conditions are established.

Judgement Value

Malfunction Criteria	Threshold Value
Opening variation after continuity is set to OFF	≥ 2 °

Time Needed for Diagnosis: 3400 ms

CR:DTC P1400 FUEL TANK PRESSURE CONTROL SOLENOID VALVE CIRCUIT LOW

1. OUTLINE OF DIAGNOSIS

Detect the open/short circuit of pressure control solenoid valve.
Judge as NG when ECM output level is different from actual terminal level.

2. COMPONENT DESCRIPTION

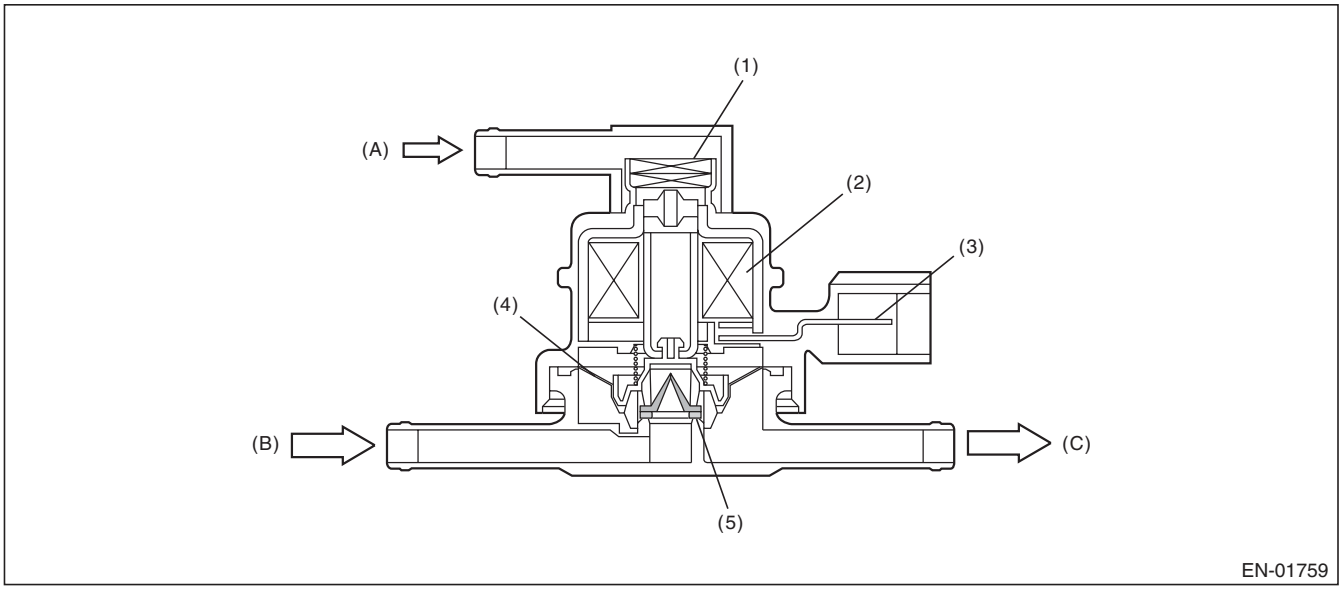

(A)	Barometric pressure	(B)	Shut-off valve	(C)	To fuel tank
(1)	Filter	(3)	Connector terminal	(5)	Valve
(2)	Coil	(4)	Diaphragm		

3. ENABLE CONDITION

Secondary Parameters	Enable Conditions
None	

4. GENERAL DRIVING CYCLE

Always perform the diagnosis after starting the engine.

5. DIAGNOSTIC METHOD

- **Abnormality Judgement**

If the duration of time while the following conditions are met is longer than the time indicated, judge as NG.

Judgement Value

Malfunction Criteria	Threshold Value
Battery voltage	≥ 10.9 V
Elapsed time after starting the engine	≥ 1 second
Terminal output voltage when ECM outputs OFF signal	Low

Time Needed for Diagnosis: 2500 ms
Malfunction Indicator Light Illumination: Illuminates when malfunction occurs in 2 continuous driving cycles.

- **Normality Judgement**

Judge as OK and clear the NG if the continuous time while the following conditions are established is more than the predetermined time.

Judgement Value

Malfunction Criteria	Threshold Value
Battery voltage	≥ 10.9 V
Elapsed time after starting the engine	≥ 1 second
Terminal output voltage when ECM outputs OFF signal	High

Time Needed for Diagnosis: Less than 1 second

CS:DTC P1410 SECONDARY AIR INJECTION SYSTEM SWITCHING VALVE STUCK OPEN

1. OUTLINE OF DIAGNOSIS

Always detect abnormally that both combination valve electromagnetic valve and the reed valve are open failure.
Calculate the integrated value of Max./Min. value and output voltage deviation of the secondary air delivery pipe pressure sensor output voltage in a given time after engine start. Judge as NG if the integrated value and the difference between Max. and Min. values are large.

2. ENABLE CONDITIONS

Secondary Parameters	Enable Conditions
Engine speed	≥ 500 rpm and < 10000 rpm
Elapsed time after starting the engine	≥ 9000 ms
After secondary air system stops	≥ 9000 ms
Amount of intake air	≥ 2 g/s (0.07 oz/s) and < 400 g/s (14.11 oz/s)
Battery voltage	≥ 10.9 V
Engine load	> 0 g/rev
After fuel cut	≥ 1000 ms

3. GENERAL DRIVING CYCLE

Perform continuous diagnosis when air flow amount is large during the secondary air pump stop after engine start.

4. DIAGNOSTIC METHOD

When both combination valve electromagnetic valve and the reed valve are open failure, the failure appears as pulses in the secondary air delivery pipe pressure sensor output. Detect abnormality by capturing these pulses using the following method.

- **Abnormality Judgement**

Calculate Max./Min. value of the secondary air delivery pipe pressure sensor output voltage and the sum of the output voltage deviation for the given time. Compare the difference between Max. and Min. values with threshold value and also compare the sum value with the threshold value. If both values exceed the threshold value, count up NG counter and then judge as NG if the counter reaches the given times.

Judgement Value

Malfunction Criteria	Threshold Value
Pipe inner pressure difference between Max. and Min.	> 0.05 V
Sum of the pipe inner pressure variation value every 4 milliseconds	> 5 V
Barometric pressure variation value	< 26.7 kPa (200 mmHg, 7.9 inHg)

Time Needed for Diagnosis: 2000 ms × 20 time(s)
Malfunction Indicator Light Illumination: Illuminates as soon as a malfunction occurs.

- **Normality Judgement**

Judge as OK and clear NG if neither exceeds the threshold value, or if either of the two exceeds the threshold value.

Judgement Value

Malfunction Criteria	Threshold Value
Pipe inner pressure difference between Max. and Min.	≤ 0.05 V
Sum of the pipe inner pressure variation value every 4 milliseconds	≤ 5 V

Time Needed for Diagnosis: 2000 ms

CT:DTC P1418 SECONDARY AIR INJECTION SYSTEM CONTROL “A” CIRCUIT SHORTED

1. OUTLINE OF DIAGNOSIS

Judge as NG when the ECM output level differs from the actual terminal level.

2. ENABLE CONDITIONS

Secondary Parameters	Enable Conditions
None	

3. GENERAL DRIVING CYCLE

Always perform the diagnosis continuously.

4. DIAGNOSTIC METHOD

- **Abnormality Judgement**

If the duration of time while the following conditions are met is longer than the time indicated, judge as NG.

Judgement Value

Malfunction Criteria	Threshold Value
Battery voltage	≥ 10.9 V
Ignition	ON
Terminal output voltage when ECM outputs ON signal	HIGH

Time Needed for Diagnosis: 2500 ms
Malfunction Indicator Light Illumination: Illuminates as soon as a malfunction occurs.

- **Normality Judgement**

Judge as OK and clear the NG if the continuous time while the following conditions are established is more than the predetermined time.

Judgement Value

Malfunction Criteria	Threshold Value
Battery voltage	≥ 10.9 V
Ignition	ON
Terminal output voltage when ECM outputs ON signal	LOW

Time Needed for Diagnosis: Less than 1 second

CU:DTC P1420 FUEL TANK PRESSURE CONTROL SOL. VALVE CIRCUIT HIGH

1. OUTLINE OF DIAGNOSIS

Detect the open/short circuit of pressure control solenoid valve.
Judge as NG when ECM output level is different from actual terminal level.

2. COMPONENT DESCRIPTION

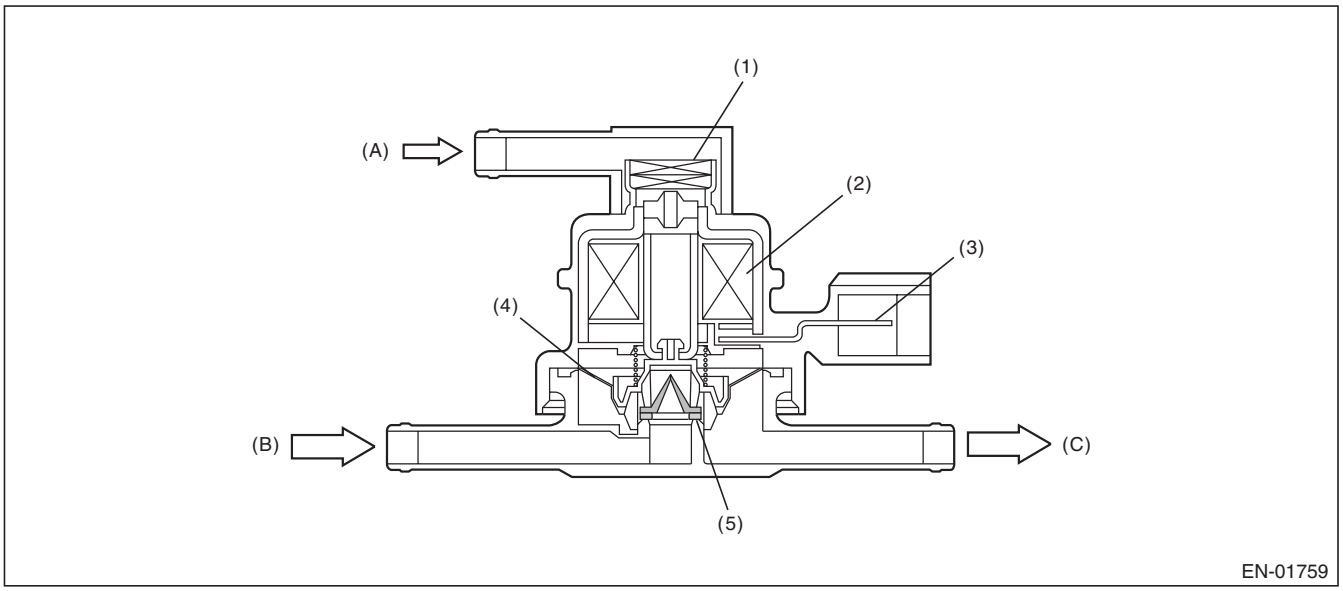

(A)	Barometric pressure	(B)	Shut-off valve	(C)	To fuel tank
(1)	Filter	(3)	Connector terminal	(5)	Valve
(2)	Coil	(4)	Diaphragm		

3. ENABLE CONDITION

Secondary Parameters	Enable Conditions
None	

4. GENERAL DRIVING CYCLE

Always perform the diagnosis after starting the engine.

5. DIAGNOSTIC METHOD

- **Abnormality Judgement**

If the duration of time while the following conditions are met is longer than the time indicated, judge as NG.

Judgement Value

Malfunction Criteria	Threshold Value
Battery voltage	≥ 10.9 V
Elapsed time after starting the engine	≥ 1 second
Terminal output voltage when ECM outputs ON signal	High

Time Needed for Diagnosis: 2500 ms
Malfunction Indicator Light Illumination: Illuminates when malfunction occurs in 2 continuous driving cycles.

- **Normality Judgement**

Judge as OK and clear the NG if the continuous time while the following conditions are established is more than the predetermined time.

Judgement Value

Malfunction Criteria	Threshold Value
Battery voltage	≥ 10.9 V
Elapsed time after starting the engine	≥ 1 second
Terminal output voltage when ECM outputs ON signal	Low

Time Needed for Diagnosis: Less than 1 second

CV:DTC P1443 VENT CONTROL SOLENOID VALVE FUNCTION PROBLEM

1. OUTLINE OF DIAGNOSIS

Detect the abnormal function (stuck closed) of the drain valve.
Judge as NG when fuel tank pressure is low.

2. COMPONENT DESCRIPTION

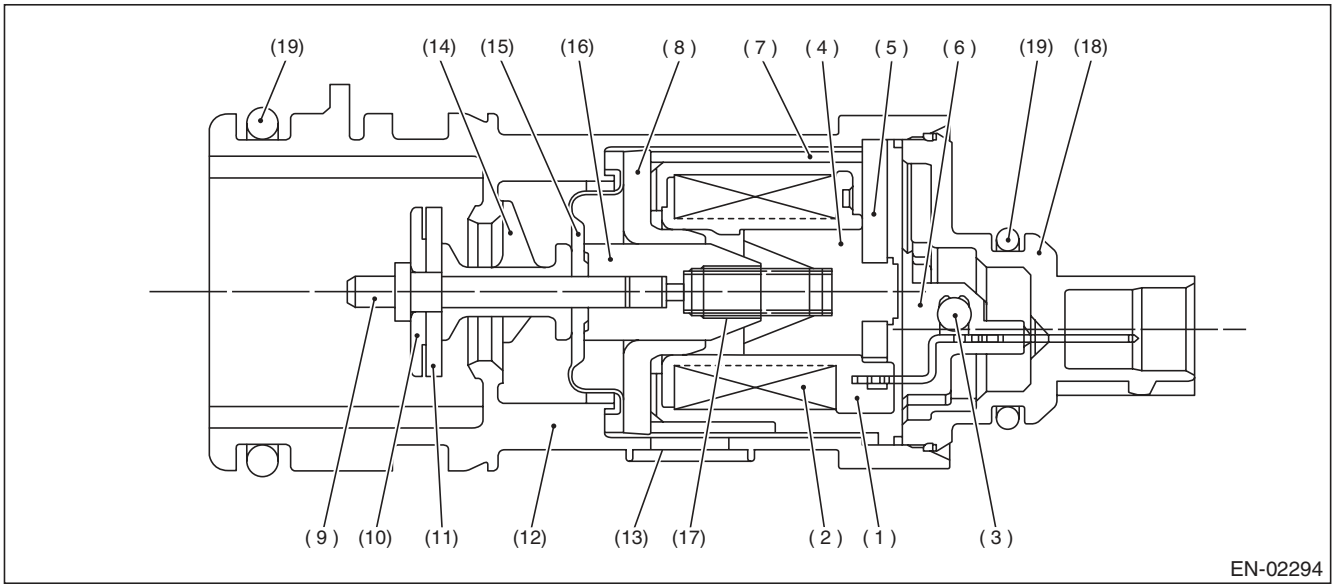

(1)	Bobbin	(8)	Magnetic plate	(14)	Retainer
(2)	Coil	(9)	Shaft	(15)	Diaphragm
(3)	Diode	(10)	Plate	(16)	Movable core
(4)	Stator core	(11)	Valve	(17)	Spring
(5)	End plate	(12)	Housing	(18)	Cover
(6)	Body	(13)	Filter	(19)	O-ring
(7)	Yoke				

3. ENABLE CONDITION

Secondary Parameters	Enable Conditions
Drain valve	Open
Battery voltage	≥ 10.9 V
Barometric pressure	≥ 75 kPa (563 mmHg, 22.2 inHg)
Tank pressure when starter is OFF → ON	–0.4 kPa (–3.2 mmHg, –0.1 inHg) and 1.4 kPa (10.7 mmHg, 0.4 inHg)

4. GENERAL DRIVING CYCLE

Always perform the diagnosis continuously.

5. DIAGNOSTIC METHOD

- **Abnormality Judgement**

If the duration of time while the following conditions are met is longer than the time indicated, judge as NG.

Judgement Value

Malfunction Criteria	Threshold Value
Fuel tank pressure	≤ –4 kPa (–30 mmHg, –1.2 inHg)

Time Needed for Diagnosis: 3000 ms
Malfunction Indicator Light Illumination: Illuminates as soon as a malfunction occurs.

- **Normality Judgement**

Judge as OK and clear the NG if the continuous time while the following conditions are established is more than the predetermined time.

Judgement Value

Malfunction Criteria	Threshold Value
Fuel tank pressure	> –4 kPa (–30 mmHg, –1.2 inHg)
Cumulative time when all the malfunction criteria below are met.	≥ 30000 ms
Purge control solenoid valve duty	Not = 0
Fuel temperature	–10 °C (14 °F) — 55 °C (131 °F)
Intake manifold relative pressure	≥ –26.7 kPa (–200 mmHg, –7.9 inHg)

Time Needed for Diagnosis: Less than 1 second

CW:DTC P1491 POSITIVE CRANKCASE VENTILATION (BLOW-BY) FUNCTION PROBLEM

1. OUTLINE OF DIAGNOSIS

Detect the blow-by hose release abnormality.
Judge as NG when the diagnosis terminal voltage is high.

2. COMPONENT DESCRIPTION

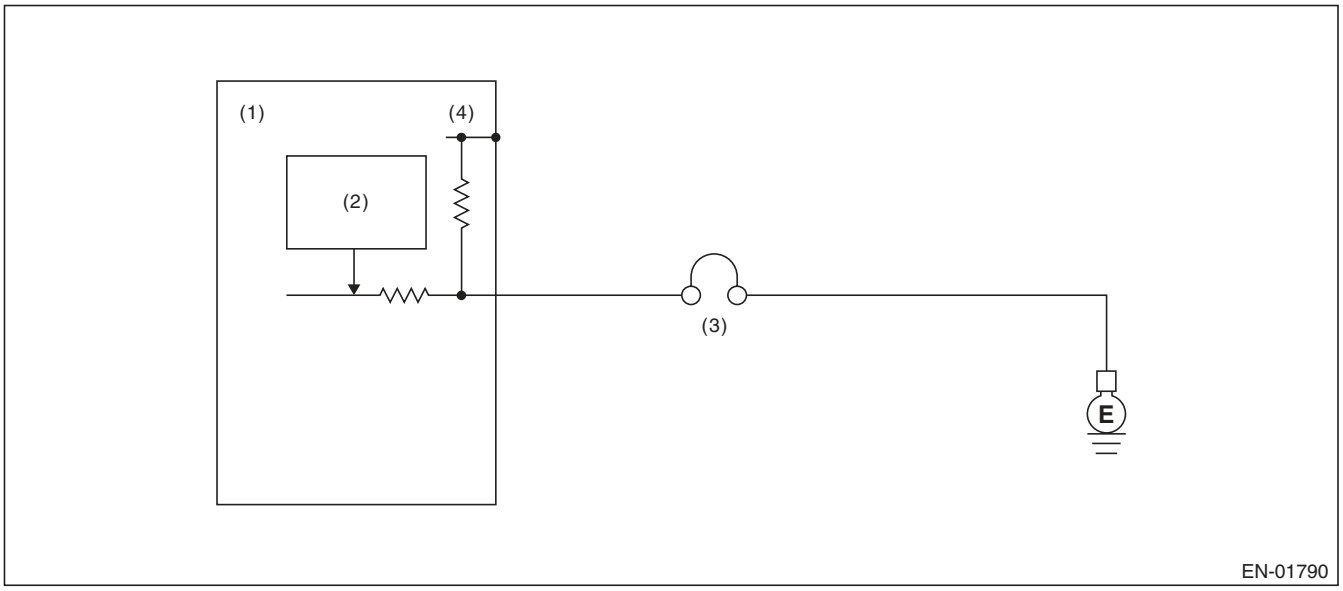

(1) Engine control module (ECM)
(2) Detecting circuit
(3) PCV diagnosis connector
(4) 5 V

3. ENABLE CONDITION

Secondary Parameters	Enable Conditions
None	

4. GENERAL DRIVING CYCLE

Always perform the diagnosis continuously.

5. DIAGNOSTIC METHOD

- **Abnormality Judgement**

If the duration of time while the following conditions are met is longer than the time indicated, judge as NG.

Judgement Value

Malfunction Criteria	Threshold Value
Battery voltage	≥ 10.9 V
Engine condition	After engine starting
Positive crankcase ventilation diagnosis voltage	High

Time Needed for Diagnosis: 2500 ms
Malfunction Indicator Light Illumination: Illuminates as soon as a malfunction occurs.

- **Normality Judgement**

Judge as OK and clear the NG if the continuous time while the following conditions are established is more than the predetermined time.

Judgement Value

Malfunction Criteria	Threshold Value
Battery voltage	≥ 10.9 V
Engine condition	After engine starting
Positive crankcase ventilation diagnosis voltage	Low

Time Needed for Diagnosis: Less than 1 second

CX:DTC P1560 BACK-UP VOLTAGE CIRCUIT MALFUNCTION

1. OUTLINE OF DIAGNOSIS

Detect the open/short circuit of back-up power supply circuit.
Judge as NG when the backup power voltage is low.

2. ENABLE CONDITION

Secondary Parameters	Enable Conditions
None	

3. GENERAL DRIVING CYCLE

Always perform the diagnosis continuously.

4. DIAGNOSTIC METHOD

- **Abnormality Judgement**

If the duration of time while the following conditions are met is longer than the time indicated, judge as NG.

Judgement Value

Malfunction Criteria	Threshold Value
Voltage of back-up power supply	Low
Battery voltage	≥ 10.9 V
Engine condition	After engine starting

Time Needed for Diagnosis: 2500 ms
Malfunction Indicator Light Illumination: Illuminates as soon as a malfunction occurs.

- **Normality Judgement**

Judge as OK and clear the NG if the continuous time while the following conditions are established is more than the predetermined time.

Judgement Value

Malfunction Criteria	Threshold Value
Voltage of back-up power supply	High
Battery voltage	≥ 10.9 V
Engine condition	After engine starting

Time Needed for Diagnosis: Less than 1 second

CY:DTC P1570 ANTENNA

1. OUTLINE OF DIAGNOSIS

NOTE:
For the detection standard, refer to DTC P0513. <Ref. to GD(H4DOTC)-151, DTC P0513 INCORRECT IMMOBILIZER KEY, Diagnostic Trouble Code (DTC) Detecting Criteria.>

CZ:DTC P1571 REFERENCE CODE INCOMPATIBILITY

1. OUTLINE OF DIAGNOSIS

NOTE:
For the detection standard, refer to DTC P0513. <Ref. to GD(H4DOTC)-151, DTC P0513 INCORRECT IMMOBILIZER KEY, Diagnostic Trouble Code (DTC) Detecting Criteria.>

DA:DTC P1572 IMM CIRCUIT FAILURE (EXCEPT ANTENNA CIRCUIT)

1. OUTLINE OF DIAGNOSIS

NOTE:
For the detection standard, refer to DTC P0513. <Ref. to GD(H4DOTC)-151, DTC P0513 INCORRECT IMMOBILIZER KEY, Diagnostic Trouble Code (DTC) Detecting Criteria.>

DB:DTC P1574 KEY COMMUNICATION FAILURE

1. OUTLINE OF DIAGNOSIS

NOTE:
For the detection standard, refer to DTC P0513. <Ref. to GD(H4DOTC)-151, DTC P0513 INCORRECT IMMOBILIZER KEY, Diagnostic Trouble Code (DTC) Detecting Criteria.>

DC:DTC P1576 EGI CONTROL MODULE EEPROM

1. OUTLINE OF DIAGNOSIS

NOTE:
For the detection standard, refer to DTC P0513. <Ref. to GD(H4DOTC)-151, DTC P0513 INCORRECT IMMOBILIZER KEY, Diagnostic Trouble Code (DTC) Detecting Criteria.>

DD:DTC P1577 IMM CONTROL MODULE EEPROM

1. OUTLINE OF DIAGNOSIS

NOTE:
For the detection standard, refer to DTC P0513. <Ref. to GD(H4DOTC)-151, DTC P0513 INCORRECT IMMOBILIZER KEY, Diagnostic Trouble Code (DTC) Detecting Criteria.>

DE:DTC P1578 METER FAILURE

1. OUTLINE OF DIAGNOSIS

NOTE:
For the detection standard, refer to DTC P0513. <Ref. to GD(H4DOTC)-151, DTC P0513 INCORRECT IMMOBILIZER KEY, Diagnostic Trouble Code (DTC) Detecting Criteria.>

DF:DTC P1602 CONTROL MODULE PROGRAMMING ERROR

1. OUTLINE OF DIAGNOSIS

Detect malfunctions of the catalyst advanced idling retard angle control.
Judge as NG when ECM is not controlling the angle properly during catalyst advanced idling retard angle control.
Judge as NG if there is exhaust gas temperature diagnosis and idle speed diagnosis and if either of them is NG.

- Exhaust gas temperature diagnosis

Judge as NG when the estimated exhausted gas temperature in 14 seconds after the cold start is below the specified value.

- Idle speed diagnosis

Judge as NG when actual engine speed is not close to target engine speed after terminating the retard angle control.

2. ENABLE CONDITION

Secondary Parameters	Enable Conditions
Atmospheric pressure	≥ 75 kPa (563 mmHg, 22.2 inHg)
Battery voltage	≥ 10.9 V
Cold start diagnosis	Incomplete
Vehicle speed	< 2 km/h (1.2 MPH)
Misfire in 200 engine revs.	< 5
Time after starting	= 14 seconds

3. GENERAL DRIVING CYCLE

Perform the diagnosis at cold start.

4. DIAGNOSTIC METHOD

- **Exhaust gas temperature diagnosis**

Abnormality Judgement

Calculate the estimated exhaust gas temperature when the diagnostic enable condition is established. Judge as NG when the following conditions are established after engine starting within the predetermined time.

Judgement Value

Malfunction Criteria	Threshold Value
Estimated exhaust gas temperature	< Value from Map

Map

Coolant temperature after starting the engine	–40 °C (–40 °F)	–30 °C (–22 °F)	–20 °C (–4 °F)	–10 °C (14 °F)	0 °C (32 °F)	10 °C (50 °F)	20 °C (68 °F)	30 °C (86 °F)	40 °C (104 °F)	45 °C (113 °F)
Threshold value (AT model)	200 °C (392 °F)	200 °C (392 °F)	200 °C (392 °F)	200 °C (392 °F)	98 °C (208.4 °F)	98 °C (208.4 °F)	97 °C (206.6 °F)	93 °C (199.4 °F)	89 °C (192.2 °F)	88 °C (190.4 °F)
Threshold value (MT model)	200 °C (392 °F)	200 °C (392 °F)	200 °C (392 °F)	200 °C (392 °F)	86.45830052 °C (187.6 °F)	83.45699292 °C (182.2 °F)	82.13981981 °C (179.9 °F)	77.22136721 °C (171 °F)	74.07767676 °C (165.3 °F)	73.24222051 °C (163.8 °F)

Time Needed for Diagnosis: 14 seconds
Malfunction Indicator Light Illumination: Illuminates when malfunction occurs in 2 continuous driving cycles.

Normality Judgement

Judge as OK and clear the NG if the following conditions are established.

Judgement Value

Malfunction Criteria	Threshold Value
Estimated exhaust gas temperature	≥ Value from Map

Time Needed for Diagnosis: Less than 1 second

- **Idle speed diagnosis**

Abnormality Judgement
Judge as NG when the following conditions are established after the predetermined time.
Judgement Value

Malfunction Criteria	Threshold Value
Continuous time of (Target engine speed – Actual engine speed > –100 rpm)	≥ 6000 ms
Continuous time of (actual retard amount > 30 °CA)	≥ 0 ms

Time Needed for Diagnosis: 14 seconds
Malfunction Indicator Light Illumination: Illuminates when malfunction occurs in 2 continuous driving cycles.
Normality Judgement
Judge as OK and clear the NG if the following conditions are established.
Judgement Value

Malfunction Criteria	Threshold Value
Continuous time of (Target engine speed – Actual engine speed > –100 rpm)	< 6000 ms
Continuous time of (actual retard amount > 30 °CA)	< 0 ms

Time Needed for Diagnosis: Less than 1 second

DG:DTC P2004 INTAKE MANIFOLD RUNNER CONTROL STUCK OPEN (BANK 1)

1. OUTLINE OF DIAGNOSIS

Detect the malfunction of tumble generator valve motor function.
Judge open fixing malfunction when the opening degree is large even after finishing the tumble generator valve closing driving.

2. ENABLE CONDITION

Secondary Parameters	Enable Conditions
Battery voltage	≥ 10.9 V
Engine coolant temperature	≥ –30 °C (–22 °F)
Ambient air temperature	≥ –30 °C (–22 °F)

3. GENERAL DRIVING CYCLE

Always perform the diagnosis continuously.

4. DIAGNOSTIC METHOD

- **Abnormality Judgement**

If the duration of time while the following conditions are met is longer than the time indicated, judge as NG.

Judgement Value

Malfunction Criteria	Threshold Value
Tumble generator valve opening	≥ 64.3 °
Tumble generator valve “close” signal output	≥ 3200 ms

Time Needed for Diagnosis: 3000 ms
Malfunction Indicator Light Illumination: Illuminates as soon as a malfunction occurs.

- **Normality Judgement**

Judge as OK and clear the NG if the continuous time while the following conditions are established is more than the predetermined time.

Judgement Value

Malfunction Criteria	Threshold Value
Tumble generator valve opening	< 64.3 °
Tumble generator valve “close” signal output	≥ 3200 ms

Time Needed for Diagnosis: Less than 1 second

DH:DTC P2005 INTAKE MANIFOLD RUNNER CONTROL STUCK OPEN (BANK 2)

1. OUTLINE OF DIAGNOSIS

Detect the malfunction of tumble generator valve motor function.
Judge open fixing malfunction when the opening degree is large even after finishing the tumble generator valve closing driving.

2. ENABLE CONDITION

Secondary Parameters	Enable Conditions
Battery voltage	≥ 10.9 V
Engine coolant temperature	≥ –30 °C (–22 °F)
Ambient air temperature	≥ –30 °C (–22 °F)

3. GENERAL DRIVING CYCLE

Always perform the diagnosis continuously.

4. DIAGNOSTIC METHOD

- **Abnormality Judgement**

If the duration of time while the following conditions are met is longer than the time indicated, judge as NG.

Judgement Value

Malfunction Criteria	Threshold Value
Tumble generator valve opening	≥ 64.3 °
Tumble generator valve “close” signal output	≥ 3200 ms

Time Needed for Diagnosis: 3000 ms
Malfunction Indicator Light Illumination: Illuminates as soon as a malfunction occurs.

- **Normality Judgement**

Judge as OK and clear the NG if the continuous time while the following conditions are established is more than the predetermined time.

Judgement Value

Malfunction Criteria	Threshold Value
Tumble generator valve opening	< 64.3 °
Tumble generator valve “close” signal output	≥ 3200 ms

Time Needed for Diagnosis: Less than 1 second

DI: DTC P2006 INTAKE MANIFOLD RUNNER CONTROL STUCK CLOSED (BANK 1)

1. OUTLINE OF DIAGNOSIS

Detect the malfunction of tumble generator valve motor function.
Judge close fixing malfunction when the opening degree is small even after finishing the tumble generator valve open driving.

2. ENABLE CONDITION

Secondary Parameters	Enable Conditions
Battery voltage	≥ 10.9 V
Engine coolant temperature	≥ –30 °C (–22 °F)
Ambient air temperature	≥ –30 °C (–22 °F)

3. GENERAL DRIVING CYCLE

Always perform the diagnosis continuously.

4. DIAGNOSTIC METHOD

- **Abnormality Judgement**

If the duration of time while the following conditions are met is longer than the time indicated, judge as NG.

Judgement Value

Malfunction Criteria	Threshold Value
Tumble generator valve opening	< 64.3 °
Tumble generator valve “open” signal output	≥ 4600 ms

Time Needed for Diagnosis: 3000 ms
Malfunction Indicator Light Illumination: Illuminates as soon as a malfunction occurs.

- **Normality Judgement**

Judge as OK and clear the NG if the continuous time while the following conditions are established is more than the predetermined time.

Judgement Value

Malfunction Criteria	Threshold Value
Tumble generator valve opening	≥ 64.3 °
Tumble generator valve “open” signal output	≥ 4600 ms

Time Needed for Diagnosis: Less than 1 second

DJ:DTC P2007 INTAKE MANIFOLD RUNNER CONTROL STUCK CLOSED (BANK 2)

1. OUTLINE OF DIAGNOSIS

Detect the malfunction of tumble generator valve motor function.
Judge close fixing malfunction when the opening degree is small even after finishing the tumble generator valve open driving.

2. ENABLE CONDITION

Secondary Parameters	Enable Conditions
Battery voltage	≥ 10.9 V
Engine coolant temperature	≥ –30 °C (–22 °F)
Ambient air temperature	≥ –30 °C (–22 °F)

3. GENERAL DRIVING CYCLE

Always perform the diagnosis continuously.

4. DIAGNOSTIC METHOD

- **Abnormality Judgement**

If the duration of time while the following conditions are met is longer than the time indicated, judge as NG.

Judgement Value

Malfunction Criteria	Threshold Value
Tumble generator valve opening	< 64.3 °
Tumble generator valve “open” signal output	≥ 4600 ms

Time Needed for Diagnosis: 3000 ms
Malfunction Indicator Light Illumination: Illuminates as soon as a malfunction occurs.

- **Normality Judgement**

Judge as OK and clear the NG if the continuous time while the following conditions are established is more than the predetermined time.

Judgement Value

Malfunction Criteria	Threshold Value
Tumble generator valve opening	≥ 64.3 °
Tumble generator valve “open” signal output	≥ 4600 ms

Time Needed for Diagnosis: Less than 1 second

DK:DTC P2008 INTAKE MANIFOLD RUNNER CONTROL CIRCUIT / OPEN (BANK 1)

1. OUTLINE OF DIAGNOSIS

Detect the open or short circuit of tumble generator valve motor.
Judge as NG when the open signal is sent from IC after tumble generator valve driving IC diagnosis.

2. COMPONENT DESCRIPTION

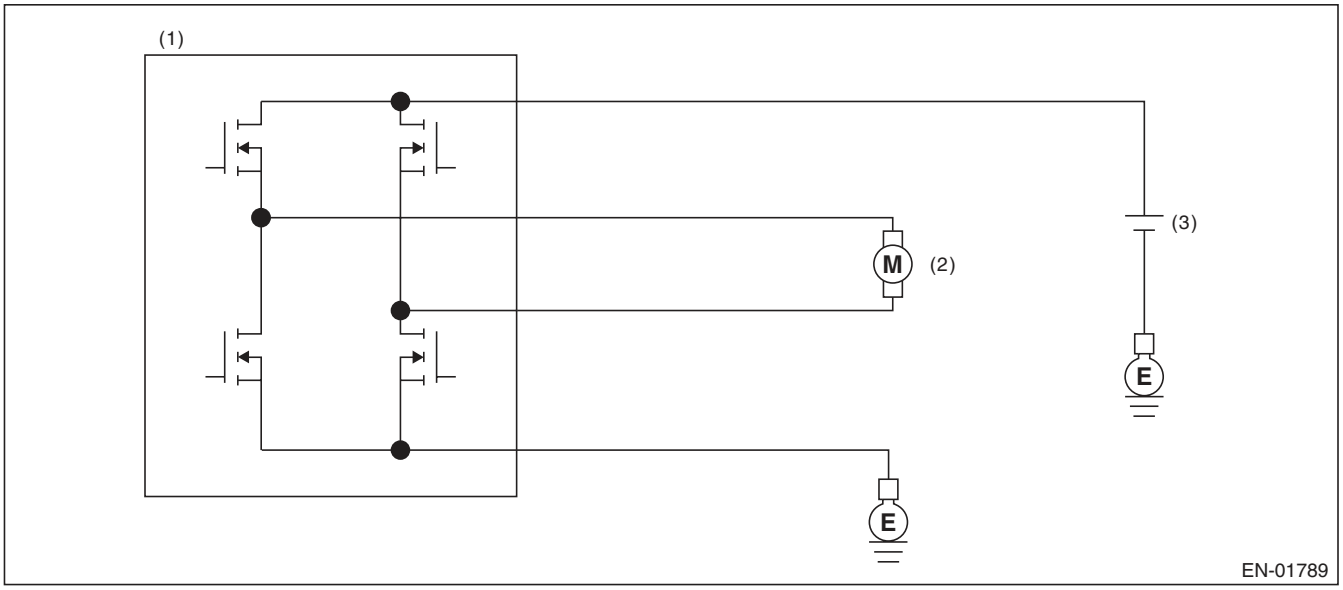

(1) Engine control module (ECM) (2) Tumble generator valve (3) Battery

3. ENABLE CONDITION

Secondary Parameters	Enable Conditions
Battery voltage	≥ 10.9 V

4. GENERAL DRIVING CYCLE

Always perform the diagnosis continuously.

5. DIAGNOSTIC METHOD

- **Abnormality Judgement**

At the main IC, check the sent signal at each timing which occurs just before the tumble generator valve output is set to ON → OFF, and judge open NG when the open NG signal is sent 96 ms × 20 time(s) in a row.

Judgement Value

Malfunction Criteria	Threshold Value
Open NG signal input	Low
Overcurrent NG signal input	High

Time Needed for Diagnosis: 96 ms × 20 time(s)
Malfunction Indicator Light Illumination: Illuminates as soon as a malfunction occurs.

- **Normality Judgement**

Judge as OK and clear the NG when the OK signal is sent.

Judgement Value

Malfunction Criteria	Threshold Value
Open NG signal input	High
Overcurrent NG signal input	High

Time Needed for Diagnosis: Less than 1 second

DL:DTC P2009 INTAKE MANIFOLD RUNNER CONTROL CIRCUIT LOW (BANK 1)

1. OUTLINE OF DIAGNOSIS

Detect the open or short circuit of tumble generator valve motor.
Judge as NG when the overcurrent signal is sent from IC after tumble generator valve driving IC diagnosis.

2. COMPONENT DESCRIPTION

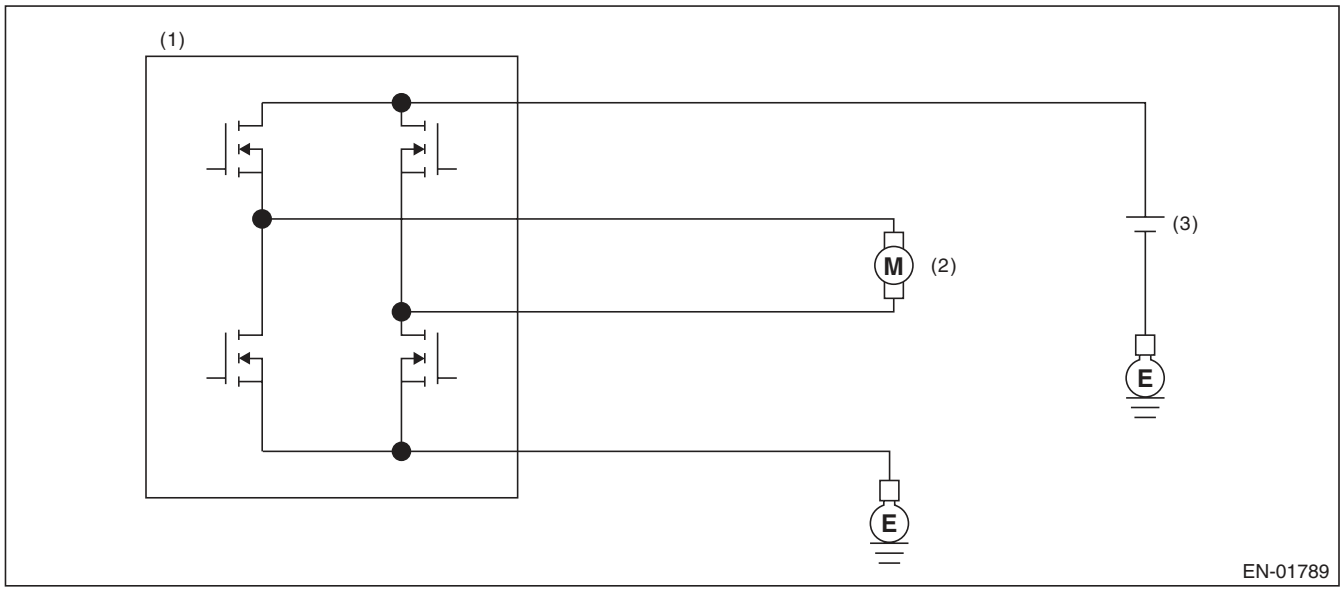

(1) Engine control module (ECM) (2) Tumble generator valve (3) Battery

3. ENABLE CONDITION

Secondary Parameters	Enable Conditions
Battery voltage	≥ 10.9 V

4. GENERAL DRIVING CYCLE

Always perform the diagnosis continuously.

5. DIAGNOSTIC METHOD

- **Abnormality Judgement**

At the main IC, check the sent signal at each timing which occurs just before the tumble generator valve output is set to ON → OFF, and judge overcurrent NG when the overcurrent NG signal is sent 96 ms × 10 time(s) in a row.

Judgement Value

Malfunction Criteria	Threshold Value
Open NG signal input	High
Overcurrent NG signal input	Low

Time Needed for Diagnosis: 96 ms × 10 time(s)
Malfunction Indicator Light Illumination: Illuminates as soon as a malfunction occurs.

- **Normality Judgement**

Judge as OK and clear the NG when the OK signal is sent.

Judgement Value

Malfunction Criteria	Threshold Value
Open NG signal input	High
Overcurrent NG signal input	High

Time Needed for Diagnosis: Less than 1 second

DM:DTC P2011 INTAKE MANIFOLD RUNNER CONTROL CIRCUIT / OPEN (BANK 2)

1. OUTLINE OF DIAGNOSIS

Detect the open or short circuit of tumble generator valve motor.
Judge as NG when the open signal is sent from IC after tumble generator valve driving IC diagnosis.

2. COMPONENT DESCRIPTION

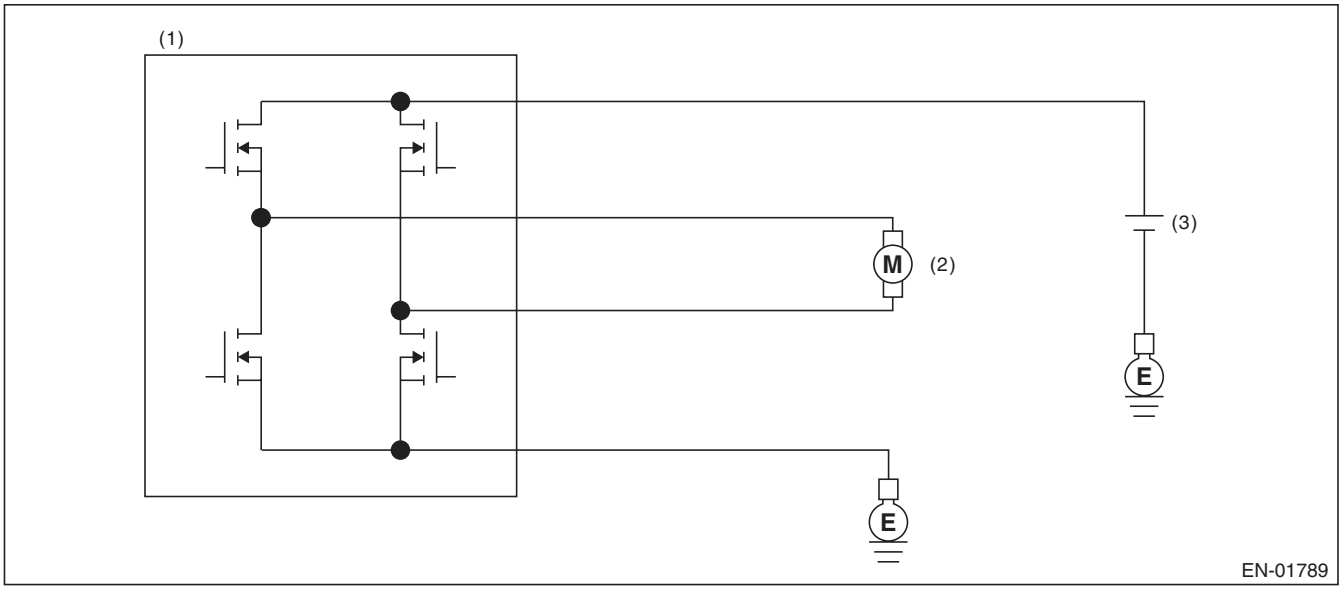

(1) Engine control module (ECM) (2) Tumble generator valve (3) Battery

3. ENABLE CONDITION

Secondary Parameters	Enable Conditions
Battery voltage	≥ 10.9 V

4. GENERAL DRIVING CYCLE

Always perform the diagnosis continuously.

5. DIAGNOSTIC METHOD

- **Abnormality Judgement**

At the main IC, check the sent signal at each timing which occurs just before the tumble generator valve output is set to ON → OFF, and judge open NG when the open NG signal is sent 96 ms × 20 time(s) in a row.

Judgement Value

Malfunction Criteria	Threshold Value
Open NG signal input	Low
Overcurrent NG signal input	High

Time Needed for Diagnosis: 96 ms × 20 time(s)
Malfunction Indicator Light Illumination: Illuminates as soon as a malfunction occurs.

- **Normality Judgement**

Judge as OK and clear the NG when the OK signal is sent.

Judgement Value

Malfunction Criteria	Threshold Value
Open NG signal input	High
Overcurrent NG signal input	High

Time Needed for Diagnosis: Less than 1 second

DN:DTC P2012 INTAKE MANIFOLD RUNNER CONTROL CIRCUIT LOW (BANK 2)

1. OUTLINE OF DIAGNOSIS

Detect the open or short circuit of tumble generator valve motor.
Judge as NG when the overcurrent signal is sent from IC after tumble generator valve driving IC diagnosis.

2. COMPONENT DESCRIPTION

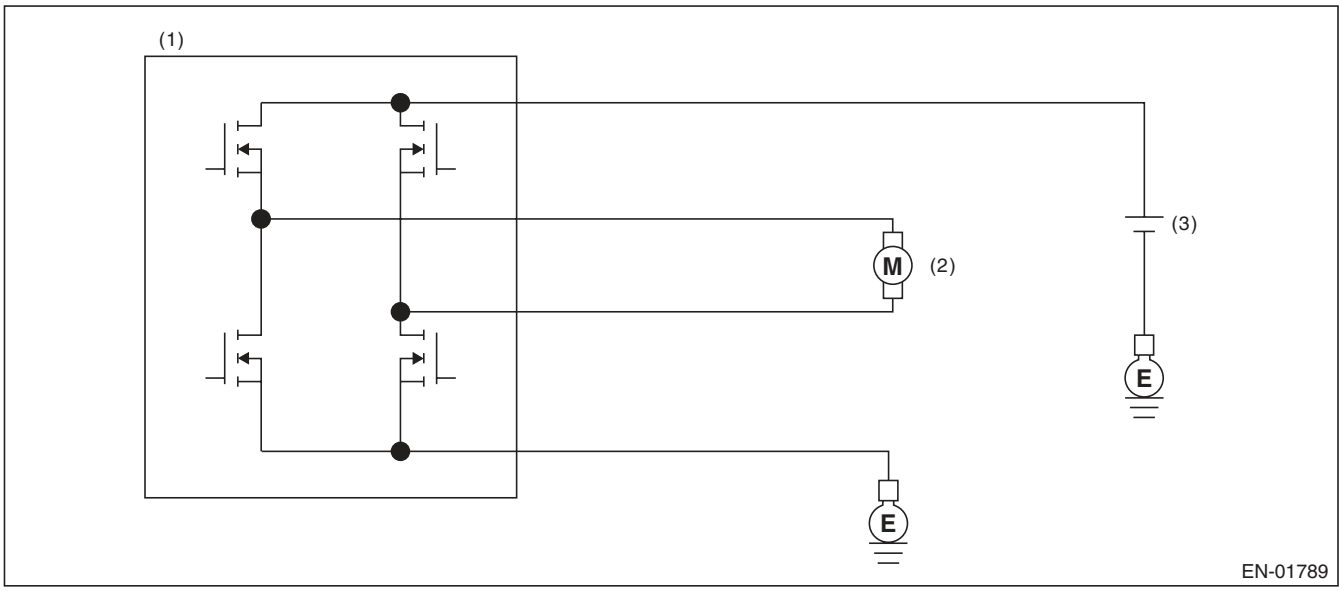

(1) Engine control module (ECM) (2) Tumble generator valve (3) Battery

3. ENABLE CONDITION

Secondary Parameters	Enable Conditions
Battery voltage	≥ 10.9 V

4. GENERAL DRIVING CYCLE

Always perform the diagnosis continuously.

5. DIAGNOSTIC METHOD

- **Abnormality Judgement**

At the main IC, check the sent signal at each timing which occurs just before the tumble generator valve output is set to ON → OFF, and judge overcurrent NG when the overcurrent NG signal is sent 96 ms × 10 time(s) in a row.

Judgement Value

Malfunction Criteria	Threshold Value
Open NG signal input	High
Overcurrent NG signal input	Low

Time Needed for Diagnosis: 96 ms × 10 time(s)
Malfunction Indicator Light Illumination: Illuminates as soon as a malfunction occurs.

- **Normality Judgement**

Judge as OK and clear the NG when the OK signal is sent.

Judgement Value

Malfunction Criteria	Threshold Value
Open NG signal input	High
Overcurrent NG signal input	High

Time Needed for Diagnosis: Less than 1 second

DO:DTC P2016 INTAKE MANIFOLD RUNNER POSITION SENSOR / SWITCH CIRCUIT LOW (BANK 1)

1. OUTLINE OF DIAGNOSIS

Detect open or short circuit of tumble generator valve position sensor.
Judge as NG if out of specification.

2. COMPONENT DESCRIPTION

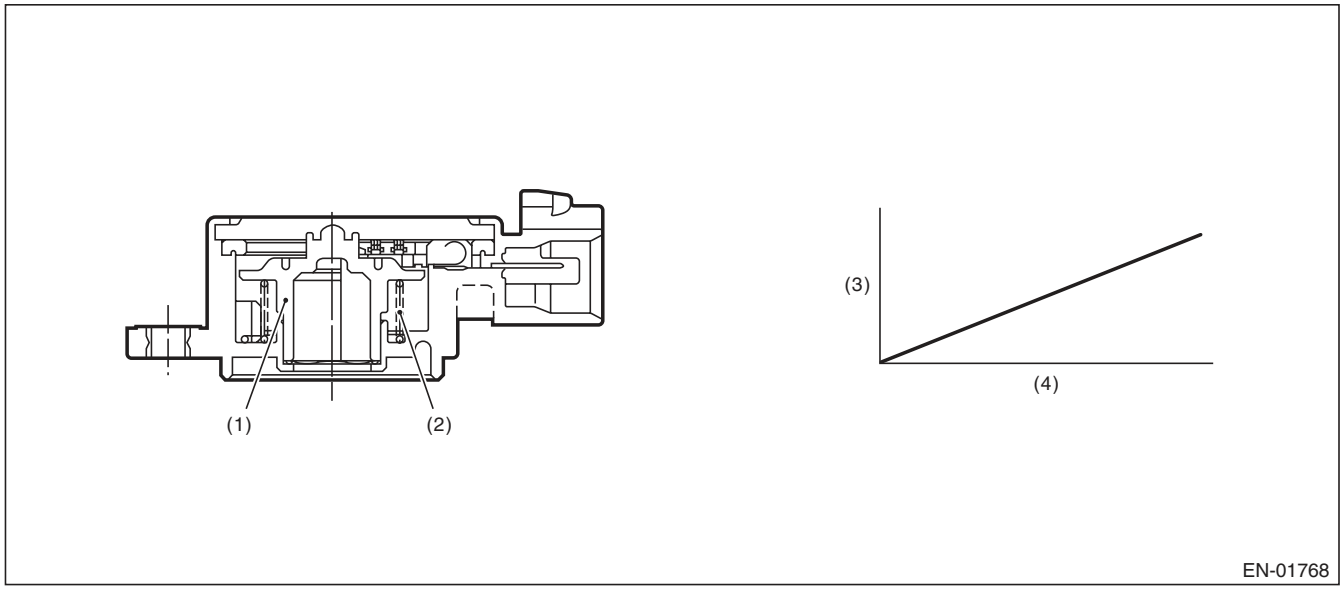

(1) Rotor
(2) Return spring
(3) Voltage (V)
(4) Tumble generator valve opening (°)

3. ENABLE CONDITION

Secondary Parameters	Enable Conditions
None	

4. GENERAL DRIVING CYCLE

Always perform the diagnosis continuously.

5. DIAGNOSTIC METHOD

- **Abnormality Judgement**

If the duration of time while the following conditions are met is longer than the time indicated, judge as NG.

Judgement Value

Malfunction Criteria	Threshold Value
Output voltage	< 0.217 V

Time Needed for Diagnosis: 500 ms
Malfunction Indicator Light Illumination: Illuminates as soon as a malfunction occurs.

- **Normality Judgement**

Judge as OK and clear the NG if the continuous time while the following conditions are established is more than the predetermined time.

Judgement Value

Malfunction Criteria	Threshold Value
Output voltage	≥ 0.217 V

Time Needed for Diagnosis: Less than 1 second

DP:DTC P2017 INTAKE MANIFOLD RUNNER POSITION SENSOR / SWITCH CIRCUIT HIGH (BANK 1)

1. OUTLINE OF DIAGNOSIS

Detect open or short circuit of tumble generator valve position sensor.
Judge as NG if out of specification.

2. COMPONENT DESCRIPTION

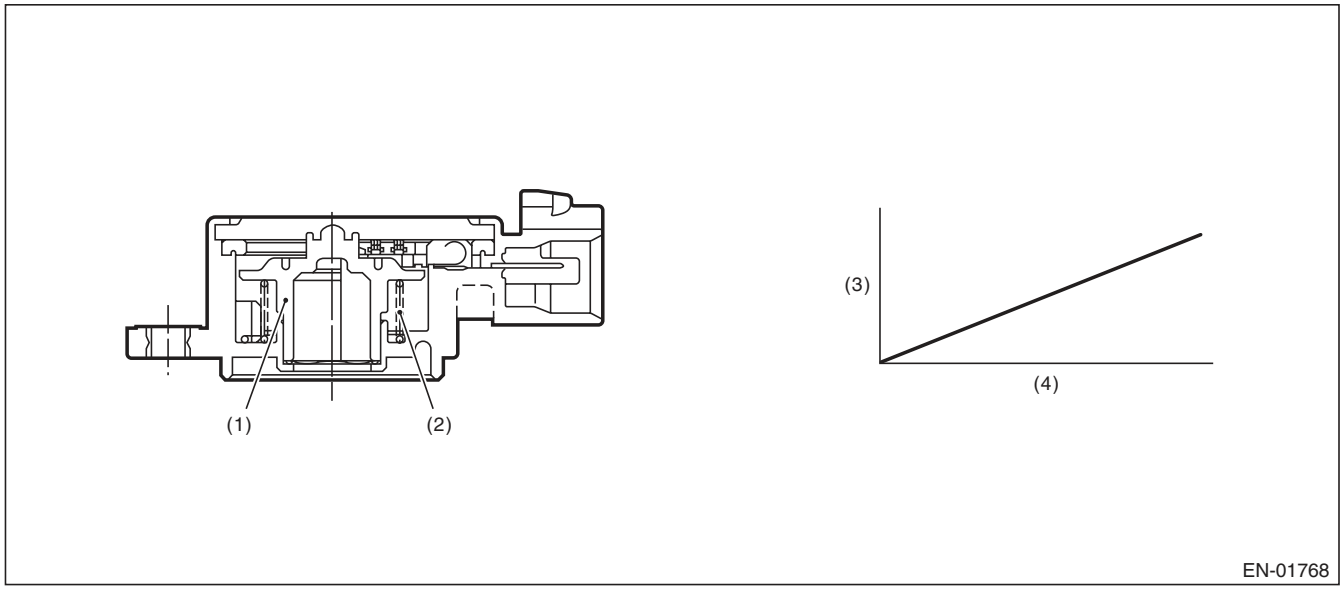

(1) Rotor
(2) Return spring
(3) Voltage (V)
(4) Throttle valve opening angle (°)

3. ENABLE CONDITION

Secondary Parameters	Enable Conditions
None	

4. GENERAL DRIVING CYCLE

Always perform the diagnosis continuously.

5. DIAGNOSTIC METHOD

- **Abnormality Judgement**

If the duration of time while the following conditions are met is longer than the time indicated, judge as NG.

Judgement Value

Malfunction Criteria	Threshold Value
Output voltage	≥ 4.783 V

Time Needed for Diagnosis: 500 ms
Malfunction Indicator Light Illumination: Illuminates as soon as a malfunction occurs.

- **Normality Judgement**

Judge as OK and clear the NG if the continuous time while the following conditions are established is more than the predetermined time.

Judgement Value

Malfunction Criteria	Threshold Value
Output voltage	< 4.783 V

Time Needed for Diagnosis: Less than 1 second

DQ:DTC P2021 INTAKE MANIFOLD RUNNER POSITION SENSOR / SWITCH CIRCUIT LOW (BANK 2)

1. OUTLINE OF DIAGNOSIS

Detect open or short circuit of tumble generator valve position sensor.
Judge as NG if out of specification.

2. COMPONENT DESCRIPTION

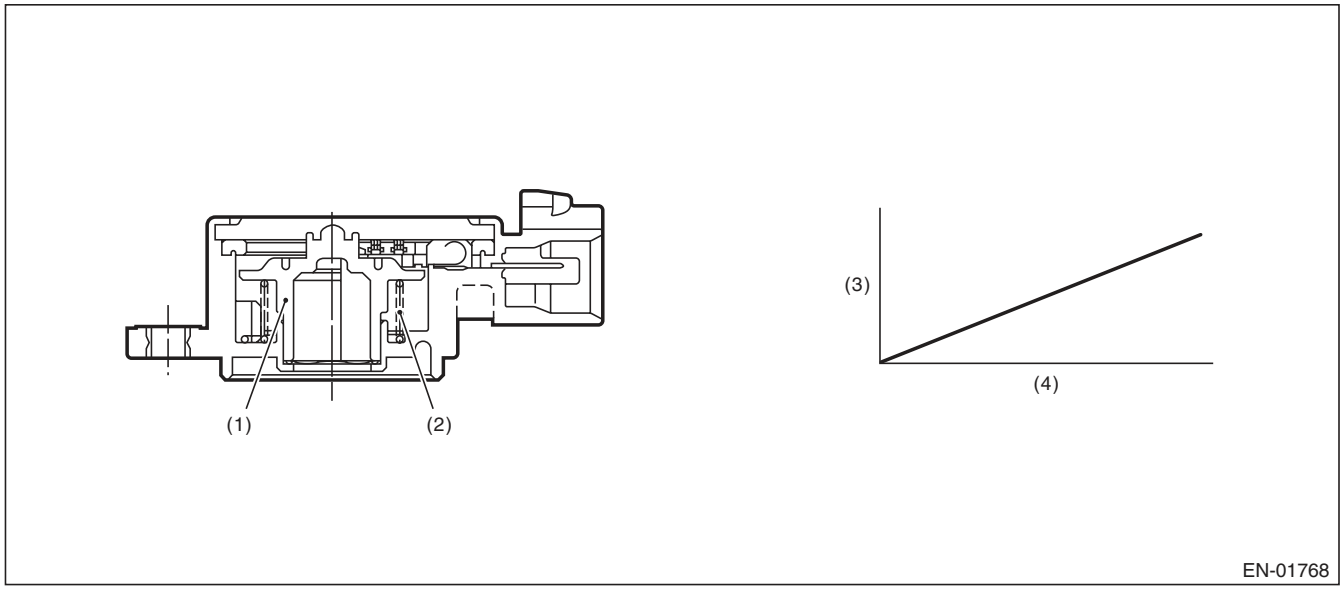

(1) Rotor
(2) Return spring
(3) Voltage (V)
(4) Tumble generator valve opening (°)

3. ENABLE CONDITION

Secondary Parameters	Enable Conditions
None	

4. GENERAL DRIVING CYCLE

Always perform the diagnosis continuously.

5. DIAGNOSTIC METHOD

- **Abnormality Judgement**

If the duration of time while the following conditions are met is longer than the time indicated, judge as NG.

Judgement Value

Malfunction Criteria	Threshold Value
Output voltage	< 0.217 V

Time Needed for Diagnosis: 500 ms
Malfunction Indicator Light Illumination: Illuminates as soon as a malfunction occurs.

- **Normality Judgement**

Judge as OK and clear the NG if the continuous time while the following conditions are established is more than the predetermined time.

Judgement Value

Malfunction Criteria	Threshold Value
Output voltage	≥ 0.217 V

Time Needed for Diagnosis: Less than 1 second

DR:DTC P2022 INTAKE MANIFOLD RUNNER POSITION SENSOR / SWITCH CIRCUIT HIGH (BANK 2)

1. OUTLINE OF DIAGNOSIS

Detect open or short circuit of tumble generator valve position sensor.
Judge as NG if out of specification.

2. COMPONENT DESCRIPTION

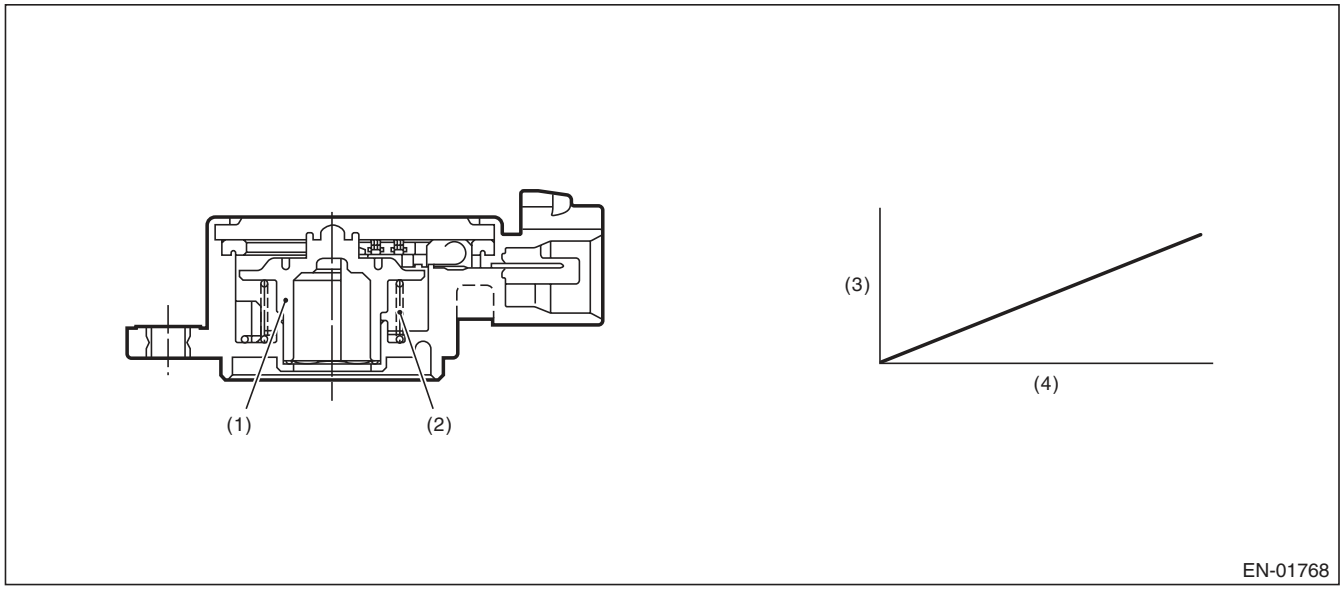

(1) Rotor
(2) Return spring
(3) Voltage (V)
(4) Tumble generator valve opening (°)

3. ENABLE CONDITION

Secondary Parameters	Enable Conditions
None	

4. GENERAL DRIVING CYCLE

Always perform the diagnosis continuously.

5. DIAGNOSTIC METHOD

- **Abnormality Judgement**

If the duration of time while the following conditions are met is longer than the time indicated, judge as NG.

Judgement Value

Malfunction Criteria	Threshold Value
Output voltage	≥ 4.783 V

Time Needed for Diagnosis: 500 ms
Malfunction Indicator Light Illumination: Illuminates as soon as a malfunction occurs.

- **Normality Judgement**

Judge as OK and clear the NG if the continuous time while the following conditions are established is more than the predetermined time.

Judgement Value

Malfunction Criteria	Threshold Value
Output voltage	< 4.783 V

Time Needed for Diagnosis: Less than 1 second

DS:DTC P2088 INTAKE CAMSHAFT POSITION ACTUATOR CONTROL CIRCUIT LOW (BANK 1)

1. OUTLINE OF DIAGNOSIS

Detect open or short circuit of the oil flow control solenoid valve.
Judge as NG when the current is small even though the duty signal is large.

2. ENABLE CONDITION

Secondary Parameters	Enable Conditions
None	

3. GENERAL DRIVING CYCLE

Always perform the diagnosis continuously.

4. DIAGNOSTIC METHOD

- **Abnormality Judgement**

If the duration of time while the following conditions are met is longer than the time indicated, judge as NG.

Judgement Value

Malfunction Criteria	Threshold Value
Battery voltage	≥ 10.9 V
Oil flow control solenoid valve control duty	≥ 99.61 %
Oil control solenoid valve control present current	< 0.306 A

Time Needed for Diagnosis: 2000 ms
Malfunction Indicator Light Illumination: Illuminates as soon as a malfunction occurs.

- **Normality Judgement**

Judge as OK and clear the NG if the continuous time while the following conditions are established is more than the predetermined time.

Judgement Value

Malfunction Criteria	Threshold Value
Battery voltage	≥ 10.9 V
Target current value of the oil flow control solenoid valve	≥ 0.14 A
|Target current value of the oil flow control solenoid valve – Oil flow control solenoid valve control current value|	< 0.08 A

Time Needed for Diagnosis: 2000 ms

DT:DTC P2089 INTAKE CAMSHAFT POSITION ACTUATOR CONTROL CIRCUIT HIGH (BANK 1)

1. OUTLINE OF DIAGNOSIS

Detect open or short circuit of oil flow control solenoid valve.
Judge as NG when the current is large even though the duty signal is small.

2. ENABLE CONDITION

Secondary Parameters	Enable Conditions
None	

3. GENERAL DRIVING CYCLE

Always perform the diagnosis continuously.

4. DIAGNOSTIC METHOD

- **Abnormality Judgement**

If the duration of time while the following conditions are met is longer than the time indicated, judge as NG.

Judgement Value

Malfunction Criteria	Threshold Value
Battery voltage	≥ 10.9 V
Oil flow control solenoid valve control duty	< 0.39 %
Oil control solenoid valve control present current	≥ 0.306 A

Time Needed for Diagnosis: 2000 ms
Malfunction Indicator Light Illumination: Illuminates as soon as a malfunction occurs.

- **Normality Judgement**

Judge as OK and clear the NG if the continuous time while the following conditions are established is more than the predetermined time.

Judgement Value

Malfunction Criteria	Threshold Value
Battery voltage	≥ 10.9 V
|Target current value of the oil flow control solenoid valve – Oil flow control solenoid valve control current value|	< 0.08 A

Time Needed for Diagnosis: 2000 ms

DU:DTC P2092 INTAKE CAMSHAFT POSITION ACTUATOR CONTROL CIRCUIT LOW (BANK 2)

1. OUTLINE OF DIAGNOSIS

NOTE:
For the detection standard, refer to DTC P2088. <Ref. to GD(H4DOTC)-199, DTC P2088 INTAKE CAMSHAFT POSITION ACTUATOR CONTROL CIRCUIT LOW (BANK 1), Diagnostic Trouble Code (DTC) Detecting Criteria.>

DV:DTC P2093 INTAKE CAMSHAFT POSITION ACTUATOR CONTROL CIRCUIT HIGH (BANK 2)

1. OUTLINE OF DIAGNOSIS

NOTE:
For the detection standard, refer to DTC P2089. <Ref. to GD(H4DOTC)-200, DTC P2089 INTAKE CAMSHAFT POSITION ACTUATOR CONTROL CIRCUIT HIGH (BANK 1), Diagnostic Trouble Code (DTC) Detecting Criteria.>

DW:DTC P2096 POST CATALYST FUEL TRIM SYSTEM TOO LEAN (BANK 1)

1. OUTLINE OF DIAGNOSIS

Detect the malfunction of fuel system from the size of the sub feedback learning value.
Control the sub feedback learning and judge as NG when the learning value is in the lean zone.

2. COMPONENT DESCRIPTION

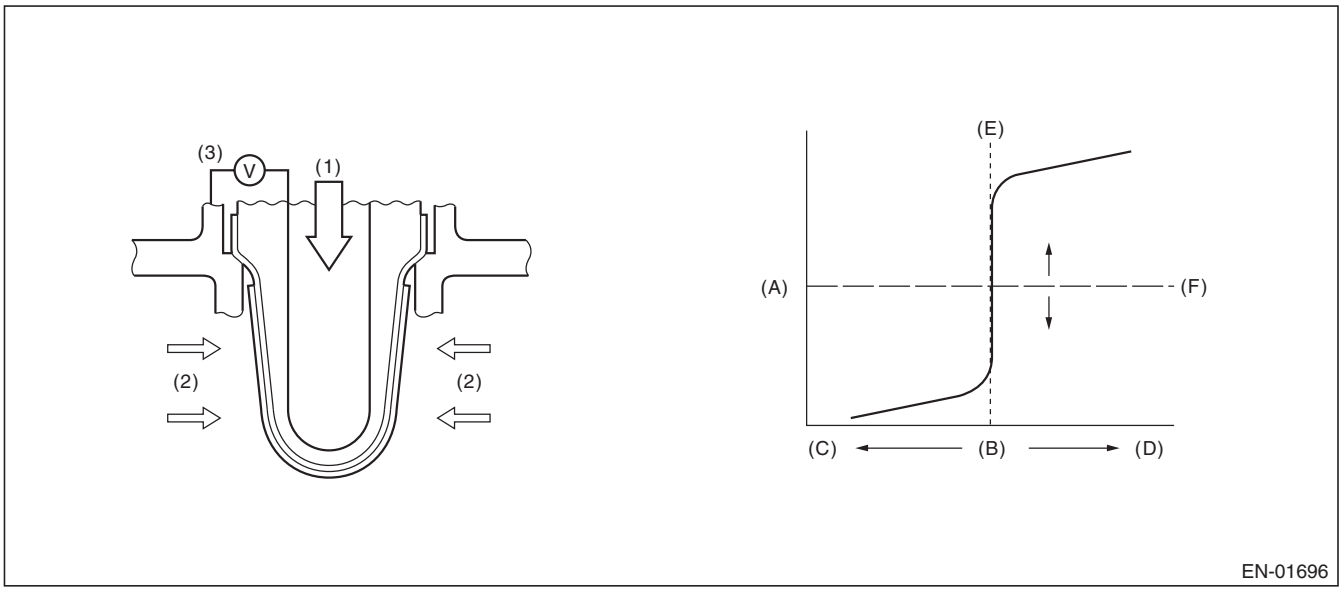

(A)	Electromotive force	(C)	Rich	(E)	Theoretical air fuel ratio
(B)	Air fuel ratio	(D)	Lean	(F)	Comparative voltage
(1)	Atmosphere	(2)	Exhaust gas	(3)	Electromotive force

3. ENABLE CONDITION

Secondary Parameters	Enable Conditions
Conditions for carrying out the sub feedback learning	Completed
Continuous time when all conditions are established.	≥ 1 s

4. GENERAL DRIVING CYCLE

Perform the diagnosis continuously when the vehicle is idling or running at a constant speed of 80 km/h (50 MPH) or more.

5. DIAGNOSTIC METHOD

- **Abnormality Judgement**

If the duration of time while the following conditions are met is longer than the time indicated, judge as NG.

Judgement Value

Malfunction Criteria	Threshold Value
Sub feedback learning value	< –0.02 (AT model) < –0.02 (MT model)

Time Needed for Diagnosis: 5 s × 1 time(s)
Malfunction Indicator Light Illumination: Illuminates when malfunction occurs in 2 continuous driving cycles.

- **Normality Judgement**

Judge as OK and clear the NG if the continuous time while the following conditions are established is more than the predetermined time.

Judgement Value

Malfunction Criteria	Threshold Value
Sub feedback learning value	≥ –0.02 + 0.005 (AT model) ≥ –0.02 + 0 (MT model)

Time Needed for Diagnosis: 5 s

DX:DTC P2097 POST CATALYST FUEL TRIM SYSTEM TOO RICH (BANK 1)

1. OUTLINE OF DIAGNOSIS

Detect the malfunction of fuel system from the size of the sub feedback learning value.
Sub feedback learning is being performed. When the learning value goes to the rich side, judge as NG.

2. COMPONENT DESCRIPTION

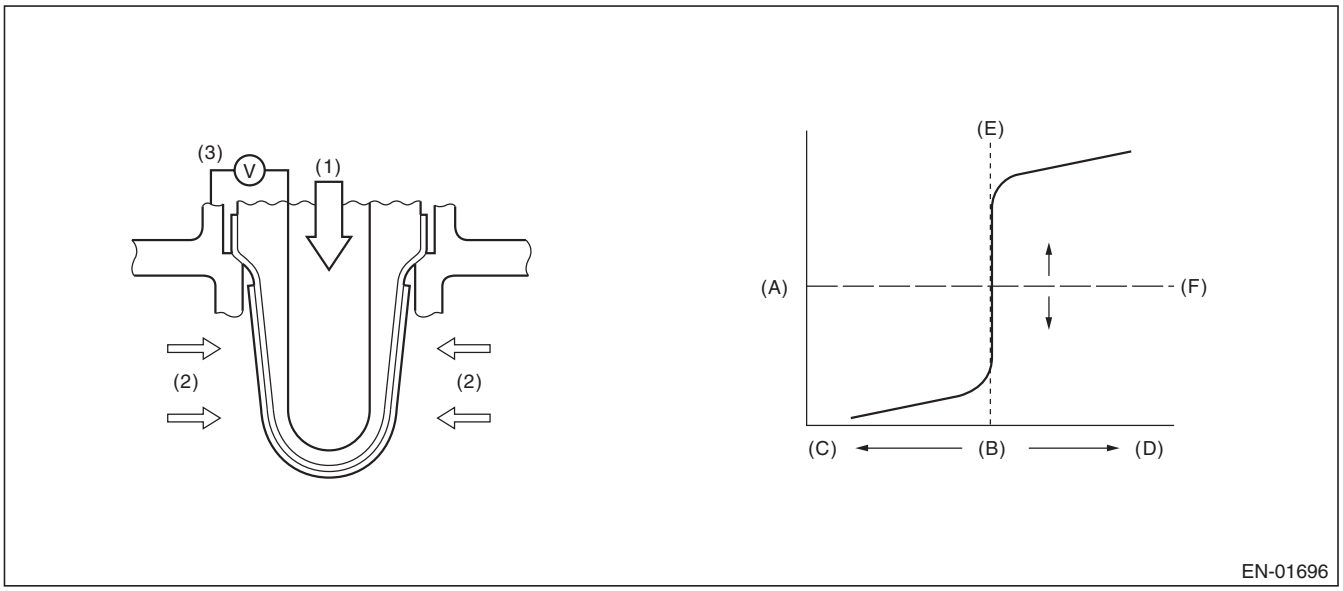

(A)	Electromotive force	(C)	Rich	(E)	Theoretical air fuel ratio
(B)	Air fuel ratio	(D)	Lean	(F)	Comparative voltage
(1)	Atmosphere	(2)	Exhaust gas	(3)	Electromotive force

3. ENABLE CONDITION

Secondary Parameters	Enable Conditions
Conditions for carrying out the sub feedback learning	Completed
Continuous time when all conditions are established.	≥ 1 s

4. GENERAL DRIVING CYCLE

Perform the diagnosis continuously when the vehicle is idling or running at a constant speed of 80 km/h (50 MPH) or more.

5. DIAGNOSTIC METHOD

- **Abnormality Judgement**

If the duration of time while the following conditions are met is longer than the time indicated, judge as NG.

Judgement Value

Malfunction Criteria	Threshold Value
Sub feedback learning value	≥ 0.04 (AT model) ≥ 0.04 (MT model)

Time Needed for Diagnosis: 5 s × 1 time(s)
Malfunction Indicator Light Illumination: Illuminates when malfunction occurs in 2 continuous driving cycles.

- **Normality Judgement**

Judge as OK and clear the NG if the continuous time while the following conditions are established is more than the predetermined time.

Judgement Value

Malfunction Criteria	Threshold Value
Sub feedback learning value	< 0.04 + –0.005 (AT model) < 0.04 + 0 (MT model)

Time Needed for Diagnosis: 5 s

DY:DTC P2101 THROTTLE ACTUATOR CONTROL MOTOR CIRCUIT RANGE/ PERFORMANCE

1. OUTLINE OF DIAGNOSIS

Judge as NG when the motor current becomes large or drive circuit is heated.

2. COMPONENT DESCRIPTION

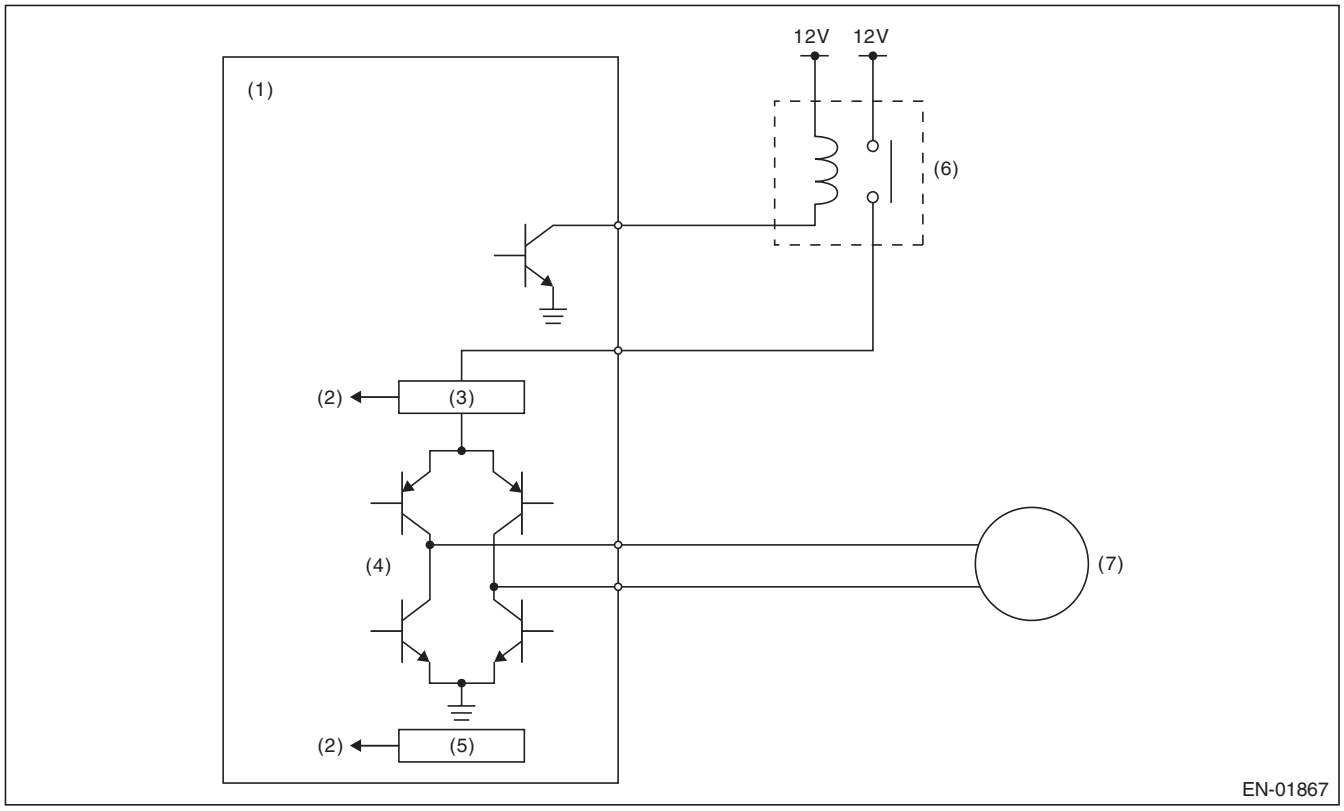

(1) Engine control module (ECM)
(2) Detecting circuit
(3) Overcurrent detection circuit
(4) Drive circuit
(5) Temperature detection circuit
(6) Electronic throttle control relay
(7) Motor

3. ENABLE CONDITION

Secondary Parameters	Enable Conditions
Under control of electronic throttle control	ON
CPU communication line sub → main normal judgment	Normal

4. GENERAL DRIVING CYCLE

Always perform the diagnosis continuously.

5. DIAGNOSTIC METHOD

- **Abnormality Judgement**

If the duration of time while the following conditions are met is longer than the time indicated, judge as NG.

Judgement Value

Malfunction Criteria	Threshold Value
Motor current or Drive circuit inner temperature	> 8 A > 175°C (347°F)

Time Needed for Diagnosis: 500 ms
Malfunction Indicator Light Illumination: Illuminates as soon as a malfunction occurs.

- **Normality Judgement**

Judge as OK and clear the NG if the continuous time while the following conditions are established is more than the predetermined time.

Judgement Value

Malfunction Criteria	Threshold Value
Motor current	≤ 8 A
Drive circuit inner temperature	≤ 175°C (347°F)

Time Needed for Diagnosis: 2000 ms

DZ:DTC P2102 THROTTLE ACTUATOR CONTROL MOTOR CIRCUIT LOW

1. OUTLINE OF DIAGNOSIS

Judge as NG when the electronic throttle control power is not supplied even when ECM sets the electronic throttle control relay to ON.

2. COMPONENT DESCRIPTION

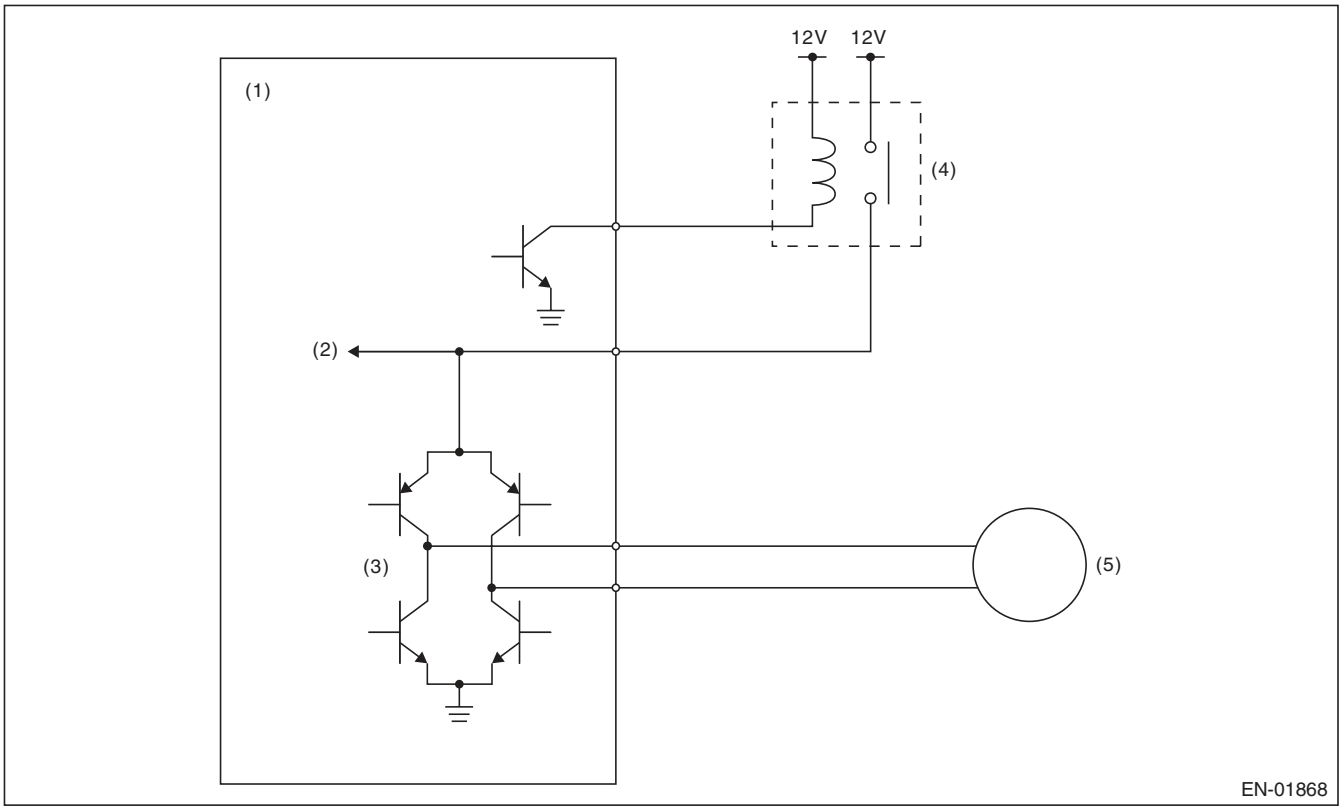

(1) Engine control module (ECM)
(2) Voltage detection circuit
(3) Drive circuit
(4) Electronic throttle control relay
(5) Motor

3. ENABLE CONDITION

Secondary Parameters	Enable Conditions
Battery voltage	≥ 11 V
Electronic throttle control relay output	ON

4. GENERAL DRIVING CYCLE

Always perform the diagnosis continuously.

5. DIAGNOSTIC METHOD

- **Abnormality Judgement**

If the duration of time while the following conditions are met is longer than the time indicated, judge as NG.

Judgement Value

Malfunction Criteria	Threshold Value
Motor power voltage	≤ 5 V

Time Needed for Diagnosis: 400 ms
Malfunction Indicator Light Illumination: Illuminates as soon as a malfunction occurs.

- **Normality Judgement**

Judge as OK and clear the NG if the continuous time while the following conditions are established is more than the predetermined time.

Judgement Value

Malfunction Criteria	Threshold Value
Motor power voltage	> 5 V

Time Needed for Diagnosis: 2000 ms

EA:DTC P2103 THROTTLE ACTUATOR CONTROL MOTOR CIRCUIT HIGH

1. OUTLINE OF DIAGNOSIS

Judge as NG when the electronic throttle control power is supplied even when ECM sets the electronic throttle control relay to OFF.

2. COMPONENT DESCRIPTION

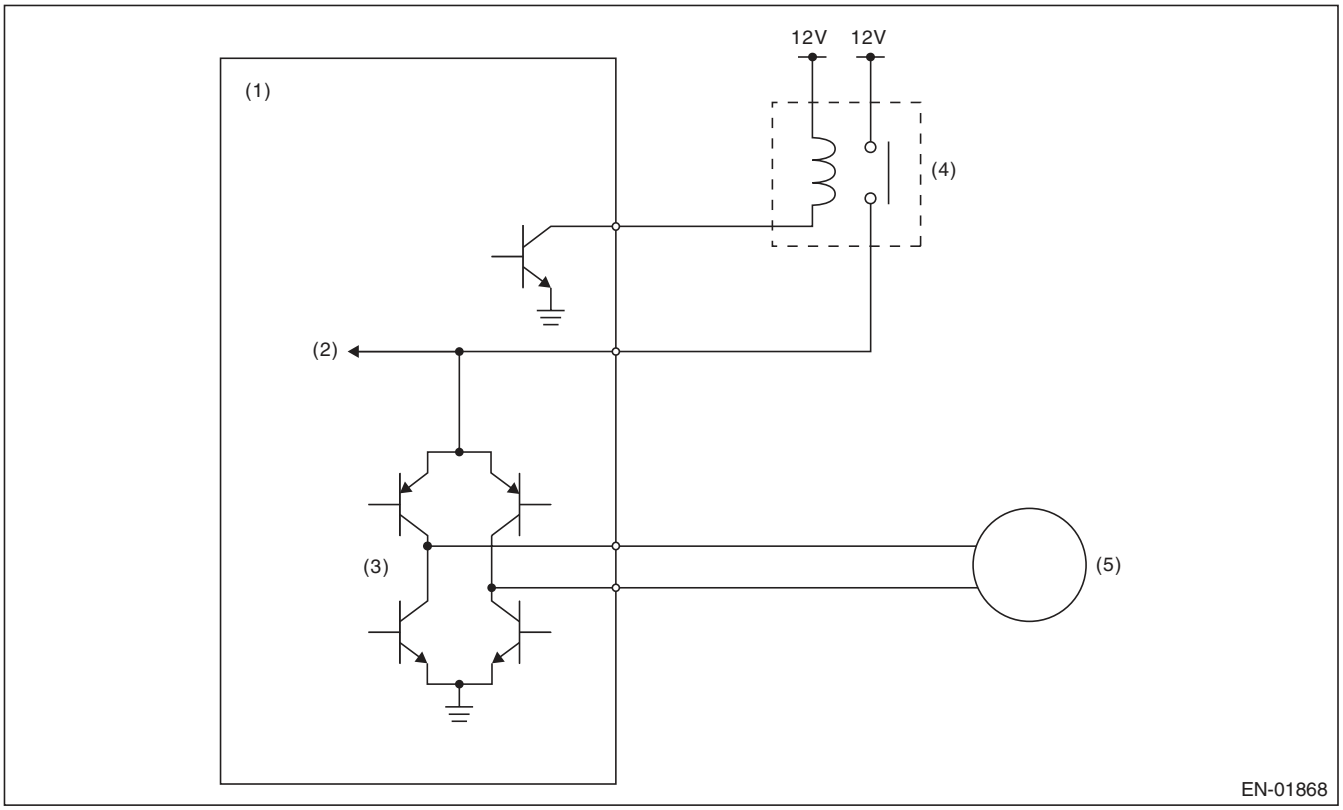

(1)	Engine control module (ECM)	(3)	Drive circuit	(5)	Motor
(2)	Voltage detection circuit	(4)	Electronic throttle control relay		

3. ENABLE CONDITION

Secondary Parameters	Enable Conditions
Battery voltage	≥ 6 V
Electronic throttle control relay output	OFF

4. GENERAL DRIVING CYCLE

- When ignition switch ON → OFF
- Ignition switch OFF → ON (Only after clearing memory)

5. DIAGNOSTIC METHOD

- **Abnormality Judgement**

If the duration of time while the following conditions are met is longer than the time indicated, judge as NG.

Judgement Value

Malfunction Criteria	Threshold Value
Motor power voltage	≥ 5 V

Time Needed for Diagnosis: 600 ms
Malfunction Indicator Light Illumination: Illuminates as soon as a malfunction occurs.

- **Normality Judgement**

Judge as OK and clear the NG if the continuous time while the following conditions are established is more than the predetermined time.

Judgement Value

Malfunction Criteria	Threshold Value
Motor power voltage	< 5 V

Time Needed for Diagnosis: 400 ms

EB:DTC P2109 THROTTLE/PEDAL POSITION SENSOR “A” MINIMUM STOP PERFORMANCE

1. OUTLINE OF DIAGNOSIS

Judge as NG when full close point learning cannot conducted or abnormal value is detected.

2. COMPONENT DESCRIPTION

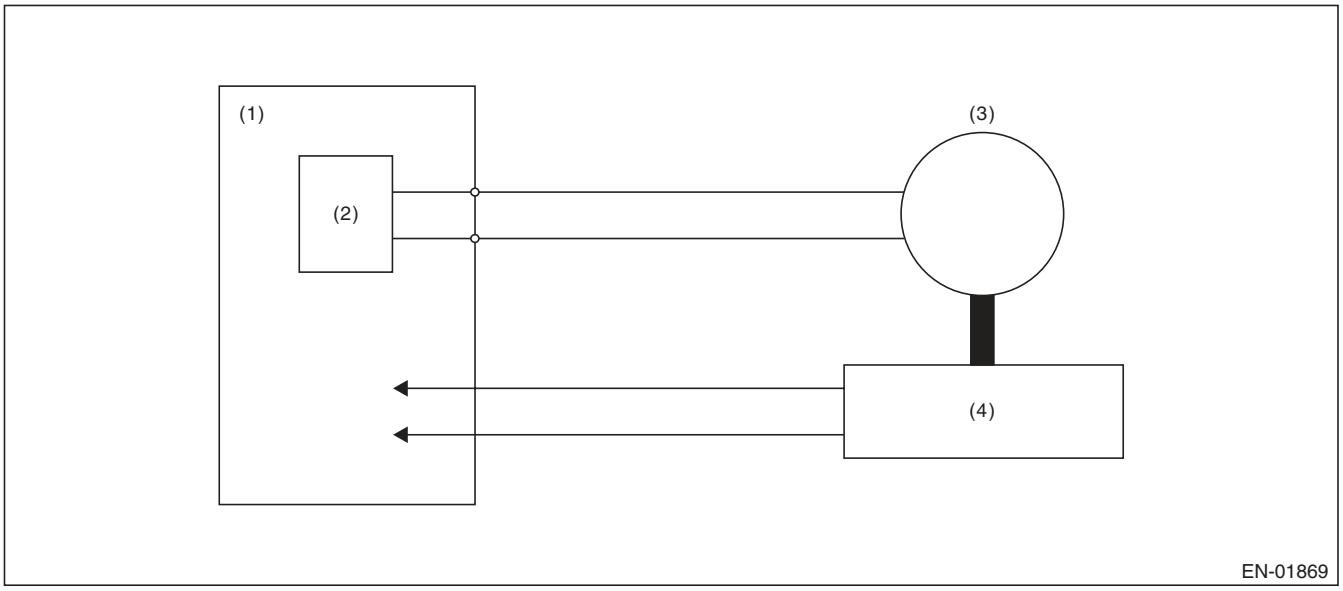

(1) Engine control module (ECM)
(2) Drive circuit
(3) Motor
(4) Throttle position sensor

3. ENABLE CONDITION

Secondary Parameters	Enable Conditions
Ignition switch	ON → OFF
Ignition switch (only after clear memory)	OFF → ON

4. GENERAL DRIVING CYCLE

Perform the diagnosis at full closed point learning.

5. DIAGNOSTIC METHOD

- **Abnormality Judgement**

If the duration of time while the following conditions are met is longer than the time indicated, judge as NG.

Judgement Value

Malfunction Criteria	Threshold Value
Throttle sensor opening angle at full close point learning	< 10.127 ° or > 19.872 °
or Throttle opening angle when the ignition switch is ON – Throttle minimum stop position	< 1.683 °

Time Needed for Diagnosis: 8 ms — 80 ms
Malfunction Indicator Light Illumination: Illuminates as soon as a malfunction occurs.

- **Normality Judgement**

Judge as OK and clear the NG if the continuous time while the following conditions are established is more than the predetermined time.

Judgement Value

Malfunction Criteria	Threshold Value
Throttle sensor opening angle at full close point learning	≥ 10.127 ° and ≤ 19.872 °
Throttle opening angle when the ignition switch is ON – Throttle minimum stop position	≥ 1.683 °

Time Needed for Diagnosis: 8 ms

EC:DTC P2122 THROTTLE/PEDAL POSITION SENSOR/SWITCH “D” CIRCUIT LOW INPUT

1. OUTLINE OF DIAGNOSIS

Detect the open or short circuit of accelerator pedal position sensor 1.
Judge as NG if out of specification.

2. COMPONENT DESCRIPTION

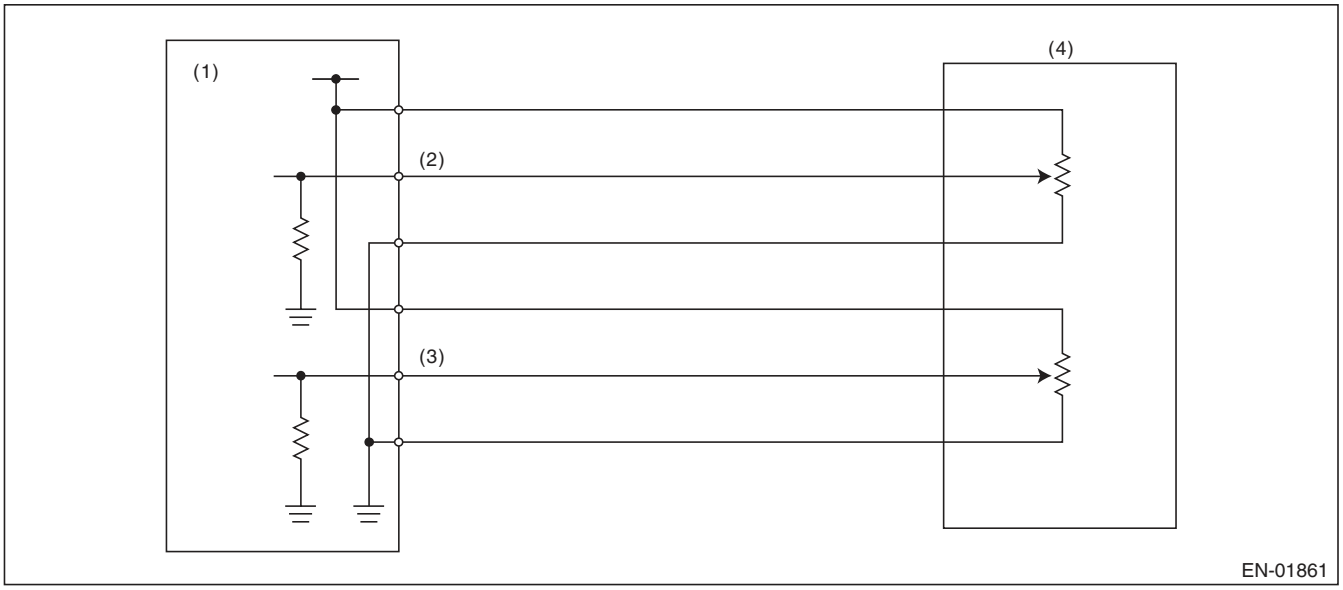

(1) Engine control module (ECM)
(2) Accelerator pedal position sensor 1 signal
(3) Accelerator pedal position sensor 2 signal
(4) Accelerator pedal position sensor

3. ENABLE CONDITION

Secondary Parameters	Enable Conditions
Ignition switch	ON
Battery voltage	≥ 6 V

4. GENERAL DRIVING CYCLE

Always perform the diagnosis continuously.

5. DIAGNOSTIC METHOD

- **Abnormality Judgement**

If the duration of time while the following conditions are met is longer than the time indicated, judge as NG.

Judgement Value

Malfunction Criteria	Threshold Value
Sensor 1 input voltage	< 0.219 V

Time Needed for Diagnosis: 100 ms
Malfunction Indicator Light Illumination: Illuminates as soon as a malfunction occurs.

- **Normality Judgement**

Judge as OK and clear the NG if the continuous time while the following conditions are established is more than the predetermined time.

Judgement Value

Malfunction Criteria	Threshold Value
Sensor 1 input voltage	≥ 0.219 V

Time Needed for Diagnosis: 100 ms

ED:DTC P2123 THROTTLE/PEDAL POSITION SENSOR/SWITCH “D” CIRCUIT HIGH INPUT

1. OUTLINE OF DIAGNOSIS

Detect the open or short circuit of accelerator pedal position sensor 1.
Judge as NG if out of specification.

2. COMPONENT DESCRIPTION

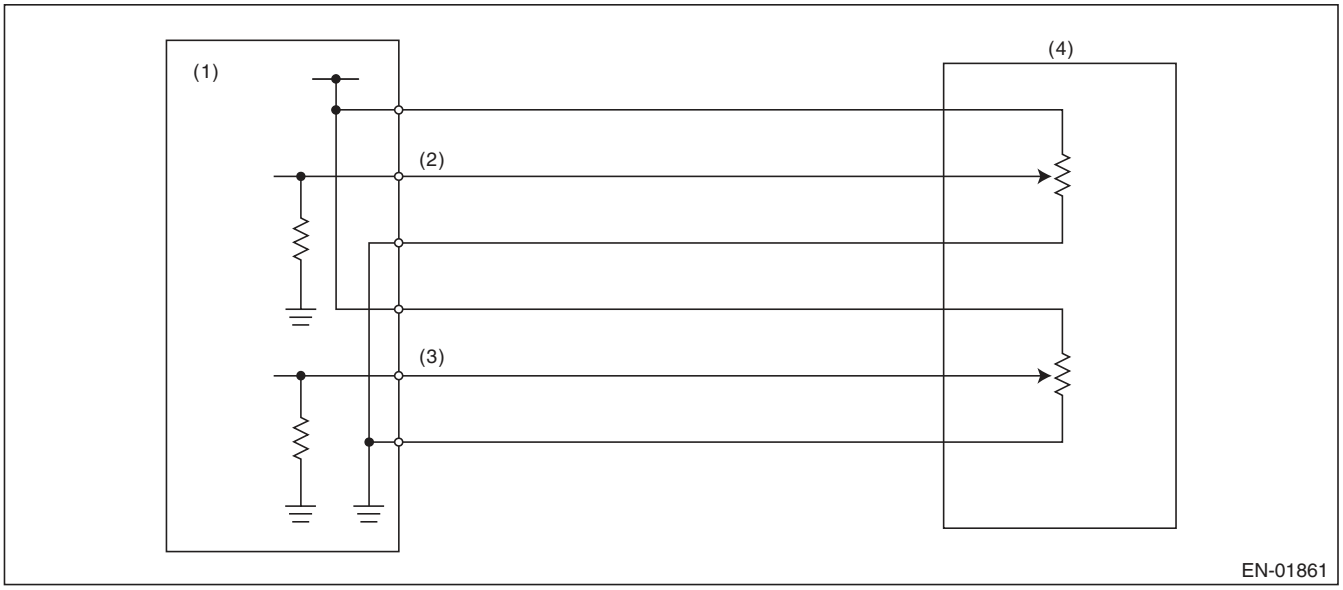

(1) Engine control module (ECM)
(2) Accelerator pedal position sensor 1 signal
(3) Accelerator pedal position sensor 2 signal
(4) Accelerator pedal position sensor

3. ENABLE CONDITION

Secondary Parameters	Enable Conditions
Ignition switch	ON
Battery voltage	≥ 6 V

4. GENERAL DRIVING CYCLE

Always perform the diagnosis continuously.

5. DIAGNOSTIC METHOD

- **Abnormality Judgement**

If the duration of time while the following conditions are met is longer than the time indicated, judge as NG.

Judgement Value

Malfunction Criteria	Threshold Value
Sensor 1 input voltage	≥ 4.781 V

Time Needed for Diagnosis: 32 ms
Malfunction Indicator Light Illumination: Illuminates as soon as a malfunction occurs.

- **Normality Judgement**

Judge as OK and clear the NG if the continuous time while the following conditions are established is more than the predetermined time.

Judgement Value

Malfunction Criteria	Threshold Value
Sensor 1 input voltage	< 4.781 V

Time Needed for Diagnosis: 32 ms

EE:DTC P2127 THROTTLE/PEDAL POSITION SENSOR/SWITCH “E” CIRCUIT LOW INPUT

1. OUTLINE OF DIAGNOSIS

Detect the open or short circuit of accelerator pedal position sensor 2.
Judge as NG if out of specification.

2. COMPONENT DESCRIPTION

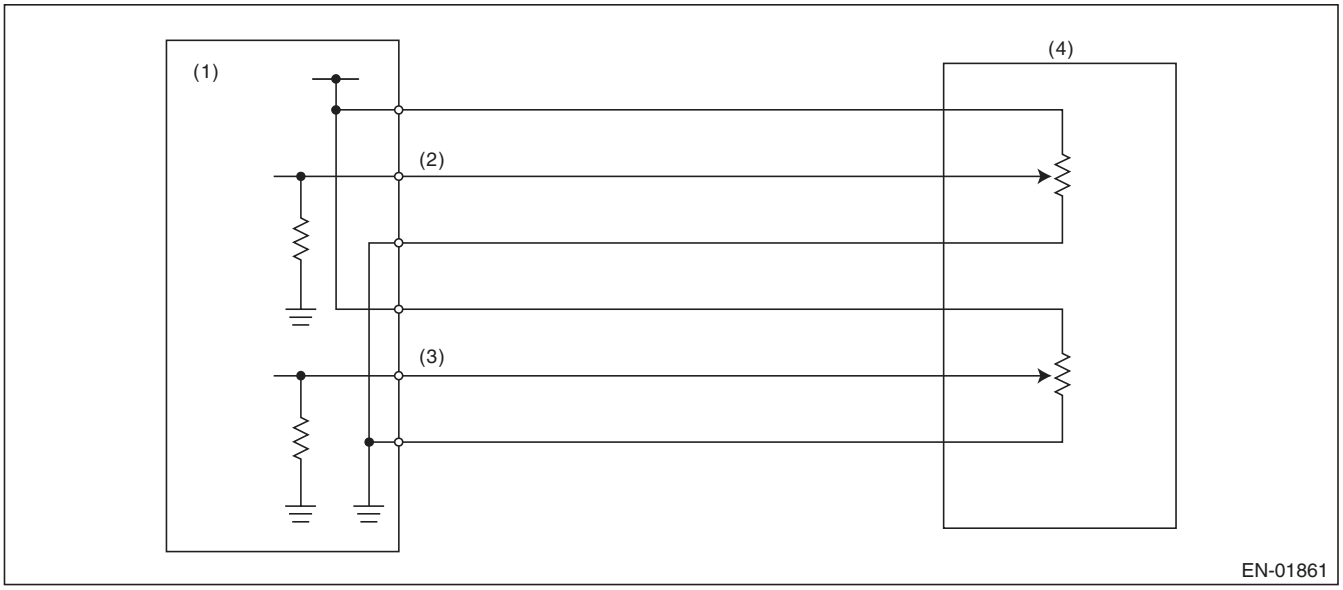

(1) Engine control module (ECM)
(2) Accelerator pedal position sensor 1 signal
(3) Accelerator pedal position sensor 2 signal
(4) Accelerator pedal position sensor

3. ENABLE CONDITION

Secondary Parameters	Enable Conditions
Ignition switch	ON
Battery voltage	≥ 6 V

4. GENERAL DRIVING CYCLE

Always perform the diagnosis continuously.

5. DIAGNOSTIC METHOD

- **Abnormality Judgement**

If the duration of time while the following conditions are met is longer than the time indicated, judge as NG.

Judgement Value

Malfunction Criteria	Threshold Value
Sensor 2 input voltage	< 0.219 V

Time Needed for Diagnosis: 100 ms
Malfunction Indicator Light Illumination: Illuminates as soon as a malfunction occurs.

- **Normality Judgement**

Judge as OK and clear the NG if the continuous time while the following conditions are established is more than the predetermined time.

Judgement Value

Malfunction Criteria	Threshold Value
Sensor 2 input voltage	≥ 0.219 V

Time Needed for Diagnosis: 100 ms

EF:DTC P2128 THROTTLE/PEDAL POSITION SENSOR/SWITCH “E” CIRCUIT HIGH INPUT

1. OUTLINE OF DIAGNOSIS

Detect the open or short circuit of accelerator pedal position sensor 2.
Judge as NG if out of specification.

2. COMPONENT DESCRIPTION

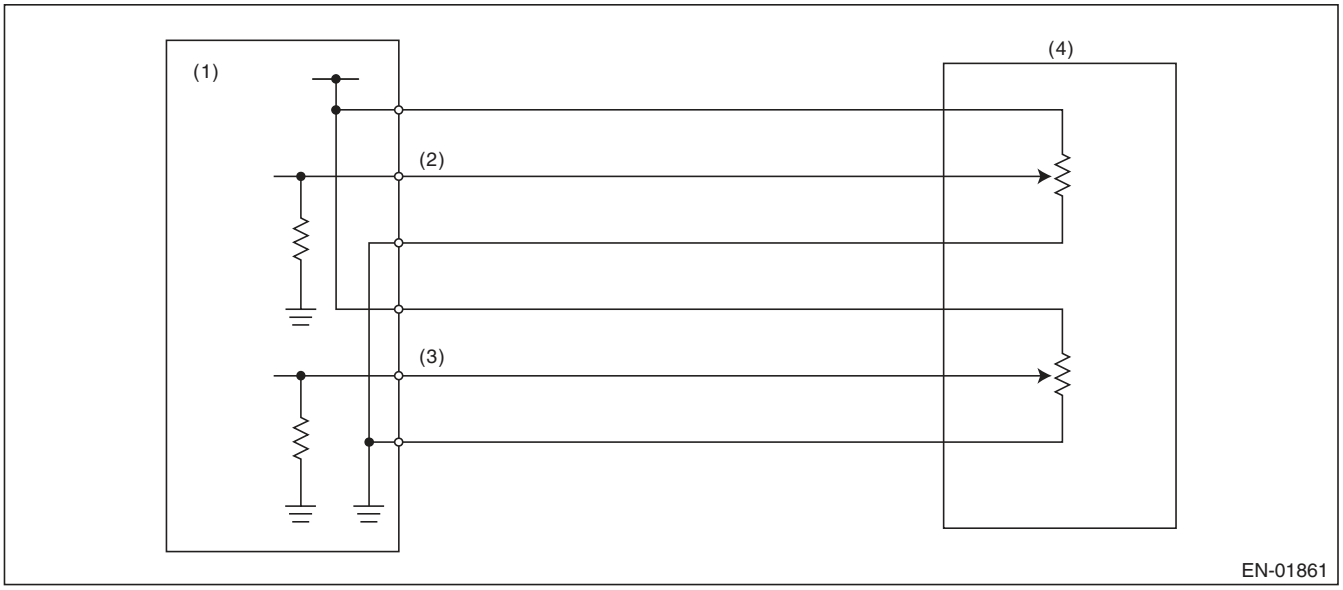

(1) Engine control module (ECM)
(2) Accelerator pedal position sensor 1 signal
(3) Accelerator pedal position sensor 2 signal
(4) Accelerator pedal position sensor

3. ENABLE CONDITION

Secondary Parameters	Enable Conditions
Ignition switch	ON
Battery voltage	≥ 6 V

4. GENERAL DRIVING CYCLE

Always perform the diagnosis continuously.

5. DIAGNOSTIC METHOD

- **Abnormality Judgement**

If the duration of time while the following conditions are met is longer than the time indicated, judge as NG.

Judgement Value

Malfunction Criteria	Threshold Value
Sensor 2 input voltage	≥ 4.781 V

Time Needed for Diagnosis: 100 ms
Malfunction Indicator Light Illumination: Illuminates as soon as a malfunction occurs.

- **Normality Judgement**

Judge as OK and clear the NG if the continuous time while the following conditions are established is more than the predetermined time.

Judgement Value

Malfunction Criteria	Threshold Value
Sensor 2 input voltage	< 4.781 V

Time Needed for Diagnosis: 100 ms

EG:DTC P2135 THROTTLE/PEDAL POSITION SENSOR/SWITCH “A”/“B” VOLTAGE CORRELATION

1. OUTLINE OF DIAGNOSIS

Judge as NG when the signal level of throttle position sensor 1 is different from the throttle position sensor 2.

2. COMPONENT DESCRIPTION

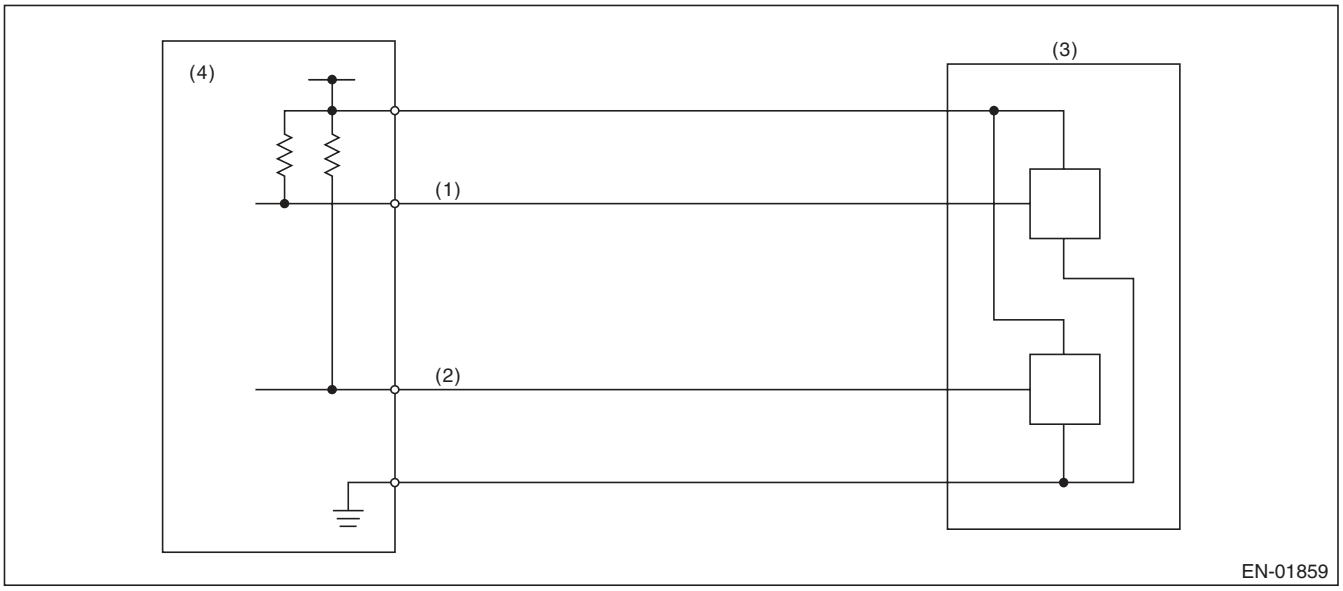

(1) Throttle position sensor 1 signal
(2) Throttle position sensor 2 signal
(3) Throttle position sensor
(4) Engine control module (ECM)

3. ENABLE CONDITION

Secondary Parameters	Enable Conditions
Ignition switch	ON
Battery voltage	≥ 6 V

4. GENERAL DRIVING CYCLE

Always perform the diagnosis continuously.

5. DIAGNOSTIC METHOD

- **Abnormality Judgement**

If the duration of time while the following conditions are met is longer than the time indicated, judge as NG.

Judgement Value

Malfunction Criteria	Threshold Value
Signal difference between two sensors	> Value from Map

Map

Throttle position sensor 1 opening angle (°) = d	0° ≤ d < 2.125 °	2.125 ° ≤ d < 4.25 °	4.25 ° ≤ d < 9 °	9 ° ≤ d < 31.625 °	31.625 ° ≤ d
Sensor output difference (°)	4.5 °	5.5 °	7.625 °	9.75 °	11.75 °

Time Needed for Diagnosis: 212 ms
Malfunction Indicator Light Illumination: Illuminates as soon as a malfunction occurs.

- **Normality Judgement**

Judge as OK and clear the NG if the continuous time while the following conditions are established is more than the predetermined time.

Judgement Value

Malfunction Criteria	Threshold Value
Signal difference between two sensors	≤ Value from Map

Time Needed for Diagnosis: 24 ms

EH:DTC P2138 THROTTLE/PEDAL POSITION SENSOR/SWITCH “D”/“E” VOLTAGE CORRELATION

1. OUTLINE OF DIAGNOSIS

Judge as NG when the signal level of throttle position sensor 1 is different from the throttle position sensor 2.

2. COMPONENT DESCRIPTION

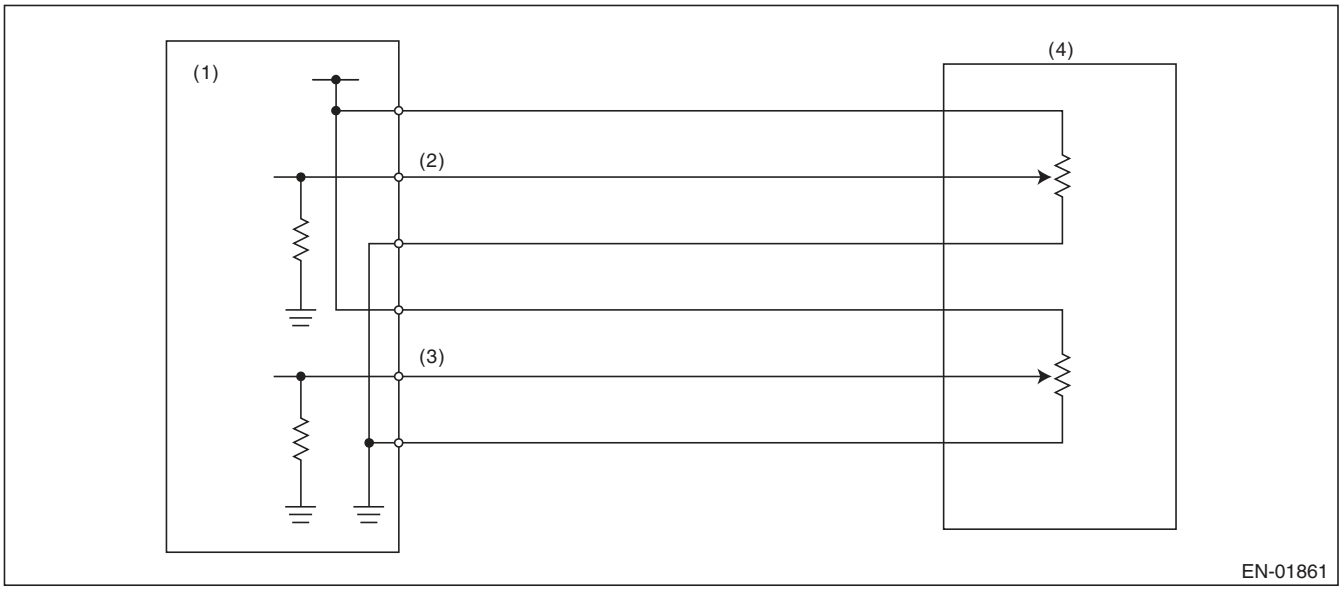

(1) Engine control module (ECM)
(2) Accelerator pedal position sensor 1 signal
(3) Accelerator pedal position sensor 2 signal
(4) Accelerator pedal position sensor

3. ENABLE CONDITION

Secondary Parameters	Enable Conditions
Ignition switch	ON
Battery voltage	≥ 6 V

4. GENERAL DRIVING CYCLE

Always perform the diagnosis continuously.

5. DIAGNOSTIC METHOD

- **Abnormality Judgement**

If the duration of time while the following conditions are met is longer than the time indicated, judge as NG.

Judgement Value

Malfunction Criteria	Threshold Value
Signal difference between two sensors	> Value from Map

Map

Throttle position sensor 1 opening angle (°) = d	0° ≤ d < 0.6 °	0.6 ° ≤ d < 1.2 °	1.2 ° ≤ d < 2 °	2 ° ≤ d < 4 °	4 ° ≤ d
Sensor output difference (°)	1.465 °	1.597 °	1.663 °	2.455 °	3.116 °

Time Needed for Diagnosis: 116 ms
Malfunction Indicator Light Illumination: Illuminates as soon as a malfunction occurs.

- **Normality Judgement**

Judge as OK and clear the NG if the continuous time while the following conditions are established is more than the predetermined time.

Judgement Value

Malfunction Criteria	Threshold Value
Signal difference between two sensors	≤ Value from Map

Time Needed for Diagnosis: 116 ms

EI: DTC P2419 EVAPORATIVE EMISSION SYSTEM SWITCHING VALVE CONTROL CIRCUIT LOW

1. OUTLINE OF DIAGNOSIS

Detect open or short circuit of the purge control solenoid valve 2.
Judge as NG when the ECM output level differs from the actual terminal level.

2. ENABLE CONDITIONS

Secondary Parameters	Enable Conditions
None	

3. GENERAL DRIVING CYCLE

Always perform the diagnosis continuously.

4. DIAGNOSTIC METHOD

- **Abnormality Judgement**

If the duration of time while the following conditions are met is longer than the time indicated, judge as NG.

Judgement Value

Malfunction Criteria	Threshold Value
Battery voltage	≥ 10.9 V
Elapsed time after starting the engine	≥ 1 second
Terminal output voltage when ECM outputs OFF signal	Low

Time Needed for Diagnosis: 2500 ms
Malfunction Indicator Light Illumination: Illuminates as soon as a malfunction occurs.

- **Normality Judgement**

Judge as OK and clear the NG if the continuous time while the following conditions are established is more than the predetermined time.

Judgement Value

Malfunction Criteria	Threshold Value
Battery voltage	≥ 10.9 V
Elapsed time after starting the engine	≥ 1 second
Terminal output voltage when ECM outputs OFF signal	High

Time Needed for Diagnosis: Less than 1 second

EJ: DTC P2420 EVAPORATIVE EMISSION SYSTEM SWITCHING VALVE CONTROL CIRCUIT HIGH

1. OUTLINE OF DIAGNOSIS

Detect open or short circuit of the purge control solenoid valve 2.
Judge as NG when the ECM output level differs from the actual terminal level.

2. ENABLE CONDITIONS

Secondary Parameters	Enable Conditions
None	

3. GENERAL DRIVING CYCLE

Always perform the diagnosis continuously.

4. DIAGNOSTIC METHOD

- **Abnormality Judgement**

If the duration of time while the following conditions are met is longer than the time indicated, judge as NG.

Judgement Value

Malfunction Criteria	Threshold Value
Battery voltage	≥ 10.9 V
Elapsed time after starting the engine	≥ 1 second
Terminal output voltage when ECM outputs ON signal	High

Time Needed for Diagnosis: 2500 ms
Malfunction Indicator Light Illumination: Illuminates as soon as a malfunction occurs.

- **Normality Judgement**

Judge as OK and clear the NG if the continuous time while the following conditions are established is more than the predetermined time.

Judgement Value

Malfunction Criteria	Threshold Value
Battery voltage	≥ 10.9 V
Elapsed time after starting the engine	≥ 1 second
Terminal output voltage when ECM outputs ON signal	Low

Time Needed for Diagnosis: Less than 1 second

EK:DTC P2431 SECONDARY AIR INJECTION SYSTEM AIR FLOW /PRESSURE SENSOR CIRCUIT RANGE/PERFORMANCE

1. OUTLINE OF DIAGNOSIS

Detect the malfunction of secondary air pressure sensor output property.
Judge as NG when the secondary air pressure sensor output is largely different from the intake manifold pressure at engine start.

2. ENABLE CONDITIONS

Secondary Parameters	Enable Conditions
Engine speed	< 300 rpm
Vehicle speed	< 1 km/h (0.6 MPH)
After secondary air system stops	≥ 2976 ms

3. GENERAL DRIVING CYCLE

Perform the diagnosis with ignition switch ON.

4. DIAGNOSTIC METHOD

- **Abnormality Judgement**

If the duration of time while the following conditions are met is longer than the time indicated, judge as NG.

Judgement Value

Malfunction Criteria	Threshold Value
|Secondary air pipe pressure – Intake manifold pressure|	≥ 26.7 kPa (200 mmHg, 7.9 inHg)
|Intake manifold pressure at engine start – Intake manifold pressure|	< 1.3 kPa (9.99 mmHg, 0.4 inHg)

Time Needed for Diagnosis: 328 ms
Malfunction Indicator Light Illumination: Illuminates when malfunction occurs in 2 continuous driving cycles.

- **Normality Judgement**

Judge as OK and clear the NG if the continuous time while the following conditions are established is more than the predetermined time.

Judgement Value

Malfunction Criteria	Threshold Value
|Secondary air pipe pressure – Intake manifold pressure|	< 26.7 kPa (200 mmHg, 7.9 inHg)

Time Needed for Diagnosis: 262 ms

EL:DTC P2432 SECONDARY AIR INJECTION SYSTEM AIR FLOW /PRESSURE SENSOR CIRCUIT LOW

1. OUTLINE OF DIAGNOSIS

Judge as NG if out of specification.

2. ENABLE CONDITIONS

Secondary Parameters	Enable Conditions
None	

3. GENERAL DRIVING CYCLE

Always perform the diagnosis continuously.

4. DIAGNOSTIC METHOD

- **Abnormality Judgement**

If the duration of time while the following conditions are met is longer than the time indicated, judge as NG.

Judgement Value

Malfunction Criteria	Threshold Value
Ignition switch	ON
Output voltage	< 0.568 V

Time Needed for Diagnosis: 500 ms
Malfunction Indicator Light Illumination: Illuminates as soon as a malfunction occurs.

- **Normality Judgement**

Judge as OK and clear the NG if the continuous time while the following conditions are established is more than the predetermined time.

Judgement Value

Malfunction Criteria	Threshold Value
Ignition switch	ON
Output voltage	≥ 0.568 V

Time Needed for Diagnosis: Less than 1 second

EM:DTC P2433 SECONDARY AIR INJECTION SYSTEM AIR FLOW /PRESSURE SENSOR CIRCUIT HIGH

1. OUTLINE OF DIAGNOSIS

Judge as NG if out of specification.

2. ENABLE CONDITIONS

Secondary Parameters	Enable Conditions
None	

3. GENERAL DRIVING CYCLE

Always perform the diagnosis continuously.

4. DIAGNOSTIC METHOD

- **Abnormality Judgement**

If the duration of time while the following conditions are met is longer than the time indicated, judge as NG.

Judgement Value

Malfunction Criteria	Threshold Value
Ignition switch	ON
Output voltage	> 4.921 V

Time Needed for Diagnosis: 500 ms
Malfunction Indicator Light Illumination: Illuminates as soon as a malfunction occurs.

- **Normality Judgement**

Judge as OK and clear the NG if the continuous time while the following conditions are established is more than the predetermined time.

Judgement Value

Malfunction Criteria	Threshold Value
Ignition switch	ON
Output voltage	≤ 4.921 V

Time Needed for Diagnosis: Less than 1 second

EN:DTC P2440 SECONDARY AIR INJECTION SYSTEM SWITCHING VALVE STUCK OPEN (BANK1)

1. OUTLINE OF DIAGNOSIS

NOTE:
For the detection standard, refer to DTC P0410. <Ref. to GD(H4DOTC)-94, DTC P0410 SECONDARY AIR INJECTION SYSTEM, Diagnostic Trouble Code (DTC) Detecting Criteria.>

EO:DTC P2441 SECONDARY AIR INJECTION SYSTEM SWITCHING VALVE STUCK CLOSED (BANK1)

1. OUTLINE OF DIAGNOSIS

NOTE:
For the detection standard, refer to DTC P0410. <Ref. to GD(H4DOTC)-94, DTC P0410 SECONDARY AIR INJECTION SYSTEM, Diagnostic Trouble Code (DTC) Detecting Criteria.>

EP:DTC P2442 SECONDARY AIR INJECTION SYSTEM SWITCHING VALVE STUCK OPEN (BANK2)

1. OUTLINE OF DIAGNOSIS

NOTE:
For the detection standard, refer to DTC P0410. <Ref. to GD(H4DOTC)-94, DTC P0410 SECONDARY AIR INJECTION SYSTEM, Diagnostic Trouble Code (DTC) Detecting Criteria.>

EQ:DTC P2443 SECONDARY AIR INJECTION SYSTEM SWITCHING VALVE STUCK CLOSED (BANK2)

1. OUTLINE OF DIAGNOSIS

NOTE:
For the detection standard, refer to DTC P0410. <Ref. to GD(H4DOTC)-94, DTC P0410 SECONDARY AIR INJECTION SYSTEM, Diagnostic Trouble Code (DTC) Detecting Criteria.>

ER:DTC P2444 SECONDARY AIR INJECTION SYSTEM PUMP STUCK ON

1. OUTLINE OF DIAGNOSIS

Detect the secondary air pump malfunction (always ON).
After the secondary air pump turns to OFF, judge as NG if the secondary air pipe pressure is higher than that before the secondary air pump operation.

2. ENABLE CONDITIONS

Secondary Parameters	Enable Conditions
Battery voltage	≥ 7 V
Engine	In operation

3. GENERAL DRIVING CYCLE

Always perform the diagnosis continuously.

4. DIAGNOSTIC METHOD

- **Abnormality Judgement**

If the duration of time while the following conditions are met is longer than the time indicated, judge as NG.

Judgement Value

Malfunction Criteria	Threshold Value
Time since secondary air control completion	≥ 3000 ms and ≤ 8000 ms
Secondary air pipe pressure – Secondary air pipe pressure before operation	> 6.7 kPa (50 mmHg, 2 inHg)

Time Needed for Diagnosis: 8000 ms
Malfunction Indicator Light Illumination: Illuminates as soon as a malfunction occurs.

- **Normality Judgement**

Judge as OK and clear the NG if the continuous time while the following conditions are established is more than the predetermined time.

Judgement Value

Malfunction Criteria	Threshold Value
Time since secondary air control completion	≥ 3000 ms and ≤ 8000 ms
Secondary air pipe pressure – Secondary air pipe pressure before operation	≤ 6.7 kPa (50 mmHg, 2 inHg)

Time Needed for Diagnosis: 8000 ms

1. General Description

A: SPECIFICATION

Fuel tank	Capacity	64 ℓ (16.9 US gal, 14.1 Imp gal)
	Install locations	Under rear seat
Fuel pump	Type	Impeller
	Shutoff discharge pressure	550 — 850 kPa (5.61 — 8.67 kg/cm^2, 79.8 — 123.3 psi)
	Discharge rate	155 ℓ (41 US gal, 34.1 Imp gal)/h or more [12 V at 300 kPa (3.06 kg/cm^2, 43.5 psi)]
Fuel filter		In-tank type

B: COMPONENT

1. INTAKE MANIFOLD

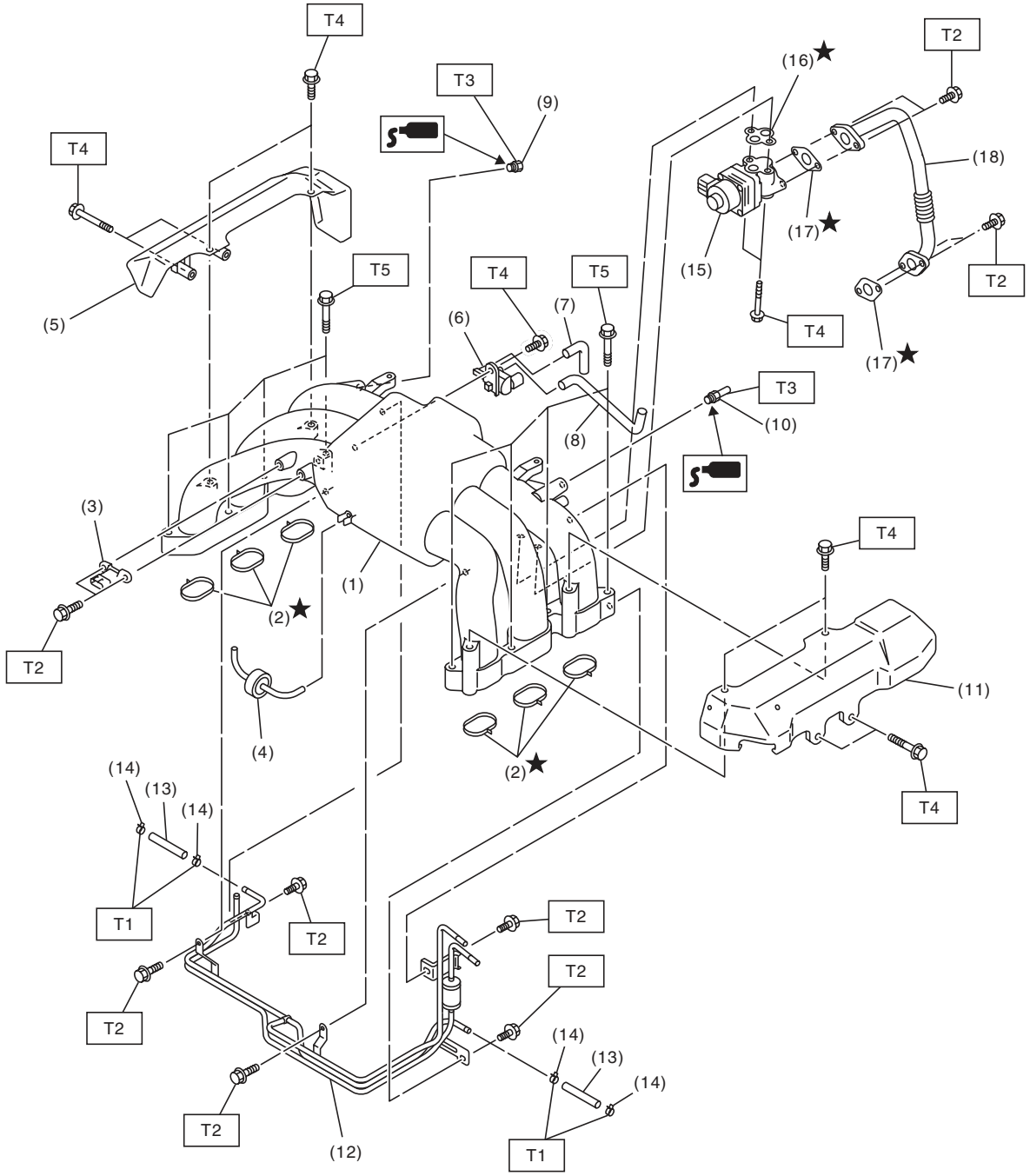

(1) Intake manifold
(2) O-ring
(3) Manifold absolute pressure sensor
(4) Filter
(5) Fuel pipe protector RH
(6) Purge control solenoid valve
(7) Hose
(8) Hose
(9) Plug
(10) Nipple
(11) Fuel pipe protector LH
(12) Fuel pipe ASSY
(13) Hose
(14) Clamp
(15) EGR valve
(16) Gasket
(17) Gasket
(18) EGR pipe

Tightening torque:N·m (kgf-m, ft-lb)
T1: 1.25 (0.1, 0.9)
T2: 6.4 (0.7, 4.7)
T3: 17 (1.7, 12.5)
T4: 19 (1.9, 14.0)
T5: 25 (2.5, 18.4)

2. FUEL INJECTOR

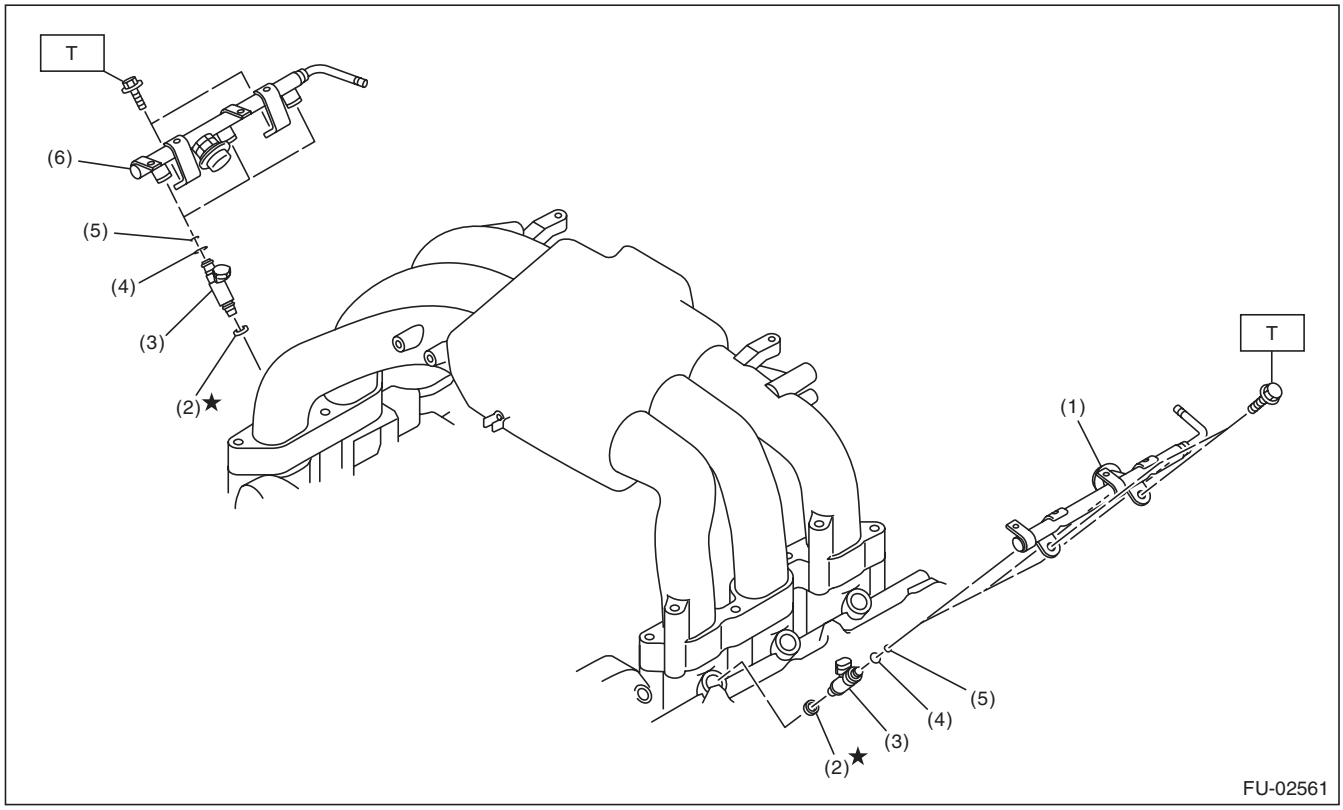

(1) Fuel injector pipe LH
(2) Insulator
(3) Fuel injector
(4) Injection rubber
(5) O-ring
(6) Fuel injector pipe RH

Tightening torque:N·m (kgf-m, ft-lb)
T: 19 (1.9, 14.0)

3. AIR INTAKE SYSTEM

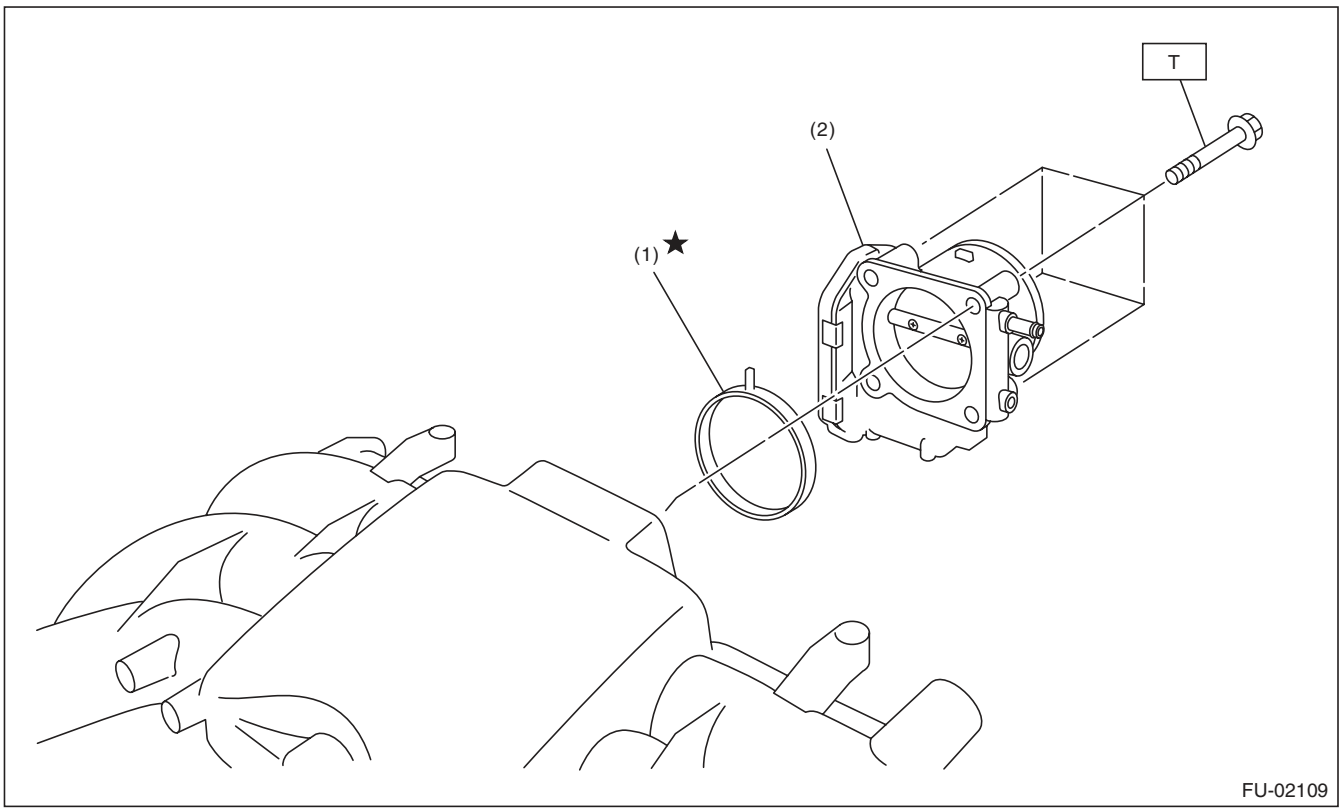

(1) O-ring

(2) Throttle body

Tightening torque:N·m (kgf-m, ft-lb)
T: 8 (0.8, 5.9)

4. CRANKSHAFT POSITION, CAMSHAFT POSITION AND KNOCK SENSORS

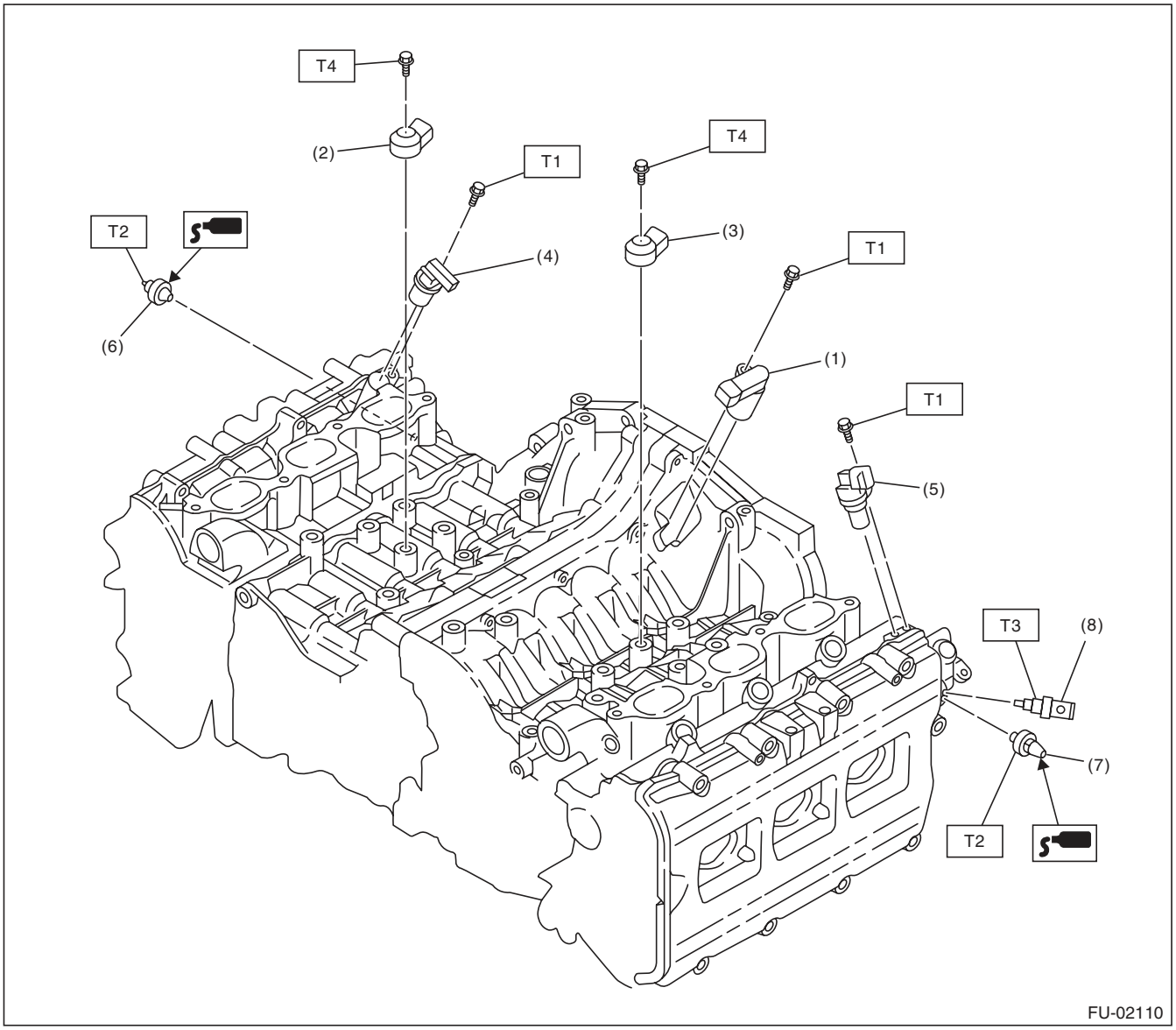

(1)	Crankshaft position sensor	(6)	Variable valve lift diagnosis oil pressure switch RH	***Tightening torque:N·m (kgf-m, ft-lb)***
(2)	Knock sensor RH			***T1: 6.4 (0.7, 4.7)***
(3)	Knock sensor LH	(7)	Variable valve lift diagnosis oil pressure switch LH	***T2: 17 (1.7, 12.5)***
(4)	Camshaft position sensor RH			***T3: 22 (2.2, 16.2)***
(5)	Camshaft position sensor LH	(8)	Oil temperature sensor	***T4: 25 (2.5, 18.4)***

5. FUEL TANK

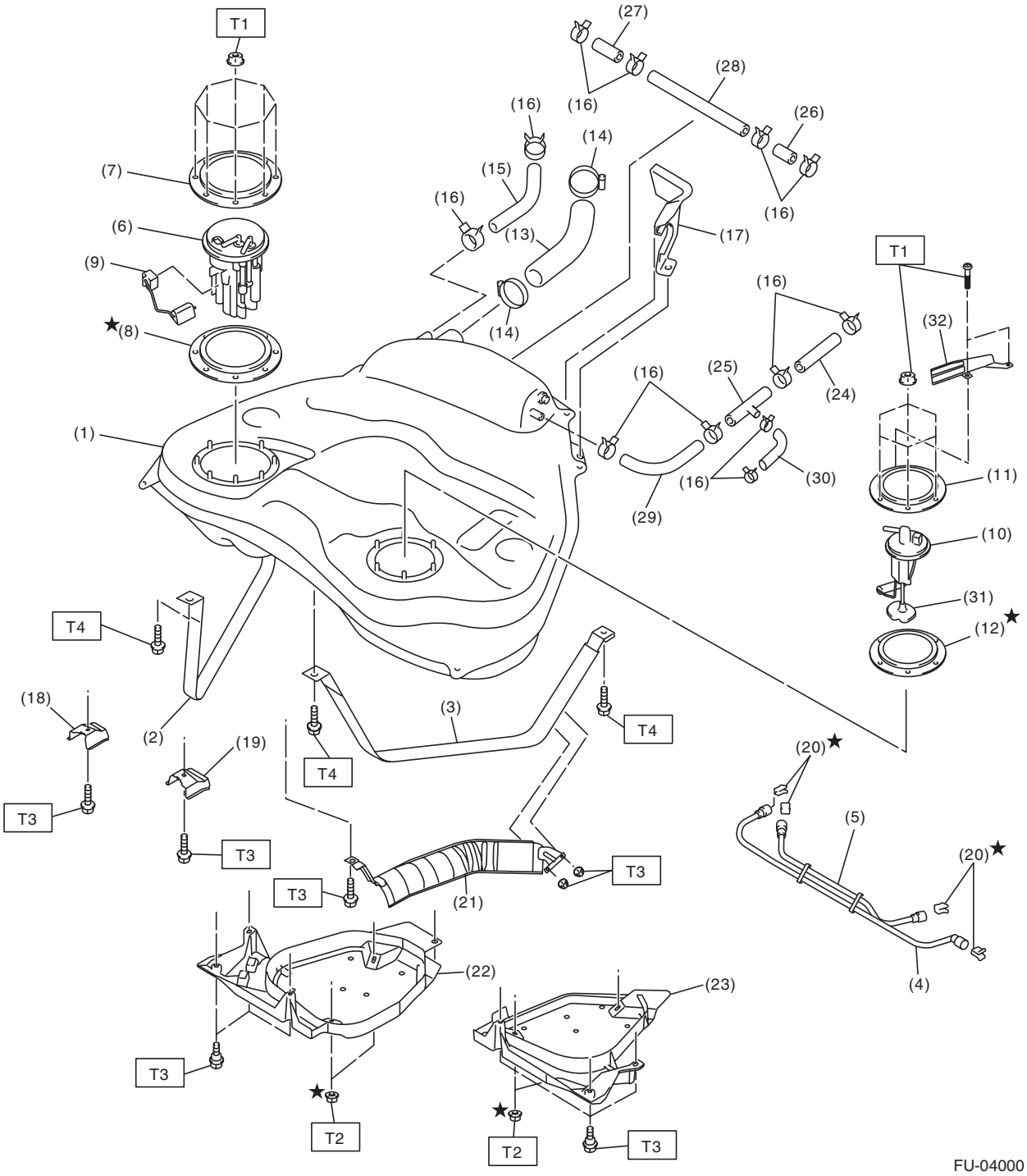
T1
(27)
(28)
(16)
(16)
(26)
(14)
(7)
(15)
(16)
(16)
(6)
(13)
(17)
(9)
T1
(16)
(32)
★(8)
(14)
(16)
(25)
(24)
(1)
(16)
(30)
(11)
(29)
(10)
(31)
T4
(12)★
(18)
(3)
T4
(2)
(19)
T4
(20)★
T3
(5)
T3
T3
T3
(21)
(20)★
(22)
(23)
(4)
T3
★
T2
★
T2
T3
FU-04000

(1) Fuel tank
(2) Fuel tank band RH
(3) Fuel tank band LH
(4) Delivery tube
(5) Jet pump tube
(6) Fuel pump ASSY
(7) Fuel pump upper plate
(8) Fuel pump gasket
(9) Fuel level sensor
(10) Fuel sub level sensor
(11) Fuel sub level sensor upper plate
(12) Fuel sub level sensor gasket
(13) Fuel filler hose
(14) Clamp
(15) Evaporation hose A
(16) Clip
(17) Fuel tank protector LH (Rear)
(18) Stopper RH
(19) Stopper LH
(20) Retainer
(21) Heat shield cover
(22) Fuel tank protector RH (Front)
(23) Fuel tank protector LH (Front)
(24) Evaporation hose B
(25) Connector
(26) Evaporation hose C
(27) Evaporation hose D
(28) Evaporation pipe
(29) Evaporation hose E
(30) Evaporation hose F
(31) Fuel sub level sensor filter
(32) Fuel sub level sensor protector

Tightening torque:N·m (kgf-m, ft-lb)

T1:	***4.4 (0.4, 3.2)***
T2:	***9 (0.9, 6.6)***
T3:	***17.5 (1.8, 12.9)***
T4:	***33 (3.4, 24.3)***

6. FUEL LINE

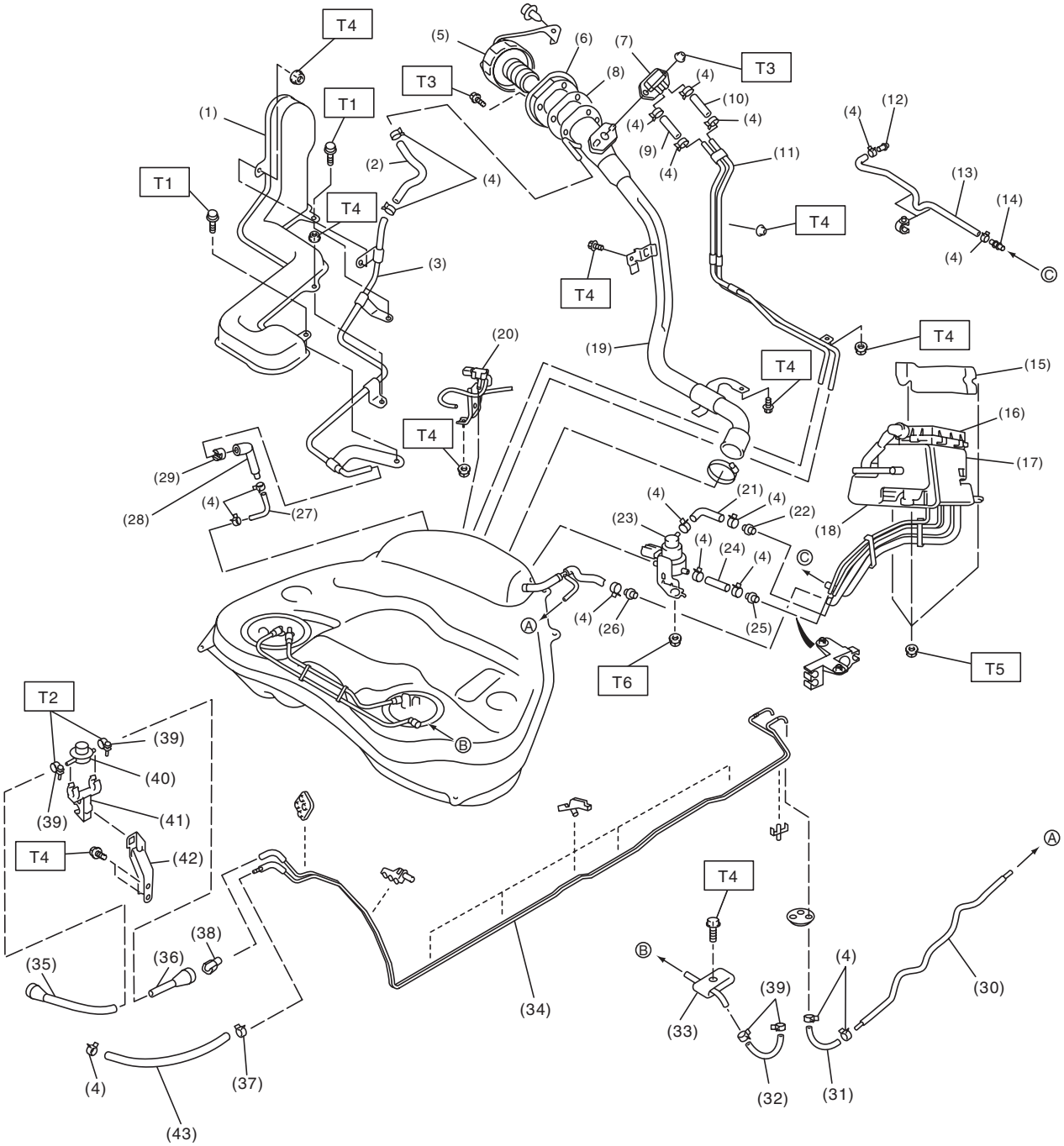
T1
T2
T3
T4
T5
T6
(1)
(2)
(3)
(4)
(5)
(6)
(7)
(8)
(9)
(10)
(11)
(12)
(13)
(14)
(15)
(16)
(17)
(18)
(19)
(20)
(21)
(22)
(23)
(24)
(25)
(26)
(27)
(28)
(29)
(30)
(31)
(32)
(33)
(34)
(35)
(36)
(37)
(38)
(39)
(40)
(41)
(42)
(43)
Ⓐ
Ⓑ
Ⓒ
FU-03217

(1) Evaporation pipe protector
(2) Evaporation hose D
(3) Evaporation pipe B
(4) Clip
(5) Fuel filler cap
(6) Filler ring
(7) Shut valve
(8) Gasket
(9) Evaporation hose C
(10) Evaporation hose C
(11) Evaporation pipe A
(12) Drain hose connector
(13) Drain hose
(14) Connector A
(15) Canister protector
(16) Drain filter
(17) Drain valve
(18) Canister
(19) Fuel filler pipe
(20) Fuel tank pressure sensor
(21) Canister hose B
(22) Connector B
(23) Pressure control solenoid valve
(24) Canister hose A
(25) Connector B
(26) Connector A
(27) Evaporation hose E
(28) Evaporation tube
(29) Retainer
(30) Purge pipe
(31) Purge hose C
(32) Fuel hose
(33) Connector
(34) Fuel pipe ASSY
(35) Fuel delivery hose A
(36) Fuel delivery hose B
(37) Clamp
(38) Quick connector check cover
(39) Clip
(40) Fuel damper
(41) Fuel damper holder
(42) Fuel damper bracket
(43) Evaporation hose A

Tightening torque:N·m (kgf-m, ft-lb)	
T1:	***1 (0.1, 0.7)***
T2:	***1.25 (0.1, 0.9)***
T3:	***4.4 (0.4, 3.2)***
T4:	***7.5 (0.8, 5.5)***
T5:	***8 (0.8, 5.9)***
T6:	***17.6 (1.8, 13.0)***

7. FUEL PUMP

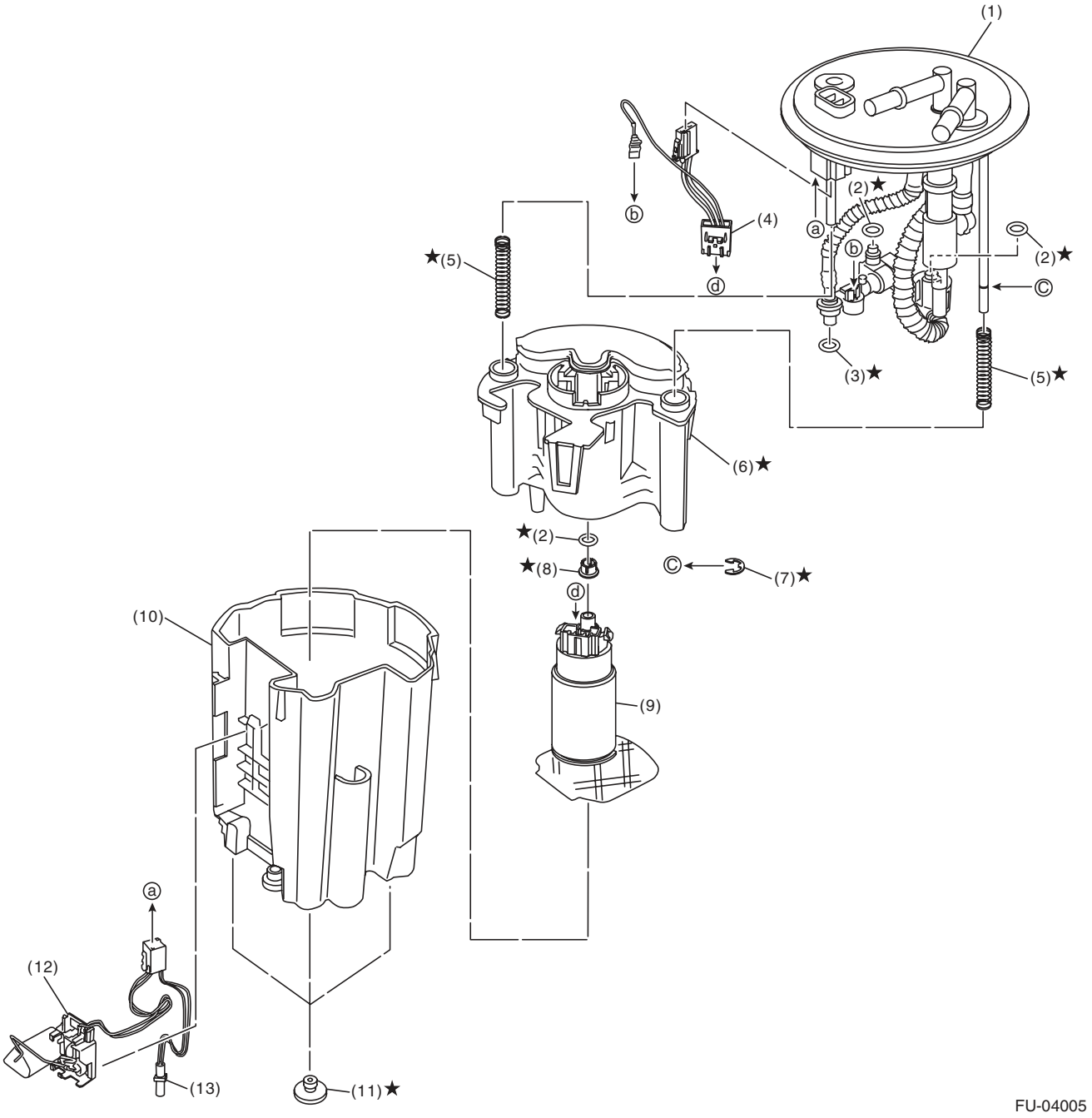

(1)	Sub tank bracket ASSY	(6)	Fuel filter	(10)	Sub tank
(2)	O-ring	(7)	Clip	(11)	Cushion
(3)	O-ring	(8)	Spacer	(12)	Fuel level sensor
(4)	Fuel pump harness	(9)	Pump ASSY	(13)	Fuel temperature sensor
(5)	Spring				

C: CAUTION

- Wear appropriate work clothing, including a cap, protective goggles and protective shoes when performing any work.
- Remove contamination including dirt and corrosion before removal, installation or disassembly.
- Keep the disassembled parts in order and protect them from dust and dirt.
- Before removal, installation or disassembly, be sure to clarify the failure. Avoid unnecessary removal, installation, disassembly and replacement.
- Vehicle components are extremely hot after driving. Be wary of receiving burns from heated parts.
- Be sure to tighten fasteners including bolts and nuts to the specified torque.
- Place shop jacks or rigid racks at the specified points.
- Before disconnecting connectors of sensors or units, be sure to disconnect the ground cable from the battery.
- Place “NO OPEN FLAMES” signs near the working area.
- Prepare a container and cloth to prevent scattering of fuels when performing work where fuels can be spilled. If the fuel spills, wipe it off immediately to prevent from penetrating into floor or flowing out for environmental protection.
- Follow all government and local regulations concerning disposal of refuse when disposing fuel.

D: PREPARATION TOOL

ILLUSTRATION	TOOL NUMBER	DESCRIPTION	REMARKS
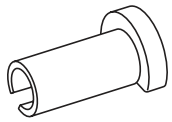 ST42099AE000	42099AE000	QUICK CONNECTOR RELEASE	Used for disconnecting quick connector of the engine compartment.
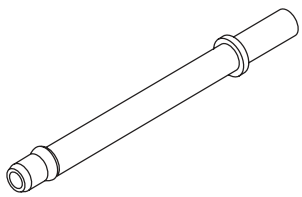 ST18471AA000	18471AA000	FUEL PIPE ADAPTER	Used for draining fuel.
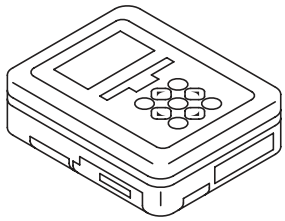 ST1B022XU0	1B022XU0	SUBARU SELECT MONITOR III KIT	Used for draining fuel.

2. Throttle Body

A: REMOVAL

1) Remove the collector cover.
2) Disconnect the ground cable from battery.

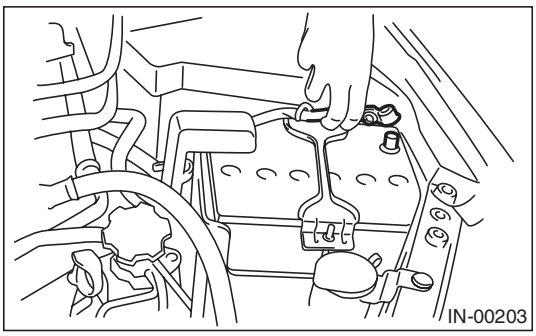

3) Remove the air intake chamber. <Ref. to IN(H6DO)-7, REMOVAL, Air Intake Chamber.>
4) Disconnect the connector from throttle body.

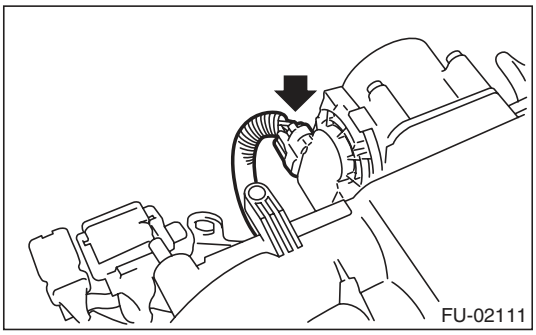

5) Disconnect the engine coolant hoses (A) from the throttle body.
6) Remove the bolts (B) which secure throttle body to intake manifold.

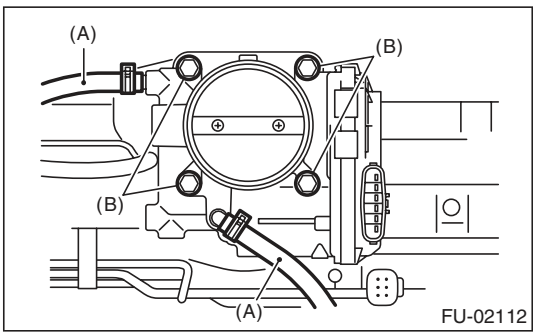

B: INSTALLATION

Install in the reverse order of removal.

NOTE:
Use new O-rings.

Tightening torque:
8 N·m (0.8 kgf-m, 5.9 ft-lb)

3. Intake Manifold

A: REMOVAL

1) Remove the collector cover.
2) Release the fuel pressure. <Ref. to FU(H6DO)-43, RELEASING OF FUEL PRESSURE, PROCEDURE, Fuel.>
3) Open the fuel filler lid, and remove the fuel filler cap.
4) Disconnect the ground cable from battery.

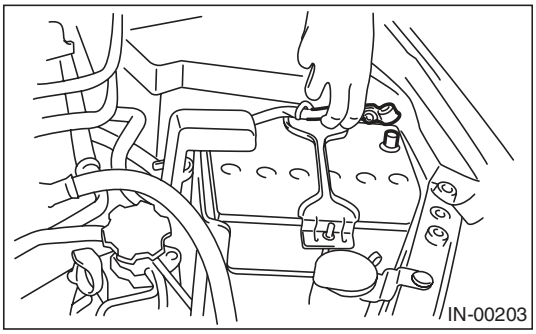

5) Remove the air cleaner case and air intake chamber. <Ref. to IN(H6DO)-5, REMOVAL, Air Cleaner Case.> <Ref. to IN(H6DO)-7, REMOVAL, Air Intake Chamber.>
6) Disconnect the connector (A) from the throttle body.
7) Disconnect the engine harness connector (B).

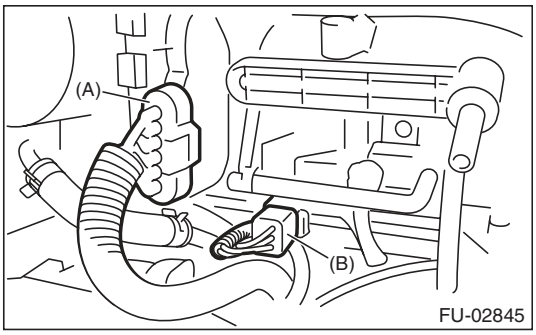

8) Disconnect the engine coolant hoses from the throttle body.

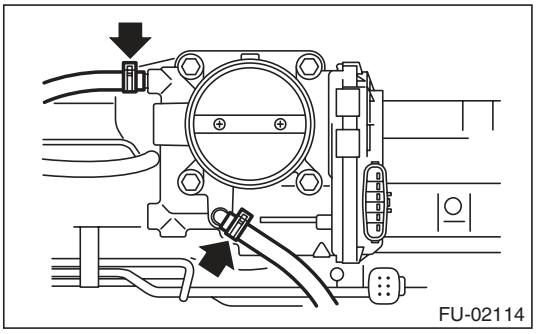

9) Disconnect the PCV hose.

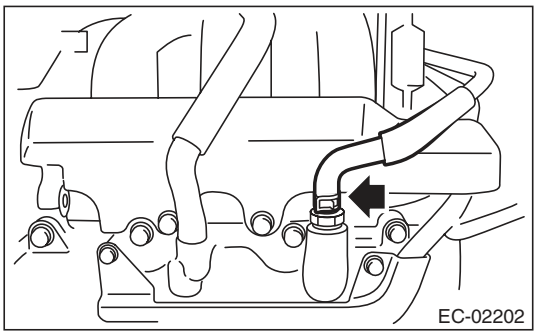

10) Disconnect the brake booster hose.

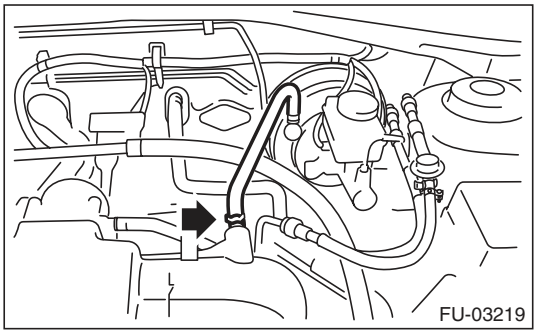

11) Disconnect the fuel hoses from the fuel pipe.
(1) Disconnect the connector of fuel pipe by pushing the ST in the direction of arrow.

ST 42099AE000 QUICK CONNECTOR RELEASE

(2) Remove the clip and disconnect the evaporation hose from the pipe.

CAUTION:
- **Be careful not to spill fuel.**
- **Catch the fuel from hoses using a container or cloth.**

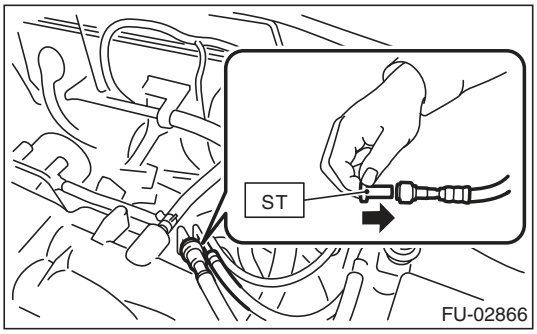

12) Remove the EGR pipe from EGR valve.

NOTE:
Be careful not to drop the gasket.

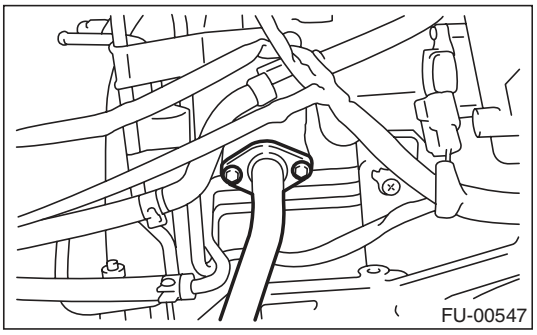

13) Remove the fuel pipe protector LH.

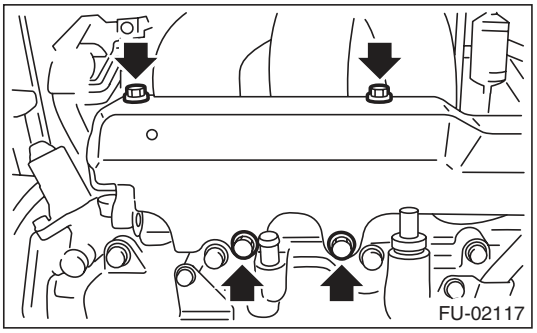

14) Remove the engine harness from the fuel injector pipe LH.
15) Remove the bolts which hold fuel injector pipe LH to cylinder head.

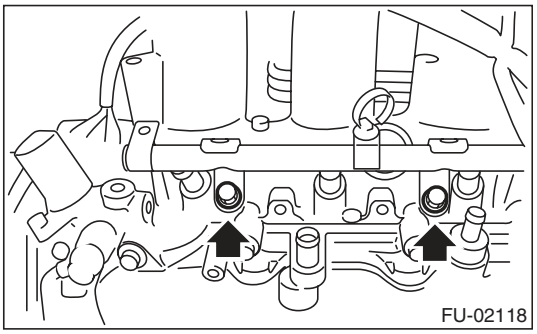

16) Remove the fuel pipe protector RH.

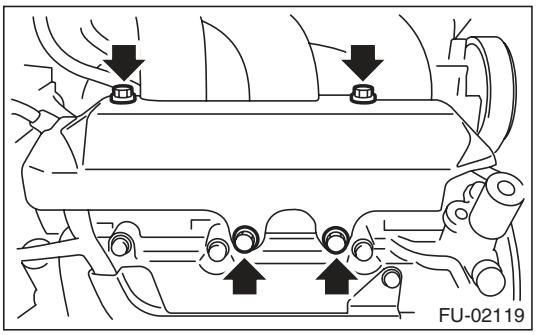

17) Remove the engine harness from the fuel injector pipe RH.

18) Remove the bolts which hold the fuel injector pipe RH to the cylinder head.

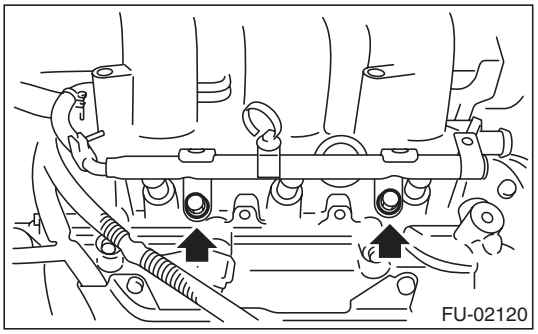

19) Remove the bolts which hold the intake manifold to the cylinder head.

- LH side

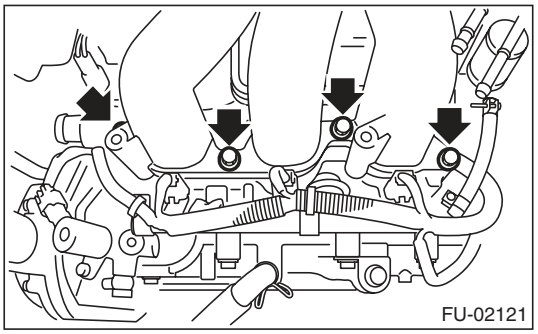

- RH side

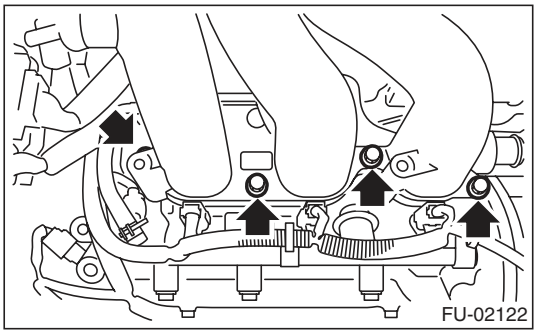

20) Remove the intake manifold.

B: INSTALLATION

1) Install the intake manifold onto cylinder heads.

NOTE:
Use new O-rings.

Tightening torque:
25 N·m (2.5 kgf-m, 18.4 ft-lb)

- RH side

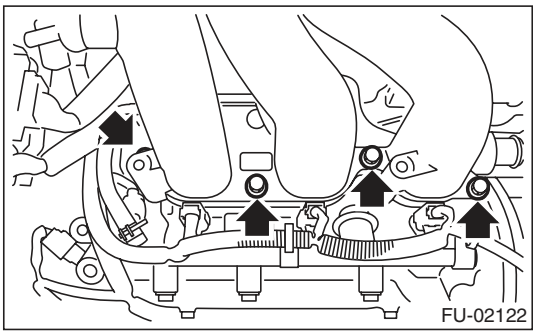

- LH side

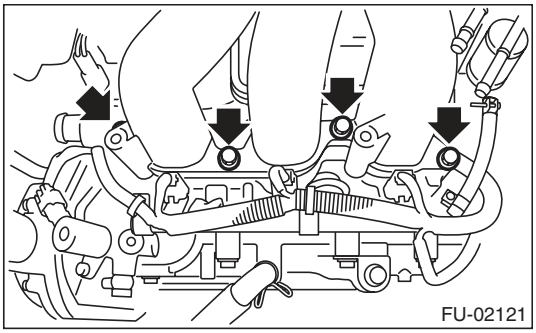

2) Install the bolts which hold fuel injector pipe RH to cylinder head.

NOTE:
Use new O-rings.

Tightening torque:
19 N·m (1.9 kgf-m, 14.0 ft-lb)

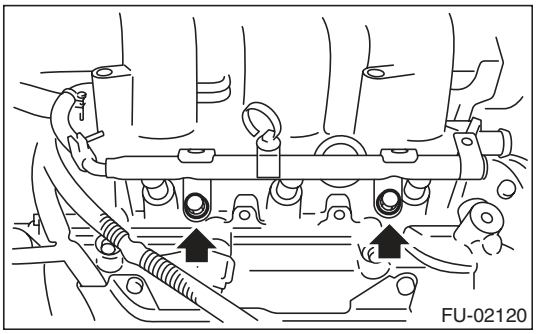

3) Install the engine harness to fuel injector pipe RH.

4) Install the fuel pipe protector RH.

Tightening torque:
19 N·m (1.9 kgf-m, 14.0 ft-lb)

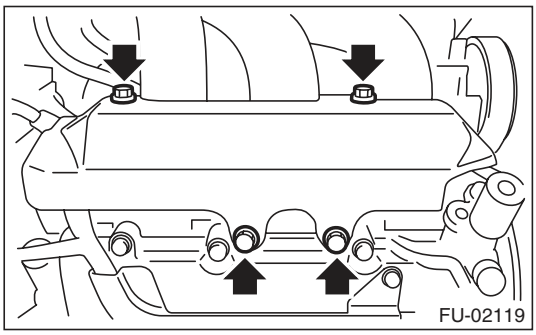

5) Install the bolts which hold fuel injector pipe LH to cylinder head.

NOTE:
Use new O-rings.

Tightening torque:
19 N·m (1.9 kgf-m, 14.0 ft-lb)

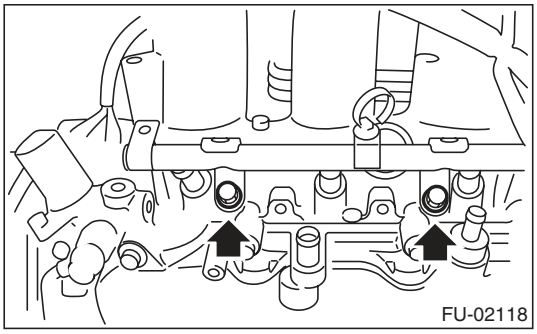

6) Install the engine harness to fuel injector pipe LH.

7) Install the fuel pipe protector LH.

Tightening torque:
19 N·m (1.9 kgf-m, 14.0 ft-lb)

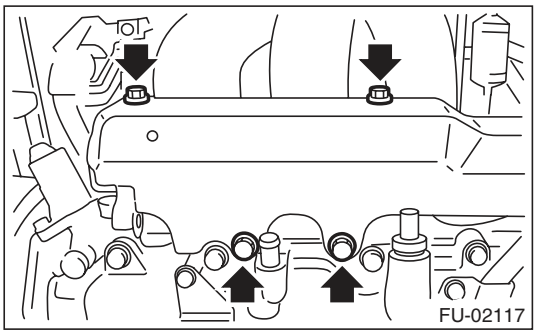

8) Install the EGR pipe to EGR valve.

NOTE:
Use a new gasket.

Tightening torque
6.4 N·m (0.7 kgf-m, 4.7 ft-lb)

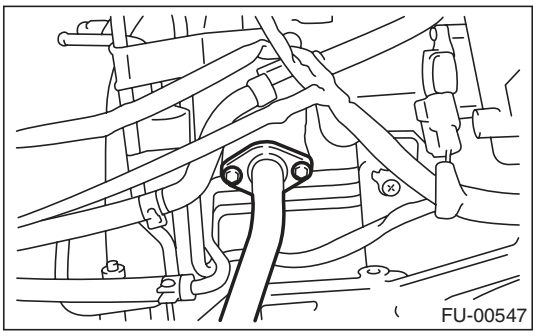

9) Connect the fuel hoses to fuel pipe.

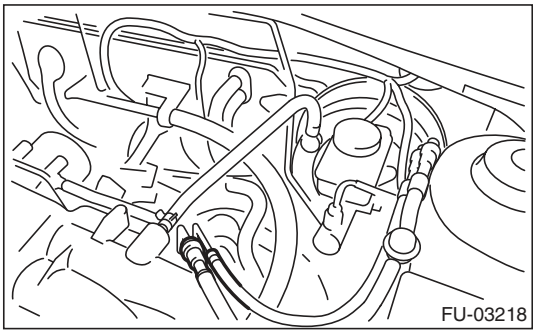

10) Connect the brake booster hose.

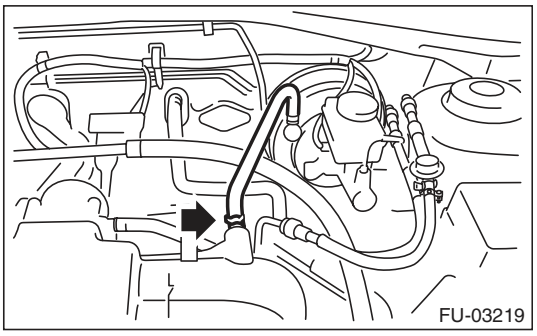

11) Connect the PCV hose.

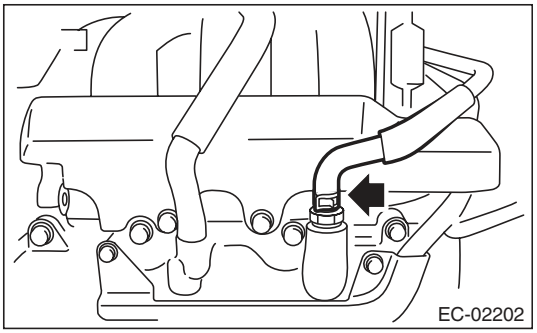

12) Connect the engine coolant hoses to throttle body.

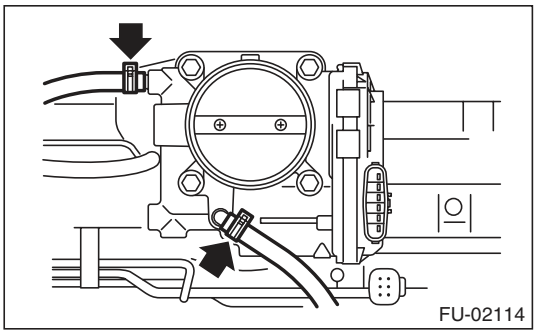

13) Connect the connector (A) to throttle body.
14) Connect the engine harness connector (B).

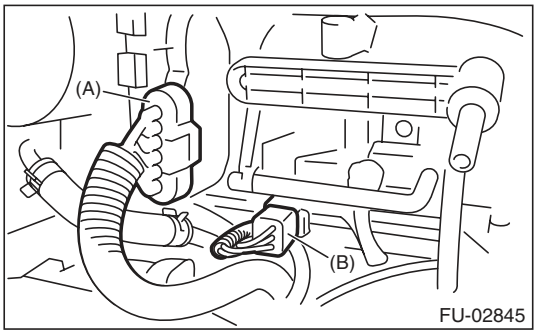

15) Install the air cleaner case and air intake chamber. <Ref. to IN(H6DO)-6, INSTALLATION, Air Cleaner Case.> <Ref. to IN(H6DO)-7, INSTALLATION, Air Intake Chamber.>
16) Install the fuse of fuel pump to the main fuse box.
17) Connect the ground cable to battery.

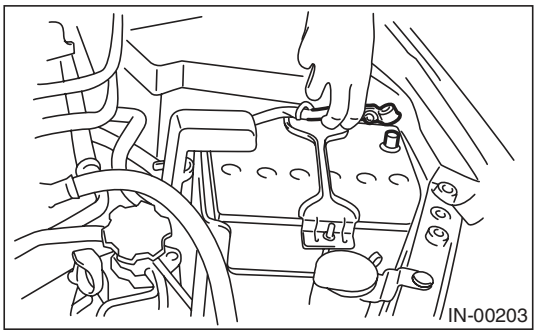

18) Install the collector cover.

C: DISASSEMBLY

1) Remove the engine harness from intake manifold.
2) Remove the throttle body. <Ref. to FU(H6DO)-13, REMOVAL, Throttle Body.>
3) Remove the EGR valve. <Ref. to FU(H6DO)-27, REMOVAL, EGR Valve.>
4) Remove the manifold absolute pressure sensor. <Ref. to FU(H6DO)-25, REMOVAL, Manifold Absolute Pressure Sensor.>
5) Remove the purge control solenoid valve. <Ref. to EC(H6DO)-8, REMOVAL, Purge Control Solenoid Valve.>
6) Loosen the clamp which holds fuel injector pipe to the fuel hose, and then disconnect the pipe from fuel hose.

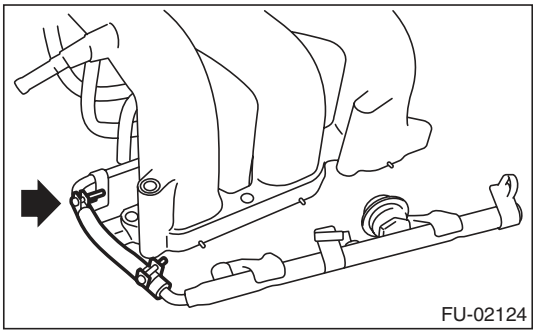
FU-02124

7) Remove the bolts which install fuel pipes on intake manifold.

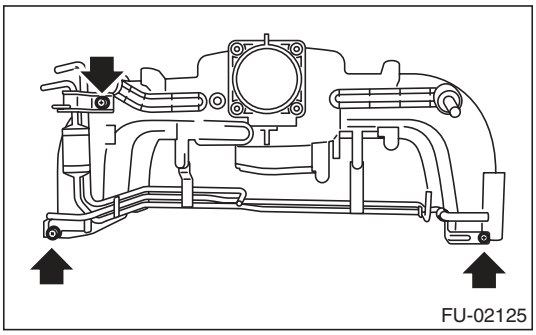
FU-02125

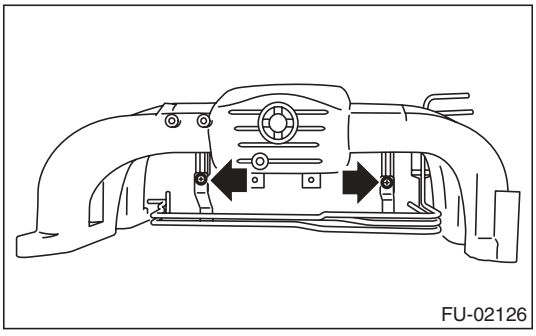
FU-02126

D: ASSEMBLY

NOTE:
When assembling the nipple, apply liquid gasket.

Liquid gasket:
THREE BOND 1105 (Part No. 004403010) or equivalent

Tightening torque:
17 N·m (1.7 kgf-m, 12.5 ft-lb)

1) Tighten the bolts which install fuel pipes on intake manifold.

Tightening torque:
6.4 N·m (0.7 kgf-m, 4.7 ft-lb)

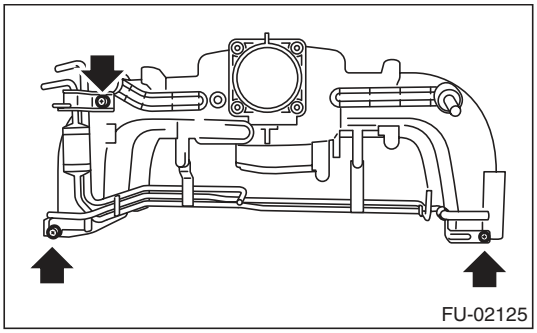
FU-02125

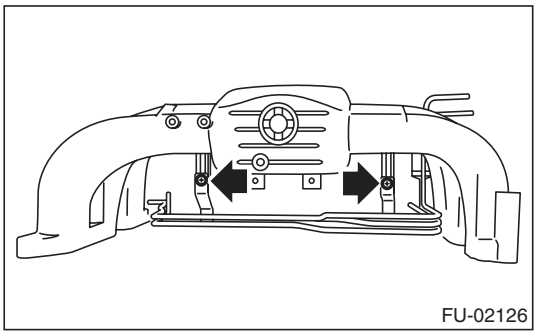
FU-02126

2) Connect the fuel injector pipe to fuel hose, and tighten the clamp screw.

Tightening torque:
1.25 N·m (0.1 kgf-m, 0.9 ft-lb)

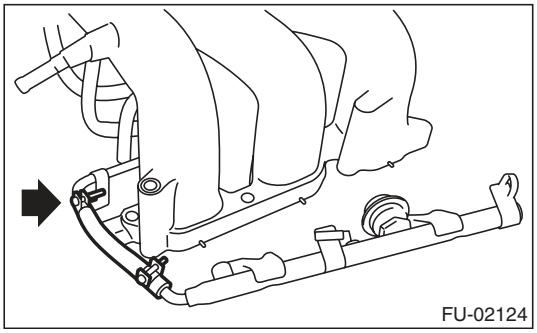
FU-02124

3) Install the purge control solenoid valve. <Ref. to EC(H6DO)-8, INSTALLATION, Purge Control Solenoid Valve.>

4) Install the manifold absolute pressure sensor. <Ref. to FU(H6DO)-25, INSTALLATION, Manifold Absolute Pressure Sensor.>
5) Install the EGR valve. <Ref. to FU(H6DO)-27, INSTALLATION, EGR Valve.>
6) Install the throttle body to the intake manifold. <Ref. to FU(H6DO)-13, INSTALLATION, Throttle Body.>
7) Install the engine harness to the intake manifold.

E: INSPECTION

Make sure the fuel pipe and fuel hoses are not damaged and the connections are tightened firmly.

4. Engine Coolant Temperature Sensor

A: REMOVAL

1) Remove the collector cover.
2) Disconnect the ground cable from battery.

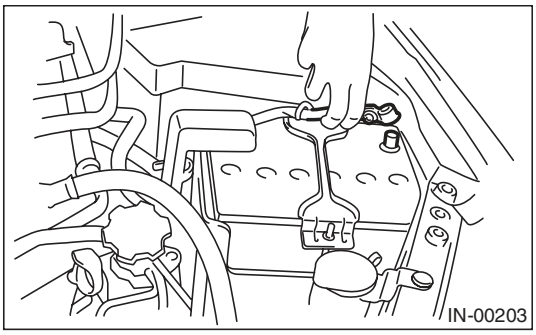

3) Drain engine coolant. <Ref. to CO(H6DO)-10, DRAINING OF ENGINE COOLANT, REPLACEMENT, Engine Coolant.>
4) Disconnect the connectors from the engine coolant temperature sensor.

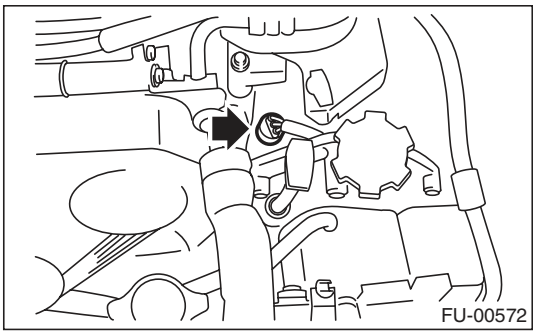

5) Remove the engine coolant temperature sensor.

B: INSTALLATION

Install in the reverse order of removal.

Tightening torque:
22 N·m (2.2 kgf-m, 16.2 ft-lb)

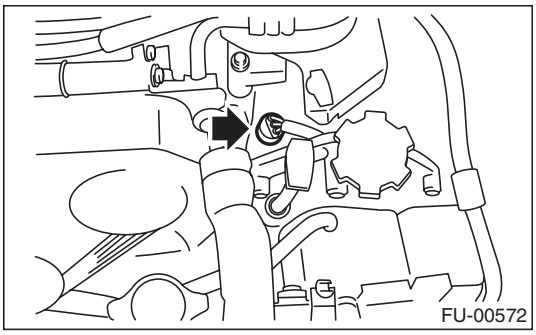

5. Crankshaft Position Sensor

A: REMOVAL

1) Remove the collector cover.
2) Disconnect the ground cable from battery.

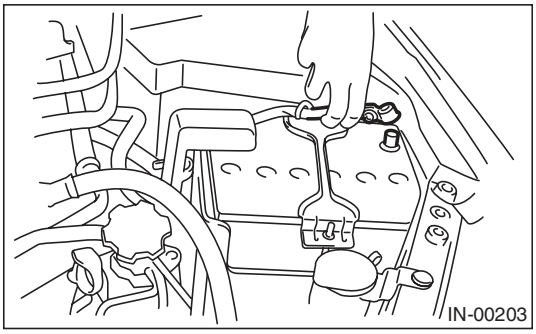

3) Remove the air intake chamber. <Ref. to IN(H6DO)-7, REMOVAL, Air Intake Chamber.>
4) Remove the service hole cover.

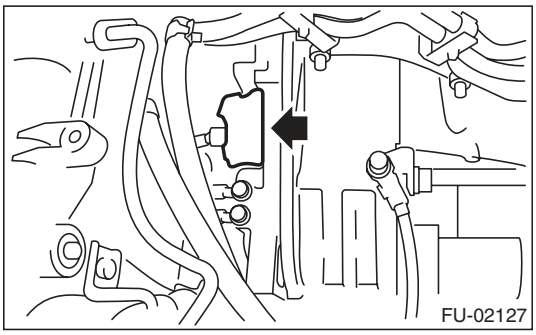

5) Remove the crankshaft position sensor.

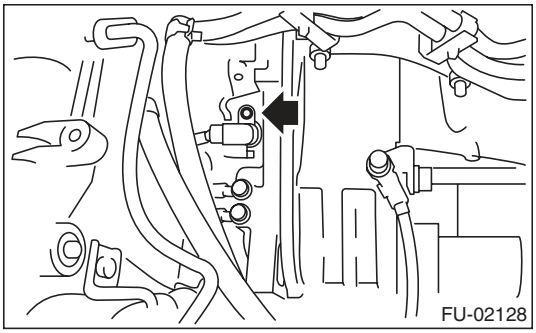

6) Disconnect the connector from crankshaft position sensor.

B: INSTALLATION

Install in the reverse order of removal.

Tightening torque:
6.4 N·m (0.7 kgf-m, 4.7 ft-lb)

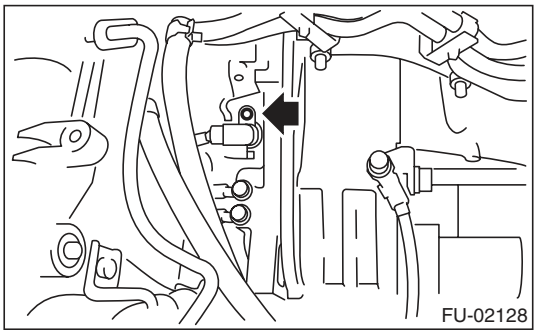

6. Camshaft Position Sensor

A: REMOVAL

1) Remove the collector cover.
2) Disconnect the ground cable from the battery.

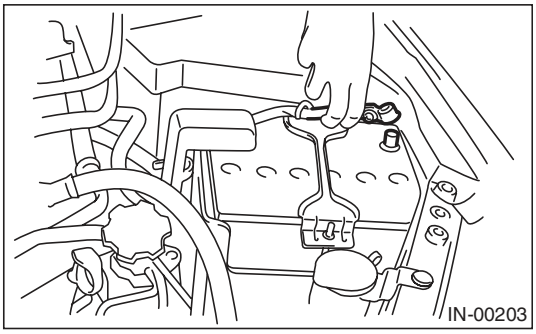

3) Remove the generator harness from the fuel pipe protector LH.
4) Remove the fuel pipe protector LH.

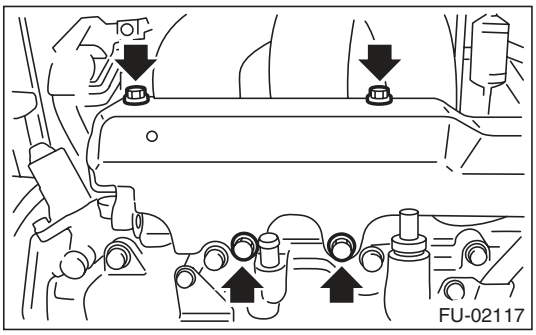

5) Disconnect the connector from camshaft position sensor LH.

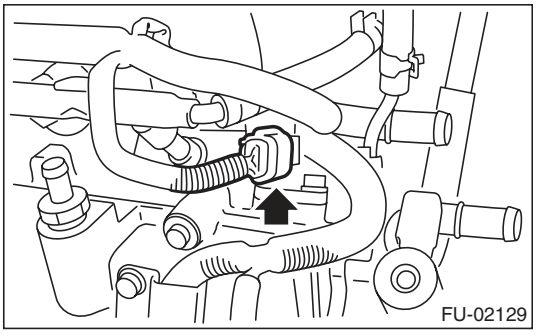

6) Remove the camshaft position sensor LH.

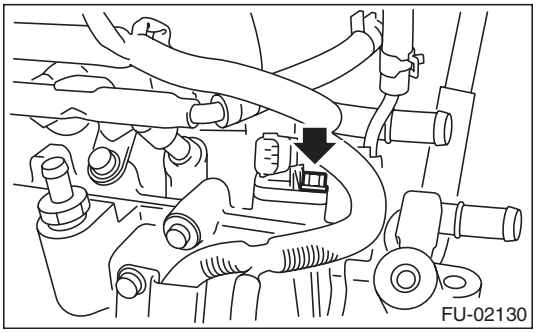

7) Remove the camshaft position sensor RH in the same procedure as LH.

B: INSTALLATION

Install in the reverse order of removal.

Tightening torque:
Camshaft position sensor
6.4 N·m (0.7 kgf-m, 4.7 ft-lb)
Fuel pipe protector
19 N·m (1.9 kgf-m, 14.0 ft-lb)

7. Knock Sensor

A: REMOVAL

1) Remove the collector cover.
2) Disconnect the ground cable from battery.

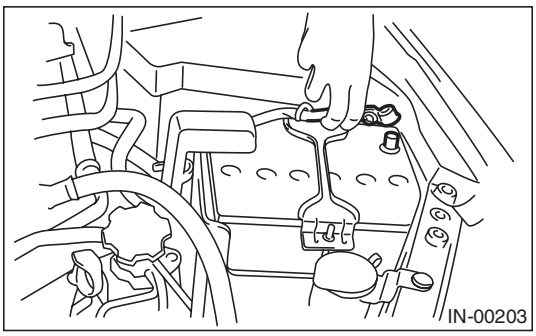

3) Remove the intake manifold. <Ref. to FU(H6DO)-14, REMOVAL, Intake Manifold.>
4) Disconnect the knock sensor connector.
5) Remove the knock sensor from the cylinder block.

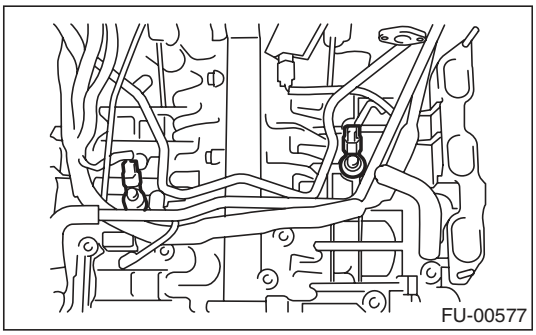

B: INSTALLATION

1) Install the knock sensor to cylinder block.

Tightening torque:
25 N·m (2.5 kgf-m, 18.4 ft-lb)

NOTE:
For the knock sensor installation angle, refer to the figure below.

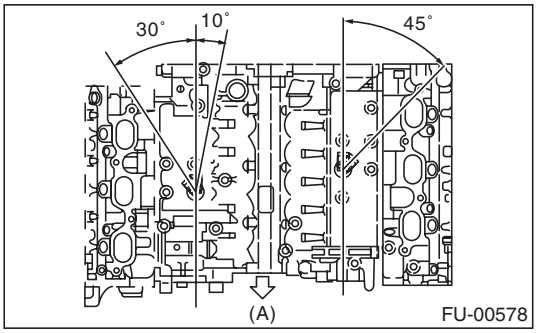

(A) Front side of vehicle

2) Connect the knock sensor connector.
3) Install the intake manifold. <Ref. to FU(H6DO)-16, INSTALLATION, Intake Manifold.>
4) Connect the ground cable to battery.

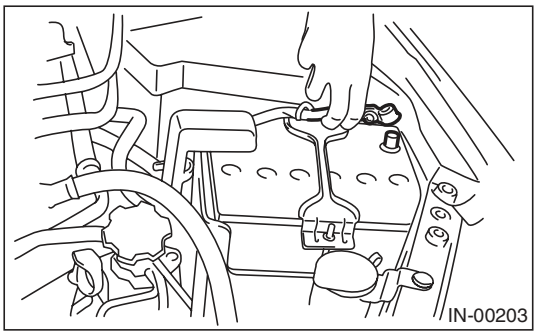

5) Install the collector cover.

8. Throttle Position Sensor

A: SPECIFICATION

Throttle body is a non-disassembled part, so do not remove the throttle position sensor from throttle body.
Refer to “Throttle Body” for removal and installation procedure. <Ref. to FU(H6DO)-13, REMOVAL, Throttle Body.> <Ref. to FU(H6DO)-13, INSTALLATION, Throttle Body.>

9. Manifold Absolute Pressure Sensor

A: REMOVAL

1) Remove the collector cover.
2) Disconnect the ground cable from the battery.

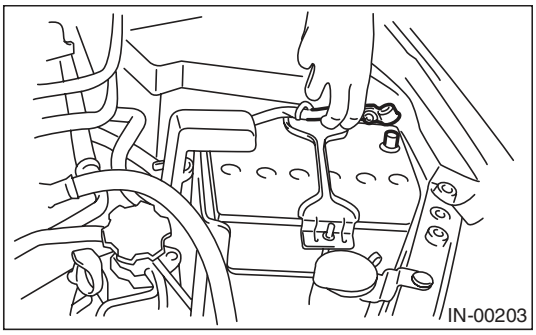

3) Disconnect the connector from the manifold absolute pressure sensor (A), and remove the filter assembly (B) from the intake manifold.

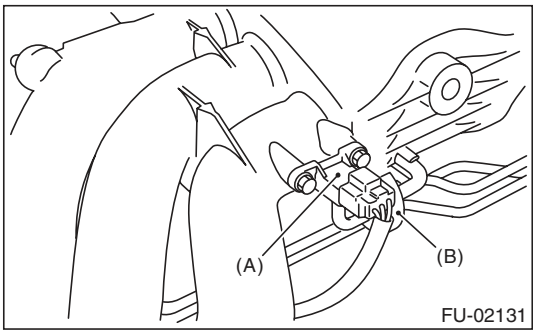

4) Remove the manifold absolute pressure sensor from intake manifold.

B: INSTALLATION

Install in the reverse order of removal.

Tightening torque:
6.4 N·m (0.7 kgf-m, 4.7 ft-lb)

10. Mass Air Flow and Intake Air Temperature Sensor

A: REMOVAL

1) Disconnect the ground cable from the battery.

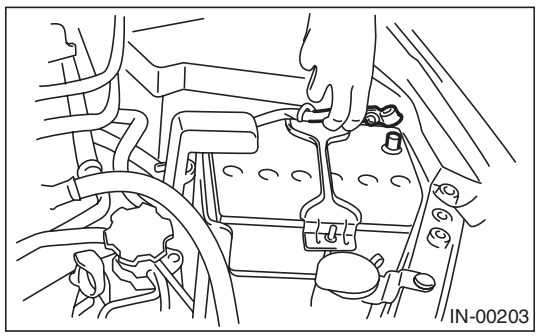

2) Disconnect the connectors from the mass air flow and intake air temperature sensor.

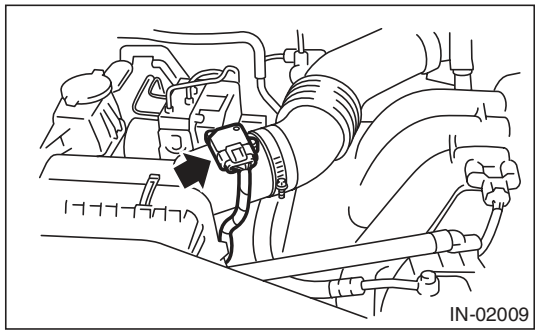

3) Remove the mass air flow and intake air temperature sensor.

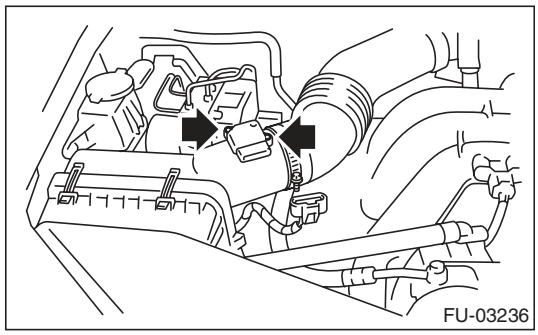

B: INSTALLATION

Install in the reverse order of removal.

Tightening torque:
1 N·m (0.1 kgf-m, 0.7 ft-lb)

11.EGR Valve

A: REMOVAL

1) Remove the collector cover.
2) Disconnect the ground cable from battery.

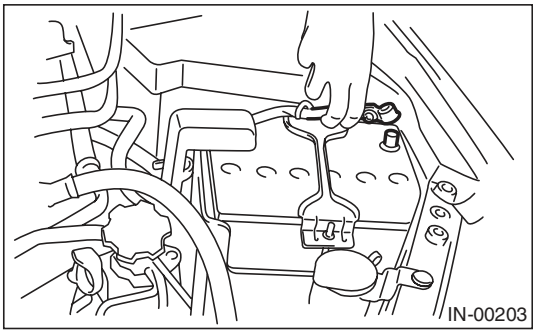

3) Remove the air intake chamber. <Ref. to IN(H6DO)-7, REMOVAL, Air Intake Chamber.>
4) Remove the starter. <Ref. to SC(H4SO)-6, REMOVAL, Starter.>
5) Remove the EGR pipe from EGR valve and cylinder head.
6) Remove the EGR valve from intake manifold.

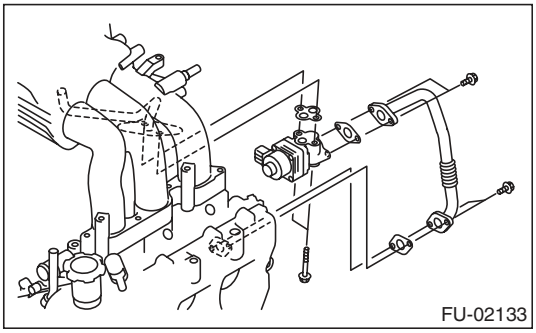

7) Disconnect the connector from the EGR valve.

B: INSTALLATION

Install in the reverse order of removal.

NOTE:
Use a new gasket.

Tightening torque:
EGR valve
19 N·m (1.9 kgf-m, 14.0 ft-lb)
EGR pipe
6.4 N·m (0.7 kgf-m, 4.7 ft-lb)

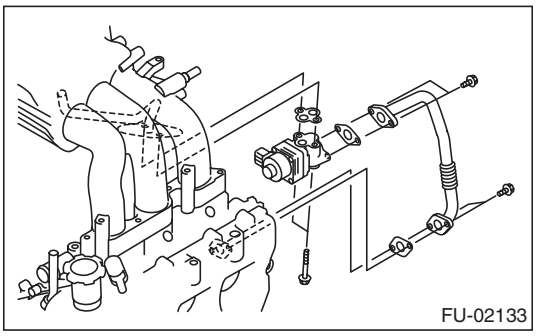

12. Fuel Injector

A: REMOVAL

1. RH SIDE

1) Remove the collector cover.
2) Release the fuel pressure. <Ref. to FU(H6DO)-43, RELEASING OF FUEL PRESSURE, PROCEDURE, Fuel.>
3) Open the fuel filler lid, and remove the fuel filler cap.
4) Disconnect the ground cable from battery.

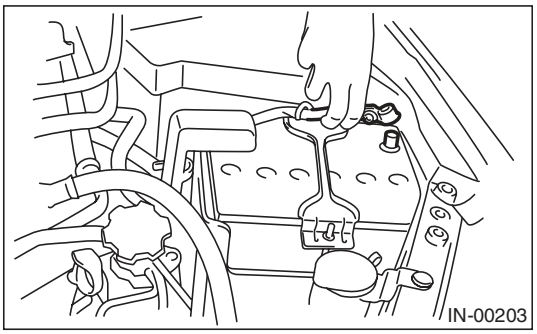

5) Remove the air cleaner case. <Ref. to IN(H6DO)-5, REMOVAL, Air Cleaner Case.>
6) Remove the fuel pipe protector RH.

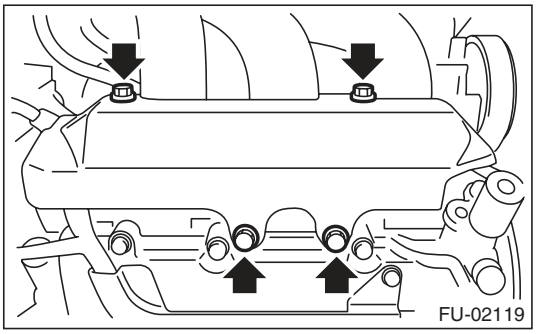

7) Disconnect the connector from fuel injector.

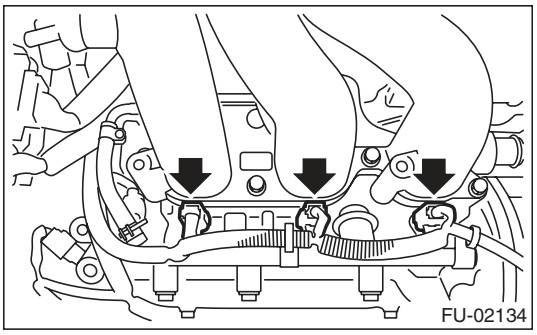

8) Remove the engine harness from the fuel injector pipe RH.
9) Remove the bolt which holds fuel injector pipe onto cylinder head.

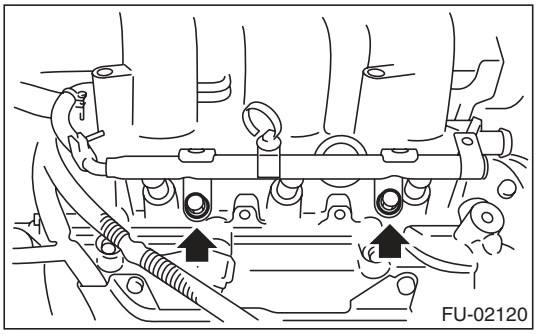

10) Remove the fuel injector while lifting up the fuel injector pipe.

2. LH SIDE

1) Remove the collector cover.
2) Release the fuel pressure. <Ref. to FU(H6DO)-43, RELEASING OF FUEL PRESSURE, PROCEDURE, Fuel.>
3) Open the fuel filler lid, and remove the fuel filler cap.
4) Remove the battery. <Ref. to SC(H4SO)-20, REMOVAL, Battery.>
5) Remove the generator harness from the fuel pipe protector LH.
6) Remove the fuel pipe protector LH.

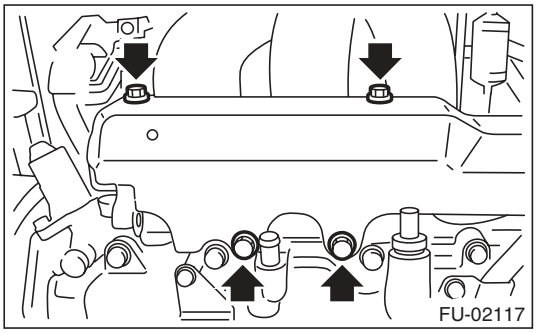

7) Disconnect the connector from fuel injector.

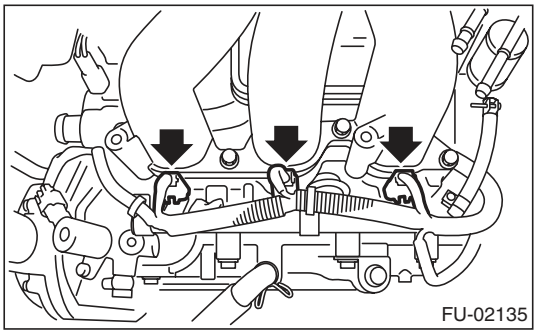

8) Remove the engine harness from the fuel injector pipe LH.

9) Remove the bolt which holds fuel injector pipe onto cylinder head.

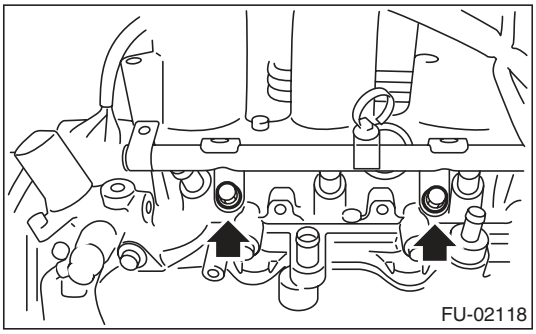

10) Remove the fuel injector while lifting up the fuel injector pipe.

B: INSTALLATION

1. RH SIDE

Install in the reverse order of removal.

NOTE:
Use new O-rings.

Tightening torque:
19 N·m (1.9 kgf-m, 14.0 ft-lb)

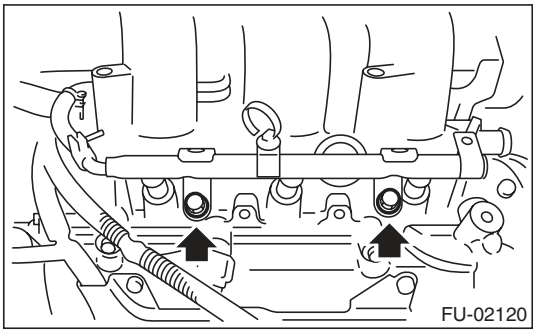

Tightening torque:
19 N·m (1.9 kgf-m, 14.0 ft-lb)

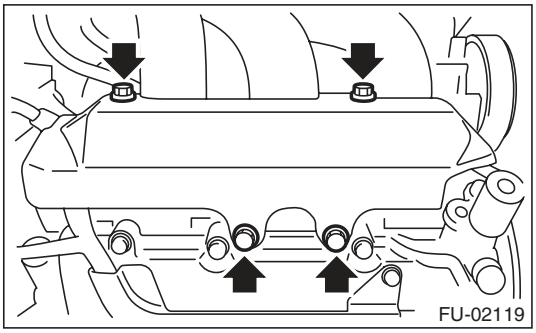

2. LH SIDE

Install in the reverse order of removal.

NOTE:
Use new O-rings.

Tightening torque:
19 N·m (1.9 kgf-m, 14.0 ft-lb)

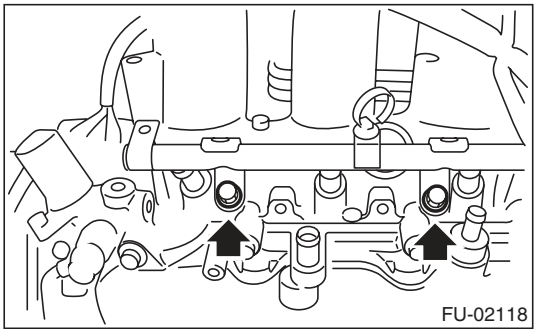

Tightening torque:
19 N·m (1.9 kgf-m, 14.0 ft-lb)

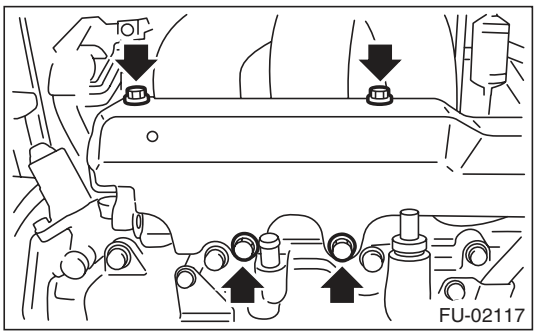

13. Variable Valve Lift Diagnosis Oil Pressure Switch

A: REMOVAL

1) Remove the collector cover.
2) Disconnect the ground cable from battery.

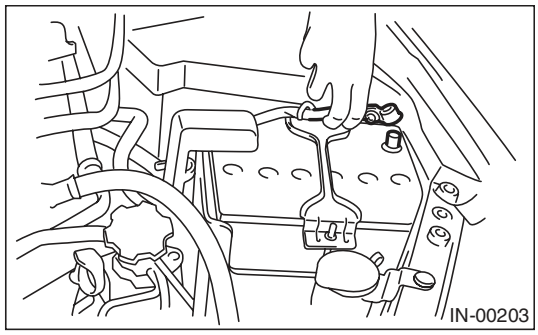

3) Remove the air intake chamber. <Ref. to IN(H6DO)-7, REMOVAL, Air Intake Chamber.>
4) Disconnect the connector from the variable valve lift diagnosis oil pressure switch.
5) Remove the variable valve lift diagnosis oil pressure switch.

- LH side

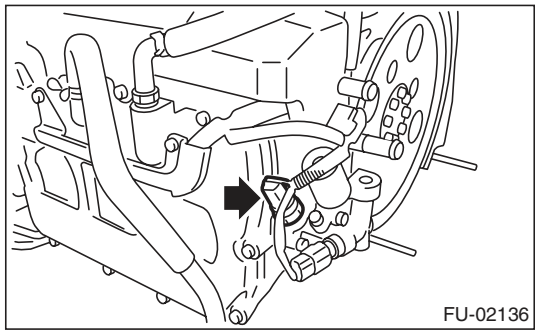

- RH side

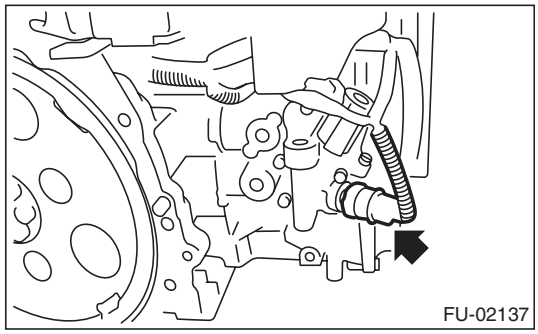

B: INSTALLATION

Install in the reverse order of removal.

NOTE:
Apply liquid gasket to the variable valve lift diagnosis oil pressure switch threads.

Liquid gasket:
THREE BOND 1324 (Part No. 004403042) or equivalent

Tightening torque:
17 N·m (1.7 kgf-m, 12.5 ft-lb)

14. Oil Temperature Sensor

A: REMOVAL

1) Remove the collector cover.
2) Disconnect the ground cable from battery.

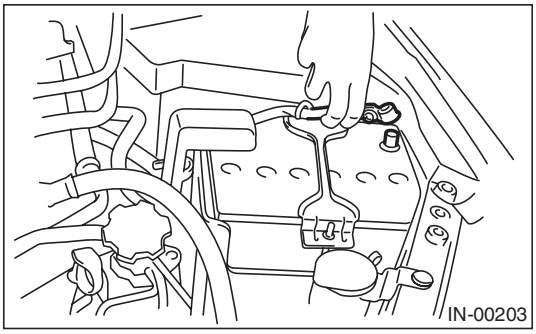

3) Remove the air intake chamber. <Ref. to IN(H6DO)-7, REMOVAL, Air Intake Chamber.>
4) Disconnect the connector from the oil temperature sensor.

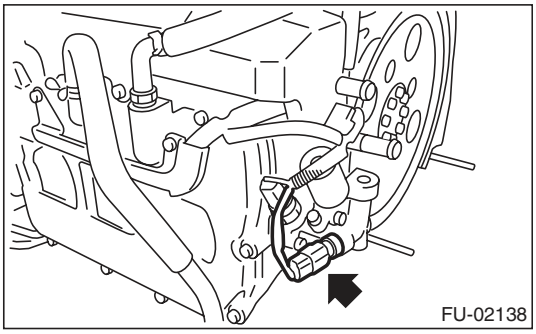

5) Remove the oil temperature sensor.

B: INSTALLATION

Install in the reverse order of removal.

Tightening torque:
22 N·m (2.2 kgf-m, 16.2 ft-lb)

15. Front Oxygen (A/F) Sensor

A: REMOVAL

1) Set the vehicle on a lift.
2) Disconnect the ground cable from the battery.

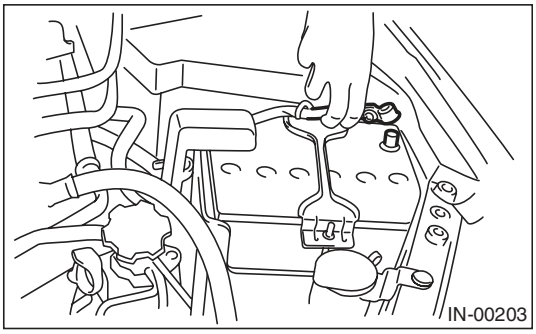

3) Lift up the vehicle.
4) Disconnect the connector of front oxygen (A/F) sensor.

- LH side

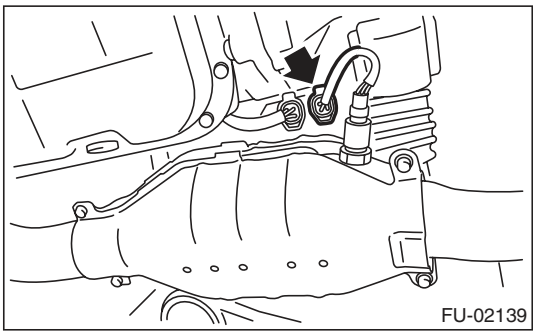

- RH side

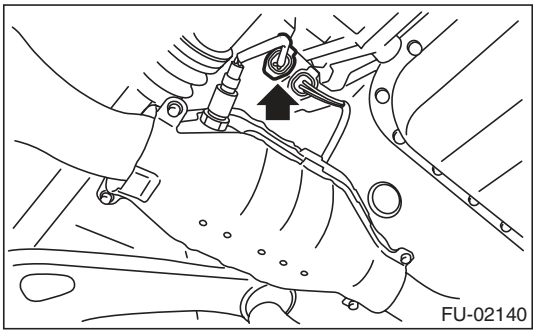

5) Apply spray-type lubricant to the threaded portion of front oxygen (A/F) sensor, and leave it for one minute or more.

6) Remove the front oxygen (A/F) sensor.

CAUTION:
When removing the front oxygen (A/F) sensor, wait until exhaust pipe cools, otherwise it will damage the exhaust pipe.

- LH side

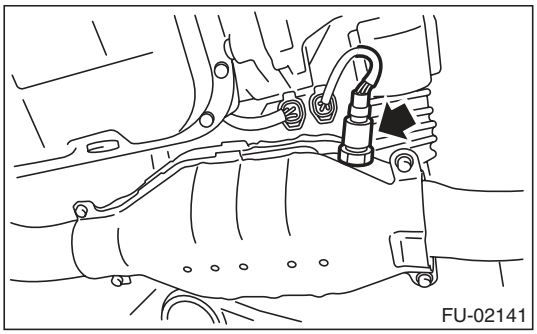

- RH side

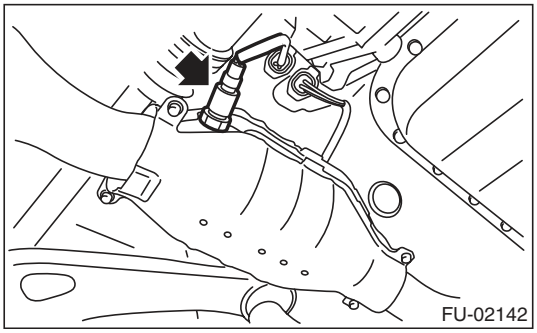

B: INSTALLATION

CAUTION:
If lubricant is spilt onto the exhaust pipe, wipe it off with cloth to avoid emission of smoke or causing a fire.

1) Before installing front oxygen (A/F) sensor, apply anti-seize compound only to the threaded portion of front oxygen (A/F) sensor to make the next removal easier.

CAUTION:
Never apply anti-seize compound to the protector of front oxygen (A/F) sensor.

Anti-seize compound:
NEVER-SEEZ NSN, JET LUBE SS-30 or equivalent

2) Install the front oxygen (A/F) sensor.

Tightening torque:
21 N·m (2.1 kgf-m, 15.5 ft-lb)

- LH side

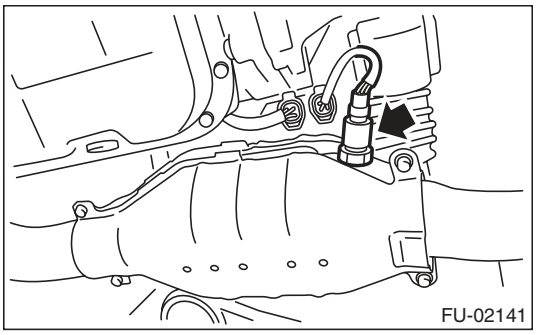

- RH side

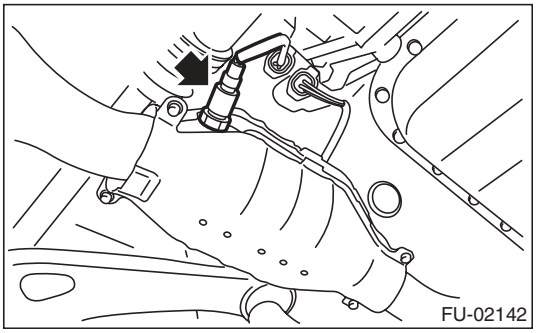

3) Connect the connector of front oxygen (A/F) sensor.

- LH side

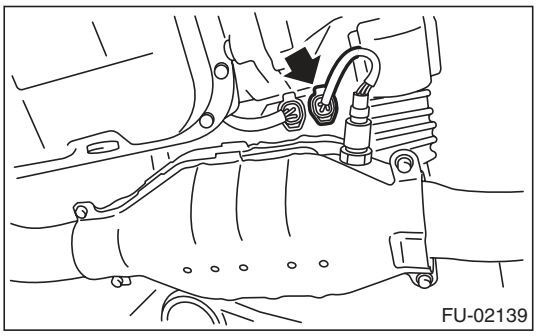

- RH side

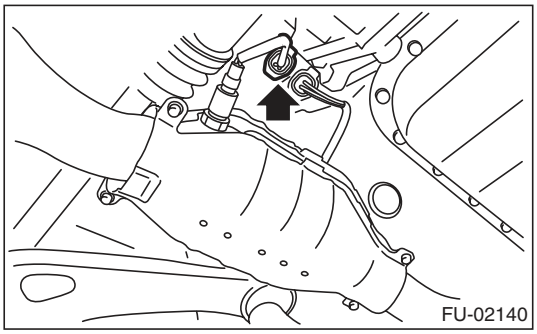

4) Lower the vehicle.
5) Connect the ground cable to battery.

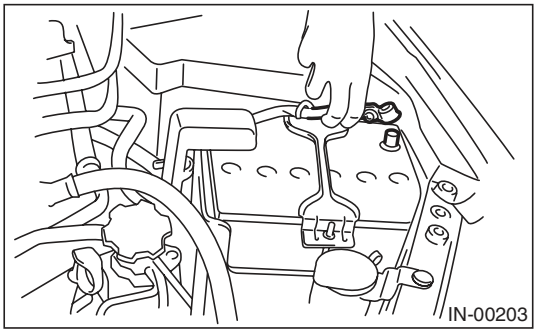

16. Rear Oxygen Sensor

A: REMOVAL

1) Set the vehicle on a lift.
2) Disconnect the ground cable from the battery.

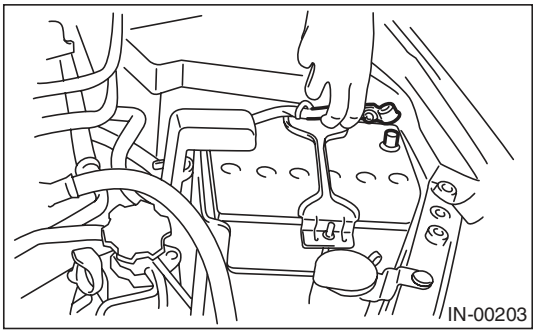

3) Lift up the vehicle.
4) Disconnect the connector from rear oxygen sensor.

- LH side

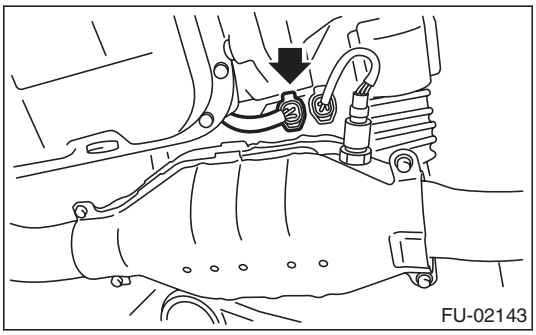

- RH side

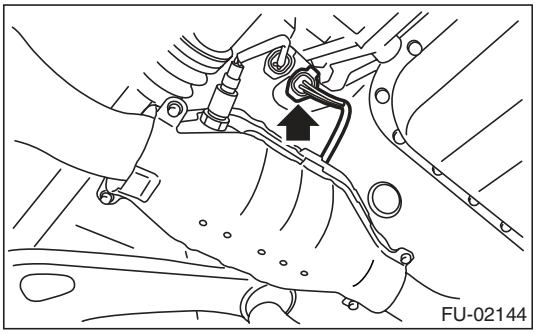

5) Remove the clip holding the harness.
6) Apply spray-type lubricant to the threaded portion of rear oxygen sensor, and leave it for one minute or more.
7) Remove the rear oxygen sensor.

CAUTION:
When removing the rear oxygen sensor, wait until exhaust pipe cools, otherwise it will damage the exhaust pipe.

- LH side

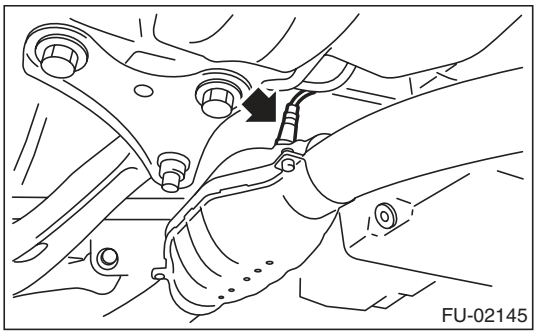

- RH side

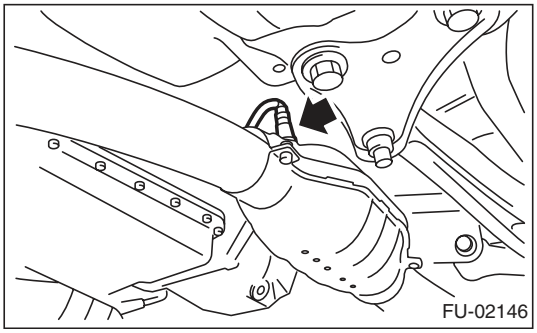

B: INSTALLATION

CAUTION:
If lubricant is spilt onto the exhaust pipe, wipe it off with cloth to avoid emission of smoke or causing a fire.

1) Before installing rear oxygen sensor, apply the anti-seize compound only to the threaded portion of rear oxygen sensor to make the next removal easier.

CAUTION:
Never apply anti-seize compound to the protector of rear oxygen sensor.

Anti-seize compound:
NEVER-SEEZ NSN, JET LUBE SS-30 or equivalent

2) Install the rear oxygen sensor.

Tightening torque:
21 N·m (2.1 kgf-m, 15.5 ft-lb)

- LH side

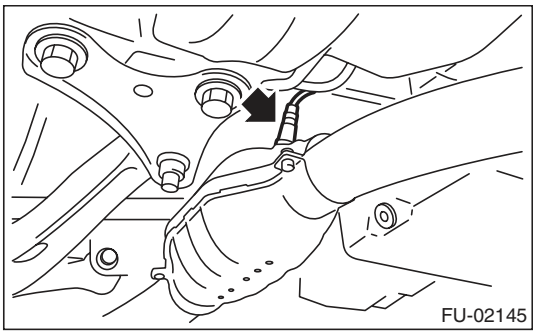

- RH side

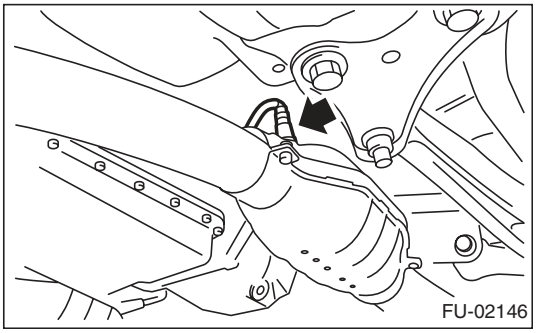

3) Hold the harness with clip.

4) Connect the connector to rear oxygen sensor.

- LH side

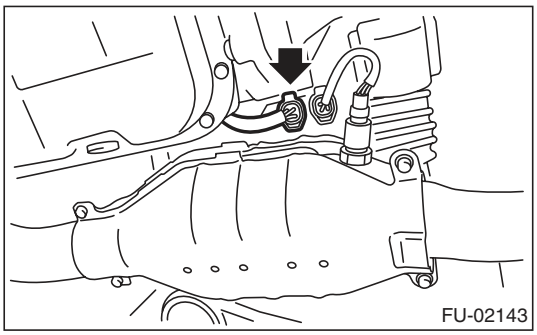

- RH side

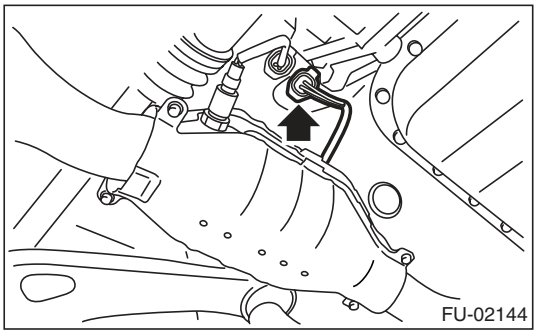

5) Lower the vehicle.

6) Connect the ground cable to battery.

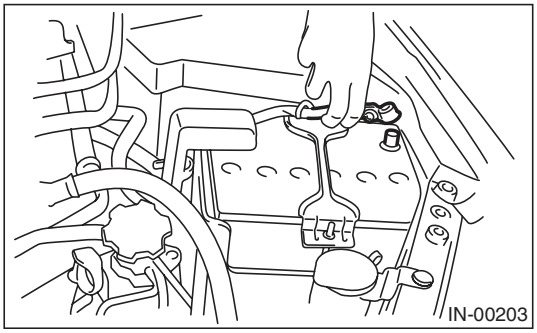

17. SI-DRIVE (SUBARU Intelligent Drive) Selector

A: REMOVAL

1) Disconnect the ground cable from battery.

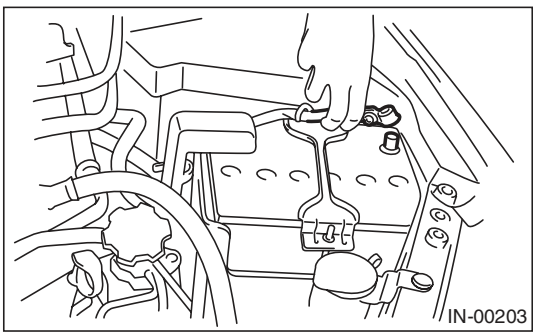

2) Remove the console box. <Ref. to EI-52, REMOVAL, Glove Box.>

3) Disconnect the SI-DRIVE selector connector.

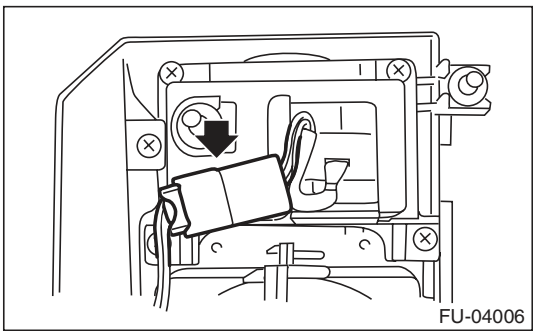

4) Remove the screws which secure the SI-DRIVE selector to the console box.

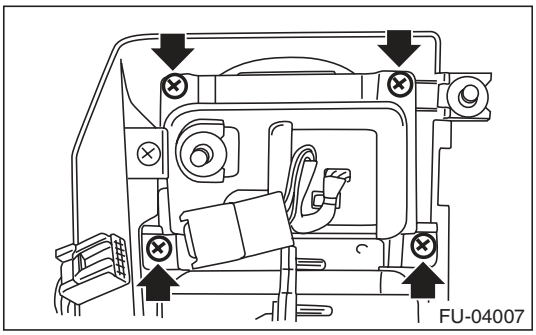

5) Disconnect the connector from SI-DRIVE selector cover, and remove the SI-DRIVE selector.

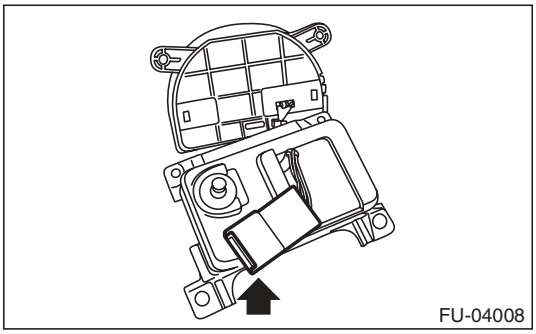

B: INSTALLATION

Install in the reverse order of removal.

C: INSPECTION

Measure the resistance between SI-DRIVE selector terminals.

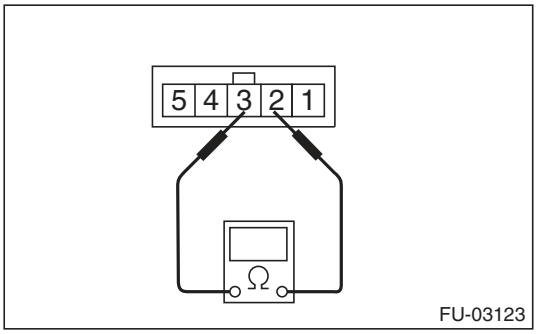

Switch position	Terminal No.	Standard value
Sport (when turning the SI-DRIVE selector to the left)	2 and 3	Less than 10 Ω
Intelligent (when pushing the SI-DRIVE selector)		0.8 — 1.2 kΩ
Sport Sharp (when turning the SI-DRIVE selector to the right)		2.14 — 3.2 kΩ

18. SI-DRIVE (SUBARU Intelligent Drive) S# Switch

A: REMOVAL

1) Disconnect the ground cable from battery.

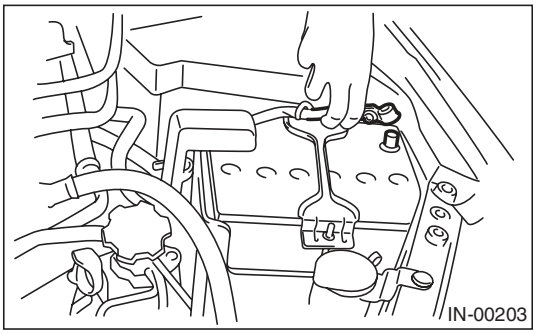

2) Remove the airbag module. <Ref. to AB-14, REMOVAL, Driver's Airbag Module.>

WARNING:
Always refer to "Airbag System" before performing service on the airbag modules. <Ref. to AB-4, CAUTION, General Description.>

3) Remove the screws which secure the SI-DRIVE S# switch to the steering wheel, and remove the SI-DRIVE S# switch.

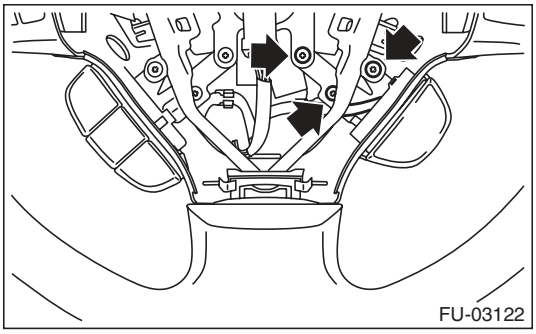

4) Disconnect the connectors from the SI-DRIVE S# switch.

B: INSTALLATION

Install in the reverse order of removal.

C: INSPECTION

Measure the resistance between SI-DRIVE S# switch terminals.

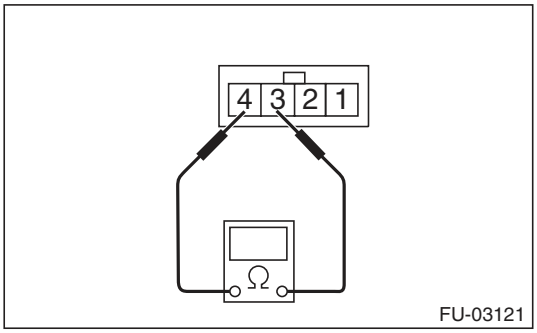

Switch position	Terminal No.	Standard value
ON (When the SI-DRIVE S# switch is pressed)	3 and 4	Less than 10 Ω
OFF		1 MΩ or more

19. Engine Control Module (ECM)

A: REMOVAL

1) Disconnect the ground cable from battery.

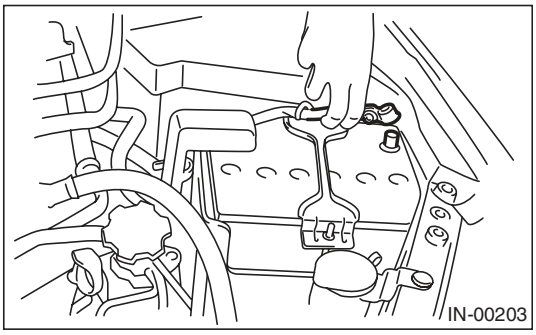

2) Remove the lower inner trim of passenger's side. <Ref. to EI-61, REMOVAL, Lower Inner Trim.>
3) Detach the floor mat of passenger's seat.
4) Remove the protect cover.

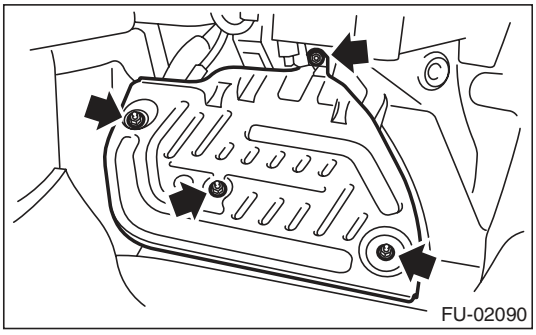

5) Remove the nuts and bolts which hold the ECM to the bracket.
6) Remove the clip (A) from bracket.

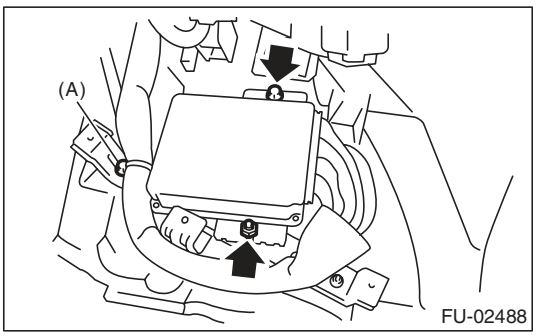

7) Disconnect the ECM connectors, and take out the ECM.

B: INSTALLATION

Install in the reverse order of removal.

CAUTION:
When the ECM of model with immobilizer has been replaced, be sure to perform the registration of immobilizer system. (Refer to the "PC application help for Subaru Select Monitor".)

NOTE:
When replacing the ECM, be careful not to use the wrong spec. ECM to avoid any damage on the fuel injection system.

Tightening torque:
7.5 N·m (0.8 kgf-m, 5.5 ft-lb)

20. Main Relay

A: REMOVAL

1) Disconnect the ground cable from battery.

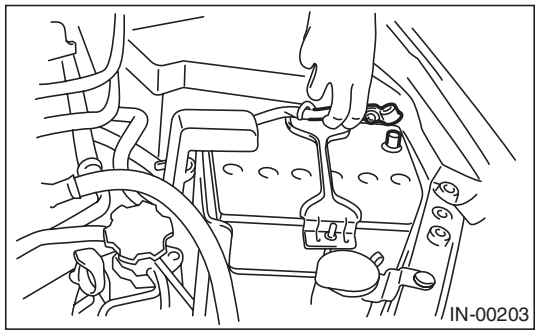

2) Remove the glove box. <Ref. to EI-52, REMOVAL, Glove Box.>
3) Remove the harness cover (A).

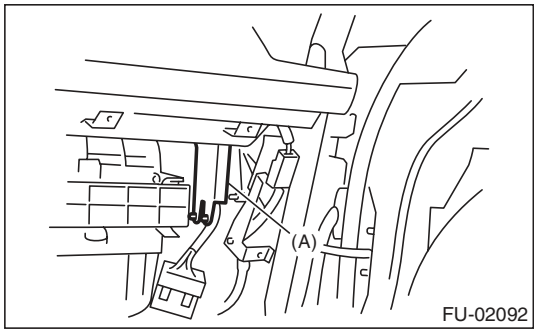

4) Disconnect the connectors from main relay.

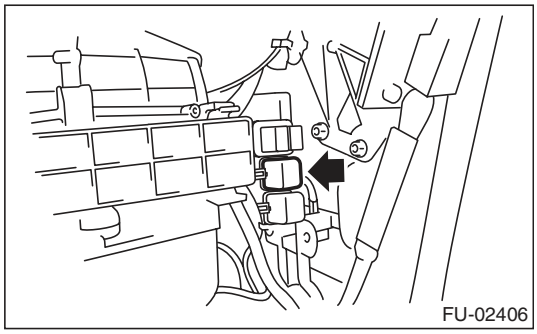

B: INSTALLATION

Install in the reverse order of removal.

21. Fuel Pump Relay

A: REMOVAL

1) Disconnect the ground cable from battery.

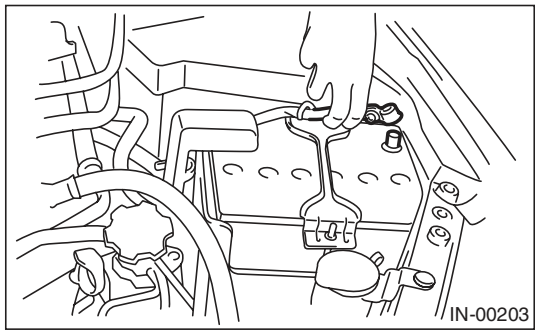

2) Remove the glove box. <Ref. to EI-52, REMOVAL, Glove Box.>
3) Remove the harness cover (A).

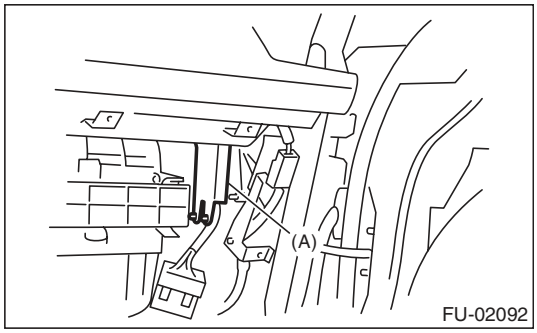

4) Disconnect the connector from fuel pump relay.

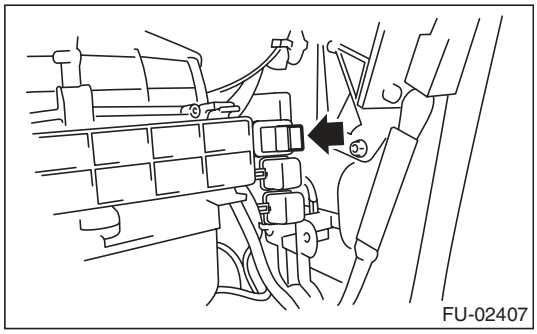

B: INSTALLATION

Install in the reverse order of removal.

22. Electronic Throttle Control Relay

A: REMOVAL

1) Disconnect the ground cable from battery.

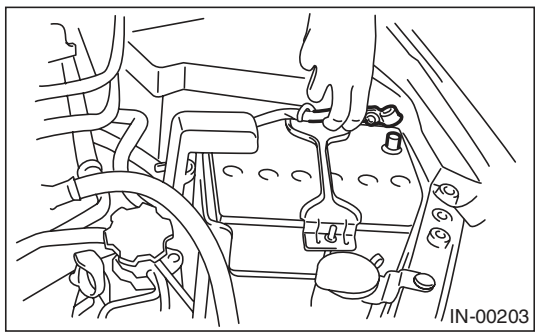

2) Remove the glove box. <Ref. to EI-52, REMOVAL, Glove Box.>
3) Remove the harness cover (A).

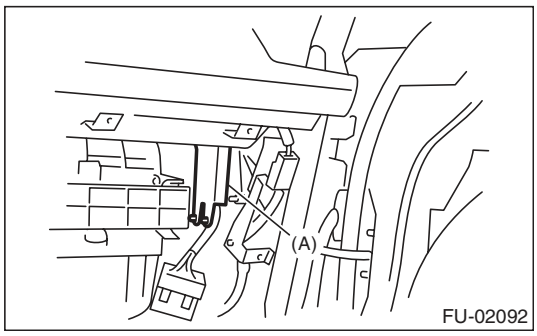

4) Disconnect the connector from electronic throttle control relay.

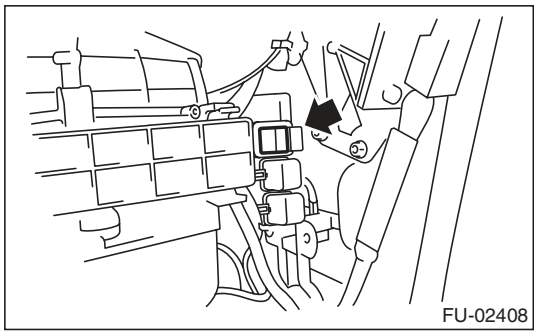

B: INSTALLATION

Install in the reverse order of removal.

23. Fuel Pump Control Unit

A: REMOVAL

1) Disconnect the ground cable from battery.

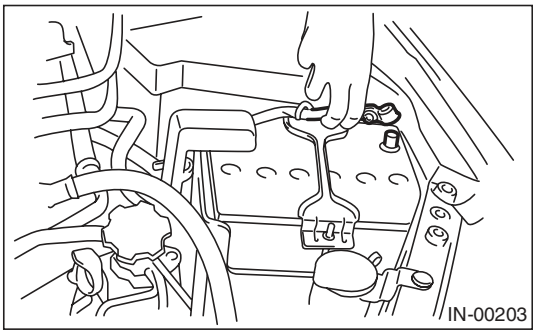

2) Remove the rear quarter trim of the left side. (Wagon model) <Ref. to EI-63, REMOVAL, Rear Quarter Trim.>
3) Peel the trunk side trim of the left side. (Sedan model)
4) Remove the fuel pump control unit.

- Wagon model

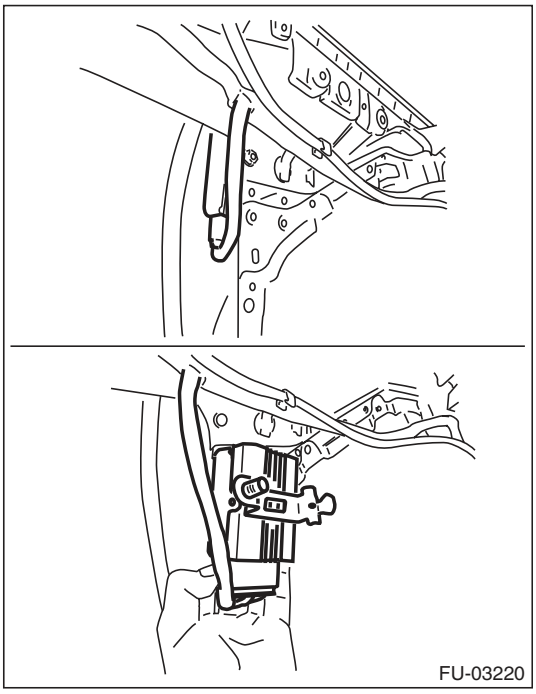

- Sedan model

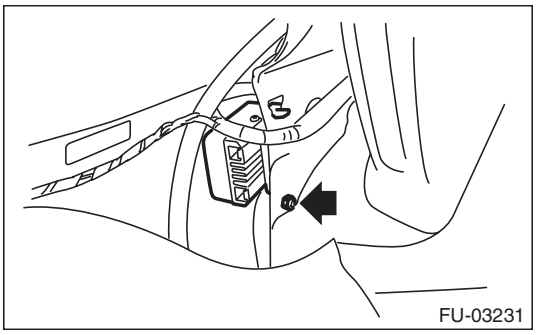

5) Disconnect the connector from fuel pump control unit.

B: INSTALLATION

Install in the reverse order of removal.

Tightening torque:
5 N·m (0.5 kgf-m, 3.7 ft-lb)

24. Fuel

A: PROCEDURE

1. RELEASING OF FUEL PRESSURE

WARNING:
Place "NO OPEN FLAMES" signs near the working area.

CAUTION:
Be careful not to spill fuel.

1) Remove the fuse of fuel pump from main fuse box.

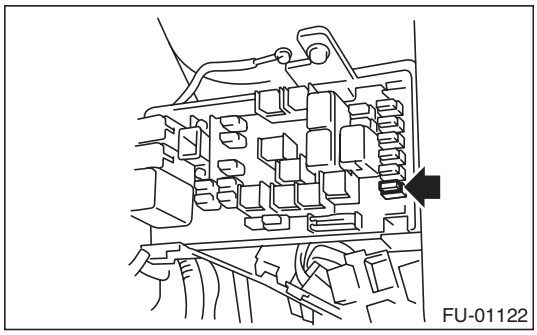

2) Start the engine and run it until it stalls.
3) After the engine stalls, crank it for five more seconds.
4) Turn the ignition switch to OFF.

2. DRAINING FUEL (WITH SUBARU SELECT MONITOR)

WARNING:
Place "NO OPEN FLAMES" signs near the working area.

CAUTION:
Be careful not to spill fuel.

NOTE:
- If the fuel pump cannot be actuated, refer to DRAINING FUEL (THROUGH THE FUEL FILLER HOSE). <Ref. to FU(H6DO)-44, DRAINING FUEL (THROUGH THE FUEL FILLER HOSE), PROCEDURE, Fuel.>
- Be careful not to let the battery run-out.

1) Release the fuel pressure. <Ref. to FU(H6DO)-43, RELEASING OF FUEL PRESSURE, PROCEDURE, Fuel.>
2) Attach ST to the fuel delivery pipe and push ST in the direction of arrow mark to disconnect the fuel delivery hose.
ST 42099AE000 QUICK CONNECTOR RELEASE

CAUTION:
- **Be careful not to spill fuel.**
- **Catch the fuel from hoses using a container or cloth.**

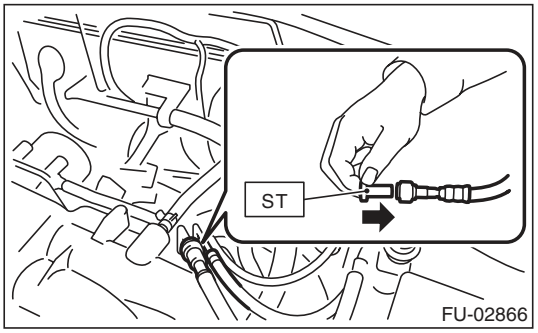

3) Connect ST to the fuel delivery hose.
ST 18471AA000 FUEL PIPE ADAPTER
4) Connect the gasoline proof hose to ST and put the end of the hose in the container.
5) Drive the fuel pump and drain the fuel using Subaru Select Monitor. <Ref. to EN(H6DO)(diag)-54, FUEL PUMP CONTROL (ON/OFF OPERATION), OPERATION, System Operation Check Mode.>

CAUTION:
Be careful not to spill fuel.

3. DRAINING FUEL (THROUGH THE FUEL FILLER HOSE)

WARNING:
Place "NO OPEN FLAMES" signs near the working area.

CAUTION:
- **Be careful not to spill fuel.**
- **Fuel may remain in the fuel filler pipe. Draining the fuel from the fuel filler pipe through the fill opening using the gasoline proof pump and the gasoline proof hose (ø10 or less) before the operation.**

1) Set the vehicle on a lift.
2) Lift up the vehicle.
3) Remove the rear exhaust pipe and muffler. <Ref. to EX(H6DO)-7, REMOVAL, Rear Exhaust Pipe.> <Ref. to EX(H6DO)-9, REMOVAL, Muffler.>
4) Open the fuel filler lid, and remove the fuel filler cap.
5) Drain the fuel from the fuel filler pipe through the filler opening using the gasoline proof pump and the gasoline proof hose (ø10 or less).
6) Disconnect the fuel filler hose (A) from the fuel filler pipe.

CAUTION:
- **Be careful not to spill fuel.**
- **Catch the fuel from hoses using a container or cloth.**

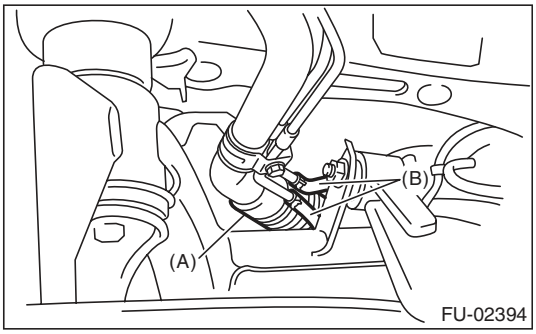

(A) Fuel filler hose
(B) Evaporation hose

7) Set the container under the vehicle and insert the gasoline proof hose (ø10 or less) into the fuel filler hose to drain the fuel.

CAUTION:
Be careful not to spill fuel.

25. Fuel Tank

A: REMOVAL

WARNING:
Place "NO OPEN FLAMES" signs near the working area.

CAUTION:
Be careful not to spill fuel.

1) Set the vehicle on a lift.
2) Release the fuel pressure. <Ref. to FU(H6DO)-43, RELEASING OF FUEL PRESSURE, PROCEDURE, Fuel.>
3) Drain fuel. <Ref. to FU(H6DO)-43, DRAINING FUEL (WITH SUBARU SELECT MONITOR), PROCEDURE, Fuel.>
4) Disconnect the ground cable from battery.

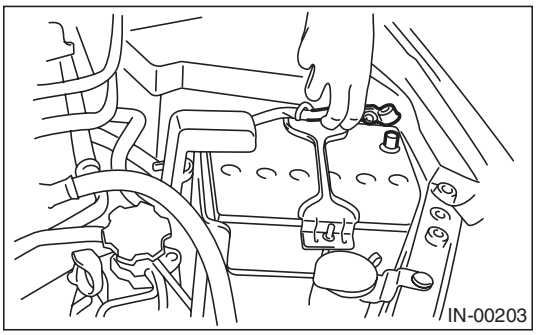

5) Remove the rear seat.
6) Remove the service hole cover of fuel pump.

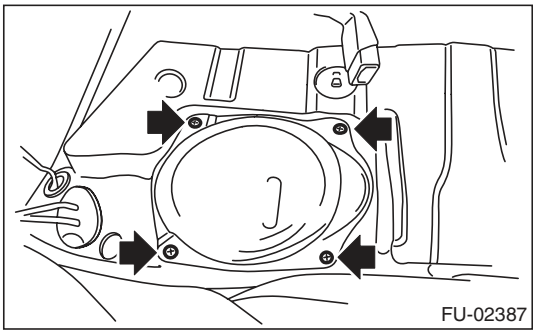

7) Disconnect the connector from fuel pump.

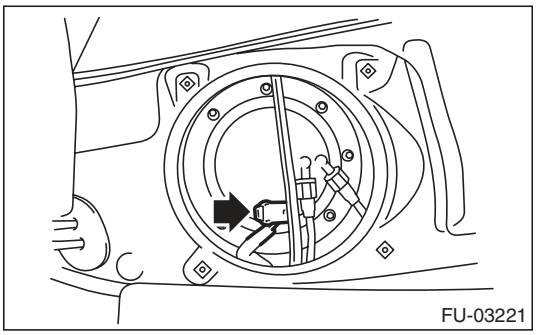

8) Remove the connector (A) and clip (B).

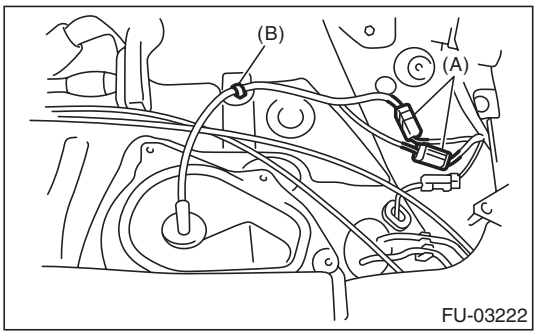

9) Remove the service hole cover of fuel sub level sensor.
   (1) Remove the bolt (A).
   (2) Push the grommet (B) down and remove the service hole cover.

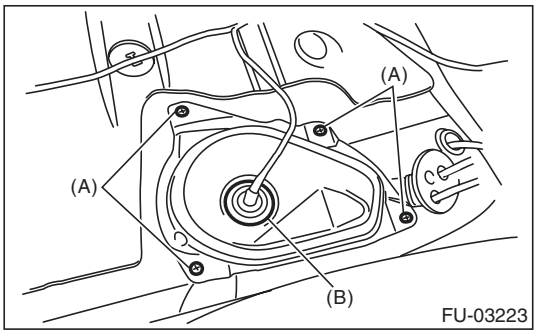

10) Disconnect connector (A) from fuel sub level sensor.
11) Disconnect the quick connector on the fuel delivery hose (B). <Ref. to FU(H6DO)-65, REMOVAL, Fuel Delivery and Evaporation Lines.>

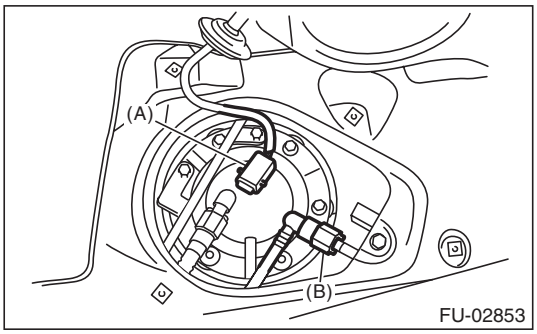

12) Remove the trunk room trim. (Sedan model) <Ref. to EI-70, REMOVAL, Trunk Room Trim.>
13) Remove the rear quarter trim. (Wagon model) <Ref. to EI-63, WAGON MODEL, REMOVAL, Rear Quarter Trim.>

14) Remove the pipe protector.

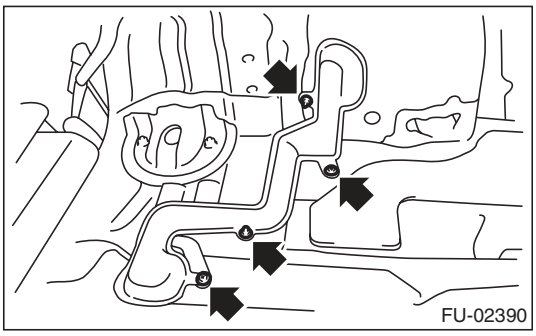

15) Remove the grommet and disconnect the quick connector of the evaporation pipe. <Ref. to FU(H6DO)-65, REMOVAL, Fuel Delivery and Evaporation Lines.>

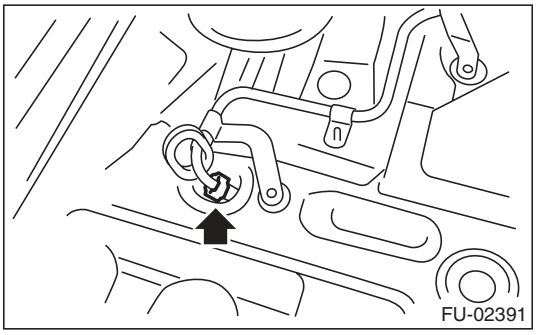

16) Remove the rear wheels.
17) Lift up the vehicle.
18) Remove the bolts which secure the rear brake hose mounting bracket.

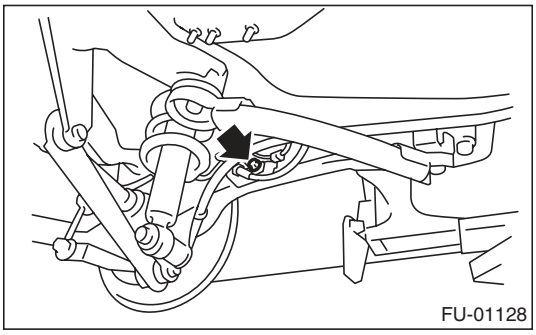

19) Remove the rear disc brake assembly and tie it to the body side of the vehicle.

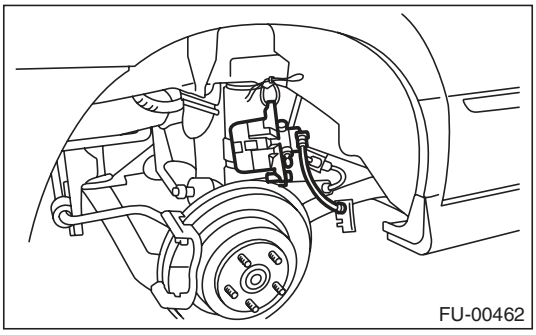

20) Remove the parking brake cable from parking brake assembly. <Ref. to PB-6, REMOVAL, Parking Brake Assembly (Rear Disc Brake).>
21) Lift up the vehicle.
22) Remove the rear exhaust pipe. <Ref. to EX(H6DO)-7, REMOVAL, Rear Exhaust Pipe.>
23) Remove the propeller shaft. <Ref. to DS-10, REMOVAL, Propeller Shaft.>
24) Remove the heat shield cover and fuel tank protector.
25) Disconnect the connector from the rear ABS wheel speed sensor.

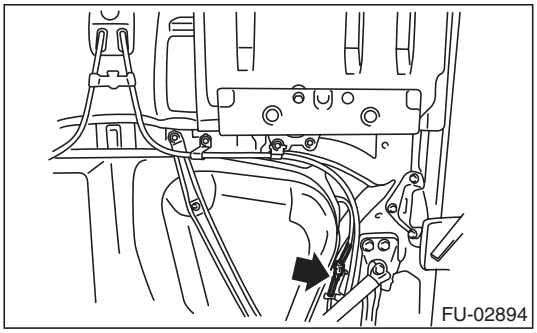

26) Remove the bolts securing the parking brake cable clamp.

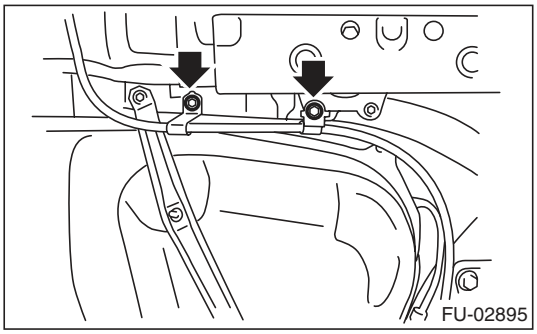

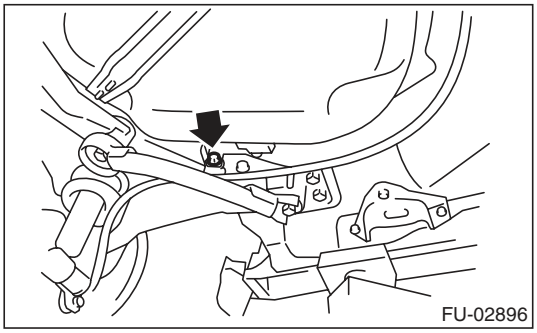

27) Remove the rear suspension assembly.

CAUTION:
A helper is required to perform this work.

(1) Support the rear suspension assembly with the transmission jack.
(2) Remove the bolts which hold the rear shock absorber to the rear suspension arm.

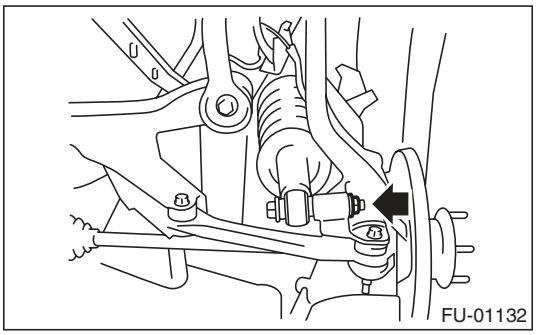

(3) Remove the bolts which secure the rear suspension assembly to the body.

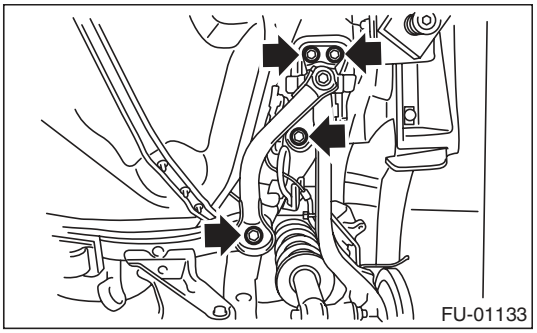

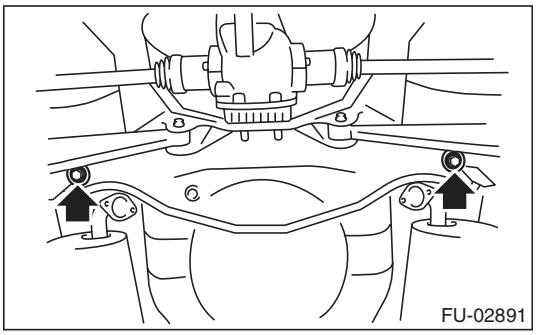

(4) Remove the rear suspension assembly.

28) Disconnect the connector.

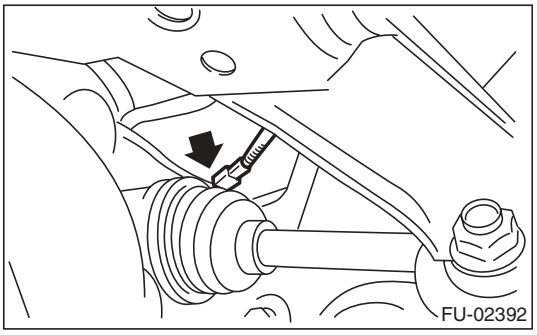

29) Disconnect the evaporation hose.

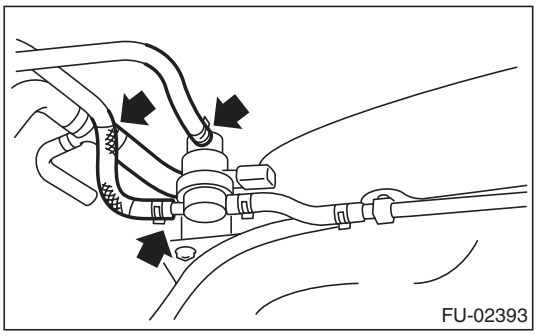

30) Disconnect the fuel filler hose (A) and evaporation hose (B).

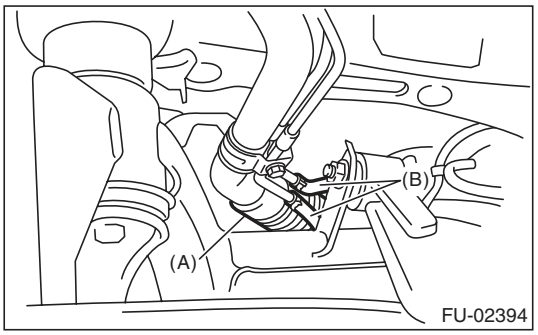

31) Support the fuel tank with a transmission jack, remove the bolts from the fuel tank band, and remove the fuel tank from the vehicle.

WARNING:
- **A helper is required to perform this work.**
- **Fuel may remain in the fuel tank. This will cause the left and right sides to be unbalanced. Be careful not to drop the fuel tank when removing.**

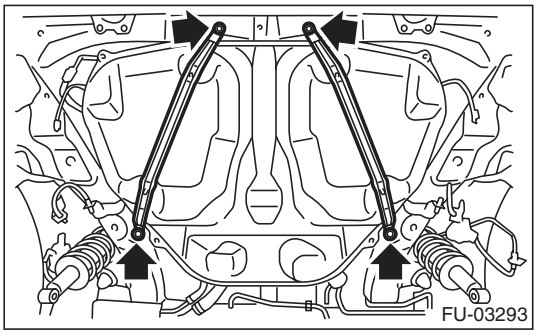

B: INSTALLATION

1) Support the fuel tank with a transmission jack, set the fuel tank in place, and temporarily tighten the bolts of the fuel tank band.

WARNING:
A helper is required to perform this work.

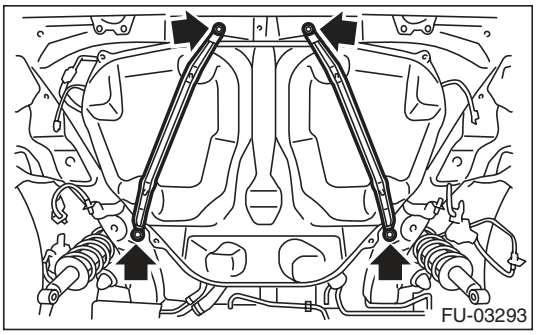

2) Securely insert the fuel filler hose (A) and evaporation hose (B) to the specified position, then tighten the clip or clamp.

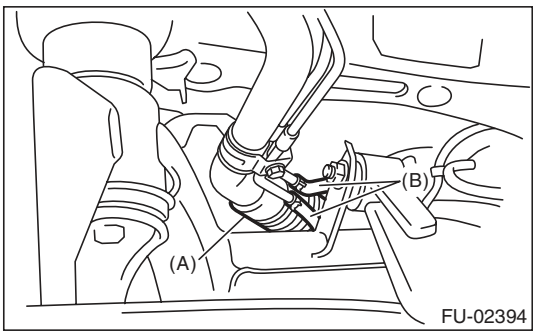

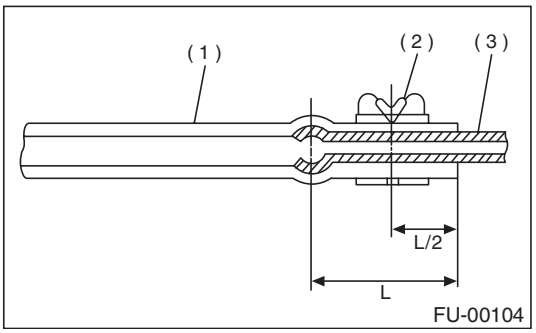

(1) Hose
(2) Clip or clamp
(3) Pipe

3) Connect the evaporation hose.

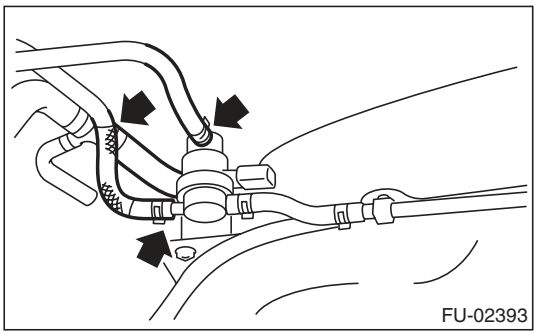

4) Tighten the fuel tank band bolts.

Tightening torque:
33 N·m (3.4 kgf-m, 24.3 ft-lb)

5) Connect the connector.

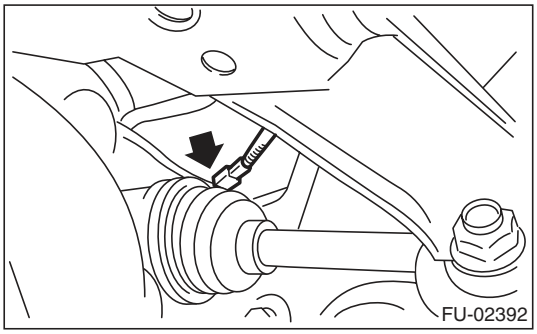

6) Install the rear suspension assembly.

CAUTION:
A helper is required to perform this work.

(1) Support the rear suspension assembly with a transmission jack.
(2) Support the rear suspension assembly, and tighten the bolts which secure the rear suspension assembly to the body.

Tightening torque:
T1: 125 N·m (12.7 kgf-m, 92.2 ft-lb)
T2: 175 N·m (17.8 kgf-m, 129.1 ft-lb)

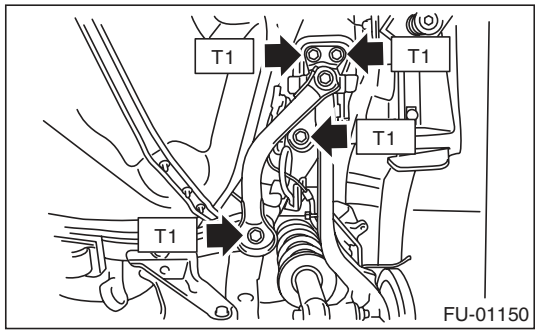

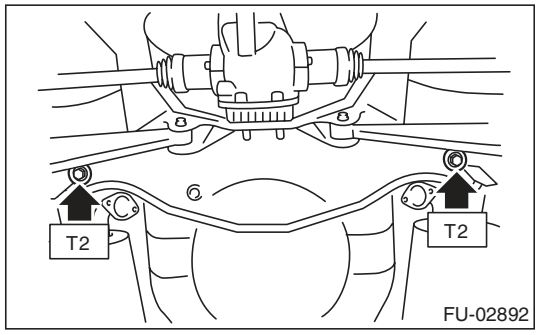

(3) Tighten the bolts which hold the rear shock absorber to the rear suspension arm. <Ref. to RS-10, INSTALLATION, Rear Arm.>

Tightening torque:
62 N·m (6.3 kgf-m, 45.7 ft-lb)

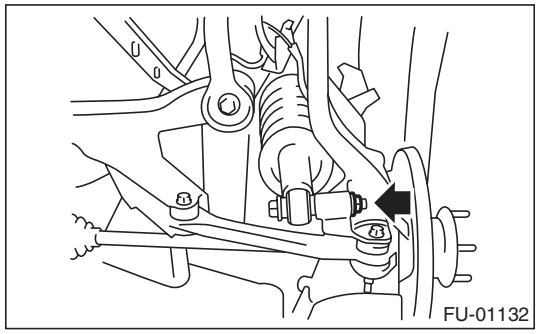

7) Tighten the bolts holding the parking brake cable clamp.

Tightening torque:
18 N·m (1.8 kgf-m, 13.3 ft-lb)

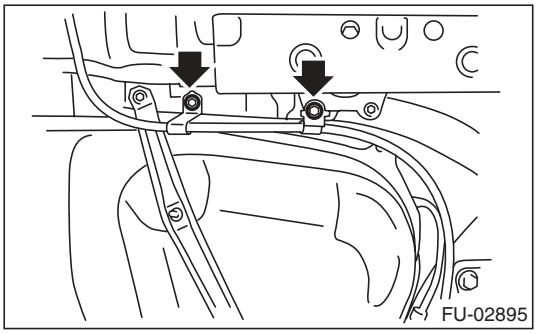

Tightening torque:
33 N·m (3.4 kgf-m, 24.3 ft-lb)

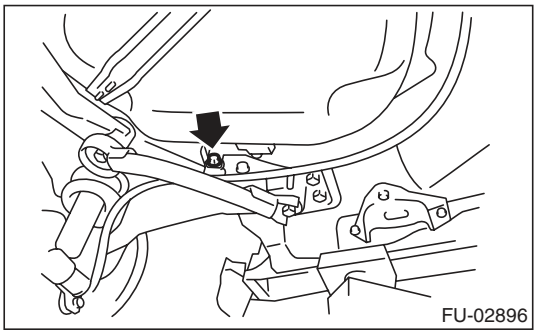

8) Connect the connector to the rear ABS wheel speed sensor.

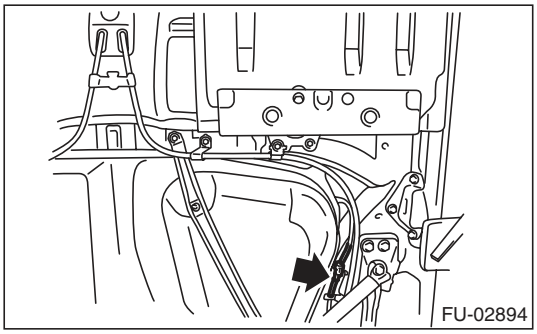

9) Install the heat shield cover.

Tightening torque:
17.5 N·m (1.8 kgf-m, 12.9 ft-lb)

10) Install the fuel tank protector.

Tightening torque:
Nut: 9 N·m (0.9 kgf-m, 6.6 ft-lb)
Bolt: 17.5 N·m (1.8 kgf-m, 12.9 ft-lb)

11) Install the propeller shaft. <Ref. to DS-11, INSTALLATION, Propeller Shaft.>
12) Install the rear exhaust pipe. <Ref. to EX(H6DO)-8, INSTALLATION, Rear Exhaust Pipe.>
13) Lower the vehicle.

14) Connect the parking brake cable to the parking brake assembly. <Ref. to PB-7, INSTALLATION, Parking Brake Assembly (Rear Disc Brake).>
15) Install the rear disc brake assembly.

Tightening torque:
66 N·m (6.7 kgf-m, 48.7 ft-lb)

16) Tighten the bolts which secure the rear brake hose mounting bracket.

Tightening torque:
33 N·m (3.4 kgf-m, 24.3 ft-lb)

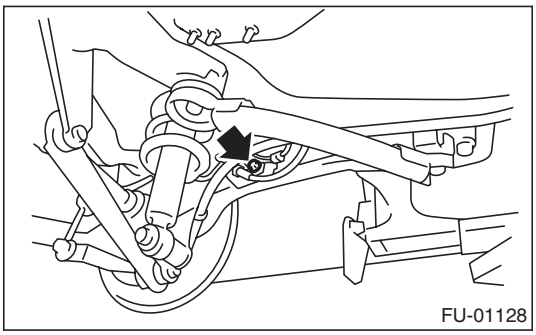

17) Install the rear wheels.

Tightening torque:
120 N·m (12.2 kgf-m, 88.5 ft-lb)

18) Connect the quick connector of the evaporation pipe. <Ref. to FU(H6DO)-66, INSTALLATION, Fuel Delivery and Evaporation Lines.>

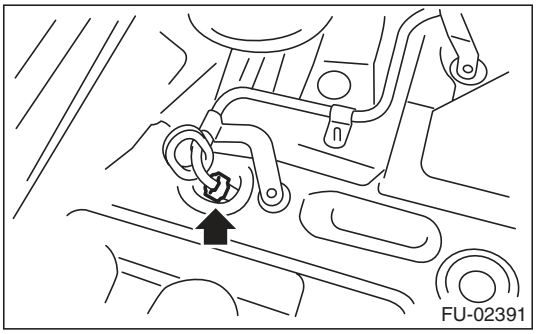

19) Install the pipe protector.

Tightening torque:
T1: 1 N·m (0.1 kgf-m, 0.7 ft-lb)
T2: 7.5 N·m (0.8 kgf-m, 5.5 ft-lb)

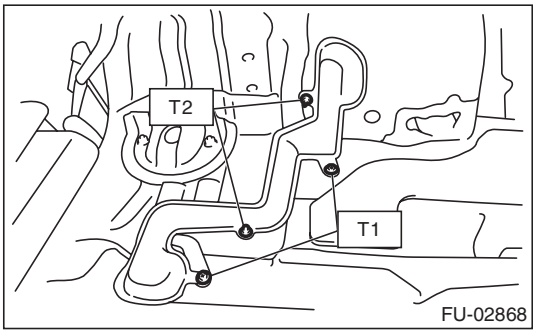

20) Install the trunk room trim. (Sedan model) <Ref. to EI-71, INSTALLATION, Trunk Room Trim.>
21) Install the rear quarter trim. (Wagon model) <Ref. to EI-64, INSTALLATION, Rear Quarter Trim.>
22) Connect connector (A) to the fuel sub level sensor.
23) Connect the quick connector of the fuel delivery hose (B). <Ref. to FU(H6DO)-66, INSTALLATION, Fuel Delivery and Evaporation Lines.>

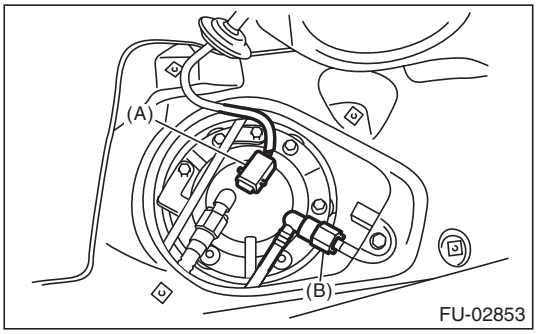

24) Install the service hole cover of fuel sub level sensor.

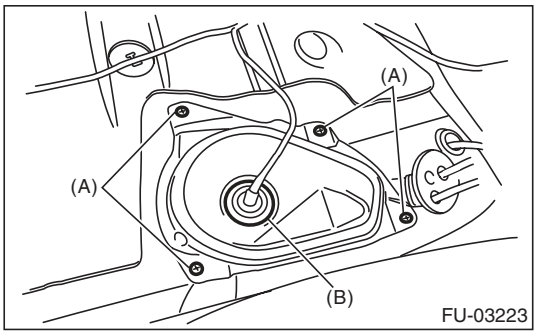

(A) Bolt
(B) Grommet

25) Connect connector (A) and install clip (B).

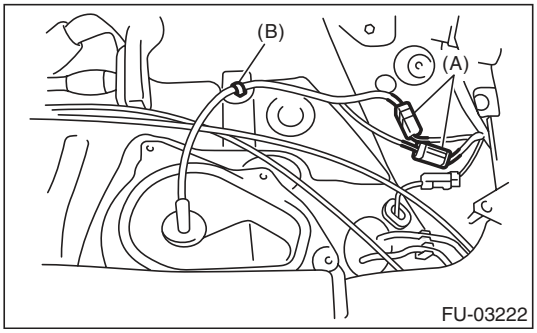

26) Connect the connector to the fuel pump.

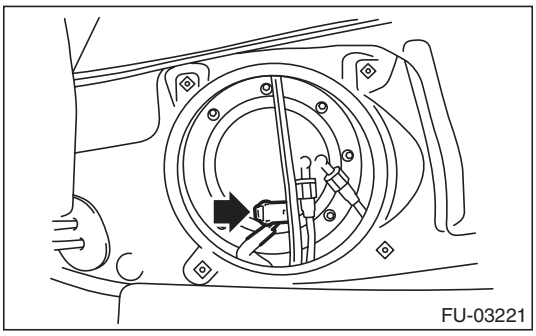

27) Install the service hole cover of fuel pump.

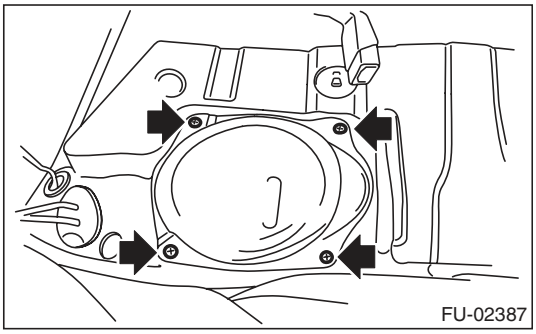

28) Install the rear seat.
29) Install the fuse of fuel pump to the main fuse box.
30) Connect the ground cable to battery.

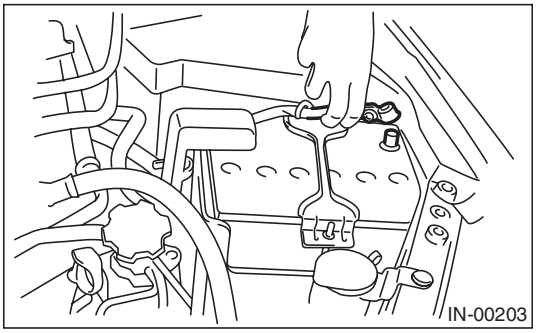

31) Inspect the wheel alignment and adjust if necessary.

C: INSPECTION

1) Check that the fuel tank does not have holes, cracks or is damaged in any way.
2) Make sure that the fuel pipe and fuel hose are not cracked and that the connections are tight.

26. Fuel Filler Pipe

A: REMOVAL

WARNING:
Place "NO OPEN FLAMES" signs near the working area.

CAUTION:
Be careful not to spill fuel.

1) Set the vehicle on a lift.
2) Release the fuel pressure. <Ref. to FU(H6DO)-43, RELEASING OF FUEL PRESSURE, PROCEDURE, Fuel.>
3) Drain fuel. <Ref. to FU(H6DO)-43, DRAINING FUEL (WITH SUBARU SELECT MONITOR), PROCEDURE, Fuel.>
4) Disconnect the ground cable from battery.

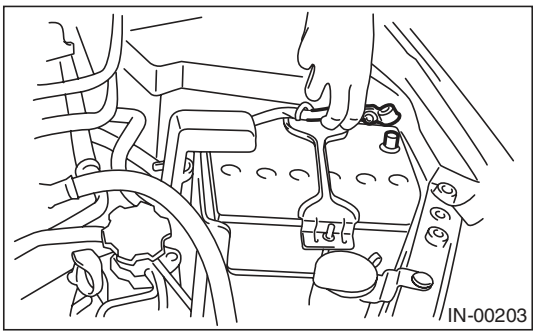

5) Open the fuel filler lid, and remove the filler cap.
6) Remove the screws which secure gasket.

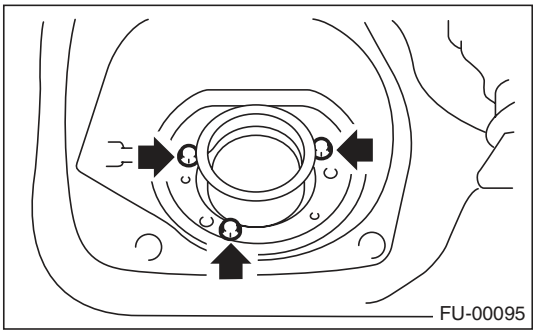

7) Remove the rear wheel RH.
8) Lift up the vehicle.
9) Remove the mud guard. <Ref. to EI-29, REMOVAL, Mud Guard.>
10) Remove the rear sub frame. <Ref. to RS-21, REMOVAL, Rear Sub Frame.>
11) Remove the bolts which hold fuel filler pipe bracket on the body.

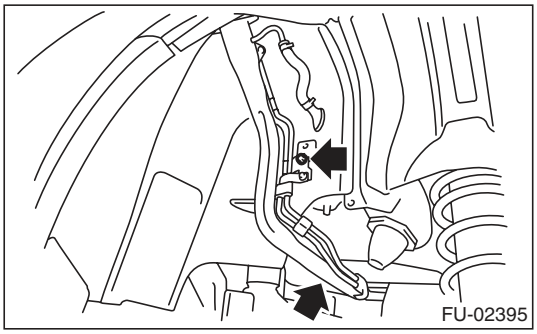

12) Disconnect the fuel filler hose (A) and evaporation hose (B).

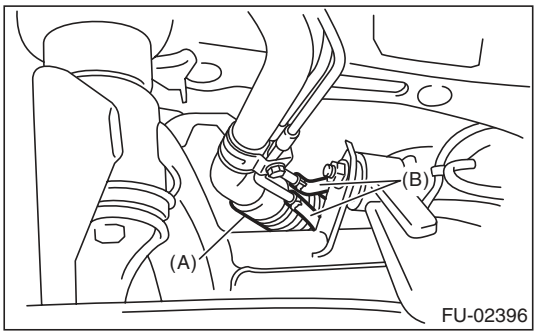

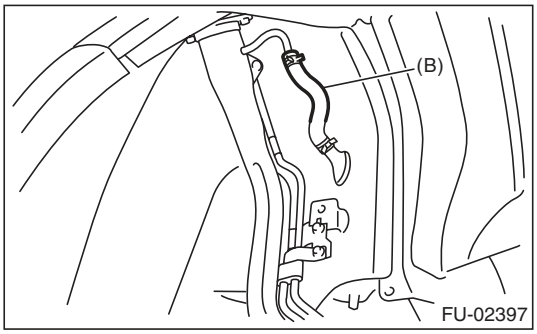

13) Remove the fuel filler pipe to the underside of the vehicle.

B: INSTALLATION

1) Open the fuel filler lid.
2) Set the fuel saucer (A) with rubber gasket (C), and insert the fuel filler pipe into hole from the inner side of apron.
3) Align the holes in fuel filler pipe neck and set the cup (B), and tighten the screws.

NOTE:
If the edges of rubber gasket are folded toward inside, straighten it with a flat tip screwdriver.

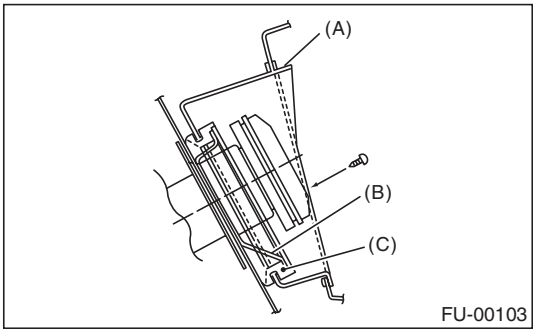

4) Securely insert the fuel filler hose (A) and evaporation hose (B) into the specified position, then tighten the clamp or clip as shown in the figure.

Tightening torque:
2.5 N·m (0.3 kgf-m, 1.8 ft-lb)

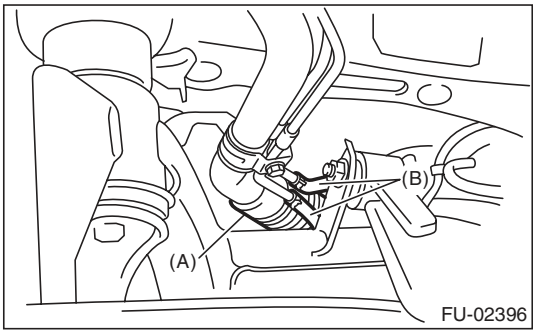

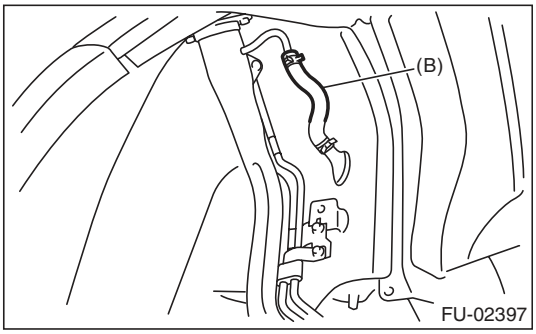

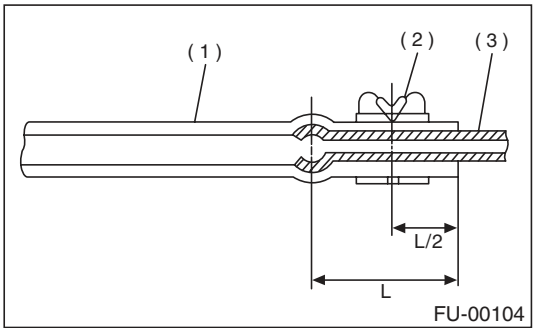

(1) Hose
(2) Clip or clamp
(3) Pipe

5) Tighten the bolts which hold fuel filler pipe bracket on the body.

Tightening torque:
7.5 N·m (0.8 kgf-m, 5.5 ft-lb)

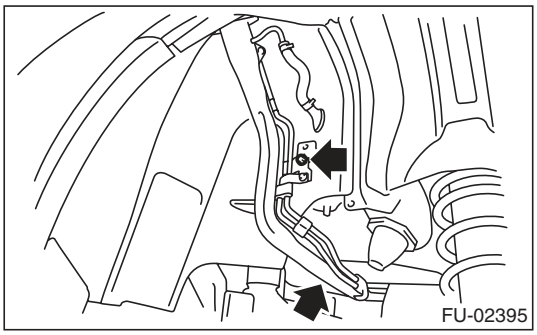

6) Install the rear sub frame. <Ref. to RS-21, INSTALLATION, Rear Sub Frame.>
7) Install the mud guard. <Ref. to EI-29, INSTALLATION, Mud Guard.>
8) Lower the vehicle.
9) Install the rear wheel RH.

Tightening torque:
120 N·m (12.2 kgf-m, 88.5 ft-lb)

10) Connect the ground cable to battery.

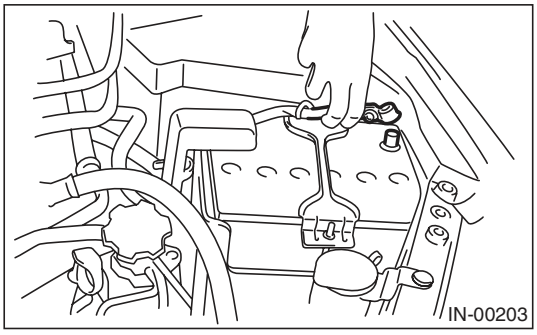

11) Inspect the wheel alignment and adjust if necessary.

C: INSPECTION

1) Check that the fuel tank does not have holes, cracks or is damaged in any way.
2) Make sure that the fuel hose is not cracked and that the connections are tight.

D: DISASSEMBLY

1) Move the clip and disconnect the evaporation hose from the shut valve.

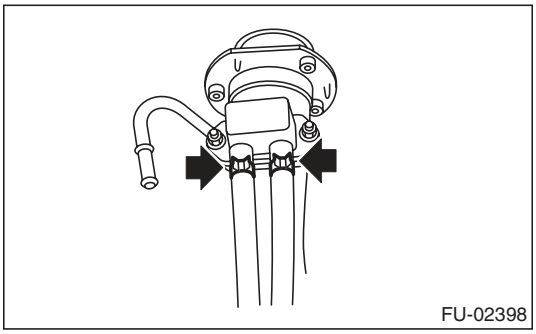

2) Remove the nut which holds the evaporation pipe assembly to the fuel filler pipe.

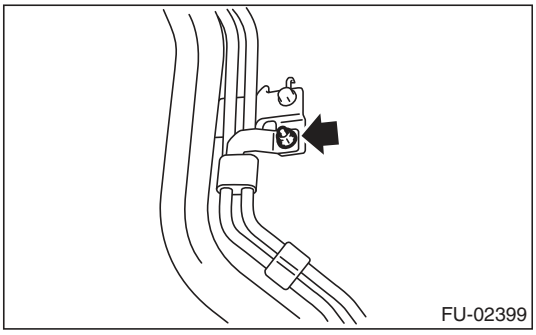

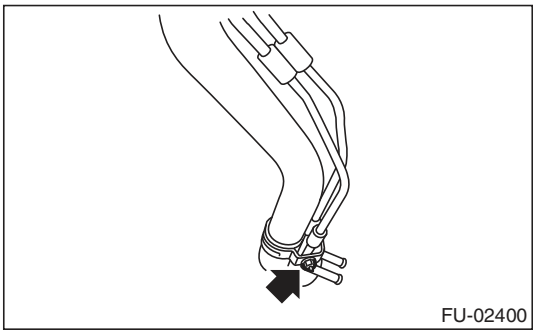

3) Remove the shut valve from the fuel filler pipe. <Ref. to EC(H4SO)-15, REMOVAL, Shut Valve.>

E: ASSEMBLY

1) Install the shut valve to the fuel filler pipe. <Ref. to EC(H4SO)-15, INSTALLATION, Shut Valve.>
2) Tighten the nuts which secure the evaporation pipe assembly to the fuel filler pipe.

Tightening torque:
7.5 N·m (0.8 kgf-m, 5.5 ft-lb)

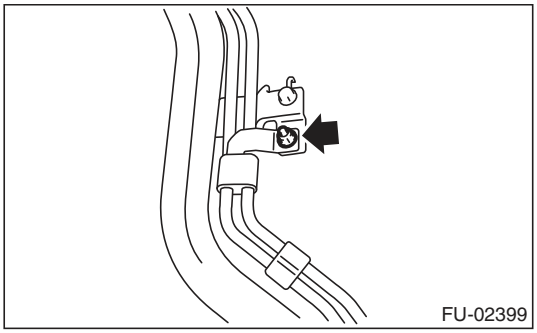

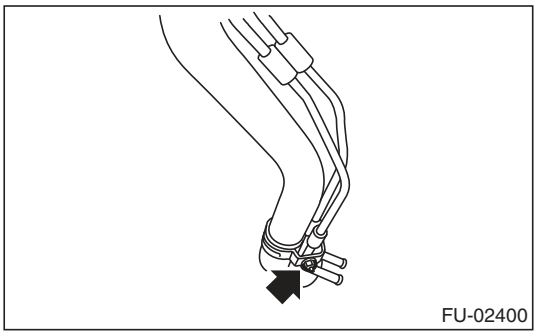

3) Connect the evaporation hose to the shut valve.

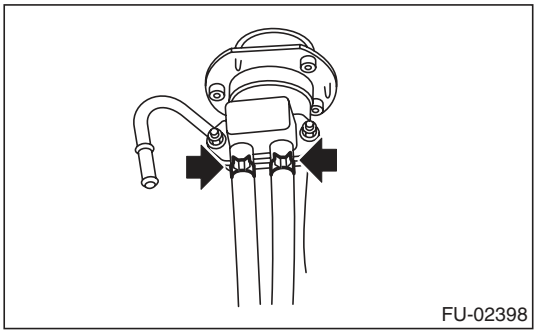

27. Fuel Pump

A: REMOVAL

WARNING:
Place "NO OPEN FLAMES" signs near the working area.

CAUTION:
- **Be careful not to spill fuel.**
- **If the fuel gauge indicates that two thirds or more of the fuel is remaining, be sure to drain fuel before starting work to avoid the fuel to spill.**

NOTE:
Fuel pump assembly consists of fuel pump, fuel filter and fuel level sensor.

1) Release the fuel pressure. <Ref. to FU(H6DO)-43, RELEASING OF FUEL PRESSURE, PROCEDURE, Fuel.>
2) Drain fuel. <Ref. to FU(H6DO)-43, DRAINING FUEL (WITH SUBARU SELECT MONITOR), PROCEDURE, Fuel.>
3) Disconnect the ground cable from battery.

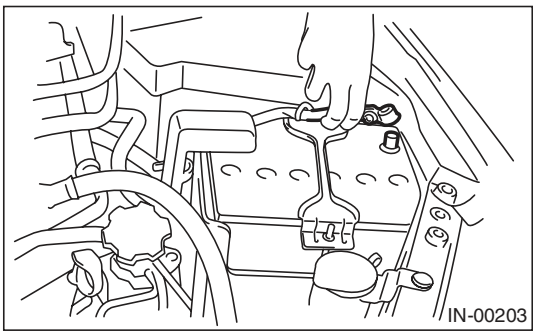

4) Remove the rear seat.
5) Remove the service hole cover.

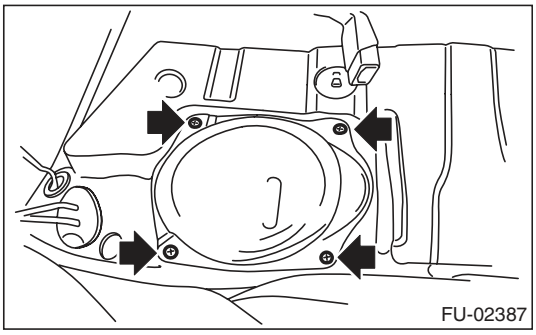

6) Disconnect the connector from fuel pump.

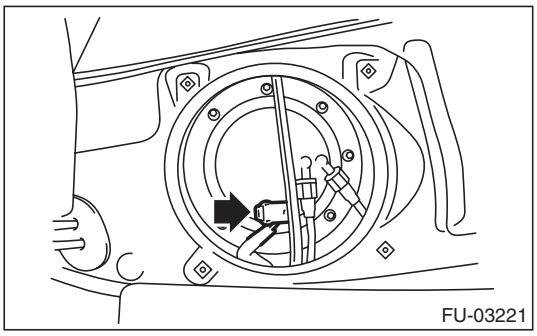

7) Disconnect the quick connector on the fuel delivery hose and jet pump hose. <Ref. to FU(H6DO)-65, REMOVAL, Fuel Delivery and Evaporation Lines.>

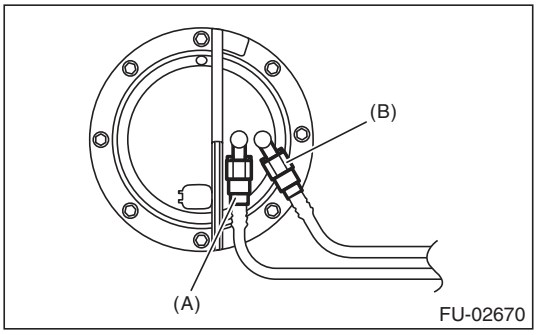

(A) Fuel delivery hose
(B) Jet pump hose

8) Remove the nuts which install fuel pump assembly onto fuel tank.
9) Remove the fuel pump assembly from the fuel tank.

B: INSTALLATION

Install in the reverse order of removal while being careful of the following.

- Make sure the sealing portion is free from fuel or foreign matter before installation.
- When assembling, point the protrusion of the gasket (A) towards the front of the vehicle.
- Insert the protrusion (B) of the gasket into the upper plate. (3 places)
- Align the protrusion (C) of the fuel pump assembly to the cut out in the upper plate.
- Tighten the nuts to the specified torque in the order as shown in the figure.

NOTE:
Use new gasket and retainer.

Tightening torque:
4.4 N·m (0.4 kgf-m, 3.2 ft-lb)

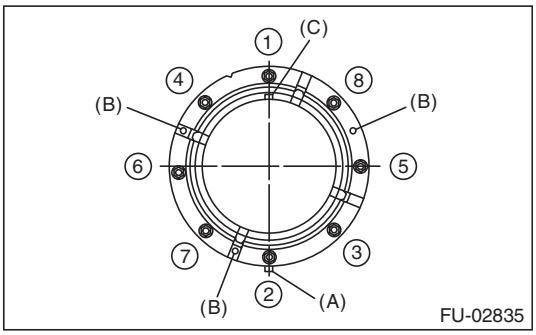

C: INSPECTION

Connect the lead harness to the connector terminal of fuel pump, and apply the battery power supply to check whether the pump operates.

CAUTION:

- **Wipe off fuel completely.**
- **Keep the battery as far apart from fuel pump as possible.**
- **Be sure to perform the ON/OFF operation on the battery side.**
- **Do not run the fuel pump for a long time under non-load condition.**

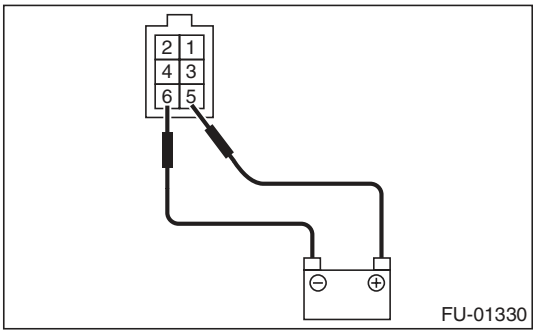

28. Fuel Level Sensor

A: REMOVAL

WARNING:
Place "NO OPEN FLAMES" signs near the working area.

CAUTION:
- **Be careful not to spill fuel.**
- **If the fuel gauge indicates that two thirds or more of the fuel is remaining, be sure to drain fuel before starting work to avoid the fuel to spill.**

NOTE:
The fuel level sensor is built in fuel pump assembly.
1) Remove the fuel pump assembly. <Ref. to FU(H6DO)-55, REMOVAL, Fuel Pump.>
2) Disconnect the connector from fuel pump bracket.
3) Remove the fuel temperature sensor.
4) Remove the fuel level sensor.

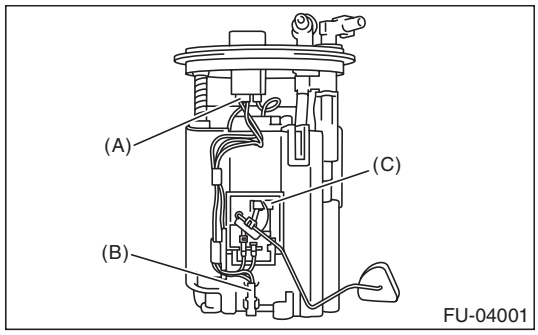

(A) Connector
(B) Fuel temperature sensor
(C) Fuel level sensor

B: INSTALLATION

Install in the reverse order of removal.

29. Fuel Sub Level Sensor

A: REMOVAL

WARNING:
Place "NO OPEN FLAMES" signs near the working area.

CAUTION:
- **Be careful not to spill fuel.**
- **If the fuel gauge indicates that two thirds or more of the fuel is remaining, be sure to drain fuel before starting work to avoid the fuel to spill.**

1) Release the fuel pressure. <Ref. to FU(H6DO)-43, RELEASING OF FUEL PRESSURE, PROCEDURE, Fuel.>
2) Drain fuel. <Ref. to FU(H6DO)-43, DRAINING FUEL (WITH SUBARU SELECT MONITOR), PROCEDURE, Fuel.>
3) Disconnect the ground cable from battery.

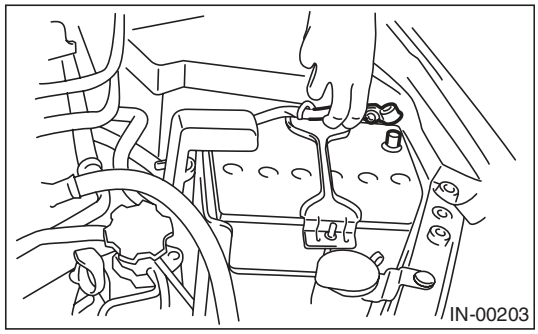

4) Remove the rear seat.
5) Remove the service hole cover.
   (1) Remove bolt (A).
   (2) Push the grommet (B) down and remove the service hole cover.

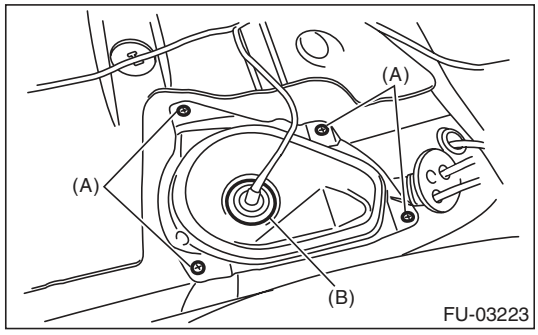

6) Disconnect the connector from the fuel sub level sensor.

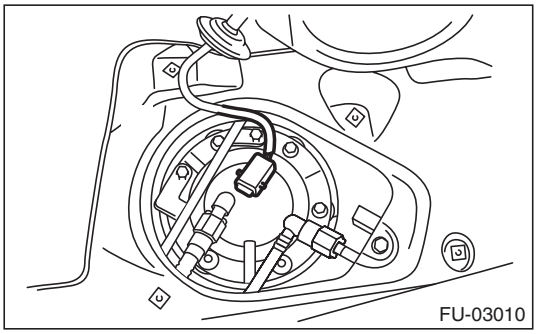

7) Disconnect the quick connector on the fuel delivery hose and jet pump hose. <Ref. to FU(H6DO)-65, REMOVAL, Fuel Delivery and Evaporation Lines.>
8) Remove the nuts and bolts which install fuel sub level sensor on fuel tank.

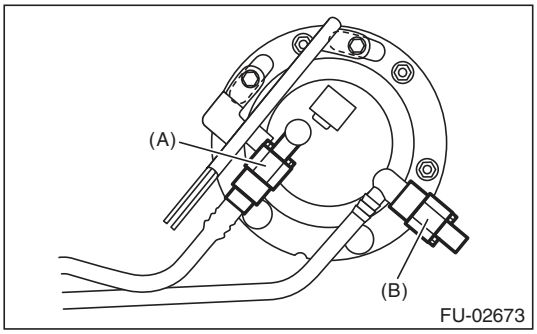

(A) Jet pump hose
(B) Fuel delivery hose

9) Remove the fuel sub level sensor.

B: INSTALLATION

Install in the reverse order of removal while being careful of the following.

- Make sure the sealing portion is free from fuel or foreign matter before installation.
- Align protrusion (A) of the gasket to the position shown in the following figure.
- Align the protrusion (B) of fuel sub level sensor with the cutout on the upper plate of fuel sub level sensor.
- Tighten the nuts and bolts to the specified torque in the order as shown in the figure.

NOTE:
Use a new gasket and retainer.

Tightening torque:
4.4 N·m (0.4 kgf-m, 3.2 ft-lb)

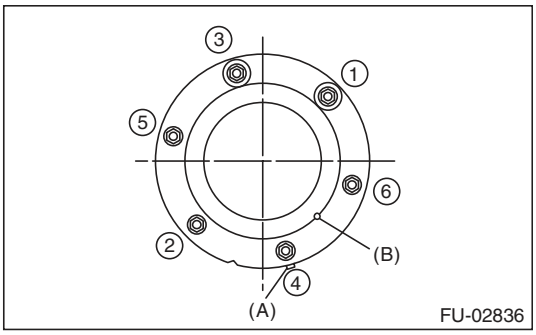

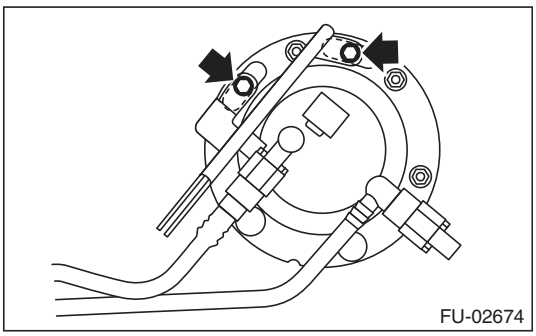

30. Fuel Filter

A: REMOVAL

WARNING:
Place "NO OPEN FLAMES" signs near the working area.

CAUTION:
- **Be careful not to spill fuel.**
- **If the fuel gauge indicates that two thirds or more of the fuel is remaining, be sure to drain fuel before starting work to avoid the fuel to spill.**
- **Be careful not to drop or apply any impact to the fuel pump during work. This may deteriorate its performance.**

NOTE:
The fuel filter is built in fuel pump assembly.

1) Remove the fuel pump assembly. <Ref. to FU(H6DO)-55, REMOVAL, Fuel Pump.>

2) Remove the fuel level sensor and fuel temperature sensor. <Ref. to FU(H6DO)-57, REMOVAL, Fuel Level Sensor.>

3) Disconnect the pump assembly connector from the sub tank bracket assembly.

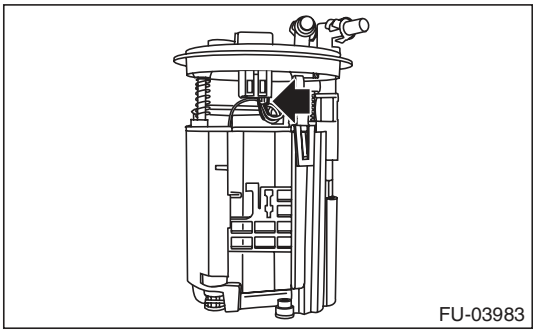
FU-03983

4) Cut off the tab holders connecting the sub tank bracket assembly and the sub tank in four locations, and separate the two.

CAUTION:
Be careful not to damage the sub tank.

NOTE:
If the O-ring is remaining on the subtank, remove.

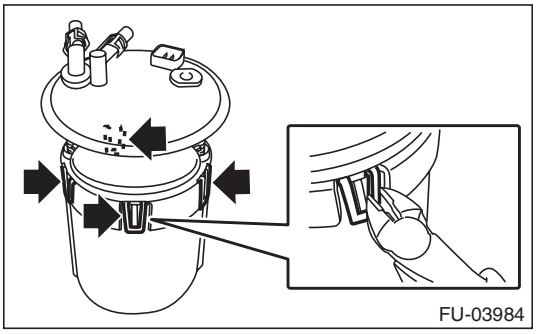
FU-03984

5) Disconnect the fuel piping connector from the fuel filter assembly in two locations.

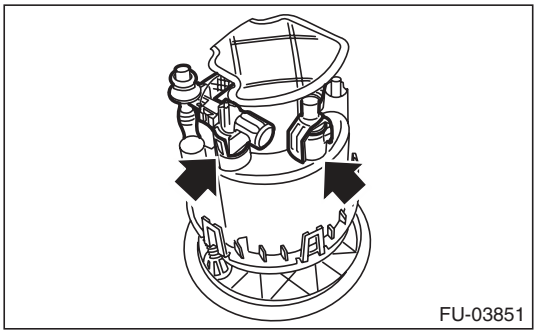
FU-03851

6) Push to compress the fuel filter assembly in the direction of the arrow, remove clip (A), and separate the sub tank bracket assembly and the fuel filter assembly.

CAUTION:
When separating the sub tank bracket assembly and the fuel filter assembly, be careful not to damage the ground wire.

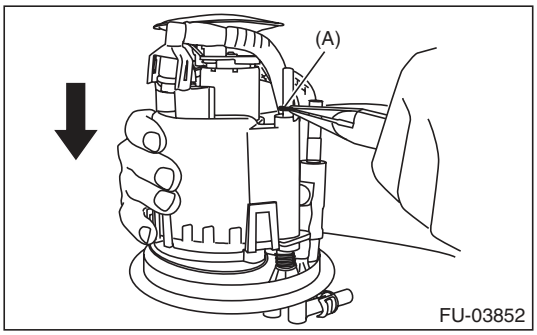

FU-03852

7) Disconnect the connector from the pump assembly.

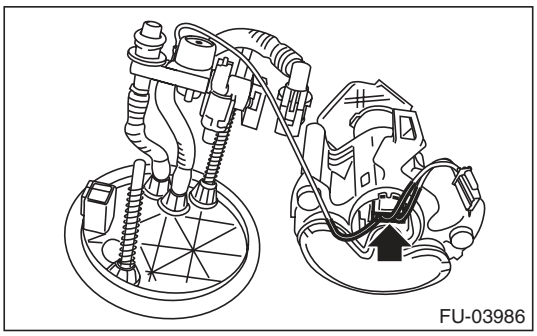
FU-03986

8) Lift the two tab holders connecting the pump assembly to the fuel filter using a flat tip screwdriver [with a shaft diameter of approx. 3 mm (0.12 in)], etc., and separate the fuel filter and pump assembly.

CAUTION:

- **To prevent damaging the tabs of the pump assembly, wrap the tip of flat tip screwdriver (A), etc. with tape (B).**

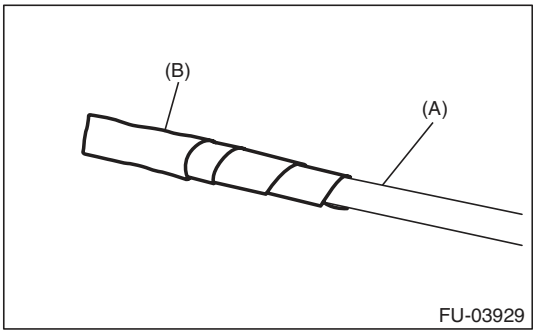

- **Be careful not to drop or apply any impact to the pump assembly.**

NOTE:
If the spacer and O-ring is remaining on the pump assembly, remove these.

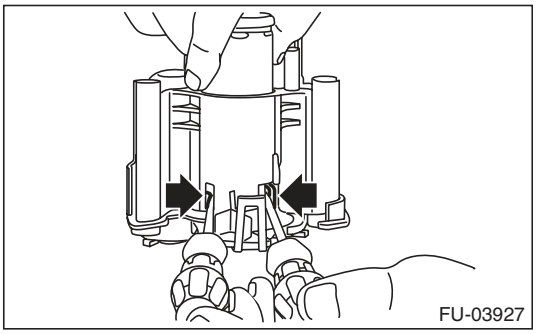

B: INSTALLATION

1) Assemble o-ring (A) and spacer (B) to the fuel pump, and attach the pump assembly to the fuel filter.

NOTE:
- Use new O-rings [8 mm (0.31 in) inner diameter].
- Use a new spacer.
- Apply gasoline to the o-ring.
- Insert the pump assembly until a “pop” is heard.

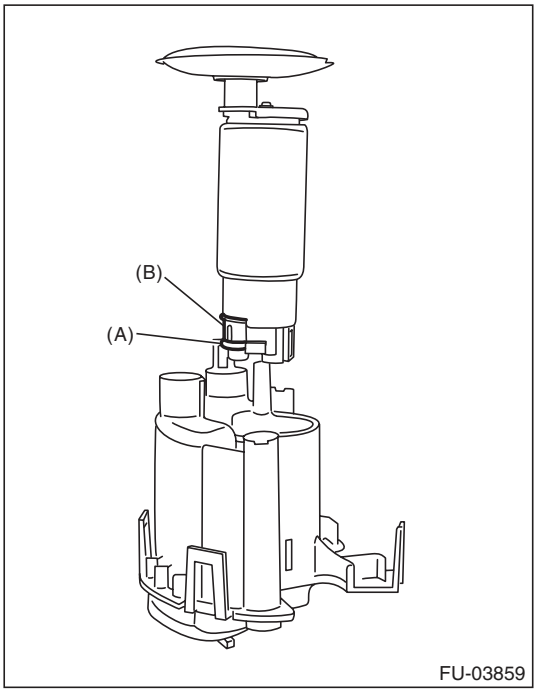

2) Connect the connector to the pump assembly.

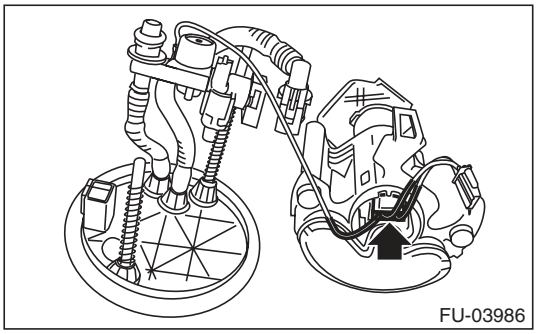

3) Attach spring (A) to the metal rod of the sub tank bracket assembly, and assemble the fuel filter assembly.

NOTE:
Use a new spring.

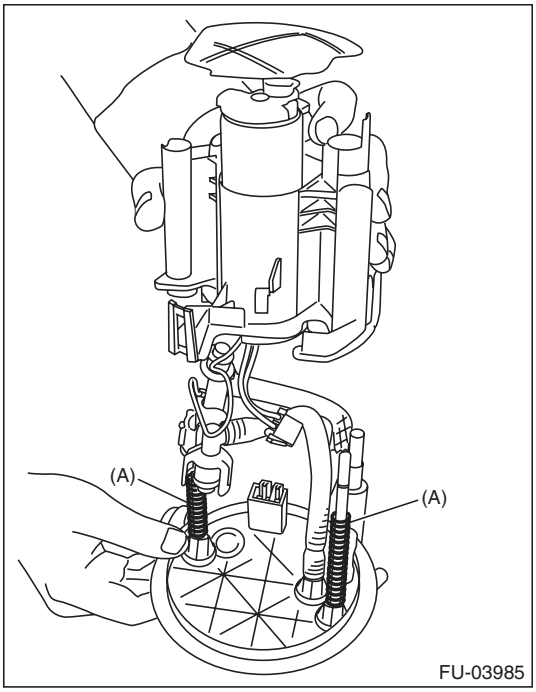

4) Push the fuel filter assembly in the direction of the arrow to compress, and attach clip (A).

NOTE:
Use a new clip.

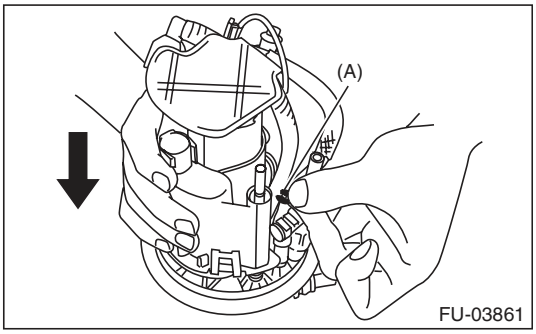

5) Connect the fuel piping connector to the fuel filter assembly.

NOTE:
- Use new O-rings.
- Apply gasoline to the o-ring.
- The O-rings of the black and white connectors are identified by a difference in diameter. Be careful not to confuse the two during assembly.

O-ring inner diameter:
Black connector O-ring [Approx. 7 mm (0.28 in)]
White connector O-ring [Approx. 8 mm (0.31 in)]

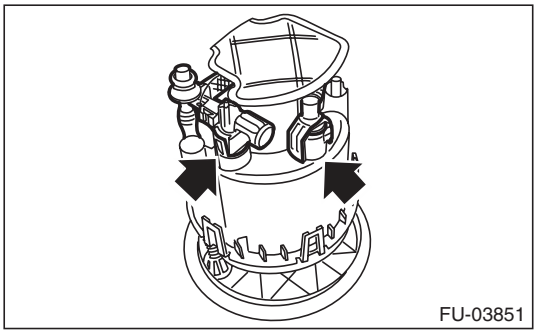

6) Attach the O-ring (A) to the fuel filter assembly, and attach the subtank to the sub tank bracket assembly.

NOTE:
- Use new O-rings [8 mm (0.31 in) inner diameter].
- Apply gasoline to the o-ring.
- Insert the pump assembly until a “pop” is heard.

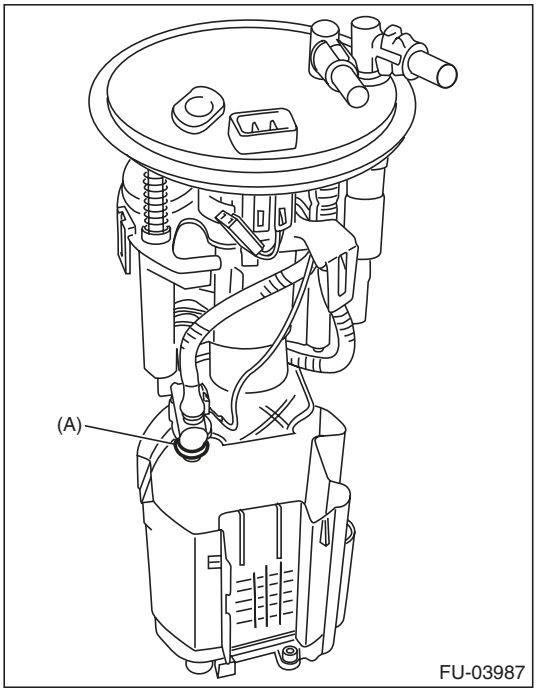

7) Replace the cushion on the rear face of the sub tank with a new cushion.

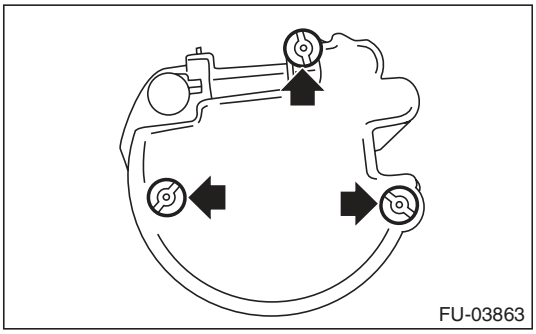

8) Connect the pump assembly connector to the sub tank bracket assembly.

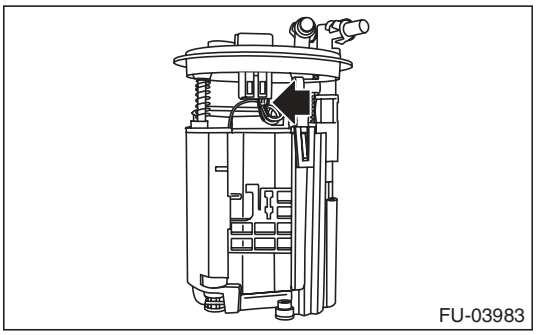

9) Install the fuel level sensor and fuel temperature sensor. <Ref. to FU(H6DO)-57, INSTALLATION, Fuel Level Sensor.>

10) Install the fuel pump assembly. <Ref. to FU(H6DO)-56, INSTALLATION, Fuel Pump.>

31. Fuel Damper

A: REMOVAL

WARNING:
Place "NO OPEN FLAMES" signs near the working area.

CAUTION:
- **Be careful not to spill fuel.**
- **Catch the fuel from hoses using a container or cloth.**

1) Release the fuel pressure. <Ref. to FU(H6DO)-43, RELEASING OF FUEL PRESSURE, PROCEDURE, Fuel.>
2) Remove the fuel damper from the fuel delivery line.

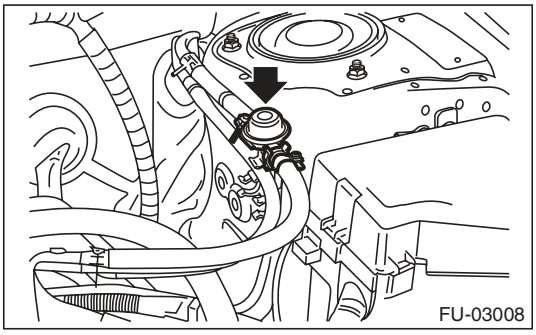

B: INSTALLATION

CAUTION:
If fuel hoses or clamps are damaged, replace them with new parts.
Install in the reverse order of removal.

Tightening torque:
1.25 N·m (0.1 kgf-m, 0.9 ft-lb)

32. Fuel Delivery and Evaporation Lines

A: REMOVAL

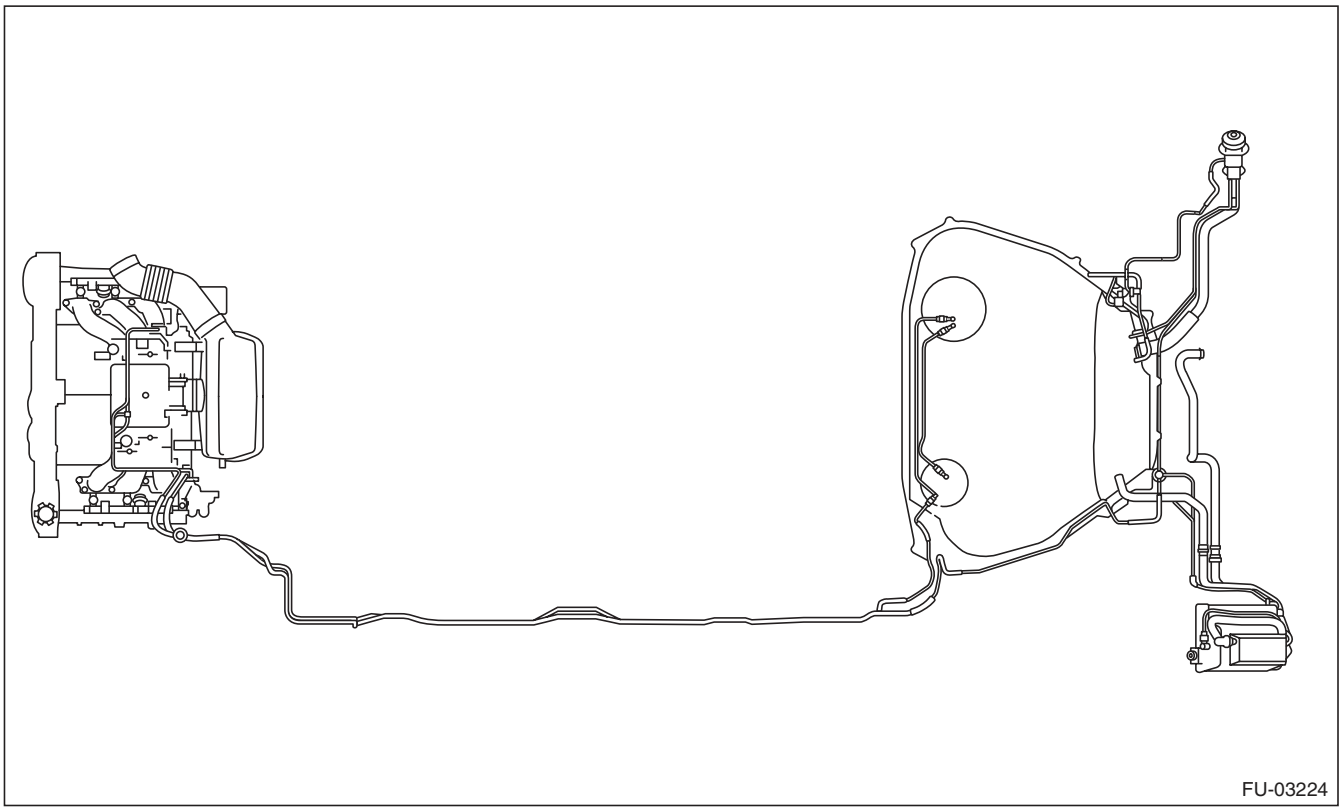

WARNING:
Place "NO OPEN FLAMES" signs near the working area.

CAUTION:
- **Be careful not to spill fuel.**
- **Catch the fuel from hoses using a container or cloth.**

1) Set the vehicle on a lift.
2) Release the fuel pressure. <Ref. to FU(H6DO)-43, RELEASING OF FUEL PRESSURE, PROCEDURE, Fuel.>
3) Open the fuel filler lid, and remove the fuel filler cap.
4) Remove the floor mat. <Ref. to EI-72, REMOVAL, Floor Mat.>
5) In the engine compartment, disconnect the fuel delivery hoses and evaporation hose.
   (1) Disconnect the quick connector of the fuel delivery line by pushing the ST in the direction of the arrow.

ST	42099AE000	QUICK CONNECTOR RELEASE

   (2) Remove the clip and disconnect the evaporation hose from the pipe.

CAUTION:
- **Be careful not to spill fuel.**
- **Catch the fuel from hoses using a container or cloth.**

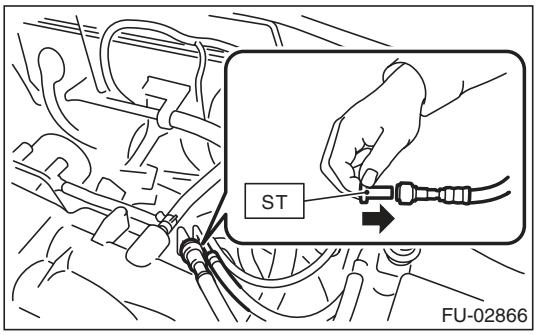

6) Lift up the vehicle.
7) Remove the canister. <Ref. to EC(H6DO)-6, REMOVAL, Canister.>
8) Remove the fuel tank. <Ref. to FU(H6DO)-45, REMOVAL, Fuel Tank.>
9) Remove the fuel pipe assembly.
10) Disconnect the quick connector, and then disconnect the fuel delivery hose and jet pump hose.
(1) Clean the pipe and connector, if they are covered with dust.
(2) To prevent from damaging or entering foreign matter, wrap the pipes and connectors with plastic bag etc.

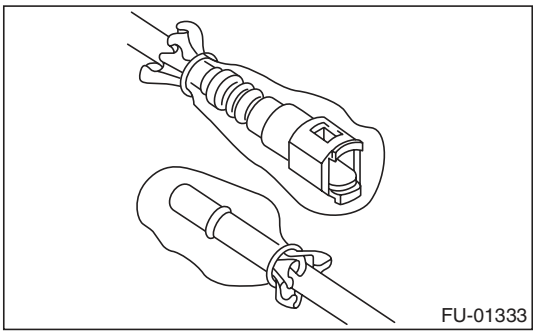

(3) Hold the connector (A) and push the retainer (B) down.
(4) Pull out the connector (A) from the retainer (B).

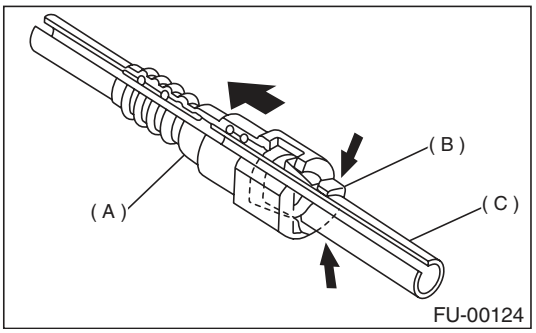

(A) Connector
(B) Retainer
(C) Pipe

B: INSTALLATION

Install in the reverse order of removal while being careful of the following.

1. CONNECTING THE FUEL LINE QUICK CONNECTOR

CAUTION:
Make sure there is no damage or dust on the connections. If necessary, clean seal surface of pipe.

NOTE:
Use a new retainer.

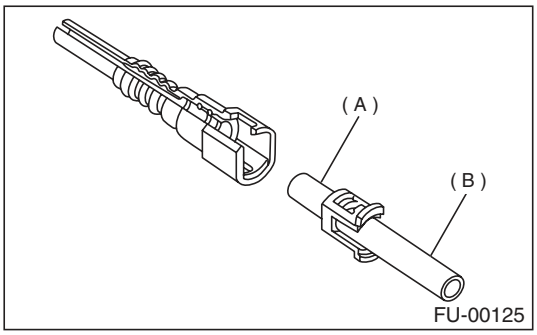

(A) Seal surface
(B) Pipe

1) Set the new retainer (B) to connector (A).
2) Push the pipe into the connector completely.

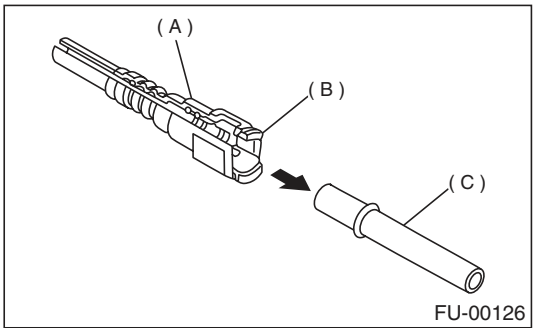

(A) Connector
(B) Retainer
(C) Pipe

CAUTION:
- **Pull the connector to ensure it is connected securely.**
- **Make sure the two retainer pawls are engaged in their mating positions in the connector.**
- **Be sure to inspect hoses and their connections for any leakage of fuel.**

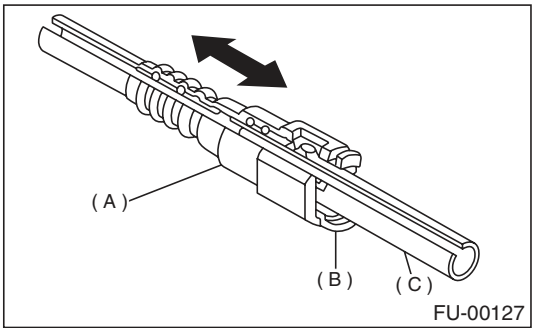

(A) Connector
(B) Retainer
(C) Pipe

2. CONNECTING THE FUEL DELIVERY HOSE

Connect the fuel delivery hose to the pipe with an overlap of 20 to 25 mm (0.79 to 0.98 in).
Type A: When the amount to be inserted is specified.
Type B: When the amount to be inserted is not specified.

L1: 2.5±1.5 mm (0.098±0.059 in)

L2: 22.5±2.5 mm (0.886±0.098 in)

CAUTION:
Be sure to inspect hoses and their connections for any leakage of fuel.

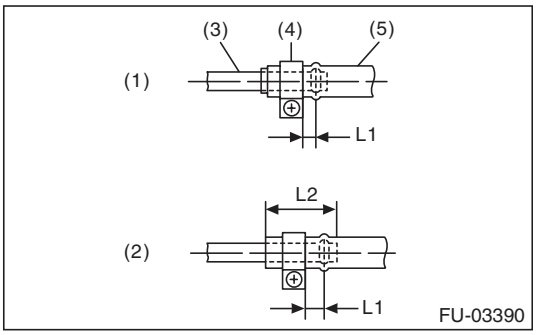

(1) Type A
(2) Type B
(3) Pipe
(4) Clamp
(5) Hose

3. CONNECTING THE EVAPORATION HOSE

Connect the evaporation hose to the pipe with an overlap of 15 to 20 mm (0.59 to 0.79 in).

L = 17.5±2.5 mm (0.689±0.098 in)

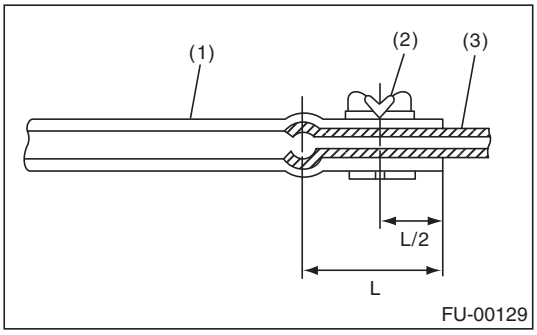

(1) Hose
(2) Clip
(3) Pipe

C: INSPECTION

1) Make sure that there are no cracks on the fuel pipes and fuel hoses.
2) Make sure the fuel pipe and fuel hose connections are tightened firmly.

33. Fuel System Trouble in General

A: INSPECTION

Trouble and possible cause		Corrective action
1. Insufficient fuel supply to injector		
1)	Fuel pump does not operate.	
	❍ Defective terminal contact	Inspect contact, especially ground, and tighten it securely.
	❍ Trouble in electromagnetic or electronic circuit parts	Replace the faulty parts.
2)	Decline of fuel pump function	Replace the fuel pump.
3)	Clogged fuel filter	Replace the fuel filter. Clean or replace the fuel tank if necessary.
4)	Clogged or bent fuel pipe or hose	Clean, correct or replace fuel pipe or hose.
5)	Air is mixed in the fuel system.	Inspect or retighten each connection part.
6)	Clogged or bent air breather tube or pipe	Clean, correct or replace the air breather tube or pipe.
7)	Damaged diaphragm of pressure regulator	Replace.
2. Leakage or blow out of fuel		
1)	Loose joints of the fuel pipe	Retighten.
2)	Cracked fuel pipe, hose and fuel tank	Replace.
3)	Defective welding part on the fuel tank	Replace.
4)	Clogged or bent air breather tube or air vent tube	Clean, correct or replace the air breather tube or air vent tube.
3. Gasoline smell inside of compartment		
1)	Loose joints at air breather tube, air vent tube and fuel filler pipe	Retighten.
2)	Problem in tightening of the fuel saucer gasket air	Correct or replace the gasket.
3)	Inoperative fuel pump modulator or circuit	Replace.
4. Defective fuel meter indicator		
1)	Defective operation of fuel level sensor	Replace.
2)	Defective operation of fuel meter	Replace.
5. Noise		
1)	Large operation noise or vibration of fuel pump	Replace.

NOTE:
- When the vehicle is left unattended for an extended period of time, water may accumulate in the fuel tank. Fill the fuel tank fully to prevent this.
- In snow-covered areas, mountainous areas, skiing areas, etc. where ambient temperatures drop to 0°C (32°F) or less throughout the winter season, use a water removing agent in the fuel system to prevent freezing fuel system and accumulating water.
- When water is accumulated in fuel filter, fill the water removing agent in the fuel tank.
- Before using water removing agent, follow the cautions noted on the bottle.

1. General Description

A: CAUTION

- Wear appropriate work clothing, including a cap, protective goggles and protective shoes when performing any work.
- Remove contamination including dirt and corrosion before removal, installation or disassembly.
- Keep the disassembled parts in order and protect them from dust and dirt.
- Before removal, installation or disassembly, be sure to clarify the failure. Avoid unnecessary removal, installation, disassembly and replacement.
- Vehicle components are extremely hot after driving. Be wary of receiving burns from heated parts.
- Be sure to tighten fasteners including bolts and nuts to the specified torque.
- Place shop jacks or rigid racks at the specified points.
- Before disconnecting connectors of sensors or units, be sure to disconnect the ground cable from battery.

2. Front Catalytic Converter

A: REMOVAL

The front and rear catalytic converters are integrated into the front exhaust pipe; therefore, refer to “Front Exhaust Pipe” for the removal procedure. <Ref. to EX(H6DO)-4, REMOVAL, Front Exhaust Pipe.>

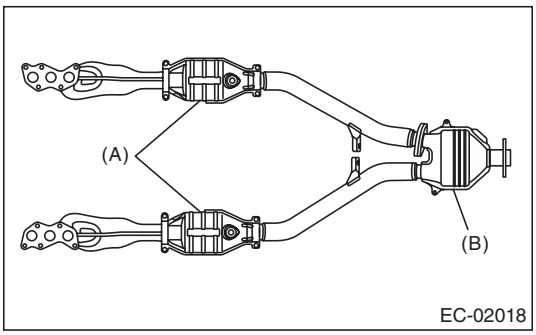

(A) Front catalytic converter
(B) Rear catalytic converter

B: INSTALLATION

The front and rear catalytic converters are integrated into front exhaust pipe as one unit; therefore, refer to “Front Exhaust Pipe” for installation procedure. <Ref. to EX(H6DO)-5, INSTALLATION, Front Exhaust Pipe.>

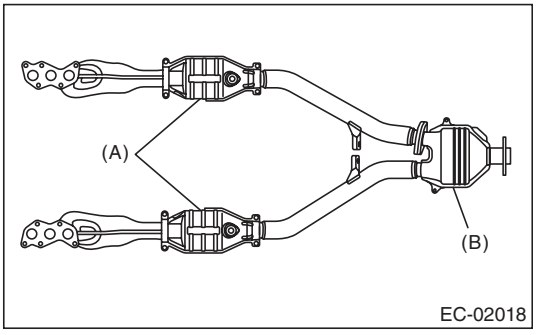

(A) Front catalytic converter
(B) Rear catalytic converter

C: INSPECTION

1) Check the connections and welds for exhaust leaks.
2) Check for hole or rust.

3. Rear Catalytic Converter

A: REMOVAL

The front and rear catalytic converters are integrated into the front exhaust pipe; therefore, refer to “Front Exhaust Pipe” for the removal procedure. <Ref. to EX(H6DO)-4, REMOVAL, Front Exhaust Pipe.>

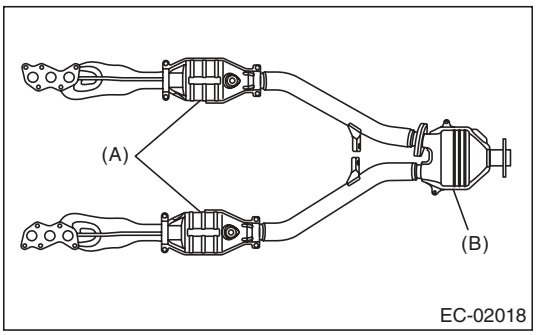

(A) Front catalytic converter
(B) Rear catalytic converter

B: INSTALLATION

The front and rear catalytic converters are integrated into front exhaust pipe as one unit; therefore, refer to “Front Exhaust Pipe” for installation procedure. <Ref. to EX(H6DO)-5, INSTALLATION, Front Exhaust Pipe.>

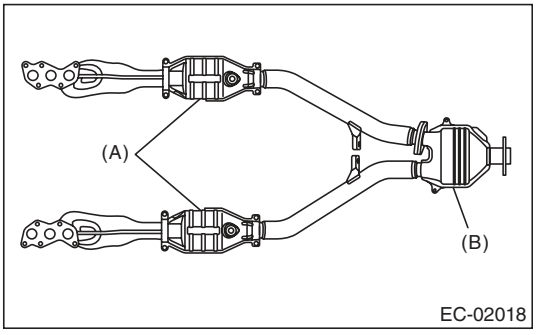

(A) Front catalytic converter
(B) Rear catalytic converter

C: INSPECTION

1) Check the connections and welds for exhaust leaks.
2) Check for hole or rust.

4. EGR Valve

A: REMOVAL

For removal procedures, refer to “FU” section. <Ref. to FU(H6DO)-27, REMOVAL, EGR Valve.>

B: INSTALLATION

For installation procedures, refer to “FU” section. <Ref. to FU(H6DO)-27, INSTALLATION, EGR Valve.>

5. Canister

A: REMOVAL

1) Set the vehicle on a lift.
2) Disconnect the ground cable from battery.

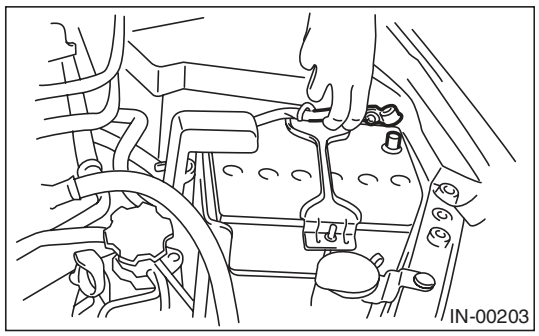

3) Lift up the vehicle.
4) Remove the rear wheel LH.
5) Remove the rear mud guard LH. <Ref. to EI-29, REAR MUD GUARD, REMOVAL, Mud Guard.>
6) Disconnect quick connector (A).
7) Disconnect the drain valve connector (B).
8) Remove clip (C).

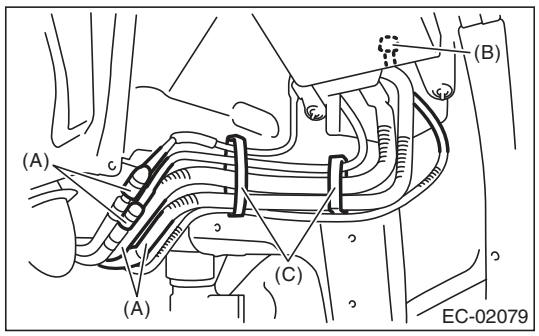

9) Remove the canister from body.

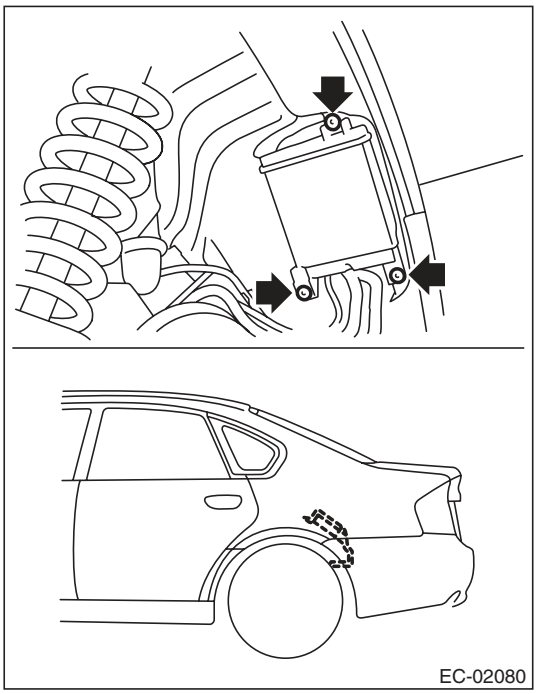

B: INSTALLATION

Install in the reverse order of removal.

NOTE:
Check that there is no damage or dust on the quick connector. If necessary, clean the seal surface of the pipe.

Tightening torque:
8 N·m (0.8 kgf-m, 5.9 ft-lb)

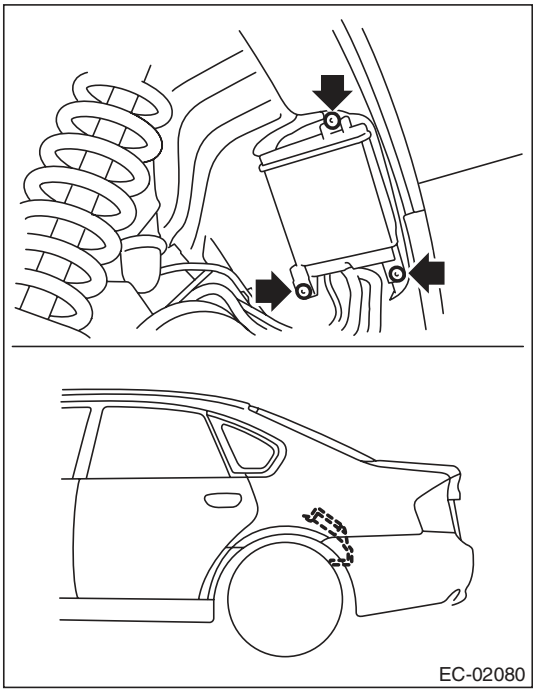

C: INSPECTION

Make sure the canister and canister hoses are not cracked or loose.

6. Purge Control Solenoid Valve

A: REMOVAL

1) Remove the collector cover.
2) Disconnect the ground cable from battery.

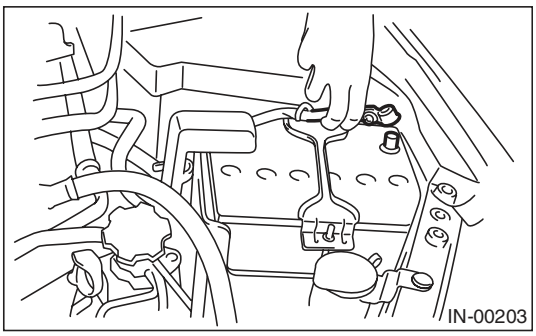

3) Remove the air intake chamber. <Ref. to IN(H6DO)-7, REMOVAL, Air Intake Chamber.>
4) Disconnect the connector and hoses of purge control solenoid valve, and then remove the purge control solenoid valve.

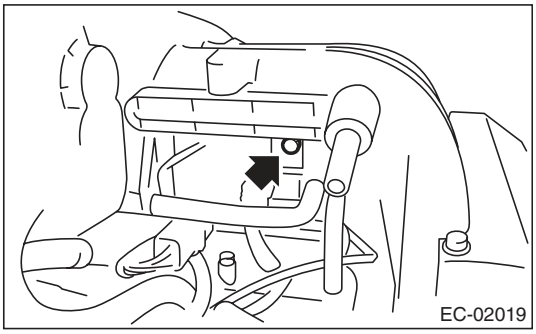

B: INSTALLATION

Install in the reverse order of removal.

Tightening torque:
19 N·m (1.9 kgf-m, 14.0 ft-lb)

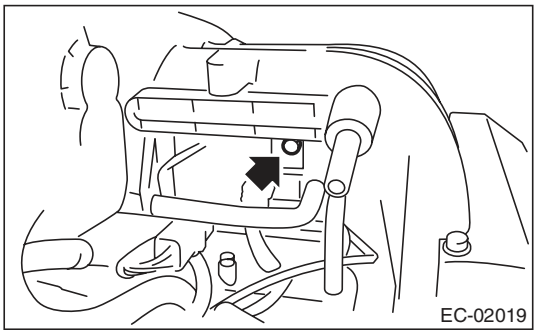

NOTE:
Connect the evaporation hose as shown in the figure.

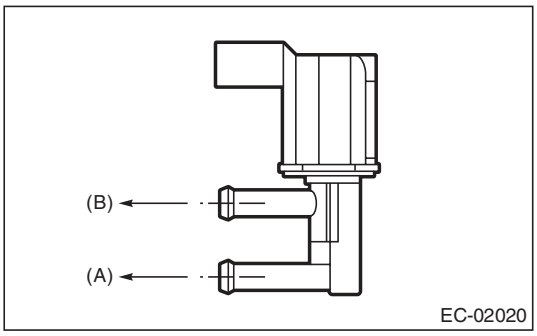

(A) To fuel pipe (evaporation line)
(B) To intake manifold

C: INSPECTION

Make sure the hoses are not cracked or loose.

7. Fuel Level Sensor

A: REMOVAL

For removal procedure, refer to “FU(H6DO)” section. <Ref. to FU(H6DO)-57, REMOVAL, Fuel Level Sensor.>

B: INSTALLATION

For installation procedure, refer to “FU(H6DO)” section. <Ref. to FU(H6DO)-57, INSTALLATION, Fuel Level Sensor.>

8. Fuel Temperature Sensor

A: REMOVAL

The fuel temperature sensor is integrated into fuel level sensor as one unit; therefore, refer to “Fuel Level Sensor” for removal procedure. <Ref. to FU(H6DO)-57, REMOVAL, Fuel Level Sensor.>

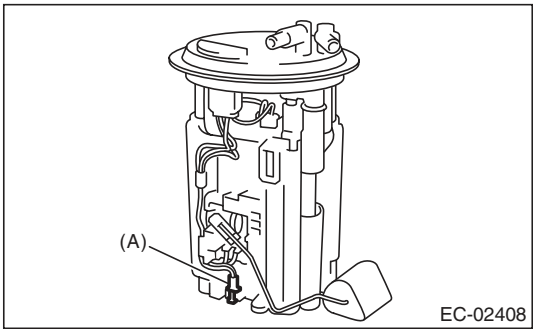

(A) Fuel temperature sensor

B: INSTALLATION

The fuel temperature sensor and fuel level sensor are integrated into one unit; therefore, refer to “Fuel Level Sensor” for installation procedure. <Ref. to FU(H6DO)-57, INSTALLATION, Fuel Level Sensor.>

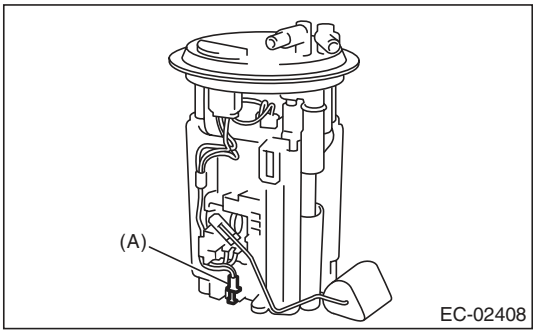

(A) Fuel temperature sensor

9. Fuel Sub Level Sensor

A: REMOVAL

For removal procedure, refer to “FU(H6DO)” section. <Ref. to FU(H6DO)-58, REMOVAL, Fuel Sub Level Sensor.>

B: INSTALLATION

For installation procedure, refer to “FU(H6DO)” section. <Ref. to FU(H6DO)-59, INSTALLATION, Fuel Sub Level Sensor.>

10. Fuel Tank Pressure Sensor

A: REMOVAL

WARNING:
Place "NO OPEN FLAMES" signs near the working area.

1) Set the vehicle on a lift.
2) Disconnect the ground cable from battery.

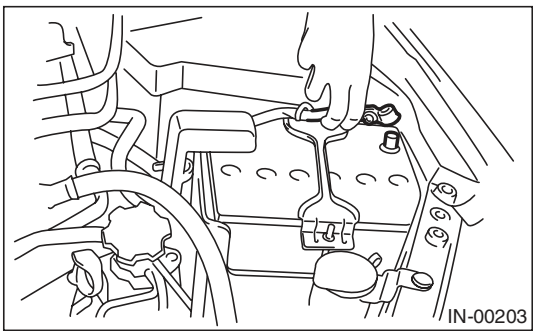

3) Open the fuel filler lid and remove the fuel filler cap.
4) Lift up the vehicle.
5) Disconnect the connector from the fuel tank pressure sensor.
6) Disconnect the pressure hose from the fuel tank pressure sensor.
7) Remove the fuel tank pressure sensor along with the bracket.

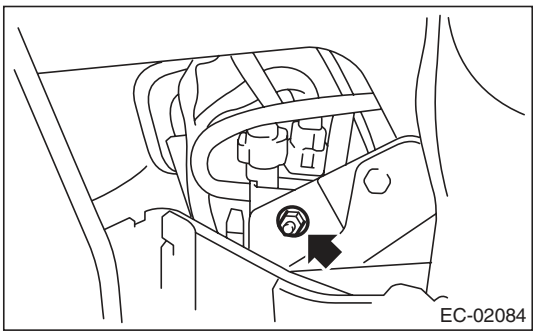

B: INSTALLATION

Install in the reverse order of removal.

Tightening torque:
7.4 N·m (0.8 kgf-m, 5.5 ft-lb)

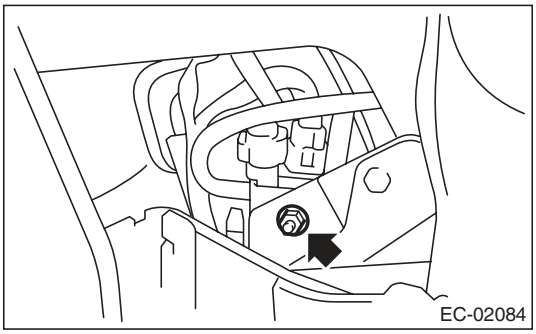

C: INSPECTION

Make sure the hoses are not cracked or loose.

11. Pressure Control Solenoid Valve

A: REMOVAL

1) Set the vehicle on a lift.
2) Disconnect the ground cable from battery.

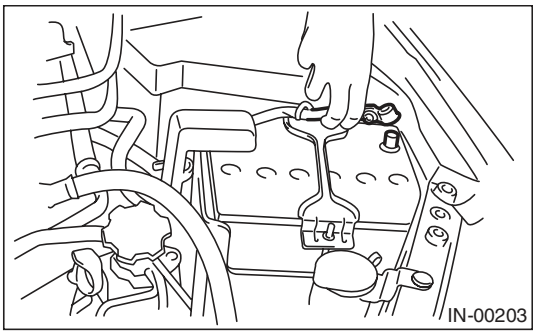

3) Lift up the vehicle.
4) Disconnect connector (A) from the pressure control solenoid valve.
5) Disconnect the evaporation hose (B) from the pressure control solenoid valve.
6) Remove the bolts (C) which secure the bracket to the fuel tank.

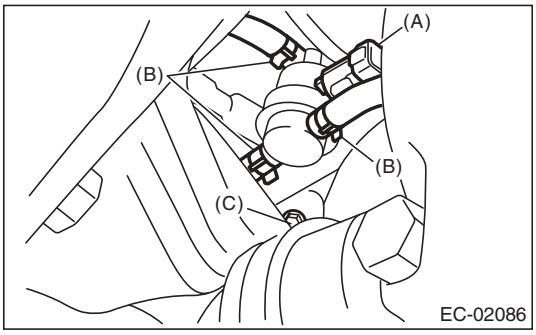

7) Remove the pressure control solenoid valve and bracket as a unit.
8) Remove the pressure control solenoid valve from the bracket.

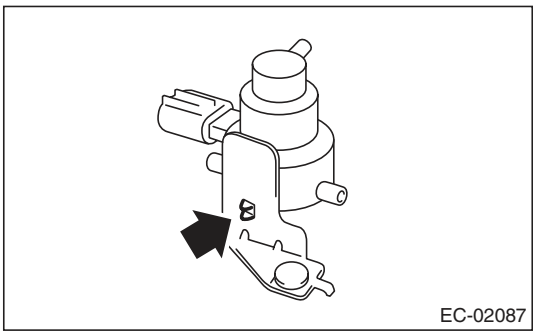

B: INSTALLATION

Install in the reverse order of removal.

Tightening torque:
7.35 N·m (0.7 kgf-m, 5.4 ft-lb)

C: INSPECTION

Make sure the hoses are not cracked or loose.

12. Drain Filter

A: SPECIFICATION

Canister is a non-disassembled part, so do not remove the drain filter from canister. Refer to “Canister” for removal and installation procedures. <Ref. to EC(H6DO)-6, REMOVAL, Canister.> <Ref. to EC(H6DO)-7, INSTALLATION, Canister.>

13.Shut Valve

A: REMOVAL

WARNING:
Place "NO OPEN FLAMES" signs near the working area.

CAUTION:
Be careful not to spill fuel.

1) Remove the fuel filler pipe. <Ref. to FU(H6DO)-52, REMOVAL, Fuel Filler Pipe.>
2) Disconnect the evaporation hose from the shut valve.

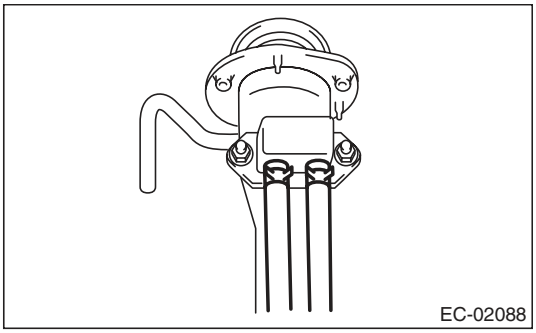

3) Remove the shut valve from the fuel filler pipe.

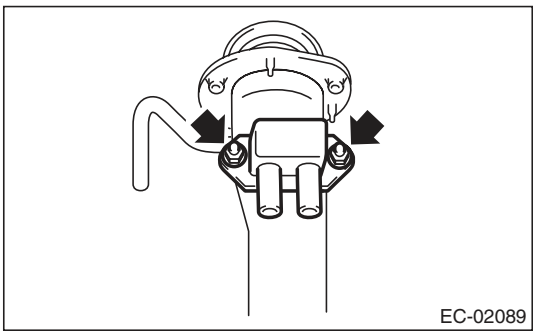

B: INSTALLATION

Install in the reverse order of removal.

Tightening torque:
4.5 N·m (0.5 kgf-m, 3.3 ft-lb)

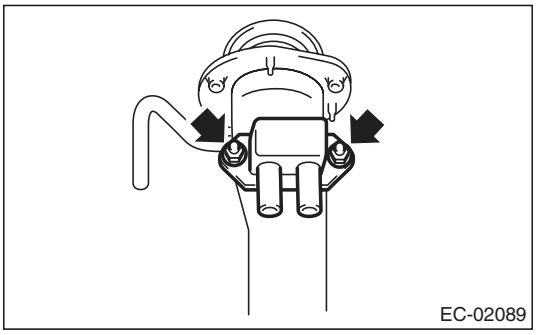

C: INSPECTION

Make sure the hoses are not cracked or loose.

14. Drain Valve

A: SPECIFICATION

Canister is a non-disassembled part, so do not remove the drain valve from canister. Refer to “Canister” for removal and installation procedures. <Ref. to EC(H6DO)-6, REMOVAL, Canister.> <Ref. to EC(H6DO)-7, INSTALLATION, Canister.>

15. PCV Valve

A: REMOVAL

1) Disconnect the PCV hose.

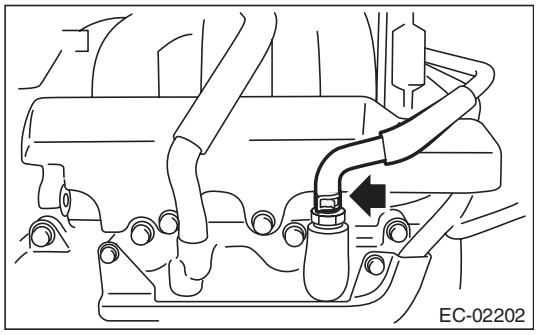

2) Remove the PCV valve from rocker cover.

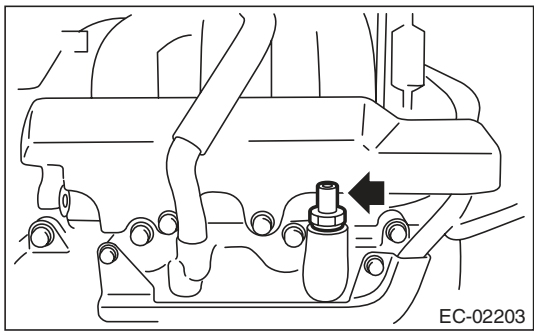

B: INSTALLATION

Install in the reverse order of removal.

NOTE:
Apply liquid gasket to the bolt threads of PCV valve.

Liquid gasket:
THREE BOND 1141 (Part No. 004403006) or equivalent

Tightening torque:
25 N·m (2.5 kgf-m, 18.4 ft-lb)

1. General Description

A: COMPONENT

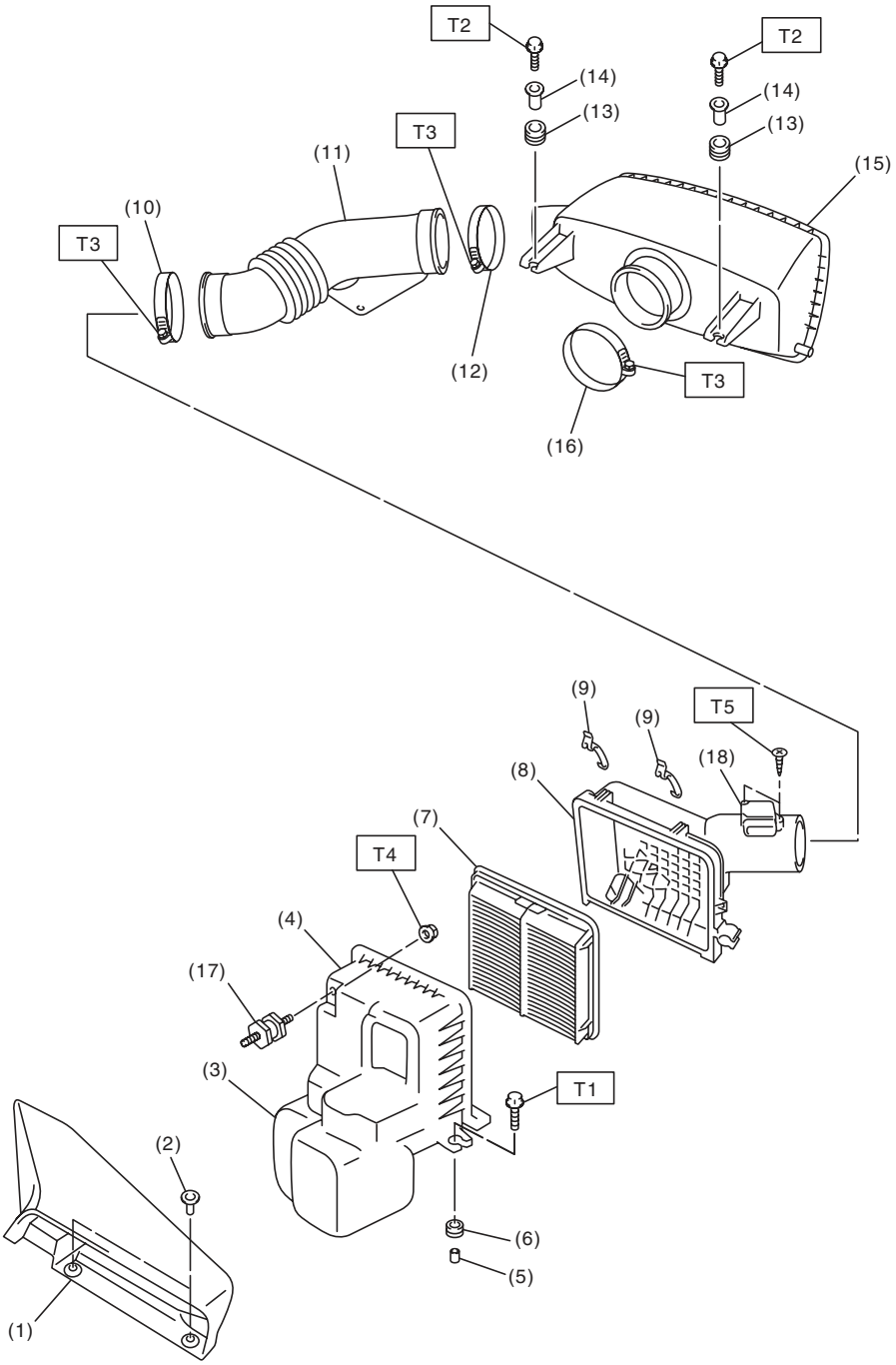

IN-02212

(1) Air intake duct
(2) Clip
(3) Resonator chamber
(4) Air cleaner case (front)
(5) Spacer
(6) Cushion
(7) Air cleaner element
(8) Air cleaner case (rear)
(9) Clip
(10) Clamp
(11) Intake boot
(12) Clamp
(13) Cushion
(14) Spacer
(15) Air intake chamber
(16) Clamp
(17) Cushion
(18) Mass air flow and intake air temperature sensor

Tightening torque:N·m (kgf-m, ft-lb)	
T1:	*6 (0.6, 4.4)*
T2:	*6.5 (0.7, 4.8)*
T3:	*3 (0.3, 2.2)*
T4:	*7.5 (0.8, 5.5)*
T5:	*1 (0.1, 0.7)*

B: CAUTION

- Wear appropriate work clothing, including a cap, protective goggles and protective shoes when performing any work.
- Remove contamination including dirt and corrosion before removal, installation or disassembly.
- Keep the disassembled parts in order and protect them from dust and dirt.
- Before removal, installation or disassembly, be sure to clarify the failure. Avoid unnecessary removal, installation, disassembly and replacement.
- Vehicle components are extremely hot after driving. Be wary of receiving burns from heated parts.
- Be sure to tighten fasteners including bolts and nuts to the specified torque.
- Place shop jacks or rigid racks at the specified points.
- Before disconnecting connectors of sensors or units, be sure to disconnect the ground cable from the battery.

2. Air Cleaner Element

A: REMOVAL

1) Disconnect the ground cable from the battery.

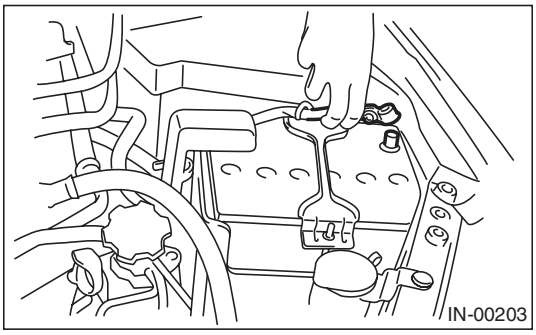

2) Disconnect the connector from mass air flow and intake air temperature sensor.

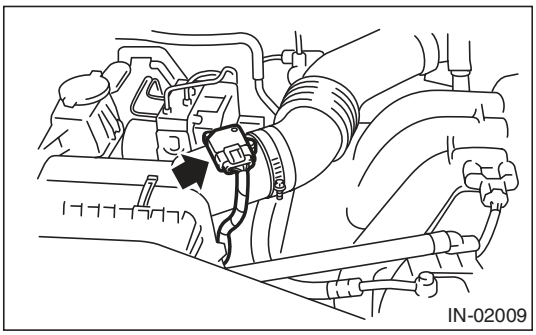

3) Remove the clip (A) securing upper side of air cleaner case.

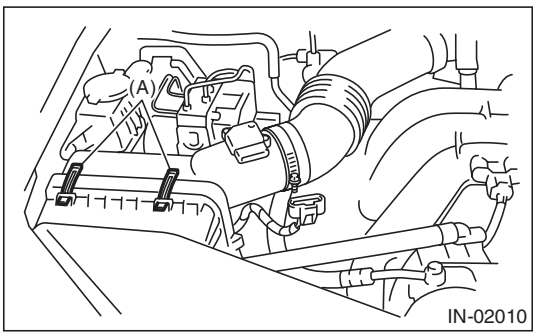

4) Pull the air cleaner case (rear) backward of the vehicle, and remove the air cleaner element.

NOTE:
Be careful of the power steering hose fixed to the bottom of the air cleaner case (rear).

B: INSTALLATION

Install in the reverse order of removal.

CAUTION:
Be sure to use SUBARU genuine air cleaner element depending on the engine type when replacing the air cleaner elements. Using other air cleaner element may affect the engine performance.

NOTE:
- Check that there are no foreign objects in the air cleaner case.
- When installing the air cleaner case (rear), align the protrusion of the air cleaner case (rear) to the hole on the air cleaner case (front) to install.

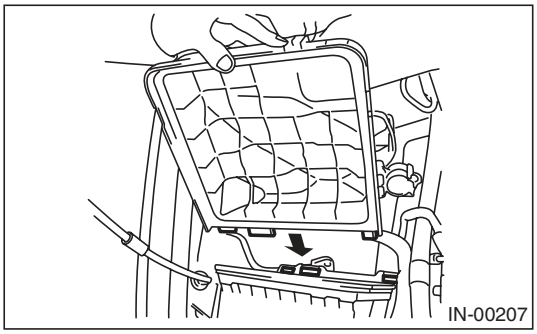

C: INSPECTION

Replace if excessively damaged or dirty.

3. Air Cleaner Case

A: REMOVAL

1) Disconnect the ground cable from battery.

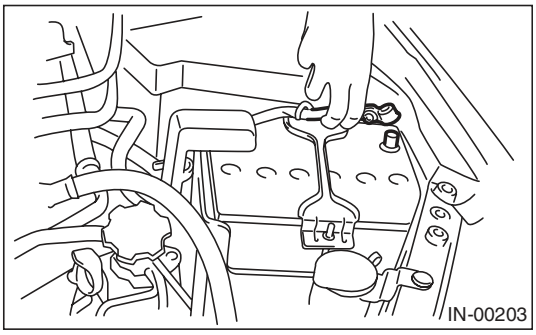

2) Remove the air intake duct. <Ref. to IN(H6DO)-8, REMOVAL, Air Intake Duct.>
3) Disconnect the connector from mass air flow and intake air temperature sensor.

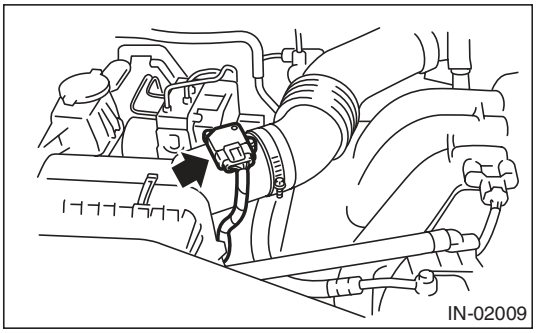

4) Loosen the clamps (A) which connect the air cleaner case and the intake boot.
5) Remove the clip (B) securing the upper side of air cleaner case.

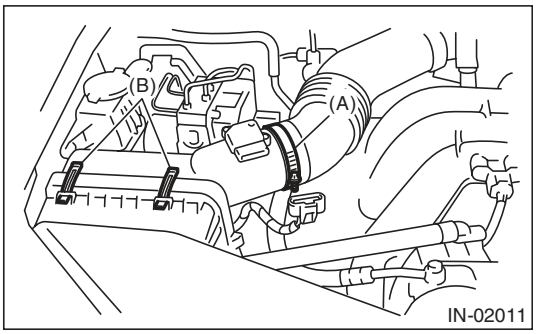

6) Remove the air cleaner case (rear) and air cleaner element.

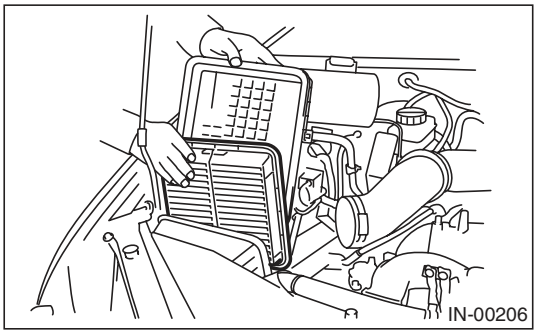

7) Remove the bolts (A) and nut (B) which secure the air cleaner case to body.

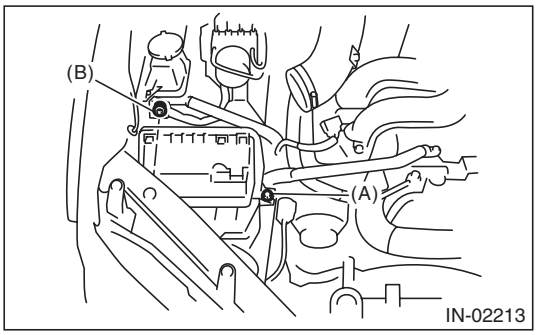

8) Remove the air cleaner case (front).

B: INSTALLATION

Install in the reverse order of removal.

Tightening torque:
Bolt (A)
6 N·m (0.6 kgf-m, 4.4 ft-lb)
Nut (B)
7.5 N·m (0.8 kgf-m, 5.5 ft-lb)

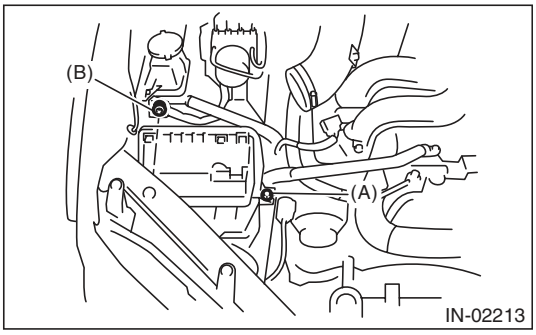

NOTE:
When installing the air cleaner case (rear), align the protrusion of the air cleaner case (rear) to the hole on the air cleaner case (front) to install.

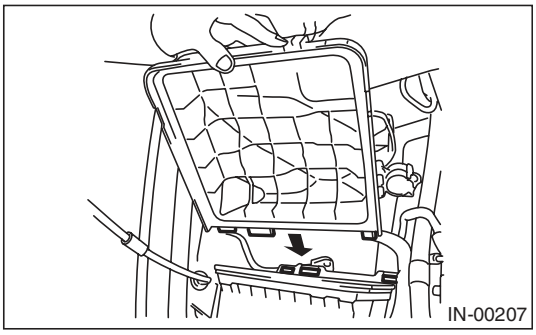

Tightening torque:
Clamp (A)
3 N·m (0.3 kgf-m, 2.2 ft-lb)

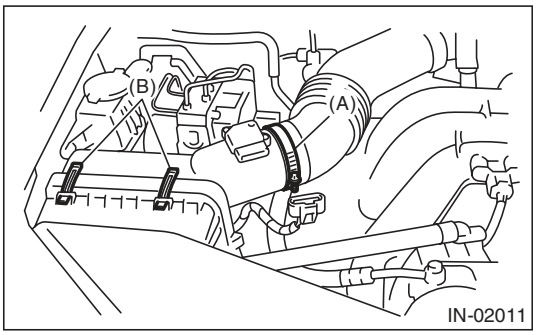

C: INSPECTION

Check for cracks or loose connections.

4. Air Intake Chamber

A: REMOVAL

1) Remove the collector cover.
2) Loosen the clamp (A) which connects air intake chamber to throttle body.
3) Loosen the clamp (B) which connects intake boot to air intake chamber.
4) Remove the bolt (C) which secures air intake chamber to the stay.

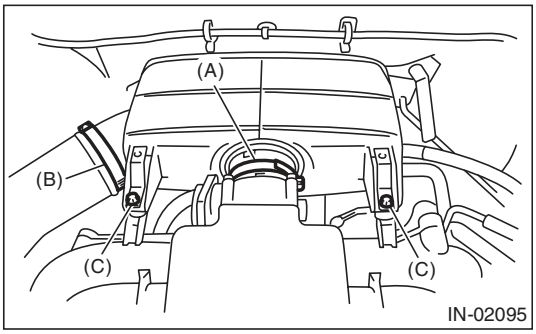

5) Disconnect the blow-by hoses, then remove the air intake chamber.

B: INSTALLATION

Install in the reverse order of removal.

Tightening torque:
Clamp (A), (B)
3 N·m (0.3 kgf-m, 2.2 ft-lb)
Bolt (C)
6.5 N·m (0.7 kgf-m, 4.8 ft-lb)

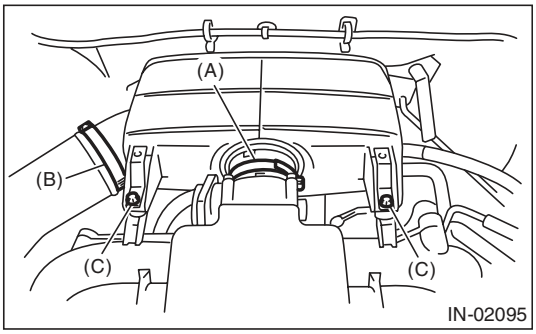

C: INSPECTION

1) Check for cracks or loose connections.
2) Check that no foreign matter is mixed in air intake chamber.

5. Air Intake Duct

A: REMOVAL

1) Remove the clip which installs the air intake duct on the front side of body.
2) Remove the air intake duct.

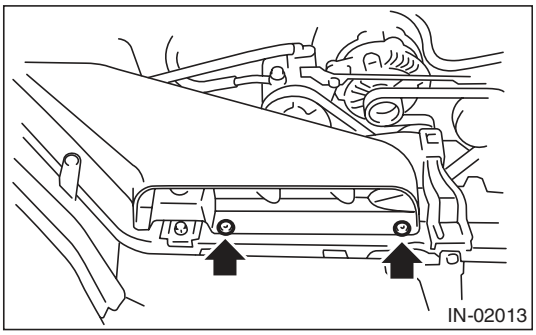

B: INSTALLATION

Install in the reverse order of removal.

C: INSPECTION

1) Check for cracks or loose connections.
2) Check that no foreign matter is mixed in air intake duct.

6. Resonator Chamber

A: REMOVAL

The resonator chamber and air cleaner case are integrated into one unit; therefore, refer to “Air Cleaner Case” for removal procedure. <Ref. to IN(H6DO)-5, REMOVAL, Air Cleaner Case.>

B: INSTALLATION

The resonator chamber and air cleaner case are integrated into one unit; therefore, refer to “Air Cleaner Case” for installation procedure. <Ref. to IN(H6DO)-6, INSTALLATION, Air Cleaner Case.>

C: INSPECTION

Check for cracks or loose connections.

Resonator Chamber

1. General Description

A: SPECIFICATION

Engine	Cylinder arrangement			Horizontally opposed, liquid cooled, 6-cylinder, 4-stroke gasoline engine
	Valve system mechanism			Chain driven, double overhead camshaft, 4-valve/cylinder
	Bore × Stroke mm (in)			89.2 × 80 (3.512 × 3.150)
	Displacement cm^3 (cu in)			3,000 (183)
	Compression ratio			10.7
	Compression pressure (350 rpm and fully open throttle): kPa (kgf/cm^2, psi)			1,275 — 1,471 (13.0 — 15.0, 185 — 213)
	Number of piston rings			Pressure ring: 2, Oil ring: 1
	Intake valve timing	Min. advance	Open	BTDC 47°
			Close	ABDC 23°
		Max. retard	Open	ATDC 3°
			Close	ABDC 73°
	Exhaust valve timing		Open	BBDC 46°
			Close	ATDC 6°
	Valve clearance mm (in)	Intake		$0.20^{+0.04}_{-0.06}$ ($0.0079^{+0.0016}_{-0.0024}$)
		Exhaust		0.35±0.05 (0.0138±0.0020)
	Idle rpm [“P” or “N” range] rpm		No load	650±50
			A/C ON	770±50
	Ignition order			1 → 6 → 3 → 2 → 5 → 4
	Ignition timing BTDC/rpm			15°±8°/650

NOTE:
OS: Oversize
US: Undersize

Camshaft	Bending limit mm (in)				0.020 (0.00079)
	Side clearance mm (in)	Intake		Standard	0.075 — 0.135 (0.0030 — 0.0053)
		Exhaust		Standard	0.030 — 0.090 (0.0012 — 0.0035)
	Cam lobe height mm (in)	Intake	HIGH	Standard	42.09 — 42.19 (1.6571 — 1.6610)
			LOW1	Standard	38.14 — 38.24 (1.5016 — 1.5055)
			LOW2	Standard	38.14 — 38.24 (1.5016 — 1.5055)
		Exhaust		Standard	40.45 — 40.55 (1.5925 — 1.5965)
	Cam base circle diameter mm (in)	Intake	HIGH	Standard	32.00 (1.2598)
			LOW1	Standard	31.84 (1.2535)
			LOW2	Standard	31.84 (1.2535)
		Exhaust		Standard	32.00 (1.2598)
	Journal O.D. mm (in)	Front		Standard	37.946 — 37.963 (1.4939 — 1.4946)
		Except for front		Standard	25.946 — 25.963 (1.0215 — 1.0222)
	Oil clearance mm (in)			Standard	0.037 — 0.072 (0.0015 — 0.0028)
Cylinder head	Warping limit (Mating surface with cylinder block) mm (in)			Standard	0.02 (0.0008)
	Inner diameter of valve lifter hole mm (in)				32.994 — 33.016 (1.2990 — 1.2998)
	Standard height mm (in)				124±0.05 (4.88±0.0020)
Valve seat	Seating angle				90°
	Contacting width mm (in)	Intake		Standard	1.0 (0.039)
		Exhaust		Standard	1.5 (0.059)
Valve guide	Inside diameter mm (in)				5.500 — 5.512 (0.2165 — 0.2170)
	Protrusion above head mm (in)				11.4 — 11.8 (0.449 — 0.465)
Valve	Head edge thickness mm (in)	Intake		Standard	1.0 (0.039)
		Exhaust		Standard	1.2 (0.047)
	Stem outer diameter mm (in)		Intake		5.455 — 5.470 (0.2148 — 0.2154)
			Exhaust		5.445 — 5.460 (0.2144 — 0.2150)
	Stem oil clearance mm (in)	Intake		Standard	0.030 — 0.057 (0.0012 — 0.0022)
		Exhaust		Standard	0.040 — 0.067 (0.0016 — 0.0026)
	Overall length mm (in)		Intake		99.7 (3.925)
			Exhaust		105.2 (4.142)
	Outer diameter of valve lifter mm (in)				32.959 — 32.975 (1.2976 — 1.2982)
Valve spring	Free length mm (in)	Intake		Inner	39.55 (1.5571)
				Outer	41.18 (1.6213)
		Exhaust			46.32 (1.8236)
	Squareness	Intake		Inner	2.5°, 1.7 mm (0.067 in) or less
				Outer	2.5°, 1.8 mm (0.071 in) or less
		Exhaust			2.5°, 2.0 mm (0.079 in) or less
Cylinder block	Standard height mm (in)				202 (7.95)
	Warping limit (Mating surface with cylinder head) mm (in)			Standard	0.02 (0.0008)
	Cylinder inner diameter mm (in)		Standard	A	89.205 — 89.215 (3.5120 — 3.5124)
				B	89.195 — 89.205 (3.5116 — 3.5120)
	Cylindricality mm (in)			Standard	0.030 (0.0012)
	Out-of-roundness mm (in)			Standard	0.010 (0.0004)
	Piston clearance mm (in)			Standard	–0.010 — 0.010 (–0.0004 — 0.0004)
	Cylinder inner diameter boring limit (diameter) mm (in)				To 89.715 (3.5321)

Piston	Outer diameter mm (in)	Standard	A	89.205 — 89.215 (3.5120 — 3.5124)
			B	89.195 — 89.205 (3.5116 — 3.5120)
		0.25 (0.0098) OS		89.445 — 89.465 (3.5215 — 3.5222)
		0.50 (0.0197) OS		89.695 — 89.715 (3.5313 — 3.5321)
	Inner diameter of piston pin hole mm (in)		Standard	22.000 — 22.006 (0.8661 — 0.8664)
Piston pin	Outer diameter mm (in)		Standard	21.994 — 22.000 (0.8659 — 0.8661)
	Standard clearance between piston and piston pin mm (in)		Standard	0.004 — 0.008 (0.0002 — 0.0003)
Piston ring	Ring closed gap mm (in)	Top ring	Standard	0.20 — 0.35 (0.0079 — 0.0138)
		Second ring	Standard	0.35 — 0.50 (0.0138 — 0.0197)
		Oil ring	Standard	0.20 — 0.60 (0.0079 — 0.0236)
	Ring groove gap mm (in)	Top ring	Standard	0.040 — 0.080 (0.0016 — 0.0031)
		Second ring	Standard	0.030 — 0.070 (0.0012 — 0.0028)
		Oil ring	Standard	0.045 — 0.125 (0.0018 — 0.0049)
Connecting rod	Thrust clearance mm (in)		Standard	0.070 — 0.330 (0.0028 — 0.0130)
Bearing of large end	Oil clearance mm (in)		Standard	0.016 — 0.043 (0.0006 — 0.0017)
	Bearing size (Thickness at center) mm (in)	Standard		1.490 — 1.506 (0.0587 — 0.0593)
		0.03 (0.0012) US		1.509 — 1.513 (0.0594 — 0.0596)
		0.05 (0.0020) US		1.519 — 1.523 (0.0598 — 0.0600)
		0.25 (0.0098) US		1.619 — 1.623 (0.0637 — 0.0639)
Bushing of small end	Clearance between piston pin and bushing mm (in)		Standard	0 — 0.022 (0 — 0.0009)
Crankshaft	Crank pin and crank journal	Out-of-roundness mm (in)		0.005 (0.0002)
		Cylindricality mm (in)		0.006 (0.0002)
	Crank pin outer diameter mm (in)	Standard		51.984 — 52.000 (2.0466 — 2.0472)
		0.03 (0.0012) US		51.954 — 51.970 (2.0454 — 2.0461)
		0.05 (0.0020) US		51.934 — 51.950 (2.0446 — 2.0453)
		0.25 (0.0098) US		51.734 — 51.750 (2.0368 — 2.0374)
	Crank journal outer diameter mm (in)	#1, #3, #5, #7	Standard	63.992 — 64.008 (2.5194 — 2.5200)
			0.03 (0.0012) US	63.962 — 63.978 (2.5182 — 2.5188)
			0.05 (0.0020) US	63.942 — 63.958 (2.5174 — 2.5180)
			0.25 (0.0098) US	63.742 — 63.758 (2.5095 — 2.5102)
		#2, #4, #6	Standard	63.992 — 64.008 (2.5194 — 2.5200)
			0.03 (0.0012) US	63.962 — 63.978 (2.5182 — 2.5188)
			0.05 (0.0020) US	63.942 — 63.958 (2.5174 — 2.5180)
			0.25 (0.0098) US	63.742 — 63.758 (2.5095 — 2.5102)
	Thrust clearance mm (in)	Standard		0.030 — 0.115 (0.0012 — 0.0045)
	Oil clearance mm (in)	Standard		0.010 — 0.030 (0.0004 — 0.0012)
Main bearing	Bearing size (Thickness at center) mm (in)	#1, #3, #5, #7	Standard	1.992 — 2.005 (0.0784 — 0.0789)
			0.03 (0.0012) US	2.011 — 2.014 (0.0792 — 0.0793)
			0.05 (0.0020) US	2.021 — 2.024 (0.0796 — 0.0797)
			0.25 (0.0098) US	2.121 — 2.124 (0.0835 — 0.0836)
		#2, #4, #6	Standard	1.996 — 2.009 (0.0786 — 0.0791)
			0.03 (0.0012) US	2.015 — 2.018 (0.0793 — 0.0794)
			0.05 (0.0020) US	2.025 — 2.028 (0.0797 — 0.0798)
			0.25 (0.0098) US	2.125 — 2.128 (0.0837 — 0.0838)

B: COMPONENT

1. V-BELT

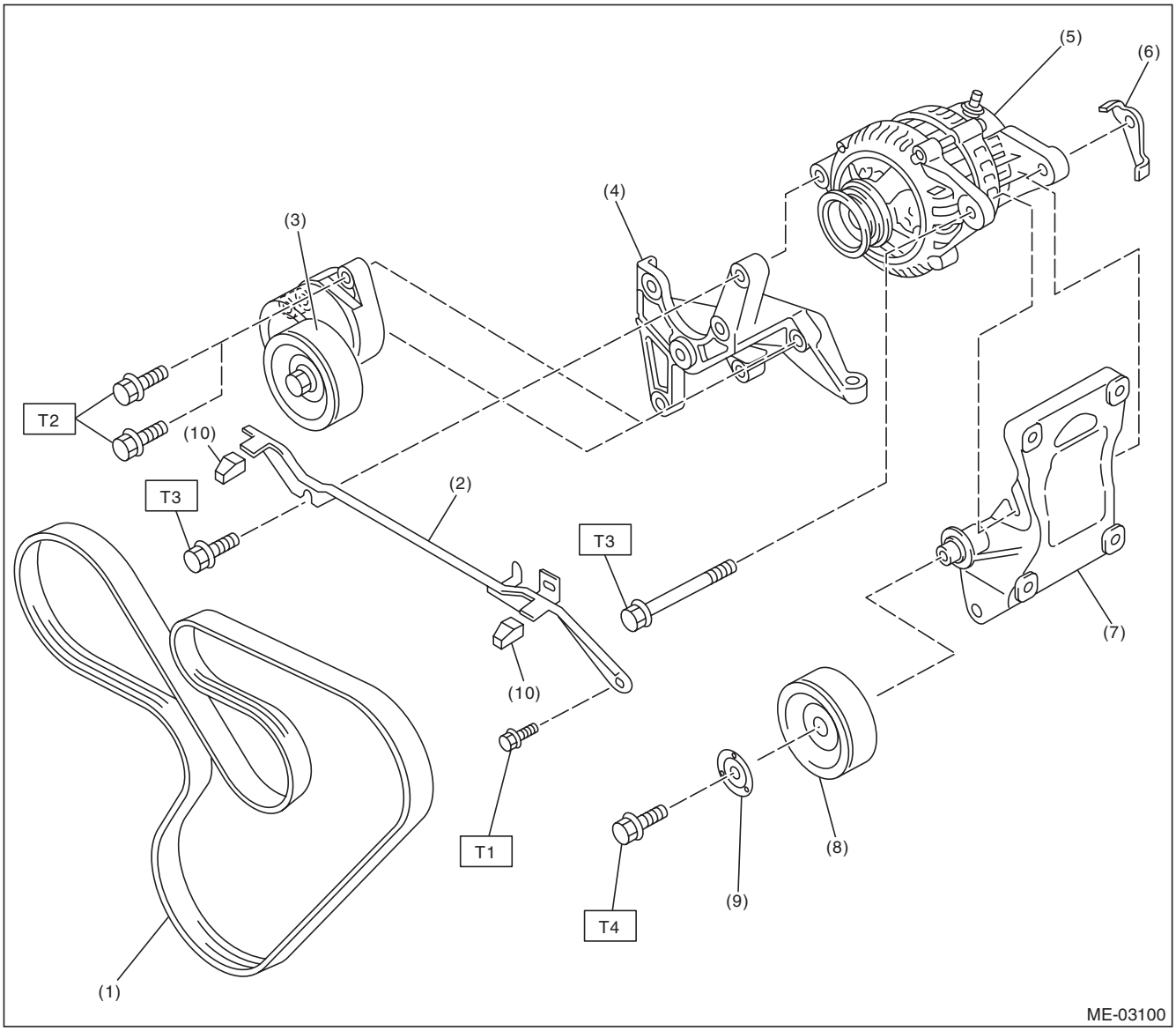

(1)	V-belt	(6)	Generator plate	***Tightening torque:N·m (kgf-m, ft-lb)***
(2)	Collector cover bracket	(7)	A/C compressor stay	***T1: 6.4 (0.7, 4.7)***
(3)	Belt tension adjuster ASSY	(8)	Idler pulley	***T2: 20 (2.0, 14.8)***
(4)	Power steering pump bracket	(9)	Idler pulley cover	***T3: 25 (2.5, 18.4)***
(5)	Generator	(10)	Cushion	***T4: 33 (3.4, 24.3)***

2. TIMING CHAIN COVER

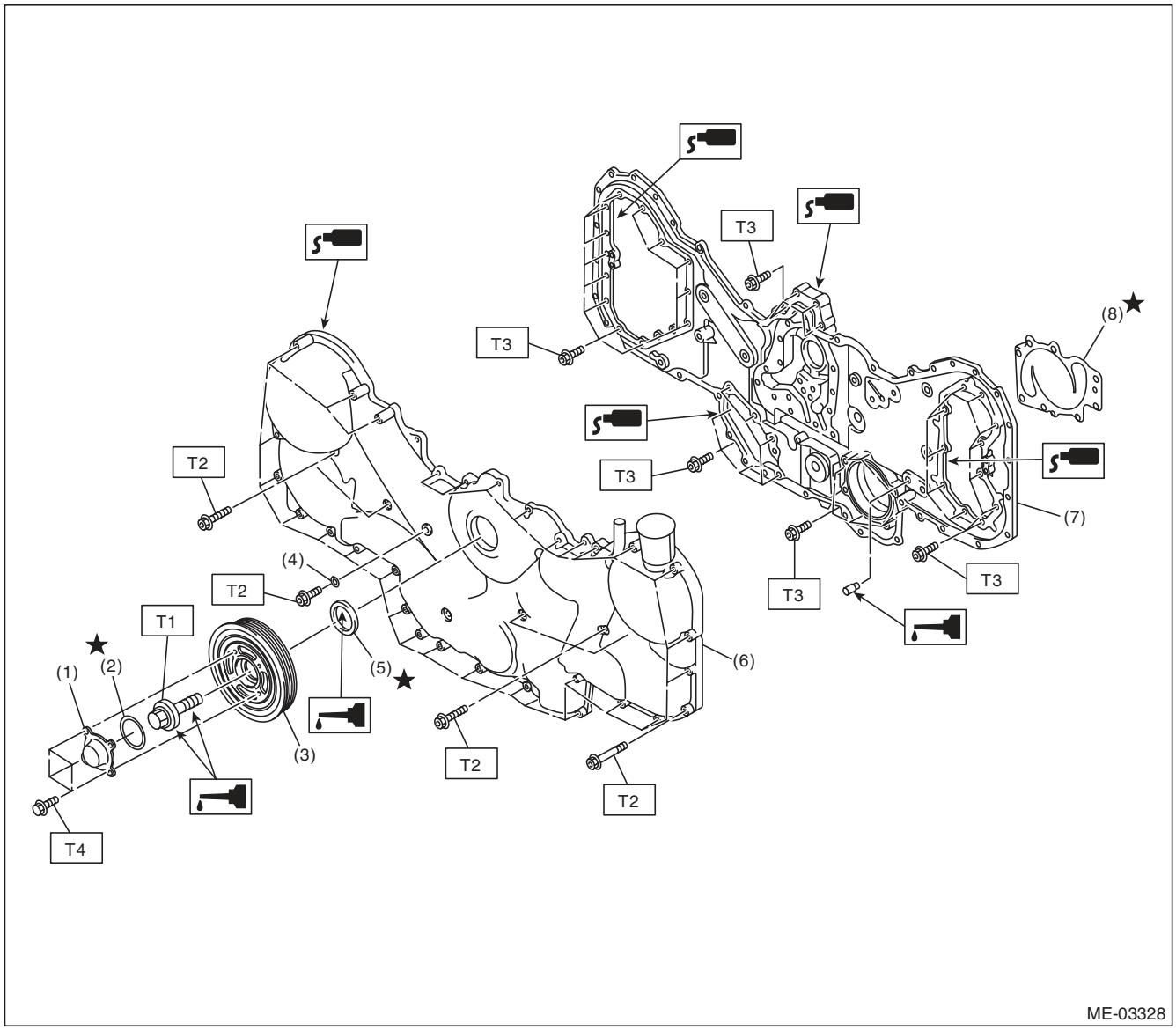

(1)	Crank pulley cover	(5)	Oil seal
(2)	O-ring	(6)	Front chain cover
(3)	Crank pulley	(7)	Rear chain cover
(4)	Sealing washer	(8)	Water pump gasket

Tightening torque:N·m (kgf-m, ft-lb)

T1: <Ref. to ME(H6DO)-43, Crank Pulley.>

T2: <Ref. to ME(H6DO)-44, Front Chain Cover.>

T3: <Ref. to ME(H6DO)-53, Rear Chain Cover.>

T4: 6.4 (0.7, 4.7)

3. TIMING CHAIN

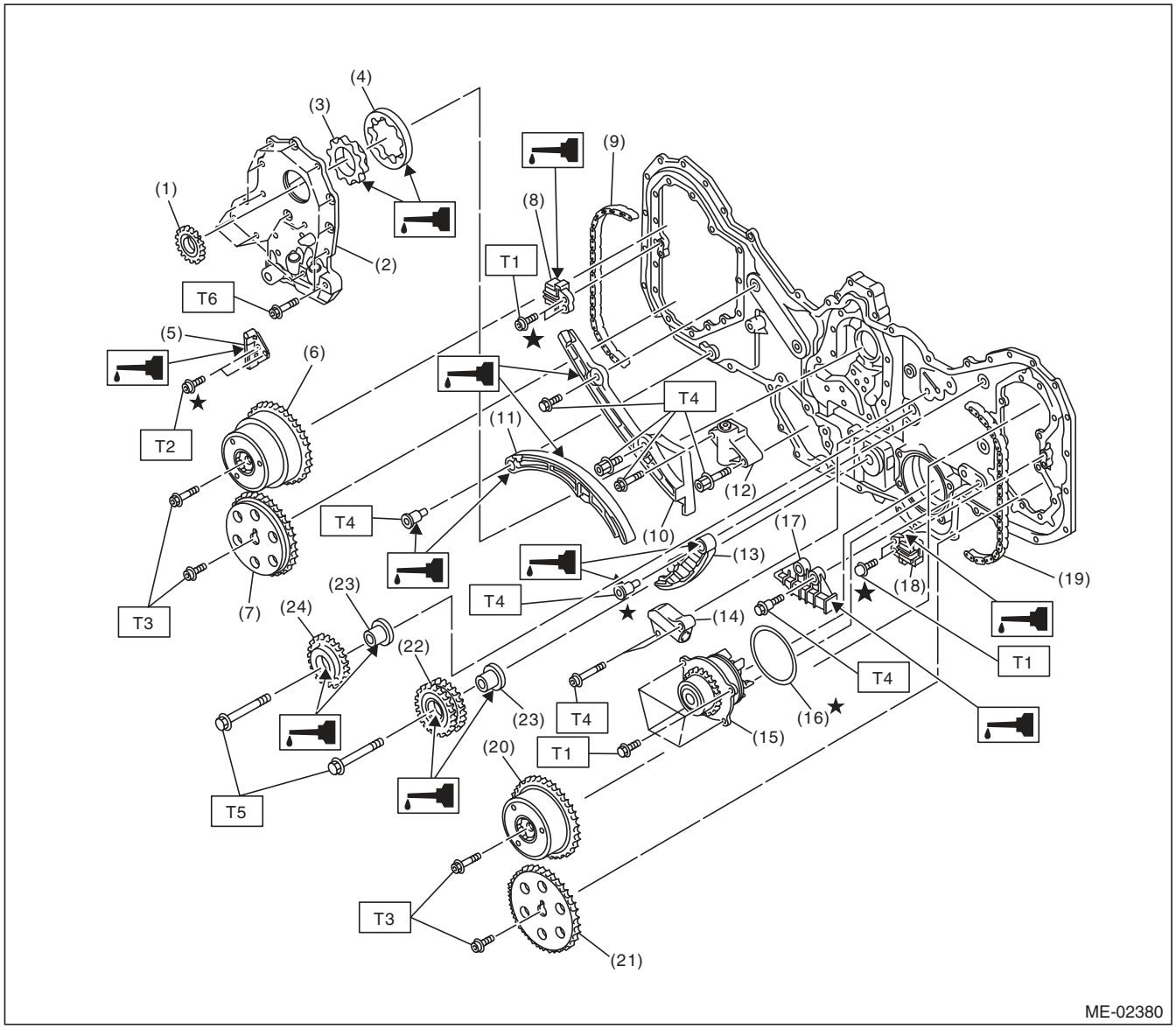

(1)	Crank sprocket	(12)	Chain tensioner (RH)	(23)	Idler sprocket collar
(2)	Oil relief case	(13)	Chain tensioner lever (LH)	(24)	Idler sprocket (upper)
(3)	Inner rotor	(14)	Chain tensioner (LH)		
(4)	Outer rotor	(15)	Water pump		
(5)	Chain guide (center)	(16)	O-ring		
(6)	Intake cam sprocket (RH)	(17)	Chain guide (LH)		
(7)	Exhaust cam sprocket (RH)	(18)	Chain guide (LH: between cams)		
(8)	Chain guide (RH: between cams)	(19)	Timing chain (LH)		
(9)	Timing chain (RH)	(20)	Intake cam sprocket (LH)		
(10)	Chain guide (RH)	(21)	Exhaust cam sprocket (LH)		
(11)	Chain tensioner lever (RH)	(22)	Idler sprocket (lower)		

Tightening torque:N·m (kgf-m, ft-lb)

T1: 6.4 (0.7, 4.7)

T2: 7.8 (0.8, 5.8)

T3: <Ref. to ME(H6DO)-51, Cam Sprocket.>

T4: 16 (1.6, 11.8)

T5: 69 (7.0, 50.9)

T6: <Ref. to LU(H6DO)-9, Oil Pump.>

4. CYLINDER HEAD AND CAMSHAFT

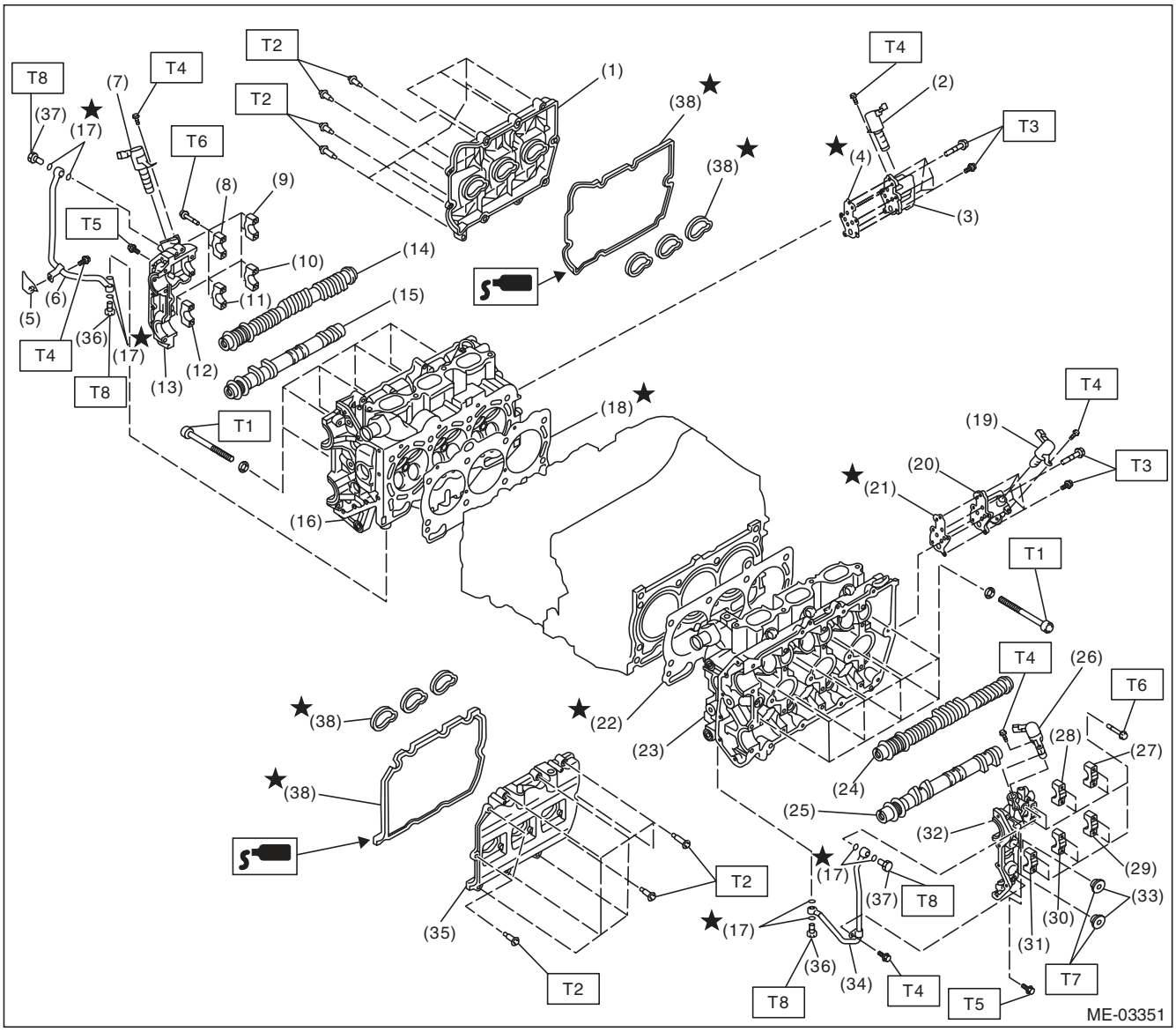

(1) Rocker cover (RH)
(2) Oil switching solenoid valve (RH)
(3) Oil switching solenoid valve holder (RH)
(4) Oil switching solenoid valve gasket (RH)
(5) Front chain cover
(6) Oil pipe (RH)
(7) Oil flow control solenoid valve (RH)
(8) Intake camshaft cap (Center RH)
(9) Intake camshaft cap (Rear RH)
(10) Exhaust camshaft cap (Rear RH)
(11) Exhaust camshaft cap (Center RH)
(12) Exhaust camshaft cap (Front RH)
(13) Front camshaft cap (RH)
(14) Intake camshaft (RH)
(15) Exhaust camshaft (RH)
(16) Cylinder head (RH)
(17) Gasket
(18) Cylinder head gasket (RH)
(19) Oil switching solenoid valve (LH)
(20) Oil switching solenoid valve holder (LH)
(21) Oil switching solenoid valve gasket (LH)
(22) Cylinder head gasket (LH)
(23) Cylinder head (LH)
(24) Intake camshaft (LH)
(25) Exhaust camshaft (LH)
(26) Oil flow control solenoid valve (LH)
(27) Intake camshaft cap (Rear LH)
(28) Intake camshaft cap (Center LH)
(29) Exhaust camshaft cap (Rear LH)
(30) Exhaust camshaft cap (Center LH)
(31) Exhaust camshaft cap (Front LH)
(32) Front camshaft cap (LH)
(33) Plug
(34) Oil pipe (LH)
(35) Rocker cover (LH)
(36) Union screw with filter (with protrusion)
(37) Union screw without filter (without protrusion)
(38) Rocker cover gasket

Tightening torque:N·m (kgf-m, ft-lb)

T1: <Ref. to ME(H6DO)-59, Cylinder Head.>
T2: <Ref. to ME(H6DO)-55, Camshaft.>
T3: <Ref. to ME(H6DO)-80, Oil Switching Solenoid Valve.>
T4: 6.4 (0.7, 4.7)
T5: 9.75 (1.0, 7.2)
T6: 16 (1.6, 11.8)
T7: 60 (6.1, 44.3)
T8: 29 (3.0, 21.4)

5. CYLINDER HEAD AND VALVE ASSEMBLY

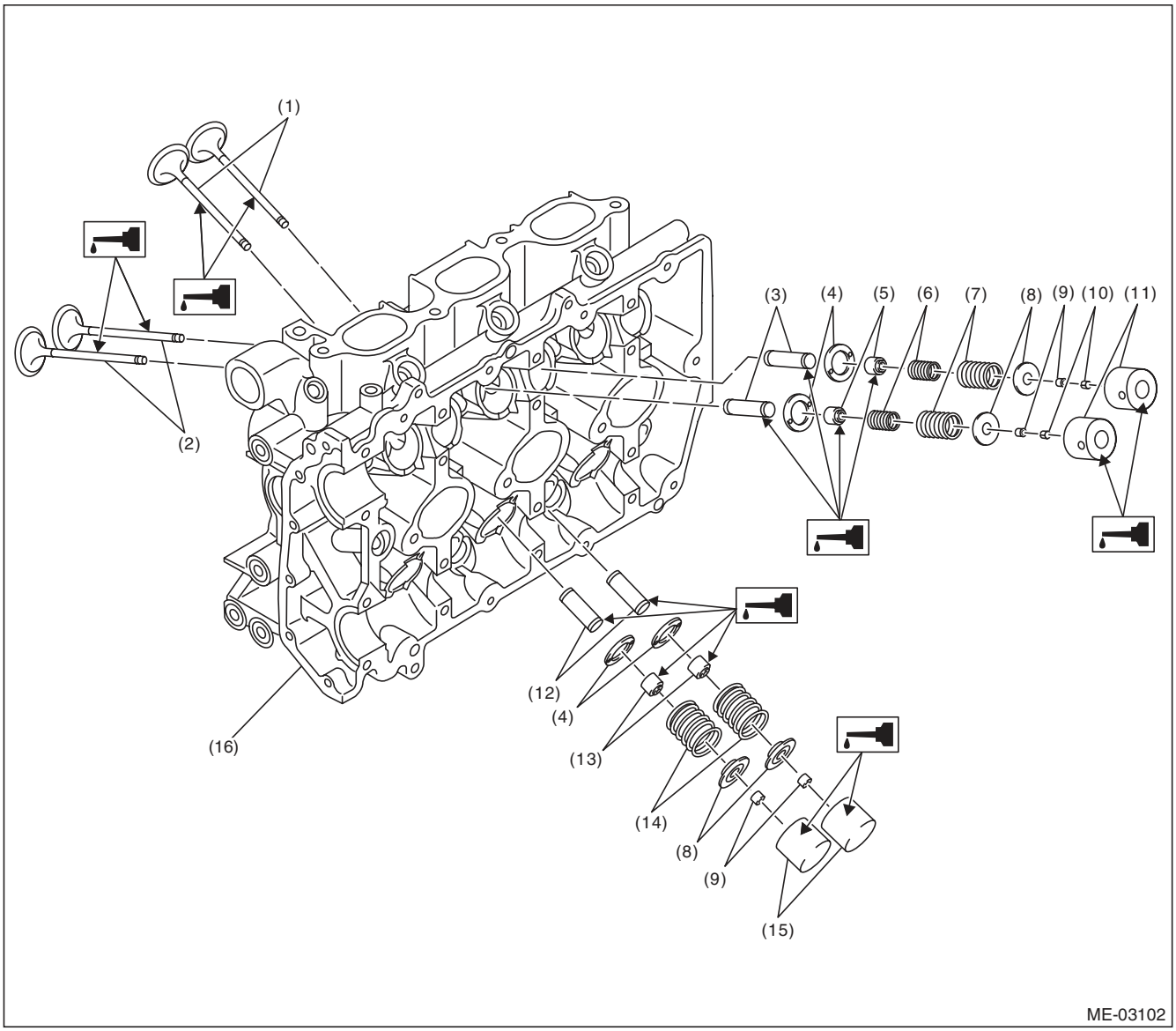

(1)	Exhaust valve	(7)	Valve spring (Outer)	(12)	Exhaust valve guide
(2)	Intake valve	(8)	Retainer	(13)	Exhaust valve stem seal
(3)	Intake valve guide	(9)	Retainer key	(14)	Valve spring
(4)	Valve spring seat	(10)	Shim	(15)	Valve lifter (Exhaust)
(5)	Intake valve stem seal	(11)	Valve lifter (Intake)	(16)	Cylinder head
(6)	Valve spring (Inner)				

6. CYLINDER BLOCK

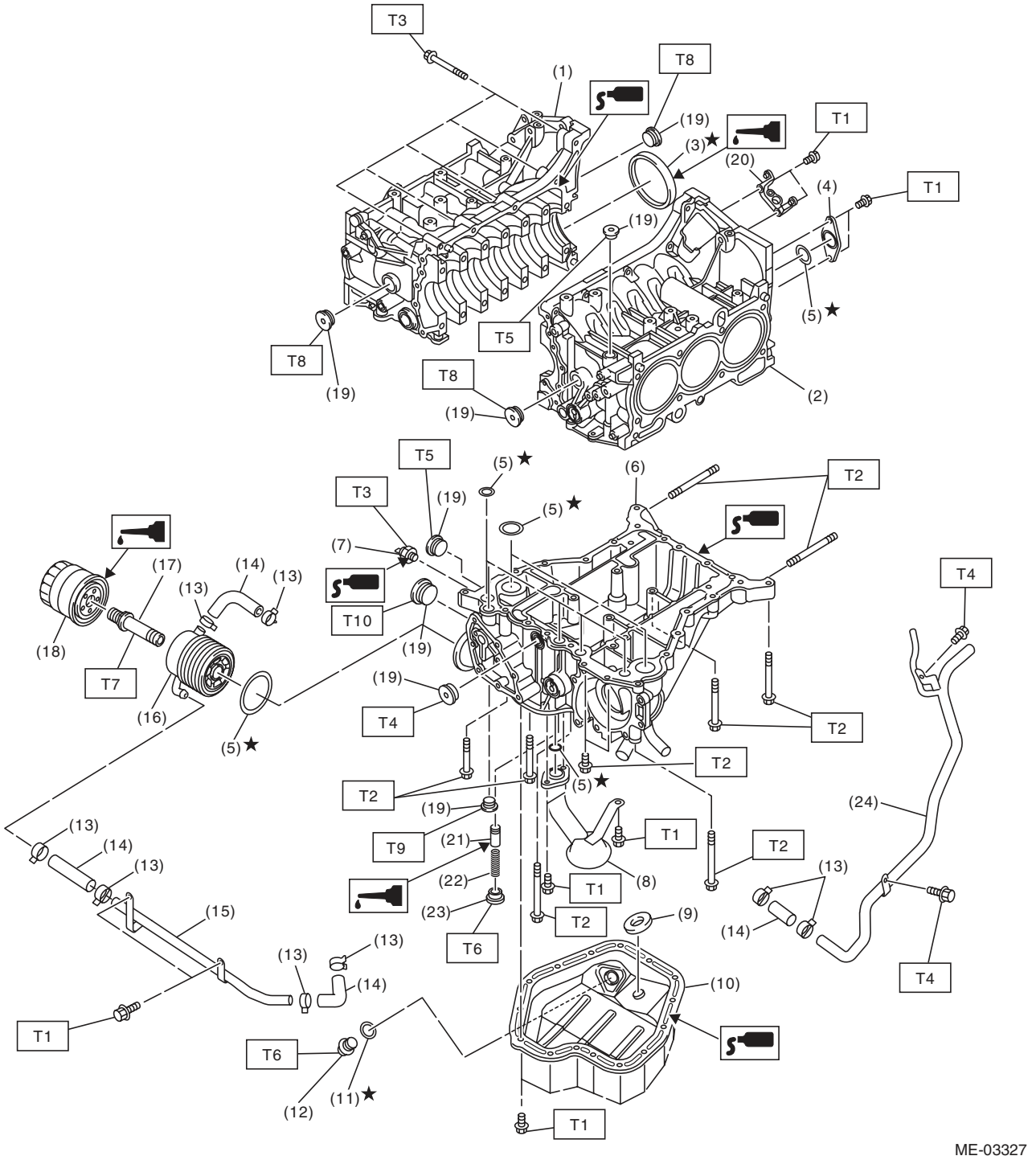

(1)	Cylinder block (RH)	(13)	Clamp	***Tightening torque:N·m (kgf-m, ft-lb)***
(2)	Cylinder block (LH)	(14)	Hose	***T1: 6.4 (0.7, 4.7)***
(3)	Rear oil seal	(15)	Oil cooler pipe	***T2: 18 (1.8, 13.3)***
(4)	Service hole cover	(16)	Oil cooler	***T3: 25 (2.5, 18.4)***
(5)	O-ring	(17)	Oil cooler connector	***T4: 16 (1.6, 11.8)***
(6)	Oil pan upper	(18)	Oil filter	***T5: 37 (3.8, 27.3)***
(7)	Oil pressure switch	(19)	Plug	***T6: 44 (4.5, 32.5)***
(8)	Oil strainer	(20)	Crankshaft position sensor holder	***T7: 54 (5.5, 39.8)***
(9)	Magnet	(21)	Relief valve	***T8: 70 (7.1, 51.6)***
(10)	Oil pan lower	(22)	Relief valve spring	***T9: 23 (2.3, 17.0)***
(11)	Metal gasket	(23)	Plug	***T10: 90 (9.2, 66.4)***
(12)	Drain plug	(24)	Water pipe	

7. CRANKSHAFT AND PISTON

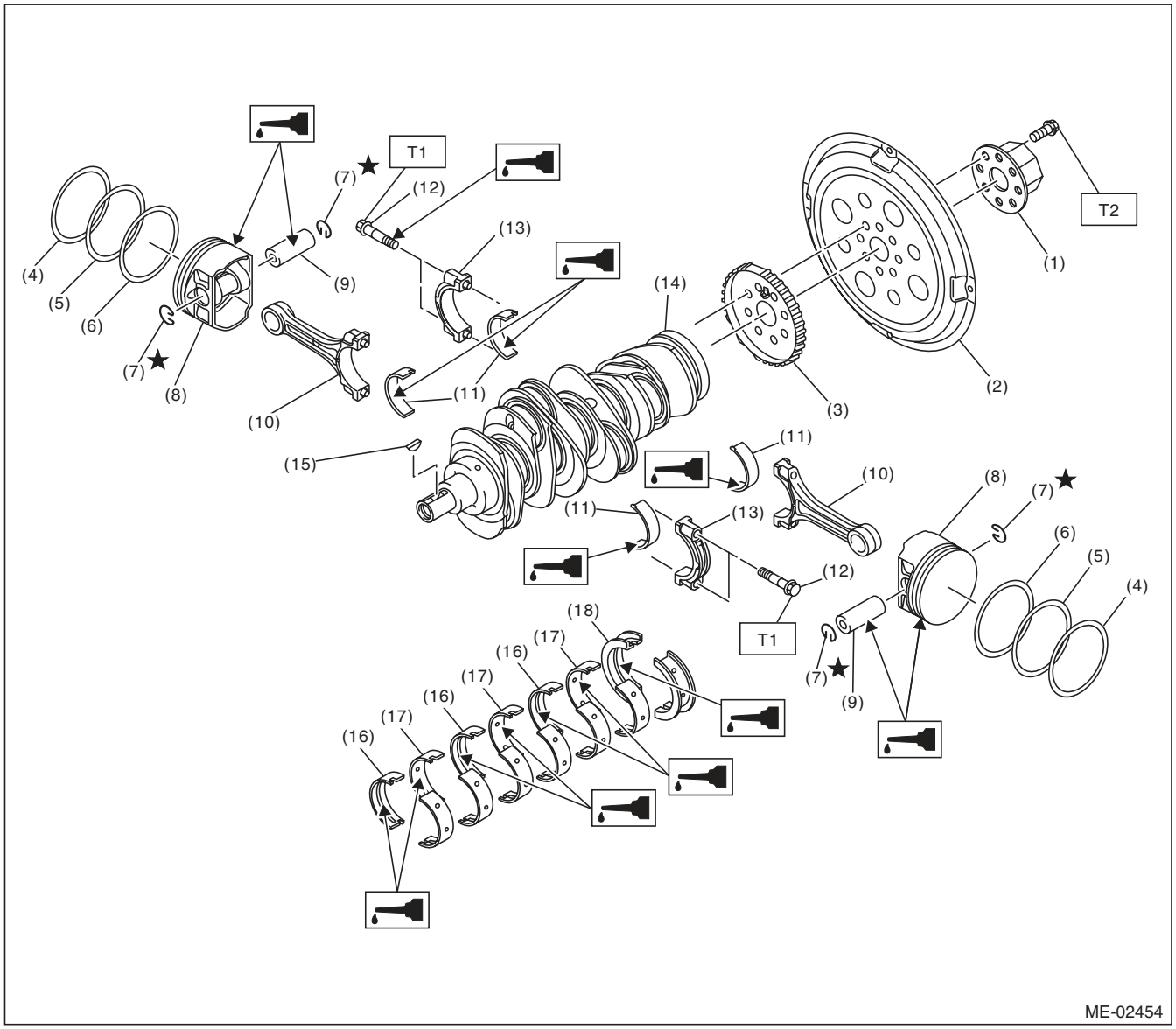

(1)	Reinforcement	(9)	Piston pin	(16)	Crankshaft bearing #1, #3, #5
(2)	Drive plate	(10)	Connecting rod	(17)	Crankshaft bearing #2, #4, #6
(3)	Crankshaft sensor plate	(11)	Connecting rod bearing	(18)	Crankshaft bearing #7
(4)	Top ring	(12)	Connecting rod bolt		
(5)	Second ring	(13)	Connecting rod cap		
(6)	Oil ring	(14)	Crankshaft		
(7)	Snap ring	(15)	Woodruff key		
(8)	Piston				

Tightening torque:N·m (kgf-m, ft-lb)

T1: 53 (5.4, 39.1)

T2: 81 (8.3, 59.7)

8. ENGINE MOUNTING

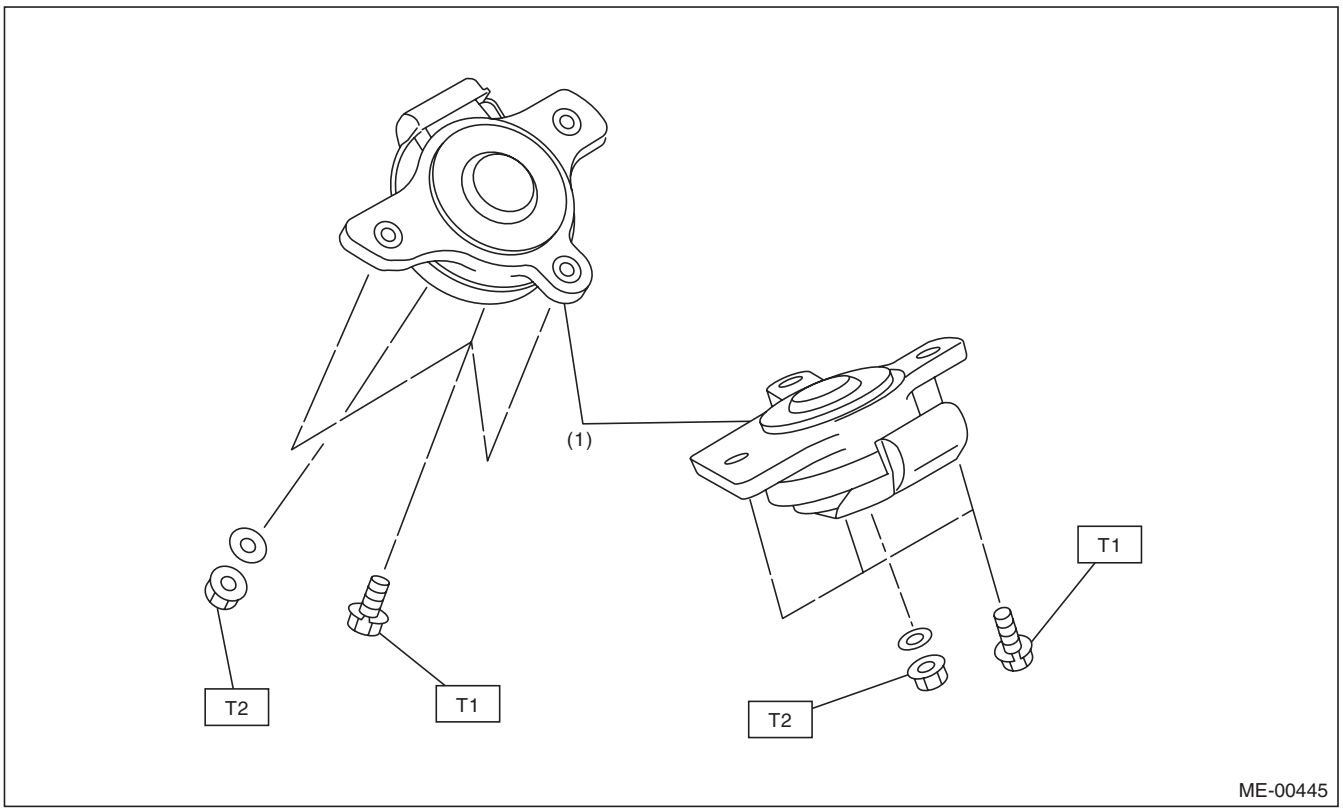

(1) Front cushion rubber

Tightening torque:N·m (kgf-m, ft-lb)
T1: 35 (3.6, 25.8)
T2: 85 (8.7, 62.7)

C: CAUTION

- Wear appropriate work clothing, including a cap, protective goggles and protective shoes when performing any work.
- Remove contamination including dirt and corrosion before removal, installation or disassembly.
- Keep the disassembled parts in order and protect them from dust and dirt.
- Before removal, installation or disassembly, be sure to clarify the failure. Avoid unnecessary removal, installation, disassembly and replacement.
- Vehicle components are extremely hot after driving. Be wary of receiving burns from heated parts.
- Be sure to tighten fasteners including bolts and nuts to the specified torque.
- Place shop jacks or rigid racks at the specified points.
- Before disconnecting connectors of sensors or units, be sure to disconnect the ground cable from the battery.
- All parts should be thoroughly cleaned, paying special attention to engine oil passages, pistons and bearings.
- Rotating parts and sliding parts such as piston, bearing and gear should be coated with oil prior to assembly.
- All removed parts, if to be reused, should be reinstalled in the original positions and directions.
- Bolts, nuts and washers should be replaced with new parts as required.
- Even if necessary inspections have been made in advance, proceed with assembly work while making rechecks.
- Remove or install the engine in an area where chain hoists, lifting devices, etc. are available for ready use.
- Be sure not to damage coated surfaces of body panels with tools, or not to stain seats and windows with coolant or oil. Place a cover over fender, as required, for protection.
- Prior to starting work, prepare the following:

Service tools, clean cloth, containers to catch coolant and oil, wire ropes, chain hoist, transmission jacks, etc.

- Lift up or lower the vehicle when necessary. Make sure to support the correct positions.

D: PREPARATION TOOL

1. SPECIAL TOOL

ILLUSTRATION	TOOL NUMBER	DESCRIPTION	REMARKS
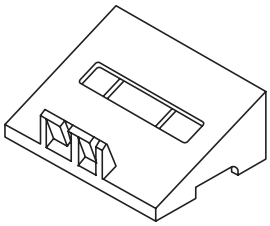 ST18250AA010	18250AA010	CYLINDER HEAD TABLE	• Used for replacing valve guides. • Used for removing and installing valve spring.
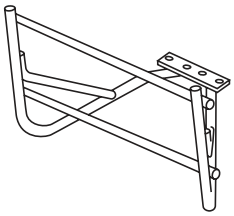 ST18232AA000	18232AA000	ENGINE STAND	Used for disassembling and assembling engine.
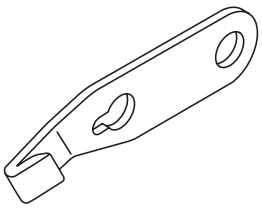 ST-498497100	498497100	CRANKSHAFT STOPPER	Used for removing and installing the drive plate.
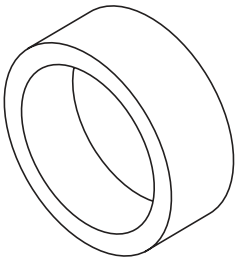 ST18254AA000	18254AA000	PISTON GUIDE	Used for installing piston in cylinder.

ILLUSTRATION	TOOL NUMBER	DESCRIPTION	REMARKS
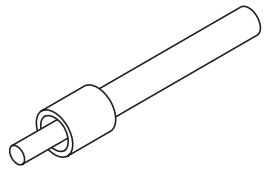 ST-499585500	499585500	VALVE OIL SEAL GUIDE	Used for press-fitting of intake and exhaust valve guide oil seals.
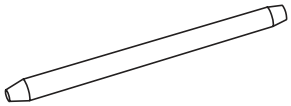 ST18253AA000	18253AA000	PISTON PIN GUIDE	Used for installing piston pin, piston and connecting rod.
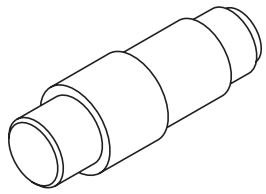 ST18350AA000	18350AA000	CONNECTING ROD BUSHING REMOVER AND INSTALLER	Used for removing and installing connecting rod bushing.
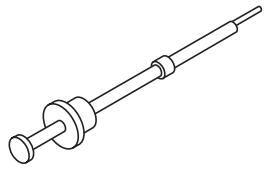 ST-499097700	499097700	PISTON PIN REMOVER ASSY	Used for removing piston pin.
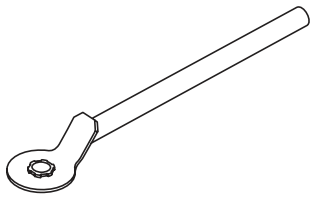 ST-499977500	499977500	CAM SPROCKET WRENCH	Used for removing and installing intake cam sprocket.

ILLUSTRATION	TOOL NUMBER	DESCRIPTION	REMARKS
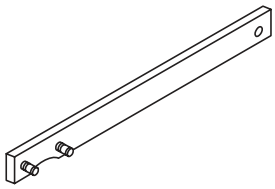 ST18231AA020	18231AA020	CAM SPROCKET WRENCH	Used for removing and installing exhaust cam sprocket.
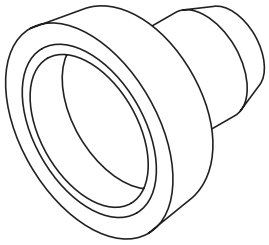 ST-499587200	499587200	CRANKSHAFT OIL SEAL INSTALLER	• Used for installing crankshaft oil seal. • Used together with the CRANKSHAFT OIL SEAL GUIDE (499597100).
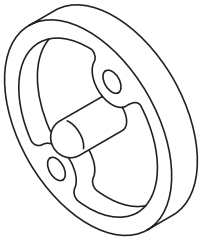 ST-499597100	499597100	CRANKSHAFT OIL SEAL GUIDE	• Used for installing crankshaft oil seal. • Used together with the CRANKSHAFT OIL SEAL INSTALLER (499587200).
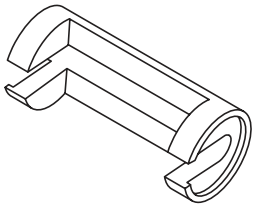 ST-499718000	499718000	VALVE SPRING REMOVER	Used for removing and installing valve spring.
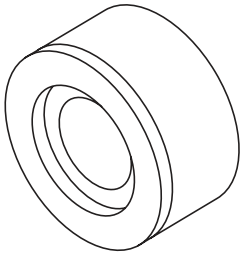 ST18251AA040	18251AA040	VALVE GUIDE ADJUSTER	Used for installing valve guides.

ILLUSTRATION	TOOL NUMBER	DESCRIPTION	REMARKS
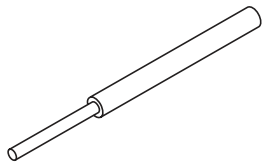 ST-499765700	499765700	VALVE GUIDE REMOVER	Used for removing valve guides.
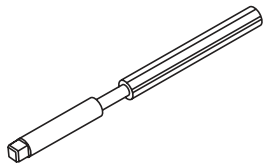 ST-499765900	499765900	VALVE GUIDE REAMER	Used for reaming valve guides.
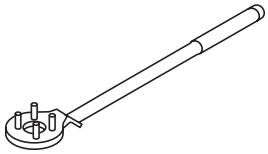 ST-499977100	499977100	CRANK PULLEY WRENCH	Used to stop rotation of the crank pulley when loosening or tightening crank pulley bolts.
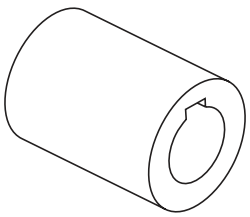 ST18252AA000	18252AA000	CRANKSHAFT SOCKET	Used for rotating crankshaft.
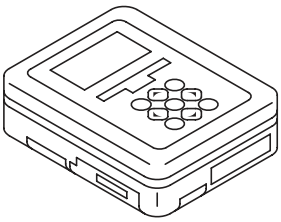 ST1B022XU0	1B022XU0	SUBARU SELECT MONITOR III KIT	Used for troubleshooting the electrical system.

ILLUSTRATION	TOOL NUMBER	DESCRIPTION	REMARKS
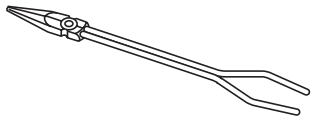 ST18233AA000	18233AA000	PISTON PIN SNAP RING PLIERS	Used for removing and installing snap ring of piston pin.
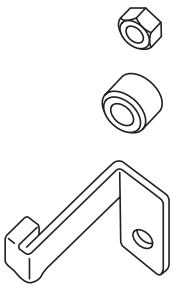 ST-498277200	498277200	STOPPER SET	Used for installing automatic transmission assembly to engine.
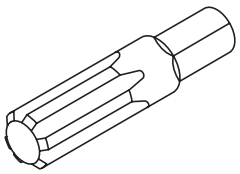 ST-499057000	499057000	TORX PLUS®	Used for removing and installing the drive plate.
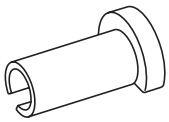 ST42099AE000	42099AE000	QUICK CONNECTOR RELEASE	Used for disconnecting quick connector of the engine compartment.
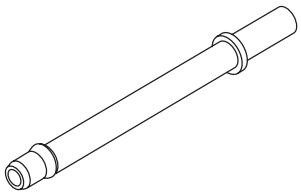 ST18471AA000	18471AA000	FUEL PIPE ADAPTER	Used for measuring fuel pressure.

ILLUSTRATION	TOOL NUMBER	DESCRIPTION	REMARKS
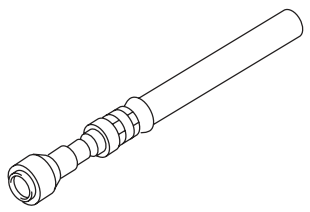 ST42075AG690	42075AG690	FUEL HOSE	• Used for measuring fuel pressure. • This is the SUBARU genuine part.

2. GENERAL TOOL

TOOL NAME	REMARKS
Compression gauge	Used for measuring compression.
Timing light	Used for measuring ignition timing.
Vacuum gauge	Used for measuring intake manifold vacuum.
Oil pressure gauge	Used for measuring engine oil pressure.
Fuel pressure gauge	Used for measuring fuel pressure.

E: PROCEDURE

It is possible to conduct the following service procedures with engine on vehicle, however, the procedures described in this section are based on the condition that the engine is removed from vehicle.

- V-belt
- Timing chain
- Camshaft
- Cylinder head

2. Compression

A: INSPECTION

CAUTION:
After warming-up, engine becomes very hot. Be careful not to burn yourself during measurement.

1) Remove the collector cover.
2) After warming-up the engine, turn the ignition switch to OFF.
3) Make sure that the battery is fully charged.
4) Release the fuel pressure. <Ref. to FU(H6DO)-43, RELEASING OF FUEL PRESSURE, PROCEDURE, Fuel.>
5) Remove all the spark plugs. <Ref. to IG(H6DO)-4, REMOVAL, Spark Plug.>
6) Fully open the throttle valve.
7) Check the starter motor for satisfactory performance and operation.
8) Secure the compression gauge tightly against the spark plug hole.

NOTE:
When using a screw-in type compression gauge, the screw should be less than 18 mm (0.71 in) long.

9) Crank the engine by means of the starter motor, and read the maximum value on the gauge when the pointer is steady.

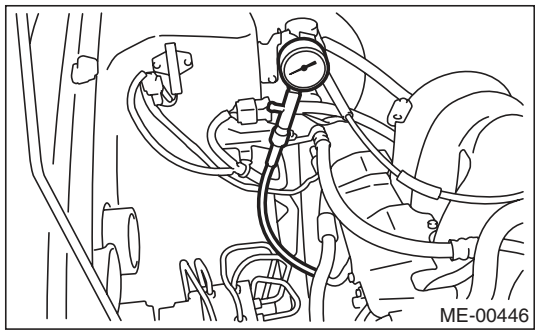

10) Perform at least two measurements per cylinder, and make sure that the values are correct.

Compression (350 rpm and fully open throttle):
Standard:
1,275 — 1,471 kPa
(13.0 — 15.0 kgf/cm^2, 185 — 213 psi)
Service limit:
1,128 kPa (11.5 kgf/cm^2, 164 psi)

11) After inspection, install the related parts in the reverse order of removal.

3. Idle Speed

A: INSPECTION

1) Before checking the idle speed, check the following item:
   (1) Check the air cleaner element is free from clogging, ignition timing is correct, spark plugs are in good condition, and hoses are connected properly.
   (2) Check the malfunction indicator light does not illuminate.
2) Warm up the engine.
3) Read the engine idle speed using Subaru Select Monitor. <Ref. to EN(H6DO)(diag)-35, READ CURRENT DATA FOR ENGINE (NORMAL MODE), OPERATION, Subaru Select Monitor.>
4) Check the idle speed when no-loaded. (Headlight, heater fan, rear defroster, radiator fan, A/C and etc. are OFF)

Idle speed [No load and gears in P or N range]: 650±50 rpm

5) Check the idle speed when loaded. (Turn the A/C switch to “ON” and operate the compressor for at least one minute before measurement.)

Idle speed [A/C ON and gears in P or N range]: 770±50 rpm

NOTE:
Idle speed cannot be adjusted manually, because the idle speed is automatically adjusted. If the prescribed idle speed cannot be maintained, refer to the General On-board Diagnosis Table under “Engine Control System”. <Ref. to EN(H6DO)(diag)-2, Basic Diagnostic Procedure.>

4. Ignition Timing

A: INSPECTION

CAUTION:
After warming-up, engine becomes very hot. Be careful not to burn yourself at measurement.

1. METHOD WITH SUBARU SELECT MONITOR

1) Before checking the ignition timing, check the following item:
   (1) Check the air cleaner element is free from clogging, spark plugs are in good condition, and hoses are connected properly.
   (2) Check the malfunction indicator light does not illuminate.
2) Warm up the engine.
3) Read the ignition timing using Subaru Select Monitor. <Ref. to EN(H6DO)(diag)-35, READ CURRENT DATA FOR ENGINE (NORMAL MODE), OPERATION, Subaru Select Monitor.>

Ignition timing [BTDC/rpm]:
15°±8°/650

If the timing is not correct, check the ignition control system. Refer to “Engine Control System”. <Ref. to EN(H6DO)(diag)-2, Basic Diagnostic Procedure.>

2. METHOD WITH TIMING LIGHT

1) Before checking the ignition timing, check the following item:
   (1) Check the air cleaner element is free from clogging, spark plugs are in good condition, and hoses are connected properly.
   (2) Check the malfunction indicator light does not illuminate.
2) Warm up the engine.
3) Stop the engine, and turn the ignition switch to OFF.
4) Remove the air cleaner case. <Ref. to IN(H6DO)-5, REMOVAL, Air Cleaner Case.>
5) Connect the timing light to the power wire of #1 ignition coil.
6) Install the air cleaner case. <Ref. to IN(H6DO)-6, INSTALLATION, Air Cleaner Case.>
7) Start the engine, aim the timing light to the crank pulley, and check the ignition timing by the crank pulley indicator.

Ignition timing [BTDC/rpm]:
15°±8°/650

If the timing is not correct, check the ignition control system. Refer to “Engine Control System”. <Ref. to EN(H6DO)(diag)-2, Basic Diagnostic Procedure.>

5. Intake Manifold Vacuum

A: INSPECTION

1) Warm up the engine.
2) Disconnect the brake booster vacuum hose from the intake manifold, and install the vacuum gauge.
3) Keep the engine at idle speed and read the vacuum gauge indication. By observing the vacuum gauge needle movement, internal condition of the engine can be diagnosed as described below.

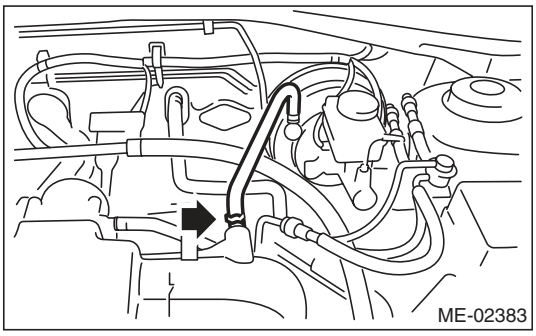

Vacuum pressure (at idling, A/C OFF):
Less than –60.0 kPa
(–450 mmHg, –17.72 inHg)

Diagnosis of engine condition by measurement of intake manifold vacuum	
Vacuum gauge indication	Possible engine condition
1. Needle is steady but lower than normal position. This tendency becomes more evident as engine temperature rises.	Air leakage around intake manifold gasket, disconnection or damage of vacuum hose
2. Needle intermittently drops to position lower than normal position.	Leakage around cylinder
3. Needle drops suddenly and intermittently from normal position.	Sticky valve
4. When engine speed is gradually increased, needle begins to vibrate rapidly at certain speed, and then vibration increases as engine speed increases.	Weak or broken valve springs
5. Needle vibrates above and below normal position in narrow range.	Defective ignition system

6. Engine Oil Pressure

A: INSPECTION

1) Remove the oil pressure switch from the cylinder block. <Ref. to LU(H6DO)-15, REMOVAL, Oil Pressure Switch.>
2) Connect the oil pressure gauge hose to the cylinder block.
3) Connect the ground cable to battery.
4) Start the engine, and measure the oil pressure.

OIL PRESSURE (at oil temperature of 80°C (176°F)):
Standard:
135 kPa (1.4 kgf/cm^2, 20 psi) or more (at 600 rpm)
500 kPa (5.1 kgf/cm^2, 73 psi) or more (at 5,000 rpm)

- If the oil pressure is out of specification, check oil pump, oil filter and lubrication line. <Ref. to LU(H6DO)-19, INSPECTION, Engine Lubrication System Trouble in General.>
- If the oil pressure warning light is ON and oil pressure is within specification, check the oil pressure switch. <Ref. to LU(H6DO)-19, INSPECTION, Engine Lubrication System Trouble in General.>

5) After measuring the oil pressure, install the oil pressure switch. <Ref. to LU(H6DO)-15, INSTALLATION, Oil Pressure Switch.>

7. Fuel Pressure

A: INSPECTION

CAUTION:
- **Before removing the fuel pressure gauge, release the fuel pressure.**
- **Be careful not to spill fuel.**
- **Catch the fuel from hoses using a container or cloth.**

NOTE:
Check or replace the fuel pump and fuel delivery line if the fuel pressure is out of the standard.

1) Remove the collector cover.
2) Release the fuel pressure. <Ref. to FU(H6DO)-43, RELEASING OF FUEL PRESSURE, PROCEDURE, Fuel.>
3) Open the fuel filler lid, and remove the fuel filler cap.
4) Disconnect the fuel delivery hose and connect the fuel pressure gauge.
   (1) Disconnect the fuel delivery hose using the ST1.

ST1 42099AE000 QUICK CONNECTOR RELEASE

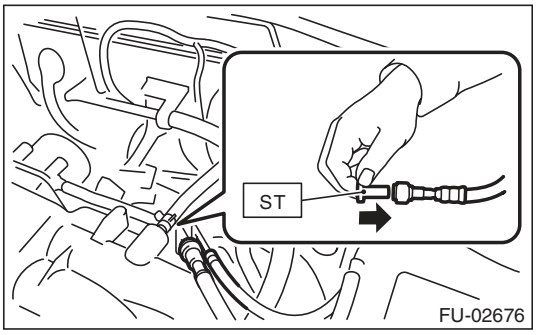

   (2) Connect the fuel pressure gauge with ST2 and ST3.

NOTE:
ST2 is a SUBARU genuine part.
ST2 42075AG690 FUEL HOSE
ST3 18471AA000 FUEL PIPE ADAPTER

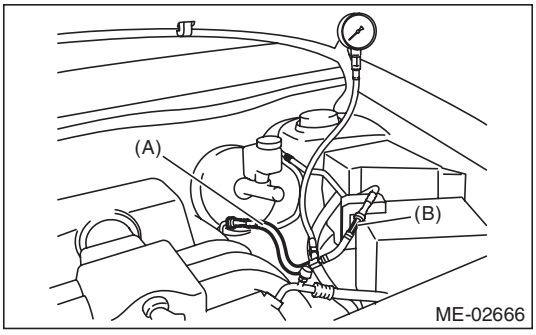

(A) ST2
(B) ST3

5) Start the engine.
6) Measure the fuel pressure after warming up the engine.

Fuel pressure:
Standard: 338 — 348 kPa
(3.4 — 3.5 kgf/cm^2, 49 — 50.5 psi)

NOTE:
The fuel pressure gauge registers 10 to 20 kPa (0.1 to 0.2 kgf/cm^2, 1 to 3 psi) higher than standard values during high-altitude operations.

8. Valve Clearance

A: INSPECTION

NOTE:
Inspection and adjustment of valve clearance should be performed while engine is cold.

1) Set the vehicle on a lift.
2) Remove the collector cover.
3) Disconnect the ground cable from the battery.

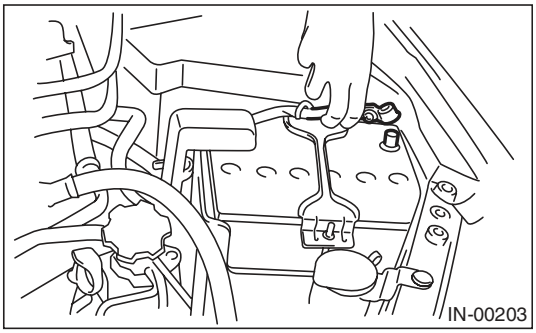

4) Lift up the vehicle.
5) Remove the under cover.
6) Lower the vehicle.
7) When inspecting RH side cylinders:
   (1) Remove the air intake duct and air cleaner case. <Ref. to IN(H6DO)-8, REMOVAL, Air Intake Duct.> <Ref. to IN(H6DO)-5, REMOVAL, Air Cleaner Case.>
   (2) Remove the fuel pipe protector (RH).

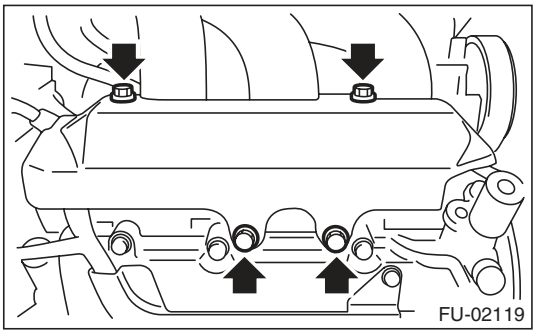

   (3) Disconnect the connector of oil pressure switch.
   (4) Remove the ignition coil. <Ref. to IG(H6DO)-7, REMOVAL, Ignition Coil.>
   (5) Remove the rocker cover (RH).

8) When inspecting LH side cylinders:
   (1) Disconnect the battery cable, and then remove the battery and battery carrier.
   (2) Disconnect the PCV hose and blow-by hose from the rocker cover (LH).

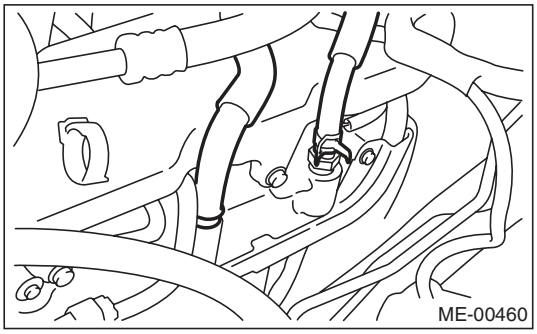

   (3) Remove the fuel pipe protector (LH).

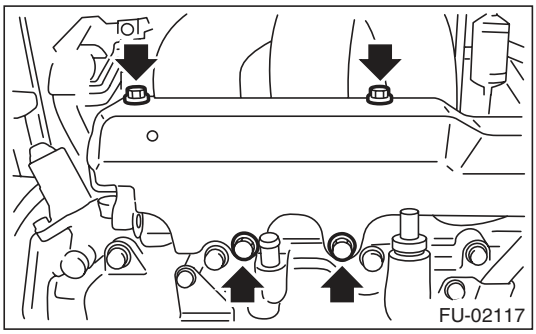

   (4) Remove the ignition coil. <Ref. to IG(H6DO)-7, REMOVAL, Ignition Coil.>
   (5) Remove the rocker cover (LH).

9) Turn the crankshaft clockwise until the cam is set to position shown in the figure.

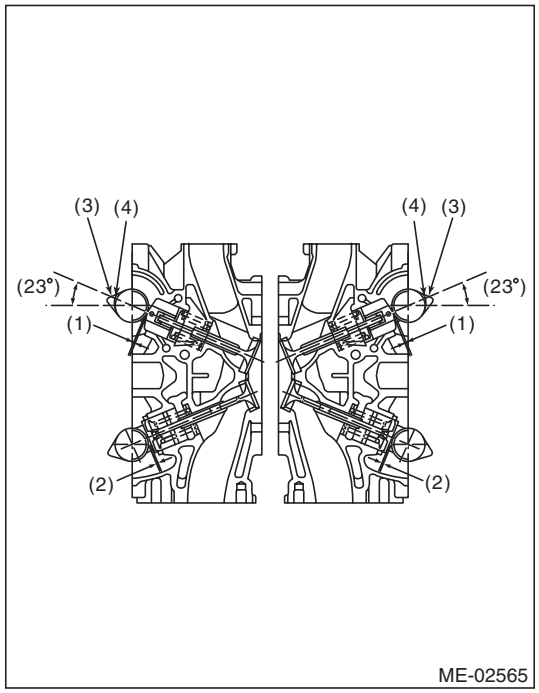

(1) Valve clearance (Intake side)
(2) Valve clearance (Exhaust side)
(3) High lift cam
(4) Low lift cam

10) Measure the clearance of intake valve and exhaust valve using thickness gauge (A).

NOTE:
- Measure it within the range of ±30° from specified position shown in the figure.
- Measure it in low lift cam for intake side.
- Insert a thickness gauge in a direction as horizontal as possible with respect to the valve lifter.

Valve clearance

Intake:

$0.20^{+0.04}_{-0.06}$ mm ($0.0079^{+0.0016}_{-0.0024}$ in)

Exhaust:

0.35±0.05 mm (0.0138±0.0020 in)

- If the measured value is not within specification, take notes of the value in order to adjust the valve clearance later on.

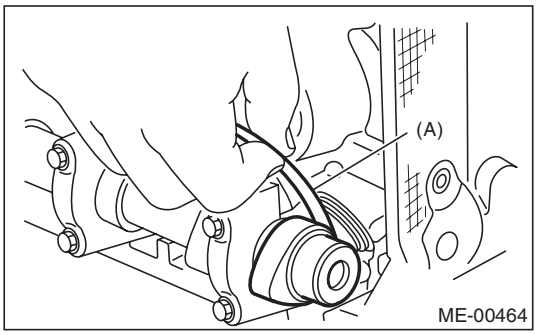

11) If necessary, adjust the valve clearance. <Ref. to ME(H6DO)-30, ADJUSTMENT, Valve Clearance.>

12) Further turn the crank pulley clockwise and then measure the valve clearances again.

13) After inspection, install the related parts in the reverse order of removal.

B: ADJUSTMENT

1. INTAKE SIDE

NOTE:
- Adjustment of valve clearance should be performed while engine is cold.
- Do not wear gloves during removal and installation of valve lifter.
- Do not use valve lifters that were dropped or otherwise exposed to strong impacts.
- When installing the valve lifter, align the anti-rotation of valve lifter with groove on cylinder head, and insert the valve lifter.

1) Measure all the valve clearances. <Ref. to ME(H6DO)-28, INSPECTION, Valve Clearance.>

NOTE:
Record each valve clearance after measurement.

2) Remove the timing chain assembly. <Ref. to ME(H6DO)-46, REMOVAL, Timing Chain Assembly.>
3) Remove the cam sprocket. <Ref. to ME(H6DO)-51, REMOVAL, Cam Sprocket.>
4) Remove the camshaft. <Ref. to ME(H6DO)-55, REMOVAL, Camshaft.>
5) Remove the valve lifter.
6) Remove the shim from valve lifter.
7) Check the thickness of the shim from the markings on the side of the shim that was removed.
8) Select a shim of suitable thickness from the following table using the measured valve clearance and shim thickness, and install it.

Unit: mm (in)
S = (V + T) – 0.20 (0.0079)
S: Required shim thickness V: Measured valve clearance T: Shim thickness to be used

Part No.	Thickness mm (in)
13218AK890	1.92 (0.0756)
13218AK900	1.94 (0.0764)
13218AK910	1.96 (0.0772)
13218AK920	1.98 (0.0780)
13218AK930	2.00 (0.0787)
13218AK940	2.02 (0.0795)
13218AK950	2.04 (0.0803)
13218AK960	2.06 (0.0811)
13218AK970	2.07 (0.0815)
13218AK980	2.08 (0.0819)
13218AK990	2.09 (0.0823)
13218AL000	2.10 (0.0827)
13218AL010	2.11 (0.0831)
13218AL020	2.12 (0.0835)
13218AL030	2.13 (0.0839)
13218AL040	2.14 (0.0843)
13218AL050	2.15 (0.0846)
13218AL060	2.16 (0.0850)
13218AL070	2.17 (0.0854)
13218AL080	2.18 (0.0858)
13218AL090	2.19 (0.0862)
13218AL100	2.20 (0.0866)
13218AL110	2.21 (0.0870)
13218AL120	2.22 (0.0874)
13218AL130	2.23 (0.0878)
13218AL140	2.24 (0.0882)
13218AL150	2.25 (0.0886)
13218AL160	2.26 (0.0890)
13218AL170	2.27 (0.0894)
13218AL180	2.28 (0.0898)
13218AL190	2.29 (0.0902)
13218AL200	2.30 (0.0906)
13218AL210	2.31 (0.0909)
13218AL220	2.32 (0.0913)
13218AL230	2.33 (0.0917)
13218AL240	2.34 (0.0921)
13218AL250	2.35 (0.0925)
13218AL260	2.36 (0.0929)
13218AL270	2.37 (0.0933)
13218AL280	2.38 (0.0937)
13218AL290	2.39 (0.0941)
13218AL300	2.40 (0.0945)
13218AL310	2.41 (0.0949)
13218AL320	2.42 (0.0953)
13218AL330	2.43 (0.0957)
13218AL340	2.44 (0.0961)
13218AL350	2.45 (0.0965)
13218AL360	2.46 (0.0969)
13218AL370	2.47 (0.0972)
13218AL380	2.48 (0.0976)

Part No.	Thickness mm (in)
13218AL390	2.49 (0.0980)
13218AL400	2.50 (0.0984)
13218AL410	2.51 (0.0988)
13218AL420	2.52 (0.0992)
13218AL430	2.53 (0.0996)
13218AL440	2.54 (0.1000)
13218AL450	2.55 (0.1004)
13218AL460	2.56 (0.1008)
13218AL470	2.57 (0.1012)
13218AL480	2.58 (0.1016)
13218AL490	2.59 (0.1020)
13218AL500	2.60 (0.1024)
13218AL510	2.61 (0.1028)
13218AL520	2.62 (0.1032)
13218AL530	2.64 (0.1039)
13218AL540	2.66 (0.1047)
13218AL550	2.68 (0.1055)
13218AL560	2.70 (0.1063)
13218AL570	2.72 (0.1071)
13218AL580	2.74 (0.1079)
13218AL590	2.76 (0.1087)

9) Install the camshaft. <Ref. to ME(H6DO)-56, INSTALLATION, Camshaft.>
10) Install the cam sprocket. <Ref. to ME(H6DO)-51, INSTALLATION, Cam Sprocket.>
11) Install the timing chain assembly. <Ref. to ME(H6DO)-47, INSTALLATION, Timing Chain Assembly.>
12) Measure all valve clearance again at this time. If the valve clearance is not correct, repeat the procedure over again from the first step.
13) After measuring, install the related parts in the reverse order of removal.

NOTE:
Use a new rocker cover gasket.

2. EXHAUST SIDE

NOTE:
- Adjustment of valve clearance should be performed while engine is cold.
- Do not wear gloves during removal and installation of valve lifter.
- Do not use valve lifters that were dropped or otherwise exposed to strong impacts.

1) Measure all the valve clearances. <Ref. to ME(H6DO)-28, INSPECTION, Valve Clearance.>

NOTE:
Record each valve clearance after measurement.

2) Remove the camshaft. <Ref. to ME(H6DO)-55, REMOVAL, Camshaft.>
3) Remove the valve lifter.
4) Measure the thickness of valve lifter using micrometer.

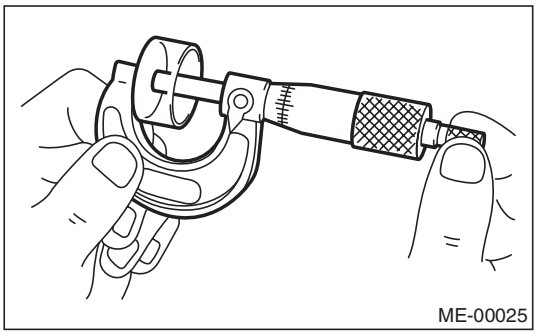

5) Select a valve lifter of suitable thickness from the following table using the measured valve clearance and valve lifter thickness, and install it.

Unit: mm (in)
S = (V + T) – 0.35 (0.0138)
S: Valve lifter thickness required V: Measured valve clearance T: Valve lifter thickness to be used

Part No.	Thickness mm (in)
13228AD181	4.32 (0.1701)
13228AD191	4.34 (0.1709)
13228AD201	4.36 (0.1717)
13228AD211	4.38 (0.1724)
13228AD221	4.40 (0.1732)
13228AD231	4.42 (0.1740)
13228AD241	4.44 (0.1748)
13228AD251	4.46 (0.1756)
13228AD261	4.48 (0.1764)
13228AD271	4.50 (0.1772)
13228AD281	4.52 (0.1780)
13228AD291	4.54 (0.1787)
13228AD301	4.56 (0.1795)
13228AD311	4.58 (0.1803)
13228AD321	4.60 (0.1811)
13228AC581	4.62 (0.1819)
13228AC591	4.63 (0.1823)
13228AC601	4.64 (0.1827)
13228AC611	4.65 (0.1831)
13228AC621	4.66 (0.1835)
13228AC631	4.67 (0.1839)
13228AC641	4.68 (0.1843)
13228AC651	4.69 (0.1846)
13228AC661	4.70 (0.1850)
13228AC671	4.71 (0.1854)
13228AC681	4.72 (0.1858)
13228AC691	4.73 (0.1862)
13228AC701	4.74 (0.1866)
13228AC711	4.75 (0.1870)
13228AC721	4.76 (0.1874)
13228AC731	4.77 (0.1878)
13228AC741	4.78 (0.1882)
13228AC751	4.79 (0.1886)
13228AC761	4.80 (0.1890)
13228AC771	4.81 (0.1894)
13228AC781	4.82 (0.1898)
13228AC791	4.83 (0.1902)
13228AC801	4.84 (0.1906)
13228AC811	4.85 (0.1909)
13228AC821	4.86 (0.1913)
13228AC831	4.87 (0.1917)
13228AC841	4.88 (0.1921)
13228AC851	4.89 (0.1925)
13228AC861	4.90 (0.1929)
13228AC871	4.91 (0.1933)
13228AC881	4.92 (0.1937)
13228AC891	4.93 (0.1941)
13228AC901	4.94 (0.1945)
13228AC911	4.95 (0.1949)
13228AC921	4.96 (0.1953)

Part No.	Thickness mm (in)
13228AC931	4.97 (0.1957)
13228AC941	4.98 (0.1961)
13228AC951	4.99 (0.1965)
13228AC961	5.00 (0.1969)
13228AC971	5.01 (0.1972)
13228AC981	5.02 (0.1976)
13228AC991	5.03 (0.1980)
13228AD001	5.04 (0.1984)
13228AD011	5.05 (0.1988)
13228AD021	5.06 (0.1992)
13228AD031	5.07 (0.1996)
13228AD041	5.08 (0.2000)
13228AD051	5.09 (0.2004)
13228AD061	5.10 (0.2008)
13228AD071	5.11 (0.2012)
13228AD081	5.12 (0.2016)
13228AD091	5.13 (0.2020)
13228AD101	5.14 (0.2024)
13228AD111	5.15 (0.2028)
13228AD121	5.16 (0.2032)
13228AD131	5.17 (0.2035)
13228AD141	5.18 (0.2039)
13228AD151	5.19 (0.2043)
13228AD161	5.20 (0.2047)
13228AD171	5.21 (0.2051)
13228AD331	5.23 (0.2059)
13228AD341	5.25 (0.2067)
13228AD351	5.27 (0.2075)
13228AD361	5.29 (0.2083)
13228AD371	5.31 (0.2091)
13228AD381	5.33 (0.2098)
13228AD391	5.35 (0.2106)
13228AD401	5.37 (0.2114)
13228AD411	5.39 (0.2122)
13228AD421	5.41 (0.2130)
13228AD431	5.43 (0.2138)
13228AD441	5.45 (0.2146)
13228AD451	5.47 (0.2154)
13228AD461	5.49 (0.2161)
13228AD471	5.51 (0.2169)
13228AD481	5.53 (0.2177)
13228AD491	5.55 (0.2185)
13228AD501	5.57 (0.2193)
13228AD511	5.59 (0.2201)

6) Install the camshaft. <Ref. to ME(H6DO)-56, INSTALLATION, Camshaft.>
7) Install the cam sprocket. <Ref. to ME(H6DO)-51, INSTALLATION, Cam Sprocket.>
8) Install the timing chain assembly. <Ref. to ME(H6DO)-47, INSTALLATION, Timing Chain Assembly.>
9) Measure all valve clearance again at this time. If the valve clearance is not correct, repeat the procedure over again from the first step.
10) After measuring, install the related parts in the reverse order of removal.

NOTE:
Use a new rocker cover gasket.

9. Engine Assembly

A: REMOVAL

1) Set the vehicle on a lift.
2) Open the front hood fully and support with the front hood stay.
3) Remove the collector cover.
4) Collect the refrigerant from A/C system. <Ref. to AC-22, PROCEDURE, Refrigerant Recovery Procedure.>
5) Release the fuel pressure. <Ref. to FU(H6DO)-43, RELEASING OF FUEL PRESSURE, PROCEDURE, Fuel.>
6) Remove the fuel filler cap.
7) Remove the battery from vehicle. <Ref. to SC(H4SO)-20, REMOVAL, Battery.>
8) Remove the air intake duct, air cleaner case and air intake chamber. <Ref. to IN(H6DO)-8, REMOVAL, Air Intake Duct.> <Ref. to IN(H6DO)-5, REMOVAL, Air Cleaner Case.> <Ref. to IN(H6DO)-7, REMOVAL, Air Intake Chamber.>
9) Remove the radiator from vehicle. <Ref. to CO(H6DO)-15, REMOVAL, Radiator.>
10) Remove the V-belts. <Ref. to ME(H6DO)-42, REMOVAL, V-belt.>
11) Disconnect the A/C pressure hoses from A/C compressor. <Ref. to AC-40, REMOVAL, Hose and Pipe.>
12) Disconnect the engine ground terminals.

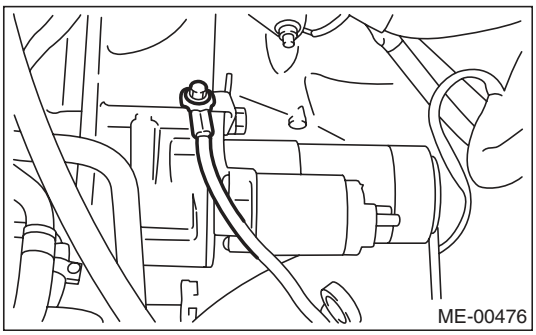

13) Disconnect the following connector.
(1) Engine harness connectors

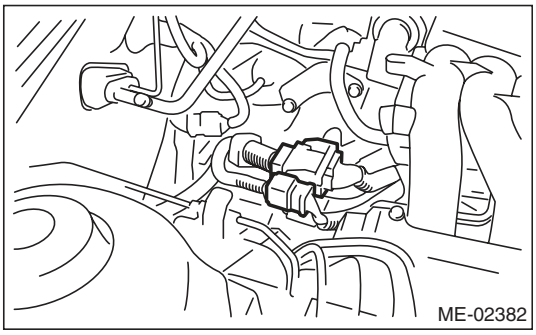

(2) Generator connector and terminal
(3) A/C compressor connector
(4) Power steering switch connector

14) Disconnect the following hoses.
(1) Brake booster vacuum hose

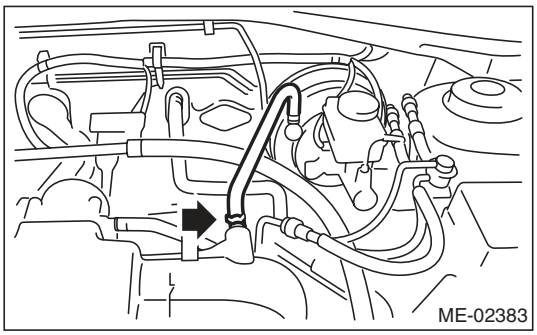

(2) Heater inlet and outlet hoses
(3) Pressure regulator vacuum hose
15) Remove the power steering pump together with the bracket.

NOTE:
Do not disconnect the hose and pipe from the pump body.

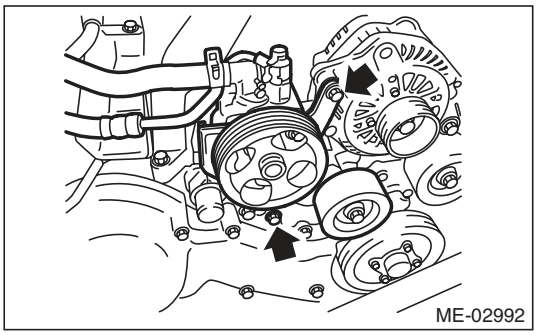

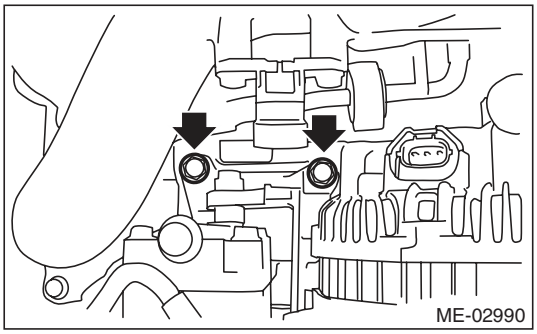

16) Place the power steering pump on the right side wheel apron.

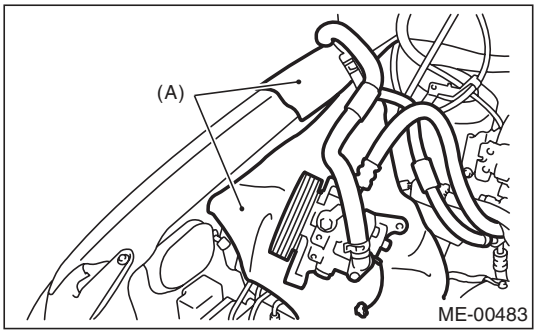

(A) Cloth

17) Lift up the vehicle.
18) Remove the under cover.
19) Remove the front exhaust pipe. <Ref. to EX(H6DO)-4, REMOVAL, Front Exhaust Pipe.>

NOTE:
Be careful not to let the front exhaust pipe interfere with water pipes on engine side.

20) Remove the ground cable.

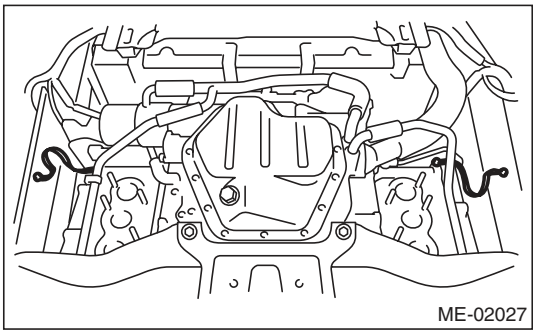

21) Remove the bolts and nuts which hold lower side of transmission to engine.

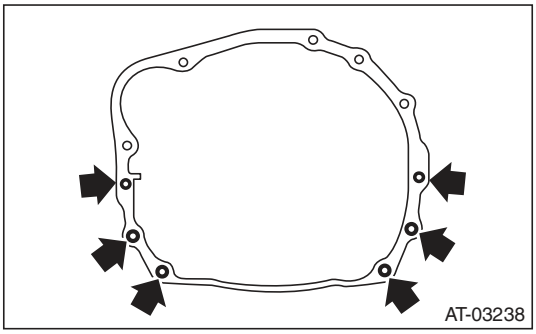

22) Remove the nuts which install front cushion rubber onto front crossmember.

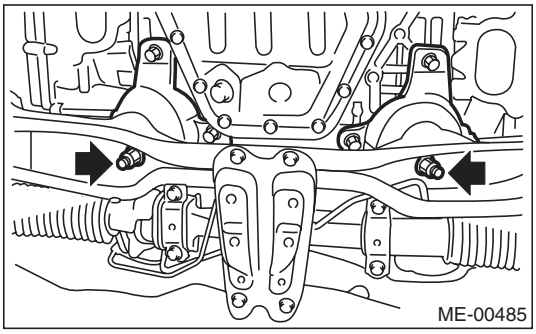

23) Lower the vehicle.

24) Separate the torque converter clutch from drive plate.
(1) Remove the service hole plug (A).
(2) Remove the bolts which hold torque converter clutch to drive plate.
(3) Remove other bolts while rotating the crankshaft using socket wrench.

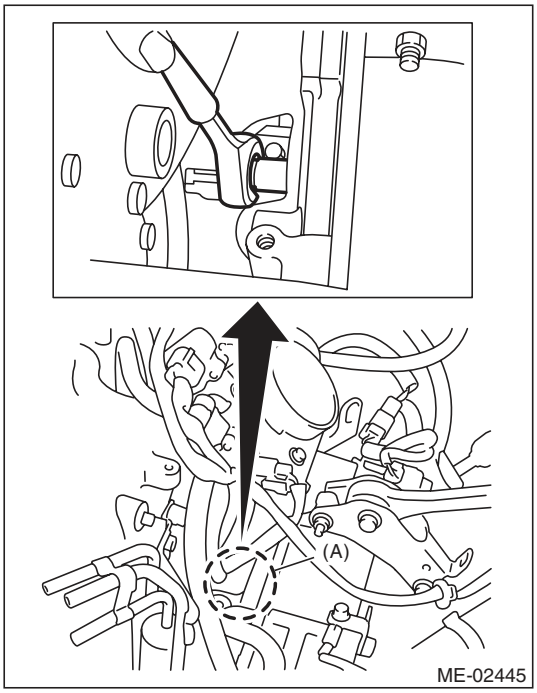

25) Remove the pitching stopper.

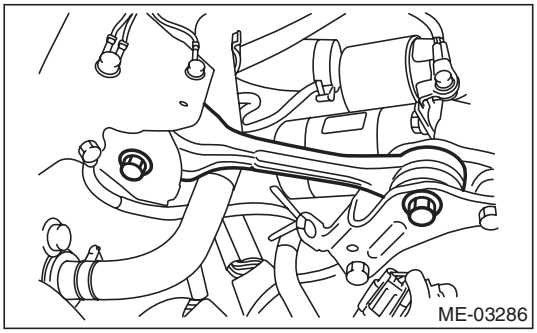

26) Disconnect the fuel delivery hose and evaporation hose.

CAUTION:
- **Be careful not to spill fuel.**
- **Catch the fuel from hoses using a container or cloth.**

(1) Disconnect the connector of fuel pipe by pushing the ST in the direction of arrow.

ST 42099AE000 QUICK CONNECTOR RELEASE

(2) Remove the clip, and disconnect the evaporation hose from the pipe.

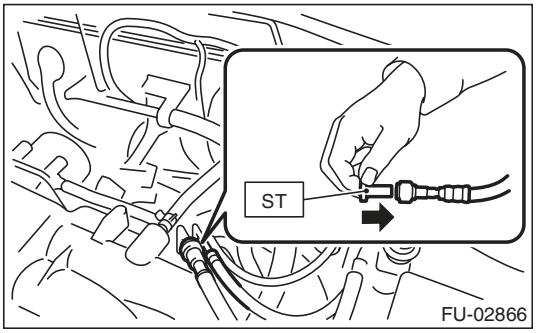

27) Support the engine with a lifting device and wire ropes.

28) Support the transmission with a garage jack.

CAUTION:
Be sure to perform this procedure to prevent the transmission from lowering by its own weight.

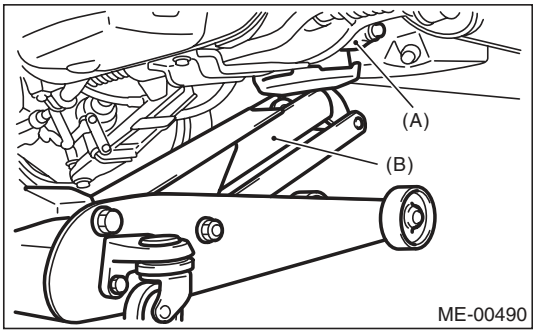

(A) Transmission
(B) Garage jack

CAUTION:
Before removing the engine away from transmission, check to be sure no work has been overlooked.

29) Separate the engine and transmission.

(1) Remove the starter. <Ref. to SC(H4SO)-6, REMOVAL, Starter.>

(2) Remove the bolts which hold upper side of transmission to engine.

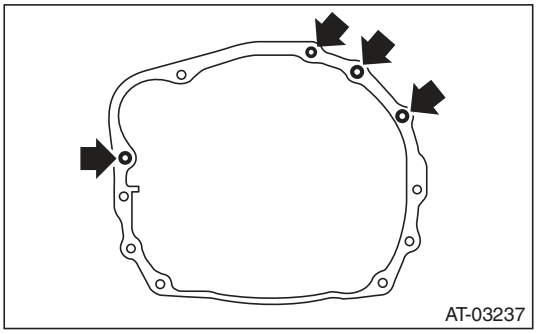

30) Attach the ST to the converter case.

ST 498277200 STOPPER SET

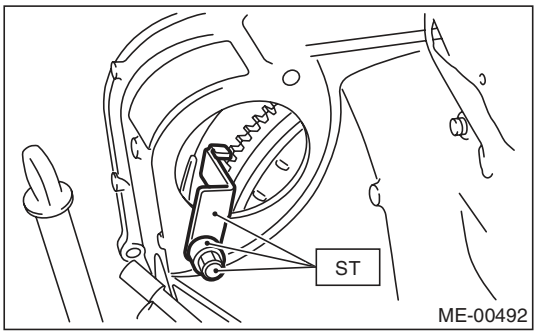

31) Remove the engine from vehicle.

(1) Slightly raise the engine.

(2) Raise the transmission with garage jack.

(3) Slowly move the engine away from engine compartment.

NOTE:
Be careful not to damage adjacent parts or body panels with crank pulley, oil level gauge, etc.

32) Remove the engine mounting.

B: INSTALLATION

1) Install the engine mounting.

Tightening torque:
35 N·m (3.6 kgf-m, 25.8 ft-lb)

2) Position the engine in engine compartment and align it with transmission.

NOTE:
Be careful not to damage adjacent parts or body panels with crank pulley, oil level gauge, etc.

3) Tighten the bolts which hold upper side of transmission to engine.

Tightening torque:
50 N·m (5.1 kgf-m, 36.9 ft-lb)

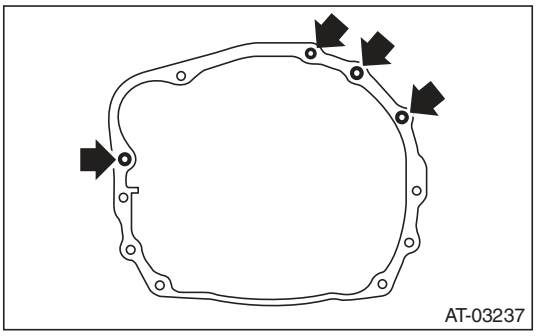

4) Remove the lifting device and wire ropes.
5) Remove the garage jack.
6) Install the pitching stopper.

Tightening torque:
T1: 50 N·m (5.1 kgf-m, 36.9 ft-lb)
T2: 58 N·m (5.9 kgf-m, 42.8 ft-lb)

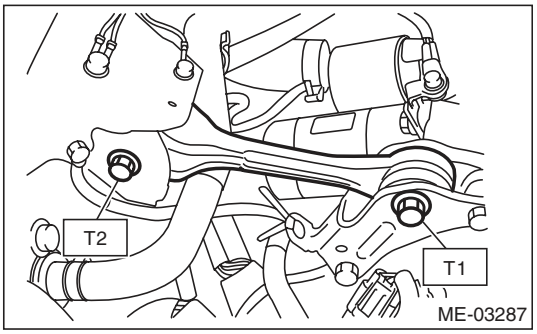

7) Remove the ST from converter case.

NOTE:
Be careful not to drop the ST into the converter case when removing the ST.
ST 498277200 STOPPER SET

8) Install the starter. <Ref. to SC(H4SO)-6, INSTALLATION, Starter.>

9) Install the torque converter clutch to drive plate.
   (1) Tighten the bolts which hold torque converter clutch to drive plate.
   (2) Tighten other bolts while rotating the crankshaft using socket wrench.

Tightening torque:
25 N·m (2.5 kgf-m, 18.4 ft-lb)

   (3) Install the service hole plug (A) to prevent getting foreign matter inside.

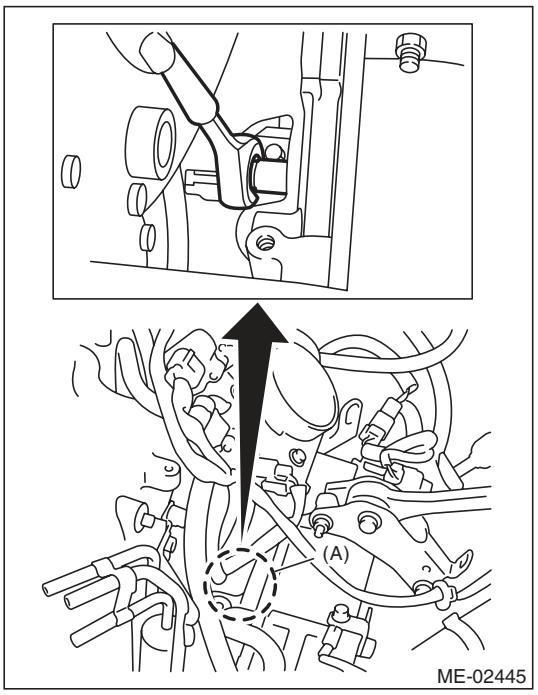

10) Install the power steering pump.

Tightening torque:
(A): 25 N·m (2.5 kgf-m, 18.4 ft-lb)
(B): 33 N·m (3.4 kgf-m, 24.3 ft-lb)

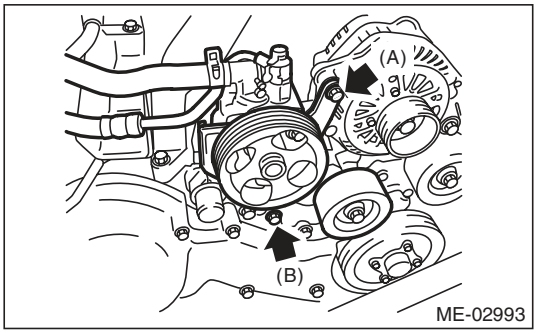

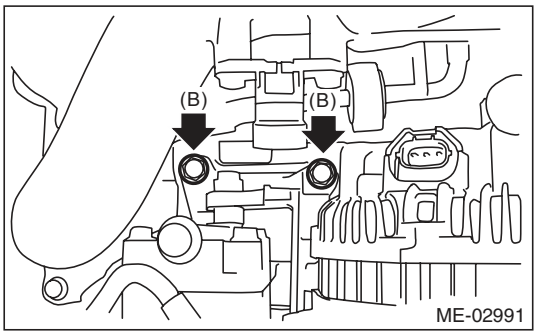

11) Lift up the vehicle.

12) Tighten the bolts and nuts which hold lower side of the transmission to engine.

Tightening torque:
50 N·m (5.1 kgf-m, 36.9 ft-lb)

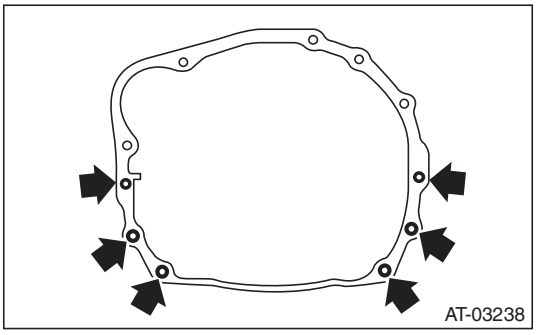

13) Tighten the nuts which install the front cushion rubber onto crossmember.

Tightening torque:
85 N·m (8.7 kgf-m, 62.7 ft-lb)

NOTE:
Make sure the front cushion rubber mounting bolts (A) and locator (B) are securely installed.

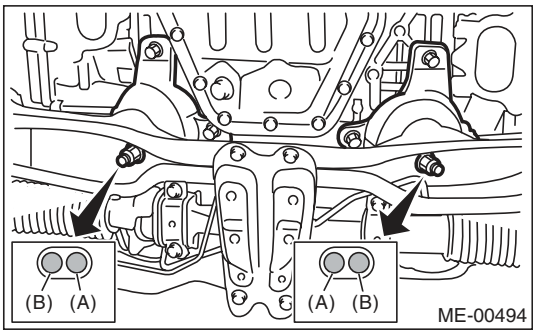

14) Install the front exhaust pipe. <Ref. to EX(H6DO)-5, INSTALLATION, Front Exhaust Pipe.>

NOTE:
- Be care not to let the front exhaust pipe interfere with water pipes and crossmember on engine side.
- Be care not to scratch the flange surface of front exhaust pipe with stud bolt on engine.

15) Connect the ground cable.

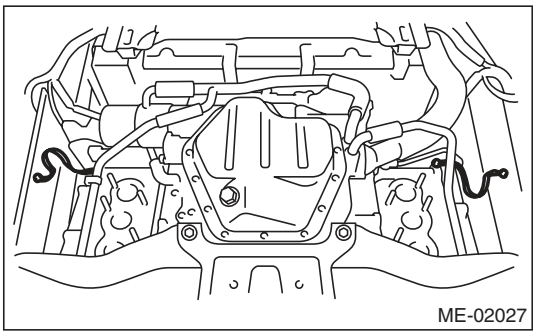

16) Install the under cover.
17) Lower the vehicle.
18) Connect the following hoses.
(1) Fuel delivery hose and evaporation hose
(2) Heater inlet and outlet hoses
(3) Brake booster vacuum hose
(4) Pressure regulator vacuum hose
19) Connect the following connectors.
(1) Engine harness connectors

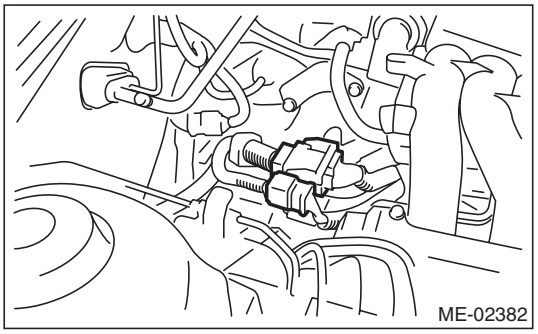

(2) Generator connector and terminal
(3) A/C compressor connector
(4) Power steering switch connector
20) Install the engine ground terminals.

Tightening torque:
14 N·m (1.4 kgf-m, 10.3 ft-lb)

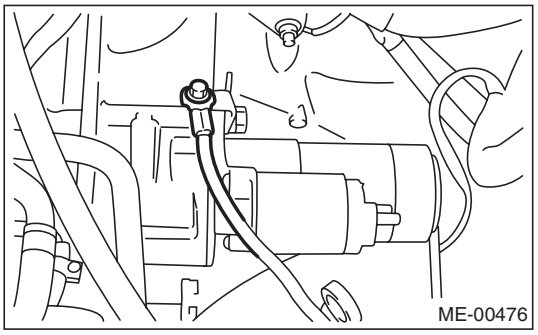

21) Install the A/C pressure hoses. <Ref. to AC-40, INSTALLATION, Hose and Pipe.>
22) Install the V-belts. <Ref. to ME(H6DO)-42, INSTALLATION, V-belt.>
23) Install the radiator to vehicle. <Ref. to CO(H6DO)-16, INSTALLATION, Radiator.>
24) Install the air intake duct, air cleaner case and air intake chamber. <Ref. to IN(H6DO)-8, INSTALLATION, Air Intake Duct.> <Ref. to IN(H6DO)-6, INSTALLATION, Air Cleaner Case.> <Ref. to IN(H6DO)-7, INSTALLATION, Air Intake Chamber.>
25) Install the battery to the vehicle. <Ref. to SC(H4SO)-20, INSTALLATION, Battery.>
26) Fill engine coolant. <Ref. to CO(H6DO)-10, FILLING OF ENGINE COOLANT, REPLACEMENT, Engine Coolant.>
27) Check the ATF level and replenish it if necessary. <Ref. to 5AT-28, INSPECTION, Automatic Transmission Fluid.>

28) Charge the A/C system with refrigerant. <Ref. to AC-23, PROCEDURE, Refrigerant Charging Procedure.>
29) Install the collector cover.
30) Remove the front hood stay, and close the front hood.
31) Lower the vehicle from lift.

C: INSPECTION

1) Check the pipes and hoses are installed firmly.
2) Check the engine coolant and ATF are at specified levels.
3) Start the engine and check for leaks of fuel, exhaust gas, engine coolant, etc. Also check for noise and vibrations.

10. Engine Mounting

A: REMOVAL

1) Remove the engine unit. <Ref. to ME(H6DO)-34, REMOVAL, Engine Assembly.>
2) Remove the engine mounting from engine assembly.

B: INSTALLATION

Install in the reverse order of removal.

Tightening torque:
Engine mounting:
35 N·m (3.6 kgf-m, 25.8 ft-lb)

C: INSPECTION

Make sure that no crack or other damages do not exist.

11. Preparation for Overhaul

A: REMOVAL

1) Remove the engine from the body. <Ref. to ME(H6DO)-34, REMOVAL, Engine Assembly.>
2) Set the engine on ST.
ST 18232AA000 ENGINE STAND

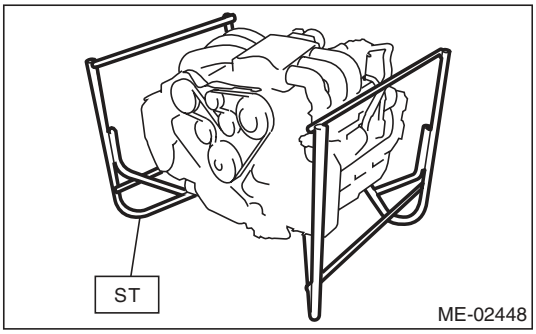

3) Before servicing overhaul, remove the sensor, pipe and hose that installed to engine.
   (1) Remove the intake manifold. <Ref. to FU(H6DO)-14, REMOVAL, Intake Manifold.>
   (2) Remove the generator. <Ref. to SC(H4SO)-14, REMOVAL, Generator.>
   (3) Remove the A/C compressor. <Ref. to AC-36, REMOVAL, Compressor.>
   (4) Disconnect the water pipe and hose.
   (5) Disconnect the engine harness.
   (6) Remove the spark plug. <Ref. to IG(H6DO)-4, REMOVAL, Spark Plug.>
   (7) Remove the camshaft position sensor. <Ref. to FU(H6DO)-22, REMOVAL, Camshaft Position Sensor.>
   (8) Remove the crankshaft position sensor. <Ref. to FU(H6DO)-21, REMOVAL, Crankshaft Position Sensor.>
   (9) Remove the knock sensor. <Ref. to FU(H6DO)-23, REMOVAL, Knock Sensor.>
   (10) Remove the engine coolant temperature sensor. <Ref. to FU(H6DO)-20, REMOVAL, Engine Coolant Temperature Sensor.>
   (11) Remove the oil pressure switch. <Ref. to LU(H6DO)-15, REMOVAL, Oil Pressure Switch.>
   (12) Remove the oil filter. <Ref. to LU(H6DO)-16, REMOVAL, Engine Oil Filter.>
   (13) Remove the oil cooler. <Ref. to LU(H6DO)-17, REMOVAL, Oil Cooler.>

12. V-belt

A: REMOVAL

NOTE:
Perform the work with the engine installed to body when replacing a single part.
1) Remove the collector cover.
2) Install the tool to belt tension adjuster assembly installation bolt.
3) Rotate the tool clockwise and loosen the V-belt to remove.

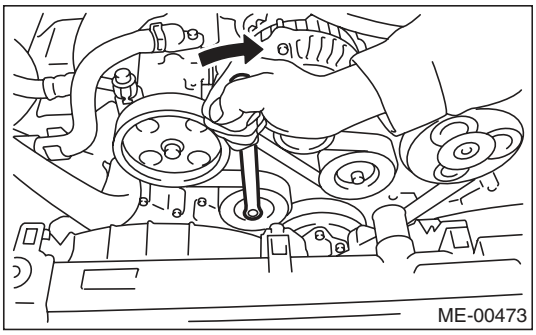

B: INSTALLATION

Install in the reverse order of removal.

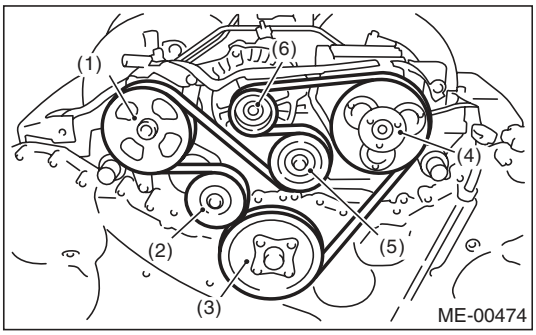

(1) Power steering oil pump pulley
(2) Belt tension adjuster ASSY
(3) Crank pulley
(4) A/C compressor pulley
(5) Belt idler
(6) Generator pulley

C: INSPECTION

1) Replace the V-belt, if cracks, fraying or wear is found.
2) Make sure that the V-belt automatic belt tension indicator (A) is within the range (D).

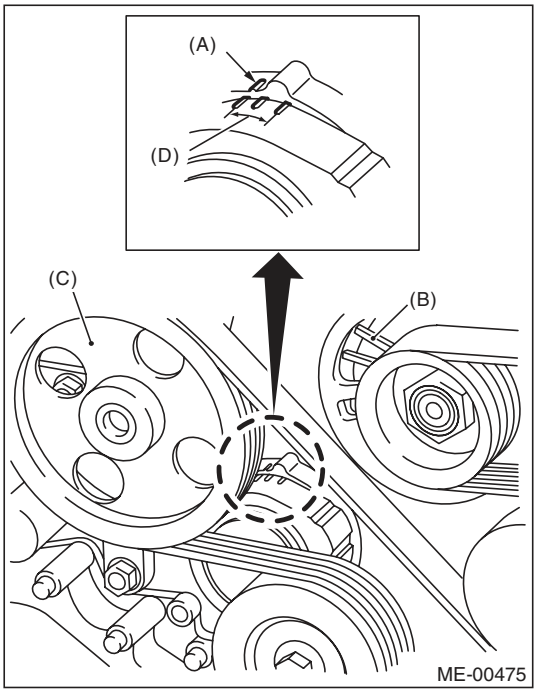

(A) Indicator
(B) Generator
(C) Power steering oil pump pulley
(D) Service limit

13. Crank Pulley

A: REMOVAL

NOTE:
Perform the work with the engine installed to body when replacing a single part.

1) Remove the V-belts. <Ref. to ME(H6DO)-42, REMOVAL, V-belt.>
2) Remove the crank pulley cover.

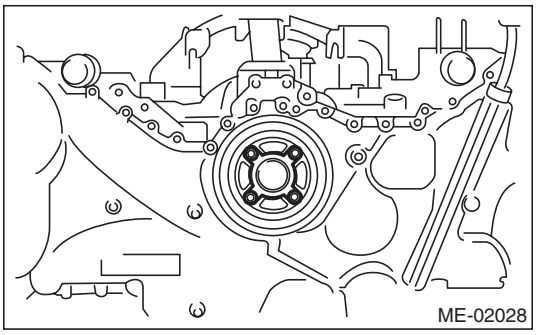

3) Remove the crank pulley bolt. To lock the crankshaft, use ST.
ST 499977100 CRANK PULLEY WRENCH

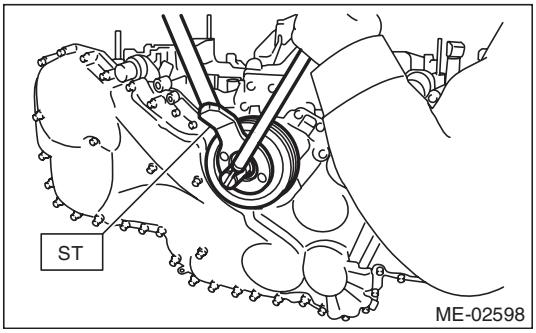

4) Remove the crank pulley.

B: INSTALLATION

1) Install the crank pulley.
2) Install the crank pulley bolt. To lock the crankshaft, use ST.
ST 499977100 CRANK PULLEY WRENCH
   (1) Clean the crankshaft thread using compressed air.
   (2) Apply engine oil to the crank pulley bolt seat and thread.
   (3) Tighten the crank pulley bolts.

Tightening torque:
178 N·m (18.1 kgf-m, 131.3 ft-lb)

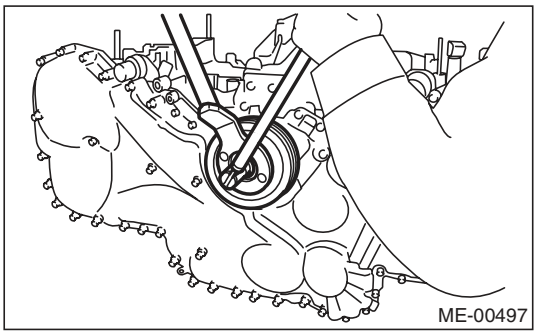

3) Install the crank pulley cover.

NOTE:
Use new O-rings.

Tightening torque:
6.4 N·m (0.7 kgf-m, 4.7 ft-lb)

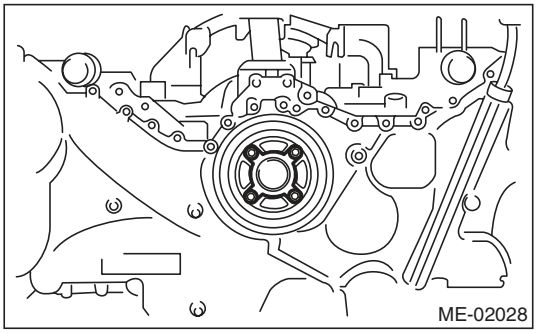

4) Install the V-belts. <Ref. to ME(H6DO)-42, INSTALLATION, V-belt.>

C: INSPECTION

1) Check the crank pulley cover for oil and air leakage.
2) Check the crank pulley for looseness.

14.Front Chain Cover

A: REMOVAL

NOTE:
When replacing the single part, perform the work with the engine installed to body.
1) Remove the V-belts. <Ref. to ME(H6DO)-42, REMOVAL, V-belt.>
2) Remove the crank pulley. <Ref. to ME(H6DO)-43, REMOVAL, Crank Pulley.>
3) Remove the bolts which install oil pipe (RH) onto the front chain cover.
4) Remove the front chain cover.

NOTE:
Chain cover installation bolt has three different sizes. To prevent the confusion in installation, keep these bolts on container individually.

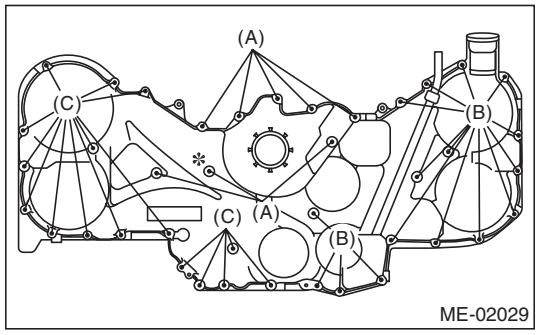

(A) M6 × 16
(B) M6 × 30
(C) M6 × 45
*: Sealing washer

B: INSTALLATION

1) Remove the used liquid gasket from mating surface, and degrease it.
2) Apply liquid gasket to the mating surface of front chain cover.

NOTE:
Install within 5 minutes after applying liquid gasket.

Liquid gasket:
THREE BOND 1217G (Part No. K0877Y0100) or equivalent

Applying liquid gasket diameter
2.5±0.5 mm (0.098±0.020 in)

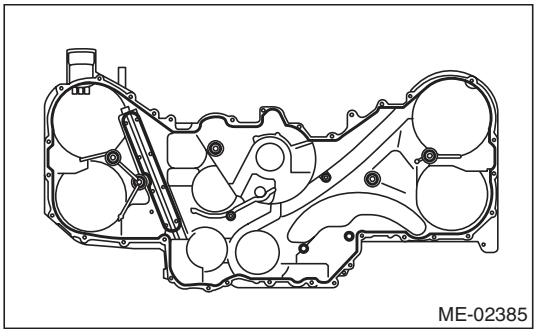

3) Install the front chain cover. Temporarily tighten the bolts.

CAUTION:
Do not install the bolts in wrong place.

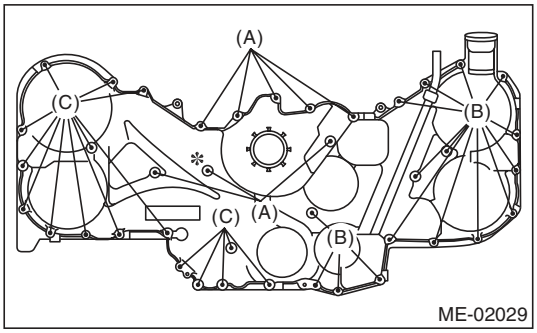

(A) M6 × 16
(B) M6 × 30
(C) M6 × 45
*: Sealing washer

4) Tighten the bolts in the numerical order as shown in the figure.

Tightening torque:
6.6 N·m (0.7 kgf-m, 4.9 ft-lb)

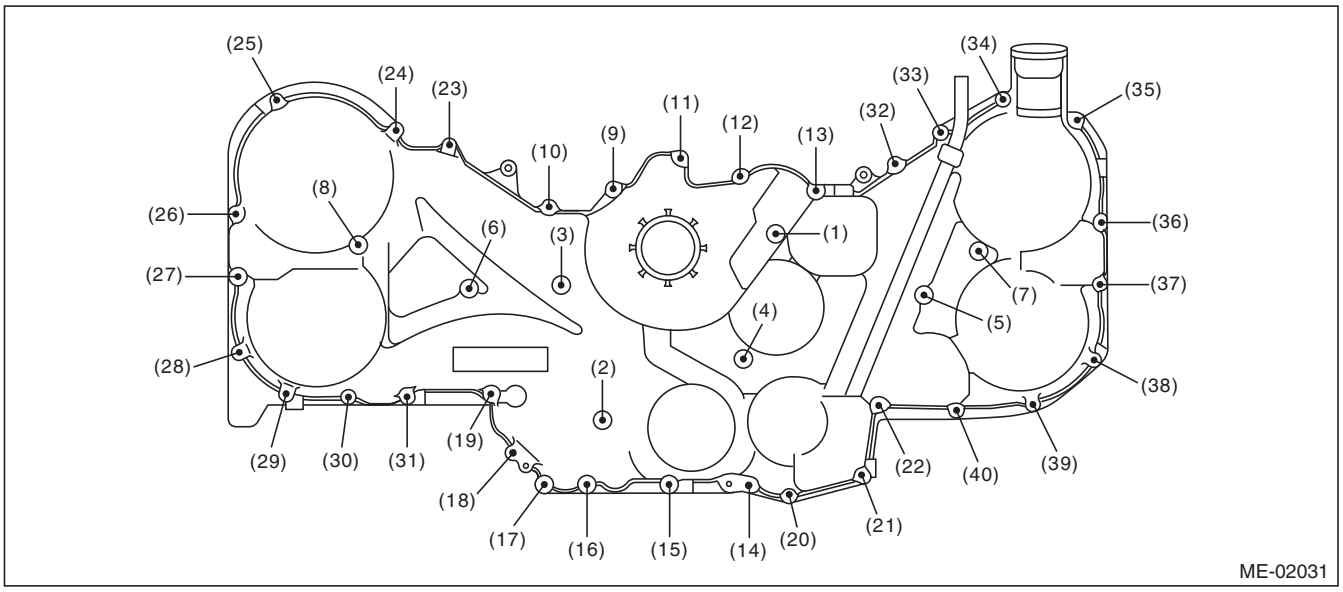

5) Tighten the bolts which install oil pipe (RH) onto the front chain cover.

Tightening torque:
6.4 N·m (0.7 kgf-m, 4.7 ft-lb)

6) Install the crank pulley. <Ref. to ME(H6DO)-43, INSTALLATION, Crank Pulley.>

7) Install the V-belts. <Ref. to ME(H6DO)-42, INSTALLATION, V-belt.>

C: INSPECTION

Check the cover surface for scratch and damage.
Check for oil leakage on cover mating surface and installation part of crank pulley.

15. Timing Chain Assembly

A: REMOVAL

NOTE:
When replacing the single part, perform the work with the engine installed to body.

1) Remove the V-belts. <Ref. to ME(H6DO)-42, REMOVAL, V-belt.>
2) Remove the crank pulley. <Ref. to ME(H6DO)-43, REMOVAL, Crank Pulley.>
3) Remove the front chain cover. <Ref. to ME(H6DO)-44, REMOVAL, Front Chain Cover.>
4) Remove the chain tensioner (RH).

NOTE:
Be careful not to let the plunger (A) pops out.

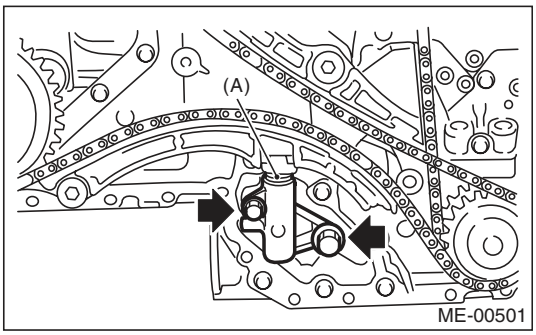

5) Remove the chain guide (RH: between cams).

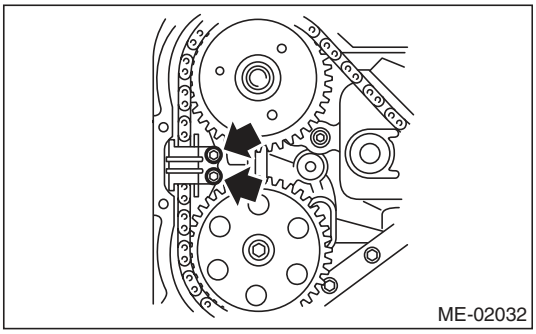

6) Remove the chain guide (RH).
7) Remove the chain tensioner lever (RH).

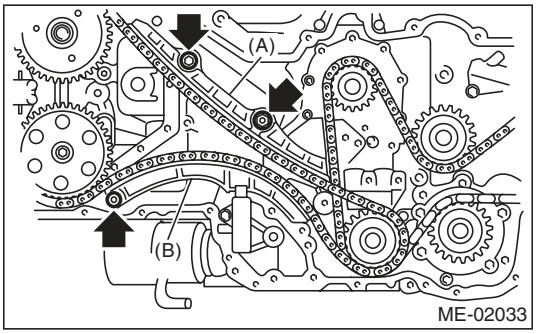

(A) Chain guide (RH)
(B) Chain tensioner lever (RH)

8) Remove the timing chain (RH).

9) Remove the chain tensioner (LH).

NOTE:
Be careful not to let the plunger pops out.

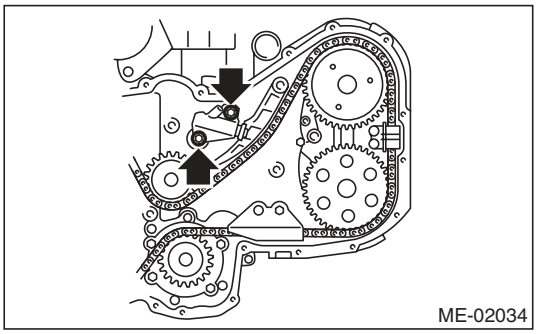

10) Remove the chain tensioner lever (LH).

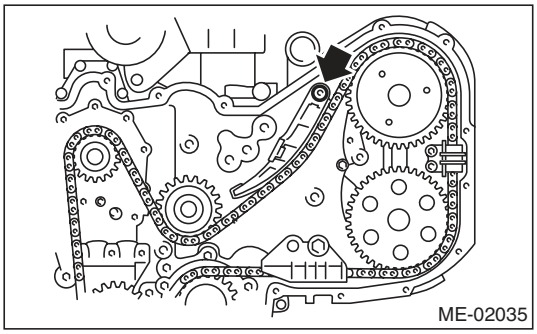

11) Remove the chain guide (LH: between cams).

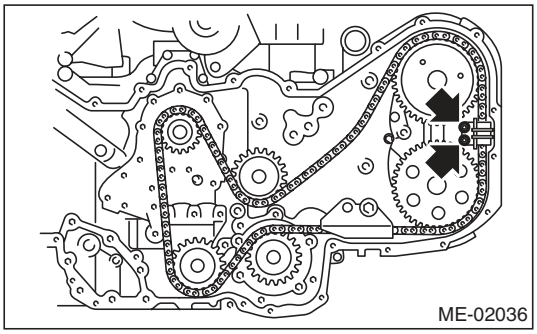

12) Remove the chain guide (LH).

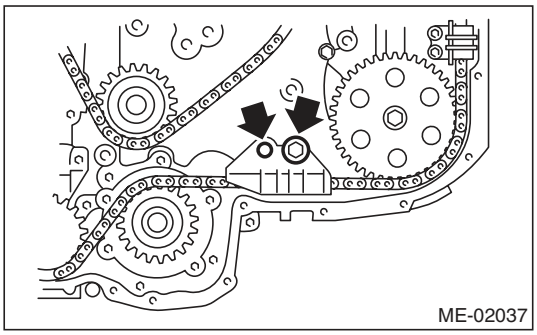

13) Remove the chain guide (center).

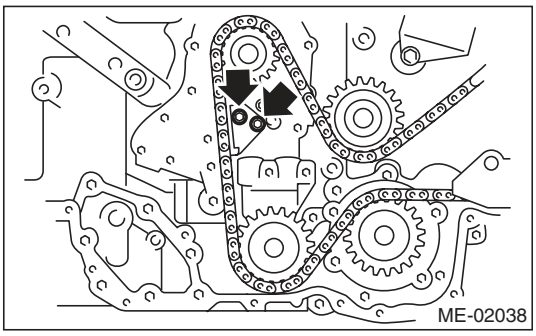

14) Remove the idler sprocket (upper).

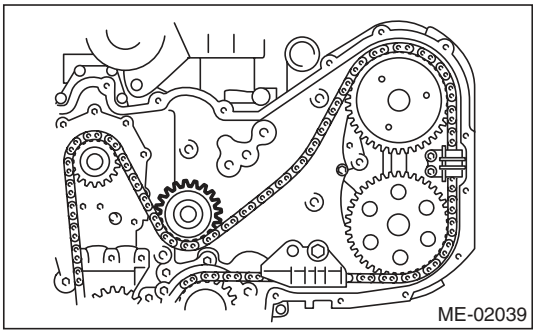

15) Remove the timing chain (LH).
16) Remove the idler sprocket (lower).

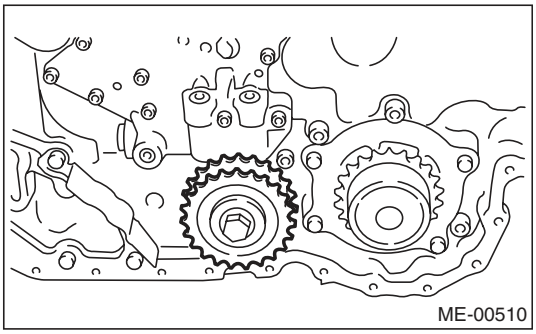

B: INSTALLATION

NOTE:
- Be careful that the foreign matter is not into or onto assembled component during installation.
- Apply engine oil to the chain guide, chain tensioner lever and idler sprocket when installing.

1) Prepare to attach the chain tensioner.
   (1) Insert the screw, spring pin and tension rod into tensioner body.
   (2) While depressing the tensioner onto rubber mat, twist it to shorten tension rod. Then insert the thin pin into the hole between tension rod and tension body to keep it.

NOTE:
Work on the rubber mat or other anti-skid materials.

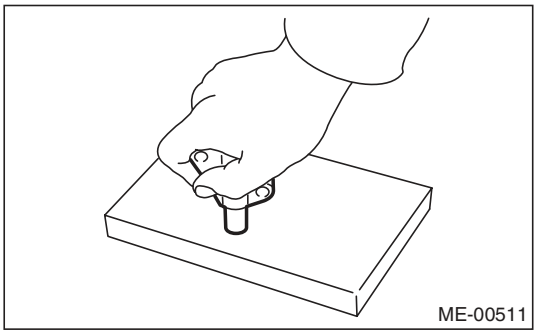

2) Using the ST, align the “Top mark” on crank sprocket to 9 o’clock position as shown in the figure.

ST 18252AA000 CRANKSHAFT SOCKET

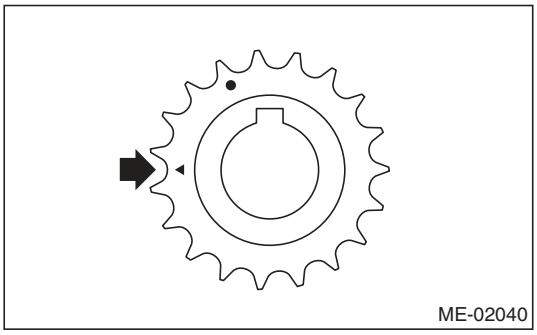

3) Align the key groove on exhaust cam sprocket to 12 o’clock position as shown in the figure.

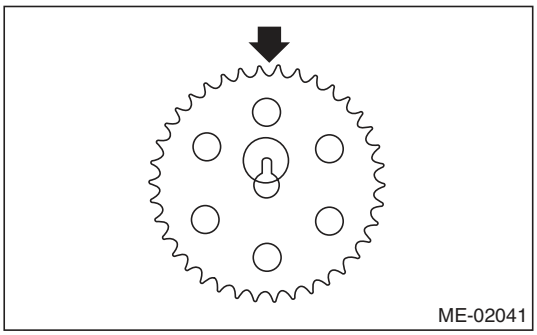

4) Align the intake cam sprocket as shown in the figure.

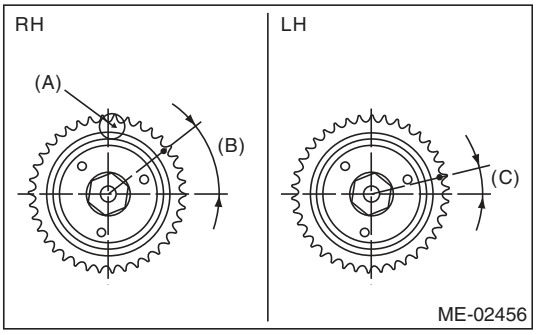

(A) Top mark
(B) 40°
(C) 15°

5) Turn the crank sprocket clockwise, align the "Top mark" to 12 o'clock position. (Piston #1 is in TDC position)

NOTE:
Do not rotate the crank shaft and cam sprocket before completing the installation of timing chain.

6) Install the idler sprocket (lower).

Tightening torque:
69 N·m (7.0 kgf-m, 50.9 ft-lb)

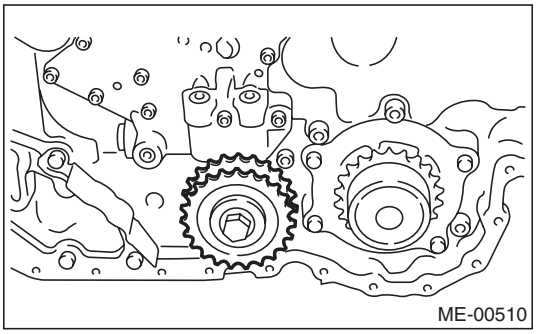

7) Install the timing chain (LH).

(1) Align the timing mark (B) on the crank sprocket with mark (A) on the timing chain (LH).

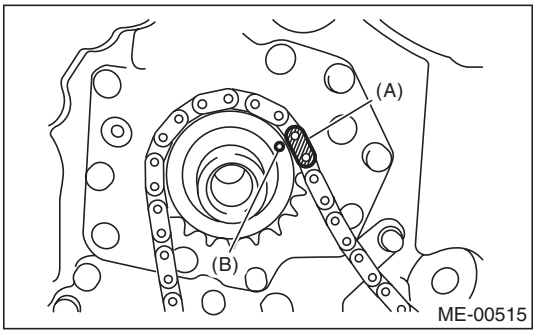

(A) Gold
(B) Mark

(2) Install the timing chain (LH) to the idler sprocket (lower), water pump, exhaust cam sprocket (LH) and intake cam sprocket (LH) in this order.

NOTE:
Check that the mark on timing chain (A) and cam sprocket (B) is aligned as same as aligned on crank sprocket.

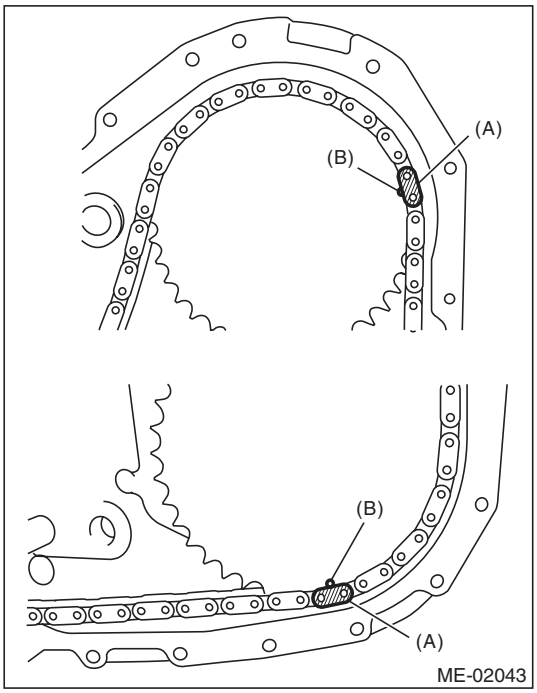

(A) Blue
(B) Mark

(3) Install the idler sprocket (upper).

Tightening torque:
69 N·m (7.0 kgf-m, 50.9 ft-lb)

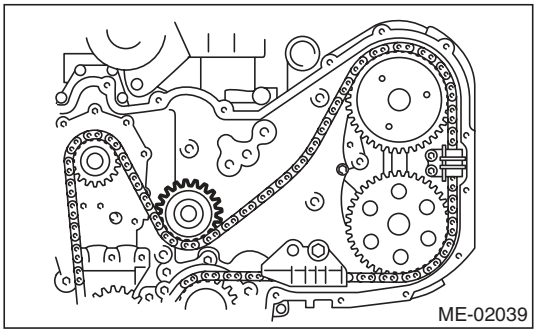

(4) Install the chain guide (LH: between cams).

Tightening torque:
6.4 N·m (0.7 kgf-m, 4.7 ft-lb)

NOTE:
Use a new installing bolt.

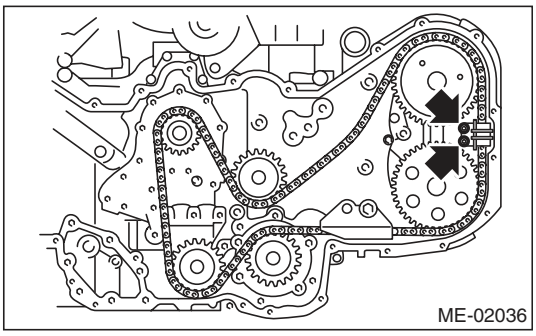

(5) Install the chain guide (LH).

Tightening torque:
16 N·m (1.6 kgf-m, 11.8 ft-lb)

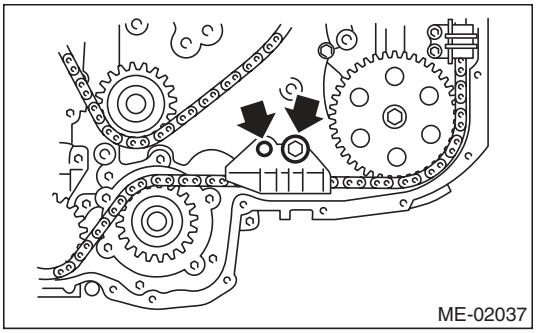

(6) Install the chain tensioner lever (LH).

Tightening torque:
16 N·m (1.6 kgf-m, 11.8 ft-lb)

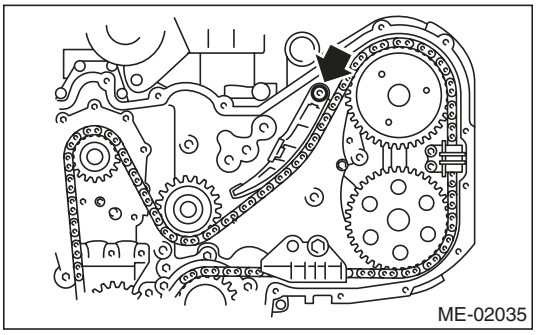

(7) Install the chain tensioner (LH).

Tightening torque:
16 N·m (1.6 kgf-m, 11.8 ft-lb)

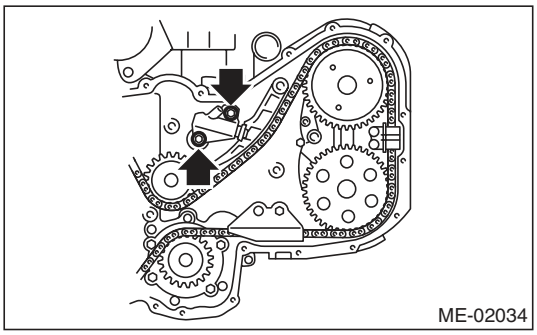

8) Install the timing chain (RH).
(1) Align the marks of timing chain LH and RH on the idler sprocket (lower).

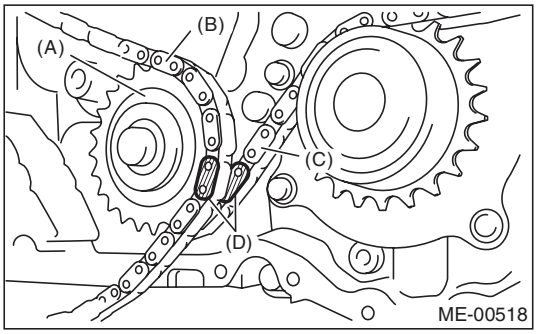

(A) Idler sprocket (lower)
(B) Timing chain (RH)
(C) Timing chain (LH)
(D) Blue

(2) Install the timing chain (RH) to the intake cam sprocket (RH) and exhaust cam sprocket (RH) in this order.

NOTE:
Check that the mark on timing chain (A) and cam sprocket (B) is aligned as same as aligned on crank sprocket.

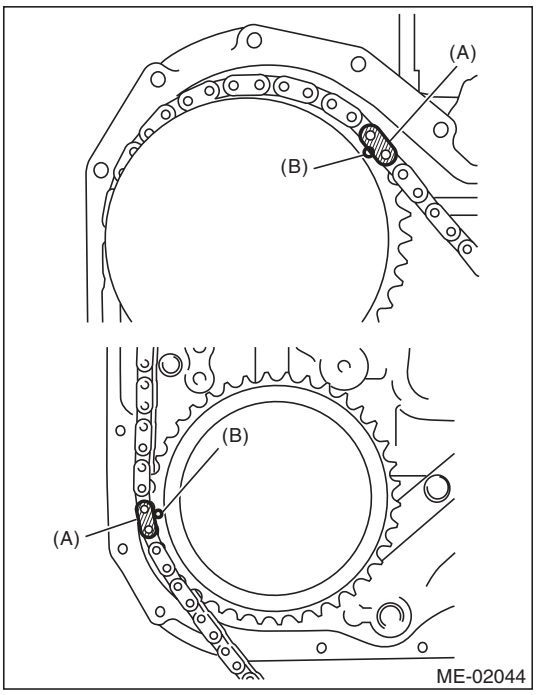

(A) Gold
(B) Mark

(3) Install the chain guide (RH).
(4) Install the chain tensioner lever (RH).

Tightening torque:
16 N·m (1.6 kgf-m, 11.8 ft-lb)

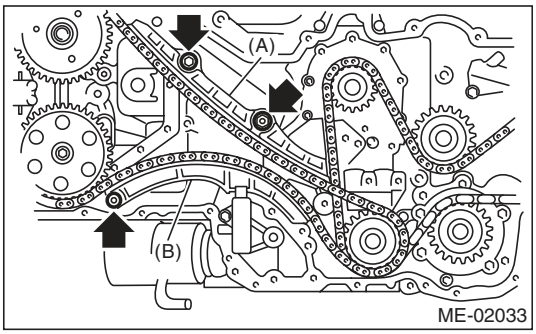

(A) Chain guide (RH)
(B) Chain tensioner lever (RH)

(5) Install the chain guide (RH: between cams).

Tightening torque:
6.4 N·m (0.7 kgf-m, 4.7 ft-lb)

NOTE:
Use a new installing bolt.

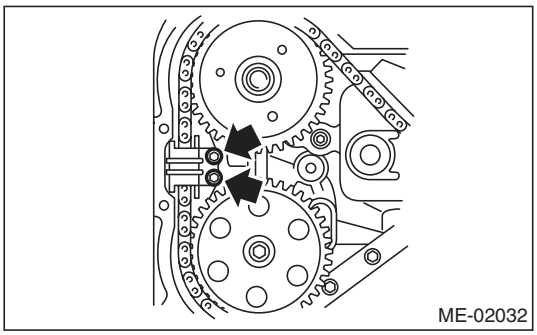

(6) Install the chain tensioner (RH).

Tightening torque:
16 N·m (1.6 kgf-m, 11.8 ft-lb)

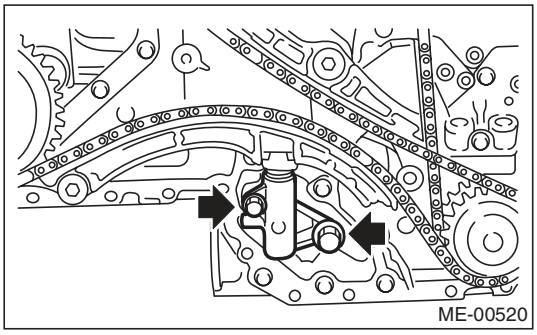

(7) Adjust the clearance between chain guide (RH) and chain guide (center) within 8.4 — 8.6 mm (0.331 — 0.339 in). Install the chain guide (center).

Tightening torque:
7.8 N·m (0.8 kgf-m, 5.9 ft-lb)

NOTE:
Use a new installing bolt.

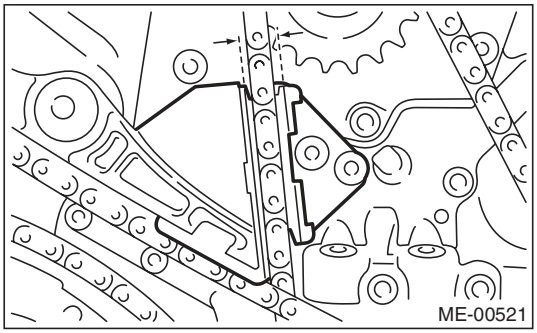

(8) Check that each mark on the sprocket and timing chain is matched, and then draw out the stopper pin from chain tensioner.

9) Install the front chain cover. <Ref. to ME(H6DO)-44, INSTALLATION, Front Chain Cover.>
10) Install the crank pulley. <Ref. to ME(H6DO)-43, INSTALLATION, Crank Pulley.>
11) Install the V-belts. <Ref. to ME(H6DO)-42, INSTALLATION, V-belt.>

16.Cam Sprocket

A: REMOVAL

NOTE:
When replacing the single part, perform the work with the engine installed to body.

1) Remove the V-belts. <Ref. to ME(H6DO)-42, REMOVAL, V-belt.>
2) Remove the crank pulley. <Ref. to ME(H6DO)-43, REMOVAL, Crank Pulley.>
3) Remove the front chain cover. <Ref. to ME(H6DO)-44, REMOVAL, Front Chain Cover.>
4) Remove the timing chain assembly. <Ref. to ME(H6DO)-46, REMOVAL, Timing Chain Assembly.>
5) Remove the cam sprocket. To lock the camshaft, use the ST.

ST 499977500 CAM SPROCKET WRENCH

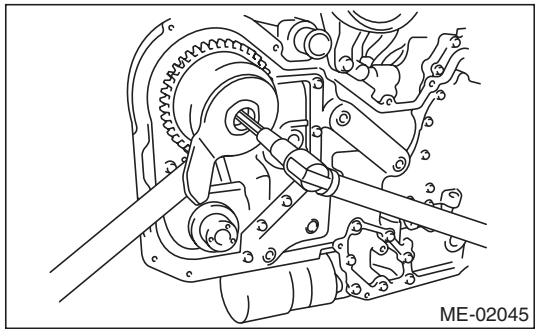

ST 18231AA020 CAM SPROCKET WRENCH

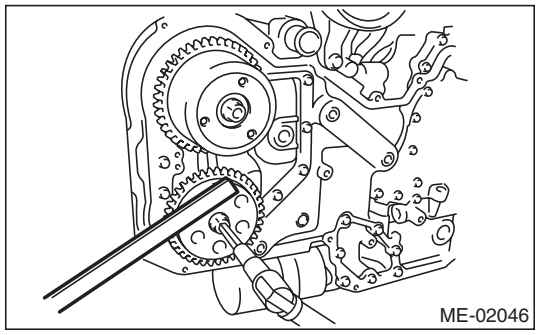

B: INSTALLATION

1) Install the cam sprocket. To lock the camshaft, use the ST.

Tightening torque:
29.5 N·m (3.0 kgf-m, 21.8 ft-lb)

2) Further tighten the bolts.

Tightening angle:
Intake side
45°±5°
Exhaust side
25°±5°

ST 499977500 CAM SPROCKET WRENCH

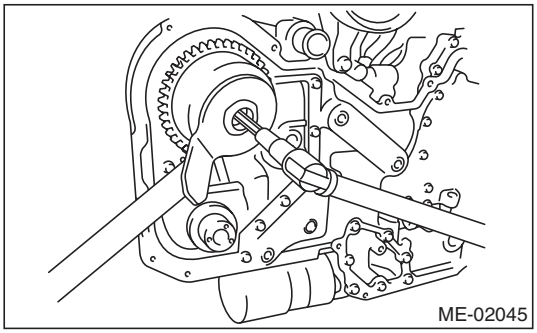

ST 18231AA020 CAM SPROCKET WRENCH

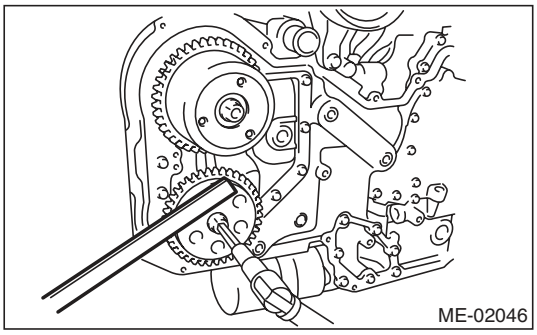

3) Install the timing chain assembly. <Ref. to ME(H6DO)-47, INSTALLATION, Timing Chain Assembly.>
4) Install the front chain cover. <Ref. to ME(H6DO)-44, INSTALLATION, Front Chain Cover.>
5) Install the crank pulley. <Ref. to ME(H6DO)-43, INSTALLATION, Crank Pulley.>
6) Install the V-belts. <Ref. to ME(H6DO)-42, INSTALLATION, V-belt.>

C: INSPECTION

1) Check the cam sprocket teeth for abnormal wear and scratches.
2) Make sure there is no free play between cam sprocket and key.

17. Crank Sprocket

A: REMOVAL

NOTE:
When replacing the single part, perform the work with the engine installed to body.

1) Remove the V-belts. <Ref. to ME(H6DO)-42, REMOVAL, V-belt.>
2) Remove the crank pulley. <Ref. to ME(H6DO)-43, REMOVAL, Crank Pulley.>
3) Remove the front chain cover. <Ref. to ME(H6DO)-44, REMOVAL, Front Chain Cover.>
4) Remove the timing chain assembly. <Ref. to ME(H6DO)-46, REMOVAL, Timing Chain Assembly.>
5) Remove the crank sprocket (A).

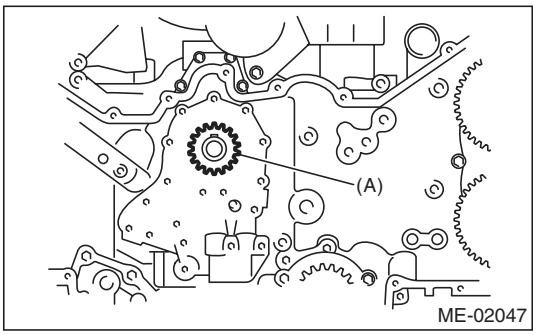

B: INSTALLATION

1) Install the crank sprocket (A).

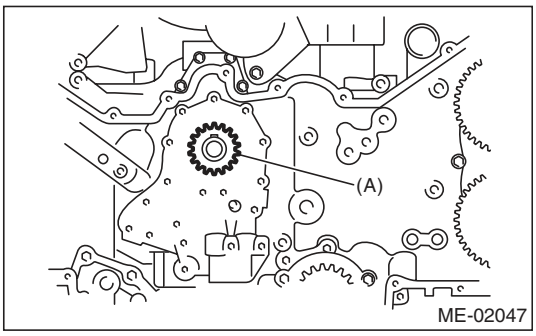

2) Install the timing chain assembly. <Ref. to ME(H6DO)-47, INSTALLATION, Timing Chain Assembly.>
3) Install the front chain cover. <Ref. to ME(H6DO)-44, INSTALLATION, Front Chain Cover.>
4) Install the crank pulley. <Ref. to ME(H6DO)-43, INSTALLATION, Crank Pulley.>
5) Install the V-belts. <Ref. to ME(H6DO)-42, INSTALLATION, V-belt.>

C: INSPECTION

1) Check the crank sprocket teeth for abnormal wear and scratches.
2) Make sure there is no free play between crank sprocket and key.

18. Rear Chain Cover

A: REMOVAL

NOTE:
When replacing the single part, perform the work with the engine installed to body.

1) Remove the V-belts. <Ref. to ME(H6DO)-42, REMOVAL, V-belt.>
2) Remove the crank pulley. <Ref. to ME(H6DO)-43, REMOVAL, Crank Pulley.>
3) Remove the front chain cover. <Ref. to ME(H6DO)-44, REMOVAL, Front Chain Cover.>
4) Remove the timing chain. <Ref. to ME(H6DO)-46, REMOVAL, Timing Chain Assembly.>
5) Remove the cam sprocket. <Ref. to ME(H6DO)-51, REMOVAL, Cam Sprocket.>
6) Remove the crank sprocket. <Ref. to ME(H6DO)-52, REMOVAL, Crank Sprocket.>
7) Remove the oil pump. <Ref. to LU(H6DO)-9, REMOVAL, Oil Pump.>
8) Remove the water pump. <Ref. to CO(H6DO)-12, REMOVAL, Water Pump.>
9) Remove the rear chain cover.

NOTE:
Installation bolt has seven different sizes. To prevent the confusion in installation, keep these bolts on container individually.

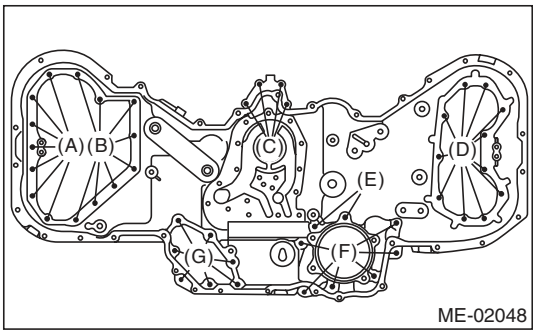

(A) M6 × 14
(B) M6 × 18 (Silver)
(C) M6 × 30
(D) M6 × 18
(E) M8 × 40
(F) M8 × 30
(G) M6 × 22

B: INSTALLATION

NOTE:
When replacing the rear chain cover, it is required to select the size. <Ref. to LU(H6DO)-10, INSPECTION, Oil Pump.>

1) Remove the used liquid gasket from mating surface, and degrease it.
2) Apply liquid gasket to the mating surface of rear chain cover.

NOTE:
Install within 5 minutes after applying liquid gasket.

Liquid gasket:
THREE BOND 1217G (Part No. K0877Y0100) or equivalent

Applying liquid gasket diameter
(A) 1.0±0.5 mm (0.039±0.020 in)
(B) 3.0±1.0 mm (0.118±0.039 in)

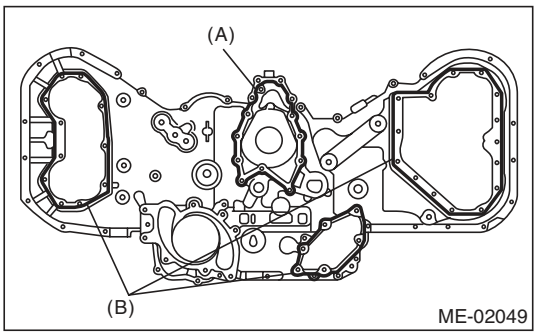

3) Install the O-ring.

NOTE:
- Use new O-rings.
- Do not install the O-ring in wrong place.

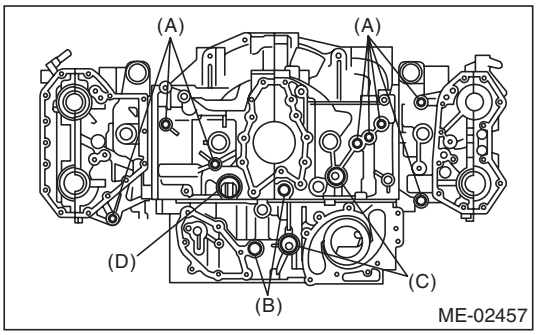

(A) 14.2 × 1.9
(B) 19.2 × 2.4
(C) 25 × 2
(D) 31.2 × 1.9

4) Install the water pump gasket.

NOTE:
Use a new gasket.

5) Temporarily tighten the rear chain cover.

NOTE:
Do not install the bolts in wrong place.

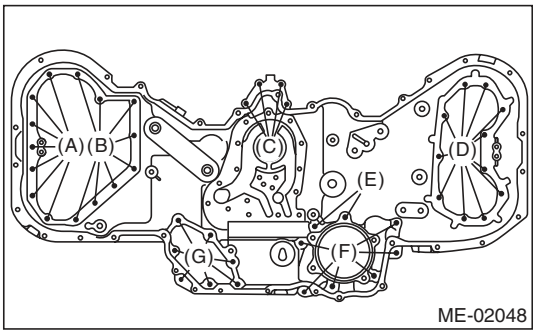

(A) M6 × 14
(B) M6 × 18 (Silver)
(C) M6 × 30
(D) M6 × 18
(E) M8 × 40
(F) M8 × 30
(G) M6 × 22

6) Tighten the bolts in the numerical order as shown in the figure.

Tightening torque:

(1) — (11)	9 N·m (0.9 kgf-m, 6.6 ft-lb)
(12) — (19)	20 N·m (2.0 kgf-m, 14.8 ft-lb)
(20) — (30)	9 N·m (0.9 kgf-m, 6.6 ft-lb)
(31) — (38)	12 N·m (1.2 kgf-m, 8.9 ft-lb)
(39) — (45)	9 N·m (0.9 kgf-m, 6.6 ft-lb)

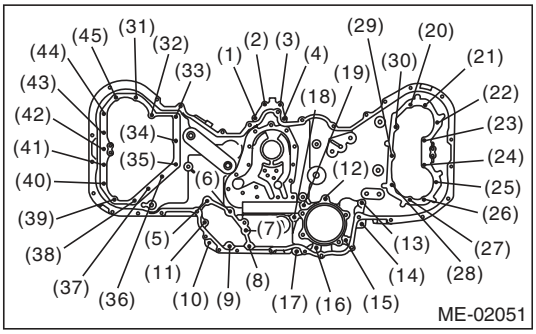

7) Install the water pump. <Ref. to CO(H6DO)-12, INSTALLATION, Water Pump.>
8) Install the oil pump. <Ref. to LU(H6DO)-9, INSTALLATION, Oil Pump.>
9) Install the crank sprocket. <Ref. to ME(H6DO)-52, INSTALLATION, Crank Sprocket.>
10) Install the cam sprocket. <Ref. to ME(H6DO)-51, INSTALLATION, Cam Sprocket.>
11) Install the timing chain. <Ref. to ME(H6DO)-47, INSTALLATION, Timing Chain Assembly.>
12) Install the front chain cover. <Ref. to ME(H6DO)-44, INSTALLATION, Front Chain Cover.>
13) Install the crank pulley. <Ref. to ME(H6DO)-43, INSTALLATION, Crank Pulley.>
14) Install the V-belts. <Ref. to ME(H6DO)-42, INSTALLATION, V-belt.>

19.Camshaft

A: REMOVAL

NOTE:
When replacing the single part, perform the work with the engine installed to body. Refer to “Valve Clearance” for preparation procedures. <Ref. to ME(H6DO)-28, Valve Clearance.>

1) Remove the V-belts. <Ref. to ME(H6DO)-42, REMOVAL, V-belt.>
2) Remove the crank pulley. <Ref. to ME(H6DO)-43, REMOVAL, Crank Pulley.>
3) Remove the front chain cover. <Ref. to ME(H6DO)-44, REMOVAL, Front Chain Cover.>
4) Remove the timing chain assembly. <Ref. to ME(H6DO)-46, REMOVAL, Timing Chain Assembly.>
5) Remove the cam sprocket. <Ref. to ME(H6DO)-51, REMOVAL, Cam Sprocket.>
6) Remove the crank sprocket. <Ref. to ME(H6DO)-52, REMOVAL, Crank Sprocket.>
7) Remove the rear chain cover. <Ref. to ME(H6DO)-53, REMOVAL, Rear Chain Cover.>
8) Disconnect the oil pipe.

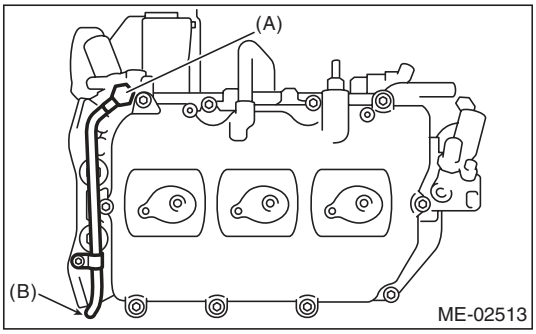

(A) Bolt without filter (without protrusion)
(B) Bolt with filter (with protrusion)

9) Remove the rocker cover (LH).

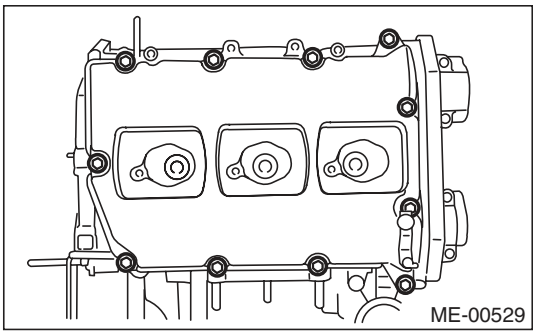

10) Remove the plugs (LH).

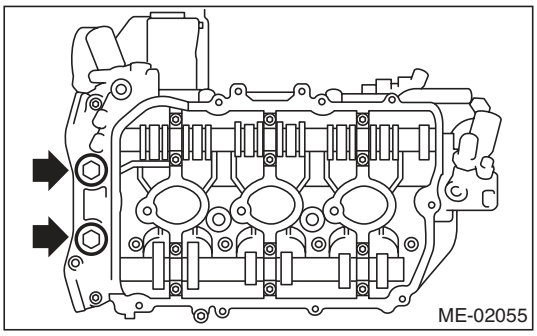

11) Loosen the camshaft cap bolts equally, a little at a time in numerical sequence shown in the figure.

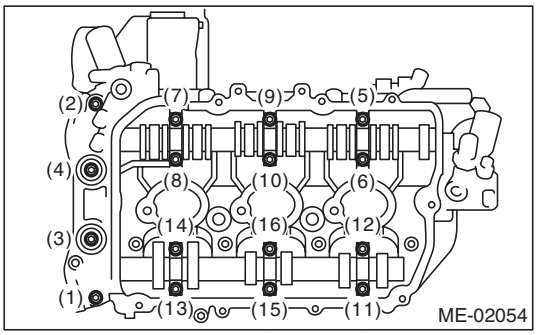

12) Remove the camshaft caps and camshaft (LH).

NOTE:
Arrange camshaft caps in order so that they can be installed in their original positions.

13) Similarly, remove the camshaft (RH) and related parts.

B: INSTALLATION

1) Apply engine oil to camshaft journals, and install the camshaft.
2) Install the camshaft cap.
   (1) Apply liquid gasket sparingly to back side of front camshaft cap as shown in the figure.

CAUTION:
Do not apply liquid gasket excessively. Applying excessively may cause excess gasket to flow toward cam journal, resulting in engine seizure.

NOTE:
Install within 5 minutes after applying liquid gasket.

Liquid gasket:
THREE BOND 1217G (Part No. K0877Y0100) or equivalent

Applying liquid gasket diameter:
2.0±0.5 mm (0.079±0.020 in)

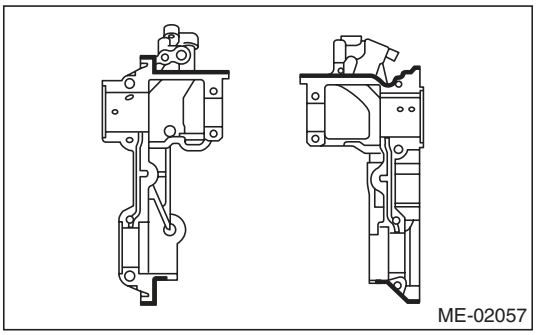

   (2) Apply engine oil to cap bearing surface, and install the cap to camshaft.
   (3) Tighten the rocker cover bolts in the numerical order as shown in the figure.

Tightening torque:
(1) — (12): 16 N·m (1.6 kgf-m, 11.8 ft-lb)
(13) — (16): 9.75 N·m (1.0 kgf-m, 7.2 ft-lb)

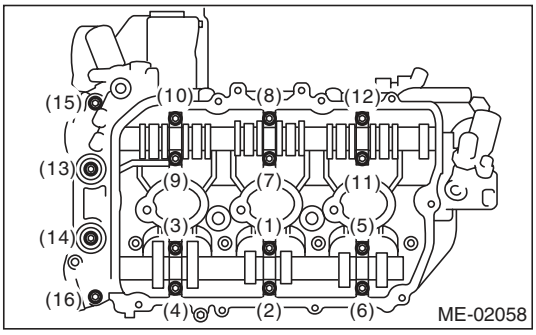

3) Install the plugs.

Tightening torque:
60 N·m (6.1 kgf-m, 44.3 ft-lb)

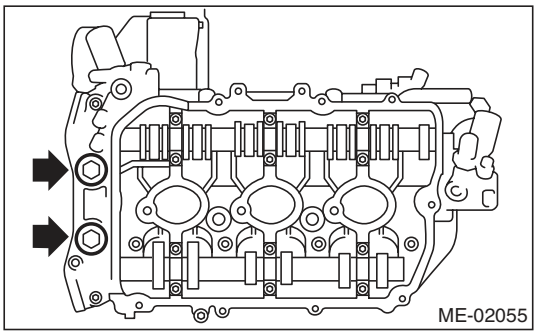

4) Install the rocker cover.
   (1) Install the rocker cover gasket to the rocker cover.

NOTE:
Use a new rocker cover gasket.

   (2) Apply liquid gasket sparingly to the mating surface of cylinder head and rocker cover as shown in the figure.

CAUTION:
Do not apply liquid gasket excessively. Applying excessively may cause excess gasket to flow toward cam journal, resulting in engine seizure.

NOTE:
Install within 5 minutes after applying liquid gasket.

Liquid gasket:
THREE BOND 1217G (Part No. K0877Y0100) or equivalent

- LH side

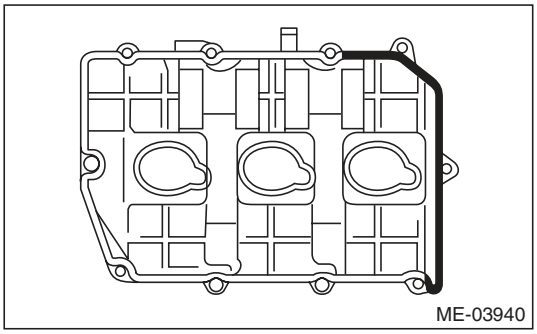

- RH side

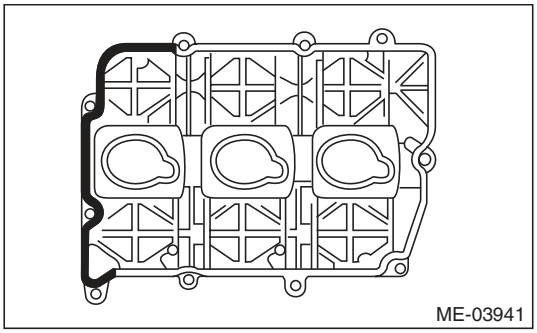

(3) Tighten the rocker cover bolts in the numerical order as shown in the figure.

Tightening torque:
6.4 N·m (0.7 kgf-m, 4.7 ft-lb)

- LH side

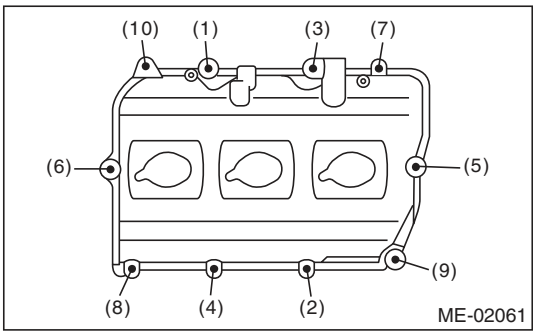

- RH side

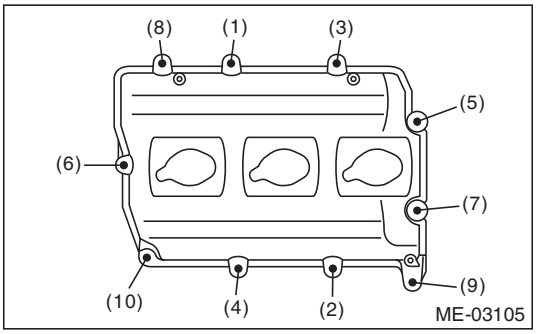

5) Connect the oil pipe.

NOTE:
- Be careful not to mistake the location of (A) and (B).
- Use a new gasket.

Tightening torque:
(A), (B)
29 N·m (3.0 kgf-m, 21.4 ft-lb)
(C)
6.4 N·m (0.7 kgf-m, 4.7 ft-lb)

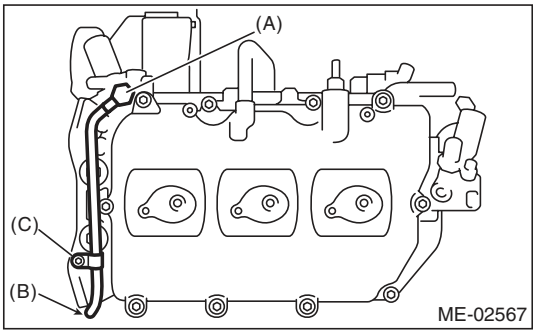

(A) Bolt without filter (without protrusion)
(B) Bolt with filter (with protrusion)
(C) Oil pipe bolt

6) Install the rear chain cover. <Ref. to ME(H6DO)-53, INSTALLATION, Rear Chain Cover.>

7) Install the crank sprocket. <Ref. to ME(H6DO)-52, INSTALLATION, Crank Sprocket.>

8) Install the cam sprocket. <Ref. to ME(H6DO)-51, INSTALLATION, Cam Sprocket.>

9) Install the timing chain assembly. <Ref. to ME(H6DO)-47, INSTALLATION, Timing Chain Assembly.>

10) Install the front chain cover. <Ref. to ME(H6DO)-44, INSTALLATION, Front Chain Cover.>

11) Install the crank pulley. <Ref. to ME(H6DO)-43, INSTALLATION, Crank Pulley.>

12) Install the V-belts. <Ref. to ME(H6DO)-42, INSTALLATION, V-belt.>

C: INSPECTION

1) Measure the bend of camshaft. Repair or replace if bended.

Service limit:
0.020 mm (0.00079 in)

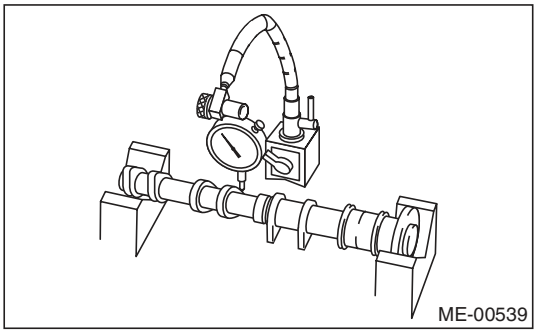

2) Check the journal for damage and wear. Replace if faulty.

3) Check the cutout portion used for camshaft sensor for damage. Replace if faulty.

4) Measure the outside diameter of camshaft journal. If the journal diameter is not within specification, check the oil clearance.

	Camshaft journal	
	Front	Except for front
Standard mm (in)	37.946 — 37.963 (1.4939 — 1.4946)	25.946 — 25.963 (1.0215 — 1.0222)

5) Measurement of the camshaft journal oil clearance:
(1) Clean the camshaft cap and cylinder head camshaft journal.
(2) Place the camshaft on the cylinder head. (Do not attach the valve rockers.)
(3) Place a plastigauge across each camshaft journals.
(4) Install the camshaft cap.

NOTE:
Do not turn the camshaft.
(5) Remove the camshaft cap.

(6) Measure the widest point of the plastigauge on each journal. If oil clearance exceeds the standard, replace the camshaft. If necessary, replace the camshaft caps and cylinder head as a set.

Standard:
0.037 — 0.072 mm (0.0015 — 0.0028 in)

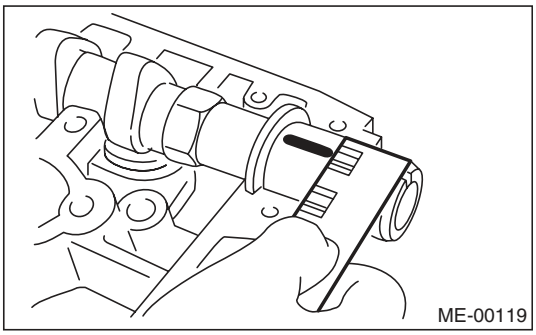

(7) Completely remove the plastigauge.

6) Check the cam face condition; remove the minor faults by grinding with oil stone. Measure the cam height H. If it exceeds the standard or offset wear occurs, replace it.

Cam height H:

Standard
Intake
HIGH 42.09 — 42.19 mm (1.6571 — 1.6610 in)
LOW1 38.14 — 38.24 mm (1.5016 — 1.5055 in)
LOW2 38.14 — 38.24 mm (1.5016 — 1.5055 in)
Exhaust
40.45 — 40.55 mm (1.5925 — 1.5965 in)

Cam base circle diameter A:

Standard
Intake
HIGH 32.00 mm (1.2598 in)
LOW1 31.84 mm (1.2535 in)
LOW2 31.84 mm (1.2535 in)
Exhaust
32.00 mm (1.2598 in)

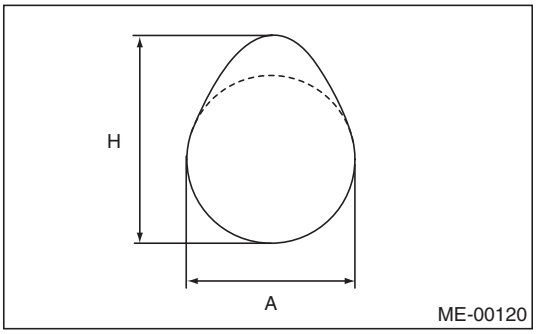

7) Measure the side clearance of the camshaft with a dial gauge. If the side clearance exceeds the standard or there is offset wear, replace the camshaft caps and cylinder head as a set. If necessary replace the camshaft.

Standard
Intake
0.075 — 0.135 mm (0.0030 — 0.0053 in)
Exhaust
0.030 — 0.090 mm (0.0012 — 0.0035 in)

20. Cylinder Head

A: REMOVAL

NOTE:
When replacing the single part, perform the work with the engine installed to body. Refer to “Valve Clearance” for preparation procedures. <Ref. to ME(H6DO)-28, Valve Clearance.>

1) Remove the V-belts. <Ref. to ME(H6DO)-42, REMOVAL, V-belt.>
2) Remove the crank pulley. <Ref. to ME(H6DO)-43, REMOVAL, Crank Pulley.>
3) Remove the front chain cover. <Ref. to ME(H6DO)-44, REMOVAL, Front Chain Cover.>
4) Remove the timing chain assembly. <Ref. to ME(H6DO)-46, REMOVAL, Timing Chain Assembly.>
5) Remove the cam sprocket. <Ref. to ME(H6DO)-51, REMOVAL, Cam Sprocket.>
6) Remove the crank sprocket. <Ref. to ME(H6DO)-52, REMOVAL, Crank Sprocket.>
7) Remove the rear chain cover. <Ref. to ME(H6DO)-53, REMOVAL, Rear Chain Cover.>
8) Remove the camshaft. <Ref. to ME(H6DO)-55, REMOVAL, Camshaft.>
9) Remove the cylinder head bolts in the numerical order as shown in the figure.
Leave bolts (2) and (4) engaged by three or four threads to prevent the cylinder head from falling.

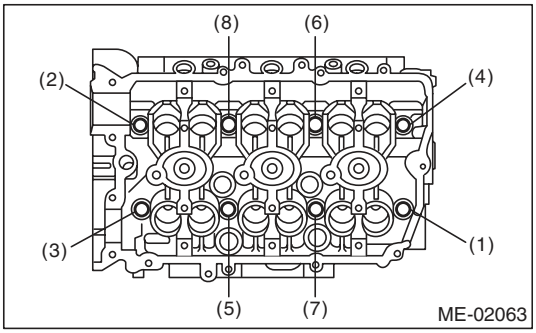

10) While tapping the cylinder head with a plastic hammer, separate it from cylinder block.
11) Remove the bolts (2) and (4) to remove cylinder head.

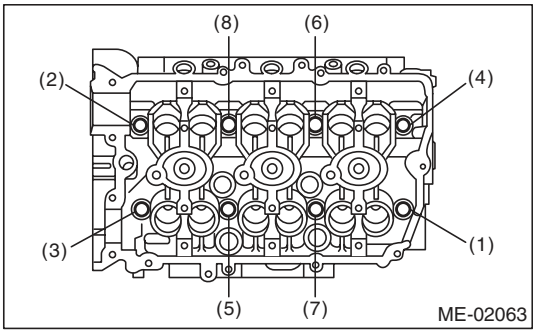

12) Remove the cylinder head gasket.

CAUTION:
Be careful not to scratch the mating surface of cylinder head and cylinder block.

13) Similarly, remove the cylinder head (RH).

B: INSTALLATION

1) Install the cylinder head and gaskets on cylinder block.

CAUTION:
Be careful not to scratch the mating surface of cylinder head and cylinder block.

NOTE:
Use new cylinder head gaskets.

2) Tighten the cylinder head bolts.
   (1) Apply a thin coat of engine oil to washers and cylinder head bolt threads.
   (2) Mount the cylinder head onto the cylinder block, then tighten the bolts with a torque of 20 N·m (2.0 kgf-m, 14.8 ft-lb) in the order indicated in the figure.
   (3) Tighten the bolts with a torque of 50 N·m (5.1 kgf-m, 36.9 ft-lb) in the order indicated in the figure.
   (4) Loosen all the bolts by 180° in the reverse order of installing, and loosen them further by 180°.
   (5) Tighten the bolts with a torque of 20 N·m (2.0 kgf-m, 14.8 ft-lb) in the order indicated in the figure.
   (6) Tighten the bolts (1) — (4) in the order indicated with a torque of 48 N·m (4.9 kgf-m, 35.4 ft-lb).
   (7) Tighten the bolts (5) — (8) in the order indicated with a torque of 44 N·m (4.5 kgf-m, 32.5 ft-lb).
   (8) Tighten all bolts 90° in the numerical order as shown in the figure.
   (9) Tighten the bolt (1) — (4) by 45° in the numerical order.

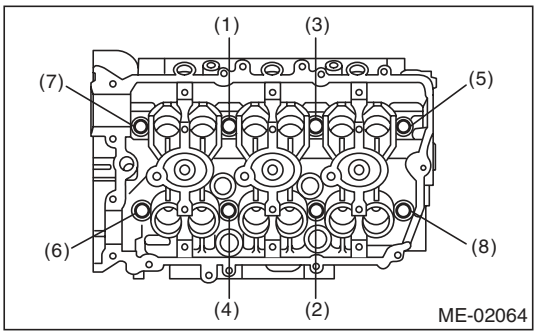

3) Install the camshaft. <Ref. to ME(H6DO)-56, INSTALLATION, Camshaft.>
4) Install the rear chain cover. <Ref. to ME(H6DO)-53, INSTALLATION, Rear Chain Cover.>

5) Install the crank sprocket. <Ref. to ME(H6DO)-52, INSTALLATION, Crank Sprocket.>
6) Install the cam sprocket. <Ref. to ME(H6DO)-51, INSTALLATION, Cam Sprocket.>
7) Install the timing chain assembly. <Ref. to ME(H6DO)-47, INSTALLATION, Timing Chain Assembly.>
8) Install the front chain cover. <Ref. to ME(H6DO)-44, INSTALLATION, Front Chain Cover.>
9) Install the crank pulley. <Ref. to ME(H6DO)-43, INSTALLATION, Crank Pulley.>
10) Install the V-belts. <Ref. to ME(H6DO)-42, INSTALLATION, V-belt.>

C: DISASSEMBLY

1) Set the cylinder head on ST.
ST 18250AA010 CYLINDER HEAD TABLE
2) Remove the valve lifter.
3) Set the ST on valve spring retainer. Compress the valve spring and remove the valve spring retainer key. Remove each valve and valve spring.
ST 499718000 VALVE SPRING REMOVER

NOTE:
- Mark each valve to prevent confusion.
- Pay careful attention not to damage the lips of intake valve oil seals and exhaust valve oil seals.
- Keep all the removed parts in order for re-installing in their original positions.
- For removal and installation procedures of the valve guide, intake valve oil seal and exhaust valve oil seal, refer to “Inspection”. <Ref. to ME(H6DO)-61, VALVE GUIDE, INSPECTION, Cylinder Head.> <Ref. to ME(H6DO)-63, INTAKE AND EXHAUST VALVE OIL SEAL, INSPECTION, Cylinder Head.>

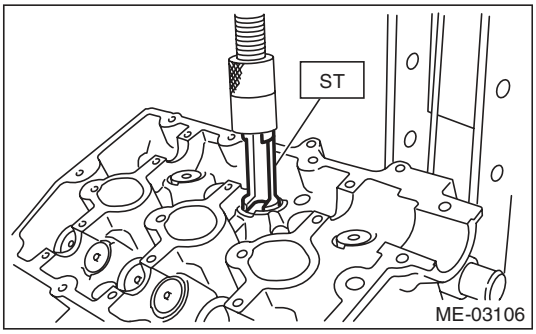

D: ASSEMBLY

1) Installation of valve spring and valve:
(1) Set the cylinder head on ST.
ST 18250AA010 CYLINDER HEAD TABLE
(2) Coat the stem of each valve with engine oil and insert the valve into the valve guide.

NOTE:
When inserting the valve into valve guide, use special care not to damage the oil seal lip.
(3) Install the valve spring and retainer.

NOTE:
- Be sure to install the valve spring with its close-coiled end facing the seat on cylinder head.
- For the valve spring on intake side, install two of them (inner and outer).
- Install the valve spring with the painted side facing to retainer.

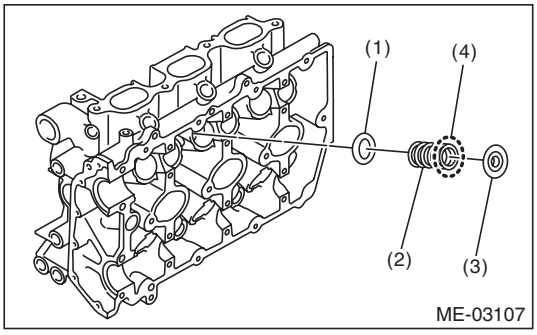

(1) Valve spring seat
(2) Valve spring
(3) Retainer
(4) Painted face

(4) Set the ST on valve spring.
ST 499718000 VALVE SPRING REMOVER

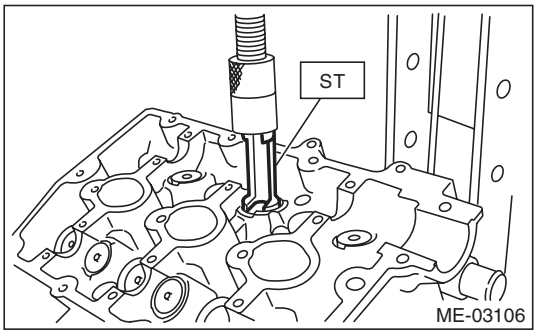

(5) Compress the valve spring and fit the valve spring retainer key.
(6) After installing, tap the valve spring retainers lightly with a plastic hammer for better seating.
2) Apply oil to the surface of valve lifter and valve shim.
3) Install the valve lifter and valve shim.

E: INSPECTION

1. CYLINDER HEAD

1) Check for cracks or damage. Use liquid penetrant tester on the important sections to check for fissures. Check that there are no marks of gas leaking or water leaking on gasket installing surface.
2) Set the cylinder head on ST.
ST 18250AA010 CYLINDER HEAD TABLE
3) Inspect the cylinder head surface that mates with cylinder block for warping by using a straight edge (A) and thickness gauge (B). If the warping exceeds the limit, replace the cylinder head.

Warping limit:
0.02 mm (0.0008 in)

Standard height of cylinder head:
124±0.05 mm (4.88±0.0020 in)

NOTE:
Uneven torque for the cylinder head bolts can cause warping. When reinstalling, pay special attention to the torque so as to tighten evenly.

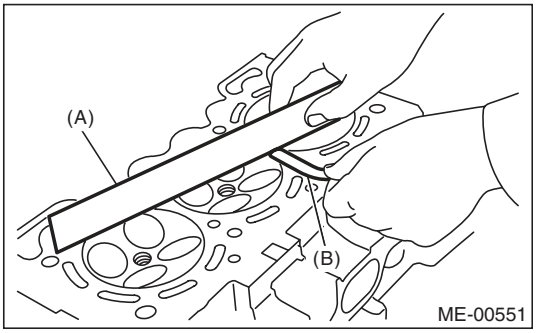

2. VALVE SEAT

Inspect the intake and exhaust valve seats. Correct the contact surfaces with a valve seat cutter if they are defective or when valve guides are replaced.

Valve seat width W:

Standard
Intake
1.0 mm (0.039 in)
Exhaust
1.5 mm (0.059 in)

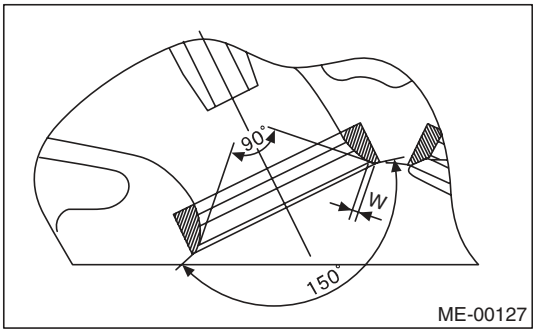

3. VALVE GUIDE

1) Check the clearance between valve guide and stem. The clearance can be checked by measuring the valve stem outer diameter with a micrometer and valve guide inner diameter with a caliper gauge respectively.

Clearance between the valve guide and valve stem:

Standard
Intake
0.030 — 0.057 mm (0.0012 — 0.0022 in)
Exhaust
0.040 — 0.067 mm (0.0016 — 0.0026 in)

2) If the clearance between valve guide and stem exceeds the standard, replace the valve guide or valve itself whichever shows greater amount of wear or damaged and etc. See the following procedure for valve guide replacement.

Valve guide inner diameter:
5.500 — 5.512 mm (0.2165 — 0.2170 in)

Valve stem outer diameters:
Intake
5.455 — 5.470 mm (0.2148 — 0.2154 in)
Exhaust
5.445 — 5.460 mm (0.2144 — 0.2150 in)

(1) Place the cylinder head on ST1 with the combustion chamber upward so that valve guides fit the holes in ST1.
(2) Insert the ST2 into valve guide and press it down to remove the valve guide.

ST1 18250AA010 CYLINDER HEAD TABLE
ST2 499765700 VALVE GUIDE REMOVER

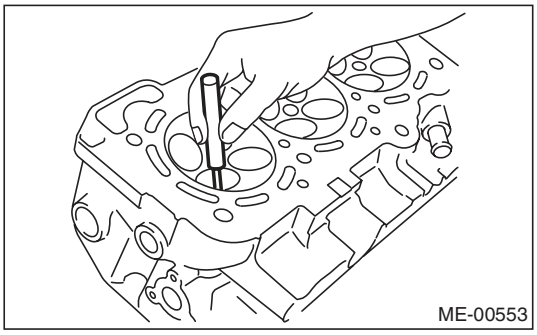

(3) Turn the cylinder head upside down and place the ST as shown in the figure.

ST 18251AA040 VALVE GUIDE ADJUSTER

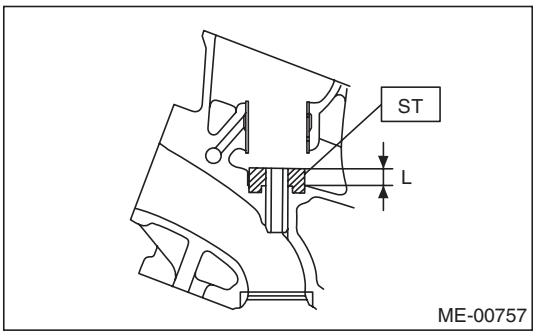

(4) Before installing a new valve guide, make sure that neither scratches nor damages exist on the inner surface of valve guide holes in cylinder head.

(5) Put a new valve guide, coated with sufficient oil, in the cylinder head, and insert the ST1 into valve guide. Press in until the valve guide upper end is flush with the upper surface of ST2.

ST1 499765700 VALVE GUIDE REMOVER
ST2 18251AA040 VALVE GUIDE ADJUSTER

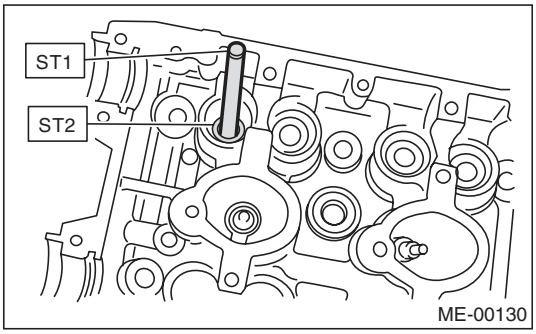

(6) Check the valve guide protrusion.

Valve guide protrusion L:
11.4 — 11.8 mm (0.449 — 0.465 in)

(7) Ream the inside of valve guide using ST. Put the ST in valve guide, and rotate the ST slowly clockwise while pushing it lightly. Bring the ST back while rotating it clockwise.

ST 499765900 VALVE GUIDE REAMER

NOTE:
- Apply engine oil to the ST when reaming.
- If the inner surface of valve guide is damaged, the edge of ST should be slightly ground with oil stone.
- If the inner surface of valve guide becomes lustrous and the ST does not chip, use a new ST or remedy the ST.

(8) After reaming, clean the valve guide to remove chips.

(9) Recheck the contact condition between valve and valve seat after replacing the valve guide.

4. INTAKE AND EXHAUST VALVE

1) Inspect the flange and stem of the valve, and replace if damaged, worn, or deformed, or if “H” is outside of the standard.

Head edge thickness H:

Standard
Intake (A)
1.0 mm (0.039 in)
Exhaust (B)
1.2 mm (0.047 in)

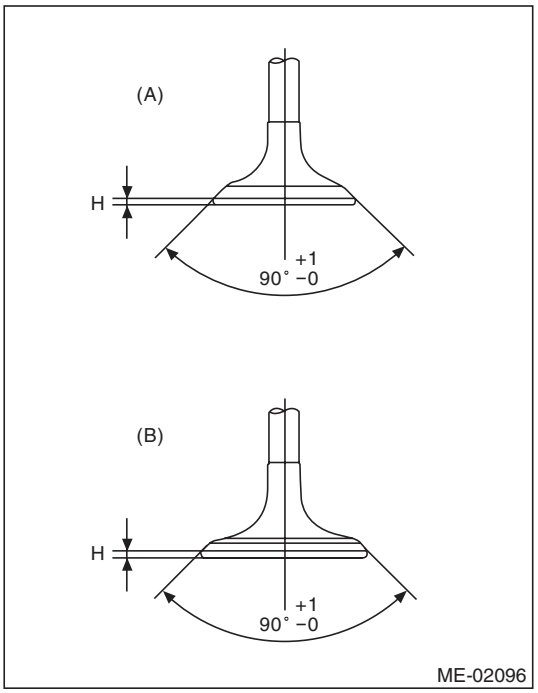

2) Put a small amount of grinding compound on the seat surface, and lap the valve and valve seat. Install a new valve oil seal after lapping.

NOTE:
It is possible to differentiate between the intake valve and the exhaust valve by their overall length.

Valve overall length:
Intake
99.7 mm (3.925 in)
Exhaust
105.2 mm (4.142 in)

5. VALVE SPRING

1) Check the valve springs for damage, free length, and tension. Replace the valve spring if it is not within the standard value presented in the table.

Free length mm (in)	Intake	Inner	39.55 (1.5571)
		Outer	41.18 (1.6213)
	Exhaust		46.32 (1.8236)
Squareness	Intake	Inner	2.5°, 1.7 mm (0.067 in) or less
		Outer	2.5°, 1.8 mm (0.071 in) or less
	Exhaust		2.5°, 2.0 mm (0.079 in) or less

2) To measure the squareness of the valve spring, stand the valve spring on a surface plate and measure its deflection at the top of the spring using a try square.

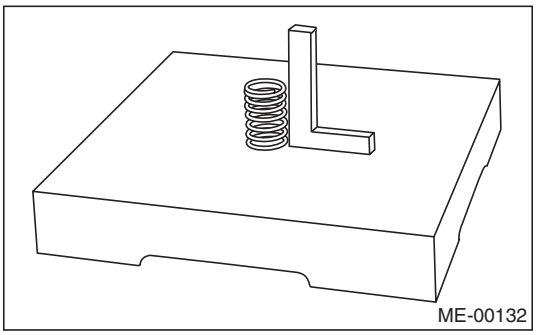

6. INTAKE AND EXHAUST VALVE OIL SEAL

1) For the following, replace the oil seal with a new part.
- When the lip is damaged
- When the spring is out of the specified position
- When readjusting the surfaces of valve and valve seat
- When replacing the valve guide

2) Set the cylinder head on ST1.
3) Using the ST2, press-fit the oil seal.

ST1 18250AA010 CYLINDER HEAD TABLE
ST2 499585500 VALVE OIL SEAL GUIDE

NOTE:
- Apply engine oil to oil seal before press-fitting.
- When press-fitting the oil seal, do not use a hammer to strike in.

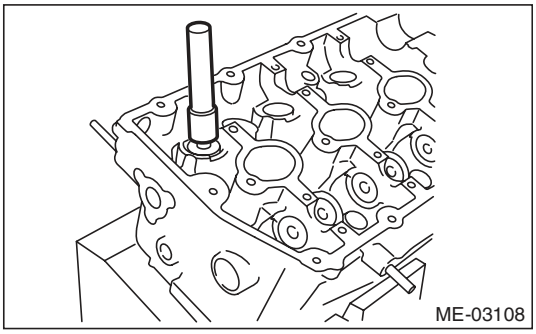

7. VALVE LIFTER

1) Check the valve lifter visually.
2) Measure the outer diameter of valve lifter.

Outer diameter:
32.959 — 32.975 mm (1.2976 — 1.2982 in)

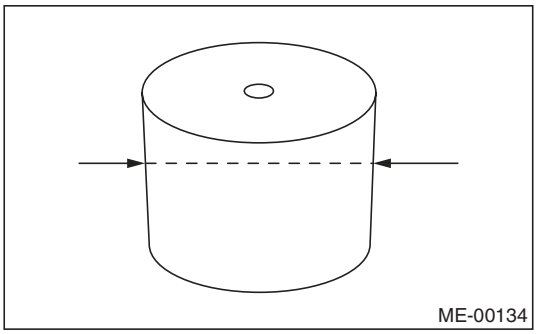

3) Measure the inner diameter of valve lifter hole of cylinder head.

Inner diameter:
32.994 — 33.016 mm (1.2990 — 1.2998 in)

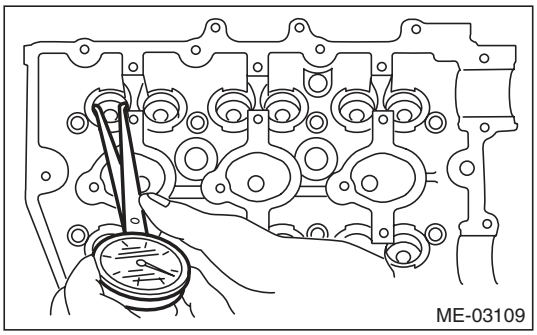

NOTE:
If difference between outer diameter of valve lifter and inner diameter of valve lifter hole is out of the standard or offset wearing is emitted, replace the cylinder head.

Standard:
0.019 — 0.057 mm (0.0007 — 0.0022 in)

21.Cylinder Block

A: REMOVAL

NOTE:
Before conducting this procedure, drain the engine oil completely.

1) Remove the V-belts. <Ref. to ME(H6DO)-42, REMOVAL, V-belt.>
2) Remove the crank pulley. <Ref. to ME(H6DO)-43, REMOVAL, Crank Pulley.>
3) Remove the front chain cover. <Ref. to ME(H6DO)-44, REMOVAL, Front Chain Cover.>
4) Remove the timing chain assembly. <Ref. to ME(H6DO)-46, REMOVAL, Timing Chain Assembly.>
5) Remove the cam sprocket. <Ref. to ME(H6DO)-51, REMOVAL, Cam Sprocket.>
6) Remove the crank sprocket. <Ref. to ME(H6DO)-52, REMOVAL, Crank Sprocket.>
7) Remove the rear chain cover. <Ref. to ME(H6DO)-53, REMOVAL, Rear Chain Cover.>
8) Remove the camshaft. <Ref. to ME(H6DO)-55, REMOVAL, Camshaft.>
9) Remove the cylinder head. <Ref. to ME(H6DO)-59, REMOVAL, Cylinder Head.>
10) Use the ST to lock the crankshaft, and remove the drive plate.

ST1 498497100 CRANKSHAFT STOPPER
ST2 499057000 TORX PLUS®

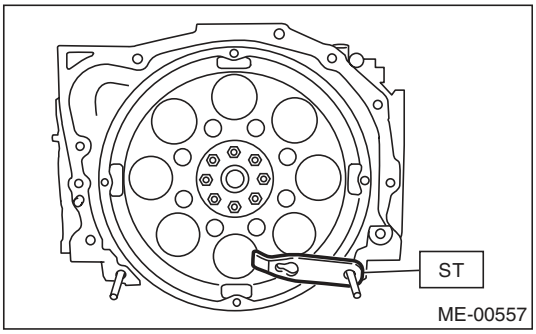

11) Remove the crankshaft position sensor plate.

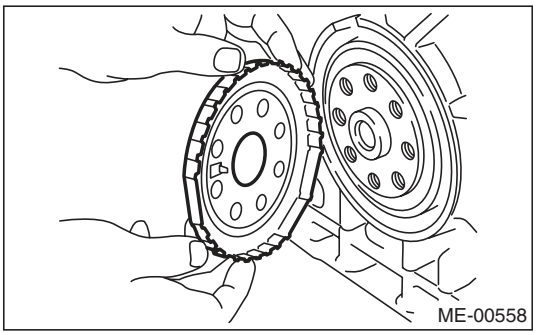

12) Remove the crankshaft position sensor bracket.

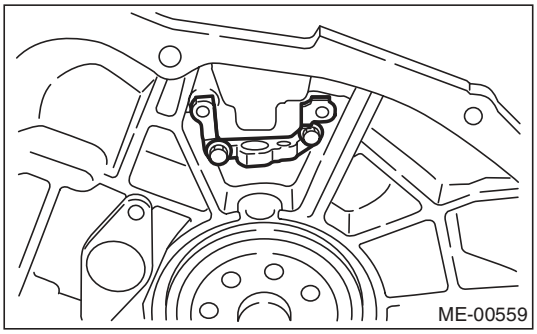

13) Rotate the engine to set oil pan upper.
14) Remove the bolts which secure oil pan lower to oil pan upper.

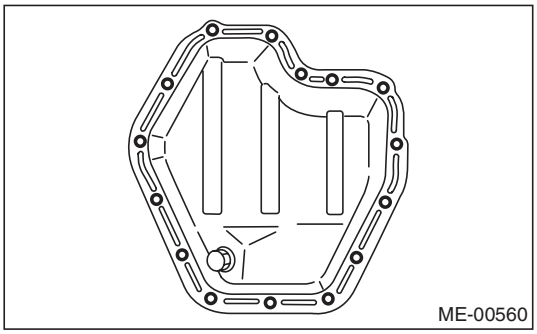

15) Insert an oil pan cutter blade between cylinder block-to-oil pan clearance and remove the oil pan.

CAUTION:
Do not use a screwdriver or similar tools in place of oil pan cutter.

16) Remove the oil strainer.

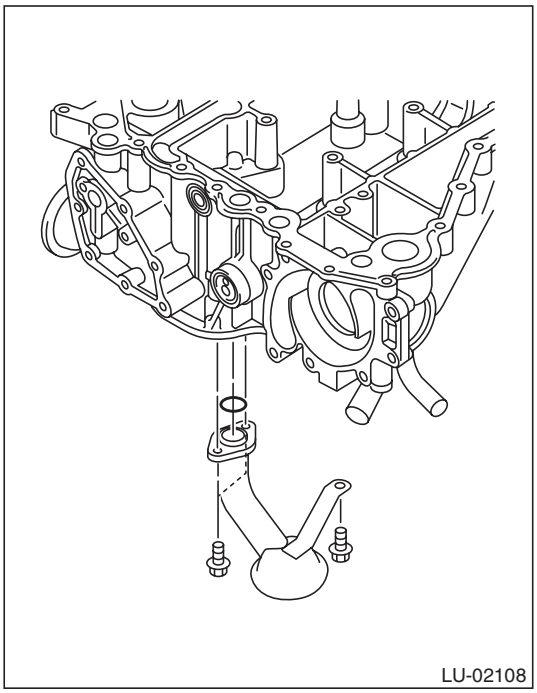

17) Remove the bolts which install oil pan upper onto cylinder block.

NOTE:
Installation bolt has five different sizes. To prevent the confusion in installation, keep these bolts on container individually.

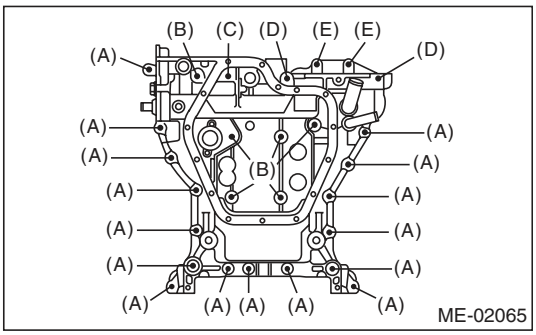

(A) M8 × 40
(B) M8 × 65
(C) M8 × 85
(D) M8 × 130.5
(E) M8 × 24

18) Remove the service hole cover and service hole plugs using a hexagon wrench.

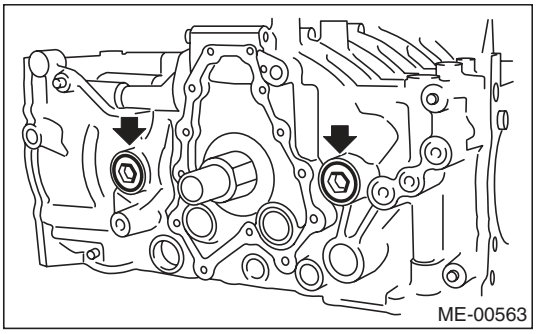

19) Rotate the crankshaft to bring #1 and #2 pistons to bottom dead center position, then, using the ST, remove the piston snap ring through service hole of #1 and #2 cylinders.

ST 18233AA000 PISTON PIN SNAP RING PLIERS

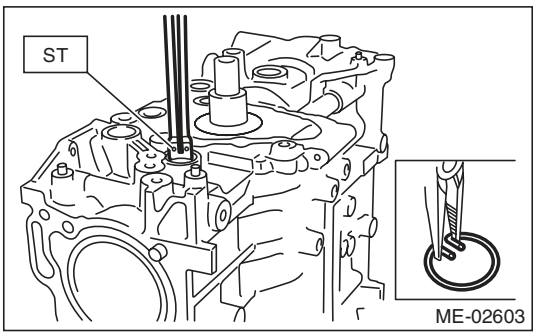

20) Draw out the piston pin from #1 and #2 pistons using ST.

ST 499097700 PISTON PIN REMOVER ASSY

NOTE:
Be careful not to confuse the original combination of piston, piston pin and cylinder.

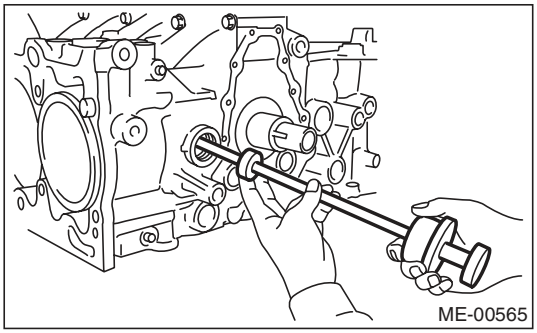

21) Similarly remove the piston pins from #3, #4, #5, and #6 pistons.
22) Remove the cylinder block connecting bolts.

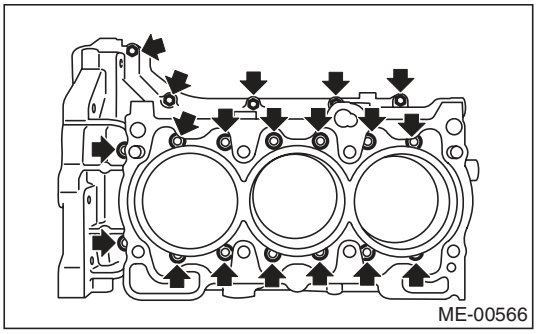

23) Separate the cylinder block (LH) and (RH).

NOTE:
When separating the cylinder block, do not allow the connecting rod to fall or damage the cylinder block.
24) Remove the rear oil seal.
25) Remove the crankshaft together with connecting rod.
26) Remove the crankshaft bearings from cylinder block using a hammer handle.

NOTE:
- Be careful not to confuse the crankshaft bearing combination.
- Press the bearing at the end opposite to locking lip.

27) Draw out each piston from cylinder block using wooden bar or hammer handle.

NOTE:
Be careful not to confuse the original combination of piston and cylinder.

B: INSTALLATION

1) After setting the cylinder block to ST, install the crankshaft bearing.
ST 18232AA000 ENGINE STAND

NOTE:
Remove oil on the mating surface of cylinder block before installation. Apply a coat of engine oil to the bearing and crankshaft journal.

2) Position the crankshaft on the cylinder block (RH).

3) Apply liquid gasket to the mating surfaces of cylinder block (RH), and position the cylinder block (LH).

NOTE:
- Do not allow liquid gasket to run over to oil passages, bearing grooves, etc.
- Install within 5 minutes after applying liquid gasket.

Liquid gasket:
THREE BOND 1217G (Part No. K0877Y0100) or equivalent

Applying liquid gasket diameter:
1.0±0.2 mm (0.039±0.008 in)

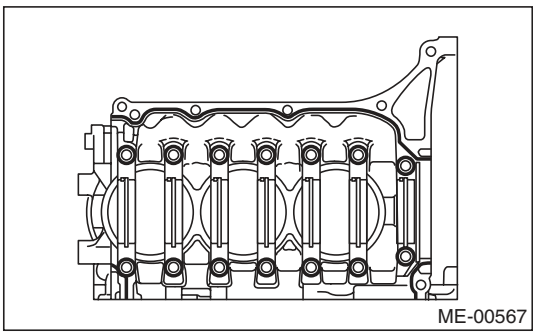

4) Apply a coat of engine oil to the washer and bolt thread.

5) Tighten all bolts in the numerical order as shown in the figure.

Tightening torque:
(1) — (11), (13): 25 N·m (2.5 kgf-m, 18.4 ft-lb)
(12), (14): 20 N·m (2.0 kgf-m, 14.8 ft-lb)

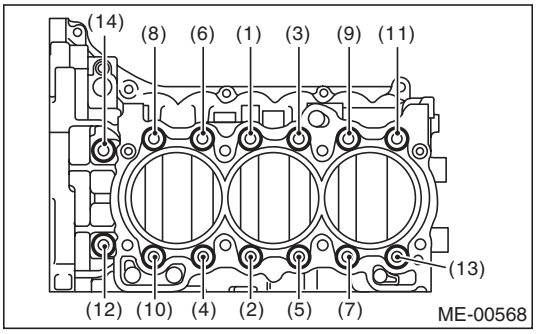

6) Retighten all bolts in the numerical order as shown in the figure.

Tightening torque:
(1) — (11), (13): 25 N·m (2.5 kgf-m, 18.4 ft-lb)
(12), (14): 20 N·m (2.0 kgf-m, 14.8 ft-lb)

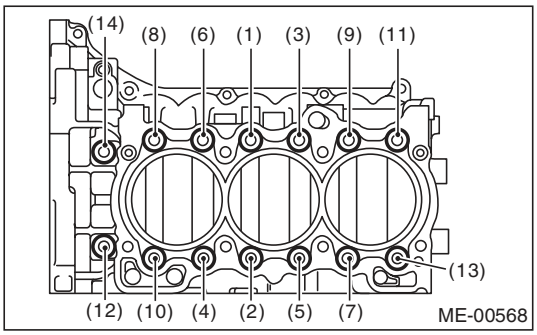

7) Tighten all bolts 90° — 110° in the numerical order as shown in the figure.

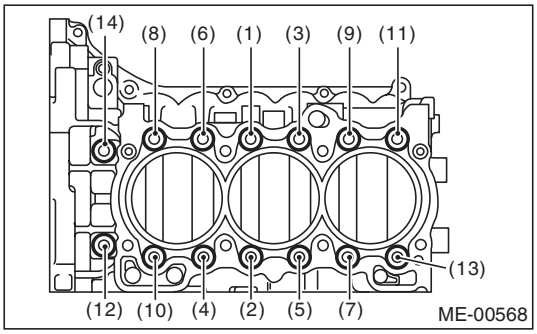

8) Install the upper bolt to cylinder block.

Tightening torque:
25 N·m (2.5 kgf-m, 18.4 ft-lb)

NOTE:
After tightening the cylinder block connecting bolts, remove the liquid gasket which is running over to the sealing surface for rear chain cover and oil pan upper.

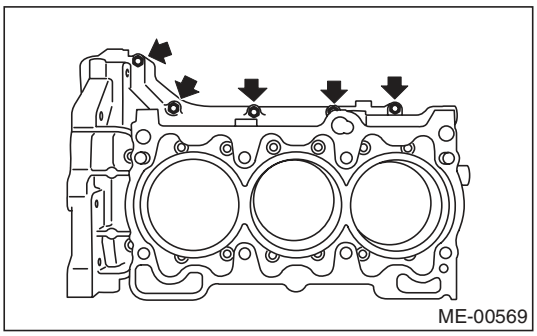

9) Apply a coat of engine oil to the oil seal periphery, then install the rear oil seal using ST1 and ST2.

NOTE:
Use new rear oil seal.

ST1	499597100	CRANKSHAFT OIL SEAL GUIDE
ST2	499587200	CRANKSHAFT OIL SEAL INSTALLER

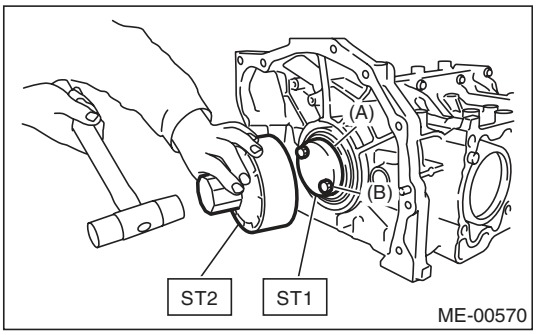

(A) Rear oil seal
(B) Drive plate installation bolt

10) Position the top ring gap at (A) in the figure.
11) Position the second ring gap at (B).

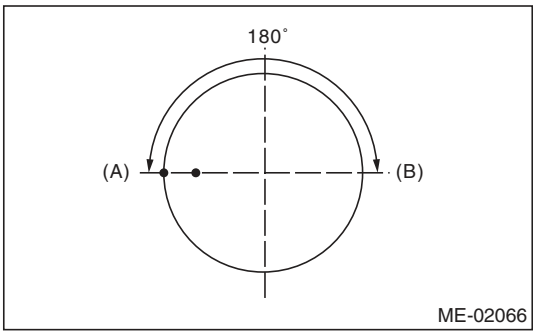

12) Position the upper rail gap at (C) in the figure.
13) Position the expander gap at (D) in the figure.
14) Position the lower rail gap at (E) in the figure.

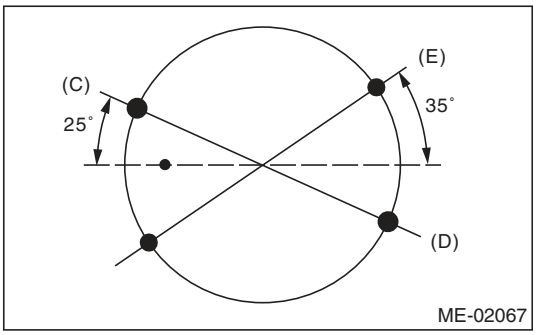

CAUTION:
- **Make sure ring gaps do not face the same direction.**
- **Make sure ring gaps are not within the piston skirt area.**
- **Assemble it so that R mark faces to top side of piston.**

15) Install the snap ring.
Install the snap rings in the piston holes located opposite to the service holes in cylinder block when positioning all pistons in corresponding cylinders.

NOTE:
Use new snap rings.

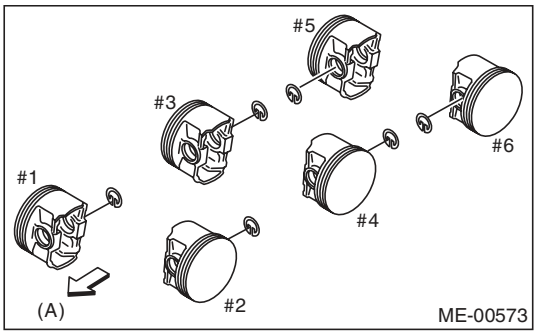

(A) Front side of vehicle

16) Installing piston:
(1) Using ST1, turn the crankshaft so that #3 and #4 connecting rod small ends are set on the service hole (A).

ST1 18252AA000 CRANKSHAFT SOCKET

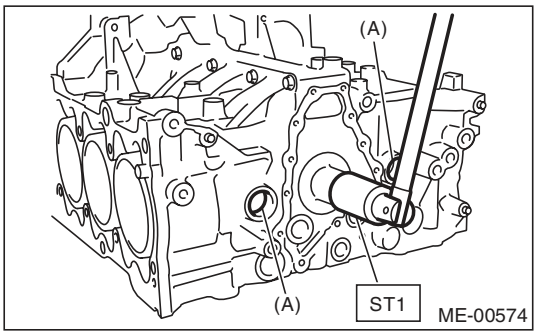

(2) Apply a thin coat of engine oil to piston and cylinder.

(3) Using ST2, press-fit the piston into cylinder.

ST2 18254AA000 PISTON GUIDE

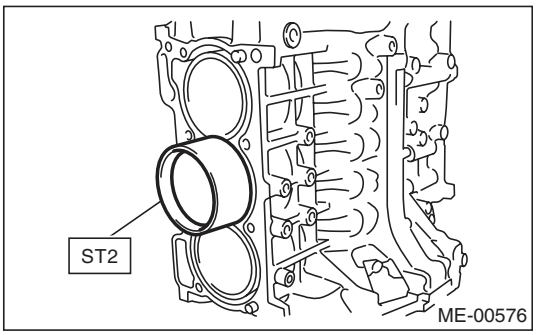

NOTE:
Let the piston front mark (A) face towards the front of engine.

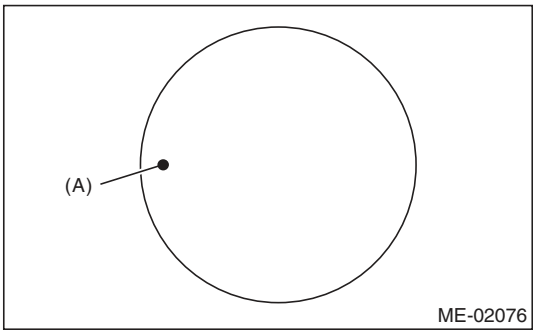

17) Installing piston pin:

(1) Apply a coat of engine oil to ST3 before insertion, and then insert it into the service hole to align piston pin hole with connecting rod small end.

ST3 18253AA000 PISTON PIN GUIDE

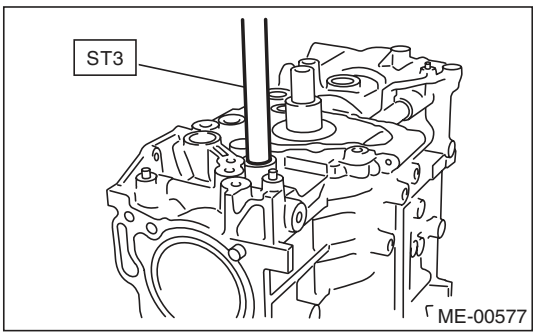

(2) Apply a coat of engine oil to piston pin, and insert the piston pin into piston and connecting rod through service hole.

(3) Using ST4, install the snap ring.

ST4 18233AA000 PISTON PIN SNAP RING PLIERS

NOTE:
Use new snap rings.

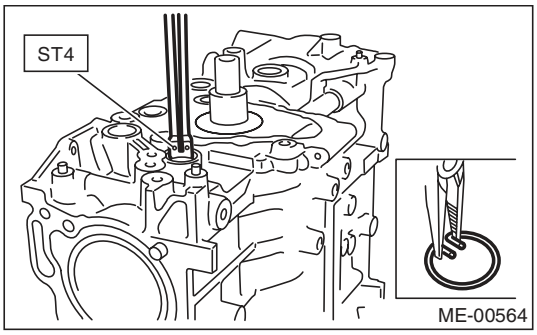

(4) Similarly install the #1, #2, #5 and #6 pistons.

18) Install the service hole plug and O-ring.

NOTE:
Use new O-rings.

19) Apply liquid gasket to the mating surface of oil pan upper.

NOTE:
Install within 5 minutes after applying liquid gasket.

Liquid gasket:
THREE BOND 1217G (Part No. K0877Y0100) or equivalent

Applying liquid gasket diameter:
Full line part
3.0±1.0 mm (0.12±0.04 in)
Broken line part
1.0 mm (0.04 in)

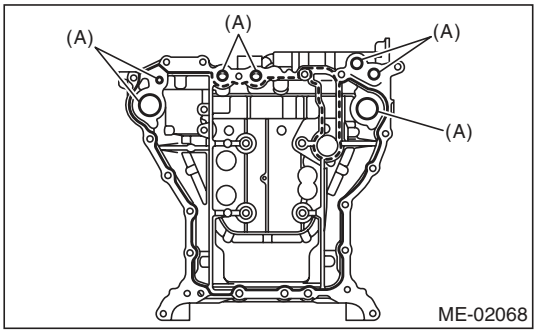

(A) O-ring

NOTE:
Use new O-rings.

20) Temporarily tighten the oil pan upper.

NOTE:
Do not install the bolts in wrong place.

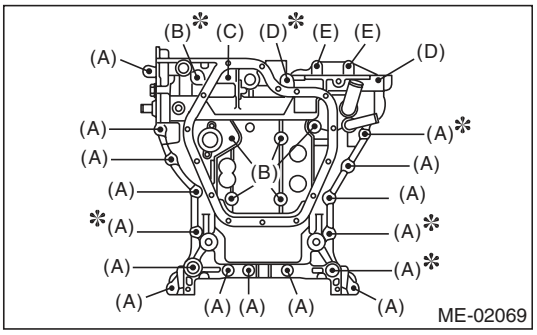

(A) M8 × 40
(B) M8 × 65
(C) M8 × 85
(D) M8 × 130.5
(E) M8 × 24
*: Coating

21) Tighten the oil pan upper installing bolts in the numerical order as shown in the figure.

Tightening torque:
18 N·m (1.8 kgf-m, 13.3 ft-lb)

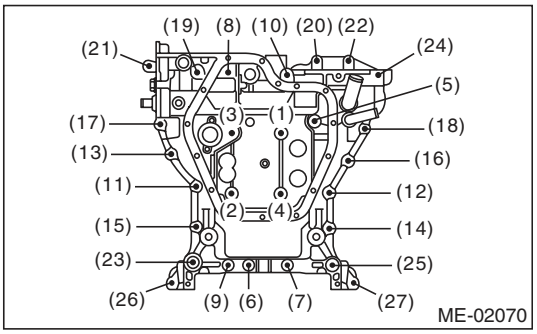

22) Install the oil strainer.

Tightening torque:
6.4 N·m (0.7 kgf-m, 4.7 ft-lb)

NOTE:
Use new O-rings.

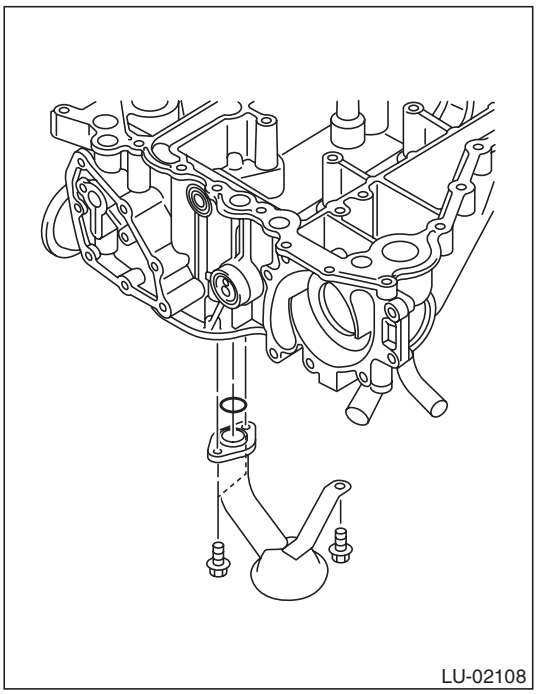

23) Apply liquid gasket to the matching surface of oil pan lower.

NOTE:
Install within 5 minutes after applying liquid gasket.

Liquid gasket:
THREE BOND 1217G (Part No. K0877Y0100) or equivalent

Applying liquid gasket diameter:
5.0±1.0 mm (0.20±0.04 in)

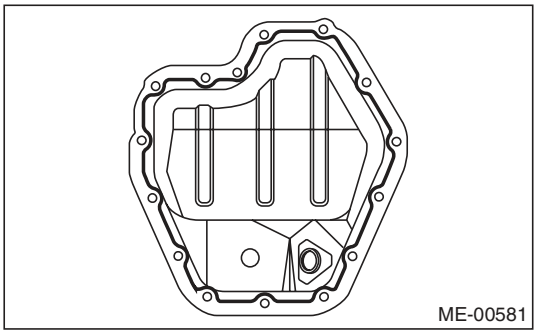

24) Tighten the oil pan lower installing bolts in the numerical order as shown in the figure.

Tightening torque:
6.4 N·m (0.7 kgf-m, 4.7 ft-lb)

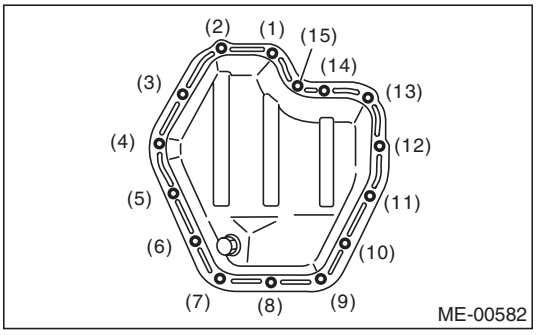

25) Attach the crankshaft position sensor holder.

Tightening torque:
6.4 N·m (0.7 kgf-m, 4.7 ft-lb)

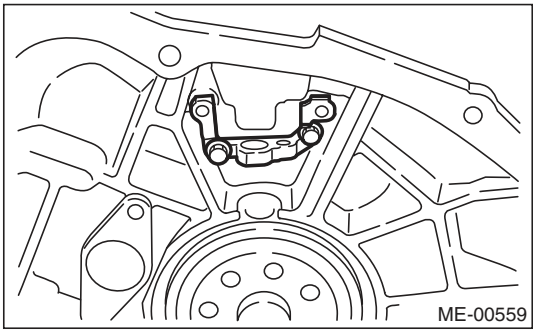

26) Install the crankshaft sensor plate.

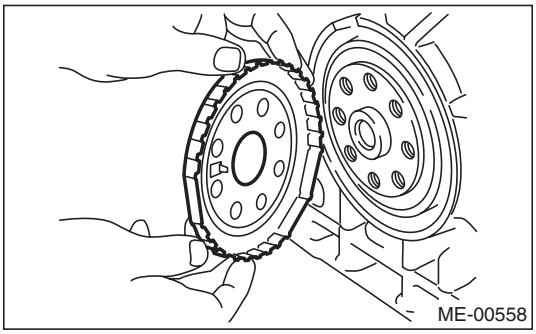

27) Use the ST to lock the crankshaft, and install the drive plate.

ST1 498497100 CRANKSHAFT STOPPER
ST2 499057000 TORX PLUS®

Tightening torque:
81 N·m (8.3 kgf-m, 59.7 ft-lb)

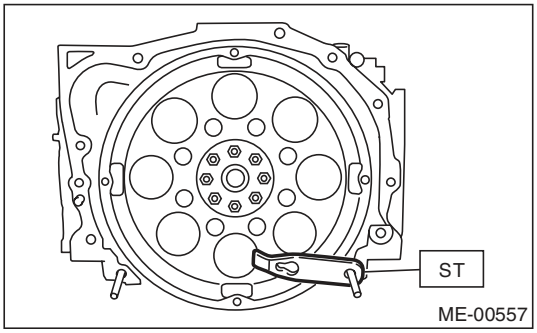

28) Install the cylinder head. <Ref. to ME(H6DO)-59, INSTALLATION, Cylinder Head.>
29) Install the camshaft. <Ref. to ME(H6DO)-56, INSTALLATION, Camshaft.>
30) Install the rear chain cover. <Ref. to ME(H6DO)-53, INSTALLATION, Rear Chain Cover.>
31) Install the crank sprocket. <Ref. to ME(H6DO)-52, INSTALLATION, Crank Sprocket.>
32) Install the cam sprocket. <Ref. to ME(H6DO)-51, INSTALLATION, Cam Sprocket.>
33) Install the timing chain assembly. <Ref. to ME(H6DO)-47, INSTALLATION, Timing Chain Assembly.>
34) Install the front chain cover. <Ref. to ME(H6DO)-44, INSTALLATION, Front Chain Cover.>
35) Install the crank pulley. <Ref. to ME(H6DO)-43, INSTALLATION, Crank Pulley.>
36) Install the V-belts. <Ref. to ME(H6DO)-42, INSTALLATION, V-belt.>

C: DISASSEMBLY

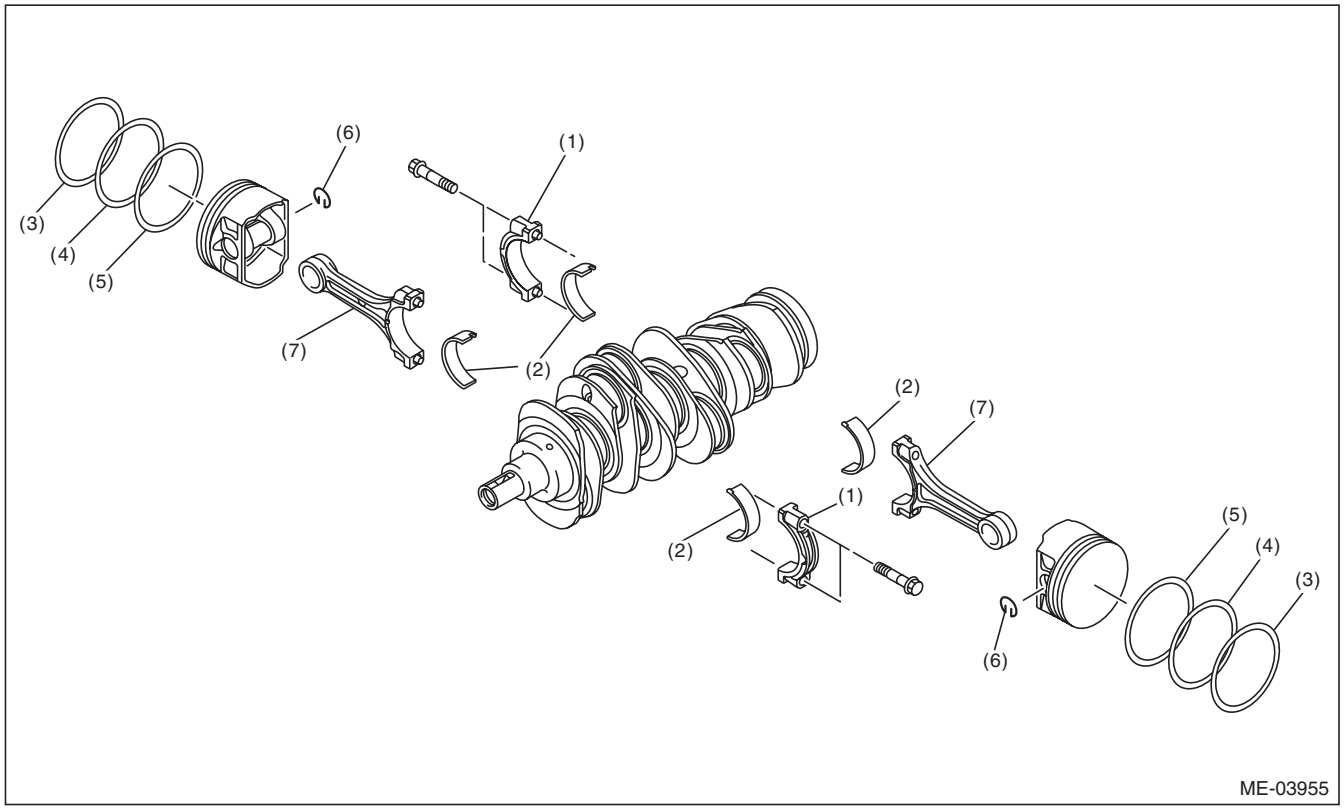

(1)	Connecting rod cap	(4)	Second ring	(6)	Snap ring
(2)	Connecting rod bearing	(5)	Oil ring	(7)	Connecting rod
(3)	Top ring				

1) Remove the connecting rod cap.
2) Remove the connecting rod bearing.

NOTE:
Arrange the removed connecting rod, connecting rod cap and bearing in order, to prevent confusion.

3) Remove the piston rings using piston ring expander.
4) Remove the oil ring by hand.

NOTE:
Arrange the removed piston rings in proper order, to prevent confusion.

5) Remove the snap ring.

D: ASSEMBLY

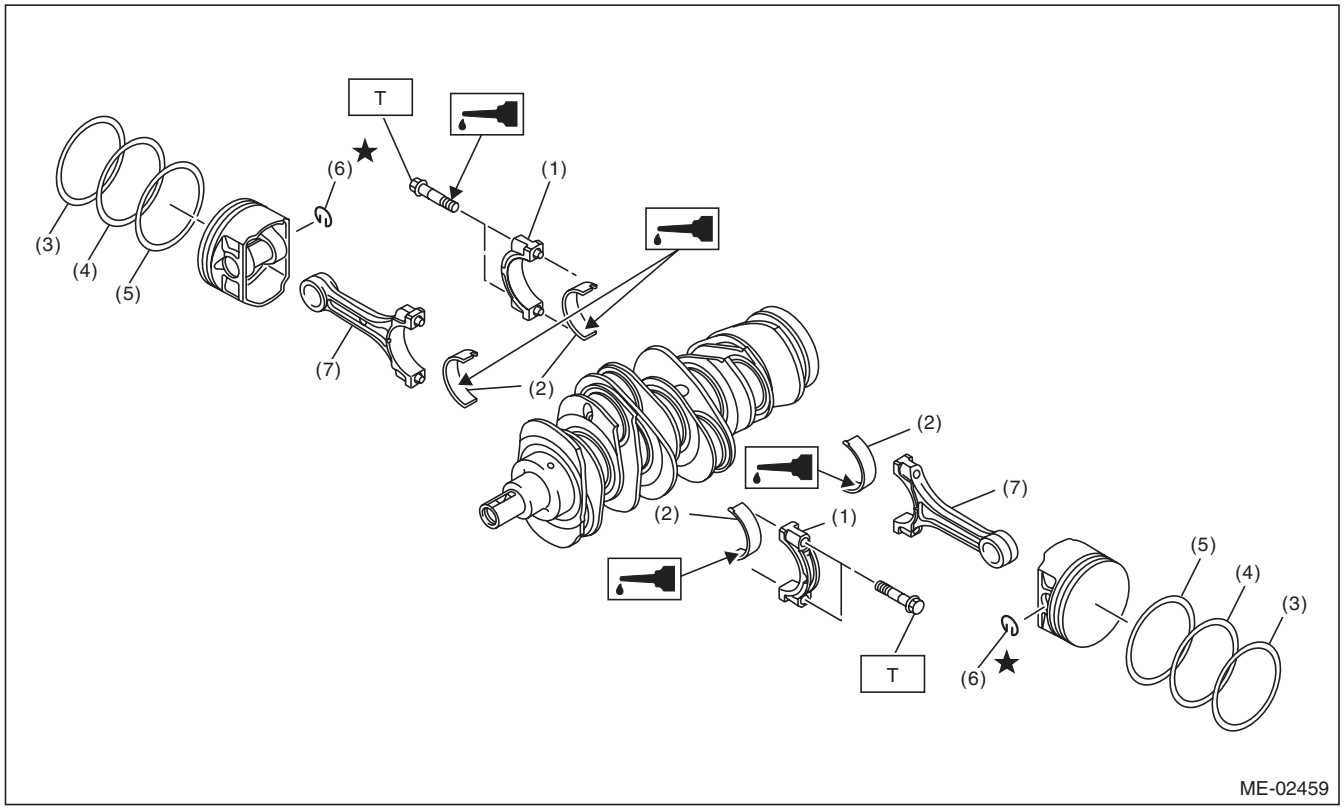

(1)	Connecting rod cap	(5)	Oil ring
(2)	Connecting rod bearing	(6)	Snap ring
(3)	Top ring	(7)	Connecting rod
(4)	Second ring		

Tightening torque:N·m (kgf-m, ft-lb)
T: 53 (5.4, 39.1)

1) Apply oil to the surface of the connecting rod bearings, and install the bearings on the connecting rods and connecting rod caps.
2) Position each connecting rod with the marking side facing forward.
3) Install the connecting rod cap. Make sure the arrow mark on connecting rod cap facing front during installation.

CAUTION:
- **Each connecting rod has its own mating cap. Make sure that they are assembled correctly by checking their matching number.**
- **When tightening the connecting rod bolts, apply oil on the threads and flange end.**

Tightening torque:
53 N·m (5.4 kgf-m, 39.1 ft-lb)

4) Install the oil ring spacer, upper rail and lower rail by hand.
5) Install the second ring and top ring using piston ring expander.

E: INSPECTION

1. CYLINDER BLOCK

1) Check for cracks or damage. Use liquid penetrant tester on the important sections to check for fissures. Check that there are no marks of gas leaking or water leaking on gasket installing surface.
2) Check the oil passages for clogging.
3) Inspect the cylinder block surface that mates with cylinder head for warping by using a straight edge. If the warping exceeds the limit, replace the cylinder block.

Warping limit:
0.02 mm (0.0008 in)

Standard height of cylinder block:
202 mm (7.95 in)

2. CYLINDER AND PISTON

1) The cylinder bore size is stamped on the front upper face of the cylinder block.

NOTE:
- Measurement should be performed at a temperature of 20°C (68°F).
- Standard sized pistons are classified into two grades, “A” and “B”. These grades should be used as guide lines in selecting a standard piston.

Standard diameter:
A: 89.205 — 89.215 mm (3.5120 — 3.5124 in)
B: 89.195 — 89.205 mm (3.5116 — 3.5120 in)

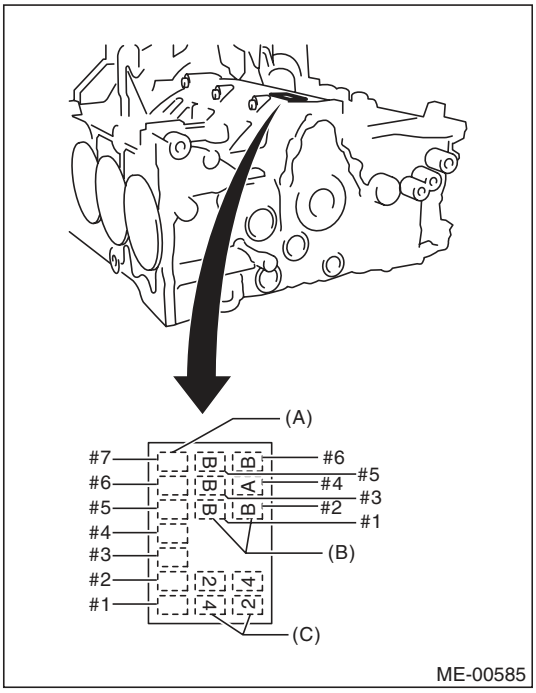

(A) Main journal size mark
(B) Cylinder bore size mark
(C) Cylinder block (RH) – (LH) combination mark

2) How to measure the inner diameter of each cylinder:
Measure the inner diameter of each cylinder in both the thrust and piston pin directions at the heights as shown in the figure, using a cylinder bore gauge.

NOTE:
Measurement should be performed at a temperature of 20°C (68°F).

Cylindricality:
Standard
0.030 mm (0.0012 in)

Out-of-roundness:
Standard
0.010 mm (0.0004 in)

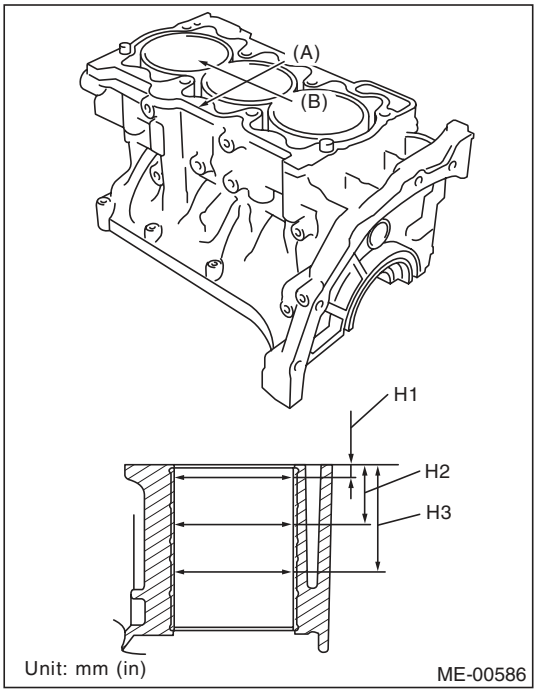

(A) Piston pin direction
(B) Thrust direction
H1: 10 mm (0.39 in)
H2: 45 mm (1.77 in)
H3: 80 mm (3.15 in)

3) When the piston is to be replaced due to general or cylinder wear, determine a suitable sized piston by measuring the piston clearance.

4) How to measure the outer diameter of each piston:
Measure the outer diameter of each piston at the height as shown in the figure. (Thrust direction)

NOTE:
Measurement should be performed at a temperature of 20°C (68°F).

Piston grade point H:
37.3 mm (1.4685 in)

Piston outer diameter:
Standard
A: 89.205 — 89.215 mm (3.5120 — 3.5124 in)
B: 89.195 — 89.205 mm (3.5116 — 3.5120 in)
0.25 mm (0.0098 in) oversize
89.445 — 89.465 mm (3.5215 — 3.5222 in)
0.50 mm (0.0197 in) oversize
89.695 — 89.715 mm (3.5313 — 3.5321 in)

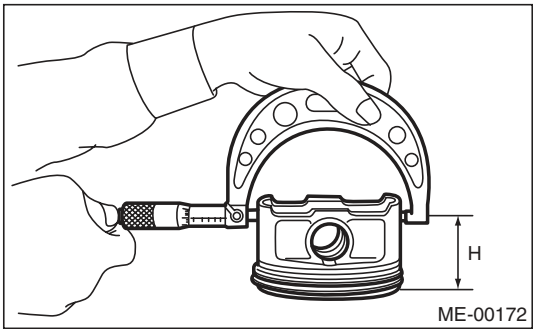

5) Calculate the clearance between cylinder and piston.

NOTE:
Measurement should be performed at a temperature of 20°C (68°F).

Cylinder to piston clearance at 20°C (68°F):
Standard
–0.010 — 0.010 mm (–0.0004 — 0.0004 in)

6) Boring and honing:
(1) If the value of cylindrically, out-of-roundness, or cylinder-to-piston clearance measured is out of standard or if there is any damage on the cylinder wall, rebore it to use an oversize piston.

CAUTION:
• When any of the cylinders needs reboring, other cylinders must be bored at the same time, and replaced with oversize pistons.
• Do not perform boring on one cylinder only. Do not replace only a single cylinder for an oversize piston.

(2) If the cylinder inner diameter exceeds the limit after boring and honing, replace the cylinder block.

Cylinder inner diameter boring limit (diameter):
To 89.715 mm (3.5321 in)

NOTE:
Immediately after reboring, the cylinder diameter may differ from its real diameter due to temperature rise. Thus, pay attention to this when measuring the cylinder diameter.

3. PISTON AND PISTON PIN

1) Check the piston and piston pin for breaks, cracks or wear. Replace if faulty.
2) Check the piston ring groove for wear or damage. Replace if faulty.
3) Make sure that the piston pin can be inserted into the piston pin hole with a thumb at 20°C (68°F). Replace if faulty.

Standard clearance between piston pin and hole in piston:
Standard
0.004 — 0.008 mm (0.0002 — 0.0003 in)

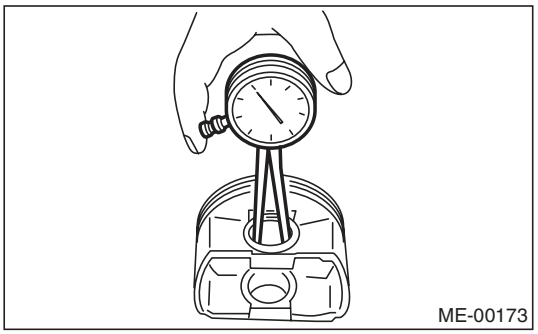

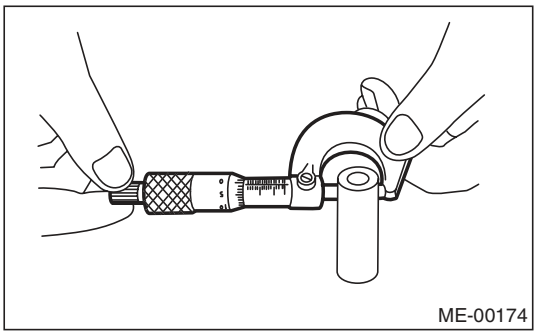

4) Check the snap ring installation groove (A) on the piston for burr. If necessary, remove burr from the groove so that the piston pin can lightly move.

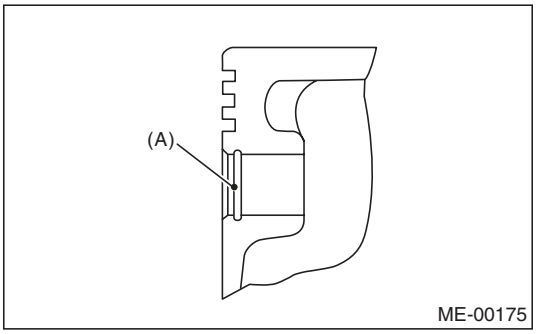

5) Check the piston pin snap ring for distortion, cracks and wear.

4. PISTON RING

1) If the piston ring is broken, damaged or worn, or if its tension is insufficient, or when the piston is replaced, replace the piston ring with a new part of the same size as piston.

NOTE:
- The top ring and second ring have the mark to determine the direction to install on them. When installing the ring to piston, face this mark to the top side.
- Oil ring consists of the upper rail, expander and lower rail. When installing on the piston, be careful of the direction of each rail.

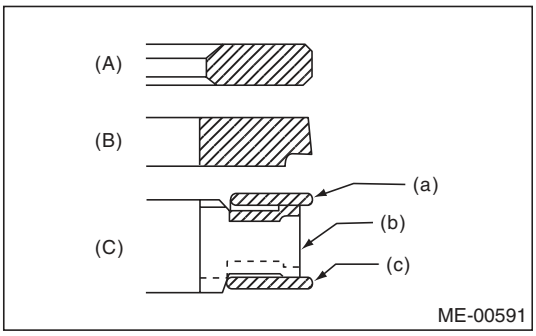

(A) Top ring
(B) Second ring
(C) Oil ring
(a) Upper rail
(b) Expander
(c) Lower rail

2) Squarely place the piston ring and oil ring in cylinder, and measure the piston ring gap with a thickness gauge.

		Standard mm (in)
Piston ring gap	Top ring	0.20 — 0.35 (0.0079 — 0.0138)
	Second ring	0.35 — 0.50 (0.0138 — 0.0197)
	Oil ring	0.20 — 0.60 (0.0079 — 0.0236)

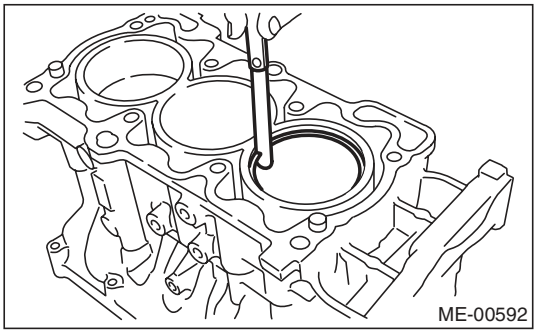

3) Fit the piston ring straight into the piston ring groove, then measure the clearance between piston ring and piston ring groove with a thickness gauge.

NOTE:
Before measuring the clearance, clean the piston ring groove and piston ring.

		Standard mm (in)
Clearance between piston ring and piston ring groove	Top ring	0.040 — 0.080 (0.0016 — 0.0031)
	Second ring	0.030 — 0.070 (0.0012 — 0.0028)
Clearance between oil ring and oil ring groove		0.045 — 0.125 (0.0018 — 0.0049)

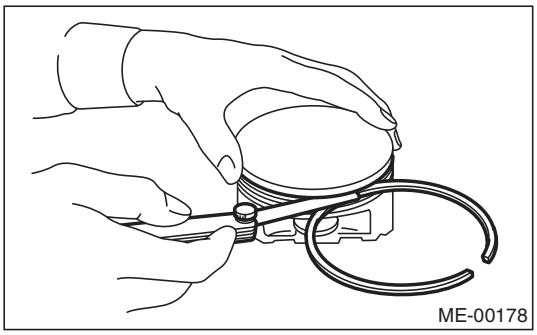

5. CONNECTING ROD

1) Replace the connecting rod, if the large or small end thrust surface is damaged.
2) Check for bend or twist using a connecting rod aligner. Replace the connecting rod if it has the bend or twist.

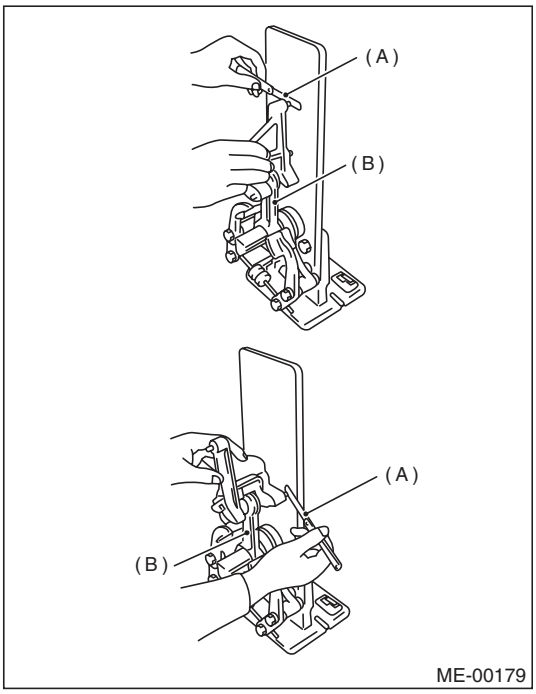

(A) Thickness gauge
(B) Connecting rod

3) Install the connecting rod fitted with bearing to crankshaft and measure the thrust clearance. If the thrust clearance exceeds the standard or uneven wear is found, replace the connecting rod.

Connecting rod thrust clearance:
Standard
0.070 — 0.330 mm (0.0028 — 0.0130 in)

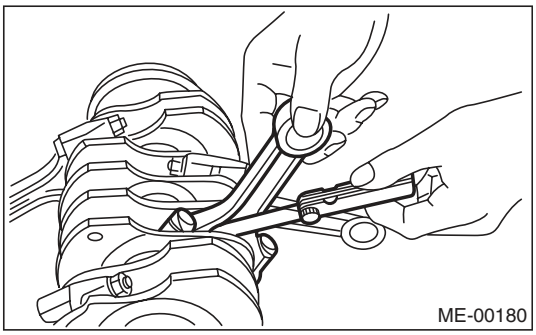

4) Inspect the connecting rod bearing for scar, peeling, seizure, melting, wear, etc.

5) Measure the oil clearance on each connecting rod bearing using plastigauge. If any oil clearance is not within the standard, replace the defective bearing with a new part of standard size or undersize as necessary. (See the table below.)

Connecting rod oil clearance:
Standard
0.016 — 0.043 mm (0.0006 — 0.0017 in)

Unit: mm (in)

Bearing	Bearing size (Thickness at center)	Outer diameter of crank pin
Standard	1.490 — 1.506 (0.0587 — 0.0593)	51.984 — 52.000 (2.0466 — 2.0472)
0.03 (0.0012) undersize	1.509 — 1.513 (0.0594 — 0.0596)	51.954 — 51.970 (2.0454 — 2.0461)
0.05 (0.0020) undersize	1.519 — 1.523 (0.0598 — 0.0600)	51.934 — 51.950 (2.0446 — 2.0453)
0.25 (0.0098) undersize	1.619 — 1.623 (0.0637 — 0.0639)	51.734 — 51.750 (2.0368 — 2.0374)

6) Inspect the bushing at connecting rod small end, and replace if worn or damaged.
7) Measure the piston pin clearance at connecting rod small end. If the measured value is not within the standard, replace it with a new part.

Clearance between piston pin and bushing:
Standard
0 — 0.022 mm (0 — 0.0009 in)

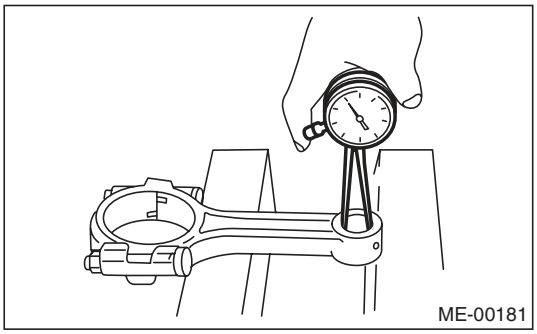

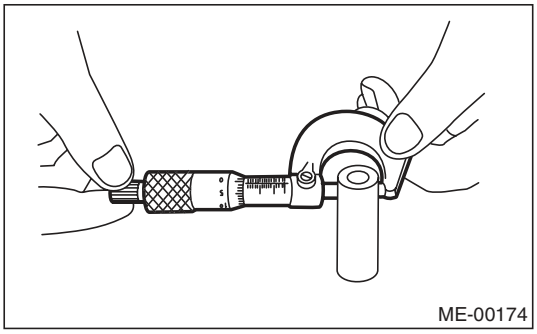

8) The replacement procedure for the connecting rod small end bushing is as follows.

(1) Remove the bushing from connecting rod with ST and press.

(2) Press the bushing with ST after applying oil on the periphery of bushing.

ST 18350AA000 CONNECTING ROD BUSHING REMOVER AND INSTALLER

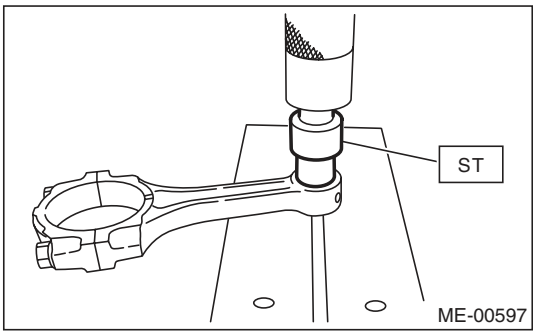

(3) Make two 3 mm (0.12 in) holes in the pressed bushing by aligning with the pre-manufactured holes on the connecting rod, and ream the inside of the bushing.

(4) After completion of reaming, clean the bushing to remove chips.

6. CRANKSHAFT AND CRANKSHAFT BEARING

1) Clean the crankshaft completely, and check it for cracks using liquid penetrant tester. Replace if defective.

2) Check the crankshaft for bend, and repair or replace if needed. Repair or replace if bended.

NOTE:
If a suitable V-block is not available, install #1 and #5 crankshaft bearing on cylinder block, position the crankshaft on these bearings, and then check the crankshaft bend using a dial gauge.

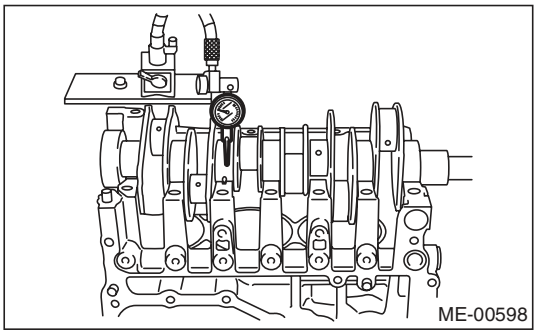

3) Inspect the crank journal and crank pin for wear. If they are not within the specification, replace the bearing with a suitable (undersize) one, and replace or readjust crankshaft as necessary. When grinding the crank journal or crank pin, finish them to the specified dimensions according to the undersize bearing to be used.

Crank pin and crank journal:
Out-of-roundness
0.005 mm (0.0002 in)
Cylindricality
0.006 mm (0.0002 in)

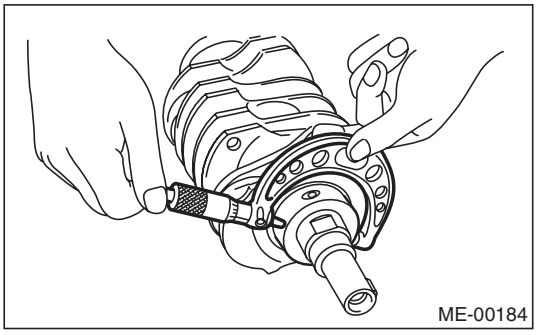

				Unit: mm (in)
		Crank journal diameter		Crank pin outer diameter
		#1, #3, #5, #7	#2, #4, #6	
Standard	Journal O.D.	63.992 — 64.008 (2.5194 — 2.5200)		51.984 — 52.000 (2.0466 — 2.0472)
	Bearing size (Thickness at center)	1.992 — 2.005 (0.0784 — 0.0789)	1.996 — 2.009 (0.0786 — 0.0791)	1.490 — 1.506 (0.0587 — 0.0593)
0.03 (0.0012) undersize	Journal O.D.	63.962 — 63.978 (2.5182 — 2.5188)		51.954 — 51.970 (2.0454 — 2.0461)
	Bearing size (Thickness at center)	2.011 — 2.014 (0.0792 — 0.0793)	2.015 — 2.018 (0.0793 — 0.0794)	1.509 — 1.513 (0.0594 — 0.0596)
0.05 (0.0020) undersize	Journal O.D.	63.942 — 63.958 (2.5174 — 2.5180)		51.934 — 51.950 (2.0446 — 2.0453)
	Bearing size (Thickness at center)	2.021 — 2.024 (0.0796 — 0.0797)	2.025 — 2.028 (0.0797 — 0.0798)	1.519 — 1.523 (0.0598 — 0.0600)
0.25 (0.0098) undersize	Journal O.D.	63.742 — 63.758 (2.5095 — 2.5102)		51.734 — 51.750 (2.0368 — 2.0374)
	Bearing size (Thickness at center)	2.121 — 2.124 (0.0835 — 0.0836)	2.125 — 2.128 (0.0837 — 0.0838)	1.619 — 1.623 (0.0637 — 0.0639)

4) Measure the thrust clearance of crankshaft at center bearing by using thickness gauge. If the thrust clearance is not within the standard, replace the bearing.

Crankshaft thrust clearance:
Standard
0.030 — 0.115 mm (0.0012 — 0.0045 in)

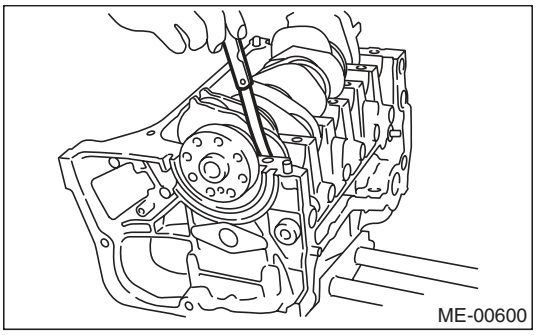

5) Inspect individual crankshaft bearings for signs of flaking, seizure, melting and wear.
6) Measure the oil clearance on each crankshaft bearing using plastigauge. If the measured value is out of standard, replace the defective bearing with an undersize one, and replace or recondition the crankshaft as necessary.

Crankshaft oil clearance:
Standard
0.010 — 0.030 mm (0.0004 — 0.0012 in)

22. Oil Flow Control Solenoid Valve

A: REMOVAL

Oil flow control solenoid valve is a unit with camshaft cap. Refer to “Camshaft” for removal procedures. <Ref. to ME(H6DO)-55, REMOVAL, Camshaft.>

B: INSTALLATION

Install in the reverse order of removal.

23. Oil Switching Solenoid Valve

A: REMOVAL

1) Disconnect the ground cable from the battery.

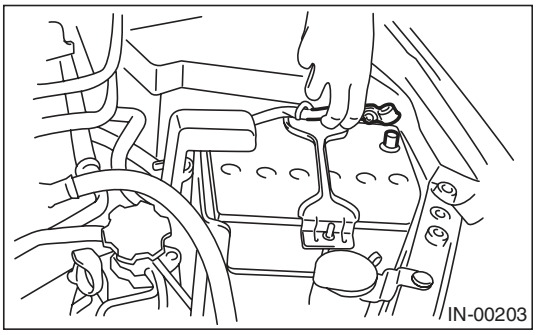

2) Remove the air intake chamber. <Ref. to IN(H6DO)-7, REMOVAL, Air Intake Chamber.>
3) Disconnect the connector from the oil switching solenoid valve.

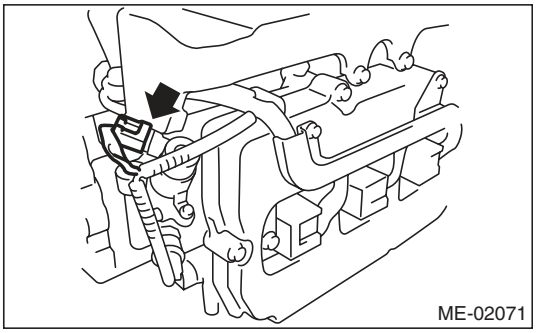

4) Remove the oil switching solenoid valve.
5) Remove the variable valve lift diagnosis oil pressure switch. <Ref. to FU(H6DO)-30, REMOVAL, Variable Valve Lift Diagnosis Oil Pressure Switch.>
6) Remove the oil temperature sensor. <Ref. to FU(H6DO)-31, REMOVAL, Oil Temperature Sensor.>
7) Remove the oil switching solenoid valve holder from the cylinder head.

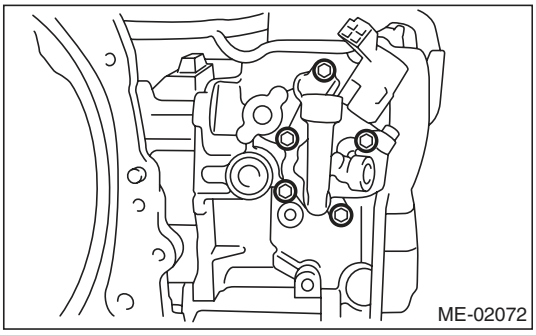

B: INSTALLATION

1) Install the oil switching solenoid valve holder.

NOTE:
Use a new gasket.

(1) Temporarily tighten the bolts by tightening torque of 5 — 10 N·m (0.5 — 1.0 kgf-m, 3.7 — 7.4 ft-lb) in order shown in the figure.
(2) Tighten the bolts by tightening torque of 10±0.5 N·m (1.0±0.05 kgf-m, 7.4±0.37 ft-lb) in order shown in the figure.

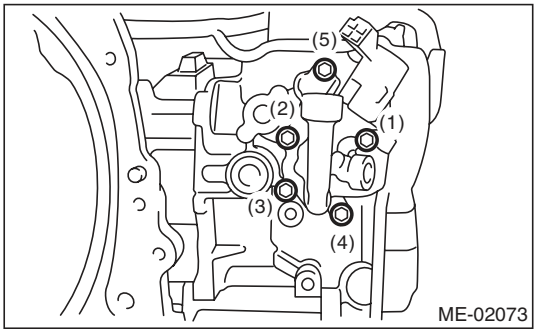

2) Install the oil temperature sensor. <Ref. to FU(H6DO)-31, INSTALLATION, Oil Temperature Sensor.>
3) Install the variable valve lift diagnosis oil pressure switch. <Ref. to FU(H6DO)-30, INSTALLATION, Variable Valve Lift Diagnosis Oil Pressure Switch.>
4) Install the oil switching solenoid valve.
5) Connect the connector to the oil switching solenoid valve.

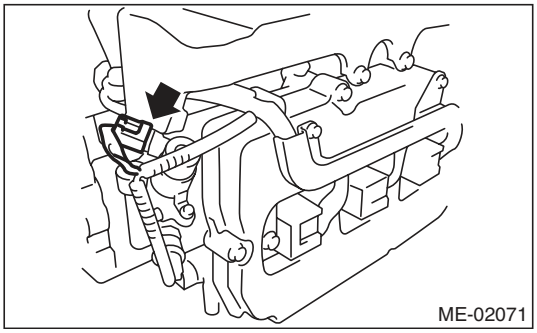

6) Install the air intake chamber. <Ref. to IN(H6DO)-7, INSTALLATION, Air Intake Chamber.>
7) Connect the ground cable to battery.

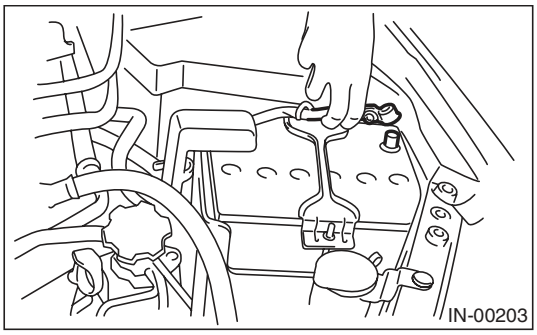

24. Intake and Exhaust Valve

A: SPECIFICATION

Refer to “Cylinder Head” for removal and installation procedures of the intake and exhaust valves. <Ref. to ME(H6DO)-59, REMOVAL, Cylinder Head.> <Ref. to ME(H6DO)-59, INSTALLATION, Cylinder Head.>

25. Piston

A: SPECIFICATION

Refer to “Cylinder Block” for removal and installation procedures of pistons. <Ref. to ME(H6DO)-64, REMOVAL, Cylinder Block.> <Ref. to ME(H6DO)-66, INSTALLATION, Cylinder Block.>

26. Connecting Rod

A: SPECIFICATION

Refer to “Cylinder Block” for removal and installation procedures of connecting rods. <Ref. to ME(H6DO)-64, REMOVAL, Cylinder Block.> <Ref. to ME(H6DO)-66, INSTALLATION, Cylinder Block.>

27. Crankshaft

A: SPECIFICATION

Refer to “Cylinder Block” for removal and installation procedures of the crankshaft. <Ref. to ME(H6DO)-64, REMOVAL, Cylinder Block.> <Ref. to ME(H6DO)-66, INSTALLATION, Cylinder Block.>

28. Engine Trouble in General

A: INSPECTION

NOTE:
The “RANK” shown in the chart shows the possibilities of the cause of trouble in order from “Very often” to “Rarely”.
A — Very often
B — Sometimes
C — Rarely

Symptoms	Problem parts etc.	Possible cause	RANK
1. Engine does not start.			
1) Starter does not turn.	Starter	Defective battery-to-starter harness	B
		Defective starter switch	C
		Defective inhibitor switch	C
		Defective starter	B
	Battery	Improper connection of the terminal	A
		Run-down battery	A
		Defective charging system	B
	Friction	Seizure of crankshaft and connecting rod bearing	C
		Seized camshaft	C
		Seized or stuck piston and cylinder	C
2) Initial combustion does not occur.	Starter	Defective starter	C
	Engine control system <Ref. to EN(H6DO)(diag)-2, Basic Diagnostic Procedure.>		A
	Fuel line	Defective fuel pump and relay	A
		Clogged fuel line	C
		Lack of or insufficient fuel	B
	Timing chain	Trouble	B
		Defective timing	B
	Compression	Incorrect valve clearance	C
		Loosened spark plug or defective gasket	C
		Loosened cylinder head bolt or defective gasket	C
		Improper valve sealing	C
		Defective valve stem	C
		Worn or broken valve spring	B
		Worn or stuck piston rings, cylinder and piston	C
		Incorrect valve timing	B
		Improper engine oil (low viscosity)	B
		Trouble of valve lifter	C
		Trouble of valve lifter. In case noise occurs with valve moving, or when the harness involved to the oil switching solenoid valve, variable valve lift diagnosis oil pressure switch and variable valve lift has trouble in a past.	B

Symptoms	Problem parts etc.	Possible cause	RANK
3) Initial combustion occurs.	Engine control system <Ref. to EN(H6DO)(diag)-2, Basic Diagnostic Procedure.>		A
	Intake system	Defective intake manifold gasket	B
		Defective throttle body gasket	B
	Fuel line	Defective fuel pump and relay	C
		Clogged fuel line	C
		Lack of or insufficient fuel	B
	Timing chain	Trouble	B
		Defective timing	B
	Compression	Incorrect valve clearance	C
		Loosened spark plug or defective gasket	C
		Loosened cylinder head bolt or defective gasket	C
		Improper valve sealing	C
		Defective valve stem	C
		Worn or broken valve spring	B
		Worn or stuck piston rings, cylinder and piston	C
		Incorrect valve timing	B
		Improper engine oil (low viscosity)	B
		Trouble of valve lifter	C
		Trouble of valve lifter. (In case noise occurs with valve moving. Or the harness involved to oil switching solenoid valve, variable valve lift diagnosis oil pressure switch and variable valve lift has trouble in a past.)	B
4) Engine stalls after initial combustion.	Engine control system <Ref. to EN(H6DO)(diag)-2, Basic Diagnostic Procedure.>		A
	Intake system	Loosened or cracked intake duct	B
		Loosened or cracked PCV hose	C
		Loosened or cracked vacuum hose	C
		Defective intake manifold gasket	B
		Defective throttle body gasket	B
		Dirty air cleaner element	C
	Fuel line	Clogged fuel line	C
		Lack of or insufficient fuel	B
	Timing chain	Trouble	B
		Defective timing	B
	Compression	Incorrect valve clearance	C
		Loosened spark plug or defective gasket	C
		Loosened cylinder head bolt or defective gasket	C
		Improper valve sealing	C
		Defective valve stem	C
		Worn or broken valve spring	B
		Worn or stuck piston rings, cylinder and piston	C
		Incorrect valve timing	B
		Improper engine oil (low viscosity)	B
		Trouble of valve lifter	C
		Trouble of valve lifter. (In case noise occurs with valve moving. Or the harness involved to oil switching solenoid valve, variable valve lift diagnosis oil pressure switch and variable valve lift has trouble in a past.)	B

Symptoms	Problem parts etc.	Possible cause	RANK
2. Rough idle and engine stall	Engine control system <Ref. to EN(H6DO)(diag)-2, Basic Diagnostic Procedure.>		A
	Intake system	Loosened or cracked intake duct	A
		Loosened or cracked PCV hose	A
		Loosened or cracked vacuum hose	A
		Defective intake manifold gasket	B
		Defective throttle body gasket	B
		Defective PCV valve	C
		Loosened oil filler cap	B
		Dirty air cleaner element	C
	Fuel line	Defective fuel pump and relay	C
		Clogged fuel line	C
		Lack of or insufficient fuel	B
	Timing chain	Defective timing	C
	Compression	Incorrect valve clearance	B
		Loosened spark plug or defective gasket	B
		Loosened cylinder head bolt or defective gasket	B
		Improper valve sealing	B
		Defective valve stem	C
		Worn or broken valve spring	B
		Worn or stuck piston rings, cylinder and piston	B
		Incorrect valve timing	A
		Improper engine oil (low viscosity)	B
		Trouble of valve lifter	C
		Trouble of valve lifter. (In case noise occurs with valve moving. Or the harness involved to oil switching solenoid valve, variable valve lift diagnosis oil pressure switch and variable valve lift has trouble in a past.)	B
	Lubrication system	Incorrect oil pressure	B
		Defective rocker cover gasket	C
	Cooling system	Over-heating	C
	Others	Evaporative emission control system malfunction	A
		Stuck or damaged throttle valve	B

Symptoms	Problem parts etc.	Possible cause	RANK
3. Low output, hesitation and poor acceleration	Engine control system <Ref. to EN(H6DO)(diag)-2, Basic Diagnostic Procedure.>		A
	Intake system	Loosened or cracked intake duct	A
		Loosened or cracked PCV hose	A
		Loosened or cracked vacuum hose	B
		Defective intake manifold gasket	B
		Defective throttle body gasket	B
		Defective PCV valve	B
		Loosened oil filler cap	B
		Dirty air cleaner element	A
	Fuel line	Defective fuel pump and relay	B
		Clogged fuel line	B
		Lack of or insufficient fuel	C
	Timing chain	Defective timing	B
	Compression	Incorrect valve clearance	B
		Loosened spark plug or defective gasket	B
		Loosened cylinder head bolt or defective gasket	B
		Improper valve sealing	B
		Defective valve stem	C
		Worn or broken valve spring	B
		Worn or stuck piston rings, cylinder and piston	C
		Incorrect valve timing	A
		Improper engine oil (low viscosity)	B
		Trouble of valve lifter	C
		Trouble of valve lifter. (In case noise occurs with valve moving. Or the harness involved to oil switching solenoid valve, variable valve lift diagnosis oil pressure switch and variable valve lift has trouble in a past.)	B
	Lubrication system	Incorrect oil pressure	B
	Cooling system	Over-heating	C
		Over-cooling	C
	Others	Evaporative emission control system malfunction	A

Symptoms	Problem parts etc.	Possible cause	RANK
4. Surging	Engine control system <Ref. to EN(H6DO)(diag)-2, Basic Diagnostic Procedure.>		A
	Intake system	Loosened or cracked intake duct	A
		Loosened or cracked PCV hose	A
		Loosened or cracked vacuum hose	A
		Defective intake manifold gasket	B
		Defective throttle body gasket	B
		Defective PCV valve	B
		Loosened oil filler cap	B
		Dirty air cleaner element	B
	Fuel line	Defective fuel pump and relay	B
		Clogged fuel line	B
		Lack of or insufficient fuel	C
	Timing chain	Defective timing	B
	Compression	Incorrect valve clearance	B
		Loosened spark plug or defective gasket	C
		Loosened cylinder head bolt or defective gasket	C
		Improper valve sealing	C
		Defective valve stem	C
		Worn or broken valve spring	C
		Worn or stuck piston rings, cylinder and piston	C
		Incorrect valve timing	A
		Improper engine oil (low viscosity)	B
		Trouble of valve lifter	C
		Trouble of valve lifter. (In case noise occurs with valve moving. Or the harness involved to oil switching solenoid valve, variable valve lift diagnosis oil pressure switch and variable valve lift has trouble in a past.)	B
	Cooling system	Over-heating	B
	Others	Evaporative emission control system malfunction	C
5. Engine does not return to idle.	Engine control system <Ref. to EN(H6DO)(diag)-2, Basic Diagnostic Procedure.>		A
	Intake system	Loosened or cracked vacuum hose	A
	Others	Stuck or damaged throttle valve	A
6. Dieseling (Run-on)	Engine control system <Ref. to EN(H6DO)(diag)-2, Basic Diagnostic Procedure.>		A
	Cooling system	Over-heating	B
	Others	Evaporative emission control system malfunction	B

Symptoms	Problem parts etc.	Possible cause	RANK
7. After burning in exhaust system	Engine control system <Ref. to EN(H6DO)(diag)-2, Basic Diagnostic Procedure.>		A
	Intake system	Loosened or cracked intake duct	C
		Loosened or cracked PCV hose	C
		Loosened or cracked vacuum hose	B
		Defective PCV valve	B
		Loosened oil filler cap	C
	Timing chain	Defective timing	B
	Compression	Incorrect valve clearance	B
		Loosened spark plug or defective gasket	C
		Loosened cylinder head bolt or defective gasket	C
		Improper valve sealing	B
		Defective valve stem	C
		Worn or broken valve spring	C
		Worn or stuck piston rings, cylinder and piston	C
		Incorrect valve timing	A
		Trouble of valve lifter	C
		Trouble of valve lifter. (In case noise occurs with valve moving. Or the harness involved to oil switching solenoid valve, variable valve lift diagnosis oil pressure switch and variable valve lift has trouble in a past.)	B
	Lubrication system	Incorrect oil pressure	C
	Cooling system	Over-cooling	C
	Others	Evaporative emission control system malfunction	C
8. Knocking	Engine control system <Ref. to EN(H6DO)(diag)-2, Basic Diagnostic Procedure.>		A
	Intake system	Loosened oil filler cap	B
	Timing chain	Defective timing	B
	Compression	Incorrect valve clearance	C
		Incorrect valve timing	B
		Trouble of valve lifter	C
		Trouble of valve lifter. (In case noise occurs with valve moving. Or the harness involved to oil switching solenoid valve, variable valve lift diagnosis oil pressure switch and variable valve lift has trouble in a past.)	B
	Cooling system	Over-heating	A
9. Excessive engine oil consumption	Intake system	Loosened or cracked PCV hose	A
		Defective PCV valve	B
		Loosened oil filler cap	C
	Compression	Defective valve stem	A
		Worn or stuck piston rings, cylinder and piston	A
	Lubrication system	Loosened oil pump attaching bolts and defective gasket	B
		Defective oil filter O-ring	B
		Defective crankshaft oil seal	B
		Defective rocker cover gasket	B
		Loosened oil drain plug or defective gasket	B
		Loosened oil pan fitting bolts or defective oil pan	B

Symptoms	Problem parts etc.	Possible cause	RANK
10. Excessive fuel consumption	Engine control system <Ref. to EN(H6DO)(diag)-2, Basic Diagnostic Procedure.>		A
	Intake system	Dirty air cleaner element	A
	Timing chain	Defective timing	B
	Compression	Incorrect valve clearance	B
		Loosened spark plug or defective gasket	C
		Loosened cylinder head bolt or defective gasket	C
		Improper valve sealing	B
		Defective valve stem	C
		Worn or broken valve spring	C
		Worn or stuck piston rings, cylinder and piston	B
		Incorrect valve timing	B
		Trouble of valve lifter	C
		Trouble of valve lifter. (In case noise occurs with valve moving. Or the harness involved to oil switching solenoid valve, variable valve lift diagnosis oil pressure switch and variable valve lift has trouble in a past.)	B
	Lubrication system	Incorrect oil pressure	C
	Cooling system	Over-cooling	C

29. Engine Noise

A: INSPECTION

Type of sound	Condition	Possible cause
Regular clicking sound	Sound increases as engine speed increases.	• Valve mechanism is defective. • Incorrect valve clearance • Worn camshaft • Broken valve spring • Trouble of valve lifter
Heavy and dull clank	Oil pressure is low.	• Worn crankshaft main bearing • Worn connecting rod bearing (large end)
	Oil pressure is normal.	Damaged engine mounting
High-pitched clank	Sound is noticeable when accelerating with an overload condition.	• Ignition timing advanced • Accumulation of carbon inside combustion chamber • Wrong heat range of spark plug • Improper octane value of gasoline
Clank when engine speed is between 1,000 and 2,000 rpm.	Noise is reduced when fuel injector connector of noisy cylinder is disconnected. (NOTE*)	• Worn crankshaft main bearing • Worn connecting rod bearing (large end)
Knocking sound when engine is operating under idling speed and engine is warm	Noise is reduced when fuel injector connector of noisy cylinder is disconnected. (NOTE*)	• Worn cylinder liner and piston ring • Broken or stuck piston ring • Worn piston pin and hole at piston end of connecting rod
	Sound is not reduced if each fuel injector connector is disconnected in turn. (NOTE*)	• Unusually worn valve lifter • Worn cam gear • Worn camshaft journal bore in cylinder head
Squeaky sound	—	Insufficient generator lubrication
Rubbing sound	—	Poor contact of generator brush and rotor
Gear scream when starting engine	—	• Defective ignition starter switch • Worn gear and starter pinion
Sound like polishing glass with a dry cloth	—	• Loose drive belt • Defective water pump shaft
Hissing sound	—	• Insufficient compression • Air leakage in air intake system, hose, connection or manifold
Timing chain noise	—	• Loose timing chain • Timing chain contacting with adjacent part
Valve noise	—	• Incorrect valve clearance • Trouble of valve lifter

NOTE*)
When disconnecting the fuel injector connector, the malfunction indicator light illuminates and DTC is stored in ECM memory. Therefore, perform the Clear Memory Mode <Ref. to EN(H6DO)(diag)-52, OPERATION, Clear Memory Mode.> and Inspection Mode <Ref. to EN(H6DO)(diag)-44, PROCEDURE, Inspection Mode.> after connecting the fuel injector connector.

1. General Description

A: COMPONENT

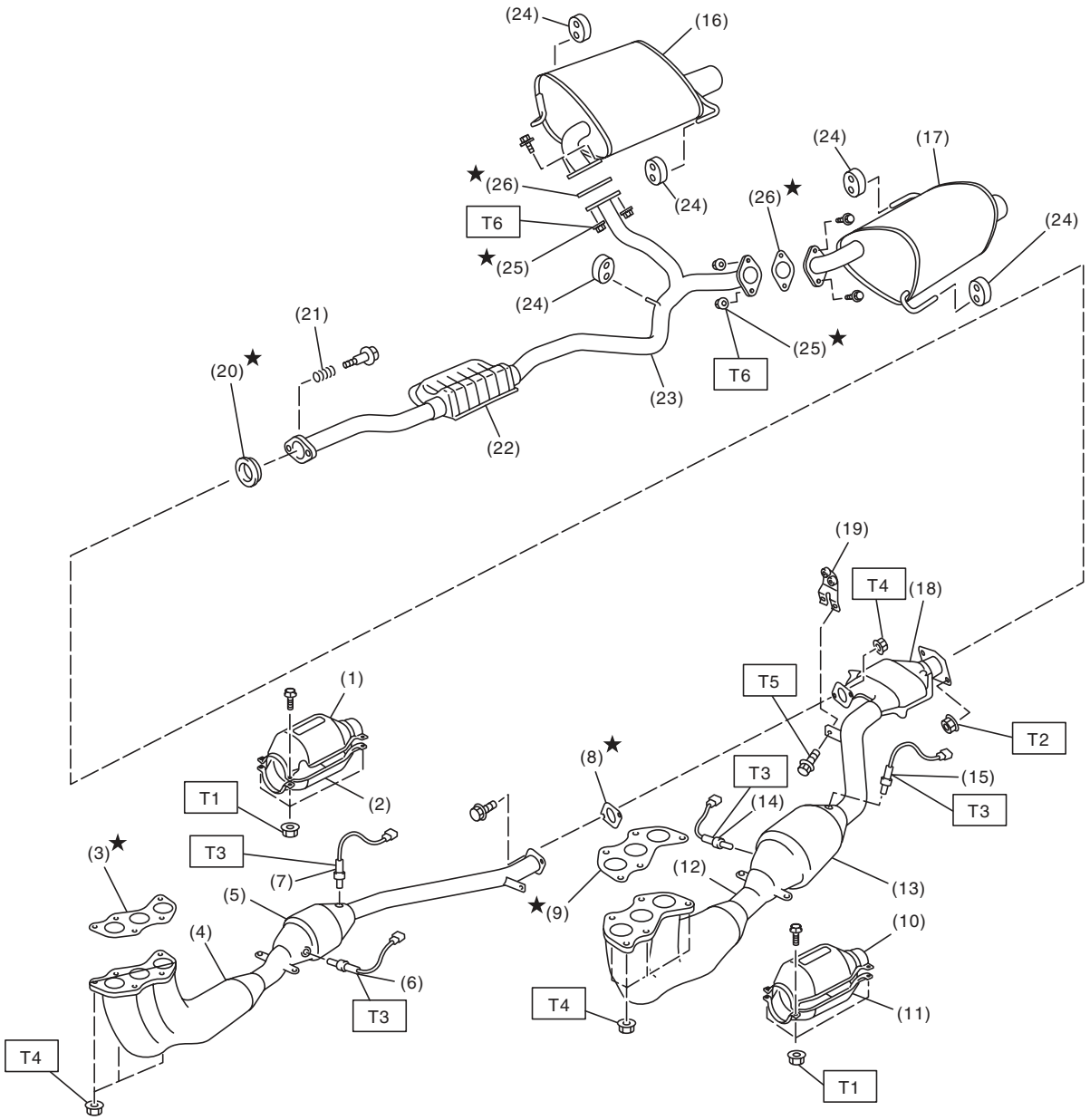

EX-02374

(1) Front catalytic converter upper cover (RH)
(2) Front catalytic converter lower cover (RH)
(3) Gasket
(4) Front exhaust pipe (RH)
(5) Front catalytic converter (RH)
(6) Front oxygen (A/F) sensor (RH)
(7) Rear oxygen sensor (RH)
(8) Gasket
(9) Gasket
(10) Front catalytic converter upper cover (LH)
(11) Front catalytic converter lower cover (LH)
(12) Front exhaust pipe (LH)
(13) Front catalytic converter (LH)
(14) Front oxygen (A/F) sensor (LH)
(15) Rear oxygen sensor (LH)
(16) Muffler (RH)
(17) Muffler (LH)
(18) Rear catalytic converter
(19) Bracket
(20) Gasket
(21) Spring
(22) Chamber
(23) Rear exhaust pipe
(24) Cushion rubber
(25) Self-locking nut
(26) Gasket

Tightening torque:N·m (kgf-m, ft-lb)	
T1:	***13 (1.3, 9.6)***
T2:	***18 (1.8, 13.3)***
T3:	***21 (2.1, 15.5)***
T4:	***30 (3.1, 22.1)***
T5:	***35 (3.6, 25.8)***
T6:	***48 (4.9, 35.4)***

B: CAUTION

- Wear appropriate work clothing, including a cap, protective goggles and protective shoes when performing any work.
- Remove contamination including dirt and corrosion before removal, installation or disassembly.
- Keep the disassembled parts in order and protect them from dust and dirt.
- Before removal, installation or disassembly, be sure to clarify the failure. Avoid unnecessary removal, installation, disassembly and replacement.
- Vehicle components are extremely hot after driving. Be wary of receiving burns from heated parts.
- Be sure to tighten fasteners including bolts and nuts to the specified torque.
- Place shop jacks or rigid racks at the specified points.
- Before disconnecting connectors of sensors or units, be sure to disconnect the ground cable from the battery.
- If any fat adheres to the exhaust pipe, wipe it off. Otherwise a fire may happen.

2. Front Exhaust Pipe

A: REMOVAL

CAUTION:
Vehicle components are extremely hot after driving. Be wary of receiving burns from heated parts.

1) Set the vehicle on a lift.
2) Disconnect the ground cable from battery.

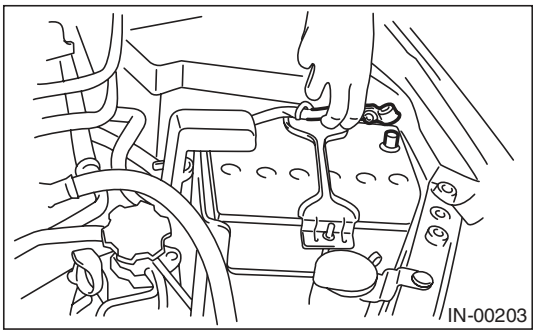

3) Lift up the vehicle.
4) Remove the under cover.
5) Disconnect the front oxygen (A/F) sensor connector (A) and rear oxygen sensor connector (B).

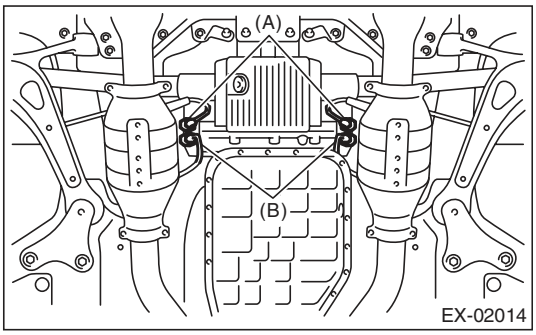

6) Separate the front exhaust pipe assembly from the rear exhaust pipe.

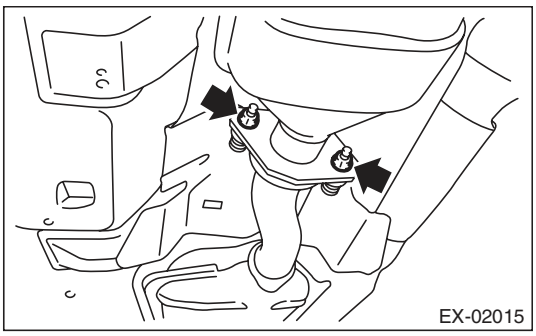

7) Remove the nuts which hold front exhaust pipe assembly onto cylinder heads.

CAUTION:
Be careful not to drop the front exhaust pipe assembly.

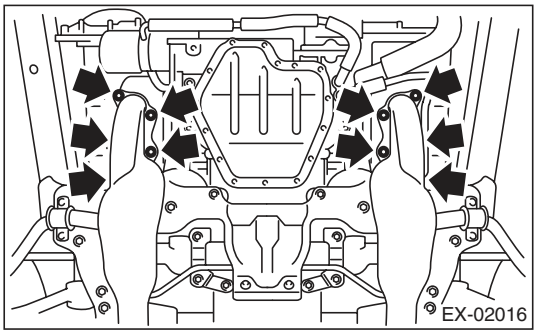

8) Remove the bolts which hold front exhaust pipe assembly to hanger bracket.

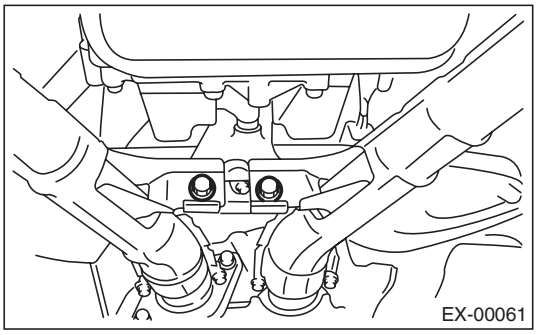

9) Remove the front exhaust pipe assembly from vehicle.

CAUTION:
- **Be careful not to let the front exhaust pipe assembly fall off when removing, since it is very heavy.**
- **After removing the front exhaust pipe assembly, do not apply excessive pulling force on the rear exhaust pipe.**

10) Separate the front exhaust pipe (RH) from front exhaust pipe assembly.

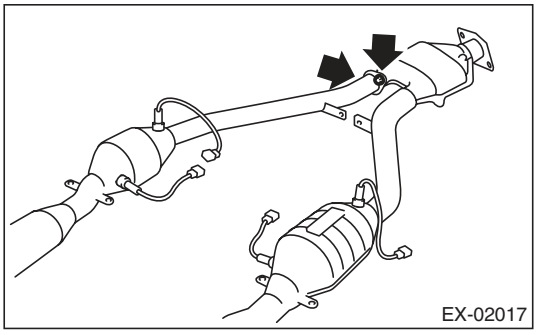

11) Remove the front oxygen (A/F) sensor and rear oxygen sensor. <Ref. to FU(H6DO)-32, REMOVAL, Front Oxygen (A/F) Sensor.> <Ref. to FU(H6DO)-34, REMOVAL, Rear Oxygen Sensor.>

B: INSTALLATION

1) Install the front oxygen (A/F) sensor and rear oxygen sensor. <Ref. to FU(H6DO)-33, INSTALLATION, Front Oxygen (A/F) Sensor.> <Ref. to FU(H6DO)-35, INSTALLATION, Rear Oxygen Sensor.>
2) Install the front exhaust pipe (RH) to the front exhaust pipe (LH).

NOTE:
Use a new gasket.

Tightening torque:
30 N·m (3.1 kgf-m, 22.1 ft-lb)

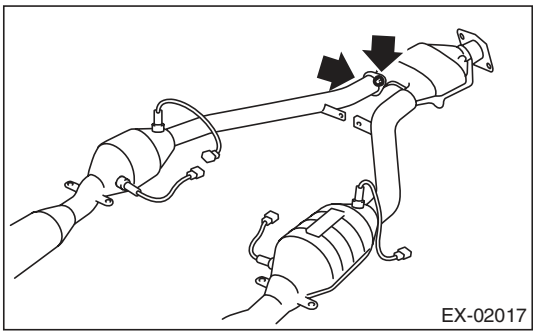

3) Install the front exhaust pipe assembly to vehicle.
4) Temporarily tighten the nuts which hold front exhaust pipe assembly onto cylinder heads.

NOTE:
Use a new gasket.

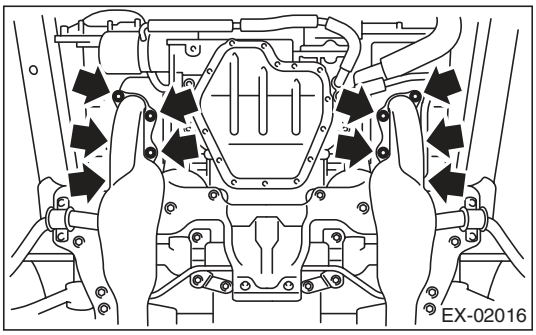

5) Temporarily tighten the bolts which hold front exhaust pipe assembly to hanger bracket.

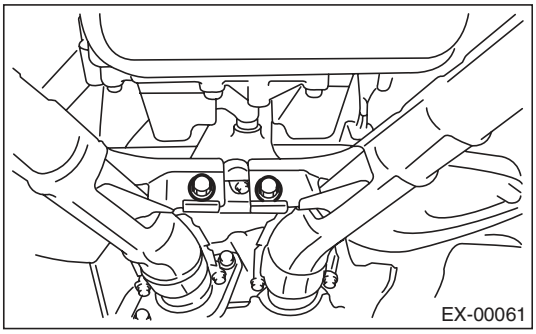

6) Tighten the bolts which install front exhaust pipe to rear exhaust pipe.

NOTE:
Use a new gasket.

Tightening torque:
18 N·m (1.8 kgf-m, 13.3 ft-lb)

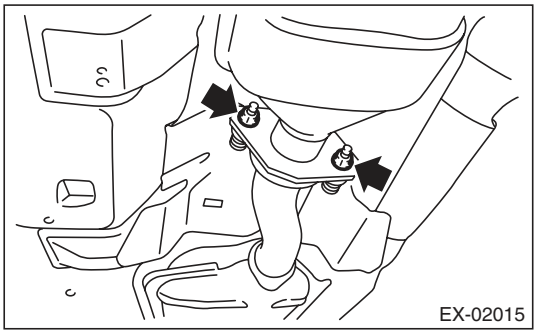

7) Tighten the bolts which hold front exhaust pipe assembly to hanger bracket.

Tightening torque:
35 N·m (3.6 kgf-m, 25.8 ft-lb)

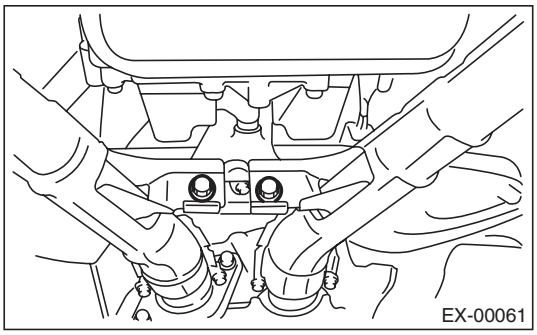

8) Tighten the nuts which hold front exhaust pipe to cylinder heads.

Tightening torque:
30 N·m (3.1 kgf-m, 22.1 ft-lb)

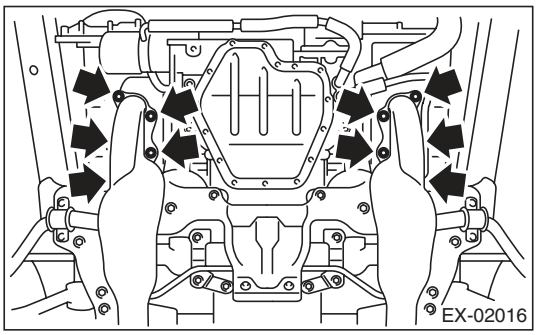

9) Install the under cover.

10) Connect the front oxygen (A/F) sensor connector (A) and rear oxygen sensor connector (B).

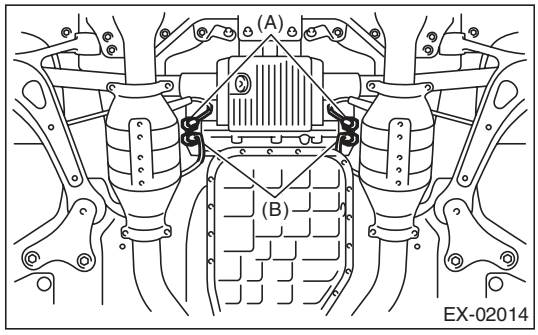

11) Lower the vehicle.
12) Connect the ground cable to battery.

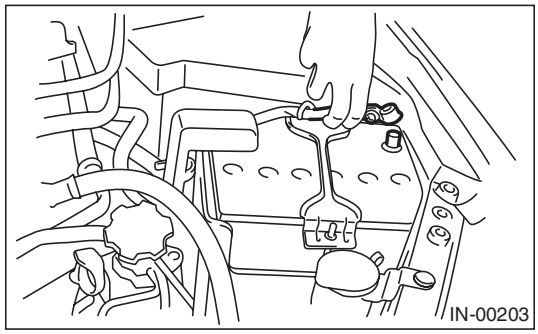

C: INSPECTION

1) Check the connections and welds for exhaust leaks.
2) Make sure there are no holes or rusting.

3. Rear Exhaust Pipe

A: REMOVAL

CAUTION:
Vehicle components are extremely hot after driving. Be wary of receiving burns from heated parts.

1) Set the vehicle on a lift.
2) Lift up the vehicle.
3) Separate the rear exhaust pipe from front exhaust pipe assembly.

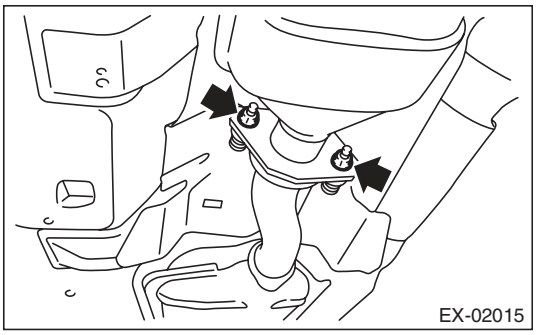

4) Separate the rear exhaust pipe from muffler.

CAUTION:
Be careful not to drop the rear exhaust pipe.

- LH side

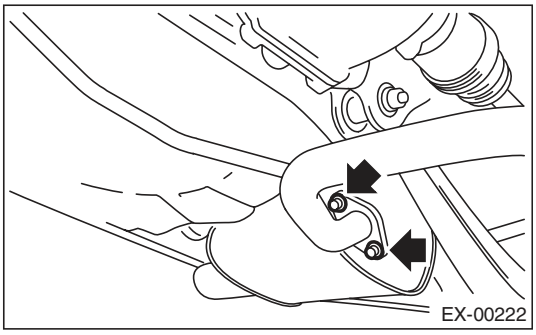

- RH side

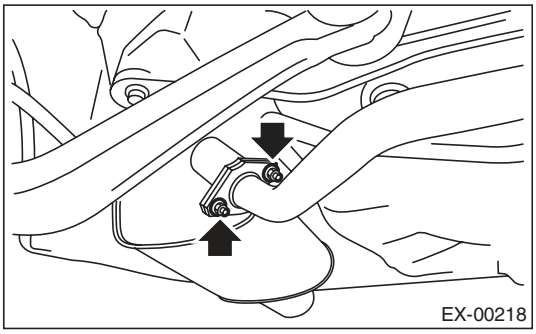

5) Apply a coat of spray type lubricant to the mating area of cushion rubber.

6) Remove the rear exhaust pipe bracket from cushion rubber.

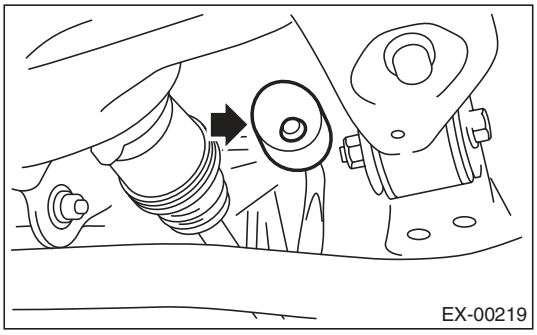

7) Remove the rear exhaust pipe.

B: INSTALLATION

1) Apply a coat of spray type lubricant to the mating area of cushion rubber.
2) Install the rear exhaust pipe bracket to cushion rubber.

NOTE:
After assembling, degrease the lubricant which was applied to the cushion rubber while removing/installing.

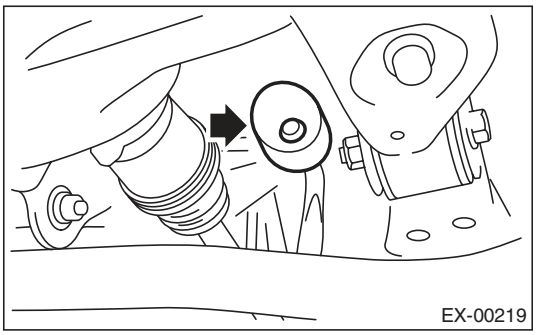

3) Install the rear exhaust pipe to muffler.

NOTE:
Use a new gasket and self-locking nut.

Tightening torque:
48 N·m (4.9 kgf-m, 35.4 ft-lb)

- LH side

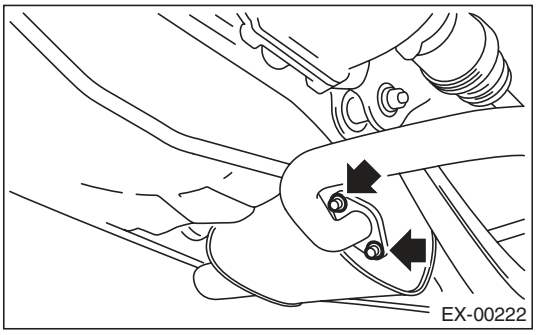

- RH side

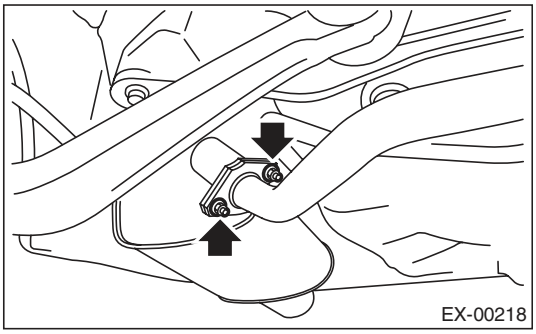

4) Install the rear exhaust pipe assembly to center exhaust pipe.

NOTE:
Use a new gasket.

Tightening torque:
18 N·m (1.8 kgf-m, 13.3 ft-lb)

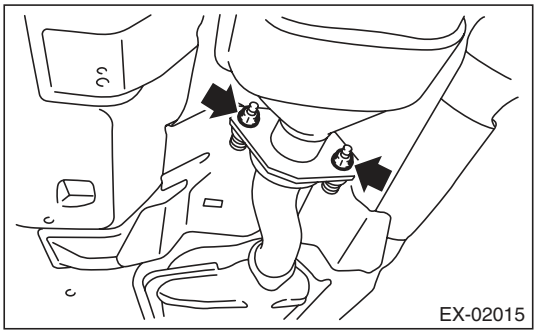

5) Lower the vehicle.

C: INSPECTION

1) Check the connections and welds for exhaust leaks.
2) Make sure there are no holes or rusting.
3) Check the cushion rubber for wear or crack.

4. Muffler

A: REMOVAL

CAUTION:
Vehicle components are extremely hot after driving. Be wary of receiving burns from heated parts.

1) Set the vehicle on a lift.
2) Lift up the vehicle.
3) Separate the muffler from rear exhaust pipe.

- LH side

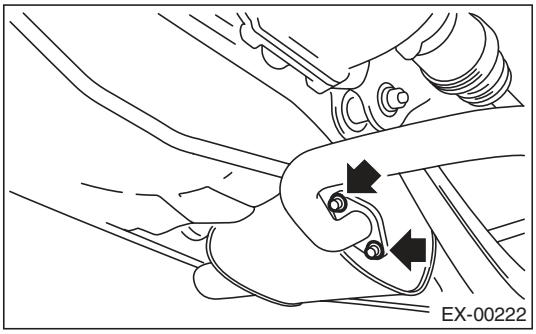

- RH side

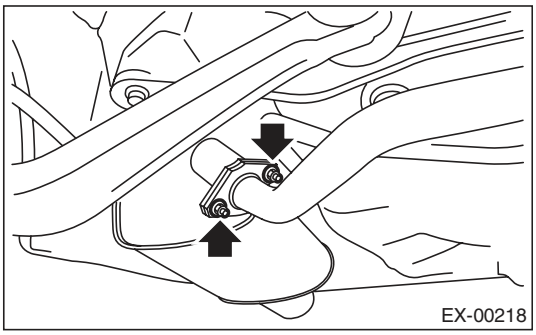

4) Apply a coat of spray type lubricant to the mating area of cushion rubber.
5) Remove the front and rear cushion rubber, and then remove the muffler.

CAUTION:
Be careful not to drop the muffler during removal.

- LH side

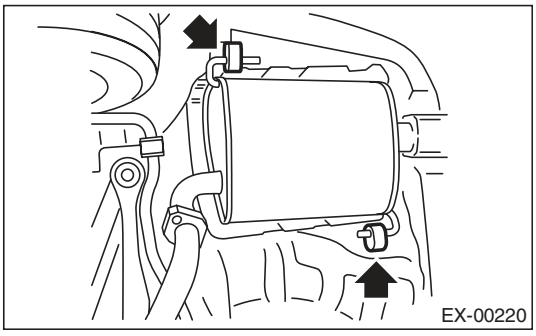

- RH side

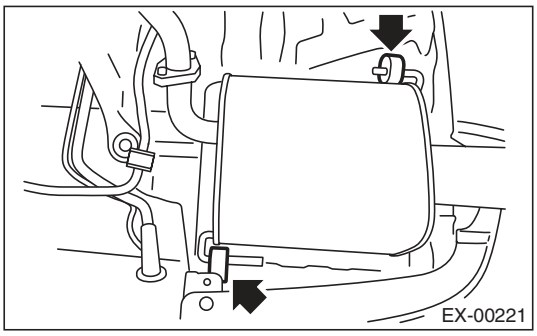

B: INSTALLATION

Install in the reverse order of removal.

NOTE:
- Use a new gasket and self-locking nut.
- After assembling, degrease the lubricant which was applied to the cushion rubber while removing/installing.

Tightening torque:
48 N·m (4.9 kgf-m, 35.4 ft-lb)

- LH side

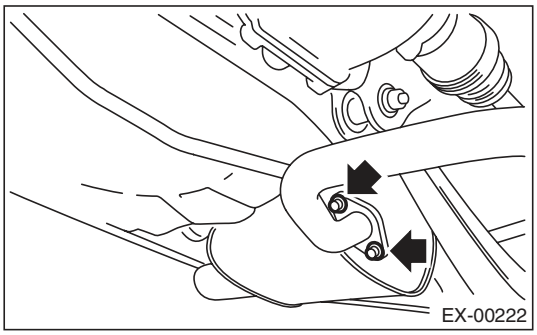

- RH side

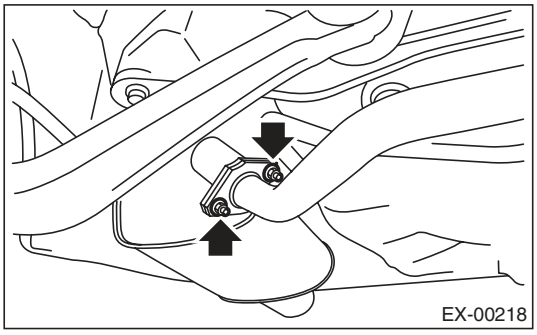

C: INSPECTION

1) Check the connections and welds for exhaust leaks.
2) Make sure there are no holes or rusting.
3) Check the cushion rubber for wear or crack.

1. General Description

A: SPECIFICATION

Cooling system			Electric fan + Forced engine coolant circulation system
Total engine coolant capacity		ℓ (US qt, Imp qt)	Approx. 7.2 (7.6, 6.3)
Water pump	Type		Centrifugal impeller type
	Discharge performance I	Discharge rate ℓ (US gal, Imp gal)/min.	320 (84.5, 70.4)
		Pump speed — Discharge pressure	5,500 rpm — 176.5 kPa (18 mAq)
		Engine coolant temperature	80°C (176°F)
	Impeller diameter	mm (in)	73.2 (2.88)
	Number of impeller vanes		6
	Number of pump sprocket teeth		22
Thermostat	Type		Wax pellet type
	Starting temperature to open		80 — 84°C (176 — 183°F)
	Fully opens		95°C (203°F)
	Valve lift	mm (in)	9.0 (0.354) or more
	Valve bore	mm (in)	35 (1.38)
Radiator fan	Motor input	Main fan W	160
		Sub fan W	160
	Fan diameter / Blade	Main fan	320 mm (12.6 in)/5
		Sub fan	320 mm (12.6 in)/7
Radiator	Type		Down flow, pressure type
	Core dimensions	Width × Height × Thickness mm (in)	690 × 349 × 16 (27.17 × 13.74 × 0.63)
	Pressure range in which cap valve is open	kPa (kgf/cm^2, psi)	Above: 108±14.7 (1.1±0.15, 16±2) Below: The atmospheric pressure or less
	Fins		Corrugated fin type
Reservoir tank	Capacity	ℓ (US qt, Imp qt)	0.45 (0.48, 0.40)

	Recommended materials	Item number	Alternative
Coolant	SUBARU SUPER COOLANT (Concentrated type)	—	—
	SUBARU SUPER COOLANT (Diluted type)	K0670Y0000	
Water for dilution	Distilled water	—	Soft water or tap water
Cooling system protective agent	Cooling system conditioner	SOA345001	—

A/C compressor	A/C middle pressure switch	Engine coolant temperature		
		Increase: less than 95°C (203°F) Decrease: less than 93°C (199°F)	Increase: 95 — 101°C (203 — 214°F) Decrease: 93 — 99°C (199 — 210°F)	Increase: 102°C (216°F) or more Decrease: 100°C (212°F) or more
OFF		0%	Refer to fig. (1)	100%
ON	OFF	Refer to fig. (2)		100%
	ON	Refer to fig. (3)		100%

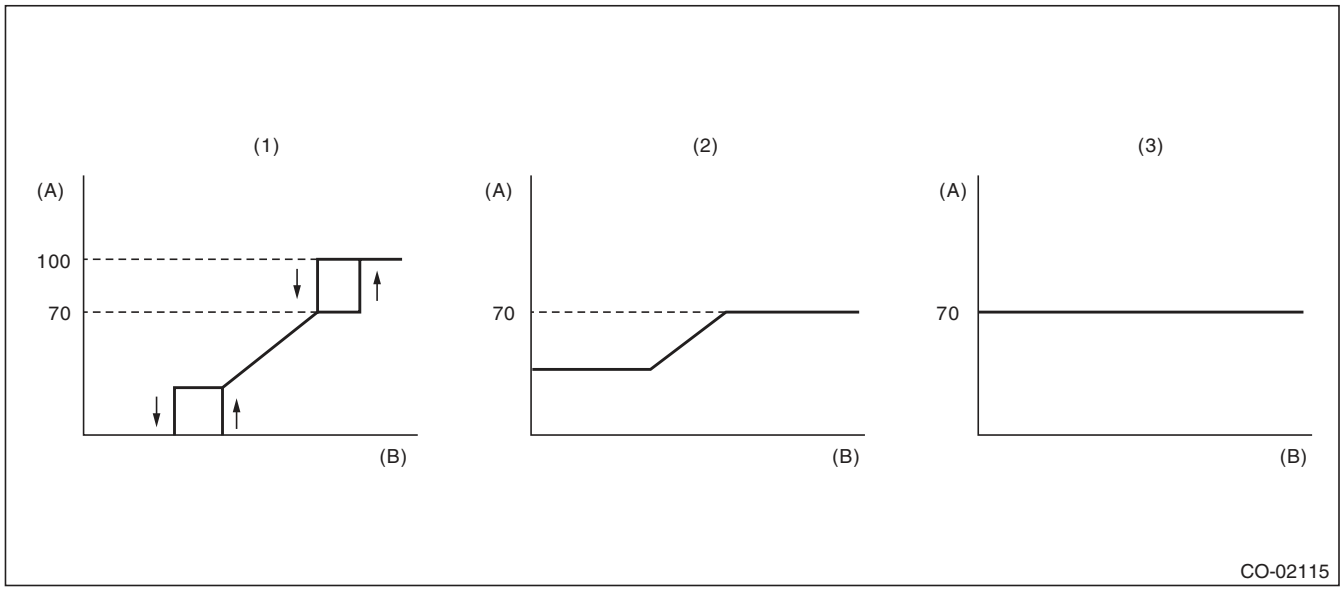

(A) Fan speed (%)

(B) Water temperature

(1) A/C OFF control

(2) A/C ON control (A/C middle pressure switch OFF)

(3) A/C ON control (A/C middle pressure switch ON)

B: COMPONENT

1. WATER PUMP

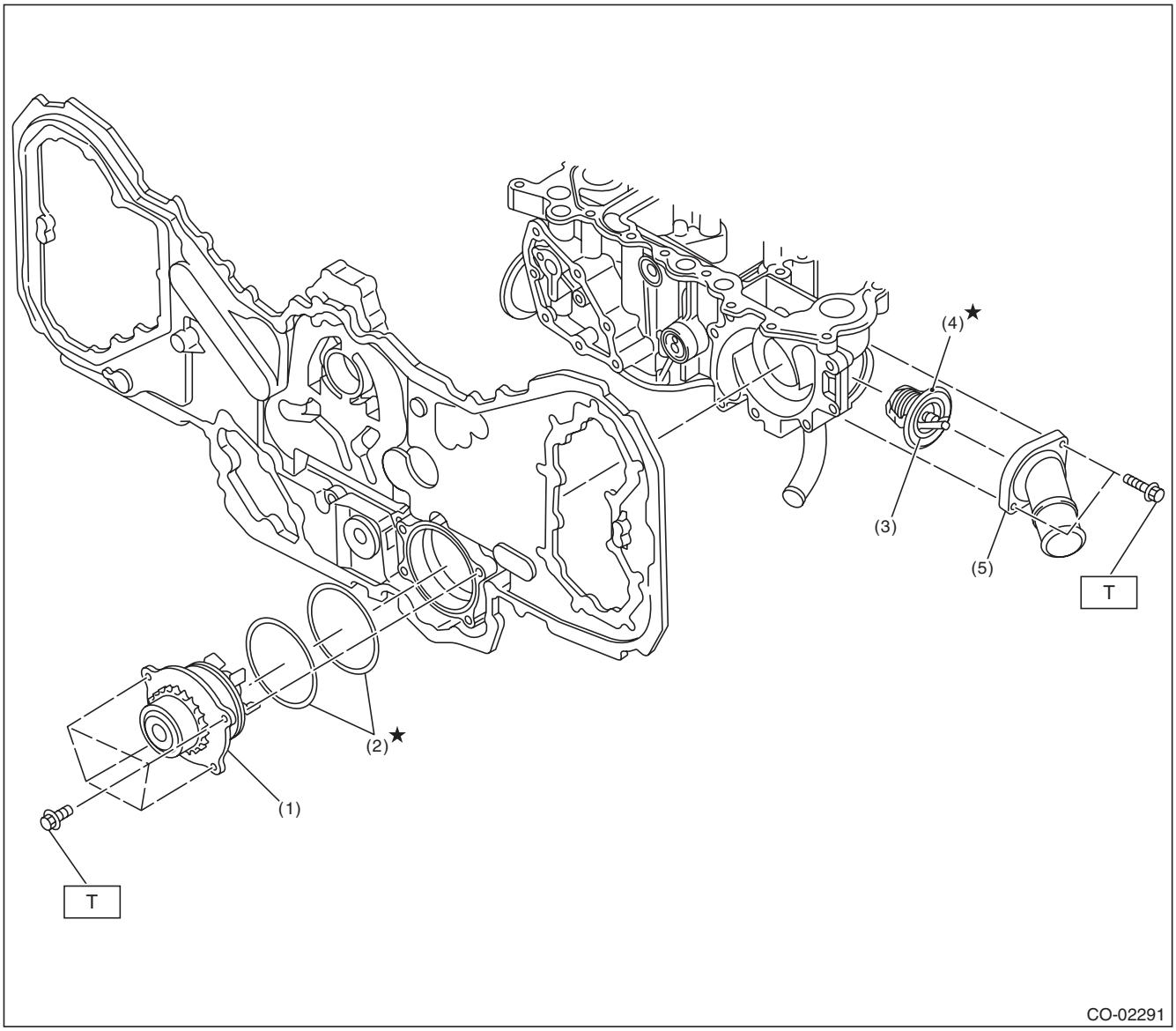

(1) Water pump ASSY
(2) O-ring
(3) Thermostat
(4) Gasket
(5) Thermostat cover

Tightening torque:N·m (kgf-m, ft-lb)
T: 6.4 (0.7, 4.7)

2. RADIATOR AND RADIATOR FAN

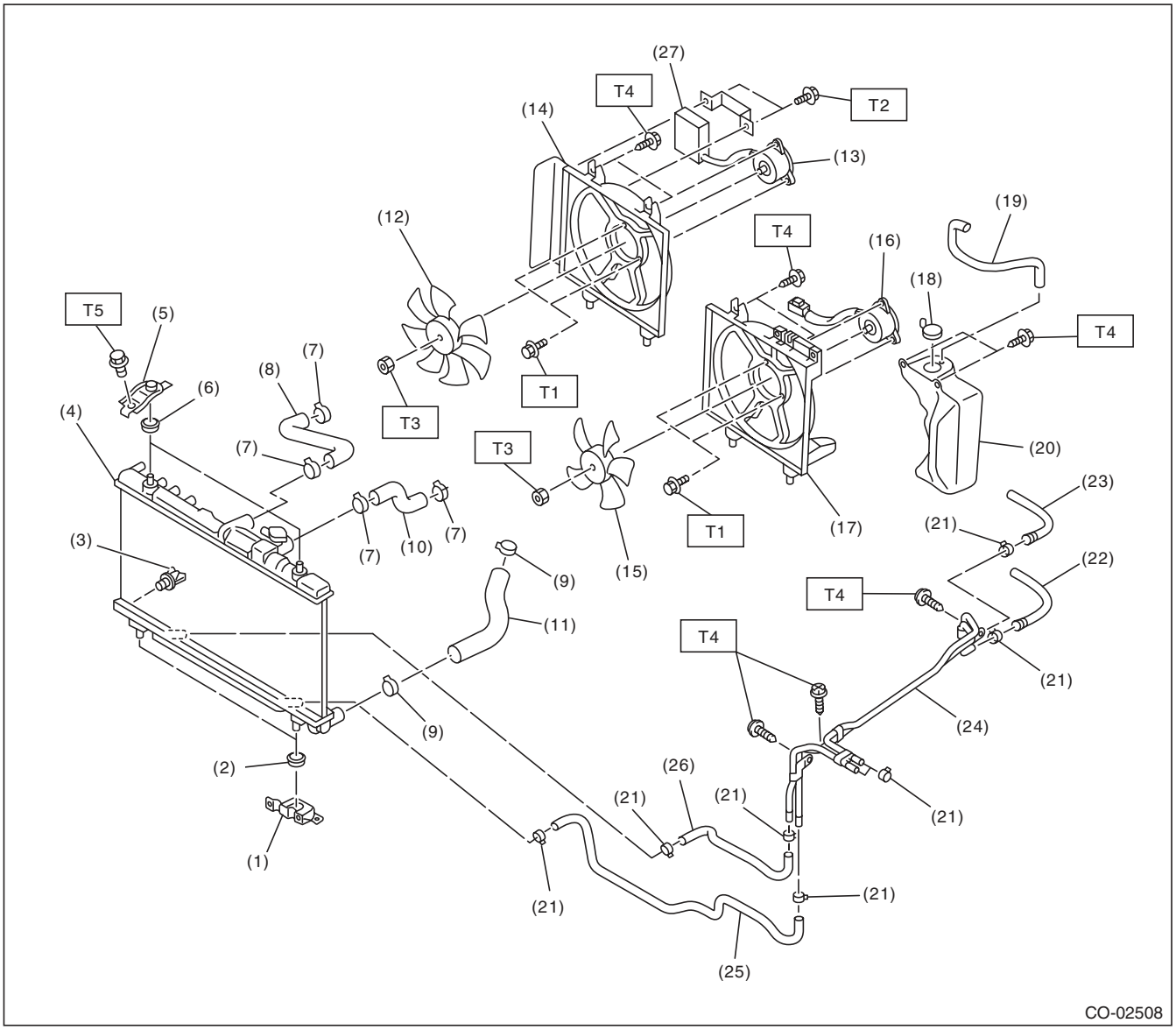

(1)	Radiator lower bracket	(13)	Radiator sub fan motor	(24)	ATF pipe
(2)	Radiator lower cushion	(14)	Radiator sub fan shroud	(25)	ATF hose C
(3)	Engine coolant drain cock	(15)	Radiator main fan	(26)	ATF hose D
(4)	Radiator	(16)	Radiator main fan motor	(27)	Radiator fan control unit
(5)	Radiator upper bracket	(17)	Radiator main fan shroud		
(6)	Radiator upper cushion	(18)	Engine coolant reservoir tank cap		
(7)	Clip	(19)	Over flow hose		
(8)	Radiator inlet hose A	(20)	Engine coolant reservoir tank		
(9)	Clip	(21)	ATF hose clamp		
(10)	Radiator inlet hose B	(22)	ATF hose A		
(11)	Radiator outlet hose	(23)	ATF hose B		
(12)	Radiator sub fan				

Tightening torque:N·m (kgf-m, ft-lb)	
T1:	***3.8 (0.4, 2.8)***
T2:	***5.4 (0.6, 4.0)***
T3:	***6.2 (0.6, 4.6)***
T4:	***7.5 (0.8, 5.5)***
T5:	***12 (1.2, 8.9)***

C: CAUTION

- Wear appropriate work clothing, including a cap, protective goggles and protective shoes when performing any work.
- Remove contamination including dirt and corrosion before removal, installation or disassembly.
- Keep the disassembled parts in order and protect them from dust and dirt.
- Before removal, installation or disassembly, be sure to clarify the failure. Avoid unnecessary removal, installation, disassembly and replacement.
- Vehicle components are extremely hot after driving. Be wary of receiving burns from heated parts.
- Be sure to tighten fasteners including bolts and nuts to the specified torque.
- Place shop jacks or rigid racks at the specified points.
- Before disconnecting connectors of sensors or units, be sure to disconnect the ground cable from battery.
- Prepare a container and cloth to prevent scattering of engine coolant when performing work where engine coolant can be spilled. If the fuel spills, wipe it off immediately to prevent from penetrating into floor or flowing out for environmental protection.
- Follow all government and local regulations concerning disposal of refuse when disposing engine coolant.

D: PREPARATION TOOL

1. SPECIAL TOOL

ILLUSTRATION	TOOL NUMBER	DESCRIPTION	REMARKS
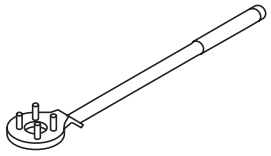 ST-499977100	499977100	CRANK PULLEY WRENCH	Used for stopping rotation of crank pulley when loosening and tightening crank pulley bolts.
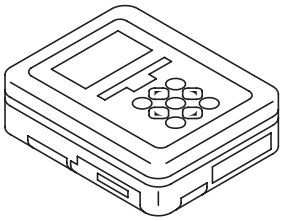 ST1B022XU0	1B022XU0	SUBARU SELECT MONITOR III KIT	Used for troubleshooting the electrical system.

2. GENERAL TOOL

TOOL NAME	REMARKS
Radiator cap tester	Used for checking radiator and radiator cap.

2. Radiator Fan System

A: WIRING DIAGRAM

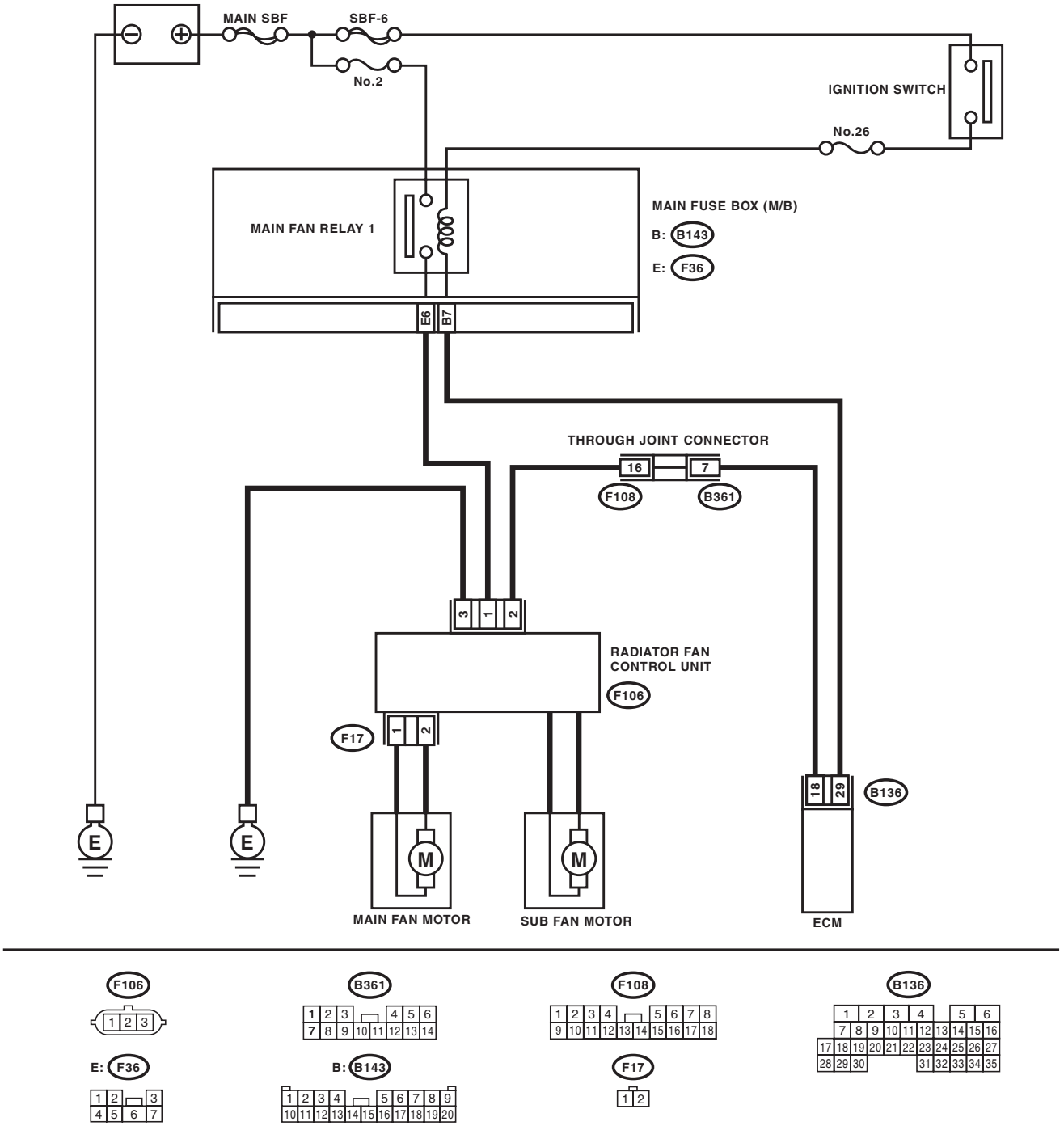

B: RADIATOR FAN CONTROL OUTPUT WAVEFORM

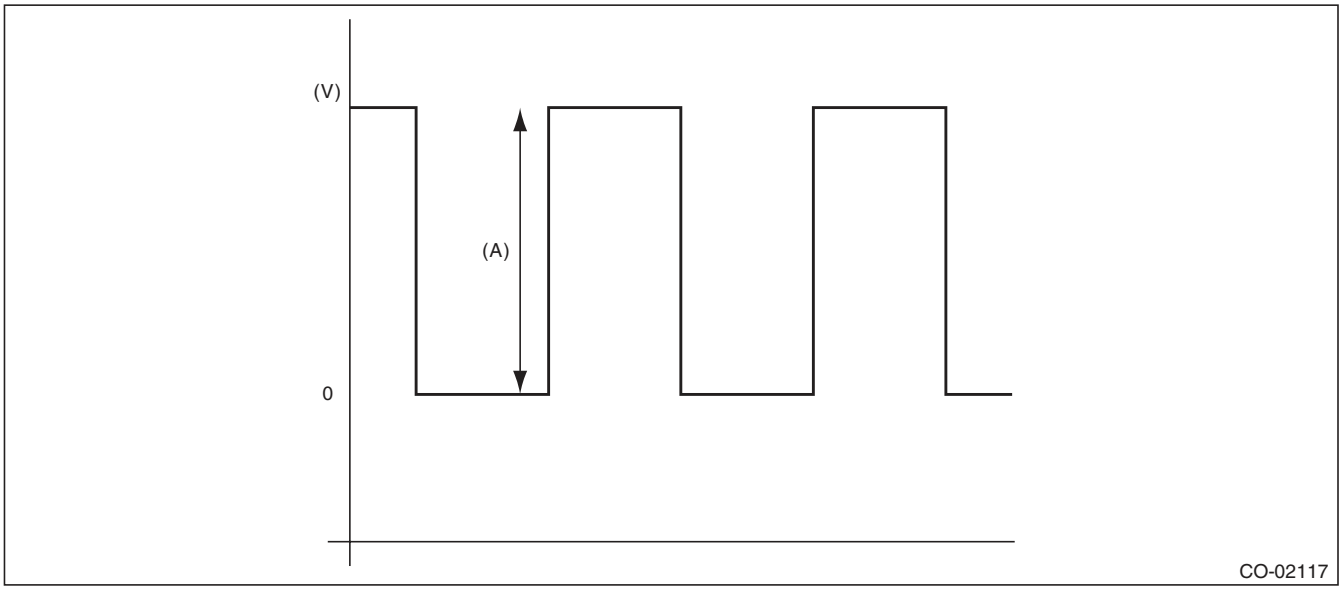

(A) 5 V

C: INSPECTION

DETECTING CONDITION:

- Engine coolant temperature is 93°C (199°F) or more.
- A/C switch is turned OFF.
- Vehicle speed is 19 km/h (12 MPH) or less.

TROUBLE SYMPTOMS:

Radiator main and sub fans do not rotate under the above conditions.

	Step	Check	Yes	No
1	**CHECK MAIN FAN RELAY 1.** 1) Turn the ignition switch to OFF. 2) Remove main fan relay 1 from the main fuse box. 3) Measure the resistance of terminal in main fan relay 1 switch.	Is the resistance 1 MΩ or more?	Go to step **2**.	Replace the main fan relay 1.
2	**CHECK MAIN FAN RELAY 1.** 1) Connect the main fan relay 1 coil side terminal to the battery. 2) Measure the resistance between terminals of main fan relay 1 switch.	Is the resistance less than 1 Ω?	Go to step **3**.	Replace the main fan relay 1.
3	**CHECK POWER SUPPLY FOR ECM.** 1) Disconnect the connectors from ECM. 2) Turn the ignition switch to ON. 3) Measure the voltage between ECM connector and chassis ground. ***Connector & terminal*** ***(B136) No. 29 (+) — Chassis ground (–):***	Is the voltage 10 V or more?	Go to step **4**.	Repair the power supply line.

	Step	Check	Yes	No
4	**CHECK POWER SUPPLY FOR RADIATOR FAN CONTROL UNIT.** 1) Turn the ignition switch to OFF. 2) Connect the connector to ECM. 3) Disconnect the connector from radiator fan control unit. 4) Turn the ignition switch to ON. 5) Measure the voltage between radiator fan control unit connector and chassis ground. ***Connector & terminal*** ***(F106) No. 1 (+) — Chassis ground (–):***	Is the voltage 10 V or more?	Go to step **5**.	Repair the power supply line.
5	**CHECK HARNESS BETWEEN ECM AND RADIATOR FAN CONTROL UNIT.** 1) Turn the ignition switch to OFF. 2) Disconnect the connectors from ECM. 3) Measure the resistance of harness between radiator fan control unit and ECM connector. ***Connector & terminal*** ***(B136) No. 18 — (F106) No. 2:***	Is the resistance less than 1 Ω?	Go to step **6**.	Repair the open circuit of harness between ECM and radiator fan control unit.
6	**CHECK RADIATOR FAN CONTROL UNIT AND GROUND CIRCUIT.** 1) Connect the connector to ECM and radiator fan control unit. 2) Measure the resistance between radiator fan control unit connector and chassis ground. ***Connector & terminal*** ***(F106) No. 3 — Chassis ground:***	Is the resistance less than 5 Ω?	Go to step **7**.	Repair the open circuit of harness between radiator fan control unit connector and chassis ground.
7	**CHECK FAN MOTOR.** 1) Disconnect the connector from radiator fan control unit. 2) Connect the battery positive (+) terminal to terminal No. 1 of the radiator fan control unit, and the ground (–) terminal to terminal No. 3.	Does the fan motor rotate?	Go to step **8**.	Replace the fan motor which does not rotate.
8	**CHECK OUTPUT SIGNAL FROM ECM.** 1) Connect the delivery (test) mode connector. 2) Turn the ignition switch to ON. 3) Check the output waveform using oscilloscope. <Ref. to CO(H6DO)-8, RADIATOR FAN CONTROL OUTPUT WAVEFORM, Radiator Fan System.> ***Connector & terminal*** ***(B136) No. 18 (+) — Chassis ground (–):***	Is a waveform output?	Replace the radiator fan control unit. <Ref. to CO(H6DO)-25, Radiator Fan Control Unit.>	Replace the ECM. <Ref. to FU(H6DO)-38, Engine Control Module (ECM).>

3. Engine Coolant

A: REPLACEMENT

1. DRAINING OF ENGINE COOLANT

1) Set the vehicle on a lift.
2) Lift up the vehicle.
3) Remove the under cover.
4) Remove the drain plug to drain engine coolant into container.

NOTE:
Remove the radiator cap so that engine coolant will drain faster.

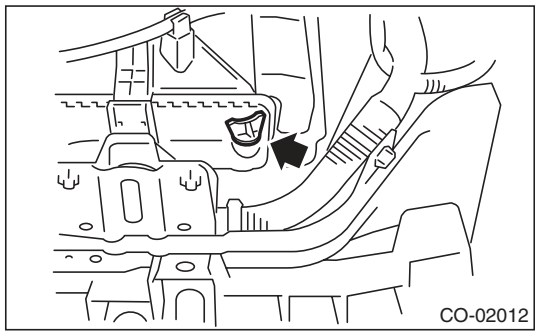

5) Install the drain plug.
6) Install the under cover.

2. FILLING OF ENGINE COOLANT

1) Pour cooling system conditioner through the filler neck.

Cooling system protective agent:
Refer to "SPECIFICATION" for the cooling system protective agent. <Ref. to CO(H6DO)-2, SPECIFICATION, General Description.>

2) Pour engine coolant into the radiator up to the filler neck position.

Recommended engine coolant:
Refer to "SPECIFICATION" for the recommended engine coolant. <Ref. to CO(H6DO)-2, SPECIFICATION, General Description.>

Amount of engine coolant:
Refer to "SPECIFICATION" for the amount of engine coolant. <Ref. to CO(H6DO)-2, SPECIFICATION, General Description.>

Engine coolant concentration:
Refer to "ADJUSTMENT" for the engine coolant concentration. <Ref. to CO(H6DO)-11, ADJUSTMENT, Engine Coolant.>

NOTE:
The SUBARU Super Coolant containing anti-freeze and anti-rust agents is especially made for SUBARU engine, which has an aluminum cylinder block. Always use SUBARU Super Coolant since other coolants may cause corrosion.

3) Fill engine coolant into the reservoir tank up to "FULL" level.

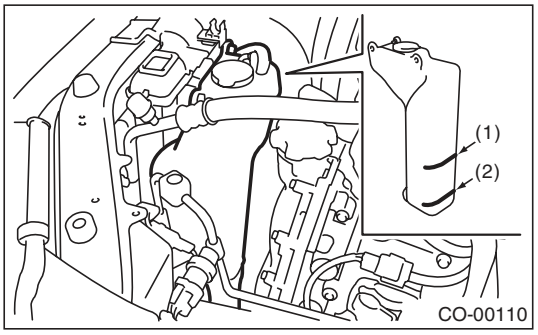

(1) FULL
(2) LOW

4) Close the radiator cap and start the engine. Race 5 to 6 times at 3,000 rpm or less, then stop the engine. (Complete this operation within 40 seconds.)
5) Wait for one minute after the engine stops, and open the radiator cap. If the engine coolant level drops, add engine coolant into radiator up to the filler neck position.
6) Perform the procedures 4) and 5) again.
7) Attach the radiator cap and reservoir tank cap properly.
8) Start the engine and operate the heater at maximum hot position and the blower speed setting to "LO".
9) Run the engine at 2,000 rpm or less until radiator fan starts and stops.

NOTE:
Be careful with the engine coolant temperature gauge to prevent overheating.
10) Stop the engine and wait until the engine coolant temperature lowers to 30°C (86°F) or less.
11) Open the radiator cap. If the engine coolant level drops, add engine coolant into radiator up to the filler neck position and reservoir tank to the "FULL" level.
12) Attach the radiator cap and reservoir tank cap properly.
13) Set the heater setting to maximum hot position and the blower speed setting to "LO" and start the engine. Perform racing at 3,000 rpm or less. If the flowing sound is heard from heater core, repeat the procedures from step 9).

B: ADJUSTMENT

1. PROCEDURE TO ADJUST THE SUBARU SUPER COOLANT CONCENTRATION

CAUTION:
Use the SUBARU Super Coolant with a 50 — 60% concentration in order to obtain maximum anti-freeze and anti-rust performance.
To adjust the concentration of SUBARU Super Coolant according to temperature, find the proper SUBARU Super Coolant concentration in the table, and add diluting water to the SUBARU Super Coolant (concentrated type) until it reaches the proper dilution.

Relationship of Subaru Super Coolant concentration and freezing temperature			
SUBARU Super Coolant concentration	50%	55%	60%
Freezing temperature	–36°C (–33°F)	–41°C (–42°F)	–50°C (–58°F)

Engine coolant and diluting water:
Refer to "SPECIFICATION" for the recommended engine coolant and diluting water. <Ref. to CO(H6DO)-2, SPECIFICATION, General Description.>

4. Water Pump

A: REMOVAL

1) Remove the radiator. <Ref. to CO(H6DO)-15, REMOVAL, Radiator.>
2) Remove the V-belts. <Ref. to ME(H6DO)-42, REMOVAL, V-belt.>
3) Remove the crank pulley. <Ref. to ME(H6DO)-43, REMOVAL, Crank Pulley.>
4) Remove the front chain cover. <Ref. to ME(H6DO)-44, REMOVAL, Front Chain Cover.>
5) Remove the timing chain assembly. <Ref. to ME(H6DO)-46, REMOVAL, Timing Chain Assembly.>
6) Remove the water pump.

NOTE:
When the water pump cannot be removed easily, screw-in the bolt (A) to the threaded end to remove water pump.

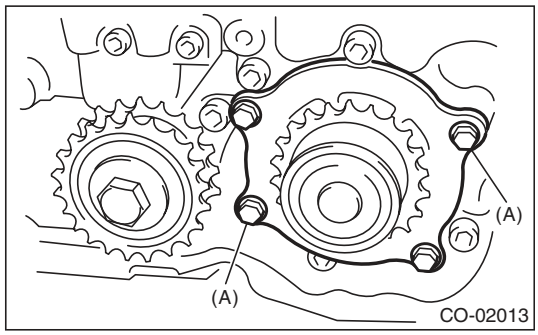

B: INSTALLATION

1) Install the water pump to rear chain cover.

NOTE:
- Use new O-rings.
- Apply engine coolant to O-ring.

Tightening torque
6.4 N·m (0.7 kgf-m, 4.7 ft-lb)

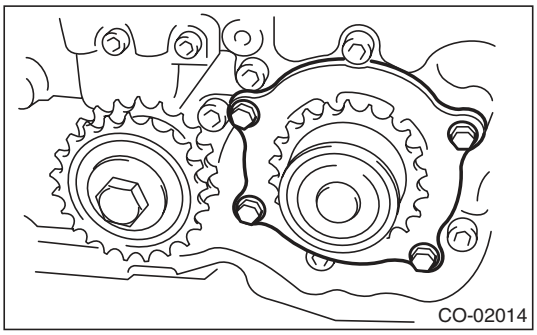

2) Install the timing chain assembly. <Ref. to ME(H6DO)-47, INSTALLATION, Timing Chain Assembly.>
3) Install the front chain cover. <Ref. to ME(H6DO)-44, INSTALLATION, Front Chain Cover.>
4) Install the crank pulley. <Ref. to ME(H6DO)-43, INSTALLATION, Crank Pulley.>
5) Install the V-belts. <Ref. to ME(H6DO)-42, INSTALLATION, V-belt.>
6) Install the radiator. <Ref. to CO(H6DO)-16, INSTALLATION, Radiator.>
7) Fill engine coolant. <Ref. to CO(H6DO)-10, FILLING OF ENGINE COOLANT, REPLACEMENT, Engine Coolant.>

C: INSPECTION

1) Check the water pump bearing for smooth rotation.
2) Check the water pump sprocket for abnormalities.

5. Thermostat

A: REMOVAL

1) Set the vehicle on a lift.
2) Lift up the vehicle.
3) Remove the under cover.
4) Drain engine coolant completely. <Ref. to CO(H6DO)-10, DRAINING OF ENGINE COOLANT, REPLACEMENT, Engine Coolant.>
5) Disconnect the radiator outlet hose from thermostat cover.

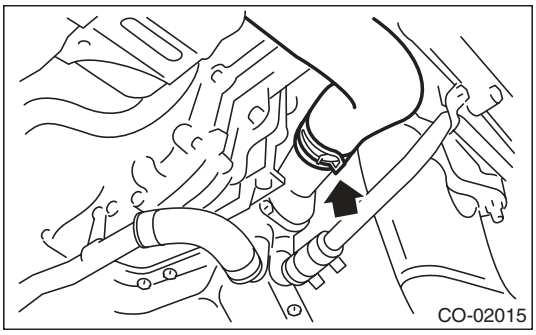

6) Remove the thermostat cover, and then remove the thermostat.

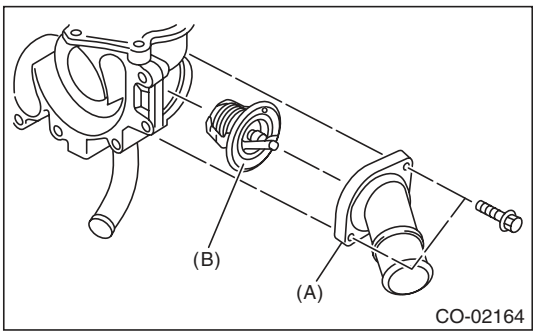

(A) Thermostat cover
(B) Thermostat

B: INSTALLATION

1) Install a gasket to thermostat.

NOTE:
Use a new gasket.

2) Install the thermostat and thermostat cover.

NOTE:
The jiggle pin must face upward when installing.

Tightening torque:
6.4 N·m (0.7 kgf-m, 4.7 ft-lb)

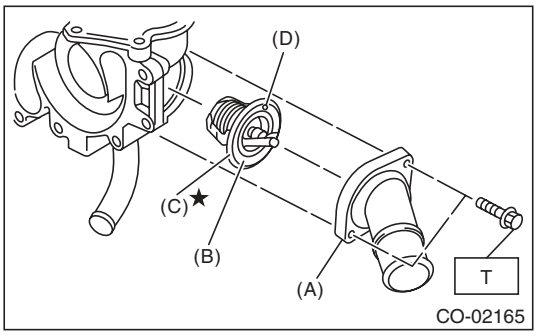

(A) Thermostat cover
(B) Thermostat
(C) Gasket
(D) Jiggle pin

3) Connect the radiator outlet hose to thermostat cover.
4) Install the under cover.
5) Lower the vehicle.
6) Fill engine coolant. <Ref. to CO(H6DO)-10, FILLING OF ENGINE COOLANT, REPLACEMENT, Engine Coolant.>

C: INSPECTION

Replace the thermostat if the valve does not close completely at an ambient temperature or if the following test shows unsatisfactory results.

- Inspection method

Immerse the thermostat and a thermometer in water. Raise water temperature gradually, and measure the temperature and valve lift when the valve begins to open and when the valve is fully opened. During the test, agitate the water for even temperature distribution. The measured value should meet the specification.

NOTE:

- Leave the thermostat in the boiling water for five minutes or more before measuring the valve lift.
- Hold the thermostat with a wire or the like to avoid contacting with container bottom.

Starting temperature to open:
80 — 84°C (176 — 183°F)

Fully opens:
95°C (203°F)

Valve lift:
9.0 mm (0.354 in) or more

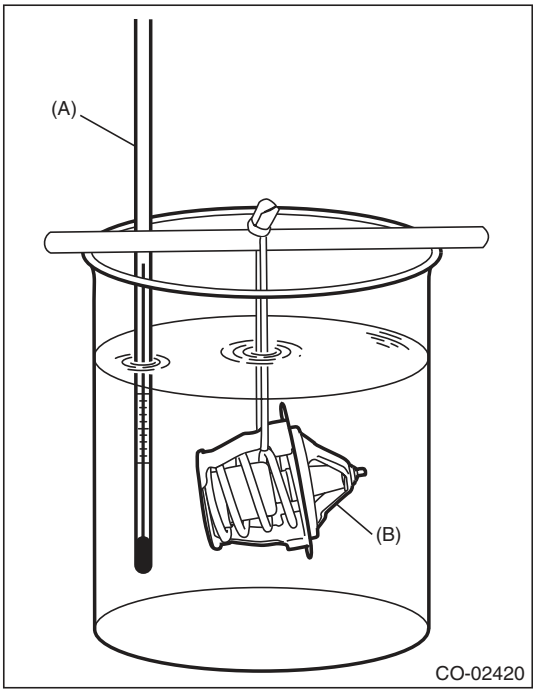

(A) Thermometer
(B) Thermostat

6. Radiator

A: REMOVAL

CAUTION:
The radiator is pressurized. Wait until engine cools down before working on the radiator.

1) Set the vehicle on a lift.
2) Remove the collector cover.
3) Disconnect the ground cable from battery.

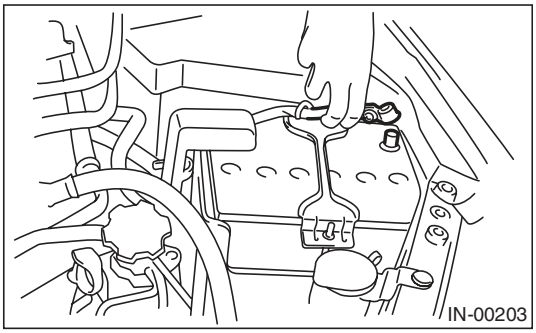

4) Lift up the vehicle.
5) Remove the under cover.
6) Drain engine coolant completely. <Ref. to CO(H6DO)-10, DRAINING OF ENGINE COOLANT, REPLACEMENT, Engine Coolant.>
7) Disconnect the radiator outlet hose from radiator.

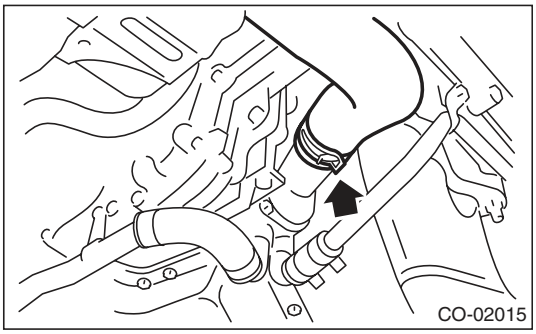

8) Disconnect the ATF hose from the radiator.

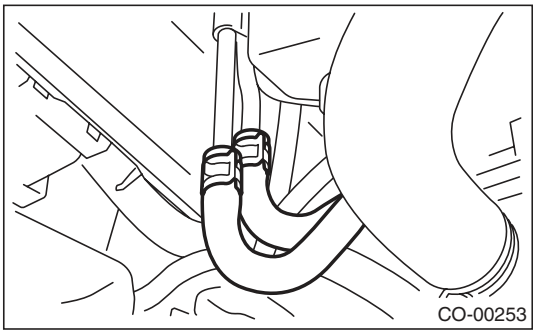

9) Lower the vehicle.
10) Remove the hood stay holder.

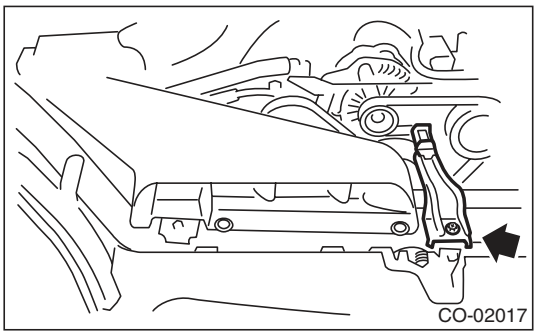

11) Remove the air intake duct. <Ref. to IN(H6DO)-8, REMOVAL, Air Intake Duct.>
12) Disconnect the connector from radiator fan control unit.

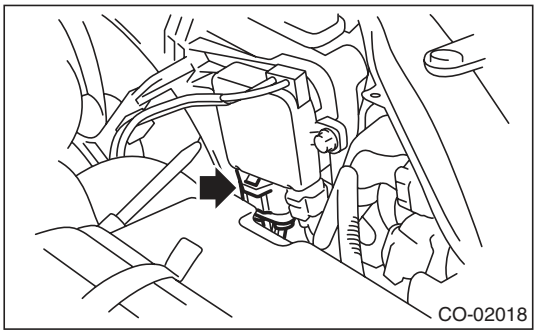

13) Remove the reservoir tank. <Ref. to CO(H6DO)-24, REMOVAL, Reservoir Tank.>
14) Disconnect the radiator inlet hose from radiator.
15) Remove the radiator upper brackets.

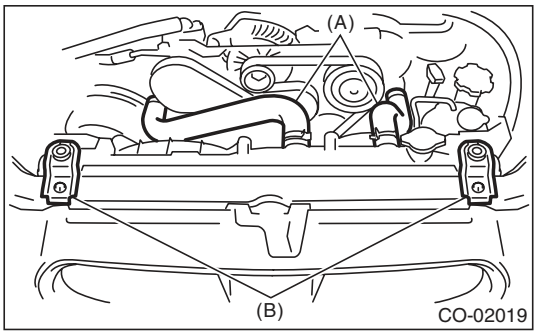

(A) Radiator inlet hose
(B) Radiator upper bracket

16) Lift the radiator up and away from vehicle.

B: INSTALLATION

1) Attach the radiator lower cushions to holes on the vehicle.

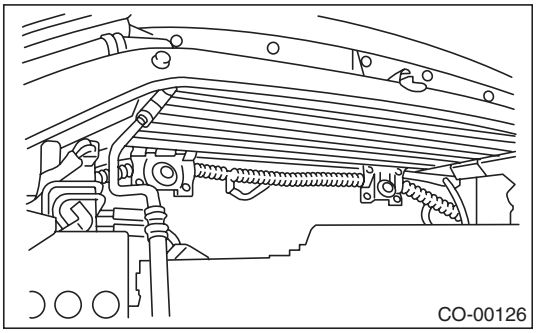

2) Install the radiator to vehicle.

NOTE:
Make pins on the lower side of radiator be fitted into the radiator lower cushions on body side.

3) Install the radiator upper brackets and tighten the bolts.

Tightening torque:
12 N·m (1.2 kgf-m, 8.9 ft-lb)

4) Connect the radiator inlet hose.

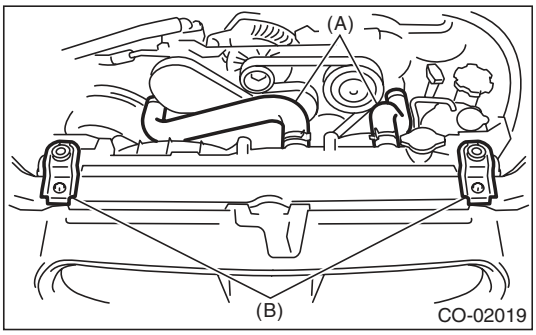

(A) Radiator inlet hose
(B) Radiator upper bracket

5) Install the reservoir tank. <Ref. to CO(H6DO)-24, INSTALLATION, Reservoir Tank.>

6) Connect the connector to the radiator fan control unit.

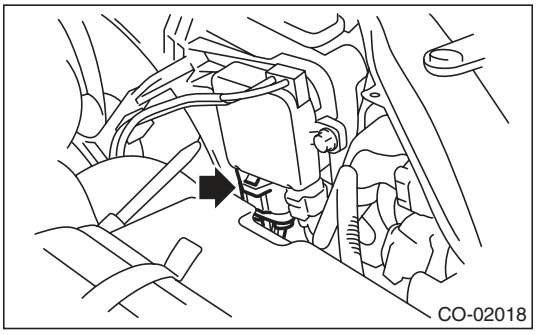

7) Install the air intake duct. <Ref. to IN(H6DO)-8, INSTALLATION, Air Intake Duct.>

8) Install the hood stay holder.

Tightening torque:
7.5 N·m (0.8 kgf-m, 5.5 ft-lb)

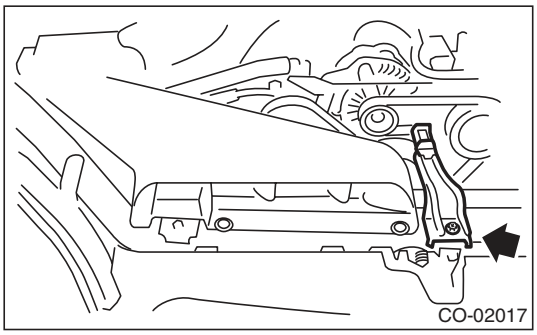

9) Lift up the vehicle.

10) Connect the ATF hoses.

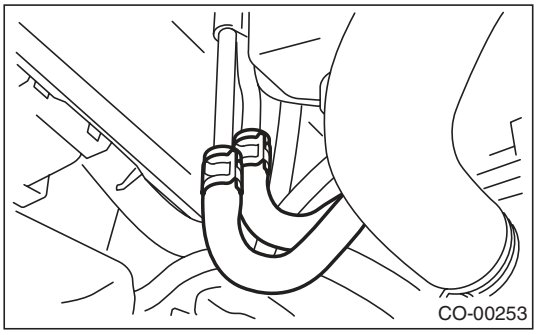

11) Connect the radiator outlet hose.

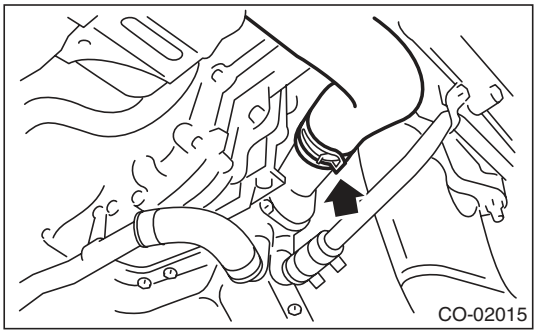

12) Install the under cover.

13) Lower the vehicle.

14) Connect the ground cable to battery.

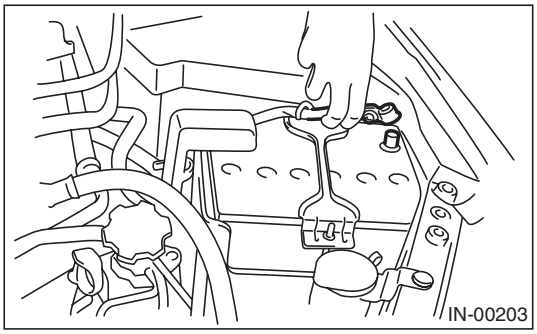

15) Fill engine coolant. <Ref. to CO(H6DO)-10, FILLING OF ENGINE COOLANT, REPLACEMENT, Engine Coolant.>

16) Check the ATF level. <Ref. to 5AT-28, INSPECTION, Automatic Transmission Fluid.>
17) Install the collector cover.

C: INSPECTION

1) Remove the radiator cap, fill the radiator with engine coolant, and then install the tester to the installation position of cap.

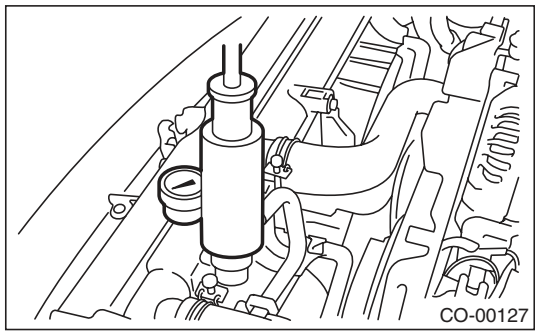

2) Apply a pressure of 157 kPa (1.6 kgf/cm^2, 23 psi) to the radiator and check the following points:
- Leakage from the radiator or its vicinity
- Leakage from the hose or its connections

CAUTION:
- **Engine should be turned off.**
- **Wipe engine coolant from check points in advance.**
- **Be careful of the spurt of engine coolant when removing the tester.**
- **Be careful not to deform the filler neck of radiator when installing and removing the tester.**

7. Radiator Cap

A: INSPECTION

1) Attach the radiator cap to tester.

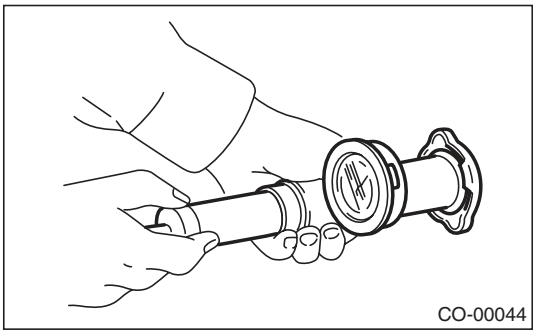

2) Increase pressure until the tester gauge pointer stops. Radiator cap is functioning properly if it holds the service limit pressure for five to six seconds. Replace the cap if it is opened under a pressure less than the service limit value.

Specification:
93 — 123 kPa
(0.95 — 1.25 kgf/cm^2, 14 — 18 psi)

Service limit:
83 kPa (0.85 kgf/cm^2, 12 psi)

CAUTION:
Be sure to remove foreign matter and rust from the cap in advance. Otherwise, results of pressure test will be incorrect.

8. Radiator Main Fan and Fan Motor

A: REMOVAL

1) Set the vehicle on a lift.
2) Remove the collector cover.
3) Disconnect the ground cable from battery.

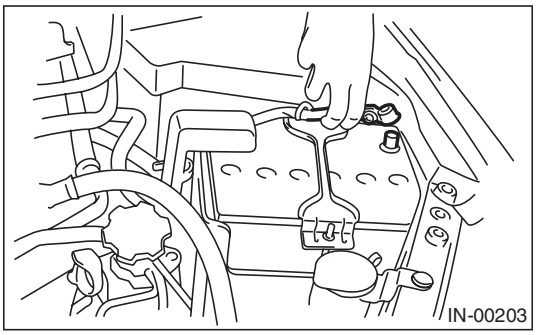

4) Remove the hood stay holder.

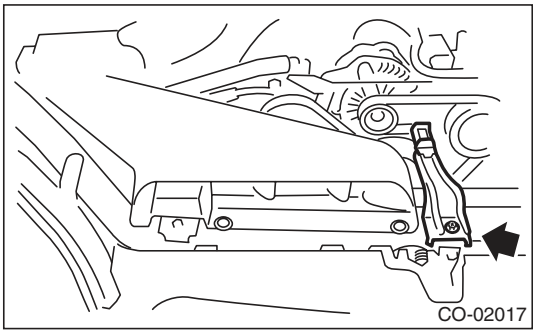

5) Remove the air intake duct. <Ref. to IN(H6DO)-8, REMOVAL, Air Intake Duct.>
6) Disconnect the connector from radiator fan control unit.

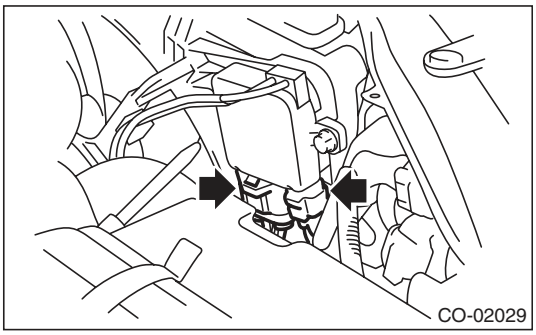

7) Lift up the vehicle.
8) Remove the under cover.
9) Drain engine coolant completely. <Ref. to CO(H6DO)-10, DRAINING OF ENGINE COOLANT, REPLACEMENT, Engine Coolant.>
10) Remove the ATF hose from the clip of the radiator main fan shroud.
11) Remove the radiator main fan motor harness from the clip.
12) Lower the vehicle.
13) Remove the reservoir tank. <Ref. to CO(H6DO)-24, REMOVAL, Reservoir Tank.>
14) Disconnect the radiator inlet hose from radiator.

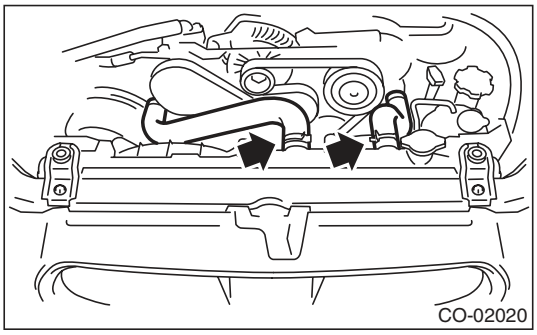

15) Remove the radiator sub fan motor assembly.

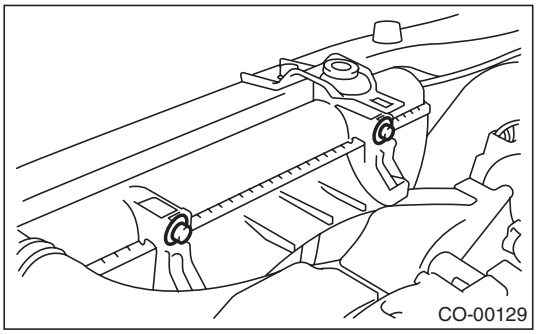

16) Remove the radiator main fan motor assembly.

NOTE:
When removing the main fan assembly with lifting it up, the main fan shroud contacts to inlet part of engine coolant. To avoid contacting it, move the main fan assembly to sub fan assembly side before removal.

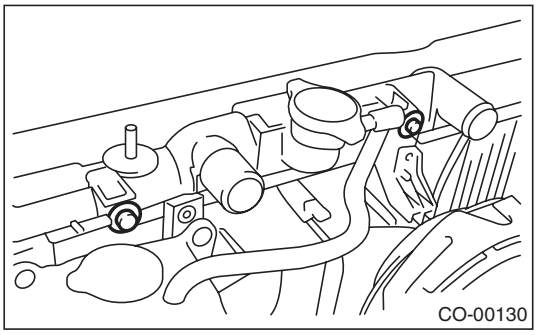

B: INSTALLATION

Install in the reverse order of removal.

- Radiator main fan assembly

Tightening torque:
7.5 N·m (0.8 kgf-m, 5.5 ft-lb)

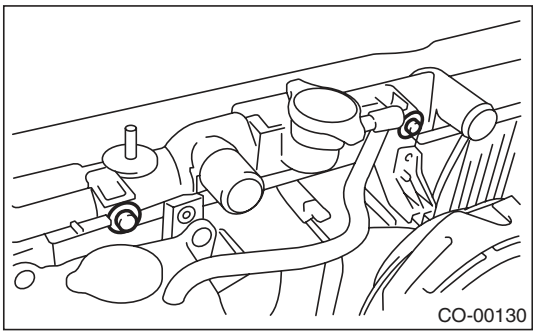

- Hood stay holder

Tightening torque:
7.5 N·m (0.8 kgf-m, 5.5 ft-lb)

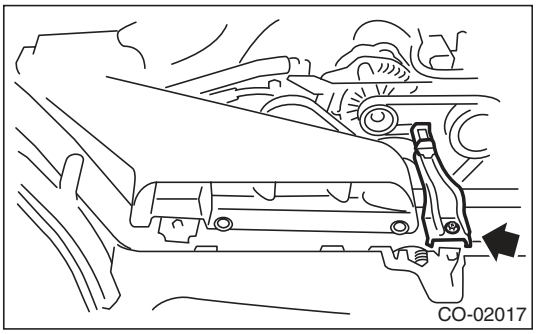

C: DISASSEMBLY

1) Remove the nut which holds fan to fan motor and shroud assembly.

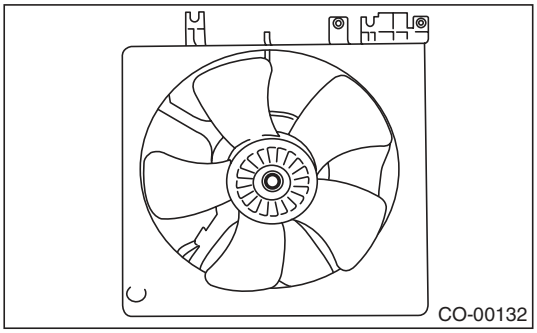

2) Remove the clip which holds the fan motor onto the shroud.

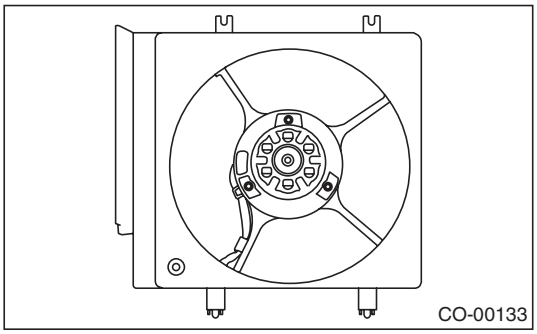

D: ASSEMBLY

Assemble in the reverse order of disassembly.

Tightening torque:
3.8 N·m (0.4 kgf-m, 2.8 ft-lb)

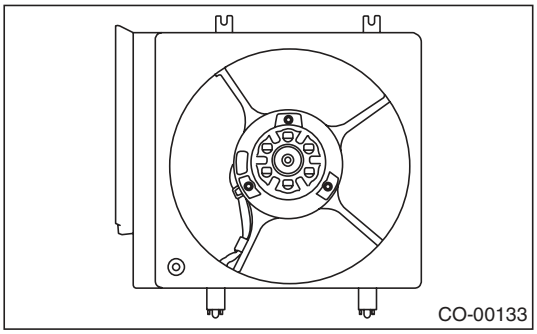

Tightening torque:
6.2 N·m (0.6 kgf-m, 4.6 ft-lb)

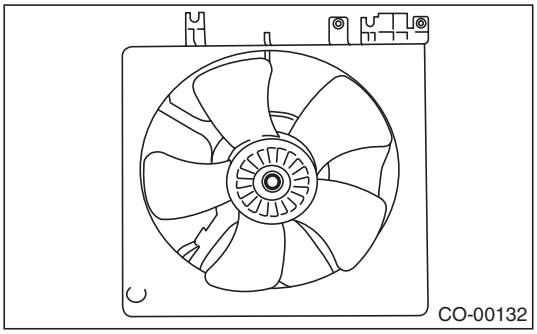

E: INSPECTION

1) Disconnect the connector from radiator fan control unit.

NOTE:
Do not remove the main fan motor harness connector.

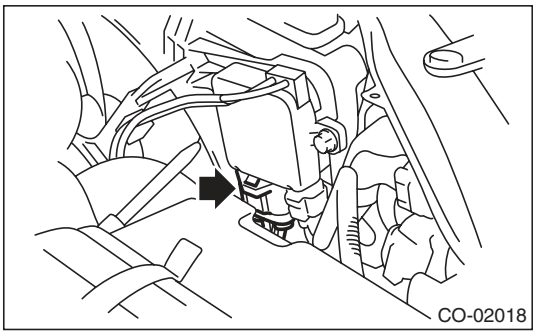

2) Connect the battery to radiator fan control unit as shown in the figure.

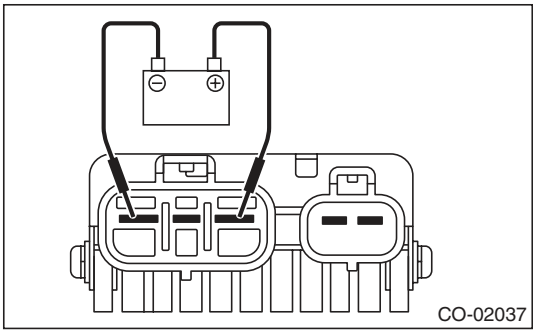

3) Check the fan motor for operations. If it does not operate, check the fan motor.

9. Radiator Sub Fan and Fan Motor

A: REMOVAL

1) Set the vehicle on a lift.
2) Remove the collector cover.
3) Disconnect the ground cable from battery.

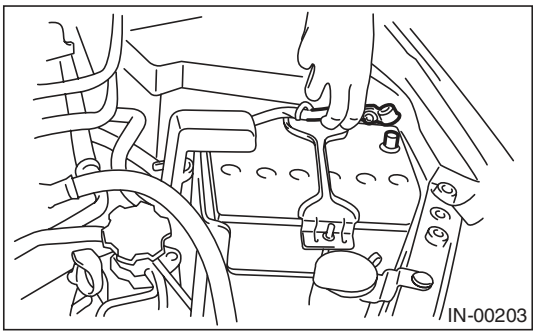

4) Remove the hood stay holder.

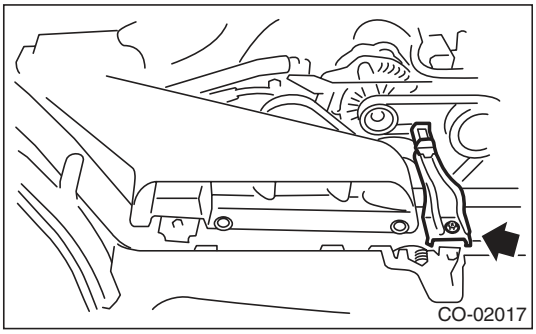

5) Remove the air intake duct. <Ref. to IN(H6DO)-8, REMOVAL, Air Intake Duct.>
6) Disconnect the connector from radiator fan control unit.

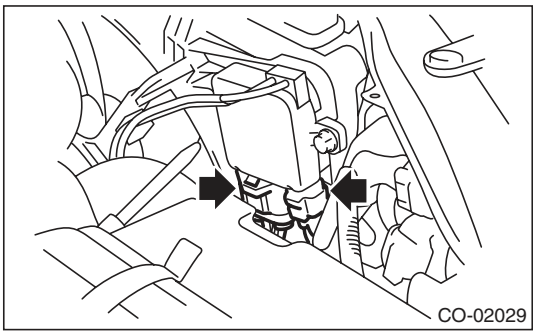

7) Remove the bolts which hold the sub fan shroud to the radiator.

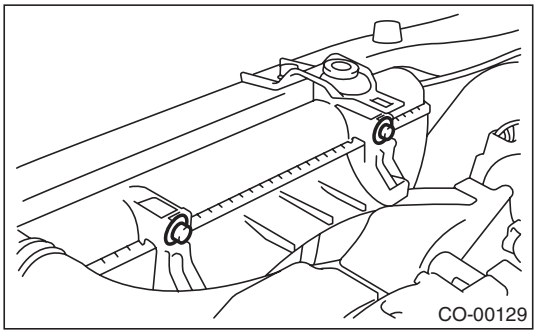

8) Lift up the vehicle.
9) Remove the under cover.
10) Remove the radiator sub fan shroud through the under side of vehicle.

B: INSTALLATION

Install in the reverse order of removal.

CAUTION:
Check if the radiator hose and the over flow hose are properly connected.

- Radiator sub fan shroud assembly

Tightening torque:
7.5 N·m (0.8 kgf-m, 5.5 ft-lb)

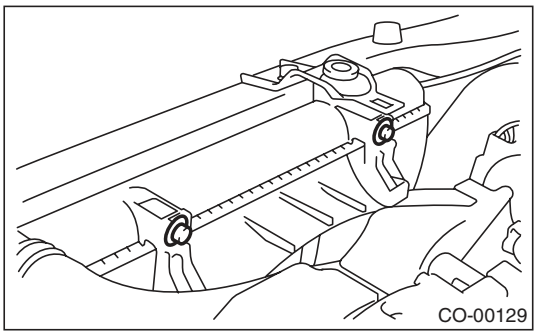

- Hood stay holder

Tightening torque:
7.5 N·m (0.8 kgf-m, 5.5 ft-lb)

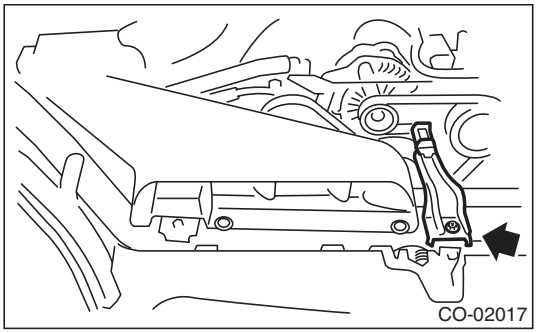

C: DISASSEMBLY

1) Remove the nut which holds fan to fan motor and shroud assembly.

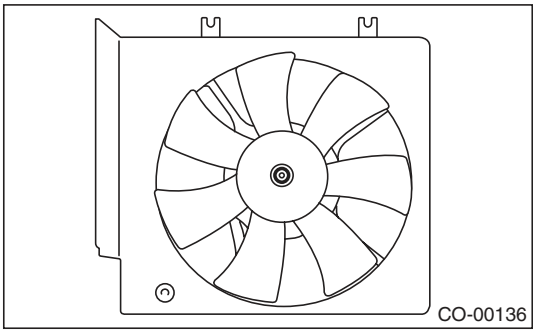

2) Remove the clip which holds the fan motor onto the shroud.

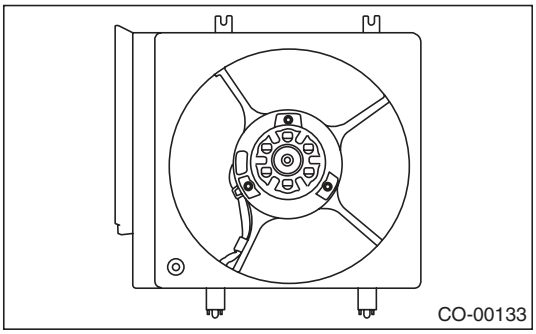

3) Remove the bolts which hold the radiator fan control unit to the shroud.

D: ASSEMBLY

Assemble in the reverse order of disassembly.

Radiator fan control unit bolt tightening torque:
5.4 N·m (0.6 kgf-m, 4.0 ft-lb)

Tightening torque:
3.8 N·m (0.4 kgf-m, 2.8 ft-lb)

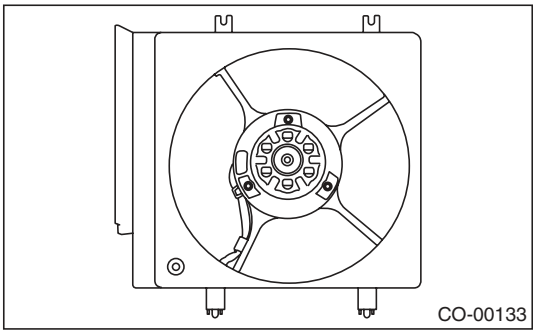

Tightening torque:
6.2 N·m (0.6 kgf-m, 4.6 ft-lb)

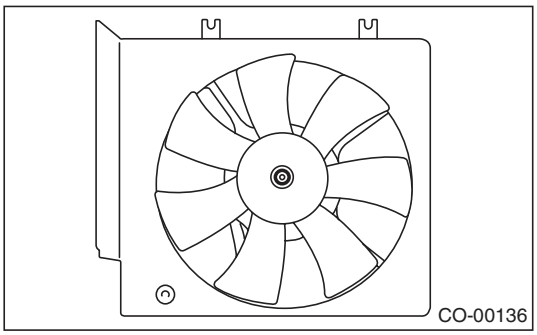

E: INSPECTION

1) Disconnect the connector from radiator fan control unit.

NOTE:
Do not remove the main fan motor harness connector.

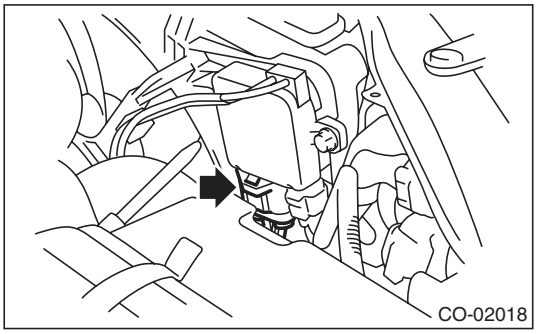

2) Connect the battery to radiator fan control unit as shown in the figure.

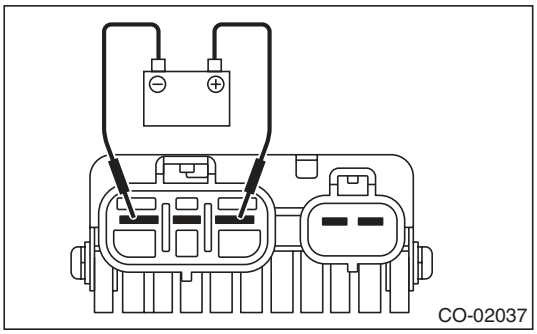

3) Check the fan motor for operations. If it does not operate, check the fan motor.

10. Reservoir Tank

A: REMOVAL

1) Disconnect the over flow hose.
2) Remove the bolts which hold the reservoir tank to the fan shroud, then remove the reservoir tank.

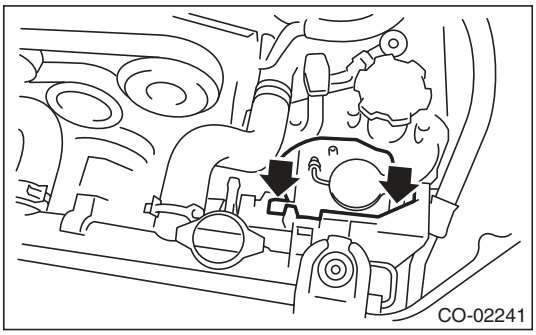

B: INSTALLATION

Install in the reverse order of removal.

Tightening torque:
7.5 N·m (0.8 kgf-m, 5.5 ft-lb)

C: INSPECTION

Make sure the engine coolant level is between “FULL” and “LOW”.

11. Radiator Fan Control Unit

A: SPECIFICATION

Radiator fan control unit forms a unit with radiator sub fan motor. Refer to “Radiator Sub Fan and Fan Motor” for removal and installation procedures. <Ref. to CO(H6DO)-22, REMOVAL, Radiator Sub Fan and Fan Motor.> <Ref. to CO(H6DO)-22, INSTALLATION, Radiator Sub Fan and Fan Motor.> <Ref. to CO(H6DO)-23, DISASSEMBLY, Radiator Sub Fan and Fan Motor.> <Ref. to CO(H6DO)-23, ASSEMBLY, Radiator Sub Fan and Fan Motor.>

12. Engine Cooling System Trouble in General

A: INSPECTION

Trouble	Possible cause	Corrective action
Overheating	a. Insufficient engine coolant	Replenish engine coolant, inspect for leakage, and repair it if necessary.
	b. Defective thermostat	Replace.
	c. Malfunction of water pump	Replace.
	d. Clogged engine coolant passage	Clean.
	e. Improper ignition timing	Inspect and repair ignition control system. <Ref. to EN(H6DO)(diag)-2, PROCEDURE, Basic Diagnostic Procedure.>
	f. Clogged or leaking radiator	Clean, repair or replace.
	g. Improper engine oil in engine coolant	Replace engine coolant. If ineffective, check, repair or replace engine components.
	h. Air/fuel mixture ratio too lean	Inspect and repair the fuel injection system. <Ref. to EN(H6DO)(diag)-2, PROCEDURE, Basic Diagnostic Procedure.>
	i. Excessive back pressure in exhaust system	Clean or replace.
	j. Insufficient clearance between piston and cylinder	Adjust or replace.
	k. Dragging brake	Adjust.
	l. Defective radiator fan	Inspect the radiator fan relay, engine coolant temperature sensor or fan motor and replace them.
Over-cooling	a. Ambient temperature extremely low	Partly cover radiator front area.
	b. Defective thermostat	Replace.
Engine coolant leaks	a. Loosened or damaged connecting units on hoses	Repair or replace.
	b. Leakage from water pump	Replace.
	c. Leakage from water pipe	Repair or replace.
	d. Leakage around cylinder head gasket	Retighten cylinder head bolts or replace gasket.
	e. Damaged or cracked cylinder head and cylinder block	Repair or replace.
	f. Damaged or cracked thermostat cover	Repair or replace.
	g. Leakage from radiator	Repair or replace.
Noise	a. Defective radiator fan	Replace.
	b. Defective water pump bearing	Replace water pump.
	c. Mechanical water pump malfunction	Replace water pump.

1. General Description

A: SPECIFICATION

Lubrication method			Forced lubrication
Oil pump	Pump type		Trochoid type
	Number of teeth	Inner rotor	7
		Outer rotor	8
	Outer rotor diameter × thickness	mm (in)	86 × 13 (3.39 × 0.51)
	Tip clearance between inner and outer rotors	mm (in)	0.04 — 0.14 (0.0016 — 0.0055)
	Side clearance between inner rotor and pump case	mm (in)	0.020 — 0.046 (0.0008 — 0.0018)
	Case clearance between outer rotor and pump case	mm (in)	0.110 — 0.175 (0.0043 — 0.0069)
Oil filter	Filter type		Full-flow filter type
	Filtration area	cm^2 (sq in)	1,300 (201.5)
	By-pass valve opening pressure	kPa (kg/cm^2, psi)	160 (1.63, 23.2)
	Outer diameter × width	mm (in)	80 × 75 (3.15 × 2.95)
	Installation screw specifications		M 20 × 1.5
Relief valve working pressure		kPa (kg/cm^2, psi)	708 (7.22, 102.7)
Oil pressure switch	Type		Immersed contact point type
	Operating voltage — power consumption		12 V — 3.4 W or less
	Warning light operating pressure	kPa (kg/cm^2, psi)	15 (0.15, 2.2)
	Proof pressure	kPa (kg/cm^2, psi)	980 (10.0, 142) or more
Engine oil	Total capacity (Overhaul)	ℓ (US qt, Imp qt)	7.0 (7.4, 6.2)
	When replacing engine oil and oil filter	ℓ (US qt, Imp qt)	5.7 (6.0, 5.0)
	When replacing engine oil only	ℓ (US qt, Imp qt)	5.5 (5.8, 4.8)

Recommended oil:

Oil corresponding to either of the following standards.

- ***For API standard, oil with SM "Energy Conserving" logo***
- ***For ILSAC standard, oil with GF-4 "Star burst mark" label on the container***

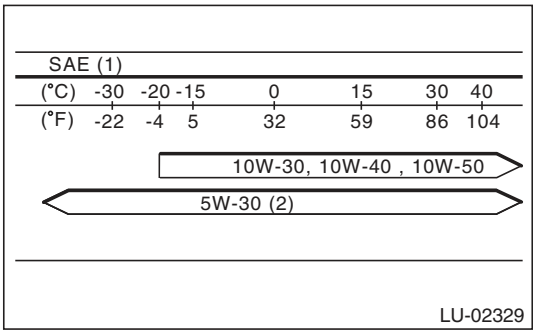

(1) SAE viscosity No. and applicable temperature
(2) Recommended

CAUTION:
It is acceptable to fill an engine with oil of another brand when replacing the oil, but make sure to use an oil with an API standard and SAE viscosity number specified by Subaru.

NOTE:
- The proper viscosity oil helps the engine maintain its ideal temperature, and cranking speed increased by reducing viscosity friction in hot condition.
- If the vehicle is used in regions of high temperatures or in other severe environments, use oil with the viscosities shown below.

API standard: SM or SL
SAE viscosity No.: 30, 40, 10W-50, 20W-40, 20W-50

B: COMPONENT

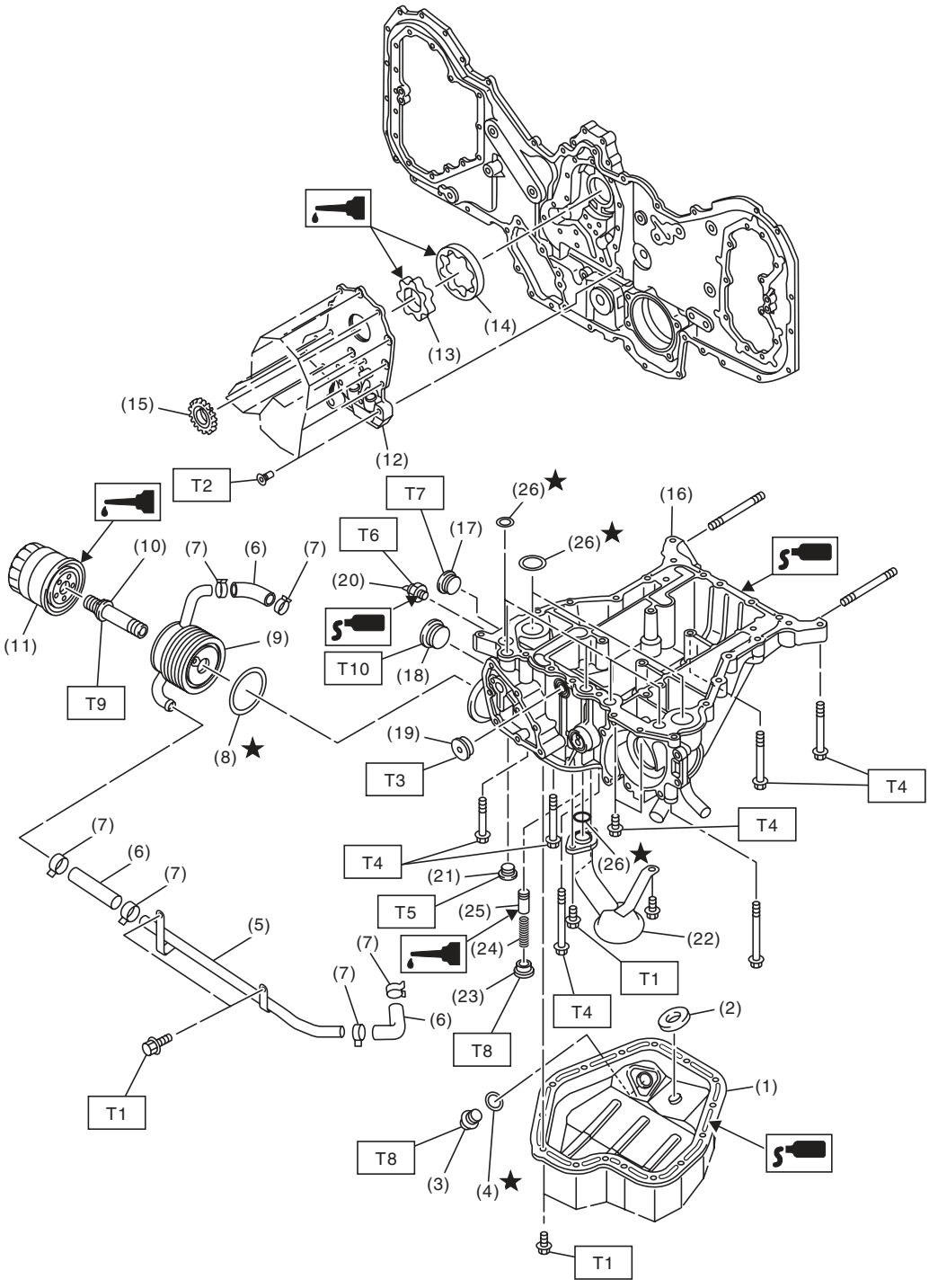
(14)
(13)
(15)
(12)
T2
T7
(26)★
(16)
T6
(17)
(26)★
(10)
(7)
(6)
(7)
(20)
(11)
(9)
T10
(18)
T9
(8)★
(19)
T3
T4
T4
(7)
(6)
(7)
T4
(26)★
(21)
T5
(25)
(5)
(22)
(7)
(24)
T1
(7)
(23)
T4
(2)
(6)
T8
(1)
T1
T8
(3)
(4)★
T1
LU-02368

(1)	Oil pan lower	(14)	Outer rotor
(2)	Magnet	(15)	Crank sprocket
(3)	Drain plug	(16)	Oil pan upper
(4)	Gasket	(17)	Plug
(5)	Engine oil cooler water pipe	(18)	Plug
(6)	Water hose	(19)	Plug
(7)	Clip	(20)	Oil pressure switch
(8)	Gasket	(21)	Plug
(9)	Oil cooler	(22)	Oil strainer
(10)	Oil cooler connector	(23)	Plug
(11)	Oil filter	(24)	Relief valve spring
(12)	Oil pump cover	(25)	Relief valve
(13)	Inner rotor	(26)	O-ring

Tightening torque:N·m (kgf-m, ft-lb)	
T1:	***6.4 (0.7, 4.7)***
T2:	***<Ref. to LU(H6DO)-9, INSTALLATION, Oil Pump.>***
T3:	***16 (1.6, 11.8)***
T4:	***18 (1.8, 13.3)***
T5:	***23 (2.3, 17.0)***
T6:	***25 (2.5, 18.4)***
T7:	***37 (3.8, 27.3)***
T8:	***44 (4.5, 32.5)***
T9:	***54 (5.5, 39.8)***
T10:	***90 (9.2, 66.4)***

C: CAUTION

- Wear appropriate work clothing, including a cap, protective goggles and protective shoes when performing any work.
- Remove contamination including dirt and corrosion before removal, installation or disassembly.
- Keep the disassembled parts in order and protect them from dust and dirt.
- Before removal, installation or disassembly, be sure to clarify the failure. Avoid unnecessary removal, installation, disassembly and replacement.
- Vehicle components are extremely hot after driving. Be wary of receiving burns from heated parts.
- Be sure to tighten fasteners including bolts and nuts to the specified torque.
- Place shop jacks or rigid racks at the specified points.
- Before disconnecting connectors of sensors or units, be sure to disconnect the ground cable from battery.
- If the engine oil is spilt over exhaust pipe or the under cover, wipe it off with cloth to avoid emitting smoke or causing a fire.
- Prepare a container and cloth to prevent scattering of oil when performing work where fuels can be spilled. If the fuel spills, wipe it off immediately to prevent from penetrating into floor or flowing out for environmental protection.
- Follow all government and local regulations concerning disposal of refuse when disposing oil.

D: PREPARATION TOOL

1. SPECIAL TOOL

ILLUSTRATION	TOOL NUMBER	DESCRIPTION	REMARKS
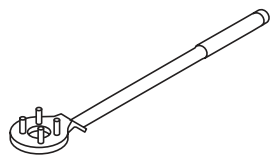 ST-499977100	499977100	CRANK PULLEY WRENCH	Used to stop rotation of the crank pulley when loosening or tightening crank pulley bolts.
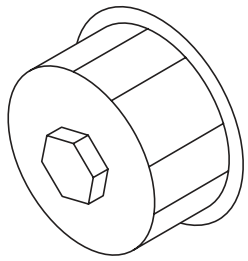 ST-498547000	498547000	OIL FILTER WRENCH	Used for removing and installing oil filter.

2. Oil Pressure System

A: WIRING DIAGRAM

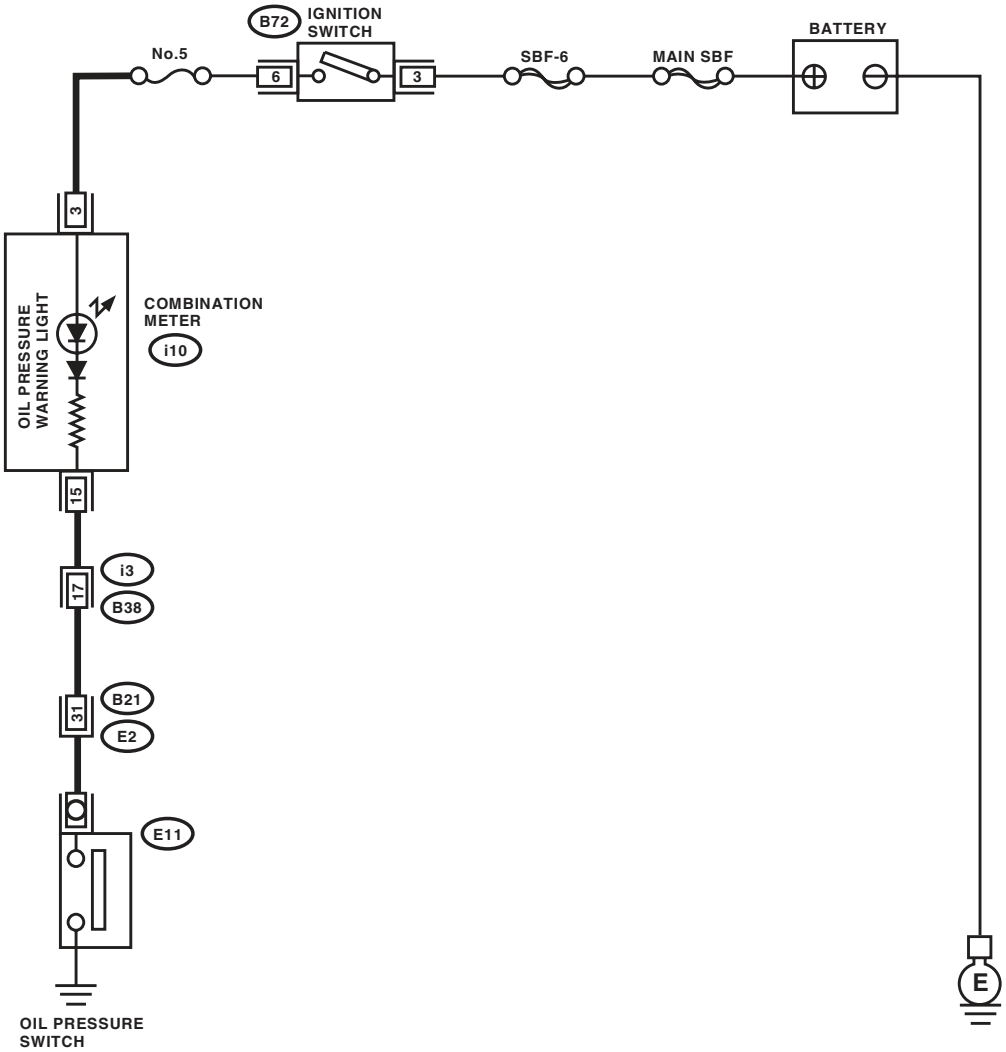

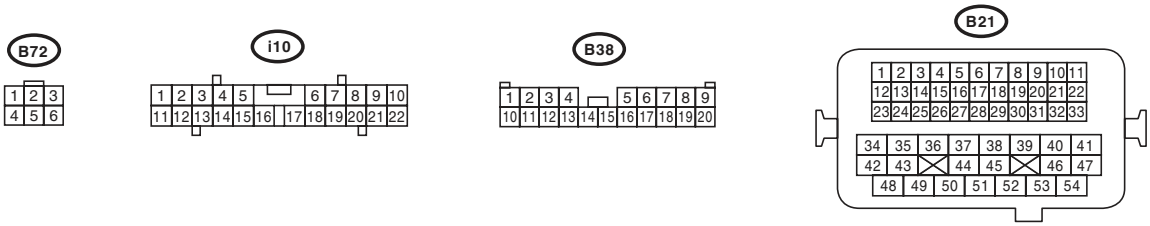

LU-02306

B: INSPECTION

	Step	Check	Yes	No
1	**CHECK COMBINATION METER.** 1) Turn the ignition switch to ON. (engine OFF) 2) Check the warning light of combination meter.	Does the warning light illuminate?	Go to step **2**.	Repair or replace the combination meter. <Ref. to IDI-5, INSPECTION, Combination Meter System.>
2	**CHECK HARNESS CONNECTOR BETWEEN COMBINATION METER AND OIL PRESSURE SWITCH.** 1) Turn the ignition switch to OFF. 2) Disconnect the connector from oil pressure switch. 3) Turn the ignition switch to ON. 4) Measure the voltage between oil pressure switch connector and engine ground. ***Connector & terminal*** ***(E11) No. 1 (+) — Engine ground (–):***	Is the voltage 10 V or more?	Replace the oil pressure switch. <Ref. to LU(H6DO)-15, Oil Pressure Switch.>	Go to step **3**.
3	**CHECK COMBINATION METER.** 1) Turn the ignition switch to OFF. 2) Remove the combination meter. 3) Measure the resistance of combination meter. ***Terminals*** ***(i10) No. 3 — (i10) No. 15:***	Is the resistance less than 10 Ω?	Repair the harness and connector. NOTE: In this case, repair the following item: • Open circuit of harness between combination meter and oil pressure switch • Poor contact in combination meter connector • Poor contact in oil pressure switch connector • Poor contact of coupling connector	Repair or replace the combination meter. <Ref. to IDI-5, INSPECTION, Combination Meter System.>

3. Engine Oil

A: INSPECTION

CAUTION:
If the engine oil is spilt over exhaust pipe or the under cover, wipe it off with cloth to avoid emitting smoke or causing a fire.

1) Park the vehicle on a level surface.
2) Remove the oil level gauge and wipe away the oil.
3) Reinsert the oil level gauge all the way. Be sure that the oil level gauge is correctly inserted and properly orientated.
4) Pull out the oil level gauge again, and check the oil level. If the engine oil level is below “L” line, make sure that there is no oil leakage from the engine, then add oil to rise the level up to the “F” line.
5) After turning off the engine, wait a few minutes for the oil to return to the oil pan before checking the oil level.

NOTE:
- Just after driving or while the engine is warm, engine oil level may over “F” line. This is caused by thermal expansion of engine oil.
- To prevent overfilling of engine oil, do not add oil above “F” line when the engine is cold.

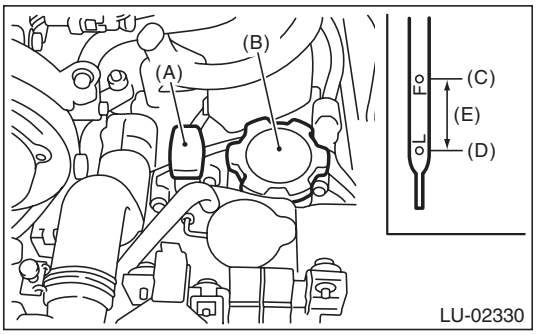

(A) Oil level gauge
(B) Engine oil filler cap
(C) “F” line
(D) “L” line
(E) Approx. 1.0 ℓ (1.1 US qt, 0.9 Imp qt)

B: REPLACEMENT

CAUTION:
If the engine oil is spilt over exhaust pipe or the under cover, wipe it off with cloth to avoid emitting smoke or causing a fire.

1) Set the vehicle on a lift.
2) Open the engine oil filler cap for quick draining of engine oil.
3) Lift up the vehicle.
4) Drain engine oil by loosening the engine oil drain plug.

NOTE:
Prepare the container for draining of engine oil.

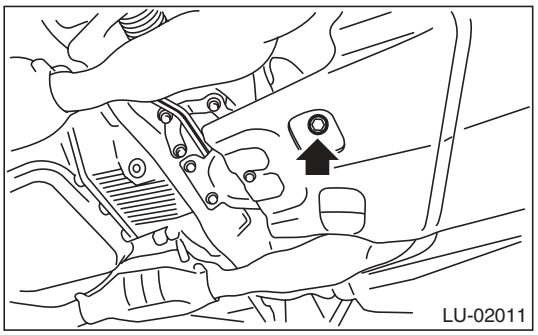

5) Tighten the engine oil drain plug after draining engine oil.

NOTE:
Use a new drain plug gasket.

Tightening torque:
44 N·m (4.5 kgf-m, 32.5 ft-lb)

6) Lower the vehicle.
7) Using engine oil of proper quality and viscosity, fill engine oil through the oil filler duct to the “F” line on the level gauge. Make sure that the vehicle is parked on a level surface when checking oil level.

Recommended oil:
Refer to “SPECIFICATION” for the recommended oil. <Ref. to LU(H6DO)-2, SPECIFICATION, General Description.>

Engine oil capacity:
Refer to “SPECIFICATION” for the engine oil capacity. <Ref. to LU(H6DO)-2, SPECIFICATION, General Description.>

8) Close the engine oil filler cap.
9) Start the engine, and spreads the oil in engine room.
10) After stopping the engine, recheck the oil level. If necessary, add engine oil up to the “F” line on the level gauge.

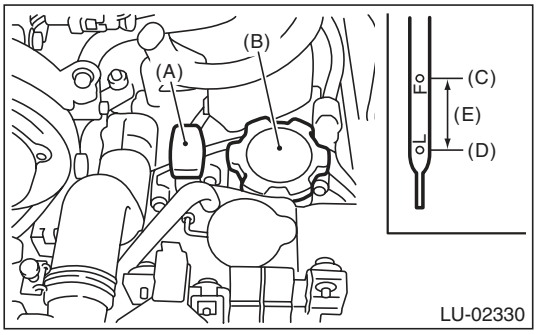

(A) Oil level gauge
(B) Engine oil filler cap
(C) “F” line
(D) “L” line
(E) Approx. 1.0 ℓ (1.1 US qt, 0.9 Imp qt)

4. Oil Pump

A: REMOVAL

1) Set the vehicle on a lift.
2) Remove the collector cover.
3) Disconnect the ground cable from battery.

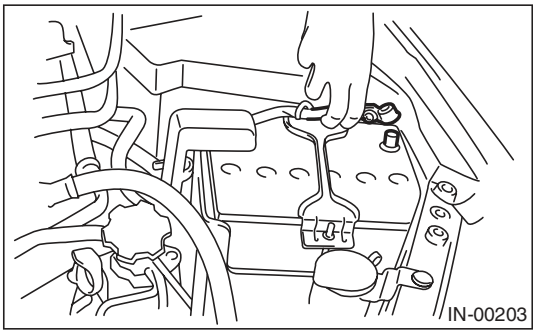

4) Lift up the vehicle.
5) Remove the under cover.
6) Drain engine coolant. <Ref. to CO(H6DO)-10, DRAINING OF ENGINE COOLANT, REPLACEMENT, Engine Coolant.>
7) Lower the vehicle.
8) Remove the radiator. <Ref. to CO(H6DO)-15, REMOVAL, Radiator.>
9) Remove the V-belts. <Ref. to ME(H6DO)-42, REMOVAL, V-belt.>
10) Remove the front chain cover. <Ref. to ME(H6DO)-44, REMOVAL, Front Chain Cover.>
11) Remove the timing chain assembly. <Ref. to ME(H6DO)-46, REMOVAL, Timing Chain Assembly.>
12) Remove the crank sprocket.
13) Remove the oil pump cover.

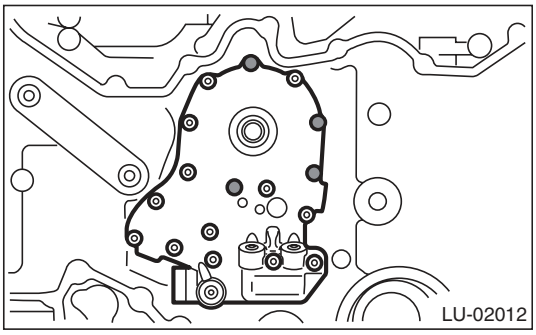

14) Remove the inner rotor and outer rotor.

B: INSTALLATION

1) Apply a coat of engine oil to the whole area of inner rotor and outer rotor.

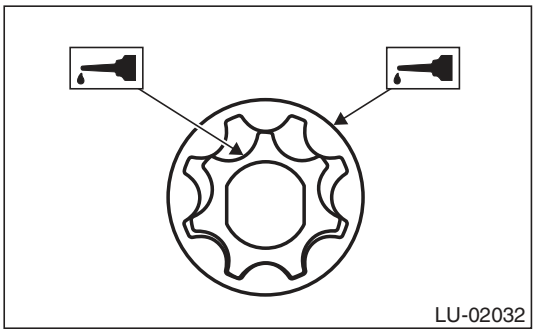

2) Install the inner rotor to crankshaft and assemble the outer rotor.
3) Install the oil pump cover.
4) Tighten the bolts in the numerical order as shown in the figure.

CAUTION:
Make sure that the bolt is installed in correct position.

Tightening torque:
6.4 N·m (0.7 kgf-m, 4.7 ft-lb)

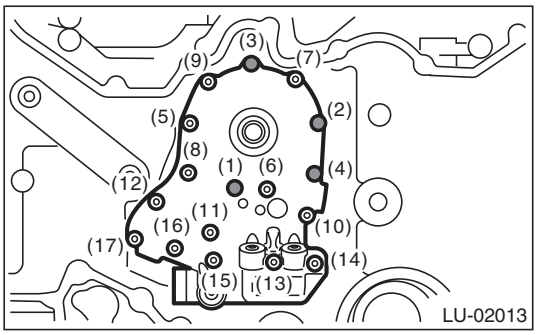

Bolt installing position	Bolt dimension
(1) and (3)	6 × 14 × 14
(2) and (4)	6 × 35 × 18
(5), (6), (7), (8), (9), (10) and (11)	6 × 35 × 15
(12), (15), (16) and (17)	6 × 16 × 16
(13) and (14)	6 × 26 × 15

5) Install the crank sprocket.
6) Install the timing chain assembly. <Ref. to ME(H6DO)-47, INSTALLATION, Timing Chain Assembly.>
7) Install the front chain cover. <Ref. to ME(H6DO)-44, INSTALLATION, Front Chain Cover.>
8) Install the V-belts. <Ref. to ME(H6DO)-42, INSTALLATION, V-belt.>
9) Install the radiator. <Ref. to CO(H6DO)-16, INSTALLATION, Radiator.>
10) Lift up the vehicle.
11) Install the under cover.
12) Lower the vehicle.

C: INSPECTION

1. TIP CLEARANCE

Measure the tip clearance of rotors. If the clearance exceeds specification, replace the rotors as a matched set.

Tip clearance:
Standard
0.04 — 0.14 mm (0.0016 — 0.0055 in)

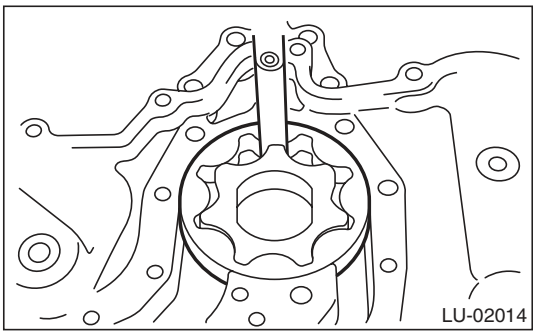

2. CASE CLEARANCE

Measure the clearance between the outer rotor and rear chain cover rotor housing. If the clearance exceeds the standard value, replace the outer rotor.

Case clearance:
Standard
0.110 — 0.175 mm (0.0043 — 0.0069 in)

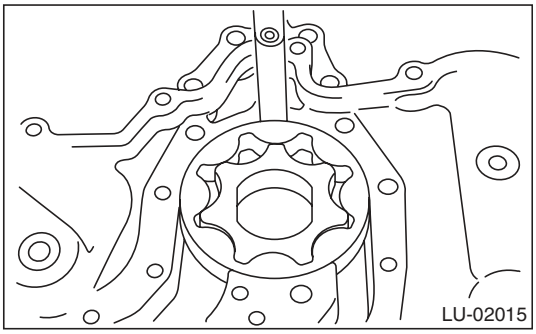

3. SIDE CLEARANCE

Measure the clearance between oil pump inner rotor and rear chain cover. If the clearance exceeds specification, replace the rotors as a matched set.

Side clearance:
Specification
0.020 — 0.046 mm (0.0008 — 0.0018 in)

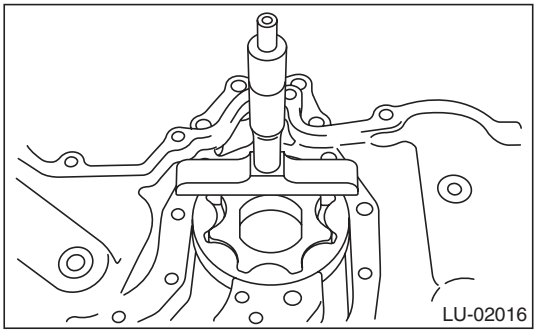

Perform the replacement part selection as follows.

- When replacing all of inner rotor, outer rotor and rear chain cover with new parts, use those with matching identification marks as there are identification marks on those parts in the locations shown on the figure.

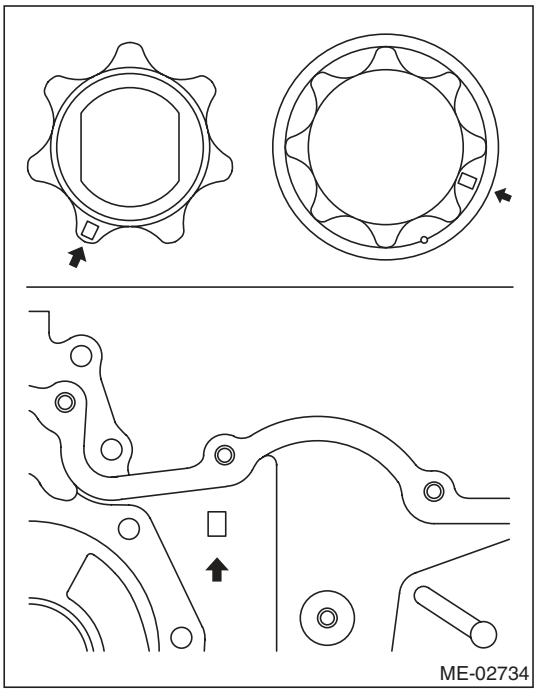

• When replacing any of inner rotor, outer rotor and rear chain cover with a new part, select the suitable size from the following table so that side clearance is within the standard value.

Inner rotor

Identification	Part No.	Rotor thickness mm (in)
A	15015AA250	12.993 — 13.006 (0.51153 — 0.51205)
None	15015AA300	12.980 — 12.993 (0.51102 — 0.51153)
C	15015AA310	12.967 — 12.980 (0.51051 — 0.51102)

Outer rotor

Identification	Part No.	Rotor thickness mm (in)
A	15016AA250	12.993 — 13.006 (0.51153 — 0.51205)
None	15016AA300	12.980 — 12.993 (0.51102 — 0.51153)
C	15016AA310	12.967 — 12.980 (0.51051 — 0.51102)

Rear chain cover

Identification	Part No.	Rotor thickness mm (in)
A	13119AA020	13.026 — 13.039 (0.51295 — 0.51335)
B	13119AA050	13.013 — 13.026 (0.51232 — 0.51284)
C	13119AA060	13.000 — 13.013 (0.51181 — 0.51232)

4. OIL PUMP CASE

Check the worn shaft hole, clogged oil passage, crank and other parts for faults.

5. Oil Pump Relief Valve

A: REMOVAL

1. REAR CHAIN COVER SIDE

Oil pump relief valve is integrated into oil pump cover as one unit; therefore, refer to “Oil Pump” for removal procedure. <Ref. to LU(H6DO)-9, REMOVAL, Oil Pump.>

2. OIL PAN UPPER SIDE

1) Remove the oil pan. <Ref. to LU(H6DO)-13, REMOVAL, Oil Pan and Strainer.>
2) Remove the plug, relief valve spring and relief valve.

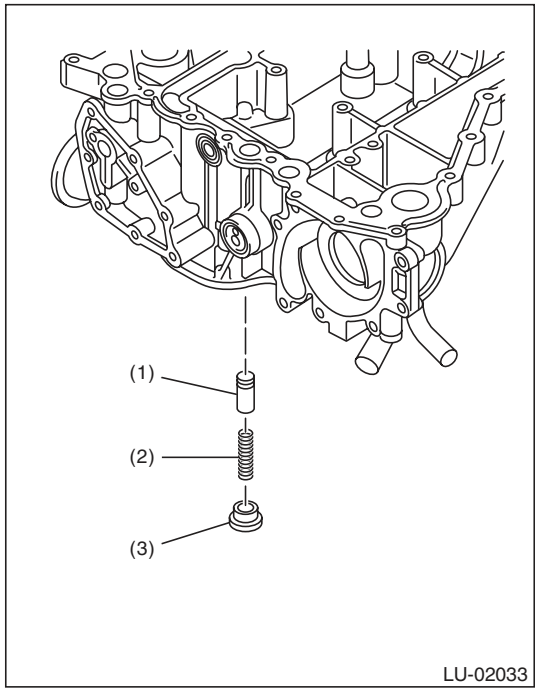

(1) Relief valve
(2) Relief valve spring
(3) Plug

B: INSTALLATION

1. REAR CHAIN COVER SIDE

Oil pump relief valve is integrated into oil pump cover as one unit; therefore, refer to “Oil Pump” for installation procedure. <Ref. to LU(H6DO)-9, INSTALLATION, Oil Pump.>

2. OIL PAN UPPER SIDE

1) Install the relief valve, relief valve spring and plug.

NOTE:
Apply engine oil to the relief valve.

Tightening torque:
T: 44 N·m (4.5 kgf-m, 32.5 ft-lb)

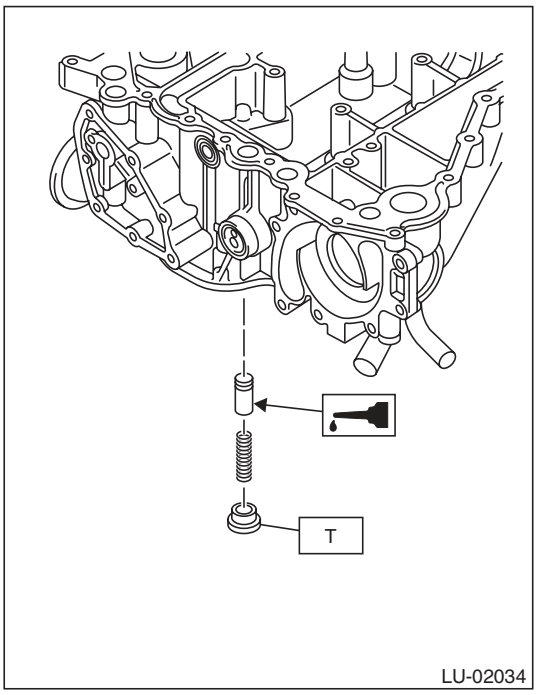

2) Install the oil pan. <Ref. to LU(H6DO)-13, INSTALLATION, Oil Pan and Strainer.>

C: INSPECTION

Check the worn shaft hole of oil pump relief valve case, clogged oil passage, crank and other parts for faults.

6. Oil Pan and Strainer

A: REMOVAL

NOTE:
Before removing the oil pan upper, remove the engine from vehicle. <Ref. to ME(H6DO)-34, REMOVAL, Engine Assembly.> <Ref. to ME(H6DO)-64, REMOVAL, Cylinder Block.>

1) Set the vehicle on a lift.
2) Lift up the vehicle.
3) Remove the under cover.
4) Drain the engine oil. <Ref. to LU(H6DO)-8, REPLACEMENT, Engine Oil.>
5) Insert an oil pan cutter blade into the gap between oil pan upper and oil pan lower, and remove the oil pan.

CAUTION:
Do not use a screwdriver or similar tool in place of oil pan cutter.

6) Remove the oil pan lower.

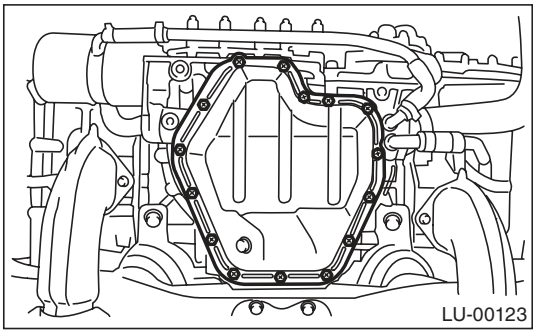

7) Remove the oil strainer.

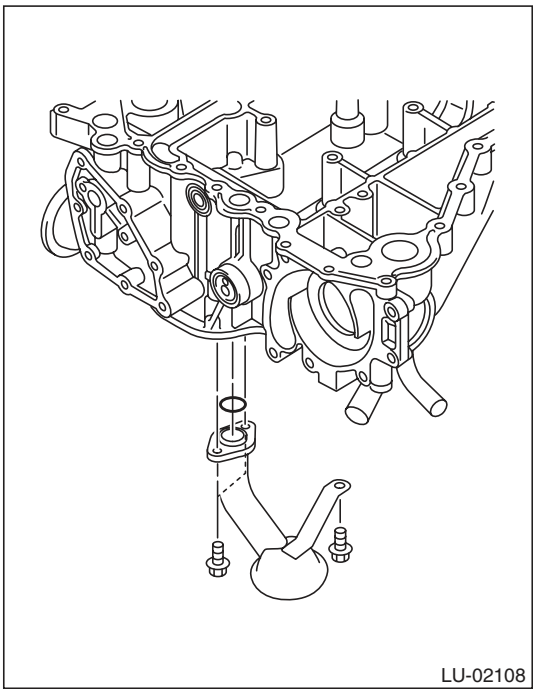

B: INSTALLATION

NOTE:
Before installing the oil pan, wipe and clean the mating surface of oil pan lower and oil pan upper.

1) Install the oil strainer onto oil pan upper.

NOTE:
Use new O-rings.

Tightening torque:
6.4 N·m (0.7 kgf-m, 4.7 ft-lb)

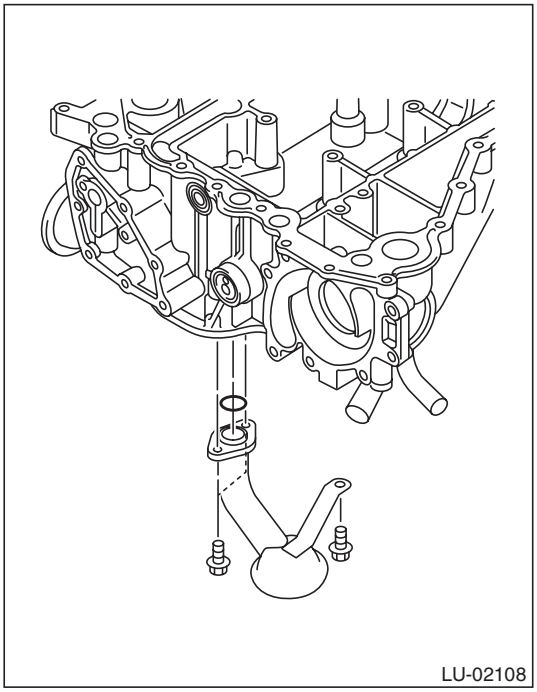

2) Apply liquid gasket to the mating surfaces of oil pan, and install the oil pan.

NOTE:
Install within 5 minutes after applying liquid gasket.

Liquid gasket:
THREE BOND 1217G (Part No. K0877Y0100) or equivalent

Applying liquid gasket diameter:
5.0±1.0 mm (0.197±0.039 in)

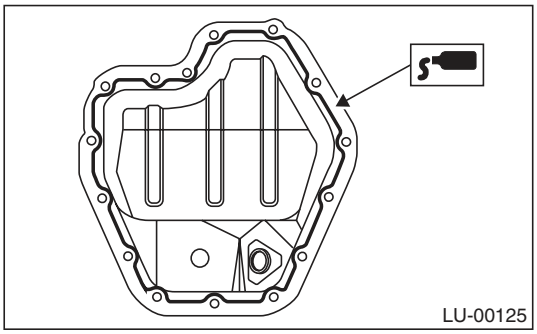

3) Tighten the oil pan lower installing bolts in the numerical order as shown in the figure.

Tightening torque:
6.4 N·m (0.7 kgf-m, 4.7 ft-lb)

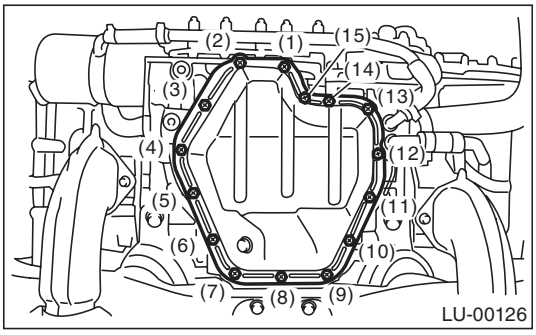

4) Install the under cover.
5) Lower the vehicle.
6) Refill the engine oil. <Ref. to LU(H6DO)-8, INSPECTION, Engine Oil.>

C: INSPECTION

Visually check that the oil pan, oil strainer and oil strainer stay are not damaged.

7. Oil Pressure Switch

A: REMOVAL

1) Set the vehicle on a lift.
2) Disconnect the ground cable from the battery.

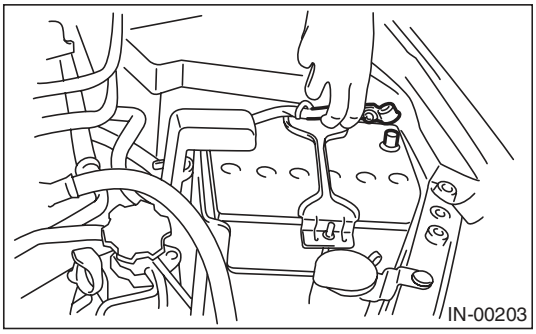

3) Lift up the vehicle.
4) Remove the under cover.
5) Disconnect the terminal from oil pressure switch.

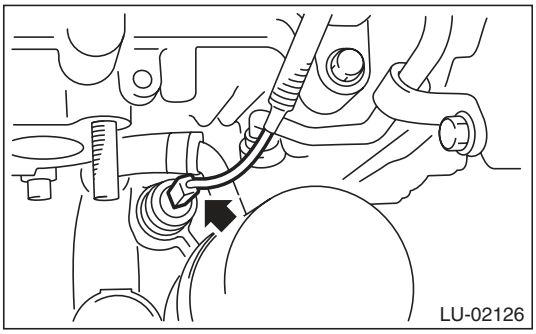

6) Remove the oil pressure switch.

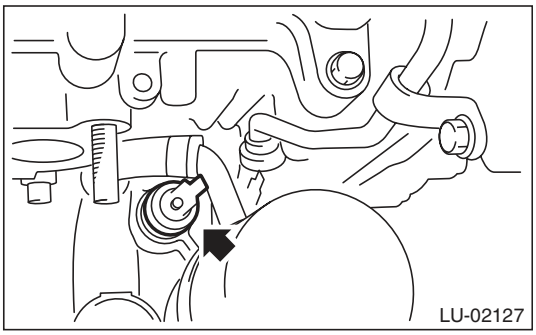

B: INSTALLATION

1) Apply liquid gasket to the oil pressure switch threads.

Liquid gasket:
THREE BOND 1324 (Part No. 004403042) or equivalent

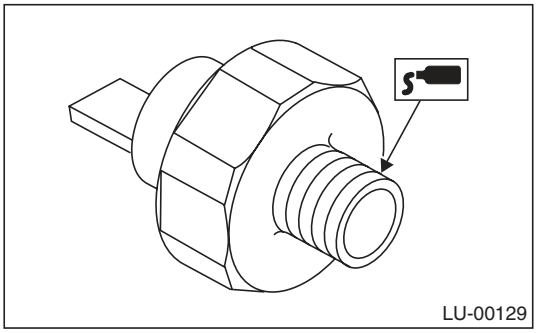

2) Install the oil pressure switch.

Tightening torque:
25 N·m (2.5 kgf-m, 18.4 ft-lb)

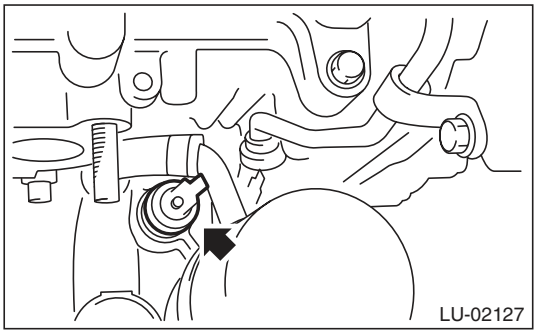

3) Connect the terminal of the oil pressure switch.

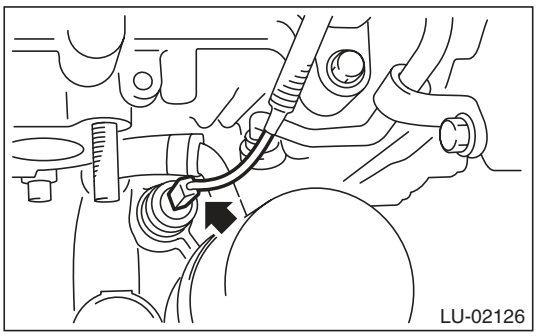

4) Install the under cover.

C: INSPECTION

Make sure oil does not leak or seep from where the oil pressure switch is installed.

8. Engine Oil Filter

A: REMOVAL

CAUTION:
If the engine oil is spilt over exhaust pipe or the under cover, wipe it off with cloth to avoid emitting smoke or causing a fire.

1) Set the vehicle on a lift.
2) Lift up the vehicle.
3) Remove the under cover.
4) Drain the engine oil. <Ref. to LU(H6DO)-8, REPLACEMENT, Engine Oil.>
5) Remove the oil filter using ST.

ST 4985447000 OIL FILTER WRENCH

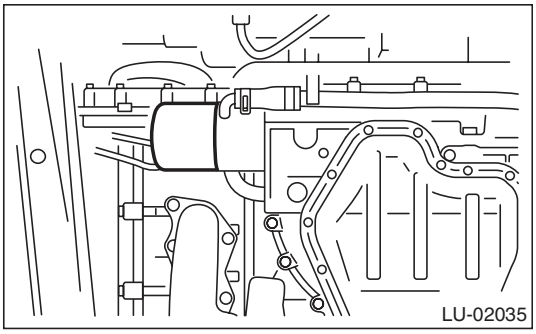

B: INSTALLATION

CAUTION:
Do not tighten excessively, or oil may leak.

1) Clean the oil filter installation surface of the oil cooler.
2) Obtain a new oil filter and apply a thin coat of engine oil to the seal rubber.
3) Install the oil filter turning it by hand, being careful not to damage the seal rubber.
4) Tighten more (approx. 3/4 turn) after the seal rubber contacts the oil cooler. When using a torque wrench, tighten to 14 N·m (1.4 kgf-m, 10.3 ft-lb).
5) Install the under cover.
6) Lower the vehicle.
7) Refill the engine oil. <Ref. to LU(H6DO)-8, INSPECTION, Engine Oil.>

C: INSPECTION

1) After installing the oil filter, run the engine and make sure that no oil is leaking around seal rubber.

NOTE:
The filter element and filter case are permanently jointed; therefore, interior cleaning is not necessary.

2) Check the engine oil level. <Ref. to LU(H6DO)-8, INSPECTION, Engine Oil.>

9. Oil Cooler

A: REMOVAL

CAUTION:
If the engine oil is spilt over exhaust pipe or the under cover, wipe it off with cloth to avoid emitting smoke or causing a fire.

1) Set the vehicle on a lift.
2) Lift up the vehicle.
3) Remove the under cover.
4) Drain engine coolant. <Ref. to CO(H6DO)-10, DRAINING OF ENGINE COOLANT, REPLACEMENT, Engine Coolant.>
5) Drain the engine oil. <Ref. to LU(H6DO)-8, REPLACEMENT, Engine Oil.>
6) Remove the bolts which hold the engine oil cooler water pipe to engine.

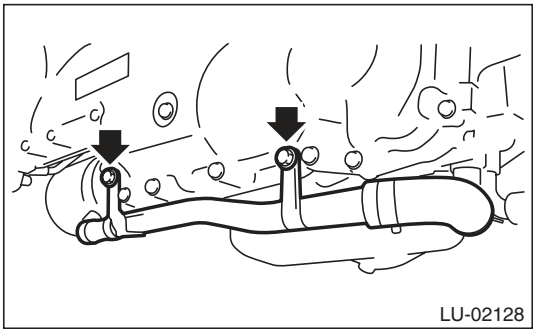

7) Disconnect the water hose from oil cooler.

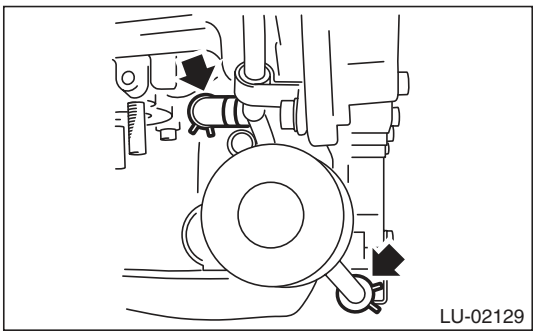

8) Remove the oil filter using the ST. <Ref. to LU(H6DO)-16, REMOVAL, Engine Oil Filter.>

9) Remove the oil cooler connector and remove the oil cooler.

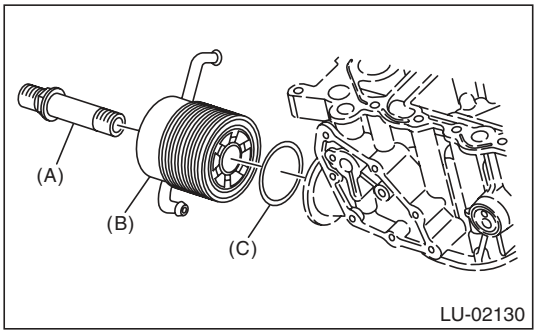

(A) Oil cooler connector
(B) Oil cooler
(C) Gasket

B: INSTALLATION

1) Install the oil cooler to oil pan upper with oil cooler connector.

NOTE:
Use a new gasket.

Tightening torque:
T: 54 N·m (5.5 kgf-m, 39.8 ft-lb)

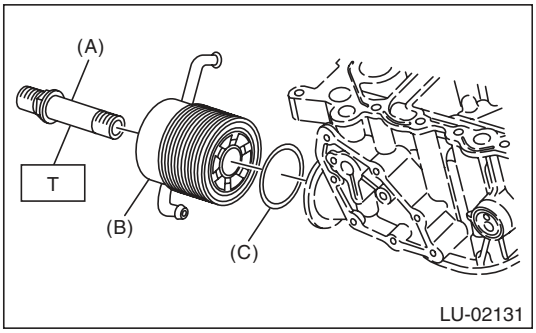

(A) Oil cooler connector
(B) Oil cooler
(C) Gasket

2) Install the oil filter. <Ref. to LU(H6DO)-16, INSTALLATION, Engine Oil Filter.>
3) Connect the water hose.

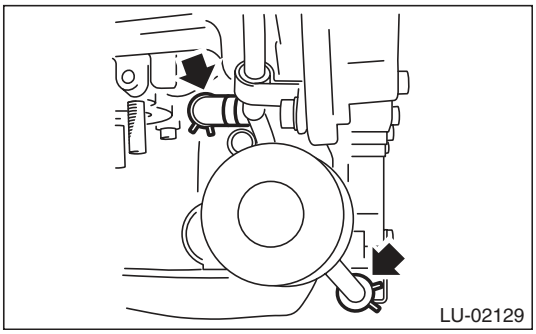

4) Install the engine oil cooler water pipe onto engine.

Tightening torque:
6.4 N·m (0.7 kgf-m, 4.7 ft-lb)

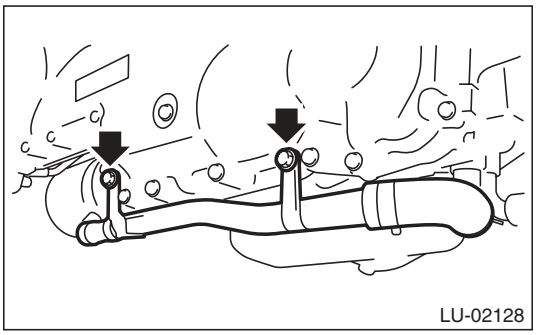

5) Lower the vehicle.
6) Refill the engine oil. <Ref. to LU(H6DO)-8, REPLACEMENT, Engine Oil.>
7) Fill engine coolant. <Ref. to CO(H6DO)-10, FILLING OF ENGINE COOLANT, REPLACEMENT, Engine Coolant.>
8) Check the engine oil level. <Ref. to LU(H6DO)-8, INSPECTION, Engine Oil.>

C: INSPECTION

1) Check that coolant passages are not clogged using an compressed air.
2) Check that the oil pan upper and O-ring installing surface of oil filter are not damaged.

10. Engine Lubrication System Trouble in General

A: INSPECTION

Before performing diagnostics, make sure that the engine oil level is correct and no oil leakage exists.

Symptom	Possible cause		Corrective action
1. Warning light remains on.	1) Oil pressure switch failure	Cracked diaphragm or oil leakage within switch	Replace.
		Broken spring or seized contacts	Replace.
	2) Low oil pressure	Clogging of oil filter	Replace.
		Malfunction of oil by-pass valve in oil filter	Clean or replace.
		Malfunction of oil relief valve in oil pump	Clean or replace.
		Clogged oil passage	Clean.
		Excessive tip clearance and side clearance of oil pump rotor and gear	Replace.
		Clogged oil strainer or broken pipe	Clean or replace.
	3) No oil pressure	Insufficient engine oil (including deterioration)	Replace.
		Broken pipe of oil strainer	Replace.
		Stuck oil pump rotor	Replace.
2. Warning light does not turn on.	1) Malfunction of combination meter		Replace.
	2) Poor contact of switch contact points		Replace.
	3) Disconnection of wiring		Repair.
3. Warning light flickers momentarily.	1) Poor contact of terminals		Repair.
	2) Defective wiring harness		Repair.
	3) Low oil pressure		Check for the same possible causes as listed 1. — 2).

1. General Description

A: SPECIFICATION

Specifications for the 3.0 L DOHC non-turbo model are the same as the 2.0 L SOHC non-turbo model.
<Ref. to SP(H4SO)-2, General Description.>

1. General Description

A: SPECIFICATION

Item		Specification
Ignition coil	Type	FK0333
	Ignition system	Independent ignition coil
	Manufacturer	Diamond Electric
Spark plug	Manufacturer and type	NGK: ILFR6B
	Thread size (diameter, pitch, length) mm	14, 1.25, 26.5
	Spark plug gap mm (in)	0.7 — 0.8 (0.028 — 0.031)
	Electrode	Iridium

B: COMPONENT

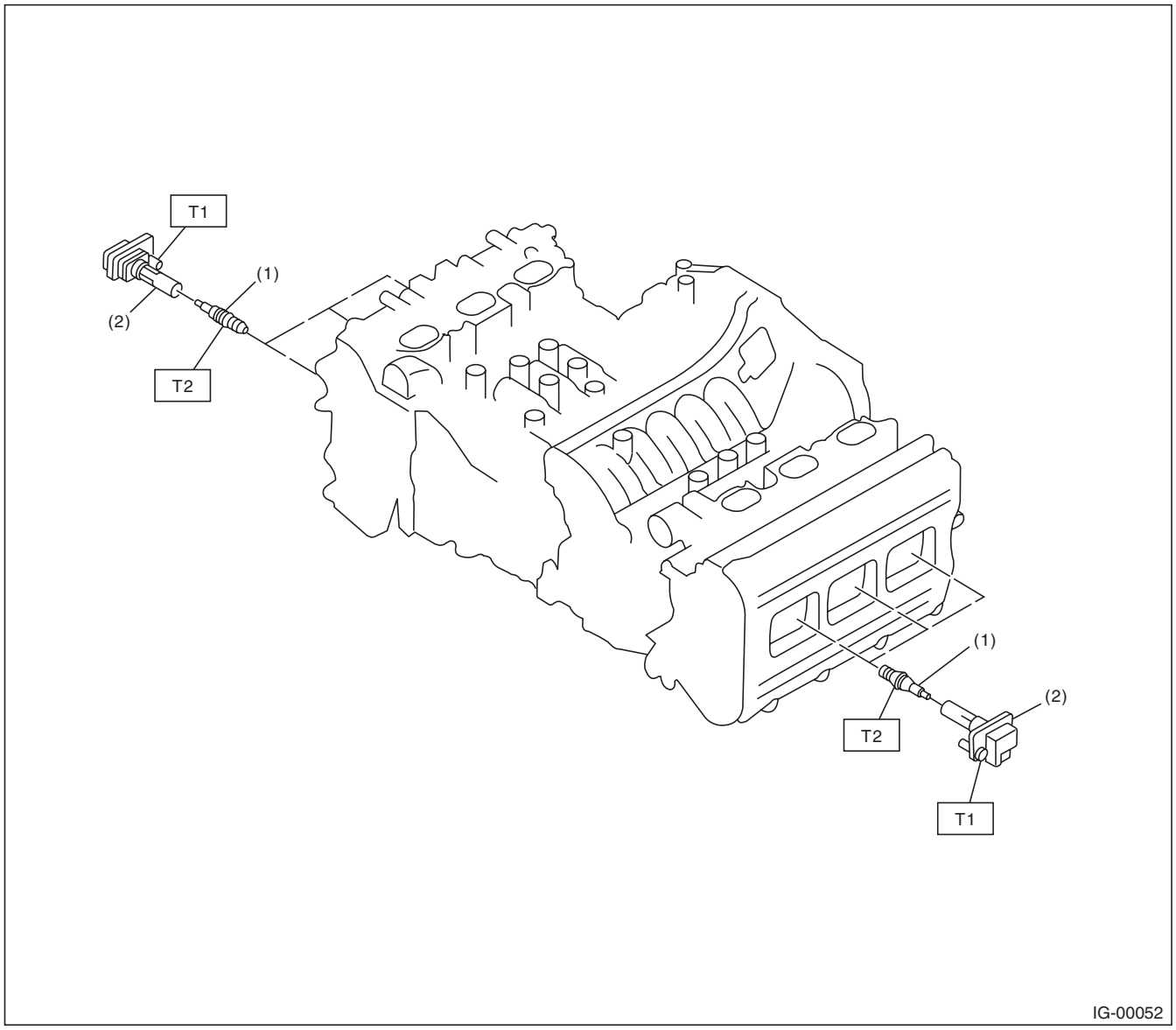

(1) Spark plug
(2) Ignition coil

Tightening torque:N·m (kgf-m, ft-lb)
T1: 16 (1.6, 11.8)
T2: 21 (2.1, 15.5)

C: CAUTION

- Wear appropriate work clothing, including a cap, protective goggles and protective shoes when performing any work.
- Remove contamination including dirt and corrosion before removal, installation or disassembly.
- Keep the disassembled parts in order and protect them from dust and dirt.
- Before removal, installation or disassembly, be sure to clarify the failure. Avoid unnecessary removal, installation, disassembly and replacement.
- Vehicle components are extremely hot after driving. Be wary of receiving burns from heated parts.
- Be sure to tighten fasteners including bolts and nuts to the specified torque.
- Place shop jacks or rigid racks at the specified points.
- Before disconnecting connectors of sensors or units, be sure to disconnect the ground cable from the battery.

2. Spark Plug

A: REMOVAL

Spark plug:
Refer to "SPECIFICATION" for the spark plug. <Ref. to IG(H6DO)-2, SPECIFICATION, General Description.>

1. RH SIDE

1) Remove the collector cover.
2) Disconnect the ground cable from battery.

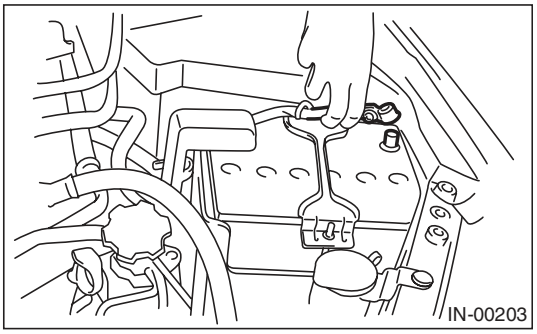

3) Remove the air cleaner case. <Ref. to IN(H6DO)-5, REMOVAL, Air Cleaner Case.>
4) Remove the bracket (A).
5) Disconnect the connector (B) from ignition coil.

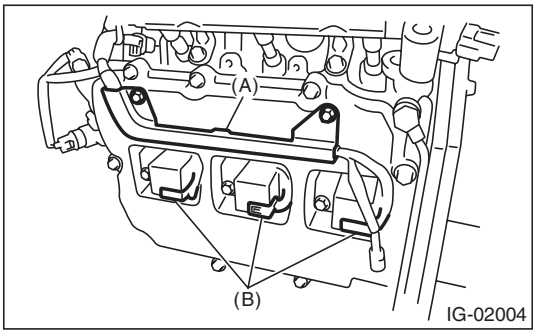

6) Remove the ignition coil.

NOTE:
Turn the #5 ignition coil to remove it.

7) Remove the spark plug with a spark plug socket.

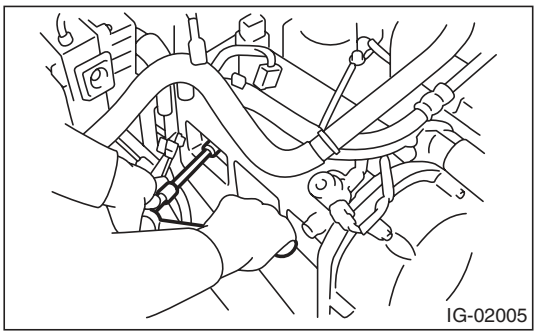

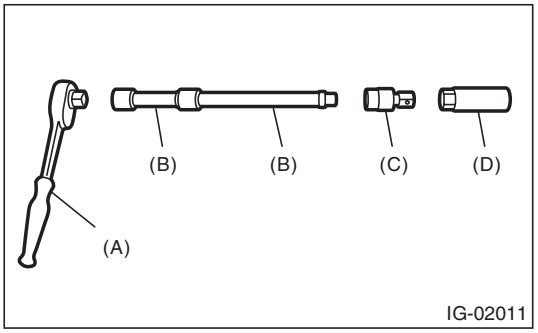

(A) Ratchet handle
(B) Extension bar
(C) Universal joint
(D) Spark plug socket

2. LH SIDE

1) Remove the collector cover.
2) Remove the battery and battery carrier. <Ref. to SC(H4SO)-20, REMOVAL, Battery.>
3) Remove the bracket (A).
4) Disconnect the connector (B) from ignition coil.

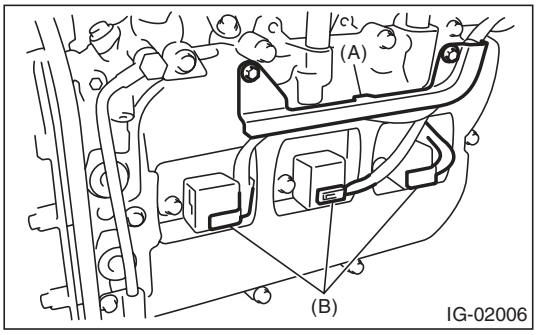

5) Remove the ignition coil.

NOTE:
Turn the #6 ignition coil to remove it.

6) Remove the spark plug with a spark plug socket.

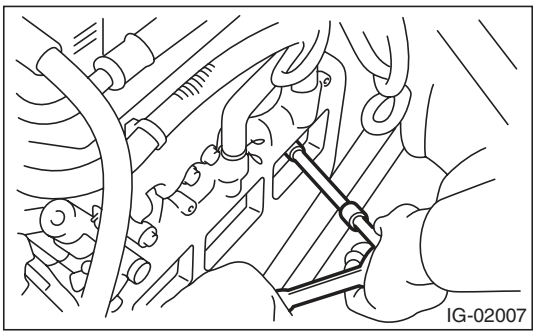

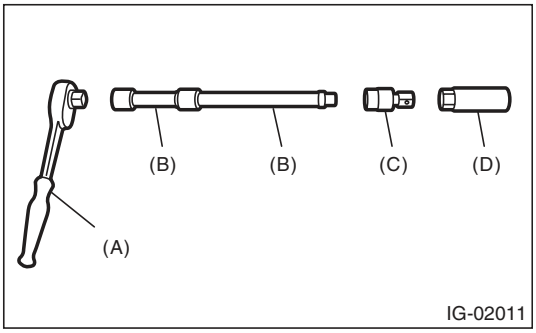

(A) Ratchet handle
(B) Extension bar
(C) Universal joint
(D) Spark plug socket

B: INSTALLATION

1. RH SIDE

Install in the reverse order of removal.

Tightening torque (Spark plug):
21 N·m (2.1 kgf-m, 15.5 ft-lb)

Tightening torque (Ignition coil):
16 N·m (1.6 kgf-m, 11.8 ft-lb)

2. LH SIDE

Install in the reverse order of removal.

Tightening torque (Spark plug):
21 N·m (2.1 kgf-m, 15.5 ft-lb)

Tightening torque (Ignition coil):
16 N·m (1.6 kgf-m, 11.8 ft-lb)

C: INSPECTION

Check the electrodes and inner and outer ceramic insulator of plugs, noting the type of deposits and the degree of electrode erosion.

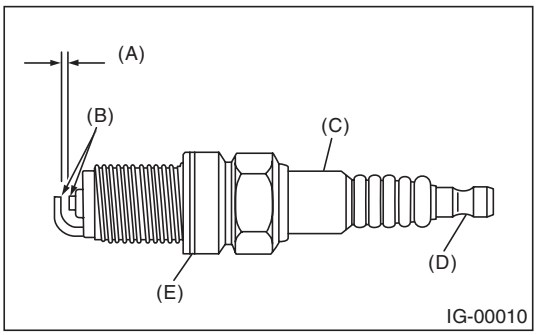

(A) Spark plug gap
(B) Carbon accumulation or wear
(C) Crack
(D) Damage
(E) Damaged gasket

1) Normal:
Brown to grayish-tan deposits and slight electrode wear indicate correct spark plug heat range.

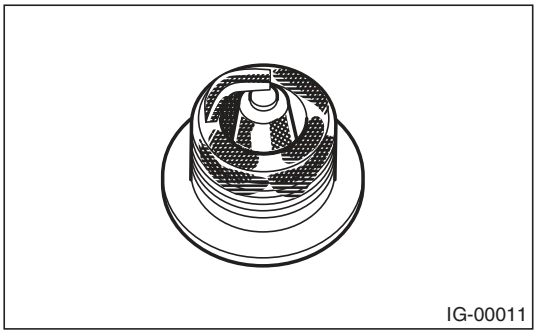

2) Carbon fouled:
Dry fluffy carbon deposits on insulator and electrode are mostly caused by slow speed driving in the city, weak ignition, too rich fuel mixture and dirty air cleaner.

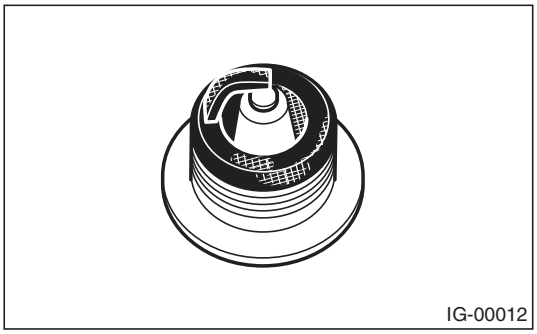

3) Oil fouled:
Wet black deposits show oil entrance into the combustion chamber through worn rings and excessive clearance between valve guides and stems.

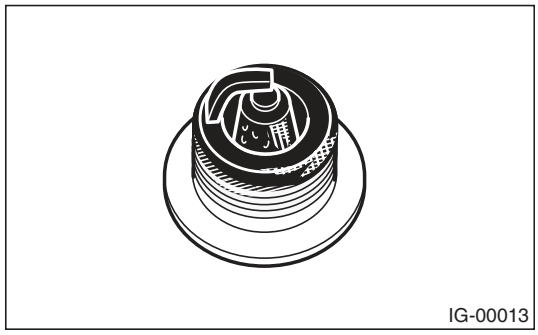

4) Overheating:
White or light gray insulator with black or brown spots and bluish burnt electrodes indicate engine overheating, incorrect ignition timing, wrong selection of fuel, and loose spark plugs.

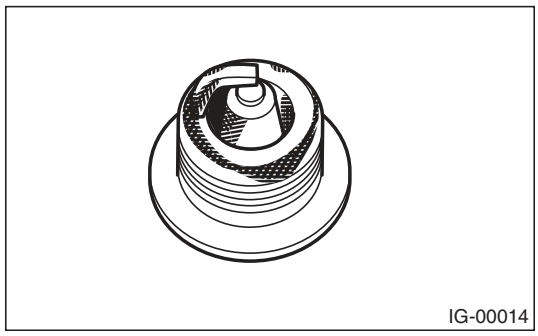

D: ADJUSTMENT

Clean spark plugs with a nylon brush, etc. Clean and remove the carbon or oxide deposits. If deposits are too stubborn, replace the spark plugs.
After cleaning the spark plugs, measure the spark plug gap using a gap gauge.

NOTE:
- Never use a plug cleaner.
- Never use a metal brush because it makes insulator worn.

Spark plug gap L:
0.7 — 0.8 mm (0.028 — 0.031 in)

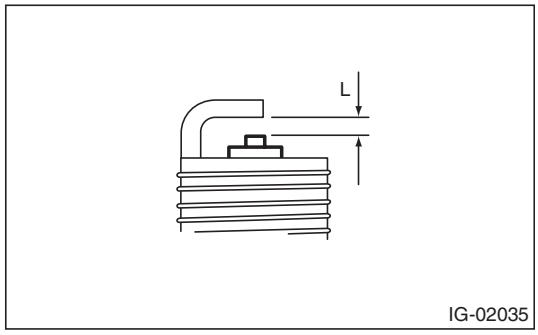

3. Ignition Coil

A: REMOVAL

Direct ignition type has been adopted. Refer to “Spark Plug” for removal procedure. <Ref. to IG(H6DO)-4, REMOVAL, Spark Plug.>

B: INSTALLATION

Install in the reverse order of removal.

Tightening torque:
16 N·m (1.6 kgf-m, 11.8 ft-lb)

C: INSPECTION

For inspection procedure, refer to “Diagnostics for Engine Starting Failure”. <Ref. to EN(H6DO)(diag)-73, IGNITION CONTROL SYSTEM, Diagnostics for Engine Starting Failure.>

1. General Description

A: SPECIFICATION

Specifications for the 3.0 L DOHC non-turbo model are included in the SC (H4SO) section. <Ref. to SC(H4SO)-2, General Description.>

1. Basic Diagnostic Procedure

A: PROCEDURE

1. ENGINE

Step		Check	Yes	No
1	**CHECK ENGINE START FAILURE.** 1) Ask the customer when and how the trouble occurred using the interview checklist. <Ref. to EN(H6DO)(diag)-3, CHECK, Check List for Interview.> 2) Start the engine.	Does the engine start?	Go to step **2**.	Inspection using Diagnostics for Engine Start Failure. <Ref. to EN(H6DO)(diag)-66, Diagnostics for Engine Starting Failure.>
2	**CHECK ILLUMINATION OF MALFUNCTION INDICATOR LIGHT.**	Does the malfunction indicator light illuminate?	Go to step **3**.	Inspection using "General Diagnostic Table" <Ref. to EN(H6DO)(diag)-353, INSPECTION, General Diagnostic Table.>
3	**CHECK THE COMMUNICATION STATUS.** 1) Turn the ignition switch to OFF. 2) Connect the Subaru Select Monitor or general scan tool to the data link connector. 3) Turn the ignition switch to ON, and run the Subaru Select Monitor or general scan tool. NOTE: • SUBARU SELECT MONITOR For detailed procedures, refer to "Subaru Select Monitor". <Ref. to EN(H6DO)(diag)-34, Subaru Select Monitor.> • General Scan Tool For detailed operation procedures, refer to the general scan tool operation manual.	Does Subaru select monitor or general scan tool communicate with vehicle normally?	Go to step **4**.	Inspection using "Diagnostics Procedure for Subaru Select Monitor Communication". <Ref. to EN(H6DO)(diag)-79, Diagnostic Procedure for Subaru Select Monitor Communication.>
4	**CHECK DTC.** Read DTC using Subaru Select Monitor or general scan tool. NOTE: • SUBARU SELECT MONITOR Refer to "Read Diagnostic Trouble Code" for detailed operation procedure. <Ref. to EN(H6DO)(diag)-43, Read Diagnostic Trouble Code (DTC).> • General Scan Tool For detailed operation procedures, refer to the general scan tool operation manual.	Is DTC displayed on the Subaru Select Monitor or general scan tool?	Record the DTC. Repair the trouble cause. <Ref. to EN(H6DO)(diag)-81, List of Diagnostic Trouble Code (DTC).> Go to step **5**.	Repair the related parts. NOTE: If DTC is not shown on display although the malfunction indicator light illuminates, perform the diagnosis of malfunction indicator light circuit or combination meter. <Ref. to EN(H6DO)(diag)-57, Malfunction Indicator Light.>
5	**PERFORM DIAGNOSIS.** 1) Perform the Clear Memory Mode. <Ref. to EN(H6DO)(diag)-52, Clear Memory Mode.> 2) Perform the Inspection Mode. <Ref. to EN(H6DO)(diag)-44, Inspection Mode.>	Is DTC displayed on the Subaru Select Monitor or general scan tool?	Inspect using "Diagnostic Procedure with Diagnostic Trouble Code (DTC)". <Ref. to EN(H6DO)(diag)-89, Diagnostic Procedure with Diagnostic Trouble Code (DTC).>	Finish the diagnosis.

2. Check List for Interview

A: CHECK

1. CHECK LIST NO. 1

Check the following item when problem has occurred.

NOTE:
Use copies of this page for interviewing customers.

Customer's name		Engine No.	
Date of purchase		Fuel brand	
Date of repair		Odometer reading	km
V.I.N.			miles
Weather	❑ Fine ❑ Cloudy ❑ Rainy ❑ Snowy ❑ Various/Others:		
Ambient air temperature	°C (°F)		
	❑ Hot ❑ Warm ❑ Cool ❑ Cold		
Place	❑ Highway ❑ Suburbs ❑ Inner city ❑ Uphill ❑ Downhill ❑ Rough road ❑ Others:		
Engine temperature	❑ Cold ❑ Warming-up ❑ After warming-up ❑ Any temperature ❑ Others:		
Engine speed	rpm		
Vehicle speed	km/h (MPH)		
Driving conditions	❑ Not affected ❑ At starting ❑ While idling ❑ At racing ❑ While accelerating ❑ While cruising ❑ While decelerating ❑ While turning (RH/LH)		
Headlight	❑ ON/❑ OFF	Rear defogger	❑ ON/❑ OFF
Blower	❑ ON/❑ OFF	Audio	❑ ON/❑ OFF
A/C compressor	❑ ON/❑ OFF	CD/Cassette	❑ ON/❑ OFF
Radiator fan	❑ ON/❑ OFF	Car phone	❑ ON/❑ OFF
Front wiper	❑ ON/❑ OFF	Wireless device	❑ ON/❑ OFF
Rear wiper	❑ ON/❑ OFF		

2. CHECK LIST NO. 2

Check the following item about the vehicle's state when malfunction indicator light illuminates.

NOTE:
Use copies of this page for interviewing customers.

a) Other warning lights or indicators turn on. ❑ Yes / ❑ No
❑ Low fuel warning light ❑ Charge indicator light ❑ Engine coolant temperature indicator light ❑ Oil pressure warning light ❑ ATF temperature indicator light or SPORT indicator light ❑ Drivers control center differential indicator light ❑ ABS warning light ❑ VDC warning light ❑ Cruise indicator light ❑ SI-CRUISE warning light ❑ Immobilizer indicator light ❑ STEERING indicator light ❑ Glow indicator ❑ Sedimentor warning light ❑ Others:
b) Fuel level
• Lack of gasoline: ❑ Yes / ❑ No • Indicator position of fuel gauge: • Experienced running out of fuel: ❑ Yes / ❑ No
c) Intentional connecting or disconnecting of harness connectors or spark plug cords: ❑ Yes / ❑ No
• What:
d) Intentional connecting or disconnecting of hoses: ❑ Yes / ❑ No
• What:
e) Installing of parts other than genuine parts: ❑ Yes / ❑ No
• What: • Where:
f) Occurrence of noise: ❑ Yes / ❑ No
• From where: • What kind:
g) Occurrence of smell: ❑ Yes / ❑ No
• From where: • What kind:
h) Intrusion of water into engine compartment or passenger compartment: ❑ Yes / ❑ No
i) Troubles occurred
❑ Engine does not start. ❑ Engine stalls during idling. ❑ Engine stalls while driving. ❑ Engine speed decreases. ❑ Engine speed does not decrease. ❑ Rough idling ❑ Poor acceleration ❑ Back fire ❑ After fire ❑ Does not shift. ❑ Excessive shift shock

3. General Description

A: CAUTION

1) Airbag system wiring harness is routed near the ECM, main relay and fuel pump relay.

CAUTION:
- **Do not use the electrical test equipment on airbag system circuits.**
- **Be careful not to damage the airbag system wiring harness when servicing the ECM, TCM, main relay and fuel pump relay.**

2) Never connect the battery in reverse polarity. Failure to do so will damage the ECM instantly, and other parts will also be damaged.
3) Do not disconnect the battery terminals while the engine is running. A large counter electromotive force will be generated in the generator, and this voltage may damage electronic parts such as ECM etc.
4) Before disconnecting the connectors of each sensor and ECM, be sure to turn the ignition switch to OFF. Perform the Clear Memory Mode after connecting the connectors. <Ref. to EN(H6DO)(diag)-52, Clear Memory Mode.>
5) When measuring the voltage or resistance of individual sensor or all electrical control modules, use a tapered pin with a diameter of less than 0.6 mm (0.024 in). Do not insert the pin 4 mm (0.16 in) or more into the part.

CAUTION:
When replacing the ECM, be careful not to use the wrong spec. ECM to avoid any damage on the fuel injection system.

NOTE:
When replacing the ECM of the models with Immobilizer, immobilizer system must be registered. To do so, all ignition keys and ID cards need to be prepared. For detailed operation procedures, refer to the “PC application help for Subaru Select Monitor”.
6) Take care not to allow water to get into the connector when servicing the vehicle in rainy weather or when washing the vehicle. Avoid exposure to water even if the connectors are waterproof.
7) Use ECM mounting stud bolts at the body side grounding point when measuring voltage and resistance inside the passenger compartment.

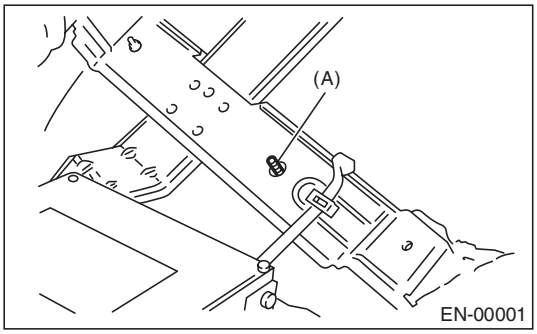

(A) Stud bolt

8) Use the engine ground terminal or engine assembly for the grounding point to chassis when measuring the voltage and resistance in engine compartment.

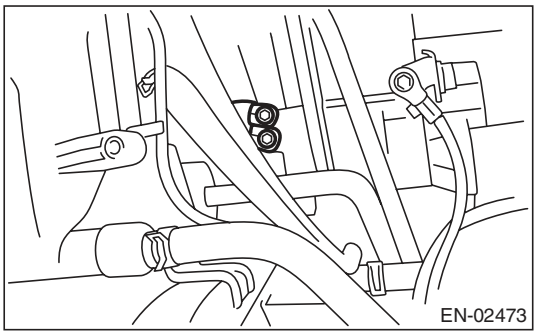

9) Every engine control system-related part is a precision part. Do not drop them.
10) Observe the following cautions when installing a radio in vehicle.

CAUTION:
- **The antenna must be kept as far apart as possible from control module. (The ECM is located under the passenger’s seat floor mat.)**
- **The antenna feeder must be placed as far apart as possible from the ECM and engine control system harness.**
- **Carefully adjust the antenna for correct matching.**
- **When mounting a large power type radio, pay special attention to the three items mentioned above.**
- **Incorrect installation of the radio may affect the operation of ECM.**

11) When disconnecting the fuel hose, release the fuel pressure. <Ref. to FU(H6DO)-43, RELEASING OF FUEL PRESSURE, PROCEDURE, Fuel.>

12) For the model with ABS, the ABS warning light may illuminate when performing driving test with jacked-up or lifted-up condition, but this is not a system malfunction. The reason for this is the speed difference between the front and rear wheels. After diagnosis of engine control system, perform the ABS memory clear procedure of self-diagnosis function.

B: INSPECTION

Before performing diagnostics, check the following item which might affect engine problems.

1. BATTERY

1) Measure the battery voltage and specific gravity of the electrolyte.

Standard voltage: 12 V

Specific gravity: 1.260 or more

2) Check the condition of the main and other fuses, and harnesses and connectors. Also check for proper grounding.

2. ENGINE GROUND

Check if the engine ground terminal is properly connected to engine.

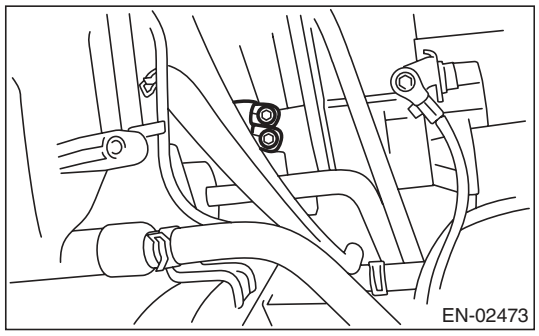

C: NOTE

- The on-board diagnostic (OBD) system detects and indicates a fault in various inputs and outputs of the complex electronic control. Malfunction indicator light in the combination meter indicates occurrence of a fault or trouble.
- Further, against such a failure or sensors as may disable the drive, the fail-safe function is provided to ensure the minimal drivability.
- The OBD system incorporated with the vehicles within this type of engine complies with OBD-II regulations. The OBD system monitors the components and the system malfunction listed in “Engine Section” which affects on emissions.
- When the system decides that a malfunction occurs, malfunction indicator light illuminates. At the same time of the malfunction indicator light illumination or blinking, a DTC and a freeze frame engine conditions are stored into on-board computer.
- The OBD system stores freeze frame engine condition data (engine load, engine coolant temperature, fuel trim, engine speed and vehicle speed, etc.) into on-board computer when it detects a malfunction.
- Freeze frame engine condition data are stored until the DTCs are cleared. However when such malfunctions as fuel trim fault and misfire are detected with the freeze frame engine condition data stored, they are rewritten into those related to the fuel trim fault and misfire.
- When the malfunction does not occur again for three consecutive driving cycles, malfunction indicator light is turned off, but DTC remains at on-board computer.
- When troubleshooting the vehicle which complies with OBD-II regulations, connect the Subaru Select Monitor or general scan tool to the vehicle.

D: PREPARATION TOOL

ILLUSTRATION	TOOL NUMBER	DESCRIPTION	REMARKS
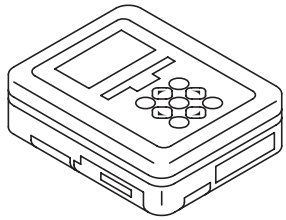 ST1B022XU0	1B022XU0	SUBARU SELECT MONITOR III KIT	Used for troubleshooting the electrical system.
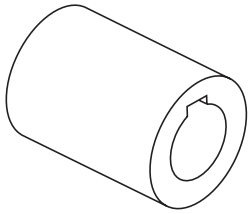 ST18252AA000	18252AA000	CRANKSHAFT SOCKET	Used for rotating crankshaft.

4. Electrical Component Location

A: LOCATION

1. CONTROL MODULE

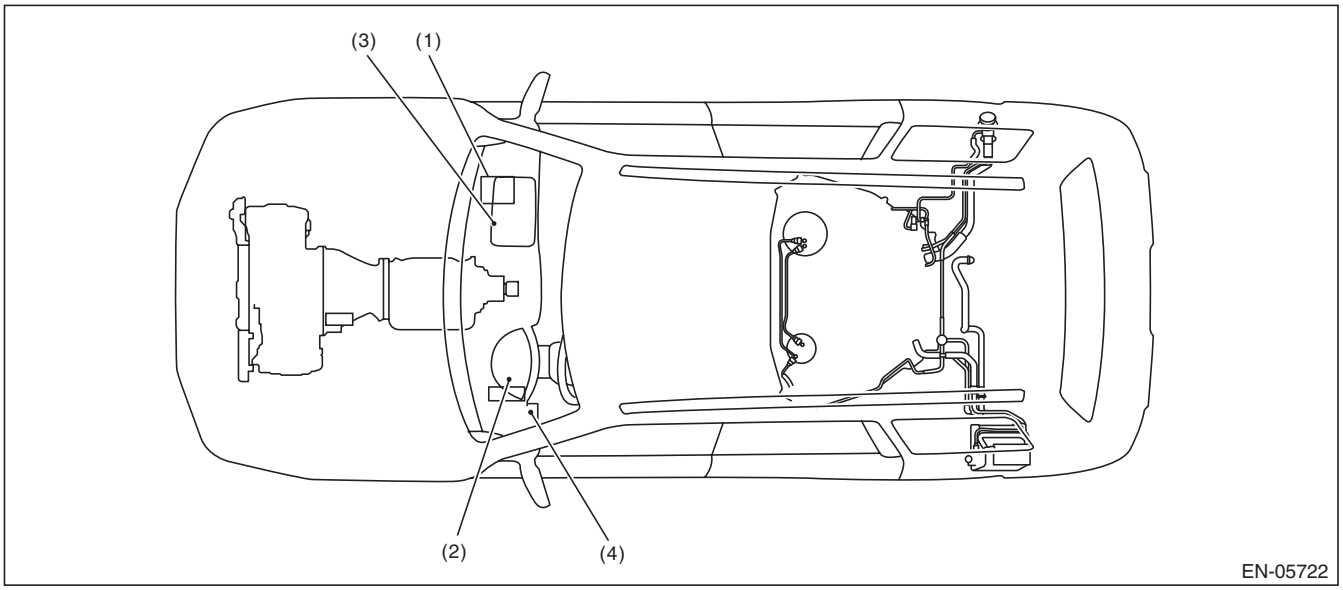

(1) Engine control module (ECM)
(2) Malfunction indicator light
(3) Delivery (test) mode connector
(4) Data link connector

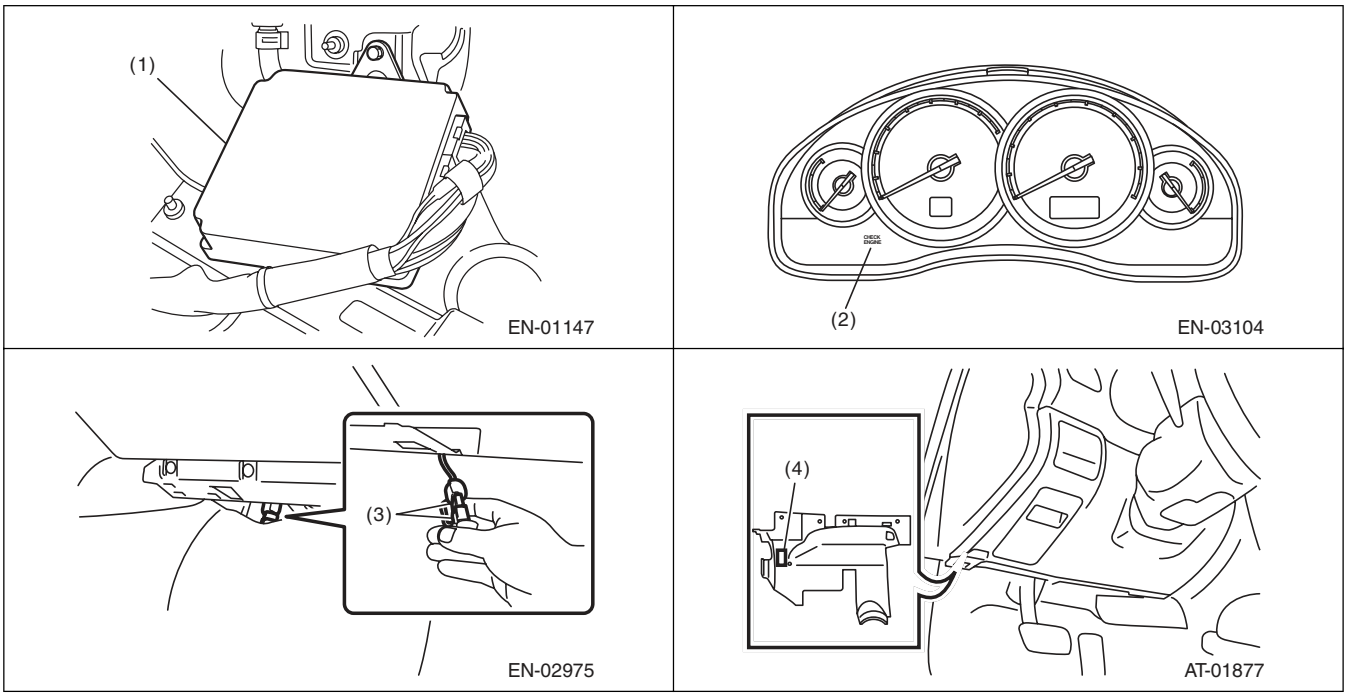

2. SENSOR

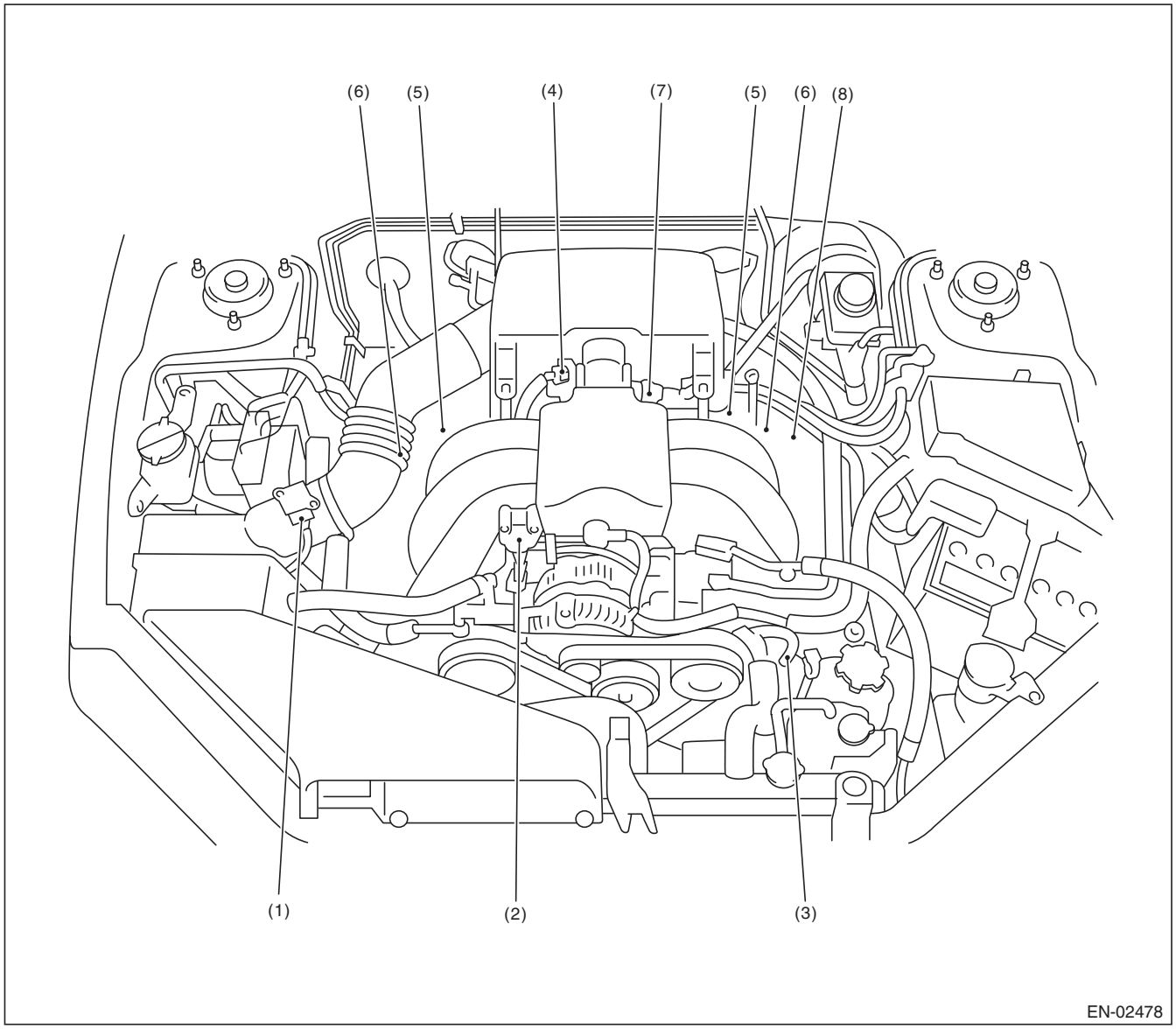

(1)	Mass air flow and intake air temperature sensor	(3)	Engine coolant temperature sensor	(6)	Camshaft position sensor
(2)	Manifold absolute pressure sensor	(4)	Electronic throttle control	(7)	Crankshaft position sensor
		(5)	Knock sensor	(8)	Oil temperature sensor

Electrical Component Location

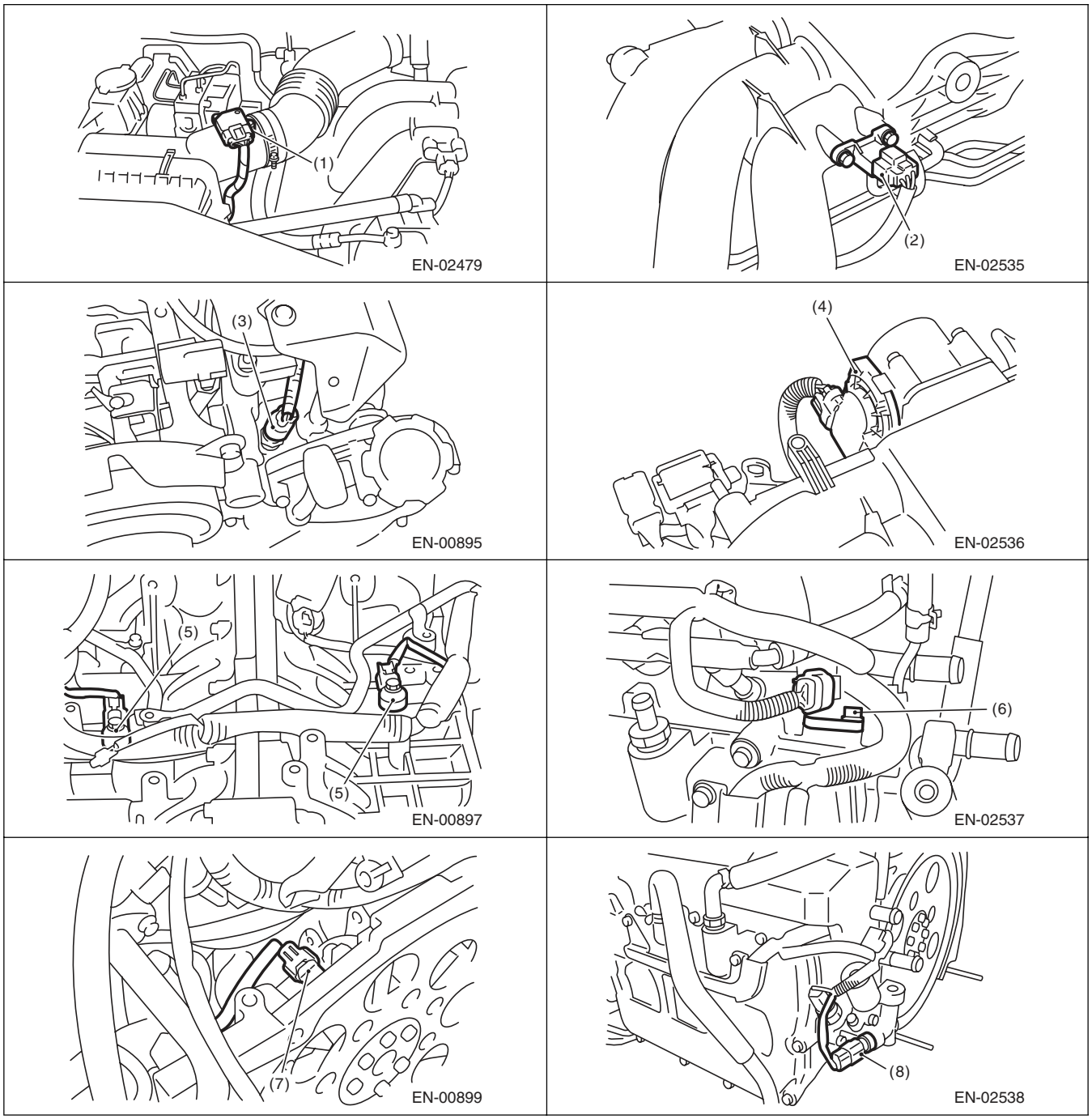

Electrical Component Location

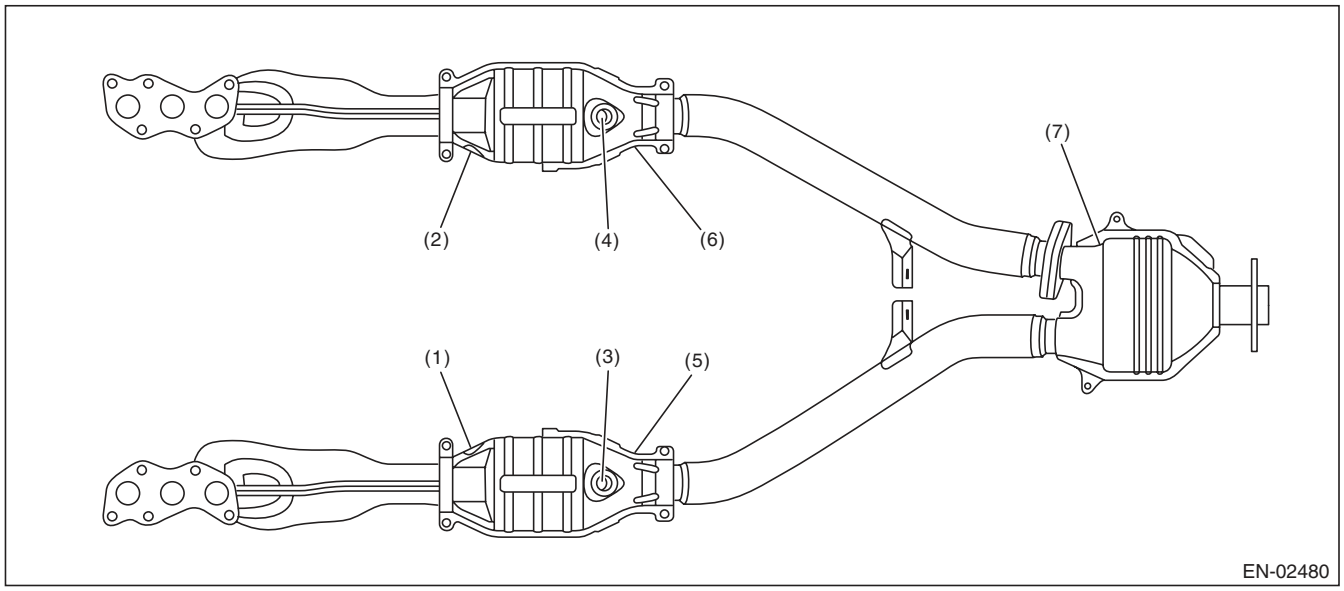

(1) Front oxygen (A/F) sensor LH
(2) Front oxygen (A/F) sensor RH
(3) Rear oxygen sensor LH
(4) Rear oxygen sensor RH
(5) Front catalytic converter LH
(6) Front catalytic converter RH
(7) Rear catalytic converter

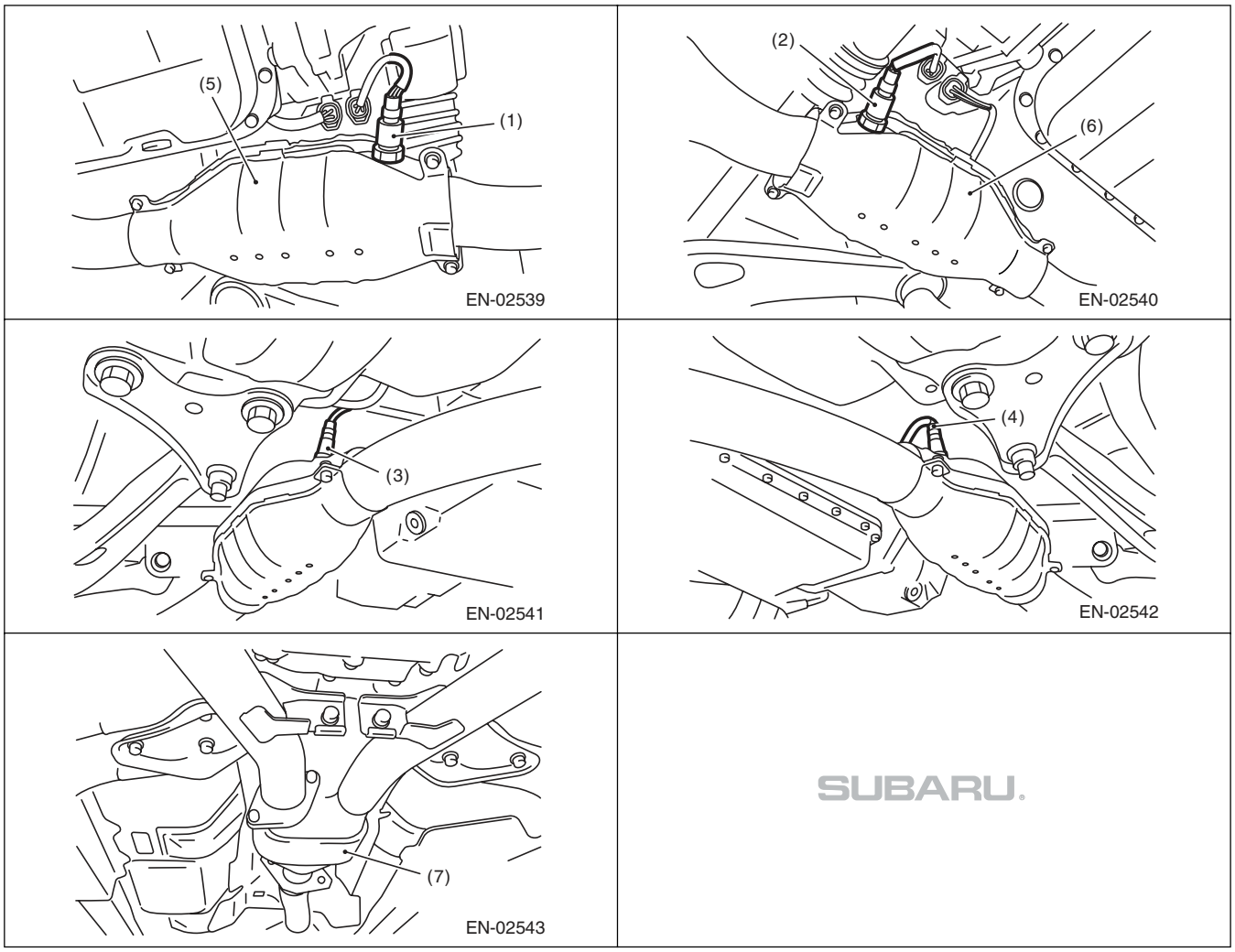

Electrical Component Location

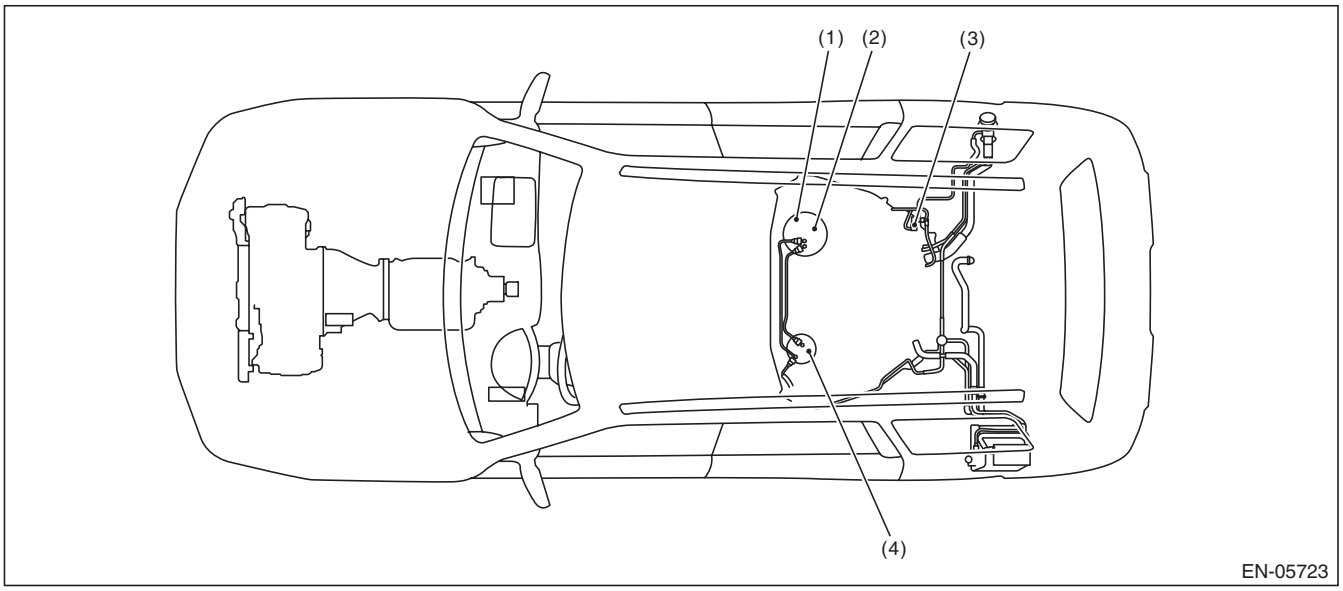

(1) Fuel level sensor
(2) Fuel temperature sensor
(3) Fuel tank pressure sensor
(4) Fuel sub level sensor

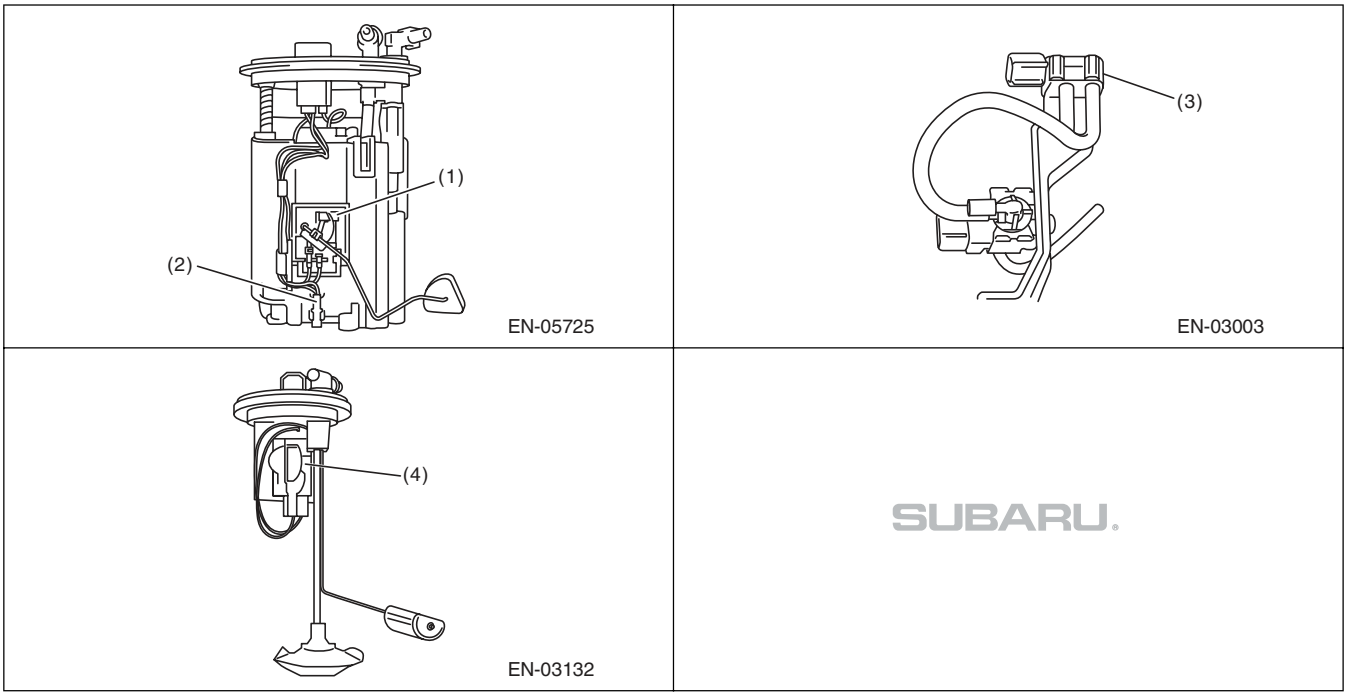

3. SOLENOID VALVE, ACTUATOR, EMISSION CONTROL SYSTEM PARTS AND IGNITION SYSTEM PARTS

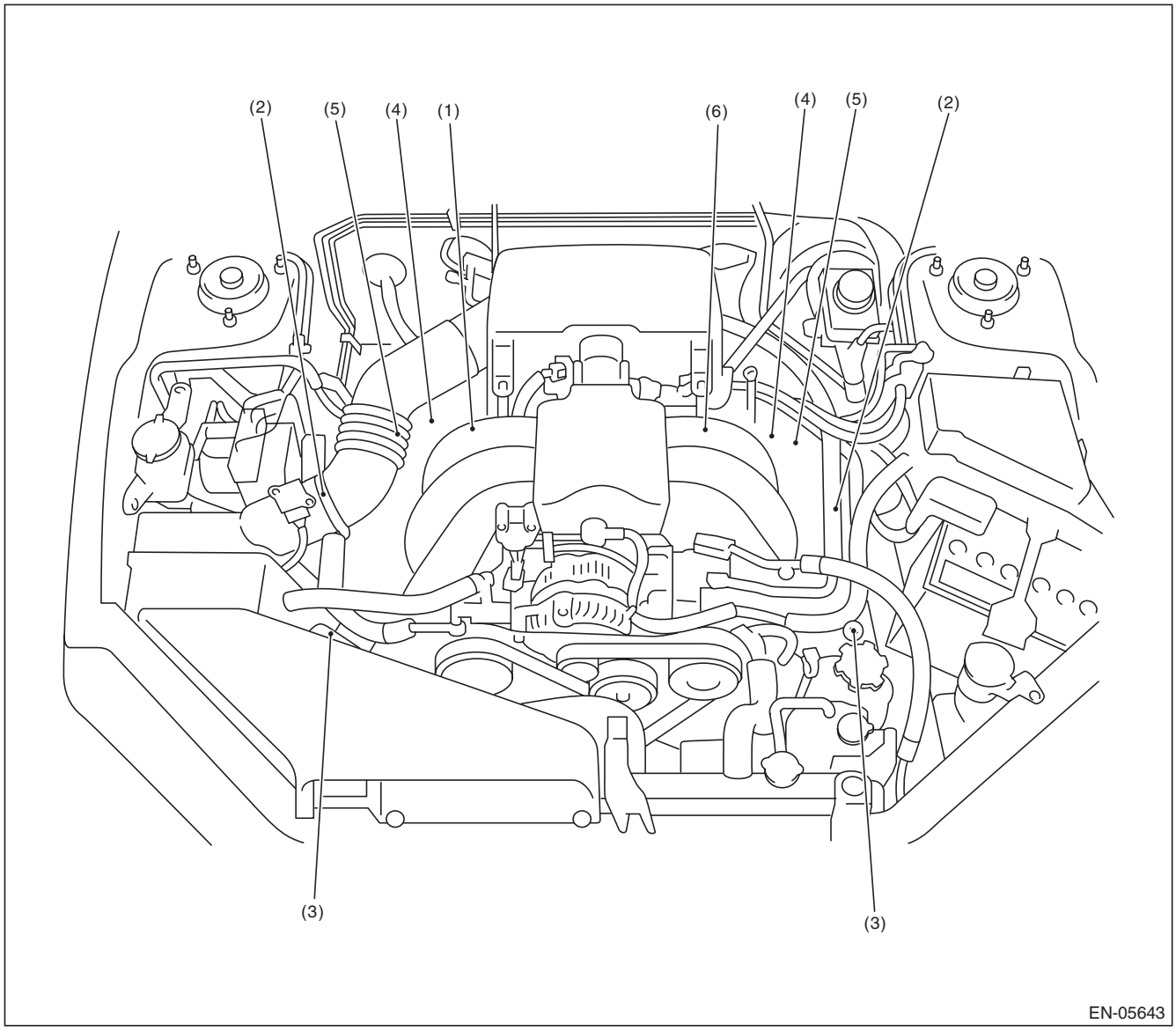

(1) Purge control solenoid valve
(2) Ignition coil
(3) Oil flow control solenoid valve
(4) Oil switching solenoid valve
(5) Variable valve lift diagnosis oil pressure switch
(6) EGR valve

Electrical Component Location

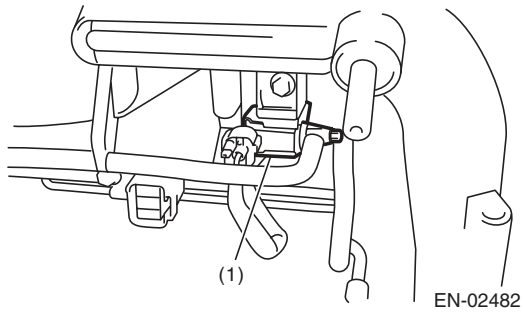

EN-02482

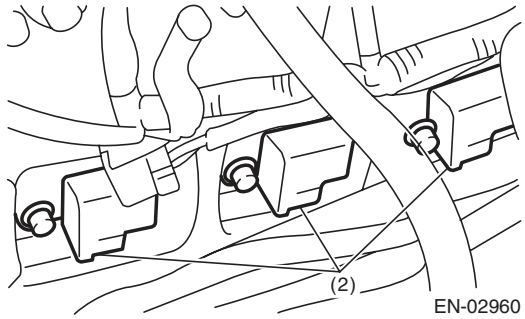

EN-02960

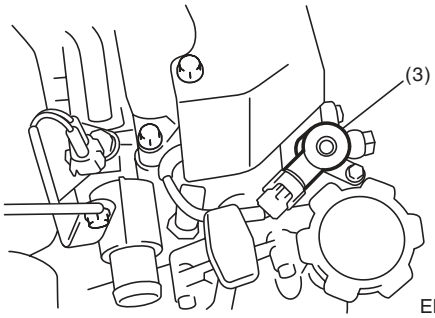

EN-02961

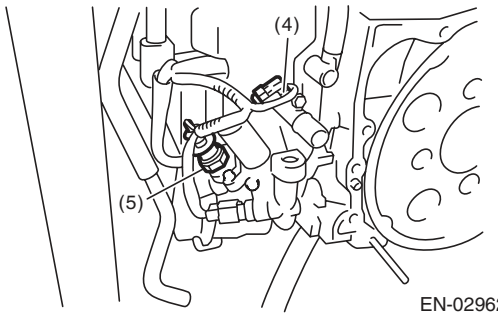

EN-02962

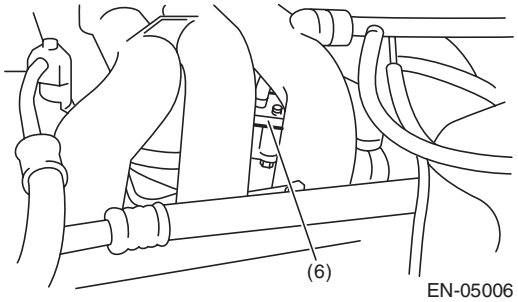

EN-05006

Electrical Component Location

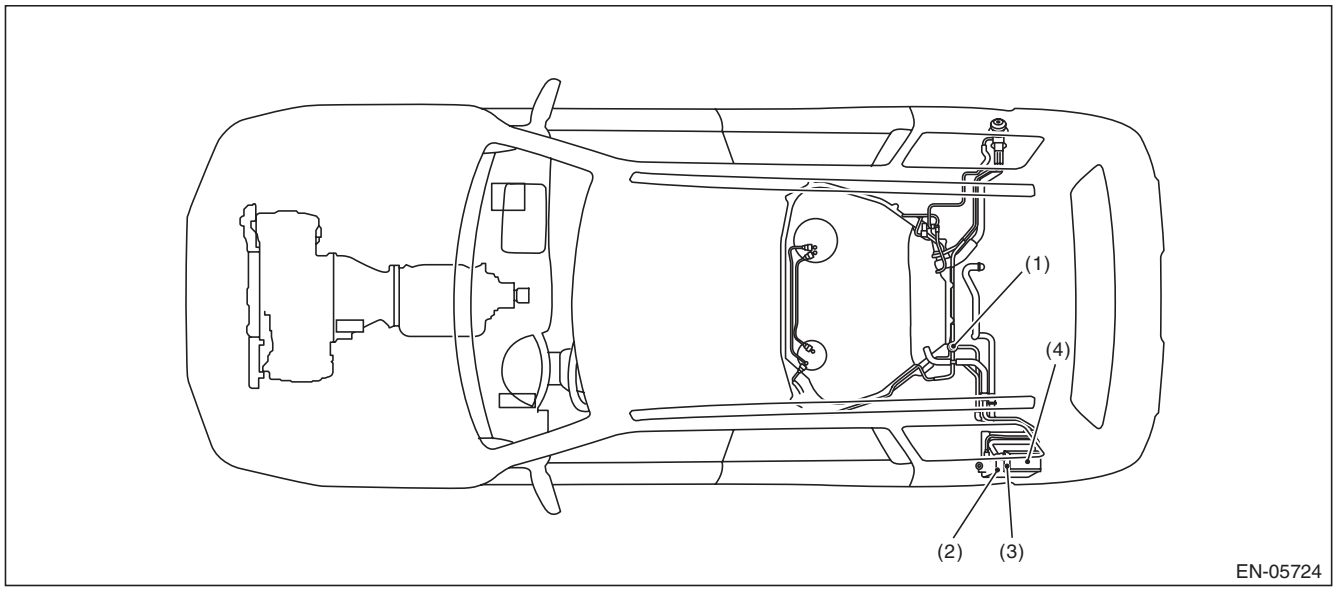

(1) Pressure control solenoid valve
(2) Canister
(3) Drain valve
(4) Drain filter

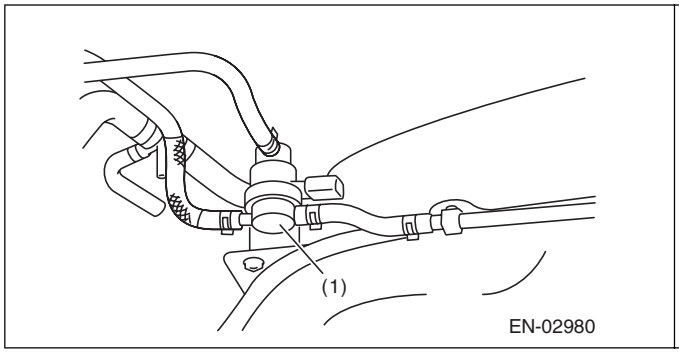

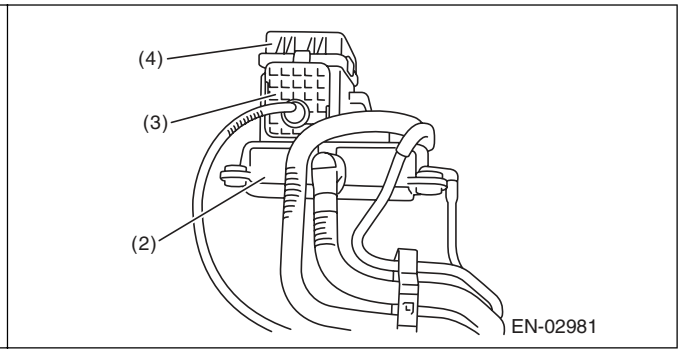

Electrical Component Location

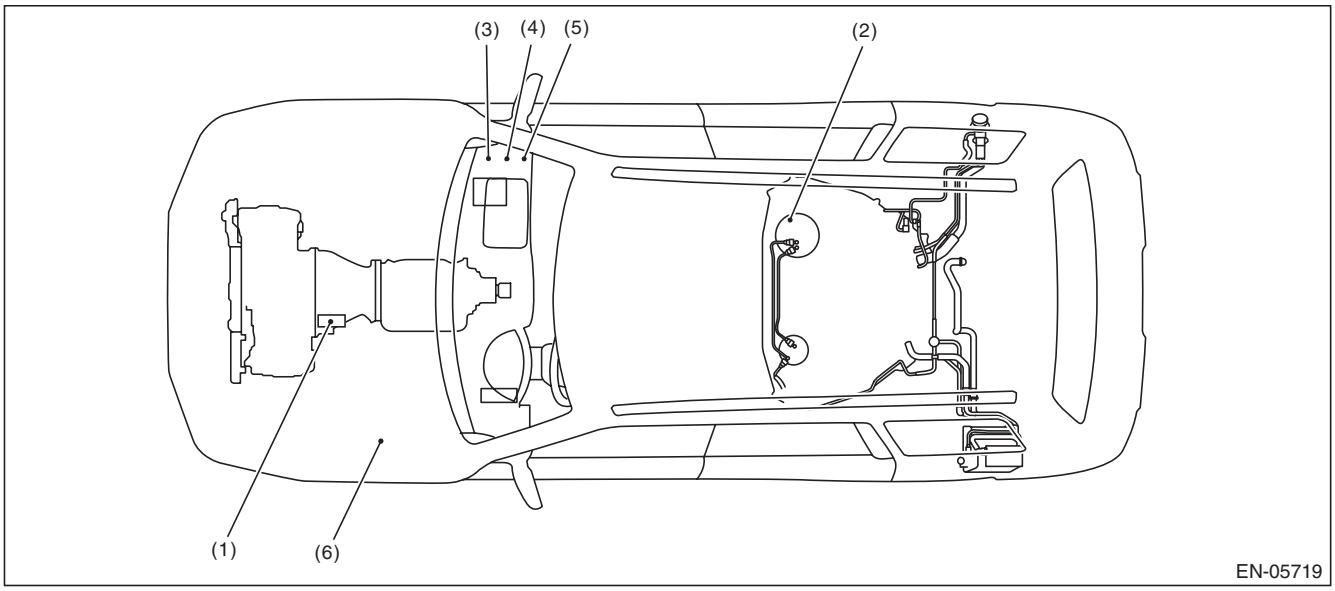

(1)	Starter	(3)	Main relay	(5)	Electronic throttle control relay
(2)	Fuel pump	(4)	Fuel pump relay	(6)	Radiator fan relay

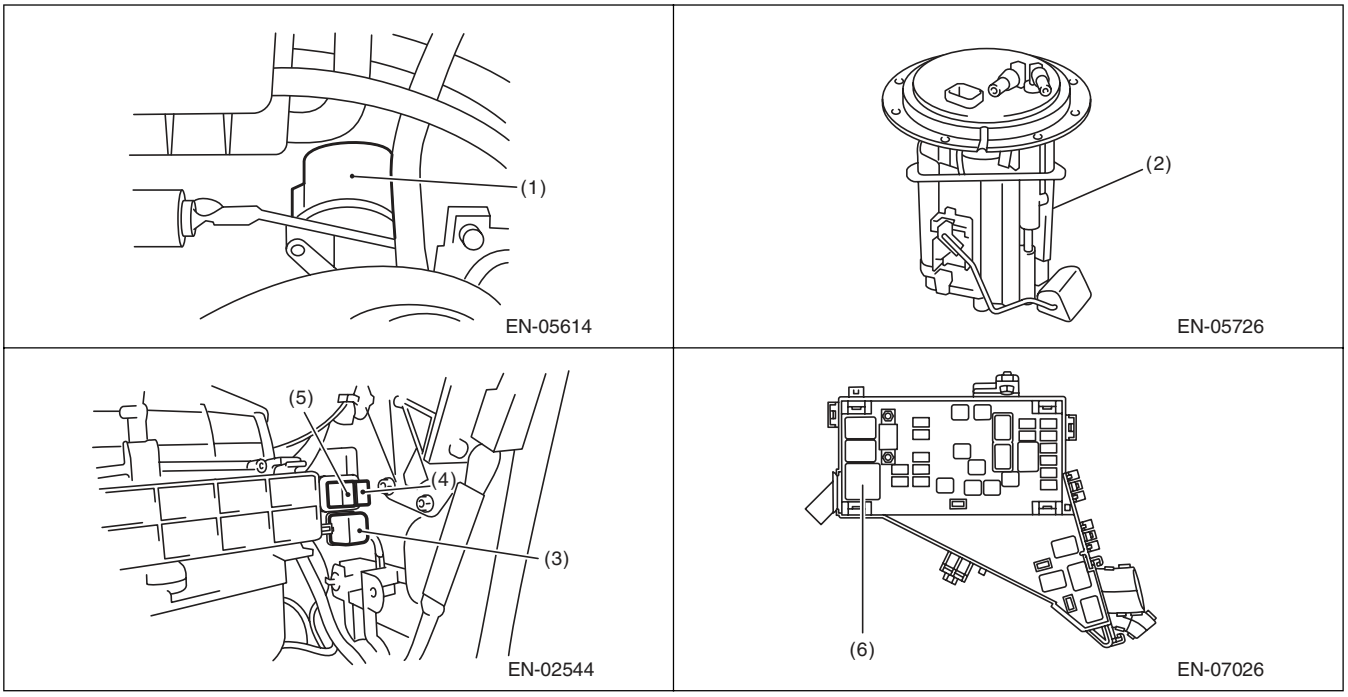

5. Engine Control Module (ECM) I/O Signal

A: ELECTRICAL SPECIFICATION

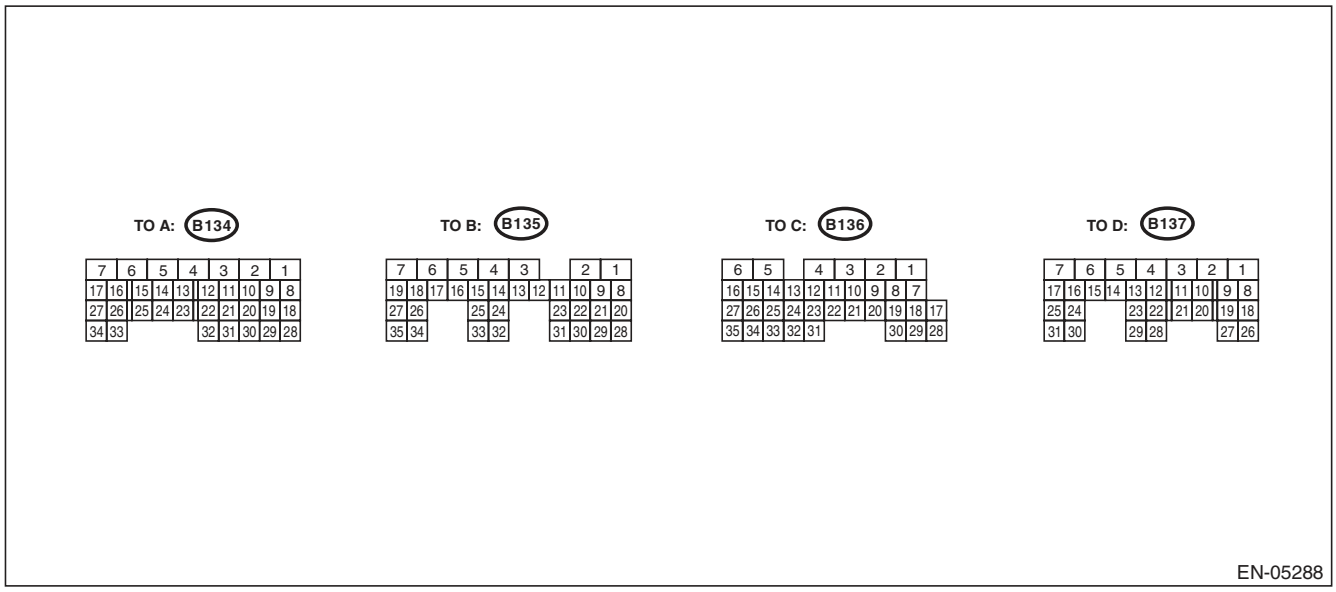

Description		Connector No.	Terminal No.	Signal (V)		Reference
				Ignition SW ON (engine OFF)	Engine ON (idling)	
Crankshaft position sensor	Signal (+)	B134	13	0	–7 — +7	Waveform
	Signal (–)	B134	14	0	0	—
	Shield	B134	24	0	0	—
Camshaft position sensor (LH)	Signal	B134	21	0.275	0 or 5	Waveform
	Ground	B134	22	0	0	—
Camshaft position sensor (RH)	Signal	B134	11	0.275	0 or 5	Waveform
	Ground	B134	22	0	0	—
Electronic throttle control	Main	B134	18	0.64 — 0.94 Fully opened: 4.01	0.64 — 0.72 (After engine is warmed up.)	Fully closed: 0.6 Fully opened: 4.01
	Sub	B134	28	1.51 — 1.76 Fully opened: 4.23	1.51 — 1.58 (After engine is warmed up.)	Fully closed: 1.48 Fully opened: 4.23
Electronic throttle control motor (+)		B137	5	Duty waveform	Duty waveform	Drive frequency: 500 Hz
Electronic throttle control motor (–)		B137	4	Duty waveform	Duty waveform	Drive frequency: 500 Hz
Electronic throttle control motor power supply		B136	1	10 — 13	12 — 14	—
Electronic throttle control motor relay		B136	21	ON: 0 OFF: 10 — 13	ON: 0 OFF: 12 — 14	When ignition switch is turned to ON: ON
EGR valve	Signal A+	B134	8	10 — 13	12 — 14	—
	Signal A–	B134	9	10 — 13	12 — 14	—
	Signal B+	B134	10	10 — 13	12 — 14	—
	Signal B–	B134	20	10 — 13	12 — 14	—

Engine Control Module (ECM) I/O Signal

Description		Connector No.	Terminal No.	Signal (V)		Reference
				Ignition SW ON (engine OFF)	Engine ON (idling)	
Accelerator pedal position sensor	Main sensor signal	B135	23	Fully closed: 1 Fully opened: 3.6	Fully closed: 1 Fully opened: 3.3	—
	Main power supply	B135	21	5	5	—
	Ground (main sensor)	B135	29	0	0	—
	Sub sensor signal	B135	31	Fully closed: 1 Fully opened: 3.7	Fully closed: 1 Fully opened: 3.3	—
	Sub power supply	B135	22	5	5	—
	Ground (sub sensor)	B135	30	0	0	—
Engine coolant temperature sensor		B134	34	1.0 — 1.4	1.0 — 1.4	After engine is warmed up.
Starter switch		B136	32	0	0	Cranking: 8 — 14
Starter relay		B136	20	ON: 0 OFF: 10 — 13	ON: 0 OFF: 12 — 14	—
A/C switch		B136	24	ON: 10 — 13 OFF: 0	ON: 12 — 14 OFF: 0	—
A/C lock sensor		B135	14	Duty waveform	Duty waveform	Auto A/C model
A/C middle pressure switch		B136	33	ON: 0 OFF: 10 — 13	ON: 0 OFF: 12 — 14	—
Ignition switch		B135	19	10 — 13	12 — 14	—
Neutral position switch		B136	31	ON: 0 OFF: 12±0.5		Switch is ON when select lever is shifted into “P” range or “N” range.
Delivery (test) mode connector		B135	27	12 — 14	12 — 14	When connected: 0
Knock sensor 1	Signal	B134	15	2.4	2.4	—
	Shield	B134	25	0	0	—
Knock sensor 2	Signal	B134	16	2.4	2.4	—
	Shield	B134	25	0	0	—
Back-up power supply		B135	5	10 — 13	12 — 14	Ignition switch “OFF”: 10 — 13
Control module power supply		B135	2	10 — 13	12 — 14	—
		B134	7	10 — 13	12 — 14	—
Sensor power supply		B134	19	5	5	—
Ignition control	#1	B137	18	0	0 — 14	Waveform
	#2	B137	19	0	0 — 14	Waveform
	#3	B137	20	0	0 — 14	Waveform
	#4	B137	21	0	0 — 14	Waveform
	#5	B137	22	0	0 — 14	Waveform
	#6	B137	23	0	0 — 14	Waveform
Fuel injector	#1	B137	8	10 — 13	1 — 14	Waveform
	#2	B137	9	10 — 13	1 — 14	Waveform
	#3	B137	10	10 — 13	1 — 14	Waveform
	#4	B137	11	10 — 13	1 — 14	Waveform
	#5	B137	12	10 — 13	1 — 14	Waveform
	#6	B137	13	10 — 13	1 — 14	Waveform
A/C relay control		B136	9	ON: 0.5 or less OFF: 10 — 13	ON: 0.5 or less OFF: 12 — 14	—

Engine Control Module (ECM) I/O Signal

Description		Connector No.	Terminal No.	Signal (V)		Reference
				Ignition SW ON (engine OFF)	Engine ON (idling)	
Blower fan switch		B135	16	ON: 0 OFF: 10 — 13	ON: 0 OFF: 12 — 14	Manual A/C model
Radiator fan control		B136	18	ON: 0.5 or less OFF: 10 — 13	ON: 0.5 or less OFF: 12 — 14	—
Radiator fan control power supply		B136	29	ON: 0.5 or less OFF: 10 — 13	ON: 0.5 or less OFF: 12 — 14	—
Self-shutoff control		B136	23	0	0	—
Malfunction indicator light		B136	11	—	—	Light “ON”: 1 or less Light “OFF”: 10 — 14
Engine speed output		B136	22	—	0 — 13 or more	Waveform
Purge control solenoid valve		B137	29	ON: 1 or less OFF: 10 — 13	ON: 1 or less OFF: 12 — 14	—
Power steering switch		B134	33	ON: 1 or less OFF: 10 — 13	ON: 1 or less OFF: 12 — 14	—
Manifold absolute pressure sensor		B134	6	3.5 — 4.8	1.1 — 1.9	—
Air flow sensor	Signal	B135	26	0.74	0.3 — 4.5	—
	Shield	B135	35	0	0	—
	Ground	B135	34	0	0	—
Intake air temperature sensor		B135	18	3.15 — 3.33	3.15 — 3.33	Intake air temperature: 25°C (77°F)
Front oxygen (A/F) sensor RH	Signal (+)	B135	9	2.8 — 3.2	2.8 — 3.2	—
	Signal (–)	B135	8	2.4 — 2.7	2.4 — 2.7	—
	Shield	B135	1	0	0	—
Front oxygen (A/F) sensor heater RH	Signal 1	B136	3	12 — 14	—	Waveform
	Signal 2	B136	2	12 — 14	—	Waveform
Front oxygen (A/F) sensor LH	Signal (+)	B135	11	2.8 — 3.2	2.8 — 3.2	—
	Signal (–)	B135	10	2.4 — 2.7	2.4 — 2.7	—
	Shield	B135	1	0	0	—
Front oxygen (A/F) sensor heater LH	Signal 1	B135	7	12 — 14	—	Waveform
	Signal 2	B135	6	12 — 14	—	Waveform
Rear oxygen sensor RH	Signal	B135	4	0	0 — 0.9	—
	Shield	B135	1	0	0	—
Rear oxygen sensor heater RH signal		B136	4	12 — 14	—	Waveform
Rear oxygen sensor LH	Signal	B135	15	0	0 — 0.9	—
	Shield	B135	1	0	0	—
Rear oxygen sensor heater LH signal		B136	5	12 — 14	—	Waveform
Immobilizer communication 1		B136	26	10	10	—
Immobilizer communication 2		B136	34	10	10	—
Fuel pump control unit	Signal 1	B135	33	0	12 — 14	—
	Signal 2	B136	12	0	0 or 5	—
Brake switch 1		B135	20	When brake pedal is depressed: 0 When brake pedal is released: 10 — 13	When brake pedal is depressed: 0 When brake pedal is released: 12 — 14	—
Brake switch 2		B135	28	When brake pedal is depressed: 10 — 13 When brake pedal is released: 0	When brake pedal is depressed: 12 — 14 When brake pedal is released: 0	—

Engine Control Module (ECM) I/O Signal

Description		Connector No.	Terminal No.	Signal (V)		Reference
				Ignition SW ON (engine OFF)	Engine ON (idling)	
Cruise control command switch		B135	24	When not operating: 3.5 — 4.5 When operating RES/ACC: 2.5 — 3.5 When operating SET/COAST: 0.5 — 1.5 When operating CANCEL: 0 — 0.5	When not operating: 3.5 — 4.5 When operating RES/ACC: 2.5 — 3.5 When operating SET/COAST: 0.5 — 1.5 When operating CANCEL: 0 — 0.5	—
Cruise control main switch		B135	12	ON: 0 OFF: 5	ON: 0 OFF: 5	—
Oil flow control solenoid valve RH	Signal (+)	B137	17	0	0.6	—
	Signal (–)	B137	16	0	0	—
Oil flow control solenoid valve LH	Signal (+)	B137	15	0	0.6	—
	Signal (–)	B137	14	0	0	—
Oil switching solenoid valve RH	Signal (+)	B137	25	0	1.9	—
	Signal (–)	B137	24	0	0	—
Oil switching solenoid valve LH	Signal (+)	B137	31	0	1.9	—
	Signal (–)	B137	30	0	0	—
Oil temperature sensor signal		B134	23	1.0 — 1.4	1.0 — 1.4	After engine is warmed up.
Variable valve lift diagnosis oil pressure switch RH		B134	31	0	0	—
Variable valve lift diagnosis oil pressure switch LH		B134	32	0	0	—
Generator control		B136	10	0 — 6.5	0 — 6.5	—
SSM communication line		B136	16	1 or less ←→ 4 or more	1 or less ←→ 4 or more	—
Clutch switch		B136	25	10 — 13	12 — 14	—
GND (sensor)		B135	30	0	0	—
Ground (ignition system)	(Ignition 1)	B137	26	0	0	—
	(Ignition 2)	B137	6	0	0	—
Ground	Engine 1	B134	5	0	0	—
	Engine 2	B137	7	0	0	—
	Engine 3	B137	2	0	0	—
	Engine 4	B137	1	0	0	—
	Engine 5	B137	3	0	0	—
	Engine 6	B134	3	0	0	—
	Body	B136	6	0	0	—
Sensor GND (engine side)		B134	29	0	0	—
Fuel tank pressure sensor		B135	32	2.3	2.7	—
Pressure control solenoid valve		B136	28	ON: 1 or less OFF: 10 — 13	ON: 1 or less OFF: 12 — 14	—
Drain valve		B136	17	ON: 1 or less OFF: 10 — 13	ON: 1 or less OFF: 12 — 14	—
Fuel temperature sensor		B135	17	2.5 — 3.8	2.5 — 3.8	Ambient temperature: 25°C (77°F)
CAN communication (+)		B136	27	2.0 — 4.5	2.0 — 4.5	Waveform
CAN communication (–)		B136	35	0.5 — 3.0	0.5 — 3.0	Waveform

Input/output name	Measuring condition	Waveform
1. Crankshaft position sensor	At idling	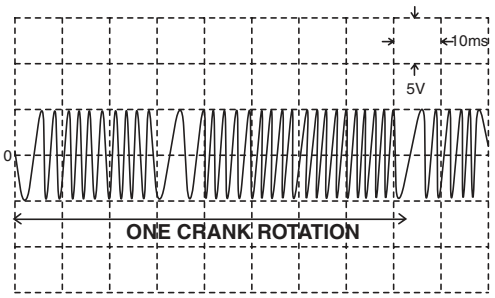 EN-05357
2. Camshaft position sensor	At idling	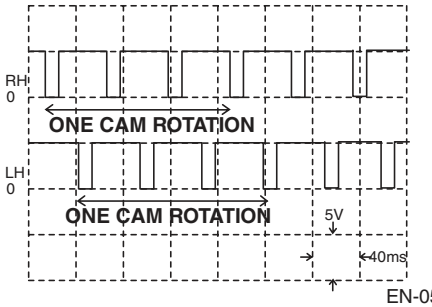 EN-05358

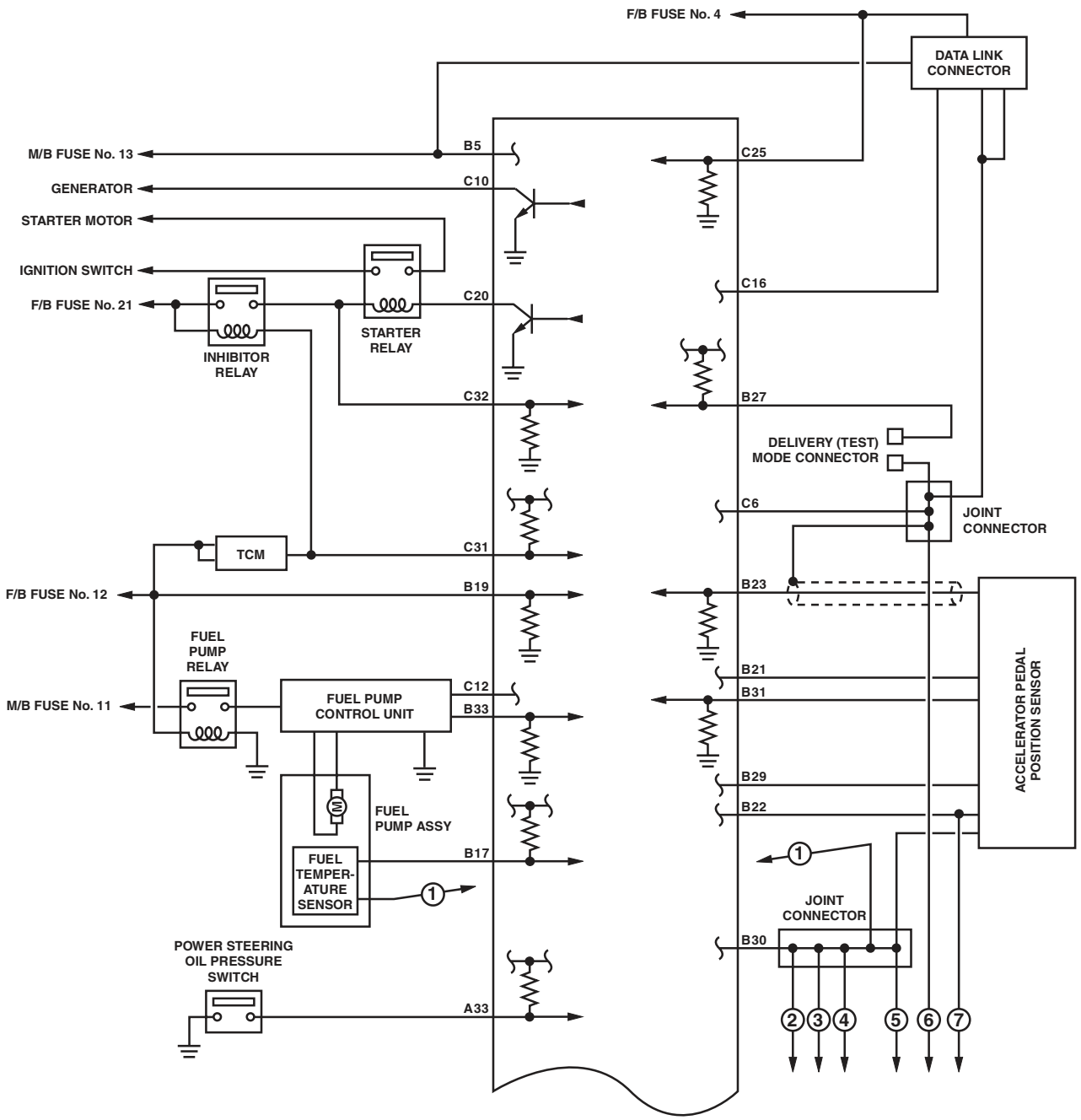
F/B FUSE No. 4
DATA LINK CONNECTOR
M/B FUSE No. 13
B5
C25
GENERATOR
C10
STARTER MOTOR
IGNITION SWITCH
C16
F/B FUSE No. 21
C20
STARTER RELAY
INHIBITOR RELAY
C32
B27
DELIVERY (TEST) MODE CONNECTOR
C6
JOINT CONNECTOR
TCM
C31
F/B FUSE No. 12
B19
B23
FUEL PUMP RELAY
B21
M/B FUSE No. 11
FUEL PUMP CONTROL UNIT
C12
B33
B31
ACCELERATOR PEDAL POSITION SENSOR
B29
B22
FUEL PUMP ASSY
B17
FUEL TEMPER-ATURE SENSOR
1
JOINT CONNECTOR
B30
POWER STEERING OIL PRESSURE SWITCH
A33
2 3 4 5 6 7

EN-06849

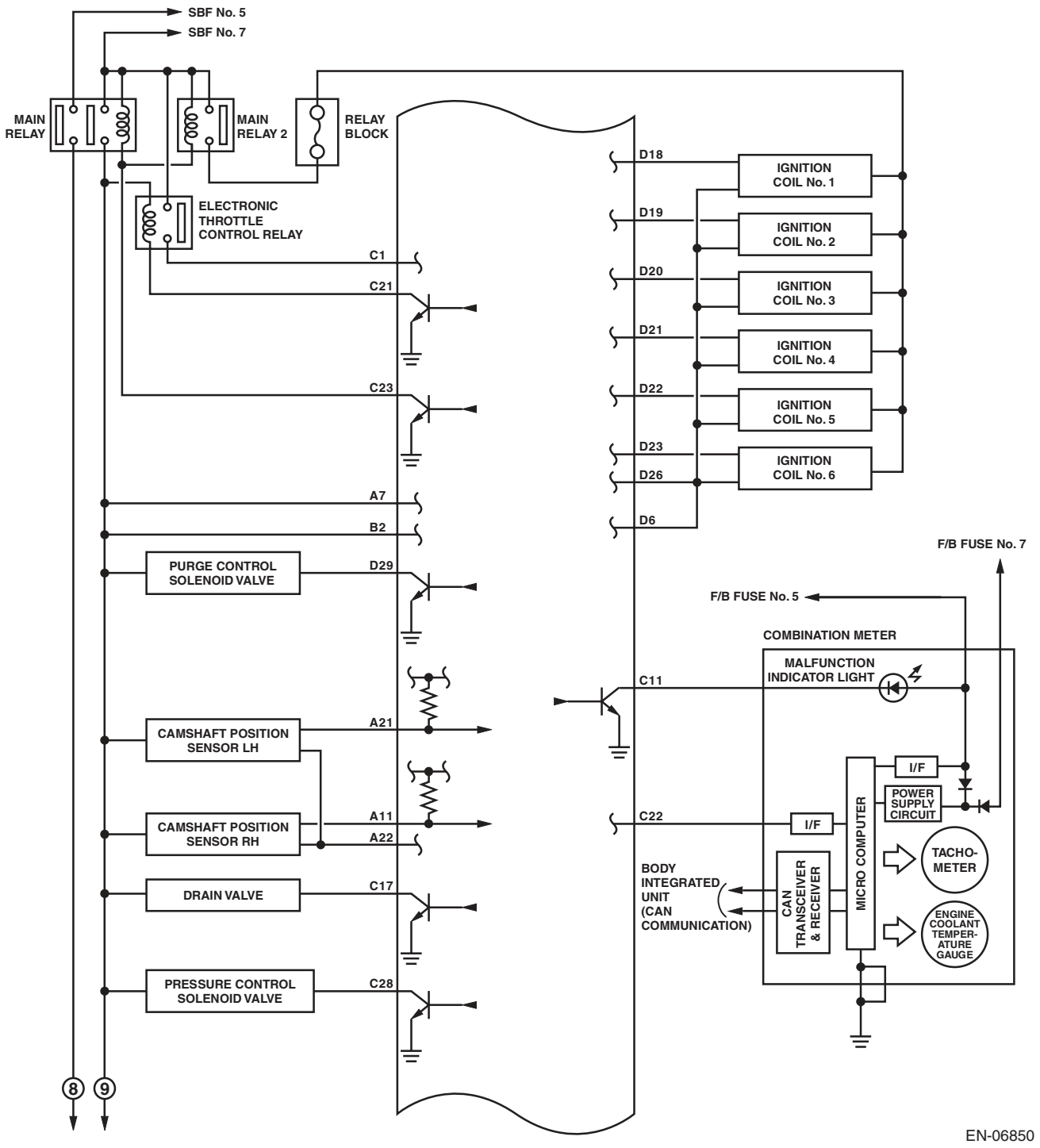
SBF No. 5
SBF No. 7
MAIN RELAY
MAIN RELAY 2
RELAY BLOCK
ELECTRONIC THROTTLE CONTROL RELAY
C1
C21
C23
A7
B2
PURGE CONTROL SOLENOID VALVE
D29
CAMSHAFT POSITION SENSOR LH
A21
CAMSHAFT POSITION SENSOR RH
A11
A22
DRAIN VALVE
C17
PRESSURE CONTROL SOLENOID VALVE
C28
8
9
D18
D19
D20
D21
D22
D23
D26
D6
IGNITION COIL No. 1
IGNITION COIL No. 2
IGNITION COIL No. 3
IGNITION COIL No. 4
IGNITION COIL No. 5
IGNITION COIL No. 6
C11
C22
F/B FUSE No. 7
F/B FUSE No. 5
COMBINATION METER
MALFUNCTION INDICATOR LIGHT
I/F
POWER SUPPLY CIRCUIT
MICRO COMPUTER
TACHO-METER
ENGINE COOLANT TEMPER-ATURE GAUGE
CAN TRANSCEIVER & RECEIVER
BODY INTEGRATED UNIT (CAN COMMUNICATION)
EN-06850

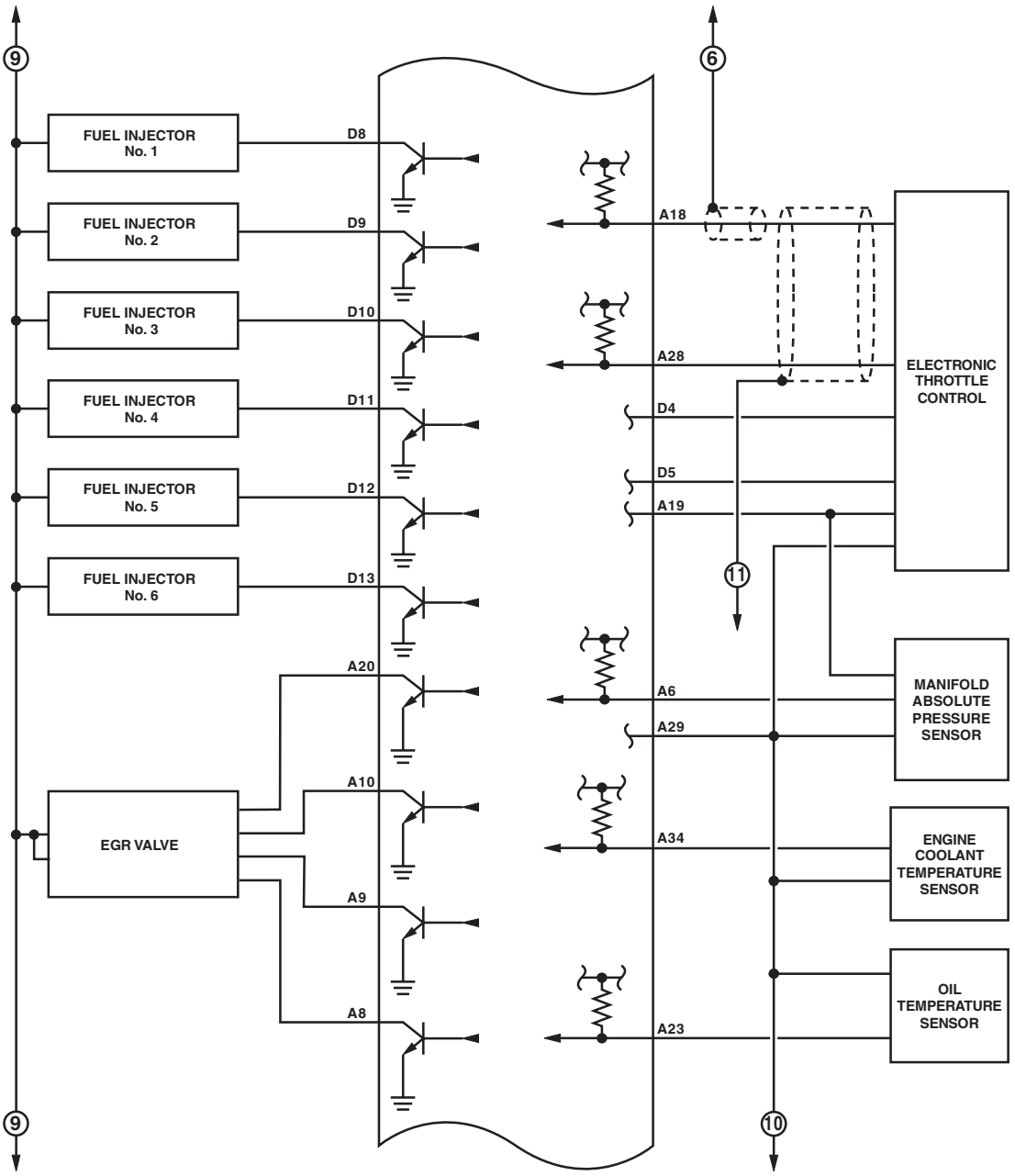
9
6
FUEL INJECTOR No. 1
FUEL INJECTOR No. 2
FUEL INJECTOR No. 3
FUEL INJECTOR No. 4
FUEL INJECTOR No. 5
FUEL INJECTOR No. 6
EGR VALVE
D8
D9
D10
D11
D12
D13
A20
A10
A9
A8
A18
A28
D4
D5
A19
11
A6
A29
A34
A23
ELECTRONIC THROTTLE CONTROL
MANIFOLD ABSOLUTE PRESSURE SENSOR
ENGINE COOLANT TEMPERATURE SENSOR
OIL TEMPERATURE SENSOR
9
10

EN-06851

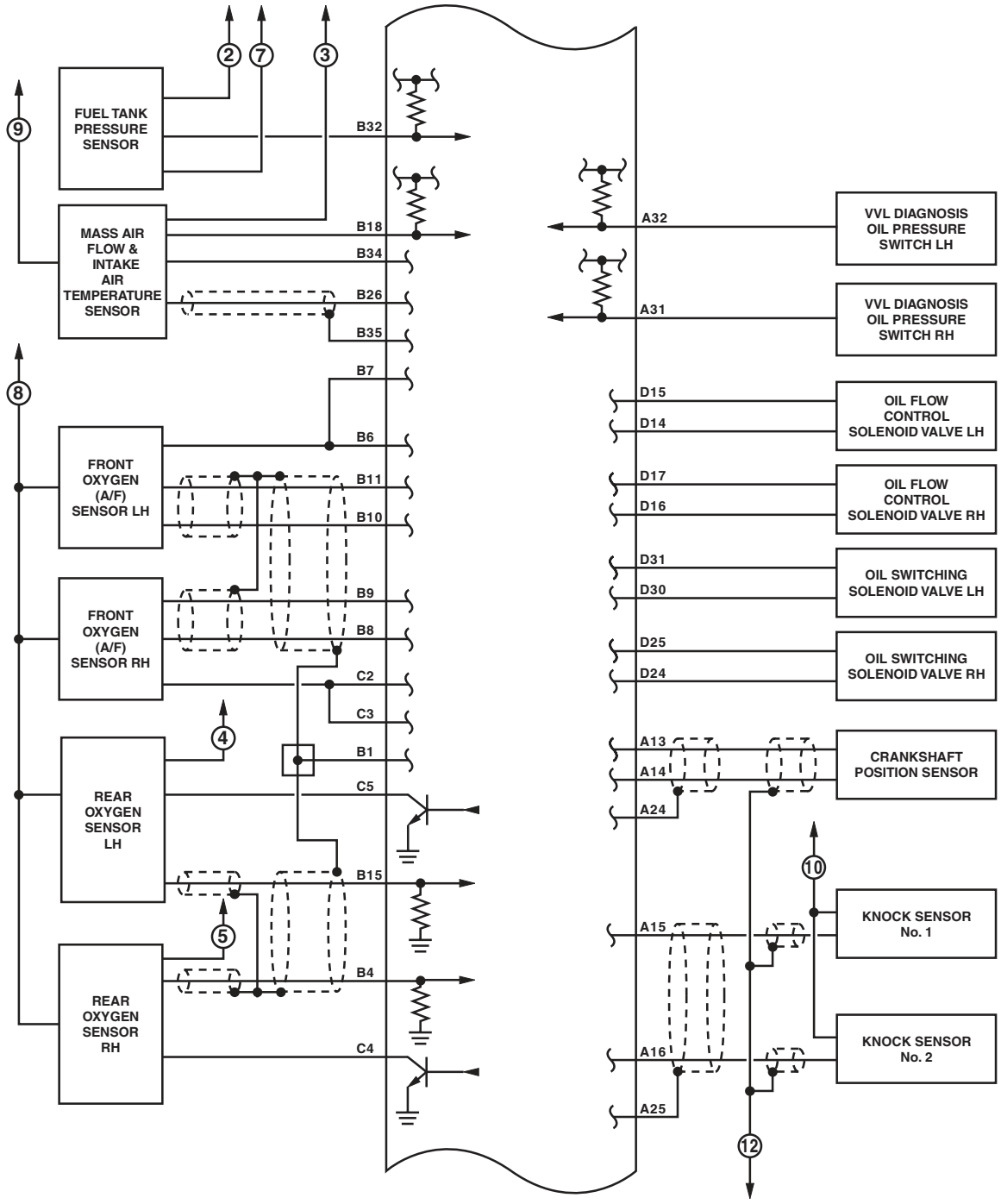
FUEL TANK PRESSURE SENSOR
MASS AIR FLOW & INTAKE AIR TEMPERATURE SENSOR
FRONT OXYGEN (A/F) SENSOR LH
FRONT OXYGEN (A/F) SENSOR RH
REAR OXYGEN SENSOR LH
REAR OXYGEN SENSOR RH
B32
B18
B34
B26
B35
B7
B6
B11
B10
B9
B8
C2
C3
B1
C5
B15
B4
C4
A32
A31
D15
D14
D17
D16
D31
D30
D25
D24
A13
A14
A24
A15
A16
A25
VVL DIAGNOSIS OIL PRESSURE SWITCH LH
VVL DIAGNOSIS OIL PRESSURE SWITCH RH
OIL FLOW CONTROL SOLENOID VALVE LH
OIL FLOW CONTROL SOLENOID VALVE RH
OIL SWITCHING SOLENOID VALVE LH
OIL SWITCHING SOLENOID VALVE RH
CRANKSHAFT POSITION SENSOR
KNOCK SENSOR No. 1
KNOCK SENSOR No. 2
2
7
3
9
8
4
5
10
12

EN-06852

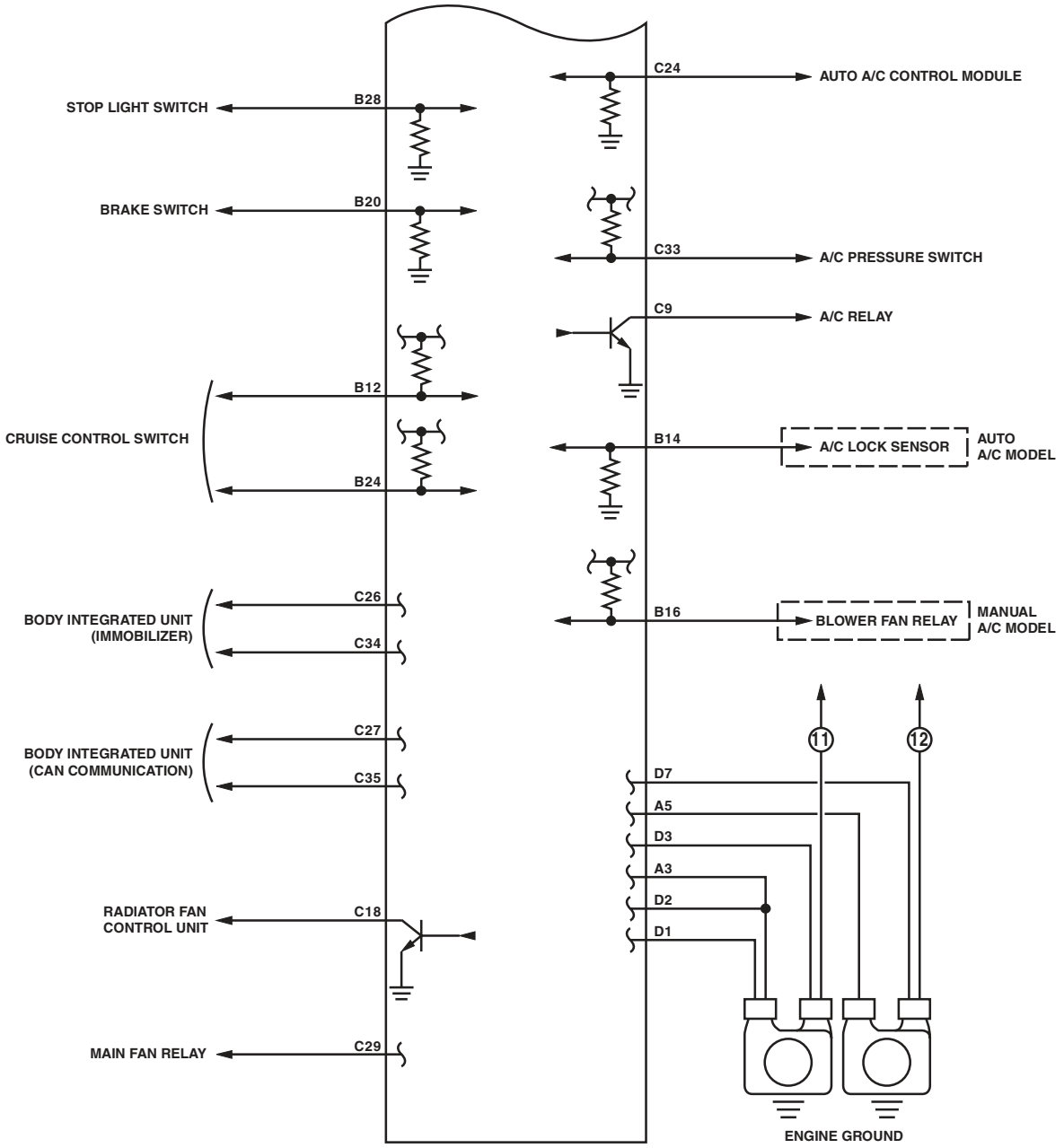
STOP LIGHT SWITCH
B28
BRAKE SWITCH
B20
CRUISE CONTROL SWITCH
B12
B24
BODY INTEGRATED UNIT (IMMOBILIZER)
C26
C34
BODY INTEGRATED UNIT (CAN COMMUNICATION)
C27
C35
RADIATOR FAN CONTROL UNIT
C18
MAIN FAN RELAY
C29
C24
AUTO A/C CONTROL MODULE
C33
A/C PRESSURE SWITCH
C9
A/C RELAY
B14
A/C LOCK SENSOR
AUTO A/C MODEL
B16
BLOWER FAN RELAY
MANUAL A/C MODEL
11
12
D7
A5
D3
A3
D2
D1
ENGINE GROUND

EN-06853

6. Engine Condition Data

A: ELECTRICAL SPECIFICATION

Contents	Specification
Engine Load	17.9 — 38.8(%): Idling
	16.6 — 33.7(%): 2,500 rpm racing

Measuring condition:
- After engine is warmed up.
- Select lever: “P” range or “N” range
- Turn the A/C off.
- Turn all the accessory switches to OFF.

7. Data Link Connector

A: NOTE

This connector is used for Subaru Select Monitor.

CAUTION:
Do not connect any scan tools except Subaru Select Monitor or general scan tool because the circuit for Subaru Select Monitor may be damaged.

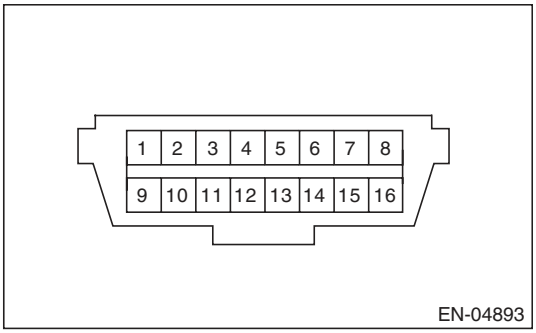

Terminal No.	Contents	Terminal No.	Contents
1	Blank	9	Blank
2	Blank	10	Blank
3	Blank	11	Blank
4	Ground	12	Blank
5	Ground	13	Blank
6	CAN communication (+)	14	CAN communication (–)
7	Subaru Select Monitor signal	15	Blank
8	Blank	16	Power supply

8. General Scan Tool

A: OPERATION

1. HOW TO USE GENERAL SCAN TOOL

1) Prepare a scan tool (general scan tool) required by SAE J1978.
2) Open the cover and connect the general scan tool to the data link connector located in the lower area of instrument panel (on the driver's side).

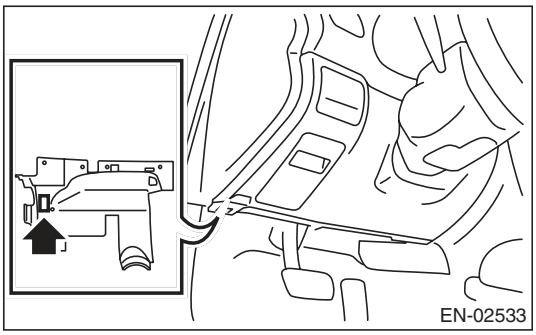

3) Using the general scan tool, call up DTC and freeze frame data.
General scan tool functions consist of:
(1) MODE $01: Current powertrain diagnostic data
(2) MODE $02: Powertrain freeze frame data
(3) MODE $03: Emission-related powertrain DTC
(4) MODE $04: Clear/Reset emission-related diagnostic information
(5) MODE $06: Request on-board monitoring test results for intermittently monitored systems
(6) MODE $07: Request on-board monitoring test results for continuously monitored systems
(7) MODE $09: Request vehicle information
Read out the data according to repair procedures. (For detailed operation procedure, refer to the general scan tool operation manual.)

NOTE:
For details concerning DTC, refer to "List of Diagnostic Trouble Code (DTC)". <Ref. to EN(H6DO)(diag)-81, List of Diagnostic Trouble Code (DTC).>

2. MODE $01 (CURRENT POWERTRAIN DIAGNOSTIC DATA)

Refer to data denoting the current operating condition of analog input/output, digital input/output or the powertrain system.
A list of the support data and PID (Parameter Identification) codes are shown in the following table.

PID	Data	Unit of measure
$01	Number of emission-related powertrain DTC and malfunction indicator light status	—
$03	Fuel system control status	—
$04	Calculated engine load value	%
$05	Engine coolant temperature	°C
$06	Short term fuel trim (Bank 1)	%
$07	Long term fuel trim (Bank 1)	%
$08	Short term fuel trim (Bank 2)	%
$09	Long term fuel trim (Bank 2)	%
$0B	Intake manifold absolute pressure	kPa
$0C	Engine speed	rpm
$0D	Vehicle speed	MPH
$0E	Ignition timing advance	°
$0F	Intake air temperature	°C
$10	Air flow rate of manifold absolute pressure sensor	g/s
$11	Throttle valve absolute opening angle	%
$13	Check whether oxygen sensor is installed.	—
$15	Oxygen sensor output voltage (Bank 1 Sensor 2)	V
$15	Oxygen sensor compensation (Bank 1 Sensor 2)	%
$19	Oxygen sensor output voltage (Bank 2 Sensor 2)	V
$19	Oxygen sensor compensation (Bank 2 Sensor 2)	%
$1C	On-board diagnostic system	—
$1F	Elapsed time after starting the engine	sec
$21	Travel distance after the malfunction indicator light illuminates	miles
$24	Oxygen sensor output voltage and short term fuel trim associated with oxygen sensor (bank 1)	– and V
$28	Oxygen sensor output voltage and short term fuel trim associated with oxygen sensor (bank 2)	– and V
$2C	Target EGR	%
$2D	EGR deviation	%
$2E	Evaporative purge	%
$2F	Fuel level	%
$30	Number of warm ups after DTC clear	—
$31	Travel distance after DTC clear	miles
$32	Fuel tank pressure	Pa
$33	Atmospheric pressure	kPa
$34	A/F sensor lambda value (Bank 1 Sensor 1)	—
$34	A/F sensor current value (Bank 1 Sensor 1)	mA
$38	A/F sensor lambda value (Bank 2 Sensor 1)	—
$38	A/F sensor current value (Bank 2 Sensor 1)	mA
$3C	Catalyst temperature #1	°C
$3D	Catalyst temperature #2	°C
$41	Diagnosis monitoring per drive cycle	—
$42	ECM power supply voltage	V
$43	Absolute load	%
$44	A/F target lambda	—
$45	Relative throttle opening angle	%
$46	Ambient temperature	°C
$47	Absolute throttle opening angle 2	%
$49	Absolute accelerator opening angle 1	%
$4A	Absolute accelerator opening angle 2	%

PID	Data	Unit of measure
$4C	Target throttle opening angle	%
$4D	Engine operating time while malfunction indicator light	min
$4E	Elapsed time after DTC clear	min
$51	Fuel used	—
$5A	Relative acceleration opening angle	%

NOTE:
Refer to general scan tool manufacturer's instruction manual to access generic OBD-II PIDs (MODE $01).

3. MODE $02 (POWERTRAIN FREEZE FRAME DATA)

Refer to data denoting the operating condition when trouble is sensed by the on-board diagnosis system.
A list of the support data and PID (Parameter Identification) codes are shown in the following table.

PID	Data	Unit of measure
$02	DTC that caused the freeze frame data storage required by CARB	—
$03	Fuel system control status	—
$04	Calculated engine load value	%
$05	Engine coolant temperature	°C
$06	Short term fuel trim (Bank 1)	%
$07	Long term fuel trim (Bank 1)	%
$08	Short term fuel trim (Bank 2)	%
$09	Long term fuel trim (Bank 2)	%
$0B	Intake manifold absolute pressure	kPa
$0C	Engine speed	rpm
$0D	Vehicle speed	MPH
$0E	Ignition timing advance	°
$0F	Intake air temperature	°C
$10	Air flow rate of manifold absolute pressure sensor	g/s
$11	Throttle valve opening angle	%
$13	Air fuel ratio sensor	—
$15	Oxygen sensor output voltage (Bank 1 Sensor 2)	V
$15	Oxygen sensor compensation (Bank 1 Sensor 2)	%
$19	Oxygen sensor output voltage (Bank 2 Sensor 2)	V
$19	Oxygen sensor compensation (Bank 2 Sensor 2)	%
$1C	On-board diagnostic system	—
$1F	Elapsed time after starting the engine	sec
$2C	Target EGR	%
$2D	EGR deviation	%
$2E	Evaporative purge	%
$2F	Fuel level	%
$32	Fuel tank pressure	Pa
$33	Atmospheric pressure	kPa
$42	ECM power supply voltage	V
$43	Absolute load	%
$44	A/F target lambda	—
$45	Relative throttle opening angle	%
$46	Ambient temperature	°C
$47	Absolute throttle opening angle 2	%
$49	Absolute accelerator opening angle 1	%
$4A	Absolute accelerator opening angle 2	%
$4C	Target throttle opening angle	%

NOTE:
Refer to general scan tool manufacturer's operation manual to access freeze frame data (MODE $02).

4. MODE $03 (EMISSION-RELATED POWERTRAIN DTC)

Refer to “List of Diagnostic Trouble Code (DTC)” for information about data denoting emission-related powertrain DTC. <Ref. to EN(H6DO)(diag)-81, List of Diagnostic Trouble Code (DTC).>

5. MODE $04 (CLEAR/RESET EMISSION-RELATED DIAGNOSTIC INFORMATION)

Refer to the mode used to clear or reset emission-related diagnostic information (OBD-II trouble diagnostic information).

NOTE:
Refer to general scan tool manufacturer’s instruction manual to clear the emission-related diagnostic information (MODE $04).

6. MODE $06

Refer to test value of troubleshooting and data of test limit indicated on the support data bit sequence table. A list of the support data is shown in the following table.

OBDMID	TID	SID	Diagnostic item
$01	$81	$0A	A/F sensor conduction abnormal (Bank 1 Sensor 1)
	$82	$8D	
	$83	$14	
	$84	$1E	A/F sensor range abnormal (Bank 1 Sensor 1)
	$85	$1E	
	$86	$20	A/F sensor response abnormal (Bank 1 Sensor 1)
$02	$87	$0B	Oxygen sensor circuit abnormal (Bank 1 Sensor 2)
	$88	$0B	
	$07	$0B	Oxygen sensor drop abnormal (Bank 1 Sensor 2)
	$08	$0B	
	$A5	$0B	
	$05	$10	Oxygen sensor response abnormal (Bank 1 Sensor 2)
	$06	$10	
$05	$81	$0A	A/F sensor conduction abnormal (Bank 2 Sensor 1)
	$82	$8D	
	$83	$14	
	$84	$1E	A/F sensor range abnormal (Bank 2 Sensor 1)
	$85	$1E	
	$86	$20	A/F sensor response abnormal (Bank 2 Sensor 1)
$06	$87	$0B	Oxygen sensor circuit abnormal (Bank 2 Sensor 2)
	$88	$0B	
	$07	$0B	Oxygen sensor drop abnormal (Bank 2 Sensor 2)
	$08	$0B	
	$A5	$0B	
	$05	$10	Oxygen sensor response abnormal (Bank 2 Sensor 2)
	$06	$10	
$21	$89	$20	Catalyst degradation diagnosis (Bank 1)
$31	$8A	$FD	EGR system diagnosis
$39	$93	$FE	Evaporative emission control system (Cap off)
$3B	$94	$FE	Evaporative emission control system (0.04 inch leak)
	$95	$FE	
$3C	$96	$FE	Evaporative emission control system (0.02 inch leak)
	$97	$FE	
$3D	$98	$FE	Evaporative emission control system (Purge flow)
$41	$99	$24	A/F sensor heater abnormal (Bank 1 Sensor 1)
	$9A	$24	
	$9B	$14	A/F sensor heater characteristic abnormal (Bank 1 Sensor 1)

OBDMID	TID	SID	Diagnostic item
$42	$9C	$24	Oxygen sensor heater abnormal (Bank 1 Sensor 2)
	$9D	$24	
$45	$99	$24	A/F sensor heater abnormal (Bank 2 Sensor 1)
	$9A	$24	
	$9B	$14	A/F sensor heater characteristic abnormal (Bank 2 Sensor 1)
$46	$9C	$24	Oxygen sensor heater abnormal (Bank 2 Sensor 2)
	$9D	$24	
$A1	$0B	$24	Misfire monitoring (All cylinders)
	$0C	$24	
$A2	$0B	$24	Misfire monitoring (#1 cylinder)
	$0C	$24	
$A3	$0B	$24	Misfire monitoring (#2 cylinder)
	$0C	$24	
$A4	$0B	$24	Misfire monitoring (#3 cylinder)
	$0C	$24	
$A5	$0B	$24	Misfire monitoring (#4 cylinder)
	$0C	$24	
$A6	$1B	$24	Misfire monitoring (#5 cylinder)
	$1C	$24	
$A7	$1B	$24	Misfire monitoring (#6 cylinder)
	$1C	$24	

7. MODE $07

Refer to the data of DTC (pending code) for troubleshooting result about emission in the first time.

8. MODE $09

Refer to the data of vehicle specification (V.I.N., calibration ID, diagnosis frequency, etc.).

9. Subaru Select Monitor

A: OPERATION

1. HOW TO USE THE SUBARU SELECT MONITOR

1) Prepare the Subaru Select Monitor kit. <Ref. to EN(H6DO)(diag)-7, PREPARATION TOOL, General Description.>

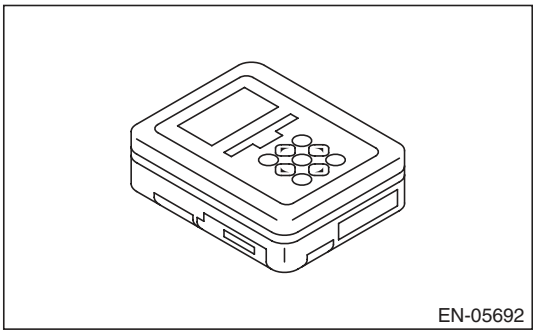

2) Prepare PC with Subaru Select Monitor installed.
3) Connect the USB cable between SDI (Subaru Diagnosis Interface) and USB port on the personal computer (dedicated port for the Subaru Select Monitor).

NOTE:
The dedicated port for the Subaru Select Monitor means the USB port which was used to install the Subaru Select Monitor.
4) Connect the diagnosis cable to SDI.
5) Connect SDI to data link connector located in the lower portion of the instrument panel (on the driver's side).

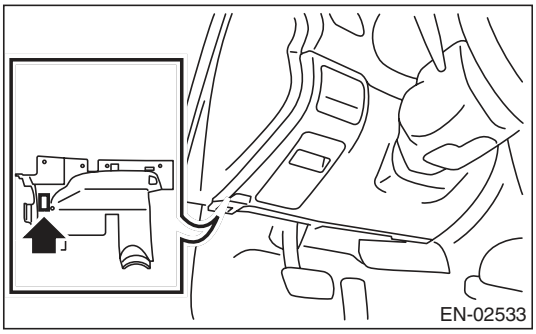

CAUTION:
Do not connect the scan tools except for Subaru Select Monitor and general scan tool.
6) Start the PC.
7) Turn the ignition switch to ON (engine OFF) and run the "PC application for Subaru Select Monitor".
8) Call up DTC and data, then record them.

NOTE:
For detailed operation procedures, refer to the "PC application help for Subaru Select Monitor".

2. READ CURRENT DATA FOR ENGINE (NORMAL MODE)

1) On the «Main Menu» display screen, select the {Each System Check}.
2) On the «System Selection Menu» display screen, select the {Engine Control System}.
3) Click the [OK] button after the information of engine type has been displayed.
4) On the «Engine Diagnosis» display screen, select the {Current Data Display & Save}.
5) On the «Current Data Display & Save» display screen, select the {Normal sampling}.
6) Using the scroll key, scroll the display screen up or down until the desired data is shown.

- A list of the support data is shown in the following table.

Contents	Display	Unit of measure	Note (at idling)
Engine Load	Engine Load	%	2.4%
Engine coolant temperature signal	Coolant Temp.	°C or °F	≥ 85°C or 185°F (After engine is warmed up.)
A/F correction 1	A/F Correction #1	%	–10% — +10%
A/F learning 1	A/F Learning #1	%	–10% — +10%
A/F correction 2	A/F Correction #2	%	–10% — +10%
A/F learning 2	A/F Learning #2	%	–10% — +10%
Intake manifold absolute pressure	Mani. Absolute Pressure	mmHg, kPa, inHg or psig	210 mmHg, 28 kPa, 8.3 inHg or 4.1 psig
Engine speed signal	Engine Speed	rpm	600 — 800 rpm (After engine is warmed up.)
Meter vehicle speed signal	Vehicle Speed	km/h or MPH	0 km/h or 0 MPH
Ignition timing signal	Ignition Timing	deg	13 — 15 deg
Intake air temperature signal	Intake Air Temp.	°C or °F	(Ambient air temperature)
Intake air amount	Mass Air Flow	g/s or lb/m	2.5 g/s — 5.0 g/s or 0.31 lb/m — 0.71 lb/m
Throttle opening angle signal	Throttle Opening Angle	%	2%
Front oxygen sensor voltage value 1	Front O2 Sensor #1	V	0.900 V
Front oxygen sensor voltage value 2	Front O2 Sensor #2	V	0.900 V
Battery voltage	Battery Voltage	V	12 — 13 V
Mass air flow voltage	Air Flow Sensor Voltage	V	1.2 — 1.3 V
Injection 1 pulse width	Fuel Injection #1 Pulse	ms	2.5 ms — 3.5 ms
Injection 2 pulse width	Fuel Injection #2 Pulse	ms	2.5 ms — 3.5 ms
Atmospheric pressure signal	Atmosphere Pressure	mmHg, kPa, inHg or psig	(Atmospheric pressure)
Intake manifold relative pressure	Mani. Relative Pressure	mmHg, kPa, inHg or psig	(Intake manifold absolute pressure — Atmospheric pressure)
Fuel tank pressure signal	Fuel Tank Pressure	mmHg, kPa, inHg or psig	7.5 mmHg, 1 kPa, 0.3 inHg or 0.14 psi
Ignition timing learning value	Learned Ignition Timing	deg	+0.0 deg
Acceleration opening angle signal	Accel. Opening Angle	%	0%
Fuel temperature signal	Fuel Temp.	°C or °F	+28°C or +82°F
Radiator fan output	Radiator Fan Control	%	0% (Water temperature 90°C (194°F) when air conditioner is OFF)
Purge control solenoid valve duty ratio	CPC Valve Duty Ratio	%	18%
Number of EGR steps	No. of EGR steps	STEP	0 STEP
Fuel pump duty	Fuel Pump Duty	%	33%
Variable valve timing advance angle amount R	VVT Adv. Ang. Amount R	deg	+0 deg — +1 deg
Variable valve timing advance angle amount L	VVT Adv. Ang. Amount L	deg	+0 deg — +1 deg
Oil flow control solenoid valve duty R	OCV Duty R	%	9.4%
Oil flow control solenoid valve duty L	OCV Duty L	%	9.4%

Contents	Display	Unit of measure	Note (at idling)
Oil flow control solenoid valve current R	OCV Current R	mA	64 mA
Oil flow control solenoid valve current L	OCV Current L	mA	64 mA
Front oxygen (A/F) sensor current value 1	A/F Sensor #1 Current	mA	0.0 mA
Front oxygen (A/F) sensor current value 2	A/F Sensor #2 Current	mA	0.0 mA
Front oxygen (A/F) sensor resistance value 1	A/F Sensor #1 Resistance	Ω	31 Ω
Front oxygen (A/F) sensor resistance value 2	A/F Sensor #2 Resistance	Ω	31 Ω
Front oxygen (A/F) sensor output lambda 1	A/F Sensor #1	—	1.01
Front oxygen (A/F) sensor output lambda 2	A/F Sensor #2	—	1.01
A/F correction 3	A/F Correction #3	%	0% — 1%
A/F learning 3	A/F Learning #3	%	0.0%
SI drive mode	SI Drive mode	—	I, S or S#
Throttle motor duty	Throttle Motor Duty	%	–20% — +20%
Throttle power supply voltage	Throttle Motor Voltage	V	(Battery voltage)
Sub throttle sensor voltage	Sub-Throttle Sensor	V	1.4 V — 1.5 V
Main throttle sensor voltage	Main-Throttle Sensor	V	0.62 V — 0.70 V
Sub accelerator sensor voltage	Sub-Accelerator Sensor	V	1.0 V — 1.2 V
Main acceleration sensor voltage	Main-Accelerator Sensor	V	0.9 V — 1.1 V
Memory vehicle speed	Memorized Cruise Speed	km/h or MPH	0 km/h or 0 MPH
A/F correction 4	A/F Correction #4	%	–1% — 1%
A/F learning 4	A/F Learning #4	%	0.0%
Fuel level sensor resistance	Fuel level resistance	Ω	4 — 96 Ω
Engine oil temperature	Oil Temperature	°C or °F	≥ 85°C or 185°F (After engine is warmed up.)
Oil switching solenoid valve duty R	OSV Duty R	%	18.4%
Oil switching solenoid valve duty L	OSV Duty L	%	18.8%
Oil switching solenoid valve current R	OSV Current R	mA	192 mA
Oil switching solenoid valve current L	OSV Current L	mA	192 mA
Variable valve lift mode	VVL Lift Mode	—	1
#1 cylinder roughness monitor	Roughness Monitor #1	—	0
#2 cylinder roughness monitor	Roughness Monitor #2	—	0
#3 cylinder roughness monitor	Roughness Monitor #3	—	0
#4 cylinder roughness monitor	Roughness Monitor #4	—	0
#5 cylinder roughness monitor	Roughness Monitor #5	—	0
#6 cylinder roughness monitor	Roughness Monitor #6	—	0
Knock sensor correction	Knocking Correction	deg	0 deg
AT/MT identification	AT Vehicle ID Signal	—	AT model
Delivery (test) mode terminal	Test Mode Signal	—	OFF
System operation check mode	D-check Require Flag	—	OFF
Delivery (test) mode terminal	Delivery Mode Connector (Test Mode Connector)	—	OFF
Neutral position switch signal	Neutral Position Switch	—	ON
Idle switch signal	Idle Switch Signal	—	ON
Ignition switch signal	Ignition Switch	—	ON
Power steering switch signal	P/S Switch Signal	—	OFF input (When OFF)
Air conditioning switch signal	A/C Switch	—	OFF input (When OFF)
Starter switch signal	Starter Switch	—	OFF
Front oxygen monitor 1	Front O2 #1 Rich Signal	—	Rich, Lean
Front oxygen monitor 2	Front O2 #2 Rich Signal	—	Rich, Lean
Knocking signal	Knocking Signal	—	None
Crankshaft position sensor signal	Crankshaft Position Sig.	—	ON

Contents	Display	Unit of measure	Note (at idling)
Camshaft position sensor signal	Camshaft Position Sig.	—	ON
Rear defogger switch signal	Rear Defogger SW	—	OFF input (When OFF)
Blower fan switch signal	Blower Fan SW	—	OFF input (When OFF)
Light switch signal	Light Switch	—	OFF input (When OFF)
A/C lock signal	A/C Lock Signal	—	OFF
A/C middle pressure switch signal	A/C Mid Pressure Switch	—	OFF input (when air conditioner is OFF)
A/C compressor relay signal	A/C Compressor Signal	—	OFF output (when air conditioner is OFF)
Pressure control solenoid valve signal	PCV Solenoid Valve	—	OFF output (when OFF)
Drain valve signal	Vent. Solenoid Valve	—	OFF output (when OFF)
Variable valve lift diagnosis oil pressure switch signal 1	Eng. Oil Press. SW 1	—	ON
Variable valve lift diagnosis oil pressure switch signal 2	Eng. Oil Press. SW 2	—	ON
AT coordinate retard angle demand signal	Retard Signal from AT	—	None
AT coordinate fuel cut demand signal	Fuel Cut signal from AT	—	None
Vehicle dynamics control (VDC) torque down prohibition output	Ban of Torque Down	—	Permission
Vehicle dynamics control (VDC) torque down demand	Request Torque Down VDC	—	None
Torque control permission signal	Torque Permission Signal	—	Permission
Electronic throttle control motor relay signal	ETC Motor Relay	—	ON
Clutch switch signal	Clutch Switch	—	OFF (when clutch is OFF)
Stop light switch signal	Stop Light Switch	—	OFF (when brake is OFF)
SET/COAST switch signal	SET/COAST SW	—	OFF (when levers are not operated)
RESUME/ACCEL switch signal	RESUME/ACCEL SW	—	OFF (when levers are not operated)
Brake switch signal	Brake Switch	—	OFF (when brake is OFF)
Main switch signal	Main Switch	—	OFF (when levers are not operated)
Body integrated unit data reception	Body Int. Unit Data	—	ON
Body integrated unit counter update	Body Int. Unit Count	—	ON
Cruise control cancel switch signal	CC Cancel SW	—	OFF (when levers are not operated)
Malfunction indicator light flag	MIL On Flag	—	Light OFF

NOTE:
For detailed operation procedures, refer to the “PC application help for Subaru Select Monitor”.

3. READ CURRENT DATA FOR ENGINE (OBD MODE)

1) On the «Main Menu» display screen, select the {Each System Check}.
2) On the «System Selection Menu» display screen, select the {Engine Control System}.
3) Click the [OK] button after the information of engine type has been displayed.
4) On the «Engine Diagnosis» display screen, select the {OBD System}.
5) On the «OBD Menu» display screen, select the {Current Data Display & Save}.
6) On the «Current Data Display & Save» display screen, select the {All Data Display}.
7) Using the scroll key, scroll the display screen up or down until the desired data is shown.

- A list of the support data is shown in the following table.

Contents	Display	Referential value (at idling)	Unit of measure
Number of diagnosis code	Number of Diag. Code:	0	—
Condition of malfunction indicator light	MI (MIL)	OFF	—
Monitoring test of misfire	Misfire monitoring (Supp)	YES	—
Monitoring test of misfire	Misfire monitoring (Rdy)	YES	—
Monitoring test of fuel system	Fuel system monitoring (Supp)	YES	—
Monitoring test of fuel system	Fuel system monitoring (Rdy)	YES	—
Monitoring test of comprehensive component	Component monitoring (Supp)	YES	—
Monitoring test of comprehensive component	Component monitoring (Rdy)	YES	—
Test of catalyst	Catalyst Diagnosis (Supp)	YES	—
Test of catalyst	Catalyst Diagnosis (Rdy)	NO	—
Test of heating-type catalyst	Heated catalyst (Supp)	NO	—
Test of heating-type catalyst	Heated catalyst (Rdy)	N/A	—
Test of evaporative emission purge control system	Evaporative purge system (Supp)	YES	—
Test of evaporative emission purge control system	Evaporative purge system (Rdy)	NO	—
Secondary air system test	Secondary air system (Supp)	NO	—
Secondary air system test	Secondary air system (Rdy)	N/A	—
Test of air conditioning system refrigerant	A/C system refrigerant (Supp)	NO	—
Test of air conditioning system refrigerant	A/C system refrigerant (Rdy)	N/A	—
Test of oxygen sensor	Oxygen sensor (Supp)	YES	—
Test of oxygen sensor	Oxygen sensor (Rdy)	NO	—
Test of oxygen sensor heater	O2 Heater Diagnosis (Supp)	YES	—
Test of oxygen sensor heater	O2 Heater Diagnosis (Rdy)	NO	—
Test of EGR system	EGR system (Supp)	NO	—
Test of EGR system	EGR system (Rdy)	N/A	—
Air fuel ratio control system for bank 1	Fuel system for Bank 1	Cl_normal	—
Air fuel ratio control system for bank 2	Fuel system for Bank 2	Cl_normal	—
Engine load data	Calculated load value	21.0	%
Engine coolant temperature signal	Coolant Temp.	91	°C
Short term fuel trim by front oxygen (A/F) sensor (Bank 1)	Short term fuel trim B1	17.2	%
Long term fuel trim by front oxygen (A/F) sensor (Bank 1)	Long term fuel trim B1	5.5	%

Contents	Display	Referential value (at idling)	Unit of measure
Short term fuel trim by front oxygen (A/F) sensor (Bank 2)	Short term fuel trim B2	17.2	%
Long term fuel trim by front oxygen (A/F) sensor (Bank 2)	Long term fuel trim B2	5.5	%
Intake manifold absolute pressure signal	Mani. Absolute Pressure	233	mmHg
Engine speed signal	Engine Speed	700	rpm
Vehicle speed signal	Vehicle Speed	0	km/h
#1 Cylinder ignition timing	Ignition timing adv. #1	16.5	°
Intake air temperature signal	Intake Air Temp.	54	°C
Intake air amount	Mass Air Flow	2.8	g/s
Throttle position signal	Throttle Opening Angle	13	%
Oxygen sensor (Bank 1 Sensor 2)	Oxygen sensor #12	0.1 — 0.7	V
A/F correction (Bank 1 Sensor 2)	Short term fuel trim #12	0.0	%
Oxygen sensor (Bank 2 Sensor 2)	Oxygen sensor #22	0.1 — 0.7	V
A/F correction (Bank 2 Sensor 2)	Short term fuel trim #22	0.0	%
On-board diagnostic system	OBD System	OBD/OBD2	—
Front oxygen (A/F) sensor (Bank 1 Sensor 1)	Oxygen sensor #11	Support	—
Oxygen sensor (Bank 1 Sensor 2)	Oxygen sensor #12	Support	—
Front oxygen (A/F) sensor (Bank 2 Sensor 1)	Oxygen sensor #21	Support	—
Oxygen sensor (Bank 2 Sensor 2)	Oxygen sensor #22	Support	—
Elapsed time after engine start	Time Since Engine Start	—	sec
Travel distance after the malfunction indicator light illuminates	Lighted MI lamp history	—	km
A/F lambda signal (Bank 1 Sensor 1)	A/F Sensor #11	1.001	—
A/F sensor output signal (Bank 1 Sensor 1)	A/F Sensor #11	2.805	V
A/F lambda signal (Bank 2 Sensor 1)	A/F Sensor #21	1.001	—
A/F sensor output signal (Bank 2 Sensor 1)	A/F Sensor #21	2.805	V
Evaporative purge	Commanded Evap Purge	0	%
Fuel level signal	Fuel Level	—	%
Number of warm ups after DTC clear	Number of warm-ups	—	—
Travel distance after DTC clear	Meter since DTC cleared	—	km
Fuel tank pressure signal	Fuel Tank Pressure	8.8	mmHg
Atmospheric pressure signal	Atmosphere Pressure	Atmospheric pressure	mmHg
A/F lambda signal (Bank 1 Sensor 1)	A/F Sensor #11	0.999	—
A/F sensor current (Bank 1 Sensor 1)	A/F Sensor #11	0.02	mA
A/F lambda signal (Bank 2 Sensor 1)	A/F Sensor #21	0.999	—
A/F sensor current (Bank 2 Sensor 1)	A/F Sensor #21	0.02	mA
Catalyst temperature #1	Catalyst Temperature #11	—	°C
Catalyst temperature #2	Catalyst Temperature #21	—	°C
Monitoring test of misfire	Misfire monitoring (Enable)	YES	—
Monitoring test of misfire	Misfire monitoring (Comp)	NO	—
Monitoring test of fuel system	Fuel system monitoring (Enable)	YES	—
Monitoring test of fuel system	Fuel system monitoring (Comp)	NO	—
Monitoring test of comprehensive component	Component monitoring (Enable)	YES	—
Monitoring test of comprehensive component	Component monitoring (Comp)	NO	—
Test of catalyst	Catalyst Diagnosis (Enable)	YES	—

Contents	Display	Referential value (at idling)	Unit of measure
Test of catalyst	Catalyst Diagnosis (Comp)	NO	—
Test of heating-type catalyst	Heated catalyst (Enable)	N/A	—
Test of heating-type catalyst	Heated catalyst (Comp)	N/A	—
Test of evaporative emission purge control system	Evaporative purge system (Enable)	NO	—
Test of evaporative emission purge control system	Evaporative purge system (Comp)	NO	—
Secondary air system test	Secondary air system (Enable)	N/A	—
Secondary air system test	Secondary air system (Comp)	N/A	—
Test of air conditioning system refrigerant	A/C system refrigerant (Enable)	N/A	—
Test of air conditioning system refrigerant	A/C system refrigerant (Comp)	N/A	—
Test of oxygen sensor	Oxygen sensor (Enable)	YES	—
Test of oxygen sensor	Oxygen sensor (Comp)	NO	—
Test of oxygen sensor heater	O2 Heater Diagnosis (Enable)	YES	—
Test of oxygen sensor heater	O2 Heater Diagnosis (Comp)	NO	—
Test of EGR system	EGR system (Enable)	N/A	—
Test of EGR system	EGR system (Comp)	N/A	—
ECM power supply voltage	Control module voltage	13.789	V
Absolute load	Absolute Load Value	22	%
A/F target lambda	Target Equivalence Ratio	0.976	—
Relative throttle opening angle	Relative Throttle Pos.	2	%
Ambient temperature	Ambient Temperature	Ambient air temperature	°C
Absolute throttle opening angle 2	Absolute Throttle Pos.#2	32	%
Absolute accelerator opening angle 1	Accelerator Pedal Pos.#1	13	%
Absolute accelerator opening angle 2	Accelerator Pedal Pos.#2	13	%
Target throttle opening angle	Target Throt. Act. Cont.	0	%
Engine operating time while malfunction indicator light lit	Time while MIL lighted	—	min
Elapsed time after DTC clear	Time since DTC cleared	—	min
Fuel used	Type of fuel	GAS	—
Relative acceleration opening angle	Relative Accelera. Pos.	0	%

NOTE:
For detailed operation procedures, refer to the “PC application help for Subaru Select Monitor”.

4. READ FREEZE FRAME DATA FOR ENGINE (OBD MODE)

1) On the «Main Menu» display screen, select the {Each System Check}.
2) On the «System Selection Menu» display screen, select the {Engine Control System}.
3) Click the [OK] button after the information of engine type has been displayed.
4) On the «Engine Diagnosis» display screen, select the {OBD System}.
5) On the «OBD Menu» display screen, select the {Freeze Frame Data Display}.

- A list of the support data is shown in the following table.

Contents	Display	Unit of measure
DTC of freeze frame data	Freeze frame data	—
Air fuel ratio control system for bank 1	Fuel system for Bank 1	—
Air fuel ratio control system for bank 2	Fuel system for Bank 2	—
Engine load data	Calculated load value	%
Engine coolant temperature signal	Coolant Temp.	°C or °F
Short term fuel trim by front oxygen (A/F) sensor (Bank 1)	Short term fuel trim B1	%
Long term fuel trim by front oxygen (A/F) sensor (Bank 1)	Long term fuel trim B1	%
Short term fuel trim by front oxygen (A/F) sensor (Bank 2)	Short term fuel trim B2	%
Long term fuel trim by front oxygen (A/F) sensor (Bank 2)	Long term fuel trim B2	%
Intake manifold absolute pressure signal	Mani. Absolute Pressure	mmHg, kPa, inHg or psig
Engine speed signal	Engine Speed	rpm
Vehicle speed signal	Vehicle Speed	km/h or MPH
Ignition timing adv. #1	Ignition timing adv. #1	°
Intake air temperature	Intake Air Temp.	°C or °F
Amount of intake air	Mass Air Flow	g/s
Throttle valve angle	Throttle Opening Angle	%
Oxygen sensor #12	Oxygen sensor #12	V
A/F correction value #12	Short term fuel trim #12	%
Oxygen sensor #22	Oxygen sensor #22	V
A/F correction value #22	Short term fuel trim #22	%
On-board diagnostic system	OBD System	—
Oxygen sensor #11	Oxygen sensor #11	—
Oxygen sensor #12	Oxygen sensor #12	—
Oxygen sensor #21	Oxygen sensor #21	—
Oxygen sensor #22	Oxygen sensor #22	—
Elapsed time after engine start	Time Since Engine Start	sec
Target EGR	Commanded EGR	%
EGR deviation	EGR Error	%
Evaporative purge	Commanded Evap Purge	%
Fuel level signal	Fuel Level	%
Fuel tank pressure signal	Fuel Tank Pressure	mmHg, kPa, inHg or psig
Atmospheric pressure	Atmosphere Pressure	mmHg, kPa, inHg or psig
ECM power supply voltage	Control module voltage	V
Absolute load	Absolute Load Value	%
A/F target lambda	Target Equivalence Ratio	—
Relative throttle opening angle	Relative Throttle Pos.	%
Ambient temperature	Ambient Temperature	°C or °F
Absolute throttle opening angle 2	Absolute Throttle Pos.#2	%
Absolute accelerator opening angle 1	Accelerator Pedal Pos.#1	%
Absolute accelerator opening angle 2	Accelerator Pedal Pos.#2	%
Target throttle opening angle	Target Throt. Act. Cont.	%

NOTE:
For detailed operation procedures, refer to the “PC application help for Subaru Select Monitor”.

5. V.I.N. REGISTRATION

1) On the «Main Menu» display screen, select the {Each System Check}.
2) On the «System Selection Menu» display screen, select the {Engine Control System}.
3) Click the [OK] button after the information of engine type has been displayed.
4) On the «Engine Diagnosis» display screen, select the {Entry VIN}.
5) Perform the procedures shown on the display screen.

NOTE:
For detailed operation procedures, refer to the “PC application help for Subaru Select Monitor”.

10. Read Diagnostic Trouble Code (DTC)

A: OPERATION

1. SUBARU SELECT MONITOR (NORMAL MODE)

1) On the «Main Menu» display screen, select the {Each System Check}.
2) On the «System Selection Menu» display screen, select the {Engine Control System}.
3) Click the [OK] button after the information of engine type has been displayed.
4) On the «Engine Diagnosis» display screen, select the {Diagnostic Code(s) Display}.
5) On the «Diagnostic Code(s) Display» display screen, select the {Temporary Diagnostic Code(s)} or {Memorized Diagnostic Code(s)}.

NOTE:
- For detailed operation procedures, refer to the “PC application help for Subaru Select Monitor”.
- For details concerning DTC, refer to “List of Diagnostic Trouble Code (DTC)”. <Ref. to EN(H6DO)(diag)-81, List of Diagnostic Trouble Code (DTC).>

2. SUBARU SELECT MONITOR (OBD MODE)

1) On the «Main Menu» display screen, select the {Each System Check}.
2) On the «System Selection Menu» display screen, select the {Engine Control System}.
3) Click the [OK] button after the information of engine type has been displayed.
4) On the «Engine Diagnosis» display screen, select the {OBD System}.
5) On the «OBD Menu» display screen, select the {Diagnostic Code(s) Display}.
6) Make sure DTC is shown on the screen.

NOTE:
- For detailed operation procedures, refer to the “PC application help for Subaru Select Monitor”.
- For details concerning DTC, refer to “List of Diagnostic Trouble Code (DTC)”. <Ref. to EN(H6DO)(diag)-81, List of Diagnostic Trouble Code (DTC).>

3. GENERAL SCAN TOOL

Refer to the data denoting emission-related powertrain DTC.
For details concerning DTC, refer to “List of Diagnostic Trouble Code (DTC)”. <Ref. to EN(H6DO)(diag)-81, List of Diagnostic Trouble Code (DTC).>

NOTE:
Refer to the general scan tool manufacturer’s operation manual to access powertrain DTC (MODE $03).

11.Inspection Mode

A: PROCEDURE

Perform the diagnosis shown in the following DTC table.
When performing the diagnosis not listed in “List of Diagnostic Trouble Code (DTC)”, refer to the item on the drive cycle. <Ref. to EN(H6DO)(diag)-48, Drive Cycle.>

DTC	Item	Condition
P0011	Intake Camshaft Position - Timing Over-Advanced or System Performance (Bank 1)	—
P0016	Crankshaft Position - Camshaft Position Correlation (Bank1)	—
P0018	Crankshaft Position - Camshaft Position Correlation (Bank2)	—
P0021	Intake Camshaft Position - Timing Over-Advanced or System Performance (Bank 2)	—
P0031	HO2S Heater Control Circuit Low (Bank 1 Sensor 1)	—
P0032	HO2S Heater Control Circuit High (Bank 1 Sensor 1)	—
P0037	HO2S Heater Control Circuit Low (Bank 1 Sensor 2)	—
P0038	HO2S Heater Control Circuit High (Bank 1 Sensor 2)	—
P0051	HO2S Heater Control Circuit Low (Bank 2 Sensor 1)	—
P0052	HO2S Heater Control Circuit High (Bank 2 Sensor 1)	—
P0057	HO2S Heater Control Circuit Low (Bank 2 Sensor 2)	—
P0058	HO2S Heater Control Circuit High (Bank 2 Sensor 2)	—
P0077	Intake Valve Control Solenoid Circuit High (Bank 1)	—
P0083	Intake Valve Control Solenoid Circuit High (Bank 2)	—
P0102	Mass or Volume Air Flow Circuit Low Input	—
P0103	Mass or Volume Air Flow Circuit High Input	—
P0107	Manifold Absolute Pressure/Barometric Pressure Circuit Low Input	—
P0108	Manifold Absolute Pressure/Barometric Pressure Circuit High Input	—
P0112	Intake Air Temperature Sensor 1 Circuit Low	—
P0113	Intake Air Temperature Sensor 1 Circuit High	—
P0117	Engine Coolant Temperature Circuit Low	—
P0118	Engine Coolant Temperature Circuit High	—
P0122	Throttle/Pedal Position Sensor/Switch “A” Circuit Low	—
P0123	Throttle/Pedal Position Sensor/Switch “A” Circuit High	—
P0131	O2 Sensor Circuit Low Voltage (Bank 1 Sensor 1)	—
P0132	O2 Sensor Circuit High Voltage (Bank 1 Sensor 1)	—
P0137	O2 Sensor Circuit Low Voltage (Bank 1 Sensor 2)	—
P0138	O2 Sensor Circuit High Voltage (Bank 1 Sensor 2)	—
P0140	O2 Sensor Circuit No Activity Detected (Bank 1 Sensor 2)	—
P0151	O2 Sensor Circuit Low Voltage (Bank 2 Sensor 1)	—
P0152	O2 Sensor Circuit High Voltage (Bank 2 Sensor 1)	—
P0157	O2 Sensor Circuit Low Voltage (Bank 2 Sensor 2)	—
P0158	O2 Sensor Circuit High Voltage (Bank 2 Sensor 2)	—
P0160	O2 Sensor Circuit No Activity Detected (Bank 2 Sensor 2)	—
P0182	Fuel Temperature Sensor “A” Circuit Low Input	—
P0183	Fuel Temperature Sensor “A” Circuit High Input	—
P0197	Engine Oil Temperature Sensor Low	—
P0198	Engine Oil Temperature Sensor High	—
P0222	Throttle/Pedal Position Sensor/Switch “B” Circuit Low	—
P0223	Throttle/Pedal Position Sensor/Switch “B” Circuit High	—
P0230	Fuel Pump Primary Circuit	—
P0327	Knock Sensor 1 Circuit Low (Bank 1 or Single Sensor)	—
P0328	Knock Sensor 1 Circuit High (Bank 1 or Single Sensor)	—
P0332	Knock Sensor 2 Circuit Low (Bank 2)	—
P0333	Knock Sensor 2 Circuit High (Bank 2)	—

DTC	Item	Condition
P0335	Crankshaft Position Sensor “A” Circuit	—
P0336	Crankshaft Position Sensor “A” Circuit Range/Performance	—
P0340	Camshaft Position Sensor “A” Circuit (Bank 1 or Single Sensor)	—
P0345	Camshaft Position Sensor “A” Circuit (Bank 2)	—
P0447	Evaporative Emission Control System Vent Control Circuit Open	—
P0448	Evaporative Emission Control System Vent Control Circuit Shorted	—
P0452	Evaporative Emission Control System Pressure Sensor Low Input	—
P0453	Evaporative Emission Control System Pressure Sensor High Input	—
P0458	Evaporative Emission System Purge Control Valve Circuit Low	—
P0462	Fuel Level Sensor “A” Circuit Low	—
P0463	Fuel Level Sensor “A” Circuit High	—
P0500	Vehicle Speed Sensor “A”	—
P0512	Starter Request Circuit	—
P0513	Incorrect Immobilizer Key	—
P0600	Serial Communication Link	—
P0604	Internal Control Module Random Access Memory (RAM) Error	—
P0605	Internal Control Module Read Only Memory (ROM) Error	—
P0607	Throttle Control System Circuit Range/Performance	—
P0638	Throttle Actuator Control Range/Performance (Bank 1)	—
P0700	Transmission Control System (MIL Request)	—
P1152	O2 Sensor Circuit Range/Performance (Low) (Bank1 Sensor1)	—
P1153	O2 Sensor Circuit Range/Performance (High) (Bank1 Sensor1)	—
P1154	O2 Sensor Circuit Range/Performance (Low) (Bank 2 Sensor 1)	—
P1155	O2 Sensor Circuit Range/Performance (High) (Bank 2 Sensor 1)	—
P1160	Return Spring Failure	—
P1400	Fuel Tank Pressure Control Solenoid Valve Circuit Low	—
P1420	Fuel Tank Pressure Control Sol. Valve Circuit High	—
P1560	Back-Up Voltage Circuit Malfunction	—
P1570	Antenna	—
P1571	Reference Code Incompatibility	—
P1572	IMM Circuit Failure (Except Antenna Circuit)	—
P1574	Key Communication Failure	—
P1576	EGI Control Module EEPROM	—
P1577	IMM Control Module EEPROM	—
P1578	Meter Failure	—
P2088	Intake Camshaft Position Actuator Control Circuit Low (Bank 1)	—
P2089	Intake Camshaft Position Actuator Control Circuit High (Bank 1)	—
P2092	Intake Camshaft Position Actuator Control Circuit Low (Bank 2)	—
P2093	Intake Camshaft Position Actuator Control Circuit High (Bank 2)	—
P2101	Throttle Actuator Control Motor Circuit Range/Performance	—
P2102	Throttle Actuator Control Motor Circuit Low	—
P2109	Throttle/Pedal Position Sensor “A” Minimum Stop Performance	—
P2122	Throttle/Pedal Position Sensor/Switch “D” Circuit Low Input	—
P2123	Throttle/Pedal Position Sensor/Switch “D” Circuit High Input	—
P2127	Throttle/Pedal Position Sensor/Switch “E” Circuit Low Input	—
P2128	Throttle/Pedal Position Sensor/Switch “E” Circuit High Input	—
P2135	Throttle/Pedal Position Sensor/Switch “A”/“B” Voltage Correlation	—
P2138	Throttle/Pedal Position Sensor/Switch “D”/“E” Voltage Correlation	—
P2227	Barometric Pressure Circuit Range/Performance	—
P2228	Barometric Pressure Circuit Low	—
P2229	Barometric Pressure Circuit High	—

1. PREPARATION FOR THE INSPECTION MODE

1) Check battery voltage is 12 V or more and fuel remains half [20 — 40 ℓ (5.3 — 10.6 US gal, 4.4 — 8.8 Imp gal)].
2) Lift up the vehicle using a garage jack and place it on rigid racks, or drive the vehicle onto free rollers.

WARNING:
- **Before lifting up the vehicle, ensure parking brakes are applied.**
- **Do not use a pantograph jack in place of a rigid rack.**
- **Secure a rope or wire to the front or rear towing hooks to prevent the lateral runout of front wheels.**
- **Before rotating the wheels, make sure that there is no one in front of the vehicle. Besides while the wheels are rotating, make sure that no one approaches the vehicle front side.**
- **Make sure that there is nothing around the wheels. For AWD model, pay special attention to all four wheels.**
- **While servicing, do not depress or release the clutch pedal or accelerator pedal quickly regardless of the engine speed. Quick operation may cause the vehicle to drop off the free roller.**
- **To prevent the vehicle from slipping due to vibration, do not place anything between rigid rack and the vehicle.**

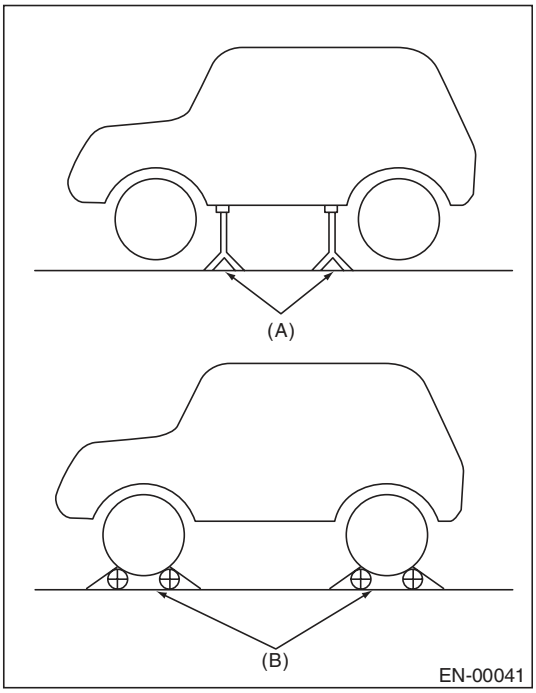

(A) Rigid rack
(B) Free roller

2. SUBARU SELECT MONITOR

1) Check that no DTC remains after clearing memory. <Ref. to EN(H6DO)(diag)-52, Clear Memory Mode.>
2) Warm up the engine.
3) Prepare the Subaru Select Monitor kit. <Ref. to EN(H6DO)(diag)-7, PREPARATION TOOL, General Description.>

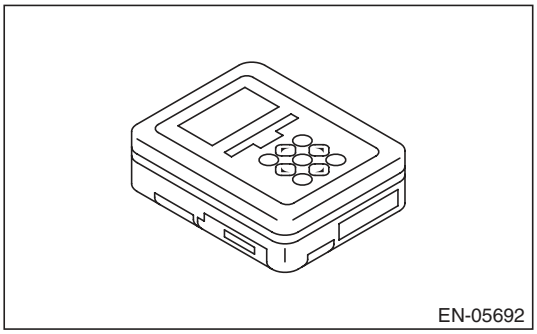

4) Prepare PC with Subaru Select Monitor installed.
5) Connect the USB cable between SDI (Subaru Diagnosis Interface) and USB port on the personal computer (dedicated port for the Subaru Select Monitor).

NOTE:
The dedicated port for the Subaru Select Monitor means the USB port which was used to install the Subaru Select Monitor.

6) Connect the diagnosis cable to SDI.
7) Connect the delivery (test) mode connector (A) located under the glove box.

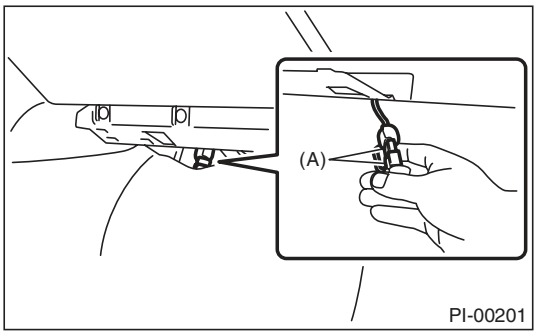

8) Connect SDI to data link connector located in the lower portion of the instrument panel (on the driver's side).

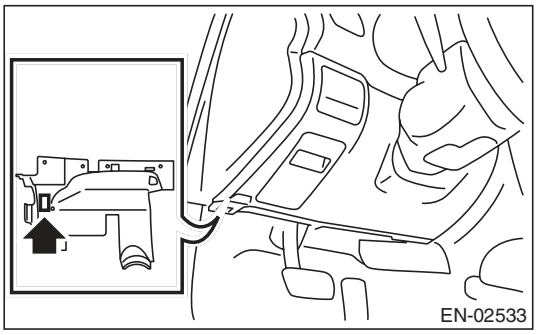

CAUTION:
Do not connect the scan tools except for Subaru Select Monitor and general scan tool.

9) Start the PC.
10) Turn the ignition switch to ON (engine OFF) and run the “PC application for Subaru Select Monitor”.
11) On the «Main Menu» display screen, select the {Each System Check}.
12) On the «System Selection Menu» display screen, select the {Engine Control System}.
13) Click the [OK] button after the information of engine type has been displayed.
14) On the «Engine Diagnosis» display screen, select the {Dealer Check Mode Procedure}.
15) When the «Perform Inspection (Dealer Check) Mode?» is shown on the screen, click the [Next] button.
16) Perform subsequent procedures as instructed on the display screen.
• If trouble still remains in the memory, the corresponding DTC appears on the display screen.

NOTE:
• For detailed operation procedures, refer to the “PC application help for Subaru Select Monitor”.
• For details concerning DTC, refer to “List of Diagnostic Trouble Code (DTC)”. <Ref. to EN(H6DO)(diag)-81, List of Diagnostic Trouble Code (DTC).>
• Release the parking brake.
• The speed difference between front and rear wheels may light the ABS warning light, but this indicates no malfunctions. When engine control diagnosis is finished, perform the ABS memory clearance procedure of self-diagnosis system. <Ref. to ABS(diag)-20, Clear Memory Mode.>

3. GENERAL SCAN TOOL

1) After performing the diagnostics and clearing the memory, check that no DTC remains. <Ref. to EN(H6DO)(diag)-52, Clear Memory Mode.>
2) Warm up the engine.
3) Connect the delivery (test) mode connector (A) located under the glove box.

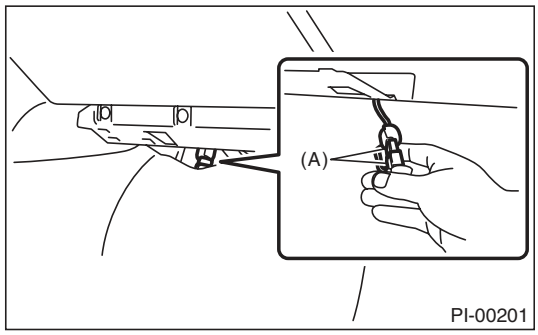

4) Connect the general scan tool to the data link connector located in the lower portion of the instrument panel (on the driver’ side).

CAUTION:
Do not connect the scan tools except for Subaru Select Monitor and general scan tool.

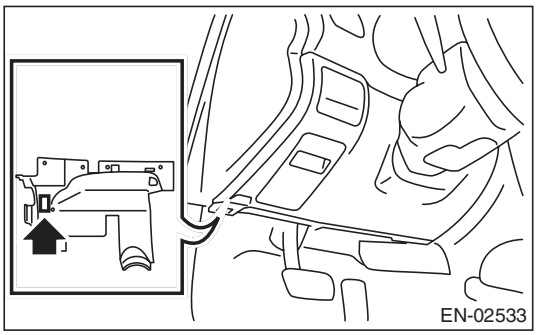

5) Start the engine.

NOTE:
Ensure the selector lever is placed in “P” range before starting.
6) Turn the neutral position switch to ON using select lever.
7) Depress the brake pedal to turn the brake switch ON.
8) Keep the engine speed in 2,500 — 3,000 rpm range for 40 seconds.
9) Place the select lever in “D” range and drive the vehicle at 5 to 10 km/h (3 to 6 MPH).

NOTE:
• For AWD model, release the parking brake.
• The speed difference between front and rear wheels may light the ABS warning light, but this indicates no malfunctions. When engine control diagnosis is finished, perform the ABS memory clearance procedure of the self-diagnosis system. <Ref. to ABS(diag)-20, Clear Memory Mode.>
10) Using the general scan tool, check DTC and record the result(s).

NOTE:
• For detailed operation procedures, refer to the general scan tool operation manual.
• For details concerning DTC, refer to “List of Diagnostic Trouble Code (DTC)”.
<Ref. to EN(H6DO)(diag)-81, List of Diagnostic Trouble Code (DTC).>

12. Drive Cycle

A: PROCEDURE

For the troubleshooting, there are driving patterns described below. Driving in the specified pattern allows to diagnose malfunctioning items listed below. After the repair of the following trouble items, be sure to drive the vehicle with the specified drive patterns to check whether the function is resumed correctly.

1. PREPARATION FOR DRIVE CYCLE

1) Check that the battery voltage is 12 V or more and fuel remains approx. half [20 — 40 ℓ (5.3 — 10.6 US gal, 4.4 — 8.8 Imp gal)].
2) After performing the diagnostics and clearing the memory, check that no DTC remains. <Ref. to EN(H6DO)(diag)-52, Clear Memory Mode.>
3) Disconnect the delivery (test) mode connector.

NOTE:
- Except for the water temperature specified at starting, be sure to carry out the diagnosis after the engine is warmed up.
- Perform the diagnosis twice if the DTC marked with *. After completing the first diagnosis, stop the engine and perform second diagnosis in same condition.

2. DRIVE CYCLE A — DRIVE THE VEHICLE WITH 80 KM/H (50 MPH) FOR 20 MINUTES, AND THEN IDLE THE ENGINE FOR A MINUTE

DTC	Item	Condition
*P0125	Insufficient Coolant Temperature for Closed Loop Fuel Control	Engine coolant temperature at engine start is less than 20°C (68°F).
*P0126	Insufficient Engine Coolant Temperature For Stable Operation	—
*P0128	Coolant Thermostat (Engine Coolant Temperature Below Thermostat Regulating Temperature)	—
*P0133	O2 Sensor Circuit Slow Response (Bank 1 Sensor 1)	—
*P0153	O2 Sensor Circuit Slow Response (Bank 2 Sensor 1)	—
*P0171	System Too Lean (Bank 1)	Complete diagnosis with drive cycle B or C as well.
*P0172	System Too Rich (Bank 1)	Complete diagnosis with drive cycle B or C as well.
*P0174	System Too Lean (Bank 2)	Complete diagnosis with drive cycle B or C as well.
*P0175	System Too Rich (Bank 2)	Complete diagnosis with drive cycle B or C as well.
*P0196	Engine Oil Temperature Sensor Circuit Range/Performance	—
*P0301	Cylinder 1 Misfire Detected	Complete diagnosis with drive cycle B or C as well.
*P0302	Cylinder 2 Misfire Detected	Complete diagnosis with drive cycle B or C as well.
*P0303	Cylinder 3 Misfire Detected	Complete diagnosis with drive cycle B or C as well.
*P0304	Cylinder 4 Misfire Detected	Complete diagnosis with drive cycle B or C as well.
*P0305	Cylinder 5 Misfire Detected	Complete diagnosis with drive cycle B or C as well.
*P0306	Cylinder 6 Misfire Detected	Complete diagnosis with drive cycle B or C as well.
*P0420	Catalyst System Efficiency below Threshold (Bank 1)	—
*P0442	Evaporative Emission Control System Leak Detected (Small Leak)	Engine coolant temperature at engine start is less than 25°C (77°F).
*P0451	Evaporative Emission Control System Pressure Sensor	—
*P0456	Evaporative Emission Control System Leak Detected (Very Small Leak)	Engine coolant temperature at engine start is less than 25°C (77°F).
*P0457	Evaporative Emission Control System Leak Detected (Fuel Cap Loose/Off)	Engine coolant temperature at engine start is less than 25°C (77°F).
*P0464	Fuel Level Sensor Circuit Intermittent	—
P1443	Vent Control Solenoid Valve Function Problem	—
*P2096	Post Catalyst Fuel Trim System Too Lean (Bank 1)	Complete diagnosis with drive cycle B or C as well.
*P2097	Post Catalyst Fuel Trim System Too Rich (Bank 1)	Complete diagnosis with drive cycle B or C as well.
*P2098	Post Catalyst Fuel Trim System Too Lean Bank 2	Complete diagnosis with drive cycle B or C as well.
*P2099	Post Catalyst Fuel Trim System Too Rich Bank 2	Complete diagnosis with drive cycle B or C as well.
P2103	Throttle Actuator Control Motor Circuit High	Complete diagnosis with drive cycle B or C as well.

3. DRIVE CYCLE B — 10 MINUTES IDLING

NOTE:
Drive the vehicle at 10 km/h (6 MPH) or faster before diagnosis.

DTC	Item	Condition
*P0171	System Too Lean (Bank 1)	Complete diagnosis with drive cycle A or C as well.
*P0172	System Too Rich (Bank 1)	Complete diagnosis with drive cycle A or C as well.
*P0174	System Too Lean (Bank 2)	Complete diagnosis with drive cycle A or C as well.
*P0175	System Too Rich (Bank 2)	Complete diagnosis with drive cycle A or C as well.
*P0301	Cylinder 1 Misfire Detected	Complete diagnosis with drive cycle A or C as well.
*P0302	Cylinder 2 Misfire Detected	Complete diagnosis with drive cycle A or C as well.
*P0303	Cylinder 3 Misfire Detected	Complete diagnosis with drive cycle A or C as well.
*P0304	Cylinder 4 Misfire Detected	Complete diagnosis with drive cycle A or C as well.
*P0305	Cylinder 5 Misfire Detected	Complete diagnosis with drive cycle A or C as well.
*P0306	Cylinder 6 Misfire Detected	Complete diagnosis with drive cycle A or C as well.
*P0459	Evaporative Emission System Purge Control Valve Circuit High	—
*P0506	Idle Air Control System RPM Lower Than Expected	—
*P0507	Idle Air Control System RPM Higher Than Expected	—
*P2096	Post Catalyst Fuel Trim System Too Lean (Bank 1)	Complete diagnosis with drive cycle A or C as well.
*P2097	Post Catalyst Fuel Trim System Too Rich (Bank 1)	Complete diagnosis with drive cycle A or C as well.
*P2098	Post Catalyst Fuel Trim System Too Lean Bank 2	Complete diagnosis with drive cycle A or C as well.
*P2099	Post Catalyst Fuel Trim System Too Rich Bank 2	Complete diagnosis with drive cycle A or C as well.
P2103	Throttle Actuator Control Motor Circuit High	Complete diagnosis with drive cycle A or C as well.

4. DRIVE CYCLE C — DRIVE THE VEHICLE WITH FOLLOWING DRIVE PATTERNS

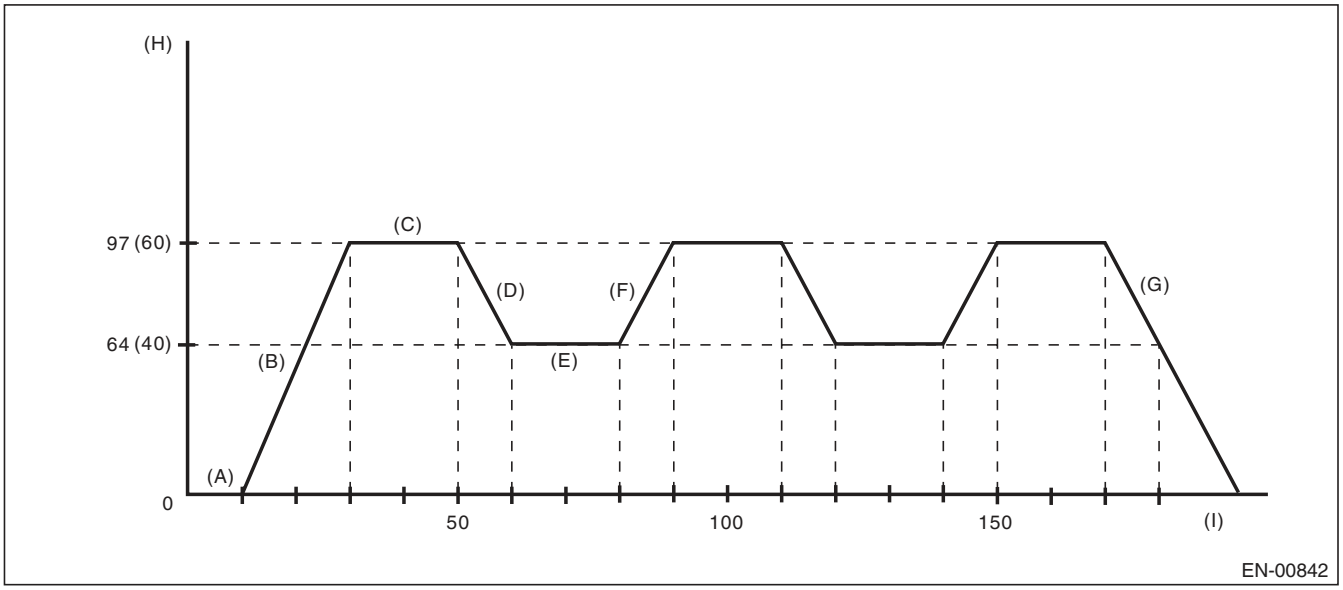

(A) Idle the engine for 10 seconds or more.

(B) Accelerate the vehicle to 97 km/h (60 MPH) within 20 seconds.

(C) Drive the vehicle at 97 km/h (60 MPH) for 20 seconds.

(D) Decelerate the vehicle to 64 km/h (40 MPH) with throttle fully closed.

(E) Drive the vehicle at 64 km/h (40 MPH) for 20 seconds.

(F) Accelerate the vehicle to 97 km/h (60 MPH) within 10 seconds.

(G) Stop the vehicle with throttle fully closed.

(H) Vehicle speed km/h (MPH)

(I) Sec.

DTC	Item	Condition
P0026	Intake Valve Control Solenoid Circuit Range/Performance (Bank 1)	—
P0028	Intake Valve Control Solenoid Circuit Range/Performance (Bank 2)	—
*P0030	HO2S Heater Control Circuit (Bank 1 Sensor 1)	—
*P0050	HO2S Heater Control Circuit (Bank 2 Sensor 1)	—
*P0068	MAP/MAF - Throttle Position Correlation	—
P0076	Intake Valve Control Solenoid Circuit Low (Bank 1)	—
P0082	Intake Valve Control Solenoid Circuit Low (Bank 2)	—
*P0101	Mass or Volume Air Flow Circuit Range/Performance	—
P0134	O2 Sensor Circuit No Activity Detected (Bank 1 Sensor 1)	—
*P0139	O2 Sensor Circuit Slow Response (Bank 1 Sensor 2)	—
P0154	O2 Sensor Circuit No Activity Detected (Bank 2 Sensor 1)	—
*P0159	O2 Sensor Circuit Slow Response (Bank 2 Sensor 2)	—
*P0171	System Too Lean (Bank 1)	Complete diagnosis with drive cycle A or B as well.
*P0172	System Too Rich (Bank 1)	Complete diagnosis with drive cycle A or B as well.
*P0174	System Too Lean (Bank 2)	Complete diagnosis with drive cycle A or B as well.
*P0175	System Too Rich (Bank 2)	Complete diagnosis with drive cycle A or B as well.
*P0301	Cylinder 1 Misfire Detected	Complete diagnosis with drive cycle A or B as well.
*P0302	Cylinder 2 Misfire Detected	Complete diagnosis with drive cycle A or B as well.
*P0303	Cylinder 3 Misfire Detected	Complete diagnosis with drive cycle A or B as well.
*P0304	Cylinder 4 Misfire Detected	Complete diagnosis with drive cycle A or B as well.
*P0305	Cylinder 5 Misfire Detected	Complete diagnosis with drive cycle A or B as well.
*P0306	Cylinder 6 Misfire Detected	Complete diagnosis with drive cycle A or B as well.
*P0400	Exhaust Gas Recirculation Flow	—
P1492	EGR Solenoid Valve Signal #1 Circuit Malfunction (Low Input)	—
P1493	EGR Solenoid Valve Signal #1 Circuit Malfunction (High Input)	—
P1494	EGR Solenoid Valve Signal #2 Circuit Malfunction (Low Input)	—
P1495	EGR Solenoid Valve Signal #2 Circuit Malfunction (High Input)	—
P1496	EGR Solenoid Valve Signal #3 Circuit Malfunction (Low Input)	—
P1497	EGR Solenoid Valve Signal #3 Circuit Malfunction (High Input)	—
P1498	EGR Solenoid Valve Signal #4 Circuit Malfunction (Low Input)	—
P1499	EGR Solenoid Valve Signal #4 Circuit Malfunction (High Input)	—
*P2096	Post Catalyst Fuel Trim System Too Lean (Bank 1)	Complete diagnosis with drive cycle A or B as well.
*P2097	Post Catalyst Fuel Trim System Too Rich (Bank 1)	Complete diagnosis with drive cycle A or B as well.
*P2098	Post Catalyst Fuel Trim System Too Lean Bank 2	Complete diagnosis with drive cycle A or B as well.
*P2099	Post Catalyst Fuel Trim System Too Rich Bank 2	Complete diagnosis with drive cycle A or B as well.
P2103	Throttle Actuator Control Motor Circuit High	Complete diagnosis with drive cycle A or B as well.

5. DRIVE CYCLE D

Drift Diagnosis

1) Make sure that the engine coolant temperature at engine starting is less than 30°C (86°F).
2) Make sure that fuel remains 10 ℓ (2.6 US gal, 2.2 Imp gal) or more and the battery voltage is 10.9 V or more.
3) Start the engine, and check that the engine coolant temperature increases by 10°C (50°F) or more, and reaches 75°C (167°F) or more, when the engine is warmed up.
4) After the engine has reached the state of procedure 3), idle the engine for 120 seconds or more.

Stuck Diagnosis

1) Make sure that the battery voltage is 10.9 V or more.
2) Perform the Clear Memory Mode. <Ref. to EN(H6DO)(diag)-52, Clear Memory Mode.>
3) Drive for approximately 50 ℓ (13.2 US gal, 11 Imp gal) of fuel.

NOTE:
- It is acceptable to drive the vehicle intermittently.
- Do not disconnect the battery terminals while diagnosing. (Data will be cleared by disconnecting the battery terminals.)

DTC	Item	Condition
*P0181	Fuel Temperature Sensor “A” Circuit Range/Performance	—

6. DRIVE CYCLE E

1) Make sure that the battery voltage is 10.9 V or more.
2) Perform the Clear Memory Mode. <Ref. to EN(H6DO)(diag)-52, Clear Memory Mode.>
3) Drive for approximately 30 ℓ (7.9 US gal, 6.6 Imp gal) of fuel.

NOTE:
- It is acceptable to drive the vehicle intermittently.
- Do not disconnect the battery terminals while diagnosing. (Data will be cleared by disconnecting the battery terminals.)

DTC	Item	Condition
*P0461	Fuel Level Sensor “A” Circuit Range/Performance	—

7. DRIVE CYCLE F

1) Make sure that the engine coolant temperature at engine starting is less than 30°C (86°F).
2) Start the engine, and warm it up until engine coolant temperature reaches to 95°C (203°F) or more.
3) Idle the engine for 10 minutes or more in the condition of step 2.

NOTE:
Do not disconnect the battery terminals while diagnosing. (Data will be cleared by disconnecting the battery terminals.)

DTC	Item	Condition
*P0111	Motor/Motor Relay Malfunction	—

8. DRIVE CYCLE H

1) Perform the Clear Memory Mode. <Ref. to EN(H6DO)(diag)-52, Clear Memory Mode.>
2) With the ignition switch ON, read the engine coolant temperature, intake air temperature and fuel temperature. <Ref. to EN(H6DO)(diag)-35, READ CURRENT DATA FOR ENGINE (NORMAL MODE), OPERATION, Subaru Select Monitor.>
3) If the values from step 2) satisfy the following two conditions, start the engine.

Condition:
|Engine coolant temperature — intake air temperature | ≤ 5°C (41°F)
|Engine coolant temperature — fuel temperature | ≤ 2°C (36°F)

NOTE:
- If the conditions are not satisfied, turn the ignition switch to OFF and wait until the parameters are satisfied.
- Start AT vehicles in the “P” range, and MT vehicles in the neutral position.

4) Idle the engine for 1 minute under the conditions in step 3).

DTC	Item	Condition
*P1602	Control Module Programming Error	—

13. Clear Memory Mode

A: OPERATION

NOTE:
When Clear Memory Mode is performed in OBD mode of Subaru Select Monitor, only DTCs are cleared.

1. SUBARU SELECT MONITOR (NORMAL MODE)

1) On the «Main Menu» display screen, select the {Each System Check}.
2) On the «System Selection Menu» display screen, select the {Engine Control System}.
3) Click the [OK] button after the information of engine type has been displayed.
4) On the «Engine Diagnosis» display screen, select the {Clearing Memory}.
5) When the “Clear Memory?” is shown on the screen, click the [Yes] button.
6) When «Done» and «Turn off the ignition switch.» are shown on the display screen, turn the ignition switch to OFF.

NOTE:
• Initial diagnosis of electronic throttle control is performed after memory clearance. Wait for 10 seconds or more after turning the ignition switch to ON, and then start the engine.
• For detailed operation procedures, refer to the “PC application help for Subaru Select Monitor”.

2. SUBARU SELECT MONITOR (OBD MODE)

1) On the «Main Menu» display screen, select the {Each System Check}.
2) On the «System Selection Menu» display screen, select the {Engine Control System}.
3) Click the [OK] button after the information of engine type has been displayed.
4) On the «Engine Diagnosis» display screen, select the {OBD System}.
5) On the «OBD Menu» display screen, select the {Clear Diagnostic Code}.
6) When the “Clear Diagnostic Code?” is shown on the screen, click the [Yes] button.
7) When «Done» and «Turn off the ignition switch.» are shown on the display screen, click the [OK] button.

NOTE:
• Initial diagnosis of electronic throttle control is performed after memory clearance. Wait for 10 seconds or more after turning the ignition switch to ON, and then start the engine.
• For detailed operation procedures, refer to the “PC application help for Subaru Select Monitor”.

3. GENERAL SCAN TOOL

For procedures clearing memory using the general scan tool, refer to the general scan tool operation manual.

NOTE:
Initial diagnosis of electronic throttle control is performed after memory clearance. For this reason, start the engine after 10 seconds or more have elapsed since the ignition switch was turned to ON.

14. Compulsory Valve Operation Check Mode

A: OPERATION

1) Prepare the Subaru Select Monitor kit. <Ref. to EN(H6DO)(diag)-7, PREPARATION TOOL, General Description.>

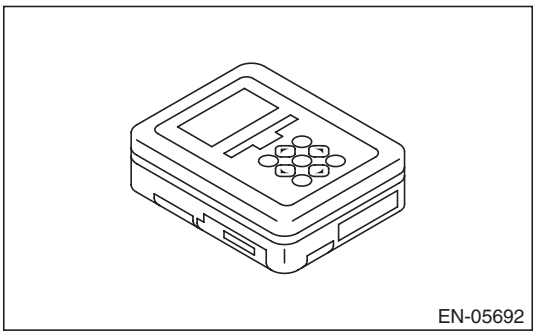

2) Prepare PC with Subaru Select Monitor installed.
3) Connect the USB cable between SDI (Subaru Diagnosis Interface) and USB port on the personal computer (dedicated port for the Subaru Select Monitor).

NOTE:
The dedicated port for the Subaru Select Monitor means the USB port which was used to install the Subaru Select Monitor.

4) Connect the diagnosis cable to SDI.
5) Connect the delivery (test) mode connector (A) located under the glove box.

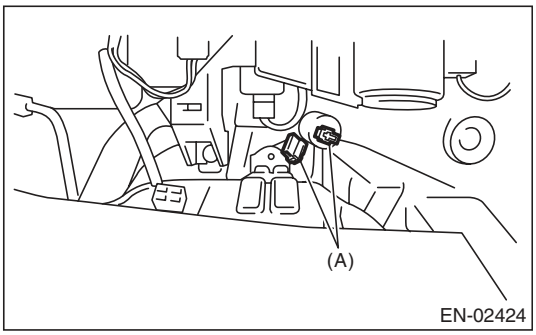

6) Connect SDI to data link connector located in the lower portion of the instrument panel (on the driver's side).

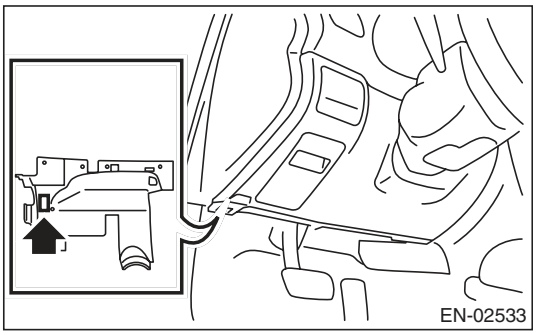

CAUTION:
Do not connect the scan tools except for Subaru Select Monitor and general scan tool.

7) Start the PC.
8) Turn the ignition switch to ON (engine OFF) and run the "PC application for Subaru Select Monitor".
9) On the «Main Menu» display screen, select the {Each System Check}.
10) On the «System Selection Menu» display screen, select the {Engine Control System}.
11) Click the [OK] button after the information of engine type has been displayed.
12) On the «Engine Diagnosis» display screen, select the {System Operation Check Mode}.
13) On the «System Operation Check Mode» display, select the {Actuator ON/OFF Operation}.
14) Select the desired actuator on the «Actuator ON/OFF Operation» display screen and click the [Next] button.
15) Clicking the [End] button completes the compulsory valve operation check mode. The display will then return to the «Actuator ON/OFF Operation» screen.

- A list of the support data is shown in the following table.

Description	Display
Compulsory fuel pump relay operation check	Fuel Pump Relay
Compulsory purge control solenoid valve operation check	CPC Solenoid Valve
Compulsory radiator fan relay operation check	Radiator Fan Relay
Compulsory air conditioning relay operation check	A/C Compressor Relay

NOTE:
- The following parts will be displayed but not functional.

Display
EGR Solenoid Valve
ASV Solenoid Valve
PCV Solenoid Valve
Vent. Solenoid Valve
FICD Solenoid
Pressure Switching Sol.1
Pressure Switching Sol.2
AAI Solenoid Valve
Tank Sensor Cntl Valve
Turbocharger Wastegate Solenoid
EXH. Bypass Control Permit Flag
Secondary Air Combi Valve 1

- For detailed operation procedures, refer to the "PC application help for Subaru Select Monitor".

15. System Operation Check Mode

A: OPERATION

1) Prepare the Subaru Select Monitor kit. <Ref. to EN(H6DO)(diag)-7, PREPARATION TOOL, General Description.>

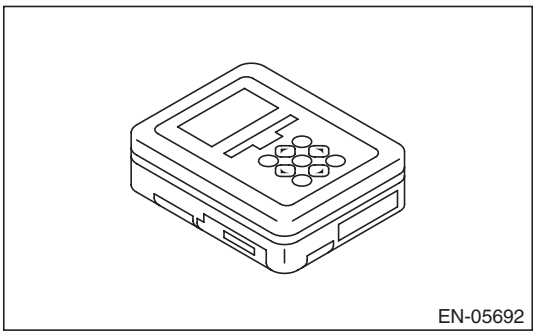

2) Prepare PC with Subaru Select Monitor installed.
3) Connect the USB cable between SDI (Subaru Diagnosis Interface) and USB port on the personal computer (dedicated port for the Subaru Select Monitor).

NOTE:
The dedicated port for the Subaru Select Monitor means the USB port which was used to install the Subaru Select Monitor.

4) Connect the diagnosis cable to SDI.
5) Connect SDI to data link connector located in the lower portion of the instrument panel (on the driver's side).

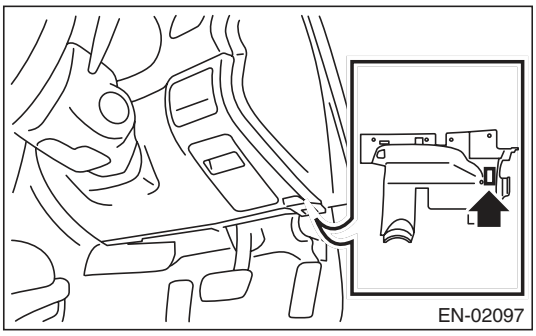

CAUTION:
Do not connect the scan tools except for Subaru Select Monitor and general scan tool.

6) Start the PC.
7) Turn the ignition switch to ON (engine OFF) and run the "PC application for Subaru Select Monitor".
8) On the «Main Menu» display screen, select the {Each System Check}.
9) On the «System Selection Menu» display screen, select the {Engine Control System}.
10) Click the [OK] button after the information of engine type has been displayed.
11) On the «Engine Diagnosis» display screen, select the {System Operation Check Mode}.
12) The following items are displayed on the monitor.

Display
Actuator ON/OFF Operation
Immobilizer System
Fuel Pump Control
Fixed Idle Ignition Timing
Idle Speed Control
Injector Control
EGR Valve Control

1. FUEL PUMP CONTROL (OFF OPERATION)

CAUTION:
After executing the system operation check mode, execute the Clear Memory Mode. <Ref. to EN(H6DO)(diag)-52, OPERATION, Clear Memory Mode.>

1) On the «System Operation Check Mode» display screen, select the {Fuel Pump Control}.
2) On the «Fuel Pump Control» display screen, select the {OFF Drive}.
3) On the «Start the Engine» display screen, start the engine and click the [OK] button.
4) On the «OFF Drive» display screen, click the [Execution] button and execute the OFF drive.
5) Click the [Cancel] button to stop the OFF drive.
6) Click the [F12 Exit] button to end the OFF drive. The screen will return to the «Fuel Pump Control» screen.

NOTE:
For detailed operation procedures, refer to the "PC application help for Subaru Select Monitor".

2. FUEL PUMP CONTROL (ON/OFF OPERATION)

CAUTION:
After executing the system operation check mode, execute the Clear Memory Mode. <Ref. to EN(H6DO)(diag)-52, OPERATION, Clear Memory Mode.>

1) On the «System Operation Check Mode» display screen, select the {Fuel Pump Control}.
2) On the «Fuel Pump Control» display screen, select the {ON/OFF Dr.}.
3) On the «Turn Ignition Switch ON with Engine OFF» display screen, turn the ignition switch to ON and click the [OK] button.
4) On the «ON/OFF Dr.» display screen, click the [Execution] button and execute the ON/OFF drive.
5) Click the [Cancel] button to stop the ON/OFF drive.

6) Click the [F12 Exit] button to end the ON/OFF drive. The screen will return to the «Fuel Pump Control» screen.

NOTE:
For detailed operation procedures, refer to the "PC application help for Subaru Select Monitor".

3. IDLING IGNITION TIMING FIXED

CAUTION:
After executing the system operation check mode, execute the Clear Memory Mode. <Ref. to EN(H6DO)(diag)-52, OPERATION, Clear Memory Mode.>

1) On the «System Operation Check Mode» display screen, select the {Fixed Idle Ignition Timing}.
2) On the «Start the Engine» display screen, start the engine and click the [OK] button.
3) On the «Fixed Idle Ignition Timing» display screen, click the [Execution] button and execute the idling ignition timing fixed.
4) Click the [Cancel] button to stop the idling ignition timing fixed.
5) Click the [F12 Exit] button to end the idling ignition timing fixed. The display will then return to the «System Operation Check Mode» screen.

NOTE:
For detailed operation procedures, refer to the "PC application help for Subaru Select Monitor".

4. IDLE SPEED CONTROL

CAUTION:
After executing the system operation check mode, execute the Clear Memory Mode. <Ref. to EN(H6DO)(diag)-52, OPERATION, Clear Memory Mode.>

1) On the «System Operation Check Mode» display screen, select the {Idle Speed Control}.
2) On the «Start the Engine» display screen, start the engine and click the [OK] button.
3) In the «Idle Speed Control» display screen, click the [△] button or the [▽] button to change the setting values, then click the [OK] button.
Setting is possible in a range between 500 rpm — 2,000 rpm, in increments of 50 rpm. However, the engine speed that can actually be controlled will vary depending on the vehicle.
4) Click the [Cancel] button to stop the idle speed control.
5) Click the [F12 Exit] button to end the idle speed control. The display will then return to the «System Operation Check Mode» screen.

NOTE:
For detailed operation procedures, refer to the "PC application help for Subaru Select Monitor".

5. INJECTOR CONTROL (INJECTION STOP MODE)

CAUTION:
After executing the system operation check mode, execute the Clear Memory Mode. <Ref. to EN(H6DO)(diag)-52, OPERATION, Clear Memory Mode.>

1) On the «System Operation Check Mode» display screen, select the {Injector Control}.
2) On the «Injector Control» display screen, select the {Injection Stop Mode}.
3) On the «Injection Stop Mode» display screen, select the fuel injector to be stopped.
4) On the «Start the Engine» display screen, start the engine and click the [OK] button.
5) On the «Fuel Injector #» display screen, click the [Execution] button and execute the injection stop mode.
6) Click the [Cancel] button to stop the injection stop mode.
7) Click the [F12 Exit] button to return the «Injection Stop Mode» display screen.
8) On the «Injection Stop Mode» display screen, click the [Return] button to end the «Injection Stop Mode». The screen will return to the «Injector Control» screen.

NOTE:
For detailed operation procedures, refer to the "PC application help for Subaru Select Monitor".

6. INJECTOR CONTROL (INJECTION QUANTITY CONTROL)

CAUTION:
After executing the system operation check mode, execute the Clear Memory Mode. <Ref. to EN(H6DO)(diag)-52, OPERATION, Clear Memory Mode.>

1) On the «System Operation Check Mode» display screen, select the {Injector Control}.
2) On the «Injector Control» display screen, select the {Injection Quantity Control}.
3) On the «Start the Engine» display screen, start the engine and click the [OK] button.
4) In the «Injection Quantity Control» display screen, click the [△] button or the [▽] button to change the setting values, then click the [OK] button.
Setting is possible in a range between 0 — 20%, in increments of 1%.
5) Click the [Cancel] button to stop the injection quantity control.
6) Click the [F12 Exit] button to end the injection quantity control. The screen will return to the «Injector Control» screen.

NOTE:
For detailed operation procedures, refer to the "PC application help for Subaru Select Monitor".

7. EGR VALVE CONTROL

CAUTION:
After executing the system operation check mode, execute the Clear Memory Mode. <Ref. to EN(H6DO)(diag)-52, OPERATION, Clear Memory Mode.>

1) On the «System Operation Check Mode» display screen, select the {EGR Valve Control}.
2) On the «Start the Engine» display screen, start the engine and click the [OK] button.
3) In the «EGR Valve Control» display screen, click the [△] button or the [▽] button to change the setting values, then click the [OK] button.
Setting is possible in increments of 1 STEP. However, the STEP number that can actually be controlled will vary depending on the vehicle.
4) Click the [Cancel] button to stop the EGR valve control.
5) Click the [F12 Exit] button to end the EGR valve control. The display will then return to the «System Operation Check Mode» screen.

NOTE:
For detailed operation procedures, refer to the “PC application help for Subaru Select Monitor”.

16. Malfunction Indicator Light

A: PROCEDURE

1. Activation of malfunction indicator light. <Ref. to EN(H6DO)(diag)-58, ACTIVATION OF MALFUNCTION INDICATOR LIGHT, Malfunction Indicator Light.>
↓
2. Malfunction indicator light does not come on. <Ref. to EN(H6DO)(diag)-59, MALFUNCTION INDICATOR LIGHT DOES NOT COME ON, Malfunction Indicator Light.>
↓
3. Malfunction indicator light does not go off. <Ref. to EN(H6DO)(diag)-61, MALFUNCTION INDICATOR LIGHT DOES NOT GO OFF, Malfunction Indicator Light.>
↓
4. Malfunction indicator light does not blink. <Ref. to EN(H6DO)(diag)-62, MALFUNCTION INDICATOR LIGHT DOES NOT BLINK, Malfunction Indicator Light.>
↓
5. Malfunction indicator light remains blinking. <Ref. to EN(H6DO)(diag)-64, MALFUNCTION INDICATOR LIGHT REMAINS BLINKING, Malfunction Indicator Light.>

B: ACTIVATION OF MALFUNCTION INDICATOR LIGHT

1) When the ignition switch is turned to ON (engine OFF), the malfunction indicator light (A) in the combination meter illuminates.

NOTE:
If the malfunction indicator light does not illuminate, perform diagnostics of the malfunction indicator light circuit or the combination meter circuit. <Ref. to EN(H6DO)(diag)-59, MALFUNCTION INDICATOR LIGHT DOES NOT COME ON, Malfunction Indicator Light.>

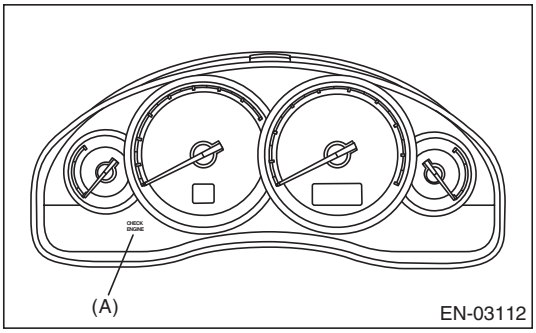

2) After starting the engine, the malfunction indicator light goes out. If it does not go off, either the engine or emission control system has malfunction.

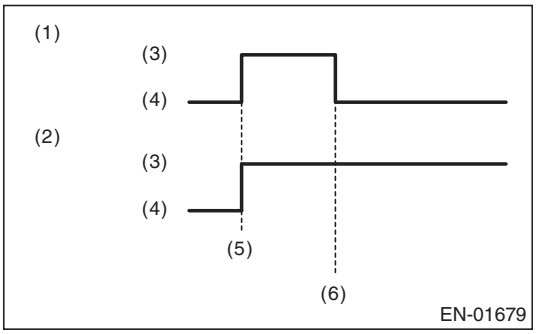

(1) No faulty
(2) Trouble occurs
(3) ON
(4) OFF
(5) Ignition switch ON
(6) Engine start

3) Turn the ignition switch to OFF and connect the delivery (test) mode connector.

(1) When the ignition switch is turned to ON (engine OFF), the malfunction indicator light illuminates.
(2) After the engine starts, malfunction indicator light blinks in a cycle of 0.5 Hz. (During diagnosis)
(3) Malfunction indicator light blinks at a cycle of 3 Hz after diagnosis if there is no trouble. Malfunction indicator light illuminates if faulty.

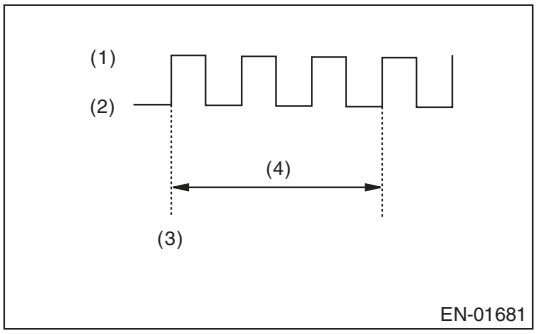

(1) ON
(2) OFF
(3) Ignition switch ON
(4) 1 second

C: MALFUNCTION INDICATOR LIGHT DOES NOT COME ON

DIAGNOSIS:

The malfunction indicator light circuit is open or shorted.

TROUBLE SYMPTOM:

When the ignition switch is turned to ON (engine OFF), malfunction indicator light does not illuminate.

WIRING DIAGRAM:

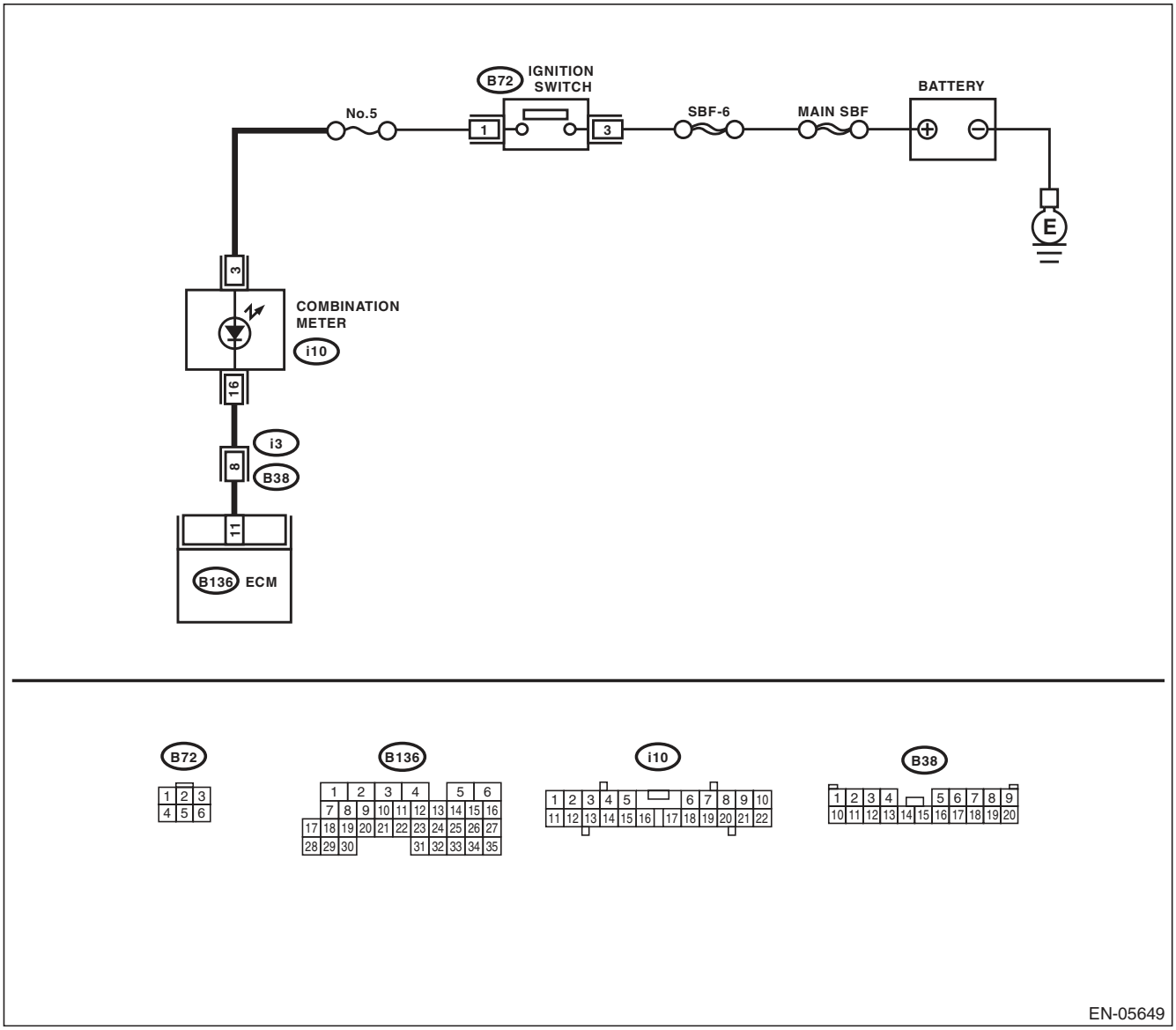

	Step	Check	Yes	No
1	**CHECK OUTPUT SIGNAL OF ECM.** 1) Turn the ignition switch to ON. 2) Measure the voltage between ECM connector and chassis ground. ***Connector & terminal*** ***(B136) No. 11 (+) — Chassis ground (–):***	Is the voltage 10 V or more?	Go to step **5**.	Go to step **2**.
2	**CHECK HARNESS BETWEEN COMBINATION METER AND ECM CONNECTOR.** 1) Turn the ignition switch to OFF. 2) Remove the combination meter. <Ref. to IDI-22, Combination Meter.> 3) Disconnect the connector from ECM and combination meter. 4) Measure the resistance of harness between ECM connector and combination meter connector. ***Connector & terminal*** ***(B136) No. 11 — (i10) No. 16:***	Is the resistance less than 1 Ω?	Go to step **3**.	Repair the harness and connector. NOTE: In this case, repair the following item: • Open circuit of harness between ECM and combination meter connector • Poor contact of coupling connector
3	**CHECK POOR CONTACT.** Check for poor contact of combination meter connector.	Is there poor contact in combination meter connector?	Repair the poor contact of combination meter connector.	Go to step **4**.
4	**CHECK HARNESS BETWEEN COMBINATION METER AND IGNITION SWITCH CONNECTOR.** 1) Turn the ignition switch to ON. 2) Measure the voltage between combination meter connector and chassis ground. ***Connector & terminal*** ***(i10) No. 3 (+) — Chassis ground (–):***	Is the voltage 10 V or more?	Replace the combination meter board. <Ref. to IDI-22, Combination Meter.>	Check the following item and repair if necessary. NOTE: • Blown out of fuse (No. 5) • Open or short circuit in harness between fuse (No. 5) and battery terminal • Poor contact in ignition switch connector
5	**CHECK POOR CONTACT.** Check for poor connection by shaking or pulling ECM connector and harness.	Does the malfunction indicator light illuminate?	Repair the poor contact of ECM connector.	Go to step **6**.
6	**CHECK ECM CONNECTOR.** Check the connection of ECM connector.	Is the ECM connector correctly connected?	Replace the ECM. <Ref. to FU(H6DO)-38, Engine Control Module (ECM).>	Repair the connection of ECM connector.

D: MALFUNCTION INDICATOR LIGHT DOES NOT GO OFF

DIAGNOSIS:
The malfunction indicator light circuit is shorted.
TROUBLE SYMPTOM:
Although malfunction indicator light comes on when the engine runs, DTC is not shown on the Subaru Select Monitor display.
WIRING DIAGRAM:

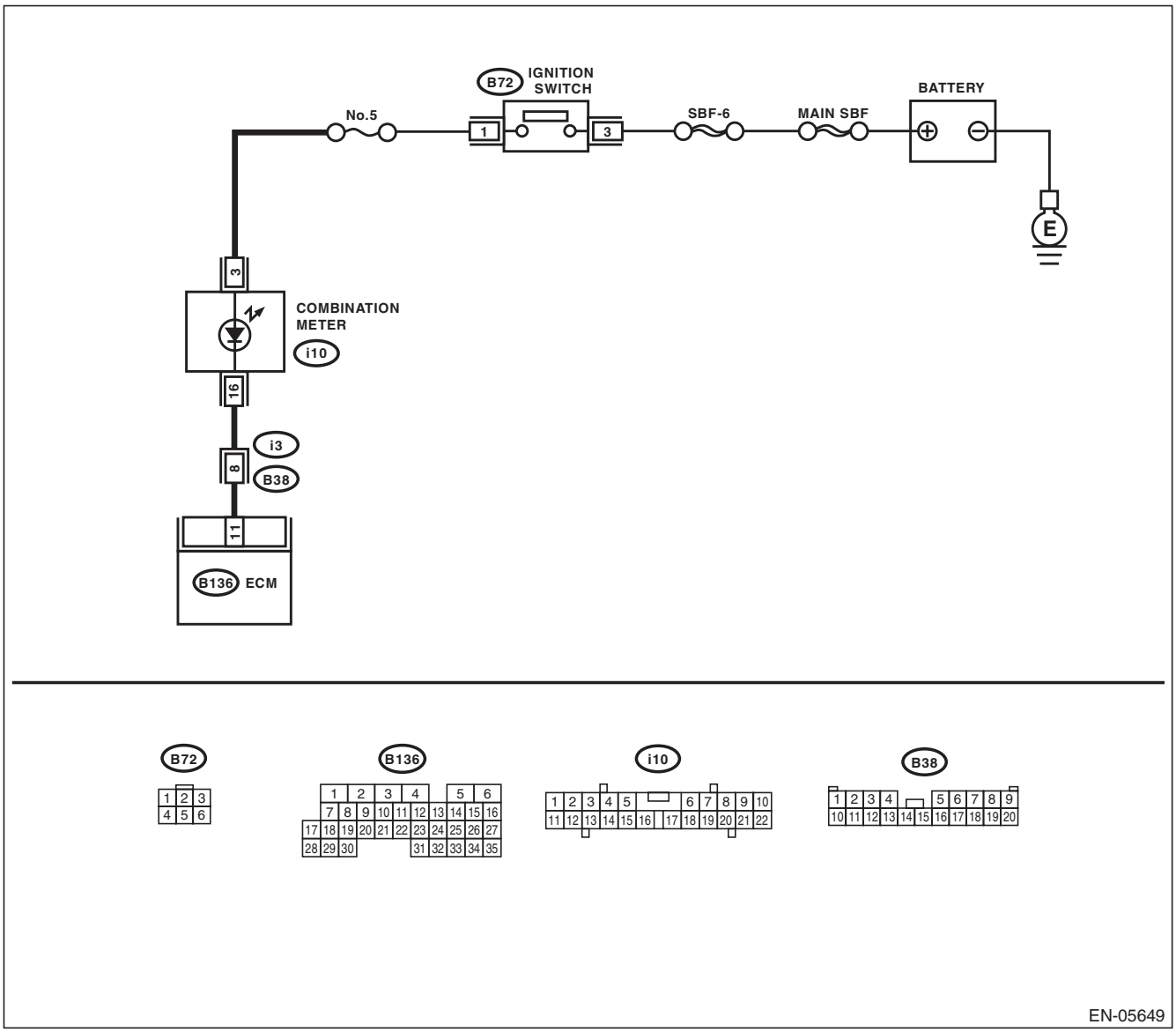

Step		Check	Yes	No
1	**CHECK HARNESS BETWEEN COMBINATION METER AND ECM CONNECTOR.** 1) Turn the ignition switch to OFF. 2) Disconnect the connectors from ECM. 3) Turn the ignition switch to ON.	Does the malfunction indicator light illuminate?	Repair the short circuit of harness between combination meter and ECM connector.	Replace the ECM. <Ref. to FU(H6DO)-38, Engine Control Module (ECM).>

E: MALFUNCTION INDICATOR LIGHT DOES NOT BLINK

DIAGNOSIS:

- The malfunction indicator light circuit is open or shorted.
- The delivery (test) mode connector circuit is open.

TROUBLE SYMPTOM:

Malfunction indicator light does not blink during Inspection Mode.

WIRING DIAGRAM:

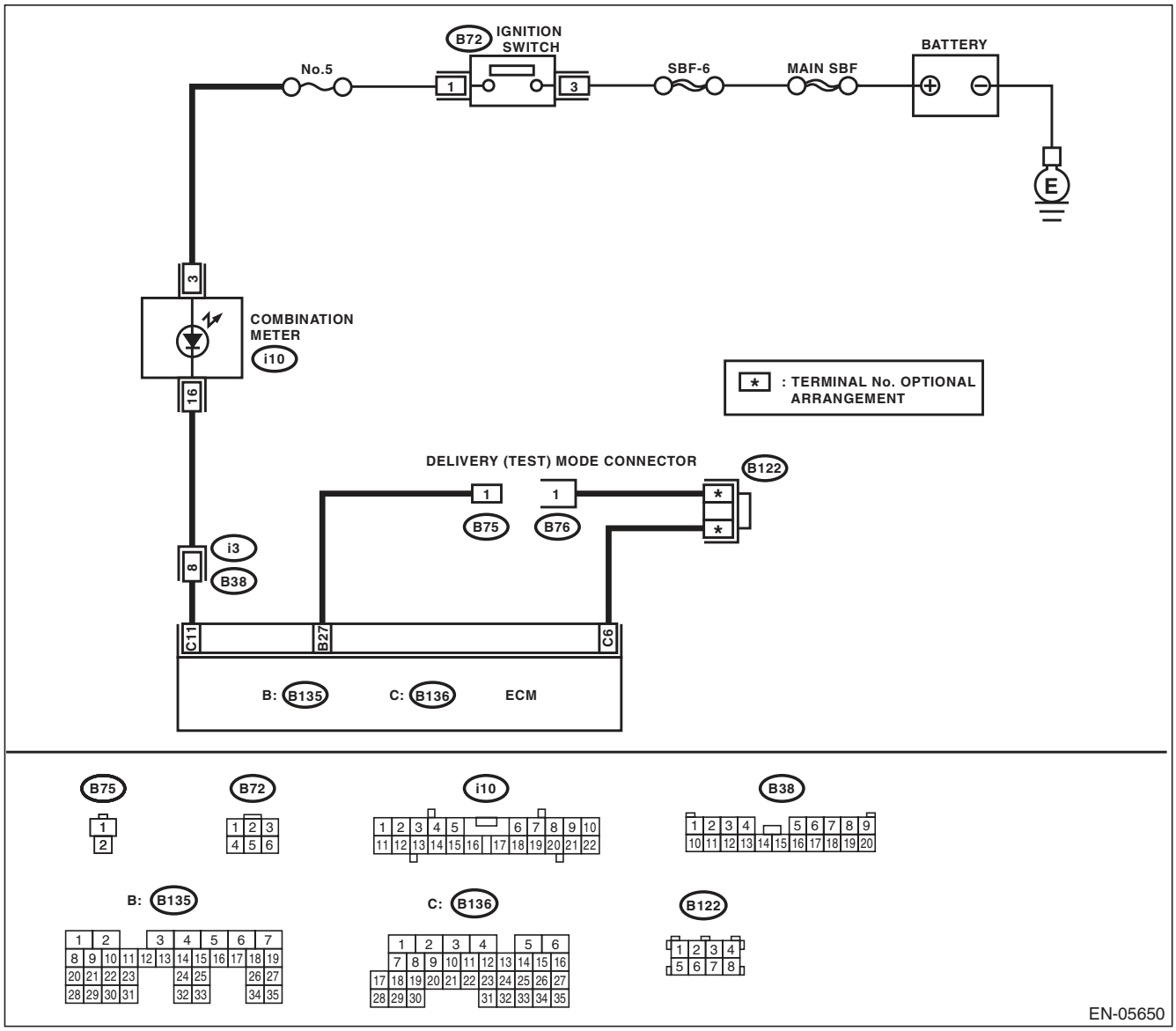

	Step	Check	Yes	No
1	**CHECK STATUS OF MALFUNCTION INDICATOR LIGHT.** 1) Turn the ignition switch to OFF. 2) Disconnect the delivery (test) mode connector. 3) Turn the ignition switch to ON. (engine OFF)	Does the malfunction indicator light illuminate?	Go to step **2**.	Repair the malfunction indicator light circuit. <Ref. to EN(H6DO)(diag)-59, MALFUNCTION INDICATOR LIGHT DOES NOT COME ON, Malfunction Indicator Light.>
2	**CHECK HARNESS BETWEEN COMBINATION METER AND ECM CONNECTOR.** 1) Turn the ignition switch to OFF. 2) Disconnect the connectors from ECM. 3) Turn the ignition switch to ON.	Does the malfunction indicator light illuminate?	Repair the ground short circuit of harness between combination meter and ECM connector.	Go to step **3**.
3	**CHECK HARNESS BETWEEN DELIVERY (TEST) MODE CONNECTOR AND ECM CONNECTOR.** 1) Turn the ignition switch to OFF. 2) Disconnect the connectors from ECM. 3) Measure the resistance of harness between delivery (test) mode connector and ECM connector. ***Connector & terminal*** ***(B76) No. 1 — (B136) No. 6*** ***(B75) No. 1 — (B135) No. 27***	Is the resistance less than 1 Ω?	Go to step **4**.	Repair the harness and connector. NOTE: In this case, repair the following item: • Open circuit of harness between ECM and delivery (test) mode connector • Poor contact in joint connector
4	**CHECK POOR CONTACT.** Check for poor contact of the ECM connector.	Is there poor contact in ECM connector?	Repair the poor contact of ECM connector.	Replace the ECM. <Ref. to FU(H6DO)-38, Engine Control Module (ECM).>

F: MALFUNCTION INDICATOR LIGHT REMAINS BLINKING

DIAGNOSIS:

The delivery (test) mode connector circuit is shorted.

TROUBLE SYMPTOM:

Malfunction indicator light blinks when delivery (test) mode connector is not connected.

WIRING DIAGRAM:

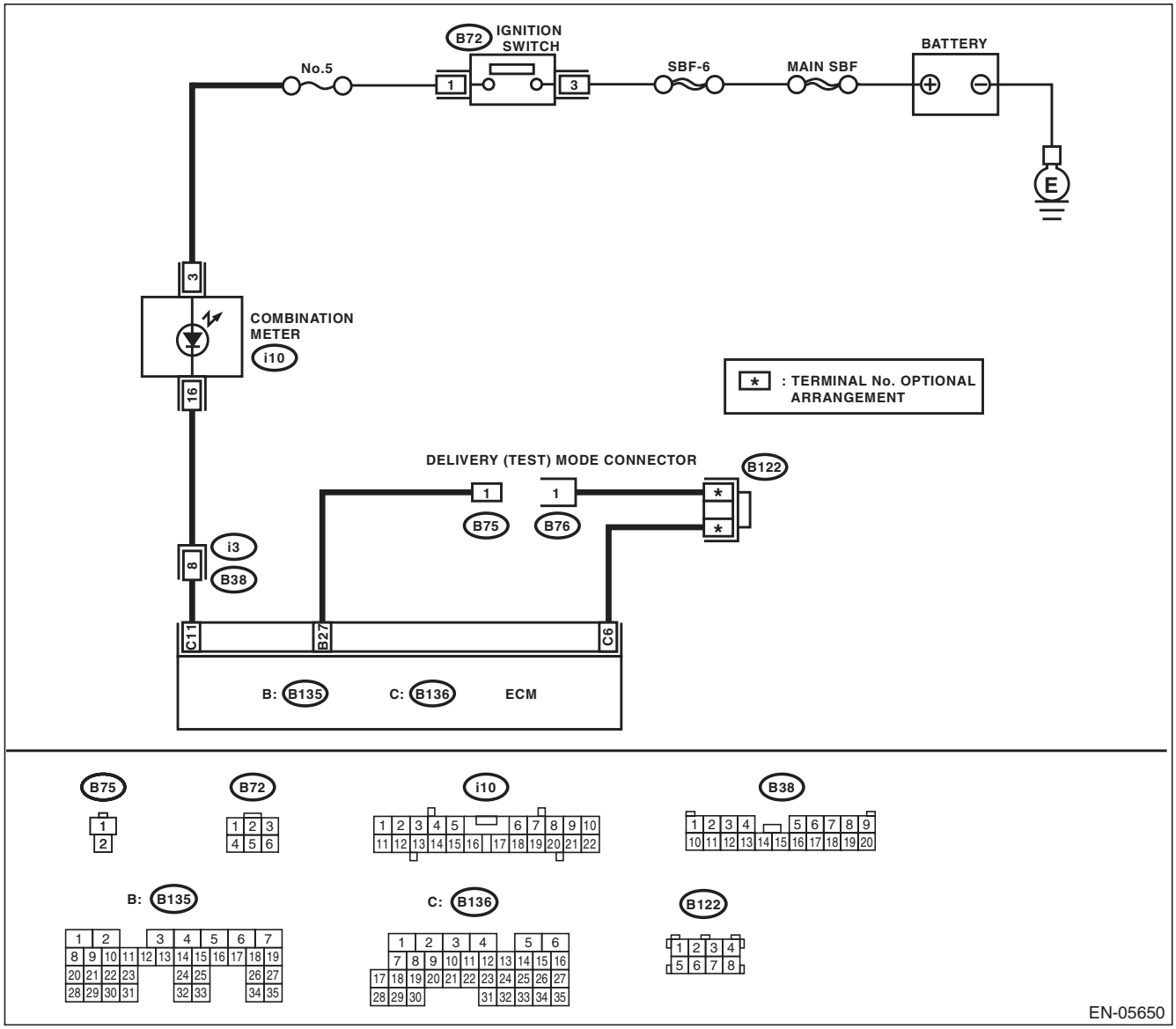

Step		Check	Yes	No
1	**CHECK DELIVERY (TEST) MODE CONNECTOR.** 1) Disconnect the delivery (test) mode connector. 2) Turn the ignition switch to ON.	Does the malfunction indicator light blink?	Go to step **2**.	System is normal. NOTE: Malfunction indicator light blinks when delivery (test) mode connector is connected.
2	**CHECK HARNESS BETWEEN ECM CONNECTOR AND CHASSIS GROUND TERMINAL.** 1) Turn the ignition switch to OFF. 2) Disconnect the connectors from ECM. 3) Measure the resistance of harness between ECM connector and chassis ground. ***Connector & terminal*** ***(B135) No. 27 — Chassis ground:***	Is the resistance less than 5 Ω?	Repair the short circuit to ground in harness between ECM and delivery (test) mode connector.	Replace the ECM. <Ref. to FU(H6DO)-38, Engine Control Module (ECM).>

17. Diagnostics for Engine Starting Failure

A: PROCEDURE

1. Check of the fuel amount
↓
2. Inspection of starter motor circuit. <Ref. to EN(H6DO)(diag)-67, STARTER MOTOR CIRCUIT, Diagnostics for Engine Starting Failure.>
↓
3. Inspection of ECM power supply and ground line. <Ref. to EN(H6DO)(diag)-71, CHECK POWER SUPPLY AND GROUND LINE OF ENGINE CONTROL MODULE (ECM), Diagnostics for Engine Starting Failure.>
↓
4. Inspection of ignition control system. <Ref. to EN(H6DO)(diag)-73, IGNITION CONTROL SYSTEM, Diagnostics for Engine Starting Failure.>
↓
5. Inspection of fuel pump circuit. <Ref. to EN(H6DO)(diag)-76, FUEL PUMP CIRCUIT, Diagnostics for Engine Starting Failure.>
↓
6. Inspection of fuel injector circuit. <Ref. to EN(H6DO)(diag)-77, FUEL INJECTOR CIRCUIT, Diagnostics for Engine Starting Failure.>

B: STARTER MOTOR CIRCUIT

CAUTION:

After repair or replacement of faulty parts, perform Clear Memory Mode <Ref. to EN(H6DO)(diag)-52, OPERATION, Clear Memory Mode.>, and Inspection Mode <Ref. to EN(H6DO)(diag)-44, PROCEDURE, Inspection Mode.>.

WIRING DIAGRAM:

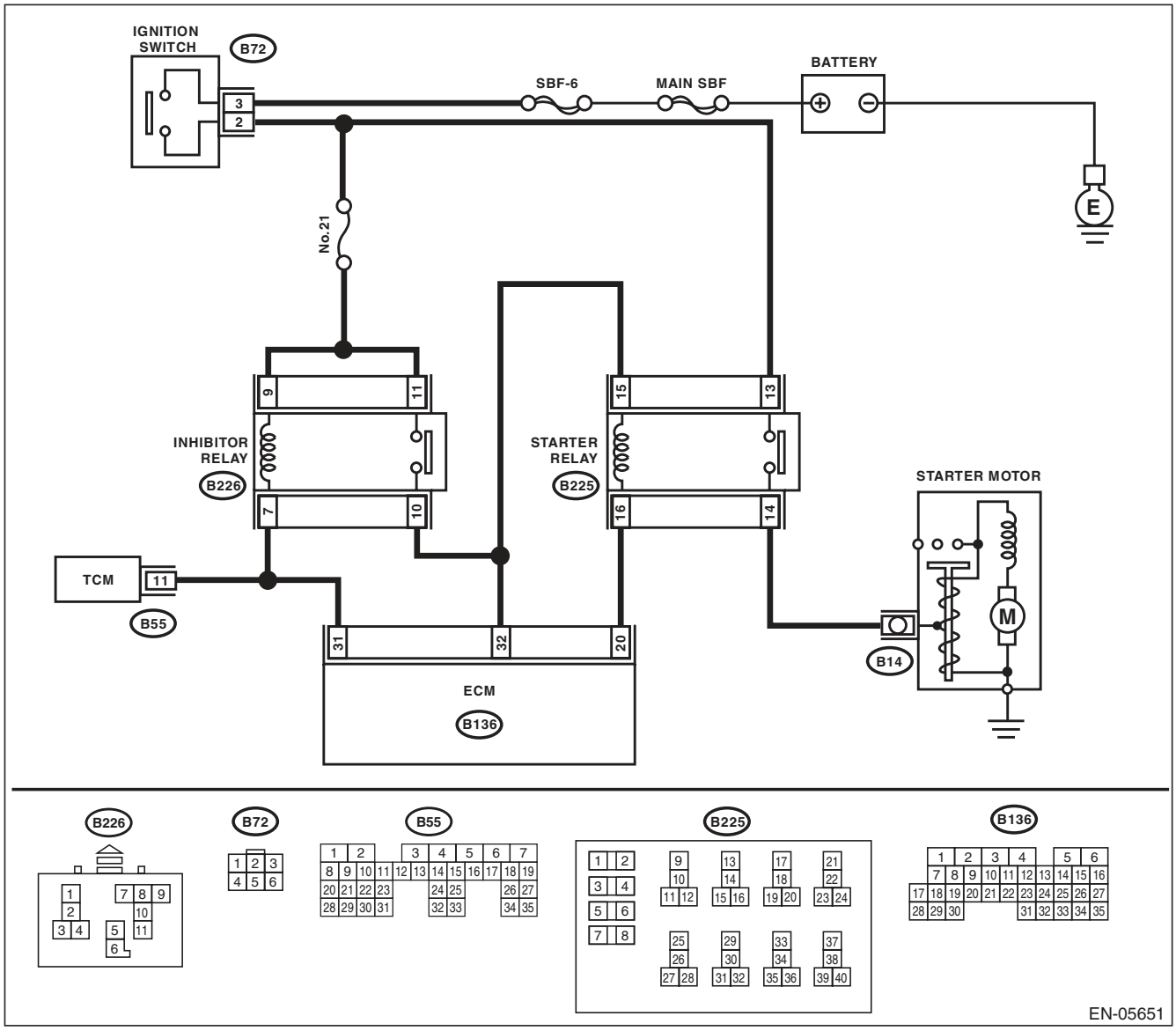

Diagnostics for Engine Starting Failure

Step		Check	Yes	No
1	**CHECK BATTERY.** Check the battery voltage.	Is the voltage 12 V or more?	Go to step **2**.	Charge or replace the battery.
2	**CHECK OPERATION OF STARTER MOTOR.**	Does the starter motor operate?	Go to step **3**.	Go to step **4**.
3	**CHECK DTC.**	Is DTC displayed? <Ref. to EN(H6DO)(diag)-43, OPERATION, Read Diagnostic Trouble Code (DTC).>	Check the appropriate DTC using the "List of Diagnostic Trouble Code (DTC)". <Ref. to EN(H6DO)(diag)-81, List of Diagnostic Trouble Code (DTC).>	The circuit has returned to a normal condition at this time. Reproduce the failure, and then perform the diagnosis again. NOTE: In this case, temporary poor contact of connector may be the cause.
4	**CHECK INPUT SIGNAL FOR STARTER MOTOR.** 1) Turn the ignition switch to OFF. 2) Disconnect the connector from starter motor. 3) Place the select lever in "P" range or "N" range. 4) Turn the ignition switch to START. 5) Measure the voltage between the starter motor connector and the engine ground. ***Connector & terminal*** ***(B14) No. 1 (+) — Engine ground (–):***	Is the voltage 10 V or more?	Check the starter motor. <Ref. to SC(H4SO)-6, Starter.>	Go to step **5**.
5	**CHECK INPUT SIGNAL FOR STARTER MOTOR.** 1) Place the select lever in "P" range or "N" range. 2) Turn the ignition switch to START. 3) Measure the voltage between starter relay connector and chassis ground. ***Connector & terminal*** ***(B225) No. 14 (+) — Chassis ground (–):***	Is the voltage 10 V or more?	Repair the open circuit of the harness between starter relay connector and starter motor.	Go to step **6**.
6	**CHECK HARNESS BETWEEN BATTERY AND IGNITION SWITCH CONNECTOR.** 1) Turn the ignition switch to OFF. 2) Disconnect the connector from ignition switch. 3) Measure the voltage between ignition switch connector and chassis ground. ***Connector & terminal*** ***(B72) No. 3 (+) — Chassis ground (–):***	Is the voltage 10 V or more?	Go to step **7**.	Check the following item and repair if necessary. • Blown out of fuse • Open or ground short circuit of harness between ignition switch connector and battery
7	**CHECK IGNITION SWITCH.** Measure the resistance between ignition switch terminals after turning the ignition switch to START position. ***Terminals*** ***No. 2 — No. 3:***	Is the resistance less than 1 Ω?	Go to step **8**.	Replace the ignition switch. <Ref. to SL-49, REPLACEMENT, Ignition Key Lock.>

	Step	Check	Yes	No
8	**CHECK INPUT VOLTAGE OF STARTER RELAY.** 1) Remove the starter relay. 2) Connect the connector to ignition switch. 3) Turn the ignition switch to START. 4) Measure the voltage between starter relay connector and chassis ground. ***Connector & terminal*** ***(B225) No. 13 (+) — Chassis ground (–):***	Is the voltage 10 V or more?	Go to step **9**.	Repair the open circuit of harness between starter relay connector and ignition switch connector.
9	**CHECK STARTER RELAY.** 1) Connect the battery to starter relay terminals No. 15 and No. 16. 2) Measure the resistance between starter relay terminals. ***Terminals*** ***No. 13 — No. 14:***	Is the resistance less than 1 Ω?	Go to step **10**.	Replace the starter relay.
10	**CHECK HARNESS BETWEEN ECM AND STARTER RELAY CONNECTOR.** 1) Turn the ignition switch to OFF. 2) Disconnect the connectors from ECM. 3) Measure the resistance of harness between ECM and starter relay connector. ***Connector & terminal*** ***(B136) No. 20 — (B225) No. 16:***	Is the resistance less than 1 Ω?	Go to step **11**.	Repair the open circuit of harness between ECM and starter relay connector.
11	**CHECK INPUT VOLTAGE OF STARTER RELAY.** 1) Connect the connector to ECM. 2) Place the select lever in “P” range or “N” range. 3) Turn the ignition switch to START. 4) Measure the voltage between starter relay connector and chassis ground. ***Connector & terminal*** ***(B225) No. 15 (+) — Chassis ground (–):***	Is the voltage 10 V or more?	Go to step **12**.	Go to step **13**.
12	**CHECK HARNESS BETWEEN ECM AND INHIBITOR RELAY CONNECTOR.** 1) Turn the ignition switch to OFF. 2) Disconnect the inhibitor relay connector. 3) Measure the resistance of harness between ECM and inhibitor relay connector. ***Connector & terminal*** ***(B136) No. 31 — (B226) No. 7:*** ***(B136) No. 32 — (B226) No. 10:***	Is the resistance less than 1 Ω?	Check the ECM power supply and ground line. <Ref. to EN(H6DO)(diag)-71, CHECK POWER SUPPLY AND GROUND LINE OF ENGINE CONTROL MODULE (ECM), Diagnostics for Engine Starting Failure.>	Repair the open circuit of harness between ECM and inhibitor relay connector.
13	**CHECK INPUT VOLTAGE OF INHIBITOR RELAY.** 1) Turn the ignition switch to OFF. 2) Disconnect the inhibitor relay connector. 3) Turn the ignition switch to START. 4) Measure the voltage between inhibitor relay connector and chassis ground. ***Connector & terminal*** ***(B226) No. 9 (+) — Chassis ground (–):*** ***(B226) No. 11 (+) — Chassis ground (–):***	Is the voltage 10 V or more?	Go to step **14**.	Check the following item and repair if necessary. • Blown out of fuse • Open or ground short circuit of harness between ignition switch connector and inhibitor relay connector

Step		Check	Yes	No
14	**CHECK INHIBITOR RELAY.** 1) Connect the battery to inhibitor relay terminals No. 7 and No. 9. 2) Measure the resistance between inhibitor relay terminals. ***Terminals*** ***No. 10 — No. 11:***	Is the resistance less than 1 Ω?	Go to step **15**.	Replace the inhibitor relay.
15	**CHECK HARNESS BETWEEN INHIBITOR RELAY CONNECTOR AND STARTER RELAY CONNECTOR.** 1) Turn the ignition switch to OFF. 2) Measure the resistance of harness between inhibitor relay connector and starter relay connector. ***Connector & terminal*** ***(B226) No. 10 — (B225) No. 15:***	Is the resistance less than 1 Ω?	Repair the open circuit of harness between TCM and inhibitor relay connector.	Repair the open circuit of harness between inhibitor relay connector and starter relay connector.

C: CHECK POWER SUPPLY AND GROUND LINE OF ENGINE CONTROL MODULE (ECM)

CAUTION:
After repair or replacement of faulty parts, perform Clear Memory Mode <Ref. to EN(H6DO)(diag)-52, OPERATION, Clear Memory Mode.>, and Inspection Mode <Ref. to EN(H6DO)(diag)-44, PROCEDURE, Inspection Mode.>.
WIRING DIAGRAM:

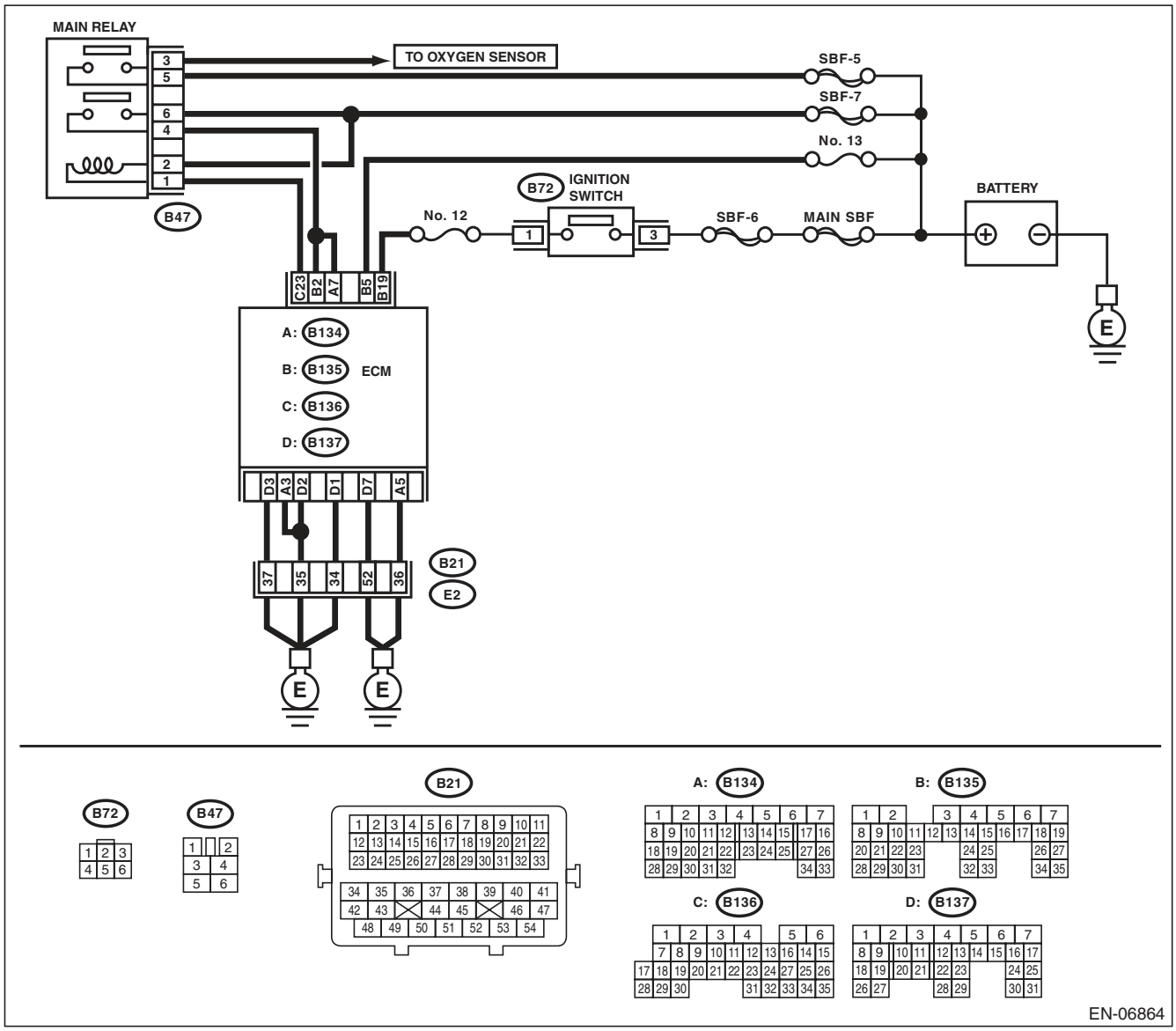

	Step	Check	Yes	No
1	**CHECK MAIN RELAY.** 1) Turn the ignition switch to OFF. 2) Remove the main relay. 3) Connect the battery to main relay terminals No. 1 and No. 2. 4) Measure the resistance between main relay terminals. ***Terminals*** ***No. 3 — No. 5:*** ***No. 4 — No. 6:***	Is the resistance less than 1 Ω?	Go to step **2**.	Replace the main relay. <Ref. to FU(H6DO)-39, Main Relay.>
2	**CHECK GROUND CIRCUIT FOR ECM.** 1) Disconnect the connectors from ECM. 2) Measure the resistance of harness between ECM connector and chassis ground. ***Connector & terminal*** ***(B134) No. 3 — Chassis ground:*** ***(B134) No. 5 — Chassis ground:*** ***(B137) No. 1 — Chassis ground:*** ***(B137) No. 2 — Chassis ground:*** ***(B137) No. 3 — Chassis ground:*** ***(B137) No. 7 — Chassis ground:***	Is the resistance less than 5 Ω?	Go to step **3**.	Repair the harness and connector. NOTE: In this case, repair the following item: • Open circuit of harness between ECM and engine ground • Poor contact of coupling connector
3	**CHECK INPUT VOLTAGE OF ECM.** 1) Turn the ignition switch to ON. 2) Measure the voltage between ECM connector and chassis ground. ***Connector & terminal*** ***(B135) No. 5 (+) — Chassis ground (–):*** ***(B135) No. 19 (+) — Chassis ground (–):***	Is the voltage 10 V or more?	Go to step **4**.	Repair the open or ground short circuit of harness of power supply circuit.
4	**CHECK INPUT VOLTAGE OF MAIN RELAY.** Measure the voltage between main relay connector and chassis ground. ***Connector & terminal*** ***(B47) No. 2 (+) — Chassis ground (–):*** ***(B47) No. 5 (+) — Chassis ground (–):*** ***(B47) No. 6 (+) — Chassis ground (–):***	Is the voltage 10 V or more?	Go to step **5**.	Repair the open or ground short circuit of harness of power supply circuit.
5	**CHECK HARNESS BETWEEN ECM AND MAIN RELAY CONNECTOR.** 1) Turn the ignition switch to OFF. 2) Measure the resistance of harness between ECM connector and fuel pump relay connector. ***Connector & terminal*** ***(B136) No. 23 — (B47) No. 1:***	Is the resistance less than 1 Ω?	Go to step **6**.	Repair the open circuit of harness between ECM connector and main relay connector.
6	**CHECK INPUT VOLTAGE OF ECM.** 1) Install the main relay. 2) Connect the connector to ECM. 3) Turn the ignition switch to ON. 4) Measure the voltage between ECM connector and chassis ground. ***Connector & terminal*** ***(B134) No. 7 (+) — Chassis ground (–):*** ***(B135) No. 2 (+) — Chassis ground (–):***	Is the voltage 10 V or more?	Check ignition control system. <Ref. to EN(H6DO)(diag)-73, IGNITION CONTROL SYSTEM, Diagnostics for Engine Starting Failure.>	Repair the harness and connector. NOTE: In this case, repair the following item: • Open circuit in harness between ECM connector and fuel injector connector • Poor contact of main relay connector

D: IGNITION CONTROL SYSTEM

CAUTION:

After repair or replacement of faulty parts, perform Clear Memory Mode <Ref. to EN(H6DO)(diag)-52, OPERATION, Clear Memory Mode.>, and Inspection Mode <Ref. to EN(H6DO)(diag)-44, PROCEDURE, Inspection Mode.>.

WIRING DIAGRAM:

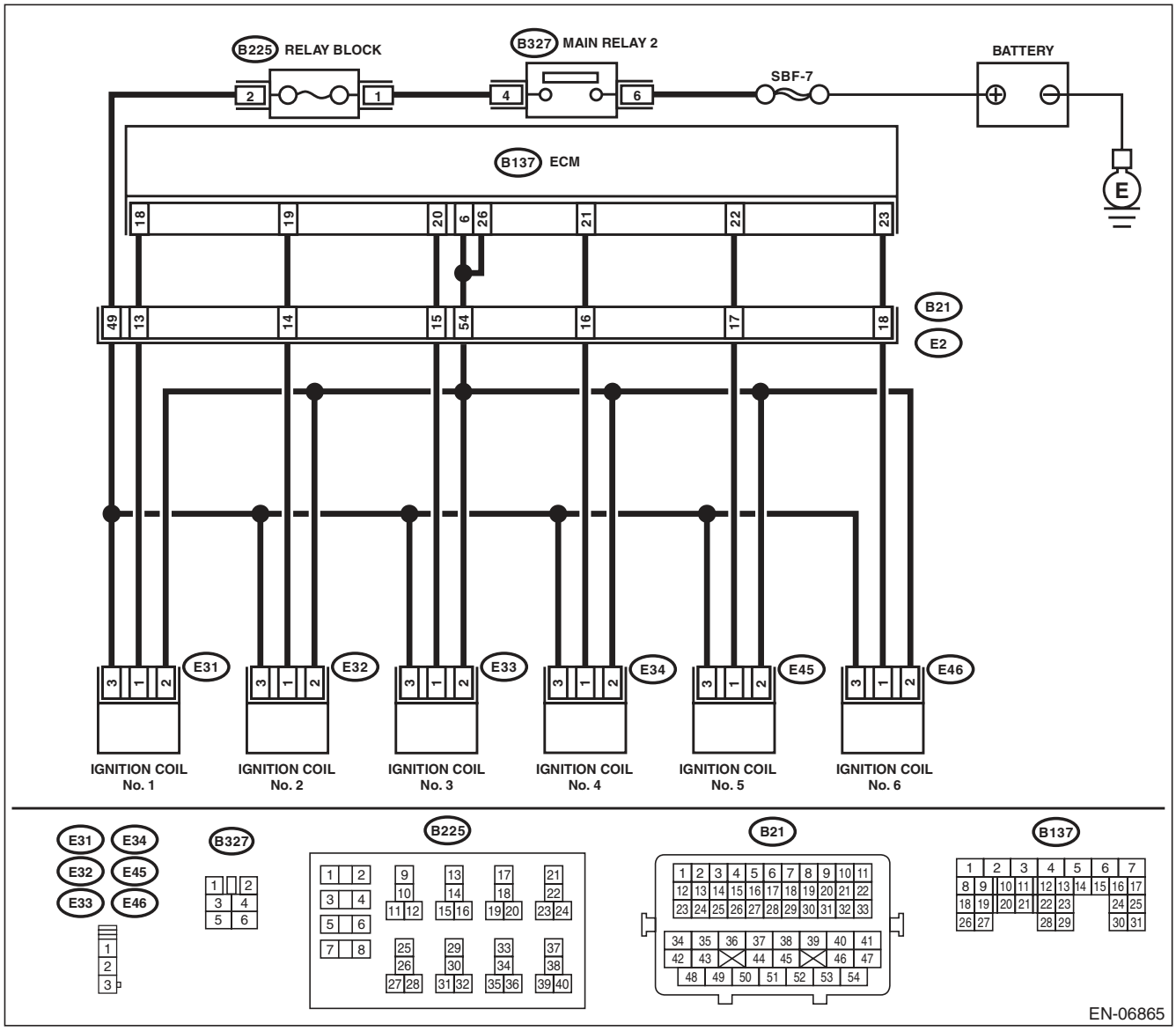

	Step	Check	Yes	No
1	**CHECK SPARK PLUG CONDITION.** 1) Remove the spark plug. <Ref. to IG(H6DO)-4, REMOVAL, Spark Plug.> 2) Check the spark plug condition. <Ref. to IG(H6DO)-5, INSPECTION, Spark Plug.>	Is the spark plug condition normal?	Go to step **2**.	Replace the spark plug. <Ref. to IG(H6DO)-4, Spark Plug.>
2	**CHECK IGNITION SYSTEM FOR SPARKS.** 1) Connect the spark plug to ignition coil. 2) Release the fuel pressure. <Ref. to FU(H6DO)-43, RELEASING OF FUEL PRESSURE, PROCEDURE, Fuel.> 3) Contact the spark plug's thread portion to the engine. 4) While opening the throttle valve fully, start the engine to check if spark occurs at each cylinder.	Does spark occur at each cylinder?	Check fuel pump system. <Ref. to EN(H6DO)(diag)-76, FUEL PUMP CIRCUIT, Diagnostics for Engine Starting Failure.>	Go to step **3**.
3	**CHECK POWER SUPPLY CIRCUIT OF IGNITION COIL.** 1) Turn the ignition switch to OFF. 2) Disconnect the connector from ignition coil. 3) Turn the ignition switch to ON. 4) Measure the voltage between ignition coil connector and engine ground. ***Connector & terminal*** ***(E31) No. 3 (+) — Engine ground (–):*** ***(E32) No. 3 (+) — Engine ground (–):*** ***(E33) No. 3 (+) — Engine ground (–):*** ***(E34) No. 3 (+) — Engine ground (–):*** ***(E45) No. 3 (+) — Engine ground (–):*** ***(E46) No. 3 (+) — Engine ground (–):***	Is the voltage 10 V or more?	Go to step **4**.	Repair the harness and connector. NOTE: In this case, repair the following item: • Open circuit or short circuit to ground in power supply circuit • Blown out of fuse • Poor contact of coupling connector
4	**CHECK HARNESS OF IGNITION COIL GROUND CIRCUIT.** 1) Turn the ignition switch to OFF. 2) Measure the resistance of harness between ignition coil connector and engine ground. ***Connector & terminal*** ***(E31) No. 2 — Engine ground:*** ***(E32) No. 2 — Engine ground:*** ***(E33) No. 2 — Engine ground:*** ***(E34) No. 2 — Engine ground:*** ***(E45) No. 2 — Engine ground:*** ***(E46) No. 2 — Engine ground:***	Is the resistance less than 5 Ω?	Go to step **5**.	Repair the harness and connector. NOTE: In this case, repair the following item: • Open circuit of harness between ECM connector and the ignition coil connector • Open circuit in harness between ECM and engine ground terminal • Poor contact of coupling connector
5	**CHECK HARNESS BETWEEN ECM AND IGNITION COIL CONNECTOR.** 1) Disconnect the connectors from ECM. 2) Measure the resistance of harness between ECM and ignition coil connector. ***Connector & terminal*** ***(B137) No. 18 — (E31) No. 1:*** ***(B137) No. 19 — (E32) No. 1:*** ***(B137) No. 20 — (E33) No. 1:*** ***(B137) No. 21 — (E34) No. 1:*** ***(B137) No. 22 — (E45) No. 1:*** ***(B137) No. 23 — (E46) No. 1:***	Is the resistance less than 1 Ω?	Go to step **6**.	Repair the harness and connector. NOTE: In this case, repair the following item: • Open circuit of harness between ECM and ignition coil connector • Poor contact of coupling connector

Step		Check	Yes	No
6	**CHECK HARNESS BETWEEN ECM AND IGNITION COIL CONNECTOR.** Measure the resistance of harness between ECM connector and chassis ground. ***Connector & terminal:*** ***(B137) No. 18 — Chassis ground:*** ***(B137) No. 19 — Chassis ground:*** ***(B137) No. 20 — Chassis ground:*** ***(B137) No. 21 — Chassis ground:*** ***(B137) No. 22 — Chassis ground:*** ***(B137) No. 23 — Chassis ground:***	Is the resistance 1 MΩ or more?	Go to step **7**.	Repair the ground short circuit of harness between ECM and ignition coil connector.
7	**CHECK POOR CONTACT.** Check for poor contact of the ECM connector.	Is there poor contact in ECM connector?	Repair the poor contact of ECM connector.	Replace the ignition coil. <Ref. to IG(H6DO)-7, Ignition Coil.>

E: FUEL PUMP CIRCUIT

CAUTION:
After repair or replacement of faulty parts, perform Clear Memory Mode <Ref. to EN(H6DO)(diag)-52, OPERATION, Clear Memory Mode.>, and Inspection Mode <Ref. to EN(H6DO)(diag)-44, PROCEDURE, Inspection Mode.>.
WIRING DIAGRAM:

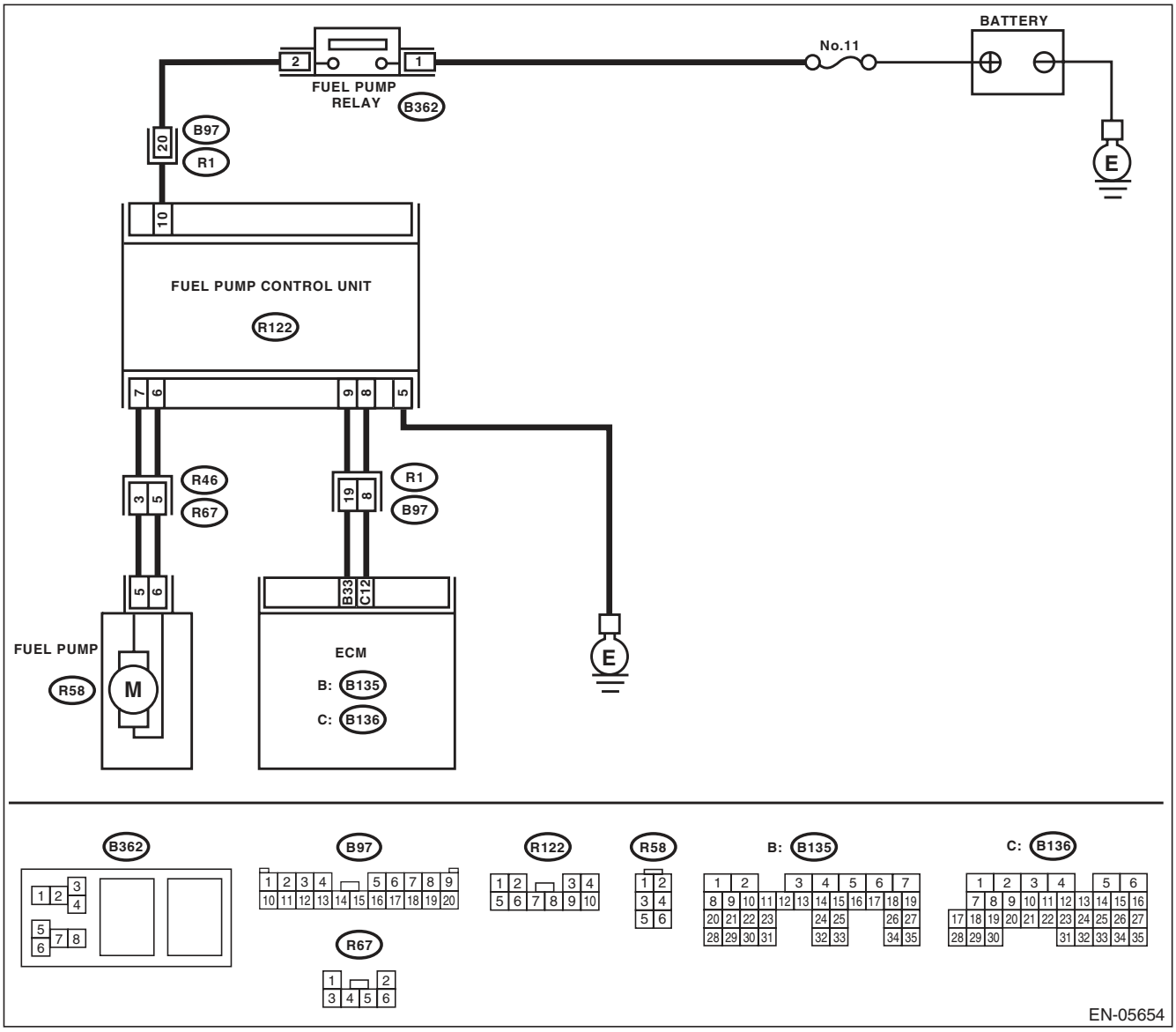

Step		Check	Yes	No
1	**CHECK OPERATING SOUND OF FUEL PUMP.** Make sure that the fuel pump operates for two seconds when turning the ignition switch to ON. NOTE: Fuel pump operation can be executed using the Subaru Select Monitor. For the procedures, refer to “Compulsory Valve Operation Check Mode”. <Ref. to EN(H6DO)(diag)-53, Compulsory Valve Operation Check Mode.>	Does the fuel pump emit operating sound?	Check the fuel injector circuit. <Ref. to EN(H6DO)(diag)-77, FUEL INJECTOR CIRCUIT, Diagnostics for Engine Starting Failure.>	Display the DTC. <Ref. to EN(H6DO)(diag)-43, OPERATION, Read Diagnostic Trouble Code (DTC).>

F: FUEL INJECTOR CIRCUIT

CAUTION:

- **Check or repair only faulty parts.**
- **After repair or replacement of faulty parts, perform Clear Memory Mode <Ref. to EN(H6DO)(diag)-52, OPERATION, Clear Memory Mode.>, and Inspection Mode <Ref. to EN(H6DO)(diag)-44, PROCEDURE, Inspection Mode.>.**

WIRING DIAGRAM:

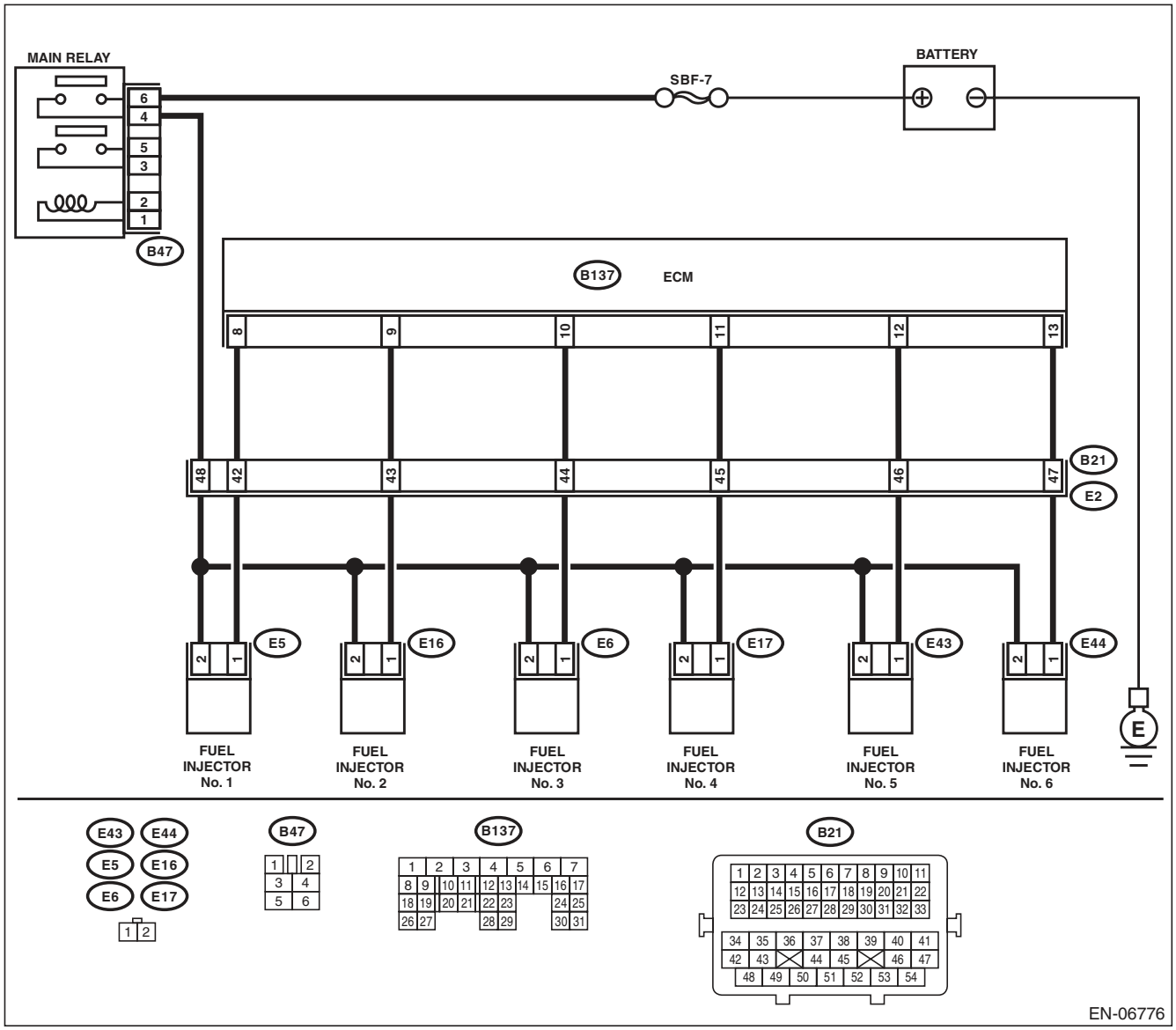

	Step	Check	Yes	No
1	**CHECK OPERATION OF EACH FUEL INJECTOR.** While cranking the engine, check each fuel injector emits operating sound. Use a sound scope or attach a screwdriver to the injector for this check.	Does the fuel pump emit operating sound?	Check the fuel pressure. <Ref. to ME(H6DO)-27, INSPECTION, Fuel Pressure.>	Go to step **2**.
2	**CHECK POWER SUPPLY TO EACH FUEL INJECTOR.** 1) Turn the ignition switch to OFF. 2) Disconnect the connector from fuel injector. 3) Turn the ignition switch to ON. 4) Measure the voltage between fuel injector connector and the engine ground. ***Connector & terminal*** ***#1 (E5) No. 2 (+) — Engine ground (–):*** ***#2 (E16) No. 2 (+) — Engine ground (–):*** ***#3 (E6) No. 2 (+) — Engine ground (–):*** ***#4 (E17) No. 2 (+) — Engine ground (–):*** ***#5 (E43) No. 2 (+) — Engine ground (–):*** ***#6 (E44) No. 2 (+) — Engine ground (–):***	Is the voltage 10 V or more?	Go to step **3**.	Repair the harness and connector. NOTE: In this case, repair the following item: • Open circuit in harness between main relay and fuel injector connector • Poor contact of main relay connector • Poor contact of coupling connector
3	**CHECK HARNESS BETWEEN ECM AND FUEL INJECTOR CONNECTOR.** 1) Turn the ignition switch to OFF. 2) Disconnect the connectors from ECM. 3) Measure the resistance of harness between ECM and fuel injector connector. ***Connector & terminal*** ***#1 (B137) No. 8 — (E5) No. 1:*** ***#2 (B137) No. 9 — (E16) No. 1:*** ***#3 (B137) No. 10 — (E6) No. 1:*** ***#4 (B137) No. 11 — (E17) No. 1:*** ***#5 (B137) No. 12 — (E43) No. 1:*** ***#6 (B137) No. 13 — (E44) No. 1:***	Is the resistance less than 1 Ω?	Go to step **4**.	Repair the harness and connector. NOTE: In this case, repair the following item: • Open circuit of harness between ECM and fuel injector connector • Poor contact of coupling connector
4	**CHECK HARNESS BETWEEN ECM AND FUEL INJECTOR CONNECTOR.** Measure the resistance between ECM and chassis ground. ***Connector & terminal*** ***#1 (B137) No. 8 — Chassis ground:*** ***#2 (B137) No. 9 — Chassis ground:*** ***#3 (B137) No. 10 — Chassis ground:*** ***#4 (B137) No. 11 — Chassis ground:*** ***#5 (B137) No. 12 — Chassis ground:*** ***#6 (B137) No. 13 — Chassis ground:***	Is the resistance 1 MΩ or more?	Go to step **5**.	Repair the short circuit to ground in harness between ECM and fuel injector connector.
5	**CHECK EACH FUEL INJECTOR.** Measure the resistance between each fuel injector terminals. ***Terminals*** ***No. 1 — No. 2:***	Is the resistance between 5 — 20 Ω?	Go to step **6**.	Replace the faulty fuel injector. <Ref. to FU(H6DO)-28, Fuel Injector.>
6	**CHECK POOR CONTACT.** Check for poor contact of the ECM connector.	Is there poor contact in ECM connector?	Repair the poor contact of ECM connector.	Inspection using "General Diagnostic Table" <Ref. to EN(H6DO)(diag)-353, INSPECTION, General Diagnostic Table.>

18. Diagnostic Procedure for Subaru Select Monitor Communication

A: COMMUNICATION FOR INITIALIZING IMPOSSIBLE

DIAGNOSIS:
Open or short circuit in data link connector
TROUBLE SYMPTOM:
Subaru Select Monitor communication failure
WIRING DIAGRAM:

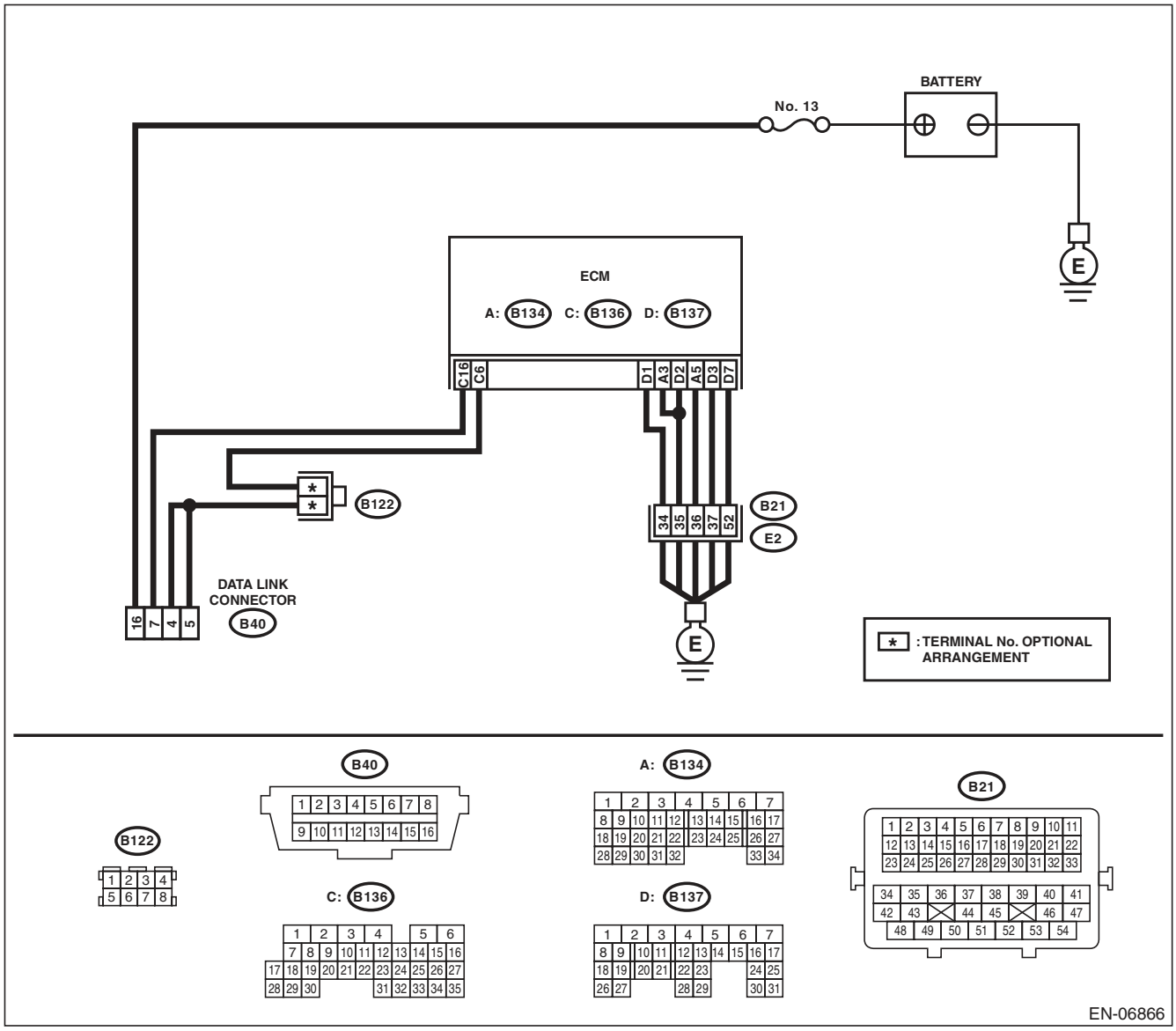

	Step	Check	Yes	No
1	**CHECK POWER SUPPLY CIRCUIT.** Connect the SDI (Subaru Diagnostic Interface) to data link connector.	Does SDI or general scan tool turn ON?	Go to step **4**.	Go to step **2**.
2	**CHECK POWER SUPPLY CIRCUIT.** Measure the voltage between data link connector and chassis ground. ***Connector & terminal*** ***(B40) No. 16 (+) — Chassis ground (–):***	Is the voltage 10 V or more?	Go to step **3**.	Repair the power supply circuit. NOTE: In this case, repair the following item: • Open or ground short circuit of harness between battery and data link connector • Blown out of fuse (M/B No. 13)
3	**CHECK HARNESS BETWEEN DATA LINK CONNECTOR AND CHASSIS GROUND.** 1) Turn the ignition switch to OFF. 2) Measure the resistance of harness between data link connector and chassis ground. ***Connector & terminal*** ***(B40) No. 4 — Chassis ground:*** ***(B40) No. 5 — Chassis ground:***	Is the resistance less than 5 Ω?	Repair the poor contact of data link connector.	Repair the harness and connector. NOTE: In this case, repair the following item: • Open circuit of harness between ECM and data link connector • Open circuit of harness between ECM and engine ground • Poor contact in ECM connector • Poor contact of coupling connector
4	**CHECK HARNESS BETWEEN ECM AND DATA LINK CONNECTOR.** 1) Disconnect the connector from ECM, TCM, VDC CU, airbag CM and body integrated unit. **CAUTION:** **When disconnecting the connector from airbag control module, always follow the precautions on AB section. <Ref. to AB-4, CAUTION, General Description.>** 2) Measure the resistance of harness between ECM and data link connector. ***Connector & terminal*** ***(B136) No. 16 — (B40) No. 7:***	Is the resistance less than 1 Ω?	Go to step **5**.	Repair the open circuit of harness between ECM and data link connector.
5	**CHECK HARNESS BETWEEN ECM AND DATA LINK CONNECTOR.** Measure the resistance between data link connector and chassis ground. ***Connector & terminal*** ***(B40) No. 7 — Chassis ground:***	Is the resistance 1 MΩ or more?	Repair the poor contact in the ECM or data link connector.	Repair the ground short circuit of harness between ECM and data link connector.

19. List of Diagnostic Trouble Code (DTC)

A: LIST

DTC	Item	Reference
P0011	Intake Camshaft Position - Timing Over-Advanced or System Performance (Bank 1)	<Ref. to EN(H6DO)(diag)-89, DTC P0011 INTAKE CAMSHAFT POSITION - TIMING OVER-ADVANCED OR SYSTEM PERFORMANCE (BANK 1), Diagnostic Procedure with Diagnostic Trouble Code (DTC).>
P0016	Crankshaft Position - Camshaft Position Correlation (Bank1)	<Ref. to EN(H6DO)(diag)-90, DTC P0016 CRANKSHAFT POSITION - CAMSHAFT POSITION CORRELATION (BANK1), Diagnostic Procedure with Diagnostic Trouble Code (DTC).>
P0018	Crankshaft Position - Camshaft Position Correlation (Bank2)	<Ref. to EN(H6DO)(diag)-91, DTC P0018 CRANKSHAFT POSITION - CAMSHAFT POSITION CORRELATION (BANK2), Diagnostic Procedure with Diagnostic Trouble Code (DTC).>
P0021	Intake Camshaft Position - Timing Over-Advanced or System Performance (Bank 2)	<Ref. to EN(H6DO)(diag)-92, DTC P0021 INTAKE CAMSHAFT POSITION - TIMING OVER-ADVANCED OR SYSTEM PERFORMANCE (BANK 2), Diagnostic Procedure with Diagnostic Trouble Code (DTC).>
P0026	Intake Valve Control Solenoid Circuit Range/Performance (Bank 1)	<Ref. to EN(H6DO)(diag)-93, DTC P0026 INTAKE VALVE CONTROL SOLENOID CIRCUIT RANGE/PERFORMANCE (BANK 1), Diagnostic Procedure with Diagnostic Trouble Code (DTC).>
P0028	Intake Valve Control Solenoid Circuit Range/Performance (Bank 2)	<Ref. to EN(H6DO)(diag)-95, DTC P0028 INTAKE VALVE CONTROL SOLENOID CIRCUIT RANGE/PERFORMANCE (BANK 2), Diagnostic Procedure with Diagnostic Trouble Code (DTC).>
P0030	HO2S Heater Control Circuit (Bank 1 Sensor 1)	<Ref. to EN(H6DO)(diag)-97, DTC P0030 HO2S HEATER CONTROL CIRCUIT (BANK 1 SENSOR 1), Diagnostic Procedure with Diagnostic Trouble Code (DTC).>
P0031	HO2S Heater Control Circuit Low (Bank 1 Sensor 1)	<Ref. to EN(H6DO)(diag)-99, DTC P0031 HO2S HEATER CONTROL CIRCUIT LOW (BANK 1 SENSOR 1), Diagnostic Procedure with Diagnostic Trouble Code (DTC).>
P0032	HO2S Heater Control Circuit High (Bank 1 Sensor 1)	<Ref. to EN(H6DO)(diag)-101, DTC P0032 HO2S HEATER CONTROL CIRCUIT HIGH (BANK 1 SENSOR 1), Diagnostic Procedure with Diagnostic Trouble Code (DTC).>
P0037	HO2S Heater Control Circuit Low (Bank 1 Sensor 2)	<Ref. to EN(H6DO)(diag)-103, DTC P0037 HO2S HEATER CONTROL CIRCUIT LOW (BANK 1 SENSOR 2), Diagnostic Procedure with Diagnostic Trouble Code (DTC).>
P0038	HO2S Heater Control Circuit High (Bank 1 Sensor 2)	<Ref. to EN(H6DO)(diag)-105, DTC P0038 HO2S HEATER CONTROL CIRCUIT HIGH (BANK 1 SENSOR 2), Diagnostic Procedure with Diagnostic Trouble Code (DTC).>
P0050	HO2S Heater Control Circuit (Bank 2 Sensor 1)	<Ref. to EN(H6DO)(diag)-107, DTC P0050 HO2S HEATER CONTROL CIRCUIT (BANK 2 SENSOR 1), Diagnostic Procedure with Diagnostic Trouble Code (DTC).>
P0051	HO2S Heater Control Circuit Low (Bank 2 Sensor 1)	<Ref. to EN(H6DO)(diag)-109, DTC P0051 HO2S HEATER CONTROL CIRCUIT LOW (BANK 2 SENSOR 1), Diagnostic Procedure with Diagnostic Trouble Code (DTC).>
P0052	HO2S Heater Control Circuit High (Bank 2 Sensor 1)	<Ref. to EN(H6DO)(diag)-111, DTC P0052 HO2S HEATER CONTROL CIRCUIT HIGH (BANK 2 SENSOR 1), Diagnostic Procedure with Diagnostic Trouble Code (DTC).>
P0057	HO2S Heater Control Circuit Low (Bank 2 Sensor 2)	<Ref. to EN(H6DO)(diag)-113, DTC P0057 HO2S HEATER CONTROL CIRCUIT LOW (BANK 2 SENSOR 2), Diagnostic Procedure with Diagnostic Trouble Code (DTC).>
P0058	HO2S Heater Control Circuit High (Bank 2 Sensor 2)	<Ref. to EN(H6DO)(diag)-115, DTC P0058 HO2S HEATER CONTROL CIRCUIT HIGH (BANK 2 SENSOR 2), Diagnostic Procedure with Diagnostic Trouble Code (DTC).>
P0068	MAP/MAF - Throttle Position Correlation	<Ref. to EN(H6DO)(diag)-117, DTC P0068 MAP/MAF - THROTTLE POSITION CORRELATION, Diagnostic Procedure with Diagnostic Trouble Code (DTC).>

List of Diagnostic Trouble Code (DTC)

DTC	Item	Reference
P0076	Intake Valve Control Solenoid Circuit Low (Bank 1)	<Ref. to EN(H6DO)(diag)-119, DTC P0076 INTAKE VALVE CONTROL SOLENOID CIRCUIT LOW (BANK 1), Diagnostic Procedure with Diagnostic Trouble Code (DTC).>
P0077	Intake Valve Control Solenoid Circuit High (Bank 1)	<Ref. to EN(H6DO)(diag)-121, DTC P0077 INTAKE VALVE CONTROL SOLENOID CIRCUIT HIGH (BANK 1), Diagnostic Procedure with Diagnostic Trouble Code (DTC).>
P0082	Intake Valve Control Solenoid Circuit Low (Bank 2)	<Ref. to EN(H6DO)(diag)-123, DTC P0082 INTAKE VALVE CONTROL SOLENOID CIRCUIT LOW (BANK 2), Diagnostic Procedure with Diagnostic Trouble Code (DTC).>
P0083	Intake Valve Control Solenoid Circuit High (Bank 2)	<Ref. to EN(H6DO)(diag)-125, DTC P0083 INTAKE VALVE CONTROL SOLENOID CIRCUIT HIGH (BANK 2), Diagnostic Procedure with Diagnostic Trouble Code (DTC).>
P0101	Mass or Volume Air Flow Circuit Range/Performance	<Ref. to EN(H6DO)(diag)-127, DTC P0101 MASS OR VOLUME AIR FLOW CIRCUIT RANGE/PERFORMANCE, Diagnostic Procedure with Diagnostic Trouble Code (DTC).>
P0102	Mass or Volume Air Flow Circuit Low Input	<Ref. to EN(H6DO)(diag)-129, DTC P0102 MASS OR VOLUME AIR FLOW CIRCUIT LOW INPUT, Diagnostic Procedure with Diagnostic Trouble Code (DTC).>
P0103	Mass or Volume Air Flow Circuit High Input	<Ref. to EN(H6DO)(diag)-131, DTC P0103 MASS OR VOLUME AIR FLOW CIRCUIT HIGH INPUT, Diagnostic Procedure with Diagnostic Trouble Code (DTC).>
P0107	Manifold Absolute Pressure/Barometric Pressure Circuit Low Input	<Ref. to EN(H6DO)(diag)-133, DTC P0107 MANIFOLD ABSOLUTE PRESSURE/BAROMETRIC PRESSURE CIRCUIT LOW INPUT, Diagnostic Procedure with Diagnostic Trouble Code (DTC).>
P0108	Manifold Absolute Pressure/Barometric Pressure Circuit High Input	<Ref. to EN(H6DO)(diag)-135, DTC P0108 MANIFOLD ABSOLUTE PRESSURE/BAROMETRIC PRESSURE CIRCUIT HIGH INPUT, Diagnostic Procedure with Diagnostic Trouble Code (DTC).>
P0111	Intake Air Temperature Sensor 1 Circuit Range/Performance	<Ref. to EN(H6DO)(diag)-137, DTC P0111 INTAKE AIR TEMPERATURE SENSOR 1 CIRCUIT RANGE/PERFORMANCE, Diagnostic Procedure with Diagnostic Trouble Code (DTC).>
P0112	Intake Air Temperature Sensor 1 Circuit Low	<Ref. to EN(H6DO)(diag)-139, DTC P0112 INTAKE AIR TEMPERATURE SENSOR 1 CIRCUIT LOW, Diagnostic Procedure with Diagnostic Trouble Code (DTC).>
P0113	Intake Air Temperature Sensor 1 Circuit High	<Ref. to EN(H6DO)(diag)-141, DTC P0113 INTAKE AIR TEMPERATURE SENSOR 1 CIRCUIT HIGH, Diagnostic Procedure with Diagnostic Trouble Code (DTC).>
P0117	Engine Coolant Temperature Circuit Low	<Ref. to EN(H6DO)(diag)-143, DTC P0117 ENGINE COOLANT TEMPERATURE CIRCUIT LOW, Diagnostic Procedure with Diagnostic Trouble Code (DTC).>
P0118	Engine Coolant Temperature Circuit High	<Ref. to EN(H6DO)(diag)-145, DTC P0118 ENGINE COOLANT TEMPERATURE CIRCUIT HIGH, Diagnostic Procedure with Diagnostic Trouble Code (DTC).>
P0122	Throttle/Pedal Position Sensor/ Switch “A” Circuit Low	<Ref. to EN(H6DO)(diag)-147, DTC P0122 THROTTLE/PEDAL POSITION SENSOR/SWITCH “A” CIRCUIT LOW, Diagnostic Procedure with Diagnostic Trouble Code (DTC).>
P0123	Throttle/Pedal Position Sensor/ Switch “A” Circuit High	<Ref. to EN(H6DO)(diag)-149, DTC P0123 THROTTLE/PEDAL POSITION SENSOR/SWITCH “A” CIRCUIT HIGH, Diagnostic Procedure with Diagnostic Trouble Code (DTC).>
P0125	Insufficient Coolant Temperature for Closed Loop Fuel Control	<Ref. to EN(H6DO)(diag)-151, DTC P0125 INSUFFICIENT COOLANT TEMPERATURE FOR CLOSED LOOP FUEL CONTROL, Diagnostic Procedure with Diagnostic Trouble Code (DTC).>
P0126	Insufficient Engine Coolant Temperature For Stable Operation	<Ref. to EN(H6DO)(diag)-152, DTC P0126 INSUFFICIENT ENGINE COOLANT TEMPERATURE FOR STABLE OPERATION, Diagnostic Procedure with Diagnostic Trouble Code (DTC).>

List of Diagnostic Trouble Code (DTC)

DTC	Item	Reference
P0128	Coolant Thermostat (Engine Coolant Temperature Below Thermostat Regulating Temperature)	<Ref. to EN(H6DO)(diag)-154, DTC P0128 COOLANT THERMOSTAT (ENGINE COOLANT TEMPERATURE BELOW THERMOSTAT REGULATING TEMPERATURE), Diagnostic Procedure with Diagnostic Trouble Code (DTC).>
P0131	O2 Sensor Circuit Low Voltage (Bank 1 Sensor 1)	<Ref. to EN(H6DO)(diag)-155, DTC P0131 O2 SENSOR CIRCUIT LOW VOLTAGE (BANK 1 SENSOR 1), Diagnostic Procedure with Diagnostic Trouble Code (DTC).>
P0132	O2 Sensor Circuit High Voltage (Bank 1 Sensor 1)	<Ref. to EN(H6DO)(diag)-157, DTC P0132 O2 SENSOR CIRCUIT HIGH VOLTAGE (BANK 1 SENSOR 1), Diagnostic Procedure with Diagnostic Trouble Code (DTC).>
P0133	O2 Sensor Circuit Slow Response (Bank 1 Sensor 1)	<Ref. to EN(H6DO)(diag)-159, DTC P0133 O2 SENSOR CIRCUIT SLOW RESPONSE (BANK 1 SENSOR 1), Diagnostic Procedure with Diagnostic Trouble Code (DTC).>
P0134	O2 Sensor Circuit No Activity Detected (Bank 1 Sensor 1)	<Ref. to EN(H6DO)(diag)-161, DTC P0134 O2 SENSOR CIRCUIT NO ACTIVITY DETECTED (BANK 1 SENSOR 1), Diagnostic Procedure with Diagnostic Trouble Code (DTC).>
P0137	O2 Sensor Circuit Low Voltage (Bank 1 Sensor 2)	<Ref. to EN(H6DO)(diag)-163, DTC P0137 O2 SENSOR CIRCUIT LOW VOLTAGE (BANK 1 SENSOR 2), Diagnostic Procedure with Diagnostic Trouble Code (DTC).>
P0138	O2 Sensor Circuit High Voltage (Bank 1 Sensor 2)	<Ref. to EN(H6DO)(diag)-165, DTC P0138 O2 SENSOR CIRCUIT HIGH VOLTAGE (BANK 1 SENSOR 2), Diagnostic Procedure with Diagnostic Trouble Code (DTC).>
P0139	O2 Sensor Circuit Slow Response (Bank 1 Sensor 2)	<Ref. to EN(H6DO)(diag)-167, DTC P0139 O2 SENSOR CIRCUIT SLOW RESPONSE (BANK 1 SENSOR 2), Diagnostic Procedure with Diagnostic Trouble Code (DTC).>
P0140	O2 Sensor Circuit No Activity Detected (Bank 1 Sensor 2)	<Ref. to EN(H6DO)(diag)-169, DTC P0140 O2 SENSOR CIRCUIT NO ACTIVITY DETECTED (BANK1 SENSOR2), Diagnostic Procedure with Diagnostic Trouble Code (DTC).>
P0151	O2 Sensor Circuit Low Voltage (Bank 2 Sensor 1)	<Ref. to EN(H6DO)(diag)-172, DTC P0151 O2 SENSOR CIRCUIT LOW VOLTAGE (BANK 2 SENSOR 1), Diagnostic Procedure with Diagnostic Trouble Code (DTC).>
P0152	O2 Sensor Circuit High Voltage (Bank 2 Sensor 1)	<Ref. to EN(H6DO)(diag)-174, DTC P0152 O2 SENSOR CIRCUIT HIGH VOLTAGE (BANK 2 SENSOR 1), Diagnostic Procedure with Diagnostic Trouble Code (DTC).>
P0153	O2 Sensor Circuit Slow Response (Bank 2 Sensor 1)	<Ref. to EN(H6DO)(diag)-176, DTC P0153 O2 SENSOR CIRCUIT SLOW RESPONSE (BANK 2 SENSOR 1), Diagnostic Procedure with Diagnostic Trouble Code (DTC).>
P0154	O2 Sensor Circuit No Activity Detected (Bank 2 Sensor 1)	<Ref. to EN(H6DO)(diag)-178, DTC P0154 O2 SENSOR CIRCUIT NO ACTIVITY DETECTED (BANK 2 SENSOR 1), Diagnostic Procedure with Diagnostic Trouble Code (DTC).>
P0157	O2 Sensor Circuit Low Voltage (Bank 2 Sensor 2)	<Ref. to EN(H6DO)(diag)-180, DTC P0157 O2 SENSOR CIRCUIT LOW VOLTAGE (BANK 2 SENSOR 2), Diagnostic Procedure with Diagnostic Trouble Code (DTC).>
P0158	O2 Sensor Circuit High Voltage (Bank 2 Sensor 2)	<Ref. to EN(H6DO)(diag)-182, DTC P0158 O2 SENSOR CIRCUIT HIGH VOLTAGE (BANK 2 SENSOR 2), Diagnostic Procedure with Diagnostic Trouble Code (DTC).>
P0159	O2 Sensor Circuit Slow Response (Bank 2 Sensor 2)	<Ref. to EN(H6DO)(diag)-184, DTC P0159 O2 SENSOR CIRCUIT SLOW RESPONSE (BANK 2 SENSOR 2), Diagnostic Procedure with Diagnostic Trouble Code (DTC).>
P0160	O2 Sensor Circuit No Activity Detected (Bank 2 Sensor 2)	<Ref. to EN(H6DO)(diag)-186, DTC P0160 O2 SENSOR CIRCUIT NO ACTIVITY DETECTED (BANK2 SENSOR2), Diagnostic Procedure with Diagnostic Trouble Code (DTC).>
P0171	System Too Lean (Bank 1)	<Ref. to EN(H6DO)(diag)-188, DTC P0171 SYSTEM TOO LEAN (BANK 1), Diagnostic Procedure with Diagnostic Trouble Code (DTC).>
P0172	System Too Rich (Bank 1)	<Ref. to EN(H6DO)(diag)-188, DTC P0172 SYSTEM TOO RICH (BANK 1), Diagnostic Procedure with Diagnostic Trouble Code (DTC).>

DTC	Item	Reference
P0174	System Too Lean (Bank 2)	<Ref. to EN(H6DO)(diag)-188, DTC P0174 SYSTEM TOO LEAN (BANK 2), Diagnostic Procedure with Diagnostic Trouble Code (DTC).>
P0175	System Too Rich (Bank 2)	<Ref. to EN(H6DO)(diag)-189, DTC P0175 SYSTEM TOO RICH (BANK 2), Diagnostic Procedure with Diagnostic Trouble Code (DTC).>
P0181	Fuel Temperature Sensor “A” Circuit Range/Performance	<Ref. to EN(H6DO)(diag)-191, DTC P0181 FUEL TEMPERATURE SENSOR “A” CIRCUIT RANGE/PERFORMANCE, Diagnostic Procedure with Diagnostic Trouble Code (DTC).>
P0182	Fuel Temperature Sensor “A” Circuit Low Input	<Ref. to EN(H6DO)(diag)-193, DTC P0182 FUEL TEMPERATURE SENSOR “A” CIRCUIT LOW INPUT, Diagnostic Procedure with Diagnostic Trouble Code (DTC).>
P0183	Fuel Temperature Sensor “A” Circuit High Input	<Ref. to EN(H6DO)(diag)-195, DTC P0183 FUEL TEMPERATURE SENSOR “A” CIRCUIT HIGH INPUT, Diagnostic Procedure with Diagnostic Trouble Code (DTC).>
P0196	Engine Oil Temperature Sensor Circuit Range/Performance	<Ref. to EN(H6DO)(diag)-197, DTC P0196 ENGINE OIL TEMPERATURE SENSOR CIRCUIT RANGE/PERFORMANCE, Diagnostic Procedure with Diagnostic Trouble Code (DTC).>
P0197	Engine Oil Temperature Sensor Low	<Ref. to EN(H6DO)(diag)-199, DTC P0197 ENGINE OIL TEMPERATURE SENSOR LOW, Diagnostic Procedure with Diagnostic Trouble Code (DTC).>
P0198	Engine Oil Temperature Sensor High	<Ref. to EN(H6DO)(diag)-201, DTC P0198 ENGINE OIL TEMPERATURE SENSOR HIGH, Diagnostic Procedure with Diagnostic Trouble Code (DTC).>
P0222	Throttle/Pedal Position Sensor/ Switch “B” Circuit Low	<Ref. to EN(H6DO)(diag)-203, DTC P0222 THROTTLE/PEDAL POSITION SENSOR/SWITCH “B” CIRCUIT LOW, Diagnostic Procedure with Diagnostic Trouble Code (DTC).>
P0223	Throttle/Pedal Position Sensor/ Switch “B” Circuit High	<Ref. to EN(H6DO)(diag)-205, DTC P0223 THROTTLE/PEDAL POSITION SENSOR/SWITCH “B” CIRCUIT HIGH, Diagnostic Procedure with Diagnostic Trouble Code (DTC).>
P0230	Fuel Pump Primary Circuit	<Ref. to EN(H6DO)(diag)-207, DTC P0230 FUEL PUMP PRIMARY CIRCUIT, Diagnostic Procedure with Diagnostic Trouble Code (DTC).>
P0301	Cylinder 1 Misfire Detected	<Ref. to EN(H6DO)(diag)-209, DTC P0301 CYLINDER 1 MISFIRE DETECTED, Diagnostic Procedure with Diagnostic Trouble Code (DTC).>
P0302	Cylinder 2 Misfire Detected	<Ref. to EN(H6DO)(diag)-209, DTC P0302 CYLINDER 2 MISFIRE DETECTED, Diagnostic Procedure with Diagnostic Trouble Code (DTC).>
P0303	Cylinder 3 Misfire Detected	<Ref. to EN(H6DO)(diag)-209, DTC P0303 CYLINDER 3 MISFIRE DETECTED, Diagnostic Procedure with Diagnostic Trouble Code (DTC).>
P0304	Cylinder 4 Misfire Detected	<Ref. to EN(H6DO)(diag)-209, DTC P0304 CYLINDER 4 MISFIRE DETECTED, Diagnostic Procedure with Diagnostic Trouble Code (DTC).>
P0305	Cylinder 5 Misfire Detected	<Ref. to EN(H6DO)(diag)-209, DTC P0305 CYLINDER 5 MISFIRE DETECTED, Diagnostic Procedure with Diagnostic Trouble Code (DTC).>
P0306	Cylinder 6 Misfire Detected	<Ref. to EN(H6DO)(diag)-210, DTC P0306 CYLINDER 6 MISFIRE DETECTED, Diagnostic Procedure with Diagnostic Trouble Code (DTC).>
P0327	Knock Sensor 1 Circuit Low (Bank 1 or Single Sensor)	<Ref. to EN(H6DO)(diag)-216, DTC P0327 KNOCK SENSOR 1 CIRCUIT LOW (BANK 1 OR SINGLE SENSOR), Diagnostic Procedure with Diagnostic Trouble Code (DTC).>
P0328	Knock Sensor 1 Circuit High (Bank 1 or Single Sensor)	<Ref. to EN(H6DO)(diag)-218, DTC P0328 KNOCK SENSOR 1 CIRCUIT HIGH (BANK 1 OR SINGLE SENSOR), Diagnostic Procedure with Diagnostic Trouble Code (DTC).>
P0332	Knock Sensor 2 Circuit Low (Bank 2)	<Ref. to EN(H6DO)(diag)-220, DTC P0332 KNOCK SENSOR 2 CIRCUIT LOW (BANK 2), Diagnostic Procedure with Diagnostic Trouble Code (DTC).>
P0333	Knock Sensor 2 Circuit High (Bank 2)	<Ref. to EN(H6DO)(diag)-222, DTC P0333 KNOCK SENSOR 2 CIRCUIT HIGH (BANK 2), Diagnostic Procedure with Diagnostic Trouble Code (DTC).>
P0335	Crankshaft Position Sensor “A” Circuit	<Ref. to EN(H6DO)(diag)-224, DTC P0335 CRANKSHAFT POSITION SENSOR “A” CIRCUIT, Diagnostic Procedure with Diagnostic Trouble Code (DTC).>

DTC	Item	Reference
P0336	Crankshaft Position Sensor “A” Circuit Range/Performance	<Ref. to EN(H6DO)(diag)-226, DTC P0336 CRANKSHAFT POSITION SENSOR “A” CIRCUIT RANGE/PERFORMANCE, Diagnostic Procedure with Diagnostic Trouble Code (DTC).>
P0340	Camshaft Position Sensor “A” Circuit (Bank 1 or Single Sensor)	<Ref. to EN(H6DO)(diag)-228, DTC P0340 CAMSHAFT POSITION SENSOR “A” CIRCUIT (BANK 1 OR SINGLE SENSOR), Diagnostic Procedure with Diagnostic Trouble Code (DTC).>
P0345	Camshaft Position Sensor “A” Circuit (Bank 2)	<Ref. to EN(H6DO)(diag)-230, DTC P0345 CAMSHAFT POSITION SENSOR “A” CIRCUIT (BANK 2), Diagnostic Procedure with Diagnostic Trouble Code (DTC).>
P0400	Exhaust Gas Recirculation Flow	<Ref. to EN(H6DO)(diag)-232, DTC P0400 EXHAUST GAS RECIRCULATION FLOW, Diagnostic Procedure with Diagnostic Trouble Code (DTC).>
P0420	Catalyst System Efficiency below Threshold (Bank 1)	<Ref. to EN(H6DO)(diag)-234, DTC P0420 CATALYST SYSTEM EFFICIENCY BELOW THRESHOLD (BANK 1), Diagnostic Procedure with Diagnostic Trouble Code (DTC).>
P0442	Evaporative Emission Control System Leak Detected (Small Leak)	<Ref. to EN(H6DO)(diag)-238, DTC P0442 EVAPORATIVE EMISSION CONTROL SYSTEM LEAK DETECTED (SMALL LEAK), Diagnostic Procedure with Diagnostic Trouble Code (DTC).>
P0447	Evaporative Emission Control System Vent Control Circuit Open	<Ref. to EN(H6DO)(diag)-241, DTC P0447 EVAPORATIVE EMISSION CONTROL SYSTEM VENT CONTROL CIRCUIT OPEN, Diagnostic Procedure with Diagnostic Trouble Code (DTC).>
P0448	Evaporative Emission Control System Vent Control Circuit Shorted	<Ref. to EN(H6DO)(diag)-243, DTC P0448 EVAPORATIVE EMISSION CONTROL SYSTEM VENT CONTROL CIRCUIT SHORTED, Diagnostic Procedure with Diagnostic Trouble Code (DTC).>
P0451	Evaporative Emission Control System Pressure Sensor	<Ref. to EN(H6DO)(diag)-245, DTC P0451 EVAPORATIVE EMISSION CONTROL SYSTEM PRESSURE SENSOR, Diagnostic Procedure with Diagnostic Trouble Code (DTC).>
P0452	Evaporative Emission Control System Pressure Sensor Low Input	<Ref. to EN(H6DO)(diag)-247, DTC P0452 EVAPORATIVE EMISSION CONTROL SYSTEM PRESSURE SENSOR LOW INPUT, Diagnostic Procedure with Diagnostic Trouble Code (DTC).>
P0453	Evaporative Emission Control System Pressure Sensor High Input	<Ref. to EN(H6DO)(diag)-249, DTC P0453 EVAPORATIVE EMISSION CONTROL SYSTEM PRESSURE SENSOR HIGH INPUT, Diagnostic Procedure with Diagnostic Trouble Code (DTC).>
P0456	Evaporative Emission Control System Leak Detected (Very Small Leak)	<Ref. to EN(H6DO)(diag)-251, DTC P0456 EVAPORATIVE EMISSION CONTROL SYSTEM LEAK DETECTED (VERY SMALL LEAK), Diagnostic Procedure with Diagnostic Trouble Code (DTC).>
P0457	Evaporative Emission Control System Leak Detected (Fuel Cap Loose/Off)	<Ref. to EN(H6DO)(diag)-254, DTC P0457 EVAPORATIVE EMISSION CONTROL SYSTEM LEAK DETECTED (FUEL CAP LOOSE/OFF), Diagnostic Procedure with Diagnostic Trouble Code (DTC).>
P0458	Evaporative Emission System Purge Control Valve Circuit Low	<Ref. to EN(H6DO)(diag)-257, DTC P0458 EVAPORATIVE EMISSION SYSTEM PURGE CONTROL VALVE CIRCUIT LOW, Diagnostic Procedure with Diagnostic Trouble Code (DTC).>
P0459	Evaporative Emission System Purge Control Valve Circuit High	<Ref. to EN(H6DO)(diag)-259, DTC P0459 EVAPORATIVE EMISSION SYSTEM PURGE CONTROL VALVE CIRCUIT HIGH, Diagnostic Procedure with Diagnostic Trouble Code (DTC).>
P0461	Fuel Level Sensor “A” Circuit Range/Performance	<Ref. to EN(H6DO)(diag)-261, DTC P0461 FUEL LEVEL SENSOR “A” CIRCUIT RANGE/PERFORMANCE, Diagnostic Procedure with Diagnostic Trouble Code (DTC).>
P0462	Fuel Level Sensor “A” Circuit Low	<Ref. to EN(H6DO)(diag)-261, DTC P0462 FUEL LEVEL SENSOR “A” CIRCUIT LOW, Diagnostic Procedure with Diagnostic Trouble Code (DTC).>
P0463	Fuel Level Sensor “A” Circuit High	<Ref. to EN(H6DO)(diag)-261, DTC P0463 FUEL LEVEL SENSOR “A” CIRCUIT HIGH, Diagnostic Procedure with Diagnostic Trouble Code (DTC).>
P0464	Fuel Level Sensor Circuit Intermittent	<Ref. to EN(H6DO)(diag)-262, DTC P0464 FUEL LEVEL SENSOR CIRCUIT INTERMITTENT, Diagnostic Procedure with Diagnostic Trouble Code (DTC).>
P0500	Vehicle Speed Sensor “A”	<Ref. to EN(H6DO)(diag)-262, DTC P0500 VEHICLE SPEED SENSOR “A”, Diagnostic Procedure with Diagnostic Trouble Code (DTC).>

DTC	Item	Reference
P0506	Idle Air Control System RPM Lower Than Expected	<Ref. to EN(H6DO)(diag)-263, DTC P0506 IDLE AIR CONTROL SYSTEM RPM LOWER THAN EXPECTED, Diagnostic Procedure with Diagnostic Trouble Code (DTC).>
P0507	Idle Air Control System RPM Higher Than Expected	<Ref. to EN(H6DO)(diag)-265, DTC P0507 IDLE AIR CONTROL SYSTEM RPM HIGHER THAN EXPECTED, Diagnostic Procedure with Diagnostic Trouble Code (DTC).>
P0512	Starter Request Circuit	<Ref. to EN(H6DO)(diag)-267, DTC P0512 STARTER REQUEST CIRCUIT, Diagnostic Procedure with Diagnostic Trouble Code (DTC).>
P0513	Incorrect Immobilizer Key	<Ref. to IM(diag)-16, DTC P0513 INCORRECT IMMOBILIZER KEY, Diagnostic Procedure with Diagnostic Trouble Code (DTC).>
P0600	Serial Communication Link	<Ref. to EN(H6DO)(diag)-268, DTC P0600 SERIAL COMMUNICATION LINK, Diagnostic Procedure with Diagnostic Trouble Code (DTC).>
P0604	Internal Control Module Random Access Memory (RAM) Error	<Ref. to EN(H6DO)(diag)-269, DTC P0604 INTERNAL CONTROL MODULE RANDOM ACCESS MEMORY (RAM) ERROR, Diagnostic Procedure with Diagnostic Trouble Code (DTC).>
P0605	Internal Control Module Read Only Memory (ROM) Error	<Ref. to EN(H6DO)(diag)-270, DTC P0605 INTERNAL CONTROL MODULE READ ONLY MEMORY (ROM) ERROR, Diagnostic Procedure with Diagnostic Trouble Code (DTC).>
P0607	Throttle Control System Circuit Range/Performance	<Ref. to EN(H6DO)(diag)-271, DTC P0607 THROTTLE CONTROL SYSTEM CIRCUIT RANGE/PERFORMANCE, Diagnostic Procedure with Diagnostic Trouble Code (DTC).>
P0638	Throttle Actuator Control Range/Performance (Bank 1)	<Ref. to EN(H6DO)(diag)-272, DTC P0638 THROTTLE ACTUATOR CONTROL RANGE/PERFORMANCE (BANK 1), Diagnostic Procedure with Diagnostic Trouble Code (DTC).>
P0700	Transmission Control System (MIL Request)	<Ref. to EN(H6DO)(diag)-272, DTC P0700 TRANSMISSION CONTROL SYSTEM (MIL REQUEST), Diagnostic Procedure with Diagnostic Trouble Code (DTC).>
P1152	O2 Sensor Circuit Range/Performance (Low) (Bank1 Sensor1)	<Ref. to EN(H6DO)(diag)-273, DTC P1152 O2 SENSOR CIRCUIT RANGE/PERFORMANCE (LOW) (BANK1 SENSOR1), Diagnostic Procedure with Diagnostic Trouble Code (DTC).>
P1153	O2 Sensor Circuit Range/Performance (High) (Bank1 Sensor1)	<Ref. to EN(H6DO)(diag)-275, DTC P1153 O2 SENSOR CIRCUIT RANGE/PERFORMANCE (HIGH) (BANK1 SENSOR1), Diagnostic Procedure with Diagnostic Trouble Code (DTC).>
P1154	O2 Sensor Circuit Range/Performance (Low) (Bank 2 Sensor 1)	<Ref. to EN(H6DO)(diag)-277, DTC P1154 O2 SENSOR CIRCUIT RANGE/PERFORMANCE (LOW) (BANK 2 SENSOR 1), Diagnostic Procedure with Diagnostic Trouble Code (DTC).>
P1155	O2 Sensor Circuit Range/Performance (High) (Bank 2 Sensor 1)	<Ref. to EN(H6DO)(diag)-279, DTC P1155 O2 SENSOR CIRCUIT RANGE/PERFORMANCE (HIGH) (BANK 2 SENSOR 1), Diagnostic Procedure with Diagnostic Trouble Code (DTC).>
P1160	Return Spring Failure	<Ref. to EN(H6DO)(diag)-280, DTC P1160 RETURN SPRING FAILURE, Diagnostic Procedure with Diagnostic Trouble Code (DTC).>
P1400	Fuel Tank Pressure Control Solenoid Valve Circuit Low	<Ref. to EN(H6DO)(diag)-281, DTC P1400 FUEL TANK PRESSURE CONTROL SOLENOID VALVE CIRCUIT LOW, Diagnostic Procedure with Diagnostic Trouble Code (DTC).>
P1420	Fuel Tank Pressure Control Sol. Valve Circuit High	<Ref. to EN(H6DO)(diag)-283, DTC P1420 FUEL TANK PRESSURE CONTROL SOL. VALVE CIRCUIT HIGH, Diagnostic Procedure with Diagnostic Trouble Code (DTC).>
P1443	Vent Control Solenoid Valve Function Problem	<Ref. to EN(H6DO)(diag)-285, DTC P1443 VENT CONTROL SOLENOID VALVE FUNCTION PROBLEM, Diagnostic Procedure with Diagnostic Trouble Code (DTC).>
P1492	EGR Solenoid Valve Signal #1 Circuit Malfunction (Low Input)	<Ref. to EN(H6DO)(diag)-287, DTC P1492 EGR SOLENOID VALVE SIGNAL #1 CIRCUIT MALFUNCTION (LOW INPUT), Diagnostic Procedure with Diagnostic Trouble Code (DTC).>
P1493	EGR Solenoid Valve Signal #1 Circuit Malfunction (High Input)	<Ref. to EN(H6DO)(diag)-287, DTC P1493 EGR SOLENOID VALVE SIGNAL #1 CIRCUIT MALFUNCTION (HIGH INPUT), Diagnostic Procedure with Diagnostic Trouble Code (DTC).>

DTC	Item	Reference
P1494	EGR Solenoid Valve Signal #2 Circuit Malfunction (Low Input)	<Ref. to EN(H6DO)(diag)-287, DTC P1494 EGR SOLENOID VALVE SIGNAL #2 CIRCUIT MALFUNCTION (LOW INPUT), Diagnostic Procedure with Diagnostic Trouble Code (DTC).>
P1495	EGR Solenoid Valve Signal #2 Circuit Malfunction (High Input)	<Ref. to EN(H6DO)(diag)-287, DTC P1495 EGR SOLENOID VALVE SIGNAL #2 CIRCUIT MALFUNCTION (HIGH INPUT), Diagnostic Procedure with Diagnostic Trouble Code (DTC).>
P1496	EGR Solenoid Valve Signal #3 Circuit Malfunction (Low Input)	<Ref. to EN(H6DO)(diag)-287, DTC P1496 EGR SOLENOID VALVE SIGNAL #3 CIRCUIT MALFUNCTION (LOW INPUT), Diagnostic Procedure with Diagnostic Trouble Code (DTC).>
P1497	EGR Solenoid Valve Signal #3 Circuit Malfunction (High Input)	<Ref. to EN(H6DO)(diag)-287, DTC P1497 EGR SOLENOID VALVE SIGNAL #3 CIRCUIT MALFUNCTION (HIGH INPUT), Diagnostic Procedure with Diagnostic Trouble Code (DTC).>
P1498	EGR Solenoid Valve Signal #4 Circuit Malfunction (Low Input)	<Ref. to EN(H6DO)(diag)-288, DTC P1498 EGR SOLENOID VALVE SIGNAL #4 CIRCUIT MALFUNCTION (LOW INPUT), Diagnostic Procedure with Diagnostic Trouble Code (DTC).>
P1499	EGR Solenoid Valve Signal #4 Circuit Malfunction (High Input)	<Ref. to EN(H6DO)(diag)-291, DTC P1499 EGR SOLENOID VALVE SIGNAL #4 CIRCUIT MALFUNCTION (HIGH INPUT), Diagnostic Procedure with Diagnostic Trouble Code (DTC).>
P1560	Back-Up Voltage Circuit Malfunction	<Ref. to EN(H6DO)(diag)-293, DTC P1560 BACK-UP VOLTAGE CIRCUIT MALFUNCTION, Diagnostic Procedure with Diagnostic Trouble Code (DTC).>
P1570	Antenna	<Ref. to IM(diag)-17, DTC P1570 ANTENNA, Diagnostic Procedure with Diagnostic Trouble Code (DTC).>
P1571	Reference Code Incompatibility	<Ref. to IM(diag)-19, DTC P1571 REFERENCE CODE INCOMPATIBILITY, Diagnostic Procedure with Diagnostic Trouble Code (DTC).>
P1572	IMM Circuit Failure (Except Antenna Circuit)	<Ref. to IM(diag)-20, DTC P1572 IMM CIRCUIT FAILURE (EXCEPT ANTENNA CIRCUIT), Diagnostic Procedure with Diagnostic Trouble Code (DTC).>
P1574	Key Communication Failure	<Ref. to IM(diag)-23, DTC P1574 KEY COMMUNICATION FAILURE, Diagnostic Procedure with Diagnostic Trouble Code (DTC).>
P1576	EGI Control Module EEPROM	<Ref. to IM(diag)-23, DTC P1576 EGI CONTROL MODULE EEPROM, Diagnostic Procedure with Diagnostic Trouble Code (DTC).>
P1577	IMM Control Module EEPROM	<Ref. to IM(diag)-24, DTC P1577 IMM CONTROL MODULE EEPROM, Diagnostic Procedure with Diagnostic Trouble Code (DTC).>
P1578	Meter Failure	<Ref. to IM(diag)-24, DTC P1578 METER FAILURE, Diagnostic Procedure with Diagnostic Trouble Code (DTC).>
P1602	Control Module Programming Error	<Ref. to EN(H6DO)(diag)-295, DTC P1602 CONTROL MODULE PROGRAMMING ERROR, Diagnostic Procedure with Diagnostic Trouble Code (DTC).>
P2088	Intake Camshaft Position Actuator Control Circuit Low (Bank 1)	<Ref. to EN(H6DO)(diag)-304, DTC P2088 INTAKE CAMSHAFT POSITION ACTUATOR CONTROL CIRCUIT LOW (BANK 1), Diagnostic Procedure with Diagnostic Trouble Code (DTC).>
P2089	Intake Camshaft Position Actuator Control Circuit High (Bank 1)	<Ref. to EN(H6DO)(diag)-306, DTC P2089 INTAKE CAMSHAFT POSITION ACTUATOR CONTROL CIRCUIT HIGH (BANK 1), Diagnostic Procedure with Diagnostic Trouble Code (DTC).>
P2092	Intake Camshaft Position Actuator Control Circuit Low (Bank 2)	<Ref. to EN(H6DO)(diag)-308, DTC P2092 INTAKE CAMSHAFT POSITION ACTUATOR CONTROL CIRCUIT LOW (BANK 2), Diagnostic Procedure with Diagnostic Trouble Code (DTC).>
P2093	Intake Camshaft Position Actuator Control Circuit High (Bank 2)	<Ref. to EN(H6DO)(diag)-310, DTC P2093 INTAKE CAMSHAFT POSITION ACTUATOR CONTROL CIRCUIT HIGH (BANK 2), Diagnostic Procedure with Diagnostic Trouble Code (DTC).>
P2096	Post Catalyst Fuel Trim System Too Lean (Bank 1)	<Ref. to EN(H6DO)(diag)-311, DTC P2096 POST CATALYST FUEL TRIM SYSTEM TOO LEAN (BANK 1), Diagnostic Procedure with Diagnostic Trouble Code (DTC).>

List of Diagnostic Trouble Code (DTC)

DTC	Item	Reference
P2097	Post Catalyst Fuel Trim System Too Rich (Bank 1)	<Ref. to EN(H6DO)(diag)-312, DTC P2097 POST CATALYST FUEL TRIM SYSTEM TOO RICH (BANK 1), Diagnostic Procedure with Diagnostic Trouble Code (DTC).>
P2098	Post Catalyst Fuel Trim System Too Lean Bank 2	<Ref. to EN(H6DO)(diag)-317, DTC P2098 POST CATALYST FUEL TRIM SYSTEM TOO LEAN BANK 2, Diagnostic Procedure with Diagnostic Trouble Code (DTC).>
P2099	Post Catalyst Fuel Trim System Too Rich Bank 2	<Ref. to EN(H6DO)(diag)-318, DTC P2099 POST CATALYST FUEL TRIM SYSTEM TOO RICH BANK 2, Diagnostic Procedure with Diagnostic Trouble Code (DTC).>
P2101	Throttle Actuator Control Motor Circuit Range/Performance	<Ref. to EN(H6DO)(diag)-324, DTC P2101 THROTTLE ACTUATOR CONTROL MOTOR CIRCUIT RANGE/PERFORMANCE, Diagnostic Procedure with Diagnostic Trouble Code (DTC).>
P2102	Throttle Actuator Control Motor Circuit Low	<Ref. to EN(H6DO)(diag)-329, DTC P2102 THROTTLE ACTUATOR CONTROL MOTOR CIRCUIT LOW, Diagnostic Procedure with Diagnostic Trouble Code (DTC).>
P2103	Throttle Actuator Control Motor Circuit High	<Ref. to EN(H6DO)(diag)-331, DTC P2103 THROTTLE ACTUATOR CONTROL MOTOR CIRCUIT HIGH, Diagnostic Procedure with Diagnostic Trouble Code (DTC).>
P2109	Throttle/Pedal Position Sensor “A” Minimum Stop Performance	<Ref. to EN(H6DO)(diag)-332, DTC P2109 THROTTLE/PEDAL POSITION SENSOR “A” MINIMUM STOP PERFORMANCE, Diagnostic Procedure with Diagnostic Trouble Code (DTC).>
P2122	Throttle/Pedal Position Sensor/ Switch “D” Circuit Low Input	<Ref. to EN(H6DO)(diag)-333, DTC P2122 THROTTLE/PEDAL POSITION SENSOR/SWITCH “D” CIRCUIT LOW INPUT, Diagnostic Procedure with Diagnostic Trouble Code (DTC).>
P2123	Throttle/Pedal Position Sensor/ Switch “D” Circuit High Input	<Ref. to EN(H6DO)(diag)-335, DTC P2123 THROTTLE/PEDAL POSITION SENSOR/SWITCH “D” CIRCUIT HIGH INPUT, Diagnostic Procedure with Diagnostic Trouble Code (DTC).>
P2127	Throttle/Pedal Position Sensor/ Switch “E” Circuit Low Input	<Ref. to EN(H6DO)(diag)-337, DTC P2127 THROTTLE/PEDAL POSITION SENSOR/SWITCH “E” CIRCUIT LOW INPUT, Diagnostic Procedure with Diagnostic Trouble Code (DTC).>
P2128	Throttle/Pedal Position Sensor/ Switch “E” Circuit High Input	<Ref. to EN(H6DO)(diag)-339, DTC P2128 THROTTLE/PEDAL POSITION SENSOR/SWITCH “E” CIRCUIT HIGH INPUT, Diagnostic Procedure with Diagnostic Trouble Code (DTC).>
P2135	Throttle/Pedal Position Sensor/ Switch “A”/“B” Voltage Correlation	<Ref. to EN(H6DO)(diag)-341, DTC P2135 THROTTLE/PEDAL POSITION SENSOR/SWITCH “A”/“B” VOLTAGE CORRELATION, Diagnostic Procedure with Diagnostic Trouble Code (DTC).>
P2138	Throttle/Pedal Position Sensor/ Switch “D”/“E” Voltage Correlation	<Ref. to EN(H6DO)(diag)-344, DTC P2138 THROTTLE/PEDAL POSITION SENSOR/SWITCH “D”/“E” VOLTAGE CORRELATION, Diagnostic Procedure with Diagnostic Trouble Code (DTC).>
P2227	Barometric Pressure Circuit Range/ Performance	<Ref. to EN(H6DO)(diag)-346, DTC P2227 BAROMETRIC PRESSURE CIRCUIT RANGE/PERFORMANCE, Diagnostic Procedure with Diagnostic Trouble Code (DTC).>
P2228	Barometric Pressure Circuit Low	<Ref. to EN(H6DO)(diag)-346, DTC P2228 BAROMETRIC PRESSURE CIRCUIT LOW, Diagnostic Procedure with Diagnostic Trouble Code (DTC).>
P2229	Barometric Pressure Circuit High	<Ref. to EN(H6DO)(diag)-347, DTC P2229 BAROMETRIC PRESSURE CIRCUIT HIGH, Diagnostic Procedure with Diagnostic Trouble Code (DTC).>

20. Diagnostic Procedure with Diagnostic Trouble Code (DTC)

A: DTC P0011 INTAKE CAMSHAFT POSITION - TIMING OVER-ADVANCED OR SYSTEM PERFORMANCE (BANK 1)

DTC DETECTING CONDITION:

- Two consecutive driving cycles with fault
- GENERAL DESCRIPTION <Ref. to GD(H6DO)-10, DTC P0011 INTAKE CAMSHAFT POSITION - TIMING OVER-ADVANCED OR SYSTEM PERFORMANCE (BANK 1), Diagnostic Trouble Code (DTC) Detecting Criteria.>

TROUBLE SYMPTOM:

- Engine stalls.
- Improper idling

CAUTION:

After repair or replacement of faulty parts, perform Clear Memory Mode <Ref. to EN(H6DO)(diag)-52, OPERATION, Clear Memory Mode.>, and Inspection Mode <Ref. to EN(H6DO)(diag)-44, PROCEDURE, Inspection Mode.>.

	Step	Check	Yes	No
1	**CHECK CURRENT DATA.** 1) Start the engine and let it idle. 2) Measure the AVCS system operating angle using the Subaru Select Monitor or general scan tool. NOTE: • SUBARU SELECT MONITOR For detailed operation procedure, refer to “READ CURRENT DATA FOR ENGINE”. <Ref. to EN(H6DO)(diag)-34, Subaru Select Monitor.> • General Scan Tool For detailed operation procedures, refer to the general scan tool operation manual.	Is the AVCS system operating angle approx. 0°?	Go to step **2**.	Check the following item and repair or replace if necessary. • Oil pipe (clog) • Oil flow control solenoid valve (clogged or dirty oil passages, spring settings) • Intake camshaft (dirt, damage of camshaft)
2	**CHECK CURRENT DATA.** 1) Drive with acceleration and deceleration at 80 km/h (50 MPH) or less. NOTE: Drive to an extent that the duty output of oil flow control solenoid valve increases. 2) Measure the AVCS system operating angle and oil flow control solenoid valve duty output using Subaru Select Monitor or general scan tool. NOTE: • SUBARU SELECT MONITOR For detailed operation procedure, refer to “READ CURRENT DATA FOR ENGINE”. <Ref. to EN(H6DO)(diag)-34, Subaru Select Monitor.> • General Scan Tool For detailed operation procedures, refer to the general scan tool operation manual.	When the oil flow control solenoid valve duty output exceeds 10%, is the AVCS system operating angle approx. 0°?	Check the following item and repair or replace if necessary. • Oil pipe (clog) • Oil flow control solenoid valve (clogged or dirty oil passages, spring settings) • Intake camshaft (dirt, damage of camshaft)	Perform the following procedures, and clean the oil routing. Replace the engine oil and idle the engine for 5 minutes, and then replace the oil filter and engine oil. <Ref. to LU(H6DO)-8, REPLACEMENT, Engine Oil.> <Ref. to LU(H6DO)-16, Engine Oil Filter.>

B: DTC P0016 CRANKSHAFT POSITION - CAMSHAFT POSITION CORRELATION (BANK1)

DTC DETECTING CONDITION:
- Two consecutive driving cycles with fault
- GENERAL DESCRIPTION <Ref. to GD(H6DO)-12, DTC P0016 CRANKSHAFT POSITION - CAMSHAFT POSITION CORRELATION (BANK1), Diagnostic Trouble Code (DTC) Detecting Criteria.>

TROUBLE SYMPTOM:
- Engine stalls.
- Improper idling

CAUTION:
After repair or replacement of faulty parts, perform Clear Memory Mode <Ref. to EN(H6DO)(diag)-52, OPERATION, Clear Memory Mode.>, and Inspection Mode <Ref. to EN(H6DO)(diag)-44, PROCEDURE, Inspection Mode.>.

	Step	Check	Yes	No
1	**CHECK CURRENT DATA.** 1) Start the engine and let it idle. 2) Measure the AVCS system operating angle and oil flow control solenoid valve duty output using Subaru Select Monitor or general scan tool. NOTE: • SUBARU SELECT MONITOR For detailed operation procedure, refer to “READ CURRENT DATA FOR ENGINE”. <Ref. to EN(H6DO)(diag)-34, Subaru Select Monitor.> • General Scan Tool For detailed operation procedures, refer to the general scan tool operation manual.	Is the AVCS system operating angle approx. 0°, and oil flow control solenoid valve duty output approx. 10%?	Perform the following procedures, and clean the oil routing. Replace the engine oil and idle the engine for 5 minutes, and then replace the oil filter and engine oil. <Ref. to LU(H6DO)-8, REPLACEMENT, Engine Oil.> <Ref. to LU(H6DO)-16, Engine Oil Filter.>	Check the following item and repair or replace if necessary. • Oil pipe (clog) • Oil flow control solenoid valve (clogged or dirty oil passages, spring settings) • Intake camshaft (dirt, damage of camshaft) • Timing chain (matching of timing mark)

C: DTC P0018 CRANKSHAFT POSITION - CAMSHAFT POSITION CORRELATION (BANK2)

DTC DETECTING CONDITION:
- Two consecutive driving cycles with fault
- GENERAL DESCRIPTION <Ref. to GD(H6DO)-13, DTC P0018 CRANKSHAFT POSITION - CAMSHAFT POSITION CORRELATION (BANK2), Diagnostic Trouble Code (DTC) Detecting Criteria.>

TROUBLE SYMPTOM:
- Engine stalls.
- Improper idling

CAUTION:
After repair or replacement of faulty parts, perform Clear Memory Mode <Ref. to EN(H6DO)(diag)-52, OPERATION, Clear Memory Mode.>, and Inspection Mode <Ref. to EN(H6DO)(diag)-44, PROCEDURE, Inspection Mode.>.

	Step	Check	Yes	No
1	**CHECK CURRENT DATA.** 1) Start the engine and let it idle. 2) Measure the AVCS system operating angle and oil flow control solenoid valve duty output using Subaru Select Monitor or general scan tool. NOTE: • SUBARU SELECT MONITOR For detailed operation procedure, refer to “READ CURRENT DATA FOR ENGINE”. <Ref. to EN(H6DO)(diag)-34, Subaru Select Monitor.> • General Scan Tool For detailed operation procedures, refer to the general scan tool operation manual.	Is the AVCS system operating angle approx. 0°, and oil flow control solenoid valve duty output approx. 10%?	Perform the following procedures, and clean the oil routing. Replace the engine oil and idle the engine for 5 minutes, and then replace the oil filter and engine oil. <Ref. to LU(H6DO)-8, REPLACEMENT, Engine Oil.> <Ref. to LU(H6DO)-16, Engine Oil Filter.>	Check the following item and repair or replace if necessary. • Oil pipe (clog) • Oil flow control solenoid valve (clogged or dirty oil passages, spring settings) • Intake camshaft (dirt, damage of camshaft) • Timing chain (matching of timing mark)

D: DTC P0021 INTAKE CAMSHAFT POSITION - TIMING OVER-ADVANCED OR SYSTEM PERFORMANCE (BANK 2)

DTC DETECTING CONDITION:
- Two consecutive driving cycles with fault
- GENERAL DESCRIPTION <Ref. to GD(H6DO)-13, DTC P0021 INTAKE CAMSHAFT POSITION - TIMING OVER-ADVANCED OR SYSTEM PERFORMANCE (BANK 2), Diagnostic Trouble Code (DTC) Detecting Criteria.>

TROUBLE SYMPTOM:
- Engine stalls.
- Improper idling

CAUTION:
After repair or replacement of faulty parts, perform Clear Memory Mode <Ref. to EN(H6DO)(diag)-52, OPERATION, Clear Memory Mode.>, and Inspection Mode <Ref. to EN(H6DO)(diag)-44, PROCEDURE, Inspection Mode.>.

	Step	Check	Yes	No
1	**CHECK CURRENT DATA.** 1) Start the engine and let it idle. 2) Measure the AVCS system operating angle using the Subaru Select Monitor or general scan tool. NOTE: • SUBARU SELECT MONITOR For detailed operation procedure, refer to “READ CURRENT DATA FOR ENGINE”. <Ref. to EN(H6DO)(diag)-34, Subaru Select Monitor.> • General Scan Tool For detailed operation procedures, refer to the general scan tool operation manual.	Is the AVCS system operating angle approx. 0°?	Go to step **2**.	Check the following item and repair or replace if necessary. • Oil pipe (clog) • Oil flow control solenoid valve (clogged or dirty oil passages, spring settings) • Intake camshaft (dirt, damage of camshaft)
2	**CHECK CURRENT DATA.** 1) Drive with acceleration and deceleration at 80 km/h (50 MPH) or less. NOTE: Drive to an extent that the duty output of oil flow control solenoid valve increases. 2) Measure the AVCS system operating angle and oil flow control solenoid valve duty output using Subaru Select Monitor or general scan tool. NOTE: • SUBARU SELECT MONITOR For detailed operation procedure, refer to “READ CURRENT DATA FOR ENGINE”. <Ref. to EN(H6DO)(diag)-34, Subaru Select Monitor.> • General Scan Tool For detailed operation procedures, refer to the general scan tool operation manual.	When the oil flow control solenoid valve duty output exceeds 10%, is the AVCS system operating angle approx. 0°?	Check the following item and repair or replace if necessary. • Oil pipe (clog) • Oil flow control solenoid valve (clogged or dirty oil passages, spring settings) • Intake camshaft (dirt, damage of camshaft)	Perform the following procedures, and clean the oil routing. Replace the engine oil and idle the engine for 5 minutes, and then replace the oil filter and engine oil. <Ref. to LU(H6DO)-8, REPLACEMENT, Engine Oil.> <Ref. to LU(H6DO)-16, Engine Oil Filter.>

E: DTC P0026 INTAKE VALVE CONTROL SOLENOID CIRCUIT RANGE/ PERFORMANCE (BANK 1)

DTC DETECTING CONDITION:

- Immediately at fault recognition
- GENERAL DESCRIPTION <Ref. to GD(H6DO)-14, DTC P0026 INTAKE VALVE CONTROL SOLENOID CIRCUIT RANGE/PERFORMANCE (BANK 1), Diagnostic Trouble Code (DTC) Detecting Criteria.>

TROUBLE SYMPTOM:

Improper idling

CAUTION:

After repair or replacement of faulty parts, perform Clear Memory Mode <Ref. to EN(H6DO)(diag)-52, OPERATION, Clear Memory Mode.>, and Inspection Mode <Ref. to EN(H6DO)(diag)-44, PROCEDURE, Inspection Mode.>.

WIRING DIAGRAM:

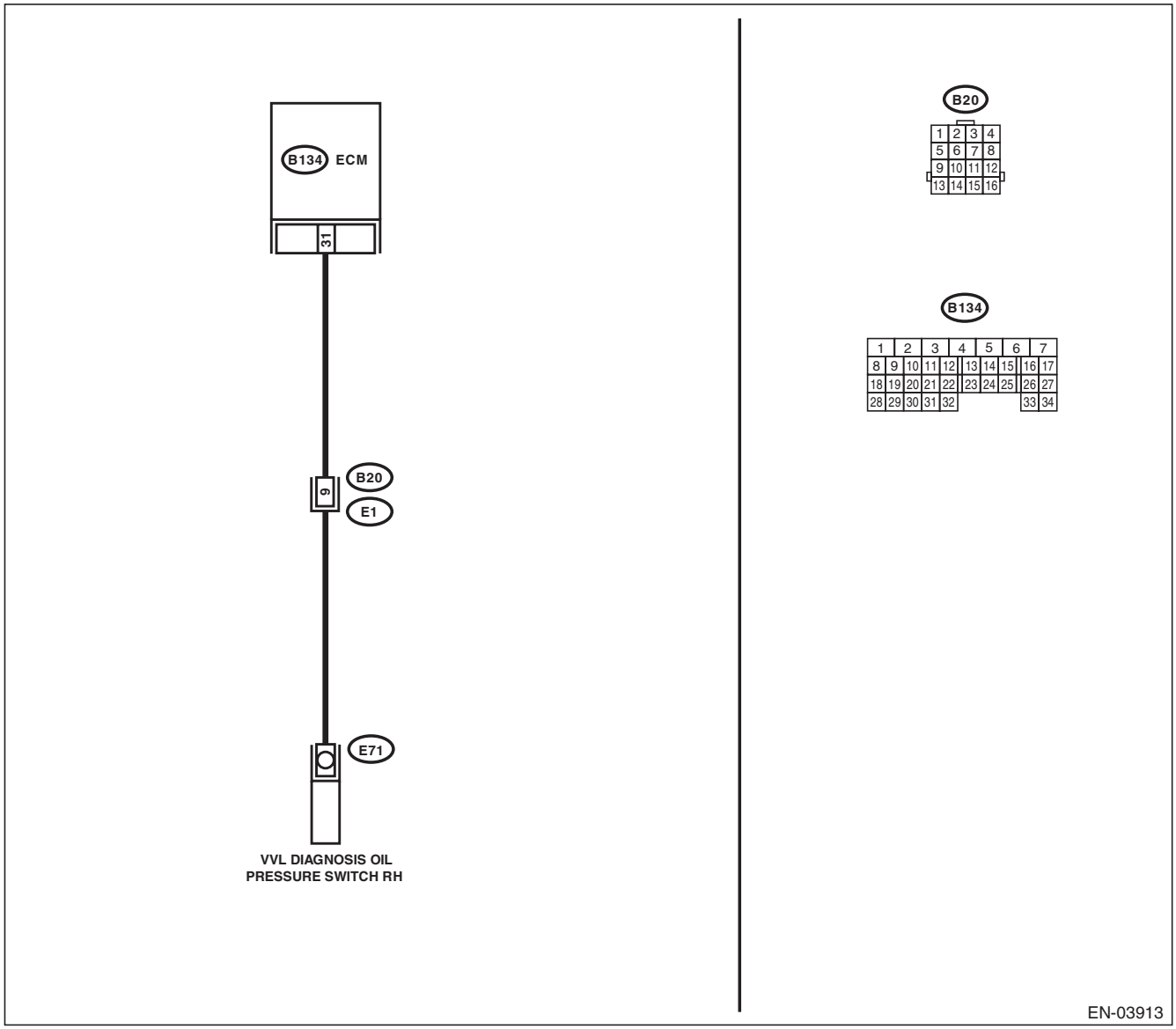

	Step	Check	Yes	No
1	**CHECK HARNESS BETWEEN ECM AND VARIABLE VALVE LIFT DIAGNOSIS OIL PRESSURE SWITCH.** 1) Warm up the engine. 2) Turn the ignition switch to OFF. 3) Disconnect the connectors from ECM and variable valve lift diagnosis oil pressure switch. 4) Measure the resistance of harness between ECM and variable valve lift diagnosis oil pressure switch connector. ***Connector & terminal*** ***(B134) No. 31 — (E71) No. 1:***	Is the resistance less than 1 Ω?	Go to step **2**.	Repair the harness and connector. NOTE: In this case, repair the following item: • Open circuit in harness between ECM and variable valve lift diagnosis oil pressure switch connector • Poor contact of coupling connector
2	**CHECK HARNESS BETWEEN ECM AND VARIABLE VALVE LIFT DIAGNOSIS OIL PRESSURE SWITCH.** Measure the resistance between variable valve lift diagnosis oil pressure switch connector and engine ground. ***Connector & terminal*** ***(E71) No. 1 — Engine ground:***	Is the resistance 1 MΩ or more?	Go to step **3**.	Repair the ground short circuit of harness between ECM and variable valve lift diagnosis oil pressure switch connector.
3	**CHECK HARNESS BETWEEN ECM AND VARIABLE VALVE LIFT DIAGNOSIS OIL PRESSURE SWITCH.** 1) Turn the ignition switch to ON. 2) Measure the voltage between variable valve lift diagnosis oil pressure switch connector and engine ground. ***Connector & terminal*** ***(E71) No. 1 (+) — Engine ground (–):***	Is the voltage 10 V or more?	Repair the short circuit of harness to power supply between ECM and variable valve lift diagnosis oil pressure switch connector.	Go to step **4**.
4	**CHECK DTC.** 1) Perform the Clear Memory Mode. 2) After idling the engine, check the DTC. NOTE: For detailed procedure, refer to “Clear Memory Mode”. <Ref. to EN(H6DO)(diag)-52, Clear Memory Mode.>	Is DTC displayed?	Replace the oil switching solenoid valve. <Ref. to ME(H6DO)-80, Oil Switching Solenoid Valve.> Go to step **5**.	End.
5	**CHECK DTC.** 1) Perform the Clear Memory Mode. 2) After idling the engine, check the DTC. NOTE: For detailed procedure, refer to “Clear Memory Mode”. <Ref. to EN(H6DO)(diag)-52, Clear Memory Mode.>	Is DTC displayed?	Check for oil routing.	End.

F: DTC P0028 INTAKE VALVE CONTROL SOLENOID CIRCUIT RANGE/ PERFORMANCE (BANK 2)

DTC DETECTING CONDITION:

- Immediately at fault recognition
- GENERAL DESCRIPTION <Ref. to GD(H6DO)-16, DTC P0028 INTAKE VALVE CONTROL SOLENOID CIRCUIT RANGE/PERFORMANCE (BANK 2), Diagnostic Trouble Code (DTC) Detecting Criteria.>

TROUBLE SYMPTOM:

Improper idling

CAUTION:

After repair or replacement of faulty parts, perform Clear Memory Mode <Ref. to EN(H6DO)(diag)-52, OPERATION, Clear Memory Mode.>, and Inspection Mode <Ref. to EN(H6DO)(diag)-44, PROCEDURE, Inspection Mode.>.

WIRING DIAGRAM:

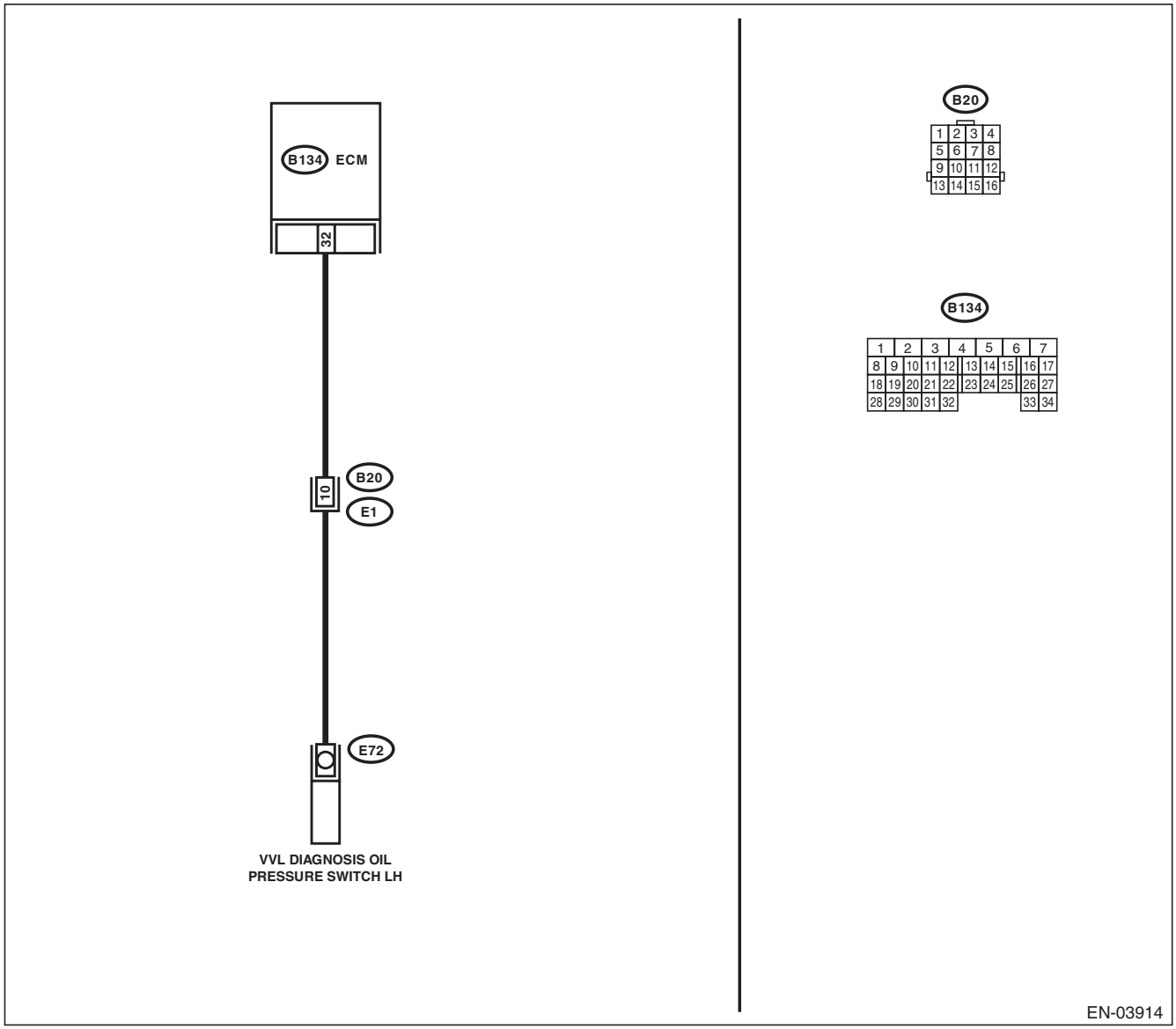

	Step	Check	Yes	No
1	**CHECK HARNESS BETWEEN ECM AND VARIABLE VALVE LIFT DIAGNOSIS OIL PRESSURE SWITCH.** 1) Warm up the engine. 2) Turn the ignition switch to OFF. 3) Disconnect the connectors from ECM and variable valve lift diagnosis oil pressure switch. 4) Measure the resistance of harness between ECM and variable valve lift diagnosis oil pressure switch connector. ***Connector & terminal*** ***(B134) No. 32 — (E72) No. 1:***	Is the resistance less than 1 Ω?	Go to step **2**.	Repair the harness and connector. NOTE: In this case, repair the following item: • Open circuit in harness between ECM and variable valve lift diagnosis oil pressure switch connector • Poor contact of coupling connector
2	**CHECK HARNESS BETWEEN ECM AND VARIABLE VALVE LIFT DIAGNOSIS OIL PRESSURE SWITCH.** Measure the resistance between variable valve lift diagnosis oil pressure switch connector and engine ground. ***Connector & terminal*** ***(E72) No. 1 — Engine ground:***	Is the resistance 1 MΩ or more?	Go to step **3**.	Repair the ground short circuit of harness between ECM and variable valve lift diagnosis oil pressure switch connector.
3	**CHECK HARNESS BETWEEN ECM AND VARIABLE VALVE LIFT DIAGNOSIS OIL PRESSURE SWITCH.** 1) Turn the ignition switch to ON. 2) Measure the voltage between variable valve lift diagnosis oil pressure switch connector and engine ground. ***Connector & terminal*** ***(E72) No. 1 (+) — Engine ground (–):***	Is the voltage 10 V or more?	Repair the short circuit of harness to power supply between ECM and variable valve lift diagnosis oil pressure switch connector.	Go to step **4**.
4	**CHECK DTC.** 1) Perform the Clear Memory Mode. 2) After idling the engine, check the DTC. NOTE: For detailed procedure, refer to “Clear Memory Mode”. <Ref. to EN(H6DO)(diag)-52, Clear Memory Mode.>	Is DTC displayed?	Replace the oil switching solenoid valve. <Ref. to ME(H6DO)-80, Oil Switching Solenoid Valve.> Go to step **5**.	End.
5	**CHECK DTC.** 1) Perform the Clear Memory Mode. 2) After idling the engine, check the DTC. NOTE: For detailed procedure, refer to “Clear Memory Mode”. <Ref. to EN(H6DO)(diag)-52, Clear Memory Mode.>	Is DTC displayed?	Check for oil routing.	End.

G: DTC P0030 HO2S HEATER CONTROL CIRCUIT (BANK 1 SENSOR 1)

DTC DETECTING CONDITION:

- Two consecutive driving cycles with fault
- GENERAL DESCRIPTION <Ref. to GD(H6DO)-17, DTC P0030 HO2S HEATER CONTROL CIRCUIT (BANK 1 SENSOR 1), Diagnostic Trouble Code (DTC) Detecting Criteria.>

CAUTION:

After repair or replacement of faulty parts, perform Clear Memory Mode <Ref. to EN(H6DO)(diag)-52, OPERATION, Clear Memory Mode.>, and Inspection Mode <Ref. to EN(H6DO)(diag)-44, PROCEDURE, Inspection Mode.>.

WIRING DIAGRAM:

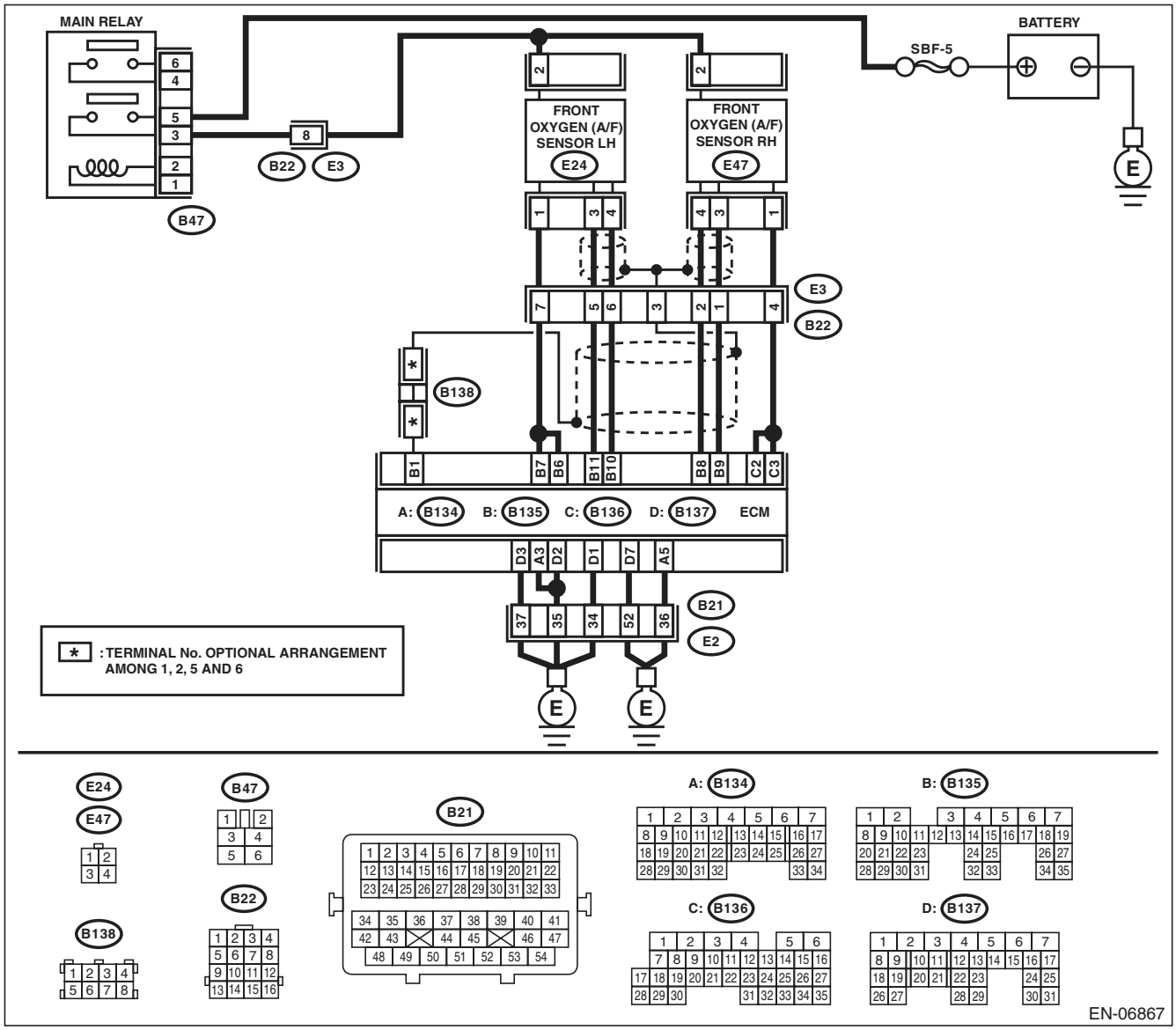

	Step	Check	Yes	No
1	**CHECK HARNESS BETWEEN ECM AND FRONT OXYGEN (A/F) SENSOR CONNECTOR.** 1) Start and warm up engine. 2) Turn the ignition switch to OFF. 3) Disconnect the connectors from ECM and front oxygen (A/F) sensor. 4) Measure the resistance of harness between ECM and front oxygen (A/F) sensor connector. ***Connector & terminal*** ***(B136) No. 2 — (E47) No. 1:*** ***(B136) No. 3 — (E47) No. 1:***	Is the resistance less than 1 Ω?	Go to step **2**.	Repair the harness and connector. NOTE: In this case, repair the following item: • Open circuit in harness between ECM and front oxygen (A/F) sensor connector • Poor contact of coupling connector
2	**CHECK HARNESS BETWEEN ECM AND FRONT OXYGEN (A/F) SENSOR CONNECTOR.** Measure the resistance of harness between ECM and front oxygen (A/F) sensor connector. ***Connector & terminal*** ***(B135) No. 9 — (E47) No. 3:*** ***(B135) No. 8 — (E47) No. 4:***	Is the resistance less than 1 Ω?	Go to step **3**.	Repair the harness and connector. NOTE: In this case, repair the following item: • Open circuit in harness between ECM and front oxygen (A/F) sensor connector • Poor contact of coupling connector
3	**CHECK FRONT OXYGEN (A/F) SENSOR.** Measure the resistance between front oxygen (A/F) sensor connector terminals. ***Terminals*** ***No. 2 — No. 1:***	Is the resistance between 2 — 3 Ω?	Go to step **4**.	Replace the front oxygen (A/F) sensor. <Ref. to FU(H6DO)-32, Front Oxygen (A/F) Sensor.>
4	**CHECK POOR CONTACT.** Check for poor contact of ECM and front oxygen (A/F) sensor connector.	Is there poor contact in ECM or front oxygen (A/F) sensor connector?	Repair the poor contact in ECM or front oxygen (A/F) sensor connector.	Replace the front oxygen (A/F) sensor. <Ref. to FU(H6DO)-32, Front Oxygen (A/F) Sensor.>

H: DTC P0031 HO2S HEATER CONTROL CIRCUIT LOW (BANK 1 SENSOR 1)

DTC DETECTING CONDITION:

- Immediately at fault recognition
- GENERAL DESCRIPTION <Ref. to GD(H6DO)-19, DTC P0031 HO2S HEATER CONTROL CIRCUIT LOW (BANK 1 SENSOR 1), Diagnostic Trouble Code (DTC) Detecting Criteria.>

CAUTION:

After repair or replacement of faulty parts, perform Clear Memory Mode <Ref. to EN(H6DO)(diag)-52, OPERATION, Clear Memory Mode.>, and Inspection Mode <Ref. to EN(H6DO)(diag)-44, PROCEDURE, Inspection Mode.>.

WIRING DIAGRAM:

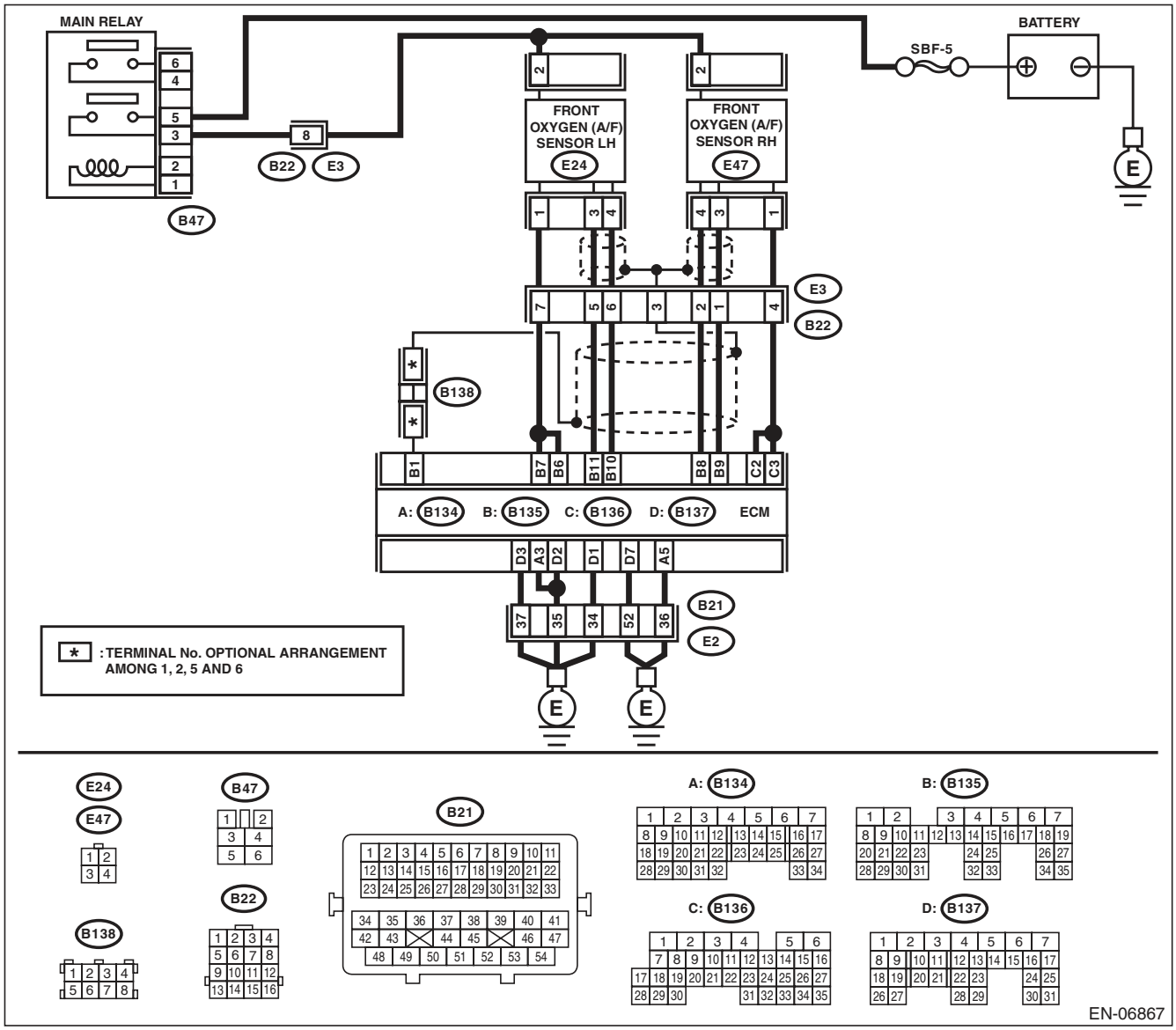

	Step	Check	Yes	No
1	**CHECK POWER SUPPLY TO FRONT OXYGEN (A/F) SENSOR.** 1) Turn the ignition switch to OFF. 2) Disconnect the connector from front oxygen (A/F) sensor. 3) Turn the ignition switch to ON. 4) Measure the voltage between front oxygen (A/F) sensor connector and engine ground. ***Connector & terminal*** ***(E47) No. 2 (+) — Engine ground (–):***	Is the voltage 10 V or more?	Go to step **2**.	Repair the power supply line. NOTE: In this case, repair the following item: • Open circuit of harness between main relay and front oxygen (A/F) sensor connector • Poor contact of main relay connector • Poor contact of coupling connector • Malfunction of main relay
2	**CHECK HARNESS BETWEEN ECM AND FRONT OXYGEN (A/F) SENSOR.** 1) Turn the ignition switch to OFF. 2) Disconnect the connectors from ECM. 3) Measure the resistance between ECM and front oxygen (A/F) sensor connector. ***Connector & terminal*** ***(B136) No. 2 — (E47) No. 1:*** ***(B136) No. 3 — (E47) No. 1:***	Is the resistance less than 1 Ω?	Go to step **3**.	Repair the harness and connector. NOTE: In this case, repair the following item: • Open circuit in harness between ECM and front oxygen (A/F) sensor connector • Poor contact of coupling connector
3	**CHECK GROUND CIRCUIT FOR ECM.** Measure the resistance of harness between ECM and chassis ground. ***Connector & terminal*** ***(B134) No. 3 — Chassis ground:*** ***(B134) No. 5 — Chassis ground:*** ***(B137) No. 1 — Chassis ground:*** ***(B137) No. 2 — Chassis ground:*** ***(B137) No. 3 — Chassis ground:*** ***(B137) No. 7 — Chassis ground:***	Is the resistance less than 5 Ω?	Go to step **4**.	Repair the harness and connector. NOTE: In this case, repair the following item: • Open circuit of harness between ECM and engine ground • Poor contact of coupling connector
4	**CHECK FRONT OXYGEN (A/F) SENSOR.** Measure the resistance between front oxygen (A/F) sensor connector terminals. ***Terminals*** ***No. 2 — No. 1:***	Is the resistance between 2 — 3 Ω?	Repair the poor contact of ECM connector.	Replace the front oxygen (A/F) sensor. <Ref. to FU(H6DO)-32, Front Oxygen (A/F) Sensor.>

I: DTC P0032 HO2S HEATER CONTROL CIRCUIT HIGH (BANK 1 SENSOR 1)

DTC DETECTING CONDITION:

- Immediately at fault recognition
- GENERAL DESCRIPTION <Ref. to GD(H6DO)-21, DTC P0032 HO2S HEATER CONTROL CIRCUIT HIGH (BANK 1 SENSOR 1), Diagnostic Trouble Code (DTC) Detecting Criteria.>

CAUTION:

After repair or replacement of faulty parts, perform Clear Memory Mode <Ref. to EN(H6DO)(diag)-52, OPERATION, Clear Memory Mode.>, and Inspection Mode <Ref. to EN(H6DO)(diag)-44, PROCEDURE, Inspection Mode.>.

WIRING DIAGRAM:

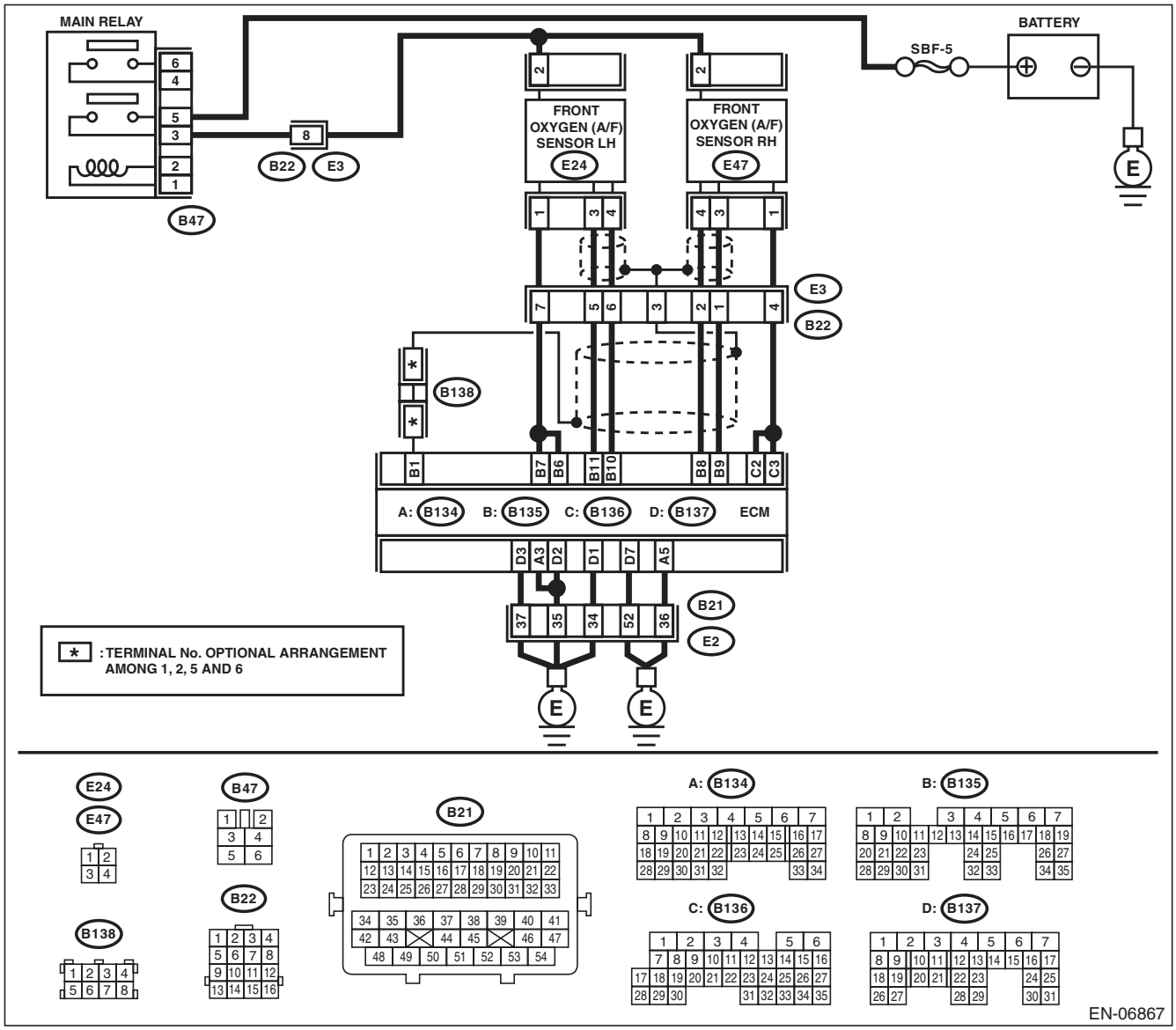

Step		Check	Yes	No
1	**CHECK HARNESS BETWEEN ECM AND FRONT OXYGEN (A/F) SENSOR.** 1) Turn the ignition switch to OFF. 2) Measure the voltage between ECM and chassis ground. ***Connector & terminal*** ***(B136) No. 2 (+) — Chassis ground (–):*** ***(B136) No. 3 (+) — Chassis ground (–):***	Is the voltage 10 V or more?	Repair the short circuit to power in the harness between ECM and front oxygen (A/F) sensor connector.	Go to step **2**.
2	**CHECK GROUND CIRCUIT FOR ECM.** 1) Disconnect the connectors from ECM. 2) Measure the resistance between ECM and chassis ground. ***Connector & terminal*** ***(B134) No. 3 — Chassis ground:*** ***(B134) No. 5 — Chassis ground:*** ***(B137) No. 1 — Chassis ground:*** ***(B137) No. 2 — Chassis ground:*** ***(B137) No. 3 — Chassis ground:*** ***(B137) No. 7 — Chassis ground:***	Is the resistance less than 5 Ω?	Repair the poor contact of ECM connector.	Repair the harness and connector. NOTE: In this case, repair the following item: • Open circuit of harness between ECM and engine ground • Poor contact of coupling connector

J: DTC P0037 HO2S HEATER CONTROL CIRCUIT LOW (BANK 1 SENSOR 2)

DTC DETECTING CONDITION:

- Two consecutive driving cycles with fault
- GENERAL DESCRIPTION <Ref. to GD(H6DO)-23, DTC P0037 HO2S HEATER CONTROL CIRCUIT LOW (BANK 1 SENSOR 2), Diagnostic Trouble Code (DTC) Detecting Criteria.>

CAUTION:

After repair or replacement of faulty parts, perform Clear Memory Mode <Ref. to EN(H6DO)(diag)-52, OPERATION, Clear Memory Mode.>, and Inspection Mode <Ref. to EN(H6DO)(diag)-44, PROCEDURE, Inspection Mode.>.

WIRING DIAGRAM:

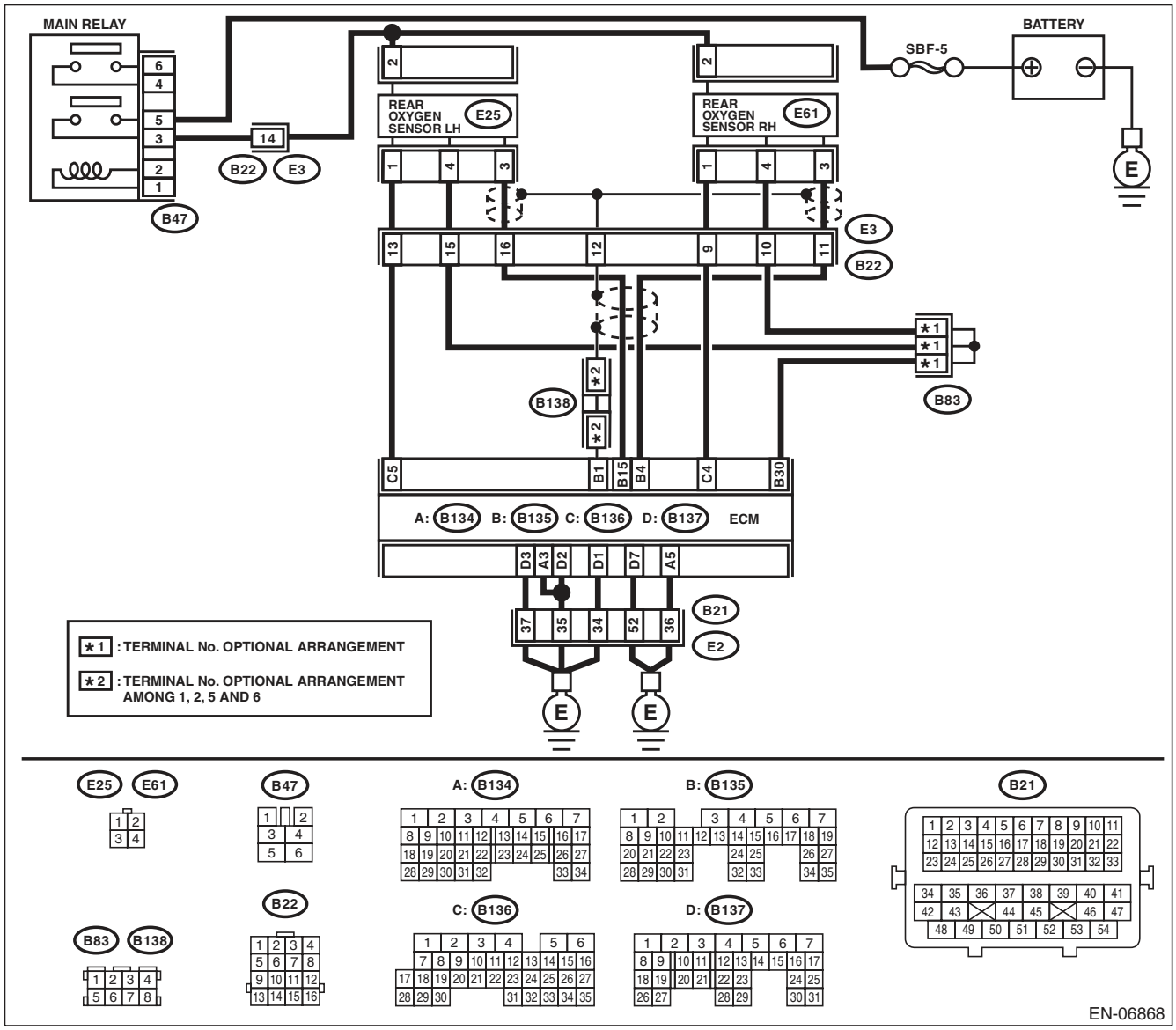

	Step	Check	Yes	No
1	**CHECK POWER SUPPLY TO REAR OXYGEN SENSOR.** 1) Turn the ignition switch to OFF. 2) Disconnect the connector from rear oxygen sensor. 3) Turn the ignition switch to ON. 4) Measure the voltage between rear oxygen sensor connector and engine ground. ***Connector & terminal*** ***(E61) No. 2 (+) — Engine ground (–):***	Is the voltage 10 V or more?	Go to step **2**.	Repair the power supply line. NOTE: In this case, repair the following item: • Open circuit of harness between main relay and rear oxygen sensor • Poor contact of main relay connector • Poor contact of coupling connector • Malfunction of main relay
2	**CHECK HARNESS BETWEEN ECM AND REAR OXYGEN SENSOR.** 1) Turn the ignition switch to OFF. 2) Disconnect the connectors from ECM. 3) Measure the resistance between the ECM and oxygen sensor connector. ***Connector & terminal*** ***(B136) No. 4 — (E61) No. 1:***	Is the resistance less than 1 Ω?	Go to step **3**.	Repair the harness and connector. NOTE: In this case, repair the following item: • Open circuit in harness between ECM and rear oxygen sensor connector • Poor contact of coupling connector
3	**CHECK GROUND CIRCUIT FOR ECM.** Measure the resistance of harness between ECM and chassis ground. ***Connector & terminal*** ***(B134) No. 3 — Chassis ground:*** ***(B134) No. 5 — Chassis ground:*** ***(B137) No. 1 — Chassis ground:*** ***(B137) No. 2 — Chassis ground:*** ***(B137) No. 3 — Chassis ground:*** ***(B137) No. 7 — Chassis ground:***	Is the resistance less than 5 Ω?	Go to step **4**.	Repair the harness and connector. NOTE: In this case, repair the following item: • Open circuit of harness between ECM and engine ground • Poor contact of coupling connector
4	**CHECK REAR OXYGEN SENSOR.** Measure the resistance between rear oxygen sensor connector terminals. ***Terminals*** ***No. 2 — No. 1:***	Is the resistance between 5 — 7 Ω?	Repair the poor contact of ECM connector.	Replace the rear oxygen sensor. <Ref. to FU(H6DO)-34, Rear Oxygen Sensor.>

K: DTC P0038 HO2S HEATER CONTROL CIRCUIT HIGH (BANK 1 SENSOR 2)

DTC DETECTING CONDITION:

- Two consecutive driving cycles with fault
- GENERAL DESCRIPTION <Ref. to GD(H6DO)-25, DTC P0038 HO2S HEATER CONTROL CIRCUIT HIGH (BANK 1 SENSOR 2), Diagnostic Trouble Code (DTC) Detecting Criteria.>

CAUTION:

After repair or replacement of faulty parts, perform Clear Memory Mode <Ref. to EN(H6DO)(diag)-52, OPERATION, Clear Memory Mode.>, and Inspection Mode <Ref. to EN(H6DO)(diag)-44, PROCEDURE, Inspection Mode.>.

WIRING DIAGRAM:

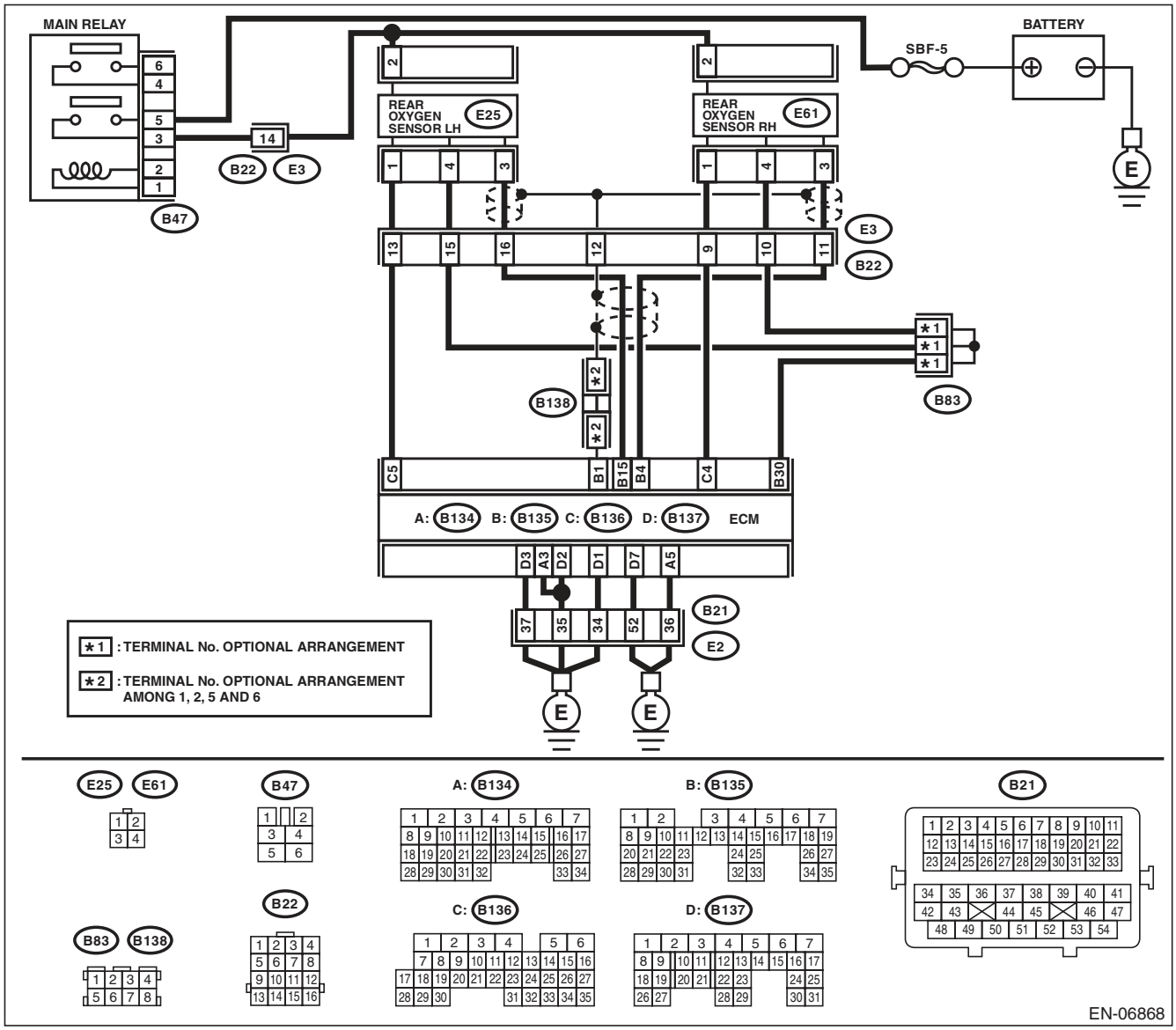

Step		Check	Yes	No
1	**CHECK HARNESS BETWEEN ECM AND REAR OXYGEN SENSOR.** 1) Turn the ignition switch to OFF. 2) Measure the voltage between ECM and chassis ground. ***Connector & terminal*** ***(B136) No. 4 (+) — Chassis ground (–):***	Is the voltage 10 V or more?	Repair the short circuit to power in the harness between ECM and rear oxygen sensor connector.	Go to step **2**.
2	**CHECK GROUND CIRCUIT FOR ECM.** 1) Disconnect the connectors from ECM. 2) Measure the resistance between ECM and chassis ground. ***Connector & terminal*** ***(B134) No. 3 — Chassis ground:*** ***(B134) No. 5 — Chassis ground:*** ***(B137) No. 1 — Chassis ground:*** ***(B137) No. 2 — Chassis ground:*** ***(B137) No. 3 — Chassis ground:*** ***(B137) No. 7 — Chassis ground:***	Is the resistance less than 5 Ω?	Repair the poor contact of ECM connector.	Repair the harness and connector. NOTE: In this case, repair the following item: • Open circuit of harness between ECM and engine ground • Poor contact of coupling connector

L: DTC P0050 HO2S HEATER CONTROL CIRCUIT (BANK 2 SENSOR 1)

DTC DETECTING CONDITION:

- Two consecutive driving cycles with fault
- GENERAL DESCRIPTION <Ref. to GD(H6DO)-26, DTC P0050 HO2S HEATER CONTROL CIRCUIT (BANK 2 SENSOR 1), Diagnostic Trouble Code (DTC) Detecting Criteria.>

CAUTION:

After repair or replacement of faulty parts, perform Clear Memory Mode <Ref. to EN(H6DO)(diag)-52, OPERATION, Clear Memory Mode.>, and Inspection Mode <Ref. to EN(H6DO)(diag)-44, PROCEDURE, Inspection Mode.>.

WIRING DIAGRAM:

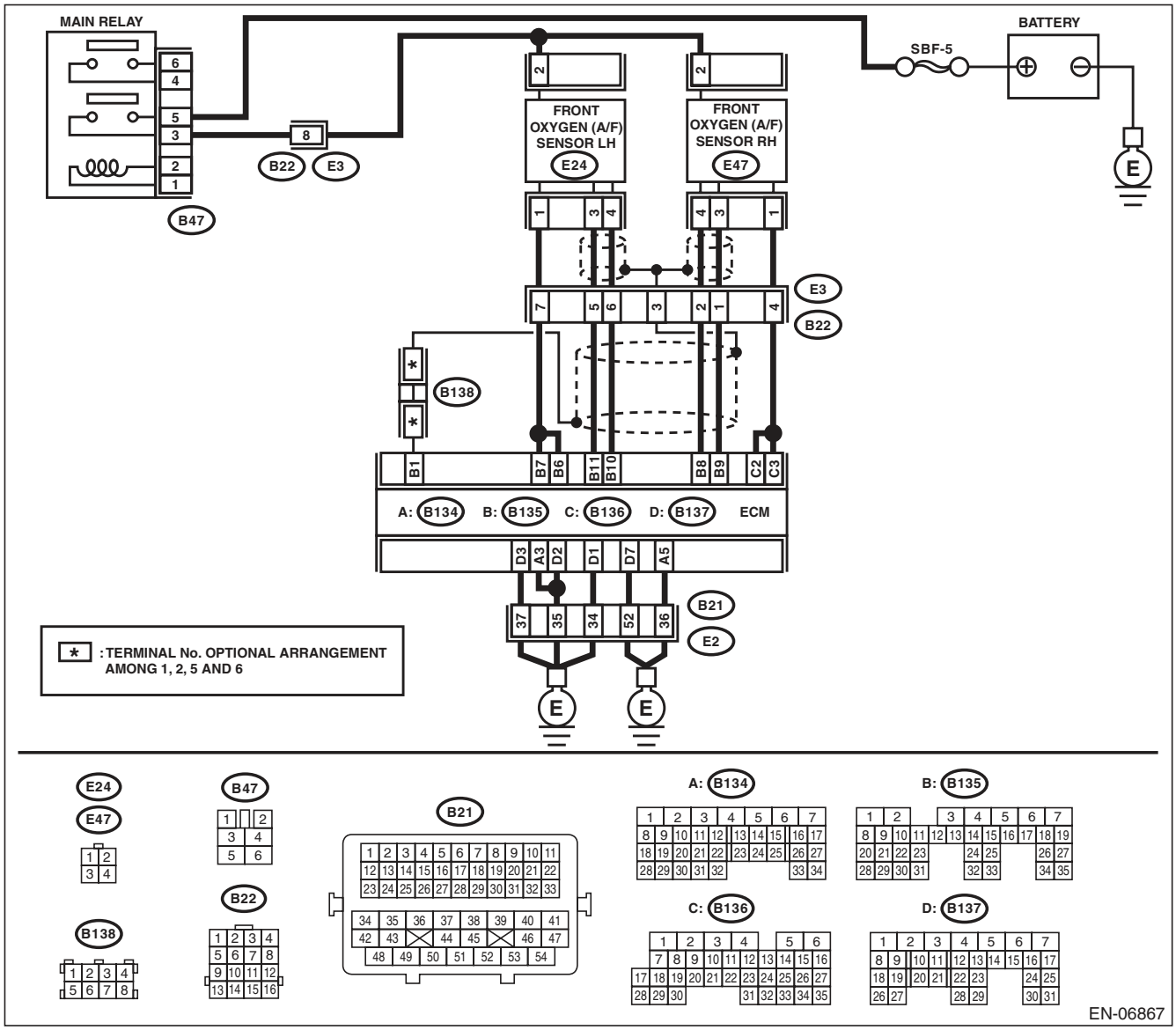

	Step	Check	Yes	No
1	**CHECK HARNESS BETWEEN ECM AND FRONT OXYGEN (A/F) SENSOR CONNECTOR.** 1) Start and warm up engine. 2) Turn the ignition switch to OFF. 3) Disconnect the connectors from ECM and front oxygen (A/F) sensor. 4) Measure the resistance of harness between ECM and front oxygen (A/F) sensor connector. ***Connector & terminal*** ***(B135) No. 6 — (E24) No. 1:*** ***(B135) No. 7 — (E24) No. 1:***	Is the resistance less than 1 Ω?	Go to step **2**.	Repair the harness and connector. NOTE: In this case, repair the following item: • Open circuit in harness between ECM and front oxygen (A/F) sensor connector • Poor contact of coupling connector
2	**CHECK HARNESS BETWEEN ECM AND FRONT OXYGEN (A/F) SENSOR CONNECTOR.** Measure the resistance of harness between ECM and front oxygen (A/F) sensor connector. ***Connector & terminal*** ***(B135) No. 11 — (E24) No. 3:*** ***(B135) No. 10 — (E24) No. 4:***	Is the resistance less than 1 Ω?	Go to step **3**.	Repair the harness and connector. NOTE: In this case, repair the following item: • Open circuit in harness between ECM and front oxygen (A/F) sensor connector • Poor contact of coupling connector
3	**CHECK FRONT OXYGEN (A/F) SENSOR.** Measure the resistance between front oxygen (A/F) sensor connector terminals. ***Terminals*** ***No. 2 — No. 1:***	Is the resistance less than 2 — 3 Ω?	Go to step **4**.	Replace the front oxygen (A/F) sensor. <Ref. to FU(H6DO)-32, Front Oxygen (A/F) Sensor.>
4	**CHECK POOR CONTACT.** Check for poor contact of ECM and front oxygen (A/F) sensor connector.	Is there poor contact in ECM or front oxygen (A/F) sensor connector?	Repair the poor contact in ECM or front oxygen (A/F) sensor connector.	Replace the front oxygen (A/F) sensor. <Ref. to FU(H6DO)-32, Front Oxygen (A/F) Sensor.>

M: DTC P0051 HO2S HEATER CONTROL CIRCUIT LOW (BANK 2 SENSOR 1)

DTC DETECTING CONDITION:

- Immediately at fault recognition
- GENERAL DESCRIPTION <Ref. to GD(H6DO)-26, DTC P0051 HO2S HEATER CONTROL CIRCUIT LOW (BANK 2 SENSOR 1), Diagnostic Trouble Code (DTC) Detecting Criteria.>

CAUTION:

After repair or replacement of faulty parts, perform Clear Memory Mode <Ref. to EN(H6DO)(diag)-52, OPERATION, Clear Memory Mode.>, and Inspection Mode <Ref. to EN(H6DO)(diag)-44, PROCEDURE, Inspection Mode.>.

WIRING DIAGRAM:

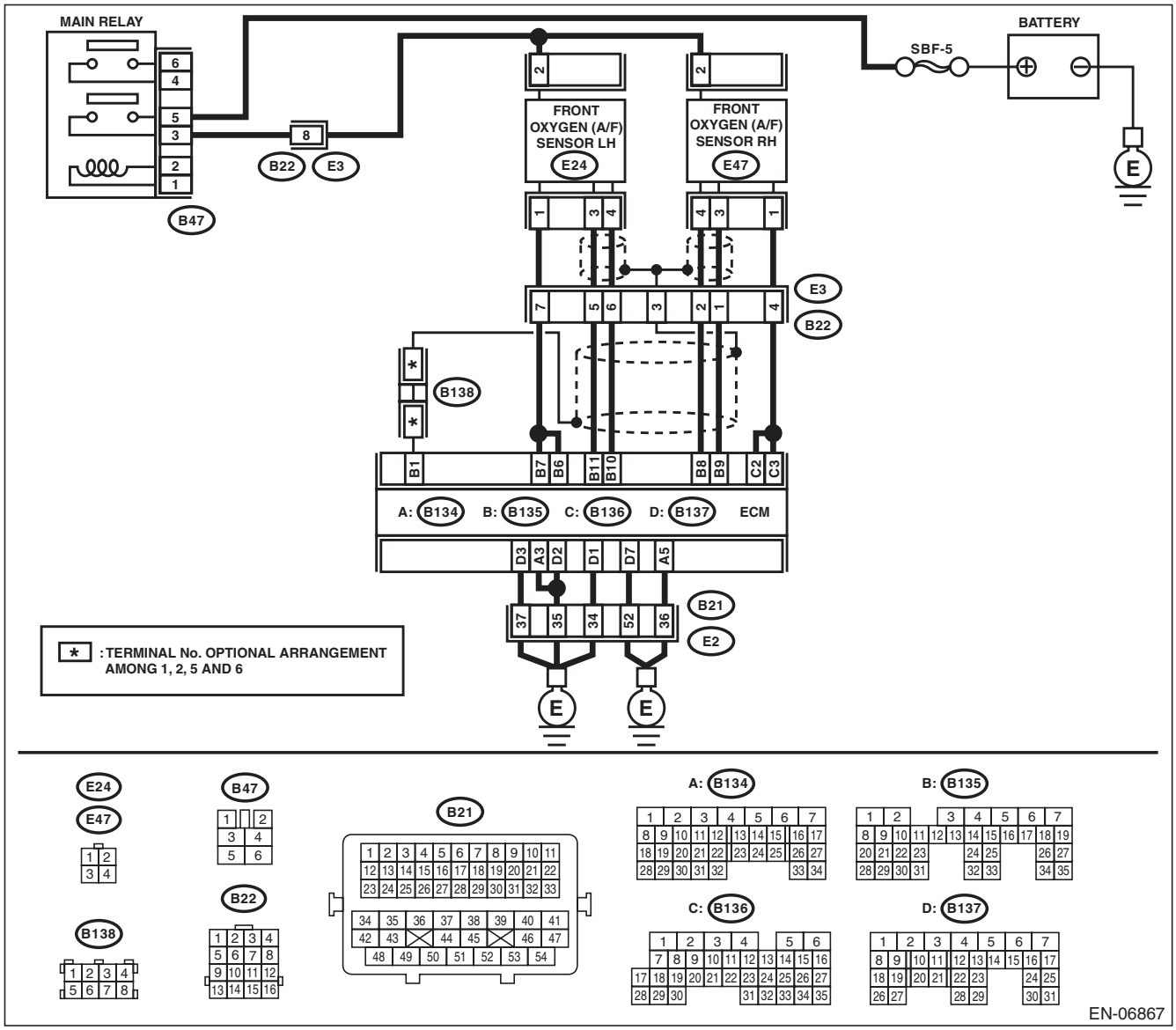

	Step	Check	Yes	No
1	**CHECK POWER SUPPLY TO FRONT OXYGEN (A/F) SENSOR.** 1) Turn the ignition switch to OFF. 2) Disconnect the connector from front oxygen (A/F) sensor. 3) Turn the ignition switch to ON. 4) Measure the voltage between front oxygen (A/F) sensor connector and engine ground. ***Connector & terminal*** ***(E24) No. 2 (+) — Engine ground (–):***	Is the voltage 10 V or more?	Go to step **2**.	Repair the power supply line. NOTE: In this case, repair the following item: • Open circuit of harness between main relay and front oxygen (A/F) sensor connector • Poor contact of main relay connector • Poor contact of coupling connector • Malfunction of main relay
2	**CHECK HARNESS BETWEEN ECM AND FRONT OXYGEN (A/F) SENSOR.** 1) Turn the ignition switch to OFF. 2) Disconnect the connectors from ECM. 3) Measure the resistance between ECM and front oxygen (A/F) sensor connector. ***Connector & terminal*** ***(B135) No. 6 — (E24) No. 1:*** ***(B135) No. 7 — (E24) No. 1:***	Is the resistance less than 1 Ω?	Go to step **3**.	Repair the harness and connector. NOTE: In this case, repair the following item: • Open circuit in harness between ECM and front oxygen (A/F) sensor connector • Poor contact of coupling connector
3	**CHECK GROUND CIRCUIT FOR ECM.** Measure the resistance of harness between ECM and chassis ground. ***Connector & terminal*** ***(B134) No. 3 — Chassis ground:*** ***(B134) No. 5 — Chassis ground:*** ***(B137) No. 1 — Chassis ground:*** ***(B137) No. 2 — Chassis ground:*** ***(B137) No. 3 — Chassis ground:*** ***(B137) No. 7 — Chassis ground:***	Is the resistance less than 5 Ω?	Go to step **4**.	Repair the harness and connector. NOTE: In this case, repair the following item: • Open circuit of harness between ECM and engine ground • Poor contact of coupling connector
4	**CHECK FRONT OXYGEN (A/F) SENSOR.** Measure the resistance between front oxygen (A/F) sensor connector terminals. ***Terminals*** ***No. 2 — No. 1:***	Is the resistance between 2 — 3 Ω?	Repair the poor contact of ECM connector.	Replace the front oxygen (A/F) sensor. <Ref. to FU(H6DO)-32, Front Oxygen (A/F) Sensor.>

N: DTC P0052 HO2S HEATER CONTROL CIRCUIT HIGH (BANK 2 SENSOR 1)

DTC DETECTING CONDITION:

- Immediately at fault recognition
- GENERAL DESCRIPTION <Ref. to GD(H6DO)-26, DTC P0052 HO2S HEATER CONTROL CIRCUIT HIGH (BANK 2 SENSOR 1), Diagnostic Trouble Code (DTC) Detecting Criteria.>

CAUTION:

After repair or replacement of faulty parts, perform Clear Memory Mode <Ref. to EN(H6DO)(diag)-52, OPERATION, Clear Memory Mode.>, and Inspection Mode <Ref. to EN(H6DO)(diag)-44, PROCEDURE, Inspection Mode.>.

WIRING DIAGRAM:

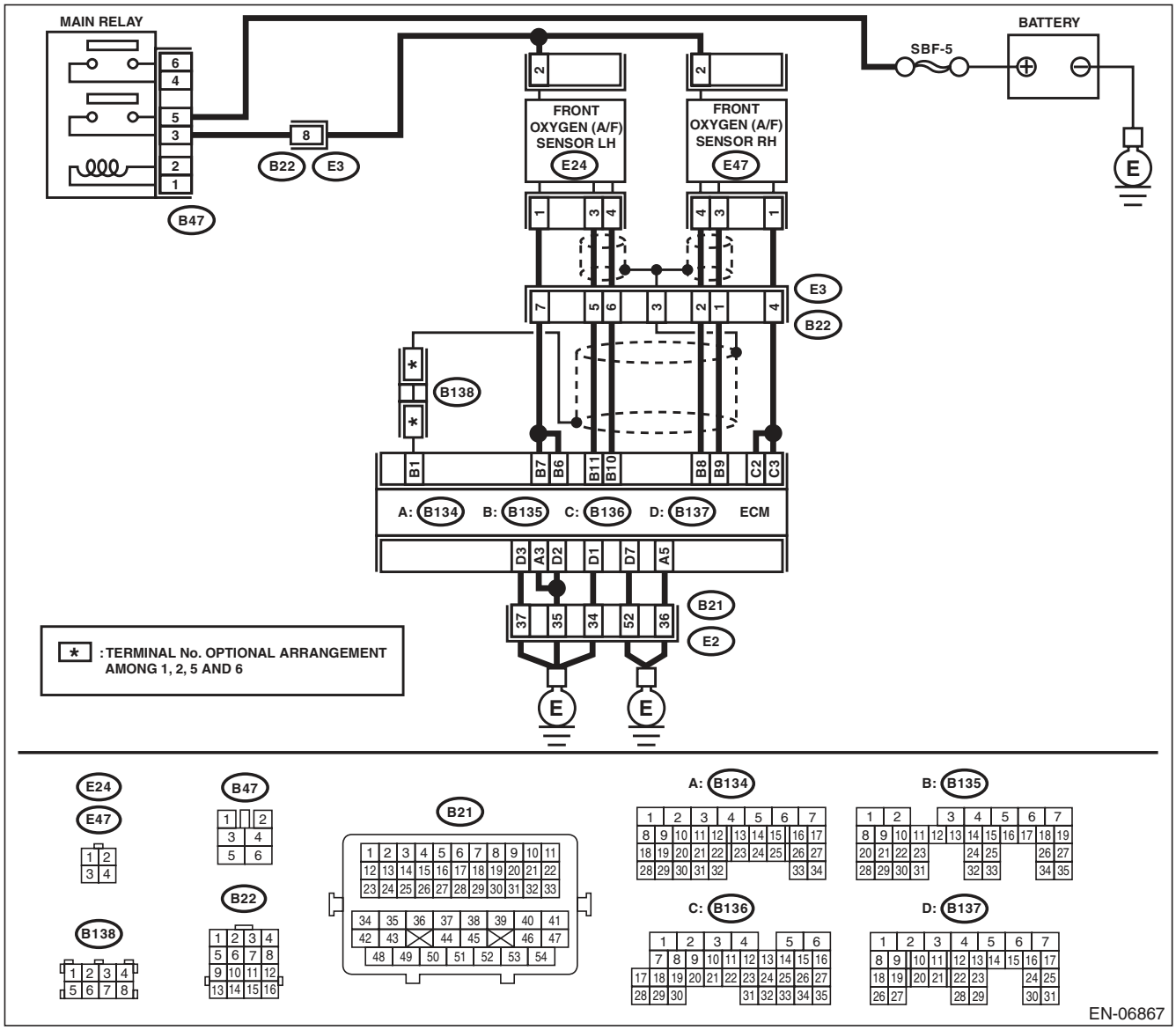

Step		Check	Yes	No
1	**CHECK HARNESS BETWEEN ECM AND FRONT OXYGEN (A/F) SENSOR.** 1) Turn the ignition switch to OFF. 2) Measure the voltage between ECM and chassis ground. ***Connector & terminal*** ***(B135) No. 6 (+) — Chassis ground (–):*** ***(B135) No. 7 (+) — Chassis ground (–):***	Is the voltage 10 V or more?	Repair the short circuit to power in the harness between ECM and front oxygen (A/F) sensor connector.	Go to step **2**.
2	**CHECK GROUND CIRCUIT FOR ECM.** 1) Disconnect the connectors from ECM. 2) Measure the resistance between ECM and chassis ground. ***Connector & terminal*** ***(B134) No. 3 — Chassis ground:*** ***(B134) No. 5 — Chassis ground:*** ***(B137) No. 1 — Chassis ground:*** ***(B137) No. 2 — Chassis ground:*** ***(B137) No. 3 — Chassis ground:*** ***(B137) No. 7 — Chassis ground:***	Is the resistance less than 5 Ω?	Repair the poor contact of ECM connector.	Repair the harness and connector. NOTE: In this case, repair the following item: • Open circuit of harness between ECM and engine ground • Poor contact of coupling connector

O: DTC P0057 HO2S HEATER CONTROL CIRCUIT LOW (BANK 2 SENSOR 2)

DTC DETECTING CONDITION:

- Two consecutive driving cycles with fault
- GENERAL DESCRIPTION <Ref. to GD(H6DO)-26, DTC P0057 HO2S HEATER CONTROL CIRCUIT LOW (BANK 2 SENSOR 2), Diagnostic Trouble Code (DTC) Detecting Criteria.>

CAUTION:

After repair or replacement of faulty parts, perform Clear Memory Mode <Ref. to EN(H6DO)(diag)-52, OPERATION, Clear Memory Mode.>, and Inspection Mode <Ref. to EN(H6DO)(diag)-44, PROCEDURE, Inspection Mode.>.

WIRING DIAGRAM:

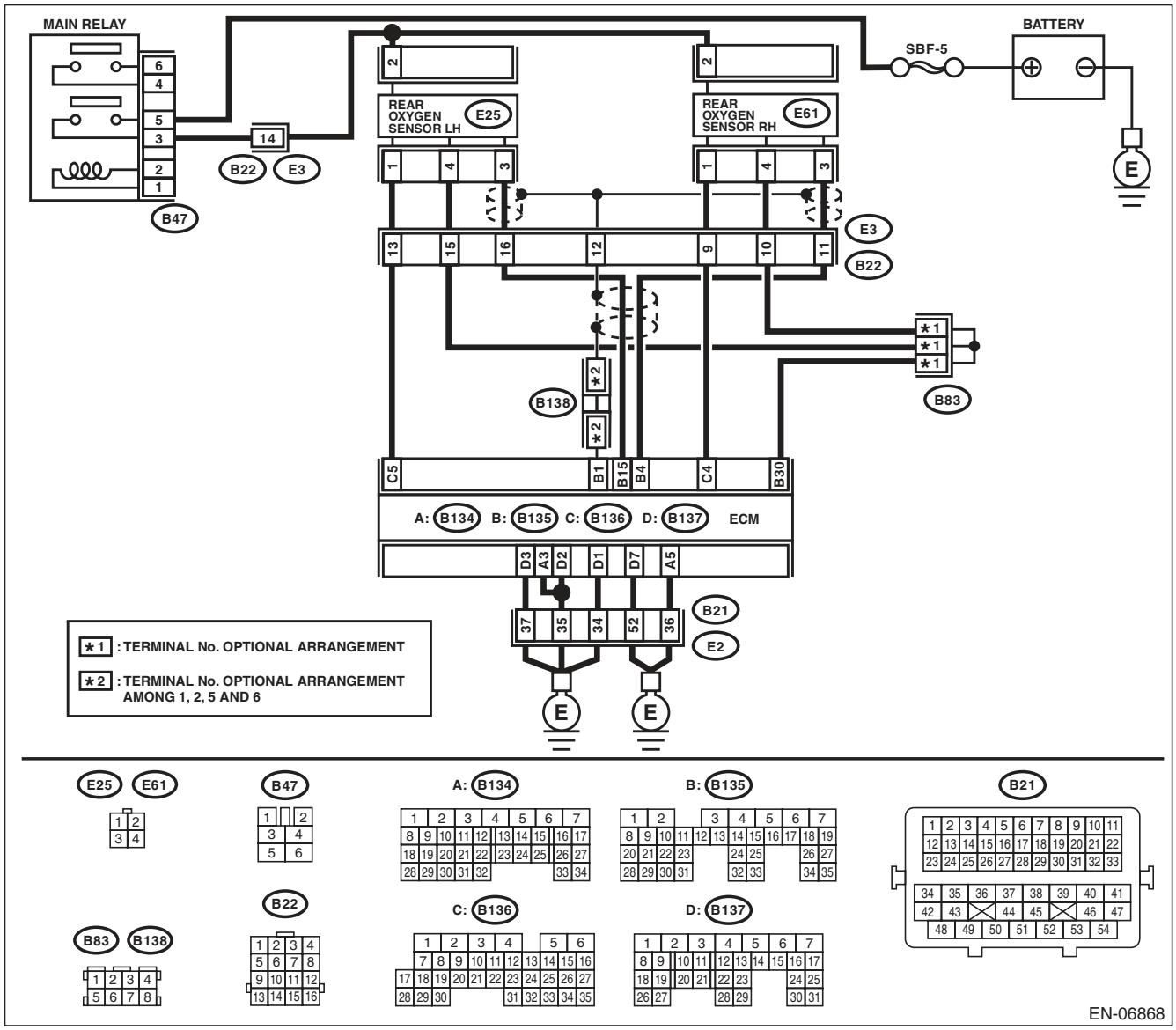

	Step	Check	Yes	No
1	**CHECK POWER SUPPLY TO REAR OXYGEN SENSOR.** 1) Turn the ignition switch to OFF. 2) Disconnect the connector from rear oxygen sensor. 3) Turn the ignition switch to ON. 4) Measure the voltage between rear oxygen sensor connector and engine ground. ***Connector & terminal*** ***(E25) No. 2 (+) — Engine ground (–):***	Is the voltage 10 V or more?	Go to step **2**.	Repair the power supply line. NOTE: In this case, repair the following item: • Open circuit of harness between main relay and rear oxygen sensor • Poor contact of main relay connector • Poor contact of coupling connector • Malfunction of main relay
2	**CHECK HARNESS BETWEEN ECM AND REAR OXYGEN SENSOR.** 1) Turn the ignition switch to OFF. 2) Disconnect the connectors from ECM. 3) Measure the resistance between the ECM and oxygen sensor connector. ***Connector & terminal*** ***(B136) No. 5 — (E25) No. 1:***	Is the resistance less than 1 Ω?	Go to step **3**.	Repair the harness and connector. NOTE: In this case, repair the following item: • Open circuit in harness between ECM and rear oxygen sensor connector • Poor contact of coupling connector
3	**CHECK GROUND CIRCUIT FOR ECM.** Measure the resistance of harness between ECM and chassis ground. ***Connector & terminal*** ***(B134) No. 3 — Chassis ground:*** ***(B134) No. 5 — Chassis ground:*** ***(B137) No. 1 — Chassis ground:*** ***(B137) No. 2 — Chassis ground:*** ***(B137) No. 3 — Chassis ground:*** ***(B137) No. 7 — Chassis ground:***	Is the resistance less than 5 Ω?	Go to step **4**.	Repair the harness and connector. NOTE: In this case, repair the following item: • Open circuit of harness between ECM and engine ground • Poor contact of coupling connector
4	**CHECK REAR OXYGEN SENSOR.** Measure the resistance between rear oxygen sensor connector terminals. ***Terminals*** ***No. 2 — No. 1:***	Is the resistance between 5 — 7 Ω?	Repair the poor contact of ECM connector.	Replace the rear oxygen sensor. <Ref. to FU(H6DO)-34, Rear Oxygen Sensor.>

P: DTC P0058 HO2S HEATER CONTROL CIRCUIT HIGH (BANK 2 SENSOR 2)

DTC DETECTING CONDITION:

- Two consecutive driving cycles with fault
- GENERAL DESCRIPTION <Ref. to GD(H6DO)-26, DTC P0058 HO2S HEATER CONTROL CIRCUIT HIGH (BANK 2 SENSOR 2), Diagnostic Trouble Code (DTC) Detecting Criteria.>

CAUTION:

After repair or replacement of faulty parts, perform Clear Memory Mode <Ref. to EN(H6DO)(diag)-52, OPERATION, Clear Memory Mode.>, and Inspection Mode <Ref. to EN(H6DO)(diag)-44, PROCEDURE, Inspection Mode.>.

WIRING DIAGRAM:

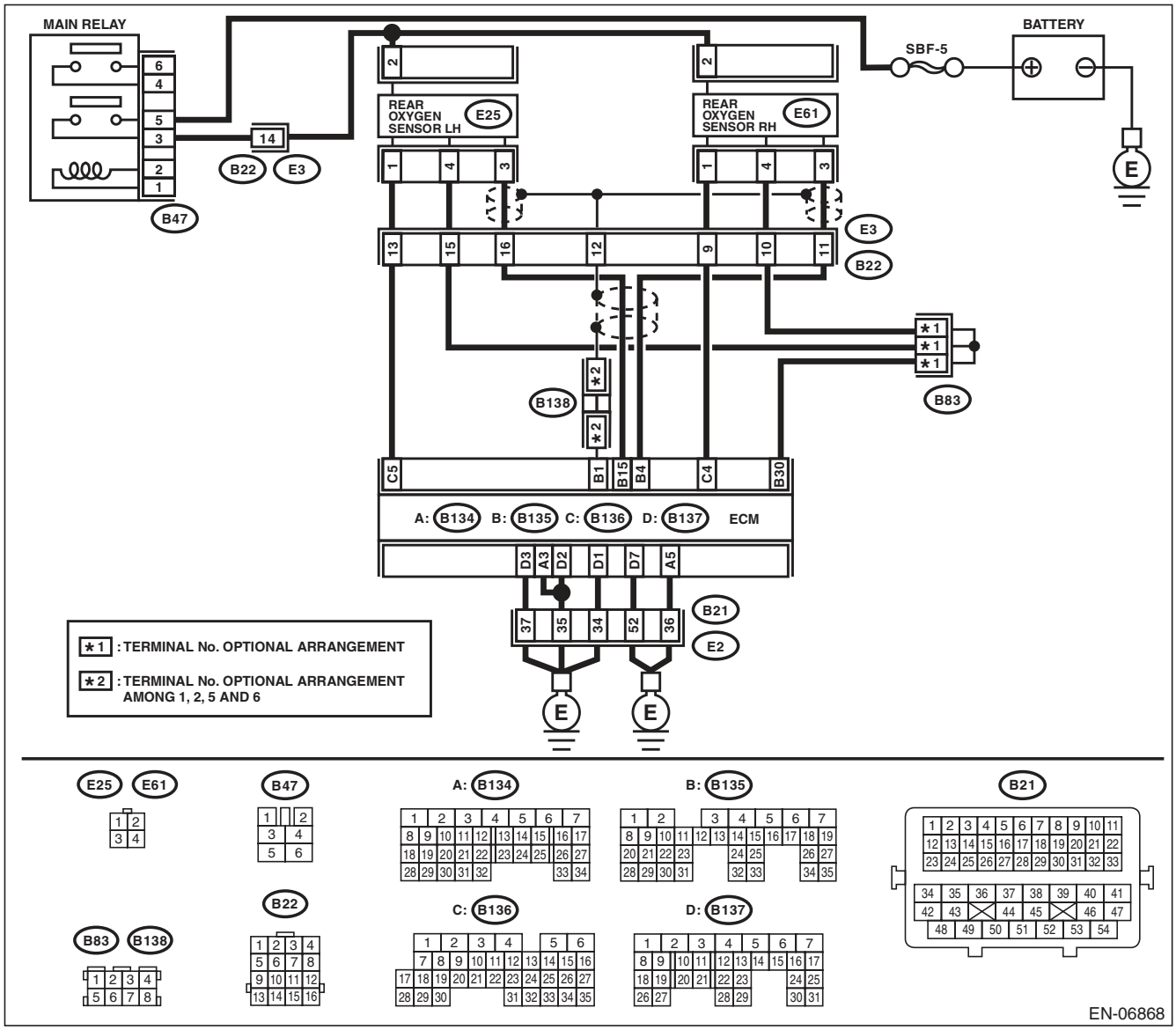

Step		Check	Yes	No
1	**CHECK HARNESS BETWEEN ECM AND REAR OXYGEN SENSOR.** 1) Turn the ignition switch to OFF. 2) Measure the voltage between ECM and chassis ground. ***Connector & terminal*** ***(B136) No. 5 (+) — Chassis ground (–):***	Is the voltage 10 V or more?	Repair the short circuit to power in the harness between ECM and rear oxygen sensor connector.	Go to step **2**.
2	**CHECK GROUND CIRCUIT FOR ECM.** 1) Disconnect the connectors from ECM. 2) Measure the resistance between ECM and chassis ground. ***Connector & terminal*** ***(B134) No. 3 — Chassis ground:*** ***(B134) No. 5 — Chassis ground:*** ***(B137) No. 1 — Chassis ground:*** ***(B137) No. 2 — Chassis ground:*** ***(B137) No. 3 — Chassis ground:*** ***(B137) No. 7 — Chassis ground:***	Is the resistance less than 5 Ω?	Repair the poor contact of ECM connector.	Repair the harness and connector. NOTE: In this case, repair the following item: • Open circuit of harness between ECM and engine ground • Poor contact of coupling connector

Q: DTC P0068 MAP/MAF - THROTTLE POSITION CORRELATION

DTC DETECTING CONDITION:

- Two consecutive driving cycles with fault
- GENERAL DESCRIPTION <Ref. to GD(H6DO)-27, DTC P0068 MAP/MAF - THROTTLE POSITION CORRELATION, Diagnostic Trouble Code (DTC) Detecting Criteria.>

CAUTION:

After repair or replacement of faulty parts, perform Clear Memory Mode <Ref. to EN(H6DO)(diag)-52, OPERATION, Clear Memory Mode.>, and Inspection Mode <Ref. to EN(H6DO)(diag)-44, PROCEDURE, Inspection Mode.>.

WIRING DIAGRAM:

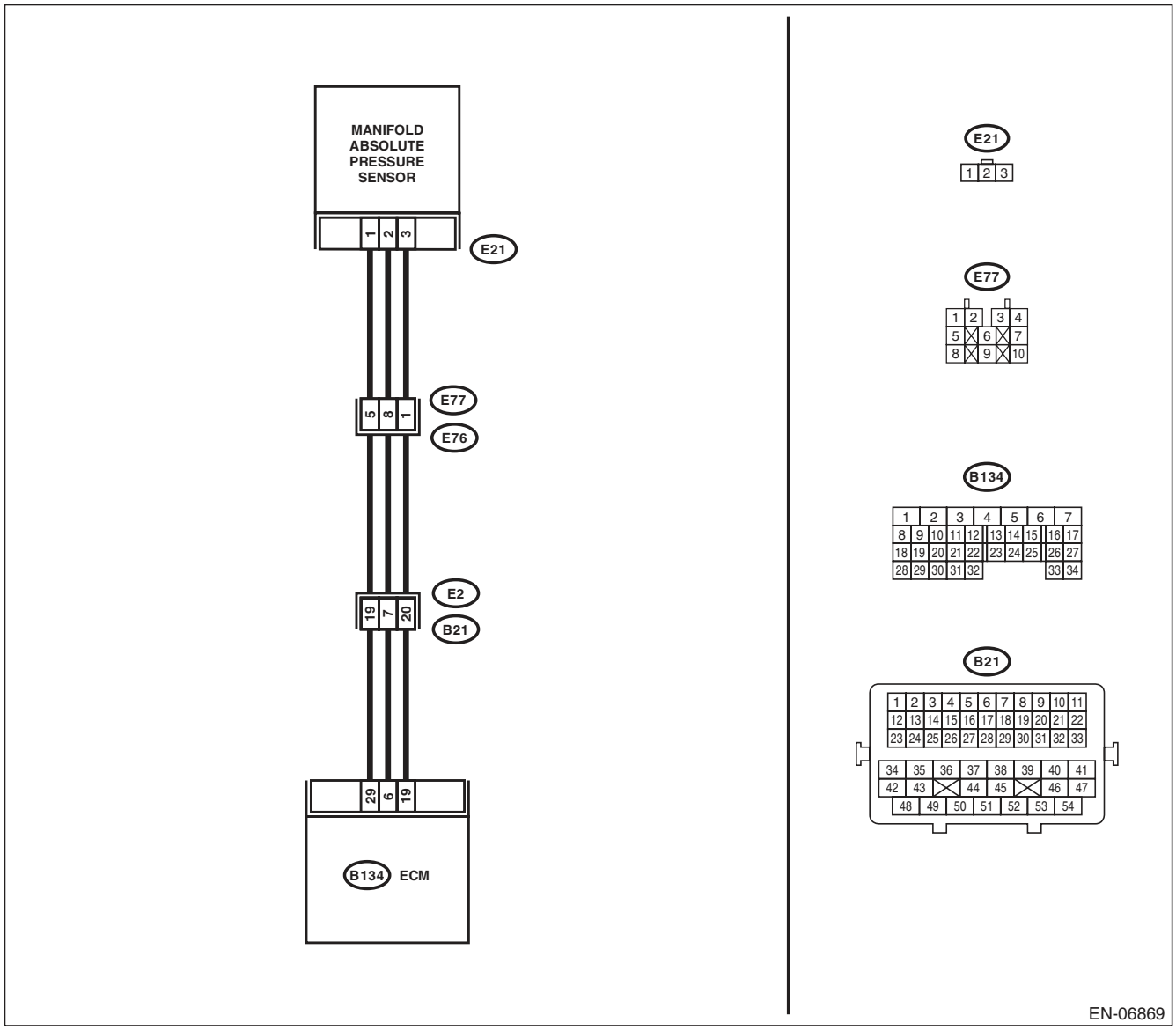

	Step	Check	Yes	No
1	**CHECK AIR INTAKE SYSTEM.**	Are there holes, loose bolts or disconnection of hose on air intake system?	Repair the air intake system.	Go to step **2**.
2	**CHECK MANIFOLD ABSOLUTE PRESSURE SENSOR.** 1) Start the engine and warm up engine until coolant temperature is higher than 75°C (167°F). 2) Place the select lever in “P” range or “N” range. 3) Turn the A/C switch to OFF. 4) Turn all the accessory switches to OFF. 5) Read the data of intake manifold pressure sensor signal using Subaru Select Monitor or general scan tool. NOTE: • SUBARU SELECT MONITOR For detailed operation procedure, refer to “READ CURRENT DATA FOR ENGINE”. <Ref. to EN(H6DO)(diag)-34, Subaru Select Monitor.> • General Scan Tool For detailed operation procedures, refer to the “General Scan Tool Instruction Manual”.	Is the measured value 73.3 — 106.6 kPa (550 — 800 mmHg, 21.65 — 31.50 inHg) when the ignition is turned ON, and 20.0 — 46.7 kPa (150 — 350 mmHg, 5.91 — 13.78 inHg) during idling?	Go to step **3**.	Replace the manifold absolute pressure sensor. <Ref. to FU(H6DO)-25, Manifold Absolute Pressure Sensor.>
3	**CHECK THROTTLE OPENING ANGLE.** Read the data of throttle position signal using Subaru Select Monitor or general scan tool. NOTE: • SUBARU SELECT MONITOR For detailed operation procedure, refer to “READ CURRENT DATA FOR ENGINE”. <Ref. to EN(H6DO)(diag)-34, Subaru Select Monitor.> • General Scan Tool For detailed operation procedures, refer to the “General Scan Tool Instruction Manual”.	Is the measured value less than 5% when throttle is fully closed?	Go to step **4**.	Replace the electronic throttle control. <Ref. to FU(H6DO)-13, Throttle Body.>
4	**CHECK THROTTLE OPENING ANGLE.**	Is the measured value 85% or more when throttle is fully open?	Replace the manifold absolute pressure sensor. <Ref. to FU(H6DO)-25, Manifold Absolute Pressure Sensor.>	Replace the electronic throttle control. <Ref. to FU(H6DO)-13, Throttle Body.>

R: DTC P0076 INTAKE VALVE CONTROL SOLENOID CIRCUIT LOW (BANK 1)

DTC DETECTING CONDITION:

- Immediately at fault recognition
- GENERAL DESCRIPTION <Ref. to GD(H6DO)-29, DTC P0076 INTAKE VALVE CONTROL SOLENOID CIRCUIT LOW (BANK 1), Diagnostic Trouble Code (DTC) Detecting Criteria.>

TROUBLE SYMPTOM:

Improper idling

CAUTION:

After repair or replacement of faulty parts, perform Clear Memory Mode <Ref. to EN(H6DO)(diag)-52, OPERATION, Clear Memory Mode.>, and Inspection Mode <Ref. to EN(H6DO)(diag)-44, PROCEDURE, Inspection Mode.>.

WIRING DIAGRAM:

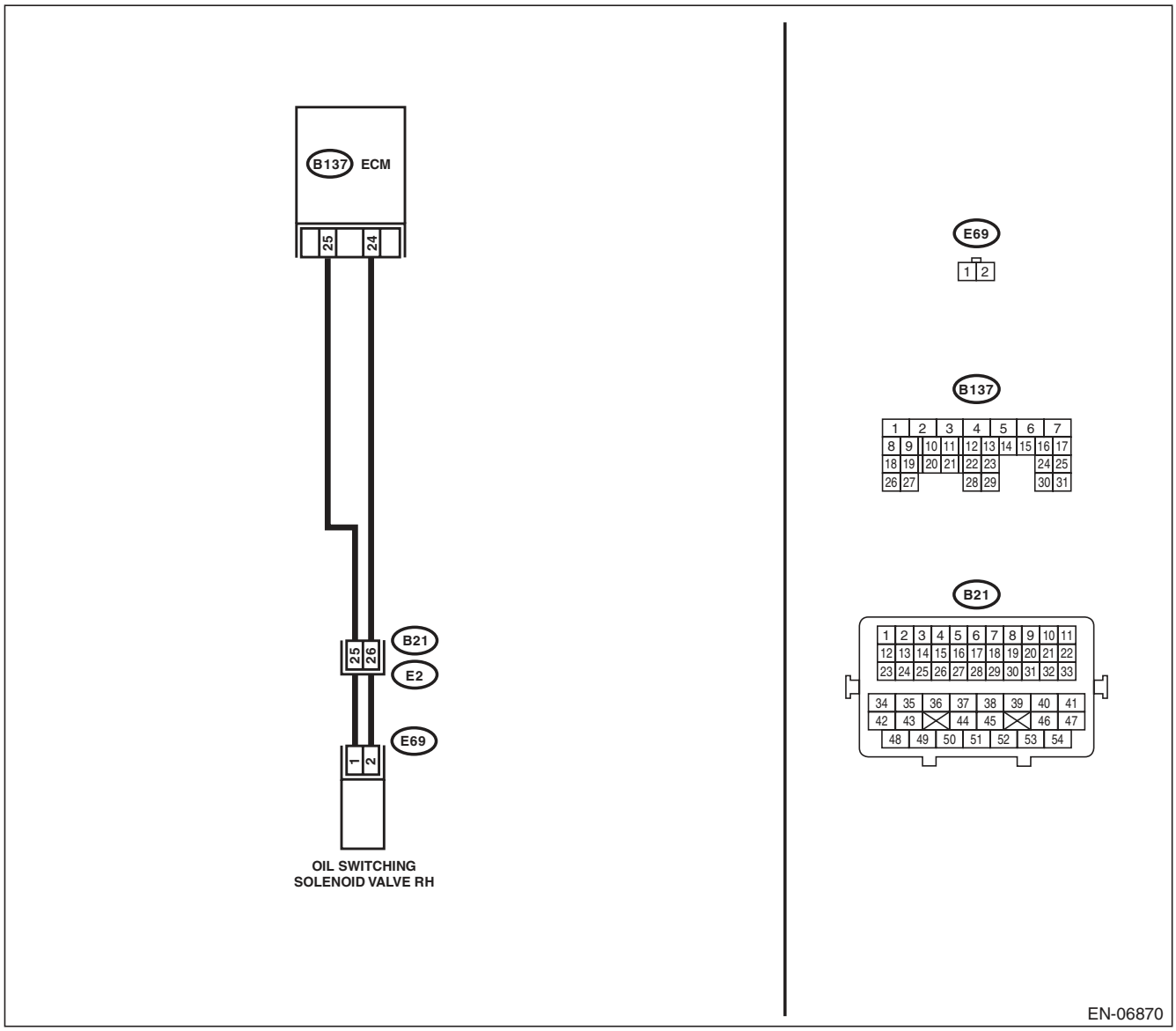

	Step	Check	Yes	No
1	**CHECK HARNESS BETWEEN ECM AND OIL SWITCHING SOLENOID VALVE.** 1) Turn the ignition switch to OFF. 2) Disconnect the connectors from the ECM and oil switching solenoid valve. 3) Measure the resistance of harness between ECM and oil switching solenoid valve. ***Connector & terminal*** ***(B137) No. 25 — (E69) No. 1:*** ***(B137) No. 24 — (E69) No. 2:***	Is the resistance less than 1 Ω?	Go to step **2**.	Repair the harness and connector. NOTE: In this case, repair the following item: • Open circuit of harness between ECM and oil switching solenoid valve connector • Poor contact of coupling connector
2	**CHECK HARNESS BETWEEN ECM AND OIL SWITCHING SOLENOID VALVE.** Measure the resistance between ECM and chassis ground. ***Connector & terminal*** ***(B137) No. 25 — Chassis ground:*** ***(B137) No. 24 — Chassis ground:***	Is the resistance 1 MΩ or more?	Go to step **3**.	Repair the ground short circuit of harness between ECM and oil switching solenoid valve connector.
3	**CHECK OIL SWITCHING SOLENOID VALVE.** Measure the resistance between oil switching solenoid valve terminals. ***Terminals*** ***No. 1 — No. 2:***	Is the resistance between 6 — 12 Ω?	Repair the poor contact of ECM and oil switching solenoid valve connector.	Replace the oil switching solenoid valve. <Ref. to ME(H6DO)-80, Oil Switching Solenoid Valve.>

S: DTC P0077 INTAKE VALVE CONTROL SOLENOID CIRCUIT HIGH (BANK 1)

DTC DETECTING CONDITION:

- Immediately at fault recognition
- GENERAL DESCRIPTION <Ref. to GD(H6DO)-30, DTC P0077 INTAKE VALVE CONTROL SOLENOID CIRCUIT HIGH (BANK 1), Diagnostic Trouble Code (DTC) Detecting Criteria.>

TROUBLE SYMPTOM:

Improper idling

CAUTION:

After repair or replacement of faulty parts, perform Clear Memory Mode <Ref. to EN(H6DO)(diag)-52, OPERATION, Clear Memory Mode.>, and Inspection Mode <Ref. to EN(H6DO)(diag)-44, PROCEDURE, Inspection Mode.>.

WIRING DIAGRAM:

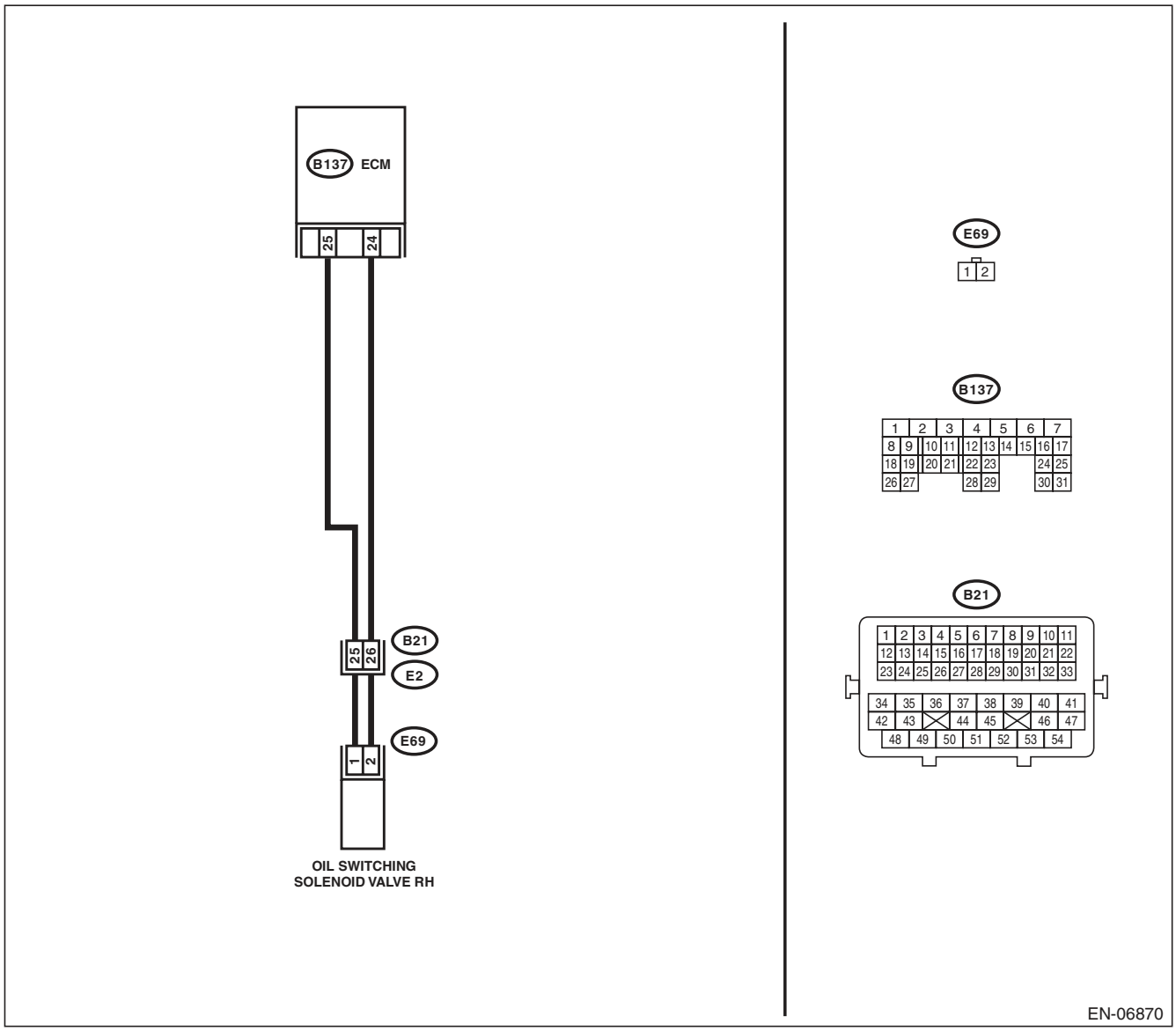

	Step	Check	Yes	No
1	**CHECK HARNESS BETWEEN ECM AND OIL SWITCHING SOLENOID VALVE.** 1) Turn the ignition switch to OFF. 2) Disconnect the connectors from the ECM and oil switching solenoid valve. 3) Measure the voltage between ECM and chassis ground. ***Connector & terminal*** ***(B137) No. 25 (+) — Chassis ground (–):*** ***(B137) No. 24 (+) — Chassis ground (–):***	Is the voltage less than 1 V?	Go to step **2**.	Repair the short circuit of harness to power supply between ECM and oil switching solenoid valve connector.
2	**CHECK HARNESS BETWEEN ECM AND OIL SWITCHING SOLENOID VALVE.** Measure the resistance of harness between ECM and oil switching solenoid valve connector. ***Connector & terminal*** ***(B137) No. 25 — (E69) No. 1:*** ***(B137) No. 24 — (E69) No. 2:***	Is the resistance less than 1 Ω?	Go to step **3**.	Repair the harness and connector. NOTE: In this case, repair the following item: • Open circuit of harness between ECM and oil switching solenoid valve connector • Poor contact of coupling connector
3	**CHECK OIL SWITCHING SOLENOID VALVE.** Measure the resistance between oil switching solenoid valve terminals. ***Terminals*** ***No. 1 — No. 2:***	Is the resistance between 6 — 12 Ω?	Repair the poor contact of ECM and oil switching solenoid valve connector.	Replace the oil switching solenoid valve. <Ref. to ME(H6DO)-80, Oil Switching Solenoid Valve.>

T: DTC P0082 INTAKE VALVE CONTROL SOLENOID CIRCUIT LOW (BANK 2)

DTC DETECTING CONDITION:

- Immediately at fault recognition
- GENERAL DESCRIPTION <Ref. to GD(H6DO)-30, DTC P0082 INTAKE VALVE CONTROL SOLENOID CIRCUIT LOW (BANK 2), Diagnostic Trouble Code (DTC) Detecting Criteria.>

TROUBLE SYMPTOM:

Improper idling

CAUTION:

After repair or replacement of faulty parts, perform Clear Memory Mode <Ref. to EN(H6DO)(diag)-52, OPERATION, Clear Memory Mode.>, and Inspection Mode <Ref. to EN(H6DO)(diag)-44, PROCEDURE, Inspection Mode.>.

WIRING DIAGRAM:

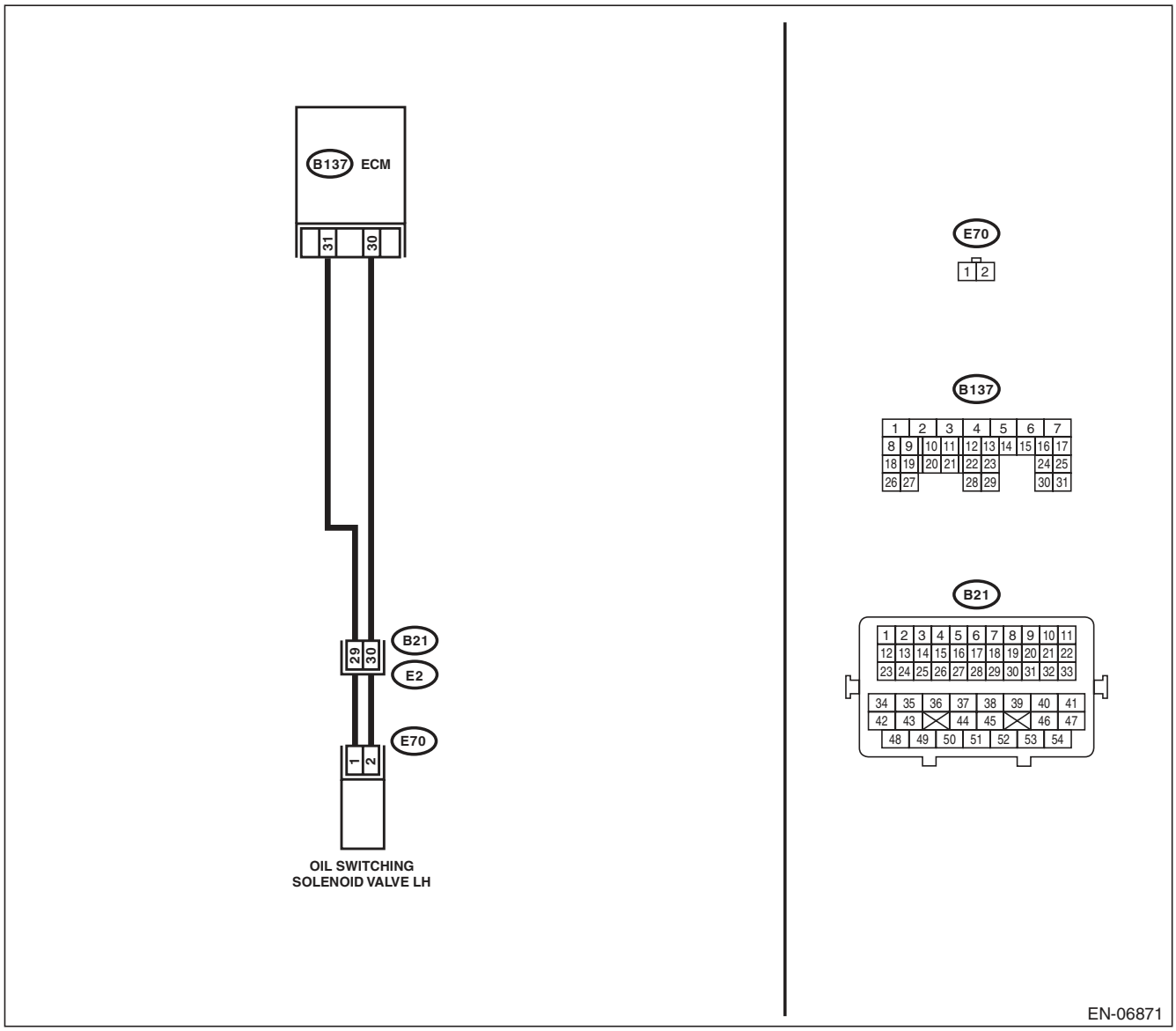

	Step	Check	Yes	No
1	**CHECK HARNESS BETWEEN ECM AND OIL SWITCHING SOLENOID VALVE.** 1) Turn the ignition switch to OFF. 2) Disconnect the connectors from the ECM and oil switching solenoid valve. 3) Measure the resistance between ECM and oil switching solenoid valve. ***Connector & terminal*** ***(B137) No. 31 — (E70) No. 1:*** ***(B137) No. 30 — (E70) No. 2:***	Is the resistance less than 1 Ω?	Go to step **2**.	Repair the harness and connector. NOTE: In this case, repair the following item: • Open circuit of harness between ECM and oil switching solenoid valve connector • Poor contact of coupling connector
2	**CHECK HARNESS BETWEEN ECM AND OIL SWITCHING SOLENOID VALVE.** Measure the resistance between ECM and chassis ground. ***Connector & terminal*** ***(B137) No. 31 — Chassis ground:*** ***(B137) No. 30 — Chassis ground:***	Is the resistance 1 MΩ or more?	Go to step **3**.	Repair the ground short circuit of harness between ECM and oil switching solenoid valve connector.
3	**CHECK OIL SWITCHING SOLENOID VALVE.** Measure the resistance between oil switching solenoid valve terminals. ***Terminals*** ***No. 1 — No. 2:***	Is the resistance between 6 — 12 Ω?	Repair the poor contact of ECM and oil switching solenoid valve connector.	Replace the oil switching solenoid valve. <Ref. to ME(H6DO)-80, Oil Switching Solenoid Valve.>

U: DTC P0083 INTAKE VALVE CONTROL SOLENOID CIRCUIT HIGH (BANK 2)

DTC DETECTING CONDITION:

- Immediately at fault recognition
- GENERAL DESCRIPTION <Ref. to GD(H6DO)-30, DTC P0083 INTAKE VALVE CONTROL SOLENOID CIRCUIT HIGH (BANK 2), Diagnostic Trouble Code (DTC) Detecting Criteria.>

TROUBLE SYMPTOM:

Improper idling

CAUTION:

After repair or replacement of faulty parts, perform Clear Memory Mode <Ref. to EN(H6DO)(diag)-52, OPERATION, Clear Memory Mode.>, and Inspection Mode <Ref. to EN(H6DO)(diag)-44, PROCEDURE, Inspection Mode.>.

WIRING DIAGRAM:

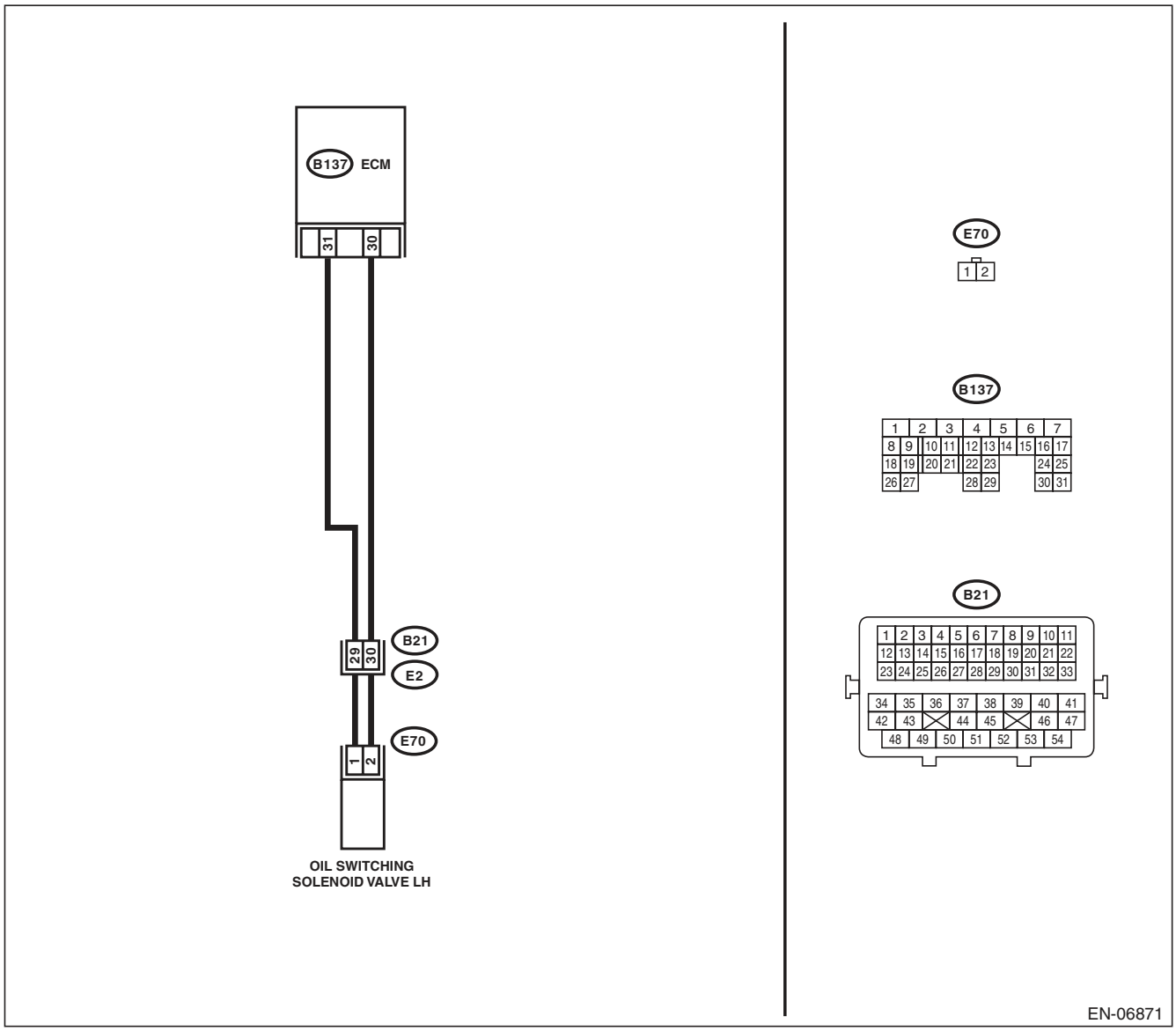

	Step	Check	Yes	No
1	**CHECK HARNESS BETWEEN ECM AND OIL SWITCHING SOLENOID VALVE.** 1) Turn the ignition switch to OFF. 2) Disconnect the connectors from the ECM and oil switching solenoid valve. 3) Measure the voltage between ECM and chassis ground. ***Connector & terminal*** ***(B137) No. 31 (+) — Chassis ground (–):*** ***(B137) No. 30 (+) — Chassis ground (–):***	Is the voltage less than 1 V?	Go to step **2**.	Repair the short circuit of harness to power supply between ECM and oil switching solenoid valve connector.
2	**CHECK HARNESS BETWEEN ECM AND OIL SWITCHING SOLENOID VALVE.** Measure the resistance between ECM and oil switching solenoid valve connector. ***Connector & terminal*** ***(B137) No. 31 — (E70) No. 1:*** ***(B137) No. 30 — (E70) No. 2:***	Is the resistance less than 1 Ω?	Go to step **3**.	Repair the harness and connector. NOTE: In this case, repair the following item: • Open circuit of harness between ECM and oil switching solenoid valve connector • Poor contact of coupling connector
3	**CHECK OIL SWITCHING SOLENOID VALVE.** Measure the resistance between oil switching solenoid valve terminals. ***Terminals*** ***No. 1 — No. 2:***	Is the resistance between 6 — 12 Ω?	Repair the poor contact of ECM and oil switching solenoid valve connector.	Replace the oil switching solenoid valve. <Ref. to ME(H6DO)-80, Oil Switching Solenoid Valve.>

V: DTC P0101 MASS OR VOLUME AIR FLOW CIRCUIT RANGE/PERFORMANCE

DTC DETECTING CONDITION:

- Two consecutive driving cycles with fault
- GENERAL DESCRIPTION <Ref. to GD(H6DO)-31, DTC P0101 MASS OR VOLUME AIR FLOW CIRCUIT RANGE/PERFORMANCE, Diagnostic Trouble Code (DTC) Detecting Criteria.>

TROUBLE SYMPTOM:

- Improper idling
- Engine stalls.
- Poor driving performance

CAUTION:

After repair or replacement of faulty parts, perform Clear Memory Mode <Ref. to EN(H6DO)(diag)-52, OPERATION, Clear Memory Mode.>, and Inspection Mode <Ref. to EN(H6DO)(diag)-44, PROCEDURE, Inspection Mode.>.

WIRING DIAGRAM:

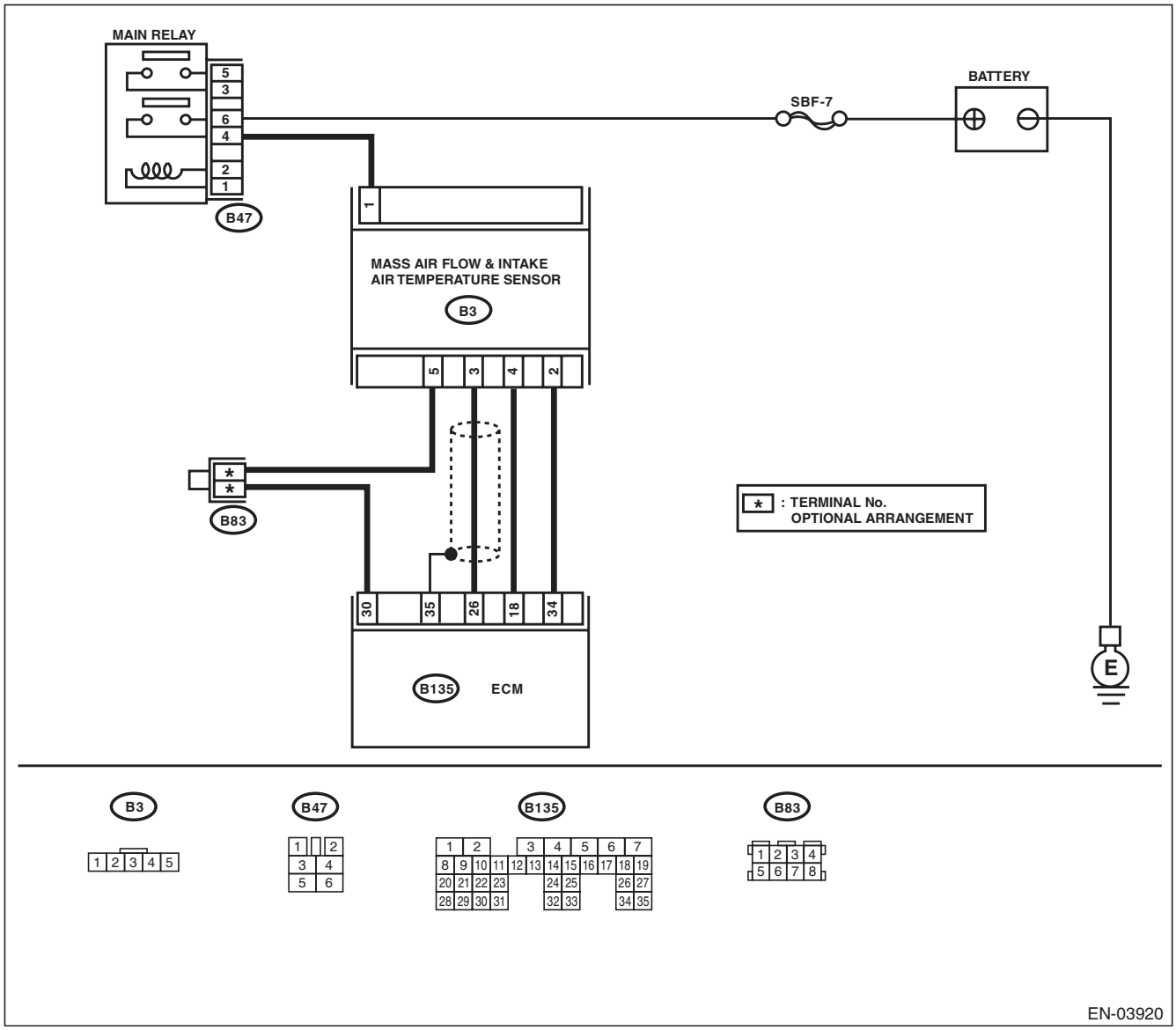

Step	Check	Yes	No
1 CHECK FOR ANY OTHER DTC ON DISPLAY.	Is any other DTC displayed?	Check the appropriate DTC using the “List of Diagnostic Trouble Code (DTC)”. <Ref. to EN(H6DO)(diag)-81, List of Diagnostic Trouble Code (DTC).>	Replace the mass air flow and intake air temperature sensor. <Ref. to FU(H6DO)-26, Mass Air Flow and Intake Air Temperature Sensor.>

W: DTC P0102 MASS OR VOLUME AIR FLOW CIRCUIT LOW INPUT

DTC DETECTING CONDITION:

- Immediately at fault recognition
- GENERAL DESCRIPTION <Ref. to GD(H6DO)-33, DTC P0102 MASS OR VOLUME AIR FLOW CIRCUIT LOW INPUT, Diagnostic Trouble Code (DTC) Detecting Criteria.>

TROUBLE SYMPTOM:

- Improper idling
- Engine stalls.
- Poor driving performance

CAUTION:

After repair or replacement of faulty parts, perform Clear Memory Mode <Ref. to EN(H6DO)(diag)-52, OPERATION, Clear Memory Mode.>, and Inspection Mode <Ref. to EN(H6DO)(diag)-44, PROCEDURE, Inspection Mode.>.

WIRING DIAGRAM:

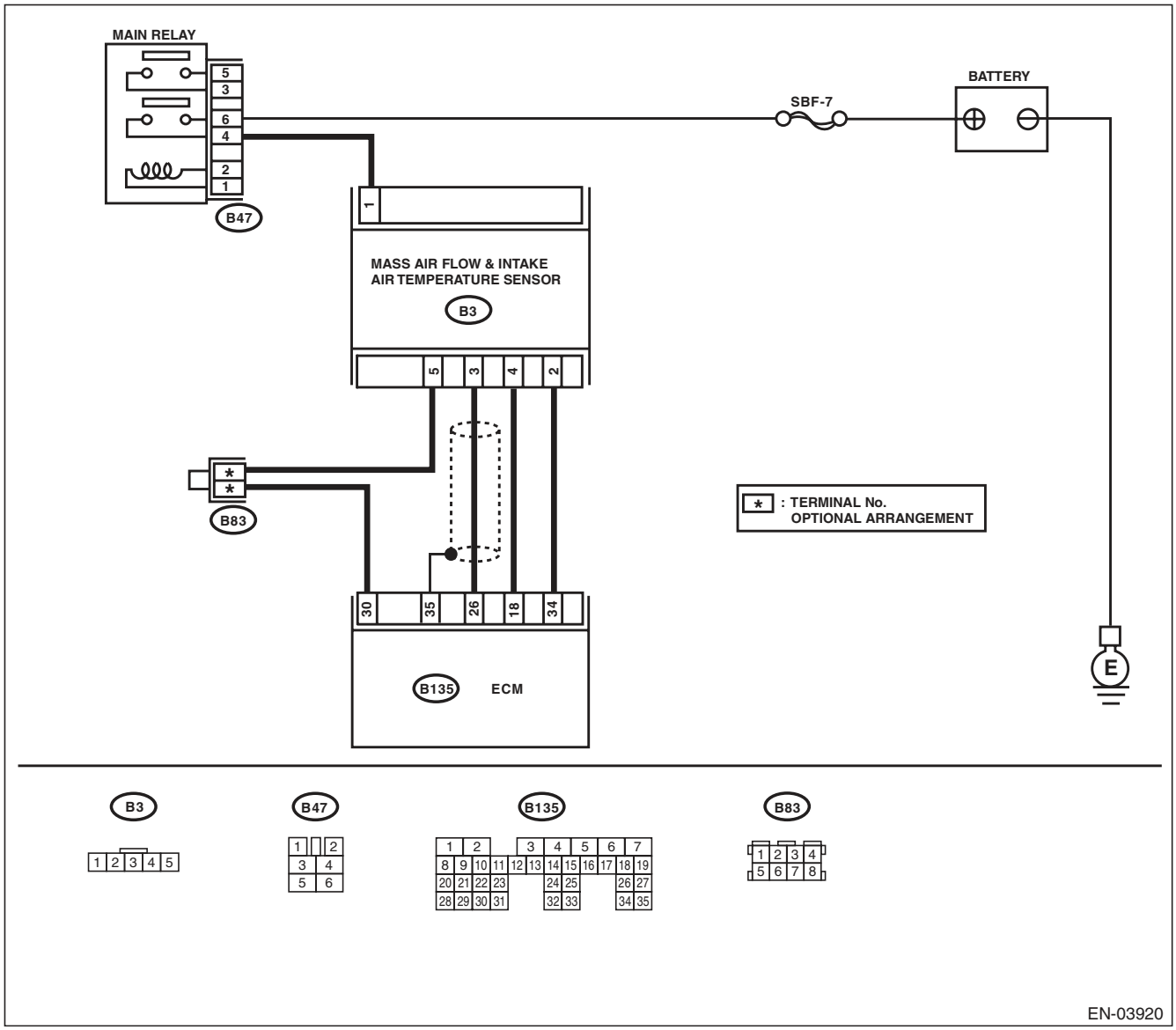

	Step	Check	Yes	No
1	**CHECK CURRENT DATA.** 1) Start the engine. 2) Read the data of air flow sensor signal using Subaru Select Monitor or general scan tool. NOTE: • SUBARU SELECT MONITOR For detailed operation procedure, refer to "READ CURRENT DATA FOR ENGINE". <Ref. to EN(H6DO)(diag)-34, Subaru Select Monitor.> • General Scan Tool For detailed operation procedures, refer to the general scan tool operation manual.	Is the voltage less than 0.2 V?	Go to step **2**.	Even if DTC is detected, the circuit has returned to a normal condition at this time. Reproduce the failure, and then perform the diagnosis again. NOTE: In this case, temporary poor contact of connector may be the cause.
2	**CHECK POWER SUPPLY OF MASS AIR FLOW AND INTAKE AIR TEMPERATURE SENSOR.** 1) Turn the ignition switch to OFF. 2) Disconnect the connector from the mass air flow and intake air temperature sensor. 3) Turn the ignition switch to ON. 4) Measure the voltage between mass air flow and intake air temperature sensor connector and engine ground. ***Connector & terminal*** ***(B3) No. 1 (+) — Engine ground (–):***	Is the voltage 10 V or more?	Go to step **3**.	Repair the harness and connector. NOTE: In this case, repair the following item: • Open circuit in harness between main relay and mass air flow and intake air temperature sensor connector • Poor contact of main relay connector
3	**CHECK HARNESS BETWEEN ECM AND MASS AIR FLOW AND INTAKE AIR TEMPERATURE SENSOR CONNECTOR.** 1) Turn the ignition switch to OFF. 2) Disconnect the connectors from ECM. 3) Measure the resistance of harness between ECM and mass air flow and intake air temperature sensor connectors. ***Connector & terminal*** ***(B135) No. 26 — (B3) No. 3:***	Is the resistance less than 1 Ω?	Go to step **4**.	Repair the open circuit of harness between ECM and mass air flow and intake air temperature sensor connector.
4	**CHECK HARNESS BETWEEN ECM AND MASS AIR FLOW AND INTAKE AIR TEMPERATURE SENSOR CONNECTOR.** Measure the resistance between ECM and chassis ground. ***Connector & terminal*** ***(B135) No. 26 — Chassis ground:***	Is the resistance 1 MΩ or more?	Go to step **5**.	Repair the ground short circuit of harness between the ECM and the mass air flow and intake air temperature sensor connectors.
5	**CHECK POOR CONTACT.** Check for any poor contact in the ECM or the mass air flow or intake air temperature sensor connector.	Is there poor contact in the ECM or the mass air flow and intake air temperature sensor connector?	Repair any poor contact in the ECM or the mass air flow and intake air temperature sensor connector.	Replace the mass air flow and intake air temperature sensor. <Ref. to FU(H6DO)-26, Mass Air Flow and Intake Air Temperature Sensor.>

X: DTC P0103 MASS OR VOLUME AIR FLOW CIRCUIT HIGH INPUT

DTC DETECTING CONDITION:

- Immediately at fault recognition
- GENERAL DESCRIPTION <Ref. to GD(H6DO)-34, DTC P0103 MASS OR VOLUME AIR FLOW CIRCUIT HIGH INPUT, Diagnostic Trouble Code (DTC) Detecting Criteria.>

TROUBLE SYMPTOM:

- Improper idling
- Engine stalls.
- Poor driving performance

CAUTION:

After repair or replacement of faulty parts, perform Clear Memory Mode <Ref. to EN(H6DO)(diag)-52, OPERATION, Clear Memory Mode.>, and Inspection Mode <Ref. to EN(H6DO)(diag)-44, PROCEDURE, Inspection Mode.>.

WIRING DIAGRAM:

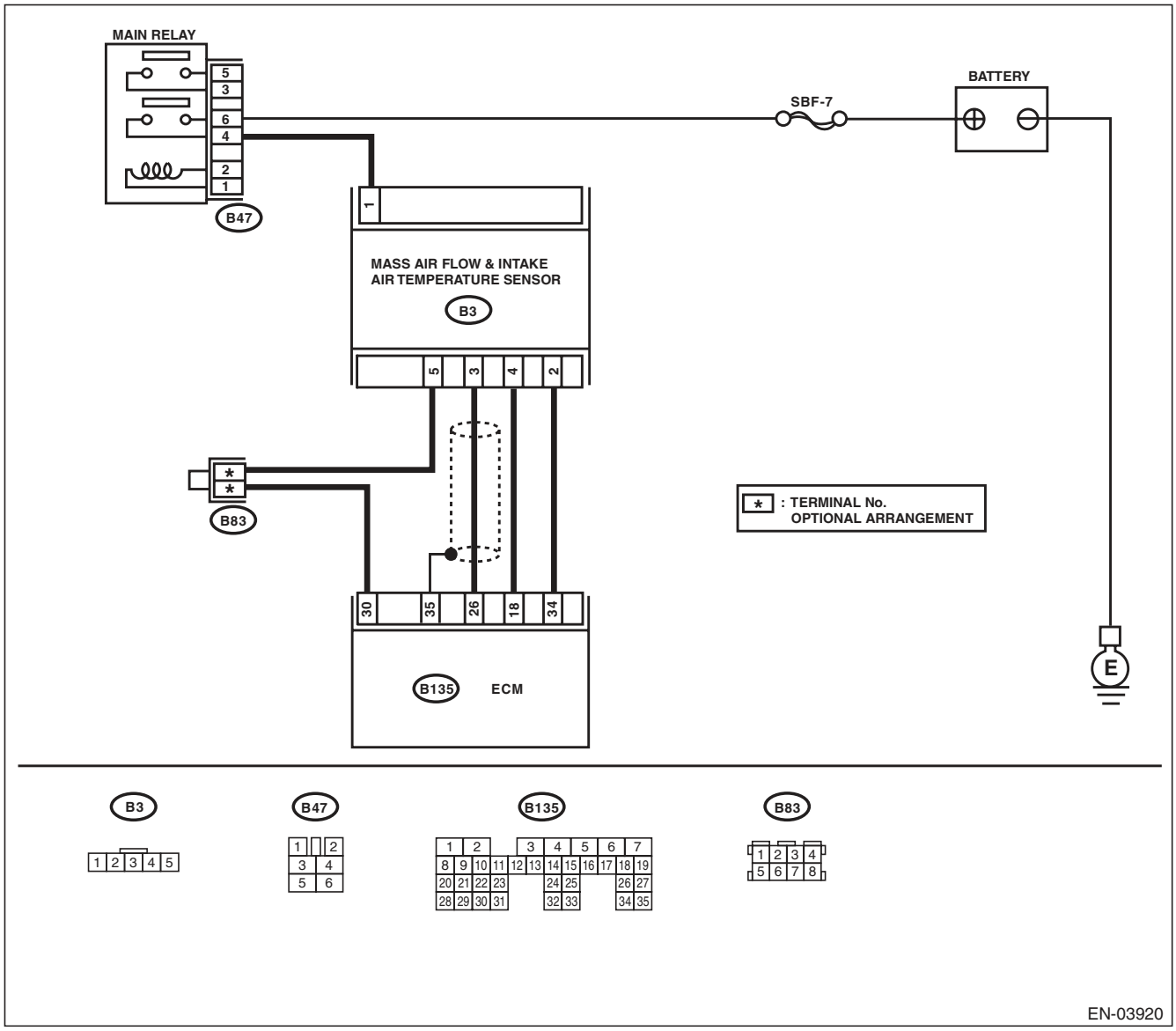

	Step	Check	Yes	No
1	**CHECK CURRENT DATA.** 1) Start the engine. 2) Read the data of air flow sensor signal using Subaru Select Monitor or general scan tool. NOTE: • SUBARU SELECT MONITOR For detailed operation procedure, refer to "READ CURRENT DATA FOR ENGINE". <Ref. to EN(H6DO)(diag)-34, Subaru Select Monitor.> • General Scan Tool For detailed operation procedures, refer to the general scan tool operation manual.	Is the voltage 5 V or more?	Go to step **2**.	Even if DTC is detected, the circuit has returned to a normal condition at this time. Reproduce the failure, and then perform the diagnosis again. NOTE: In this case, temporary poor contact of connector may be the cause.
2	**CHECK HARNESS BETWEEN ECM AND MASS AIR FLOW AND INTAKE AIR TEMPERATURE SENSOR CONNECTOR.** 1) Turn the ignition switch to OFF. 2) Disconnect the connector from the mass air flow and intake air temperature sensor. 3) Start the engine. 4) Read the data of air flow sensor signal using Subaru Select Monitor or general scan tool. NOTE: • SUBARU SELECT MONITOR For detailed operation procedure, refer to "READ CURRENT DATA FOR ENGINE". <Ref. to EN(H6DO)(diag)-34, Subaru Select Monitor.> • General Scan Tool For detailed operation procedures, refer to the general scan tool operation manual.	Is the voltage 5 V or more?	Repair the short circuit to power in the harness between the ECM and the mass air flow and intake air temperature sensor connector.	Go to step **3**.
3	**CHECK HARNESS BETWEEN ECM AND MASS AIR FLOW AND INTAKE AIR TEMPERATURE SENSOR CONNECTOR.** 1) Turn the ignition switch to OFF. 2) Measure the resistance of harness between mass air flow and intake air temperature sensor connector and engine ground. ***Connector & terminal*** ***(B3) No. 2 — Engine ground:***	Is the resistance less than 5 Ω?	Go to step **4**.	Repair the harness and connector. NOTE: In this case, repair the following item: • Open circuit in harness between ECM and mass air flow and intake air temperature sensor connectors. • Poor contact in ECM connector
4	**CHECK POOR CONTACT.** Check for any poor contact in the mass air flow and intake air temperature sensor connector.	Is there poor contact in the mass air flow and intake air temperature sensor connector?	Repair any poor contact of the mass air flow and intake air temperature sensor connector.	Replace the mass air flow and intake air temperature sensor. <Ref. to FU(H6DO)-26, Mass Air Flow and Intake Air Temperature Sensor.>

Y: DTC P0107 MANIFOLD ABSOLUTE PRESSURE/BAROMETRIC PRESSURE CIRCUIT LOW INPUT

DTC DETECTING CONDITION:

- Immediately at fault recognition
- GENERAL DESCRIPTION <Ref. to GD(H6DO)-35, DTC P0107 MANIFOLD ABSOLUTE PRESSURE/ BAROMETRIC PRESSURE CIRCUIT LOW INPUT, Diagnostic Trouble Code (DTC) Detecting Criteria.>

CAUTION:

After repair or replacement of faulty parts, perform Clear Memory Mode <Ref. to EN(H6DO)(diag)-52, OPERATION, Clear Memory Mode.>, and Inspection Mode <Ref. to EN(H6DO)(diag)-44, PROCEDURE, Inspection Mode.>.

WIRING DIAGRAM:

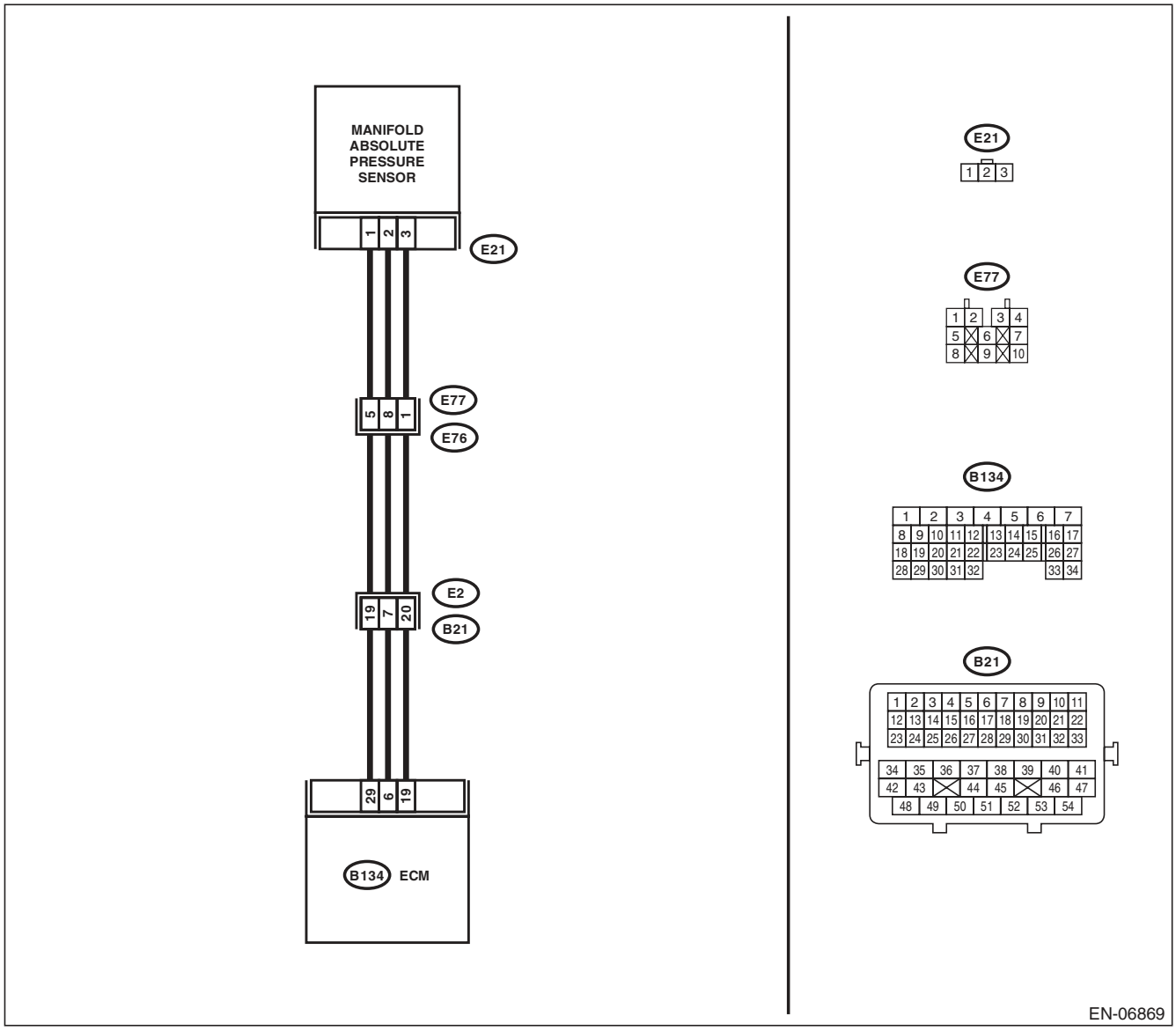

	Step	Check	Yes	No
1	**CHECK CURRENT DATA.** 1) Start the engine. 2) Read the data of intake manifold absolute pressure signal using Subaru Select Monitor or general scan tool. NOTE: • SUBARU SELECT MONITOR For detailed operation procedure, refer to "READ CURRENT DATA FOR ENGINE". <Ref. to EN(H6DO)(diag)-34, Subaru Select Monitor.> • General Scan Tool For detailed operation procedures, refer to the general scan tool operation manual.	Is the measured value less than 13.3 kPa (100 mmHg, 3.94 inHg)?	Go to step **2**.	Even if DTC is detected, the circuit has returned to a normal condition at this time. Reproduce the failure, and then perform the diagnosis again. NOTE: In this case, temporary poor contact of connector may be the cause.
2	**CHECK POWER SUPPLY OF MANIFOLD ABSOLUTE PRESSURE SENSOR.** 1) Turn the ignition switch to OFF. 2) Disconnect the connector from manifold absolute pressure sensor. 3) Turn the ignition switch to ON. 4) Measure the voltage between manifold absolute pressure sensor connector and engine ground. ***Connector & terminal*** ***(E21) No. 3 (+) — Engine ground (–):***	Is the voltage 4.5 V or more?	Go to step **3**.	Repair the harness and connector. NOTE: In this case, repair the following item: • Open circuit of harness between ECM and manifold absolute pressure sensor connector. • Poor contact in ECM connector • Poor contact of coupling connector
3	**CHECK HARNESS BETWEEN ECM AND MANIFOLD ABSOLUTE PRESSURE SENSOR CONNECTOR.** 1) Turn the ignition switch to OFF. 2) Disconnect the connectors from ECM. 3) Measure the resistance of harness between ECM and manifold absolute pressure sensor connector. ***Connector & terminal*** ***(B134) No. 6 — (E21) No. 2:***	Is the resistance less than 1 Ω?	Go to step **4**.	Repair the harness and connector. NOTE: In this case, repair the following item: • Open circuit of harness between ECM and manifold absolute pressure sensor connector. • Poor contact of coupling connector
4	**CHECK HARNESS BETWEEN ECM AND MANIFOLD ABSOLUTE PRESSURE SENSOR CONNECTOR.** Measure the resistance between ECM and chassis ground. ***Connector & terminal*** ***(B134) No. 6 — Chassis ground:***	Is the resistance 1 MΩ or more?	Go to step **5**.	Repair ground short circuit of harness between ECM and manifold absolute pressure sensor connector.
5	**CHECK POOR CONTACT.** Check for poor contact in ECM and manifold absolute pressure sensor connector.	Is there poor contact in ECM or manifold absolute pressure sensor connector?	Repair the poor contact in ECM or manifold absolute pressure sensor connector.	Replace the manifold absolute pressure sensor. <Ref. to FU(H6DO)-25, Manifold Absolute Pressure Sensor.>

Z: DTC P0108 MANIFOLD ABSOLUTE PRESSURE/BAROMETRIC PRESSURE CIRCUIT HIGH INPUT

DTC DETECTING CONDITION:

- Immediately at fault recognition
- GENERAL DESCRIPTION <Ref. to GD(H6DO)-36, DTC P0108 MANIFOLD ABSOLUTE PRESSURE/ BAROMETRIC PRESSURE CIRCUIT HIGH INPUT, Diagnostic Trouble Code (DTC) Detecting Criteria.>

CAUTION:

After repair or replacement of faulty parts, perform Clear Memory Mode <Ref. to EN(H6DO)(diag)-52, OPERATION, Clear Memory Mode.>, and Inspection Mode <Ref. to EN(H6DO)(diag)-44, PROCEDURE, Inspection Mode.>.

WIRING DIAGRAM:

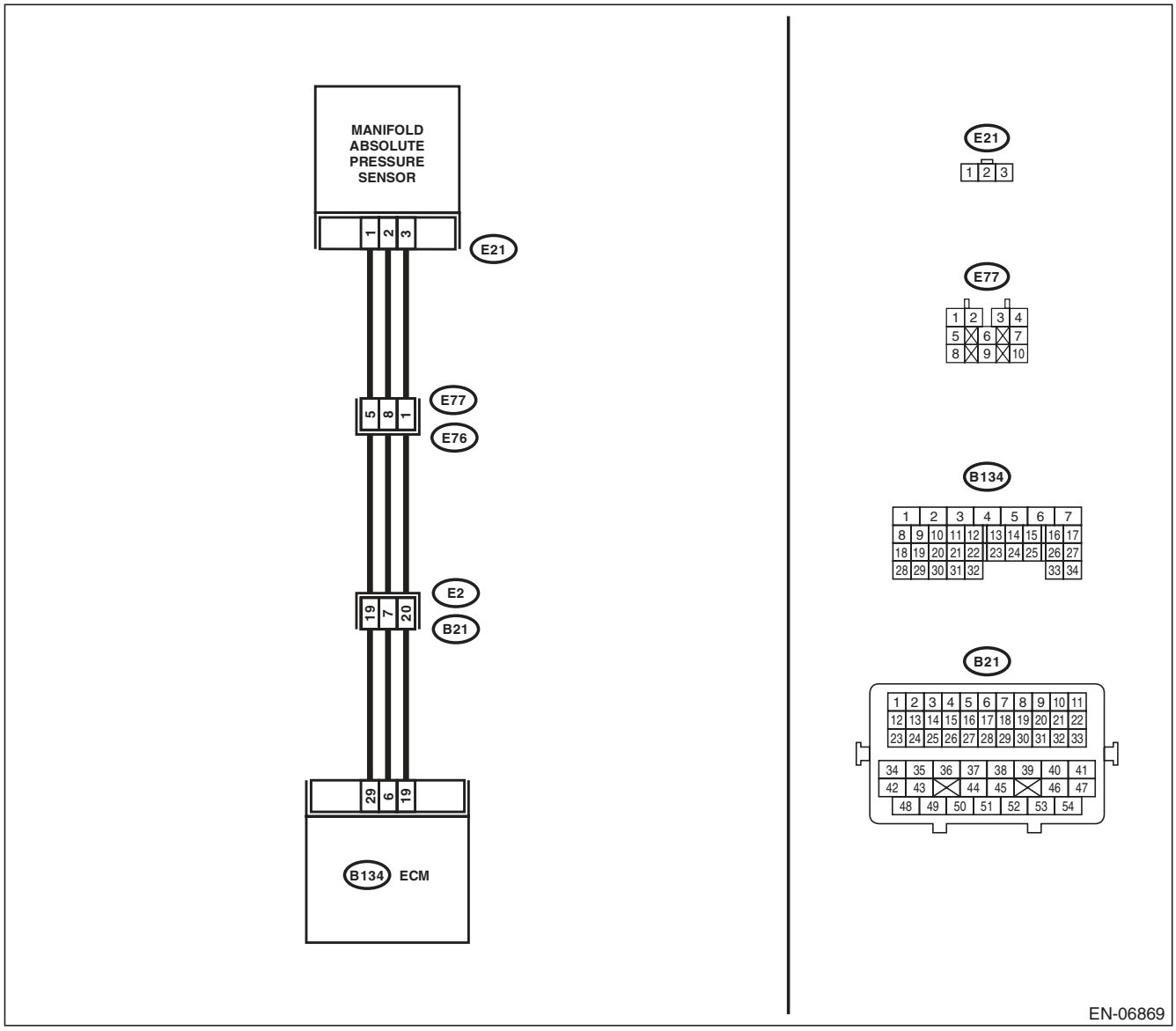

	Step	Check	Yes	No
1	**CHECK CURRENT DATA.** 1) Start the engine. 2) Read the data of intake manifold absolute pressure signal using Subaru Select Monitor or general scan tool. NOTE: • SUBARU SELECT MONITOR For detailed operation procedure, refer to "READ CURRENT DATA FOR ENGINE". <Ref. to EN(H6DO)(diag)-34, Subaru Select Monitor.> • General Scan Tool For detailed operation procedures, refer to the general scan tool operation manual.	Is the measured value 119.5 kPa (896.5 mmHg, 35.29 inHg) or more?	Go to step **2**.	Even if DTC is detected, the circuit has returned to a normal condition at this time. Reproduce the failure, and then perform the diagnosis again. NOTE: In this case, temporary poor contact of connector may be the cause.
2	**CHECK HARNESS BETWEEN ECM AND MANIFOLD ABSOLUTE PRESSURE SENSOR CONNECTOR.** 1) Turn the ignition switch to OFF. 2) Disconnect the connector from manifold absolute pressure sensor. 3) Start the engine. 4) Read the data of intake manifold absolute pressure signal using Subaru Select Monitor or general scan tool. NOTE: • SUBARU SELECT MONITOR For detailed operation procedure, refer to "READ CURRENT DATA FOR ENGINE". <Ref. to EN(H6DO)(diag)-34, Subaru Select Monitor.> • General Scan Tool For detailed operation procedures, refer to the general scan tool operation manual.	Is the measured value 119.5 kPa (896.5 mmHg, 35.29 inHg) or more?	Repair the short circuit to power in harness between ECM and manifold absolute pressure sensor connector.	Go to step **3**.
3	**CHECK HARNESS BETWEEN ECM AND MANIFOLD ABSOLUTE PRESSURE SENSOR CONNECTOR.** 1) Turn the ignition switch to OFF. 2) Measure the resistance of harness between manifold absolute pressure sensor connector and engine ground. ***Connector & terminal*** ***(E21) No. 1 — Engine ground:***	Is the resistance less than 5 Ω?	Go to step **4**.	Repair the harness and connector. NOTE: In this case, repair the following item: • Open circuit of harness between ECM and manifold absolute pressure sensor connector. • Poor contact in ECM connector • Poor contact of coupling connector
4	**CHECK POOR CONTACT.** Check for poor contact in manifold absolute pressure sensor connector.	Is there poor contact in manifold absolute pressure sensor connector?	Repair the poor contact of manifold absolute pressure sensor connector.	Replace the manifold absolute pressure sensor. <Ref. to FU(H6DO)-25, Manifold Absolute Pressure Sensor.>

AA:DTC P0111 INTAKE AIR TEMPERATURE SENSOR 1 CIRCUIT RANGE/ PERFORMANCE

DTC DETECTING CONDITION:

- Two consecutive driving cycles with fault
- GENERAL DESCRIPTION <Ref. to GD(H6DO)-37, DTC P0111 INTAKE AIR TEMPERATURE SENSOR 1 CIRCUIT RANGE/PERFORMANCE, Diagnostic Trouble Code (DTC) Detecting Criteria.>

TROUBLE SYMPTOM:

- Improper idling
- Poor driving performance

CAUTION:

After repair or replacement of faulty parts, perform Clear Memory Mode <Ref. to EN(H6DO)(diag)-52, OPERATION, Clear Memory Mode.>, and Inspection Mode <Ref. to EN(H6DO)(diag)-44, PROCEDURE, Inspection Mode.>.

WIRING DIAGRAM:

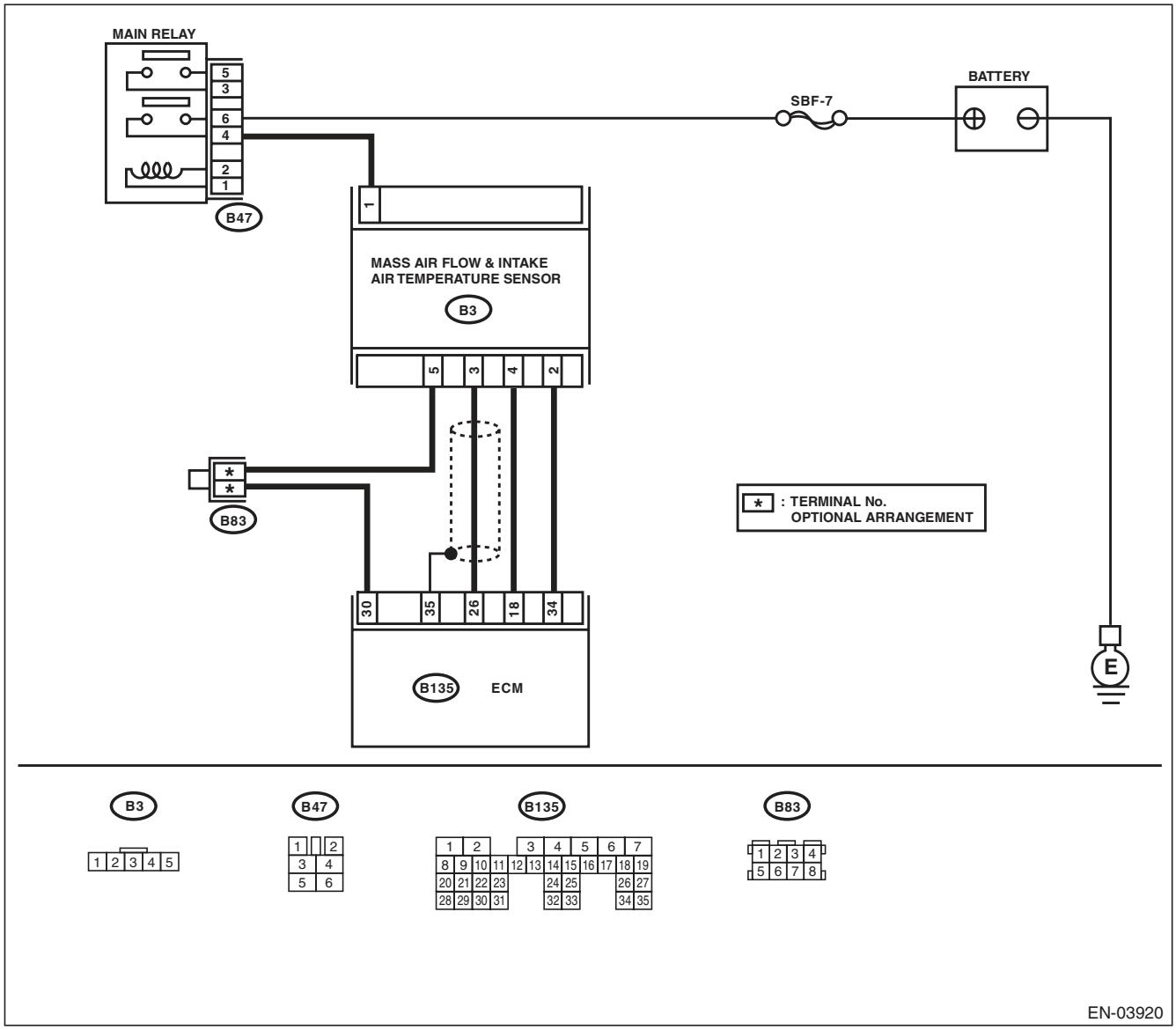

Step		Check	Yes	No
1	**CHECK ENGINE COOLANT TEMPERATURE.** 1) Start the engine and warm up completely. 2) Measure the engine coolant temperature using the Subaru Select Monitor or general scan tool. NOTE: • SUBARU SELECT MONITOR For detailed operation procedure, refer to “READ CURRENT DATA FOR ENGINE”. <Ref. to EN(H6DO)(diag)-34, Subaru Select Monitor.> • General Scan Tool For detailed operation procedures, refer to the general scan tool operation manual.	Is the engine coolant temperature 75°C (167°F) or higher?	Replace the mass air flow and intake air temperature sensor. <Ref. to FU(H6DO)-26, Mass Air Flow and Intake Air Temperature Sensor.>	Check DTC P0125 using “List of Diagnostic Trouble Code (DTC)”. <Ref. to EN(H6DO)(diag)-81, List of Diagnostic Trouble Code (DTC).>

AB:DTC P0112 INTAKE AIR TEMPERATURE SENSOR 1 CIRCUIT LOW

DTC DETECTING CONDITION:

- Immediately at fault recognition
- GENERAL DESCRIPTION <Ref. to GD(H6DO)-39, DTC P0112 INTAKE AIR TEMPERATURE SENSOR 1 CIRCUIT LOW, Diagnostic Trouble Code (DTC) Detecting Criteria.>

TROUBLE SYMPTOM:

- Improper idling
- Poor driving performance

CAUTION:

After repair or replacement of faulty parts, perform Clear Memory Mode <Ref. to EN(H6DO)(diag)-52, OPERATION, Clear Memory Mode.>, and Inspection Mode <Ref. to EN(H6DO)(diag)-44, PROCEDURE, Inspection Mode.>.

WIRING DIAGRAM:

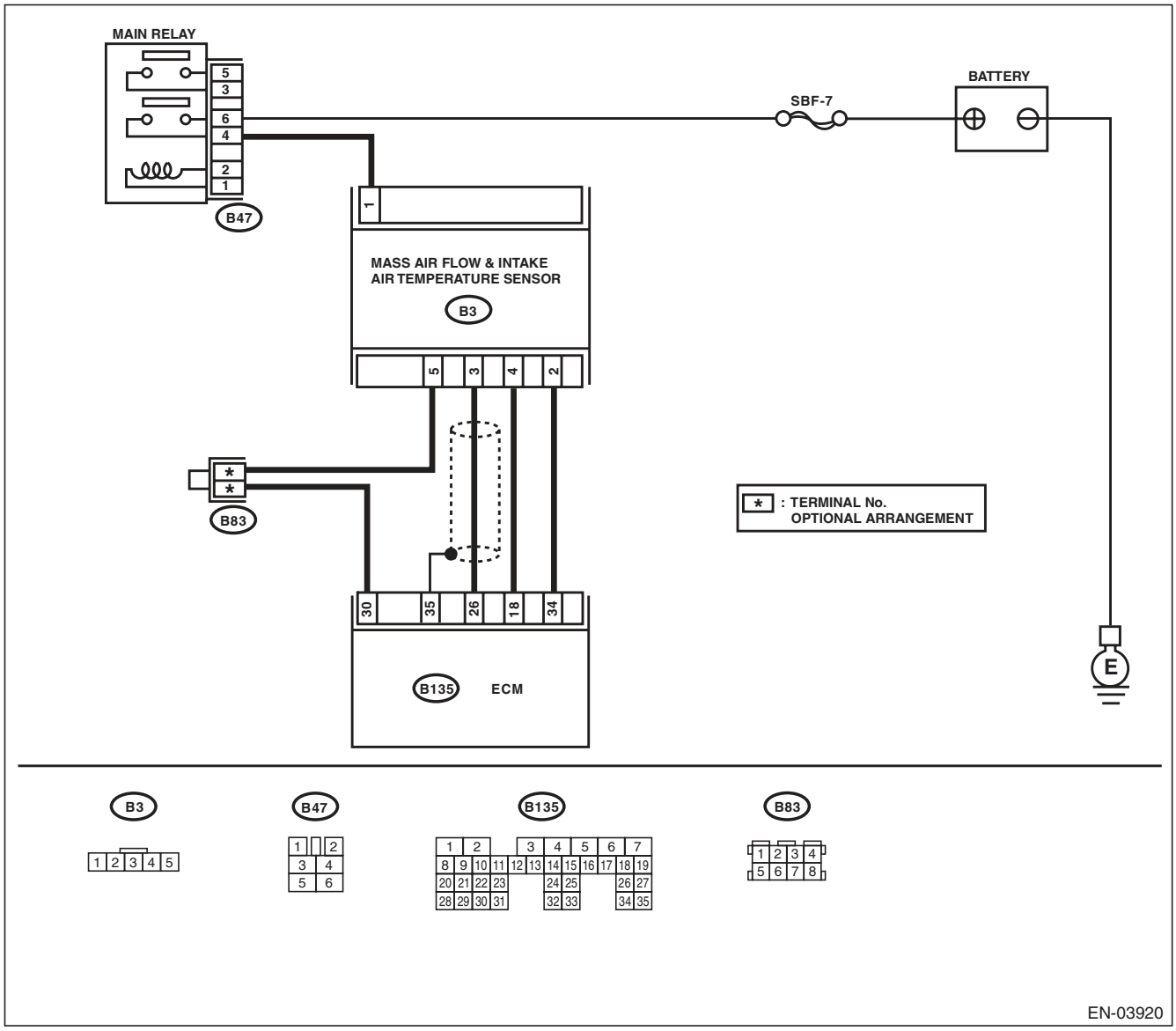

	Step	Check	Yes	No
1	**CHECK CURRENT DATA.** 1) Start the engine. 2) Read the data of intake air temperature sensor signal using Subaru Select Monitor or general scan tool. NOTE: • SUBARU SELECT MONITOR For detailed operation procedure, refer to "READ CURRENT DATA FOR ENGINE". <Ref. to EN(H6DO)(diag)-34, Subaru Select Monitor.> • General Scan Tool For detailed operation procedures, refer to the general scan tool operation manual.	Is the intake air temperature 120°C (248°F) or higher?	Go to step **2**.	Even if DTC is detected, the circuit has returned to a normal condition at this time. Reproduce the failure, and then perform the diagnosis again. NOTE: In this case, temporary poor contact of connector may be the cause.
2	**CHECK HARNESS BETWEEN ECM AND MASS AIR FLOW AND INTAKE AIR TEMPERATURE SENSOR CONNECTOR.** 1) Turn the ignition switch to OFF. 2) Disconnect the connector from ECM and mass air flow and intake air temperature sensor. 3) Measure the resistance between ECM and chassis ground. ***Connector & terminal*** ***(B135) No. 18 — Chassis ground:***	Is the resistance 1 MΩ or more?	Replace the mass air flow and intake air temperature sensor. <Ref. to FU(H6DO)-26, Mass Air Flow and Intake Air Temperature Sensor.>	Repair the ground short circuit of harness between the ECM and the mass air flow and intake air temperature sensor connectors.

AC:DTC P0113 INTAKE AIR TEMPERATURE SENSOR 1 CIRCUIT HIGH

DTC DETECTING CONDITION:

- Immediately at fault recognition
- GENERAL DESCRIPTION <Ref. to GD(H6DO)-40, DTC P0113 INTAKE AIR TEMPERATURE SENSOR 1 CIRCUIT HIGH, Diagnostic Trouble Code (DTC) Detecting Criteria.>

TROUBLE SYMPTOM:

- Improper idling
- Poor driving performance

CAUTION:

After repair or replacement of faulty parts, perform Clear Memory Mode <Ref. to EN(H6DO)(diag)-52, OPERATION, Clear Memory Mode.>, and Inspection Mode <Ref. to EN(H6DO)(diag)-44, PROCEDURE, Inspection Mode.>.

WIRING DIAGRAM:

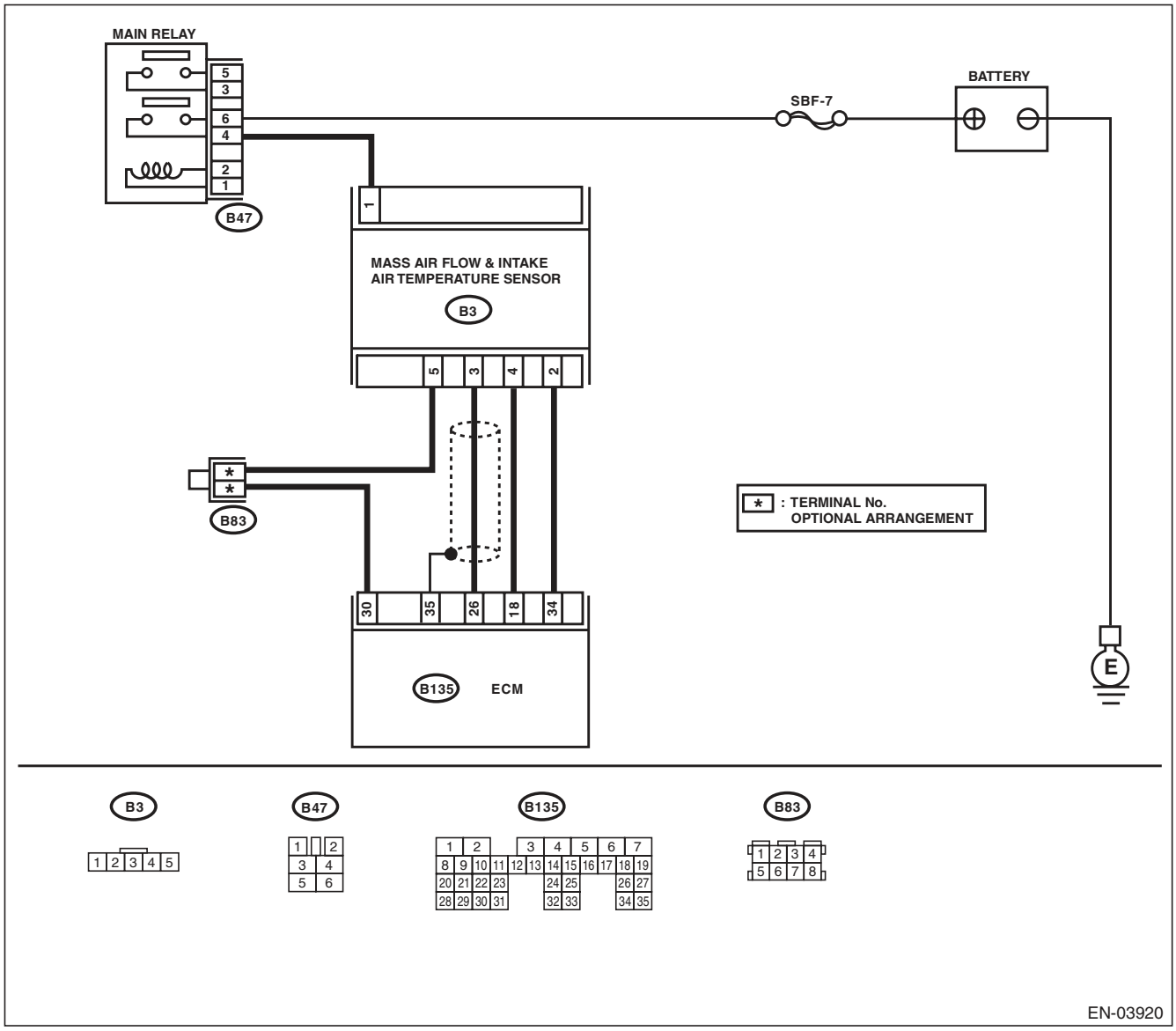

	Step	Check	Yes	No
1	**CHECK CURRENT DATA.** 1) Start the engine. 2) Read the data of intake air temperature sensor signal using Subaru Select Monitor or general scan tool. NOTE: • SUBARU SELECT MONITOR For detailed operation procedure, refer to "READ CURRENT DATA FOR ENGINE". <Ref. to EN(H6DO)(diag)-34, Subaru Select Monitor.> • General Scan Tool For detailed operation procedures, refer to the general scan tool operation manual.	Is the intake air temperature less than –40°C (–40°F) ?	Go to step **2**.	Even if DTC is detected, the circuit has returned to a normal condition at this time. Reproduce the failure, and then perform the diagnosis again. NOTE: In this case, temporary poor contact of connector may be the cause.
2	**CHECK POOR CONTACT.** Check for poor contact in the ECM or the mass air flow and intake air temperature sensor connector.	Is there poor contact in the ECM or the mass air flow and intake air temperature sensor connector?	Repair any poor contact in the ECM or the mass air flow and intake air temperature sensor connector.	Go to step **3**.
3	**CHECK HARNESS BETWEEN ECM AND MASS AIR FLOW AND INTAKE AIR TEMPERATURE SENSOR CONNECTOR.** 1) Turn the ignition switch to OFF. 2) Disconnect the connector from ECM and mass air flow and intake air temperature sensor. 3) Measure the resistance of harness between ECM and mass air flow and intake air temperature sensor connectors. ***Connector & terminal*** ***(B135) No. 18 — (B3) No. 4:*** ***(B135) No. 30 — (B3) No. 5:***	Is the resistance less than 1 Ω?	Go to step **4**.	Repair the open circuit of harness between ECM and mass air flow and intake air temperature sensor connector.
4	**CHECK HARNESS BETWEEN ECM AND MASS AIR FLOW AND INTAKE AIR TEMPERATURE SENSOR CONNECTOR.** 1) Connect all connectors. 2) Turn the ignition switch to ON. 3) Disconnect the connector from the mass air flow and intake air temperature sensor. 4) Measure the voltage between ECM and chassis ground. ***Connector & terminal*** ***(B135) No. 18 (+) — Chassis ground (–):***	Is the voltage 5 V or more?	Repair the short circuit to power in the harness between the ECM and the mass air flow and intake air temperature sensor connector.	Replace the mass air flow and intake air temperature sensor. <Ref. to FU(H6DO)-26, Mass Air Flow and Intake Air Temperature Sensor.>

AD:DTC P0117 ENGINE COOLANT TEMPERATURE CIRCUIT LOW

DTC DETECTING CONDITION:

- Immediately at fault recognition
- GENERAL DESCRIPTION <Ref. to GD(H6DO)-41, DTC P0117 ENGINE COOLANT TEMPERATURE CIRCUIT LOW, Diagnostic Trouble Code (DTC) Detecting Criteria.>

TROUBLE SYMPTOM:

- Hard to start
- Improper idling
- Poor driving performance

CAUTION:

After repair or replacement of faulty parts, perform Clear Memory Mode <Ref. to EN(H6DO)(diag)-52, OPERATION, Clear Memory Mode.>, and Inspection Mode <Ref. to EN(H6DO)(diag)-44, PROCEDURE, Inspection Mode.>.

WIRING DIAGRAM:

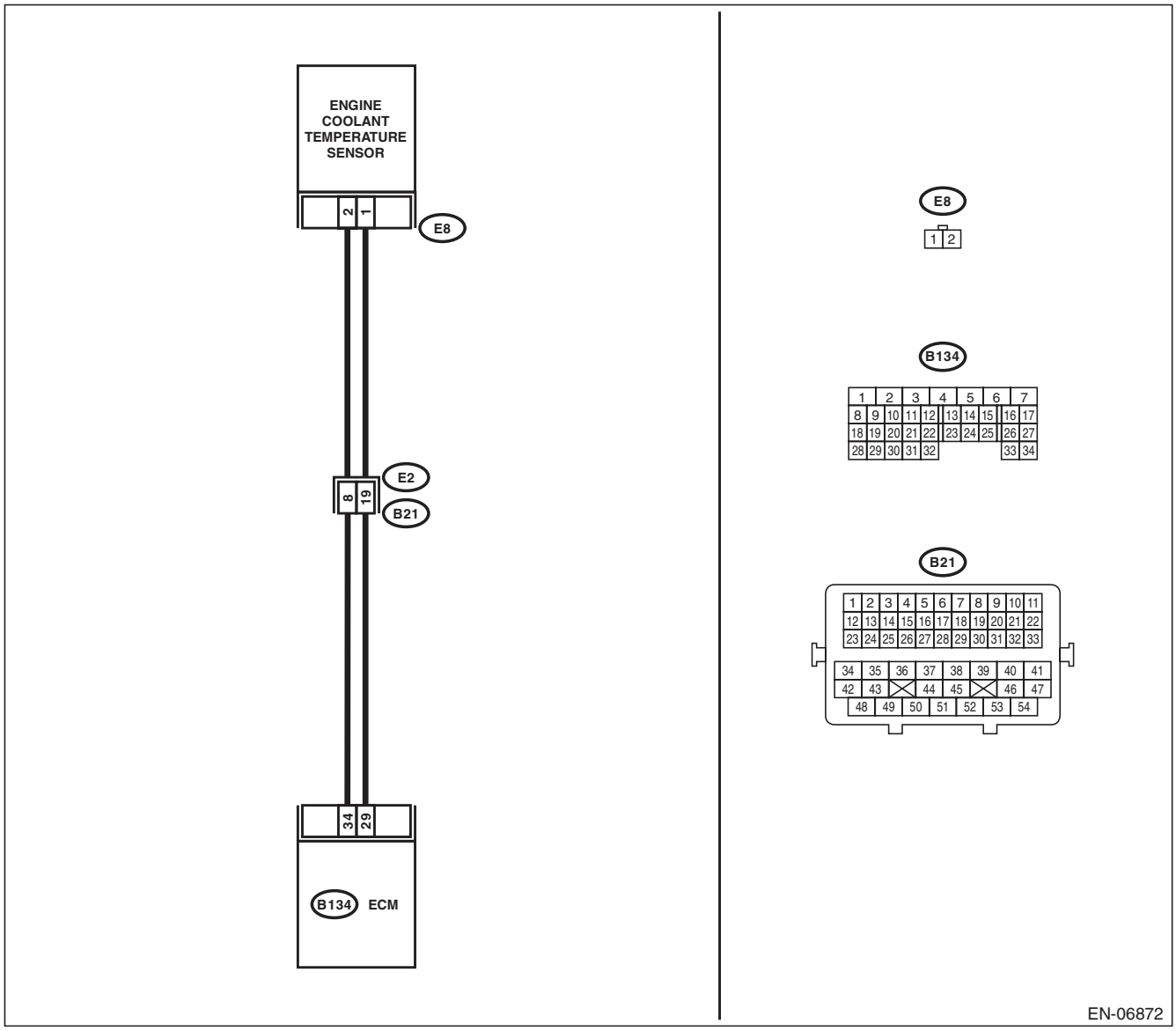

	Step	Check	Yes	No
1	**CHECK CURRENT DATA.** 1) Start the engine. 2) Read the data of engine coolant temperature sensor signal using Subaru Select Monitor or general scan tool. NOTE: • SUBARU SELECT MONITOR For detailed operation procedure, refer to "READ CURRENT DATA FOR ENGINE". <Ref. to EN(H6DO)(diag)-34, Subaru Select Monitor.> • General Scan Tool For detailed operation procedures, refer to the general scan tool operation manual.	Is the engine coolant temperature 150°C (302°F) or higher?	Go to step **2**.	Even if DTC is detected, the circuit has returned to a normal condition at this time. Reproduce the failure, and then perform the diagnosis again. NOTE: In this case, temporary poor contact of connector may be the cause.
2	**CHECK HARNESS BETWEEN ECM AND ENGINE COOLANT TEMPERATURE SENSOR CONNECTOR.** 1) Turn the ignition switch to OFF. 2) Disconnect the connectors from ECM and engine coolant temperature sensor. 3) Measure the resistance between ECM and chassis ground. ***Connector & terminal*** ***(B134) No. 34 — Chassis ground:***	Is the resistance 1 MΩ or more?	Replace the engine coolant temperature sensor. <Ref. to FU(H6DO)-20, Engine Coolant Temperature Sensor.>	Repair the short circuit to ground in harness between ECM and engine coolant temperature sensor.

AE:DTC P0118 ENGINE COOLANT TEMPERATURE CIRCUIT HIGH

DTC DETECTING CONDITION:

- Immediately at fault recognition
- GENERAL DESCRIPTION <Ref. to GD(H6DO)-42, DTC P0118 ENGINE COOLANT TEMPERATURE CIRCUIT HIGH, Diagnostic Trouble Code (DTC) Detecting Criteria.>

TROUBLE SYMPTOM:

- Hard to start
- Improper idling
- Poor driving performance

CAUTION:

After repair or replacement of faulty parts, perform Clear Memory Mode <Ref. to EN(H6DO)(diag)-52, OPERATION, Clear Memory Mode.>, and Inspection Mode <Ref. to EN(H6DO)(diag)-44, PROCEDURE, Inspection Mode.>.

WIRING DIAGRAM:

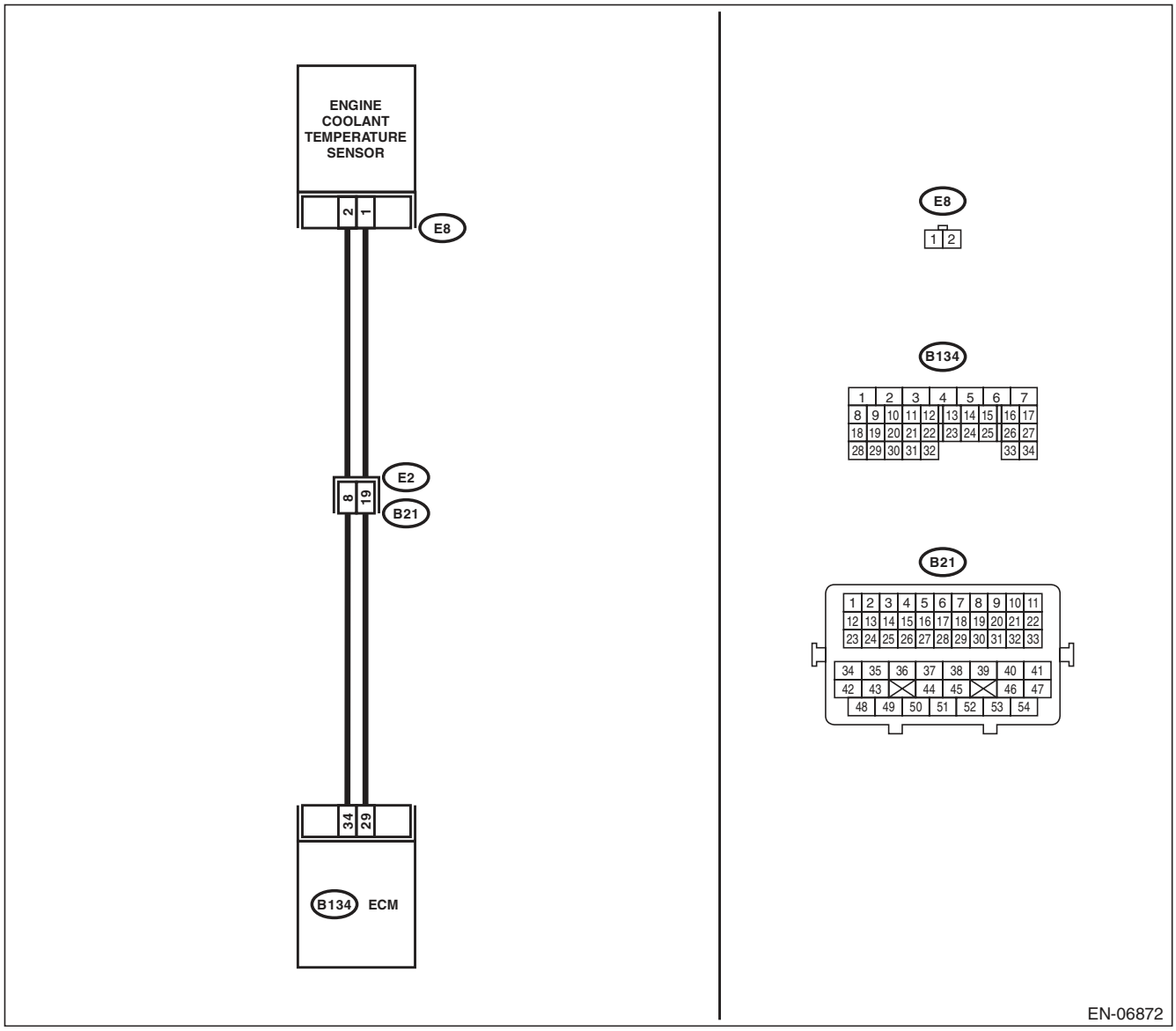

	Step	Check	Yes	No
1	**CHECK CURRENT DATA.** 1) Start the engine. 2) Read the data of engine coolant temperature sensor signal using Subaru Select Monitor or general scan tool. NOTE: • SUBARU SELECT MONITOR For detailed operation procedure, refer to "READ CURRENT DATA FOR ENGINE". <Ref. to EN(H6DO)(diag)-34, Subaru Select Monitor.> • General Scan Tool For detailed operation procedures, refer to the general scan tool operation manual.	Is the engine coolant temperature less than –40°C (–40°F) ?	Go to step **2**.	Even if DTC is detected, the circuit has returned to a normal condition at this time. Reproduce the failure, and then perform the diagnosis again. NOTE: In this case, temporary poor contact of connector may be the cause.
2	**CHECK POOR CONTACT.** Check for poor contact in ECM and engine coolant temperature sensor connector.	Is there poor contact in ECM or engine coolant temperature sensor connector?	Repair the poor contact in ECM or engine coolant temperature sensor connector.	Go to step **3**.
3	**CHECK HARNESS BETWEEN ECM AND ENGINE COOLANT TEMPERATURE SENSOR CONNECTOR.** 1) Turn the ignition switch to OFF. 2) Disconnect the connectors from ECM and engine coolant temperature sensor. 3) Measure the resistance of harness between ECM and engine coolant temperature sensor connector. ***Connector & terminal*** ***(B134) No. 34 — (E8) No. 2:*** ***(B134) No. 29 — (E8) No. 1:***	Is the resistance less than 1 Ω?	Go to step **4**.	Repair the harness and connector. NOTE: In this case, repair the following item: • Open circuit in harness between ECM and engine coolant temperature sensor connector • Poor contact of coupling connector
4	**CHECK HARNESS BETWEEN ECM AND ENGINE COOLANT TEMPERATURE SENSOR CONNECTOR.** 1) Connect all connectors. 2) Turn the ignition switch to ON. 3) Measure the voltage between ECM and chassis ground. ***Connector & terminal*** ***(B134) No. 34 (+) — Chassis ground (–):***	Is the voltage 5 V or more?	Repair the short circuit to power in harness between ECM and engine coolant temperature sensor connector.	Replace the engine coolant temperature sensor. <Ref. to FU(H6DO)-20, Engine Coolant Temperature Sensor.>

AF:DTC P0122 THROTTLE/PEDAL POSITION SENSOR/SWITCH “A” CIRCUIT LOW

DTC DETECTING CONDITION:

- Immediately at fault recognition
- GENERAL DESCRIPTION <Ref. to GD(H6DO)-43, DTC P0122 THROTTLE/PEDAL POSITION SENSOR/SWITCH “A” CIRCUIT LOW, Diagnostic Trouble Code (DTC) Detecting Criteria.>

TROUBLE SYMPTOM:

- Improper idling
- Engine stalls.
- Poor driving performance

CAUTION:

After repair or replacement of faulty parts, perform Clear Memory Mode <Ref. to EN(H6DO)(diag)-52, OPERATION, Clear Memory Mode.>, and Inspection Mode <Ref. to EN(H6DO)(diag)-44, PROCEDURE, Inspection Mode.>.

WIRING DIAGRAM:

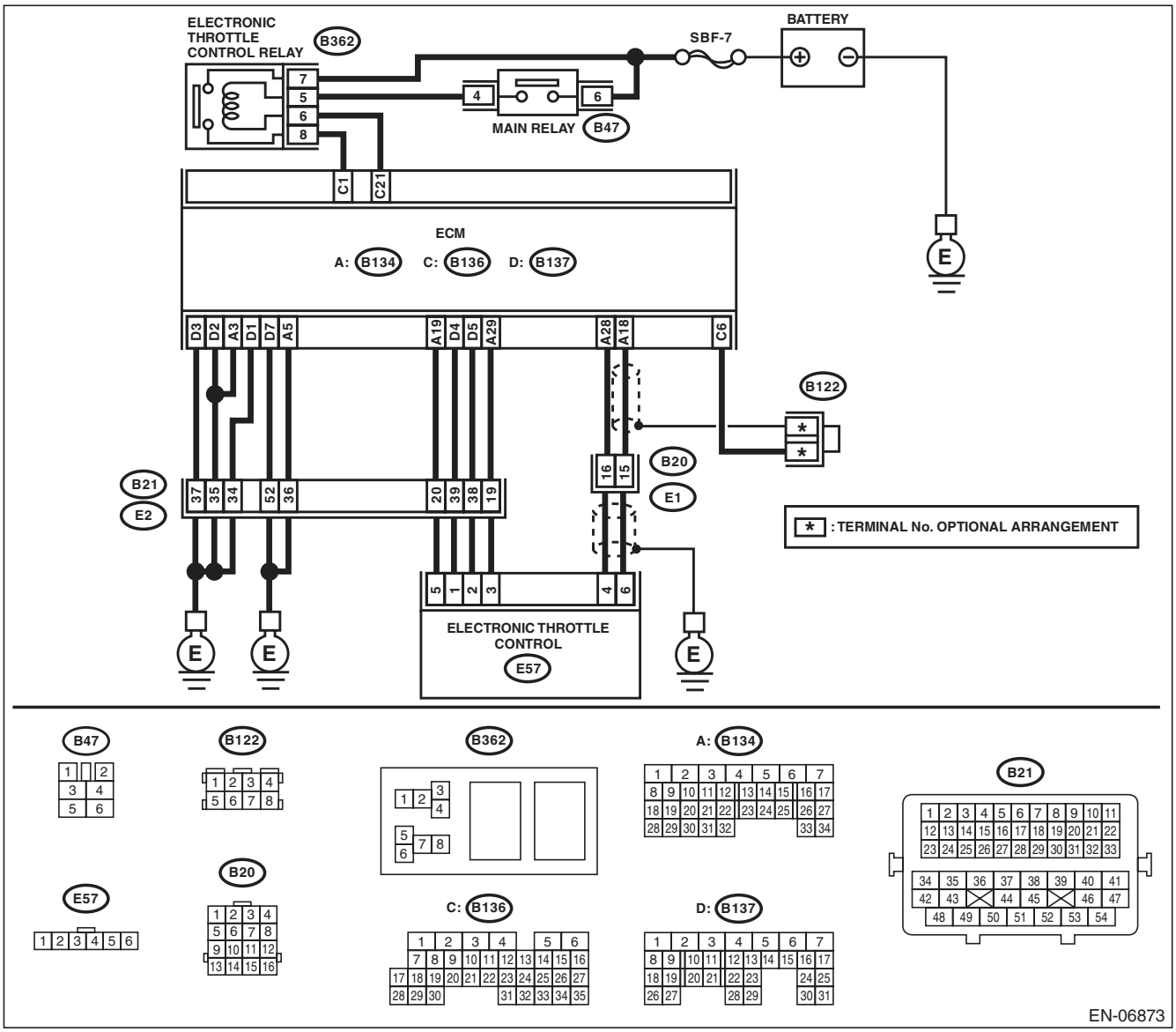

Step		Check	Yes	No
1	**CHECK HARNESS BETWEEN ECM AND ELECTRONIC THROTTLE CONTROL.** 1) Turn the ignition switch to OFF. 2) Disconnect the connectors from ECM and electronic throttle control. 3) Measure the resistance between ECM and chassis ground. ***Connector & terminal*** ***(B134) No. 19 — Chassis ground:*** ***(B134) No. 18 — Chassis ground:*** ***(B134) No. 18 — (B136) No. 6:***	Is the resistance 1 MΩ or more?	Go to step **2**.	Repair the short circuit to ground in harness between ECM and electronic throttle control connector.
2	**CHECK SHORT CIRCUIT INSIDE THE ECM.** 1) Connect the connector to ECM. 2) Measure the resistance between electronic throttle control connector and engine ground. ***Connector & terminal*** ***(E57) No. 6 — Engine ground:***	Is the resistance 1 MΩ or more?	Replace the electronic throttle control. <Ref. to FU(H6DO)-13, Throttle Body.>	Repair the short circuit to ground in harness between ECM and electronic throttle control connector. Replace the ECM if defective. <Ref. to FU(H6DO)-38, Engine Control Module (ECM).>

AG:DTC P0123 THROTTLE/PEDAL POSITION SENSOR/SWITCH “A” CIRCUIT HIGH

DTC DETECTING CONDITION:

- Immediately at fault recognition
- GENERAL DESCRIPTION <Ref. to GD(H6DO)-44, DTC P0123 THROTTLE/PEDAL POSITION SENSOR/SWITCH “A” CIRCUIT HIGH, Diagnostic Trouble Code (DTC) Detecting Criteria.>

TROUBLE SYMPTOM:

- Improper idling
- Engine stalls.
- Poor driving performance

CAUTION:

After repair or replacement of faulty parts, perform Clear Memory Mode <Ref. to EN(H6DO)(diag)-52, OPERATION, Clear Memory Mode.>, and Inspection Mode <Ref. to EN(H6DO)(diag)-44, PROCEDURE, Inspection Mode.>.

WIRING DIAGRAM:

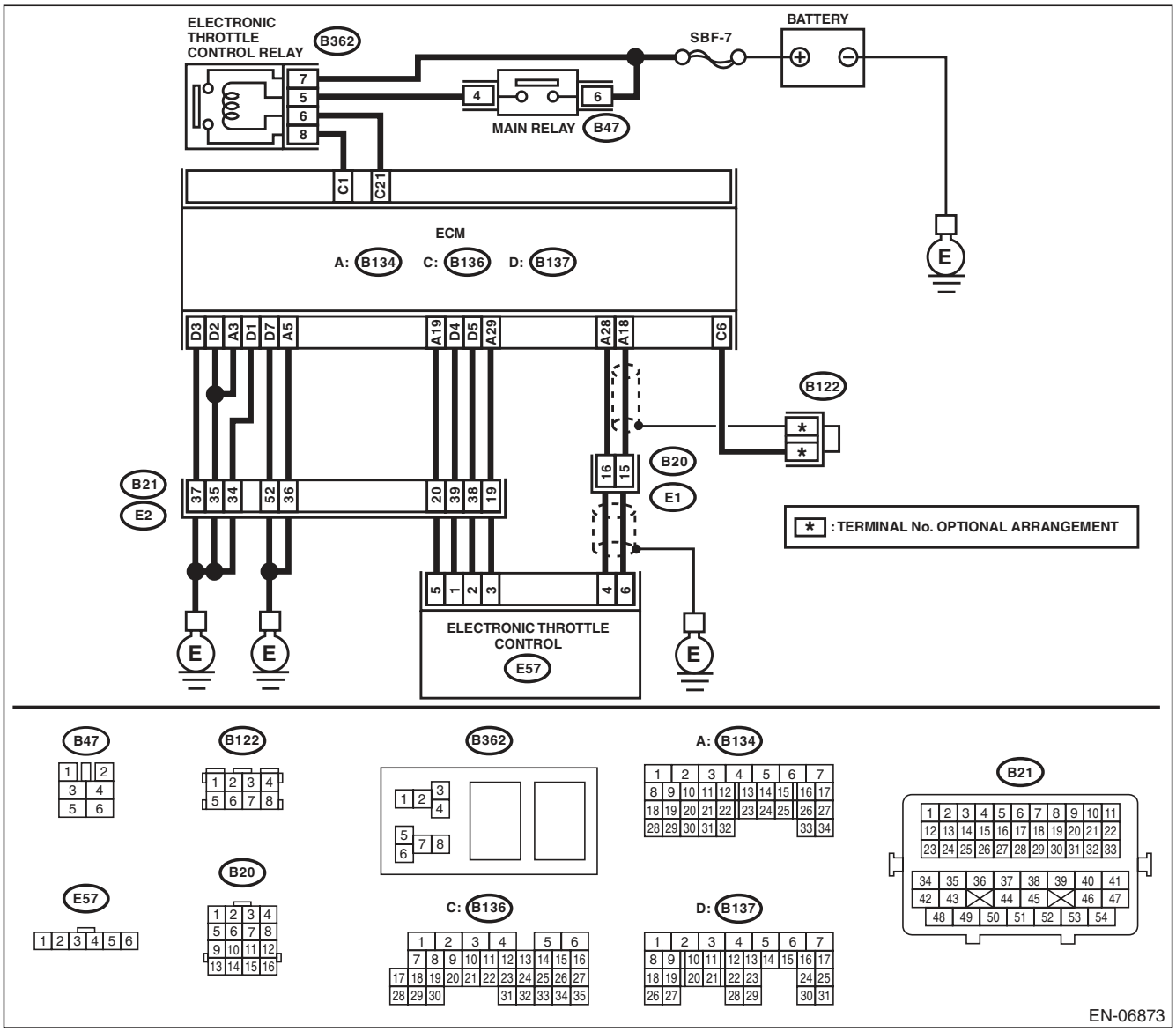

	Step	Check	Yes	No
1	**CHECK HARNESS BETWEEN ECM AND ELECTRONIC THROTTLE CONTROL.** 1) Turn the ignition switch to OFF. 2) Disconnect the connectors from ECM and electronic throttle control. 3) Measure the resistance of harness between ECM and electronic throttle control connector. ***Connector & terminal*** ***(B134) No. 18 — (E57) No. 6:*** ***(B134) No. 29 — (E57) No. 3:***	Is the resistance less than 1 Ω?	Go to step **2**.	Repair the harness and connector. NOTE: In this case, repair the following item: • Open circuit in harness between ECM and electronic throttle control connector • Poor contact of coupling connector
2	**CHECK HARNESS BETWEEN ECM AND ELECTRONIC THROTTLE CONTROL.** 1) Connect the connector to ECM. 2) Measure the resistance between electronic throttle control connector and engine ground. ***Connector & terminal*** ***(E57) No. 3 — Engine ground:***	Is the resistance less than 5 Ω?	Go to step **3**.	Repair the harness and connector. NOTE: In this case, repair the following item: • Open circuit of harness between ECM and engine ground • Poor contact in ECM connector • Poor contact of coupling connector
3	**CHECK HARNESS BETWEEN ECM AND ELECTRONIC THROTTLE CONTROL.** 1) Turn the ignition switch to ON. 2) Measure the voltage between electronic throttle control connector and engine ground. ***Connector & terminal*** ***(E57) No. 6 (+) — Engine ground (–):***	Is the voltage 4.85 V or more?	Repair the short circuit to power in the harness between ECM and electronic throttle control connector.	Go to step **4**.
4	**CHECK HARNESS BETWEEN ECM AND ELECTRONIC THROTTLE CONTROL.** 1) Turn the ignition switch to OFF. 2) Disconnect the connectors from ECM. 3) Measure the resistance between ECM connectors. ***Connector & terminal*** ***(B134) No. 19 — (B134) No. 18:***	Is the resistance 1 MΩ or more?	Repair poor contact of the electronic throttle control connector. Replace the electronic throttle control if defective. <Ref. to FU(H6DO)-13, Throttle Body.>	Repair the short circuit to power in the harness between ECM and electronic throttle control connector.

AH:DTC P0125 INSUFFICIENT COOLANT TEMPERATURE FOR CLOSED LOOP FUEL CONTROL

DTC DETECTING CONDITION:

- Two consecutive driving cycles with fault
- GENERAL DESCRIPTION <Ref. to GD(H6DO)-45, DTC P0125 INSUFFICIENT COOLANT TEMPERATURE FOR CLOSED LOOP FUEL CONTROL, Diagnostic Trouble Code (DTC) Detecting Criteria.>

TROUBLE SYMPTOM:

Engine does not return to idle.

CAUTION:

After repair or replacement of faulty parts, perform Clear Memory Mode <Ref. to EN(H6DO)(diag)-52, OPERATION, Clear Memory Mode.>, and Inspection Mode <Ref. to EN(H6DO)(diag)-44, PROCEDURE, Inspection Mode.>.

Step		Check	Yes	No
1	**CHECK TIRE SIZE.**	Is the tire size as specified and the same size as three other wheels?	Go to step **2**.	Replace the tire.
2	**CHECK ENGINE COOLANT.** Check the following items: • Amount of engine coolant • Engine coolant freeze • Contamination of engine coolant	Is the engine coolant normal?	Go to step **3**.	Fill or replace the engine coolant. <Ref. to CO(H6DO)-10, Engine Coolant.>
3	**CHECK THERMOSTAT.**	Does the thermostat remain opened?	Replace the thermostat. <Ref. to CO(H6DO)-13, Thermostat.>	Replace the engine coolant temperature sensor. <Ref. to FU(H6DO)-20, Engine Coolant Temperature Sensor.>

AI: DTC P0126 INSUFFICIENT ENGINE COOLANT TEMPERATURE FOR STABLE OPERATION

DTC DETECTING CONDITION:

- Two consecutive driving cycles with fault
- GENERAL DESCRIPTION <Ref. to GD(H6DO)-47, DTC P0126 INSUFFICIENT ENGINE COOLANT TEMPERATURE FOR STABLE OPERATION, Diagnostic Trouble Code (DTC) Detecting Criteria.>

TROUBLE SYMPTOM:

- Hard to start
- Improper idling
- Poor driving performance

CAUTION:

After repair or replacement of faulty parts, perform Clear Memory Mode <Ref. to EN(H6DO)(diag)-52, OPERATION, Clear Memory Mode.>, and Inspection Mode <Ref. to EN(H6DO)(diag)-44, PROCEDURE, Inspection Mode.>.

WIRING DIAGRAM:

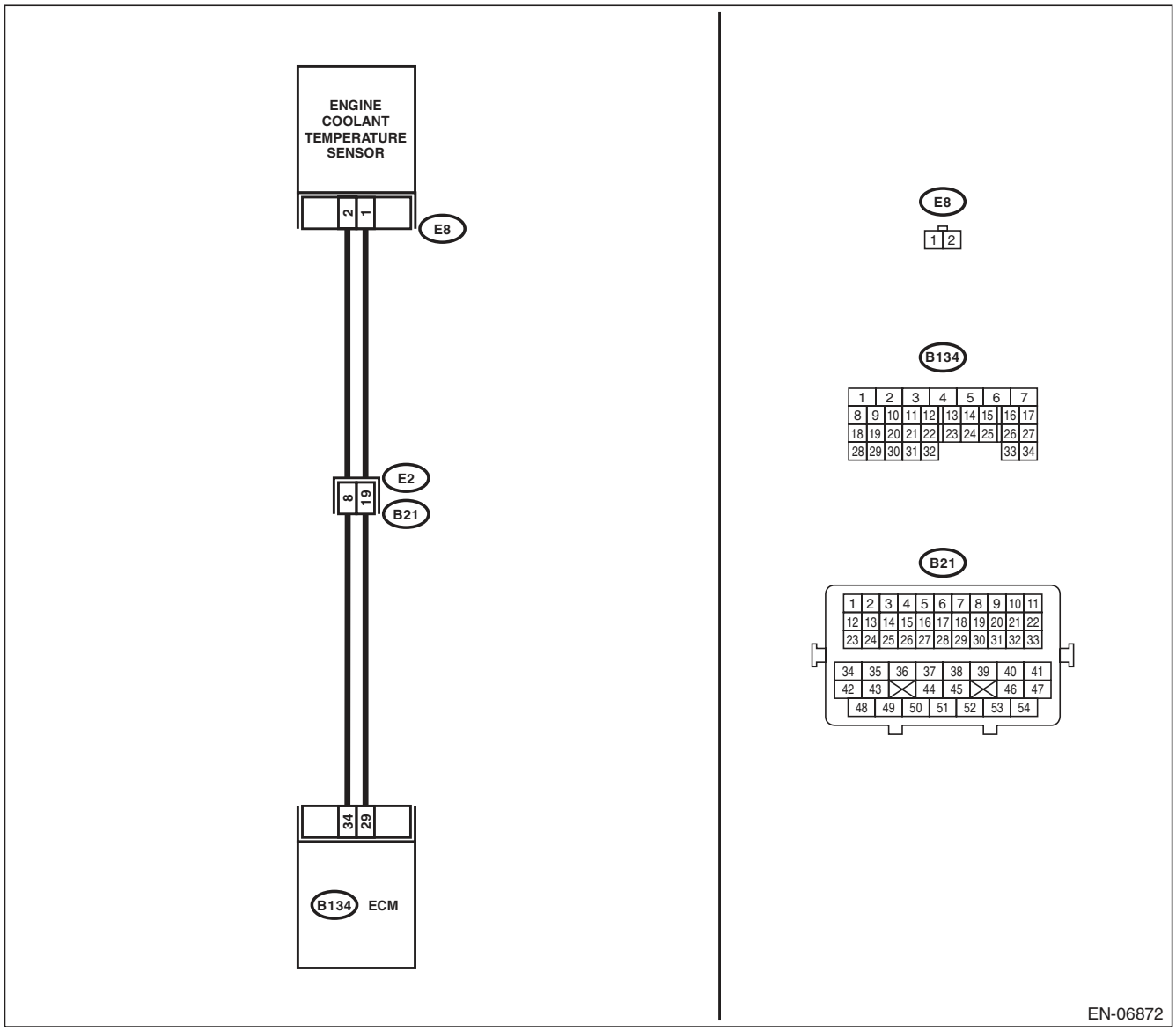

Step		Check	Yes	No
1	**CHECK ENGINE COOLANT TEMPERATURE SENSOR.** Measure the resistance between engine coolant temperature sensor terminals when the engine coolant is cold and after warmed up. ***Terminals*** ***No. 1 — No. 2:***	Is the resistance of engine coolant temperature sensor different between when engine coolant is cold and after warmed up?	Repair the poor contact of ECM connector.	Replace the engine coolant temperature sensor. <Ref. to FU(H6DO)-20, Engine Coolant Temperature Sensor.>

AJ:DTC P0128 COOLANT THERMOSTAT (ENGINE COOLANT TEMPERATURE BELOW THERMOSTAT REGULATING TEMPERATURE)

DTC DETECTING CONDITION:

- Two consecutive driving cycles with fault
- GENERAL DESCRIPTION <Ref. to GD(H6DO)-49, DTC P0128 COOLANT THERMOSTAT (ENGINE COOLANT TEMPERATURE BELOW THERMOSTAT REGULATING TEMPERATURE), Diagnostic Trouble Code (DTC) Detecting Criteria.>

TROUBLE SYMPTOM:

Thermostat remains open.

CAUTION:

After repair or replacement of faulty parts, perform Clear Memory Mode <Ref. to EN(H6DO)(diag)-52, OPERATION, Clear Memory Mode.>, and Inspection Mode <Ref. to EN(H6DO)(diag)-44, PROCEDURE, Inspection Mode.>.

Step		Check	Yes	No
1	**CHECK ENGINE COOLANT.**	Are the coolant level and mixture ratio of engine coolant to anti-freeze solution correct?	Go to step **2**.	Replace the engine coolant. <Ref. to CO(H6DO)-10, REPLACEMENT, Engine Coolant.>
2	**CHECK RADIATOR FAN.** 1) Start the engine. 2) Check the radiator fan operation.	Does the radiator fan continuously rotate for 3 minutes or more during idling?	Repair radiator fan circuit. <Ref. to CO(H6DO)-19, Radiator Main Fan and Fan Motor.> and <Ref. to CO(H6DO)-22, Radiator Sub Fan and Fan Motor.>	Replace the thermostat. <Ref. to CO(H6DO)-13, Thermostat.>

AK:DTC P0131 O2 SENSOR CIRCUIT LOW VOLTAGE (BANK 1 SENSOR 1)

DTC DETECTING CONDITION:

- Immediately at fault recognition
- GENERAL DESCRIPTION <Ref. to GD(H6DO)-51, DTC P0131 O2 SENSOR CIRCUIT LOW VOLTAGE (BANK 1 SENSOR 1), Diagnostic Trouble Code (DTC) Detecting Criteria.>

CAUTION:

After repair or replacement of faulty parts, perform Clear Memory Mode <Ref. to EN(H6DO)(diag)-52, OPERATION, Clear Memory Mode.>, and Inspection Mode <Ref. to EN(H6DO)(diag)-44, PROCEDURE, Inspection Mode.>.

WIRING DIAGRAM:

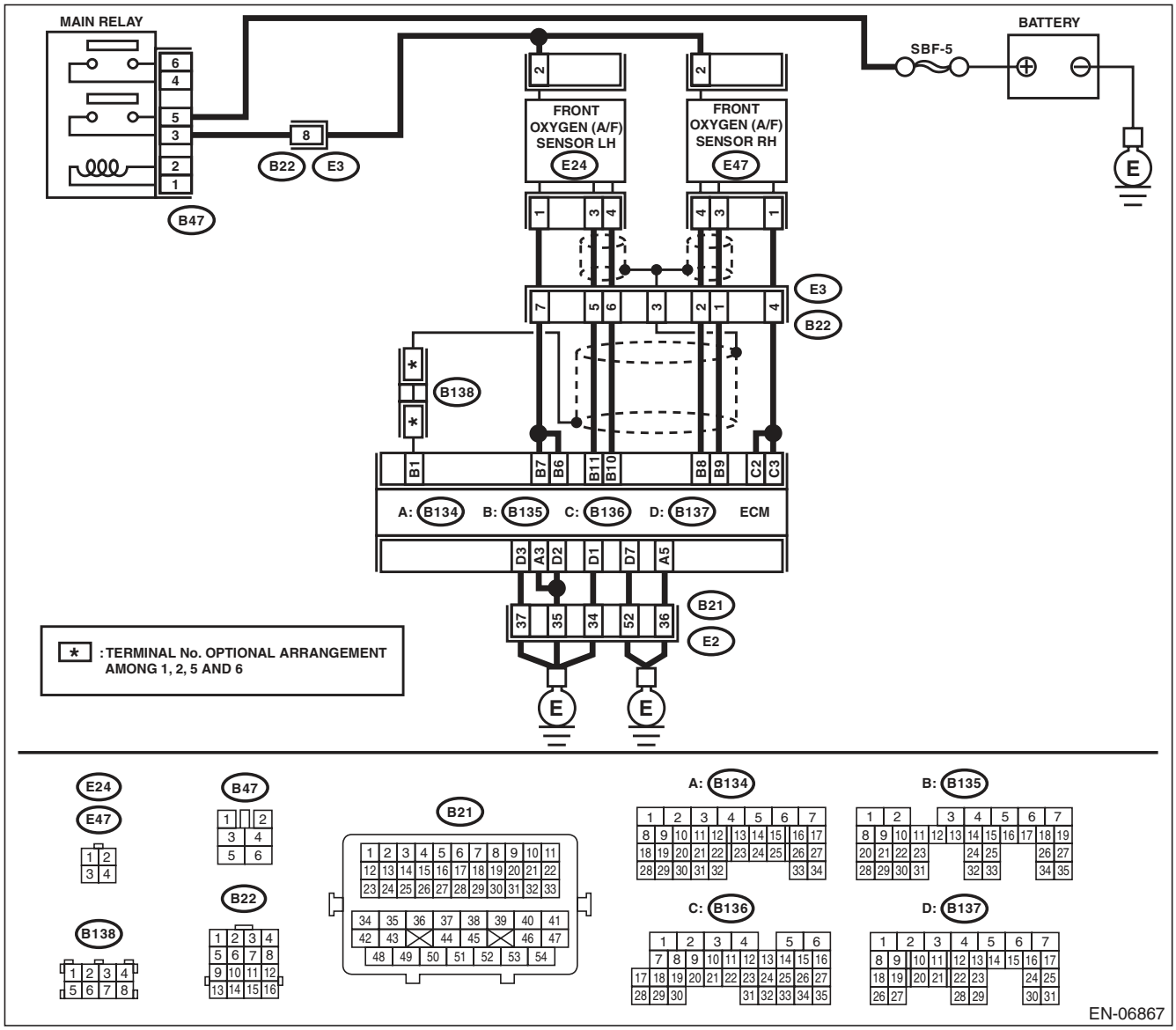

Step		Check	Yes	No
1	**CHECK FRONT OXYGEN (A/F) SENSOR CONNECTOR AND COUPLING CONNECTOR.**	Has water entered the connector?	Completely remove any water inside.	Go to step **2**.
2	**CHECK HARNESS BETWEEN ECM AND FRONT OXYGEN (A/F) SENSOR CONNECTOR.** 1) Turn the ignition switch to OFF. 2) Disconnect the connectors from ECM and front oxygen (A/F) sensor connector. 3) Measure the resistance between ECM and chassis ground. ***Connector & terminal*** ***(B135) No. 9 — Chassis ground:*** ***(B135) No. 8 — Chassis ground:***	Is the resistance 1 MΩ or more?	Go to step **3**.	Repair the ground short circuit of harness between ECM and front oxygen (A/F) sensor connector.
3	**CHECK POOR CONTACT.** Check for poor contact in the front oxygen (A/F) sensor connector.	Is there poor contact in front oxygen (A/F) sensor connector?	Repair the poor contact of the front oxygen (A/F) sensor connector.	Replace the front oxygen (A/F) sensor. <Ref. to FU(H6DO)-32, Front Oxygen (A/F) Sensor.>

AL:DTC P0132 O2 SENSOR CIRCUIT HIGH VOLTAGE (BANK 1 SENSOR 1)

DTC DETECTING CONDITION:

- Immediately at fault recognition
- GENERAL DESCRIPTION <Ref. to GD(H6DO)-53, DTC P0132 O2 SENSOR CIRCUIT HIGH VOLTAGE (BANK 1 SENSOR 1), Diagnostic Trouble Code (DTC) Detecting Criteria.>

CAUTION:

After repair or replacement of faulty parts, perform Clear Memory Mode <Ref. to EN(H6DO)(diag)-52, OPERATION, Clear Memory Mode.>, and Inspection Mode <Ref. to EN(H6DO)(diag)-44, PROCEDURE, Inspection Mode.>.

WIRING DIAGRAM:

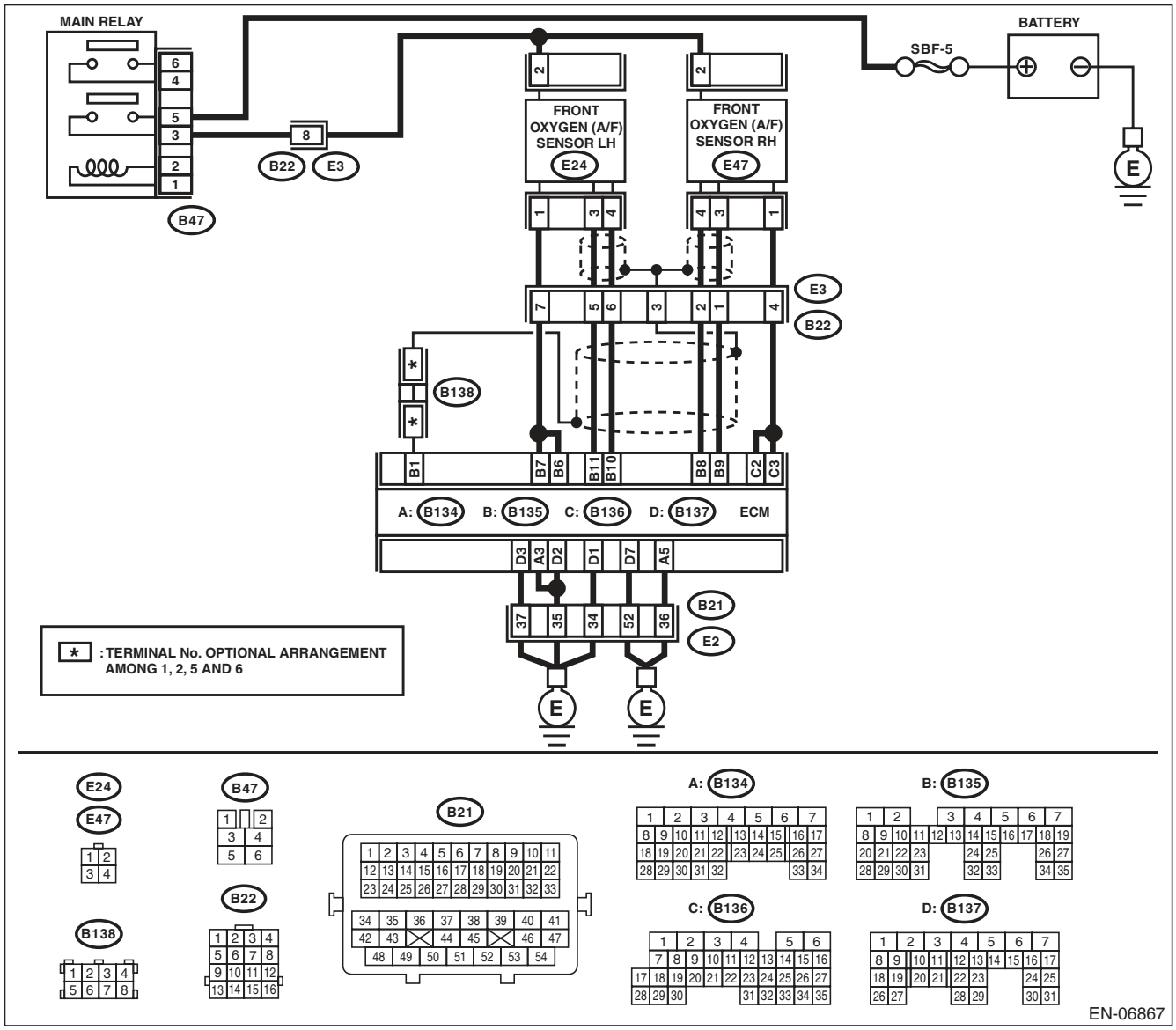

Step		Check	Yes	No
1	**CHECK FRONT OXYGEN (A/F) SENSOR CONNECTOR AND COUPLING CONNECTOR.**	Has water entered the connector?	Completely remove any water inside.	Go to step **2**.
2	**CHECK HARNESS BETWEEN ECM AND FRONT OXYGEN (A/F) SENSOR CONNECTOR.** 1) Turn the ignition switch to OFF. 2) Disconnect the connector from front oxygen (A/F) sensor. 3) Turn the ignition switch to ON. 4) Measure the voltage between ECM and chassis ground. ***Connector & terminal*** ***(B135) No. 9 (+) — Chassis ground (–):*** ***(B135) No. 8 (+) — Chassis ground (–):***	Is the voltage 8 V or more?	Repair the short circuit to power in the harness between ECM and front oxygen (A/F) sensor connector.	Replace the front oxygen (A/F) sensor. <Ref. to FU(H6DO)-32, Front Oxygen (A/F) Sensor.>

AM:DTC P0133 O2 SENSOR CIRCUIT SLOW RESPONSE (BANK 1 SENSOR 1)

DTC DETECTING CONDITION:

- Two consecutive driving cycles with fault
- GENERAL DESCRIPTION <Ref. to GD(H6DO)-55, DTC P0133 O2 SENSOR CIRCUIT SLOW RESPONSE (BANK 1 SENSOR 1), Diagnostic Trouble Code (DTC) Detecting Criteria.>

CAUTION:

After repair or replacement of faulty parts, perform Clear Memory Mode <Ref. to EN(H6DO)(diag)-52, OPERATION, Clear Memory Mode.>, and Inspection Mode <Ref. to EN(H6DO)(diag)-44, PROCEDURE, Inspection Mode.>.

WIRING DIAGRAM:

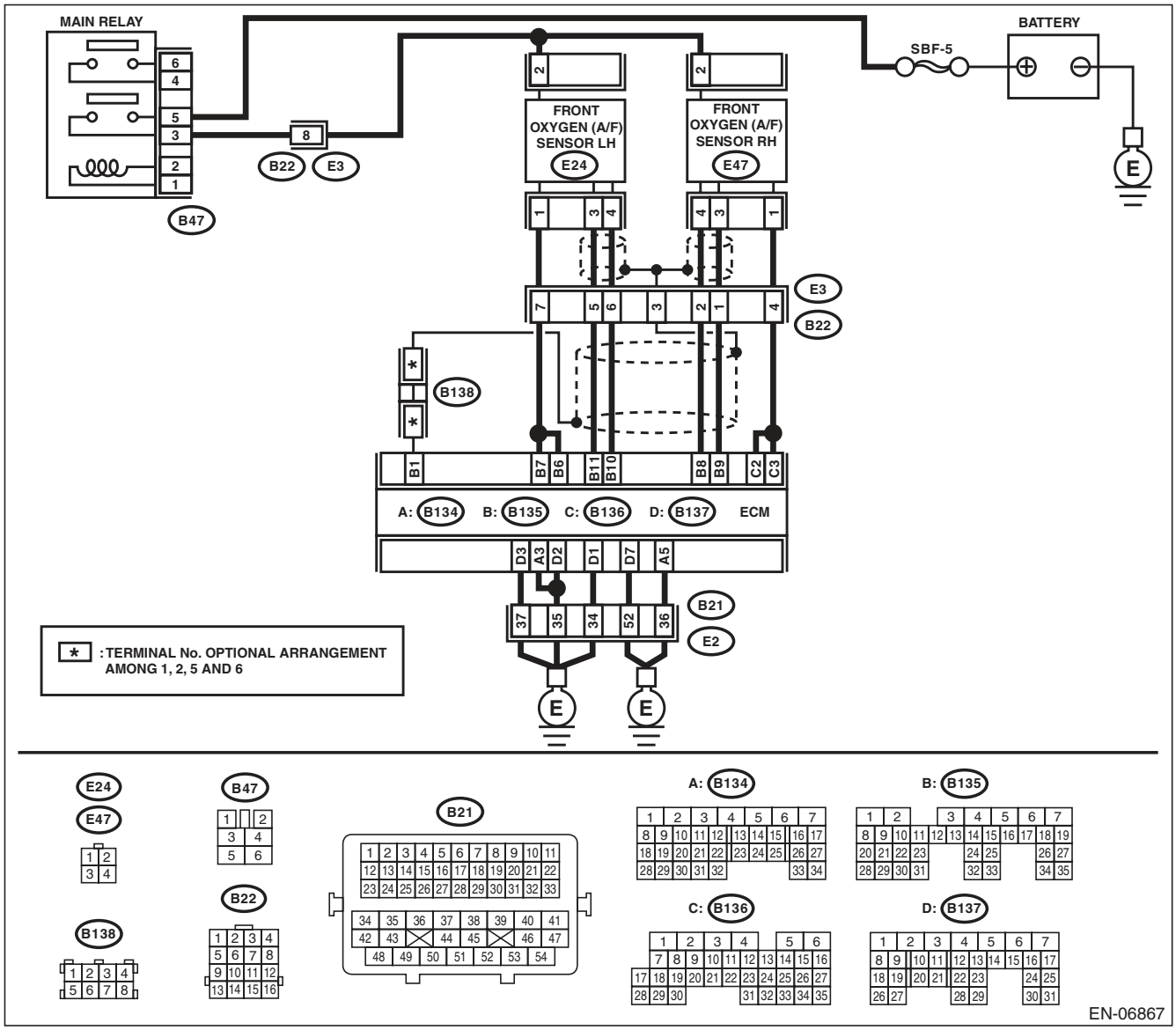

Step		Check	Yes	No
1	**CHECK EXHAUST SYSTEM.** NOTE: Check the following items. • Loose installation of front portion of exhaust pipe onto cylinder heads • Loose connection between front exhaust pipe and front catalytic converter • Damage of exhaust pipe resulting in a hole	Is there any fault in exhaust system?	Repair the exhaust system.	Replace the front oxygen (A/F) sensor. <Ref. to FU(H6DO)-32, Front Oxygen (A/F) Sensor.>

AN:DTC P0134 O2 SENSOR CIRCUIT NO ACTIVITY DETECTED (BANK 1 SENSOR 1)

DTC DETECTING CONDITION:

- Immediately at fault recognition
- GENERAL DESCRIPTION <Ref. to GD(H6DO)-58, DTC P0134 O2 SENSOR CIRCUIT NO ACTIVITY DETECTED (BANK 1 SENSOR 1), Diagnostic Trouble Code (DTC) Detecting Criteria.>

CAUTION:

After repair or replacement of faulty parts, perform Clear Memory Mode <Ref. to EN(H6DO)(diag)-52, OPERATION, Clear Memory Mode.>, and Inspection Mode <Ref. to EN(H6DO)(diag)-44, PROCEDURE, Inspection Mode.>.

WIRING DIAGRAM:

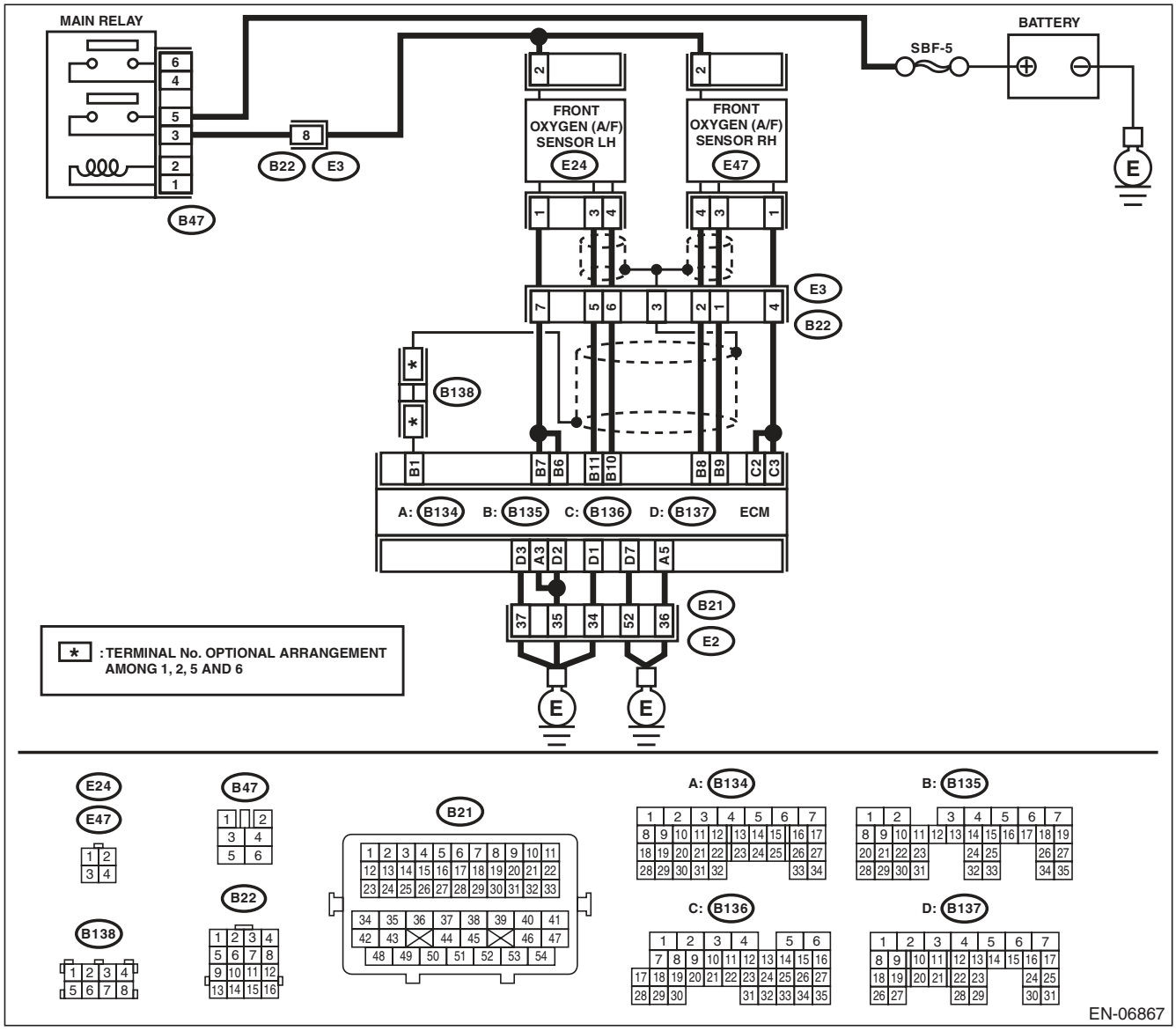

Step		Check	Yes	No
1	**CHECK HARNESS BETWEEN ECM AND FRONT OXYGEN (A/F) SENSOR CONNECTOR.** 1) Turn the ignition switch to OFF. 2) Disconnect the connectors from ECM and front oxygen (A/F) sensor connector. 3) Measure the resistance of harness between ECM and front oxygen (A/F) sensor connector. ***Connector & terminal*** ***(B135) No. 9 — (E47) No. 3:*** ***(B135) No. 8 — (E47) No. 4:***	Is the resistance less than 1 Ω?	Go to step **2**.	Repair the harness and connector. NOTE: In this case, repair the following item: • Open circuit in harness between ECM and front oxygen (A/F) sensor connector • Poor contact of coupling connector
2	**CHECK POOR CONTACT.** Check for poor contact of ECM and front oxygen (A/F) sensor connector.	Is there poor contact in ECM or front oxygen (A/F) sensor connector?	Repair the poor contact in ECM or front oxygen (A/F) sensor connector.	Replace the front oxygen (A/F) sensor. <Ref. to FU(H6DO)-32, Front Oxygen (A/F) Sensor.>

AO:DTC P0137 O2 SENSOR CIRCUIT LOW VOLTAGE (BANK 1 SENSOR 2)

DTC DETECTING CONDITION:

- Two consecutive driving cycles with fault
- GENERAL DESCRIPTION <Ref. to GD(H6DO)-60, DTC P0137 O2 SENSOR CIRCUIT LOW VOLTAGE (BANK 1 SENSOR 2), Diagnostic Trouble Code (DTC) Detecting Criteria.>

CAUTION:

After repair or replacement of faulty parts, perform Clear Memory Mode <Ref. to EN(H6DO)(diag)-52, OPERATION, Clear Memory Mode.>, and Inspection Mode <Ref. to EN(H6DO)(diag)-44, PROCEDURE, Inspection Mode.>.

WIRING DIAGRAM:

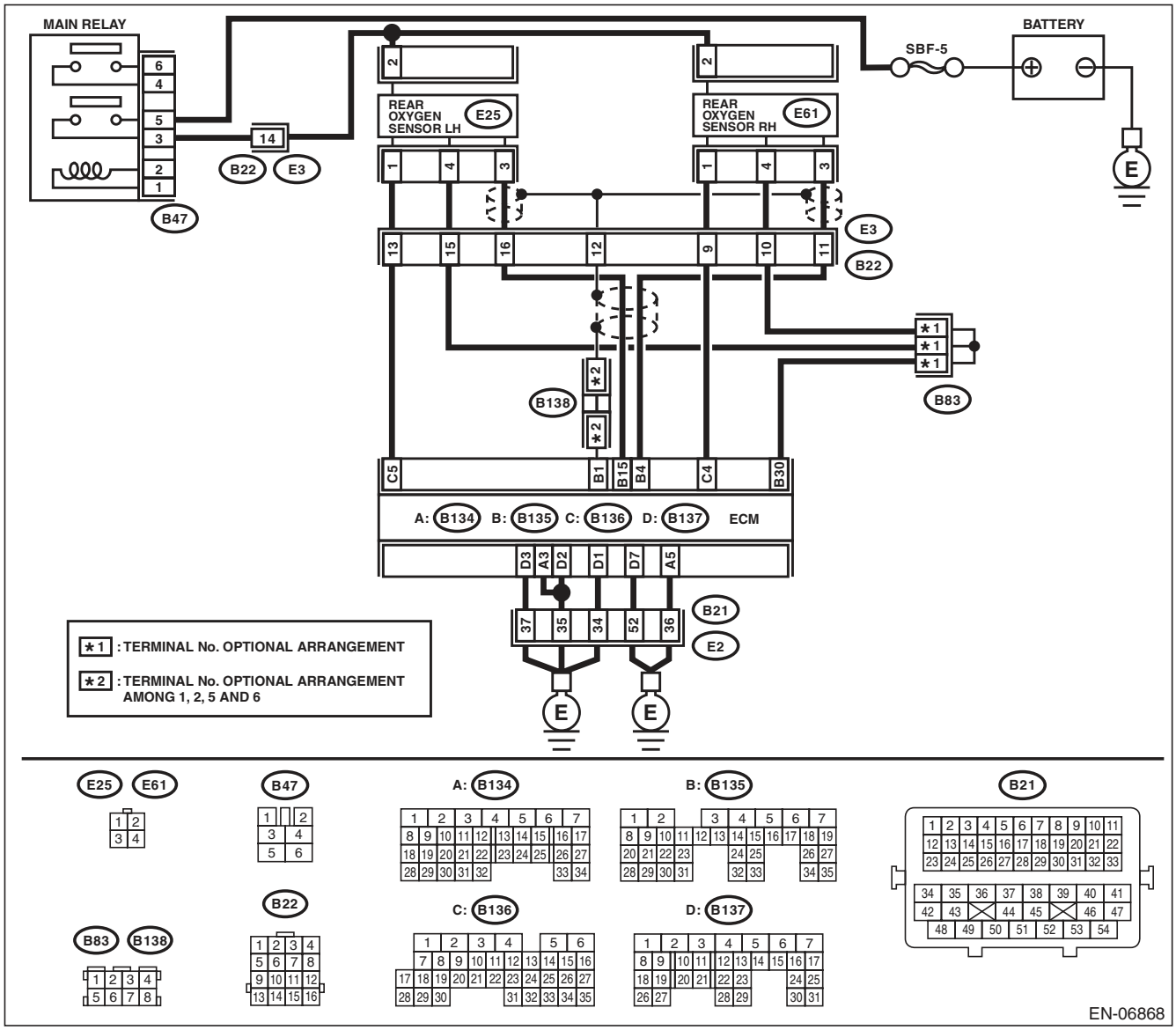

	Step	Check	Yes	No
1	**CHECK REAR OXYGEN SENSOR DATA.** 1) Warm up the engine until engine coolant temperature is above 75°C (167°F), and keep the engine speed at 3,000 rpm. (for up to 2 minutes) 2) Read the data of rear oxygen sensor signal using Subaru Select Monitor or general scan tool. NOTE: • SUBARU SELECT MONITOR For detailed operation procedure, refer to "READ CURRENT DATA FOR ENGINE". <Ref. to EN(H6DO)(diag)-34, Subaru Select Monitor.> • General Scan Tool For detailed operation procedures, refer to the general scan tool operation manual.	Is the voltage 490 mV or more?	Go to step **5**.	Go to step **2**.
2	**CHECK REAR OXYGEN SENSOR CONNECTOR AND COUPLING CONNECTOR.**	Has water entered the connector?	Completely remove any water inside.	Go to step **3**.
3	**CHECK HARNESS BETWEEN ECM AND REAR OXYGEN SENSOR CONNECTOR.** 1) Turn the ignition switch to OFF. 2) Disconnect the connectors from ECM and rear oxygen sensor. 3) Measure the resistance of harness between ECM and rear oxygen sensor connector. ***Connector & terminal*** ***(B135) No. 4 — (E61) No. 3:*** ***(B135) No. 30 — (E61) No. 4:***	Is the resistance less than 1 Ω?	Go to step **4**.	Repair the harness and connector. NOTE: In this case, repair the following item: • Open circuit in harness between ECM and rear oxygen sensor connector • Poor contact of coupling connector
4	**CHECK HARNESS BETWEEN ECM AND REAR OXYGEN SENSOR.** 1) Turn the ignition switch to OFF. 2) Disconnect the connector from rear oxygen sensor. 3) Turn the ignition switch to ON. 4) Measure the voltage between rear oxygen sensor connector and chassis ground. ***Connector & terminal*** ***(E61) No. 3 (+) — Chassis ground (–):***	Is the voltage 0.2 — 0.5 V?	Replace the rear oxygen sensor. <Ref. to FU(H6DO)-34, Rear Oxygen Sensor.>	Repair the harness and connector. NOTE: In this case, repair the following item: • Open circuit of harness between the ECM and rear oxygen sensor • Poor contact of the rear oxygen sensor connector • Poor contact in ECM connector
5	**CHECK EXHAUST SYSTEM.** Check exhaust system parts. NOTE: Check the following items. • Looseness and improper attachment of exhaust system parts • Damage (crack, hole etc.) of parts • Looseness and improper attachment of parts between front oxygen (A/F) sensor and rear oxygen sensor	Is there any fault in exhaust system?	Repair or replace faulty parts.	Replace the rear oxygen sensor. <Ref. to FU(H6DO)-34, Rear Oxygen Sensor.>

AP:DTC P0138 O2 SENSOR CIRCUIT HIGH VOLTAGE (BANK 1 SENSOR 2)

DTC DETECTING CONDITION:

- Two consecutive driving cycles with fault
- GENERAL DESCRIPTION <Ref. to GD(H6DO)-63, DTC P0138 O2 SENSOR CIRCUIT HIGH VOLTAGE (BANK 1 SENSOR 2), Diagnostic Trouble Code (DTC) Detecting Criteria.>

CAUTION:

After repair or replacement of faulty parts, perform Clear Memory Mode <Ref. to EN(H6DO)(diag)-52, OPERATION, Clear Memory Mode.>, and Inspection Mode <Ref. to EN(H6DO)(diag)-44, PROCEDURE, Inspection Mode.>.

WIRING DIAGRAM:

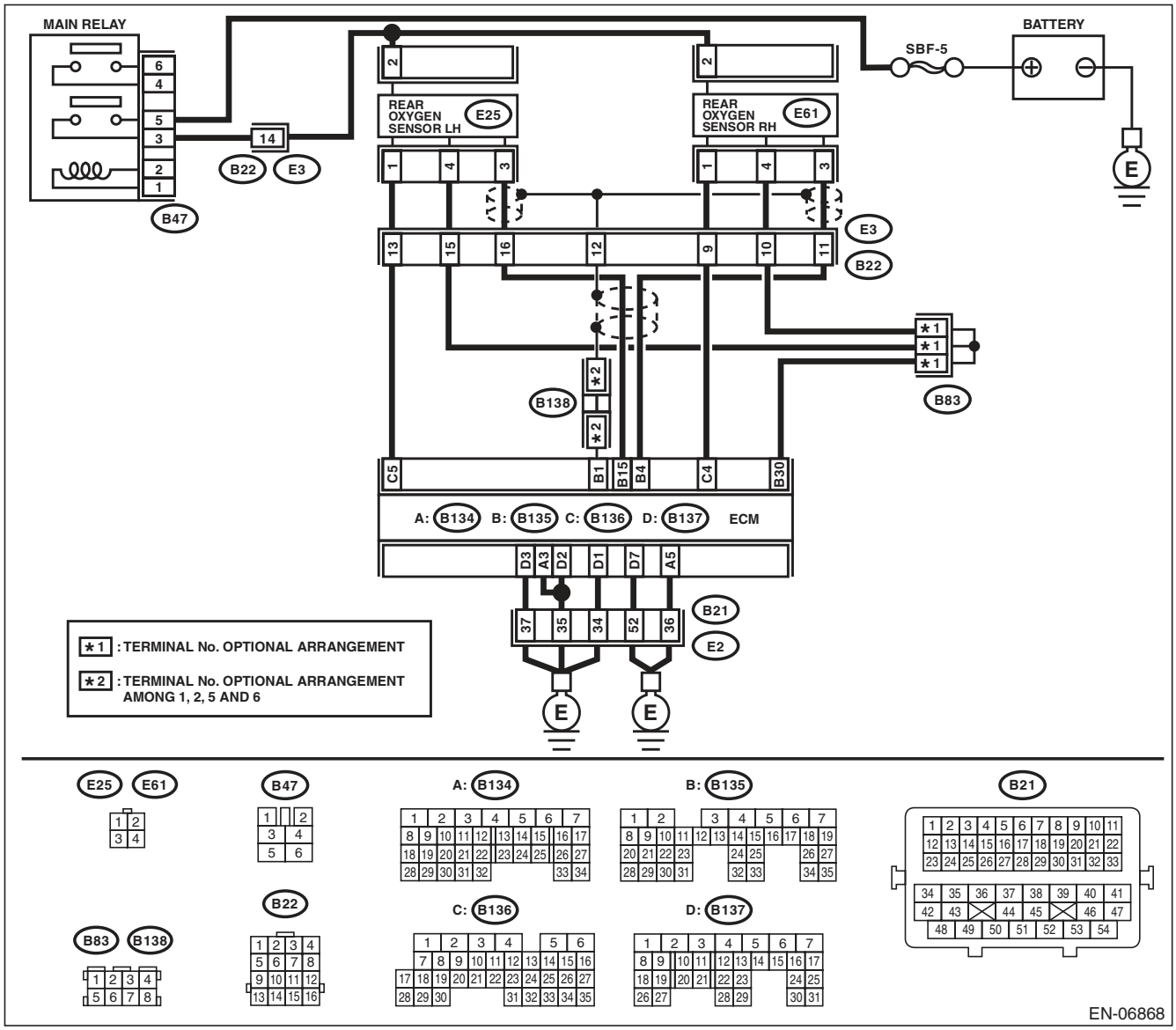

	Step	Check	Yes	No
1	**CHECK REAR OXYGEN SENSOR DATA.** 1) Warm up the engine until engine coolant temperature is above 75°C (167°F), and rapidly reduce the engine speed from 3,000 rpm. 2) Read the data of rear oxygen sensor signal using Subaru Select Monitor or general scan tool. NOTE: • SUBARU SELECT MONITOR For detailed operation procedure, refer to "READ CURRENT DATA FOR ENGINE". <Ref. to EN(H6DO)(diag)-34, Subaru Select Monitor.> • General Scan Tool For detailed operation procedures, refer to the general scan tool operation manual.	Is the voltage 250 mV or less?	Go to step **5**.	Go to step **2**.
2	**CHECK REAR OXYGEN SENSOR CONNECTOR AND COUPLING CONNECTOR.**	Has water entered the connector?	Completely remove any water inside.	Go to step **3**.
3	**CHECK HARNESS BETWEEN ECM AND REAR OXYGEN SENSOR CONNECTOR.** 1) Turn the ignition switch to OFF. 2) Disconnect the connectors from ECM and rear oxygen sensor. 3) Measure the resistance of harness between ECM and rear oxygen sensor connector. ***Connector & terminal*** ***(B135) No. 4 — (E61) No. 3:*** ***(B135) No. 30 — (E61) No. 4:***	Is the resistance less than 1 Ω?	Go to step **4**.	Repair the harness and connector. NOTE: In this case, repair the following item: • Open circuit in harness between ECM and rear oxygen sensor connector • Poor contact of coupling connector
4	**CHECK HARNESS BETWEEN ECM AND REAR OXYGEN SENSOR.** 1) Turn the ignition switch to OFF. 2) Disconnect the connector from rear oxygen sensor. 3) Turn the ignition switch to ON. 4) Measure the voltage between rear oxygen sensor connector and chassis ground. ***Connector & terminal*** ***(E61) No. 3 (+) — Chassis ground (–):***	Is the voltage 0.2 — 0.5 V?	Replace the rear oxygen sensor. <Ref. to FU(H6DO)-34, Rear Oxygen Sensor.>	Repair the harness and connector. NOTE: In this case, repair the following item: • Open circuit of harness between the ECM and rear oxygen sensor • Poor contact of the rear oxygen sensor connector • Poor contact in ECM connector
5	**CHECK EXHAUST SYSTEM.** Check exhaust system parts. NOTE: Check the following items. • Looseness and improper attachment of exhaust system parts • Damage (crack, hole etc.) of parts • Looseness and improper attachment of parts between front oxygen (A/F) sensor and rear oxygen sensor	Is there any fault in exhaust system?	Repair or replace faulty parts.	Replace the rear oxygen sensor. <Ref. to FU(H6DO)-34, Rear Oxygen Sensor.>

AQ:DTC P0139 O2 SENSOR CIRCUIT SLOW RESPONSE (BANK 1 SENSOR 2)

DTC DETECTING CONDITION:

- Two consecutive driving cycles with fault
- GENERAL DESCRIPTION <Ref. to GD(H6DO)-64, DTC P0139 O2 SENSOR CIRCUIT SLOW RESPONSE (BANK 1 SENSOR 2), Diagnostic Trouble Code (DTC) Detecting Criteria.>

CAUTION:

After repair or replacement of faulty parts, perform Clear Memory Mode <Ref. to EN(H6DO)(diag)-52, OPERATION, Clear Memory Mode.>, and Inspection Mode <Ref. to EN(H6DO)(diag)-44, PROCEDURE, Inspection Mode.>.

WIRING DIAGRAM:

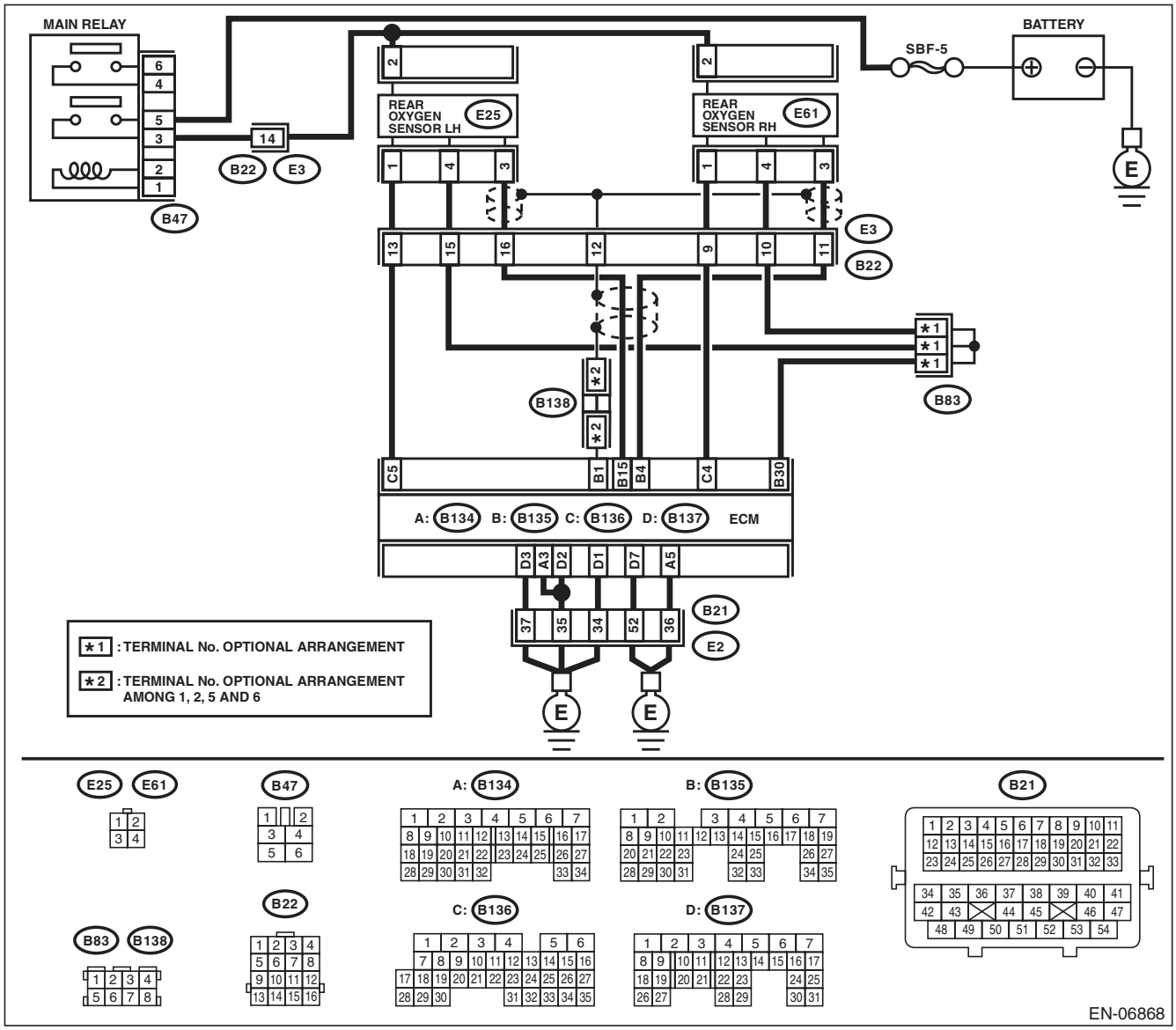

	Step	Check	Yes	No
1	**CHECK HARNESS BETWEEN ECM AND REAR OXYGEN SENSOR CONNECTOR.** 1) Turn the ignition switch to OFF. 2) Disconnect the connectors from ECM and rear oxygen sensor. 3) Measure the resistance of harness between ECM and rear oxygen sensor connector. ***Connector & terminal*** ***(B135) No. 4 — (E61) No. 3:***	Is the resistance less than 1 Ω?	Go to step **2**.	Repair the harness and connector. NOTE: In this case, repair the following item: • Open circuit in harness between ECM and rear oxygen sensor connector • Poor contact of coupling connector
2	**CHECK HARNESS BETWEEN ECM AND REAR OXYGEN SENSOR CONNECTOR.** Measure the resistance between rear oxygen sensor connector and chassis ground. ***Connector & terminal*** ***(E61) No. 3 — Chassis ground***	Is the resistance 1 MΩ or more?	Go to step **3**.	Repair the ground short circuit of harness between ECM and rear oxygen sensor connector.
3	**CHECK REAR OXYGEN SENSOR.** Measure the resistance between rear oxygen sensor terminals. ***Terminals*** ***No. 3 — No. 4***	Is the resistance less than 1 Ω?	Replace the rear oxygen sensor. <Ref. to FU(H6DO)-34, Rear Oxygen Sensor.>	Even if DTC is detected, the circuit has returned to a normal condition at this time. Reproduce the failure, and then perform the diagnosis again. NOTE: In this case, temporary poor contact of connector may be the cause.

AR:DTC P0140 O2 SENSOR CIRCUIT NO ACTIVITY DETECTED (BANK1 SENSOR2)

DTC DETECTING CONDITION:

- Two consecutive driving cycles with fault
- GENERAL DESCRIPTION <Ref. to GD(H6DO)-69, DTC P0140 O2 SENSOR CIRCUIT NO ACTIVITY DETECTED (BANK1 SENSOR2), Diagnostic Trouble Code (DTC) Detecting Criteria.>

CAUTION:

After repair or replacement of faulty parts, perform Clear Memory Mode <Ref. to EN(H6DO)(diag)-52, OPERATION, Clear Memory Mode.>, and Inspection Mode <Ref. to EN(H6DO)(diag)-44, PROCEDURE, Inspection Mode.>.

WIRING DIAGRAM:

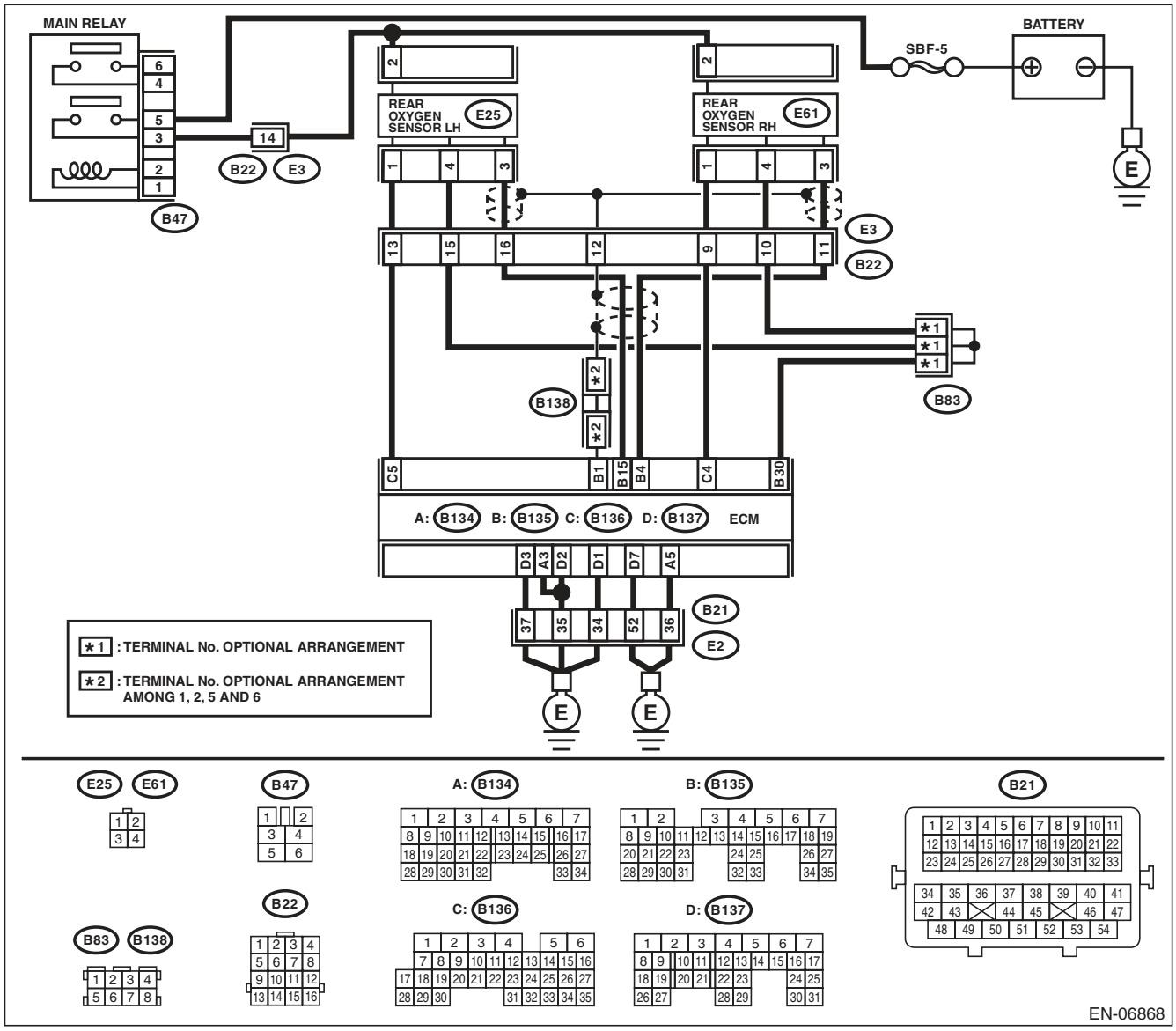

	Step	Check	Yes	No
1	**CHECK REAR OXYGEN SENSOR DATA.** 1) Warm up the engine until engine coolant temperature is above 75°C (167°F), and keep the engine speed at 3,000 rpm. (for up to 2 minutes) 2) Read the data of rear oxygen sensor signal using Subaru Select Monitor or general scan tool. NOTE: • SUBARU SELECT MONITOR For detailed operation procedure, refer to "READ CURRENT DATA FOR ENGINE". <Ref. to EN(H6DO)(diag)-34, Subaru Select Monitor.> • General Scan Tool For detailed operation procedures, refer to the general scan tool operation manual.	Is the voltage 490 mV or more?	Go to step **6**.	Go to step **2**.
2	**CHECK REAR OXYGEN SENSOR DATA.** 1) Warm up the engine until engine coolant temperature is above 75°C (167°F), and rapidly reduce the engine speed from 3,000 rpm. 2) Read the data of rear oxygen sensor signal using Subaru Select Monitor or general scan tool. NOTE: • SUBARU SELECT MONITOR For detailed operation procedure, refer to "READ CURRENT DATA FOR ENGINE". <Ref. to EN(H6DO)(diag)-34, Subaru Select Monitor.> • General Scan Tool For detailed operation procedures, refer to the general scan tool operation manual.	Is the voltage 250 mV or less?	Go to step **6**.	Go to step **3**.
3	**CHECK REAR OXYGEN SENSOR CONNECTOR AND COUPLING CONNECTOR.**	Has water entered the connector?	Completely remove any water inside.	Go to step **4**.
4	**CHECK HARNESS BETWEEN ECM AND REAR OXYGEN SENSOR CONNECTOR.** 1) Turn the ignition switch to OFF. 2) Disconnect the connectors from ECM and rear oxygen sensor. 3) Measure the resistance of harness between ECM and rear oxygen sensor connector. ***Connector & terminal*** ***(B135) No. 4 — (E61) No. 3:*** ***(B135) No. 30 — (E61) No. 4:***	Is the resistance less than 1 Ω?	Go to step **5**.	Repair the harness and connector. NOTE: In this case, repair the following item: • Open circuit in harness between ECM and rear oxygen sensor connector • Poor contact of coupling connector

	Step	Check	Yes	No
5	**CHECK HARNESS BETWEEN ECM AND REAR OXYGEN SENSOR.** 1) Turn the ignition switch to OFF. 2) Disconnect the connector from rear oxygen sensor. 3) Turn the ignition switch to ON. 4) Measure the voltage between rear oxygen sensor connector and chassis ground. ***Connector & terminal*** ***(E61) No. 3 (+) — Chassis ground (–):***	Is the voltage 0.2 — 0.5 V?	Replace the rear oxygen sensor. <Ref. to FU(H6DO)-34, Rear Oxygen Sensor.>	Repair the harness and connector. NOTE: In this case, repair the following item: • Open circuit of harness between the ECM and rear oxygen sensor • Poor contact of the rear oxygen sensor connector • Poor contact in ECM connector
6	**CHECK EXHAUST SYSTEM.** Check exhaust system parts. NOTE: Check the following items. • Looseness and improper attachment of exhaust system parts • Damage (crack, hole etc.) of parts • Looseness and improper attachment of parts between front oxygen (A/F) sensor and rear oxygen sensor	Is there any fault in exhaust system?	Repair or replace faulty parts.	Replace the rear oxygen sensor. <Ref. to FU(H6DO)-34, Rear Oxygen Sensor.>

AS:DTC P0151 O2 SENSOR CIRCUIT LOW VOLTAGE (BANK 2 SENSOR 1)

DTC DETECTING CONDITION:

- Immediately at fault recognition
- GENERAL DESCRIPTION <Ref. to GD(H6DO)-71, DTC P0151 O2 SENSOR CIRCUIT LOW VOLTAGE (BANK 2 SENSOR 1), Diagnostic Trouble Code (DTC) Detecting Criteria.>

CAUTION:

After repair or replacement of faulty parts, perform Clear Memory Mode <Ref. to EN(H6DO)(diag)-52, OPERATION, Clear Memory Mode.>, and Inspection Mode <Ref. to EN(H6DO)(diag)-44, PROCEDURE, Inspection Mode.>.

WIRING DIAGRAM:

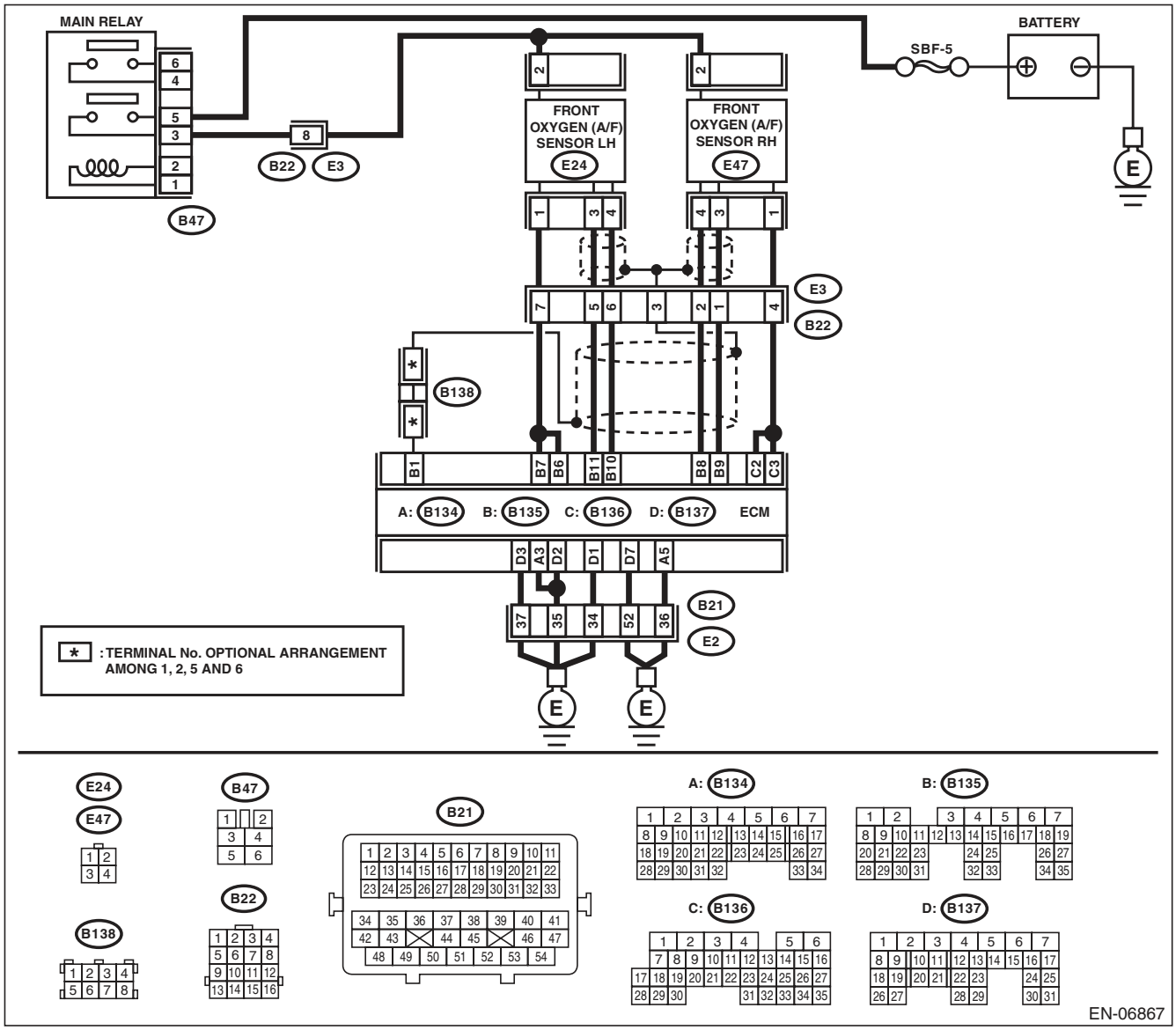

Step		Check	Yes	No
1	**CHECK FRONT OXYGEN (A/F) SENSOR CONNECTOR AND COUPLING CONNECTOR.**	Has water entered the connector?	Completely remove any water inside.	Go to step **2**.
2	**CHECK HARNESS BETWEEN ECM AND FRONT OXYGEN (A/F) SENSOR CONNECTOR.** 1) Turn the ignition switch to OFF. 2) Disconnect the connectors from ECM and front oxygen (A/F) sensor connector. 3) Measure the resistance between ECM and chassis ground. ***Connector & terminal*** ***(B135) No. 11 — Chassis ground:*** ***(B135) No. 10 — Chassis ground:***	Is the resistance 1 MΩ or more?	Go to step **3**.	Repair the ground short circuit of harness between ECM and front oxygen (A/F) sensor connector.
3	**CHECK POOR CONTACT.** Check for poor contact in the front oxygen (A/F) sensor connector.	Is there poor contact in front oxygen (A/F) sensor connector?	Repair the poor contact of the front oxygen (A/F) sensor connector.	Replace the front oxygen (A/F) sensor. <Ref. to FU(H6DO)-32, Front Oxygen (A/F) Sensor.>

AT:DTC P0152 O2 SENSOR CIRCUIT HIGH VOLTAGE (BANK 2 SENSOR 1)

DTC DETECTING CONDITION:

- Immediately at fault recognition
- GENERAL DESCRIPTION <Ref. to GD(H6DO)-71, DTC P0152 O2 SENSOR CIRCUIT HIGH VOLTAGE (BANK 2 SENSOR 1), Diagnostic Trouble Code (DTC) Detecting Criteria.>

CAUTION:

After repair or replacement of faulty parts, perform Clear Memory Mode <Ref. to EN(H6DO)(diag)-52, OPERATION, Clear Memory Mode.>, and Inspection Mode <Ref. to EN(H6DO)(diag)-44, PROCEDURE, Inspection Mode.>.

WIRING DIAGRAM:

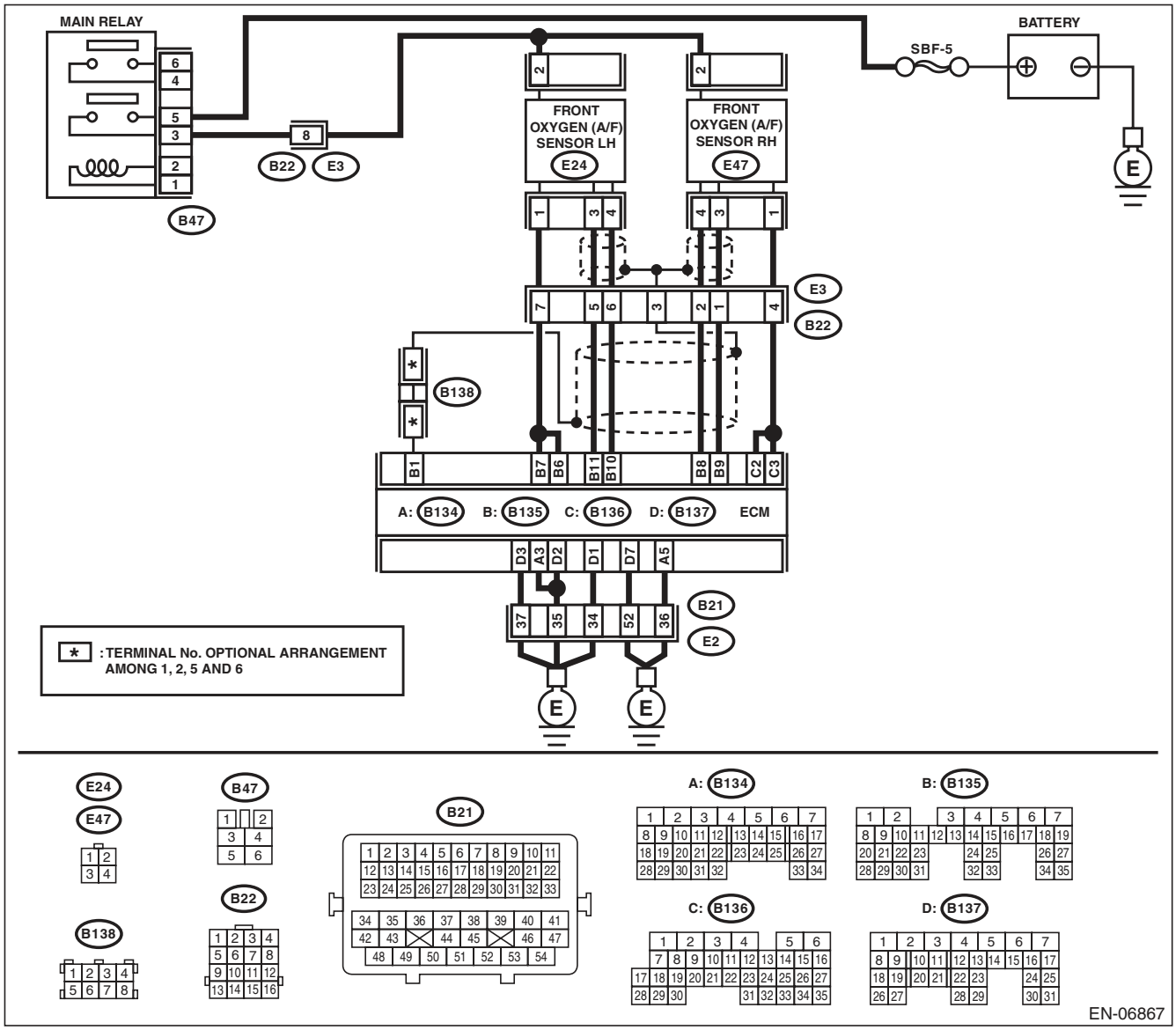

Step		Check	Yes	No
1	**CHECK FRONT OXYGEN (A/F) SENSOR CONNECTOR AND COUPLING CONNECTOR.**	Has water entered the connector?	Completely remove any water inside.	Go to step **2**.
2	**CHECK HARNESS BETWEEN ECM AND FRONT OXYGEN (A/F) SENSOR CONNECTOR.** 1) Turn the ignition switch to OFF. 2) Disconnect the connector from front oxygen (A/F) sensor. 3) Turn the ignition switch to ON. 4) Measure the voltage between ECM and chassis ground. ***Connector & terminal*** ***(B135) No. 11 (+) — Chassis ground (–):*** ***(B135) No. 10 (+) — Chassis ground (–):***	Is the voltage 8 V or more?	Repair the short circuit to power in the harness between ECM and front oxygen (A/F) sensor connector.	Replace the front oxygen (A/F) sensor. <Ref. to FU(H6DO)-32, Front Oxygen (A/F) Sensor.>

AU:DTC P0153 O2 SENSOR CIRCUIT SLOW RESPONSE (BANK 2 SENSOR 1)

DTC DETECTING CONDITION:

- Two consecutive driving cycles with fault
- GENERAL DESCRIPTION <Ref. to GD(H6DO)-71, DTC P0153 O2 SENSOR CIRCUIT SLOW RESPONSE (BANK 2 SENSOR 1), Diagnostic Trouble Code (DTC) Detecting Criteria.>

CAUTION:

After repair or replacement of faulty parts, perform Clear Memory Mode <Ref. to EN(H6DO)(diag)-52, OPERATION, Clear Memory Mode.>, and Inspection Mode <Ref. to EN(H6DO)(diag)-44, PROCEDURE, Inspection Mode.>.

WIRING DIAGRAM:

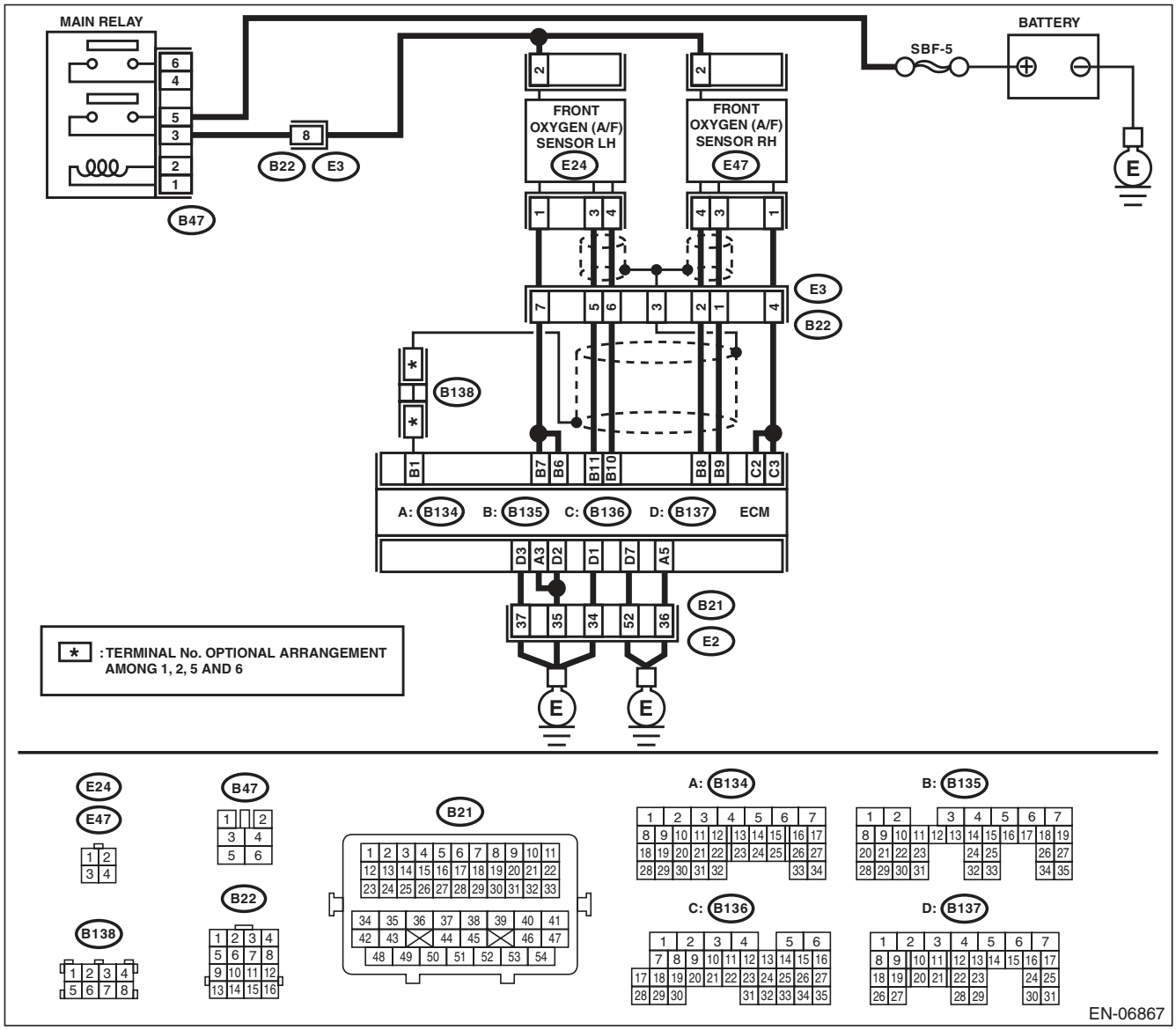

Step		Check	Yes	No
1	**CHECK EXHAUST SYSTEM.** NOTE: Check the following items. • Loose installation of front portion of exhaust pipe onto cylinder heads • Loose connection between front exhaust pipe and front catalytic converter • Damage of exhaust pipe resulting in a hole	Is there any fault in exhaust system?	Repair the exhaust system.	Replace the front oxygen (A/F) sensor. <Ref. to FU(H6DO)-32, Front Oxygen (A/F) Sensor.>

AV:DTC P0154 O2 SENSOR CIRCUIT NO ACTIVITY DETECTED (BANK 2 SENSOR 1)

DTC DETECTING CONDITION:

- Immediately at fault recognition
- GENERAL DESCRIPTION <Ref. to GD(H6DO)-71, DTC P0154 O2 SENSOR CIRCUIT NO ACTIVITY DETECTED (BANK 2 SENSOR 1), Diagnostic Trouble Code (DTC) Detecting Criteria.>

CAUTION:

After repair or replacement of faulty parts, perform Clear Memory Mode <Ref. to EN(H6DO)(diag)-52, OPERATION, Clear Memory Mode.>, and Inspection Mode <Ref. to EN(H6DO)(diag)-44, PROCEDURE, Inspection Mode.>.

WIRING DIAGRAM:

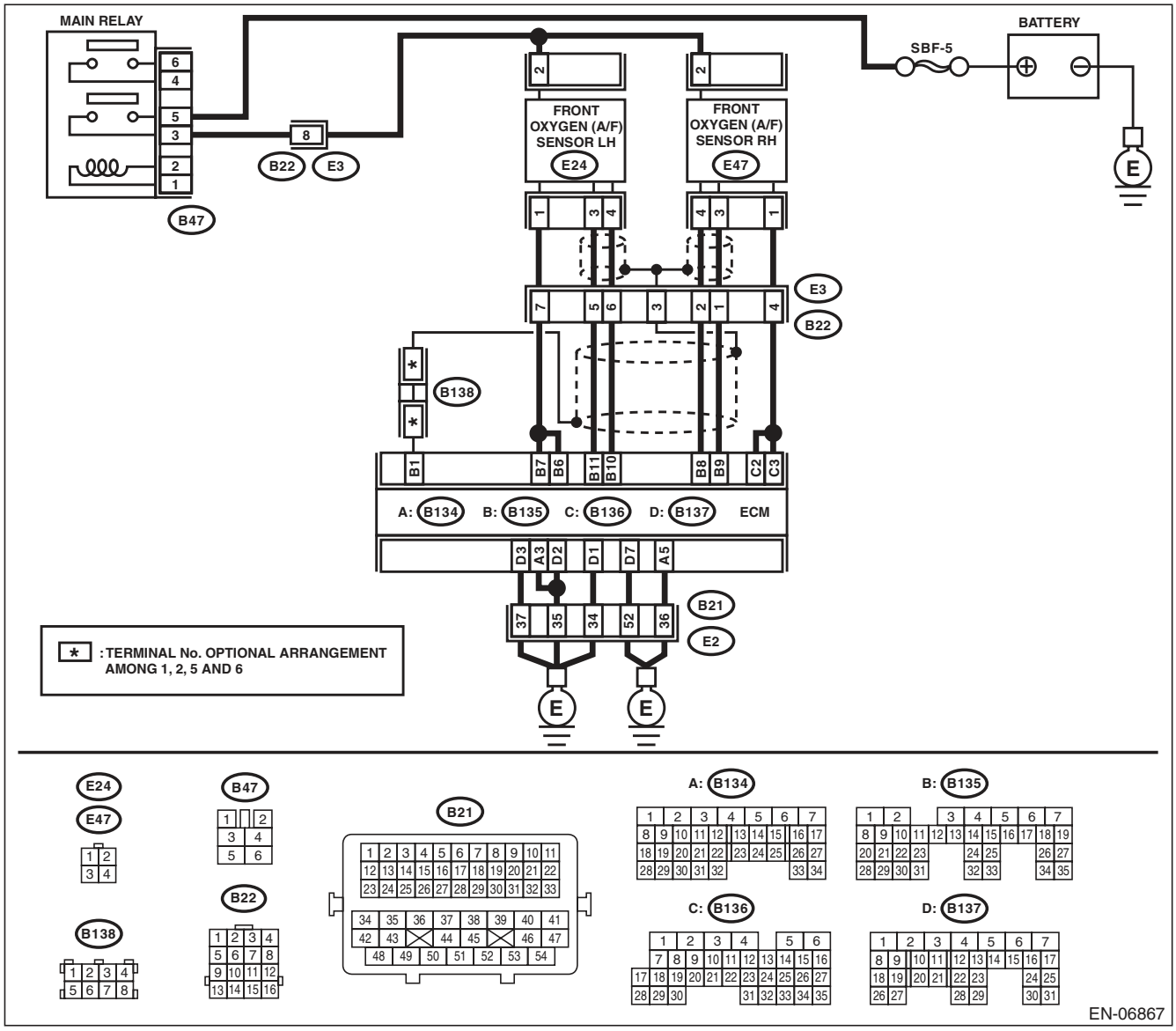

	Step	Check	Yes	No
1	**CHECK HARNESS BETWEEN ECM AND FRONT OXYGEN (A/F) SENSOR CONNECTOR.** 1) Turn the ignition switch to OFF. 2) Disconnect the connectors from ECM and front oxygen (A/F) sensor connector. 3) Measure the resistance of harness between ECM and front oxygen (A/F) sensor connector. ***Connector & terminal*** ***(B135) No. 11 — (E24) No. 3:*** ***(B135) No. 10 — (E24) No. 4:***	Is the resistance less than 1 Ω?	Go to step **2**.	Repair the harness and connector. NOTE: In this case, repair the following item: • Open circuit in harness between ECM and front oxygen (A/F) sensor connector • Poor contact of coupling connector
2	**CHECK POOR CONTACT.** Check for poor contact of ECM and front oxygen (A/F) sensor connector.	Is there poor contact in ECM or front oxygen (A/F) sensor connector?	Repair the poor contact in ECM or front oxygen (A/F) sensor connector.	Replace the front oxygen (A/F) sensor. <Ref. to FU(H6DO)-32, Front Oxygen (A/F) Sensor.>

AW:DTC P0157 O2 SENSOR CIRCUIT LOW VOLTAGE (BANK 2 SENSOR 2)

DTC DETECTING CONDITION:

- Two consecutive driving cycles with fault
- GENERAL DESCRIPTION <Ref. to GD(H6DO)-71, DTC P0157 O2 SENSOR CIRCUIT LOW VOLTAGE (BANK 2 SENSOR 2), Diagnostic Trouble Code (DTC) Detecting Criteria.>

CAUTION:

After repair or replacement of faulty parts, perform Clear Memory Mode <Ref. to EN(H6DO)(diag)-52, OPERATION, Clear Memory Mode.>, and Inspection Mode <Ref. to EN(H6DO)(diag)-44, PROCEDURE, Inspection Mode.>.

WIRING DIAGRAM:

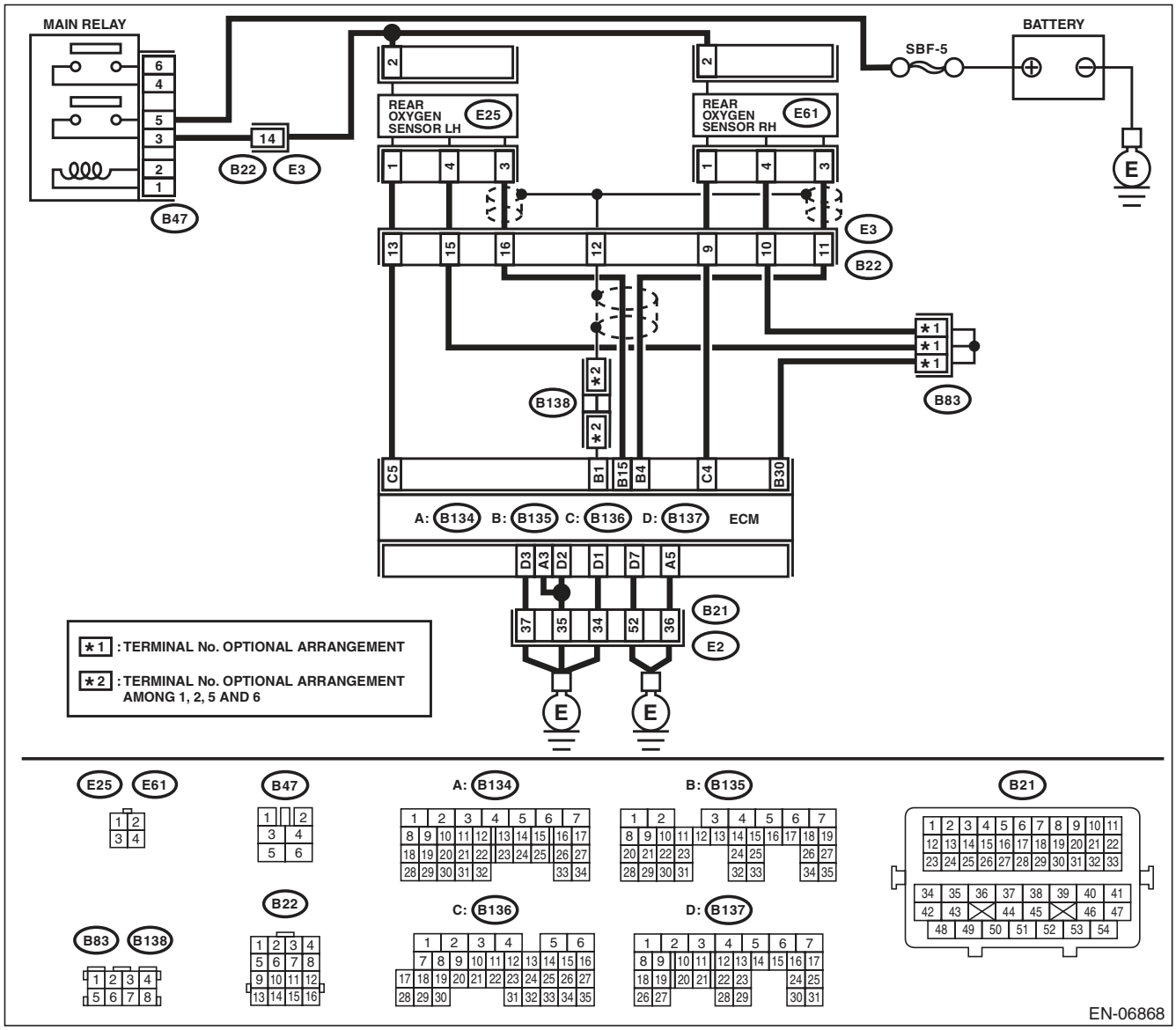

	Step	Check	Yes	No
1	**CHECK REAR OXYGEN SENSOR DATA.** 1) Warm up the engine until engine coolant temperature is above 75°C (167°F), and keep the engine speed at 3,000 rpm. (for up to 2 minutes) 2) Read the data of rear oxygen sensor signal using Subaru Select Monitor or general scan tool. NOTE: • SUBARU SELECT MONITOR For detailed operation procedure, refer to "READ CURRENT DATA FOR ENGINE". <Ref. to EN(H6DO)(diag)-34, Subaru Select Monitor.> • General Scan Tool For detailed operation procedures, refer to the general scan tool operation manual.	Is the voltage 490 mV or more?	Go to step **5**.	Go to step **2**.
2	**CHECK REAR OXYGEN SENSOR CONNECTOR AND COUPLING CONNECTOR.**	Has water entered the connector?	Completely remove any water inside.	Go to step **3**.
3	**CHECK HARNESS BETWEEN ECM AND REAR OXYGEN SENSOR CONNECTOR.** 1) Turn the ignition switch to OFF. 2) Disconnect the connectors from ECM and rear oxygen sensor. 3) Measure the resistance of harness between ECM and rear oxygen sensor connector. ***Connector & terminal*** ***(B135) No. 15 — (E25) No. 3:*** ***(B135) No. 30 — (E25) No. 4:***	Is the resistance less than 1 Ω?	Go to step **4**.	Repair the harness and connector. NOTE: In this case, repair the following item: • Open circuit in harness between ECM and rear oxygen sensor connector • Poor contact of coupling connector
4	**CHECK HARNESS BETWEEN ECM AND REAR OXYGEN SENSOR.** 1) Turn the ignition switch to OFF. 2) Disconnect the connector from rear oxygen sensor. 3) Turn the ignition switch to ON. 4) Measure the voltage between rear oxygen sensor connector and chassis ground. ***Connector & terminal*** ***(E25) No. 3 (+) — Chassis ground (–):***	Is the voltage 0.2 — 0.5 V?	Replace the rear oxygen sensor. <Ref. to FU(H6DO)-34, Rear Oxygen Sensor.>	Repair the harness and connector. NOTE: In this case, repair the following item: • Open circuit of harness between the ECM and rear oxygen sensor • Poor contact of the rear oxygen sensor connector • Poor contact in ECM connector
5	**CHECK EXHAUST SYSTEM.** Check exhaust system parts. NOTE: Check the following items. • Looseness and improper attachment of exhaust system parts • Damage (crack, hole etc.) of parts • Looseness and improper attachment of parts between front oxygen (A/F) sensor and rear oxygen sensor	Is there any fault in exhaust system?	Repair or replace faulty parts.	Replace the rear oxygen sensor. <Ref. to FU(H6DO)-34, Rear Oxygen Sensor.>

AX:DTC P0158 O2 SENSOR CIRCUIT HIGH VOLTAGE (BANK 2 SENSOR 2)

DTC DETECTING CONDITION:

- Two consecutive driving cycles with fault
- GENERAL DESCRIPTION <Ref. to GD(H6DO)-71, DTC P0158 O2 SENSOR CIRCUIT HIGH VOLTAGE (BANK 2 SENSOR 2), Diagnostic Trouble Code (DTC) Detecting Criteria.>

CAUTION:

After repair or replacement of faulty parts, perform Clear Memory Mode <Ref. to EN(H6DO)(diag)-52, OPERATION, Clear Memory Mode.>, and Inspection Mode <Ref. to EN(H6DO)(diag)-44, PROCEDURE, Inspection Mode.>.

WIRING DIAGRAM:

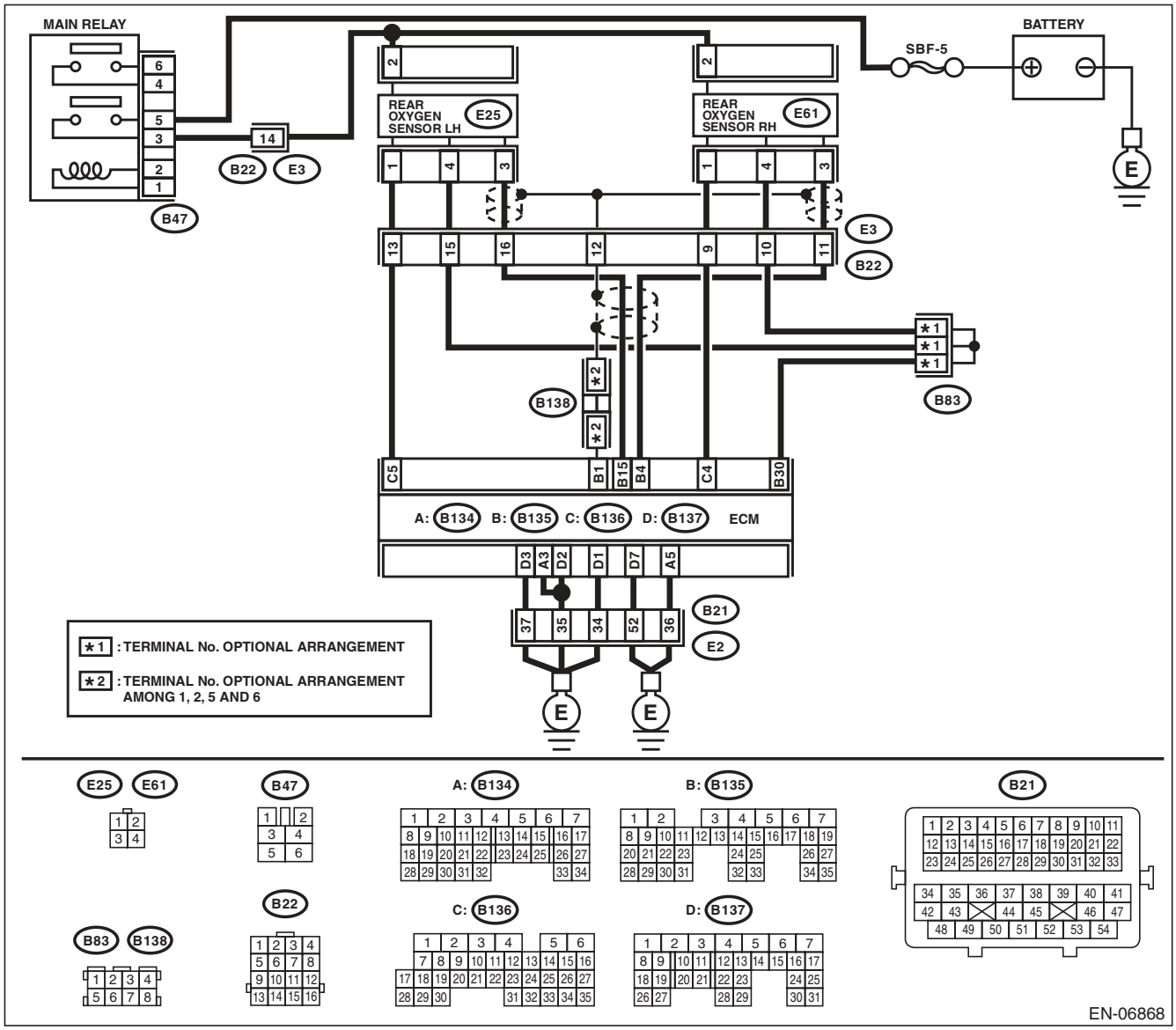

	Step	Check	Yes	No
1	**CHECK REAR OXYGEN SENSOR DATA.** 1) Warm up the engine until engine coolant temperature is above 75°C (167°F), and rapidly reduce the engine speed from 3,000 rpm. 2) Read the data of rear oxygen sensor signal using Subaru Select Monitor or general scan tool. NOTE: • SUBARU SELECT MONITOR For detailed operation procedure, refer to "READ CURRENT DATA FOR ENGINE". <Ref. to EN(H6DO)(diag)-34, Subaru Select Monitor.> • General Scan Tool For detailed operation procedures, refer to the general scan tool operation manual.	Is the voltage 250 mV or less?	Go to step **5**.	Go to step **2**.
2	**CHECK REAR OXYGEN SENSOR CONNECTOR AND COUPLING CONNECTOR.**	Has water entered the connector?	Completely remove any water inside.	Go to step **3**.
3	**CHECK HARNESS BETWEEN ECM AND REAR OXYGEN SENSOR CONNECTOR.** 1) Turn the ignition switch to OFF. 2) Disconnect the connectors from ECM and rear oxygen sensor. 3) Measure the resistance of harness between ECM and rear oxygen sensor connector. ***Connector & terminal*** ***(B135) No. 15 — (E25) No. 3:*** ***(B135) No. 30 — (E25) No. 4:***	Is the resistance less than 1 Ω?	Go to step **4**.	Repair the harness and connector. NOTE: In this case, repair the following item: • Open circuit in harness between ECM and rear oxygen sensor connector • Poor contact of coupling connector
4	**CHECK HARNESS BETWEEN ECM AND REAR OXYGEN SENSOR.** 1) Turn the ignition switch to OFF. 2) Disconnect the connector from rear oxygen sensor. 3) Turn the ignition switch to ON. 4) Measure the voltage between rear oxygen sensor connector and chassis ground. ***Connector & terminal*** ***(E25) No. 3 (+) — Chassis ground (–):***	Is the voltage 0.2 — 0.5 V?	Replace the rear oxygen sensor. <Ref. to FU(H6DO)-34, Rear Oxygen Sensor.>	Repair the harness and connector. NOTE: In this case, repair the following item: • Open circuit of harness between the ECM and rear oxygen sensor • Poor contact of the rear oxygen sensor connector • Poor contact in ECM connector
5	**CHECK EXHAUST SYSTEM.** Check exhaust system parts. NOTE: Check the following items. • Looseness and improper attachment of exhaust system parts • Damage (crack, hole etc.) of parts • Looseness and improper attachment of parts between front oxygen (A/F) sensor and rear oxygen sensor	Is there any fault in exhaust system?	Repair or replace faulty parts.	Replace the rear oxygen sensor. <Ref. to FU(H6DO)-34, Rear Oxygen Sensor.>

AY:DTC P0159 O2 SENSOR CIRCUIT SLOW RESPONSE (BANK 2 SENSOR 2)

DTC DETECTING CONDITION:

- Two consecutive driving cycles with fault
- GENERAL DESCRIPTION <Ref. to GD(H6DO)-71, DTC P0159 O2 SENSOR CIRCUIT SLOW RESPONSE (BANK 2 SENSOR 2), Diagnostic Trouble Code (DTC) Detecting Criteria.>

CAUTION:

After repair or replacement of faulty parts, perform Clear Memory Mode <Ref. to EN(H6DO)(diag)-52, OPERATION, Clear Memory Mode.>, and Inspection Mode <Ref. to EN(H6DO)(diag)-44, PROCEDURE, Inspection Mode.>.

WIRING DIAGRAM:

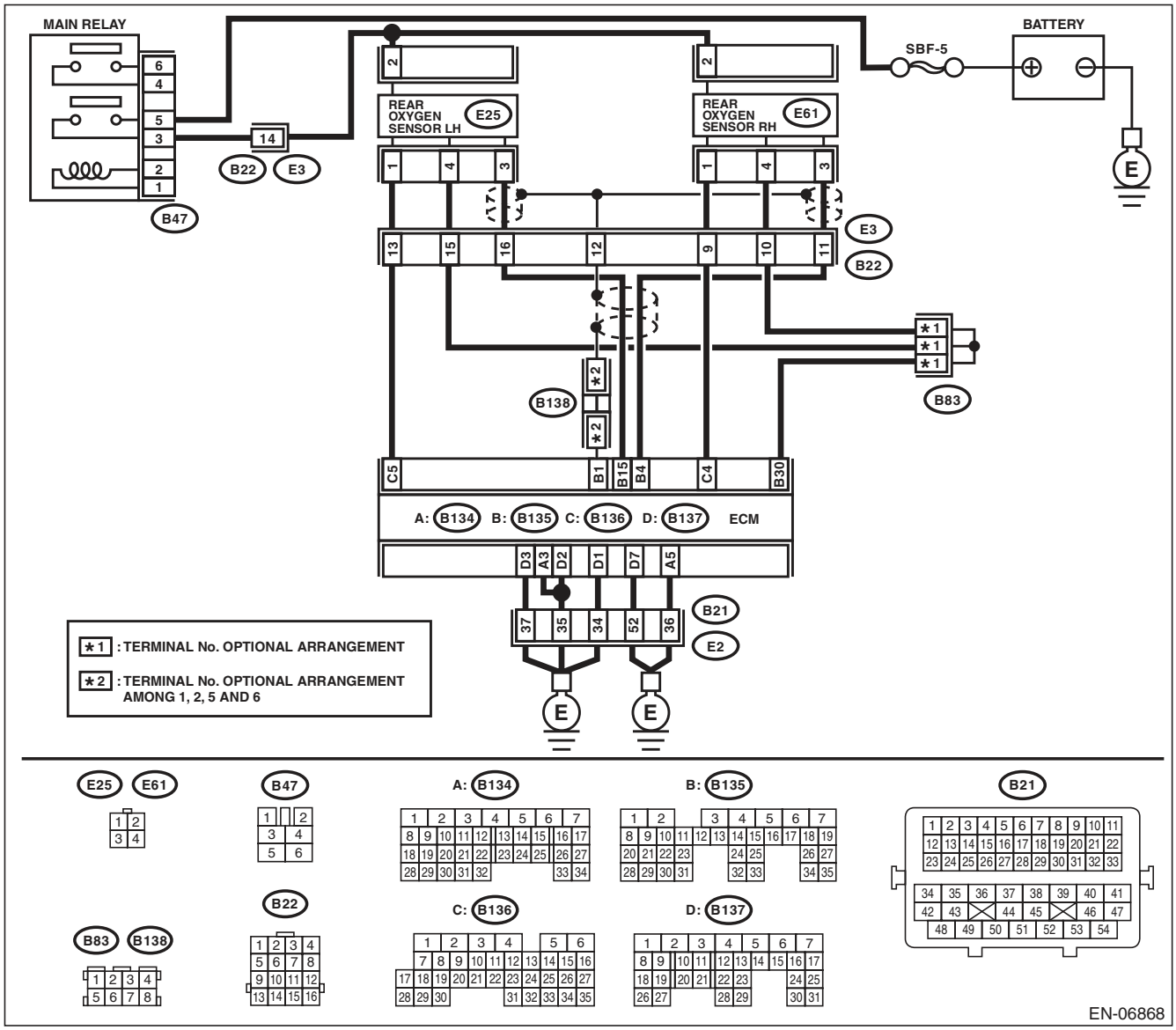

	Step	Check	Yes	No
1	**CHECK HARNESS BETWEEN ECM AND REAR OXYGEN SENSOR CONNECTOR.** 1) Turn the ignition switch to OFF. 2) Disconnect the connectors from ECM and rear oxygen sensor. 3) Measure the resistance of harness between ECM and rear oxygen sensor connector. ***Connector & terminal*** ***(B135) No. 15 — (E25) No. 3:***	Is the resistance less than 1 Ω?	Go to step **2**.	Repair the harness and connector. NOTE: In this case, repair the following item: • Open circuit in harness between ECM and rear oxygen sensor connector • Poor contact of coupling connector
2	**CHECK HARNESS BETWEEN ECM AND REAR OXYGEN SENSOR CONNECTOR.** Measure the resistance between rear oxygen sensor connector and chassis ground. ***Connector & terminal*** ***(B25) No. 3 — Chassis ground:***	Is the resistance 1 MΩ or more?	Go to step **3**.	Repair the ground short circuit of harness between ECM and rear oxygen sensor connector.
3	**CHECK REAR OXYGEN SENSOR.** Measure the resistance between rear oxygen sensor terminals. ***Terminals*** ***No. 3 — No. 4***	Is the resistance less than 1 Ω?	Replace the rear oxygen sensor. <Ref. to FU(H6DO)-34, Rear Oxygen Sensor.>	Even if DTC is detected, the circuit has returned to a normal condition at this time. Reproduce the failure, and then perform the diagnosis again. NOTE: In this case, temporary poor contact of connector may be the cause.

AZ:DTC P0160 O2 SENSOR CIRCUIT NO ACTIVITY DETECTED (BANK2 SENSOR2)

DTC DETECTING CONDITION:

- Two consecutive driving cycles with fault
- GENERAL DESCRIPTION <Ref. to GD(H6DO)-71, DTC P0160 O2 SENSOR CIRCUIT NO ACTIVITY DETECTED (BANK2 SENSOR2), Diagnostic Trouble Code (DTC) Detecting Criteria.>

CAUTION:

After repair or replacement of faulty parts, perform Clear Memory Mode <Ref. to EN(H6DO)(diag)-52, OPERATION, Clear Memory Mode.>, and Inspection Mode <Ref. to EN(H6DO)(diag)-44, PROCEDURE, Inspection Mode.>.

WIRING DIAGRAM:

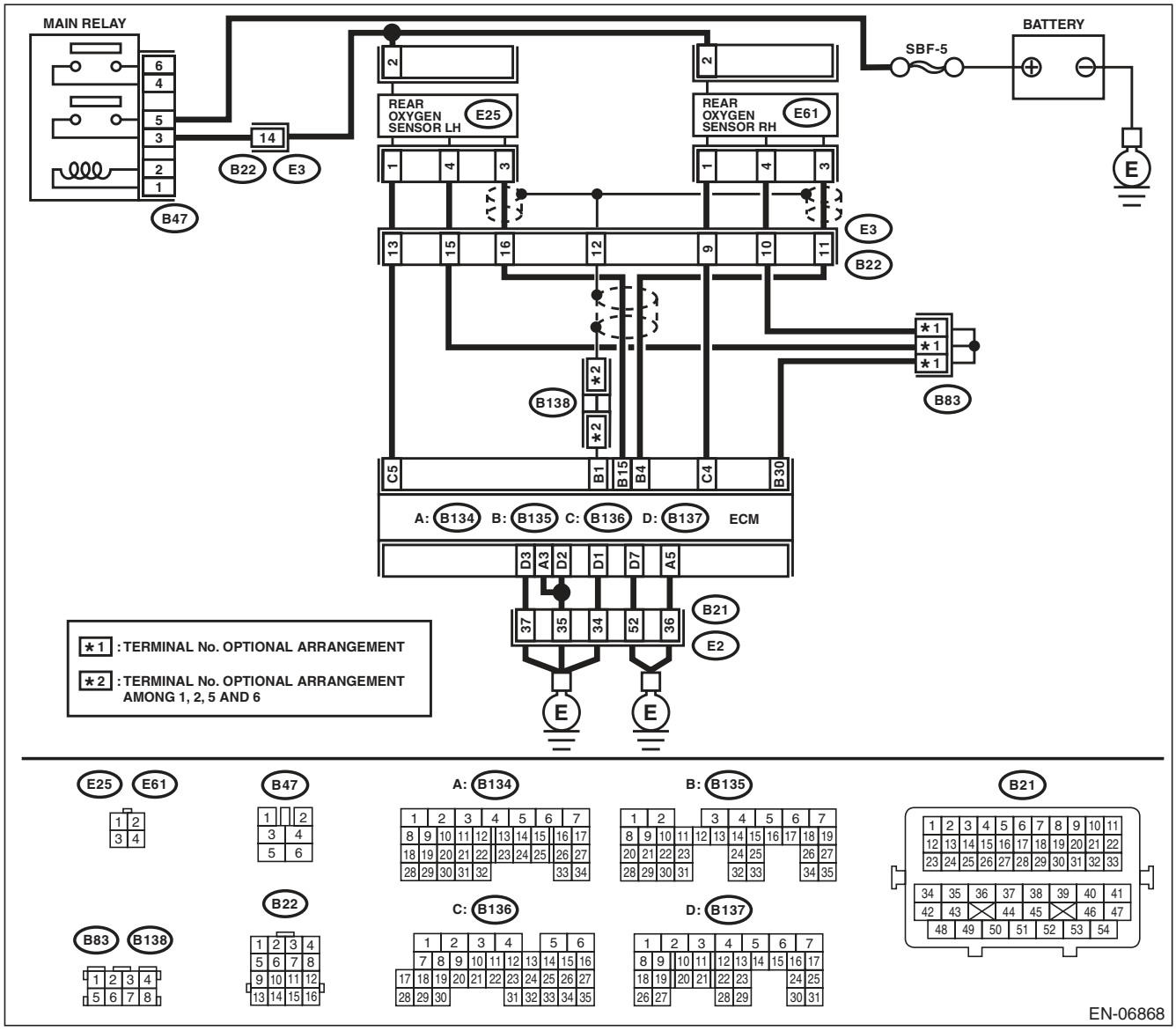

	Step	Check	Yes	No
1	**CHECK REAR OXYGEN SENSOR DATA.** 1) Warm up the engine until engine coolant temperature is above 75°C (167°F), and keep the engine speed at 3,000 rpm. (for up to 2 minutes) 2) Read the data of rear oxygen sensor signal using Subaru Select Monitor or general scan tool. NOTE: • SUBARU SELECT MONITOR For detailed operation procedure, refer to "READ CURRENT DATA FOR ENGINE". <Ref. to EN(H6DO)(diag)-34, Subaru Select Monitor.> • General Scan Tool For detailed operation procedures, refer to the general scan tool operation manual.	Is the voltage 490 mV or more?	Go to step **6**.	Go to step **2**.
2	**CHECK REAR OXYGEN SENSOR DATA.** 1) Warm up the engine until engine coolant temperature is above 75°C (167°F), and rapidly reduce the engine speed from 3,000 rpm. 2) Read the data of rear oxygen sensor signal using Subaru Select Monitor or general scan tool. NOTE: • SUBARU SELECT MONITOR For detailed operation procedure, refer to "READ CURRENT DATA FOR ENGINE". <Ref. to EN(H6DO)(diag)-34, Subaru Select Monitor.> • General Scan Tool For detailed operation procedures, refer to the general scan tool operation manual.	Is the voltage 250 mV or less?	Go to step **6**.	Go to step **3**.
3	**CHECK REAR OXYGEN SENSOR CONNECTOR AND COUPLING CONNECTOR.**	Has water entered the connector?	Completely remove any water inside.	Go to step **4**.
4	**CHECK HARNESS BETWEEN ECM AND REAR OXYGEN SENSOR CONNECTOR.** 1) Turn the ignition switch to OFF. 2) Disconnect the connectors from ECM and rear oxygen sensor. 3) Measure the resistance of harness between ECM and rear oxygen sensor connector. ***Connector & terminal*** ***(B135) No. 15 — (E25) No. 3:*** ***(B135) No. 30 — (E25) No. 4:***	Is the resistance less than 1 Ω?	Go to step **5**.	Repair the harness and connector. NOTE: In this case, repair the following item: • Open circuit in harness between ECM and rear oxygen sensor connector • Poor contact of coupling connector

Step		Check	Yes	No
5	**CHECK HARNESS BETWEEN ECM AND REAR OXYGEN SENSOR.** 1) Turn the ignition switch to OFF. 2) Disconnect the connector from rear oxygen sensor. 3) Turn the ignition switch to ON. 4) Measure the voltage between rear oxygen sensor connector and chassis ground. ***Connector & terminal*** ***(E25) No. 3 (+) — Chassis ground (–):***	Is the voltage 0.2 — 0.5 V?	Replace the rear oxygen sensor. <Ref. to FU(H6DO)-34, Rear Oxygen Sensor.>	Repair the harness and connector. NOTE: In this case, repair the following item: • Open circuit of harness between the ECM and rear oxygen sensor • Poor contact of the rear oxygen sensor connector • Poor contact in ECM connector
6	**CHECK EXHAUST SYSTEM.** Check exhaust system parts. NOTE: Check the following items. • Looseness and improper attachment of exhaust system parts • Damage (crack, hole etc.) of parts • Looseness and improper attachment of parts between front oxygen (A/F) sensor and rear oxygen sensor	Is there any fault in exhaust system?	Repair or replace faulty parts.	Replace the rear oxygen sensor. <Ref. to FU(H6DO)-34, Rear Oxygen Sensor.>

BA:DTC P0171 SYSTEM TOO LEAN (BANK 1)

NOTE:
Refer to DTC P0175 for diagnostic procedure. <Ref. to EN(H6DO)(diag)-189, DTC P0175 SYSTEM TOO RICH (BANK 2), Diagnostic Procedure with Diagnostic Trouble Code (DTC).>

BB:DTC P0172 SYSTEM TOO RICH (BANK 1)

NOTE:
Refer to DTC P0175 for diagnostic procedure. <Ref. to EN(H6DO)(diag)-189, DTC P0175 SYSTEM TOO RICH (BANK 2), Diagnostic Procedure with Diagnostic Trouble Code (DTC).>

BC:DTC P0174 SYSTEM TOO LEAN (BANK 2)

NOTE:
Refer to DTC P0175 for diagnostic procedure. <Ref. to EN(H6DO)(diag)-189, DTC P0175 SYSTEM TOO RICH (BANK 2), Diagnostic Procedure with Diagnostic Trouble Code (DTC).>

BD:DTC P0175 SYSTEM TOO RICH (BANK 2)

DTC DETECTING CONDITION:

- Two consecutive driving cycles with fault
- GENERAL DESCRIPTION <Ref. to GD(H6DO)-74, DTC P0175 SYSTEM TOO RICH (BANK 2), Diagnostic Trouble Code (DTC) Detecting Criteria.>

TROUBLE SYMPTOM:

- Improper idling
- Engine stalls.
- Poor driving performance

CAUTION:

After repair or replacement of faulty parts, perform Clear Memory Mode <Ref. to EN(H6DO)(diag)-52, OPERATION, Clear Memory Mode.>, and Inspection Mode <Ref. to EN(H6DO)(diag)-44, PROCEDURE, Inspection Mode.>.

	Step	Check	Yes	No
1	**CHECK EXHAUST SYSTEM.**	Are there holes or loose bolts on exhaust system?	Repair the exhaust system.	Go to step **2**.
2	**CHECK AIR INTAKE SYSTEM.**	Are there holes, loose bolts or disconnection of hose on air intake system?	Repair the air intake system.	Go to step **3**.
3	**CHECK FUEL PRESSURE.** **WARNING:** **Place "NO OPEN FLAMES" signs near the working area.** **CAUTION:** **Be careful not to spill fuel.** Measure the fuel pressure. <Ref. to ME(H6DO)-27, INSPECTION, Fuel Pressure.> **CAUTION:** **Release fuel pressure before removing the fuel pressure gauge.**	Is the measured value 333 — 343 kPa (3.4 — 3.5 kgf/cm^2, 48.4 — 49.8 psi)?	Go to step **4**.	Repair the following item. Fuel pressure is too high: • Clogged fuel line or bent hose Fuel pressure is too low: • Improper fuel pump discharge • Clogged fuel line
4	**CHECK ENGINE COOLANT TEMPERATURE SENSOR.** 1) Start the engine and warm up completely. 2) Read the data of engine coolant temperature sensor signal using Subaru Select Monitor or general scan tool. NOTE: • SUBARU SELECT MONITOR For detailed operation procedure, refer to "READ CURRENT DATA FOR ENGINE". <Ref. to EN(H6DO)(diag)-34, Subaru Select Monitor.> • General Scan Tool For detailed operation procedures, refer to the general scan tool operation manual.	Is the engine coolant temperature 75°C (167°F) or higher?	Go to step **5**.	Replace the engine coolant temperature sensor. <Ref. to FU(H6DO)-20, Engine Coolant Temperature Sensor.>

	Step	Check	Yes	No
5	**CHECK MASS AIR FLOW AND INTAKE AIR TEMPERATURE SENSOR SIGNAL.** 1) Start the engine and warm up engine until coolant temperature is higher than 75°C (167°F). 2) Place the select lever in “P” range or “N” range. 3) Turn the A/C switch to OFF. 4) Turn all the accessory switches to OFF. 5) Read the data of the mass air flow and intake air temperature sensor signal using Subaru Select Monitor or general scan tool. NOTE: • SUBARU SELECT MONITOR For detailed operation procedure, refer to “READ CURRENT DATA FOR ENGINE”. <Ref. to EN(H6DO)(diag)-34, Subaru Select Monitor.> • General Scan Tool For detailed operation procedures, refer to the general scan tool operation manual.	Is the measured value 2.0 — 5.0 g/s (0.26 — 0.66 lb/m)?	Go to step **6**.	Replace the mass air flow and intake air temperature sensor. <Ref. to FU(H6DO)-26, Mass Air Flow and Intake Air Temperature Sensor.>
6	**CHECK MASS AIR FLOW AND INTAKE AIR TEMPERATURE SENSOR.** 1) Start the engine and warm up engine until coolant temperature is higher than 75°C (167°F). 2) Place the select lever in “P” range or “N” range. 3) Turn the A/C switch to OFF. 4) Turn all the accessory switches to OFF. 5) Open the front hood. 6) Measure the ambient temperature. 7) Read the data of the mass air flow and intake air temperature sensor signal using Subaru Select Monitor or general scan tool. NOTE: • SUBARU SELECT MONITOR For detailed operation procedure, refer to “READ CURRENT DATA FOR ENGINE”. <Ref. to EN(H6DO)(diag)-34, Subaru Select Monitor.> • General Scan Tool For detailed operation procedures, refer to the general scan tool operation manual.	Subtract ambient temperature from intake air temperature. Is the obtained value –10 — 50°C (–18 — 90°F)?	Repair the poor contact of ECM connector.	Check the mass air flow and intake air temperature sensor. <Ref. to FU(H6DO)-26, Mass Air Flow and Intake Air Temperature Sensor.>

BE:DTC P0181 FUEL TEMPERATURE SENSOR “A” CIRCUIT RANGE/ PERFORMANCE

DTC DETECTING CONDITION:

- Two consecutive driving cycles with fault
- GENERAL DESCRIPTION <Ref. to GD(H6DO)-75, DTC P0181 FUEL TEMPERATURE SENSOR “A” CIRCUIT RANGE/PERFORMANCE, Diagnostic Trouble Code (DTC) Detecting Criteria.>

CAUTION:

After repair or replacement of faulty parts, perform Clear Memory Mode <Ref. to EN(H6DO)(diag)-52, OPERATION, Clear Memory Mode.>, and Inspection Mode <Ref. to EN(H6DO)(diag)-44, PROCEDURE, Inspection Mode.>.

WIRING DIAGRAM:

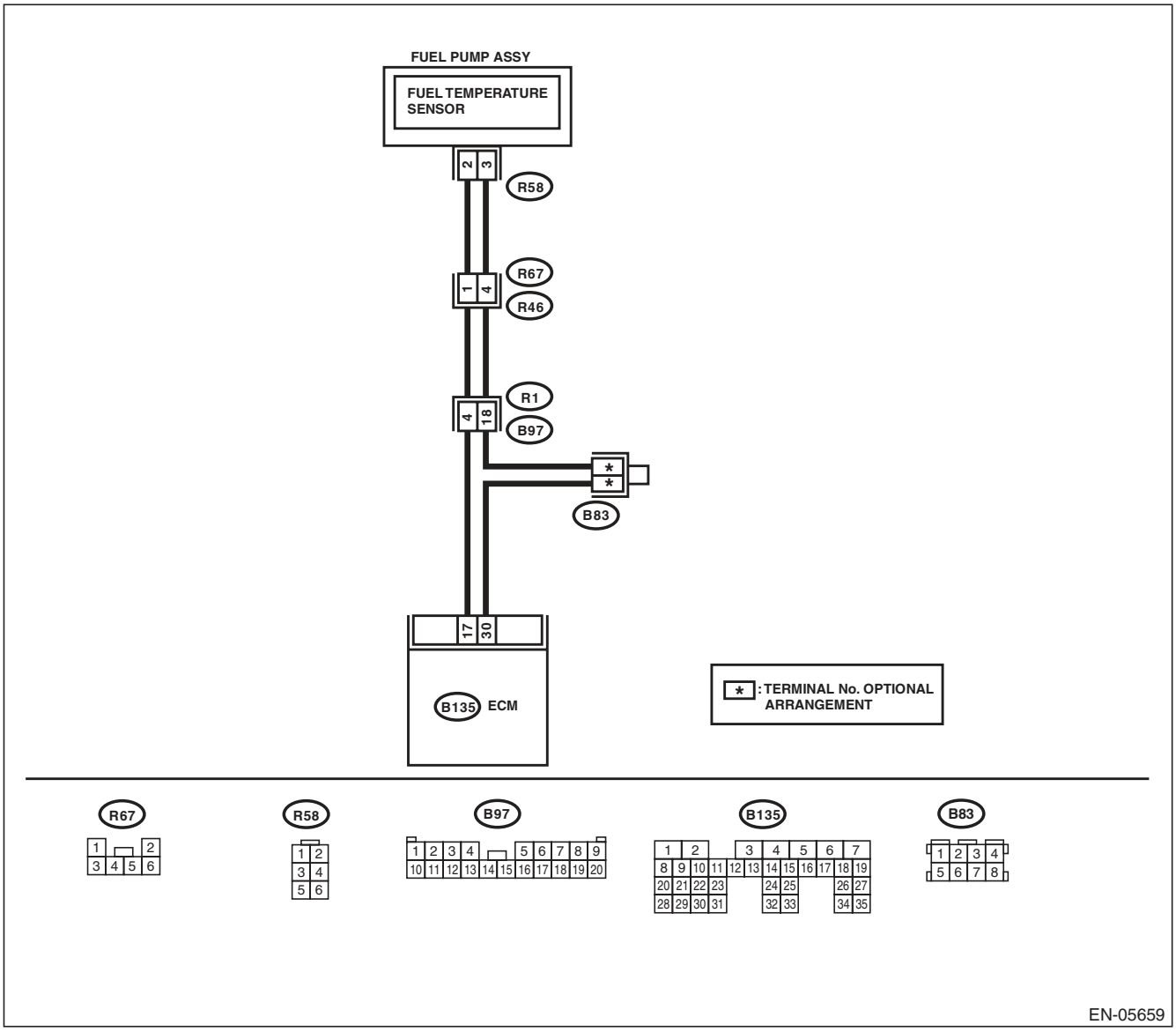

Step	Check	Yes	No
1 CHECK FOR ANY OTHER DTC ON DISPLAY.	Is any other DTC displayed?	Check the appropriate DTC using the “List of Diagnostic Trouble Code (DTC)”. <Ref. to EN(H6DO)(diag)-81, List of Diagnostic Trouble Code (DTC).>	Replace the fuel temperature sensor. <Ref. to EC(H6DO)-10, Fuel Temperature Sensor.>

BF:DTC P0182 FUEL TEMPERATURE SENSOR “A” CIRCUIT LOW INPUT

DTC DETECTING CONDITION:

- Immediately at fault recognition
- GENERAL DESCRIPTION <Ref. to GD(H6DO)-78, DTC P0182 FUEL TEMPERATURE SENSOR “A” CIRCUIT LOW INPUT, Diagnostic Trouble Code (DTC) Detecting Criteria.>

CAUTION:

After repair or replacement of faulty parts, perform Clear Memory Mode <Ref. to EN(H6DO)(diag)-52, OPERATION, Clear Memory Mode.>, and Inspection Mode <Ref. to EN(H6DO)(diag)-44, PROCEDURE, Inspection Mode.>.

WIRING DIAGRAM:

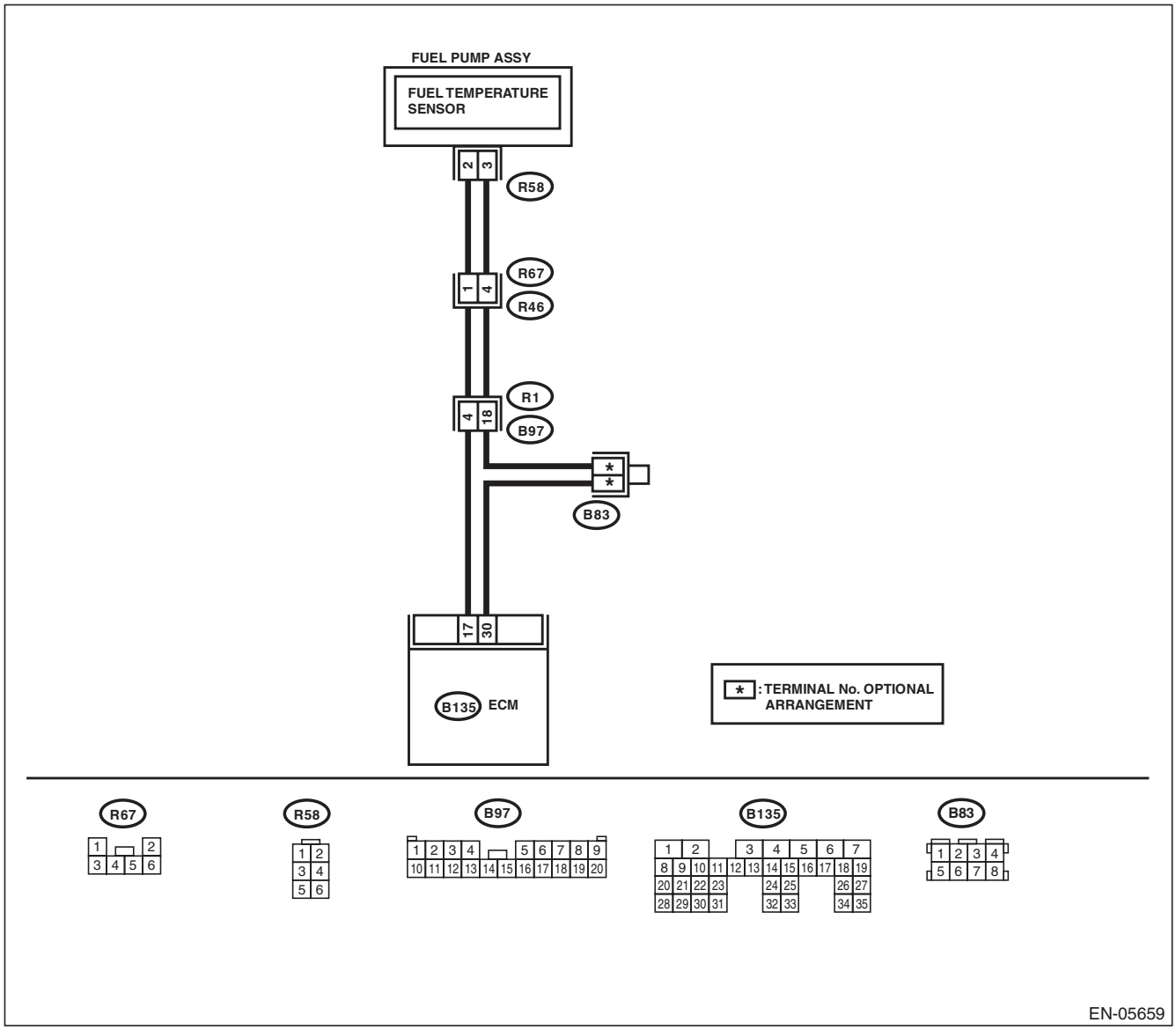

Step		Check	Yes	No
1	**CHECK CURRENT DATA.** 1) Start the engine. 2) Read the data of fuel temperature sensor signal using Subaru Select Monitor. NOTE: For detailed operation procedure, refer to “READ CURRENT DATA FOR ENGINE”. <Ref. to EN(H6DO)(diag)-34, Subaru Select Monitor.>	Is the temperature 120°C (248°F) or higher?	Go to step **2**.	Even if DTC is detected, the circuit has returned to a normal condition at this time. Reproduce the failure, and then perform the diagnosis again. NOTE: In this case, temporary poor contact of connector may be the cause.
2	**CHECK HARNESS BETWEEN ECM AND FUEL TEMPERATURE SENSOR CONNECTOR.** 1) Turn the ignition switch to OFF. 2) Disconnect the connector from ECM and fuel temperature sensor. 3) Measure the resistance between ECM and chassis ground. ***Connector & terminal*** ***(B135) No. 17 — Chassis ground:***	Is the resistance 1 MΩ or more?	Replace the fuel temperature sensor. <Ref. to EC(H6DO)-10, Fuel Temperature Sensor.>	Repair the ground short circuit of harness between ECM and fuel pump.

BG:DTC P0183 FUEL TEMPERATURE SENSOR “A” CIRCUIT HIGH INPUT

DTC DETECTING CONDITION:

- Immediately at fault recognition
- GENERAL DESCRIPTION <Ref. to GD(H6DO)-79, DTC P0183 FUEL TEMPERATURE SENSOR “A” CIRCUIT HIGH INPUT, Diagnostic Trouble Code (DTC) Detecting Criteria.>

CAUTION:

After repair or replacement of faulty parts, perform Clear Memory Mode <Ref. to EN(H6DO)(diag)-52, OPERATION, Clear Memory Mode.>, and Inspection Mode <Ref. to EN(H6DO)(diag)-44, PROCEDURE, Inspection Mode.>.

WIRING DIAGRAM:

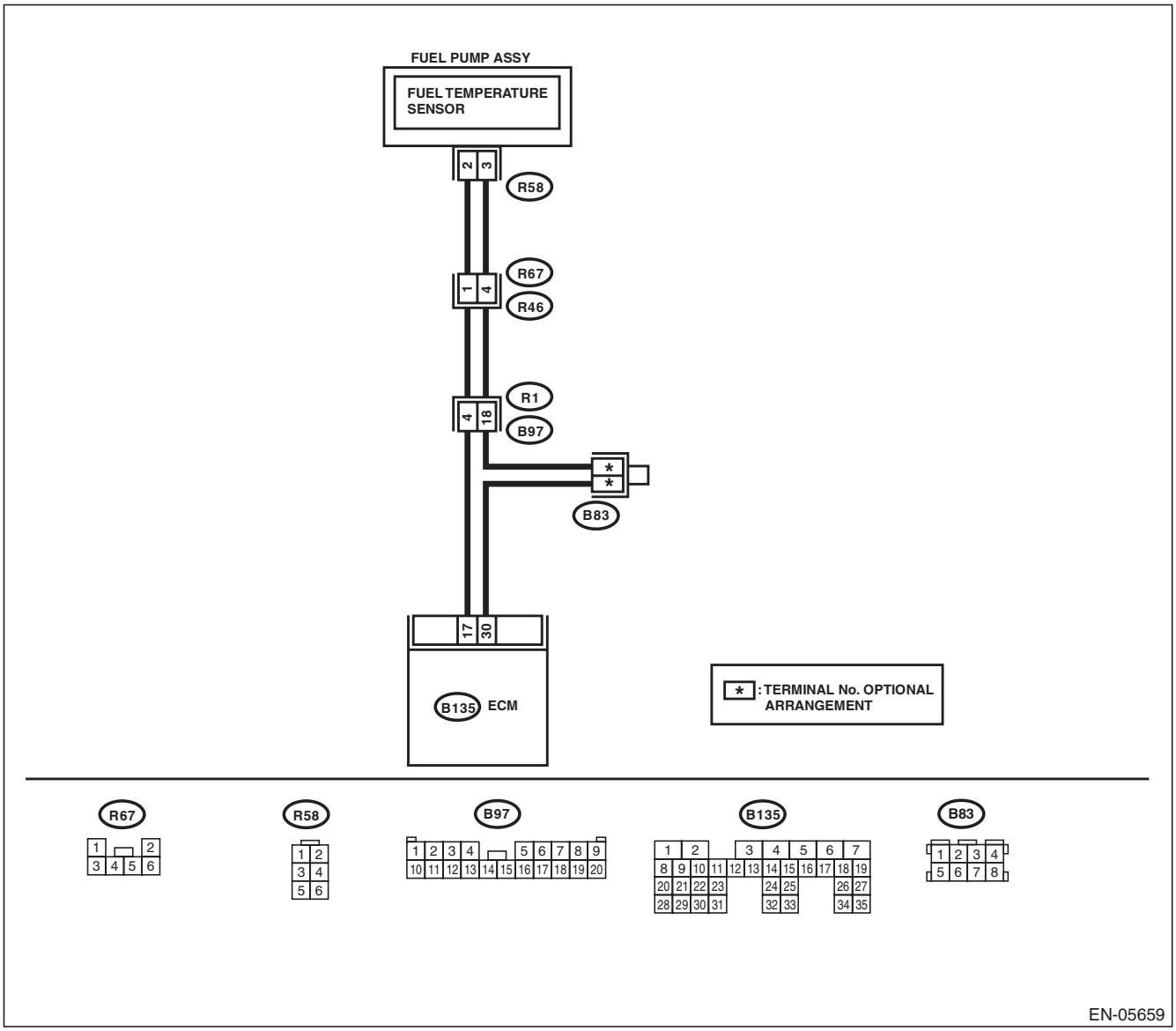

	Step	Check	Yes	No
1	**CHECK CURRENT DATA.** 1) Start the engine. 2) Read the data of fuel temperature sensor signal using Subaru Select Monitor. NOTE: For detailed operation procedure, refer to "READ CURRENT DATA FOR ENGINE". <Ref. to EN(H6DO)(diag)-34, Subaru Select Monitor.>	Is the temperature less than –40°C (–40°F)?	Go to step **2**.	Even if DTC is detected, the circuit has returned to a normal condition at this time. Reproduce the failure, and then perform the diagnosis again. NOTE: In this case, temporary poor contact of connector may be the cause.
2	**CHECK POOR CONTACT.** Repair any poor contact between the ECM and fuel temperature sensor connectors.	Is there poor contact in the ECM or fuel temperature sensor connectors?	Repair any poor contact between the ECM and fuel temperature sensor connectors.	Go to step **3**.
3	**CHECK HARNESS BETWEEN ECM AND FUEL TEMPERATURE SENSOR CONNECTOR.** 1) Turn the ignition switch to OFF. 2) Disconnect the connector from ECM and fuel temperature sensor. 3) Measure the resistance of the harness between the ECM and fuel temperature sensor connector. ***Connector & terminal*** ***(B135) No. 17 — (R58) No. 2:*** ***(B135) No. 30 — (R58) No. 3:***	Is the resistance less than 1 Ω?	Go to step **4**.	Repair the harness and connector. NOTE: In this case, repair the following item: • Open circuit in harness between ECM and fuel temperature sensor connector • Poor contact of coupling connector
4	**CHECK HARNESS BETWEEN ECM AND FUEL TEMPERATURE SENSOR CONNECTOR.** 1) Connect all connectors. 2) Turn the ignition switch to ON. 3) Measure the voltage between ECM and chassis ground. ***Connector & terminal*** ***(B135) No. 17 (+) — Chassis ground (–):***	Is the voltage 5 V or more?	Repair the short circuit to power in the harness between the ECM and fuel temperature sensor connector.	Replace the fuel temperature sensor. <Ref. to EC(H6DO)-10, Fuel Temperature Sensor.>

BH:DTC P0196 ENGINE OIL TEMPERATURE SENSOR CIRCUIT RANGE/ PERFORMANCE

DTC DETECTING CONDITION:
- Two consecutive driving cycles with fault
- GENERAL DESCRIPTION <Ref. to GD(H6DO)-80, DTC P0196 ENGINE OIL TEMPERATURE SENSOR CIRCUIT RANGE/PERFORMANCE, Diagnostic Trouble Code (DTC) Detecting Criteria.>

TROUBLE SYMPTOM:
- Hard to start
- Improper idling
- Poor driving performance

CAUTION:
After repair or replacement of faulty parts, perform Clear Memory Mode <Ref. to EN(H6DO)(diag)-52, OPERATION, Clear Memory Mode.>, and Inspection Mode <Ref. to EN(H6DO)(diag)-44, PROCEDURE, Inspection Mode.>.

WIRING DIAGRAM:

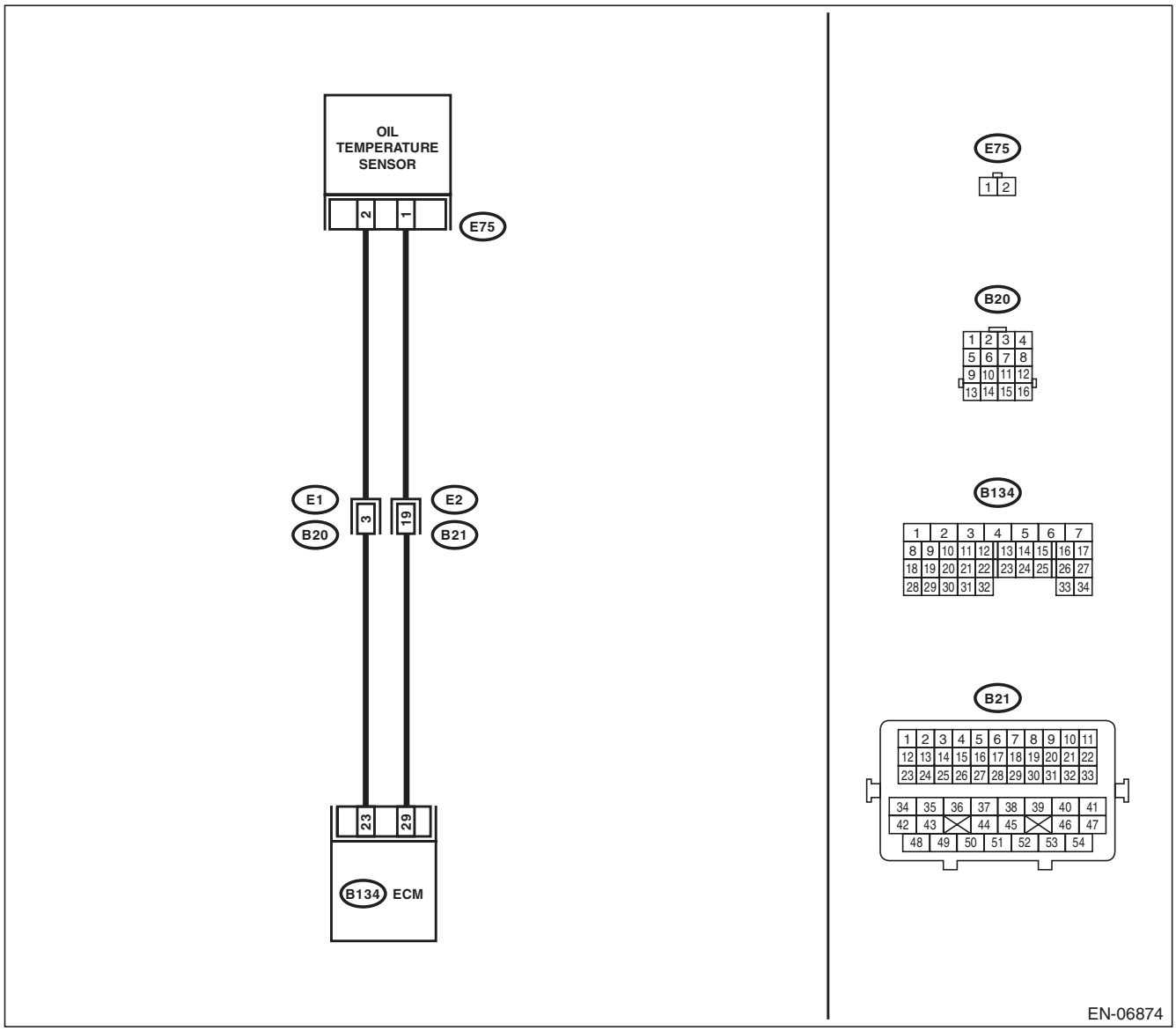

Step	Check	Yes	No
1 CHECK FOR ANY OTHER DTC ON DISPLAY.	Is any other DTC displayed?	Check the appropriate DTC using the “List of Diagnostic Trouble Code (DTC)”. <Ref. to EN(H6DO)(diag)-81, List of Diagnostic Trouble Code (DTC).>	Replace the oil temperature sensor. <Ref. to FU(H6DO)-31, Oil Temperature Sensor.>

BI: DTC P0197 ENGINE OIL TEMPERATURE SENSOR LOW

DTC DETECTING CONDITION:
- Immediately at fault recognition
- GENERAL DESCRIPTION <Ref. to GD(H6DO)-82, DTC P0197 ENGINE OIL TEMPERATURE SENSOR LOW, Diagnostic Trouble Code (DTC) Detecting Criteria.>

TROUBLE SYMPTOM:
- Hard to start
- Improper idling
- Poor driving performance

CAUTION:
After repair or replacement of faulty parts, perform Clear Memory Mode <Ref. to EN(H6DO)(diag)-52, OPERATION, Clear Memory Mode.>, and Inspection Mode <Ref. to EN(H6DO)(diag)-44, PROCEDURE, Inspection Mode.>.

WIRING DIAGRAM:

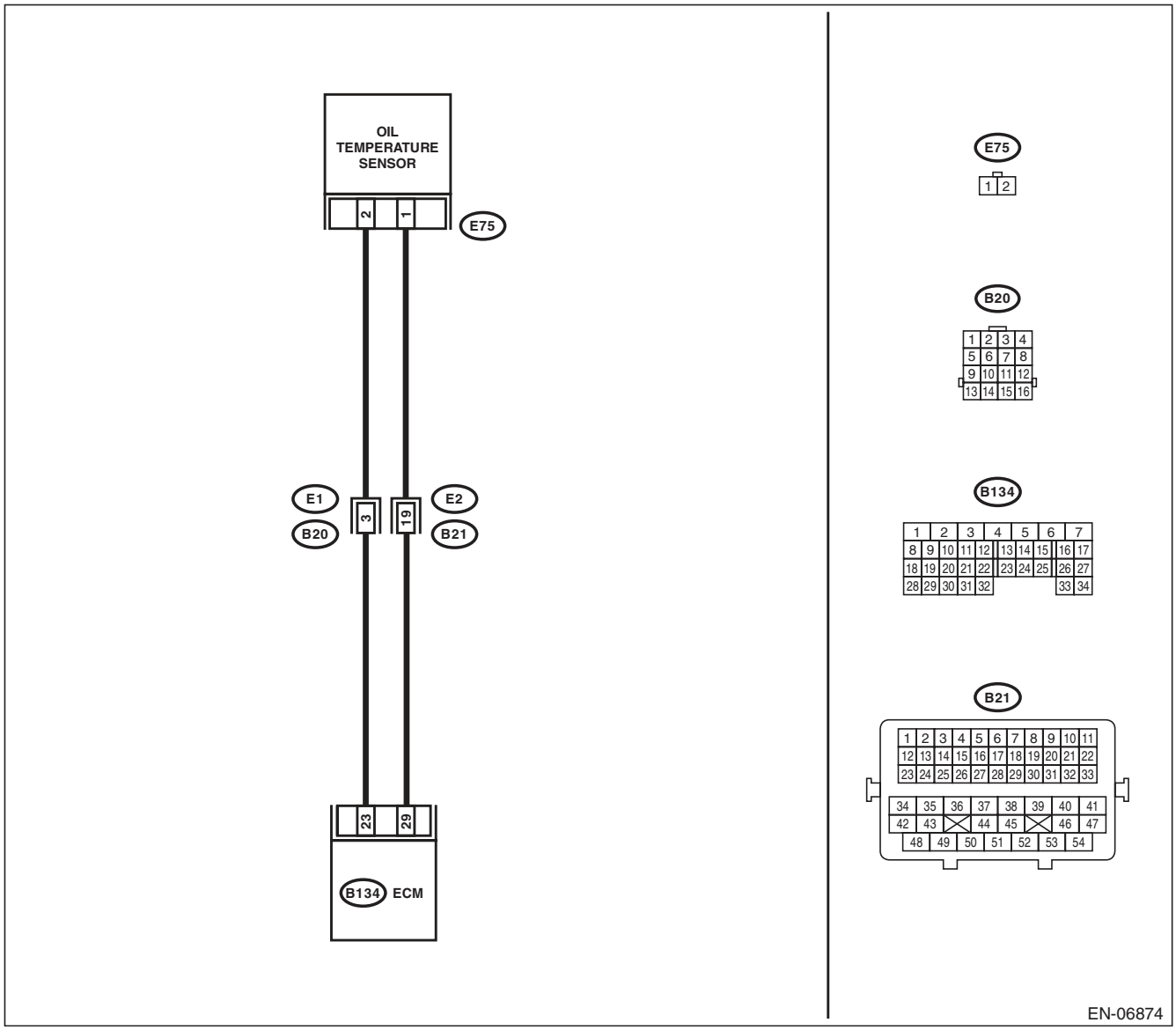

	Step	Check	Yes	No
1	**CHECK CURRENT DATA.** 1) Start the engine. 2) Read the data of oil temperature sensor signal using Subaru Select Monitor or general scan tool. NOTE: • SUBARU SELECT MONITOR For detailed operation procedure, refer to "READ CURRENT DATA FOR ENGINE". <Ref. to EN(H6DO)(diag)-34, Subaru Select Monitor.> • General Scan Tool For detailed operation procedures, refer to the general scan tool operation manual.	Is the oil temperature 215°C (419°F) or more?	Go to step **2**.	Even if DTC is detected, the circuit has returned to a normal condition at this time. Reproduce the failure, and then perform the diagnosis again. NOTE: In this case, temporary poor contact of connector may be the cause.
2	**CHECK HARNESS BETWEEN ECM AND OIL TEMPERATURE SENSOR CONNECTOR.** 1) Turn the ignition switch to OFF. 2) Disconnect the connector from ECM and oil temperature sensor. 3) Measure the resistance between ECM and chassis ground. ***Connector & terminal*** ***(B134) No. 23 — Chassis ground:***	Is the resistance 1 MΩ or more?	Replace the oil temperature sensor. <Ref. to FU(H6DO)-31, Oil Temperature Sensor.>	Repair the short circuit to ground in harness between ECM and oil temperature sensor.

BJ:DTC P0198 ENGINE OIL TEMPERATURE SENSOR HIGH

DTC DETECTING CONDITION:

- Immediately at fault recognition
- GENERAL DESCRIPTION <Ref. to GD(H6DO)-83, DTC P0198 ENGINE OIL TEMPERATURE SENSOR HIGH, Diagnostic Trouble Code (DTC) Detecting Criteria.>

TROUBLE SYMPTOM:

- Hard to start
- Improper idling
- Poor driving performance

CAUTION:

After repair or replacement of faulty parts, perform Clear Memory Mode <Ref. to EN(H6DO)(diag)-52, OPERATION, Clear Memory Mode.>, and Inspection Mode <Ref. to EN(H6DO)(diag)-44, PROCEDURE, Inspection Mode.>.

WIRING DIAGRAM:

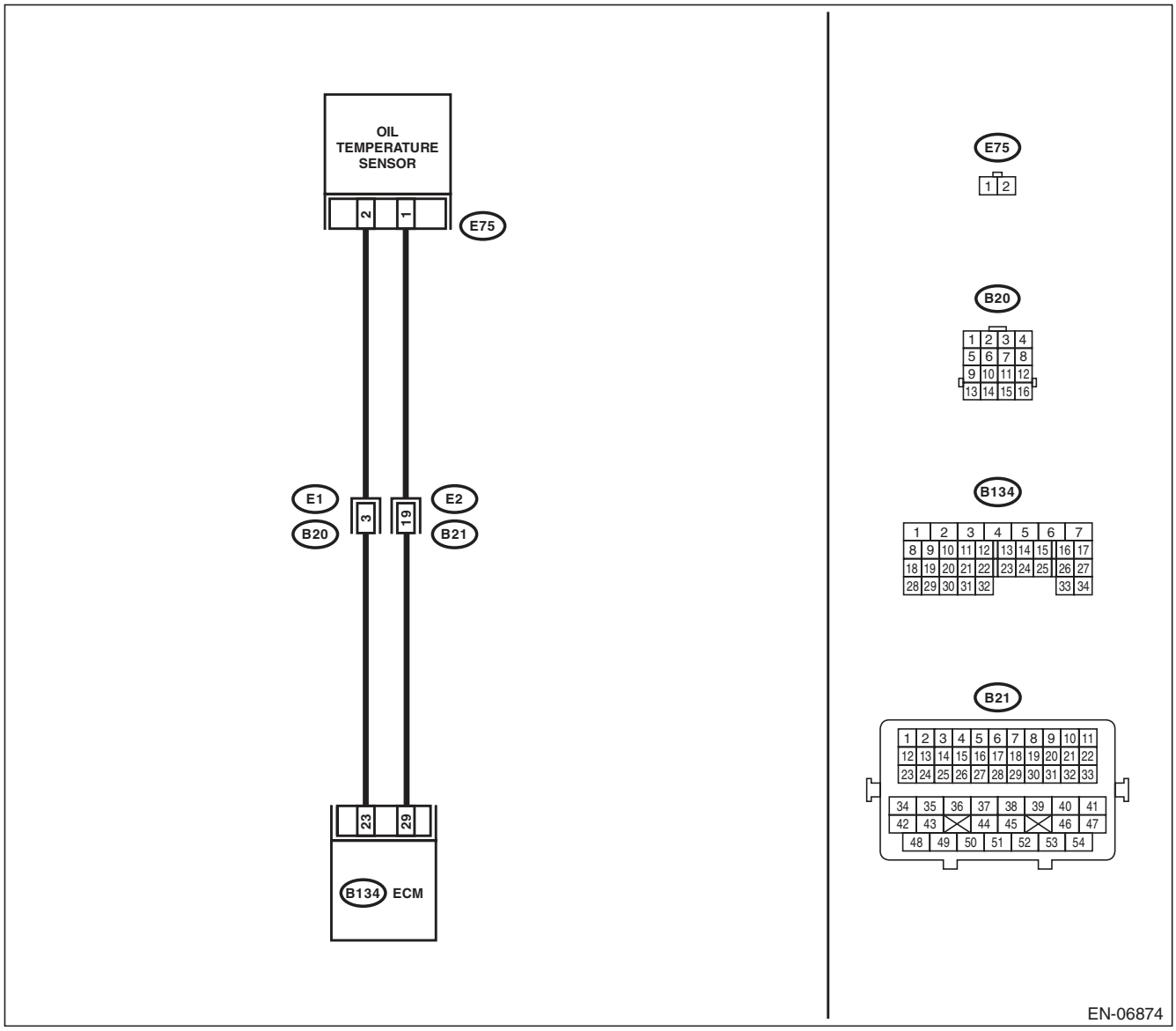

	Step	Check	Yes	No
1	**CHECK CURRENT DATA.** 1) Start the engine. 2) Read the data of oil temperature sensor signal using Subaru Select Monitor or general scan tool. NOTE: • SUBARU SELECT MONITOR For detailed operation procedure, refer to "READ CURRENT DATA FOR ENGINE". <Ref. to EN(H6DO)(diag)-34, Subaru Select Monitor.> • General Scan Tool For detailed operation procedures, refer to the general scan tool operation manual.	Is the oil temperature less than –40°C (–40°F)?	Go to step **2**.	Even if DTC is detected, the circuit has returned to a normal condition at this time. Reproduce the failure, and then perform the diagnosis again. NOTE: In this case, temporary poor contact of connector may be the cause.
2	**CHECK POOR CONTACT.** Check for poor contact of ECM and oil temperature sensor connector.	Is there poor contact in ECM or oil temperature sensor connector?	Repair the poor contact in ECM or oil temperature sensor connector.	Go to step **3**.
3	**CHECK HARNESS BETWEEN ECM AND OIL TEMPERATURE SENSOR CONNECTOR.** 1) Turn the ignition switch to OFF. 2) Disconnect the connector from ECM and oil temperature sensor. 3) Measure the resistance of harness between ECM and oil temperature sensor connector. ***Connector & terminal*** ***(B134) No. 23 — (E75) No. 2:*** ***(B134) No. 29 — (E75) No. 1:***	Is the resistance less than 1 Ω?	Go to step **4**.	Repair the harness and connector. NOTE: In this case, repair the following item: • Open circuit in harness between ECM and oil temperature sensor connector • Poor contact of coupling connector
4	**CHECK HARNESS BETWEEN ECM AND OIL TEMPERATURE SENSOR CONNECTOR.** 1) Connect all connectors. 2) Turn the ignition switch to ON. 3) Measure the voltage between ECM and chassis ground. ***Connector & terminal*** ***(B134) No. 23 (+) — Chassis ground (–):***	Is the voltage 5 V or more?	Repair the short circuit in harness to power supply between ECM and oil temperature sensor connector.	Replace the oil temperature sensor. <Ref. to FU(H6DO)-31, Oil Temperature Sensor.>

BK:DTC P0222 THROTTLE/PEDAL POSITION SENSOR/SWITCH “B” CIRCUIT LOW

DTC DETECTING CONDITION:

- Immediately at fault recognition
- GENERAL DESCRIPTION <Ref. to GD(H6DO)-84, DTC P0222 THROTTLE/PEDAL POSITION SENSOR/SWITCH “B” CIRCUIT LOW, Diagnostic Trouble Code (DTC) Detecting Criteria.>

TROUBLE SYMPTOM:

- Improper idling
- Poor driving performance
- Engine stalls.

CAUTION:

After repair or replacement of faulty parts, perform Clear Memory Mode <Ref. to EN(H6DO)(diag)-52, OPERATION, Clear Memory Mode.>, and Inspection Mode <Ref. to EN(H6DO)(diag)-44, PROCEDURE, Inspection Mode.>.

WIRING DIAGRAM:

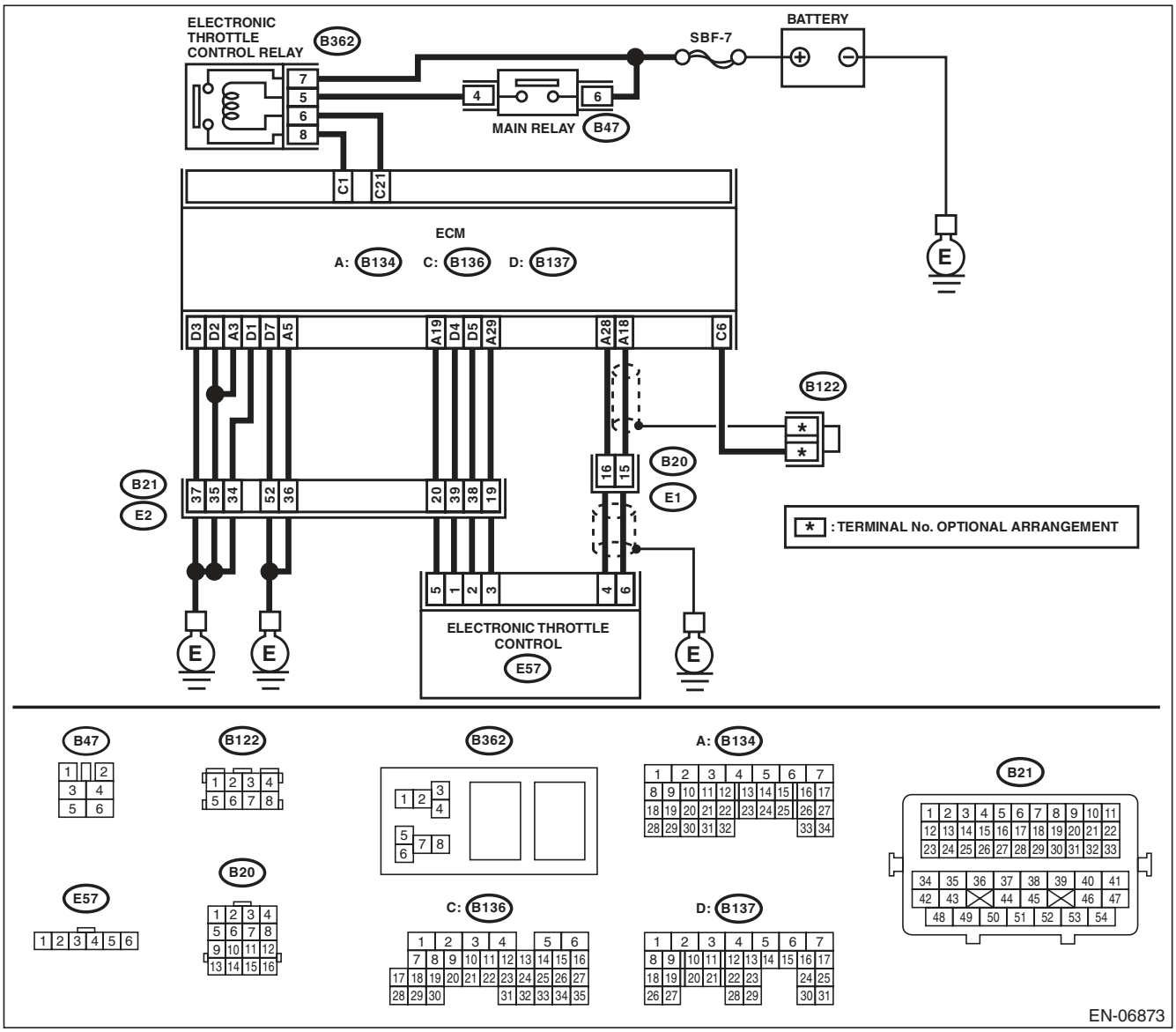

Step		Check	Yes	No
1	**CHECK HARNESS BETWEEN ECM AND ELECTRONIC THROTTLE CONTROL.** 1) Turn the ignition switch to OFF. 2) Disconnect the connectors from ECM and electronic throttle control. 3) Measure the resistance between ECM and chassis ground. ***Connector & terminal*** ***(B134) No. 19 — Chassis ground:*** ***(B134) No. 28 — Chassis ground:***	Is the resistance 1 MΩ or more?	Go to step **2**.	Repair the short circuit to ground in harness between ECM and electronic throttle control connector.
2	**CHECK SHORT CIRCUIT INSIDE THE ECM.** 1) Connect the connector to ECM. 2) Measure the resistance between electronic throttle control connector and engine ground. ***Connector & terminal*** ***(E57) No. 4 — Engine ground:***	Is the resistance 1 MΩ or more?	Replace the electronic throttle control. <Ref. to FU(H6DO)-13, Throttle Body.>	Repair the short circuit to ground in harness between ECM and electronic throttle control connector. Replace the ECM if defective. <Ref. to FU(H6DO)-38, Engine Control Module (ECM).>

BL:DTC P0223 THROTTLE/PEDAL POSITION SENSOR/SWITCH “B” CIRCUIT HIGH

DTC DETECTING CONDITION:

- Immediately at fault recognition
- GENERAL DESCRIPTION <Ref. to GD(H6DO)-85, DTC P0223 THROTTLE/PEDAL POSITION SENSOR/SWITCH “B” CIRCUIT HIGH, Diagnostic Trouble Code (DTC) Detecting Criteria.>

TROUBLE SYMPTOM:

- Improper idling
- Poor driving performance
- Engine stalls.

CAUTION:

After repair or replacement of faulty parts, perform Clear Memory Mode <Ref. to EN(H6DO)(diag)-52, OPERATION, Clear Memory Mode.>, and Inspection Mode <Ref. to EN(H6DO)(diag)-44, PROCEDURE, Inspection Mode.>.

WIRING DIAGRAM:

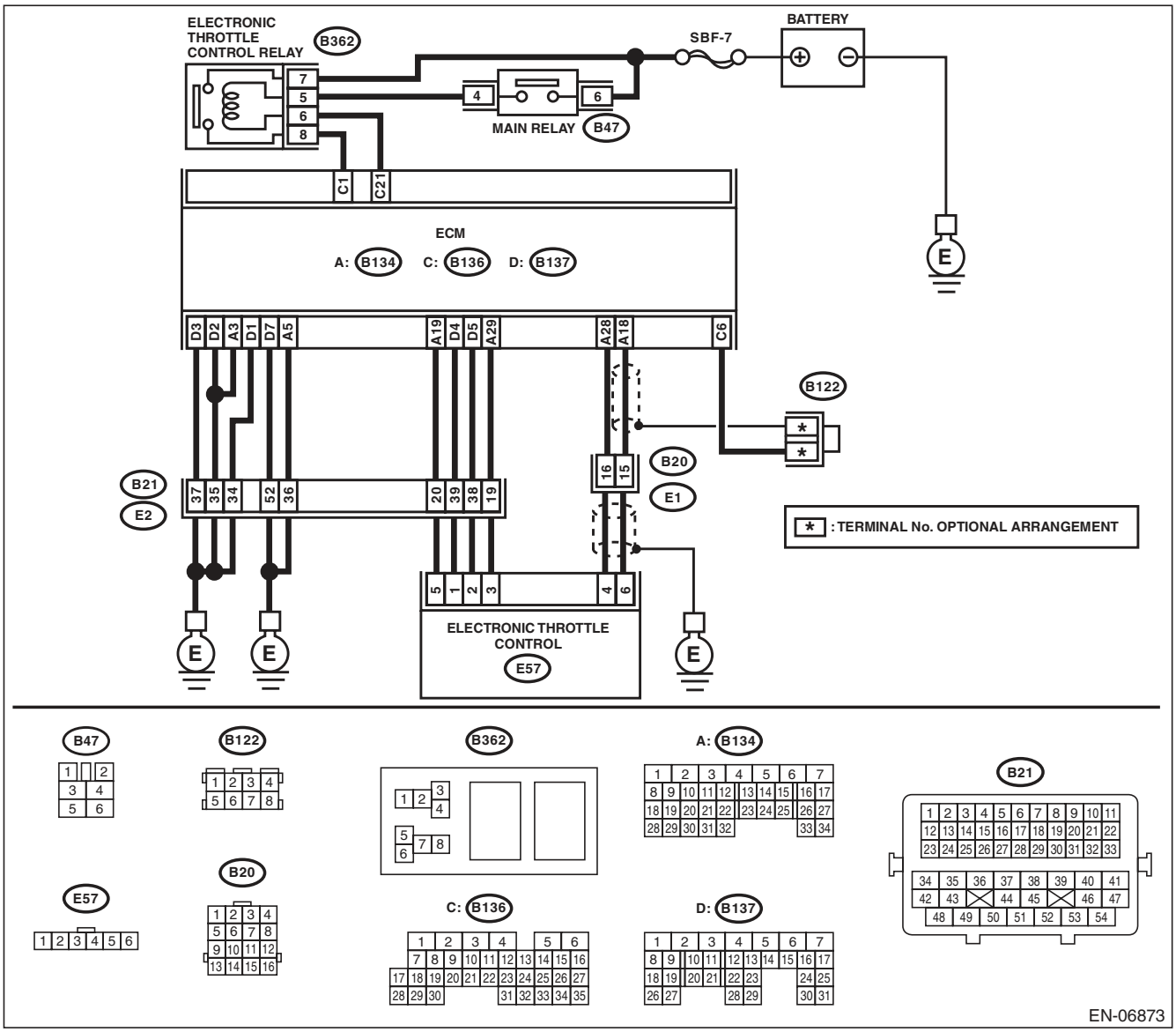

	Step	Check	Yes	No
1	**CHECK HARNESS BETWEEN ECM AND ELECTRONIC THROTTLE CONTROL.** 1) Turn the ignition switch to OFF. 2) Disconnect the connectors from ECM and electronic throttle control. 3) Measure the resistance of harness between ECM and electronic throttle control connector. ***Connector & terminal*** ***(B134) No. 28 — (E57) No. 4:*** ***(B134) No. 29 — (E57) No. 3:***	Is the resistance less than 1 Ω?	Go to step **2**.	Repair the harness and connector. NOTE: In this case, repair the following item: • Open circuit in harness between ECM and electronic throttle control connector • Poor contact of coupling connector
2	**CHECK HARNESS BETWEEN ECM AND ELECTRONIC THROTTLE CONTROL.** 1) Connect the connector to ECM. 2) Measure the resistance between electronic throttle control connector and engine ground. ***Connector & terminal*** ***(E57) No. 3 — Engine ground:***	Is the resistance less than 5 Ω?	Go to step **3**.	Repair the harness and connector. NOTE: In this case, repair the following item: • Open circuit of harness between ECM and engine ground • Poor contact in ECM connector • Poor contact of coupling connector
3	**CHECK HARNESS BETWEEN ECM AND ELECTRONIC THROTTLE CONTROL.** 1) Turn the ignition switch to ON. 2) Measure the voltage between electronic throttle control connector and engine ground. ***Connector & terminal*** ***(E57) No. 4 (+) — Engine ground (–):***	Is the voltage 4.85 V or more?	Repair the short circuit to power in the harness between ECM and electronic throttle control connector.	Go to step **4**.
4	**CHECK HARNESS BETWEEN ECM AND ELECTRONIC THROTTLE CONTROL.** 1) Turn the ignition switch to OFF. 2) Disconnect the connectors from ECM. 3) Measure the resistance between ECM connectors. ***Connector & terminal*** ***(B134) No. 19 — (B134) No. 28:***	Is the resistance 1 MΩ or more?	Repair poor contact of the electronic throttle control connector. Replace the electronic throttle control if defective. <Ref. to FU(H6DO)-13, Throttle Body.>	Repair the short circuit to power in the harness between ECM and electronic throttle control connector.

BM:DTC P0230 FUEL PUMP PRIMARY CIRCUIT

DTC DETECTING CONDITION:

- Two consecutive driving cycles with fault
- GENERAL DESCRIPTION <Ref. to GD(H6DO)-86, DTC P0230 FUEL PUMP PRIMARY CIRCUIT, Diagnostic Trouble Code (DTC) Detecting Criteria.>

CAUTION:

After repair or replacement of faulty parts, perform Clear Memory Mode <Ref. to EN(H6DO)(diag)-52, OPERATION, Clear Memory Mode.>, and Inspection Mode <Ref. to EN(H6DO)(diag)-44, PROCEDURE, Inspection Mode.>.

WIRING DIAGRAM:

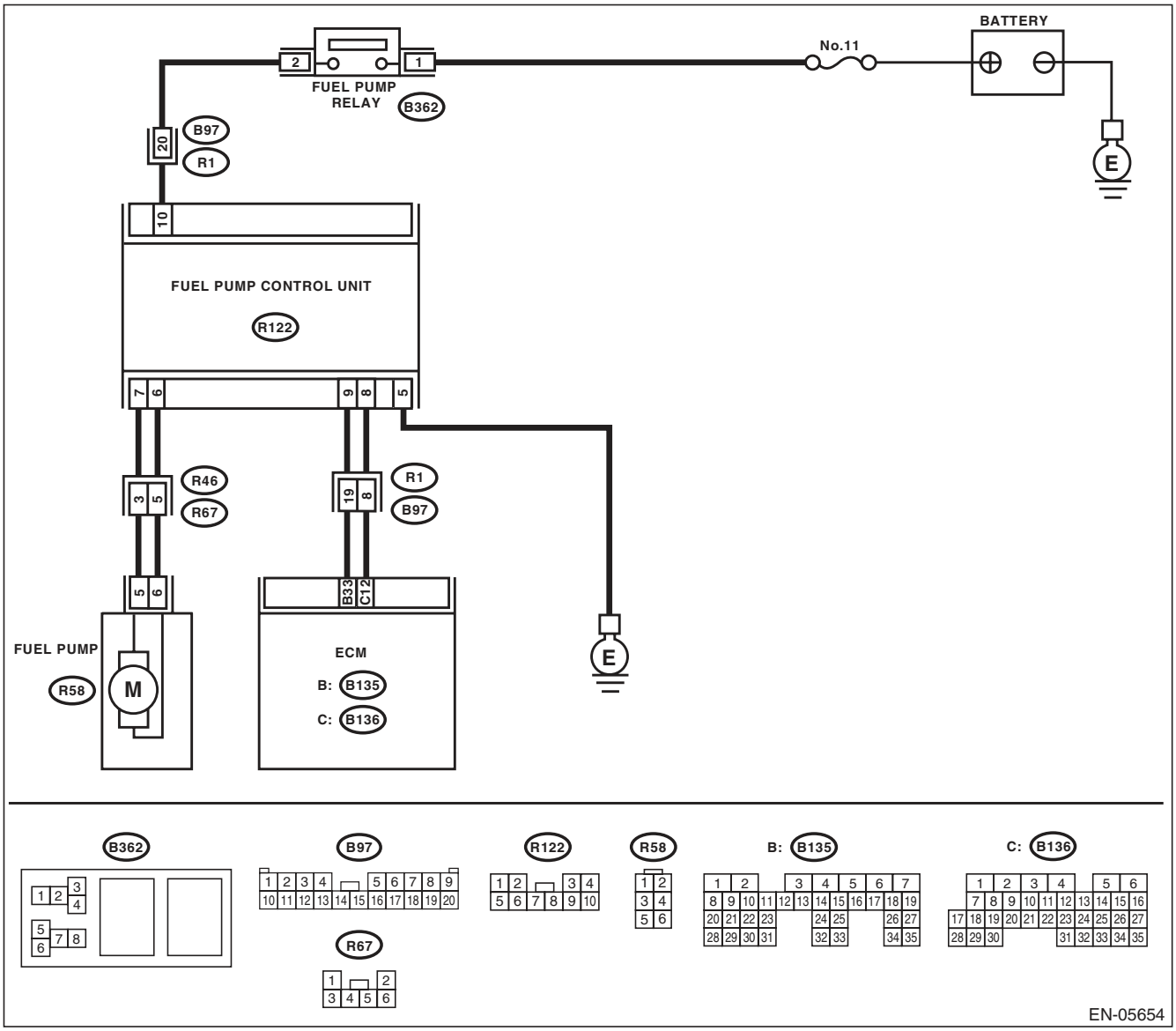

	Step	Check	Yes	No
1	**CHECK POWER SUPPLY CIRCUIT TO FUEL PUMP CONTROL UNIT.** 1) Turn the ignition switch to OFF. 2) Disconnect the connector from fuel pump control unit. 3) Turn the ignition switch to ON. 4) Measure the voltage between fuel pump control unit and chassis ground. ***Connector & terminal*** ***(R122) No. 10 (+) — Chassis ground (–):***	Is the voltage 10 V or more?	Go to step **2**.	Repair the power supply circuit. NOTE: In this case, repair the following item: • Open or ground short circuit of harness between fuel pump relay and fuel pump control unit connector • Poor contact of fuel pump control unit connector • Poor contact of fuel pump relay connector
2	**CHECK GROUND CIRCUIT OF FUEL PUMP CONTROL UNIT.** 1) Turn the ignition switch to OFF. 2) Measure the resistance of harness between fuel pump control unit and chassis ground. ***Connector & terminal*** ***(R122) No. 5 — Chassis ground:***	Is the resistance less than 5 Ω?	Go to step **3**.	Repair the harness and connector. NOTE: In this case, repair the following item: • Open circuit between fuel pump control unit connector and chassis ground • Poor contact of fuel pump control unit connector
3	**CHECK HARNESS BETWEEN FUEL PUMP CONTROL UNIT AND FUEL PUMP CONNECTOR.** 1) Disconnect the connector from fuel pump. 2) Measure the resistance of harness between fuel pump control unit and fuel pump connector. ***Connector & terminal*** ***(R122) No. 7 — (R58) No. 5:*** ***(R122) No. 6 — (R58) No. 6:***	Is the resistance less than 1 Ω?	Go to step **4**.	Repair the harness and connector. NOTE: In this case, repair the following item: • Open circuit in haness between fuel pump control unit connector and fuel pump connector • Poor contact of coupling connector
4	**CHECK HARNESS BETWEEN FUEL PUMP CONTROL UNIT AND FUEL PUMP CONNECTOR.** Measure the resistance between fuel pump control unit and chassis ground. ***Connector & terminal*** ***(R122) No. 7 — Chassis ground:*** ***(R122) No. 6 — Chassis ground:***	Is the resistance 1 MΩ or more?	Go to step **5**.	Repair the short circuit to ground in harness between fuel pump control unit connector and fuel pump connector.

Step		Check	Yes	No
5	**CHECK HARNESS BETWEEN ECM AND FUEL PUMP CONTROL UNIT.** 1) Disconnect the connectors from ECM. 2) Measure the resistance of harness between ECM and fuel pump control unit. ***Connector & terminal*** ***(B136) No. 12 — (R122) No. 8:*** ***(B135) No. 33 — (R122) No. 9:***	Is the resistance less than 1 Ω?	Go to step **6**.	Repair the harness and connector. NOTE: In this case, repair the following item: • Open circuit in harness between ECM and fuel pump control unit connector • Poor contact of coupling connector
6	**CHECK HARNESS BETWEEN ECM AND FUEL PUMP CONTROL UNIT.** Measure the resistance between fuel pump control unit and chassis ground. ***Connector & terminal*** ***(R122) No. 8 — Chassis ground:*** ***(R122) No. 9 — Chassis ground:***	Is the resistance 1 MΩ or more?	Go to step **7**.	Repair the short circuit to ground in harness between ECM and fuel pump control unit connector.
7	**CHECK POOR CONTACT.** Check for poor contact of ECM and fuel pump control unit connector.	Is there poor contact in ECM or fuel pump control unit connector?	Repair the poor contact of ECM or fuel pump control unit connector.	Go to step **8**.
8	**CHECK EXPERIENCE OF RUNNING OUT OF FUEL.**	Has the vehicle experienced running out of fuel?	Finish the diagnosis. NOTE: DTC may be recorded as a result of fuel pump idling while running out of fuel.	Replace the fuel pump control unit. <Ref. to FU(H6DO)-42, Fuel Pump Control Unit.>

BN:DTC P0301 CYLINDER 1 MISFIRE DETECTED

NOTE:
For the diagnostic procedure, refer to DTC P0306. <Ref. to EN(H6DO)(diag)-210, DTC P0306 CYLINDER 6 MISFIRE DETECTED, Diagnostic Procedure with Diagnostic Trouble Code (DTC).>

BO:DTC P0302 CYLINDER 2 MISFIRE DETECTED

NOTE:
For the diagnostic procedure, refer to DTC P0306. <Ref. to EN(H6DO)(diag)-210, DTC P0306 CYLINDER 6 MISFIRE DETECTED, Diagnostic Procedure with Diagnostic Trouble Code (DTC).>

BP:DTC P0303 CYLINDER 3 MISFIRE DETECTED

NOTE:
For the diagnostic procedure, refer to DTC P0306. <Ref. to EN(H6DO)(diag)-210, DTC P0306 CYLINDER 6 MISFIRE DETECTED, Diagnostic Procedure with Diagnostic Trouble Code (DTC).>

BQ:DTC P0304 CYLINDER 4 MISFIRE DETECTED

NOTE:
For the diagnostic procedure, refer to DTC P0306. <Ref. to EN(H6DO)(diag)-210, DTC P0306 CYLINDER 6 MISFIRE DETECTED, Diagnostic Procedure with Diagnostic Trouble Code (DTC).>

BR:DTC P0305 CYLINDER 5 MISFIRE DETECTED

NOTE:
For the diagnostic procedure, refer to DTC P0306. <Ref. to EN(H6DO)(diag)-210, DTC P0306 CYLINDER 6 MISFIRE DETECTED, Diagnostic Procedure with Diagnostic Trouble Code (DTC).>

BS:DTC P0306 CYLINDER 6 MISFIRE DETECTED

DTC DETECTING CONDITION:

- Two consecutive driving cycles with fault
- Immediately at fault recognition (A misfire which could damage catalyst occurs.)
- GENERAL DESCRIPTION <Ref. to GD(H6DO)-93, DTC P0306 CYLINDER 6 MISFIRE DETECTED, Diagnostic Trouble Code (DTC) Detecting Criteria.>

TROUBLE SYMPTOM:

- Engine stalls.
- Improper idling
- Rough driving

CAUTION:

After repair or replacement of faulty parts, perform Clear Memory Mode <Ref. to EN(H6DO)(diag)-52, OPERATION, Clear Memory Mode.>, and Inspection Mode <Ref. to EN(H6DO)(diag)-44, PROCEDURE, Inspection Mode.>.

WIRING DIAGRAM:

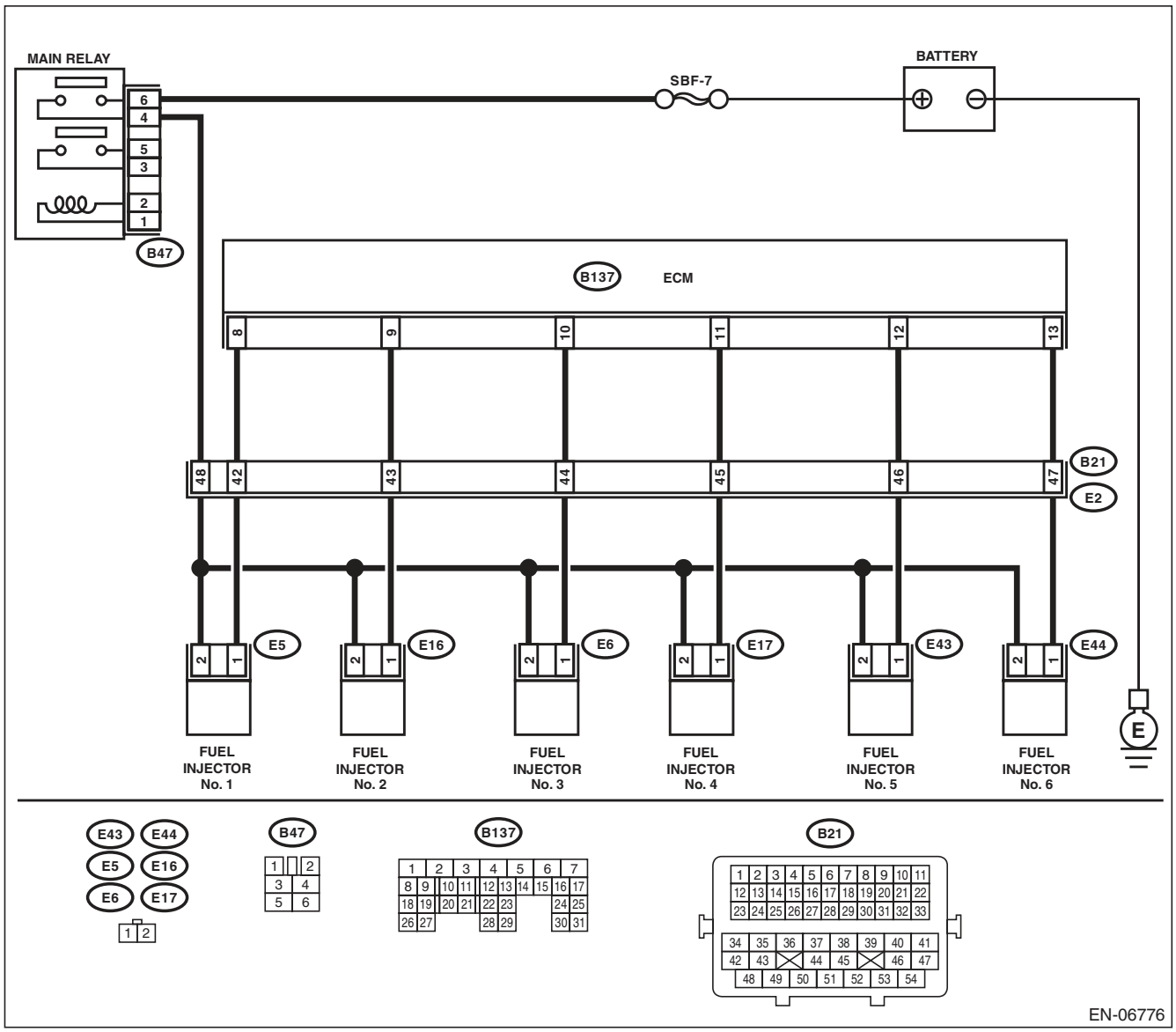

	Step	Check	Yes	No
1	**CHECK OUTPUT SIGNAL OF ECM.** 1) Turn the ignition switch to ON. 2) Measure the voltage between ECM and chassis ground on faulty cylinders. ***Connector & terminal*** ***#1 (B137) No. 8 (+) — Chassis ground (–):*** ***#2 (B137) No. 9 (+) — Chassis ground (–):*** ***#3 (B137) No. 10 (+) — Chassis ground (–):*** ***#4 (B137) No. 11 (+) — Chassis ground (–):*** ***#5 (B137) No. 12 (+) — Chassis ground (–):*** ***#6 (B137) No. 13 (+) — Chassis ground (–):***	Is the voltage 10 V or more?	Go to step **6**.	Go to step **2**.
2	**CHECK HARNESS BETWEEN ECM AND FUEL INJECTOR.** 1) Turn the ignition switch to OFF. 2) Disconnect the connector from fuel injector on faulty cylinders. 3) Measure the resistance between fuel injector connector and engine ground on faulty cylinders. ***Connector & terminal*** ***#1 (E5) No. 1 — Engine ground:*** ***#2 (E16) No. 1 — Engine ground:*** ***#3 (E6) No. 1 — Engine ground:*** ***#4 (E17) No. 1 — Engine ground:*** ***#5 (E43) No. 1 — Engine ground:*** ***#6 (E44) No. 1 — Engine ground:***	Is the resistance 1 MΩ or more?	Go to step **3**.	Repair the ground short circuit of harness between ECM and fuel injector.
3	**CHECK HARNESS BETWEEN ECM AND FUEL INJECTOR.** Measure the resistance of harness between ECM and fuel injector on faulty cylinders. ***Connector & terminal*** ***#1 (B137) No. 8 — (E5) No. 1:*** ***#2 (B137) No. 9 — (E16) No. 1:*** ***#3 (B137) No. 10 — (E6) No. 1:*** ***#4 (B137) No. 11 — (E17) No. 1:*** ***#5 (B137) No. 12 — (E43) No. 1:*** ***#6 (B137) No. 13 — (E44) No. 1:***	Is the resistance less than 1 Ω?	Go to step **4**.	Repair the harness and connector. NOTE: In this case, repair the following item: • Open circuit of harness between ECM and fuel injector connector • Poor contact of coupling connector
4	**CHECK FUEL INJECTOR.** Measure the resistance between fuel injector terminals on faulty cylinder. ***Terminals*** ***No. 1 — No. 2:***	Is the resistance between 5 — 20 Ω?	Go to step **5**.	Replace the faulty fuel injector. <Ref. to FU(H6DO)-28, Fuel Injector.>
5	**CHECK POWER SUPPLY LINE.** 1) Turn the ignition switch to ON. 2) Measure the voltage between fuel injector and engine ground on faulty cylinders. ***Connector & terminal*** ***#1 (E5) No. 2 (+) — Engine ground (–):*** ***#2 (E16) No. 2 (+) — Engine ground (–):*** ***#3 (E6) No. 2 (+) — Engine ground (–):*** ***#4 (E17) No. 2 (+) — Engine ground (–):*** ***#5 (E43) No. 2 (+) — Engine ground (–):*** ***#6 (E44) No. 2 (+) — Engine ground (–):***	Is the voltage 10 V or more?	Repair the poor contact of all connectors in fuel injector circuit.	Repair the harness and connector. NOTE: In this case, repair the following item: • Open circuit in harness between the main relay and fuel injector on faulty cylinders • Poor contact of coupling connector • Poor contact of main relay connector

	Step	Check	Yes	No
6	**CHECK HARNESS BETWEEN ECM AND FUEL INJECTOR.** 1) Turn the ignition switch to OFF. 2) Disconnect the connector from fuel injector on faulty cylinders. 3) Turn the ignition switch to ON. 4) Measure the voltage between ECM and chassis ground on faulty cylinders. ***Connector & terminal*** ***#1 (B137) No. 8 (+) — Chassis ground (–):*** ***#2 (B137) No. 9 (+) — Chassis ground (–):*** ***#3 (B137) No. 10 (+) — Chassis ground (–):*** ***#4 (B137) No. 11 (+) — Chassis ground (–):*** ***#5 (B137) No. 12 (+) — Chassis ground (–):*** ***#6 (B137) No. 13 (+) — Chassis ground (–):***	Is the voltage 10 V or more?	Repair the short circuit to power in the harness between the ECM and fuel injector.	Go to step **7**.
7	**CHECK FUEL INJECTOR.** 1) Turn the ignition switch to OFF. 2) Measure the resistance between fuel injector terminals on faulty cylinder. ***Terminals*** ***No. 1 — No. 2:***	Is the resistance less than 1 Ω?	Replace the faulty fuel injector. <Ref. to FU(H6DO)-28, Fuel Injector.>	Go to step **8**.
8	**CHECK INSTALLATION OF CAMSHAFT POSITION SENSOR/CRANKSHAFT POSITION SENSOR.**	Is the camshaft position sensor or crankshaft position sensor loosely installed?	Tighten the camshaft position sensor or crankshaft position sensor.	Go to step **9**.
9	**CHECK CRANK PLATE.**	Is the crank sprocket rusted or the teeth of crank plate broken?	Replace the crank plate. <Ref. to ME(H6DO)-64, Cylinder Block.>	Go to step **10**.
10	**CHECK INSTALLATION CONDITION OF TIMING CHAIN.** Turn the crankshaft using ST, and align the alignment mark on crank sprocket with alignment mark on cylinder block. ST 18252AA000 CRANKSHAFT SOCKET	Is the timing chain dislocated from its proper position?	Correct the installation condition of timing chain. <Ref. to ME(H6DO)-46, Timing Chain Assembly.>	Go to step **11**.
11	**CHECK FUEL LEVEL.**	Is the fuel meter indication lower than the “Lower” level?	Refill the fuel so that fuel meter indication is higher than the “Lower” level. After replenishing fuel, Go to step **13**.	Go to step **12**.
12	**CHECK STATUS OF MALFUNCTION INDICATOR LIGHT.** 1) Clear the memory using the Subaru Select Monitor or general scan tool. NOTE: • SUBARU SELECT MONITOR For detailed operation procedure, refer to “READ CURRENT DATA FOR ENGINE”. <Ref. to EN(H6DO)(diag)-34, Subaru Select Monitor.> • General Scan Tool For detailed operation procedures, refer to the general scan tool operation manual. 2) Start the engine, and drive the vehicle 10 minutes or more.	Does the malfunction indicator light illuminate or blink?	Go to step **14**.	Go to step **13**.

Step		Check	Yes	No
13	**CHECK CAUSE OF MISFIRE.**	Was the cause of misfire identified when the engine is running?	Finish diagnostics operation, if the engine has no abnormality.	Repair the poor contact of connector. NOTE: In this case, repair the following item: • Poor contact of ignition coil connector • Poor contact in fuel injector connector on faulty cylinders • Poor contact in ECM connector • Poor contact of coupling connector
14	**CHECK AIR INTAKE SYSTEM.**	Is there any fault in air intake system?	Repair the air intake system. NOTE: Check the following items. • Are there air leaks or air suction caused by loose or dislocated nuts and bolts? • Are there cracks or any disconnection of hoses?	Go to step **15**.
15	**CHECK MISFIRE SYMPTOM.** 1) Turn the ignition switch to ON. 2) Read the DTC. NOTE: • SUBARU SELECT MONITOR For detailed operation procedure, refer to “READ CURRENT DATA FOR ENGINE”. <Ref. to EN(H6DO)(diag)-34, Subaru Select Monitor.> • General Scan Tool For detailed operation procedures, refer to the general scan tool operation manual.	Does the Subaru Select Monitor or general scan tool indicate only one DTC?	Go to step **21**.	Go to step **16**.
16	**CHECK FOR ANY OTHER DTC ON DISPLAY.**	Are DTCs P0301 and P0302 displayed?	Go to step **22**.	Go to step **17**.
17	**CHECK DTC ON DISPLAY.**	Are DTCs P0303 and P0304 displayed?	Go to step **23**.	Go to step **18**.
18	**CHECK DTC ON DISPLAY.**	Are DTC P0305 and P0306 displayed?	Go to step **24**.	Go to step **19**.
19	**CHECK DTC ON DISPLAY.**	Are DTC P0301, P0303 and P0305 displayed?	Go to step **25**.	Go to step **20**.
20	**CHECK DTC ON DISPLAY.**	Are DTC P0302, P0304 and P0306 displayed?	Go to step **26**.	Go to step **27**.

Step		Check	Yes	No
21	**ONLY ONE CYLINDER.**	Is there any fault in the cylinder?	Repair or replace faulty parts. NOTE: Check the following items. • Spark plug • Fuel injector • Compression ratio	Check DTC P0171, P0172, P0174 or P0175 using “List of Diagnostic Trouble Code (DTC)”. <Ref. to EN(H6DO)(diag)-81, List of Diagnostic Trouble Code (DTC).>

22	**GROUP OF #1 AND #2 CYLINDERS.**	Are there any faults in #1 and #2 cylinders?	Repair or replace faulty parts.
			NOTE:
			• Check the following items.
			  • Spark plug
			  • Fuel injector
			  • Ignition coil
			  • Compression ratio
			• If any fault is not found, check the “IGNITION CONTROL SYSTEM” of #1 and #2 cylinders side. <Ref. to EN(H6DO)(diag)-73, IGNITION CONTROL SYSTEM, Diagnostics for Engine Starting Failure.>
				Check DTC P0171, P0172, P0174 or P0175 using “List of Diagnostic Trouble Code (DTC)”. <Ref. to EN(H6DO)(diag)-81, List of Diagnostic Trouble Code (DTC).>

23	**GROUP OF #3 AND #4 CYLINDERS.**	Are there any faults in #3 and #4 cylinders?	Repair or replace faulty parts.
			NOTE:
			• Check the following items.
			  • Spark plug
			  • Fuel injector
			  • Ignition coil
			  • Compression ratio
			• If any fault is not found, check the “IGNITION CONTROL SYSTEM” of #3 and #4 cylinders side. <Ref. to EN(H6DO)(diag)-73, IGNITION CONTROL SYSTEM, Diagnostics for Engine Starting Failure.>
				Check DTC P0171, P0172, P0174 or P0175 using “List of Diagnostic Trouble Code (DTC)”. <Ref. to EN(H6DO)(diag)-81, List of Diagnostic Trouble Code (DTC).>

Step		Check	Yes	No
24	**GROUP OF #5 AND #6 CYLINDERS.**	Are there any faults in #5 and #6 cylinders?	Repair or replace faulty parts. NOTE: • Check the following items. • Spark plug • Fuel injector • Ignition coil • Compression ratio • If any fault is not found, check the "IGNITION CONTROL SYSTEM" of #5 and #6 cylinders side. <Ref. to EN(H6DO)(diag)-73, IGNITION CONTROL SYSTEM, Diagnostics for Engine Starting Failure.>	Check DTC P0171, P0172, P0174 or P0175 using "List of Diagnostic Trouble Code (DTC)". <Ref. to EN(H6DO)(diag)-81, List of Diagnostic Trouble Code (DTC).>
25	**GROUP OF #1, #3 AND #5 CYLINDERS.**	Is there any fault in #1, #3 and #5 cylinders?	Repair or replace faulty parts. NOTE: Check the following items. • Spark plug • Fuel injector • Compression ratio • Skipping timing chain teeth	Check DTC P0171, P0172, P0174 or P0175 using "List of Diagnostic Trouble Code (DTC)". <Ref. to EN(H6DO)(diag)-81, List of Diagnostic Trouble Code (DTC).>
26	**GROUP OF #2, #4 AND #6 CYLINDERS.**	Is there any fault in #2, #4 and #6 cylinders?	Repair or replace faulty parts. NOTE: Check the following items. • Spark plug • Fuel injector • Compression ratio • Skipping timing chain teeth	Check DTC P0171, P0172, P0174 or P0175 using "List of Diagnostic Trouble Code (DTC)". <Ref. to EN(H6DO)(diag)-81, List of Diagnostic Trouble Code (DTC).>
27	**CYLINDER AT RANDOM.**	Is the engine idle rough?	Check DTC P0171, P0172, P0174 or P0175 using "List of Diagnostic Trouble Code (DTC)". <Ref. to EN(H6DO)(diag)-81, List of Diagnostic Trouble Code (DTC).>	Repair or replace faulty parts. NOTE: Check the following items. • Spark plug • Fuel injector • Compression ratio

BT:DTC P0327 KNOCK SENSOR 1 CIRCUIT LOW (BANK 1 OR SINGLE SENSOR)

DTC DETECTING CONDITION:

- Immediately at fault recognition
- GENERAL DESCRIPTION <Ref. to GD(H6DO)-94, DTC P0327 KNOCK SENSOR 1 CIRCUIT LOW (BANK 1 OR SINGLE SENSOR), Diagnostic Trouble Code (DTC) Detecting Criteria.>

TROUBLE SYMPTOM:

- Poor driving performance
- Knocking occurs.

CAUTION:

After repair or replacement of faulty parts, perform Clear Memory Mode <Ref. to EN(H6DO)(diag)-52, OPERATION, Clear Memory Mode.>, and Inspection Mode <Ref. to EN(H6DO)(diag)-44, PROCEDURE, Inspection Mode.>.

WIRING DIAGRAM:

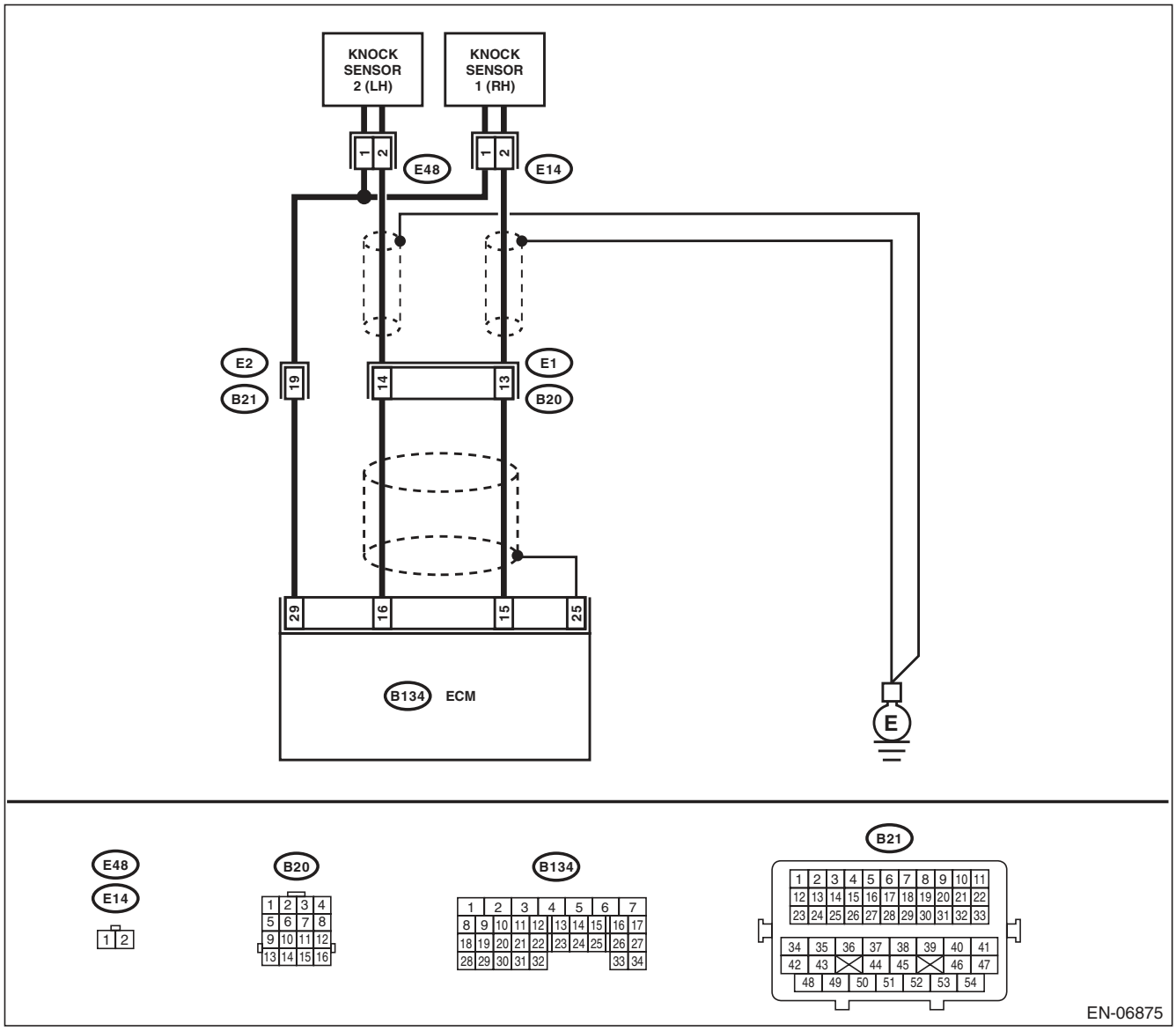

Step		Check	Yes	No
1	**CHECK HARNESS BETWEEN ECM AND KNOCK SENSOR.** 1) Turn the ignition switch to OFF. 2) Disconnect the connectors from ECM. 3) Measure the resistance between ECM connectors. ***Connector & terminal*** ***(B134) No. 15 — (B134) No. 29:***	Is the resistance 600 kΩ or more?	Go to step **2**.	Repair the poor contact of ECM connector.
2	**CHECK KNOCK SENSOR.** 1) Disconnect the connector from knock sensor. 2) Measure the resistance between knock sensor terminals. ***Terminals*** ***No. 1 — No. 2:***	Is the resistance 600 kΩ or more?	Replace the knock sensor. <Ref. to FU(H6DO)-23, Knock Sensor.>	Repair the harness and connector. NOTE: In this case, repair the following item: • Open circuit of harness between ECM and knock sensor • Poor contact of the knock sensor connector • Poor contact of coupling connector

BU:DTC P0328 KNOCK SENSOR 1 CIRCUIT HIGH (BANK 1 OR SINGLE SENSOR)

DTC DETECTING CONDITION:

- Immediately at fault recognition
- GENERAL DESCRIPTION <Ref. to GD(H6DO)-95, DTC P0328 KNOCK SENSOR 1 CIRCUIT HIGH (BANK 1 OR SINGLE SENSOR), Diagnostic Trouble Code (DTC) Detecting Criteria.>

TROUBLE SYMPTOM:

- Poor driving performance
- Knocking occurs.

CAUTION:

After repair or replacement of faulty parts, perform Clear Memory Mode <Ref. to EN(H6DO)(diag)-52, OPERATION, Clear Memory Mode.>, and Inspection Mode <Ref. to EN(H6DO)(diag)-44, PROCEDURE, Inspection Mode.>.

WIRING DIAGRAM:

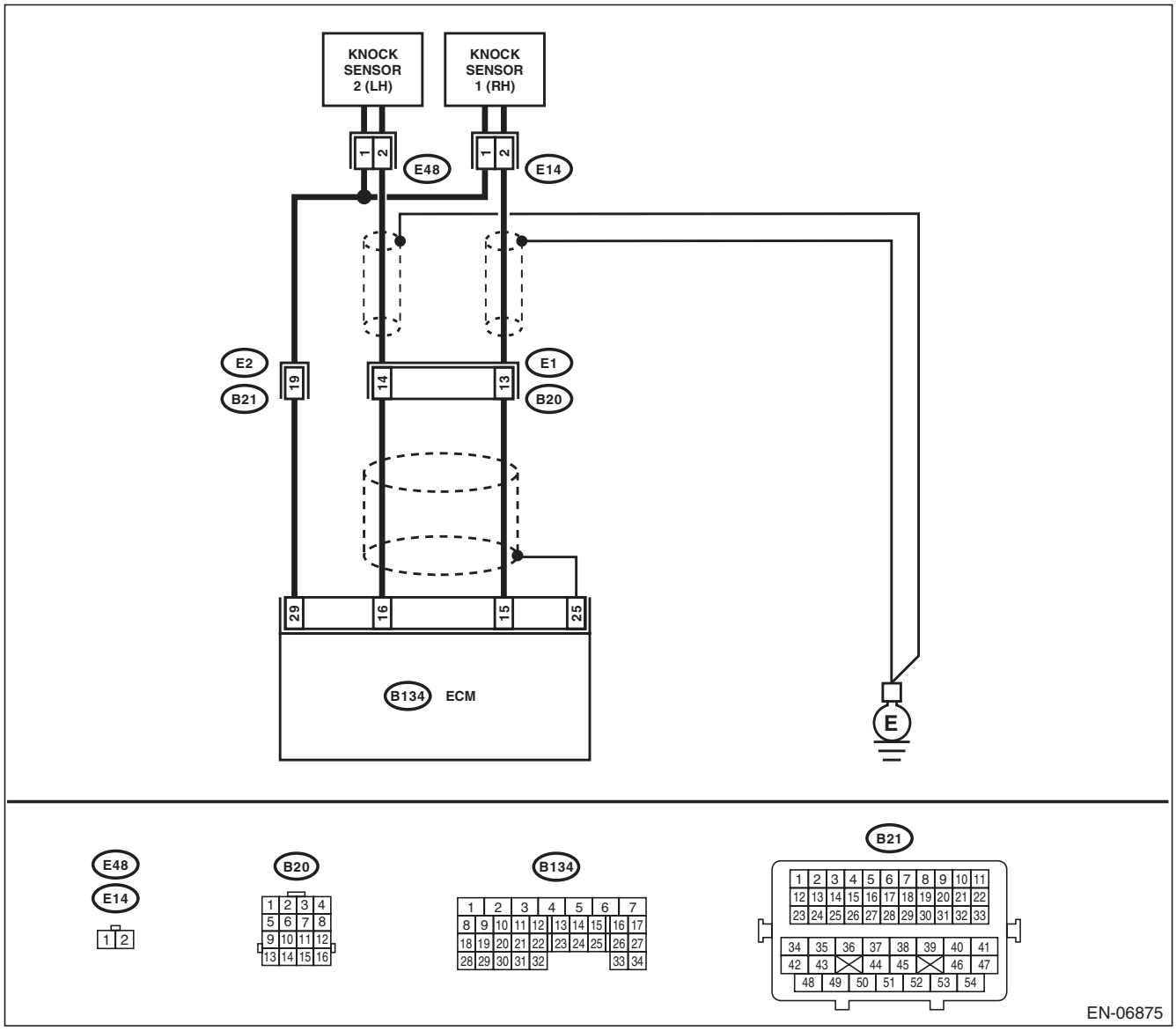

	Step	Check	Yes	No
1	**CHECK HARNESS BETWEEN ECM AND KNOCK SENSOR.** 1) Turn the ignition switch to OFF. 2) Disconnect the connectors from ECM. 3) Measure the resistance between ECM connectors. ***Connector & terminal*** ***(B134) No. 15 — (B134) No. 29:***	Is the resistance less than 500 kΩ?	Go to step **2**.	Go to step **3**.
2	**CHECK KNOCK SENSOR.** 1) Disconnect the connector from knock sensor. 2) Measure the resistance between knock sensor connectors. ***Terminals*** ***No. 1 — No. 2:***	Is the resistance less than 500 kΩ?	Replace the knock sensor. <Ref. to FU(H6DO)-23, Knock Sensor.>	Repair the short circuit to ground in harness between ECM and knock sensor connector. NOTE: The harness between both connectors are shielded. Remove the shield and repair the short circuit of harness.
3	**CHECK INPUT SIGNAL OF ECM.** 1) Connect the connector to ECM. 2) Turn the ignition switch to ON. 3) Measure the voltage between ECM and chassis ground. ***Connector & terminal*** ***(B134) No. 15 (+) — Chassis ground (–):***	Is the voltage 2 V or more?	Even if DTC is detected, the circuit has returned to a normal condition at this time. Reproduce the failure, and then perform the diagnosis again. NOTE: In this case, temporary poor contact of connector may be the cause.	Repair the poor contact of ECM connector.

BV:DTC P0332 KNOCK SENSOR 2 CIRCUIT LOW (BANK 2)

DTC DETECTING CONDITION:

- Immediately at fault recognition
- GENERAL DESCRIPTION <Ref. to GD(H6DO)-96, DTC P0332 KNOCK SENSOR 2 CIRCUIT LOW (BANK 2), Diagnostic Trouble Code (DTC) Detecting Criteria.>

TROUBLE SYMPTOM:

- Driving performance problem
- Knocking is occurred.

CAUTION:

After repair or replacement of faulty parts, perform Clear Memory Mode <Ref. to EN(H6DO)(diag)-52, OPERATION, Clear Memory Mode.>, and Inspection Mode <Ref. to EN(H6DO)(diag)-44, PROCEDURE, Inspection Mode.>.

WIRING DIAGRAM:

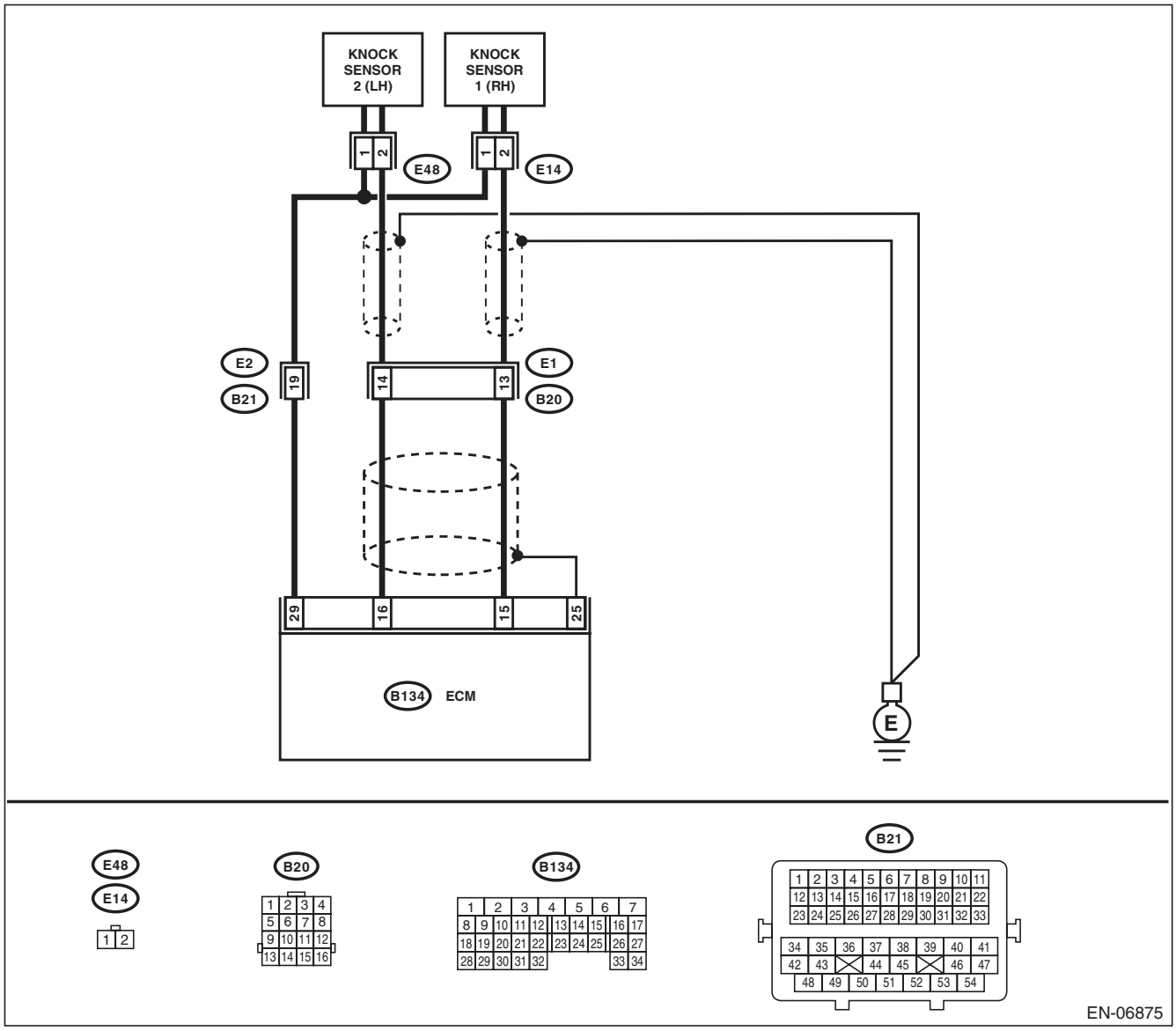

	Step	Check	Yes	No
1	**CHECK HARNESS BETWEEN ECM AND KNOCK SENSOR.** 1) Turn the ignition switch to OFF. 2) Disconnect the connectors from ECM. 3) Measure the resistance between ECM connectors. ***Connector & terminal*** ***(B134) No. 16 — (B134) No. 29:***	Is the resistance 600 kΩ or more?	Go to step **2**.	Repair the poor contact of ECM connector.
2	**CHECK KNOCK SENSOR.** 1) Disconnect the connector from knock sensor. 2) Measure the resistance between knock sensor terminals. ***Terminals*** ***No. 1 — No. 2:***	Is the resistance 600 kΩ or more?	Replace the knock sensor. <Ref. to FU(H6DO)-23, Knock Sensor.>	Repair the harness and connector. NOTE: In this case, repair the following item: • Open circuit of harness between ECM and knock sensor • Poor contact of the knock sensor connector • Poor contact of coupling connector

BW:DTC P0333 KNOCK SENSOR 2 CIRCUIT HIGH (BANK 2)

DTC DETECTING CONDITION:

- Immediately at fault recognition
- GENERAL DESCRIPTION <Ref. to GD(H6DO)-96, DTC P0333 KNOCK SENSOR 2 CIRCUIT HIGH (BANK 2), Diagnostic Trouble Code (DTC) Detecting Criteria.>

TROUBLE SYMPTOM:

- Driving performance problem
- Knocking occurs.

CAUTION:

After repair or replacement of faulty parts, perform Clear Memory Mode <Ref. to EN(H6DO)(diag)-52, OPERATION, Clear Memory Mode.>, and Inspection Mode <Ref. to EN(H6DO)(diag)-44, PROCEDURE, Inspection Mode.>.

WIRING DIAGRAM:

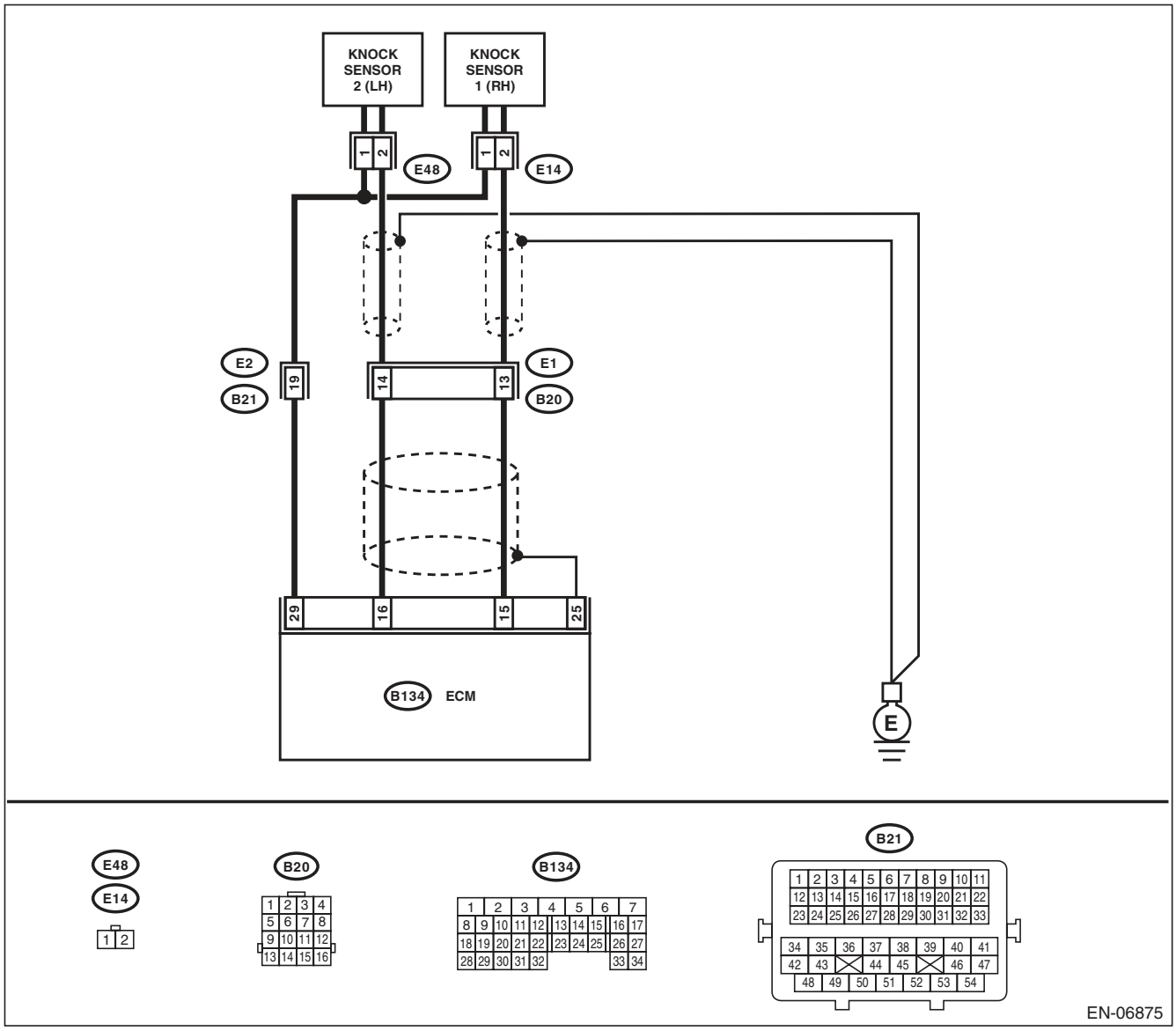

	Step	Check	Yes	No
1	**CHECK HARNESS BETWEEN ECM AND KNOCK SENSOR.** 1) Turn the ignition switch to OFF. 2) Disconnect the connectors from ECM. 3) Measure the resistance between ECM connectors. ***Connector & terminal*** ***(B134) No. 16 — (B134) No. 29:***	Is the resistance less than 500 kΩ?	Go to step **2**.	Go to step **3**.
2	**CHECK KNOCK SENSOR.** 1) Disconnect the connector from knock sensor. 2) Measure the resistance between knock sensor connectors. ***Terminals*** ***No. 1 — No. 2:***	Is the resistance less than 500 kΩ?	Replace the knock sensor. <Ref. to FU(H6DO)-23, Knock Sensor.>	Repair the short circuit to ground in harness between ECM and knock sensor connector. NOTE: The harness between both connectors are shielded. Remove the shield and repair the short circuit of harness.
3	**CHECK INPUT SIGNAL OF ECM.** 1) Connect the connector to ECM. 2) Turn the ignition switch to ON. 3) Measure the voltage between ECM and chassis ground. ***Connector & terminal*** ***(B134) No. 16 (+) — Chassis ground (–):***	Is the voltage 2 V or more?	Even if DTC is detected, the circuit has returned to a normal condition at this time. Reproduce the failure, and then perform the diagnosis again. NOTE: In this case, temporary poor contact of connector may be the cause.	Repair the poor contact of ECM connector.

BX:DTC P0335 CRANKSHAFT POSITION SENSOR “A” CIRCUIT

DTC DETECTING CONDITION:

- Immediately at fault recognition
- GENERAL DESCRIPTION <Ref. to GD(H6DO)-97, DTC P0335 CRANKSHAFT POSITION SENSOR “A” CIRCUIT, Diagnostic Trouble Code (DTC) Detecting Criteria.>

TROUBLE SYMPTOM:

- Engine stalls.
- Failure of engine to start

CAUTION:

After repair or replacement of faulty parts, perform Clear Memory Mode <Ref. to EN(H6DO)(diag)-52, OPERATION, Clear Memory Mode.>, and Inspection Mode <Ref. to EN(H6DO)(diag)-44, PROCEDURE, Inspection Mode.>.

WIRING DIAGRAM:

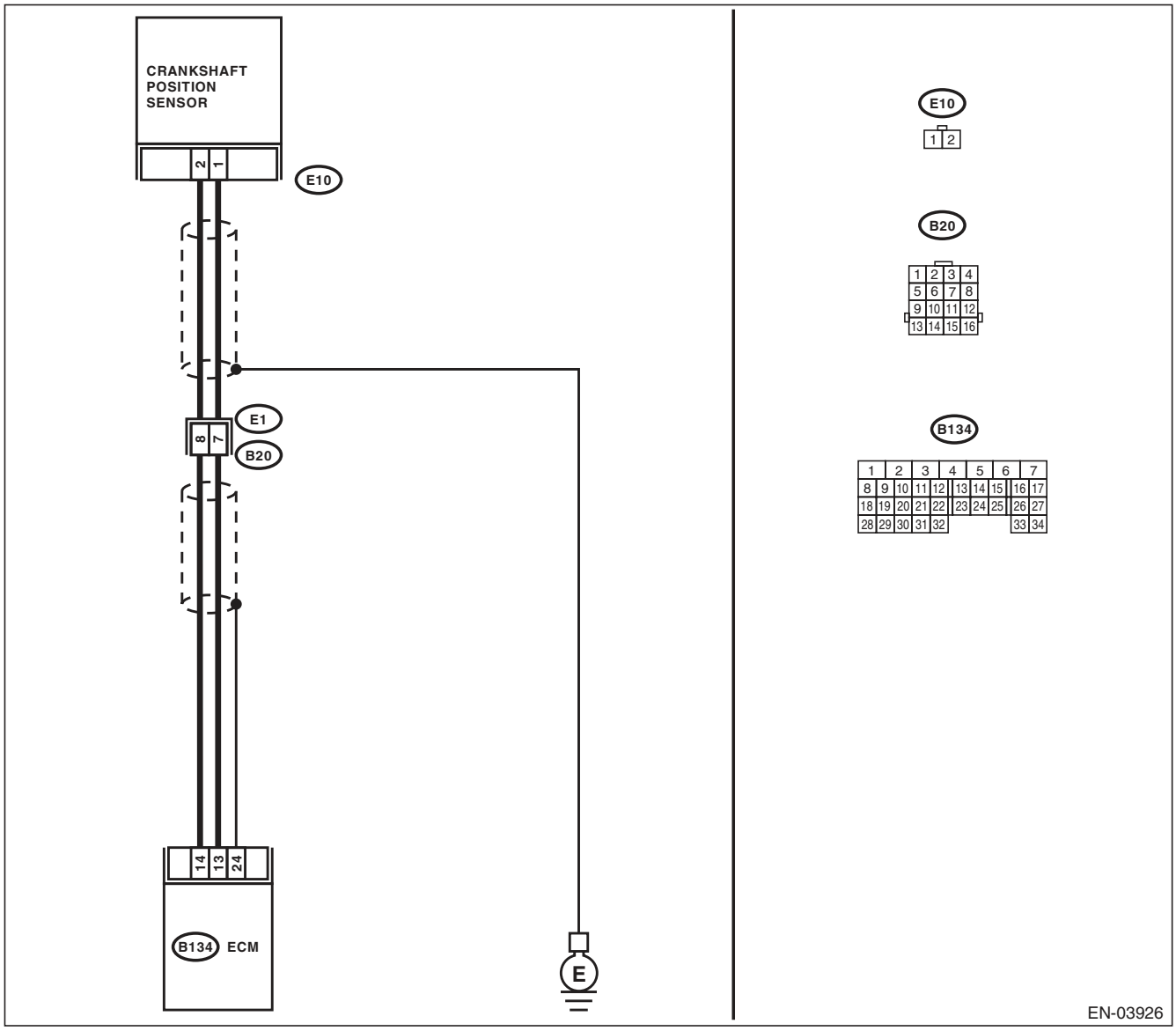

	Step	Check	Yes	No
1	**CHECK CONDITION OF CRANKSHAFT POSITION SENSOR.**	Is the crankshaft position sensor installation bolt tightened securely?	Go to step **2**.	Tighten the crankshaft position sensor installation bolt securely.
2	**CHECK CRANKSHAFT POSITION SENSOR.** 1) Turn the ignition switch to OFF. 2) Remove the crankshaft position sensor. 3) Measure the resistance between connector terminals of crankshaft position sensor. ***Terminals*** ***No. 1 — No. 2:***	Is the resistance between 1 and 4 kΩ?	Go to step **3**.	Replace the crankshaft position sensor. <Ref. to FU(H6DO)-21, Crankshaft Position Sensor.>
3	**CHECK HARNESS BETWEEN ECM AND CRANK SHAFT POSITION SENSOR.** 1) Disconnect the connectors from ECM. 2) Measure the resistance of harness between ECM and crankshaft position sensor connector. ***Connector & terminal*** ***(B134) No. 13 — (E10) No. 1:*** ***(B134) No. 14 — (E10) No. 2:***	Is the resistance less than 1 Ω?	Repair the poor contact of ECM and crankshaft position sensor connector.	Repair the harness and connector. NOTE: In this case, repair the following item: • Open circuit in harness between ECM and crankshaft position sensor connector • Poor contact of coupling connector

BY:DTC P0336 CRANKSHAFT POSITION SENSOR “A” CIRCUIT RANGE/ PERFORMANCE

DTC DETECTING CONDITION:

- Two consecutive driving cycles with fault
- GENERAL DESCRIPTION <Ref. to GD(H6DO)-99, DTC P0336 CRANKSHAFT POSITION SENSOR “A” CIRCUIT RANGE/PERFORMANCE, Diagnostic Trouble Code (DTC) Detecting Criteria.>

TROUBLE SYMPTOM:

- Engine stalls.
- Failure of engine to start

CAUTION:

After repair or replacement of faulty parts, perform Clear Memory Mode <Ref. to EN(H6DO)(diag)-52, OPERATION, Clear Memory Mode.>, and Inspection Mode <Ref. to EN(H6DO)(diag)-44, PROCEDURE, Inspection Mode.>.

WIRING DIAGRAM:

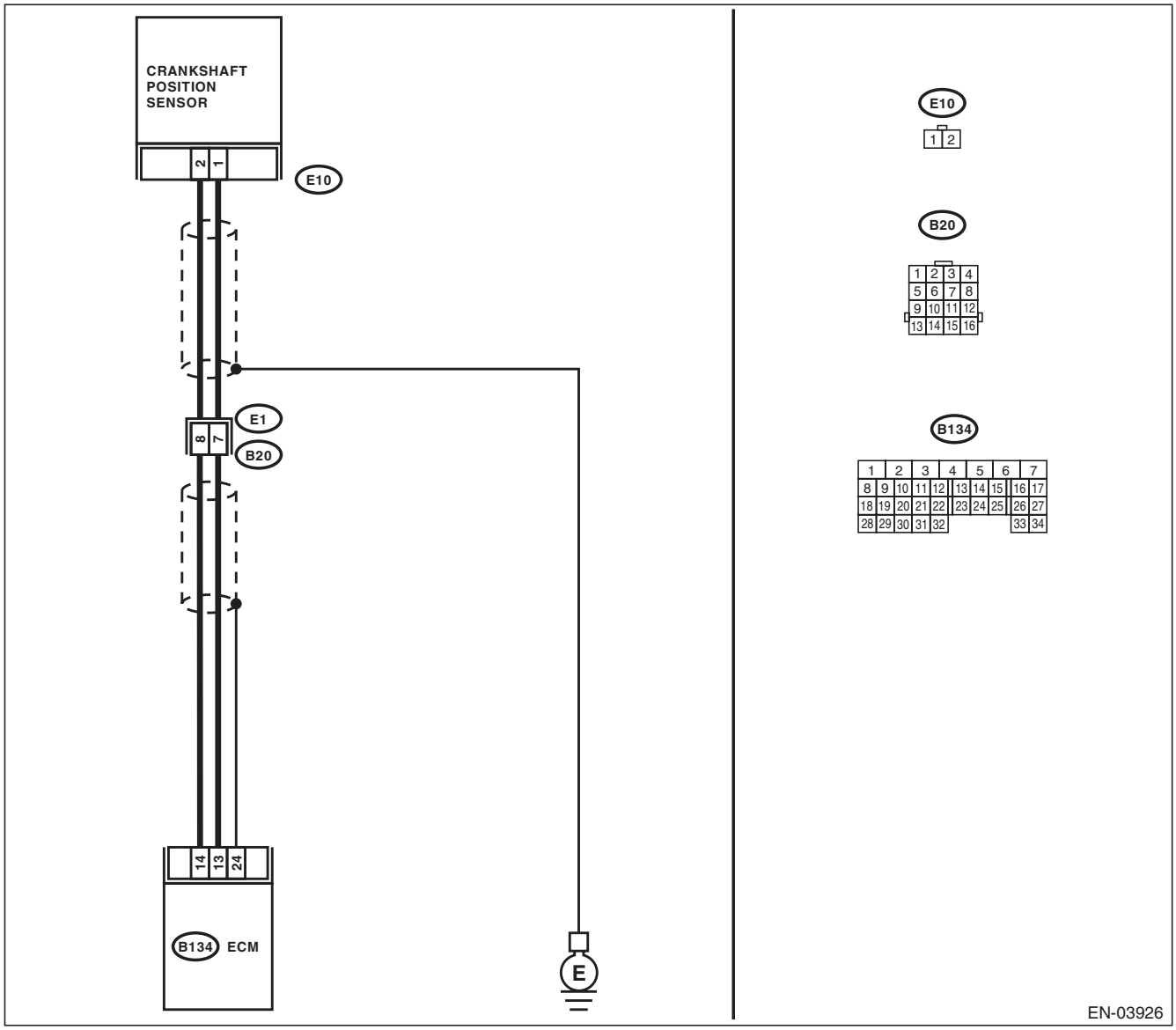

	Step	Check	Yes	No
1	**CHECK CONDITION OF CRANKSHAFT POSITION SENSOR.** Turn the ignition switch to OFF.	Is the crankshaft position sensor installation bolt tightened securely?	Go to step **2**.	Tighten the crankshaft position sensor installation bolt securely.
2	**CHECK CRANKSHAFT PLATE.**	Are the crankshaft plate teeth cracked or damaged?	Replace the crankshaft plate.	Go to step **3**.
3	**CHECK INSTALLATION CONDITION OF TIMING CHAIN.** Turn the crankshaft, and align alignment mark on crank sprocket with alignment mark on cylinder block. ST 18252AA000 CRANKSHAFT SOCKET	Is the timing chain dislocated from its proper position?	Correct the installation condition of timing chain. <Ref. to ME(H6DO)-46, Timing Chain Assembly.>	Replace the crankshaft position sensor. <Ref. to FU(H6DO)-21, Crankshaft Position Sensor.>

BZ:DTC P0340 CAMSHAFT POSITION SENSOR “A” CIRCUIT (BANK 1 OR SINGLE SENSOR)

DTC DETECTING CONDITION:

- Immediately at fault recognition
- GENERAL DESCRIPTION <Ref. to GD(H6DO)-101, DTC P0340 CAMSHAFT POSITION SENSOR “A” CIRCUIT (BANK 1 OR SINGLE SENSOR), Diagnostic Trouble Code (DTC) Detecting Criteria.>

TROUBLE SYMPTOM:

- Engine stalls.
- Failure of engine to start

CAUTION:

After repair or replacement of faulty parts, perform Clear Memory Mode <Ref. to EN(H6DO)(diag)-52, OPERATION, Clear Memory Mode.>, and Inspection Mode <Ref. to EN(H6DO)(diag)-44, PROCEDURE, Inspection Mode.>.

WIRING DIAGRAM:

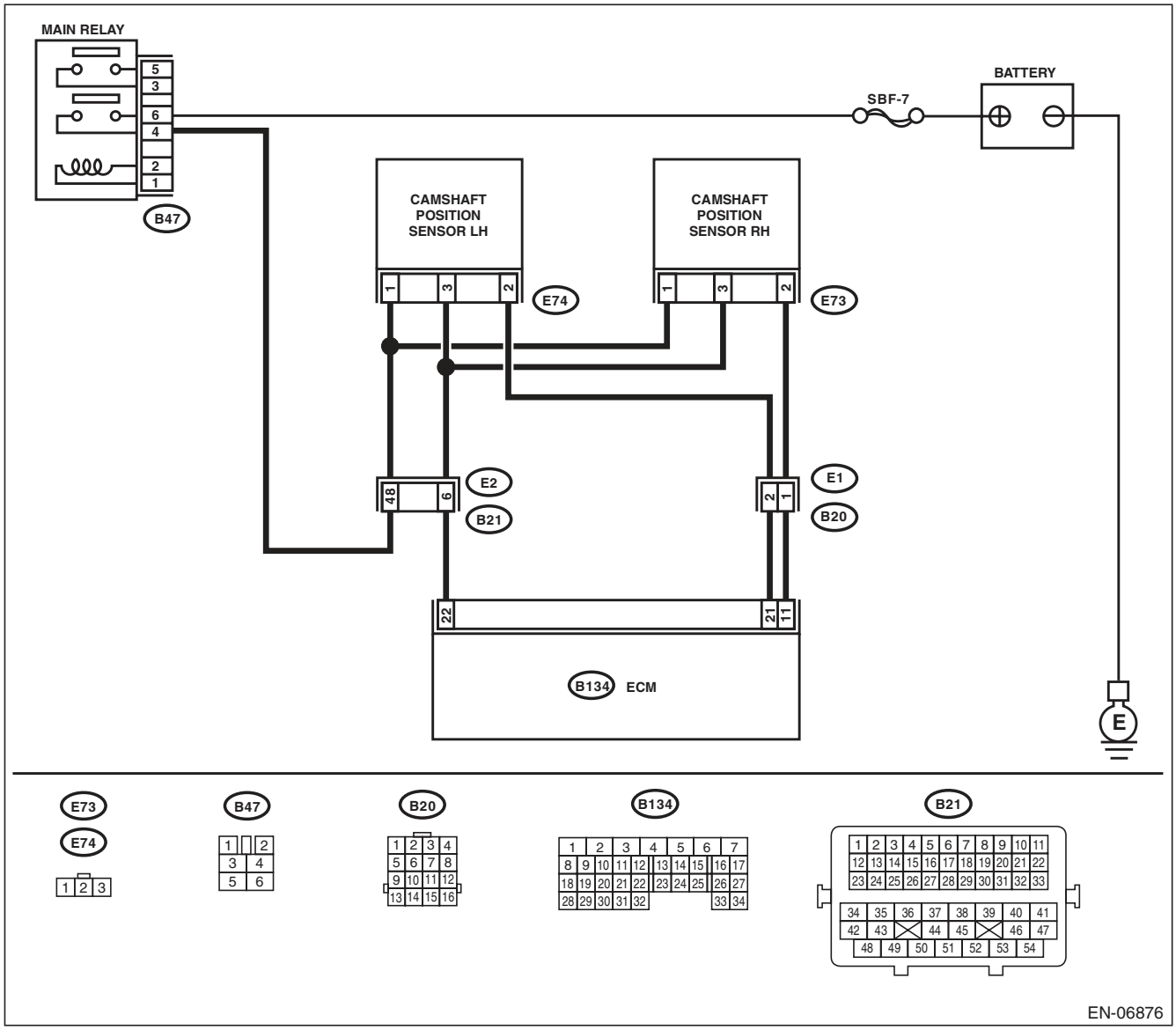

	Step	Check	Yes	No
1	**CHECK POWER SUPPLY OF CAMSHAFT POSITION SENSOR.** 1) Turn the ignition switch to OFF. 2) Disconnect the connector from the camshaft position sensor. 3) Turn the ignition switch to ON. 4) Measure the voltage between camshaft position sensor connector and engine ground. ***Connector & terminal*** ***(E73) No. 1 (+) — Engine ground (–):***	Is the voltage 10 V or more?	Go to step **2**.	Repair the harness and connector. NOTE: In this case, repair the following item: • Open circuit or short circuit to ground in harness between main relay connector and camshaft position sensor connector • Poor contact of coupling connector
2	**CHECK HARNESS BETWEEN ECM AND CAMSHAFT POSITION SENSOR CONNECTOR.** 1) Turn the ignition switch to OFF. 2) Disconnect the connectors from ECM. 3) Measure the resistance between the ECM and camshaft position sensor connector. ***Connector & terminal*** ***(B134) No. 11 — (E73) No. 2:*** ***(B134) No. 22 — (E73) No. 3:***	Is the resistance less than 1 Ω?	Go to step **3**.	Repair the harness and connector. NOTE: In this case, repair the following item: • Open circuit in harness between the ECM and camshaft position sensor connector • Poor contact of coupling connector
3	**CHECK HARNESS BETWEEN ECM AND CAMSHAFT POSITION SENSOR CONNECTOR.** Measure the resistance between camshaft position sensor connector and engine ground. ***Connector & terminal*** ***(E73) No. 2 — Engine ground:***	Is the resistance 1 MΩ or more?	Go to step **4**.	Repair short circuit to ground in harness between ECM and camshaft position sensor connector.
4	**CHECK HARNESS BETWEEN ECM AND CAMSHAFT POSITION SENSOR CONNECTOR.** Measure the voltage between camshaft position sensor connector and engine ground. ***Connector & terminal*** ***(E73) No. 2 (+) — Engine ground (–):***	Is the voltage 5 V or more?	Repair the short circuit to power in the harness between ECM and camshaft position sensor connector.	Go to step **5**.
5	**CHECK CONDITION OF CAMSHAFT POSITION SENSOR.**	Is the camshaft position sensor installation bolt tightened securely?	Go to step **6**.	Tighten the camshaft position sensor installation bolt securely.
6	**CHECK CAMSHAFT POSITION SENSOR.** Check the waveform of the camshaft position sensor. <Ref. to EN(H6DO)(diag)-17, Engine Control Module (ECM) I/O Signal.>	Is there any abnormality in waveform?	Replace the camshaft position sensor. <Ref. to FU(H6DO)-22, Camshaft Position Sensor.>	Repair the following item. • Poor contact in ECM connector • Poor contact of camshaft position sensor connector • Poor contact of coupling connector

CA:DTC P0345 CAMSHAFT POSITION SENSOR “A” CIRCUIT (BANK 2)

DTC DETECTING CONDITION:

- Immediately at fault recognition
- GENERAL DESCRIPTION <Ref. to GD(H6DO)-102, DTC P0345 CAMSHAFT POSITION SENSOR “A” CIRCUIT (BANK 2), Diagnostic Trouble Code (DTC) Detecting Criteria.>

TROUBLE SYMPTOM:

- Engine stalls.
- Failure of engine to start

CAUTION:

After repair or replacement of faulty parts, perform Clear Memory Mode <Ref. to EN(H6DO)(diag)-52, OPERATION, Clear Memory Mode.>, and Inspection Mode <Ref. to EN(H6DO)(diag)-44, PROCEDURE, Inspection Mode.>.

WIRING DIAGRAM:

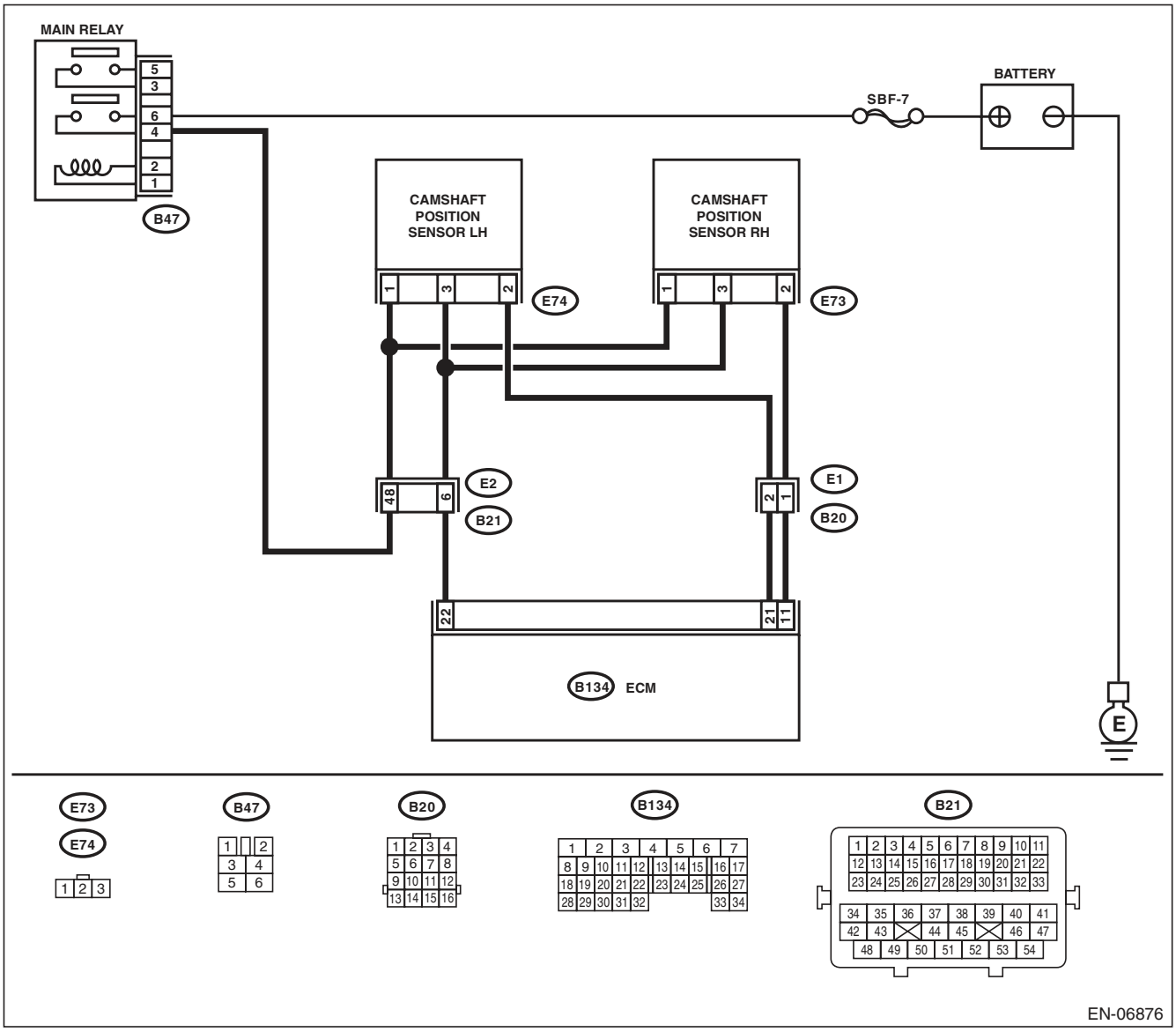

	Step	Check	Yes	No
1	**CHECK POWER SUPPLY OF CAMSHAFT POSITION SENSOR.** 1) Turn the ignition switch to OFF. 2) Disconnect the connector from the camshaft position sensor. 3) Turn the ignition switch to ON. 4) Measure the voltage between camshaft position sensor connector and engine ground. ***Connector & terminal*** ***(E74) No. 1 (+) — Engine ground (–):***	Is the voltage 10 V or more?	Go to step **2**.	Repair the harness and connector. NOTE: In this case, repair the following item: • Open circuit or short circuit to ground in harness between main relay connector and camshaft position sensor connector • Poor contact of coupling connector
2	**CHECK HARNESS BETWEEN ECM AND CAMSHAFT POSITION SENSOR CONNECTOR.** 1) Turn the ignition switch to OFF. 2) Disconnect the connectors from ECM. 3) Measure the resistance between the ECM and camshaft position sensor connector. ***Connector & terminal*** ***(B134) No. 21 — (E74) No. 2:*** ***(B134) No. 22 — (E74) No. 3:***	Is the resistance less than 1 Ω?	Go to step **3**.	Repair the harness and connector. NOTE: In this case, repair the following item: • Open circuit in harness between the ECM and camshaft position sensor connector • Poor contact of coupling connector
3	**CHECK HARNESS BETWEEN ECM AND CAMSHAFT POSITION SENSOR CONNECTOR.** Measure the resistance between camshaft position sensor connector and engine ground. ***Connector & terminal*** ***(E74) No. 21 — Engine ground:***	Is the resistance 1 MΩ or more?	Go to step **4**.	Repair short circuit to ground in harness between ECM and camshaft position sensor connector.
4	**CHECK HARNESS BETWEEN ECM AND CAMSHAFT POSITION SENSOR CONNECTOR.** Measure the voltage between camshaft position sensor connector and engine ground. ***Connector & terminal*** ***(E74) No. 21 (+) — Engine ground (–):***	Is the voltage 5 V or more?	Repair the short circuit to power in the harness between ECM and camshaft position sensor connector.	Go to step **5**.
5	**CHECK CONDITION OF CAMSHAFT POSITION SENSOR.**	Is the camshaft position sensor installation bolt tightened securely?	Go to step **6**.	Tighten the camshaft position sensor installation bolt securely.
6	**CHECK CAMSHAFT POSITION SENSOR.** Check the waveform of the camshaft position sensor. <Ref. to EN(H6DO)(diag)-17, Engine Control Module (ECM) I/O Signal.>	Is there any abnormality in waveform?	Replace the camshaft position sensor. <Ref. to FU(H6DO)-22, Camshaft Position Sensor.>	Repair the following item. • Poor contact in ECM connector • Poor contact of camshaft position sensor connector • Poor contact of coupling connector

CB:DTC P0400 EXHAUST GAS RECIRCULATION FLOW

DTC DETECTING CONDITION:

- Two consecutive driving cycles with fault
- GENERAL DESCRIPTION <Ref. to GD(H6DO)-103, DTC P0400 EXHAUST GAS RECIRCULATION FLOW, Diagnostic Trouble Code (DTC) Detecting Criteria.>

TROUBLE SYMPTOM:

- Movement performance problem when engine is low speed.
- Improper idling
- Movement performance problem

CAUTION:

After repair or replacement of faulty parts, perform Clear Memory Mode <Ref. to EN(H6DO)(diag)-52, OPERATION, Clear Memory Mode.>, and Inspection Mode <Ref. to EN(H6DO)(diag)-44, PROCEDURE, Inspection Mode.>.

WIRING DIAGRAM:

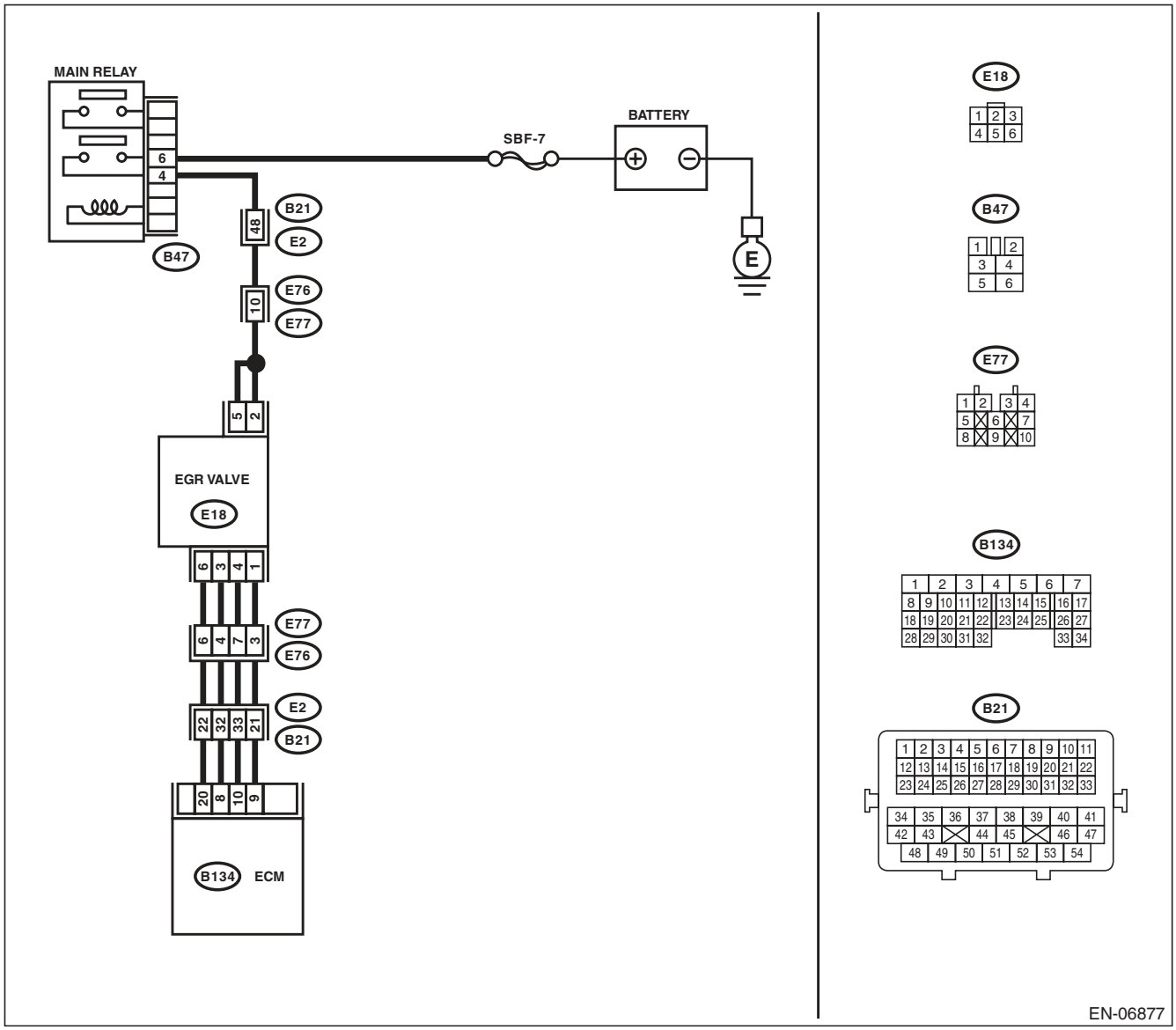

	Step	Check	Yes	No
1	**CHECK CURRENT DATA.** 1) Start the engine. 2) Read data of intake manifold absolute pressure signal using Subaru Select Monitor or general scan tool. NOTE: • SUBARU SELECT MONITOR For detailed operation procedure, refer to “READ CURRENT DATA FOR ENGINE”. <Ref. to EN(H6DO)(diag)-34, Subaru Select Monitor.> • General Scan Tool For detailed operation procedures, refer to the general scan tool operation manual.	Is the measured value 53.3 kPa (400 mmHg, 15.75 inHg) or more?	Make sure that the EGR valve, manifold absolute pressure sensor and throttle body are installed securely.	Go to step **2**.
2	**CHECK EGR VALVE.** Remove the EGR valve.	Are there holes, plugged piping or foreign objects caught in the EGR system?	Repair the EGR system.	Replace the EGR valve. <Ref. to FU(H6DO)-27, EGR Valve.>

CC:DTC P0420 CATALYST SYSTEM EFFICIENCY BELOW THRESHOLD (BANK 1)

DTC DETECTING CONDITION:

- Two consecutive driving cycles with fault
- GENERAL DESCRIPTION <Ref. to GD(H6DO)-106, DTC P0420 CATALYST SYSTEM EFFICIENCY BELOW THRESHOLD (BANK 1), Diagnostic Trouble Code (DTC) Detecting Criteria.>

TROUBLE SYMPTOM:

- Engine stalls.
- Idle mixture is out of specifications.

CAUTION:

After repair or replacement of faulty parts, perform Clear Memory Mode <Ref. to EN(H6DO)(diag)-52, OPERATION, Clear Memory Mode.>, and Inspection Mode <Ref. to EN(H6DO)(diag)-44, PROCEDURE, Inspection Mode.>.

WIRING DIAGRAM:

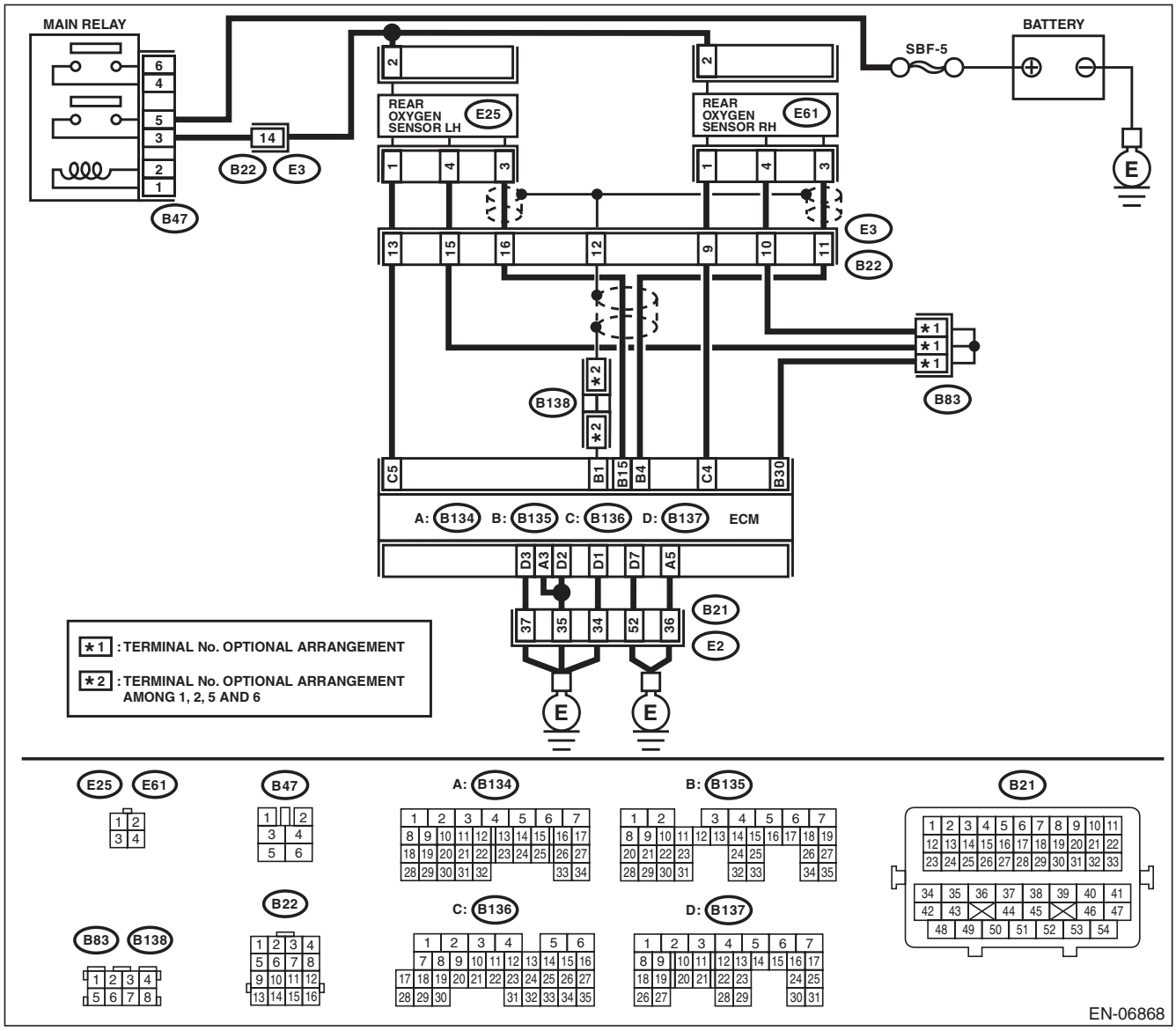

	Step	Check	Yes	No
1	**CHECK EXHAUST SYSTEM.** Check for gas leaks or air suction caused by loose or dislocated nuts and bolts, and open hole at exhaust pipes. NOTE: Check the following positions. • Between cylinder head and front exhaust pipe • Between front exhaust pipe and front catalytic converter • Between front catalytic converter and rear catalytic converter • Looseness and improper attachment of front oxygen (A/F) sensor or rear oxygen sensor	Is there any fault in exhaust system?	Repair or replace the exhaust system. <Ref. to EX(H6DO)-2, General Description.>	Go to step **2**.
2	**CHECK WAVEFORM DATA ON THE SUBARU SELECT MONITOR (WHILE DRIVING).** 1) Drive at a constant speed between 80 — 112 km/h (50 — 70 MPH). 2) After 5 minutes have elapsed in the condition of step 1), use the Subaru Select Monitor while still driving to read the waveform data. • At normal condition 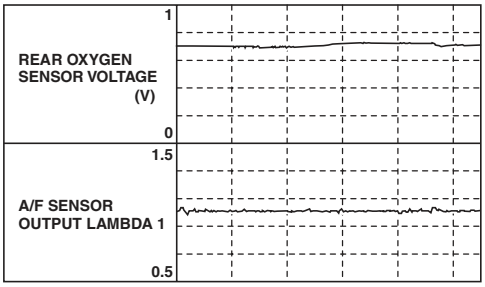 EN-06666 • At abnormal condition (numerous inversion) 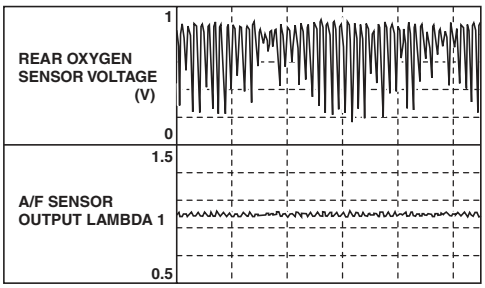 EN-06667	Is normal waveform pattern displayed?	Even if DTC is detected, the circuit has returned to a normal condition at this time. Reproduce the failure, and then perform the diagnosis again. NOTE: In this case, temporary poor contact of connector may be the cause.	Go to step **3**.

Step		Check	Yes	No
3	**CHECK WAVEFORM DATA ON THE SUBARU SELECT MONITOR (WHILE IDLING).** 1) Run the engine at idle. 2) In the condition of step 1), use the Subaru Select Monitor to read the waveform data. • At normal condition 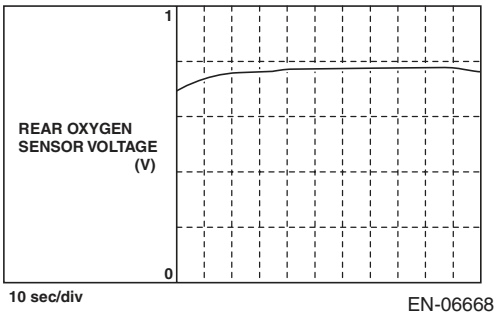 EN-06668 • At abnormal condition 1 (numerous inversion) 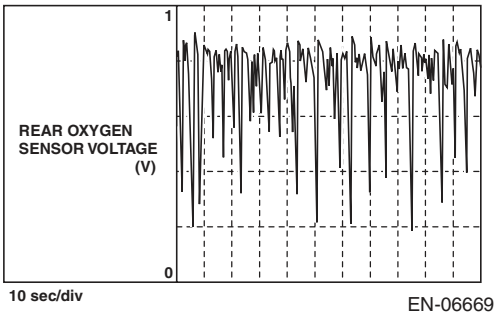 EN-06669 • At abnormal condition 2 (noise input) 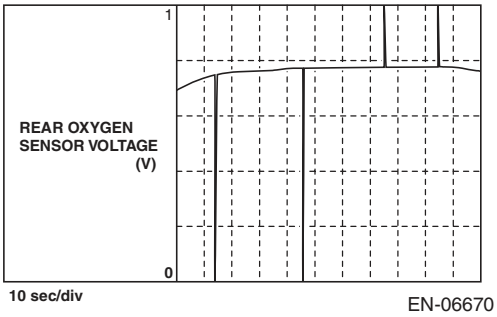 EN-06670	Is normal waveform pattern displayed?	Go to step **4**.	• The waveform is displayed at abnormal condition 1:Go to step **4**. • The waveform is displayed at abnormal condition 2:Go to step **5**.
4	**CHECK CATALYTIC CONVERTER.**	Is the catalytic converter damaged?	Replace the catalytic converter. <Ref. to EC(H6DO)-3, Front Catalytic Converter.>	Go to step **5**.
5	**CHECK REAR OXYGEN SENSOR CONNECTOR AND COUPLING CONNECTOR.**	Has water entered the connector?	Completely remove any water inside.	Go to step **6**.

	Step	Check	Yes	No
6	**CHECK HARNESS BETWEEN ECM AND REAR OXYGEN SENSOR CONNECTOR.** 1) Turn the ignition switch to OFF. 2) Disconnect the connectors from ECM and rear oxygen sensor. 3) Measure the resistance of harness between ECM and rear oxygen sensor connector. ***Connector & terminal*** ***(B135) No. 4 — (E61) No. 3:*** ***(B135) No. 30 — (E61) No. 4:*** ***(B135) No. 15 — (E25) No. 3:*** ***(B135) No. 30 — (E25) No. 4:***	Is the resistance less than 1 Ω?	Go to step **7**.	Repair the harness and connector. NOTE: In this case, repair the following item: • Open circuit in harness between ECM and rear oxygen sensor connector • Poor contact of coupling connector
7	**CHECK HARNESS BETWEEN ECM AND REAR OXYGEN SENSOR CONNECTOR.** 1) Turn the ignition switch to ON. 2) Measure the voltage between rear oxygen sensor connector and chassis ground. ***Connector & terminal*** ***(E61) No. 3 (+) — Chassis ground (–):*** ***(E25) No. 3 (+) — Chassis ground (–):***	Is the voltage 0.2 — 0.5 V?	Go to step **8**.	Repair the harness and connector. NOTE: Repair the following locations. • Open circuit of harness between the ECM and rear oxygen sensor • Poor contact in ECM and rear oxygen sensor • Poor contact in ECM connector
8	**CHECK REAR OXYGEN SENSOR SHIELD.** 1) Turn the ignition switch to OFF. 2) Expose the rear oxygen sensor connector body side harness sensor shield. 3) Measure the resistance between the sensor shield and chassis ground.	Is the resistance less than 1 Ω?	Replace the rear oxygen sensor. <Ref. to FU(H6DO)-34, Rear Oxygen Sensor.>	Repair the open circuit in the rear oxygen sensor harness.

CD:DTC P0442 EVAPORATIVE EMISSION CONTROL SYSTEM LEAK DETECTED (SMALL LEAK)

DTC DETECTING CONDITION:

- Two consecutive driving cycles with fault
- GENERAL DESCRIPTION <Ref. to GD(H6DO)-108, DTC P0442 EVAPORATIVE EMISSION CONTROL SYSTEM LEAK DETECTED (SMALL LEAK), Diagnostic Trouble Code (DTC) Detecting Criteria.>

TROUBLE SYMPTOM:

- Fuel odor
- There is a hole of more than 1.0 mm (0.04 in) dia. in evaporation system or fuel tank.

CAUTION:

After repair or replacement of faulty parts, perform Clear Memory Mode <Ref. to EN(H6DO)(diag)-52, OPERATION, Clear Memory Mode.>, and Inspection Mode <Ref. to EN(H6DO)(diag)-44, PROCEDURE, Inspection Mode.>.

WIRING DIAGRAM:

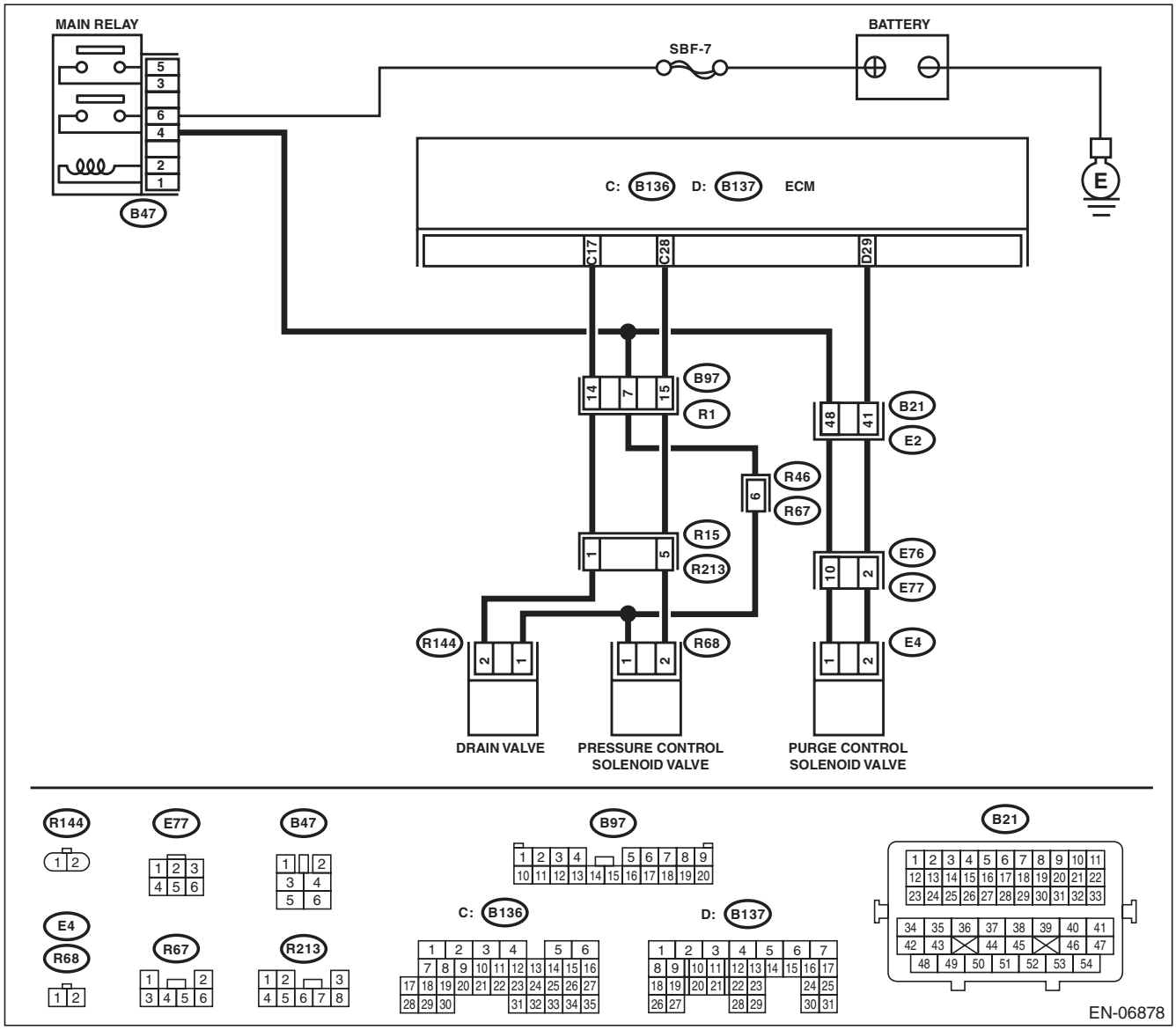

	Step	Check	Yes	No
1	**CHECK FUEL FILLER CAP.** 1) Turn the ignition switch to OFF. 2) Check the fuel filler cap. NOTE: The DTC is stored in memory if fuel filler cap is or was loose or if the cap chain has caught while tightening.	Is the fuel filler cap tightened securely?	Go to step **2**.	Tighten fuel filler cap securely.
2	**CHECK FUEL FILLER CAP.**	Is the fuel filler cap genuine?	Go to step **3**.	Replace with a genuine fuel filler cap.
3	**CHECK FUEL FILLER PIPE GASKET.**	Is there any damage to the seal between fuel filler cap and fuel filler pipe?	Repair or replace the fuel filler cap and fuel filler pipe. <Ref. to FU(H6DO)-52, Fuel Filler Pipe.>	Go to step **4**.
4	**CHECK DRAIN VALVE.** 1) Connect the delivery (test) mode connector. 2) Turn the ignition switch to ON. 3) Operate the drain valve using the Subaru Select Monitor. NOTE: The drain valve can be operated using Subaru Select Monitor. For the procedures, refer to “Compulsory Valve Operation Check Mode”. <Ref. to EN(H6DO)(diag)-53, Compulsory Valve Operation Check Mode.>	Does the drain valve operate?	Go to step **5**.	Replace the drain valve. <Ref. to EC(H6DO)-16, Drain Valve.>
5	**CHECK PURGE CONTROL SOLENOID VALVE.** Operate the purge control solenoid valve using the Subaru Select Monitor. NOTE: Purge control solenoid valve operation can be executed using Subaru Select Monitor. For the procedures, refer to “Compulsory Valve Operation Check Mode”. <Ref. to EN(H6DO)(diag)-53, Compulsory Valve Operation Check Mode.>	Does the purge control solenoid valve operate?	Go to step **6**.	Replace the purge control solenoid valve. <Ref. to EC(H6DO)-8, Purge Control Solenoid Valve.>
6	**CHECK PRESSURE CONTROL SOLENOID VALVE.** Operate the pressure control solenoid valve using the Subaru Select Monitor. NOTE: The pressure control solenoid valve operation can be executed using the Subaru Select Monitor. For the procedures, refer to “Compulsory Valve Operation Check Mode”. <Ref. to EN(H6DO)(diag)-53, Compulsory Valve Operation Check Mode.>	Does the pressure control solenoid valve operate?	Go to step **7**.	Replace the pressure control solenoid valve. <Ref. to EC(H6DO)-13, Pressure Control Solenoid Valve.>
7	**CHECK EVAPORATIVE EMISSION CONTROL SYSTEM LINE.** 1) Turn the ignition switch to OFF. 2) Disconnect the delivery (test) mode connector.	Is there any hole of more than 1.0 mm (0.04 in) dia. on evaporation line?	Repair or replace the evaporation line. <Ref. to FU(H6DO)-65, Fuel Delivery and Evaporation Lines.>	Go to step **8**.

Step		Check	Yes	No
8	**CHECK CANISTER.**	Is the canister damaged or is there a hole of more than 1.0 mm (0.04 in) dia. in it?	Repair or replace the canister. <Ref. to EC(H6DO)-6, Canister.>	Go to step **9**.
9	**CHECK FUEL TANK.** Remove the fuel tank. <Ref. to FU(H6DO)-45, Fuel Tank.>	Is the fuel tank damaged or is there any hole of more than 1.0 mm (0.04 in) dia. in it?	Repair or replace the fuel tank. <Ref. to FU(H6DO)-45, Fuel Tank.>	Go to step **10**.
10	**CHECK ANY OTHER MECHANICAL TROUBLE IN EVAPORATIVE EMISSION CONTROL SYSTEM.**	Is there any hole of more than 1.0 mm (0.04 in) dia., crack, clogging, or disconnections, bend, misconnection of hoses or pipes in evaporative emission control system?	Repair or replace the hoses or pipes.	Repair the poor contact of ECM connector.

CE:DTC P0447 EVAPORATIVE EMISSION CONTROL SYSTEM VENT CONTROL CIRCUIT OPEN

DTC DETECTING CONDITION:

- Immediately at fault recognition
- GENERAL DESCRIPTION <Ref. to GD(H6DO)-124, DTC P0447 EVAPORATIVE EMISSION CONTROL SYSTEM VENT CONTROL CIRCUIT OPEN, Diagnostic Trouble Code (DTC) Detecting Criteria.>

CAUTION:

After repair or replacement of faulty parts, perform Clear Memory Mode <Ref. to EN(H6DO)(diag)-52, OPERATION, Clear Memory Mode.>, and Inspection Mode <Ref. to EN(H6DO)(diag)-44, PROCEDURE, Inspection Mode.>.

WIRING DIAGRAM:

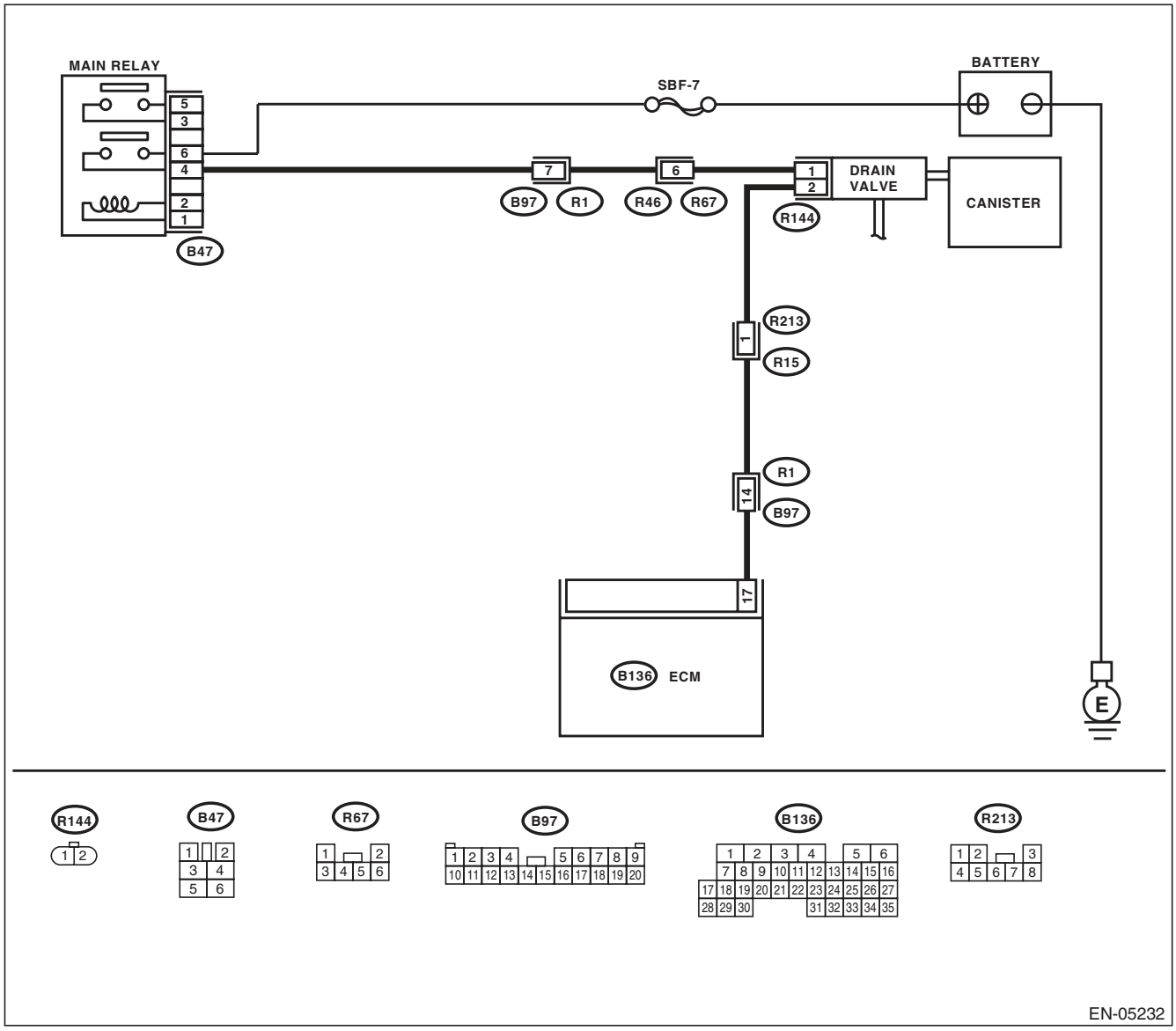

	Step	Check	Yes	No
1	**CHECK OUTPUT SIGNAL OF ECM.** 1) Turn the ignition switch to ON. 2) Measure the voltage between ECM and chassis ground. ***Connector & terminal*** ***(B136) No. 17 (+) — Chassis ground (–):***	Is the voltage 10 V or more?	Check for poor contact of the ECM connector.	Go to step **2**.
2	**CHECK HARNESS BETWEEN ECM AND DRAIN VALVE.** 1) Turn the ignition switch to OFF. 2) Disconnect the connectors from the ECM and drain valve. 3) Measure the resistance between the drain valve connector and chassis ground. ***Connector & terminal*** ***(R144) No. 2 — Chassis ground:***	Is the resistance 1 MΩ or more?	Go to step **3**.	Repair the ground short circuit of harness between ECM and drain valve connector.
3	**CHECK HARNESS BETWEEN ECM AND DRAIN VALVE.** Measure the resistance of harness between ECM and drain valve connector. ***Connector & terminal*** ***(B136) No. 17 — (R144) No. 2:***	Is the resistance less than 1 Ω?	Go to step **4**.	Repair the harness and connector. NOTE: In this case, repair the following item: • Open circuit in harness between ECM and drain valve connector • Poor contact of coupling connector
4	**CHECK DRAIN VALVE.** Measure the resistance between drain valve terminals. ***Terminals*** ***No. 1 — No. 2:***	Is the resistance between 10 — 100 Ω?	Go to step **5**.	Replace the drain valve. <Ref. to EC(H6DO)-16, Drain Valve.>
5	**CHECK POWER SUPPLY TO DRAIN VALVE.** 1) Turn the ignition switch to ON. 2) Measure the voltage between drain valve and chassis ground. ***Connector & terminal*** ***(R144) No. 1 (+) — Chassis ground (–):***	Is the voltage 10 V or more?	Repair poor contact of the drain valve connector.	Repair the harness and connector. NOTE: In this case, repair the following item: • Open circuit of harness between main relay and drain valve • Poor contact of coupling connector • Poor contact of main relay connector

CF:DTC P0448 EVAPORATIVE EMISSION CONTROL SYSTEM VENT CONTROL CIRCUIT SHORTED

DTC DETECTING CONDITION:

- Immediately at fault recognition
- GENERAL DESCRIPTION <Ref. to GD(H6DO)-126, DTC P0448 EVAPORATIVE EMISSION CONTROL SYSTEM VENT CONTROL CIRCUIT SHORTED, Diagnostic Trouble Code (DTC) Detecting Criteria.>

CAUTION:

After repair or replacement of faulty parts, perform Clear Memory Mode <Ref. to EN(H6DO)(diag)-52, OPERATION, Clear Memory Mode.>, and Inspection Mode <Ref. to EN(H6DO)(diag)-44, PROCEDURE, Inspection Mode.>.

WIRING DIAGRAM:

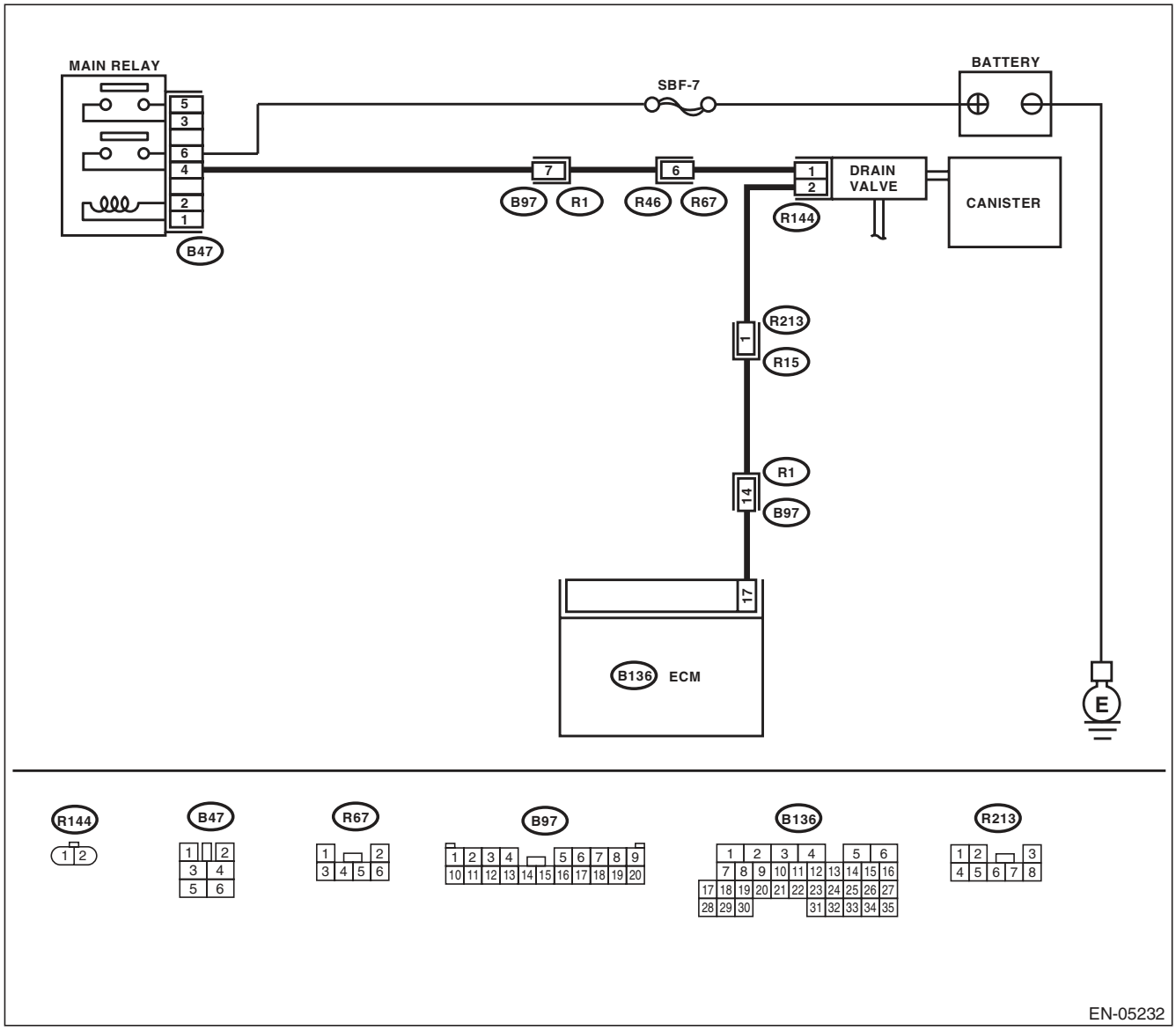

Step		Check	Yes	No
1	**CHECK HARNESS BETWEEN ECM AND DRAIN VALVE.** 1) Turn the ignition switch to OFF. 2) Disconnect the connectors from the ECM and drain valve. 3) Turn the ignition switch to ON. 4) Measure the voltage between ECM and chassis ground. ***Connector & terminal*** ***(B136) No. 17 (+) — Chassis ground (–):***	Is the voltage 10 V or more?	Repair the short circuit to the power supply in the harness between the ECM and drain valve connector.	Go to step **2**.
2	**CHECK DRAIN VALVE.** 1) Turn the ignition switch to OFF. 2) Measure the resistance between drain valve terminals. ***Terminals*** ***No. 1 — No. 2:***	Is the resistance less than 1 Ω?	Replace the drain valve. <Ref. to EC(H6DO)-16, Drain Valve.>	Repair the poor contact of ECM connector.

CG:DTC P0451 EVAPORATIVE EMISSION CONTROL SYSTEM PRESSURE SENSOR

DTC DETECTING CONDITION:

- Two consecutive driving cycles with fault
- GENERAL DESCRIPTION <Ref. to GD(H6DO)-128, DTC P0451 EVAPORATIVE EMISSION CONTROL SYSTEM PRESSURE SENSOR, Diagnostic Trouble Code (DTC) Detecting Criteria.>

CAUTION:

After repair or replacement of faulty parts, perform Clear Memory Mode <Ref. to EN(H6DO)(diag)-52, OPERATION, Clear Memory Mode.>, and Inspection Mode <Ref. to EN(H6DO)(diag)-44, PROCEDURE, Inspection Mode.>.

WIRING DIAGRAM:

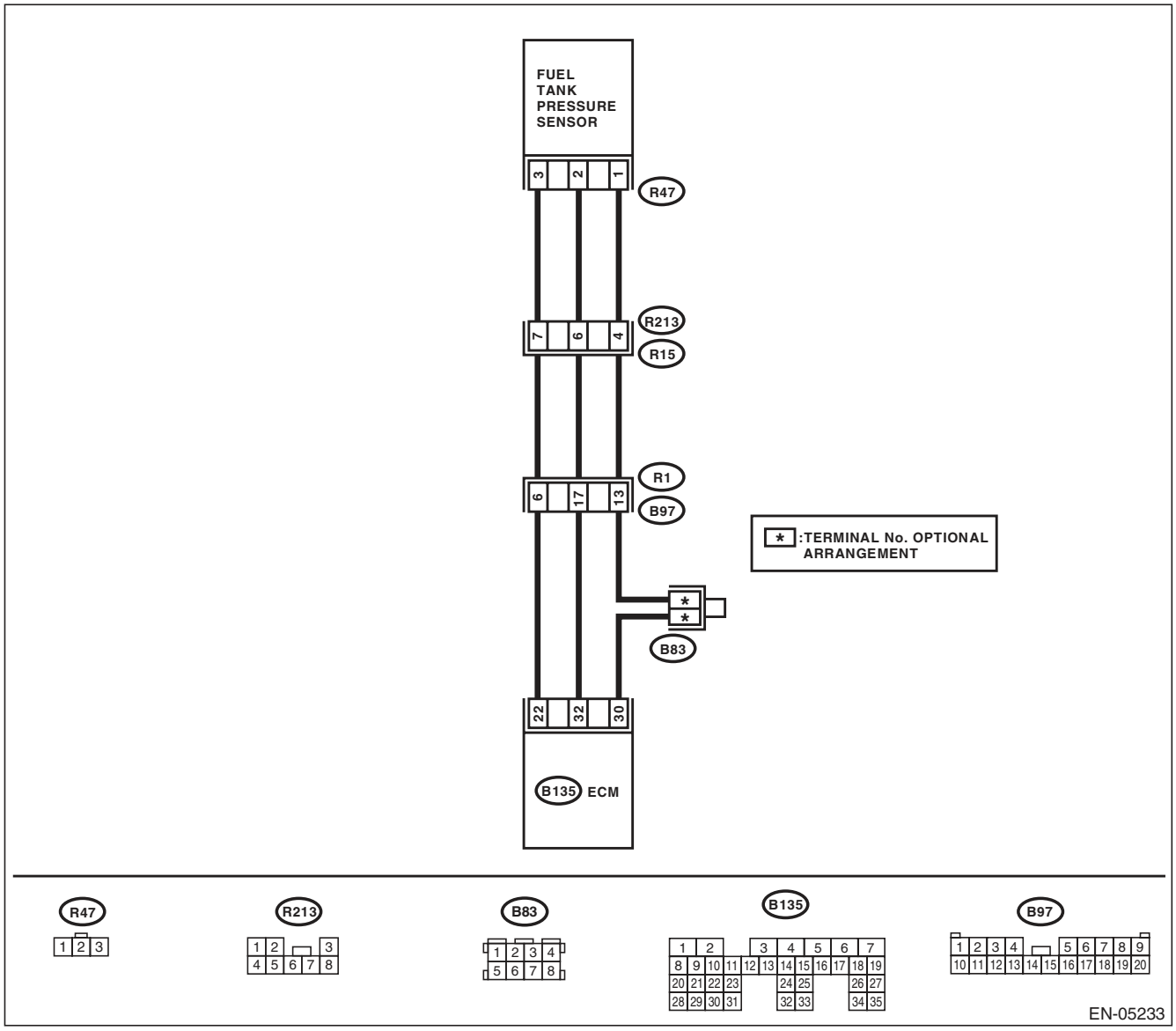

Step		Check	Yes	No
1	**CHECK FUEL FILLER CAP.** 1) Turn the ignition switch to OFF. 2) Open the fuel flap.	Is the fuel filler cap tightened securely?	Go to step **2**.	Tighten fuel filler cap securely.
2	**CHECK PRESSURE VACUUM LINE.** NOTE: Check the following items. • Disconnection, leakage and clogging of the vacuum hoses and pipes between fuel tank pressure sensor and fuel tank • Disconnection, leakage and clogging of the air ventilation hoses and pipes between fuel filler pipe and fuel tank	Is there any fault in pressure/ vacuum line?	Repair or replace the hoses and pipes.	Replace the fuel tank pressure sensor. <Ref. to EC(H6DO)-12, Fuel Tank Pressure Sensor.>

CH:DTC P0452 EVAPORATIVE EMISSION CONTROL SYSTEM PRESSURE SENSOR LOW INPUT

DTC DETECTING CONDITION:

- Immediately at fault recognition
- GENERAL DESCRIPTION <Ref. to GD(H6DO)-130, DTC P0452 EVAPORATIVE EMISSION CONTROL SYSTEM PRESSURE SENSOR LOW INPUT, Diagnostic Trouble Code (DTC) Detecting Criteria.>

CAUTION:

After repair or replacement of faulty parts, perform Clear Memory Mode <Ref. to EN(H6DO)(diag)-52, OPERATION, Clear Memory Mode.>, and Inspection Mode <Ref. to EN(H6DO)(diag)-44, PROCEDURE, Inspection Mode.>.

WIRING DIAGRAM:

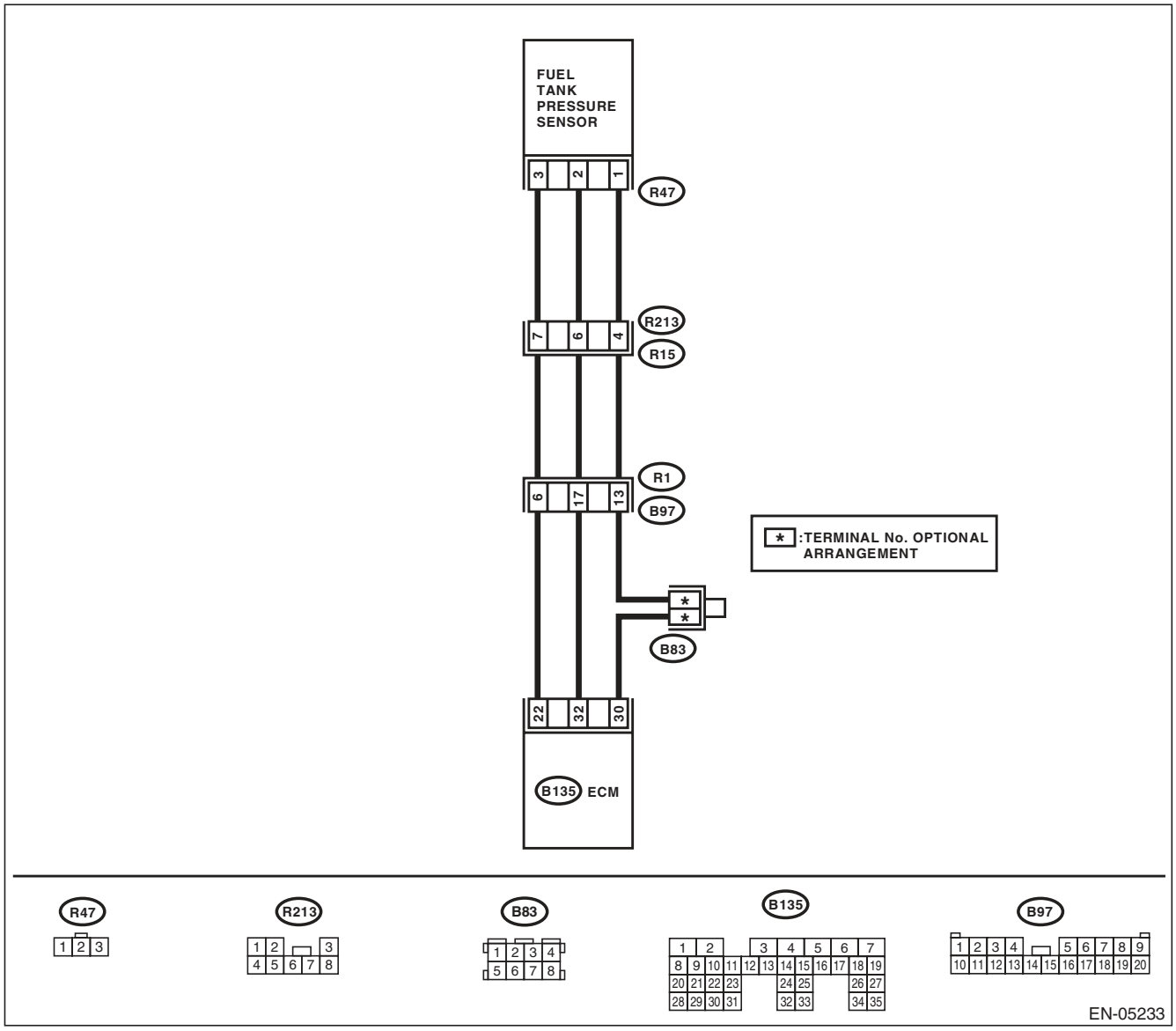

	Step	Check	Yes	No
1	**CHECK CURRENT DATA.** 1) Turn the ignition switch to ON. 2) Read the data of fuel tank pressure sensor signal using the Subaru Select Monitor or general scan tool. NOTE: • SUBARU SELECT MONITOR For detailed operation procedure, refer to "READ CURRENT DATA FOR ENGINE". <Ref. to EN(H6DO)(diag)-34, Subaru Select Monitor.> • General Scan Tool For detailed operation procedures, refer to the general scan tool operation manual.	Is the measured value less than –7.45 kPa (–55.85 mmHg, –2.2003 inHg) ?	Go to step **2**.	Even if DTC is detected, the circuit has returned to a normal condition at this time. Reproduce the failure, and then perform the diagnosis again. NOTE: In this case, temporary poor contact of connector may be the cause.
2	**CHECK FUEL TANK PRESSURE SENSOR POWER SOURCE.** 1) Turn the ignition switch to OFF. 2) Disconnect the connector from the fuel tank pressure sensor. 3) Turn the ignition switch to ON. 4) Measure the voltage between the fuel tank pressure sensor connector and chassis ground. ***Connector & terminal*** ***(R47) No. 3 (+) — Chassis ground (–):***	Is the voltage 4.5 V or more?	Go to step **3**.	Repair the harness and connector. NOTE: In this case, repair the following item: • Open circuit of harness between ECM and fuel tank pressure sensor connector • Poor contact in ECM connector • Poor contact of coupling connector
3	**CHECK HARNESS BETWEEN ECM AND FUEL TANK PRESSURE SENSOR CONNECTOR.** 1) Turn the ignition switch to OFF. 2) Disconnect the connectors from ECM. 3) Measure the resistance of harness between the ECM and fuel tank pressure sensor connector. ***Connector & terminal*** ***(B135) No. 32 — (R47) No. 2:***	Is the resistance less than 1 Ω?	Go to step **4**.	Repair the harness and connector. NOTE: In this case, repair the following item: • Open circuit of harness between ECM and fuel tank pressure sensor connector • Poor contact of coupling connector
4	**CHECK HARNESS BETWEEN ECM AND FUEL TANK PRESSURE SENSOR CONNECTOR.** Measure the resistance between ECM and chassis ground. ***Connector & terminal*** ***(B135) No. 32 — Chassis ground:***	Is the resistance 1 MΩ or more?	Go to step **5**.	Repair the ground short circuit of harness between ECM and fuel tank pressure sensor connector.
5	**CHECK POOR CONTACT.** Check for poor contact between the ECM and fuel tank pressure sensor connector.	Is there poor contact in the ECM or fuel tank pressure sensor connector?	Repair the poor contact in the ECM or fuel tank pressure sensor connector.	Replace the fuel tank pressure sensor. <Ref. to EC(H6DO)-12, Fuel Tank Pressure Sensor.>

CI: DTC P0453 EVAPORATIVE EMISSION CONTROL SYSTEM PRESSURE SENSOR HIGH INPUT

DTC DETECTING CONDITION:

- Immediately at fault recognition
- GENERAL DESCRIPTION <Ref. to GD(H6DO)-132, DTC P0453 EVAPORATIVE EMISSION CONTROL SYSTEM PRESSURE SENSOR HIGH INPUT, Diagnostic Trouble Code (DTC) Detecting Criteria.>

CAUTION:

After repair or replacement of faulty parts, perform Clear Memory Mode <Ref. to EN(H6DO)(diag)-52, OPERATION, Clear Memory Mode.>, and Inspection Mode <Ref. to EN(H6DO)(diag)-44, PROCEDURE, Inspection Mode.>.

WIRING DIAGRAM:

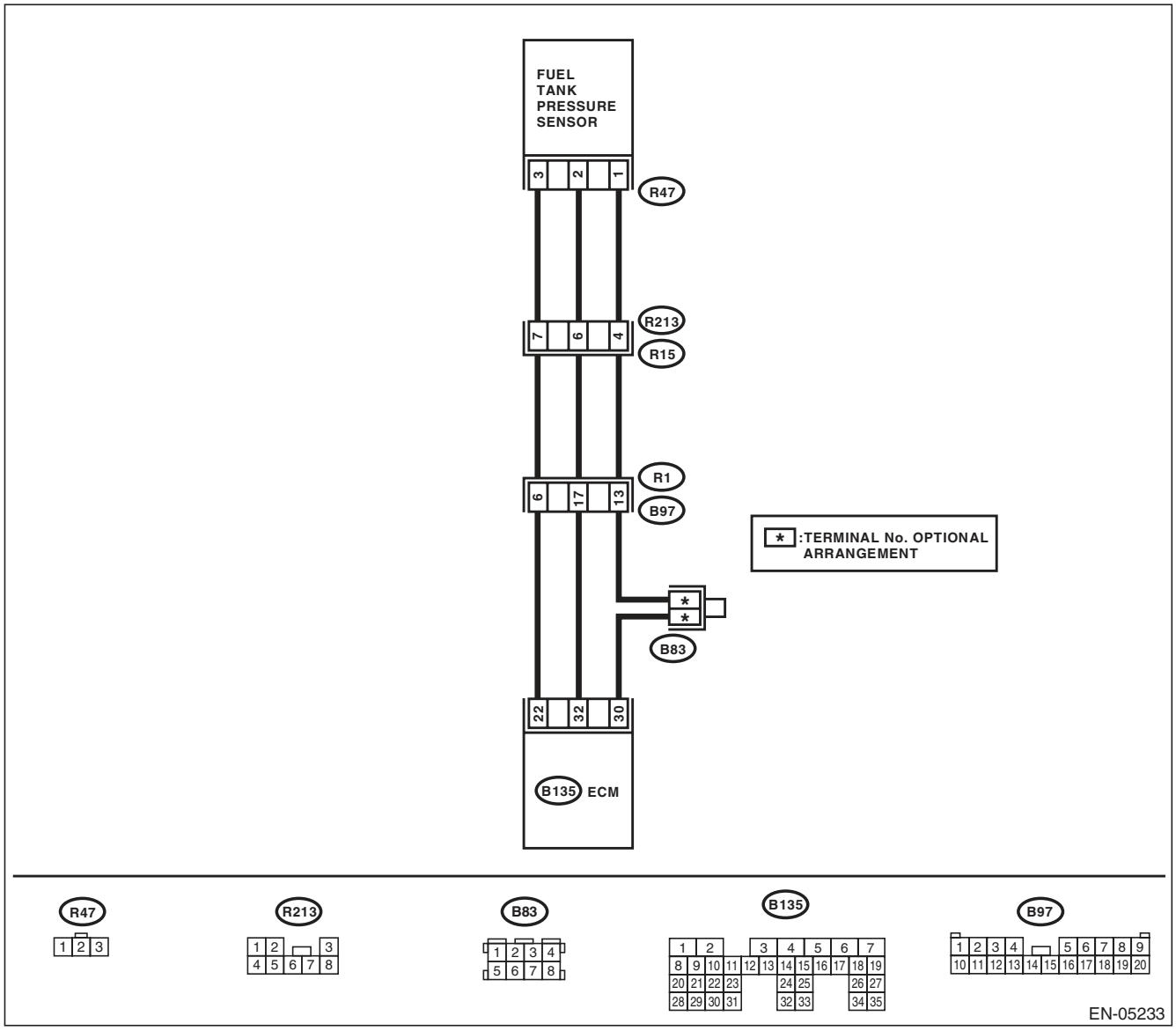

	Step	Check	Yes	No
1	**CHECK CURRENT DATA.** 1) Turn the ignition switch to ON. 2) Read the data of fuel tank pressure sensor signal using the Subaru Select Monitor or general scan tool. NOTE: • SUBARU SELECT MONITOR For detailed operation procedure, refer to "READ CURRENT DATA FOR ENGINE". <Ref. to EN(H6DO)(diag)-34, Subaru Select Monitor.> • General Scan Tool For detailed operation procedures, refer to the general scan tool operation manual.	Is the measured value 7.98 kPa (59.85 mmHg, 2.357 inHg) or more?	Go to step **2**.	Even if DTC is detected, the circuit has returned to a normal condition at this time. Reproduce the failure, and then perform the diagnosis again. NOTE: In this case, temporary poor contact of connector may be the cause.
2	**CHECK HARNESS BETWEEN ECM AND FUEL TANK PRESSURE SENSOR CONNECTOR.** 1) Turn the ignition switch to OFF. 2) Disconnect the connector from the fuel tank pressure sensor. 3) Turn the ignition switch to ON. 4) Read the data of fuel tank pressure sensor signal using the Subaru Select Monitor or general scan tool. NOTE: • SUBARU SELECT MONITOR For detailed operation procedure, refer to "READ CURRENT DATA FOR ENGINE". <Ref. to EN(H6DO)(diag)-34, Subaru Select Monitor.> • General Scan Tool For detailed operation procedures, refer to the general scan tool operation manual.	Is the measured value 7.98 kPa (59.85 mmHg, 2.357 inHg) or more?	Repair the short circuit to power supply in the harness between the ECM and fuel tank pressure sensor connector.	Go to step **3**.
3	**CHECK HARNESS BETWEEN ECM AND FUEL TANK PRESSURE SENSOR CONNECTOR.** 1) Turn the ignition switch to OFF. 2) Measure the resistance of harness between fuel tank pressure sensor connector and engine ground. ***Connector & terminal*** ***(R47) No. 1 — Engine ground:***	Is the resistance less than 5 Ω?	Go to step **4**.	Repair the harness and connector. NOTE: In this case, repair the following item: • Open circuit of harness between ECM and fuel tank pressure sensor connector • Poor contact in ECM connector • Poor contact of coupling connector
4	**CHECK POOR CONTACT.** Check for poor contact of the fuel tank pressure sensor connector.	Is there poor contact in fuel tank pressure sensor connector?	Repair the poor contact in the fuel tank pressure sensor connector.	Replace the fuel tank pressure sensor. <Ref. to EC(H6DO)-12, Fuel Tank Pressure Sensor.>

CJ:DTC P0456 EVAPORATIVE EMISSION CONTROL SYSTEM LEAK DETECTED (VERY SMALL LEAK)

DTC DETECTING CONDITION:

- Two consecutive driving cycles with fault
- GENERAL DESCRIPTION <Ref. to GD(H6DO)-133, DTC P0456 EVAPORATIVE EMISSION CONTROL SYSTEM LEAK DETECTED (VERY SMALL LEAK), Diagnostic Trouble Code (DTC) Detecting Criteria.>

TROUBLE SYMPTOM:

- Fuel odor
- There is a hole of more than 0.5 mm (0.020 in) dia. in evaporation system or fuel tank.

CAUTION:

After repair or replacement of faulty parts, perform Clear Memory Mode <Ref. to EN(H6DO)(diag)-52, OPERATION, Clear Memory Mode.>, and Inspection Mode <Ref. to EN(H6DO)(diag)-44, PROCEDURE, Inspection Mode.>.

WIRING DIAGRAM:

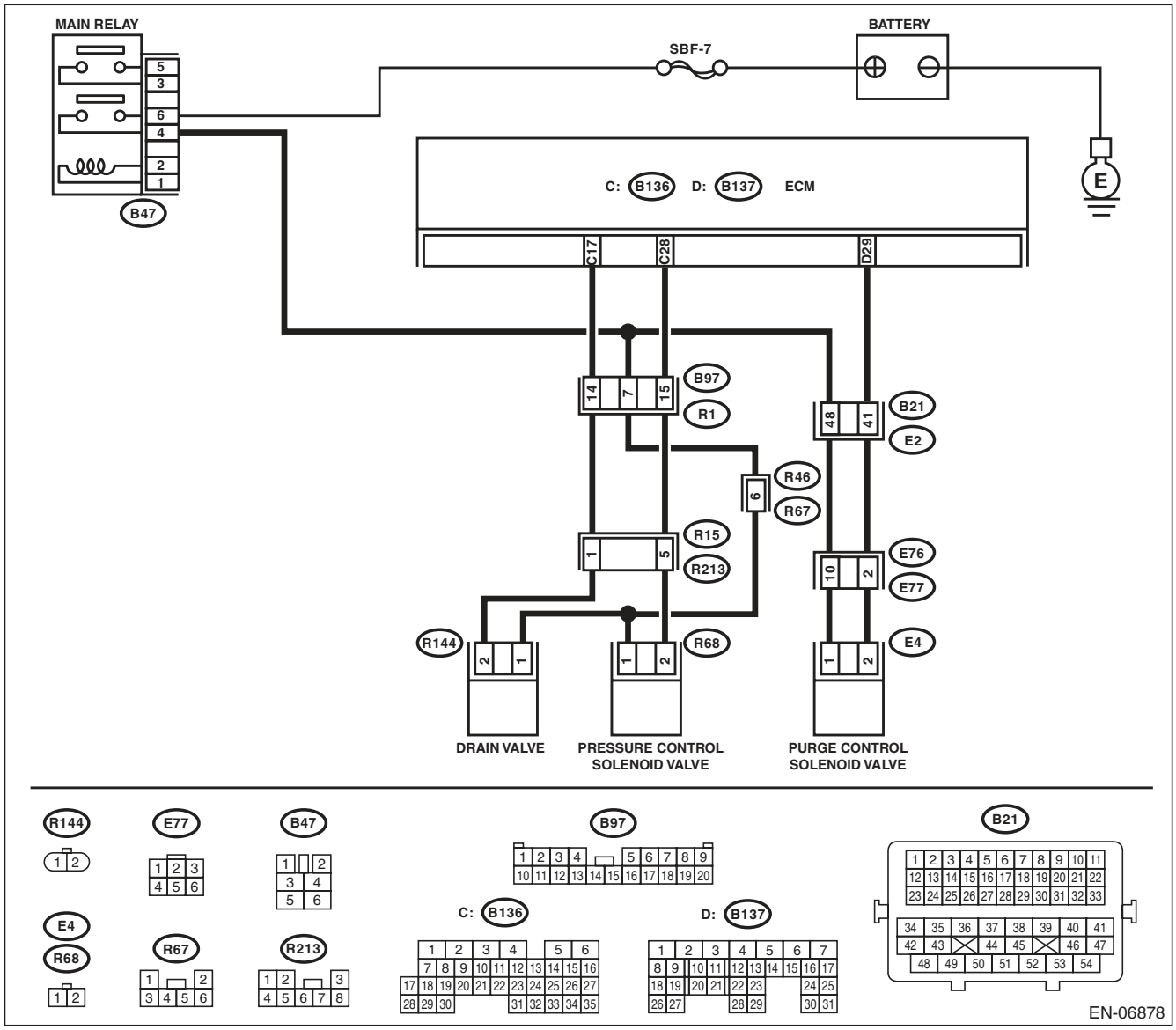

	Step	Check	Yes	No
1	**CHECK FUEL FILLER CAP.** 1) Turn the ignition switch to OFF. 2) Check the fuel filler cap. NOTE: The DTC is stored in memory if fuel filler cap is or was loose or if the cap chain has caught while tightening.	Is the fuel filler cap tightened securely?	Go to step **2**.	Tighten fuel filler cap securely.
2	**CHECK FUEL FILLER CAP.**	Is the fuel filler cap genuine?	Go to step **3**.	Replace with a genuine fuel filler cap.
3	**CHECK FUEL FILLER PIPE GASKET.**	Is there any damage to the seal between fuel filler cap and fuel filler pipe?	Repair or replace the fuel filler cap and fuel filler pipe. <Ref. to FU(H6DO)-52, Fuel Filler Pipe.>	Go to step **4**.
4	**CHECK DRAIN VALVE.** 1) Connect the delivery (test) mode connector. 2) Turn the ignition switch to ON. 3) Operate the drain valve using the Subaru Select Monitor. NOTE: Drain valve can be operated using the Subaru Select Monitor. For the procedures, refer to “Compulsory Valve Operation Check Mode”. <Ref. to EN(H6DO)(diag)-53, Compulsory Valve Operation Check Mode.>	Does the drain valve operate?	Go to step **5**.	Replace the drain valve. <Ref. to EC(H6DO)-16, Drain Valve.>
5	**CHECK PURGE CONTROL SOLENOID VALVE.** Operate the purge control solenoid valve using the Subaru Select Monitor. NOTE: Purge control solenoid valve operation can be executed using Subaru Select Monitor. For the procedures, refer to “Compulsory Valve Operation Check Mode”. <Ref. to EN(H6DO)(diag)-53, Compulsory Valve Operation Check Mode.>	Does the purge control solenoid valve operate?	Go to step **6**.	Replace the purge control solenoid valve. <Ref. to EC(H6DO)-8, Purge Control Solenoid Valve.>
6	**CHECK PRESSURE CONTROL SOLENOID VALVE.** Operate the pressure control solenoid valve using the Subaru Select Monitor. NOTE: The pressure control solenoid valve operation can be executed using the Subaru Select Monitor. For the procedures, refer to “Compulsory Valve Operation Check Mode”. <Ref. to EN(H6DO)(diag)-53, Compulsory Valve Operation Check Mode.>	Does the pressure control solenoid valve operate?	Go to step **7**.	Replace the pressure control solenoid valve. <Ref. to EC(H6DO)-13, Pressure Control Solenoid Valve.>
7	**CHECK EVAPORATIVE EMISSION CONTROL SYSTEM LINE.** 1) Turn the ignition switch to OFF. 2) Disconnect the delivery (test) mode connector.	Is there any hole of more than 0.5 mm (0.020 in) dia. on evaporation line?	Repair or replace the evaporation line. <Ref. to FU(H6DO)-65, Fuel Delivery and Evaporation Lines.>	Go to step **8**.

Step		Check	Yes	No
8	**CHECK CANISTER.**	Is the canister damaged or is there a hole of more than 0.5 mm (0.020 in) dia. in it?	Repair or replace the canister. <Ref. to EC(H6DO)-6, Canister.>	Go to step **9**.
9	**CHECK FUEL TANK.** Remove the fuel tank. <Ref. to FU(H6DO)-45, Fuel Tank.>	Is the fuel tank damaged or is there any hole of more than 0.5 mm (0.020 in) dia. in it?	Repair or replace the fuel tank. <Ref. to FU(H6DO)-45, Fuel Tank.>	Go to step **10**.
10	**CHECK ANY OTHER MECHANICAL TROUBLE IN EVAPORATIVE EMISSION CONTROL SYSTEM.**	Is there any hole of more than 0.5 mm (0.020 in) dia., crack, clogging, or disconnections, bend, misconnection of hoses or pipes in evaporative emission control system?	Repair or replace the hoses or pipes.	Repair the poor contact of ECM connector.

CK:DTC P0457 EVAPORATIVE EMISSION CONTROL SYSTEM LEAK DETECTED (FUEL CAP LOOSE/OFF)

DTC DETECTING CONDITION:

- Two consecutive driving cycles with fault
- GENERAL DESCRIPTION <Ref. to GD(H6DO)-133, DTC P0457 EVAPORATIVE EMISSION CONTROL SYSTEM LEAK DETECTED (FUEL CAP LOOSE/OFF), Diagnostic Trouble Code (DTC) Detecting Criteria.>

TROUBLE SYMPTOM:

- Fuel odor
- Fuel filler cap loose or lost

CAUTION:

After repair or replacement of faulty parts, perform Clear Memory Mode <Ref. to EN(H6DO)(diag)-52, OPERATION, Clear Memory Mode.>, and Inspection Mode <Ref. to EN(H6DO)(diag)-44, PROCEDURE, Inspection Mode.>.

WIRING DIAGRAM:

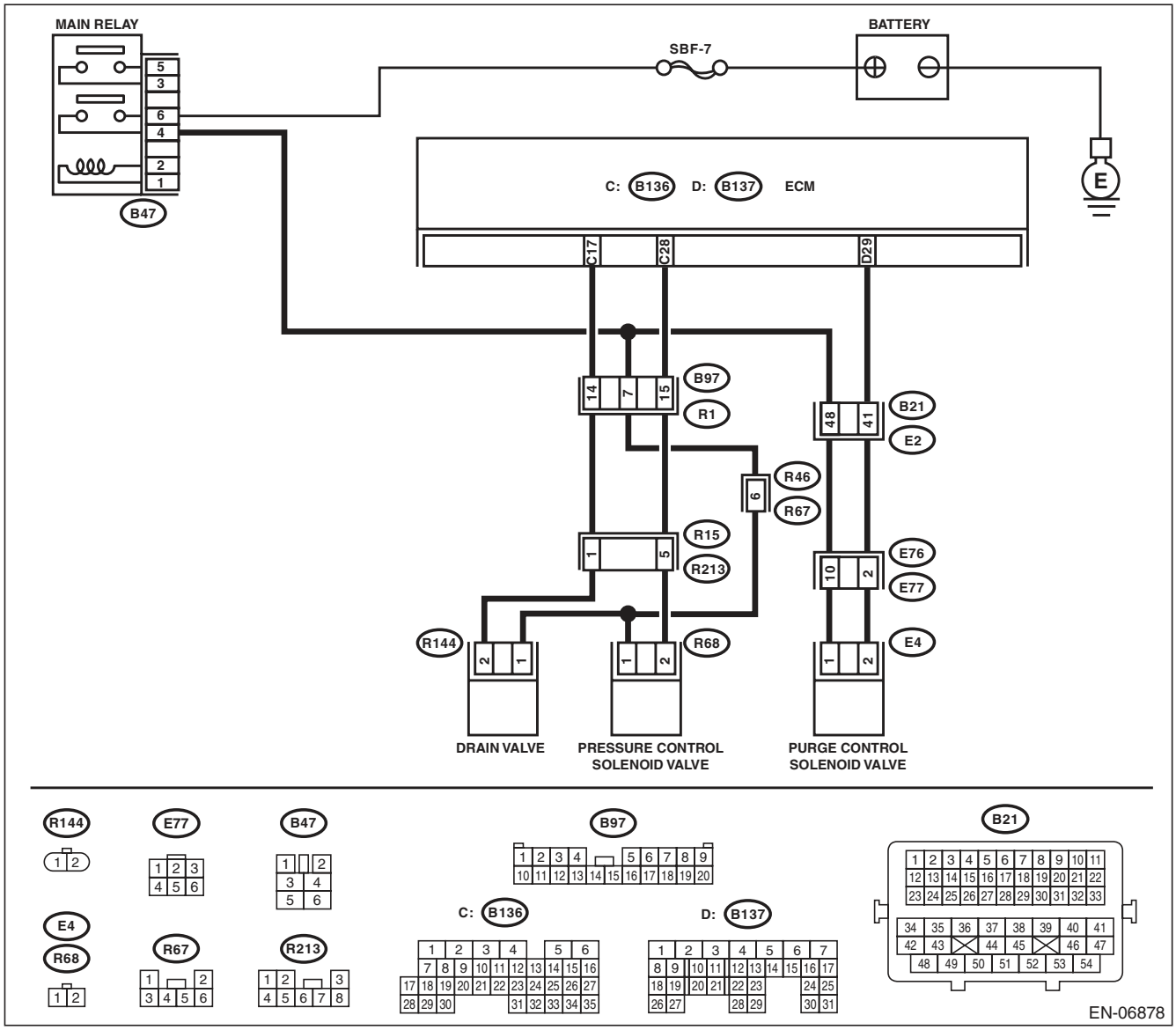

	Step	Check	Yes	No
1	**CHECK FUEL FILLER CAP.** 1) Turn the ignition switch to OFF. 2) Check the fuel filler cap. NOTE: The DTC is stored in memory if fuel filler cap is or was loose or if the cap chain has caught while tightening.	Is the fuel filler cap tightened securely?	Go to step **2**.	Tighten fuel filler cap securely.
2	**CHECK FUEL FILLER CAP.**	Is the fuel filler cap genuine?	Go to step **3**.	Replace with a genuine fuel filler cap.
3	**CHECK FUEL FILLER PIPE GASKET.**	Is there any damage to the seal between fuel filler cap and fuel filler pipe?	Repair or replace the fuel filler cap and fuel filler pipe. <Ref. to FU(H6DO)-52, Fuel Filler Pipe.>	Go to step **4**.
4	**CHECK DRAIN VALVE.** 1) Connect the delivery (test) mode connector. 2) Turn the ignition switch to ON. 3) Operate the drain valve using the Subaru Select Monitor. NOTE: Drain valve can be operated using the Subaru Select Monitor. For the procedures, refer to “Compulsory Valve Operation Check Mode”. <Ref. to EN(H6DO)(diag)-53, Compulsory Valve Operation Check Mode.>	Does the drain valve operate?	Go to step **5**.	Replace the drain valve. <Ref. to EC(H6DO)-16, Drain Valve.>
5	**CHECK PURGE CONTROL SOLENOID VALVE.** Operate the purge control solenoid valve using the Subaru Select Monitor. NOTE: Purge control solenoid valve operation can be executed using Subaru Select Monitor. For the procedures, refer to “Compulsory Valve Operation Check Mode”. <Ref. to EN(H6DO)(diag)-53, Compulsory Valve Operation Check Mode.>	Does the purge control solenoid valve operate?	Go to step **6**.	Replace the purge control solenoid valve. <Ref. to EC(H6DO)-8, Purge Control Solenoid Valve.>
6	**CHECK PRESSURE CONTROL SOLENOID VALVE.** Operate the pressure control solenoid valve using the Subaru Select Monitor. NOTE: The pressure control solenoid valve operation can be executed using the Subaru Select Monitor. For the procedures, refer to “Compulsory Valve Operation Check Mode”. <Ref. to EN(H6DO)(diag)-53, Compulsory Valve Operation Check Mode.>	Does the pressure control solenoid valve operate?	Go to step **7**.	Replace the pressure control solenoid valve. <Ref. to EC(H6DO)-13, Pressure Control Solenoid Valve.>
7	**CHECK EVAPORATIVE EMISSION CONTROL SYSTEM LINE.** 1) Turn the ignition switch to OFF. 2) Disconnect the delivery (test) mode connector.	Are there any disconnected, broken or clogged evaporation lines?	Repair or replace the evaporation line. <Ref. to FU(H6DO)-65, Fuel Delivery and Evaporation Lines.>	Go to step **8**.

Step		Check	Yes	No
8	**CHECK CANISTER.**	Is the canister damaged?	Repair or replace the canister. <Ref. to EC(H6DO)-6, Canister.>	Go to step **9**.
9	**CHECK FUEL TANK.** Remove the fuel tank. <Ref. to FU(H6DO)-45, Fuel Tank.>	Is the fuel tank damaged?	Repair or replace the fuel tank. <Ref. to FU(H6DO)-45, Fuel Tank.>	Go to step **10**.
10	**CHECK ANY OTHER MECHANICAL TROUBLE IN EVAPORATIVE EMISSION CONTROL SYSTEM.**	Are there holes, cracks, clogging, or disconnections, misconnection of hoses or pipes in evaporative emission control system?	Repair or replace the hoses or pipes.	Repair the poor contact of ECM connector.

CL:DTC P0458 EVAPORATIVE EMISSION SYSTEM PURGE CONTROL VALVE CIRCUIT LOW

DTC DETECTING CONDITION:

- Two consecutive driving cycles with fault
- GENERAL DESCRIPTION <Ref. to GD(H6DO)-134, DTC P0458 EVAPORATIVE EMISSION SYSTEM PURGE CONTROL VALVE CIRCUIT LOW, Diagnostic Trouble Code (DTC) Detecting Criteria.>

TROUBLE SYMPTOM:

Improper idling

CAUTION:

After repair or replacement of faulty parts, perform Clear Memory Mode <Ref. to EN(H6DO)(diag)-52, OPERATION, Clear Memory Mode.>, and Inspection Mode <Ref. to EN(H6DO)(diag)-44, PROCEDURE, Inspection Mode.>.

WIRING DIAGRAM:

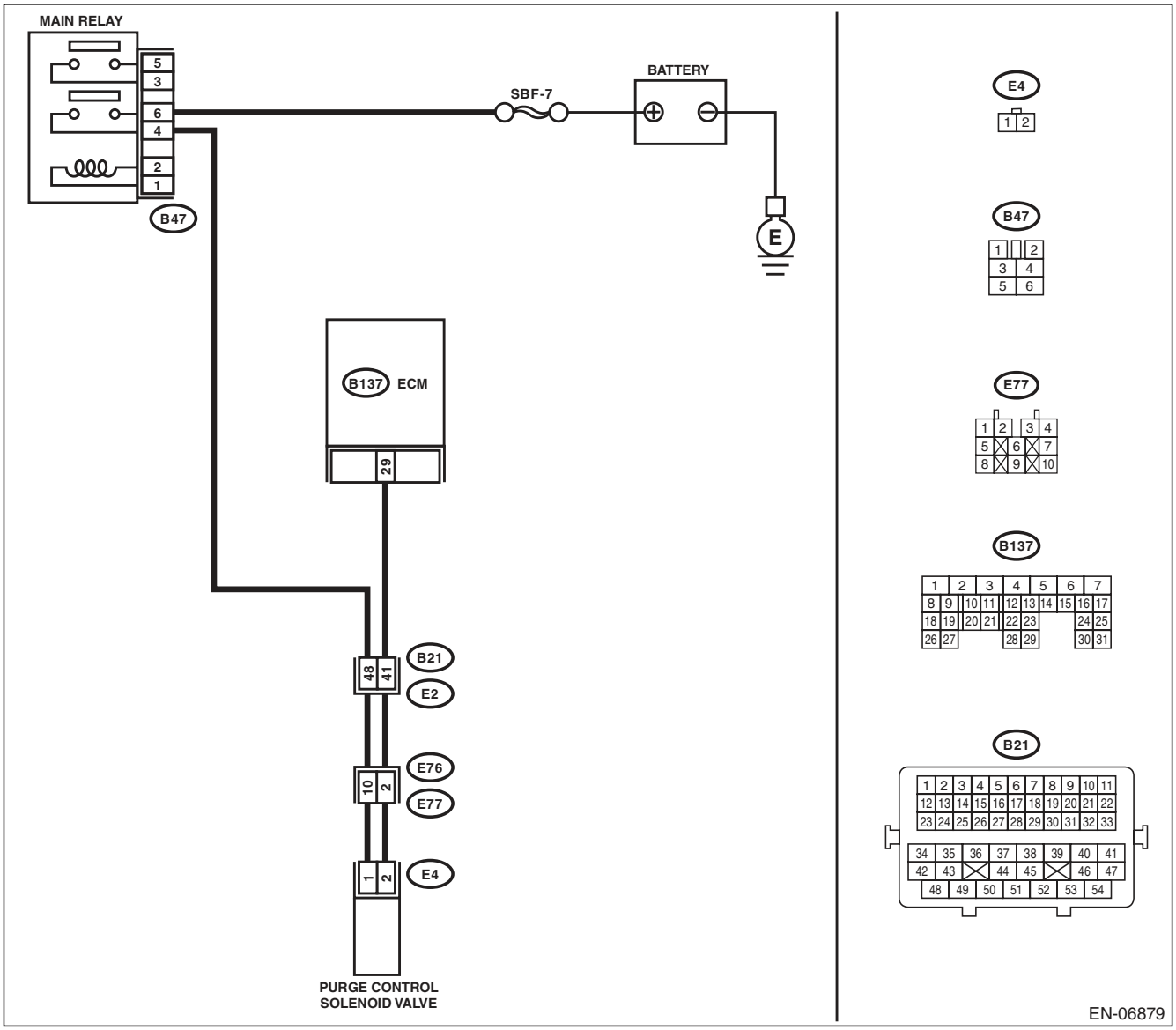

	Step	Check	Yes	No
1	**CHECK OUTPUT SIGNAL OF ECM.** 1) Turn the ignition switch to ON. 2) Measure the voltage between ECM and chassis ground. ***Connector & terminal*** ***(B137) No. 29 (+) — Chassis ground (–):***	Is the voltage 10 V or more?	Repair the poor contact of ECM connector.	Go to step **2**.
2	**CHECK IN HARNESS BETWEEN ECM AND PURGE CONTROL SOLENOID VALVE.** 1) Turn the ignition switch to OFF. 2) Disconnect the connectors from ECM and purge control solenoid valve. 3) Measure the resistance between the purge control solenoid valve connector and engine ground. ***Connector & terminal*** ***(E4) No. 2 — Engine ground:***	Is the resistance 1 MΩ or more?	Go to step **3**.	Repair the ground short circuit of harness between ECM and purge control solenoid valve connector.
3	**CHECK HARNESS BETWEEN ECM AND PURGE CONTROL SOLENOID VALVE.** Measure the resistance of harness between ECM and purge control solenoid valve connector. ***Connector & terminal*** ***(B137) No. 29 — (E4) No. 2:***	Is the resistance less than 1 Ω?	Go to step **4**.	Repair the harness and connector. NOTE: In this case, repair the following item: • Open circuit in harness between ECM and purge control solenoid valve connector • Poor contact of coupling connector
4	**CHECK PURGE CONTROL SOLENOID VALVE.** 1) Remove the purge control solenoid valve. 2) Measure the resistance between purge control solenoid valve terminals. ***Terminals*** ***No. 1 — No. 2:***	Is the resistance between 10 — 100 Ω?	Go to step **5**.	Replace the purge control solenoid valve. <Ref. to EC(H6DO)-8, Purge Control Solenoid Valve.>
5	**CHECK POWER SUPPLY TO PURGE CONTROL SOLENOID VALVE.** 1) Turn the ignition switch to ON. 2) Measure the voltage between purge control solenoid valve and engine ground. ***Connector & terminal*** ***(E4) No. 1 (+) — Engine ground (–):***	Is the voltage 10 V or more?	Repair the poor contact of purge control solenoid valve connector.	Repair the harness and connector. NOTE: In this case, repair the following item: • Open circuit in harness between main relay and purge control solenoid valve connector • Poor contact of coupling connector • Poor contact of main relay connector

CM:DTC P0459 EVAPORATIVE EMISSION SYSTEM PURGE CONTROL VALVE CIRCUIT HIGH

DTC DETECTING CONDITION:

- Two consecutive driving cycles with fault
- GENERAL DESCRIPTION <Ref. to GD(H6DO)-136, DTC P0459 EVAPORATIVE EMISSION SYSTEM PURGE CONTROL VALVE CIRCUIT HIGH, Diagnostic Trouble Code (DTC) Detecting Criteria.>

TROUBLE SYMPTOM:

Improper idling

CAUTION:

After repair or replacement of faulty parts, perform Clear Memory Mode <Ref. to EN(H6DO)(diag)-52, OPERATION, Clear Memory Mode.>, and Inspection Mode <Ref. to EN(H6DO)(diag)-44, PROCEDURE, Inspection Mode.>.

WIRING DIAGRAM:

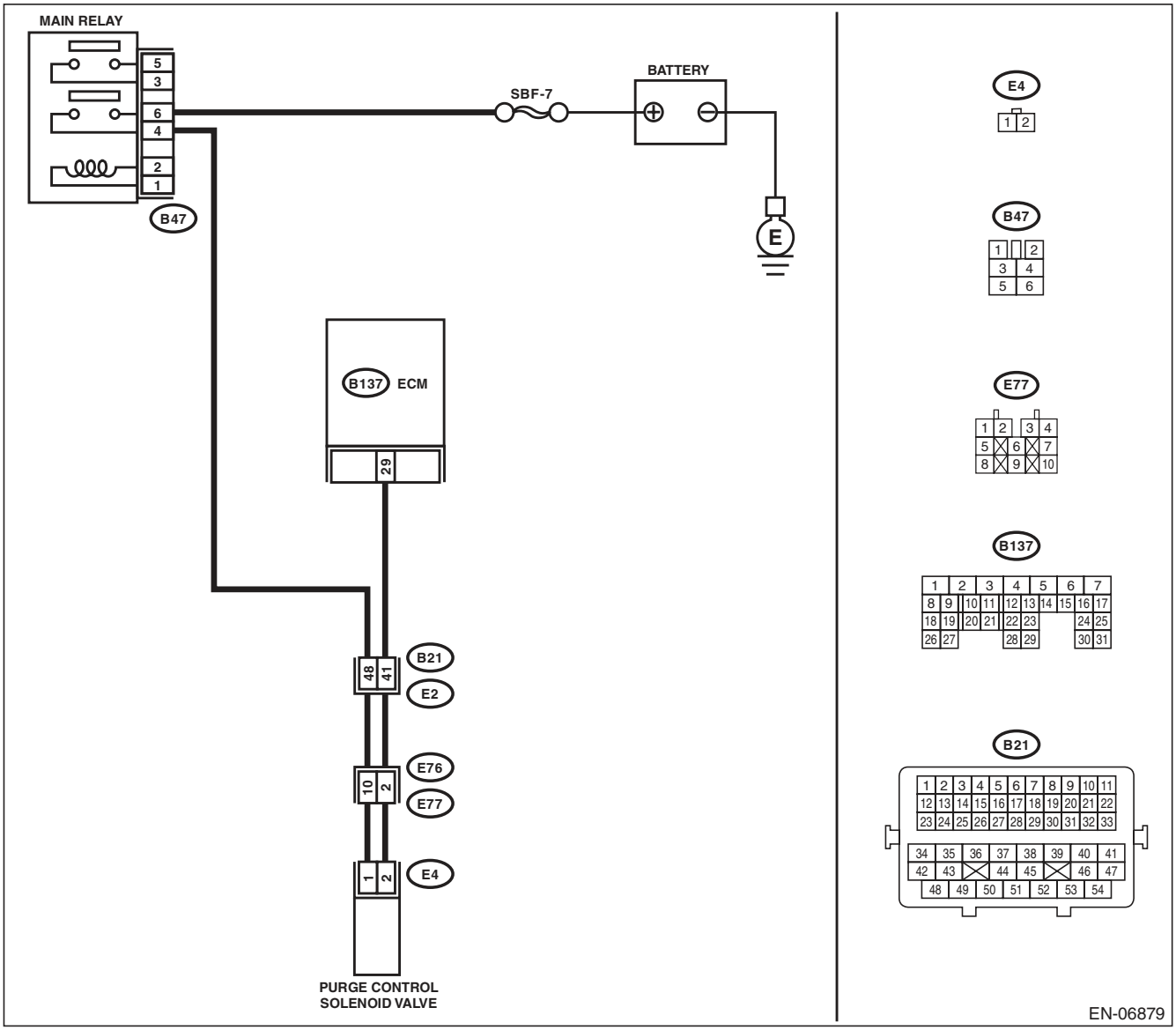

Step		Check	Yes	No
1	**CHECK HARNESS BETWEEN ECM AND PURGE CONTROL SOLENOID VALVE.** 1) Turn the ignition switch to OFF. 2) Disconnect the connectors from ECM and purge control solenoid valve. 3) Turn the ignition switch to ON. 4) Measure the voltage between ECM and chassis ground. ***Connector & terminal*** ***(B137) No. 29 (+) — Chassis ground (–):***	Is the voltage 10 V or more?	Repair the short circuit to power in the harness between ECM and purge control solenoid valve connector.	Go to step **2**.
2	**CHECK PURGE CONTROL SOLENOID VALVE.** 1) Turn the ignition switch to OFF. 2) Measure the resistance between purge control solenoid valve terminals. ***Terminals*** ***No. 1 — No. 2:***	Is the resistance less than 1 Ω?	Replace the purge control solenoid valve. <Ref. to EC(H6DO)-8, Purge Control Solenoid Valve.>	Repair the poor contact of ECM connector.

CN:DTC P0461 FUEL LEVEL SENSOR “A” CIRCUIT RANGE/PERFORMANCE

DTC DETECTING CONDITION:

- Two consecutive driving cycles with fault
- GENERAL DESCRIPTION <Ref. to GD(H6DO)-138, DTC P0461 FUEL LEVEL SENSOR “A” CIRCUIT RANGE/PERFORMANCE, Diagnostic Trouble Code (DTC) Detecting Criteria.>

CAUTION:

After repair or replacement of faulty parts, perform Clear Memory Mode <Ref. to EN(H6DO)(diag)-52, OPERATION, Clear Memory Mode.>, and Inspection Mode <Ref. to EN(H6DO)(diag)-44, PROCEDURE, Inspection Mode.>.

Step	Check	Yes	No
1 **CHECK FOR ANY OTHER DTC ON DISPLAY.**	Is any other DTC displayed?	Check the appropriate DTC using the “List of Diagnostic Trouble Code (DTC)”. <Ref. to EN(H6DO)(diag)-81, List of Diagnostic Trouble Code (DTC).>	Replace the fuel level sensor and fuel sub level sensor. <Ref. to FU(H6DO)-57, Fuel Level Sensor.> <Ref. to FU(H6DO)-58, Fuel Sub Level Sensor.>

CO:DTC P0462 FUEL LEVEL SENSOR “A” CIRCUIT LOW

NOTE:
For the diagnostic procedure, refer to DTC P0463. <Ref. to EN(H6DO)(diag)-261, DTC P0463 FUEL LEVEL SENSOR “A” CIRCUIT HIGH, Diagnostic Procedure with Diagnostic Trouble Code (DTC).>

CP:DTC P0463 FUEL LEVEL SENSOR “A” CIRCUIT HIGH

DTC DETECTING CONDITION:

- Two consecutive driving cycles with fault
- GENERAL DESCRIPTION <Ref. to GD(H6DO)-142, DTC P0463 FUEL LEVEL SENSOR “A” CIRCUIT HIGH, Diagnostic Trouble Code (DTC) Detecting Criteria.>

CAUTION:

After repair or replacement of faulty parts, perform Clear Memory Mode <Ref. to EN(H6DO)(diag)-52, OPERATION, Clear Memory Mode.>, and Inspection Mode <Ref. to EN(H6DO)(diag)-44, PROCEDURE, Inspection Mode.>.

Step	Check	Yes	No
1 **CHECK FOR ANY OTHER DTC ON DISPLAY.**	Is DTC P0462 or P0463 displayed on the Subaru Select Monitor?	Check the combination meter. <Ref. to IDI-5, INSPECTION, Combination Meter System.>	Even if DTC is detected, the circuit has returned to a normal condition at this time. Reproduce the failure, and then perform the diagnosis again. NOTE: In this case, temporary poor contact of connector may be the cause.

CQ:DTC P0464 FUEL LEVEL SENSOR CIRCUIT INTERMITTENT

DTC DETECTING CONDITION:

- Two consecutive driving cycles with fault
- GENERAL DESCRIPTION <Ref. to GD(H6DO)-144, DTC P0464 FUEL LEVEL SENSOR CIRCUIT INTERMITTENT, Diagnostic Trouble Code (DTC) Detecting Criteria.>

CAUTION:

After repair or replacement of faulty parts, perform Clear Memory Mode <Ref. to EN(H6DO)(diag)-52, OPERATION, Clear Memory Mode.>, and Inspection Mode <Ref. to EN(H6DO)(diag)-44, PROCEDURE, Inspection Mode.>.

Step	Check	Yes	No
1 **CHECK FOR ANY OTHER DTC ON DISPLAY.**	Is DTC P0464 displayed on the display?	Check the combination meter. <Ref. to IDI-5, INSPECTION, Combination Meter System.>	Even if DTC is detected, the circuit has returned to a normal condition at this time. Reproduce the failure, and then perform the diagnosis again. NOTE: In this case, temporary poor contact of connector may be the cause.

CR:DTC P0500 VEHICLE SPEED SENSOR “A”

DTC DETECTING CONDITION:

- Immediately at fault recognition
- GENERAL DESCRIPTION <Ref. to GD(H6DO)-147, DTC P0500 VEHICLE SPEED SENSOR “A”, Diagnostic Trouble Code (DTC) Detecting Criteria.>

CAUTION:

After repair or replacement of faulty parts, perform Clear Memory Mode <Ref. to EN(H6DO)(diag)-52, OPERATION, Clear Memory Mode.>, and Inspection Mode <Ref. to EN(H6DO)(diag)-44, PROCEDURE, Inspection Mode.>.

Step	Check	Yes	No
1 **CHECK DTC OF VDC.** Check DTC of VDC.	Is DTC of VDC displayed?	Perform the diagnosis according to DTC. <Ref. to VDC(diag)-34, List of Diagnostic Trouble Code (DTC).>	Repair the poor contact of ECM connector.

CS:DTC P0506 IDLE AIR CONTROL SYSTEM RPM LOWER THAN EXPECTED

DTC DETECTING CONDITION:

- Two consecutive driving cycles with fault
- GENERAL DESCRIPTION <Ref. to GD(H6DO)-148, DTC P0506 IDLE AIR CONTROL SYSTEM RPM LOWER THAN EXPECTED, Diagnostic Trouble Code (DTC) Detecting Criteria.>

TROUBLE SYMPTOM:

- Hard to start the engine.
- Engine does not start.
- Improper idling
- Engine stalls.

CAUTION:

After repair or replacement of faulty parts, perform Clear Memory Mode <Ref. to EN(H6DO)(diag)-52, OPERATION, Clear Memory Mode.>, and Inspection Mode <Ref. to EN(H6DO)(diag)-44, PROCEDURE, Inspection Mode.>.

WIRING DIAGRAM:

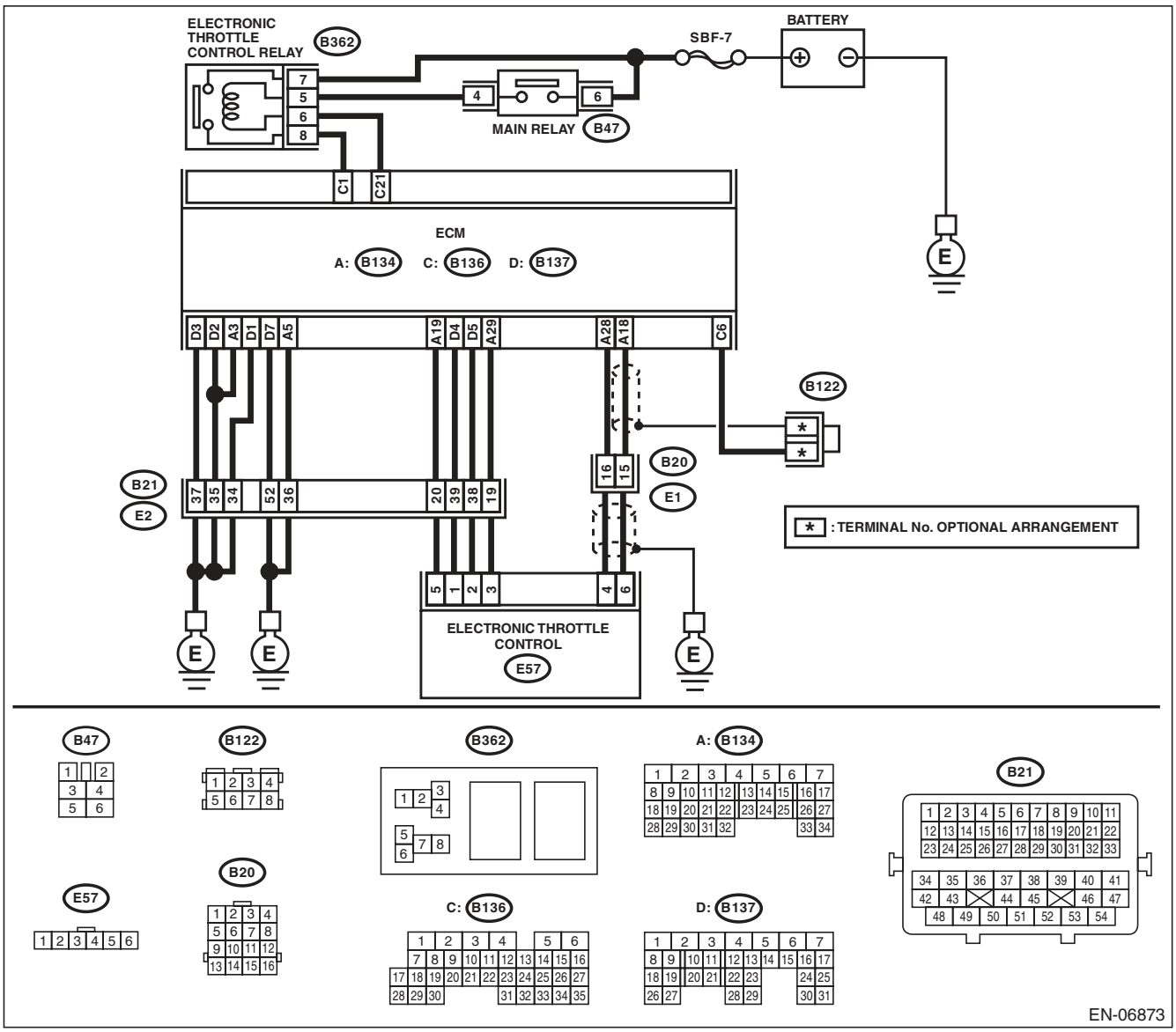

Step		Check	Yes	No
1	**CHECK FOR ANY OTHER DTC ON DISPLAY.**	Is any other DTC displayed?	Check the appropriate DTC using the “List of Diagnostic Trouble Code (DTC)”. <Ref. to EN(H6DO)(diag)-81, List of Diagnostic Trouble Code (DTC).>	Go to step **2**.
2	**CHECK AIR CLEANER ELEMENT.** 1) Turn the ignition switch to OFF. 2) Check the air cleaner element.	Is the air cleaner element excessively clogged?	Replace the air cleaner element. <Ref. to IN(H6DO)-4, Air Cleaner Element.>	Go to step **3**.
3	**CHECK ELECTRONIC THROTTLE CONTROL.** 1) Remove the electronic throttle control. 2) Check the electronic throttle control.	Are foreign matter found inside electronic throttle control?	Remove foreign matter from electronic throttle control.	Perform the diagnosis of DTC P2101. <Ref. to EN(H6DO)(diag)-324, DTC P2101 THROTTLE ACTUATOR CONTROL MOTOR CIRCUIT RANGE/PERFORMANCE, Diagnostic Procedure with Diagnostic Trouble Code (DTC).>

CT:DTC P0507 IDLE AIR CONTROL SYSTEM RPM HIGHER THAN EXPECTED

DTC DETECTING CONDITION:

- Two consecutive driving cycles with fault
- GENERAL DESCRIPTION <Ref. to GD(H6DO)-149, DTC P0507 IDLE AIR CONTROL SYSTEM RPM HIGHER THAN EXPECTED, Diagnostic Trouble Code (DTC) Detecting Criteria.>

TROUBLE SYMPTOM:

Engine keeps running at higher speed than specified idle speed.

CAUTION:

After repair or replacement of faulty parts, perform Clear Memory Mode <Ref. to EN(H6DO)(diag)-52, OPERATION, Clear Memory Mode.>, and Inspection Mode <Ref. to EN(H6DO)(diag)-44, PROCEDURE, Inspection Mode.>.

WIRING DIAGRAM:

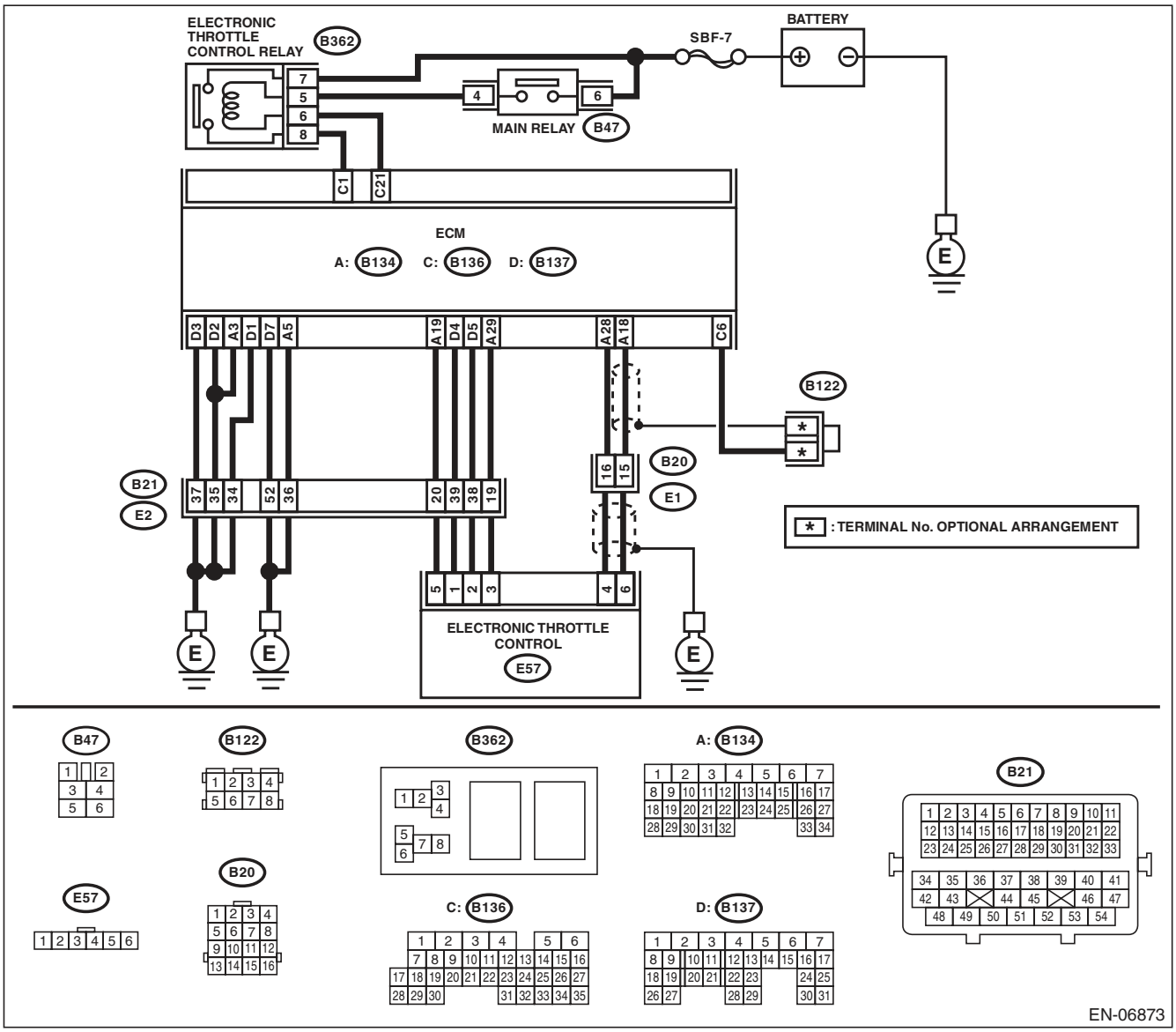

Step		Check	Yes	No
1	**CHECK FOR ANY OTHER DTC ON DISPLAY.**	Is any other DTC displayed?	Check the appropriate DTC using the “List of Diagnostic Trouble Code (DTC)”. <Ref. to EN(H6DO)(diag)-81, List of Diagnostic Trouble Code (DTC).>	Go to step **2**.
2	**CHECK AIR INTAKE SYSTEM.** 1) Start and idle the engine. 2) Check the following items. • Loose installation of intake manifold and throttle body • Cracks of intake manifold gasket and throttle body gasket • Disconnection of vacuum hoses	Is there any fault in air intake system?	Repair air suction and leaks.	Go to step **3**.
3	**CHECK ELECTRONIC THROTTLE CONTROL.** 1) Turn the ignition switch to OFF. 2) Remove the electronic throttle control. 3) Check the electronic throttle control.	Are foreign matter found inside electronic throttle control?	Remove foreign matter from electronic throttle control.	Perform the diagnosis of DTC P2101. <Ref. to EN(H6DO)(diag)-324, DTC P2101 THROTTLE ACTUATOR CONTROL MOTOR CIRCUIT RANGE/PERFORMANCE, Diagnostic Procedure with Diagnostic Trouble Code (DTC).>

CU:DTC P0512 STARTER REQUEST CIRCUIT

DTC DETECTING CONDITION:

- Immediately at fault recognition
- GENERAL DESCRIPTION <Ref. to GD(H6DO)-150, DTC P0512 STARTER REQUEST CIRCUIT, Diagnostic Trouble Code (DTC) Detecting Criteria.>

TROUBLE SYMPTOM:

Failure of engine to start

CAUTION:

After repair or replacement of faulty parts, perform Clear Memory Mode <Ref. to EN(H6DO)(diag)-52, OPERATION, Clear Memory Mode.>, and Inspection Mode <Ref. to EN(H6DO)(diag)-44, PROCEDURE, Inspection Mode.>.

WIRING DIAGRAM:

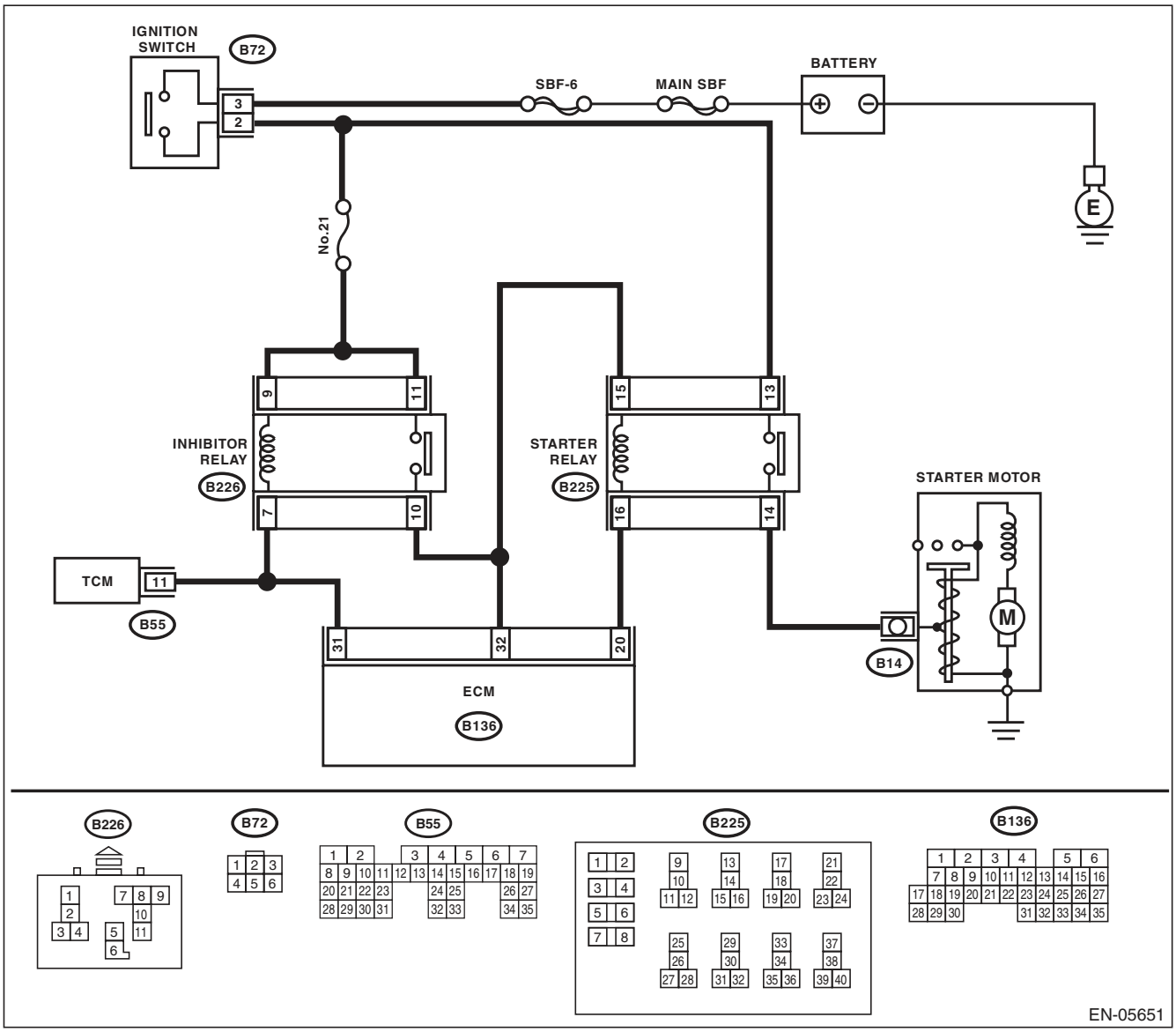

Step		Check	Yes	No
1	**CHECK FOR ANY OTHER DTC ON DISPLAY.**	Is any other DTC displayed?	Check the appropriate DTC using the “List of Diagnostic Trouble Code (DTC)”. <Ref. to EN(H6DO)(diag)-81, List of Diagnostic Trouble Code (DTC).>	Go to step **2**.
2	**CHECK HARNESS BETWEEN ECM AND IGNITION SWITCH.** 1) Turn the ignition switch to OFF. 2) Disconnect the connectors from ECM. 3) Turn the ignition switch to ON. 4) Measure the voltage between ECM and chassis ground. ***Connector & terminal*** ***(B136) No. 32 (+) — Chassis ground (–):***	Is the voltage 10 V or more?	Repair the short circuit to power in the harness between the ECM and ignition switch.	Repair the poor contact of ECM connector.

CV:DTC P0600 SERIAL COMMUNICATION LINK

NOTE:
For the diagnostic procedure, refer to LAN section. <Ref. to LAN(diag)-2, Basic Diagnostic Procedure.>

CW:DTC P0604 INTERNAL CONTROL MODULE RANDOM ACCESS MEMORY (RAM) ERROR

DTC DETECTING CONDITION:

- Immediately at fault recognition
- GENERAL DESCRIPTION <Ref. to GD(H6DO)-154, DTC P0604 INTERNAL CONTROL MODULE RANDOM ACCESS MEMORY (RAM) ERROR, Diagnostic Trouble Code (DTC) Detecting Criteria.>

TROUBLE SYMPTOM:

- Engine does not start.
- Engine stalls.

CAUTION:

After repair or replacement of faulty parts, perform Clear Memory Mode <Ref. to EN(H6DO)(diag)-52, OPERATION, Clear Memory Mode.>, and Inspection Mode <Ref. to EN(H6DO)(diag)-44, PROCEDURE, Inspection Mode.>.

WIRING DIAGRAM:

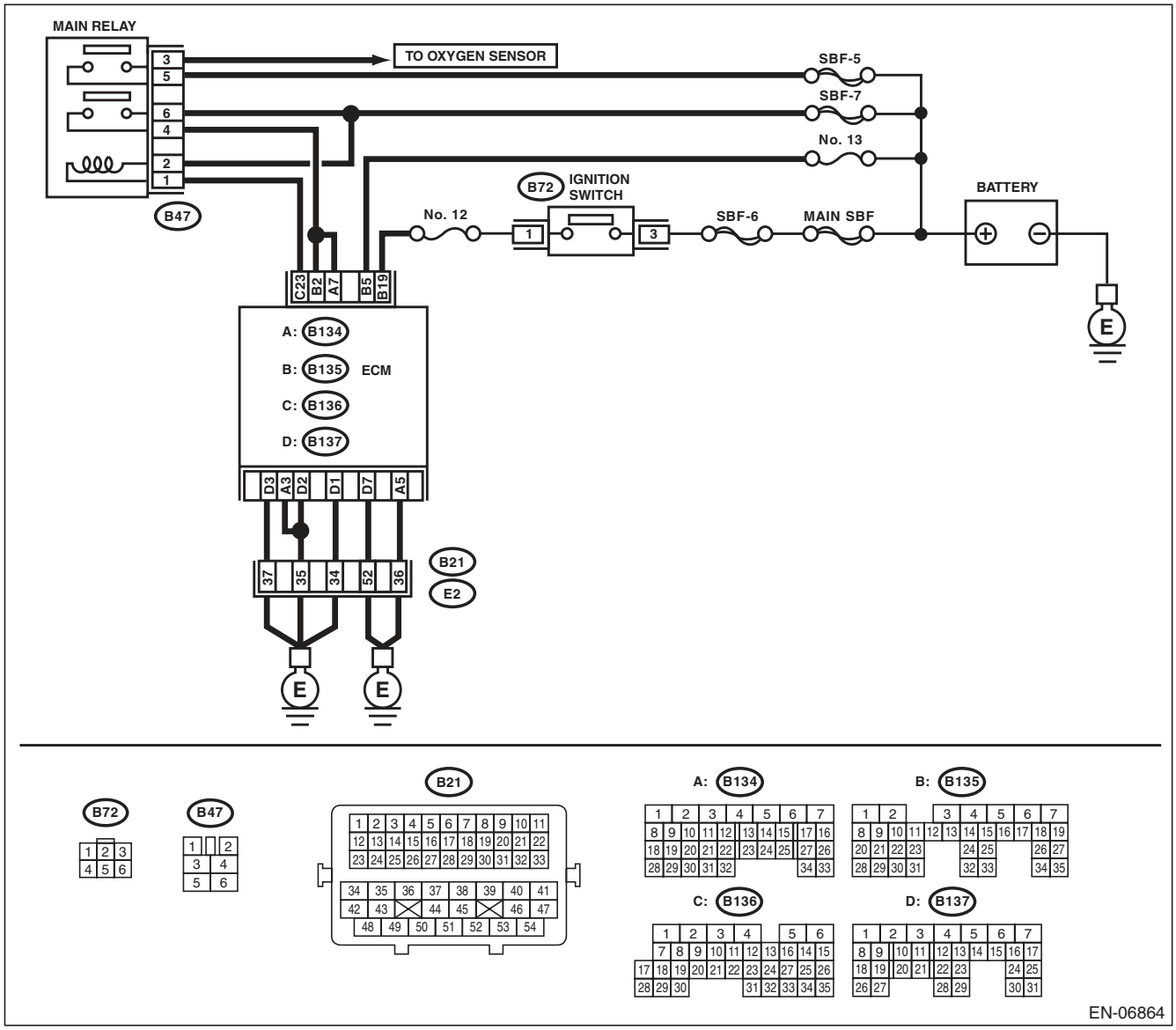

Step	Check	Yes	No
1 **CHECK FOR ANY OTHER DTC ON DISPLAY.**	Is any other DTC displayed?	Check the appropriate DTC using the “List of Diagnostic Trouble Code (DTC)”. <Ref. to EN(H6DO)(diag)-81, List of Diagnostic Trouble Code (DTC).>	Even if DTC is detected, the circuit has returned to a normal condition at this time. Reproduce the failure, and then perform the diagnosis again. NOTE: In this case, temporary poor contact of connector may be the cause.

CX:DTC P0605 INTERNAL CONTROL MODULE READ ONLY MEMORY (ROM) ERROR

NOTE:
For the diagnostic procedure, refer to DTC P0607. <Ref. to EN(H6DO)(diag)-271, DTC P0607 THROTTLE CONTROL SYSTEM CIRCUIT RANGE/PERFORMANCE, Diagnostic Procedure with Diagnostic Trouble Code (DTC).>

CY:DTC P0607 THROTTLE CONTROL SYSTEM CIRCUIT RANGE/PERFORMANCE

DTC DETECTING CONDITION:

- Immediately at fault recognition
- GENERAL DESCRIPTION <Ref. to GD(H6DO)-156, DTC P0607 THROTTLE CONTROL SYSTEM CIRCUIT RANGE/PERFORMANCE, Diagnostic Trouble Code (DTC) Detecting Criteria.>

TROUBLE SYMPTOM:

- Improper idling
- Poor driving performance

CAUTION:

After repair or replacement of faulty parts, perform Clear Memory Mode <Ref. to EN(H6DO)(diag)-52, OPERATION, Clear Memory Mode.>, and Inspection Mode <Ref. to EN(H6DO)(diag)-44, PROCEDURE, Inspection Mode.>.

WIRING DIAGRAM:

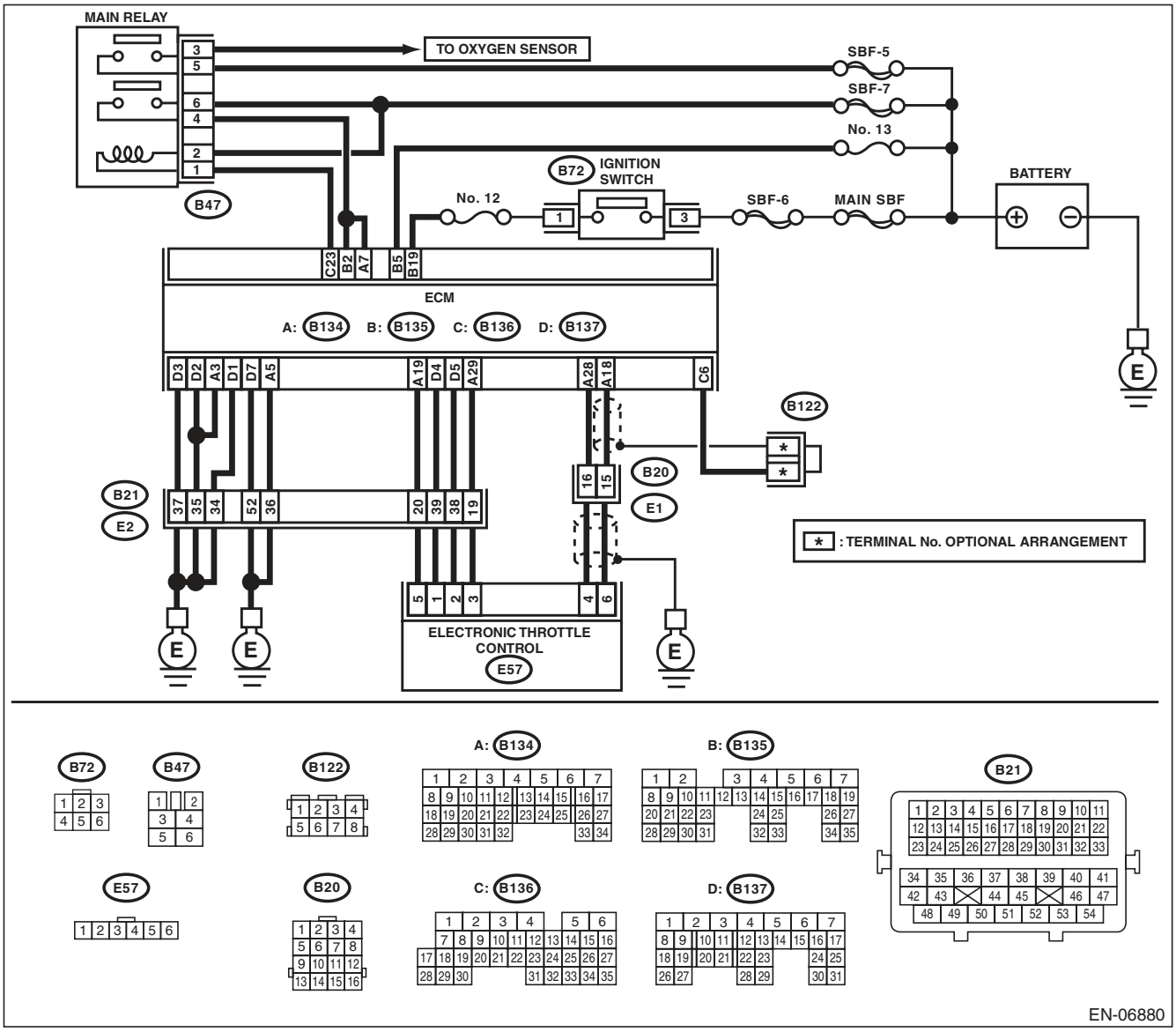

Step		Check	Yes	No
1	**CHECK INPUT VOLTAGE OF ECM.** 1) Turn the ignition switch to ON. 2) Measure the voltage between ECM and chassis ground. ***Connector & terminal*** ***(B134) No. 7 (+) — Chassis ground (–):*** ***(B135) No. 2 (+) — Chassis ground (–):***	Is the voltage 10 — 13 V?	Go to step **2**.	Repair the open or ground short circuit of power supply circuit.
2	**CHECK INPUT VOLTAGE OF ECM.** 1) Start the engine. 2) Measure the voltage between ECM and chassis ground. ***Connector & terminal*** ***(B134) No. 7 (+) — Chassis ground (–):*** ***(B135) No. 2 (+) — Chassis ground (–):***	Is the voltage 13 — 15 V?	Go to step **3**.	Repair the open or ground short circuit of power supply circuit.
3	**CHECK HARNESS BETWEEN ECM AND ELECTRONIC THROTTLE CONTROL.** 1) Turn the ignition switch to OFF. 2) Disconnect the connectors from ECM and electronic throttle control. 3) Measure the resistance of harness between ECM and electronic throttle control connector. ***Connector & terminal*** ***(B134) No. 19 — (E57) No. 5:*** ***(B134) No. 29 — (E57) No. 3:***	Is the resistance less than 1 Ω?	Go to step **4**.	Repair the harness and connector. NOTE: In this case, repair the following item: • Open circuit in harness between ECM and electronic throttle control connector • Poor contact of coupling connector
4	**CHECK ECM GROUND HARNESS.** Measure the voltage between ECM and chassis ground. ***Connector & terminal*** ***(B134) No. 3 (+) — Chassis ground (–):*** ***(B134) No. 5 (+) — Chassis ground (–):*** ***(B137) No. 1 (+) — Chassis ground (–):*** ***(B137) No. 2 (+) — Chassis ground (–):*** ***(B137) No. 3 (+) — Chassis ground (–):*** ***(B137) No. 7 (+) — Chassis ground (–):***	Is the voltage less than 1 V?	Repair the poor contact of ECM connector.	Repair the following item. • Open circuit of ground circuit • Retightening of engine ground terminals • Poor contact of coupling connector

CZ:DTC P0638 THROTTLE ACTUATOR CONTROL RANGE/PERFORMANCE (BANK 1)

NOTE:
For the diagnostic procedure, refer to DTC P2101. <Ref. to EN(H6DO)(diag)-324, DTC P2101 THROTTLE ACTUATOR CONTROL MOTOR CIRCUIT RANGE/PERFORMANCE, Diagnostic Procedure with Diagnostic Trouble Code (DTC).>

DA:DTC P0700 TRANSMISSION CONTROL SYSTEM (MIL REQUEST)

NOTE:
For the diagnostic procedure, refer to AT section. <Ref. to 5AT(diag)-2, Basic Diagnostic Procedure.>

DB:DTC P1152 O2 SENSOR CIRCUIT RANGE/PERFORMANCE (LOW) (BANK1 SENSOR1)

DTC DETECTING CONDITION:

- Two consecutive driving cycles with fault
- GENERAL DESCRIPTION <Ref. to GD(H6DO)-162, DTC P1152 O2 SENSOR CIRCUIT RANGE/PERFORMANCE (LOW) (BANK1 SENSOR1), Diagnostic Trouble Code (DTC) Detecting Criteria.>

CAUTION:

After repair or replacement of faulty parts, perform Clear Memory Mode <Ref. to EN(H6DO)(diag)-52, OPERATION, Clear Memory Mode.>, and Inspection Mode <Ref. to EN(H6DO)(diag)-44, PROCEDURE, Inspection Mode.>.

WIRING DIAGRAM:

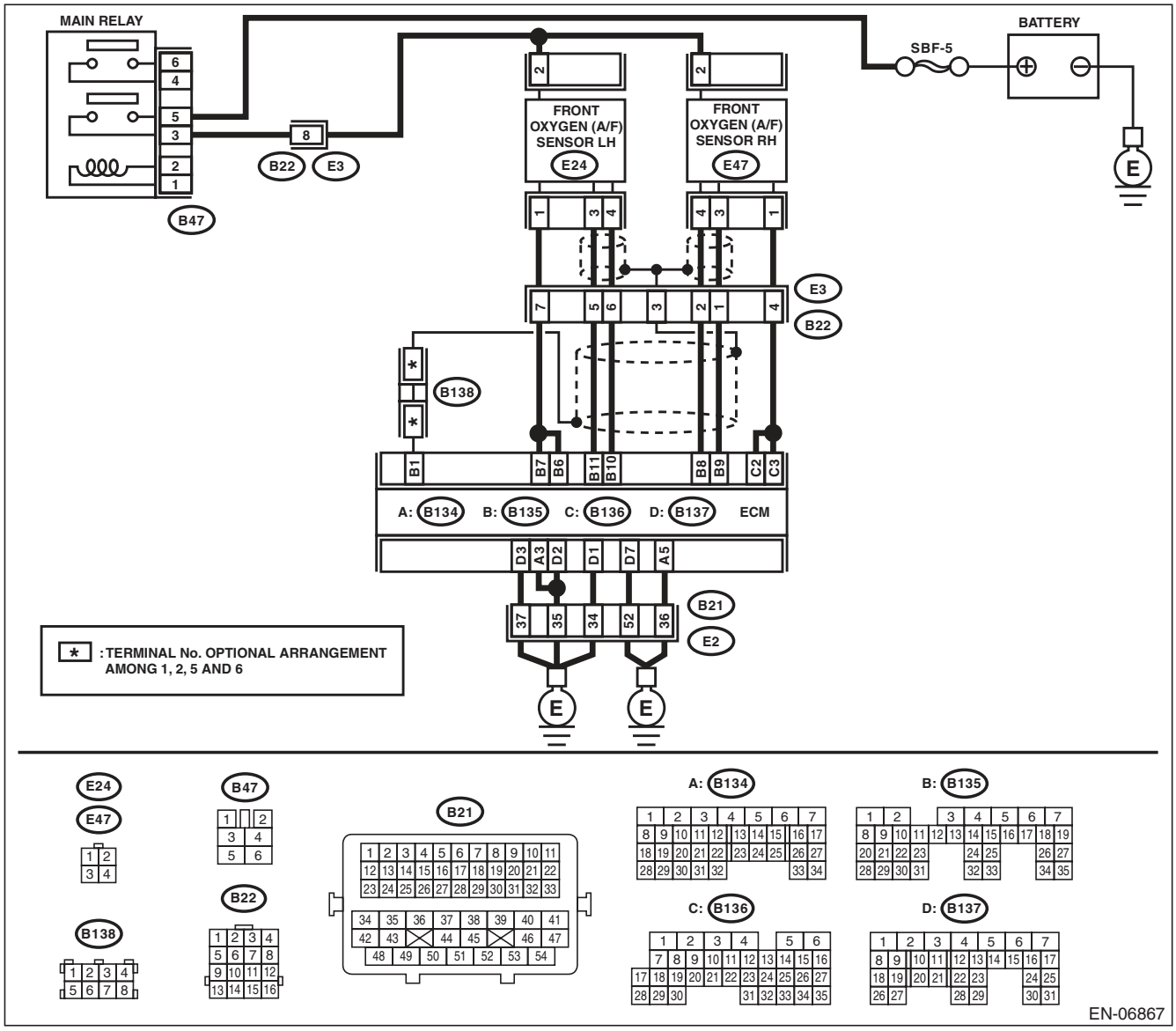

Step		Check	Yes	No
1	**CHECK FRONT OXYGEN (A/F) SENSOR CONNECTOR AND COUPLING CONNECTOR.**	Has water entered the connector?	Completely remove any water inside.	Go to step **2**.
2	**CHECK HARNESS BETWEEN ECM AND FRONT OXYGEN (A/F) SENSOR CONNECTOR.** 1) Turn the ignition switch to OFF. 2) Disconnect the connectors from ECM and front oxygen (A/F) sensor. 3) Measure the resistance of harness between ECM and front oxygen (A/F) sensor connector. ***Connector & terminal*** ***(B135) No. 9 — (E47) No. 3:*** ***(B135) No. 8 — (E47) No. 4:***	Is the resistance less than 1 Ω?	Go to step **3**.	Repair the harness and connector. NOTE: In this case, repair the following item: • Open circuit in harness between ECM and front oxygen (A/F) sensor connector • Poor contact of coupling connector
3	**CHECK POOR CONTACT.** Check for poor contact in the front oxygen (A/F) sensor connector.	Is there poor contact in front oxygen (A/F) sensor connector?	Repair the poor contact of the front oxygen (A/F) sensor connector.	Replace the front oxygen (A/F) sensor. <Ref. to FU(H6DO)-32, Front Oxygen (A/F) Sensor.>

DC:DTC P1153 O2 SENSOR CIRCUIT RANGE/PERFORMANCE (HIGH) (BANK1 SENSOR1)

DTC DETECTING CONDITION:

- Two consecutive driving cycles with fault
- GENERAL DESCRIPTION <Ref. to GD(H6DO)-164, DTC P1153 O2 SENSOR CIRCUIT RANGE/PERFORMANCE (HIGH) (BANK1 SENSOR1), Diagnostic Trouble Code (DTC) Detecting Criteria.>

CAUTION:

After repair or replacement of faulty parts, perform Clear Memory Mode <Ref. to EN(H6DO)(diag)-52, OPERATION, Clear Memory Mode.>, and Inspection Mode <Ref. to EN(H6DO)(diag)-44, PROCEDURE, Inspection Mode.>.

WIRING DIAGRAM:

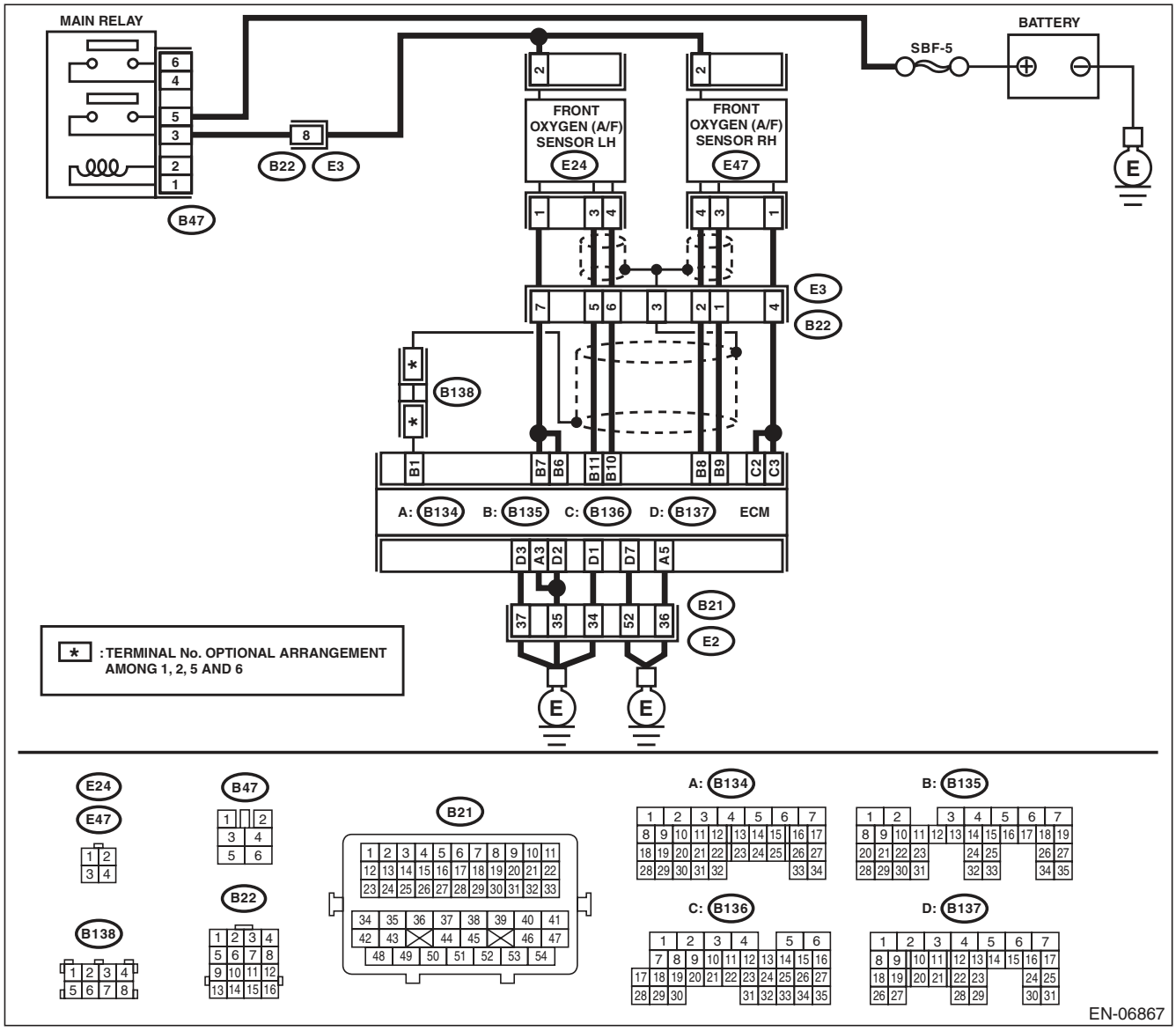

	Step	Check	Yes	No
1	**CHECK FRONT OXYGEN (A/F) SENSOR CONNECTOR AND COUPLING CONNECTOR.**	Has water entered the connector?	Completely remove any water inside.	Go to step **2**.
2	**CHECK HARNESS BETWEEN ECM AND FRONT OXYGEN (A/F) SENSOR CONNECTOR.** 1) Turn the ignition switch to OFF. 2) Disconnect the connectors from ECM. 3) Measure the resistance between ECM and chassis ground. ***Connector & terminal*** ***(B135) No. 9 — Chassis ground:*** ***(B135) No. 8 — Chassis ground:***	Is the resistance 1 MΩ or more?	Go to step **3**.	Repair the ground short circuit of harness between ECM and front oxygen (A/F) sensor connector.
3	**CHECK OUTPUT SIGNAL FOR ECM.** 1) Connect the connector to ECM. 2) Turn the ignition switch to ON. 3) Measure the voltage between ECM and chassis ground. ***Connector & terminal*** ***(B135) No. 9 (+) — Chassis ground (–):***	Is the voltage 4.5 V or more?	Go to step **5**.	Go to step **4**.
4	**CHECK OUTPUT SIGNAL FOR ECM.** Measure the voltage between ECM and chassis ground. ***Connector & terminal*** ***(B135) No. 8 (+) — Chassis ground (–):***	Is the voltage 4.95 V or more?	Go to step **5**.	Replace the front oxygen (A/F) sensor. <Ref. to FU(H6DO)-32, Front Oxygen (A/F) Sensor.>
5	**CHECK OUTPUT SIGNAL FOR ECM.** Measure the voltage between ECM and chassis ground. ***Connector & terminal*** ***(B135) No. 9 (+) — Chassis ground (–):*** ***(B135) No. 8 (+) — Chassis ground (–):***	Is the voltage 8 V or more?	Repair the short circuit to power in the harness between ECM and front oxygen (A/F) sensor connector. After repair, replace the ECM. <Ref. to FU(H6DO)-38, Engine Control Module (ECM).>	Repair the poor contact of ECM connector.

DD:DTC P1154 O2 SENSOR CIRCUIT RANGE/PERFORMANCE (LOW) (BANK 2 SENSOR 1)

DTC DETECTING CONDITION:

- Two consecutive driving cycles with fault
- GENERAL DESCRIPTION <Ref. to GD(H6DO)-166, DTC P1154 O2 SENSOR CIRCUIT RANGE/PERFORMANCE (LOW) (BANK 2 SENSOR 1), Diagnostic Trouble Code (DTC) Detecting Criteria.>

CAUTION:

After repair or replacement of faulty parts, perform Clear Memory Mode <Ref. to EN(H6DO)(diag)-52, OPERATION, Clear Memory Mode.>, and Inspection Mode <Ref. to EN(H6DO)(diag)-44, PROCEDURE, Inspection Mode.>.

WIRING DIAGRAM:

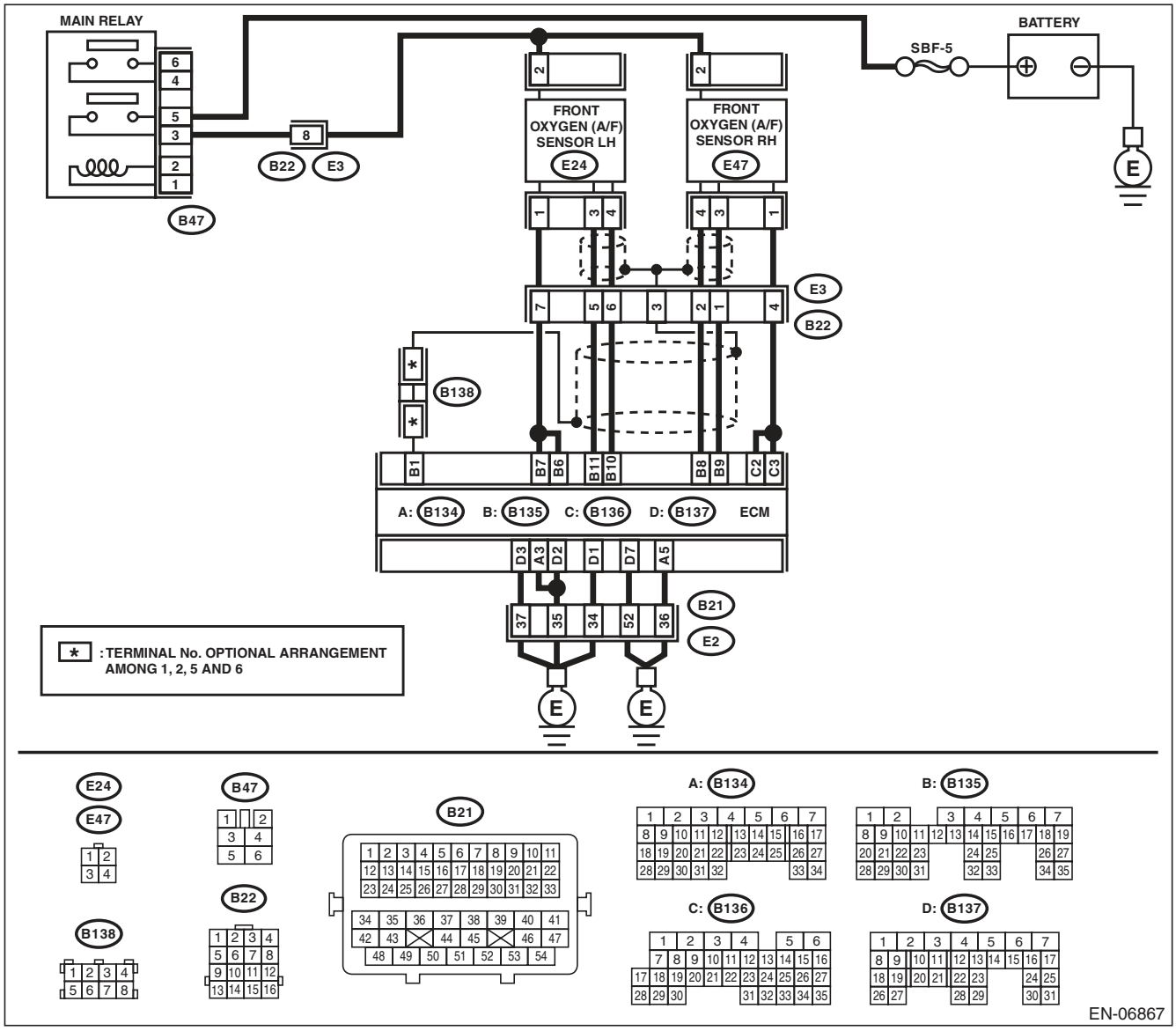

Step		Check	Yes	No
1	**CHECK FRONT OXYGEN (A/F) SENSOR CONNECTOR AND COUPLING CONNECTOR.**	Has water entered the connector?	Completely remove any water inside.	Go to step **2**.
2	**CHECK HARNESS BETWEEN ECM AND FRONT OXYGEN (A/F) SENSOR CONNECTOR.** 1) Turn the ignition switch to OFF. 2) Disconnect the connectors from ECM and front oxygen (A/F) sensor. 3) Measure the resistance of harness between ECM and front oxygen (A/F) sensor connector. ***Connector & terminal*** ***(B135) No. 11 — (E24) No. 3:*** ***(B135) No. 10 — (E24) No. 4:***	Is the resistance less than 1 Ω?	Go to step **3**.	Repair the harness and connector. NOTE: In this case, repair the following item: • Open circuit in harness between ECM and front oxygen (A/F) sensor connector • Poor contact of coupling connector
3	**CHECK POOR CONTACT.** Check for poor contact in the front oxygen (A/F) sensor connector.	Is there poor contact in front oxygen (A/F) sensor connector?	Repair the poor contact of the front oxygen (A/F) sensor connector.	Replace the front oxygen (A/F) sensor. <Ref. to FU(H6DO)-32, Front Oxygen (A/F) Sensor.>

DE:DTC P1155 O2 SENSOR CIRCUIT RANGE/PERFORMANCE (HIGH) (BANK 2 SENSOR 1)

DTC DETECTING CONDITION:

- Two consecutive driving cycles with fault
- GENERAL DESCRIPTION <Ref. to GD(H6DO)-166, DTC P1155 O2 SENSOR CIRCUIT RANGE/PERFORMANCE (HIGH) (BANK 2 SENSOR 1), Diagnostic Trouble Code (DTC) Detecting Criteria.>

CAUTION:

After repair or replacement of faulty parts, perform Clear Memory Mode <Ref. to EN(H6DO)(diag)-52, OPERATION, Clear Memory Mode.>, and Inspection Mode <Ref. to EN(H6DO)(diag)-44, PROCEDURE, Inspection Mode.>.

WIRING DIAGRAM:

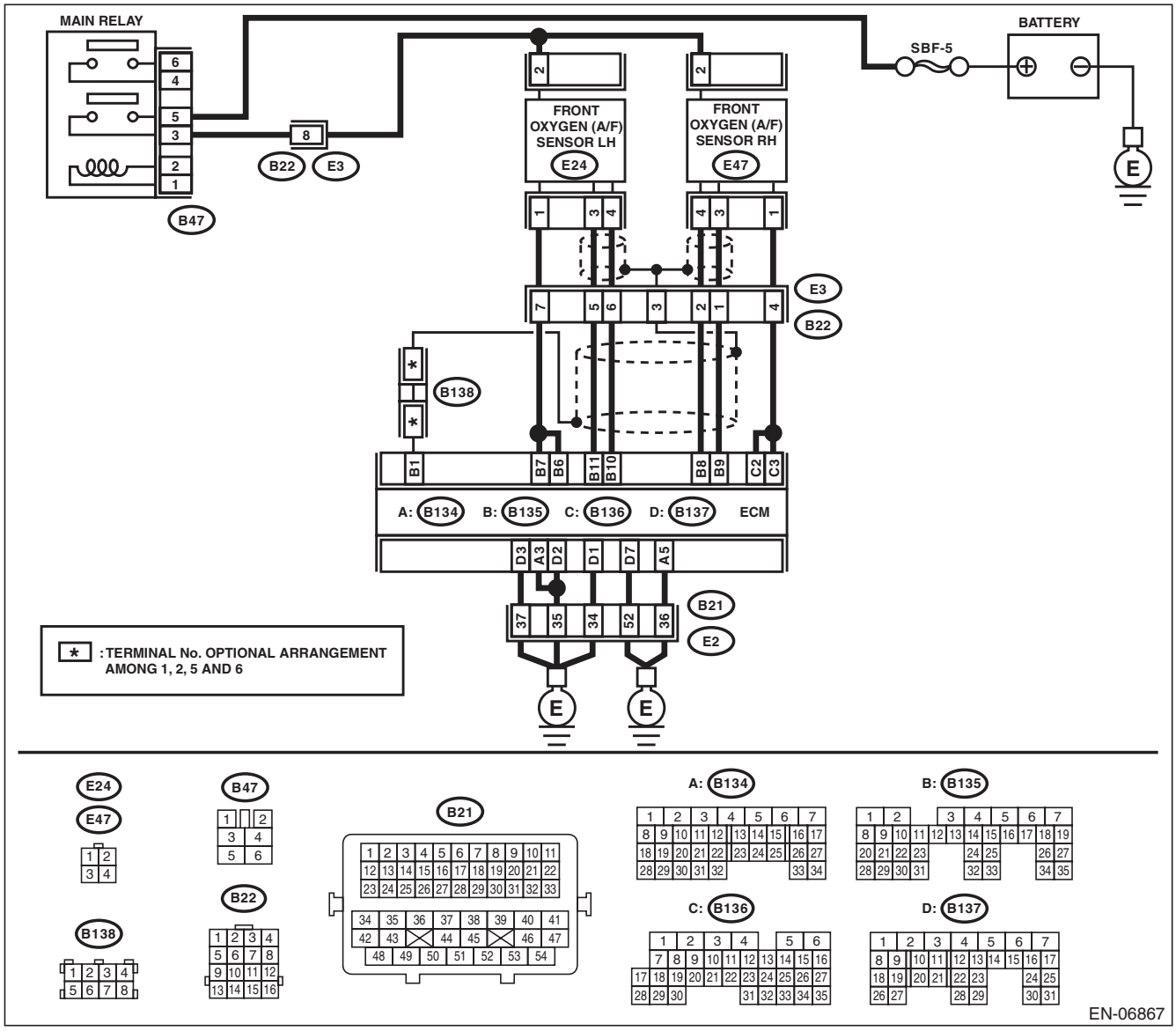

Step		Check	Yes	No
1	**CHECK FRONT OXYGEN (A/F) SENSOR CONNECTOR AND COUPLING CONNECTOR.**	Has water entered the connector?	Completely remove any water inside.	Go to step **2**.
2	**CHECK HARNESS BETWEEN ECM AND FRONT OXYGEN (A/F) SENSOR CONNECTOR.** 1) Turn the ignition switch to OFF. 2) Disconnect the connectors from ECM. 3) Measure the resistance between ECM and chassis ground. ***Connector & terminal*** ***(B135) No. 11 — Chassis ground:*** ***(B135) No. 10 — Chassis ground:***	Is the resistance 1 MΩ or more?	Go to step **3**.	Repair the ground short circuit of harness between ECM and front oxygen (A/F) sensor connector.
3	**CHECK OUTPUT SIGNAL FOR ECM.** 1) Connect the connector to ECM. 2) Turn the ignition switch to ON. 3) Measure the voltage between ECM and chassis ground. ***Connector & terminal*** ***(B135) No. 11 (+) — Chassis ground (–):***	Is the voltage 4.5 V or more?	Go to step **5**.	Go to step **4**.
4	**CHECK OUTPUT SIGNAL FOR ECM.** Measure the voltage between ECM and chassis ground. ***Connector & terminal*** ***(B135) No. 10 (+) — Chassis ground (–):***	Is the voltage 4.95 V or more?	Go to step **5**.	Replace the front oxygen (A/F) sensor. <Ref. to FU(H6DO)-32, Front Oxygen (A/F) Sensor.>
5	**CHECK OUTPUT SIGNAL FOR ECM.** Measure the voltage between ECM and chassis ground. ***Connector & terminal*** ***(B135) No. 11 (+) — Chassis ground (–):*** ***(B135) No. 10 (+) — Chassis ground (–):***	Is the voltage 8 V or more?	Repair the short circuit to power in the harness between ECM and front oxygen (A/F) sensor connector. After repair, replace the ECM. <Ref. to FU(H6DO)-38, Engine Control Module (ECM).>	Repair the poor contact of ECM connector.

DF:DTC P1160 RETURN SPRING FAILURE

NOTE:
For the diagnostic procedure, refer to DTC P2101. <Ref. to EN(H6DO)(diag)-324, DTC P2101 THROTTLE ACTUATOR CONTROL MOTOR CIRCUIT RANGE/PERFORMANCE, Diagnostic Procedure with Diagnostic Trouble Code (DTC).>

DG:DTC P1400 FUEL TANK PRESSURE CONTROL SOLENOID VALVE CIRCUIT LOW

DTC DETECTING CONDITION:

- Two consecutive driving cycles with fault
- GENERAL DESCRIPTION <Ref. to GD(H6DO)-169, DTC P1400 FUEL TANK PRESSURE CONTROL SOLENOID VALVE CIRCUIT LOW, Diagnostic Trouble Code (DTC) Detecting Criteria.>

CAUTION:

After repair or replacement of faulty parts, perform Clear Memory Mode <Ref. to EN(H6DO)(diag)-52, OPERATION, Clear Memory Mode.>, and Inspection Mode <Ref. to EN(H6DO)(diag)-44, PROCEDURE, Inspection Mode.>.

WIRING DIAGRAM:

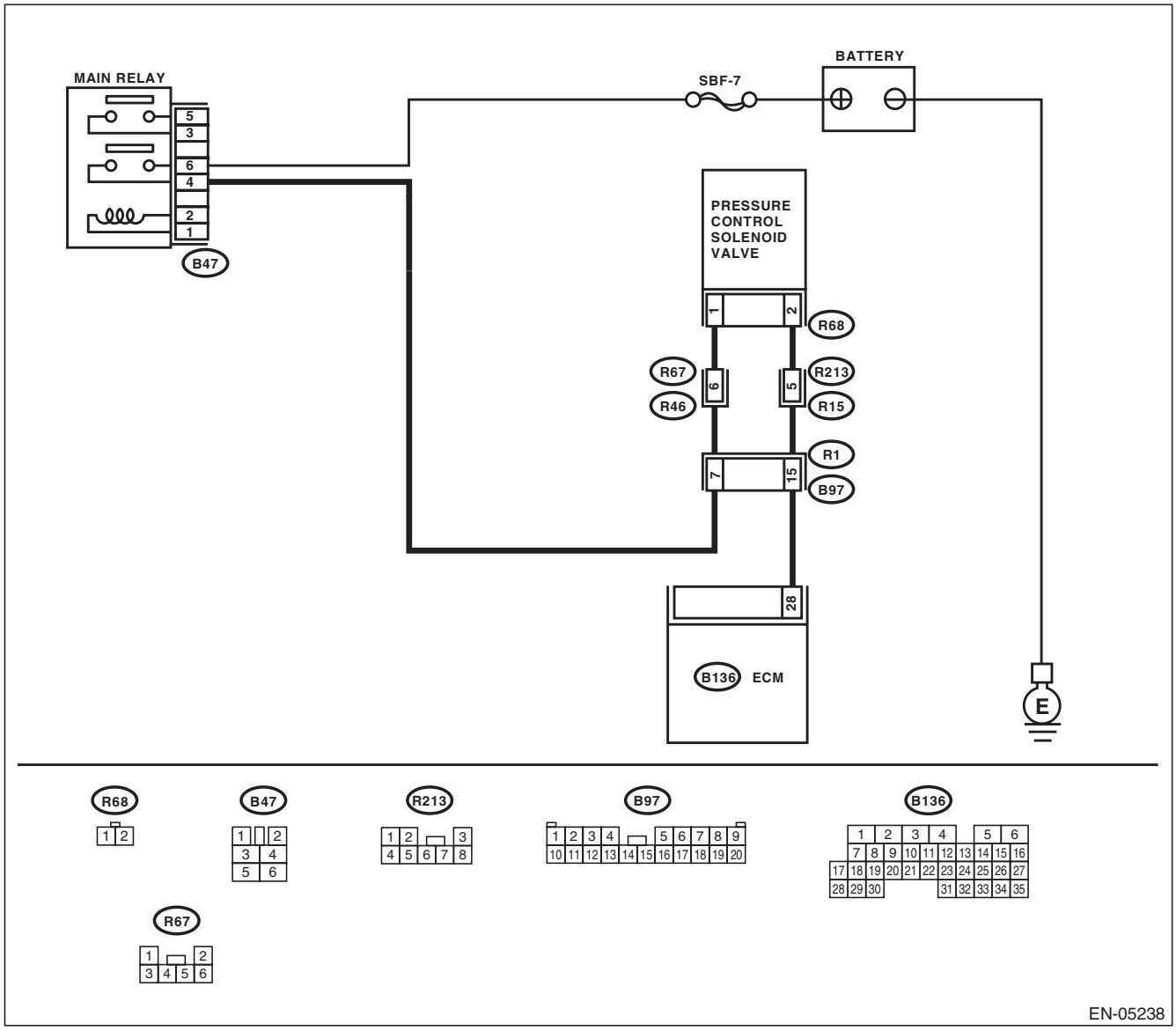

	Step	Check	Yes	No
1	**CHECK OUTPUT SIGNAL OF ECM.** 1) Turn the ignition switch to ON. 2) Measure the voltage between ECM and chassis ground. ***Connector & terminal*** ***(B136) No. 28 (+) — Chassis ground (–):***	Is the voltage 10 V or more?	Repair the poor contact of ECM connector.	Go to step **2**.
2	**CHECK HARNESS BETWEEN ECM AND PRESSURE CONTROL SOLENOID VALVE.** 1) Turn the ignition switch to OFF. 2) Disconnect the connector from the ECM and pressure control solenoid valve. 3) Measure the resistance between pressure control solenoid valve and chassis ground. ***Connector & terminal*** ***(R68) No. 2 — Chassis ground:***	Is the resistance 1 MΩ or more?	Go to step **3**.	Repair the ground short circuit of harness between ECM and pressure control solenoid valve connector.
3	**CHECK HARNESS BETWEEN ECM AND PRESSURE CONTROL SOLENOID VALVE.** Measure the resistance of harness between ECM and pressure control solenoid valve connector. ***Connector & terminal*** ***(B136) No. 28 — (R68) No. 2:***	Is the resistance less than 1 Ω?	Go to step **4**.	Repair the harness and connector. NOTE: In this case, repair the following item: • Open circuit in harness between ECM and pressure control solenoid valve connector • Poor contact of coupling connector
4	**CHECK PRESSURE CONTROL SOLENOID VALVE.** Measure the resistance between pressure control solenoid valve terminals. ***Terminals*** ***No. 1 — No. 2:***	Is the resistance between 10 — 100 Ω?	Go to step **5**.	Replace the pressure control solenoid valve. <Ref. to EC(H6DO)-13, Pressure Control Solenoid Valve.>
5	**CHECK POWER SUPPLY TO THE PRESSURE CONTROL SOLENOID VALVE.** 1) Turn the ignition switch to ON. 2) Measure the voltage between pressure control solenoid valve and chassis ground. ***Connector & terminal*** ***(R68) No. 1 (+) — Chassis ground (–):***	Is the voltage 10 V or more?	Repair the poor contact of pressure control solenoid valve connector.	Repair the harness and connector. NOTE: In this case, repair the following item: • Open circuit in harness between main relay and pressure control solenoid valve connector • Poor contact of coupling connector • Poor contact of main relay connector

DH:DTC P1420 FUEL TANK PRESSURE CONTROL SOL. VALVE CIRCUIT HIGH

DTC DETECTING CONDITION:

- Two consecutive driving cycles with fault
- GENERAL DESCRIPTION <Ref. to GD(H6DO)-171, DTC P1420 FUEL TANK PRESSURE CONTROL SOL. VALVE CIRCUIT HIGH, Diagnostic Trouble Code (DTC) Detecting Criteria.>

CAUTION:

After repair or replacement of faulty parts, perform Clear Memory Mode <Ref. to EN(H6DO)(diag)-52, OPERATION, Clear Memory Mode.>, and Inspection Mode <Ref. to EN(H6DO)(diag)-44, PROCEDURE, Inspection Mode.>.

WIRING DIAGRAM:

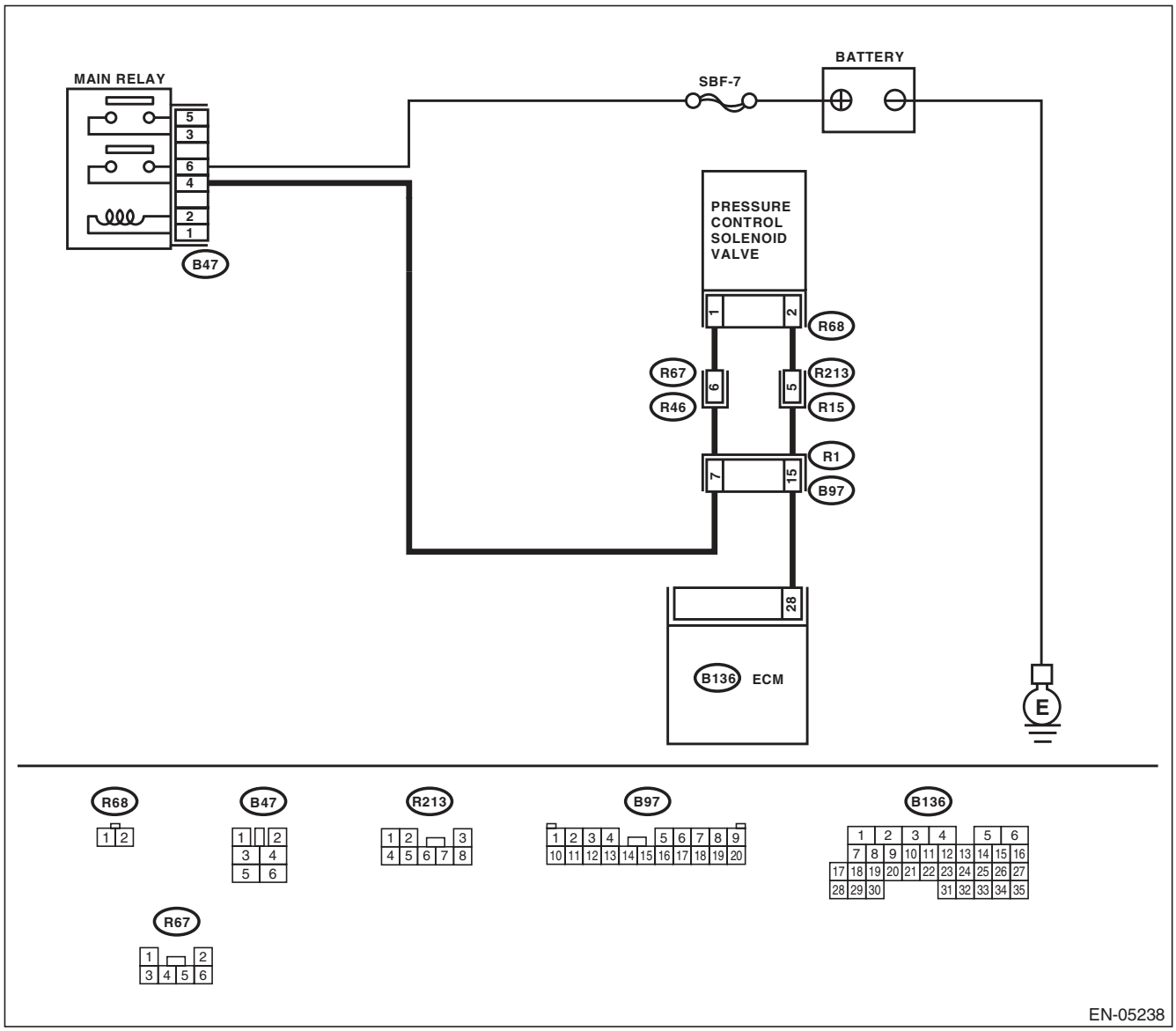

Step		Check	Yes	No
1	**CHECK HARNESS BETWEEN ECM AND PRESSURE CONTROL SOLENOID VALVE.** 1) Turn the ignition switch to OFF. 2) Disconnect the connector from the ECM and pressure control solenoid valve. 3) Turn the ignition switch to ON. 4) Measure the voltage between ECM and chassis ground. ***Connector & terminal*** ***(B136) No. 28 (+) — Chassis ground (–):***	Is the voltage 10 V or more?	Repair the short circuit to power supply in the harness between the ECM and pressure control solenoid valve connector.	Go to step **2**.
2	**CHECK PRESSURE CONTROL SOLENOID VALVE.** 1) Turn the ignition switch to OFF. 2) Measure the resistance between pressure control solenoid valve terminals. ***Terminals*** ***No. 1 — No. 2:***	Is the resistance less than 1 Ω?	Replace the pressure control solenoid valve. <Ref. to EC(H6DO)-13, Pressure Control Solenoid Valve.>	Repair the poor contact of ECM connector.

DI: DTC P1443 VENT CONTROL SOLENOID VALVE FUNCTION PROBLEM

DTC DETECTING CONDITION:

- Immediately at fault recognition
- GENERAL DESCRIPTION <Ref. to GD(H6DO)-173, DTC P1443 VENT CONTROL SOLENOID VALVE FUNCTION PROBLEM, Diagnostic Trouble Code (DTC) Detecting Criteria.>

TROUBLE SYMPTOM:

Improper fuel supply

CAUTION:

After repair or replacement of faulty parts, perform Clear Memory Mode <Ref. to EN(H6DO)(diag)-52, OPERATION, Clear Memory Mode.>, and Inspection Mode <Ref. to EN(H6DO)(diag)-44, PROCEDURE, Inspection Mode.>.

WIRING DIAGRAM:

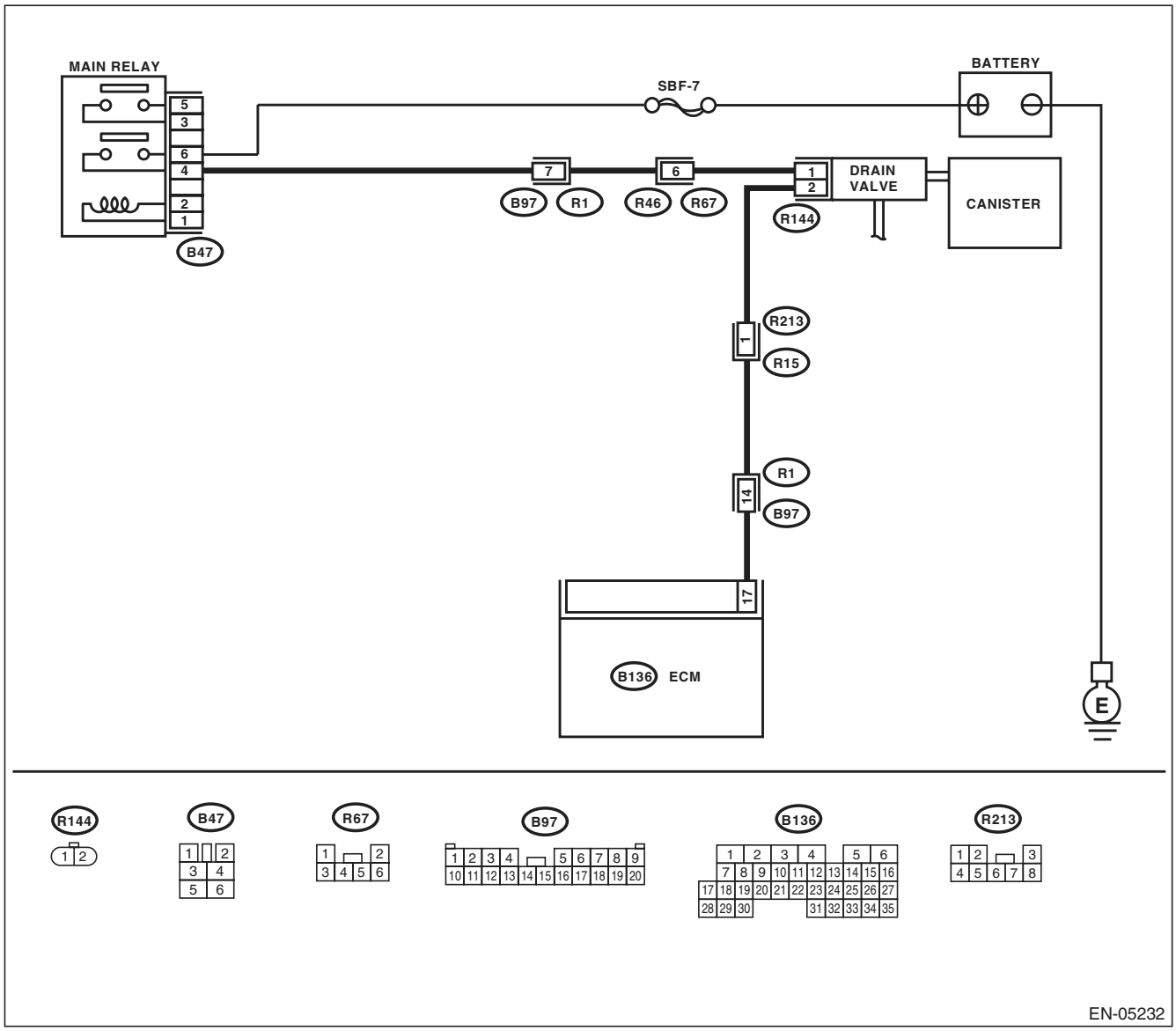

Step		Check	Yes	No
1	**CHECK FOR ANY OTHER DTC ON DISPLAY.**	Is any other DTC displayed?	Check the appropriate DTC using the “List of Diagnostic Trouble Code (DTC)”. <Ref. to EN(H6DO)(diag)-81, List of Diagnostic Trouble Code (DTC).>	Go to step **2**.
2	**CHECK DRAIN HOSE.** Check the drain hose for clogging.	Is there clogging in the drain hose?	Replace the drain hose.	Go to step **3**.
3	**CHECK DRAIN VALVE OPERATION.** 1) Turn the ignition switch to OFF. 2) Connect the delivery (test) mode connector at the lower portion of instrument panel (on the driver’s side). 3) Turn the ignition switch to ON. 4) Operate the drain valve. NOTE: Drain valve can be operated using the Subaru Select Monitor. For the procedures, refer to “Compulsory Valve Operation Check Mode”. <Ref. to EN(H6DO)(diag)-53, Compulsory Valve Operation Check Mode.>	Does the drain valve operate?	Repair the poor contact of ECM connector.	Replace the drain valve. <Ref. to EC(H6DO)-16, Drain Valve.>

DJ:DTC P1492 EGR SOLENOID VALVE SIGNAL #1 CIRCUIT MALFUNCTION (LOW INPUT)

NOTE:
For the diagnostic procedure, refer to DTC P1498. <Ref. to EN(H6DO)(diag)-288, DTC P1498 EGR SOLENOID VALVE SIGNAL #4 CIRCUIT MALFUNCTION (LOW INPUT), Diagnostic Procedure with Diagnostic Trouble Code (DTC).>

DK:DTC P1493 EGR SOLENOID VALVE SIGNAL #1 CIRCUIT MALFUNCTION (HIGH INPUT)

NOTE:
For the diagnostic procedure, refer to DTC P1499. <Ref. to EN(H6DO)(diag)-291, DTC P1499 EGR SOLENOID VALVE SIGNAL #4 CIRCUIT MALFUNCTION (HIGH INPUT), Diagnostic Procedure with Diagnostic Trouble Code (DTC).>

DL:DTC P1494 EGR SOLENOID VALVE SIGNAL #2 CIRCUIT MALFUNCTION (LOW INPUT)

NOTE:
For the diagnostic procedure, refer to DTC P1498. <Ref. to EN(H6DO)(diag)-288, DTC P1498 EGR SOLENOID VALVE SIGNAL #4 CIRCUIT MALFUNCTION (LOW INPUT), Diagnostic Procedure with Diagnostic Trouble Code (DTC).>

DM:DTC P1495 EGR SOLENOID VALVE SIGNAL #2 CIRCUIT MALFUNCTION (HIGH INPUT)

NOTE:
For the diagnostic procedure, refer to DTC P1499. <Ref. to EN(H6DO)(diag)-291, DTC P1499 EGR SOLENOID VALVE SIGNAL #4 CIRCUIT MALFUNCTION (HIGH INPUT), Diagnostic Procedure with Diagnostic Trouble Code (DTC).>

DN:DTC P1496 EGR SOLENOID VALVE SIGNAL #3 CIRCUIT MALFUNCTION (LOW INPUT)

NOTE:
For the diagnostic procedure, refer to DTC P1498. <Ref. to EN(H6DO)(diag)-288, DTC P1498 EGR SOLENOID VALVE SIGNAL #4 CIRCUIT MALFUNCTION (LOW INPUT), Diagnostic Procedure with Diagnostic Trouble Code (DTC).>

DO:DTC P1497 EGR SOLENOID VALVE SIGNAL #3 CIRCUIT MALFUNCTION (HIGH INPUT)

NOTE:
For the diagnostic procedure, refer to DTC P1499. <Ref. to EN(H6DO)(diag)-291, DTC P1499 EGR SOLENOID VALVE SIGNAL #4 CIRCUIT MALFUNCTION (HIGH INPUT), Diagnostic Procedure with Diagnostic Trouble Code (DTC).>

DP:DTC P1498 EGR SOLENOID VALVE SIGNAL #4 CIRCUIT MALFUNCTION (LOW INPUT)

DTC DETECTING CONDITION:

- Immediately at fault recognition
- GENERAL DESCRIPTION <Ref. to GD(H6DO)-175, DTC P1492 EGR SOLENOID VALVE SIGNAL #1 CIRCUIT MALFUNCTION (LOW INPUT), Diagnostic Trouble Code (DTC) Detecting Criteria.> <Ref. to GD(H6DO)-179, DTC P1494 EGR SOLENOID VALVE SIGNAL #2 CIRCUIT MALFUNCTION (LOW INPUT), Diagnostic Trouble Code (DTC) Detecting Criteria.> <Ref. to GD(H6DO)-179, DTC P1496 EGR SOLENOID VALVE SIGNAL #3 CIRCUIT MALFUNCTION (LOW INPUT), Diagnostic Trouble Code (DTC) Detecting Criteria.> <Ref. to GD(H6DO)-179, DTC P1498 EGR SOLENOID VALVE SIGNAL #4 CIRCUIT MALFUNCTION (LOW INPUT), Diagnostic Trouble Code (DTC) Detecting Criteria.>

TROUBLE SYMPTOM:

- Improper idling
- Poor driving performance
- Engine breathing

CAUTION:

After repair or replacement of faulty parts, perform Clear Memory Mode <Ref. to EN(H6DO)(diag)-52, OPERATION, Clear Memory Mode.>, and Inspection Mode <Ref. to EN(H6DO)(diag)-44, PROCEDURE, Inspection Mode.>.

WIRING DIAGRAM:

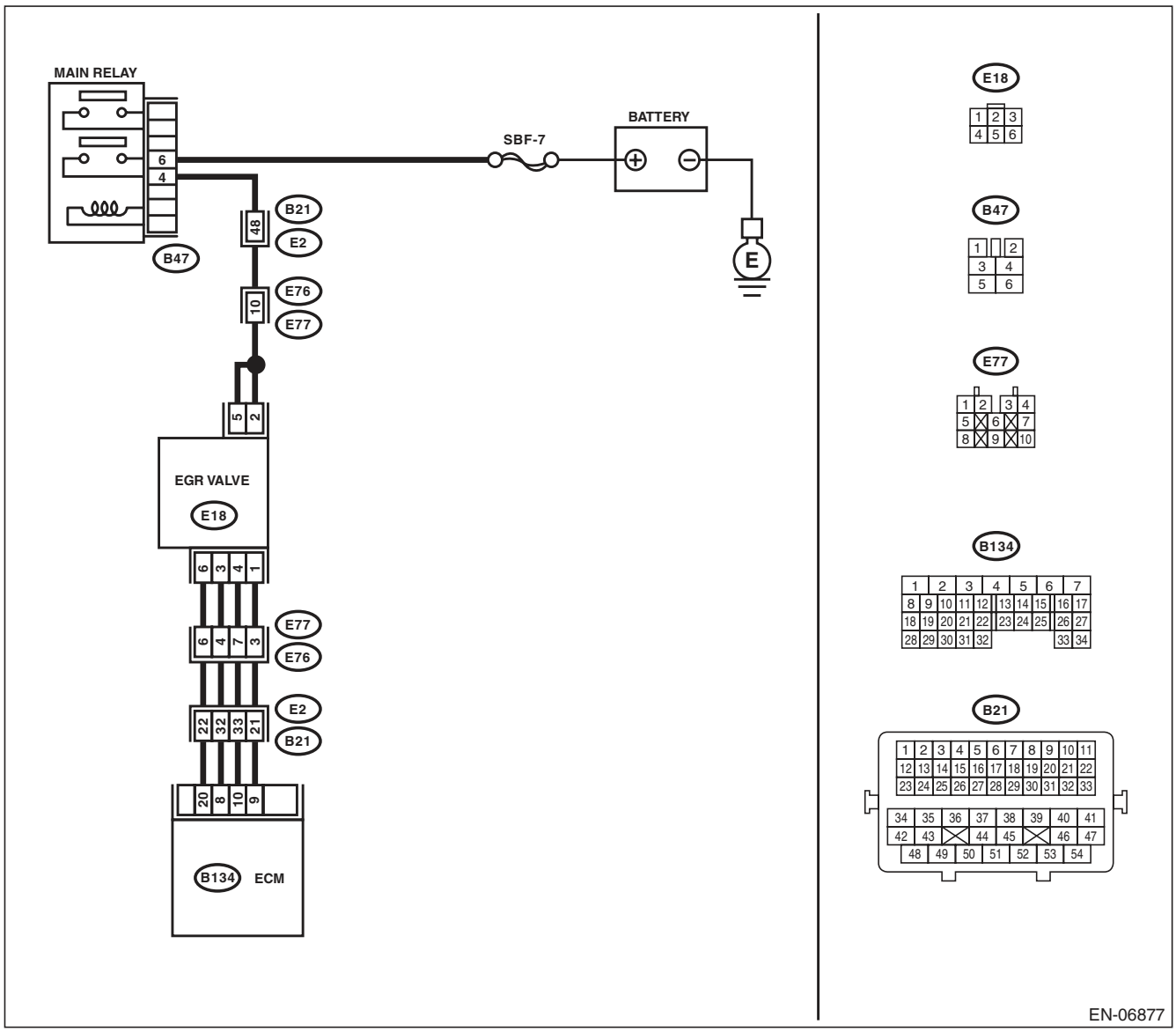

	Step	Check	Yes	No
1	**CHECK POWER SUPPLY TO EGR VALVE.** 1) Turn the ignition switch to OFF. 2) Disconnect the connector from EGR valve. 3) Turn the ignition switch to ON. 4) Measure the voltage between EGR valve connector and engine ground. ***Connector & terminal*** ***(E18) No. 2 (+) — Engine ground (–):*** ***(E18) No. 5 (+) — Engine ground (–):***	Is the voltage 10 V or more?	Go to step **2**.	Repair the harness and connector. NOTE: In this case, repair the following item: • Open circuit in harness between EGR valve connector and main relay connector • Poor contact of coupling connector
2	**CHECK HARNESS BETWEEN ECM AND EGR VALVE CONNECTOR.** 1) Turn the ignition switch to OFF. 2) Disconnect the connectors from ECM. 3) Measure the resistance of harness between ECM and EGR valve connector. ***Connector & terminal*** ***DTC P1492; (B134) No. 8 — (E18) No. 3:*** ***DTC P1494; (B134) No. 9 — (E18) No. 1:*** ***DTC P1496; (B134) No. 10 — (E18) No. 4:*** ***DTC P1498; (B134) No. 20 — (E18) No. 6:***	Is the resistance less than 1 Ω?	Go to step **3**.	Repair the harness and connector. NOTE: In this case, repair the following item: • Open circuit in harness between ECM and EGR valve connector • Poor contact of coupling connector
3	**CHECK HARNESS BETWEEN ECM AND EGR VALVE CONNECTOR.** 1) Disconnect the connectors from ECM. 2) Measure the resistance between ECM and chassis ground. ***Connector & terminal*** ***DTC P1492; (B134) No. 8 — Chassis ground:*** ***DTC P1494; (B134) No. 9 — Chassis ground:*** ***DTC P1496; (B134) No. 10 — Chassis ground:*** ***DTC P1498; (B134) No. 20 — Chassis ground:***	Is the resistance 1 MΩ or more?	Go to step **4**.	Repair the ground short in harness between ECM and EGR valve connector.
4	**CHECK POOR CONTACT.** Check poor contact of ECM and EGR valve connectors.	Is there poor contact in ECM or EGR valve connector?	Repair the poor contact in ECM or EGR valve connector.	Replace the EGR valve. <Ref. to FU(H6DO)-27, EGR Valve.>

DQ:DTC P1499 EGR SOLENOID VALVE SIGNAL #4 CIRCUIT MALFUNCTION (HIGH INPUT)

DTC DETECTING CONDITION:

- Immediately at fault recognition
- GENERAL DESCRIPTION <Ref. to GD(H6DO)-177, DTC P1493 EGR SOLENOID VALVE SIGNAL #1 CIRCUIT MALFUNCTION (HIGH INPUT), Diagnostic Trouble Code (DTC) Detecting Criteria.> <Ref. to GD(H6DO)-179, DTC P1495 EGR SOLENOID VALVE SIGNAL #2 CIRCUIT MALFUNCTION (HIGH INPUT), Diagnostic Trouble Code (DTC) Detecting Criteria.> <Ref. to GD(H6DO)-179, DTC P1497 EGR SOLENOID VALVE SIGNAL #3 CIRCUIT MALFUNCTION (HIGH INPUT), Diagnostic Trouble Code (DTC) Detecting Criteria.> <Ref. to GD(H6DO)-179, DTC P1499 EGR SOLENOID VALVE SIGNAL #4 CIRCUIT MALFUNCTION (HIGH INPUT), Diagnostic Trouble Code (DTC) Detecting Criteria.>

TROUBLE SYMPTOM:

- Improper idling
- Poor driving performance
- Engine breathing

CAUTION:

After repair or replacement of faulty parts, perform Clear Memory Mode <Ref. to EN(H6DO)(diag)-52, OPERATION, Clear Memory Mode.>, and Inspection Mode <Ref. to EN(H6DO)(diag)-44, PROCEDURE, Inspection Mode.>.

WIRING DIAGRAM:

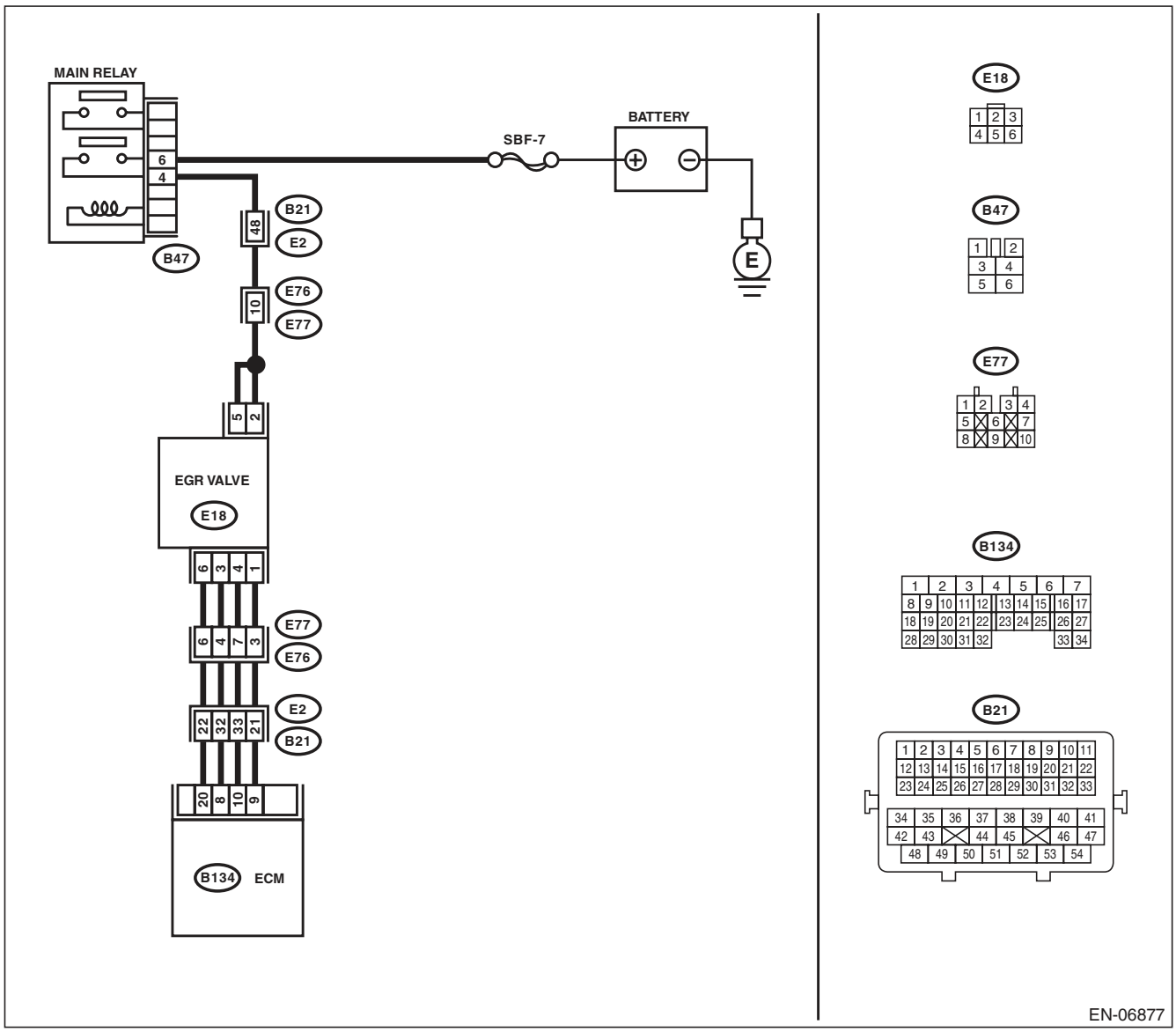

Step	Check	Yes	No
1 **CHECK HARNESS BETWEEN ECM AND EGR VALVE CONNECTOR.** 1) Turn the ignition switch to OFF. 2) Disconnect the connector from EGR valve. 3) Turn the ignition switch to ON. 4) Measure the voltage between ECM and chassis ground. ***Connector & terminal*** ***DTC P1493; (B134) No. 8 (+) — Chassis ground (–):*** ***DTC P1495; (B134) No. 9 (+) — Chassis ground (–):*** ***DTC P1497; (B134) No. 10 (+) — Chassis ground (–):*** ***DTC P1499; (B134) No. 20 (+) — Chassis ground (–):***	Is the voltage 10 V or more?	Repair the power supply short circuit of harness between ECM and EGR valve connector.	Repair the poor contact of ECM connector.

DR:DTC P1560 BACK-UP VOLTAGE CIRCUIT MALFUNCTION

DTC DETECTING CONDITION:

- Immediately at fault recognition
- GENERAL DESCRIPTION <Ref. to GD(H6DO)-180, DTC P1560 BACK-UP VOLTAGE CIRCUIT MALFUNCTION, Diagnostic Trouble Code (DTC) Detecting Criteria.>

CAUTION:

After repair or replacement of faulty parts, perform Clear Memory Mode <Ref. to EN(H6DO)(diag)-52, OPERATION, Clear Memory Mode.>, and Inspection Mode <Ref. to EN(H6DO)(diag)-44, PROCEDURE, Inspection Mode.>.

WIRING DIAGRAM:

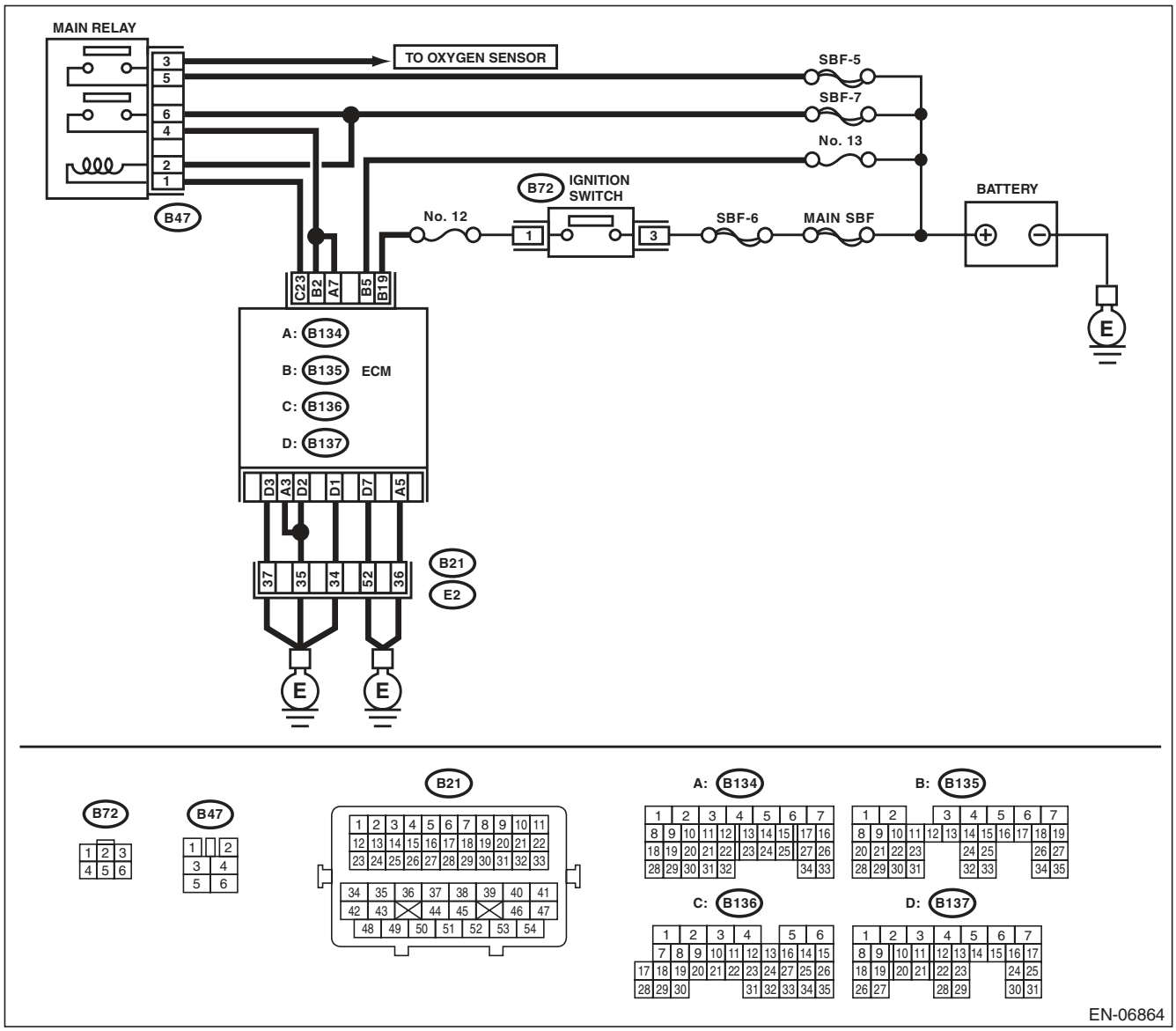

Step		Check	Yes	No
1	**CHECK INPUT SIGNAL OF ECM.** 1) Turn the ignition switch to OFF. 2) Measure the voltage between ECM and chassis ground. ***Connector & terminal*** ***(B135) No. 5 (+) — Chassis ground (–):***	Is the voltage 10 V or more?	Repair the poor contact of ECM connector.	Go to step **2**.
2	**CHECK HARNESS BETWEEN ECM AND MAIN FUSE BOX CONNECTOR.** 1) Disconnect the connectors from ECM. 2) Measure the resistance between ECM and chassis ground. ***Connector & terminal*** ***(B135) No. 5 — Chassis ground:***	Is the resistance 1 MΩ or more?	Go to step **3**.	Repair the ground short circuit of harness between ECM and battery terminal.
3	**CHECK FUSE NO. 13.**	Is the fuse blown out?	Replace the fuse.	Repair the harness and connector. NOTE: In this case, repair the following item: • Open circuit in harness between ECM and battery • Poor contact in ECM connector • Poor contact of battery terminal

DS:DTC P1602 CONTROL MODULE PROGRAMMING ERROR

DTC DETECTING CONDITION:

- Two consecutive driving cycles with fault
- GENERAL DESCRIPTION <Ref. to GD(H6DO)-182, DTC P1602 CONTROL MODULE PROGRAMMING ERROR, Diagnostic Trouble Code (DTC) Detecting Criteria.>

TROUBLE SYMPTOM:

- Engine keeps running at higher speed than specified idle speed.
- Engine keeps running at a lower speed than the specified idle speed.
- Engine stalls.

CAUTION:

After repair or replacement of faulty parts, perform Clear Memory Mode <Ref. to EN(H6DO)(diag)-52, OPERATION, Clear Memory Mode.>, and Inspection Mode <Ref. to EN(H6DO)(diag)-44, PROCEDURE, Inspection Mode.>.

WIRING DIAGRAM:

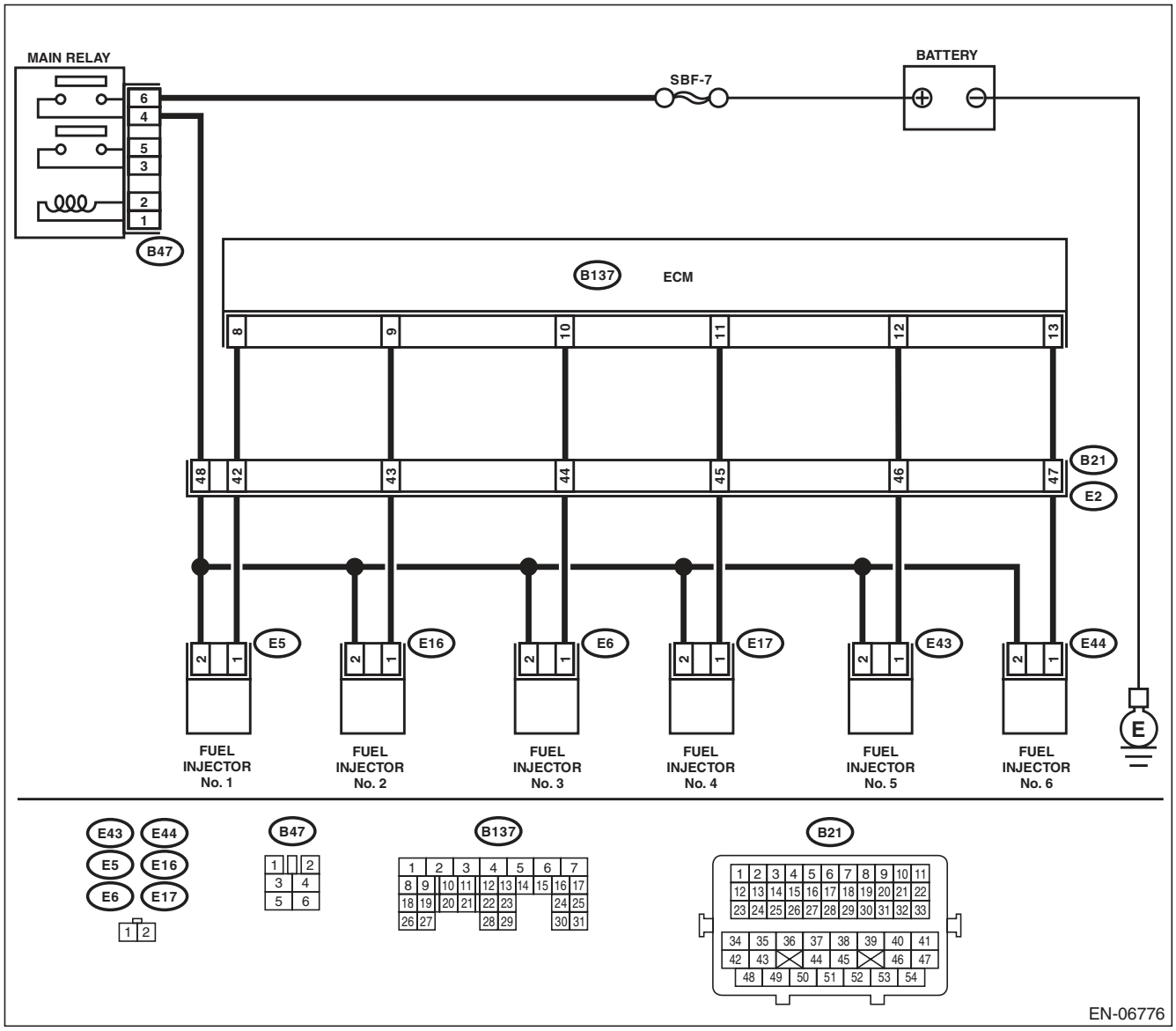

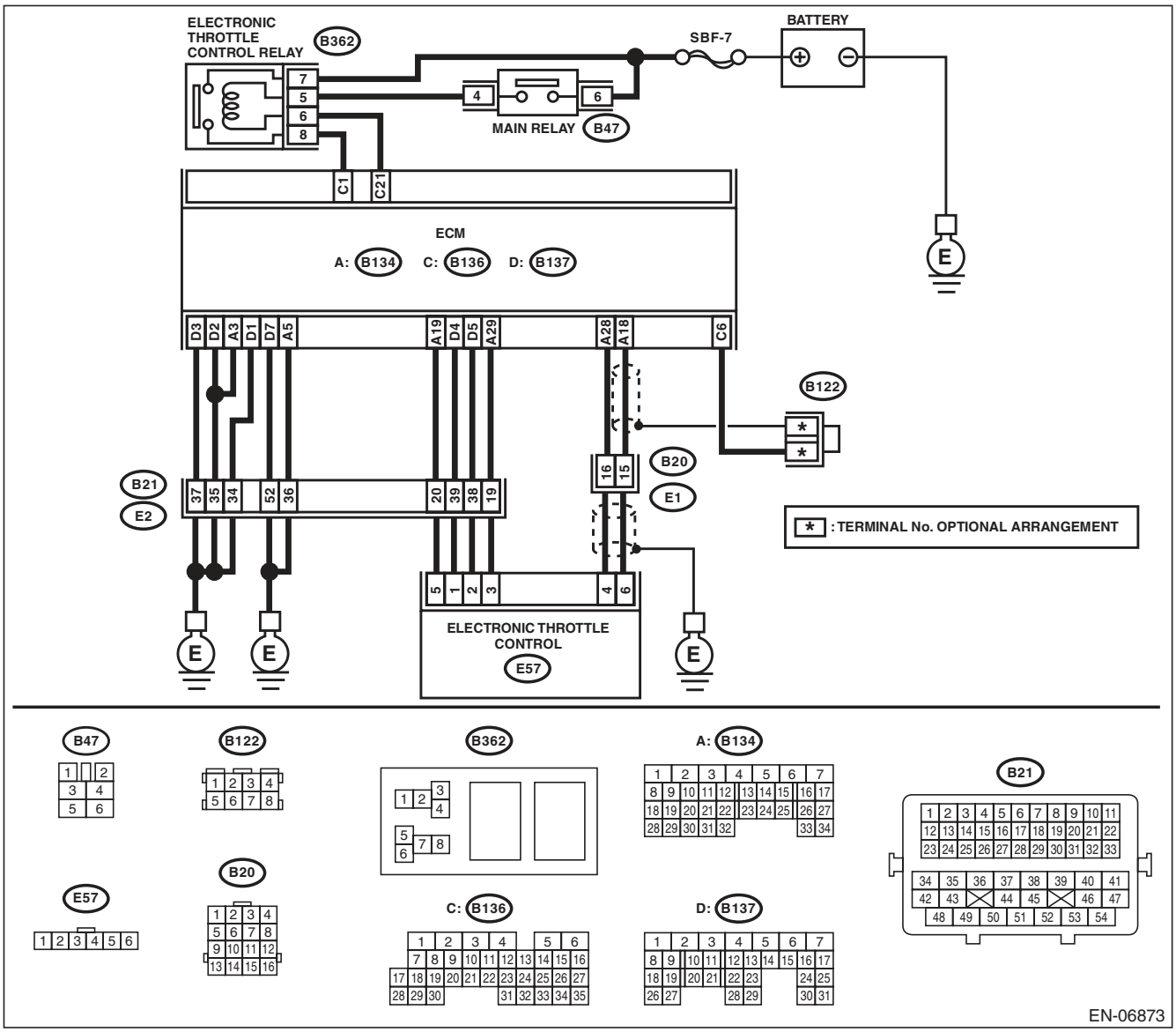

Step		Check	Yes	No
1	**CHECK FOR ANY OTHER DTC ON DISPLAY.**	Is any other DTC displayed?	Check the appropriate DTC using the “List of Diagnostic Trouble Code (DTC)”. <Ref. to EN(H6DO)(diag)-81, List of Diagnostic Trouble Code (DTC).>	Go to step **2**.
2	**CHECK ENGINE OIL.**	Is there a proper amount of engine oil?	Go to step **3**.	Replace engine oil. <Ref. to LU(H6DO)-8, REPLACEMENT, Engine Oil.>
3	**CHECK EXHAUST SYSTEM.**	Are there holes or loose bolts on exhaust system?	Repair the exhaust system.	Go to step **4**.

	Step	Check	Yes	No
4	**CHECK AIR INTAKE SYSTEM.**	Are there holes, loose bolts or disconnection of hose on air intake system?	Repair the air intake system.	Go to step **5**.
5	**CHECK FUEL PRESSURE.** **WARNING:** **Place "NO OPEN FLAMES" signs near the working area.** **CAUTION:** **Be careful not to spill fuel.** Measure the fuel pressure. <Ref. to ME(H6DO)-27, INSPECTION, Fuel Pressure.> **CAUTION:** **Release fuel pressure before removing the fuel pressure gauge.**	Is the measured value 333 — 363 kPa (3.4 — 3.7 kgf/cm^2, 48 — 53 psi)?	Go to step **6**.	Repair the following item. Fuel pressure is too high: • Clogged fuel line or bent hose Fuel pressure is too low: • Improper fuel pump discharge • Clogged fuel line
6	**CHECK ENGINE COOLANT TEMPERATURE SENSOR.** 1) Start the engine and warm up completely. 2) Read the data of engine coolant temperature sensor signal using Subaru Select Monitor or general scan tool. NOTE: • SUBARU SELECT MONITOR For detailed operation procedure, refer to "READ CURRENT DATA FOR ENGINE". <Ref. to EN(H6DO)(diag)-34, Subaru Select Monitor.> • General Scan Tool For detailed operation procedures, refer to the general scan tool operation manual.	Is the engine coolant temperature 75°C (167°F) or higher?	Go to step **7**.	Replace the engine coolant temperature sensor. <Ref. to FU(H6DO)-20, Engine Coolant Temperature Sensor.>
7	**CHECK MASS AIR FLOW AND INTAKE AIR TEMPERATURE SENSOR.** 1) Start the engine and warm up engine until coolant temperature is higher than 75°C (167°F). 2) Place the select lever in "P" range or "N" range. 3) Turn the A/C switch to OFF. 4) Turn all the accessory switches to OFF. 5) Read the data of the mass air flow and intake air temperature sensor signal using Subaru Select Monitor or general scan tool. NOTE: • SUBARU SELECT MONITOR For detailed operation procedure, refer to "READ CURRENT DATA FOR ENGINE". <Ref. to EN(H6DO)(diag)-34, Subaru Select Monitor.> • General Scan Tool For detailed operation procedures, refer to the general scan tool operation manual.	Is the measured value 2.0 — 5.0 g/s (0.26 — 0.66 lb/m)?	Go to step **8**.	Replace the mass air flow and intake air temperature sensor. <Ref. to FU(H6DO)-26, Mass Air Flow and Intake Air Temperature Sensor.>

	Step	Check	Yes	No
8	**CHECK MASS AIR FLOW AND INTAKE AIR TEMPERATURE SENSOR.** 1) Start the engine and warm up engine until coolant temperature is higher than 75°C (167°F). 2) Place the select lever in “P” range or “N” range. 3) Turn the A/C switch to OFF. 4) Turn all the accessory switches to OFF. 5) Open the front hood. 6) Measure the ambient temperature. 7) Read the data of the mass air flow and intake air temperature sensor signal using Subaru Select Monitor or general scan tool. NOTE: • SUBARU SELECT MONITOR For detailed operation procedure, refer to “READ CURRENT DATA FOR ENGINE”. <Ref. to EN(H6DO)(diag)-34, Subaru Select Monitor.> • General Scan Tool For detailed operation procedures, refer to the general scan tool operation manual.	Subtract ambient temperature from intake air temperature. Is the obtained value –10 — 50°C (–18 — 90°F)?	Go to step **9**.	Check the mass air flow and intake air temperature sensor. <Ref. to FU(H6DO)-26, Mass Air Flow and Intake Air Temperature Sensor.>
9	**CHECK OUTPUT SIGNAL OF ECM.** 1) Turn the ignition switch to ON. 2) Measure the voltage between ECM and chassis ground on faulty cylinders. ***Connector & terminal*** ***#1 (B137) No. 8 (+) — Chassis ground (–):*** ***#2 (B137) No. 9 (+) — Chassis ground (–):*** ***#3 (B137) No. 10 (+) — Chassis ground (–):*** ***#4 (B137) No. 11 (+) — Chassis ground (–):*** ***#5 (B137) No. 12 (+) — Chassis ground (–):*** ***#6 (B137) No. 13 (+) — Chassis ground (–):***	Is the voltage 10 V or more?	Go to step **14**.	Go to step **10**.
10	**CHECK HARNESS BETWEEN ECM AND FUEL INJECTOR.** 1) Turn the ignition switch to OFF. 2) Disconnect the connector from fuel injector on faulty cylinders. 3) Measure the resistance between fuel injector connector and engine ground on faulty cylinders. ***Connector & terminal*** ***#1 (E5) No. 1 — Engine ground:*** ***#2 (E16) No. 1 — Engine ground:*** ***#3 (E6) No. 1 — Engine ground:*** ***#4 (E17) No. 1 — Engine ground:*** ***#5 (E43) No. 1 — Engine ground:*** ***#6 (E44) No. 1 — Engine ground:***	Is the resistance 1 MΩ or more?	Go to step **11**.	Repair the ground short circuit of harness between ECM and fuel injector.
11	**CHECK HARNESS BETWEEN ECM AND FUEL INJECTOR.** Measure the resistance of harness between ECM and fuel injector on faulty cylinders. ***Connector & terminal*** ***#1 (B137) No. 8 — (E5) No. 1:*** ***#2 (B137) No. 9 — (E16) No. 1:*** ***#3 (B137) No. 10 — (E6) No. 1:*** ***#4 (B137) No. 11 — (E17) No. 1:*** ***#5 (B137) No. 12 — (E43) No. 1:*** ***#6 (B137) No. 13 — (E44) No. 1:***	Is the resistance less than 1 Ω?	Go to step **12**.	Repair the harness and connector. NOTE: In this case, repair the following item: • Open circuit of harness between ECM and fuel injector connector • Poor contact of coupling connector

	Step	Check	Yes	No
12	**CHECK FUEL INJECTOR.** Measure the resistance between fuel injector terminals on faulty cylinder. ***Terminals*** ***No. 1 — No. 2:***	Is the resistance between 5 — 20 Ω?	Go to step **13**.	Replace the faulty fuel injector. <Ref. to FU(H6DO)-28, Fuel Injector.>
13	**CHECK POWER SUPPLY LINE.** 1) Turn the ignition switch to ON. 2) Measure the voltage between fuel injector and engine ground on faulty cylinders. ***Connector & terminal*** ***#1 (E5) No. 2 (+) — Engine ground (–):*** ***#2 (E16) No. 2 (+) — Engine ground (–):*** ***#3 (E6) No. 2 (+) — Engine ground (–):*** ***#4 (E17) No. 2 (+) — Engine ground (–):*** ***#5 (E43) No. 2 (+) — Engine ground (–):*** ***#6 (E44) No. 2 (+) — Engine ground (–):***	Is the voltage 10 V or more?	Repair the poor contact of all connectors in fuel injector circuit.	Repair the harness and connector. NOTE: In this case, repair the following item: • Open circuit in harness between the main relay and fuel injector on faulty cylinders • Poor contact of coupling connector • Poor contact of main relay connector
14	**CHECK HARNESS BETWEEN ECM AND FUEL INJECTOR.** 1) Turn the ignition switch to OFF. 2) Disconnect the connector from fuel injector on faulty cylinders. 3) Turn the ignition switch to ON. 4) Measure the voltage between ECM and chassis ground on faulty cylinders. ***Connector & terminal*** ***#1 (B137) No. 8 (+) — Chassis ground (–):*** ***#2 (B137) No. 9 (+) — Chassis ground (–):*** ***#3 (B137) No. 10 (+) — Chassis ground (–):*** ***#4 (B137) No. 11 (+) — Chassis ground (–):*** ***#5 (B137) No. 12 (+) — Chassis ground (–):*** ***#6 (B137) No. 13 (+) — Chassis ground (–):***	Is the voltage 10 V or more?	Repair the short circuit to power in the harness between the ECM and fuel injector.	Go to step **15**.
15	**CHECK FUEL INJECTOR.** 1) Turn the ignition switch to OFF. 2) Measure the resistance between fuel injector terminals on faulty cylinder. ***Terminals*** ***No. 1 — No. 2:***	Is the resistance less than 1 Ω?	Replace the faulty fuel injector. <Ref. to FU(H6DO)-28, Fuel Injector.>	Go to step **16**.
16	**CHECK INSTALLATION OF CAMSHAFT POSITION SENSOR/CRANKSHAFT POSITION SENSOR.**	Is the camshaft position sensor or crankshaft position sensor loosely installed?	Tighten the camshaft position sensor or crankshaft position sensor.	Go to step **17**.
17	**CHECK CRANK PLATE.**	Is the crank sprocket rusted or the teeth of crank plate broken?	Replace the crank plate. <Ref. to ME(H6DO)-64, Cylinder Block.>	Go to step **18**.
18	**CHECK INSTALLATION CONDITION OF TIMING CHAIN.** Turn the crankshaft using ST, and align the alignment mark on crank sprocket with alignment mark on cylinder block. ST 18252AA000 CRANKSHAFT SOCKET	Is the timing chain dislocated from its proper position?	Correct the installation condition of timing chain. <Ref. to ME(H6DO)-46, Timing Chain Assembly.>	Go to step **19**.

	Step	Check	Yes	No
19	**CHECK ELECTRONIC THROTTLE CONTROL RELAY.** 1) Turn the ignition switch to OFF. 2) Remove the electronic throttle control relay. 3) Connect the battery to terminals No. 5 and No. 6 of electronic throttle control relay. 4) Measure the resistance between electronic throttle control relay terminals. ***Terminals*** ***No. 7 — No. 8:***	Is the resistance less than 1 Ω?	Go to step **20**.	Replace the electronic throttle control relay. <Ref. to EN(H6DO)(diag)-8, Electrical Component Location.>
20	**CHECK POWER SUPPLY OF ELECTRONIC THROTTLE CONTROL RELAY.** Measure the voltage between electronic throttle control relay connector and chassis ground. ***Connector & terminal*** ***(B362) No. 7 (+) — Chassis ground (–):***	Is the voltage 10 V or more?	Go to step **21**.	Repair the open or ground short circuit of power supply circuit.
21	**CHECK HARNESS BETWEEN ECM AND ELECTRONIC THROTTLE CONTROL RELAY.** 1) Disconnect the connectors from ECM. 2) Turn the ignition switch to ON. 3) Measure the voltage between electronic throttle control relay connector and chassis ground. ***Connector & terminal*** ***(B362) No. 6 (+) — Chassis ground (–):***	Is the voltage 10 V or more?	Repair the short circuit to power in harness between ECM and electronic throttle control relay.	Go to step **22**.
22	**CHECK HARNESS BETWEEN ECM AND ELECTRONIC THROTTLE CONTROL RELAY.** 1) Turn the ignition switch to OFF. 2) Measure the resistance between electronic throttle control relay connector and chassis ground. ***Connector & terminal*** ***(B362) No. 6 — Chassis ground:*** ***(B362) No. 8 — Chassis ground:***	Is the resistance 1 MΩ or more?	Go to step **23**.	Repair the ground short circuit of harness between ECM and electronic throttle control relay.
23	**CHECK HARNESS BETWEEN ECM AND ELECTRONIC THROTTLE CONTROL RELAY.** Measure the resistance between ECM and electronic throttle control relay connector. ***Connector & terminal*** ***(B136) No. 21 — (B362) No. 6:*** ***(B136) No. 1 — (B362) No. 8:***	Is the resistance less than 1 Ω?	Go to step **24**.	Repair the open circuit of harness between ECM and electronic throttle control relay.
24	**CHECK HARNESS BETWEEN ECM AND ELECTRONIC THROTTLE CONTROL.** 1) Turn the ignition switch to OFF. 2) Disconnect the connectors from ECM and electronic throttle control. 3) Measure the resistance between ECM and chassis ground. ***Connector & terminal*** ***(B134) No. 19 — Chassis ground:*** ***(B134) No. 18 — Chassis ground:*** ***(B134) No. 18 — (B136) No. 6:*** ***(B134) No. 28 — Chassis ground:***	Is the resistance 1 MΩ or more?	Go to step **25**.	Repair the short circuit to ground in harness between ECM and electronic throttle control connector.

	Step	Check	Yes	No
25	**CHECK SHORT CIRCUIT INSIDE THE ECM.** 1) Connect the connector to ECM. 2) Measure the resistance between electronic throttle control connector and engine ground. ***Connector & terminal*** ***(E57) No. 6 — Engine ground:*** ***(E57) No. 4 — Engine ground:***	Is the resistance 1 MΩ or more?	Go to step **26**.	Repair the short circuit to ground in harness between ECM and electronic throttle control connector. Replace the ECM if defective. <Ref. to FU(H6DO)-38, Engine Control Module (ECM).>
26	**CHECK HARNESS BETWEEN ECM AND ELECTRONIC THROTTLE CONTROL.** 1) Disconnect the connectors from ECM. 2) Measure the resistance of harness between ECM and electronic throttle control connector. ***Connector & terminal*** ***(B134) No. 18 — (E57) No. 6:*** ***(B134) No. 28 — (E57) No. 4:*** ***(B134) No. 29 — (E57) No. 3:***	Is the resistance less than 1 Ω?	Go to step **27**.	Repair the harness and connector. NOTE: In this case, repair the following item: • Open circuit in harness between ECM and electronic throttle control connector • Poor contact of coupling connector
27	**CHECK HARNESS BETWEEN ECM AND ELECTRONIC THROTTLE CONTROL.** 1) Connect the connector to ECM. 2) Measure the resistance between electronic throttle control connector and engine ground. ***Connector & terminal*** ***(E57) No. 3 — Engine ground:***	Is the resistance less than 5 Ω?	Go to step **28**.	Repair the harness and connector. NOTE: In this case, repair the following item: • Open circuit of harness between ECM and engine ground • Poor contact in ECM connector • Poor contact of coupling connector
28	**CHECK HARNESS BETWEEN ECM AND ELECTRONIC THROTTLE CONTROL.** 1) Turn the ignition switch to ON. 2) Measure the voltage between electronic throttle control connector and engine ground. ***Connector & terminal*** ***(E57) No. 6 (+) — Engine ground (–):*** ***(E57) No. 4 (+) — Engine ground (–):***	Is the voltage 4.85 V or more?	Repair the short circuit to power in the harness between ECM and electronic throttle control connector.	Go to step **29**.
29	**CHECK HARNESS BETWEEN ECM AND ELECTRONIC THROTTLE CONTROL.** 1) Turn the ignition switch to OFF. 2) Disconnect the connectors from ECM. 3) Measure the resistance between ECM connectors. ***Connector & terminal*** ***(B134) No. 19 — (B134) No. 18:*** ***(B134) No. 19 — (B134) No. 28:***	Is the resistance 1 MΩ or more?	Go to step **30**.	Repair the short circuit to power in the harness between ECM and electronic throttle control connector.

	Step	Check	Yes	No
30	**CHECK SENSOR OUTPUT.** 1) Connect all connectors. 2) Turn the ignition switch to ON. 3) Read the data of main throttle sensor signal using Subaru Select Monitor. NOTE: For detailed operation procedure, refer to "READ CURRENT DATA FOR ENGINE". <Ref. to EN(H6DO)(diag)-34, Subaru Select Monitor.>	Is the voltage 0.81 — 0.87 V?	Go to step **31**.	Repair poor contact of the electronic throttle control connector. Replace the electronic throttle control if defective. <Ref. to FU(H6DO)-13, Throttle Body.>
31	**CHECK SENSOR OUTPUT.** Read the data of sub throttle sensor signal using Subaru Select Monitor. NOTE: SUBARU SELECT MONITOR For detailed operation procedure, refer to "READ CURRENT DATA FOR ENGINE". <Ref. to EN(H6DO)(diag)-34, Subaru Select Monitor.>	Is the voltage 1.64 — 1.70 V?	Go to step **32**.	Repair poor contact of the electronic throttle control connector. Replace the electronic throttle control if defective. <Ref. to FU(H6DO)-13, Throttle Body.>
32	**CHECK HARNESS BETWEEN ECM AND ELECTRONIC THROTTLE CONTROL MOTOR.** 1) Turn the ignition switch to OFF. 2) Disconnect the connectors from ECM and electronic throttle control. 3) Measure the resistance between ECM and electronic throttle control connector. ***Connector & terminal*** ***(B137) No. 5 — (E57) No. 2:*** ***(B137) No. 4 — (E57) No. 1:***	Is the resistance less than 1 Ω?	Go to step **33**.	Repair the harness and connector. NOTE: In this case, repair the following item: • Open circuit in harness between ECM and electronic throttle control • Poor contact of coupling connector
33	**CHECK HARNESS BETWEEN ECM AND ELECTRONIC THROTTLE CONTROL MOTOR.** 1) Connect the connector to ECM. 2) Turn the ignition switch to ON. 3) Measure the voltage between electronic throttle control connector and engine ground. ***Connector & terminal*** ***(E57) No. 2 (+) — Engine ground (–):*** ***(E57) No. 1 (+) — Engine ground (–):***	Is the voltage 5 V or more?	Repair the short circuit to power in the harness between ECM and electronic throttle control.	Go to step **34**.
34	**CHECK HARNESS BETWEEN ECM AND ELECTRONIC THROTTLE CONTROL MOTOR.** 1) Turn the ignition switch to OFF. 2) Disconnect the connectors from ECM. 3) Measure the resistance between electronic throttle control connector and engine ground. ***Connector & terminal*** ***(E57) No. 2 — Engine ground:*** ***(E57) No. 1 — Engine ground:***	Is the resistance 1 MΩ or more?	Go to step **35**.	Repair the short circuit to ground in harness between ECM and electronic throttle control.
35	**CHECK ELECTRONIC THROTTLE CONTROL MOTOR HARNESS.** Measure the resistance between the electronic throttle control connector terminals. ***Connector & terminal*** ***(E57) No. 2 — (E57) No. 1:***	Is the resistance 1 MΩ or more?	Go to step **36**.	Repair the short circuit of harness between ECM and electronic throttle control.

	Step	Check	Yes	No
36	**CHECK ELECTRONIC THROTTLE CONTROL GROUND CIRCUIT.** Measure the resistance between ECM and chassis ground. ***Connector & terminal*** ***(B134) No. 3 — Chassis ground:*** ***(B134) No. 5 — Chassis ground:*** ***(B137) No. 1 — Chassis ground:*** ***(B137) No. 2 — Chassis ground:*** ***(B137) No. 3 — Chassis ground:*** ***(B137) No. 7 — Chassis ground:***	Is the resistance less than 5 Ω?	Go to step **37**.	Repair the harness and connector. NOTE: In this case, repair the following item: • Open circuit of harness between ECM and engine ground • Poor contact of coupling connector
37	**CHECK ELECTRONIC THROTTLE CONTROL.** Measure the resistance between electronic throttle control terminals. ***Terminals*** ***No. 2 — No. 1:***	Is the resistance 50 Ω or less?	Go to step **38**.	Replace the electronic throttle control. <Ref. to FU(H6DO)-13, Throttle Body.>
38	**CHECK ELECTRONIC THROTTLE CONTROL.** Move the throttle valve to the fully open and fully closed positions with fingers. Check that the valve returns to the specified position when releasing fingers.	Does the valve return to the specified position? Standard value: 3 mm (0.12 in) from fully closed position	Repair the poor contact of ECM connector.	Replace the electronic throttle control. <Ref. to FU(H6DO)-13, Throttle Body.>

DT:DTC P2088 INTAKE CAMSHAFT POSITION ACTUATOR CONTROL CIRCUIT LOW (BANK 1)

DTC DETECTING CONDITION:

- Immediately at fault recognition
- GENERAL DESCRIPTION <Ref. to GD(H6DO)-184, DTC P2088 INTAKE CAMSHAFT POSITION ACTUATOR CONTROL CIRCUIT LOW (BANK 1), Diagnostic Trouble Code (DTC) Detecting Criteria.>

TROUBLE SYMPTOM:

Improper idling

CAUTION:

After repair or replacement of faulty parts, perform Clear Memory Mode <Ref. to EN(H6DO)(diag)-52, OPERATION, Clear Memory Mode.>, and Inspection Mode <Ref. to EN(H6DO)(diag)-44, PROCEDURE, Inspection Mode.>.

WIRING DIAGRAM:

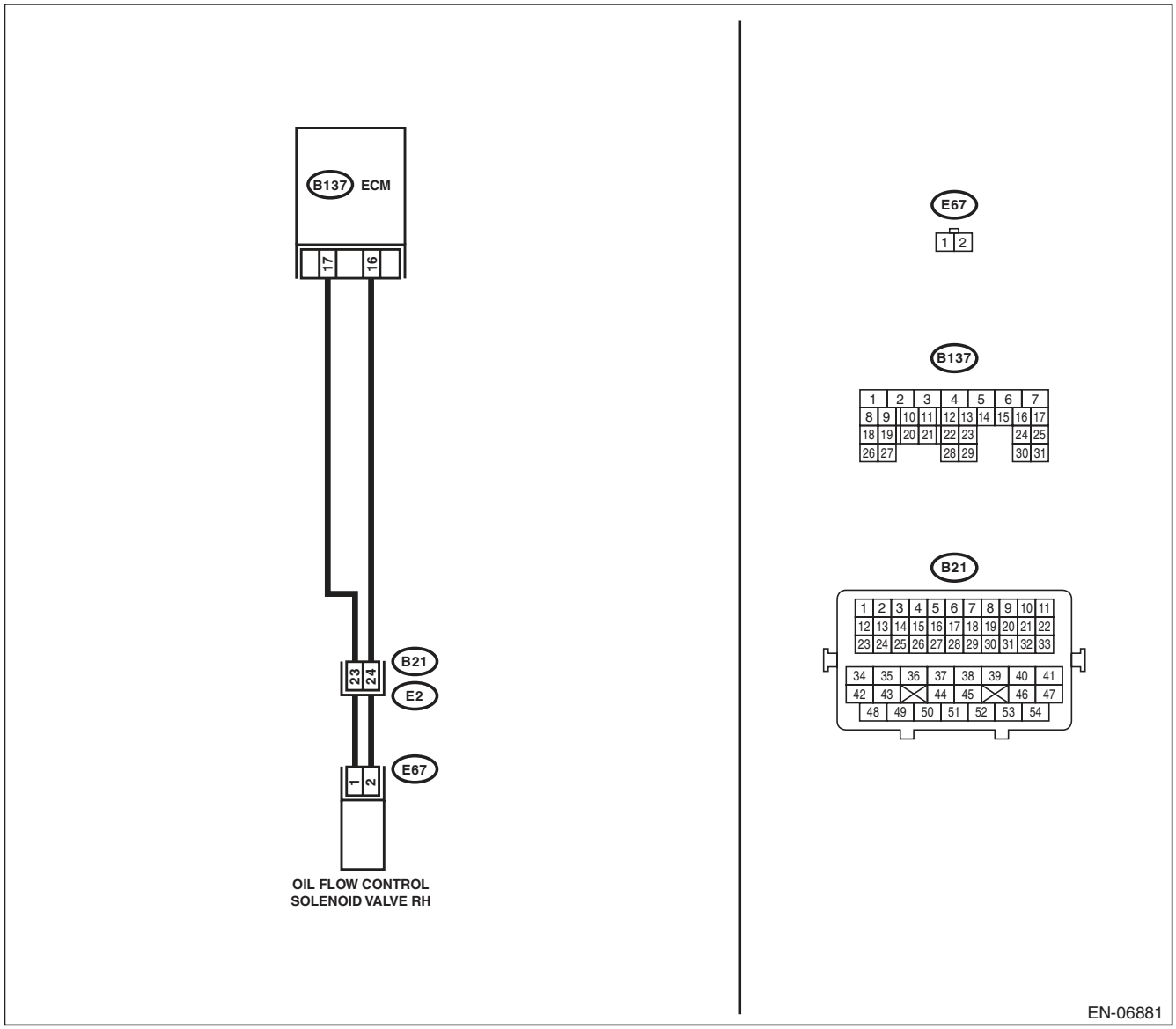

	Step	Check	Yes	No
1	**CHECK HARNESS BETWEEN ECM AND OIL FLOW CONTROL SOLENOID VALVE.** 1) Turn the ignition switch to OFF. 2) Disconnect the connectors from ECM and oil flow control solenoid valve. 3) Measure the resistance of harness between ECM and oil flow control solenoid valve. ***Connector & terminal*** ***(B137) No. 17 — (E67) No. 1:*** ***(B137) No. 16 — (E67) No. 2:***	Is the resistance less than 1 Ω?	Go to step **2**.	Repair the harness and connector. NOTE: In this case, repair the following item: • Open circuit of the harness between the ECM and oil flow control solenoid valve connector • Poor contact of coupling connector
2	**CHECK HARNESS BETWEEN ECM AND OIL FLOW CONTROL SOLENOID VALVE.** Measure the resistance between ECM and chassis ground. ***Connector & terminal*** ***(B137) No. 17 — Chassis ground:*** ***(B137) No. 16 — Chassis ground:***	Is the resistance 1 MΩ or more?	Go to step **3**.	Repair the short circuit to ground in harness between ECM and oil flow control solenoid valve connector.
3	**CHECK OIL FLOW CONTROL SOLENOID VALVE.** Measure the resistance between oil flow control solenoid valve terminals. ***Terminals*** ***No. 1 — No. 2:***	Is the resistance between 6 — 12 Ω?	Repair the poor contact of ECM and oil flow control solenoid valve connector.	Replace the oil flow control solenoid valve. <Ref. to ME(H6DO)-55, Camshaft.>

DU:DTC P2089 INTAKE CAMSHAFT POSITION ACTUATOR CONTROL CIRCUIT HIGH (BANK 1)

DTC DETECTING CONDITION:

- Immediately at fault recognition
- GENERAL DESCRIPTION <Ref. to GD(H6DO)-185, DTC P2089 INTAKE CAMSHAFT POSITION ACTUATOR CONTROL CIRCUIT HIGH (BANK 1), Diagnostic Trouble Code (DTC) Detecting Criteria.>

TROUBLE SYMPTOM:

Improper idling

CAUTION:

After repair or replacement of faulty parts, perform Clear Memory Mode <Ref. to EN(H6DO)(diag)-52, OPERATION, Clear Memory Mode.>, and Inspection Mode <Ref. to EN(H6DO)(diag)-44, PROCEDURE, Inspection Mode.>.

WIRING DIAGRAM:

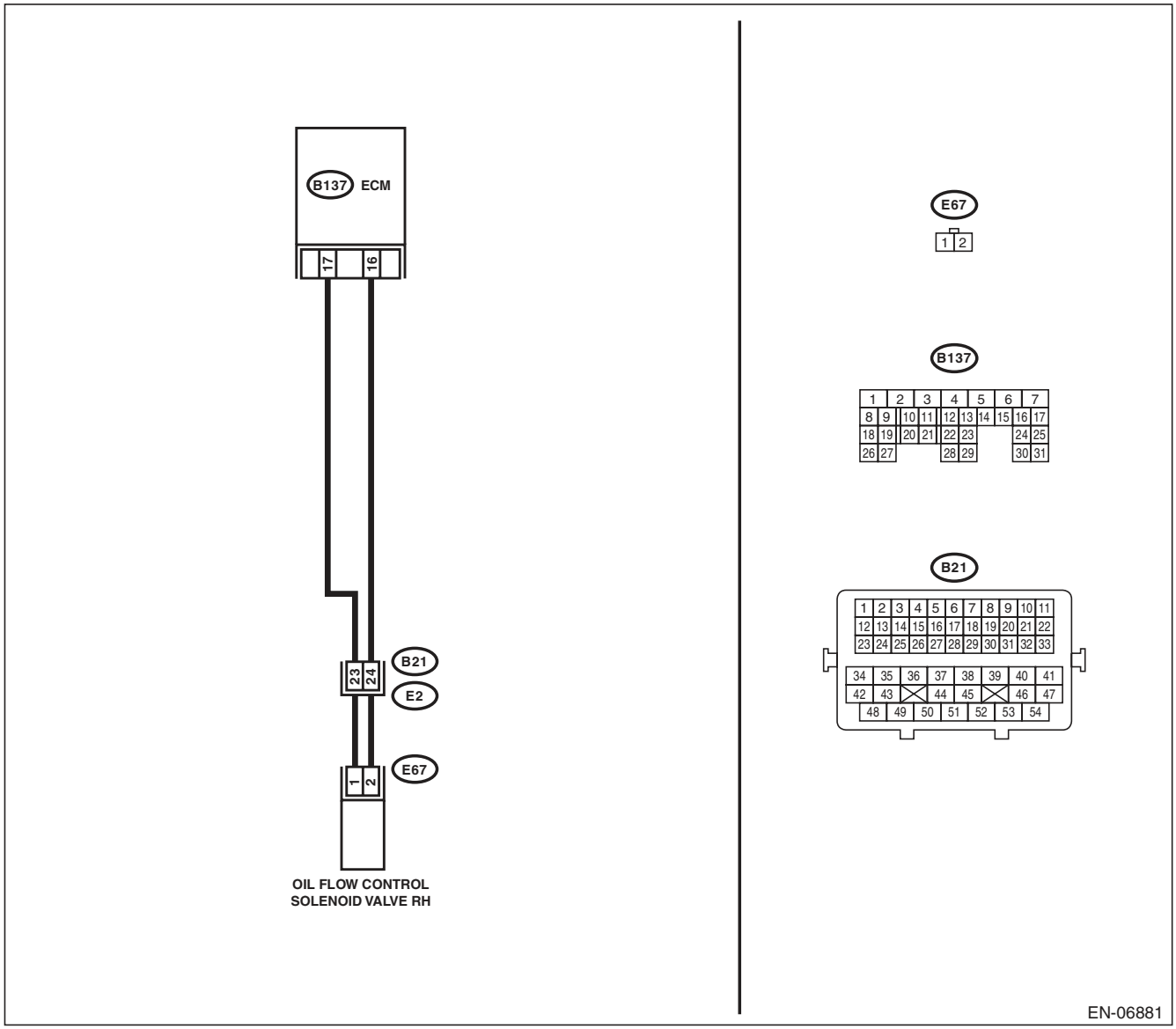

	Step	Check	Yes	No
1	**CHECK HARNESS BETWEEN ECM AND OIL FLOW CONTROL SOLENOID VALVE.** 1) Turn the ignition switch to OFF. 2) Disconnect the connectors from ECM and oil flow control solenoid valve. 3) Measure the voltage between ECM and chassis ground. ***Connector & terminal*** ***(B137) No. 17 (+) — Chassis ground (–):*** ***(B137) No. 16 (+) — Chassis ground (–):***	Is the voltage less than 1 V?	Go to step **2**.	Repair the short circuit to power in harness between ECM and oil flow control solenoid valve connector.
2	**CHECK HARNESS BETWEEN ECM AND OIL FLOW CONTROL SOLENOID VALVE.** Measure the resistance of harness between ECM and oil flow control solenoid valve connector. ***Connector & terminal*** ***(B137) No. 17 — (E67) No. 1:*** ***(B137) No. 16 — (E67) No. 2:***	Is the resistance less than 1 Ω?	Go to step **3**.	Repair the harness and connector. NOTE: In this case, repair the following item: • Open circuit of the harness between the ECM and oil flow control solenoid valve connector • Poor contact of coupling connector
3	**CHECK OIL FLOW CONTROL SOLENOID VALVE.** Measure the resistance between oil flow control solenoid valve terminals. ***Terminals*** ***No. 1 — No. 2:***	Is the resistance between 6 — 12 Ω?	Repair the poor contact of ECM and oil flow control solenoid valve connector.	Replace the oil flow control solenoid valve. <Ref. to ME(H6DO)-55, Camshaft.>

DV:DTC P2092 INTAKE CAMSHAFT POSITION ACTUATOR CONTROL CIRCUIT LOW (BANK 2)

DTC DETECTING CONDITION:

- Immediately at fault recognition
- GENERAL DESCRIPTION <Ref. to GD(H6DO)-186, DTC P2092 INTAKE CAMSHAFT POSITION ACTUATOR CONTROL CIRCUIT LOW (BANK 2), Diagnostic Trouble Code (DTC) Detecting Criteria.>

TROUBLE SYMPTOM:

Improper idling

CAUTION:

After repair or replacement of faulty parts, perform Clear Memory Mode <Ref. to EN(H6DO)(diag)-52, OPERATION, Clear Memory Mode.>, and Inspection Mode <Ref. to EN(H6DO)(diag)-44, PROCEDURE, Inspection Mode.>.

WIRING DIAGRAM:

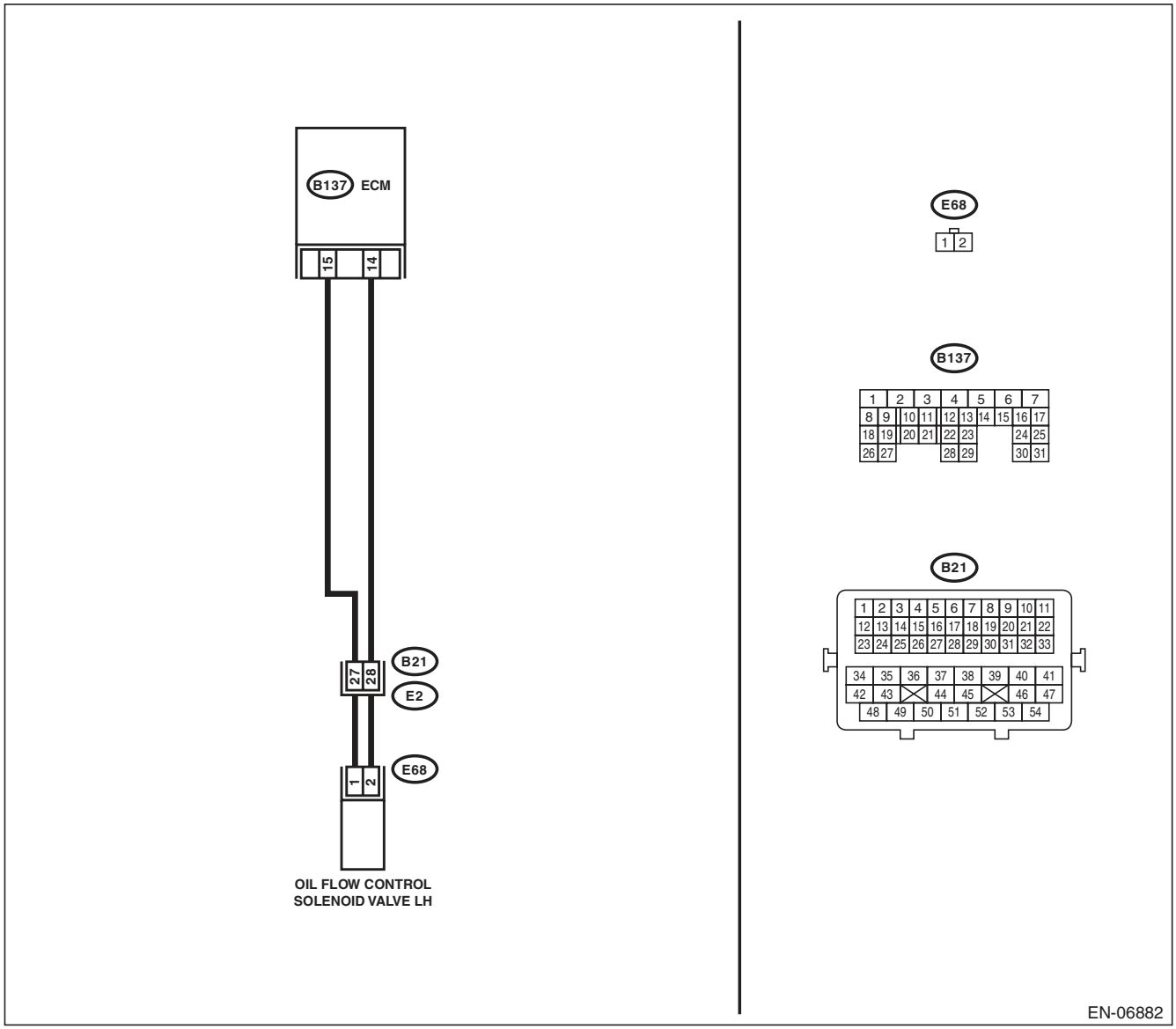

	Step	Check	Yes	No
1	**CHECK HARNESS BETWEEN ECM AND OIL FLOW CONTROL SOLENOID VALVE.** 1) Turn the ignition switch to OFF. 2) Disconnect the connectors from ECM and oil flow control solenoid valve. 3) Measure the resistance of harness between ECM and oil flow control solenoid valve. ***Connector & terminal*** ***(B137) No. 15 — (E68) No. 1:*** ***(B137) No. 14 — (E68) No. 2:***	Is the resistance less than 1 Ω?	Go to step **2**.	Repair the harness and connector. NOTE: In this case, repair the following item: • Open circuit of the harness between the ECM and oil flow control solenoid valve connector • Poor contact of coupling connector
2	**CHECK HARNESS BETWEEN ECM AND OIL FLOW CONTROL SOLENOID VALVE.** Measure the resistance between ECM and chassis ground. ***Connector & terminal*** ***(B137) No. 15 — Chassis ground:*** ***(B137) No. 14 — Chassis ground:***	Is the resistance 1 MΩ or more?	Go to step **3**.	Repair the short circuit to ground in harness between ECM and oil flow control solenoid valve connector.
3	**CHECK OIL FLOW CONTROL SOLENOID VALVE.** Measure the resistance between oil flow control solenoid valve terminals. ***Terminals*** ***No. 1 — No. 2:***	Is the resistance between 6 — 12 Ω?	Repair the poor contact of ECM and oil flow control solenoid valve connector.	Replace the oil flow control solenoid valve. <Ref. to ME(H6DO)-55, Camshaft.>

DW:DTC P2093 INTAKE CAMSHAFT POSITION ACTUATOR CONTROL CIRCUIT HIGH (BANK 2)

DTC DETECTING CONDITION:

- Immediately at fault recognition
- GENERAL DESCRIPTION <Ref. to GD(H6DO)-186, DTC P2093 INTAKE CAMSHAFT POSITION ACTUATOR CONTROL CIRCUIT HIGH (BANK 2), Diagnostic Trouble Code (DTC) Detecting Criteria.>

TROUBLE SYMPTOM:

Improper idling

CAUTION:

After repair or replacement of faulty parts, perform Clear Memory Mode <Ref. to EN(H6DO)(diag)-52, OPERATION, Clear Memory Mode.>, and Inspection Mode <Ref. to EN(H6DO)(diag)-44, PROCEDURE, Inspection Mode.>.

WIRING DIAGRAM:

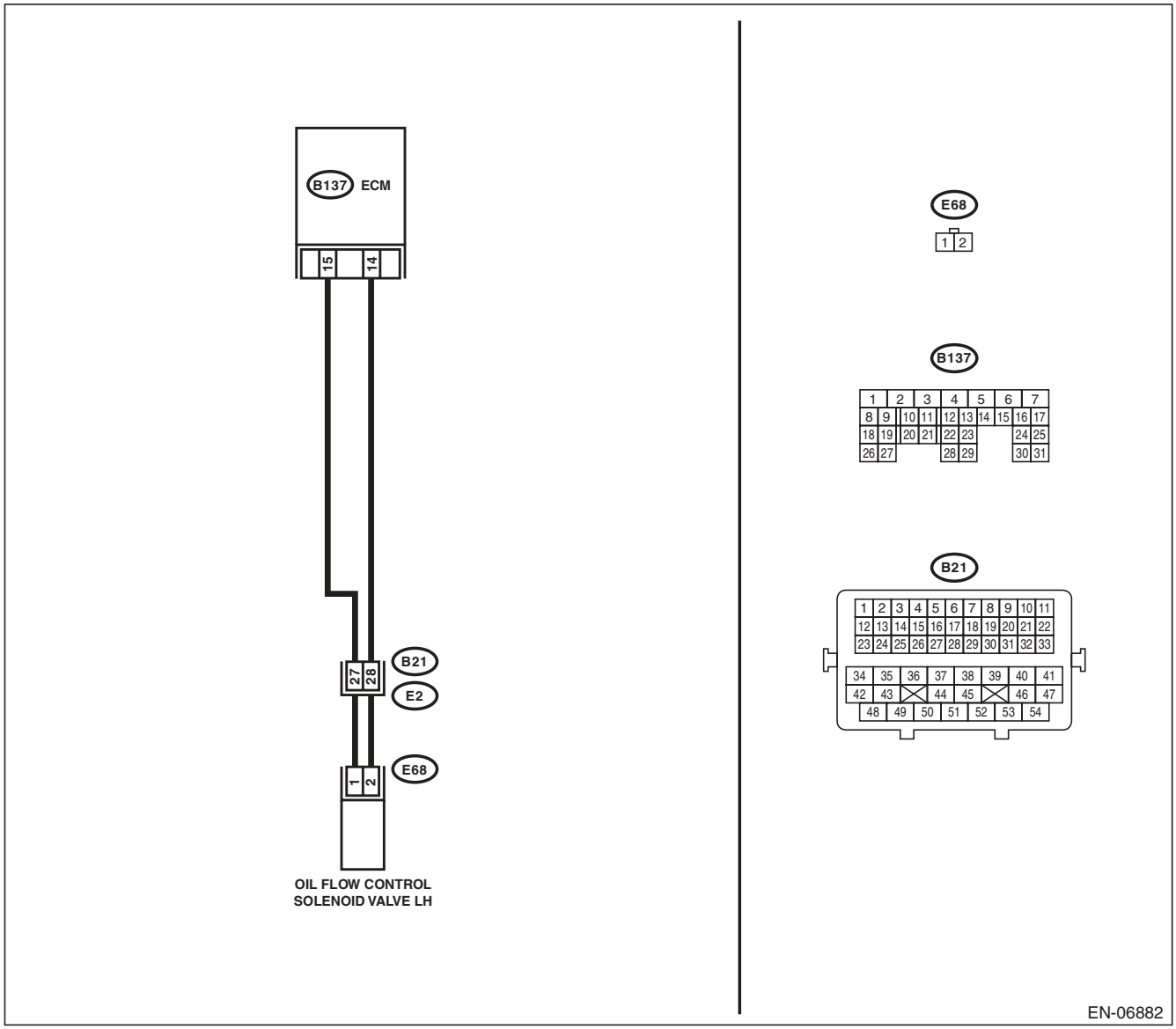

	Step	Check	Yes	No
1	**CHECK HARNESS BETWEEN ECM AND OIL FLOW CONTROL SOLENOID VALVE.** 1) Turn the ignition switch to OFF. 2) Disconnect the connectors from ECM and oil flow control solenoid valve. 3) Measure the voltage between ECM and chassis ground. ***Connector & terminal*** ***(B137) No. 15 (+) — Chassis ground (–):*** ***(B137) No. 14 (+) — Chassis ground (–):***	Is the voltage less than 1 V?	Go to step **2**.	Repair the short circuit to power in harness between ECM and oil flow control solenoid valve connector.
2	**CHECK HARNESS BETWEEN ECM AND OIL FLOW CONTROL SOLENOID VALVE.** Measure the resistance of harness between ECM and oil flow control solenoid valve connector. ***Connector & terminal*** ***(B137) No. 15 — (E68) No. 1:*** ***(B137) No. 14 — (E68) No. 2:***	Is the resistance less than 1 Ω?	Go to step **3**.	Repair the harness and connector. NOTE: In this case, repair the following item: • Open circuit of the harness between the ECM and oil flow control solenoid valve connector • Poor contact of coupling connector
3	**CHECK OIL FLOW CONTROL SOLENOID VALVE.** Measure the resistance between oil flow control solenoid valve terminals. ***Terminals*** ***No. 1 — No. 2:***	Is the resistance between 6 — 12 Ω?	Repair the poor contact of ECM and oil flow control solenoid valve connector.	Replace the oil flow control solenoid valve. <Ref. to ME(H6DO)-55, Camshaft.>

DX:DTC P2096 POST CATALYST FUEL TRIM SYSTEM TOO LEAN (BANK 1)

NOTE:
Refer to DTC P2097 for diagnostic procedure. <Ref. to EN(H6DO)(diag)-312, DTC P2097 POST CATALYST FUEL TRIM SYSTEM TOO RICH (BANK 1), Diagnostic Procedure with Diagnostic Trouble Code (DTC).>

DY:DTC P2097 POST CATALYST FUEL TRIM SYSTEM TOO RICH (BANK 1)

DTC DETECTING CONDITION:

- Two consecutive driving cycles with fault
- GENERAL DESCRIPTION <Ref. to GD(H6DO)-189, DTC P2097 POST CATALYST FUEL TRIM SYSTEM TOO RICH (BANK 1), Diagnostic Trouble Code (DTC) Detecting Criteria.>

CAUTION:

After repair or replacement of faulty parts, perform Clear Memory Mode <Ref. to EN(H6DO)(diag)-52, OPERATION, Clear Memory Mode.>, and Inspection Mode <Ref. to EN(H6DO)(diag)-44, PROCEDURE, Inspection Mode.>.

WIRING DIAGRAM:

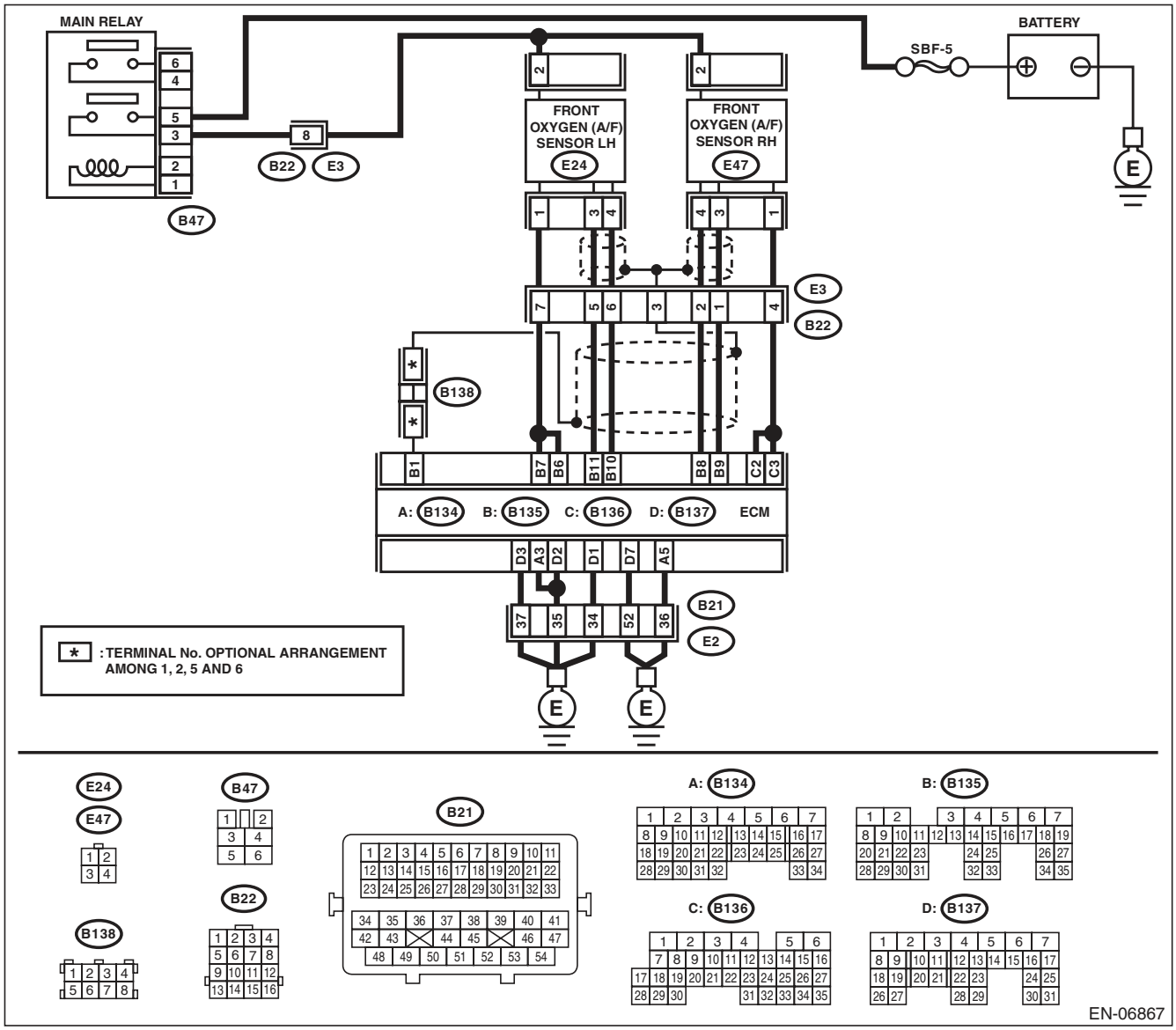

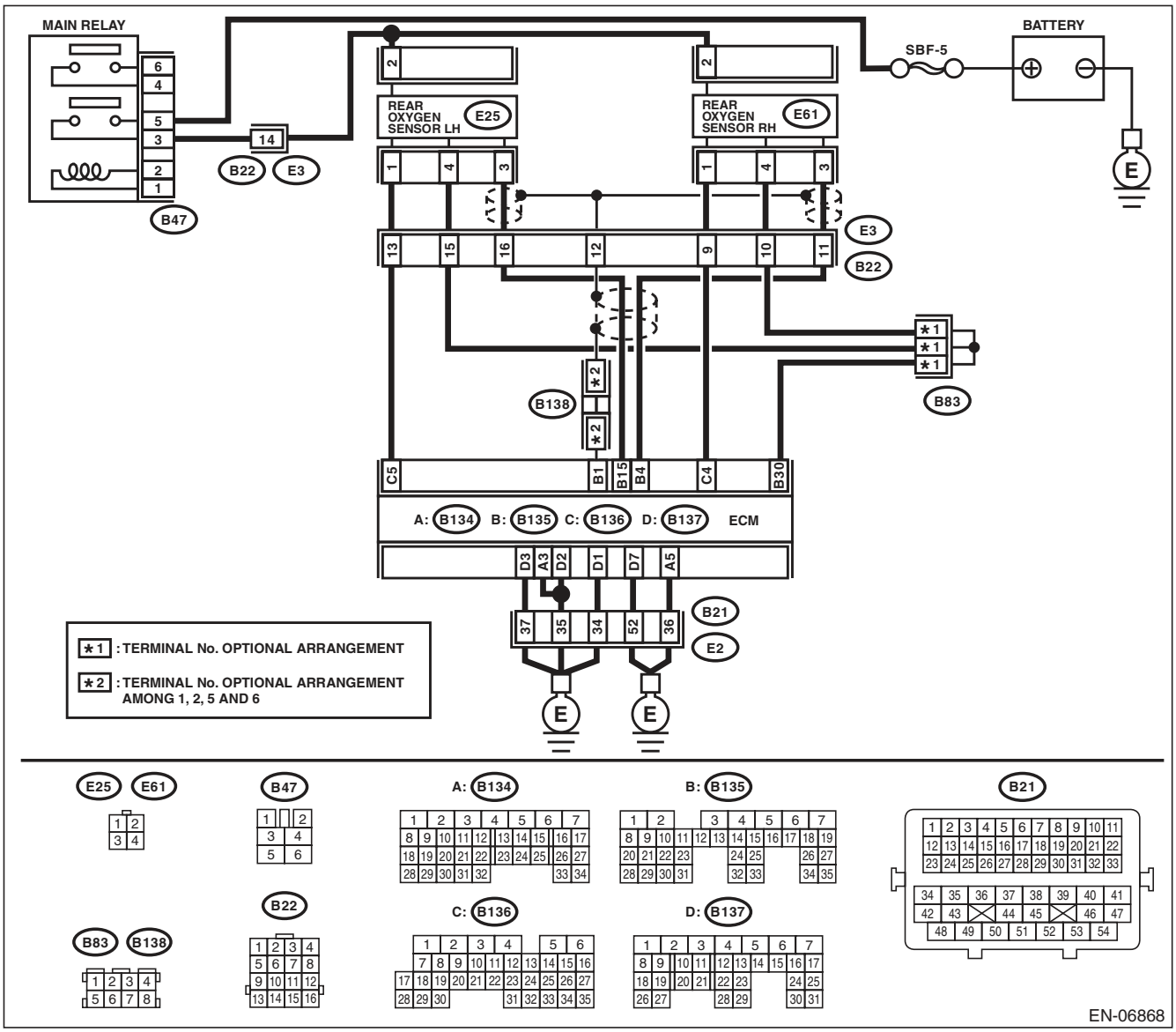
MAIN RELAY
BATTERY
SBF-5
REAR OXYGEN SENSOR LH
E25
REAR OXYGEN SENSOR RH
E61
B47
B22
E3
B138
B83
B21
E2
A: B134
B: B135
C: B136
D: B137
ECM
★1 : TERMINAL No. OPTIONAL ARRANGEMENT
★2 : TERMINAL No. OPTIONAL ARRANGEMENT AMONG 1, 2, 5 AND 6
EN-06868

	Step	Check	Yes	No
1	**CHECK FOR ANY OTHER DTC ON DISPLAY.**	Is any other DTC displayed?	Check DTC using "List of Diagnostic Trouble Code (DTC)". <Ref. to EN(H6DO)(diag)-81, List of Diagnostic Trouble Code (DTC).>	Go to step **2**.
2	**CHECK FRONT OXYGEN (A/F) SENSOR CONNECTOR AND COUPLING CONNECTOR.**	Has water entered the connector?	Completely remove any water inside.	Go to step **3**.
3	**CHECK HARNESS BETWEEN ECM AND FRONT OXYGEN (A/F) SENSOR CONNECTOR.** 1) Turn the ignition switch to OFF. 2) Disconnect the connectors from ECM and front oxygen (A/F) sensor. 3) Measure the resistance of harness between ECM and front oxygen (A/F) sensor connector. ***Connector & terminal*** ***(B135) No. 9 — (E47) No. 3:*** ***(B135) No. 8 — (E47) No. 4:***	Is the resistance less than 1 Ω?	Go to step **4**.	Repair the harness and connector. NOTE: In this case, repair the following item: • Open circuit in harness between ECM and front oxygen (A/F) sensor connector • Poor contact of coupling connector
4	**CHECK HARNESS BETWEEN ECM AND FRONT OXYGEN (A/F) SENSOR CONNECTOR.** Measure the resistance between ECM and chassis ground. ***Connector & terminal*** ***(B135) No. 9 — Chassis ground:*** ***(B135) No. 8 — Chassis ground:***	Is the resistance 1 MΩ or more?	Go to step **5**.	Repair the ground short circuit of harness between ECM and front oxygen (A/F) sensor connector.
5	**CHECK OUTPUT SIGNAL FOR ECM.** 1) Connect the connector to ECM. 2) Turn the ignition switch to ON. 3) Measure the voltage between front oxygen (A/F) sensor connector and chassis ground. ***Connector & terminal*** ***(E47) No. 3 (+) — Chassis ground (–):***	Is the voltage 4.5 V or more?	Go to step **7**.	Go to step **6**.
6	**CHECK OUTPUT SIGNAL FOR ECM.** Measure the voltage between front oxygen (A/F) sensor connector and chassis ground. ***Connector & terminal*** ***(E47) No. 4 (+) — Chassis ground (–):***	Is the voltage 4.95 V or more?	Go to step **7**.	Go to step **8**.
7	**CHECK OUTPUT SIGNAL FOR ECM.** Measure the voltage between front oxygen (A/F) sensor connector and chassis ground. ***Connector & terminal*** ***(E47) No. 3 (+) — Chassis ground (–):*** ***(E47) No. 4 (+) — Chassis ground (–):***	Is the voltage 8 V or more?	Repair the short circuit to power in the harness between ECM and front oxygen (A/F) sensor connector. After repair, replace the ECM. <Ref. to FU(H6DO)-38, Engine Control Module (ECM).>	Repair the poor contact of ECM connector.
8	**CHECK EXHAUST SYSTEM.**	Are there holes or loose bolts on exhaust system?	Repair the exhaust system.	Go to step **9**.

	Step	Check	Yes	No
9	**CHECK AIR INTAKE SYSTEM.**	Are there holes, loose bolts or disconnection of hose on air intake system?	Repair the air intake system.	Go to step **10**.
10	**CHECK FUEL PRESSURE.** **WARNING:** **Place "NO OPEN FLAMES" signs near the working area.** **CAUTION:** **Be careful not to spill fuel.** 1) Connect the front oxygen (A/F) sensor connector. 2) Measure the fuel pressure. <Ref. to ME(H6DO)-27, INSPECTION, Fuel Pressure.> **CAUTION:** **Release fuel pressure before removing the fuel pressure gauge.**	Is the measured value 333 — 343 kPa (3.4 — 3.5 kgf/cm^2, 48.4 — 49.8 psi)?	Go to step **11**.	Repair the following item. Fuel pressure is too high: • Clogged fuel line or bent hose Fuel pressure is too low: • Improper fuel pump discharge • Clogged fuel line
11	**CHECK ENGINE COOLANT TEMPERATURE SENSOR.** 1) Start the engine and warm up completely. 2) Read the data of engine coolant temperature sensor signal using Subaru Select Monitor or general scan tool. NOTE: • SUBARU SELECT MONITOR For detailed operation procedure, refer to "READ CURRENT DATA FOR ENGINE". <Ref. to EN(H6DO)(diag)-34, Subaru Select Monitor.> • General Scan Tool For detailed operation procedures, refer to the general scan tool operation manual.	Is the engine coolant temperature 75°C (167°F) or higher?	Go to step **12**.	Replace the engine coolant temperature sensor. <Ref. to FU(H6DO)-20, Engine Coolant Temperature Sensor.>
12	**CHECK MASS AIR FLOW AND INTAKE AIR TEMPERATURE SENSOR.** 1) Start the engine and warm up engine until coolant temperature is higher than 75°C (167°F). 2) Place the select lever in "P" range or "N" range. 3) Turn the A/C switch to OFF. 4) Turn all the accessory switches to OFF. 5) Read the data of the mass air flow and intake air temperature sensor signal using Subaru Select Monitor or general scan tool. NOTE: • SUBARU SELECT MONITOR For detailed operation procedure, refer to "READ CURRENT DATA FOR ENGINE". <Ref. to EN(H6DO)(diag)-34, Subaru Select Monitor.> • General Scan Tool For detailed operation procedures, refer to the general scan tool operation manual.	Is the measured value 2.0 — 5.0 g/s (0.26 — 0.66 lb/m)?	Go to step **13**.	Replace the mass air flow and intake air temperature sensor. <Ref. to FU(H6DO)-26, Mass Air Flow and Intake Air Temperature Sensor.>

	Step	Check	Yes	No
13	**CHECK MASS AIR FLOW AND INTAKE AIR TEMPERATURE SENSOR.** 1) Start the engine and warm up engine until coolant temperature is higher than 75°C (167°F). 2) Place the select lever in “P” range or “N” range. 3) Turn the A/C switch to OFF. 4) Turn all the accessory switches to OFF. 5) Open the front hood. 6) Measure the ambient temperature. 7) Read the data of the mass air flow and intake air temperature sensor signal using Subaru Select Monitor or general scan tool. NOTE: • SUBARU SELECT MONITOR For detailed operation procedure, refer to “READ CURRENT DATA FOR ENGINE”. <Ref. to EN(H6DO)(diag)-34, Subaru Select Monitor.> • General Scan Tool For detailed operation procedures, refer to the general scan tool operation manual.	Subtract ambient temperature from intake air temperature. Is the obtained value –10 — 50°C (–18 — 90°F)?	Go to step **14**.	Check the mass air flow and intake air temperature sensor. <Ref. to FU(H6DO)-26, Mass Air Flow and Intake Air Temperature Sensor.>
14	**CHECK REAR OXYGEN SENSOR DATA.** 1) Warm up the engine until engine coolant temperature is above 75°C (167°F), and keep the engine speed at 3,000 rpm. (for up to 2 minutes) 2) Read the data of rear oxygen sensor signal using Subaru Select Monitor or general scan tool. NOTE: • SUBARU SELECT MONITOR For detailed operation procedure, refer to “READ CURRENT DATA FOR ENGINE”. <Ref. to EN(H6DO)(diag)-34, Subaru Select Monitor.> • General Scan Tool For detailed operation procedures, refer to the general scan tool operation manual.	Is the voltage 490 mV or more?	Go to step **15**.	Go to step **16**.
15	**CHECK REAR OXYGEN SENSOR DATA.** 1) Warm up the engine until engine coolant temperature is above 75°C (167°F), and rapidly reduce the engine speed from 3,000 rpm. 2) Read the data of rear oxygen sensor signal using Subaru Select Monitor or general scan tool. NOTE: • SUBARU SELECT MONITOR For detailed operation procedure, refer to “READ CURRENT DATA FOR ENGINE”. <Ref. to EN(H6DO)(diag)-34, Subaru Select Monitor.> • General Scan Tool For detailed operation procedures, refer to the general scan tool operation manual.	Is the voltage 250 mV or less?	Go to step **17**.	Go to step **16**.
16	**CHECK REAR OXYGEN SENSOR CONNECTOR AND COUPLING CONNECTOR.**	Has water entered the connector?	Completely remove any water inside.	Go to step **18**.

Step		Check	Yes	No
17	**CHECK FRONT OXYGEN (A/F) SENSOR AND REAR OXYGEN SENSOR DATA.** 1) Warm up the engine until engine coolant temperature is higher than 75°C (167°F), then keep the engine idling for 5 minutes or more. 2) Read the data of rear oxygen sensor signal using Subaru Select Monitor or general scan tool. NOTE: • SUBARU SELECT MONITOR For detailed operation procedure, refer to "READ CURRENT DATA FOR ENGINE". <Ref. to EN(H6DO)(diag)-34, Subaru Select Monitor.> • General Scan Tool For detailed operation procedures, refer to the general scan tool operation manual.	Is a voltage of 0.8 V or more maintained for 5 minutes or more?	Replace the front oxygen (A/F) sensor. <Ref. to FU(H6DO)-32, Front Oxygen (A/F) Sensor.>	Go to step **18**.
18	**CHECK HARNESS BETWEEN ECM AND REAR OXYGEN SENSOR CONNECTOR.** 1) Turn the ignition switch to OFF. 2) Disconnect the connectors from ECM and rear oxygen sensor. 3) Measure the resistance of harness between ECM and rear oxygen sensor connector. ***Connector & terminal*** ***(B135) No. 4 — (E61) No. 3:*** ***(B135) No. 30 — (E61) No. 4:***	Is the resistance less than 1 Ω?	Go to step **19**.	Repair the harness and connector. NOTE: In this case, repair the following item: • Open circuit in harness between ECM and rear oxygen sensor connector • Poor contact of coupling connector
19	**CHECK HARNESS BETWEEN ECM AND REAR OXYGEN SENSOR CONNECTOR.** 1) Connect the connector to ECM. 2) Turn the ignition switch to ON. 3) Measure the voltage between rear oxygen sensor connector and chassis ground. ***Connector & terminal*** ***(E61) No. 3 (+) — Chassis ground (–):***	Is the voltage 0.2 — 0.5 V?	Replace the rear oxygen sensor. <Ref. to FU(H6DO)-34, Rear Oxygen Sensor.>	Repair the harness and connector. NOTE: In this case, repair the following item: • Open circuit of harness between the ECM and rear oxygen sensor • Poor contact in ECM connector • Poor contact of coupling connector

DZ:DTC P2098 POST CATALYST FUEL TRIM SYSTEM TOO LEAN BANK 2

NOTE:
Refer to DTC P2099 for diagnostic procedure. <Ref. to EN(H6DO)(diag)-318, DTC P2099 POST CATALYST FUEL TRIM SYSTEM TOO RICH BANK 2, Diagnostic Procedure with Diagnostic Trouble Code (DTC).>

EA:DTC P2099 POST CATALYST FUEL TRIM SYSTEM TOO RICH BANK 2

DTC DETECTING CONDITION:

- Two consecutive driving cycles with fault
- GENERAL DESCRIPTION <Ref. to GD(H6DO)-190, DTC P2099 POST CATALYST FUEL TRIM SYSTEM TOO RICH BANK 2, Diagnostic Trouble Code (DTC) Detecting Criteria.>

CAUTION:

After repair or replacement of faulty parts, perform Clear Memory Mode <Ref. to EN(H6DO)(diag)-52, OPERATION, Clear Memory Mode.>, and Inspection Mode <Ref. to EN(H6DO)(diag)-44, PROCEDURE, Inspection Mode.>.

WIRING DIAGRAM:

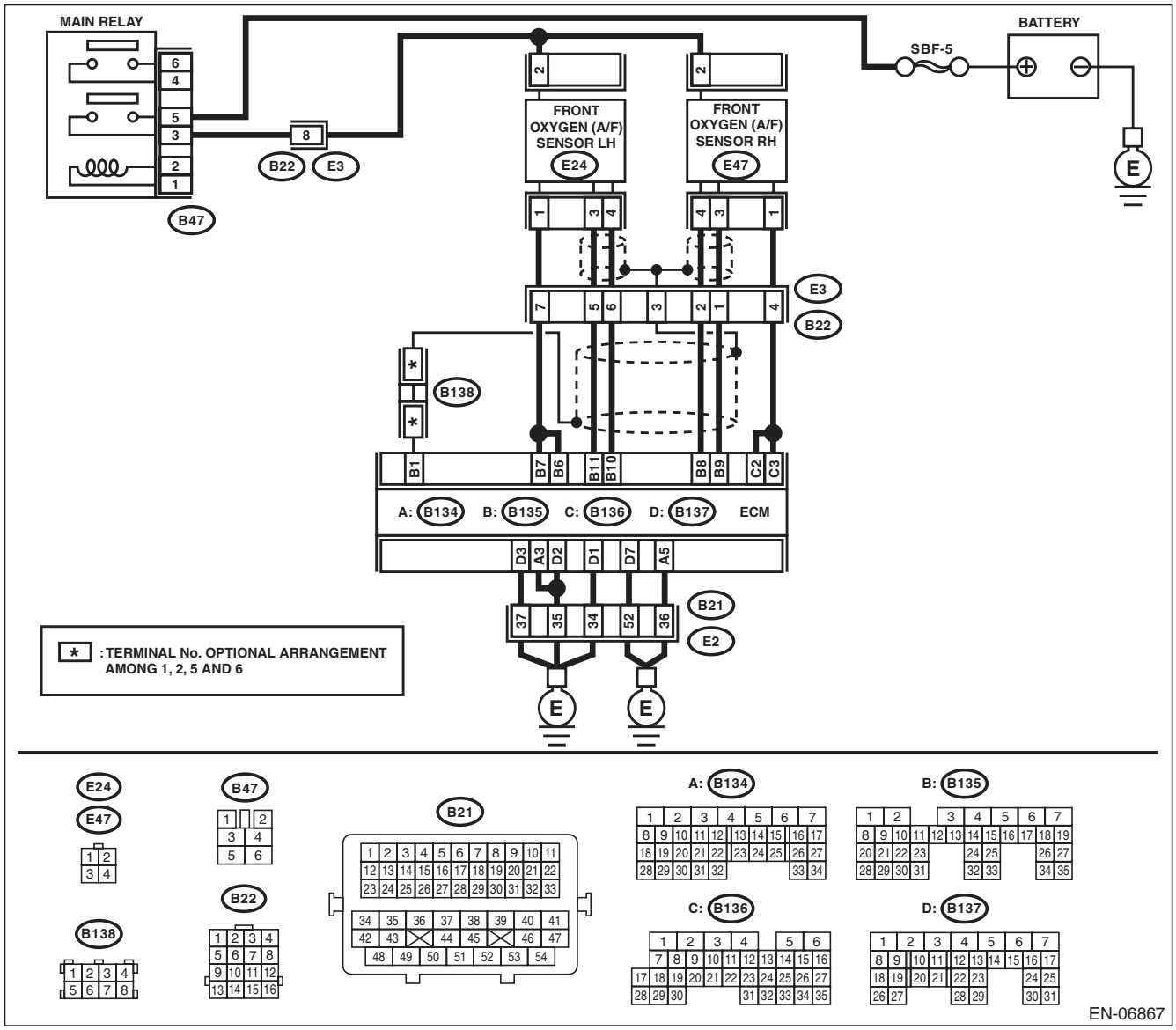

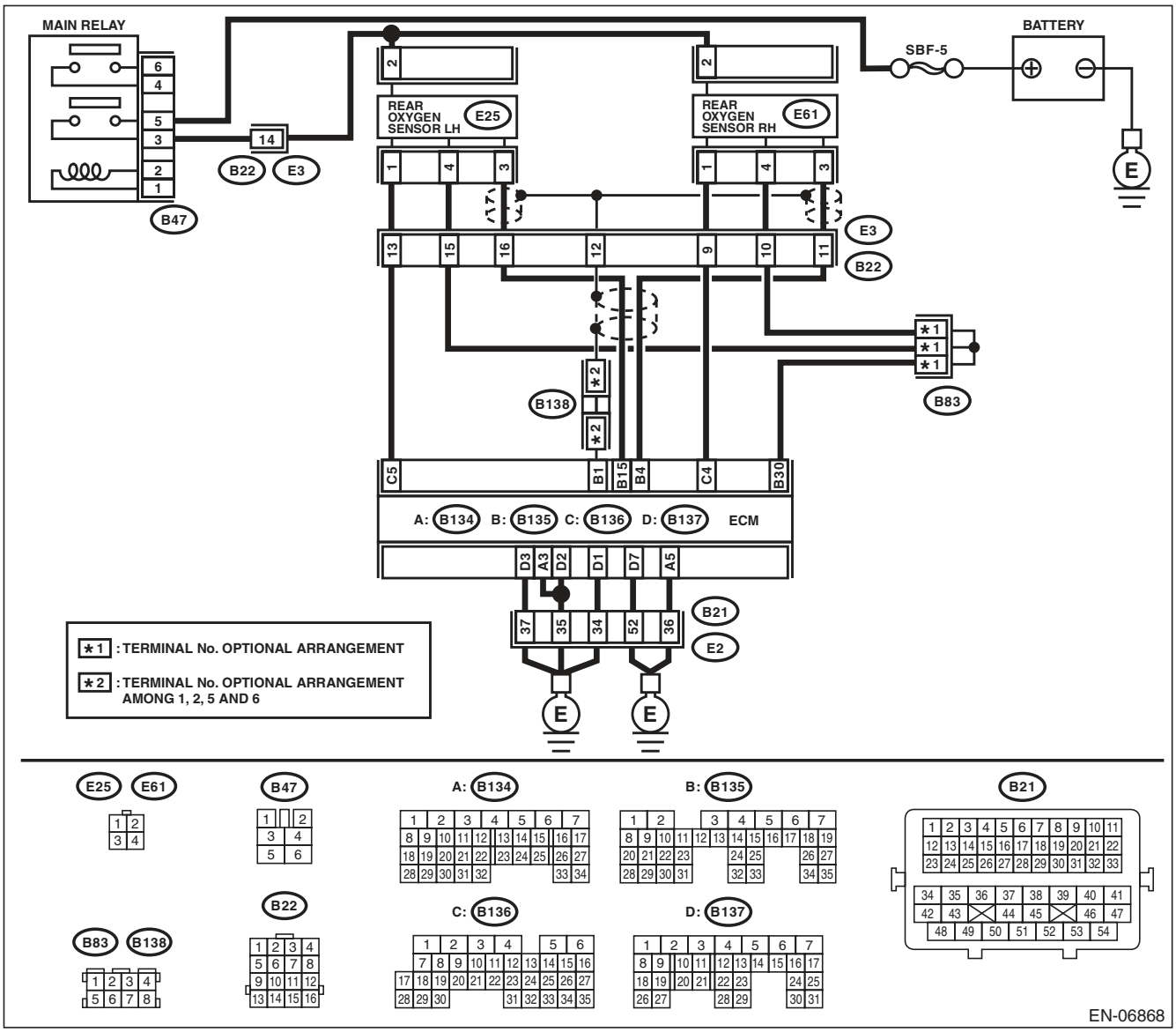
MAIN RELAY
BATTERY
SBF-5
REAR OXYGEN SENSOR LH
E25
REAR OXYGEN SENSOR RH
E61
B47
B22
E3
B138
B83
B21
E2
A: B134
B: B135
C: B136
D: B137
ECM
★1 : TERMINAL No. OPTIONAL ARRANGEMENT
★2 : TERMINAL No. OPTIONAL ARRANGEMENT AMONG 1, 2, 5 AND 6
EN-06868

	Step	Check	Yes	No
1	**CHECK FOR ANY OTHER DTC ON DISPLAY.**	Is any other DTC displayed?	Check DTC using "List of Diagnostic Trouble Code (DTC)". <Ref. to EN(H6DO)(diag)-81, List of Diagnostic Trouble Code (DTC).>	Go to step **2**.
2	**CHECK FRONT OXYGEN (A/F) SENSOR CONNECTOR AND COUPLING CONNECTOR.**	Has water entered the connector?	Completely remove any water inside.	Go to step **3**.
3	**CHECK HARNESS BETWEEN ECM AND FRONT OXYGEN (A/F) SENSOR CONNECTOR.** 1) Turn the ignition switch to OFF. 2) Disconnect the connectors from ECM and front oxygen (A/F) sensor. 3) Measure the resistance of harness between ECM and front oxygen (A/F) sensor connector. ***Connector & terminal*** ***(B135) No. 11 — (E24) No. 3:*** ***(B135) No. 10 — (E24) No. 4:***	Is the resistance less than 1 Ω?	Go to step **4**.	Repair the harness and connector. NOTE: In this case, repair the following item: • Open circuit in harness between ECM and front oxygen (A/F) sensor connector • Poor contact of coupling connector
4	**CHECK HARNESS BETWEEN ECM AND FRONT OXYGEN (A/F) SENSOR CONNECTOR.** Measure the resistance between ECM and chassis ground. ***Connector & terminal*** ***(B135) No. 11 — Chassis ground:*** ***(B135) No. 10 — Chassis ground:***	Is the resistance 1 MΩ or more?	Go to step **5**.	Repair the ground short circuit of harness between ECM and front oxygen (A/F) sensor connector.
5	**CHECK OUTPUT SIGNAL FOR ECM.** 1) Connect the connector to ECM. 2) Turn the ignition switch to ON. 3) Measure the voltage between front oxygen (A/F) sensor connector and chassis ground. ***Connector & terminal*** ***(E24) No. 3 (+) — Chassis ground (–):***	Is the voltage 4.5 V or more?	Go to step **7**.	Go to step **6**.
6	**CHECK OUTPUT SIGNAL FOR ECM.** Measure the voltage between front oxygen (A/F) sensor connector and chassis ground. ***Connector & terminal*** ***(E24) No. 4 (+) — Chassis ground (–):***	Is the voltage 4.95 V or more?	Go to step **7**.	Go to step **8**.
7	**CHECK OUTPUT SIGNAL FOR ECM.** Measure the voltage between front oxygen (A/F) sensor connector and chassis ground. ***Connector & terminal*** ***(E24) No. 3 (+) — Chassis ground (–):*** ***(E24) No. 4 (+) — Chassis ground (–):***	Is the voltage 8 V or more?	Repair the short circuit to power in the harness between ECM and front oxygen (A/F) sensor connector. After repair, replace the ECM. <Ref. to FU(H6DO)-38, Engine Control Module (ECM).>	Repair the poor contact of ECM connector.
8	**CHECK EXHAUST SYSTEM.**	Are there holes or loose bolts on exhaust system?	Repair the exhaust system.	Go to step **9**.

	Step	Check	Yes	No
9	**CHECK AIR INTAKE SYSTEM.**	Are there holes, loose bolts or disconnection of hose on air intake system?	Repair the air intake system.	Go to step **10**.
10	**CHECK FUEL PRESSURE.** **WARNING:** **Place "NO OPEN FLAMES" signs near the working area.** **CAUTION:** **Be careful not to spill fuel.** 1) Connect the front oxygen (A/F) sensor connector. 2) Measure the fuel pressure. <Ref. to ME(H6DO)-27, INSPECTION, Fuel Pressure.> **CAUTION:** **Release fuel pressure before removing the fuel pressure gauge.**	Is the measured value 333 — 343 kPa (3.4 — 3.5 kgf/cm^2, 48.4 — 49.8 psi)?	Go to step **11**.	Repair the following item. Fuel pressure is too high: • Clogged fuel line or bent hose Fuel pressure is too low: • Improper fuel pump discharge • Clogged fuel line
11	**CHECK ENGINE COOLANT TEMPERATURE SENSOR.** 1) Start the engine and warm up completely. 2) Read the data of engine coolant temperature sensor signal using Subaru Select Monitor or general scan tool. NOTE: • SUBARU SELECT MONITOR For detailed operation procedure, refer to "READ CURRENT DATA FOR ENGINE". <Ref. to EN(H6DO)(diag)-34, Subaru Select Monitor.> • General Scan Tool For detailed operation procedures, refer to the general scan tool operation manual.	Is the engine coolant temperature 75°C (167°F) or higher?	Go to step **12**.	Replace the engine coolant temperature sensor. <Ref. to FU(H6DO)-20, Engine Coolant Temperature Sensor.>
12	**CHECK MASS AIR FLOW AND INTAKE AIR TEMPERATURE SENSOR.** 1) Start the engine and warm up engine until coolant temperature is higher than 75°C (167°F). 2) Place the select lever in "P" range or "N" range. 3) Turn the A/C switch to OFF. 4) Turn all the accessory switches to OFF. 5) Read the data of the mass air flow and intake air temperature sensor signal using Subaru Select Monitor or general scan tool. NOTE: • SUBARU SELECT MONITOR For detailed operation procedure, refer to "READ CURRENT DATA FOR ENGINE". <Ref. to EN(H6DO)(diag)-34, Subaru Select Monitor.> • General Scan Tool For detailed operation procedures, refer to the general scan tool operation manual.	Is the measured value 2.0 — 5.0 g/s (0.26 — 0.66 lb/m)?	Go to step **13**.	Replace the mass air flow and intake air temperature sensor. <Ref. to FU(H6DO)-26, Mass Air Flow and Intake Air Temperature Sensor.>

	Step	Check	Yes	No
13	**CHECK MASS AIR FLOW AND INTAKE AIR TEMPERATURE SENSOR.** 1) Start the engine and warm up engine until coolant temperature is higher than 75°C (167°F). 2) Place the select lever in “P” range or “N” range. 3) Turn the A/C switch to OFF. 4) Turn all the accessory switches to OFF. 5) Open the front hood. 6) Measure the ambient temperature. 7) Read the data of the mass air flow and intake air temperature sensor signal using Subaru Select Monitor or general scan tool. NOTE: • SUBARU SELECT MONITOR For detailed operation procedure, refer to “READ CURRENT DATA FOR ENGINE”. <Ref. to EN(H6DO)(diag)-34, Subaru Select Monitor.> • General Scan Tool For detailed operation procedures, refer to the general scan tool operation manual.	Subtract ambient temperature from intake air temperature. Is the obtained value –10 — 50°C (–18 — 90°F)?	Go to step **14**.	Check the mass air flow and intake air temperature sensor. <Ref. to FU(H6DO)-26, Mass Air Flow and Intake Air Temperature Sensor.>
14	**CHECK REAR OXYGEN SENSOR DATA.** 1) Warm up the engine until engine coolant temperature is above 75°C (167°F), and keep the engine speed at 3,000 rpm. (for up to 2 minutes) 2) Read the data of rear oxygen sensor signal using Subaru Select Monitor or general scan tool. NOTE: • SUBARU SELECT MONITOR For detailed operation procedure, refer to “READ CURRENT DATA FOR ENGINE”. <Ref. to EN(H6DO)(diag)-34, Subaru Select Monitor.> • General Scan Tool For detailed operation procedures, refer to the general scan tool operation manual.	Is the voltage 490 mV or more?	Go to step **15**.	Go to step **16**.
15	**CHECK REAR OXYGEN SENSOR DATA.** 1) Warm up the engine until engine coolant temperature is above 75°C (167°F), and rapidly reduce the engine speed from 3,000 rpm. 2) Read the data of rear oxygen sensor signal using Subaru Select Monitor or general scan tool. NOTE: • SUBARU SELECT MONITOR For detailed operation procedure, refer to “READ CURRENT DATA FOR ENGINE”. <Ref. to EN(H6DO)(diag)-34, Subaru Select Monitor.> • General Scan Tool For detailed operation procedures, refer to the general scan tool operation manual.	Is the voltage 250 mV or less?	Go to step **17**.	Go to step **16**.
16	**CHECK REAR OXYGEN SENSOR CONNECTOR AND COUPLING CONNECTOR.**	Has water entered the connector?	Completely remove any water inside.	Go to step **18**.

	Step	Check	Yes	No
17	**CHECK FRONT OXYGEN (A/F) SENSOR AND REAR OXYGEN SENSOR DATA.** 1) Warm up the engine until engine coolant temperature is higher than 75°C (167°F), then keep the engine idling for 5 minutes or more. 2) Read the data of rear oxygen sensor signal using Subaru Select Monitor or general scan tool. NOTE: • SUBARU SELECT MONITOR For detailed operation procedure, refer to "READ CURRENT DATA FOR ENGINE". <Ref. to EN(H6DO)(diag)-34, Subaru Select Monitor.> • General Scan Tool For detailed operation procedures, refer to the general scan tool operation manual.	Is a voltage of 0.8 V or more maintained for 5 minutes or more?	Replace the front oxygen (A/F) sensor. <Ref. to FU(H6DO)-32, Front Oxygen (A/F) Sensor.>	Go to step **18**.
18	**CHECK HARNESS BETWEEN ECM AND REAR OXYGEN SENSOR CONNECTOR.** 1) Turn the ignition switch to OFF. 2) Disconnect the connectors from ECM and rear oxygen sensor. 3) Measure the resistance of harness between ECM and rear oxygen sensor connector. ***Connector & terminal*** ***(B135) No. 15 — (E25) No. 3:*** ***(B135) No. 30 — (E25) No. 4:***	Is the resistance less than 1 Ω?	Go to step **19**.	Repair the harness and connector. NOTE: In this case, repair the following item: • Open circuit in harness between ECM and rear oxygen sensor connector • Poor contact of coupling connector
19	**CHECK HARNESS BETWEEN ECM AND REAR OXYGEN SENSOR CONNECTOR.** 1) Connect the connector to ECM. 2) Turn the ignition switch to ON. 3) Measure the voltage between rear oxygen sensor connector and chassis ground. ***Connector & terminal*** ***(E25) No. 3 (+) — Chassis ground (–):***	Is the voltage 0.2 — 0.5 V?	Replace the rear oxygen sensor. <Ref. to FU(H6DO)-34, Rear Oxygen Sensor.>	Repair the harness and connector. NOTE: In this case, repair the following item: • Open circuit of harness between the ECM and rear oxygen sensor • Poor contact in ECM connector • Poor contact of coupling connector

EB:DTC P2101 THROTTLE ACTUATOR CONTROL MOTOR CIRCUIT RANGE/ PERFORMANCE

DTC DETECTING CONDITION:

- Immediately at fault recognition
- GENERAL DESCRIPTION <Ref. to GD(H6DO)-191, DTC P2101 THROTTLE ACTUATOR CONTROL MOTOR CIRCUIT RANGE/PERFORMANCE, Diagnostic Trouble Code (DTC) Detecting Criteria.>

TROUBLE SYMPTOM:

- Improper idling
- Poor driving performance
- Engine stalls.

CAUTION:

After repair or replacement of faulty parts, perform Clear Memory Mode <Ref. to EN(H6DO)(diag)-52, OPERATION, Clear Memory Mode.>, and Inspection Mode <Ref. to EN(H6DO)(diag)-44, PROCEDURE, Inspection Mode.>.

WIRING DIAGRAM:

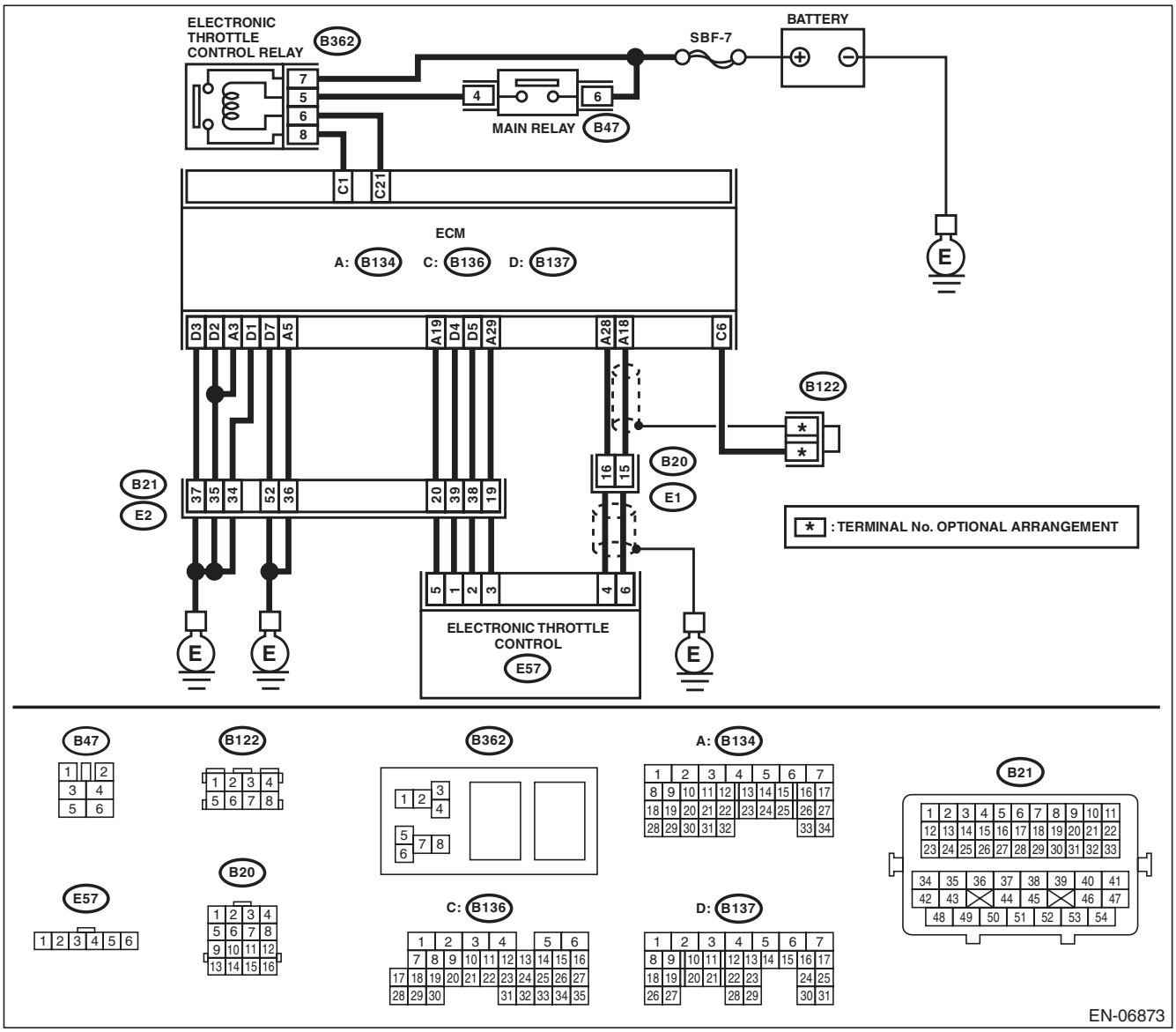

	Step	Check	Yes	No
1	**CHECK ELECTRONIC THROTTLE CONTROL RELAY.** 1) Turn the ignition switch to OFF. 2) Remove the electronic throttle control relay. 3) Connect the battery to terminals No. 5 and No. 6 of electronic throttle control relay. 4) Measure the resistance between electronic throttle control relay terminals. ***Terminals*** ***No. 7 — No. 8:***	Is the resistance less than 1 Ω?	Go to step **2**.	Replace the electronic throttle control relay. <Ref. to EN(H6DO)(diag)-8, Electrical Component Location.>
2	**CHECK POWER SUPPLY OF ELECTRONIC THROTTLE CONTROL RELAY.** Measure the voltage between electronic throttle control relay connector and chassis ground. ***Connector & terminal*** ***(B362) No. 7 (+) — Chassis ground (–):***	Is the voltage 10 V or more?	Go to step **3**.	Repair the open or ground short circuit of power supply circuit.
3	**CHECK HARNESS BETWEEN ECM AND ELECTRONIC THROTTLE CONTROL RELAY.** 1) Disconnect the connectors from ECM. 2) Turn the ignition switch to ON. 3) Measure the voltage between electronic throttle control relay connector and chassis ground. ***Connector & terminal*** ***(B362) No. 6 (+) — Chassis ground (–):***	Is the voltage 10 V or more?	Repair the short circuit to power in harness between ECM and electronic throttle control relay.	Go to step **4**.
4	**CHECK HARNESS BETWEEN ECM AND ELECTRONIC THROTTLE CONTROL RELAY.** 1) Turn the ignition switch to OFF. 2) Measure the resistance between electronic throttle control relay connector and chassis ground. ***Connector & terminal*** ***(B362) No. 6 — Chassis ground:*** ***(B362) No. 8 — Chassis ground:***	Is the resistance 1 MΩ or more?	Go to step **5**.	Repair the ground short circuit of harness between ECM and electronic throttle control relay.
5	**CHECK HARNESS BETWEEN ECM AND ELECTRONIC THROTTLE CONTROL RELAY.** Measure the resistance between ECM and electronic throttle control relay connector. ***Connector & terminal*** ***(B136) No. 21 — (B362) No. 6:*** ***(B136) No. 1 — (B362) No. 8:***	Is the resistance less than 1 Ω?	Go to step **6**.	Repair the open circuit of harness between ECM and electronic throttle control relay.
6	**CHECK HARNESS BETWEEN ECM AND ELECTRONIC THROTTLE CONTROL.** 1) Turn the ignition switch to OFF. 2) Disconnect the connectors from electronic throttle control. 3) Measure the resistance between ECM and chassis ground. ***Connector & terminal*** ***(B134) No. 19 — Chassis ground:*** ***(B134) No. 18 — Chassis ground:*** ***(B134) No. 18 — (B136) No. 6:*** ***(B134) No. 28 — Chassis ground:***	Is the resistance 1 MΩ or more?	Go to step **7**.	Repair the short circuit to ground in harness between ECM and electronic throttle control connector.

	Step	Check	Yes	No
7	**CHECK SHORT CIRCUIT INSIDE THE ECM.** 1) Connect the connector to ECM. 2) Measure the resistance between electronic throttle control connector and engine ground. ***Connector & terminal*** ***(E57) No. 6 — Engine ground:*** ***(E57) No. 4 — Engine ground:***	Is the resistance 1 MΩ or more?	Go to step **8**.	Repair the short circuit to ground in harness between ECM and electronic throttle control connector. Replace the ECM if defective. <Ref. to FU(H6DO)-38, Engine Control Module (ECM).>
8	**CHECK HARNESS BETWEEN ECM AND ELECTRONIC THROTTLE CONTROL.** 1) Disconnect the connectors from ECM. 2) Measure the resistance of harness between ECM and electronic throttle control connector. ***Connector & terminal*** ***(B134) No. 18 — (E57) No. 6:*** ***(B134) No. 28 — (E57) No. 4:*** ***(B134) No. 29 — (E57) No. 3:***	Is the resistance less than 1 Ω?	Go to step **9**.	Repair the harness and connector. NOTE: In this case, repair the following item: • Open circuit in harness between ECM and electronic throttle control connector • Poor contact of coupling connector
9	**CHECK HARNESS BETWEEN ECM AND ELECTRONIC THROTTLE CONTROL.** 1) Connect the connector to ECM. 2) Measure the resistance between electronic throttle control connector and engine ground. ***Connector & terminal*** ***(E57) No. 3 — Engine ground:***	Is the resistance less than 5 Ω?	Go to step **10**.	Repair the harness and connector. NOTE: In this case, repair the following item: • Open circuit of harness between ECM and engine ground • Poor contact in ECM connector • Poor contact of coupling connector
10	**CHECK HARNESS BETWEEN ECM AND ELECTRONIC THROTTLE CONTROL.** 1) Turn the ignition switch to ON. 2) Measure the voltage between electronic throttle control connector and engine ground. ***Connector & terminal*** ***(E57) No. 6 (+) — Engine ground (–):*** ***(E57) No. 4 (+) — Engine ground (–):***	Is the voltage 4.85 V or more?	Repair the short circuit to power in the harness between ECM and electronic throttle control connector.	Go to step **11**.
11	**CHECK HARNESS BETWEEN ECM AND ELECTRONIC THROTTLE CONTROL.** 1) Turn the ignition switch to OFF. 2) Disconnect the connectors from ECM. 3) Measure the resistance between ECM connectors. ***Connector & terminal*** ***(B134) No. 19 — (B134) No. 18:*** ***(B134) No. 19 — (B134) No. 28:***	Is the resistance 1 MΩ or more?	Go to step **12**.	Repair the short circuit to power in the harness between ECM and electronic throttle control connector.

	Step	Check	Yes	No
12	**CHECK SENSOR OUTPUT.** 1) Connect all connectors. 2) Turn the ignition switch to ON. 3) Read the data of main throttle sensor signal using Subaru Select Monitor. NOTE: For detailed operation procedure, refer to "READ CURRENT DATA FOR ENGINE". <Ref. to EN(H6DO)(diag)-34, Subaru Select Monitor.>	Is the voltage 0.81 — 0.87 V?	Go to step **13**.	Repair poor contact of the electronic throttle control connector. Replace the electronic throttle control if defective. <Ref. to FU(H6DO)-13, Throttle Body.>
13	**CHECK SENSOR OUTPUT.** Read the data of sub throttle sensor signal using Subaru Select Monitor. NOTE: For detailed operation procedure, refer to "READ CURRENT DATA FOR ENGINE". <Ref. to EN(H6DO)(diag)-34, Subaru Select Monitor.>	Is the voltage 1.64 — 1.70 V?	Go to step **14**.	Repair poor contact of the electronic throttle control connector. Replace the electronic throttle control if defective. <Ref. to FU(H6DO)-13, Throttle Body.>
14	**CHECK HARNESS BETWEEN ECM AND ELECTRONIC THROTTLE CONTROL MOTOR.** 1) Turn the ignition switch to OFF. 2) Disconnect the connectors from ECM and electronic throttle control. 3) Measure the resistance between ECM and electronic throttle control connector. ***Connector & terminal*** ***(B137) No. 5 — (E57) No. 2:*** ***(B137) No. 4 — (E57) No. 1:***	Is the resistance less than 1 Ω?	Go to step **15**.	Repair the harness and connector. NOTE: In this case, repair the following item: • Open circuit in harness between ECM and electronic throttle control • Poor contact of coupling connector
15	**CHECK HARNESS BETWEEN ECM AND ELECTRONIC THROTTLE CONTROL MOTOR.** 1) Connect the connector to ECM. 2) Turn the ignition switch to ON. 3) Measure the voltage between electronic throttle control connector and engine ground. ***Connector & terminal*** ***(E57) No. 2 (+) — Engine ground (–):*** ***(E57) No. 1 (+) — Engine ground (–):***	Is the voltage 5 V or more?	Repair the short circuit to power in the harness between ECM and electronic throttle control.	Go to step **16**.
16	**CHECK HARNESS BETWEEN ECM AND ELECTRONIC THROTTLE CONTROL MOTOR.** 1) Turn the ignition switch to OFF. 2) Disconnect the connectors from ECM. 3) Measure the resistance between electronic throttle control connector and engine ground. ***Connector & terminal*** ***(E57) No. 2 — Engine ground:*** ***(E57) No. 1 — Engine ground:***	Is the resistance 1 MΩ or more?	Go to step **17**.	Repair the short circuit to ground in harness between ECM and electronic throttle control.
17	**CHECK ELECTRONIC THROTTLE CONTROL MOTOR HARNESS.** Measure the resistance between the electronic throttle control connector terminals. ***Connector & terminal*** ***(E57) No. 2 — (E57) No. 1:***	Is the resistance 1 MΩ or more?	Go to step **18**.	Repair the short circuit of harness between ECM and electronic throttle control.

	Step	Check	Yes	No
18	**CHECK ELECTRONIC THROTTLE CONTROL GROUND CIRCUIT.** Measure the resistance between ECM and chassis ground. ***Connector & terminal*** ***(B134) No. 3 — Chassis ground:*** ***(B134) No. 5 — Chassis ground:*** ***(B137) No. 1 — Chassis ground:*** ***(B137) No. 2 — Chassis ground:*** ***(B137) No. 3 — Chassis ground:*** ***(B137) No. 7 — Chassis ground:***	Is the resistance less than 5 Ω?	Go to step **19**.	Repair the harness and connector. NOTE: In this case, repair the following item: • Open circuit of harness between ECM and engine ground • Poor contact of coupling connector
19	**CHECK ELECTRONIC THROTTLE CONTROL.** Measure the resistance between electronic throttle control terminals. ***Terminals*** ***No. 2 — No. 1:***	Is the resistance 50 Ω or less?	Go to step **20**.	Replace the electronic throttle control. <Ref. to FU(H6DO)-13, Throttle Body.>
20	**CHECK ELECTRONIC THROTTLE CONTROL.** Move the throttle valve to the fully open and fully closed positions with fingers. Check that the valve returns to the specified position when releasing fingers.	Does the valve return to the specified position? Standard value: 3 mm (0.12 in) from fully closed position	Repair the poor contact of ECM connector.	Replace the electronic throttle control. <Ref. to FU(H6DO)-13, Throttle Body.>

EC:DTC P2102 THROTTLE ACTUATOR CONTROL MOTOR CIRCUIT LOW

DTC DETECTING CONDITION:

- Immediately at fault recognition
- GENERAL DESCRIPTION <Ref. to GD(H6DO)-193, DTC P2102 THROTTLE ACTUATOR CONTROL MOTOR CIRCUIT LOW, Diagnostic Trouble Code (DTC) Detecting Criteria.>

TROUBLE SYMPTOM:

- Improper idling
- Poor driving performance
- Engine stalls.

CAUTION:

After repair or replacement of faulty parts, perform Clear Memory Mode <Ref. to EN(H6DO)(diag)-52, OPERATION, Clear Memory Mode.>, and Inspection Mode <Ref. to EN(H6DO)(diag)-44, PROCEDURE, Inspection Mode.>.

WIRING DIAGRAM:

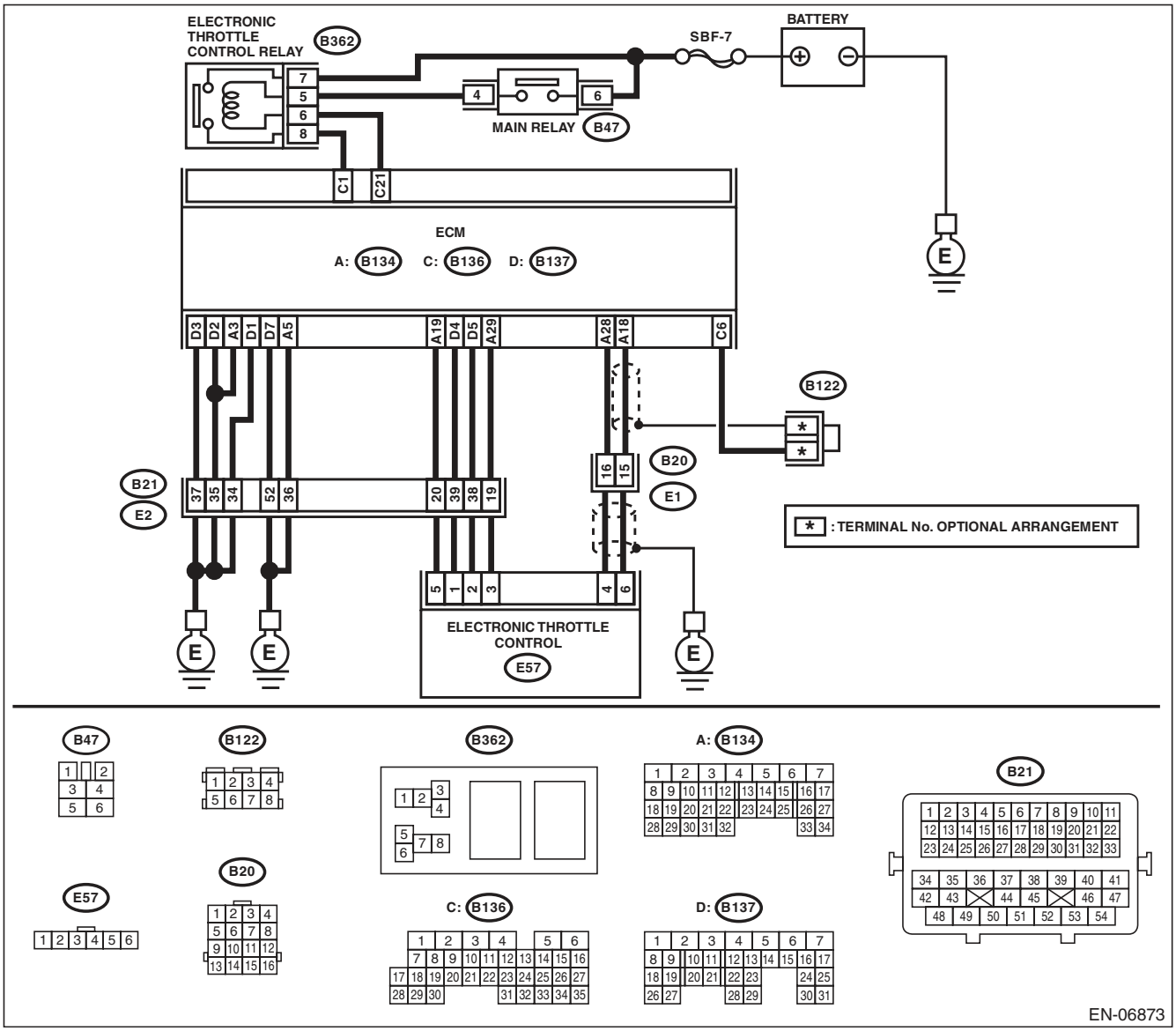

	Step	Check	Yes	No
1	**CHECK ELECTRONIC THROTTLE CONTROL RELAY.** 1) Turn the ignition switch to OFF. 2) Remove the electronic throttle control relay. 3) Connect the battery to terminals No. 5 and No. 6 of electronic throttle control relay. 4) Measure the resistance between electronic throttle control relay terminals. ***Terminals*** ***No. 7 — No. 8:***	Is the resistance less than 1 Ω?	Go to step **2**.	Replace the electronic throttle control relay. <Ref. to EN(H6DO)(diag)-8, Electrical Component Location.>
2	**CHECK POWER SUPPLY OF ELECTRONIC THROTTLE CONTROL RELAY.** Measure the voltage between electronic throttle control relay connector and chassis ground. ***Connector & terminal*** ***(B362) No. 7 (+) — Chassis ground (–):***	Is the voltage 10 V or more?	Go to step **3**.	Repair the open or ground short circuit of power supply circuit.
3	**CHECK HARNESS BETWEEN ECM AND ELECTRONIC THROTTLE CONTROL RELAY.** 1) Disconnect the connectors from ECM. 2) Turn the ignition switch to ON. 3) Measure the voltage between electronic throttle control relay connector and chassis ground. ***Connector & terminal*** ***(B362) No. 6 (+) — Chassis ground (–):***	Is the voltage 10 V or more?	Repair the short circuit to power in harness between ECM and electronic throttle control relay.	Go to step **4**.
4	**CHECK HARNESS BETWEEN ECM AND ELECTRONIC THROTTLE CONTROL RELAY.** 1) Turn the ignition switch to OFF. 2) Measure the resistance between electronic throttle control relay connector and chassis ground. ***Connector & terminal*** ***(B362) No. 6 — Chassis ground:*** ***(B362) No. 8 — Chassis ground:***	Is the resistance 1 MΩ or more?	Go to step **5**.	Repair the ground short circuit of harness between ECM and electronic throttle control relay.
5	**CHECK HARNESS BETWEEN ECM AND ELECTRONIC THROTTLE CONTROL RELAY.** Measure the resistance between ECM and electronic throttle control relay connector. ***Connector & terminal*** ***(B136) No. 21 — (B362) No. 6:*** ***(B136) No. 1 — (B362) No. 8:***	Is the resistance less than 1 Ω?	Repair the poor contact of ECM connector.	Repair the open circuit of harness between ECM and electronic throttle control relay.

ED:DTC P2103 THROTTLE ACTUATOR CONTROL MOTOR CIRCUIT HIGH

DTC DETECTING CONDITION:

- Immediately at fault recognition
- GENERAL DESCRIPTION <Ref. to GD(H6DO)-195, DTC P2103 THROTTLE ACTUATOR CONTROL MOTOR CIRCUIT HIGH, Diagnostic Trouble Code (DTC) Detecting Criteria.>

CAUTION:

After repair or replacement of faulty parts, perform Clear Memory Mode <Ref. to EN(H6DO)(diag)-52, OPERATION, Clear Memory Mode.>, and Inspection Mode <Ref. to EN(H6DO)(diag)-44, PROCEDURE, Inspection Mode.>.

WIRING DIAGRAM:

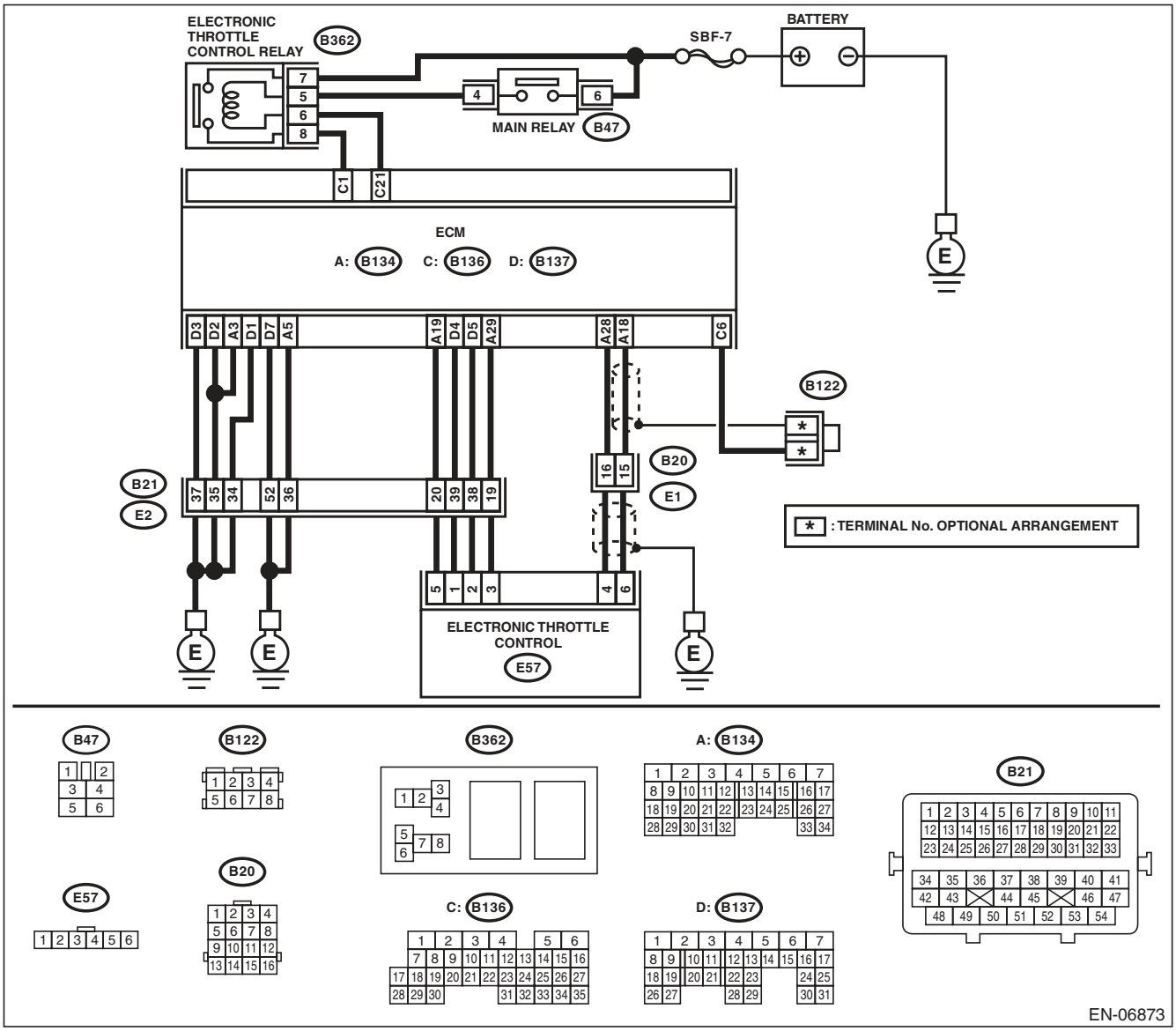

Step		Check	Yes	No
1	**CHECK ELECTRONIC THROTTLE CONTROL RELAY.** 1) Turn the ignition switch to OFF. 2) Remove the electronic throttle control relay. 3) Measure the resistance between electronic throttle control relay terminals. ***Terminals*** ***No. 7 — No. 8:***	Is the resistance 1 MΩ or more?	Go to step **2**.	Replace the electronic throttle control relay. <Ref. to EN(H6DO)(diag)-8, Electrical Component Location.>
2	**CHECK SHORT CIRCUIT OF ELECTRONIC THROTTLE CONTROL RELAY POWER SUPPLY.** 1) Turn the ignition switch to ON. 2) Measure the voltage between electronic throttle control relay connector and chassis ground. ***Connector & terminal*** ***(B362) No. 8 (+) — Chassis ground (–):***	Is the voltage 10 V or more?	Repair the short circuit to power in harness between ECM and electronic throttle control relay.	Go to step **3**.
3	**CHECK HARNESS BETWEEN ECM AND ELECTRONIC THROTTLE CONTROL RELAY.** 1) Turn the ignition switch to OFF. 2) Disconnect the connectors from ECM. 3) Measure the resistance between ECM and chassis ground. ***Connector & terminal*** ***(B136) No. 21 — Chassis ground:***	Is the resistance 1 MΩ or more?	Repair the poor contact of ECM connector.	Repair the ground short circuit of harness between ECM and electronic throttle control relay.

EE:DTC P2109 THROTTLE/PEDAL POSITION SENSOR “A” MINIMUM STOP PERFORMANCE

NOTE:
For the diagnostic procedure, refer to DTC P2101. <Ref. to EN(H6DO)(diag)-324, DTC P2101 THROTTLE ACTUATOR CONTROL MOTOR CIRCUIT RANGE/PERFORMANCE, Diagnostic Procedure with Diagnostic Trouble Code (DTC).>

EF:DTC P2122 THROTTLE/PEDAL POSITION SENSOR/SWITCH “D” CIRCUIT LOW INPUT

DTC DETECTING CONDITION:

- Immediately at fault recognition
- GENERAL DESCRIPTION <Ref. to GD(H6DO)-199, DTC P2122 THROTTLE/PEDAL POSITION SENSOR/SWITCH “D” CIRCUIT LOW INPUT, Diagnostic Trouble Code (DTC) Detecting Criteria.>

TROUBLE SYMPTOM:

- Improper idling
- Poor driving performance

CAUTION:

After repair or replacement of faulty parts, perform Clear Memory Mode <Ref. to EN(H6DO)(diag)-52, OPERATION, Clear Memory Mode.>, and Inspection Mode <Ref. to EN(H6DO)(diag)-44, PROCEDURE, Inspection Mode.>.

WIRING DIAGRAM:

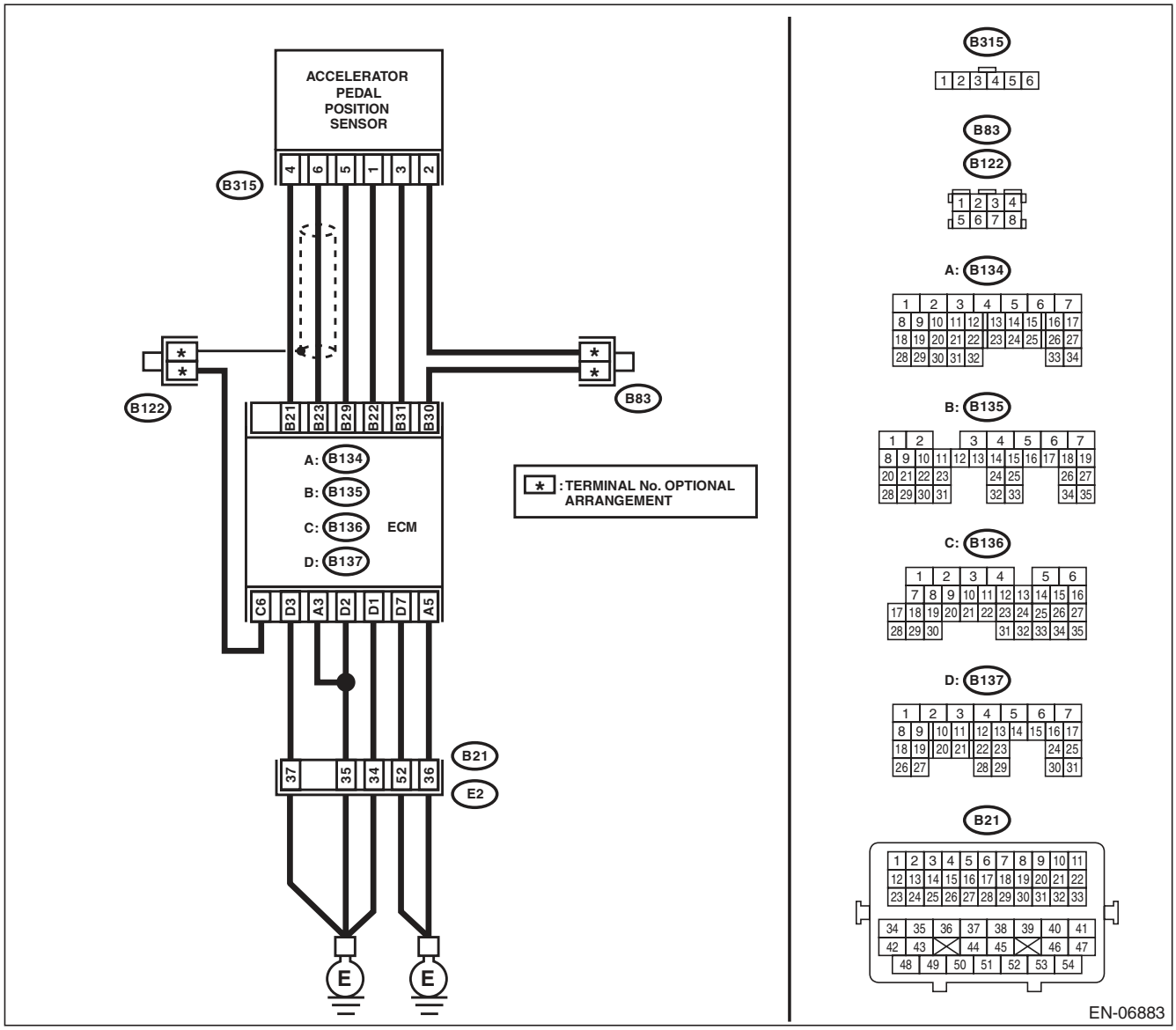

	Step	Check	Yes	No
1	**CHECK HARNESS BETWEEN ECM AND ACCELERATOR PEDAL POSITION SENSOR.** 1) Turn the ignition switch to OFF. 2) Disconnect the connector from ECM and accelerator pedal position sensor. 3) Measure the resistance between ECM and chassis ground. ***Connector & terminal*** ***(B135) No. 21 — Chassis ground:*** ***(B135) No. 23 — Chassis ground:*** ***(B135) No. 23 — (B136) No. 6:***	Is the resistance 1 MΩ or more?	Go to step **2**.	Repair the ground short circuit of harness between ECM and accelerator pedal position sensor connector.
2	**CHECK SHORT CIRCUIT INSIDE THE ECM.** 1) Connect the connector to ECM. 2) Measure the resistance between accelerator pedal position sensor connector and chassis ground. ***Connector & terminal*** ***(B315) No. 5 — Chassis ground:***	Is the resistance 1 MΩ or more?	Replace the accelerator pedal. <Ref. to SP(H4SO)-3, Accelerator Pedal.>	Repair the ground short circuit of harness between ECM and accelerator pedal position sensor connector. Replace the ECM if defective. <Ref. to FU(H6DO)-38, Engine Control Module (ECM).>

EG:DTC P2123 THROTTLE/PEDAL POSITION SENSOR/SWITCH “D” CIRCUIT HIGH INPUT

DTC DETECTING CONDITION:

- Immediately at fault recognition
- GENERAL DESCRIPTION <Ref. to GD(H6DO)-201, DTC P2123 THROTTLE/PEDAL POSITION SENSOR/SWITCH “D” CIRCUIT HIGH INPUT, Diagnostic Trouble Code (DTC) Detecting Criteria.>

TROUBLE SYMPTOM:

- Improper idling
- Poor driving performance

CAUTION:

After repair or replacement of faulty parts, perform Clear Memory Mode <Ref. to EN(H6DO)(diag)-52, OPERATION, Clear Memory Mode.>, and Inspection Mode <Ref. to EN(H6DO)(diag)-44, PROCEDURE, Inspection Mode.>.

WIRING DIAGRAM:

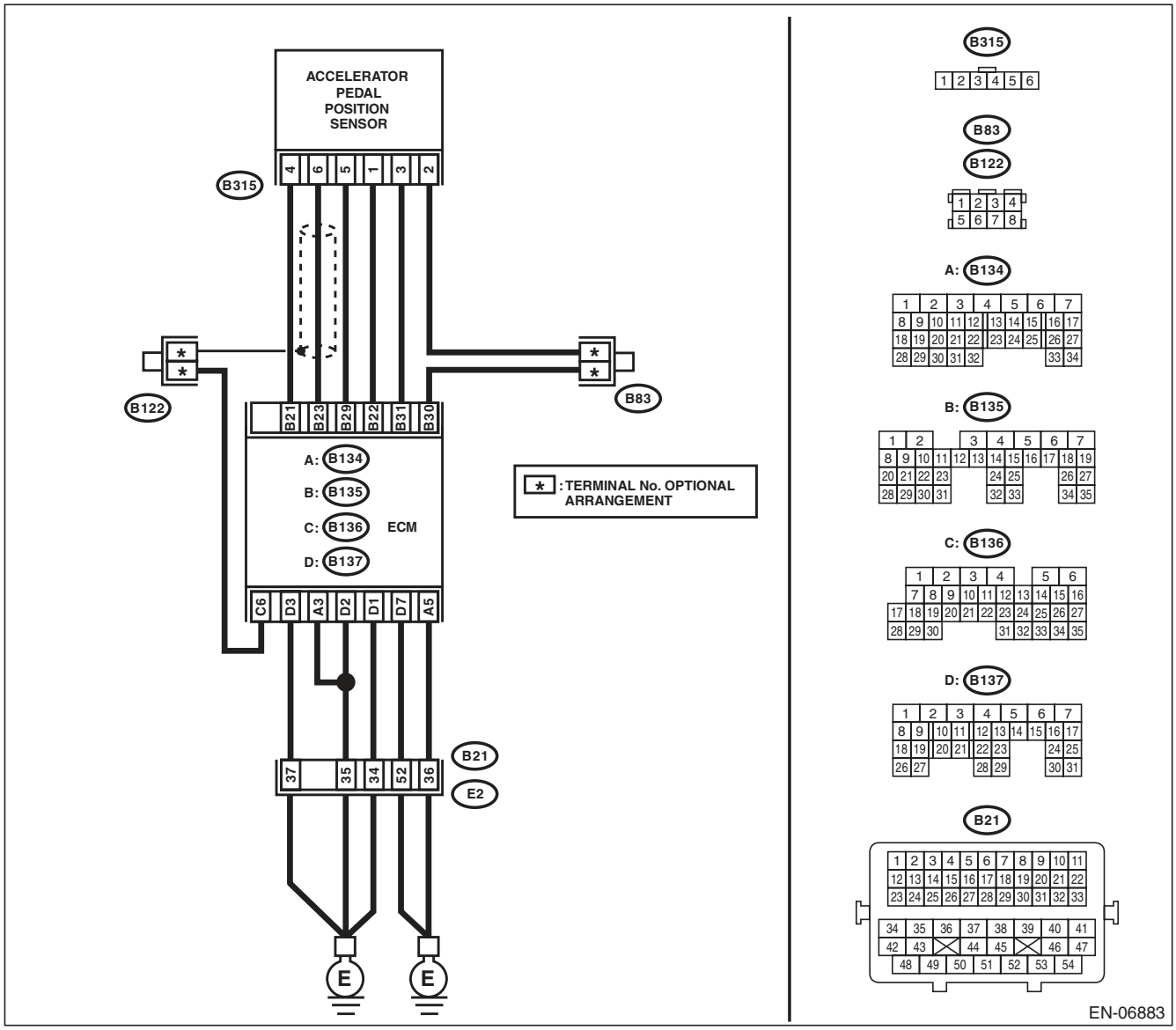

	Step	Check	Yes	No
1	**CHECK HARNESS BETWEEN ECM AND ACCELERATOR PEDAL POSITION SENSOR.** 1) Turn the ignition switch to OFF. 2) Disconnect the connector from ECM and accelerator pedal position sensor. 3) Measure the resistance of harness between ECM and accelerator pedal position sensor connector. ***Connector & terminal*** ***(B135) No. 23 — (B315) No. 6:*** ***(B135) No. 29 — (B315) No. 5:***	Is the resistance less than 1 Ω?	Go to step **2**.	Repair the open circuit in harness between ECM and accelerator pedal position sensor connector.
2	**CHECK HARNESS BETWEEN ECM AND ACCELERATOR PEDAL POSITION SENSOR.** 1) Connect the connector to ECM. 2) Measure the resistance between accelerator pedal position sensor connector and chassis ground. ***Connector & terminal*** ***(B315) No. 5 — Chassis ground:***	Is the resistance less than 5 Ω?	Go to step **3**.	Repair the harness and connector. NOTE: In this case, repair the following item: • Open circuit of harness between ECM and engine ground • Poor contact in ECM connector • Poor contact of coupling connector
3	**CHECK HARNESS BETWEEN ECM AND ACCELERATOR PEDAL POSITION SENSOR.** 1) Turn the ignition switch to ON. 2) Measure the voltage between accelerator pedal position sensor connector and chassis ground. ***Connector & terminal*** ***(B315) No. 6 (+) — Chassis ground (–):***	Is the voltage 4.85 V or more?	Repair the short circuit of harness to power supply between ECM and accelerator pedal position sensor connector.	Go to step **4**.
4	**CHECK HARNESS BETWEEN ECM AND ACCELERATOR PEDAL POSITION SENSOR.** 1) Turn the ignition switch to OFF. 2) Disconnect the connectors from ECM. 3) Measure the resistance between ECM connectors. ***Connector & terminal*** ***(B135) No. 21 — (B135) No. 23:***	Is the resistance 1 MΩ or more?	Repair the poor contact of accelerator pedal position sensor connector. Replace the accelerator pedal if defective. <Ref. to SP(H4SO)-3, Accelerator Pedal.>	Repair the short circuit of harness to power supply between ECM and accelerator pedal position sensor connector.

EH:DTC P2127 THROTTLE/PEDAL POSITION SENSOR/SWITCH “E” CIRCUIT LOW INPUT

DTC DETECTING CONDITION:

- Immediately at fault recognition
- GENERAL DESCRIPTION <Ref. to GD(H6DO)-203, DTC P2127 THROTTLE/PEDAL POSITION SENSOR/SWITCH “E” CIRCUIT LOW INPUT, Diagnostic Trouble Code (DTC) Detecting Criteria.>

TROUBLE SYMPTOM:

- Improper idling
- Poor driving performance

CAUTION:

After repair or replacement of faulty parts, perform Clear Memory Mode <Ref. to EN(H6DO)(diag)-52, OPERATION, Clear Memory Mode.>, and Inspection Mode <Ref. to EN(H6DO)(diag)-44, PROCEDURE, Inspection Mode.>.

WIRING DIAGRAM:

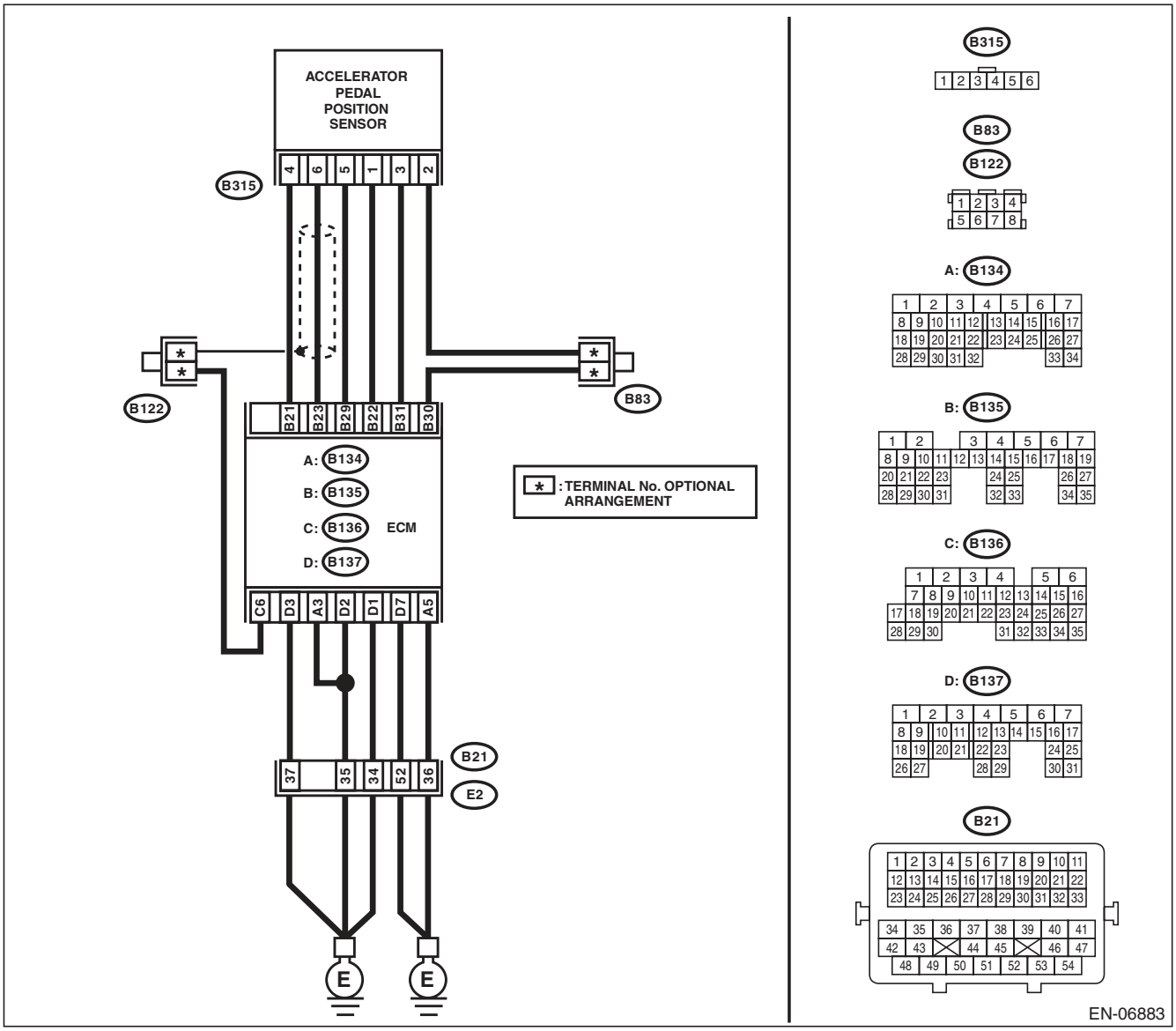

	Step	Check	Yes	No
1	**CHECK HARNESS BETWEEN ECM AND ACCELERATOR PEDAL POSITION SENSOR.** 1) Turn the ignition switch to OFF. 2) Disconnect the connector from ECM and accelerator pedal position sensor. 3) Measure the resistance between ECM and chassis ground. ***Connector & terminal*** ***(B135) No. 22 — Chassis ground:*** ***(B135) No. 31 — Chassis ground:***	Is the resistance 1 MΩ or more?	Go to step **2**.	Repair the ground short circuit of harness between ECM and accelerator pedal position sensor connector.
2	**CHECK SHORT CIRCUIT INSIDE THE ECM.** 1) Connect the connector to ECM. 2) Measure the resistance between accelerator pedal position sensor connector and chassis ground. ***Connector & terminal*** ***(B315) No. 3 — Chassis ground:***	Is the resistance 1 MΩ or more?	Replace the accelerator pedal. <Ref. to SP(H4SO)-3, Accelerator Pedal.>	Repair the ground short circuit of harness between ECM and accelerator pedal position sensor connector. Replace the ECM if defective. <Ref. to FU(H6DO)-38, Engine Control Module (ECM).>

EI: DTC P2128 THROTTLE/PEDAL POSITION SENSOR/SWITCH “E” CIRCUIT HIGH INPUT

DTC DETECTING CONDITION:

- Immediately at fault recognition
- GENERAL DESCRIPTION <Ref. to GD(H6DO)-205, DTC P2128 THROTTLE/PEDAL POSITION SENSOR/SWITCH “E” CIRCUIT HIGH INPUT, Diagnostic Trouble Code (DTC) Detecting Criteria.>

TROUBLE SYMPTOM:

- Improper idling
- Poor driving performance

CAUTION:

After repair or replacement of faulty parts, perform Clear Memory Mode <Ref. to EN(H6DO)(diag)-52, OPERATION, Clear Memory Mode.>, and Inspection Mode <Ref. to EN(H6DO)(diag)-44, PROCEDURE, Inspection Mode.>.

WIRING DIAGRAM:

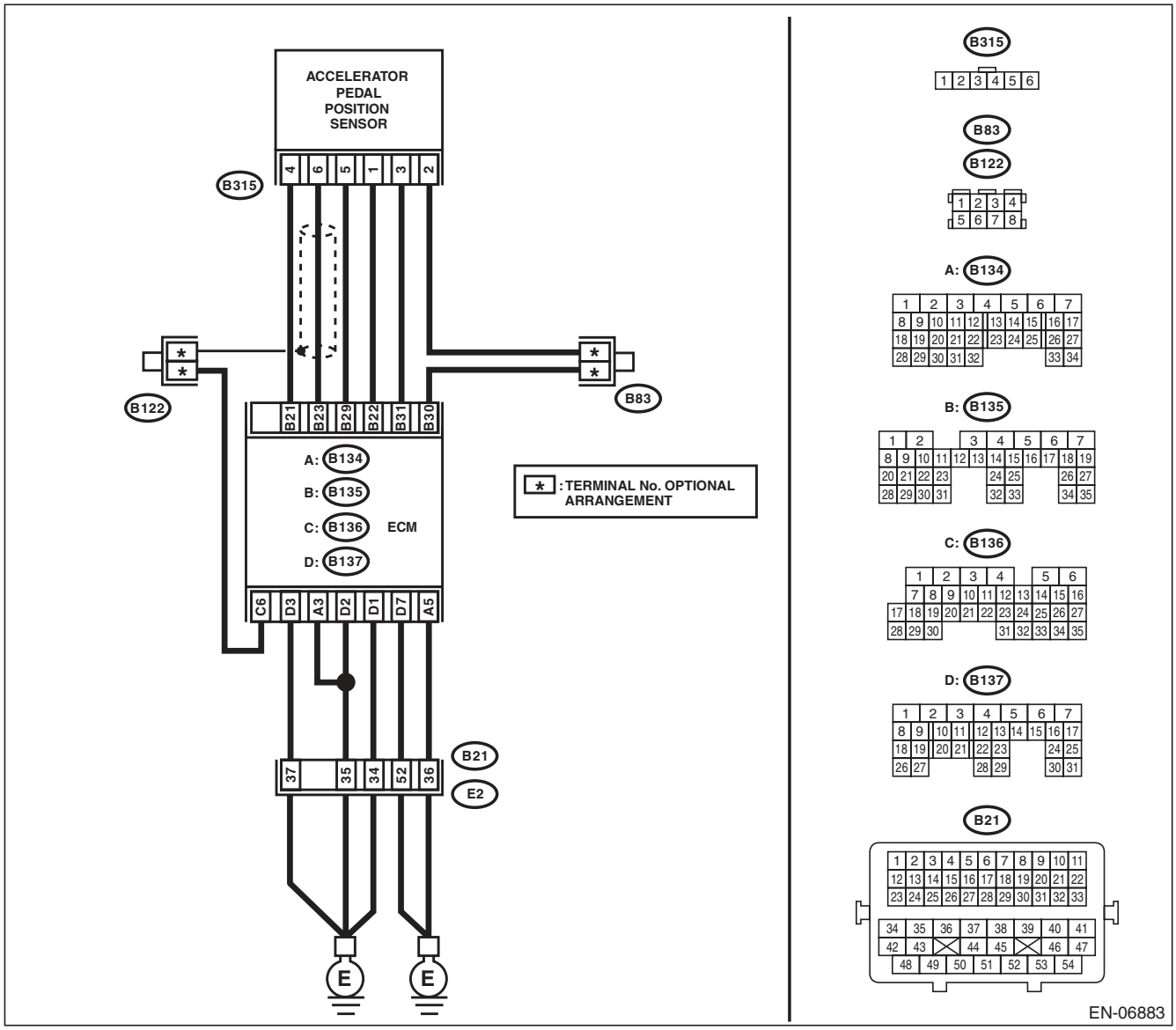

	Step	Check	Yes	No
1	**CHECK HARNESS BETWEEN ECM AND ACCELERATOR PEDAL POSITION SENSOR.** 1) Turn the ignition switch to OFF. 2) Disconnect the connector from ECM and accelerator pedal position sensor. 3) Measure the resistance of harness between ECM and accelerator pedal position sensor connector. ***Connector & terminal*** ***(B135) No. 31 — (B315) No. 3:*** ***(B135) No. 30 — (B315) No. 2:***	Is the resistance less than 1 Ω?	Go to step **2**.	Repair the open circuit in harness between ECM and accelerator pedal position sensor connector.
2	**CHECK HARNESS BETWEEN ECM AND ACCELERATOR PEDAL POSITION SENSOR.** 1) Connect the connector to ECM. 2) Measure the resistance between accelerator pedal position sensor connector and chassis ground. ***Connector & terminal*** ***(B315) No. 5 — Chassis ground:***	Is the resistance less than 1 Ω?	Go to step **3**.	Repair the harness and connector. NOTE: In this case, repair the following item: • Open circuit of harness between ECM and engine ground • Poor contact in ECM connector • Poor contact of coupling connector
3	**CHECK HARNESS BETWEEN ECM AND ACCELERATOR PEDAL POSITION SENSOR.** 1) Turn the ignition switch to ON. 2) Measure the voltage between accelerator pedal position sensor connector and chassis ground. ***Connector & terminal*** ***(B315) No. 3 (+) — Chassis ground (–):***	Is the voltage 4.85 V or more?	Repair the short circuit of harness to power supply between ECM and accelerator pedal position sensor connector.	Go to step **4**.
4	**CHECK HARNESS BETWEEN ECM AND ACCELERATOR PEDAL POSITION SENSOR.** 1) Turn the ignition switch to OFF. 2) Disconnect the connectors from ECM. 3) Measure the resistance between ECM connectors. ***Connector & terminal*** ***(B135) No. 22 — (B135) No. 31:***	Is the resistance 1 MΩ or more?	Repair the poor contact of accelerator pedal position sensor connector. Replace the accelerator pedal if defective. <Ref. to SP(H4SO)-3, Accelerator Pedal.>	Repair the short circuit of harness to power supply between ECM and accelerator pedal position sensor connector.

EJ: DTC P2135 THROTTLE/PEDAL POSITION SENSOR/SWITCH “A”/“B” VOLTAGE CORRELATION

DTC DETECTING CONDITION:

- Immediately at fault recognition
- GENERAL DESCRIPTION <Ref. to GD(H6DO)-207, DTC P2135 THROTTLE/PEDAL POSITION SENSOR/SWITCH “A”/“B” VOLTAGE CORRELATION, Diagnostic Trouble Code (DTC) Detecting Criteria.>

TROUBLE SYMPTOM:

- Improper idling
- Poor driving performance

CAUTION:

After repair or replacement of faulty parts, perform Clear Memory Mode <Ref. to EN(H6DO)(diag)-52, OPERATION, Clear Memory Mode.>, and Inspection Mode <Ref. to EN(H6DO)(diag)-44, PROCEDURE, Inspection Mode.>.

WIRING DIAGRAM:

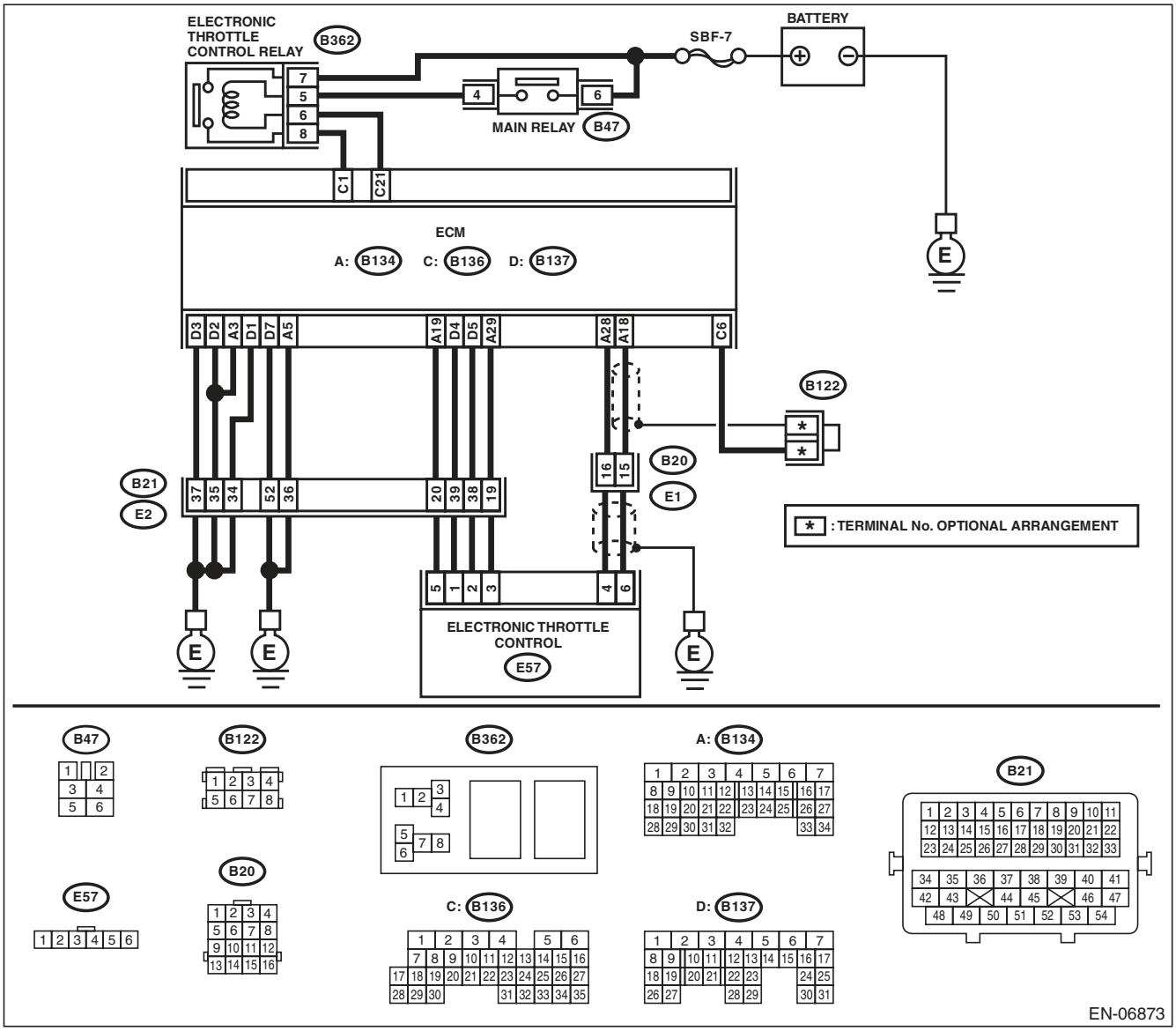

	Step	Check	Yes	No
1	**CHECK HARNESS BETWEEN ECM AND ELECTRONIC THROTTLE CONTROL.** 1) Turn the ignition switch to OFF. 2) Disconnect the connectors from ECM and electronic throttle control. 3) Measure the resistance between ECM and chassis ground. ***Connector & terminal*** ***(B134) No. 19 — Chassis ground:*** ***(B134) No. 18 — Chassis ground:*** ***(B134) No. 18 — (B136) No. 6:*** ***(B134) No. 28 — Chassis ground:***	Is the resistance 1 MΩ or more?	Go to step **2**.	Repair the short circuit to ground in harness between ECM and electronic throttle control connector.
2	**CHECK SHORT CIRCUIT INSIDE THE ECM.** 1) Connect the connector to ECM. 2) Measure the resistance between electronic throttle control connector and engine ground. ***Connector & terminal*** ***(E57) No. 6 — Engine ground:*** ***(E57) No. 4 — Engine ground:***	Is the resistance 1 MΩ or more?	Go to step **3**.	Repair the short circuit to ground in harness between ECM and electronic throttle control connector. Replace the ECM if defective. <Ref. to FU(H6DO)-38, Engine Control Module (ECM).>
3	**CHECK HARNESS BETWEEN ECM AND ELECTRONIC THROTTLE CONTROL.** 1) Disconnect the connectors from ECM. 2) Measure the resistance of harness between ECM and electronic throttle control connector. ***Connector & terminal*** ***(B134) No. 18 — (E57) No. 6:*** ***(B134) No. 28 — (E57) No. 4:*** ***(B134) No. 29 — (E57) No. 3:***	Is the resistance less than 1 Ω?	Go to step **4**.	Repair the harness and connector. NOTE: In this case, repair the following item: • Open circuit in harness between ECM and electronic throttle control connector • Poor contact of coupling connector
4	**CHECK HARNESS BETWEEN ECM AND ELECTRONIC THROTTLE CONTROL.** 1) Connect the connector to ECM. 2) Measure the resistance between electronic throttle control connector and engine ground. ***Connector & terminal*** ***(E57) No. 3 — Engine ground:***	Is the resistance less than 5 Ω?	Go to step **5**.	Repair the harness and connector. NOTE: In this case, repair the following item: • Open circuit of harness between ECM and engine ground • Poor contact in ECM connector • Poor contact of coupling connector
5	**CHECK HARNESS BETWEEN ECM AND ELECTRONIC THROTTLE CONTROL.** 1) Turn the ignition switch to ON. 2) Measure the voltage between electronic throttle control connector and engine ground. ***Connector & terminal*** ***(E57) No. 6 (+) — Engine ground (–):*** ***(E57) No. 4 (+) — Engine ground (–):***	Is the voltage 4.85 V or more?	Repair the short circuit to power in the harness between ECM and electronic throttle control connector.	Go to step **6**.

Step		Check	Yes	No
6	**CHECK HARNESS BETWEEN ECM AND ELECTRONIC THROTTLE CONTROL.** 1) Turn the ignition switch to OFF. 2) Disconnect the connectors from ECM. 3) Measure the resistance between ECM connectors. ***Connector & terminal*** ***(B134) No. 19 — (B134) No. 18:*** ***(B134) No. 19 — (B134) No. 28:***	Is the resistance 1 MΩ or more?	Repair poor contact of the electronic throttle control connector. Replace the electronic throttle control if defective. <Ref. to FU(H6DO)-13, Throttle Body.>	Repair the short circuit to power in the harness between ECM and electronic throttle control connector.

EK:DTC P2138 THROTTLE/PEDAL POSITION SENSOR/SWITCH “D”/“E” VOLTAGE CORRELATION

DTC DETECTING CONDITION:

- Immediately at fault recognition
- GENERAL DESCRIPTION <Ref. to GD(H6DO)-209, DTC P2138 THROTTLE/PEDAL POSITION SENSOR/SWITCH “D”/“E” VOLTAGE CORRELATION, Diagnostic Trouble Code (DTC) Detecting Criteria.>

CAUTION:

After repair or replacement of faulty parts, perform Clear Memory Mode <Ref. to EN(H6DO)(diag)-52, OPERATION, Clear Memory Mode.>, and Inspection Mode <Ref. to EN(H6DO)(diag)-44, PROCEDURE, Inspection Mode.>.

TROUBLE SYMPTOM:

- Improper idling
- Poor driving performance

WIRING DIAGRAM:

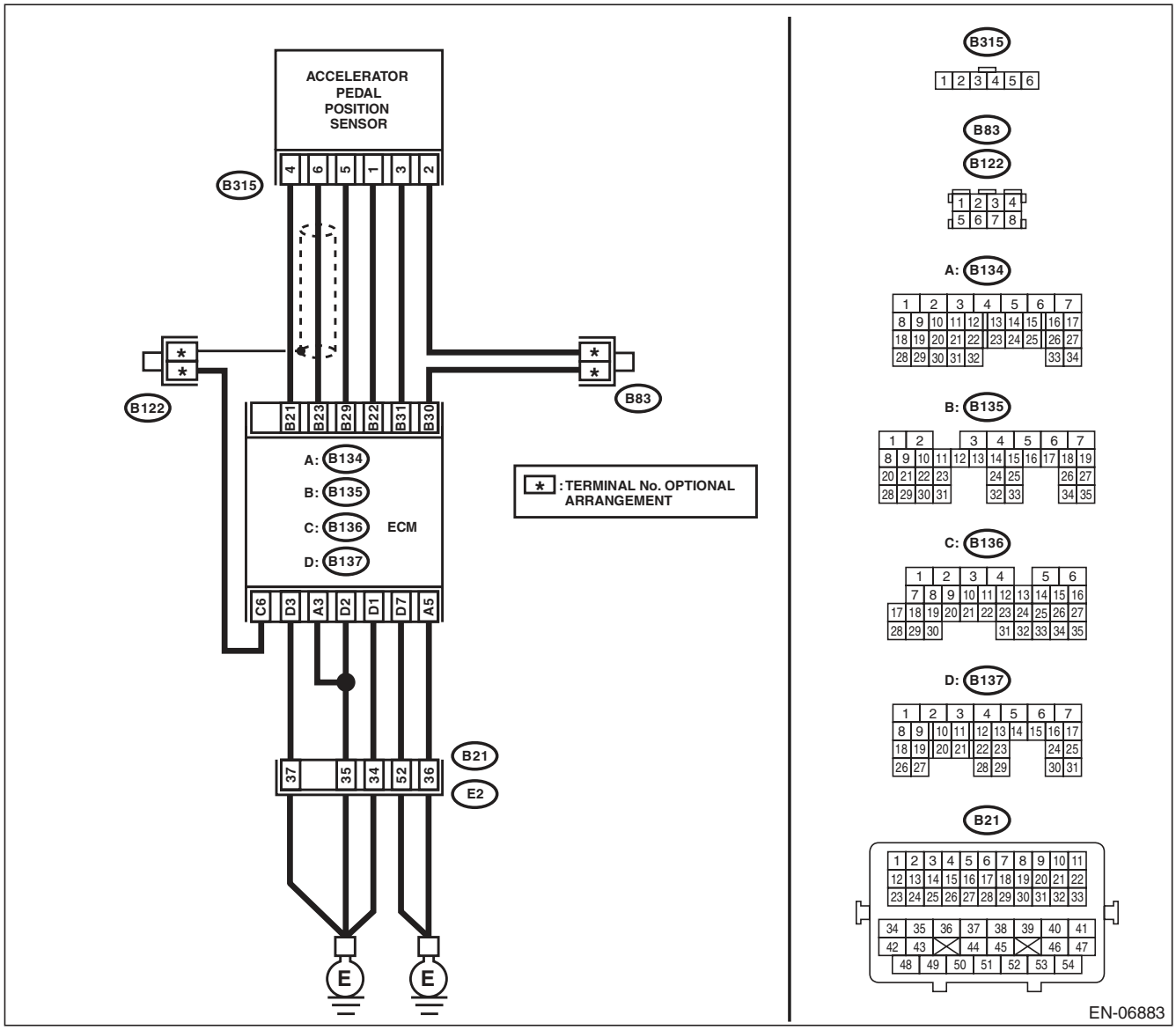

	Step	Check	Yes	No
1	**CHECK ACCELERATOR PEDAL POSITION SENSOR OUTPUT.** 1) Turn the ignition switch to ON. 2) Measure the voltage between ECM and chassis ground. ***Connector & terminal*** ***(B135) No. 23 (+) — Chassis ground (–):*** ***(B135) No. 31 (+) — Chassis ground (–):***	Is the difference in measured values for the main accelerator pedal position sensor signal and the sub accelerator pedal position sensor signal 0 V?	Go to step **3**.	Go to step **2**.
2	**CHECK ACCELERATOR PEDAL POSITION SENSOR OUTPUT.** 1) Measure the voltage between accelerator pedal position sensor connector and chassis ground. ***Connector & terminal*** ***(B315) No. 6 (+) — Chassis ground (–):*** ***(B315) No. 3 (+) — Chassis ground (–):***	Is the difference in measured values for the main accelerator pedal position sensor signal and the sub accelerator pedal position sensor signal 0 V?	Replace the accelerator pedal. <Ref. to SP(H4SO)-3, Accelerator Pedal.>	Repair the harness and connector. NOTE: In this case, repair the following item: • Open circuit of harness between the ECM and accelerator pedal position sensor connector. • Short circuit to ground in harness between ECM and accelerator pedal position sensor connector. • Poor contact of coupling connector
3	**CHECK HARNESS BETWEEN ECM AND ACCELERATOR PEDAL POSITION SENSOR CONNECTOR.** Check the resistance of harness between the accelerator pedal position sensor connector and chassis ground. ***Connector & terminal*** ***(B315) No. 5 — Chassis ground:*** ***(B315) No. 2 — Chassis ground:***	Is the resistance less than 5 Ω?	Repair the poor contact of ECM connector.	Repair the harness and connector. NOTE: In this case, repair the following item: • Open circuit of harness between the ECM and accelerator pedal position sensor connector. • Open circuit of harness between ECM and engine ground • Poor contact in ECM connector • Poor contact of coupling connector

EL:DTC P2227 BAROMETRIC PRESSURE CIRCUIT RANGE/PERFORMANCE

DTC DETECTING CONDITION:

- Two consecutive driving cycles with fault
- GENERAL DESCRIPTION <Ref. to GD(H6DO)-211, DTC P2227 BAROMETRIC PRESSURE CIRCUIT RANGE/PERFORMANCE, Diagnostic Trouble Code (DTC) Detecting Criteria.>

CAUTION:

After repair or replacement of faulty parts, perform Clear Memory Mode <Ref. to EN(H6DO)(diag)-52, OPERATION, Clear Memory Mode.>, and Inspection Mode <Ref. to EN(H6DO)(diag)-44, PROCEDURE, Inspection Mode.>.

Step	Check	Yes	No
1 **CHECK FOR ANY OTHER DTC ON DISPLAY.**	Is any other DTC displayed?	Check DTC using "List of Diagnostic Trouble Code (DTC)". <Ref. to EN(H6DO)(diag)-81, List of Diagnostic Trouble Code (DTC).>	Replace the ECM. <Ref. to FU(H6DO)-38, Engine Control Module (ECM).> NOTE: The barometric pressure sensor is built into the ECM.

EM:DTC P2228 BAROMETRIC PRESSURE CIRCUIT LOW

DTC DETECTING CONDITION:

- Immediately at fault recognition
- GENERAL DESCRIPTION <Ref. to GD(H6DO)-212, DTC P2228 BAROMETRIC PRESSURE CIRCUIT LOW, Diagnostic Trouble Code (DTC) Detecting Criteria.>

CAUTION:

After repair or replacement of faulty parts, perform Clear Memory Mode <Ref. to EN(H6DO)(diag)-52, OPERATION, Clear Memory Mode.>, and Inspection Mode <Ref. to EN(H6DO)(diag)-44, PROCEDURE, Inspection Mode.>.

Step	Check	Yes	No
1 **CHECK FOR ANY OTHER DTC ON DISPLAY.**	Is any other DTC displayed?	Check DTC using "List of Diagnostic Trouble Code (DTC)". <Ref. to EN(H6DO)(diag)-81, List of Diagnostic Trouble Code (DTC).>	Replace the ECM. <Ref. to FU(H6DO)-38, Engine Control Module (ECM).> NOTE: The barometric pressure sensor is built into the ECM.

EN:DTC P2229 BAROMETRIC PRESSURE CIRCUIT HIGH

DTC DETECTING CONDITION:

- Immediately at fault recognition
- GENERAL DESCRIPTION <Ref. to GD(H6DO)-213, DTC P2229 BAROMETRIC PRESSURE CIRCUIT HIGH, Diagnostic Trouble Code (DTC) Detecting Criteria.>

CAUTION:

After repair or replacement of faulty parts, perform Clear Memory Mode <Ref. to EN(H6DO)(diag)-52, OPERATION, Clear Memory Mode.>, and Inspection Mode <Ref. to EN(H6DO)(diag)-44, PROCEDURE, Inspection Mode.>.

Step	Check	Yes	No
1 CHECK FOR ANY OTHER DTC ON DISPLAY.	Is any other DTC displayed?	Check DTC using "List of Diagnostic Trouble Code (DTC)". <Ref. to EN(H6DO)(diag)-81, List of Diagnostic Trouble Code (DTC).>	Replace the ECM. <Ref. to FU(H6DO)-38, Engine Control Module (ECM).> NOTE: The barometric pressure sensor is built into the ECM.

21. Diagnostic Procedure without Diagnostic Trouble Code (DTC)

A: CHECK SI-DRIVE (SUBARU INTELLIGENT DRIVE) SYSTEM

DIAGNOSIS:
SI-DRIVE mode will not change.

CAUTION:
Note that the SI-DRIVE system performs the following control when changing modes.
1. When the engine is cold, the low coolant temperature display will light in the multi-information display meter. In this case, it will not be possible to change to the S# (sports sharp) mode.
2. If the engine is stopped in the S# (sports sharp) mode, it will be in the S (sports) mode when the engine is restarted.
3. If the engine is stopped in the S (sports) or I (intelligent) mode, then restarted, it will enter the mode it was on before stopping the engine.
4. If the malfunction indicator light becomes lit while the engine is running, it will enter the S (sports) mode. In this case, it will not be possible to change to the S# (sports sharp) or I (intelligent) mode.
5. If there is a possible engine coolant or engine oil temperature overheat condition, it will not be possible to switch to the S# (sports sharp) mode. When driving in the S# (sports sharp) mode, it will enter the S (sports) mode.

1. EVEN WHEN THE SI-DRIVE MODE IS CHANGED, THE MULTI-INFORMATION DISPLAY DOES NOT CHANGE, AND THE MODE DOES NOT SWITCH.

WIRING DIAGRAM:

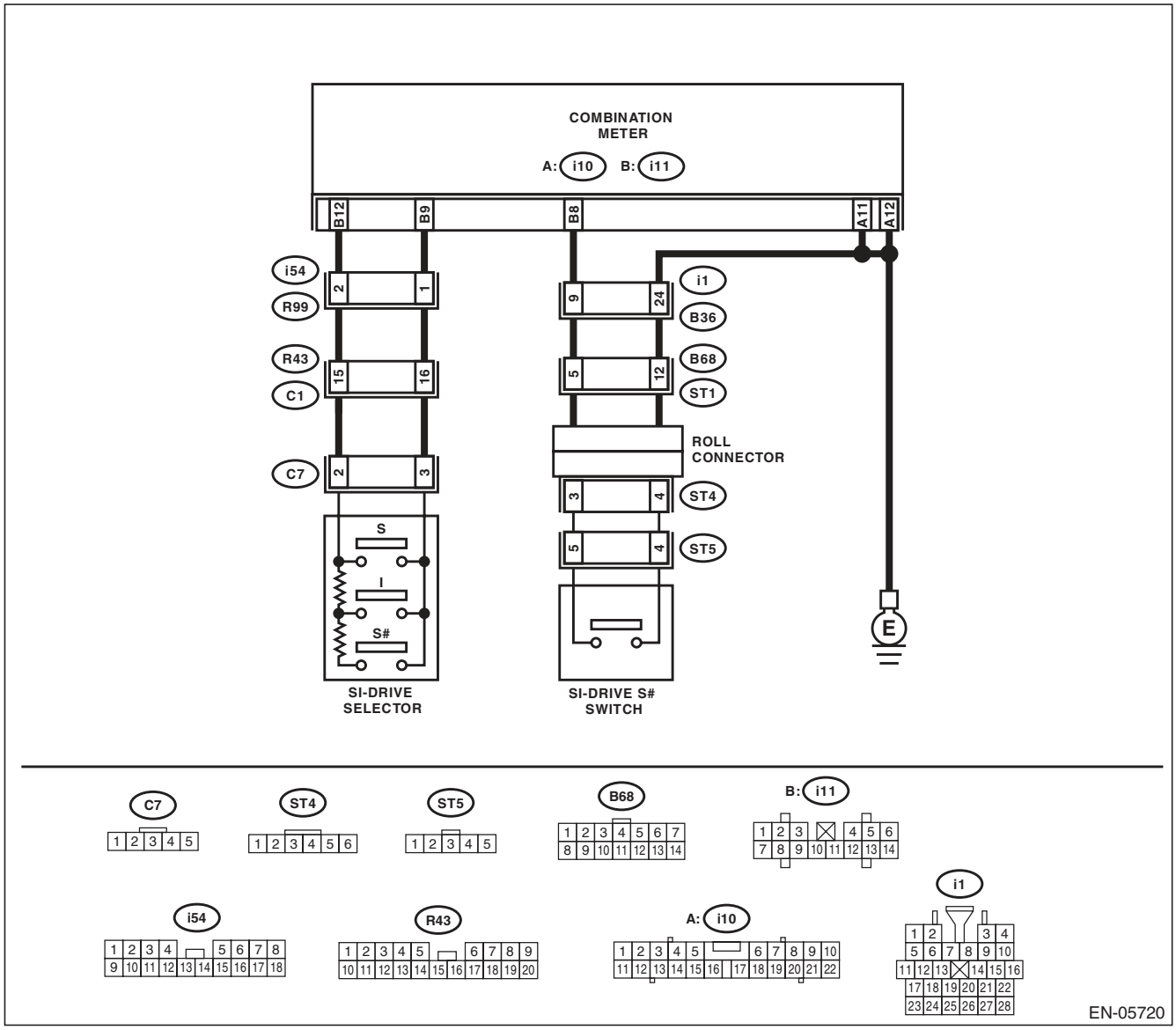

	Step	Check	Yes	No
1	**CHECK SI-DRIVE SELECTOR.** 1) Disconnect the connector from the multi-information display meter. 2) Measure the resistance between connectors when the SI-DRIVE selector is operated. ***Connector & terminal*** ***(i11) No. 9 — (i11) No. 12:***	Does the resistance change as shown below? S#: 2.14 — 3.2 kΩ I: 0.8 — 1.2 kΩ S: Less than 10 Ω	Go to step **2**.	Go to step **5**.
2	**CHECK SI-DRIVE S# SWITCH.** 1) Hold down the SI- DRIVE S# switch. 2) Measure the resistance of harness between the multi-information display meter connector and chassis ground. ***Connector & terminal*** ***(i11) No. 8 — Chassis ground:***	Is the resistance less than 10 Ω?	Go to step **3**.	Go to step **6**.
3	**CHECK POOR CONTACT.** Check the following items. • Cracked or improperly connected connector • Broken connector pin • Disconnection connector terminal	Is there any abnormal condition?	Correct the cause of trouble.	Go to step **4**.
4	**RECHECK FAULT.** 1) Connect all connectors. 2) Change the SI-DRIVE mode.	Is there any abnormal condition?	Replace the multi-information display meter. <Ref. to IDI-22, Combination Meter.>	The circuit has returned to a normal condition at this time. Reproduce the failure, and then perform the diagnosis again. NOTE: In this case, temporary poor contact of connector may be the cause.
5	**CHECK SI-DRIVE SELECTOR HARNESS AND CONNECTOR.** Check the following items. • Short or open circuit in the harness • Improperly connected or loose terminal in the SI-DRIVE selector connector • Improperly connected or loose terminal in coupling connector	Is there any abnormal condition?	Correct the cause of trouble.	Go to step **7**.
6	**CHECK SI-DRIVE S# SWITCH HARNESS AND CONNECTOR.** Check the following items. • Short or open circuit in the harness • Improperly connected or loose terminal in steering roll connector • Improperly connected or loose terminal in coupling connector	Is there any abnormal condition?	Correct the cause of trouble.	Go to step **7**.
7	**RECHECK FAULT.** 1) Connect all connectors. 2) Change the SI-DRIVE mode.	Is there any abnormal condition?	Replace the SI-DRIVE selector or SI-DRIVE S# switch. <Ref. to FU(H6DO)-36, SI-DRIVE (SUBARU Intelligent Drive) Selector.> or <Ref. to FU(H6DO)-37, SI-DRIVE (SUBARU Intelligent Drive) S# Switch.>	The circuit has returned to a normal condition at this time. Reproduce the failure, and then perform the diagnosis again. NOTE: In this case, temporary poor contact of connector may be the cause.

2. WHEN THE SI-DRIVE MODE IS CHANGED, “MODE CHANGE ERROR” APPEARS IN THE MULTI INFORMATION DISPLAY APPROXIMATELY 5 SECONDS LATER.

Step		Check	Yes	No
1	**CHECK DTC.**	Is DTC displayed?	Check the corresponding DTC using the “List of Diagnostic Trouble Code (DTC)” for each unit.	Go to step **2**.
2	**CHECK DISPLAY OF MULTI-INFORMATION DISPLAY METER.** Check whether there are other errors displayed other than the “Mode Change Error”. Examples: • “Err” is displayed in the external temperature or fuel consumption displays. • FUEL gauge, TEMP gauge or ECO gauge does not move.	Is there other errors displayed other than the “Mode Change Error”?	For the diagnostic procedure, refer to LAN section. <Ref. to LAN(diag)-2, Basic Diagnostic Procedure.>	Go to step **3**.
3	**CHECK MULTI-INFORMATION DISPLAY METER AND ECM.**	Is the multi-information display meter and ECM part numbers correct?	Replace the multi-information display meter. <Ref. to IDI-22, Combination Meter.>	Replace the multi-information display meter or ECM to that of the correct part number. <Ref. to IDI-22, Combination Meter.> or <Ref. to FU(H6DO)-38, Engine Control Module (ECM).>

3. WHEN THE SI-DRIVE MODE IS CHANGED, “MODE CHANGE ERROR” IS NOT DISPLAYED IN MULTI-INFORMATION DISPLAY, AND “S#”, “I”, “S” FLASHES.

NOTE:
In this case, there may be a problem outside the SI-DRIVE system.

	Step	Check	Yes	No
1	**CHECK MALFUNCTION INDICATOR LIGHT.** 1) Start the engine. 2) Check whether the malfunction indicator light is lit or not.	Does the malfunction indicator light illuminate?	Check the appropriate DTC using the “List of Diagnostic Trouble Code (DTC)”. <Ref. to EN(H6DO)(diag)-81, List of Diagnostic Trouble Code (DTC).>	Go to step **2**.
2	**CHECK ENGINE COOLANT TEMPERATURE GAUGE.** 1) Turn the ignition switch to ON. 2) Check the engine coolant temperature gauge.	Is it overheating?	Investigate and repair the cause of overheating.	Go to step **3**.
3	**CHECK ENGINE OIL TEMPERATURE.** 1) Turn the ignition switch to ON. 2) Check the engine oil temperature using Subaru Select Monitor. NOTE: For detailed operation procedure, refer to “READ CURRENT DATA FOR ENGINE”. <Ref. to EN(H6DO)(diag)-34, Subaru Select Monitor.>	Is the engine oil temperature 117°C (243°F) or higher?	Inspect and repair the cause of engine oil temperature rise. NOTE: Ask the customer whether the vehicle has experienced a long drive in low gear or towing of heavy load. If not, drive the vehicle again after the engine oil temperature lowers, and check if the oil temperature rises.	Go to step **4**.
4	**CHECK DISPLAY OF MULTI-INFORMATION DISPLAY.** 1) Turn the ignition switch to ON. 2) Change the SI-DRIVE mode. 3) Check the display of the multi-information display.	Do the displays “S#”, “I”, “S” of the multi-information display flash?	Replace the multi-information display meter. <Ref. to IDI-22, Combination Meter.>	Perform test operation, and check the malfunction indicator, the engine coolant temperature gauge and the engine oil temperature. If they are operating normally, end the diagnosis.

22. General Diagnostic Table

A: INSPECTION

NOTE:
Malfunction of parts other than those listed is also possible. <Ref. to ME(H6DO)-85, Engine Trouble in General.>

Symptoms	Problem parts
1. Engine stalls during idling.	1) Manifold absolute pressure sensor 2) Mass air flow and intake air temperature sensor 3) Ignition parts (*1) 4) Engine coolant temperature sensor (*2) 5) Crankshaft position sensor (*3) 6) Camshaft position sensor (*3) 7) Fuel injection parts (*4)
2. Rough idling	1) Manifold absolute pressure sensor 2) Mass air flow and intake air temperature sensor 3) Engine coolant temperature sensor (*2) 4) Ignition parts (*1) 5) Air intake system (*5) 6) Fuel injection parts (*4) 7) Electronic throttle control 8) Crankshaft position sensor (*3) 9) Camshaft position sensor (*3) 10) Oxygen sensor 11) Fuel pump and fuel pump relay
3. Engine does not return to idle.	1) Engine coolant temperature sensor 2) Electronic throttle control 3) Manifold absolute pressure sensor 4) Mass air flow and intake air temperature sensor 5) Accelerator pedal position sensor 6) Oil temperature sensor
4. Poor acceleration	1) Manifold absolute pressure sensor 2) Mass air flow and intake air temperature sensor 3) Electronic throttle control 4) Fuel injection parts (*4) 5) Fuel pump and fuel pump relay 6) Engine coolant temperature sensor (*2) 7) Crankshaft position sensor (*3) 8) Camshaft position sensor (*3) 9) A/C switch and A/C cut relay 10) Engine torque control signal circuit 11) Ignition parts (*1) 12) Accelerator pedal position sensor 13) Oil temperature sensor
5. Engine stalls, engine sags or hesitates at acceleration.	1) Manifold absolute pressure sensor 2) Mass air flow and intake air temperature sensor 3) Engine coolant temperature sensor (*2) 4) Crankshaft position sensor (*3) 5) Camshaft position sensor (*3) 6) Purge control solenoid valve 7) Fuel injection parts (*4) 8) Electronic throttle control 9) Fuel pump and fuel pump relay

Symptoms	Problem parts
6. Surging	1) Mass air flow and intake air temperature sensor 2) Manifold absolute pressure sensor 3) Engine coolant temperature sensor (*2) 4) Crankshaft position sensor (*3) 5) Camshaft position sensor (*3) 6) Fuel injection parts (*4) 7) Electronic throttle control 8) Fuel pump and fuel pump relay
7. Spark knock	1) Mass air flow and intake air temperature sensor 2) Manifold absolute pressure sensor 3) Engine coolant temperature sensor 4) Knock sensor 5) Fuel injection parts (*4) 6) Fuel pump and fuel pump relay
8. After-burn in exhaust system	1) Mass air flow and intake air temperature sensor 2) Manifold absolute pressure sensor 3) Engine coolant temperature sensor (*2) 4) Fuel injection parts (*4) 5) Fuel pump and fuel pump relay

*1: Check ignition coil and spark plug.
*2: Indicate the symptom occurring only in cold temperatures.
*3: Ensure the secure installation.
*4: Check the fuel injector and fuel pressure regulator.
*5: Inspect air leak in air intake system.

1. List of Diagnostic Trouble Code (DTC)

A: LIST

DTC	Item	Index
P0011	Intake Camshaft Position - Timing Over-Advanced or System Performance (Bank 1)	<Ref. to GD(H6DO)-10, DTC P0011 INTAKE CAMSHAFT POSITION - TIMING OVER-ADVANCED OR SYSTEM PERFORMANCE (BANK 1), Diagnostic Trouble Code (DTC) Detecting Criteria.>
P0016	Crankshaft Position - Camshaft Position Correlation (Bank1)	<Ref. to GD(H6DO)-12, DTC P0016 CRANKSHAFT POSITION - CAMSHAFT POSITION CORRELATION (BANK1), Diagnostic Trouble Code (DTC) Detecting Criteria.>
P0018	Crankshaft Position - Camshaft Position Correlation (Bank2)	<Ref. to GD(H6DO)-13, DTC P0018 CRANKSHAFT POSITION - CAMSHAFT POSITION CORRELATION (BANK2), Diagnostic Trouble Code (DTC) Detecting Criteria.>
P0021	Intake Camshaft Position - Timing Over-Advanced or System Performance (Bank 2)	<Ref. to GD(H6DO)-13, DTC P0021 INTAKE CAMSHAFT POSITION - TIMING OVER-ADVANCED OR SYSTEM PERFORMANCE (BANK 2), Diagnostic Trouble Code (DTC) Detecting Criteria.>
P0026	Intake Valve Control Solenoid Circuit Range/Performance (Bank 1)	<Ref. to GD(H6DO)-14, DTC P0026 INTAKE VALVE CONTROL SOLENOID CIRCUIT RANGE/PERFORMANCE (BANK 1), Diagnostic Trouble Code (DTC) Detecting Criteria.>
P0028	Intake Valve Control Solenoid Circuit Range/Performance (Bank 2)	<Ref. to GD(H6DO)-16, DTC P0028 INTAKE VALVE CONTROL SOLENOID CIRCUIT RANGE/PERFORMANCE (BANK 2), Diagnostic Trouble Code (DTC) Detecting Criteria.>
P0030	HO2S Heater Control Circuit (Bank 1 Sensor 1)	<Ref. to GD(H6DO)-17, DTC P0030 HO2S HEATER CONTROL CIRCUIT (BANK 1 SENSOR 1), Diagnostic Trouble Code (DTC) Detecting Criteria.>
P0031	HO2S Heater Control Circuit Low (Bank 1 Sensor 1)	<Ref. to GD(H6DO)-19, DTC P0031 HO2S HEATER CONTROL CIRCUIT LOW (BANK 1 SENSOR 1), Diagnostic Trouble Code (DTC) Detecting Criteria.>
P0032	HO2S Heater Control Circuit High (Bank 1 Sensor 1)	<Ref. to GD(H6DO)-21, DTC P0032 HO2S HEATER CONTROL CIRCUIT HIGH (BANK 1 SENSOR 1), Diagnostic Trouble Code (DTC) Detecting Criteria.>
P0037	HO2S Heater Control Circuit Low (Bank 1 Sensor 2)	<Ref. to GD(H6DO)-23, DTC P0037 HO2S HEATER CONTROL CIRCUIT LOW (BANK 1 SENSOR 2), Diagnostic Trouble Code (DTC) Detecting Criteria.>
P0038	HO2S Heater Control Circuit High (Bank 1 Sensor 2)	<Ref. to GD(H6DO)-25, DTC P0038 HO2S HEATER CONTROL CIRCUIT HIGH (BANK 1 SENSOR 2), Diagnostic Trouble Code (DTC) Detecting Criteria.>
P0050	HO2S Heater Control Circuit (Bank 2 Sensor 1)	<Ref. to GD(H6DO)-26, DTC P0050 HO2S HEATER CONTROL CIRCUIT (BANK 2 SENSOR 1), Diagnostic Trouble Code (DTC) Detecting Criteria.>
P0051	HO2S Heater Control Circuit Low (Bank 2 Sensor 1)	<Ref. to GD(H6DO)-26, DTC P0051 HO2S HEATER CONTROL CIRCUIT LOW (BANK 2 SENSOR 1), Diagnostic Trouble Code (DTC) Detecting Criteria.>
P0052	HO2S Heater Control Circuit High (Bank 2 Sensor 1)	<Ref. to GD(H6DO)-26, DTC P0052 HO2S HEATER CONTROL CIRCUIT HIGH (BANK 2 SENSOR 1), Diagnostic Trouble Code (DTC) Detecting Criteria.>
P0057	HO2S Heater Control Circuit Low (Bank 2 Sensor 2)	<Ref. to GD(H6DO)-26, DTC P0057 HO2S HEATER CONTROL CIRCUIT LOW (BANK 2 SENSOR 2), Diagnostic Trouble Code (DTC) Detecting Criteria.>
P0058	HO2S Heater Control Circuit High (Bank 2 Sensor 2)	<Ref. to GD(H6DO)-26, DTC P0058 HO2S HEATER CONTROL CIRCUIT HIGH (BANK 2 SENSOR 2), Diagnostic Trouble Code (DTC) Detecting Criteria.>
P0068	MAP/MAF - Throttle Position Correlation	<Ref. to GD(H6DO)-27, DTC P0068 MAP/MAF - THROTTLE POSITION CORRELATION, Diagnostic Trouble Code (DTC) Detecting Criteria.>
P0076	Intake Valve Control Solenoid Circuit Low (Bank 1)	<Ref. to GD(H6DO)-29, DTC P0076 INTAKE VALVE CONTROL SOLENOID CIRCUIT LOW (BANK 1), Diagnostic Trouble Code (DTC) Detecting Criteria.>

List of Diagnostic Trouble Code (DTC)

DTC	Item	Index
P0077	Intake Valve Control Solenoid Circuit High (Bank 1)	<Ref. to GD(H6DO)-30, DTC P0077 INTAKE VALVE CONTROL SOLENOID CIRCUIT HIGH (BANK 1), Diagnostic Trouble Code (DTC) Detecting Criteria.>
P0082	Intake Valve Control Solenoid Circuit Low (Bank 2)	<Ref. to GD(H6DO)-30, DTC P0082 INTAKE VALVE CONTROL SOLENOID CIRCUIT LOW (BANK 2), Diagnostic Trouble Code (DTC) Detecting Criteria.>
P0083	Intake Valve Control Solenoid Circuit High (Bank 2)	<Ref. to GD(H6DO)-30, DTC P0083 INTAKE VALVE CONTROL SOLENOID CIRCUIT HIGH (BANK 2), Diagnostic Trouble Code (DTC) Detecting Criteria.>
P0101	Mass or Volume Air Flow Circuit Range/Performance	<Ref. to GD(H6DO)-31, DTC P0101 MASS OR VOLUME AIR FLOW CIRCUIT RANGE/PERFORMANCE, Diagnostic Trouble Code (DTC) Detecting Criteria.>
P0102	Mass or Volume Air Flow Circuit Low Input	<Ref. to GD(H6DO)-33, DTC P0102 MASS OR VOLUME AIR FLOW CIRCUIT LOW INPUT, Diagnostic Trouble Code (DTC) Detecting Criteria.>
P0103	Mass or Volume Air Flow Circuit High Input	<Ref. to GD(H6DO)-34, DTC P0103 MASS OR VOLUME AIR FLOW CIRCUIT HIGH INPUT, Diagnostic Trouble Code (DTC) Detecting Criteria.>
P0107	Manifold Absolute Pressure/ Barometric Pressure Circuit Low Input	<Ref. to GD(H6DO)-35, DTC P0107 MANIFOLD ABSOLUTE PRESSURE/ BAROMETRIC PRESSURE CIRCUIT LOW INPUT, Diagnostic Trouble Code (DTC) Detecting Criteria.>
P0108	Manifold Absolute Pressure/ Barometric Pressure Circuit High Input	<Ref. to GD(H6DO)-36, DTC P0108 MANIFOLD ABSOLUTE PRESSURE/ BAROMETRIC PRESSURE CIRCUIT HIGH INPUT, Diagnostic Trouble Code (DTC) Detecting Criteria.>
P0111	Intake Air Temperature Sensor 1 Circuit Range/Performance	<Ref. to GD(H6DO)-37, DTC P0111 INTAKE AIR TEMPERATURE SENSOR 1 CIRCUIT RANGE/PERFORMANCE, Diagnostic Trouble Code (DTC) Detecting Criteria.>
P0112	Intake Air Temperature Sensor 1 Circuit Low	<Ref. to GD(H6DO)-39, DTC P0112 INTAKE AIR TEMPERATURE SENSOR 1 CIRCUIT LOW, Diagnostic Trouble Code (DTC) Detecting Criteria.>
P0113	Intake Air Temperature Sensor 1 Circuit High	<Ref. to GD(H6DO)-40, DTC P0113 INTAKE AIR TEMPERATURE SENSOR 1 CIRCUIT HIGH, Diagnostic Trouble Code (DTC) Detecting Criteria.>
P0117	Engine Coolant Temperature Circuit Low	<Ref. to GD(H6DO)-41, DTC P0117 ENGINE COOLANT TEMPERATURE CIRCUIT LOW, Diagnostic Trouble Code (DTC) Detecting Criteria.>
P0118	Engine Coolant Temperature Circuit High	<Ref. to GD(H6DO)-42, DTC P0118 ENGINE COOLANT TEMPERATURE CIRCUIT HIGH, Diagnostic Trouble Code (DTC) Detecting Criteria.>
P0122	Throttle/Pedal Position Sensor/ Switch “A” Circuit Low	<Ref. to GD(H6DO)-43, DTC P0122 THROTTLE/PEDAL POSITION SENSOR/SWITCH “A” CIRCUIT LOW, Diagnostic Trouble Code (DTC) Detecting Criteria.>
P0123	Throttle/Pedal Position Sensor/ Switch “A” Circuit High	<Ref. to GD(H6DO)-44, DTC P0123 THROTTLE/PEDAL POSITION SENSOR/SWITCH “A” CIRCUIT HIGH, Diagnostic Trouble Code (DTC) Detecting Criteria.>
P0125	Insufficient Coolant Temperature for Closed Loop Fuel Control	<Ref. to GD(H6DO)-45, DTC P0125 INSUFFICIENT COOLANT TEMPERATURE FOR CLOSED LOOP FUEL CONTROL, Diagnostic Trouble Code (DTC) Detecting Criteria.>
P0126	Insufficient Engine Coolant Temperature For Stable Operation	<Ref. to GD(H6DO)-47, DTC P0126 INSUFFICIENT ENGINE COOLANT TEMPERATURE FOR STABLE OPERATION, Diagnostic Trouble Code (DTC) Detecting Criteria.>
P0128	Coolant Thermostat (Engine Coolant Temperature Below Thermostat Regulating Temperature)	<Ref. to GD(H6DO)-49, DTC P0128 COOLANT THERMOSTAT (ENGINE COOLANT TEMPERATURE BELOW THERMOSTAT REGULATING TEMPERATURE), Diagnostic Trouble Code (DTC) Detecting Criteria.>
P0131	O2 Sensor Circuit Low Voltage (Bank 1 Sensor 1)	<Ref. to GD(H6DO)-51, DTC P0131 O2 SENSOR CIRCUIT LOW VOLTAGE (BANK 1 SENSOR 1), Diagnostic Trouble Code (DTC) Detecting Criteria.>
P0132	O2 Sensor Circuit High Voltage (Bank 1 Sensor 1)	<Ref. to GD(H6DO)-53, DTC P0132 O2 SENSOR CIRCUIT HIGH VOLTAGE (BANK 1 SENSOR 1), Diagnostic Trouble Code (DTC) Detecting Criteria.>
P0133	O2 Sensor Circuit Slow Response (Bank 1 Sensor 1)	<Ref. to GD(H6DO)-55, DTC P0133 O2 SENSOR CIRCUIT SLOW RESPONSE (BANK 1 SENSOR 1), Diagnostic Trouble Code (DTC) Detecting Criteria.>

List of Diagnostic Trouble Code (DTC)

DTC	Item	Index
P0134	O2 Sensor Circuit No Activity Detected (Bank 1 Sensor 1)	<Ref. to GD(H6DO)-58, DTC P0134 O2 SENSOR CIRCUIT NO ACTIVITY DETECTED (BANK 1 SENSOR 1), Diagnostic Trouble Code (DTC) Detecting Criteria.>
P0137	O2 Sensor Circuit Low Voltage (Bank 1 Sensor 2)	<Ref. to GD(H6DO)-60, DTC P0137 O2 SENSOR CIRCUIT LOW VOLTAGE (BANK 1 SENSOR 2), Diagnostic Trouble Code (DTC) Detecting Criteria.>
P0138	O2 Sensor Circuit High Voltage (Bank 1 Sensor 2)	<Ref. to GD(H6DO)-63, DTC P0138 O2 SENSOR CIRCUIT HIGH VOLTAGE (BANK 1 SENSOR 2), Diagnostic Trouble Code (DTC) Detecting Criteria.>
P0139	O2 Sensor Circuit Slow Response (Bank 1 Sensor 2)	<Ref. to GD(H6DO)-64, DTC P0139 O2 SENSOR CIRCUIT SLOW RESPONSE (BANK 1 SENSOR 2), Diagnostic Trouble Code (DTC) Detecting Criteria.>
P0140	O2 Sensor Circuit No Activity Detected (Bank1 Sensor2)	<Ref. to GD(H6DO)-69, DTC P0140 O2 SENSOR CIRCUIT NO ACTIVITY DETECTED (BANK1 SENSOR2), Diagnostic Trouble Code (DTC) Detecting Criteria.>
P0151	O2 Sensor Circuit Low Voltage (Bank 2 Sensor 1)	<Ref. to GD(H6DO)-71, DTC P0151 O2 SENSOR CIRCUIT LOW VOLTAGE (BANK 2 SENSOR 1), Diagnostic Trouble Code (DTC) Detecting Criteria.>
P0152	O2 Sensor Circuit High Voltage (Bank 2 Sensor 1)	<Ref. to GD(H6DO)-71, DTC P0152 O2 SENSOR CIRCUIT HIGH VOLTAGE (BANK 2 SENSOR 1), Diagnostic Trouble Code (DTC) Detecting Criteria.>
P0153	O2 Sensor Circuit Slow Response (Bank 2 Sensor 1)	<Ref. to GD(H6DO)-71, DTC P0153 O2 SENSOR CIRCUIT SLOW RESPONSE (BANK 2 SENSOR 1), Diagnostic Trouble Code (DTC) Detecting Criteria.>
P0154	O2 Sensor Circuit No Activity Detected (Bank 2 Sensor 1)	<Ref. to GD(H6DO)-71, DTC P0154 O2 SENSOR CIRCUIT NO ACTIVITY DETECTED (BANK 2 SENSOR 1), Diagnostic Trouble Code (DTC) Detecting Criteria.>
P0157	O2 Sensor Circuit Low Voltage (Bank 2 Sensor 2)	<Ref. to GD(H6DO)-71, DTC P0157 O2 SENSOR CIRCUIT LOW VOLTAGE (BANK 2 SENSOR 2), Diagnostic Trouble Code (DTC) Detecting Criteria.>
P0158	O2 Sensor Circuit High Voltage (Bank 2 Sensor 2)	<Ref. to GD(H6DO)-71, DTC P0158 O2 SENSOR CIRCUIT HIGH VOLTAGE (BANK 2 SENSOR 2), Diagnostic Trouble Code (DTC) Detecting Criteria.>
P0159	O2 Sensor Circuit Slow Response (Bank 2 Sensor 2)	<Ref. to GD(H6DO)-71, DTC P0159 O2 SENSOR CIRCUIT SLOW RESPONSE (BANK 2 SENSOR 2), Diagnostic Trouble Code (DTC) Detecting Criteria.>
P0160	O2 Sensor Circuit No Activity Detected (Bank2 Sensor2)	<Ref. to GD(H6DO)-71, DTC P0160 O2 SENSOR CIRCUIT NO ACTIVITY DETECTED (BANK2 SENSOR2), Diagnostic Trouble Code (DTC) Detecting Criteria.>
P0171	System Too Lean (Bank 1)	<Ref. to GD(H6DO)-72, DTC P0171 SYSTEM TOO LEAN (BANK 1), Diagnostic Trouble Code (DTC) Detecting Criteria.>
P0172	System Too Rich (Bank 1)	<Ref. to GD(H6DO)-73, DTC P0172 SYSTEM TOO RICH (BANK 1), Diagnostic Trouble Code (DTC) Detecting Criteria.>
P0174	System Too Lean (Bank 2)	<Ref. to GD(H6DO)-74, DTC P0174 SYSTEM TOO LEAN (BANK 2), Diagnostic Trouble Code (DTC) Detecting Criteria.>
P0175	System Too Rich (Bank 2)	<Ref. to GD(H6DO)-74, DTC P0175 SYSTEM TOO RICH (BANK 2), Diagnostic Trouble Code (DTC) Detecting Criteria.>
P0181	Fuel Temperature Sensor “A” Circuit Range/Performance	<Ref. to GD(H6DO)-75, DTC P0181 FUEL TEMPERATURE SENSOR “A” CIRCUIT RANGE/PERFORMANCE, Diagnostic Trouble Code (DTC) Detecting Criteria.>
P0182	Fuel Temperature Sensor “A” Circuit Low Input	<Ref. to GD(H6DO)-78, DTC P0182 FUEL TEMPERATURE SENSOR “A” CIRCUIT LOW INPUT, Diagnostic Trouble Code (DTC) Detecting Criteria.>
P0183	Fuel Temperature Sensor “A” Circuit High Input	<Ref. to GD(H6DO)-79, DTC P0183 FUEL TEMPERATURE SENSOR “A” CIRCUIT HIGH INPUT, Diagnostic Trouble Code (DTC) Detecting Criteria.>
P0196	Engine Oil Temperature Sensor Circuit Range/Performance	<Ref. to GD(H6DO)-80, DTC P0196 ENGINE OIL TEMPERATURE SENSOR CIRCUIT RANGE/PERFORMANCE, Diagnostic Trouble Code (DTC) Detecting Criteria.>
P0197	Engine Oil Temperature Sensor Low	<Ref. to GD(H6DO)-82, DTC P0197 ENGINE OIL TEMPERATURE SENSOR LOW, Diagnostic Trouble Code (DTC) Detecting Criteria.>
P0198	Engine Oil Temperature Sensor High	<Ref. to GD(H6DO)-83, DTC P0198 ENGINE OIL TEMPERATURE SENSOR HIGH, Diagnostic Trouble Code (DTC) Detecting Criteria.>

List of Diagnostic Trouble Code (DTC)

DTC	Item	Index
P0222	Throttle/Pedal Position Sensor/ Switch “B” Circuit Low	<Ref. to GD(H6DO)-84, DTC P0222 THROTTLE/PEDAL POSITION SENSOR/SWITCH “B” CIRCUIT LOW, Diagnostic Trouble Code (DTC) Detecting Criteria.>
P0223	Throttle/Pedal Position Sensor/ Switch “B” Circuit High	<Ref. to GD(H6DO)-85, DTC P0223 THROTTLE/PEDAL POSITION SENSOR/SWITCH “B” CIRCUIT HIGH, Diagnostic Trouble Code (DTC) Detecting Criteria.>
P0230	Fuel Pump Primary Circuit	<Ref. to GD(H6DO)-86, DTC P0230 FUEL PUMP PRIMARY CIRCUIT, Diagnostic Trouble Code (DTC) Detecting Criteria.>
P0301	Cylinder 1 Misfire Detected	<Ref. to GD(H6DO)-88, DTC P0301 CYLINDER 1 MISFIRE DETECTED, Diagnostic Trouble Code (DTC) Detecting Criteria.>
P0302	Cylinder 2 Misfire Detected	<Ref. to GD(H6DO)-93, DTC P0302 CYLINDER 2 MISFIRE DETECTED, Diagnostic Trouble Code (DTC) Detecting Criteria.>
P0303	Cylinder 3 Misfire Detected	<Ref. to GD(H6DO)-93, DTC P0303 CYLINDER 3 MISFIRE DETECTED, Diagnostic Trouble Code (DTC) Detecting Criteria.>
P0304	Cylinder 4 Misfire Detected	<Ref. to GD(H6DO)-93, DTC P0304 CYLINDER 4 MISFIRE DETECTED, Diagnostic Trouble Code (DTC) Detecting Criteria.>
P0305	Cylinder 5 Misfire Detected	<Ref. to GD(H6DO)-93, DTC P0305 CYLINDER 5 MISFIRE DETECTED, Diagnostic Trouble Code (DTC) Detecting Criteria.>
P0306	Cylinder 6 Misfire Detected	<Ref. to GD(H6DO)-93, DTC P0306 CYLINDER 6 MISFIRE DETECTED, Diagnostic Trouble Code (DTC) Detecting Criteria.>
P0327	Knock Sensor 1 Circuit Low (Bank 1 or Single Sensor)	<Ref. to GD(H6DO)-94, DTC P0327 KNOCK SENSOR 1 CIRCUIT LOW (BANK 1 OR SINGLE SENSOR), Diagnostic Trouble Code (DTC) Detecting Criteria.>
P0328	Knock Sensor 1 Circuit High (Bank 1 or Single Sensor)	<Ref. to GD(H6DO)-95, DTC P0328 KNOCK SENSOR 1 CIRCUIT HIGH (BANK 1 OR SINGLE SENSOR), Diagnostic Trouble Code (DTC) Detecting Criteria.>
P0332	Knock Sensor 2 Circuit Low (Bank 2)	<Ref. to GD(H6DO)-96, DTC P0332 KNOCK SENSOR 2 CIRCUIT LOW (BANK 2), Diagnostic Trouble Code (DTC) Detecting Criteria.>
P0333	Knock Sensor 2 Circuit High (Bank 2)	<Ref. to GD(H6DO)-96, DTC P0333 KNOCK SENSOR 2 CIRCUIT HIGH (BANK 2), Diagnostic Trouble Code (DTC) Detecting Criteria.>
P0335	Crankshaft Position Sensor “A” Circuit	<Ref. to GD(H6DO)-97, DTC P0335 CRANKSHAFT POSITION SENSOR “A” CIRCUIT, Diagnostic Trouble Code (DTC) Detecting Criteria.>
P0336	Crankshaft Position Sensor “A” Circuit Range/Performance	<Ref. to GD(H6DO)-99, DTC P0336 CRANKSHAFT POSITION SENSOR “A” CIRCUIT RANGE/PERFORMANCE, Diagnostic Trouble Code (DTC) Detecting Criteria.>
P0340	Camshaft Position Sensor “A” Circuit (Bank 1 or Single Sensor)	<Ref. to GD(H6DO)-101, DTC P0340 CAMSHAFT POSITION SENSOR “A” CIRCUIT (BANK 1 OR SINGLE SENSOR), Diagnostic Trouble Code (DTC) Detecting Criteria.>
P0345	Camshaft Position Sensor “A” Circuit (Bank 2)	<Ref. to GD(H6DO)-102, DTC P0345 CAMSHAFT POSITION SENSOR “A” CIRCUIT (BANK 2), Diagnostic Trouble Code (DTC) Detecting Criteria.>
P0400	Exhaust Gas Recirculation Flow	<Ref. to GD(H6DO)-103, DTC P0400 EXHAUST GAS RECIRCULATION FLOW, Diagnostic Trouble Code (DTC) Detecting Criteria.>
P0420	Catalyst System Efficiency below Threshold (Bank 1)	<Ref. to GD(H6DO)-106, DTC P0420 CATALYST SYSTEM EFFICIENCY BELOW THRESHOLD (BANK 1), Diagnostic Trouble Code (DTC) Detecting Criteria.>
P0442	Evaporative Emission Control System Leak Detected (Small Leak)	<Ref. to GD(H6DO)-108, DTC P0442 EVAPORATIVE EMISSION CONTROL SYSTEM LEAK DETECTED (SMALL LEAK), Diagnostic Trouble Code (DTC) Detecting Criteria.>
P0447	Evaporative Emission Control System Vent Control Circuit Open	<Ref. to GD(H6DO)-124, DTC P0447 EVAPORATIVE EMISSION CONTROL SYSTEM VENT CONTROL CIRCUIT OPEN, Diagnostic Trouble Code (DTC) Detecting Criteria.>
P0448	Evaporative Emission Control System Vent Control Circuit Shorted	<Ref. to GD(H6DO)-126, DTC P0448 EVAPORATIVE EMISSION CONTROL SYSTEM VENT CONTROL CIRCUIT SHORTED, Diagnostic Trouble Code (DTC) Detecting Criteria.>

List of Diagnostic Trouble Code (DTC)

DTC	Item	Index
P0451	Evaporative Emission Control System Pressure Sensor	<Ref. to GD(H6DO)-128, DTC P0451 EVAPORATIVE EMISSION CONTROL SYSTEM PRESSURE SENSOR, Diagnostic Trouble Code (DTC) Detecting Criteria.>
P0452	Evaporative Emission Control System Pressure Sensor Low Input	<Ref. to GD(H6DO)-130, DTC P0452 EVAPORATIVE EMISSION CONTROL SYSTEM PRESSURE SENSOR LOW INPUT, Diagnostic Trouble Code (DTC) Detecting Criteria.>
P0453	Evaporative Emission Control System Pressure Sensor High Input	<Ref. to GD(H6DO)-132, DTC P0453 EVAPORATIVE EMISSION CONTROL SYSTEM PRESSURE SENSOR HIGH INPUT, Diagnostic Trouble Code (DTC) Detecting Criteria.>
P0456	Evaporative Emission Control System Leak Detected (Very Small Leak)	<Ref. to GD(H6DO)-133, DTC P0456 EVAPORATIVE EMISSION CONTROL SYSTEM LEAK DETECTED (VERY SMALL LEAK), Diagnostic Trouble Code (DTC) Detecting Criteria.>
P0457	Evaporative Emission Control System Leak Detected (Fuel Cap Loose/Off)	<Ref. to GD(H6DO)-133, DTC P0457 EVAPORATIVE EMISSION CONTROL SYSTEM LEAK DETECTED (FUEL CAP LOOSE/OFF), Diagnostic Trouble Code (DTC) Detecting Criteria.>
P0458	Evaporative Emission System Purge Control Valve Circuit Low	<Ref. to GD(H6DO)-134, DTC P0458 EVAPORATIVE EMISSION SYSTEM PURGE CONTROL VALVE CIRCUIT LOW, Diagnostic Trouble Code (DTC) Detecting Criteria.>
P0459	Evaporative Emission System Purge Control Valve Circuit High	<Ref. to GD(H6DO)-136, DTC P0459 EVAPORATIVE EMISSION SYSTEM PURGE CONTROL VALVE CIRCUIT HIGH, Diagnostic Trouble Code (DTC) Detecting Criteria.>
P0461	Fuel Level Sensor “A” Circuit Range/ Performance	<Ref. to GD(H6DO)-138, DTC P0461 FUEL LEVEL SENSOR “A” CIRCUIT RANGE/PERFORMANCE, Diagnostic Trouble Code (DTC) Detecting Criteria.>
P0462	Fuel Level Sensor “A” Circuit Low	<Ref. to GD(H6DO)-140, DTC P0462 FUEL LEVEL SENSOR “A” CIRCUIT LOW, Diagnostic Trouble Code (DTC) Detecting Criteria.>
P0463	Fuel Level Sensor “A” Circuit High	<Ref. to GD(H6DO)-142, DTC P0463 FUEL LEVEL SENSOR “A” CIRCUIT HIGH, Diagnostic Trouble Code (DTC) Detecting Criteria.>
P0464	Fuel Level Sensor Circuit Intermittent	<Ref. to GD(H6DO)-144, DTC P0464 FUEL LEVEL SENSOR CIRCUIT INTERMITTENT, Diagnostic Trouble Code (DTC) Detecting Criteria.>
P0500	Vehicle Speed Sensor “A”	<Ref. to GD(H6DO)-147, DTC P0500 VEHICLE SPEED SENSOR “A”, Diagnostic Trouble Code (DTC) Detecting Criteria.>
P0506	Idle Air Control System RPM Lower Than Expected	<Ref. to GD(H6DO)-148, DTC P0506 IDLE AIR CONTROL SYSTEM RPM LOWER THAN EXPECTED, Diagnostic Trouble Code (DTC) Detecting Criteria.>
P0507	Idle Air Control System RPM Higher Than Expected	<Ref. to GD(H6DO)-149, DTC P0507 IDLE AIR CONTROL SYSTEM RPM HIGHER THAN EXPECTED, Diagnostic Trouble Code (DTC) Detecting Criteria.>
P0512	Starter Request Circuit	<Ref. to GD(H6DO)-150, DTC P0512 STARTER REQUEST CIRCUIT, Diagnostic Trouble Code (DTC) Detecting Criteria.>
P0513	Incorrect Immobilizer Key	<Ref. to GD(H6DO)-151, DTC P0513 INCORRECT IMMOBILIZER KEY, Diagnostic Trouble Code (DTC) Detecting Criteria.>
P0600	Serial Communication Link	<Ref. to GD(H6DO)-152, DTC P0600 SERIAL COMMUNICATION LINK, Diagnostic Trouble Code (DTC) Detecting Criteria.>
P0604	Internal Control Module Random Access Memory (RAM) Error	<Ref. to GD(H6DO)-154, DTC P0604 INTERNAL CONTROL MODULE RANDOM ACCESS MEMORY (RAM) ERROR, Diagnostic Trouble Code (DTC) Detecting Criteria.>
P0605	Internal Control Module Read Only Memory (ROM) Error	<Ref. to GD(H6DO)-155, DTC P0605 INTERNAL CONTROL MODULE READ ONLY MEMORY (ROM) ERROR, Diagnostic Trouble Code (DTC) Detecting Criteria.>
P0607	Throttle Control System Circuit Range/ Performance	<Ref. to GD(H6DO)-156, DTC P0607 THROTTLE CONTROL SYSTEM CIRCUIT RANGE/PERFORMANCE, Diagnostic Trouble Code (DTC) Detecting Criteria.>
P0638	Throttle Actuator Control Range/ Performance (Bank 1)	<Ref. to GD(H6DO)-159, DTC P0638 THROTTLE ACTUATOR CONTROL RANGE/PERFORMANCE (BANK 1), Diagnostic Trouble Code (DTC) Detecting Criteria.>

List of Diagnostic Trouble Code (DTC)

DTC	Item	Index
P0700	Transmission Control System (MIL Request)	<Ref. to GD(H6DO)-161, DTC P0700 TRANSMISSION CONTROL SYSTEM (MIL REQUEST), Diagnostic Trouble Code (DTC) Detecting Criteria.>
P1152	O2 Sensor Circuit Range/Performance (Low) (Bank1 Sensor1)	<Ref. to GD(H6DO)-162, DTC P1152 O2 SENSOR CIRCUIT RANGE/PERFORMANCE (LOW) (BANK1 SENSOR1), Diagnostic Trouble Code (DTC) Detecting Criteria.>
P1153	O2 Sensor Circuit Range/Performance (High) (Bank1 Sensor1)	<Ref. to GD(H6DO)-164, DTC P1153 O2 SENSOR CIRCUIT RANGE/PERFORMANCE (HIGH) (BANK1 SENSOR1), Diagnostic Trouble Code (DTC) Detecting Criteria.>
P1154	O2 Sensor Circuit Range/Performance (Low) (Bank 2 Sensor 1)	<Ref. to GD(H6DO)-166, DTC P1154 O2 SENSOR CIRCUIT RANGE/PERFORMANCE (LOW) (BANK 2 SENSOR 1), Diagnostic Trouble Code (DTC) Detecting Criteria.>
P1155	O2 Sensor Circuit Range/Performance (High) (Bank 2 Sensor 1)	<Ref. to GD(H6DO)-166, DTC P1155 O2 SENSOR CIRCUIT RANGE/PERFORMANCE (HIGH) (BANK 2 SENSOR 1), Diagnostic Trouble Code (DTC) Detecting Criteria.>
P1160	Return Spring Failure	<Ref. to GD(H6DO)-167, DTC P1160 RETURN SPRING FAILURE, Diagnostic Trouble Code (DTC) Detecting Criteria.>
P1400	Fuel Tank Pressure Control Solenoid Valve Circuit Low	<Ref. to GD(H6DO)-169, DTC P1400 FUEL TANK PRESSURE CONTROL SOLENOID VALVE CIRCUIT LOW, Diagnostic Trouble Code (DTC) Detecting Criteria.>
P1420	Fuel Tank Pressure Control Sol. Valve Circuit High	<Ref. to GD(H6DO)-171, DTC P1420 FUEL TANK PRESSURE CONTROL SOL. VALVE CIRCUIT HIGH, Diagnostic Trouble Code (DTC) Detecting Criteria.>
P1443	Vent Control Solenoid Valve Function Problem	<Ref. to GD(H6DO)-173, DTC P1443 VENT CONTROL SOLENOID VALVE FUNCTION PROBLEM, Diagnostic Trouble Code (DTC) Detecting Criteria.>
P1492	EGR Solenoid Valve Signal #1 Circuit Malfunction (Low Input)	<Ref. to GD(H6DO)-175, DTC P1492 EGR SOLENOID VALVE SIGNAL #1 CIRCUIT MALFUNCTION (LOW INPUT), Diagnostic Trouble Code (DTC) Detecting Criteria.>
P1493	EGR Solenoid Valve Signal #1 Circuit Malfunction (High Input)	<Ref. to GD(H6DO)-177, DTC P1493 EGR SOLENOID VALVE SIGNAL #1 CIRCUIT MALFUNCTION (HIGH INPUT), Diagnostic Trouble Code (DTC) Detecting Criteria.>
P1494	EGR Solenoid Valve Signal #2 Circuit Malfunction (Low Input)	<Ref. to GD(H6DO)-179, DTC P1494 EGR SOLENOID VALVE SIGNAL #2 CIRCUIT MALFUNCTION (LOW INPUT), Diagnostic Trouble Code (DTC) Detecting Criteria.>
P1495	EGR Solenoid Valve Signal #2 Circuit Malfunction (High Input)	<Ref. to GD(H6DO)-179, DTC P1495 EGR SOLENOID VALVE SIGNAL #2 CIRCUIT MALFUNCTION (HIGH INPUT), Diagnostic Trouble Code (DTC) Detecting Criteria.>
P1496	EGR Solenoid Valve Signal #3 Circuit Malfunction (Low Input)	<Ref. to GD(H6DO)-179, DTC P1496 EGR SOLENOID VALVE SIGNAL #3 CIRCUIT MALFUNCTION (LOW INPUT), Diagnostic Trouble Code (DTC) Detecting Criteria.>
P1497	EGR Solenoid Valve Signal #3 Circuit Malfunction (High Input)	<Ref. to GD(H6DO)-179, DTC P1497 EGR SOLENOID VALVE SIGNAL #3 CIRCUIT MALFUNCTION (HIGH INPUT), Diagnostic Trouble Code (DTC) Detecting Criteria.>
P1498	EGR Solenoid Valve Signal #4 Circuit Malfunction (Low Input)	<Ref. to GD(H6DO)-179, DTC P1498 EGR SOLENOID VALVE SIGNAL #4 CIRCUIT MALFUNCTION (LOW INPUT), Diagnostic Trouble Code (DTC) Detecting Criteria.>
P1499	EGR Solenoid Valve Signal #4 Circuit Malfunction (High Input)	<Ref. to GD(H6DO)-179, DTC P1499 EGR SOLENOID VALVE SIGNAL #4 CIRCUIT MALFUNCTION (HIGH INPUT), Diagnostic Trouble Code (DTC) Detecting Criteria.>
P1560	Back-Up Voltage Circuit Malfunction	<Ref. to GD(H6DO)-180, DTC P1560 BACK-UP VOLTAGE CIRCUIT MALFUNCTION, Diagnostic Trouble Code (DTC) Detecting Criteria.>
P1570	Antenna	<Ref. to GD(H6DO)-181, DTC P1570 ANTENNA, Diagnostic Trouble Code (DTC) Detecting Criteria.>
P1571	Reference Code Incompatibility	<Ref. to GD(H6DO)-181, DTC P1571 REFERENCE CODE INCOMPATIBILITY, Diagnostic Trouble Code (DTC) Detecting Criteria.>
P1572	IMM Circuit Failure (Except Antenna Circuit)	<Ref. to GD(H6DO)-181, DTC P1572 IMM CIRCUIT FAILURE (EXCEPT ANTENNA CIRCUIT), Diagnostic Trouble Code (DTC) Detecting Criteria.>

List of Diagnostic Trouble Code (DTC)

DTC	Item	Index
P1574	Key Communication Failure	<Ref. to GD(H6DO)-181, DTC P1574 KEY COMMUNICATION FAILURE, Diagnostic Trouble Code (DTC) Detecting Criteria.>
P1576	EGI Control Module EEPROM	<Ref. to GD(H6DO)-181, DTC P1576 EGI CONTROL MODULE EEPROM, Diagnostic Trouble Code (DTC) Detecting Criteria.>
P1577	IMM Control Module EEPROM	<Ref. to GD(H6DO)-181, DTC P1577 IMM CONTROL MODULE EEPROM, Diagnostic Trouble Code (DTC) Detecting Criteria.>
P1578	Meter Failure	<Ref. to GD(H6DO)-181, DTC P1578 METER FAILURE, Diagnostic Trouble Code (DTC) Detecting Criteria.>
P1602	Control Module Programming Error	<Ref. to GD(H6DO)-182, DTC P1602 CONTROL MODULE PROGRAMMING ERROR, Diagnostic Trouble Code (DTC) Detecting Criteria.>
P2088	Intake Camshaft Position Actuator Control Circuit Low (Bank 1)	<Ref. to GD(H6DO)-184, DTC P2088 INTAKE CAMSHAFT POSITION ACTUATOR CONTROL CIRCUIT LOW (BANK 1), Diagnostic Trouble Code (DTC) Detecting Criteria.>
P2089	Intake Camshaft Position Actuator Control Circuit High (Bank 1)	<Ref. to GD(H6DO)-185, DTC P2089 INTAKE CAMSHAFT POSITION ACTUATOR CONTROL CIRCUIT HIGH (BANK 1), Diagnostic Trouble Code (DTC) Detecting Criteria.>
P2092	Intake Camshaft Position Actuator Control Circuit Low (Bank 2)	<Ref. to GD(H6DO)-186, DTC P2092 INTAKE CAMSHAFT POSITION ACTUATOR CONTROL CIRCUIT LOW (BANK 2), Diagnostic Trouble Code (DTC) Detecting Criteria.>
P2093	Intake Camshaft Position Actuator Control Circuit High (Bank 2)	<Ref. to GD(H6DO)-186, DTC P2093 INTAKE CAMSHAFT POSITION ACTUATOR CONTROL CIRCUIT HIGH (BANK 2), Diagnostic Trouble Code (DTC) Detecting Criteria.>
P2096	Post Catalyst Fuel Trim System Too Lean (Bank 1)	<Ref. to GD(H6DO)-187, DTC P2096 POST CATALYST FUEL TRIM SYSTEM TOO LEAN (BANK 1), Diagnostic Trouble Code (DTC) Detecting Criteria.>
P2097	Post Catalyst Fuel Trim System Too Rich (Bank 1)	<Ref. to GD(H6DO)-189, DTC P2097 POST CATALYST FUEL TRIM SYSTEM TOO RICH (BANK 1), Diagnostic Trouble Code (DTC) Detecting Criteria.>
P2098	Post Catalyst Fuel Trim System Too Lean Bank 2	<Ref. to GD(H6DO)-190, DTC P2098 POST CATALYST FUEL TRIM SYSTEM TOO LEAN BANK 2, Diagnostic Trouble Code (DTC) Detecting Criteria.>
P2099	Post Catalyst Fuel Trim System Too Rich Bank 2	<Ref. to GD(H6DO)-190, DTC P2099 POST CATALYST FUEL TRIM SYSTEM TOO RICH BANK 2, Diagnostic Trouble Code (DTC) Detecting Criteria.>
P2101	Throttle Actuator Control Motor Circuit Range/Performance	<Ref. to GD(H6DO)-191, DTC P2101 THROTTLE ACTUATOR CONTROL MOTOR CIRCUIT RANGE/PERFORMANCE, Diagnostic Trouble Code (DTC) Detecting Criteria.>
P2102	Throttle Actuator Control Motor Circuit Low	<Ref. to GD(H6DO)-193, DTC P2102 THROTTLE ACTUATOR CONTROL MOTOR CIRCUIT LOW, Diagnostic Trouble Code (DTC) Detecting Criteria.>
P2103	Throttle Actuator Control Motor Circuit High	<Ref. to GD(H6DO)-195, DTC P2103 THROTTLE ACTUATOR CONTROL MOTOR CIRCUIT HIGH, Diagnostic Trouble Code (DTC) Detecting Criteria.>
P2109	Throttle/Pedal Position Sensor “A” Minimum Stop Performance	<Ref. to GD(H6DO)-197, DTC P2109 THROTTLE/PEDAL POSITION SENSOR “A” MINIMUM STOP PERFORMANCE, Diagnostic Trouble Code (DTC) Detecting Criteria.>
P2122	Throttle/Pedal Position Sensor/Switch “D” Circuit Low Input	<Ref. to GD(H6DO)-199, DTC P2122 THROTTLE/PEDAL POSITION SENSOR/SWITCH “D” CIRCUIT LOW INPUT, Diagnostic Trouble Code (DTC) Detecting Criteria.>
P2123	Throttle/Pedal Position Sensor/Switch “D” Circuit High Input	<Ref. to GD(H6DO)-201, DTC P2123 THROTTLE/PEDAL POSITION SENSOR/SWITCH “D” CIRCUIT HIGH INPUT, Diagnostic Trouble Code (DTC) Detecting Criteria.>
P2127	Throttle/Pedal Position Sensor/Switch “E” Circuit Low Input	<Ref. to GD(H6DO)-203, DTC P2127 THROTTLE/PEDAL POSITION SENSOR/SWITCH “E” CIRCUIT LOW INPUT, Diagnostic Trouble Code (DTC) Detecting Criteria.>

List of Diagnostic Trouble Code (DTC)

DTC	Item	Index
P2128	Throttle/Pedal Position Sensor/ Switch “E” Circuit High Input	<Ref. to GD(H6DO)-205, DTC P2128 THROTTLE/PEDAL POSITION SENSOR/SWITCH “E” CIRCUIT HIGH INPUT, Diagnostic Trouble Code (DTC) Detecting Criteria.>
P2135	Throttle/Pedal Position Sensor/ Switch “A”/“B” Voltage Correlation	<Ref. to GD(H6DO)-207, DTC P2135 THROTTLE/PEDAL POSITION SENSOR/SWITCH “A”/“B” VOLTAGE CORRELATION, Diagnostic Trouble Code (DTC) Detecting Criteria.>
P2138	Throttle/Pedal Position Sensor/ Switch “D”/“E” Voltage Correlation	<Ref. to GD(H6DO)-209, DTC P2138 THROTTLE/PEDAL POSITION SENSOR/SWITCH “D”/“E” VOLTAGE CORRELATION, Diagnostic Trouble Code (DTC) Detecting Criteria.>
P2227	Barometric Pressure Circuit Range/ Performance	<Ref. to GD(H6DO)-211, DTC P2227 BAROMETRIC PRESSURE CIRCUIT RANGE/PERFORMANCE, Diagnostic Trouble Code (DTC) Detecting Criteria.>
P2228	Barometric Pressure Circuit Low	<Ref. to GD(H6DO)-212, DTC P2228 BAROMETRIC PRESSURE CIRCUIT LOW, Diagnostic Trouble Code (DTC) Detecting Criteria.>
P2229	Barometric Pressure Circuit High	<Ref. to GD(H6DO)-213, DTC P2229 BAROMETRIC PRESSURE CIRCUIT HIGH, Diagnostic Trouble Code (DTC) Detecting Criteria.>

2. Diagnostic Trouble Code (DTC) Detecting Criteria

A: DTC P0011 INTAKE CAMSHAFT POSITION - TIMING OVER-ADVANCED OR SYSTEM PERFORMANCE (BANK 1)

1. OUTLINE OF DIAGNOSIS

Detect the AVCS system malfunction.
Judge NG when the amount of AVCS actual timing advance does not approach to the amount of AVCS target timing advance.

2. COMPONENT DESCRIPTION

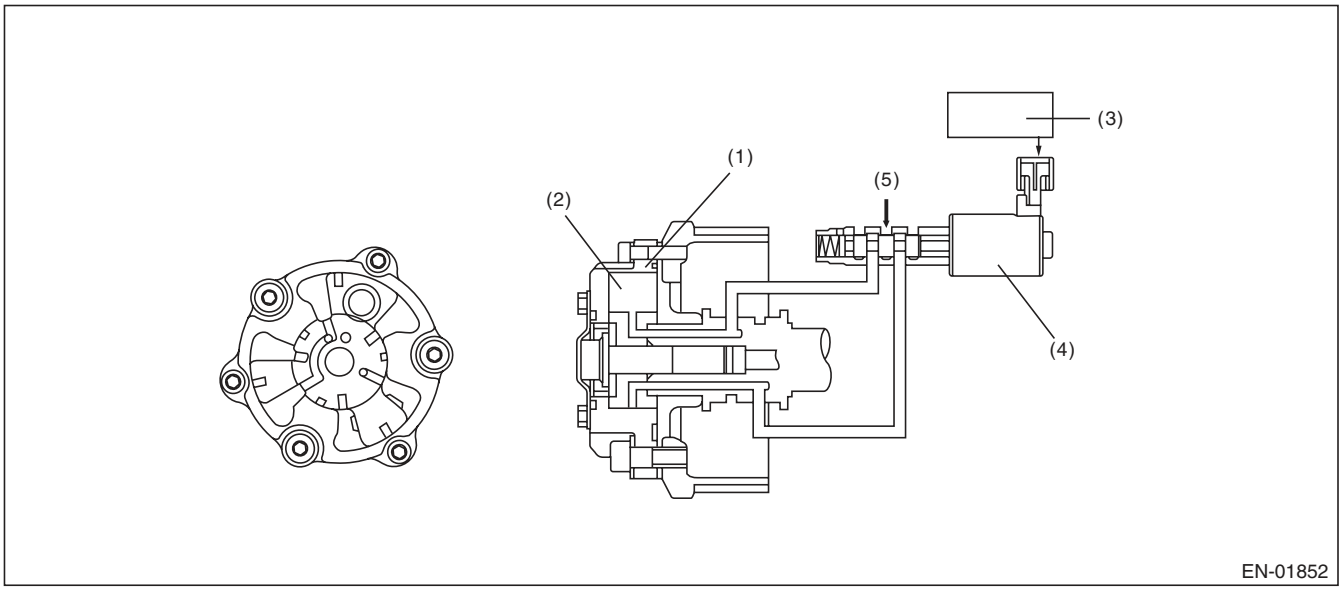

(1) AVCS timing controller
(2) Vane
(3) Engine control module (ECM)
(4) Oil flow control solenoid valve
(5) Oil pressure

3. ENABLE CONDITION

Secondary Parameters	Enable Conditions
Time of establishing all secondary parameter conditions	≥ 3000 ms
Battery voltage	≥ 10.9 V
Engine speed	≥ 1500 rpm
Engine coolant temperature	≥ 50 °C (122 °F)
AVCS control	Operation
Target advance angle	≥ 0 °CA
Target timing advance change amount (per 64 ms)	< 1.07 °CA

4. GENERAL DRIVING CYCLE

Perform the diagnosis continuously after warming up when the engine speed increases and AVCS operates.

5. DIAGNOSTIC METHOD

1) When the conditions during which the differences of AVCS target timing advance amount and AVCS actual timing advance amount is large continues for certain amount of time.
2) When the differences of target timing advance amount and actual timing advance amount is calculated during AVCS control, and the difference per predetermined time is the specified value or larger.

- **Abnormality Judgement**

Judge as NG when the following conditions are established within the predetermined time.

Judgement Value

Malfunction criteria	Threshold value
Σ(Target position – Actual position) or Σ(Target position – Actual position)	> 8000 °CA (Bank 1) > 8000 °CA (Bank 2) < –2500 °CA (Bank 1) < –2500 °CA (Bank 2)

Time Needed for Diagnosis: 30000 ms
Malfunction Indicator Light Illumination: Illuminates when malfunction occurs in 2 continuous driving cycles.

- **Normality Judgement**

Judge as OK and clear the NG if the following conditions are established within the predetermined time.

Judgement Value

Malfunction criteria	Threshold value
Σ(Target position – Actual position)	≤ 8000 °CA (Bank 1) ≤ 8000 °CA (Bank 2) and ≥ –2500 °CA (Bank 1) ≥ –2500 °CA (Bank 2)

Time Needed for Diagnosis: 30000 ms

B: DTC P0016 CRANKSHAFT POSITION - CAMSHAFT POSITION CORRELATION (BANK1)

1. OUTLINE OF DIAGNOSIS

Detect the AVCS system malfunction.
Judge as NG when the timing advance is outside the normal range.

2. COMPONENT DESCRIPTION

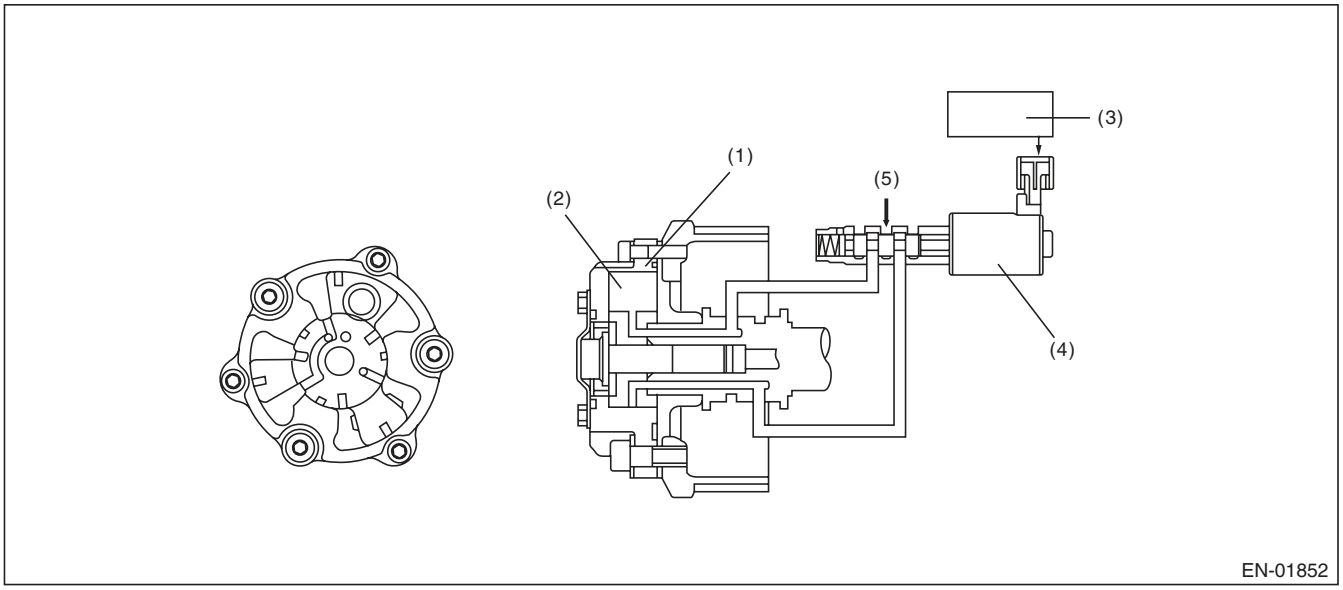

(1) AVCS timing controller
(2) Vane
(3) Engine control module (ECM)
(4) Oil flow control solenoid valve
(5) Oil pressure

3. ENABLE CONDITION

Secondary Parameters	Enable Conditions
Battery voltage	≥ 10.9 V
Engine speed	≥ 500 rpm
Engine coolant temperature	≥ 50 °C (122 °F)
AVCS control	Not in operation
Target timing advance	0°CA

4. GENERAL DRIVING CYCLE

Perform the diagnosis continuously after starting engine and while AVCS is not operating.

5. DIAGNOSTIC METHOD

Judge as NG when the camshaft sensor input position is not within the normal range.

- **Abnormality Judgement**

If the duration of time while the following conditions are met is longer than the time indicated, judge as NG.

Judgement Value

Malfunction Criteria	Threshold Value
Crankshaft position when camshaft position sensor signal is input	< BTDC 22 °CA (Bank 1) < BTDC 22 °CA (Bank 2) or > BTDC 58 °CA (Bank 1) > BTDC 58 °CA (Bank 2)

Time Needed for Diagnosis: 20000 ms
Malfunction Indicator Light Illumination: Illuminates when malfunction occurs in 2 continuous driving cycles.

- **Normality Judgement**

Judge as OK and clear the NG if the continuous time while the following conditions are established is more than the predetermined time.

Judgement Value

Malfunction Criteria	Threshold Value
Crankshaft position when camshaft position sensor signal is input	≥ BTDC 22 °CA (Bank 1) ≥ BTDC 22 °CA (Bank 2) and ≤ BTDC 58 °CA (Bank 1) ≤ BTDC 58 °CA (Bank 2)

Time Needed for Diagnosis: 1000 ms

C: DTC P0018 CRANKSHAFT POSITION - CAMSHAFT POSITION CORRELATION (BANK2)

1. OUTLINE OF DIAGNOSIS

NOTE:
For the detection standard, refer to DTC P0016. <Ref. to GD(H6DO)-12, DTC P0016 CRANKSHAFT POSITION - CAMSHAFT POSITION CORRELATION (BANK1), Diagnostic Trouble Code (DTC) Detecting Criteria.>

D: DTC P0021 INTAKE CAMSHAFT POSITION - TIMING OVER-ADVANCED OR SYSTEM PERFORMANCE (BANK 2)

1. OUTLINE OF DIAGNOSIS

NOTE:
For the detection standard, refer to DTC P0011. <Ref. to GD(H6DO)-10, DTC P0011 INTAKE CAMSHAFT POSITION - TIMING OVER-ADVANCED OR SYSTEM PERFORMANCE (BANK 1), Diagnostic Trouble Code (DTC) Detecting Criteria.>

E: DTC P0026 INTAKE VALVE CONTROL SOLENOID CIRCUIT RANGE/ PERFORMANCE (BANK 1)

1. OUTLINE OF DIAGNOSIS

Judge as NG with either Low NG or High NG.
A variable valve lift diagnosis oil pressure switch is installed for diagnosis. It is possible to determine whether the intake valve is in high mode (increase the amount of lift) or in low mode (suppressing the amount of lift) when the variable valve lift diagnosis oil pressure switch is turned ON or OFF.

- **Normal**

Oil switching solenoid valve duty	Intake valve	Variable valve lift diagnosis oil pressure switch
Large	High mode	ON
Minimum	Low mode	OFF

- **Low NG**

When the variable valve lift diagnosis oil pressure switch remains OFF even though the intake valve tried to enter high mode (oil switching solenoid valve duty is large), this is judged as a Low NG.

- **High NG**

When the variable valve lift diagnosis oil pressure switch remains ON even though the intake valve tried to enter low mode (oil switching solenoid valve duty is small), this is judged as a High NG.

2. COMPONENT DESCRIPTION

The variable valve lift system optimizes the intake valve lift by switching between the low lift cam and the high lift cam according to the engine speed. The amount of intake valve lift is varied by controlling the oil switching solenoid valve duty according to signals from the ECM.

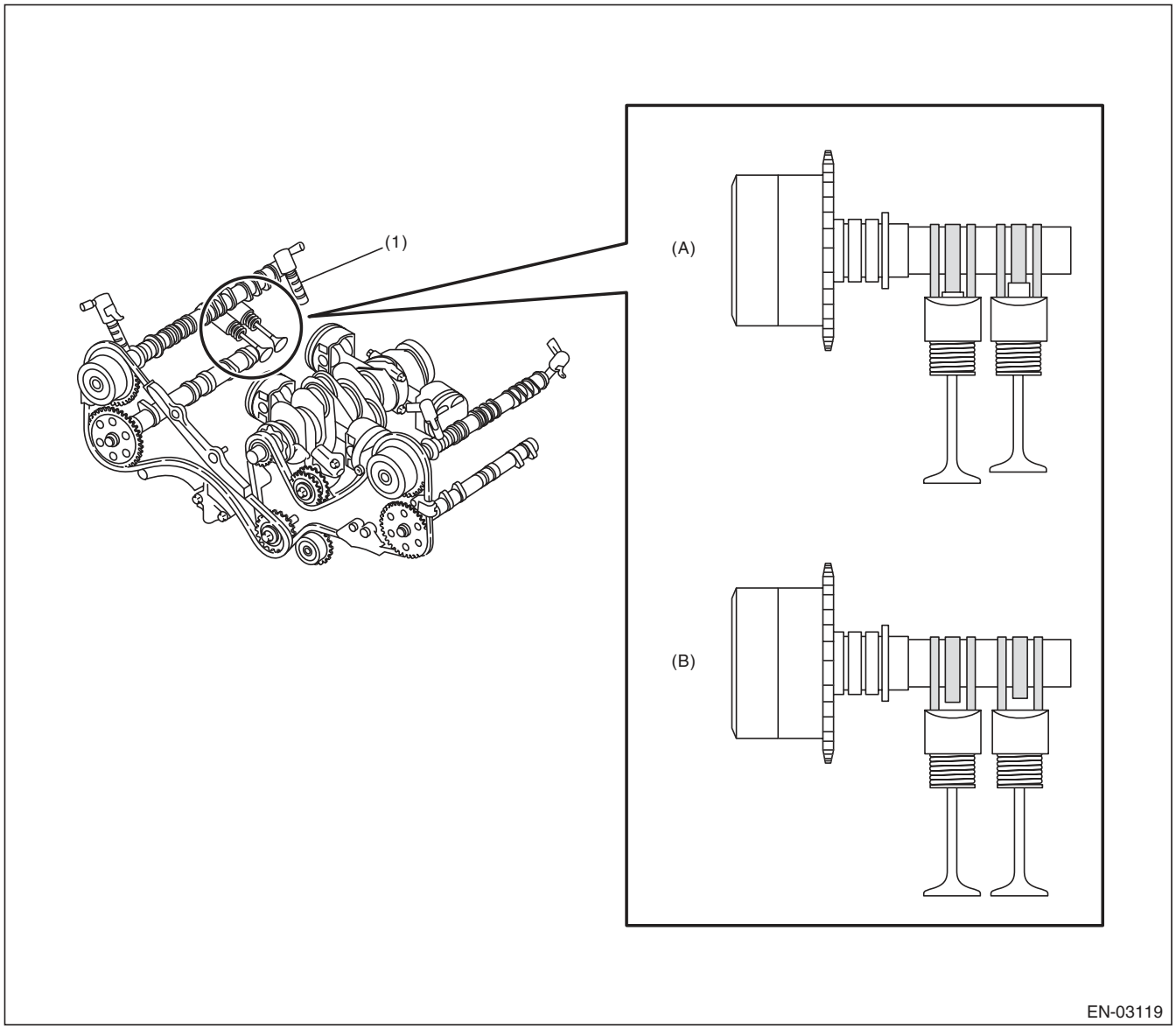

(A) When at low speed (B) When at high speed

(1) Oil switching solenoid valve

3. ENABLE CONDITION

Secondary Parameters	Enable Conditions
Battery voltage	≥ 10.9 V
After engine starting	≥ 6000 ms
Engine oil temperature	≥ 0 °C (32 °F)
Variable valve lift control	Operation

4. GENERAL DRIVING CYCLE

Perform the diagnosis continuously 6 seconds after engine start while variable valve lift is being controlled

5. DIAGNOSTIC METHOD

- **Abnormality Judgement**

If the duration of time while the following conditions are met is longer than the time indicated, judge as NG.

Judgement Value

Malfunction Criteria	Threshold Value
Low	
Duty ratio	≥ 62 %
Variable valve lift diagnosis oil pressure switch	OFF
High	
Duty ratio	< 33 %
Variable valve lift diagnosis oil pressure switch	ON

Time Needed for Diagnosis:
Low side: 784 ms
High side: 3000 ms
Malfunction Indicator Light Illumination: Illuminates as soon as a malfunction occurs.

- **Normality Judgement**

Judge as OK and clear the NG if the continuous time while the following conditions are established is more than the predetermined time.

Judgement Value

Malfunction criteria	Threshold value
Low	
Duty ratio	≥ 62 %
Variable valve lift diagnosis oil pressure switch	ON
High	
Duty ratio	< 33 %
Variable valve lift diagnosis oil pressure switch	OFF

Time Needed for Diagnosis:
Low side: 208 ms
High side: 3000 ms

F: DTC P0028 INTAKE VALVE CONTROL SOLENOID CIRCUIT RANGE/ PERFORMANCE (BANK 2)

1. OUTLINE OF DIAGNOSIS

NOTE:
For the detection standard, refer to DTC P0026. <Ref. to GD(H6DO)-14, DTC P0026 INTAKE VALVE CONTROL SOLENOID CIRCUIT RANGE/PERFORMANCE (BANK 1), Diagnostic Trouble Code (DTC) Detecting Criteria.>

G: DTC P0030 HO2S HEATER CONTROL CIRCUIT (BANK 1 SENSOR 1)

1. OUTLINE OF DIAGNOSIS

Detect functional errors of the front oxygen (A/F) sensor heater.
Judge as NG when it is determined that the front oxygen (A/F) sensor impedance is large when looking at engine status such as deceleration fuel cut.

2. COMPONENT DESCRIPTION

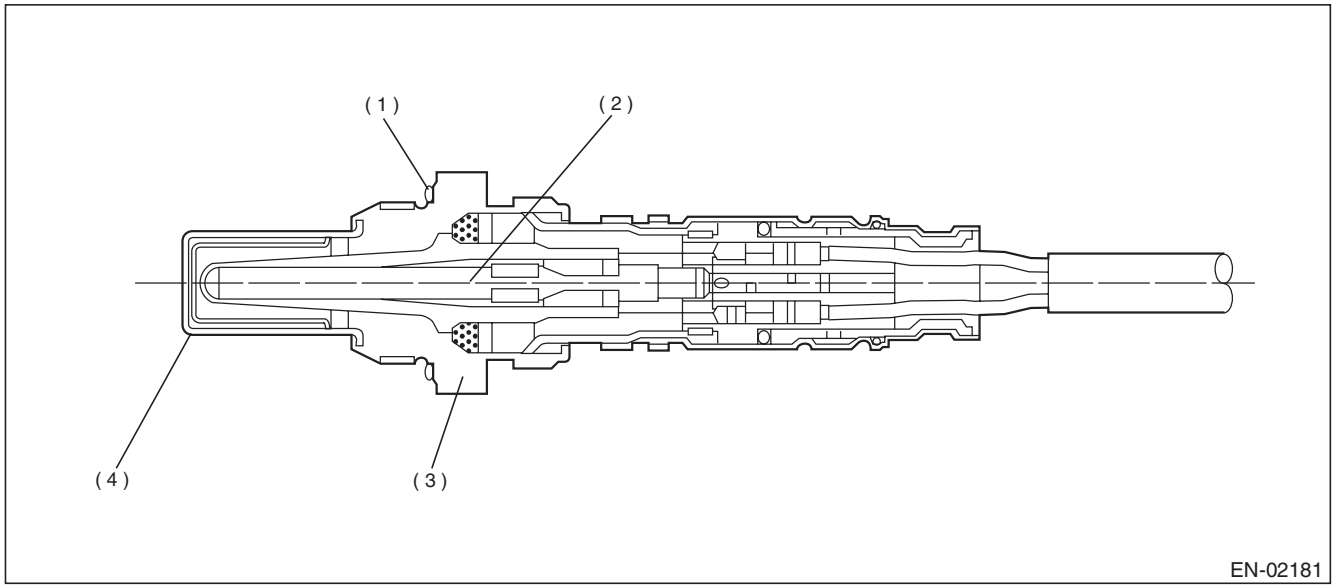

(1) Gasket
(2) Ceramic heater
(3) Sensor housing
(4) Protection tube

3. ENABLE CONDITION

Secondary Parameters	Enable Conditions
Condition established time	≥ 30000 ms
Battery voltage	≥ 10.9 V
Heater current	Permitted
Control duty ≥ 35 %	Experienced
After fuel cut	≥ 20000 ms

4. GENERAL DRIVING CYCLE

Perform the diagnosis continuously after 30000 ms or more have passed since the engine started.

5. DIAGNOSTIC METHOD

- **Abnormality Judgement**

If the duration of time while the following conditions are met is longer than the time indicated, judge as NG.

Judgement Value

Malfunction criteria	Threshold value
Front oxygen (A/F) sensor impedance	> 50 Ω

Time Needed for Diagnosis: 10000 ms
Malfunction Indicator Light Illumination: Illuminates when malfunction occurs in 2 continuous driving cycles.

- **Normality Judgement**

Judge as OK and clear the NG if the continuous time while the following conditions are established is more than the predetermined time.

Judgement Value

Malfunction criteria	Threshold value
Front oxygen (A/F) sensor impedance	≤ 50 Ω

Time Needed for Diagnosis: 10000 ms

H: DTC P0031 HO2S HEATER CONTROL CIRCUIT LOW (BANK 1 SENSOR 1)

1. OUTLINE OF DIAGNOSIS

Detect front oxygen (A/F) sensor heater open or short circuit.
The front oxygen (A/F) sensor heater performs duty control, and the output terminal voltage at ON is 0 V, and the output terminal voltage at OFF is the battery voltage.
Judge as NG when the terminal voltage remains Low.

2. COMPONENT DESCRIPTION

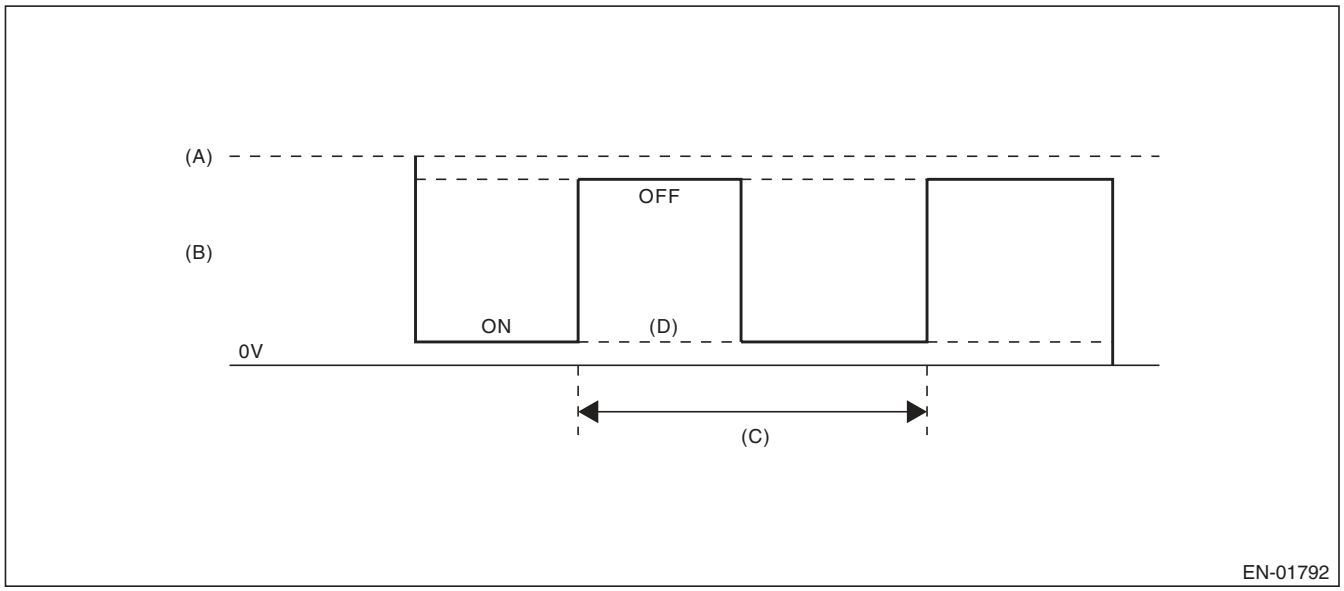

(A) Battery voltage
(B) Front oxygen (A/F) sensor heater output voltage
(C) 128 milliseconds
(D) Low error

3. ENABLE CONDITION

Secondary Parameters	Enable Conditions
Battery voltage	≥ 10.9 V

4. GENERAL DRIVING CYCLE

Always perform the diagnosis continuously.

5. DIAGNOSTIC METHOD

- **Abnormality Judgement**

If the duration of time while the following conditions are met is longer than the time indicated, judge as NG.

Judgement Value

Malfunction Criteria	Threshold Value
Output voltage level	Low
Front oxygen (A/F) sensor heater control duty	< 87.5 %

Time Needed for Diagnosis: 4 ms × 250 time(s)
Malfunction Indicator Light Illumination: Illuminates as soon as a malfunction occurs.

- **Normality Judgement**

Judge as OK and clear the NG if the continuous time while the following conditions are established is more than the predetermined time.

Judgement Value

Malfunction Criteria	Threshold Value
Output voltage level	High

Time Needed for Diagnosis: Less than 1 second

I: DTC P0032 HO2S HEATER CONTROL CIRCUIT HIGH (BANK 1 SENSOR 1)

1. OUTLINE OF DIAGNOSIS

Detect front oxygen (A/F) sensor heater open or short circuit.
The front oxygen (A/F) sensor heater performs duty control, and the output terminal voltage at ON is 0 V, and the output terminal voltage at OFF is the battery voltage.
Judge as NG when the terminal voltage remains High.

2. COMPONENT DESCRIPTION

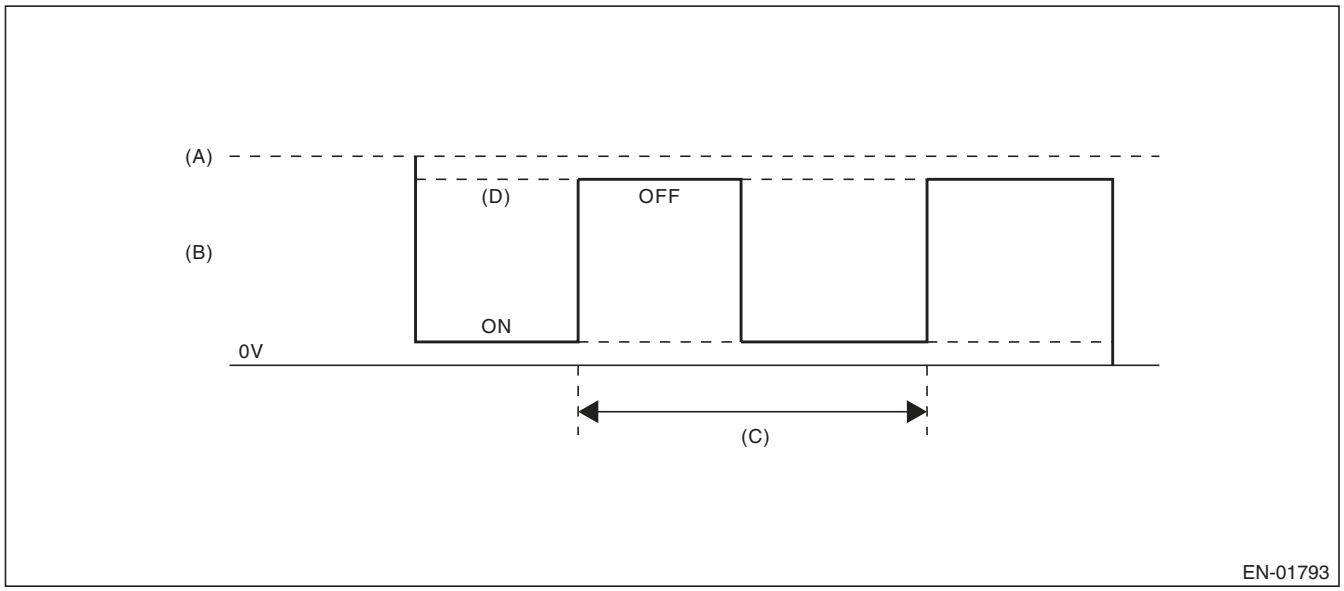

(A) Battery voltage
(B) Front oxygen (A/F) sensor heater output voltage
(C) 128 milliseconds
(D) High error

3. ENABLE CONDITION

Secondary Parameters	Enable Conditions
Battery voltage	≥ 10.9 V

4. GENERAL DRIVING CYCLE

Always perform the diagnosis continuously.

5. DIAGNOSTIC METHOD

- **Abnormality Judgement**

If the duration of time while the following conditions are met is longer than the time indicated, judge as NG.

Judgement Value

Malfunction Criteria	Threshold Value
Output voltage level	High
Front oxygen (A/F) sensor heater control duty	≥ 12.5 %

Time Needed for Diagnosis: 4 ms × 250 time(s)
Malfunction Indicator Light Illumination: Illuminates as soon as a malfunction occurs.

- **Normality Judgement**

Judge as OK and clear the NG if the continuous time while the following conditions are established is more than the predetermined time.

Judgement Value

Malfunction Criteria	Threshold Value
Output voltage level	Low

Time Needed for Diagnosis: Less than 1 second

J: DTC P0037 HO2S HEATER CONTROL CIRCUIT LOW (BANK 1 SENSOR 2)

1. OUTLINE OF DIAGNOSIS

Detect the rear oxygen sensor heater open or short circuit.
The rear oxygen sensor heater performs duty control, and the output terminal voltage at ON is 0 V, and the output terminal voltage at OFF is the battery voltage.
Judge as NG when the terminal voltage remains Low.

2. COMPONENT DESCRIPTION

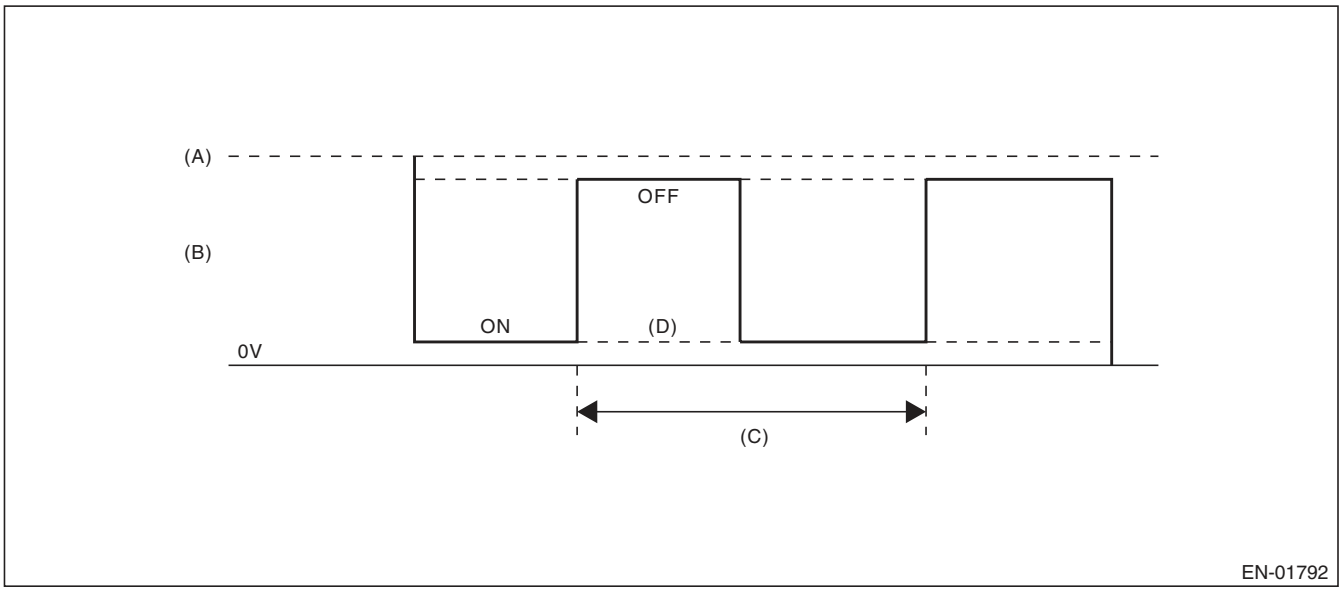

(A) Battery voltage
(B) Output voltage of the rear oxygen sensor heater
(C) 256 milliseconds (cycles)
(D) Low error

3. ENABLE CONDITION

Secondary Parameters	Enable Conditions
Battery voltage	≥ 10.9 V
Elapsed time after engine starting	≥ 1 second
Engine speed	< 4500 rpm

4. GENERAL DRIVING CYCLE

After starting the engine, perform the diagnosis continuously when engine is low speed.

5. DIAGNOSTIC METHOD

- **Abnormality Judgement**

If the duration of time while the following conditions are met is longer than the time indicated, judge as NG.

Judgement Value

Malfunction Criteria	Threshold Value
Output voltage level	Low
Rear oxygen sensor heater control duty	< 75 %

Time Needed for Diagnosis: 8 ms × 320 time(s)
Malfunction Indicator Light Illumination: Illuminates when malfunction occurs in 2 continuous driving cycles.

- **Normality Judgement**

Judge as OK and clear the NG if the continuous time while the following conditions are established is more than the predetermined time.

Judgement Value

Malfunction Criteria	Threshold Value
Output voltage level	High

Time Needed for Diagnosis: Less than 1 second

K: DTC P0038 HO2S HEATER CONTROL CIRCUIT HIGH (BANK 1 SENSOR 2)

1. OUTLINE OF DIAGNOSIS

Detect the rear oxygen sensor heater open or short circuit.
The rear oxygen sensor heater performs duty control, and the output terminal voltage at ON is 0 V, and the output terminal voltage at OFF is the battery voltage.
Judge as NG when the terminal voltage remains High.

2. COMPONENT DESCRIPTION

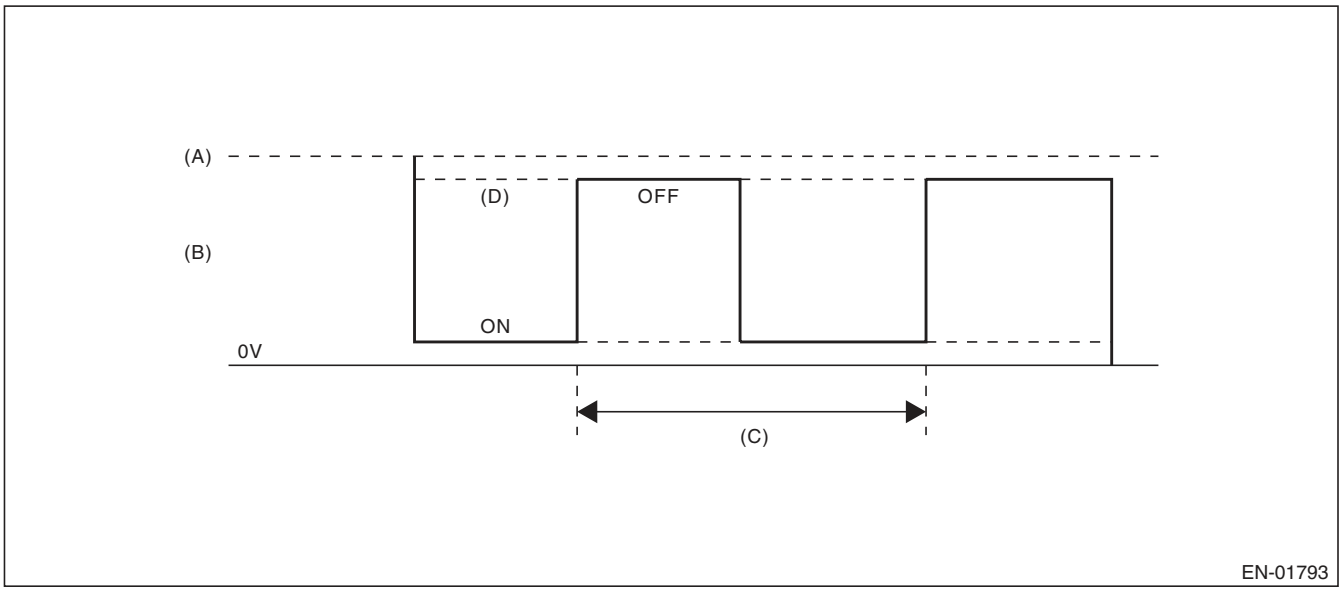

(A) Battery voltage
(B) Output voltage of the rear oxygen sensor heater
(C) 256 milliseconds (cycles)
(D) High error

3. ENABLE CONDITION

Secondary Parameters	Enable Conditions
Battery voltage	≥ 10.9 V
Elapsed time after engine starting	≥ 1 second
Engine speed	< 4500 rpm

4. GENERAL DRIVING CYCLE

After starting the engine, perform the diagnosis continuously when engine is low speed.

5. DIAGNOSTIC METHOD

• Abnormality Judgement

If the duration of time while the following conditions are met is longer than the time indicated, judge as NG.

Judgement Value

Malfunction Criteria	Threshold Value
Output voltage level	High
Rear oxygen sensor heater control duty	≥ 15 %

Time Needed for Diagnosis: 8 ms × 320 time(s)
Malfunction Indicator Light Illumination: Illuminates when malfunction occurs in 2 continuous driving cycles.

• Normality Judgement

Judge as OK and clear the NG if the continuous time while the following conditions are established is more than the predetermined time.

Judgement Value

Malfunction Criteria	Threshold Value
Output voltage level	Low

Time Needed for Diagnosis: Less than 1 second

L: DTC P0050 HO2S HEATER CONTROL CIRCUIT (BANK 2 SENSOR 1)

1. OUTLINE OF DIAGNOSIS

NOTE:
For the detection standard, refer to DTC P0030. <Ref. to GD(H6DO)-17, DTC P0030 HO2S HEATER CONTROL CIRCUIT (BANK 1 SENSOR 1), Diagnostic Trouble Code (DTC) Detecting Criteria.>

M: DTC P0051 HO2S HEATER CONTROL CIRCUIT LOW (BANK 2 SENSOR 1)

1. OUTLINE OF DIAGNOSIS

NOTE:
For the detection standard, refer to DTC P0031. <Ref. to GD(H6DO)-19, DTC P0031 HO2S HEATER CONTROL CIRCUIT LOW (BANK 1 SENSOR 1), Diagnostic Trouble Code (DTC) Detecting Criteria.>

N: DTC P0052 HO2S HEATER CONTROL CIRCUIT HIGH (BANK 2 SENSOR 1)

1. OUTLINE OF DIAGNOSIS

NOTE:
For the detection standard, refer to DTC P0032. <Ref. to GD(H6DO)-21, DTC P0032 HO2S HEATER CONTROL CIRCUIT HIGH (BANK 1 SENSOR 1), Diagnostic Trouble Code (DTC) Detecting Criteria.>

O: DTC P0057 HO2S HEATER CONTROL CIRCUIT LOW (BANK 2 SENSOR 2)

1. OUTLINE OF DIAGNOSIS

NOTE:
For the detection standard, refer to DTC P0037. <Ref. to GD(H6DO)-23, DTC P0037 HO2S HEATER CONTROL CIRCUIT LOW (BANK 1 SENSOR 2), Diagnostic Trouble Code (DTC) Detecting Criteria.>

P: DTC P0058 HO2S HEATER CONTROL CIRCUIT HIGH (BANK 2 SENSOR 2)

1. OUTLINE OF DIAGNOSIS

NOTE:
For the detection standard, refer to DTC P0038. <Ref. to GD(H6DO)-25, DTC P0038 HO2S HEATER CONTROL CIRCUIT HIGH (BANK 1 SENSOR 2), Diagnostic Trouble Code (DTC) Detecting Criteria.>

Q: DTC P0068 MAP/MAF - THROTTLE POSITION CORRELATION

1. OUTLINE OF DIAGNOSIS

Detect problems in the intake manifold pressure sensor output properties.
Judge as NG when the intake air pressure AD value is Low whereas it seemed to be High from the viewpoint of engine condition, or when it is High whereas it seemed to be Low from the engine condition.

2. COMPONENT DESCRIPTION

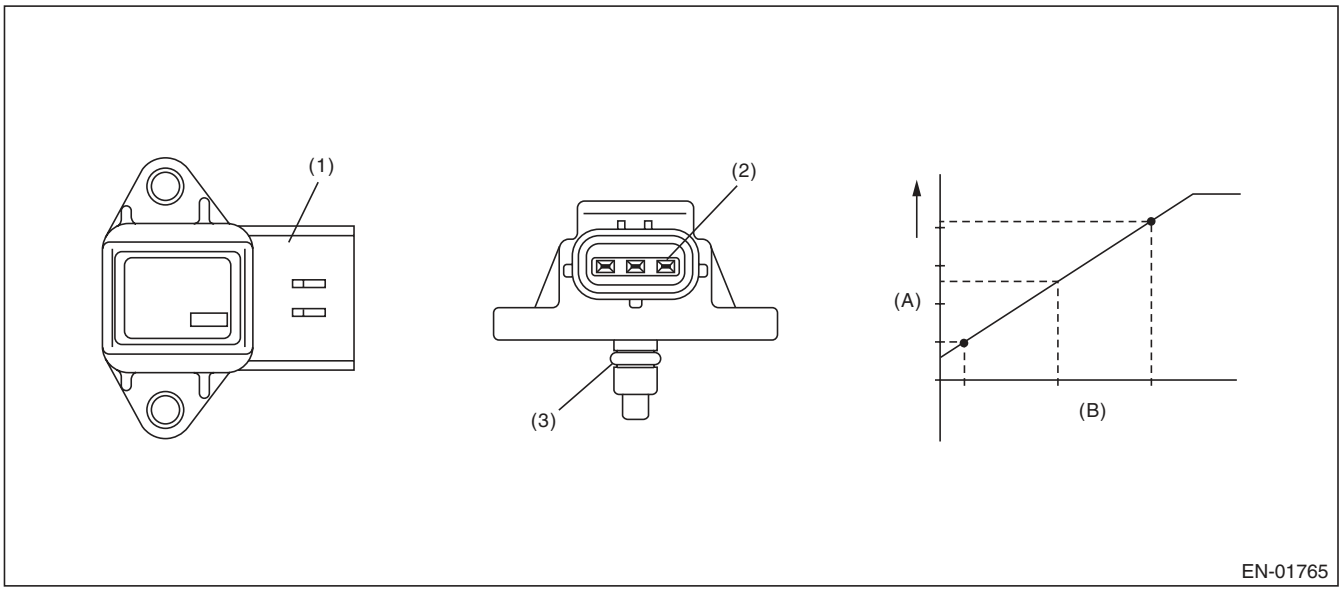

(A) Output voltage
(B) Absolute pressure

(1) Connector
(2) Terminals
(3) O-ring

3. ENABLE CONDITION

Secondary Parameters	Enable Conditions
Engine coolant temperature	≥ 75 °C (167 °F)

4. GENERAL DRIVING CYCLE

Perform the diagnosis continuously after idling.

5. DIAGNOSTIC METHOD

- **Abnormality Judgement**

Judge as NG when Low side or High side becomes NG.
If the duration of time while the following conditions are met is longer than the time indicated, judge as NG.

Judgement Value

Malfunction criteria	Threshold value
Low	
Engine speed	< 2500 rpm
Throttle position	≥ 15 °
Output voltage	< 2.12 V
Engine load	> 0.87 g/rev (0.03 oz/rev)
High	
Engine speed	500 rpm — 850 rpm
Throttle position	< 3.5 °
Output voltage	≥ 2.66 V
Engine load	< 0.6 g/rev (0.02 oz/rev)

Time Needed for Diagnosis:
Low side: 3000 ms
High side: 10000 ms
Malfunction Indicator Light Illumination: Illuminates when malfunction occurs in 2 continuous driving cycles.

- **Normality Judgement**

Judge as OK and clear the NG when both Low side and High side become OK.
If the duration of time while the following conditions are met is longer than the time indicated, judge as OK.

Judgement Value

Malfunction criteria	Threshold value
Low	
Engine speed	< 2500 rpm
Throttle position	≥ 15 °
Output voltage	≥ 2.12 V
Engine load	> 0.87 g/rev (0.03 oz/rev)
High	
Engine speed	500 rpm — 850 rpm
Throttle position	< 3.5 °
Output voltage	< 2.66 V
Engine load	< 0.6 g/rev (0.02 oz/rev)

Time Needed for Diagnosis:
Low side: Less than 1 second
High side: Less than 1 second

R: DTC P0076 INTAKE VALVE CONTROL SOLENOID CIRCUIT LOW (BANK 1)

1. OUTLINE OF DIAGNOSIS

Detect the open circuit of the oil switching solenoid valve.
Judge as NG when the current is small even though the output duty is large.

2. ENABLE CONDITION

Secondary Parameters	Enable Conditions
Battery voltage	≥ 10.9 V

3. GENERAL DRIVING CYCLE

Always perform the diagnosis continuously.

4. DIAGNOSTIC METHOD

- **Abnormality Judgement**

If the duration of time while the following conditions are met is longer than the time indicated, judge as NG.

Judgement Value

Malfunction criteria	Threshold value
Duty ratio	≥ 30 %
Control current	< 0.026 A

Time Needed for Diagnosis: 2000 ms
Malfunction Indicator Light Illumination: Illuminates as soon as a malfunction occurs.

- **Normality Judgement**

Judge as OK and clear the NG if the continuous time while the following conditions are established is more than the predetermined time.

Judgement Value

Malfunction Criteria	Threshold Value
|Oil switching solenoid valve target current value – Oil switching solenoid valve current value|	< 0.08 A
Target current	≥ 0.11 A

Time Needed for Diagnosis: 2000 ms

S: DTC P0077 INTAKE VALVE CONTROL SOLENOID CIRCUIT HIGH (BANK 1)

1. OUTLINE OF DIAGNOSIS

Detect short circuits of the oil switching solenoid valve.
Judge as a short NG when the current is large even though the output duty is small.

2. ENABLE CONDITION

Secondary Parameters	Enable Conditions
Battery voltage	≥ 10.9 V

3. GENERAL DRIVING CYCLE

Always perform the diagnosis continuously.

4. DIAGNOSTIC METHOD

- **Abnormality Judgement**

If the duration of time while the following conditions are met is longer than the time indicated, judge as NG.

Judgement Value

Malfunction criteria	Threshold value
Duty ratio	< 7 %
Control current	≥ 0.465 A

Time Needed for Diagnosis: 2000 ms
Malfunction Indicator Light Illumination: Illuminates as soon as a malfunction occurs.

- **Normality Judgement**

Judge as OK and clear the NG if the continuous time while the following conditions are established is more than the predetermined time.

Judgement Value

Malfunction Criteria	Threshold Value
|Oil switching solenoid valve target current value – Oil switching solenoid valve current value|	< 0.08 A

Time Needed for Diagnosis: 2000 ms

T: DTC P0082 INTAKE VALVE CONTROL SOLENOID CIRCUIT LOW (BANK 2)

1. OUTLINE OF DIAGNOSIS

NOTE:
For the detection standard, refer to DTC P0076. <Ref. to GD(H6DO)-29, DTC P0076 INTAKE VALVE CONTROL SOLENOID CIRCUIT LOW (BANK 1), Diagnostic Trouble Code (DTC) Detecting Criteria.>

U: DTC P0083 INTAKE VALVE CONTROL SOLENOID CIRCUIT HIGH (BANK 2)

1. OUTLINE OF DIAGNOSIS

NOTE:
For the detection standard, refer to DTC P0077. <Ref. to GD(H6DO)-30, DTC P0077 INTAKE VALVE CONTROL SOLENOID CIRCUIT HIGH (BANK 1), Diagnostic Trouble Code (DTC) Detecting Criteria.>

V: DTC P0101 MASS OR VOLUME AIR FLOW CIRCUIT RANGE/PERFORMANCE

1. OUTLINE OF DIAGNOSIS

Detect the malfunction of air flow sensor output properties.
Judge as a low side NG when the air flow voltage indicates a small value regardless of running in a state where the air flow voltage increases. Judge as a high side NG when the air flow voltage indicates a large value regardless of running in a state where the air flow voltage decreases. Judge air flow sensor property NG when the Low side or High side becomes NG.

2. COMPONENT DESCRIPTION

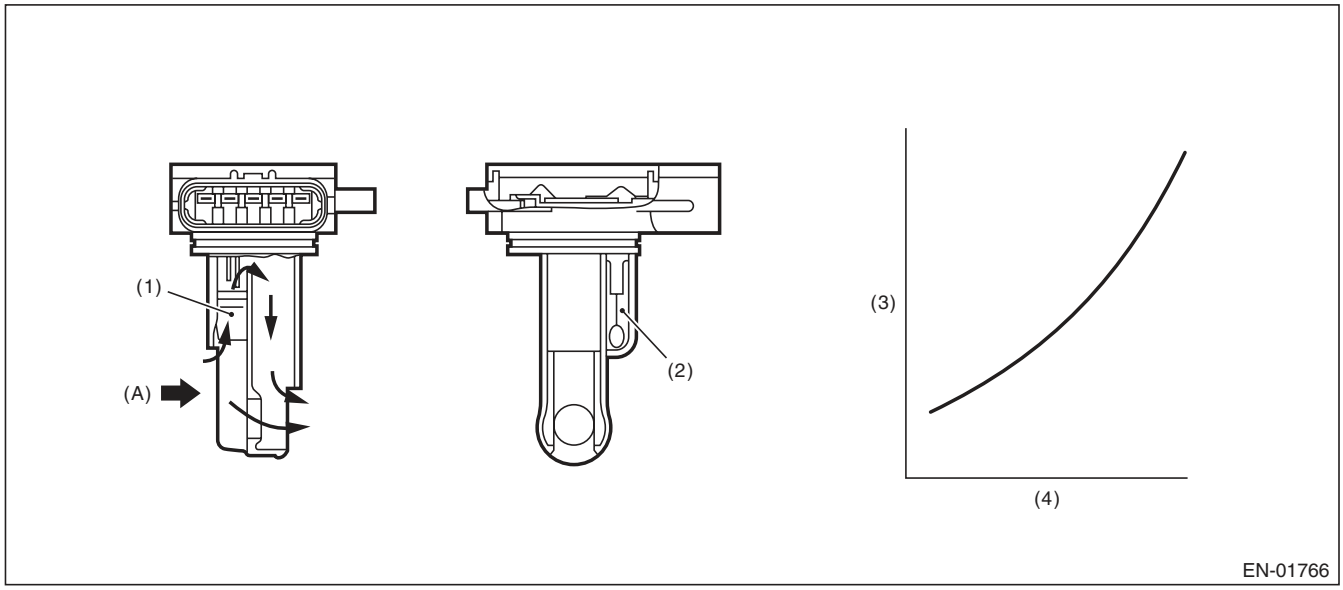

(A) Air

(1) Air flow sensor
(2) Intake air temperature sensor
(3) Voltage (V)
(4) Amount of intake air (kg (lb)/s)

3. ENABLE CONDITION

Secondary Parameters	Enable Conditions
Engine coolant temperature	≥ 75 °C (167 °F)

4. GENERAL DRIVING CYCLE

Perform the diagnosis continuously after idling.

5. DIAGNOSTIC METHOD

• Abnormality Judgement

Judge as NG when Low side or High side becomes NG.
If the duration of time while the following conditions are met is longer than the time indicated, judge as NG.

Judgement Value

Malfunction criteria	Threshold value
Low	
Output voltage	< 1.79 V
Engine speed	≥ 2000 rpm
Throttle opening angle	≥ 15 °
Intake manifold pressure	≥ 73.3 kPa (550 mmHg, 21.7 inHg)
High (1)	
Output voltage	≥ 1.83 V
Engine speed	500 rpm — 850 rpm
Throttle opening angle	< 3.5 °
Intake manifold pressure	≥ 46.7 kPa (350 mmHg, 13.8 inHg)
High (2)	
Output voltage	≥ 1.73 V
Engine speed	500 rpm — 850 rpm
Throttle opening angle	< 3.5 °
Intake manifold pressure	≥ 46.7 kPa (350 mmHg, 13.8 inHg)
Fuel system diagnosis	Rich side malfunction

Time Needed for Diagnosis:
Low: 5000 ms
High: 10000 ms
Malfunction Indicator Light Illumination: Illuminates when malfunction occurs in 2 continuous driving cycles.

• Normality Judgement

Judge as OK and clear the NG when both Low side and High side become OK.
Judge as OK and clear the NG if the continuous time while the following conditions are established is more than the predetermined time.

Judgement Value

Malfunction criteria	Threshold value
Low	
Output voltage	≥ 1.79 V
Engine speed	≥ 2000 rpm
Throttle opening angle	≥ 15 °
Intake manifold pressure	≥ 73.3 kPa (550 mmHg, 21.7 inHg)
High	
Output voltage	< 1.83 V
Engine speed	500 rpm — 850 rpm
Throttle opening angle	< 3.5 °
Intake manifold pressure	< 46.7 kPa (350 mmHg, 13.8 inHg)
Fuel system diagnosis	Rich side normal

Time Needed for Diagnosis:
Low: Less than 1 second
High: Less than 1 second

W: DTC P0102 MASS OR VOLUME AIR FLOW CIRCUIT LOW INPUT

1. OUTLINE OF DIAGNOSIS

Detect open or short circuits of the air flow sensor.
Judge as NG if out of specification.

2. COMPONENT DESCRIPTION

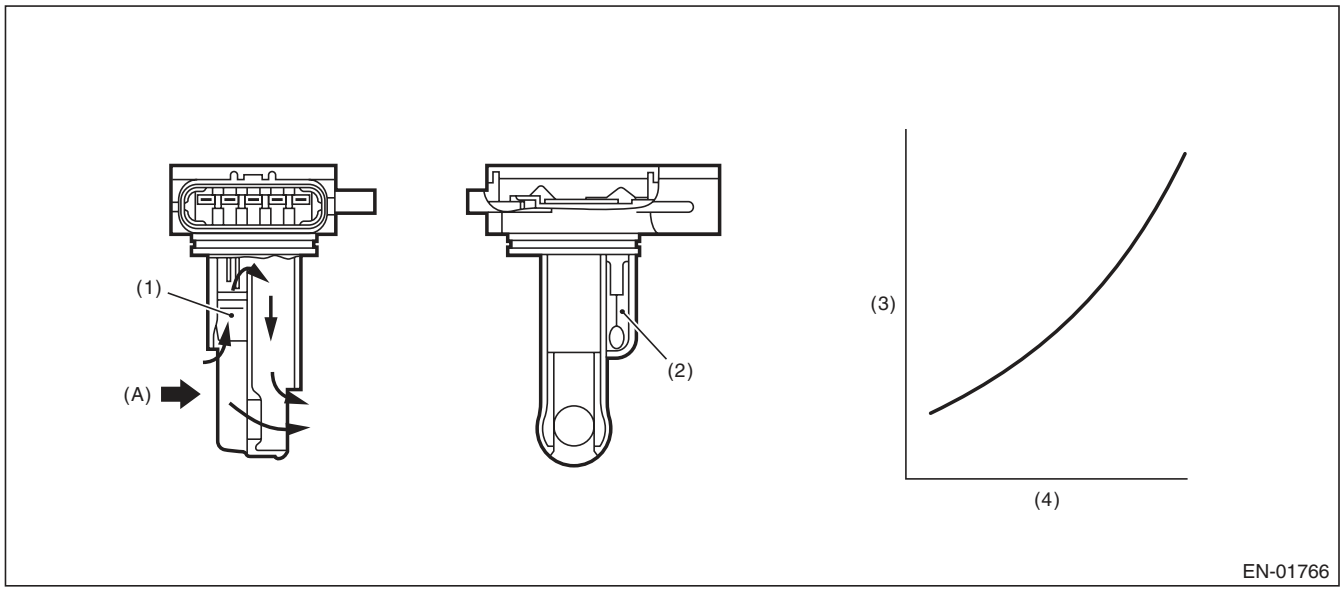

(A) Air

(1) Air flow sensor
(2) Intake air temperature sensor
(3) Voltage (V)
(4) Amount of intake air (kg (lb)/s)

3. ENABLE CONDITION

Secondary Parameters	Enable Conditions
None	

4. GENERAL DRIVING CYCLE

Always perform the diagnosis continuously.

5. DIAGNOSTIC METHOD

- **Abnormality Judgement**

If the duration of time while the following conditions are met is longer than the time indicated, judge as NG.

Judgement Value

Malfunction criteria	Threshold value
Output voltage	≤ 0.200 V

Time Needed for Diagnosis: 500 ms
Malfunction Indicator Light Illumination: Illuminates as soon as a malfunction occurs.

- **Normality Judgement**

Judge as OK and clear the NG if the continuous time while the following conditions are established is more than the predetermined time.

Judgement Value

Malfunction criteria	Threshold value
Output voltage	> 0.200 V

Time Needed for Diagnosis: Less than 1 second

X: DTC P0103 MASS OR VOLUME AIR FLOW CIRCUIT HIGH INPUT

1. OUTLINE OF DIAGNOSIS

Detect open or short circuits of the air flow sensor.
Judge as NG if out of specification.

2. COMPONENT DESCRIPTION

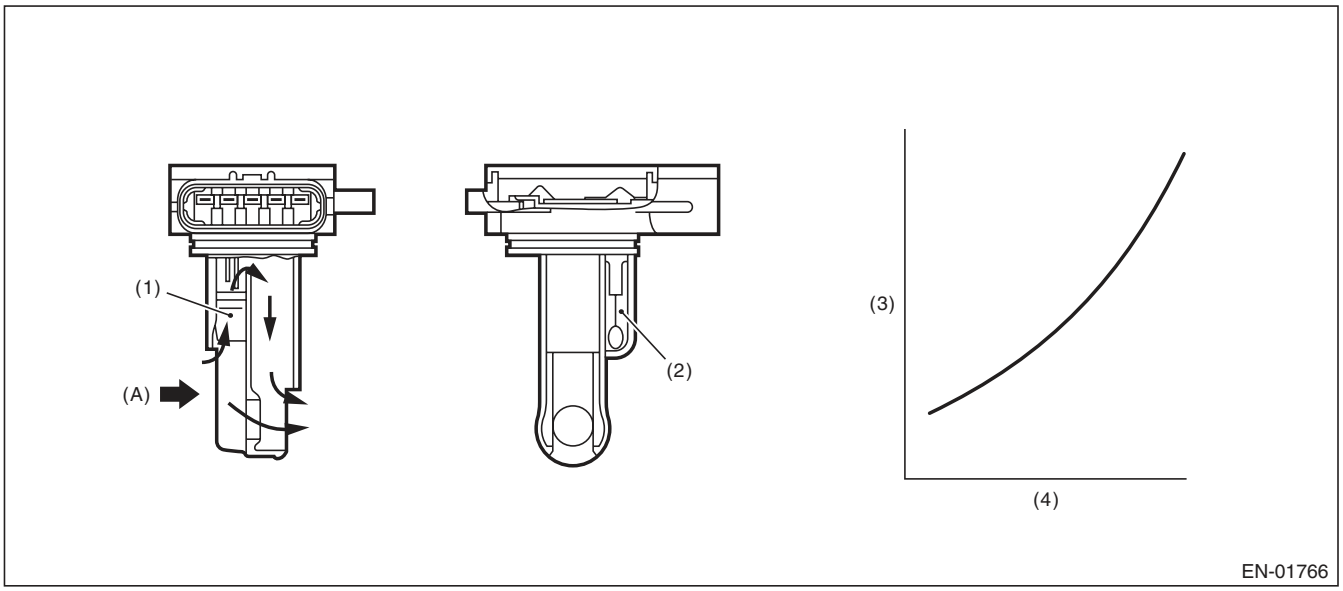

(A) Air

(1) Air flow sensor
(2) Intake air temperature sensor
(3) Voltage (V)
(4) Amount of intake air (kg (lb)/s)

3. ENABLE CONDITION

Secondary Parameters	Enable Conditions
None	

4. GENERAL DRIVING CYCLE

Always perform the diagnosis continuously.

5. DIAGNOSTIC METHOD

- **Abnormality Judgement**

If the duration of time while the following conditions are met is longer than the time indicated, judge as NG.

Judgement Value

Malfunction criteria	Threshold value
Output voltage	≥ 4.791 V

Time Needed for Diagnosis: 500 ms
Malfunction Indicator Light Illumination: Illuminates as soon as a malfunction occurs.

- **Normality Judgement**

Judge as OK and clear the NG if the continuous time while the following conditions are established is more than the predetermined time.

Judgement Value

Malfunction criteria	Threshold value
Output voltage	< 4.791 V

Time Needed for Diagnosis: Less than 1 second

Y: DTC P0107 MANIFOLD ABSOLUTE PRESSURE/BAROMETRIC PRESSURE CIRCUIT LOW INPUT

1. OUTLINE OF DIAGNOSIS

Detect the open or short circuit of intake manifold pressure sensor.
Judge as NG if out of specification.

2. COMPONENT DESCRIPTION

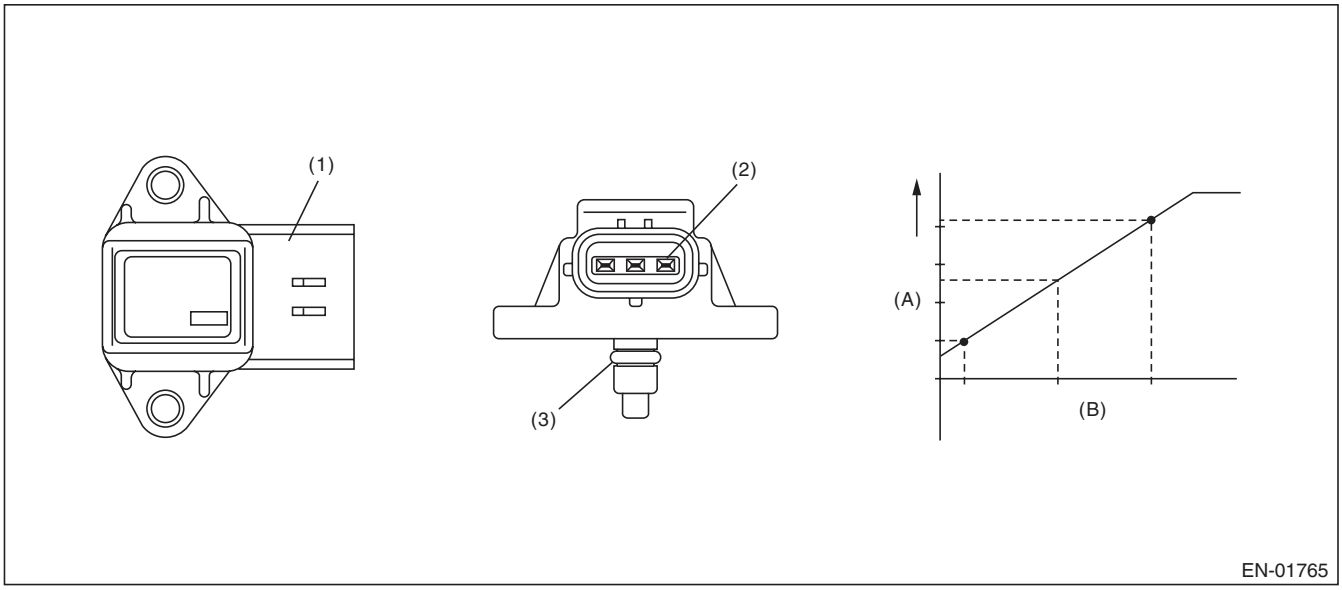

(A) Output voltage (B) Absolute pressure

(1) Connector (2) Terminals (3) O-ring

3. ENABLE CONDITION

Secondary Parameters	Enable Conditions
None	

4. GENERAL DRIVING CYCLE

Always perform the diagnosis continuously.

5. DIAGNOSTIC METHOD

- **Abnormality Judgement**

If the duration of time while the following conditions are met is longer than the time indicated, judge as NG.

Judgement Value

Malfunction criteria	Threshold value
Output voltage	≤ 0.568 V

Time Needed for Diagnosis: 500 ms
Malfunction Indicator Light Illumination: Illuminates as soon as a malfunction occurs.

- **Normality Judgement**

Judge as OK and clear the NG if the continuous time while the following conditions are established is more than the predetermined time.

Judgement Value

Malfunction criteria	Threshold value
Output voltage	> 0.568 V

Time Needed for Diagnosis: Less than 1 second

Z: DTC P0108 MANIFOLD ABSOLUTE PRESSURE/BAROMETRIC PRESSURE CIRCUIT HIGH INPUT

1. OUTLINE OF DIAGNOSIS

Detect the open or short circuit of intake manifold pressure sensor.
Judge as NG if out of specification.

2. COMPONENT DESCRIPTION

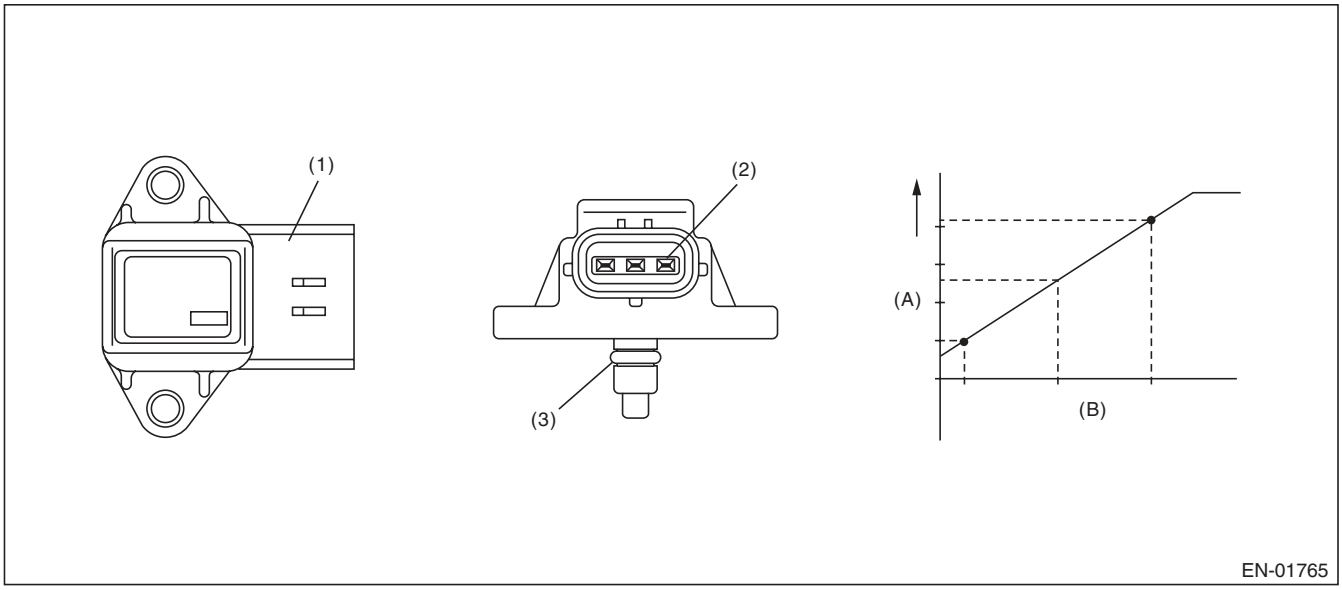

(A) Output voltage (B) Absolute pressure

(1) Connector (2) Terminals (3) O-ring

3. ENABLE CONDITION

Secondary Parameters	Enable Conditions
None	

4. GENERAL DRIVING CYCLE

Always perform the diagnosis continuously.

5. DIAGNOSTIC METHOD

- **Abnormality Judgement**

If the duration of time while the following conditions are met is longer than the time indicated, judge as NG.

Judgement Value

Malfunction criteria	Threshold value
Output voltage	≥ 4.382 V

Time Needed for Diagnosis: 500 ms
Malfunction Indicator Light Illumination: Illuminates as soon as a malfunction occurs.

- **Normality Judgement**

Judge as OK and clear the NG if the continuous time while the following conditions are established is more than the predetermined time.

Judgement Value

Malfunction criteria	Threshold value
Output voltage	< 4.382 V

Time Needed for Diagnosis: Less than 1 second

AA:DTC P0111 INTAKE AIR TEMPERATURE SENSOR 1 CIRCUIT RANGE/ PERFORMANCE

1. OUTLINE OF DIAGNOSIS

Detect the malfunction of intake air temperature sensor output property.
Judge as NG when the intake air temperature is not varied whereas it seemed to be varied from the viewpoint of engine condition.

2. COMPONENT DESCRIPTION

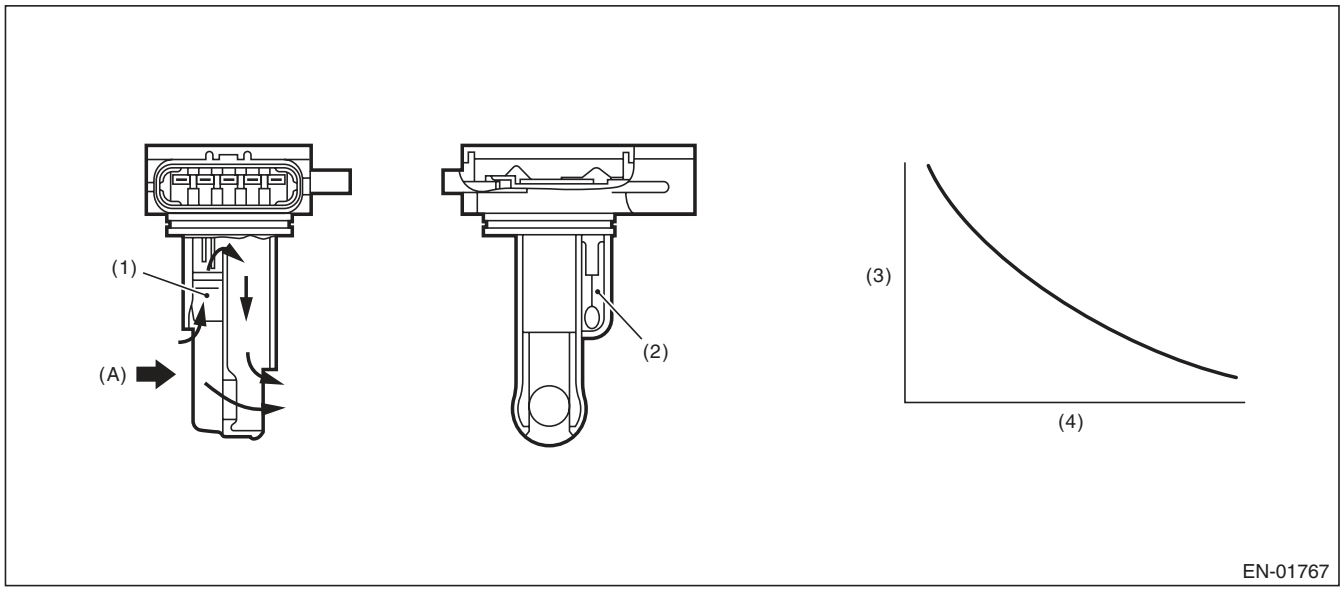

(A) Air

(1) Air flow sensor
(2) Intake air temperature sensor
(3) Resistance value (Ω)
(4) Intake air temperature °C (°F)

3. ENABLE CONDITION

Secondary Parameters	Enable Conditions
Engine coolant temperature at engine starting	< 30 °C (86 °F)
Engine coolant temperature	≥ 95 °C (203 °F)
Battery voltage	≥ 10.9 V
Continuous time when the vehicle speed is less than 60 km/h (37.3 MPH	≥ 600 s

4. GENERAL DRIVING CYCLE

Perform the diagnosis when the vehicle speed condition is met after warming up from a cold condition.

5. DIAGNOSTIC METHOD

- **Abnormality Judgement**

Judge as NG when the following conditions are established.

Judgement Value

Malfunction criteria	Threshold value
Output voltage difference between Max. and Min.	< 0.02 V(Equivalent to approximately 0.5°C (0.9°F) near 25°C)

Time Needed for Diagnosis: Less than 1 second
Malfunction Indicator Light Illumination: Illuminates when malfunction occurs in 2 continuous driving cycles.

- **Normality Judgement**

Judge as OK and clear the NG if the following conditions are established.

Judgement Value

Malfunction criteria	Threshold value
Output voltage difference between Max. and Min.	≥ 0.02 V

Time Needed for Diagnosis: Less than 1 second

AB:DTC P0112 INTAKE AIR TEMPERATURE SENSOR 1 CIRCUIT LOW

1. OUTLINE OF DIAGNOSIS

Detect open or short circuit of the intake air temperature sensor.
Judge as NG if out of specification.

2. COMPONENT DESCRIPTION

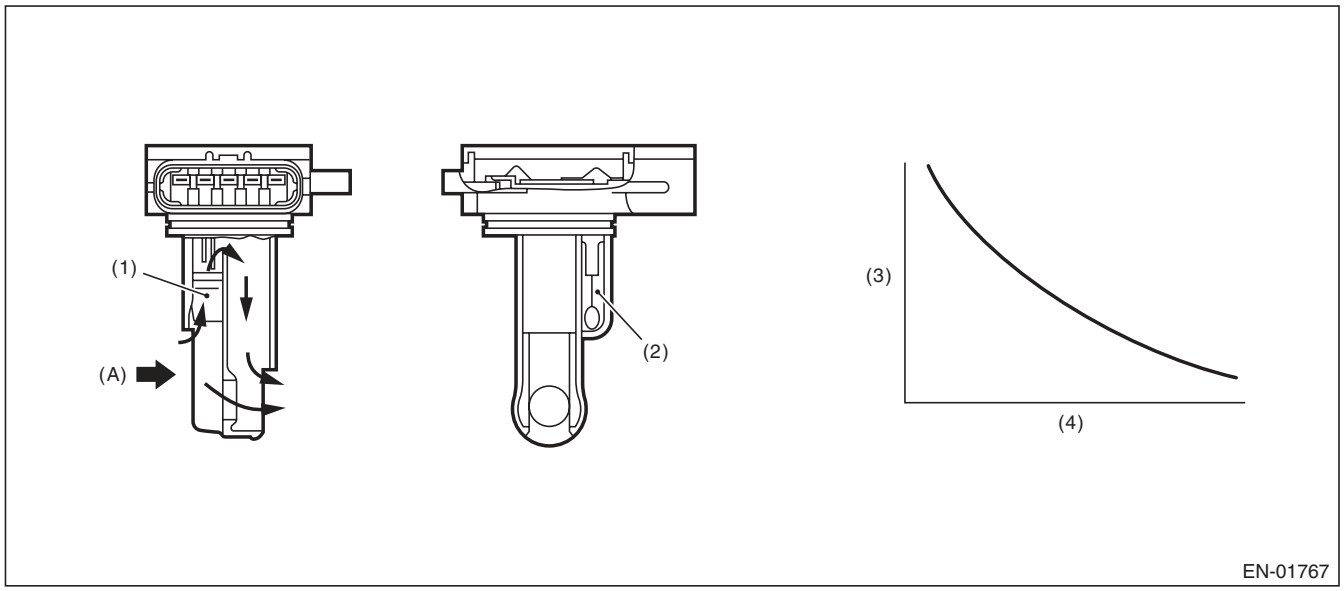

(A) Air

(1) Air flow sensor
(2) Intake air temperature sensor
(3) Resistance value (Ω)
(4) Intake air temperature °C (°F)

3. ENABLE CONDITION

Secondary Parameters	Enable Conditions
None	

4. GENERAL DRIVING CYCLE

Always perform the diagnosis continuously.

5. DIAGNOSTIC METHOD

- **Abnormality Judgement**

If the duration of time while the following conditions are met is longer than the time indicated, judge as NG.

Judgement Value

Malfunction criteria	Threshold value
Output voltage	< 0.231 V

Time Needed for Diagnosis: 500 ms
Malfunction Indicator Light Illumination: Illuminates as soon as a malfunction occurs.

- **Normality Judgement**

Judge as OK and clear the NG if the continuous time while the following conditions are established is more than the predetermined time.

Judgement Value

Malfunction criteria	Threshold value
Output voltage	≥ 0.231 V

Time Needed for Diagnosis: Less than 1 second

AC:DTC P0113 INTAKE AIR TEMPERATURE SENSOR 1 CIRCUIT HIGH

1. OUTLINE OF DIAGNOSIS

Detect open or short circuit of the intake air temperature sensor.
Judge as NG if out of specification.

2. COMPONENT DESCRIPTION

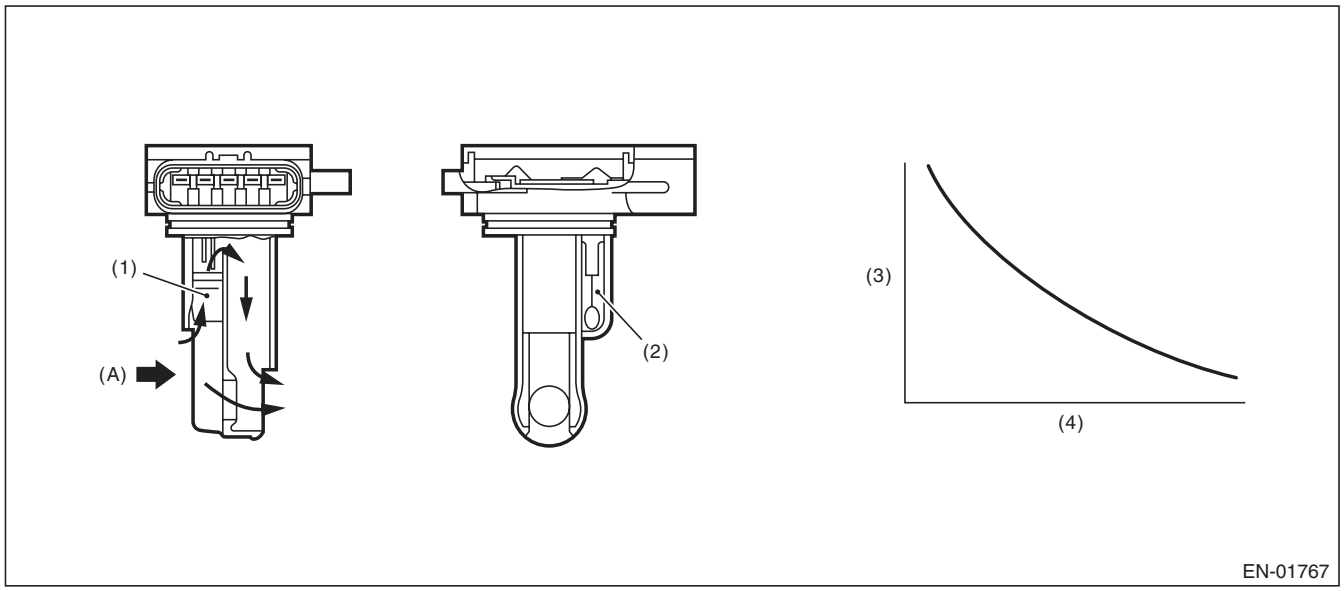

(A) Air

(1) Air flow sensor
(2) Intake air temperature sensor
(3) Resistance value (Ω)
(4) Intake air temperature °C (°F)

3. ENABLE CONDITION

Secondary Parameters	Enable Conditions
None	

4. GENERAL DRIVING CYCLE

Always perform the diagnosis continuously.

5. DIAGNOSTIC METHOD

- **Abnormality Judgement**

If the duration of time while the following conditions are met is longer than the time indicated, judge as NG.

Judgement Value

Malfunction criteria	Threshold value
Output voltage	≥ 4.716 V

Time Needed for Diagnosis: 500 ms
Malfunction Indicator Light Illumination: Illuminates as soon as a malfunction occurs.

- **Normality Judgement**

Judge as OK and clear the NG if the continuous time while the following conditions are established is more than the predetermined time.

Judgement Value

Malfunction criteria	Threshold value
Output voltage	< 4.716 V

Time Needed for Diagnosis: Less than 1 second

AD:DTC P0117 ENGINE COOLANT TEMPERATURE CIRCUIT LOW

1. OUTLINE OF DIAGNOSIS

Detect the open or short circuit of the engine coolant temperature sensor.
Judge as NG if out of specification.

2. COMPONENT DESCRIPTION

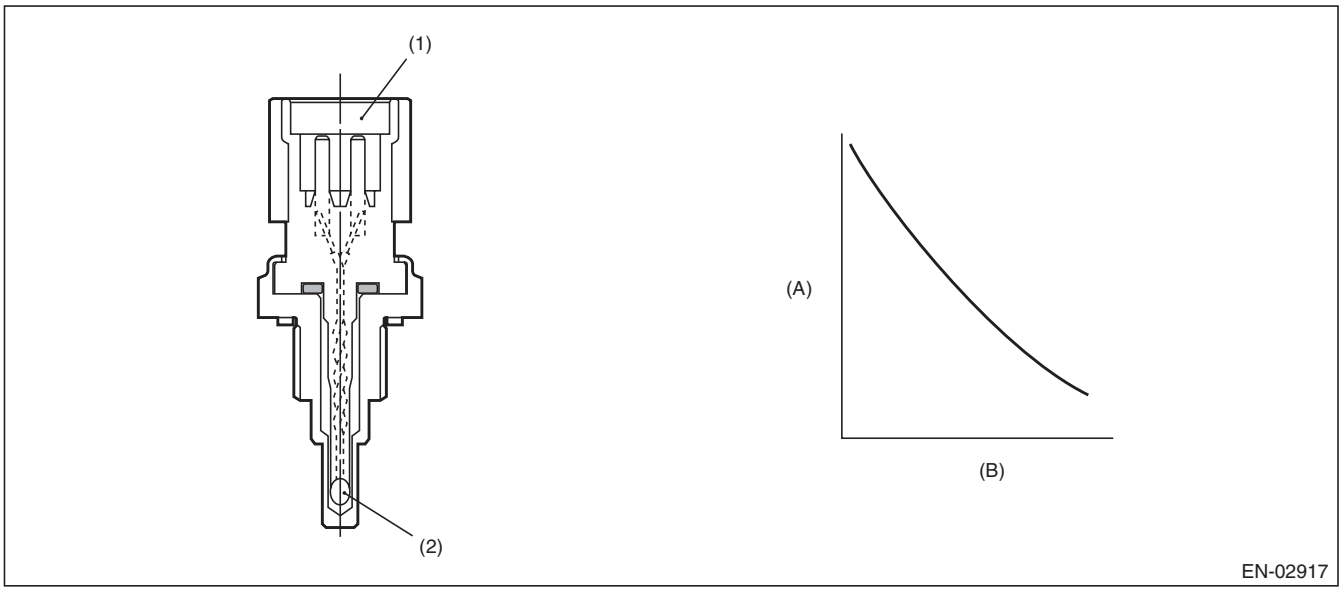

(A) Resistance value (kΩ) (B) Temperature °C (°F)

(1) Connector (2) Thermistor element

3. ENABLE CONDITION

Secondary Parameters	Enable Conditions
None	

4. GENERAL DRIVING CYCLE

Always perform the diagnosis continuously.

5. DIAGNOSTIC METHOD

- **Abnormality Judgement**

If the duration of time while the following conditions are met is longer than the time indicated, judge as NG.

Judgement Value

Malfunction criteria	Threshold value
Output voltage	< 0.265 V

Time Needed for Diagnosis: 500 ms
Malfunction Indicator Light Illumination: Illuminates as soon as a malfunction occurs.

- **Normality Judgement**

Judge as OK and clear the NG if the continuous time while the following conditions are established is more than the predetermined time.

Judgement Value

Malfunction criteria	Threshold value
Output voltage	≥ 0.265 V

Time Needed for Diagnosis: Less than 1 second

AE:DTC P0118 ENGINE COOLANT TEMPERATURE CIRCUIT HIGH

1. OUTLINE OF DIAGNOSIS

Detect the open or short circuit of the engine coolant temperature sensor.
Judge as NG if out of specification.

2. COMPONENT DESCRIPTION

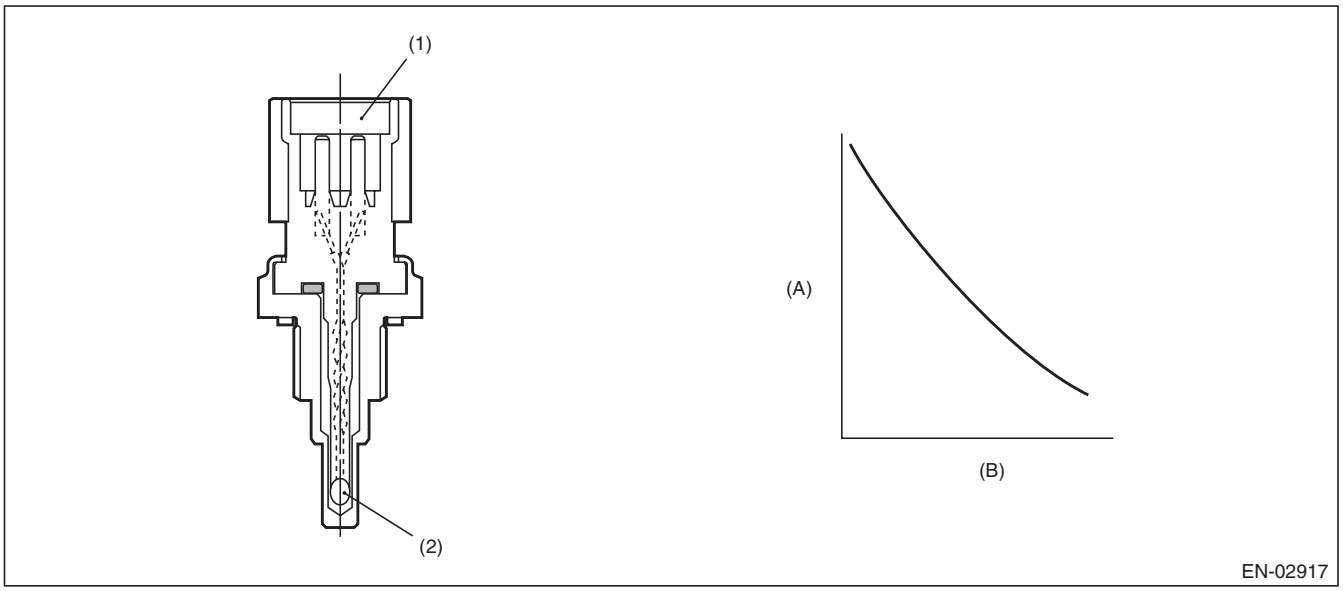

(A) Resistance value (kΩ) (B) Temperature °C (°F)

(1) Connector (2) Thermistor element

3. ENABLE CONDITION

Secondary Parameters	Enable Conditions
None	

4. GENERAL DRIVING CYCLE

Always perform the diagnosis continuously.

5. DIAGNOSTIC METHOD

- **Abnormality Judgement**

If the duration of time while the following conditions are met is longer than the time indicated, judge as NG.

Judgement Value

Malfunction criteria	Threshold value
Output voltage	≥ 4.716 V

Time Needed for Diagnosis: 500 ms
Malfunction Indicator Light Illumination: Illuminates as soon as a malfunction occurs.

- **Normality Judgement**

Judge as OK and clear the NG if the continuous time while the following conditions are established is more than the predetermined time.

Judgement Value

Malfunction criteria	Threshold value
Output voltage	< 4.716 V

Time Needed for Diagnosis: Less than 1 second

AF:DTC P0122 THROTTLE/PEDAL POSITION SENSOR/SWITCH “A” CIRCUIT LOW

1. OUTLINE OF DIAGNOSIS

Detect the open or short circuit of throttle position sensor 1.
Judge as NG if out of specification.

2. COMPONENT DESCRIPTION

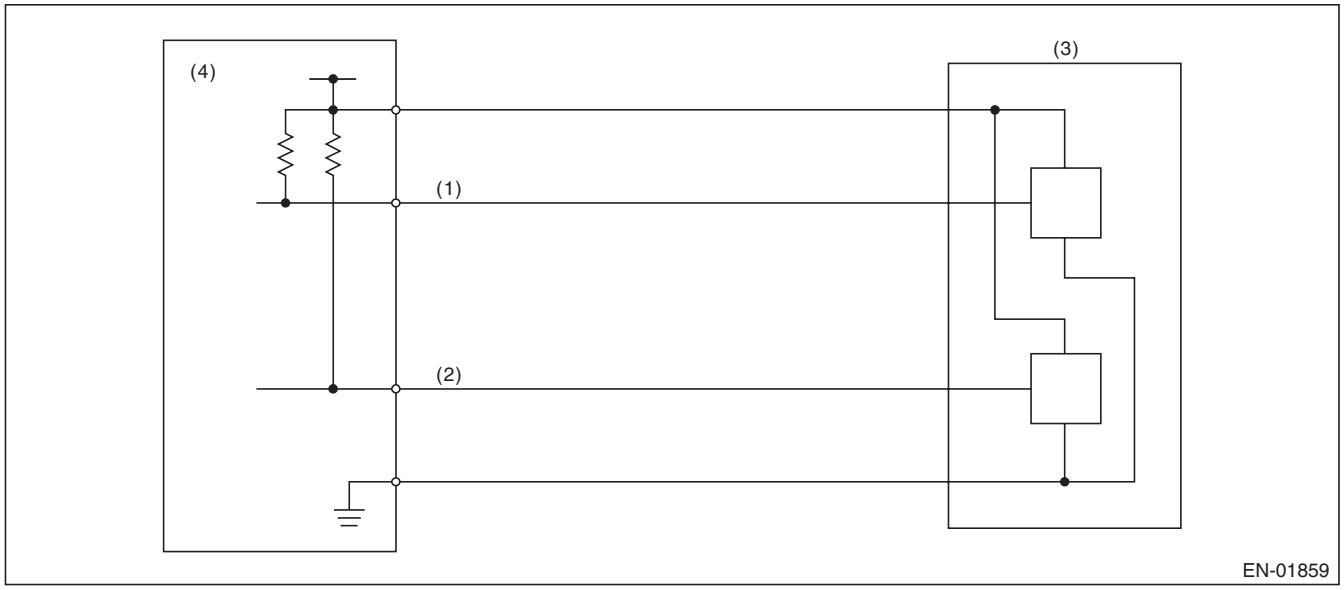

(1) Throttle position sensor 1 signal
(2) Throttle position sensor 2 signal
(3) Throttle position sensor
(4) Engine control module (ECM)

3. ENABLE CONDITION

Secondary Parameters	Enable Conditions
Ignition switch	ON
Battery voltage	≥ 6 V

4. GENERAL DRIVING CYCLE

Always perform the diagnosis continuously.

5. DIAGNOSTIC METHOD

- **Abnormality Judgement**

If the duration of time while the following conditions are met is longer than the time indicated, judge as NG.

Judgement Value

Malfunction criteria	Threshold value
Sensor 1 input voltage	≤ 0.224 V

Time Needed for Diagnosis: 24 ms
Malfunction Indicator Light Illumination: Illuminates as soon as a malfunction occurs.

- **Normality Judgement**

Judge as OK and clear the NG if the continuous time while the following conditions are established is more than the predetermined time.

Judgement Value

Malfunction criteria	Threshold value
Sensor 1 input voltage	> 0.224 V

Time Needed for Diagnosis: 24 ms

AG:DTC P0123 THROTTLE/PEDAL POSITION SENSOR/SWITCH “A” CIRCUIT HIGH

1. OUTLINE OF DIAGNOSIS

Detect the open or short circuit of throttle position sensor 1.
Judge as NG if out of specification.

2. COMPONENT DESCRIPTION

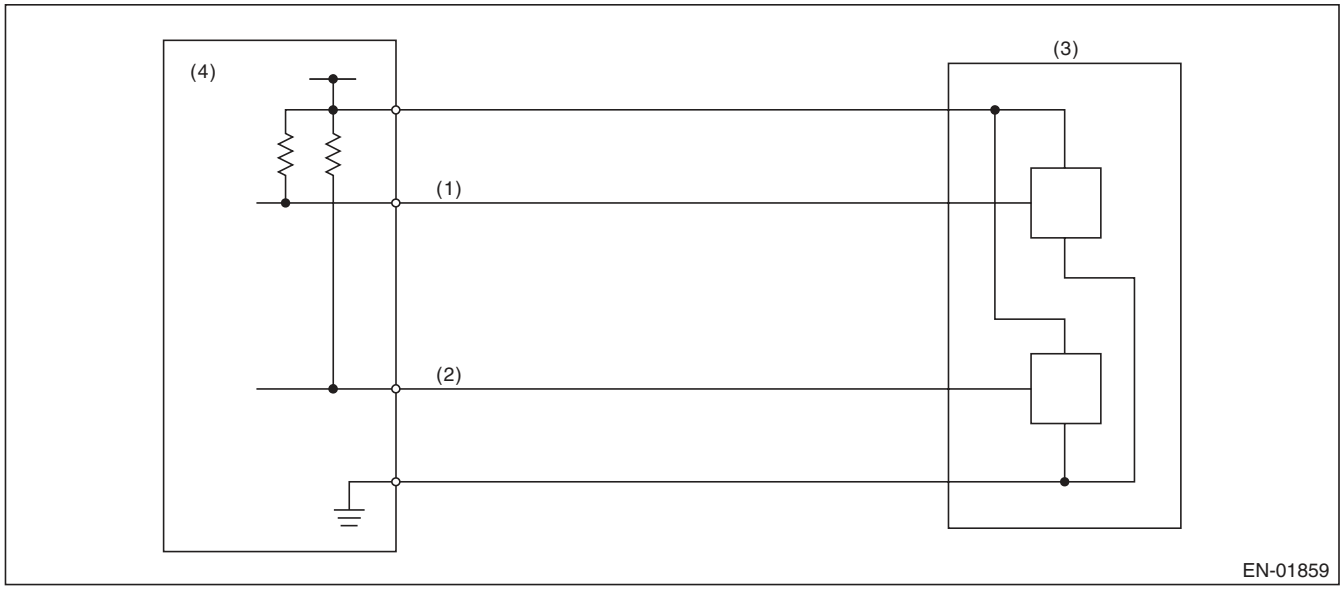

(1) Throttle position sensor 1 signal
(2) Throttle position sensor 2 signal
(3) Throttle position sensor
(4) Engine control module (ECM)

3. ENABLE CONDITION

Secondary Parameters	Enable Conditions
Ignition switch	ON
Battery voltage	≥ 6 V

4. GENERAL DRIVING CYCLE

Always perform the diagnosis continuously.

5. DIAGNOSTIC METHOD

- **Abnormality Judgement**

If the duration of time while the following conditions are met is longer than the time indicated, judge as NG.

Judgement Value

Malfunction criteria	Threshold value
Sensor 1 input voltage	≥ 4.851 V

Time Needed for Diagnosis: 24 ms
Malfunction Indicator Light Illumination: Illuminates as soon as a malfunction occurs.

- **Normality Judgement**

Judge as OK and clear the NG if the continuous time while the following conditions are established is more than the predetermined time.

Judgement Value

Malfunction criteria	Threshold value
Sensor 1 input voltage	< 4.851 V

Time Needed for Diagnosis: 24 ms

AH:DTC P0125 INSUFFICIENT COOLANT TEMPERATURE FOR CLOSED LOOP FUEL CONTROL

1. OUTLINE OF DIAGNOSIS

Detect the malfunction of engine coolant temperature output property.
Judge as NG when the engine coolant temperature does not rise in driving conditions where it should.

2. COMPONENT DESCRIPTION

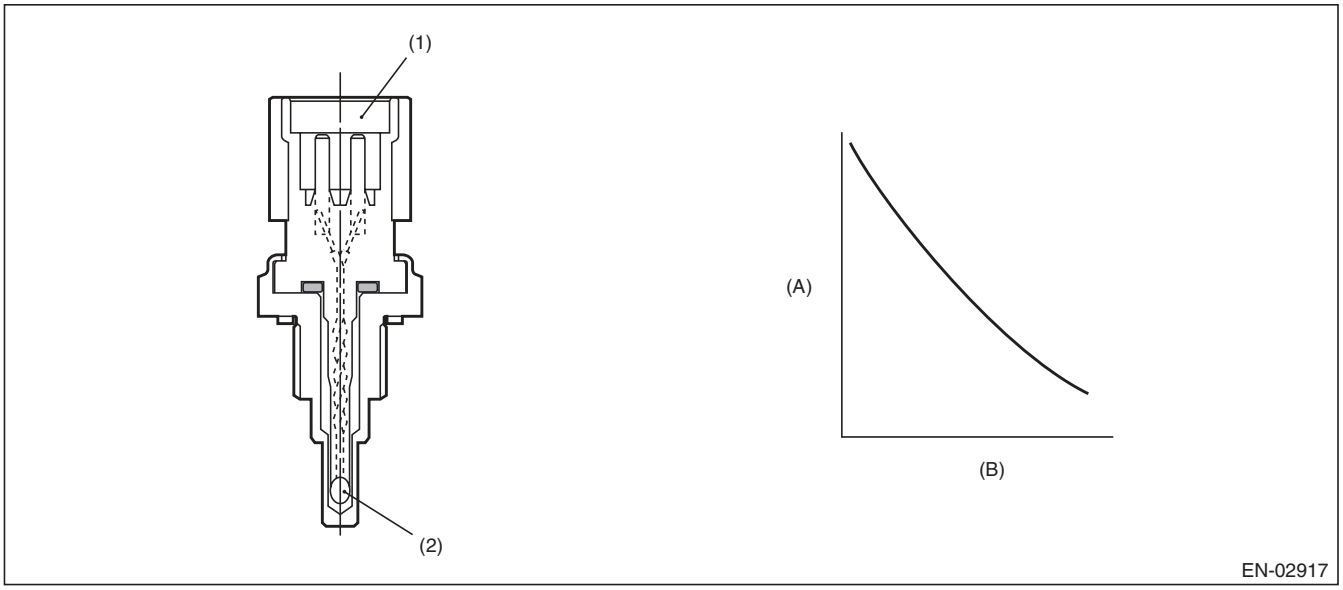

(A) Resistance value (kΩ) (B) Temperature °C (°F)

(1) Connector (2) Thermistor element

3. ENABLE CONDITION

Secondary Parameters	Enable Conditions
Engine speed	≥ Value from Map
Battery voltage	≥ 10.9 V

Map

Engine coolant temperature °C (°F)	–40 (–40)	110 (230)
Engine speed rpm	500	500

4. GENERAL DRIVING CYCLE

Perform the diagnosis only once after engine start.

5. DIAGNOSTIC METHOD

- **Abnormality Judgement**

Judge as NG if the criteria below are met.

Judgement Value

Malfunction Criteria	Threshold Value
Engine coolant temperature	< 20 °C (68 °F)
Timer for diagnosis after engine start	≥ Judgement value of timer after engine start

Timer for diagnosis after engine start
a. Timer stop at fuel cut
b. During the driving conditions except a) above, timer counts up as follows.
64 milliseconds + TWCNT milliseconds (the time of at 64 milliseconds)
TWCNT is defined as follows,
TWCNT = 0 at idle switch ON,
TWCNT show on the following table at idle switch OFF.

		Vehicle speed km/h (MPH)							
		0 (0)	8 (5)	16 (9.9)	24 (14.9)	32 (19.9)	40 (24.9)	48 (29.8)	56 (34.8)
Temperature °C (°F)	–20 (–4)	0 ms	37.136 ms	74.272 ms	111.41 ms	126.66 ms	141.91 ms	163.59 ms	185.26 ms
	–10 (14)	0 ms	27.391 ms	54.782 ms	82.173 ms	99.65 ms	117.13 ms	135.96 ms	154.8 ms
	0 (32)	0 ms	17.646 ms	35.292 ms	52.938 ms	72.64 ms	92.341 ms	108.34 ms	124.33 ms
	10 (50)	0 ms	7.9012 ms	15.802 ms	23.704 ms	45.63 ms	67.556 ms	80.711 ms	93.867 ms
	20 (68)	0 ms	7.9012 ms	15.802 ms	23.704 ms	45.63 ms	67.556 ms	80.711 ms	93.867 ms

Judgement value of timer after engine starting
t = 429523 ms – 28605 ms × Ti
Ti : The lowest coolant temperature after engine start
Time Needed for Diagnosis: Less than 1 second
Malfunction Indicator Light Illumination: Illuminates when malfunction occurs in 2 continuous driving cycles.

- **Normality Judgement**

Judge as OK and clear the NG when the malfunction criteria below are met.

Judgement Value

Malfunction Criteria	Threshold Value
Engine coolant temperature	≥ 20 °C (68 °F)

Time Needed for Diagnosis: Less than 1 second

AI: DTC P0126 INSUFFICIENT ENGINE COOLANT TEMPERATURE FOR STABLE OPERATION

1. OUTLINE OF DIAGNOSIS

Detect the malfunction of the engine coolant temperature sensor characteristics.
Memorize the engine coolant temperature and fuel temperature at the last engine stop, and use them to judge as NG when the engine coolant temperature does not decrease when it should.

2. COMPONENT DESCRIPTION

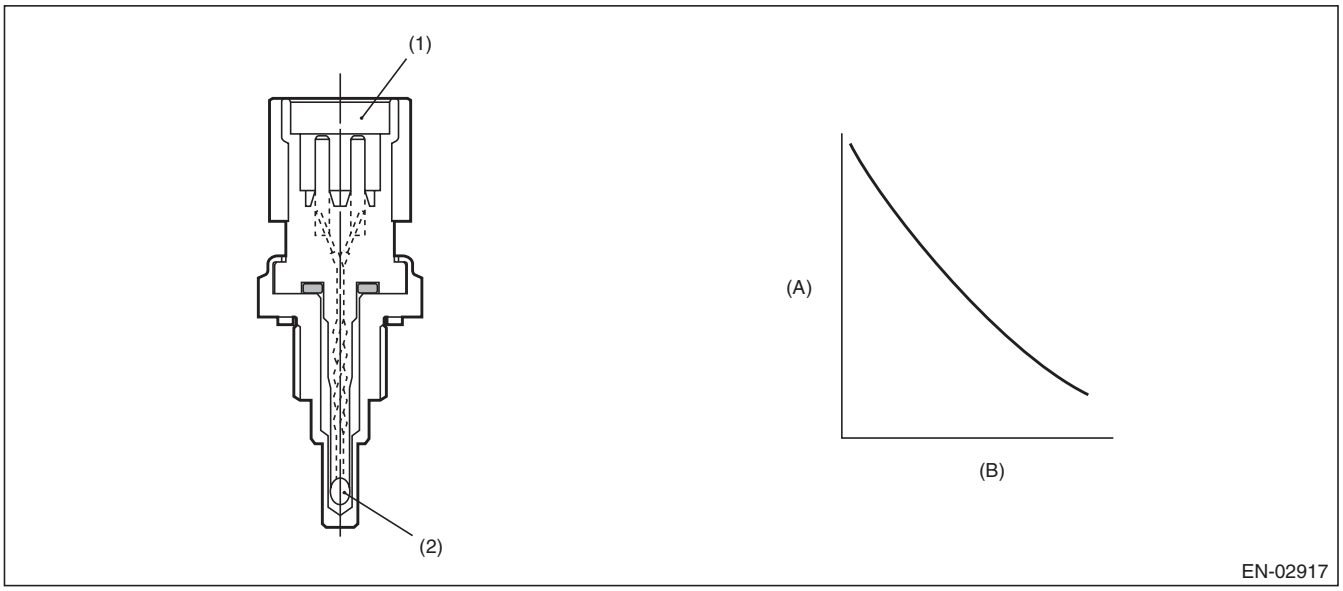

(A) Resistance value (kΩ) (B) Temperature °C (°F)

(1) Connector (2) Thermistor element

3. ENABLE CONDITION

Secondary Parameters	Enable Conditions
Battery voltage	≥ 10.9 V
Refueling from the last engine stop till the current engine start	None
Fuel level	≥ 15 ℓ (3.96 US gal, 3.3 Imp gal)
Engine coolant temperature at the last engine stop	≥ 75 °C (167 °F)

4. GENERAL DRIVING CYCLE

Perform the diagnosis only once after starting the engine.

5. DIAGNOSTIC METHOD

- **Abnormality Judgement**

If the duration of time while the following conditions are met is longer than the time indicated, judge as NG.

Judgement Value

Malfunction Criteria	Threshold Value
Engine coolant temperature at the last engine stop — Minimum engine coolant temperature after the engine start	< 2.5 °C (36.5 °F)
Fuel temperature at the last engine stop — fuel temperature	≥ 5 °C (41 °F)
Intake air temperature — fuel temperature	< 2.5 °C (36.5 °F)
Fuel temperature	< 35 °C (95 °F)

Time Needed for Diagnosis: 2500 ms
Malfunction Indicator Light Illumination: Illuminates when malfunction occurs in 2 continuous driving cycles.

- **Normality Judgement**

Judge as OK and clear the NG if the continuous time while the following conditions are established is more than the predetermined time.

Judgement Value

Malfunction Criteria	Threshold Value
Engine coolant temperature at the last engine stop — Minimum engine coolant temperature after the engine start	≥ 2.5 °C (36.5 °F)

Time Needed for Diagnosis: Less than 1 second

AJ:DTC P0128 COOLANT THERMOSTAT (ENGINE COOLANT TEMPERATURE BELOW THERMOSTAT REGULATING TEMPERATURE)

1. OUTLINE OF DIAGNOSIS

Detect malfunctions of the thermostat function.
Judge as NG when the engine coolant temperature is lower than the estimated engine coolant temperature and the difference between them is large. Judge as OK when the engine coolant temperature becomes to 75°C (167°F), and the difference is small, before judging NG.

2. COMPONENT DESCRIPTION

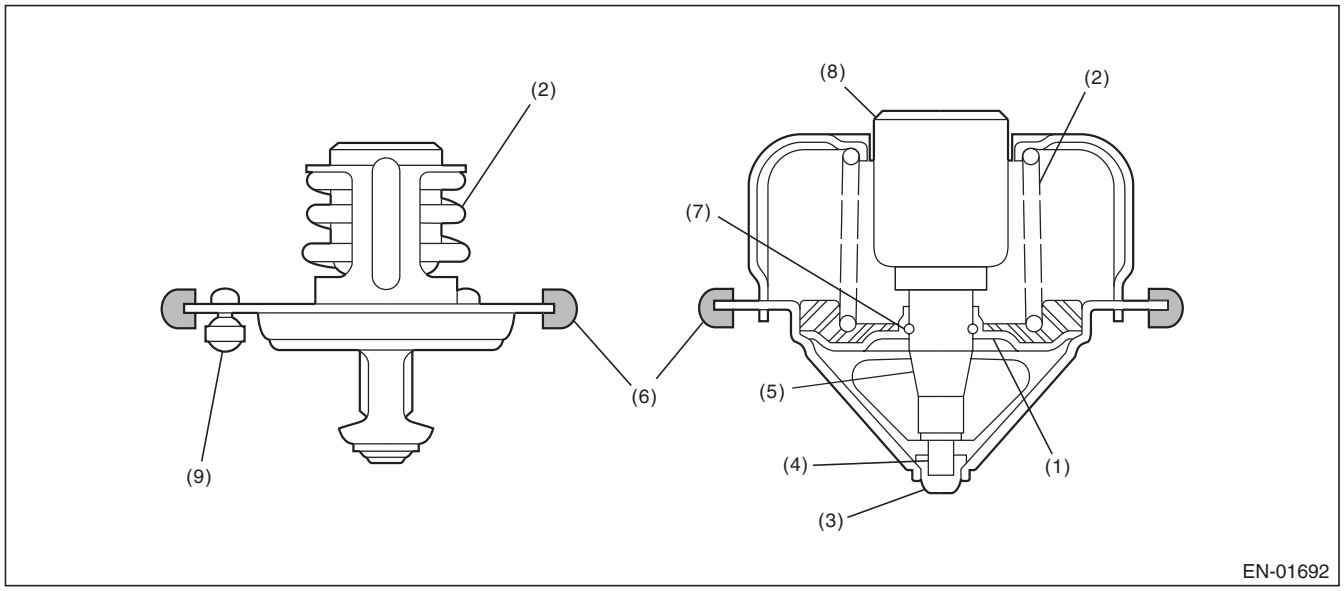

(1)	Valve	(4)	Piston	(7)	Stop ring
(2)	Spring	(5)	Guide	(8)	Wax element
(3)	Stopper	(6)	Rubber seal	(9)	Jiggle valve

3. ENABLE CONDITION

Secondary Parameters	Enable Conditions
None	

4. GENERAL DRIVING CYCLE

Always perform the diagnosis continuously.

5. DIAGNOSTIC METHOD

- **Abnormality Judgement**

If the duration of time while the following conditions are met is longer than the time indicated, judge as NG.

Judgement Value

Malfunction Criteria	Threshold Value
Battery voltage	≥ 10.9 V
Estimate ambient temperature	≥ –7 °C (19.4 °F)
Thermostat malfunction diagnosis	Incomplete
Engine coolant temperature at engine starting	< 55 °C (131 °F)
Estimated coolant temperature	≥ 75 °C (167 °F)
Engine coolant temperature	≤ 75 °C (167 °F)
(Estimated – Measured) Engine coolant temperature	> 20 °C (68 °F)
Vehicle speed	≥ 20 km/h (12.4 MPH)

Time Needed for Diagnosis: 64 ms × 3 time(s) × 120 time(s)
Malfunction Indicator Light Illumination: Illuminates when malfunction occurs in 2 continuous driving cycles.

- **Normality Judgement**

Judge as OK and clear the NG if the continuous time while the following conditions are established is more than the predetermined time.

Judgement Value

Malfunction Criteria	Threshold Value
Battery voltage	≥ 10.9 V
Estimate ambient temperature	≥ –7 °C (19.4 °F)
Thermostat malfunction diagnosis	Incomplete
Engine coolant temperature at engine starting	< 55 °C (131 °F)
Engine coolant temperature	≥ 75 °C (167 °F)
(Estimated – Measured) Engine coolant temperature	≤ 20 °C (68 °F)

Time Needed for Diagnosis: Less than 1 second

AK:DTC P0131 O2 SENSOR CIRCUIT LOW VOLTAGE (BANK 1 SENSOR 1)

1. OUTLINE OF DIAGNOSIS

Detect the open or short circuit of sensor.
Judge as NG when the element applied voltage is out of range, or the element current is out of range.

2. COMPONENT DESCRIPTION

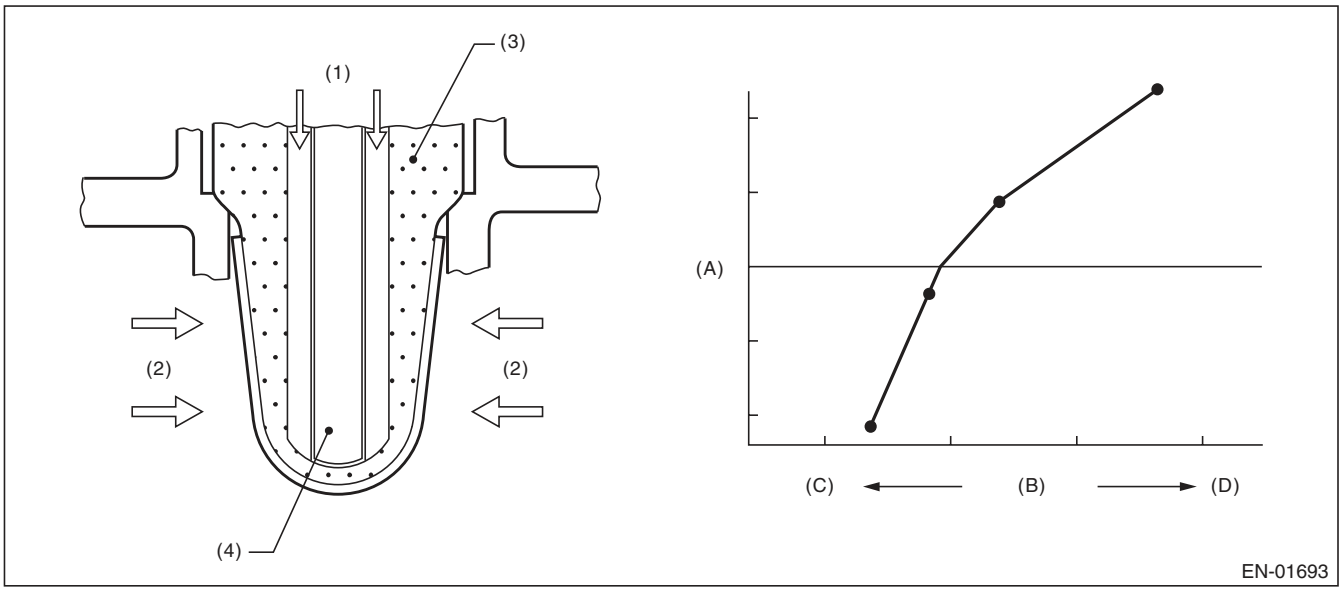

(A) Electromotive force
(B) Air fuel ratio
(C) Lean
(D) Rich

(1) Atmosphere
(2) Exhaust gas
(3) ZrO_2
(4) Ceramic heater

3. ENABLE CONDITION

Secondary Parameters	Enable Conditions
Battery voltage	≥ 10.9 V

4. GENERAL DRIVING CYCLE

Always perform the diagnosis continuously.

5. DIAGNOSTIC METHOD

- **Abnormality Judgement**

If the duration of time while the following conditions are met is longer than the time indicated, judge as NG.

Judgement Value

Malfunction criteria	Threshold value
Input voltage or Input current	< 1.800 V < –0.005 A

Time Needed for Diagnosis: 1000 ms
Malfunction Indicator Light Illumination: Illuminates as soon as a malfunction occurs.

- **Normality Judgement**

Judge as OK and clear the NG if the continuous time while the following conditions are established is more than the predetermined time.

Judgement Value

Malfunction criteria	Threshold value
Input voltage	≥ 1.800 V
Input current	≥ –0.005 A

Time Needed for Diagnosis: Less than 1 second

AL:DTC P0132 O2 SENSOR CIRCUIT HIGH VOLTAGE (BANK 1 SENSOR 1)

1. OUTLINE OF DIAGNOSIS

Detect the open or short circuit of sensor.
Judge as NG when the element applied voltage is out of range, or the element current is out of range.

2. COMPONENT DESCRIPTION

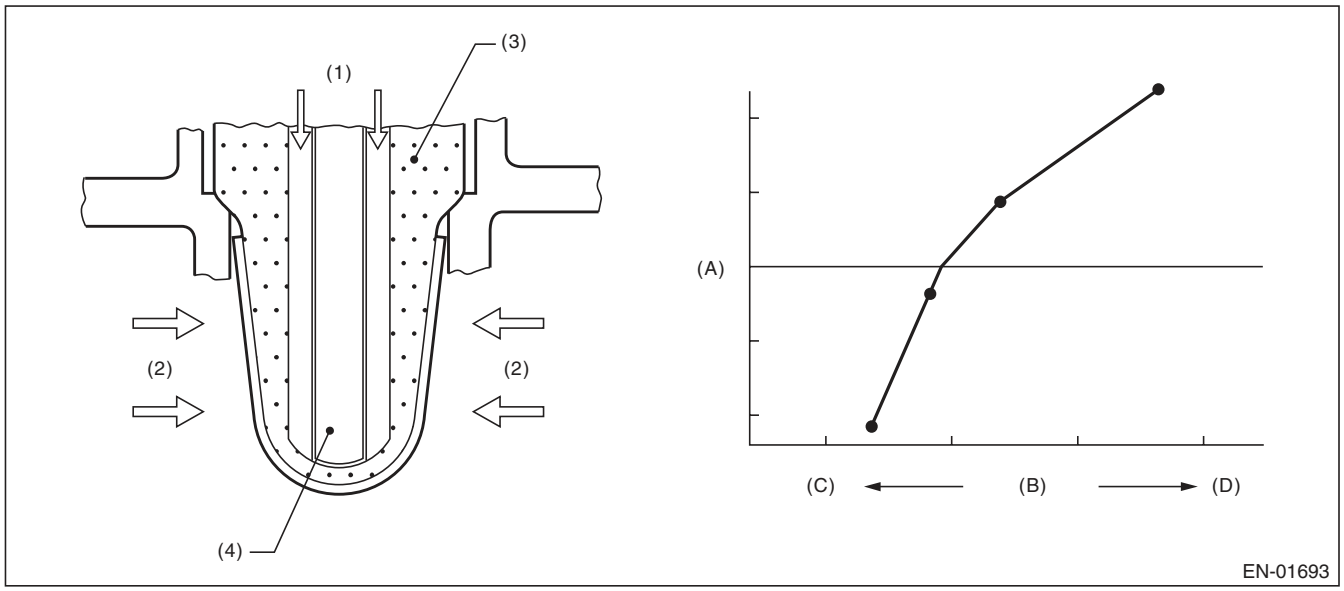

(A) Electromotive force
(B) Air fuel ratio
(C) Lean
(D) Rich

(1) Atmosphere
(2) Exhaust gas
(3) ZrO_2
(4) Ceramic heater

3. ENABLE CONDITION

Secondary Parameters	Enable Conditions
Battery voltage	≥ 10.9 V

4. GENERAL DRIVING CYCLE

Always perform the diagnosis continuously.

5. DIAGNOSTIC METHOD

- **Abnormality Judgement**

If the duration of time while the following conditions are met is longer than the time indicated, judge as NG.

Judgement Value

Malfunction criteria	Threshold value
Input voltage or Input current	> 3.800 V > 0.005 A

Time Needed for Diagnosis: 1000 ms
Malfunction Indicator Light Illumination: Illuminates as soon as a malfunction occurs.

- **Normality Judgement**

Judge as OK and clear the NG if the continuous time while the following conditions are established is more than the predetermined time.

Judgement Value

Malfunction criteria	Threshold value
Input voltage	≤ 3.800 V
Input current	≤ 0.005 A

Time Needed for Diagnosis: Less than 1 second

AM:DTC P0133 O2 SENSOR CIRCUIT SLOW RESPONSE (BANK 1 SENSOR 1)

1. OUTLINE OF DIAGNOSIS

Detect the slow response of front oxygen (A/F) sensor.
Front oxygen (A/F) sensor cover has some ventilation holes for exhaust gas. Clogged ventilation holes are diagnosed.
When the holes are clogged, the A/F output variation becomes slow comparing with the actual A/F variation because oxygen which reaches the zirconia layer is insufficient. Therefore, if the sensor cover holes are clogged, the rich to lean judgment in the ECM is delayed when the actual change from rich to lean occurs.
Judge as NG when the actual movement in comparison to the ECM control amount is slow.

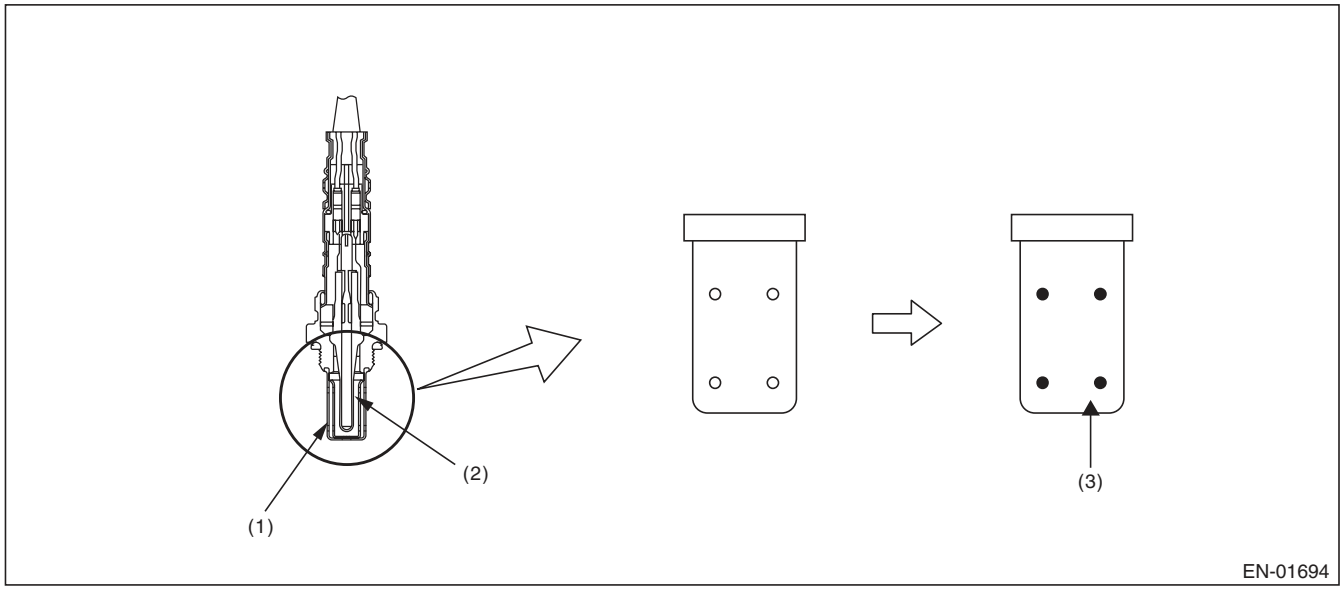

(1) Cover
(2) Zirconia
(3) Clogging

2. COMPONENT DESCRIPTION

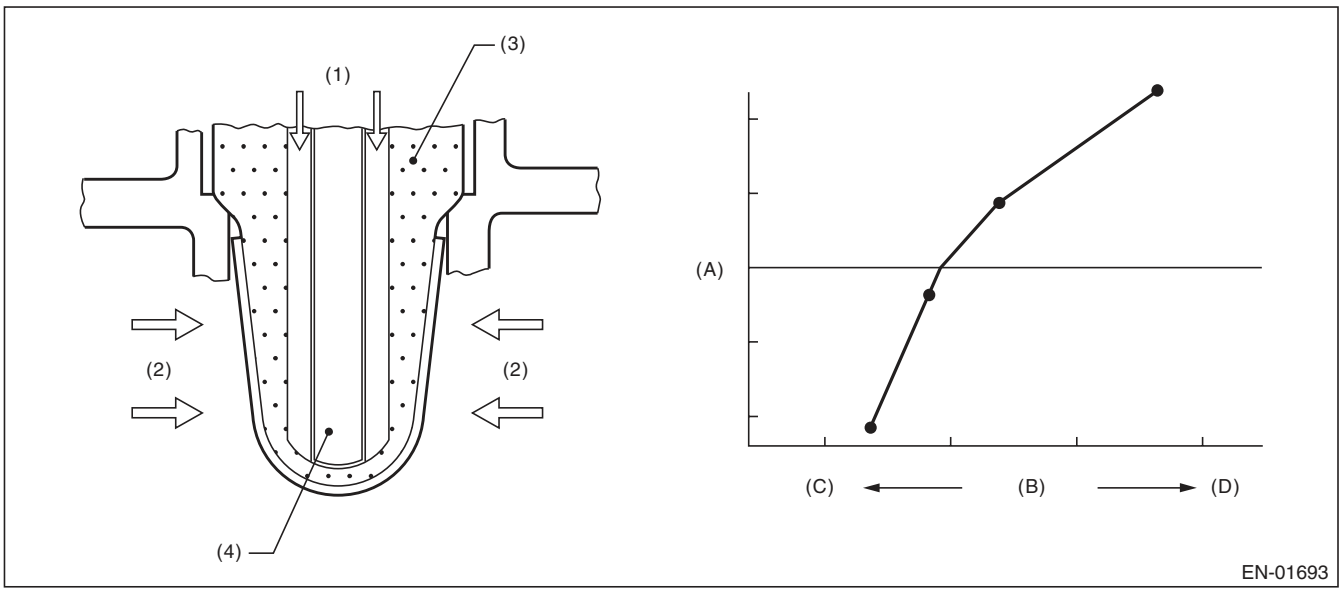

(A)	Electromotive force	(C)	Lean	(D)	Rich
(B)	Air fuel ratio				
(1)	Atmosphere	(3)	ZrO_2	(4)	Ceramic heater
(2)	Exhaust gas				

3. ENABLE CONDITION

Secondary Parameters	Enable Conditions
Time needed for all secondary parameters to be in enable conditions	≥ 1024 ms
Battery voltage	≥ 10.9 V
Barometric pressure	> 75 kPa (563 mmHg, 22.2 inHg)
Closed loop control with main feedback	Operation
Front oxygen (A/F) sensor impedance	0 Ω — 50 Ω
Elapsed time after starting the engine	≥ 120000 ms
Engine coolant temperature	≥ 75 °C (167 °F)
Engine speed	1000 rpm — 2500 rpm
Vehicle speed	10 km/h — 120 km/h (6.2 MPH — 74.6 MPH)
Amount of intake air	10 g/s — 40 g/s (0.35 oz/s — 1.41 oz/s)
Engine load	< 0.02 g/rev (0 oz/rev)
Learning value of EVAP conc. during purge	< 0.2
Total time of operating canister purge	≥ 19.9 s

4. GENERAL DRIVING CYCLE

Perform diagnosis only once at a constant speed of 10 km/h — 120 km/h (6.2 MPH — 74.6 MPH) 120000 ms or more after starting the engine.

5. DIAGNOSTIC METHOD

Calculate faf difference every 32ms × 4 , and the λ value difference. Calculate the diagnosis value after calculating 820 time(s).

- **Abnormality Judgement**

If the duration of time while the following conditions are met is longer than the time indicated, judge as NG.

Judgement Value

Malfunction Criteria	Threshold Value
parafca = td2faf/td2lmd where, td2faf (N) = td2faf (n–1) + |d2faf (n)| td2lmd (N) = td2lmd (n–1) + |d2lmd (n)| add up to 32 ms × 4 × 820 time(s). d2faf (n) = (faf (n) – faf (n–1)) – (faf (n–1) – faf (n–2)) d2lmd (n) = (lmd (n) – lmd (n–1)) – (lmd (n–1) – lmd (n–2)) faf = main feedback compensation coefficient every 128 milliseconds lmd = output lambda every 128 milliseconds	> 0.2

Time Needed for Diagnosis: 32 ms × 4 × 820 time(s)
Malfunction Indicator Light Illumination: Illuminates when malfunction occurs in 2 continuous driving cycles.

- **Normality Judgement**

Judge as OK and clear the NG if the continuous time while the following conditions are established is more than the predetermined time.

Judgement Value

Malfunction Criteria	Threshold Value
parafca = td2faf/td2lmd where, td2faf (N) = td2faf (n–1) + |d2faf (n)| td2lmd (N) = td2lmd (n–1) + |d2lmd (n)| add up to 32 ms × 4 × 820 time(s). d2faf (n) = (faf (n) – faf (n–1)) – (faf (n–1) – faf (n–2)) d2lmd (n) = (lmd (n) – lmd (n–1)) – (lmd (n–1) – lmd (n–2)) faf = main feedback compensation coefficient every 128 milliseconds lmd = output lambda every 128 milliseconds	≤ 0.2

Time Needed for Diagnosis: 32 ms × 4 × 820 time(s)

AN:DTC P0134 O2 SENSOR CIRCUIT NO ACTIVITY DETECTED (BANK 1 SENSOR 1)

1. OUTLINE OF DIAGNOSIS

Detect open circuits of the sensor.
Judge as NG when the impedance of the element is large.

2. COMPONENT DESCRIPTION

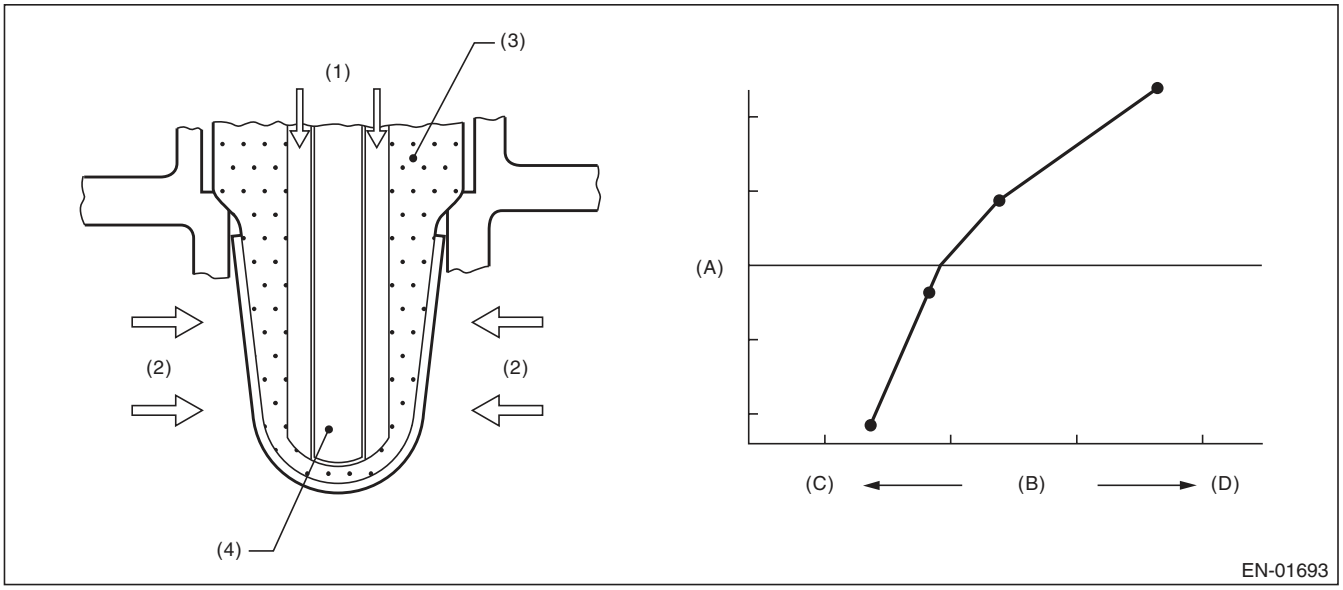

(A)	Electromotive force	(C)	Lean	(D)	Rich
(B)	Air fuel ratio				
(1)	Atmosphere	(3)	ZrO_2	(4)	Ceramic heater
(2)	Exhaust gas				

3. ENABLE CONDITION

Secondary Parameters	Enable Conditions
None	

4. GENERAL DRIVING CYCLE

Always perform the diagnosis continuously.

5. DIAGNOSTIC METHOD

- **Abnormality Judgement**

If the duration of time while the following conditions are met is longer than the time indicated, judge as NG.

Judgement Value

Malfunction Criteria	Threshold Value
Battery voltage	≥ 10.9 V
Time of heater control duty at 70 % or more	≥ 30000 ms
Front oxygen (A/F) sensor impedance.	> 500 Ω

Time Needed for Diagnosis: 5000 ms
Malfunction Indicator Light Illumination: Illuminates as soon as a malfunction occurs.

- **Normality Judgement**

Judge as OK and clear the NG if the continuous time while the following conditions are established is more than the predetermined time.

Judgement Value

Malfunction Criteria	Threshold Value
Battery voltage	≥ 10.9 V
Front oxygen (A/F) sensor impedance.	≤ 500 Ω

Time Needed for Diagnosis: Less than 1 second

AO:DTC P0137 O2 SENSOR CIRCUIT LOW VOLTAGE (BANK 1 SENSOR 2)

1. OUTLINE OF DIAGNOSIS

Detect continuity NG of the oxygen sensor. If the oxygen sensor voltage reading is not within the probable range considering the operating conditions, judge as NG.

2. COMPONENT DESCRIPTION

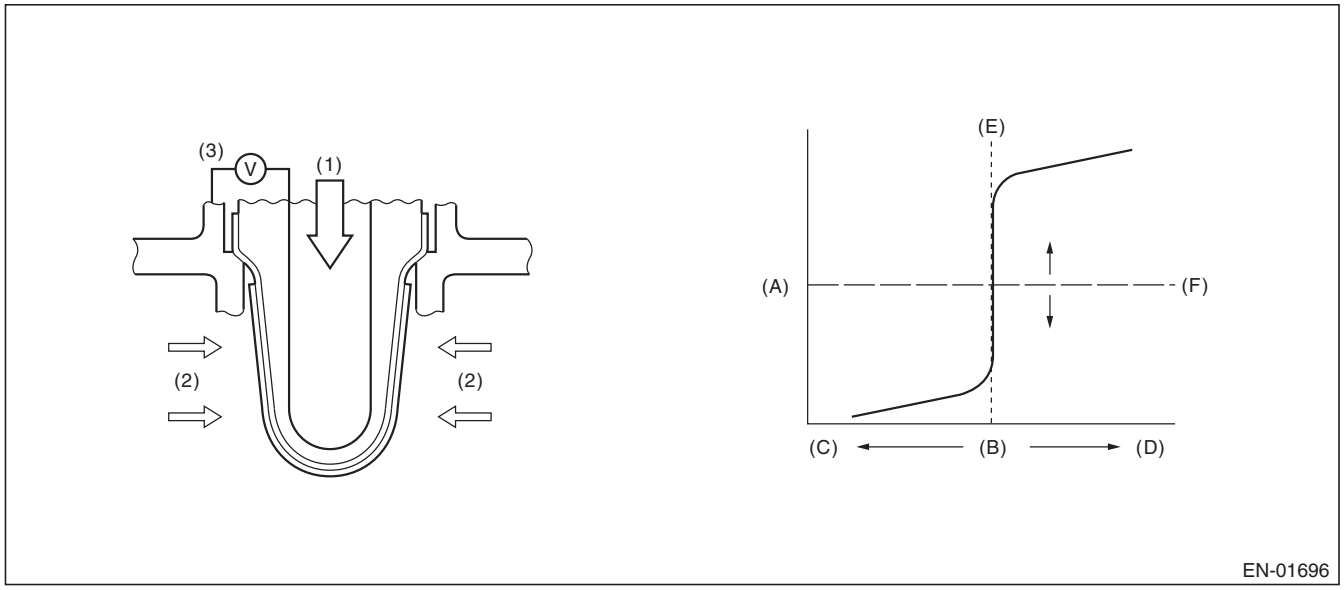

(A)	Electromotive force	(C)	Rich	(E)	Theoretical air fuel ratio
(B)	Air fuel ratio	(D)	Lean	(F)	Comparative voltage
(1)	Atmosphere	(2)	Exhaust gas	(3)	Electromotive force

3. ENABLE CONDITION

Used for abnormality judgment

Secondary Parameters	Enable Conditions
High	
Secondary air system	Not in operation
Closed loop control at the oxygen sensor	In operation
Misfire detection every 200 rotations	< 7 time(s)
Front oxygen (A/F) sensor compensation coefficient	Not in limit value
Battery voltage	≥ 10.9 V
Engine coolant temperature	≥ 75 °C (167 °F)
Low (1)	
Secondary air system	Not in operation
Closed loop control at the oxygen sensor	In operation
Misfire detection every 200 rotations	< 7 time(s)
Front oxygen (A/F) sensor compensation coefficient	Not in limit value
Battery voltage	≥ 10.9 V
Engine coolant temperature	≥ 75 °C (167 °F)
Amount of intake air	≥ 10 g/s (0.35 oz/s)
Low (2)	
Secondary air system	Not in operation
Closed loop control at the oxygen sensor	In operation
Misfire detection every 200 rotations	< 7 time(s)
Front oxygen (A/F) sensor compensation coefficient	Not in limit value
Battery voltage	≥ 10.9 V
Engine coolant temperature	≥ 75 °C (167 °F)
Amount of intake air	< 10 g/s (0.35 oz/s)
Current continuation time of the rear oxygen sensor heater	≥ 25000 ms
Low (3)	
Secondary air system	Not in operation
Closed loop control at the oxygen sensor	In operation
Misfire detection every 200 rotations	< 7 time(s)
Front oxygen (A/F) sensor compensation coefficient	Not in limit value
Battery voltage	≥ 10.9 V
Engine coolant temperature	≥ 75 °C (167 °F)
Amount of intake air	< 10 g/s (0.35 oz/s)
Current continuation time of the rear oxygen sensor heater	≥ 25000 ms
Fuel cut	Experienced

Used for normality judgment

Secondary Parameters	Enable Conditions
Secondary air system	Not in operation
Closed loop control at the oxygen sensor	In operation
Misfire detection every 200 rotations	< 7 time(s)
Front oxygen (A/F) sensor compensation coefficient	Not in limit value
Battery voltage	≥ 10.9 V
Engine coolant temperature	≥ 75 °C (167 °F)

4. GENERAL DRIVING CYCLE

After starting the engine, continuously perform the diagnosis with the same engine condition.

5. DIAGNOSTIC METHOD

- **Abnormality Judgement**

If the duration of time while the following conditions are met is longer than the time indicated, judge as NG.

Judgement Value

Malfunction Criteria	Threshold Value	DTC
High Sensor output voltage	> 1.200 V	P0138 P0158
Low Sensor output voltage	< 0.030 V	P0137 P0157

Time Needed for Diagnosis:

High: 2500 ms
Low (1): 20000 ms
Low (2): 40000 ms
Low (3): Value from Map

Map

Fuel Cut Time (second)	0	2000	10000
Time needed for diagnosis (second)	40000	40000	60000

Malfunction Indicator Light Illumination: Illuminates when malfunction occurs in 2 continuous driving cycles.

- **Normality Judgement**

Judge as OK and clear the NG if the continuous time while the following conditions are established is more than the predetermined time.

Judgement Value

Malfunction Criteria	Threshold Value	DTC
High Sensor output voltage	≤ 1.200 V	P0138 P0158
Low Sensor output voltage	≥ 0.030 V	P0137 P0157

Time Needed for Diagnosis:

High: Less than 1 second
Low (1): Less than 1 second
Low (2): Less than 1 second
Low (3): Less than 1 second

AP:DTC P0138 O2 SENSOR CIRCUIT HIGH VOLTAGE (BANK 1 SENSOR 2)

1. OUTLINE OF DIAGNOSIS

NOTE:
For the detection standard, refer to DTC P0137. <Ref. to GD(H6DO)-60, DTC P0137 O2 SENSOR CIRCUIT LOW VOLTAGE (BANK 1 SENSOR 2), Diagnostic Trouble Code (DTC) Detecting Criteria.>

AQ:DTC P0139 O2 SENSOR CIRCUIT SLOW RESPONSE (BANK 1 SENSOR 2)

1. OUTLINE OF DIAGNOSIS

Detect the slow response of the oxygen sensor.
Judge as NG if either the rich to lean response diagnosis or lean to rich response diagnosis is NG, and Judge as OK if both are OK.
[Rich → lean diagnosis response]
1. Measure the response time for oxygen sensor output changes when the A/F ratio changes to rich to lean. If the measured response time is larger than the threshold value, it is NG. If it is smaller, it is OK.
2. Judge as NG when the oxygen sensor voltage is large (rich) when recovering from a deceleration fuel cut.
[Lean → rich diagnosis response]
1. Measure the response time for oxygen sensor output changes when the A/F ratio changes to lean to rich. If the measured response time is larger than the threshold value, it is NG.
2. Judge as NG when the oxygen sensor voltage remains small when recovering from a deceleration fuel cut.

Diagnostic method

Measure the response time of the output change of the oxygen sensor when the A/F ratio changes to rich to lean. And Judge as NG when the measured response time is larger than the threshold value.

2. COMPONENT DESCRIPTION

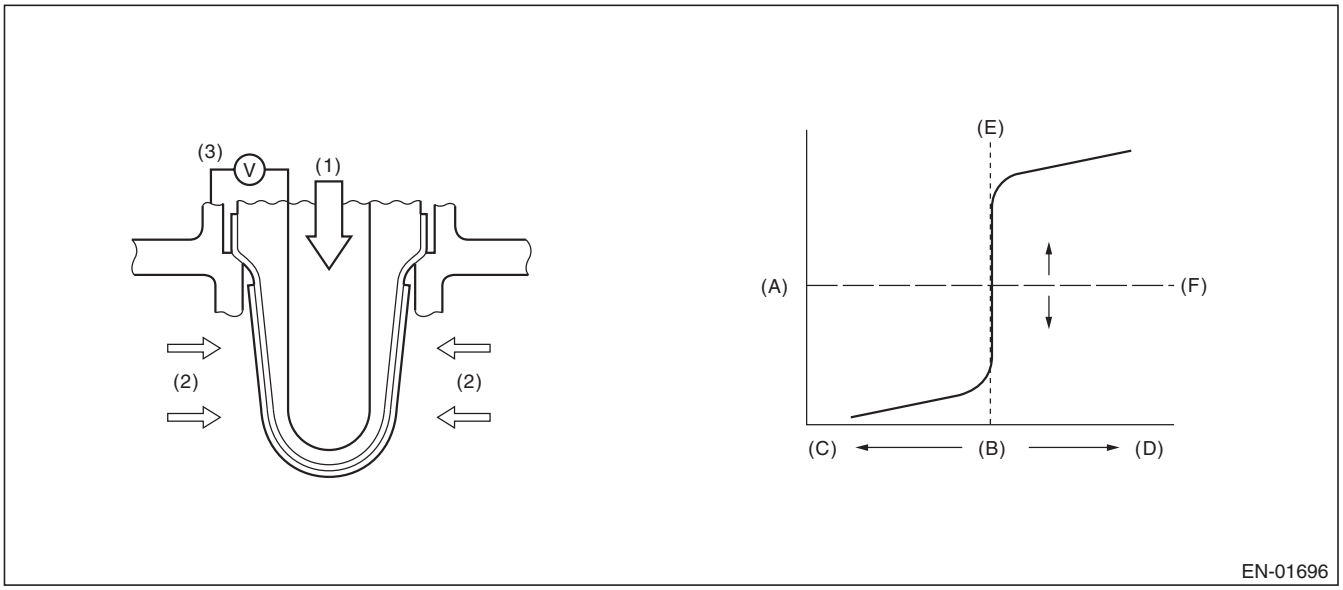

(A)	Electromotive force	(C)	Rich	(E)	Theoretical air fuel ratio
(B)	Air fuel ratio	(D)	Lean	(F)	Comparative voltage
(1)	Atmosphere	(2)	Exhaust gas	(3)	Electromotive force

3. ENABLE CONDITION

Rich → lean diagnosis response

Secondary Parameters	Enable Conditions
Battery voltage	≥ 10.9 V
A/F main feedback control condition	Completed
Deceleration fuel cut time is 5000 ms or more.	Experienced
After fuel cut	≥ 2000 ms
Current calculation time of the rear oxygen sensor heater	≥ 40000 ms
Current continuation time of the rear oxygen sensor heater	≥ 20000 ms
Estimated catalyst temperature	≥ 400 °C (752 °F)
Number of deceleration fuel cut	≥ 1 time(s)

4. GENERAL DRIVING CYCLE

Perform the diagnosis only once when deceleration fuel cut occurs after rapid acceleration. (Pay attention to the oxygen sensor voltage for the timing of the deceleration.)

5. DIAGNOSTIC METHOD

When the oxygen sensor output voltage changes from 0.55 V (rich) to 0.15 V (lean), calculate the minimum response time for output change between 0.5 V and 0.2 V for the judgment criteria.

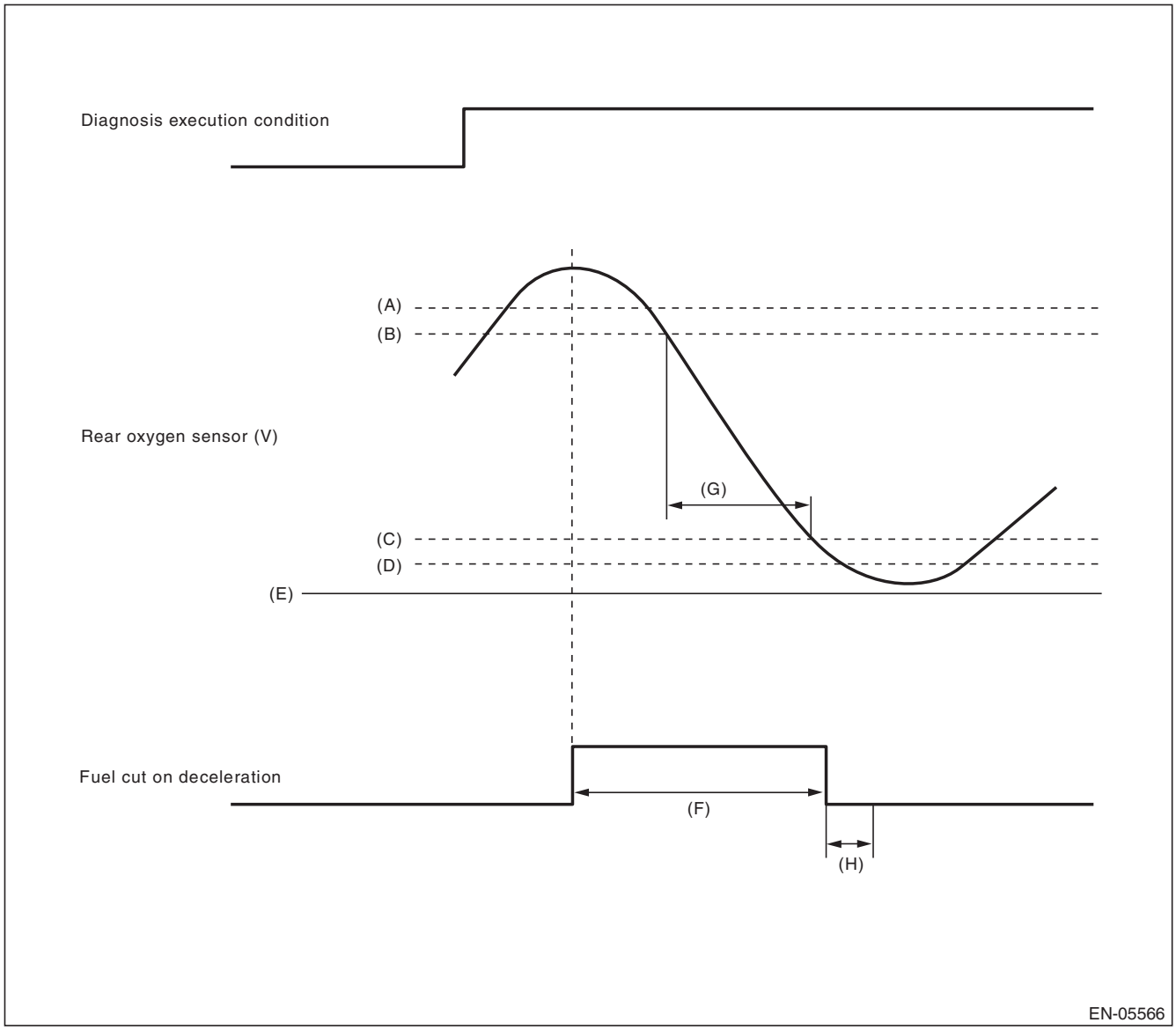

(A) 0.55 V
(B) 0.5 V
(C) 0.2 V
(D) 0.15 V
(E) 0 V
(F) More than 5000 ms
(G) Measure the response time.
(H) Execute the malfunction judgment in 2000 ms from the recovery of fuel cut on deceleration.

- **Abnormality Judgement**

1) Judge as NG when the judgment value is larger than the threshold value after deceleration fuel cut.
Response time (diagnosis value) > threshold value → abnormal

NOTE:
Variation time of rear oxygen sensor output voltage is short during fuel cut in deceleration. NG judgment should be performed after deceleration fuel cut. Even without deceleration fuel cut, judge as OK if the value is below the threshold.
When the deceleration fuel cut time is 5000 ms or more, judge as NG if the following criteria are met 2000 ms after recovering from the deceleration fuel cut.
2) Judge as NG when the oxygen sensor voltage at recovery from a deceleration fuel cut, is large.
If the fuel cut time in a deceleration fuel cut is long (5000 ms or more), and even after recovering from a deceleration fuel cut, the oxygen sensor voltage is high (0.55 V or more), judge as NG.

Judgement Value

Malfunction criteria	Threshold value
Shortest time change from rich (0.5 V O_2 output) to lean (0.2 V) when voltage reduces from 0.55 V to 0.15 V	> 491 ms
or	
Longest time over 0.55 V	≥ 2000 ms

Time Needed for Diagnosis: 1 time(s)
Malfunction Indicator Light Illumination: Illuminates when malfunction occurs in 2 continuous driving cycles.

- **Normality Judgement**

1) Regardless of a deceleration fuel cut, if the response time (diagnosis value) when the oxygen sensor voltage has changed from rich to lean is shorter than the threshold value (judgment value), judge as a normal condition.
Response time (diagnosis value) ≤ threshold value → normal
2) Do not judge as a normal condition.
Judge as OK and clear the NG if the following conditions are established.

Judgement Value

Malfunction criteria	Threshold value
Shortest time change from rich (0.5 V O_2 output) to lean (0.2 V) when voltage reduces from 0.55 V to 0.15 V	≤ 491 ms

Time Needed for Diagnosis: 1 time(s)

6. ENABLE CONDITION

Lean → rich response diagnosis

Secondary Parameters	Enable Conditions
Battery voltage	≥ 10.9 V
A/F main feedback control condition	Completed
Deceleration fuel cut time is 5000 ms or more.	Experienced
After fuel cut	≥ 2000 ms
Current calculation time of the rear oxygen sensor heater	≥ 0 ms
Current continuation time of the rear oxygen sensor heater	≥ 0 ms
Estimated catalyst temperature	≥ 0 °C (32 °F)
Number of deceleration fuel cut	≥ 1 time(s)

7. GENERAL DRIVING CYCLE

Perform the diagnosis only once when deceleration fuel cut occurs after rapid acceleration. (Pay attention to the oxygen sensor voltage for the timing of the deceleration.)

8. DIAGNOSTIC METHOD

When the oxygen sensor output voltage changes from 0.25 V (lean) to 0.55 V (rich), calculate the minimum response time for output change between 0.3 V and 0.5 V for the judgment criteria.

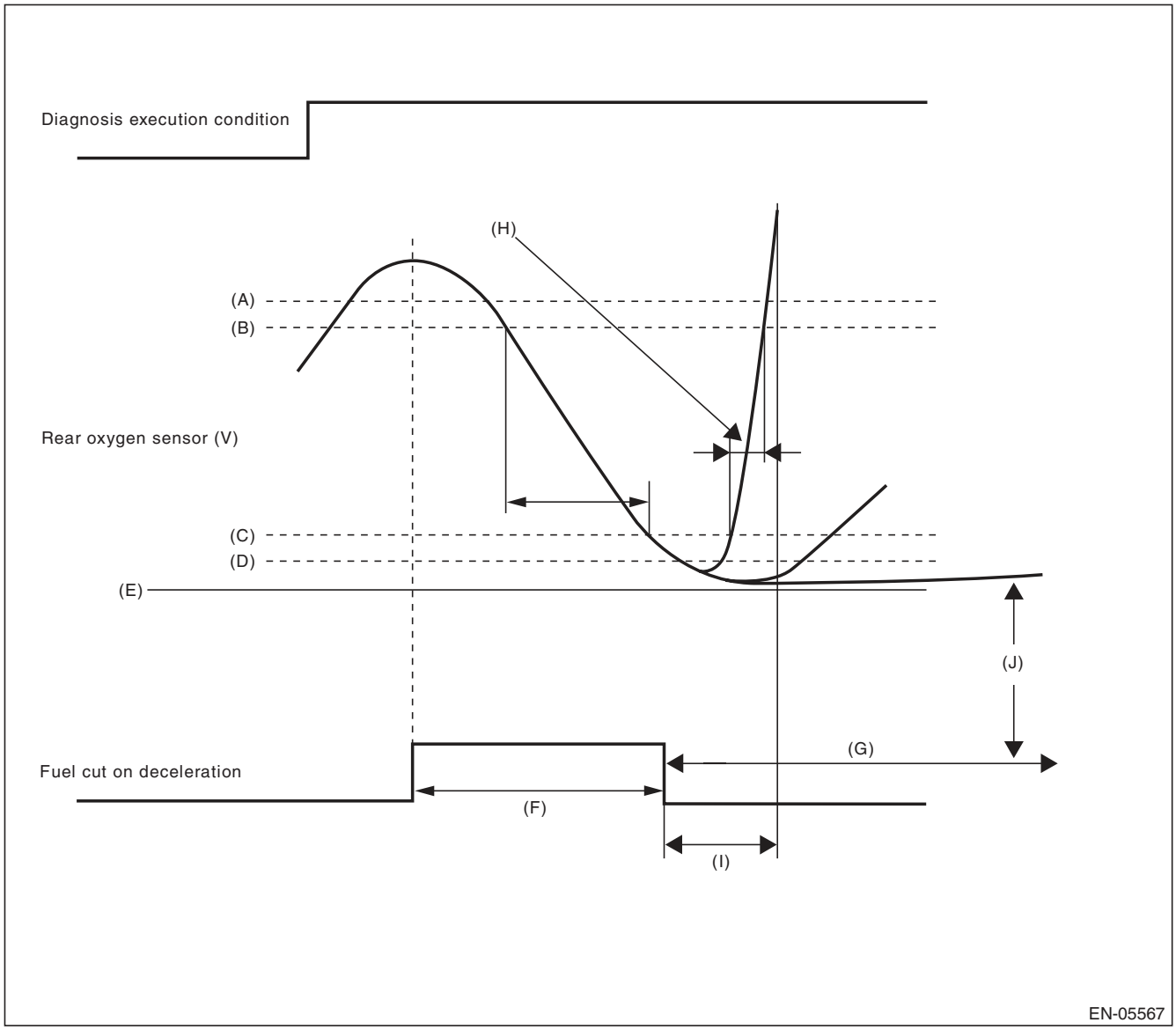

(A) 0.55 V
(B) 0.5 V
(C) 0.3 V
(D) 0.25 V
(E) 0 V
(F) More than 5 seconds
(G) More than 120000 ms
(H) Measure the response time (diagnostic value).
(I) Execute the malfunction judgment in 2000 ms from the recovery of fuel cut on deceleration.
(J) Judge NG when the voltage of rear oxygen sensor is 0.25 V or less for 120000 ms or more after recovery of fuel cut on deceleration.

- **Abnormality Judgement**

1) Judge as NG when the judgment value is larger than the threshold value after deceleration fuel cut.
Response time (diagnosis value) > threshold value → abnormal
2) If the oxygen sensor voltage is small after recovering from a deceleration fuel cut, and remains small, judge as NG.

Judgement Value

Malfunction Criteria	Threshold Value
Shortest time change from lean (0.3 V O_2 output) to rich (0.5 V) when voltage changes from 0.25 V to 0.55 V	> 2000 ms
or	
Longest time under 0.25 V	≥ 120000 ms

Time Needed for Diagnosis: 1 time(s)
Malfunction Indicator Light Illumination: Illuminates when malfunction occurs in 2 continuous driving cycles.

- **Normality Judgement**

1) Regardless of a deceleration fuel cut, if the response time (diagnosis value) when the oxygen sensor voltage has changed from rich to lean is shorter than the threshold value (judgment value), judge as a normal condition.
Response time (diagnosis value) ≤ threshold value → normal
2) Do not judge as a normal condition.
Judge as OK and clear the NG if the following conditions are established.

Judgement Value

Malfunction criteria	Threshold value
Shortest time change from lean (0.3 V O_2 output) to rich (0.5 V) when voltage changes from 0.25 V to 0.55 V	≤ 2000 ms

Time Needed for Diagnosis: 1 time(s)

AR:DTC P0140 O2 SENSOR CIRCUIT NO ACTIVITY DETECTED (BANK1 SENSOR2)

1. OUTLINE OF DIAGNOSIS

Detect the rear oxygen sensor open or short circuit. Judge as NG when the rear oxygen sensor voltage can be determined to be abnormal considering conditions such as intake air amount, engine coolant temperature, main feedback control and deceleration fuel cut.

2. COMPONENT DESCRIPTION

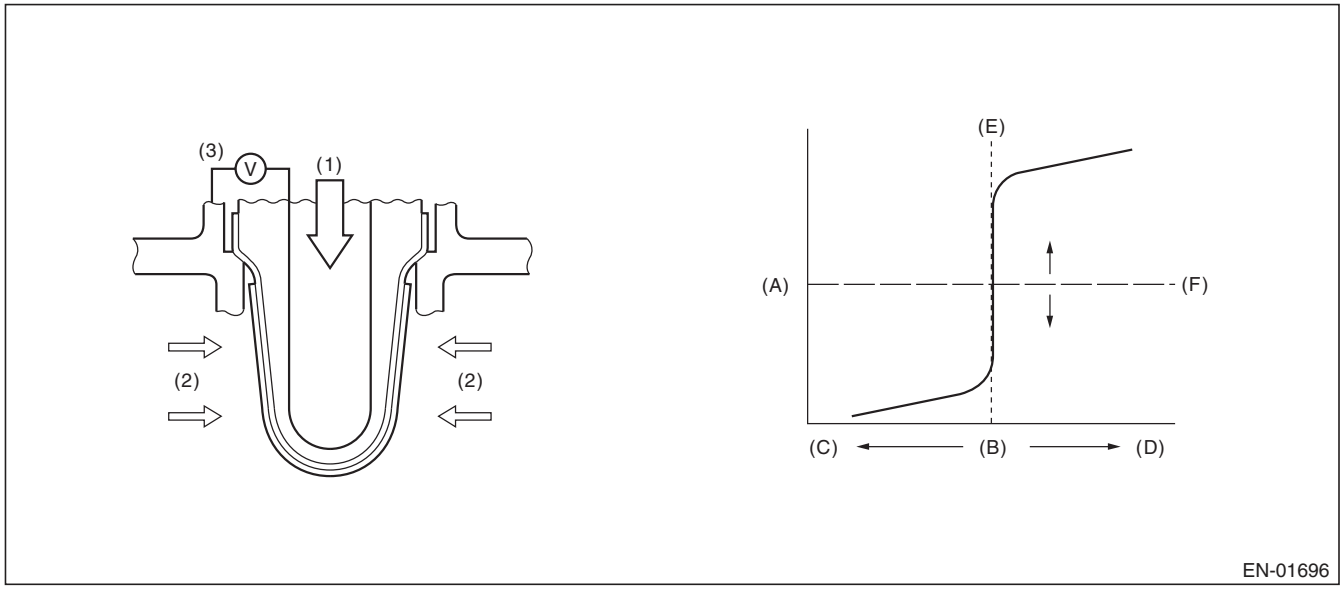

(A)	Electromotive force	(C)	Rich	(E)	Theoretical air fuel ratio
(B)	Air fuel ratio	(D)	Lean	(F)	Comparative voltage
(1)	Atmosphere	(2)	Exhaust gas	(3)	Electromotive force

3. ENABLE CONDITION (USED ONLY FOR MALFUNCTION JUDGMENT)

Secondary Parameters	Enable Conditions
Closed loop control at the rear oxygen sensor	In operation
Target output voltage of rear oxygen sensor	≥ 0.55 V + 0.05 V
Amount of intake air	≥ 10 g/s (0.35 oz/s)
Engine coolant temperature	≥ 75 °C (167 °F)
Misfire detection every 200 rotations	< 7 time(s)
Front oxygen (A/F) sensor compensation coefficient	Not in limit value
Battery voltage	≥ 10.9 V
Deceleration fuel cut of 5000 ms or more.	Experienced

4. GENERAL DRIVING CYCLE

Perform the diagnosis once after starting the engine.

5. DIAGNOSTIC METHOD

- **Abnormality Judgement**

If the duration of time while the following conditions are met is longer than the time indicated, judge as NG.

Judgement Value

Malfunction Criteria	Threshold Value
Minimum output voltage or Maximum output voltage	> 0.15 V < 0.55 V

Time Needed for Diagnosis: 200000 ms
Malfunction Indicator Light Illumination: Illuminates when malfunction occurs in 2 continuous driving cycles.

- **Normality Judgement**

Judge as OK and clear the NG if the following conditions are established.

Judgement Value

Malfunction Criteria	Threshold Value
Diagnosis of the rear oxygen sensor voltage low side	Incomplete
Minimum output voltage	≤ 0.15 V
Maximum output voltage	≥ 0.55 V

AS:DTC P0151 O2 SENSOR CIRCUIT LOW VOLTAGE (BANK 2 SENSOR 1)

1. OUTLINE OF DIAGNOSIS

NOTE:
For the detection standard, refer to DTC P0131. <Ref. to GD(H6DO)-51, DTC P0131 O2 SENSOR CIRCUIT LOW VOLTAGE (BANK 1 SENSOR 1), Diagnostic Trouble Code (DTC) Detecting Criteria.>

AT:DTC P0152 O2 SENSOR CIRCUIT HIGH VOLTAGE (BANK 2 SENSOR 1)

1. OUTLINE OF DIAGNOSIS

NOTE:
For the detection standard, refer to DTC P0132. <Ref. to GD(H6DO)-53, DTC P0132 O2 SENSOR CIRCUIT HIGH VOLTAGE (BANK 1 SENSOR 1), Diagnostic Trouble Code (DTC) Detecting Criteria.>

AU:DTC P0153 O2 SENSOR CIRCUIT SLOW RESPONSE (BANK 2 SENSOR 1)

1. OUTLINE OF DIAGNOSIS

NOTE:
For the detection standard, refer to DTC P0133. <Ref. to GD(H6DO)-55, DTC P0133 O2 SENSOR CIRCUIT SLOW RESPONSE (BANK 1 SENSOR 1), Diagnostic Trouble Code (DTC) Detecting Criteria.>

AV:DTC P0154 O2 SENSOR CIRCUIT NO ACTIVITY DETECTED (BANK 2 SENSOR 1)

1. OUTLINE OF DIAGNOSIS

NOTE:
For the detection standard, refer to DTC P0134. <Ref. to GD(H6DO)-58, DTC P0134 O2 SENSOR CIRCUIT NO ACTIVITY DETECTED (BANK 1 SENSOR 1), Diagnostic Trouble Code (DTC) Detecting Criteria.>

AW:DTC P0157 O2 SENSOR CIRCUIT LOW VOLTAGE (BANK 2 SENSOR 2)

1. OUTLINE OF DIAGNOSIS

NOTE:
For the detection standard, refer to DTC P0137. <Ref. to GD(H6DO)-60, DTC P0137 O2 SENSOR CIRCUIT LOW VOLTAGE (BANK 1 SENSOR 2), Diagnostic Trouble Code (DTC) Detecting Criteria.>

AX:DTC P0158 O2 SENSOR CIRCUIT HIGH VOLTAGE (BANK 2 SENSOR 2)

1. OUTLINE OF DIAGNOSIS

NOTE:
For the detection standard, refer to DTC P0137. <Ref. to GD(H6DO)-60, DTC P0137 O2 SENSOR CIRCUIT LOW VOLTAGE (BANK 1 SENSOR 2), Diagnostic Trouble Code (DTC) Detecting Criteria.>

AY:DTC P0159 O2 SENSOR CIRCUIT SLOW RESPONSE (BANK 2 SENSOR 2)

1. OUTLINE OF DIAGNOSIS

NOTE:
For the detection standard, refer to DTC P0139. <Ref. to GD(H6DO)-64, DTC P0139 O2 SENSOR CIRCUIT SLOW RESPONSE (BANK 1 SENSOR 2), Diagnostic Trouble Code (DTC) Detecting Criteria.>

AZ:DTC P0160 O2 SENSOR CIRCUIT NO ACTIVITY DETECTED (BANK2 SENSOR2)

1. OUTLINE OF DIAGNOSIS

NOTE:
For the detection standard, refer to DTC P0140. <Ref. to GD(H6DO)-69, DTC P0140 O2 SENSOR CIRCUIT NO ACTIVITY DETECTED (BANK1 SENSOR2), Diagnostic Trouble Code (DTC) Detecting Criteria.>

BA:DTC P0171 SYSTEM TOO LEAN (BANK 1)

1. OUTLINE OF DIAGNOSIS

Detect fuel system malfunction by the amount of main feedback control.

Diagnostic method

Fuel system is diagnosed by comparing the target air fuel ratio calculated by ECM with the actual air fuel ratio measured by sensor.

2. ENABLE CONDITION

Secondary Parameters	Enable Conditions
A/F main learning system	In operation
Engine coolant temperature	≥ 75 °C (167 °F)
Engine load change	< 0.02 g/rev (0 oz/rev)
Engine load	≥ Value of Map 1

Map1

Engine speed (rpm)	Idling	700	1000	1500	2000	2500	3000	3500	4000	4500	5000
Measured value (g(oz)/rev)	Non-turbo	0.357 (0.01)	0.25 (0.01)	0.25 (0.01)	0.317 (0.01)	0.326 (0.01)	0.337 (0.01)	0.397 (0.01)	0.439 (0.02)	0.454 (0.02)	0.454 (0.02)

3. GENERAL DRIVING CYCLE

Perform the diagnosis continuously at idling or at a constant speed after warming up the engine.

4. DIAGNOSTIC METHOD

• Abnormality Judgement

Compare the diagnosed value (fsobd) with the threshold value, and if a condition meeting the malfunction criteria below continues for 10 s × 5 time(s) or more, judge that there is a fault in the fuel system.

Judgement Value

Malfunction criteria	Threshold value
fsobd = (sglmd – tglmda) + faf + flaf In this case: sglmd = measured lambda tglmda = target lambda faf = main feedback compensation coefficient every 64 milliseconds flaf = main feedback learning compensation coefficient	≥ Value of Map 2

Map2

Amount of air (g (oz)/s)	0 (0)	3.2 (0.11)	6.4 (0.23)	9.6 (0.34)	12.8 (0.45)	16 (0.56)	19.2 (0.68)
fsobdL1 (%)	1.4	1.4	1.332	1.265	1.265	1.265	1.265

Time Needed for Diagnosis: 10 s × 5 time(s)
Malfunction Indicator Light Illumination: Illuminates when malfunction occurs in 2 continuous driving cycles.

• Normality Judgement

Judge as OK and clear the NG if the continuous time while the following conditions are established is more than the predetermined time.

Judgement Value

Malfunction Criteria	Threshold Value
fsobd = (sglmd – tglmda) + faf + flaf	< 1.2

Time Needed for Diagnosis: 10 s

BB:DTC P0172 SYSTEM TOO RICH (BANK 1)

1. OUTLINE OF DIAGNOSIS

Detect fuel system malfunction by the amount of main feedback control.

Diagnostic method

Fuel system is diagnosed by comparing the target air fuel ratio calculated by ECM with the actual air fuel ratio measured by sensor.

2. ENABLE CONDITION

Secondary Parameters	Enable Conditions
A/F main learning system	In operation
Engine coolant temperature	≥ 75 °C (167 °F)
Engine load change	≤ 0.02 g/rev (0 oz/rev)
Learning value of EVAP conc.	< 0.1
Cumulative time of canister purge after engine start	≥ 20 s
Continuous period after canister purge starting	≥ 29884 ms
Engine load	≥ Value of Map 1

Map1

Engine speed (rpm)	Idling	700	1000	1500	2000	2500	3000	3500	4000	4500	5000
Measured value (g(oz)/rev)	Non-turbo	0.357 (0.01)	0.25 (0.01)	0.25 (0.01)	0.317 (0.01)	0.326 (0.01)	0.337 (0.01)	0.397 (0.01)	0.439 (0.02)	0.454 (0.02)	0.454 (0.02)

3. GENERAL DRIVING CYCLE

Perform the diagnosis continuously at idling or at a constant speed after warming up the engine.

4. DIAGNOSTIC METHOD

- **Abnormality Judgement**

Compare the diagnosed value (fsobd) with the threshold value, and if a condition meeting the malfunction criteria below continues for 10 s × 5 time(s) or more, judge that there is a fault in the fuel system.

Judgement Value

Malfunction criteria	Threshold value
fsobd = (sglmd – tglmda) + faf + flaf In this case: sglmd = measured lambda tglmda = target lambda faf = main feedback compensation coefficient every 64 milliseconds flaf = main feedback learning compensation coefficient	< Value of Map 2

Map2

Amount of air (g (oz)/s)	0 (0)	3.2 (0.11)	6.4 (0.23)	9.6 (0.34)	12.8 (0.45)	16 (0.56)	19.2 (0.68)
fsobdL1 (%)	0.6	0.6	0.688	0.735	0.735	0.735	0.735

Time Needed for Diagnosis: 10 s × 5 time(s)
Malfunction Indicator Light Illumination: Illuminates when malfunction occurs in 2 continuous driving cycles.

- **Normality Judgement**

Judge as OK when the malfunction criteria below continues for 10 seconds.

Judgement Value

Malfunction Criteria	Threshold Value
fsobd = (sglmd – tglmda) + faf + flaf	≥ 0.8

Time Needed for Diagnosis: 10 s

BC:DTC P0174 SYSTEM TOO LEAN (BANK 2)

1. OUTLINE OF DIAGNOSIS

NOTE:
For the detection standard, refer to DTC P0171. <Ref. to GD(H6DO)-72, DTC P0171 SYSTEM TOO LEAN (BANK 1), Diagnostic Trouble Code (DTC) Detecting Criteria.>

BD:DTC P0175 SYSTEM TOO RICH (BANK 2)

1. OUTLINE OF DIAGNOSIS

NOTE:
For the detection standard, refer to DTC P0172. <Ref. to GD(H6DO)-73, DTC P0172 SYSTEM TOO RICH (BANK 1), Diagnostic Trouble Code (DTC) Detecting Criteria.>

BE:DTC P0181 FUEL TEMPERATURE SENSOR “A” CIRCUIT RANGE/ PERFORMANCE

1. OUTLINE OF DIAGNOSIS

Detect faults in the fuel temperature sensor output properties.
Diagnosis is performed in two methods (drift diagnosis and stuck diagnosis). If either is NG, judge as NG. If both are OK, Judge as OK and clear the NG.

Drift Diagnosis

Normally fuel temperature is lower than engine coolant temperature. When the fuel temperature becomes higher than the engine coolant temperature, the range is considered to be shifted, and judged as NG.

Stuck Diagnosis

As the engine warms up (cumulative amount of intake air after starting is large), if the fuel temperature which should rise does not, determine as being stuck and NG.

2. COMPONENT DESCRIPTION

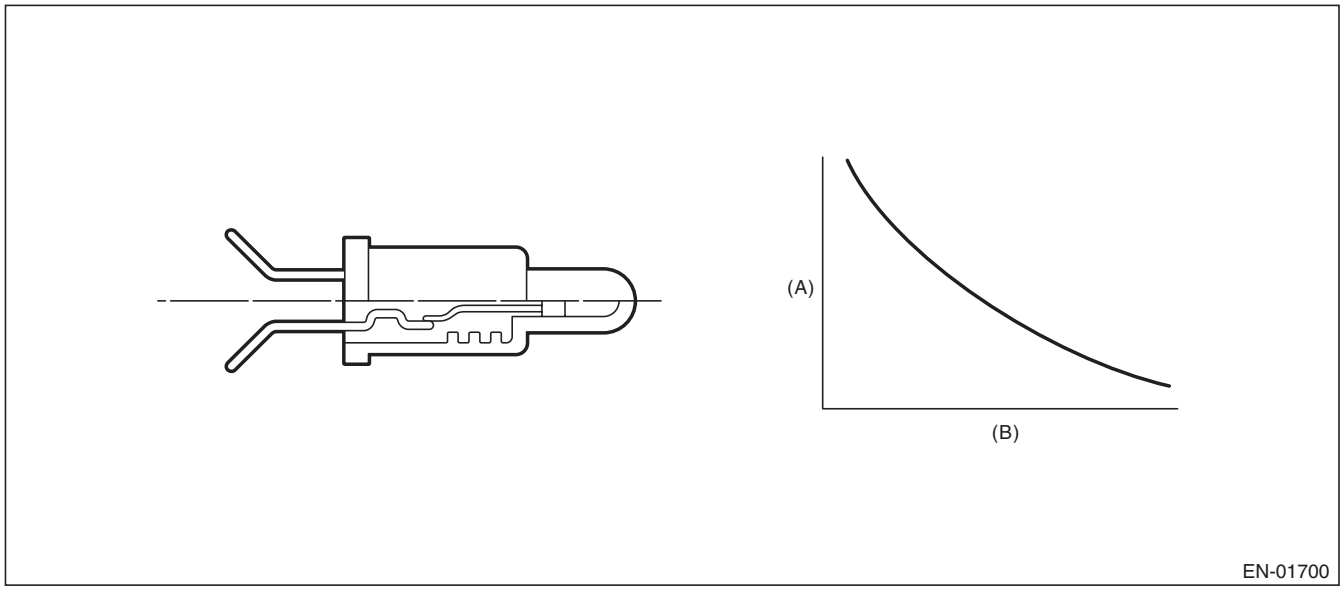

(A) Resistance value (Ω) (B) Fuel temperature °C (°F)

3. ENABLE CONDITION

DRIFT DIAGNOSIS

Secondary Parameters	Enable Conditions
None	

4. GENERAL DRIVING CYCLE

Always perform the diagnosis continuously.

5. DIAGNOSTIC METHOD

• Abnormality Judgement

If the duration of time while the following conditions are met is longer than the time indicated, judge as NG.

Judgement Value

Malfunction criteria	Threshold value
Fuel level	≥ 9.6 ℓ (2.54 US gal, 2.11 Imp gal)
Elapsed time after starting the engine	≥ 20 s
Engine coolant temperature – Engine coolant temperature at engine start	> 10 °C (50 °F)
Fuel temperature – Engine coolant temperature	≥ 10 °C (50 °F)
Battery voltage	≥ 10.9 V

Time Needed for Diagnosis: 120 s
Malfunction Indicator Light Illumination: Illuminates when malfunction occurs in 2 continuous driving cycles.

• Normality Judgement

Judge as OK and clear the NG if the continuous time while the following conditions are established is more than the predetermined time.

Judgement Value

Malfunction criteria	Threshold value
Fuel level	≥ 9.6 ℓ (2.54 US gal, 2.11 Imp gal)
Elapsed time after starting the engine	≥ 20 s
Engine coolant temperature – Engine coolant temperature at engine start	> 10 °C (50 °F)
Fuel temperature – Engine coolant temperature	< 10 °C (50 °F)
Battery voltage	≥ 10.9 V
Engine coolant temperature	< 75 °C (167 °F)

Time Needed for Diagnosis: Less than 1 second

6. ENABLE CONDITION

Stuck Diagnosis

Secondary Parameters	Enable Conditions
Elapsed time after starting the engine	≥ 20000 ms
Battery voltage	≥ 10.9 V

7. GENERAL DRIVING CYCLE

Always perform diagnosis after 20 seconds have passed since the engine started.

8. DIAGNOSTIC METHOD

- **Abnormality Judgement**

Judge as NG when the following conditions are established.

Judgement Value

Malfunction criteria	Threshold value
Accumulated amount of intake air	≥ 551043 g (19435.29 oz)
Fuel temperature difference between Max. and Min.	< 2 °C (35.6 °F)

Time Needed for Diagnosis: Less than 1 second
Malfunction Indicator Light Illumination: Illuminates when malfunction occurs in 2 continuous driving cycles.

- **Normality Judgement**

Judge as OK and clear the NG if the following conditions are established.

Judgement Value

Malfunction criteria	Threshold value
Fuel temperature difference between Max. and Min.	≥ 2 °C (35.6 °F)

Time Needed for Diagnosis: Less than 1 second

BF:DTC P0182 FUEL TEMPERATURE SENSOR “A” CIRCUIT LOW INPUT

1. OUTLINE OF DIAGNOSIS

Detect the open or short circuit of fuel temperature sensor.
Judge as NG if out of specification.

2. COMPONENT DESCRIPTION

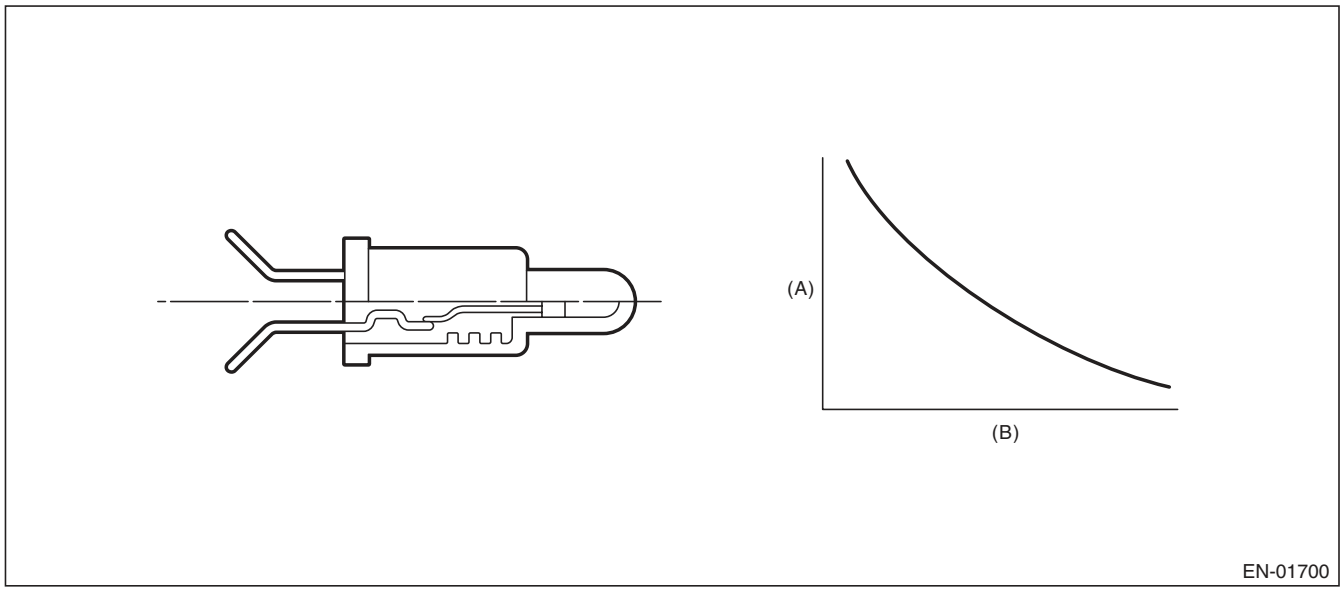

(A) Resistance value (Ω) (B) Fuel temperature °C (°F)

3. ENABLE CONDITION

Secondary Parameters	Enable Conditions
None	

4. GENERAL DRIVING CYCLE

Always perform the diagnosis continuously.

5. DIAGNOSTIC METHOD

- **Abnormality Judgement**

If the duration of time while the following conditions are met is longer than the time indicated, judge as NG.

Judgement Value

Malfunction criteria	Threshold value
Output voltage	< 0.344 V
Battery voltage	≥ 10.9 V

Time Needed for Diagnosis: 2500 ms
Malfunction Indicator Light Illumination: Illuminates as soon as a malfunction occurs.

- **Normality Judgement**

Judge as OK and clear the NG if the continuous time while the following conditions are established is more than the predetermined time.

Judgement Value

Malfunction criteria	Threshold value
Output voltage	≥ 0.344 V
Battery voltage	≥ 10.9 V

Time Needed for Diagnosis: Less than 1 second

BG:DTC P0183 FUEL TEMPERATURE SENSOR “A” CIRCUIT HIGH INPUT

1. OUTLINE OF DIAGNOSIS

Detect the open or short circuit of fuel temperature sensor.
Judge as NG if out of specification.

2. COMPONENT DESCRIPTION

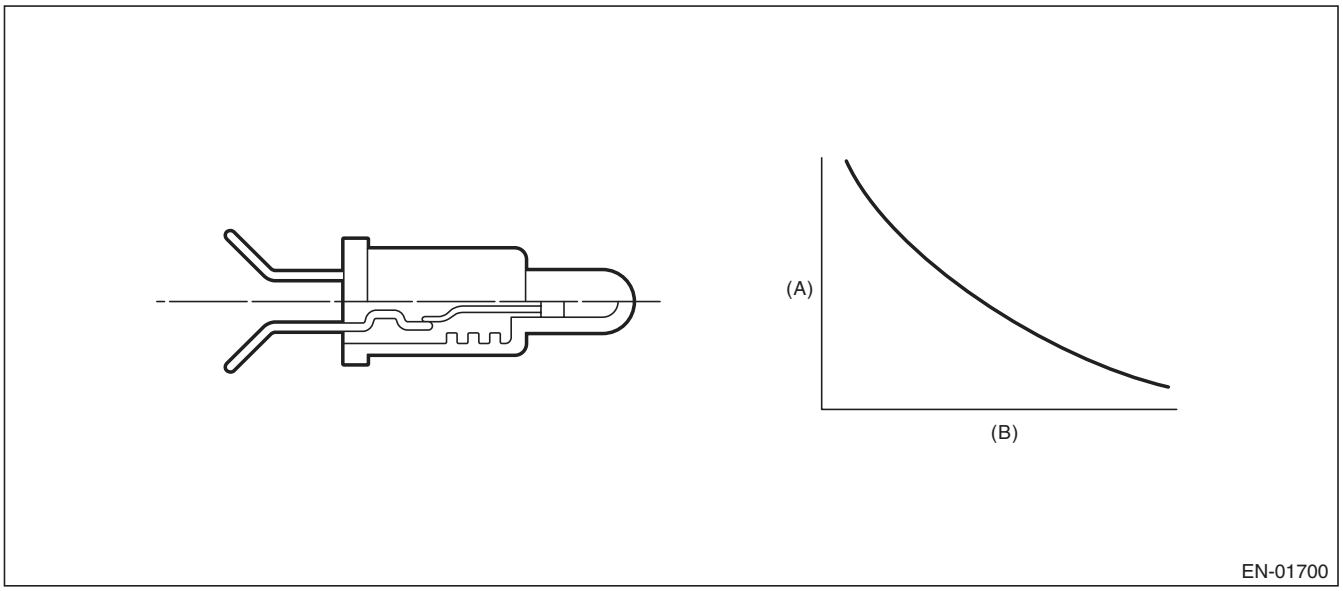

(A) Resistance value (Ω) (B) Fuel temperature °C (°F)

3. ENABLE CONDITION

Secondary Parameters	Enable Conditions
None	

4. GENERAL DRIVING CYCLE

Always perform the diagnosis continuously.

5. DIAGNOSTIC METHOD

- **Abnormality Judgement**

If the duration of time while the following conditions are met is longer than the time indicated, judge as NG.

Judgement Value

Malfunction criteria	Threshold value
Output voltage	≥ 4.716 V
Battery voltage	≥ 10.9 V

Time Needed for Diagnosis: 2500 ms
Malfunction Indicator Light Illumination: Illuminates as soon as a malfunction occurs.

- **Normality Judgement**

Judge as OK and clear the NG if the continuous time while the following conditions are established is more than the predetermined time.

Judgement Value

Malfunction criteria	Threshold value
Output voltage	< 4.716 V
Battery voltage	≥ 10.9 V

Time Needed for Diagnosis: Within 1 second

BH:DTC P0196 ENGINE OIL TEMPERATURE SENSOR CIRCUIT RANGE/ PERFORMANCE

1. OUTLINE OF DIAGNOSIS

Detect for abnormal values in the oil temperature sensor output properties.
Judge as NG when the oil temperature does not rise even though the engine is running under a condition where it should rise.

2. ENABLE CONDITION

Secondary Parameters	Enable Conditions
Battery voltage	≥ 10.9 V
Engine speed	≥ Value from Map

Map

Engine coolant temperature °C (°F)	–40 (–40)	110 (230)
Engine speed rpm	500	500

3. GENERAL DRIVING CYCLE

Perform the diagnosis continuously after starting the engine.

4. DIAGNOSTIC METHOD

- **Abnormality Judgement**

Judge as NG when the following conditions are established.

Judgement Value

Malfunction Criteria	Threshold Value
Engine oil temperature	< 15 °C (59 °F)
After engine start oil temperature sensor characteristic diagnosis timer.	≥ Judgement value for after engine start oil temperature sensor characteristic diagnosis timer

After engine start oil temperature sensor characteristic diagnosis timer (timer for diagnosis).
a. Timer stop at fuel cut
b. During the driving conditions except a) above, timer counts up as follows.
64 milliseconds + TOILCNT milliseconds (at the time of 64 milliseconds).
Where, TOILCNT is determined as follows,
TOILCNT = 0 at idle switch ON
For TOILCNT at Idle switch off, refer to the following table.

		Vehicle speed km/h (MPH)							
		0 (0)	8 (5)	16 (9.9)	24 (14.9)	32 (19.9)	40 (24.9)	48 (29.8)	56 (34.8)
Temperature °C (°F)	–40 (–40)	0 ms	32 ms	76 ms	130 ms	149 ms	171 ms	176 ms	181 ms
	–30 (–22)	67 ms	93 ms	121 ms	157 ms	170 ms	184 ms	193 ms	203 ms
	–20 (–4)	98 ms	123 ms	148 ms	184 ms	193 ms	204 ms	214 ms	226 ms
	–10 (14)	145 ms	166 ms	187 ms	208 ms	223 ms	239 ms	242 ms	245 ms
	0 (32)	161 ms	187 ms	212 ms	243 ms	252 ms	262 ms	266 ms	270 ms

After engine start oil temperature characteristic diagnosis timer judgment value (t).
t = 2400000 ms – 60000 ms × Ti (t ≥ 2400000)
Ti = The lowest coolant temperature after starting the engine.
Time Needed for Diagnosis: Less than 1 second
Malfunction Indicator Light Illumination: Illuminates when malfunction occurs in 2 continuous driving cycles.

- **Normality Judgement**

Judge as OK and clear the NG if the following conditions are established.

Judgement Value

Malfunction Criteria	Threshold Value
Engine oil temperature	≥ 15 °C (59 °F)

Time Needed for Diagnosis: Less than 1 second

BI: DTC P0197 ENGINE OIL TEMPERATURE SENSOR LOW

1. OUTLINE OF DIAGNOSIS

Detect the open or short circuit of the oil temperature sensor.
Judge as NG when outside of the judgment value.

2. ENABLE CONDITION

Secondary Parameters	Enable Conditions
None	

3. GENERAL DRIVING CYCLE

Always perform the diagnosis continuously.

4. DIAGNOSTIC METHOD

- **Abnormality Judgement**

If the duration of time while the following conditions are met is longer than the time indicated, judge as NG.

Judgement Value

Malfunction criteria	Threshold value
Output voltage	< 0.166 V

Time Needed for Diagnosis: 500 ms
Malfunction Indicator Light Illumination: Illuminates as soon as a malfunction occurs.

- **Normality Judgement**

Judge as OK and clear the NG if the continuous time while the following conditions are established is more than the predetermined time.

Judgement Value

Malfunction criteria	Threshold value
Output voltage	≥ 0.166 V

Time Needed for Diagnosis: Less than 1 second

BJ:DTC P0198 ENGINE OIL TEMPERATURE SENSOR HIGH

1. OUTLINE OF DIAGNOSIS

Detect the open or short circuit of the oil temperature sensor.
Judge as NG when outside of the judgment value.

2. ENABLE CONDITION

Secondary Parameters	Enable Conditions
None	

3. GENERAL DRIVING CYCLE

Always perform the diagnosis continuously.

4. DIAGNOSTIC METHOD

- **Abnormality Judgement**

If the duration of time while the following conditions are met is longer than the time indicated, judge as NG.

Judgement Value

Malfunction criteria	Threshold value
Output voltage	≥ 4.716 V

Time Needed for Diagnosis: 500 ms
Malfunction Indicator Light Illumination: Illuminates as soon as a malfunction occurs.

- **Normality Judgement**

Judge as OK and clear the NG if the continuous time while the following conditions are established is more than the predetermined time.

Judgement Value

Malfunction criteria	Threshold value
Output voltage	< 4.716 V

Time Needed for Diagnosis: Less than 1 second

BK:DTC P0222 THROTTLE/PEDAL POSITION SENSOR/SWITCH “B” CIRCUIT LOW

1. OUTLINE OF DIAGNOSIS

Detect the open or short circuit of throttle position sensor 2.
Judge as NG if out of specification.

2. COMPONENT DESCRIPTION

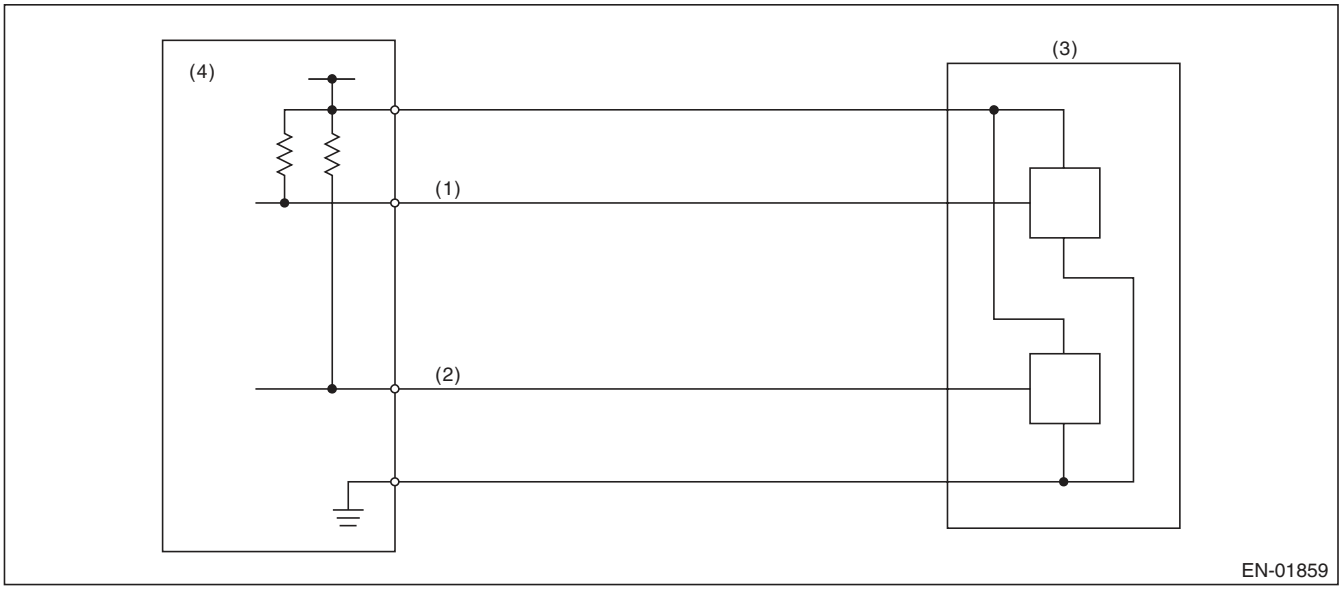

(1) Throttle position sensor 1 signal
(2) Throttle position sensor 2 signal
(3) Throttle position sensor
(4) Engine control module (ECM)

3. ENABLE CONDITION

Secondary Parameters	Enable Conditions
Ignition switch	ON
Battery voltage	≥ 6 V

4. GENERAL DRIVING CYCLE

Always perform the diagnosis continuously.

5. DIAGNOSTIC METHOD

- **Abnormality Judgement**

If the duration of time while the following conditions are met is longer than the time indicated, judge as NG.

Judgement Value

Malfunction criteria	Threshold value
Sensor 2 input voltage	≤ 0.926 V

Time Needed for Diagnosis: 24 ms
Malfunction Indicator Light Illumination: Illuminates as soon as a malfunction occurs.

- **Normality Judgement**

Judge as OK and clear the NG if the continuous time while the following conditions are established is more than the predetermined time.

Judgement Value

Malfunction criteria	Threshold value
Sensor 2 input voltage	> 0.926 V

Time Needed for Diagnosis: 24 ms

BL:DTC P0223 THROTTLE/PEDAL POSITION SENSOR/SWITCH “B” CIRCUIT HIGH

1. OUTLINE OF DIAGNOSIS

Detect the open or short circuit of throttle position sensor 2.
Judge as NG if out of specification.

2. COMPONENT DESCRIPTION

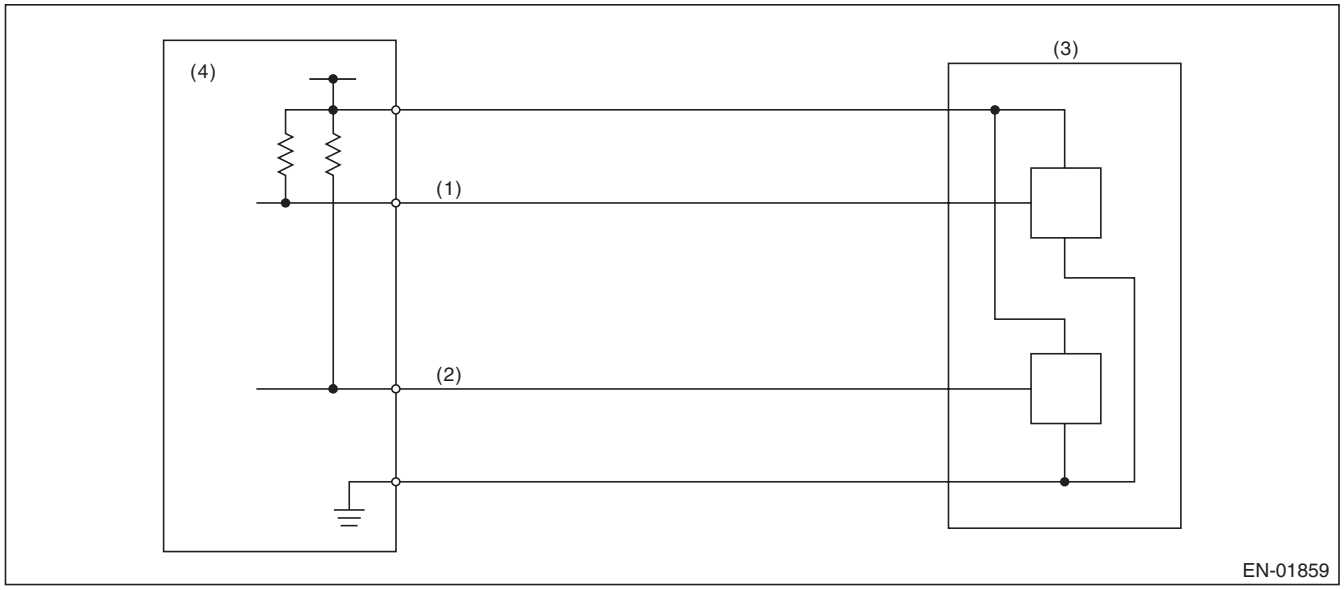

(1) Throttle position sensor 1 signal
(2) Throttle position sensor 2 signal
(3) Throttle position sensor
(4) Engine control module (ECM)

3. ENABLE CONDITION

Secondary Parameters	Enable Conditions
Ignition switch	ON
Battery voltage	≥ 6 V

4. GENERAL DRIVING CYCLE

Always perform the diagnosis continuously.

5. DIAGNOSTIC METHOD

- **Abnormality Judgement**

If the duration of time while the following conditions are met is longer than the time indicated, judge as NG.

Judgement Value

Malfunction criteria	Threshold value
Sensor 2 input voltage	≥ 4.851 V

Time Needed for Diagnosis: 24 ms
Malfunction Indicator Light Illumination: Illuminates as soon as a malfunction occurs.

- **Normality Judgement**

Judge as OK and clear the NG if the continuous time while the following conditions are established is more than the predetermined time.

Judgement Value

Malfunction criteria	Threshold value
Sensor 2 input voltage	< 4.851 V

Time Needed for Diagnosis: 24 ms

BM:DTC P0230 FUEL PUMP PRIMARY CIRCUIT

1. OUTLINE OF DIAGNOSIS

Detect the malfunction of fuel pump control unit.
Judge as NG when the NG signal is sent through a diagnostic line coming from the fuel pump control unit.
Fuel pump control unit detects the open or short circuit malfunction for each line, and then sends NG signals if one of them is found NG.

2. COMPONENT DESCRIPTION

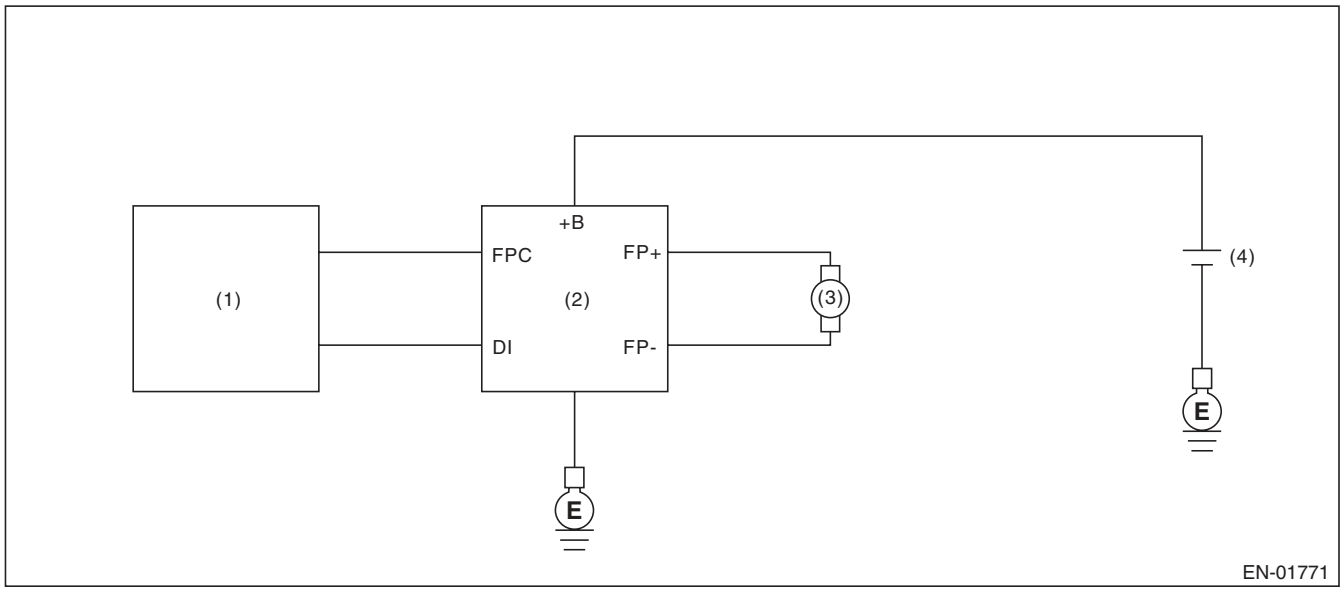

(1) Engine control module (ECM)
(2) Fuel pump control unit
(3) Fuel pump
(4) Battery

3. ENABLE CONDITION

Secondary Parameters	Enable Conditions
None	

4. GENERAL DRIVING CYCLE

Always perform the diagnosis continuously.

5. DIAGNOSTIC METHOD

- **Abnormality Judgement**

If the duration of time while the following conditions are met is longer than the time indicated, judge as NG.

Judgement Value

Malfunction criteria	Threshold value
Battery voltage	≥ 8 V
Elapsed time after starting the engine	≥ 180000 ms
Fuel pump control	ON
Fuel pump control unit output diagnosis signal	Low
Fuel level	≥ 9.6 ℓ (2.54 US gal, 2.11 Imp gal)

Time Needed for Diagnosis: 2500 ms
Malfunction Indicator Light Illumination: Illuminates when malfunction occurs in 2 continuous driving cycles.

- **Normality Judgement**

Judge as OK and clear the NG if the continuous time while the following conditions are established is more than the predetermined time.

Judgement Value

Malfunction criteria	Threshold value
Battery voltage	≥ 8 V
Elapsed time after starting the engine	≥ 180000 ms
Fuel pump control	ON
Fuel pump control unit output diagnosis signal	High
Fuel level	≥ 9.6 ℓ (2.54 US gal, 2.11 Imp gal)

Time Needed for Diagnosis: Less than 1 second

BN:DTC P0301 CYLINDER 1 MISFIRE DETECTED

1. OUTLINE OF DIAGNOSIS

Detect the presence of misfire occurrence. (Revolution fluctuation method)
Monitoring Misfire which influences exhaust deterioration (1.5 times of FTP) and catalyst damage is made obligatory by the law. Misfire affecting these two has two patterns below. :

- Intermittent misfire (The same cylinder misfires in random, or different cylinders misfire in random.): FTP 1.5 times misfire
- Every time misfire (The same cylinder misfires every time.): FTP 1.5 times misfire, Catalyst damage misfire

The following detecting methods are adopted for these detection.
1) Intermittent misfire: FTP 1.5 times misfire

- 120° Interval Difference Method
- 360° Interval Difference Method (whole range)
- 720° Interval Difference Method (3,000 rpm or more)

2) Misfire every time: FTP 1.5 times misfire, Catalyst damage misfire

- 360° Interval Difference Method

2. ENABLE CONDITION

Secondary Parameters	Enable Conditions
All secondary parameters enable conditions	≥ 1024 ms
Intake manifold pressure change at 120°CA	< Value of Map 1
Throttle position change during 16 milliseconds	< 20 °
Fuel shut-off function	Not in operation
Fuel level	≥ 9.6 ℓ (2.54 US gal, 2.11 Imp gal)
Vehicle dynamic control or AT torque control	Not in operation
Evaporative system leak check	Not in operation
Engine speed	400 rpm — 8000 rpm
Intake manifold pressure	≥ Value of Map 2
Battery voltage	≥ 8 V
Fuel parameter determination	Not extremely low volatility
Elapsed time after starting the engine	≥ 0 ms
Engine speed change during 32 milliseconds	< 500 rpm

Map1

rpm	700	1000	1500	2000	2500	3000	3500	4000	4500	5000	5500	6000	6500	7000
kPa (mmHg, inHg)	20 (150, 5.9)	20 (150, 5.9)	20 (150, 5.9)	20 (150, 5.9)	20 (150, 5.9)	20 (150, 5.9)	20 (150, 5.9)	20 (150, 5.9)	20 (150, 5.9)	20 (150, 5.9)	20 (150, 5.9)	20 (150, 5.9)	20 (150, 5.9)	20 (150, 5.9)

Map2

rpm	700	1000	1500	2000	2500	3000	3500	4000	4500	5000	5500	6000	6500	7000
kPa (mmHg, inHg)	26.7 (200.0, 7.9)	23.3 (175.0, 6.9)	23.3 (175.0, 6.9)	23.3 (175.0, 6.9)	23.6 (177.0, 7)	24.4 (183.0, 7.2)	28.3 (212.5, 8.4)	32.3 (242.2, 9.5)	36.3 (272.0, 10.7)	36.3 (272.0, 10.7)	37.2 (279.0, 11)	38.1 (286.0, 11.3)	41.9 (314.0, 12.4)	48.9 (367.0, 14.4)

3. GENERAL DRIVING CYCLE

- If conditions are met, it is possible to detect the misfires from idling to high engine speed. However, to avoid excessive load or harm to the engine, perform diagnosis at idle.
- Perform the diagnosis continuously.

4. DIAGNOSTIC METHOD

When a misfire occurs, the engine speed will decreased and the crankshaft position speed will change. Calculate the interval difference value (diagnostic value) from crankshaft position speed by the following formula, and judge whether a misfire is occurring or not comparing the calculated result with judgment value. Counting the number of misfires. If the misfire ratio is higher during 1000 revs. or 200 revs., Judge corresponding cylinders as NG.

Diagnostic value calculation (Calculate from angle speed) →	Misfire detection every single ignition (Compare diagnostic value with judgment value) →	NG judgment (Misfire occurrence judgment required by the law) (Compare number of misfire with judgment)
	• 120° Interval Difference Method • 360° Interval Difference Method • 720° Interval Difference Method	• FTP 1.5 times misfire NG judgment • Catalyst damage misfire NG judgment

As shown in the following figure, pick a cylinder as the standard and name it omg 0. And the former crankshaft position speed is named omg 1, the second former crankshaft position speed is named omg 2, the third is named omg 3, etc.

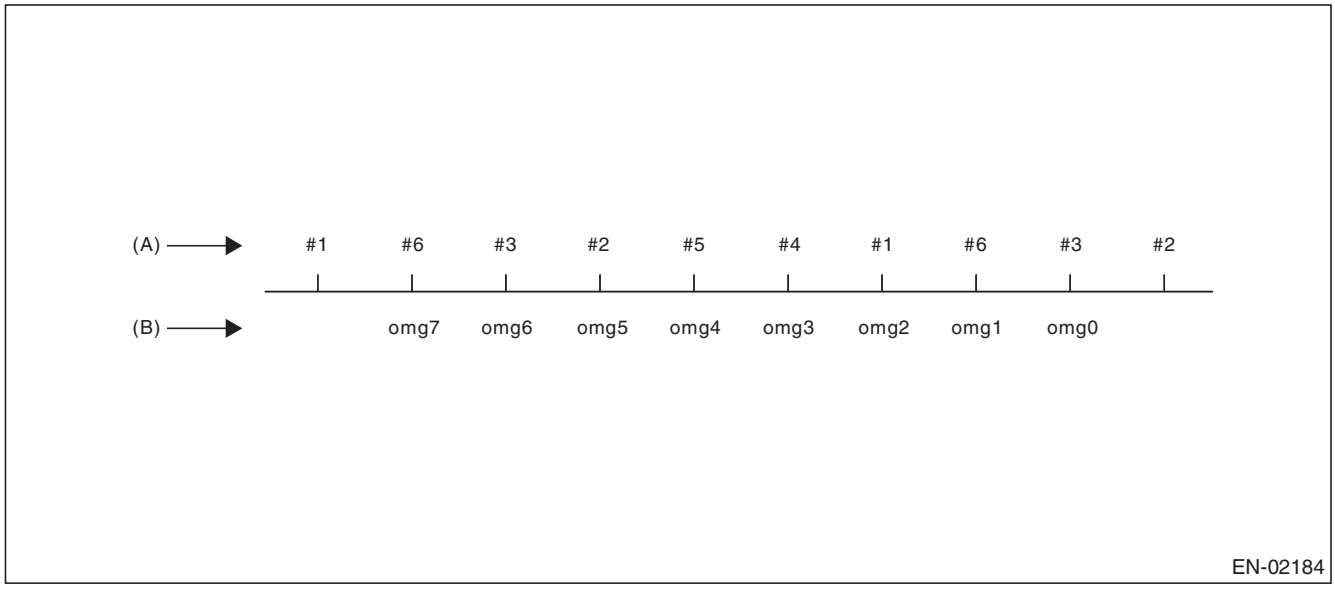

(A) Ignition order (B) Crankshaft position speed

120° Interval Difference Method

Diagnostic value	domg 120 = (omg 1 – omg 0) – (omg 7 – omg 1)/6
Judge as a misfire in the following cases. • domg 120 > judgment value of positive side • domg 121 ≤ judgment value of negative side (Judgement value before 120° CA)	

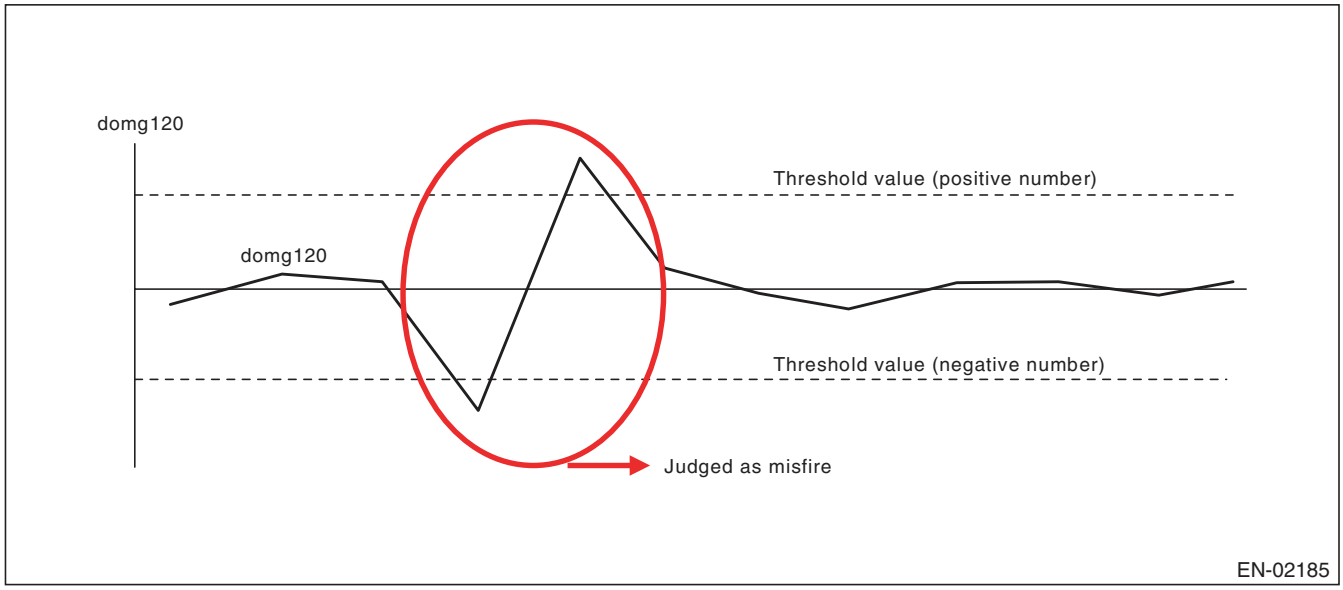

360° Interval Difference Method

Diagnostic value	domg 360 = (omg 1 – omg 0) – (omg 4 – omg 3)
Misfire judgment	domg 360 > Judgement value → Judge as misfire

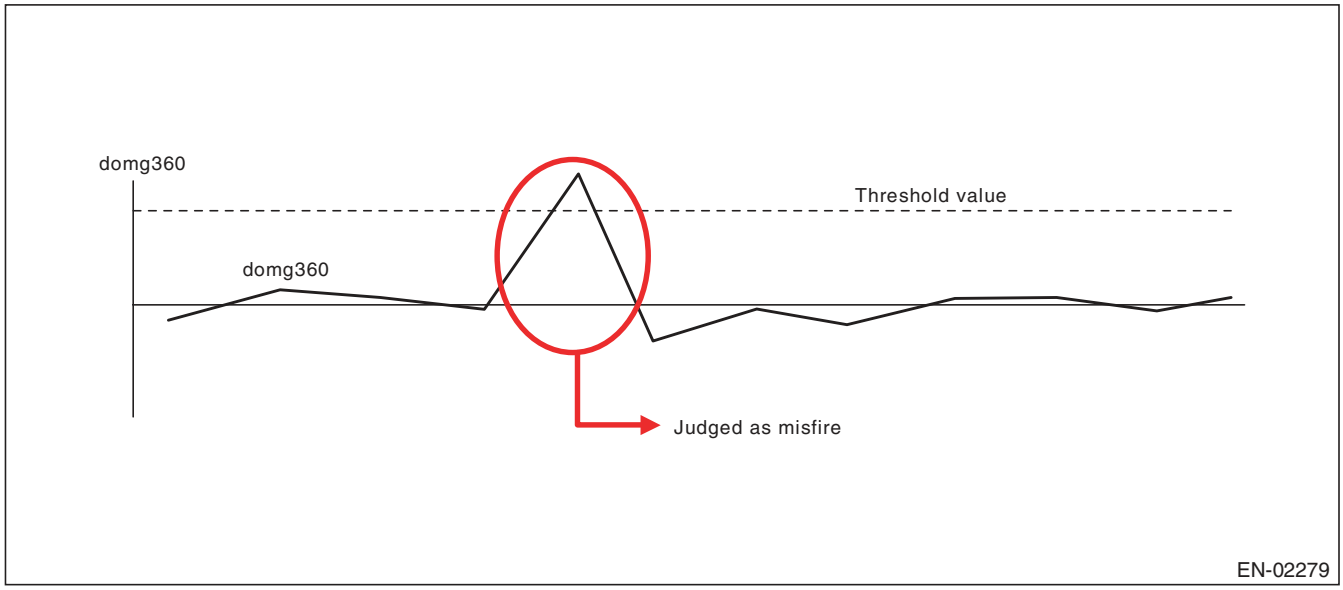

720° Interval Difference Method

Diagnostic value	domg 720 = (omg 1 – omg 0) – (omg 7 – omg 6)
Misfire judgment	domg 720 > Judgement value → Judge as misfire

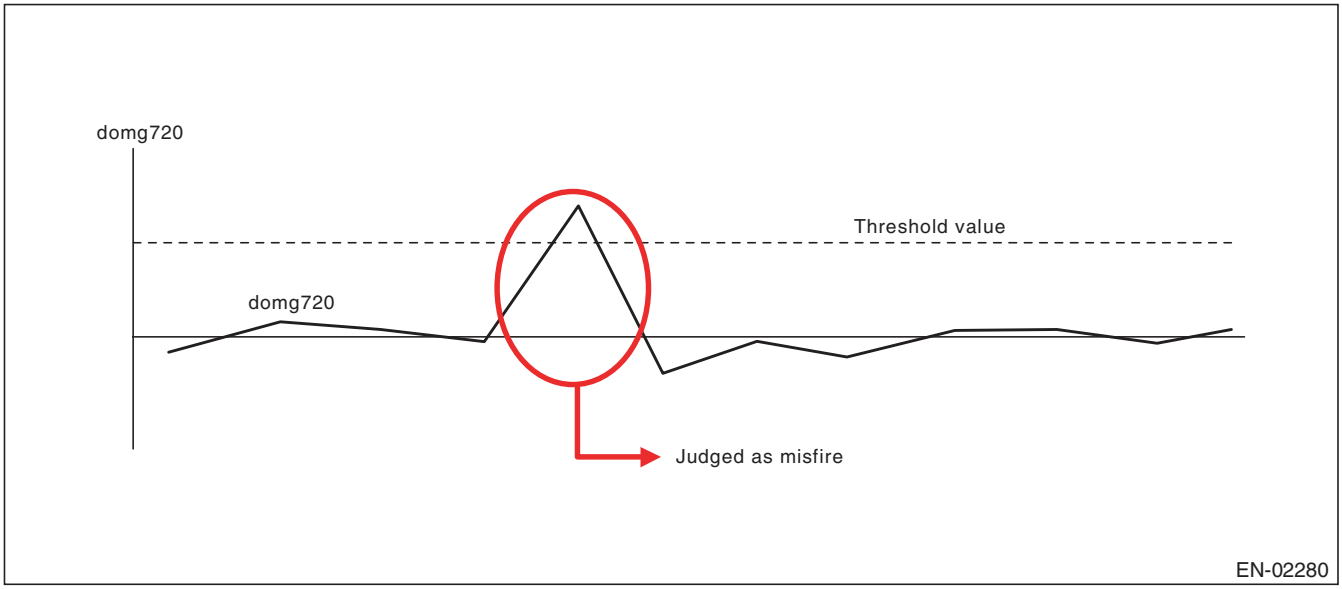

- **FTP 1.5 times misfire (Misfire occurrence level which influences exhaust gas)**
- **Abnormality Judgement**

Judgement Value (Judge that malfunction occurs when the misfire ratio is high in 1000 engine revs.)

Malfunction Criteria	Threshold Value
FTP emission judgment value	≥ 27 × 100/3000% in 1000 revs.

Time Needed for Diagnosis: 1000 engine revs.
Malfunction Indicator Light Illumination: Illuminates when malfunction occurs in 2 continuous driving cycles.

- **Normality Judgement**

Judgement Value

Malfunction criteria	Threshold value
FTP emission judgment value	< 27 × 100/3000% in 1000 revs.

Time Needed for Diagnosis: 1000 engine revs.

- **Catalyst damage misfire (Misfire occurrence level damaging catalyst)**
- **Abnormality Judgement**

Judgement Value

Malfunction criteria	Threshold value
Catalyst damage misfire judgment value	≥ Value of Map 3

Map 3

		Intake air (g(oz)/rev)									
		0.2 (0.01)	0.4 (0.01)	0.6 (0.02)	0.8 (0.03)	1 (0.04)	1.2 (0.04)	1.4 (0.05)	1.6 (0.06)	1.8 (0.06)	2 (0.07)
Engine speed (rpm)	700	90	90	88	76	68	68	68	68	68	68
	1000	90	90	88	76	68	68	68	68	68	68
	1500	89	88	80	64	56	56	56	56	56	56
	2000	88	84	64	40	36	35	35	35	35	35
	2500	88	80	56	36	30	30	30	30	30	30
	3000	64	56	30	30	30	30	30	30	30	30
	3500	50	40	30	30	30	30	30	30	30	30
	4000	40	38	30	30	30	30	30	30	30	30
	4500	50	30	30	30	30	30	30	30	30	30
	5000	40	30	30	30	30	30	30	30	30	30
	5500	40	30	30	30	30	30	30	30	30	30
	6000	36	36	30	30	30	30	30	30	30	30
	6500	32	32	30	30	30	30	30	30	30	30
	7000	32	32	30	30	30	30	30	30	30	30

Time Needed for Diagnosis: 200 engine revs.
Malfunction Indicator Light Illumination: Illuminates as soon as a malfunction occurs.

- **Normality Judgement**

Judgement Value

Malfunction criteria	Threshold value
Catalyst damage misfire judgment value	< Value of Map 2

Time Needed for Diagnosis: 200 engine revs.

BO:DTC P0302 CYLINDER 2 MISFIRE DETECTED

1. OUTLINE OF DIAGNOSIS

NOTE:
For the detection standard, refer to DTC P0301. <Ref. to GD(H6DO)-88, DTC P0301 CYLINDER 1 MISFIRE DETECTED, Diagnostic Trouble Code (DTC) Detecting Criteria.>

BP:DTC P0303 CYLINDER 3 MISFIRE DETECTED

1. OUTLINE OF DIAGNOSIS

NOTE:
For the detection standard, refer to DTC P0301. <Ref. to GD(H6DO)-88, DTC P0301 CYLINDER 1 MISFIRE DETECTED, Diagnostic Trouble Code (DTC) Detecting Criteria.>

BQ:DTC P0304 CYLINDER 4 MISFIRE DETECTED

1. OUTLINE OF DIAGNOSIS

NOTE:
For the detection standard, refer to DTC P0301. <Ref. to GD(H6DO)-88, DTC P0301 CYLINDER 1 MISFIRE DETECTED, Diagnostic Trouble Code (DTC) Detecting Criteria.>

BR:DTC P0305 CYLINDER 5 MISFIRE DETECTED

1. OUTLINE OF DIAGNOSIS

NOTE:
For the detection standard, refer to DTC P0301. <Ref. to GD(H6DO)-88, DTC P0301 CYLINDER 1 MISFIRE DETECTED, Diagnostic Trouble Code (DTC) Detecting Criteria.>

BS:DTC P0306 CYLINDER 6 MISFIRE DETECTED

1. OUTLINE OF DIAGNOSIS

NOTE:
For the detection standard, refer to DTC P0301. <Ref. to GD(H6DO)-88, DTC P0301 CYLINDER 1 MISFIRE DETECTED, Diagnostic Trouble Code (DTC) Detecting Criteria.>

BT:DTC P0327 KNOCK SENSOR 1 CIRCUIT LOW (BANK 1 OR SINGLE SENSOR)

1. OUTLINE OF DIAGNOSIS

Detect the open or short circuit of knock sensor.
Judge as NG if out of specification.

2. COMPONENT DESCRIPTION

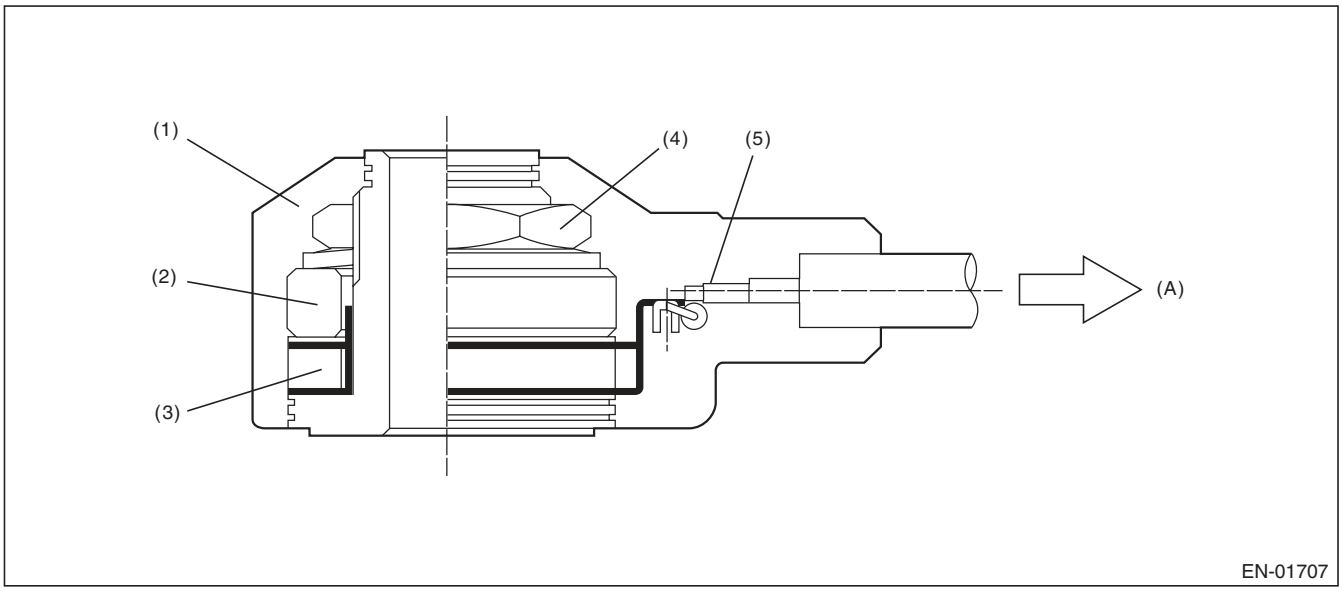

(A) To knock sensor harness

(1) Case
(2) Weight
(3) Piezoelectric element
(4) Nut
(5) Resistance

3. ENABLE CONDITION

Secondary Parameters	Enable Conditions
None	

4. GENERAL DRIVING CYCLE

Always perform the diagnosis continuously.

5. DIAGNOSTIC METHOD

- **Abnormality Judgement**

If the duration of time while the following conditions are met is longer than the time indicated, judge as NG.

Judgement Value

Malfunction criteria	Threshold value
Output voltage	< 0.238 V

Time Needed for Diagnosis: 1000 ms
Malfunction Indicator Light Illumination: Illuminates as soon as a malfunction occurs.

- **Normality Judgement**

Judge as OK and clear the NG if the continuous time while the following conditions are established is more than the predetermined time.

Judgement Value

Malfunction criteria	Threshold value
Output voltage	≥ 0.238 V

Time Needed for Diagnosis: Less than 1 second

BU:DTC P0328 KNOCK SENSOR 1 CIRCUIT HIGH (BANK 1 OR SINGLE SENSOR)

1. OUTLINE OF DIAGNOSIS

Detect the open or short circuit of knock sensor.
Judge as NG if out of specification.

2. COMPONENT DESCRIPTION

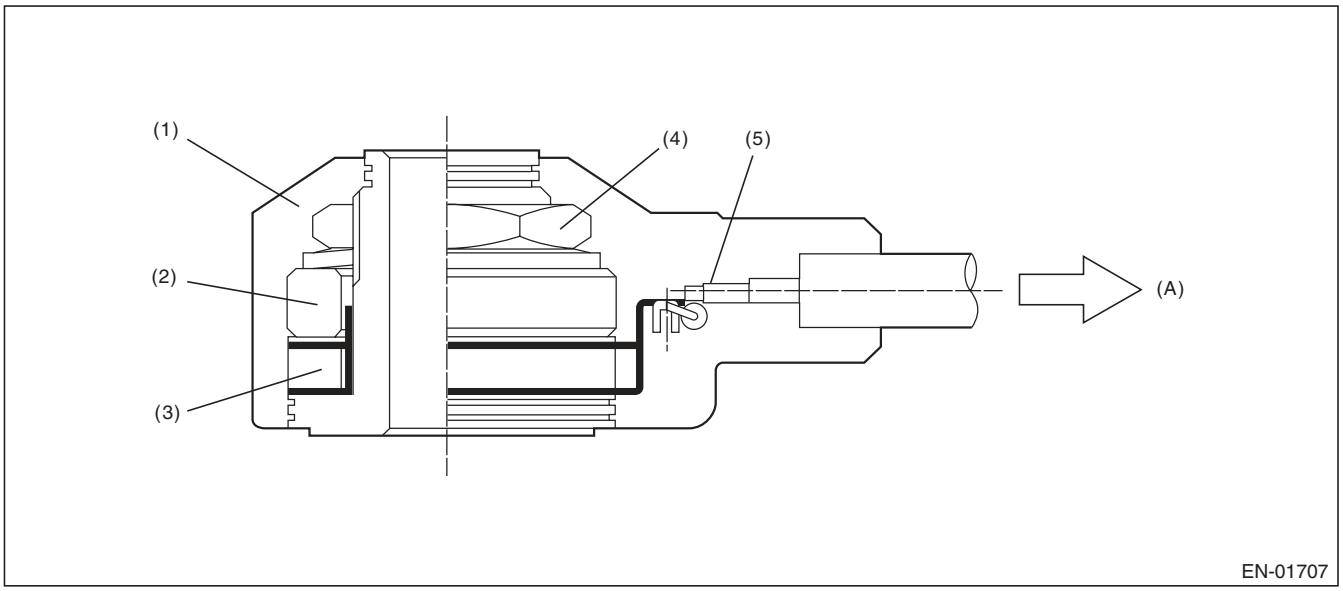

(A) To knock sensor harness

(1) Case
(2) Weight
(3) Piezoelectric element
(4) Nut
(5) Resistance

3. ENABLE CONDITION

Secondary Parameters	Enable Conditions
None	

4. GENERAL DRIVING CYCLE

Always perform the diagnosis continuously.

5. DIAGNOSTIC METHOD

- **Abnormality Judgement**

If the duration of time while the following conditions are met is longer than the time indicated, judge as NG.

Judgement Value

Malfunction criteria	Threshold value
Output voltage	≥ 4.714 V

Time Needed for Diagnosis: 1000 ms
Malfunction Indicator Light Illumination: Illuminates as soon as a malfunction occurs.

- **Normality Judgement**

Judge as OK and clear the NG if the continuous time while the following conditions are established is more than the predetermined time.

Judgement Value

Malfunction criteria	Threshold value
Output voltage	< 4.714 V

Time Needed for Diagnosis: Less than 1 second

BV:DTC P0332 KNOCK SENSOR 2 CIRCUIT LOW (BANK 2)

1. OUTLINE OF DIAGNOSIS

NOTE:
For the detection standard, refer to DTC P0327. <Ref. to GD(H6DO)-94, DTC P0327 KNOCK SENSOR 1 CIRCUIT LOW (BANK 1 OR SINGLE SENSOR), Diagnostic Trouble Code (DTC) Detecting Criteria.>

BW:DTC P0333 KNOCK SENSOR 2 CIRCUIT HIGH (BANK 2)

1. OUTLINE OF DIAGNOSIS

NOTE:
For the detection standard, refer to DTC P0328. <Ref. to GD(H6DO)-95, DTC P0328 KNOCK SENSOR 1 CIRCUIT HIGH (BANK 1 OR SINGLE SENSOR), Diagnostic Trouble Code (DTC) Detecting Criteria.>

BX:DTC P0335 CRANKSHAFT POSITION SENSOR “A” CIRCUIT

1. OUTLINE OF DIAGNOSIS

Detect the open or short circuit of the crankshaft position sensor.
Judge as NG when the crank signal is not input even though the starter was rotated.

2. COMPONENT DESCRIPTION

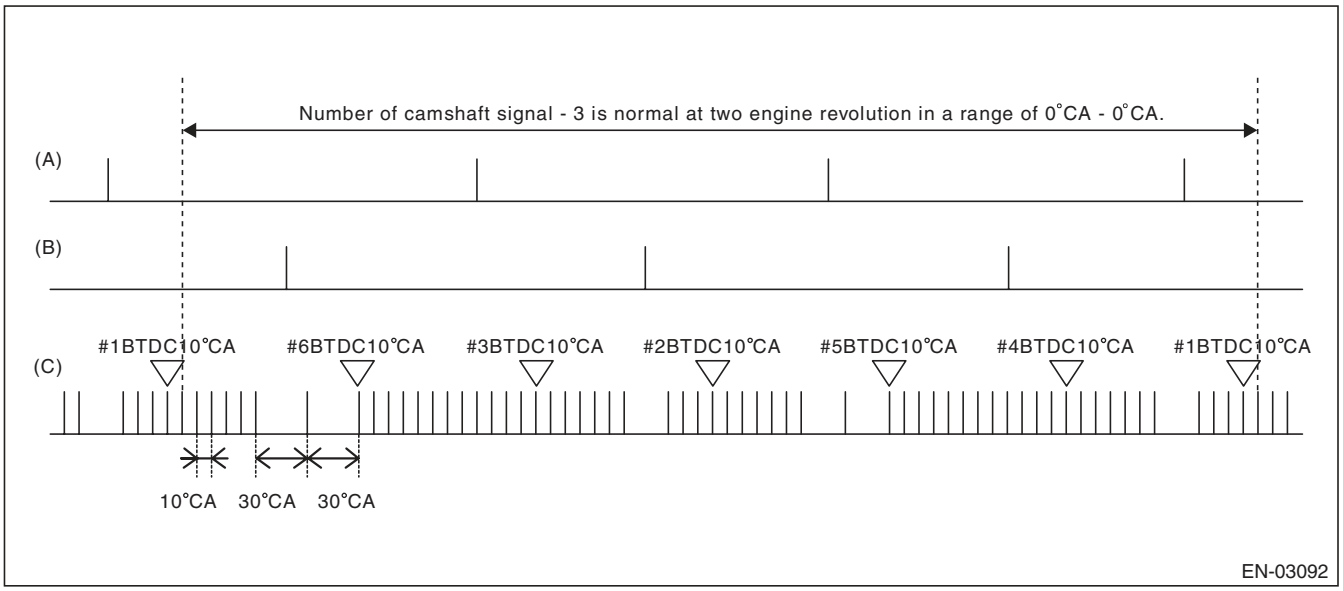

(A) Camshaft signal (RH) (B) Camshaft signal (LH) (C) Crankshaft signal

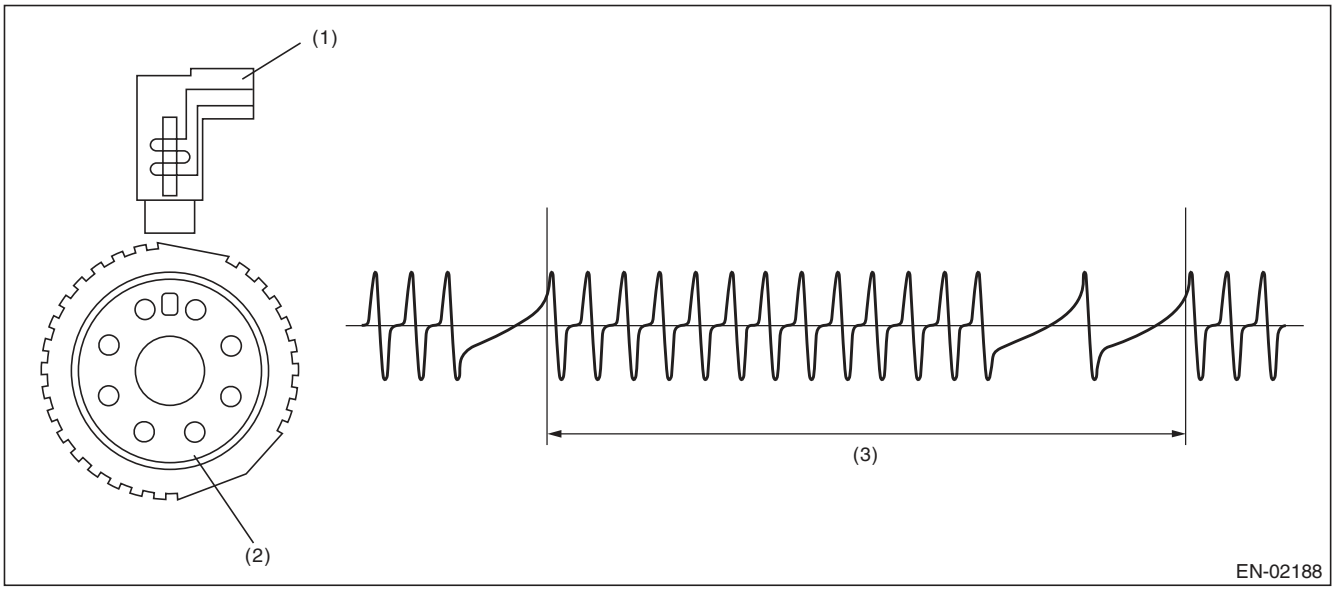

(1) Crankshaft position sensor (2) Crank sprocket (3) Crankshaft half-turn

3. ENABLE CONDITION

Secondary Parameters	Enable Conditions
None	

4. GENERAL DRIVING CYCLE

Always perform the diagnosis continuously.

5. DIAGNOSTIC METHOD

- **Abnormality Judgement**

If the duration of time while the following conditions are met is longer than the time indicated, judge as NG.

Judgement Value

Malfunction Criteria	Threshold Value
Starter switch	ON
Crankshaft position sensor signal	Not detected
Battery voltage	≥ 8 V

Time Needed for Diagnosis: 3000 ms
Malfunction Indicator Light Illumination: Illuminates as soon as a malfunction occurs.

- **Normality Judgement**

Judge as OK and clear the NG if the continuous time while the following conditions are established is more than the predetermined time.

Judgement Value

Malfunction Criteria	Threshold Value
Crankshaft position sensor signal	Input exists
Battery voltage	≥ 8 V

Time Needed for Diagnosis: Less than 1 second

BY:DTC P0336 CRANKSHAFT POSITION SENSOR “A” CIRCUIT RANGE/ PERFORMANCE

1. OUTLINE OF DIAGNOSIS

Detect for faults in crankshaft position sensor output properties.
Judge as NG when there is a problem in the number of crankshaft signals for every revolution.

2. COMPONENT DESCRIPTION

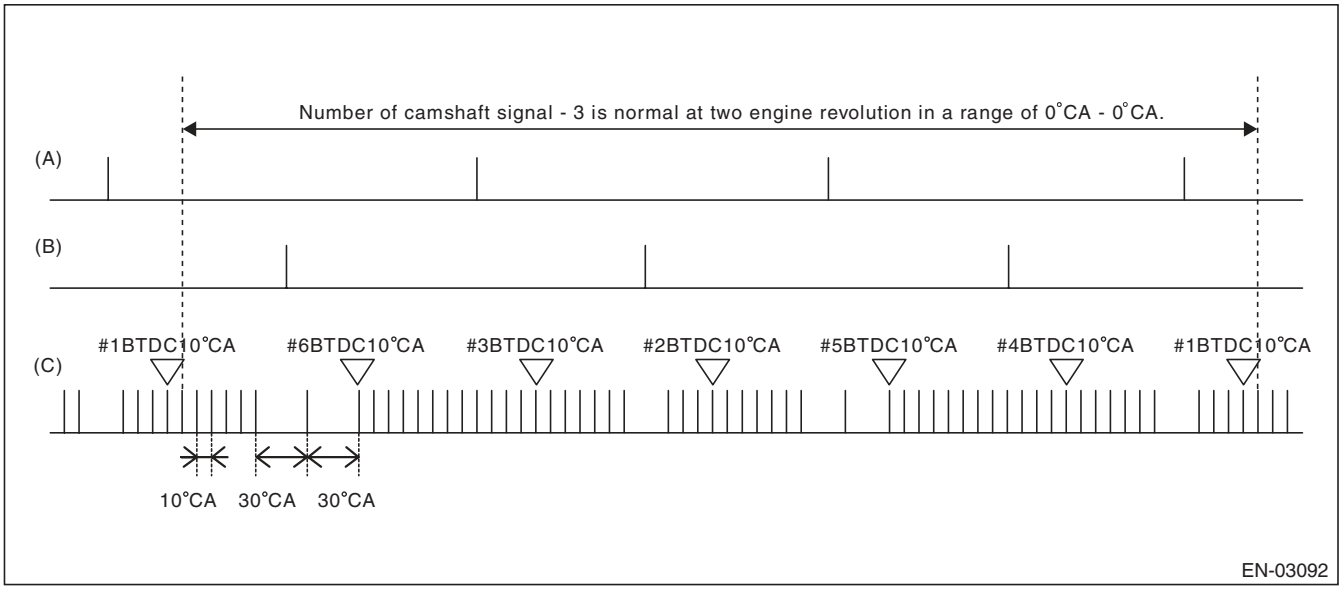

(A) Camshaft signal (RH) (B) Camshaft signal (LH) (C) Crankshaft signal

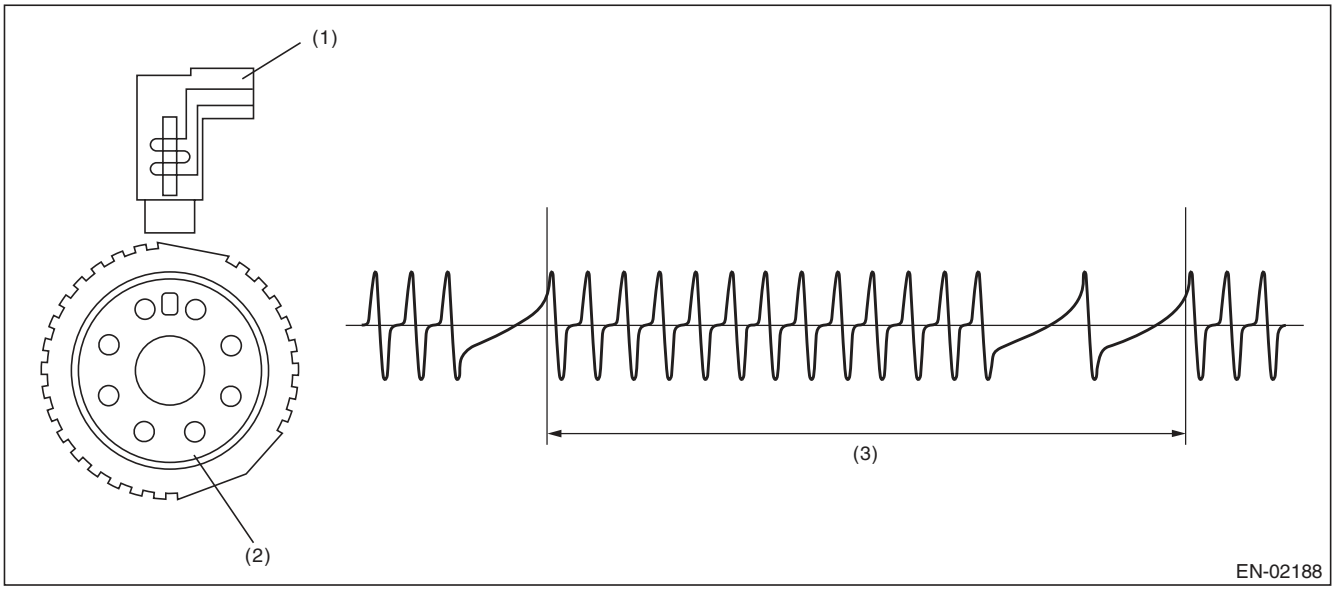

(1) Crankshaft position sensor (2) Crank sprocket (3) Crankshaft half-turn

3. ENABLE CONDITION

Secondary Parameters	Enable Conditions
Battery voltage	≥ 8 V
Engine speed	< 3000 rpm

4. GENERAL DRIVING CYCLE

Perform the diagnosis continuously under 3000 rpm engine speed.

5. DIAGNOSTIC METHOD

- **Abnormality Judgement**

Judge as NG when the following conditions are established.

Judgement Value

Malfunction Criteria	Threshold Value
Cylinder number identification	Completed
Amount of crank sensor signal during 1 rev.	Not = 30

Time Needed for Diagnosis: 10 engine revs.
Malfunction Indicator Light Illumination: Illuminates when malfunction occurs in 2 continuous driving cycles.

- **Normality Judgement**

Judge as OK and clear the NG if the continuous time while the following conditions are established is more than the predetermined time.

Judgement Value

Malfunction Criteria	Threshold Value
Cylinder number identification	Completed
Amount of crank sensor signal during 1 rev.	= 30

Time Needed for Diagnosis: Less than 1 second

BZ:DTC P0340 CAMSHAFT POSITION SENSOR “A” CIRCUIT (BANK 1 OR SINGLE SENSOR)

1. OUTLINE OF DIAGNOSIS

Detect the open or short circuit of the camshaft position sensor.
Judge as NG when the number of camshaft signals remains abnormal.

2. COMPONENT DESCRIPTION

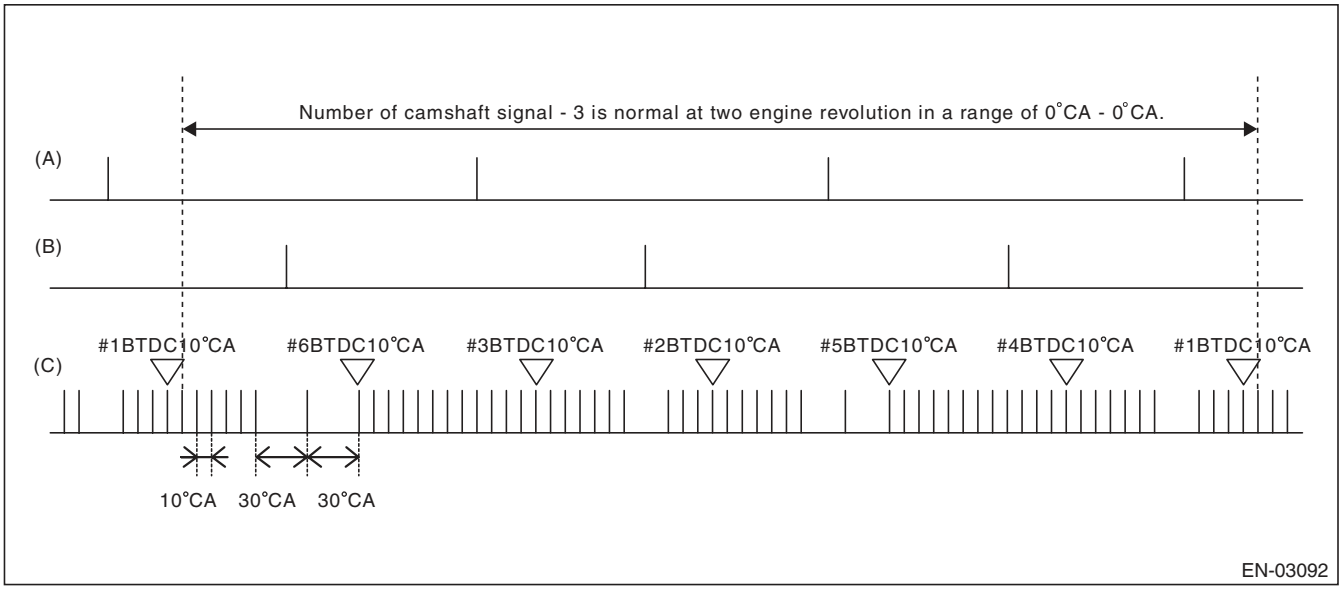

(A) Camshaft signal (RH) (B) Camshaft signal (LH) (C) Crankshaft signal

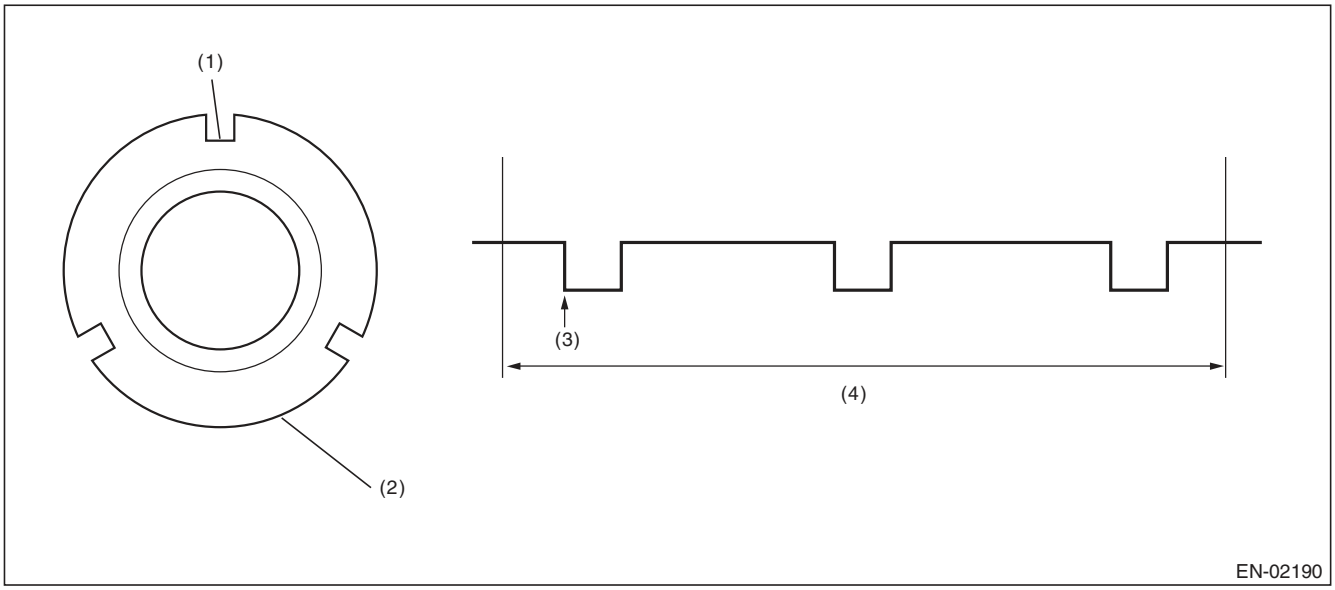

(1) Throttle
(2) Camshaft plate
(3) Detecting point
(4) Camshaft one revolution (engine two revolutions)

3. ENABLE CONDITION

Secondary Parameters	Enable Conditions
Battery voltage	≥ 8 V

4. GENERAL DRIVING CYCLE

Always perform the diagnosis continuously.

5. DIAGNOSTIC METHOD

- **Abnormality Judgement 1**

Judge as NG when the condition where the number of camshaft position sensor signals are less than 3 times during 2 engine speed. continues.

Judgement Value

Malfunction Criteria	Threshold Value
Amount of camshaft sensor signal during 2 revs.	< 3.000 time(s)

Time Needed for Diagnosis: Two engine revolutions × 4 time(s)
Malfunction Indicator Light Illumination: Illuminates as soon as a malfunction occurs.

- **Normality Judgement 1**

Judge as OK and clear the NG when the malfunction criteria below are met.

Judgement Value

Malfunction Criteria	Threshold Value
Camshaft position sensor signal	≥ 3.000 time(s)

Time Needed for Diagnosis: Two engine revolutions

- **Abnormality Judgement 2**

If the duration of time while the following conditions are met is longer than the time indicated, judge as NG.

Judgement Value

Malfunction Criteria	Threshold Value
Starter	ON
Camshaft position sensor signal	No input

Time Needed for Diagnosis: 3000 ms

- **Normality Judgement 2**

Judge as OK and clear the NG if the continuous time while the following conditions are established is more than the predetermined time.

Judgement Value

Malfunction Criteria	Threshold Value
Camshaft position sensor signal	Input exists

Time Needed for Diagnosis: Less than 1 second

CA:DTC P0345 CAMSHAFT POSITION SENSOR “A” CIRCUIT (BANK 2)

1. OUTLINE OF DIAGNOSIS

NOTE:
For the detection standard, refer to DTC P0340. <Ref. to GD(H6DO)-101, DTC P0340 CAMSHAFT POSITION SENSOR “A” CIRCUIT (BANK 1 OR SINGLE SENSOR), Diagnostic Trouble Code (DTC) Detecting Criteria.>

CB:DTC P0400 EXHAUST GAS RECIRCULATION FLOW

1. OUTLINE OF DIAGNOSIS

Detect EGR system malfunction.
Intake manifold pressure (negative pressure) is constant because the throttle valve is fully closed during deceleration fuel cut. At this time, when the EGR valve is opened/closed, the intake manifold pressure will change. EGR System OK/NG is judged by the range of this change.

2. COMPONENT DESCRIPTION

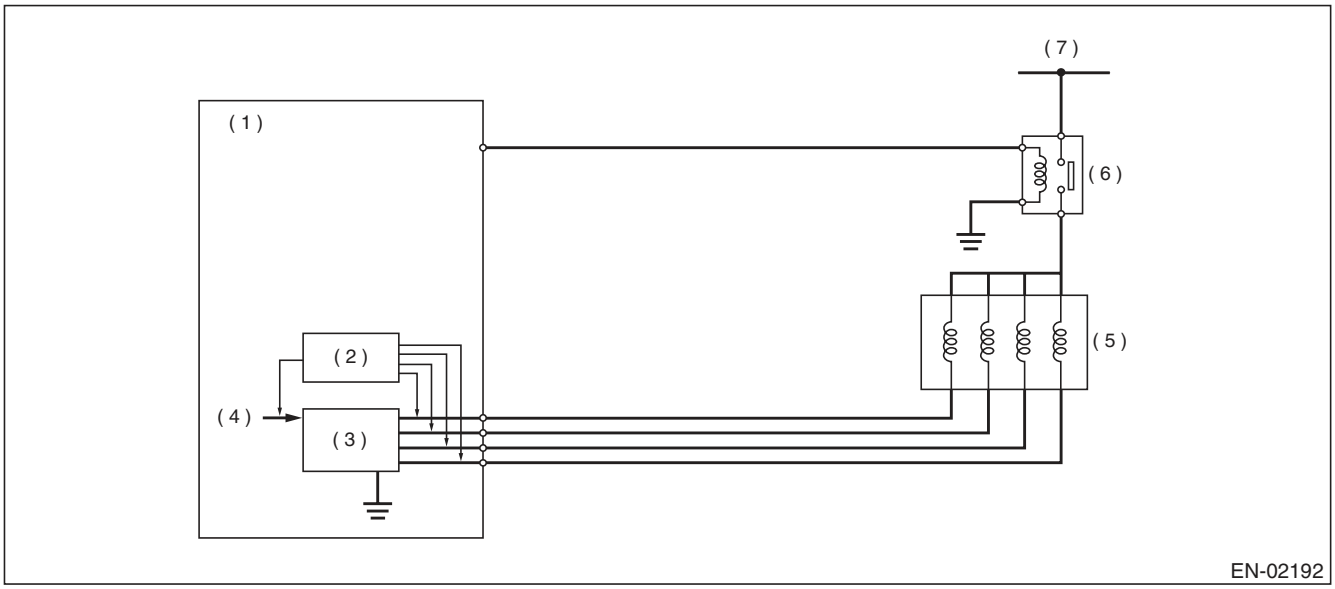

(1) ECM
(2) Detecting circuit
(3) Switching circuit
(4) CPU
(5) EGR valve
(6) Main relay
(7) Battery power supply

3. ENABLE CONDITION

Secondary Parameters	Enable Conditions
Elapsed time after starting the engine	≥ 40 s
Engine coolant temperature	≥ 75 °C(167 °F)
Engine speed	1200 rpm — 3250 rpm
Intake manifold pressure (absolute pressure)	< 36.7 kPa (275 mmHg, 10.8 inHg)
Ambient air temperature	≥ 5 °C(41 °F)
Throttle position	< 0.25 °
Battery voltage	≥ 10.9 V
Barometric pressure	≥ 75 kPa (563 mmHg, 22.2 inHg)
Vehicle speed	≥53 km/h (32.9 MPH)
Fuel shut-off function	In operation
Neutral switch	OFF
After neutral switch ON/OFF change	≥ Value from Map
No load change (A/C, power steering, lighting, rear defogger, heater fan and radiator fan)	≥ 5000 ms

Map

Engine coolant temperature °C (°F)	–40 (–40)	–30 (–22)	–20 (–4)	–10 (14)	0 (32)	10 (50)	20 (68)	30 (86)
After neutral switch change msec	0	0	0	0	0	0	0	0

Engine coolant temperature °C (°F)	40 (104)	50 (122)	60 (140)	70 (158)	80 (176)	90 (194)	100 (212)	110 (230)
After neutral switch change msec	0	0	0	0	0	0	0	0

4. GENERAL DRIVING CYCLE

During deceleration fuel cut from 53 km/h (approx. 33 MPH) or more, perform diagnosis once.
Be careful of vehicle speed and engine speed. (Diagnosis will not be completed if the vehicle speed and engine speed conditions become out of specification due to deceleration.)

5. DIAGNOSTIC METHOD

Measure the pressure values when the enable conditions are established, and perform diagnosis by calculating those results.
1. Label the intake manifold pressure value as PMOF1, which is observed when enable conditions are established, and set the EGR target step to 50 steps (nearly full open).
2. Label the intake manifold pressure value as PMON, which is observed after one second has passed since EGR target step was set to 50 steps (when the enable conditions were established), and set the EGR target step to 0.
3. Label the intake manifold pressure as PMOF2, which is observed after one second has passed since EGR target step was set to 0 (after two seconds have passed since the enable conditions were established).

- **Abnormality Judgement**

Judge as NG when the following conditions are established.

Judgement Value

Malfunction Criteria	Threshold Value
PMON – (PMOF1 + PMOF2)/2	< 1.6 kPa (11.8 mmHg, 0.5 inHg)

Time Needed for Diagnosis: 1 time
Malfunction Indicator Light Illumination: Illuminates when malfunction occurs in 2 continuous driving cycles.

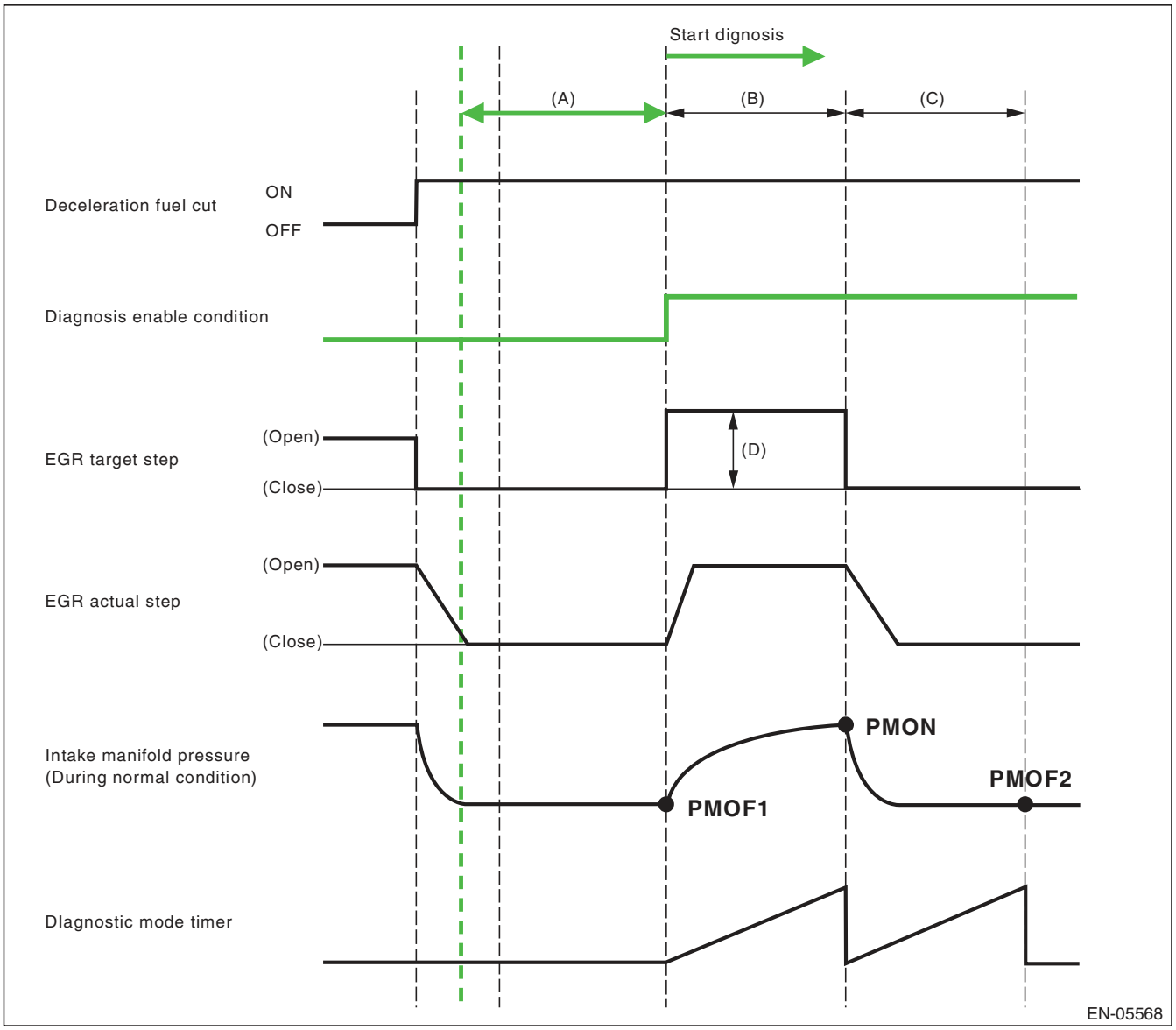

(A) 2000 ms
(B) 1500 ms
(C) 1500 ms
(D) 50 step(s)

- **Normality Judgement**

Judge as OK and clear the NG if the following conditions are established.

Judgement Value

Malfunction Criteria	Threshold Value
PMON – (PMOF1 + PMOF2)/2	≥ 1.6 kPa (11.8 mmHg, 0.5 inHg)

Time Needed for Diagnosis: 1 time

CC:DTC P0420 CATALYST SYSTEM EFFICIENCY BELOW THRESHOLD (BANK 1)

1. OUTLINE OF DIAGNOSIS

Detect the deterioration of the catalyst function.
Though the front oxygen sensor output would change slowly with a new catalyst, the sensor output with a deteriorated catalyst becomes high and the inversion time is shortened.
For this reason, the catalyst diagnosis is carried out by monitoring the front oxygen sensor output and comparing it with the front oxygen (A/F) sensor output.

2. COMPONENT DESCRIPTION

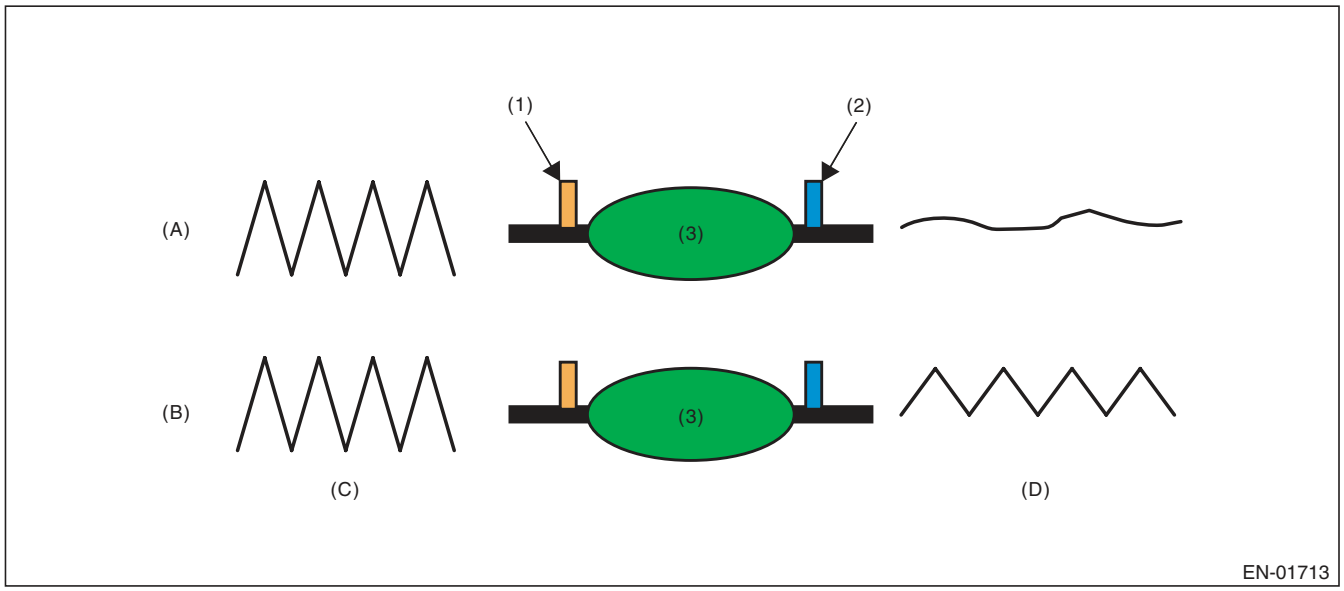

(A)	Normal	(C)	Output waveform from the front oxygen (A/F) sensor	(D)	Output waveform from the front oxygen sensor
(B)	Deterioration				
(1)	Front oxygen (A/F) sensor	(2)	Front oxygen sensor	(3)	Catalytic converter

3. ENABLE CONDITION

Secondary Parameters	Enable Conditions
Battery voltage	≥ 10.9 V
Atmospheric pressure	≥ 75 kPa (563 mmHg, 22.2 inHg)
Engine coolant temperature	≥ 75 °C (167 °F)
Estimated catalyst temperature	≥ 560 °C (1040 °F)
Misfire detection every 200 rotations	< 7 time(s)
Learning value of evaporation gas density	< 0.2
Sub feedback	In operation
Evaporative system diagnosis	Not in operation
Time of difference (< 0.10) between actual lambda and target lambda	≥ 1000 ms
Vehicle speed	> 60 km/h (37.3 MPH)
Amount of intake air	≥ 10 g/s (0.35 oz/s) and < 40 g/s (1.41 oz/s)
Engine load change every 0.5 engine speed.	< 0.02 g/rev (0 oz/rev)
Rear oxygen output change from 660 mV or less to 660 mV or more	Experienced after fuel cut
Elapsed time after starting the engine	≥ 205 s
Purge execution calculated time	≥ 5 s

4. GENERAL DRIVING CYCLE

Perform the diagnosis only once at a constant 60 km/h (37.3 MPH) or higher.

5. DIAGNOSTIC METHOD

After establishing the execution conditions, calculate the front oxygen (A/F) sensor lambda deviation cumulative value (Σ |(sglmd$_n$ – sglmd$_{n-1}$)|) and rear oxygen sensor output voltage deviation cumulative value (Σ |(ro2sad$_n$ – ro2sad$_{n-1}$)|) per 32 milliseconds × 4 , and when the front oxygen (A/F) sensor lambda deviation cumulative value (Σ |(sglmd$_n$ – sglmd$_{n-1}$)|) becomes the predetermined value or more, calculate the diagnostic value.

- **Abnormality Judgement**

If the duration of time while the following conditions are met is within the time indicated, judge as NG.

Judgement Value

Malfunction criteria	Threshold value
Σ |(ro2sad$_n$ – ro2sad$_{n-1}$)| / Σ |(sglmd$_n$ – sglmd$_{n-1}$)|	> 25

Time Needed for Diagnosis: 30 — 55 seconds
Malfunction Indicator Light Illumination: Illuminates when malfunction occurs in 2 continuous driving cycles.

- **Normality Judgement**

Judge as OK and clear the NG if the continuous time while the following conditions are established is within the predetermined time.

Judgement Value

Malfunction criteria	Threshold value
Σ |(ro2sad$_n$ – ro2sad$_{n-1}$)| / Σ |(sglmd$_n$ – sglmd$_{n-1}$)|	≤ 25

Time Needed for Diagnosis: 30 — 55 seconds

CD:DTC P0442 EVAPORATIVE EMISSION CONTROL SYSTEM LEAK DETECTED (SMALL LEAK)

1. OUTLINE OF DIAGNOSIS

Check if there is a leakage in fuel system or not, and perform the function diagnosis of valve.

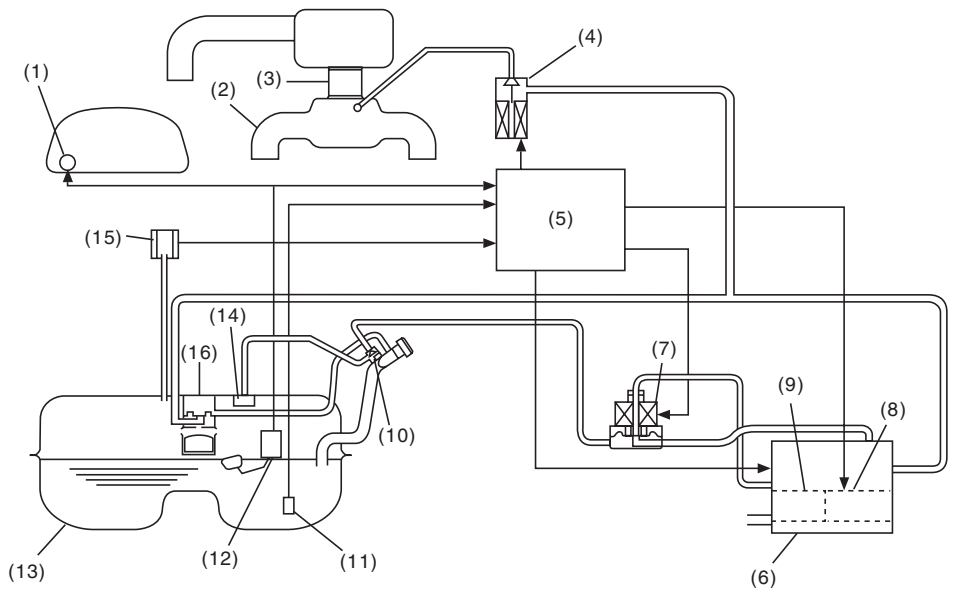

(1)	Fuel gauge	(7)	Pressure control valve	(12)	Fuel level sensor
(2)	Intake manifold	(8)	Drain valve	(13)	Fuel tank
(3)	Throttle body	(9)	Drain filter	(14)	Fuel cut valve
(4)	Purge control solenoid valve	(10)	Shut-off valve	(15)	Fuel tank pressure sensor
(5)	Engine control module (ECM)	(11)	Fuel temperature sensor	(16)	Vent valve
(6)	Canister				

In this system diagnosis, check for leakage and valve function is conducted by changing the fuel tank pressure and monitoring the pressure change using the fuel tank pressure sensor. When in 0.04 inch diagnosis, perform in the order of mode Z → mode A → mode B → mode C and mode D; When in 0.02 inch diagnosis, perform in the order of mode A → mode B → mode C → mode D and mode E.

0.04-inch Diagnosis

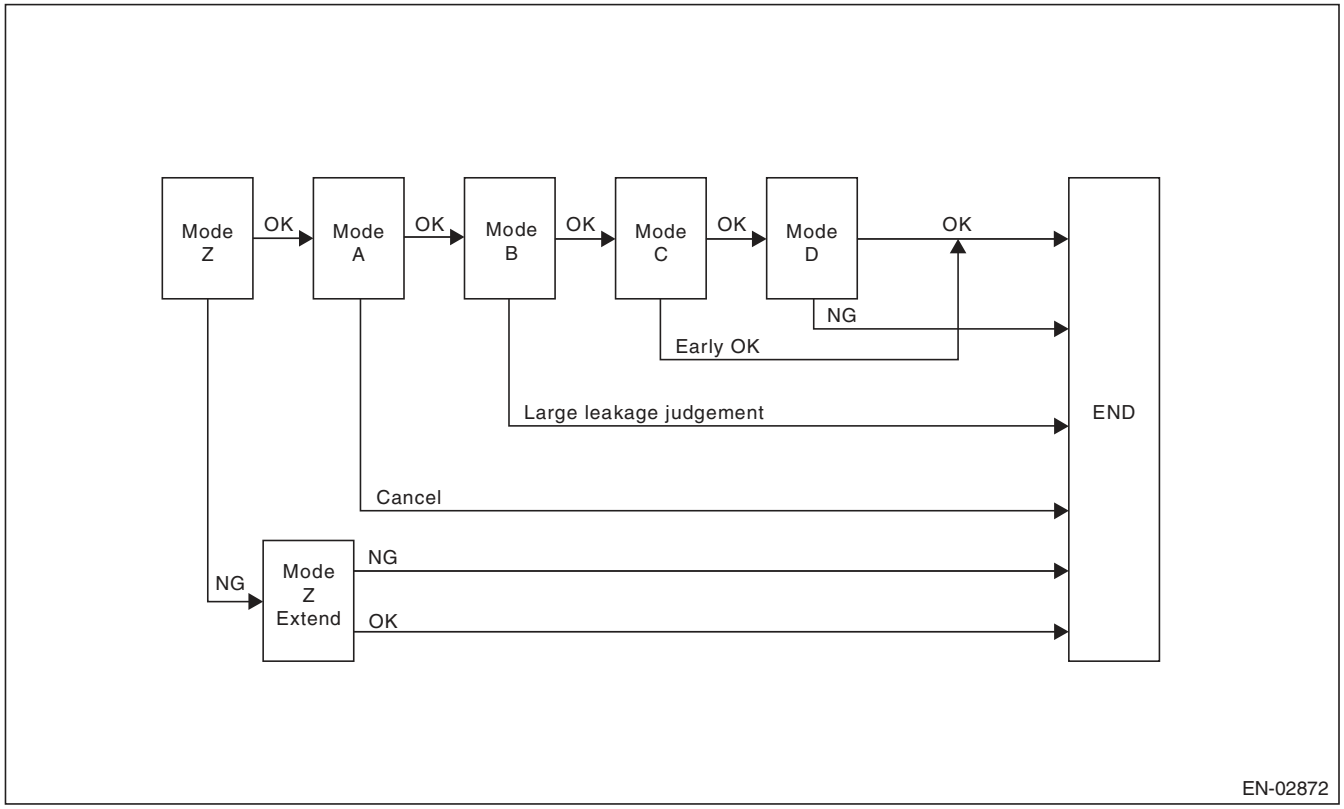

Mode	Mode Description	Diagnosis Period
Mode Z (Purge control solenoid valve opening failure diagnosis)	Perform purge control solenoid valve opening failure diagnosis from the size of tank pressure variation from diagnosis start.	0 ms + 3000 ms — 0 ms + 3000 ms + 13000 ms
Mode A (Estimated evaporation amount)	Calculate the tank pressure change amount (P1).	10000 ms
Mode B (Sealed negative pressure, large leakage judgement)	Decrease the pressure in the tank to the target value by introducing the intake manifold pressure to the fuel tank. If the tank pressure cannot be reduced, it is diagnosed as large leak.	0 — 10000 ms + 25000 ms
Mode C (Pressure increase check, advanced OK judgement)	Wait until the tank pressure returns to the target (start level of P2 calculation). If the tank pressure does not become the value, make advanced OK judgement.	0 — 17000 ms
Mode D (Negative pressure variation measurement, evaporation leakage diagnosis)	Calculate the tank pressure variation (P2), and obtain the diagnostic value using P1 found in Mode A. Perform the evaporation diagnosis using the diagnostic value.	0 ms + 10000 ms

Mode Table for Evaporative Emission Control System Diagnosis

Mode	Behavior of tank internal pressure under normal conditions	Diagnostic item	DTC
Mode Z	Roughly the same as barometric pressure (Same as 0 kPa (0 mmHg, 0 inHg))	Purge control solenoid valve is judged to be open.	P0457
Mode A	Pressure is in proportion to amount of evaporative emission.	—	None
Mode B	Negative pressure is formed due to intake manifold negative pressure	Large leak	P0457
Mode C	Reaches target pressure	—	None
Mode D	Pressure change is small.	EVAP system large leak determination. [1.0 mm (0.04 in)]	P0442

0.02-inch Diagnosis

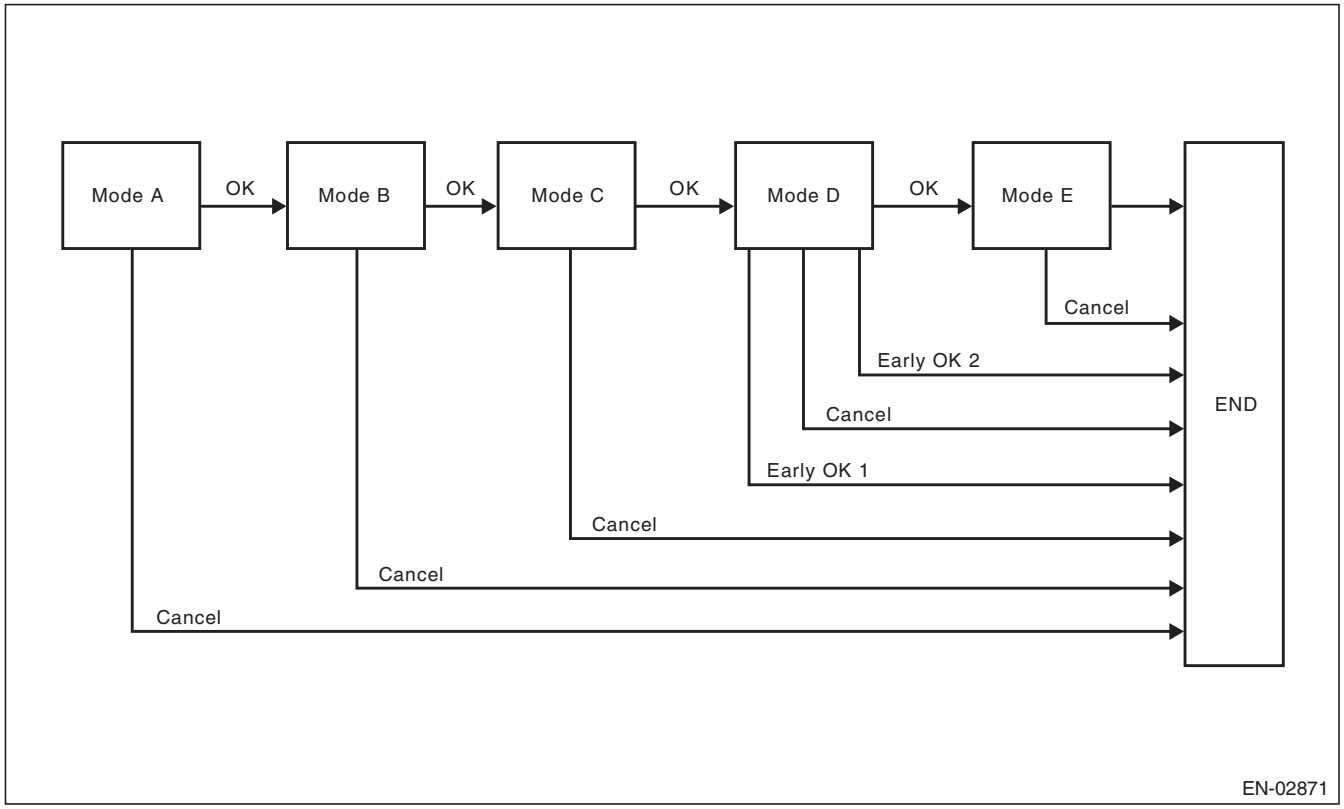

Mode	Mode Description	Diagnosis Period
Mode A (0 point compensation)	When the pressure in the tank is not near 0 mmHg, wait until it returns to 0 point (near 0 mmHg).	0 — Value of Map 1
Mode B (Negative pressure introduced)	Decrease the pressure in the tank to the target value by introducing the intake manifold pressure to the fuel tank.	0 — Value of Map 2
Mode C (Negative pressure maintained)	Wait until the tank pressure returns to the target (start level of P2 calculation).	0 — 20000 ms + 0 + Value from Map 2
Mode D (Negative pressure change calculated)	Calculate the time it takes for the tank pressure to change to the Mode E shifting pressure. If the tank pressure does not change to the Mode E shifting pressure, make advanced OK judgement.	0 — 0 ms + 200000 ms
Mode E (Evaporation generated amount calculation)	Calculate the amount of evaporation (P1).	0 — 0 ms + 200000 ms + Value from Map 3

Map1

Fuel level (ℓ , US gal, Imp gal)	0	10, 2.64, 2.2	20, 5.28, 4.4	30, 7.93, 6.6	40, 10.57, 8.8	50, 13.21, 11	60, 15.85, 13.2
Time Needed for Diagnosis (ms)	12000	12000	11000	10000	7500	5000	5000

Map2

Fuel level (ℓ , US gal, Imp gal)	0	10, 2.64, 2.2	20, 5.28, 4.4	30, 7.93, 6.6	40, 10.57, 8.8	50, 13.21, 11	60, 15.85, 13.2
Time Needed for Diagnosis (ms)	18500	18500	18500	18500	18500	18500	18500

Map 3

Fuel level (ℓ , US gal, Imp gal)	0	10, 2.64, 2.2	20, 5.28, 4.4	30, 7.93, 6.6	40, 10.57, 8.8	50, 13.21, 11	60, 15.85, 13.2
Time Needed for Diagnosis (ms)	60000	60000	60000	60000	60000	60000	60000

2. COMPONENT DESCRIPTION

Pressure control solenoid valve

PCV controls the fuel tank pressure to be equal to the atmospheric air pressure. Normally, the solenoid is set to OFF. The valve opens and closes mechanically in accordance with the pressure difference between tank and atmospheric air, or tank and canister.
The valve is forcibly opened by setting the solenoid to ON at the time of diagnosis.

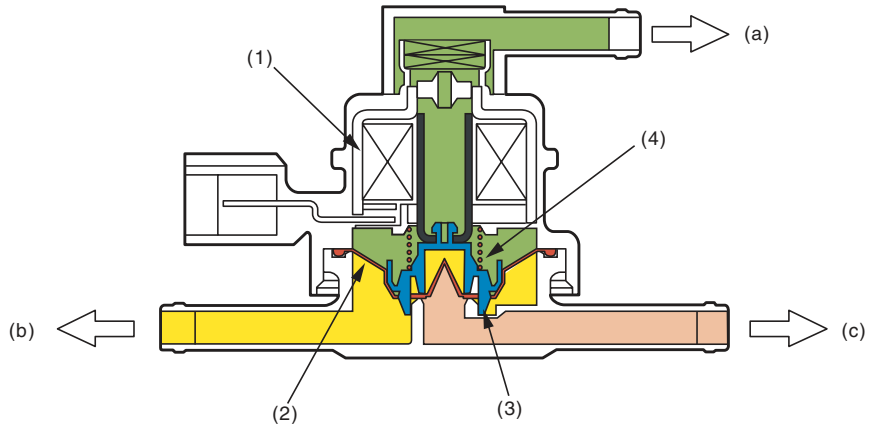

(a)	Barometric pressure	(b)	Fuel tank	(c)	Canister
(1)	Solenoid	(3)	Valve	(4)	Spring
(2)	Diaphragm				

Valve Operation and Air Flow

In the figure below, divided by the diaphragm, the part above X is charged with atmospheric air pressure, and the part below X is charged with tank pressure. Also, the part above Y is charged with tank pressure, and the part below Y is charged with canister pressure.
If the atmospheric air pressure port is A, tank pressure port is B, and canister pressure port is C, the air flows according to pressure difference from each port as shown in the table below.

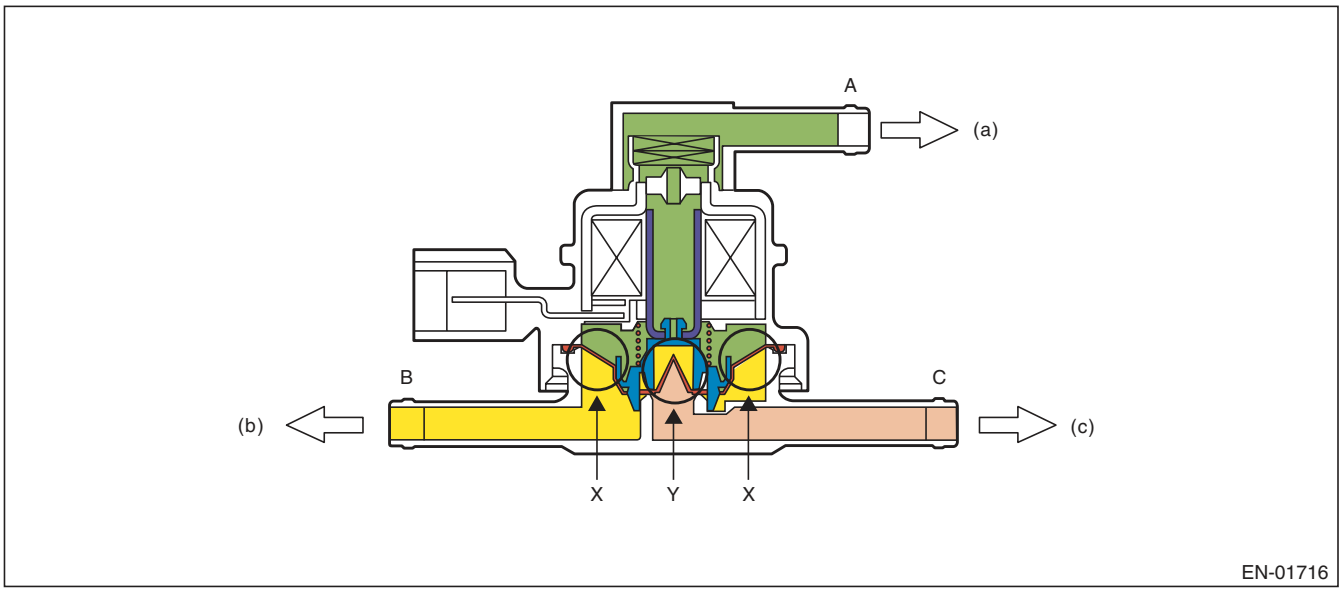

(a) Barometric pressure (b) Fuel tank (c) Canister

Condition of pressure	Flow
A < B (solenoid OFF)	B → C
B < C (solenoid OFF)	C → B
Solenoid ON	B ← → C

When A < B (solenoid OFF)

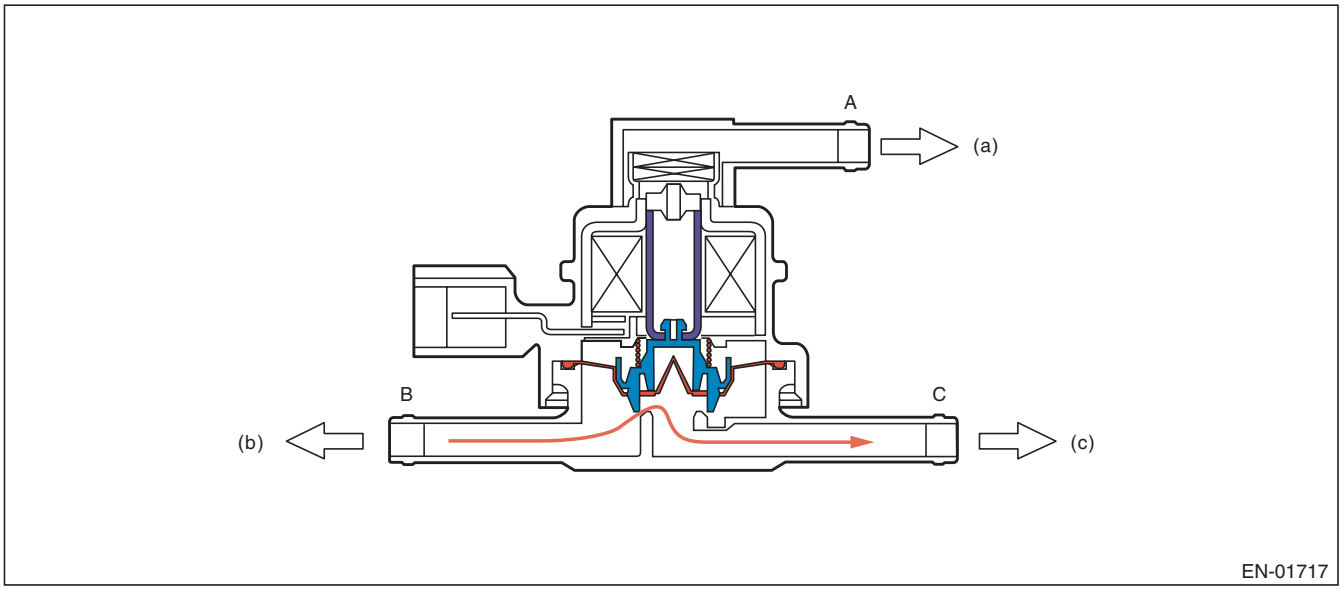

(a) Barometric pressure (b) Fuel tank (c) Canister

When B < C (solenoid OFF)

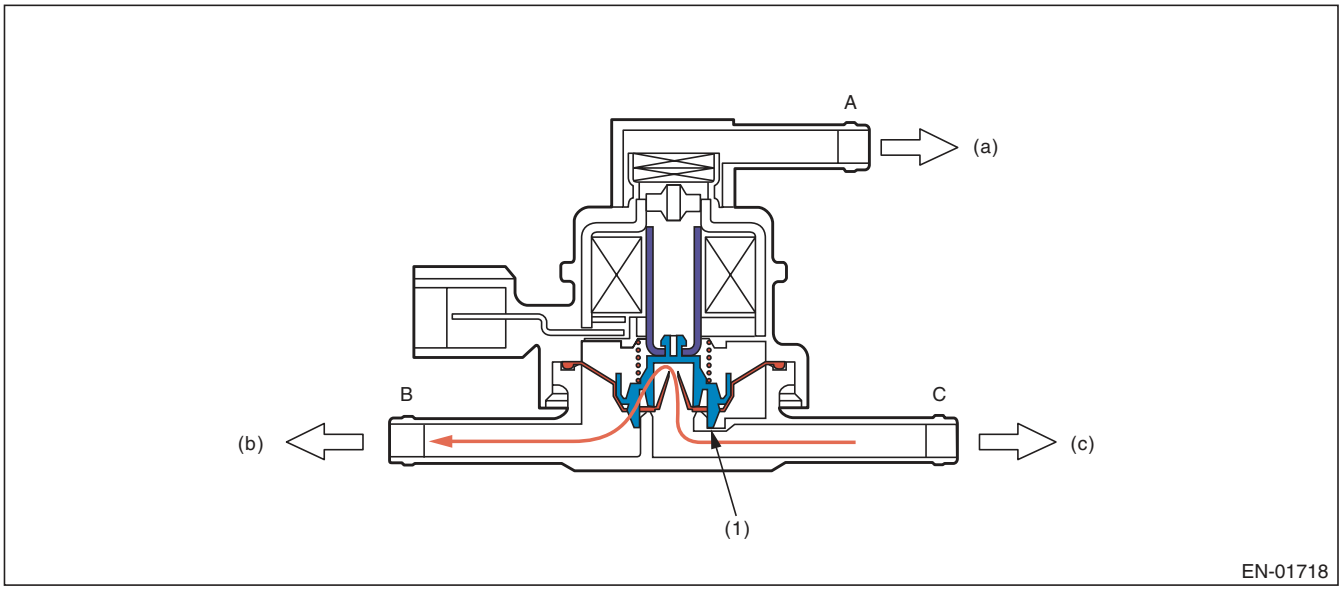

(a) Barometric pressure (b) Fuel tank (c) Canister

(1) Valve

When Solenoid is ON

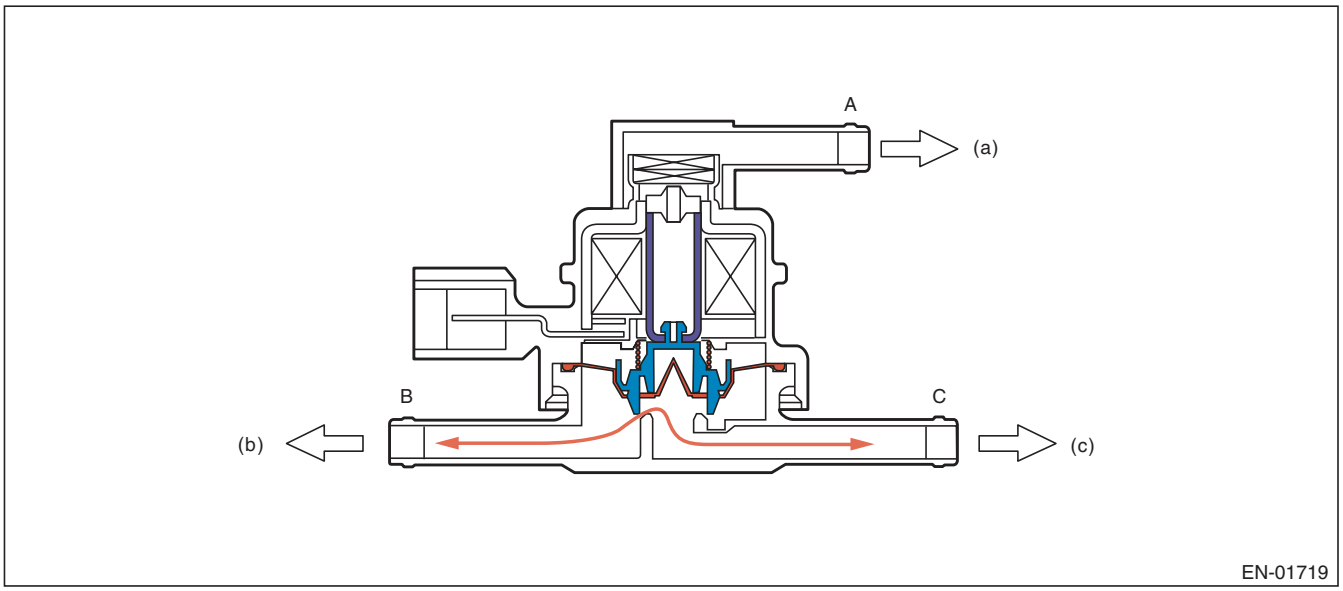

(a) Barometric pressure (b) Fuel tank (c) Canister

Drain valve

Drain valve controls the ambient air to be introduced to the canister.

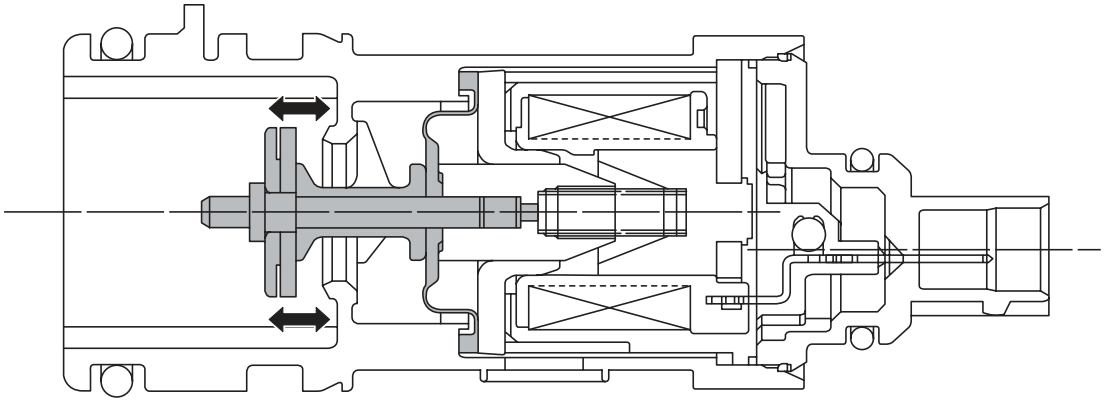

EN-02293

3. ENABLE CONDITION

0.04-inch Diagnosis

Secondary Parameters	Enable Conditions
Battery voltage	≥ 10.9 V
Barometric pressure	≥ 75 kPa (563 mmHg, 22.2 inHg)
Total time of canister purge operation	≥ 120000 ms
Elapsed time after starting the engine	≥ 856 s
Learning value of evaporation gas density	< 0.08
Engine speed	1050 rpm — 6500 rpm
Fuel tank pressure	≥ –4 kPa (–30 mmHg, –1.2 inHg)
Intake manifold relative vacuum (relative pressure)	≥ – 26.7 kPa (– 200 mmHg, – 7.9 inHg)
Vehicle speed	≥ 32 km/h (19.9 MPH)
Fuel level	9.6 ℓ (2.54 US gal, 2.11 Imp gal) — 54.4 ℓ (14.37 US gal, 11.97 Imp gal)
Closed air/fuel ratio control	In operation
Fuel temperature	–10 °C (14 °F) — 45 °C (113 °F)
Intake air temperature	≥ –10 °C (14 °F)
Pressure change every one second	< 1.7 mmHg (Mode A)
	< 1.7 mmHg (Mode D)
Minimum pressure change value every one second – Maximum pressure change value every one second	< 1.7 mmHg (Mode A)
	< 1.7 mmHg (Mode D)
Change of fuel level per 128 milliseconds	< 2 ℓ (0.53 US gal, 0.44 Imp gal)
Air fuel ratio	0.76 — 1.25

0.02-inch Diagnosis

Secondary Parameters	Enable Conditions
At starting a diagnosis	
Evap. diagnosis	Incomplete
Battery voltage	≥ 10.9 V
Barometric pressure	≥ 75 kPa (563 mmHg, 22.2 inHg)
Time since last incomplete 0.02-inch leakage diagnosis	
When cancelling in mode A	> 120000 ms
When cancelling in other than mode A	> 600000 ms
Total time of canister purge operation	≥ 120000 ms
Elapsed time after starting the engine	≥ 120 s
Fuel temperature	–10 °C (14 °F) — 55 °C (131 °F)
Fuel level	9.6 ℓ (2.54 US gal, 2.11 Imp gal) — 54.4 ℓ (14.37 US gal, 11.97 Imp gal)
Intake manifold relative vacuum (relative pressure)	≥ – 8 kPa (– 60 mmHg, – 2.4 inHg)
Fuel tank pressure	–0.7 kPa (–5 mmHg, –0.2 inHg) — 1.4 kPa (10.7 mmHg, 0.4 inHg)
Vehicle speed	50 km/h (31.1 MPH) — 510 km/h (316.9 MPH) continues for 125000 ms
Closed air/fuel ratio control	In operation
Engine speed	1050 rpm — 7000 rpm
During diagnosis	
Change of fuel level	≤ Value of Map 4
Pressure change every one second	< 0.1 kPa (0.44 mmHg, 0 inHg)
Minimum pressure change value every one second – Maximum pressure change value every one second	< 0.1 kPa (0.51 mmHg, 0 inHg) (Mode D)
| Pressure change in tank every second |	≤ 0.1 kPa (0.75 mmHg, 0 inHg)
Barometric pressure change	–0.5 kPa (–3.6 mmHg, –0.1 inHg) — 0.3 kPa (2.4 mmHg, 0.1 inHg) (Mode D) –0.3 kPa (–2.4 mmHg, –0.1 inHg) — 0.3 kPa (2.4 mmHg, 0.1 inHg) (Mode E)

Map4

Fuel level (ℓ , US gal, Imp gal)	0	10, 2.64, 2.2	20, 5.28, 4.4	30, 7.93, 6.6	40, 10.57, 8.8	50, 13.21, 11	60, 15.85, 13.2
Change (ℓ , US gal, Imp gal)	5, 1.32, 1.1	5, 1.32, 1.1	5, 1.32, 1.1	5, 1.32, 1.1	5, 1.32, 1.1	5, 1.32, 1.1	5, 1.32, 1.1

4. GENERAL DRIVING CYCLE

0.04-inch Diagnosis

- Perform the diagnosis only once in 856 seconds or more after starting the engine, at a constant speed of 32 km/h (20 MPH) or more.
- Pay attention to the fuel temperature and fuel level.

0.02-inch Diagnosis

- Perform the diagnosis 125 seconds or more at a constant engine speed of 50 km/h (31 MPH) or higher to judge as NG or OK.
- If judgement cannot be made, repeat the diagnosis.
- Pay attention to the fuel level.

5. DIAGNOSTIC METHOD

Purge control solenoid valve stuck open fault diagnosis

DTC
P0457 Evaporative Emission Control System Leak Detected (Fuel Cap Loose/Off)

Purpose of Mode Z

When performing the leakage diagnosis of EVAP system, the purge control solenoid valve must operate normally. Therefore, mode Z is used to diagnose the purge control solenoid valve stuck open condition. Note that if a purge control solenoid valve stuck open fault is detected, the EVAP system leakage diagnosis is cancelled.

DIAGNOSTIC METHOD

Purge control solenoid valve functional diagnosis is performed by monitoring the tank pressure in mode Z.

- **Abnormality Judgement**

If OK judgment cannot be made, extend Mode Z, and Judge as NG when the following conditions are established after predetermined amount of time.

Judgement Value

Malfunction criteria	Threshold value	DTC
evptez – evptezha	> 0.6 kPa (4.5 mmHg, 0.2 inHg)	P0457
evptezini	≤ 1.4 kPa (10.7 mmHg, 0.4 inHg)	
Time of 2 ℓ (0.53 US gal, 0.44 Imp gal) or more fuel no sloshing	≥ 40000 ms	

Time Needed for Diagnosis: 0 ms + 3000 ms + 13000 ms

Malfunction Indicator Light Illumination: Illuminates when malfunction occurs in 2 continuous driving cycles.

When judgment for purge control solenoid valve stuck open NG is made, end the evaporative diagnosis.

Cancel the evaporative diagnosis when the OK/NG judgment for purge control solenoid valve stuck open cannot be made in Mode Z.

- **Normality Judgement**

Judge as OK and change to Mode A when the following conditions are established after predetermined time has passed since Mode Z started.

Judgement Value

Malfunction criteria	Threshold value	DTC
evptez – evptezha	≤ 0.4 kPa (3 mmHg, 0.1 inHg)	P0457

Normal

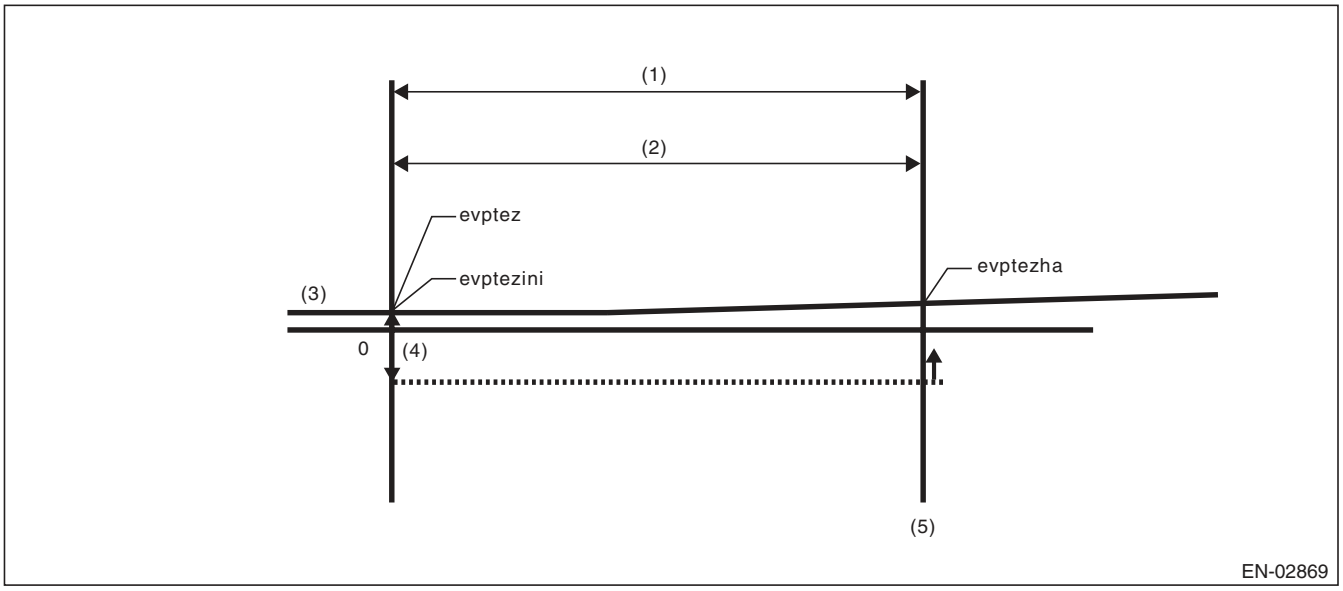

(1)	Mode Z	(3)	Fuel tank pressure	(5)	OK judgment
(2)	3000 ms	(4)	0.4 kPa (3 mmHg, 0.1 inHg)		

evptez – evptezha ≤ 0.4 kPa (3 mmHg, 0.1 inHg) Normal when above is established
Time Needed for Diagnosis: 0 ms + 3000 ms

Purge control solenoid valve Open Fixation

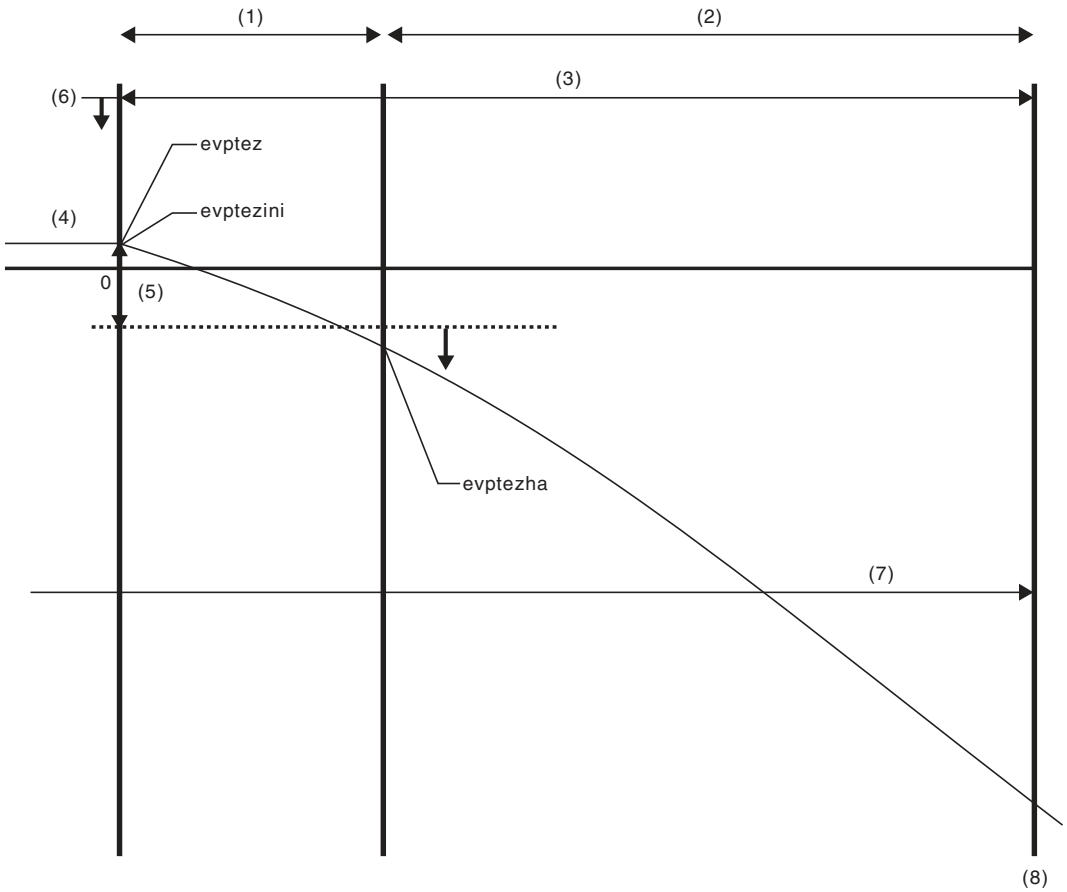

(1)	Mode Z	(4)	Fuel tank pressure	(7)	40000 ms no fuel sloshing
(2)	Extended mode Z	(5)	0.6 kPa (4.5 mmHg, 0.2 inHg)	(8)	NG judgment
(3)	3000 ms + 13000 ms	(6)	1.4 kPa (10.7 mmHg, 0.4 inHg)		

- evptezini ≤ 1.4 kPa (10.7 mmHg, 0.4 inHg)
- evptez – evptezha > 0.6 kPa (4.5 mmHg, 0.2 inHg)
- No fuel sloshing of over 2 ℓ (0.53 US gal, 0.44 Imp gal) lasts for more than 40000 ms.

Judge as abnormal when all are established.

Leak Diagnosis

DTC
P0442 Evaporative Emission Control System Leak Detected (Small Leak)
P0457 Evaporative Emission Control System Leak Detected (Fuel Cap Loose/Off)

- The diagnostic consists of creating a sealed vacuum in the fuel tank and then determining the presence of leakage from the speed at which the tank internal pressure returns to barometric pressure.
- The diagnosis is divided into the following five phases.

Mode A: (Estimated evaporation gas amount)
Calculate the tank pressure change amount (P1) when using mode A. After calculating P1, switch to mode B.
Mode B: (Negative pressure sealed)
Introduce negative pressure in the intake manifold to the tank.
Approx. 0 → –1.4 kPa (0 → –10.5 mmHg, 0 → –0.4 inHg)
When the pressure above (desired negative pressure) is reached, enters Mode C.
In this case, if the tank pressure does not reach the target negative pressure, judge that there is a large leakage in the system and terminate the evaporative emission control system diagnosis.
Abnormality Judgement
Judge as NG (large leakage) when the following conditions are established.
Judgement Value

Malfunction criteria	Threshold value	DTC
Time to reach target negative pressure	≥ 10000 ms + 25000 ms	P0457
or		
Mode B time	≥ 10000 ms	
(Min. pressure value in tank when in mode B) – (Tank pressure when mode B started)	> –0.3 kPa (–2.5 mmHg, –0.1 inHg)	

Time Needed for Diagnosis: 0 ms + 3000 ms + 10000 ms + 10000 ms + 25000 ms
Mode C: (Check pressure rise)
Stop the introduction of negative pressure. (Wait until the tank pressure returns to the start level of P2 calculation.)
Change to Mode D when the tank pressure returns to the start level of P2 calculation.
Judge immediate OK and change to Mode E when it does not return in spite of spending the specified time.

Tank pressure when starting calculation of P2	Time for advanced OK judgment
–1.3 kPa (–9.75 mmHg, –0.4 inHg)	17000 ms

Time Needed for Diagnosis: 0 ms + 3000 ms + 10000 ms + 10000 ms + 25000 ms + 17000 ms

Mode D: (Measure amount of negative pressure change)
Monitor the tank pressure change amount when using mode D. In this case, the tank pressure increases, (nears barometric pressure) because evaporation occurs. However, if any leakage exists, the pressure increases additionally in proportion to this leakage. The pressure variation of this tank is P2.
After calculating P2, perform a small leak diagnosis according to the items below.

When Mode D is ended
Assign tank variations measured in Mode A and Mode D, P1 and P2, to the formula below, judge small leaks in the system. If the measured judgment value exceeds the threshold value, it is judged to be a malfunction.

Abnormality Judgement
Judge as NG when the following conditions are established within the predetermined time. Judge as OK and clear the NG if the following conditions are not established within the predetermined time.

Judgement Value

Malfunction Criteria	Threshold Value	DTC
P2 – 1.5 – × P1 P2: Tank pressure that changes every 10000 ms in mode D P1: Tank pressure that changes every 10000 ms in mode A	> Value of Map 5	P0442

*1.5 –: Evaporation amount compensation value when below negative pressure (Amount of evaporation occurrence increases as a vacuum condition increases.)

Map 5 Malfunction criteria limit for evaporation diagnosis

Fuel temperature vs. Fuel level	25 °C (77 °F)	30 °C (86 °F)	35 °C (95 °F)	40 °C (104 °F)	45 °C (113 °F)
0 ℓ (0 US gal, 0 Imp gal)	0.3 kPa (2.1 mmHg, 0.1 inHg)	0.3 kPa (2.2 mmHg, 0.1 inHg)	0.3 kPa (2.3 mmHg, 0.1 inHg)	0.3 kPa (2.35 mmHg, 0.1 inHg)	0.3 kPa (2.4 mmHg, 0.1 inHg)
10 ℓ (2.64 US gal, 2.2 Imp gal)	0.3 kPa (2.1 mmHg, 0.1 inHg)	0.3 kPa (2.2 mmHg, 0.1 inHg)	0.3 kPa (2.3 mmHg, 0.1 inHg)	0.3 kPa (2.35 mmHg, 0.1 inHg)	0.3 kPa (2.4 mmHg, 0.1 inHg)
20 ℓ (5.28 US gal, 4.4 Imp gal)	0.3 kPa (2.3 mmHg, 0.1 inHg)	0.3 kPa (2.4 mmHg, 0.1 inHg)	0.3 kPa (2.5 mmHg, 0.1 inHg)	0.3 kPa (2.6 mmHg, 0.1 inHg)	0.4 kPa (2.7 mmHg, 0.1 inHg)
30 ℓ (7.93 US gal, 6.6 Imp gal)	0.4 kPa (2.9 mmHg, 0.1 inHg)	0.4 kPa (3.05 mmHg, 0.1 inHg)	0.4 kPa (3.15 mmHg, 0.1 inHg)	0.4 kPa (3.25 mmHg, 0.1 inHg)	0.4 kPa (3.35 mmHg, 0.1 inHg)
40 ℓ (10.57 US gal, 8.8 Imp gal)	0.4 kPa (2.9 mmHg, 0.1 inHg)	0.4 kPa (3.15 mmHg, 0.1 inHg)	0.4 kPa (3.3 mmHg, 0.1 inHg)	0.5 kPa (3.4 mmHg, 0.1 inHg)	0.5 kPa (3.5 mmHg, 0.1 inHg)
50 ℓ (13.21 US gal, 11 Imp gal)	0.4 kPa (3.2 mmHg, 0.1 inHg)	0.4 kPa (3.3 mmHg, 0.1 inHg)	0.5 kPa (3.5 mmHg, 0.1 inHg)	0.5 kPa (3.6 mmHg, 0.1 inHg)	0.5 kPa (3.7 mmHg, 0.1 inHg)
60 ℓ (15.85 US gal, 13.2 Imp gal)	0.4 kPa (3.2 mmHg, 0.1 inHg)	0.4 kPa (3.3 mmHg, 0.1 inHg)	0.5 kPa (3.5 mmHg, 0.1 inHg)	0.5 kPa (3.6 mmHg, 0.1 inHg)	0.5 kPa (3.7 mmHg, 0.1 inHg)

Time Needed for Diagnosis: 0 ms + 3000 ms + 10000 ms + 10000 ms + 25000 ms + 17000 ms + 10000 ms
Malfunction Indicator Light Illumination: Illuminates when malfunction occurs in 2 continuous driving cycles.

Leak Diagnosis

DTC
P0456 Evaporative Emission Control System Leak Detected (very small leak)

- The diagnostic consists of creating a sealed vacuum in the fuel tank and then determining the presence of leakage from the speed at which the tank internal pressure returns to barometric pressure.
- The diagnosis is divided into the following five phases.

Mode A: (0 point compensation)
When the pressure in the tank is not near 0 mmHg, wait until it returns to 0 point (near 0 mmHg). Shift to mode B when returned to the 0 point. Cancel the diagnosis when 0 point does not return in the specified time.
Mode B: (Negative pressure introduced)
Introduce negative pressure in the intake manifold to the tank.
Approx. 0 → –2 kPa (0 → –15 mmHg, 0 → –0.6 inHg)
When the pressure above (desired negative pressure) is reached, enters Mode C.
When the tank internal pressure does not reach the target negative pressure, the diagnosis is cancelled.
Mode C: (Negative pressure maintained)
Stop the introduction of negative pressure. (Wait until the tank pressure returns to the start level of P2 calculation.)
Change to Mode D either when the tank pressure returns to the start level of P2 calculation, or when the predetermined amount of time has passed.
Mode D: (Calculate the amount of negative pressure change)
Monitor the tank pressure in mode D, calculate (P2) the pressure change in the tank, and measure the time (evpdset) for the tank pressure to change to the Mode E shifting pressure. When the Mode E shifting pressure is reached, Mode E is entered. If it does not change to the Mode E shifting pressure after the predetermined amount of time has passed, make advanced OK judgment or cancel the diagnosis.
Normality Judgement
Judge as OK when the following conditions are established.

Judgement Value

Malfunction criteria	Threshold value
Advanced OK judgment 1	
Mode D time	≥ 0 ms + 20000 ms
Tank internal pressure	≤ Value of Map 6
Advanced OK judgment 2	
Mode D time	≥ 0 ms + 200000 ms
P2	≤ Value of Map 7

Map6

Fuel level (ℓ , US gal, Imp gal)	0, 0, 0	10, 2.64, 2.2	20, 5.28, 4.4	30, 7.93, 6.6	40, 10.57, 8.8	50, 13.21, 11	60, 15.85, 13.2
Tank pressure (kPa, mmHg, inHgl)	–1.9, –13.9, –0.5	–1.9, –13.9, –0.5	–1.8, –13.8, –0.5	–1.8, –13.7, –0.5	–1.8, –13.6, –0.5	–1.8, –13.5, –0.5	–1.8, –13.5, –0.5

Map7

Fuel level (ℓ , US gal, Imp gal)	0, 0, 0	10, 2.64, 2.2	20, 5.28, 4.4	30, 7.93, 6.6	40, 10.57, 8.8	50, 13.21, 11	60, 15.85, 13.2
Tank pressure (kPa, mmHg, inHgl)	0.9, 7, 0.3	0.9, 7, 0.3	0.9, 7.05, 0.3	0.9, 7.1, 0.3	1.1, 8.2, 0.3	1.3, 9.6, 0.4	1.3, 9.6, 0.4

Mode E: (Evaporation occurrence amount calculation)
Calculate the change of tank pressure with the time evpdset to judge as NG/OK according to the value of P1. (ambiguous determination acceptable).

- **Abnormality Judgement**

Judge as NG when the following conditions are established.

Judgement Value

Malfunction criteria	Threshold value
P1	< Value of Map 8

Map 8 Malfunction criteria limit for evaporation diagnosis

Time (evpdset) vs. Fuel level	0 ms	30000 ms	50000 ms	100000 ms	160000 ms	200000 ms
0 ℓ (0 US gal, 0 Imp gal)	0 kPa (0 mmHg, 0 inHg)	0.1 kPa (0.5 mmHg, 0 inHg)	0.2 kPa (1.7 mmHg, 0.1 inHg)	0.4 kPa (2.7 mmHg, 0.1 inHg)	0.4 kPa (2.7 mmHg, 0.1 inHg)	0.4 kPa (2.7 mmHg, 0.1 inHg)
10 ℓ (2.64 US gal, 2.2 Imp gal)	0 kPa (0 mmHg, 0 inHg)	0.1 kPa (0.5 mmHg, 0 inHg)	0.2 kPa (1.7 mmHg, 0.1 inHg)	0.4 kPa (2.7 mmHg, 0.1 inHg)	0.4 kPa (2.7 mmHg, 0.1 inHg)	0.4 kPa (2.7 mmHg, 0.1 inHg)
20 ℓ (5.28 US gal, 4.4 Imp gal)	0 kPa (0 mmHg, 0 inHg)	0.1 kPa (0.5 mmHg, 0 inHg)	0.2 kPa (1.7 mmHg, 0.1 inHg)	0.4 kPa (2.7 mmHg, 0.1 inHg)	0.4 kPa (2.7 mmHg, 0.1 inHg)	0.4 kPa (2.7 mmHg, 0.1 inHg)
30 ℓ (7.93 US gal, 6.6 Imp gal)	0 kPa (0 mmHg, 0 inHg)	0.1 kPa (0.5 mmHg, 0 inHg)	0.2 kPa (1.7 mmHg, 0.1 inHg)	0.4 kPa (2.7 mmHg, 0.1 inHg)	0.4 kPa (2.7 mmHg, 0.1 inHg)	0.4 kPa (2.7 mmHg, 0.1 inHg)
40 ℓ (10.57 US gal, 8.8 Imp gal)	0 kPa (0 mmHg, 0 inHg)	0.1 kPa (0.5 mmHg, 0 inHg)	0.2 kPa (1.85 mmHg, 0.1 inHg)	0.3 kPa (2.5 mmHg, 0.1 inHg)	0.3 kPa (2.5 mmHg, 0.1 inHg)	0.3 kPa (2.5 mmHg, 0.1 inHg)
50 ℓ (13.21 US gal, 11 Imp gal)	0 kPa (0 mmHg, 0 inHg)	0.1 kPa (0.5 mmHg, 0 inHg)	0.3 kPa (2 mmHg, 0.1 inHg)	0.3 kPa (2.3 mmHg, 0.1 inHg)	0.3 kPa (2.3 mmHg, 0.1 inHg)	0 kPa (0 mmHg, 0 inHg)
60 ℓ (15.85 US gal, 13.2 Imp gal)	0 kPa (0 mmHg, 0 inHg)	0.1 kPa (0.5 mmHg, 0 inHg)	0.3 kPa (2 mmHg, 0.1 inHg)	0.3 kPa (2.3 mmHg, 0.1 inHg)	0.3 kPa (2.3 mmHg, 0.1 inHg)	0 kPa (0 mmHg, 0 inHg)

Time Needed for Diagnosis: Value of Map1+ Value of Map2 + 20000 ms + 0 + Value of Map2 + 0 ms + 200000 ms + Value of Map3 + 0 ms + 200000 ms
Malfunction Indicator Light Illumination: Illuminates when malfunction occurs in 2 continuous driving cycles.

- **Normality Judgement**

Judge as OK when the following conditions are established.

Judgement Value

Malfunction criteria	Threshold value
P1	> Value of Map 9

Map 9 Malfunction criteria limit for evaporation diagnosis

Time (evpdset) vs. Fuel level	0 ms	30000 ms	50000 ms	100000 ms	160000 ms	200000 ms
0 ℓ (0 US gal, 0 Imp gal)	0.1 kPa (1 mmHg, 0 inHg)	0.5 kPa (3.5 mmHg, 0.1 inHg)	0.6 kPa (4.2 mmHg, 0.2 inHg)	0.6 kPa (4.2 mmHg, 0.2 inHg)	0.6 kPa (4.2 mmHg, 0.2 inHg)	0.6 kPa (4.2 mmHg, 0.2 inHg)
10 ℓ (2.64 US gal, 2.2 Imp gal)	0.1 kPa (1 mmHg, 0 inHg)	0.5 kPa (3.5 mmHg, 0.1 inHg)	0.6 kPa (4.2 mmHg, 0.2 inHg)	0.6 kPa (4.2 mmHg, 0.2 inHg)	0.6 kPa (4.2 mmHg, 0.2 inHg)	0.6 kPa (4.2 mmHg, 0.2 inHg)
20 ℓ (5.28 US gal, 4.4 Imp gal)	0.1 kPa (1 mmHg, 0 inHg)	0.4 kPa (3.25 mmHg, 0.1 inHg)	0.5 kPa (4.1 mmHg, 0.2 inHg)	0.5 kPa (4.1 mmHg, 0.2 inHg)	0.5 kPa (4.1 mmHg, 0.2 inHg)	0.5 kPa (4.1 mmHg, 0.2 inHg)
30 ℓ (7.93 US gal, 6.6 Imp gal)	0.1 kPa (1 mmHg, 0 inHg)	0.4 kPa (3 mmHg, 0.1 inHg)	0.5 kPa (3.9 mmHg, 0.2 inHg)	0.5 kPa (3.9 mmHg, 0.2 inHg)	0.5 kPa (3.9 mmHg, 0.2 inHg)	0.5 kPa (3.9 mmHg, 0.2 inHg)
40 ℓ (10.57 US gal, 8.8 Imp gal)	0.1 kPa (1 mmHg, 0 inHg)	0.3 kPa (2.25 mmHg, 0.1 inHg)	0.5 kPa (3.4 mmHg, 0.1 inHg)	0.5 kPa (3.4 mmHg, 0.1 inHg)	0.5 kPa (3.4 mmHg, 0.1 inHg)	0.5 kPa (3.4 mmHg, 0.1 inHg)
50 ℓ (13.21 US gal, 11 Imp gal)	0.1 kPa (1 mmHg, 0 inHg)	0.2 kPa (1.5 mmHg, 0.1 inHg)	0.4 kPa (2.9 mmHg, 0.1 inHg)	0.4 kPa (2.9 mmHg, 0.1 inHg)	0.4 kPa (2.9 mmHg, 0.1 inHg)	0.4 kPa (2.9 mmHg, 0.1 inHg)
60 ℓ (15.85 US gal, 13.2 Imp gal)	0.1 kPa (1 mmHg, 0 inHg)	0.2 kPa (1.5 mmHg, 0.1 inHg)	0.4 kPa (2.9 mmHg, 0.1 inHg)	0.4 kPa (2.9 mmHg, 0.1 inHg)	0.4 kPa (2.9 mmHg, 0.1 inHg)	0.4 kPa (2.9 mmHg, 0.1 inHg)

Time Needed for Diagnosis: Value of Map1+ Value of Map2 + 20000 ms + 0 + Value of Map2 + 0 ms + 200000 ms + Value of Map3 + 0 ms + 200000 ms

CE:DTC P0447 EVAPORATIVE EMISSION CONTROL SYSTEM VENT CONTROL CIRCUIT OPEN

1. OUTLINE OF DIAGNOSIS

Detect open or short circuit of the drain valve.
Judge as NG when the ECM output level differs from the actual terminal level.

2. COMPONENT DESCRIPTION

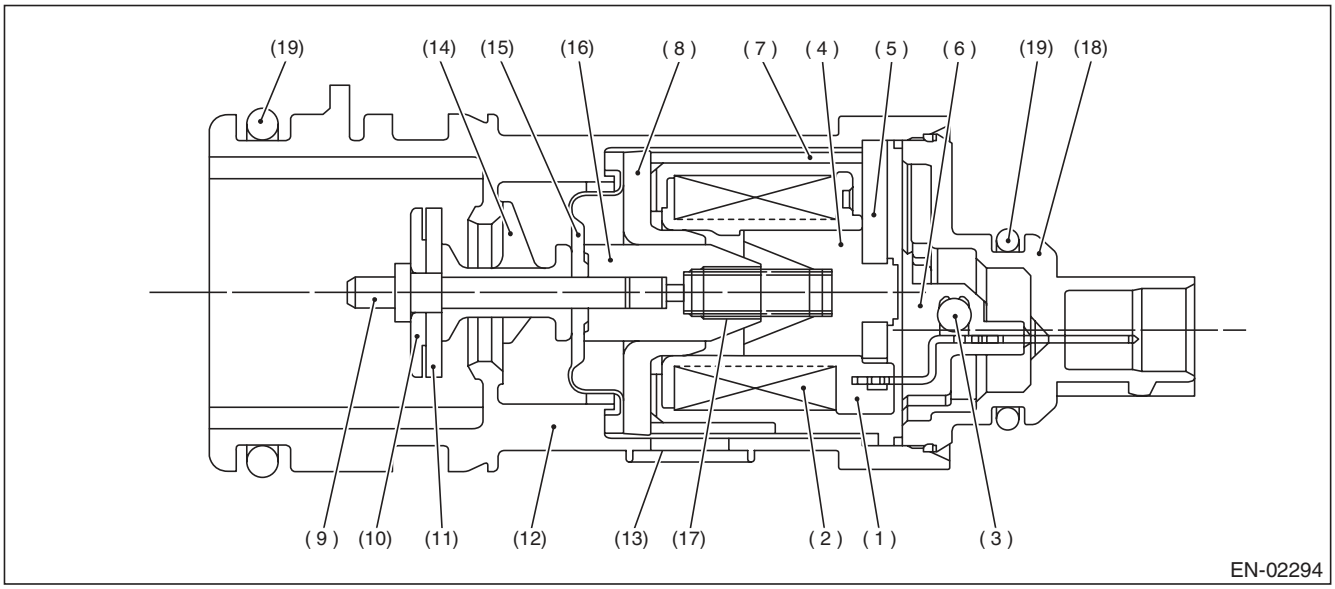

(1)	Bobbin	(8)	Magnetic plate	(14)	Retainer
(2)	Coil	(9)	Shaft	(15)	Diaphragm
(3)	Diode	(10)	Plate	(16)	Movable core
(4)	Stator core	(11)	Valve	(17)	Spring
(5)	End plate	(12)	Housing	(18)	Cover
(6)	Body	(13)	Filter	(19)	O-ring
(7)	Yoke				

3. ENABLE CONDITION

Secondary Parameters	Enable Conditions
None	

4. GENERAL DRIVING CYCLE

Always perform the diagnosis continuously.

5. DIAGNOSTIC METHOD

- **Abnormality Judgement**

If the duration of time while the following conditions are met is longer than the time indicated, judge as NG.

Judgement Value

Malfunction criteria	Threshold value
Battery voltage	≥ 10.9 V
Elapsed time after starting the engine	≥ 1 second
Terminal output voltage when ECM outputs OFF signal	Low

Time Needed for Diagnosis: 2500 ms
Malfunction Indicator Light Illumination: Illuminates as soon as a malfunction occurs.

- **Normality Judgement**

Judge as OK and clear the NG if the continuous time while the following conditions are established is more than the predetermined time.

Judgement Value

Malfunction criteria	Threshold value
Battery voltage	≥ 10.9 V
Elapsed time after starting the engine	≥ 1 second
Terminal output voltage when ECM outputs OFF signal	High

Time Needed for Diagnosis: Less than 1 second

CF:DTC P0448 EVAPORATIVE EMISSION CONTROL SYSTEM VENT CONTROL CIRCUIT SHORTED

1. OUTLINE OF DIAGNOSIS

Detect open or short circuit of the drain valve.
Judge as NG when the ECM output level differs from the actual terminal level.

2. COMPONENT DESCRIPTION

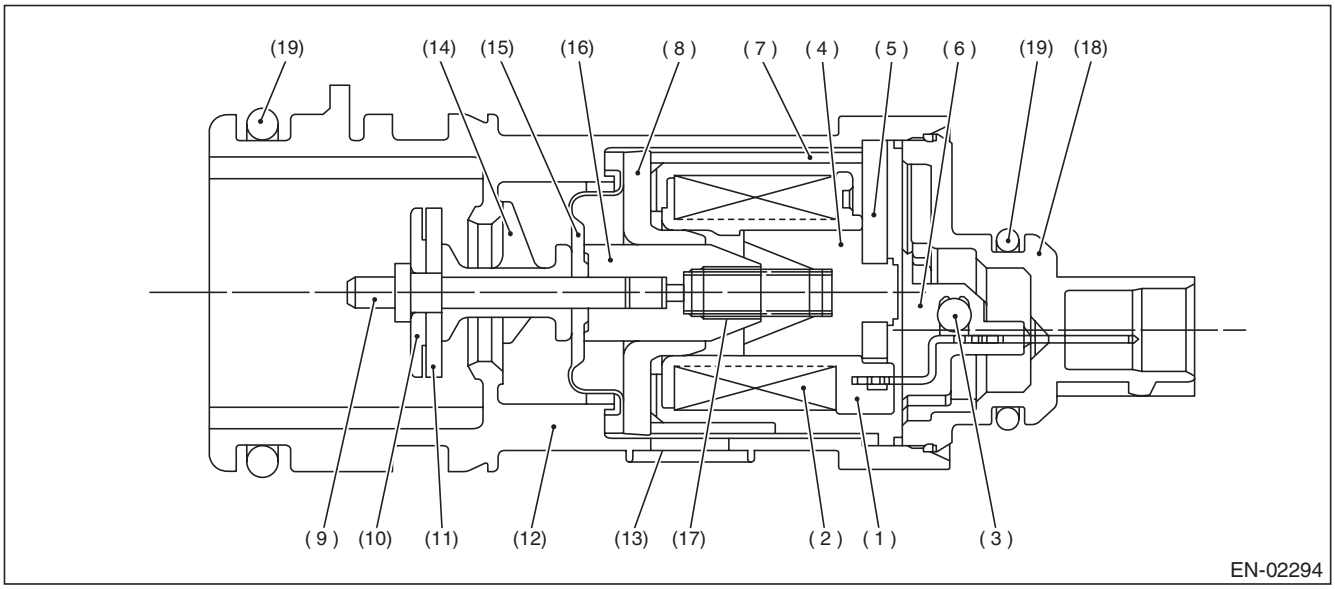

(1)	Bobbin	(8)	Magnetic plate	(14)	Retainer
(2)	Coil	(9)	Shaft	(15)	Diaphragm
(3)	Diode	(10)	Plate	(16)	Movable core
(4)	Stator core	(11)	Valve	(17)	Spring
(5)	End plate	(12)	Housing	(18)	Cover
(6)	Body	(13)	Filter	(19)	O-ring
(7)	Yoke				

3. ENABLE CONDITION

Secondary Parameters	Enable Conditions
None	

4. GENERAL DRIVING CYCLE

Always perform the diagnosis continuously.

5. DIAGNOSTIC METHOD

- **Abnormality Judgement**

If the duration of time while the following conditions are met is longer than the time indicated, judge as NG.

Judgement Value

Malfunction criteria	Threshold value
Battery voltage	≥ 10.9 V
Elapsed time after starting the engine	≥ 1 second
Terminal output voltage when ECM outputs ON signal	High

Time Needed for Diagnosis: 2500 ms
Malfunction Indicator Light Illumination: Illuminates as soon as a malfunction occurs.

- **Normality Judgement**

Judge as OK and clear the NG if the continuous time while the following conditions are established is more than the predetermined time.

Judgement Value

Malfunction criteria	Threshold value
Battery voltage	≥ 10.9 V
Elapsed time after starting the engine	≥ 1 second
Terminal output voltage when ECM outputs ON signal	Low

Time Needed for Diagnosis: Less than 1 second

CG:DTC P0451 EVAPORATIVE EMISSION CONTROL SYSTEM PRESSURE SENSOR

1. OUTLINE OF DIAGNOSIS

Detect the tank pressure sensor output property abnormality.
Judge as NG when there is no pressure variation, which should exist in the tank, considering the engine status.

2. COMPONENT DESCRIPTION

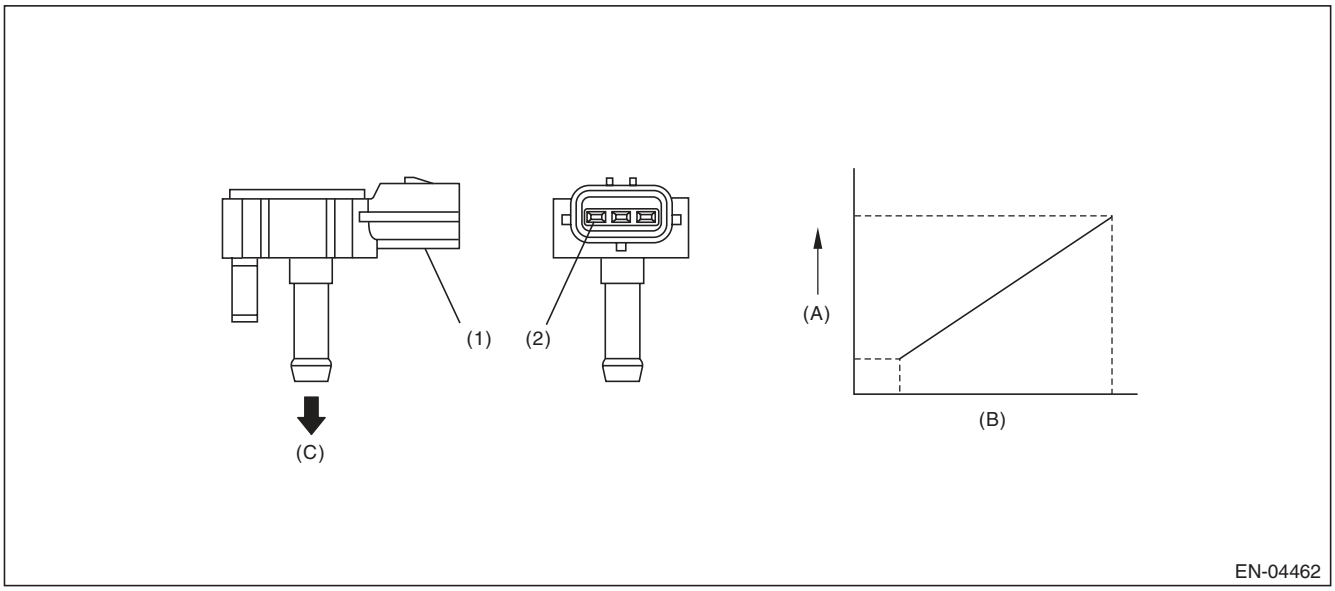

(A)	Output voltage	(B)	Input voltage	(C)	To fuel tank
(1)	Connector	(2)	Terminals		

3. ENABLE CONDITION

Secondary Parameters	Enable Conditions
Elapsed time after starting the engine	≥ 60 s
Fuel level	≥ 9.6 ℓ (2.54 US gal, 2.11 Imp gal)
Fuel temperature	< 35 °C (95 °F)
Battery voltage	≥ 10.9 V
Barometric pressure	≥ 75 kPa (563 mmHg, 22.2 inHg)

4. GENERAL DRIVING CYCLE

- Perform the diagnosis continuously after 60 s have passed since the engine started.
- Pay attention to the fuel level and temperature.

5. DIAGNOSTIC METHOD

• Abnormality Judgement

If the duration of time while the following conditions are met is longer than the time indicated, judge as NG.

Judgement Value

Malfunction Criteria	Threshold Value
Number of times that the difference between the Max. fuel level every 60 s and Min. fuel level every 60 s is 2 ℓ (0.53 US gal, 0.44 Imp gal) or more (with enable condition established)	≥ 16 time(s)
Maximum – Minimum tank pressure (with enable condition completed)	< 0 kPa (0.375 mmHg, 0 inHg)
Maximum – Minimum fuel temperature (with enable condition completed)	≥ 7 °C (44.6 °F)

If the difference between the Max. fuel level every 60 s and Min. fuel level every 60 s is less than 2 ℓ (0.53 US gal, 0.44 Imp gal), extend 60 s and make judgement with the Max. and Min. values for the fuel level in 60 s × 2. If a difference does not appear, extend the time (60 s × 3, 60 s × 4, 60 s × 5) and continue the judgement. If the difference between the Max. fuel level every 60 s and Min. fuel level every 60 s is 2 ℓ (0.53 US gal, 0.44 Imp gal) or more, the diagnosis counter counts up.

Time Needed for Diagnosis: 60 s × 16 time(s) or more

Malfunction Indicator Light Illumination: Illuminates when malfunction occurs in 2 continuous driving cycles.

• Normality Judgement

Judge as OK and clear the NG if the continuous time while the following conditions are established is more than the predetermined time.

Judgement Value

Malfunction Criteria	Threshold Value
Maximum — Minimum tank pressure	≥ 0 kPa (0.375 mmHg, 0 inHg)

Time Needed for Diagnosis: Less than 1 second

CH:DTC P0452 EVAPORATIVE EMISSION CONTROL SYSTEM PRESSURE SENSOR LOW INPUT

1. OUTLINE OF DIAGNOSIS

Detect the open or short circuit of the fuel tank pressure sensor.
Judge as NG if out of specification.

2. COMPONENT DESCRIPTION

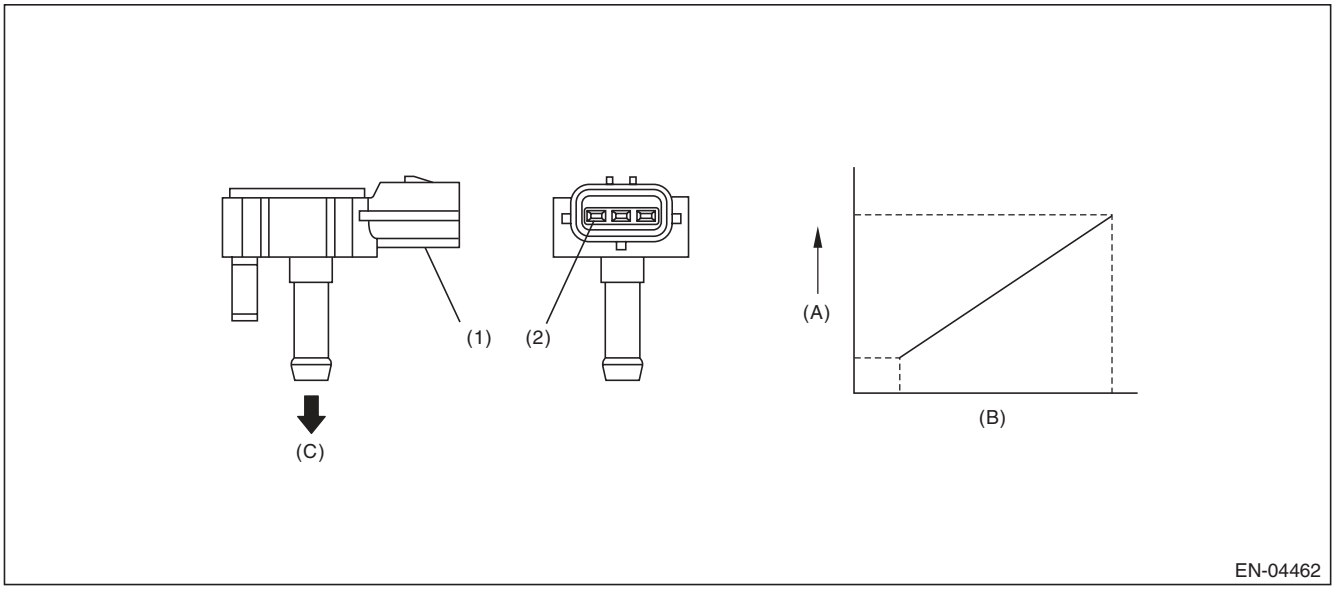

(A) Output voltage
(B) Input voltage
(C) To fuel tank
(1) Connector
(2) Terminals

3. ENABLE CONDITION

Secondary Parameters	Enable Conditions
None	

4. GENERAL DRIVING CYCLE

Always perform the diagnosis continuously.

5. DIAGNOSTIC METHOD

- **Abnormality Judgement**

If the duration of time while the following conditions are met is longer than the time indicated, judge as NG.

Judgement Value

Malfunction criteria	Threshold value
Fuel tank pressure	< –7.4 kPa (–55.85 mmHg, –2.2 inHg)
Battery voltage	≥ 10.9 V

Time Needed for Diagnosis: 15000 ms
Malfunction Indicator Light Illumination: Illuminates as soon as a malfunction occurs.

- **Normality Judgement**

Judge as OK and clear the NG if the continuous time while the following conditions are established is more than the predetermined time.

Judgement Value

Malfunction criteria	Threshold value
Fuel tank pressure	≥ –7.4 kPa (–55.85 mmHg, –2.2 inHg)
Battery voltage	≥ 10.9 V

Time Needed for Diagnosis: Less than 1 second

CI: DTC P0453 EVAPORATIVE EMISSION CONTROL SYSTEM PRESSURE SENSOR HIGH INPUT

1. OUTLINE OF DIAGNOSIS

Detect the open or short circuit of the fuel tank pressure sensor.
Judge as NG if out of specification.

2. COMPONENT DESCRIPTION

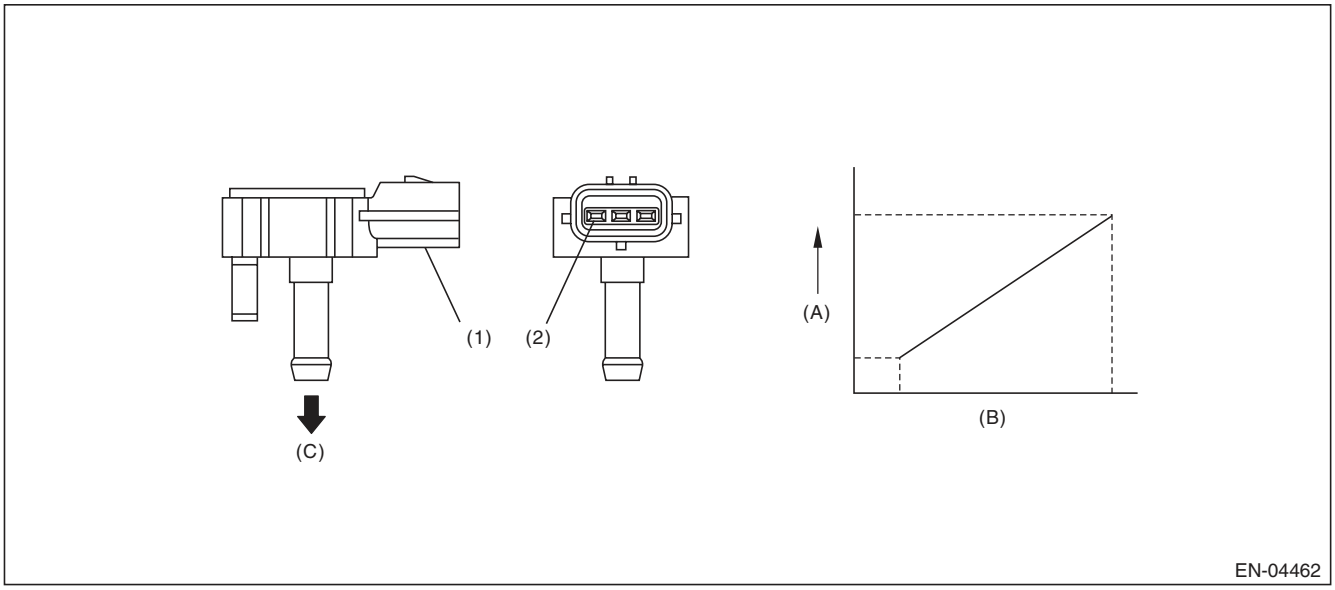

(A) Output voltage (B) Input voltage (C) To fuel tank

(1) Connector (2) Terminals

3. ENABLE CONDITION

Secondary Parameters	Enable Conditions
Time needed for all secondary parameters to be in enable conditions	≥ 5000 ms
Vehicle speed	≥ 2 km/h (1.2 MPH)
All conditions of EVAP canister purge	Completed
Learning value of evaporation gas concentration (left and right)	< 0.08
Main feedback compensation coefficient (left and right)	≥ 0.9
Battery voltage	≥ 10.9 V

4. GENERAL DRIVING CYCLE

Perform the diagnosis when purging enable conditions are met without idling.

5. DIAGNOSTIC METHOD

- **Abnormality Judgement**

If the duration of time while the following conditions are met is longer than the time indicated, judge as NG.

Judgement Value

Malfunction criteria	Threshold value
Fuel tank pressure	≥ 8 kPa (59.85 mmHg, 2.4 inHg)
Fuel temperature	< 35 °C (95 °F)
Barometric pressure	≥ 75 kPa (563 mmHg, 22.2 inHg)

Time Needed for Diagnosis: 15000 ms
Malfunction Indicator Light Illumination: Illuminates as soon as a malfunction occurs.

- **Normality Judgement**

Judge as OK and clear the NG if the continuous time while the following conditions are established is more than the predetermined time.

Judgement Value

Malfunction Criteria	Threshold Value
Fuel tank pressure	< 8 kPa (59.85 mmHg, 2.4 inHg)

Time Needed for Diagnosis: Less than 1 second

CJ:DTC P0456 EVAPORATIVE EMISSION CONTROL SYSTEM LEAK DETECTED (VERY SMALL LEAK)

1. OUTLINE OF DIAGNOSIS

NOTE:
For the detection standard, refer to DTC P0442. <Ref. to GD(H6DO)-108, DTC P0442 EVAPORATIVE EMISSION CONTROL SYSTEM LEAK DETECTED (SMALL LEAK), Diagnostic Trouble Code (DTC) Detecting Criteria.>

CK:DTC P0457 EVAPORATIVE EMISSION CONTROL SYSTEM LEAK DETECTED (FUEL CAP LOOSE/OFF)

1. OUTLINE OF DIAGNOSIS

For the detection standard, refer to DTC P0442. <Ref. to GD(H6DO)-108, DTC P0442 EVAPORATIVE EMISSION CONTROL SYSTEM LEAK DETECTED (SMALL LEAK), Diagnostic Trouble Code (DTC) Detecting Criteria.>

CL:DTC P0458 EVAPORATIVE EMISSION SYSTEM PURGE CONTROL VALVE CIRCUIT LOW

1. OUTLINE OF DIAGNOSIS

Detect open or short circuit of the purge control solenoid valve.
Judge as NG when the ECM output level differs from the actual terminal level.

2. COMPONENT DESCRIPTION

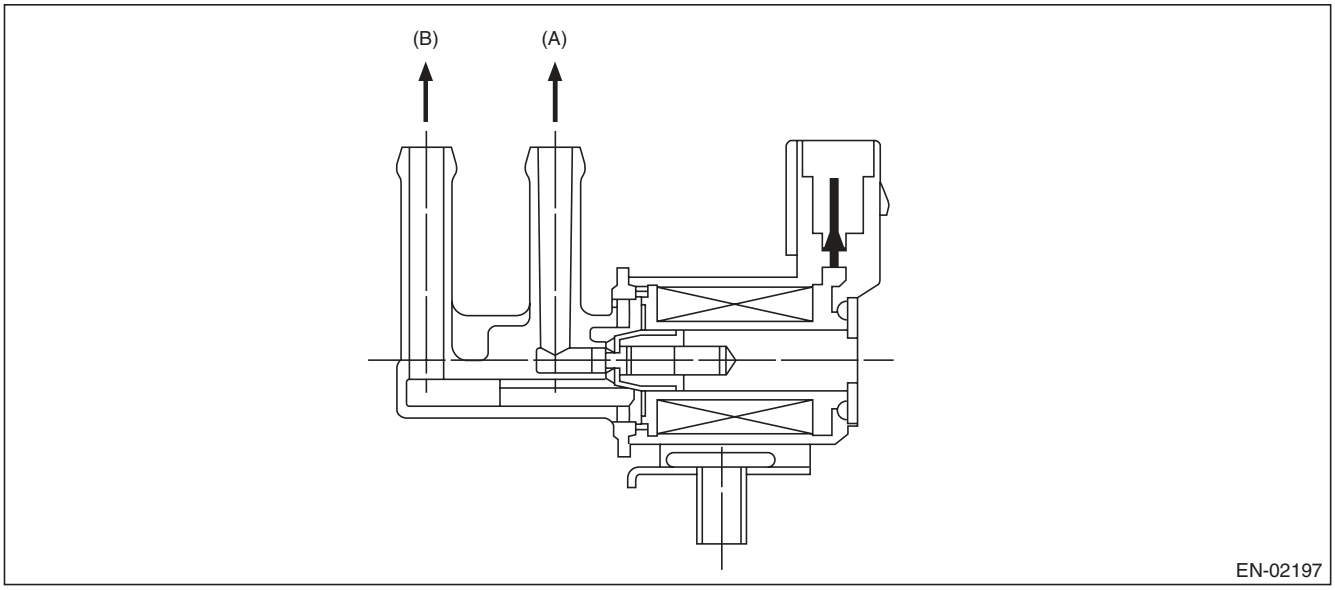

(A) To canister (B) To intake manifold

3. ENABLE CONDITION

Secondary Parameters	Enable Conditions
Battery voltage	≥ 10.9 V
Elapsed time after starting the engine	≥ 1 second

4. GENERAL DRIVING CYCLE

Always perform the diagnosis after starting the engine.

5. DIAGNOSTIC METHOD

- **Abnormality Judgement**

If the duration of time while the following conditions are met is longer than the time indicated, judge as NG.

Judgement Value

Malfunction criteria	Threshold value
Duty ratio of “ON”	< 0.75
Terminal output voltage	Low

Time Needed for Diagnosis: 2500 ms
Malfunction Indicator Light Illumination: Illuminates when malfunction occurs in 2 continuous driving cycles.

- **Normality Judgement**

Judge as OK and clear the NG if the continuous time while the following conditions are established is more than the predetermined time.

Judgement Value

Malfunction Criteria	Threshold Value
Terminal output voltage	High

Time Needed for Diagnosis: Less than 1 second

CM:DTC P0459 EVAPORATIVE EMISSION SYSTEM PURGE CONTROL VALVE CIRCUIT HIGH

1. OUTLINE OF DIAGNOSIS

Detect open or short circuit of the purge control solenoid valve.
Judge as NG when the ECM output level differs from the actual terminal level.

2. COMPONENT DESCRIPTION

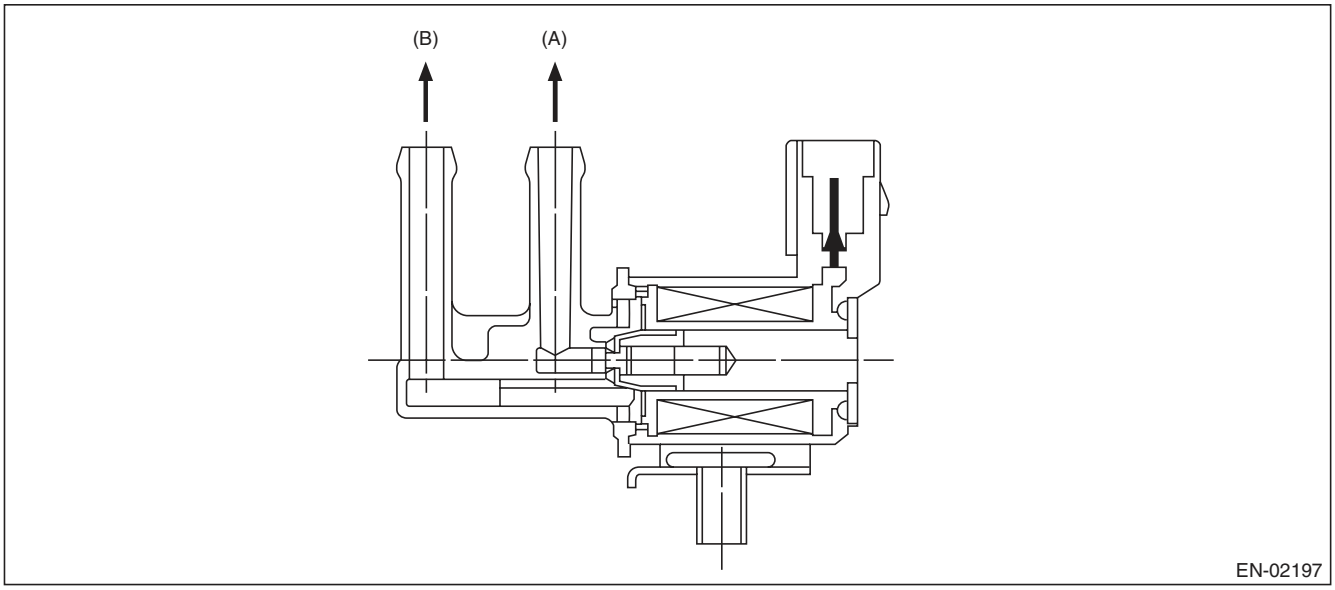

(A) To canister (B) To intake manifold

3. ENABLE CONDITION

Secondary Parameters	Enable Conditions
Battery voltage	≥ 10.9 V
Elapsed time after starting the engine	≥ 1 second

4. GENERAL DRIVING CYCLE

Always perform the diagnosis after starting the engine.

5. DIAGNOSTIC METHOD

- **Abnormality Judgement**

If the duration of time while the following conditions are met is longer than the time indicated, judge as NG.

Judgement Value

Malfunction criteria	Threshold value
Duty ratio of “ON”	≥ 0.25
Terminal output voltage	High

Time Needed for Diagnosis: 2500 ms
Malfunction Indicator Light Illumination: Illuminates when malfunction occurs in 2 continuous driving cycles.

- **Normality Judgement**

Judge as OK and clear the NG if the continuous time while the following conditions are established is more than the predetermined time.

Judgement Value

Malfunction Criteria	Threshold Value
Terminal output voltage	Low

Time Needed for Diagnosis: Less than 1 second

CN:DTC P0461 FUEL LEVEL SENSOR “A” CIRCUIT RANGE/PERFORMANCE

1. OUTLINE OF DIAGNOSIS

Detect malfunctions of the fuel level sensor output property.
If the fuel level does not vary in a particular driving condition / engine condition where it should, judge as NG.

2. COMPONENT DESCRIPTION

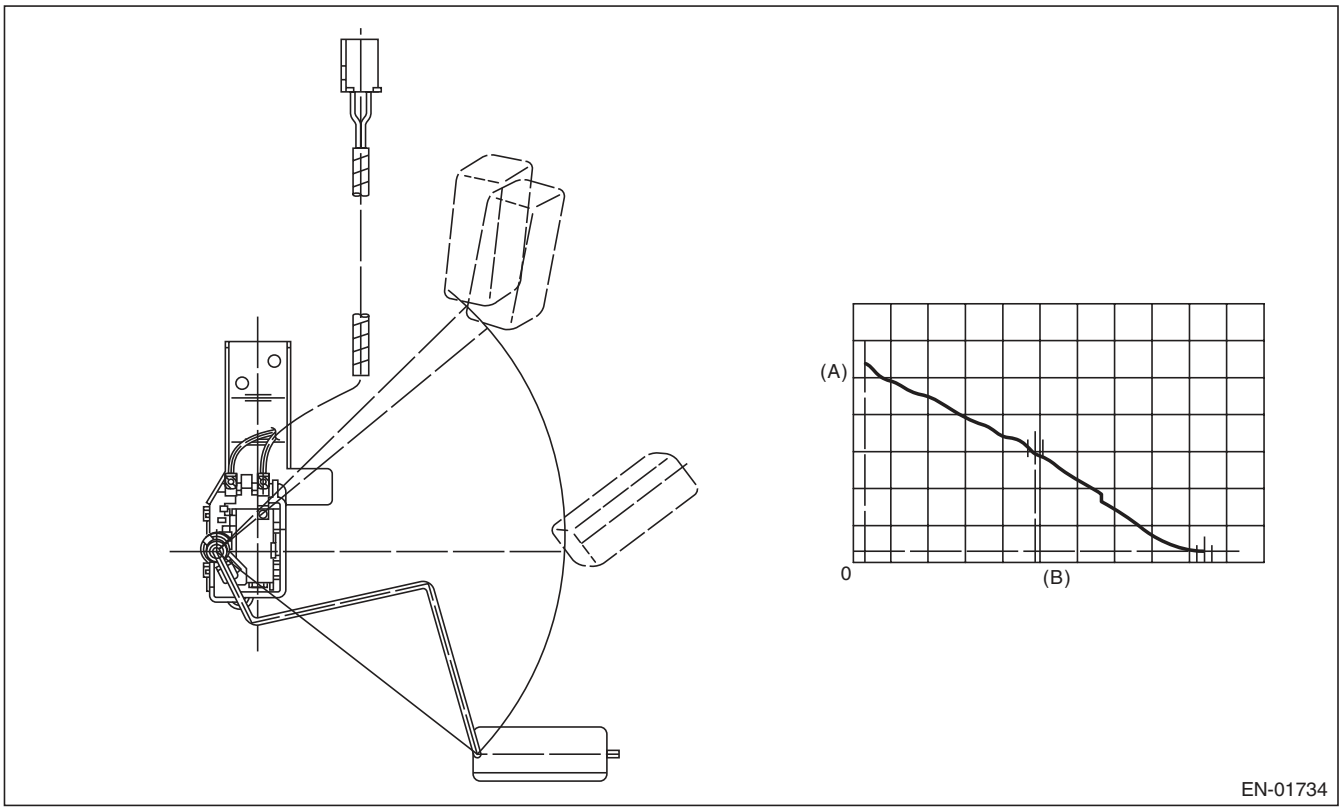

(A) Fuel level (B) Resistance

3. ENABLE CONDITION

Secondary Parameters	Enable Conditions
None	

4. GENERAL DRIVING CYCLE

Always perform the diagnosis continuously.

5. DIAGNOSTIC METHOD

- **Abnormality Judgement**

Judge as NG when the following conditions are established.

Judgement Value

Malfunction criteria	Threshold value
Accumulated amount of intake air	≥ 330957 g (11672.85 oz)
Max. – min. values of fuel level output	< 2.6 ℓ (0.69 US gal, 0.57 Imp gal)
Battery voltage	≥ 10.9 V
Engine speed	< 6500 rpm
Elapsed time after starting the engine	≥ 5000 ms

Time Needed for Diagnosis: Less than 1 second
Malfunction Indicator Light Illumination: Illuminates when malfunction occurs in 2 continuous driving cycles.

- **Normality Judgement**

Judge as OK and clear the NG if the following conditions are established.

Judgement Value

Malfunction criteria	Threshold value
Accumulated amount of intake air	≥ 330957 g (11672.85 oz)
Max. – min. values of fuel level output	≥ 2.6 ℓ (0.69 US gal, 0.57 Imp gal)
Battery voltage	≥ 10.9 V
Engine speed	< 6500 rpm
Elapsed time after starting the engine	≥ 5000 ms

Time Needed for Diagnosis: Less than 1 second

CO:DTC P0462 FUEL LEVEL SENSOR “A” CIRCUIT LOW

1. OUTLINE OF DIAGNOSIS

Detect the open or short circuit of fuel level sensor. Judge as NG if out of specification.

2. COMPONENT DESCRIPTION

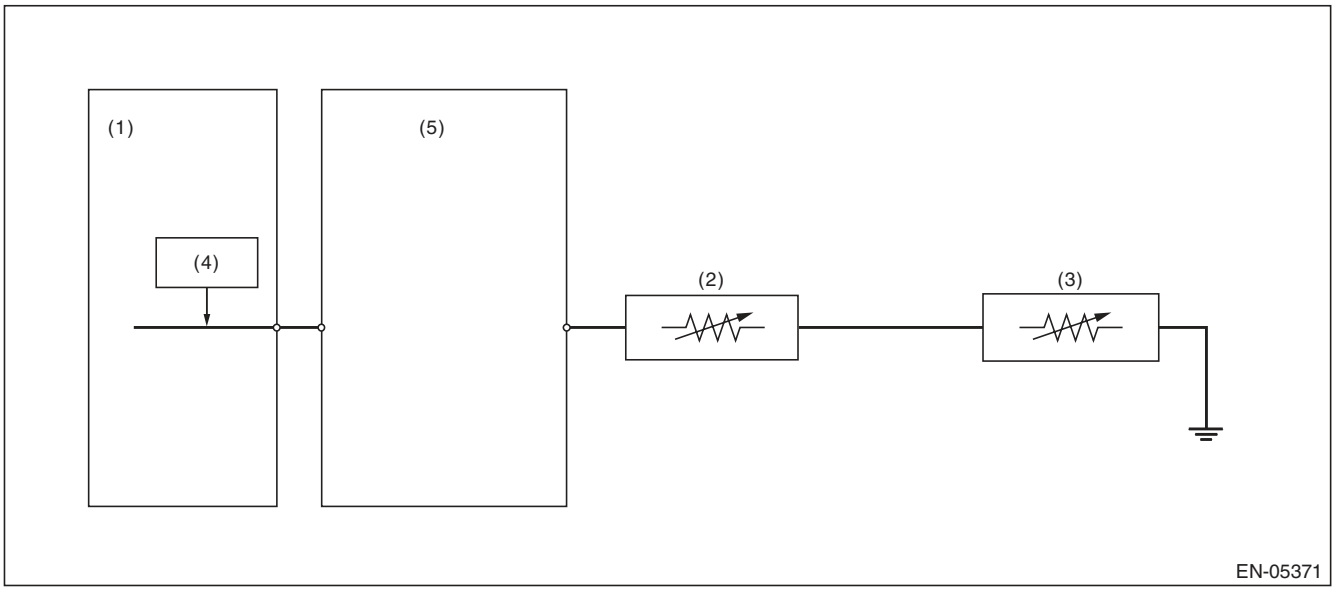

(1) Engine control module (ECM)
(2) Fuel level sensor
(3) Fuel sub level sensor
(4) Detecting circuit
(5) Body integrated unit

3. ENABLE CONDITION

Secondary Parameters	Enable Conditions
None	

4. GENERAL DRIVING CYCLE

Always perform the diagnosis continuously.

5. DIAGNOSTIC METHOD

- **Abnormality Judgement**

If the duration of time while the following conditions are met is longer than the time indicated, judge as NG.

Judgement Value

Malfunction criteria	Threshold value
Battery voltage	≥ 10.9 V
Elapsed time after starting the engine	≥ 3000 ms
Output voltage	< 0.173 V

Time Needed for Diagnosis: 2500 ms
Malfunction Indicator Light Illumination: Illuminates when malfunction occurs in 2 continuous driving cycles.

- **Normality Judgement**

Judge as OK and clear the NG if the continuous time while the following conditions are established is more than the predetermined time.

Judgement Value

Malfunction criteria	Threshold value
Battery voltage	≥ 10.9 V
Elapsed time after starting the engine	≥ 3000 ms
Output voltage	≥ 0.173 V

Time Needed for Diagnosis: Less than 1 second

CP:DTC P0463 FUEL LEVEL SENSOR “A” CIRCUIT HIGH

1. OUTLINE OF DIAGNOSIS

Detect the open or short circuit of fuel level sensor. Judge as NG if out of specification.

2. COMPONENT DESCRIPTION

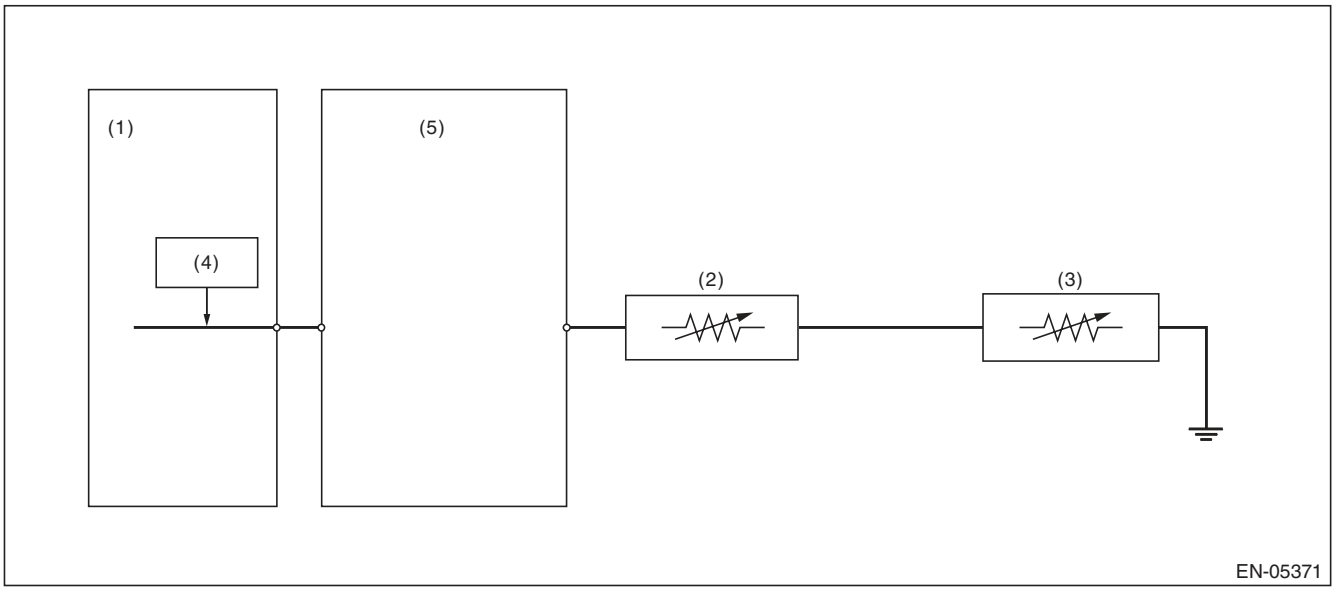

(1) Engine control module (ECM)
(2) Fuel level sensor
(3) Fuel sub level sensor
(4) Detecting circuit
(5) Body integrated unit

3. ENABLE CONDITION

Secondary Parameters	Enable Conditions
None	

4. GENERAL DRIVING CYCLE

Always perform the diagnosis continuously.

5. DIAGNOSTIC METHOD

- **Abnormality Judgement**

If the duration of time while the following conditions are met is longer than the time indicated, judge as NG.

Judgement Value

Malfunction criteria	Threshold value
Battery voltage	≥ 10.9 V
Elapsed time after starting the engine	≥ 3000 ms
Output voltage	≥ 7.212 V

Time Needed for Diagnosis: 1000 ms
Malfunction Indicator Light Illumination: Illuminates when malfunction occurs in 2 continuous driving cycles.

- **Normality Judgement**

Judge as OK and clear the NG if the continuous time while the following conditions are established is more than the predetermined time.

Judgement Value

Malfunction criteria	Threshold value
Battery voltage	≥ 10.9 V
Elapsed time after starting the engine	≥ 3000 ms
Output voltage	< 7.212 V

Time Needed for Diagnosis: Less than 1 second

CQ:DTC P0464 FUEL LEVEL SENSOR CIRCUIT INTERMITTENT

1. OUTLINE OF DIAGNOSIS

Detect the unstable output faults from the fuel level sensor caused by noise. Judge as NG when the max. value and cumulative value of output voltage variation of the fuel level sensor is larger than the threshold value.

2. ENABLE CONDITION

Malfunction Criteria	Threshold Value
Engine speed	≥ 500 rpm
Elapsed time after starting the engine	≥ 1 second
Battery voltage	≥ 10.9 V
Idle switch	ON
Fuel level	≥ 9.6 ℓ (2.54 US gal, 2.11 Imp gal) and < 54.4 ℓ (14.37 US gal, 11.97 Imp gal)
Vehicle speed = 0 km/h (0 MPH)	≥ 10000 ms

3. GENERAL DRIVING CYCLE

- Always perform the diagnosis continuously at idle speed.
- Pay attention to the fuel level.

4. DIAGNOSTIC METHOD

Calculate the Max. value (DELFLMAX) and cumulative value (SUMFL) of output voltage variation of fuel level sensor during 12.2 seconds. Judge it normal when both max. and cumulative values are not over the threshold value. Otherwise, when either of them is over the threshold value, the diagnosis counter counts up. Judge as NG if the counter indicated 4 time(s).

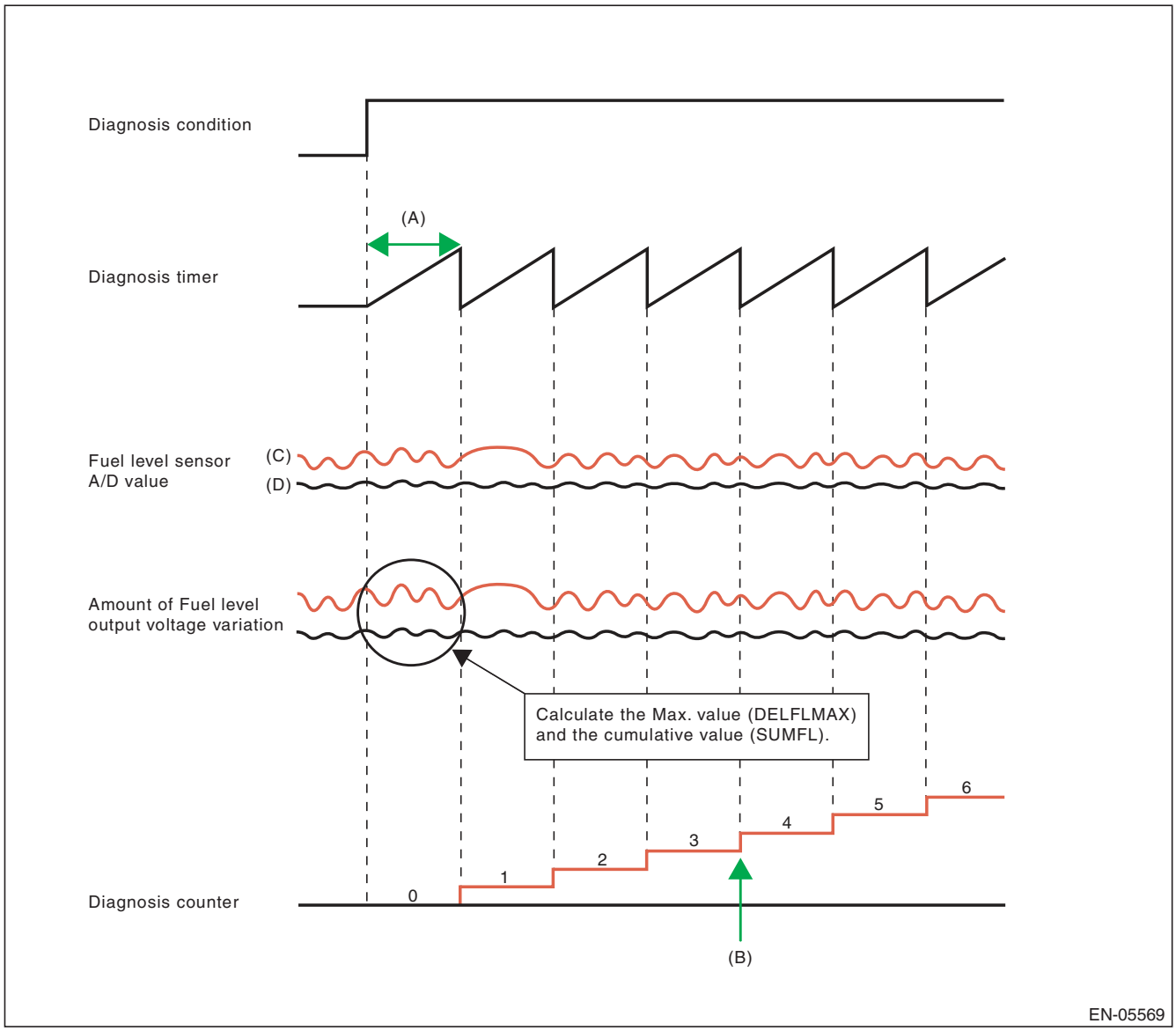

(A) 12288 ms
(B) NG at 4 time(s)
(C) Malfunction
(D) Normal

- **Abnormality Judgement**

If the duration of time while the following conditions are met is longer than the time indicated, judge as NG.

Judgement Value

Malfunction Criteria	Threshold Value
Integrated times of the condition reaching follows,	≥ 4 time(s)
DELFLMAX	≥ Value from Map
or	
SUMFL	≥ 25.92 V
At this time,	
DELFLMAX: Maximum difference of sensor output for 12288 ms	
SUMFL: Integrated value of the sensor output deviation for12288 ms	

Map

Fuel level (ℓ , US gal, Imp gal)	0, 0, 0	10, 2.64, 2.2	20, 5.28, 4.4	30, 7.93, 6.6	40, 10.57, 8.8	50, 13.21, 11	60, 15.85, 13.2
Measured voltage (V)	0.27	0.27	0.426	0.582	0.738	0.894	0.894

The diagnosis counter does not count up when the following conditions are completed within 12288 ms.

Maximum value – Minimum value of change of tank pressure for 12288 ms	≥ 0 kPa (0.375031 mmHg, 0 inHg)
Maximum value – Minimum value of battery voltage for12288 ms	≥ 0.609 V

Time Needed for Diagnosis: 12288 ms × 4 time(s)
Malfunction Indicator Light Illumination: Illuminates when malfunction occurs in 2 continuous driving cycles.

- **Normality Judgement**

Judge as OK and clear the NG if the continuous time while the following conditions are established is more than the predetermined time.

Judgement Value

Malfunction Criteria	Threshold Value
DELFLMAX	< Value from Map
SUMFL	< 25.92 V
At this time,	
DELFLMAX: Maximum difference of sensor output for 12288 ms	
SUMFL: Integrated value of the sensor output deviation for12288 ms	

Time Needed for Diagnosis: 12288 ms

CR:DTC P0500 VEHICLE SPEED SENSOR “A”

1. OUTLINE OF DIAGNOSIS

Judge as NG when outside of the judgment value.
Judge NG when the received data from ABSCM&H/U is abnormal vehicle speed, and the vehicle speed data is impossible.

2. COMPONENT DESCRIPTION

Vehicle speed signals are taken in to the ABS control module and hydraulic control unit, and normal/erroneous data of the ABS wheel speed sensor is received by CAN communication from the ABS control module and hydraulic control unit.

3. ENABLE CONDITION

Secondary Parameters	Enable Conditions
Battery voltage	≥ 10.9 V
Elapsed time after engine starting	≥ 2000 ms

4. GENERAL DRIVING CYCLE

Always perform diagnosis more than 2000 ms after starting the engine.

5. DIAGNOSTIC METHOD

- **Abnormality Judgement**

If the duration of time while the following conditions are met is longer than the time indicated, judge as NG.

Judgement Value

Malfunction Criteria	Threshold Value
Front ABS wheel speed sensor status	Malfunction
Either of the following is established	
Front left wheel speed	≥ 300 km/h (186.4 MPH)
Front right wheel speed	≥ 300 km/h (186.4 MPH)

Time Needed for Diagnosis: 2500 ms
Malfunction Indicator Light Illumination: Illuminates as soon as a malfunction occurs.

- **Normality Judgement**

Judge as OK and clear the NG if the continuous time while the following conditions are established is more than the predetermined time.

Judgement Value

Malfunction Criteria	Threshold Value
Front left wheel speed	> 0 km/h (0 MPH) and < 300 km/h (186.4 MPH)
Front right wheel speed	> 0 km/h (0 MPH) and < 300 km/h (186.4 MPH)

Time Needed for Diagnosis: 2500 ms

CS:DTC P0506 IDLE AIR CONTROL SYSTEM RPM LOWER THAN EXPECTED

1. OUTLINE OF DIAGNOSIS

Detect the malfunction that actual engine speed is not close to target engine speed during idling. Judge as NG when actual engine speed is not close to target engine speed during idling.

2. ENABLE CONDITION

Secondary Parameters	Enable Conditions
Engine coolant temperature	≥ 75 °C (167 °F)
Battery voltage	≥ 10.9 V
Atmospheric pressure	≥ 75 kPa (563 mmHg, 22.2 inHg)
Fuel level	≥ 9.6 ℓ (2.54 US gal, 2.11 Imp gal)
Elapsed time after starting the engine	≥ 10.49 s
Feedback of ISC	In operation
Lambda value (left and right)	≥ 0.9 and < 1.1
After switching air conditioner to ON/OFF	≥ 5.1 s
After intake manifold pressure changes by 4 kPa (30 mmHg, 1.2 inHg) or more.	> 5.1 s
Elapsed time after switching neutral position switch to ON/OFF	> 5.1 s
Vehicle speed	0 km/h (0 MPH)

3. GENERAL DRIVING CYCLE

Perform the diagnosis continuously at idling after warming up engine.

4. DIAGNOSTIC METHOD

- **Abnormality Judgement**

If the duration of time while the following conditions are met is longer than the time indicated, judge as NG.

Judgement Value

Malfunction Criteria	Threshold Value
Actual engine speed — Targeted engine speed	< –100 rpm
Feedback compensation for ISC	Max.

Time Needed for Diagnosis: 10 s × 3 time(s)
Malfunction Indicator Light Illumination: Illuminates when malfunction occurs in 2 continuous driving cycles.

- **Normality Judgement**

Judge as OK and clear the NG if the continuous time while the following conditions are established is more than the predetermined time.

Judgement Value

Malfunction Criteria	Threshold Value
Actual engine speed — Targeted engine speed	≥ –100 rpm

Time Needed for Diagnosis: 10 s

CT:DTC P0507 IDLE AIR CONTROL SYSTEM RPM HIGHER THAN EXPECTED

1. OUTLINE OF DIAGNOSIS

Detect the malfunction that actual engine speed is not close to target engine speed during idling. Judge as NG when actual engine speed is not close to target engine speed during idling.

2. ENABLE CONDITION

Secondary Parameters	Enable Conditions
Engine coolant temperature	≥ 75 °C (167 °F)
Battery voltage	≥ 10.9 V
Atmospheric pressure	≥ 75 kPa (563 mmHg, 22.2 inHg)
Fuel level	≥ 9.6 ℓ (2.54 US gal, 2.11 Imp gal)
Elapsed time after starting the engine	≥ 10.49 s
Feedback of ISC	In operation
Lambda value (left and right)	≥ 0.9 and < 1.1
After switching air conditioner to ON/OFF	≥ 5.1 s
After intake manifold pressure changes by 4 kPa (30 mmHg, 1.2 inHg) or more.	> 5.1 s
Elapsed time after switching neutral position switch to ON/OFF	> 5.1 s
Vehicle speed	0 km/h (0 MPH)

3. GENERAL DRIVING CYCLE

Perform the diagnosis continuously at idling after warming up engine.

4. DIAGNOSTIC METHOD

- **Abnormality Judgement**

If the duration of time while the following conditions are met is longer than the time indicated, judge as NG.

Judgement Value

Malfunction Criteria	Threshold Value
Actual – Target engine speed	≥ 200 rpm
Feedback value for ISC	Min.

Time Needed for Diagnosis: 10 s × 3 time(s)
Malfunction Indicator Light Illumination: Illuminates when malfunction occurs in 2 continuous driving cycles.

- **Normality Judgement**

Judge as OK and clear the NG if the continuous time while the following conditions are established is more than the predetermined time.

Judgement Value

Malfunction Criteria	Threshold Value
Actual – Target engine speed	< 200 rpm

Time Needed for Diagnosis: 10 s

CU:DTC P0512 STARTER REQUEST CIRCUIT

1. OUTLINE OF DIAGNOSIS

Detect the open or short circuit of starter SW.
Judge as ON NG when the starter SW signal remains ON.

2. ENABLE CONDITION

Secondary Parameters	Enable Conditions
None	

3. GENERAL DRIVING CYCLE

Always perform the diagnosis continuously.

4. DIAGNOSTIC METHOD

- **Abnormality Judgement**

If the duration of time while the following conditions are met is longer than the time indicated, judge as NG.

Judgement Value

Malfunction criteria	Threshold value
Engine condition	After engine starting
Starter OFF signal	Not detected
Battery voltage	≥ 8 V

Time Needed for Diagnosis: 180000 ms
Malfunction Indicator Light Illumination: Illuminates when malfunction occurs in 2 continuous driving cycles.

- **Normality Judgement**

Judge as OK and clear the NG if the continuous time while the following conditions are established is more than the predetermined time.

Judgement Value

Malfunction criteria	Threshold value
Starter OFF signal	Detected
Battery voltage	≥ 8 V

Time Needed for Diagnosis: Less than 1 second

CV:DTC P0513 INCORRECT IMMOBILIZER KEY

1. OUTLINE OF DIAGNOSIS

DTC	Item	Outline of diagnosis
P0513	Incorrect Immobilizer Key	Incorrect immobilizer key (Use of unregistered key in body integrated unit)
P1570	Antenna	Faulty antenna
P1571	Reference Code Incompatibility	Reference code incompatibility between body integrated unit and ECM
P1572	IMM Circuit Failure (Except Antenna Circuit)	Communication failure between body integrated unit and ECM
P1574	Key Communication Failure	Failure of body integrated unit to verify key (transponder) ID code or transponder failure
P1576	EGI Control Module EEPROM	ECM malfunctioning
P1577	IMM Control Module EEPROM	Body integrated unit malfunctioning
P1578	Meter Failure	Reference code incompatibility between body integrated unit and combination meter

2. ENABLE CONDITION

When starting the engine.

3. GENERAL DRIVING CYCLE

Perform the diagnosis only after starting the engine.

4. DIAGNOSTIC METHOD

Judge as NG when the conditions for the outline of the diagnosis of the top are established.

CW:DTC P0600 SERIAL COMMUNICATION LINK

1. OUTLINE OF DIAGNOSIS

Detect malfunction of CAN communication.
When CAN communications is not possible, and CAN communications with TCM is not possible, judge as NG if data from the TCM is not normal.

2. COMPONENT DESCRIPTION

ECM and TCM are connected by high speed CAN.

(Common Specifications)
CAN Protocol 2.0 B (Active)
Frame Format: 11 Bit ID Frame (Standard Frame)

(High speed CAN)
Conforms to ISO11898
Communication Speed: 500 kbps

3. ENABLE CONDITION

Secondary Parameters	Enable Conditions
None	

4. GENERAL DRIVING CYCLE

Perform the diagnosis continuously after starting the engine.

5. DIAGNOSTIC METHOD

- **Abnormality Judgement**

Judge as NG when the following conditions are established.

Judgement Value

Malfunction Criteria	Threshold Value
Battery voltage	> 10.9 V
Starter switch	OFF
Engine	run
bus off flag or error warning flag	set (error)
or	
ID received from control module connected to driving system CAN	None during 500 milliseconds
or	
Data updated from control module connected to driving system CAN	None during 500 milliseconds

Time Needed for Diagnosis: Less than 1 second
Malfunction Indicator Light Illumination: Illuminates as soon as a malfunction occurs.

- **Normality Judgement**

Judge as OK and clear the NG if the continuous time while the following conditions are established is more than the predetermined time.

Judgement Value

Malfunction Criteria	Threshold Value
Battery voltage	> 10.9 V
Starter switch	OFF
Engine	run
bus off flag or error warning flag	clear (No error)
ID received from control module connected to driving system CAN	Yes
Data updated from control module connected to driving system CAN	Yes

Time Needed for Diagnosis: 1000 ms
Malfunction Indicator Light Illumination: Illuminates as soon as a malfunction occurs.

CX:DTC P0604 INTERNAL CONTROL MODULE RANDOM ACCESS MEMORY (RAM) ERROR

1. OUTLINE OF DIAGNOSIS

Detect the malfunction of microcomputer (RAM).
When there is a problem in the main CPU normal RAM, or the sub CPU normal RAM, judge as NG. Judge as OK when both are operating properly.
If it is possible to write data to the whole area of RAM in the initial routine, and is possible to read the same data, it is judged as OK, and if not, NG.

2. ENABLE CONDITION

Secondary Parameters	Enable Conditions
None	

Diagnosis with the initial routine.

3. GENERAL DRIVING CYCLE

Perform the diagnosis as soon as the ignition switch is turned to ON.

4. DIAGNOSTIC METHOD

- **Abnormality Judgement**

Judge as NG when the following conditions are established.

Judgement Value

Malfunction criteria	Threshold value
Write the specified value to RAM and then read.	The written value cannot be read.

Time Needed for Diagnosis: Less than 1 second
Malfunction Indicator Light Illumination: Illuminates as soon as a malfunction occurs.

- **Normality Judgement**

Judge as OK and clear the NG if the following conditions are established.

Judgement Value

Malfunction criteria	Threshold value
Write the specified value to RAM and then read.	The written value can be read.

Time Needed for Diagnosis: Less than 1 second

CY:DTC P0605 INTERNAL CONTROL MODULE READ ONLY MEMORY (ROM) ERROR

1. OUTLINE OF DIAGNOSIS

Judge as NG when SUM value of ROM is outside the standard value.

2. ENABLE CONDITION

Secondary Parameters	Enable Conditions
Ignition switch	ON

3. GENERAL DRIVING CYCLE

Always perform the diagnosis continuously.

4. DIAGNOSTIC METHOD

- **Abnormality Judgement**

Judge as NG when the following conditions are established.

Judgement Value

Malfunction criteria	Threshold value
SUM value of ROM	Standard

Time Needed for Diagnosis:
- Main CPU: 16 milliseconds × 32 time(s)
- Sub CPU: 16 milliseconds × 2 time(s)

Malfunction Indicator Light Illumination: Illuminates as soon as a malfunction occurs.

- **Normality Judgement**

Judge as OK and clear the NG if the following conditions are established.

Judgement Value

Malfunction criteria	Threshold value
SUM value of ROM	Standard

Time Needed for Diagnosis:
- Main CPU: 16 milliseconds × 125 time(s)
- Sub CPU: 16 milliseconds × 2 time(s)

CZ:DTC P0607 THROTTLE CONTROL SYSTEM CIRCUIT RANGE/PERFORMANCE

1. OUTLINE OF DIAGNOSIS

Judge as NG when any one of the followings is established.
(1) When the read value of throttle position sensor 1 signal is mismatched between main CPU and sub CPU.
(2) When the read value of accelerator pedal position sensor 1 signal is mismatched between main CPU and sub CPU.
(3) When the sub CPU operates abnormally.
(4) When the communication between main CPU ← → sub CPU is abnormal.
(5) When the input amplifier circuit of throttle position sensor 1 is abnormal.
(6) When the cruise control cannot be canceled correctly.
(7) When the signal of brake SW1 and 2 is mismatched.

2. COMPONENT DESCRIPTION

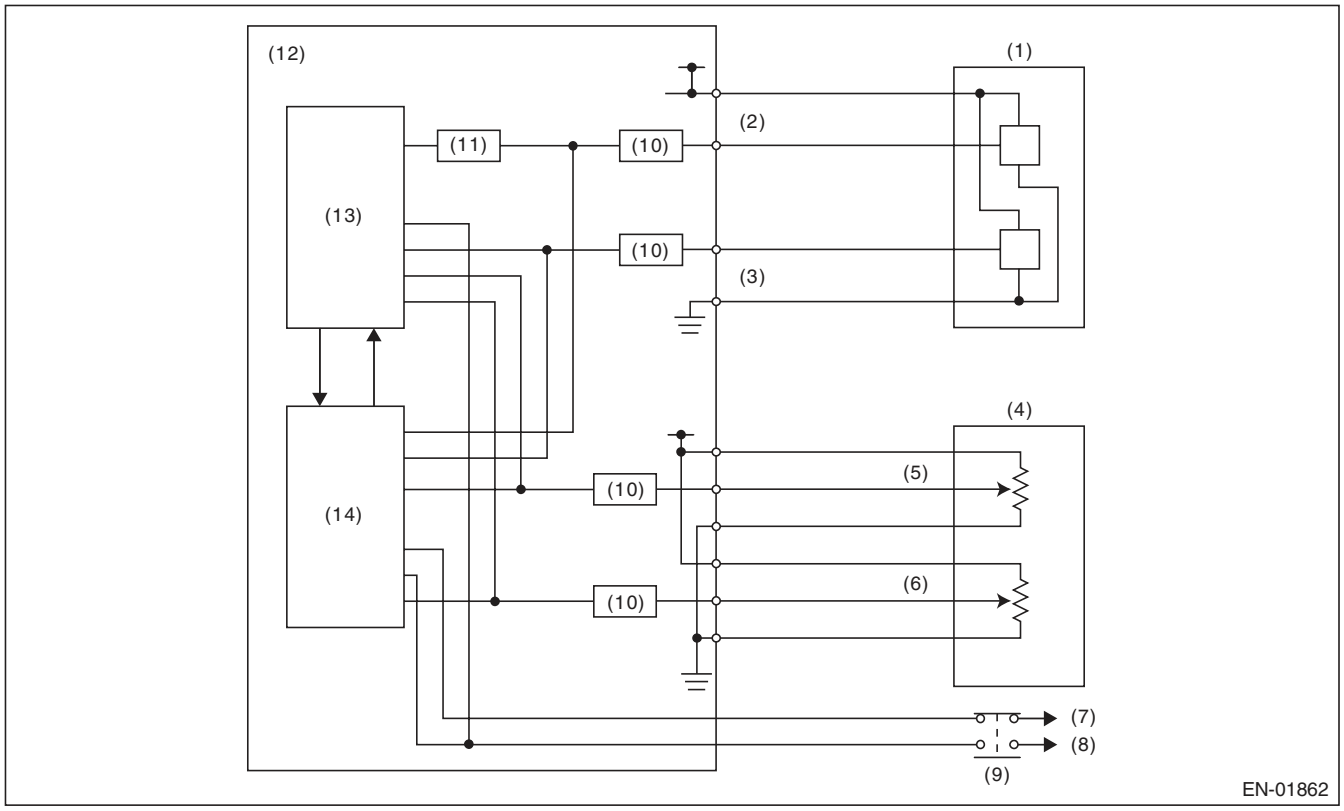

(1)	Throttle position sensor	(6)	Accelerator pedal position sensor 2	(11)	Amplifier circuit
(2)	Throttle position sensor 1	(7)	Battery	(12)	Engine control module (ECM)
(3)	Throttle position sensor 2	(8)	Stop light	(13)	Sub CPU
(4)	Accelerator pedal position sensor	(9)	Brake switch	(14)	Main CPU
(5)	Accelerator pedal position sensor 1	(10)	I/F circuit		

3. ENABLE CONDITION

Secondary Parameters	Enable Conditions
(1) Ignition switch	ON
(1) Battery voltage	≥ 6 V
(2) Ignition switch	ON
(2) Battery voltage	≥ 6 V
(3) Ignition switch	ON
(3) Battery voltage	≥ 6 V
(4) Ignition switch	ON
(4) Battery voltage	≥ 6 V
(5) Throttle opening angle	
(5) Ignition switch	ON
(5) Battery voltage	≥ 6 V
(6) Brake switch (only with cruise control)	ON
(6) Ignition switch	ON
(6) Battery voltage	≥ 6 V
(7) Ignition switch	ON
(7) Battery voltage	≥ 6 V

4. GENERAL DRIVING CYCLE

(1) — (4): Always perform the diagnosis continuously.
(5): Always perform the diagnosis continuously when idling.
(6): Perform the diagnosis when the brake pedal is depressed.
(7): Always perform the diagnosis continuously.

5. DIAGNOSTIC METHOD

• Abnormality Judgement

Judge as NG when the following conditions are established.

Judgement Value

Malfunction Criteria	Threshold Value
(1) Difference of CPU reading value of the throttle position sensor signal	≥ 0.4058 V
(2) Difference of CPU read value of the accelerator pedal position sensor signal	≥ 0.127542424 V
(3) WD pulse from sub CPU	No WD pulse occur
(4) Communication between CPU	Not possible to communicate
(5) |Throttle position sensor 1 opening angle — (Throttle position sensor 1 opening angle after passing amplifier) 1/4|	≥ 3 °
(6) Cruise control cancel signal at brake ON	Cruise control cancel signal OFF
(7) Brake switch 1, 2 signal	SW 1 and 2 are not matched

Time Needed for Diagnosis:
(1): 600 ms
(2): 830 ms
(3): 200 ms
(4): 200 ms
(5): 24 ms
(6): 250 ms
(7): 200 ms

Malfunction Indicator Light Illumination: Illuminates as soon as a malfunction occurs.

• Normality Judgement

Judge as OK and clear the NG if the following conditions are established.

Judgement Value

Malfunction Criteria	Threshold Value
(1) Difference of CPU reading value of the throttle position sensor signal	< 0.4058 V
(2) Difference of CPU read value of the accelerator pedal position sensor signal	< 0.127542424 V
(3) WD pulse from sub CPU	WD pulse occur
(4) Communication between CPU	Possible to communicate
(5) |Throttle position sensor 1 opening angle — (Throttle position sensor 1 opening angle after passing amplifier) 1/4|	< 3 °
(6) Cruise control cancel signal at brake ON	Cruise control cancel signal ON
(7) Brake switch 1, 2 signal	SW 1 and 2 are matched

Time Needed for Diagnosis:
(1): 2000 ms
(2): 2000 ms
(3): 2000 ms
(4): 2000 ms
(5): 24 ms
(6): 2000 ms
(7): 2000 ms

DA:DTC P0638 THROTTLE ACTUATOR CONTROL RANGE/PERFORMANCE (BANK 1)

1. OUTLINE OF DIAGNOSIS

Judge as NG when the target opening angle and actual opening angle is mismatched or the current to motor is the specified duty or more for specified time continuously.

2. COMPONENT DESCRIPTION

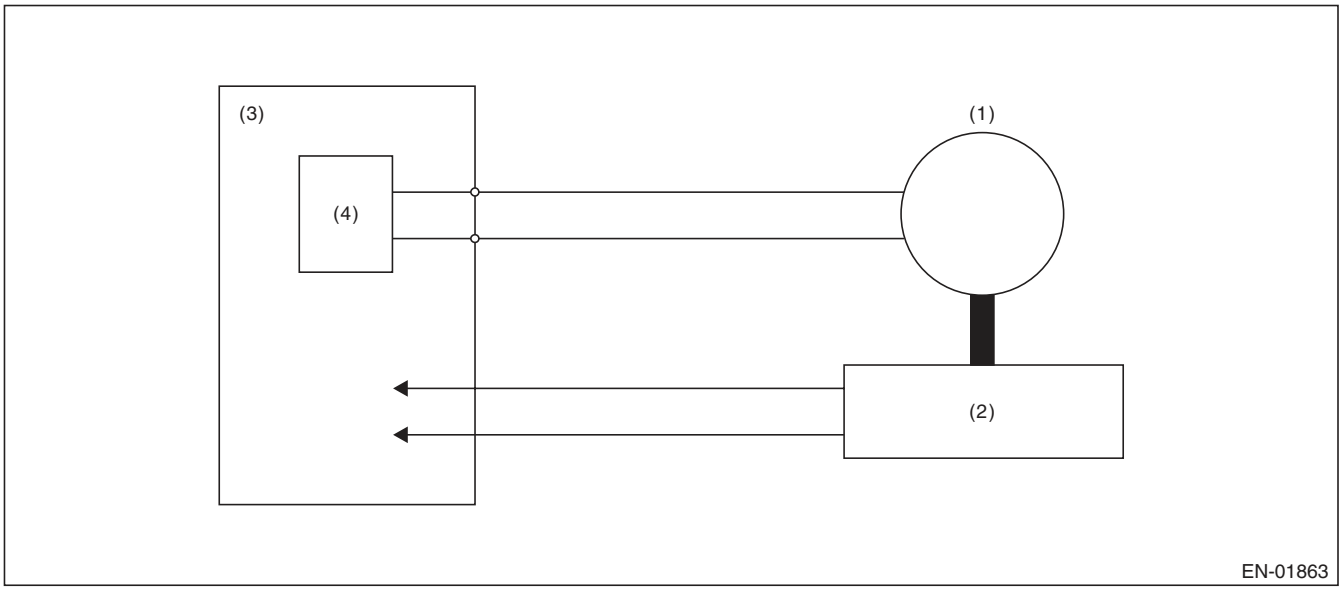

(1) Motor
(2) Throttle position sensor
(3) Engine control module (ECM)
(4) Drive circuit

3. ENABLE CONDITION

Secondary Parameters	Enable Conditions
Normal operation of electronic throttle control	ON

4. GENERAL DRIVING CYCLE

Always perform the diagnosis continuously when the electronic throttle control is operating.

5. DIAGNOSTIC METHOD

• Abnormality Judgement

Judge as NG when the following conditions are established.

Judgement Value

Malfunction criteria	Threshold value
Difference between target opening angle and actual opening angle	≥ Value of Map 1
Output duty to drive circuit	≥ 95%

Map1

Target throttle opening angle (°) = d	0 ≤ d < 6.15	6.15 ≤ d < 9.65	9.65 ≤ d < 14.65	14.65 ≤ d < 26.65	26.65 ≤ d
Difference between target opening angle and actual opening angle (°)	3.5	5	12	25	25

Time Needed for Diagnosis:

- Difference between target opening angle and actual opening angle: 1000 milliseconds (when target opening angle > actual opening angle) or value of Map 2 (when target opening angle ≤ actual opening angle)
- Output duty to drive circuit: value of Map 3

Map2

Throttle position sensor 1 opening angle (°) = d	0 ≤ d < 5.5	5.5 ≤ d < 9	9 ≤ d < 13	13 ≤ d < 22	22 ≤ d
Judgement time (milliseconds)	1000	400	300	250	250

Map 3

Voltage to drive circuit (V)	6	8	10	12	14	16
Judgement time (milliseconds)	2000	2000	2000	2000	2000	2000

• Normality Judgement

Judge as OK and clear the NG if the following conditions are established.

Judgement Value

Malfunction criteria	Threshold value
Difference between target opening angle and actual opening angle	< Value of Map 1
Output duty to drive circuit	< 95%

Time Needed for Diagnosis:

- Difference between target opening angle and actual opening angle: 2000 ms
- Output duty to drive circuit: 2000 ms

Malfunction Indicator Light Illumination: Illuminates as soon as a malfunction occurs.

DB:DTC P0700 TRANSMISSION CONTROL SYSTEM (MIL REQUEST)

1. OUTLINE OF DIAGNOSIS

Judge as NG when there is CAN communication with the TCM and there is a MIL lighting request.

2. ENABLE CONDITION

Secondary Parameters	Enable Conditions
None	

3. GENERAL DRIVING CYCLE

Always perform the diagnosis continuously.

4. DIAGNOSTIC METHOD

- **Abnormality Judgement**

If the duration of time while the following conditions are met is longer than the time indicated, judge as NG.

Judgement Value

Malfunction criteria	Threshold value
Battery voltage	≥ 10.9 V
MIL lighting request from TCM	Yes

Time Needed for Diagnosis: 2500 ms
Malfunction Indicator Light Illumination: Illuminates as soon as a malfunction occurs.

- **Normality Judgement**

If the duration of time while the following conditions are met is longer than the time indicated, judge as NG.

Judgement Value

Malfunction criteria	Threshold value
Battery voltage	≥ 10.9 V
MIL lighting request from TCM	None

Time Needed for Diagnosis: Less than 1 second

DC:DTC P1152 O2 SENSOR CIRCUIT RANGE/PERFORMANCE (LOW) (BANK1 SENSOR1)

1. OUTLINE OF DIAGNOSIS

Detect that λ value remains low.
Judge as NG when lambda value is abnormal in accordance with λ value of front oxygen (A/F) sensor and running conditions such as vehicle speed, amount of intake air, engine coolant temperature, sub feedback control, etc.

λ value = Actual air fuel ratio/Theoretical air fuel ratio
λ > 1: Lean
λ < 1: Rich

2. COMPONENT DESCRIPTION

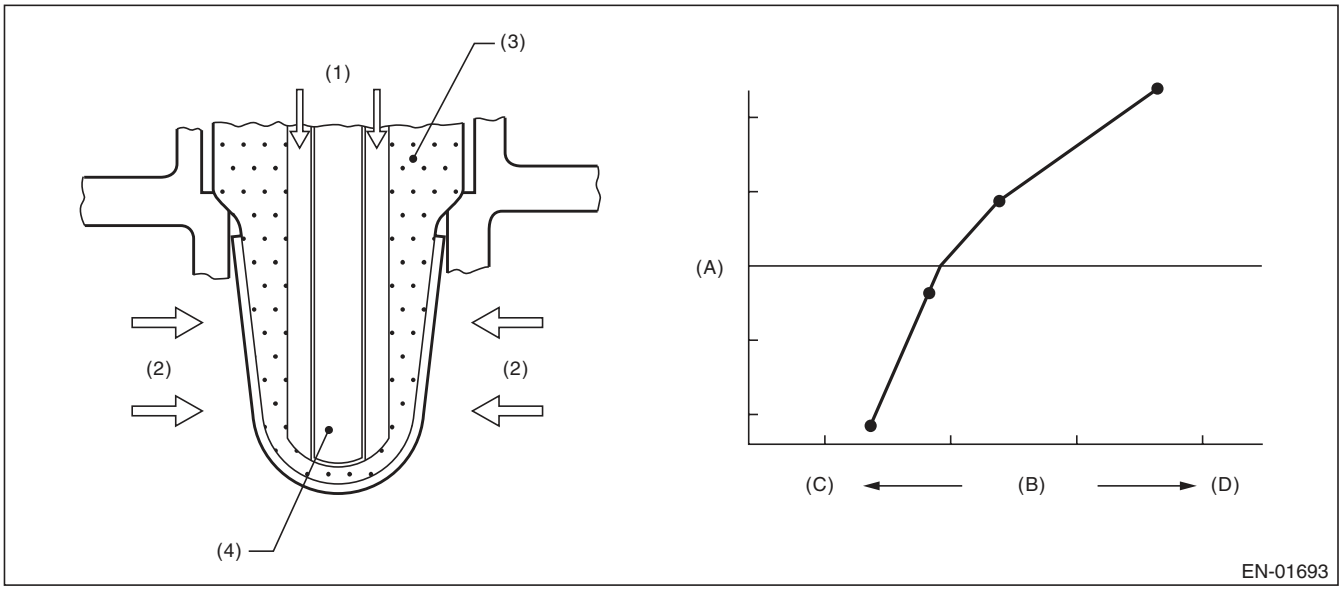

(A)	Electromotive force	(C)	Lean	(D)	Rich
(B)	Air fuel ratio				
(1)	Atmosphere	(3)	ZrO_2	(4)	Ceramic heater
(2)	Exhaust gas				

3. ENABLE CONDITION

Secondary Parameters	Enable Conditions
Time needed for all secondary parameters to be in enable conditions	≥ 4096 ms
Battery voltage	≥ 10.9 V
Barometric pressure	≥ 75 kPa (563 mmHg, 22.2 inHg)
Rear oxygen sensor sub feedback	Execution
Rear oxygen sensor output voltage – Feedback target voltage	–0.2 V — 0.1 V
or rear oxygen sensor sub feedback compensation coefficient	On Min.
or rear oxygen sensor sub feedback compensation coefficient	On Max.
Elapsed time after starting the engine	≥ 60000 ms
Engine coolant temperature	≥ 75 °C (167 °F)
Vehicle speed	≥ 20 km/h (12.4 MPH)
Amount of intake air	≥ 8 g/s (0.28 oz/s)
Load change at 120°CA	< 0.02 g/rev (0 oz/rev)
Front oxygen (A/F) sensor impedance	0 Ω — 50 Ω
Learning value of evaporation gas density	< 0.2
Total time of operating canister purge	≥ 19.9 s
Targeted lambda value load compensation coefficient	–0.05 — 0.050

4. GENERAL DRIVING CYCLE

Perform diagnosis continuously at a constant speed of 20 km/h (12.4 MPH) or more after 60000 ms have passed since the engine started.

5. DIAGNOSTIC METHOD

- **Abnormality Judgement**

If the duration of time while the following conditions are met is longer than the time indicated, judge as NG.

Judgement Value

Malfunction criteria	Threshold value
λ value	< 0.85

Time Needed for Diagnosis: 10000 ms
Malfunction Indicator Light Illumination: Illuminates when malfunction occurs in 2 continuous driving cycles.

- **Normality Judgement**

Judge as OK and clear the NG if the continuous time while the following conditions are established is more than the predetermined time.

Judgement Value

Malfunction criteria	Threshold value
λ value	≥ 0.85

Time Needed for Diagnosis: Less than 1 second

DD:DTC P1153 O2 SENSOR CIRCUIT RANGE/PERFORMANCE (HIGH) (BANK1 SENSOR1)

1. OUTLINE OF DIAGNOSIS

Detect that λ value remains high.
Judge as NG when lambda value is abnormal in accordance with λ value of front oxygen (A/F) sensor and running conditions such as vehicle speed, amount of intake air, engine coolant temperature, sub feedback control, etc.

λ value = Actual air fuel ratio/Theoretical air fuel ratio
λ > 1: Lean
λ < 1: Rich

2. COMPONENT DESCRIPTION

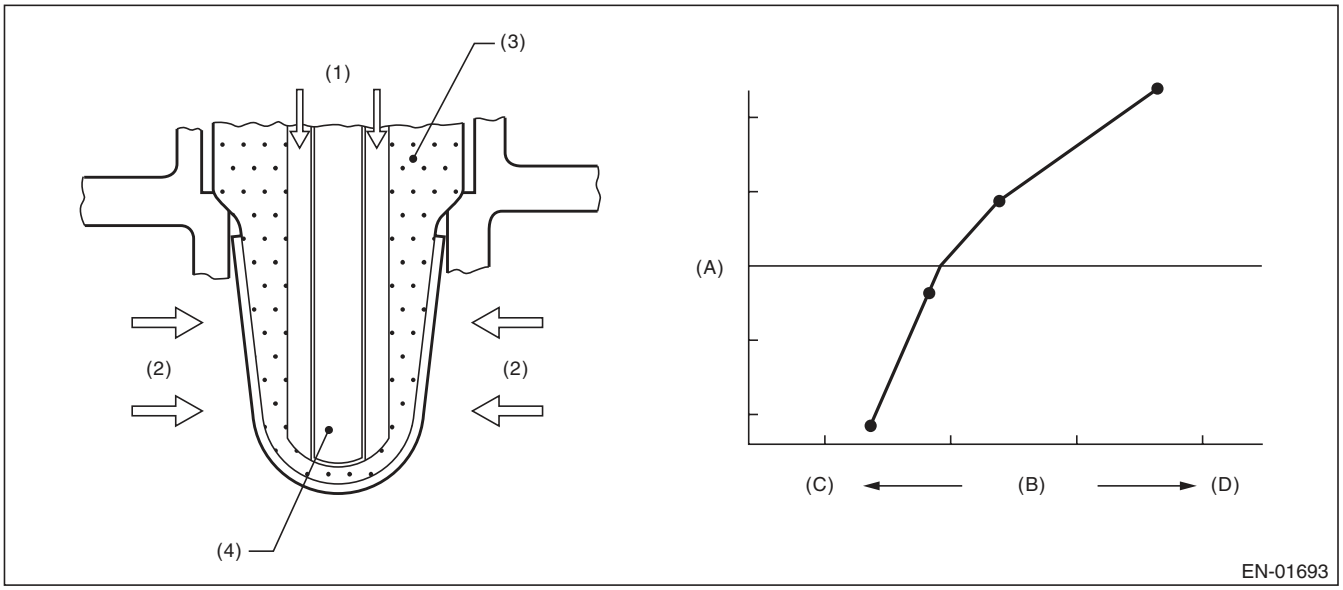

(A)	Electromotive force	(C)	Lean	(D)	Rich
(B)	Air fuel ratio				
(1)	Atmosphere	(3)	ZrO_2	(4)	Ceramic heater
(2)	Exhaust gas				

3. ENABLE CONDITION

Secondary Parameters	Enable Conditions
Time needed for all secondary parameters to be in enable conditions	≥ 4096 ms
Battery voltage	≥ 10.9 V
Barometric pressure	≥ 75 kPa (563 mmHg, 22.2 inHg)
Rear oxygen sensor sub feedback	Execution
Rear oxygen sensor output voltage – Feedback target voltage	–0.2 V — 0.1 V
or rear oxygen sensor sub feedback compensation coefficient	On Min.
or rear oxygen sensor sub feedback compensation coefficient	On Max.
Elapsed time after starting the engine	≥ 60000 ms
Engine coolant temperature	≥ 75 °C (167 °F)
Vehicle speed	≥ 20 km/h (12.4 MPH)
Amount of intake air	≥ 8 g/s (0.28 oz/s)
Load change at 120°CA	< 0.02 g/rev (0 oz/rev)
Front oxygen (A/F) sensor impedance	0 Ω — 50 Ω
Learning value of evaporation gas density	< 0.2
Total time of operating canister purge	≥ 19.9 s
Targeted lambda value load compensation coefficient	–0.05 — 0.050

4. GENERAL DRIVING CYCLE

Perform diagnosis continuously at a constant speed of 20 km/h (12.4 MPH) or more after 60000 ms have passed since the engine started.

5. DIAGNOSTIC METHOD

- **Abnormality Judgement**

If the duration of time while the following conditions are met is longer than the time indicated, judge as NG.

Judgement Value

Malfunction criteria	Threshold value
λ value	> 1.15

Time Needed for Diagnosis: 10000 ms
Malfunction Indicator Light Illumination: Illuminates when malfunction occurs in 2 continuous driving cycles.

- **Normality Judgement**

Judge as OK and clear the NG if the continuous time while the following conditions are established is more than the predetermined time.

Judgement Value

Malfunction criteria	Threshold value
λ value	≤ 1.15

Time Needed for Diagnosis: Less than 1 second

DE:DTC P1154 O2 SENSOR CIRCUIT RANGE/PERFORMANCE (LOW) (BANK 2 SENSOR 1)

1. OUTLINE OF DIAGNOSIS

NOTE:
For the detection standard, refer to DTC P1152. <Ref. to GD(H6DO)-162, DTC P1152 O2 SENSOR CIRCUIT RANGE/PERFORMANCE (LOW) (BANK1 SENSOR1), Diagnostic Trouble Code (DTC) Detecting Criteria.>

DF:DTC P1155 O2 SENSOR CIRCUIT RANGE/PERFORMANCE (HIGH) (BANK 2 SENSOR 1)

1. OUTLINE OF DIAGNOSIS

NOTE:
For the detection standard, refer to DTC P1153. <Ref. to GD(H6DO)-164, DTC P1153 O2 SENSOR CIRCUIT RANGE/PERFORMANCE (HIGH) (BANK1 SENSOR1), Diagnostic Trouble Code (DTC) Detecting Criteria.>

DG:DTC P1160 RETURN SPRING FAILURE

1. OUTLINE OF DIAGNOSIS

Judge as NG when the valve is opened more than the default opening angle, but does not move to the close direction with the motor power stopped.

2. COMPONENT DESCRIPTION

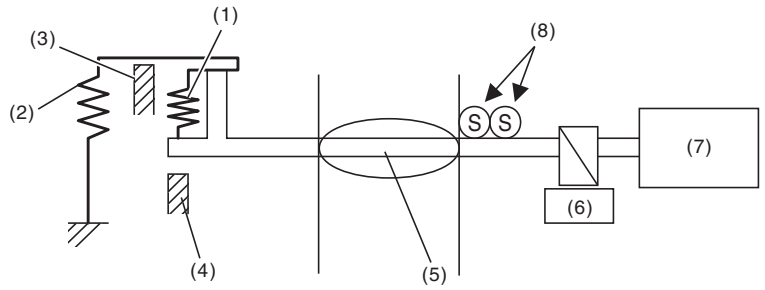

(1) Opener spring
(2) Return spring
(3) Intermediate stopper
(4) Full closed stopper
(5) Throttle valve
(6) Gear
(7) DC motor
(8) Main and sub throttle position sensor

3. ENABLE CONDITION

Secondary Parameters	Enable Conditions
Battery voltage	≥ 6 V
Throttle position sensor	Normal

4. GENERAL DRIVING CYCLE

- Ignition switch ON → OFF
- Ignition switch OFF → ON (Only after clearing memory)

5. DIAGNOSTIC METHOD

- **Abnormality Judgement**

Judge as NG when the following conditions are established.

Judgement Value

Malfunction criteria	Threshold value
Opening variation after continuity is set to OFF	< 2 °

Time Needed for Diagnosis: 24 ms
Malfunction Indicator Light Illumination: Illuminates as soon as a malfunction occurs.

- **Normality Judgement**

Judge as OK and clear the NG if the following conditions are established.

Judgement Value

Malfunction criteria	Threshold value
Opening variation after continuity is set to OFF	≥ 2 °

Time Needed for Diagnosis: 3400 ms

DH:DTC P1400 FUEL TANK PRESSURE CONTROL SOLENOID VALVE CIRCUIT LOW

1. OUTLINE OF DIAGNOSIS

Detect the open/short circuit of pressure control solenoid valve.
Judge as NG when ECM output level is different from actual terminal level.

2. COMPONENT DESCRIPTION

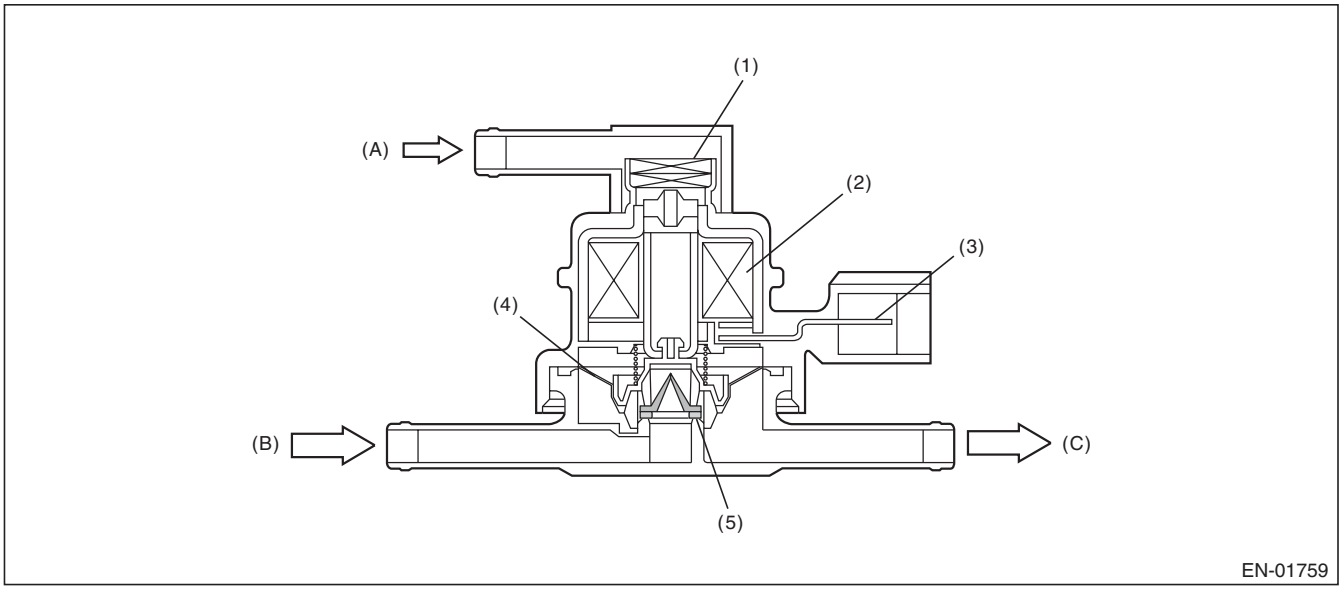

(A)	Barometric pressure	(B)	Shut-off valve	(C)	To fuel tank
(1)	Filter	(3)	Connector terminal	(5)	Valve
(2)	Coil	(4)	Diaphragm		

3. ENABLE CONDITION

Secondary Parameters	Enable Conditions
None	

4. GENERAL DRIVING CYCLE

Always perform the diagnosis after starting the engine.

5. DIAGNOSTIC METHOD

- **Abnormality Judgement**

If the duration of time while the following conditions are met is longer than the time indicated, judge as NG.

Judgement Value

Malfunction criteria	Threshold value
Battery voltage	≥ 10.9 V
Elapsed time after starting the engine	≥ 1 second
Terminal output voltage when ECM outputs OFF signal	Low

Time Needed for Diagnosis: 2500 ms
Malfunction Indicator Light Illumination: Illuminates when malfunction occurs in 2 continuous driving cycles.

- **Normality Judgement**

Judge as OK and clear the NG if the continuous time while the following conditions are established is more than the predetermined time.

Judgement Value

Malfunction criteria	Threshold value
Battery voltage	≥ 10.9 V
Elapsed time after starting the engine	≥ 1 second
Terminal output voltage when ECM outputs OFF signal	High

Time Needed for Diagnosis: Less than 1 second

DI: DTC P1420 FUEL TANK PRESSURE CONTROL SOL. VALVE CIRCUIT HIGH

1. OUTLINE OF DIAGNOSIS

Detect the open/short circuit of pressure control solenoid valve.
Judge as NG when ECM output level is different from actual terminal level.

2. COMPONENT DESCRIPTION

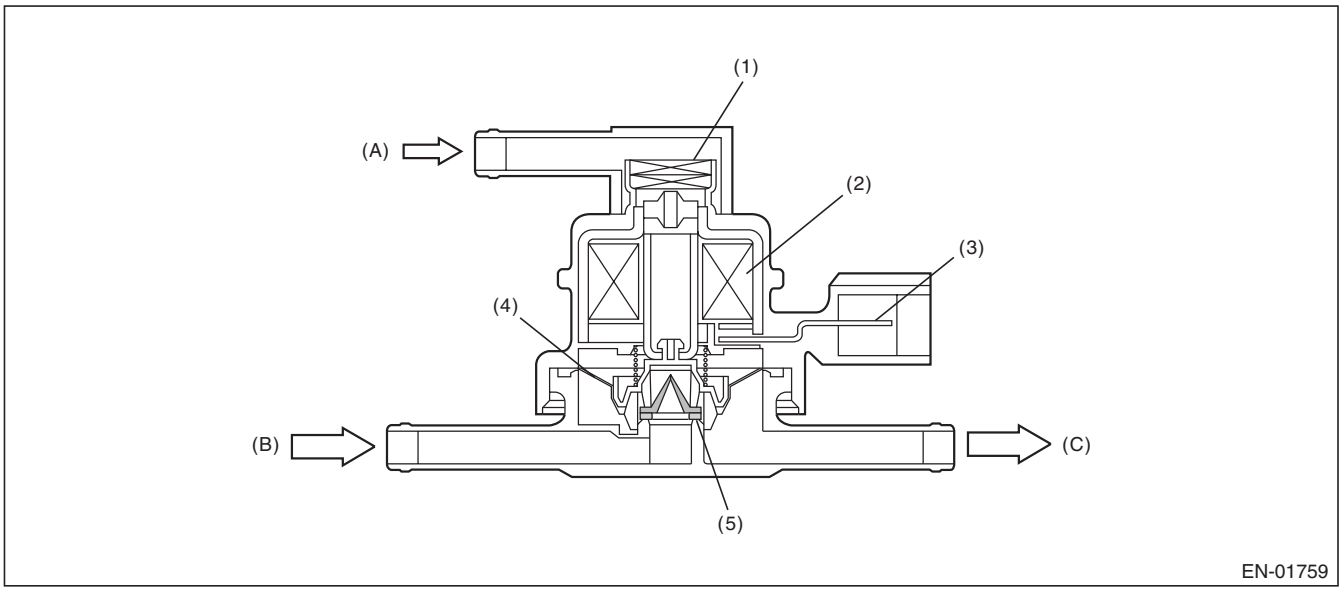

(A)	Barometric pressure	(B)	Shut-off valve	(C)	To fuel tank
(1)	Filter	(3)	Connector terminal	(5)	Valve
(2)	Coil	(4)	Diaphragm		

3. ENABLE CONDITION

Secondary Parameters	Enable Conditions
None	

4. GENERAL DRIVING CYCLE

Always perform the diagnosis after starting the engine.

5. DIAGNOSTIC METHOD

- **Abnormality Judgement**

If the duration of time while the following conditions are met is longer than the time indicated, judge as NG.

Judgement Value

Malfunction criteria	Threshold value
Battery voltage	≥ 10.9 V
Elapsed time after starting the engine	≥ 1 second
Terminal output voltage when ECM outputs ON signal	High

Time Needed for Diagnosis: 2500 ms
Malfunction Indicator Light Illumination: Illuminates when malfunction occurs in 2 continuous driving cycles.

- **Normality Judgement**

Judge as OK and clear the NG if the continuous time while the following conditions are established is more than the predetermined time.

Judgement Value

Malfunction criteria	Threshold value
Battery voltage	≥ 10.9 V
Elapsed time after starting the engine	≥ 1 second
Terminal output voltage when ECM outputs ON signal	Low

Time Needed for Diagnosis: Less than 1 second

DJ:DTC P1443 VENT CONTROL SOLENOID VALVE FUNCTION PROBLEM

1. OUTLINE OF DIAGNOSIS

Detect the abnormal function (stuck closed) of the drain valve.
Judge as NG when fuel tank pressure is low.

2. COMPONENT DESCRIPTION

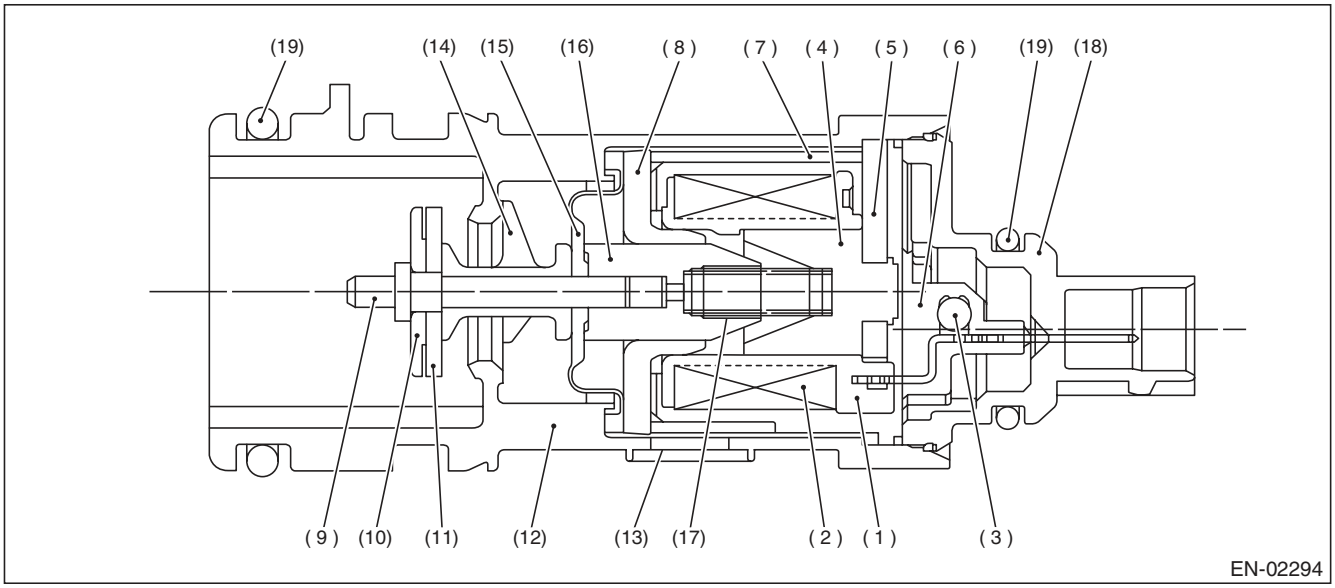

(1)	Bobbin	(8)	Magnetic plate	(14)	Retainer
(2)	Coil	(9)	Shaft	(15)	Diaphragm
(3)	Diode	(10)	Plate	(16)	Movable core
(4)	Stator core	(11)	Valve	(17)	Spring
(5)	End plate	(12)	Housing	(18)	Cover
(6)	Body	(13)	Filter	(19)	O-ring
(7)	Yoke				

3. ENABLE CONDITION

Secondary Parameters	Enable Conditions
Drain valve	Open
Battery voltage	≥ 10.9 V
Barometric pressure	≥ 75 kPa (563 mmHg, 22.2 inHg)
Tank pressure when starter is OFF → ON	–0.4 kPa (–3.2 mmHg, –0.1 inHg) and 1.4 kPa (10.7 mmHg, 0.4 inHg)

4. GENERAL DRIVING CYCLE

Always perform the diagnosis continuously.

5. DIAGNOSTIC METHOD

- **Abnormality Judgement**

If the duration of time while the following conditions are met is longer than the time indicated, judge as NG.

Judgement Value

Malfunction Criteria	Threshold Value
Fuel tank pressure	≤ –4 kPa (–30 mmHg, –1.2 inHg)

Time Needed for Diagnosis: 3000 ms
Malfunction Indicator Light Illumination: Illuminates as soon as a malfunction occurs.

- **Normality Judgement**

Judge as OK and clear the NG if the continuous time while the following conditions are established is more than the predetermined time.

Judgement Value

Malfunction Criteria	Threshold Value
Fuel tank pressure	> –4 kPa (–30 mmHg, –1.2 inHg)
Cumulative time when all the malfunction criteria below are met.	≥ 30000 ms
Purge control solenoid valve duty	Not = 0
Fuel temperature	–10 °C (14 °F) — 55 °C (131 °F)
Intake manifold relative pressure	≥ –26.7 kPa (–200 mmHg, –7.9 inHg)

Time Needed for Diagnosis: Less than 1 second

DK:DTC P1492 EGR SOLENOID VALVE SIGNAL #1 CIRCUIT MALFUNCTION (LOW INPUT)

1. OUTLINE OF DIAGNOSIS

- Detects open or short circuit of EGR.
- Judge as NG when the ECM output level differs from the actual terminal level.

2. COMPONENT DESCRIPTION

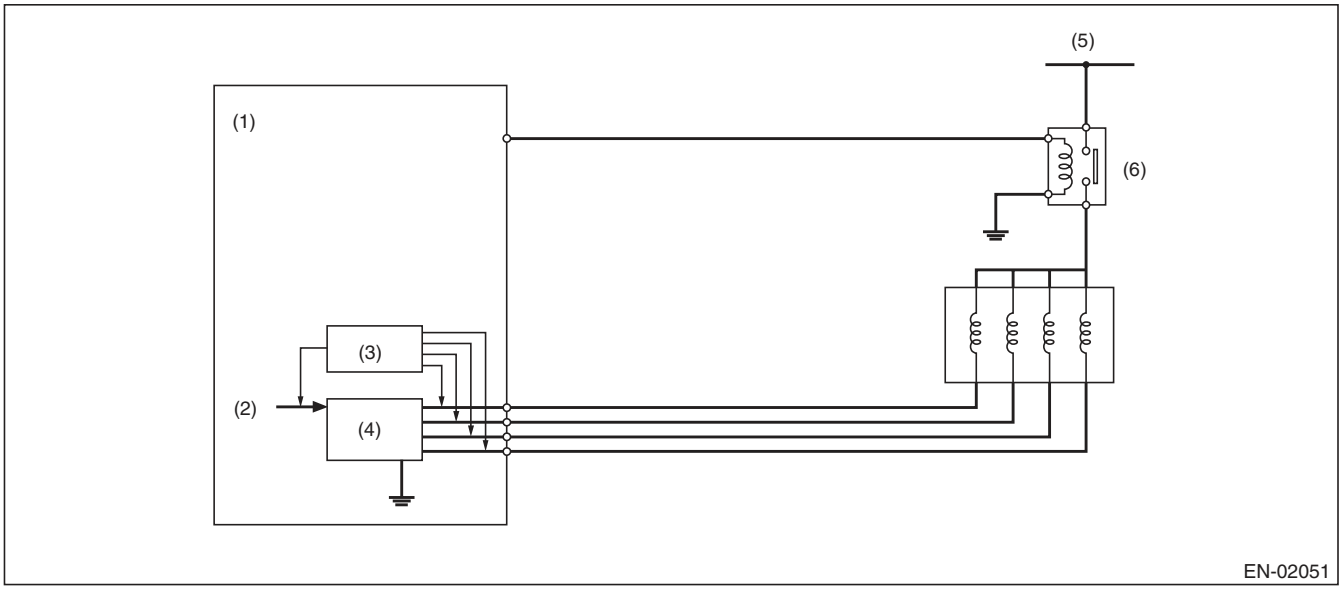

(1)	Engine control module (ECM)	(3)	Detecting circuit	(5)	Battery voltage
(2)	Computer unit (CPU)	(4)	Switch circuit	(6)	Main relay

3. ENABLE CONDITION

Secondary Parameters	Enable Conditions
Elapsed time after starting the engine	≥ 1 second
EGR valve target position	> 0 step
Battery voltage	≥ 10.9 V

4. GENERAL DRIVING CYCLE

Perform diagnosis continuously during EGR operation.

5. DIAGNOSTIC METHOD

- **Abnormality Judgement**

If the duration of time while the following conditions are met is longer than the time indicated, judge as NG.

Judgement Value

Malfunction Criteria	Threshold Value
Terminal voltage level when ECM outputs OFF signal	Low level

Time Needed for Diagnosis: 4 ms × 625 time(s)
Malfunction Indicator Light Illumination: Illuminates as soon as a malfunction occurs.

- **Normality Judgement**

Judge as OK and clear the NG if the continuous time while the following conditions are established is more than the predetermined time.

Judgement Value

Malfunction Criteria	Threshold Value
Terminal voltage level when ECM outputs OFF signal	High level

Time Needed for Diagnosis: 4 ms × 2 time(s)

DL:DTC P1493 EGR SOLENOID VALVE SIGNAL #1 CIRCUIT MALFUNCTION (HIGH INPUT)

1. OUTLINE OF DIAGNOSIS

- Detects open or short circuit of EGR.
- Judge as NG when the ECM output level differs from the actual terminal level.

2. COMPONENT DESCRIPTION

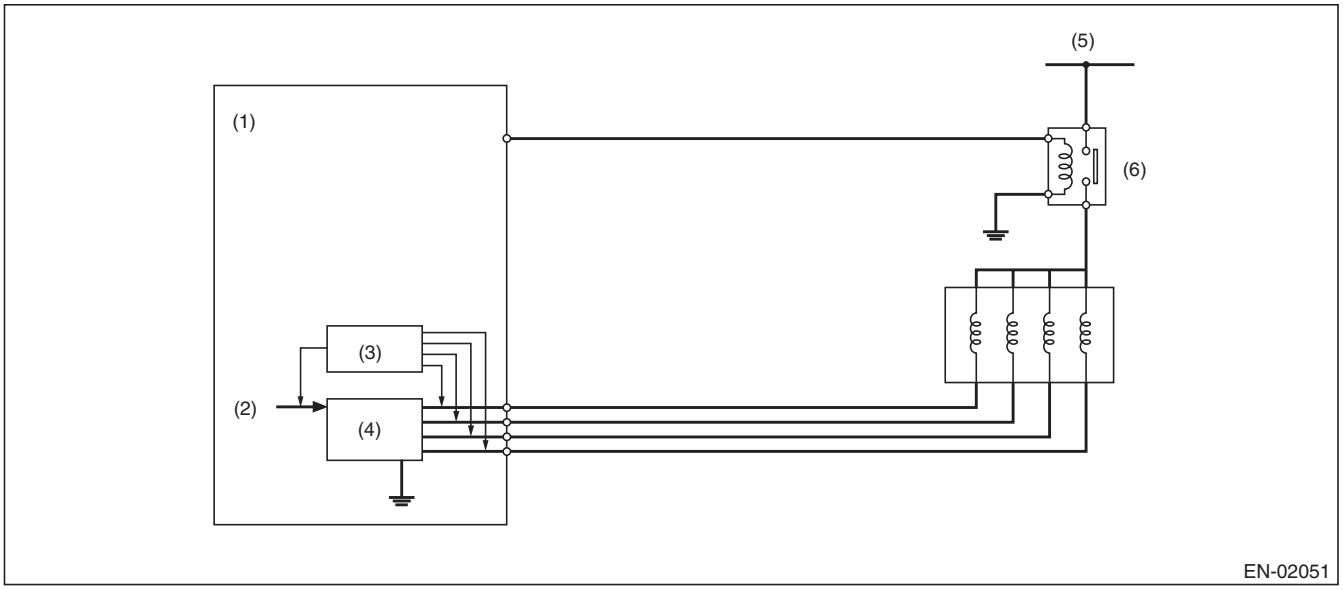

(1)	Engine control module (ECM)	(3)	Detecting circuit	(5)	Battery voltage
(2)	Computer unit (CPU)	(4)	Switch circuit	(6)	Main relay

3. ENABLE CONDITION

Secondary Parameters	Enable Conditions
Elapsed time after starting the engine	≥ 1 second
EGR valve target position	> 0 step
Battery voltage	≥ 10.9 V

4. GENERAL DRIVING CYCLE

Always perform the diagnosis continuously.

5. DIAGNOSTIC METHOD

- **Abnormality Judgement**

If the duration of time while the following conditions are met is longer than the time indicated, judge as NG.

Judgement Value

Malfunction Criteria	Threshold Value
Terminal voltage level when ECM outputs ON signal	High level

Time Needed for Diagnosis: 4 ms × 625 time(s)
Malfunction Indicator Light Illumination: Illuminates as soon as a malfunction occurs.

- **Normality Judgement**

Judge as OK and clear the NG if the continuous time while the following conditions are established is more than the predetermined time.

Judgement Value

Malfunction Criteria	Threshold Value
Terminal voltage level when ECM outputs ON signal	Low level

Time Needed for Diagnosis: 4 ms × 2 time(s)

DM:DTC P1494 EGR SOLENOID VALVE SIGNAL #2 CIRCUIT MALFUNCTION (LOW INPUT)

1. OUTLINE OF DIAGNOSIS

NOTE:
For the detection standard, refer to DTC P1492. <Ref. to GD(H6DO)-175, DTC P1492 EGR SOLENOID VALVE SIGNAL #1 CIRCUIT MALFUNCTION (LOW INPUT), Diagnostic Trouble Code (DTC) Detecting Criteria.>

DN:DTC P1495 EGR SOLENOID VALVE SIGNAL #2 CIRCUIT MALFUNCTION (HIGH INPUT)

1. OUTLINE OF DIAGNOSIS

NOTE:
For the detection standard, refer to DTC P1493. <Ref. to GD(H6DO)-177, DTC P1493 EGR SOLENOID VALVE SIGNAL #1 CIRCUIT MALFUNCTION (HIGH INPUT), Diagnostic Trouble Code (DTC) Detecting Criteria.>

DO:DTC P1496 EGR SOLENOID VALVE SIGNAL #3 CIRCUIT MALFUNCTION (LOW INPUT)

1. OUTLINE OF DIAGNOSIS

NOTE:
For the detection standard, refer to DTC P1492. <Ref. to GD(H6DO)-175, DTC P1492 EGR SOLENOID VALVE SIGNAL #1 CIRCUIT MALFUNCTION (LOW INPUT), Diagnostic Trouble Code (DTC) Detecting Criteria.>

DP:DTC P1497 EGR SOLENOID VALVE SIGNAL #3 CIRCUIT MALFUNCTION (HIGH INPUT)

1. OUTLINE OF DIAGNOSIS

NOTE:
For the detection standard, refer to DTC P1493. <Ref. to GD(H6DO)-177, DTC P1493 EGR SOLENOID VALVE SIGNAL #1 CIRCUIT MALFUNCTION (HIGH INPUT), Diagnostic Trouble Code (DTC) Detecting Criteria.>

DQ:DTC P1498 EGR SOLENOID VALVE SIGNAL #4 CIRCUIT MALFUNCTION (LOW INPUT)

1. OUTLINE OF DIAGNOSIS

NOTE:
For the detection standard, refer to DTC P1492. <Ref. to GD(H6DO)-175, DTC P1492 EGR SOLENOID VALVE SIGNAL #1 CIRCUIT MALFUNCTION (LOW INPUT), Diagnostic Trouble Code (DTC) Detecting Criteria.>

DR:DTC P1499 EGR SOLENOID VALVE SIGNAL #4 CIRCUIT MALFUNCTION (HIGH INPUT)

1. OUTLINE OF DIAGNOSIS

NOTE:
For the detection standard, refer to DTC P1493. <Ref. to GD(H6DO)-177, DTC P1493 EGR SOLENOID VALVE SIGNAL #1 CIRCUIT MALFUNCTION (HIGH INPUT), Diagnostic Trouble Code (DTC) Detecting Criteria.>

DS:DTC P1560 BACK-UP VOLTAGE CIRCUIT MALFUNCTION

1. OUTLINE OF DIAGNOSIS

Detect the open/short circuit of back-up power supply circuit.
Judge as NG when the backup power voltage is low.

2. ENABLE CONDITION

Secondary Parameters	Enable Conditions
None	

3. GENERAL DRIVING CYCLE

Always perform the diagnosis continuously.

4. DIAGNOSTIC METHOD

- **Abnormality Judgement**

If the duration of time while the following conditions are met is longer than the time indicated, judge as NG.

Judgement Value

Malfunction Criteria	Threshold Value
Voltage of back-up power supply	Low
Battery voltage	≥ 10.9 V
Engine condition	After engine starting

Time Needed for Diagnosis: 2500 ms
Malfunction Indicator Light Illumination: Illuminates as soon as a malfunction occurs.

- **Normality Judgement**

Judge as OK and clear the NG if the continuous time while the following conditions are established is more than the predetermined time.

Judgement Value

Malfunction Criteria	Threshold Value
Voltage of back-up power supply	High
Battery voltage	≥ 10.9 V
Engine condition	After engine starting

Time Needed for Diagnosis: Less than 1 second

DT:DTC P1570 ANTENNA

1. OUTLINE OF DIAGNOSIS

NOTE:
For the detection standard, refer to DTC P0513. <Ref. to GD(H6DO)-151, DTC P0513 INCORRECT IMMOBILIZER KEY, Diagnostic Trouble Code (DTC) Detecting Criteria.>

DU:DTC P1571 REFERENCE CODE INCOMPATIBILITY

1. OUTLINE OF DIAGNOSIS

NOTE:
For the detection standard, refer to DTC P0513. <Ref. to GD(H6DO)-151, DTC P0513 INCORRECT IMMOBILIZER KEY, Diagnostic Trouble Code (DTC) Detecting Criteria.>

DV:DTC P1572 IMM CIRCUIT FAILURE (EXCEPT ANTENNA CIRCUIT)

1. OUTLINE OF DIAGNOSIS

NOTE:
For the detection standard, refer to DTC P0513. <Ref. to GD(H6DO)-151, DTC P0513 INCORRECT IMMOBILIZER KEY, Diagnostic Trouble Code (DTC) Detecting Criteria.>

DW:DTC P1574 KEY COMMUNICATION FAILURE

1. OUTLINE OF DIAGNOSIS

NOTE:
For the detection standard, refer to DTC P0513. <Ref. to GD(H6DO)-151, DTC P0513 INCORRECT IMMOBILIZER KEY, Diagnostic Trouble Code (DTC) Detecting Criteria.>

DX:DTC P1576 EGI CONTROL MODULE EEPROM

1. OUTLINE OF DIAGNOSIS

NOTE:
For the detection standard, refer to DTC P0513. <Ref. to GD(H6DO)-151, DTC P0513 INCORRECT IMMOBILIZER KEY, Diagnostic Trouble Code (DTC) Detecting Criteria.>

DY:DTC P1577 IMM CONTROL MODULE EEPROM

1. OUTLINE OF DIAGNOSIS

NOTE:
For the detection standard, refer to DTC P0513. <Ref. to GD(H6DO)-151, DTC P0513 INCORRECT IMMOBILIZER KEY, Diagnostic Trouble Code (DTC) Detecting Criteria.>

DZ:DTC P1578 METER FAILURE

1. OUTLINE OF DIAGNOSIS

NOTE:
For the detection standard, refer to DTC P0513. <Ref. to GD(H6DO)-151, DTC P0513 INCORRECT IMMOBILIZER KEY, Diagnostic Trouble Code (DTC) Detecting Criteria.>

EA:DTC P1602 CONTROL MODULE PROGRAMMING ERROR

1. OUTLINE OF DIAGNOSIS

Detect malfunctions of the catalyst advanced idling retard angle control.
Judge as NG when ECM is not controlling the angle properly during catalyst advanced idling retard angle control.
Judge as NG if there is exhaust gas temperature diagnosis and idle speed diagnosis and if either of them is NG.

- Exhaust gas temperature diagnosis

Judge as NG when the estimated exhausted gas temperature in 14 seconds after the cold start is below the specified value.

- Idle speed diagnosis

Judge as NG when actual engine speed is not close to target engine speed after terminating the retard angle control.

2. ENABLE CONDITION

Secondary Parameters	Enable Conditions
Atmospheric pressure	≥ 75 kPa (563 mmHg, 22.2 inHg)
Battery voltage	≥ 10.9 V
Cold start diagnosis	Incomplete
Vehicle speed	< 2 km/h (1.2 MPH)
Misfire in 200 engine revs.	< 7
Time after starting	= 14 seconds

3. GENERAL DRIVING CYCLE

Perform the diagnosis at cold start.

4. DIAGNOSTIC METHOD

- **Exhaust gas temperature diagnosis**

Abnormality Judgement
Calculate the estimated exhaust gas temperature when the diagnostic enable condition is established. Judge as NG when the following conditions are established after engine starting within the predetermined time.

Judgement Value

Malfunction criteria	Threshold value
Estimated exhaust gas temperature	< Value from Map

Map

Coolant temperature after starting the engine	–40 °C (–40 °F)	–30 °C (–22 °F)	–20 °C (–4 °F)	–10 °C (14 °F)	0 °C (32 °F)	10 °C (50 °F)	20 °C (68 °F)	30 °C (86 °F)	40 °C (104 °F)	50 °C (122 °F)
Threshold Value	0 °C (32 °F)	0 °C (32 °F)	0 °C (32 °F)	0 °C (32 °F)	155 °C (311 °F)	150 °C (302 °F)	155 °C (311 °F)	140 °C (284 °F)	133 °C (271.4 °F)	130 °C (266 °F)

Time Needed for Diagnosis: 14 seconds
Malfunction Indicator Light Illumination: Illuminates when malfunction occurs in 2 continuous driving cycles.
Normality Judgement
Judge as OK and clear the NG if the following conditions are established.

Judgement Value

Malfunction criteria	Threshold value
Estimated exhaust gas temperature	≥ Value from Map

Time Needed for Diagnosis: Less than 1 second

- **Idle speed diagnosis**

Abnormality Judgement
Judge as NG when the following conditions are established after the predetermined time.

Judgement Value

Malfunction criteria	Threshold value
Continuous time of (Target engine speed – Actual engine speed > –200 rpm)	≥ 6000 ms
Continuous time of (actual retard amount > 20 °CA)	≥ 0 ms

Time Needed for Diagnosis: 14 seconds
Malfunction Indicator Light Illumination: Illuminates when malfunction occurs in 2 continuous driving cycles.
Normality Judgement
Judge as OK and clear the NG if the following conditions are established.

Judgement Value

Malfunction criteria	Threshold value
Continuous time of (Target engine speed – Actual engine speed > –200 rpm)	< 6000 ms
Continuous time of (actual retard amount > 20 °CA)	< 0 ms

Time Needed for Diagnosis: Less than 1 second

EB:DTC P2088 INTAKE CAMSHAFT POSITION ACTUATOR CONTROL CIRCUIT LOW (BANK 1)

1. OUTLINE OF DIAGNOSIS

Detect open or short circuit of the oil flow control solenoid valve.
Judge as NG when the current is small even though the duty signal is large.

2. ENABLE CONDITION

Secondary Parameters	Enable Conditions
None	

3. GENERAL DRIVING CYCLE

Always perform the diagnosis continuously.

4. DIAGNOSTIC METHOD

- **Abnormality Judgement**

If the duration of time while the following conditions are met is longer than the time indicated, judge as NG.

Judgement Value

Malfunction criteria	Threshold value
Battery voltage	≥ 10.9 V
Oil flow control solenoid valve control duty	≥ 99.61 %
Oil control solenoid valve control present current	< 0.306 A

Time Needed for Diagnosis: 2000 ms
Malfunction Indicator Light Illumination: Illuminates as soon as a malfunction occurs.

- **Normality Judgement**

Judge as OK and clear the NG if the continuous time while the following conditions are established is more than the predetermined time.

Judgement Value

Malfunction criteria	Threshold value
Battery voltage	≥ 10.9 V
Target current value of the oil flow control solenoid valve	≥ 0.14 A
|Target current value of the oil flow control solenoid valve – Oil flow control solenoid valve control current value|	< 0.08 A

Time Needed for Diagnosis: 2000 ms

EC:DTC P2089 INTAKE CAMSHAFT POSITION ACTUATOR CONTROL CIRCUIT HIGH (BANK 1)

1. OUTLINE OF DIAGNOSIS

Detect open or short circuit of oil flow control solenoid valve.
Judge as NG when the current is large even though the duty signal is small.

2. ENABLE CONDITION

Secondary Parameters	Enable Conditions
None	

3. GENERAL DRIVING CYCLE

Always perform the diagnosis continuously.

4. DIAGNOSTIC METHOD

- **Abnormality Judgement**

If the duration of time while the following conditions are met is longer than the time indicated, judge as NG.

Judgement Value

Malfunction criteria	Threshold value
Battery voltage	≥ 10.9 V
Oil flow control solenoid valve control duty	< 0.39 %
Oil control solenoid valve control present current	≥ 0.306 A

Time Needed for Diagnosis: 2000 ms
Malfunction Indicator Light Illumination: Illuminates as soon as a malfunction occurs.

- **Normality Judgement**

Judge as OK and clear the NG if the continuous time while the following conditions are established is more than the predetermined time.

Judgement Value

Malfunction criteria	Threshold value
Battery voltage	≥ 10.9 V
|Target current value of the oil flow control solenoid valve – Oil flow control solenoid valve control current value|	< 0.08 A

Time Needed for Diagnosis: 2000 ms

ED:DTC P2092 INTAKE CAMSHAFT POSITION ACTUATOR CONTROL CIRCUIT LOW (BANK 2)

1. OUTLINE OF DIAGNOSIS

NOTE:
For the detection standard, refer to DTC P2088. <Ref. to GD(H6DO)-184, DTC P2088 INTAKE CAMSHAFT POSITION ACTUATOR CONTROL CIRCUIT LOW (BANK 1), Diagnostic Trouble Code (DTC) Detecting Criteria.>

EE:DTC P2093 INTAKE CAMSHAFT POSITION ACTUATOR CONTROL CIRCUIT HIGH (BANK 2)

1. OUTLINE OF DIAGNOSIS

NOTE:
For the detection standard, refer to DTC P2089. <Ref. to GD(H6DO)-185, DTC P2089 INTAKE CAMSHAFT POSITION ACTUATOR CONTROL CIRCUIT HIGH (BANK 1), Diagnostic Trouble Code (DTC) Detecting Criteria.>

EF:DTC P2096 POST CATALYST FUEL TRIM SYSTEM TOO LEAN (BANK 1)

1. OUTLINE OF DIAGNOSIS

Detect the malfunction of fuel system from the size of the sub feedback learning value.
Control the sub feedback learning and judge as NG when the learning value is in the lean zone.

2. COMPONENT DESCRIPTION

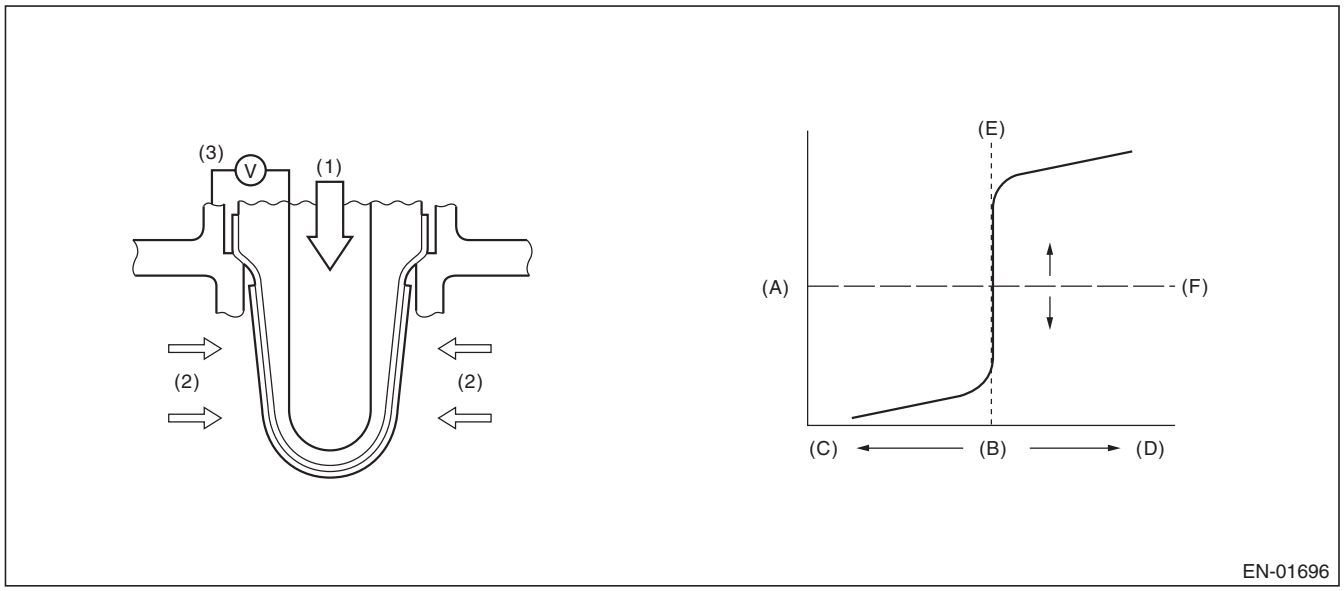

(A)	Electromotive force	(C)	Rich	(E)	Theoretical air fuel ratio
(B)	Air fuel ratio	(D)	Lean	(F)	Comparative voltage
(1)	Atmosphere	(2)	Exhaust gas	(3)	Electromotive force

3. ENABLE CONDITION

Secondary Parameters	Enable Conditions
Conditions for carrying out the sub feedback learning	Completed
Continuous time when all conditions are established.	≥ 1 s

4. GENERAL DRIVING CYCLE

Perform the diagnosis continuously when the vehicle is idling or running at a constant speed of 80 km/h (50 MPH) or more.

5. DIAGNOSTIC METHOD

- **Abnormality Judgement**

If the duration of time while the following conditions are met is longer than the time indicated, judge as NG.

Judgement Value

Malfunction criteria	Threshold value
Sub feedback learning value	< –0.03

Time Needed for Diagnosis: 5 s × 1 time(s)
Malfunction Indicator Light Illumination: Illuminates when malfunction occurs in 2 continuous driving cycles.

- **Normality Judgement**

Judge as OK and clear the NG if the continuous time while the following conditions are established is more than the predetermined time.

Judgement Value

Malfunction criteria	Threshold value
Sub feedback learning value	≥ –0.03 + 0

Time Needed for Diagnosis: 5 s

EG:DTC P2097 POST CATALYST FUEL TRIM SYSTEM TOO RICH (BANK 1)

1. OUTLINE OF DIAGNOSIS

Detect the malfunction of fuel system from the size of the sub feedback learning value.
Sub feedback learning is being performed. When the learning value goes to the rich side, judge as NG.

2. COMPONENT DESCRIPTION

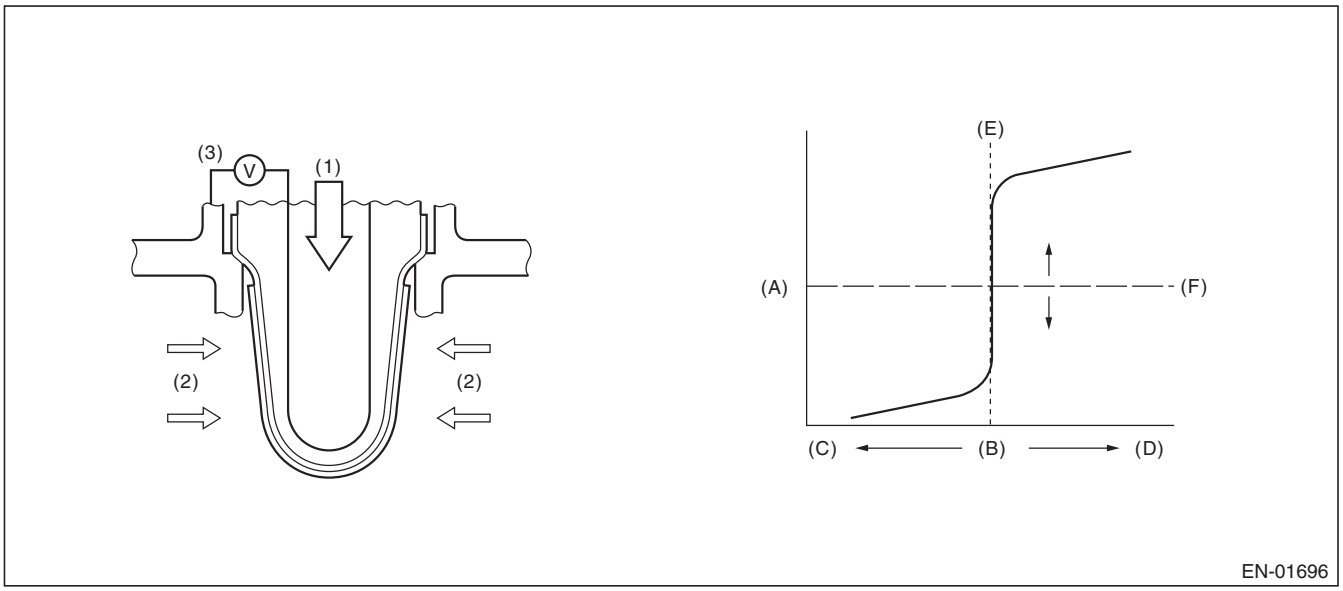

(A)	Electromotive force	(C)	Rich	(E)	Theoretical air fuel ratio
(B)	Air fuel ratio	(D)	Lean	(F)	Comparative voltage
(1)	Atmosphere	(2)	Exhaust gas	(3)	Electromotive force

3. ENABLE CONDITION

Secondary Parameters	Enable Conditions
Conditions for carrying out the sub feedback learning	Completed
Continuous time when all conditions are established.	≥ 1 s

4. GENERAL DRIVING CYCLE

Perform the diagnosis continuously when the vehicle is idling or running at a constant speed of 80 km/h (50 MPH) or more.

5. DIAGNOSTIC METHOD

- **Abnormality Judgement**

If the duration of time while the following conditions are met is longer than the time indicated, judge as NG.

Judgement Value

Malfunction criteria	Threshold value
Sub feedback learning value	≥ 0.04

Time Needed for Diagnosis: 5 s × 1 time(s)
Malfunction Indicator Light Illumination: Illuminates when malfunction occurs in 2 continuous driving cycles.

- **Normality Judgement**

Judge as OK and clear the NG if the continuous time while the following conditions are established is more than the predetermined time.

Judgement Value

Malfunction criteria	Threshold value
Sub feedback learning value	< 0.04 + 0

Time Needed for Diagnosis: 5 s

EH:DTC P2098 POST CATALYST FUEL TRIM SYSTEM TOO LEAN BANK 2

1. OUTLINE OF DIAGNOSIS

NOTE:
For the detection standard, refer to DTC P2096. <Ref. to GD(H6DO)-187, DTC P2096 POST CATALYST FUEL TRIM SYSTEM TOO LEAN (BANK 1), Diagnostic Trouble Code (DTC) Detecting Criteria.>

EI: DTC P2099 POST CATALYST FUEL TRIM SYSTEM TOO RICH BANK 2

1. OUTLINE OF DIAGNOSIS

NOTE:
For the detection standard, refer to DTC P2097. <Ref. to GD(H6DO)-189, DTC P2097 POST CATALYST FUEL TRIM SYSTEM TOO RICH (BANK 1), Diagnostic Trouble Code (DTC) Detecting Criteria.>

EJ: DTC P2101 THROTTLE ACTUATOR CONTROL MOTOR CIRCUIT RANGE/ PERFORMANCE

1. OUTLINE OF DIAGNOSIS

Judge as NG when the motor current becomes large or drive circuit is heated.

2. COMPONENT DESCRIPTION

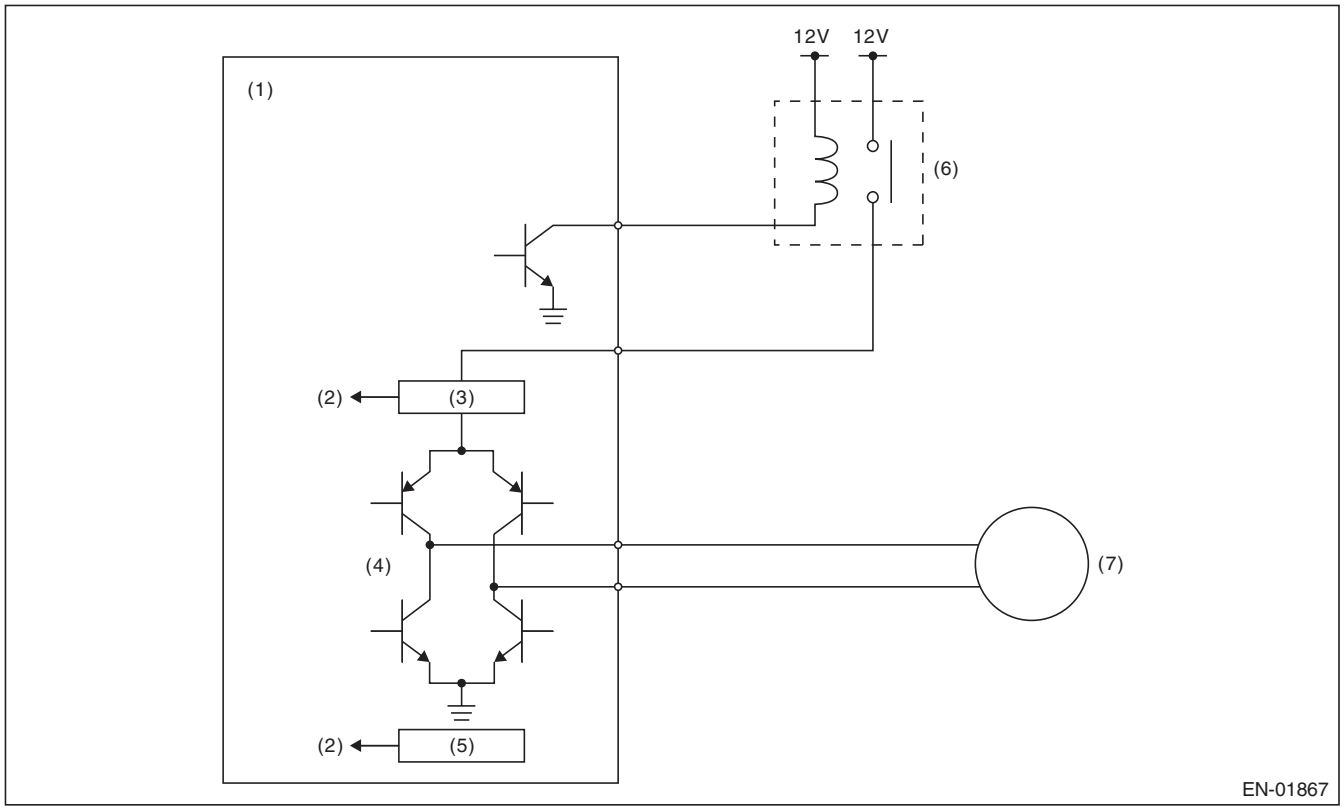

(1)	Engine control module (ECM)	(4)	Drive circuit	(6)	Electronic throttle control relay
(2)	Detecting circuit	(5)	Temperature detection circuit	(7)	Motor
(3)	Overcurrent detection circuit				

3. ENABLE CONDITION

Secondary Parameters	Enable Conditions
Under control of electronic throttle control	ON
CPU communication line sub → main normal judgment	Normal

4. GENERAL DRIVING CYCLE

Always perform the diagnosis continuously.

5. DIAGNOSTIC METHOD

- **Abnormality Judgement**

If the duration of time while the following conditions are met is longer than the time indicated, judge as NG.

Judgement Value

Malfunction criteria	Threshold value
Motor current or Drive circuit inner temperature	> 8 A > 175°C (347°F)

Time Needed for Diagnosis: 500 ms
Malfunction Indicator Light Illumination: Illuminates as soon as a malfunction occurs.

- **Normality Judgement**

Judge as OK and clear the NG if the continuous time while the following conditions are established is more than the predetermined time.

Judgement Value

Malfunction Criteria	Threshold Value
Motor current	≤ 8 A
Drive circuit inner temperature	≤ 175°C (347°F)

Time Needed for Diagnosis: 2000 ms

EK:DTC P2102 THROTTLE ACTUATOR CONTROL MOTOR CIRCUIT LOW

1. OUTLINE OF DIAGNOSIS

Judge as NG when the electronic throttle control power is not supplied even when ECM sets the electronic throttle control relay to ON.

2. COMPONENT DESCRIPTION

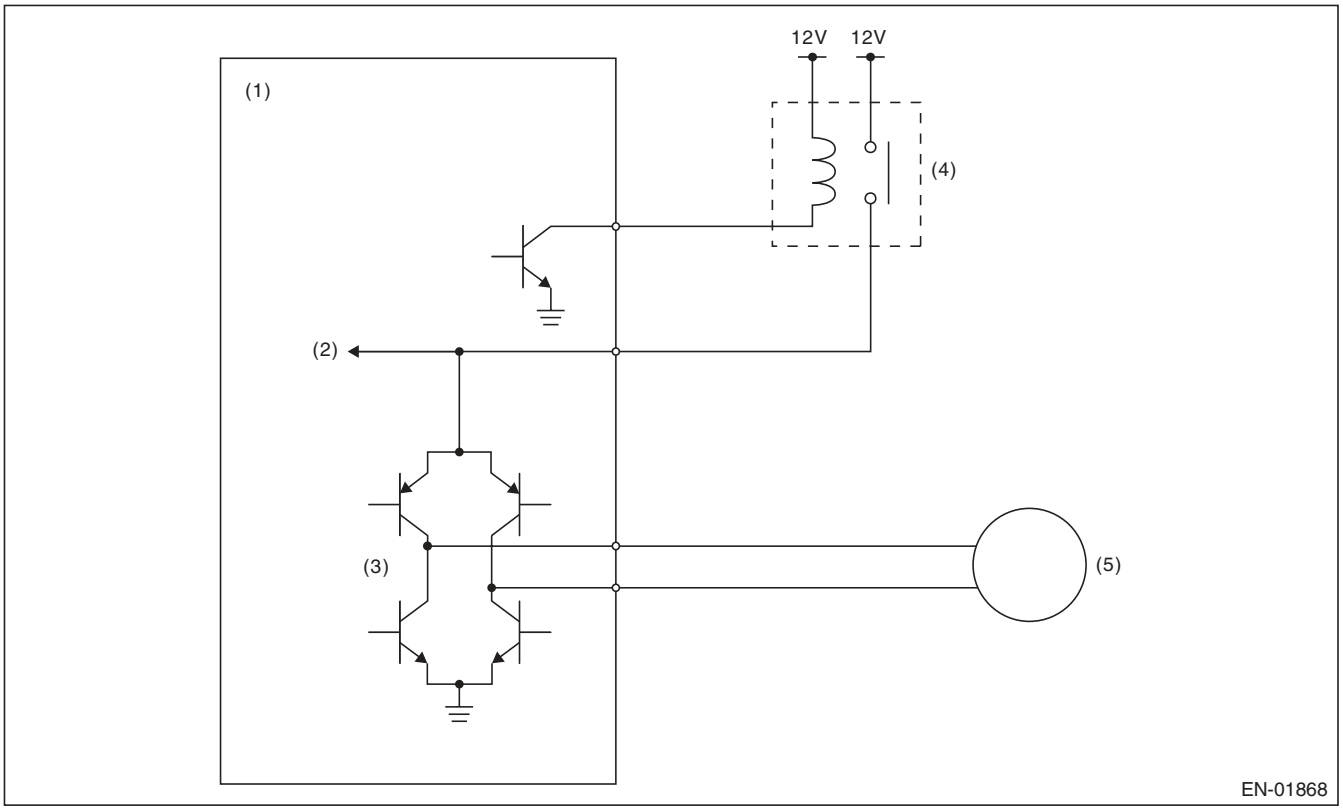

(1) Engine control module (ECM)
(2) Voltage detection circuit
(3) Drive circuit
(4) Electronic throttle control relay
(5) Motor

3. ENABLE CONDITION

Secondary Parameters	Enable Conditions
Battery voltage	≥ 11 V
Electronic throttle control relay output	ON

4. GENERAL DRIVING CYCLE

Always perform the diagnosis continuously.

5. DIAGNOSTIC METHOD

- **Abnormality Judgement**

If the duration of time while the following conditions are met is longer than the time indicated, judge as NG.

Judgement Value

Malfunction criteria	Threshold value
Motor power voltage	≤ 5 V

Time Needed for Diagnosis: 400 ms
Malfunction Indicator Light Illumination: Illuminates as soon as a malfunction occurs.

- **Normality Judgement**

Judge as OK and clear the NG if the continuous time while the following conditions are established is more than the predetermined time.

Judgement Value

Malfunction criteria	Threshold value
Motor power voltage	> 5 V

Time Needed for Diagnosis: 2000 ms

EL:DTC P2103 THROTTLE ACTUATOR CONTROL MOTOR CIRCUIT HIGH

1. OUTLINE OF DIAGNOSIS

Judge as NG when the electronic throttle control power is supplied even when ECM sets the electronic throttle control relay to OFF.

2. COMPONENT DESCRIPTION

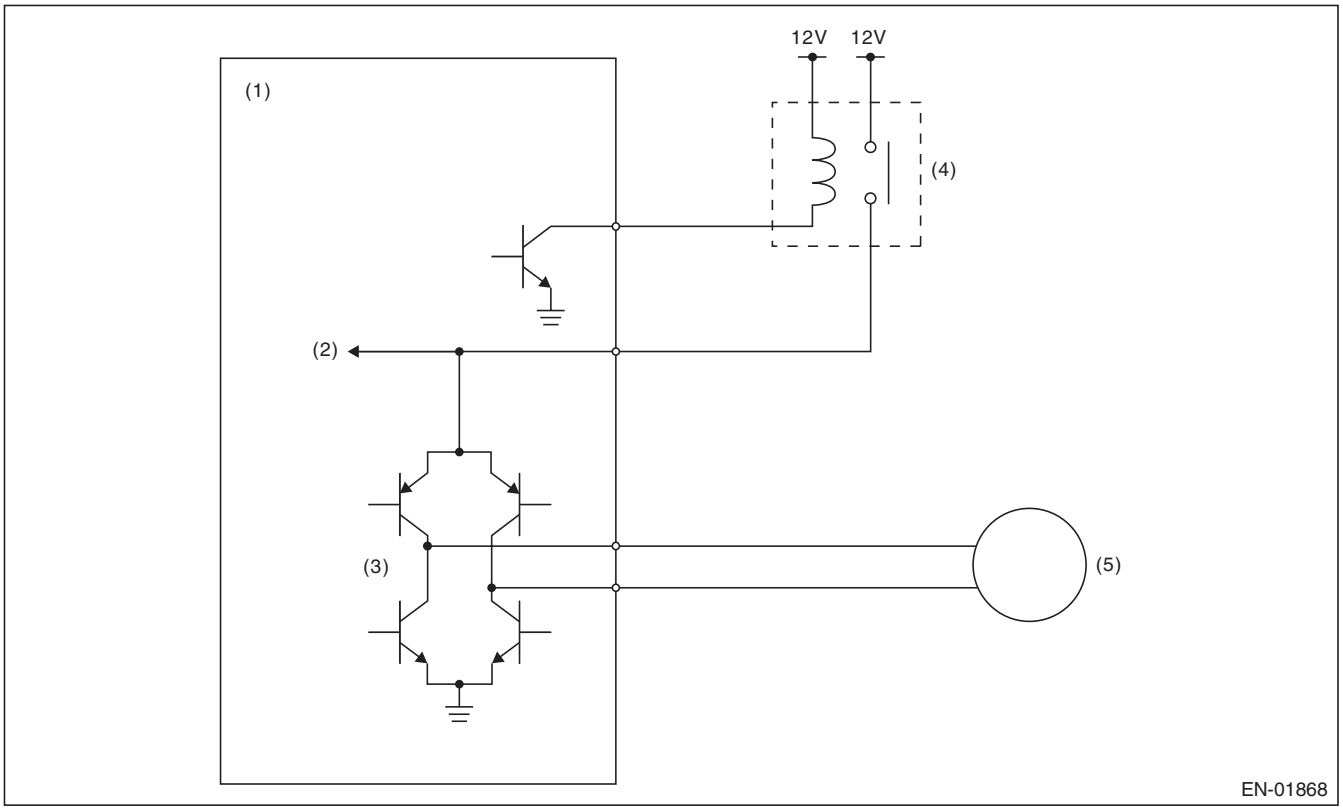

(1) Engine control module (ECM)
(2) Voltage detection circuit
(3) Drive circuit
(4) Electronic throttle control relay
(5) Motor

3. ENABLE CONDITION

Secondary Parameters	Enable Conditions
Battery voltage	≥ 6 V
Electronic throttle control relay output	OFF

4. GENERAL DRIVING CYCLE

- When ignition switch ON → OFF
- Ignition switch OFF → ON (Only after clearing memory)

5. DIAGNOSTIC METHOD

- **Abnormality Judgement**

If the duration of time while the following conditions are met is longer than the time indicated, judge as NG.

Judgement Value

Malfunction criteria	Threshold value
Motor power voltage	≥ 5 V

Time Needed for Diagnosis: 600 ms
Malfunction Indicator Light Illumination: Illuminates as soon as a malfunction occurs.

- **Normality Judgement**

Judge as OK and clear the NG if the continuous time while the following conditions are established is more than the predetermined time.

Judgement Value

Malfunction criteria	Threshold value
Motor power voltage	< 5 V

Time Needed for Diagnosis: 400 ms

EM:DTC P2109 THROTTLE/PEDAL POSITION SENSOR “A” MINIMUM STOP PERFORMANCE

1. OUTLINE OF DIAGNOSIS

Judge as NG when full close point learning cannot conducted or abnormal value is detected.

2. COMPONENT DESCRIPTION

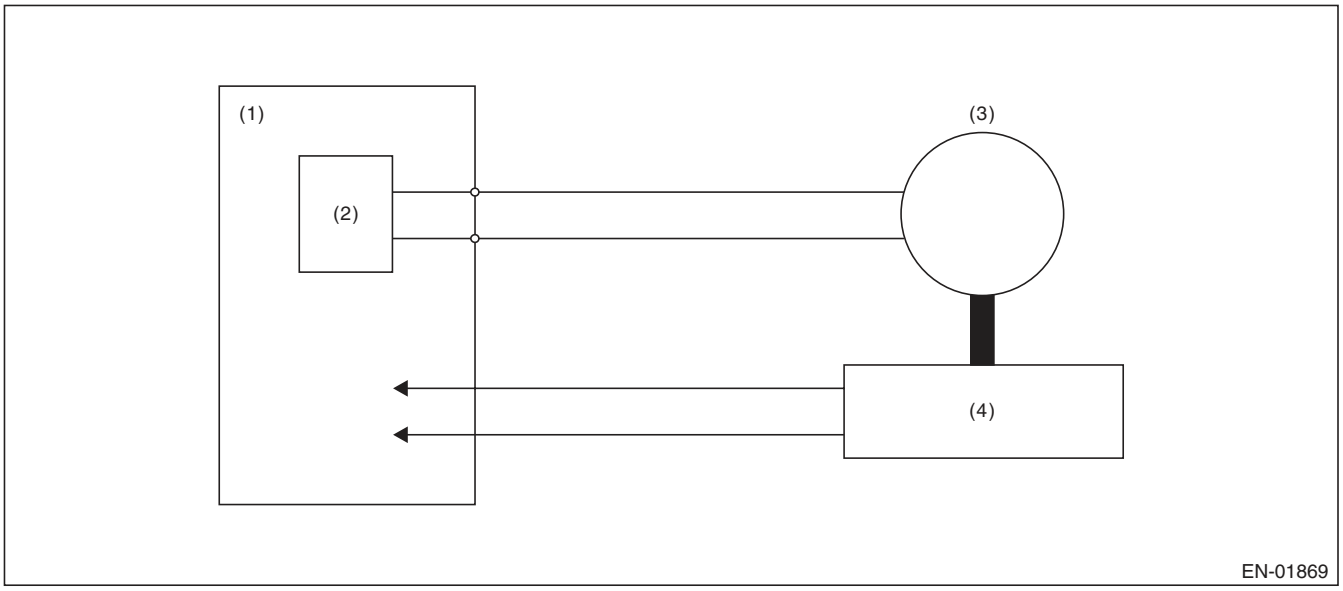

(1) Engine control module (ECM)
(2) Drive circuit
(3) Motor
(4) Throttle position sensor

3. ENABLE CONDITION

Secondary Parameters	Enable Conditions
Ignition switch	ON → OFF
Ignition switch (only after clear memory)	OFF → ON

4. GENERAL DRIVING CYCLE

Perform the diagnosis at full closed point learning.

5. DIAGNOSTIC METHOD

- **Abnormality Judgement**

If the duration of time while the following conditions are met is longer than the time indicated, judge as NG.

Judgement Value

Malfunction criteria	Threshold value
Throttle sensor opening angle at full close point learning	< 10.127 ° or > 19.872 °
or Throttle opening angle when the ignition switch is ON – Throttle minimum stop position	< 1.683 °

Time Needed for Diagnosis: 8 ms — 80 ms
Malfunction Indicator Light Illumination: Illuminates as soon as a malfunction occurs.

- **Normality Judgement**

Judge as OK and clear the NG if the continuous time while the following conditions are established is more than the predetermined time.

Judgement Value

Malfunction criteria	Threshold value
Throttle sensor opening angle at full close point learning	≥ 10.127 ° and ≤ 19.872 °
Throttle opening angle when the ignition switch is ON – Throttle minimum stop position	≥ 1.683 °

Time Needed for Diagnosis: 8 ms

EN:DTC P2122 THROTTLE/PEDAL POSITION SENSOR/SWITCH “D” CIRCUIT LOW INPUT

1. OUTLINE OF DIAGNOSIS

Detect the open or short circuit of accelerator pedal position sensor 1.
Judge as NG if out of specification.

2. COMPONENT DESCRIPTION

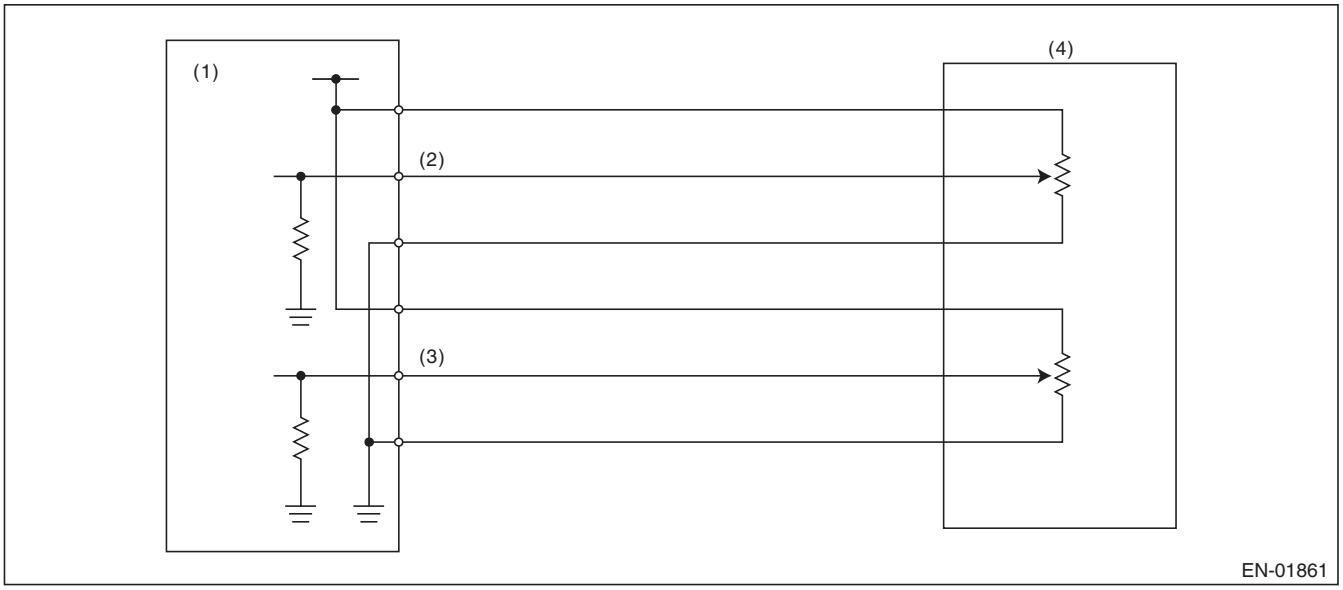

(1) Engine control module (ECM)
(2) Accelerator pedal position sensor 1 signal
(3) Accelerator pedal position sensor 2 signal
(4) Accelerator pedal position sensor

3. ENABLE CONDITION

Secondary Parameters	Enable Conditions
Ignition switch	ON
Battery voltage	≥ 6 V

4. GENERAL DRIVING CYCLE

Always perform the diagnosis continuously.

5. DIAGNOSTIC METHOD

- **Abnormality Judgement**

If the duration of time while the following conditions are met is longer than the time indicated, judge as NG.

Judgement Value

Malfunction criteria	Threshold value
Sensor 1 input voltage	< 0.219 V

Time Needed for Diagnosis: 100 ms
Malfunction Indicator Light Illumination: Illuminates as soon as a malfunction occurs.

- **Normality Judgement**

Judge as OK and clear the NG if the continuous time while the following conditions are established is more than the predetermined time.

Judgement Value

Malfunction criteria	Threshold value
Sensor 1 input voltage	≥ 0.219 V

Time Needed for Diagnosis: 100 ms

EO:DTC P2123 THROTTLE/PEDAL POSITION SENSOR/SWITCH “D” CIRCUIT HIGH INPUT

1. OUTLINE OF DIAGNOSIS

Detect the open or short circuit of accelerator pedal position sensor 1.
Judge as NG if out of specification.

2. COMPONENT DESCRIPTION

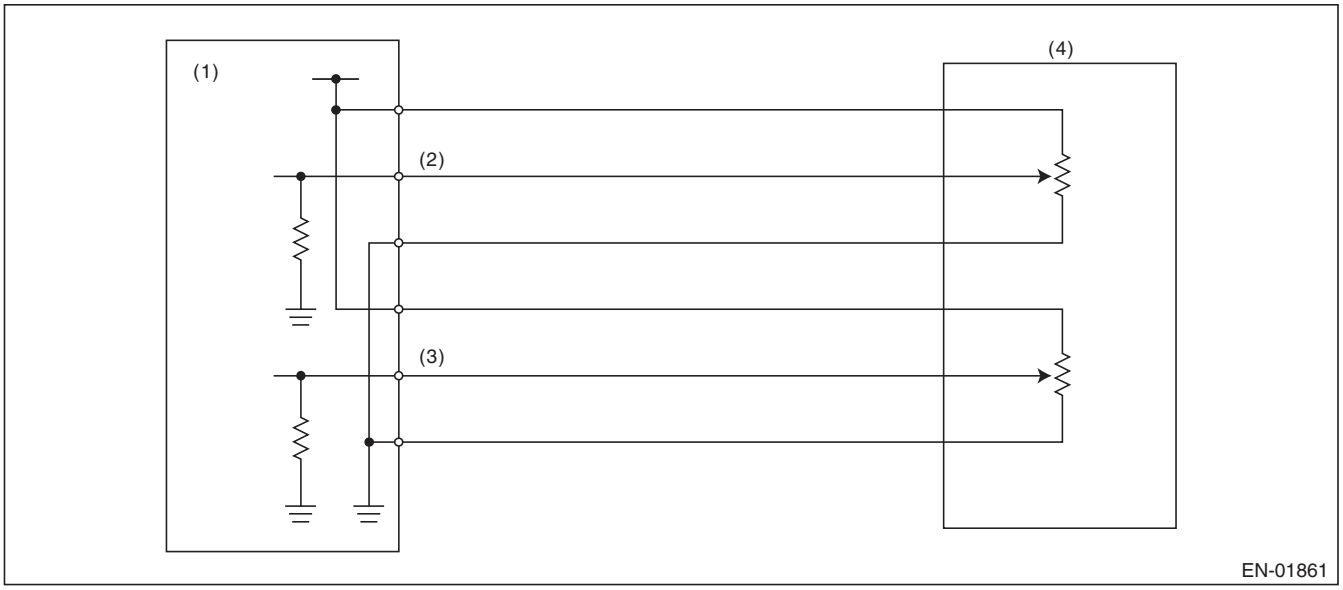

(1) Engine control module (ECM)
(2) Accelerator pedal position sensor 1 signal
(3) Accelerator pedal position sensor 2 signal
(4) Accelerator pedal position sensor

3. ENABLE CONDITION

Secondary Parameters	Enable Conditions
Ignition switch	ON
Battery voltage	≥ 6 V

4. GENERAL DRIVING CYCLE

Always perform the diagnosis continuously.

5. DIAGNOSTIC METHOD

- **Abnormality Judgement**

If the duration of time while the following conditions are met is longer than the time indicated, judge as NG.

Judgement Value

Malfunction criteria	Threshold value
Sensor 1 input voltage	≥ 4.781 V

Time Needed for Diagnosis: 32 ms
Malfunction Indicator Light Illumination: Illuminates as soon as a malfunction occurs.

- **Normality Judgement**

Judge as OK and clear the NG if the continuous time while the following conditions are established is more than the predetermined time.

Judgement Value

Malfunction criteria	Threshold value
Sensor 1 input voltage	< 4.781 V

Time Needed for Diagnosis: 32 ms

EP:DTC P2127 THROTTLE/PEDAL POSITION SENSOR/SWITCH “E” CIRCUIT LOW INPUT

1. OUTLINE OF DIAGNOSIS

Detect the open or short circuit of accelerator pedal position sensor 2.
Judge as NG if out of specification.

2. COMPONENT DESCRIPTION

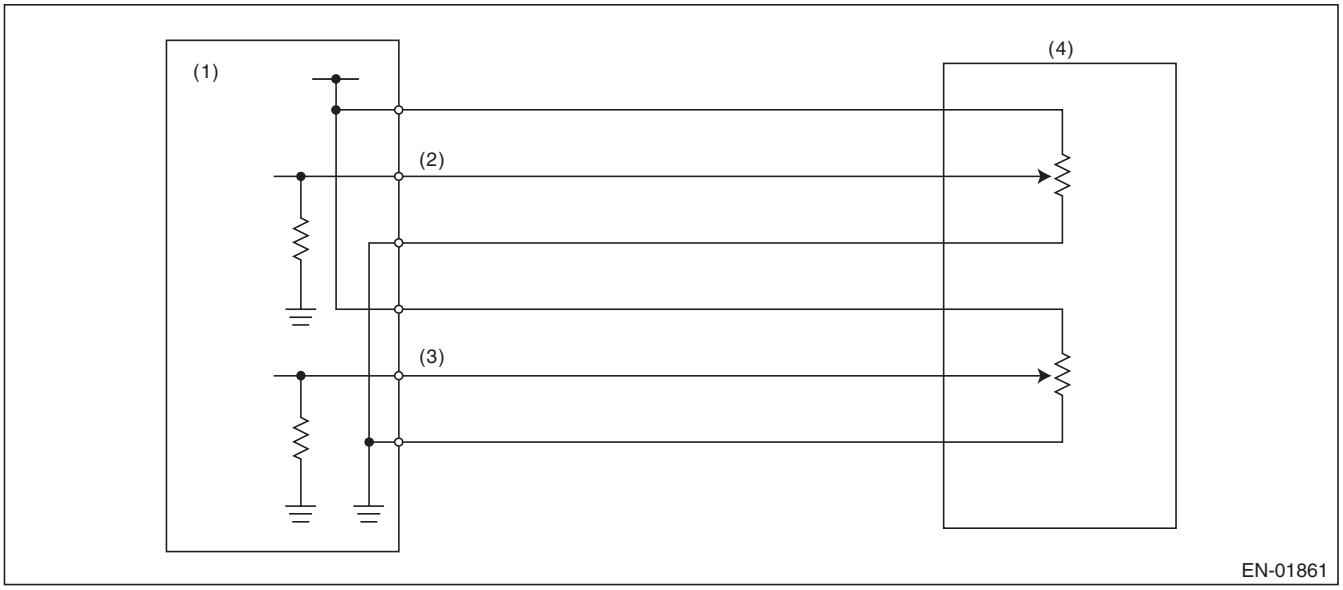

(1) Engine control module (ECM)
(2) Accelerator pedal position sensor 1 signal
(3) Accelerator pedal position sensor 2 signal
(4) Accelerator pedal position sensor

3. ENABLE CONDITION

Secondary Parameters	Enable Conditions
Ignition switch	ON
Battery voltage	≥ 6 V

4. GENERAL DRIVING CYCLE

Always perform the diagnosis continuously.

5. DIAGNOSTIC METHOD

- **Abnormality Judgement**

If the duration of time while the following conditions are met is longer than the time indicated, judge as NG.

Judgement Value

Malfunction criteria	Threshold value
Sensor 2 input voltage	< 0.219 V

Time Needed for Diagnosis: 100 ms
Malfunction Indicator Light Illumination: Illuminates as soon as a malfunction occurs.

- **Normality Judgement**

Judge as OK and clear the NG if the continuous time while the following conditions are established is more than the predetermined time.

Judgement Value

Malfunction criteria	Threshold value
Sensor 2 input voltage	≥ 0.219 V

Time Needed for Diagnosis: 100 ms

EQ:DTC P2128 THROTTLE/PEDAL POSITION SENSOR/SWITCH “E” CIRCUIT HIGH INPUT

1. OUTLINE OF DIAGNOSIS

Detect the open or short circuit of accelerator pedal position sensor 2.
Judge as NG if out of specification.

2. COMPONENT DESCRIPTION

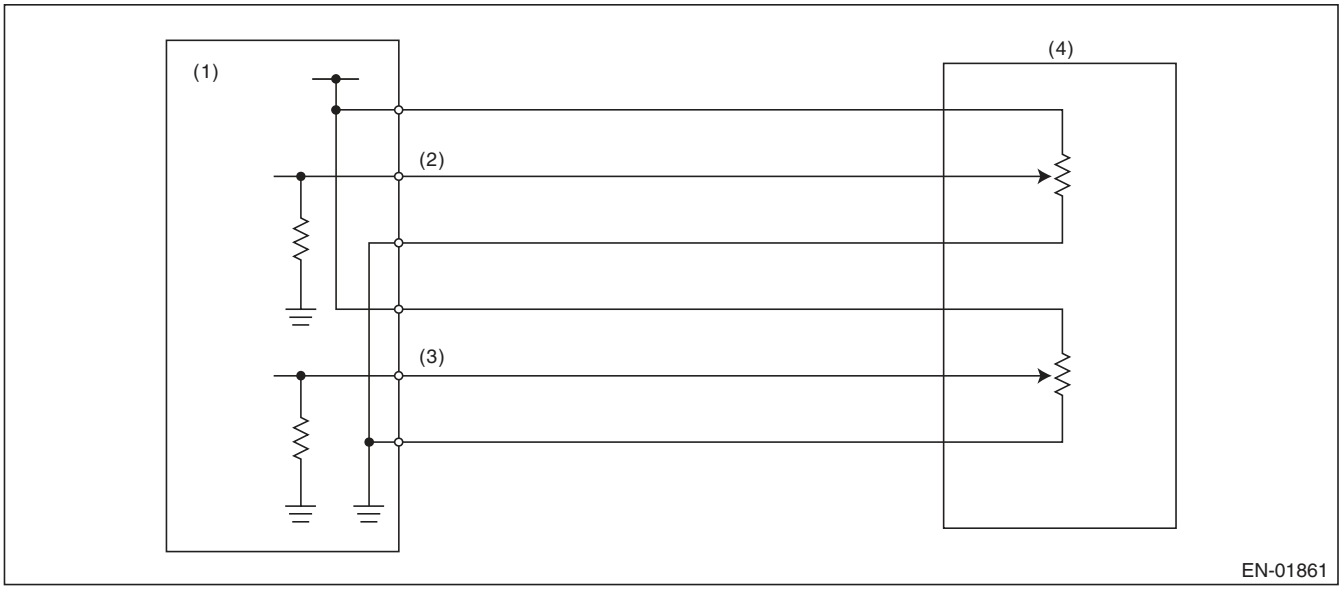

(1) Engine control module (ECM)
(2) Accelerator pedal position sensor 1 signal
(3) Accelerator pedal position sensor 2 signal
(4) Accelerator pedal position sensor

3. ENABLE CONDITION

Secondary Parameters	Enable Conditions
Ignition switch	ON
Battery voltage	≥ 6 V

4. GENERAL DRIVING CYCLE

Always perform the diagnosis continuously.

5. DIAGNOSTIC METHOD

- **Abnormality Judgement**

If the duration of time while the following conditions are met is longer than the time indicated, judge as NG.

Judgement Value

Malfunction criteria	Threshold value
Sensor 2 input voltage	≥ 4.781 V

Time Needed for Diagnosis: 100 ms
Malfunction Indicator Light Illumination: Illuminates as soon as a malfunction occurs.

- **Normality Judgement**

Judge as OK and clear the NG if the continuous time while the following conditions are established is more than the predetermined time.

Judgement Value

Malfunction criteria	Threshold value
Sensor 2 input voltage	< 4.781 V

Time Needed for Diagnosis: 100 ms

ER:DTC P2135 THROTTLE/PEDAL POSITION SENSOR/SWITCH “A”/“B” VOLTAGE CORRELATION

1. OUTLINE OF DIAGNOSIS

Judge as NG when the signal level of throttle position sensor 1 is different from the throttle position sensor 2.

2. COMPONENT DESCRIPTION

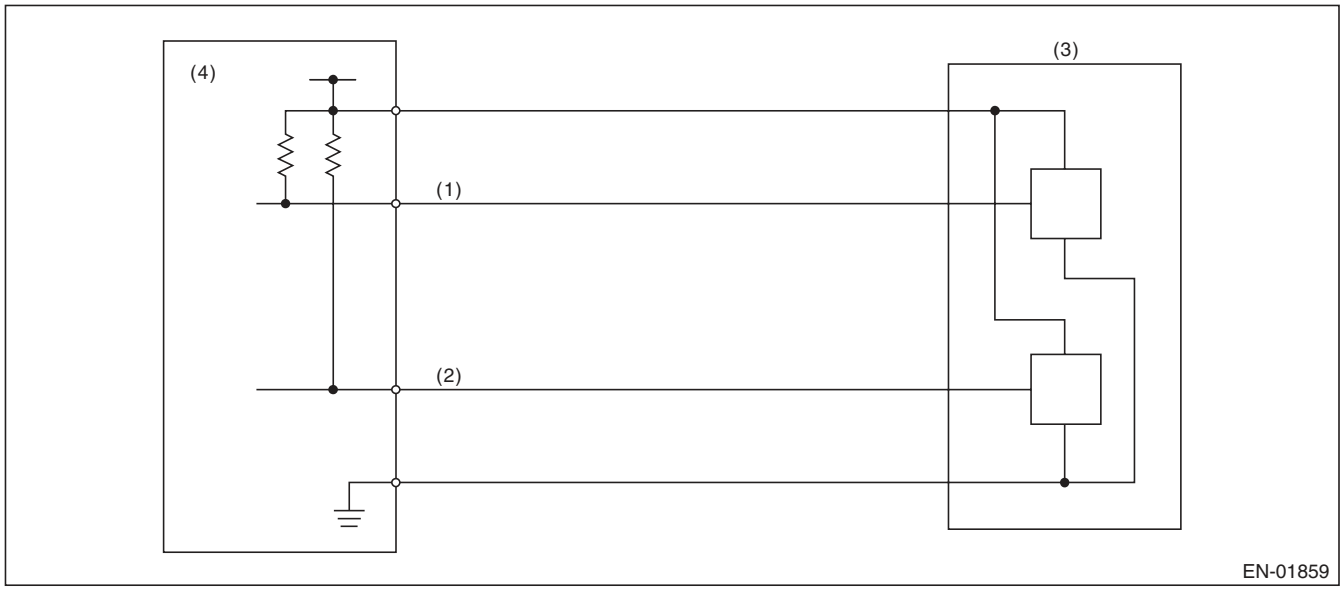

(1) Throttle position sensor 1 signal
(2) Throttle position sensor 2 signal
(3) Throttle position sensor
(4) Engine control module (ECM)

3. ENABLE CONDITION

Secondary Parameters	Enable Conditions
Ignition switch	ON
Battery voltage	≥ 6 V

4. GENERAL DRIVING CYCLE

Always perform the diagnosis continuously.

5. DIAGNOSTIC METHOD

- **Abnormality Judgement**

If the duration of time while the following conditions are met is longer than the time indicated, judge as NG.

Judgement Value

Malfunction Criteria	Threshold Value
Signal difference between two sensors	> Value from Map

Map

Throttle position sensor 1 opening angle (°) = d	0° ≤ d < 2.125 °	2.125 ° ≤ d < 4.25 °	4.25 ° ≤ d < 9 °	9 ° ≤ d < 31.625 °	31.625 ° ≤ d
Sensor output difference (°)	4.5 °	5.5 °	7.625 °	9.75 °	11.75 °

Time Needed for Diagnosis: 212 ms
Malfunction Indicator Light Illumination: Illuminates as soon as a malfunction occurs.

- **Normality Judgement**

Judge as OK and clear the NG if the continuous time while the following conditions are established is more than the predetermined time.

Judgement Value

Malfunction Criteria	Threshold Value
Signal difference between two sensors	≤ Value from Map

Time Needed for Diagnosis: 24 ms

ES:DTC P2138 THROTTLE/PEDAL POSITION SENSOR/SWITCH “D”/“E” VOLTAGE CORRELATION

1. OUTLINE OF DIAGNOSIS

Judge as NG when the signal level of throttle position sensor 1 is different from the throttle position sensor 2.

2. COMPONENT DESCRIPTION

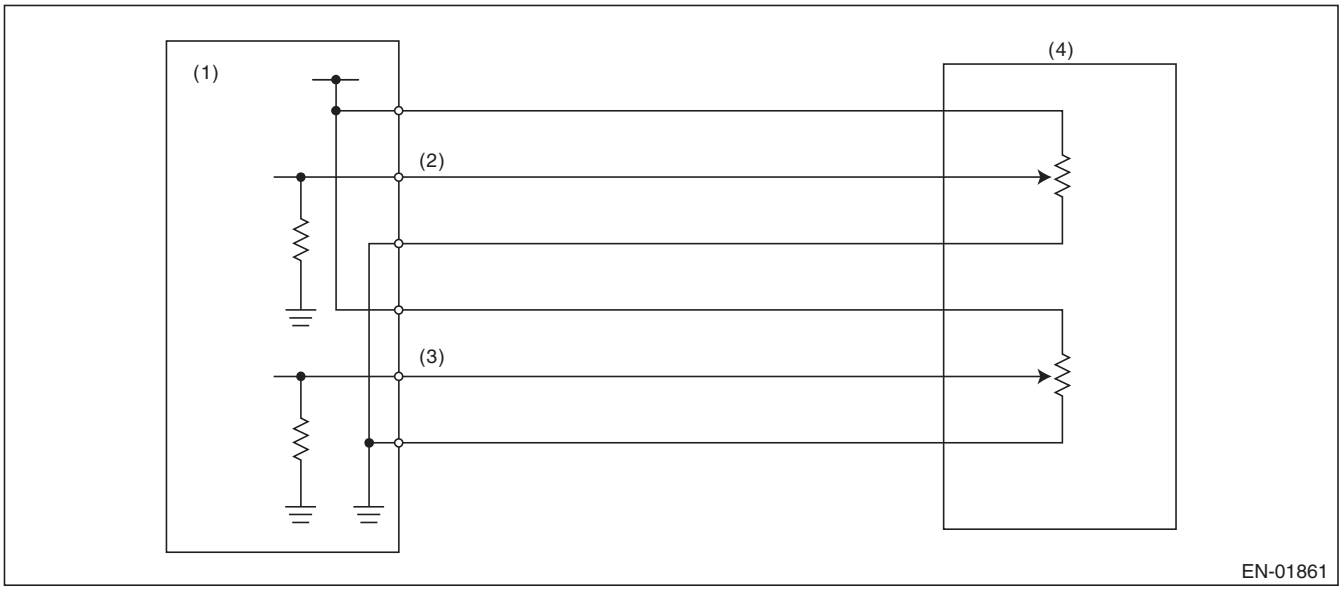

(1) Engine control module (ECM)
(2) Accelerator pedal position sensor 1 signal
(3) Accelerator pedal position sensor 2 signal
(4) Accelerator pedal position sensor

3. ENABLE CONDITION

Secondary Parameters	Enable Conditions
Ignition switch	ON
Battery voltage	≥ 6 V

4. GENERAL DRIVING CYCLE

Always perform the diagnosis continuously.

5. DIAGNOSTIC METHOD

- **Abnormality Judgement**

If the duration of time while the following conditions are met is longer than the time indicated, judge as NG.

Judgement Value

Malfunction Criteria	Threshold Value
Signal difference between two sensors	> Value from Map

Map

Throttle position sensor 1 opening angle (°) = d	0° ≤ d < 0.6 °	0.6 ° ≤ d < 1.2 °	1.2 ° ≤ d < 2 °	2 ° ≤ d < 4 °	4 ° ≤ d
Sensor output difference (°)	1.465 °	1.597 °	1.663 °	2.455 °	3.116 °

Time Needed for Diagnosis: 116 ms
Malfunction Indicator Light Illumination: Illuminates as soon as a malfunction occurs.

- **Normality Judgement**

Judge as OK and clear the NG if the continuous time while the following conditions are established is more than the predetermined time.

Judgement Value

Malfunction Criteria	Threshold Value
Signal difference between two sensors	≤ Value from Map

Time Needed for Diagnosis: 116 ms

ET:DTC P2227 BAROMETRIC PRESSURE CIRCUIT RANGE/PERFORMANCE

1. OUTLINE OF DIAGNOSIS

Detect the malfunction of barometric pressure sensor output property.
Judge as NG when the barometric pressure sensor output is largely different from the intake manifold pressure at engine start.

2. COMPONENT DESCRIPTION

The barometric pressure sensor is built into the ECM.

3. ENABLE CONDITION

Secondary Parameters	Enable Conditions
Engine speed	< 300 rpm
Vehicle speed	< 1 km/h (0.6 MPH)

4. GENERAL DRIVING CYCLE

Perform the diagnosis once at ignition switch ON.

5. DIAGNOSTIC METHOD

- **Abnormality Judgement**

If the duration of time while the following conditions are met is longer than the time indicated, judge as NG.

Judgement Value

Malfunction criteria	Threshold value
|Barometric pressure – Intake manifold pressure|	≥ 26.7 kPa (200 mmHg, 7.9 inHg)
|Intake manifold pressure at engine start – Intake manifold pressure|	< 1.3 kPa (9.99 mmHg, 0.4 inHg)

Time Needed for Diagnosis: 328 ms
Malfunction Indicator Light Illumination: Illuminates when malfunction occurs in 2 continuous driving cycles.

- **Normality Judgement**

Judge as OK and clear the NG if the continuous time while the following conditions are established is more than the predetermined time.

Judgement Value

Malfunction criteria	Threshold value
|Barometric pressure – Intake manifold pressure|	< 26.7 kPa (200 mmHg, 7.9 inHg)

Time Needed for Diagnosis: 262 ms

EU:DTC P2228 BAROMETRIC PRESSURE CIRCUIT LOW

1. OUTLINE OF DIAGNOSIS

Detect the open/short circuit of the barometric pressure sensor.
Judge as NG if out of specification.

2. COMPONENT DESCRIPTION

The barometric pressure sensor is built into the ECM.

3. ENABLE CONDITION

Secondary Parameters	Enable Conditions
None	

4. GENERAL DRIVING CYCLE

Always perform the diagnosis continuously.

5. DIAGNOSTIC METHOD

- **Abnormality Judgement**

If the duration of time while the following conditions are met is longer than the time indicated, judge as NG.

Judgement Value

Malfunction criteria	Threshold value
Output voltage	< 1.707 V

Time Needed for Diagnosis: 500 ms
Malfunction Indicator Light Illumination: Illuminates as soon as a malfunction occurs.

- **Normality Judgement**

Judge as OK and clear the NG if the continuous time while the following conditions are established is more than the predetermined time.

Judgement Value

Malfunction criteria	Threshold value
Output voltage	≥ 1.707 V

Time Needed for Diagnosis: Less than 1 second

EV:DTC P2229 BAROMETRIC PRESSURE CIRCUIT HIGH

1. OUTLINE OF DIAGNOSIS

Detect the open/short circuit of the barometric pressure sensor.
Judge as NG if out of specification.

2. COMPONENT DESCRIPTION

The barometric pressure sensor is built into the ECM.

3. ENABLE CONDITION

Secondary Parameters	Enable Conditions
None	

4. GENERAL DRIVING CYCLE

Always perform the diagnosis continuously.

5. DIAGNOSTIC METHOD

- **Abnormality Judgement**

If the duration of time while the following conditions are met is longer than the time indicated, judge as NG.

Judgement Value

Malfunction criteria	Threshold value
Output voltage	≥ 4.234 V

Time Needed for Diagnosis: 500 ms
Malfunction Indicator Light Illumination: Illuminates as soon as a malfunction occurs.

- **Normality Judgement**

Judge as OK and clear the NG if the continuous time while the following conditions are established is more than the predetermined time.

Judgement Value

Malfunction criteria	Threshold value
Output voltage	< 4.234 V

Time Needed for Diagnosis: Less than 1 second