A INTRODUCTION

This manual consists of the following 11 sections:

No.	Section	Description
A	INDEX	Index of the contents of this manual.
	INTRODUCTION	Brief explanation of each section.
B	HOW TO USE THIS MANUAL	Instructions on how to use this manual.
C	TROUBLE-SHOOTING	Describes the basic inspection procedures for electrical circuits.
D	ABBREVIATIONS	Defines the abbreviations used in this manual.
E	GLOSSARY OF TERMS AND SYMBOLS	Defines the symbols and functions of major parts.
F	RELAY LOCATIONS	Shows position of the Electronic Control Unit, Relays, Relay Block, etc. This section is closely related to the system circuit.
G	ELECTRICAL WIRING ROUTING	Describes position of Parts Connectors, Splice points, Ground points, etc. This section is closely related to the system circuit.
H	POWER SOURCE (Current Flow Chart)	Describes power distribution from the power supply to various electrical loads.
I	INDEX	Index of the system circuits.
	SYSTEM CIRCUITS	Electrical circuits of each system are shown from the power supply through ground points. Wiring connections and their positions are shown and classified by code according to the connection method. (Refer to the section, “How to use this manual”). The “System Outline” and “Service Hints” useful for troubleshooting are also contained in this section.
J	GROUND POINTS	Shows ground positions of all the parts described in this manual.
K	OVERALL ELECTRICAL WIRING DIAGRAM	Provides circuit diagrams showing the circuit connections.

This manual provides information on the electrical circuits installed on vehicles by dividing them into a circuit for each system.

The actual wiring of each system circuit is shown from the point where the power source is received from the battery as far as each ground point. (All circuit diagrams are shown with the switches in the OFF position.)

When troubleshooting any problem, first understand the operation of the circuit where the problem was detected (see System Circuit section), the power source supplying power to that circuit (see Power Source section), and the ground points (see Ground Points section). See the System Outline to understand the circuit operation.

When the circuit operation is understood, begin troubleshooting of the problem circuit to isolate the cause. Use Relay Location and Electrical Wiring Routing sections to find each part, junction block and wiring harness connectors, wiring harness and wiring harness connectors, splice points, and ground points of each system circuit. Internal wiring for each junction block is also provided for better understanding of connection within a junction block.
Wiring related to each system is indicated in each system circuit by arrows (from__,to__). When overall connections are required, see the Overall Electrical Wiring Diagram at the end of this manual.

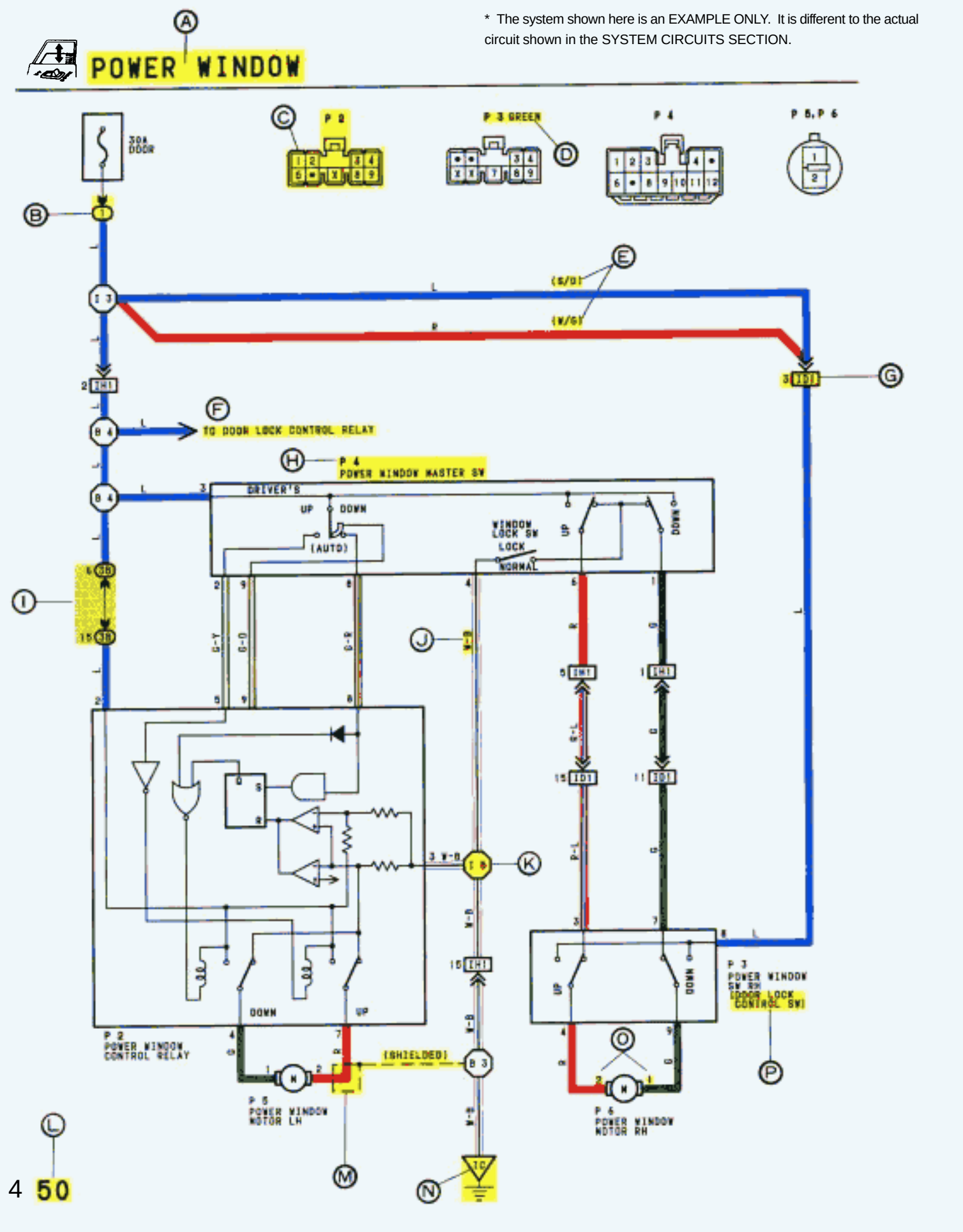
POWER WINDOW
* The system shown here is an EXAMPLE ONLY. It is different to the actual circuit shown in the SYSTEM CIRCUITS SECTION.
30A DOOR
P 2
P 3 GREEN
P 4
P 5, P 6
(S/O)
(W/G)
TO DOOR LOCK CONTROL RELAY
P 4
POWER WINDOW MASTER SW
DRIVER'S
UP
DOWN
(AUTO)
WINDOW LOCK SW
LOCK
NORMAL
P 2
POWER WINDOW CONTROL RELAY
P 5
POWER WINDOW MOTOR LH
(SHIELDED)
P 6
POWER WINDOW MOTOR RH
P 3
POWER WINDOW SW RH
(DOOR LOCK CONTROL SW)

(A) : System Title

(B) : Indicates a Relay Block. No shading is used and only the Relay Block No. is shown to distinguish it from the J/B.

Example: (1) Indicates Relay Block No. 1.

(C) : Indicates the connector to be connected to a part (the numeral indicates the pin No.)
Explanation of pin use.

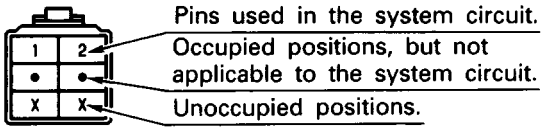

The pins shown are only for the highest grade, or only include those in the specification.

(D) : Connector Color Connectors not indicated are milky white in color:

(E) : ( ) is used to indicate different wiring and connector, etc. when the vehicle model, engine type, or specification is different.

(F) : Indicates related system.

(G) : Indicates the wiring harness and wiring harness connector. The wiring harness with male terminal is shown with arrows (⋁).

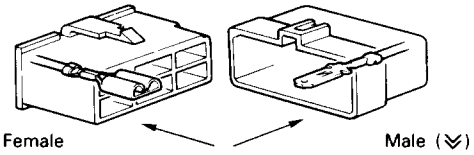

The first letter of the code for each wiring harness and wiring harness connector(s) indicates thecomponent's location, e.g, "E" for the Engine Compartment, "I" for the Instrument Panel and Surrounding area, and "B" for the Body and Surrounding area.

When more than one code has the first and second letters in common, followed by numbers (e.g, IH1, IH2), this indicates the same type of wiring harness and wiring harness connector.

(H) : Represents a part (all parts are shown in sky blue). The code is the same as the code used in parts position.

(I) : Junction Block (The number in the circle is the J/B No. and the connector code is shown beside it). Junction Blocks are shaded to clearly separate them from other parts .

Example:

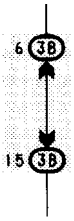

3B indicates that it is inside Junction Block No. 3.

(J) : Indicates the wiring color.
Wire colors are indicated by an alphabetical code.

B = Black	L = Black	R = Red
BR = Brown	LG = Light Green	V = Violet
G = Green	O = Orange	W = White
GR = Gray	P = Pink	Y = Yellow

The first letter indicates the basic wire color and the second letter indicates the color of the stripe.

Example: L - Y

(K) : Indicates a wiring Splice Point (Codes are "E" for the Engine Room, "I" for the Instrument Panel, and "B" for the Body).

Example:

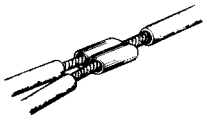

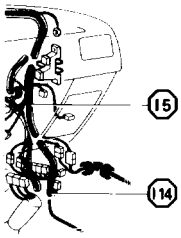

The Location of Splice Point I 5 is indicated by the shaded section.

(L) : Page No.

(M) : Indicates a shielded cable.

(N) : Indicates a ground point.

The first letter of the code for each ground point(s) indicates the component's location, e.g. "E" for the Engine Compartment, "I" for the Instrument Panel and Surrounding area, and "B" for the Body and Surrounding area.

(O) : Indicates the pin number of the connector.
The numbering system is different for female and male connectors.

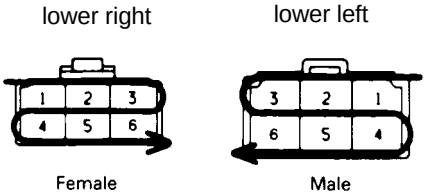

(P) : When 2 parts both use one connector in common, the parts connector name used in the wire routing section is shown in square brackets [ ].

Q

SYSTEM OUTLINE

WITH THE IGNITION SW TURNED ON, THE CURRENT FLOWS TO **TERMINAL 3** OF THE POWER WINDOW MASTER SW, **TERMINAL 2** OF THE POWER WINDOW CONTROL RELAY AND **TERMINAL 8** OF THE POWER WINDOW SW THROUGH THE **DOOR** FUSE.

1. DRIVER'S WINDOW "MANUAL UP" OPERATION BY MASTER SW

HOLDING MANUAL SW (DRIVER'S) ON "UP" POSITION LOCATED IN POWER WINDOW MASTER SW, THE CURRENT FLOWS TO **TERMINAL 5** OF THE POWER WINDOW CONTROL RELAY THROUGH **TERMINAL 3** OF THE MASTER SW ➔ **TERMINAL 2** TO OPERATE A POWER WINDOW CONTROL RELAY. THUS THE CURRENT INSIDE THE RELAY FLOWS FROM **TERMINAL 2** OF THE RELAY ➔ **TERMINAL 1** ➔ **TERMINAL 2** OF THE POWER WINDOW MOTOR ➔ **TERMINAL 1** ➔ **TERMINAL 4** OF THE RELAY ➔ **TERMINAL 3** ➔ TO **GROUND**. THE MOTOR TURNS TO ASCENT THE WINDOW. RELEASING THIS SW, THE ROTATION OF MOTOR IS STOPPED AND THE WINDOWS CAN STOP AT WILL POINT.

(FOR THE "MANUAL DOWN" OPERATION, CURRENT FLOWS IN THE REVERSE DIRECTION BECAUSE THE TERMINALS WHERE IT FLOW ARE CHANGED).

2. DRIVER'S WINDOW "AUTO DOWN" OPERATION BY MASTER SW

ONCE THE "AUTO DOWN" BUTTON OF THE MASTER SW IS PUSHED, THE CURRENT FLOW **TERMINAL 9** OF THE POWER WINDOW CONTROL RELAY THROUGH **TERMINAL 3** OF THE MASTER SW➔ **TERMINALS 8** AND **9** TO OPERATE THE RELAY. THUS THE CURRENT INSIDE THE POWER WINDOW CONTROL RELAY FLOWS FROM **TERMINAL 2** OF THE RELAY ➔ **TERMINAL 4** ➔ **TERMINAL 1** OF THE POWER WINDOW MOTOR ➔ **TERMINAL 2** ➔ **TERMINAL 1** OF THE RELAY ➔ **TERMINAL 3** ➔ TO **GROUND**. THE MOTOR CONTINUES THE ROTATION ENABLING TO DESCENT THE WINDOW.

THE WINDOW DESCENDS TO THE END POSITION. THE CURRENT WILL BE CUT OFF TO RELEASE THE AUTO DOWN FUNCTION BASED ON THE INCREASING CURRENT BETWEEN **TERMINAL 2** OF THE RELAY AND **TERMINAL 1** IN RELAY.

3. DRIVER'S WINDOW AUTO DOWN RELEASE OPERATION BY MASTER SW

HOLDING THE MANUAL SW (DRIVER'S) ON "UP" POSITION IN OPERATING AUTO DOWN. THE CURRENT FROM **TERMINAL 3** OF THE MASTER SW PASSING **TERMINAL 2** FLOWS **TERMINAL 5** OF THE RELAY AND RELEASES THE AUTO DOWN FUNCTION IN THE POWER WINDOW CONTROL RELAY. RELEASING THE HAND FROM SW, WINDOW STOPS AND CONTINUING ON TOUCHING SW. THE FUNCTION SWITCHES TO MANUAL UP OPERATION.

4. PASSENGER'S WINDOW UP OPERATION (MASTER SW) AND WINDOW LOCK SW OPERATION

HOLDING PASSENGER'S WINDOW SW (MASTER SW) ON "UP", THE CURRENT FLOWS FROM **TERMINAL 3** OF THE MASTER SW PASSING **TERMINAL 6** TO **TERMINAL 3** OF THE POWER WINDOW SW (PASSENGER'S) ➔ **TERMINAL 4 TERMINAL** ➔ **2** OF THE MOTOR ➔ **TERMINAL 1** ➔ **TERMINAL 9** OF THE POWER WINDOW SW ➔ **TERMINAL 7** ➔ **TERMINAL 1** OF THE MASTER SW ➔ **TERMINAL 4** TO **GROUND**. THE MOTOR RUNS TO ASCENT THE WINDOW. RELEASING THIS SW, THE ROTATION OF MOTOR IS STOPPED AND WINDOW CAN STOP AT WILL PLACE. SWITCHING THE WINDOW LOCK SW IN "LOCK" POSITION, THE CIRCUIT IS OPENED AND STOPPED THE MOTOR ROTATION.

R

(FOR THE DOWN OPERATION, CURRENT FLOWS IN THE REVERSE DIRECTION BECAUSE THE TERMINALS WHERE IT FLOWS ARE CHANGED).

SERVICE HINTS

P 2 POWER WINDOW CONTROL RELAY

3-GROUND: ALWAYS CONTINUITY

2-GROUND: APPROX. 12 VOLTS WITH THE IGNITION SW AT **ON** POSITION

5-GROUND: APPROX. 12 VOLTS WITH THE IGNITION SW AT **ON** POSITION AND THE MASTER SW AT **UP** POSITION

8-GROUND: APPROX. 12 VOLTS WITH THE IGNITION SW AT **ON** POSITION AND THE MASTER SW AT **AUTO DOWN** POSITION

9-GROUND: APPROX. 12 VOLTS WITH THE IGNITION SW AT **ON** POSITION AND THE MASTER SW AT **DOWN** OR **AUTO DOWN** POSITION

P 4 POWER WINDOW MASTER SW

4-GROUND: ALWAYS CONTINUITY

3-GROUND: APPROX. 12 VOLTS WITH THE IGNITION SW AT **ON** POSITION

WINDOW LOCK SW

OPEN WITH THE WINDOW LOCK SW AT **LOCK** POSITION

S

: PARTS LOCATION

CODE	SEE PAGE	CODE	SEE PAGE	CODE	SEE PAGE
P2	21	**P4**	21	**P6**	21
P3	21	**P5**	21		

T

: RELAY BLOCKS

CODE	SEE PAGE	RELAY BLOCK (RELAY BLOCK LOCATION)
1	16	R/B NO. 1 (INSTRUMENT PANEL LEFT)

U

: JUNCTION BLOCK AND WIRE HARNESS CONNECTOR

CODE	SEE PAGE	JUNCTION BLOCK AND WIRE HARNESS (CONNECTOR LOCATION)
38	14	J/B NO. 3 AND COWL WIRE (INSTRUMENT PANEL LEFT SIDE)

V

: CONNECTOR JOINING WIRE HARNESS AND WIRE HARNESS

CODE	SEE PAGE	JOINING WIRE HARNESS AND WIRE HARNESS (CONNECTOR LOCATION)
ID1	26	FRONT DOOR RH WIRE AND COWL WIRE (RIGHT KICK PANEL)
IH1	26	FRONT DOOR LH WIRE AND COWL WIRE (LEFT KICK PANEL)

W

: GROUND POINTS

CODE	SEE PAGE	GROUND POINT LOCATION
IC	24	COWL LEFT

X

: SPLICE POINTS

CODE	SEE PAGE	WIRE HARNESS WITH SPLICE POINTS	CODE	SEE PAGE	WIRE HARNESS WITH SPLICE POINTS
I 5	24	COWL WIRE			

Ⓠ: Explains the system outline.

Ⓡ: Indicates values or explain the function for reference during troubleshooting.

Ⓢ: Indicates the reference page showing the position on the vehicle of the parts in the system circuit.

Example: Part “P 4” (Power Window Master SW) is on page 21 of the manual.

* The letter in the code is from the first letter of the part, and the number indicates its order in parts starting with the letter.

Example: P 4

Part is 4th in order

Power Window Master SW

Ⓣ: Indicates the reference page showing the position on the vehicle of Relay Block Connectors in the system circuit.

Example: Connector “1” is described on page 16 on this manual and is installed on the left side of the instrument panel.

Ⓤ: Indicates the reference page showing the position on the vehicle of J/B and Wire Harness in the system circuit.

Example: Connector “3B”connects the Cowl Wire and J/B No. 3. It is described on page 14 of this manual, and is installed on the instrument panel left side.

Ⓥ: Indicates the reference page describing the wiring harness and wiring harness connector (the female wiring harness is shown first, followed by the male wiring harness).

Example: Connector “ID1”connects the front door RH wire (female) and cowl wire (male). It is described on page 26 of this manual, and is installed on the right side kick panel.

Ⓦ: Indicates the reference page showing the position of the ground points on the vehicle.

Example: Ground point “IC” is described on page 24 of this manual and is installed on the cowl left side.

Ⓧ: Indicates the reference page showing the position of the splice points on the vehicle.

Example: Splice point “I 5” is on the Cowl Wire Harness and is described on page 24 of this manual.

HINTS:

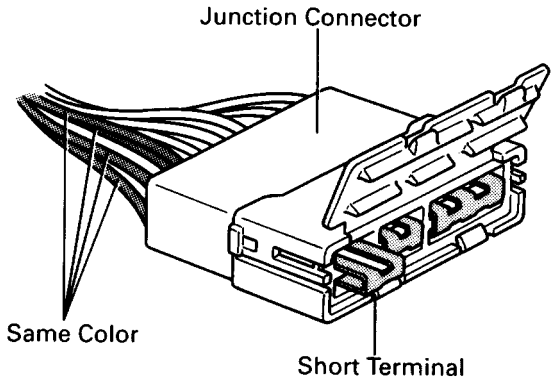

Junction connector (code: J1 to J19) in this manual include a short terminal which is connected to a number of wire harnesses. Always perform inspection with the short terminal installed. (When installing the wire harnesses, the harnesses can be connected to any position within the short terminal grouping. Accordingly, in other vehicles, the same position in the short terminal may be connected to a wire harness from a different part.)
Wire harness sharing the same short terminal grouping have the same color.

B HOW TO USE THIS MANUAL

The “Current Flow Chart” section, describes which parts each power source (fuses, fusible links, and circuit breakers) transmits current to. In the Power Source circuit diagram, the conditions when battery power is supplied to each system are explained. Since all System Circuit diagrams start from the power source, the power source system must be fully understood.

H POWER SOURCE (CURRENT FLOW CHART)

The chart below shows the route by which current flows from the battery to each electrical source (Fusible Link, Circuit Breaker, Fuse, etc.) and other parts.

The next page and following pages shown the parts to which each electrical source outputs current.

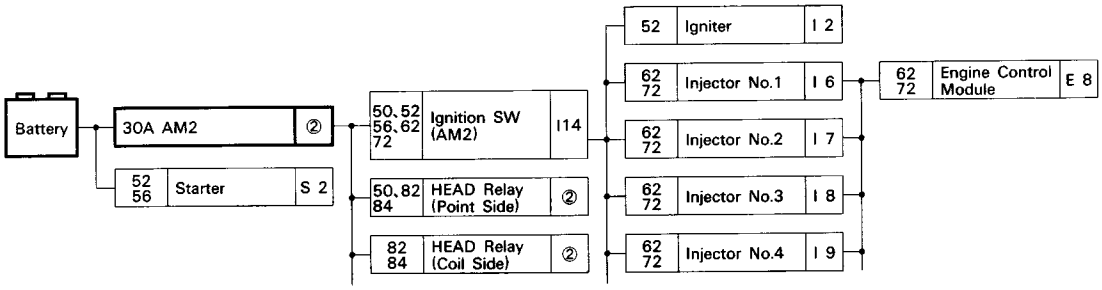

Location	CB or Fuse		ABS Actuator	ABS Relay		ADD Indicator SW	Auto Antenna Motor	ABS Deceleration Sensor	ABS ECU		A/C Amplifier	A/C Dual Pressure SW	A/C SW	ADD Control Relay	Airbag Sencor Assembly	Ashtray Illumination	Auto Antenna Control Relay	Back-Up Light SW	Brake Fluid Level Warning SW	Back-Up Light Relay	Cigarette Lighter	Cigarette Lighter Illumination	Circuit Opening Relay	Clock
Page Nos. of Related Systems			120		132 138	166	120	120 132 138	120	174			90 174	138	127	90	166 168	98	170	98	164	90	62 72	164
			A 2	A 3	A 4	A 6	A 8	A 9	A10	A11	A12	A13	A14	A16	A17	A19	A20	B 1	B 2	B 3	C 4	C 5	C 6	C 7
	15A	ECU-B							●						●									
	10A	GAUGE	●		●	●			●	●							●	●	●	●				
	10A	TURN																						
①	15A	ECU-IG						●	●															

POWER SOURCE

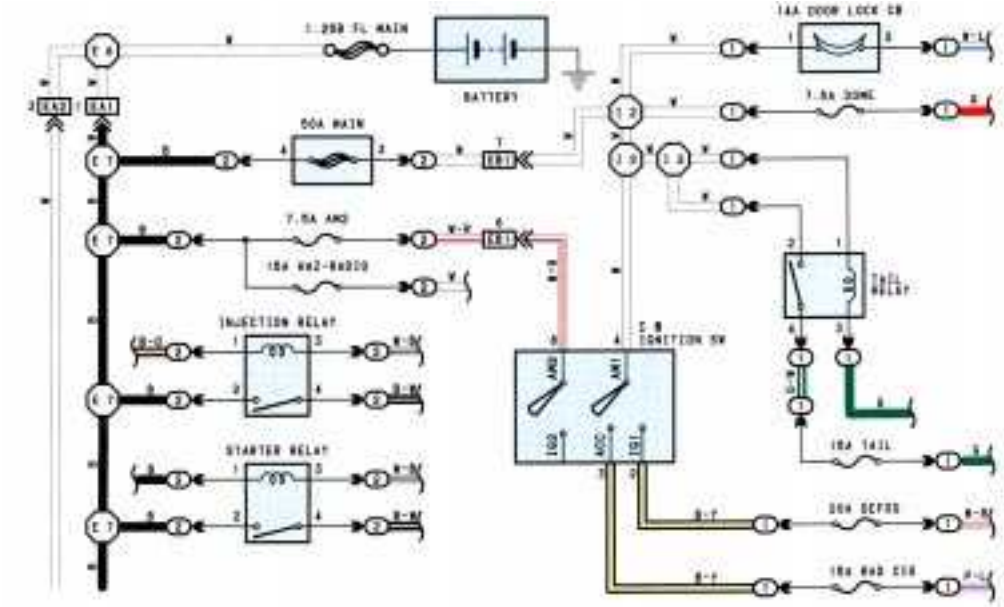

8 * The system shown here is an EXAMPLE ONLY. It is different to the actual circuit shown in the SYSTEM CIRCUITS SECTION.

The ground points circuit diagram shows the connections from all major parts to the respective ground points. When troubleshooting a faulty ground point, checking the system circuits which use a common ground may help you identify the problem ground quickly. The relationship between ground points (EA, IB and IC shown below) can also be checked this way.

J GROUND POINT

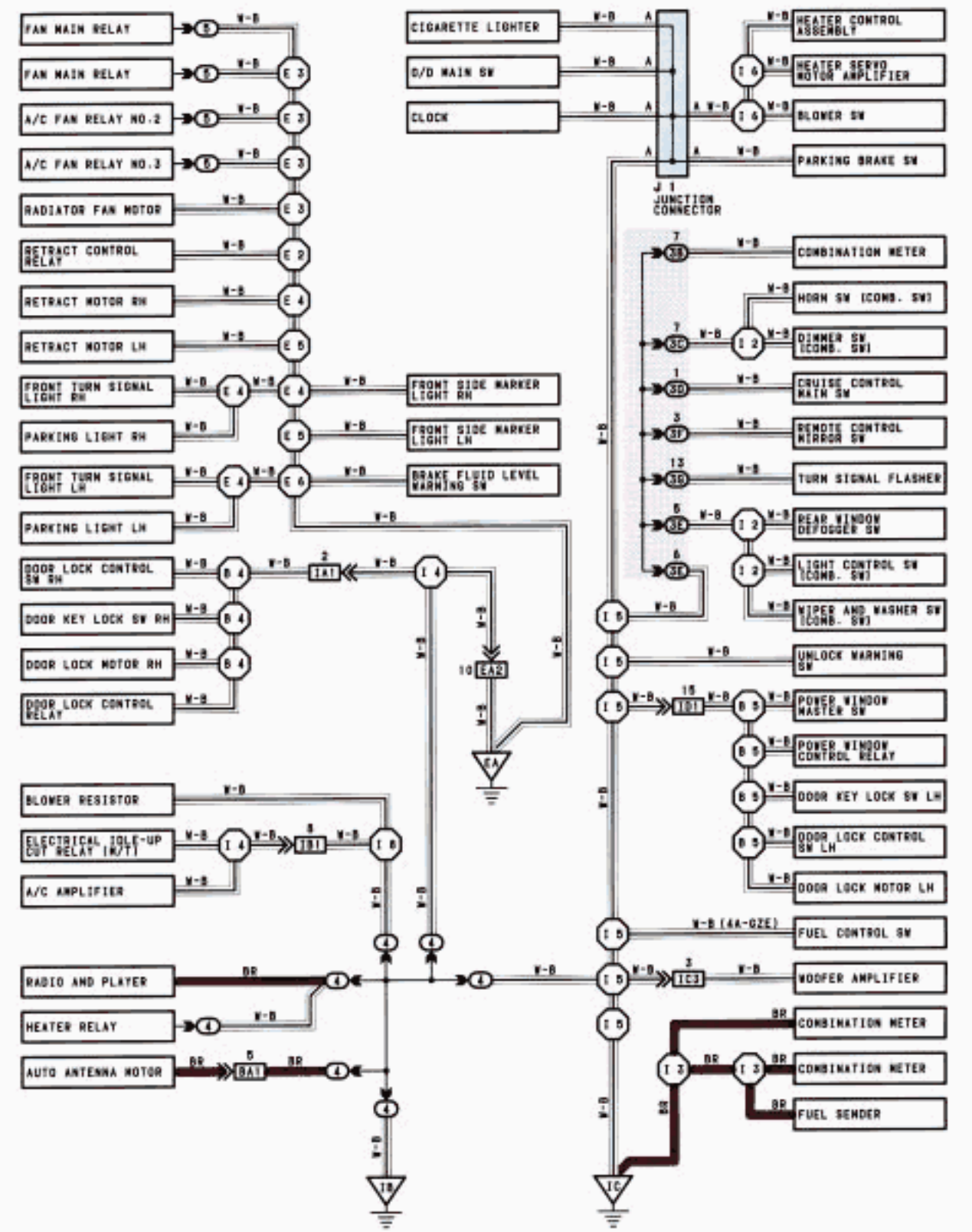

* The system shown here is an EXAMPLE ONLY. It is different to the actual circuit shown in the SYSTEM CIRCUITS SECTION.

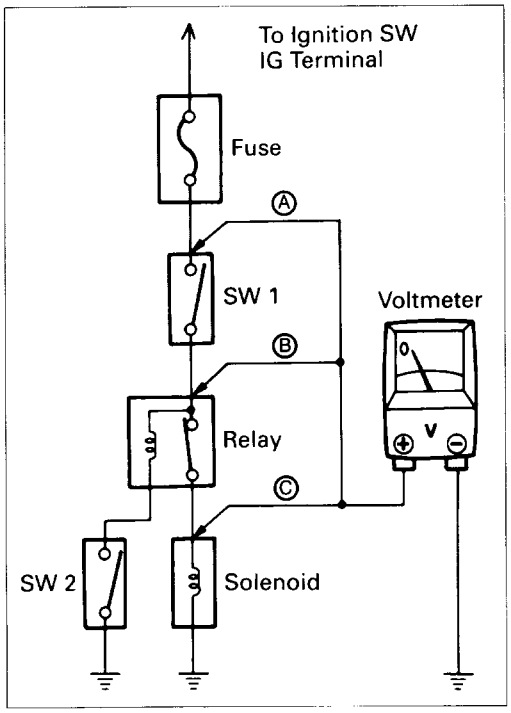

VOLTAGE CHECK

(a) Establish conditions in which voltage is present at the check point.

Example:
Ⓐ - Ignition SW on
Ⓑ - Ignition SW and SW 1 on
Ⓒ - Ignition SW, SW 1 and Relay on (SW2 off)

(b) Using a voltmeter, connect the negative lead to a good ground point or negative battery terminal, and the positive lead to the connector or component terminal. This check can be done with a test light instead of a voltmeter.

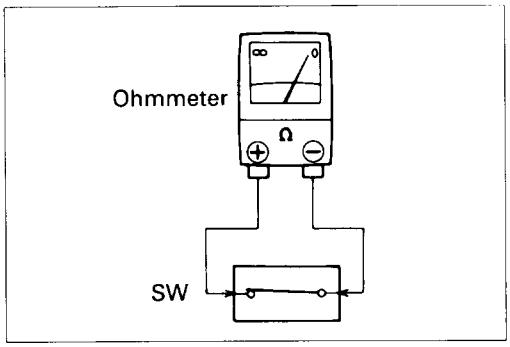

CONTINUITY AND RESISTANCE CHECK

(a) Disconnect the battery terminal or wire so there is no voltage between the check points.

(b) Contact the two leads of an ohmmeter to each of the check point.

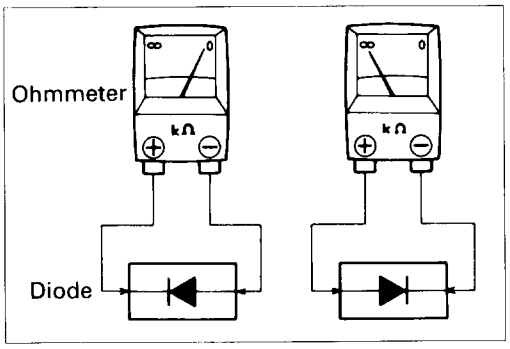

If the circuit has diodes, reverse the two leads and check again.
When contacting the negative lead to the diode positive side and the positive lead to the negative side, there should be continuity.
When contacting the two leads in reverse, there should be no continuity.

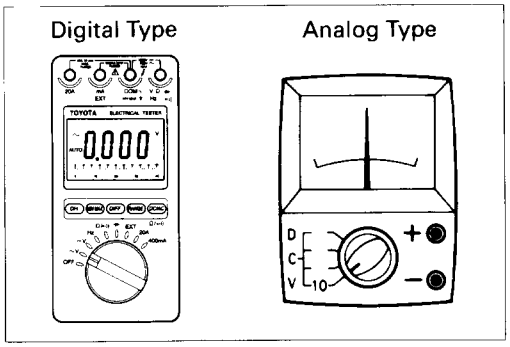

(c) Use the volt/ohmmeter with high impedance (10 kΩ/V minimum) for troubleshooting of the electrical circuit.

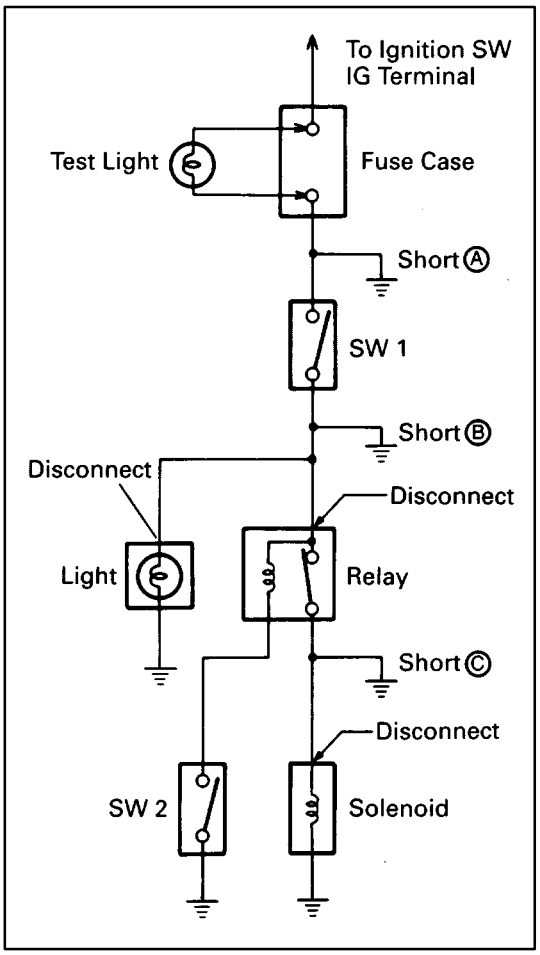

FINDING A SHORT CIRCUIT

(a) Remove the blown fuse and disconnect all loads of the fuse.
(b) Connect a test light in place of the fuse.
(c) Establish conditions in which the test light comes on.

Example:
Ⓐ - Ignition SW on
Ⓑ - Ignition SW and SW 1 on
Ⓒ - Ignition SW, SW 1 and Relay on (Connect the Relay) and SW 2 off (or Disconnect SW 2)

(d) Disconnect and reconnect the connectors while watching the test light.
The short lies between the connector where the test light stays lit and the connector where the light goes out.

(e) Find the exact location of the short by lightly shaking the problem wire along the body.

CAUTION:

(a) Do not open the cover or the case of the ECU unless absolutely necessary. (If the IC terminals are touched, the IC may be destroyed by static electricity.)
(b) When replacing the internal mechanism (ECU part) of the digital meter, be careful that no part of your body or clothing comes in contact with the terminals of leads from the IC, etc. of the replacement part (spare part).

DISCONNECTION OF MALE AND FEMALE CONNECTORS

To pull apart the connectors, pull on the connector itself, not the wire harness.

HINT: Check to see what kind of connector you are disconnecting before pulling apart.

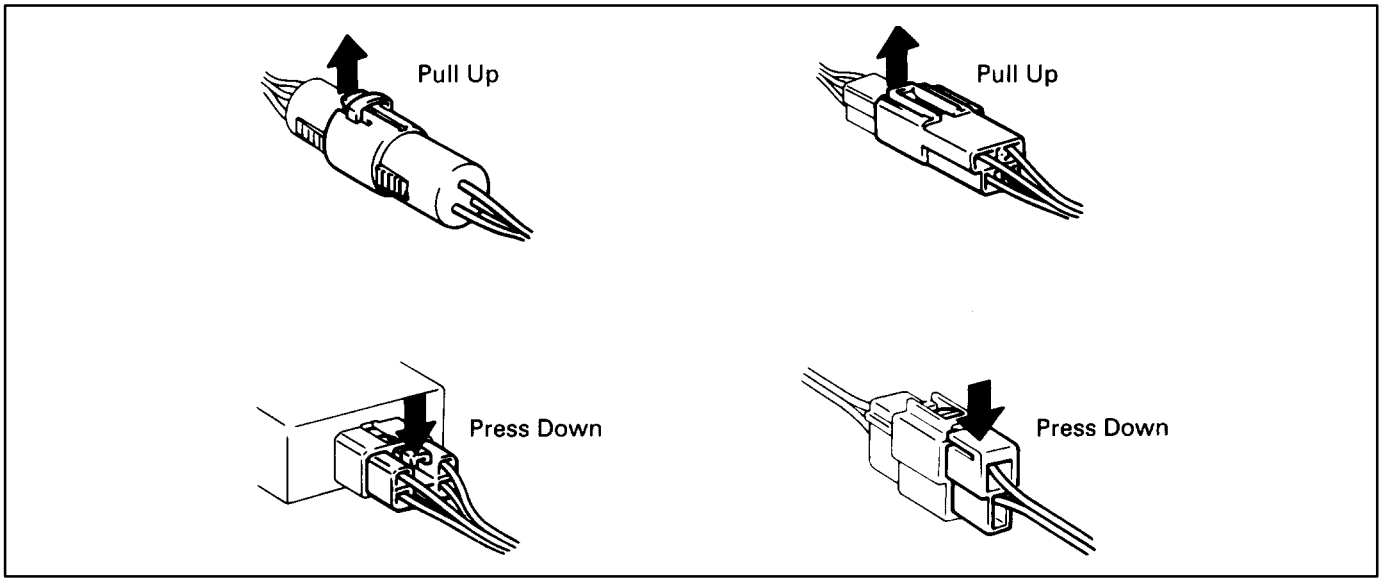

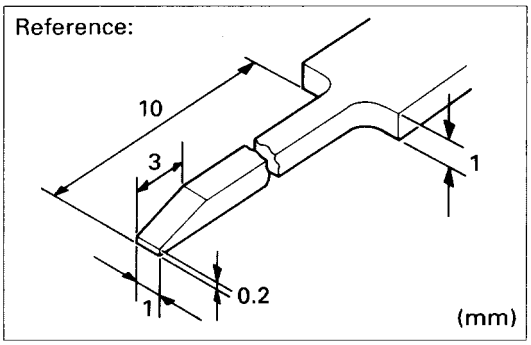

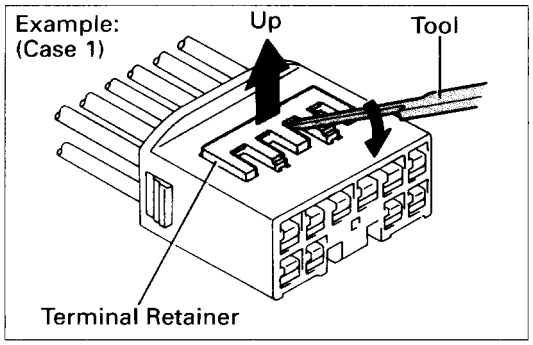

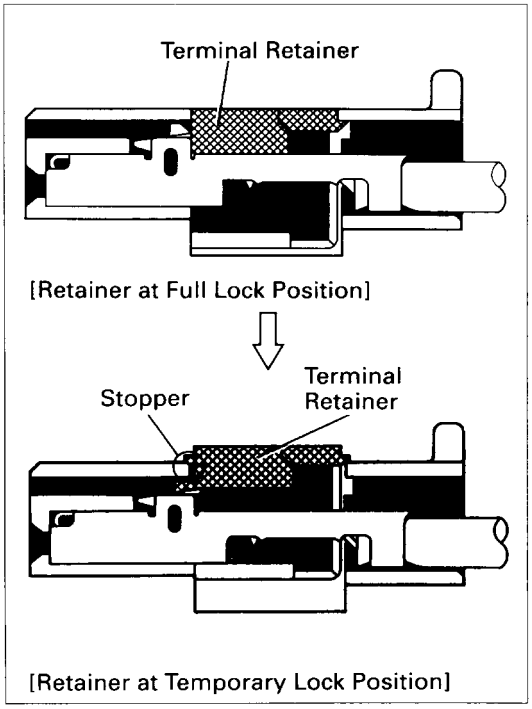

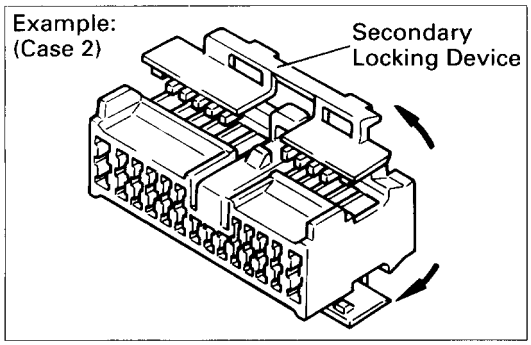

HOW TO REPLACE TERMINAL (with terminal retainer or secondary locking device)

1. PREPARE THE SPECIAL TOOL

   HINT: To remove the terminal from the connector, please construct and use the special tool or like object shown on the left.

2. DISCONNECT CONNECTOR

3. DISENGAGE THE SECONDARY LOCKING DEVICE OR TERMINAL RETAINER

   (a) Locking device must be disengaged before the terminal locking clip can be released and the terminal removed from the connector.

   (b) Use a special tool or the terminal pick to unlock the secondary locking device or terminal retainer.

   NOTICE:
   Do not remove the terminal retainer from connector body.

   Ⓐ For Non-Waterproof Type Connector

   HINT: The needle insertion position varies according to the connector's shape (number of terminals etc.), so check the position before inserting it.

   "Case 1"
   Raise the terminal retainer up to the temporary lock position.

   "Case 2"
   Open the secondary locking device.

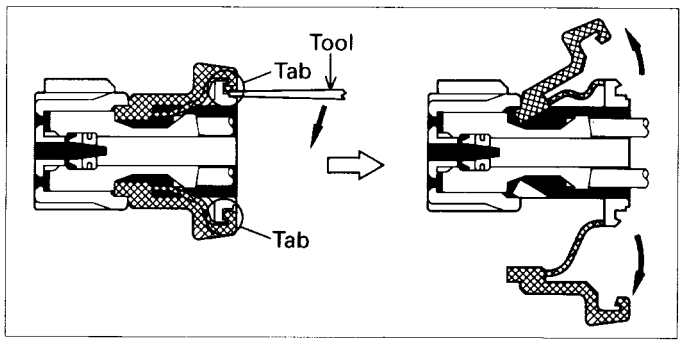

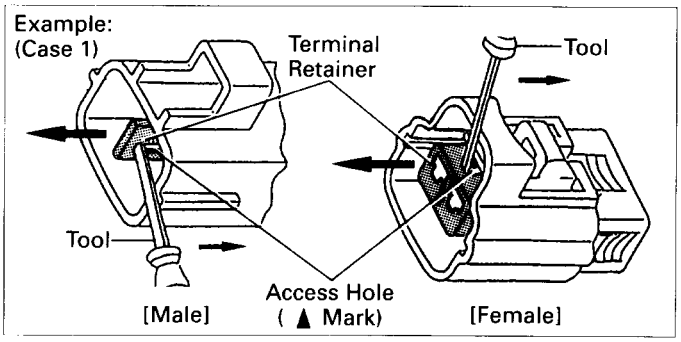

Ⓑ For Waterproof Type Connector

HINT: Terminal retainer color is different according to connector body.

Example:

Terminal Retainer	:Connector Body
Black or White	:Gray
Black or White	:Dark Gray
Gray or White	:Black

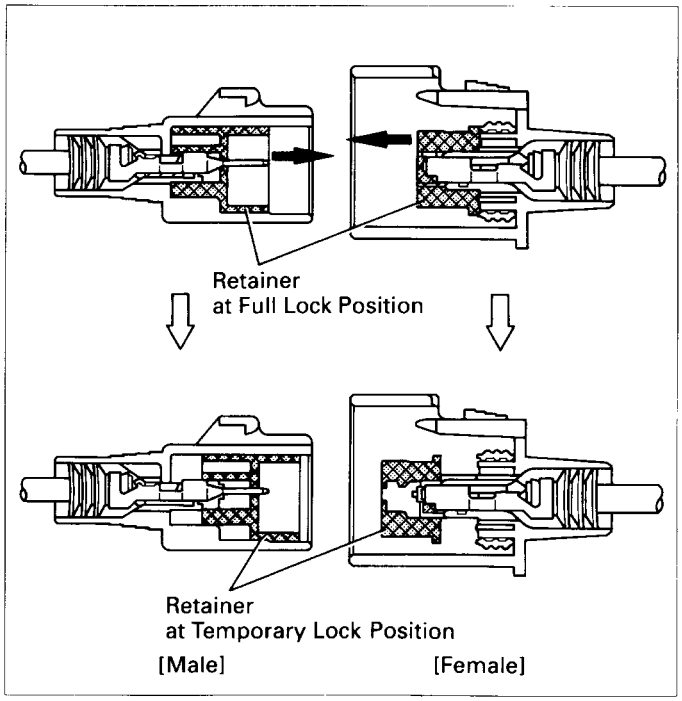

"Case 1"

Type where terminal retainer is pulled up to the temporary lock position (Pull Type).

Insert the special tool into the terminal retainer access hole (• Mark) and pull the terminal retainer up to the temporary lock position.

HINT: The needle insertion position varies according to the connector's shape (number of terminals etc.), so check the position before inserting it.

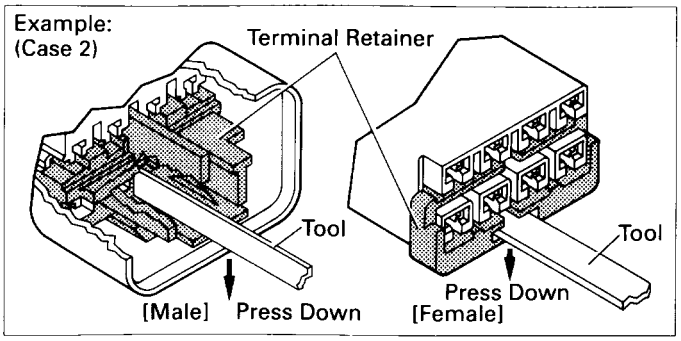

"Case 2"

Type which cannot be pulled as far as Power Lock insert the tool straight into the access hole of terminal retainer as shown.

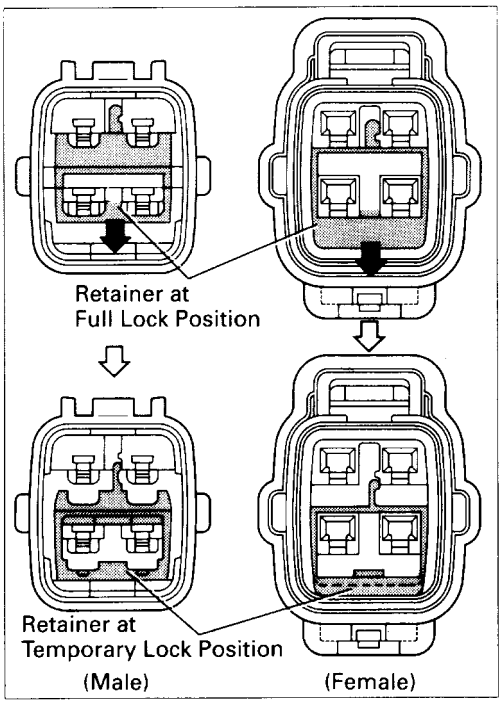

Push the terminal retainer down to the temporary lock position.

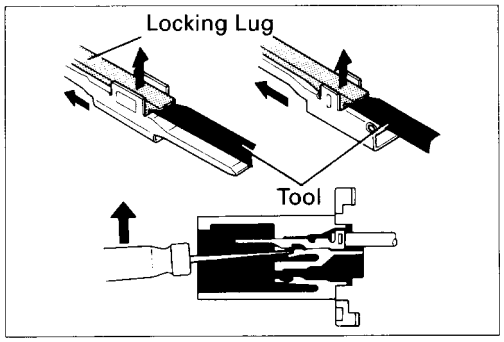

(c) Release the locking lug from terminal and pull the terminal out from rear.

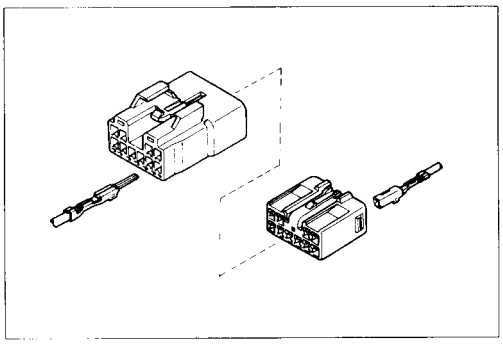

4. INSTALL TERMINAL TO CONNECTOR

(a) Insert the terminal.

HINT:
1. Make sure the terminal is positioned correctly.
2. Insert the terminal until the locking lug locks firmly.
3. Insert the terminal with terminal retainer in the temporary lock position.

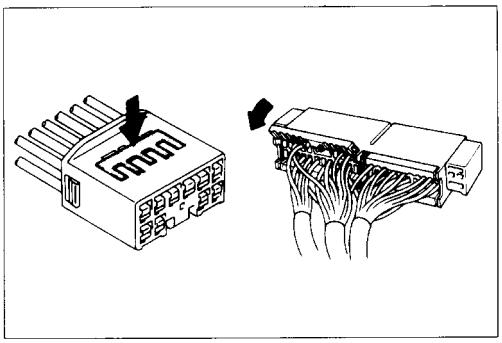

(b) Push the secondary locking device or terminal retainer into the full lock position.

5. CONNECT CONNECTOR

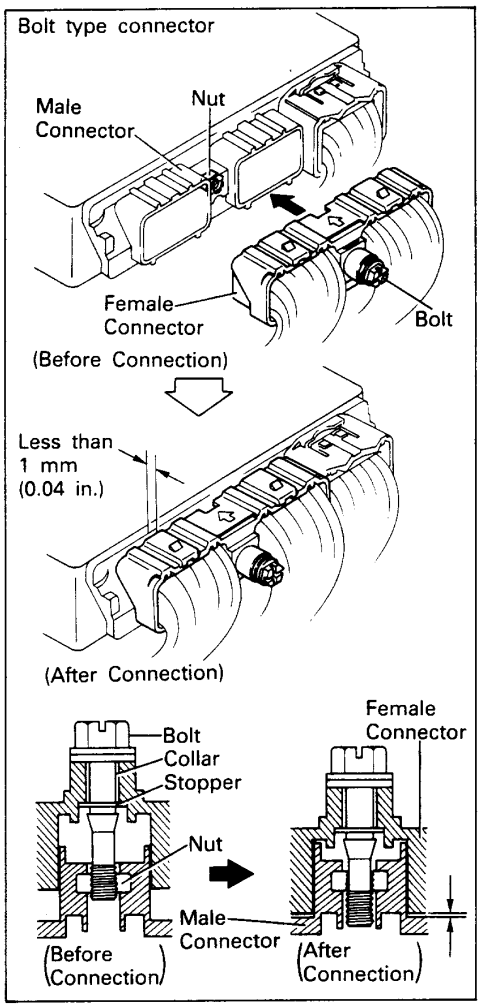

DISCONNECTION AND CONNECTION OF BOLT TYPE CONNECTORS

For engine control module in this vehicle, connections are used which require a bolt built into the connector to be screwed down to securely connect the connector.

1. Disconnect the connector

   After completely loosening the bolt, the two parts of the connector can be separated.

   NOTICE:
   Do not pull the wire harness when disconnecting the connector.

2. Connect the connector

   NOTICE:
   Before connecting the connector, always check that the terminals are not bent or damaged.

   (a) Match the guide section of the male connector correctly with the female connector, then press them together.
   (b) Tighten the bolt.
   Make sure the connectors are completely connected, by tightening the bolt until there is a clearance of less than 1 mm (0.04 in.) between the bottom of male connector and the end of female connector.

ABBREVIATIONS

The follow abbreviations are used in this manual.

ABS	=	Anti-Lock Brake Systerm	O/D	=	Overdrive
A/C	=	Air Conditioning	PPS	=	Progressive Power Steering
ACIS	=	Acoustic Control Induction System	R/B	=	Relay Block
A/T	=	Automatic Transmission	RH	=	Right-Hand
COMB.	=	Combination	SFI	=	Sequential Multiport Fuel Injection
ECU.	=	Electronic Control Unit	SRS	=	Supplemental Restraint System
EGR	=	Exhaust Gas Recirculation	SW	=	Switch
ESA	=	Electronic Spark Advance	TEMP.	=	Temperature
EVAP	=	Evaporative Emission	TRAC	=	Traction Control
J/B	=	Junction Block	VSV	=	Vacuum Switching Valve
LH	=	Left-Hand	w/	=	With
M/T	=	Manual Transmission	w/o	=	Without

* The titles given inside the components are the names of the terminals (terminal codes) and are not treated as being abbreviations.

E GLOSSARY OF TERMS AND SYMBOLS

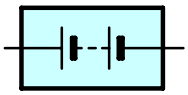

BATTERY
Stores chemical energy and converts it into electrical energy. Provides DC current for the auto's various electrical circuits.

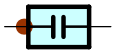

CAPACITOR (Condenser)
A small holding unit for temporary storage of electrical voltage.

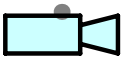

CIGARETTE LIGHTER
An electric resistance heating element.

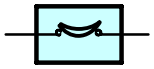

CIRCUIT BREAKER
Basically a reusable fuse, a circuit breaker will heat and open if too much current flows through it. Some units automatically reset when cool, others must be manually reset.

DIODE
A semiconductor which allows current flow in only one direction.

DIODE, ZENER
A diode which allows current flow in one direction but blocks reverse flow only up to a specific voltage. Above that potential, it passes the excess voltage. This acts as a simple voltage regulator.

PHOTODIODE
The photodiode is a semiconductor which controls the current flow according to the amount of light.

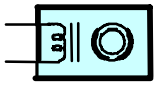

DISTRIBUTOR, IIA
Channels high-voltage current from the ignition coil to the individual spark plugs.

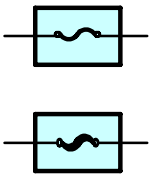

(for Medium Current Fuse)

(for High Current Fuse or Fusible Link.)

FUSE
A thin metal strip which burns through when too much current flows through it, thereby stopping current flow and protecting a circuit from damage.

FUSIBLE LINK
A heavy-gauge wire placed in high amperage circuits which burns through on overloads, thereby protecting the circuit. The numbers indicate the cross-section surface area of the wires.

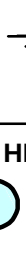

1. **SINGLE FILAMENT**

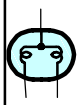

2. **DOUBLE FILAMENT**

HEADLIGHTS
Current flow causes a headlight filament to heat up and emit light. A headlight may have either a single (1) filament or a double (2) filament.

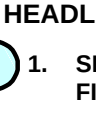

GROUND
The point at which wiring attaches to the Body, thereby providing a return path for an electrical circuit; without a ground, current cannot flow.

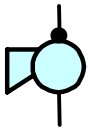

HORN
An electric device which sounds a loud audible signal.

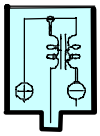

IGNITION COIL
Convert low-voltage DC current into high-voltage ingition current for firing the spark plugs.

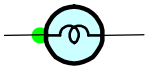

LIGHT
Current flow through a filament causes the filament to heat up and emit light.

LED (LIGHT EMITTING DIODE)
Upon current flow, these diodes emit light without producing the heat of a comparable light.

METER, ANALOG
Current flow activates a magnetic coil which causes a needle to move, thereby providing a relative display against a background calibration.

METER, DIGITAL
Current flow activates one or many LED's, LCD's, or fluoresent displays, which provide a relative or digital display.

MOTOR
A power unit which converts electrical energy into mechanical energy, especially rotary motion.

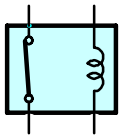

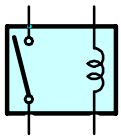

RELAY

1. **NORMALLY CLOSED**
2. **NORMALLY OPEN**

Basically, an electrically operated switch which may be normally closed (1) or open (2). Current flow through a small coil creates a magnetic field which either opens or closes an attached switch.

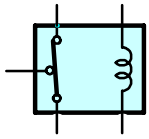

RELAY, DOUBLE THROW

A relay which passes current through one set of contacts or the other.

RESISTOR

An electrical component with a fixed resistance, placed in a circuit to reduce voltage to a specific value.

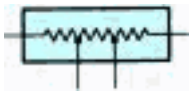

RESISTOR, TAPPED

A resistor which supplies two or more different non adjustable resistance values.

RESISTOR, VARIABLE or RHEOSTAT

A controllable resistor with a variable rate of resistance. Also called a potentiometer or rheostat.

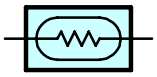

SENSOR (Thermistor)

A resistor which varies its resistance with temperature.

SENSOR, SPEED

Uses magnetic impulses to open and close a switch to create a signal for activation of other components.

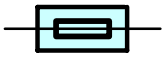

SHORT PIN

Used to provide an unbroken connection within a juction block.

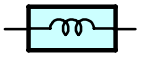

SOLENOID

An electromagnetic coil which forms a magnetic field when current flows, to move a plunger, etc.

SPEAKER

An electromechanical device which creates sound waves from current flow.

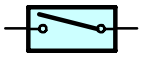

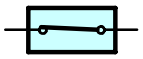

SWITCH, MANUAL

1. **NORMALLY OPEN**
2. **NORMALLY CLOSED**

Open and closes circuits, thereby stopping (1) or allowing (2) current flow.

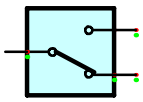

SWITCH, DOUBLE THROW

A switch which continuously passes cureent through one set of contacts or the other.

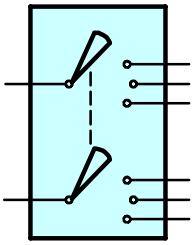

SWITCH, IGNITION

A key operated switch with several positions which allows various circuits, particularly the primary ignition circuit, to become operational.

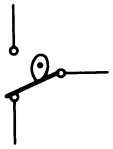

SWITCH, WIPER PARK

Automatically returns wipers to the stop position when the wiper switch is turned off.

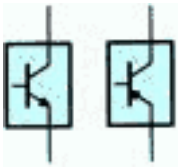

TRANSISTOR

A solid state device typically used as an electronic relay; stops or passes current depending on the voltage applied at “base.”

(1) **NOT CONNECTED**

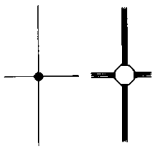

(2) **SPLICED**

WIRES

Wires are always drawn as straight lines on wiring diagrams. Crossed wires (1) without a black dot at the junction are not joined; crossed wires (2) and a black dot or octagonal (O) mark at the juction as spliced (joined) connections.

F RELAY LOCATIONS

[Engine Compartment]

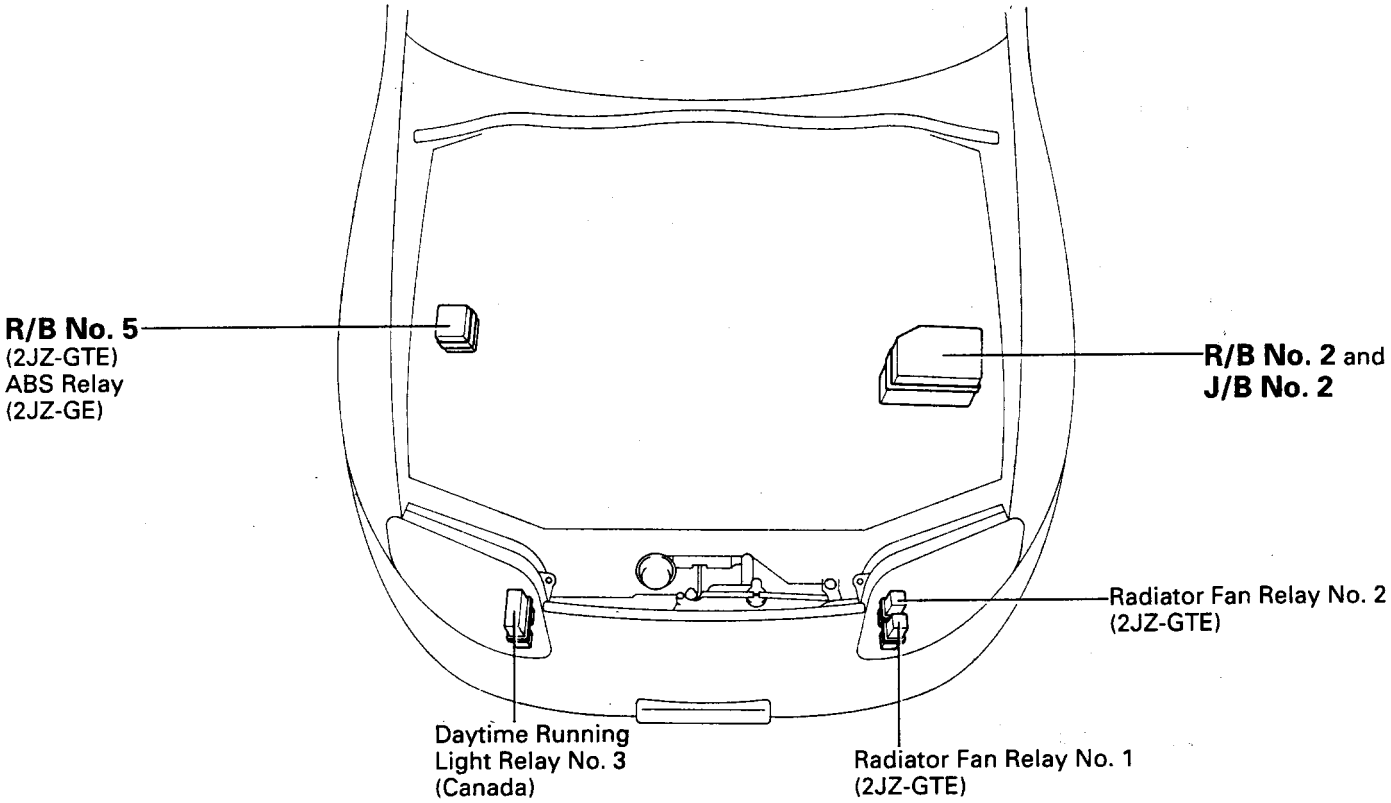

[Instrument Panel]

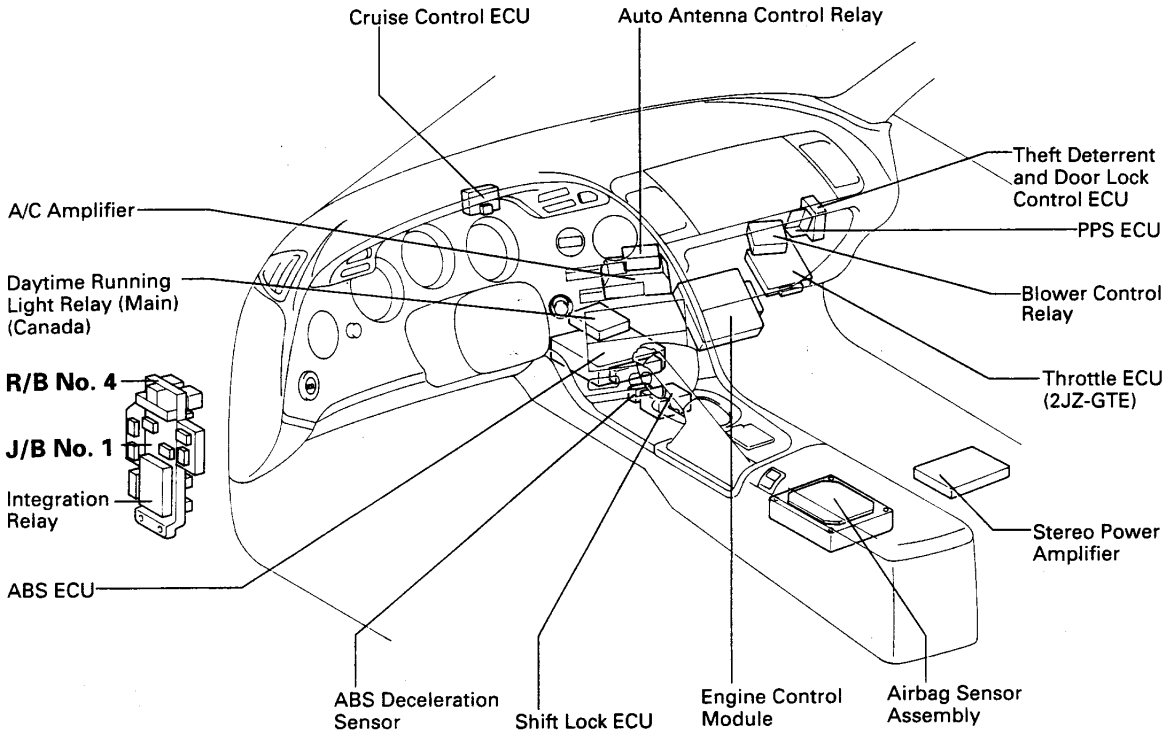

[Body]

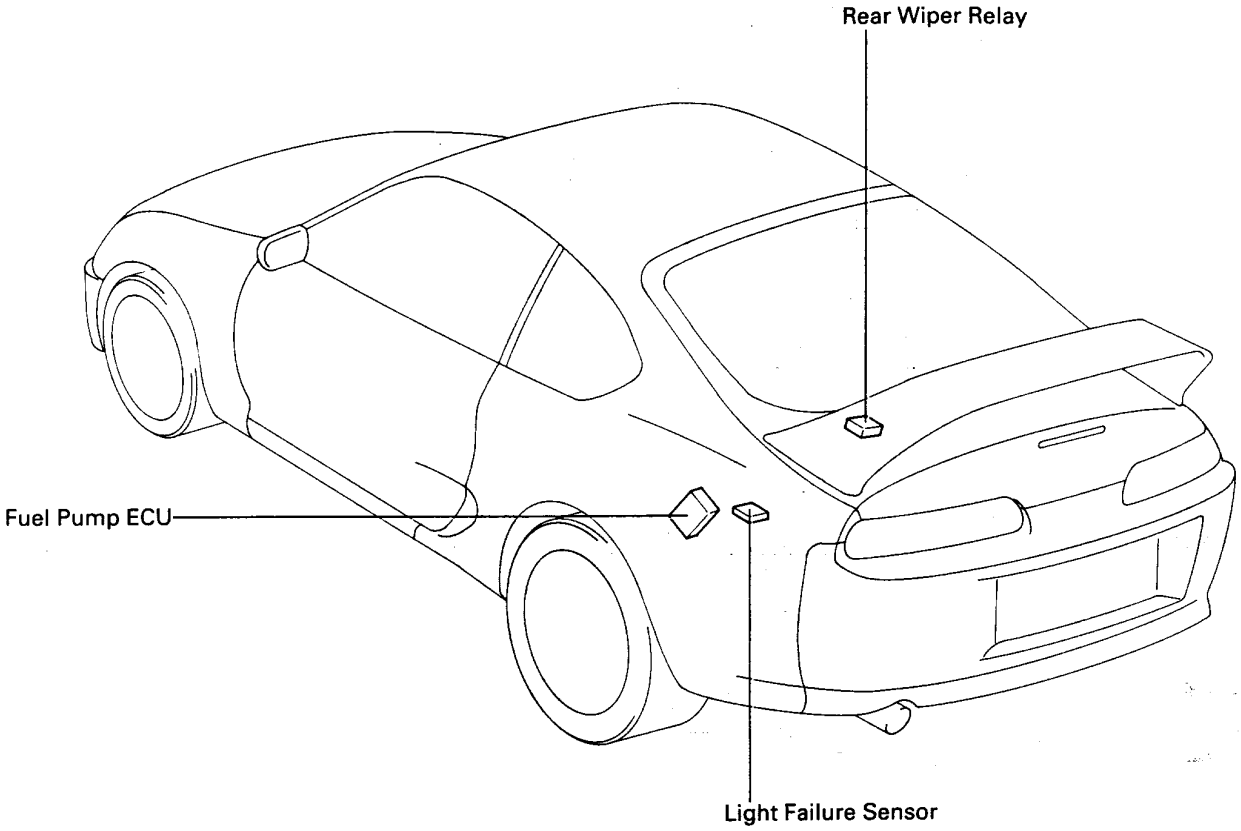
Rear Wiper Relay
Fuel Pump ECU
Light Failure Sensor

[Seat]

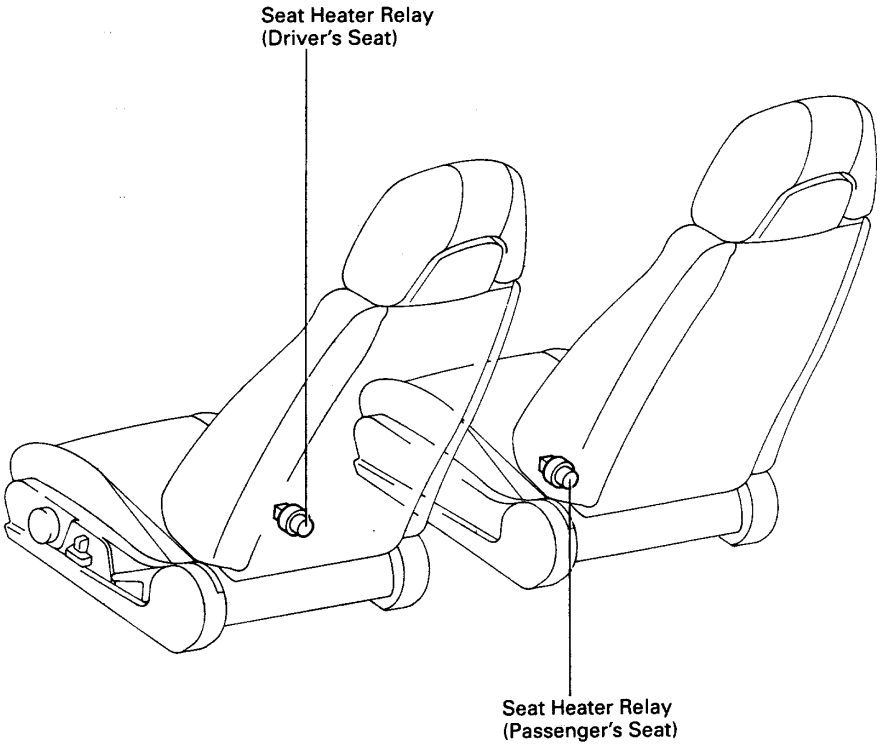
Seat Heater Relay
(Driver's Seat)
Seat Heater Relay
(Passenger's Seat)

F RELAY LOCATIONS

⬭ : J/B No. 1	Left Kick Panel (See Page 18)

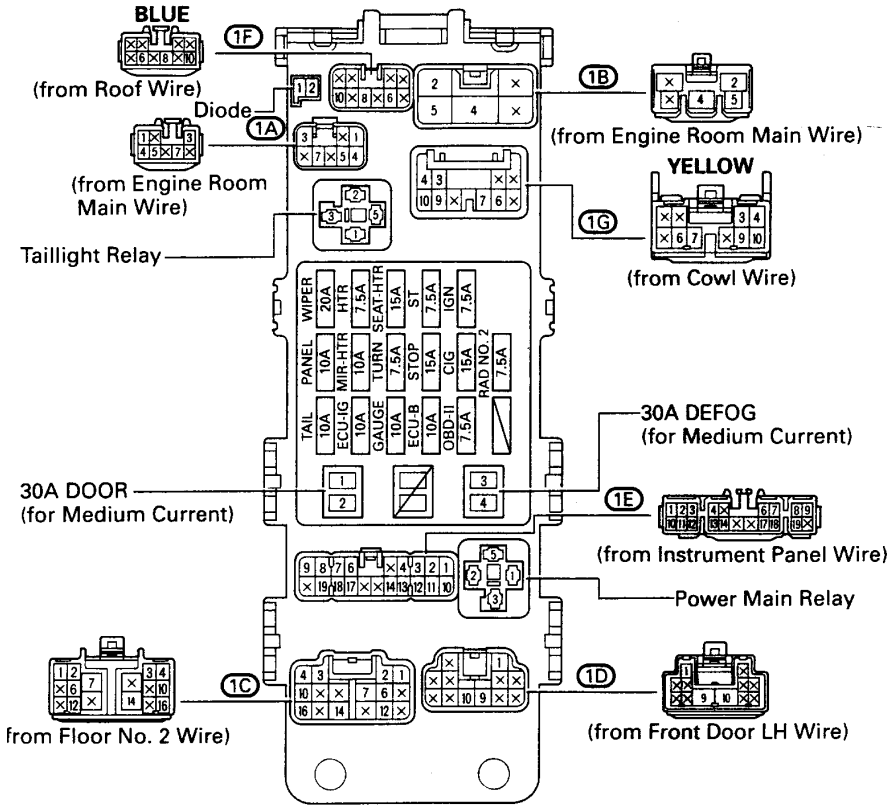

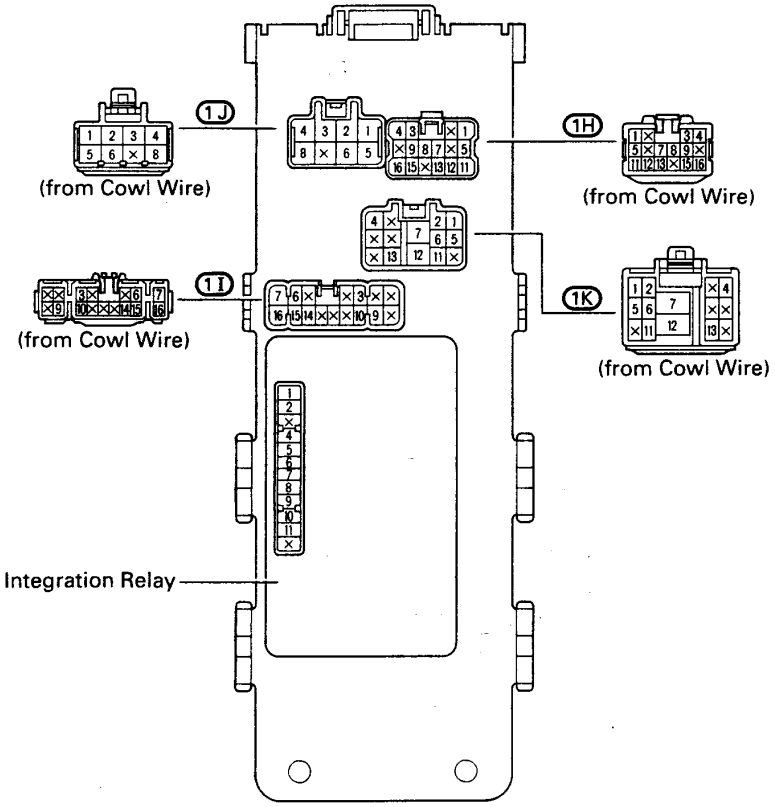

[J/B No. 1 Inner Circuit]

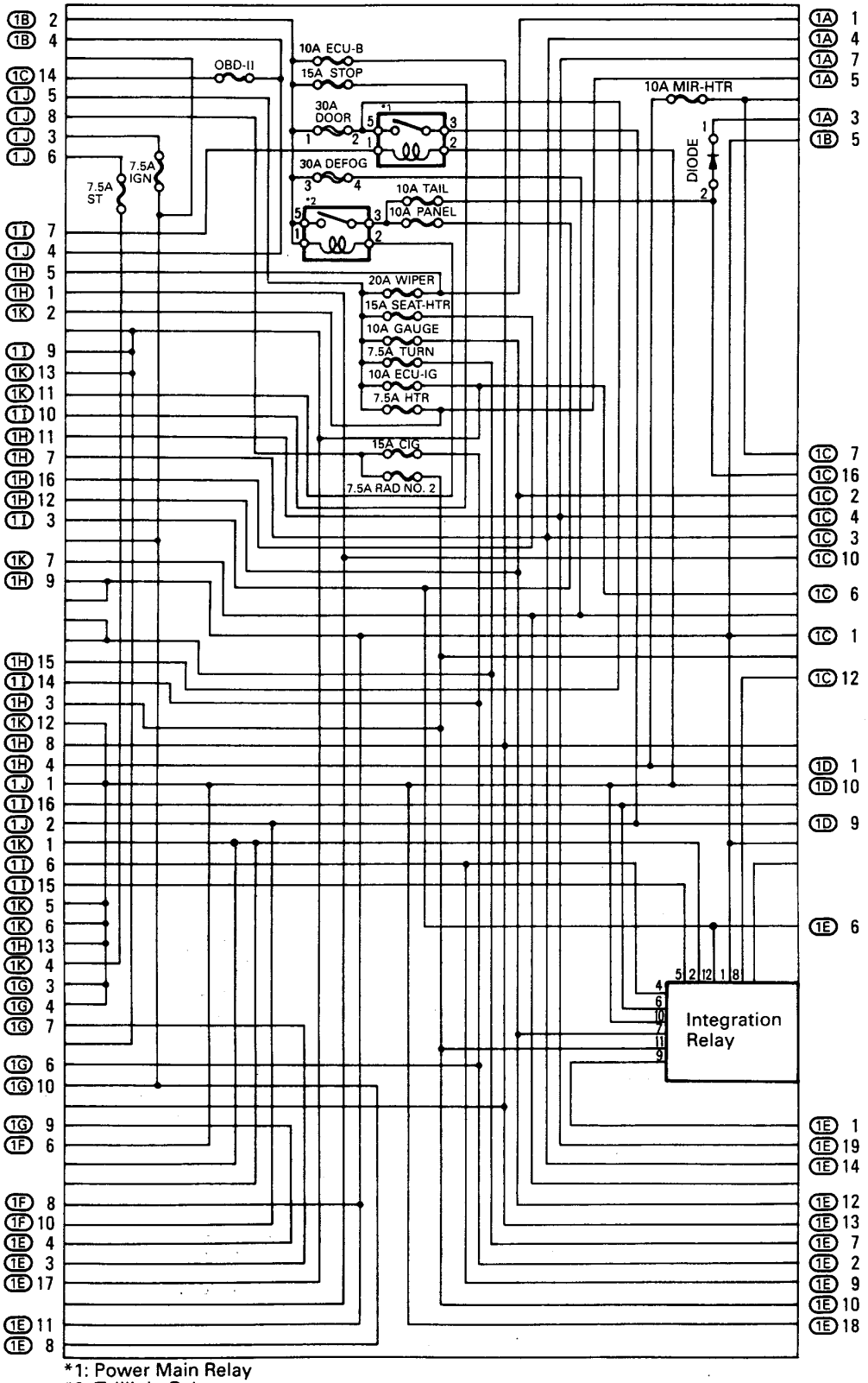

*1: Power Main Relay
*2: Taillight Relay

F RELAY LOCATIONS

② : R/B No. 2	Engine Compartment Left (See Page 18)
⬭ : J/B No. 2	

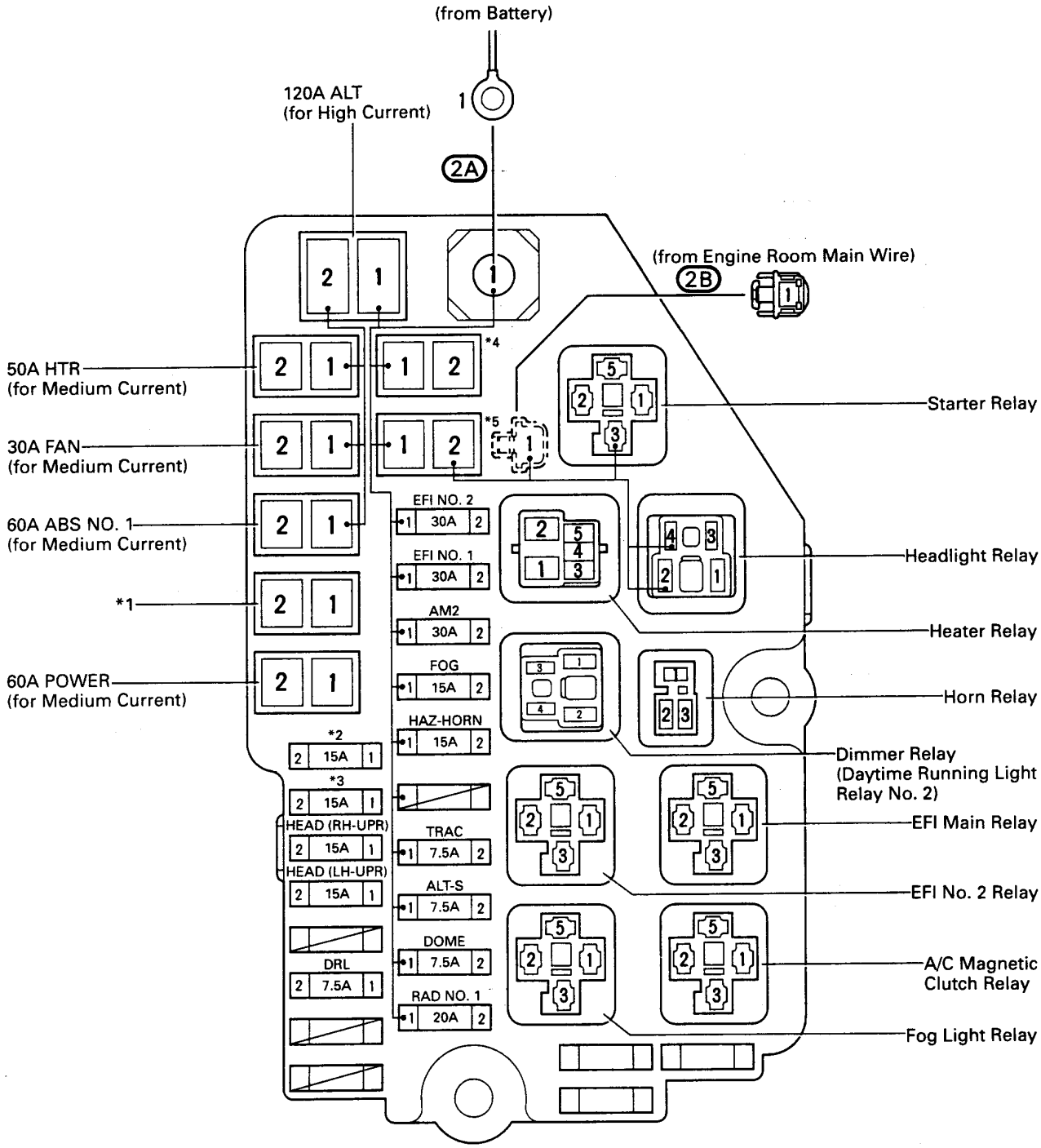

*1: { 50A AM1 (for Medium Current) (USA)
60A AM1 (for Medium Current) (CANADA)

*2: { HEAD (RH) (USA)
HEAD (RH-LWR) (CANADA)

*3: { HEAD (LH) (USA)
HEAD (LH-LWR) (CANADA)

*4: 30A ABS NO. 2
(for Medium Current)

*5: 50A MAIN
(for Medium Current)

④ : R/B No. 4	Left Kick Panel (See Page 18)

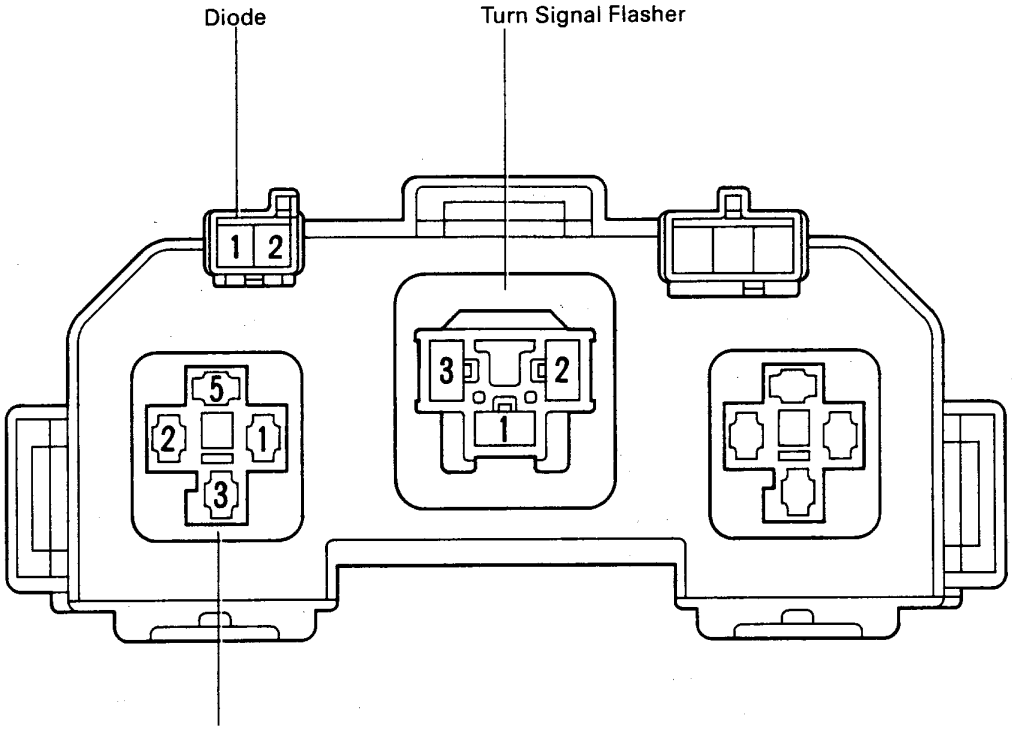

⑤ : R/B No. 5	Engine Compartment Right (See Page 18)

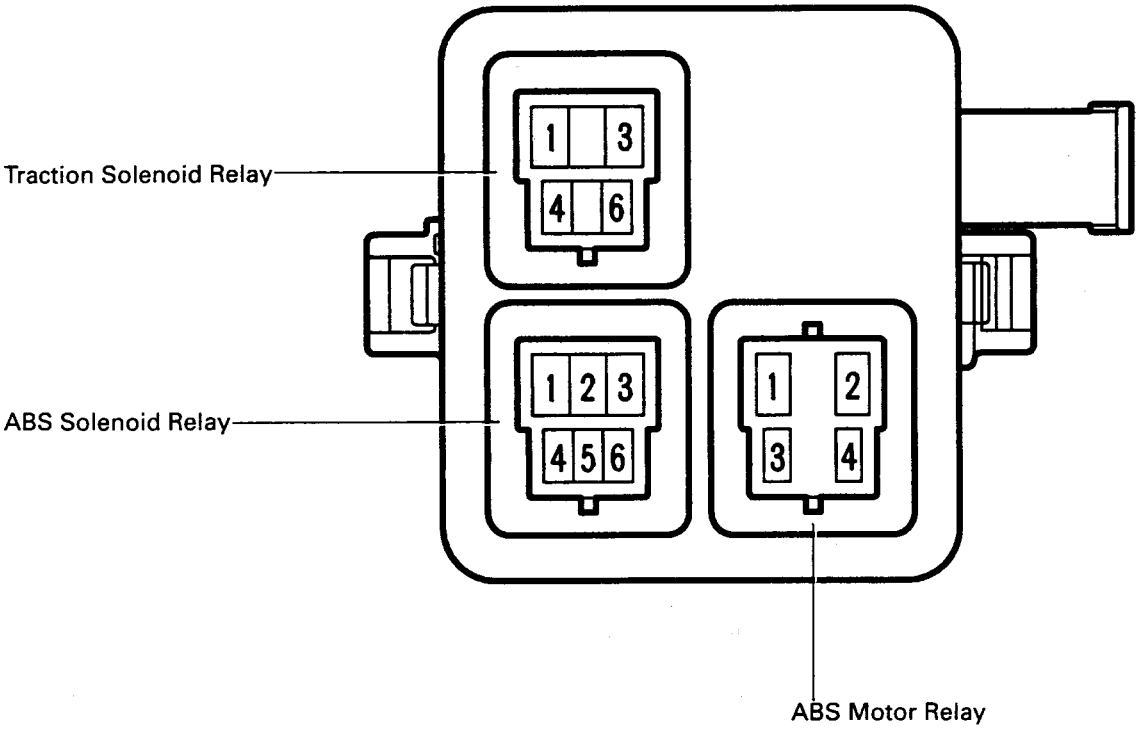

Position of Parts in Engine Compartment

[2JZ-GTE]

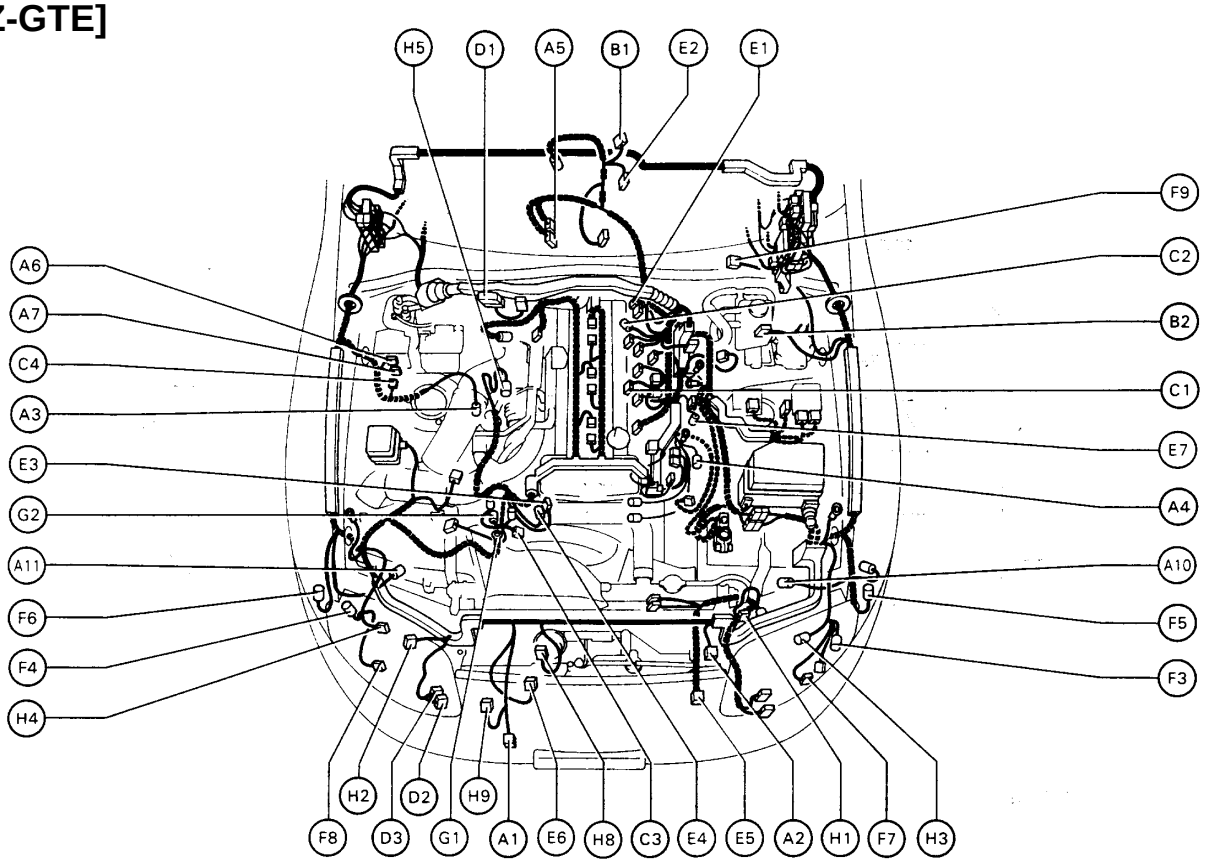

A 1 A/C Ambient Temp Sensor
A 2 A/C Condensor Fan Motor
A 3 A/C Triple Pressure SW
(A/C Dual and Single Pressure SW)
A 4 A/C Magnetic Clutch and Lock Sensor
A 5 A/T Fluid Temp. Sensor
A 6 ABS Actuator
A 7 ABS Actuator
A10 ABS Speed Sensor Front LH
A11 ABS Speed Sensor Front RH

B 1 Back-Up Light SW (M/T)
B 2 Brake Fluid Level Warning SW

C 1 Camshaft Position Sensor No.1
C 2 Camshaft Position Sensor No.2
C 3 Crankshaft Position Sensor
C 4 Cruise Control Actuator

D 1 Data Link Connector 1
D 2 Daytime Running Light Relay No.3
D 3 Daytime Running Light Relay No.3

E 1 EGR Gas Temp. Sensor
E 2 Electronically Controlled Transmission Solenoid
E 3 Engine Coolant Temp. Sensor
E 4 Engine Coolant Temp. Sender
E 5 Engine Coolant Temp. SW
E 6 Engine Hood Courtesy SW
E 7 Engine Oil Level Sensor

F 3 Front Fog Light LH
F 4 Front Fog Light RH
F 5 Front Side Marker Light LH
F 6 Front Side Marker Light RH
F 7 Front Turn Signal Light LH
F 8 Front Turn Signal Light RH and Parking Light RH
F 9 Front Wiper Motor

G 1 Generator
G 2 Generator

H 1 Headlight Hi LH
H 2 Headlight Hi RH
H 3 Headlight Lo LH
H 4 Headlight Lo RH
H 5 Heated Oxygen Sensor (Bank 1 Sensor 1)
H 8 Horn LH
H 9 Horn RH

Position of Parts in Engine Compartment

[2JZ-GTE]

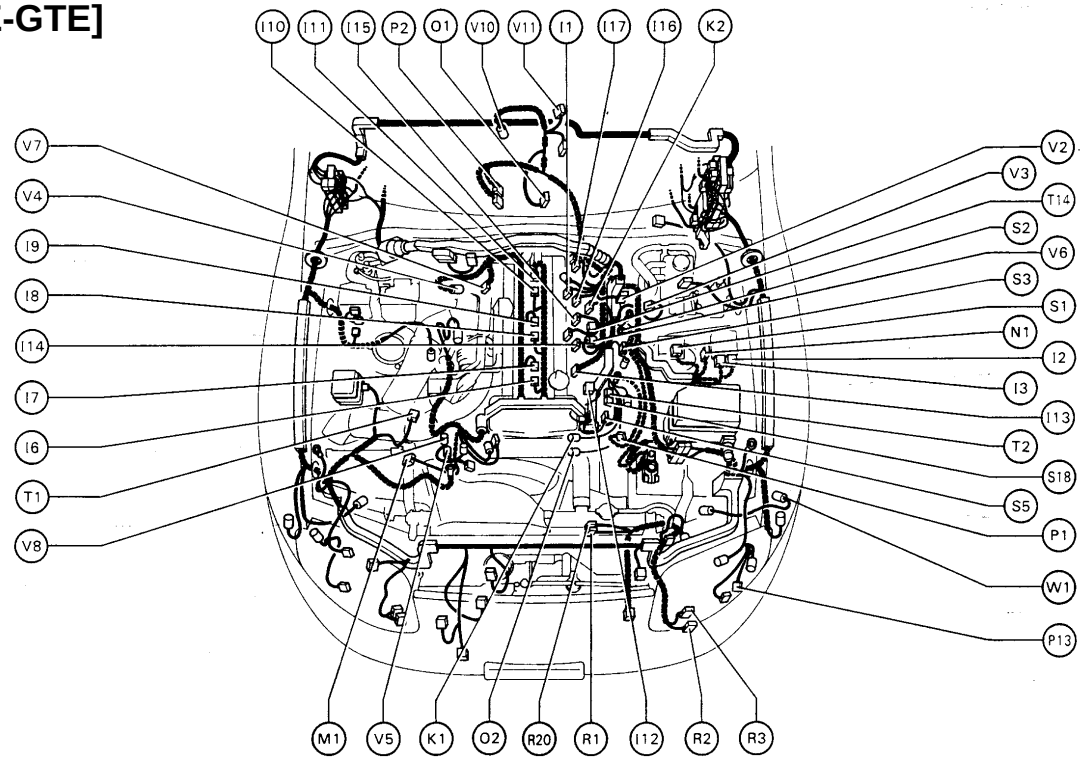

I 1 Idle AIr Control Valve
I 2 Igniter
I 3 Igniter
I 6 Ignition Coil No.1
I 7 Ignition Coil No.2
I 8 Ignition Coil No.3
I 9 Ignition Coil No.4
I10 Ignition Coil No.5
I11 Ignition Coil No.6
I12 Injector No.1
I13 Injector No.2
I14 Injector No.3
I15 Injector No.4
I16 Injector No.5
I17 Injector No.6

K 1 Knock Sensor (on Front Side)
K 2 Knock Sensor (on Rear Side)

M 1 Mass Air Flow Meter

N 1 Noise Filter

O 1 O/D Direct Clutch Speed Sensor
O 2 Oil Pressure SW

P 1 PPS Solenoid
P 2 Park/Neutral Position SW, Back-Up Light SW and A/T Indicator Light SW (A/T)
P13 Parking Light LH

R 1 Radiator Fan Motor No.1
R 2 Radiator Fan Relay No.1
R 3 Radiator Fan Relay No.2
R20 Radiator Fan Motor No.2

S 1 SFI Resistor
S 2 Starter
S 3 Starter
S 5 Sub Throttle Position Sensor
S18 Sub Throttle Valve Motor

T 1 Theft Deterrent Horn
T 2 Throttle Position Sensor
T14 Turbo Pressure Sensor

V 2 VSV (EGR)
V 3 VSV (EVAP)
V 4 VSV (Exhaust Bypass Valve)
V 5 VSV (Exhaust Gas Control Valve)
V 6 VSV (Fuel Pressure Up)
V 7 VSV (Intake Air Control Valve)
V 8 VSV (Waste Gate Valve)
V10 Vehicle Speed Sensor No.1 (Combination Meter)
V11 Vehicle Speed Sensor No.2 (Electronically Controlled Transmission)

W 1 Washer Motor

Position of Parts in Engine Compartment

[2JZ-GE]

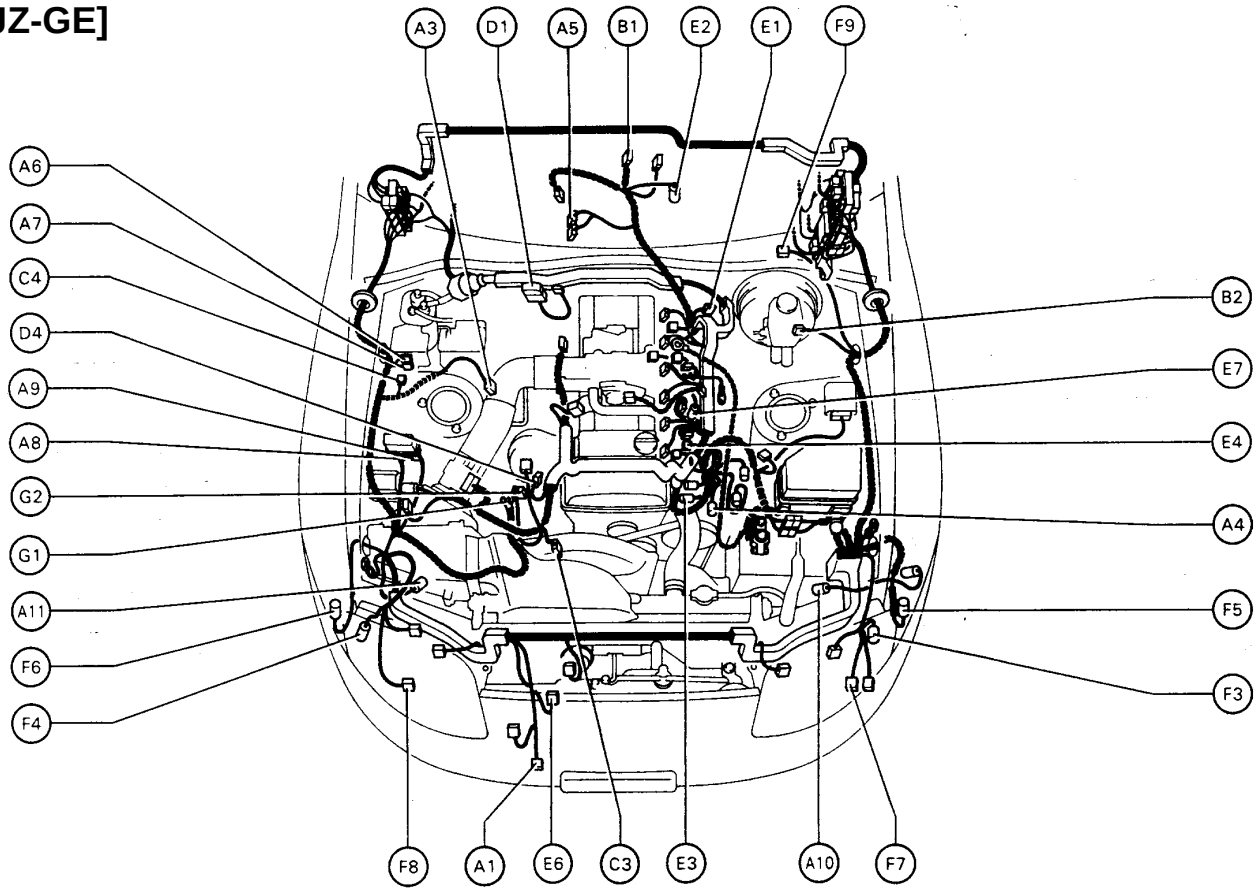

A 1 A/C Ambient Temp. Sensor
A 3 A/C Dual Pressure SW
A 4 A/C Magnetic Clutch and Lock Sensor
A 5 A/T Fluid Temp. Sensor
A 6 ABS Actuator
A 7 ABS Actuator
A 8 ABS Relay
A 9 ABS Relay
A10 ABS Speed Sensor Front LH
A11 ABS Speed Sensor Front RH

B 1 Back-Up Light SW (M/T)
B 2 Brake Fluid Level Warning SW

C 3 Crankshaft Position Sensor
C 4 Cruise Control Actuator

D 1 Data Link Connector 1
D 4 Distributor

E 1 EGR Gas Temp. Sensor
E 2 Electronically Controlled Transmission Solenoid
E 3 Engine Coolant Temp. Sensor
E 4 Engine Coolant Temp. Sender
E 6 Engine Hood Courtesy SW
E 7 Engine Oil Level Sensor

F 3 Front Fog Light LH
F 4 Front Fog Light RH
F 5 Front Side Marker Light LH
F 6 Front Side Marker Light RH
F 7 Front Turn Signal Light LH
F 8 Front Turn Signal Light RH and Parking Light RH
F 9 Front Wiper Motor

G 1 Generator
G 2 Generator

Position of Parts in Engine Compartment

[2JZ-GE]

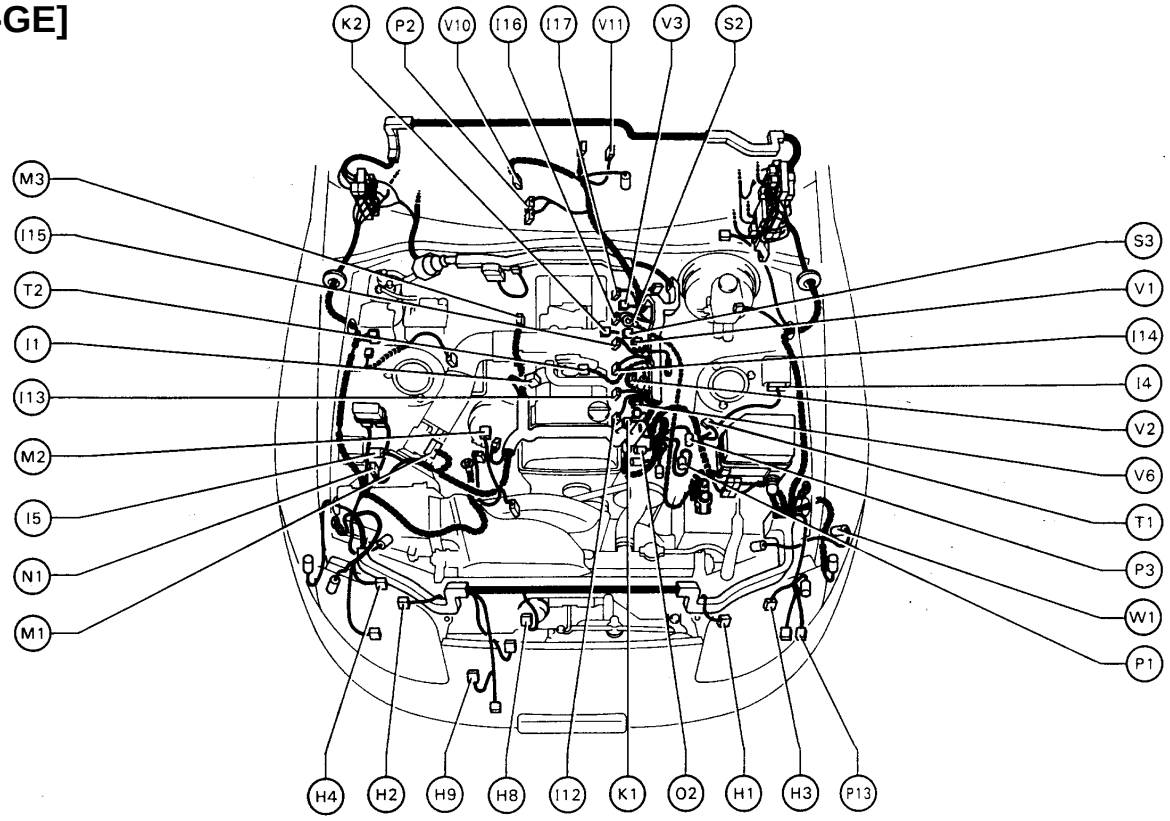

H 1 Headlight Hi LH
H 2 Headlight Hi RH
H 3 Headlight Lo LH
H 4 Headlight Lo RH
H 8 Horn LH
H 9 Horn RH

I 1 Idle Air Control Valve
I 4 Igniter
I 5 Ignition Coil
I 12 Injector No.1
I 13 Injector No.2
I 14 Injector No.3
I 15 Injector No.4
I 16 Injector No.5
I 17 Injector No.6

K 1 Knock Sensor (on Front Side)
K 2 Knock Sensor (on Rear Side)

M 1 Mass Air Flow Meter
M 2 Main Heated Oxygen Sensor (Bank 1 Sensor 1)
M 3 Main Heated Oxygen Sensor (Bank 2 Sensor 1)

N 1 Noise Filter

O 2 Oil Pressure SW

P 1 PPS Solenoid
P 2 Park/Neutral Position SW, Back-Up Light SW and A/T Indicator Light SW (A/T)
P 3 Power Steering Pressure SW
P13 Parking Light LH

S 2 Starter
S 3 Starter

T 1 Theft Deterrent Horn
T 2 Throttle Position Sensor

V 1 VSV (ACIS)
V 2 VSV (EGR)
V 3 VSV (EVAP)
V 6 VSV (Fuel Pressure Up)
V10 Vehicle Speed Sensor No.1 (Combination Meter)
V11 Vehicle Speed Sensor No.2 (Electronically Controlled Transmission)

W 1 Washer Motor

Position of Parts in Instrument Panel

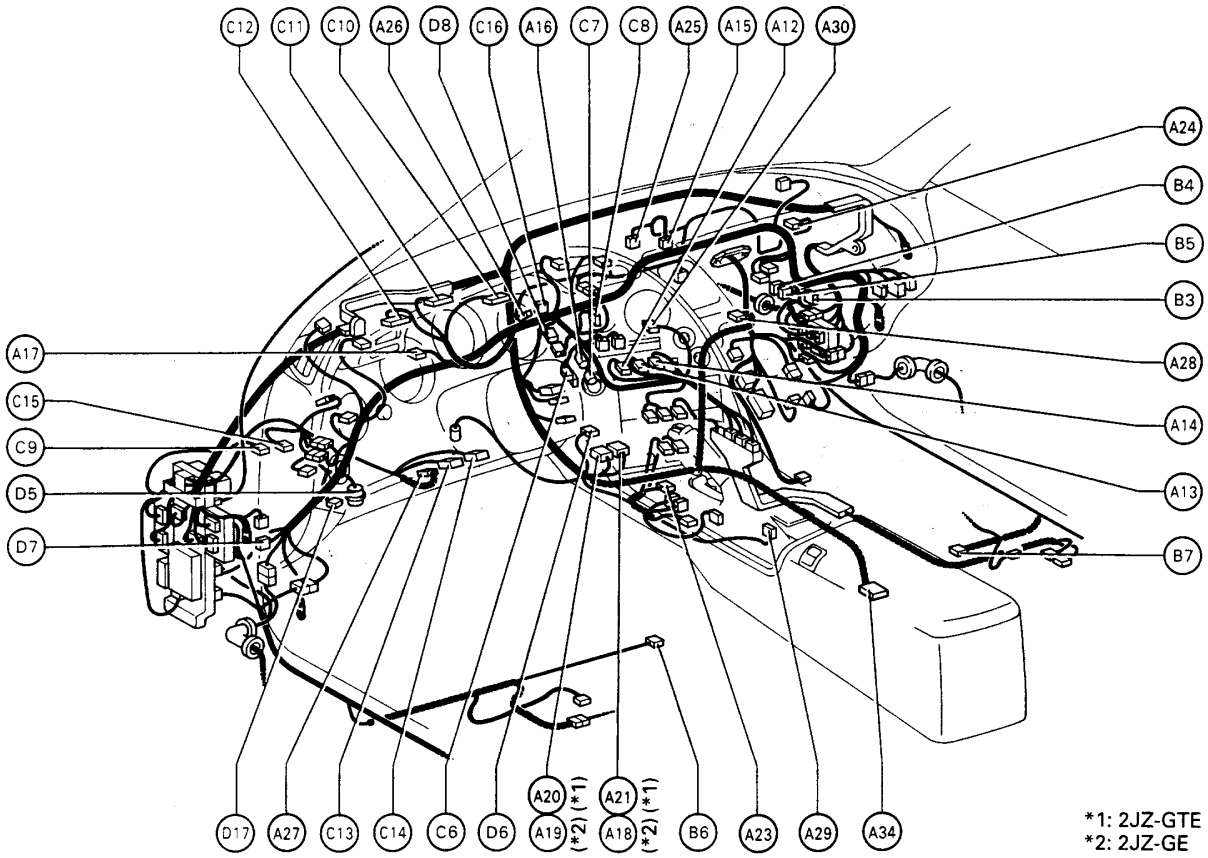

A12 A/C Amplifier
A13 A/C Amplifier
A14 A/C Amplifier
A15 A/C Evaporator Temp. Sensor
A16 A/C Room Temp. Sensor
A17 A/C Solar Sensor
A18 ABS ECU
A19 ABS ECU
A20 ABS ECU
A21 ABS ECU
A23 ABS Deceleration Sensor
A24 Air Inlet Control Servo Motor
A25 Air Mix Control Servo Motor
A26 Air Vent Mode Control Servo Motor
A27 Airbag Squib (Steering Wheel Pad)
A28 Airbag Squib (Front Passenger Airbag Assembly)
A29 Ashtray Illumination
A30 Auto Antenna Control Relay
A34 Airbag Sensor

B 3 Blower Motor
B 4 Blower Motor Control Relay
B 5 Blower Motor Control Relay
B 6 Buckle SW LH
B 7 Buckle SW RH

C 6 Cigarette Lighter
C 7 Cigarette Lighter Illumination
C 8 Clock
C 9 Clutch Start SW
C10 Combination Meter
C11 Combination Meter
C12 Combination Meter
C13 Combination SW
C14 Combination SW
C15 Cruise Control Clutch SW
C16 Cruise Control ECU

D 5 Data Link Connector 2
D 6 Daytime Running Light Relay (Main)
D 7 Diode (Interior Light)
D 8 Diode (Idle-Up)
D17 Data Link Connector 3

Position of Parts in Instrument Panel

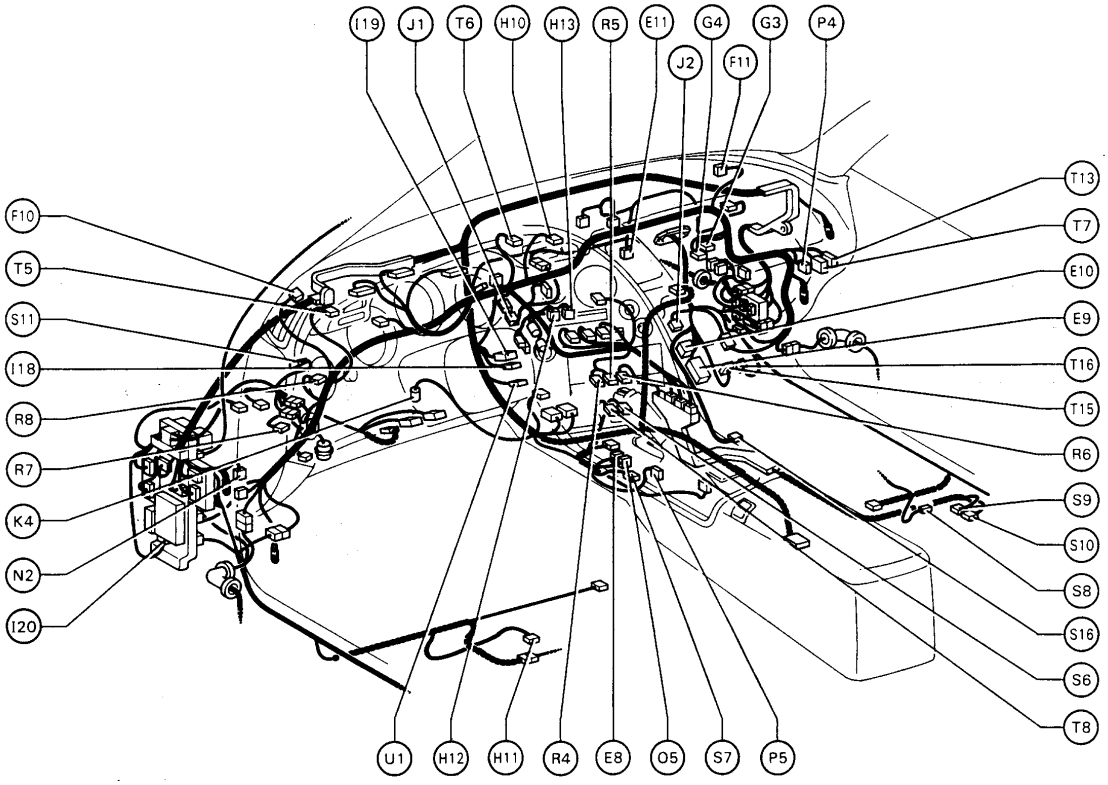

E 8 Electronically Controlled Transmission Pattern Select SW
E 9 Engine Control Module
E10 Engine Control Module
E11 Engine Coolant Temp. Sensor (A/C System)

F10 Front Tweeter (Speaker) LH
F11 Front Tweeter (Speaker) RH

G 3 Glove Box Light
G 4 Glove Box Light SW

H10 Hazard SW
H11 Heated Oxygen Sensor (Bank 1 Sensor 2)
H12 Heater Control SW
H13 Heater Control SW

I18 Ignition Key Cylinder Light
I19 Ignition SW
I20 Integration Relay

J 1 Junction Connector
J 2 Junction Connector

K 4 Kick Down SW

N 2 Noise Filter

O 5 O/D Main SW and A/T Indicator Illumination

P 4 PPS ECU
P 5 Parking Brake SW

R 4 Radio and Player (w/o Stereo Power Amplifier)
R 5 Radio and Player (w/o Stereo Power Amplifier)
R 6 Radio and Player (w/ Stereo Power Amplifier)
R 7 Remote Control Mirror SW
R 8 Rheostat

S 6 Seat Heater SW
S 7 Shift Lock ECU
S 8 Stereo Power Amplifier
S 9 Stereo Power Amplifier
S10 Stereo Power Amplifier
S11 Stop Light SW
S16 Sub Heated Oxygen Sensor (Bank 1 Sensor 2)

T 5 Telltale Light LH
T 6 Telltale Light RH
T 7 Theft Deterrent and Door Lock Control ECU
T 8 Traction Control SW
T13 Theft Deterrent and Door Lock Control ECU
T15 Throttle ECU
T16 Throttle ECU

U 1 Unlock Warning SW

Position of Parts in Body

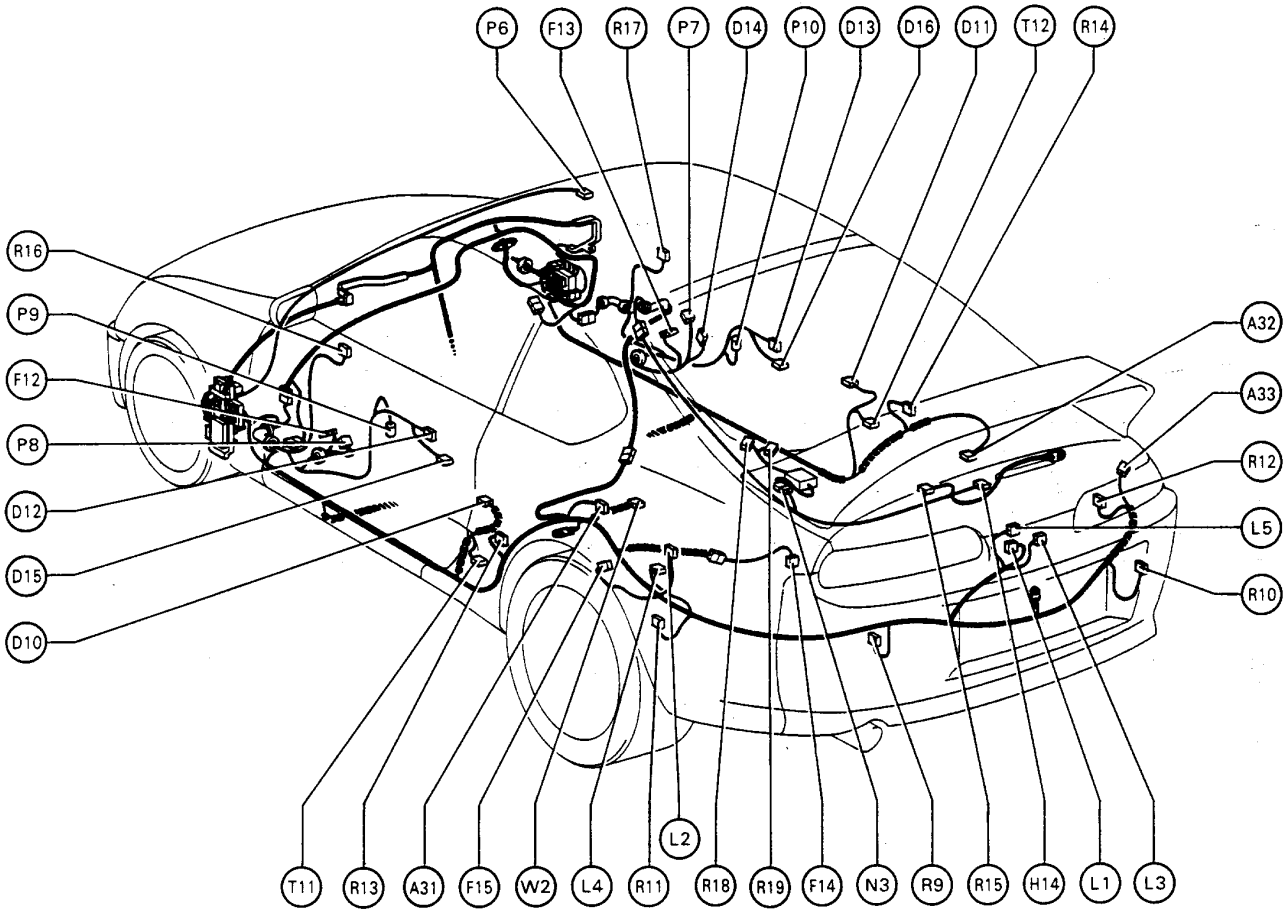

A31 ABS Speed Sensor Rear LH
A32 ABS Speed Sensor Rear RH
A33 Auto Antenna Motor

D10 Door Courtesy SW LH
D11 Door Courtesy SW RH
D12 Door Key Lock and Unlock SW LH
D13 Door Key Lock and Unlock SW RH
D14 Door Lock Control SW RH
D15 Door Lock Motor and Door Unlock Detection SW LH
D16 Door Lock Motor and Door Unlock Detection SW RH

F12 Front Door Speaker LH
F13 Front Door Speaker RH
F14 Fuel Pump and Sender
F15 Fuel Pump ECU

H14 High Mounted Stop Light

L 1 License Plate Light
L 2 Light Failure Sensor
L 3 Luggage Compartment Key Unlock SW
L 4 Luggage Compartment Light
L 5 Luggage Compartment Light SW

N 3 Noise Filter

P 6 Personal Light
P 7 Power Window Control SW RH
P 8 Power Window Master SW and Door Lock Control SW LH
P 9 Power Window Motor LH
P10 Power Window Motor RH

R 9 Rear Combination Light LH
R10 Rear Combination Light RH
R11 Rear Side Marker Light LH
R12 Rear Side Marker Light RH
R13 Rear Speaker LH
R14 Rear Speaker RH
R15 Rear Wiper Motor and Relay
R16 Remote Control Mirror and Mirror Heater LH
R17 Remote Control Mirror and Mirror Heater RH
R18 Rear Window Defogger (+)
R19 Rear Window Defogger (-)

T11 Tension Reducer Solenoid LH
T12 Tension Reducer Solenoid RH

W2 Woofer (Speaker)

Position of Parts in Seat

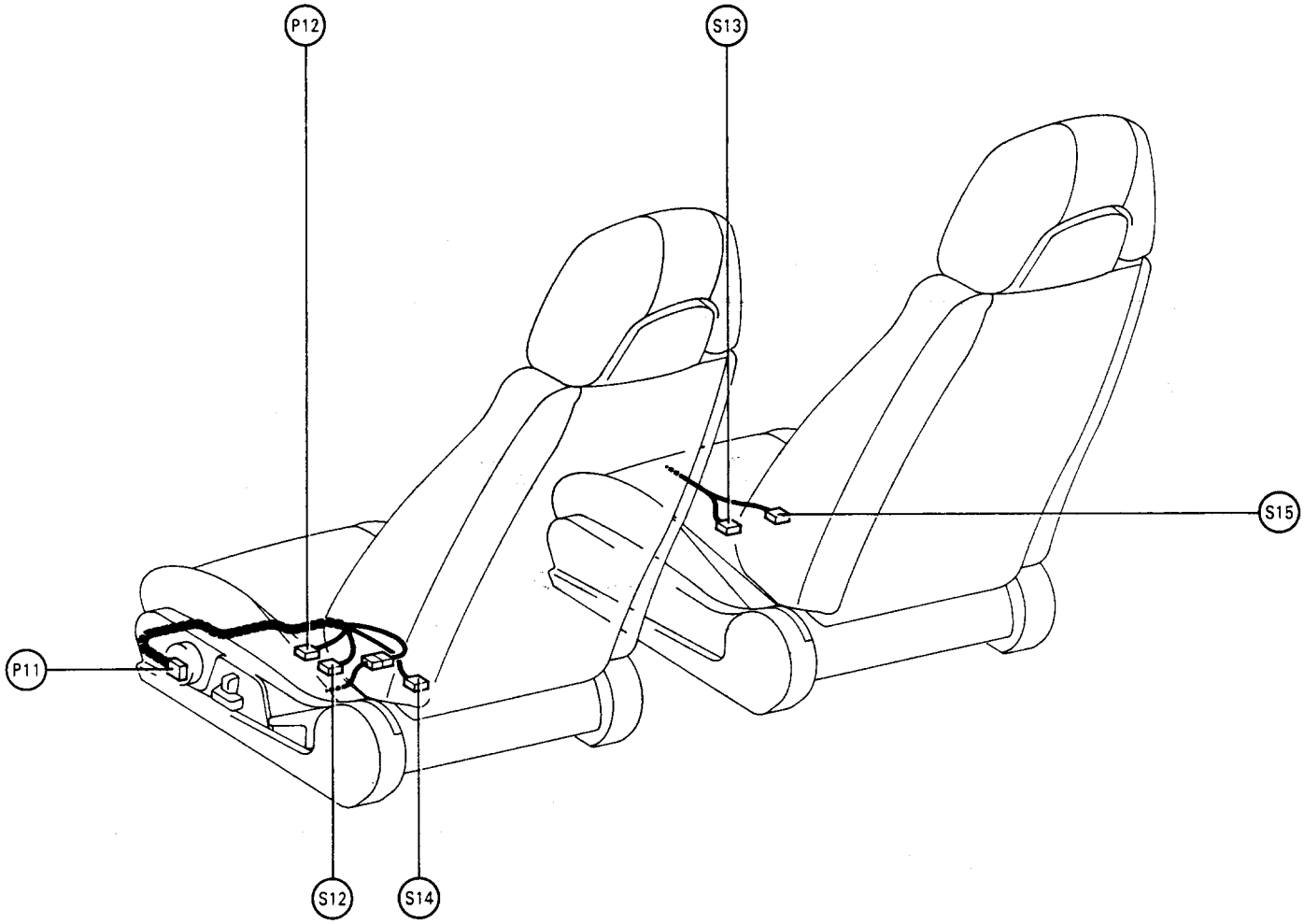

P11 Power Seat Control SW (Driver's Seat)
P12 Power Seat Motor (Driver's Seat Slide Control)

S12 Seat Heater (Driver's Seat)

S13 Seat Heater (Front Passenger's Seat)
S14 Seat Heater Relay (Driver's Seat)
S15 Seat Heater Relay (Front Passenger's Seat)

▭	: Location of Connector Joining Wire Harness and Wire Harness
▽	: Location of Ground Points

[2JZ-GTE]

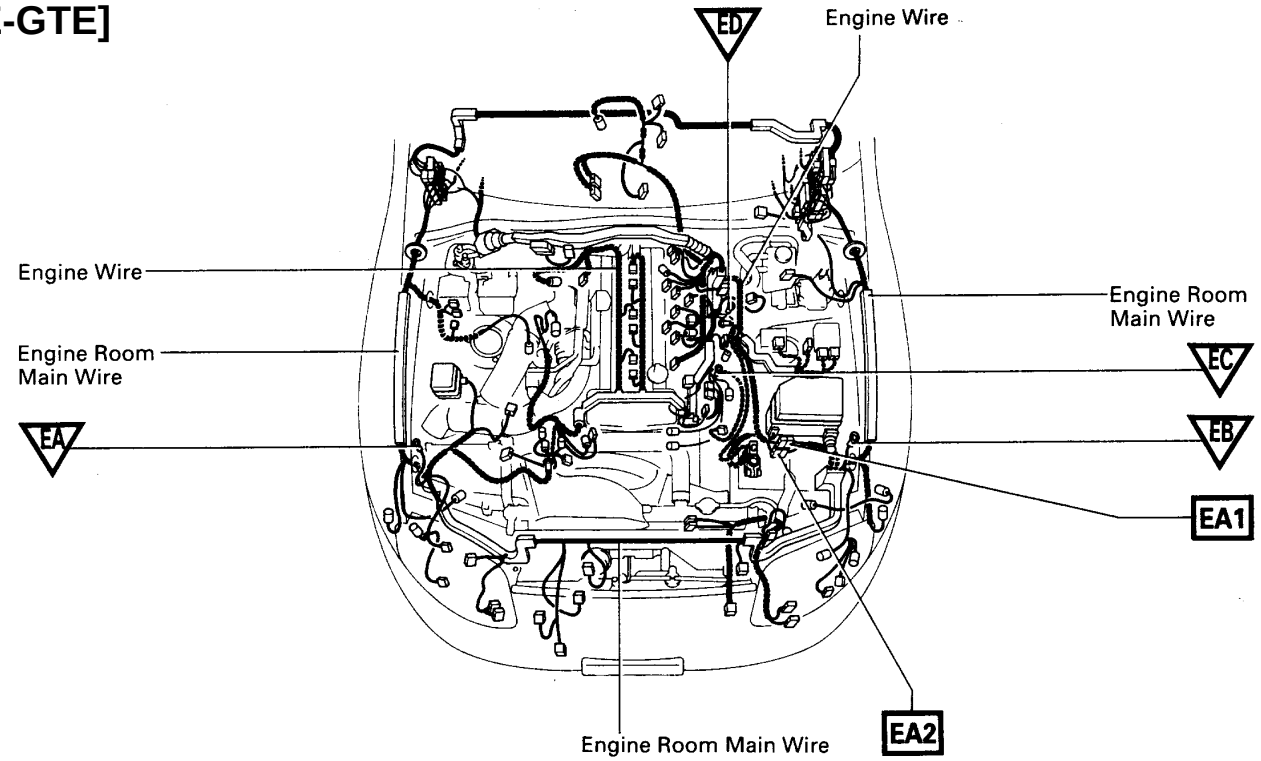

⬡	: Location of Splice Points

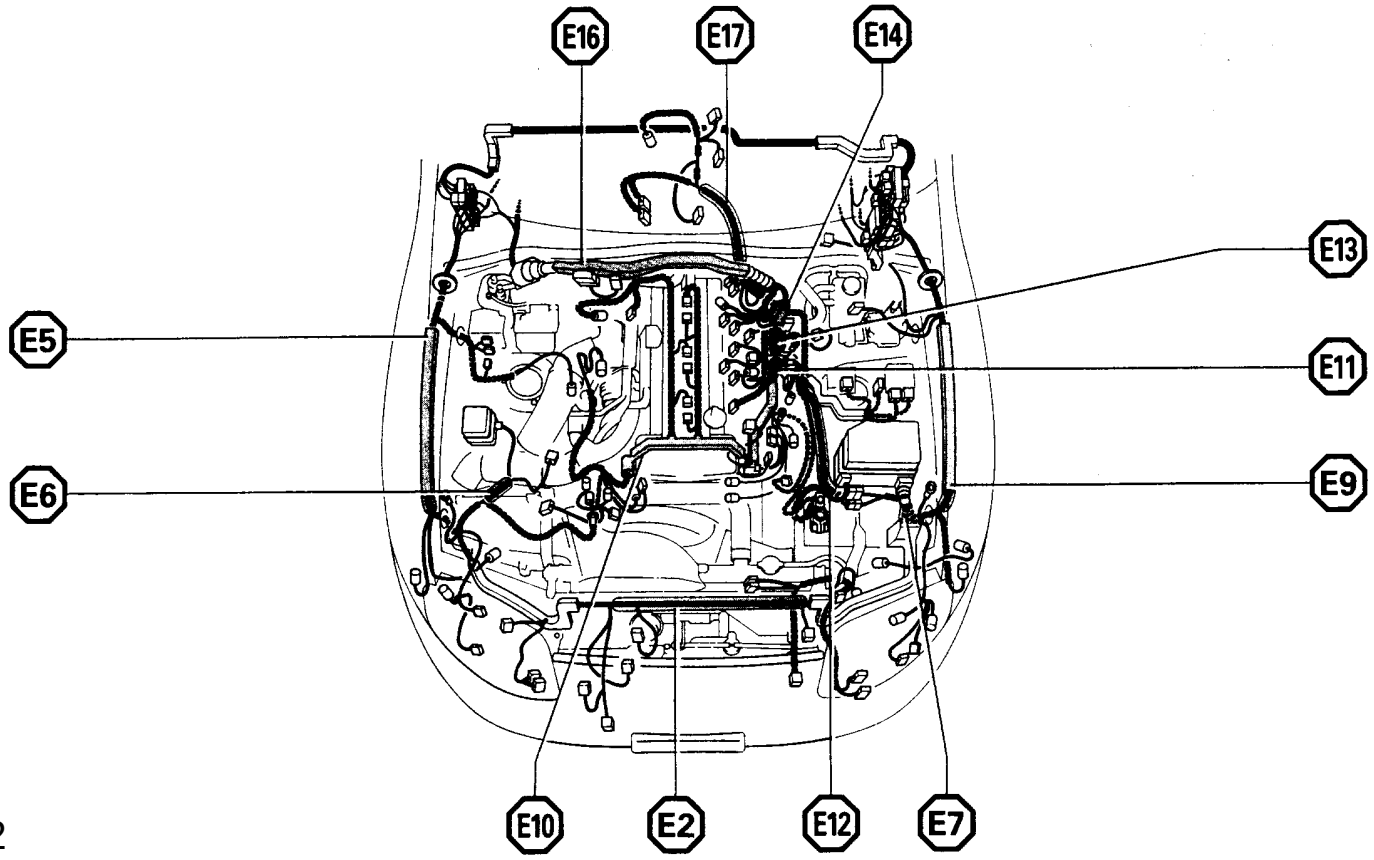

Connector Joining Wire Harness and Wire Harness

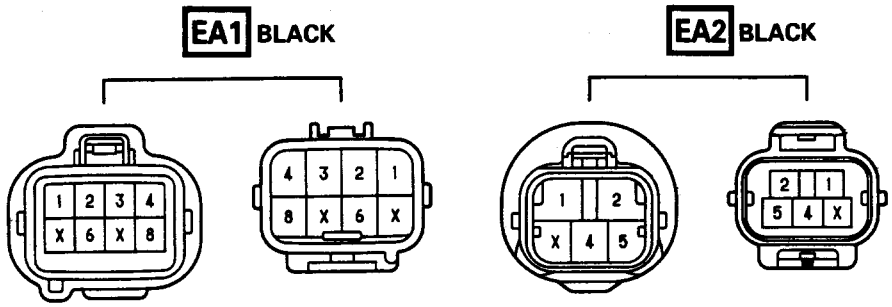

CODE	JOINING WIRE HARNESS AND WIRE HARNESS (CONNECTOR LOCATION)
EA1	ENGINE WIRE AND ENGINE ROOM MAIN WIRE (NEAR THE R/B NO.2)
EA2	

▭ : Location of Connector Joining Wire Harness and Wire Harness
▽ : Location of Ground Points

[2JZ-GE]

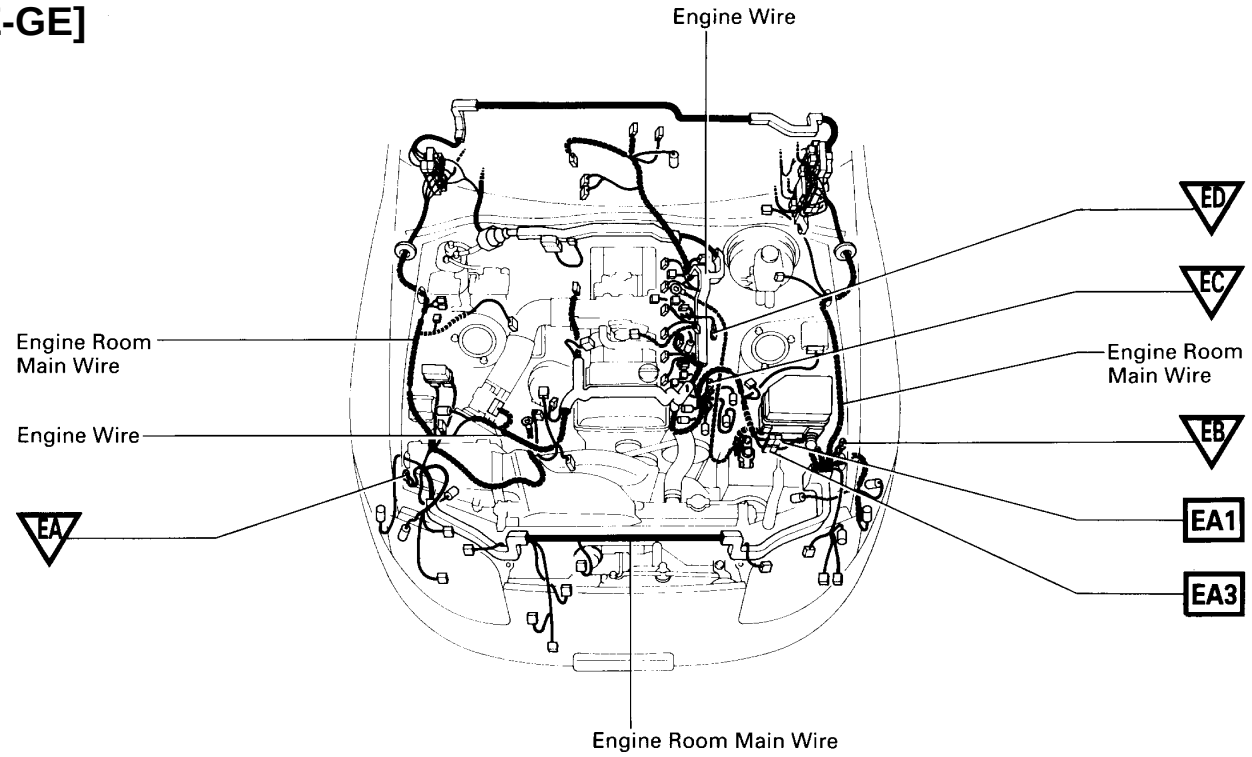

⬡ : Location of Splice Points

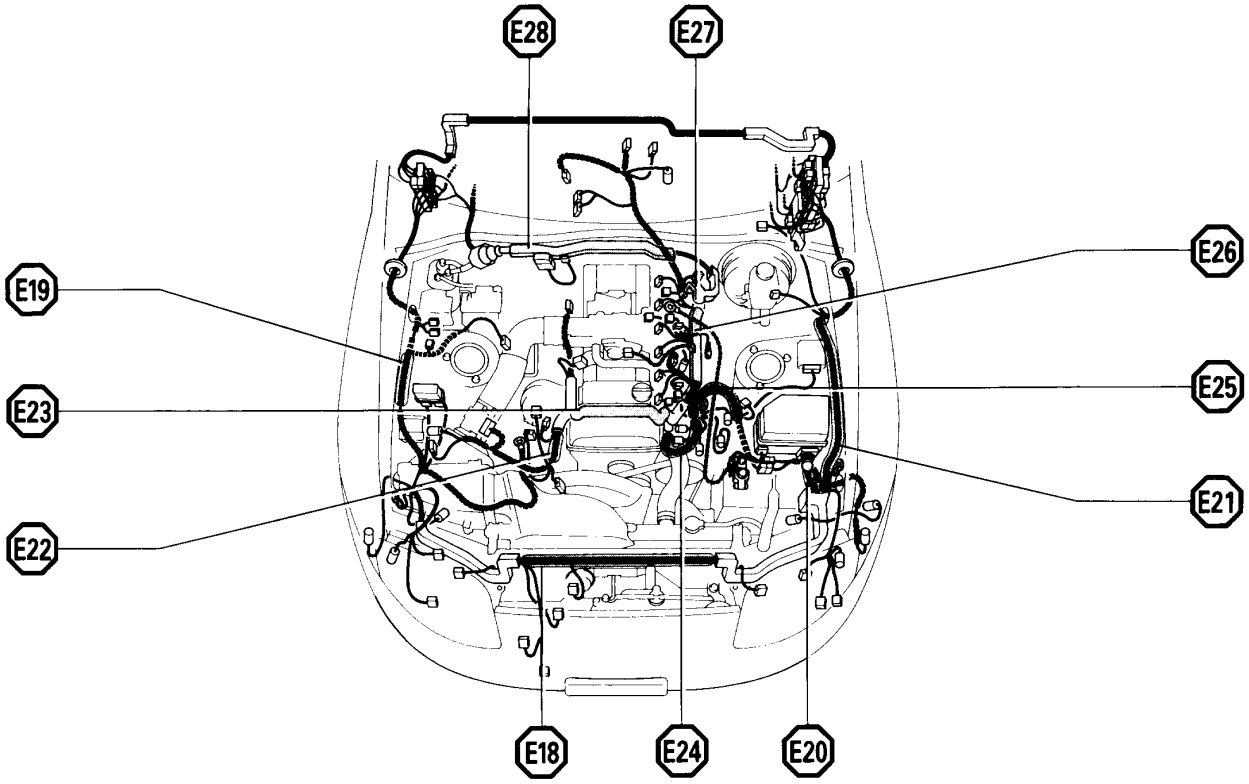

Connector Joining Wire Harness and Wire Harness

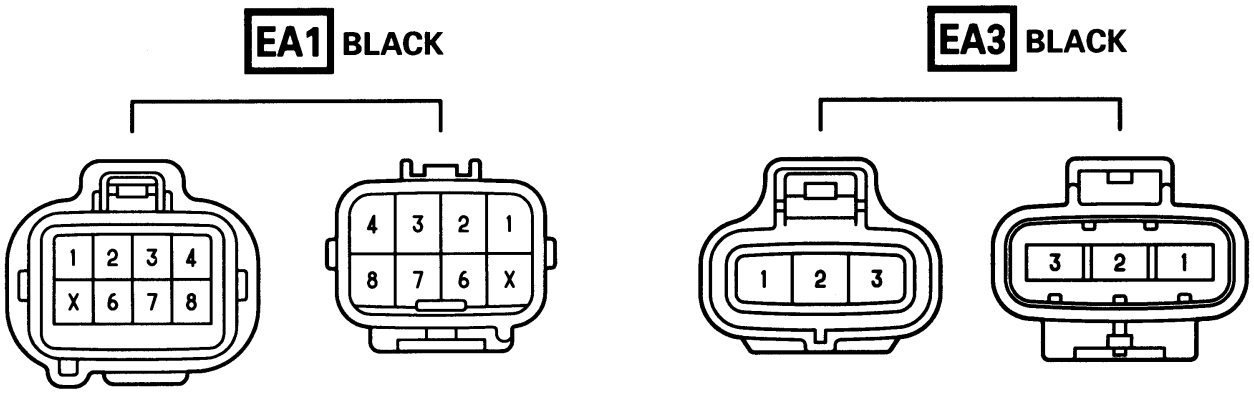

CODE	JOINING WIRE HARNESS AND WIRE HARNESS (CONNECTOR LOCATION)
EA1	ENGINE WIRE AND ENGINE ROOM MAIN WIRE (NEAR THE R/B NO.2)
EA3	

▭ : Location of Connector Joining Wire Harness and Wire Harness

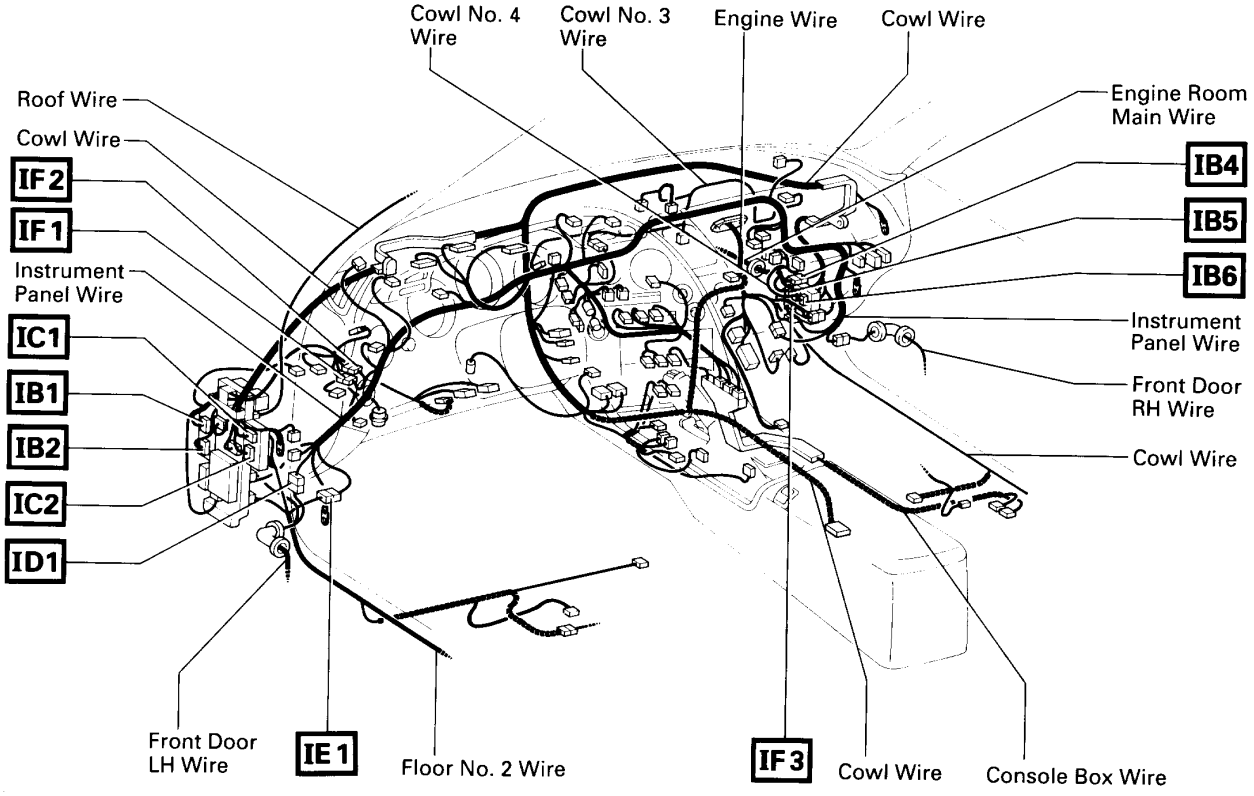

▽ : Location of Ground Points

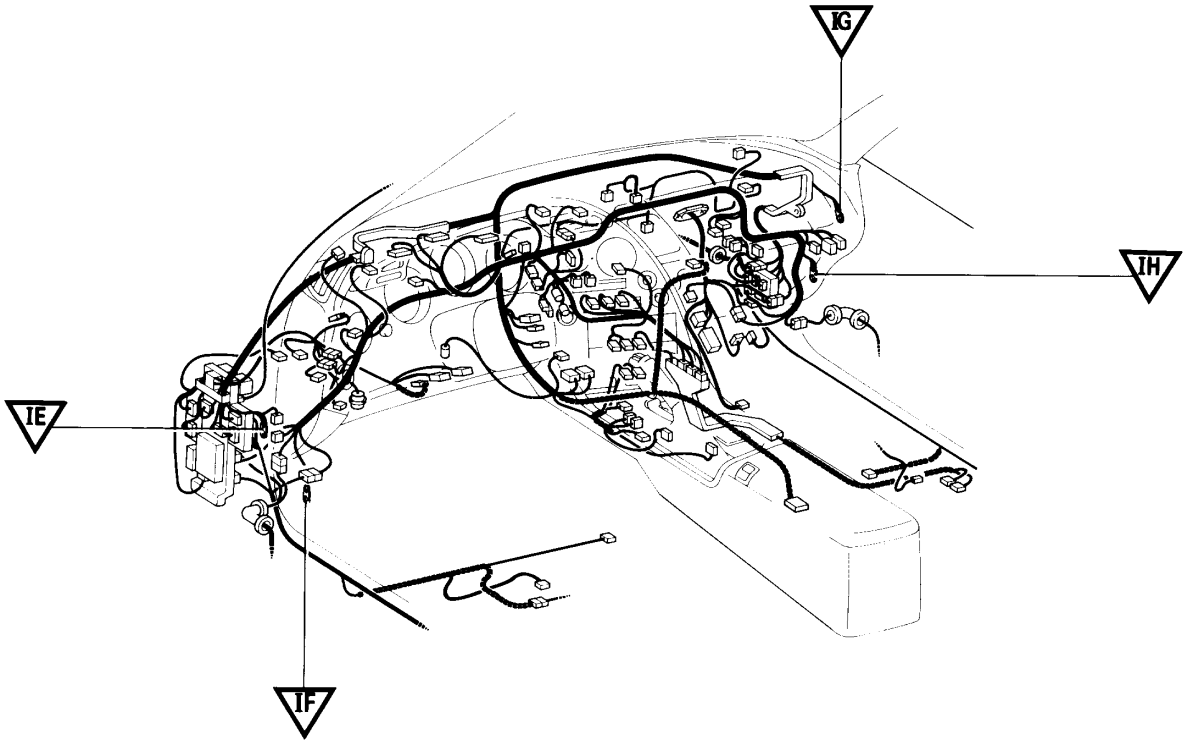

Connector Joining Wire Harness and Wire Harness

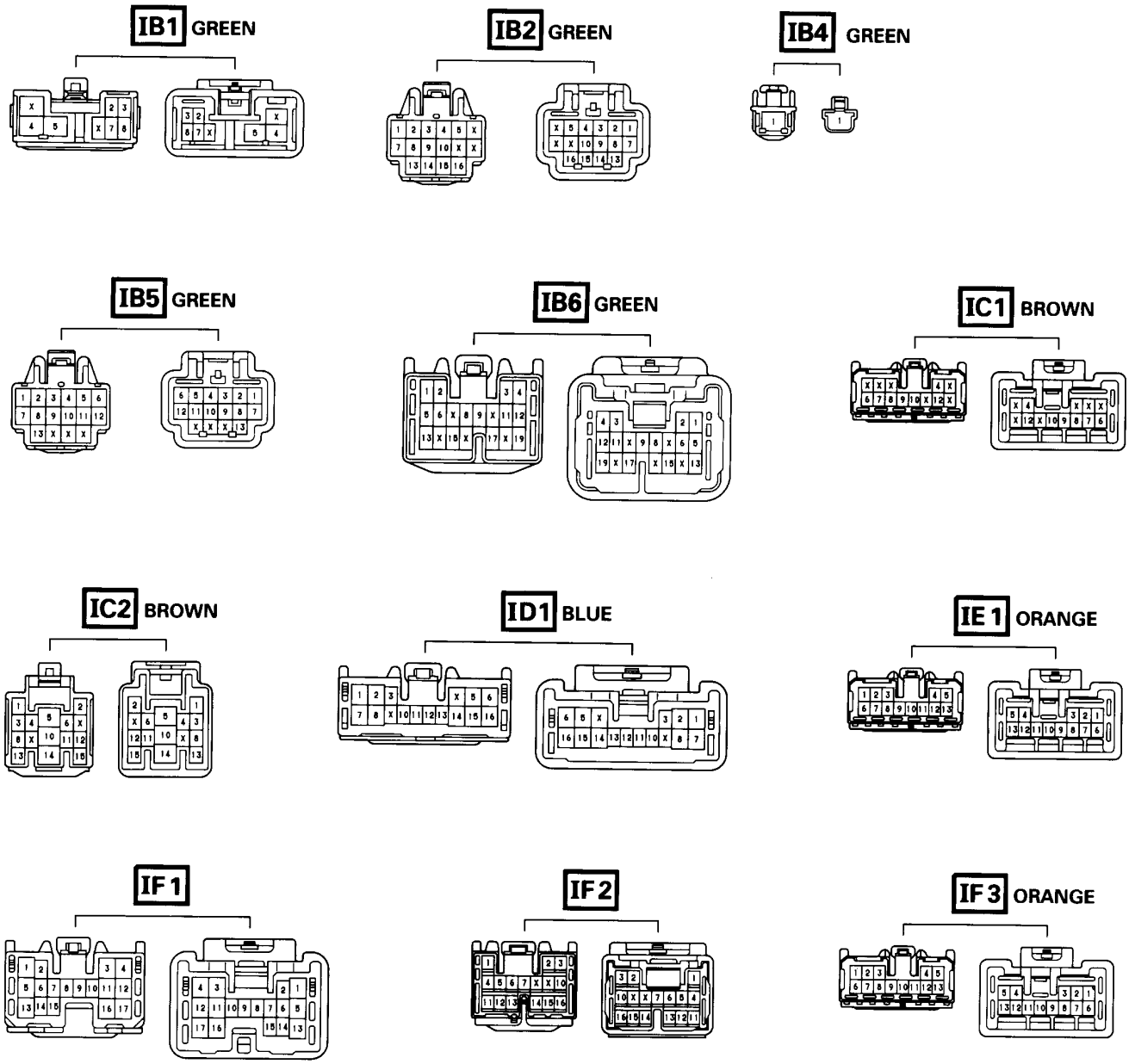

CODE	JOINING WIRE HARNESS AND WIRE HARNESS (CONNECTOR LOCATION)
IB1	ENGINE ROOM MAIN WIRE AND COWL WIRE (LEFT KICK PANEL)
IB2	
IB4	ENGINE ROOM MAIN WIRE AND COWL WIRE (RIGHT KICK PANEL)
IB5	
IB6	
IC1	FLOOR NO.2 WIRE AND COWL WIRE (LEFT KICK PANEL)
IC2	
ID1	FRONT DOOR LH WIRE AND INSTRUMENT PANEL WIRE (LEFT KICK PANEL)
IE1	INSTRUMENT PANEL WIRE AND FLOOR NO.2 WIRE (LEFT KICK PANEL)
IF1	INSTRUMENT PANEL WIRE AND COWL WIRE (INSTRUMENT PANEL REINFORCEMENT LH)
IF2	
IF3	INSTRUMENT PANEL WIRE AND COWL WIRE (RIGHT KICK PANEL)

□ : Location of Connector Joining Wire Harness and Wire Harness

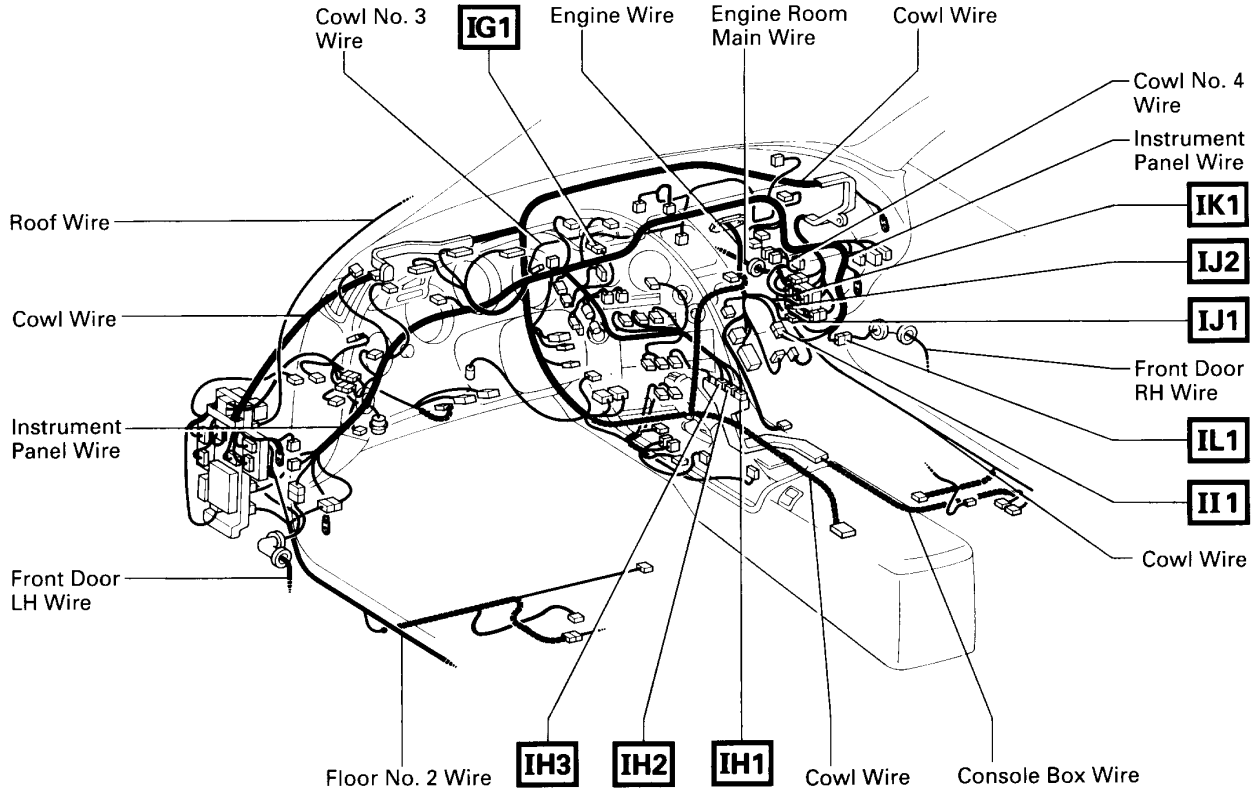

○ : Location of Splice Points

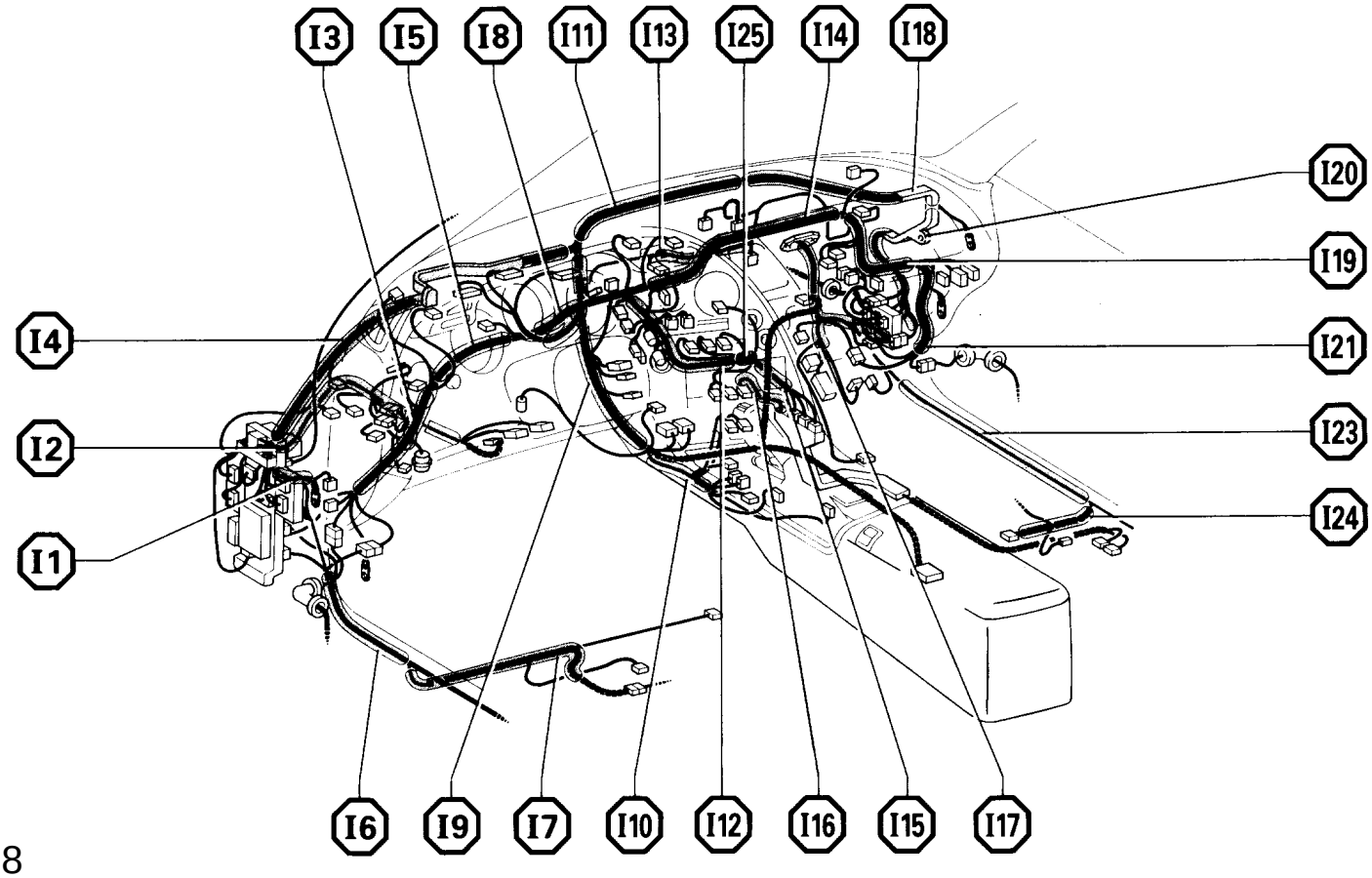

Connector Joining Wire Harness and Wire Harness

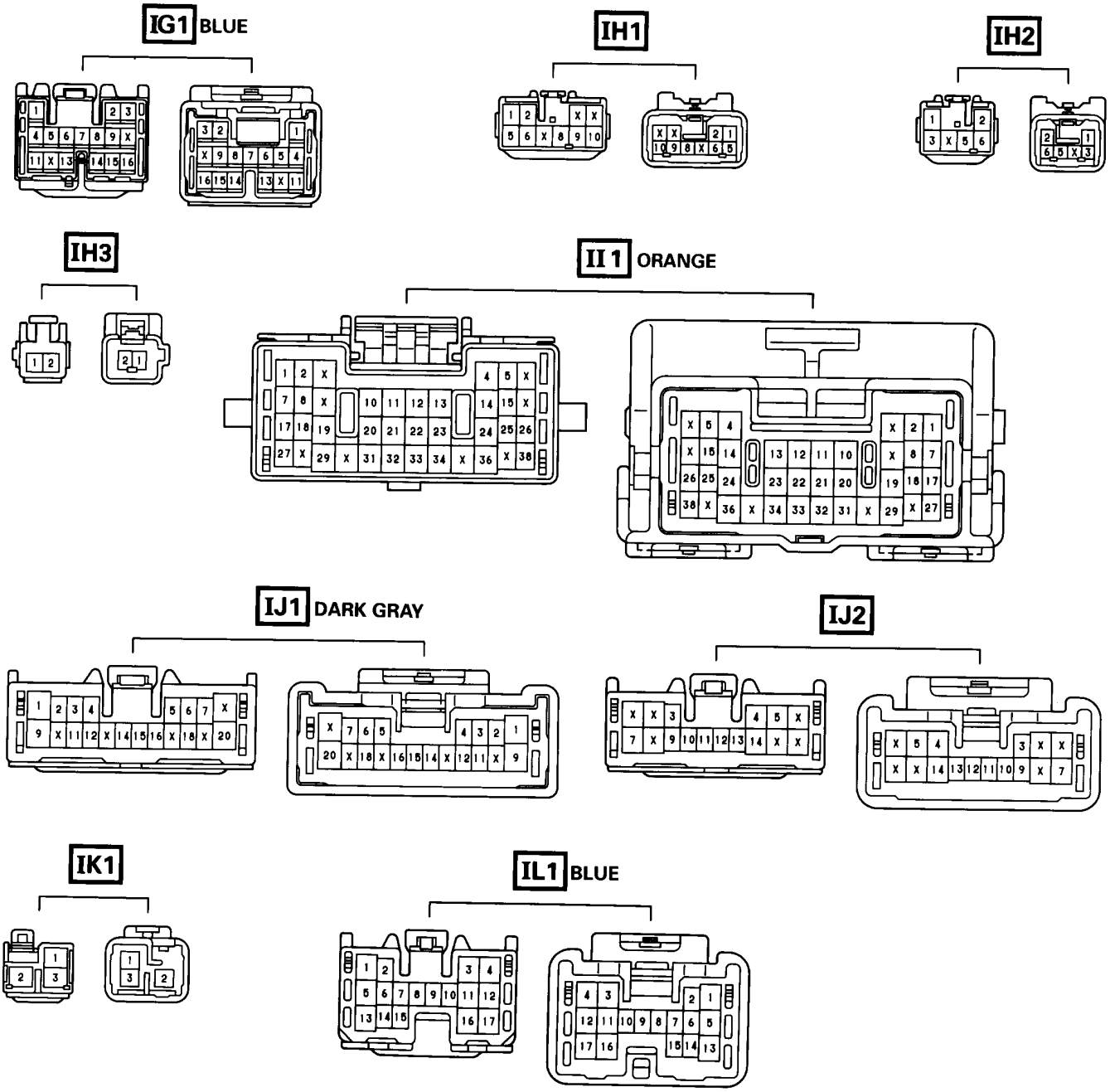

CODE	JOINING WIRE HARNESS AND WIRE HARNESS (CONNECTOR LOCATION)
IG1	INSTRUMENT PANEL WIRE AND COWL NO.3 WIRE (BEHIND HEATER CONTROL SW)
IH1	INSTRUMENT PANEL WIRE AND CONSOLE BOX WIRE (UNDER THE INSTRUMENT PANEL BRACE RH)
IH2	
IH3	
II1	ENGINE WIRE AND INSTRUMENT PANEL WIRE (RIGHT KICK PANEL)
IJ1	ENGINE WIRE AND COWL WIRE (RIGHT KICK PANEL)
IJ2	
IK1	COWL NO.4 WIRE AND COWL WIRE (RIGHT KICK PANEL)
IL1	FRONT DOOR RH WIRE AND INSTRUMENT PANEL WIRE (RIGHT KICK PANEL)

▭ : Location of Connector Joining Wire Harness and Wire Harness
▽ : Location of Ground Points

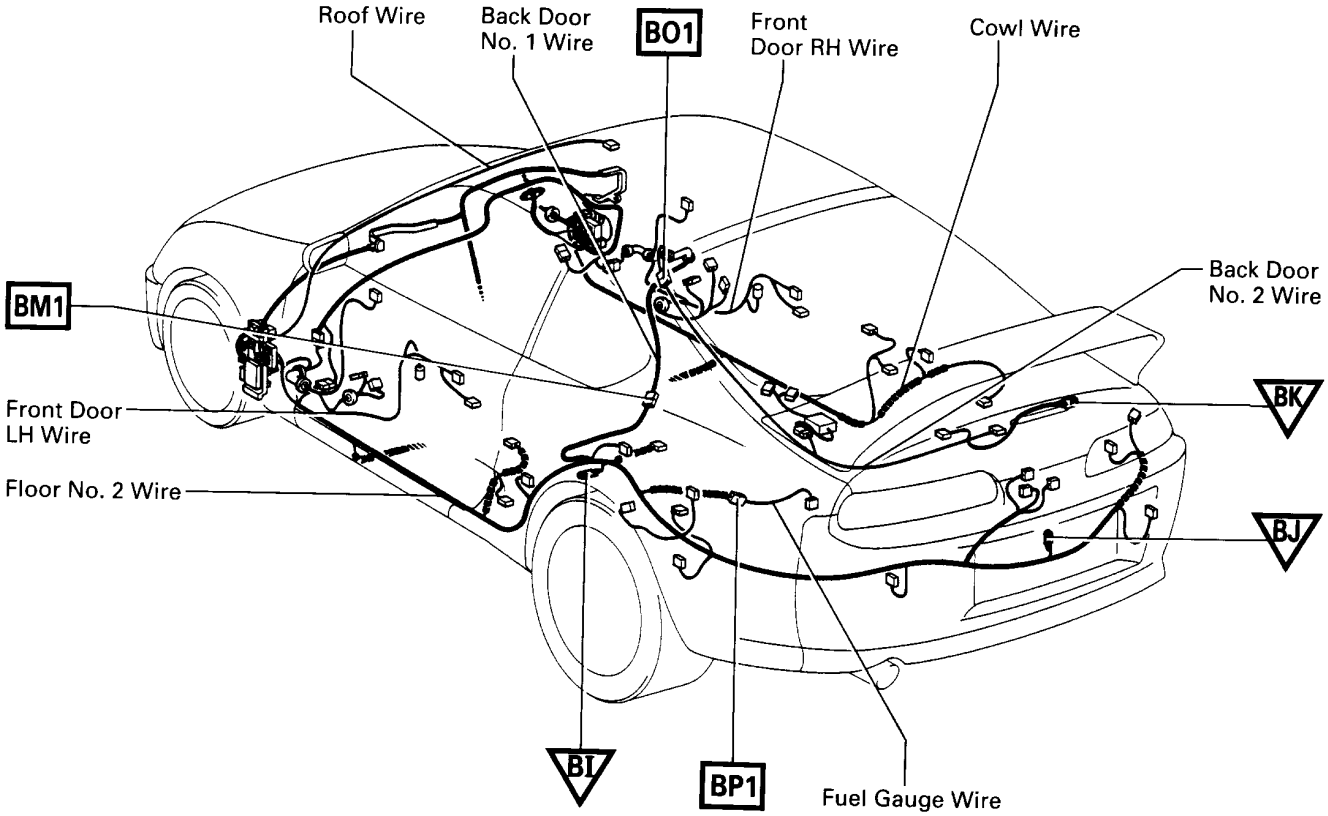

○ : Location of Splice Points

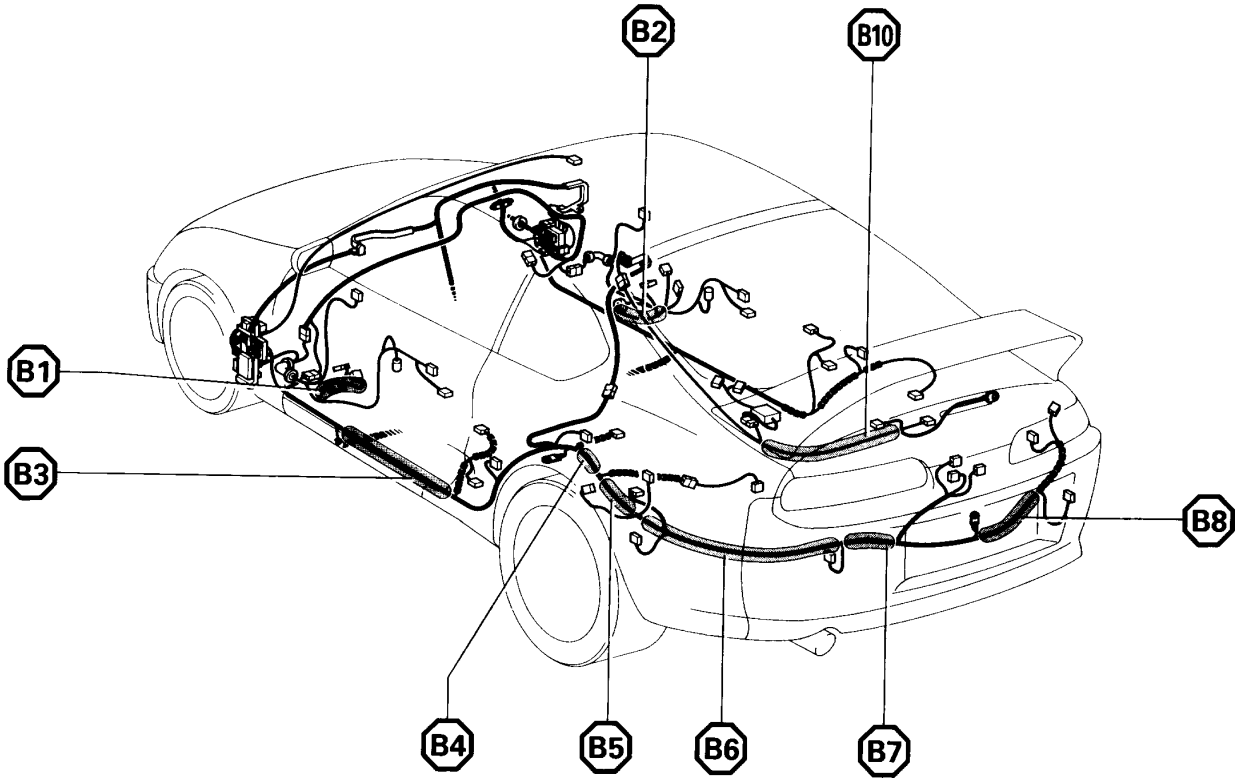

Connector Joining Wire Harness and Wire Harness

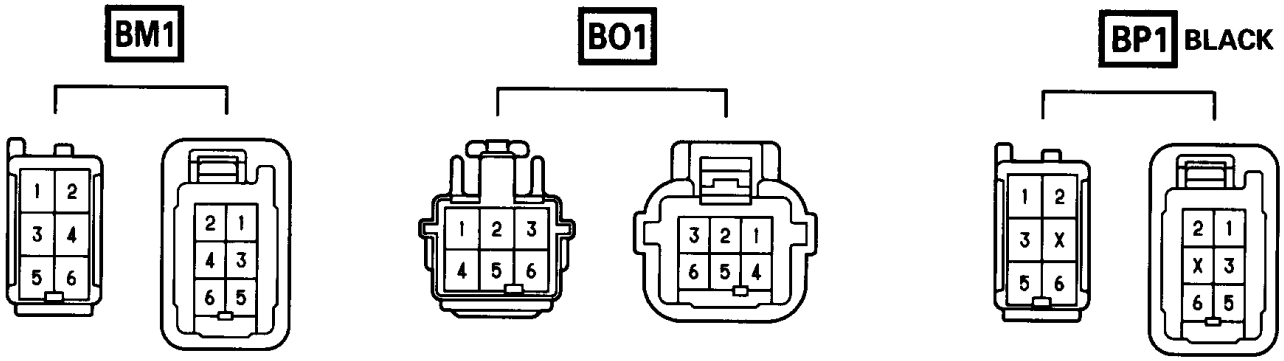

CODE	JOINING WIRE HARNESS AND WIRE HARNESS (CONNECTOR LOCATION)
BM1	BACK DOOR NO. 1 WIRE AND FLOOR NO.2 WIRE (LEFT SIDE OF PACKAGE TRAY TRIM)
BO1	BACK DOOR NO. 2 WIRE AND BACK DOOR NO. 1 WIRE (BACK DOOR UPPER LEFT)
BP1	FUEL GAUGE WIRE AND FLOOR NO.2 WIRE (LUGGAGE ROOM FRONT LH)

▭ : Location of Connector Joining Wire Harness and Wire Harness

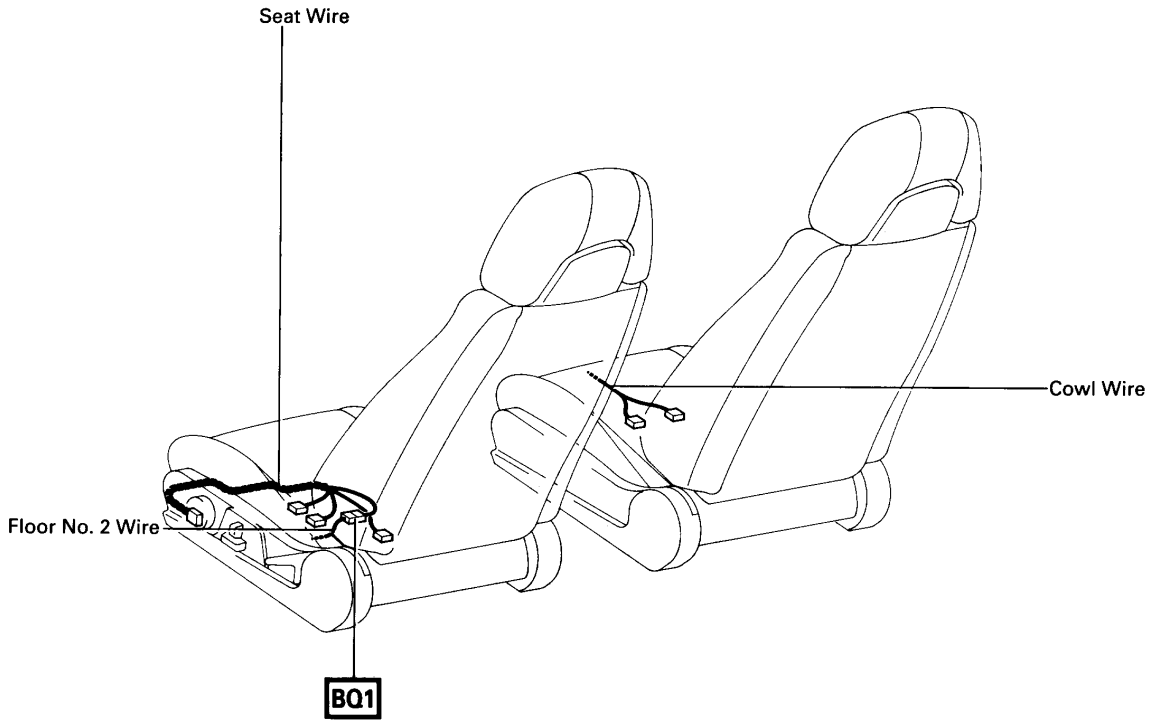

⬡ : Location of Splice Points

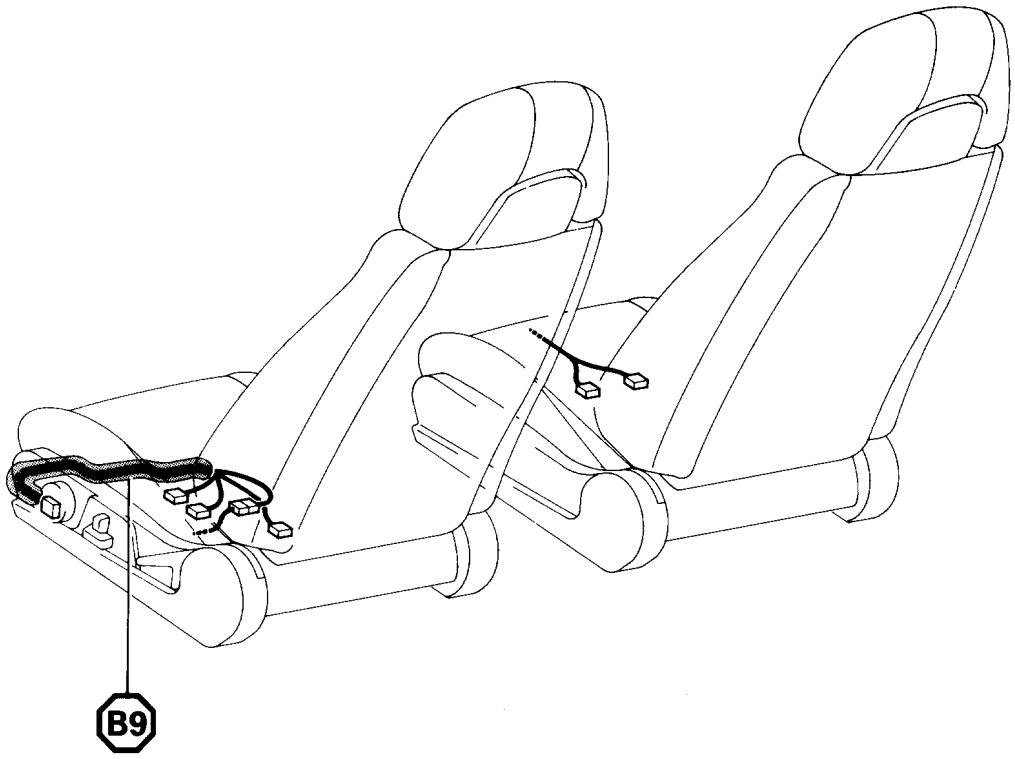

Connector Joining Wire Harness and Wire Harness

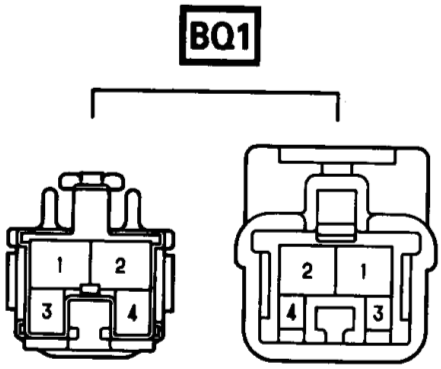

CODE	JOINING WIRE HARNESS AND WIRE HARNESS (CONNECTOR LOCATION)
BQ1	FLOOR NO. 2 WIRE AND SEAT WIRE (UNDER THE FRONT LH SEAT)

J GROUND POINT

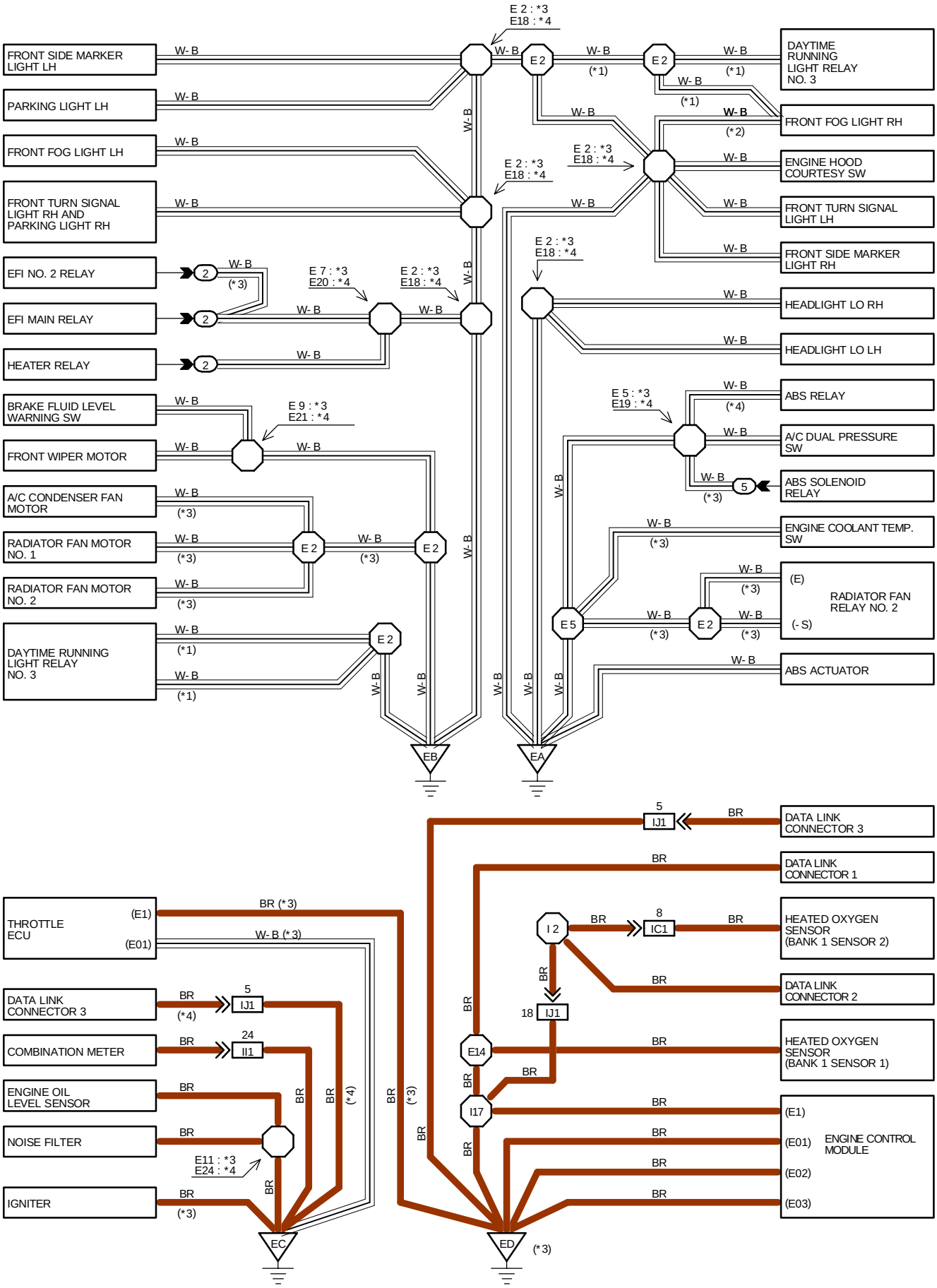

*1 : CANADA
*2 : USA
*3 : 2JZ- GTE
*4 : 2JZ- GE

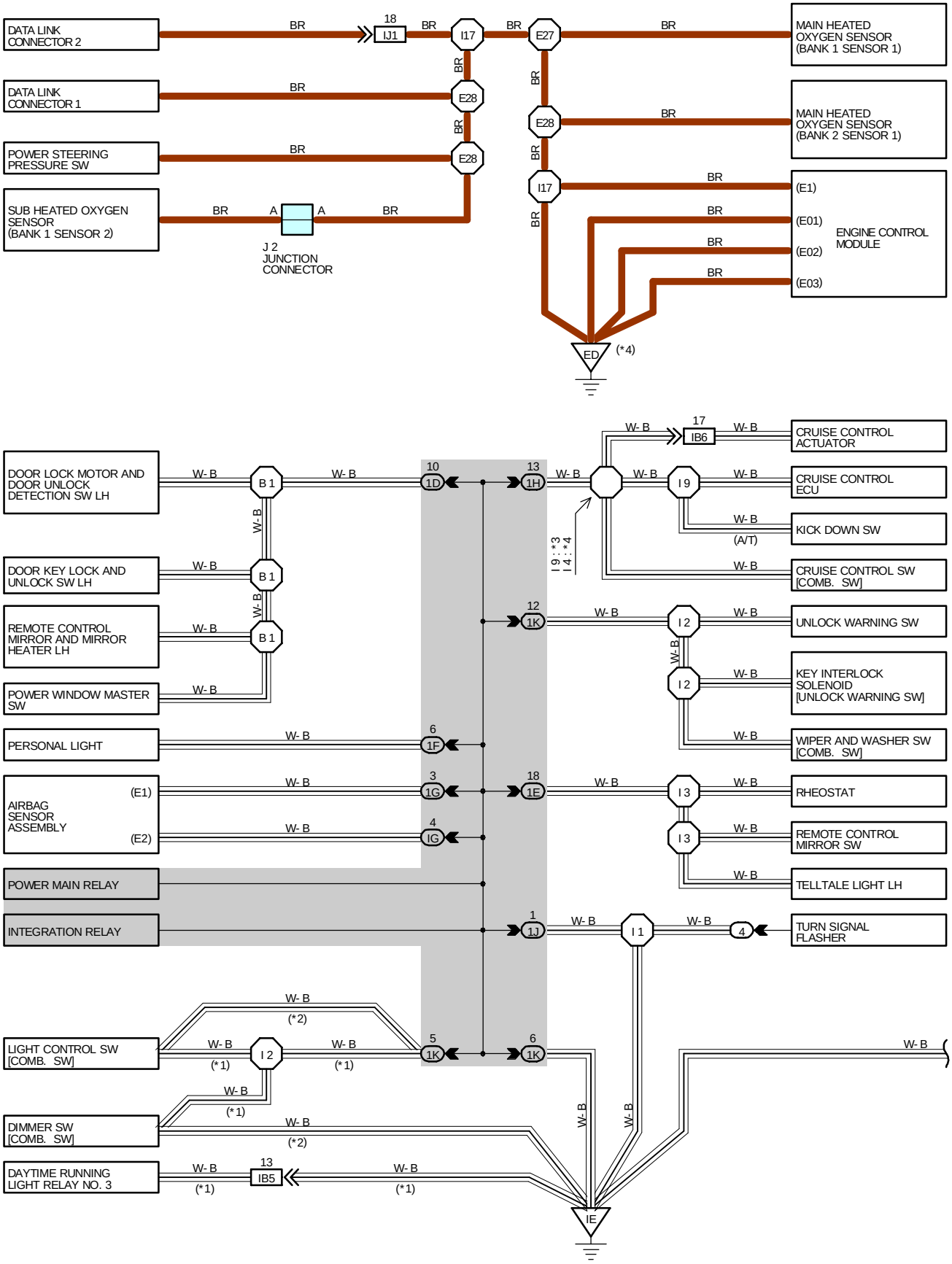

J GROUND POINT

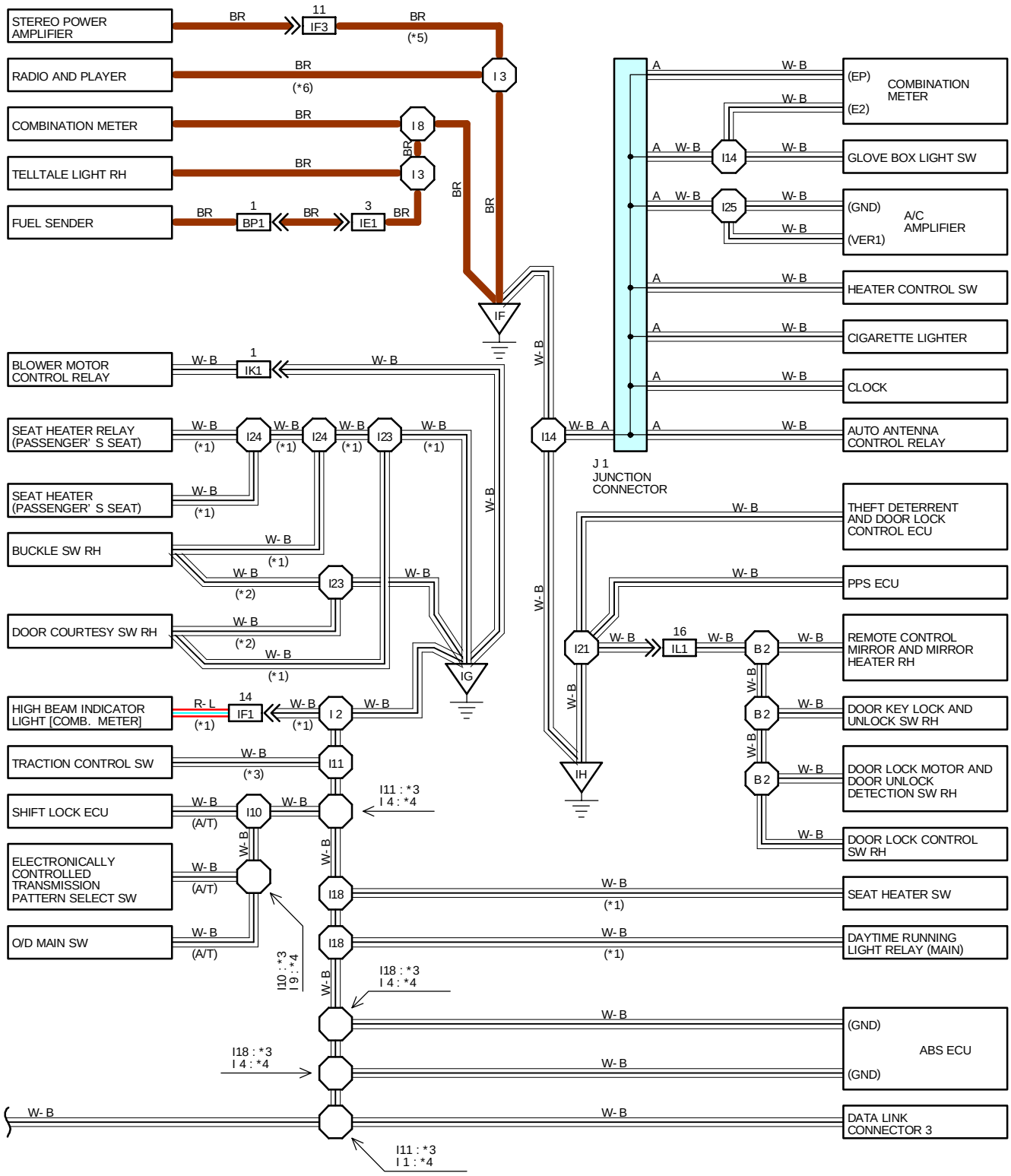

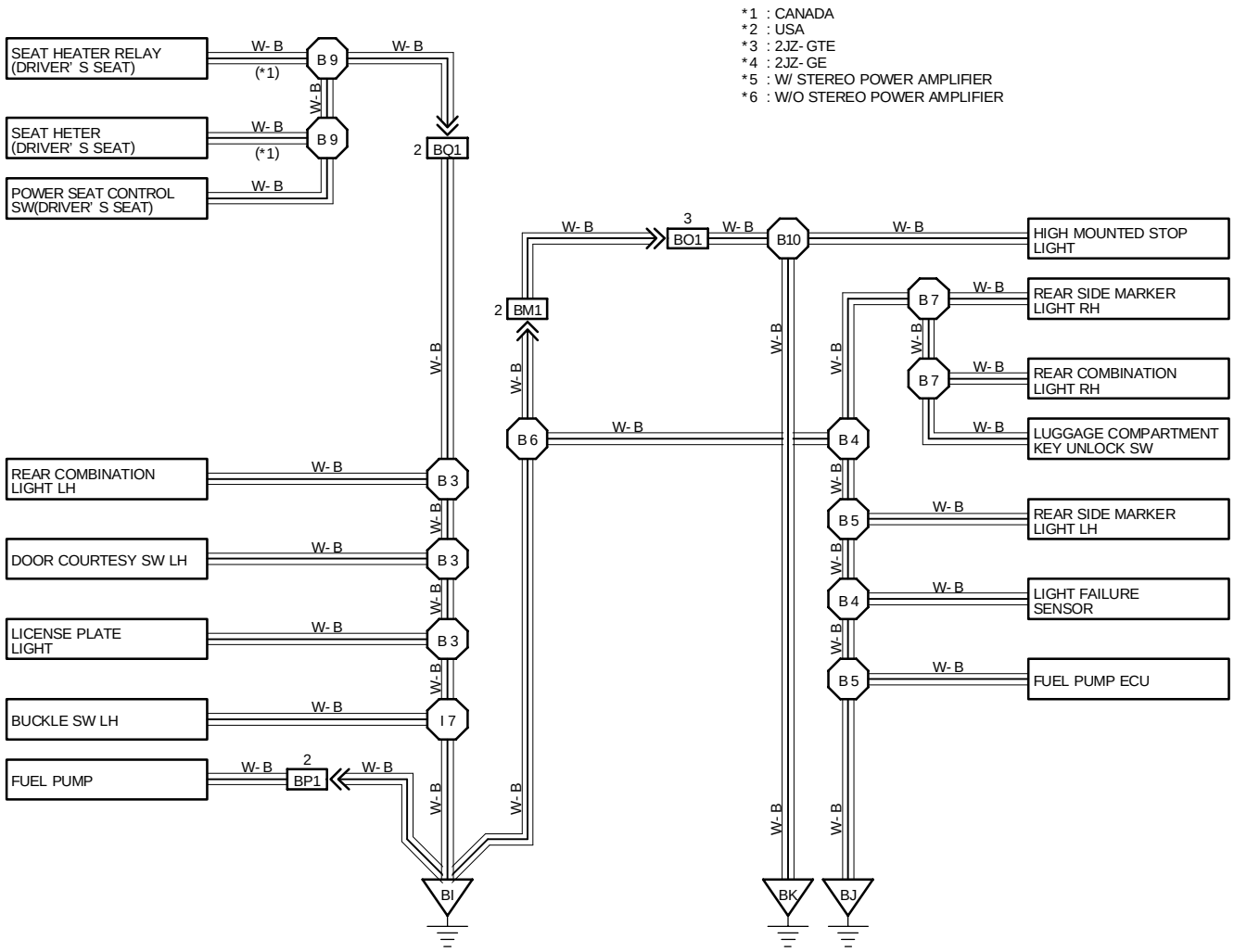
*1 : CANADA
*2 : USA
*3 : 2JZ- GTE
*4 : 2JZ- GE
*5 : W/ STEREO POWER AMPLIFIER
*6 : W/O STEREO POWER AMPLIFIER
SEAT HEATER RELAY (DRIVER' S SEAT)
SEAT HETER (DRIVER' S SEAT)
POWER SEAT CONTROL SW(DRIVER' S SEAT)
REAR COMBINATION LIGHT LH
DOOR COURTESY SW LH
LICENSE PLATE LIGHT
BUCKLE SW LH
FUEL PUMP
HIGH MOUNTED STOP LIGHT
REAR SIDE MARKER LIGHT RH
REAR COMBINATION LIGHT RH
LUGGAGE COMPARTMENT KEY UNLOCK SW
REAR SIDE MARKER LIGHT LH
LIGHT FAILURE SENSOR
FUEL PUMP ECU
W- B
(*1)
B 9
2 BQ1
2 BP1
3 BO1
2 BM1
B10
B 7
B 6
B 4
B 5
B 3
I 7
BI
BK
BJ

J GROUND POINT

: PARTS LOCATION

CODE	SEE PAGE	CODE	SEE PAGE	CODE	SEE PAGE
J1	29	J2	29		

: RELAY BLOCKS

CODE	SEE PAGE	RELAY BLOCKS (RELAY BLOCK LOCATION)
2	22	R/B NO. 2 (ENGINE COMPARTMENT LEFT)
4	23	R/B NO. 4 (LEFT KICK PANEL)
5	23	R/B NO. 5 (ENGINE COMPARTMENT RIGHT)

: JUNCTION BLOCK AND WIRE HARNESS CONNECTOR

CODE	SEE PAGE	JUNCTION BLOCK AND WIRE HARNESS (CONNECTOR LOCATION)
1D	20	FRONT DOOR LH WIRE AND J/B NO. 1 (LEFT KICK PANEL)
1E	20	INSTRUMENT PANEL WIRE AND J/B NO. 1 (LEFT KICK PANEL)
1F	20	ROOF WIRE AND J/B NO. 1 (LEFT KICK PANEL)
1G	20	COWL WIRE AND J/B NO. 1 (LEFT KICK PANEL)
1H		
1J		
1K		

: CONNECTOR JOINING WIRE HARNESS AND WIRE HARNESS

CODE	SEE PAGE	JOINING WIRE HARNESS AND WIRE HARNESS (CONNECTOR LOCATION)
IB5	36	ENGINE ROOM MAIN WIRE AND COWL WIRE (RIGHT KICK PANEL)
IC1	36	FLOOR NO. 2 WIRE AND COWL WIRE (LEFT KICK PANEL)
IE1	36	INSTRUMENT PANEL WIRE AND FLOOR NO. 2 WIRE (LEFT KICK PANEL)
IF1	36	INSTRUMENT PANEL WIRE AND COWL WIRE (INSTRUMENT PANEL REINFORCEMENT LH)
IF3	36	INSTRUMENT PANEL WIRE AND COWL WIRE (RIGHT KICK PANEL)
II1	38	ENGINE WIRE AND INSTRUMENT PANEL WIRE (RIGHT KICK PANEL)
IJ1	38	ENGINE WIRE AND COWL WIRE (RIGHT KICK PANEL)
IK1	38	COWL NO. 4 WIRE AND COWL WIRE (RIGHT KICK PANEL)
IL1	38	FRONT DOOR RH WIRE AND INSTRUMENT PANEL WIRE
BM1	40	BACK DOOR NO. 1 WIRE AND FLOOR NO. 2 WIRE (LEFT SIDE OF PACKAGE TRAY TRIM)
BO1	40	BACK DOOR NO. 2 WIRE AND BACK DOOR NO. 1 WIRE
BP1	40	FUEL GAUGE WIRE AND FLOOR NO. 2 WIRE (LUGGAGE ROOM FRONT LH)
BQ1	42	FLOOR NO. 2 WIRE AND SEAT WIRE (UNDER THE FRONT LH SEAT)

: GROUND POINTS

CODE	SEE PAGE	GROUND POINTS LOCATION
EA	32 (2JZ-GTE) 34 (2JZ-GE)	FRONT SIDE OF RIGHT FENDER
EB	32 (2JZ-GTE) 34 (2JZ-GE)	FRONT SIDE OF LEFT FENDER
EC	32 (2JZ-GTE) 34 (2JZ-GE)	FRONT SIDE OF INTAKE MANIFOLD
ED	32 (2JZ-GTE) 34 (2JZ-GE)	REAR SIDE OF INTAKE MANIFOLD
IE	36	LEFT KICK PANEL
IF		
IG	36	RIGHT KICK PANEL
IH		
BI	40	LEFT QUARTER PILLAR
BJ	40	LOWER BACK PANEL CENTER
BK	40	RIGHT SIDE OF HIGH MOUNTED STOP LIGHT

: SPLICE POINTS

CODE	SEE PAGE	WIRE HARNESS WITH SPLICE POINTS	CODE	SEE PAGE	WIRE HARNESS WITH SPLICE POINTS
E2	32	ENGINE ROOM MAIN WIRE	I10	38	COWL WIRE
E5			I11		
E7			I14	38	INSTRUMENT PANEL WIRE
E9			I17	38	ENGINE WIRE
E14	32	ENGINE WIRE	I18	38	COWL WIRE
E18	34	ENGINE ROOM MAIN WIRE	I21	38	INSTRUMENT PANEL WIRE
E19			I23	38	COWL WIRE
E20			I24		
E21			I25	38	INSTRUMENT PANEL WIRE
E24	34	ENGINE WIRE	B1	40	FRONT DOOR LH WIRE
E27			B2	40	FRONT DOOR RH WIRE
E28			B3	40	FLOOR NO. 2 WIRE
I1	38	COWL WIRE	B4		
I2			B5		
I3	38	INSTRUMENT PANEL WIRE	B6		
I4	38	COWL WIRE	B7		
I7	38	FLOOR NO. 2 WIRE	B9	42	SEAT WIRE
I8	38	INSTRUMENT PANEL WIRE	B10	40	BACK DOOR NO. 2 WIRE
I9	38	COWL WIRE			

J 1

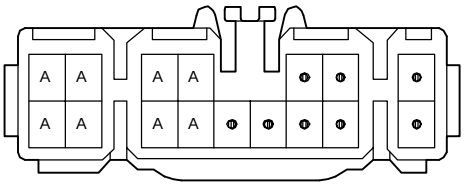

(HINT : SEE PAGE 7)

J 2

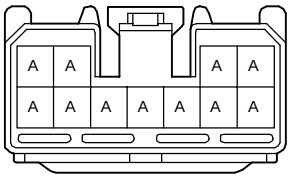

(HINT : SEE PAGE 7)

H POWER SOURCE (Current Flow Chart)

The chart below shows the route by which current flows from the battery to each electrical source (Fusible Link, Circuit Breaker, Fuse, etc.) and other parts.

The next page and following pages show the parts to which each electrical source outputs current.

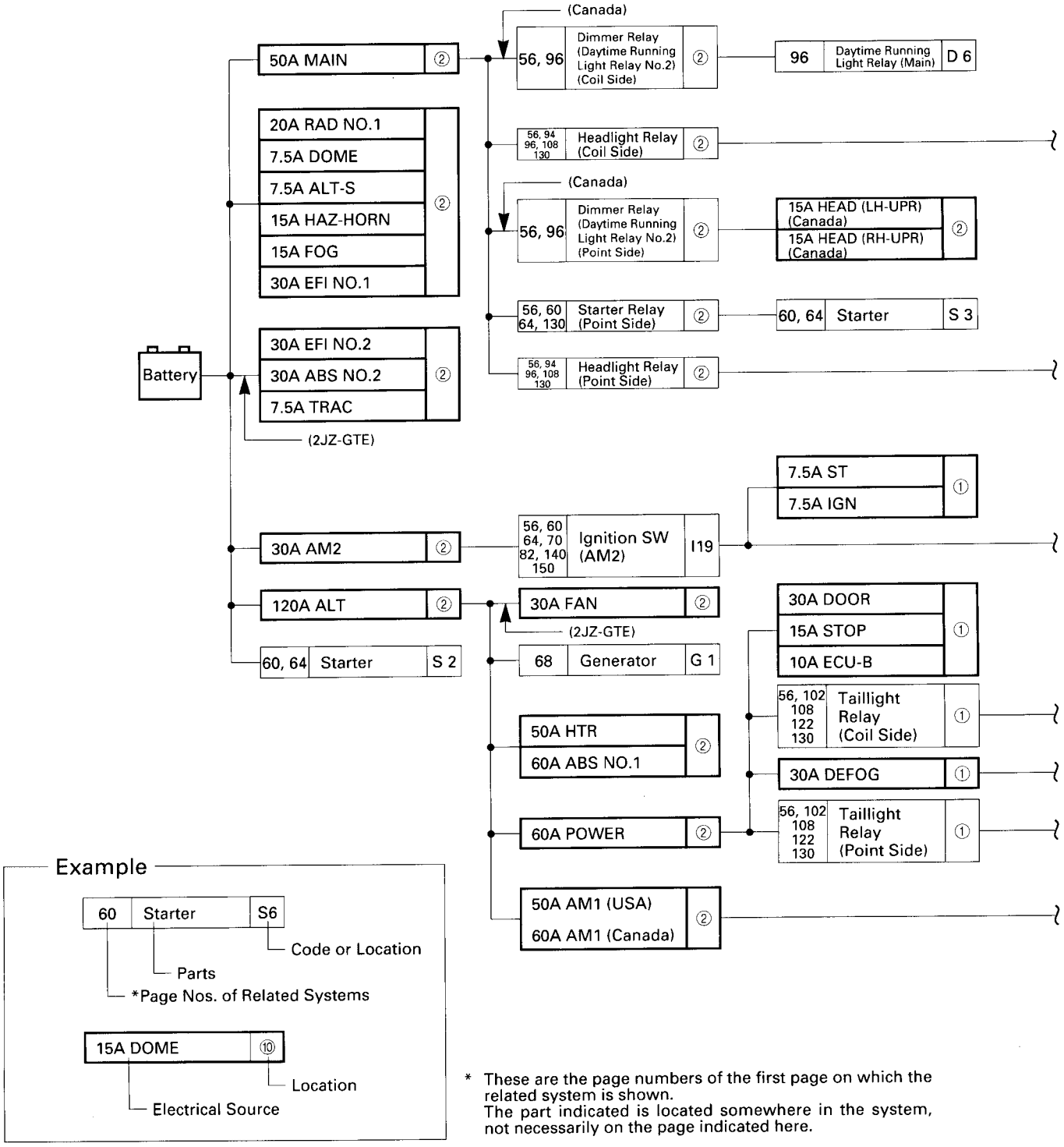

[LOCATION] ①: J/B No. 1 (See page 20) ②: R/B No.2 (See page 22)

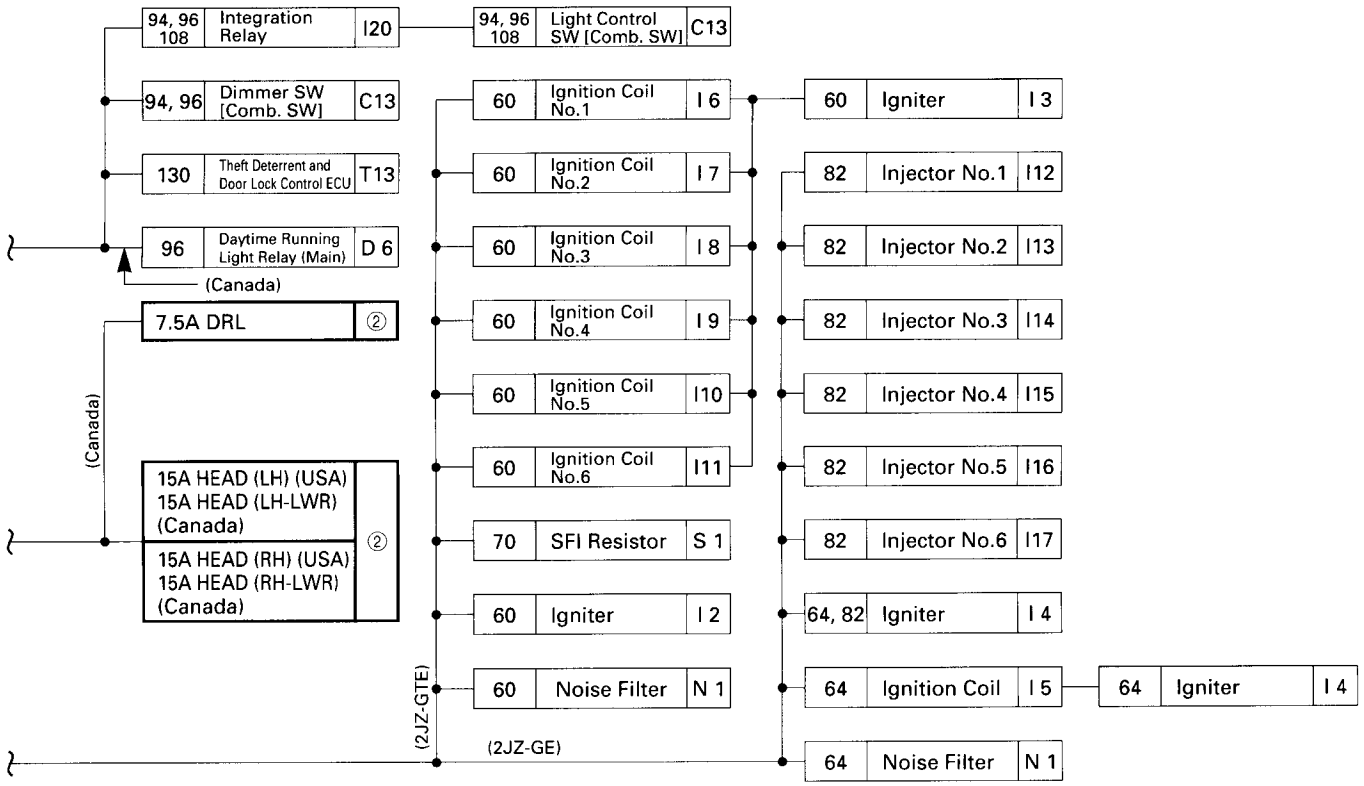

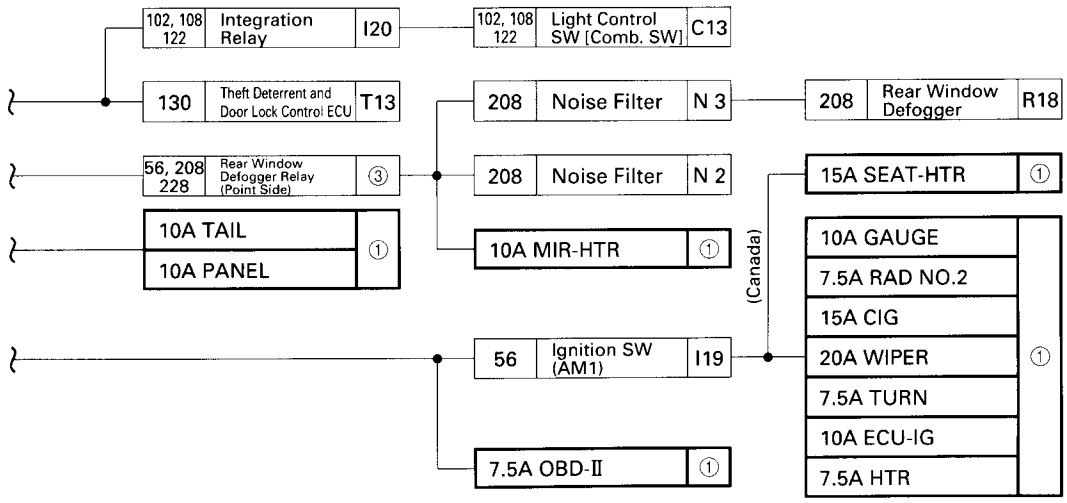

③: R/B No. 4 (See page 23)

H POWER SOURCE (Current Flow Chart)

*1: (CANADA)
*2: (USA

Location	CB or Fuse		A/C Condenser Fan Motor	A/C Single Pressure SW [A/C Triple Pressure SW]	A/C Magnetic Clutch and Lock Sensor	ABS Actuator	ABS Relay		A/C Amplifier		ABS ECU				Air Inlet Control Servo Motor	Ashtray Illumination	Auto Antenna Control Relay	Auto Antenna Motor	Airbag Sensor Assembly	Back-Up Light SW (M/T)	Brake Fluid Level Warning SW	Blower Motor Control Relay	Buckle SW LH	Buckle SW RH
		*Page Nos. of Related Systems	228	228	228	159 164	159	159	228	208 228	159	159	164	164	228	122	210	210	197	116	220	228	206	206
		CB or Fuse	A 2	A 3	A 4	A 6	A 8	A 9	A12	A14	A18	A19	A20	A21	A24	A29	A30	A33	A34	B 1	B 2	B 4	B 6	B 7
①	7.5A	HTR		●	●				●	●					●									
①	7.5A	IGN																	●					
①	7.5A	OBD-II																						
①	7.5A	RAD NO.2															●							
①	7.5A	ST																						
①	7.5A	TURN																						
①	10A	ECU-B								●									●					
①	10A	ECU-IG									●		●				●						●	●
①	10A	GAUGE				●		●		●	●	●	●	●						●	●			
①	10A	MIR-HTR																						
①	10A	PANEL														●								
①	10A	TAIL																						
①	15A	CIG							●										●					
①	15A	SEAT-HTR																						
①	15A	STOP									●		●											
①	20A	WIPER																						
①	30A	DEFOG																						
①	30A	DOOR																						
②	7.5A	ALT-S																						
②	7.5A	DOME																						
②	7.5A	DRL																						
②	7.5A	TRAC																						
②	15A	FOG																						
②	15A	HAZ-HORN																						
②	15A	HEAD (LH) *2																						
②	15A	HEAD (LH-LWR) *1																						
②	15A	HEAD (LH-UPR) *1																						
②	15A	HEAD (RH) *2																						
②	15A	HEAD (RH-LWR) *1																						
②	15A	HEAD (RH-UPR) *1																						
②	20A	RAD NO.1															●	●						
②	30A	EFI NO.1																						
②	30A	EFI NO.2																						
②	30A	FAN	●																●					
②	50A	HTR																				●		
②	60A	ABS NO.1				●	●	●				●	●	●										

* These are the page numbers of the first page on which the related system is shown.
The part indicated is located somewhere in the system, not necessarily on the page indicated here.

[LOCATION] ①:J/B No. 1 (See page 20) ②:R/B No.2 (See page 22) ③:R/B No.4 (See page 23)

C6 Cigarette Lighter (186)	C7 Cigarette Lighter Illumination (122)	C8 Clock (186)	C9 Clutch Start SW (60, 64, 70, 82, 130, 220)	C10 Combination Meter (140, 150, 169, 174, 220)	C10 Meter Illumination [Comb. Meter] (122)	C10 Speedometer [Comb. Meter] (70, 82, 181, 228)	C10 Turn Signal Indicator Light [Comb. Meter] (111)	C11 Combination Meter (140, 150, 220)	C12 Combination Meter (220)	C12 High Beam Indicator Light [Comb. Meter] (94, 96)	C12 Turn Signal Indicator Light [Comb. Meter] (111)	C13 Dimmer SW [Comb. SW] (94)	C13 Fog Light SW [Comb. SW] (106)	C13 Horn SW [Comb. SW] (129)	C13 Turn Signal SW [Comb. SW] (111)	C14 Front Wiper and Washer SW [Comb. SW] (126)	C14 Rear Wiper and Washer SW [Comb. SW] (203)	C15 Cruise Control Clutch SW (174)	C16 Cruise Control ECU (140, 150, 174)	D1 Data Link Connector 1 (70, 82, 140, 150, 159, 164, 197)	D2 Daytime Running Light Relay No.3 (96)	D3 Daytime Running Light Relay No.3 (96)	D5 Data Link Connector 2 (70, 140, 169, 174, 197)	D6 Daytime Running Light Relay (Main) (96, 220)	D7 Diode (Interior Light) (118)	D8 Diode (Idle-Up) (70, 82)
			●						●																	
							●				●				●											
																			●	●			●			
																			●							
				●		●		●										●	●	●			●	●		
																										●
	●	●		●	●																					●
●		●																								
																			●							
																●	●									
		●																						●	●	
																						●				
							●				●			●												
												●	●													
													●													
																					●	●				
									●	●		●														
										●											●	●				
																				●						

④:R/B No. 5 (See page 23)

H POWER SOURCE (Current Flow Chart)

Location	CB or Fuse		Door Courtesy SW LH	Door Courtesy SW RH	Data Link Connector 3	Electronically Controlled Transmission Solenoid	Engine Coolant Temp. Sender	Engine Coolant Temp. SW	Engine Oil Level Sensor	Electronically Controlled Transmission Pattern Select SW	Engine Control Module	Engine Control Module	Front Fog Light LH	Front Fog Light RH	Front Side Marker Light LH	Front Side Marker Light RH	Front Turn Signal Light LH	Front Turn Signal Light RH and Parking Light RH	Front Wiper Motor	Fuel Pump and Sender	Fuel Pump ECU
		*Page Nos. of Related Systems	118	118	70 82	140	220	228	220	122	60, 64 70, 82 140, 150	70, 82 140, 150 220, 228	106	106	102	102	111	102 111	126	220	70 82
			D10	D11	D17	E 2	E 4	E 5	E 7	E 8	E 9	E10	F 3	F 4	F 5	F 6	F 7	F 8	F 9	F14	F15
①	7.5A	HTR						●				●									
①	7.5A	IGN										●									
①	7.5A	OBD-II			●																
①	7.5A	RAD NO.2																			
①	7.5A	ST									●										
①	7.5A	TURN															●	●			
①	10A	ECU-B																			
①	10A	ECU-IG																			
①	10A	GAUGE					●		●			●								●	
①	10A	MIR-HTR										●									
①	10A	PANEL								●		●									
①	10A	TAIL													●	●		●			
①	15A	CIG																			
①	15A	SEAT-HTR																			
①	15A	STOP										●									
①	20A	WIPER																	●		
①	30A	DEFOG																			
①	30A	DOOR																			
②	7.5A	ALT-S																			
②	7.5A	DOME	●	●																	
②	7.5A	DRL																			
②	7.5A	TRAC																			
②	15A	FOG											●	●							
②	15A	HAZ-HORN															●	●			
②	15A	HEAD (LH) *2																			
②	15A	HEAD (LH-LWR) *1																			
②	15A	HEAD (LH-UPR) *1																			
②	15A	HEAD (RH) *2																			
②	15A	HEAD (RH-LWR) *1																			
②	15A	HEAD (RH-UPR) *1																			
②	20A	RAD NO.1																			
②	30A	EFI NO.1				●					●	●									●
②	30A	EFI NO.2																			●
②	30A	FAN																			
②	50A	HTR																			
②	60A	ABS NO.1																			

* These are the page numbers of the first page on which the related system is shown.
The part indicated is located somewhere in the system, not necessarily on the page indicated here.

[LOCATION] ①:J/B No. 1 (See page 20) ②: R/B No.2 (See page 22) ③: R/B No. 4 (See page 23)

	Generator	Glove Box Light	Glove Box Light SW	Headlight Hi LH	Headlight Hi RH	Headlight Lo LH	Headlight Lo RH	Heated Oxygen Sensor (Bank 1 Sensor 1)	Horn LH	Horn RH	Hazard SW	Heated Oxygen Sensor (Bank 1 Sensor 2)	Heater Control SW	High Mounted Stop Light	Idle Air Control Valve	Ignition Key Cylinder Light	License Plate Light	Light Failure Sensor	Luggage Compartment Light	Luggage Compartment Light SW	Mass Air Flow Meter	Main Heated Oxygen Sensor (Bank 1 Sensor 1)	Main Heated Oxygen Sensor (Bank 2 Sensor 1)	Oil Pressure SW	O/D Main SW and A/T Indicator Illumination	Park/Neutral Position SW, Back-Up Light SW and A/T Indicator Light SW (A/T)	PPS ECU
	G 2	G 3	G 4	H 1	H 2	H 3	H 4	H 5	H 8	H 9	H10	H11	H12	H14	I 1	I18	L 1	L 2	L 4	L 5	M 1	M 2	M 3	O 2	O 5	P 2	P 4
68 220	●												●														
122																											
122																											
94 96																											
94 96																										●	
94 96											●																
94 96																											
70																											●
129	●																	●						●	●	●	
129																											
111 122											●																
70																											
122 228		●	●								●		●												●		
114														●				●									
70 82																											
118																●											
102																	●	●									
102 114 220																											
118																			●	●							
118																											
70, 82 140, 150																					●						
82																						●					
82																							●				
220																											
122 140 150																											
60, 64 70, 82 116, 130 140, 150 174, 220																											
181																											●

④: R/B No. 5 (See page 23)

H POWER SOURCE (Current Flow Chart)

Location	CB or Fuse		Parking Brake SW	Personal Light	Power Window Control SW RH	Power Window Master SW and Door Lock Control SW LH	Power Window Motor LH	Power Window Motor RH	Power Seat Control SW (Driver's Seat)	Power Seat Motor (Driver's Seat Slide Control)	Parking Light LH	Radiator Fan Motor No.1	Radiator Fan Relay No.1	Radiator Fan Relay No.2	Radio and Player (w/o Stereo Power Amplifier)	Radio and Player (w/ Stereo Power Amplifier)	Remote Control Mirror SW	Rheostat	Back-Up Light LH [Rear Comb. Light LH]	Rear Turn Signal Light LH [Rear Comb. Light LH]	Stop Light LH [Rear Comb. Light LH]	Taillight LH [Rear Comb. Light LH]	Back-Up Light RH [Rear Comb. Light RH]	Rear Turn Signal Light RH [Rear Comb. Light RH]
		*Page Nos. of Related Systems	220	118	136	136	136	136	190	190	102	228	228	228	122 210 218	122	188	122	116	111	114	102	116	111
		CB or Fuse	P5	P6	P7	P8	P9	P10	P11	P12	P13	R1	R2	R3	R4	R6	R7	R8	R9				R10	
①	7.5A	HTR											●	●										
	7.5A	IGN																						
	7.5A	OBD-II																						
	7.5A	RAD NO.2													●		●							
	7.5A	ST																						
	7.5A	TURN																		●				●
	10A	ECU-B																						
	10A	ECU-IG																						
	10A	GAUGE	●																●				●	
	10A	MIR-HTR																						
	10A	PANEL													●	●		●						
	10A	TAIL									●											●		
	15A	CIG																						
	15A	SEAT-HTR																						
	15A	STOP																			●			
	20A	WIPER																						
	30A	DEFOG																						
	30A	DOOR			●	●	●	●	●	●														
②	7.5A	ALT-S																						
	7.5A	DOME		●																				
	7.5A	DRL																						
	7.5A	TRAC																						
	15A	FOG																						
	15A	HAZ-HORN																		●				●
	15A	HEAD (LH) *2																						
	15A	HEAD (LH-LWR) *1																						
	15A	HEAD (LH-UPR) *1																						
	15A	HEAD (RH) *2																						
	15A	HEAD (RH-LWR) *1																						
	15A	HEAD (RH-UPR) *1																						
	20A	RAD NO.1													●									
	30A	EFI NO.1																						
	30A	EFI NO.2																						
	30A	FAN										●	●	●										
	50A	HTR																						
	60A	ABS NO.1																						

* These are the page numbers of the first page on which the related system is shown.
The part indicated is located somewhere in the system, not necessarily on the page indicated here.

[LOCATION] ①: J/B No. 1 (See page 20) ②: R/B No. 2 (See page 22) ③: R/B No.4 (See page 23)

R10		R11	R12	R15	R16	R17	R20	S 6	S 7	S 8	S11	S12	S13	S14	S15	S16	T 1	T 5			T 6					
Stop Light RH [Rear Comb. Light RH]	Taillight RH [Rear Comb. Light RH]	Rear Side Marker Light LH	Rear Side Marker Light RH	Rear Wiper Motor and Relay	Remote Control Mirror and Mirror Heater LH	Remote Control Mirror and Mirror Heater RH	Radiator Fan Motor No.2	Seat Heater SW	Shift Lock ECU	Stereo Power Amplifier	Stop Light SW	Seat Heater (Driver's Seat)	Seat Heater (Front Passenger's Seat)	Seat Heater Relay (Driver's Seat)	Seat Heater Relay (Front Passenger's Seat)	Sub Heated Oxygen Sensor (Bank 1 Sensor 2)	Theft Deterrent Horn	ABS Warning Light [Telltale Light LH]	Malfunction Indicator Lamp [Telltale Light LH]	Telltale Light LH	Charge Warning Light [Telltale Light RH]	Open Door Warning Light [Telltale Light RH]	Rear Light Warning Light [Telltale Light RH]	Seat Belt Warning Light [Telltale Light RH]	SRS Warning Light [Telltale Light RH]	Telltale Light RH
114	102	102	102	203	188, 208	188, 208	228	122, 192	184	210, 214	70, 82, 114, 140, 150, 159, 164, 174, 184	192	192	192	192	82	130	159, 164	70, 82	169, 220	68	118	102, 114	194	197	70, 82, 122, 140, 150, 174, 181, 220, 228
																					●					●
					●	●				●																
																									●	●
									●																	
																		●	●	●			●	●		●
					●	●																				
								●																		●
	●	●	●																							
									●																	
								●				●	●	●	●											
●									●		●															
				●																						
																						●				●
																●										
									●																	
															●											
						●																				

④: R/B No. 5 (See page 23)

H POWER SOURCE (Current Flow Chart)

*1: (CANADA)
*2: (USA

Location	CB or Fuse		Theft Deterrent and Door Lock Control ECU	Traction Control SW	Tension Reducer Solenoid LH	Tension Reducer Solenoid RH	Theft Deterrent and Door Lock Control ECU	Throttle ECU		VSV (ACIS)	VSV (EGR)	VSV (EVAP)	VSV (Exhaust Bypass Valve)	VSV (Exhaust Gas Control Valve)	VSV (Fuel Pressure Up)	VSV (Intake Air Control Valve)	VSV (Waste Gate Valve)	Vehicle Speed Sensor No.1 (Combination Metar)	Washer Motor	Diode	Integration Relay	Power Main Relay (Point Side)	Power Main Relay (Coil Side)
		*Page Nos. of Related Systems	130 136	122	206	206	60 64 130 136	169	164 169	82	70 82	70 82	70	70	70 82	70	70	70, 82 140, 150 174, 181 220, 228	126 203	102	108 118 194	130 136	130 136
		CB or Fuse	T 7	T 8	T11	T12	T13	T15	T16	V 1	V 2	V 3	V 4	V 5	V 6	V 7	V 8	V10	W 1	①			
①	7.5A	HTR																					
①	7.5A	IGN																					
①	7.5A	OBD-II																					
①	7.5A	RAD NO.2																			●		
①	7.5A	ST					●																
①	7.5A	TURN																					
①	10A	ECU-B							●														
①	10A	ECU-IG	●		●	●																	●
①	10A	GAUGE							●									●			●		
①	10A	MIR-HTR																					
①	10A	PANEL		●																			
①	10A	TAIL																		●			
①	15A	CIG	●																				
①	15A	SEAT-HTR																					
①	15A	STOP																					
①	20A	WIPER																	●				
①	30A	DEFOG																					
①	30A	DOOR	●																			●	
②	7.5A	ALT-S																					
②	7.5A	DOME					●														●		●
②	7.5A	DRL																					
②	7.5A	TRAC							●														
②	15A	FOG																					
②	15A	HAZ-HORN					●																
②	15A	HEAD (LH) *2																					
②	15A	HEAD (LH-LWR) *1																					
②	15A	HEAD (LH-UPR) *1																					
②	15A	HEAD (RH) *2																					
②	15A	HEAD (RH-LWR) *1																					
②	15A	HEAD (RH-UPR) *1																					
②	20A	RAD NO.1																					
②	30A	EFI NO.1						●		●	●	●	●	●	●	●	●						
②	30A	EFI NO.2																					
②	30A	FAN																					
②	50A	HTR																					
②	60A	ABS NO.1																					

* These are the page numbers of the first page on which the related system is shown.
The part indicated is located somewhere in the system, not necessarily on the page indicated here.

[LOCATION] ①: J/B No. 1 (See page 20) ②: R/B No.2 (See page 22) ③: R/B No.4 (See page 23)

228	228	70 82 140 150 169	70	70	106	106	228	228	129 130	129 130	60 64 130	220	56 208 228	111	164	164	164	169
A/C Magnetic Clutch Relay (Point Side)	A/C Magnetic Clutch Relay (Coil Side)	EFI Main Relay (Point Side)	EFI No.2 Relay (Point Side)	EFI No.2 Relay (Coil Side)	Fog Light Relay (Point Side)	Fog Light Relay (Coil Side)	Heater Relay (Point Side)	Heater Relay (Coil Side)	Horn Relay (Point Side)	Horn Relay (Coil Side)	Starter Relay (Coil Side)	Diode	Rear Window Defogger Relay (Coil Side)	Turn Signal Flasher	ABS Motor Relay (Point Side)	ABS Solenoid Relay (Point Side)	ABS Solenoid Relay (Terminal 5)	Traction Solenoid Relay (Point Side)
②												③			④			
●	●							●										
											●							
														●				
												●	●				●	
																	●
					●													
									●	●				●				
						●												
						●												
		●		●														
			●															
							●											
														●	●			

④: R/B No. 5 (See page 23)

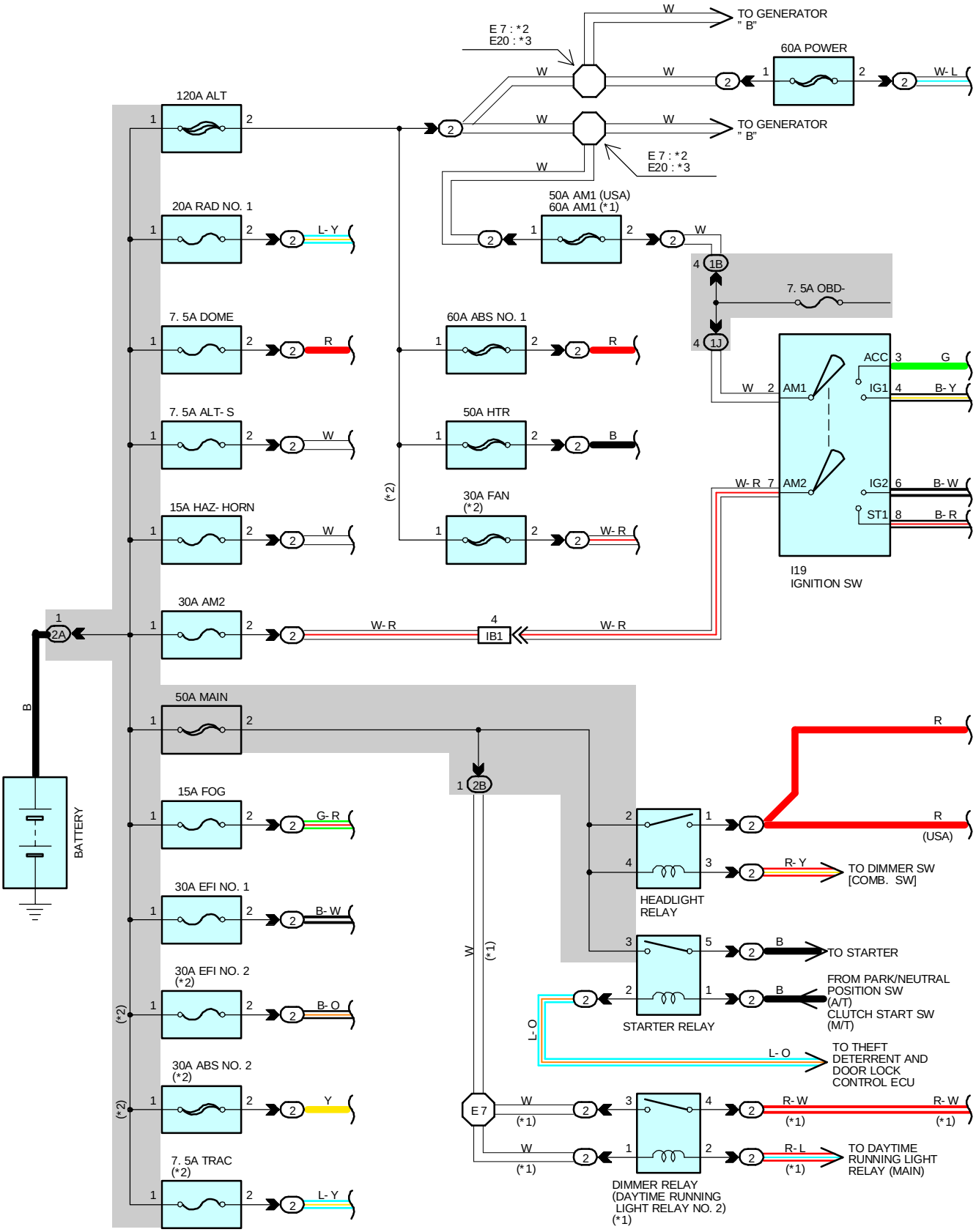
TO GENERATOR " B"
E 7 : *2
E20 : *3
60A POWER
W- L
120A ALT
TO GENERATOR " B"
E 7 : *2
E20 : *3
50A AM1 (USA)
60A AM1 (*1)
20A RAD NO. 1
L- Y
1B
7. 5A OBD-
7. 5A DOME
R
60A ABS NO. 1
1J
ACC
G
IG1
B- Y
7. 5A ALT- S
W
50A HTR
B
AM1
AM2
IG2
B- W
ST1
B- R
W- R
15A HAZ- HORN
30A FAN
(*2)
I19
IGNITION SW
30A AM2
2A
IB1
50A MAIN
2B
BATTERY
15A FOG
G- R
R
(USA)
HEADLIGHT RELAY
R- Y
TO DIMMER SW [COMB. SW]
30A EFI NO. 1
B- W
TO STARTER
30A EFI NO. 2 (*2)
B- O
FROM PARK/NEUTRAL POSITION SW (A/T) CLUTCH START SW (M/T)
STARTER RELAY
L- O
TO THEFT DETERRENT AND DOOR LOCK CONTROL ECU
30A ABS NO. 2 (*2)
Y
E 7
R- W
(*1)
7. 5A TRAC (*2)
R- L
TO DAYTIME RUNNING LIGHT RELAY (MAIN)
DIMMER RELAY (DAYTIME RUNNING LIGHT RELAY NO. 2) (*1)

*1 : CANADA
*2 : 2JZ- GTE
*3 : 2JZ- GE

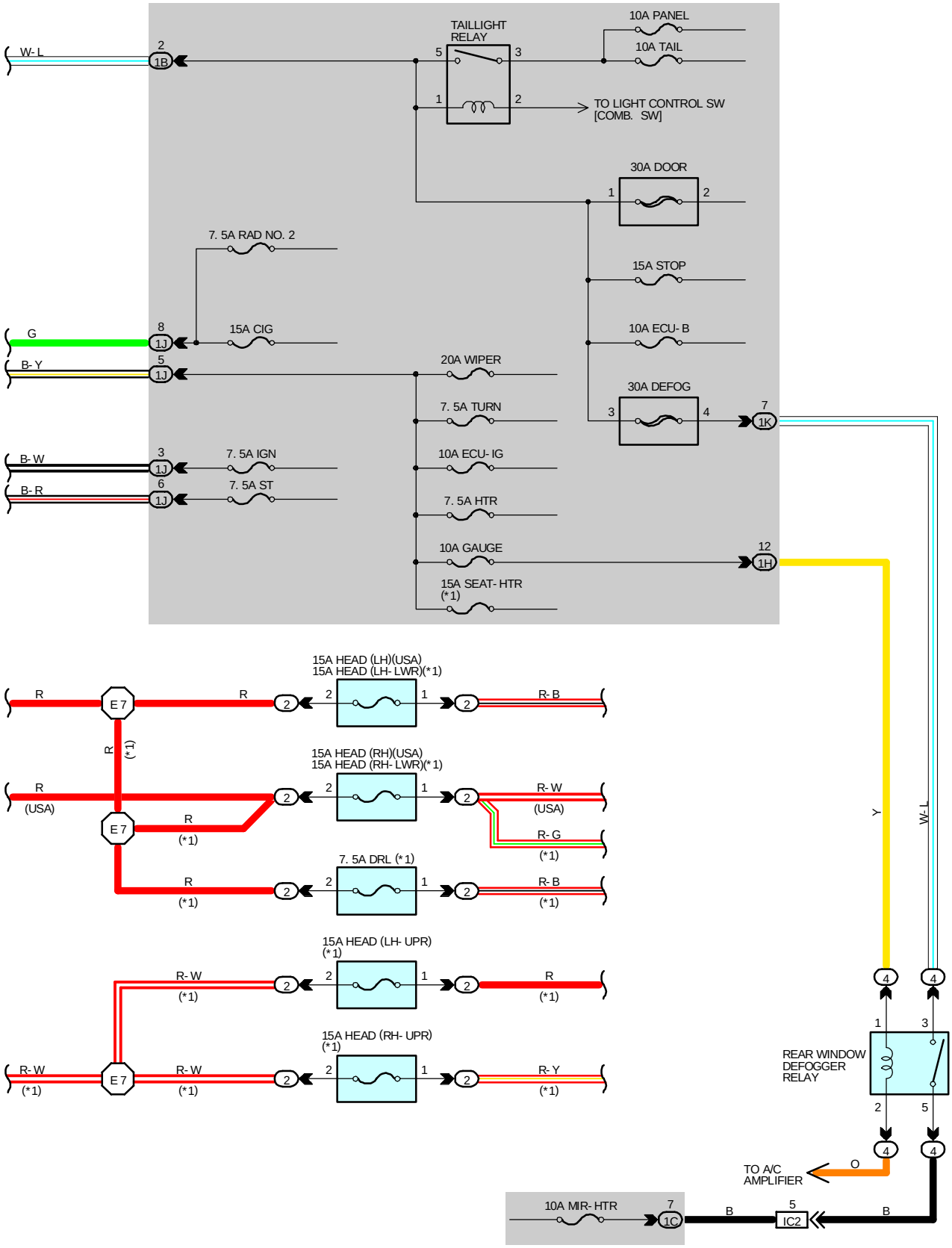

SERVICE HINTS

HEADLIGHT RELAY (USA)

2-1 : CLOSED WITH THE LIGHT CONTROL SW AT **HEAD** POSITION OR THE DIMMER SW AT **FLASH** POSITION

HEADLIGHT RELAY (CANADA)

2-1 : CLOSED WITH THE LIGHT CONTROL SW AT **HEAD** POSITION OR THE DIMMER SW AT **FLASH** POSITION
: CLOSED WITH THE ENGINE RUNNING AND THE PARKING BRAKE LEVER RELEASED (PARKING BRAKE SW OFF)

TAILLIGHT RELAY

5-3 : CLOSED WITH THE LIGHT CONTROL SW AT **TAIL** OR **HEAD** POSITION

I19 IGNITION SW

2-3 : CLOSED WITH THE IGNITION KEY AT **ACC** OR **ON** POSITION
2-4 : CLOSED WITH THE IGNITION KEY AT **ON** OR **ST** POSITION
7-6 : CLOSED WITH THE IGNITION KEY AT **ON** OR **ST** POSITION
7-8 : CLOSED WITH THE IGNITION KEY AT **ST** POSITION

: PARTS LOCATION

CODE	SEE PAGE	CODE	SEE PAGE	CODE	SEE PAGE
I19	29				

: RELAY BLOCKS

CODE	SEE PAGE	RELAY BLOCKS (RELAY BLOCK LOCATION)
2	22	R/B NO.2 (ENGINE COMPARTMENT LEFT)
4	23	R/B NO.4 (LEFT KICK PANEL)

: JUNCTION BLOCK AND WIRE HARNESS CONNECTOR

CODE	SEE PAGE	JUNCTION BLOCK AND WIRE HARNESS (CONNECTOR LOCATION)
1B	20	ENGINE ROOM MAIN WIRE AND J/B NO. 1 (LEFT KICK PANEL)
1C	20	FLOOR NO. 2 WIRE AND J/B NO. 1 (LEFT KICK PANEL)
1H	20	COWL WIRE AND J/B NO. 1 (LEFT KICK PANEL)
1J		
1K		
2A	22	BATTERY AND J/B NO. 2 (ENGINE COMPARTMENT LEFT)
2B	22	ENGINE ROOM MAIN WIRE AND J/B NO. 2 (ENGINE COMPARTMENT LEFT)

: CONNECTOR JOINING WIRE HARNESS AND WIRE HARNESS

CODE	SEE PAGE	JOINING WIRE HARNESS AND WIRE HARNESS (CONNECTOR LOCATION)
IB1	36	ENGINE ROOM MAIN WIRE AND COWL WIRE (LEFT KICK PANEL)
IC2	36	FLOOR NO. 2 WIRE AND COWL WIRE (LEFT KICK PANEL)

: SPLICE POINTS

CODE	SEE PAGE	WIRE HARNESS WITH SPLICE POINTS	CODE	SEE PAGE	WIRE HARNESS WITH SPLICE POINTS
E7	32	ENGINE ROOM MAIN WIRE	E20	34	ENGINE ROOM MAIN WIRE

I19

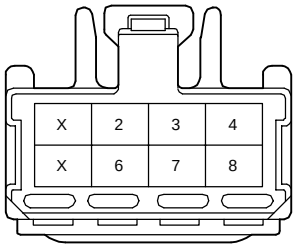

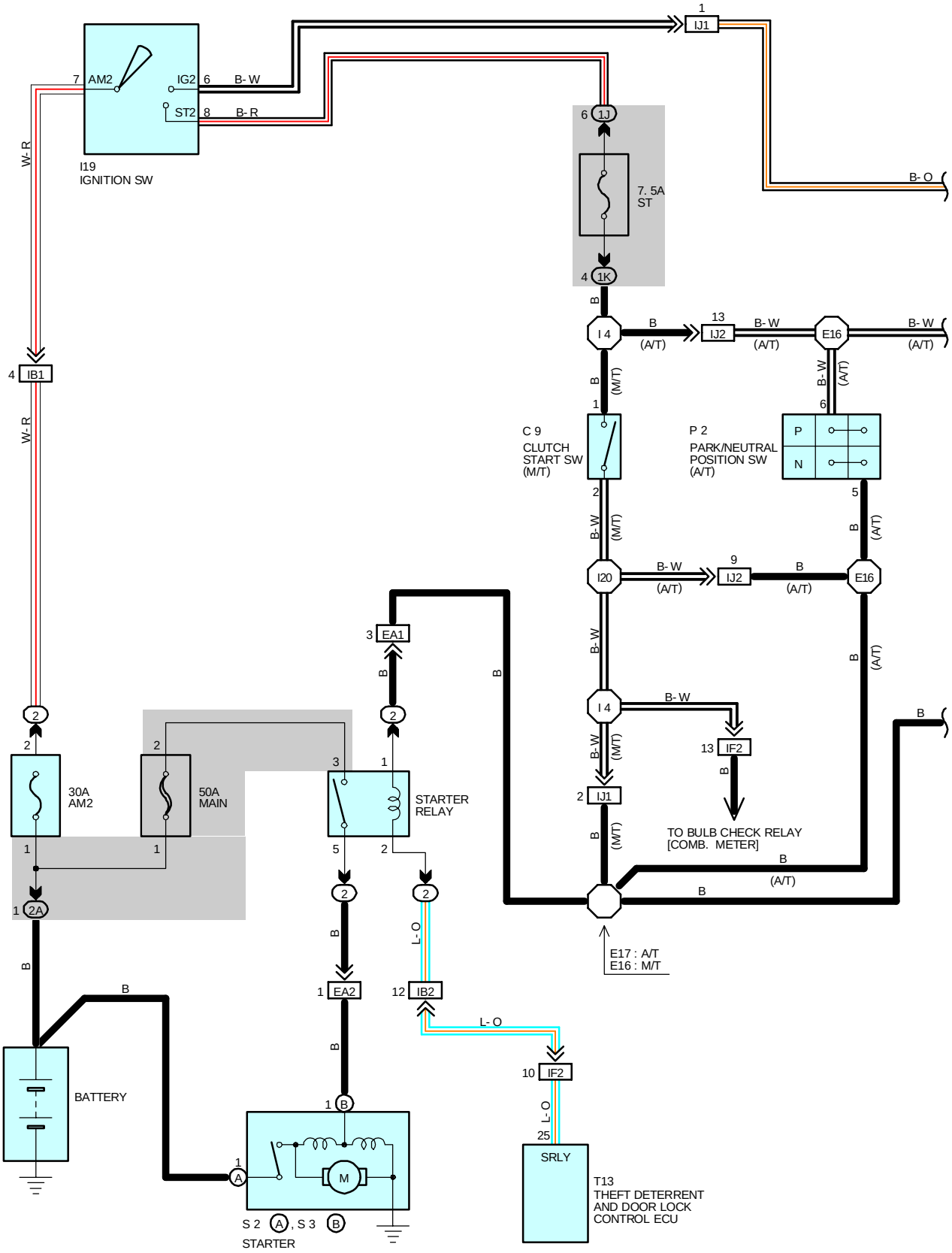
I19
IGNITION SW
AM2
IG2
ST2
B-W
B-R
W-R
IJ1
B-O
1J
7. 5A
ST
1K
I 4
IJ2
E16
(A/T)
(M/T)
IB1
C 9
CLUTCH
START SW
(M/T)
P 2
PARK/NEUTRAL
POSITION SW
(A/T)
P
N
I20
EA1
30A
AM2
50A
MAIN
STARTER
RELAY
IF2
TO BULB CHECK RELAY
[COMB. METER]
2A
E17 : A/T
E16 : M/T
EA2
IB2
L-O
BATTERY
B
SRLY
T13
THEFT DETERRENT
AND DOOR LOCK
CONTROL ECU
S 2 A , S 3 B
STARTER

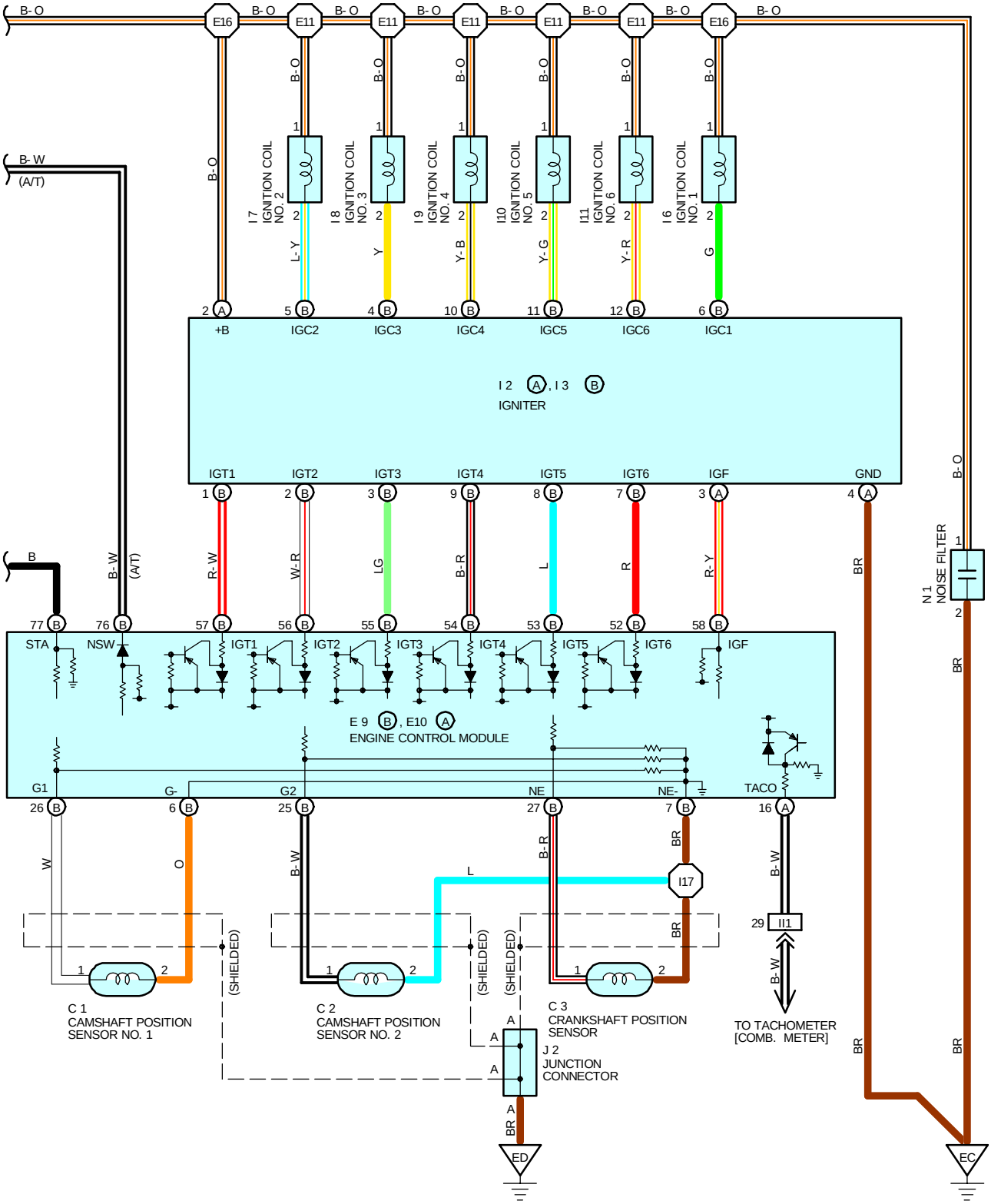
B- O
E16
E11
B- W
(A/T)
I 7 IGNITION COIL NO. 2
I 8 IGNITION COIL NO. 3
I 9 IGNITION COIL NO. 4
I10 IGNITION COIL NO. 5
I11 IGNITION COIL NO. 6
I 6 IGNITION COIL NO. 1
L- Y
Y
Y- B
Y- G
Y- R
G
+B
IGC2
IGC3
IGC4
IGC5
IGC6
IGC1
I 2 A, I 3 B
IGNITER
IGT1
IGT2
IGT3
IGT4
IGT5
IGT6
IGF
GND
R- W
W- R
LG
B- R
L
R
R- Y
BR
N 1 NOISE FILTER
B
STA
NSW
E 9 B, E10 A
ENGINE CONTROL MODULE
G1
G-
G2
NE
NE-
TACO
W
O
I17
II1
(SHIELDED)
C 1 CAMSHAFT POSITION SENSOR NO. 1
C 2 CAMSHAFT POSITION SENSOR NO. 2
C 3 CRANKSHAFT POSITION SENSOR
J 2 JUNCTION CONNECTOR
TO TACHOMETER [COMB. METER]
ED
EC

SERVICE HINTS

I19 IGNITION SW

7-8 : CLOSED WITH THE IGNITION SW AT **ST** POSITION
7-6 : CLOSED WITH THE IGNITION SW AT **ON** OR **ST** POSITION

P2 PARK/NEUTRAL POSITION SW (A/T)

6-5 : CLOSED WITH THE A/T SHIFT LEVER IN **P** OR **N** POSITION

C9 CLUTCH START SW (M/T)

1-2 : CLOSED WITH THE CLUTCH PEDAL FULLY DEPRESSED

S2 (A), S3 (B) STARTER

POINTS CLOSED WITH THE PARK/NEUTRAL POSITION SW ON AND THE IGNITION SW AT **ST** POSITION (A/T)
POINTS CLOSED WITH THE CLUTCH START SW ON AND THE IGNITION SW AT **ST** POSITION (M/T)

: PARTS LOCATION

CODE		SEE PAGE	CODE		SEE PAGE	CODE		SEE PAGE
C1		24	I3	B	25	J2		29
C2		24	I6		25	N1		25 (2JZ-GTE)
C3		24 (2JZ-GTE)	I7		25	P2		25 (2JZ-GTE)
C9		28	I8		25	S2	A	25 (2JZ-GTE)
D1		24 (2JZ-GTE)	I9		25	S3	B	25 (2JZ-GTE)
E9	B	29	I10		25	T13		29
E10	A	29	I11		25			
I2	A	25	I19		29			

: RELAY BLOCKS

CODE	SEE PAGE	RELAY BLOCKS (RELAY BLOCK LOCATION)
2	22	R/B NO. 2 (ENGINE COMPARTMENT LEFT)

: JUNCTION BLOCK AND WIRE HARNESS CONNECTOR

CODE	SEE PAGE	JUNCTION BLOCK AND WIRE HARNESS (CONNECTOR LOCATION)
1J	20	COWL WIRE AND J/B NO. 1 (LEFT KICK PANEL)
IK		
2A	22	BATTERY AND J/B NO. 2 (ENGINE COMPARTMENT LEFT)

: CONNECTOR JOINING WIRE HARNESS AND WIRE HARNESS

CODE	SEE PAGE	JOINING WIRE HARNESS AND WIRE HARNESS (CONNECTOR LOCATION)
EA1	32(2JZ-GTE)	ENGINE WIRE AND ENGINE ROOM MAIN WIRE (NEAR THE R/B NO. 2)
EA2	32	
IB1	36	ENGINE ROOM MAIN WIRE AND COWL WIRE (LEFT KICK PANEL)
IB2		
IF2	36	INSTRUMENT PANEL WIRE AND COWL WIRE (INSTRUMENT PANEL REINFORCEMENT LH)
II1	38	ENGINE WIRE AND INSTRUMENT PANEL WIRE (RIGHT KICK PANEL)
IJ1	38	ENGINE WIRE AND COWL WIRE (RIGHT KICK PANEL)
IJ2		

: GROUND POINTS

CODE	SEE PAGE	GROUND POINTS LOCATION
EC	32 (2JZ-GTE)	FRONT SIDE OF INTAKE MANIFOLD
ED	32 (2JZ-GTE)	REAR SIDE OF INTAKE MANIFOLD

: SPLICE POINTS

CODE	SEE PAGE	WIRE HARNESS WITH SPLICE POINTS	CODE	SEE PAGE	WIRE HARNESS WITH SPLICE POINTS
E11	32	ENGINE WIRE	I4	38	COWL WIRE
E16			I17		
E17			I20		

C 1 BLACK

C 2 BLACK

C 3 DARK GRAY

C 9

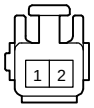

E 9 (B) DARK GRAY

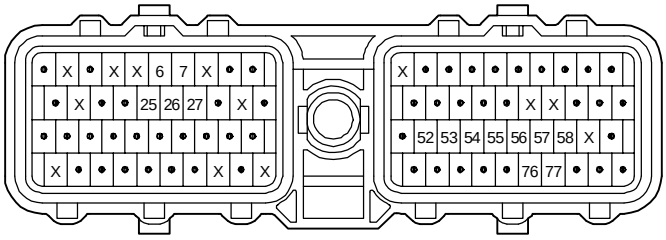

E10 (A) DARK GRAY

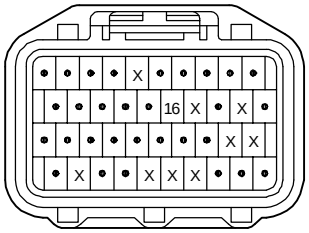

I 2 (A) BLACK

I 3 (B) BLACK

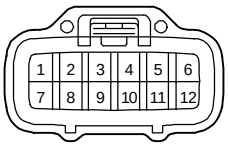

I 6, I 7, I 8
I 9, I10, I11 BLACK

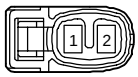

I19

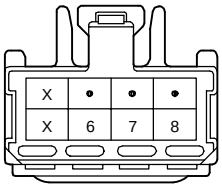

J 2

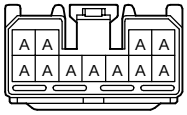

(HINT : SEE PAGE 7)

N 1 GRAY

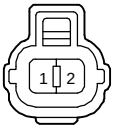

P 2 GRAY

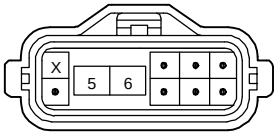

S 2 (A)

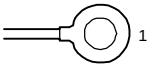

S 3 (B) BLACK

T13 ORANGE

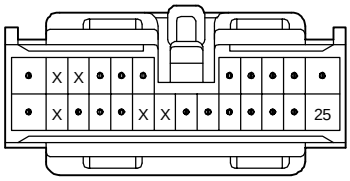

*1 : 2JZ- GTE
*2 : 2JZ- GE

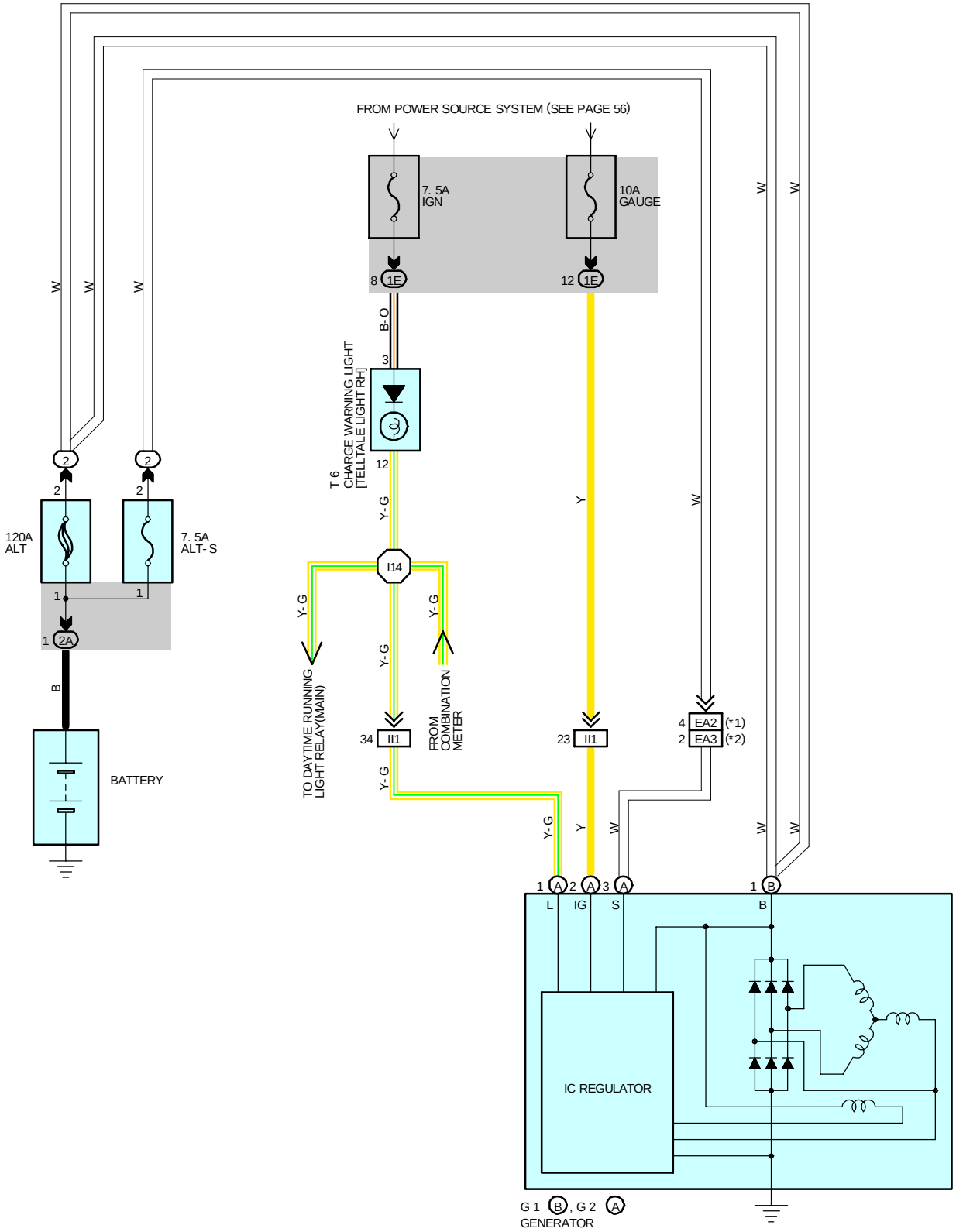

SERVICE HINTS

G2 (A) GENERATOR

(A) 3-GROUND : **13.9-15.1** VOLTS WITH THE ENGINE RUNNING AT **2000** RPM AND **25**•C (**77**•F)
13.5-14.3 VOLTS WITH THE ENGINE RUNNING AT **5000** RPM AND **115**•C (**239**•F)

(A) 1-GROUND ; **0-4** VOLTS WITH THE IGNITION SW AT **ON** POSITION AND THE ENGINE NOT RUNNING

: PARTS LOCATION

CODE		SEE PAGE	CODE		SEE PAGE	CODE	SEE PAGE
G1	B	24 (2JZ-GTE)	G2	A	24 (2JZ-GTE)	T6	29
		26 (2JZ-GE)			26 (2JZ-GE)		

: RELAY BLOCKS

CODE	SEE PAGE	RELAY BLOCKS (RELAY BLOCK LOCATION)
2	22	R/B NO. 2 (ENGINE COMPARTMENT LEFT)

: JUNCTION BLOCK AND WIRE HARNESS CONNECTOR

CODE	SEE PAGE	JUNCTION BLOCK AND WIRE HARNESS (CONNECTOR LOCATION)
1E	20	INSTRUMENT PANEL WIRE AND J/B NO. 1 (LEFT KICK PANEL)
2A	22	BATTERY AND J/B NO. 2 (ENGINE COMPARTMENT LEFT)

: CONNECTOR JOINING WIRE HARNESS AND WIRE HARNESS

CODE	SEE PAGE	JOINING WIRE HARNESS AND WIRE HARNESS (CONNECTOR LOCATION)
EA2	32	ENGINE WIRE AND ENGINE ROOM MAIN WIRE (NEAR THE R/B NO. 2)
EA3	34	
II1	38	ENGINE WIRE AND INSTRUMENT PANEL WIRE (RIGHT KICK PANEL)

: SPLICE POINTS

CODE	SEE PAGE	WIRE HARNESS WITH SPLICE POINTS	CODE	SEE PAGE	WIRE HARNESS WITH SPLICE POINTS
I14	38	INSTRUMENT PANEL WIRE			

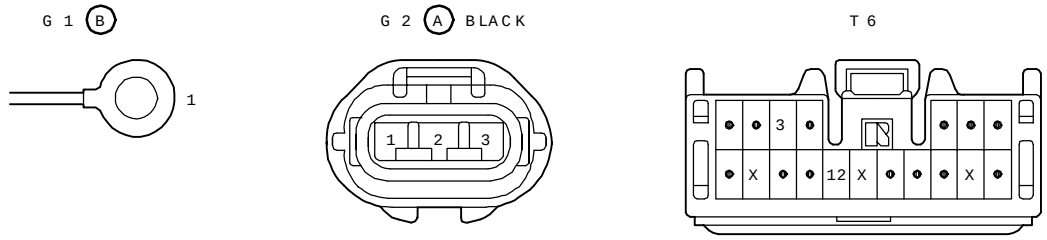

SYSTEM OUTLINE

THE ENGINE CONTROL SYSTEM UTILIZES A MICROCOMPUTER AND MAINTAINS OVERALL CONTROL OF THE ENGINE, TRANSMISSION ETC. AN OUTLINE OF THE ENGINE CONTROL IS GIVEN HERE.

1. INPUT SIGNALS

(1) ENGINE COOLANT TEMP. SIGNAL CIRCUIT
THE ENGINE COOLANT TEMP. SENSOR DETECTS THE ENGINE COOLANT TEMP. WHICH IS INPUT INTO **TERMINAL THW** OF THE ENGINE CONTROL MODULE AS A CONTROL SIGNAL.

(2) INTAKE AIR TEMP. SIGNAL CIRCUIT
THE INTAKE AIR TEMP. SENSOR IS INSTALLED IN THE MASS AIR FLOW METER AND DETECTS THE INTAKE AIR TEMP. WHICH IS INPUT AS A CONTROL SIGNAL TO **TERMINAL THA** OF THE ENGINE CONTROL MODULE.

(3) OXYGEN DENSITY SIGNAL CIRCUIT
THE OXYGEN DENSITY IN THE EXHAUST EMISSION IS DETECTED BY THE HEATED OXYGEN SENSOR SIDE AND INPUT AS A CONTROL SIGNAL TO **TERMINAL OX1, OXS** OF THE ENGINE CONTROL MODULE.

(4) RPM SIGNAL CIRCUIT
CRANKSHAFT POSITION IS DETECTED BY THE CRANKSHAFT POSITION SENSOR. CRANKSHAFT POSITION IS INPUT AS A CONTROL SIGNAL TO **TERMINAL NE** OF THE ENGINE CONTROL MODULE.

(5) THROTTLE POSITION SIGNAL CIRCUIT
THE THROTTLE POSITION SENSOR DETECTS THE THROTTLE VALVE OPENING ANGLE AS A CONTROL SIGNAL, WHICH IS INPUT INTO **TERMINAL VTA1** OF THE ENGINE CONTROL MODULE. WHEN THE VALVE IS COMPLETELY CLOSED, THE CONTROL SIGNAL IS INPUT INTO **TERMINAL IDL1**.

(6) VEHICLE SPEED CIRCUIT
THE VEHICLE SPEED IS DETECTED BY VEHICLE SPEED SENSOR NO. 1 INSTALLED IN THE TRANSMISSION AND THE SIGNAL IS INPUT TO **TERMINAL SP1** OF THE ENGINE CONTROL MODULE VIA THE COMBINATION METER.

(7) NEUTRAL POSITION SIGNAL CIRCUIT
THE PARK/NEUTRAL POSITION SW DETECTS WHETHER THE SHIFT POSITION IS IN “N” AND “ P” OR NOT, AND THE SIGNAL IS INPUT INTO **TERMINAL NSW** OF THE ENGINE CONTROL MODULE.

(8) A/C SW SIGNAL CIRCUIT
THE OPERATING VOLTAGE OF THE A/C MAGNETIC CLUTCH IS DETECTED AND THE SIGNAL IS INPUT INTO **TERMINAL ACMG** OF ENGINE CONTROL MODULE AS A CONTROL SIGNAL.

(9) BATTERY SIGNAL CIRCUIT
VOLTAGE IS CONSTANTLY APPLIED TO **TERMINAL BATT** OF THE ENGINE CONTROL MODULE. WITH THE IGNITION SW TURNED ON, THE VOLTAGE FOR ENGINE CONTROL MODULE START-UP POWER SUPPLY IS APPLIED TO **TERMINAL +B** OF THE ENGINE CONTROL MODULE VIA EFI MAIN RELAY.
THE CURRENT FLOWING THROUGH THE **IGN** FUSE FLOWS TO **TERMINAL IGSW** OF THE ENGINE CONTROL MODULE.

(10) INTAKE AIR VOLUME SIGNAL CIRCUIT
INTAKE AIR VOLUME IS DETECTED BY THE MASS AIR FLOW METER AND THE SIGNAL IS INPUT TO **TERMINAL VG** OF THE ENGINE CONTROL MODULE AS A CONTROL SIGNAL.

(11) STOP LIGHT SW SIGNAL CIRCUIT
THE STOP LIGHT SW IS USED TO DETECT WHETHER THE VEHICLE IS BRAKING OR NOT AND THE SIGNAL IS INPUT INTO **TERMINAL STP** OF THE ENGINE CONTROL MODULE AS A CONTROL SIGNAL.

(12) STARTER SIGNAL CIRCUIT
TO CONFIRM WHETHER THE ENGINE IS CRANKING THE VOLTAGE APPLIED TO THE STARTER MOTOR DURING CRANKING IS DETECTED AND THE SIGNAL IS INPUT IN **TERMINAL STA** OF THE ENGINE CONTROL MODULE AS A CONTROL SIGNAL.

(13) ENGINE KNOCK SIGNAL CIRCUIT
ENGINE KNOCKING IS DETECTED BY KNOCK SENSOR FRONT AND REAR SIDE AND THE SIGNAL IS INPUT **TERMINALS KNK1** AND **KNK2** AS A CONTROL SIGNAL.

2. CONTROL SYSTEM

* SEQUENTIAL MULTIPORT FUEL INJECTION SYSTEM
  THE SEQUENTIAL MULTIPORT FUEL INJECTION SYSTEM MONITORS THE ENGINE CONDITION THROUGH THE SIGNALS INPUT FROM EACH SENSOR (INPUT SIGNALS FROM (1) TO (13) ETC.) TO THE ENGINE CONTROL MODULE. THE BEST FUEL INJECTION TIMING IS DECIDED BASED ON THIS DATA AND THE PROGRAM MEMORIZED BY THE ENGINE CONTROL MODULE, AND THE CONTROL SIGNAL IS OUTPUT TO **TERMINALS #10, #20, #30, #40, #50 AND #60** OF THE ENGINE CONTROL MODULE TO OPERATE THE INJECTOR (INJECT THE FUEL). THE SEQUENTIAL MULTIPORT FUEL INJECTION SYSTEM PRODUCES CONTROLS OF FUEL INJECTION OPERATION BY THE ENGINE CONTROL MODULE IN RESPONSE TO THE DRIVING CONDITIONS.
* ESA SYSTEM
  THE ESA SYSTEM MONITORS THE ENGINE CONDITION THROUGH THE SIGNALS INPUT TO THE ENGINE CONTROL MODULE FROM EACH SENSOR (INPUT SIGNALS FROM (1), (2), (4) TO (13) ETC.). THE BEST IGNITION TIMING IS DECIDED ACCORDING TO THIS DATA AND THE MEMORIZED DATA IN THE ENGINE CONTROL MODULE AND THE CONTROL SIGNAL IS OUTPUT TO **TERMINALS IGT1, IGT2, IGT3, IGT4, IGT5** AND **IGT6** THESE SIGNALS CONTROL THE IGNITER TO PROVIDE THE BEST IGNITION TIMING FOR THE DRIVING CONDITIONS.
* HEATED OXYGEN SENSOR HEATER CONTROL SYSTEM
  THE MAIN HEATED OXYGEN SENSOR, SUB HEATED OXYGEN SENSOR HEATER CONTROL SYSTEM TURNS THE HEATER ON WHEN THE INTAKE AIR VOLUME IS LOW (TEMP. OF EXHAUST EMISSIONS IS LOW) AND WARMS UP THE OXYGEN SENSOR TO IMPROVE DETECTION PERFORMANCE OF THE SENSOR. THE ENGINE CONTROL MODULE EVALUATES THE SIGNALS FROM EACH SENSOR (INPUT SIGNALS FROM (1), (2), (4), (9) TO (11) ETC.), AND OUTPUTS CURRENT TO **TERMINALS HT1, HTS** TO CONTROL THE HEATER
* IDLE AIR CONTROL SYSTEM
  THE IDLE AIR CONTROL SYSTEM (STEP MOTOR TYPE) INCREASES THE ENGINE SPEED AND PROVIDES IDLING STABILITY FOR FAST IDLE-UP WHEN THE ENGINE IS COLD, AND WHEN THE IDLE SPEED HAS DROPPED DUE TO ELECTRICAL LOAD AND SO ON. THE ENGINE CONTROL MODULE EVALUATES THE SIGNALS FROM EACH SENSOR (INPUT SIGNALS FROM (1), (4), (5), (8), (9), (11) ETC.), OUTPUTS CURRENT TO **TERMINALS ISC1, ISC2, ISC3** AND **ISC4** TO CONTROL THE IDLE AIR CONTROL VALVE.
* EGR CONTROL SYSTEM
  THE EGR CONTROL SYSTEM DETECTS THE SIGNAL FROM EACH SENSOR (INPUT SIGNALS FROM (1), (4), (9), (10) ETC.), AND OUTPUTS CURRENT TO **TERMINAL EGR** TO CONTROL THE EGR VALVE.
* FUEL PUMP CONTROL SYSTEM
  THE ENGINE CONTROL MODULE OUTPUTS CURRENT TO **TERMINAL FPC** AND CONTROLS THE FUEL PUMP ECU AND FUEL PUMP DRIVE SPEED IN RESPONSE TO THE DRIVING CONDITIONS

3. DIAGNOSIS SYSTEM

WITH THE DIAGNOSIS SYSTEM, WHEN THERE IS A MALFUNCTION IN THE ENGINE CONTROL MODULE SIGNAL SYSTEM, THE MALFUNCTIONING SYSTEM IS RECORDED IN THE MEMORY. THE MALFUNCTIONING SYSTEM CAN BE FOUND BY READING THE CODE DISPLAYED BY THE MALFUNCTION INDICATOR LAMP.

4. FAIL-SAFE SYSTEM

WHEN A MALFUNCTION HAS OCCURRED IN ANY SYSTEM, IF THERE IS A POSSIBILITY OF ENGINE TROUBLE BEING CAUSED BY CONTINUED CONTROL BASED ON THE SIGNALS FROM THAT SYSTEM, THE FAIL-SAFE SYSTEM EITHER CONTROLS THE SYSTEM BY USING DATA (STANDARD VALUES) RECORDED IN THE ENGINE CONTROL MODULE MEMORY OR ELSE STOPS THE ENGINE.

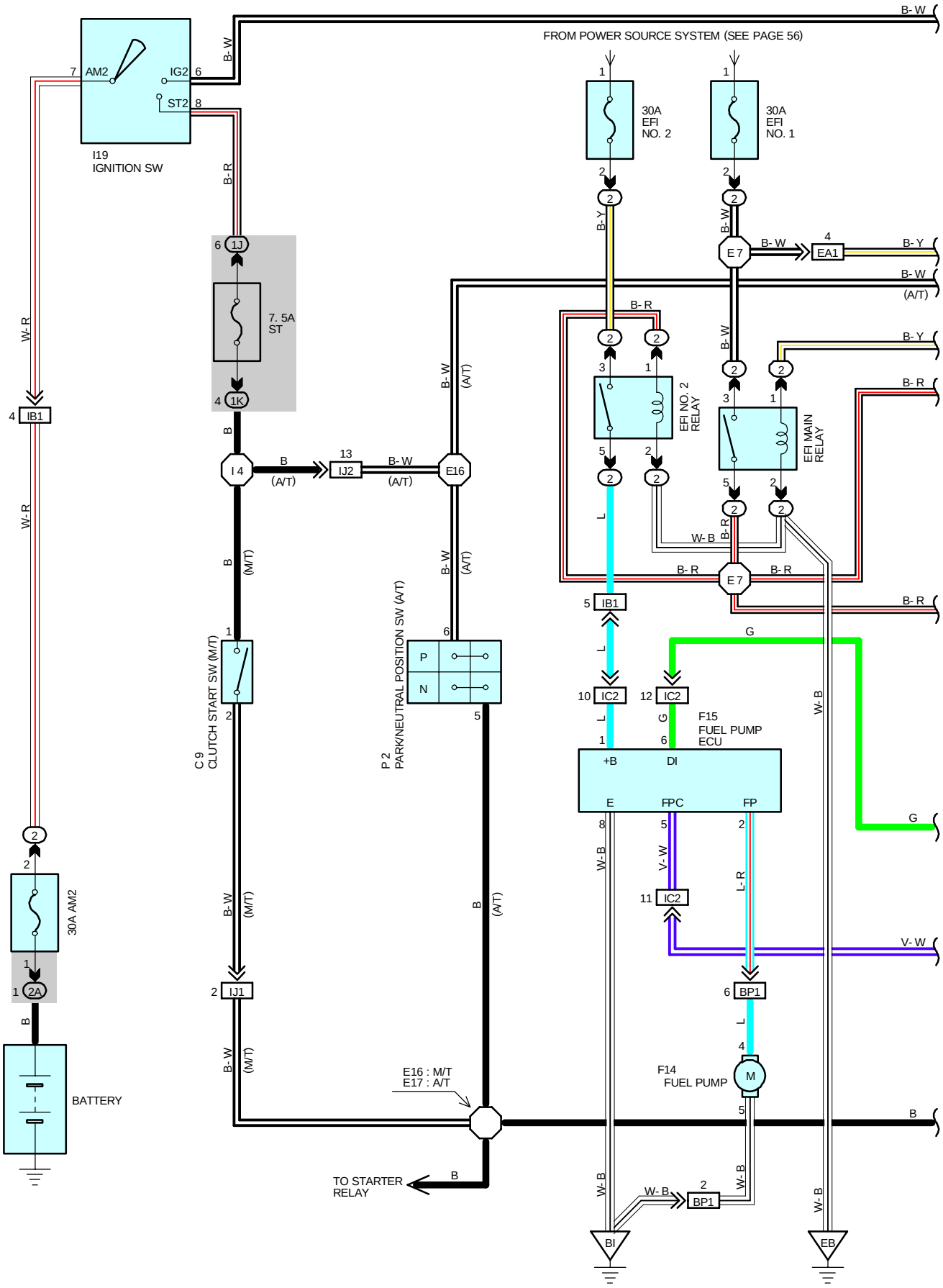
FROM POWER SOURCE SYSTEM (SEE PAGE 56)
I19
IGNITION SW
AM2
IG2
ST2
30A
EFI
NO. 2
30A
EFI
NO. 1
7. 5A
ST
EFI NO. 2
RELAY
EFI MAIN
RELAY
C 9
CLUTCH START SW (M/T)
P 2
PARK/NEUTRAL POSITION SW (A/T)
F15
FUEL PUMP
ECU
F14
FUEL PUMP
30A AM2
BATTERY
E16 : M/T
E17 : A/T
TO STARTER
RELAY
(A/T)
(M/T)

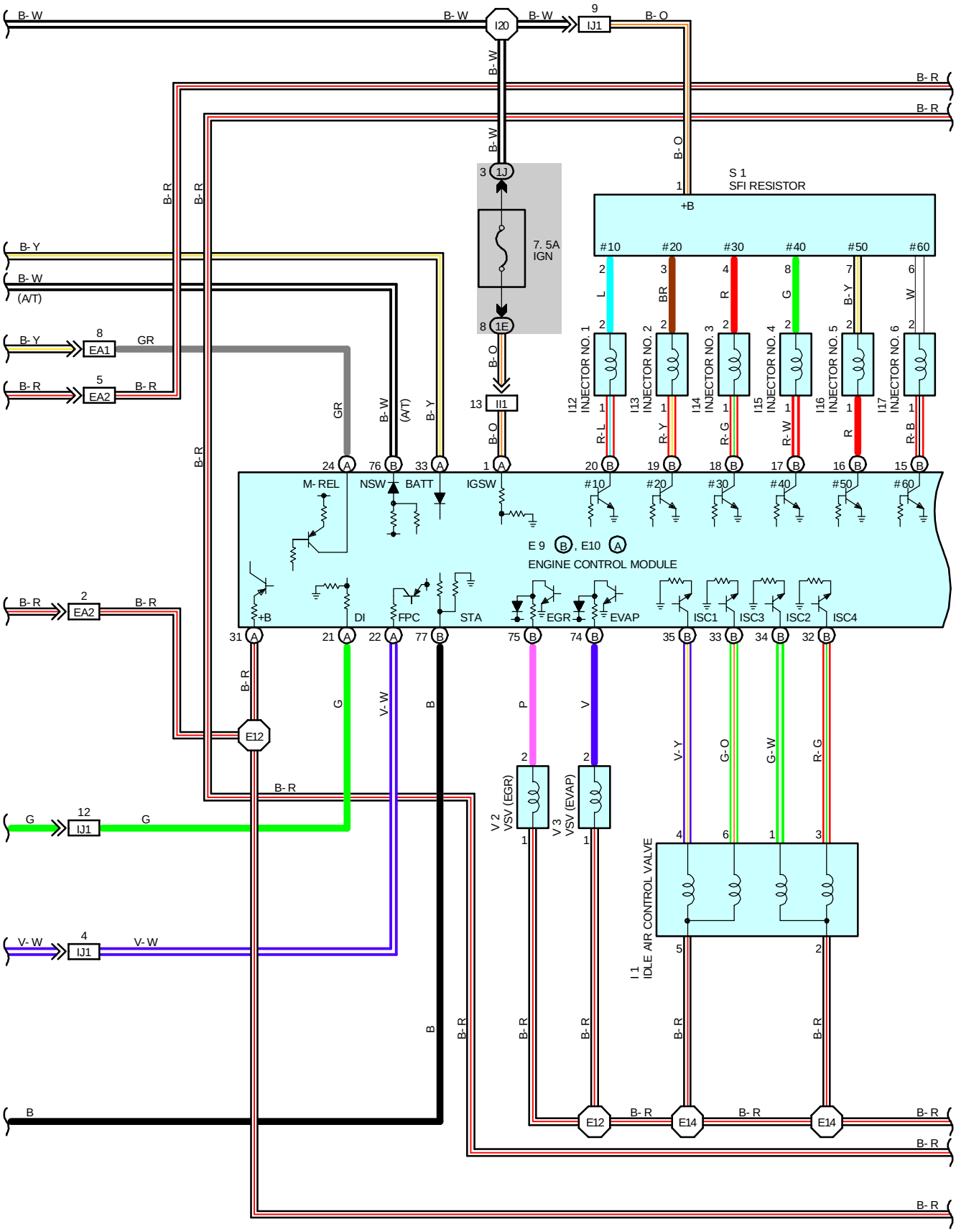

B- W
I20
IJ1
B- O
B- R
S 1
SFI RESISTOR
+B
#10
#20
#30
#40
#50
#60
7. 5A
IGN
1J
1E
II1
B- Y
(A/T)
EA1
EA2
GR
I12
INJECTOR NO. 1
I13
INJECTOR NO. 2
I14
INJECTOR NO. 3
I15
INJECTOR NO. 4
I16
INJECTOR NO. 5
I17
INJECTOR NO. 6
M- REL
NSW
BATT
IGSW
E 9
E10
ENGINE CONTROL MODULE
DI
FPC
STA
EGR
EVAP
ISC1
ISC3
ISC2
ISC4
E12
V 2
VSV (EGR)
V 3
VSV (EVAP)
I 1
IDLE AIR CONTROL VALVE
E14
V- W

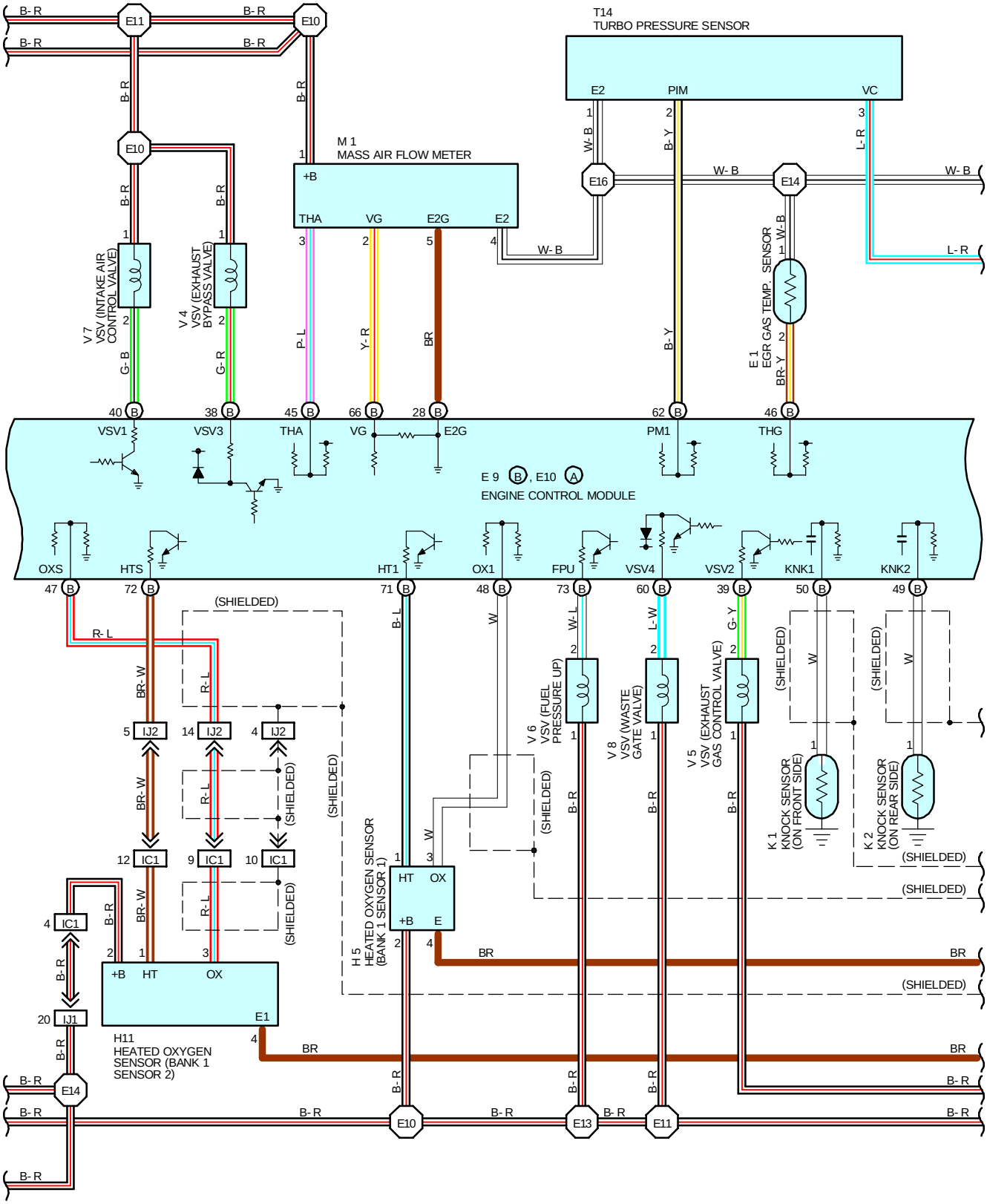
T14
TURBO PRESSURE SENSOR
E2
PIM
VC
M 1
MASS AIR FLOW METER
+B
THA
VG
E2G
E2
V 7
VSV (INTAKE AIR CONTROL VALVE)
V 4
VSV (EXHAUST BYPASS VALVE)
E 1
EGR GAS TEMP. SENSOR
VSV1
VSV3
THA
VG
E2G
PM1
THG
E 9 B, E10 A
ENGINE CONTROL MODULE
OXS
HTS
HT1
OX1
FPU
VSV4
VSV2
KNK1
KNK2
(SHIELDED)
V 6
VSV (FUEL PRESSURE UP)
V 8
VSV (WASTE GATE VALVE)
V 5
VSV (EXHAUST GAS CONTROL VALVE)
K 1
KNOCK SENSOR (ON FRONT SIDE)
K 2
KNOCK SENSOR (ON REAR SIDE)
H 5
HEATED OXYGEN SENSOR (BANK 1 SENSOR 1)
HT
OX
+B
E
H11
HEATED OXYGEN SENSOR (BANK 1 SENSOR 2)
E1
IJ2
IC1
IJ1
E10
E11
E13
E14
E16

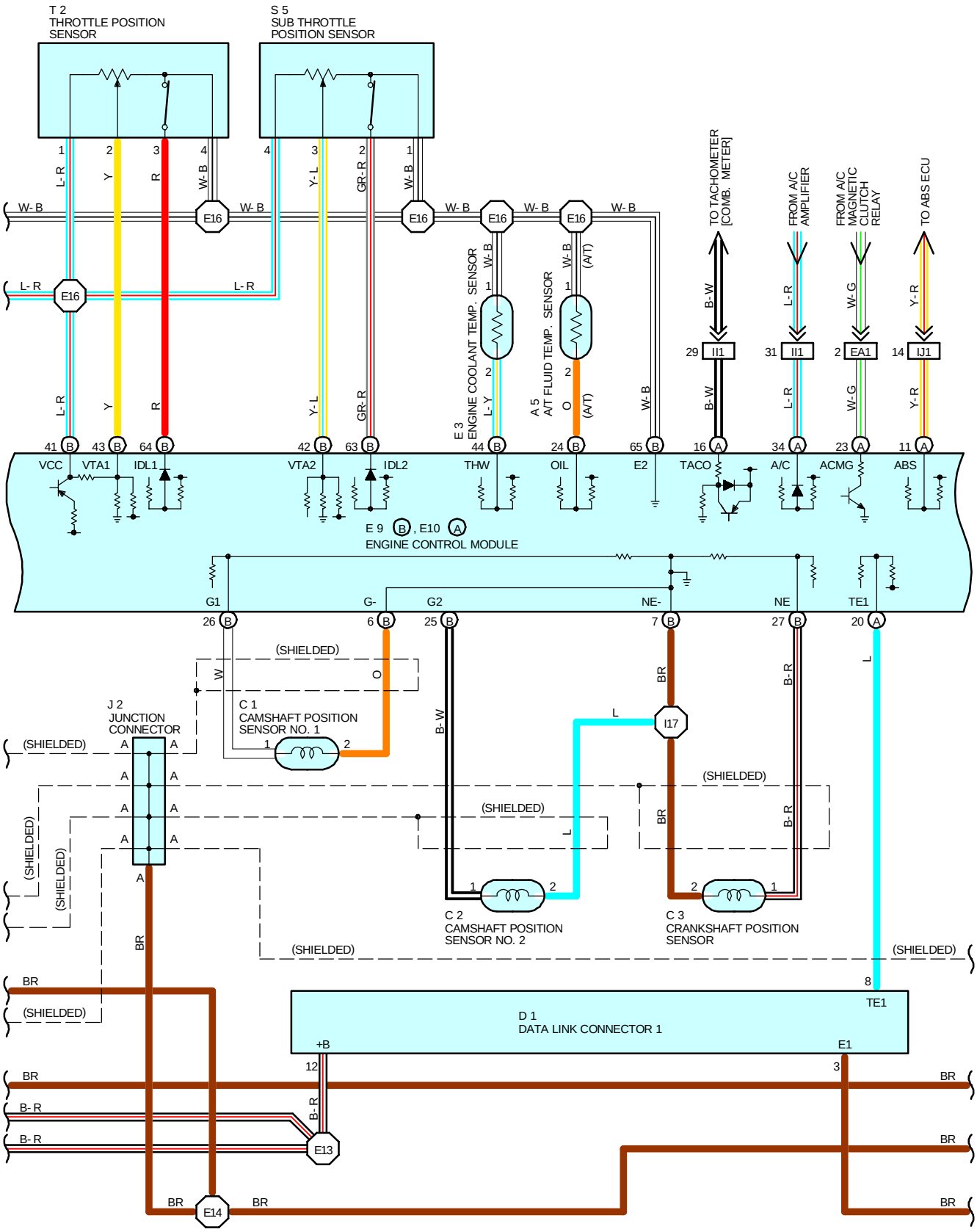
T 2
THROTTLE POSITION SENSOR
S 5
SUB THROTTLE POSITION SENSOR
E16
E 3
ENGINE COOLANT TEMP. SENSOR
A 5
A/T FLUID TEMP. SENSOR
TO TACHOMETER [COMB. METER]
FROM A/C AMPLIFIER
FROM A/C MAGNETIC CLUTCH RELAY
TO ABS ECU
I1
EA1
IJ1
VCC
VTA1
IDL1
VTA2
IDL2
THW
OIL
E2
TACO
A/C
ACMG
ABS
E 9 B , E10 A
ENGINE CONTROL MODULE
G1
G-
G2
NE-
NE
TE1
(SHIELDED)
J 2
JUNCTION CONNECTOR
C 1
CAMSHAFT POSITION SENSOR NO. 1
I17
C 2
CAMSHAFT POSITION SENSOR NO. 2
C 3
CRANKSHAFT POSITION SENSOR
D 1
DATA LINK CONNECTOR 1
+B
E1
E13
E14

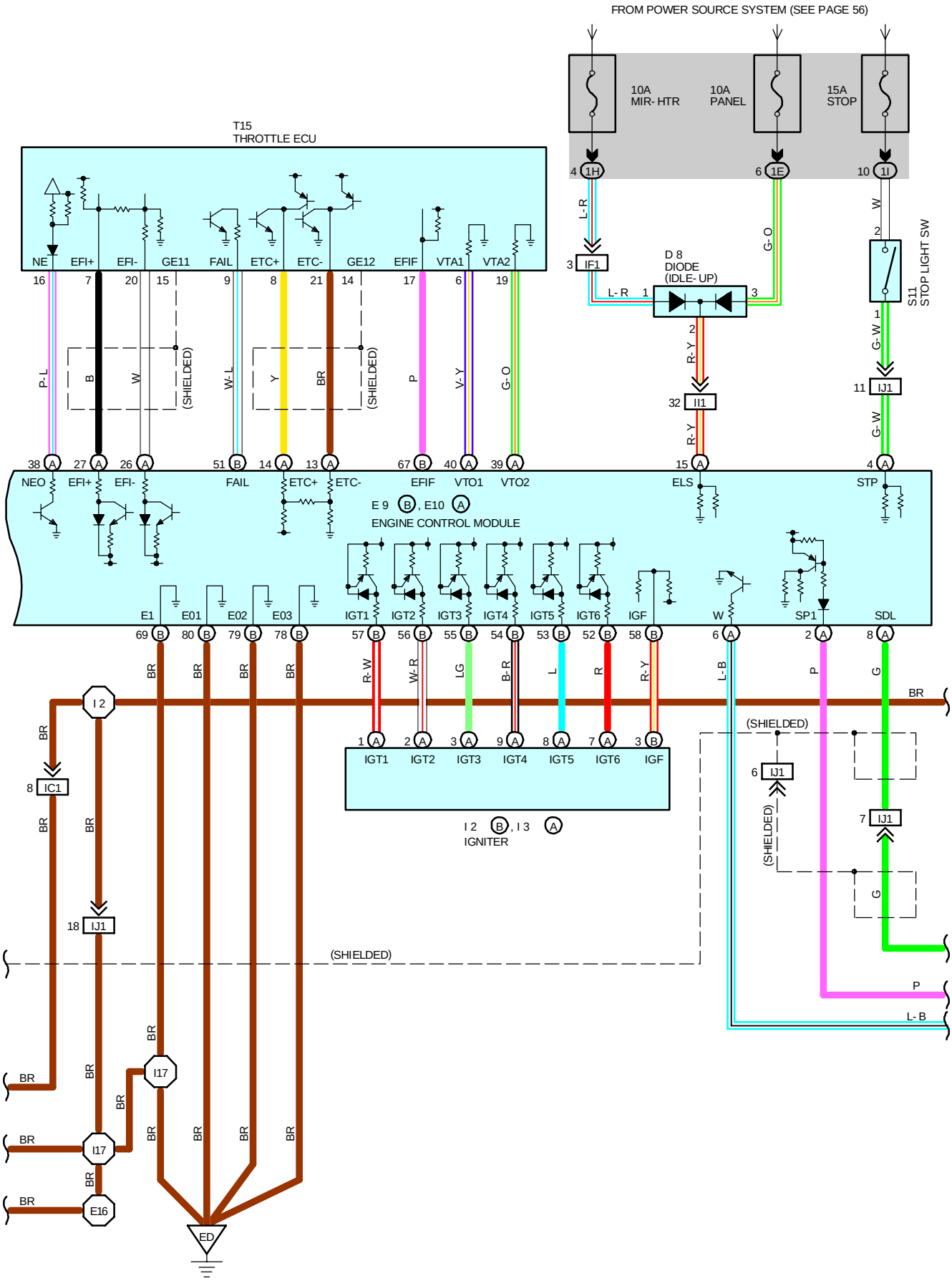
FROM POWER SOURCE SYSTEM (SEE PAGE 56)
10A MIR- HTR
10A PANEL
15A STOP
T15 THROTTLE ECU
NE
EFI+
EFI-
GE11
FAIL
ETC+
ETC-
GE12
EFIF
VTA1
VTA2
D 8 DIODE (IDLE- UP)
S11 STOP LIGHT SW
(SHIELDED)
NEO
ELS
STP
E 9 B, E10 A
ENGINE CONTROL MODULE
VTO1
VTO2
E1
E01
E02
E03
IGT1
IGT2
IGT3
IGT4
IGT5
IGT6
IGF
W
SP1
SDL
I 2 B, I 3 A
IGNITER
ED

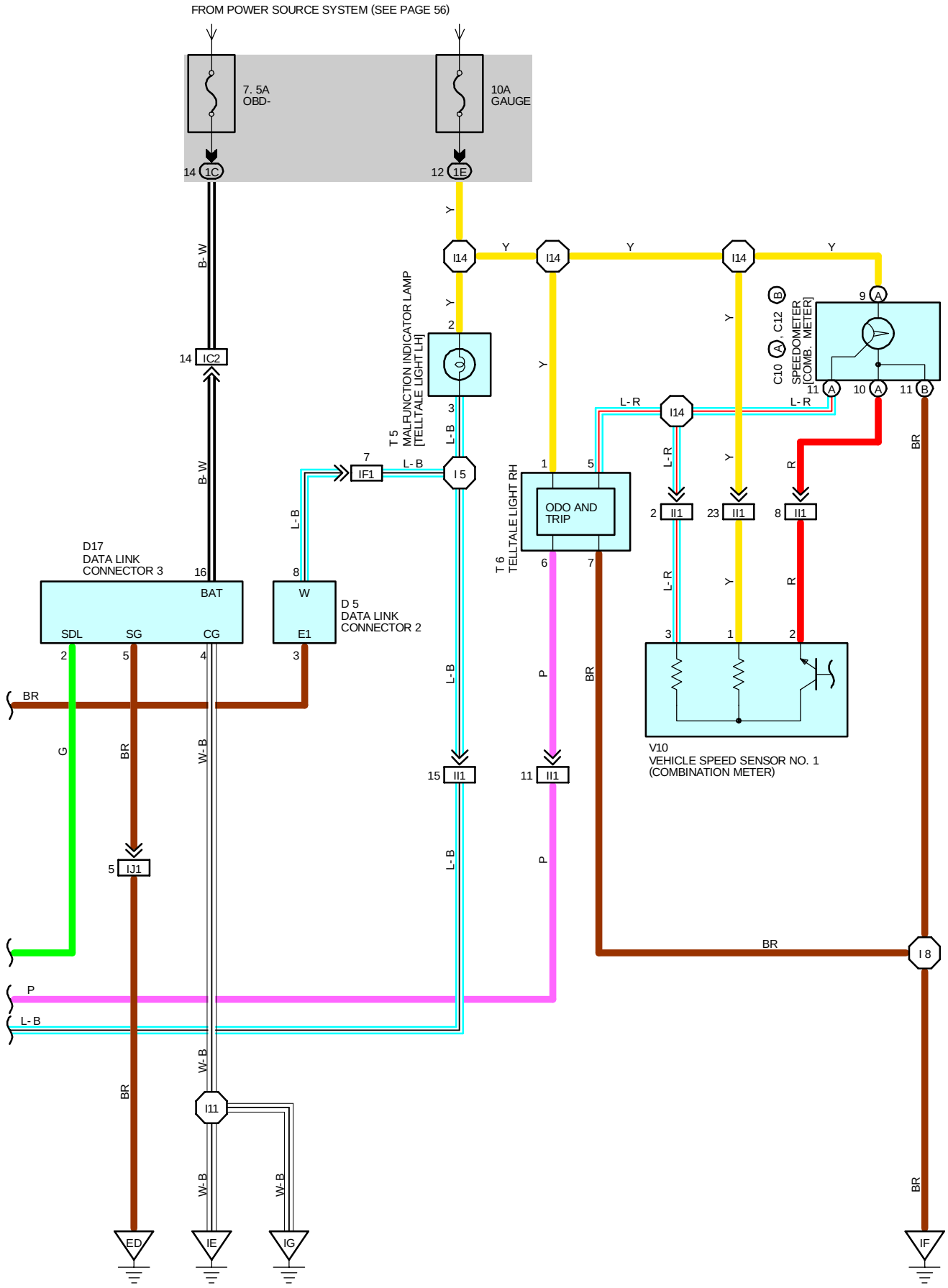
FROM POWER SOURCE SYSTEM (SEE PAGE 56)
7. 5A
OBD-
10A
GAUGE
14 1C
12 1E
B- W
14 IC2
B- W
D17
DATA LINK
CONNECTOR 3
16
BAT
SDL
SG
CG
2
5
4
BR
G
BR
W- B
5 IJ1
P
L- B
BR
W- B
I11
W- B
W- B
ED
IE
IG
Y
I14
Y
I14
Y
I14
Y
T 5
MALFUNCTION INDICATOR LAMP
[TELLTALE LIGHT LH]
2
3
L- B
7
IF1
L- B
I 5
L- B
8
W
D 5
DATA LINK
CONNECTOR 2
E1
3
L- B
15 II1
L- B
P
11 II1
P
T 6
TELLTALE LIGHT RH
1
5
ODO AND
TRIP
6
7
BR
L- R
I14
L- R
L- R
Y
2 II1
23 II1
8 II1
L- R
Y
R
3
1
2
V10
VEHICLE SPEED SENSOR NO. 1
(COMBINATION METER)
BR
I 8
BR
IF
C10 A, C12 B
SPEEDOMETER
[COMB. METER]
9 A
11 A
10 A
11 B
BR

SERVICE HINTS

EFI MAIN RELAY

②3- ②5 : CLOSED WITH THE IGNITION SW AT **ON** POSITION

EFI NO. 2 RELAY

②3- ②5 : CLOSED WITH THE IGNITION SW AT **ON** POSITION

E3 ENGINE COOLANT TEMP. SENSOR

1-2 : **10-20** KΩ (**-20** •C, **-4** •F)
4-7 KΩ (**0**•C, **32**•F)
2-3 KΩ (**20**•C, **68**•F)
0.9-1.3 KΩ (**40**•C, **104**•F)
0.4-0.7 KΩ (**60**•C, **140**•F)
0.2-0.4 KΩ (**80**•C, **176**•F)

I1 IDLE AIR CONTROL VALVE

1, 3-2 : APPROX. **10-30** Ω
4, 6-5 : APPROX. **10-30** Ω

I12, I13, I14, I15, I16, I17 INJECTOR

1-2 : APPROX. **13.8** Ω

T2 THROTTLE POSITION SENSOR

1-4 : APPROX. **4-9** KΩ
1-3 : **3.3-10.0** KΩ WITH THROTTLE VALVE FULLY **OPENED** POSITION
0.2-0.8 KΩ WITH CLEARANCE BETWEEN LEVER AND STOP SCREW **0** MM (**0** IN.)
1-2 : **0-2.3** KΩ WITH CLEARANCE BETWEEN LEVER AND STOP SCREW **0.45** MM (**0.0177** IN.)
INFINITY WITH CLEARANCE BETWEEN LEVER AND STOP SCREW **0.55** MM (**0.0216** IN.)

E9 (B), E10 (A) ENGINE CONTROL MODULE

(VOLTAGE AT ENGINE CONTROL MODULE WIRING CONNECTORS)

BATT-E1 : ALWAYS **9-14** VOLTS
IGSW-E1 : **9-14** VOLTS WITH THE IGNITION SW ON
M-REL-E : **9-14** VOLTS WITH THE IGNITION SW ON
+B-E1 : **9-14** VOLTS WITH THE IGNITION SW ON
IDL1-E2 : **9-14** VOLTS WITH THE IGNITION SW ON AND THE THROTTLE VALVE FULLY OPEN
0-1.5 VOLTS WITH THE IGNITION SW ON AND THE THROTTLE VALVE FULLY CLOSED
VTA1-E2 : **0.3-0.8** VOLTS WITH THE IGNITION SW ON AND THE THROTTLE VALVE FULLY CLOSED
3.2-4.9 VOLTS WITH THE IGNITION SW ON AND THE THROTTLE VALVE OPEN
THA-E2 : **0.5-3.4** VOLTS WITH THE IGNITION SW ON AND THE INTAKE AIR TEMP. **20**•C (**68**•F)
THW-E2 : **0.2-1.0** VOLTS WITH THE IGNITION SW ON AND THE COOLANT TEMP. **80**•C (**176**•F)
STA-E1 : **6-14** VOLTS WITH THE ENGINE CRANKING
W-E1 : **9-14** VOLTS WITH ENGINE IDLING
IGF-E1 : PULSE GENERATION (ENGINE IDLING)
NSW-E1 : **0-3** VOLTS WITH THE IGNITION SW ON AND THE SHIFT LEVER **P** OR **N** POSITION
9-14 VOLTS WITH THE IGNITION SW ON AND THE SHIFT LEVER EXCEPT **P** OR **N** POSITION
SP1 : PULSE GENERATION
TE1-E1 : **9-14** VOLTS WITH THE IGNITION SW ON
A/C-E1 : **0-1.5** VOLTS WITH THE IGNITION SW ON AND THE A/C OFF
7.5-14 VOLTS WITH THE IGNITION SW ON AND THE A/C ON
ELS-E1 : **9-14** VOLTS WITH THE TAILLIGHT ON, DEFOGGER ON
0-1.5 VOLTS WITH THE TAILLIGHT OFF, DEFOGGER OFF
STP-E1 : **7.5-14** VOLTS WITH THE STOP LIGHT SW ON (BRAKE PEDAL DEPRESSED)
0-1.5 VOLTS WITH THE STOP LIGHT SW OFF
ISC1, ISC2, ISC3, ISC4-E1 : PULSE GENERATION (ENGINE IDLING)
#10, #20, #30, #40, #50, #60-E01, E02 : PULSE GENERATION (ENGINE IDLING)

(RESISTANCE OF ENGINE CONTROL MODULE WIRING CONNECTORS)

IDL1-E2 : INFINITY WITH THE THROTTLE VALVE OPEN
0-2.3 KΩ WITH THE THROTTLE VALVE FULLY CLOSED
VTA1-E2 : **3.3** KΩ- **10**.0 KΩ WITH THE THROTTLE VALVE FULLY OPEN
200 Ω -**800** Ω WITH THE THROTTLE VALVE FULLY CLOSED
VCC-E2 : **4** KΩ -**9** KΩ
THA-E2 : **2** KΩ -**3** KΩ WITH THE INTAKE AIR TEMP. **20**•C (**68**•F)
THW-E2 : **200** Ω -**400** Ω WITH THE COOLANT TEMP. **80**•C (**176**•F)
ISC1, ISC2, ISC3, ISC4- +B : **10-30** Ω
#10, #20, #30, #40, #50, #60- +B : **13.2-14.2** Ω

: PARTS LOCATION

CODE	SEE PAGE	CODE	SEE PAGE	CODE	SEE PAGE
A5	24 (2JZ-GTE)	H5	24	S1	25
C1	24	H11	29	S5	25
C2	24	I1	25 (2JZ-GTE)	S11	29
C3	24 (2JZ-GTE)	I2 B	25	T2	25 (2JZ-GTE)
C9	28	I3 A	25	T5	29
C10 A	28	I12	25 (2JZ-GTE)	T6	29
C12 B	28	I13	25 (2JZ-GTE)	T14	25
D1	24 (2JZ-GTE)	I14	25 (2JZ-GTE)	T15	29
D5	28	I15	25 (2JZ-GTE)	V2	25 (2JZ-GTE)
D8	28	I16	25 (2JZ-GTE)	V3	25 (2JZ-GTE)
D17	28	I17	25 (2JZ-GTE)	V4	25
E1	24 (2JZ-GTE)	I19	29	V5	25
E3	24 (2JZ-GTE)	J2	29	V6	25 (2JZ-GTE)
E9 B	29	K1	25 (2JZ-GTE)	V7	25
E10 A	29	K2	25 (2JZ-GTE)	V8	25
F14	30	M1	25	V10	25 (2JZ-GTE)
F15	30	P2	25 (2JZ-GTE)		

: RELAY BLOCKS

CODE	SEE PAGE	RELAY BLOCKS (RELAY BLOCK LOCATION)
2	22	R/B NO. 2 (ENGINE COMPARTMENT LEFT)

: JUNCTION BLOCK AND WIRE HARNESS CONNECTOR

CODE	SEE PAGE	JUNCTION BLOCK AND WIRE HARNESS (CONNECTOR LOCATION)
1C	20	FLOOR NO. 2 WIRE AND J/B NO. 1 (LEFT KICK PANEL)
1E	20	INSTRUMENT PANEL WIRE AND J/B NO. 1 (LEFT KICK PANEL)
1H	20	COWL WIRE AND J/B NO. 1 (LEFT KICK PANEL)
1I		
1J		
1K		
2A	22	BATTERY AND J/B NO. 2 (ENGINE COMPARTMENT LEFT)

: CONNECTOR JOINING WIRE HARNESS AND WIRE HARNESS

CODE	SEE PAGE	JOINING WIRE HARNESS AND WIRE HARNESS (CONNECTOR LOCATION)
EA1	32 (2JZ-GTE)	ENGINE WIRE AND ENGINE ROOM MAIN WIRE (NEAR THE R/B NO. 2)
EA2	32	
IB1	36	ENGINE ROOM MAIN WIRE AND COWL WIRE (LEFT KICK PANEL)
IC1	36	FLOOR NO. 2 WIRE AND COWL WIRE (LEFT KICK PANEL)
IC2		
IF1	36	INSTRUMENT PANEL WIRE AND COWL WIRE (INSTRUMENT PANEL REINFORCEMENT LH)
II1	38	ENGINE WIRE AND INSTRUMENT PANEL WIRE (RIGHT KICK PANEL)
IJ1	38	ENGINE WIRE AND COWL WIRE (RIGHT KICK PANEL)
IJ2		
BP1	40	FUEL GAUGE WIRE AND FLOOR NO. 2 WIRE (LUGGAGE ROOM FRONT LH)

: GROUND POINTS

CODE	SEE PAGE	GROUND POINTS LOCATION
EB	32 (2JZ-GTE)	FRONT SIDE OF LEFT FENDER
ED	32 (2JZ-GTE)	REAR SIDE OF INTAKE MANIFOLD
IE	36	LEFT KICK PANEL
IF		
IG	36	RIGHT KICK PANEL
BI	40	LEFT QUARTER PILLAR

: SPLICE POINTS

CODE	SEE PAGE	WIRE HARNESS WITH SPLICE POINTS	CODE	SEE PAGE	WIRE HARNESS WITH SPLICE POINTS
E7	32	ENGINE ROOM MAIN WIRE	I2	38	COWL WIRE
E10	32	ENGINE WIRE	I4	38	INSTRUMENT PANEL WIRE
E11			I5	38	INSTRUMENT PANEL WIRE
E12			I8		
E13			I11	38	COWL WIRE
E14			I14	38	INSTRUMENT PANEL WIRE
E16			I17	38	ENGINE WIRE
E17			I20	38	COWL WIRE

A 5 GRAY

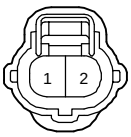

C 1 BLACK

C 2 BLACK

C 3 DARK GRAY

C 9

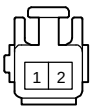

C10 (A) BLUE

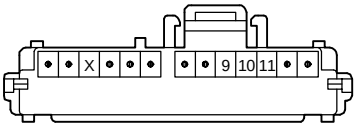

C12 (B)

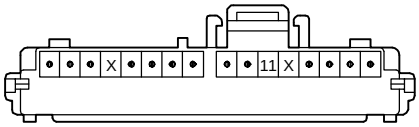

D 1 BLACK

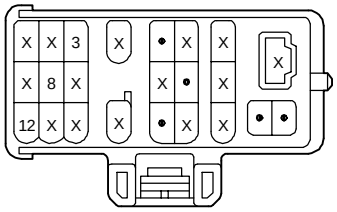

D 5 DARK GRAY

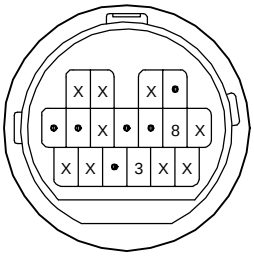

D 8 ORANGE

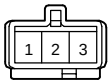

D17

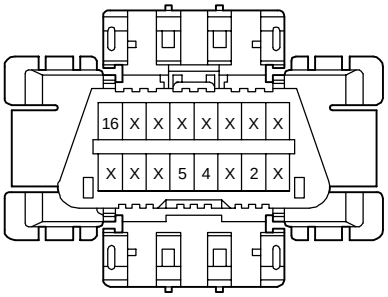

E 1 DARK GRAY

E 3 DARK GRAY

E 9 (B) DARK GRAY

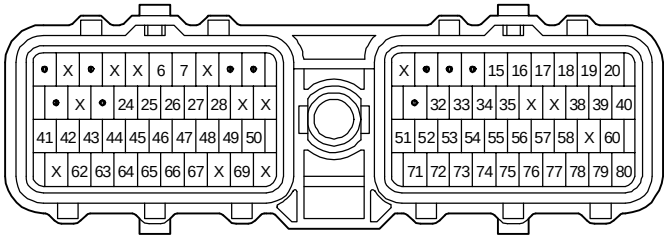

E10 (A) DARK GRAY

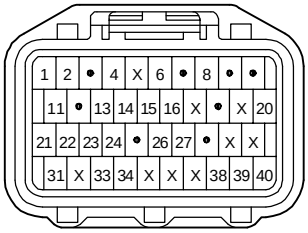

F14 DARK GRAY

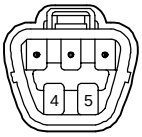

F15 BLACK

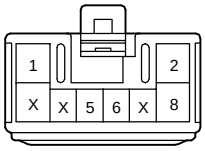

H 5 DARK GRAY

H11 GRAY

I 1 BLACK

I 2 (B) BLACK

I 3 (A) BLACK

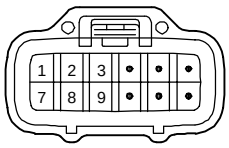

I12, I14, I16 DARK GRAY

I13, I15, I17 BROWN

I19

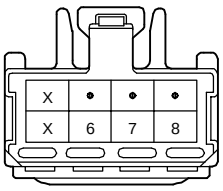

J 2

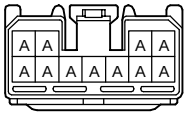

(HINT : SEE PAGE 7)

K 1, K 2 DARK GRAY

M 1 BLACK

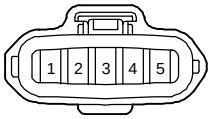

P 2 GRAY

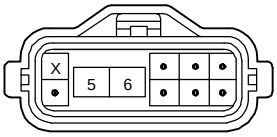

S 1 DARK GRAY

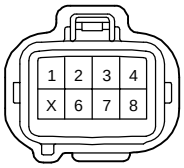

S 5 BLACK

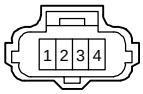

S11 BLUE

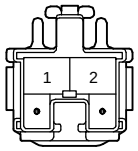

T 2 BLACK

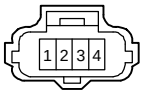

T 5

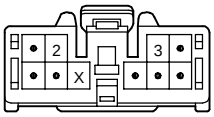

T 6

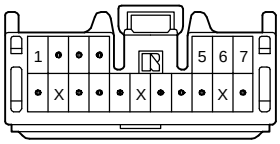

T14 BLACK

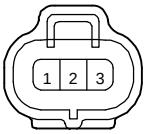

T15

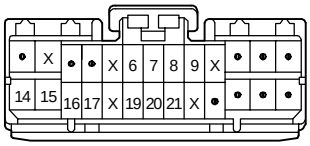

V 2 BLACK

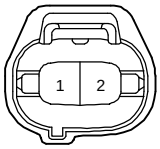

V 3 BROWN

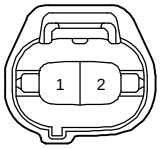

V 4 BLUE

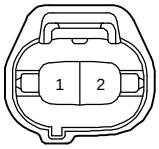

V 5 BLACK

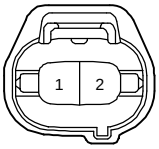

V 6 BLUE

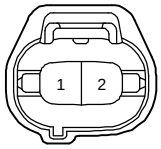

V 7 BLACK

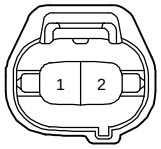

V 8 BLUE

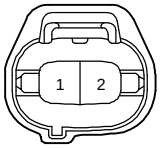

V10 BLACK

*1 : 2JZ-GTE
*2 : 2JZ-GE

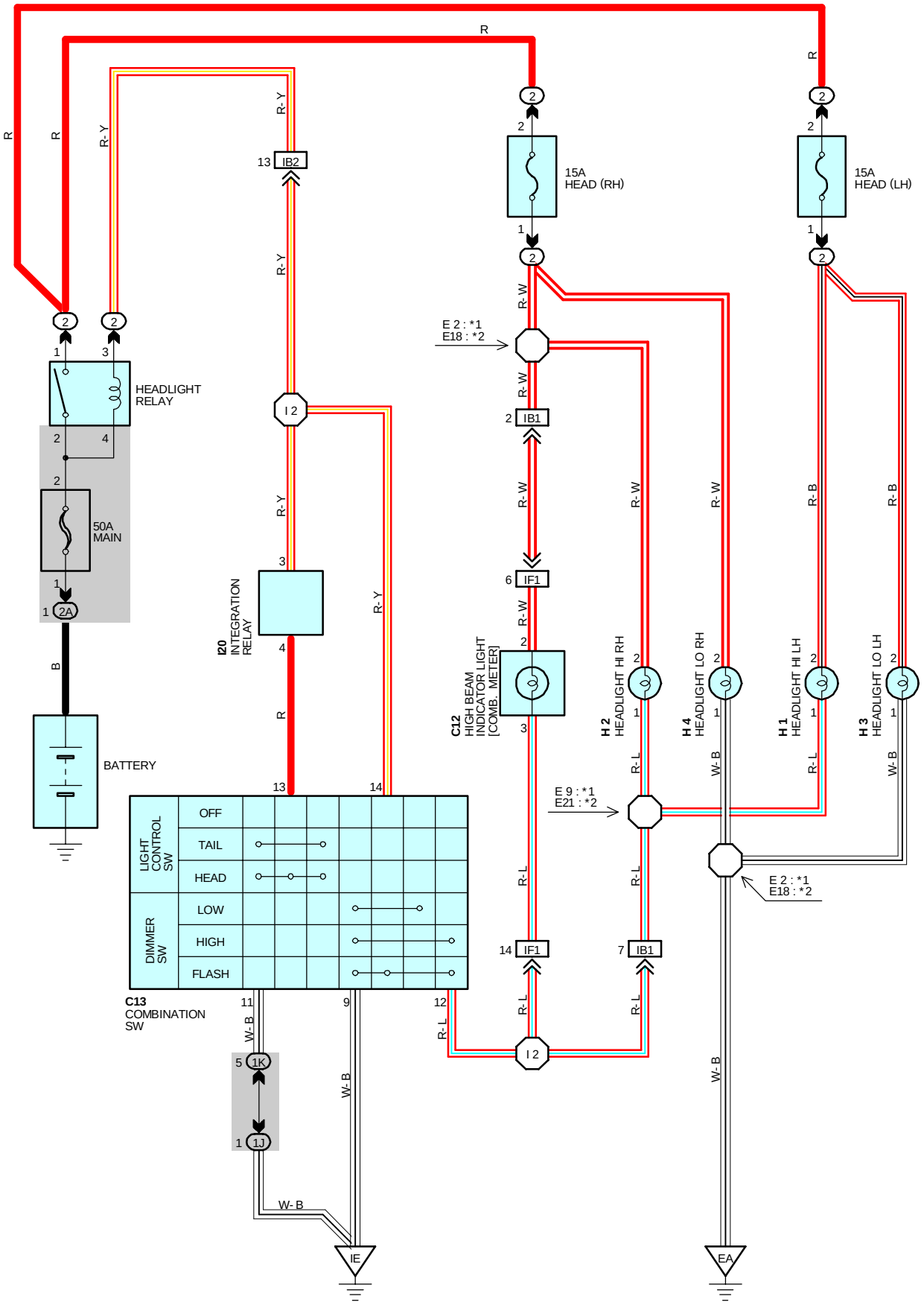

SERVICE HINTS

HEADLIGHT RELAY

2-1 : CLOSED WITH THE LIGHT CONTROL SW AT **HEAD** POSITION OR THE DIMMER SW AT **FLASH** POSITION

C13 LIGHT CONTROL SW [COMB. SW]

13-11 : CLOSED WITH THE LIGHT CONTROL SW AT **HEAD** POSITION

C13 LIGHT CONTROL SW [COMB. SW]

14-9 : CLOSED WITH THE DIMMER SW AT **FLASH** POSITION
12-9 : CLOSED WITH THE DIMMER SW AT **HIGH** OR **FLASH** POSITION

: PARTS LOCATION

CODE	SEE PAGE	CODE	SEE PAGE	CODE	SEE PAGE
C12	28	H2	24 (2JZ-GTE)	H4	24 (2JZ-GTE)
C13	28		27 (2JZ-GE)		27 (2JZ-GE)
H1	24 (2JZ-GTE)	H3	24 (2JZ-GTE)	I20	29
	27 (2JZ-GE)		27 (2JZ-GE)		

: RELAY BLOCKS

CODE	SEE PAGE	RELAY BLOCKS (RELAY BLOCK LOCATION)
2	22	R/B NO.2 (ENGINE COMPARTMENT LEFT)

: JUNCTION BLOCK AND WIRE HARNESS CONNECTOR

CODE	SEE PAGE	JUNCTION BLOCK AND WIRE HARNESS (CONNECTOR LOCATION)
1J	20	COWL WIRE AND J/B NO. 1 (LEFT KICK PANEL)
1K		
2A	22	BATTERY AND J/B NO. 2 (ENGINE COMPARTMENT LEFT)

: CONNECTOR JOINING WIRE HARNESS AND WIRE HARNESS

CODE	SEE PAGE	JOINING WIRE HARNESS AND WIRE HARNESS (CONNECTOR LOCATION)
IB1	36	ENGINE ROOM MAIN WIRE AND COWL WIRE (LEFT KICK PANEL)
IB2		
IF1	36	INSTRUMENT PANEL WIRE AND COWL WIRE (INSTRUMENT PANEL REINFORCEMENT LH)

: GROUND POINTS

CODE	SEE PAGE	GROUND POINTS LOCATION
EA	32 (2JZ-GTE)	FRONT SIDE OF RIGHT FENDER
	34 (2JZ-GE)	
IE	36	LEFT KICK PANEL

: SPLICE POINTS

CODE	SEE PAGE	WIRE HARNESS WITH SPLICE POINTS	CODE	SEE PAGE	WIRE HARNESS WITH SPLICE POINTS
E2	32	ENGINE ROOM MAIN WIRE	E21	34	ENGINE ROOM MAIN WIRE
E9			I2	38	COWL WIRE
E18	34				

C12

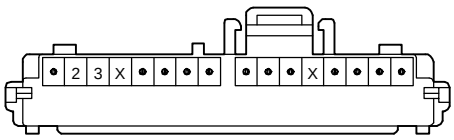

C13 BLACK

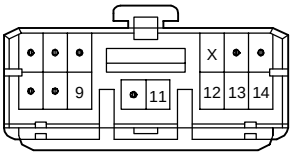

H 1 BLACK

H 2 BLACK

H 3 BROWN

H 4 BROWN

I20

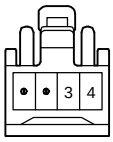

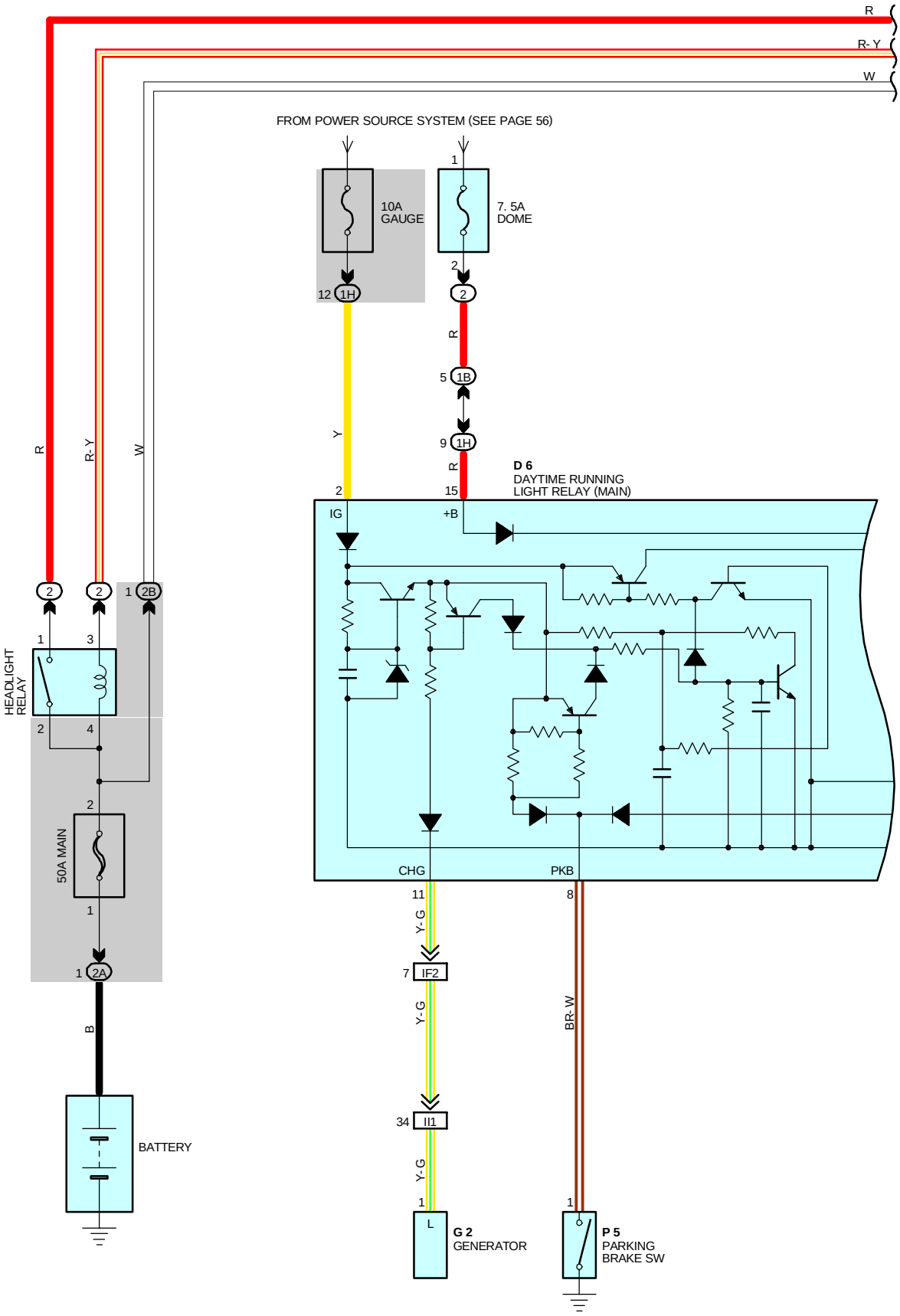
R
R- Y
W
FROM POWER SOURCE SYSTEM (SEE PAGE 56)
10A
GAUGE
7. 5A
DOME
12 1H
1
2
R
5 1B
Y
9 1H
R
D 6
DAYTIME RUNNING
LIGHT RELAY (MAIN)
2
15
IG
+B
2
2
1 2B
HEADLIGHT
RELAY
1
3
2
4
2
50A MAIN
1
1 2A
B
BATTERY
CHG
PKB
11
8
Y- G
7 IF2
Y- G
BR- W
34 II1
Y- G
1
L
G 2
GENERATOR
1
P 5
PARKING
BRAKE SW

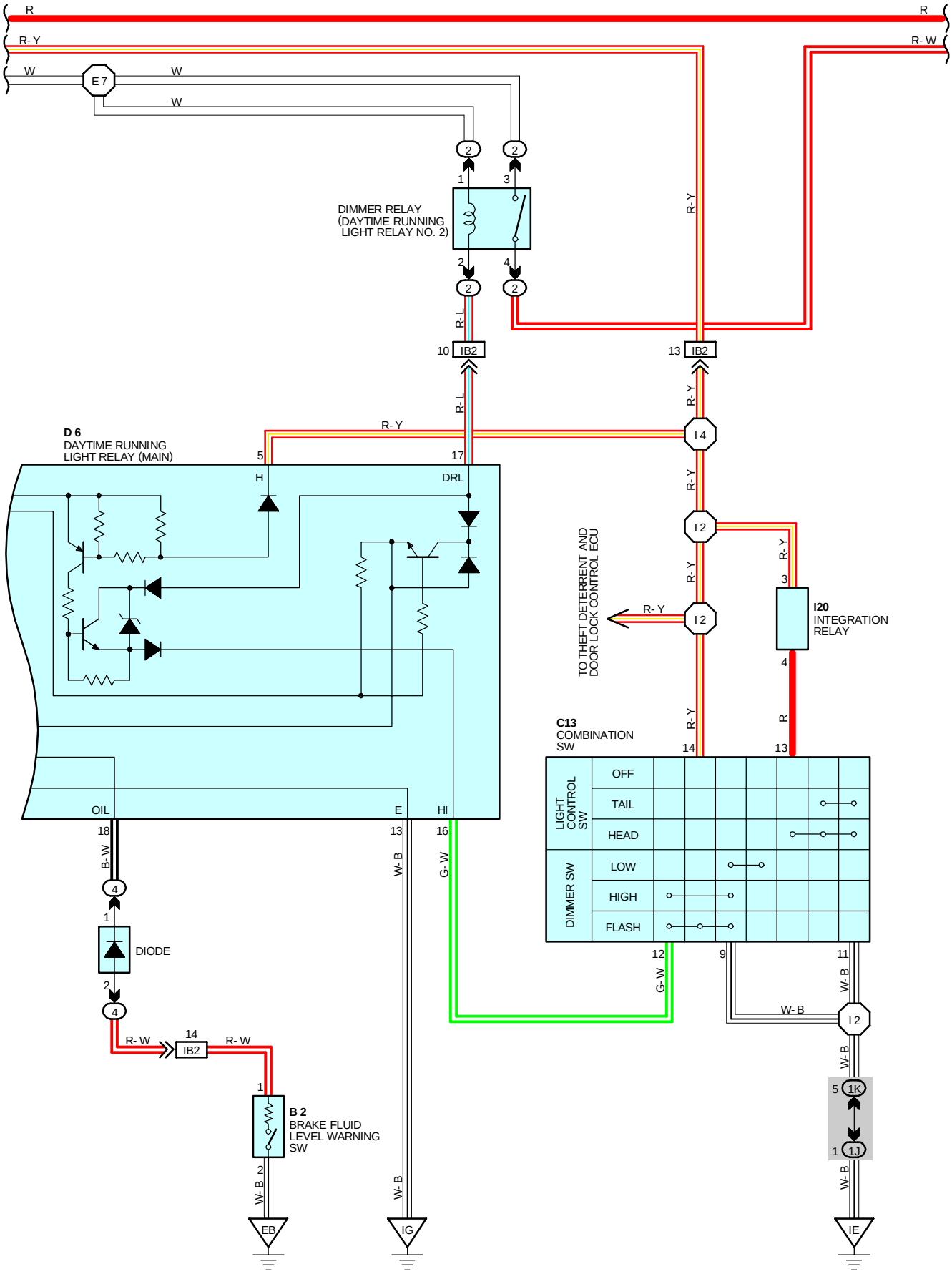
R
R
R- Y
R- W
W
E 7
W
W
DIMMER RELAY
(DAYTIME RUNNING
LIGHT RELAY NO. 2)
R- Y
R- L
IB2
IB2
R- L
R- Y
I 4
D 6
DAYTIME RUNNING
LIGHT RELAY (MAIN)
H
DRL
OIL
E
HI
R- Y
I 2
TO THEFT DETERRENT AND
DOOR LOCK CONTROL ECU
I 2
I20
INTEGRATION
RELAY
C13
COMBINATION
SW
LIGHT CONTROL SW
OFF
TAIL
HEAD
DIMMER SW
LOW
HIGH
FLASH
B- W
W- B
G- W
DIODE
R- W
IB2
B 2
BRAKE FLUID
LEVEL WARNING
SW
W- B
EB
IG
IE
1K
1J

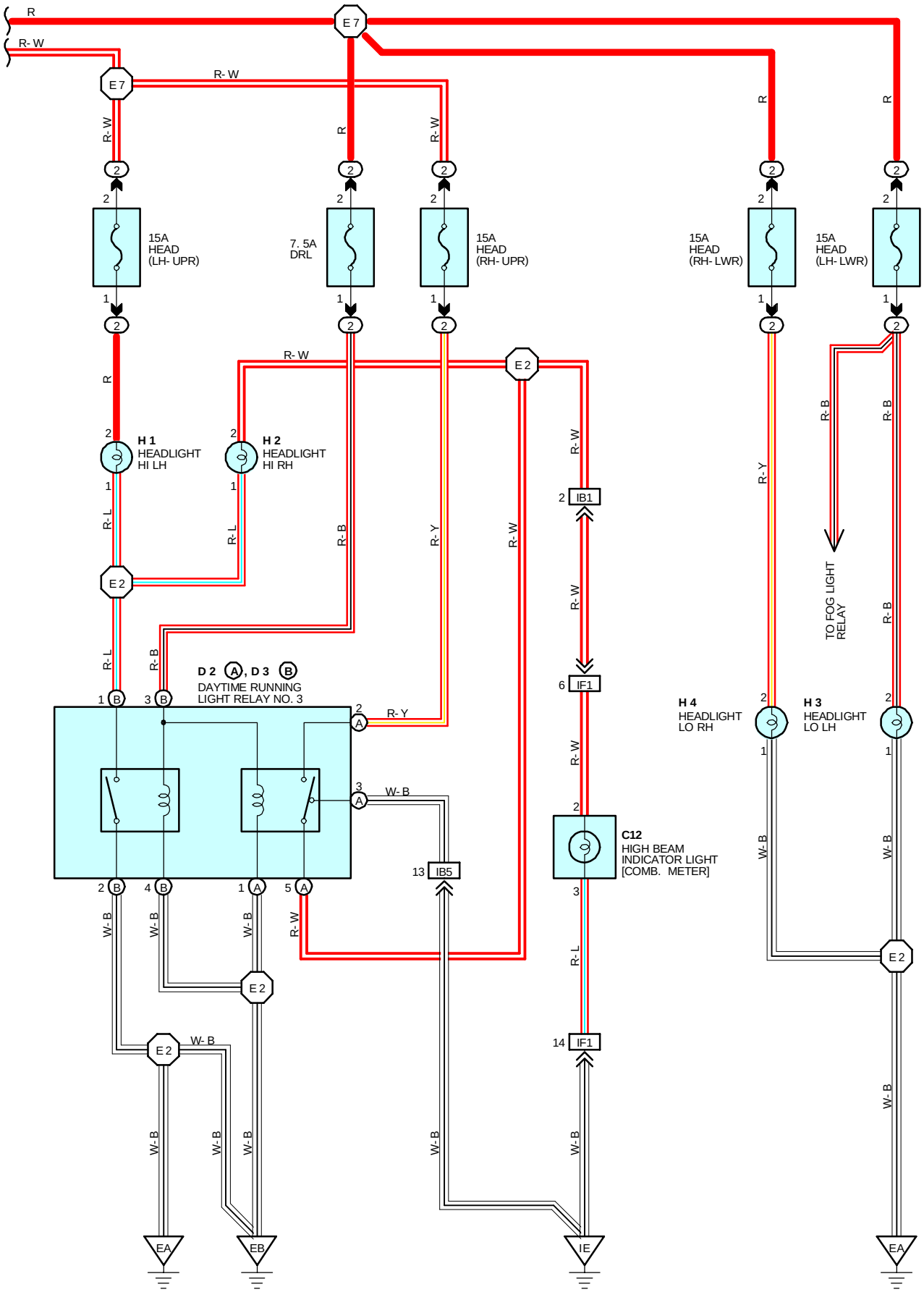
R
R- W
E 7
15A
HEAD
(LH- UPR)
7. 5A
DRL
15A
HEAD
(RH- UPR)
15A
HEAD
(RH- LWR)
15A
HEAD
(LH- LWR)
H 1
HEADLIGHT
HI LH
H 2
HEADLIGHT
HI RH
E 2
R- L
R- B
R- Y
D 2 A, D 3 B
DAYTIME RUNNING
LIGHT RELAY NO. 3
W- B
IB1
IF1
IB5
C12
HIGH BEAM
INDICATOR LIGHT
[COMB. METER]
H 4
HEADLIGHT
LO RH
H 3
HEADLIGHT
LO LH
TO FOG LIGHT
RELAY
EA
EB
IE

SYSTEM OUTLINE

VOLTAGE IS ALWAYS APPLIED FROM THE **MAIN** FUSE, THROUGH THE HEADLIGHT RELAY (COIL SIDE) TO **TERMINAL 5** OF THE DAYTIME RUNNING LIGHT RELAY (MAIN), **TERMINAL 6** OF THE INTEGRATION RELAY, **TERMINAL 14** OF THE DIMMER SW, DIMMER RELAY (DAYTIME RUNNING LIGHT RELAY NO. 2) (COIL SIDE), TO **TERMINAL 17** OF THE DAYTIME RUNNING LIGHT RELAY (MAIN). WHEN THE IGNITION SW IS TURNED ON, VOLTAGE FROM THE **GAUGE** FUSE IS APPLIED TO **TERMINAL 2** OF THE DAYTIME RUNNING LIGHT RELAY (MAIN).

1. DAYTIME RUNNING LIGHT OPERATION

WHEN THE ENGINE STARTS, VOLTAGE FROM **TERMINAL 'L'** OF THE GENERATOR IS APPLIED TO **TERMINAL 11** OF THE DAYTIME RUNNING LIGHT RELAY (MAIN). IF THE PARKING BRAKE LEVER IS PULLED UP (PARKING BRAKE SW ON) AT THIS TIME, THE DAYTIME RUNNING LIGHT SYSTEM DOES NOT OPERATE. WHEN THE PARKING BRAKE IS RELEASED (PARKING BRAKE SW OFF), A SIGNAL IS OUTPUT FROM **TERMINAL 1** OF THE PARKING BRAKE SW TO **TERMINAL 8** OF THE DAYTIME RUNNING LIGHT RELAY (MAIN). THIS ACTIVATES THE DAYTIME RUNNING LIGHT RELAY (MAIN), TURNING ON THE DIMMER RELAY (DAYTIME RUNNING LIGHT RELAY NO. 2). CURRENT ALSO FLOWS FROM THE **MAIN** FUSE TO THE DIMMER RELAY (DAYTIME RUNNING LIGHT RELAY NO. 2) (POINT SIDE) → **HEAD (LH-UPR)** FUSE → HEADLIGHT HI LH → HEADLIGHT HI RH → **TERMINAL (A)5** OF THE DAYTIME RUNNING LIGHT RELAY NO. 3 → **TERMINAL (A)3** → **GROUND**, CAUSING THE HEADLIGHTS TO LIGHT UP AT APPROX. **20%** OF THEIR NORMAL BRIGHTNESS.
ONCE THE DAYTIME RUNNING LIGHT RELAY (MAIN) HAS BEEN ACTIVATED AND THE HEADLIGHTS LIGHT UP, THE HEADLIGHTS REMAIN ON EVEN IF THE PARKING BRAKE LEVER IS ENGAGED AGAIN (PARKING BRAKE SW ON).

2. HEADLIGHT OPERATION

WHEN THE LIGHT CONTROL SW IS AT **HEAD** POSITION AND THE DIMMER SW AT **LOW** POSITION, CURRENT FLOWS FROM THE HEADLIGHT RELAY (COIL SIDE) TO **TERMINAL 3** OF THE INTEGRATION RELAY → **TERMINAL 4** → **TERMINAL 13** OF THE LIGHT CONTROL SW → **TERMINAL 11** → **GROUND**, ACTIVATING THE HEADLIGHT RELAY.
THIS CAUSES THE CURRENT TO FLOW FROM THE HEADLIGHT RELAY (POINT SIDE) TO THE **HEAD LWR** FUSE → HEADLIGHT LO → **GROUND**, CAUSING THE HEADLIGHTS TO LIGHT UP AT NORMAL BRIGHTNESS. SIMUTANEOUSLY, CURRENT FLOWS FROM THE **DRL** FUSE → DAYTIME RUNNING LIGHT RELAY NO. 3 (COIL SIDE) → **GROUND**, ACTIVATING RELAY NO. 3.
WHEN THE DIMMER SW IS AT **HIGH** POSITION, **TERMINAL 12** OF THE DIMMER SW OUTPUTS A SIGNAL TO **TERMINAL 16** OF THE DAYTIME RUNNING LIGHT RELAY (MAIN) TO ACTIVATE IT. THIS TURNS ON DIMMER RELAY (DAYTIME RUNNING LIGHT RELAY NO. 2). SO CURRENT FLOWS FROM THE DIMMER RELAY (DAYTIME RUNNING LIGHT RELAY NO. 2) (POINT SIDE) TO THE **HEAD (LH-UPR)** FUSE → HEADLIGHT HI LH → DAYTIME RUNNING LIGHT NO. 3 (POINT SIDE) → **GROUND**, AND FROM THE **HEAD (RH-UPR)** FUSE → DAYTIME RUNNING LIGHT RELAY NO. 3 (POINT SIDE) → HEADLIGHT HI RH → DAYTIME RUNNING LIGHT RELAY NO. 3 (POINT SIDE) → **GROUND**, CAUSING THE HEADLIGHTS TO OPERATE AT HI.
WHEN THE DIMMER SW IS AT **FLASH** POSITION, CURRENT FROM THE HEADLIGHT RELAY (COIL SIDE) FLOWS TO **TERMINAL 14** OF THE DIMMER SW → **TERMINAL 9** → **GROUND**, ACTIVATING THE RELAY. SIMULTANEOUSLY, CURRENT FROM THE HEADLIGHT RELAY (POINT SIDE) FLOWS TO HEADLIGHT LO, LIGHTING UP HEADLIGHT LO AND ACTIVATING DAYTIME RUNNING LIGHT RELAY NO. 3. THEN **TERMINAL 12** OF THE DIMMER SW OUTPUTS A SIGNAL TO **TERMINAL 16** OF THE DAYTIME RUNNING LIGHT RELAY (MAIN), ACTIVATING THE DAYTIME RUNNING LIGHT RELAY (MAIN) SO THAT CURRNET FLOWS TO HEADLIGHT HI LIKE IT DOES FOR **HIGH** POSITION. THIS CAUSES ALL HEADLIGHTS TO LIGHT UP.

SERVICE HINTS

D6 DAYTIME RUNNING LIGHT RELAY (MAIN)

15-GROUND	: ALWAYS APPROX. **12** VOLTS
2-GROUND	: APPROX. **12** VOLTS WITH TEH IGNITION SW AT **ON** POSITION
13-GROUND	: ALWAYS CONTINUITY
5-GROUND	: APPROX. **12** VOLTS WITH THE DAYTIME RUNNING LIGHT SYSTEM DOES NOT OPERATE OR THE LIGHT CONTROL SW AT **OFF** OR **TAIL** POSITION (WHEN THE CONNECTOR IS DISCONNECTED, ALWAYS APPROX. **12** VOLTS)
8-GROUND	: CONTINUITY WITH THE PARKING BRAKE LEVER RELEASED

HEADLIGHT (CANADA)

: PARTS LOCATION

CODE		SEE PAGE	CODE	SEE PAGE	CODE	SEE PAGE
B2		24 (2JZ-GTE)	D6	28	H4	24 (2JZ-GTE)
C12		28	G2	24 (2JZ-GTE)	I20	29
C13		28	H1	24 (2JZ-GTE)	P5	29
D2	A	24	H2	24 (2JZ-GTE)		
D3	B	24	H3	24 (2JZ-GTE)		

: RELAY BLOCKS

CODE	SEE PAGE	RELAY BLOCKS (RELAY BLOCK LOCATION)
2	22	R/B NO. 2 (ENGINE COMPARTMENT LEFT)
4	23	R/B NO. 4 (LEFT KICK PANEL)

: JUNCTION BLOCK AND WIRE HARNESS CONNECTOR

CODE	SEE PAGE	JUNCTION BLOCK AND WIRE HARNESS (CONNECTOR LOCATION)
1B	20	ENGINE ROOM MAIN WIRE AND J/B NO. 1 (LEFT KICK PANEL)
1H	20	COWL WIRE AND J/B NO. 1 (LEFT KICK PANEL)
1J		
1K		
2A	22	BATTERY AND J/B NO. 2 (ENGINE COMPARTMENT LEFT)
2B	22	ENGINE ROOM MAIN AND J/B NO. 2 (ENGINE COMPARTMENT LEFT)

: CONNECTOR JOINING WIRE HARNESS AND WIRE HARNESS

CODE	SEE PAGE	JOINING WIRE HARNESS AND WIRE HARNESS (CONNECTOR LOCATION)
IB1	36	ENGINE ROOM MAIN WIRE AND COWL WIRE (LEFT KICK PANEL)
IB2		
IB5	36	ENGINE ROOM MAIN WIRE AND COWL WIRE (RIGHT KICK PANEL)
IF1	36	INSTRUMENT PANEL WIRE AND COWL WIRE (INSTRUMENT PANEL REINFORCEMENT LH)
IF2		
II1	38	ENGINE WIRE AND INSTRUMENT PANEL WIRE (RIGHT KICK PANEL)

: GROUND POINTS

CODE	SEE PAGE	GROUND POINTS LOCATION
EA	32 (2JZ-GTE)	FRONT SIDE OF RIGHT FENDER
EB	32 (2JZ-GTE)	FRONT SIDE OF LEFT FENDER
IE	36	LEFT KICK PANEL
IG	36	RIGHT KICK PANEL

: SPLICE POINTS

CODE	SEE PAGE	WIRE HARNESS WITH SPLICE POINTS	CODE	SEE PAGE	WIRE HARNESS WITH SPLICE POINTS
E2	32	ENGINE ROOM MAIN WIRE	I2	38	COWL WIRE
E7			I4		

B 2 GRAY

C12

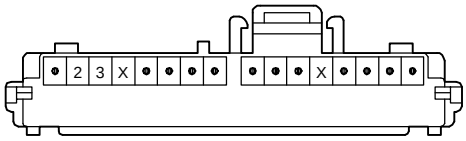

C13 BLACK

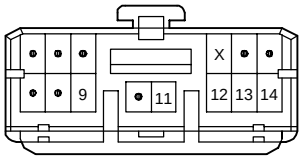

D 2 (A) GRAY

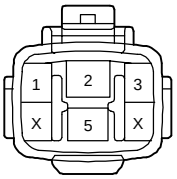

D 3 (B) GRAY

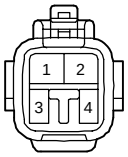

D 6 GRAY

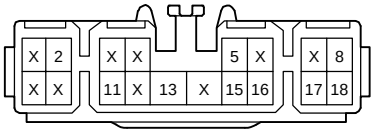

G 2 BLACK

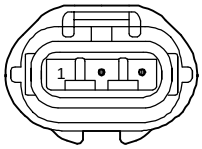

H 1 BLACK

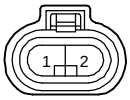

H 2 BLACK

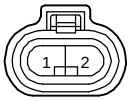

H 3 BROWN

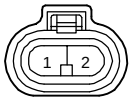

H 4 BROWN

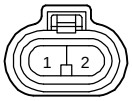

I20

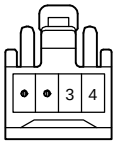

P 5

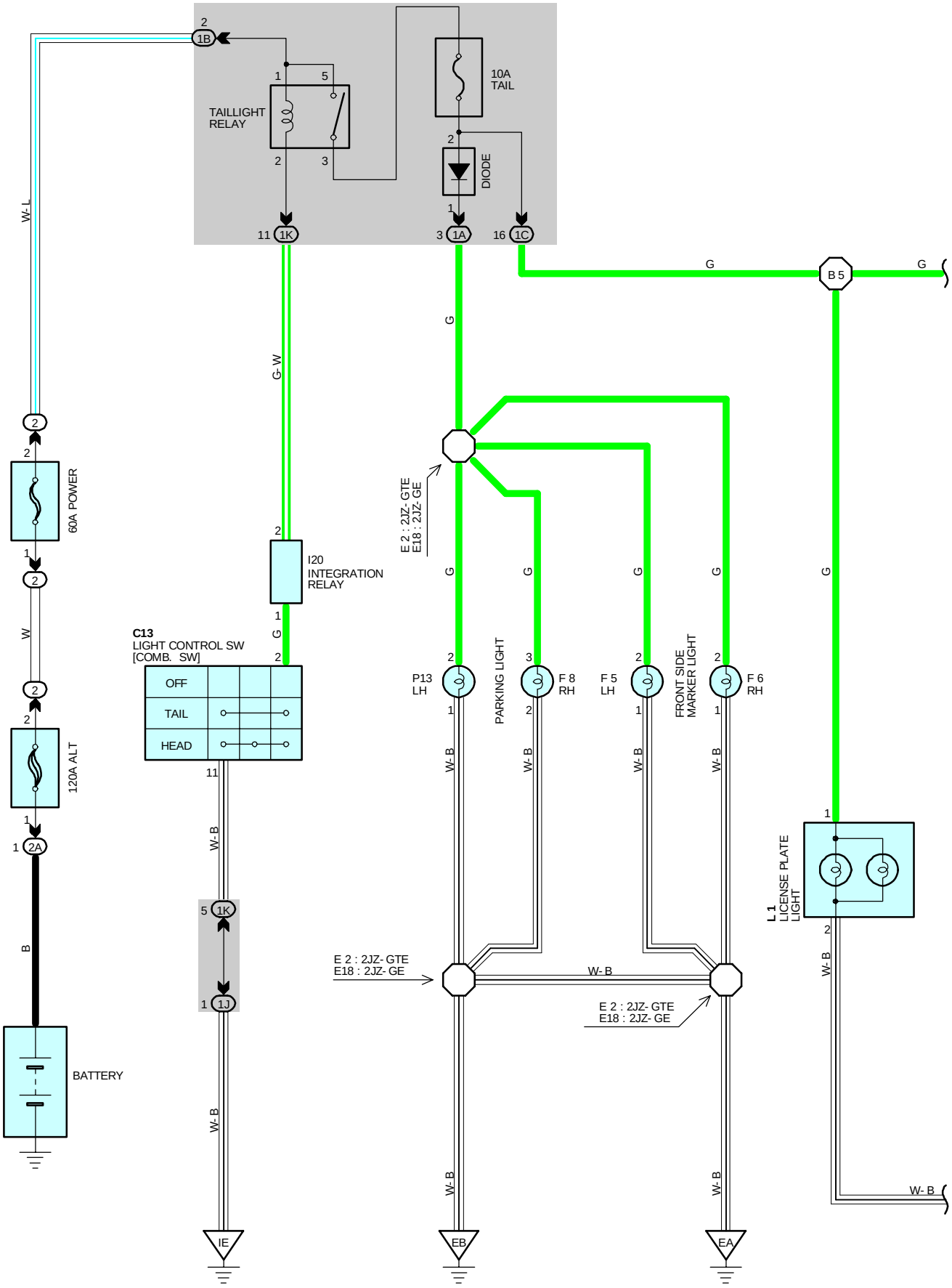
TAILLIGHT RELAY
10A TAIL
DIODE
60A POWER
120A ALT
BATTERY
I20 INTEGRATION RELAY
C13 LIGHT CONTROL SW [COMB. SW]
OFF
TAIL
HEAD
E 2 : 2JZ- GTE
E18 : 2JZ- GE
P13 LH
PARKING LIGHT
F 8 RH
F 5 LH
FRONT SIDE MARKER LIGHT
F 6 RH
L 1 LICENSE PLATE LIGHT
B 5
W- L
G- W
G
W
B
W- B
IE
EB
EA

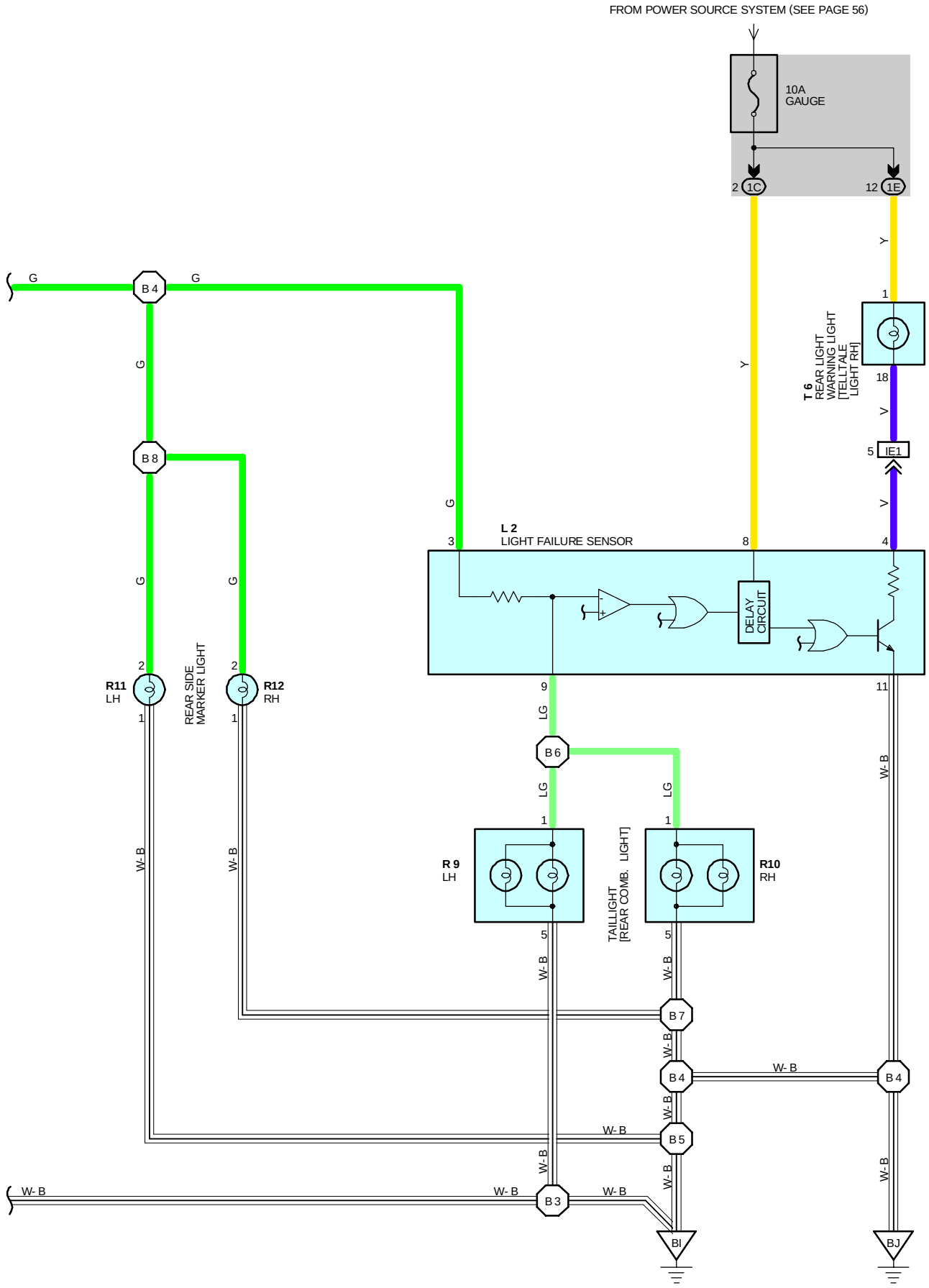
FROM POWER SOURCE SYSTEM (SEE PAGE 56)
10A
GAUGE
2 1C
12 1E
Y
1
T 6
REAR LIGHT
WARNING LIGHT
[TELLTALE
LIGHT RH]
18
V
5 IE1
G
B 4
B 8
L 2
LIGHT FAILURE SENSOR
3
8
4
DELAY
CIRCUIT
9
11
LG
B 6
R11
LH
REAR SIDE
MARKER LIGHT
R12
RH
W- B
R 9
LH
TAILLIGHT
[REAR COMB. LIGHT]
R10
RH
B 7
B 4
B 5
B 3
BI
BJ

TAILLIGHT

SYSTEM OUTLINE

WHEN THE LIGHT CONTROL SW IS TURNED TO **TAIL** OR **HEAD** POSITION. THE CURRENT FLOWS TO **TERMINAL 3** OF THE LIGHT FAILURE SENSOR THROUGH THE **TAIL** FUSE.
WHEN THE IGNITION SW IS TURNED ON, THE CURRENT FLOWS FROM THE **GAUGE** FUSE TO **TERMINAL 8** OF THE LIGHT FAILURE SENSOR, AND ALSO FLOWS THROUGH THE REAR LIGHT WARNING LIGHT TO **TERMINAL 4** OF THE LIGHT FAILURE SENSOR.

TAILLIGHT DISCONNECTION WARNING

WITH THE IGNITION SW ON AND THE LIGHT CONTROL SW TURNED TO **TAIL** OR **HEAD** POSITION, IF THE TAILLIGHT CIRCUIT IS OPEN, THE LIGHT FAILURE SENSOR DETECTS THE FAILURE BY THE CHANGE IN CURRENT FLOWING FROM **TERMINAL 3** OF THE LIGHT FAILURE SENSOR TO **TERMINAL 9**, AND THE WARNING CIRCUIT OF THE LIGHT FAILURE SENSOR IS ACTIVATED.
AS A RESULT, THE CURRENT FLOWS FROM **TERMINAL 4** OF THE LIGHT FAILURE SENSOR → **TERMINAL 11** → **GROUND** AND TURNS THE REAR LIGHT WARNING LIGHT ON, WHICH REMAINS ON UNTIL THE LIGHT CONTROL SW IS TURNED OFF.

SERVICE HINTS

TAILLIGHT RELAY

5-3 : CLOSED WITH THE LIGHT CONTROL SW AT **TAIL** OR **HEAD** POSITION

L2 LIGHT FAILURE SENSOR

4,8-GROUND : APPROX. **12** VOLTS WITH THE IGNITION SW AT **ON** POSITION
3-GROUND : APPROX. **12** VOLTS WITH THE LIGHT CONTROL SW AT **TAIL** OR **HEAD** POSITION
11-GROUND : ALWAYS CONTINUITY

: PARTS LOCATION

CODE	SEE PAGE	CODE	SEE PAGE	CODE	SEE PAGE
C13	28	F8	26 (2JZ-GE)	R9	30
F5	24 (2JZ-GTE)	I20	29	R10	30
	26 (2JZ-GE)	L1	30	R11	30
F6	24 (2JZ-GTE)	L2	30	R12	30
	26 (2JZ-GE)	P13	24 (2JZ-GTE)	T6	29
F8	24 (2JZ-GTE)		26 (2JZ-GE)		

: RELAY BLOCKS

CODE	SEE PAGE	RELAY BLOCKS (RELAY BLOCK LOCATION)
2	22	R/B NO. 2 (ENGINE COMPARTMENT LEFT)

: JUNCTION BLOCK AND WIRE HARNESS CONNECTOR

CODE	SEE PAGE	JUNCTION BLOCK AND WIRE HARNESS (CONNECTOR LOCATION)
1A	20	ENGINE ROOM MAIN WIRE AND J/B NO. 1 (LEFT KICK PANEL)
1B		
1C	20	FLOOR NO. 2 WIRE AND J/B NO. 1 (LEFT KICK PANEL)
1E	20	INSTRUMENT PANEL WIRE AND J/B NO. 1
1J	20	COWL WIRE AND J/B NO. 1 (LEFT KICK PANEL)
1K		
2A	22	BATTERY AND J/B NO. 2 (ENGINE COMPARTMENT LEFT)

: CONNECTOR JOINING WIRE HARNESS AND WIRE HARNESS

CODE	SEE PAGE	JOINING WIRE HARNESS AND WIRE HARNESS (CONNECTOR LOCATION)
IE1	36	INSTRUMENT PANEL WIRE AND FLOOR NO. 2 WIRE (LEFT KICK PANEL)

: GROUND POINTS

CODE	SEE PAGE	GROUND POINTS LOCATION
EA	32 (2JZ-GTE)	FRONT SIDE OF RIGHT FENDER
	34 (2JZ-GE)	
EB	32 (2JZ-GTE)	FRONT SIDE OF LEFT FENDER
	34 (2JZ-GE)	
IE	36	LEFT KICK PANEL
BI	40	LEFT QUARTER PILLAR
BJ	40	LOWER BACK PANEL CENTER

: SPLICE POINTS

CODE	SEE PAGE	WIRE HARNESS WITH SPLICE POINTS	CODE	SEE PAGE	WIRE HARNESS WITH SPLICE POINTS
E2	32	ENGINE ROOM MAIN WIRE	B5	40	FLOOR NO. 2 WIRE
E18	34		B6		
B3	40	FLOOR NO. 2 WIRE	B7		
B4			B8		

C13 BLACK

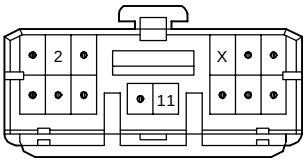

F 5 GRAY

F 6 GRAY

F 8 GRAY

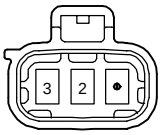

I20

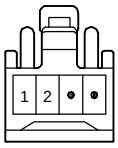

L 1 GRAY

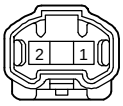

L 2

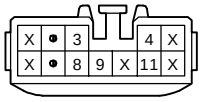

R 9

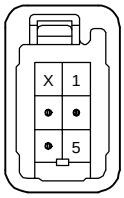

P13 GRAY

R10

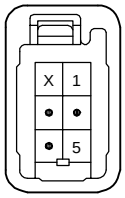

R11 GRAY

R12 GRAY

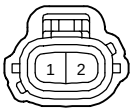

T 6

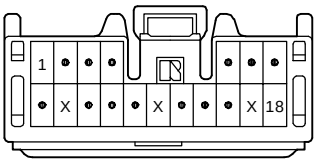

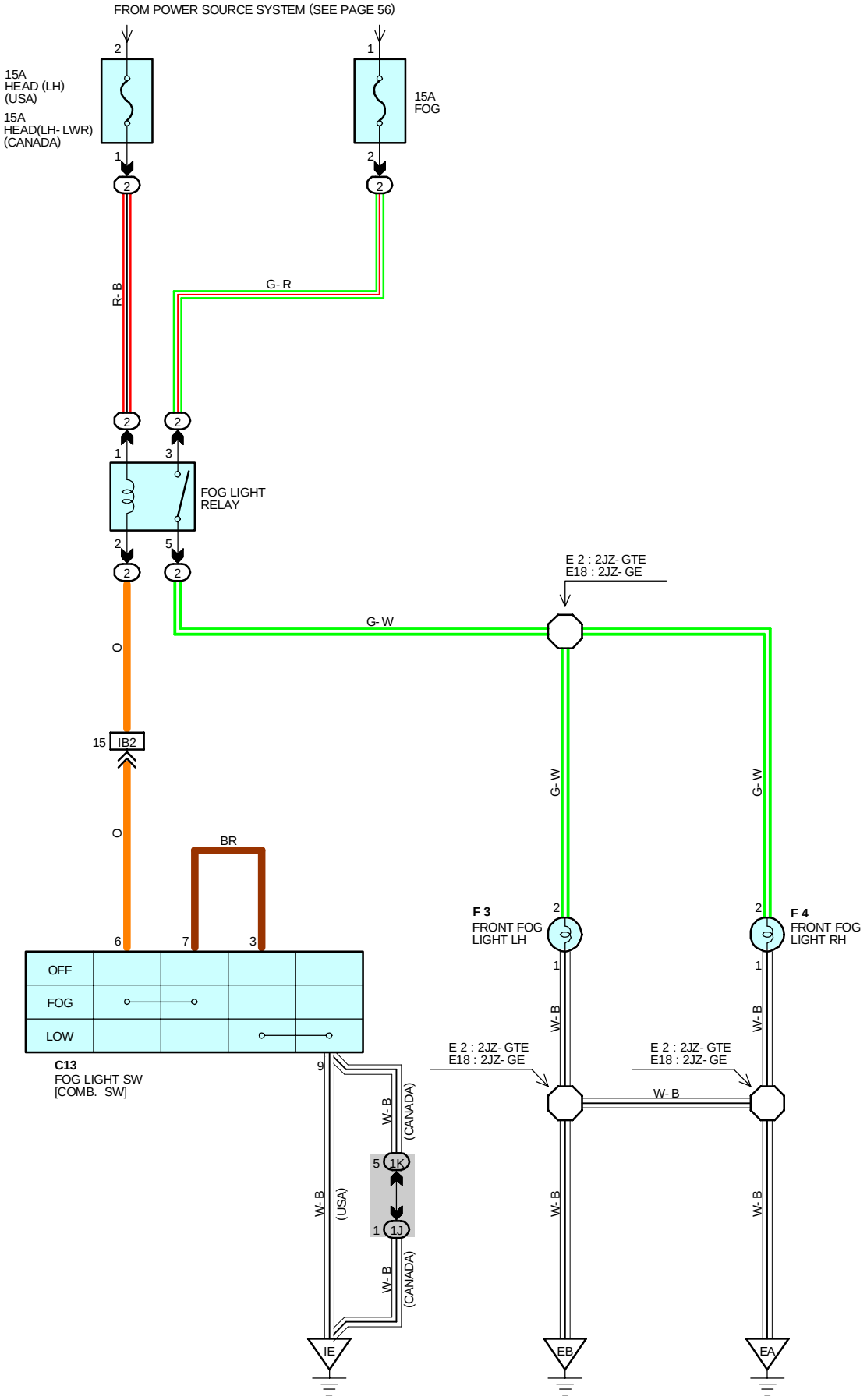
FROM POWER SOURCE SYSTEM (SEE PAGE 56)
15A
HEAD (LH)
(USA)
15A
HEAD(LH- LWR)
(CANADA)
15A
FOG
R- B
G- R
FOG LIGHT
RELAY
E 2 : 2JZ- GTE
E18 : 2JZ- GE
G- W
O
IB2
BR
OFF
FOG
LOW
C13
FOG LIGHT SW
[COMB. SW]
F 3
FRONT FOG
LIGHT LH
F 4
FRONT FOG
LIGHT RH
W- B
(CANADA)
(USA)
1K
1J
IE
EB
EA

SERVICE HINTS

FOG LIGHT RELAY

(2)3-(2)5 : CLOSED WITH THE LIGHT CONTROL SW AT **HEAD** POSITION, DIMMER SW AT **LOW** POSITION AND THE FOG LIGHT SW **ON** POSITION

: PARTS LOCATION

CODE	SEE PAGE	CODE	SEE PAGE	CODE	SEE PAGE
C13	28	F3	26 (2JZ-GE)	F4	26 (2JZ-GE)
F3	24 (2JZ-GTE)	F4	24 (2JZ-GTE)		

: RELAY BLOCKS

CODE	SEE PAGE	RELAY BLOCKS (RELAY BLOCK LOCATION)
2	22	R/B NO. 2 (ENGINE COMPARTMENT LEFT)

: JUNCTION BLOCK AND WIRE HARNESS CONNECTOR

CODE	SEE PAGE	JUNCTION BLOCK AND WIRE HARNESS (CONNECTOR LOCATION)
1J	20	COWL WIRE AND J/B NO. 1 (LEFT KICK PANEL)
1K		

: CONNECTOR JOINING WIRE HARNESS AND WIRE HARNESS

CODE	SEE PAGE	JOINING WIRE HARNESS AND WIRE HARNESS (CONNECTOR LOCATION)
IB2	36	ENGINE ROOM MAIN WIRE AND COWL WIRE (LEFT KICK PANEL)

: GROUND POINTS

CODE	SEE PAGE	GROUND POINTS LOCATION
EA	32 (2JZ-GTE)	FRONT SIDE OF RIGHT FENDER
	34 (2JZ-GE)	
EB	32 (2JZ-GTE)	FRONT SIDE OF LEFT FENDER
	34 (2JZ-GE)	
IE	36	LEFT KICK PANEL

: SPLICE POINTS

CODE	SEE PAGE	WIRE HARNESS WITH SPLICE POINTS	CODE	SEE PAGE	WIRE HARNESS WITH SPLICE POINTS
E2	32	ENGINE ROOM MAIN WIRE	E18	34	ENGINE ROOM MAIN WIRE

C13 BLACK

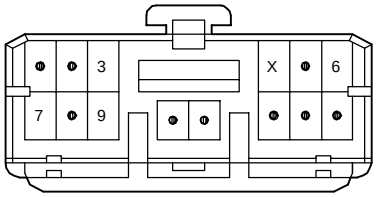

F 3 GRAY

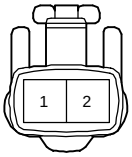

F 4 GRAY

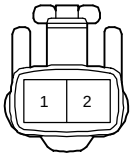

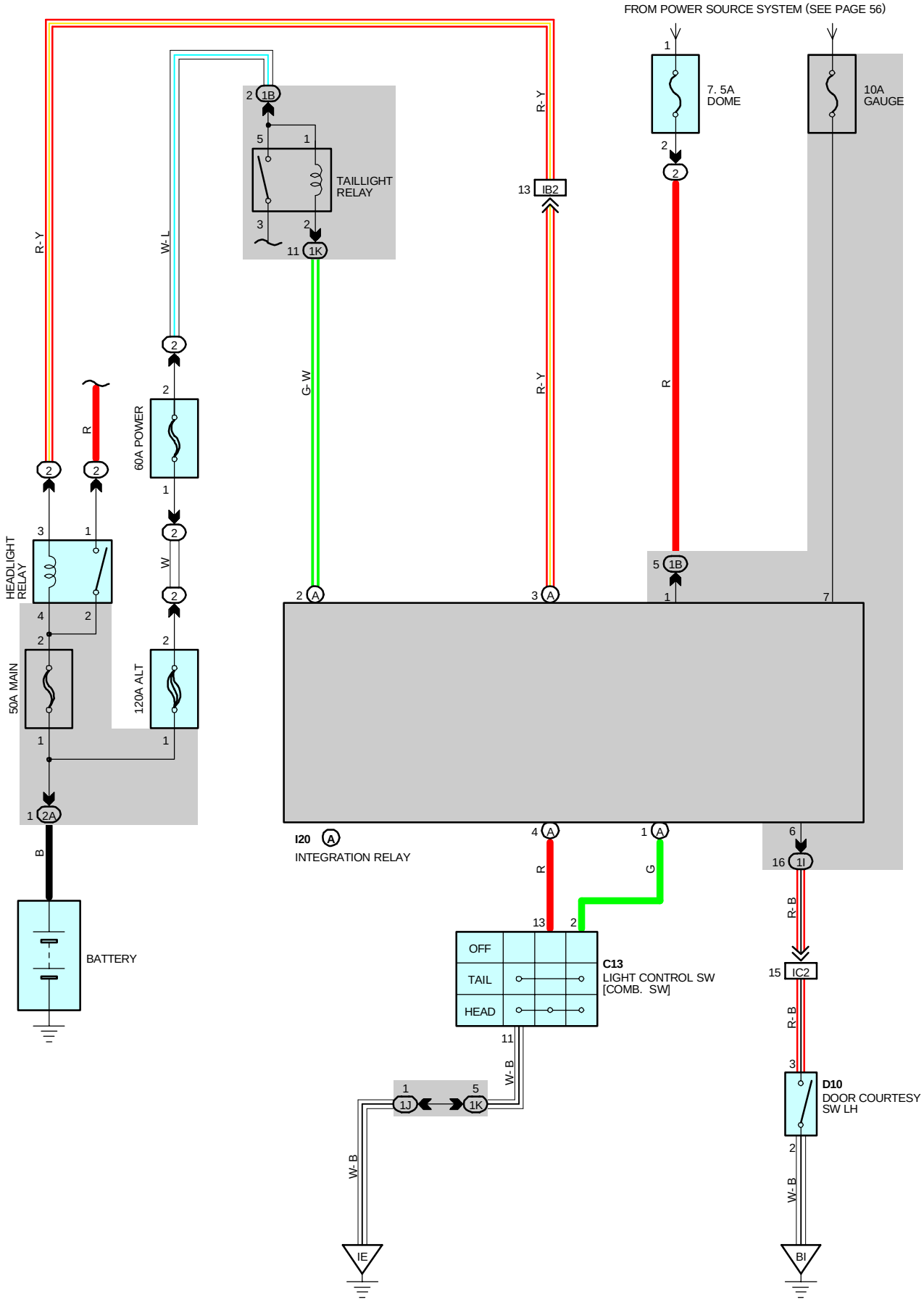
FROM POWER SOURCE SYSTEM (SEE PAGE 56)
7. 5A
DOME
10A
GAUGE
TAILLIGHT
RELAY
IB2
R- Y
W- L
G- W
R
60A POWER
HEADLIGHT
RELAY
W
50A MAIN
120A ALT
B
BATTERY
I20
INTEGRATION RELAY
G
OFF
TAIL
HEAD
C13
LIGHT CONTROL SW
[COMB. SW]
W- B
IE
R- B
IC2
D10
DOOR COURTESY
SW LH
BI

SYSTEM OUTLINE

WITH THE IGNITION SW TURNED ON, THE CURRENT FLOWS TO **TERMINAL 7** OF THE INTEGRATION RELAY THROUGH **GAUGE** FUSE. VOLTAGE IS APPLIED AT ALL TIMES TO **TERMINAL (A) 2** OF THE INTEGRATION RELAY THROUGH THE TAILLIGHT RELAY COIL SIDE, AND TO **TERMINAL (A) 3** THROUGH THE HEADLIGHT RELAY COIL SIDE.

1. NORMAL LIGHTING OPERATION

<TURN TAILLIGHT ON>

WITH THE LIGHT CONTROL SW TURNED TO TAIL POSITION, A SIGNAL IS INPUT INTO **TERMINAL (A) 1** OF THE INTEGRATION RELAY. DUE TO THIS SIGNAL, THE CURRENT FLOWING TO **TERMINAL (A) 2** OF THE RELAY FLOWS TO **TERMINAL (A) 1** → **TERMINAL 2** OF THE LIGHT CONTROL SW → **TERMINAL 11** → TO **GROUND**, AND TAILLIGHT RELAY CAUSES TAILLIGHTS TO TURN ON.

<TURN HEADLIGHT ON>

WITH THE LIGHT CONTROL SW TURNED TO HEAD POSITION, A SIGNAL IS INPUT INTO **TERMINALS (A) 1** AND **(A) 4** OF THE INTEGRATION RELAY. DUE TO THIS SIGNAL, THE CURRENT FLOWING TO **TERMINAL (A) 3** OF THE RELAY FLOWS TO **TERMINAL (A) 4** → **TERMINAL 13** OF THE LIGHT CONTROL SW → **TERMINAL 11** → TO **GROUND** IN THE HEADLIGHT CIRCUIT, AND CAUSES TAILLIGHT AND HEADLIGHT RELAY TO TURN THE LIGHTS ON. THE TAILLIGHT CIRCUIT IS SAME AS ABOVE.

2. LIGHT AUTO TURN OFF OPERATION

WITH LIGHT ON AND IGNITION SW TURNED OFF (INPUT SIGNAL GOES TO **TERMINAL 7** OF THE RELAY), WHEN THE DRIVER'S DOOR IS OPENED (INPUT SIGNAL GOES TO **TERMINAL 6** OF THE RELAY), THE RELAY OPERATES AND THE CURRENT IS CUT OFF WHICH FLOWS FROM **TERMINAL (A) 2** OF THE RELAY TO **TERMINAL (A) 1** IN TAILLIGHT CIRCUIT AND FROM **TERMINAL (A) 3** TO **TERMINAL (A) 4** IN HEADLIGHT CIRCUIT.
AS A RESULT, ALL LIGHTS ARE TURNED OFF AUTOMATICALLY.

SERVICE HINTS

HEADLIGHT RELAY

2-1 : CLOSED WITH THE LIGHT CONTROL SW AT **HEAD** POSITION OR THE DIMMER SW AT **FLASH** POSITION (USA)
: CLOSED WITH THE ENGINE RUNNING AND THE PARKING BRAKE LEVER RELEASED (CANADA)

TAILLIGHT RELAY

3-5 : CLOSED WITH THE LIGHT CONTROL SW AT **TAIL** OR **HEAD** POSITION

D10 DOOR COURTESY SW LH

3-2 : CLOSED WITH THE LH DOOR OPEN

I20 (A) INTEGRATION RELAY

7-GROUND : APPROX. **12** VOLTS WITH THE IGNITION SW AT **ON** POSITION
6-GROUND : CONTINUITY WITH THE LH DOOR OPEN
1-GROUND : ALWAYS APPROX. **12** VOLTS
(A)2-GROUND : ALWAYS APPROX. **12** VOLTS
(A)3-GROUND : ALWAYS APPROX. **12** VOLTS
(A)4-GROUND : CONTINUITY WITH THE LIGHT CONTROL SW AT **HEAD** POSITION
(A)1-GROUND : CONTINUITY WITH THE LIGHT CONTROL SW AT **TAIL** OR **HEAD** POSITION

: PARTS LOCATION

CODE	SEE PAGE	CODE	SEE PAGE	CODE		SEE PAGE
C13	28	D10	30	I20	A	29

: RELAY BLOCKS

CODE	SEE PAGE	RELAY BLOCKS (RELAY BLOCK LOCATION)
2	22	R/B NO. 2 (ENGINE COMPARTMENT LEFT)

: JUNCTION BLOCK AND WIRE HARNESS CONNECTOR

CODE	SEE PAGE	JUNCTION BLOCK AND WIRE HARNESS (CONNECTOR LOCATION)
1B	20	ENGINE ROOM MAIN WIRE AND J/B NO. 1 (LEFT KICK PANEL)
1I	20	COWL WIRE AND J/B NO. 1 (LEFT KICK PANEL)
1J		
1K		
2A	22	BATTERY AND J/B NO. 2 (ENGINE COMPARTMENT LEFT)

: CONNECTOR JOINING WIRE HARNESS AND WIRE HARNESS

CODE	SEE PAGE	JOINING WIRE HARNESS AND WIRE HARNESS (CONNECTOR LOCATION)
IB2	36	ENGINE ROOM MAIN WIRE AND COWL WIRE (LEFT KICK PANEL)
IC2	36	FLOOR NO. 2 WIRE AND COWL WIRE (LEFT KICK PANEL)

: GROUND POINTS

CODE	SEE PAGE	GROUND POINTS LOCATION
IE	36	LEFT KICK PANEL
BI	40	LEFT QUARTER PILLAR

C13 BLACK

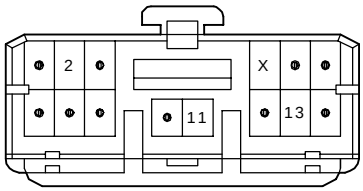

D10

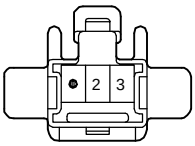

I20 (A)

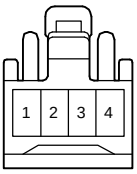

C10 (B) BLUE

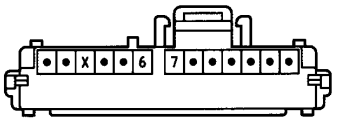

C12 (A)

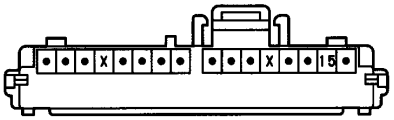

C13 BLACK

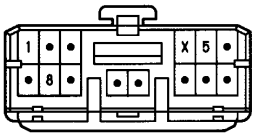

F 7 GRAY

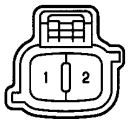

F 8 GRAY

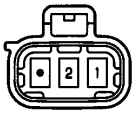

H10

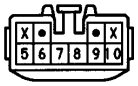

J 1

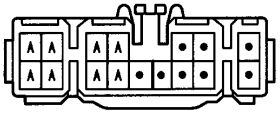

(HINT:SEE PAGE 7)

R 9

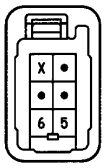

R10

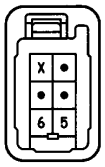

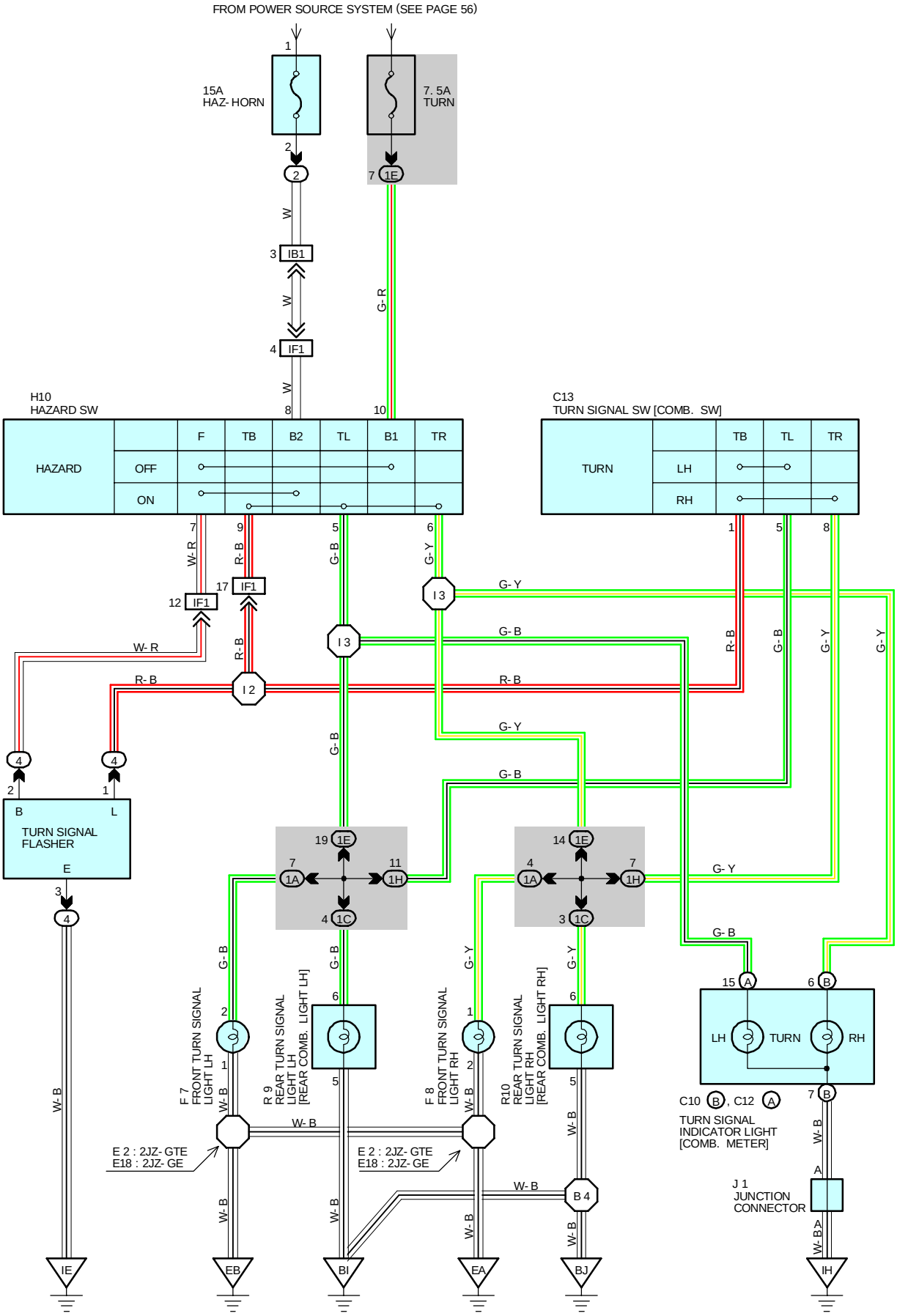
FROM POWER SOURCE SYSTEM (SEE PAGE 56)
15A
HAZ- HORN
7. 5A
TURN
IB1
IF1
H10
HAZARD SW
HAZARD
OFF
ON
F
TB
B2
TL
B1
TR
C13
TURN SIGNAL SW [COMB. SW]
TURN
LH
RH
I 3
I 2
TURN SIGNAL
FLASHER
F 7
FRONT TURN SIGNAL
LIGHT LH
R 9
REAR TURN SIGNAL
LIGHT LH
[REAR COMB. LIGHT LH]
F 8
FRONT TURN SIGNAL
LIGHT RH
R10
REAR TURN SIGNAL
LIGHT RH
[REAR COMB. LIGHT RH]
E 2 : 2JZ- GTE
E18 : 2JZ- GE
B 4
C10 , C12
TURN SIGNAL
INDICATOR LIGHT
[COMB. METER]
J 1
JUNCTION
CONNECTOR
IE
EB
BI
EA
BJ
IH

SERVICE HINTS

TURN SIGNAL FLASHER

(4) 1-GROUND : CHANGES FROM APPROX. **12** VOLTS TO **0** VOLTS WITH THE IGNITION SW ON AND THE TURN SIGNAL SW LEFT OR RIGHT, OR WITH THE HAZARD WARNING SW ON.

(4) 2-GROUND : **12** VOLTS WITH THE IGNITION SW ON OR THE HAZARD SW ON

(4) 3-GROUND : ALWAYS CONTINUITY

: PARTS LOCATION

CODE		SEE PAGE	CODE	SEE PAGE	CODE	SEE PAGE
C10	B	28	F 7	26 (2JZ-GE)	J 1	29
C12	A	28	F 8	26 (2JZ-GTE)	R 9	30
C13		28		26 (2JZ-GE)	R10	30
F 7		24 (2JZ-GTE)	H10	29		

: RELAY BLOCKS

CODE	SEE PAGE	RELAY BLOCKS (RELAY BLOCK LOCATION)
2	22	R/B NO. 2 (ENGINE COMPARTMENT LEFT)
4	23	R/B NO. 4 (LEFT KICK PANEL)

: JUNCTION BLOCK AND WIRE HARNESS CONNECTOR

CODE	SEE PAGE	JUNCTION BLOCK AND WIRE HARNESS (CONNECTOR LOCATION)
1A	20	ENGINE ROOM MAIN WIRE AND J/B NO. 1 (LEFT KICK PANEL)
1C	20	FLOOR NO. 2 WIRE AND J/B NO. 1 (LEFT KICK PANEL)
1E	20	INSTRUMENT PANEL WIRE AND J/B NO. 1 (LEFT KICK PANEL)
1H	20	COWL WIRE AND J/B NO. 1 (LEFT KICK PANEL)

: CONNECTOR JOINING WIRE HARNESS AND WIRE HARNESS

CODE	SEE PAGE	JOINING WIRE HARNESS AND WIRE HARNESS (CONNECTOR LOCATION)
IB1	36	ENGINE ROOM MAIN WIRE AND COWL WIRE (LEFT KICK PANEL)
IF1	36	INSTRUMENT PANEL WIRE AND COWL WIRE (INSTRUMENT PANEL REINFORCEMENT LH)

: GROUND POINTS

CODE	SEE PAGE	GROUND POINTS LOCATION
EA	32 (2JZ-GTE) 34 (2JZ-GE)	FRONT SIDE OF RIGHT FENDER
EB	32 (2JZ-GTE) 34 (2JZ-GE)	FRONT SIDE OF LEFT FENDER
IE	36	LEFT KICK PANEL
IH	36	RIGHT KICK PANEL
BI	40	LEFT QUARTER PILLAR
BJ	40	LOWER BACK PANEL CENTER

: SPLICE POINTS

CODE	SEE PAGE	WIRE HARNESS WITH SPLICE POINTS	CODE	SEE PAGE	WIRE HARNESS WITH SPLICE POINTS
E 2	32	ENGINE ROOM WIRE	I 3	38	INSTRUMENT PANEL WIRE
E18	34		B 4	40	FLOOR NO. 2 WIRE
I 2	38	COWL WIRE			

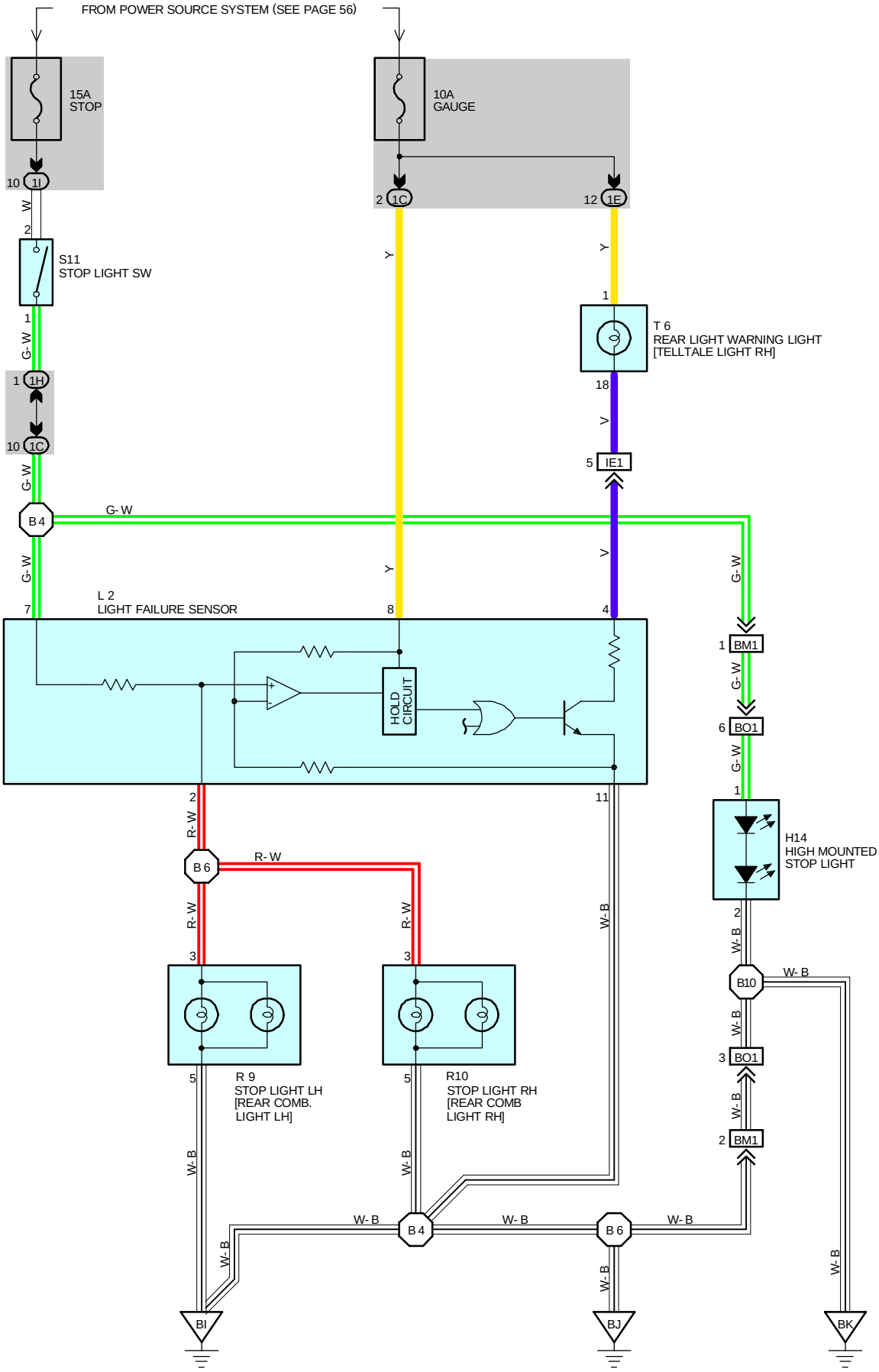
FROM POWER SOURCE SYSTEM (SEE PAGE 56)
15A
STOP
10A
GAUGE
10
1I
2
1C
12
1E
W
2
S11
STOP LIGHT SW
1
G-W
1
1H
10
1C
G-W
B 4
G-W
Y
Y
1
T 6
REAR LIGHT WARNING LIGHT
[TELLTALE LIGHT RH]
18
V
5
IE1
V
G-W
G-W
7
L 2
LIGHT FAILURE SENSOR
8
4
HOLD
CIRCUIT
1
BM1
G-W
6
BO1
G-W
1
H14
HIGH MOUNTED
STOP LIGHT
2
R-W
B 6
R-W
R-W
R-W
3
3
11
W-B
2
W-B
B10
W-B
W-B
3
BO1
W-B
2
BM1
5
R 9
STOP LIGHT LH
[REAR COMB.
LIGHT LH]
5
R10
STOP LIGHT RH
[REAR COMB
LIGHT RH]
W-B
W-B
W-B
B 4
W-B
B 6
W-B
W-B
W-B
W-B
BI
BJ
BK

SYSTEM OUTLINE

CURRENT IS APPLIED AT ALL TIMES THROUGH THE **STOP** FUSE TO **TERMINAL 2** OF THE STOP LIGHT SW.
WHEN THE IGNITION SW IS TURNED ON, CURRENT FLOWS FROM THE **GAUGE** FUSE TO **TERMINAL 8** OF THE LIGHT FAILURE SENSOR, AND ALSO FLOWS THROUGH THE REAR LIGHT WARNING LIGHT TO **TERMINAL 4** OF THE LIGHT FAILURE SENSOR.

STOP LIGHT DISCONNECTION WARNING

WHEN THE IGNITION SW IS TURNED ON AND THE BRAKE PEDAL IS PRESSED (STOP LIGHT SW ON), IF THE STOP LIGHT CIRCUIT IS OPEN, THE CURRENT FLOWING FROM **TERMINAL 7** OF THE LIGHT FAILURE SENSOR TO **TERMINAL 2** CHANGES, SO THE LIGHT FAILURE SENSOR DETECTS THE DISCONNECTION AND THE WARNING CIRCUIT OF THE LIGHT FAILURE SENSOR IS ACTIVATED.
AS A RESULT, THE CURRENT FLOWS FROM **TERMINAL 4** OF THE LIGHT FAILURE SENSOR → **TERMINAL 11** → **GROUND** AND TURNS THE REAR LIGHT WARNING LIGHT ON. BY PRESSING THE BRAKE PEDAL, THE CURRENT FLOWING TO **TERMINAL 8** OF THE LIGHT FAILURE SENSOR KEEPS THE WARNING CIRCUIT ON HOLDING AND THE WARNING LIGHT ON UNTIL THE IGNITION SW IS TURNED OFF.

SERVICE HINTS

S11 STOP LIGHT SW

2-1 :CLOSED WITH THE BRAKE PEDAL DEPRESSED

L 2 LIGHT FAILURE SENSOR

2, 7 GROUND : APPROX. **12** VOLTS WITH THE STOP LIGHT SW ON

4, 8 GROUND : APPROX. **12** VOLTS WITH THE IGNITION SW AT **ON** POSITION
11 GROUND : ALWAYS CONTINUITY

: PARTS LOCATION

CODE	SEE PAGE	CODE	SEE PAGE	CODE	SEE PAGE
H14	30	R 9	30	S11	29
L 2	30	R10	30	T 6	29

: JUNCTION BLOCK AND WIRE HARNESS CONNECTOR

CODE	SEE PAGE	JUNCTION BLOCK AND WIRE HARNESS (CONNECTOR LOCATION)
1C	20	FLOOR NO. 2 WIRE AND J/B NO. 1 (LEFT KICK PANEL)
1E	20	INSTRUMENT PANEL WIRE AND J/B NO. 1 (LEFT KICK PANEL)
1H	20	COWL WIRE AND J/B NO. 1 (LEFT KICK PANEL)
1I		

: CONNECTOR JOINING WIRE HARNESS AND WIRE HARNESS

CODE	SEE PAGE	JOINING WIRE HARNESS AND WIRE HARNESS (CONNECTOR LOCATION)
IE1	36	INSTRUMENT PANEL WIRE AND FLOOR NO. 2 WIRE (LEFT KICK PANEL)
BM1	40	BACK DOOR NO. 1 WIRE AND FLOOR NO. 2 WIRE (LEFT SIDE OF PACKAGE TRAY TRIM)
BO1	40	BACK DOOR NO. 2 WIRE AND BACK DOOR NO. 1 WIRE (BACK DOOR UPPER LEFT)

: GROUND POINTS

CODE	SEE PAGE	GROUND POINTS LOCATION
BI	40	LEFT QUARTER PILLAR
BJ	40	LOWER BACK PANEL CENTER
BK	40	RIGHT SIDE OF HIGH MOUNTED STOP LIGHT

: SPLICE POINTS

CODE	SEE PAGE	WIRE HARNESS WITH SPLICE POINTS	CODE	SEE PAGE	WIRE HARNESS WITH SPLICE POINTS
B 4	40	FLOOR NO. 2 WIRE	B10	40	BACK DOOR NO. 2 WIRE
B 6					

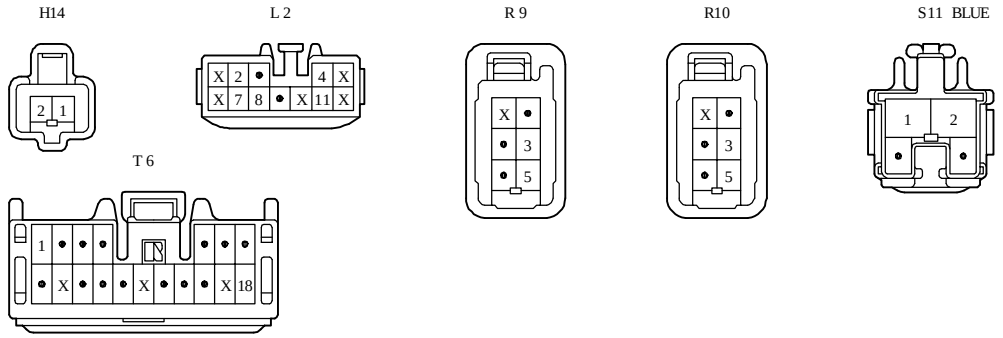

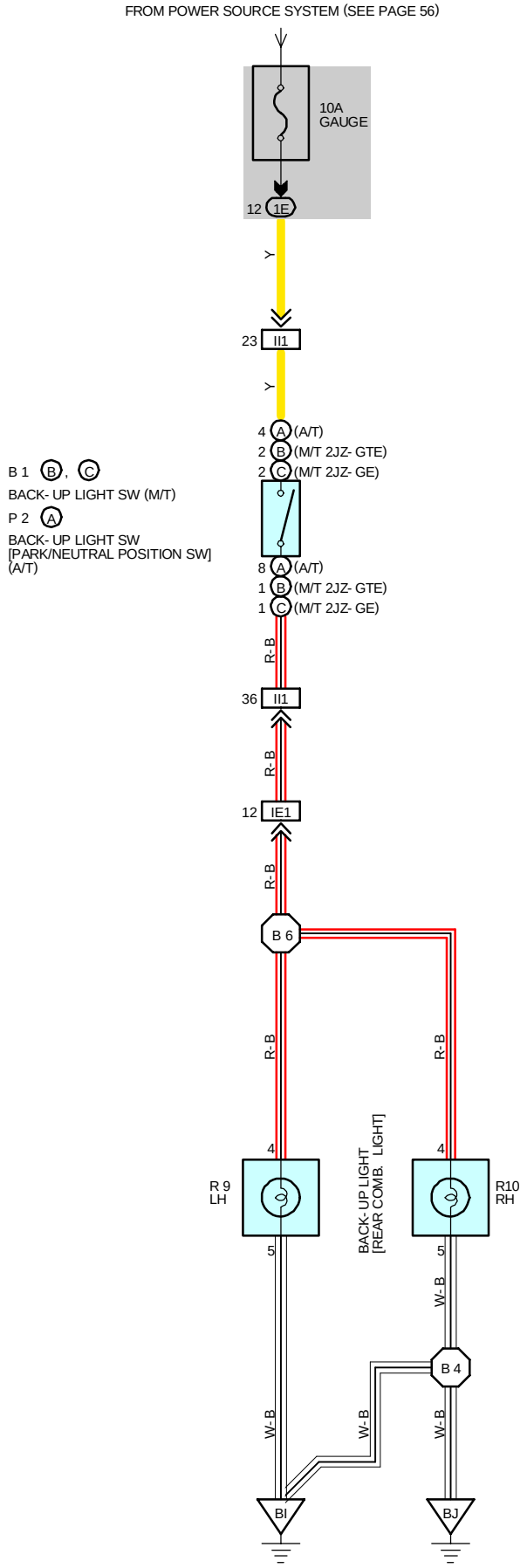
FROM POWER SOURCE SYSTEM (SEE PAGE 56)
10A
GAUGE
12 1E
Y
23 II1
Y
4 A (A/T)
2 B (M/T 2JZ- GTE)
2 C (M/T 2JZ- GE)
B 1 B, C
BACK- UP LIGHT SW (M/T)
P 2 A
BACK- UP LIGHT SW
[PARK/NEUTRAL POSITION SW]
(A/T)
8 A (A/T)
1 B (M/T 2JZ- GTE)
1 C (M/T 2JZ- GE)
R-B
36 II1
R-B
12 IE1
R-B
B 6
R-B
R-B
4
4
R 9
LH
R10
RH
BACK- UP LIGHT
[REAR COMB. LIGHT]
5
5
W-B
B 4
W-B
W-B
W-B
BI
BJ

SERVICE HINTS

B 1 (B)**,** (C) **BACK-UP LIGHT SW (M/T)**

P 2 (A) **BACK-UP LIGHT SW [PARK/NEUTRAL POSITION SW] (A/T)**

(B)**,** (C) 2-1, (A) 4-8 : CLOSED WITH THE SHIFT LEVER IN **R** POSITION

: PARTS LOCATION

CODE		SEE PAGE	CODE		SEE PAGE	CODE	SEE PAGE
B 1	B	24 (2JZ-GTE)	P 2	A	25 (2JZ-GTE)	R 9	30
	C	26 (2JZ-GE)			27 (2JZ-GE)	R10	30

: JUNCTION BLOCK AND WIRE HARNESS CONNECTOR

CODE	SEE PAGE	JUNCTION BLOCK AND WIRE HARNESS (CONNECTOR LOCATION)
1E	20	INSTRUMENT PANEL WIRE AND J/B NO. 1 (LEFT KICK PANEL)

: CONNECTOR JOINING WIRE HARNESS AND WIRE HARNESS

CODE	SEE PAGE	JOINING WIRE HARNESS AND WIRE HARNESS (CONNECTOR LOCATION)
IE1	36	INSTRUMENT PANEL WIRE AND FLOOR NO. 2 WIRE (LEFT KICK PANEL)
II1	38	ENGINE WIRE AND INSTRUMENT PANEL WIRE (RIGHT KICK PANEL)

: GROUND POINTS

CODE	SEE PAGE	GROUND POINTS LOCATION
BI	40	LEFT QUARTER PILLAR
BJ	40	LOWER BACK PANEL CENTER

: SPLICE POINTS

CODE	SEE PAGE	WIRE HARNESS WITH SPLICE POINTS	CODE	SEE PAGE	WIRE HARNESS WITH SPLICE POINTS
B 4	40	FLOOR NO. 2 WIRE	B 6	40	FLOOR NO. 2 WIRE

B 1 (B) GRAY

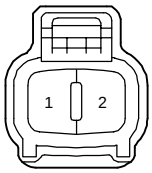

B 1 (C) GRAY

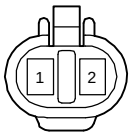

P 2 (A) GRAY

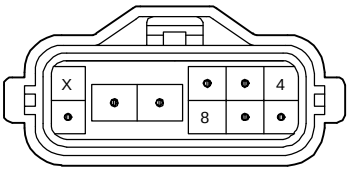

R 9

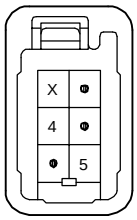

R10

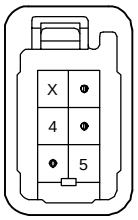

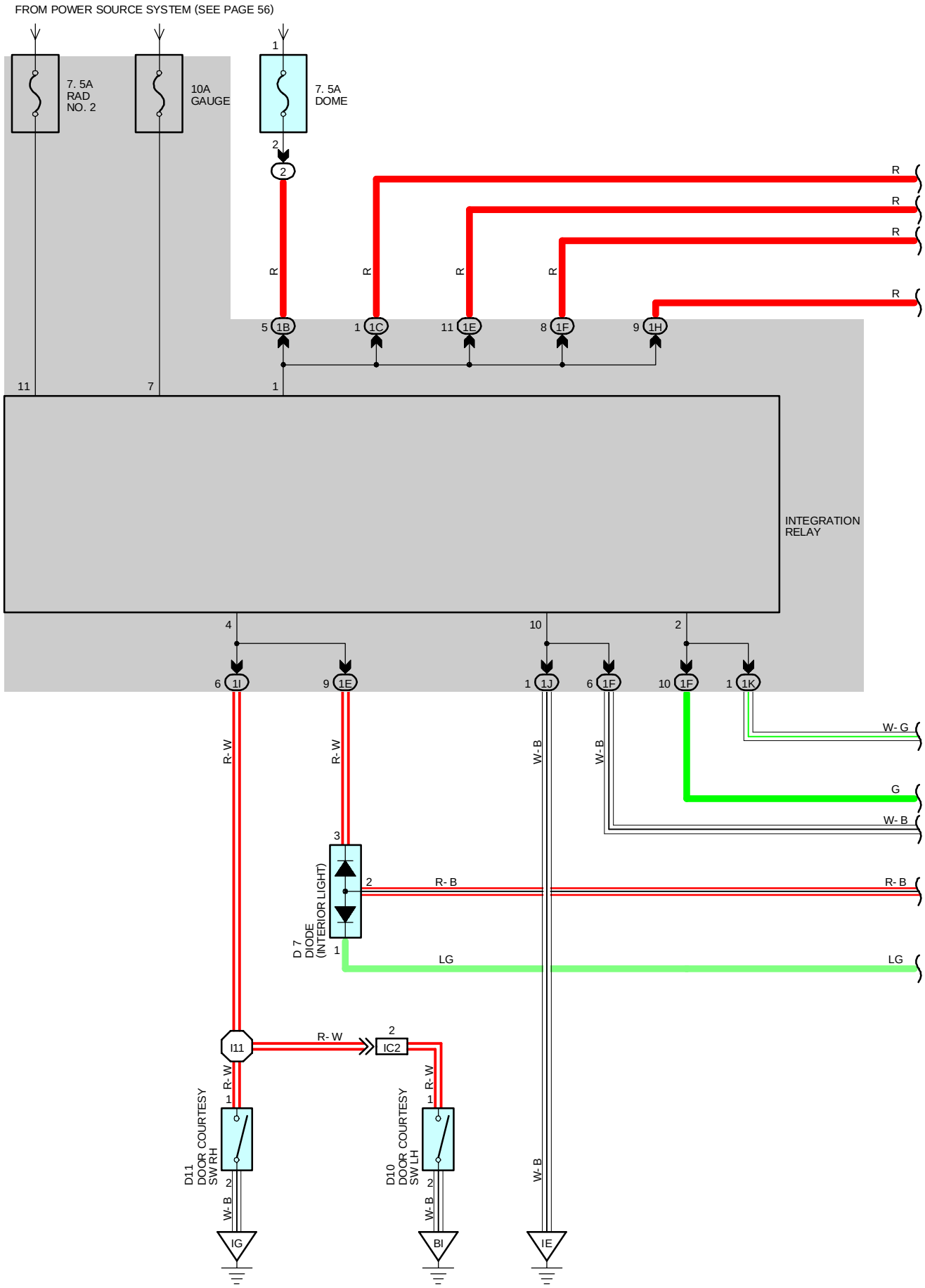
FROM POWER SOURCE SYSTEM (SEE PAGE 56)
7. 5A
RAD
NO. 2
10A
GAUGE
7. 5A
DOME
INTEGRATION
RELAY
D 7
DIODE
(INTERIOR LIGHT)
D11
DOOR COURTESY
SW RH
D10
DOOR COURTESY
SW LH
I11
IC2
IG
BI
IE
R
R- W
W- B
W- G
G
R- B
LG

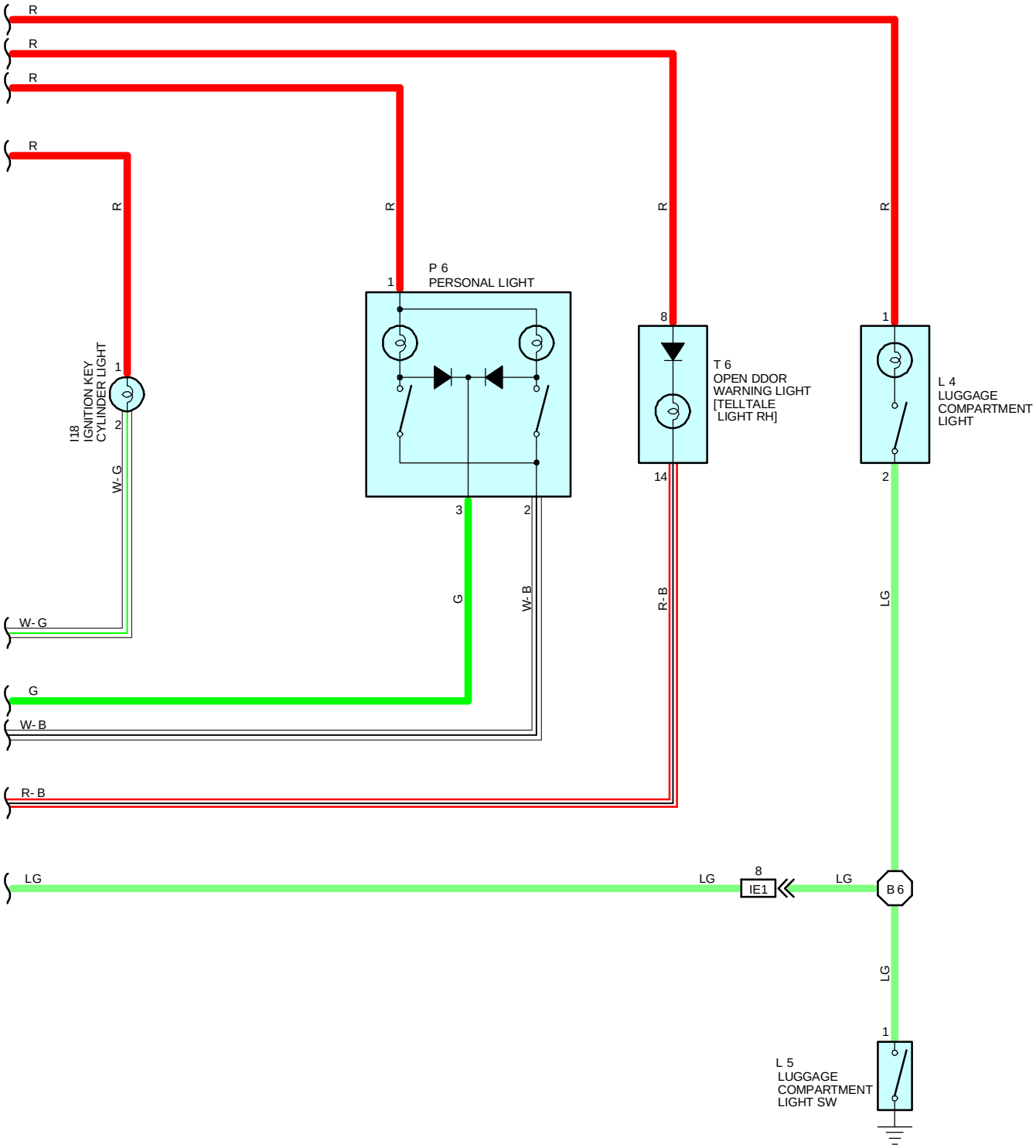
R
R
R
R
R
R
R
R
P 6
PERSONAL LIGHT
1
3
2
8
14
T 6
OPEN DDOR
WARNING LIGHT
[TELLTALE
LIGHT RH]
1
2
L 4
LUGGAGE
COMPARTMENT
LIGHT
I18
IGNITION KEY
CYLINDER LIGHT
1
2
W- G
W- G
G
W- B
R- B
G
W- B
R- B
LG
LG
LG
LG
8
IE1
B 6
LG
1
L 5
LUGGAGE
COMPARTMENT
LIGHT SW

INTERIOR LIGHT

SERVICE HINTS

INTERGRATION RELAY (J/B NO. 1)
1-GROUND : ALWAYS APPROX. **12** VOLTS
4-GROUND : CONTINUITY WITH THE RH DOOR OPEN OR THE LH DOOR OPEN

D10, D11 DOOR COURTESY SW LH, RH
1-2 : CLOSED WITH THE DOOR OPEN

L 5 LUGGAGE COMPARTMENT LIGHT SW
1-GROUND : CLOSED WITH THE LUGGAGE COMPARTMENT DOOR OPEN

: PARTS LOCATION

CODE	SEE PAGE	CODE	SEE PAGE	CODE	SEE PAGE
D 7	28	I18	29	P 6	30
D10	30	L 4	30	T 6	29
D11	30	L 5	30		

: RELAY BLOCKS

CODE	SEE PAGE	RELAY BLOCKS (RELAY BLOCK LOCATION)
2	22	R/B NO. 2 (ENGINE COMPARTMENT LEFT)

: JUNCTION BLOCK AND WIRE HARNESS CONNECTOR

CODE	SEE PAGE	JUNCTION BLOCK AND WIRE HARNESS (CONNECTOR LOCATION)
1B	20	ENGINE ROOM MAIN WIRE AND J/B NO. 1 (LEFT KICK PANEL)
1C	20	FLOOR NO. 2 WIRE AND J/B NO. 1 (LEFT KICK PANEL)
1D	20	FRONT DOOR LH WIRE AND J/B NO. 1 (LEFT KICK PANEL)
1E	20	INSTRUMENT PANEL WIRE AND J/B NO. 1 (LEFT KICK PANEL)
1F	20	ROOF WIRE AND J/B NO. 1 (LEFT KICK PANEL)
1H	20	COWL WIRE AND J/B NO. 1 (LEFT KICK PANEL)
1I		
1J		
1K		

: CONNECTOR JOINING WIRE HARNESS AND WIRE HARNESS

CODE	SEE PAGE	JOINING WIRE HARNESS AND WIRE HARNESS (CONNECTOR LOCATION)
IC2	36	FLOOR NO. 2 WIRE AND COWL WIRE (LEFT KICK PANEL)
IE1	36	INSTRUMENT PANEL WIRE AND J/B NO. 1 (LEFT KICK PANEL)

: GROUND POINTS

CODE	SEE PAGE	GROUND POINTS LOCATION
IE	36	LEFT KICK PANEL
IG	36	RIGHT KICK PANEL
BI	40	LEFT QUARTER PILLAR

: SPLICE POINTS

CODE	SEE PAGE	WIRE HARNESS WITH SPLICE POINTS	CODE	SEE PAGE	WIRE HARNESS WITH SPLICE POINTS
I11	38	COWL WIRE	B 6	40	FLOOR NO. 2 WIRE

D 7

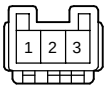

D10

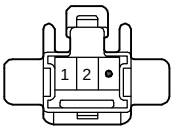

D11

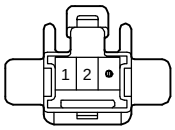

I18 BLUE

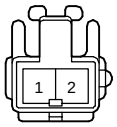

L 4

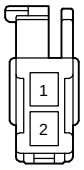

L 5 GRAY

P 6

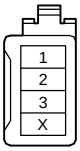

T 6

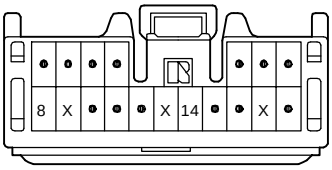

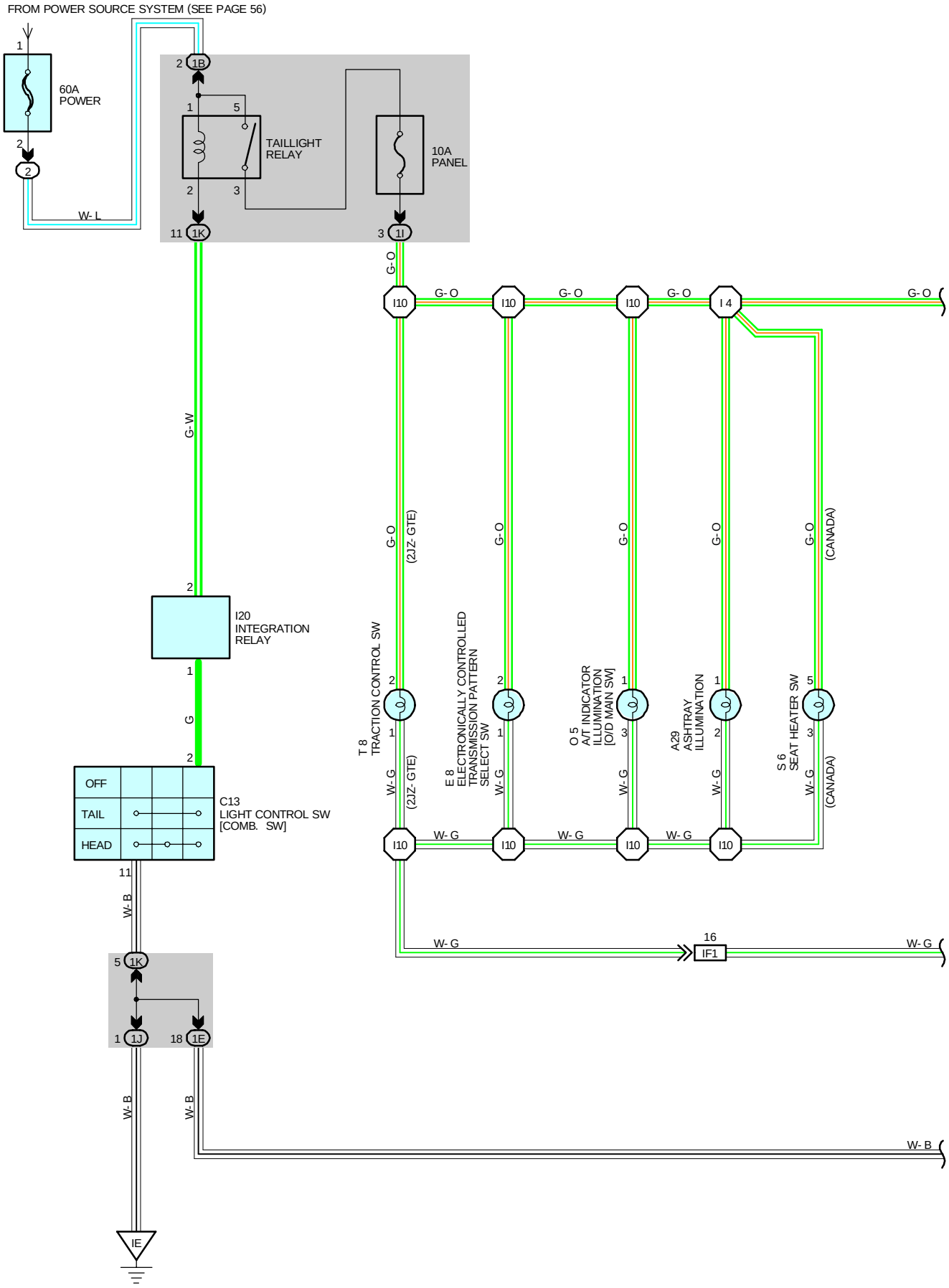
FROM POWER SOURCE SYSTEM (SEE PAGE 56)
60A POWER
TAILLIGHT RELAY
10A PANEL
W- L
G- W
G- O
I20 INTEGRATION RELAY
G
C13 LIGHT CONTROL SW [COMB. SW]
OFF
TAIL
HEAD
W- B
T 8 TRACTION CONTROL SW
E 8 ELECTRONICALLY CONTROLLED TRANSMISSION PATTERN SELECT SW
O 5 A/T INDICATOR ILLUMINATION [O/D MAIN SW]
A29 ASHTRAY ILLUMINATION
S 6 SEAT HEATER SW
(2JZ- GTE)
(CANADA)
W- G
IF1
IE

*1 : W/ STEREO POWER AMPLIFIER
*2 : W/O STEREO POWER AMPLIFIER

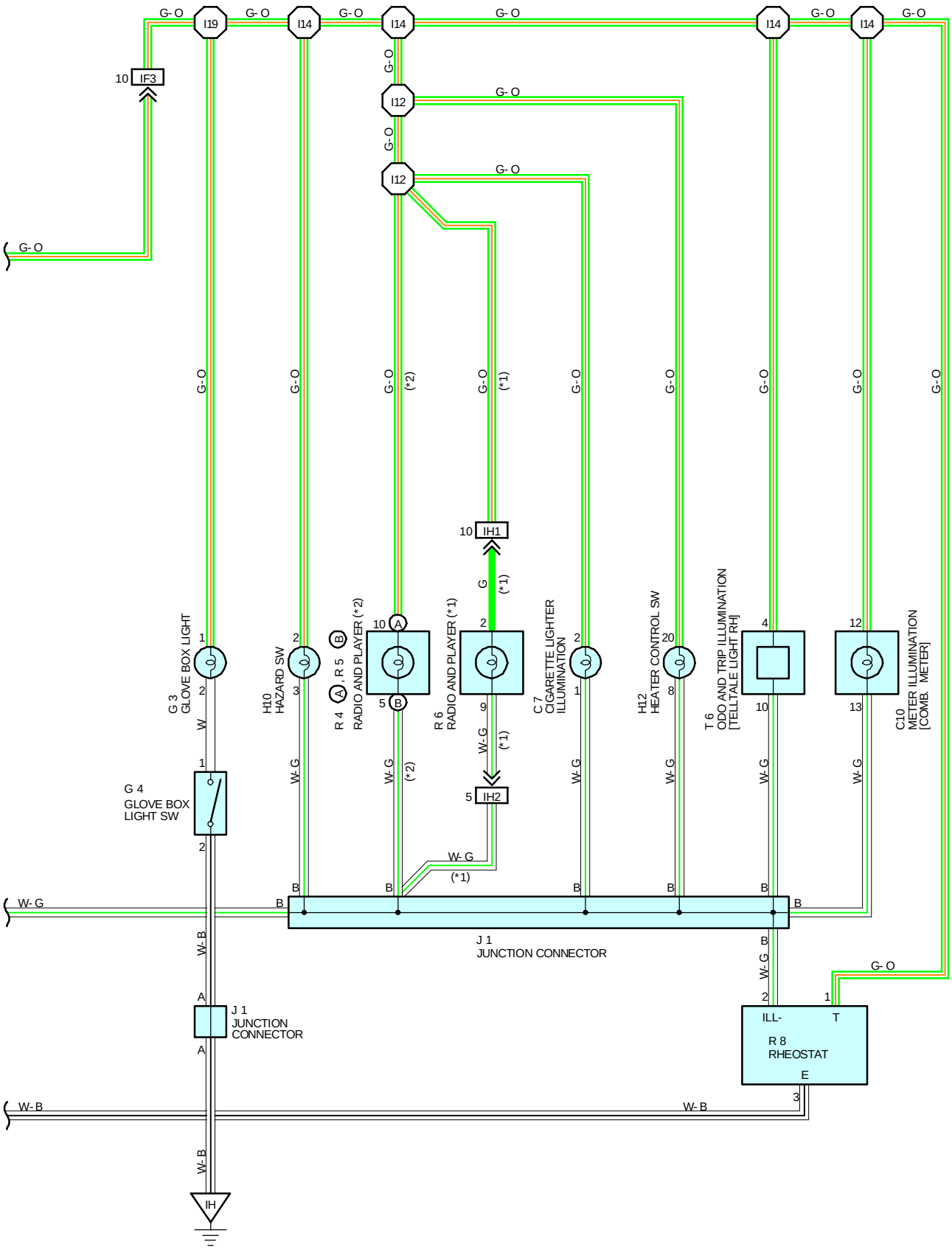

SERVICE HINTS

TAILLIGHT RELAY

5-3 : CLOSED WITH THE LIGHT CONTROL SW AT **TAIL** OR **HEAD** POSITION

C13 LIGHT CONTROL SW [COMB. SW]

2-1 1 : CLOSED WITH THE LIGHT CONTROL SW AT **TAIL** OR **HEAD** POSITION

: PARTS LOCATION

CODE	SEE PAGE	CODE		SEE PAGE	CODE	SEE PAGE
A29	28	H10		29	R 6	29
C 7	28	H12		29	R 8	29
C10	28	I20		29	S 6	29
C13	28	J 1		29	T 6	29
E 8	29	O 5		29	T 8	29
G 3	29	R 4	A	29		
G 4	29	R 5	B	29		

: RELAY BLOCKS

CODE	SEE PAGE	RELAY BLOCKS (RELAY BLOCK LOCATION)
2	22	R/B NO. 2 (ENGINE COMPARTMENT LEFT)

: JUNCTION BLOCK AND WIRE HARNESS CONNECTOR

CODE	SEE PAGE	JUNCTION BLOCK AND WIRE HARNESS (CONNECTOR LOCATION)
1B	20	ENGINE ROOM MAIN WIRE AND J/B NO. 1 (LEFT KICK PANEL)
1E	20	INSTRUMENT PANEL WIRE AND J/B NO. 1 (LEFT KICK PANEL)
1I	20	COWL WIRE AND J/B NO. 1 (LEFT KICK PANEL)
1J		
1K		

: CONNECTOR JOINING WIRE HARNESS AND WIRE HARNESS

CODE	SEE PAGE	JOINING WIRE HARNESS AND WIRE HARNESS (CONNECTOR LOCATION)
IF1	36	INSTRUMENT PANEL WIRE AND COWL WIRE (INSTRUMENT PANEL REINFORCEMENT LH)
IF3	36	INSTRUMENT PANEL WIRE AND COWL WIRE (RIGHT KICK PANEL)
IH1	38	INSTRUMENT PANEL AND CONSOLE BOX WIRE (UNDER THE INSTRUMENT PANEL BRACE RH)
IH2		

: GROUND POINTS

CODE	SEE PAGE	GROUND POINTS LOCATION
IE	36	LEFT KICK PANEL
IH	36	RIGHT KICK PANEL

: SPLICE POINTS

CODE	SEE PAGE	WIRE HARNESS WITH SPLICE POINTS	CODE	SEE PAGE	WIRE HARNESS WITH SPLICE POINTS
I 4	38	COWL WIRE	I14	38	INSTRUMENT PANEL WIRE
I10	38	COWL WIRE	I19		
I12	38	INSTRUMENT PANEL WIRE			

A29

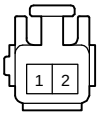

C 7 BLACK

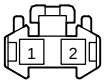

C10 BLUE

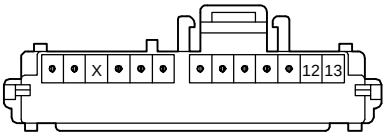

C13 BLACK

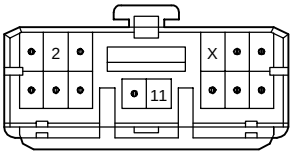

E 8

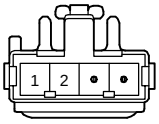

G 3 BLACK

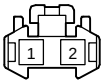

G 4 BLACK

H10

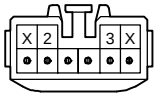

H12 ORANGE

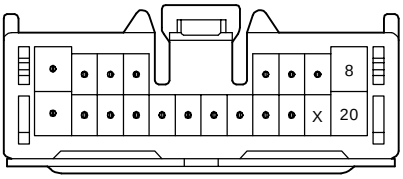

I20

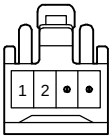

J 1

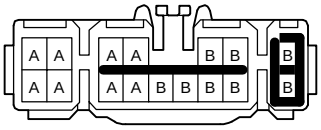

(HINT : SEE PAGE 7)

O 5 BLUE

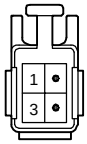

R 4 (A)

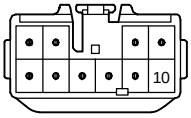

R 5 (B)

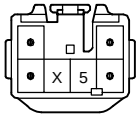

R 6

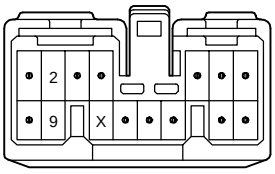

R 8

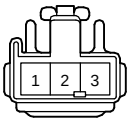

S 6 BLACK

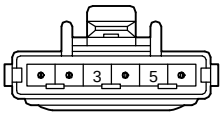

T 6

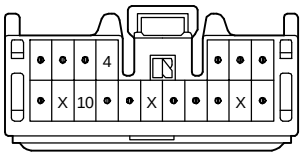

T 8 BLACK

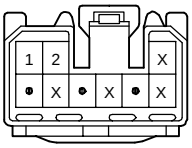

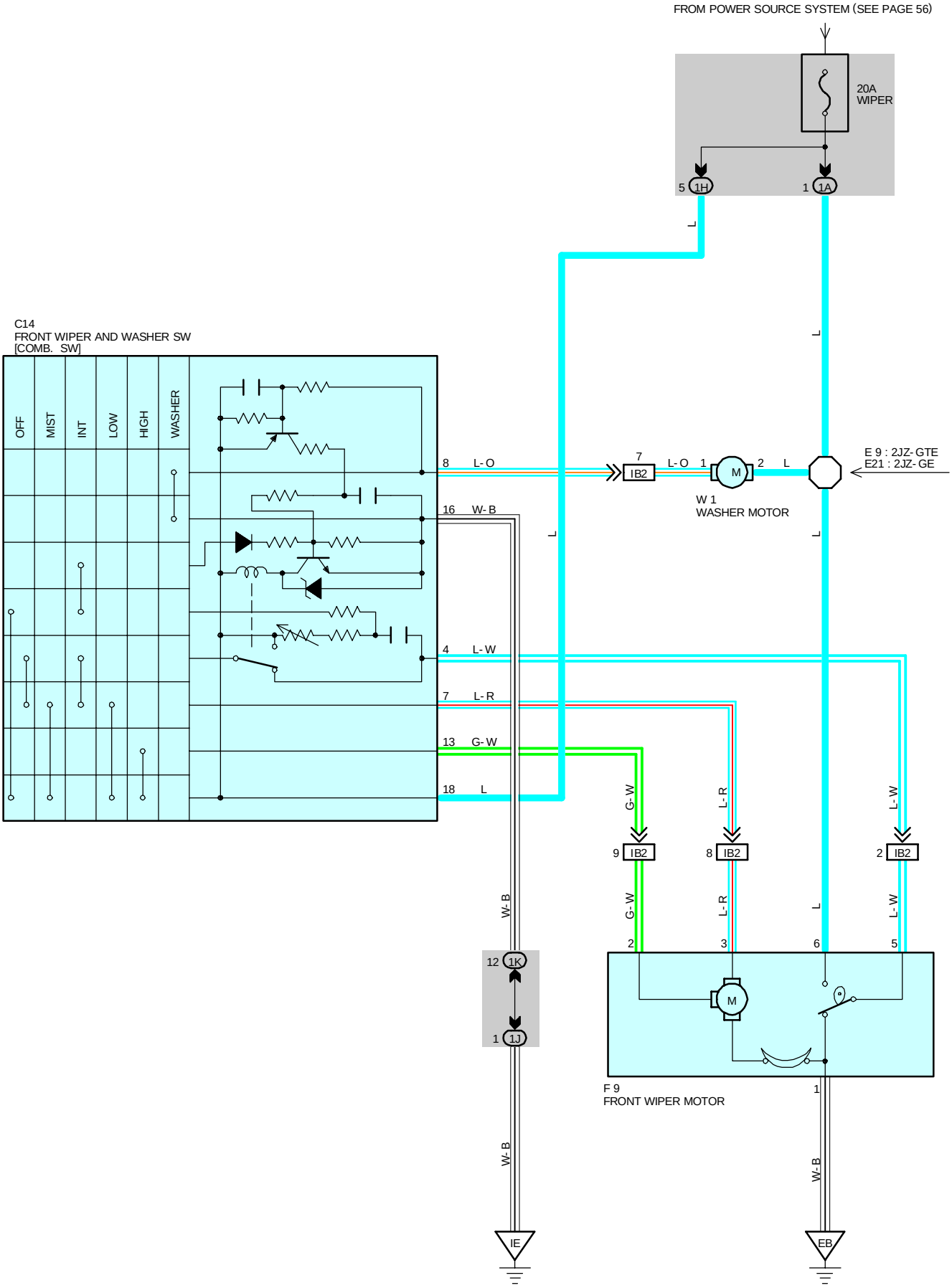
FROM POWER SOURCE SYSTEM (SEE PAGE 56)
20A
WIPER
5 1H
1 1A
L
C14
FRONT WIPER AND WASHER SW
[COMB. SW]
OFF
MIST
INT
LOW
HIGH
WASHER
8 L-O
16 W-B
4 L-W
7 L-R
13 G-W
18 L
7 IB2 L-O 1 M 2 L
W 1
WASHER MOTOR
E 9 : 2JZ-GTE
E21 : 2JZ-GE
G-W
L-R
L-W
9 IB2
8 IB2
2 IB2
W-B
12 1K
1 1J
2 3 6 5
M
F 9
FRONT WIPER MOTOR
1
IE
EB

SYSTEM OUTLINE

WITH THE IGNITION SW TURNED ON, THE CURRENT FLOWS TO **TERMINAL 18** OF THE FRONT WIPER AND WASHER SW, **TERMINAL 2** OF THE WASHER MOTOR AND **TERMINAL 6** OF THE FRONT WIPER MOTOR FROM THE **WIPER** FUSE.

1. LOW SPEED POSITION
WITH THE WIPER SW TURNED TO **LOW** POSITION, THE CURRENT FLOWS FROM **TERMINAL 18** OF THE FRONT WIPER AND WASHER SW TO **TERMINAL 7** → **TERMINAL 3** OF THE FRONT WIPER MOTOR → **TERMINAL 1** → TO **GROUND** AND CAUSES THE WIPER MOTOR TO RUN AT LOW SPEED.

2. HIGH SPEED POSITION
WITH THE WIPER SW TURNED TO **HIGH** POSITION, THE CURRENT FLOWS FROM **TERMINAL 18** OF THE FRONT WIPER AND WASHER SW → **TERMINAL 13** → **TERMINAL 2** OF THE FRONT WIPER MOTOR→ **TERMINAL 1** → TO **GROUND** AND CAUSES TO THE WIPER MOTOR TO RUN AT HIGH SPEED.

3. INT POSITION
WITH THE WIPER SW TURNED TO **INT** POSITION, THE RELAY OPERATES AND THE CURRENT WHICH IS CONNECTED BY RELAY FUNCTION FLOWS FROM THE **TERMINAL 18** OF THE FRONT WIPER AND WASHER SW → **TERMINAL 16**→ TO **GROUND.** THIS FLOWS OF THE CURRENT OPERATES THE INTERMITTENT CIRCUIT AND THE CURRENT FLOWS FROM **TERMINAL 18** OF THE FRONT WIPER AND WASHER SW → **TERMINAL 7** → **TERMINAL 3** OF THE FRONT WIPER MOTOR → **TERMINAL 1** → TO **GROUND** AND FUNCTIONS.
THE INTERMITTENT OPERATION IS CONTROLLED BY A CONDENSER'S CHARGED AND DISCHARGED FUNCTION INSTALLED IN RELAY AND INTERMITTENT TIME IS CONTROLLED BY A TIME CONTROL SW TO CHARGE THE CHARGING TIME OF THE CONDENSER.

4. MIST POSITION
WITH THE WIPER SW TURNED TO **MIST** POSITION, THE CURRENT FLOWS FROM **TERMINAL 18** OF THE FRONT WIPER AND WASHER SW → **TERMINAL 7** → **TERMINAL 3** OF THE FRONT WIPER MOTOR → **TERMINAL 1** → TO **GROUND** AND CAUSES THE WIPER MOTOR TO RUN AT LOW SPEED.

5. WASHER CONTINUOUS OPERATION
WITH THE WASHER SW TURNED TO ON, THE CURRENT FLOWS THROUGH **TERMINAL 2** OF THE WASHER MOTOR → **TERMINAL 1**→ **TERMINAL 8** OF THE FRONT WIPER AND WASHER SW → **TERMINAL 16** → TO **GROUND** AND CAUSES TO THE WASHER MOTOR TO RUN, AND WINDOW WASHER IS JET. THIS CAUSES THE CURRENT TO FLOW WASHER CONTINUOUS OPERATION CIRCUIT IN **TERMINAL 18** OF THE FRONT WIPER AND WASHER SW → **TERMINAL 7** → **TERMINAL 3** OF THE FRONT WIPER MOTOR→ **TERMINAL 1** → TO **GROUND** AND FUNCTION.

SERVICE HINTS

C14 FRONT WIPER AND WASHER SW [COMB. SW]

16-GROUND : ALWAYS CONTINUITY
18-GROUND : APPROX. **12** VOLTS WITH THE IGNITION SW AT **ON** POSITION
7-GROUND : APPROX. **12** VOLTS WITH THE WIPER AND WASHER SW AT **LOW** POSITION
: APPROX. **12** VOLTS EVERY APPROX. **1** TO **10** SECONDS INTERMITTENTLY WITH THE WIPER SW AT **INT** POSITION
4-GROUND : APPROX. **12** VOLTS WITH THE IGNITION SW ON UNLESS THE WIPER MOTOR AT **STOP** POSITION
13-GROUND : APPROX. **12** VOLTS WITH THE IGNITION SW ON AND THE WIPER AND WASHER SW AT **HIGH** POSITION

F 9 FRONT WIPER MOTOR

5-6 : CLOSED UNLESS WIPER MOTOR AT **STOP** POSITION

○ : PARTS LOCATION

CODE	SEE PAGE	CODE	SEE PAGE	CODE	SEE PAGE
C14	28	F 9	26 (2JZ-GE)	W 2	27 (2JZ-GTE)
F 9	24 (2JZ-GTE)	W 1	25 (2JZ-GTE)		

⬭ : JUNCTION BLOCK AND WIRE HARNESS CONNECTOR

CODE	SEE PAGE	JUNCTION BLOCK AND WIRE HARNESS (CONNECTOR LOCATION)
1A	20	ENGINE ROOM MAIN WIRE AND J/B NO. 1 (LEFT KICK PANEL)
1H	20	COWL WIRE AND J/B NO. 1 (LEFT KICK PANEL)
1J		
1K		

▭ : CONNECTOR JOINING WIRE HARNESS AND WIRE HARNESS

CODE	SEE PAGE	JOINING WIRE HARNESS AND WIRE HARNESS (CONNECTOR LOCATION)
IB2	36	ENGINE ROOM MAIN WIRE AND COWL WIRE (LEFT KICK PANEL)

: GROUND POINTS

CODE	SEE PAGE	GROUND POINTS LOCATION
EB	32 (2JZ-GTE)	FRONT SIDE OF LEFT FENDER
	34 (2JZ-GE)	
IE	36	LEFT KICK PANEL

: SPLICE POINTS

CODE	SEE PAGE	WIRE HARNESS WITH SPLICE POINTS	CODE	SEE PAGE	WIRE HARNESS WITH SPLICE POINTS
E 9	32	ENGINE ROOM MAIN WIRE	E21	34	ENGINE ROOM MAIN WIRE

C14 BLACK

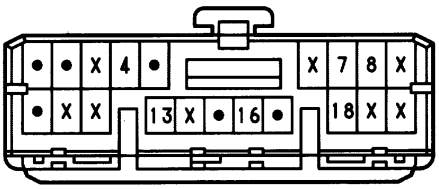

F 9 BLACK

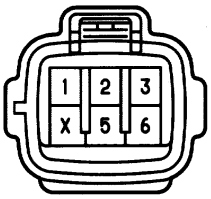

W 1 BLACK

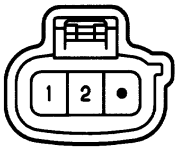

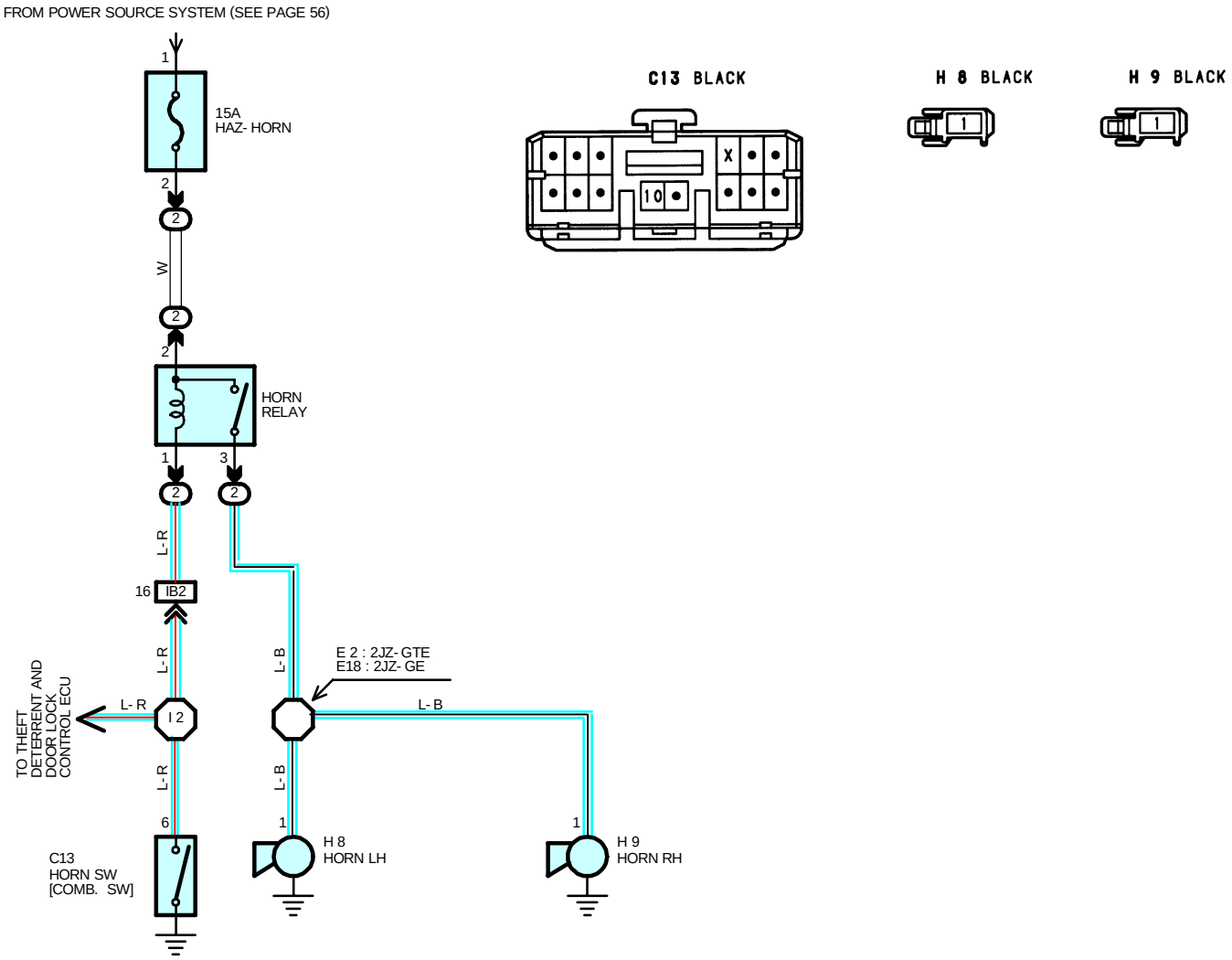

SERVICE HINTS

HORN RELAY

(2) 2- (2) 3 : CLOSED WITH THE HORN SW ON

: PARTS LOCATION

CODE	SEE PAGE	CODE	SEE PAGE	CODE	SEE PAGE
C13	28	H 8	27 (2JZ-GE)	H 9	27 (2JZ-GE)
H 8	24 (2JZ-GTE)	H 9	24 (2JZ-GTE)		

: RELAY BLOCKS

CODE	SEE PAGE	RELAY BLOCKS (RELAY BLOCK LOCATION)
2	22	R/B NO. 2 (ENGINE COMPARTMENT LEFT)

: CONNECTOR JOINING WIRE HARNESS AND WIRE HARNESS

CODE	SEE PAGE	JOINING WIRE HARNESS AND WIRE HARNESS (CONNECTOR LOCATION)
IB2	36	ENGINE ROOM MAIN WIRE AND COWL WIRE (LEFT KICK PANEL)

: SPLICE POINTS

CODE	SEE PAGE	WIRE HARNESS WITH SPLICE POINTS	CODE	SEE PAGE	WIRE HARNESS WITH SPLICE POINTS
E 2	32	ENGINE ROOM MAIN WIRE	I 2	38	COWL WIRE
E18	34				

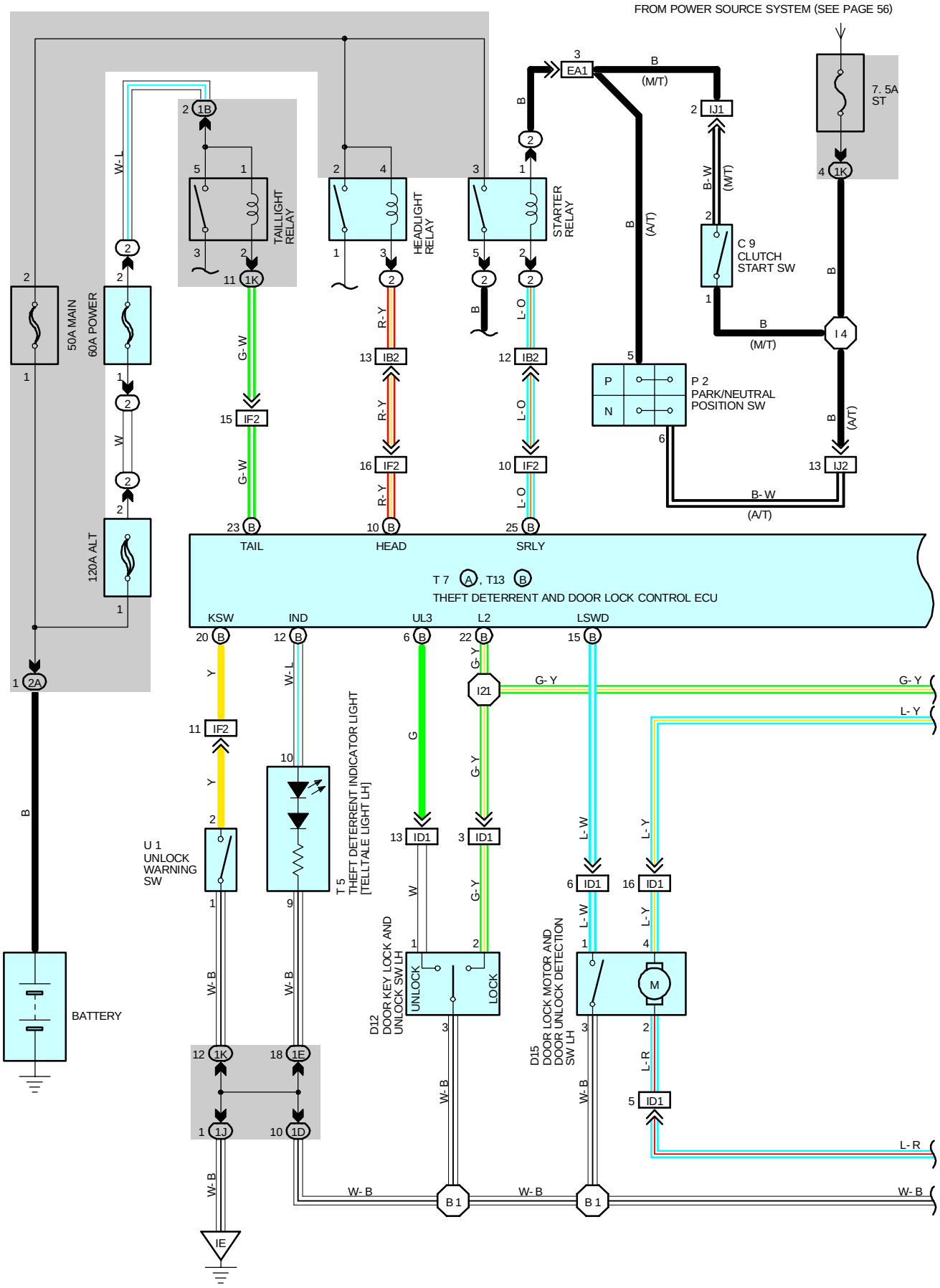
FROM POWER SOURCE SYSTEM (SEE PAGE 56)
7. 5A
ST
EA1
IJ1
C 9
CLUTCH
START SW
I 4
P 2
PARK/NEUTRAL
POSITION SW
IJ2
TAILLIGHT
RELAY
HEADLIGHT
RELAY
STARTER
RELAY
50A MAIN
60A POWER
120A ALT
IB2
IF2
TAIL
HEAD
SRLY
T 7 A, T13 B
THEFT DETERRENT AND DOOR LOCK CONTROL ECU
KSW
IND
UL3
L2
LSWD
I21
ID1
U 1
UNLOCK
WARNING
SW
T 5
THEFT DETERRENT INDICATOR LIGHT
[TELLTALE LIGHT LH]
D12
DOOR KEY LOCK AND
UNLOCK SW LH
UNLOCK
LOCK
D15
DOOR LOCK MOTOR AND
DOOR UNLOCK DETECTION
SW LH
M
BATTERY
B 1
IE

*1 : 2JZ- GE
*2 : 2JZ- GTE
*3 : EXCEPT 2JZ- GE M/T

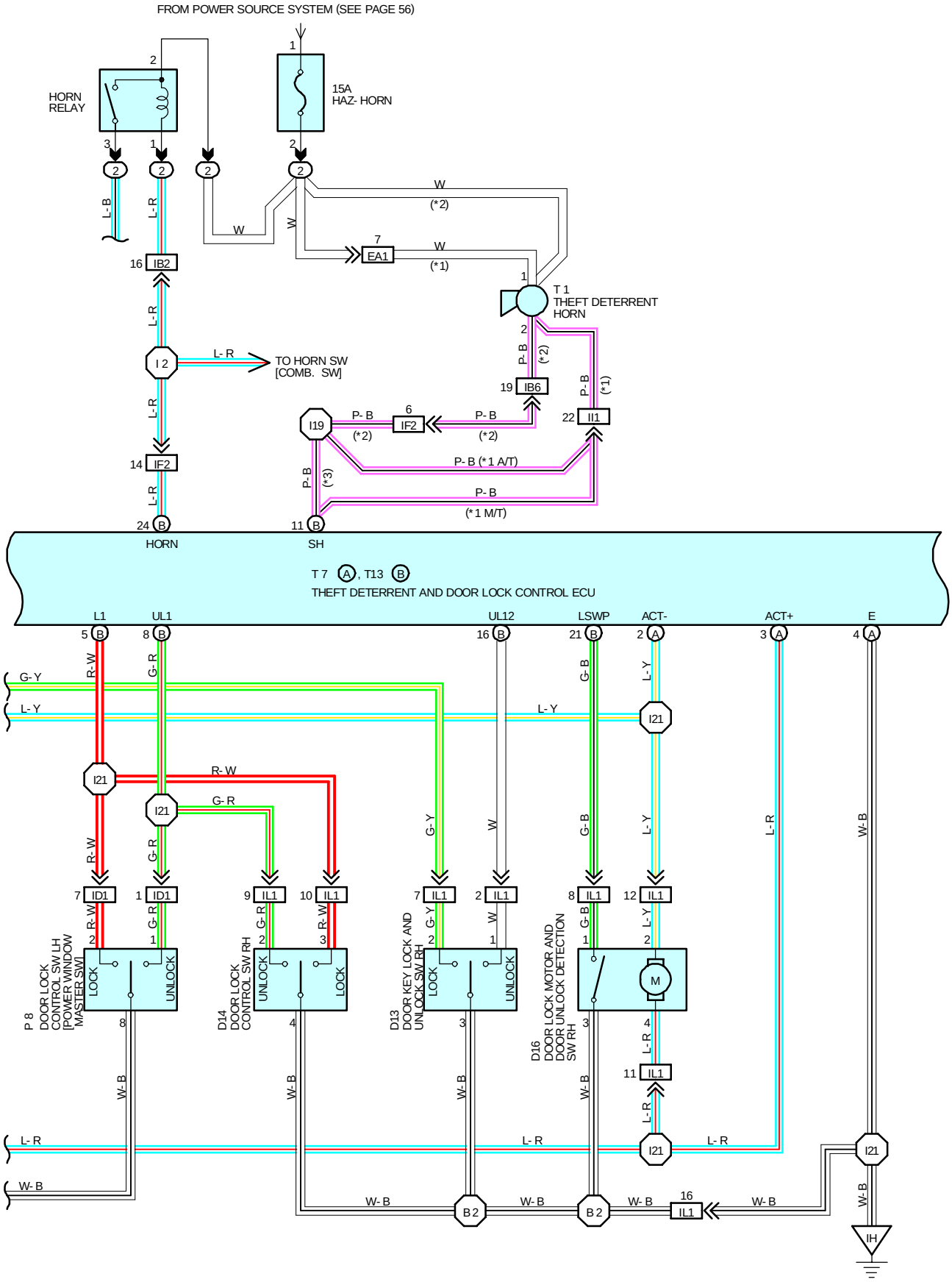

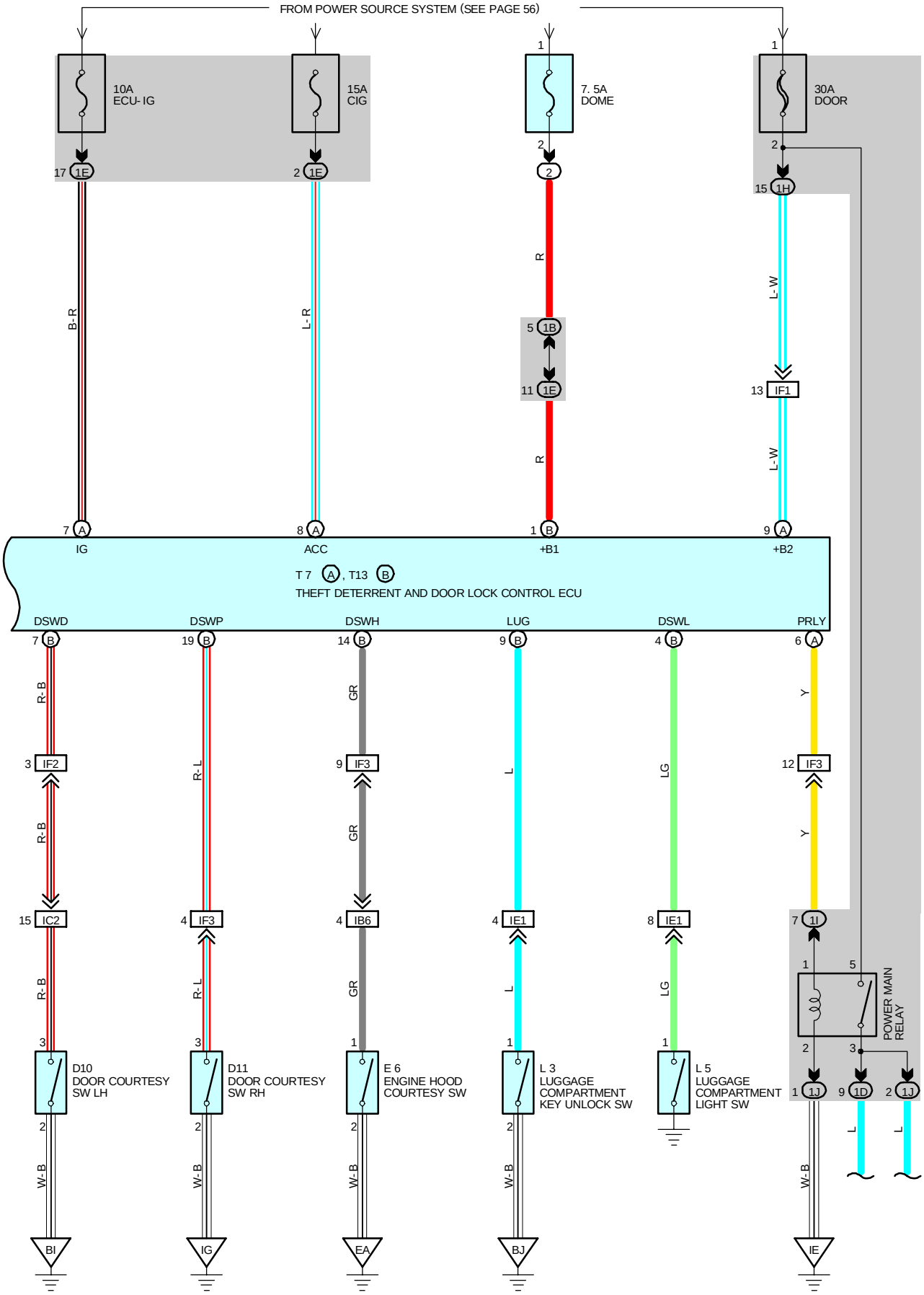
FROM POWER SOURCE SYSTEM (SEE PAGE 56)
10A ECU- IG
15A CIG
7. 5A DOME
30A DOOR
17 1E
2 1E
1 2
15 1H
B-R
L-R
R
L-W
5 1B
11 1E
13 IF1
7 A IG
8 A ACC
1 B +B1
9 A +B2
T 7 A, T13 B
THEFT DETERRENT AND DOOR LOCK CONTROL ECU
DSWD
DSWP
DSWH
LUG
DSWL
PRLY
7 B
19 B
14 B
9 B
4 B
6 A
R-B
R-L
GR
L
LG
Y
3 IF2
9 IF3
12 IF3
15 IC2
4 IF3
4 IB6
4 IE1
8 IE1
7 1I
POWER MAIN RELAY
D10 DOOR COURTESY SW LH
D11 DOOR COURTESY SW RH
E 6 ENGINE HOOD COURTESY SW
L 3 LUGGAGE COMPARTMENT KEY UNLOCK SW
L 5 LUGGAGE COMPARTMENT LIGHT SW
1 1J
9 1D
2 1J
W-B
BI
IG
EA
BJ
IE

SYSTEM OUTLINE

CURRENT ALWAYS FLOWS TO **TERMINAL (A) 9** OF THE THEFT DETERRENT AND DOOR LOCK CONTROL ECU THROUGH THE **DOOR** FUSE, AND TO **TERMINAL (B) 1** THROUGH THE **DOME** FUSE.
WHEN THE IGNITION SW TURNED ON, THE CURRENT FLOWING THROUGH THE **ECU-IG** FUSE " **TERMINAL (A) 7** OF THE ECU " **TERMINAL (A) 6** FLOWS THROUGH THE COIL SIDE OF THE POWER MAIN RELAY TO **GROUND,** CAUSING THE RELAY TO OPERATE. THE CURRENT FLOWING THROUGH THE **DOOR** FUSE FLOWS TO THE DOOR LOCK CONTROL SWITCHES, CAUSING THE INDICATOR LIGHT TO LIGHT UP.

1. MANUAL LOCK OPERATION
WHEN THE DOOR LOCK CONTROL SW OR KEY SW ARE PUSHED TO **LOCK** POSITION, A LOCK SIGNAL IS INPUT TO **TERMINAL (B) 5, (B) 22** (FOR KEY SW) OF THE THEFT DETERRENT AND DOOR LOCK CONTROL ECU AND CAUSES THE ECU TO FUNCTION. CURRENT FLOWS FROM **TERMINAL (A) 9** OF THE ECU " **TERMINAL (A) 3** " **TERMINAL 2** (LH), **TERMINAL 4** (RH) OF THE DOOR LOCK MOTORS " **TERMINAL 4** (LH), **TERMINAL 2** (RH) " **TERMINAL (A) 2** OF THE ECU " **TERMINAL (A) 4** " **GROUND** AND THE DOOR LOCK MOTOR CAUSES THE DOOR TO LOCK.

2. MANUAL LOCK OPERATION
WHEN THE DOOR LOCK CONTROL SW OR KEY SW ARE PUSHED TO UNLOCK POSITION, AN UNLOCK SIGNAL IS INPUT TO **TERMINAL (B) 8, (B) 6** (FOR KEY SW LH) OR **(B) 16** (FOR KEY SW RH) OF THE THEFT DETERRENT AND DOOR LOCK CONTROL ECU AND CAUSES TO FUNCTION.
CURRENT FLOWS FROM **TERMINAL (A) 9** OF THE ECU " **TERMINAL (A) 2** " **TERMINAL 4** (LH), **TERMINAL 2** (RH) OF THE DOOR LOCK MOTORS " **TERMINAL 2** (LH), **TERMINAL 4** (RH) " **TERMINAL (A) 3** OF THE ECU " **TERMINAL (A) 4** " **GROUND** AND THE DOOR LOCK MOTOR CAUSES THE DOOR TO UNLOCK.
WHEN UNLOCK OPERATION OCCURS USING THE LH DOOR KEY SW, DOING THE UNLOCK OPERATION ONCE UNLOCKS ONLY THE DRIVER'S DOOR. TO UNLOCK ALL OTHER DOORS TOGETHER, UNLOCK OPERATION MUST BE DONE AGAIN WITHIN **3** SECONDS OF THE FIRST OPERATION.

3. IGNITION KEY REMINDER OPERATION
- OPERATION OF DOOR LOCK BUTTON (OPERATION OF DOOR LOCK MOTORS)
  WHEN THE IGNITION KEY IS IN THE CYLINDER (UNLOCK WARNING SW ON) AND THE DOOR IS OPENED AND LOCKED USING DOOR LOCK BUTTON (DOOR LOCK MOTOR). THE DOOR IS LOCKED ONCE BUT EACH DOOR IS UNLOCKED SOON BY THE OPERATION OF THE ECU. AS A RESULT OF ECU ACTIVATION, THE CURRENT FLOWS FROM **TERMINAL (A) 9** OF THE ECU " **TERMINAL (A) 2** " **TERMINAL 4** (LH),**TERMINAL 2** (RH)OF THE DOOR LOCK MOTORS " **TERMINAL 2** (LH), **TERMINAL 4** (RH) " **TERMINAL (A) 3** OF THE ECU " **TERMINAL (A) 4** " **GROUND** AND CAUSES ALL THE DOOR LOCK CONTROL SW AND DOOR LOCK KEY SW.
- KEY LESS LOCK OPERATION
  WHEN THE IGNITION KEY IS STILL INSERTED IN THE CYLINDER (UNLOCK WARNING SW ON), THE DOOR IS OPEN AND UNLOCK OPERATION IS PREVENTED BY KEEPING THE DOOR LOCK BUTTON PRESSED TO THE LOCK SIDE, THE DOOR IS KEPT IN THE LOCK CONDITION. IF THE DOOR IS THEN CLOSED, A SIGNAL IS INPUT TO THE ECU FROM THE DOOR COURTESY SW. THIS ACTIVATES THE ECU AND EACH DOOR IS UNLOCKED.

SERVICE HINTS

D10, D11 DOOR COURTESY SW LH, RH
3-2 : CLOSED WITH THE DOOR OPEN
D12, D13 DOOR KEY LOCK AND UNLOCK SW LH, RH
1-3 : CLOSED WITH THE DOOR LOCK CYLINDER UNLOCKED WITH KEY
2-3 : CLOSED WITH THE DOOR LOCK CYLINDER LOCKED WITH KEY
D15, D16 DOOR LOCK MOTOR AND DOOR UNLOCK DETECTION SW LH, RH
1-3 : CLOSED WITH **UNLOCK** POSITION.
E 6 ENGINE HOOD COURTESY SW
1-2 : CLOSED WITH THE ENGINE HOOD OPEN
U 1 UNLOCK WARNING SW
2-1 : CLOSED WITH THE IGNITION KEY IN CYLINDER
L 3 LUGGAGE COMPARTMENT KEY UNLOCK SW
2-1 : CLOSED WITH THE DOOR LOCK CYLINDER UNLOCKED WITH KEY
L 5 LUGGAGE COMPARTMENT LIGHT SW
1-GROUND : CLOSED WITH THE DOOR OPEN
T 7 (A), T13 (B) THEFT DETERRENT AND DOOR LOCK CONTROL ECU
(B) 9-GROUND : CONTINUITY WITH THE LUGGAGE COMPARTMENT DOOR TO **UNLOCK** POSITION
(B) 14-GROUND : CONTINUITY WITH THE ENGINE HOOD OPEN
(B) 4-GROUND : CONTINUITY WITH THE LUGGAGE COMPARTMENT DOOR OPEN
(B) 8-GROUND : CONTINUITY WITH THE DOOR LOCK CONTROL SW TO **UNLOCK** POSITION
(B) 5-GROUND : CONTINUITY WITH THE DOOR LOCK CONTROL SW TO **LOCK** POSITION
(B) 25-GROUND : APPROX. **12** VOLTS WITH THE SHIFT LEVER IN **N** OR **P** POSITION AND THE IGNITION SW AT **ST** POSITION (A/T)
: APPROX. **12** VOLTS WITH THE CLUTCH PEDAL FULLY DEPRESSED (M/T)
(A) 7-GROUND : APPROX. **12** VOLTS WITH THE IGNITION SW AT **ON** POSITION
(B) 20-GROUND : CONTINUITY WITH THE IGNITION KEY IN CYLINDER
(B) 15-GROUND : CONTINUITY WITH THE LH DOOR TO **UNLOCK** POSITION
(B) 21-GROUND : CONTINUITY WITH THE RH DOOR TO **UNLOCK** POSITION
(B) 6-GROUND : CONTINUITY WITH THE DOOR KEY LOCK AND UNLOCK SW LH TO **UNLOCK** POSITION
(B) 16-GROUND : CONTINUITY WITH THE DOOR KEY LOCK AND UNLOCK SW RH TO **UNLOCK** POSITION
(B) 22-GROUND : CONTINUITY WITH THE DOOR KEY LOCK AND UNLOCK SW TO **LOCK** POSITION
(A) 4-GROUND : ALWAYS CONTINUITY
(B) 1-GROUND : ALWAYS APPROX. **12** VOLTS

: PARTS LOCATION

CODE	SEE PAGE	CODE	SEE PAGE	CODE	SEE PAGE
C 9	28	D16	30	P 8	30
D10	30	E 6	24 (2JZ-GTE)	T 1	25 (2JZ-GTE)
D11	30		26 (2JZ-GE)		27 (2JZ-GE)
D12	30	L 3	30	T 5	29
D13	30	L 5	30	T 7 A	29
D14	30	P 2	25 (2JZ-GTE)	T13 B	29
D15	30		27 (2JZ-GE)	U 1	29

: RELAY BLOCKS

CODE	SEE PAGE	RELAY BLOCKS (RELAY BLOCK LOCATION)
2	22	R/B NO. 2 (ENGINE COMPARTMENT LEFT)

: JUNCTION BLOCK AND WIRE HARNESS CONNECTOR

CODE	SEE PAGE	JUNCTION BLOCK AND WIRE HARNESS (CONNECTOR LOCATION)
1B	20	ENGINE ROOM MAIN WIRE AND J/B NO. 1 (LEFT KICK PANEL)
1D	20	FRONT DOOR LH WIRE AND J/B NO. 1 (LEFT KICK PANEL)
1E	20	INSTRUMENT PANEL WIRE AND J/B NO. 1 (LEFT KICK PANEL)
1H	20	COWL WIRE AND J/B NO. 1 (LEFT KICK PANEL)
1I		
1J		
1K		
2A	22	BATTERY AND J/B NO.2 (ENGINE COMPARTMENT LEFT)

: CONNECTOR JOINING WIRE HARNESS AND WIRE HARNESS

CODE	SEE PAGE	JOINING WIRE HARNESS AND WIRE HARNESS (CONNECTOR LOCATION)
EA1	32 (2JZ-GTE) 34 (2JZ-GE)	ENGINE WIRE AND ENGINE ROOM MAIN WIRE (NEAR THE R/B NO. 2)
IB2	36	ENGINE ROOM MAIN WIRE AND COWL WIRE (LEFT KICK PANEL)
IB6	36	ENGINE ROOM MAIN WIRE AND COWL WIRE (RIGHT KICK PANEL)
IC2	36	FLOOR NO. 2 WIRE AND COWL WIRE (LEFT KICK PANEL)
ID1	36	FRONT DOOR LH WIRE AND INSTRUMENT PANEL WIRE (LEFT KICK PANEL)
IE1	36	INSTRUMENT PANEL WIRE AND FLOOR NO. 2 WIRE (LEFT KICK PANEL)
IF1 IF2	36	INSTRUMENT PANEL WIRE AND COWL WIRE (INSTRUMENT PANEL REINFORCEMENT LH)
IF3	36	INSTRUMENT PANEL WIRE AND COWL WIRE (RIGHT KICK PANEL)
II1	38	ENGINE WIRE AND INSTRUMENT PANEL WIRE (RIGHT KICK PANEL)
IJ1 IJ2	38	ENGINE WIRE AND COWL WIRE (RIGHT KICK PANEL)
IL1	38	FRONT DOOR RH WIRE AND INSTRUMENT PANEL WIRE (RIGHT KICK PANEL)

: GROUND POINTS

CODE	SEE PAGE	GROUND POINTS LOCATION
EA	32 (2JZ-GTE) 34 (2JZ-GE)	FRONT SIDE OF RIGHT FENDER
IE	36	LEFT KICK PANEL
IG IH	36	RIGHT KICK PANEL
BI	40	LEFT QUARTER PILLAR
BJ	40	LOWER BACK PANEL CENTER

: SPLICE POINTS

CODE	SEE PAGE	WIRE HARNESS WITH SPLICE POINTS	CODE	SEE PAGE	WIRE HARNESS WITH SPLICE POINTS
I 2	38	COWL WIRE	I21	38	INSTRUMENT PANEL WIRE
I 4			B 1	40	FRONT DOOR LH WIRE
I19	38	INSTRUMENT PANEL WIRE	B 2	40	FRONT DOOR RH WIRE

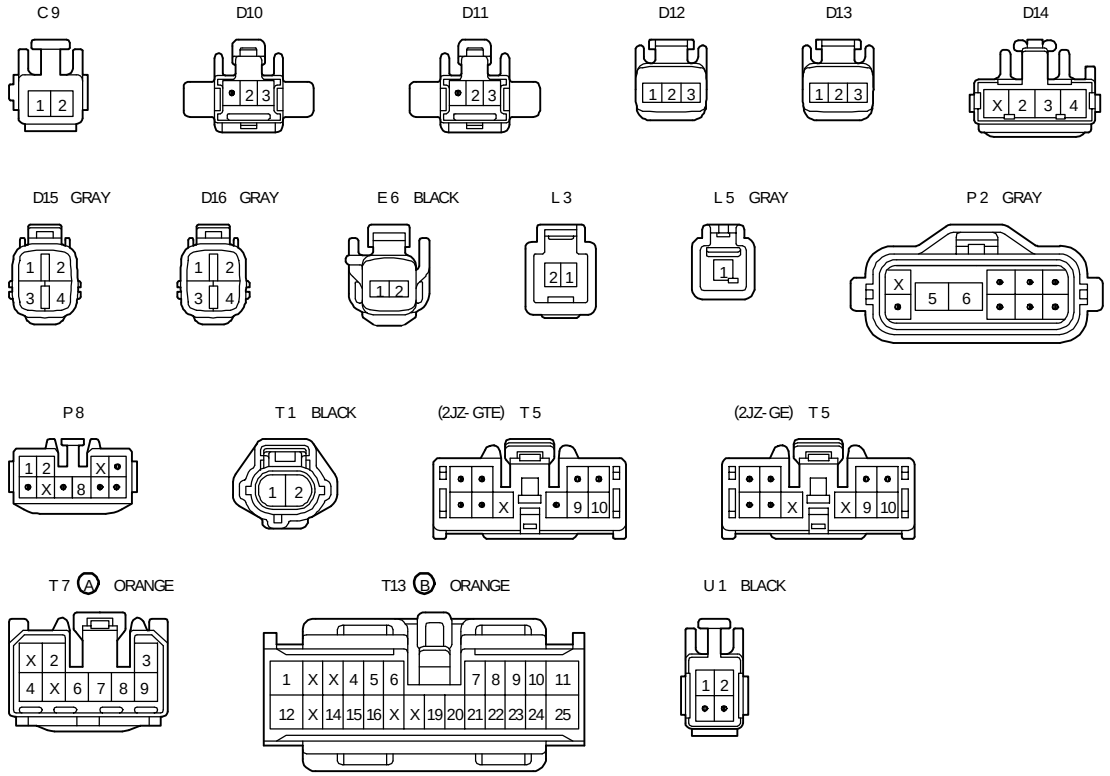

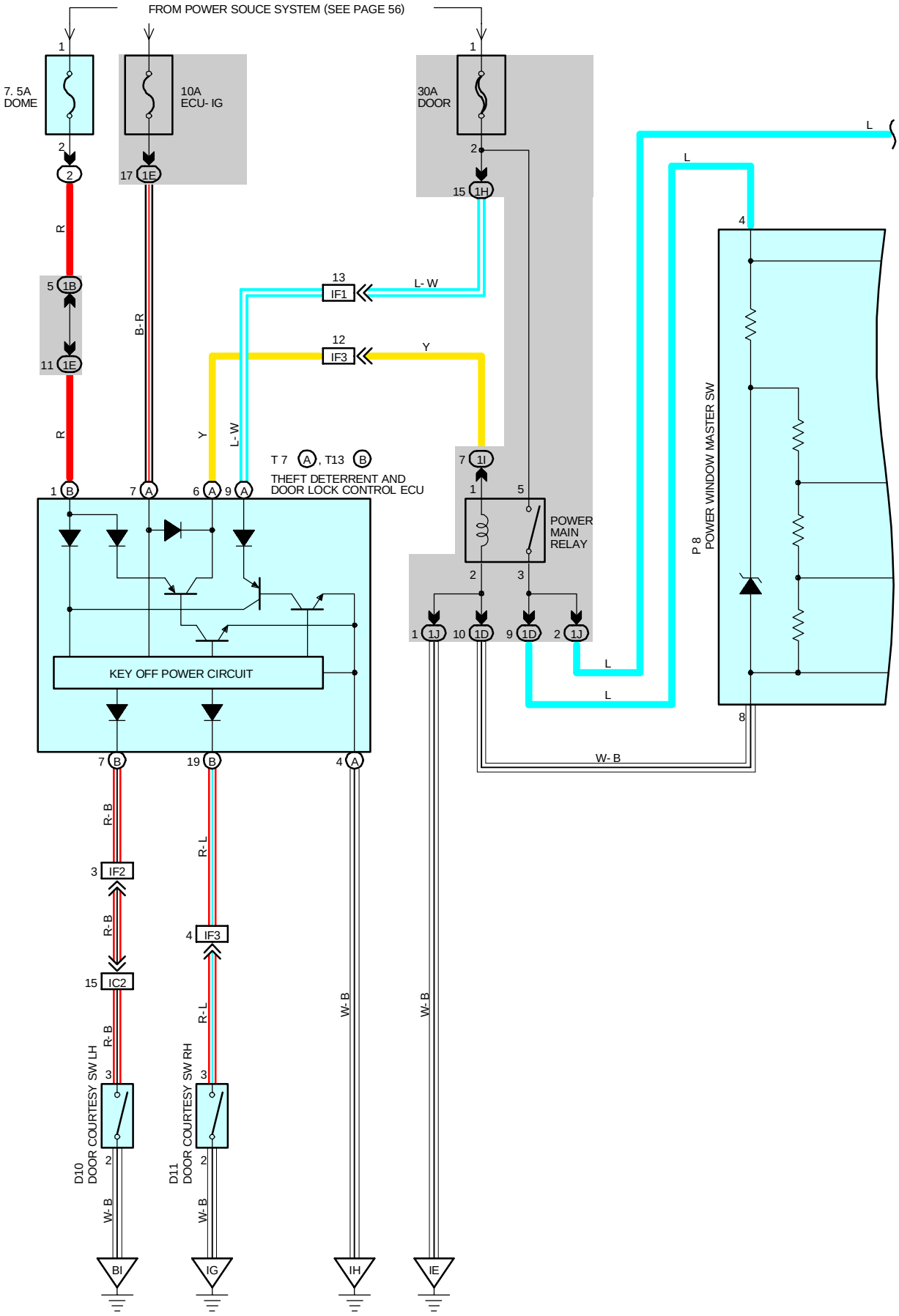
FROM POWER SOUCE SYSTEM (SEE PAGE 56)
7. 5A DOME
10A ECU- IG
30A DOOR
R
B-R
L- W
Y
L
T 7 A, T13 B
THEFT DETERRENT AND DOOR LOCK CONTROL ECU
POWER MAIN RELAY
P 8 POWER WINDOW MASTER SW
KEY OFF POWER CIRCUIT
W- B
R- B
R- L
IF1
IF2
IF3
IC2
D10 DOOR COURTESY SW LH
D11 DOOR COURTESY SW RH
BI
IG
IH
IE

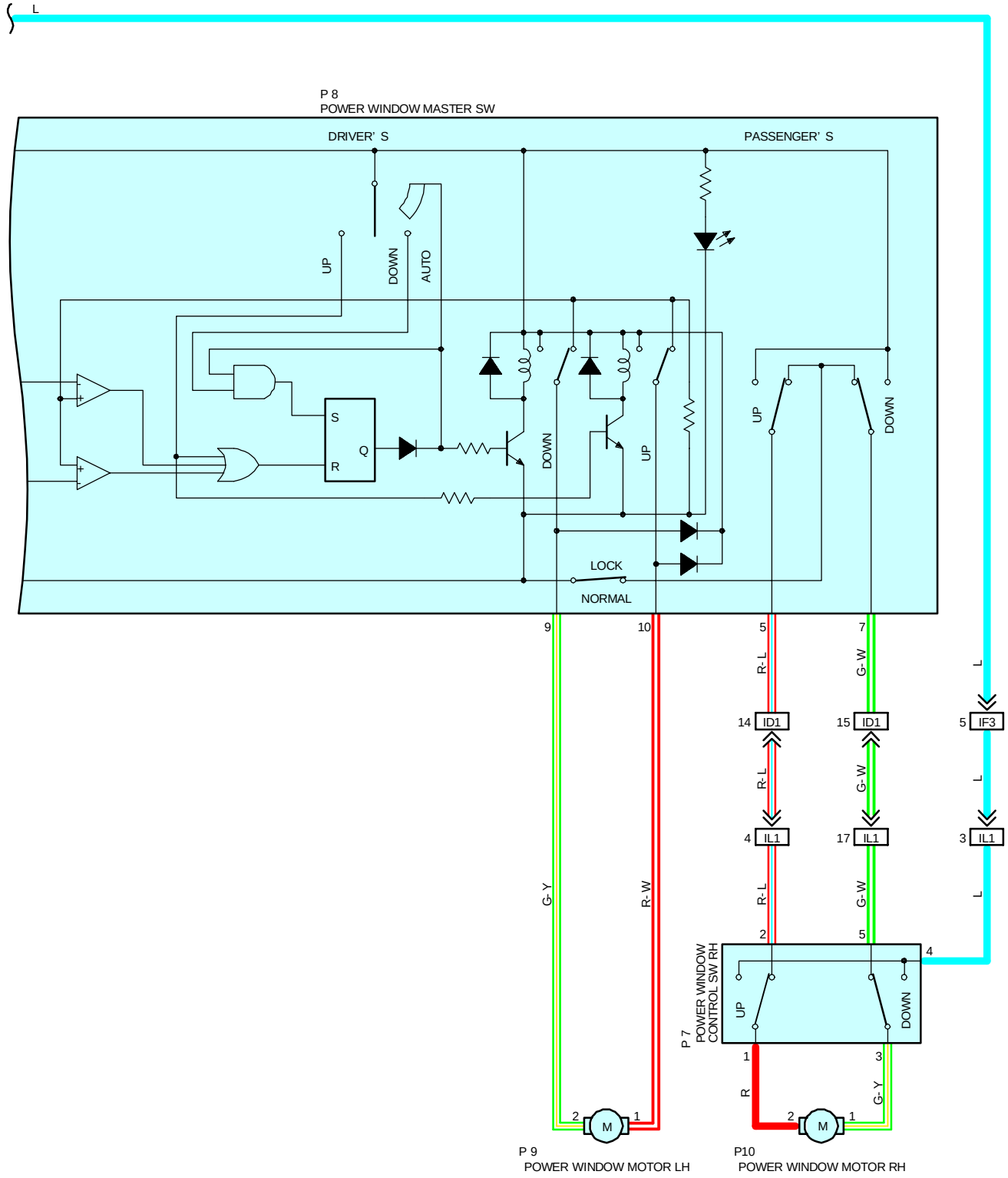
L
P 8
POWER WINDOW MASTER SW
DRIVER' S
PASSENGER' S
UP
DOWN
AUTO
S
Q
R
DOWN
UP
UP
DOWN
LOCK
NORMAL
9
10
5
7
R- L
G- W
L
14
ID1
15
ID1
5
IF3
R- L
G- W
L
4
IL1
17
IL1
3
IL1
G- Y
R- W
R- L
G- W
L
2
5
4
POWER WINDOW
CONTROL SW RH
P 7
UP
DOWN
1
3
R
G- Y
2
M
1
2
M
1
P 9
POWER WINDOW MOTOR LH
P10
POWER WINDOW MOTOR RH

SYSTEM OUTLINE

WITH THE IGNITION SW TURNED ON, THE CURRENT FLOWS THROUGH THE **ECU-IG** FUSE TO → **TERMINAL (A)7** OF THE THEFT DETERRENT AND DOOR LOCK CONTROL ECU → **TERMINAL (A)6** → **TERMINAL 1** OF THE POWER MAIN RELAY → **TERMINAL 2** → **GROUND,** THIS ACTIVATES THE RELAY AND THE CURRENT FLOWING TO **TERMINAL 5** OF THE RELAY FROM DOOR FUSE FLOWS TO **TERMINAL 3** OF THE RELAY →**TERMINAL 4** OF THE POWER WINDOW MASTER SW AND → **TERMINAL 4** OF THE POWER WINDOW CONTROL SW RH.

1. MANUAL OPERATION (DRIVER'S WINDOW)

WITH THE IGNITION SW TURNED ON AND WITH THE POWER WINDOW MASTER SW (DRIVER'S) AT **UP** POSITION, THE CURRENT FLOWING TO **TERMINAL 4** OF THE POWER WINDOW MASTER SW FLOWS TO **TERMINAL 10** OF THE MASTER SW → **TERMINAL 1** → OF THE POWER WINDOW MOTOR → **TERMINAL 2** → **TERMINAL 9** OF THE MASTER SW → **TERMINAL 8** →**GROUND** AND CAUSES THE POWER WINDOW MOTOR TO ROTATE IN THE UP DIRECTION. THE WINDOW ASCENDS ONLY WHILE THE SW IS BEING PUSHED.

IN DOWN OPERATION, THE FLOW OF CURRENT FROM **TERMINAL 4** OF THE POWER WINDOW MASTER SW TO **TERMINAL 9** OF THE MASTER SW CAUSES THE FLOW OF CURRENT FROM **TERMINAL 2** OF THE POWER WINDOW MOTOR→ **TERMINAL 1** → **TERMINAL 10** OF THE MASTER SW → **TERMINAL 8** →**GROUND,** FLOWING IN THE OPPOSITE DIRECTION TO MANUAL UP OPERATION AND CAUSING THE MOTOR TO ROTATE IN REVERSE, LOWERING THE WINDOW.

2. DRIVER'S WINDOW AUTO DOWN OPERATION

WHEN THE DRIVER'S WINDOW SW IS PUSHED STRONGLY ON THE DOWN SIDE, THE CURRENT FLOWING TO **TERMINAL 4** OF THE POWER WINDOW MASTER SW FLOWS TO THE DOWN CONTACT POINT AND AUTO DOWN CONTACT POINT OF THE DRIVER'S SW.

THIS ACTIVATES THE RELAY (DOWN SIDE) INSIDE THE POWER WINDOW MASTER SW, AND THE HOLD CIRCUIT ALSO TURNS ON AT THE SAME TIME, SO THE RELAY (DOWN SIDE) REMAINS ACTIVATED EVEN WHEN THE SW IS RELEASED.

CURRENT FLOWS AT THIS TIME FROM **TERMINAL 4** OF THE POWER WINDOW MASTER SW → **TERMINAL 9** → **TERMINAL 2** OF **POWER WINDOW MOTOR** → **TERMINAL 1** → **TERMINAL 10** OF POWER WINDOW MASTER SW → **TERMINAL 8** → **GROUND**, SO THE MOTOR CONTINUES TO OPERATE UNTIL THE DRIVER'S WINDOW IS FULLY DOWN.

WHEN THE DRIVER'S WINDOW FINISHES DOWN OPERATION THE HOLD CIRCUIT GOES OFF, SO THE RELAY (DOWN SIDE)) ALSO TURNS OFF. THIS STOPS THE CURRENT FLOWING FROM FROM **TERMINAL 4** OF THE POWER WINDOW MASTER SW TO **TERMINAL 9**, SO THE POWER WINDOW MOTOR STOPS AND AUTO DOWN OPERATION STOPS.

WHEN THE DRIVER'S SW IS PULLED ON THE UP SIDE DURING AUTO DOWN OPERATION, THE HOLD CIRCUIT IS TURNED OFF SO CURRENT FLOWS FROM **TERMINAL 4** OF THE POWER WINDOW MASTER SW TO **TERMINAL 9** IS CUT OFF AND THE POWER WINDOW MOTOR STOPS. IF THE SW REMAINS PULLED UP, THE RELAY (UPSIDE) IS ACTIVATED, SO CURRENT FLOWS FROM **TERMINAL 4** OF THE POWER WINDOW MASTER SW → **TERMINAL 10** → **TERMINAL 1** OF THE POWER WINDOW MOTOR → **TERMINAL 2** → **TERMINAL 9** → **TERMINAL 8** →**GROUND,** THE POWER WINDOW MOTOR ROTATES IN THE UP DIRECTION AND MANUAL UP OPERATION OCCURS WHILE THE SW IS PULLED UP.

3. MANUAL OPERATION BY POWER WINDOW SW (FRONT RH WINDOW)

WITH POWER WINDOW SW (FRONT RH) PULLED TO THE UP SIDE, CURRENT FLOWING FROM **TERMINAL 4** OF THE POWER WINDOW CONTROL SW FLOWS TO **TERMINAL 1** OF THE POWER WINDOW SW → **TERMINAL 2** OF THE POWER WINDOW MOTOR → **TERMINAL 1** → **TERMINAL 3** OF THE POWER WINDOW SW → **TERMINAL 5** → **TERMINAL 7** OF THE MASTER SW → **TERMINAL 8** → **GROUND** AND CAUSES THE POWER WINDOW MOTOR (FRONT RH) TO ROTATE IN THE UP DIRECTION. UP OPERATION CONTINUES ONLY WHILE THE POWER WINDOW SW IS PULLED TO THE UP SIDE. WHEN THE POWER WINDOW SW (FRONT RH) IS PULLED TO THE DOWN SIDE, THE CURRENT FLOWING TO THE MOTOR FLOWS IN THE OPPOSITE DIRECTION, FROM **TERMINAL 1** TO **TERMINAL 2,** AND THE MOTOR ROTATES IN REVERSE. WHEN THE WINDOW LOCK SW IS PUSHED TO THE LOCK SIDE, THE GROUND CIRCUIT TO THE PASSENGER'S WINDOW BECOMES OPEN.

AS A RESULT, EVEN IF OPEN/CLOSE OPERATION OF THE PASSENGER'S WINDOW IS TRIED, THE CURRENT FROM **TERMINAL 8** OF THE POWER WINDOW MASTER SW IS NOT GROUNDED AND THE MOTOR DOES NOT ROTATE, SO THE PASSENGER'S WINDOW CANNOT BE OPERATED AND WINDOW LOCK OCCURS. FURTHERMORE, REAR LH, RH WINDOW OPERATE THE SAME AS THE ABOVE CIRCUIT.

4. KEY OFF POWER WINDOW OPERATION

WITH THE IGNITION SW TURNED FROM ON TO OFF, THE THEFT DETERRENT AND **DOOR** LOCK CONTROL ECU AND CURRENT FLOWS FROM DOOR FUSE **TERMINAL (A) 9** OF THE ECU OR DOME FUSE TO **TERMINAL (B)1** OF THE ECU → **TERMINAL (A) 6** → **TERMINAL 1** OF THE POWER RELAY → **TERMINAL 2** → **GROUND** FOR ABOUT **60** SECONDS. THE SAME AS NORMAL OPERATION, THE CURRENT FLOWS FROM **DOOR** FUSE →**TERMINAL 5** OF THE POWER MAIN RELAY → **TERMINAL 3** → **TERMINAL 4** OF THE POWER WINDOW MASTER SW, AND **TERMINAL 4** OF THE POWER WINDOW CONTROL SW RH. AS A RESULT, FOR ABOUT **60** SECONDS AFTER THE IGNITION SW IS TURNED. THE FUNCTIONING OF THIS RELAY MAKES IT POSSIBLE TO RAISE AND LOWER THE POWER WINDOW ALSO, BY OPENING THE FRONT DOOR (DOOR OPEN DETECTION SW ON ED) WITHIN ABOUT **60** SECONDS AFTER TURNING THE IGNITION SW TO OFF, A SIGNAL IS INPUT TO **TERMINAL (B) 19, (B) 7 OF THE** THEFT DETERRENT AND DOOR LOCK CONTROL ECU. AS A RESULT, THE ECU TURNED OFF AND UP AND DOWN MOVEMENT OF THE POWER WINDOW STOPS.

SERVICE HINTS

P 8 POWER WINDOW MASTER SW

4-GROUND : APPROX. **12** VOLTS WITH THE IGNITION SW AT **ON** POSITION
8-GROUND : ALWAYS CONTINUITY
10-GROUND : APPROX. **12** VOLTS WITH THE IGNITION SW **ON** AND MASTER SW (DRIVER'S WINDOW) AT **UP** POSITION
9-GROUND : APPROX. **12** VOLTS WITH THE IGNITION SW **ON** AND MASTER SW (DRIVER'S WINDOW) AT **DOWN** OR **AUTO DOWN** POSITION

WINDOW LOCK SW

OPEN WITH THE WINDOW LOCK SW AT **LOCK** POSITION

: PARTS LOCATION

CODE	SEE PAGE	CODE	SEE PAGE	CODE		SEE PAGE
D10	30	P 8	25	T 7	A	29
D11	30	P 9	27	T13	B	29
P 7	30	P10	27			

: RELAY BLOCKS

CODE	SEE PAGE	RELAY BLOCKS (RELAY BLOCK LOCATION)
2	22	R/B NO. 2 (ENGINE COMPARTMENT LEFT)

: JUNCTION BLOCK AND WIRE HARNESS CONNECTOR

CODE	SEE PAGE	JUNCTION BLOCK AND WIRE HARNESS (CONNECTOR LOCATION)
1B	20	ENGINE ROOM MAIN WIRE AND J/B NO. 1 (LEFT KICK PANEL)
1D	20	FRONT DOOR LH WIRE AND J/B NO. 1 (LEFT KICK PANEL)
1E	20	INSTRUMENT PANEL WIRE AND J/B NO. 1 (LEFT KICK PANEL)
1H	20	COWL WIRE AND J/B NO. 1 (LEFT KICK PANEL)
1I		
1J		

: CONNECTOR JOINING WIRE HARNESS AND WIRE HARNESS

CODE	SEE PAGE	JOINING WIRE HARNESS AND WIRE HARNESS (CONNECTOR LOCATION)
IC2	36	FLOOR NO. 2 WIRE AND COWL WIRE (LEFT KICK PANEL)
ID1	36	FRONT DOOR LH WIRE AND INSTRUMENT PANEL WIRE (LEFT KICK PANEL)
IF1	36	INSTRUMENT PANEL WIRE AND COWL WIRE (INSTRUMENT PANEL REINFORCEMENT LH)
IF2	36	INSTRUMENT PANEL WIRE AND COWL WIRE (INSTRUMENT PANEL REINFORCEMENT LH)
IF3	36	INSTRUMENT PANEL WIRE AND COWL WIRE (RIGHT KICK PANEL)
IL1	38	FRONT DOOR RH WIRE AND INSTRUMENT PANEL WIRE (RIGHT KICK PANEL)

: GROUND POINTS

CODE	SEE PAGE	GROUND POINTS LOCATION
IE	36	LEFT KICK PANEL
IG	36	RIGHT KICK PANEL
IH		
BI	40	LEFT QUARTER PILLAR

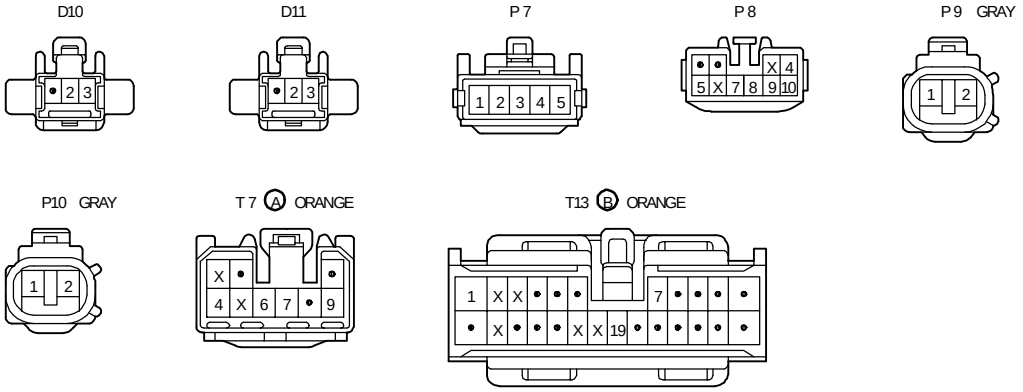

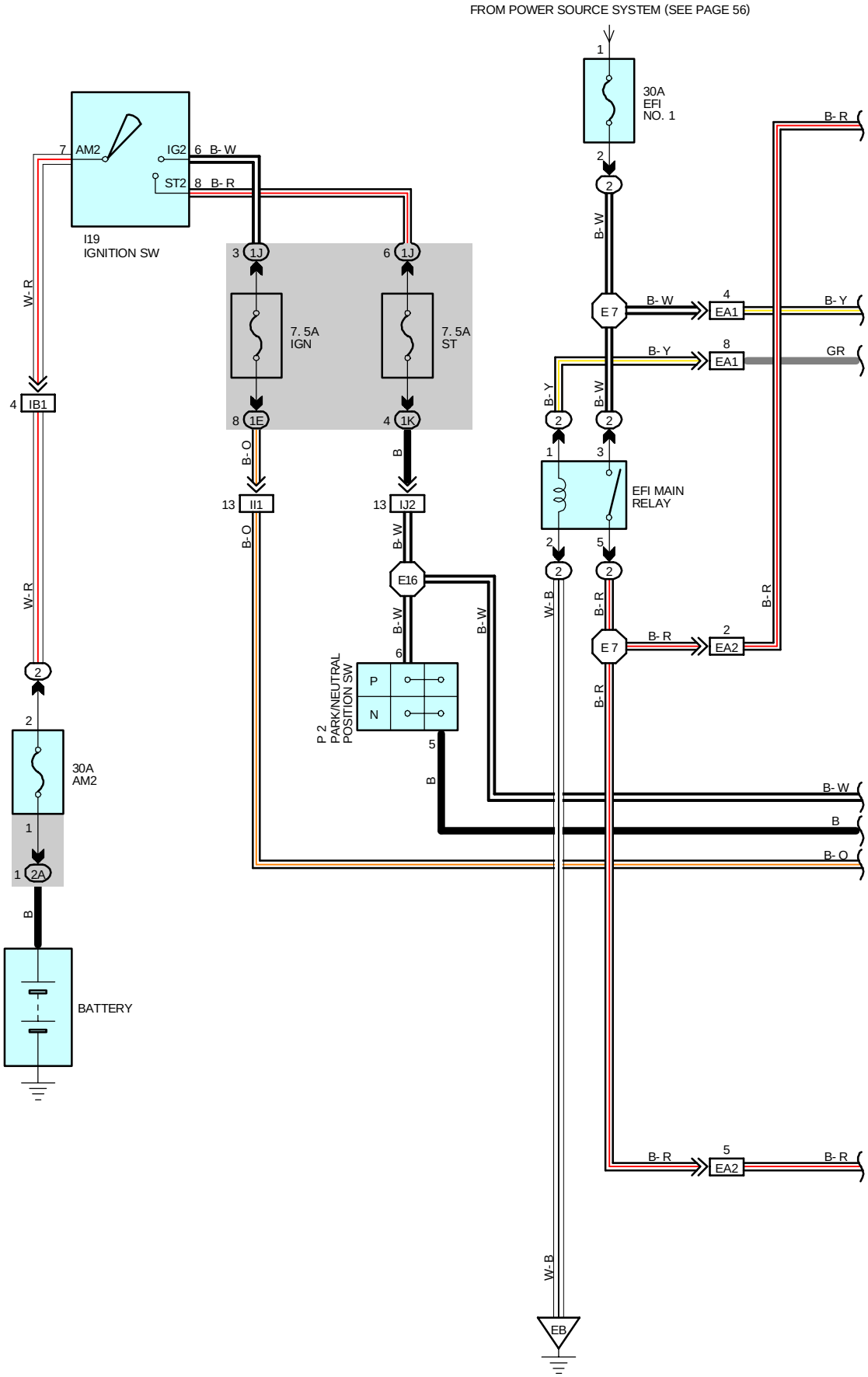
FROM POWER SOURCE SYSTEM (SEE PAGE 56)
30A
EFI
NO. 1
I19
IGNITION SW
AM2
IG2
ST2
7. 5A
IGN
7. 5A
ST
IB1
II1
IJ2
E16
E7
EA1
EA2
EFI MAIN
RELAY
P 2
PARK/NEUTRAL
POSITION SW
P
N
30A
AM2
BATTERY
EB
W- R
B- W
B- R
B- Y
GR
B- O
B
W- B

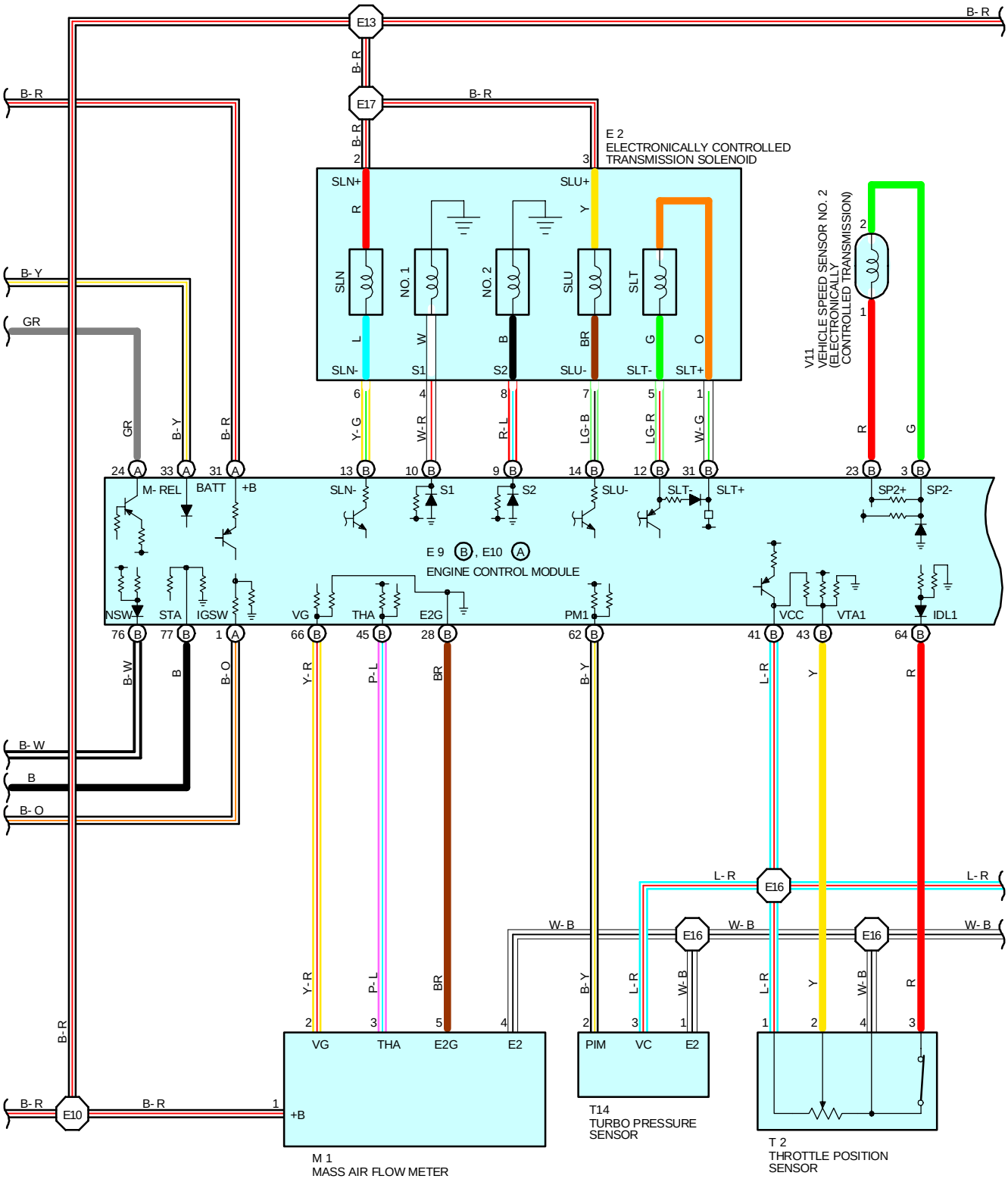
E13
E17
E10
E16
B- R
B- Y
GR
B- W
B
B- O
E 2
ELECTRONICALLY CONTROLLED
TRANSMISSION SOLENOID
SLN+
SLU+
SLN
NO. 1
NO. 2
SLU
SLT
SLN-
S1
S2
SLU-
SLT-
SLT+
V11
VEHICLE SPEED SENSOR NO. 2
(ELECTRONICALLY
CONTROLLED TRANSMISSION)
M- REL
BATT
+B
SP2+
SP2-
E 9 B, E10 A
ENGINE CONTROL MODULE
NSW
STA
IGSW
VG
THA
E2G
PM1
VCC
VTA1
IDL1
PIM
VC
E2
M 1
MASS AIR FLOW METER
T14
TURBO PRESSURE
SENSOR
T 2
THROTTLE POSITION
SENSOR

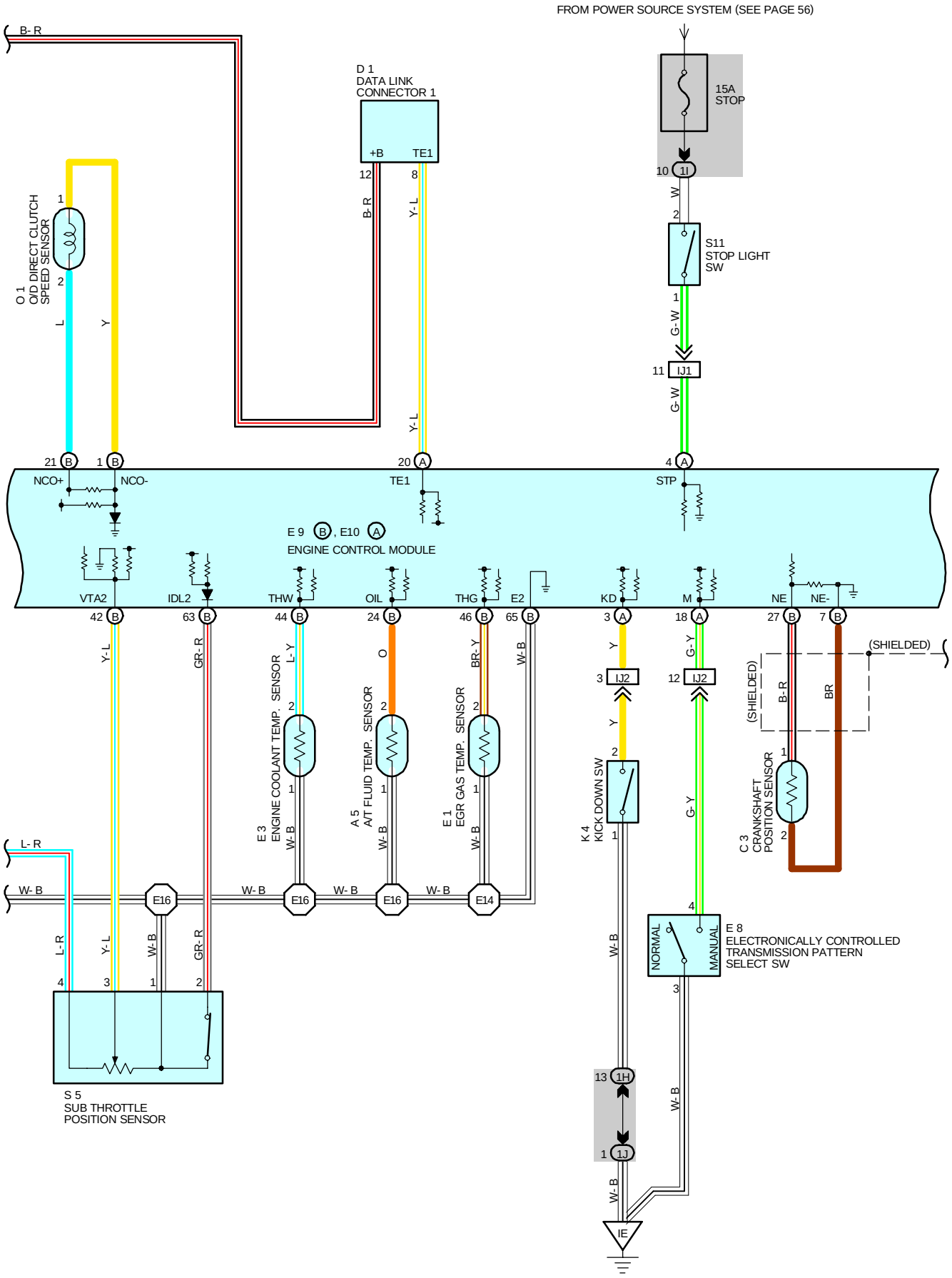
FROM POWER SOURCE SYSTEM (SEE PAGE 56)
B- R
D 1
DATA LINK
CONNECTOR 1
+B
TE1
12
8
B- R
Y- L
15A
STOP
10
1I
W
2
S11
STOP LIGHT
SW
1
G- W
11
IJ1
G- W
O 1
O/D DIRECT CLUTCH
SPEED SENSOR
1
2
L
Y
Y- L
21
1
20
4
NCO+
NCO-
TE1
STP
E 9 , E10
ENGINE CONTROL MODULE
VTA2
IDL2
THW
OIL
THG
E2
KD
M
NE
NE-
42
63
44
24
46
65
3
18
27
7
Y- L
GR- R
L- Y
O
BR- Y
W- B
Y
G- Y
(SHIELDED)
3
IJ2
12
IJ2
B- R
BR
E 3
ENGINE COOLANT TEMP. SENSOR
A 5
A/T FLUID TEMP. SENSOR
E 1
EGR GAS TEMP. SENSOR
K 4
KICK DOWN SW
C 3
CRANKSHAFT
POSITION SENSOR
L- R
W- B
E16
E16
E16
E14
NORMAL
MANUAL
E 8
ELECTRONICALLY CONTROLLED
TRANSMISSION PATTERN
SELECT SW
S 5
SUB THROTTLE
POSITION SENSOR
13
1H
1
1J
IE

AND A/T INDICATOR (2JZ-GTE)

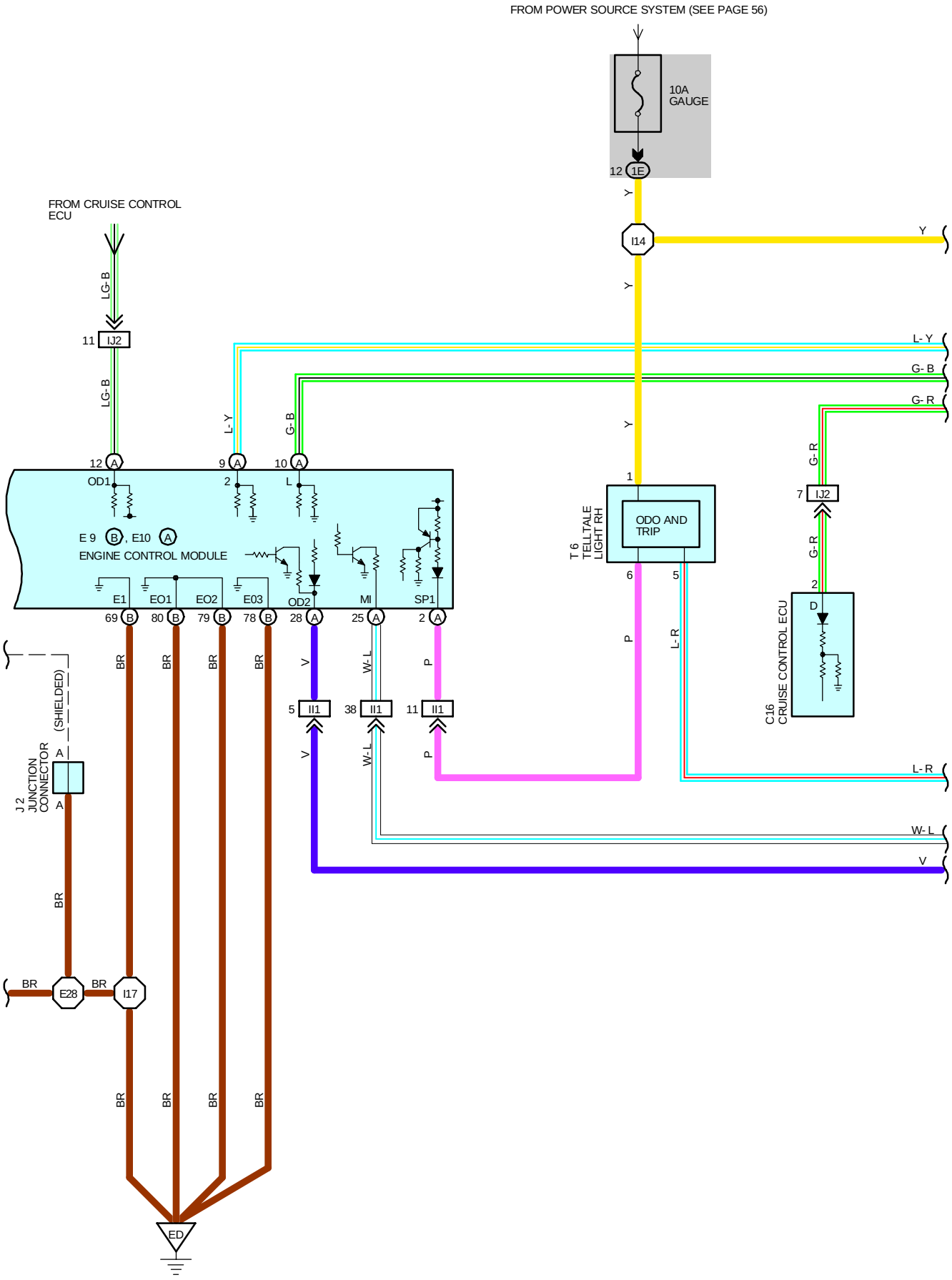

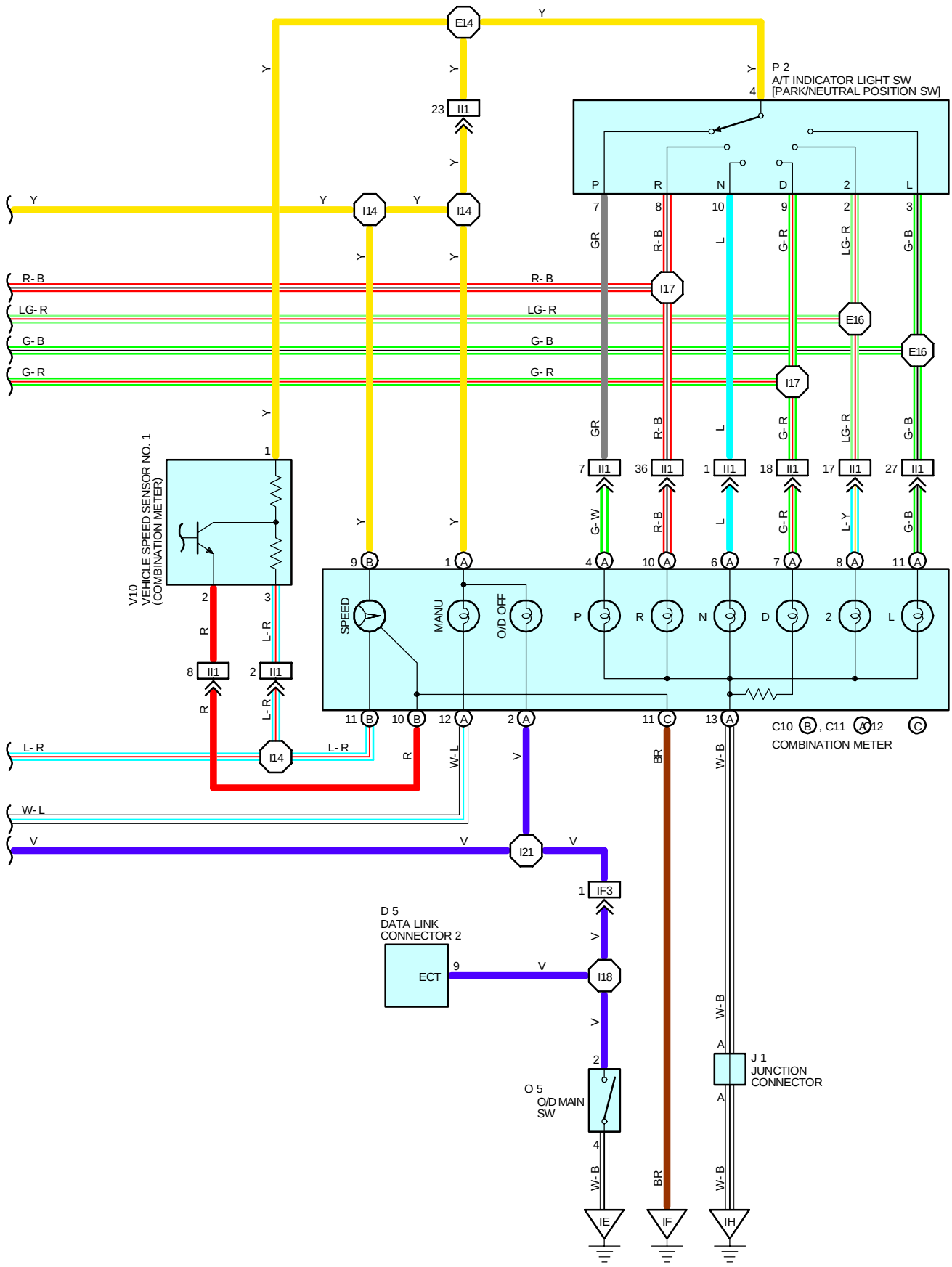
E14
P 2
A/T INDICATOR LIGHT SW
[PARK/NEUTRAL POSITION SW]
I14
I17
E16
I21
IF3
I18
V10
VEHICLE SPEED SENSOR NO. 1
(COMBINATION METER)
SPEED
MANU
O/D OFF
C10 B , C11 A 12 C
COMBINATION METER
D 5
DATA LINK
CONNECTOR 2
ECT
O 5
O/D MAIN
SW
J 1
JUNCTION
CONNECTOR
IE
IF
IH

SYSTEM OUTLINE

THIS SYSTEM ELECTRICALLY CONTROLS THE LINE PRESSURE, THROTTLE PRESSURE, LOCK-UP PRESSURE AND ACCUMULATOR PRESSURE ETC. THROUGH THE SOLENOID VALVE. THE ELECTRONICALLY CONTROLLED TRANSMISSION IS A SYSTEM WHICH PRECISELY CONTROLS GEAR SHIFT TIMING AND LOCK-UP TIMING IN RESPONSE TO THE VEHICLE'S DRIVING CONDITIONS AND THE ENGINE OPERATING CONDITIONS DETECTED BY VARIOUS SENSORS, MAKING SMOOTH DRIVING POSSIBLE BY SHIFT SELECTION FOR EACH GEAR WHICH IS THE MOST APPROPRIATE TO THE DRIVING CONDITIONS AT THAT TIME, AND CONTROLS THE ENGINE TORQUE DURING SHIFTING TO ACHIEVE OPTIMUM SHIFT FEELING.

1. GEAR SHIFT OPERATION

WHEN DRIVING, THE ENGINE WARM UP CONDITION IS INPUT AS A SIGNAL TO **TERMINAL (B) 44** OF THE ENGINE CONTROL MODULE FROM THE ENGINE COOLANT TEMP. SENSOR AND THE VEHICLE SPEED SIGNAL FROM VEHICLE SPEED SENSOR NO. 2 IS INPUT TO **TERMINAL (B) 23** OF THE ENGINE CONTROL MODULE. AT THE SAME TIME, THE THROTTLE VALVE OPENING SIGNAL FROM THE THROTTLE POSITION SENSOR (MAIN) IS INPUT TO **TERMINAL (B) 43** OF THE ENGINE CONTROL MODULE AS THROTTLE ANGLE SIGNAL.

BASED ON THESE SIGNALS, THE ENGINE CONTROL SELECTS THE BEST SHIFT POSITION FOR DRIVING CONDITIONS AND SENDS CURRENT TO THE ELECTRONICALLY CONTROLLED TRANSMISSION SOLENOIDS.

WHEN SHIFTING TO 1ST SPEED, THE CURRENT FLOWS FROM **TERMINAL (B) 10** OF THE ENGINE CONTROL MODULE → **TERMINAL 4** OF ELECTRONICALLY CONTROLLED TRANSMISSION SOLENOID→**GROUND** AND CONTINUITY TO NO. 1 SOLENOID CAUSES THE SHIFT (NO. 2 SOLENOID DOES NOT HAVE CONTINUITY AT THIS TIME.)

FOR 2ND SPEED, THE CURRENT FLOWS SIMULTANEOUSLY FROM **TERMINAL (B) 9** OF THE ENGINE CONTROL MODULE → **TERMINAL 8** OF ELECTRONICALLY CONTROLLED TRANSMISSION SOLENOID → **GROUND** AND FROM **TERMINAL (B) 10** OF THE ENGINE CONTROL MODULE → **TERMINAL 4** OF ELECTRONICALLY CONTROLLED TRANSMISSION SOLENOID → **GROUND,** AND CONTINUITY TO NO. 1 AND NO. 2 SOLENOIDS CAUSES THE SHIFT.

FOR 3RD SPEED, THERE IS NO CONTINUITY TO NO. 1 SOLENOID, ONLY TO NO. 2 SOLENOID, CAUSING THE SHIFT.

SHIFTING INTO THE 4TH SPEED (OVERDRIVE) OCCURS WHEN NO CURRENT FLOWS TO NO. 1 AND NO. 2 SOLENOIDS. THE NO. 4 SOLENOID (FOR ACCUMULATOR BACK PRESSURE MODULATION) IS INSTALLED TO ADJUST THE BACK PRESSURE ON THE ACCUMULATOR AND CONTROLS THE HYDRAULIC PRESSURE DURING SHIFTING AND LOCK-UP IN ORDER TO PROVIDE SMOOTH SHIFTING WITH LITTLE SHIFT SHOCK.

2. LOCK-UP OPERATION

WHEN THE ENGINE CONTROL MODULE DECIDES BASED ON EACH SIGNAL THAT THE LOCK-UP CONDITION HAS BEEN MET, THE CURRENT THROUGH EFI NO. 1 FUSE FLOWS FROM THE EFI MAIN RELAY → **TERMINAL 3** OF ELECTRONICALLY CONTROLLED TRANSMISSION SOLENOID → **TERMINAL 7**→ **TERMINAL (B) 14** OF THE ENGINE CONTROL MODULE → **GROUND**,SO CONTINUITY TO NO. 3 (FOR LOCK-UP) CAUSES LOCK-UP.

3. STOP LIGHT SW CIRCUIT

IF THE BRAKE PEDAL IS DEPRESSED (STOP LIGHT SW ON) WHEN DRIVING IN LOCK-UP CONDITION, A SIGNAL IS INPUT TO **TERMINAL(A) 4** OF THE ENGINE CONTROL MODULE. THE ENGINE CONTROL MODULE OPERATES AND CUTS THE CURRENT TO THE SOLENOID.TO RELEASE LOCK-UP.

4. OVERDRIVE CIRCUIT

∗ O/D MAIN SW ON

WHEN THE O/D MAIN SW IS TURNED ON (SW POINT IS OPEN), A SIGNAL IS INPUT TO **TERMINAL (A) 28** OF THE ENGINE CONTROL MODULE, AND THE ELECTRONICALLY CONTROLLED TRANSMISSION CAUSES SHIFT TO OVERDRIVE WHEN THE CONDITIONS FOR OVERDRIVE ARE MET.

∗ O/D MAIN SW OFF

WHEN THE O/D MAIN SW IS TURNED OFF (SW POINT IS CLOSED), THE CURRENT FLOWING THROUGH THE O/D OFF INDICATOR LIGHT FLOWS TO **GROUND** BY WAY OF THE O/D MAIN SW AND CAUSES THE O/D OFF INDICATOR LIGHT TO LIGHT UP. AT THE SAME TIME, A SIGNAL IS INPUT TO **TERMINAL (A) 28** OF THE ENGINE CONTROL MODULE AND THE ELECTRONICALLY CONTROLLED TRANSMISSION PREVENTS SHIFT INTO OVERDRIVE.

5. ELECTRONICALLY CONTROLLED TRANSMISSION PATTERN SELECT SW CIRCUIT

WHEN THE ELECTRONICALLY CONTROLLED TRANSMISSION PATTERN SELECT SW IS SWITCHED FROM NORMAL TO MANUAL, A SIGNAL IS INPUT TO **TERMINAL (A) 18** OF THE ENGINE CONTROL MODULE. INPUT OF THIS SIGNAL CAUSES CURRENT TO FLOW FROM THE **GAUGE** FUSE TO **TERMINAL (A) 1** OF THE COMBINATION METER → **TERMINAL (A) 12**→ **TERMINAL (A) 25** OF THE ENGINE CONTROL MODULE → **GROUND,** LIGHTING UP THE INDICATOR LIGHT. IF THE A/T SHIFT LEVER IS THEN SHIFTED **TO "2"** POSITION, THE ENGINE CONTROL MODULE ENABLES THE VEHICLE TO START OFF WITH THE TRANSMISSION IS 2ND GEAR, THUS PERMITTING EASING STARTING OFF AND DRIVING ON SLIPPERY ROADS.

6. CRUISE CONTROL

WHEN CRUISE CONTROL OPERATION IS SELECTED A SIGNAL IS INPUT TO **TERMINAL (A) 12** OF THE ENGINE CONTROL MODULE FROM CRUISE CONTREOL ECU. AS A RESULT, THE ENGINE CONTROL MODULE OPERATES AND CONTROLS OVERDRIVE, LOCK-UP AND SO ON FOR SMOOTH DRIVING.

SERVICE HINTS

E2 ELECTRONICALLY CONTROLLED TRANSMISSION SOLENOID

8-GROUND:APPROX. **13.2Ω:**
4-GROUND:APPROX. **13.2Ω:**
6.2:APPROX. **8.3 Ω:**
7.3:APPROX. **3.8 Ω:**
1.5:APPROX. **3.8 Ω:**

E 3 ENGINE COOLANT TEMP. SENSOR

1-2:1- **10-20** KΩ μ– **20•C** –**4•F**
4-7 KΩ (**0•C** –**32•F**
2-3 KΩ μ**20•C** –**68•F**
0.9-1.3 KΩ μ **40•C** - **104•F**
0.4-0.7 KΩ μ **60•C** –**140•F**
0.2-0.4 KΩ μ **80•C** –**176•F**

E 9 (B), E10 (A) ENGINE CONTROL MODULE

BATT-E1:AL WAYS **9-14** VOLTS
IGSW-E1: **9-14** VOLTS WITH THE IGNITION SW ON
+B-E:**9-14** VOLTS WITH THE IGNITION SW ON
IDL1-E1:**0-1.5** VOLTS WITH THE IGNITION SW ON AND THE THROTTLE VALVE FULLY CLOSED
9-14 VOLTS WITH THE IGNITION SW ON AND THE THROTTLE VALVE FULLY OPEN
VTA1-E1: **0.3-0.8** VOLTS WITH THE IGNITION SW ON AND THE THROTTLE VALVE FULLY CLOSED
3.2-4.9 VOLTS WITH THE IGNITION SW ON AND THE THROTTLE VALVE FULLY OPEN
STA-E1: **6-14** VOLTS WITH THE ENGINE CRANKING
M-REL-E1: **9-14** VOLTS WITH THE IGNITION SW ON
VCC-E1:**4.5-5.5** VOLTS WITH THE IGNITION SW ON
L-E1:APPROX. **7.5-14** VOLTS WITH THE SHIFT LEVER AT "**L**" POSITION
2-E1:APPROX. **7.5-14** VOLTS WITH THE SHIFT LEVER AT **"2"** POSITION
R-E1:APPROX. **7.5-14** VOLTS WITH THE SHIFT LEVER AT "**R**" POSITION

0 1 O/D DIRECT CLUTCH SPEED SENSOR

1-2:APPROX. **620 Ω:**

V11 VEHICLE SPEED SENSOR NO. 2 (ELECTRONICALLY CONTROLLED TRANSMISION)

1-2:APPROX. **620 Ω:**

E 8 ELECTRONICALLY CONTROLLED TRANSMISSION PATTERN SELECT SW

4-3:CLOSED WITH ELECTRONICALLY CONTROLLED TRANSMISSION PATTERN SELECT SW AT MANUAL POSITION

: PARTS LOCATION

CODE		SEE PAGE	CODE		SEE PAGE	CODE	SEE PAGE
A 5		24(2JZ-GTE)	E 3		24(2JZ-GTE)	0 5	29
C 3		24(2JZ-GTE)	E 8		29	P2	25(2JZ-GTE)
C10	B	28	E 9	B	29	S 5	25
C11	A	28	E10	A	29	S11	29
C12	C	28	I19		29	T 2	25(2JZ-GTE)
C16		28	J 1		29	T 6	29
D 1		24(2JZ-GTE)	J 2		29	T14	25
D 5		28	K 4		29	V10	25(2JZ-GTE)
E 1		24(2JZ-GTE)	M 1		25	V11	25(2JZ-GTE)
E 2		24(2JZ-GTE)	0 1		25		

: RELAY BLOCKS

CODE	SEE PAGE	RELAY BLOCKS (RELAY BLOCK LOCATION)
2	22	R/B NO. 2 (ENGINE COMPARTMENT LEFT)

: JUNCTION BLOCK AND WIRE HARNESS CONNECTOR

CODE	SEE PAGE	JUNCTION BLOCK AND WIRE HARNESS (CONNECTOR LOCATION)
IE	20	INSTRUMENT PANEL WIRE AND J/B NO. 1 (LEFT KICK PANEL)
1H	20	COWL WIRE AND J/B NO. 1 (LEFT KICK PANEL)
1I		
1J		
1K		
2A	22	BATTERY AND J/B NO. 2 (ENGINE COMPARTMENT LEFT)

AND A/T INDICATOR (2JZ-GTE)

: CONNECTOR JOINING WIRE HARNESS AND WIRE HARNESS

CODE	SEE PAGE	JOINING WIRE HARNESS AND WIRE HARNESS (CONNECTOR LOCATION)
EA1	32(2JZ-GTE)	ENGINE WIRE AND ENGINE ROOM MAIN WIRE (NEAR THE R/B NO. 2)
EA2	32	
IB1	36	ENGINE ROOM MAIN WIRE AND COWL WIRE (LEFT KICK PANEL)
IF3	36	INSTRUMENT PANEL AND COWL WIRE (RIGHT KICK PANEL)
II1	38	ENGINE WIRE AND INSTRUMENT PANEL (RIGHT KICK PANEL)
IJ1	38	ENGINE WIRE AND COWL WIRE (RIGHT KICK PANEL)
IJ2		

: GROUND POINTS

CODE	SEE PAGE	GROUND POINTS LOCATION
EB	32(2JZ-GTE)	FRONT SIDE OF LEFT FENDER
ED	32(2JZ-GTE)	REAR SIDE OF INTAKE MANIFOLD
IE	36	LEFT KICK PANEL
IF		
IH	36	RIGHT KICK PANEL

: SPLICE POINTS

CODE	SEE PAGE	WIRE HARNESS WITH SPLICE POINTS	CODE	SEE PAGE	WIRE HARNESS WITH SPLICE POINTS
E 7	32	ENGINE ROOM MAIN WIRE	E17	32	ENGINE WIRE
E10	32	ENGINE WIRE	I14	38	INSTRUMENT PANEL WIRE
E13			I17	38	ENGINE WIRE
E14			I18	38	COWL WIRE
E16			I21	38	INSTRUMENT PANEL WIRE

A 5 GRAY

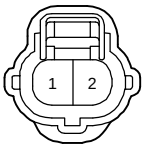

C 3 DARK GRAY

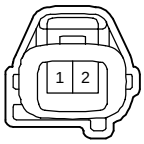

C10 (B) BLUE

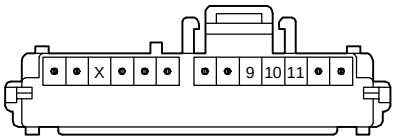

C11 (A) BROWN

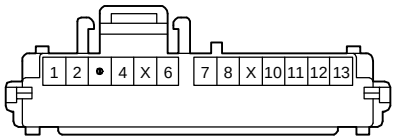

C12 (C)

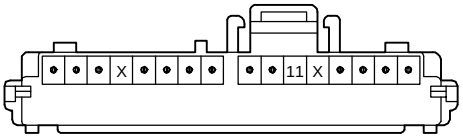

C16 GREEN

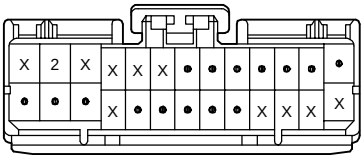

D 1 BLACK

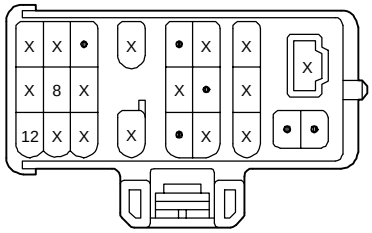

D 5 DARK GRAY

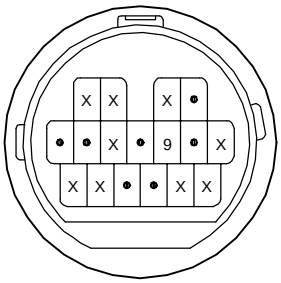

E 1 DARK GRAY

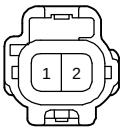

E 2 GRAY

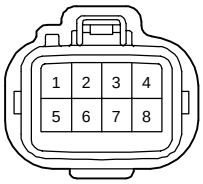

E 3 DARK GRAY

E 8

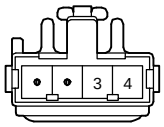

E9 (B) DARK GRAY

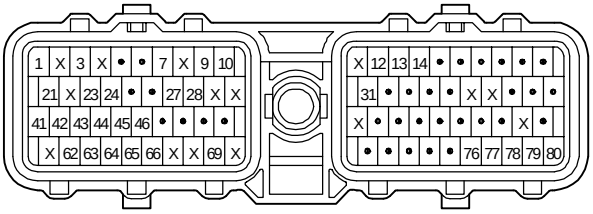

E10 (A) DARK GRAY

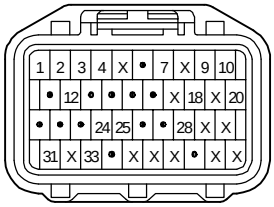

I19

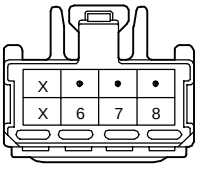

J1

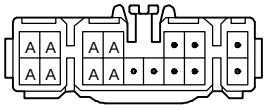

(HINT : SEE PAGE 7)

J2

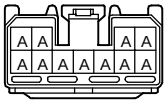

(HINT : SEE PAGE 7)

K4 BLACK

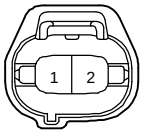

M1 BLACK

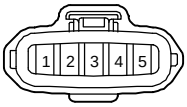

O1 BLACK

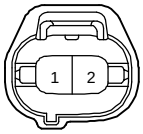

O5 BLUE

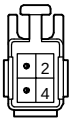

P2 GRAY

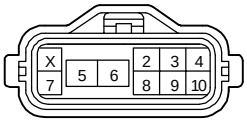

S5 BLACK

S11 BLUE

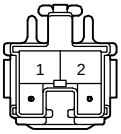

T2 BLACK

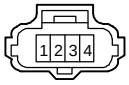

T6

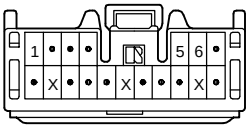

T14 BLACK

V10 BLACK

V11 BLACK

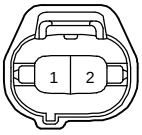

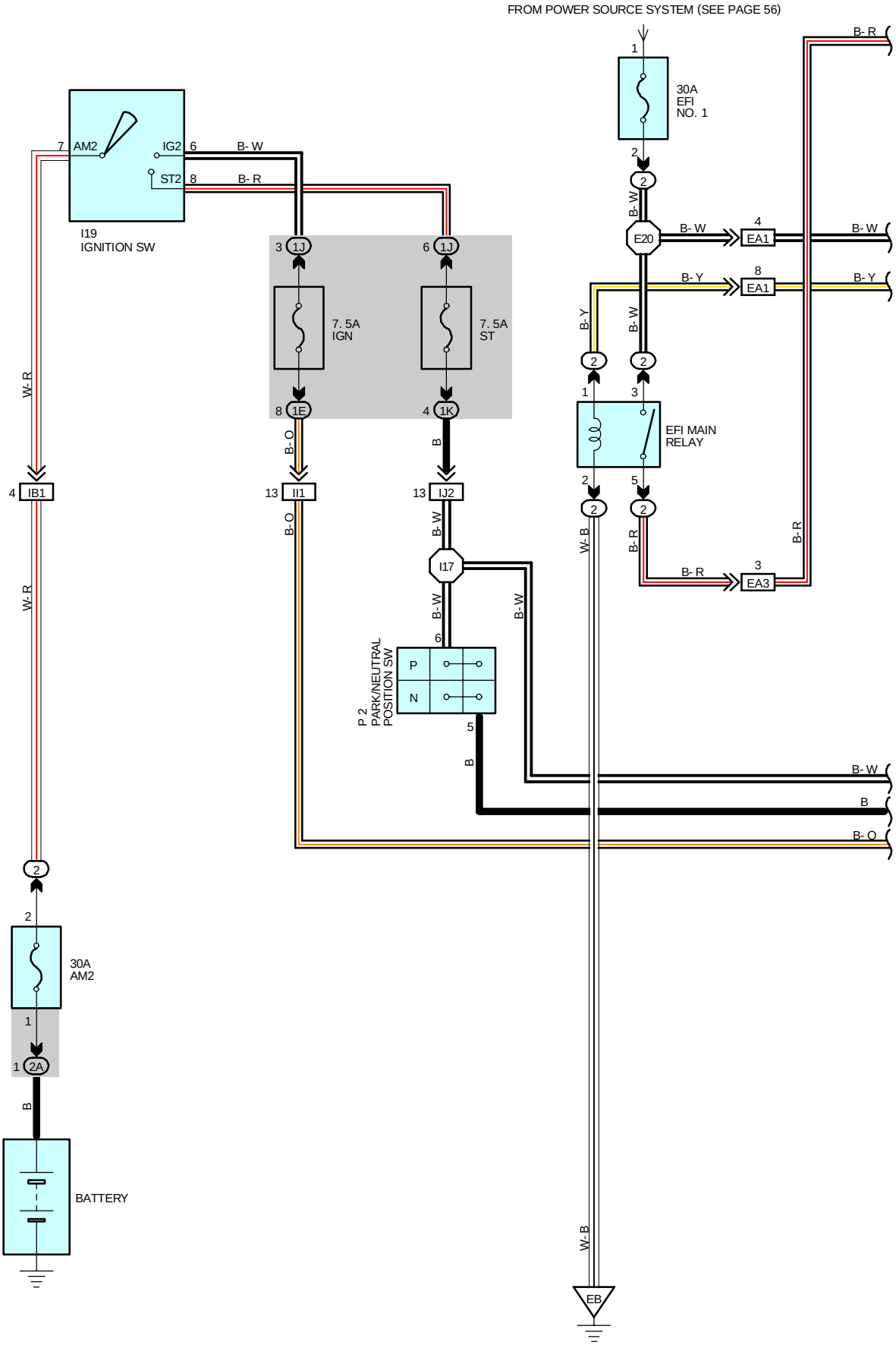
FROM POWER SOURCE SYSTEM (SEE PAGE 56)
30A
EFI
NO. 1
AM2
IG2
ST2
I19
IGNITION SW
B- W
B- R
7. 5A
IGN
7. 5A
ST
E20
EA1
EA3
B- Y
EFI MAIN
RELAY
IB1
II1
IJ2
I17
P 2
PARK/NEUTRAL
POSITION SW
P
N
W- R
B- O
B
W- B
30A
AM2
2A
BATTERY
EB

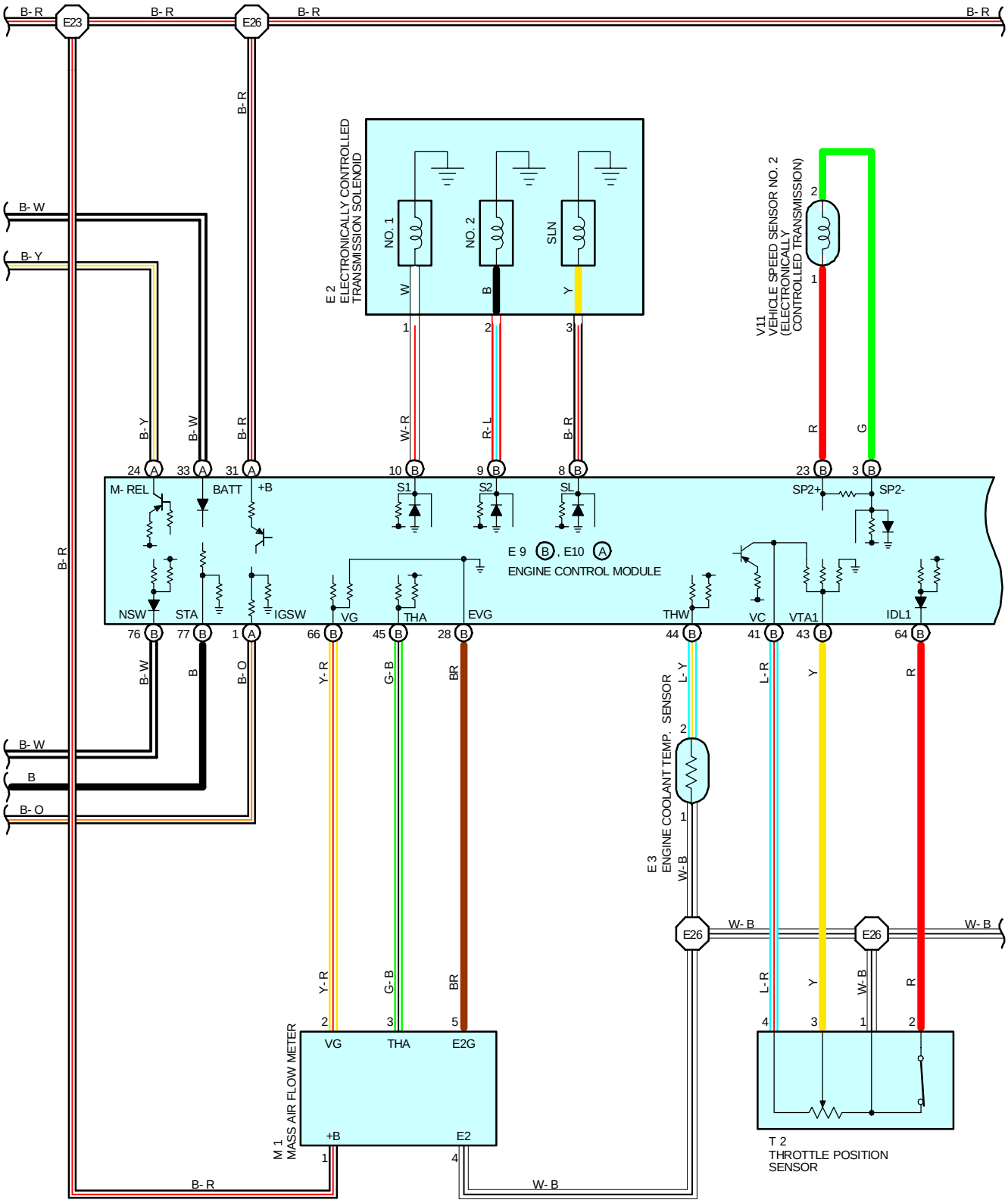
B- R
E23
E26
B- W
B- Y
B
B- O
E 2
ELECTRONICALLY CONTROLLED TRANSMISSION SOLENOID
NO. 1
NO. 2
SLN
W
B
Y
V11
VEHICLE SPEED SENSOR NO. 2 (ELECTRONICALLY CONTROLLED TRANSMISSION)
R
G
W- R
R- L
M- REL
BATT
+B
S1
S2
SL
SP2+
SP2-
E 9 B, E10 A
ENGINE CONTROL MODULE
NSW
STA
IGSW
VG
THA
EVG
THW
VC
VTA1
IDL1
Y- R
G- B
BR
L- Y
L- R
E 3
ENGINE COOLANT TEMP. SENSOR
W- B
M 1
MASS AIR FLOW METER
E2G
E2
T 2
THROTTLE POSITION SENSOR

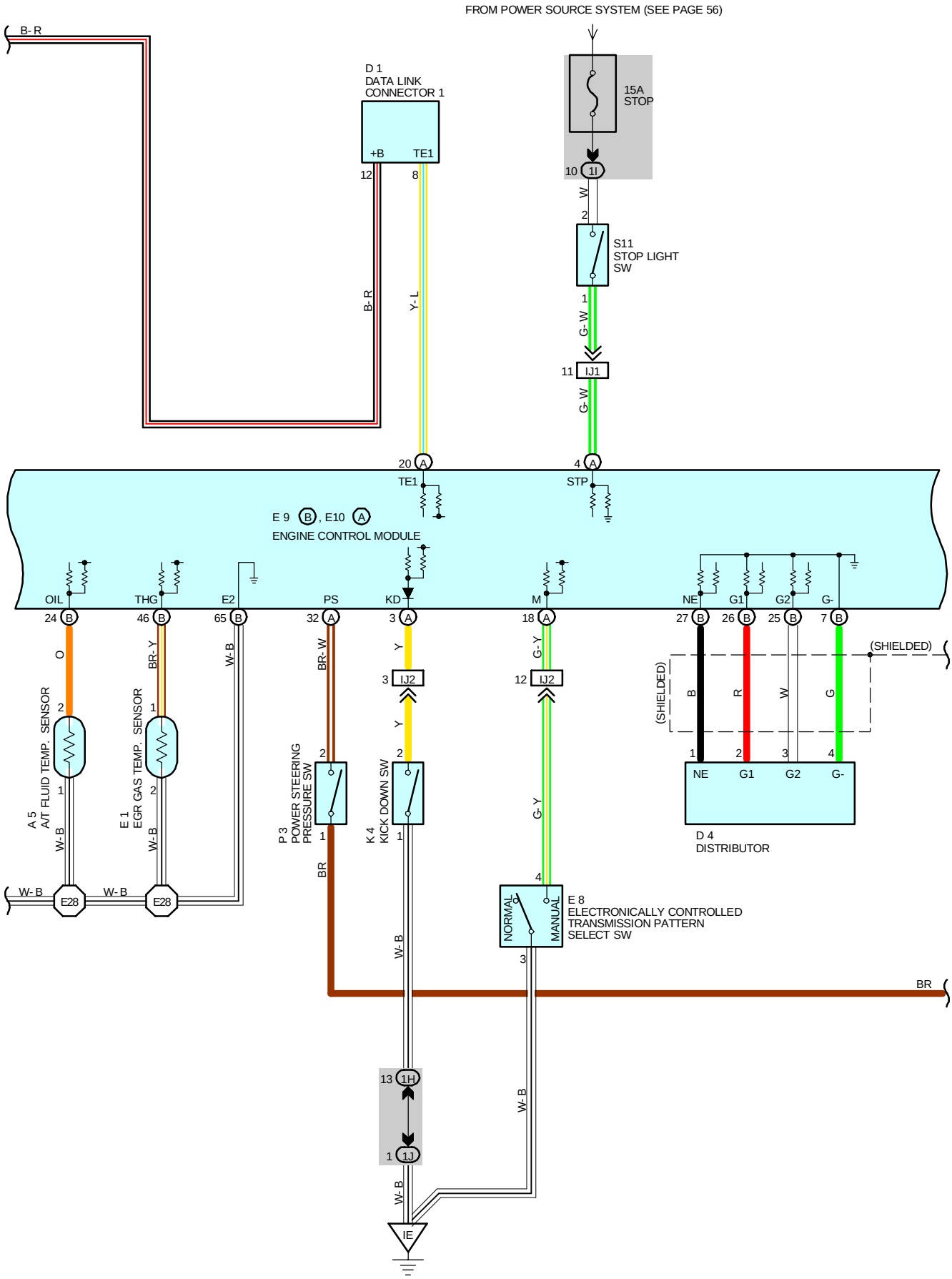
FROM POWER SOURCE SYSTEM (SEE PAGE 56)
B- R
D 1
DATA LINK
CONNECTOR 1
+B
TE1
12
8
15A
STOP
10
1I
W
2
S11
STOP LIGHT
SW
1
G- W
11
IJ1
G- W
B- R
Y- L
20
A
TE1
4
A
STP
E 9
B
, E10
A
ENGINE CONTROL MODULE
OIL
THG
E2
PS
KD
M
NE
G1
G2
G-
24
B
46
B
65
B
32
A
3
A
18
A
27
B
26
B
25
B
7
B
O
BR- Y
W- B
BR- W
Y
G- Y
3
IJ2
12
IJ2
(SHIELDED)
(SHIELDED)
B
R
W
G
A 5
A/T FLUID TEMP. SENSOR
E 1
EGR GAS TEMP. SENSOR
P 3
POWER STEERING
PRESSURE SW
K 4
KICK DOWN SW
NE
G1
G2
G-
D 4
DISTRIBUTOR
W- B
E28
W- B
E28
BR
W- B
G- Y
NORMAL
MANUAL
E 8
ELECTRONICALLY CONTROLLED
TRANSMISSION PATTERN
SELECT SW
BR
13
1H
1
1J
W- B
W- B
IE

AND A/T INDICATOR (2JZ-GE)

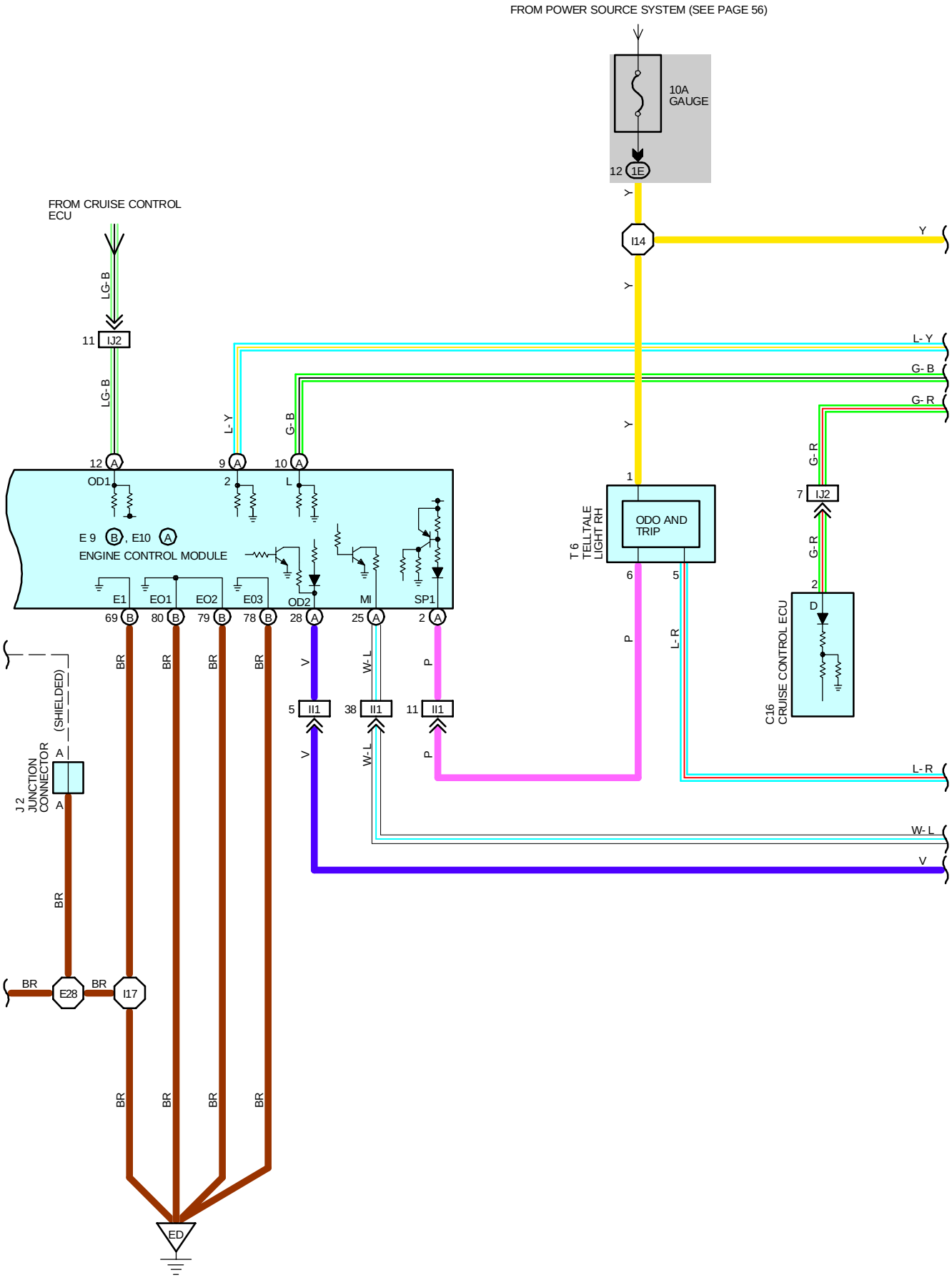

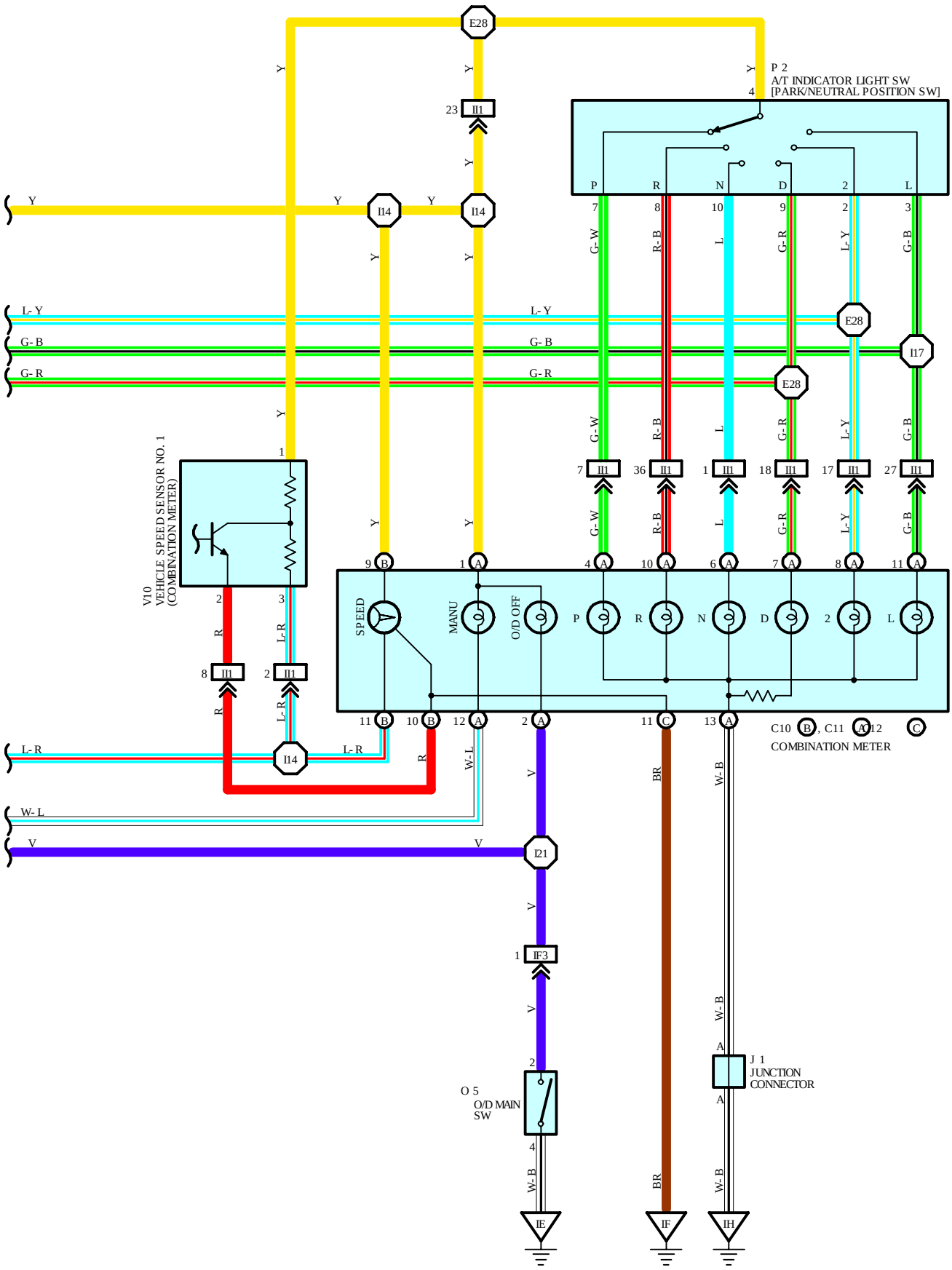
E28
P 2
A/T INDICATOR LIGHT SW
[PARK/NEUTRAL POSITION SW]
I11
I14
I17
I21
IF3
V10
VEHICLE SPEED SENSOR NO. 1
(COMBINATION METER)
SPEED
MANU
O/D OFF
C10 B, C11 A, C12 C
COMBINATION METER
O 5
O/D MAIN
SW
J 1
JUNCTION
CONNECTOR
IE
IF
IH

SYSTEM OUTLINE

THIS SYSTEM ELECTRICALLY CONTROLS THE LINE PRESSURE, THROTTLE PRESSURE, LOCK-UP PRESSURE AND ACCUMULATOR PRESSURE ETC. THROUGH THE SOLENOID VALVE. THE ELECTRONICALLY CONTROLLED TRANSMISSION IS A SYSTEM WHICH PRECISELY CONTROLS GEAR SHIFT TIMING AND LOCK-UP TIMING IN RESPONSE TO THE VEHICLE'S DRIVING CONDITIONS AND THE ENGINE OPERATING CONDITIONS DETECTED BY VARIOUS SENSORS, MAKING SMOOTH DRIVING POSSIBLE BY SHIFT SELECTION FOR EACH GEAR WHICH IS THE MOST APPROPRIATE TO THE DRIVING CONDITIONS AT THAT TIME, AND CONTROLS THE ENGINE TORQUE DURING SHIFTING TO ACHIEVE OPTIMUM SHIFT FEELING.

1. GEAR SHIFT OPERATION

WHEN DRIVING, THE ENGINE WARM UP CONDITION IS INPUT AS A SIGNAL TO **TERMINAL (B) 44** OF THE ENGINE CONTROL MODULE FROM THE ENGINE COOLANT TEMP. SENSOR AND THE VEHICLE SPEED SIGNAL FROM VEHICLE SPEED SENSOR NO. 2 IS INPUT **TERMINAL (B) 23** OF THE ENGINE CONTROL MODULE**.** AT THE SAME TIME, THE THROTTLE VALVE OPENING SIGNAL FROM THE THROTTLE POSITION SENSOR IS INPUT TO **TERMINAL (B) 43** OF THE ENGINE CONTROL MODULE AS THROTTLE ANGLE SIGNAL.

BASED ON THESE SIGNALS, THE ENGINE CONTROL MODULE SELECTS THE BEST SHIFT POSITION FOR DRIVING CONDITIONS AND SENDS CURRENT TO THE ELECTRONICALLY CONTROLLED TRANSMISSION SOLENOIDS.

WHEN SHIFTING TO 1ST SPEED, THE CURRENT FLOWS FROM **TERMINAL (B) 10** OF THE ENGINE CONTROL MODULE ➔ **TERMINAL 1** OF THE ELECTRONICALLY CONTROLLED TRANSMISSION SOLENOID **.** ➔ **GROUND** AND CONTINUITY TO NO. 1 SOLENOID CAUSES THE SHIFT (NO. 2 SOLENOID DOES NOT HAVE CONTINUITY AT THIS TIME.)

FOR 2ND SPEED, THE CURRENT FLOWS SIMULTANEOUSLY FROM **TERMINAL (B) 9** OF THE ENGINE CONTROL MODULE ➔ **TERMINAL 2** OF ELECTRONICALLY CONTROLLED TRANSMISSION SOLENOID ➔ **GROUND,** AND FROM **TERMINAL (B) 10** OF THE ENGINE CONTROL MODULE ➔ **TERMINAL 1** OF THE ELECTRONICALLY CONTROLLED TRANSMISSION SOLENOID ➔ **GROUND,** AND CONTINUITY TO NO. 1 AND NO. 2 SOLENOIDS CAUSES THE SHIFT.

FOR 3RD SPEED, THERE IS NO CONTINUITY TO NO. 1 SOLENOID, ONLY TO NO. 2 SOLENOID, CAUSING THE SHIFT.

SHIFTING INTO THE 4TH SPEED (OVERDRIVE) OCCURS WHEN NO CURRENT FLOWS TO NO. 1 AND NO. 2 SOLENOIDS.

2. LOCK-UP OPERATION

WHEN THE ENGINE CONTROL MODULE JUDGES FROM EACH SIGNAL THAT LOCK-UP OPERATION CONDITIONS HAVE BEEN MET, THE CURRENT FLOWS FROM **TERMINAL (B) 8** OF THE ENGINE CONTROL MODULE ➔ **TERMINAL 3** OF THE ELECTRONICALLY CONTROLLED TRANSMISSION SOLENOID ➔ **GROUND**, CAUSING CONTINUITY TO THE LOCK-UP SOLENOID AND CAUSING LOCK-UP OPERATION.

3. STOP LIGHT SW CIRCUIT

IF THE BRAKE PEDAL IS DEPRESSED (STOP LIGHT SW ON) WHEN DRIVING IN LOCK-UP CONDITION, A SIGNAL IS INPUT TO **TERMINAL(A) 4** OF THE ENGINE CONTROL MODULE. THE ENGINE CONTROL MODULE OPERATES AND CUTS THE CURRENT TO THE SOLENOID TO RELEASE LOCK-UP.

4. OVERDRIVE CIRCUIT

∗ O/D MAIN SW ON

WHEN THE O/D MAIN SW IS TURNED ON (SW POINT IS OPEN), A SIGNAL IS INPUT TO **TERMINAL (A) 28** OF THE ENGINE CONTROL MODULE AND THE ELECTRONICALLY CONTROLLED TRANSMISSION CAUSES SHIFT TO OVERRIDE WHEN THE CONDITIONS FOR OVERDRIVE ARE MET.

∗ O/D MAIN SW OFF

WHEN THE O/D MAIN SW IS TURNED OFF (SW POINT IS CLOSED). THE CURRENT FLOWING THROUGHTHE O/D OFF INDICATOR LIGHT FLOWS TO **GROUND** BY WAY OF THE O/D MAIN SW AND CAUSES THE O/D OFF INDICATOR LIGHT TO LIGHT UP. AT THE SAME TIME, A SIGNAL IS INPUT TO **TERMINAL (A) 28** OF THE ENGINE CONTROL MODULE AND THE ELECTRONICALLY CONTROLLED TRANSMISSION PREVENTS SHIFT INTO OVERDRIVE.

5. ELECTRONICALLY CONTROLLED TRANSMISSION PATTERN SELECT SW CIRCUIT

WHEN THE ELECTRONICALLY CONTROLLED TRANSMISSION PATTERN SELECT SW IS SWITCHED FROM **NORMAL** TO **MANUAL**, A SIGNAL IS INPUT TO **TERMINAL (A) 18** OF THE ENGINE CONTROL MODULE. INPUT OF THIS SIGNAL CAUSES CURRENT TO FLOW FROM THE **GAUGE** FUSE TO **TERMINAL (A) 1** OF THE COMBINATION METER ➔ **TERMINAL (A) 12** ➔ **TERMINAL (A) 25** OF THE ENGINE CONTROL MODULE ➔ **GROUND**, LIGHTING UP THE INDICATOR LIGHT. IF THE A/T SHIFT LEVER IS THEN SHIFTED TO "2" POSITION, THE ENGINE CONTROL MODULE ENABLES THE VEHICLE TO START OFF WITH THE TRANSMISSION IN 2ND GEAR, THUS PERMITTING EASING STARTING OFF AND DRIVING ON SLIPPERY ROADS.

6. CRUISE CONTROL

WHEN CRUISE CONTROL OPERATION IS SELECTED A SIGNAL IS INPUT TO **TERMINAL (A) 12** OF THE ENGINE CONTROL MODULE FROM CRUISE CONTROL ECU. AS A RESULT, THE ENGINE CONTROL MODULE OPERATES AND CONTROLS OVERDRIVE, LOCK-UP AND SO ON FOR SMOOTH DRIVING.

SERVICE HINTS

E2 ELECTRONICALLY CONTROLLED TRANSMISSION SOLENOID
1, 2, 3-GROUND **:** EACH **11-15** Ω
E 3 ENGINE COOLANT TEMP. SENSOR
4-7 K– μ**0•C 32•F)**
2-3 K– μ**20•C 68•F)**
0-9.3 K– μ**40•C 104•F)**
0-4.7 K– μ**60•C 140•F)**
0-2.4 K– μ**80•C 176•F)**
E 9 (B), E10 (A) ENGINE CONTROL MODULE
BATT-E1:AL WAYS **9-14** VOLTS
IGSW-E1: **9-14** VOLTS WITH THE IGNITION SW ON
+B-E1:**9-14** VOLTS WITH THE IGNITION SW ON
IDL1-E1:**0-1.5** VOLTS WITH THE IGNITION SW ON AND THE THROTTLE VALVE FULLY CLOSED
:9-14 VOLTS WITH THE IGNITION SW ON AND THE THROTTLE VALVE FULLY OPEN
VTA1-E1: **0.3-0.8** VOLTS WITH THE IGNITION SW ON AND THE THROTTLE VALVE FULLY CLOSED
3.2-4.9 VOLTS WITH THE IGNITION SW ON AND THE THROTTLE VALVE FULLY OPEN
STA-E1: **6-14** VOLTS WITH THE ENGINE CRANKING
M-REL-E1: **9-14** VOLTS WITH THE IGNITION SW ON
VCC-E1:**4.5-5.5** VOLTS WITH THE IGNITION SW ON
L-E1: **7.5-14** VOLTS WITH THE SHIFT LEVER AT "**L**" POSITION
2-E1: **7.5-14** VOLTS WITH THE SHIFT LEVER AT **"2**" POSITION
V11 VEHICLE SPEED SENSOR NO. 2 (ELCTRONICALLY CONTROLLED TRANSMISSION)
1-2:APPROX. **620**–
E 8 ELECTRONICALLY CONTROLLED TRANSMISSION PATTERN SELECT SW
4-3 :CLOSED WITH THE ELECTRONICALLY CONTROLLED TRANSMISSION PATTERN SELECT SW AT **MANUAL** POSITION

: PARTS LOCATION

CODE		SEE PAGE	CODE		SEE PAGE	CODE	SEE PAGE
A4		26(2JZ-GE)	E 3		26(2JZ-GE)	0 5	29
C10	B	28	E 8		29	P 2	27(2JZ-GE)
C11	A	28	E 9	B	29	P 3	27(2JZ-GE)
C12	C	28	E10	A	29	S11	29
C16		28	I19		29	T 2	27(2JZ-GE)
D 1		26(2JZ-GE)	J 1		29	T 6	29
D 4		26	J 2		29	V10	27(2JZ-GE)
E 1		26(2JZ-GE)	K 4		29	V11	27(2JZ-GE)
E 2		26(2JZ-GE)	M 1		29		

: RELAY BLOCKS

CODE	SEE PAGE	RELAY BLOCKS (RELAY BLOCK LOCATION)
2	22	R/B NO. 2 (ENGINE COMPARTMENT LEFT)

: JUNCTION BLOCK AND WIRE HARNESS CONNECTOR

CODE	SEE PAGE	JUNCTION BLOCK AND WIRE HARNESS (CONNECTOR LOCATION)
1B	20	ENGINE ROOM MAIN WIRE AND J/B NO. 1 (LEFT KICK PANEL)
1E	20	INSTRUMENT PANEL WIRE AND J/B NO. 1 (LEFT KICK PANEL)
1H	20	COWL WIRE AND J/B NO. 1 (LEFT KICK PANEL)
1I		
1J		
1K		
2A	22	BATTERY AND J/B NO. 2 (ENGINE COMPARTMENT LEFT)

: CONNECTOR JOINING WIRE HARNESS AND WIRE HARNESS

CODE	SEE PAGE	JOINING WIRE HARNESS AND WIRE HARNESS (CONNECTOR LOCATION)
EA1	34(2JZ-GE)	ENGINE WIRE AND ENGINE ROOM MAIN WIRE (NEAR THE R/B NO. 2)
EA3	34	
IB1	36	ENGINE ROOM MAIN WIRE AND COWL WIRE (LEFT KICK PANEL)
IF3	36	INSTRUMENT PANEL WIRE AND COWL WIRE (RIGHT KICK PANEL)
II1	38	ENGINE WIRE AND INSTRUMENT PANEL WIRE (RIGHT KICK PANEL)
IJ1	38	ENGINE WIRE AND COWL WIRE (RIGHT KICK PANEL)
IJ2		

AND A/T INDICATOR (2JZ-GE)

: GROUND POINTS

CODE	SEE PAGE	GROUND POINTS LOCATION
EB	34(2JZ-GE)	FRONT SIDE OF LEFT FENDER
ED	34(2JZ-GE)	REAR SIDE OF INTAKE MANIFOLD
IE	36	LEFT KICK PANEL
IF		
IH	36	RIGHT KICK PANEL

: SPLICE POINTS

CODE	SEE PAGE	WIRE HARNESS WITH SPLICE POINTS	CODE	SEE PAGE	WIRE HARNESS WITH SPLICE POINTS
E20	34	ENGINE WIRE	I14	38	INSTRUMENT PANEL WIRE
E23			I17	38	ENGINE WIRE
E26			I21	38	INSTRUMENT PANEL WIRE
E28					

A 5 GRAY

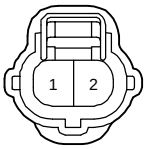

C10 (B) BLUE

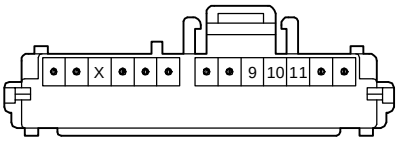

C11 (A) BROWN

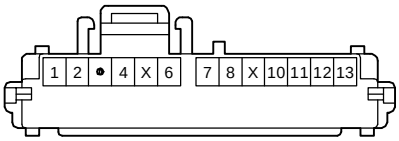

C12 (C)

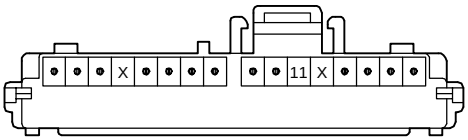

C16 GREEN

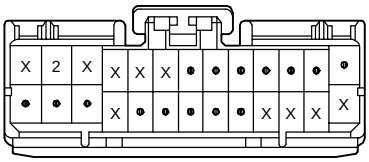

D 1 BLACK

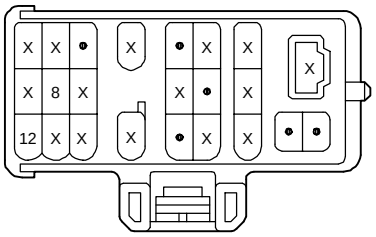

D 4 BLACK

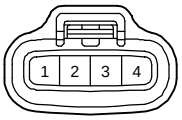

E 1 DARK GRAY

E 2 BLACK

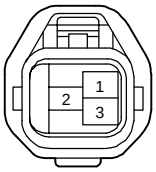

E 3 GREEN

E 8

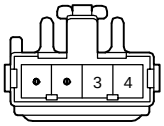

ELECTRONICALLY CONTROLLED TRANSMISSION AND A/T INDICATOR (2JZ-GE)

E 9 (B) DARK GRAY

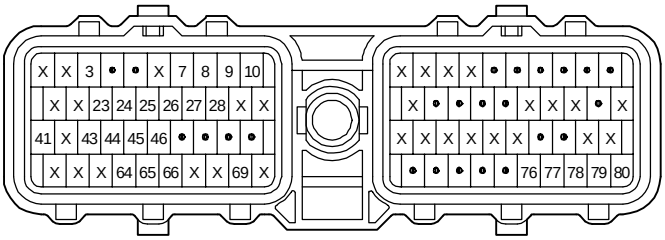

E10 (A) DARK GRAY

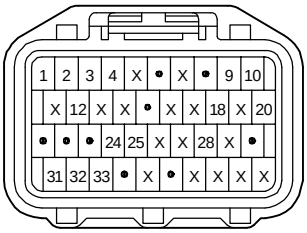

I19

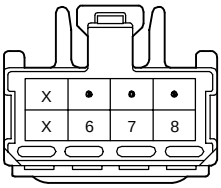

J 1

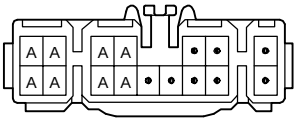

(HINT : SEE PAGE 7)

J 2

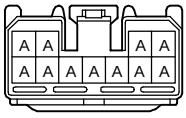

(HINT : SEE PAGE 7)

K 4 BLACK

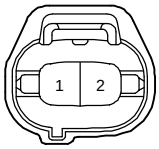

M 1 BLACK

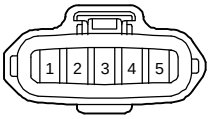

O 5 BLUE

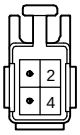

P 2 GRAY

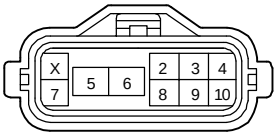

P 3 DARK GRAY

S11 BLUE

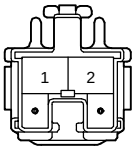

T 2 BLACK

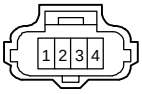

T 6

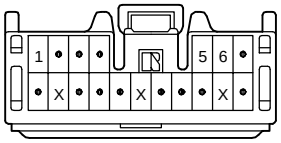

V10 BLACK

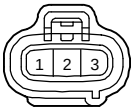

V11 BLACK

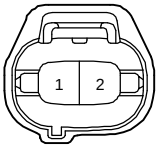

A 6 Ⓐ BLACK

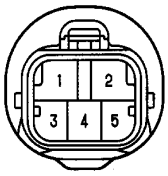

A 7 Ⓑ GRAY

A 8 Ⓐ GRAY

A 9 Ⓑ GRAY

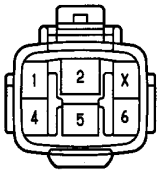

A10, A11 GRAY

A18 Ⓑ

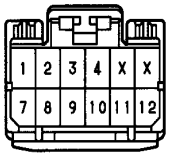

A19 Ⓐ

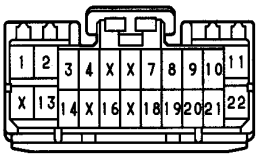

A31 GRAY

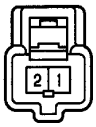

A32 GRAY

D 1 BLACK

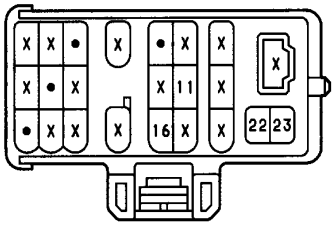

D 5 DARK GRAY

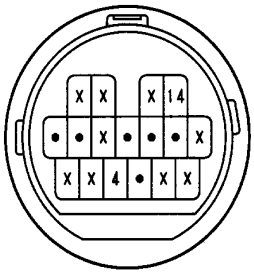

S11 BLUE

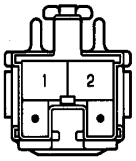

T 5

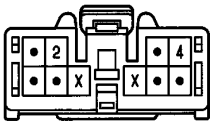

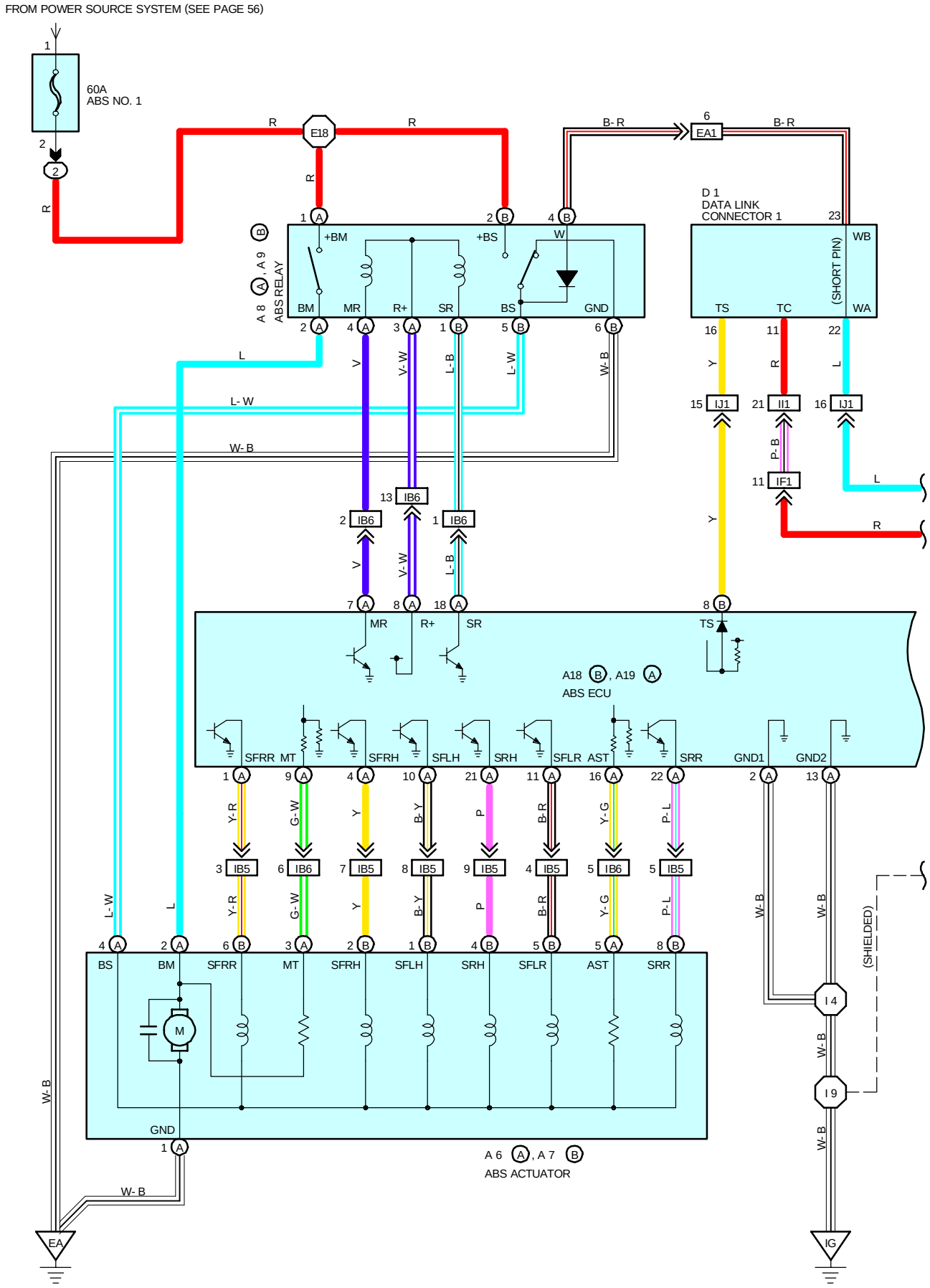
FROM POWER SOURCE SYSTEM (SEE PAGE 56)
60A
ABS NO. 1
E18
EA1
D 1
DATA LINK
CONNECTOR 1
(SHORT PIN)
A 8 B, A 9 A
ABS RELAY
+BM
+BS
BM
MR
R+
SR
BS
GND
TS
TC
WB
WA
IJ1
II1
IF1
IB6
IB5
A18 B, A19 A
ABS ECU
SFRR
MT
SFRH
SFLH
SRH
SFLR
AST
SRR
GND1
GND2
(SHIELDED)
I 4
I 9
A 6 A, A 7 B
ABS ACTUATOR
EA
IG

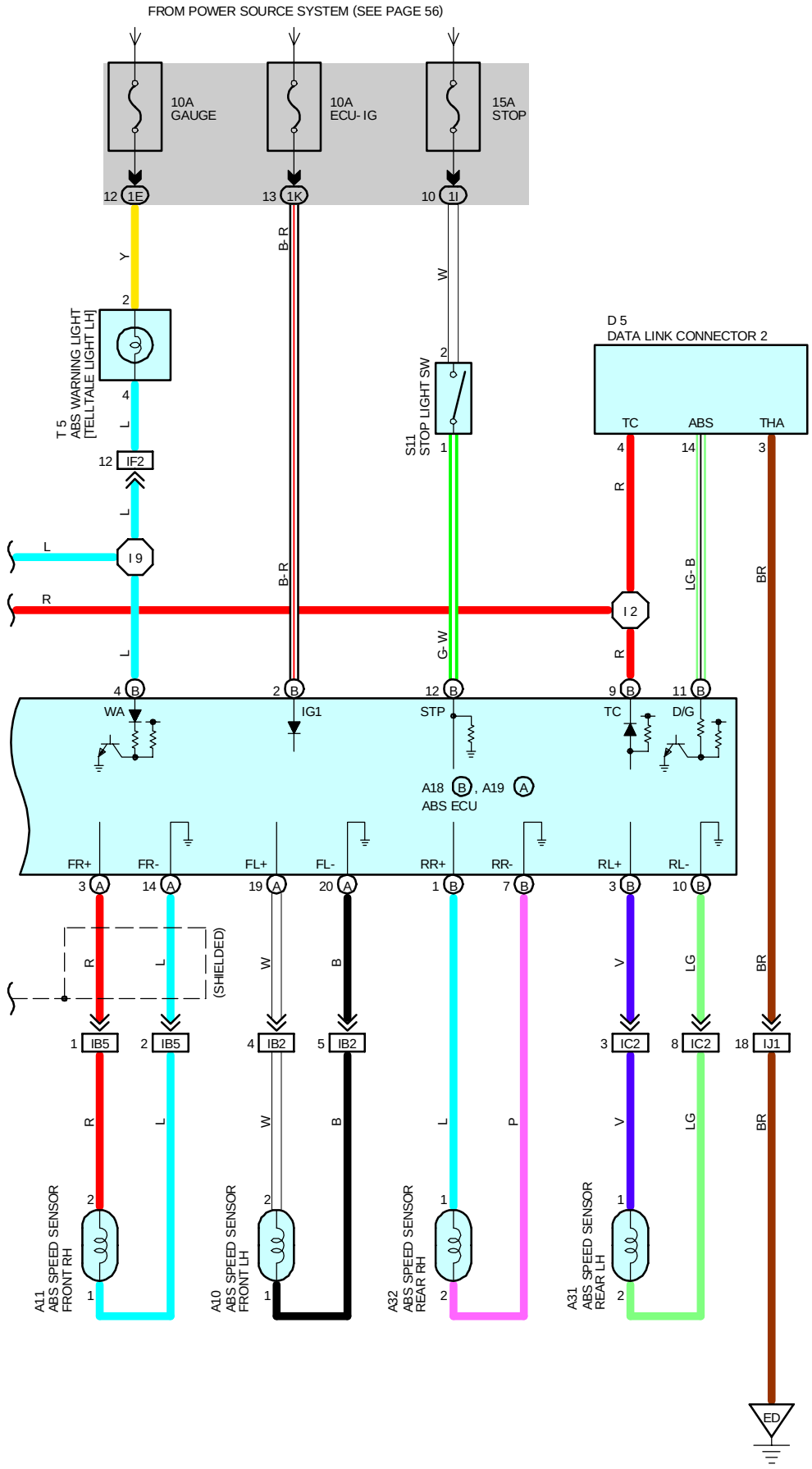
FROM POWER SOURCE SYSTEM (SEE PAGE 56)
10A GAUGE
10A ECU- IG
15A STOP
12 1E
13 1K
10 1I
Y
B- R
W
T 5
ABS WARNING LIGHT
[TELLTALE LIGHT LH]
S11
STOP LIGHT SW
D 5
DATA LINK CONNECTOR 2
TC
ABS
THA
IF2
I 9
I 2
LG- B
BR
G- W
WA
IG1
STP
D/G
A18 B, A19 A
ABS ECU
FR+
FR-
FL+
FL-
RR+
RR-
RL+
RL-
(SHIELDED)
IB5
IB2
IC2
IJ1
A11
ABS SPEED SENSOR
FRONT RH
A10
ABS SPEED SENSOR
FRONT LH
A32
ABS SPEED SENSOR
REAR RH
A31
ABS SPEED SENSOR
REAR LH
ED

SYSTEM OUTLINE

THIS SYSTEM CONTROLS THE RESPECTIVE BRAKE FLUID PRESSURES ACTING ON THE DISC BRAKE CYLINDERS OF THE RIGHT FRONT WHEEL, LEFT FRONT WHEEL AND REAR WHEELS WHEN THE BRAKES ARE APPLIED IN A PANIC STOP SO THAT THE WHEELS DO NOT LOCK. THIS RESULTS IN IMPROVED DIRECTIONAL STABILITY AND STEERABILITY DURING PANIC BRAKING.

1. INPUT SIGNALS

(1) SPEED SENSOR SIGNAL
THE SPEED OF THE WHEELS IS DETECTED AND INPUT TO **TERMINALS FL+, FR+, RL+** AND **RR+** OF THE ABS ECU.

(2) STOP LIGHT SW SIGNAL
A SIGNAL IS INPUT TO **TERMINAL STP** OF THE ABS ECU WHEN THE BRAKE PEDAL IS DEPRESSED.

2. SYSTEM OPERATION

DURING SUDDEN BRAKING, THE ABS ECU WHICH HAS SIGNALS INPUT FROM EACH SENSOR CONTROLS THE CURRENT FLOWING TO THE SOLENOID INSIDE THE ACTUATOR AND LETS THE HYDRAULIC PRESSURE ACTING ON EACH WHEEL CYLINDER ESCAPE TO THE RESERVOIR. THE PUMP INSIDE THE ACTUATOR IS ALSO OPERATING AT THIS TIME AND IT RETURNS THE BRAKE FLUID FROM THE RESERVOIR TO THE MASTER CYLINDER, THUS PREVENTING LOCKING OF THE VEHICLE WHEELS.
IF THE ECU JUDGES THAT THE HYDRAULIC PRESSURE ACTING ON THE WHEEL CYLINDER IS INSUFFICIENT, THE CURRENT ACTING ON SOLENOID IS CONTROLLED AND THE HYDRAULIC PRESSURE IS INCREASED.
HOLDING OF THE HYDRAULIC PRESSURE IS ALSO CONTROLLED BY THE ECU, BY THE SAME METHOD AS ABOVE, BY REPEATED PRESSURE REDUCTION, HOLDING AND INCREASE ARE REPEATED TO MAINTAIN VEHICLE STABILITY AND TO IMPROVE STEERABILITY DURING SUDDEN BRAKING.

SERVICE HINTS

A 6 (A), A 7 (B) ABS ACTUATOR
(A) 1-GROUND : ALWAYS CONTINUITY
(B) 5-(A) 4:33
(B) 1,**(B)** 2,**(B)** 4,**(A)** 4:APPROX. **8.8**
(B) 5,**(B)** 6,**(B)** 8,**(A)** 4:APPROX. **4.3**

A10, A11 ABS SPEED SENSOR FRONT LH, RH
1-2:1.4-1.8 K **(20•C, 68•F)**

A31, A32 ABS SPEED SENSOR REAR LH, RH
1-2:0.9-1.3 K **(20•C, 68•F)**

A18, (B), A19(A) ABS ECU
(B) 2-GROUND **:10-14** VOLTS WITH THE IGNITION SW ON
(B)12-GROUND **:10-14** VOLTS WITH THE STOP LIGHT SW ON (BRAKE PEDAL DEPRESSED)
(A) 2, **(A)** 13-GROUND **:ALWAYS CONTINUITY**
(A) 1, (A) 4, (A) 10, (A) 11, (A) 21, (A) 22-GROUND**:10-14** VOLTS WITH THE IGNITION SW ON

S11 STOP LIGHT SW
1-2:CLOSED WITH THE BRAKE PEDAL DEPRESSED

: PARTS LOCATION

CODE		SEE PAGE	CODE		SEE PAGE	CODE	SEE PAGE
A 6	A	26(2JZ-GE)	A11		26(2JZ-GE)	D 1	26(2JZ-GE)
A 7	B	26(2JZ-GE)	A18	B	28	D 5	28
A 8	A	26	A19	A	28	S11	29
A 9	B	26	A31		30	T 5	29
A10		26(2JZ-GE)	A32		30		

: RELAY BLOCKS

CODE	SEE PAGE	RELAY BLOCKS (RELAY BLOCK LOCATION)
2	22	R/B NO. 2 (ENGINE COMPARTMENT LEFT)

: JUNCTION BLOCK AND WIRE HARNESS CONNECTOR

CODE	SEE PAGE	JUNCTION BLOCK AND HARNESS AND WIRE HARNESS (CONNECTOR LOCATION)
1E	20	INSTRUMENT PANEL WIRE AND J/B NO. 1 (LEFT KICK PANEL)
1I	20	COWL WIRE AND J/B NO. 1 (LEFT KICK PANEL)
1K		

: CONNECTOR JOINING WIRE HARNESS AND WIRE HARNESS

CODE	SEE PAGE	JOINING WIRE HARNESS AND WIRE HARNESS (CONNECTOR LOCATION)
EA1	34(2JZ-GE)	ENGINE WIRE AND ENGINE ROOM MAIN WIRE (NEAR THE R/B NO. 2)
IB2	36	ENGINE ROOM MAIN WIRE AND COWL WIRE (LEFT KICK PANEL)
IB5	36	ENGINE ROOM MAIN WIRE AND COWL WIRE (RIGHT KICK PANEL)
IB6		
IC2	36	FLOOR NO. 2 WIRE AND COWL WIRE (LEFT KICK PANEL))
IF1	36	INSTRUMENT PANEL WIRE AND COWL WIRE (INSTRUMENT PANEL REINFORCEMENT LH)
IF2		
II1	38	ENGINE WIRE AND INSTRUMENT PANEL WIRE (RIGHT KICK PANEL)
IJ1	38	ENGINE WIRE AND COWL WIRE (RIGHT KICK PANEL)

: GROUND POINTS

CODE	SEE PAGE	GROUND POINTS LOCATION
EA	34(2JZ-GE)	FRONT SIDE OF RIGHT FENDER
ED	34(2JZ-GE)	REAR SIDE OF INTAKE FENDER
IG	36	RIGHT KICK PANEL

: SPLICE POINTS

CODE	SEE PAGE	WIRE HARNESS WITH SPLICE POINTS	CODE	SEE PAGE	WIRE HARNESS WITH SPLICE POINTS
E18	34	ENGINE ROOM MAIN WIRE	I 4	38	COWL WIRE
I 2	38	COWL WIRE	I 9		

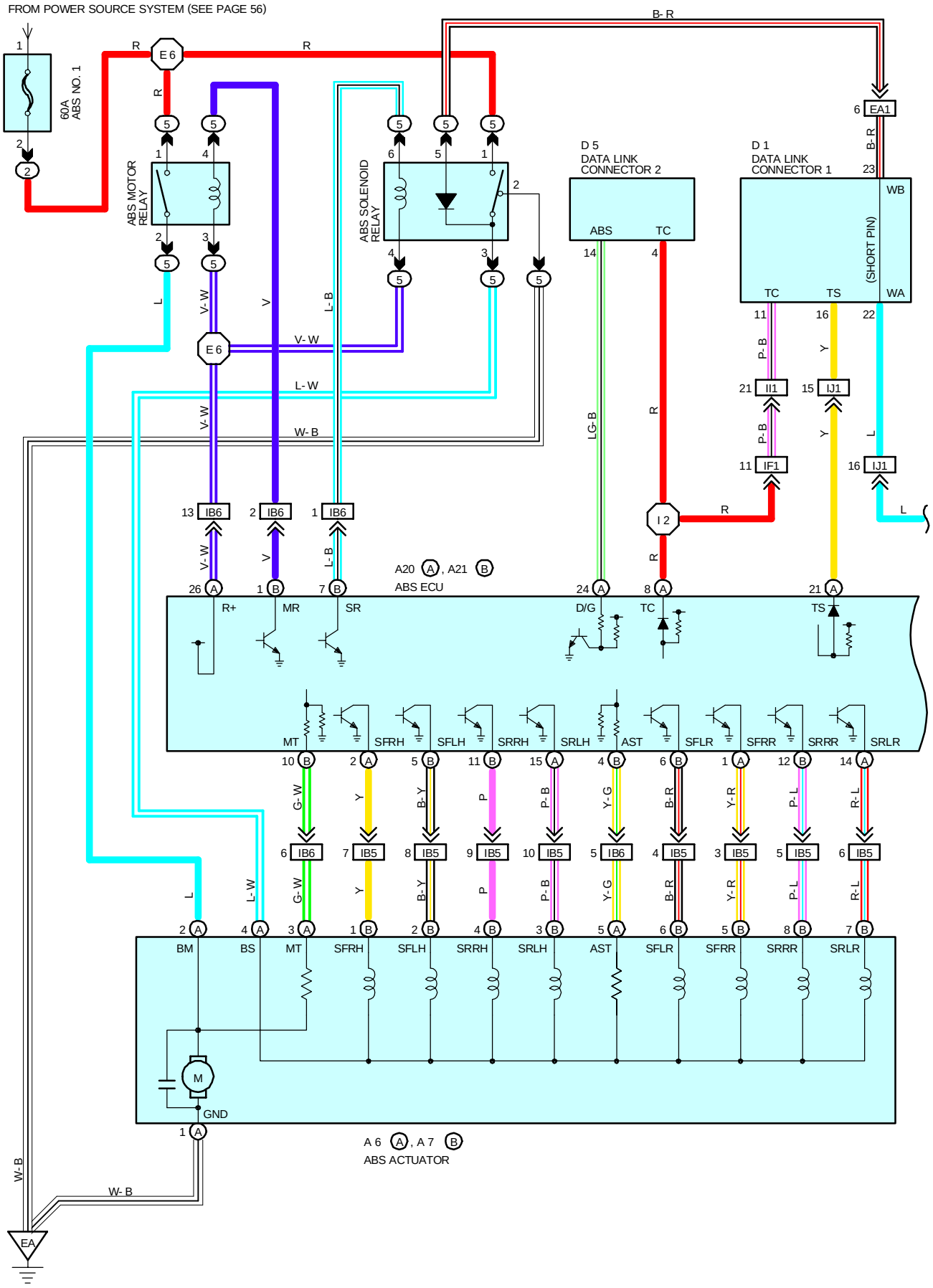
FROM POWER SOURCE SYSTEM (SEE PAGE 56)
60A
ABS NO. 1
ABS MOTOR RELAY
ABS SOLENOID RELAY
D 5
DATA LINK CONNECTOR 2
D 1
DATA LINK CONNECTOR 1
(SHORT PIN)
A20 A, A21 B
ABS ECU
A 6 A, A 7 B
ABS ACTUATOR
EA

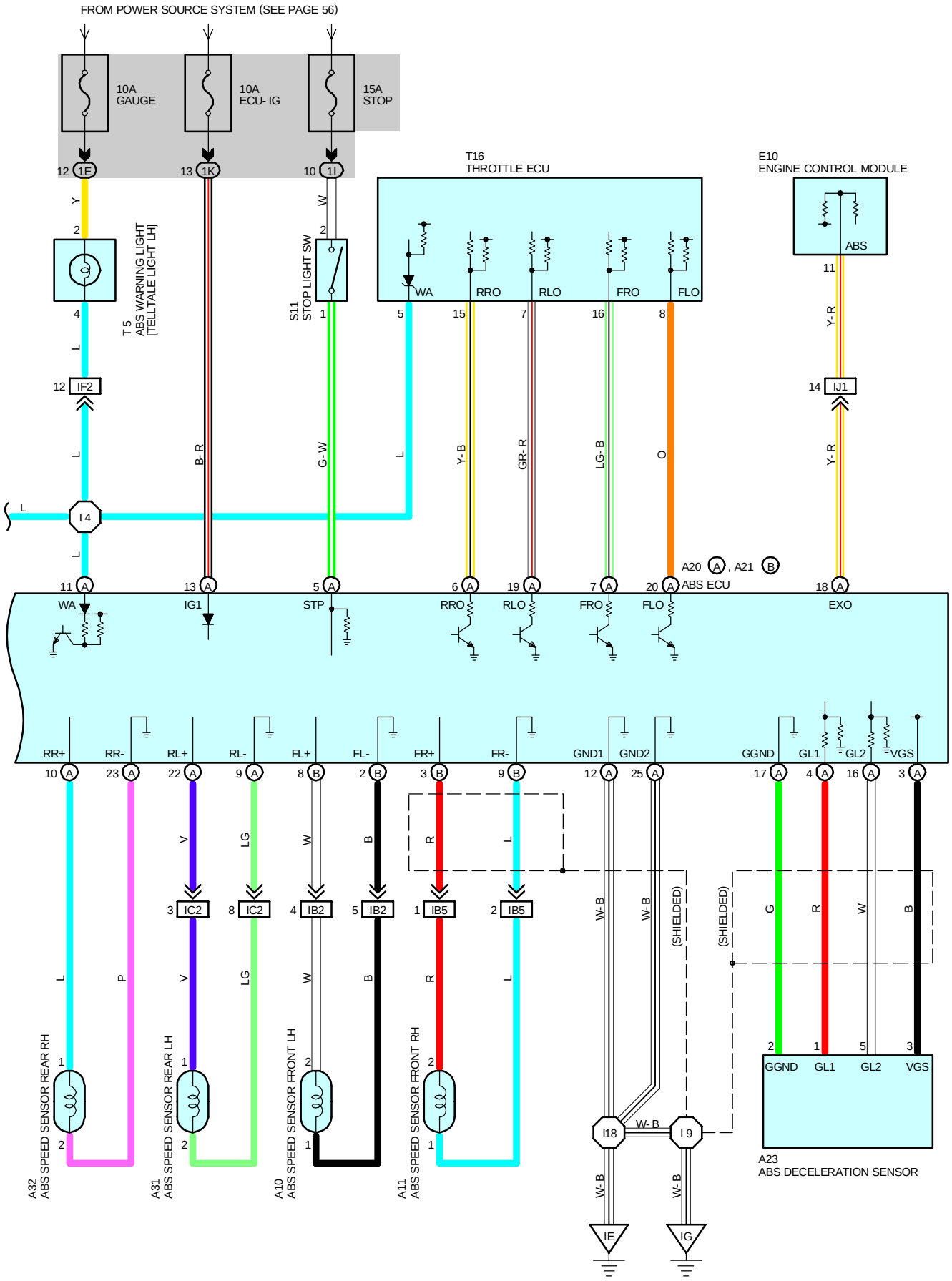
FROM POWER SOURCE SYSTEM (SEE PAGE 56)
10A GAUGE
10A ECU- IG
15A STOP
12 1E
13 1K
10 1I
T16 THROTTLE ECU
E10 ENGINE CONTROL MODULE
ABS
T 5 ABS WARNING LIGHT [TELLTALE LIGHT LH]
S11 STOP LIGHT SW
WA
RRO
RLO
FRO
FLO
12 IF2
I 4
14 IJ1
A20 A , A21 B
ABS ECU
11 A WA
13 A IG1
5 A STP
6 A RRO
19 A RLO
7 A FRO
20 A FLO
18 A EXO
RR+ 10 A
RR- 23 A
RL+ 22 A
RL- 9 A
FL+ 8 B
FL- 2 B
FR+ 3 B
FR- 9 B
GND1 12 A
GND2 25 A
GGND 17 A
GL1 4 A
GL2 16 A
VGS 3 A
3 IC2
8 IC2
4 IB2
5 IB2
1 IB5
2 IB5
(SHIELDED)
A32 ABS SPEED SENSOR REAR RH
A31 ABS SPEED SENSOR REAR LH
A10 ABS SPEED SENSOR FRONT LH
A11 ABS SPEED SENSOR FRONT RH
I18
I 9
IE
IG
A23 ABS DECELERATION SENSOR

SYSTEM OUTLINE

THIS SYSTEM CONTROLS THE RESPECTIVE BRAKE FLUID PRESSURES ACTING ON THE DISC BRAKE CYLINDERS OF THE RIGHT FRONT WHEEL, LEFT FRONT WHEEL, RIGHT REAR WHEEL AND LEFT REAR WHEEL WHEN THE BRAKES ARE APPLIED IN A PANIC STOP SO THAT THE WHEELS DO NOT LOCK.
THIS RESULTS IN IMPROVED DIRECTIONALLY STABILITY AND STEERABILITY DURING PANIC BRAKING.

1. INPUT SIGNALS

(3) SPEED SENSOR SIGNAL
THE SPEED OF THE WHEELS IS DETECTED AND INPUT TO **TERMINALS FL+, FR+, RL+** AND **RR+** OF THE ABS ECU.

(4) STOP LIGHT SW SIGNAL
A SIGNAL IS INPUT TO **TERMINAL STP** OF THE ABS ECU WHEN THE BRAKE PEDAL IS DEPRESSED.

(5) DECELERATION SENSOR SIGNAL
LONGITUDINAL AND LATERAL ACCELERATION IS DETECTED AND INPUT TO THE ABS ECU.

2. SYSTEM OPERATION

DURING SUDDEN BRAKING, THE ABS ECU WHICH HAS SIGNALS INPUT FROM EACH SENSOR CONTROLS THE CURRENT FLOWING TO THE SOLENOID INSIDE THE ACTUATOR AND LETS THE HYDRAULIC PRESSURE ACTING ON EACH WHEEL CYLINDER ESCAPE TO THE RESERVOIR. THE PUMP INSIDE THE ACTUATOR IS ALSO OPERATING AT THIS TIME AND IT RETURNS THE BRAKE FLUID FROM THE RESERVOIR TO THE MASTER CYLINDER, THUS PREVENTING LOCKING OF THE VEHICLE WHEELS.
IF THE ECU JUDGES THAT THE HYDRAULIC PRESSURE ACTING ON THE WHEEL CYLINDER IS INSUFFICIENT, THE CURRENT ACTING ON SOLENOID IS CONTROLLED AND THE HYDRAULIC PRESSURE IS INCREASED.
HOLDING OF THE HYDRAULIC PRESSURE IS ALSO CONTROLLED BY THE ECU, BY THE SAME METHOD AS ABOVE, BY REPEATED PRESSURE REDUCTION, HOLDING AND INCREASE ARE REPEATED TO MAINTAIN VEHICLE STABILITY AND TO IMPROVE STEERABILITY DURING SUDDEN BRAKING.

SERVICE HINTS

A20 (A), A21 (B) ABS ECU

(A) 13-GROUND::**10-14** VOLTS WITH THE IGNITION SW AT ON POSITION
(A) 5-GROUND:**10-14** VOLTS WITH THE STOP LIGHT SW ON
(A) 12,**(A)** 25-GROUND:ALWAYS CONTINUITY

A 6 (A), A 7 (B) ABS ACTUATOR

(A) 1-GROUND:ALWAYS CONTINUITY
(A) 5-(A) **4.33** Ω
(B) 1, **(B)** 2, **(B)** 3, **(B)** 4- **(A)** 4,:APPROX. **8 8** Ω
(B) 5, **(B)** 6, **(B)** 7, **(B)** 8- **(A)** 4,:APPROX. **4.3** Ω

S11 STOP LIGHT SW

2-1:CLOSED WITH THE BRAKE PEDAL DEPRESSED

A10, A11 ABS SPEED SENSOR FRONT LH, RH

1-2:0.4-1.8 KΩ **(20•C, 68•F)**

A31, A32 ABS SPEED SENSOR REAR LH, RH

1-2:0.9-1.3 KΩ **(20•C, 68•F)**

: PARTS LOCATION

CODE		SEE PAGE	CODE		SEE PAGE	CODE	SEE PAGE
A 6	A	24(2JZ-GTE)	A21	B	28	D 5	28
A 7	B	24(2JZ-GTE)	A23		28	E10	29
A10		24(2JZ-GTE)	A31		30	S11	29
A11		24(2JZ-GTE)	A32		30	T 5	29
A20	A	28	D 1		24(2JZ-GTE)	T16	29

: RELAY BLOCKS

CODE	SEE PAGE	RELAY BLOCKS (RELAY BLOCK LOCATION)
2	22	R/B NO. 2 (ENGINE COMPARTMENT LEFT)
5	23	R/B NO. 5 (ENGINE COMPARTMENT RIGHT)

: JUNCTION BLOCK AND WIRE HARNESS CONNECTOR

CODE	SEE PAGE	JUNCTION BLOCK AND WIRE HARNESS (CONNECTOR LOCATION)
1E	20	INSTRUMENT PANEL WIRE AND J/B NO. 1 (LEFT KICK PANEL)
1H	20	COWL WIRE AND J/B NO. 1 (LEFT KICK PANEL)
1I	20	COWL WIRE AND NO. 1 (LEFT KICK PANEL
1K	20	COWL WIRE AND J/B NO. 1 (LEFT KICK PANEL)

: CONNECTOR JOINING WIRE HARNESS AND WIRE HARNESS

CODE	SEE PAGE	JOINING WIRE HARNESS AND WIRE HARNESS (CONNECTOR LOCATION)
EA1	32(2JZ-GTE)	ENGINE WIRE AND ENGINE ROOM MAIN WIRE (NEAR THE R/B NO. 2)
IB2	36	ENGINE ROOM MAIN WIRE AND COWL WIRE (LEFT KICK PANEL)
IB5	36	ENGINE ROOM MAIN WIRE AND COWL WIRE (RIGHT KICK PANEL)
IB6		
IC2	36	FLOOR NO. 2 WIRE AND COWL WIRE (LEFT KICK PANEL)
IF1	36	INSTRUMENT PANEL WIRE AND COWL WIRE (INSTRUMENT PANEL REINFORCEMENT LH)
IF2		
II1	38	ENGINE WIRE AND INSTRUMENT PANEL WIRE (RIGHT KICK PANEL)
IJ1	38	ENGINE WIRE AND COWL WIRE (RIGHT KICK PANEL)

: GROUND POINTS

CODE	SEE PAGE	GROUND POINTS LOCATION
IE	36	LEFT KICK PANEL
IG	36	RIGHT KICK PANEL

: SPLICE POINTS

CODE	SEE PAGE	WIRE HARNESS WITH SPLICE POINTS	CODE	SEE PAGE	WIRE HARNESS WITH SPLICE POINTS
I 2	38	COWL WIRE	I 9	38	COWL WIRE
I11			I18		

A 6 (A) BLACK

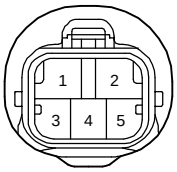

A 7 (B) GRAY

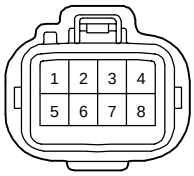

A10 GRAY

A11 GRAY

A20 (A)

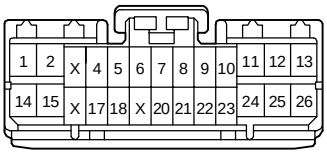

A21 (B)

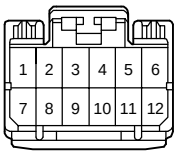

A23

A31 GRAY

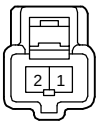

A32 GRAY

D 1 BLACK

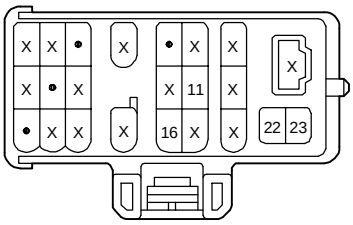

D 5 DARK GRAY

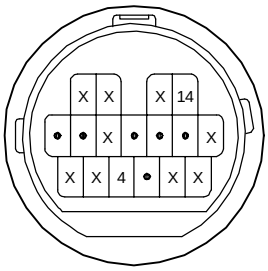

E10 DARK GRAY

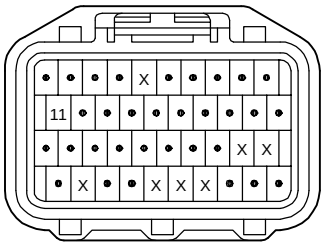

S11 BLUE

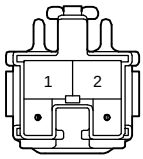

T 5

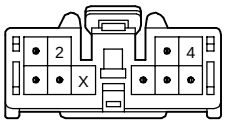

T16

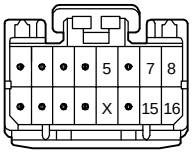

SYSTEM OUTLINE

TRACTION CONTROL IS THE SYSTEM TO REALIZE A FAVORABLE ACCELERATOR CONTROLABILITY BY MAKING THE ENGINE OUTPUT MOST APPROPRIATE FOR THE ACCELERATION UNDER EACH DRIVING CONDITION PROVIDED BY THE THROTTLE ECU.

(TRACTION OFF SW)

THIS IS THE SWITCH TO STOP THE OPERATION OF SLIP CONTROL. AFTER STARTING THE ENGINE, PRESSING THE SWITCH ONE TIME UNDER THE CONDITION THAT THE SNOW INDICATOR DOES NOT LIGHT ON, MAKES IT IN THE OPERATION STOP CONDITION (OFF), AND PRESSING IT ONE MORE TIME MAKES IT IN THE OPERATION WAITING CONDITION. IN ADDITION, RESTARTING AFTER THE ENGINE STOP MAKES IT IN THE OPERATION WAITING CONDITION WITHOUT CONCERNING THE TRACTION OFF SW.

(SNOW MODE SW)

THIS IS THE SWITCH TO FIX LOW μ LOADS CONTROL AT THE TIME OF DRIVING ON A SLIPPERY ROAD SUCH AS SNOWY ROAD. AFTER STARTING THE ENGINE, PRESSING THE SWITCH MAKES IT FIX AT LOW μ LOAD CONTROL AND SNOW INDICATOR LIGHT COMES ON. IN ADDITION, RESTARTING AFTER THE ENGINE STOP MAKES IT ALWAYS IN NORMAL CONDITION (AUTO MODE) WITHOUT CONCERNING THE SNOW MODE SW CONDITION. PRESSING THE SNOW MODE SW UNDER OPERATION PROHIBITION CONDITION OF THE TRACITION (TRAC OFF INDICATOR LIGHTS ON.) CANCELS THE OPERATION PROHIBITION OF THE TRACTION AND ALSO FIXES IT AT LOW μ LOAD CONTROL.

(TRAC OFF INDICATOR LIGHT)

THIS LIGHT COMES ON BY SELECTING THE OPERATION STOP CONDITION OF THE TRACTION CONTROL WITH TRACTION OFF SW AND ALERTS THE DRIVER TO BE IN OPERATION STOP CONDITION AND ALSO ALERTS THE DRIVER BY BLINKING IN CASE OF THE OCCURANCE OF THE SYSTEM MAULFUCTION.

SERVICE HINTS

T15 (A), T16 (B)THROTTLE ECU

WT-E1**: 0.3** VOLTS WITH THE IGNITION SW ON AND THE TRAC OFF INDICATOR LIGHT ON
9-14 VOLTS WITH THE IGNITION SW ON AND THE TRAC OFF INDICATOR LIGHT OFF
IND-E1 : **0.3** VOLTS WITH THE IGNITION SW ON AND SLIP INDICATOR LIGHT ON
: **9-14** VOLTS WITH THE IGNITION SW ON AND SLIP INDICATOR LIGHT OFF
CSW-E1: **0.3** VOLTS WITH THE IGNITION SW ON AND THE TRAC OFF SW HOLDED ON PUSHING
: **9-14** VOLTS WITH THE IGNITION SW ON AND THE TRAC OFF SW RELEASED
SIND-E1 **0.3** VOLTS WITH THE IGNITION SW ON AND THE SNOW INDICATOR LIGHT ON
9-14 VOLTS WITH THE IGNITION SW ON AND THE SNOW INDICATOR LIGHT OFF
SNOW-E1: **0.3** VOLTS WITH THE IGNITION SW ON AND THE SNOW MODE SW HELD ON PUSHING
: **9-14** VOLTS WITH THE IGNITION SW ON AND THE SNOW MODE SW RELEASED
NE-E1: PULSE GENERATION (ENGINE IDLING)
TC-E1: **4.5-5.5** VOLTS WITH THE IGNITION SW ON AND THE ENGINE NOT RUNNING
WA-E1: **9-14** VOLTS WITH THE IGNITION SW ON AND THE ABS ECU NORMAL CONDITION
0.3 VOLTS WITH THE IGNITION SW ON AND THE ABS ECU ABNORMAL CONDITION
EFIB-E1 **9-14** VOLTS WITH THE IGNITION SW ON AND THE ENGINE NOT RUNNING
IDL2-E1: **9-14** VOLTS WITH THE ENGINE RUNNING AND THE SUB THROTTLE VALVE FULLY OPEN
0-3 VOLTS WITH THE ENGINE RUNNING AND THE SUB THROTTLE VALVE FULLY CLOSED
VTA2-E1: **3.2-4.9** VOLTS WITH THE ENGINE RUNNING AND THE SUB THROTTLE VALVE FULLY OPEN
0.3-0.8 VOLTS WITH THE ENGINE RUNNING AND THE SUB THROTTLE VALVE FULLY CLOSED
BATT-E1: ALWAYS **9-14** VOLTS
+B-E1: **9-14** VOLTS WITH THE IGNITION SW ON AND ENGINE NOT RUNNING
IDL1-E1: **9-14** VOLTS WITH THE IGNITION SW ON AND THE THROTTLE VALVE FULLY OPEN
0-3 VOLTS WITH THE IGNITION SW ON AND THE THROTTLE VALVE FULLY CLOSED
VTA1-E1: **3.2- 4.9** VOLTS WITH THE IGNITION SW ON AND THE THROTTLE VALVE FULLY OPEN
0.3-0.8 VOLTS WITH THE IGNITION SW ON AND THE THROTTLE VALVE FULLY CLOSED
RLY+-RL Y **:9-14** VOLTS WITH THE IGNITION SW ON
A,A-,B,B+--EO1: PULSE GENERATION (ENGINE RUNNING AND THE THROTTLE VALVE FULLY CLOSED)
EFI+,EFI-, ETC+,ETC--E1: PULSE GENERATION (IGNITION SW ON)

T 8 TRACTION CONTROL SW

4-6 :CLOSED WITH THE TRACTIOIN CONTROL SW AT **OFF** POSITION
8-6 :CLOSED WITH THE TRACTIOIN CONTROL SW AT **SNOW** POSITION

S18 SUB THROTTLE VALVE MOTOR

4-6, 3-1:APPROX. **0.44** Ω

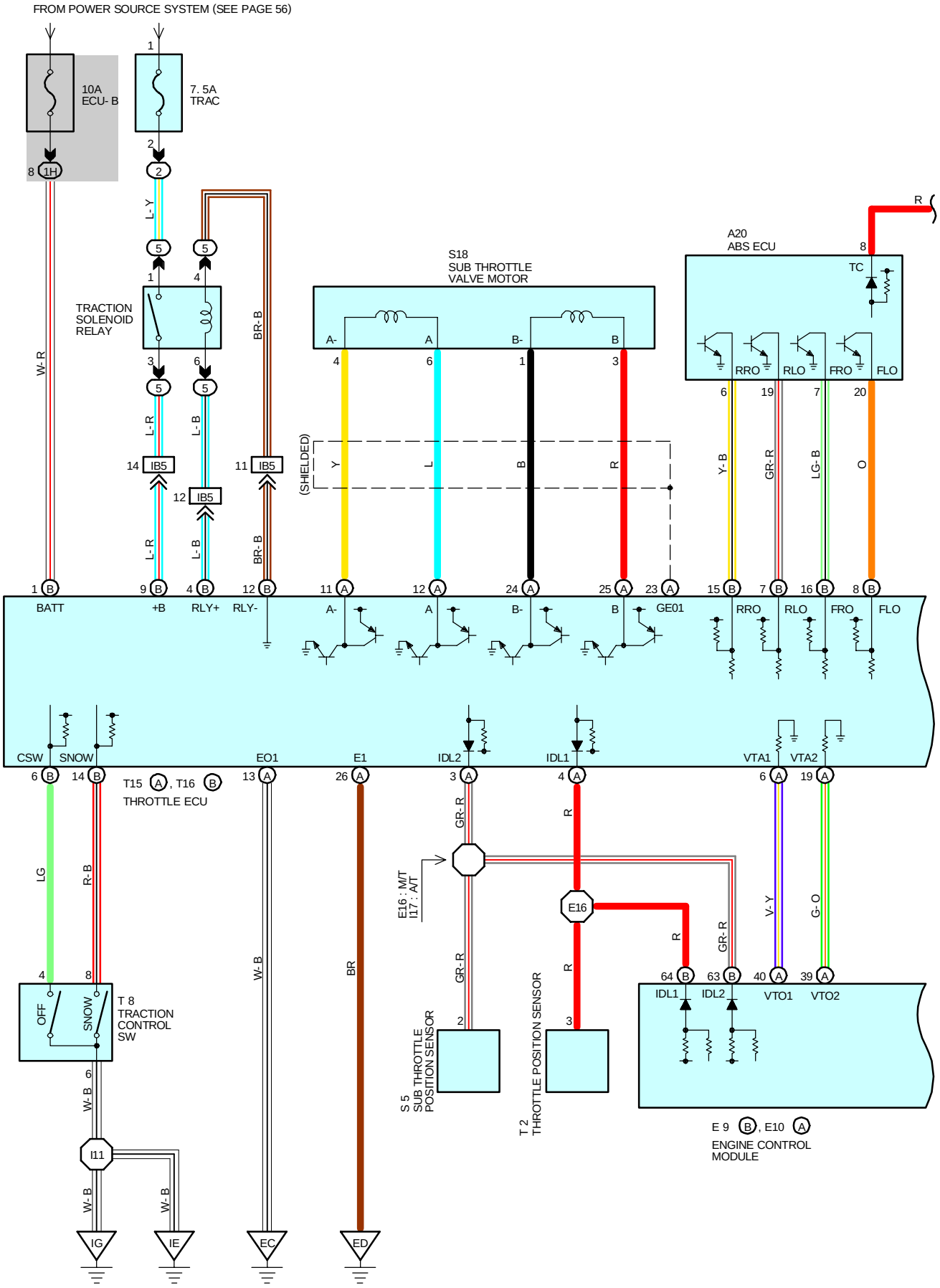
FROM POWER SOURCE SYSTEM (SEE PAGE 56)
10A
ECU- B
7. 5A
TRAC
TRACTION
SOLENOID
RELAY
S18
SUB THROTTLE
VALVE MOTOR
A20
ABS ECU
TC
(SHIELDED)
BATT
+B
RLY+
RLY-
GE01
RRO
RLO
FRO
FLO
CSW
SNOW
EO1
E1
IDL2
IDL1
VTA1
VTA2
T15 A, T16 B
THROTTLE ECU
E16 : M/T
I17 : A/T
T 8
TRACTION
CONTROL
SW
OFF
SNOW
I11
IG
IE
EC
ED
S 5
SUB THROTTLE
POSITION SENSOR
T 2
THROTTLE POSITION SENSOR
VTO1
VTO2
E 9 B, E10 A
ENGINE CONTROL
MODULE

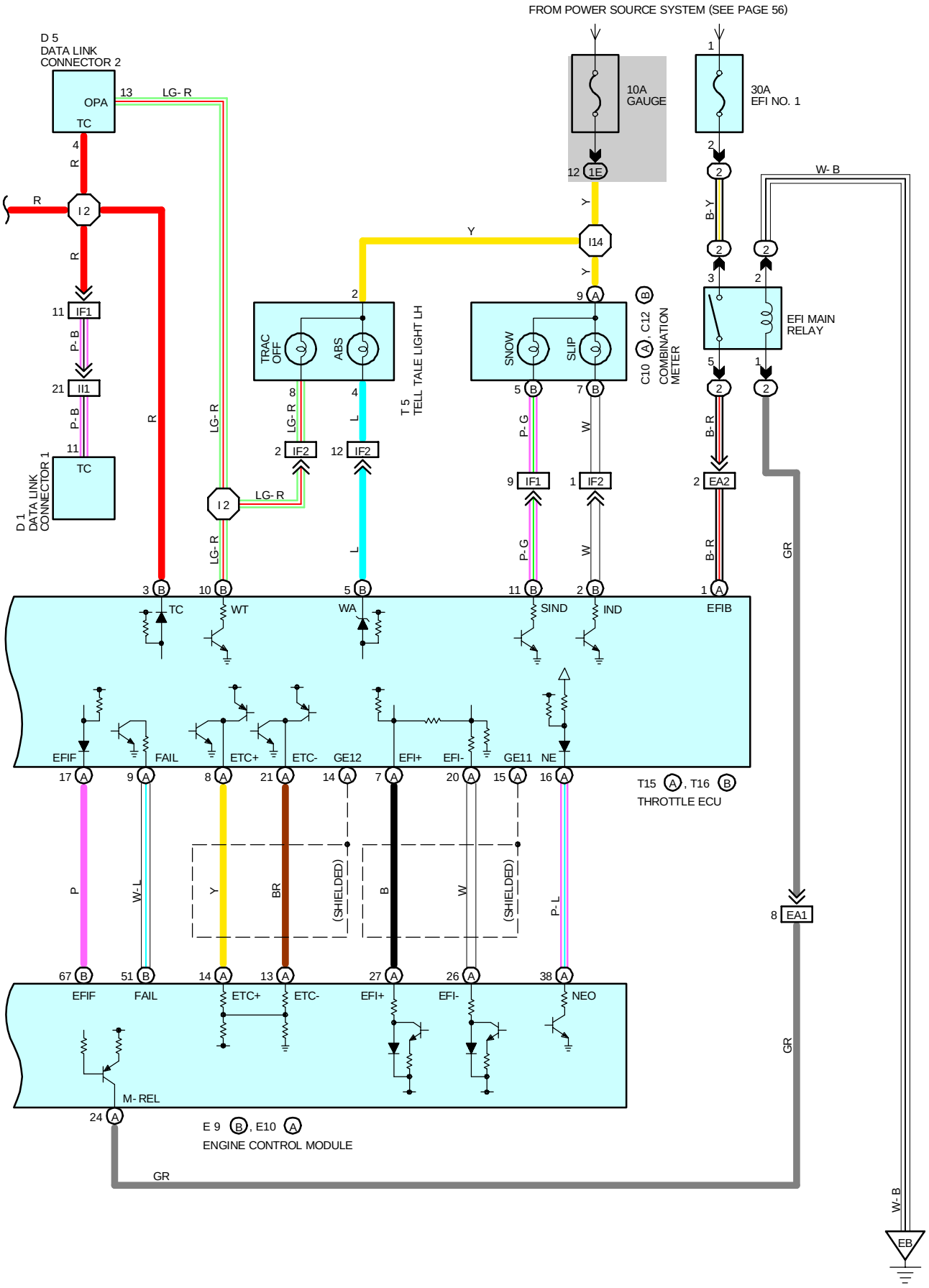
FROM POWER SOURCE SYSTEM (SEE PAGE 56)
D 5
DATA LINK
CONNECTOR 2
OPA
TC
13
LG- R
4
R
I 2
R
R
11
IF1
P- B
21
II1
P- B
11
TC
D 1
DATA LINK
CONNECTOR 1
R
LG- R
LG- R
I 2
LG- R
LG- R
10A
GAUGE
12
1E
Y
Y
I14
Y
30A
EFI NO. 1
B- Y
W- B
EFI MAIN
RELAY
TRAC
OFF
ABS
T 5
TELL TALE LIGHT LH
SNOW
SLIP
C10 A, C12 B
COMBINATION
METER
LG- R
L
IF2
IF2
P- G
W
IF1
IF2
B- R
EA2
GR
3 B
TC
10 B
WT
5 B
WA
11 B
SIND
2 B
IND
1 A
EFIB
EFIF
FAIL
ETC+
ETC-
GE12
EFI+
EFI-
GE11
NE
17 A
9 A
8 A
21 A
14 A
7 A
20 A
15 A
16 A
T15 A, T16 B
THROTTLE ECU
P
W- L
Y
BR
(SHIELDED)
B
W
(SHIELDED)
P- L
8 EA1
67 B
51 B
14 A
13 A
27 A
26 A
38 A
EFIF
FAIL
ETC+
ETC-
EFI+
EFI-
NEO
M- REL
24 A
E 9 B, E10 A
ENGINE CONTROL MODULE
GR
GR
W- B
EB

: PARTS LOCATION

CODE		SEE PAGE	CODE		SEE PAGE	CODE		SEE PAGE
A20		28	E 9	B	29	T 5		29
C10	A	28	E10	A	29	T 8		29
C12	B	28	S 5		25(2JZ-GTE)	T15	A	29
D 1		24(2JZ-GTE)	S18		25(2JZ-GTE)	T16	B	29
D 5		28	T 2		25(2JZ-GTE)			

: RELAY BLOCKS

CODE	SEE PAGE	RELAY BLOCKS (RELAY BLOCK LOCATION)
2	22	R/B NO. 2 (ENGINE COMPARTMENT LEFT)
5	23	R/B NO. 5 (ENGINE COMPARTMENT RIGHT)

: JUNCTION BLOCK AND WIRE HARNESS CONNECTOR

CODE	SEE PAGE	JUNCTION BLOCK AND WIRE HARNESS (CONNECTOR LOCATION)
1E	20	INSTRUMENT PANEL WIRE AND J/B NO. 1 (LEFT KICK PANEL)
1H	20	COWL WIRE AND J/B NO. 1 (LEFT KICK PANEL)

: CONNECTOR JOINING WIRE HARNESS AND WIRE HARNESS

CODE	SEE PAGE	JOIINING WIRE HARNESS AND WIRE HARNESS (CONNECTOR LOCATION)
EA1	32(2J2-GTE)	ENGINE WIRE AND ENGINE ROOM MAIN WIRE (NEAR THE R/B NO. 2)
EA2		
IB5	36	ENGINE ROOM MAIN WIRE AND COWL WIRE (RIGHT KICK PANEL)
IF1	36	INSTRUMENT PANEL WIRE AND COWL WIRE (INSTRUMENT PANEL REINFORCEMENT LH)
IF2		
II1	38	ENGINE WIRE AND INSTRUMENT PANEL WIRE (RIGHT KICK PANEL)

: GROUND POINTS

CODE	SEE PAGE	GROUND POINTS LOCATION
EB	32(2JZ-GTE)	FRONT SIDE OF LEFT FENDER
EC	32(2JZ-GTE)	FRONT SIDE OF INTAKE MANIFOLD
ED	32(2JZ-GTE)	REAR SIDE OF INTAKE MANIFOLD
IE	36	LEFT KICK PANEL
IG	36	RIGHT KICK PANEL

: SPLICE POINTS

CODE	SEE PAGE	WIRE HARNESS WITH SPLICE POINTS	CODE	SEE PAGE	WIRE HARNESS WITH SPLICE POINTS
E16	32	ENGINE WIRE	I14	38	INSTRUMENT PANEL WIRE
I 2	38	COWL WIRE	I17	38	ENGINE WIRE
I11					

A20

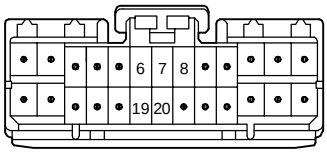

C10 (A) BLUE

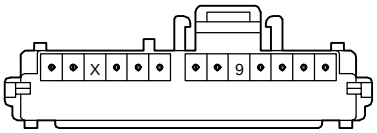

C12 (B)

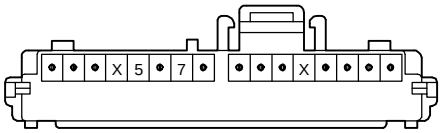

D 1 BLACK

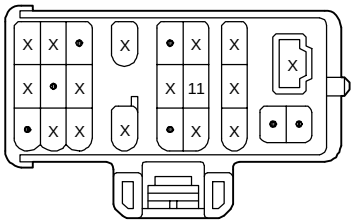

D 5 DARK GRAY

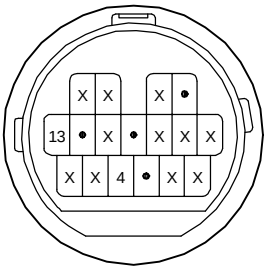

E 9 (B) DARK GRAY

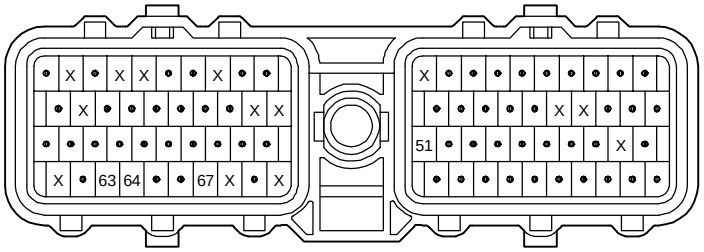

E10 (A) DARK GRAY

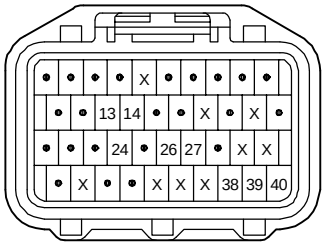

S 5 BLACK

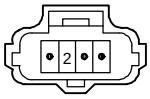

S18 BLACK

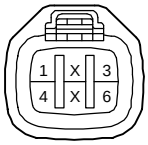

T 2 BLACK

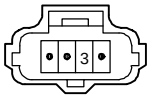

T 5

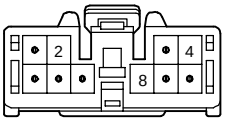

T 8

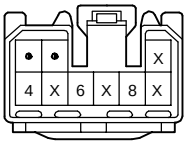

T15 (A)

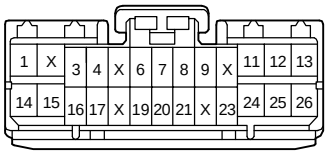

T16 (B)

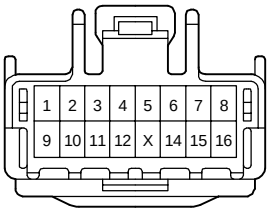

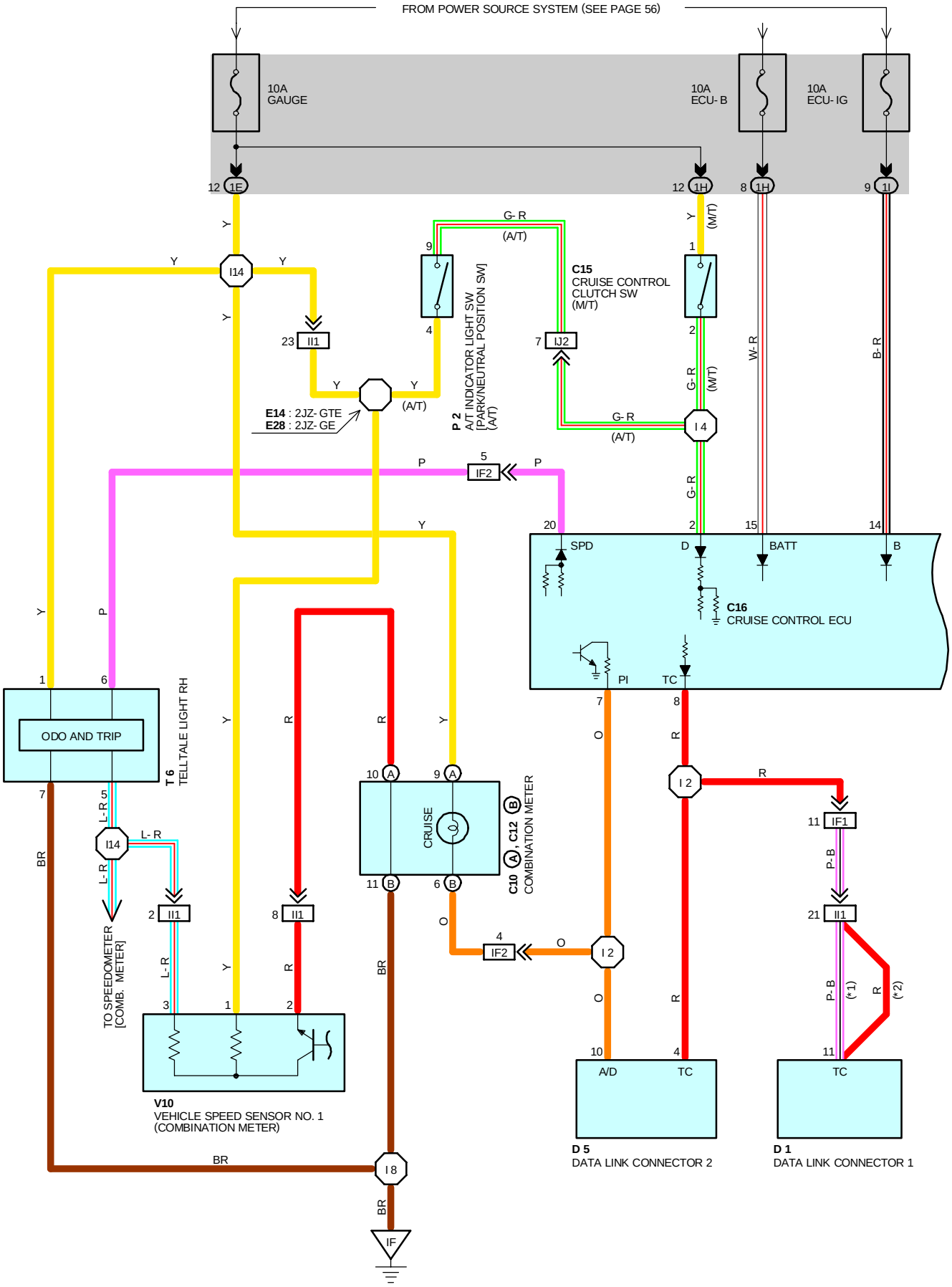
FROM POWER SOURCE SYSTEM (SEE PAGE 56)
10A GAUGE
10A ECU- B
10A ECU- IG
C15 CRUISE CONTROL CLUTCH SW (M/T)
P 2 A/T INDICATOR LIGHT SW [PARK/NEUTRAL POSITION SW]
E14 : 2JZ- GTE
E28 : 2JZ- GE
C16 CRUISE CONTROL ECU
SPD
BATT
PI
TC
ODO AND TRIP
T 6 TELLTALE LIGHT RH
CRUISE
C10 A, C12 B COMBINATION METER
TO SPEEDOMETER [COMB. METER]
V10 VEHICLE SPEED SENSOR NO. 1 (COMBINATION METER)
A/D
D 5 DATA LINK CONNECTOR 2
D 1 DATA LINK CONNECTOR 1
IF

*1 : 2JZ-GTE
*2 : 2JZ-GE

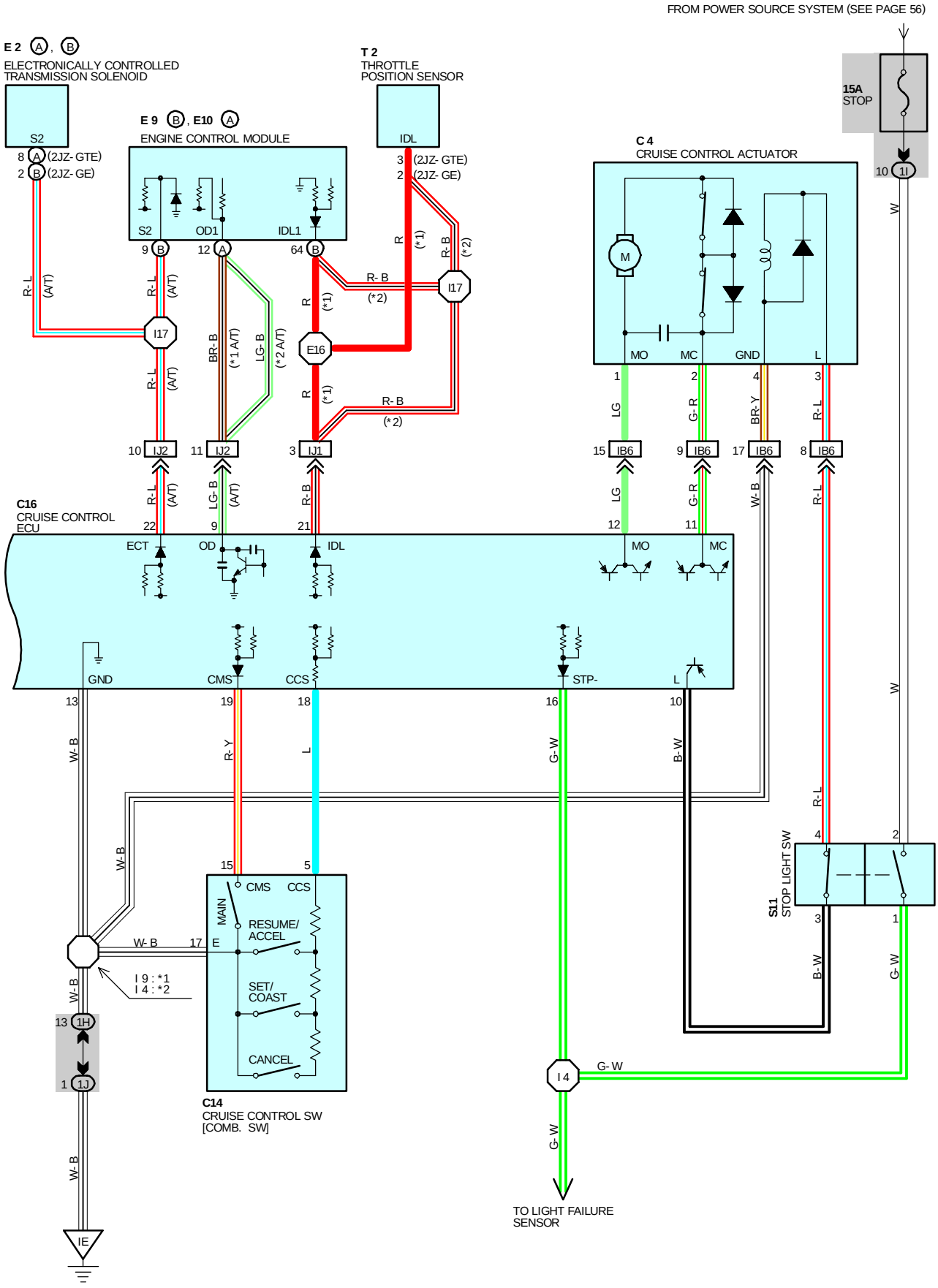

SYSTEM OUTLINE

CURRENT IS APPLIED AT ALL TIMES THROUGH **STOP** FUSE TO **TERMINAL 1** OF THE CRUISE CONTROL ECU, **TERMINAL 2** OF THE STOP LIGHT SW, AND ALSO THROUGH THE **ECU-B** FUSE TO **TERMINAL 15** OF THE CRUISE CONTROL ECU.
WITH THE IGNITION SW TURNED TO ON, THE CURRENT FLOWS THROUGH GAUGE FUSE TO **TERMINAL (A) 9** OF THE COMBINATION METER AND THE CURRENT THROUGH **ECU-IG** FUSE FLOWS TO **TERMINAL 14** OF THE CRUISE CONTROL ECU.
WHEN THE IGNITION SW IS ON AND THE CRUISE CONTROL MAIN SWITCH IS TURNED ON, A SIGNAL IS INPUT FROM **TERMINAL 15** OF CRUISE CONTROL MAIN SW TO **TERMINAL 19** OF THE CRUISE CONTROL ECU. AS A RESULT, THE CRUISE CONTROL ECU FUNCTIONS AND THE CURRENT FLOWS THROUGH **TERMINAL 14** OF THE CRUISE CONTROL ECU TO **TERMINAL 13** OF THE CRUISE CONTROL ECU → **GROUND**, AND THE CRUISE CONTROL SYSTEM IS IN A CONDITION READY FOR OPERATION.
AT THE SAME TIME, THE CURRENT THROUGH THE **GAUGE** FUSE FLOWS TO **TERMINAL (A) 9** OF THE CRUISE CONTROL INDICATOR LIGHT → **TERMINAL (B) 6** → **TERMINAL 7** OF THE CRUISE CONTROL ECU → **TERMINAL 13** → **GROUND**, CAUSING THE CRUISE CONTROL INDICATOR LIGHT TO LIGHT UP, INDICATING THAT THE CRUISE CONTROL IS READY FOR OPERATION.

1. SET OPERATION

WHEN THE CRUISE CONTROL MAIN SW IS TURNED ON AND THE SET SW IS PUSHED WITH THE VEHICLE SPEED WITHIN THE SET LIMIT (APPROX. **40** KM/H, **25** MPH TO **200** KM/H, **124** MPH), A SIGNAL IS INPUT TO **TERMINAL 18** OF THE CRUISE CONTROL ECU AND THE VEHICLE SPEED AT THE TIME THE SET SW IS RELEASED, WHICH I MEMORIZED IN THE ECU AS THE SET SPEED.

2. SET SPEED CONTROL

DURING CRUISE CONTROL DRIVING, THE ECU COMPARES THE SET SPEED MEMORIZED IN THE ECU WITH THE ACTUAL VEHICLE SPEED INPUTS INTO **TERMINAL 20** OF THE CRUISE CONTROL ECU FROM THE SPEED SENSOR, AND CONTROLS THE CRUISE CONTROL ACTUATOR TO MAINTAIN THE SET SPEED.
WHEN THE ACTUAL SPEED IS LOWER THAN THE SET SPEED, THE ECU CAUSES THE CURRENT TO THE CRUISE CONTROL ACTUATOR TO FLOW FROM **TERMINAL 12** → **TERMINAL 1** OF THE CRUISE CONTROL ACTUATOR → **TERMINAL 2** → **TERMINAL 11** OF THE CRUISE CONTROL ECU. AS A RESULT, THE MOTOR IN THE CRUISE CONTROL ACTUATOR IS ROTATED TO OPEN THE THROTTLE VALVE AND THE THROTTLE CABLE IS PULLED TO INCREASE THE VEHICLE SPEED. WHEN THE ACTUAL DRIVING SPEED IS HIGHER THAN THE SET SPEED, THE CURRENT TO CRUISE CONTROL ACTUATOR FLOWS FROM **TERMINAL 11** OF THE ECU → **TERMINAL 2** OF THE CRUISE CONTROL ACTUATOR → **TERMINAL 1** → **TERMINAL 12** OF THE CRUISE CONTROL ECU.
THIS CAUSES THE MOTOR IN THE CRUISE CONTROL ACTUATOR TO ROTATE TO CLOSE THE THROTTLE VALVE AND RETURN THE THROTTLE CABLE TO DECREASE THE VEHICLE SPEED.

3. COAST CONTROL

DURING THE CRUISE CONTROL DRIVING, WHILE THE COAST SW IS ON, THE CRUISE CONTROL ACTUATOR RETURNS THE THROTTLE CABLE TO CLOSE THE THROTTLE VALVE AND DECREASE THE DRIVING SPEED. THE VEHICLE SPEED WHEN THE COAST SWITCH IS TURNED OFF IS MEMORIZED AND THE VEHICLE CONTINUES AT THE NEW SET SPEED.

4. ACCEL CONTROL

DURING CRUISE CONTROL DRIVING, WHILE THE ACCEL SW IS TURNED ON, THE CRUISE CONTROL ACTUATOR PULLS THE THROTTLE CABLE TO OPEN THE THROTTLE VALVE AND INCREASE THE DRIVING SPEED.
THE VEHICLE SPEED WHEN THE ACCEL SW IS TURNED OFF IS MEMORIZED AND THE VEHICLE CONTINUES AT THE NEW SET SPEED.

5. RESUME CONTROL

UNLESS THE VEHICLE SPEED FALLS BELOW THE MINIMUM SPEED LIMIT (APPROX. **40** KM/H, **25** MPH) AFTER CANCELING THE SET SPEED BY THE CANCEL SW, PUSHING THE RESUME SW WILL CAUSE THE VEHICLE TO RESUME THE SPEED SET BEFORE THE CANCELLATION.

6. MANUAL CANCEL MECHANISM

IF ANY OF THE FOLLOWING OPERATIONS OCCUR DURING CRUISE CONTROL OPERATION, THE MAGNETIC CLUTCH OF THE ACTUATOR TURNS OFF AND THE MOTOR ROTATES TO CLOSE THE THROTTLE VALVE AND THE CRUISE CONTROL IS RELEASED.

- ∗ PLACING THE SHIFT LEVER IN EXCEPT “D” POSITION (PARK/NEUTRAL POSITION SW EXCEPT “D” POSITION). “SIGNAL IS NOT INPUT TO **TERMINAL 2** OF THE ECU” (A/T)
- ∗ DEPRESSING THE BRAKE PEDAL (STOP LIGHT SW ON). “SIGNAL IS INPUT TO **TERMINAL 16** OF THE ECU”
- ∗ PUSHING THE CANCEL SWITCH (CANCEL SW ON). “SIGNAL IS INPUT TO **TERMINAL 18** OF THE ECU”
- ∗ DEPRESSING THE CLUTCH PEDAL (CRUISE CONTROL CLUTCH SW OFF). “SIGNAL IS NOT INPUT TO **TERMINAL 2** OF THE ECU”

7. AUTO CANCEL FUNCTION

A) IF ANY OF THE FOLLOWING OPERATING CONDITIONS OCCUR DURING CRUISE CONTROL OPERATION, THE SET SPEED IS ERASED, CURRENT FLOW TO MAGNETIC CLUTCH IS STOPPED AND THE CRUISE CONTROL IS RELEASED. (MAIN SW TURNS OFF).
WHEN THIS OCCURS, THE IGNITION SW MUST BE TURNED OFF ONCE BEFORE THE MAIN SW WILL TURN ON.

- ∗ OVER CURRENT TO TRANSISTOR DRIVING MOTOR AND/OR MAGNETIC CLUTCH.
- ∗ WHEN CURRENT CONTINUED TO FLOW TO THE MOTOR INSIDE THE ACTUATOR IN THE THROTTLE VALVE "OPEN" DIRECTION.
- ∗ OPEN CIRCUIT IN MAGNETIC CLUTCH.
- ∗ MOMENTARY INTERRUPTION OF VEHICLE SPEED SIGNAL.
- ∗ SHORT CIRCUIT IN CRUISE CONTROL SW.
- ∗ MOTOR DOES NOT OPERATE DESPITE THE MOTOR DRIVE SIGNAL BEING OUTPUT.

B) IF ANY OF THE FOLLOWING CONDITIONS OCCUR DURING CRUISE CONTROL OPERATION, THE SET SPEED IS ERASED AND THE CRUISE CONTROL IS RELEASED. (THE POWER OF MAGNETIC CLUTCH IS CUT OFF UNTIL THE SET SW IS "ON" AGAIN.)

- ∗ WHEN THE VEHICLE SPEED FALLS BELOW THE MINIMUM SPEED LIMIT, APPROX. **40** KM/H (**25** MPH)
- ∗ WHEN THE VEHICLE SPEED FALLS MORE THAN **16** KM/H (**10** MPH) BELOW THE SET SPEED, E.G. ON AN UPWARD SLOPE.
- ∗ WHEN POWER TO THE CRUISE CONTROL SYSTEM IS MOMENTARILY CUT OFF.

8. AUTOMATIC TRANSMISSION CONTROL FUNCTION

- ∗ IN OVERDRIVE. IF THE VEHICLE SPEED BECOMES LOWER THAN THE OVERDRIVE CUT SPEED (SET SPEED MINUS APPROX. **4** KM/H, **2.5** MPH) DURING CRUISE CONTROL OPERATION, SUCH AS DRIVING UP A HILL, THE OVERDRIVE IS RELEASED AND THE POWER INCREASED TO PREVENT A REDUCTION IN VEHICLE SPEED.
- ∗ AFTER RELEASING THE OVERDRIVE, VEHICLE SPEED BECOMES HIGHER THAN THE OVERDRIVE RETURN SPEED (SET SPEED MINUS APPROX, **2** KM/H, **1.2** MPH) AND THE ECU JUDGES BY THE SIGNALS FROM POTENTIOMETER OF THE ACTUATOR THAT THE UPWARD SLOPE HAS FINISHED, OVERDRIVE IS RESUMED AFTER APPROXIMATELY **2** SECONDS.
- ∗ DURING CRUISE CONTROL DRIVING, THE CRUISE CONTROL OPERATION SIGNAL IS OUTPUT FROM THE CRUISE CONTROL ECU TO THE ENGINE CONTROL MODULE. UPON RECEIVING THIS SIGNAL, THE ENGINE CONTROL MODULE CHANGES THE SHIFT PATTERN TO NORMAL. TO MAINTAIN SMOOTH CRUISE CONTROL OPERATION (ON A DOWNWARD SLOPE ETC.), LOCK-UP RELEASE OF THE TRANSMISSION WHEN THE IDLING POINT OF THE THROTTLE POSITION IS "ON" IS FORBIDDEN.

SERVICE HINTS

C 4 CRUISE CONTROL ACTUATOR

3-4 : APPROX. **38.5** Ω

C14 CRUISE CONTROL SW [COMB. SW]

15-17 : CONTINUITY WITH THE MAIN SW ON
5-17 : APPROX. **418** Ω WITH THE CANCEL SW ON
APPROX. **68** Ω WITH THE RESUME/ACCEL SW ON
APPROX. **198** Ω WITH THE SET/COAST SW ON

C16 CRUISE CONTROL ECU

14-GROUND : APPROX. **12** VOLTS WITH THE IGNITION SW AT **ON** POSITION
15-GROUND : ALWAYS APPROX. **12** VOLTS
20-GROUND : **4** PULSE WITH **1** ROTATION OF ROTOR SHAFT
18-GROUND : APPROX. **418** Ω WITH THE CANCEL SW ON IN CONTROL SW
APPROX. **198** Ω WITH THE SET/COAST SW ON IN CONTROL SW
APPROX. **68** Ω WITH THE RESUME/ACCEL SW ON IN CONTROL SW
13-GROUND : ALWAYS CONTINUITY

: PARTS LOCATION

CODE		SEE PAGE	CODE		SEE PAGE	CODE	SEE PAGE
C 4		24 (2JZ-GTE)	D 1		26 (2JZ-GE)	S11	29
		26 (2JZ-GE)	D 5		28	T 2	25 (2JZ-GTE)
C10	A	28	E 2	A	24 (2JZ-GTE)		27 (2JZ-GE)
C12	B	28		B	26 (2JZ-GE)	T 6	29
C14		28	E 9	B	29	V10	25 (2JZ-GTE)
C15		28	E10	A	29		27 (2JZ-GE)
C16		28	P 2		25 (2JZ-GTE)		
D 1		24 (2JZ-GTE)			17 (2JZ-GE)		

: JUNCTION BLOCK AND WIRE HARNESS CONNECTOR

CODE	SEE PAGE	JUNCTION BLOCK AND WIRE HARNESS (CONNECTOR LOCATION)
1E	20	INSTRUMENT PANEL WIRE AND J/B NO. (LEFT KICK PANEL)
1H	20	COWL WIRE AND J/B NO. 1 (LEFT KICK PANEL)
1I		
1J		

: CONNECTOR JOINING WIRE HARNESS AND WIRE HARNESS

CODE	SEE PAGE	JOINING WIRE HARNESS AND WIRE HARNESS (CONNECTOR LOCATION)
IB6	36	ENGINE ROOM MAIN WIRE AND COWL WIRE (RIGHT KICK PANEL)
IF1	36	INSTRUMENT PANEL WIRE AND COWL WIRE (INSTRUMENT PANEL REINFORCEMENT LH)
IF2		
II1	38	ENGINE WIRE AND INSTRUMENT PANEL WIRE (RIGHT KICK PANEL)
IJ1	38	ENGINE WIRE AND COWL WIRE (RIGHT KICK PANEL)
IJ2		

: GROUND POINTS

CODE	SEE PAGE	GROUND POINTS LOCATION
IE	36	LEFT KICK PANEL
IF		

: SPLICE POINTS

CODE	SEE PAGE	WIRE HARNESS WITH SPLICE POINTS	CODE	SEE PAGE	WIRE HARNESS WITH SPLICE POINTS
E14	32	ENGINE WIRE	I4	38	COWL WIRE
E16			I8	38	INSTRUMENT PANEL WIRE
E28	34		I14		
I2	38	COWL WIRE	I17	38	ENGINE WIRE

C 4 GRAY

C10 (A) BLUE

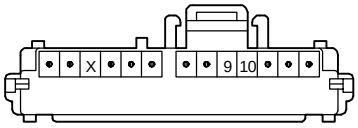

C12 (B)

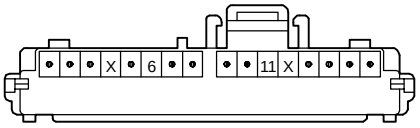

C14 BLACK

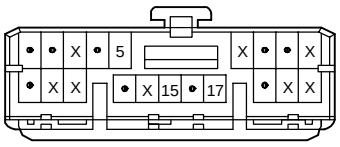

C15

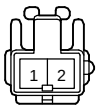

(A/T) **C16** GREEN

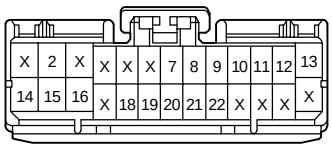

(M/T) **C16** GREEN

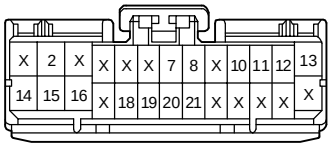

D 1 BLACK

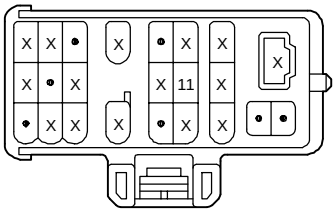

(2JZ- GTE) **D 5** DARK GRAY

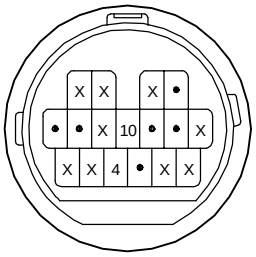

(2JZ- GTE) **E 2** (A) GRAY

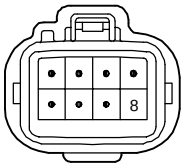

(2JZ- GE) **E** 2 (B) BLACK

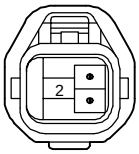

(2JZ- GTE) **E 9** (B) DARK GRAY

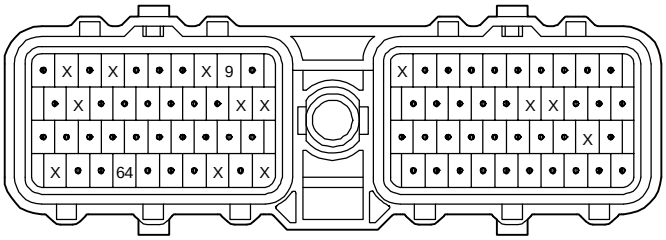

(2JZ- GE) **E** 9 (B) DARK GRAY

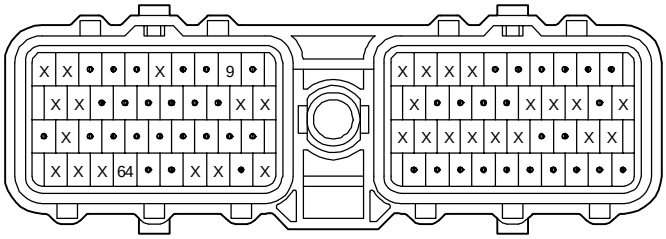

(2JZ- GTE) **E10** (A) DARK GRAY

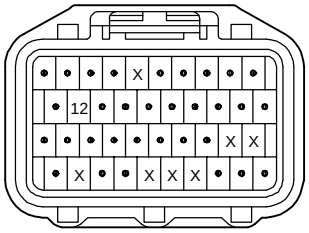

(2JZ-GE) **E10** (A) DARK GRAY

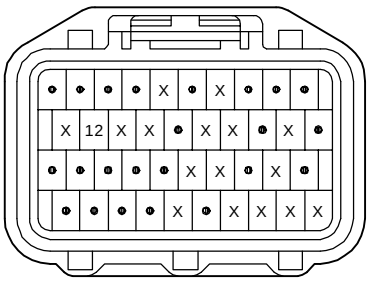

P 2 GRAY

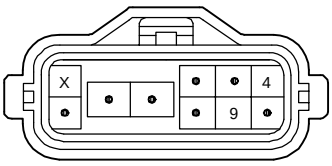

S11 BLUE

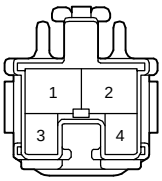

(2JZ-GTE) **T 2** BLACK

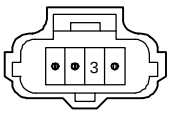

(2JZ-GE) **T 2** BLACK

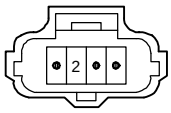

T 6

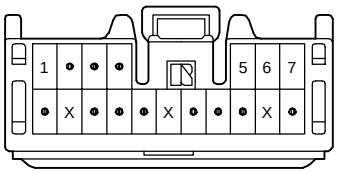

V10 BLACK

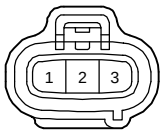

C10 (A) BLUE

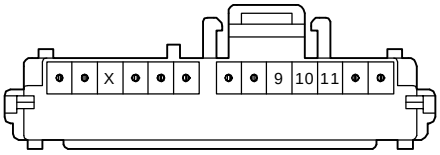

C12 (B)

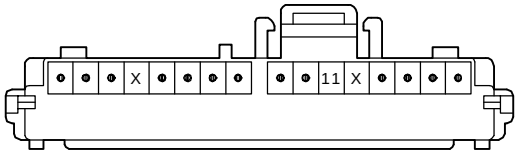

P 1 GRAY

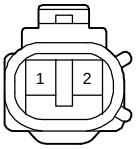

P 4 BLUE

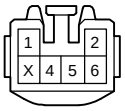

T 6

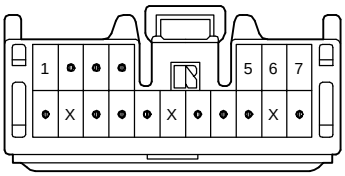

V10 BLACK

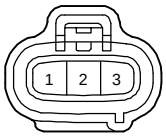

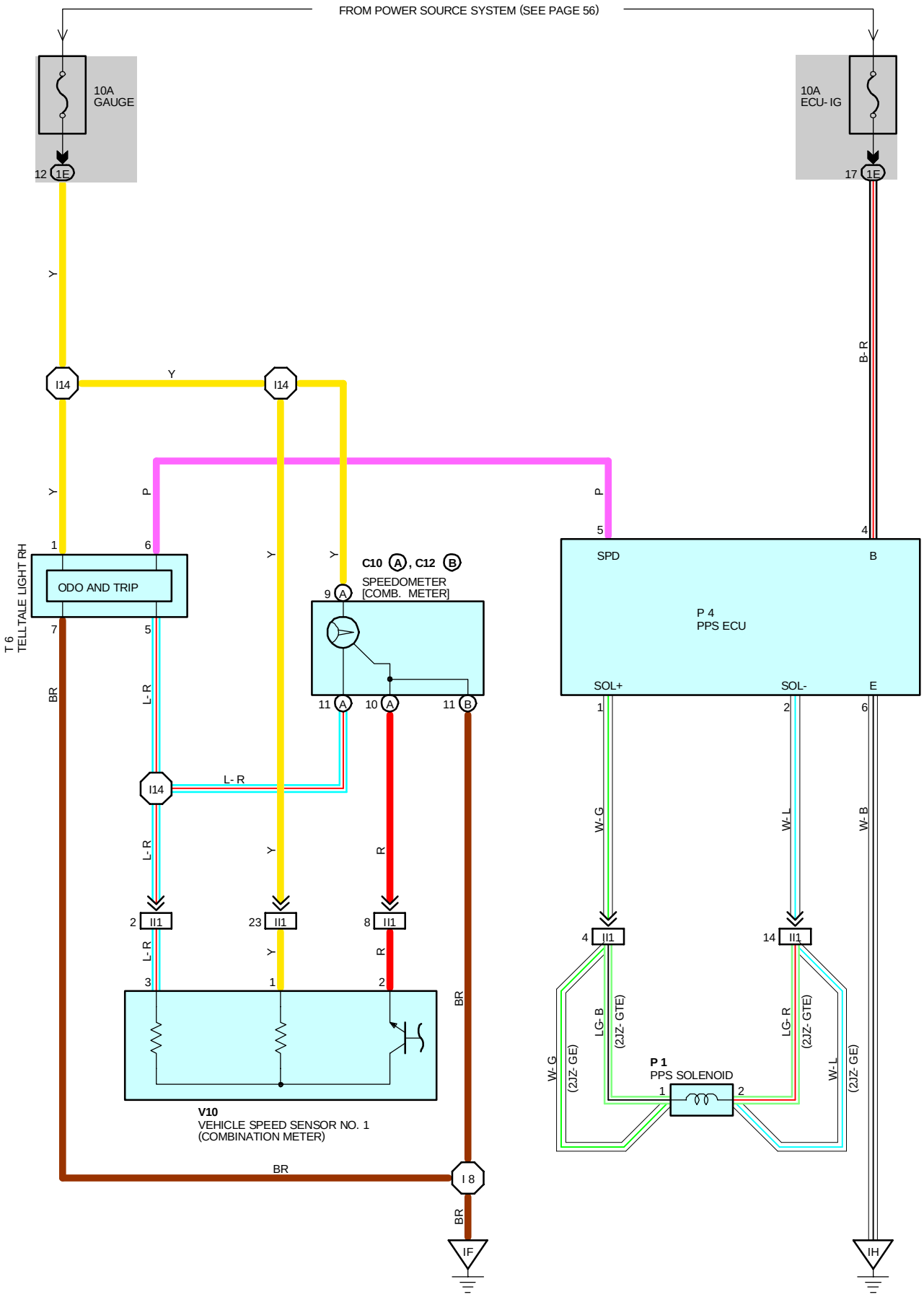
FROM POWER SOURCE SYSTEM (SEE PAGE 56)
10A
GAUGE
10A
ECU- IG
12 1E
17 1E
Y
B- R
I14
I14
Y
Y
P
P
1
6
5
4
T 6
TELLTALE LIGHT RH
ODO AND TRIP
7
5
BR
L- R
Y
Y
C10 A, C12 B
SPEEDOMETER
[COMB. METER]
9 A
11 A
10 A
11 B
SPD
B
P 4
PPS ECU
SOL+
SOL-
E
1
2
6
I14
L- R
L- R
Y
R
W- G
W- L
W- B
2 II1
23 II1
8 II1
4 II1
14 II1
L- R
Y
R
3
1
2
BR
LG- B
(2JZ- GTE)
LG- R
(2JZ- GTE)
W- G
(2JZ- GE)
W- L
(2JZ- GE)
P 1
PPS SOLENOID
1
2
V10
VEHICLE SPEED SENSOR NO. 1
(COMBINATION METER)
BR
I 8
BR
IF
IH

SYSTEM OUTLINE

THE PPS (HYDRAULIC REACTION TYPE) CONTROLS THE HYDRAULIC PRESSURE APPLIED TO THE HYDRAULIC REACTION CHAMBER IN THE GEAR BOX CONTROL UNIT USING THE PPS ECU, TO CHANGE THE STEERING FORCE AND PROVIDE OPTIMUM STEERING FEELING AT ANY VEHICLE SPEEDS AND UNDER ANY STEERING CONDITIONS.

(PPS OPERATION)
WHEN THE IGNITION SW IS TURNED ON THE STARTING CURRENT FLOWS FROM THE **ECU-IG** FUSE TO **TERMINAL 4** OF THE PPS ECU. THE PPS ECU MONITORS VEHICLE SPEED, INPUT SIGNAL TO **TERMINAL 5** OF THE ECU. WHEN THE VEHICLE SPEED IS LOW, THE PPS ECU SENDS A HIGHER-CURRENT FROM **TERMINAL 1** OF THE ECU ➔ **TERMINAL 1** OF THE SOLENOID VALVE ➔ **TERMINAL 2** ➔ **TERMINAL 2** OF THE ECU ➔ **TERMINAL 6** ➔ **GROUND**, INCREASING THE SOLENOID VALVE OPENING ANGLE TO PROVIDE COMFORTABLE STEERING OPERATION. WHEN THE VEHICLE SPEED IS HIGH, THE PPS ECU DECREASES THE SOLENOID VALVE OPENING ANGLE BY REDUCING THE CURRENT TO THE VALVE TO PROVIDE RESPONSIVE STEERING FEELING.

SERVICE HINTS

P1 PPS SOLENOID

1-2 : APPROX. **7.7** Ω (**25**•C, **77**•F)

P4 PPS ECU

4-GROUND : APPROX. **12** VOLTS WITH THE IGNITION SW AT **ON** POSITION
6-GROUND : ALWAYS CONTINUITY

: PARTS LOCATION

CODE		SEE PAGE	CODE	SEE PAGE	CODE	SEE PAGE
C10	A	28	P1	27 (2JZ-GE)	V10	25 (2JZ-GTE)
C12	B	28	P4	29		27 (2JZ-GE)
P1		25 (2JZ-GTE)	T6	29		

: JUNCTION BLOCK AND WIRE HARNESS CONNECTOR

CODE	SEE PAGE	JUNCTION BLOCK AND WIRE HARNESS (CONNECTOR LOCATION)
1E	20	INSTRUMENT PANEL WIRE AND J/B NO. 1 (LEFT KICK PANEL)

: CONNECTOR JOINING WIRE HARNESS AND WIRE HARNESS

CODE	SEE PAGE	JOINING WIRE HARNESS AND WIRE HARNESS (CONNECTOR LOCATION)
II1	38	ENGINE WIRE AND INSTRUMENT PANEL WIRE (RIGHT KICK PANEL)

: GROUND POINTS

CODE	SEE PAGE	GROUND POINTS LOCATION
IF	36	LEFT KICK PANEL
IH	36	RIGHT KICK PANEL

: SPLICE POINTS

CODE	SEE PAGE	WIRE HARNESS WITH SPLICE POINTS	CODE	SEE PAGE	WIRE HARNESS WITH SPLICE POINTS
I8	38	INSTRUMENT PANEL WIRE	I14	38	INSTRUMENT PANEL WIRE

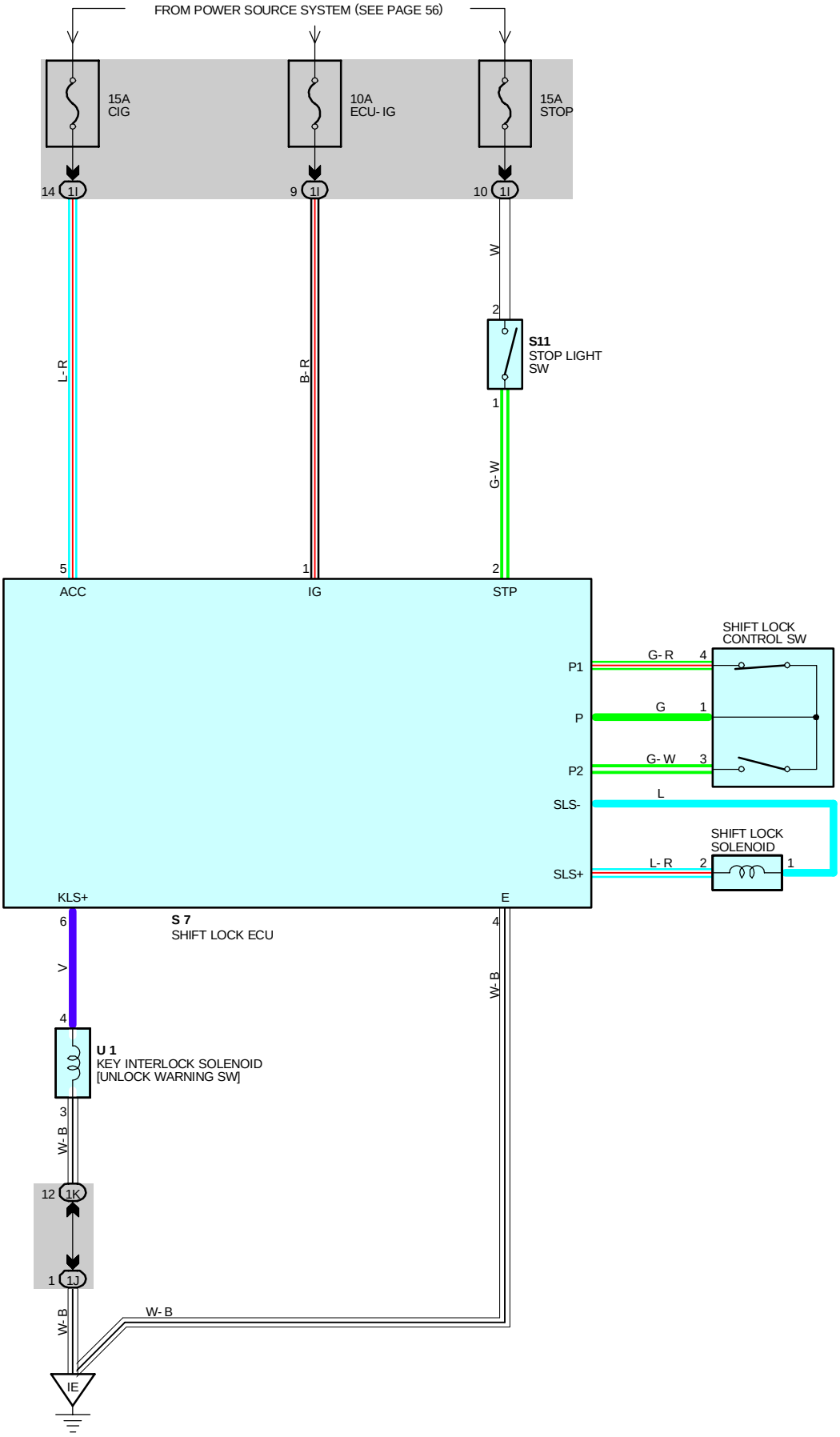
FROM POWER SOURCE SYSTEM (SEE PAGE 56)
15A
CIG
10A
ECU- IG
15A
STOP
14
1I
9
1I
10
1I
W
2
S11
STOP LIGHT
SW
1
L- R
B- R
G- W
5
1
2
ACC
IG
STP
SHIFT LOCK
CONTROL SW
P1
G- R
4
P
G
1
P2
G- W
3
SLS-
L
SHIFT LOCK
SOLENOID
SLS+
L- R
2
1
KLS+
E
6
S 7
SHIFT LOCK ECU
4
V
W- B
4
U 1
KEY INTERLOCK SOLENOID
[UNLOCK WARNING SW]
3
W- B
12
1K
1
1J
W- B
W- B
IE

SYSTEM OUTLINE

WHEN THE IGNITION SW IS TURNED TO **ACC** POSITION THE CURRENT FROM THE **CIG** FUSE FLOWS TO **TERMINAL 5** OF THE SHIFT LOCK ECU, IN THE ON POSITION, THE CURRENT FROM THE **ECU-IG** FUSE FLOWS TO **TERMINAL 1** OF THE ECU.

1. SHIFT LOCK MECHANISM

WITH THE IGNITION SW ON, WHEN A SIGNAL THAT THE BRAKE PEDAL IS DEPRESSED (STOP LIGHT SW ON) AND A SIGNAL THAT THE SHIFT LEVER IS PUT IN **"P"** POSITION (CONTINUITY BETWEEN P1 AND P OF THE SHIFT LOCK CONTROL SW) IS INPUT TO THE ECU, THE ECU OPERATES AND CURRENT FLOWS FROM **TERMINAL 1** OF THE ECU ➔ **TERMINAL 'SLS+'** OF THE SHIFT LOCK SOLENOID SOLENOID ➔ **TERMINAL 'SLS-'** ➔ **TERMINAL 4** OF THE ECU ➔ **GROUND**. THIS CAUSES THE SHIFT LOCK SOLENOID TO TURN ON (PLATE STOPPER DISENGAGES) AND THE SHIFT LEVER CAN SHIFT INTO POSITION OTHER THAN THE **"P"**.

2. KEY INTERLOCK MECHANISM

WITH THE IGNITION SW **ON** OR **ACC** POSITION, WHEN THE SHIFT LEVER IS PUT IN **"P"** POSITION (NO CONTINUITY BETWEEN P2 AND P OF SHIFT LOCK CONTROL SW), THE CURRENT FLOWING FROM **TERMINAL 6** OF THE ECU ➔ KEY INTERLOCK SOLENOID IS CUT OFF. THIS CAUSES THE KEY INTERLOCK SOLENOID TO TURN OFF (LOCK LEVER DISENGAGES FROM **LOCK** POSITION) AND THE IGNITION KEY CAN BE TURNED FROM **ACC** TO **LOCK** POSITION.

SERVICE HINTS

S7 SHIFT LOCK ECU

5-GROUND : APPROX. **12** VOLTS WITH THE IGNITION SW AT **ACC** OR **ON** POSITION
1-GROUND : APPROX. **12** VOLTS WITH THE IGNITION SW AT **ON** POSITION
4-GROUND : ALWAYS CONTINUITY
2-GROUND : APPROX. **12** VOLTS WITH THE BRAKE PEDAL DEPRESSED

S11 STOP LIGHT SW

2-1 : CLOSED WITH THE BRAKE PEDAL DEPRESSED

○ : PARTS LOCATION

CODE	SEE PAGE	CODE	SEE PAGE	CODE	SEE PAGE
S7	29	S11	29	U1	29

⬭ : JUNCTION BLOCK AND WIRE HARNESS CONNECTOR

CODE	SEE PAGE	JUNCTION BLOCK AND WIRE HARNESS (CONNECTOR LOCATION)
1I	20	COWL WIRE AND J/B NO. 1 (LEFT KICK PANEL)
1J		
1K		

▽ : GROUND POINTS

CODE	SEE PAGE	GROUND POINTS LOCATION
IE	36	LEFT KICK PANEL

S 7

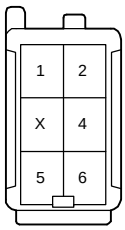

S11 BLUE

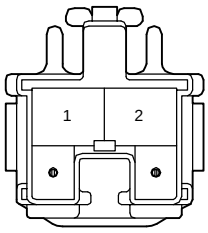

U 1

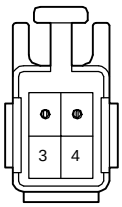

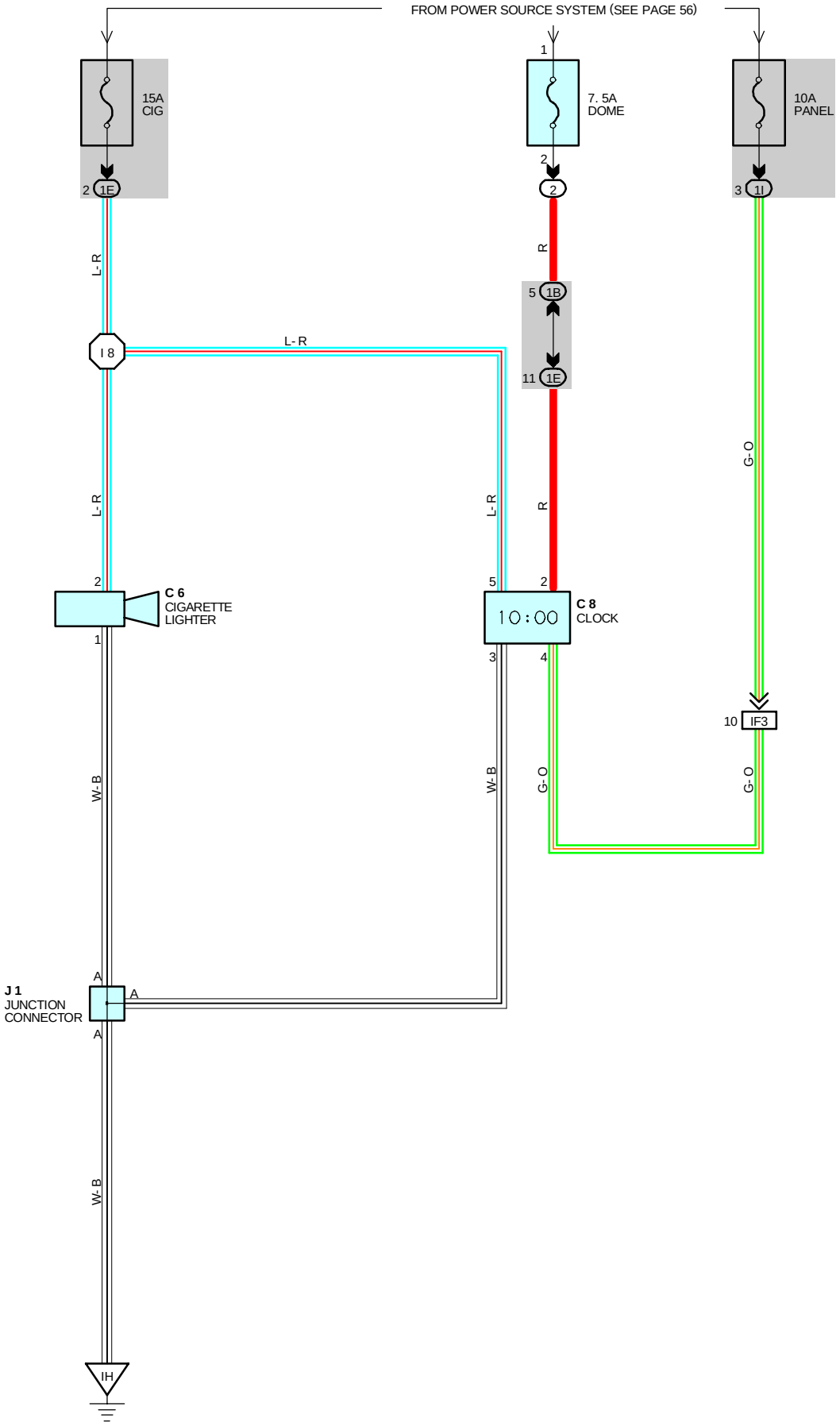
FROM POWER SOURCE SYSTEM (SEE PAGE 56)
15A
CIG
7. 5A
DOME
10A
PANEL
2
1E
1
2
3
1I
L- R
R
5
1B
11
1E
I 8
L- R
G- O
L- R
L- R
R
2
C 6
CIGARETTE
LIGHTER
1
5
2
C 8
CLOCK
10:00
3
4
10
IF3
W- B
W- B
G- O
G- O
A
J 1
JUNCTION
CONNECTOR
A
A
W- B
IH

SERVICE HINTS

C6 CIGARETTE LIGHTER

2-GROUND : APPROX. **12** VOLTS WITH THE IGNITION SW AT **ACC** OR **ON** POSITION
1-GROUND : ALWAYS CONTINUITY

C8 CLOCK

2-GROUND : ALWAYS **12** VOLTS (POWER FOR CLOCK)
5-GROUND : APPROX. **12** VOLTS WITH THE IGNITION SW AT **ACC** OR **ON** POSITION (POWER FOR INDICATION)
3-GROUND : ALWAYS CONTINUITY

: PARTS LOCATION

CODE	SEE PAGE	CODE	SEE PAGE	CODE	SEE PAGE
C6	28	C8	28	J1	29

: RELAY BLOCKS

CODE	SEE PAGE	RELAY BLOCKS (RELAY BLOCK LOCATION)
2	22	R/B NO. 2 (ENGINE COMPARTMENT LEFT)

: JUNCTION BLOCK AND WIRE HARNESS CONNECTOR

CODE	SEE PAGE	JUNCTION BLOCK AND WIRE HARNESS (CONNECTOR LOCATION)
1B	20	ENGINE ROOM MAIN WIRE AND J/B NO. 1 (LEFT KICK PANEL)
1E	20	INSTRUMENT PANEL WIRE AND J/B NO. 1 (LEFT KICK PANEL)
1I	20	COWL WIRE AND J/B NO. 1 (LEFT KICK PANEL)

: CONNECTOR JOINING WIRE HARNESS AND WIRE HARNESS

CODE	SEE PAGE	JOINING WIRE HARNESS AND WIRE HARNESS (CONNECTOR LOCATION)
IF3	36	INSTRUMENT PANEL WIRE AND COWL WIRE (RIGHT KICK PANEL)

: GROUND POINTS

CODE	SEE PAGE	GROUND POINTS LOCATION
IH	36	RIGHT KICK PANEL

: SPLICE POINTS

CODE	SEE PAGE	WIRE HARNESS WITH SPLICE POINTS	CODE	SEE PAGE	WIRE HARNESS WITH SPLICE POINTS
I8	38	INSTRUMENT PANEL WIRE			

C 6

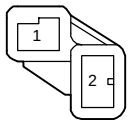

C 8 GRAY

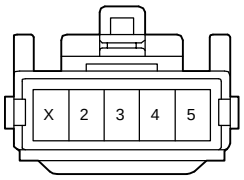

J 1

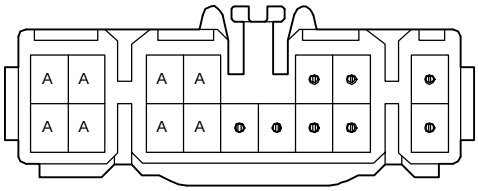

(HINT : SEE PAGE 7)

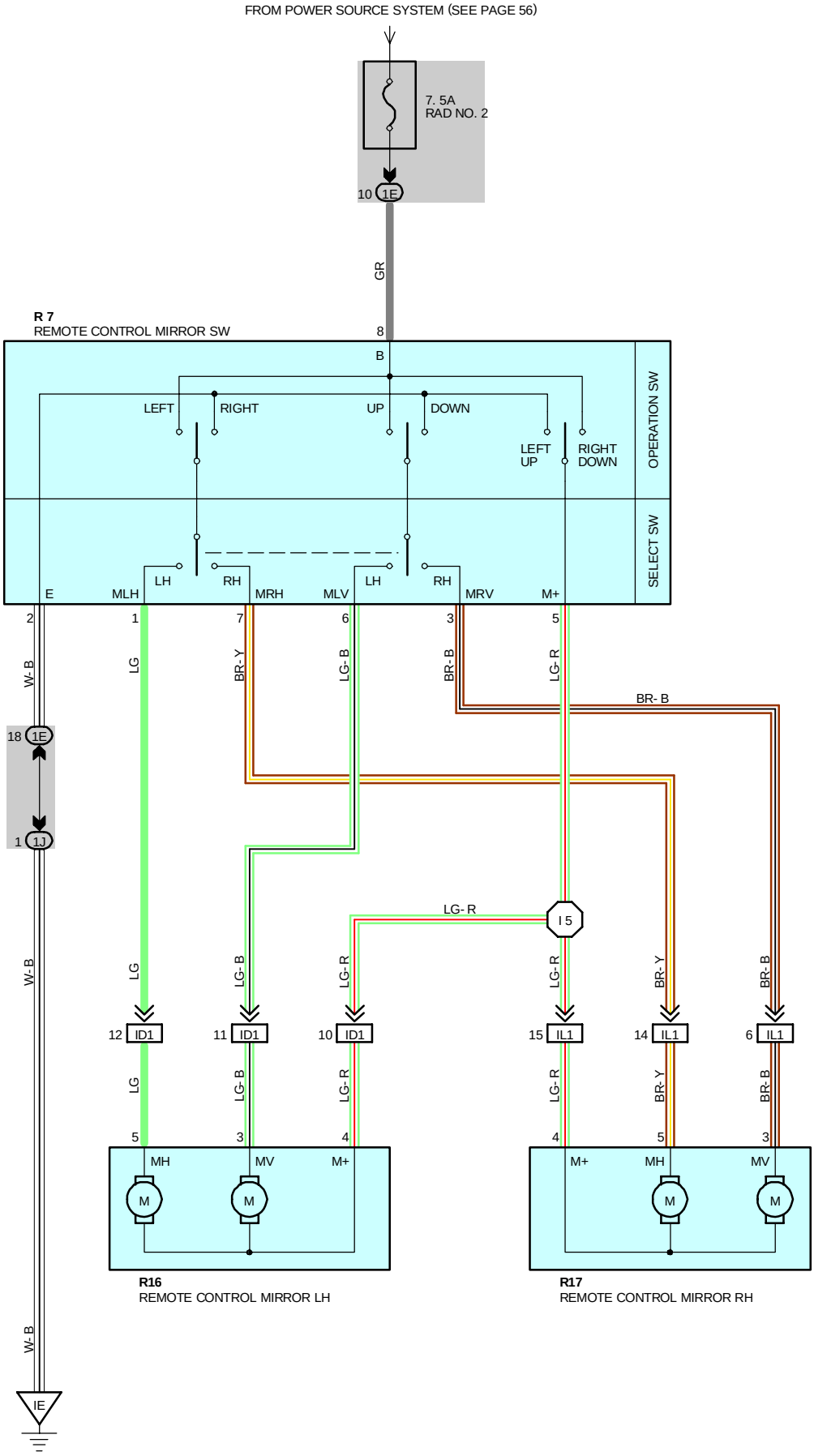
FROM POWER SOURCE SYSTEM (SEE PAGE 56)
7. 5A
RAD NO. 2
10 1E
GR
R 7
REMOTE CONTROL MIRROR SW
8
B
LEFT
RIGHT
UP
DOWN
LEFT UP
RIGHT DOWN
OPERATION SW
SELECT SW
LH
RH
LH
RH
E
MLH
MRH
MLV
MRV
M+
2
1
7
6
3
5
W- B
LG
BR- Y
LG- B
BR- B
LG- R
BR- B
18 1E
1 1J
W- B
LG- R
I 5
LG
LG- B
LG- R
LG- R
BR- Y
BR- B
12 ID1
11 ID1
10 ID1
15 IL1
14 IL1
6 IL1
LG
LG- B
LG- R
LG- R
BR- Y
BR- B
5
3
4
4
5
3
MH
MV
M+
M+
MH
MV
M
M
M
M
R16
REMOTE CONTROL MIRROR LH
R17
REMOTE CONTROL MIRROR RH
W- B
IE

SERVICE HINTS

R7 REMOTE CONTROL MIRROR SW

8-GROUND : APPROX. **12** VOLTS WITH THE IGNITION SW AT **ACC** OR **ON** POSITION
5-2 : CONTINUITY WITH THE OPERATION SW AT **LEFT** OR **UP** POSITION
8-5 : CONTINUITY WITH THE OPERATION SW AT **RIGHT** OR **DOWN** POSITION
2-GROUND : ALWAYS CONTINUITY

: PARTS LOCATION

CODE	SEE PAGE	CODE	SEE PAGE	CODE	SEE PAGE
R7	29	R16	30	R17	30

: JUNCTION BLOCK AND WIRE HARNESS CONNECTOR

CODE	SEE PAGE	JUNCTION BLOCK AND WIRE HARNESS (CONNECTOR LOCATION)
1E	20	INSTRUMENT PANEL WIRE AND J/B NO. 1(LEFT KICK PANEL)
1J	20	COWL WIRE AND J/B NO. 1 (LEFT KICK PANEL)

: CONNECTOR JOINING WIRE HARNESS AND WIRE HARNESS

CODE	SEE PAGE	JOINING WIRE HARNESS AND WIRE HARNESS (CONNECTOR LOCATION)
ID1	36	FRONT DOOR LH WIRE AND INSTRUMENT PANEL WIRE (LEFT KICK PANEL)
IL1	38	FRONT DOOR RH WIRE AND INSTRUMENT PANEL WIRE (RIGHT KICK PANEL)

: GROUND POINTS

CODE	SEE PAGE	GROUND POINTS LOCATION
IE	36	LEFT KICK PANEL

: SPLICE POINTS

CODE	SEE PAGE	WIRE HARNESS WITH SPLICE POINTS	CODE	SEE PAGE	WIRE HARNESS WITH SPLICE POINTS
I5	38	INSTRUMENT PANEL WIRE			

R 7

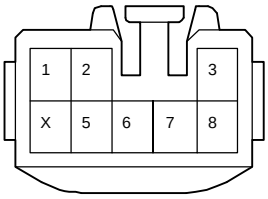

R 16

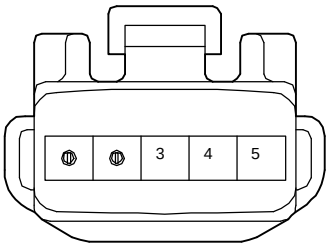

R 17

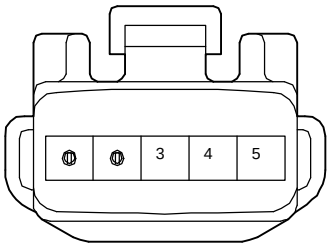

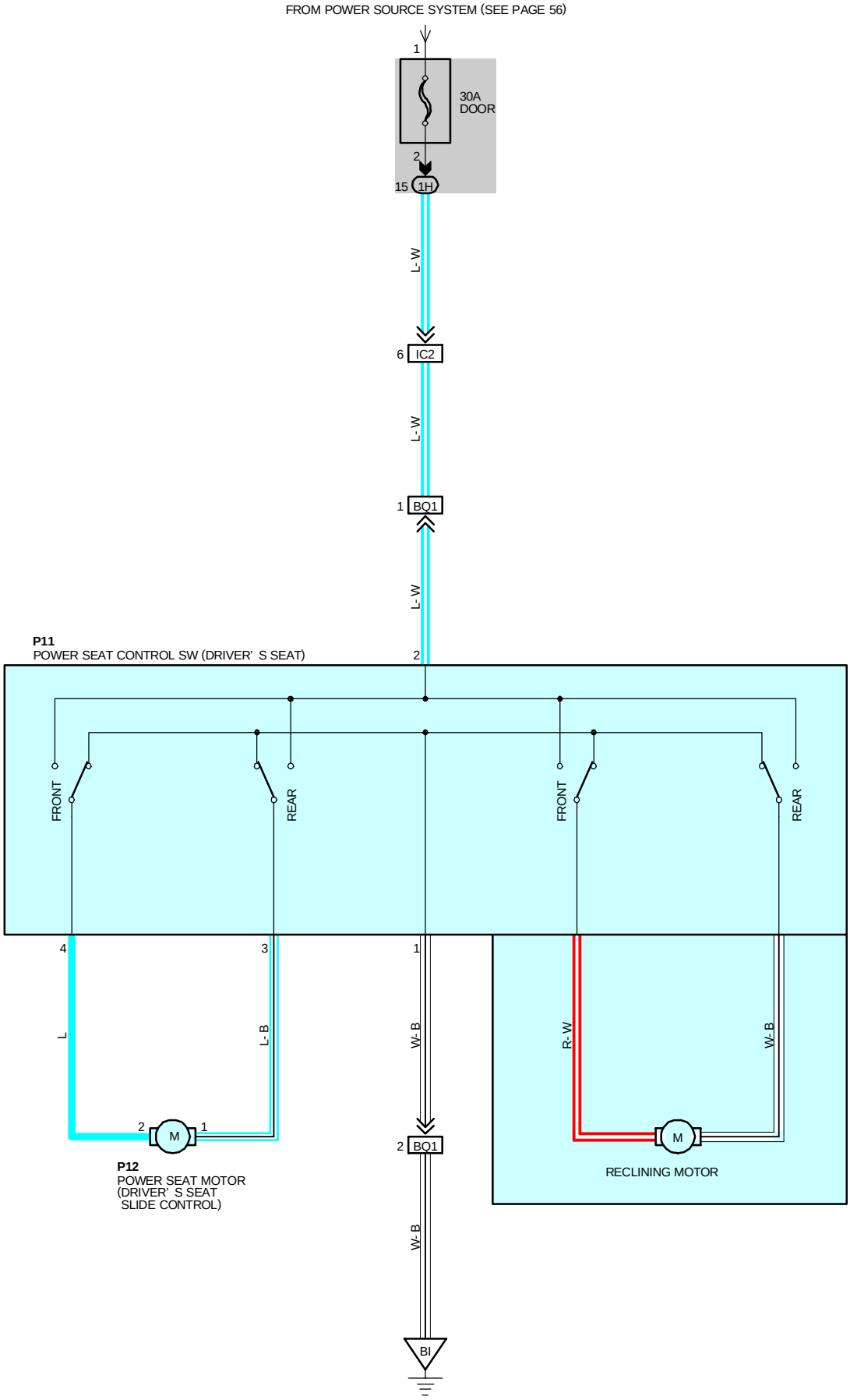
FROM POWER SOURCE SYSTEM (SEE PAGE 56)
1
30A
DOOR
2
15
1H
L- W
6
IC2
L- W
1
BQ1
L- W
P11
POWER SEAT CONTROL SW (DRIVER' S SEAT)
2
FRONT
REAR
FRONT
REAR
4
3
1
L
L- B
W- B
R- W
W- B
2
M
1
2
BQ1
M
P12
POWER SEAT MOTOR
(DRIVER' S SEAT
SLIDE CONTROL)
RECLINING MOTOR
W- B
BI

SERVICE HINTS

P11 POWER SEAT CONTROL SW (DRIVER'S SEAT)

2-GROUND : ALWAYS APPROX. **12** VOLTS
1-GROUND : ALWAYS CONTINUITY

: PARTS LOCATION

CODE	SEE PAGE	CODE	SEE PAGE	CODE	SEE PAGE
P11	31	P12	31		

: JUNCTION BLOCK AND WIRE HARNESS CONNECTOR

CODE	SEE PAGE	JUNCTION BLOCK AND WIRE HARNESS (CONNECTOR LOCATION)
1H	20	COWL WIRE AND J/B NO. 1 (LEFT KICK PANEL)

: CONNECTOR JOINING WIRE HARNESS AND WIRE HARNESS

CODE	SEE PAGE	JOINING WIRE HARNESS AND WIRE HARNESS (CONNECTOR LOCATION)
IC2	36	FLOOR NO. 2 WIRE AND COWL WIRE (LEFT KICK PANEL)
BQ1	42	FLOOR NO. 2 WIRE AND SEAT WIRE (UNDER THE FRONT LH SEAT)

: GROUND POINTS

CODE	SEE PAGE	GROUND POINTS LOCATION
B1	40	LEFT QUARTER PILLAR

P11

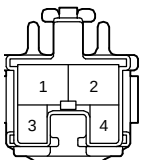

P12

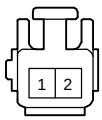

SEAT HEATER (CANADA)

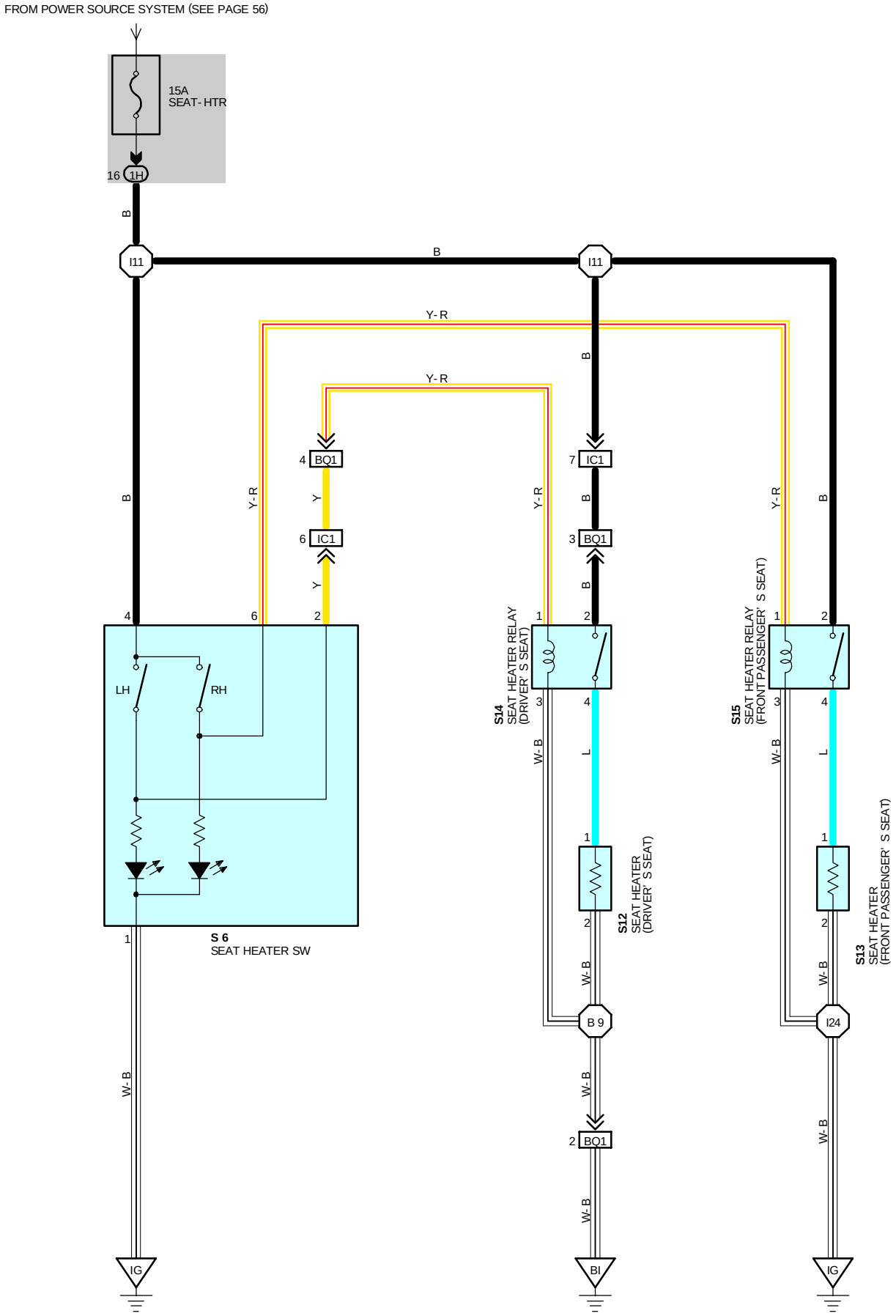

SERVICE HINTS

S6 SEAT HEATER SW

4-GROUND ; APPROX. **12** VOLTS WITH THE IGNITION SW AT **ON** POSITION
1-GROUND : ALWAYS CONTINUITY

: PARTS LOCATION

CODE	SEE PAGE	CODE	SEE PAGE	CODE	SEE PAGE
S6	29	S13	31	S15	31
S12	31	S14	31		

: JUNCTION BLOCK AND WIRE HARNESS CONNECTOR

CODE	SEE PAGE	JUNCTION BLOCK AND WIRE HARNESS (CONNECTOR LOCATION)
1H	20	COWL WIRE AND J/B NO. 1 (LEFT KICK PANEL)

: CONNECTOR JOINING WIRE HARNESS AND WIRE HARNESS

CODE	SEE PAGE	JOINING WIRE HARNESS AND WIRE HARNESS (CONNECTOR LOCATION)
IC1	36	FLOOR NO. 2 WIRE AND COWL WIRE (LEFT KICK PANEL)
BQ1	42	FLOOR NO. 2 WIRE AND SEAT WIRE (UNDER THE FRONT LH SEAT)

: GROUND POINTS

CODE	SEE PAGE	GROUND POINTS LOCATION
IG	36	RIGHT KICK PANEL
BI	40	LEFT QUARTER PILLAR

: SPLICE POINTS

CODE	SEE PAGE	WIRE HARNESS WITH SPLICE POINTS	CODE	SEE PAGE	WIRE HARNESS WITH SPLICE POINTS
I11	38	COWL WIRE	B9	42	SEAT WIRE
I24					

S 6 BLACK

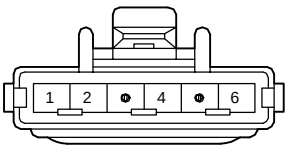

S12 BLUE

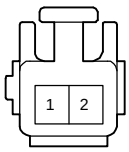

S13 BLUE

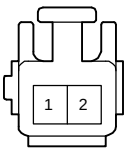

S14

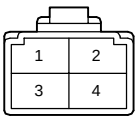

S15

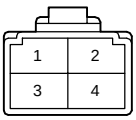

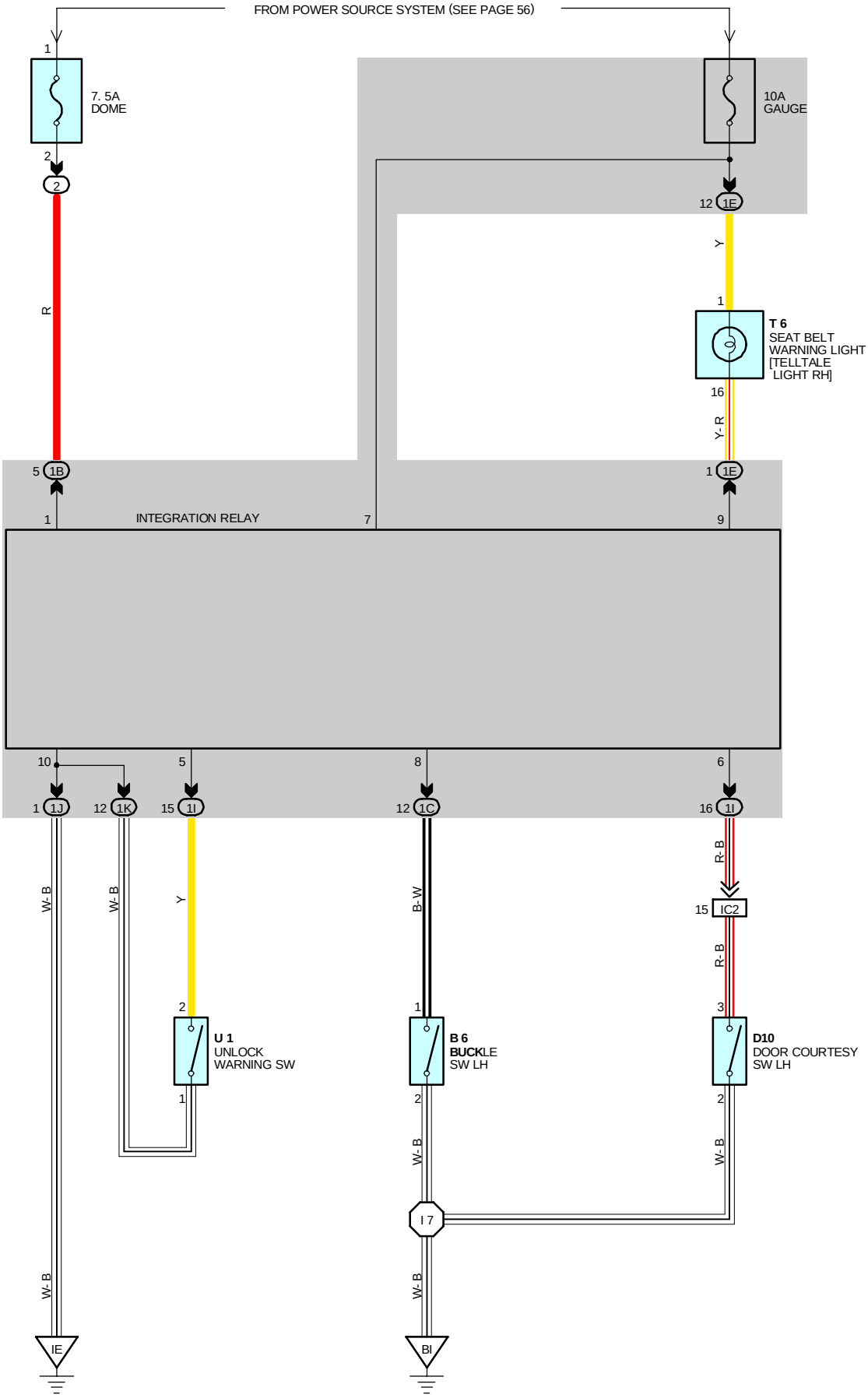
FROM POWER SOURCE SYSTEM (SEE PAGE 56)
7. 5A
DOME
10A
GAUGE
T 6
SEAT BELT
WARNING LIGHT
[TELLTALE
LIGHT RH]
INTEGRATION RELAY
U 1
UNLOCK
WARNING SW
B 6
BUCKLE
SW LH
D10
DOOR COURTESY
SW LH
IC2
I 7
IE
BI
R
Y
Y-R
W-B
B-W
R-B

SYSTEM OUTLINE

CURRENT ALWAYS FLOWS TO **TERMINAL 1** OF THE INTEGRATION RELAY THROUGH **DOME** FUSE.

1. SEAT BELT WARNING SYSTEM

WHEN THE IGNITION SW IS TURNED ON, CURRENT FLOWS FROM THE GAUGE FUSE TO **TERMINAL 7** OF THE INTEGRATION RELAY. AT THE SAME TIME, CURRENT FLOWS TO **TERMINAL 9** OF THE RELAY FROM THE **GAUGE** FUSE THROUGH THE SEAT BELT WARNING LIGHT. THIS CURRENT ACTIVATES THE INTEGRATION RELAY AND CURRENT FLOWING THROUGH THE WARNING LIGHT FLOW FROM **TERMINAL 9** OF THE RELAY → **TERMINAL 10** → **GROUND**, CAUSING THE WARNING LIGHT TO LIGHT UP. A BUCKLE SW OFF SIGNAL IS INPUT TO **TERMINAL 8** OF THE RELAY, THE CURRENT FLOWING TO **TERMINAL 7** OF THE RELAY FLOWS THROUGH **TERMINAL 10** → **GROUND** AND THE SEAT BELT WARNING BUZZER SOUNDS FOR APPROX. **4-8** SECONDS. HOWEVER, IF THE SEAT BELT IS PUT ON DURING THIS PERIOD (WHILE THE BUZZER IS SOUNDING), SIGNAL INPUT TO **TERMINAL 8** OF RELAY STOPS AND THE CURRENT FLOW FROM **TERMINAL 7** OF THE RELAY → **TERMINAL 10** → **GROUND** IS CUT, CAUSING THE BUZZER TO STOP.

2. UNLOCK WARNING SYSTEM

WITH THE IGNITION KEY INSERTED IN THE KEY CYLINDER (UNLOCK SW ON), THE IGNITION SW STILL OFF AND DRIVER'S DOOR OPENS (DOOR COURTESY SW ON), WHEN A SIGNAL IS INPUT TO **TERMINAL 6** OF THE RELAY, THE INTEGRATION RELAY OPERATES, CURRENT FLOWS FROM **TERMINAL 7** OF THE RELAY → **TERMINAL 10** → **GROUND** AND UNLOCK WARNING BUZZER SOUNDS.

SERVICE HINTS

B6 BUCKLE SW LH

1-2 : CLOSED WITH THE DRIVER'S SEAT BELT IN USE

D10 DOOR COURTESY SW LH

3-2 : CLOSED WITH THE LH DOOR OPEN

U1 UNLOCK WARNING SW

2-1 : CLOSED WITH THE IGNITION KEY IN CYLINDER

INTEGRATION RELAY

10-GROUND : ALWAYS CONTINUITY
6-GROUND : CONTINUITY WITH THE DRIVER'S DOOR OPEN
5-GROUND : CONTINUITY WITH THE IGNITION KEY IN CYLINDER
8-GROUND : CONTINUITY WITH THE DRIVER'S SEAT BELT IN USE
9-GROUND : **0** VOLTS WITH THE IGNITION SW ON AND BUCKLE SW OFF
1-GROUND : ALWAYS APPROX. **12** VOLTS

: PARTS LOCATION

CODE	SEE PAGE	CODE	SEE PAGE	CODE	SEE PAGE
B6	28	T6	29		
D10	30	U1	29		

: RELAY BLOCKS

CODE	SEE PAGE	RELAY BLOCKS (RELAY BLOCK LOCATION)
2	22	R/B NO. 2 (ENGINE COMPARTMENT LEFT)

: JUNCTION BLOCK AND WIRE HARNESS CONNECTOR

CODE	SEE PAGE	JUNCTION BLOCK AND WIRE HARNESS (CONNECTOR LOCATION)
1B	20	ENGINE ROOM MAIN WIRE AND J/B NO. 1 (LEFT KICK PANEL)
1C	20	FLOOR NO. 2 WIRE AND J/B NO. 1 (LEFT KICK PANEL)
1E	20	INSTRUMENT PANEL WIRE AND J/B NO. 1 (LEFT KICK PANEL)
1I	20	COWL WIRE AND J/B NO. 1 (LEFT KICK PANEL)
1J		
1K		

: CONNECTOR JOINING WIRE HARNESS AND WIRE HARNESS

CODE	SEE PAGE	JOINING WIRE HARNESS AND WIRE HARNESS (CONNECTOR LOCATION)
IC2	36	FLOOR NO. 2 WIRE AND COWL WIRE (LEFT KICK PANEL)

: GROUND POINTS

CODE	SEE PAGE	GROUND POINTS LOCATION
IE	36	LEFT KICK PANEL
BI	40	LEFT QUARTER PILLAR

: SPLICE POINTS

CODE	SEE PAGE	WIRE HARNESS WITH SPLICE POINTS	CODE	SEE PAGE	WIRE HARNESS WITH SPLICE POINTS
I7	38	FLOOR NO. 2 WIRE			

B 6

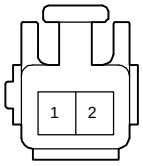

D10

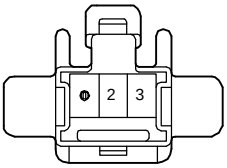

T 6

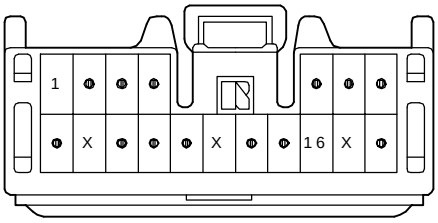

U 1

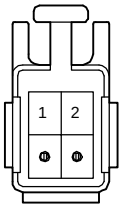

C14 BLACK

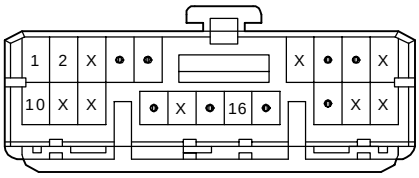

R15

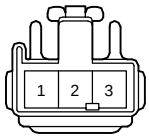

W 1 BLACK

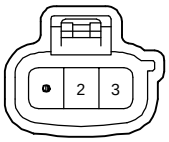

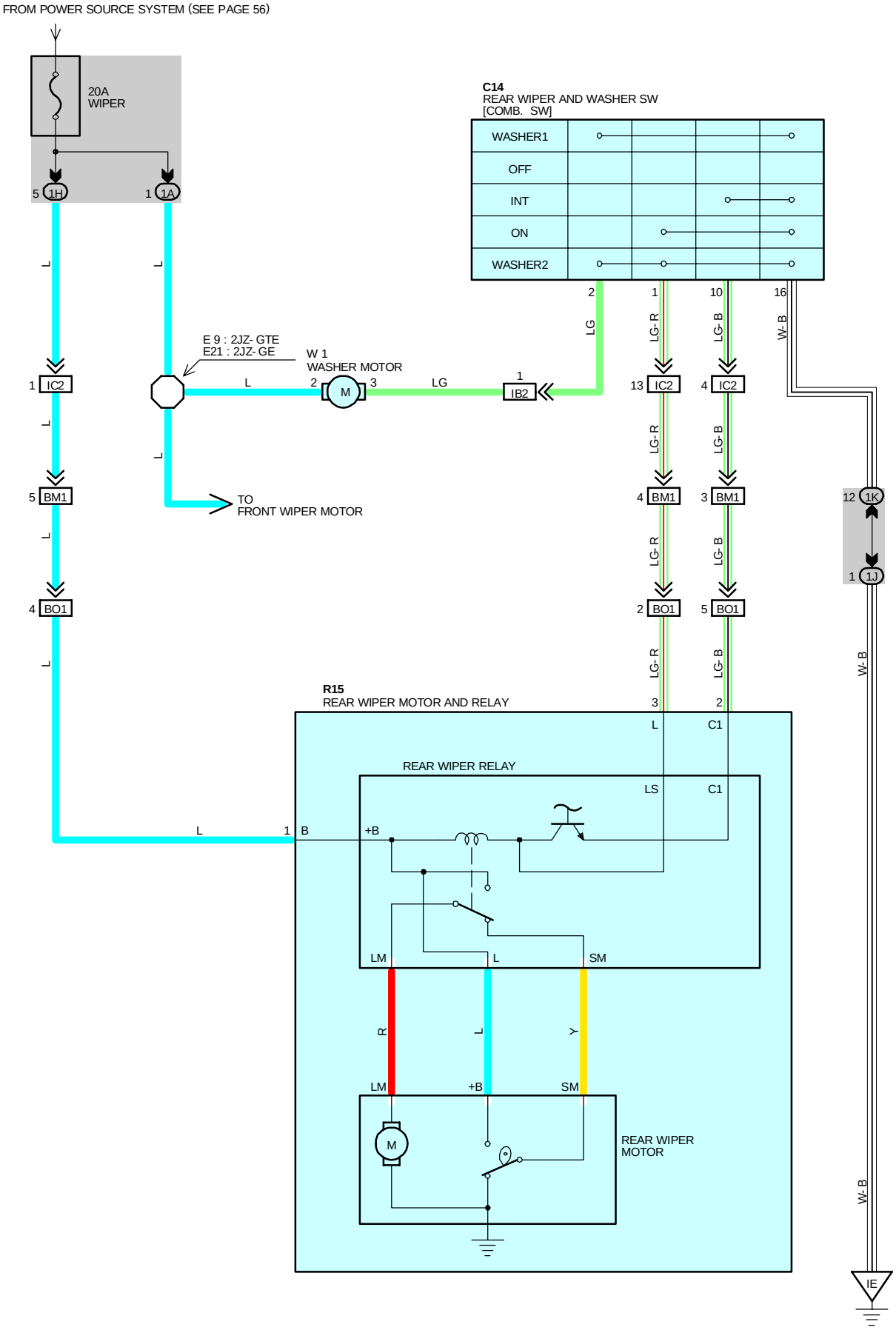
FROM POWER SOURCE SYSTEM (SEE PAGE 56)
20A
WIPER
5 1H
1 1A
C14
REAR WIPER AND WASHER SW
[COMB. SW]
WASHER1
OFF
INT
ON
WASHER2
E 9 : 2JZ- GTE
E21 : 2JZ- GE
W 1
WASHER MOTOR
TO
FRONT WIPER MOTOR
1 IC2
5 BM1
4 BO1
1 IB2
13 IC2
4 IC2
4 BM1
3 BM1
2 BO1
5 BO1
12 1K
1 1J
R15
REAR WIPER MOTOR AND RELAY
REAR WIPER RELAY
REAR WIPER
MOTOR
IE

SYSTEM OUTLINE

WHEN THE IGNITION SW IS TURNED ON, CURRENT FLOWS TO **TERMINAL 2** OF THE WASHER MOTOR, **TERMINAL 1** OF THE REAR WIPER MOTOR AND RELAY THROUGH THE **WIPER** FUSE.

1. REAR WIPER NORMAL OPERATION

WITH THE IGNITION SW TURNED ON AND REAR WIPER AND WASHER SW TURNED ON, THE CURRENT FLOWING TO **TERMINAL 1** OF THE REAR WIPER RELAY FLOWS TO **TERMINAL 3** OF THE RELAY → **TERMINAL 1** OF THE REAR WIPER AND WASHER SW → **TERMINAL 16** → TO **GROUND**. THUS, THE RELAY COIL IS ACTIVATED AND THE CURRENT TO **TERMINAL 1** OF THE RELAY FLOWS TO → **TERMIANL LH** → **TERMINAL LH** OF THE REAR WIPER MOTOR → MOTOR → TO **GROUND** AND CAUSES THE MOTOR TO OPERATE THE WIPER.

2. REAR WIPER INTERMITTENT OPERATION

WHEN THE IGNITION SW IS ON AND THE REAR WIPER AND WASHER SW IS TURNED TO **INT** POSITION, CURRENT FLOWING TO **TERMINAL 1** OF THE REAR WIPER MOTOR AND RELAY FLOWS TO **TERMINAL 2** OF THE RELAY → **TERMINAL 10** OF THE REAR WIPER AND WASHER SW → **TERMINAL 16** → **GROUND**.

THIS CAUSES THE MOTOR TO OPERATE (THE POINT CHANGES) AND THE INTERMITTENT CIRCUIT OF THE RELAY OPERATES. INTERMITTENT OPERATION OF THE CIRCUIT IS CONTROLLED BY THE CHANGING AND DISCHARGING OF THE CONDENSER INSTALLED INSIDE THE RELAY.

3. WASHER OPERATION

WITH THE IGNITION SW TURNED ON AND THE REAR WIPER AND WASHER SW TURNED TO **ON** POSITION, WHEN THE WIPER SW IS TURNED FURTHER, THE CURRENT FLOWING TO **TERMINAL 2** OF THE WASHER MOTOR FLOWS TO **TERMINAL 3** OF THE MOTOR → **TERMINAL 2** OF THE REAR WIPER AND WASHER SW → **TERMINAL 16** → TO **GROUND**, SO THAT THE WASHER MOTOR ROTATES AND THE WINDOW WASHER EJECTS THE SPRAY, ONLY WHILE THE SWITCH IS FULLY TURNED.

WHEN THE WIPER SW IS OFF AND THEN TURNED TO WASHER ON (WIPER OFF SIDE), ONLY THE WASHER OPERATES.

SERVICE HINTS

W1 WASHER MOTOR

2-GROUND : APPROX. **12** VOLTS WITH THE IGNITION SW AT **ON** POSITION
3-GROUND : CONTINUITY WITH THE WASHER SW TURNED ON

R15 REAR WIPER MOTOR AND RELAY

1-GROUND : APPROX. **12** VOLTS WITH THE IGNITION SW AT **ON** POSITION
2-GROUND : CONTINUITY WITH THE REAR WIPER SW AT **INT** POSITION
3-GROUND : CONTINUITY WITH THE REAR WIPER SW AT **ON** POSITION

: PARTS LOCATION

CODE	SEE PAGE	CODE	SEE PAGE	CODE	SEE PAGE
C14	28	W1	25 (2JZ-GTE)		
R15	30		27 (2JZ-GE)		

: JUNCTION BLOCK AND WIRE HARNESS CONNECTOR

CODE	SEE PAGE	JUNCTION BLOCK AND WIRE HARNESS (CONNECTOR LOCATION)
1A	20	ENGINE ROOM MAIN WIRE AND J/B NO. 1 (LEFT KICK PANEL)
1H	20	COWL WIRE AND J/B NO. 1 (LEFT KICK PANEL)
1J		
1K		

: CONNECTOR JOINING WIRE HARNESS AND WIRE HARNESS

CODE	SEE PAGE	JOINING WIRE HARNESS AND WIRE HARNESS (CONNECTOR LOCATION)
IB2	36	ENGINE ROOM MAIN WIRE AND COWL WIRE (LET KICK PANEL)
IC2	36	FLOOR NO. 2 WIRE AND COWL WIRE (LEFT KICK PANEL)
BM1	40	BACK DOOR NO. 1 WIRE AND FLOOR NO. 2 WIRE (LEFT SIDE OF PACKAGE TRAY TRIM)
BO1	40	BACK DOOR NO. 2 WIRE AND BACK DOOR NO. 1 WIRE (BACK DOOR UPPER LEFT)

: GROUND POINTS

CODE	SEE PAGE	GROUND POINTS LOCATION
IE	36	LEFT KICK PANEL

: SPLICE POINTS

CODE	SEE PAGE	WIRE HARNESS WITH SPLICE POINTS	CODE	SEE PAGE	WIRE HARNESS WITH SPLICE POINTS
E9	32	ENGINE ROOM MAIN WIRE	E21	34	ENGINE ROOM MAIN WIRE

NOTICE: When inspecting or repairing the SRS, perform the operation in accordance with the following precautionary instructions and the procedure and precautions in the Repair Manual for the applicable model year.

- Malfunction symptoms of the supplemental restraint system are difficult to confirm, so the diagnostic trouble codes become the most important source of information when troubleshooting.
  When troubleshooting the supplemental restraint system, always inspect the diagnostic trouble codes before disconnecting the battery.
- Work must be started after 90 seconds from the time the Ignition SW is set to the “LOCK” position and the negative (-) terminal cable is disconnected from the battery.
  (The supplemental restraint system is equipped with a back-up power source so that if work is started within 90 seconds of disconnecting the negative (-) terminal cable of the battery, the SRS may be activated.)
  When the negative (-) terminal cable is disconnected from the battery, memory of the clock and audio systems will be cancelled. So before starting work, make a record of the contents memorized by each memory system. When work is finished, reset the clock and audio system as before and adjust the clock.
  To avoid erasing the memory of each memory system, never use a back-up power supply from outside the vehicle.
- When removing the steering wheel pad or handling a new steering wheel pad, keep the pad upper surface facing upward. Also, lock the lock lever of the twin lock type connector at the rear of the pad and take care not to damage the connector.
  (Storing the pad with its metallic surface up may lead to a serious accident if the SRS inflates for some reason.)
- Always store a removed or new front passenger airbag assembly with the airbag door facing up. Storing the airbag assembly with the airbag door facing down could cause a serious accident if the airbag inflates.
- Store the steering wheel pad where the ambient temperature remains below 93°C (200°F), without high humidity and away from electrical noise.
- Never use SRS parts from another vehicle. When replacing SRS parts, replace them with new parts.
- Never disassemble and repair the steering wheel pad, front passenger airbag assembly, airbag sensor assembly.
- Before repairing the body, remove the airbag sensors if during repair shocks are likely to be applied to the sensors due to vibration of the body or direct tapping with tools or other parts.
- Do not reuse a steering wheel pad.
  After evaluating whether the airbag sensor assembly is damaged or not, decide whether or not to reuse it.
  (See the Repair Manual for the method for evaluating the airbag sensor assembly.)
- When troubleshooting the supplemental restraint system, use a high-impedance (Min. 10 kΩ/V) tester.
- The wire harness of the supplemental restraint system is integrated with the cowl wire harness assembly. The vehicle wiring harness exclusively for the airbag system is distinguished by corrugated yellow tubing, as are the connectors.
- Do not measure the resistance of the airbag squibs.
  (It is possible this will deploy the airbag and is very dangerous.)
- If the wire harness used in the supplemental restraint system is damaged, replace the whole wire harness assembly.
- INFORMATION LABELS (NOTICES) are attached to the periphery of the SRS components. Follow the instructions on the notices.

The SRS has connectors which possess the functions described below:

1. SRS ACTIVATION PREVENTION MECHANISM
   Each connector contains a short spring plate. When the connector is disconnected, the short spring plate automatically connects the power source and grounding terminals of the squib to preclude a potential difference between the terminals.

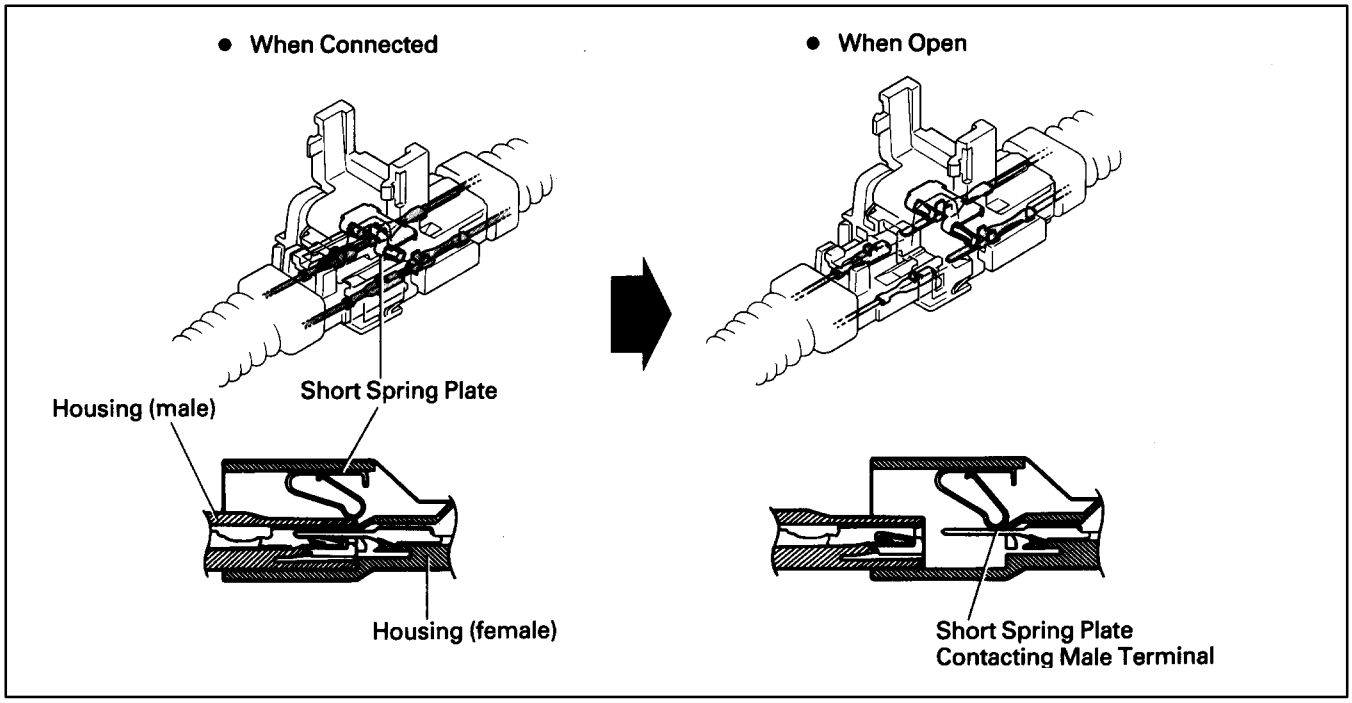

2. ELECTRICAL CONNECTION CHECK MECHANISM
   This mechanism is designed to electrically checks if connectors are connected correctly and completely.
   The electrical connection check mechanism is designed so that the disconnection detection pin connects with the diagnosis terminals when the connector housing lock is in to locked condition.

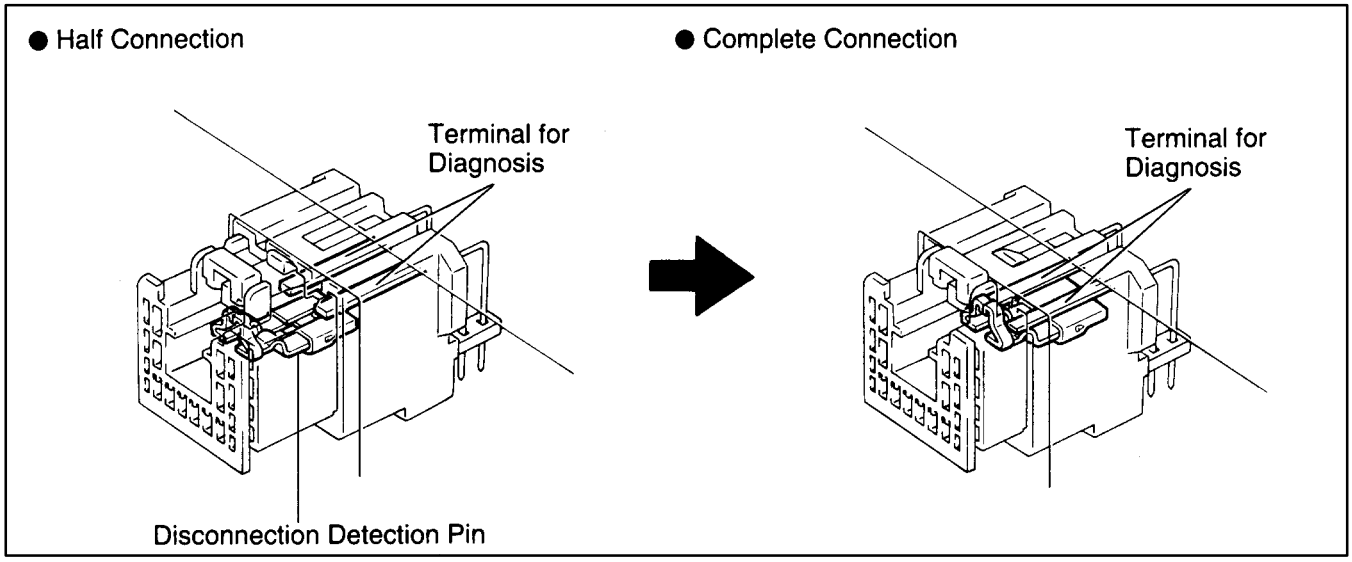

3. CONNECTOR TWIN-LOCK MECHANISM
With this mechanism connectors (male and female connectors) are locked by two locking devices to increase connection reliability. If the primary lock is incomplete, ribs interfere and prevent the secondary lock.

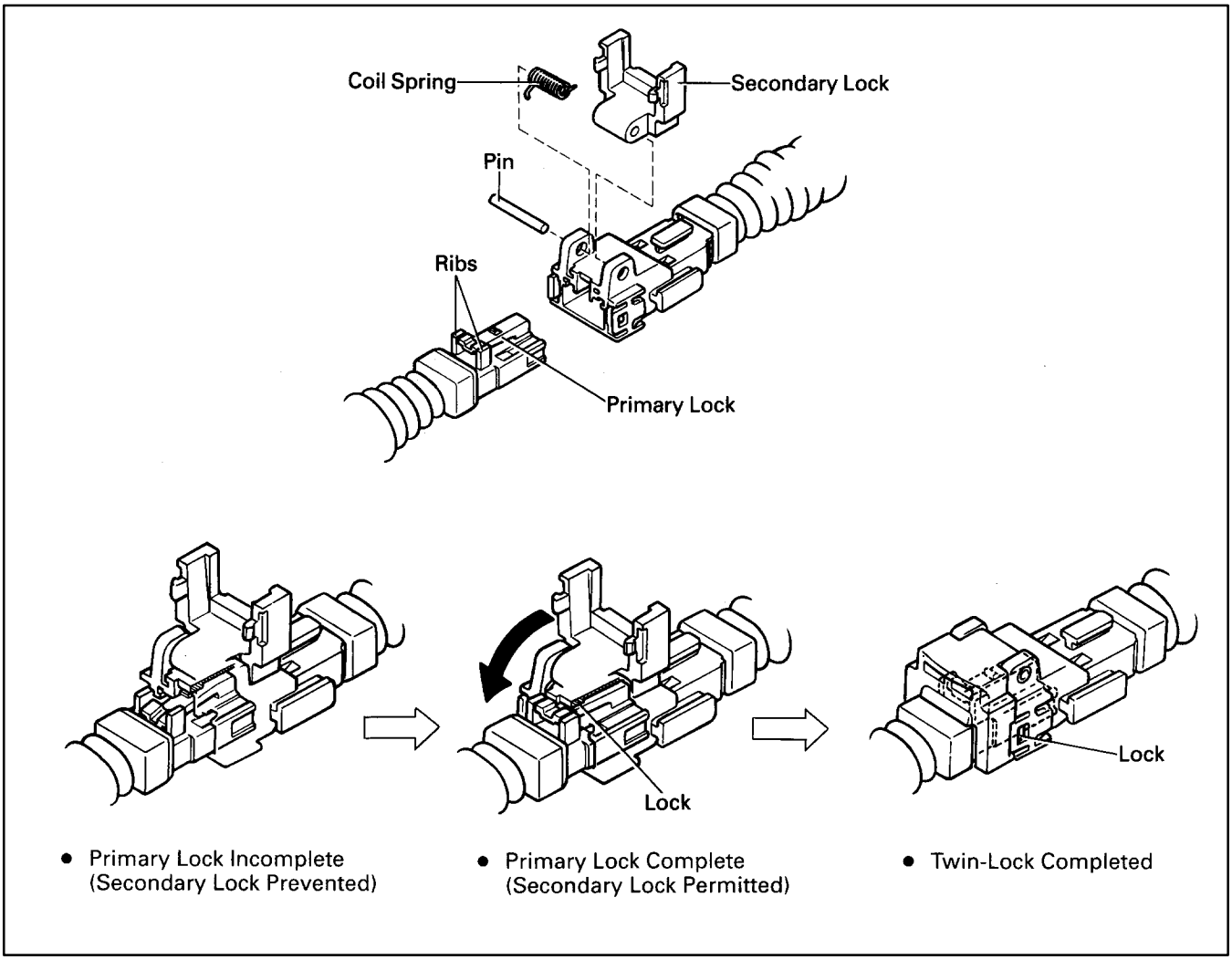

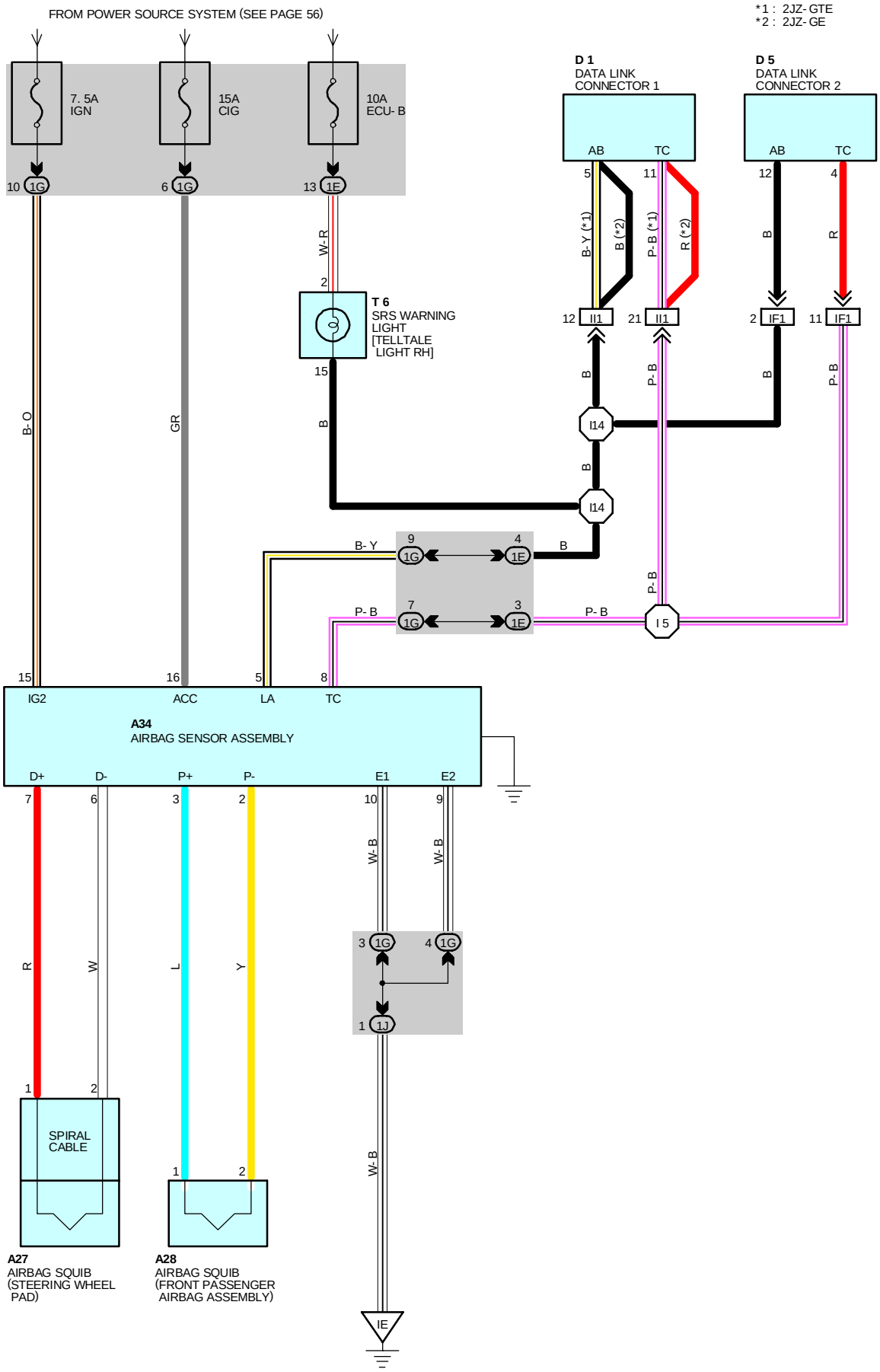
FROM POWER SOURCE SYSTEM (SEE PAGE 56)
*1 : 2JZ-GTE
*2 : 2JZ-GE
7.5A IGN
15A CIG
10A ECU-B
D 1 DATA LINK CONNECTOR 1
D 5 DATA LINK CONNECTOR 2
AB
TC
T 6 SRS WARNING LIGHT [TELLTALE LIGHT RH]
A34 AIRBAG SENSOR ASSEMBLY
IG2
ACC
LA
TC
D+
D-
P+
P-
E1
E2
SPIRAL CABLE
A27 AIRBAG SQUIB (STEERING WHEEL PAD)
A28 AIRBAG SQUIB (FRONT PASSENGER AIRBAG ASSEMBLY)
IE

SYSTEM OUTLINE

THE SRS IS A DRIVER AND PASSENGER PROTECTION DEVICE WHICH HAS A SUPPLEMENTAL ROLE TO THE SEAT BELTS.
WHEN THE IGNITION SW IS TURNED TO ACC OR ON, THE CURRENT FROM THE **CIG** FUSE FLOWS TO **TERMINAL 16** OF THE AIRBAG SENSOR ASSEMBLY. ONLY WHEN THE IGNITION SW IS ON DOES THE CURRENT FROM THE **IGN** FUSE FLOW TO **TERMINAL 15** OF THE AIRBAG SENSOR ASSEMBLY.
IF AN ACCIDENT OCCURS WHILE DRIVING, DECELERATION CAUSED BY A FRONTAL IMPACT IS DETECTED BY THE SENSOR IN THE AIRBAG SENSOR ASSEMBLY, AND WHEN THE FRONTAL IMPACT EXCEEDS A SET LEVEL (WHEN THE SAFING SENSOR BUILT INTO THE AIRBAG SENSOR ASSEMBLY IS ON, THE FLOOR SENSOR BUILT INTO THE AIRBAG SENSOR ASSEMBLY IS ON AND THE AIRBAG SENSOR ASSEMBLY IS ON), THE CURRENT FROM THE **CIG** OR THE **IGN** FUSE FLOWS THROUGH THE AIRBAG SENSOR ASSEMBLY TO **TERMINALS 7** AND **3** OF THE AIRBAG SENSOR ASSEMBLY TO **TERMINAL 1** OF THE AIRBAG SQUIB → **TERMINAL 2** → **TERMINALS 6** AND **2** OF THE AIRBAG SENSOR ASSEMBLY → THE FLOOR SENSOR BUILT INTO THE AIRBAG SENSOR ASSEMBLY → **TERMINAL 9**, **TERMINAL 10** OR **BODY GROUND** → **GROUND**. WHEN THE SAFING SENSOR BUILT INTO THE AIRBAG SENSOR ASSEMBLY IS ON, AND FLOOR SENSOR BUILT INTO THE AIRBAG SENSOR ASSEMBLY IS ON, ONE OF THE ABOVE-MENTIONED CIRCUITS IS ACTIVATED SO THAT THE CURRENT FLOWS TO THE AIRBAG SQUIBS, CAUSING IT TO OPERATE.
THE AIRBAG STORED INSIDE THE STEERING WHEEL PAD IS INSTANTANEOUSLY EXPANDED TO SOFTEN THE SHOCK TO A DRIVER.
SIMULTANEOUSLY, THE AIRBAG STORED INSIDE THE PASSENGER'S INSTRUMENT PANEL IS INSTANTANEOUSLY EXPANDED TO SOFTEN THE SHOCK TO A PASSENGER.

○ : PARTS LOCATION

CODE	SEE PAGE	CODE	SEE PAGE	CODE	SEE PAGE
A27	28	D1	24 (2JZ-GTE)	T6	29
A28	28		26 (2JZ-GE)		
A34	28	D5	28		

: JUNCTION BLOCK AND WIRE HARNESS CONNECTOR

CODE	SEE PAGE	JUNCTION BLOCK AND WIRE HARNESS (CONNECTOR LOCATION)
1E	20	INSTRUMENT PANEL WIRE AND J/B NO. 1 (LEFT KICK PANEL)
1G	20	COWL WIRE AND J/B NO. 1 (LEFT KICK PANEL)
1J		

: CONNECTOR JOINING WIRE HARNESS AND WIRE HARNESS

CODE	SEE PAGE	JOINING WIRE HARNESS AND WIRE HARNESS (CONNECTOR LOCATION)
IF1	36	INSTRUMENT PANEL WIRE AND COWL WIRE (INSTRUMENT PANEL REINFORCEMENT LH)
II1	38	ENGINE WIRE AND INSTRUMENT PANEL WIRE (RIGHT KICK PANEL)

▽ : GROUND POINTS

CODE	SEE PAGE	GROUND POINTS LOCATION
IE	36	LEFT KICK PANEL

: SPLICE POINTS

CODE	SEE PAGE	WIRE HARNESS WITH SPLICE POINTS	CODE	SEE PAGE	WIRE HARNESS WITH SPLICE POINTS
I5	38	INSTRUMENT PANEL WIRE	I14	38	INSTRUMENT WIRE

A27 YELLOW

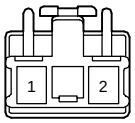

A28 YELLOW

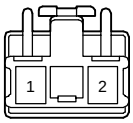

C 5 YELLOW

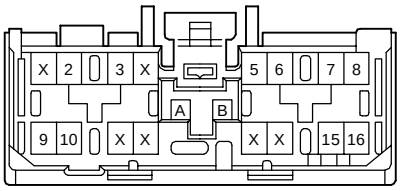

D 1 BLACK

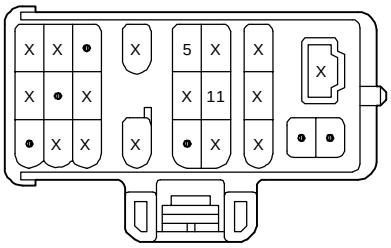

D 5 DARK GRAY

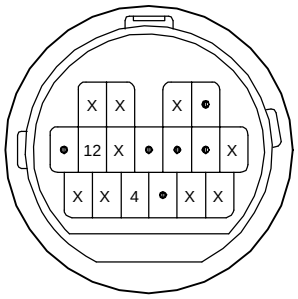

T 6

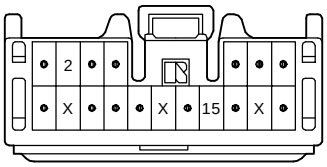

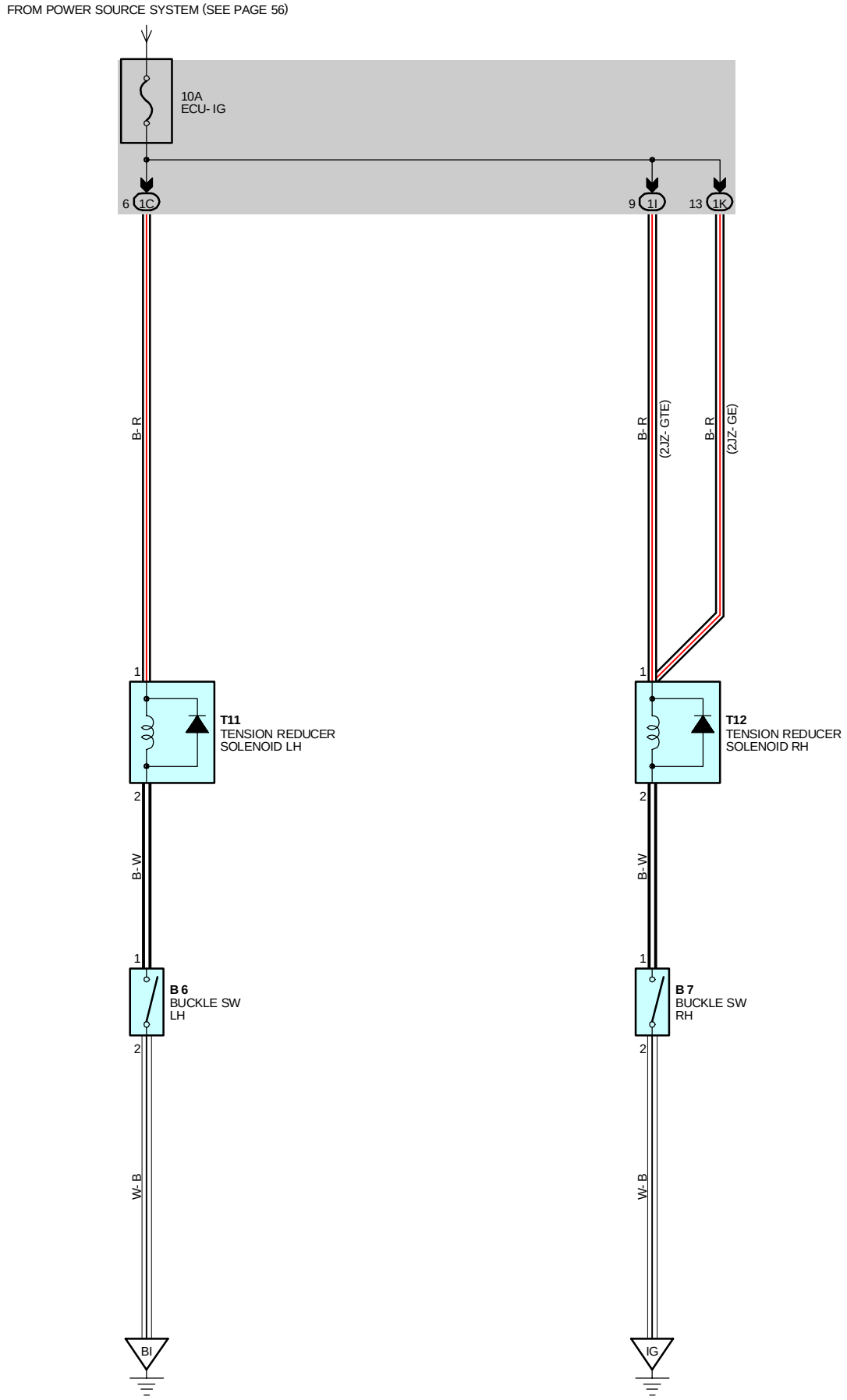
FROM POWER SOURCE SYSTEM (SEE PAGE 56)
10A
ECU- IG
6
1C
9
1I
13
1K
B- R
B- R
(2JZ- GTE)
B- R
(2JZ- GE)
1
T11
TENSION REDUCER
SOLENOID LH
2
1
T12
TENSION REDUCER
SOLENOID RH
2
B- W
B- W
1
B 6
BUCKLE SW
LH
2
1
B 7
BUCKLE SW
RH
2
W- B
W- B
BI
IG

SERVICE HINTS

B6 BUCKLE SW LH

1-2 : CLOSED WITH THE DRIVER'S SEAT BELT IN USE

B7 BUCKLE SW RH

1-2 : CLOSED WITH THE FRONT PASSENGER'S SEAT BELT IN USE

T11, T12 TENSION REDUCER SOLENOID LH, RH

1-GROUND : APPROX. **12** VOLTS WITH THE IGNITION SW AT **ON** POSITION

: PARTS LOCATION

CODE	SEE PAGE	CODE	SEE PAGE	CODE	SEE PAGE
B6	28	T11	30		
B7	28	T12	30		

: JUNCTION BLOCK AND WIRE HARNESS CONNECTOR

CODE	SEE PAGE	JUNCTION BLOCK AND WIRE HARNESS (CONNECTOR LOCATION)
1C	20	FLOOR NO. 2 WIRE AND J/B NO. 1 (LEFT KICK PANEL)
1I	20	COWL WIRE AND J/B NO. 1 (LEFT KICK PANEL)
1K		

: GROUND POINTS

CODE	SEE PAGE	GROUND POINTS LOCATION
IG	36	RIGHT KICK PANEL
BI	40	LEFT QUARTER PILLAR

B 6

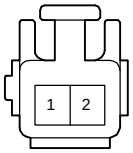

B 7

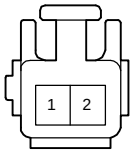

T11

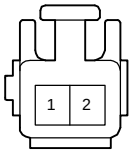

T12

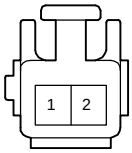

REAR WINDOW DEFOGGER AND MIRROR HEATER

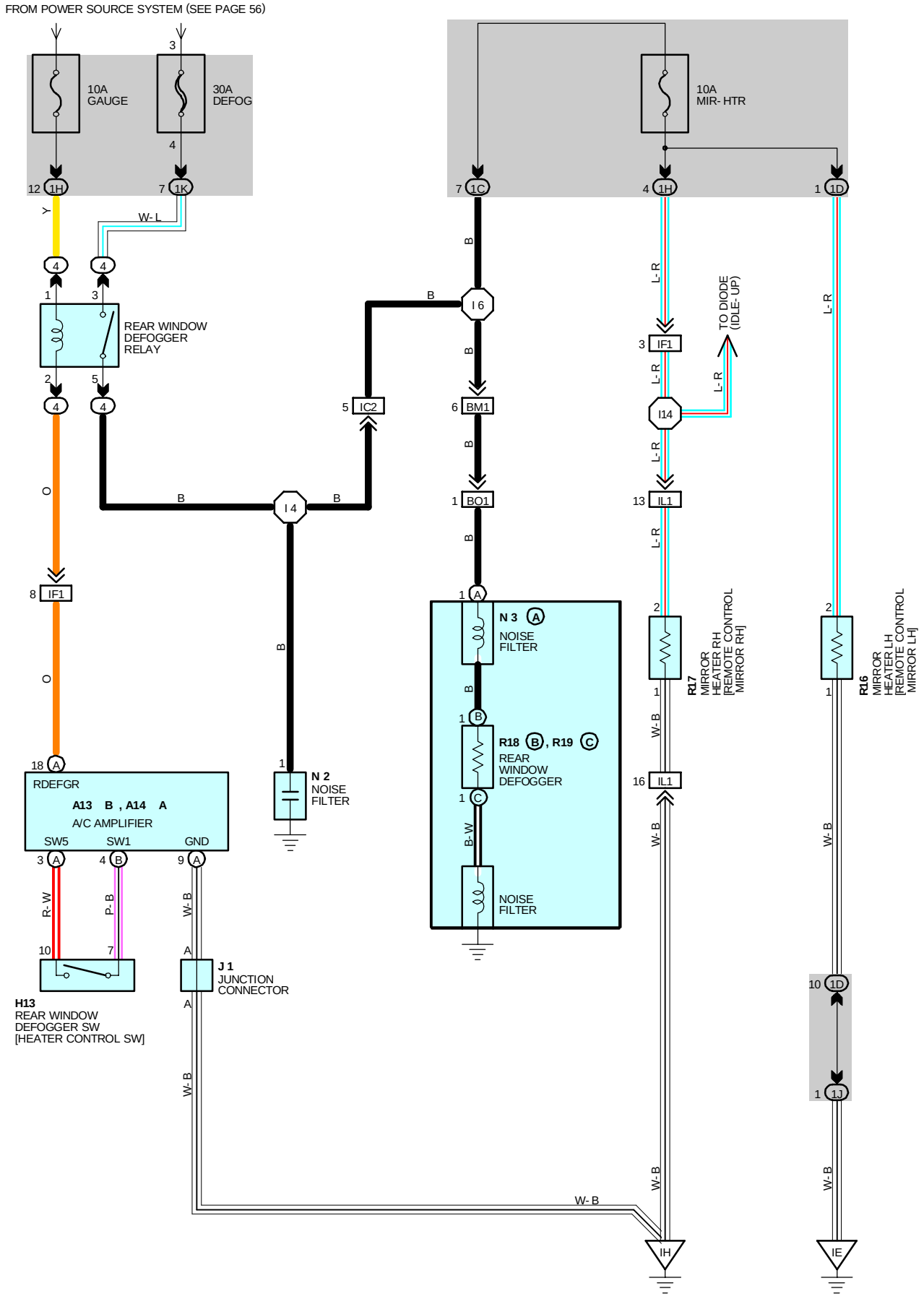

SERVICE HINTS

REAR WINDOW DEFOGGER RELAY

(4) 3- **(4)** 5 : CLOSED WITH THE IGNITION SW AT **ON** POSITION AND THE REAR WINDOW SW [HEATER CONTROL SW] **ON**

: PARTS LOCATION

CODE		SEE PAGE	CODE		SEE PAGE	CODE		SEE PAGE
A13	B	28	N 2		29	R18	B	30
A14	A	28	N 3	A	30	R19	C	30
H13		29	R16		30			
J 1		29	R17		30			

: RELAY BLOCKS

CODE	SEE PAGE	RELAY BLOCKS (RELAY BLOCK LOCATION)
4	23	R/B NO. 4 (LEFT KICK PANEL)

: JUNCTION BLOCK AND WIRE HARNESS CONNECTOR

CODE	SEE PAGE	JUNCTION BLOCK AND WIRE HARNESS (CONNECTOR LOCATION)
1C	20	FLOOR NO. 2 WIRE AND J/B NO. 1 (LEFT KICK PANEL)
1D	20	FRONT DOOR LH WIRE AND J/B NO. 1 (LEFT KICK PANEL
1H	20	COWL WIRE AND J/B NO. 1 (LEFT KICK PANEL)
1J		
1K		

: CONNECTOR JOINING WIRE HARNESS AND WIRE HARNESS

CODE	SEE PAGE	JOINING WIRE HARNESS AND WIRE HARNESS (CONNECTOR LOCATION)
IC2	36	FLOOR NO. 2 WIRE AND COWL WIRE (LEFT KICK PANEL)
IF1	36	INSTRUMENT PANEL WIRE AND COWL WIRE (INSTRUMENT PANEL REINFORCEMENT LH)
IL1	38	FRONT DOOR RH WIRE AND INSTRUMENT PANEL WIRE (RIGHT KICK PANEL)
BM1	40	BACK DOOR NO. 1 WIRE AND FLOOR NO. 2 WIRE (LEFT SIDE OF PACKAGE TRAY TRIM)
BO1	40	BACK DOOR NO. 2 WIRE AND BACK DOOR NO. 1 WIRE (BACK DOOR UPPER LEFT)

: GROUND POINTS

CODE	SEE PAGE	GROUND POINTS LOCATION
IE	36	LEFT KICK PANEL
IH	36	RIGHT KICK PANEL

: SPLICE POINTS

CODE	SEE PAGE	WIRE HARNESS WITH SPLICE POINTS	CODE	SEE PAGE	WIRE HARNESS WITH SPLICE POINTS
I 4	38	COWL WIRE	I14	38	INSTRUMENT PANEL WIRE
I 6	38	FLOOR NO. 2 WIRE			

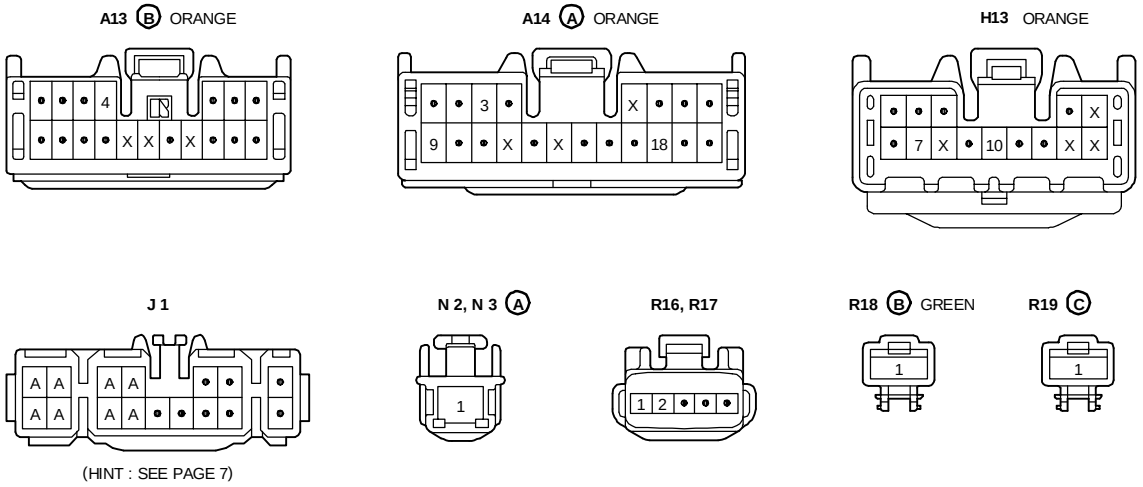

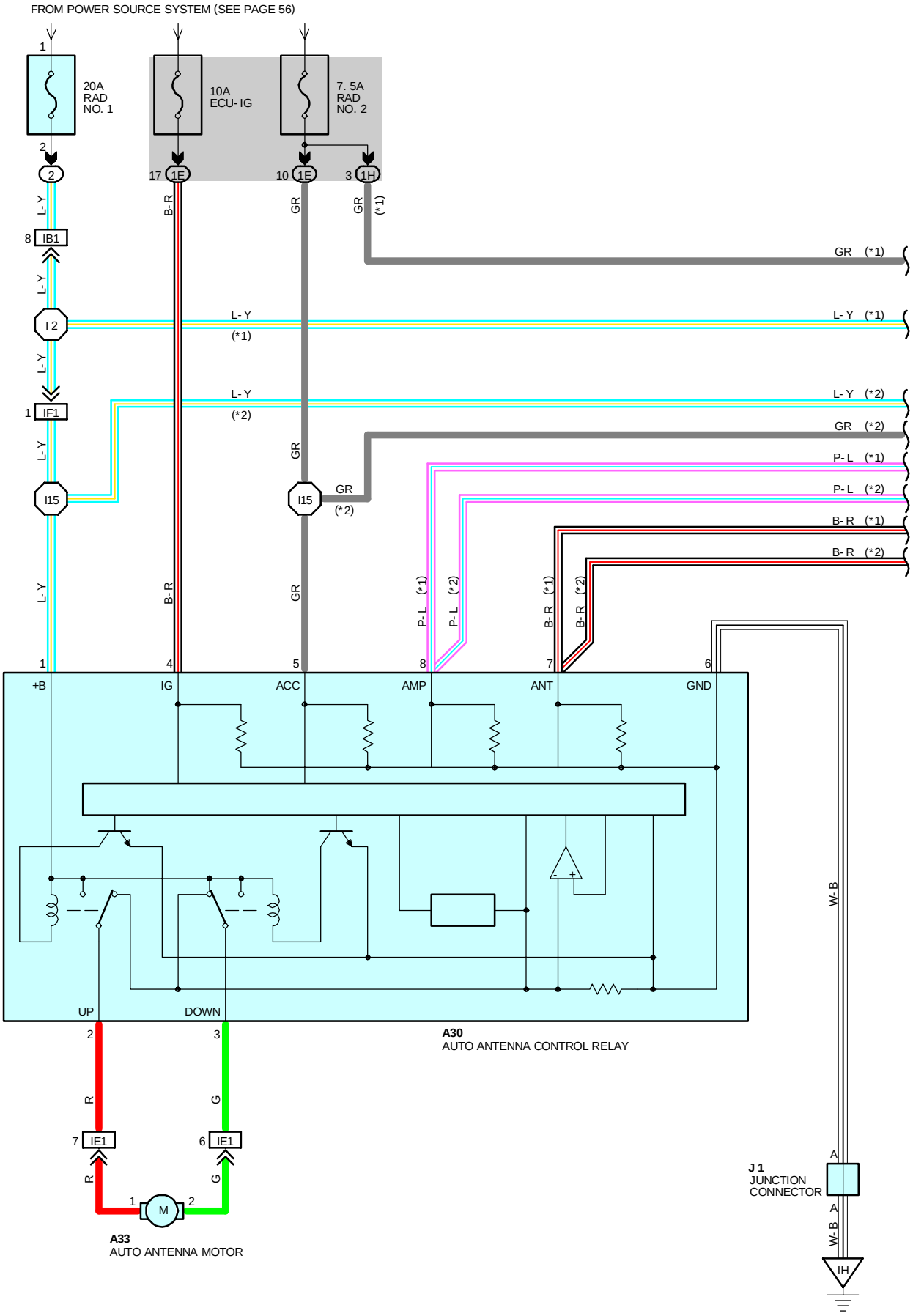
FROM POWER SOURCE SYSTEM (SEE PAGE 56)
20A
RAD
NO. 1
10A
ECU- IG
7. 5A
RAD
NO. 2
IB1
I 2
IF1
I15
L- Y
B- R
GR
GR (*1)
L- Y (*1)
L- Y (*2)
GR (*2)
P- L (*1)
P- L (*2)
B- R (*1)
B- R (*2)
+B
IG
ACC
AMP
ANT
GND
UP
DOWN
A30
AUTO ANTENNA CONTROL RELAY
R
G
IE1
M
A33
AUTO ANTENNA MOTOR
W- B
J 1
JUNCTION
CONNECTOR
IH

*1 : W/ STEREO POWER AMPLIFIER
*2 : W/O STEREO POWER AMPLIFIER

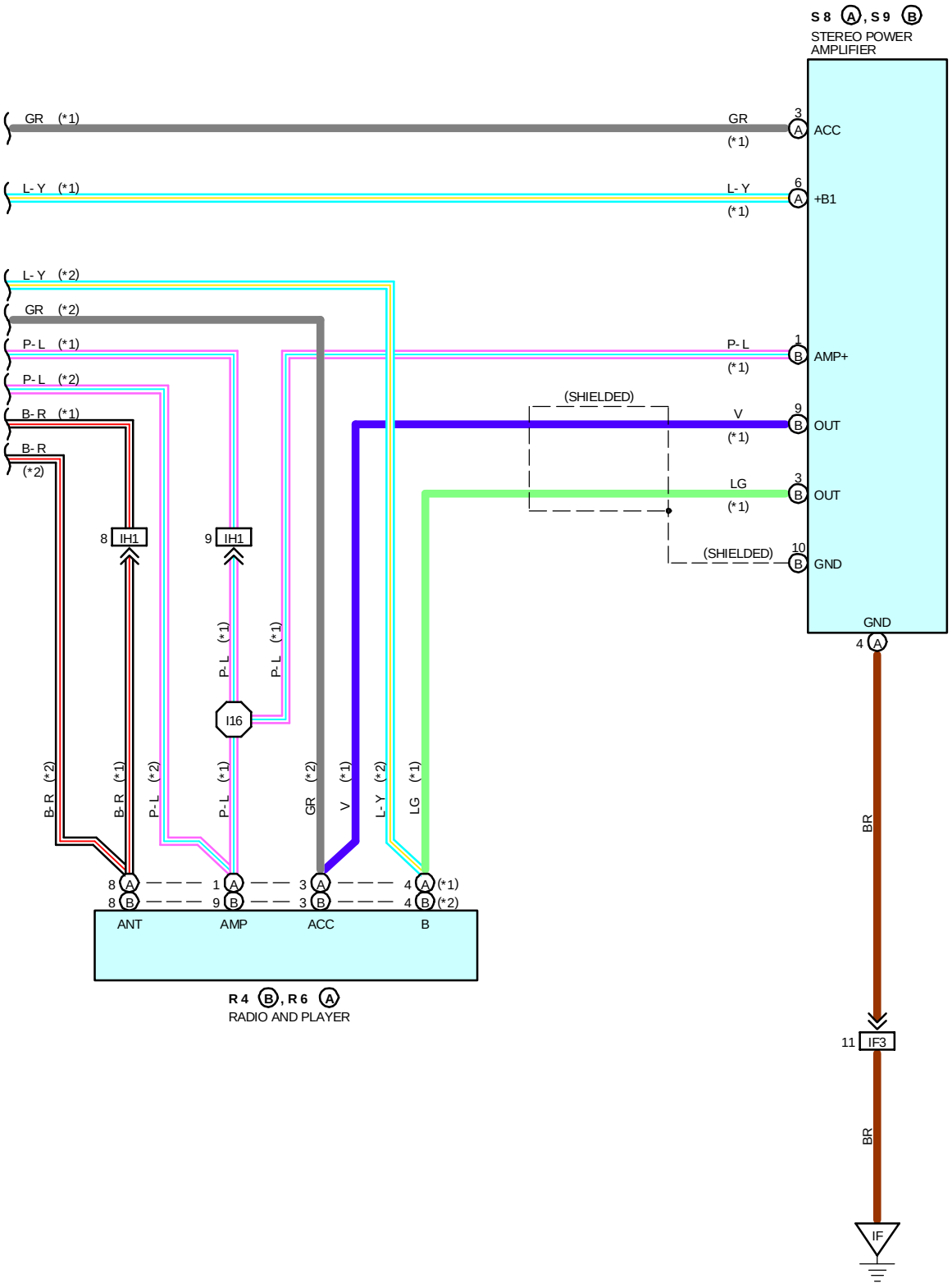

AUTO ANTENNA

SERVICE HINTS

A30 AUTO ANTENNA CONTROL RELAY

1-GROUND : ALWAYS APPROX. **12** VOLTS
4-GROUND : APPROX. **12** VOLTS WITH THE IGNITION SW AT **ON** POSITION
5-GROUND : APPROX. **12** VOLTS WITH THE IGNITION SW AT **ACC** OR **ON** POSITION
6-GROUND : ALWAYS CONTINUITY

: PARTS LOCATION

CODE	SEE PAGE	CODE		SEE PAGE	CODE		SEE PAGE
A30	28	R 4	B	29	S 9	B	29
A33	30	R 6	A	29			
J 1	29	S 8	A	29			

: RELAY BLOCKS

CODE	SEE PAGE	RELAY BLOCKS (RELAY BLOCK LOCATION)
2	22	R/B NO. 2 (LEFT KICK PANEL)

: JUNCTION BLOCK AND WIRE HARNESS CONNECTOR

CODE	SEE PAGE	JUNCTION BLOCK AND WIRE HARNESS (CONNECTOR LOCATION)
1E	20	INSTRUMENT PANEL WIRE AND J/B NO. 1 (LEFT KICK PANEL)
1H	20	COWL WIRE AND J/B NO. 1 (LEFT KICK PANEL)

: CONNECTOR JOINING WIRE HARNESS AND WIRE HARNESS

CODE	SEE PAGE	JOINING WIRE HARNESS AND WIRE HARNESS (CONNECTOR LOCATION)
IB1	36	ENGINE ROOM MAIN WIRE AND COWL WIRE (LEFT KICK PANEL)
IE1	36	INSTRUMENT PANEL WIRE AND FLOOR NO. 2 WIRE (LEFT KICK PANEL)
IF1	36	INSTRUMENT PANEL WIRE AND COWL WIRE (INSTRUMENT PANEL REINFORCEMENT LH)
IF3	36	INSTRUMENT PANEL WIRE AND COWL WIRE (RIGHT KICK PANEL)
IH1	38	INSTRUMENT PANEL WIRE AND CONSOLE BOX WIRE (UNDER THE INSTRUMENT PANEL BRACE RH)

: GROUND POINTS

CODE	SEE PAGE	GROUND POINTS LOCATION
IF	36	LEFT KICK PANEL
IH	36	RIGHT KICK PANEL

: SPLICE POINTS

CODE	SEE PAGE	WIRE HARNESS WITH SPLICE POINTS	CODE	SEE PAGE	WIRE HARNESS WITH SPLICE POINTS
I 2	38	COWL WIRE	I16	38	CONSOLE BOX WIRE
I15	38	INSTRUMENT PANEL WIRE			

A30 GRAY

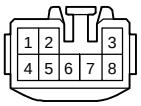

A33

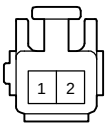

J 1

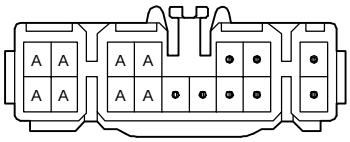

(HINT : SEE PAGE 7)

R 4 (B)

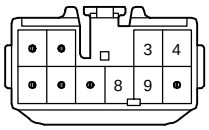

R 6 (A)

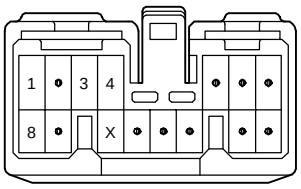

S 8 (A)

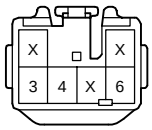

(W/ WOOFER) **S 9** (B) BLACK

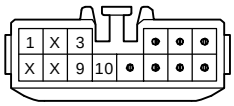

(W/O WOOFER) **S 9** (B)

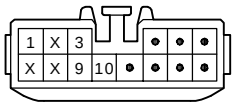

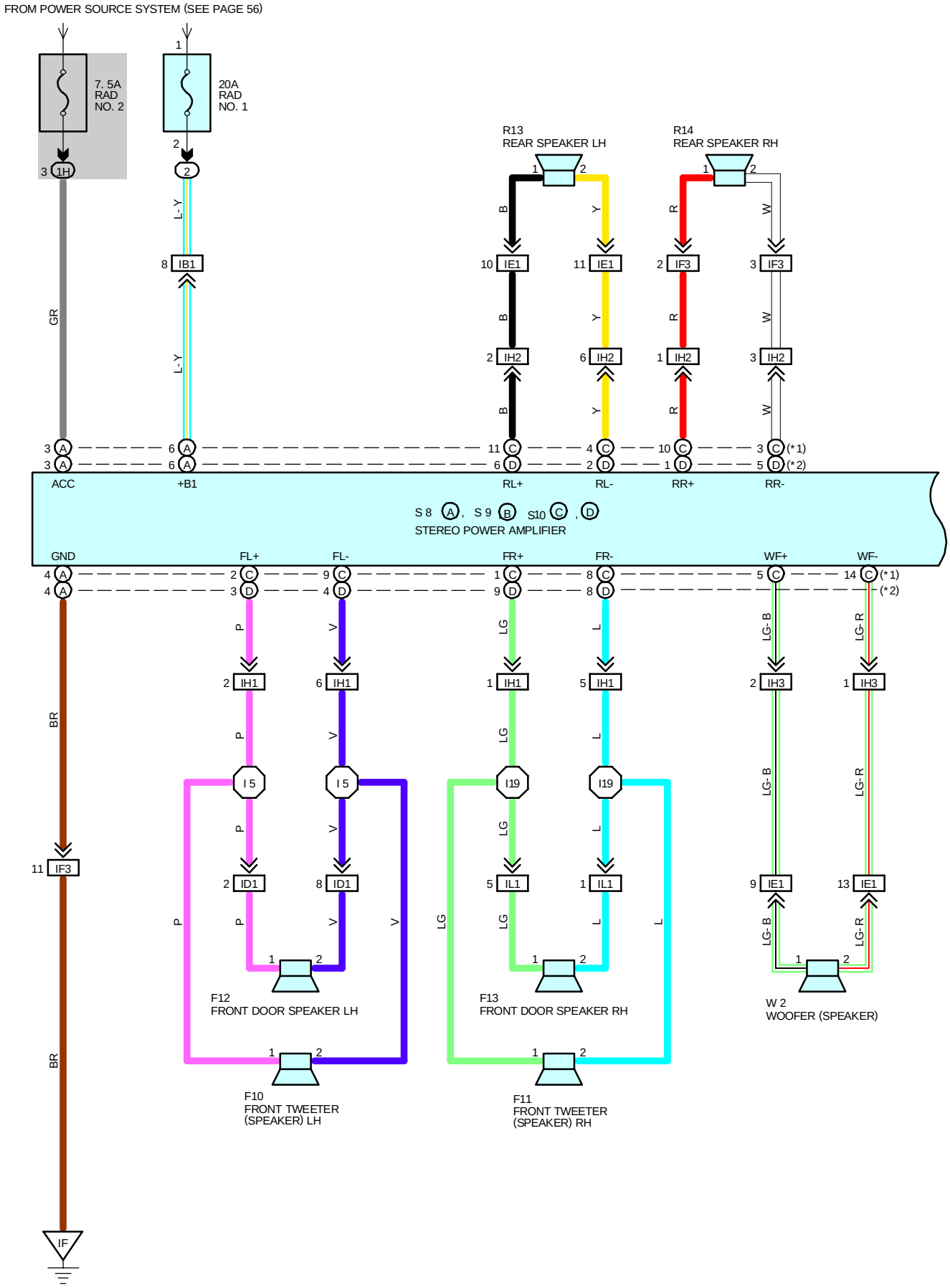
FROM POWER SOURCE SYSTEM (SEE PAGE 56)
7. 5A
RAD
NO. 2
20A
RAD
NO. 1
R13
REAR SPEAKER LH
R14
REAR SPEAKER RH
ACC
+B1
RL+
RL-
RR+
RR-
S 8 A, S 9 B S10 C , D
STEREO POWER AMPLIFIER
GND
FL+
FL-
FR+
FR-
WF+
WF-
F12
FRONT DOOR SPEAKER LH
F13
FRONT DOOR SPEAKER RH
W 2
WOOFER (SPEAKER)
F10
FRONT TWEETER
(SPEAKER) LH
F11
FRONT TWEETER
(SPEAKER) RH

(w/STEREO POWER AMPLIFIER)

*1 : W/ WOOFER (SPEAKER)
*2 : W/O WOOFER (SPEAKER)

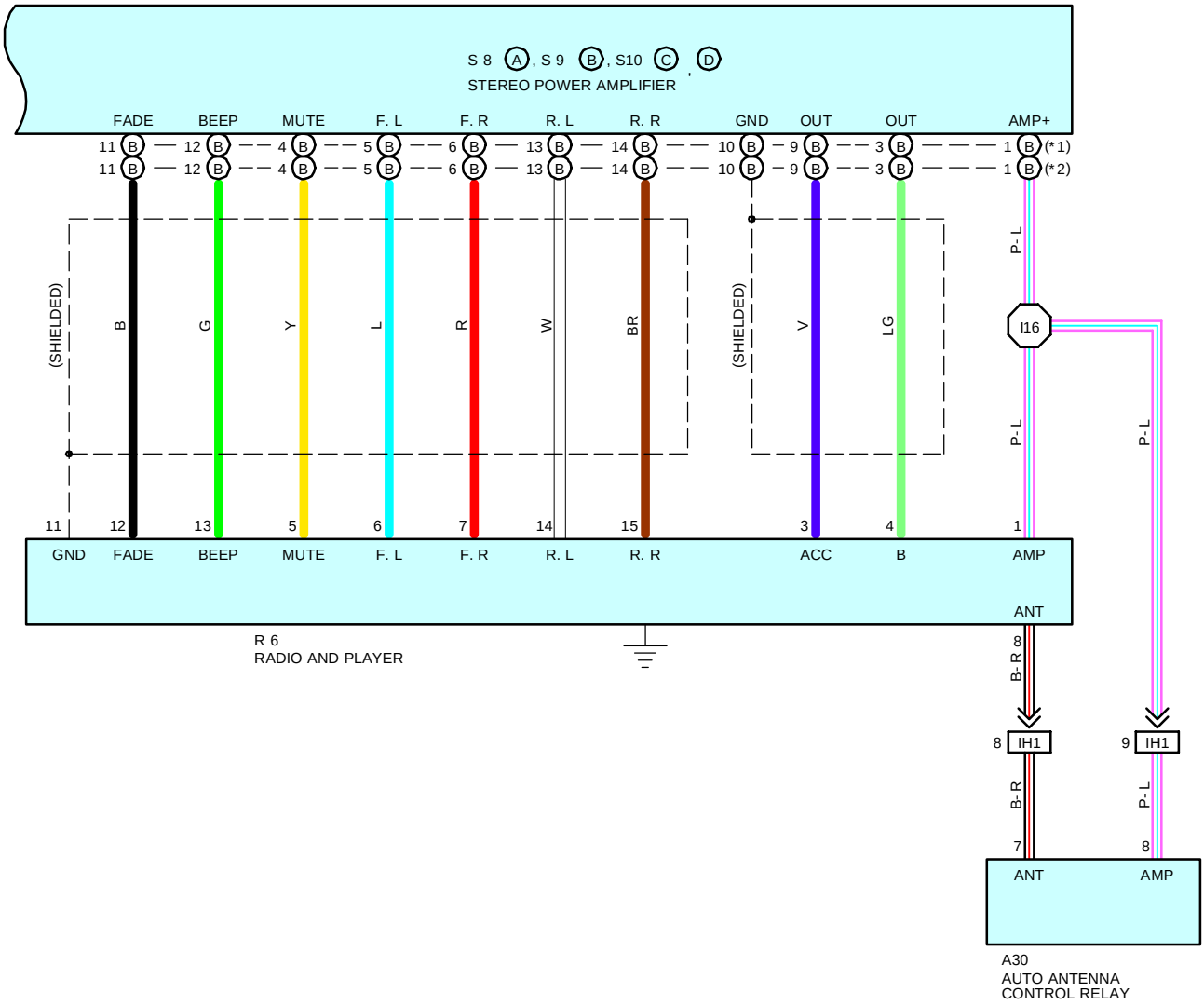

SERVICE HINTS

S8 (A) STEREO POWER AMPLIFIER

(A) 6, (A) 2-GROUND : ALWAYS APPROX. **12** VOLTS
(A) 3-GROUND : APPROX. **12** VOLTS WITH THE IGNITION SW AT **ON** OR **ACC** POSITION
(A) 4-GROUND : ALWAYS CONTINUITY

: PARTS LOCATION

CODE	SEE PAGE	CODE		SEE PAGE	CODE		SEE PAGE
A30	28	R6		29	S10	C	29
F10	29	R13		30		D	29
F11	29	R14		30	W2		30
F12	30	S8	A	29			
F13	30	S9	B	29			

: RELAY BLOCKS

CODE	SEE PAGE	RELAY BLOCKS (RELAY BLOCK LOCATION)
2	22	R/B NO. 2 (ENGINE COMPARTMENT)

: JUNCTION BLOCK AND WIRE HARNESS CONNECTOR

CODE	SEE PAGE	JUNCTION BLOCK AND WIRE HARNESS (CONNECTOR LOCATION)
1H	20	COWL WIRE AND J/B NO. 1 (LEFT KICK PANEL)

: CONNECTOR JOINING WIRE HARNESS AND WIRE HARNESS

CODE	SEE PAGE	JOINING WIRE HARNESS AND WIRE HARNESS (CONNECTOR LOCATION)
IB1	36	ENGINE ROOM MAIN WIRE AND COWL WIRE (LEFT KICK PANEL)
ID1	36	FRONT DOOR LH WIRE AND INSTRUMENT PANEL WIRE (LEFT KICK PANEL)
IE1	36	INSTRUMENT PANEL WIRE AND FLOOR NO. 2 WIRE (LEFT KICK PANEL)
IF3	36	INSTRUMENT PANEL WIRE AND COWL WIRE (RIGHT KICK PANEL)
IH1	38	INSTRUMENT PANEL WIRE AND CONSOLE BOX WIRE (UNDER THE INSTRUMENT PANEL BRACE RH)
IH2		
IH3		
IL1	38	FRONT DOOR RH WIRE AND INSTRUMENT PANEL WIRE (RIGHT KICK PANEL)

: GROUND POINTS

CODE	SEE PAGE	GROUND POINTS LOCATION
IF	36	LEFT KICK PANEL

: SPLICE POINTS

CODE	SEE PAGE	WIRE HARNESS WITH SPLICE POINTS	CODE	SEE PAGE	WIRE HARNESS WITH SPLICE POINTS
I5	38	INSTRUMENT PANEL WIRE	I19	38	INSTRUMENT PANEL WIRE
I16	38	CONSOLE BOX WIRE			

(w/STEREO POWER AMPLIFIER)

*1 : W/ WOOFER (SPEAKER)
*2 : W/O WOOFER (SPEAKER)

A30 GRAY

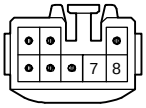

F10

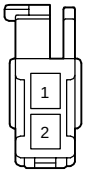

F11

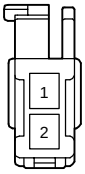

F12

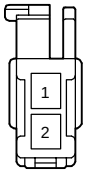

F13

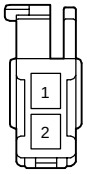

R 6

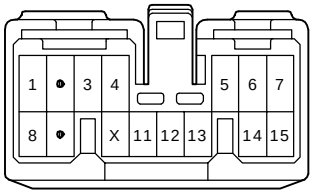

R13

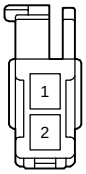

R14

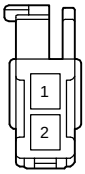

S 8 (A)

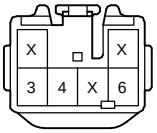

(*1) S 9 (B) BLACK

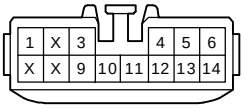

(*2) S 9 (B)

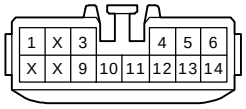

(*1) S10 (C) BLACK

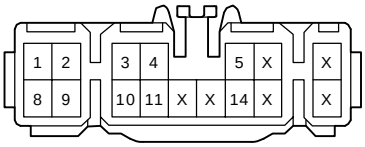

(*2) S10 (D)

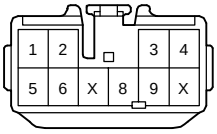

W 2

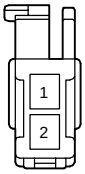

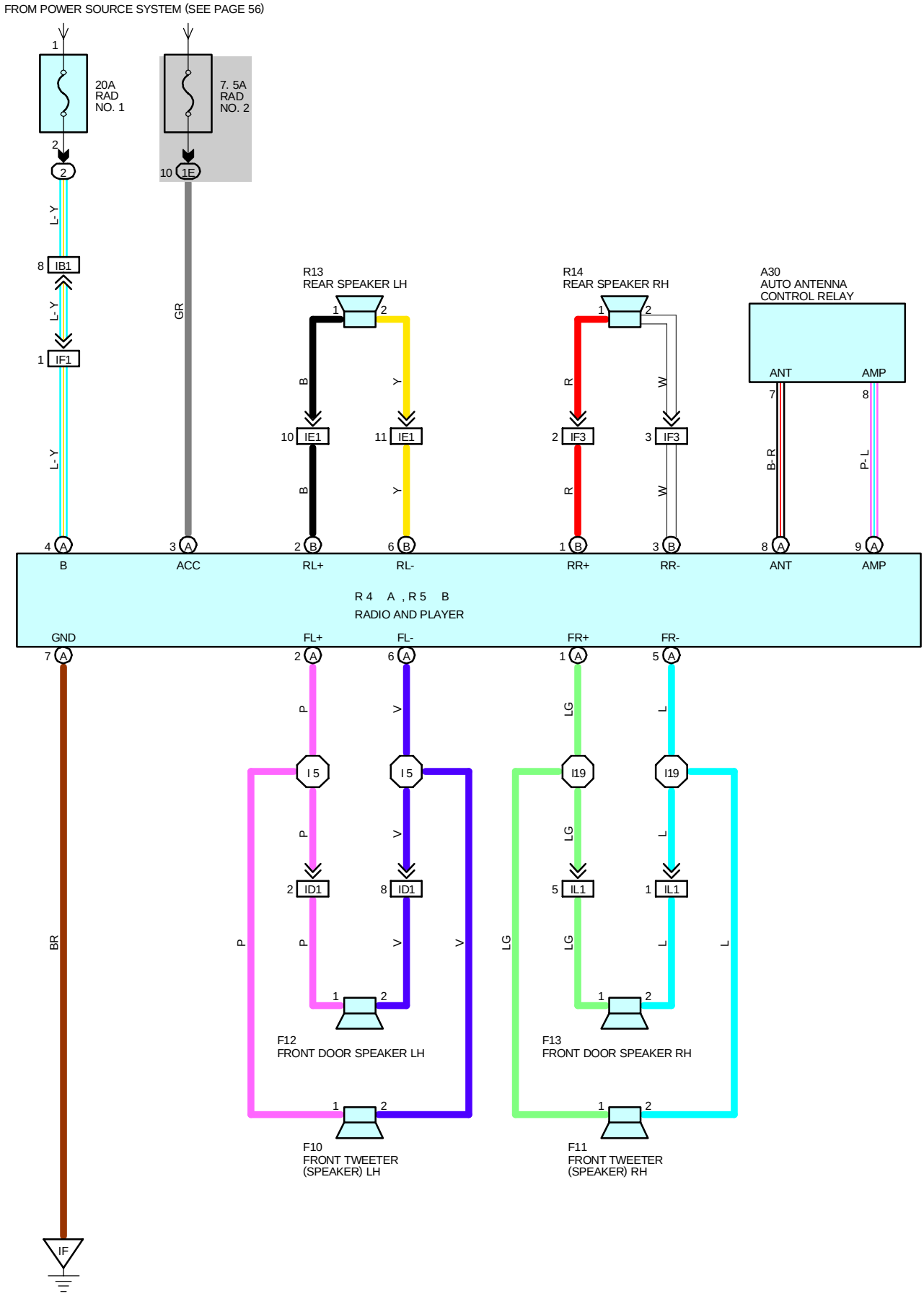
FROM POWER SOURCE SYSTEM (SEE PAGE 56)
20A
RAD
NO. 1
7. 5A
RAD
NO. 2
IB1
IF1
L-Y
GR
R13
REAR SPEAKER LH
R14
REAR SPEAKER RH
A30
AUTO ANTENNA
CONTROL RELAY
ANT
AMP
B-R
P-L
IE1
IF3
B
Y
R
W
B
ACC
RL+
RL-
RR+
RR-
ANT
AMP
R 4 A , R 5 B
RADIO AND PLAYER
GND
FL+
FL-
FR+
FR-
BR
P
V
LG
L
I 5
I19
ID1
IL1
F12
FRONT DOOR SPEAKER LH
F13
FRONT DOOR SPEAKER RH
F10
FRONT TWEETER
(SPEAKER) LH
F11
FRONT TWEETER
(SPEAKER) RH
IF

(w/o STEREO POWER AMPLIFIER

SERVICE HINTS

R4(A) RADIO AND PLAYER

(A) 4-GROUND : ALWAYS APPROX. **12** VOLTS
(A) 3-GROUND : APPROX. **12** VOLTS WITH THE IGNITION SW AT **ON** OR **ACC** POSITION
(A) 7-GROUND : ALWAYS CONTINUITY

: PARTS LOCATION

CODE	SEE PAGE	CODE	SEE PAGE	CODE	SEE PAGE
A30	28	F12	30	R5 B	29
F10	29	F13	30	R13	30
F11	29	R4 A	29	R14	30

: RELAY BLOCKS

CODE	SEE PAGE	RELAY BLOCKS (RELAY BLOCK LOCATION)
2	22	R/B NO. 2 (ENGINE COMPARTMENT LEFT)

: JUNCTION BLOCK AND WIRE HARNESS CONNECTOR

CODE	SEE PAGE	JUNCTION BLOCK AND WIRE HARNESS (CONNECTOR LOCATION)
1E	20	INSTRUMENT PANEL WIRE AND J/B NO. 1 (LEFT KICK PANEL)

: CONNECTOR JOINING WIRE HARNESS AND WIRE HARNESS

CODE	SEE PAGE	JOINING WIRE HARNESS AND WIRE HARNESS (CONNECTOR LOCATION)
IB1	36	ENGINE ROOM MAIN WIRE AND COWL WIRE (LEFT KICK PANEL)
ID1	36	FRONT DOOR LH WIRE AND INSTRUMENT PANEL WIRE (LEFT KICK PANEL)
IE1	36	INSTRUMENT PANEL WIRE AND FLOOR NO. 2 WIRE (LEFT KICK PANEL)
IF1	36	INSTRUMENT PANEL WIRE AND COWL WIRE (INSTRUMENT PANEL REINFORCEMENT LH)
IF3	36	INSTRUMENT PANEL WIRE AND COWL WIRE (RIGHT KICK PANEL)
IL1	38	FRONT DOOR RH WIRE AND INSTRUMENT PANEL WIRE (RIGHT KICK PANEL)

: GROUND POINTS

CODE	SEE PAGE	GROUND POINTS LOCATION
IF	36	LEFT KICK PANEL

: SPLICE POINTS

CODE	SEE PAGE	WIRE HARNESS WITH SPLICE POINTS	CODE	SEE PAGE	WIRE HARNESS WITH SPLICE POINTS
I5	38	INSTRUMENT PANEL WIRE	I19	38	INSTRUMENT PANEL WIRE

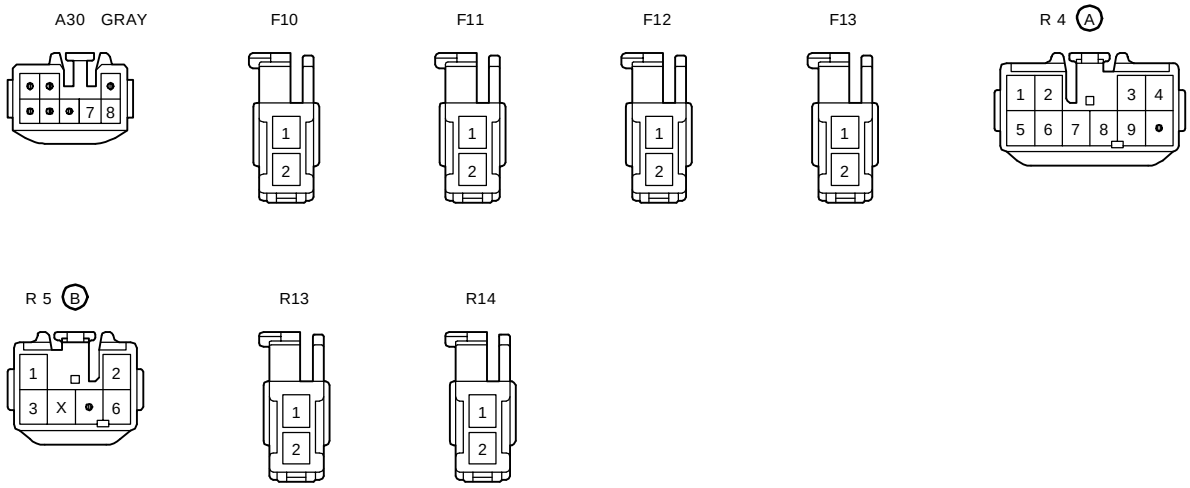

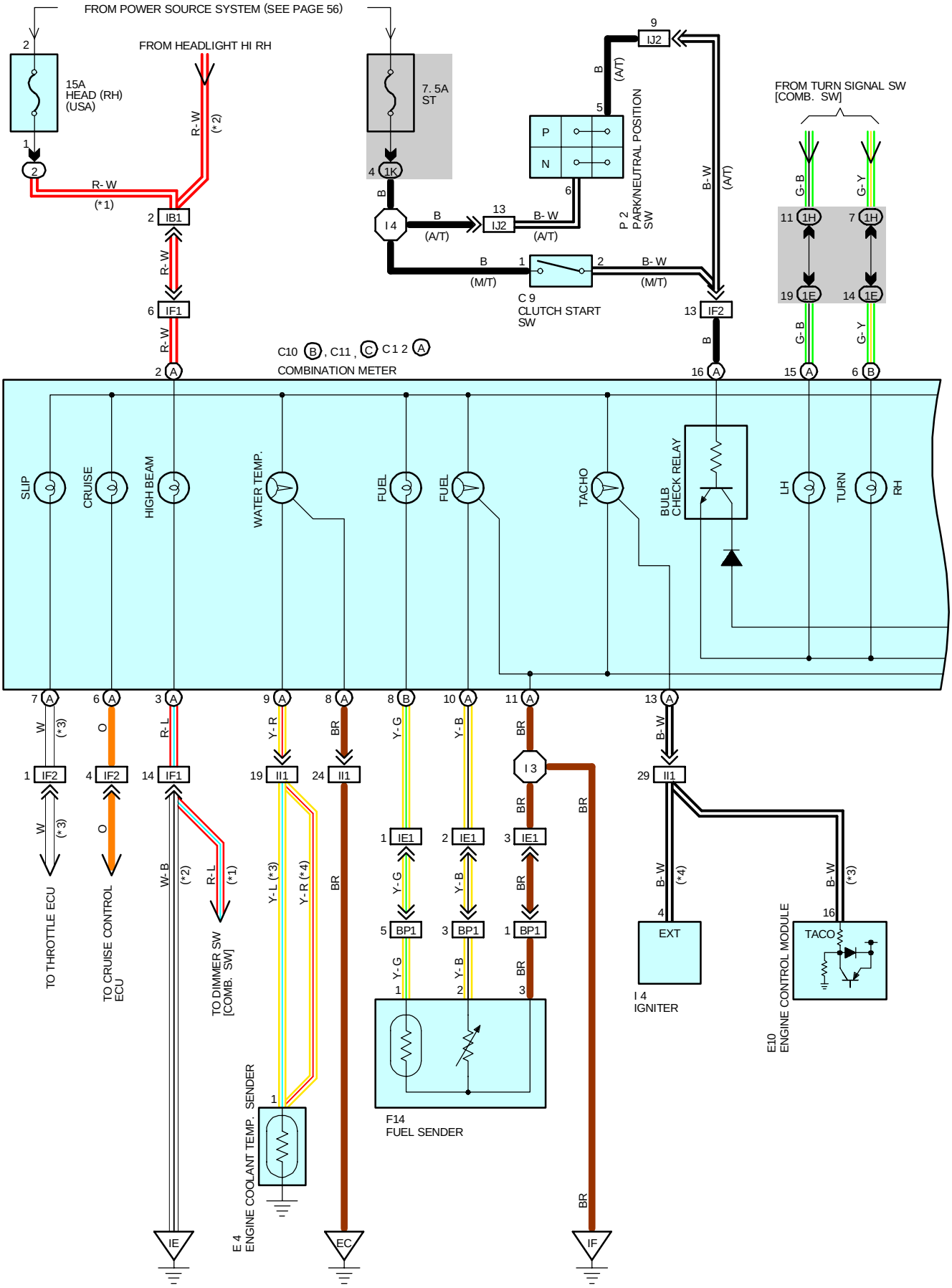
FROM POWER SOURCE SYSTEM (SEE PAGE 56)
FROM HEADLIGHT HI RH
15A
HEAD (RH)
(USA)
7. 5A
ST
FROM TURN SIGNAL SW
[COMB. SW]
P
N
P 2
PARK/NEUTRAL POSITION
SW
C 9
CLUTCH START
SW
C10 B, C11 C, C12 A
COMBINATION METER
SLIP
CRUISE
HIGH BEAM
WATER TEMP.
FUEL
FUEL
TACHO
BULB
CHECK RELAY
LH
TURN
RH
TO THROTTLE ECU
TO CRUISE CONTROL
ECU
TO DIMMER SW
[COMB. SW]
E 4
ENGINE COOLANT TEMP. SENDER
F14
FUEL SENDER
I 4
IGNITER
E10
ENGINE CONTROL MODULE
TACO
EXT

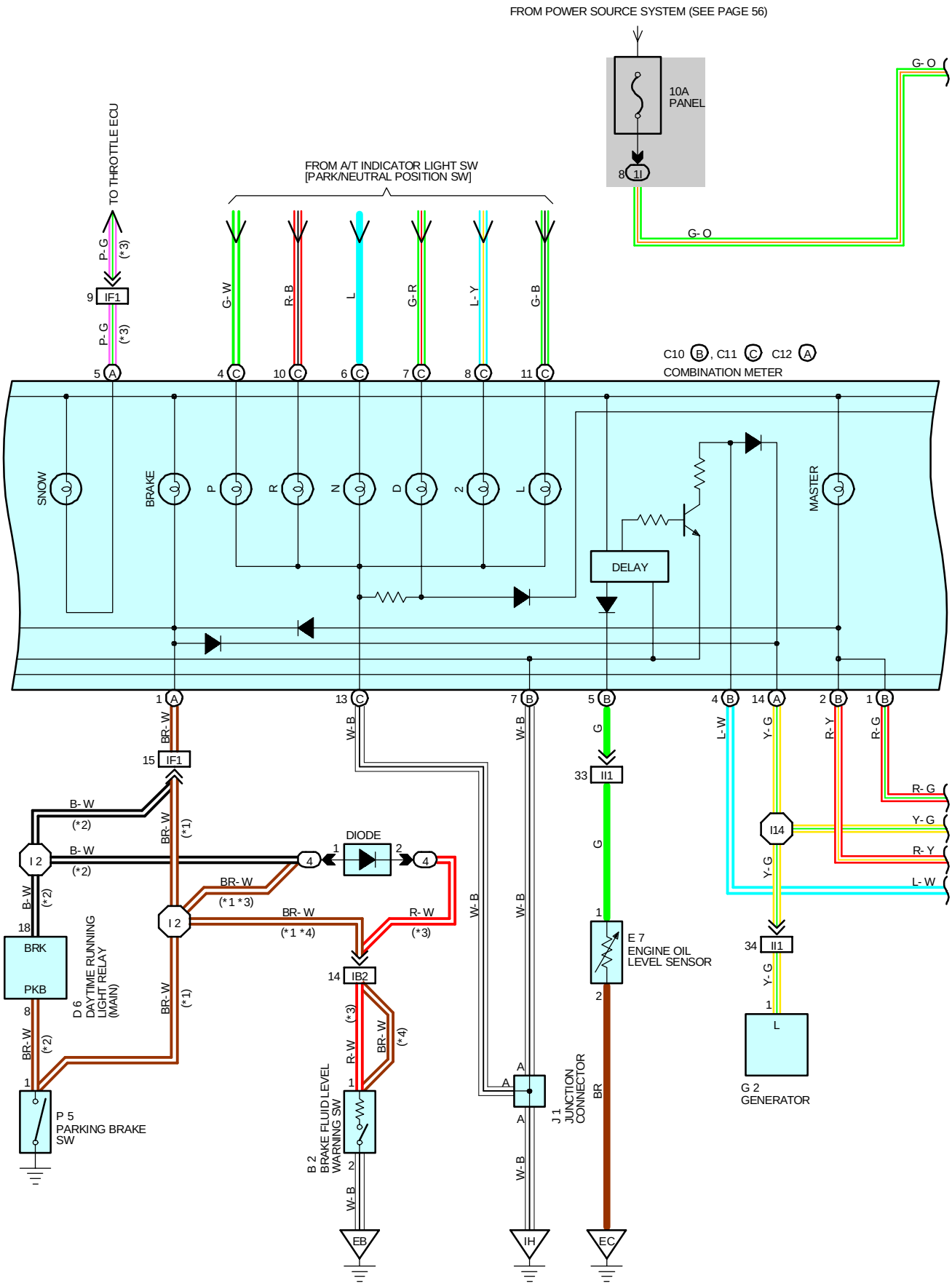
FROM POWER SOURCE SYSTEM (SEE PAGE 56)
10A
PANEL
8 1I
G- O
G- O
TO THROTTLE ECU
P- G
(*3)
9 IF1
P- G
(*3)
FROM A/T INDICATOR LIGHT SW
[PARK/NEUTRAL POSITION SW]
G- W
R- B
L
G- R
L- Y
G- B
5 A
4 C
10 C
6 C
7 C
8 C
11 C
C10 B, C11 C C12 A
COMBINATION METER
SNOW
BRAKE
P
R
N
D
2
L
MASTER
DELAY
1 A
13 C
7 B
5 B
4 B
14 A
2 B
1 B
BR- W
15 IF1
W- B
W- B
G
33 II1
L- W
Y- G
R- Y
R- G
R- G
Y- G
R- Y
L- W
B- W
(*2)
B- W
(*2)
I 2
BR- W
(*1)
DIODE
1
2
4
4
BR- W
(*1 *3)
BR- W
(*1 *4)
R- W
(*3)
I 2
W- B
W- B
W- B
G
1
E 7
ENGINE OIL
LEVEL SENSOR
2
I14
Y- G
34 II1
Y- G
1
L
G 2
GENERATOR
B- W
(*2)
18
BRK
PKB
D 6
DAYTIME RUNNING
LIGHT RELAY
(MAIN)
BR- W
(*1)
14 IB2
(*3)
BR- W
(*4)
R- W
BR- W
(*2)
8
1
P 5
PARKING BRAKE
SW
1
B 2
BRAKE FLUID LEVEL
WARNING SW
2
W- B
A
A
A
J 1
JUNCTION
CONNECTOR
BR
W- B
EB
IH
EC

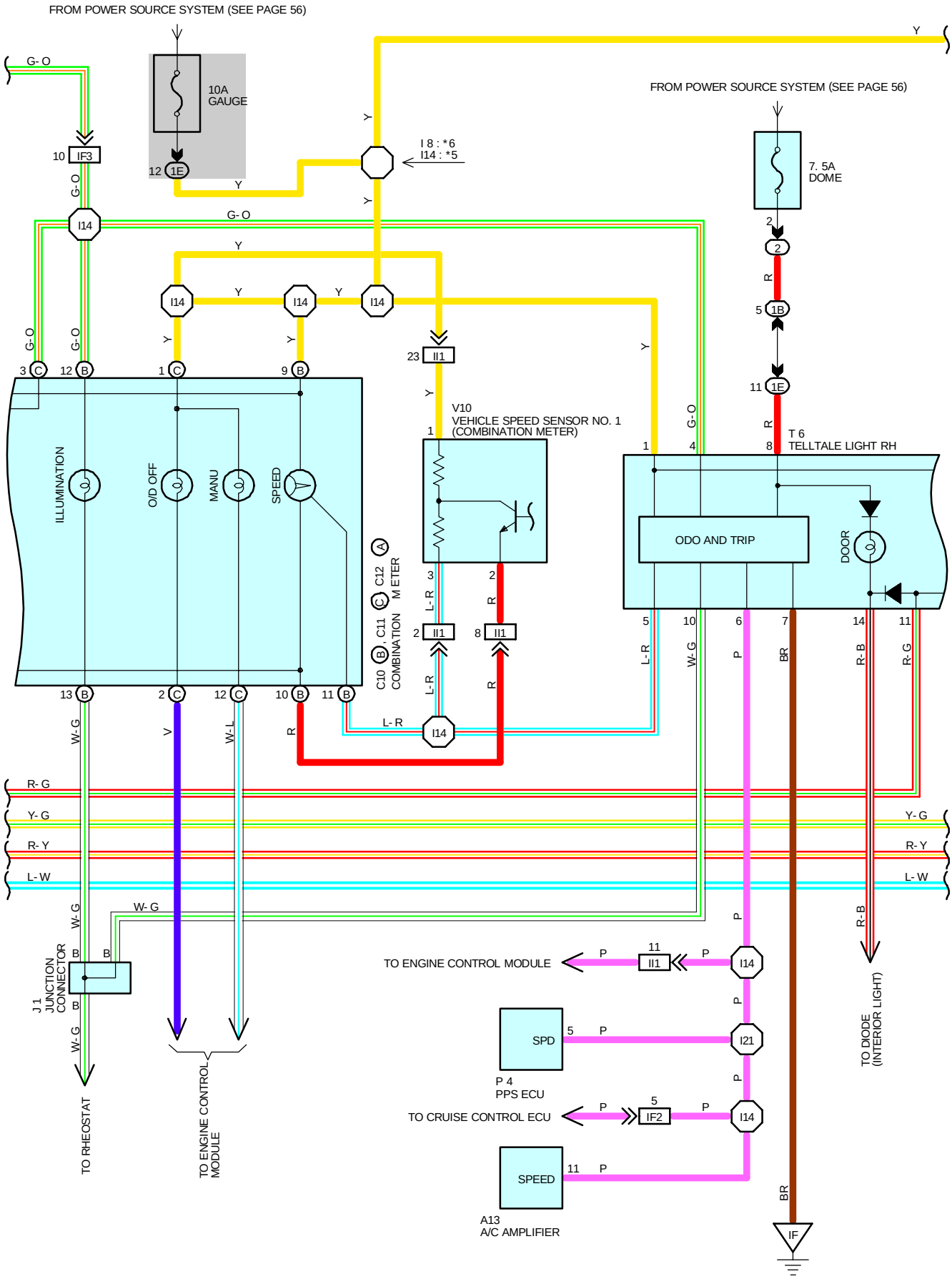
FROM POWER SOURCE SYSTEM (SEE PAGE 56)
10A
GAUGE
I 8 : *6
I14 : *5
FROM POWER SOURCE SYSTEM (SEE PAGE 56)
7. 5A
DOME
V10
VEHICLE SPEED SENSOR NO. 1
(COMBINATION METER)
T 6
TELLTALE LIGHT RH
ILLUMINATION
O/D OFF
MANU
SPEED
ODO AND TRIP
DOOR
C10 B, C11 C, C12 A
COMBINATION METER
J 1
JUNCTION
CONNECTOR
TO RHEOSTAT
TO ENGINE CONTROL
MODULE
TO ENGINE CONTROL MODULE
SPD
P 4
PPS ECU
TO CRUISE CONTROL ECU
SPEED
A13
A/C AMPLIFIER
TO DIODE
(INTERIOR LIGHT)

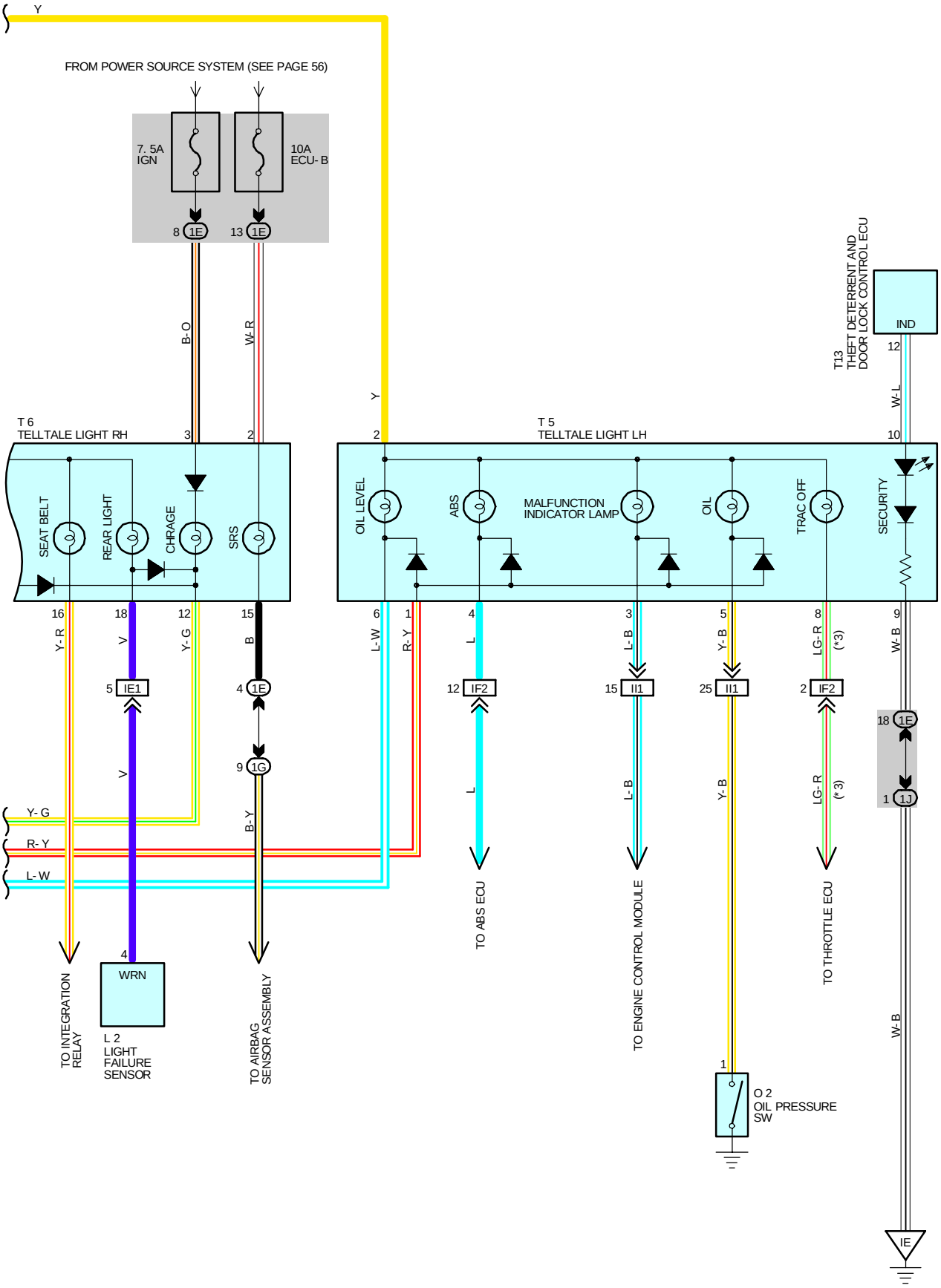
Y
FROM POWER SOURCE SYSTEM (SEE PAGE 56)
7. 5A
IGN
10A
ECU- B
8 1E
13 1E
B- O
W- R
Y
T 6
TELLTALE LIGHT RH
3
2
SEAT BELT
REAR LIGHT
CHRAGE
SRS
T 5
TELLTALE LIGHT LH
2
OIL LEVEL
ABS
MALFUNCTION
INDICATOR LAMP
OIL
TRAC OFF
SECURITY
T13
THEFT DETERRENT AND
DOOR LOCK CONTROL ECU
IND
12
W- L
10
16
18
12
15
6
1
4
3
5
8
9
Y- R
V
Y- G
B
L- W
R- Y
L
L- B
Y- B
LG- R
(*3)
W- B
5 IE1
4 1E
12 IF2
15 II1
25 II1
2 IF2
18 1E
9 1G
1 1J
V
L
L- B
Y- B
LG- R
(*3)
B- Y
Y- G
R- Y
L- W
TO ABS ECU
TO ENGINE CONTROL MODULE
TO THROTTLE ECU
4
WRN
TO INTEGRATION
RELAY
L 2
LIGHT
FAILURE
SENSOR
TO AIRBAG
SENSOR ASSEMBLY
W- B
1
O 2
OIL PRESSURE
SW
IE

COMBINATION METER

SERVICE HINTS

B2 BRAKE FLUID LEVEL WARNING SW
1-2 : CLOSED WITH THE FLOAT DOWN

P5 PARKING BRAKE SW
1-GROUND : CLOSED WITH THE PARKING BRAKE LEVER PULLED UP

O2 OIL PRESSURE SW
1-GROUND : CLOSED WITH THE OIL PRESSURE ABOVE APPROX. **20** KPA (**2.8** PSI, **0.2** KG/CM^2)

E4 ENGINE COOLANT TEMP. SENDER
1-GROUND : APPROX. **160-240** Ω (**50**•C, **122**•F)
APPROX. **17.1-20.4** Ω (**120**•C, **288**•F)

E7 ENGINE OIL LEVEL SENSOR
1-2 : CLOSED WITH THE FLOAT UP AND THE ENGINE OIL TEMP. AT BELOW APPROX. **55**•C (**131**•F)
OPEN WITH THE FLOAT DOWN AND THE ENGINE OIL TEMP. AT BELOW APPOX. **60**•C (**140**•F)

F14 FUEL SENDER
1-2 : APPROX. **3** Ω AT FUEL FULL
APPROX. **110** Ω AT FUEL EMPTY

C10 (B), C12 (A) COMBINATION METER
(B) 9-GROUND : APPROX. **12** VOLTS WITH THE IGNITION SW AT **ON** POSITION
(A) 16-GROUND : APPROX. **12** VOLTS WITH THE IGNITION SW AT **ST** POSITION AND THE SHIFT LEVER AT **P** OR **N** POSITION (A/T)
12 VOLTS WITH THE IGNITION SW AT **ST** POSITION AND THE CLUTCH PEDAL DEPRESSED (M/T)
(A) 8-GROUND : ALWAYS CONTINUITY
(A) 11-GROUND : ALWAYS CONTINUITY

: PARTS LOCATION

CODE		SEE PAGE	CODE	SEE PAGE	CODE	SEE PAGE
A13		28	E7	24 (2JZ-GTE)	O2	27 (2JZ-GE)
B2		24 (2JZ-GTE)		26 (2JZ-GE)	P2	25 (2JZ-GTE)
		26 (2JZ-GE)	E10	29		27 (2JZ-GE)
C9		28	F14	30	P4	29
C10	B	28	G2	24 (2JZ-GTE)	P5	29
C11	C	28		26 (2JZ-GE)	T5	29
C12	A	28	I4	27	T6	29
D6		28	J1	29	T13	29
E4		24 (2JZ-GTE)	L2	30	V10	25 (2JZ-GTE)
		26 (2JZ-GE)	O2	25 (2JZ-GTE)		27 (2JZ-GE)

: RELAY BLOCKS

CODE	SEE PAGE	RELAY BLOCKS (RELAY BLOCK LOCATION)
2	22	R/B NO. 2 (ENGINE COMPARTMENT LEFT)
4	23	R/B NO. 4 (LEFT KICK PANEL)

: JUNCTION BLOCK AND WIRE HARNESS CONNECTOR

CODE	SEE PAGE	JUNCTION BLOCK AND WIRE HARNESS (CONNECTOR LOCATION)
1B	20	ENGINE ROOM MAIN WIRE AND J/B NO. 1 (LEFT KICK PANEL)
1E	20	INSTRUMENT PANEL WIRE AND J/B NO. 1 (LEFT KICK PANEL)
1G	20	COWL WIRE AND J/B NO. 1 (LEFT KICK PANEL)
1H		
1I		
1J		
1K		

: CONNECTOR JOINING WIRE HARNESS AND WIRE HARNESS

CODE	SEE PAGE	JOINING WIRE HARNESS AND WIRE HARNESS (CONNECTOR LOCATION)
IB1	36	ENGINE ROOM MAIN WIRE AND COWL WIRE (LEFT KICK PANEL)
IB2		
IE1	36	INSTRUMENT PANEL WIRE AND FLOOR NO. 2 WIRE (LEFT KICK PANEL)
IF1	36	INSTRUMENT PANEL WIRE AND COWL WIRE (INSTRUMENT PANEL REINFORCEMENT LH)
IF2		
IF3	36	INSTRUMENT PANEL WIRE AND COWL WIRE (RIGHT KICK PANEL)
II1	38	ENGINE WIRE AND INSTRUMENT PANEL WIRE (RIGHT KICK PANEL)
IJ2	38	ENGINE WIRE COWL WIRE (RIGHT KICK PANEL)
BP1	40	FUEL GAUGE WIRE AND FLOOR NO. 2 WIRE (LUGGAGE ROOM FRONT LH)

: GROUND POINTS

CODE	SEE PAGE	GROUND POINTS LOCATION
EB	32 (2JZ-GTE) 34 (2JZ-GE)	FRONT SIDE OF LEFT FENDER
EC	32 (2JZ-GTE) 34 (2JZ-GE)	FRONT SIDE OF INTAKE MANIFOLD
IE IF	36	LEFT KICK PANEL
IH	36	RIGHT KICK PANEL

: SPLICE POINTS

CODE	SEE PAGE	WIRE HARNESS WITH SPLICE POINTS	CODE	SEE PAGE	WIRE HARNESS WITH SPLICE POINTS
I2	38	COWL WIRE	I8	38	INSTRUMENT PANEL WIRE
I3	38	INSTRUMENT PANEL WIRE	I14		
I4	38	COWL WIRE	I21		

A13 ORANGE

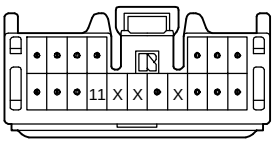

B 2 GRAY

C 9

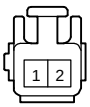

C10 (B) BLUE

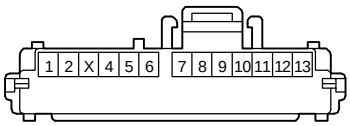

C11 (C) BROWN

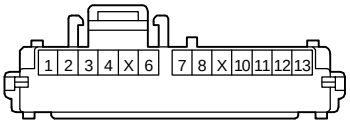

C12 (A)

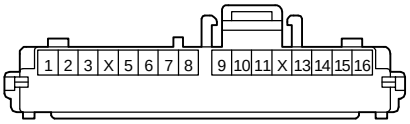

D 6 GRAY

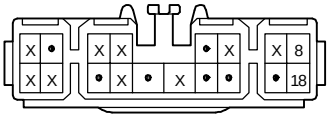

E 4 GRAY

E 7 GRAY

E10 DARK GRAY

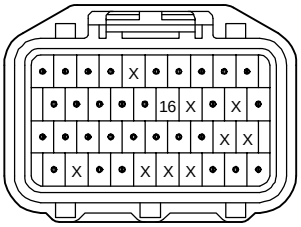

F14 DARK GRAY

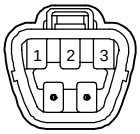

G 2 BLACK

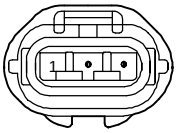

I 4 BLACK

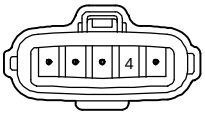

J 1

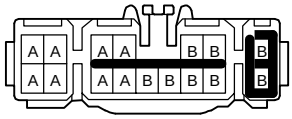

(HINT : SEE PAGE 7)

L 2

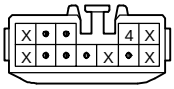

O 2 BLACK

P 2 GRAY

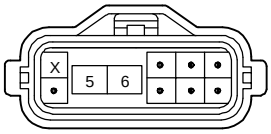

P 4 BLUE

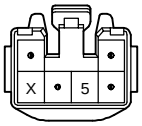

P 5

(2JZ-GTE) T 5

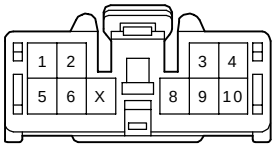

(2JZ-GE) T 5

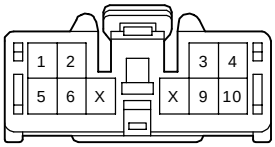

T 6

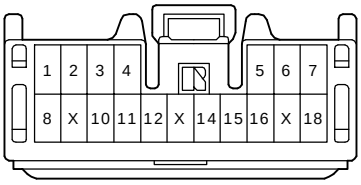

T13 ORANGE

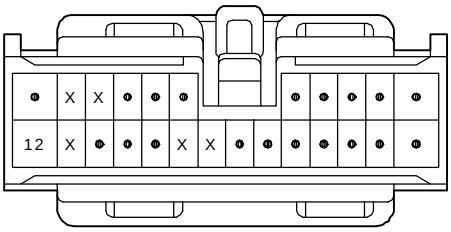

V10 BLACK

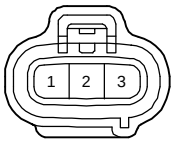

SYSTEM OUTLINE

1. HEATER BLOWER OPERATION

MANUAL BLOWER OPERATION

WHEN THE BLOWER CONTROL SW IS SET TO ANY BLOWER SPEEDS, THE A/C AMPLIFIER OPERATES AND THE CURRENT TO DRIVE THE BLOWER MOTOR FLOWS FROM **TERMINAL BLW** OF THE A/C AMPLIFIER TO **TERMINAL SI** OF THE BLOWER MOTOR CONTROL RELAY. THE CURRENT ACTIVATES THE RELAY AND THE VOLTAGE APPLIED TO **TERMINAL +B** OF THE BLOWER MOTOR CONTROL RELAY IS OUTPUT AT **TERMINAL M+** AS THE VOLTAGE FOR THE SELECTED BLOWER SPEED. THE CURRENT THEN FLOWS FROM **TERMINAL M+** OF THE BLOWER MOTOR CONTROL RELAY TO **TERMINAL 2 ➔ TERMINAL 1 ➔ TERMINAL M-** OF THE BLOWER MOTOR CONTROL RELAY ➔ **TERMINAL GND ➔ GROUND**, AND THE BLOWER MOTOR OPERATES AT THE BLOWER SPEED SELECTED.

AUTO FUNCTION

WHEN THE AUTO SW IS TURNED ON, THE A/C AMPLIFIER CALCULATES THE REQUIRED VENT TEMPERATURE BASE ON THE SET TEMPERATURE AND INPUT FROM EACH SENSOR. THEN **TERMINAL BLW** OF THE A/C AMPLIFIER INPUTS CURRENT TO **TERMINAL SI** OF THE BLOWER MOTOR CONTROL RELAY IN CONFORMITY WITH THE REQUIRED VENT OUTPUT. THIS CURRENT ACTIVATES THE BLOWER MOTOR CONTROL RELAY SO THAT CURRENT FLOWS FROM **TERMINAL M+** OF THE BLOWER MOTOR CONTROL RELAY ➔ **TERMINAL 2** OF THE BLOWER MOTOR ➔ **TERMINAL 1 ➔ TERMINAL M-** OF THE BLOWER MOTOR CONTROL RELAY ➔ **TERMINAL GND ➔ GROUND**, ACTIVATING THE BLOWER MOTOR. THE BLOWER MOTOR THEN OPERATES AT DIFFERENT STEPS IN CONFORMITY WITH VARIABLE CURRENT FLOW OUTPUT FROM **TERMINAL BLW** OF THE A/C AMPLIFIER TO **TERMINAL SI** OF HE BLOWER MOTOR CONTROL RELAY.

2. OPERATION OF AIR INLET CONTROL SERVO MOTOR

(SWITCHING FROM FRESH TO RECIRC)

WITH THE IGNITION SW TURNED ON, THE CURRENT FLOWS FROM **HTR** FUSE TO **TERMINAL 2** OF THE AIR INLET CONTROL SERVO MOTOR ➔ **TERMINAL 5 ➔ TERMINAL AIR** OF THE A/C AMPLIFIER ➔ **TERMINAL GND ➔ GROUND**, THE MOTOR ROTATES AND THE DAMPER STOPS AT **RECIRC** POSITION.

(SWITCHING FROM RECIRC TO FRESH)

WITH THE IGNITION SW TURNED ON, THE CURRENT FLOWS FROM **HTR** FUSE TO **TERMINAL 2** OF THE AIR INLET CONTROL SERVO MOTOR ➔ **TERMINAL 3 ➔ TERMINAL AIF** OF THE A/C AMPLIFIER ➔ **TERMINAL GND ➔ GROUND**, THE MOTOR ROTATES AND THE DAMPER STOPS AT **FRESH** POSITION.

3. OPERATION OF AIR VENT MODE CONTROL SERVO MOTOR

WITH THE IGNITION SW TURNED ON, THE CURRENT FLOWS FROM **HTR** FUSE TO **TERMINAL IG** OF THE A/C AMPLIFIER

(SWITCHING FROM DEF TO FACE)

THE CURRENT FROM **TERMINAL AOF** OF THE A/C AMPLIFIER ➔ **TERMINAL 1** OF THE AIR VENT MODE CONTROL SERVO MOTOR ➔ **TERMINAL 2 ➔ TERMINAL AOD** OF THE A/C AMPLIFIER ➔ **TERMINAL GND ➔ GROUND**. THE MOTOR ROTATES AND THE DAMPER MOVES TO FACE SIDE. WHEN THE DAMPER OPERATES WITH THE A/C SW AT **FACE** POSITION, THE DAMPER POSITION SIGNAL IS INPUT FROM **TERMINAL 3** OF THE SERVO MOTOR TO THE **TERMINAL TP0** OF THE A/C AMPLIFIER. AS A RESULT, CURRENT TO THE SERVO MOTOR CIRCUIT IS CUT OFF BY THE AMPLIFIER, SO THE DAMPER STOPS AT THAT POSITION.

(SWITCHING FROM FACE TO DEF)

THE CURRENT FLOWS FROM **TERMINAL AOD** OF THE A/C AMPLIFIER ➔ **TERMINAL 2** OF THE AIR VENT MODE CONTROL SERVO MOTOR ➔ **TERMINAL 1 ➔ TERMINAL AOF** OF THA A/C AMPLIFIER ➔ **TERMINAL GND ➔ GROUND**, THE MOTOR ROTATES AND THE DAMPER STOPS AT THAT POSITION.

4. OPERATION OF AIR MIX CONTROL SERVO MOTOR

WHEN THE TEMPERATURE SW IS TURNED TO THE “COOL” SIDE, THE CURRENT FLOWS FROM **TERMINAL AMC** OF THE A/C AMPLIFIER ➔ **TERMINAL 1** OF THE AIR MIX CONTROL SERVO MOTOR ➔ MOTOR ➔ **TERMINAL 2 ➔ TERMINAL AMH** OF THE A/C AMPLIFIER ➔ **TERMINAL GND ➔ GROUND** AND THE MOTOR ROTATES. THE DAMPER OPENING ANGLE AT THIS TIME IS INPUT FROM **TERMINAL 3** OF SERVO MOTOR TO **TERMINAL TP** OF THE A/C CONTROL ASSEMBLY, THIS IS USED TO DETERMINE THE DAMPER STOP POSITION AND MAINTAIN THE SET TEMPERATURE.

WHEN THE TEMPERATURE CONTROL SW IS TURNED TO THE “WARM” SIDE, THE CURRENT FLOWS FROM **TERMINAL AMH** OF THE A/C AMPLIFIER ➔ **TERMINAL 2** OF THE AIR MIX CONTROL SERVO MOTOR ➔ MOTOR ➔ **TERMINAL 1 ➔ TERMINAL AMC** OF THE A/C AMPLIFIER, ROTATING THE MOTOR IN REVERSE AND SWITCHING THE DAMPER FROM COOL TO WARM SIDE.

5. AIR CONDITIONING OPERATION

THE A/C AMPLIFIER RECEIVES VARIOUS SIGNALS, I.E., THE ENGINE RPM FROM THE IGNITER, OUTLET TEMPERATURE SIGNAL FROM THE A/C THERMISTOR, COOLANT TEMPERATURE FROM THE ENGINE COOLANT TEMP. SENSOR AND THE LOCK SIGNAL FROM THE A/C COMPRESSOR, ETC.

WHEN THE ENGINE IS STARTED AND THE A/C SW (HEATER CONTROL SW) IS ON, A SIGNAL IS INPUT TO THE A/C AMPLIFIER. AS A RESULT, THE GROUND CIRCUIT IN A/C AMPLIFIER IS CLOSED AND CURRENT FLOWS FROM **HTR** FUSE TO **TERMINAL 1** OF THE A/C MAGNETIC CLUTCH RELAY ➔ **TERMINAL 2** ➔ **TERMINAL ACMG** OF THE ENGINE CONTROL MODULE ➔ **TERMINAL A/C** ➔ **TERMINAL MGC** OF THE A/C AMPLIFIER ➔ **TERMINAL GND** ➔ **GROUND**, TURNING THE RELAY ON, SO THAT THE A/C MAGNETIC CLUTCH IS ON AND THE A/C AMPLIFIER OPERATES.

AT THE SAME TIME, THE ENGINE CONTROL MODULE DETECTS THE MAGNETIC CLUTCH IS ON AND THE A/C AMPLIFIER IS OPERATING AND OPENS DIRECTION TO AVOID LOWERING THE ENGINE RPM DURING A/C OPERATING.

WHEN ANY OF THE FOLLOWING SIGNALS ARE INPUT TO THE A/C AMPLIFIER, THE A/C AMPLIFIER OPERATES TO TURN OFF THE AIR CONDITIONING.

* ENGINE RPM SIGNAL IS HIGH.
* COOLANT TEMP. SIGNAL IS HIGH.
* A SIGNAL THAT THE TEMPERATURE AT THE AIR OUTLET IS LOW.
* A SIGNAL THAT THERE IS A LARGE DIFFERENCE BETWEEN ENGINE SPEED AND COMPRESSOR SPEED.
* A SIGNAL THAT THE REFRIGERANT PRESSURE IS ABNORMALLY HIGH OR LOW.

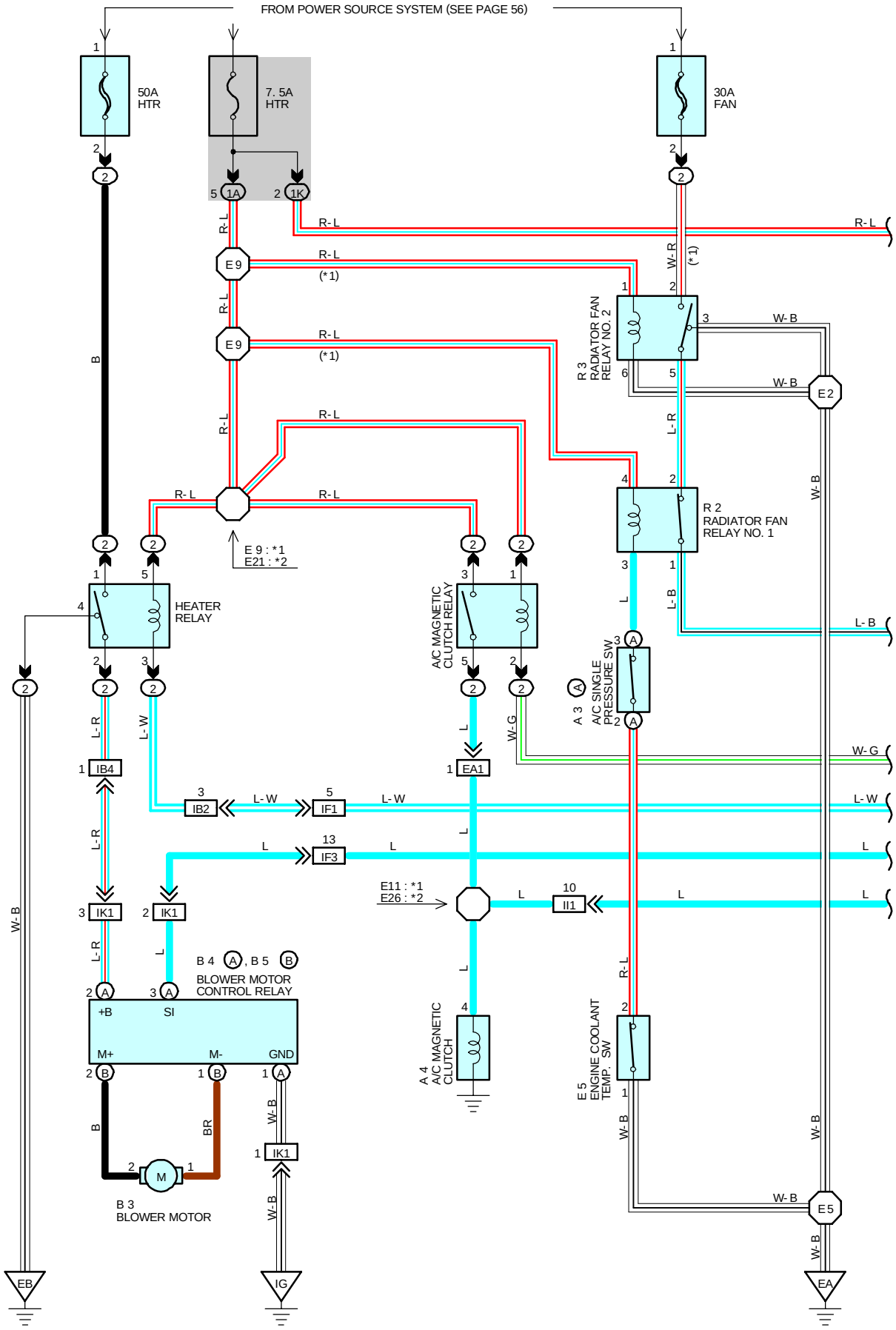
FROM POWER SOURCE SYSTEM (SEE PAGE 56)
50A HTR
7. 5A HTR
30A FAN
E 9
E 9 : *1
E21 : *2
HEATER RELAY
A/C MAGNETIC CLUTCH RELAY
R 3 RADIATOR FAN RELAY NO. 2
R 2 RADIATOR FAN RELAY NO. 1
A 3 A/C SINGLE PRESSURE SW
E2
E11 : *1
E26 : *2
II1
IB4
IB2
IF1
IF3
EA1
IK1
B 4 A, B 5 B
BLOWER MOTOR CONTROL RELAY
+B
SI
M+
M-
GND
B 3 BLOWER MOTOR
A 4 A/C MAGNETIC CLUTCH
E 5 ENGINE COOLANT TEMP. SW
E5
EB
IG
EA

*1 : 2JZ- GTE
*2 : 2JZ- GE

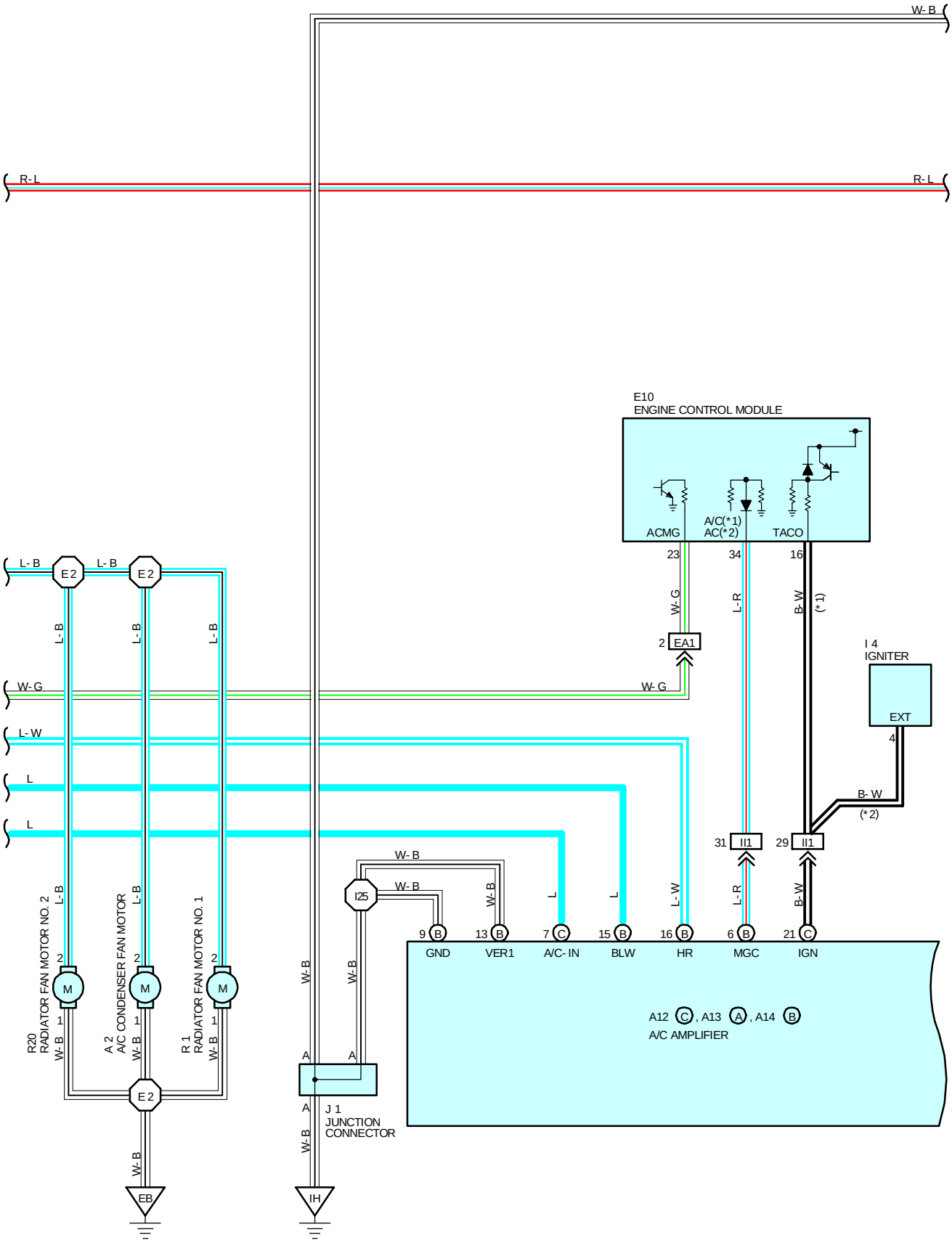

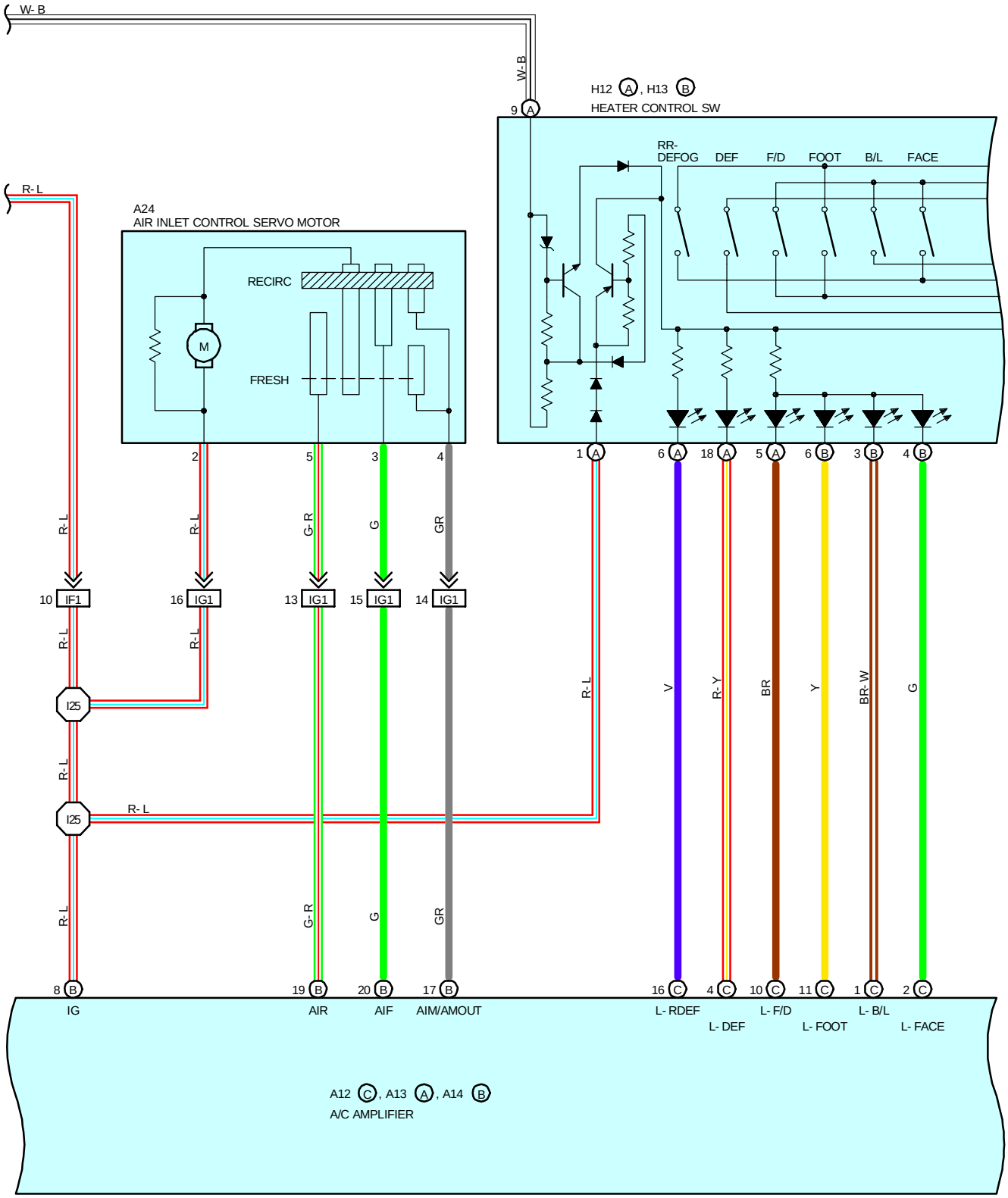
W- B
W- B
H12 A, H13 B
HEATER CONTROL SW
9 A
RR-
DEFOG
DEF
F/D
FOOT
B/L
FACE
R- L
A24
AIR INLET CONTROL SERVO MOTOR
RECIRC
M
FRESH
2
5
3
4
1 A
6 A
18 A
5 A
6 B
3 B
4 B
R- L
R- L
G- R
G
GR
10 IF1
16 IG1
13 IG1
15 IG1
14 IG1
R- L
R- L
I25
R- L
I25
R- L
R- L
V
R- Y
BR
Y
BR- W
G
G- R
G
GR
8 B
19 B
20 B
17 B
16 C
4 C
10 C
11 C
1 C
2 C
IG
AIR
AIF
AIM/AMOUT
L- RDEF
L- DEF
L- F/D
L- FOOT
L- B/L
L- FACE
A12 C, A13 A, A14 B
A/C AMPLIFIER

*1 : 2JZ- GTE
*2 : 2JZ- GE

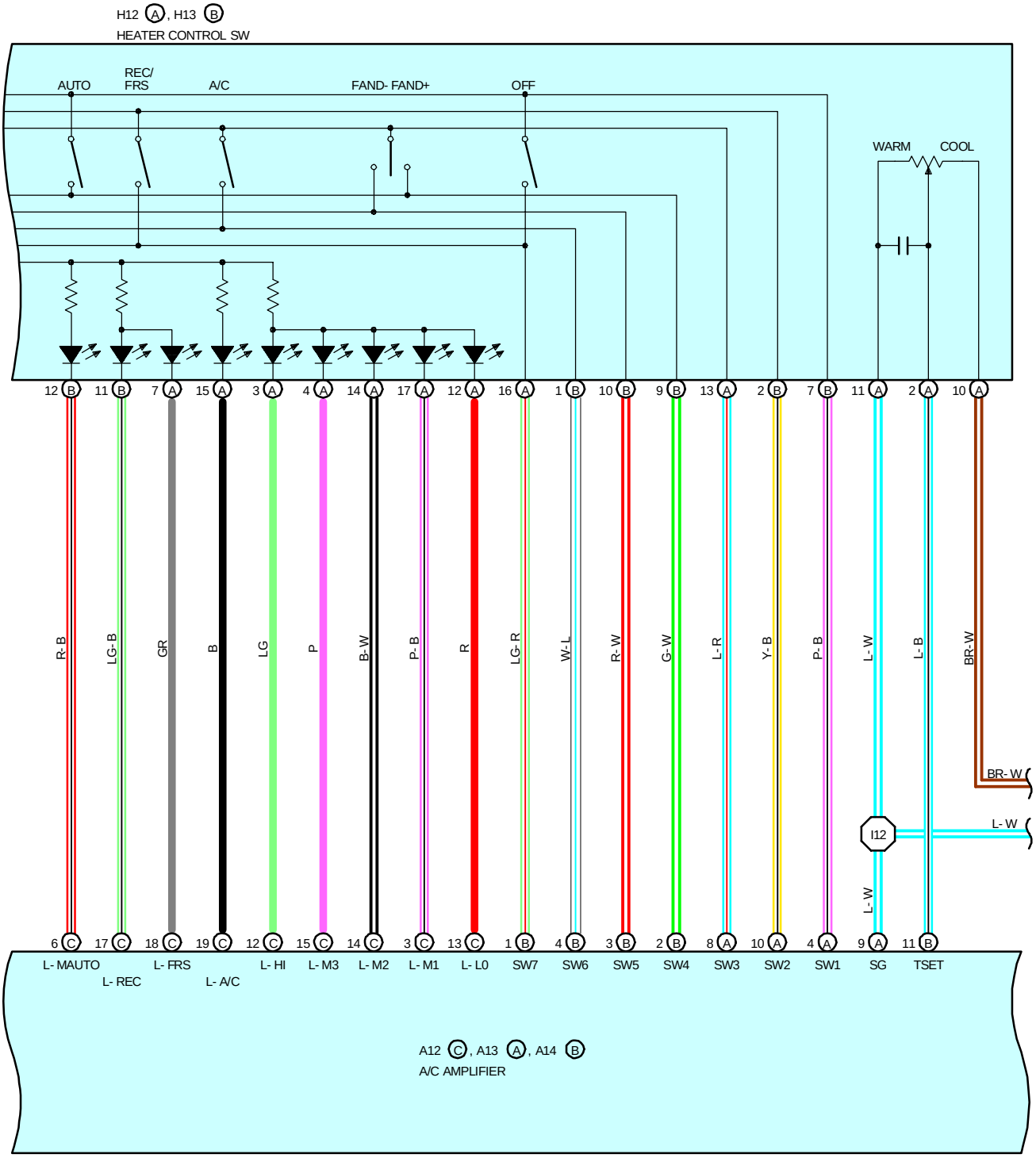

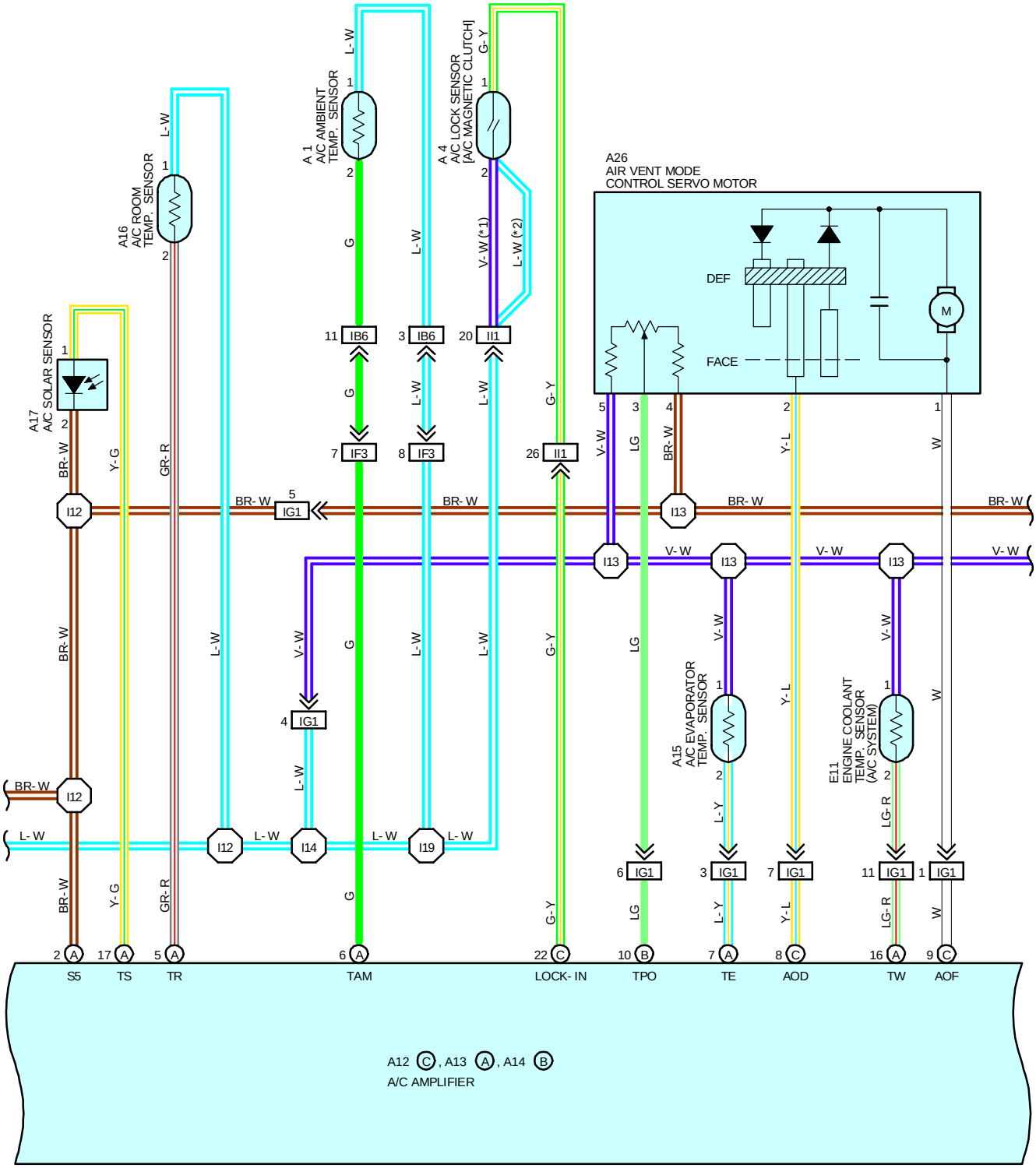
A17
A/C SOLAR SENSOR
A16
A/C ROOM
TEMP. SENSOR
A 1
A/C AMBIENT
TEMP. SENSOR
A 4
A/C LOCK SENSOR
[A/C MAGNETIC CLUTCH]
A26
AIR VENT MODE
CONTROL SERVO MOTOR
DEF
FACE
M
A15
A/C EVAPORATOR
TEMP. SENSOR
E11
ENGINE COOLANT
TEMP. SENSOR
(A/C SYSTEM)
S5
TS
TR
TAM
LOCK- IN
TPO
TE
AOD
TW
AOF
A12 C, A13 A, A14 B
A/C AMPLIFIER

*1 : 2JZ- GTE
*2 : 2JZ- GE

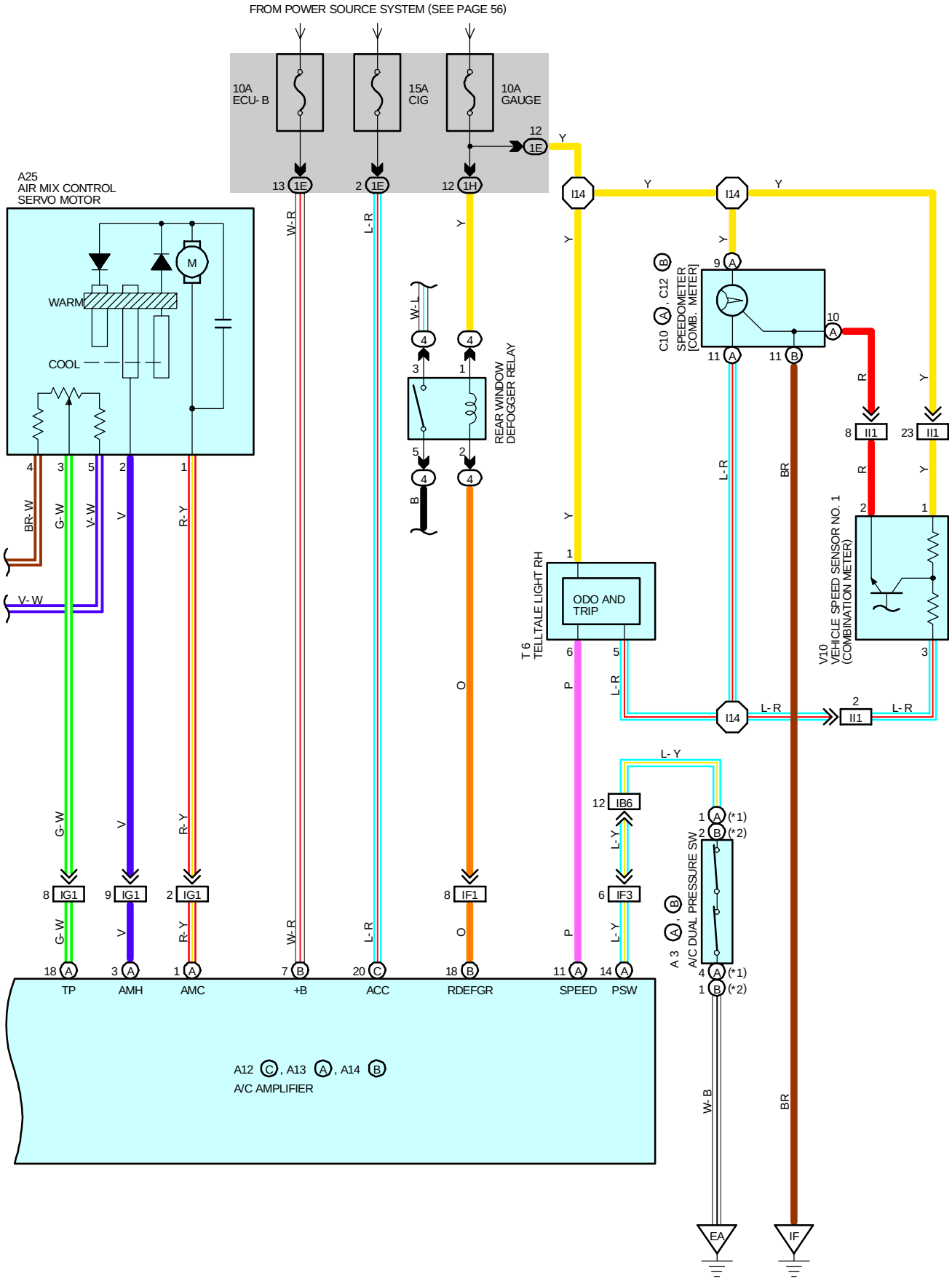

SERVICE HINTS

A4 A/C MAGNETIC CLUTCH

4-GROUND : APPROX. **3.7** Ω

A3 (A) A/C DUAL PRESSURE SW [A/C TRIPLE PRESSURE SW] (2JZ-GTE)

(A)1 -(A) 4 : OPEN ABOVE APPROX. **225** KPA (**33** PSI, **2.3** KG/CM^2) OR **3140** KPA (**458** PSI, **32** KG/CM^2)

A3 (B) A/C DUAL PRESSURE SW (2JZ-GE)

(B)1- (B)2 : OPEN ABOVE APPROX. **225** KPA (**33** PSI, **2.3** KG/CM^2) OR **3140** KPA (**458** PSI, **32** KG/CM^2)

A12 (C), A13 (A), A14 (B) A/C AMPLIFIER

+B-GROUND : ALWAYS APPROX. **10-14** VOLTS
IG-GROUND : APPROX. **10-14** VOLTS WITH THE IGNITION SW AT **ON** POSITION
HR-GROUND : APPROX. **10-14** VOLTS WITH THE IGNITION SW AT **ON** POSITION AND DO NOT TURN THE BLOWER MOTOR BELOW **1** VOLT WITH THE IGNITION SW AT **ON** POSITION AND TURN THE BLOWER MOTOR
ACC-GROUND : APPROX. **10-14** VOLTS WITH THE IGNITION SW AT **ACC** OR **ON** POSITION
TW-GROUND : **10-14** VOLTS AT START THE ENGINE AND MAX. COLD POSITION OF THE A/C TEMP. CONTROL SW
BELOW **1** VOLT AT START THE ENGINE AND MAX. WARM POSITION OF THE A/C TEMP. CONTROL SW
MGC-GROUND :BELOW **1** VOLT AT START THE ENGINE, PUSH THE A/C AUTO SW AND THE A/C SW **ON** POSITION
10-14 VOLTS AT START THE ENGINE, PUSH THE A/C AUTO SW AND THE A/C SW **OFF** POSITION
BLW-GROUND : **1.0-3.0** VOLTS WITH THE IGNITION SW ON AND TURN THE BLOWER MOTOR
S5-GROUND : **4-6** VOLTS WITH THE IGNITION SW ON
SG-GROUND : ALWAYS CONTINUITY
AMH-AMC : **13-19** VOLTS WITH THE IGNITION SW OFF
AOF-GROUND : APPROX. **12** VOLTS WITH THE FACE SW ON
AOD-GROUND : APPROX. **12** VOLTS WITH THE DEF SW ON
GND-GROUND : ALWAYS CONTINUITY

: PARTS LOCATION

CODE		SEE PAGE	CODE		SEE PAGE	CODE		SEE PAGE
A1		24 (2JZ-GTE)	A17		28	H12	A	29
		26 (2JZ-GE)	A24		28	H13	B	29
A2		24	A25		28	I4		27
A3	A	24 (2JZ-GTE)	A26		28	J1		29
	B	26 (2JZ-GE)	B3		28	R1		25
A4		24 (2JZ-GTE)	B4	A	28	R2		25
		26 (2JZ-GE)	B5	B	28	R3		25
A12	C	28	C10	A	28	R20		25
A13	A	28	C12	B	28	T6		29
A14	B	28	E5		24	V10		25 (2JZ-GTE)
A15		28	E10		29			27 (2JZ-GE)
A16		28	E11		29			

: RELAY BLOCKS

CODE	SEE PAGE	RELAY BLOCKS (RELAY BLOCK LOCATION)
2	22	R/B NO. 2 (ENGINE COMPARTMENT LEFT)
4	23	R/B NO. 4 (LEFT KICK PANEL)

: JUNCTION BLOCK AND WIRE HARNESS CONNECTOR

CODE	SEE PAGE	JUNCTION BLOCK AND WIRE HARNESS (CONNECTOR LOCATION)
1A	20	ENGINE ROOM MAIN WIRE AND J/B NO. 1 (LEFT KICK PANEL)
1E	20	INSTRUMENT PANEL WIRE AND J/B NO. 1(LEFT KICK PANEL)
1H	20	COWL WIRE AND J/B NO. 1 (LEFT KICK PANEL)
1K		

: CONNECTOR JOINING WIRE HARNESS AND WIRE HARNESS

CODE	SEE PAGE	JOINING WIRE HARNESS AND WIRE HARNESS (CONNECTOR LOCATION)
EA1	32 (2JZ-GTE)	ENGINE WIRE AND ENGINE ROOM MAIN WIRE (NEAR THE R/B NO. 2)
	34 (2JZ-GE)	
IB2	36	ENGINE ROOM MAIN WIRE AND COWL WIRE (LEFT KICK PANEL)
IB4	36	ENGINE ROOM MAIN WIRE AND COWL WIRE (RIGHT KICK PANEL)
IB6		
IF1	36	INSTRUMENT PANEL WIRE AND COWL WIRE (INSTRUMENT PANEL REINFORCEMENT LH)
IF3	36	INSTRUMENT PANEL WIRE AND COWL WIRE (RIGHT KICK PANEL)
IG1	38	INSTRUMENT PANEL WIRE AND COWL NO. 3 WIRE (BEHIND HEATER CONTROL SW)
II1	38	ENGINE WIRE AND INSTRUMENT PANEL WIRE (RIGHT KICK PANEL)
IK1	38	COWL NO. 4 WIRE AND COWL WIRE (RIGHT KICK PANEL)

: GROUND POINTS

CODE	SEE PAGE	GROUND POINTS LOCATION
EA	32 (2JZ-GTE) 34 (2JZ-GE)	FRONT SIDE OF RIGHT FENDER
EB	32 (2JZ-GTE) 34 (2JZ-GE)	FRONT SIDE OF LEFT FENDER
IF	36	LEFT KICK PANEL
IG IH	36	RIGHT KICK PANEL

: SPLICE POINTS

CODE	SEE PAGE	WIRE HARNESS WITH SPLICE POINTS	CODE	SEE PAGE	WIRE HARNESS WITH SPLICE POINTS
E2	32	ENGINE ROOM MAIN WIRE	I12	38	INSTRUMENT PANEL WIRE
E5			I13	38	COWL NO. 3 WIRE
E9			I14	38	INSTRUMENT PANEL WIRE
E11	32	ENGINE WIRE	I19		
E21	34	ENGINE ROOM MAIN WIRE	I25		
E26	34	ENGINE WIRE			

A 1 BLACK

A 2 BLACK

(2JZ- GTE) A 3 (A) BLACK

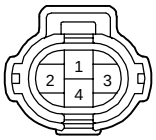

(2JZ- GE) A 3 (B) GRAY

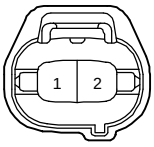

A 4 GRAY

A12 (C) ORANGE

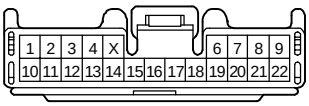

A13 (A) ORANGE

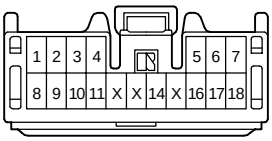

A14 (B) ORANGE

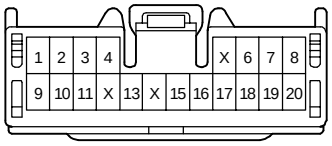

A15

A16 BLACK

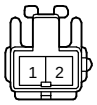

A17 GRAY

A24

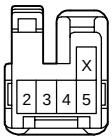

A25

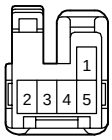

A26

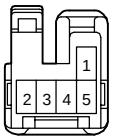

B 3 BLACK

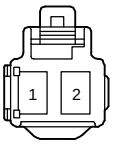

B 4 (A) BLACK

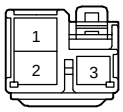

B 5 (B) BLACK

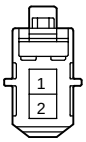

C10 (A) BLUE

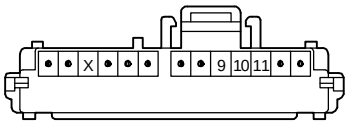

C12 (B)

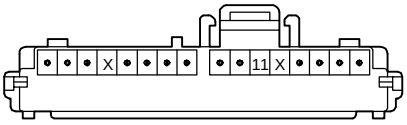

E 5 DARK GRAY

(2JZ- GTE) E10 DARK GRAY

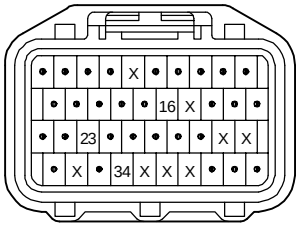

(2JZ- GE) E10 DARK GRAY

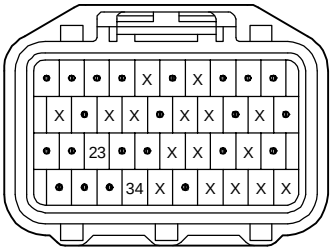

E11

H12 (A) ORANGE

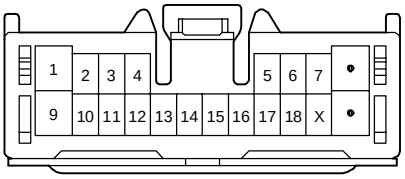

H13 (B) ORANGE

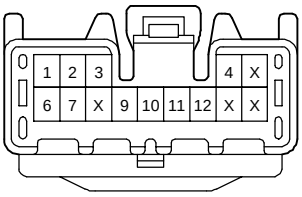

I 4 BLACK

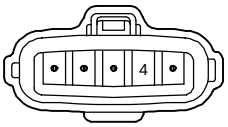

J 1

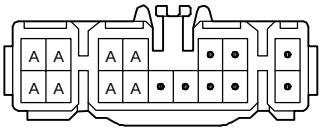

(HINT : SEE PAGE 7)

R 1 BLACK

R 2 BLACK

R 3 GRAY

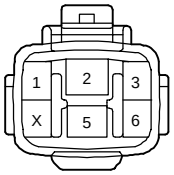

R20 BLACK

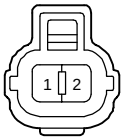

T 6

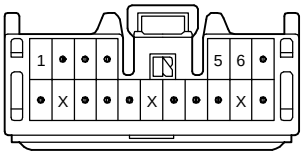

V10 BLACK

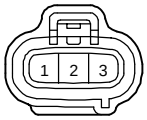

K OVERALL ELECTRICAL WIRING DIAGRAM

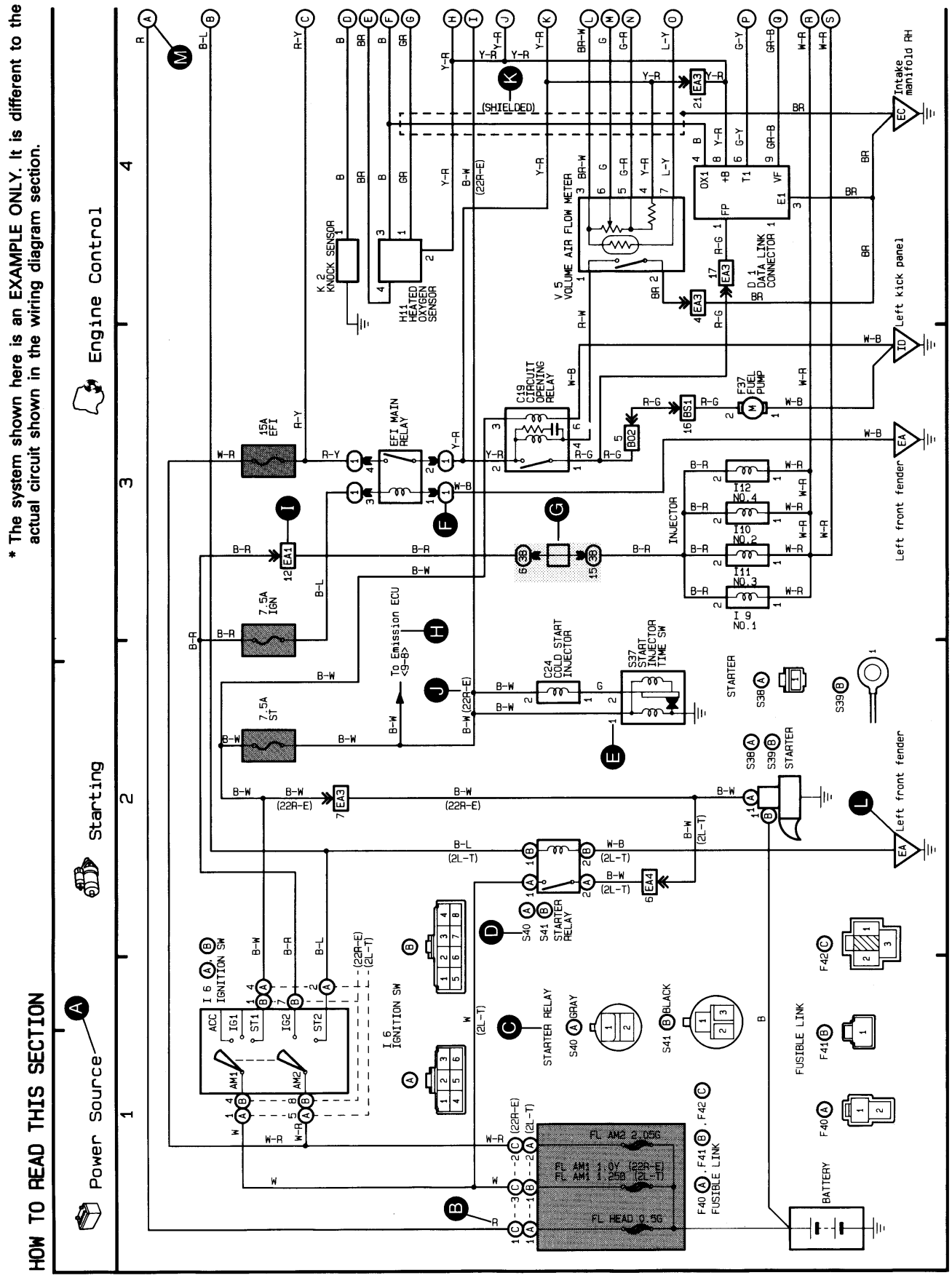

* The system shown here is an EXAMPLE ONLY. It is different to the actual circuit shown in the wiring diagram section.

A: System Title

B: Indicates the wiring color.

Wire colors are indicated by an alphabetical code.

B	= Black	L	= Blue	R	= Red
BR	= Brown	LG	= Light Green	V	= Violet
G	= Green	O	= Orange	W	= White
GR	= Gray	P	= Pink	Y	= Yellow

The first letter indicates the basic wire color and the second letter indicates the color of the stripe.

Example: L – Y

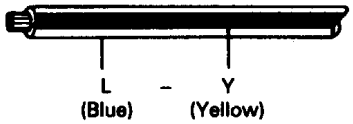

C: Indicates the connector to be connected to a part (the numeral indicates the pin No.)

D: The position of the parts is the same as shown in the wiring diagram and wire routing.

E: Indicates the pin number of the connector. The numbering system is different for female and male connectors.

Example: Numbered in order from upper left to lower right — Numbered in order from upper right to lower left

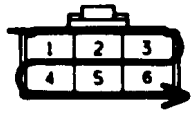

Female

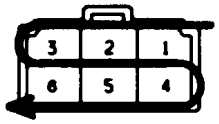

Male

The numbering system for the overall wiring diagram is the same as above.

F: Indicates a Relay Block. No shading is used and only the Relay Block No. is shown to distinguish it from the J/B.

Example: ① Indicates Relay Block No. 1.

G: Junction Block (The number in the circle is the J/B No. and the connector code is shown beside it). Junction Blocks are shaded to clearly separate them from other parts (different junction blocks are shaded differently for further clarification).

Example:

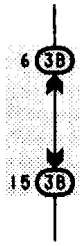

3B indicates that it is inside Junction Block No. 3.

H: Indicates related system.

I: Indicates the wiring harness and wiring harness connector. The wiring harness with male terminal is shown with arrows (⩔). Outside numerals are pin numbers.

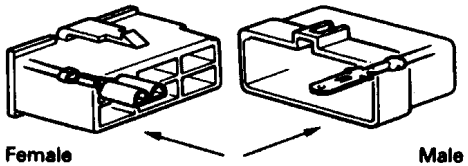

Female — Male (⩔)

J: ( ) is used to indicate different wiring and connector, etc. when the vehicle model, engine type, or specification is different.

K: Indicates a shielded cable.

L: Indicates and located on ground point.

M: The same code occuring on the next page indicates that the wire harness is continuous.

SYSTEM INDEX

1997 Model (Location No. 1 to 27)

SYSTEMS	LOCATION
ABS	19-3 (w/ Traction Control) 18-3 (w/o Traction Control)
Auto Antenna	25-4
Back-Up Light	16-8 (2JZ-GE) 15-8 (2JZ-GTE)
Charging	1-4
Cigarette Lighter	22-1
Clock	21-3
Combination Meter	26-3
Cruise Control	17-3
Electric Tension Reducer	21-4
Electronically Controlled Transmission and A/T Indicator	16-3 (2JZ-GE) 15-3 (2JZ-GTE)
Engine Control	4-3 (2JZ-GE) 3-3 (2JZ-GTE)
Fog Light	5-4
Front Wiper and Washer	23-4
Headlight	6-3 (Canada) 5-3 (USA)
Horn	9-4
Ignition	2-4 (2JZ-GE) 2-2 (2JZ-GTE)
Illumination	8-3
Interior Light	10-3
Light Auto Turn Off	11-2
Power Seat	12-4
Power Source	1～27-1
Power Window	12-2
PPS	21-3
Radiator Fan and Automatic Air Conditioning	27-3
Radio and Player	24-3 (w/ Stereo Power Amplifier) 25-2 (w/o Stereo Power Amplifier)
Rear Window Defogger and Mirror Heater	21-2
Rear Wiper and Washer	23-2
Remote Control Mirror	11-4
Seat Heater (Canada)	22-4
Shift Lock	22-2
SRS	13-3
Starting	1-2
Stop Light	7-4
Taillight	7-2
Theft Deterrent and Door Lock Control	14-3
Traction Control	20-3
Turn Signal and Hazard Warning Light	9-2
Unlock and Seat Belt Warning	10-2

1 SUPRA ELECTRICAL WIRING DIAGRAM

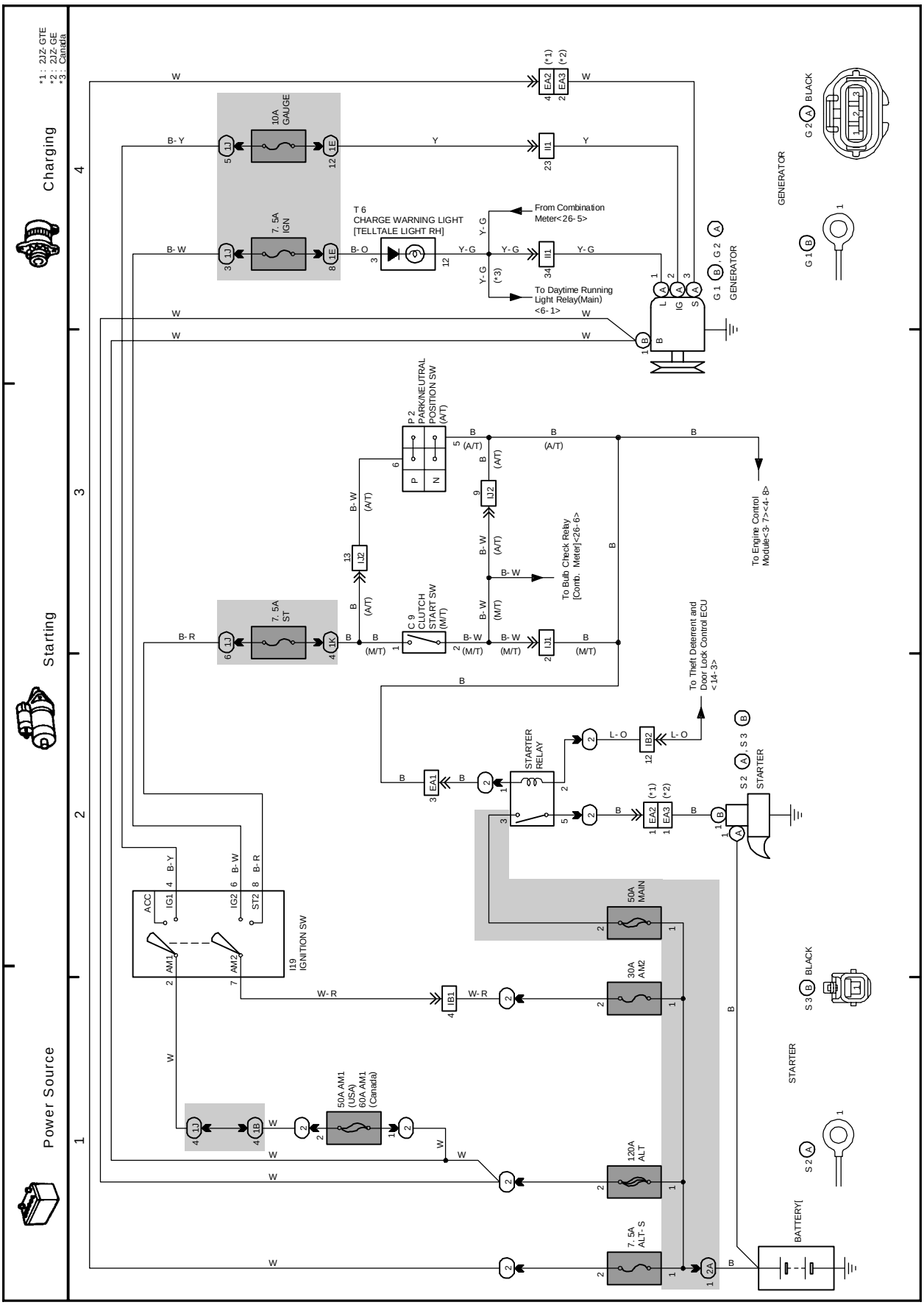

K OVERALL ELECTRICAL WIRING DIAGRAM

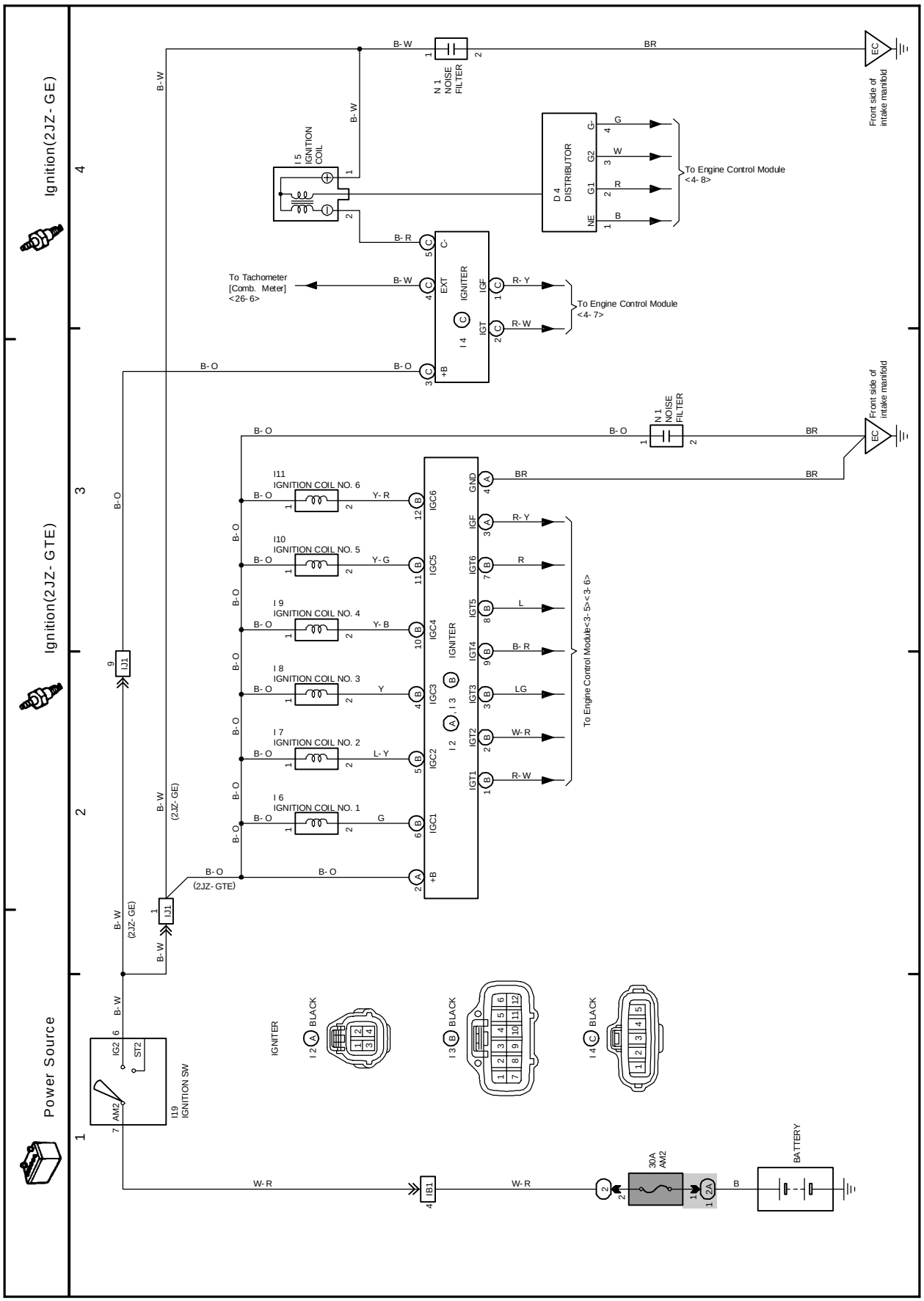

K OVERALL ELECTRICAL WIRING DIAGRAM

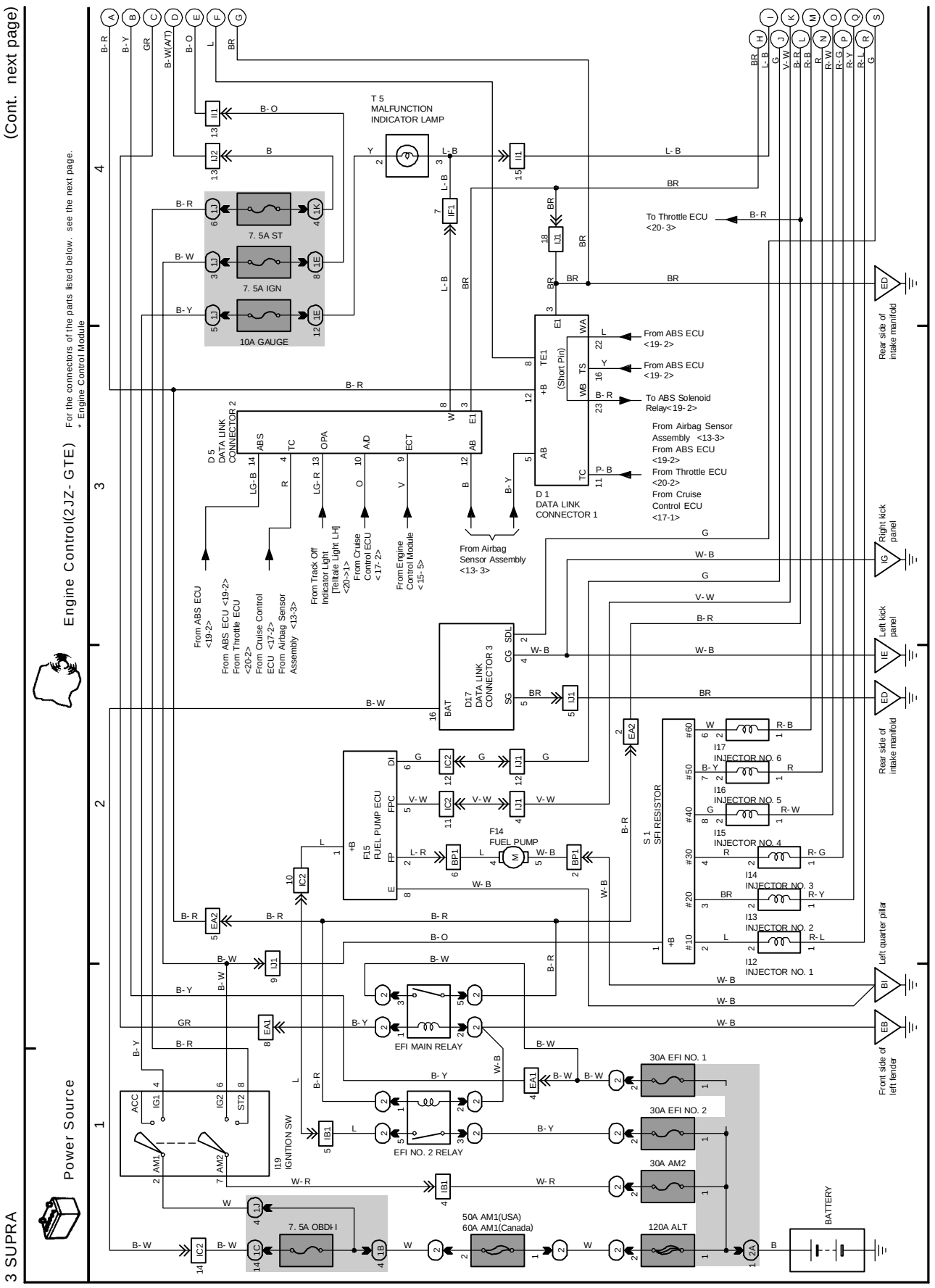

(Cont. next page)

Engine Control(2JZ- GTE)

For the connectors of the parts listed below. see the next page.
* Engine Control Module

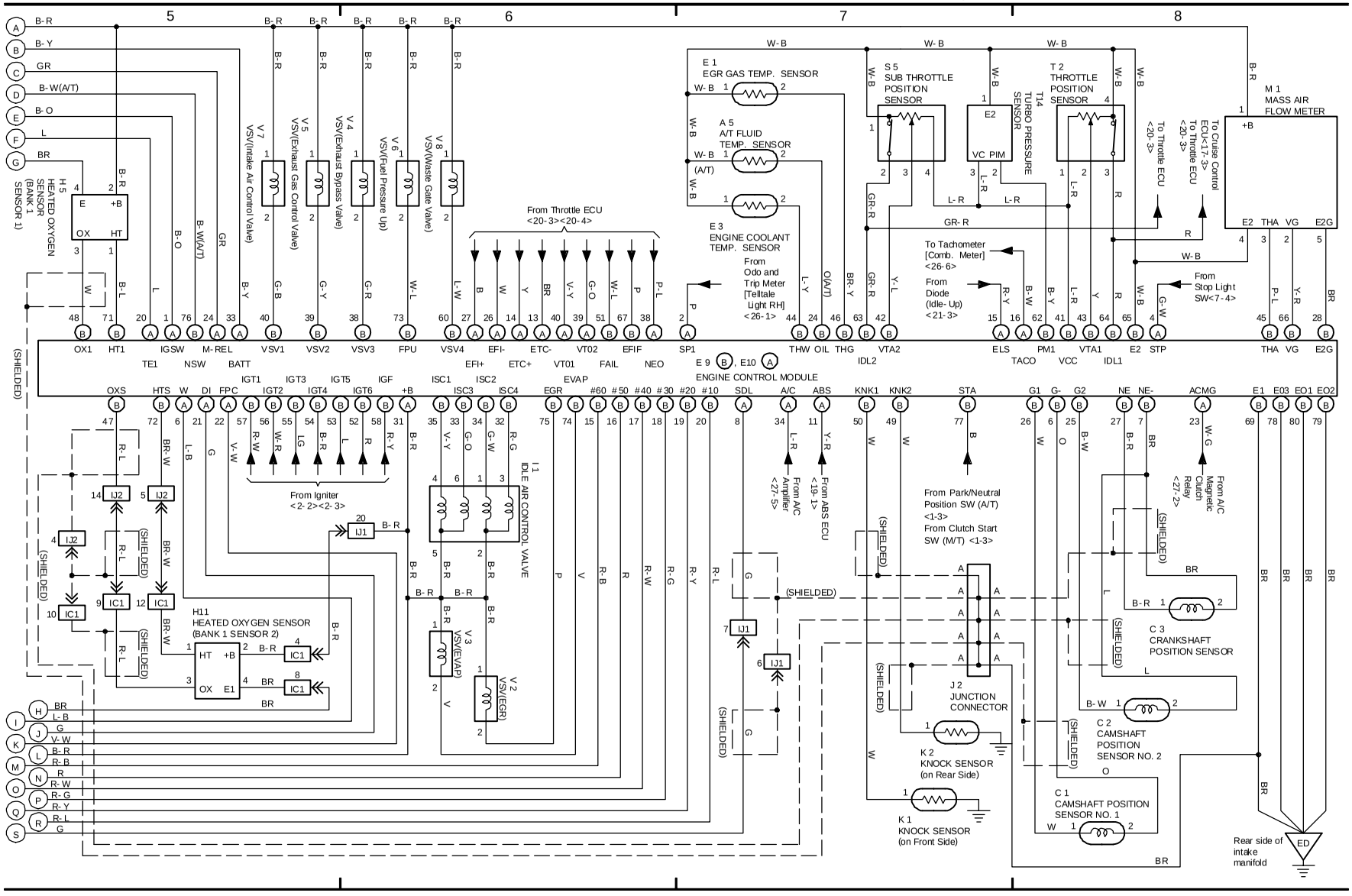

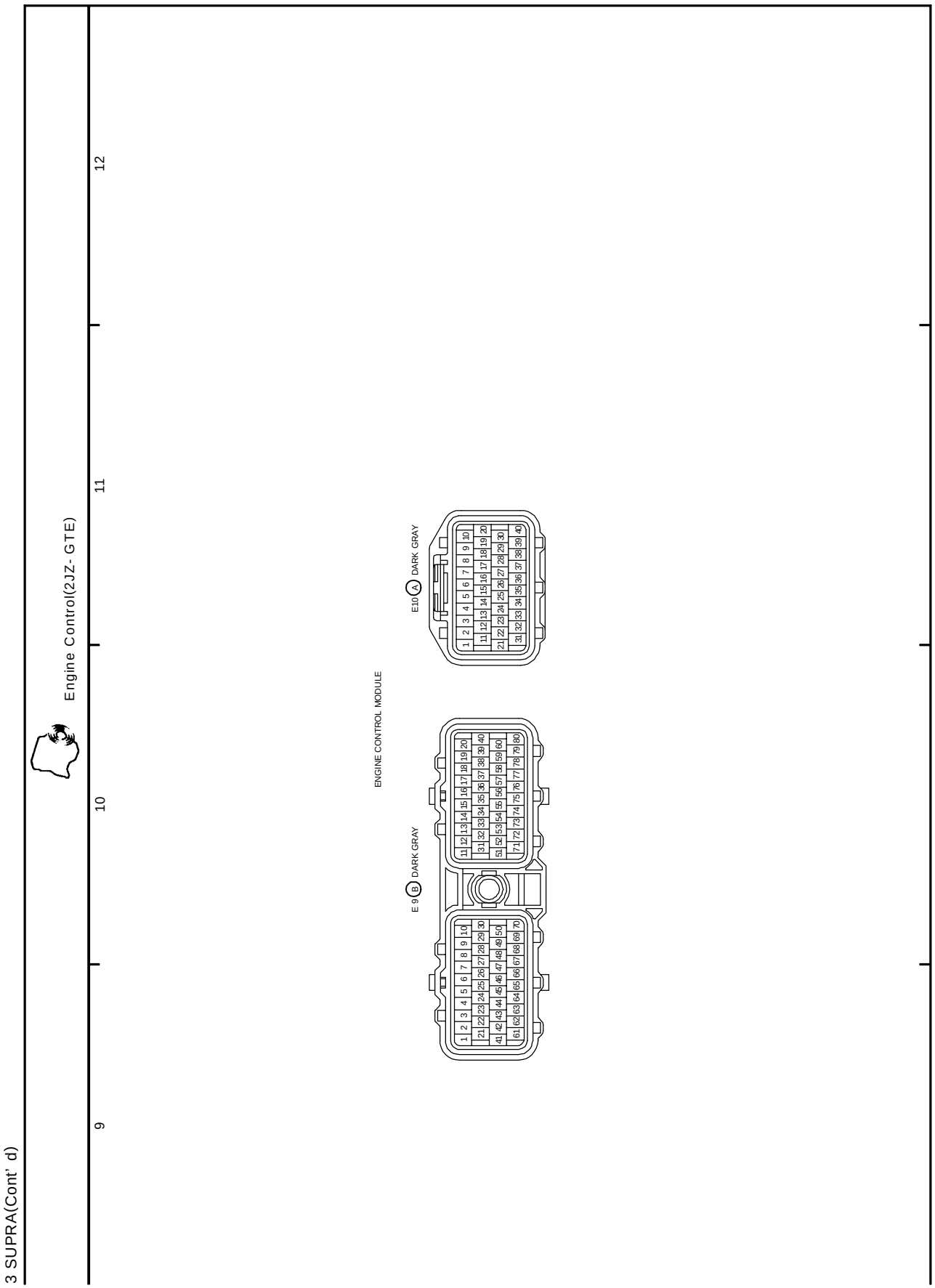
3 SUPRA(Cont' d)
9
10
11
12
Engine Control(2JZ- GTE)
ENGINE CONTROL MODULE
E 9 (B) DARK GRAY
E10 (A) DARK GRAY

K OVERALL ELECTRICAL WIRING DIAGRAM

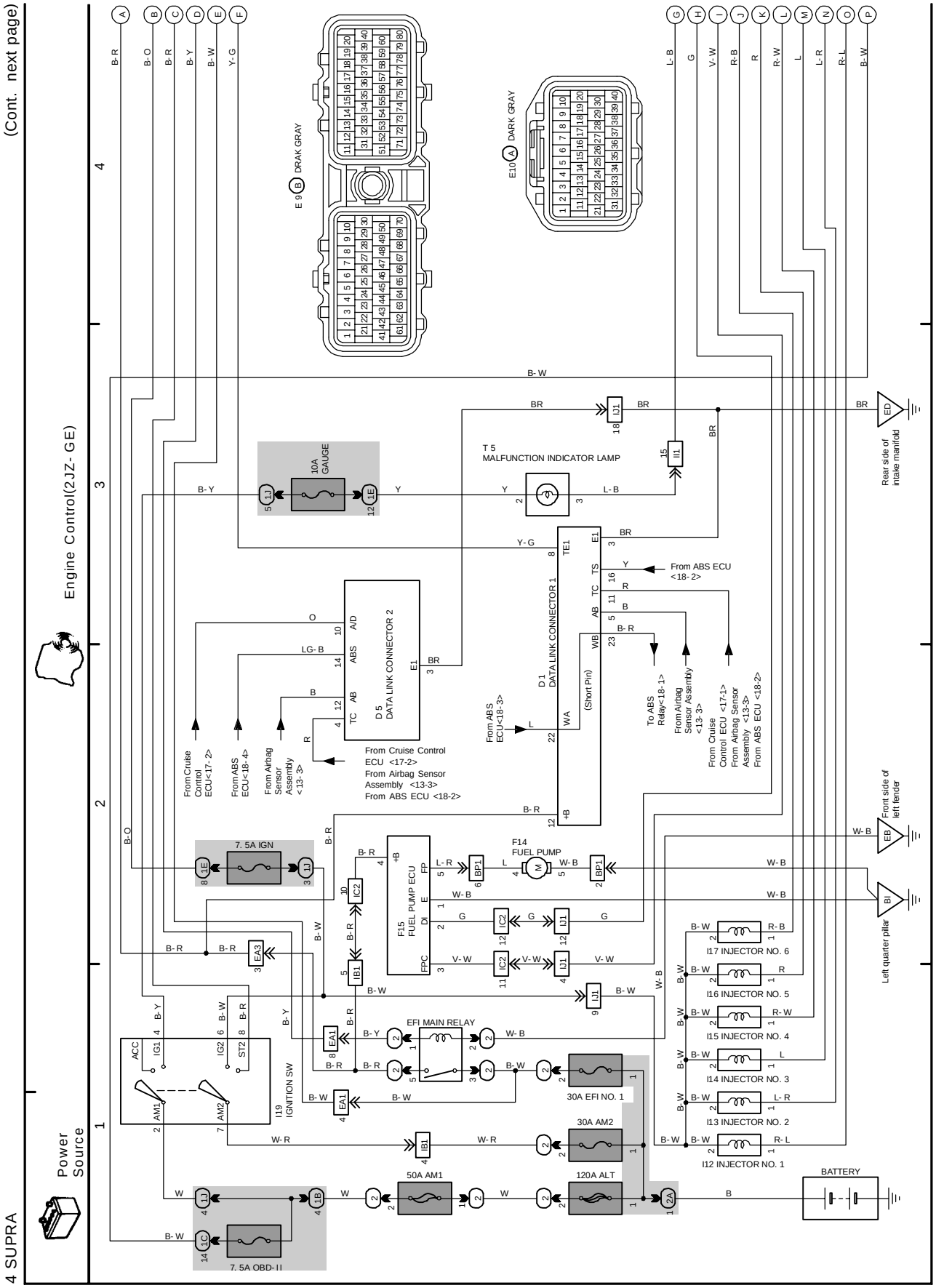

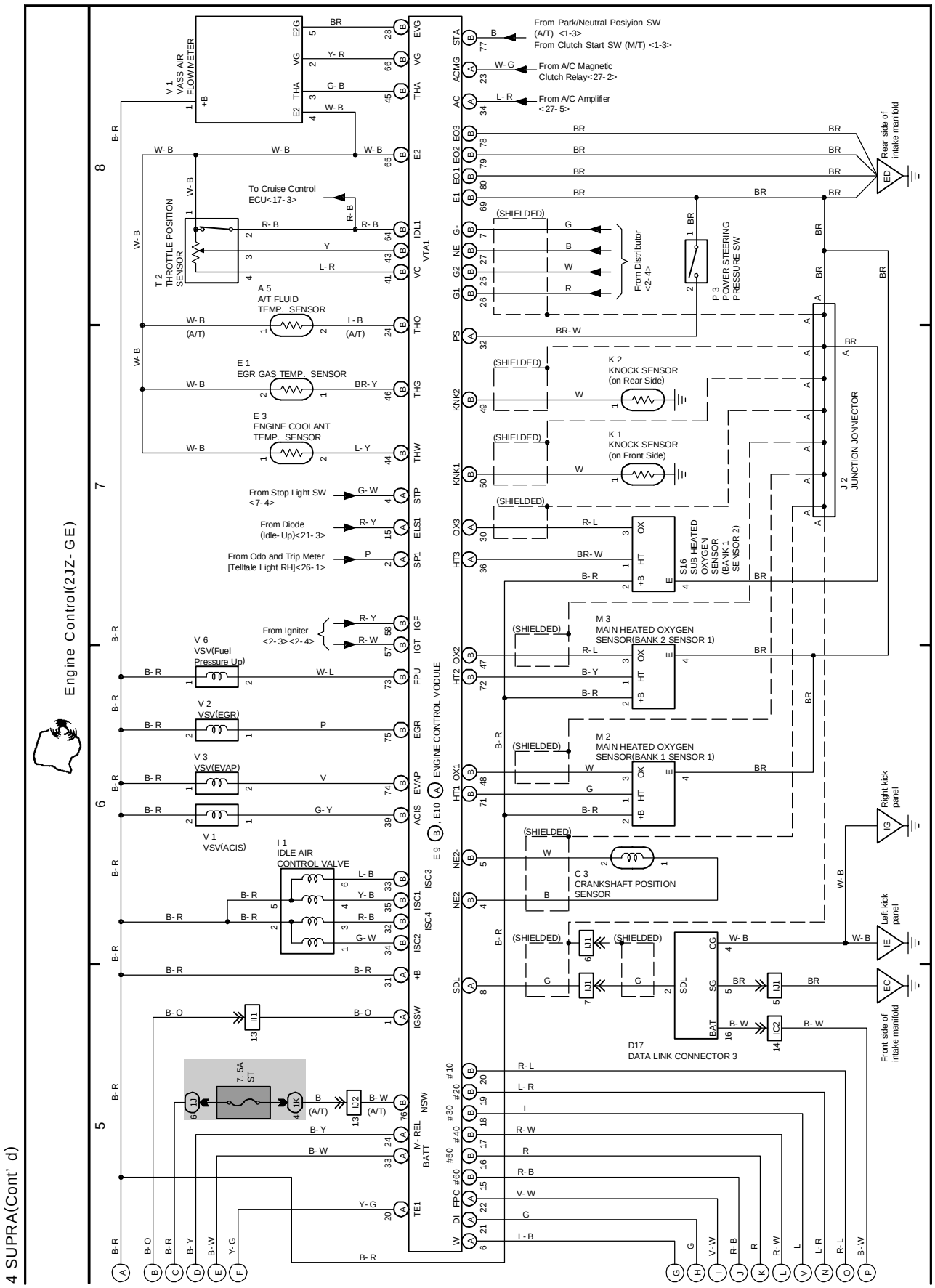
Engine Control(2JZ-GE)
M 1
MASS AIR
FLOW METER
T 2
THROTTLE POSITION
SENSOR
To Cruise Control
ECU<17-3>
A 5
A/T FLUID
TEMP. SENSOR
E 1
EGR GAS TEMP. SENSOR
E 3
ENGINE COOLANT
TEMP. SENSOR
From Stop Light SW
<7-4>
From Diode
(Idle-Up)<21-3>
From Odo and Trip Meter
[Telltale Light RH]<26-1>
From Igniter
<2-3><2-4>
V 6
VSV(Fuel
Pressure Up)
V 2
VSV(EGR)
V 3
VSV(EVAP)
V 1
VSV(ACIS)
I 1
IDLE AIR
CONTROL VALVE
ENGINE CONTROL MODULE
From Park/Neutral Posiyion SW
(A/T) <1-3>
From Clutch Start SW (M/T) <1-3>
From A/C Magnetic
Clutch Relay<27-2>
From A/C Amplifier
<27-5>
Rear side of
intake manifold
From Distributor
<2-4>
P 3
POWER STEERING
PRESSURE SW
K 2
KNOCK SENSOR
(on Rear Side)
K 1
KNOCK SENSOR
(on Front Side)
J 2
JUNCTION JONNECTOR
S16
SUB HEATED
OXYGEN
SENSOR
(BANK 1
SENSOR 2)
M 3
MAIN HEATED OXYGEN
SENSOR(BANK 2 SENSOR 1)
M 2
MAIN HEATED OXYGEN
SENSOR(BANK 1 SENSOR 1)
C 3
CRANKSHAFT POSITION
SENSOR
Right kick
panel
Left kick
panel
Front side of
intake manifold
D17
DATA LINK CONNECTOR 3
7.5A
ST
(SHIELDED)
(A/T)

K OVERALL ELECTRICAL WIRING DIAGRAM

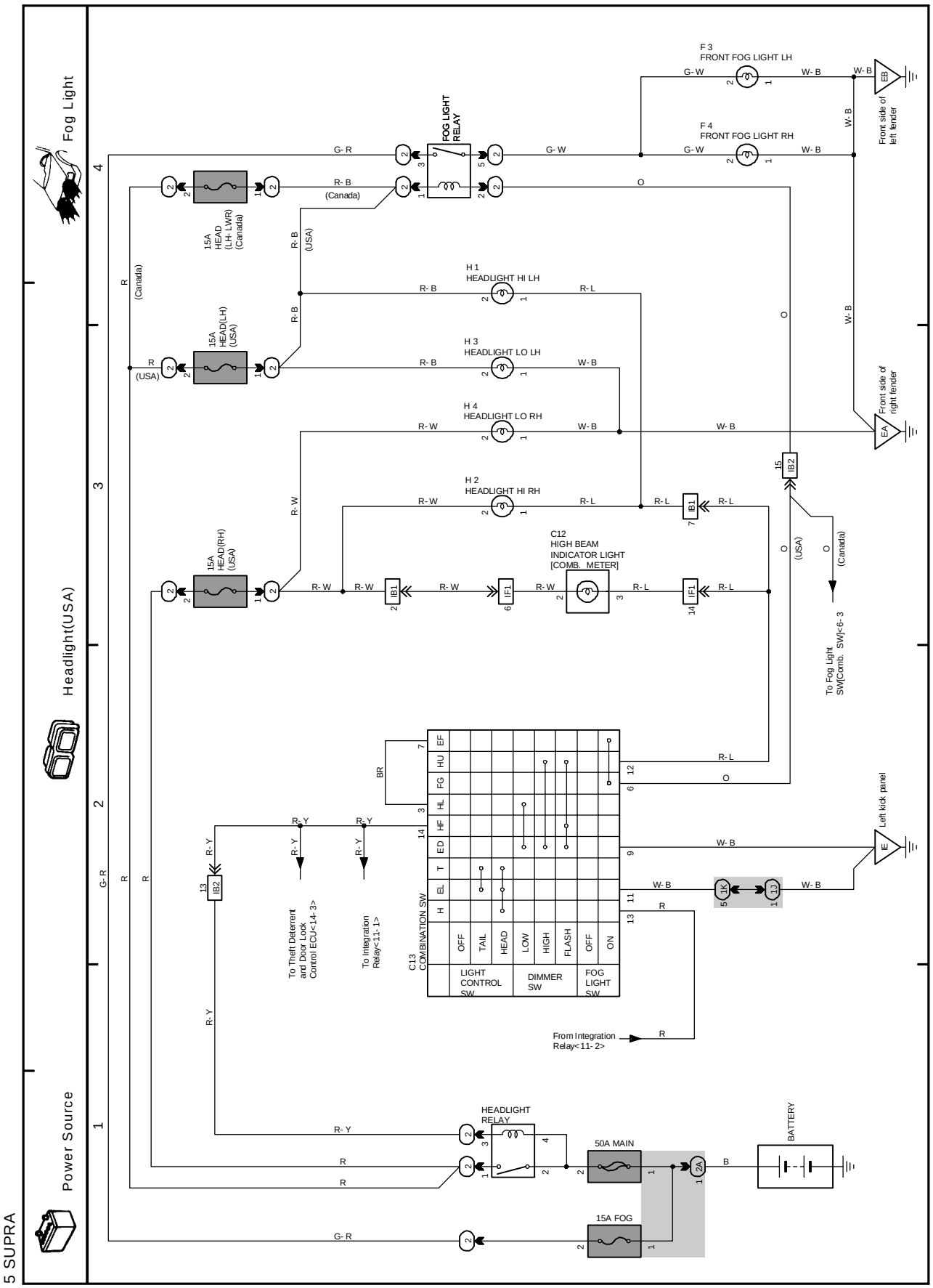

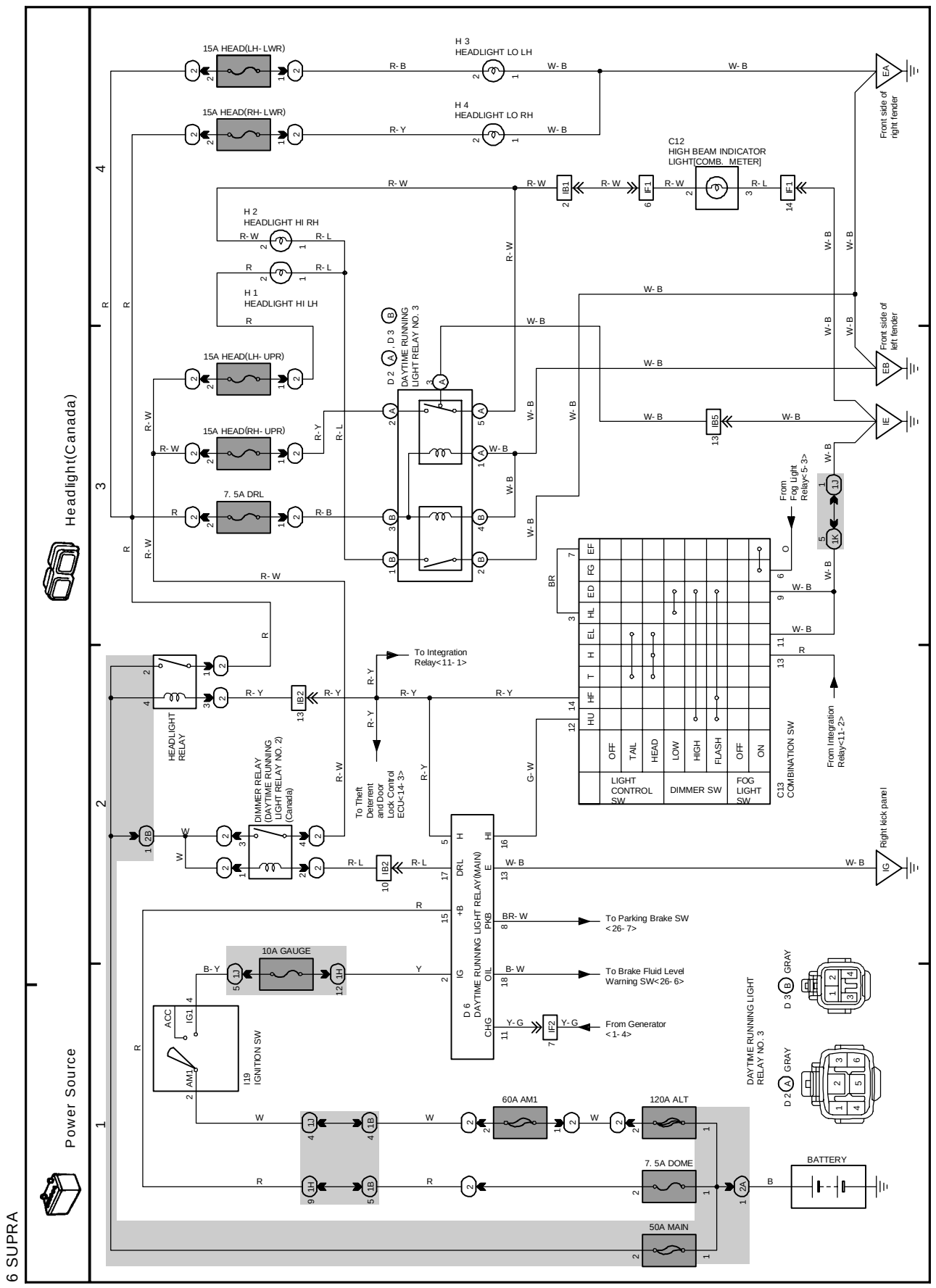
Headlight(Canada)
Power Source
15A HEAD(LH- LWR)
15A HEAD(RH- LWR)
15A HEAD(LH- UPR)
15A HEAD(RH- UPR)
7. 5A DRL
H 3
HEADLIGHT LO LH
H 4
HEADLIGHT LO RH
H 2
HEADLIGHT HI RH
H 1
HEADLIGHT HI LH
C12
HIGH BEAM INDICATOR
LIGHT[COMB. METER]
D 2 , D 3
DAYTIME RUNNING
LIGHT RELAY NO. 3
Front side of right fender
Front side of left fender
From Fog Light Relay<5- 3>
HEADLIGHT RELAY
DIMMER RELAY (DAYTIME RUNNING LIGHT RELAY NO. 2) (Canada)
To Integration Relay<11- 1>
To Theft Deterrent and Door Lock Control ECU<14- 3>
LIGHT CONTROL SW
DIMMER SW
FOG LIGHT SW
OFF
TAIL
HEAD
LOW
HIGH
FLASH
OFF
ON
C13
COMBINATION SW
From Integration Relay<11- 2>
Right kick panel
DAYTIME RUNNING LIGHT(MAIN)
To Parking Brake SW
< 26- 7>
10A GAUGE
To Brake Fluid Level
Warning SW<26- 6>
From Generator
<1- 4>
I19
IGNITION SW
ACC
IG1
AM1
60A AM1
120A ALT
7. 5A DOME
50A MAIN
BATTERY
DAYTIME RUNNING LIGHT
RELAY NO. 3
D 3 GRAY
D 2 GRAY

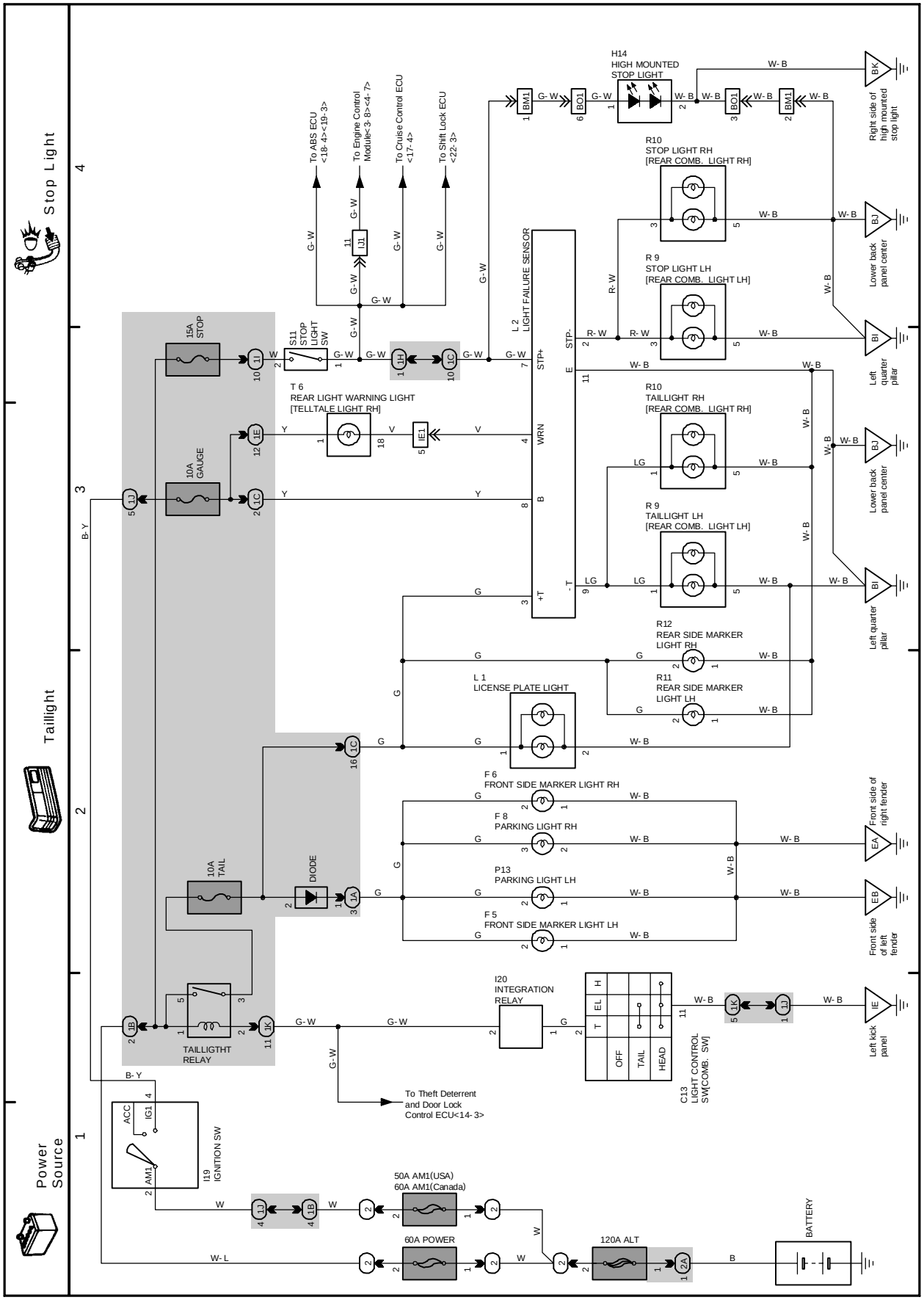
Stop Light
Taillight
Power Source
To ABS ECU <18-4><19-3>
To Engine Control Module<-3-8><4-7>
To Cruise Control ECU <17-4>
To Shift Lock ECU <22-3>
H14 HIGH MOUNTED STOP LIGHT
R10 STOP LIGHT RH [REAR COMB. LIGHT RH]
R 9 STOP LIGHT LH [REAR COMB. LIGHT LH]
R10 TAILLIGHT RH [REAR COMB. LIGHT RH]
R 9 TAILLIGHT LH [REAR COMB. LIGHT LH]
R12 REAR SIDE MARKER LIGHT RH
R11 REAR SIDE MARKER LIGHT LH
L 1 LICENSE PLATE LIGHT
F 6 FRONT SIDE MARKER LIGHT RH
F 8 PARKING LIGHT RH
P13 PARKING LIGHT LH
F 5 FRONT SIDE MARKER LIGHT LH
T 6 REAR LIGHT WARNING LIGHT [TELLTALE LIGHT RH]
L 2 LIGHT FAILURE SENSOR
S11 STOP LIGHT SW
15A STOP
10A GAUGE
10A TAIL
DIODE
TAILLIGTHT RELAY
I20 INTEGRATION RELAY
C13 LIGHT CONTROL SW[COMB. SW]
OFF
TAIL
HEAD
To Theft Deterrent and Door Lock Control ECU<14-3>
I19 IGNITION SW
ACC
IG1
AM1
50A AM1(USA)
60A AM1(Canada)
60A POWER
120A ALT
BATTERY
Right side of high mounted stop light
Lower back panel center
Left quarter pillar
Front side of right fender
Front side of left fender
Left kick panel

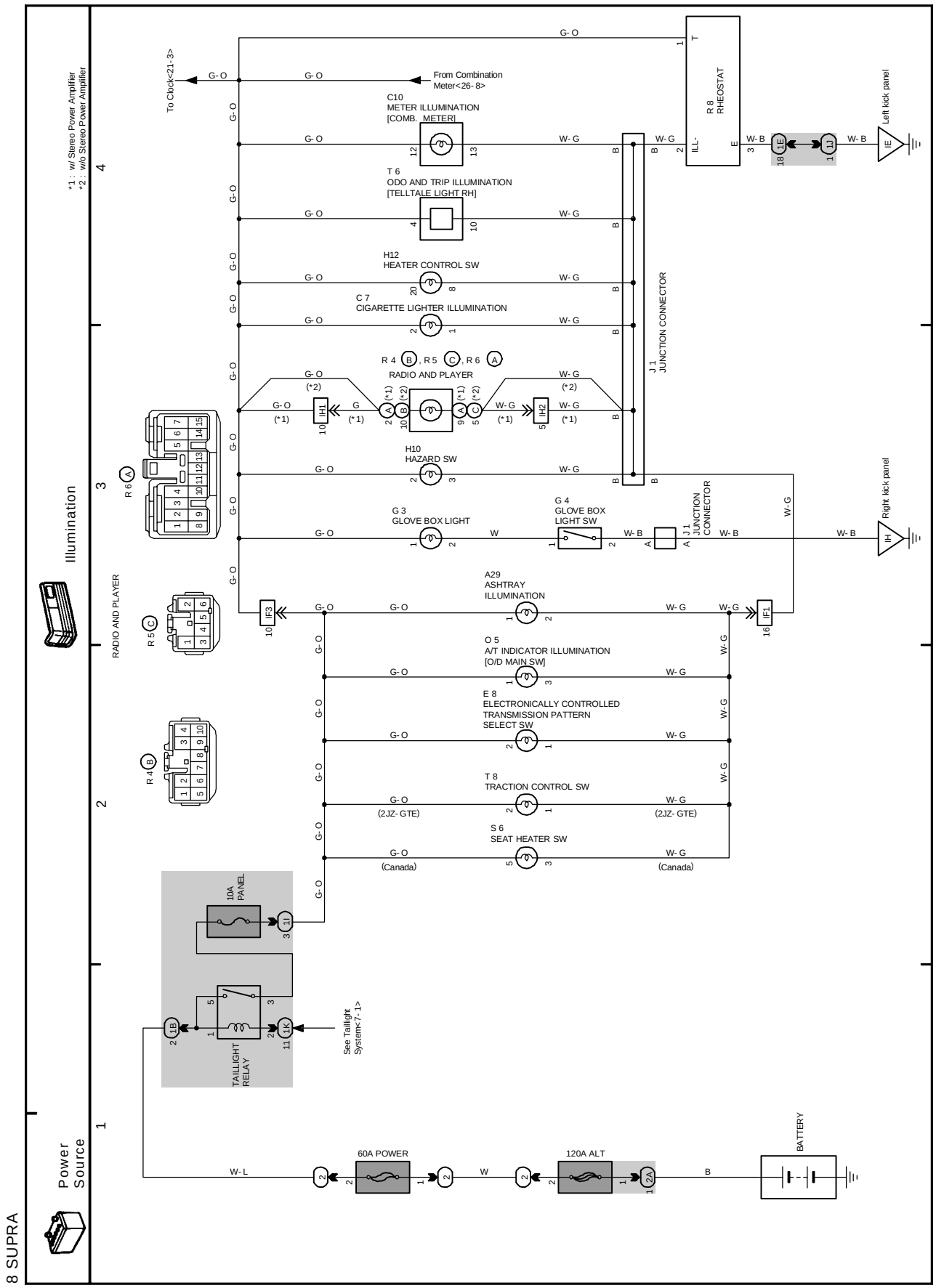
*1 : w/ Stereo Power Amplifier
*2 : w/o Stereo Power Amplifier
Illumination
Power Source
To Clock<21-3>
From Combination Meter<26-8>
C10
METER ILLUMINATION
[COMB. METER]
T 6
ODO AND TRIP ILLUMINATION
[TELLTALE LIGHT RH]
H12
HEATER CONTROL SW
C 7
CIGARETTE LIGHTER ILLUMINATION
R 4 B , R 5 C , R 6 A
RADIO AND PLAYER
H10
HAZARD SW
G 3
GLOVE BOX LIGHT
G 4
GLOVE BOX
LIGHT SW
A29
ASHTRAY
ILLUMINATION
O 5
A/T INDICATOR ILLUMINATION
[O/D MAIN SW]
E 8
ELECTRONICALLY CONTROLLED
TRANSMISSION PATTERN
SELECT SW
T 8
TRACTION CONTROL SW
S 6
SEAT HEATER SW
(2JZ- GTE)
(Canada)
R 8
RHEOSTAT
J 1
JUNCTION CONNECTOR
Left kick panel
Right kick panel
10A
PANEL
TAILLIGHT
RELAY
See Taillight
System<7-1>
60A POWER
120A ALT
BATTERY

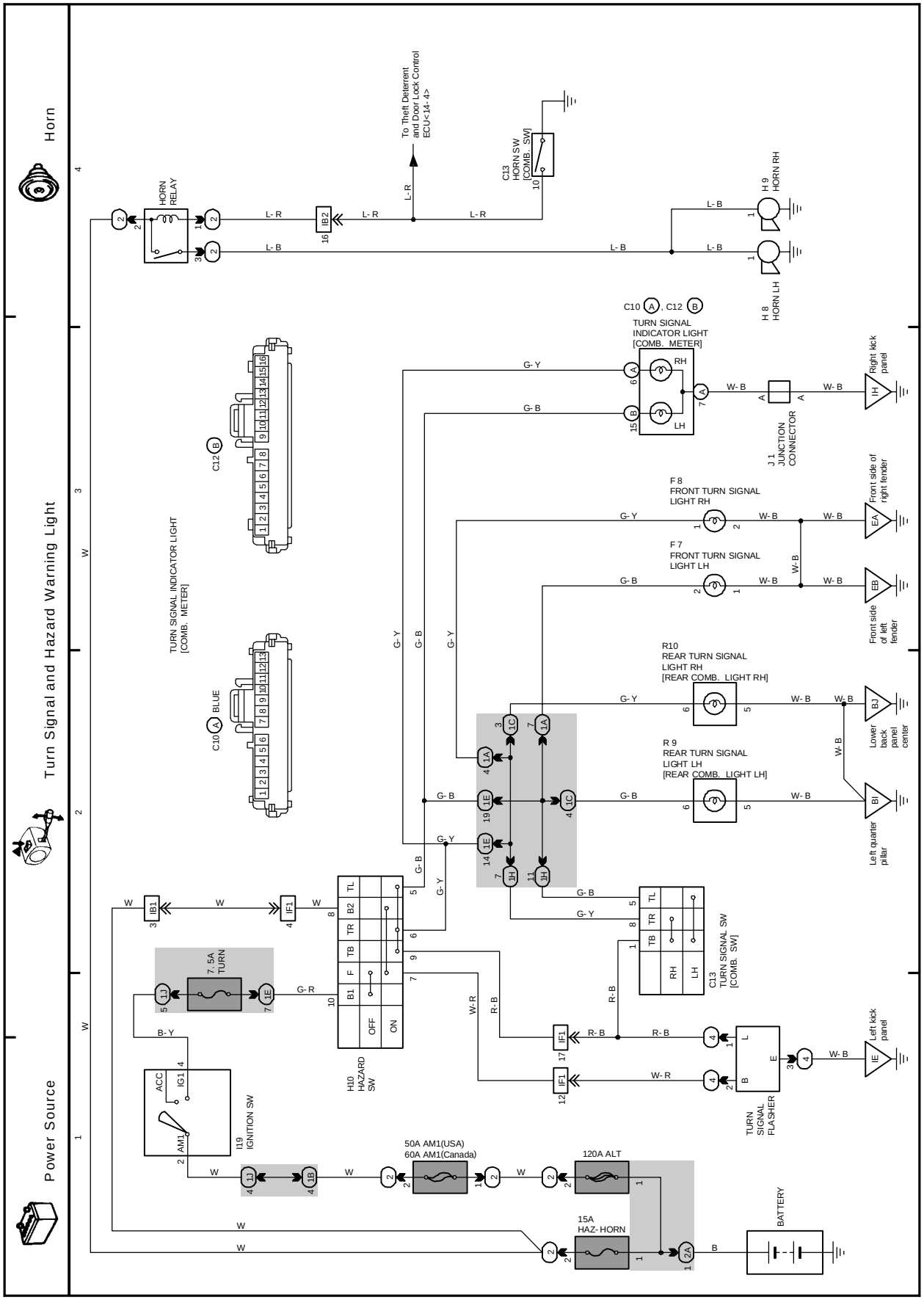
Horn
Turn Signal and Hazard Warning Light
Power Source
HORN RELAY
To Theft Deterrent and Door Lock Control ECU<14-4>
C13 HORN SW [COMB. SW]
H 9 HORN RH
H 8 HORN LH
C10 A, C12 B
TURN SIGNAL INDICATOR LIGHT [COMB. METER]
Right kick panel
J 1 JUNCTION CONNECTOR
F 8 FRONT TURN SIGNAL LIGHT RH
F 7 FRONT TURN SIGNAL LIGHT LH
Front side of right fender
Front side of left fender
R10 REAR TURN SIGNAL LIGHT RH [REAR COMB. LIGHT RH]
R 9 REAR TURN SIGNAL LIGHT LH [REAR COMB. LIGHT LH]
Lower back panel center
Left quarter pillar
C12 B
C10 A BLUE
TURN SIGNAL INDICATOR LIGHT [COMB. METER]
7.5A TURN
H10 HAZARD SW
C13 TURN SIGNAL SW [COMB. SW]
Left kick panel
TURN SIGNAL FLASHER
I19 IGNITION SW
50A AM1(USA) 60A AM1(Canada)
120A ALT
15A HAZ-HORN
BATTERY

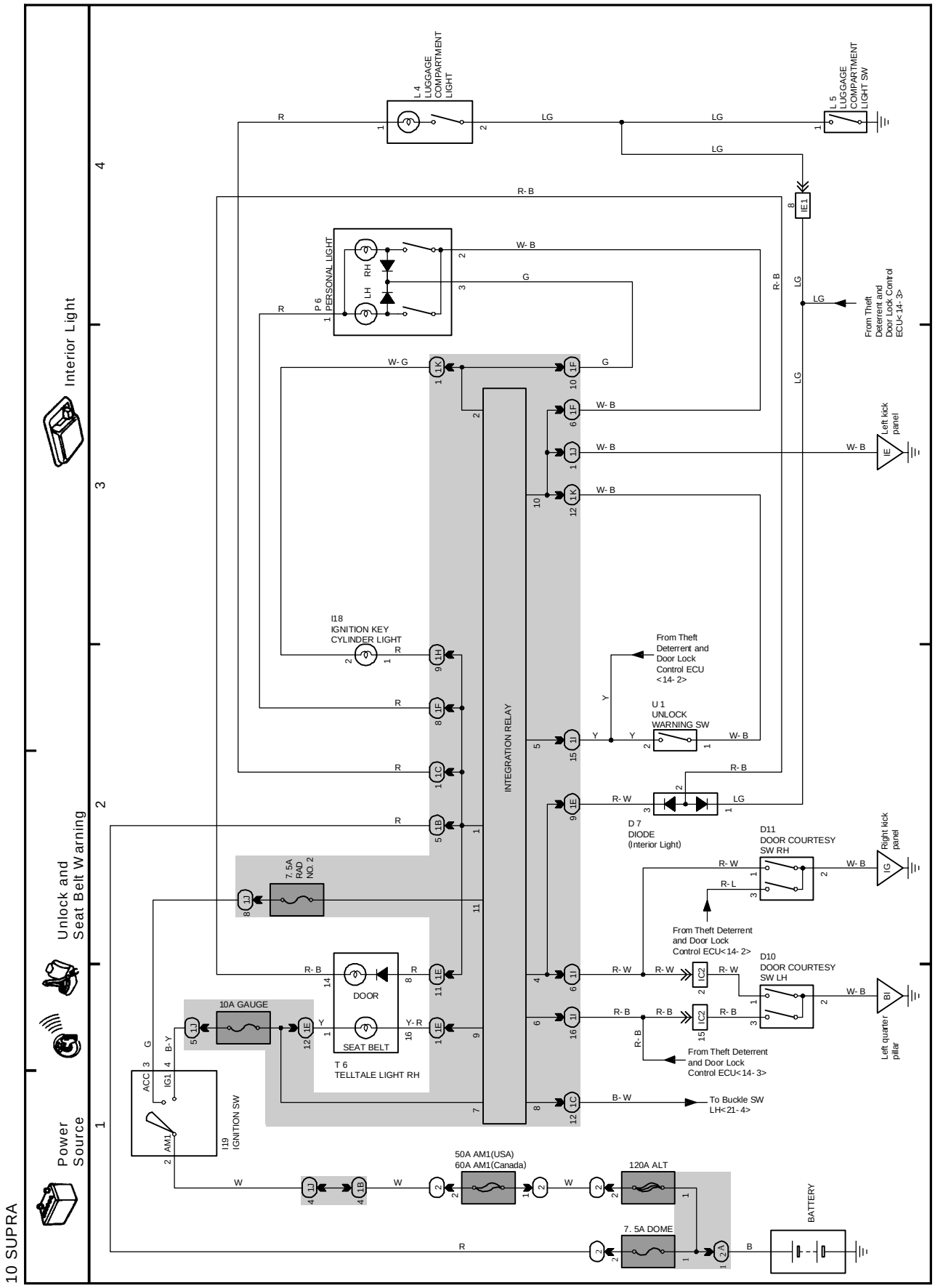
10 SUPRA
Power Source
Unlock and Seat Belt Warning
Interior Light
1
2
3
4
L 4 LUGGAGE COMPARTMENT LIGHT
L 5 LUGGAGE COMPARTMENT LIGHT SW
P 6 PERSONAL LIGHT
LH
RH
IE1
From Theft Deterrent and Door Lock Control ECU<14- 3>
Left kick panel
I18 IGNITION KEY CYLINDER LIGHT
INTEGRATION RELAY
From Theft Deterrent and Door Lock Control ECU <14- 2>
U 1 UNLOCK WARNING SW
D 7 DIODE (Interior Light)
D11 DOOR COURTESY SW RH
Right kick panel
From Theft Deterrent and Door Lock Control ECU<14- 2>
D10 DOOR COURTESY SW LH
Left quarter pillar
From Theft Deterrent and Door Lock Control ECU<14- 3>
To Buckle SW LH<21- 4>
7.5A RAD NO. 2
10A GAUGE
DOOR
SEAT BELT
T 6 TELLTALE LIGHT RH
ACC
IG1
AM1
I19 IGNITION SW
50A AM1(USA)
60A AM1(Canada)
120A ALT
7. 5A DOME
BATTERY

K OVERALL ELECTRICAL WIRING DIAGRAM

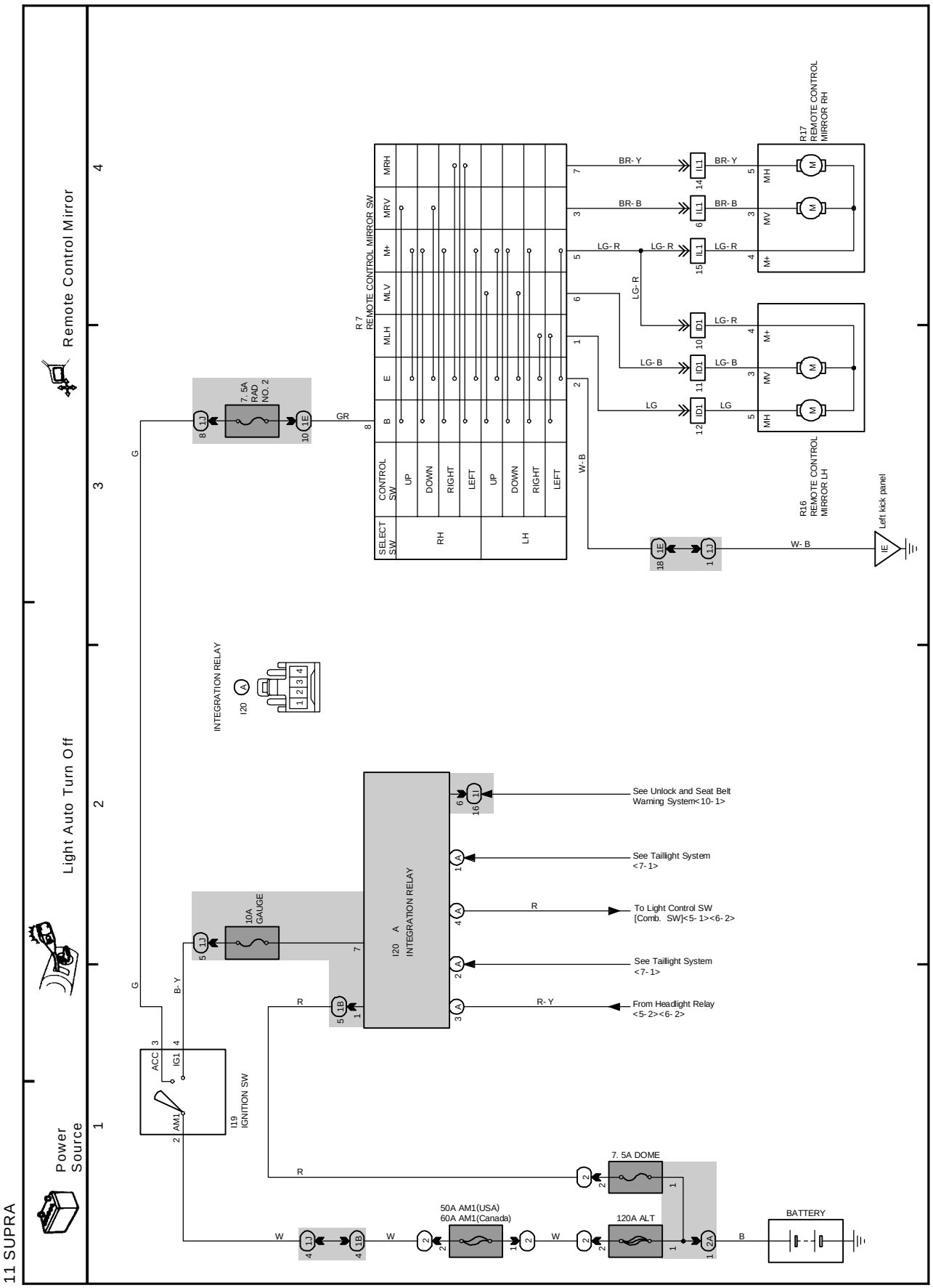

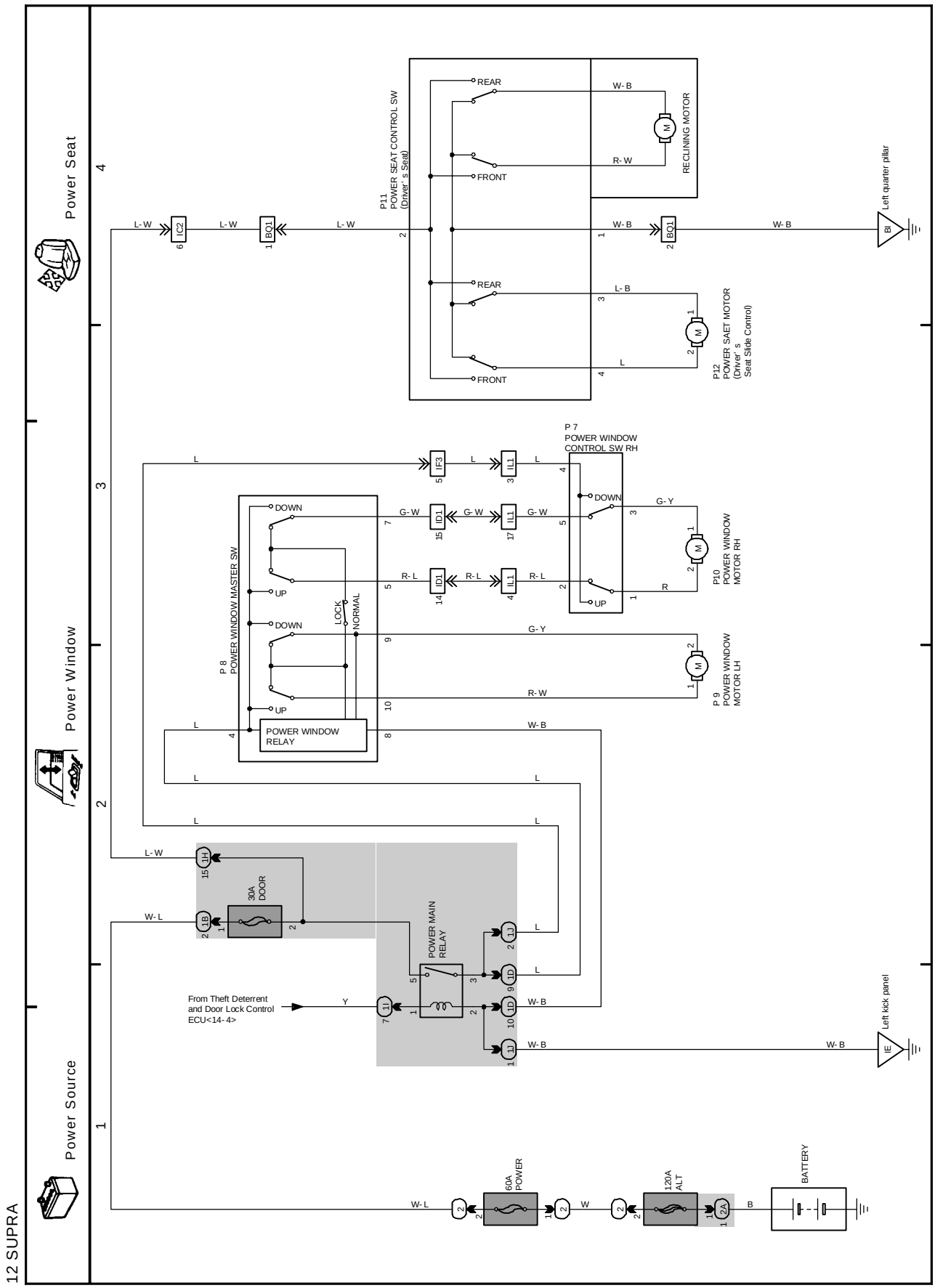
12 SUPRA
Power Source
Power Window
Power Seat
1
2
3
4
P11
POWER SEAT CONTROL SW
(Driver's Seat)
REAR
FRONT
RECLINING MOTOR
P12
POWER SAET MOTOR
(Driver's
Seat Slide Control)
Left quarter pillar
P 7
POWER WINDOW
CONTROL SW RH
DOWN
UP
P10
POWER WINDOW
MOTOR RH
P 8
POWER WINDOW MASTER SW
LOCK
NORMAL
POWER WINDOW
RELAY
P 9
POWER WINDOW
MOTOR LH
30A
DOOR
POWER MAIN
RELAY
From Theft Deterrent
and Door Lock Control
ECU<14-4>
Left kick panel
60A
POWER
120A
ALT
BATTERY

K OVERALL ELECTRICAL WIRING DIAGRAM

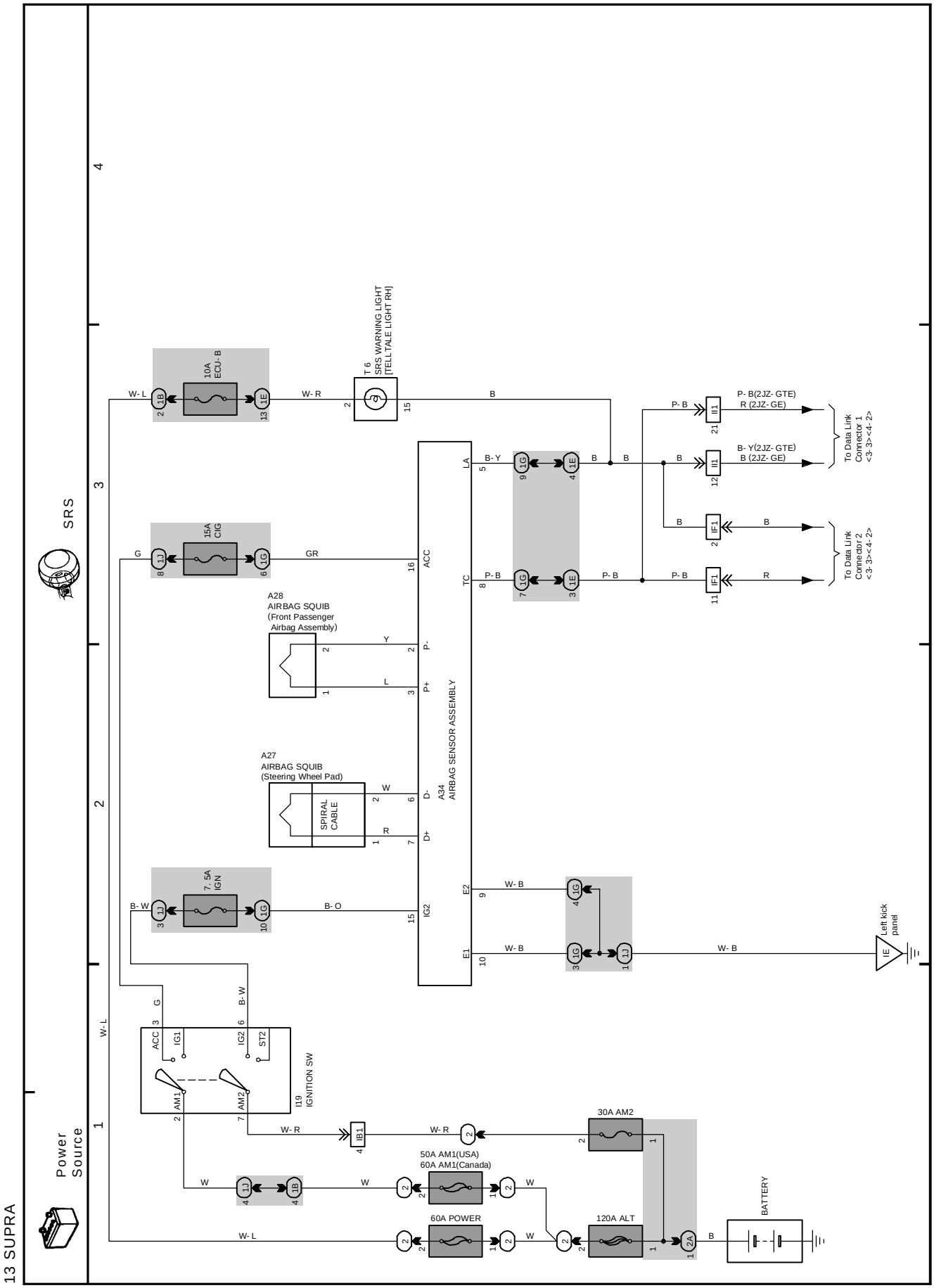

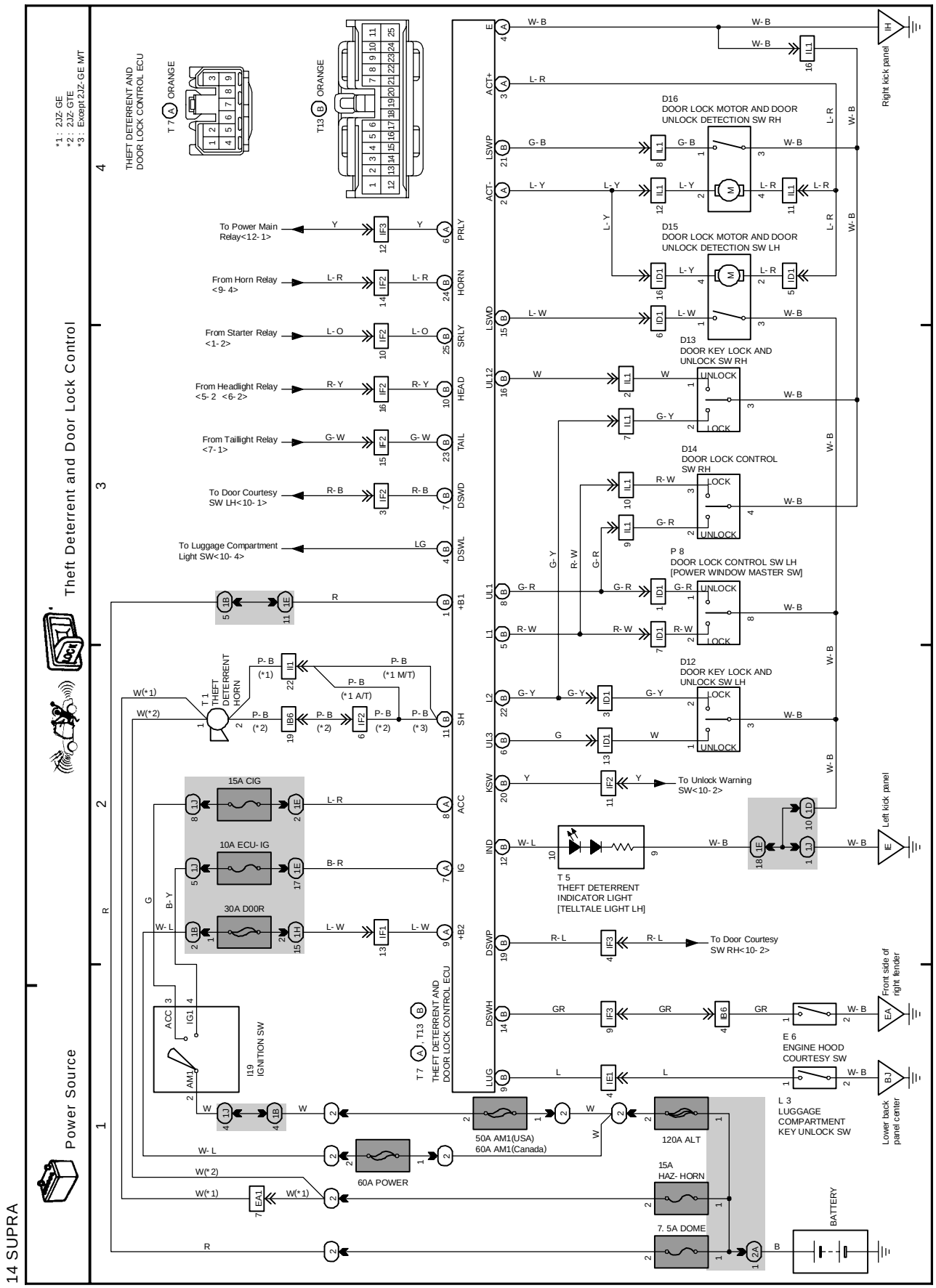
Theft Deterrent and Door Lock Control
Power Source
*1 : 2JZ-GE
*2 : 2JZ-GTE
*3 : Except 2JZ-GE M/T
THEFT DETERRENT AND DOOR LOCK CONTROL ECU
T 7 A ORANGE
T13 B ORANGE
To Power Main Relay<12-1>
From Horn Relay <9-4>
From Starter Relay <1-2>
From Headlight Relay <5-2 <6-2>
From Taillight Relay <7-1>
To Door Courtesy SW LH<10-1>
To Luggage Compartment Light SW<10-4>
D16 DOOR LOCK MOTOR AND DOOR UNLOCK DETECTION SW RH
D15 DOOR LOCK MOTOR AND DOOR UNLOCK DETECTION SW LH
D13 DOOR KEY LOCK AND UNLOCK SW RH
D14 DOOR LOCK CONTROL SW RH
P 8 DOOR LOCK CONTROL SW LH [POWER WINDOW MASTER SW]
D12 DOOR KEY LOCK AND UNLOCK SW LH
To Unlock Warning SW<10-2>
T 5 THEFT DETERRENT INDICATOR LIGHT [TELLTALE LIGHT LH]
To Door Courtesy SW RH<10-2>
E 6 ENGINE HOOD COURTESY SW
L 3 LUGGAGE COMPARTMENT KEY UNLOCK SW
Right kick panel
Left kick panel
Front side of right fender
Lower back panel center
T 1 THEFT DETERRENT HORN
15A CIG
10A ECU-IG
30A D00R
I19 IGNITION SW
50A AM1(USA)
60A AM1(Canada)
60A POWER
120A ALT
15A HAZ-HORN
7.5A DOME
BATTERY

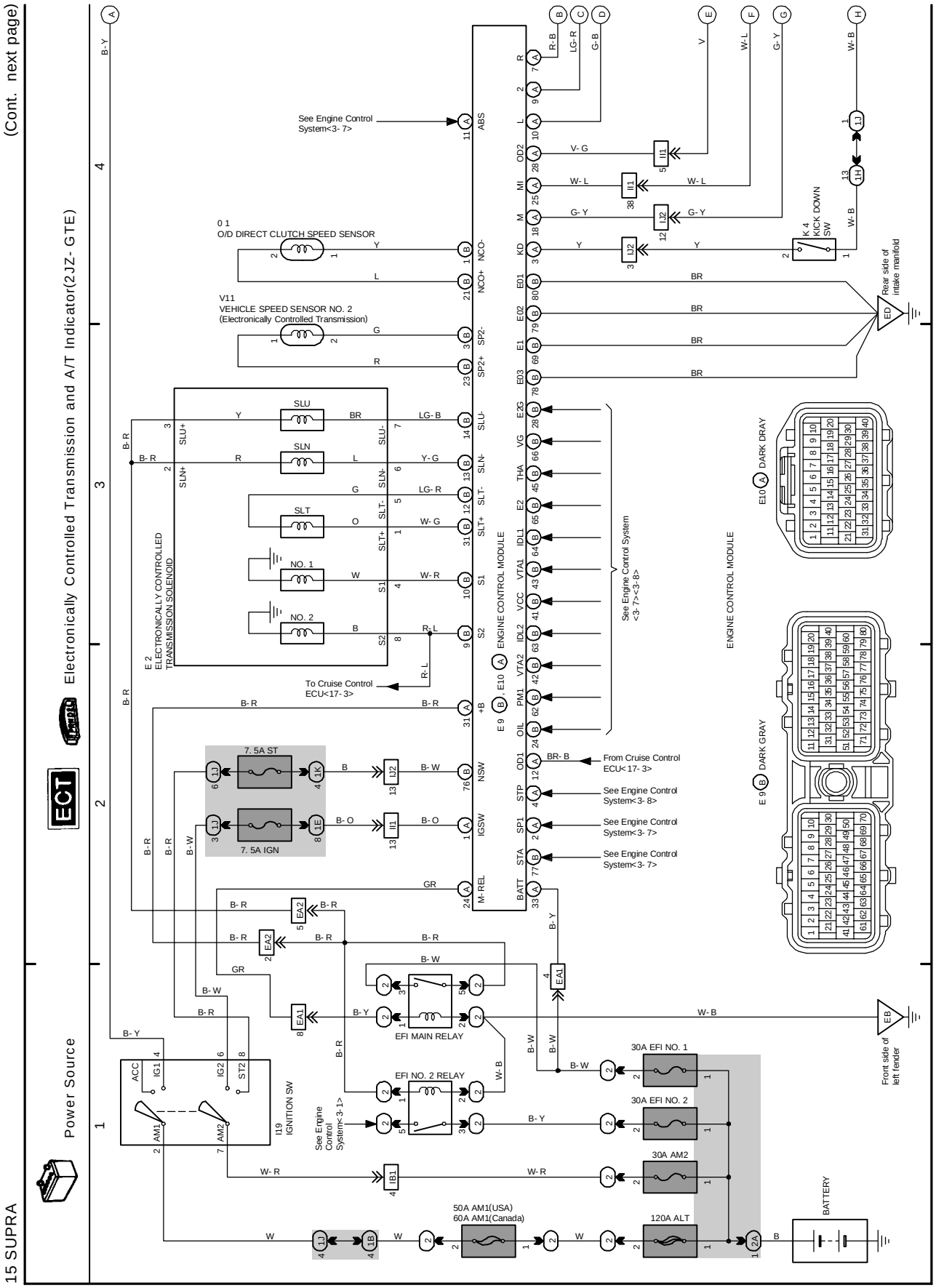
15 SUPRA
Power Source
ECT
Electronically Controlled Transmission and A/T Indicator(2JZ- GTE)
(Cont. next page)
See Engine Control System<3- 7>
O/D DIRECT CLUTCH SPEED SENSOR
V11
VEHICLE SPEED SENSOR NO. 2
(Electronically Controlled Transmission)
SLU
SLN
SLT
NO. 1
NO. 2
E 2
ELECTRONICALLY CONTROLLED TRANSMISSION SOLENOID
To Cruise Control ECU<17- 3>
7. 5A ST
7. 5A IGN
ENGINE CONTROL MODULE
See Engine Control System <3- 7><3- 8>
From Cruise Control ECU<17- 3>
See Engine Control System<3- 8>
See Engine Control System<3- 7>
See Engine Control System<3- 7>
K 4
KICK DOWN SW
Rear side of intake manifold
E10 DARK DRAY
E 9 DARK GRAY
EFI MAIN RELAY
EFI NO. 2 RELAY
I19
IGNITION SW
See Engine Control System<3- 1>
30A EFI NO. 1
30A EFI NO. 2
30A AM2
50A AM1(USA)
60A AM1(Canada)
120A ALT
BATTERY
Front side of left fender

15 SUPRA(Cont' d)

ECT

Electronically Controlled Transmission and A/T Indicator (2JZ- GTE)

Back- Up Light(2JZ- GTE)

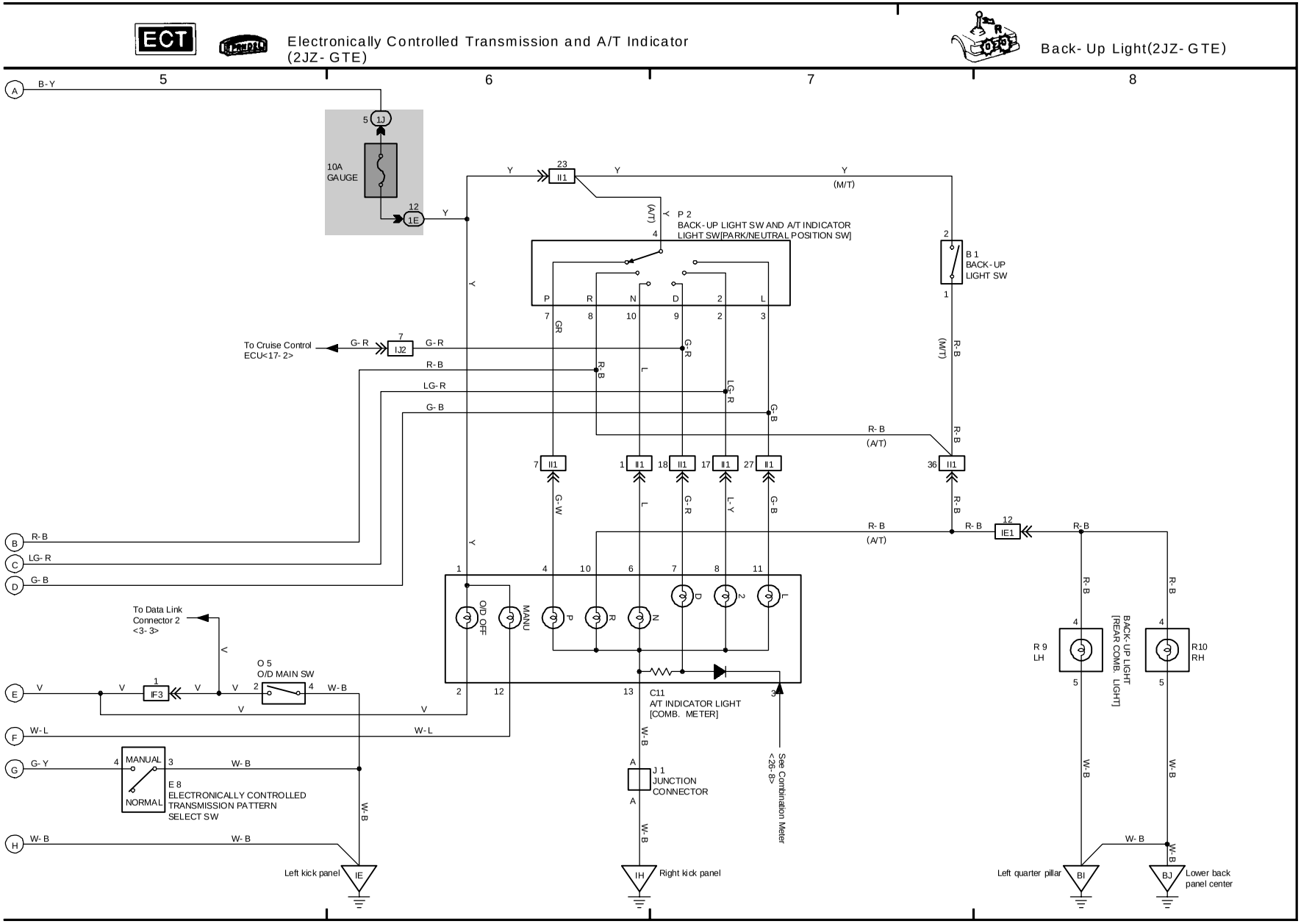

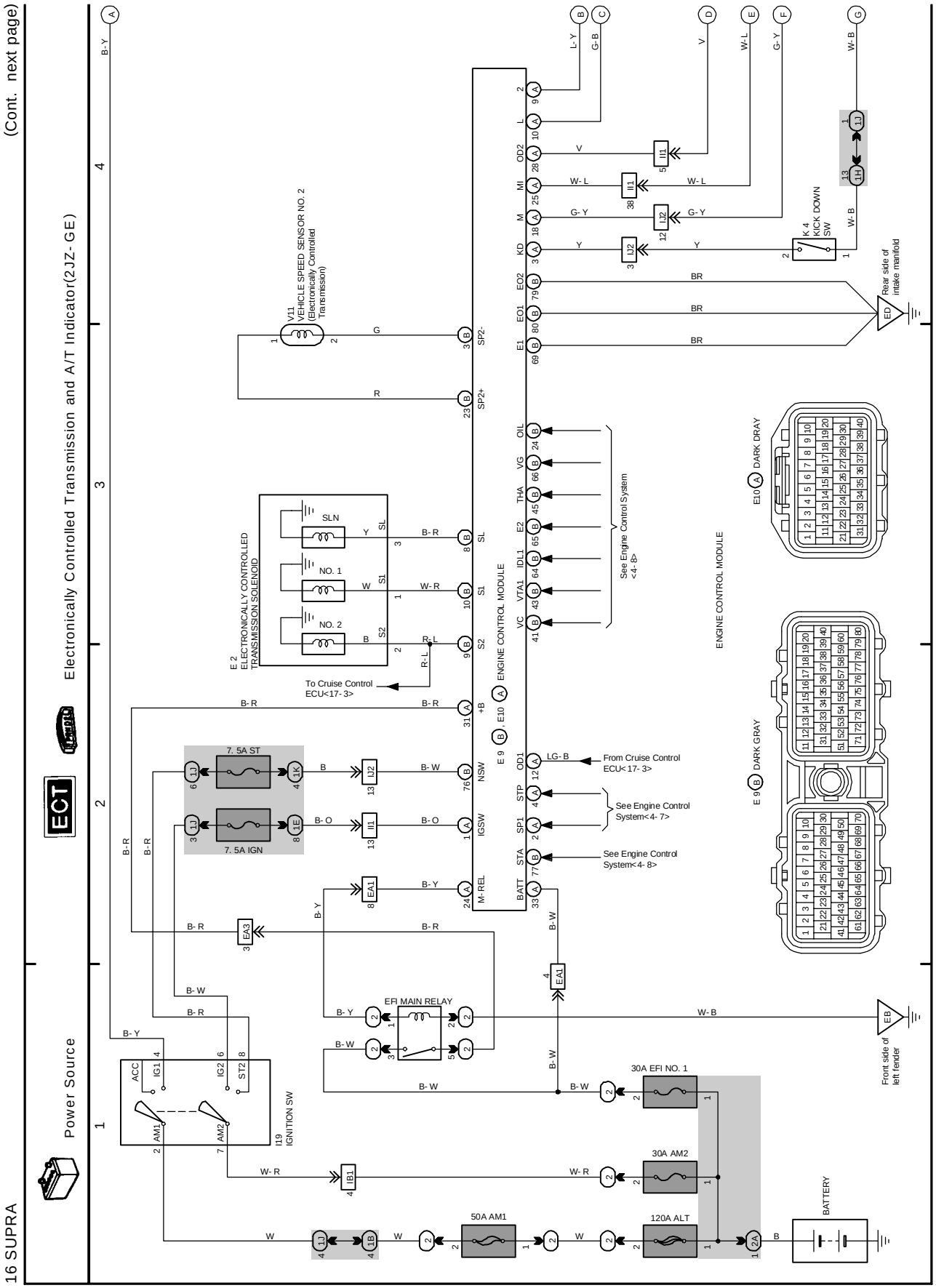
16 SUPRA
Power Source
ECT
Electronically Controlled Transmission and A/T Indicator(2JZ- GE)
(Cont. next page)
ENGINE CONTROL MODULE
E 9 (B), E10 (A) ENGINE CONTROL MODULE
E10 (A) DARK DRAY
E 9 (B) DARK GRAY
See Engine Control System <4- 8>
From Cruise Control ECU< 17- 3>
See Engine Control System<4- 7>
See Engine Control System<4- 8>
V11 VEHICLE SPEED SENSOR NO. 2 (Electronically Controlled Transmission)
E 2 ELECTRONICALLY CONTROLLED TRANSMISSION SOLENOID
SLN
NO. 1
NO. 2
To Cruise Control ECU<17- 3>
K 4 KICK DOWN SW
Rear side of intake manifold
Front side of left fender
7. 5A ST
7. 5A IGN
EFI MAIN RELAY
30A EFI NO. 1
30A AM2
50A AM1
120A ALT
BATTERY
19 IGNITION SW
ACC
IG1
IG2
ST2
AM1
AM2

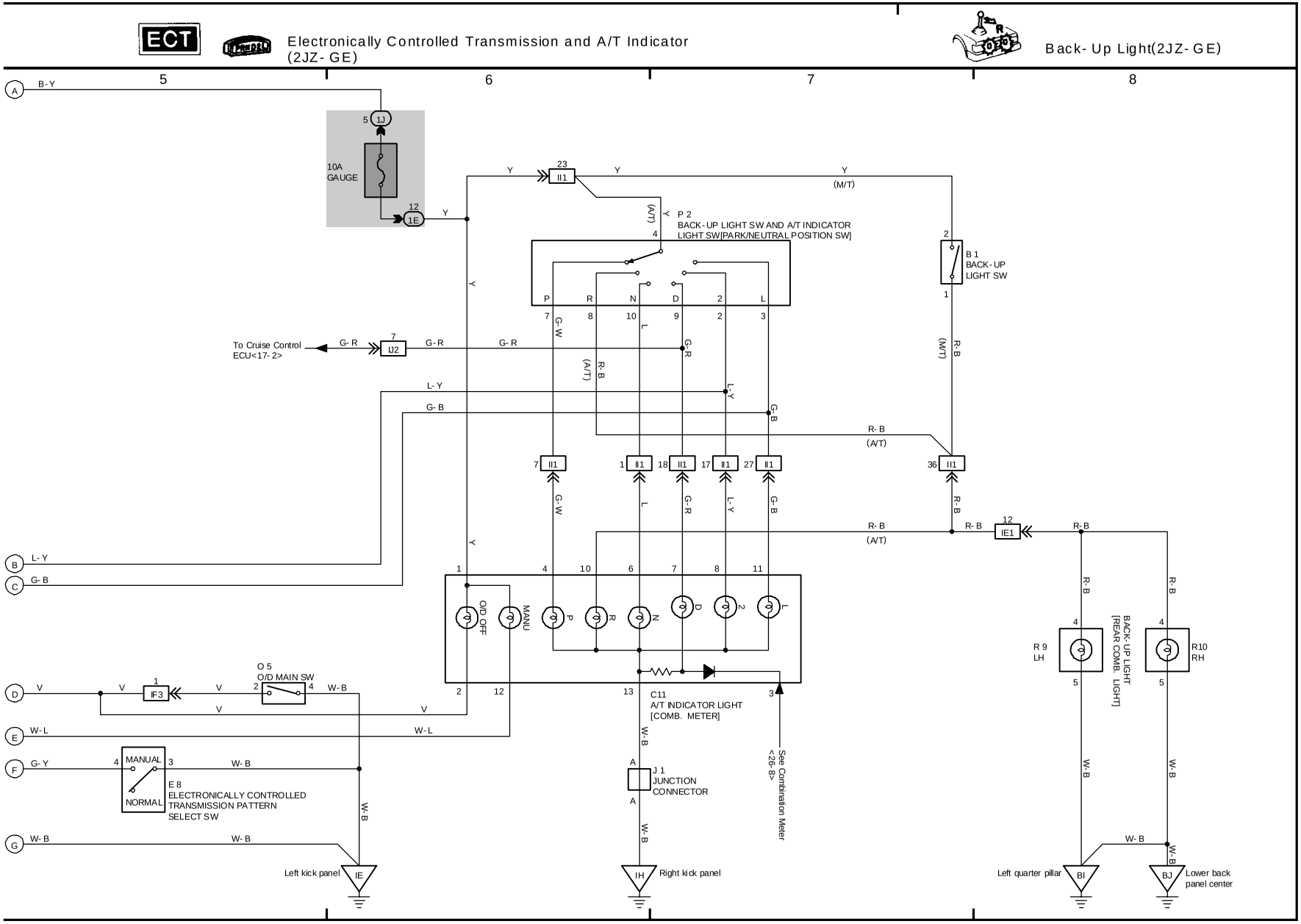
ECT
Electronically Controlled Transmission and A/T Indicator (2JZ- GE)
Back- Up Light(2JZ- GE)
5
6
7
8
10A GAUGE
P 2
BACK- UP LIGHT SW AND A/T INDICATOR LIGHT SW[PARK/NEUTRAL POSITION SW]
B 1
BACK- UP LIGHT SW
To Cruise Control ECU<17- 2>
O 5
O/D MAIN SW
E 8
ELECTRONICALLY CONTROLLED TRANSMISSION PATTERN SELECT SW
MANUAL
NORMAL
C11
A/T INDICATOR LIGHT [COMB. METER]
J 1
JUNCTION CONNECTOR
See Combination Meter <26- 8>
R 9 LH
R10 RH
BACK- UP LIGHT [REAR COMB. LIGHT]
Left kick panel
Right kick panel
Left quarter pillar
Lower back panel center

K

K OVERALL ELECTRICAL WIRING DIAGRAM

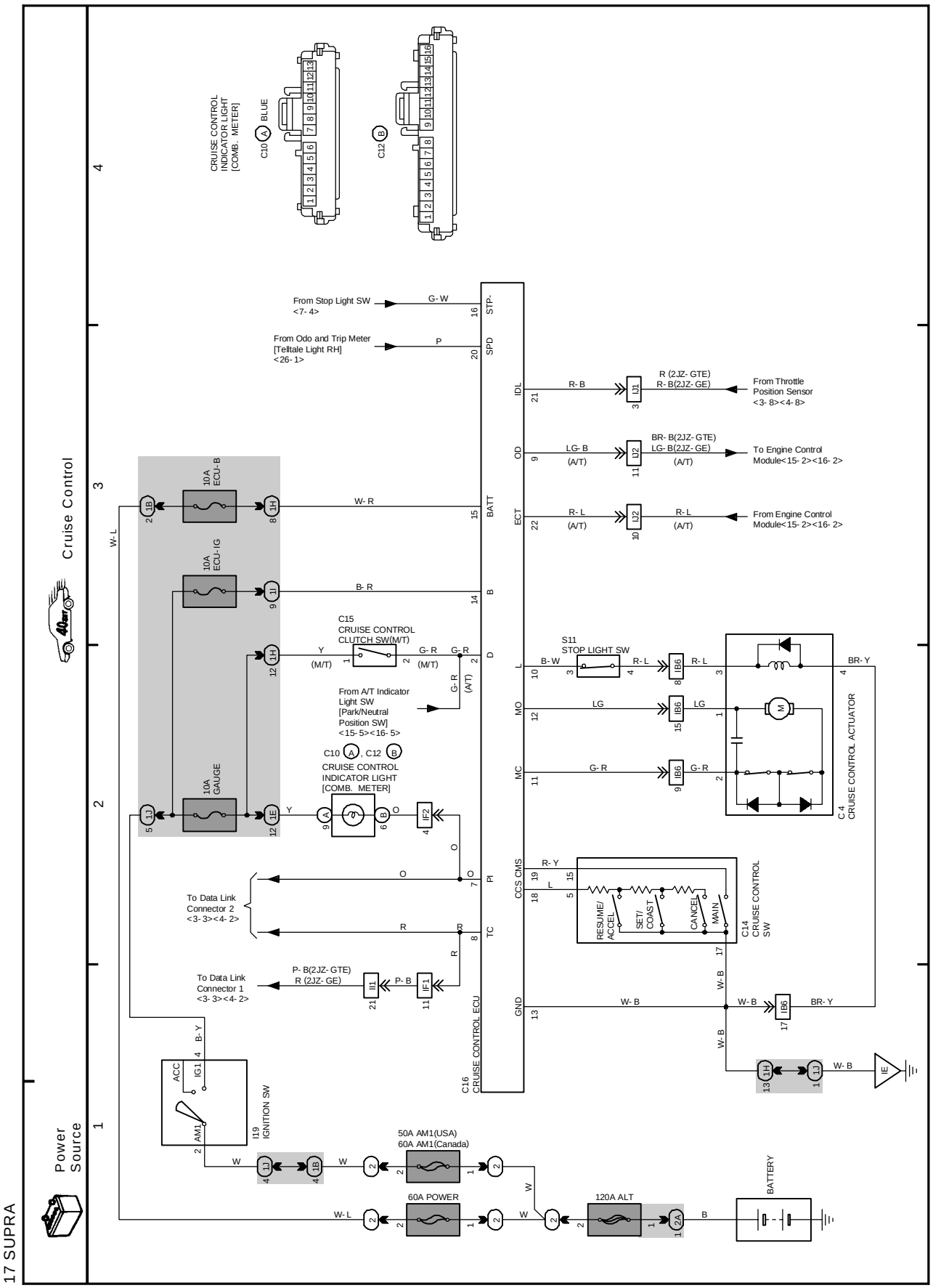

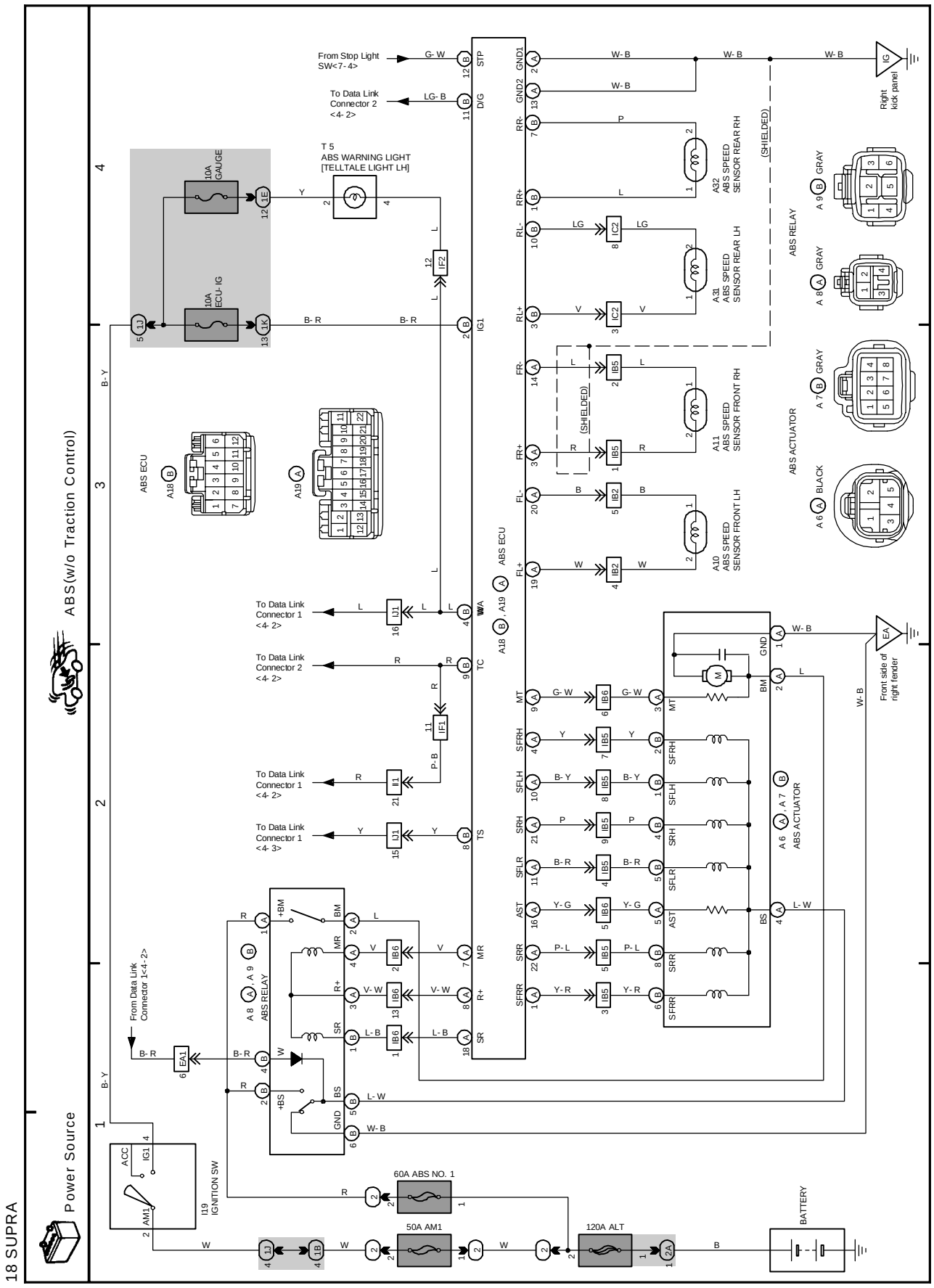
18 SUPRA
Power Source
ABS(w/o Traction Control)
From Stop Light SW<7-4>
To Data Link Connector 2 <4-2>
T 5
ABS WARNING LIGHT [TELLTALE LIGHT LH]
10A GAUGE
10A ECU-IG
ABS ECU
A18
A19
To Data Link Connector 1 <4-2>
To Data Link Connector 2 <4-2>
To Data Link Connector 1 <4-2>
To Data Link Connector 1 <4-3>
From Data Link Connector 1<4-2>
ABS RELAY
A8, A9
I19 IGNITION SW
ACC
IG1
AM1
60A ABS NO. 1
50A AM1
120A ALT
BATTERY
A32 ABS SPEED SENSOR REAR RH
A31 ABS SPEED SENSOR REAR LH
A11 ABS SPEED SENSOR FRONT RH
A10 ABS SPEED SENSOR FRONT LH
(SHIELDED)
ABS RELAY
ABS ACTUATOR
A6, A7
Right kick panel
Front side of right fender
GRAY
BLACK

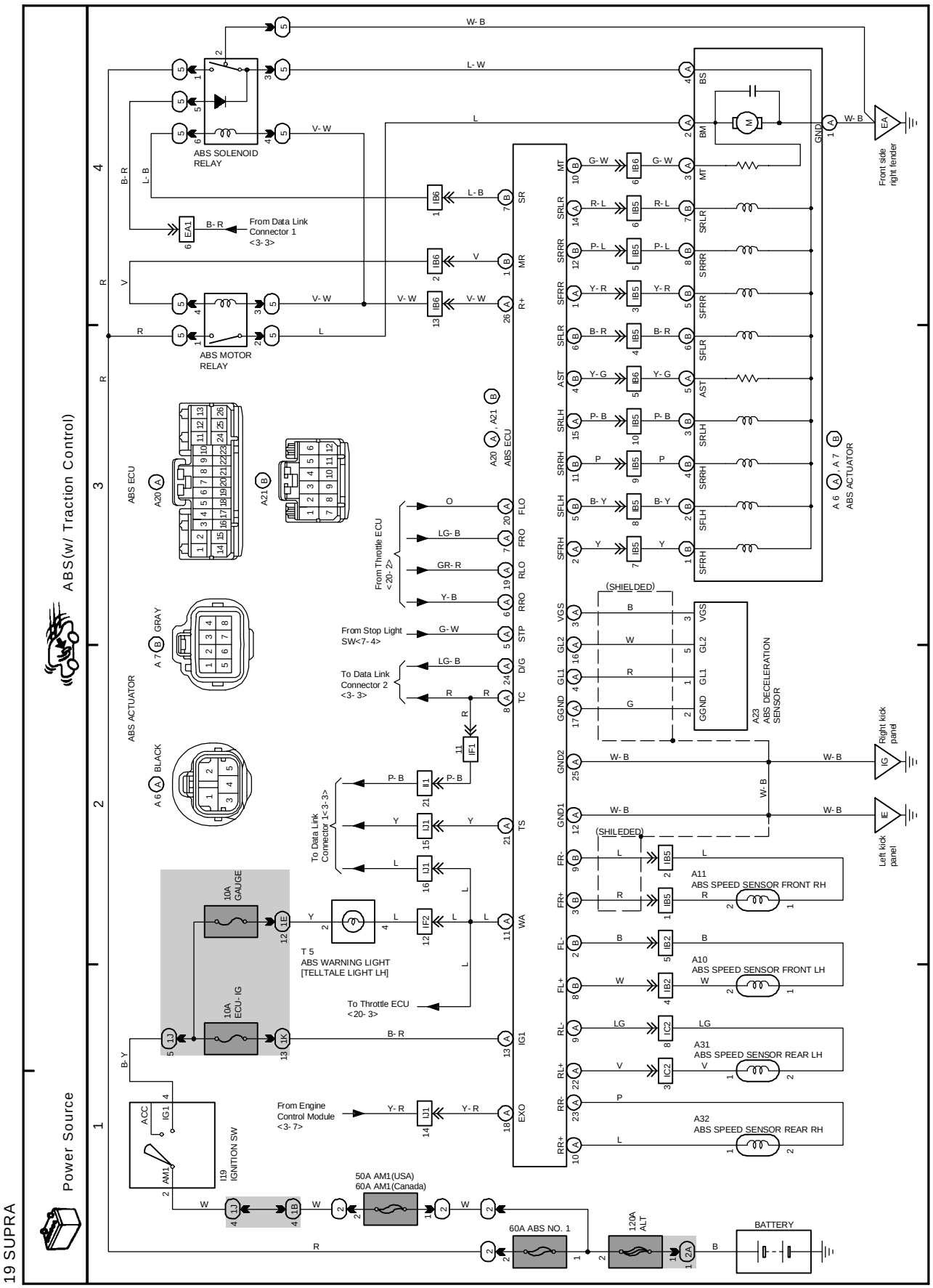
ABS(w/ Traction Control)
Power Source
ABS SOLENOID RELAY
ABS MOTOR RELAY
From Data Link Connector 1 <3- 3>
ABS ECU
ABS ACTUATOR
From Throttle ECU <20- 2>
From Stop Light SW<7- 4>
To Data Link Connector 2 <3- 3>
To Data Link Connector 1<3- 3>
T 5
ABS WARNING LIGHT [TELLTALE LIGHT LH]
To Throttle ECU <20- 3>
From Engine Control Module <3- 7>
10A GAUGE
10A ECU- IG
I19 IGNITION SW
50A AM1(USA)
60A AM1(Canada)
60A ABS NO. 1
120A ALT
BATTERY
A23 ABS DECELERATION SENSOR
A11 ABS SPEED SENSOR FRONT RH
A10 ABS SPEED SENSOR FRONT LH
A31 ABS SPEED SENSOR REAR LH
A32 ABS SPEED SENSOR REAR RH
Front side right fender
Right kick panel
Left kick panel
(SHIELDED)

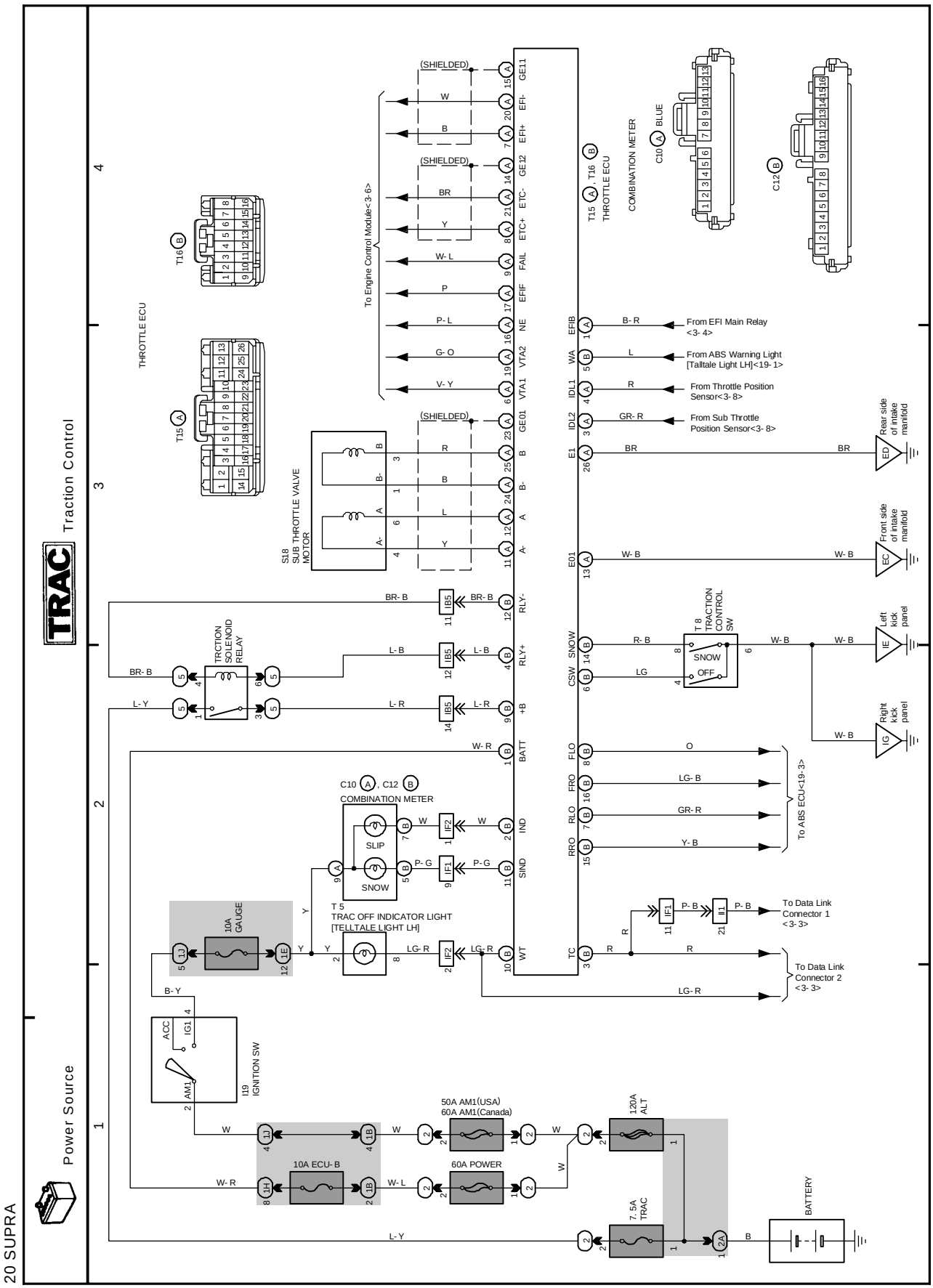
20 SUPRA
Power Source
TRAC
Traction Control
THROTTLE ECU
T16
T15
To Engine Control Module<3-6>
(SHIELDED)
W
B
BR
Y
W-L
P
P-L
G-O
V-Y
R
L
S18
SUB THROTTLE VALVE MOTOR
GE11
EFI-
EFI+
GE12
ETC-
ETC+
FAIL
EFIF
NE
VTA2
VTA1
GE01
B
B-
A
A-
T15 A, T16 B
THROTTLE ECU
COMBINATION METER
C10 A BLUE
C12 B
EFIB
WA
IDL1
IDL2
E1
E01
SNOW
CSW
FLO
FRO
RLO
RRO
TC
BATT
IND
SIND
WT
RLY-
RLY+
+B
B-R
From EFI Main Relay <3-4>
L
From ABS Warning Light [Talltale Light LH]<19-1>
R
From Throttle Position Sensor<3-8>
GR-R
From Sub Throttle Position Sensor<3-8>
BR
Rear side of intake manifold
ED
W-B
Front side of intake manifold
EC
T 8 TRACTION CONTROL SW
SNOW
OFF
R-B
LG
Left kick panel
IE
Right kick panel
IG
O
LG-B
GR-R
Y-B
To ABS ECU<19-3>
TRCTION SOLENOID RELAY
BR-B
L-B
L-Y
L-R
IB5
C10 A, C12 B
COMBINATION METER
SLIP
SNOW
IF2
IF1
P-G
T 5
TRAC OFF INDICATOR LIGHT [TELLTALE LIGHT LH]
LG-R
10A GAUGE
1J
1E
B-Y
ACC
IG1
AM1
I19 IGNITION SW
P-B
II1
To Data Link Connector 1 <3-3>
To Data Link Connector 2 <3-3>
50A AM1(USA)
60A AM1(Canada)
120A ALT
10A ECU-B
1H
1B
60A POWER
7.5A TRAC
2A
BATTERY
1
2
3
4

K OVERALL ELECTRICAL WIRING DIAGRAM

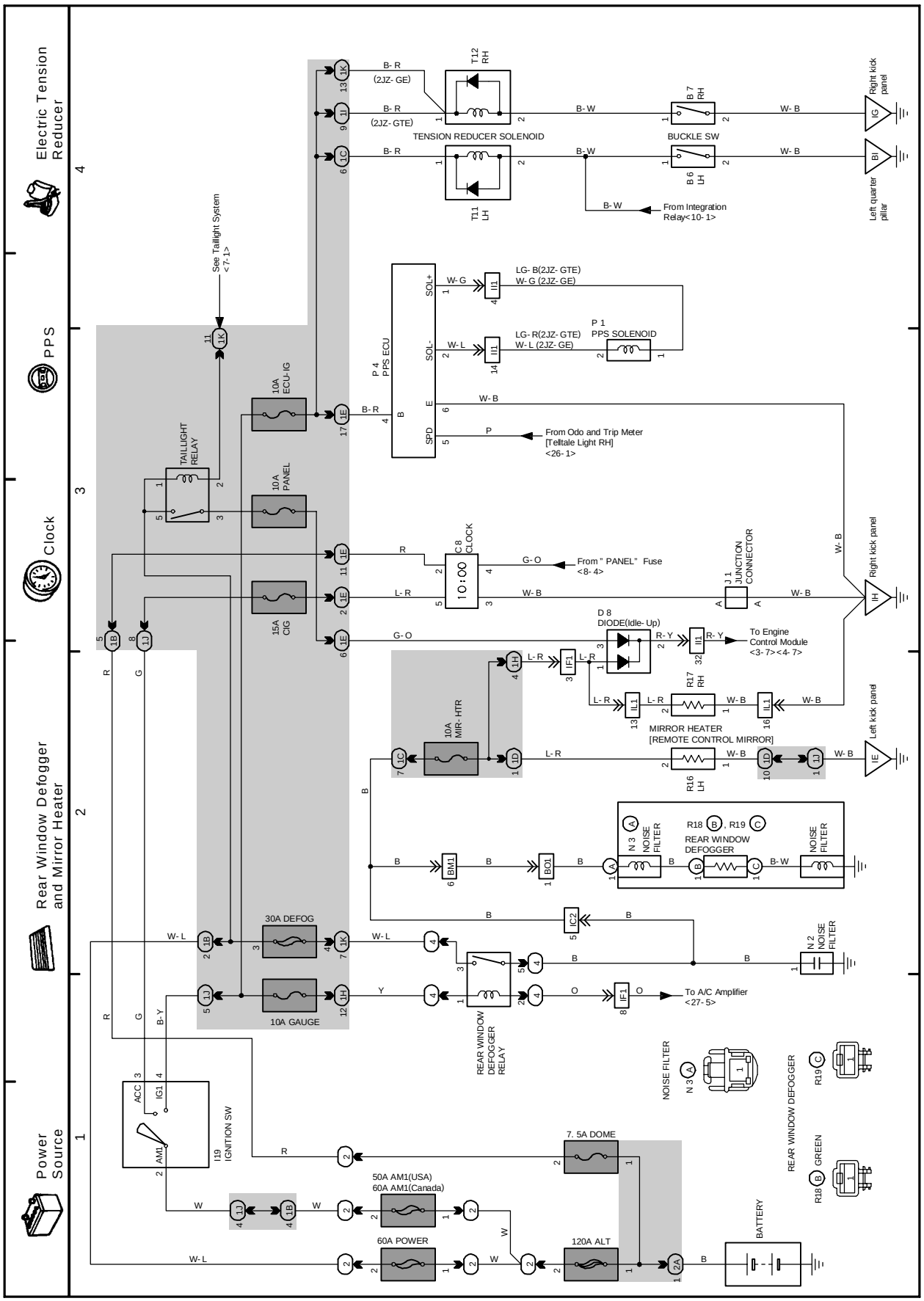

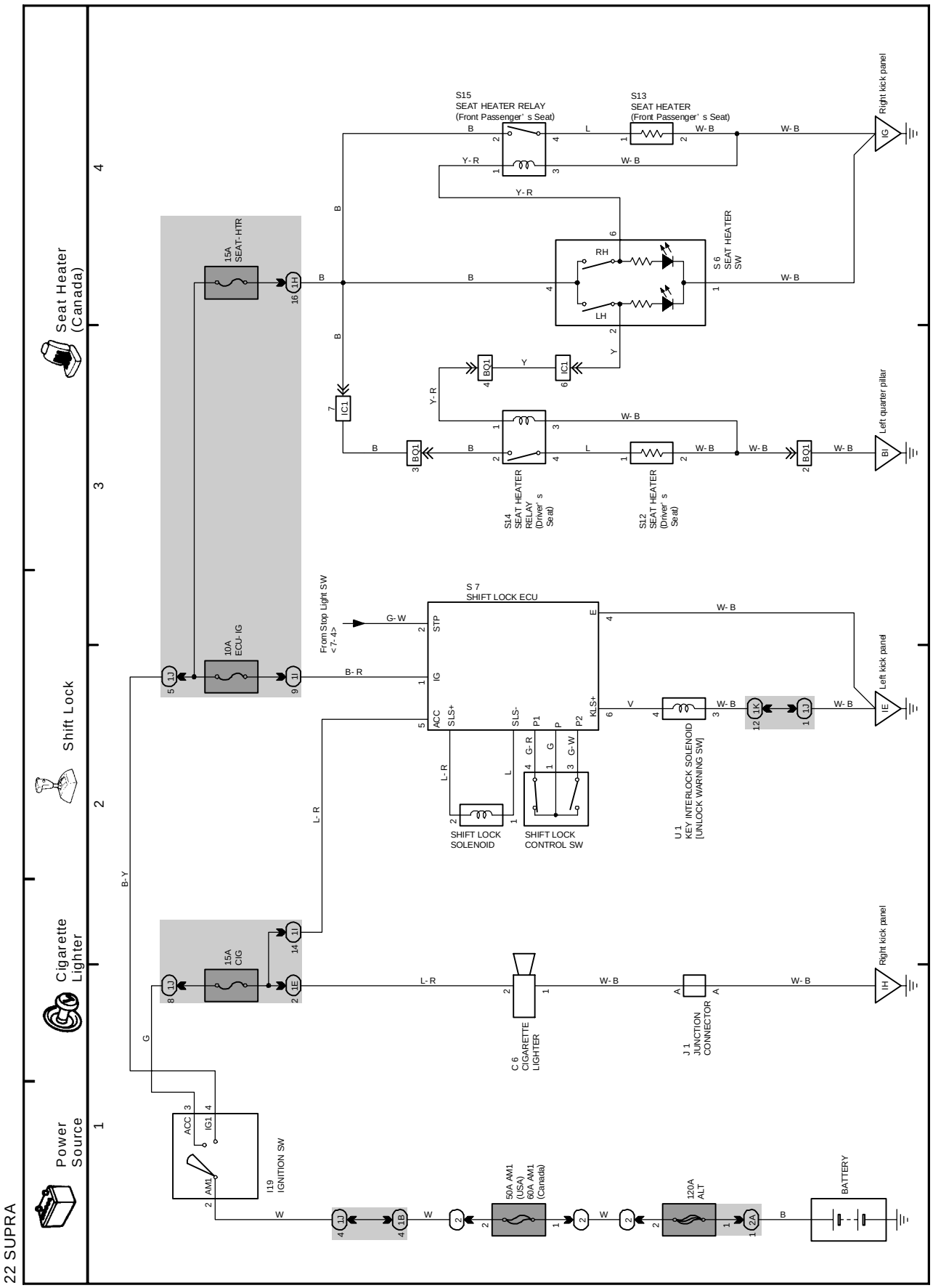
22 SUPRA
Power Source
Cigarette Lighter
Shift Lock
Seat Heater (Canada)
1
2
3
4
I19 IGNITION SW
ACC
IG1
AM1
BATTERY
50A AM1 (USA) 60A AM1 (Canada)
120A ALT
15A CIG
C 6 CIGARETTE LIGHTER
J 1 JUNCTION CONNECTOR
Right kick panel
10A ECU-IG
15A SEAT-HTR
From Stop Light SW <7-4>
S 7 SHIFT LOCK ECU
STP
IG
ACC
SLS+
SLS-
P1
P
P2
KLS+
E
SHIFT LOCK SOLENOID
SHIFT LOCK CONTROL SW
U 1 KEY INTERLOCK SOLENOID [UNLOCK WARNING SW]
Left kick panel
S14 SEAT HEATER RELAY (Driver's Seat)
S12 SEAT HEATER (Driver's Seat)
Left quarter pillar
S15 SEAT HEATER RELAY (Front Passenger's Seat)
S13 SEAT HEATER (Front Passenger's Seat)
S 6 SEAT HEATER SW
RH
LH

K OVERALL ELECTRICAL WIRING DIAGRAM

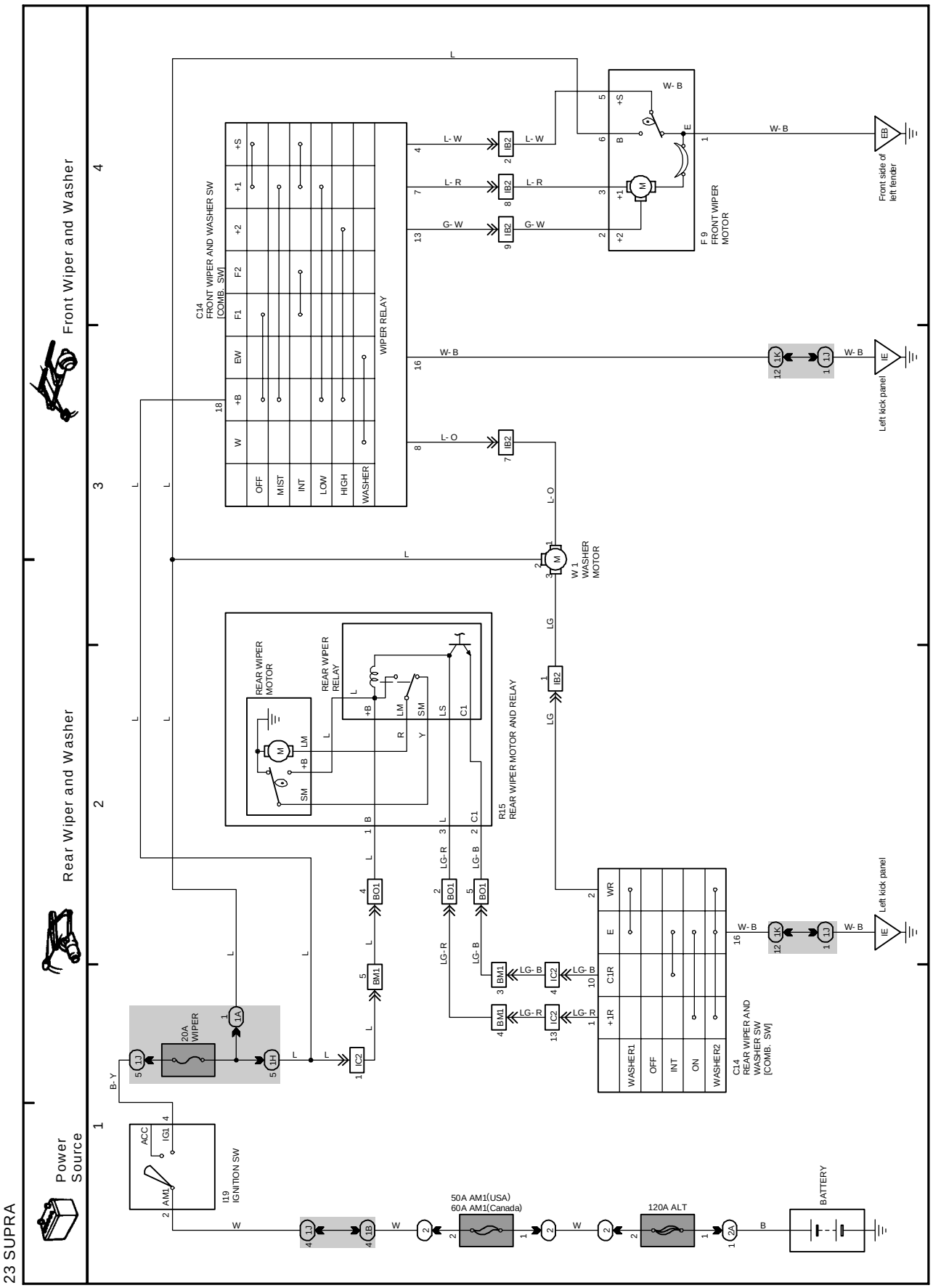

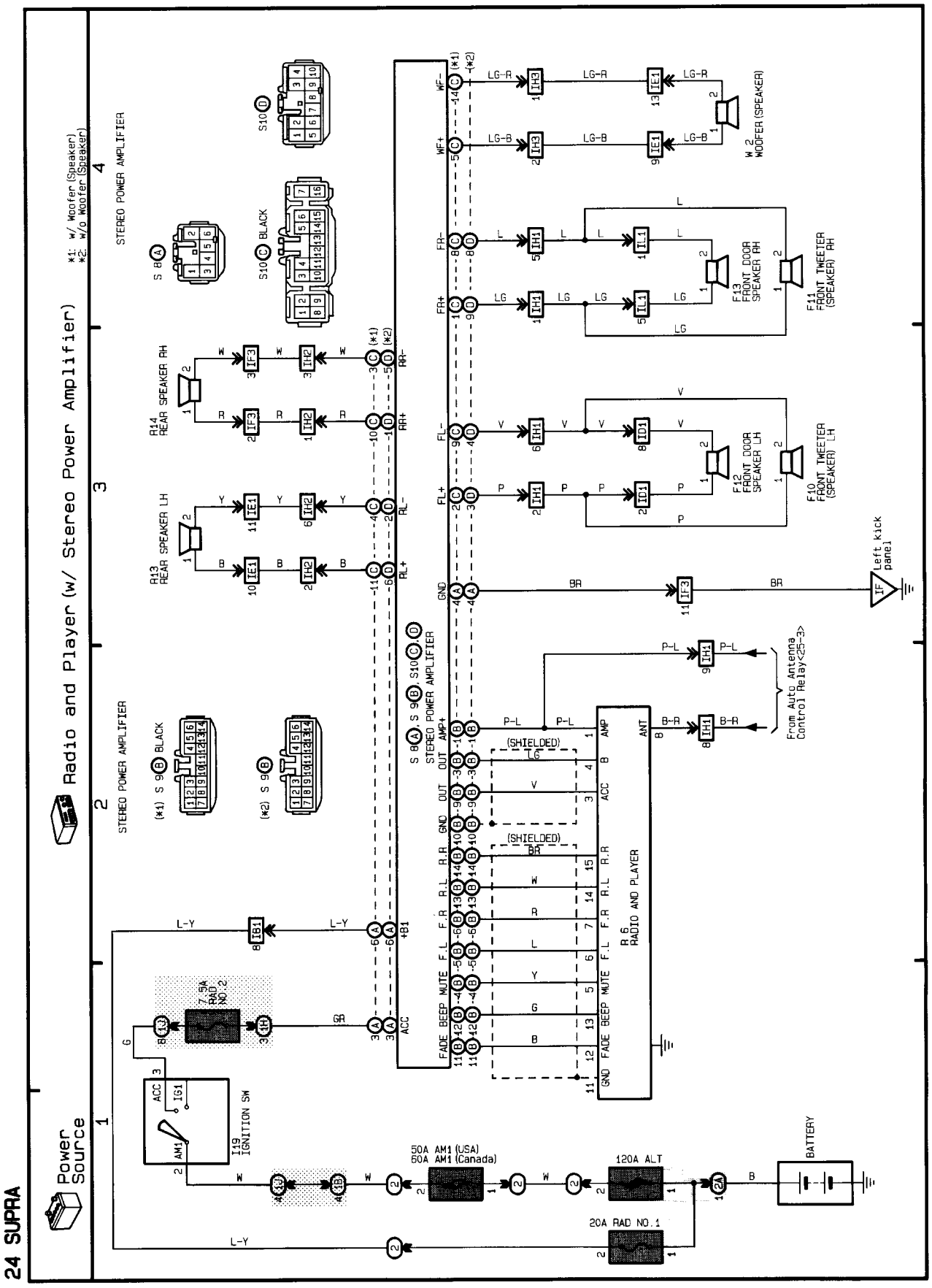
24 SUPRA
Power Source
Radio and Player (w/ Stereo Power Amplifier)
*1: w/ Woofer (Speaker)
*2: w/o Woofer (Speaker)
STEREO POWER AMPLIFIER
R13 REAR SPEAKER LH
R14 REAR SPEAKER RH
(*1) S 9 BLACK
(*2) S 9
S 8
S10 BLACK
S10
W 2 WOOFER (SPEAKER)
F13 FRONT DOOR SPEAKER RH
F11 FRONT TWEETER (SPEAKER) RH
F12 FRONT DOOR SPEAKER LH
F10 FRONT TWEETER (SPEAKER) LH
Left kick panel
From Auto Antenna Control Relay<25-3>
R 6 RADIO AND PLAYER
(SHIELDED)
7.5A RAD NO.2
I19 IGNITION SW
50A AM1 (USA)
50A AM1 (Canada)
120A ALT
20A RAD NO.1
BATTERY

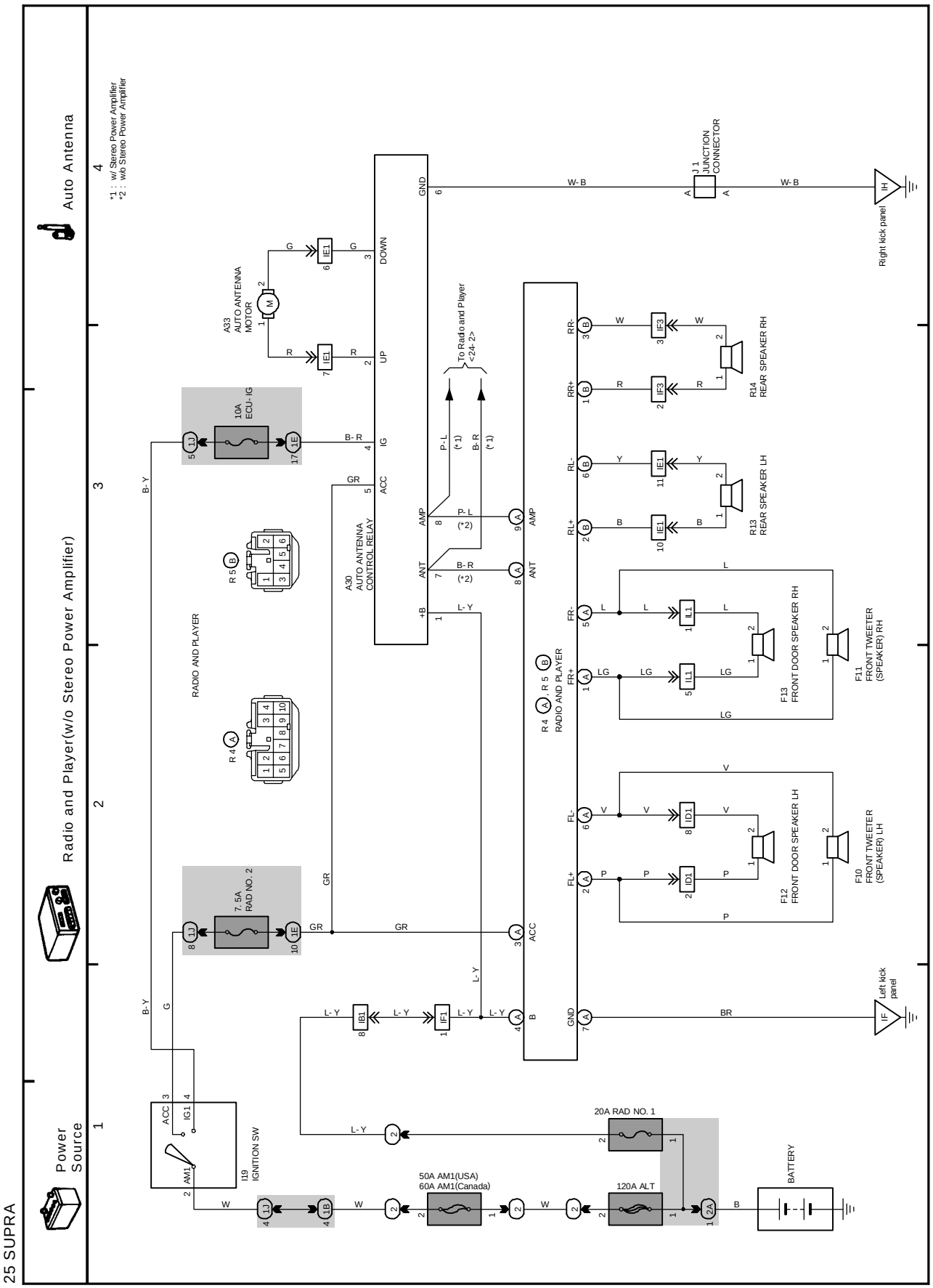
Power Source
Radio and Player(w/o Stereo Power Amplifier)
Auto Antenna
*1 : w/ Stereo Power Amplifier
*2 : w/o Stereo Power Amplifier
A33 AUTO ANTENNA MOTOR
A30 AUTO ANTENNA CONTROL RELAY
10A ECU- IG
7. 5A RAD NO. 2
RADIO AND PLAYER
R 4
R 5
To Radio and Player <24- 2>
J 1 JUNCTION CONNECTOR
Right kick panel
Left kick panel
F10 FRONT TWEETER (SPEAKER) LH
F11 FRONT TWEETER (SPEAKER) RH
F12 FRONT DOOR SPEAKER LH
F13 FRONT DOOR SPEAKER RH
R13 REAR SPEAKER LH
R14 REAR SPEAKER RH
I19 IGNITION SW
20A RAD NO. 1
50A AM1(USA)
60A AM1(Canada)
120A ALT
BATTERY

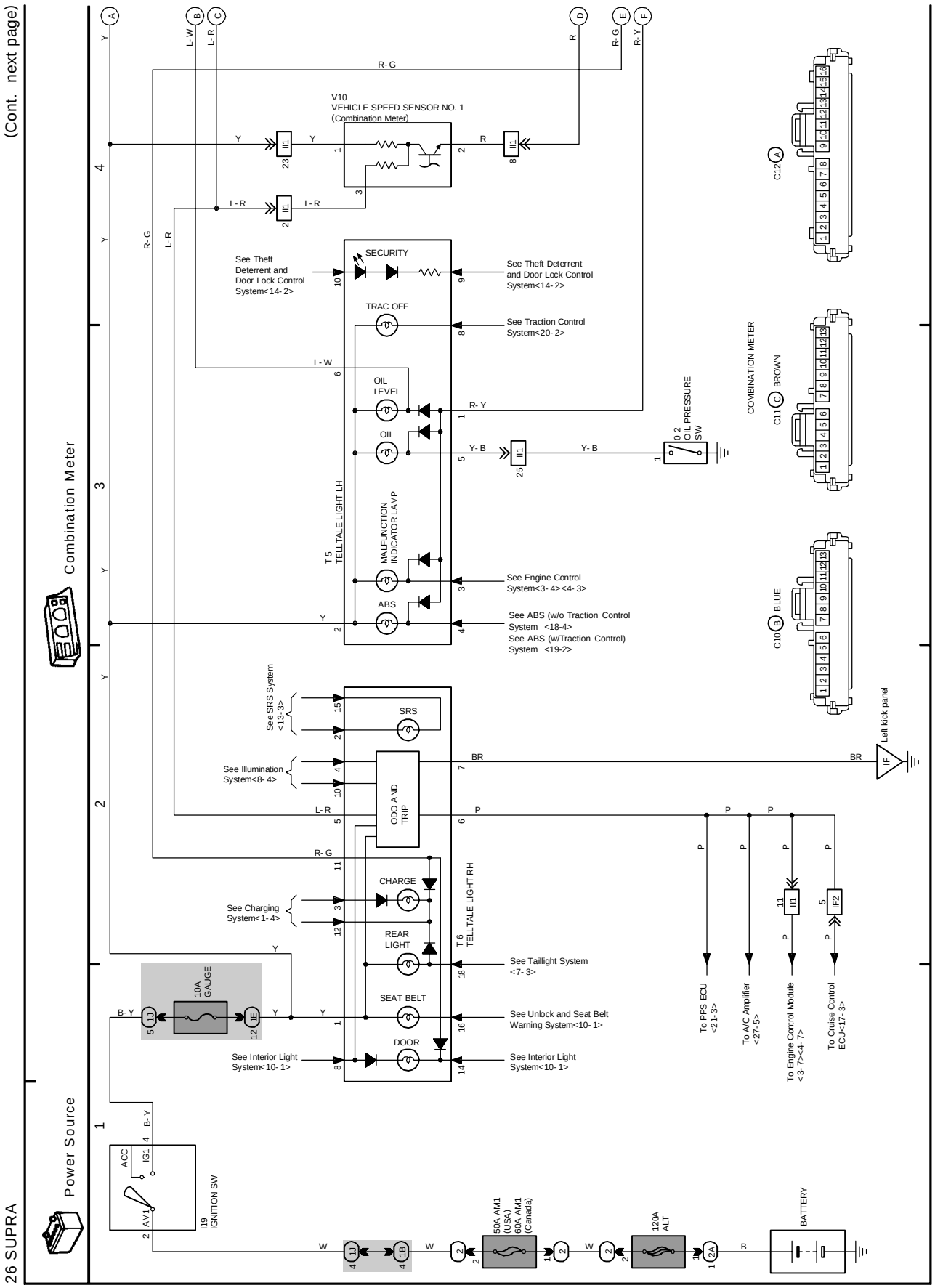
(Cont. next page)
Combination Meter
Power Source
V10
VEHICLE SPEED SENSOR NO. 1
(Combination Meter)
SECURITY
See Theft Deterrent and Door Lock Control System<14-2>
See Theft Deterrent and Door Lock Control System<14-2>
TRAC OFF
See Traction Control System<20-2>
OIL LEVEL
OIL
MALFUNCTION INDICATOR LAMP
ABS
See Engine Control System<3-4><4-3>
See ABS (w/o Traction Control System <18-4>
See ABS (w/Traction Control) System <19-2>
T 5 TELLTALE LIGHT LH
OIL PRESSURE SW
COMBINATION METER
C12 A
C11 C BROWN
C10 B BLUE
See SRS System <13-3>
SRS
See Illumination System<8-4>
ODO AND TRIP
Left kick panel
See Charging System<1-4>
CHARGE
REAR LIGHT
SEAT BELT
DOOR
T 6 TELLTALE LIGHT RH
See Taillight System <7-3>
See Unlock and Seat Belt Warning System<10-1>
See Interior Light System<10-1>
See Interior Light System<10-1>
10A GAUGE
To PPS ECU <21-3>
To A/C Amplifier <27-5>
To Engine Control Module <3-7><4-7>
To Cruise Control ECU<17-3>
ACC
IG1
AM1
I19 IGNITION SW
50A AM1 (USA) 60A AM1 (Canada)
120A ALT
BATTERY

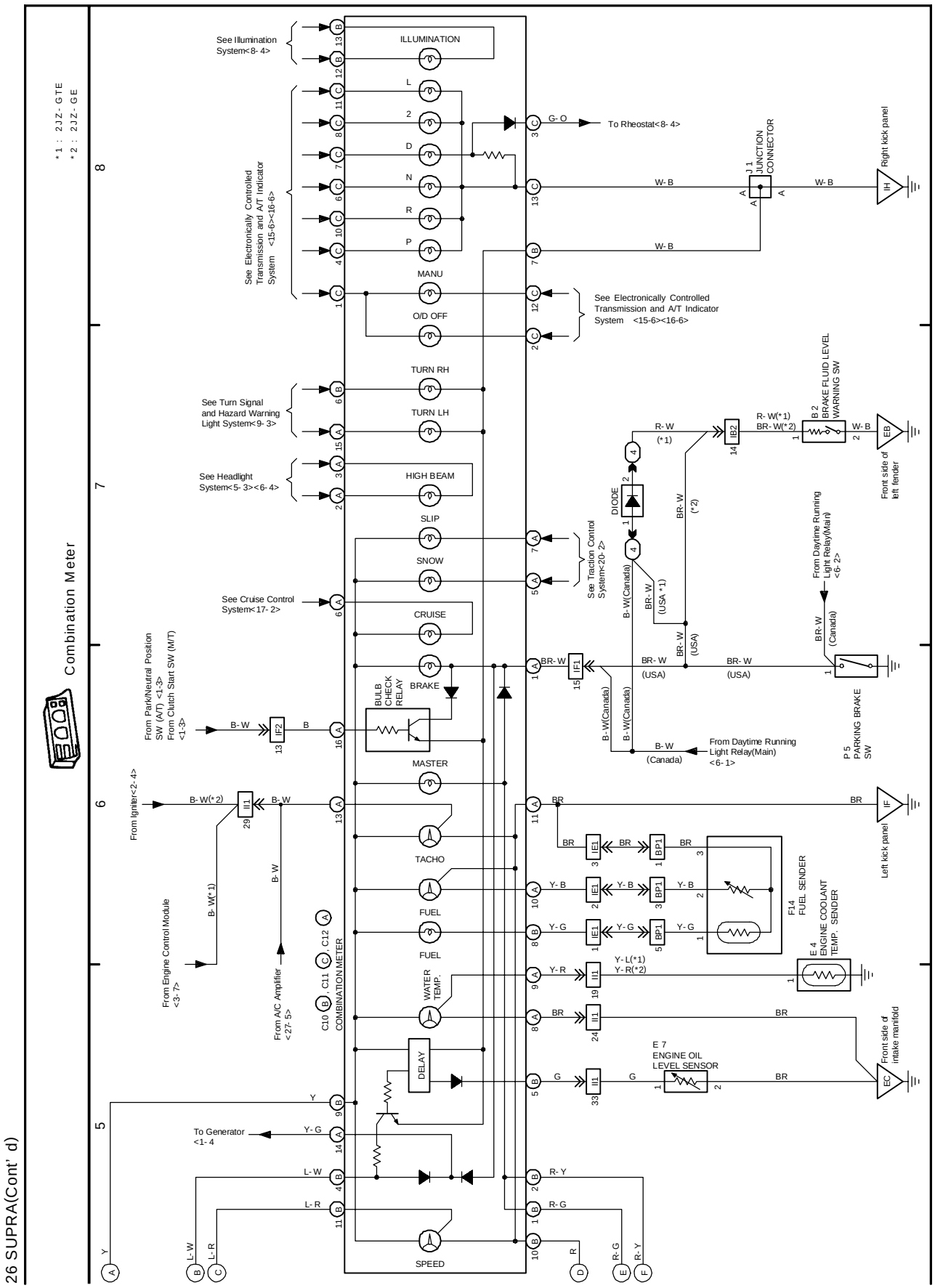
Combination Meter
*1 : 2JZ-GTE
*2 : 2JZ-GE
ILLUMINATION
See Illumination System<8-4>
See Electronically Controlled Transmission and A/T Indicator System <15-6><16-6>
MANU
O/D OFF
TURN RH
TURN LH
See Turn Signal and Hazard Warning Light System<9-3>
HIGH BEAM
See Headlight System<5-3><6-4>
SLIP
SNOW
See Traction Control System<20-2>
CRUISE
See Cruise Control System<17-2>
BRAKE
BULB CHECK RELAY
MASTER
TACHO
FUEL
WATER TEMP.
DELAY
SPEED
COMBINATION METER
From Park/Neutral Position SW (A/T) <1-3>
From Clutch Start SW (M/T) <1-3>
From Igniter<2-4>
From Engine Control Module <3-7>
From A/C Amplifier <27-5>
To Generator <1-4
To Rheostat<8-4>
J 1 JUNCTION CONNECTOR
Right kick panel
DIODE
B 2 BRAKE FLUID LEVEL WARNING SW
Front side of left fender
From Daytime Running Light Relay(Main) <6-2>
From Daytime Running Light Relay(Main) <6-1>
P 5 PARKING BRAKE SW
Left kick panel
F14 FUEL SENDER
E 4 ENGINE COOLANT TEMP. SENDER
E 7 ENGINE OIL LEVEL SENSOR
Front side of intake manifold

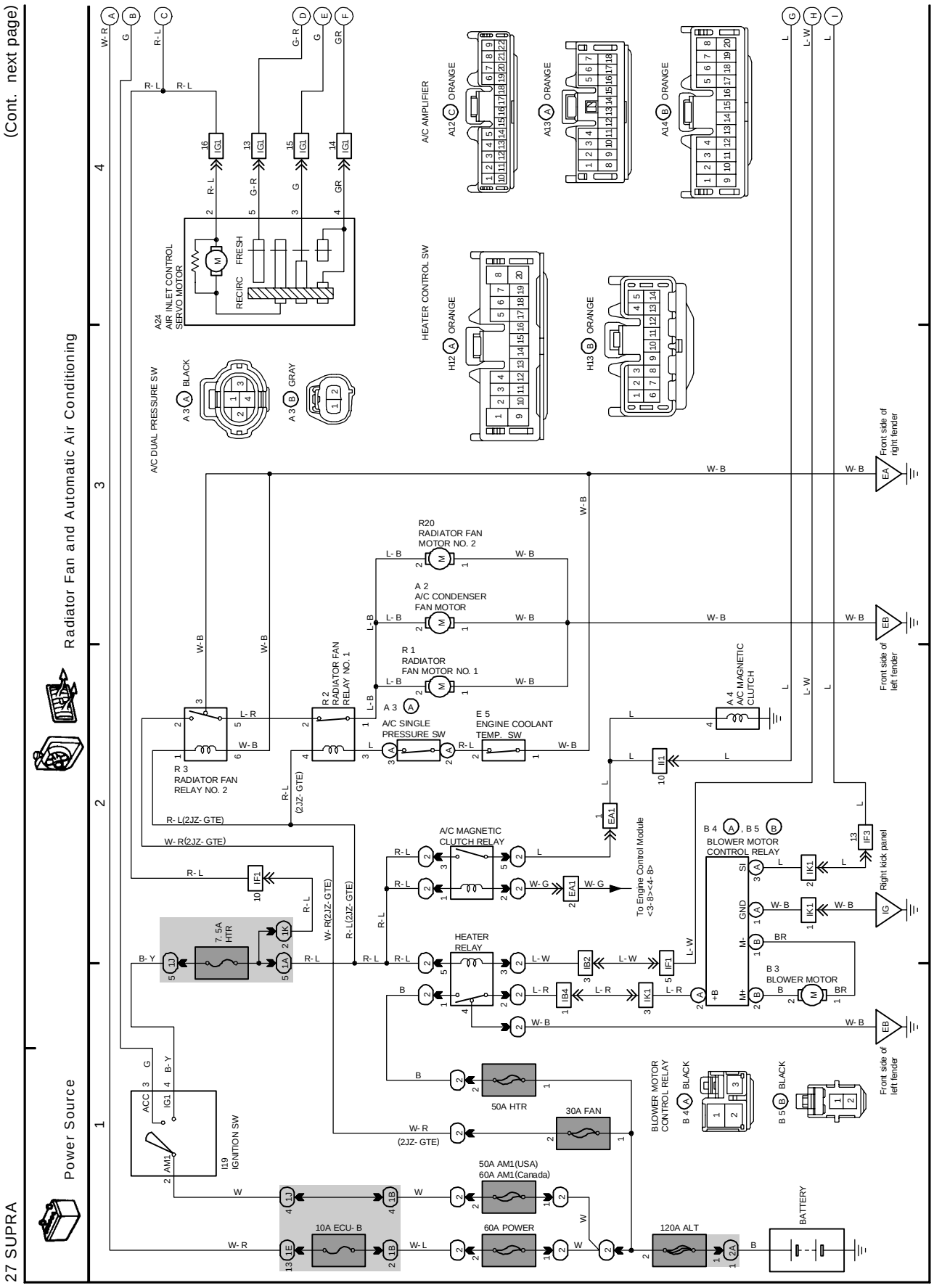
(Cont. next page)
Radiator Fan and Automatic Air Conditioning
Power Source
A24 AIR INLET CONTROL SERVO MOTOR
RECIRC
FRESH
A/C DUAL PRESSURE SW
A 3 BLACK
A 3 GRAY
A/C AMPLIFIER
A12 ORANGE
A13 ORANGE
A14 ORANGE
HEATER CONTROL SW
H12 ORANGE
H13 ORANGE
R20 RADIATOR FAN MOTOR NO. 2
A 2 A/C CONDENSER FAN MOTOR
R 1 RADIATOR FAN MOTOR NO. 1
R 2 RADIATOR FAN RELAY NO. 1
R 3 RADIATOR FAN RELAY NO. 2
A 3 A/C SINGLE PRESSURE SW
E 5 ENGINE COOLANT TEMP. SW
A 4 A/C MAGNETIC CLUTCH
A/C MAGNETIC CLUTCH RELAY
HEATER RELAY
To Engine Control Module <3-8><4-8>
B 4 , B 5
BLOWER MOTOR CONTROL RELAY
B 3 BLOWER MOTOR
BLOWER MOTOR CONTROL RELAY B 4 BLACK
B 5 BLACK
Front side of right fender
Front side of left fender
Right kick panel
7.5A HTR
50A HTR
30A FAN
I19 IGNITION SW
50A AM1(USA) 60A AM1(Canada)
10A ECU-B
60A POWER
120A ALT
BATTERY
(2JZ-GTE)
R-L(2JZ-GTE)
W-R(2JZ-GTE)

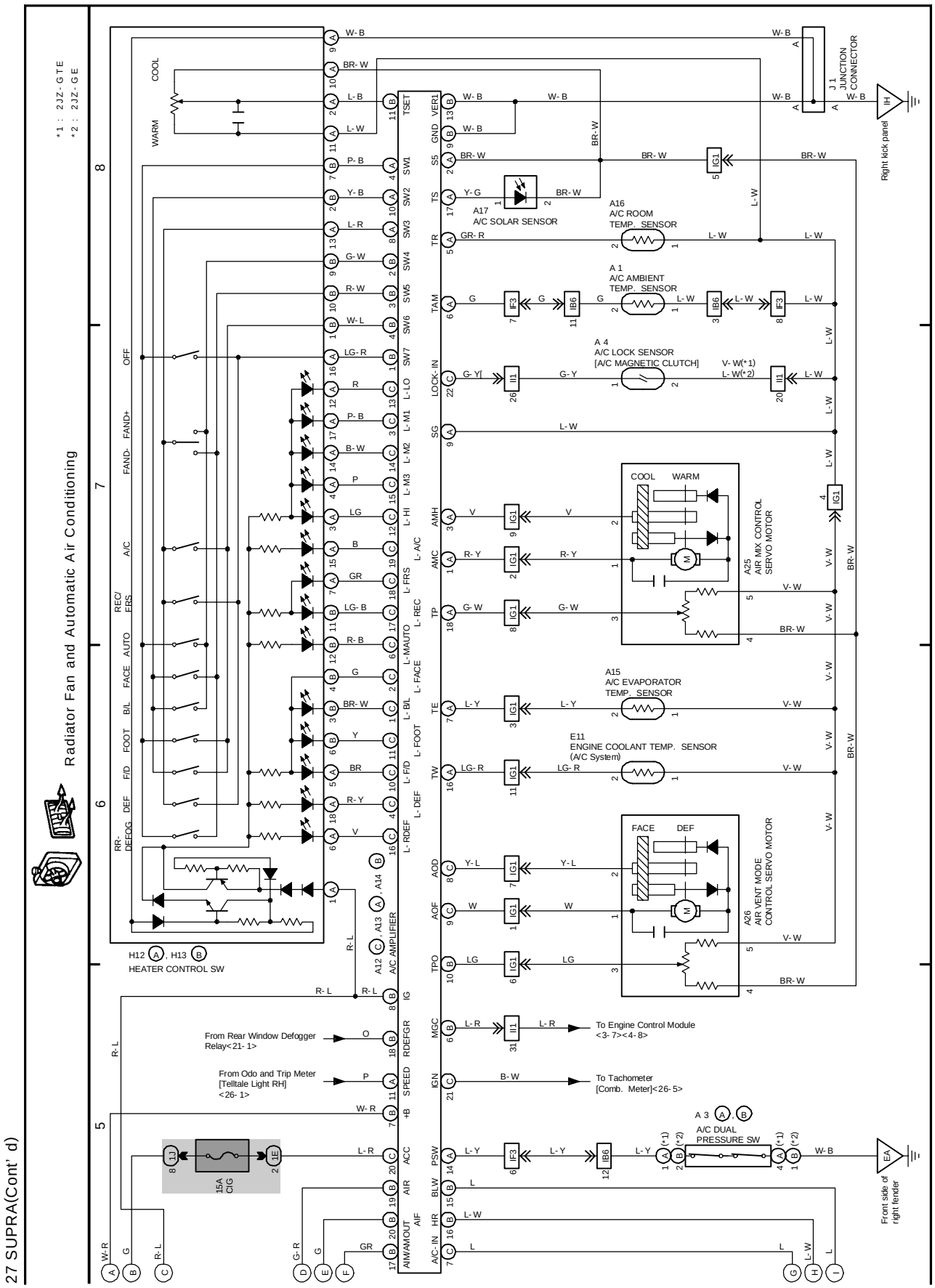
Radiator Fan and Automatic Air Conditioning
*1 : 2JZ-GTE
*2 : 2JZ-GE
COOL
WARM
OFF
FAND+
FAND-
A/C
REC/ ERS
AUTO
FACE
B/L
FOOT
F/D
DEF
RR- DEFOG
H12 (A), H13 (B)
HEATER CONTROL SW
A12 (C), A13 (A), A14 (B)
A/C AMPLIFIER
A17
A/C SOLAR SENSOR
A16
A/C ROOM
TEMP. SENSOR
A 1
A/C AMBIENT
TEMP. SENSOR
A 4
A/C LOCK SENSOR
[A/C MAGNETIC CLUTCH]
A25
AIR MIX CONTROL
SERVO MOTOR
A15
A/C EVAPORATOR
TEMP. SENSOR
E11
ENGINE COOLANT TEMP. SENSOR
(A/C System)
A26
AIR VENT MODE
CONTROL SERVO MOTOR
J 1
JUNCTION
CONNECTOR
Right kick panel
From Rear Window Defogger
Relay<21- 1>
From Odo and Trip Meter
[Telltale Light RH]
<26- 1>
To Engine Control Module
<3- 7><4- 8>
To Tachometer
[Comb. Meter]<26- 5>
A 3 (A), (B)
A/C DUAL
PRESSURE SW
15A
CIG
Front side of
right fender