DISCOVERY

CONTENTS

SECTION 1	***Introduction***	*1*
SECTION 2	***Controls & instruments***	*7*
SECTION 3	***Driving & operating***	*85*
SECTION 4	***Owner maintenance***	*129*
SECTION 5	***General data***	*177*
SECTION 6	***Parts & accessories***	*189*
SECTION 7	***Off-road driving***	*193*
	Index	*199*

As part of the Land Rover environmental policy, this publication is printed on paper made from chlorine free pulp.

© Rover Group Limited 1999

Publication No LRL 0322ENG
11.99 Discovery Series II - 2nd Edition

Downloaded from www.Manualslib.com manuals search engine

Downloaded from www.Manualslib.com manuals search engine

SECTION 1
Introduction

OWNER HANDBOOK

This handbook covers all current versions of Land Rover Discovery petrol and diesel models and, together with the Service Portfolio book, provides all the information you need to derive maximum pleasure from owning and driving your new vehicle.

For your convenience, the handbook is divided into sections, each dealing with a different aspect of the vehicle. These are listed on the title page and you will find it worthwhile to take a little time to read each one, and get to know your Discovery as soon as you possibly can. The more you understand before you drive, the greater the satisfaction once you are seated behind the steering wheel.

The specification of each vehicle will vary according to territorial requirements and also from model to model within the vehicle range. Some of the information published in this handbook, therefore, may not apply to your particular vehicle.

Section Contents **Page**

Safety warnings 3
Service Portfolio book 3
Information labels 4
Vehicle identification number 5
Breakdown safety code 6

Land Rover operates a policy of constant product improvement and therefore reserves the right to change specifications without notice at any time. Whilst every effort is made to ensure complete accuracy of the information in this handbook, no liabilities for inaccuracies or the consequences thereof can be accepted by the manufacturer or the dealer, except in respect of personal injury caused by the negligence of the manufacturer or the dealer.

All rights reserved. No part of this publication may be reproduced, stored in a retrieval system or transmitted, in any form, electronic, mechanical, photocopying, recording, or other means without prior written permission from Rover Group Limited.

Downloaded from www.Manualslib.com manuals search engine

Downloaded from www.Manualslib.com manuals search engine

Introduction

SERVICE PORTFOLIO

The Service Portfolio book included in your literature pack contains important vehicle identification information, details of your entitlement under the terms of the Land Rover warranty, as well as useful consumer advice.

Most important of all, however, is the section on maintenance. This outlines the servicing requirements for your vehicle and also includes the First Service Voucher, and the service record slips, which the Dealer should sign and stamp to certify that the routine services have been carried out at the recommended intervals.

WARNINGS IN THIS HANDBOOK

WARNING

Safety warnings are included in this handbook. These indicate either a procedure which must be followed precisely, or information that should be considered with great care in order to avoid the possibility of personal injury or serious damage to the vehicle.

WARNING LABELS ATTACHED TO THE VEHICLE

Warning labels attached to your vehicle bearing this symbol mean: DO NOT touch or adjust components until you have read the relevant instructions in the handbook.

Warning labels showing this symbol indicate that the ignition system utilises very high voltages. DO NOT touch any ignition components while the starter switch is turned on!

WARNING

Your vehicle has a higher ground clearance and, hence, a higher centre of gravity than ordinary passenger cars. This will result in different handling characteristics. Inexperienced drivers should take additional care, particularly in off-road driving situations and when performing abrupt manoeuvres on unstable surfaces.

Downloaded from www.Manualslib.com manuals search engine

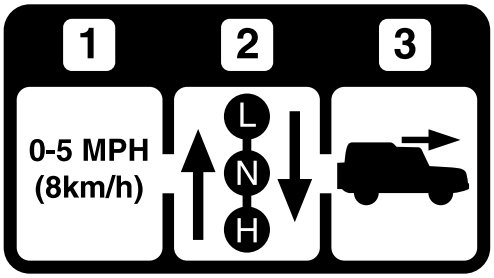

A

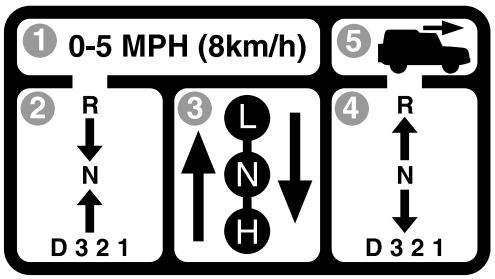

H2608

B

Information concerning operation of the transfer gearbox with either manual 'A' or automatic gearbox 'B' is printed on the centre console. This is important information and must be understood fully with reference to the *'Gearbox and Transmission'* section of this handbook, before using the transfer gearbox.

Downloaded from www.Manualslib.com manuals search engine

SUN VISOR LABELS

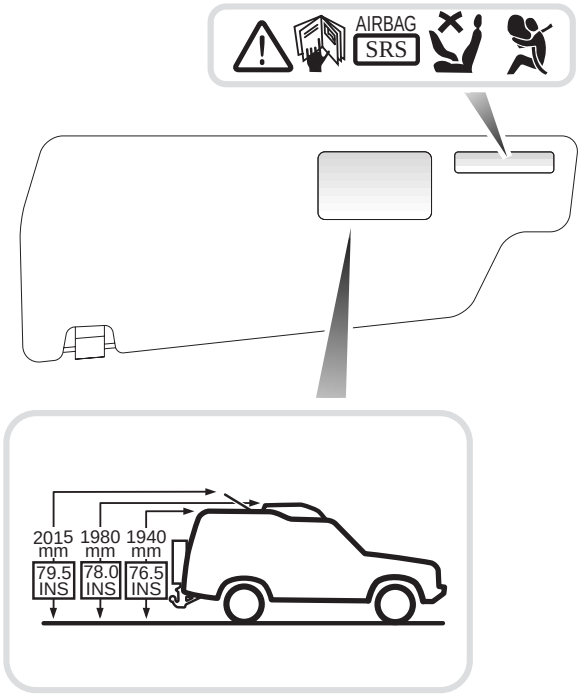

H2545

Always take careful note of warning information about the airbag SRS attached to the sun visor (illustrated above) or other parts of the vehicle.

Details of the vehicle's standard ride height, both with and without an open sunroof are printed on the drivers sun visor.

VEHICLE IDENTIFICATION NUMBER (VIN)

If you need to communicate with a Land Rover dealer, you may be asked to quote the Vehicle Identification Number (VIN).

The VIN (and recommended maximum vehicle weights) is stamped on a plate riveted to the top of the radiator grille panel in the engine compartment (this should match the VIN recorded in the Service Portfolio book).

In addition, as a deterrent to car thieves and to assist the police, the VIN is stamped on a plate which is visible through the lowest part of the left side of the windscreen and also on the vehicle's chassis.

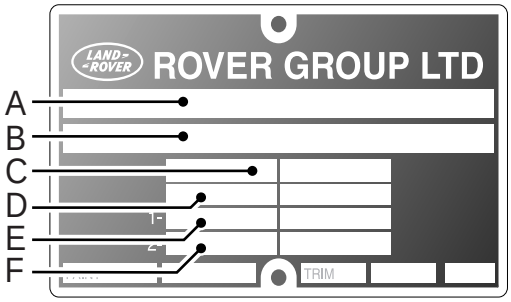

H2518

A. Type approval (where required)

B. Vehicle Identification Number (VIN)

C. Gross vehicle weight (where required)

D. Gross train weight (where required)

E. Maximum front axle load (where required)

F. Maximum rear axle load (where required)

Downloaded from www.Manualslib.com manuals search engine

IMPORTANT INFORMATION

Remember the breakdown safety code

If a breakdown occurs while travelling:

- Wherever possible, consistent with road safety and traffic conditions, the vehicle should be moved off the main thoroughfare, preferably into a lay-by. If a breakdown occurs on a motorway, pull well over to the inside of the hard shoulder.
- Switch on hazard lights.
- If possible, position a warning triangle or a flashing amber light at an appropriate distance from the vehicle to warn other traffic of the breakdown, (note the legal requirements of some countries).
- Consider evacuating passengers through nearside doors onto the verge as a precaution in case your vehicle is accidentally struck by other traffic.

Downloaded from www.Manualslib.com manuals search engine

SECTION 2
Controls & instruments

In this section of the handbook you will find descriptions of the controls and instruments.

For your own safety, it is most important to read this section fully and to gain a thorough understanding of all the controls before driving.

Section Contents **Page**

Controls 9
Security card 10
Locks & alarm 11
Seats 20
Seat belts 30
Airbag SRS 36
Steering column 40
Door mirrors 41
Instruments 43
Warning lights 45
Audible warnings 50
Lights & indicators 51
Wipers & washers 53
Switches 56
Electric windows 59
Sunroof 60
Heating & ventilation 62
Air conditioning 65
Interior equipment 69
Compass set zones 78
Rear step 79
Loadspace cover 80
In-car telephones 81
In-car entertainment 82

Downloaded from www.Manualslib.com manuals search engine

Downloaded from www.Manualslib.com manuals search engine

Controls

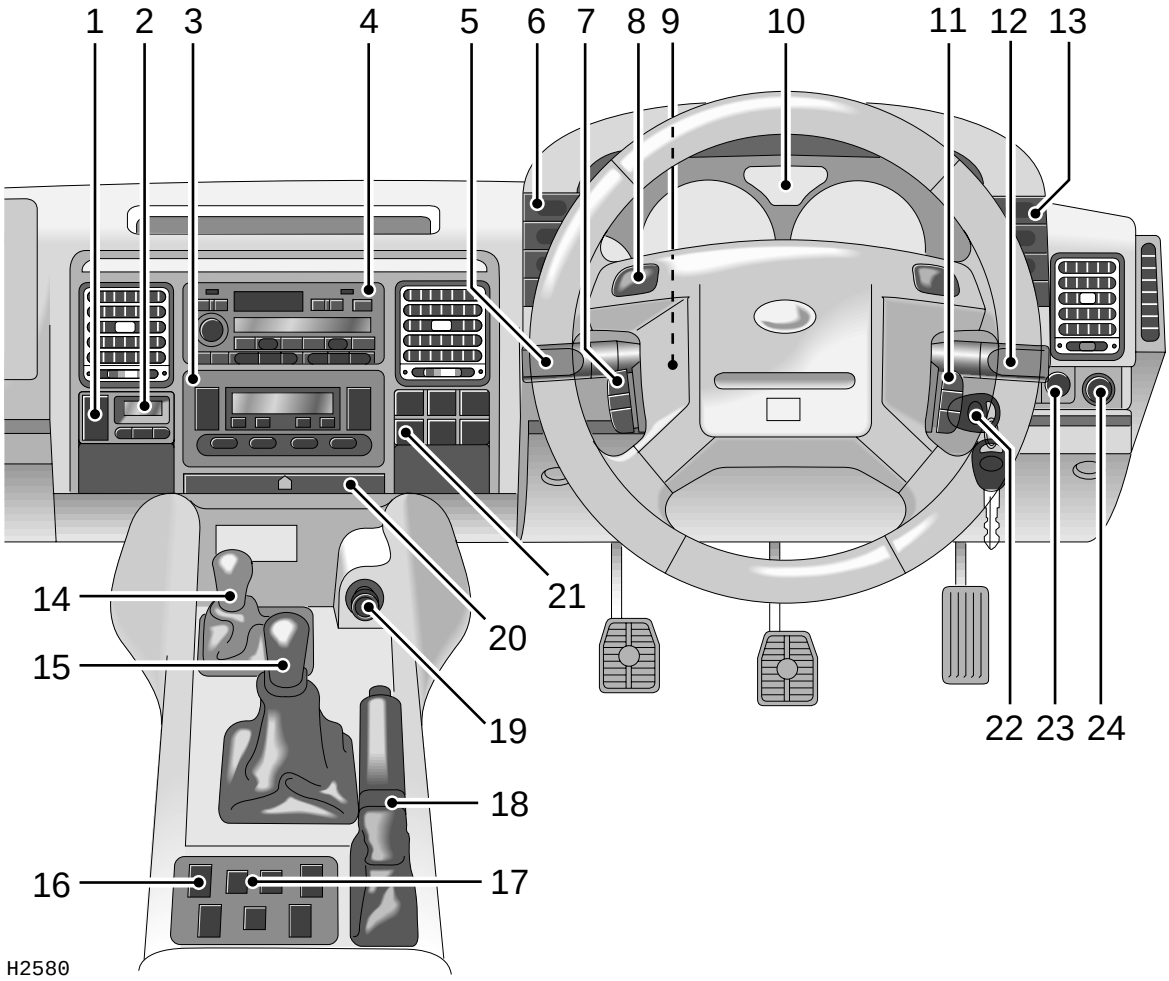

1. Door locks switch
2. Clock
3. Heater/air conditioning controls
4. Radio cassette player
5. Lighting and direction indicator controls
6. LH binnacle switch panel (includes rear fog guard light)
7. Remote radio controls (if fitted)
8. Horn switches (2)
9. Steering column height adjuster
10. Instrument panel
11. Cruise control switches (if fitted)
12. Windscreen wiper/washer controls
13. RH binnacle switch panel (includes rear wash/wipe)
14. Transfer gear lever
15. Main gear lever
16. Electric window switches
17. Heated front seat switches (if fitted)
18. Handbrake
19. Cigar lighter
20. Cup holder
21. Fascia panel switches (includes hazard warning, fuel filler and screen demisters)
22. Starter switch
23. Headlamp levelling control (if fitted)
24. Electric mirror adjuster

NOTE: *The precise specification and location of controls may vary according to territorial requirements and from model to model within the vehicle range.*

Downloaded from www.Manualslib.com manuals search engine

Security Card

The security card, supplied with the literature pack, contains important emergency information. It is ESSENTIAL that you keep the card safe from theft and ensure that it is passed to the new owner if you sell the vehicle.

- **Key number:** This is the number of the starter/door key - essential if you ever need to obtain a replacement.
- **Emergency key access code:** You will need this code in order to start the vehicle if the handset has been lost or damaged (see *'Emergency key access'* in the *'Locks & alarm'* section).
- **Locking wheel nut number:** If your vehicle has locking wheel nuts, you will have been provided with a special wheel nut socket to remove them. You will need to quote this number to obtain a replacement socket.
- **VIN (vehicle identification number):** This identity number is unique to your vehicle and is essential proof of its specification. The number can also be found in various locations around the vehicle (see '*Vehicle Identification'* in Section 1).
- **Radio security code number:** This unique code must be entered into the radio whenever the power supply has been disconnected. Without this code, the radio unit will not operate (see *'Security code'* in the *'In-Car Entertainment'* book).

WARNING

Never leave the security card inside the vehicle when it is unattended.

Memorise the emergency key access code, or keep the card on your person while driving, in case of emergencies.

Downloaded from www.Manualslib.com manuals search engine

ALARM SYSTEM

Your vehicle is fitted with a sophisticated electronic anti-theft alarm and engine immobilisation system. There are also a number of additional security features, some of which are selectable options and some are standard features of the vehicle. In order to ensure maximum security and operating convenience, you are strongly advised to gain a full understanding of the features and alternatives available, by thoroughly reading this section of the handbook.

IMPORTANT INFORMATION
FOR MAXIMUM SECURITY ALWAYS SUPERLOCK THE VEHICLE USING THE REMOTE HANDSET (except when passengers are to be left inside or if it is necessary to leave a window or sunroof open).

LOCKING

With the remote handset:

Press the lock (padlock symbol) button once:

- all doors are superlocked (see *'Superlocking')*
- engine immobilised
- perimetric alarm activated (protects the doors, bonnet and taildoor)
- interior space protection activated

The direction indicator lights flash three times to confirm that the vehicle is secure and the anti-theft alarm indicator light (in the instrument panel) starts to flash.

With the key:

Insert the key and turn the door lock towards the rear of the vehicle:

- all doors locked (not superlocked)
- engine immobilised
- perimetric alarm activated (protects the doors, bonnet and taildoor)
- NO INTERIOR SPACE PROTECTION

The direction indicator lights flash once to confirm that the vehicle is secure and the anti-theft alarm indicator light (in the instrument panel) starts to flash.

UNLOCKING

With the remote handset:

- Press the unlock (Land Rover) button once to disarm the alarm and unlock the driver's door only (see *'Single point entry').*
- Press the unlock button twice to disarm the alarm and unlock ALL the doors.

In either case, the direction indicator lights flash once and the interior lights illuminate.

With the key:

While the doors can be unlocked using the key, this method is NOT RECOMMENDED - depending on the specification of the vehicle the alarm may not be disarmed.

NOTE: *If the handset does not operate after the vehicle has been parked for a long period, unlock the driver's door with the key and then try again. If the handset still fails to operate, enter the EKA code using the procedure shown later in this section.*

Downloaded from www.Manualslib.com manuals search engine

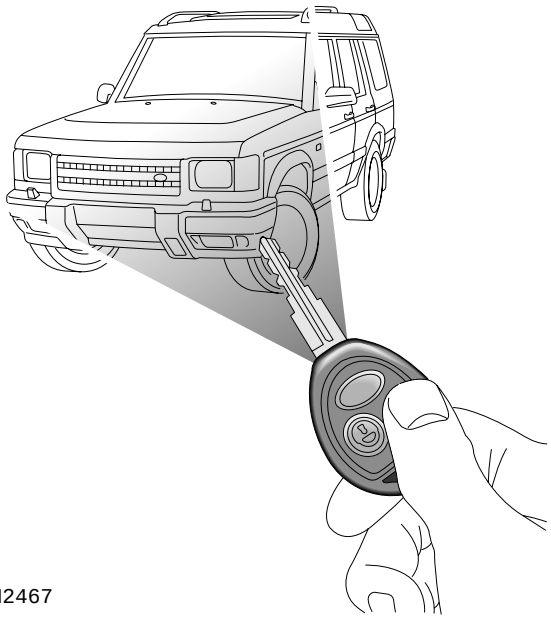

H2467

Using the remote handset

While it is not necessary to point the handset at the vehicle, the handset must be within range of the vehicle when a button is pressed. Note that the operating range may vary depending upon handset battery condition and may sometimes be limited by physical and geographical factors beyond your control. From a security point of view, it may not be wise to unlock unless you are within a few feet of the vehicle.

Superlocking

Provided all the doors are fully closed, the Superlocking feature is activated automatically whenever the vehicle is locked using the remote handset. Superlocking immobilises the interior door handles, thereby preventing an intruder from gaining entry by smashing a window and reaching inside the vehicle to operate the door handles.

Note that locking with the key will not activate superlocking.

WARNING

For safety, NEVER use Superlocking if passengers are to remain inside the vehicle - in an emergency they would not be able to escape.

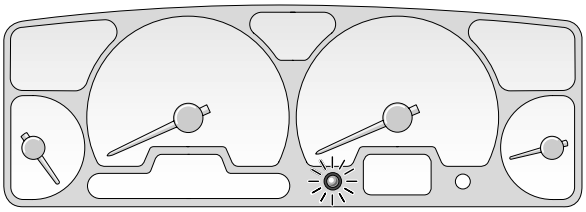

H2546

Anti-theft alarm indicator light

This light provides information about the status of the alarm system, as follows:

When the vehicle is locked:
The light flashes rapidly while the alarm is arming itself. After ten seconds, the light adjusts to a slower frequency and continues to flash as an anti-theft deterrent until the alarm is disarmed.

If the engine is immobilised (even though the alarm has been disarmed):
The light flashes slowly until the engine is remobilised.

If the alarm has been triggered:
The light will flash rapidly when the alarm is disarmed until the starter switch is turned to position II.

If the remote handset battery power is low:
The light will flash rapidly for ten seconds after the handset has been used when the driver's door is opened.

Downloaded from www.Manualslib.com manuals search engine

Mislock

If the driver's door is not fully closed when the handset lock button is pressed, the alarm sounder or vehicle horn will sound once, indicating a mislock. In this case, none of the doors will lock and the alarm system will not be armed.

If a passenger door or other aperture is not fully closed when the handset lock button is pressed, the alarm sounder or vehicle horn will sound once, indicating a mislock. However, the 'partial arming' attributes of the security system will enable as much of the system to be armed as possible (all fully closed door or bonnet apertures will be protected, but an open door will not!). As soon as the open aperture is closed, the system will automatically revert to a fully armed state.

NOTE: *If a mislock occurs as a result of an open door, the superlocking and interior space protection features will not be activated.*

NOTE: *Your Land Rover dealer can disable the mislock audible warning.*

If the alarm sounds

If the alarm is triggered, the alarm sounder or vehicle horn will sound for 30 seconds before switching off and resetting itself to the same protection status that existed prior to the alarm being triggered.

To silence the alarm, press either button on the remote handset.

Headlight courtesy delay (if fitted)

When locking the vehicle, the remote handset can be used to illuminate the headlights for 30 seconds. At night this will make it easier for you to unlock the garage, or walk to your house in safety. Operate this feature at the same time as you lock the car, by keeping the handset LOCK button pressed for more than 2 seconds (the doors lock and alarm system arms in the usual way).

To extinguish the lights before the 30 second illumination period has expired, press the lock button again.

NOTE: *This feature can be disabled by a Land Rover dealer.*

Single point entry

This is a personal security feature, which enables the driver's door only to be unlocked, leaving the other doors in a locked state. It can be operated by the remote handset as follows:

Press the unlock button once to unlock the driver's door, press a second time (within one minute) to unlock the remaining doors.

NOTE: *This feature can be disabled by a Land Rover dealer.*

Downloaded from www.Manualslib.com manuals search engine

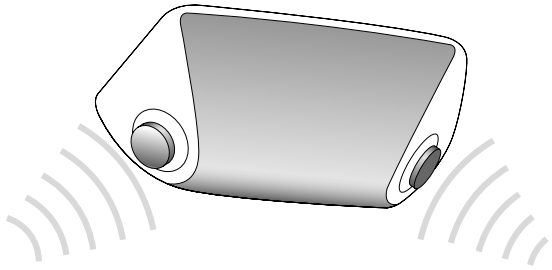

H2468

Interior space protection

Interior space protection is designed to protect the interior of the vehicle from intrusion (entry by a thief through a smashed window, for example). Two pairs of sensors monitor the interior space and activate the alarm if air movement is detected in the passenger compartment.

Using the handset:
Interior space protection is activated automatically whenever the remote handset is used to set the alarm and can ONLY be deactivated with the handset.

Key operation:
Using the key will NOT activate (or deactivate) interior space protection.

NOTE: *The feature cannot be activated if a door is open, or if the starter switch is turned on.*

WARNING

Never activate interior space protection if windows or sunroof are to be left open, or if passengers or animals are to be left inside the vehicle - any movement will activate the alarm.

Speed-related locking (if fitted)

This security feature locks all the doors automatically when the vehicle speed exceeds 4 mph (7 km/h), and unlocks the doors as soon as the starter switch is turned off (provided the doors had previously been locked by the speed related feature).

Note that this feature is not selectable by the driver, and that operation of the door locks by any other means (interior locking switch on the fascia panel, for example) will disable the speed-related locking function for the remainder of the journey, or until the starter switch is turned off and on again.

NOTE: *This feature can be selected or deselected by a Land Rover dealer.*

Downloaded from www.Manualslib.com manuals search engine

ENGINE IMMOBILISATION

Engine immobilisation is an important aspect of the security system, and includes a feature known as 'passive immobilisation'. This is designed to safeguard the vehicle from theft, should the driver forget to lock the doors and prevents the engine from being started unless the GENUINE handset key is inserted into the starter switch. Engine immobilisation is automatic whenever any of the following conditions occur.

- The vehicle is locked using handset or key.
- Thirty seconds after the starter switch has been turned off AND the driver's door opened.
- Five minutes after the starter switch is turned off, or the alarm system is disarmed.

The engine will be re-mobilised automatically whenever the genuine handset key is inserted into the starter switch and turned to position 'II'.

EMERGENCY KEY ACCESS

If the handset is damaged, or fails to operate, the engine can be re-mobilised by using the key to enter a unique four number emergency key access code. The code is recorded on the Security Information card and is entered as follows:

IMPORTANT INFORMATION

When entering a code:

- ENSURE each key movement is carried out with care and precision and turned to the full extent of its travel.
- After turning the key to either the lock or unlock positions, make sure it is FULLY returned to the centre (vertical) position.
- An interval of 10 seconds or more between key turns, or the key being held in a locked or unlocked position for 5 seconds or more will cancel an entry attempt, in which case you must start again with operation 1.

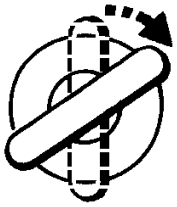

1. Ensure that all doors are closed, then using the key turn the driver's door lock to the UNLOCK position (towards the front of the car) and hold in this position for at least 5 seconds until the alarm sounder sounds once). Then return the key to the centre position. It is now possible to use the key to enter the separate numerical values of the four numbers that make up the emergency key access code.

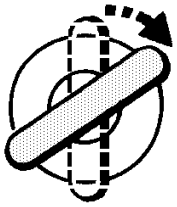

2. Enter the FIRST number of the code. If the first number is 4, turn the key (towards the front of the car) to the UNLOCK position 4 times. Ensure the key is FULLY returned to the centre position after each turn.

Downloaded from www.Manualslib.com manuals search engine

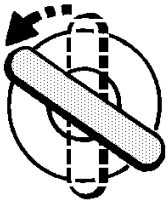

3. Enter the SECOND number of the code. If the second number is 3, turn the key (towards the rear) to the LOCK position 3 times. Remember; the key must be FULLY returned to the centre position after each turn.

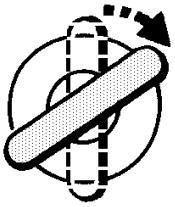

4. Enter the THIRD number of the code. If the third number is 12, turn the key to the UNLOCK position twelve times, ensuring that the key is FULLY returned to the centre position after each turn.

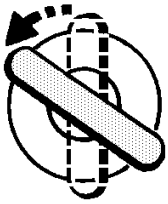

5. Enter the FOURTH number of the code. If the fourth number is 1, turn the key to the LOCK position once. Ensure the key is FULLY returned to the centre position.

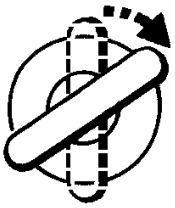

6. Finally, turn the key to the unlock position once more. If the code has been entered correctly, a double 'bleep' will sound (a single 'bleep' indicates that the code has been entered incorrectly).

NOTE: *If the Mislock audible warning has been deselected (by a Land Rover dealer), the alarm sounder will not sound when an EKA code has been entered. Instead, the alarm indicator light on the instrument panel will flash once (for one second) to indicate a successful code entry.*

There is now a **five minute delay** before the alarm and engine immobiliser are deactivated. **DO NOT OPEN THE DOOR OR ATTEMPT TO ENTER THE VEHICLE YET!**

7. Through the driver's door window, observe the anti-theft alarm indicator light on the instrument panel. If code entry was successful, this light will continue flashing (once every two seconds) for the five minute delay period.

DO NOT OPEN THE DOOR OR ATTEMPT TO ENTER THE CAR until the full delay period has elapsed - this will be indicated by the anti-theft alarm indicator light extinguishing.

8. Now open the door, insert the key into the starter and turn the switch to position 'II' IMMEDIATELY! If the starter switch is not turned to position 'II' within 30 seconds of the indicator light extinguishing, the engine will automatically immobilise again.

If an incorrect code has been entered:
If an incorrect code has been entered, the alarm sounder will sound once and the anti-theft alarm indicator light will continue to flash. In this case, return to operation '1' and re-enter the code.

After three failed entry attempts, the security system invokes a delay period of ten minutes during which the system will not accept any further attempts to enter a code.

IMPORTANT INFORMATION
Memorise the emergency key access code or keep the Security card on your person in case of emergencies. NEVER leave the card in the vehicle.

Downloaded from www.Manualslib.com manuals search engine

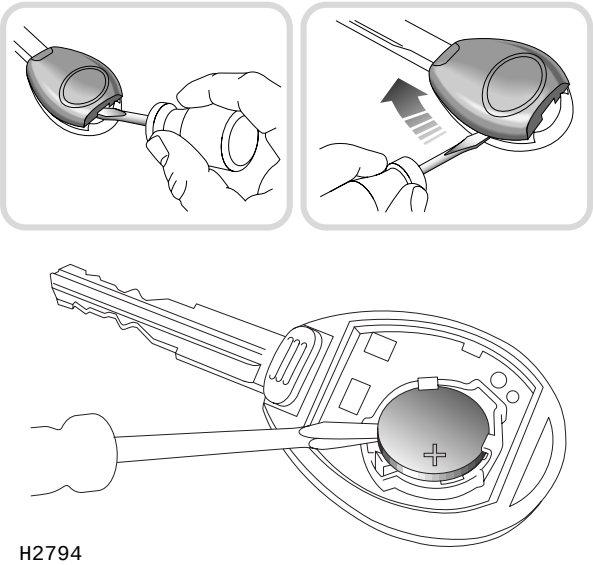

REMOTE HANDSET BATTERY

The battery should last for approximately three years dependent upon use. When the battery needs replacing it will be apparent from the following symptoms:

- A gradual deterioration in range and performance.
- The alarm indicator light in the instrument panel will flash rapidly for 10 seconds after the driver's door is opened.

Always fit a Land Rover STC 4080 or a Panasonic CR2032 replacement battery (available from a Land Rover dealer) and adopt the following replacement procedure:

1) With the handset face down, insert the blade of a small flat-bladed screwdriver into the slot at the rear of the handset (see inset) and prise the back upwards.

2) Insert the screwdriver blade as shown in the right hand inset and then carefully slide it along the joint towards the key to release the back of the handset.

3) Use a small flat-bladed screwdriver to prise the battery from its mounting (see illustration), taking care to avoid touching the circuit board or the metal battery contacts.

4) Fit the new battery, ensuring that correct polarity is maintained ('+' side facing up). Finger marks will adversely affect battery life; if possible, avoid touching the flat surfaces of the battery and wipe them clean before fitting.

5) Press the two halves of the handset firmly together and ensure that both halves are fully joined to prevent dirt or moisture from entering the handset.

The handset is now ready for use.

WARNING

The handset contains delicate electronic circuits and must be protected from impact and water damage, high temperatures and humidity, direct sunlight and the effects of solvents, waxes and abrasive cleaners.

Downloaded from www.Manualslib.com manuals search engine

KEY AND HANDSET NUMBERS

You have been supplied with two remote handsets with integral keys which operate all locks.

The key number is stamped on a tag attached to the key ring. Check that the key number has been entered in the space provided on your Security card.

If the remote handset is lost, contact a Land Rover dealer, who can supply replacement units.

WARNING

Keep the Security card and spare handset in a safe place - NOT IN THE VEHICLE!

Interior door handles and door sill locking buttons

From inside the vehicle, each door can be individually locked by depressing the appropriate door sill button. However, doors cannot be unlocked by raising the sill button.

Use the door handles to unlock, as follows:

- First operation of the door handle unlocks the door.
- Second operation of the door handle opens the door.

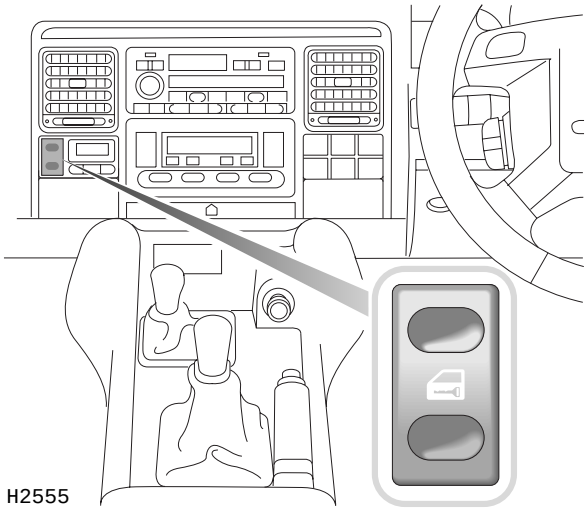

Interior locking switch

This is a personal security feature which allows the driver to lock (or unlock) all the doors from inside the vehicle (while driving or with the vehicle stationary). Press the lower part of the switch to lock (the alarm will not be armed), and the upper part to unlock.

NOTE: *If the locks have already been superlocked, the switch will not release the locks.*

Downloaded from www.Manualslib.com manuals search engine

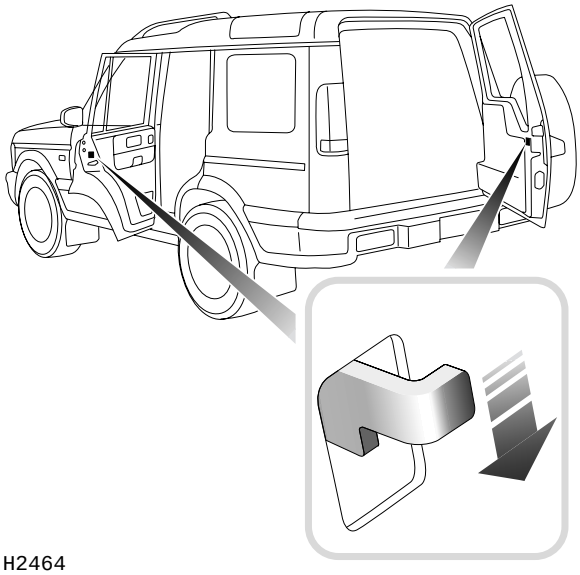

H2464

CHILD-PROOF LOCKS

Move the locking levers on the rear doors and taildoor down to engage the child locks.

With the child-proof locks engaged, neither the rear doors nor the taildoor can be opened from inside the vehicle, thereby avoiding the risk of a door being opened accidentally while the vehicle is moving.

WARNING

NEVER leave children unsupervised in the vehicle.

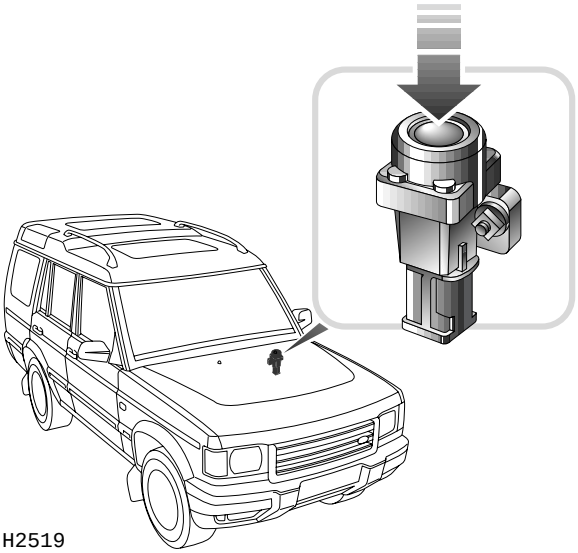

H2519

DOOR LOCKING CUT-OFF SWITCH

An inertia switch, operational only with the starter switch in position 'II' and the alarm disarmed, prevents the doors centrally locking (or if the doors are locked, will unlock them) in the event of an accident or sudden impact.

When the switch operates, the direction indicator lights flash (if market permits), until the system is reset by turning the starter switch on and off, and opening and closing the driver's door.

Note that doors cannot be locked again until the switch is reset.

The inertia switch also cuts off the fuel supply (see *'Fuel cut-off switch').*

WARNING

Always check for fuel leaks before resetting the switch!

Downloaded from www.Manualslib.com manuals search engine

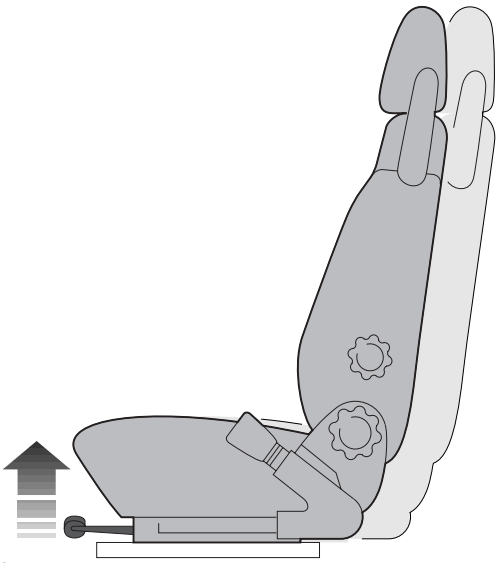

H2547

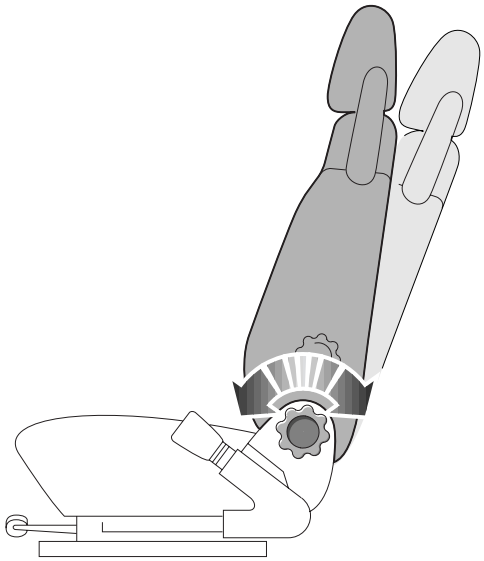

H2548

FRONT SEAT ADJUSTMENT

Forward/backward movement

Lift the lever to slide the seat forward or back. Ensure the seat is locked in position before driving.

WARNING

To avoid the risk of loss of control and personal injury, DO NOT adjust the driver's seat while the vehicle is in motion.

DO NOT travel with the seat backs reclined steeply rearwards. Optimum benefit is obtained from the seat belt with the seat back angle set to approximately 25 degrees from the upright (vertical).

Backrest movement

Rotate the handwheel to achieve the desired backrest angle.

Downloaded from www.Manualslib.com manuals search engine

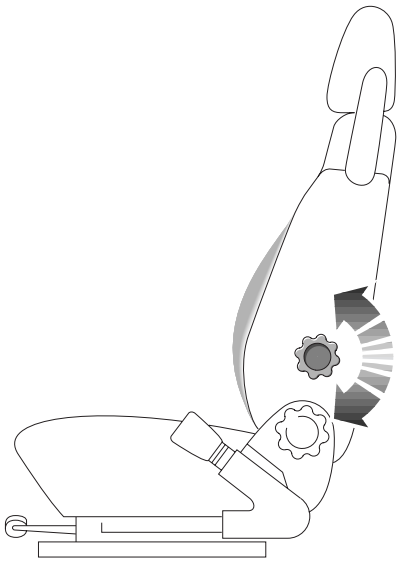

H2590

Lumbar support

Rotate the handwheel to increase or decrease support to the lumbar region of the back.

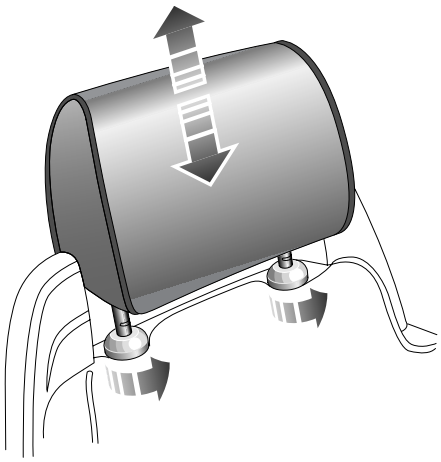

H2465

HEAD RESTRAINTS

Pull the head restraint up or down until the cushion is level with the back of the head.

WARNING

Head restraints are designed to support the back of the head (NOT THE NECK), and to restrain rearward movement of the head in the event of a collision. The restraint must be positioned level with the head to be effective.

Head restraint removal

Turn both mounting collars fully anti-clockwise and pull the restraint upwards to remove.

After replacing a head restraint turn the mounting collars clockwise.

Downloaded from www.Manualslib.com manuals search engine

POWER OPERATED FRONT SEATS
(if fitted)

WARNING

To avoid the risk of loss of control and personal injury, DO NOT adjust the driver's seat while the vehicle is in motion.

The seat adjustment controls are situated on the side of the centrally mounted cubby box.

Seat adjustment is only possible when the starter switch is turned to position 'II' or for 45 seconds after opening the driver's door.

The following functions are available:

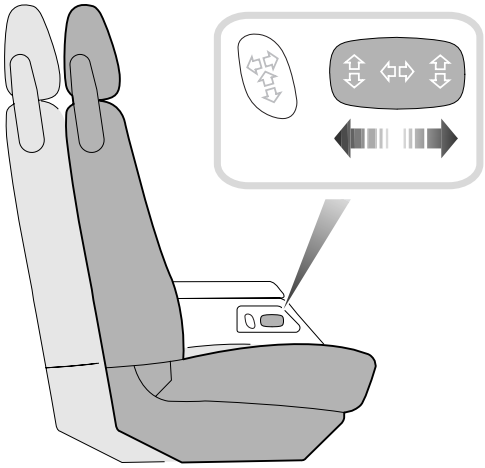

H2469

Forward/backward adjustment

Push and hold the switch forwards or backwards to move the seat to the desired position.

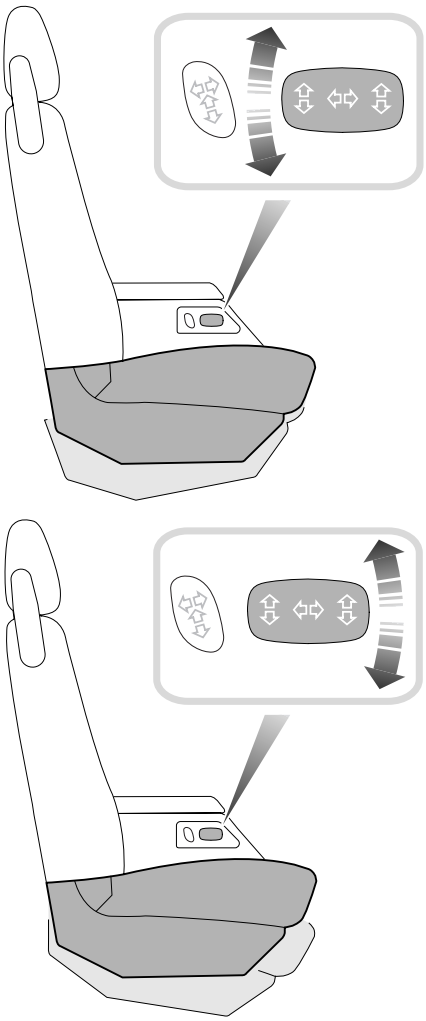

H2470

Seat cushion angle

Twist the switch to tilt the seat cushion to the desired position. Note that the front and rear of the switch work independently - the front raising or lowering the front of the cushion, the rear of the switch similarly controlling the rear of the seat cushion.

Downloaded from www.Manualslib.com manuals search engine

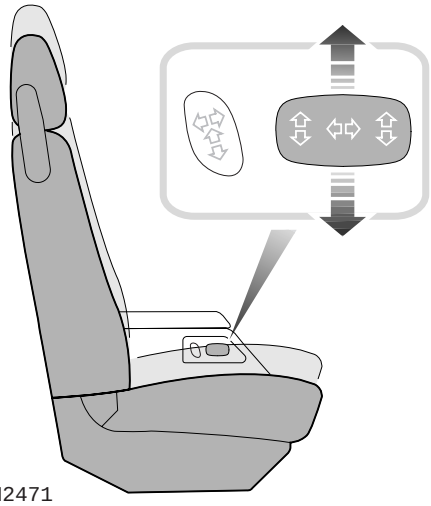

Seat cushion height (driver's seat only)
Push the switch up or down to raise or lower the cushion.

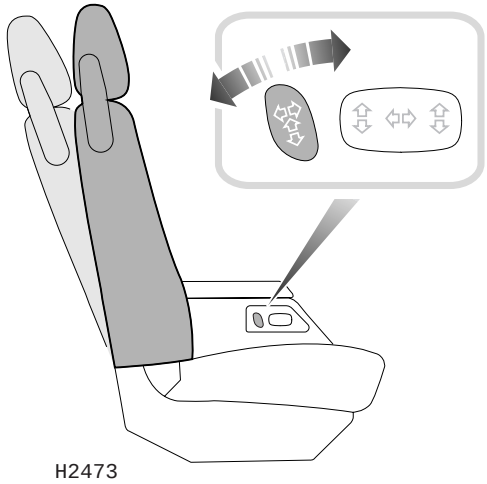

Seat back adjustment
Twist the switch forward or backward until the desired seat back angle is achieved.

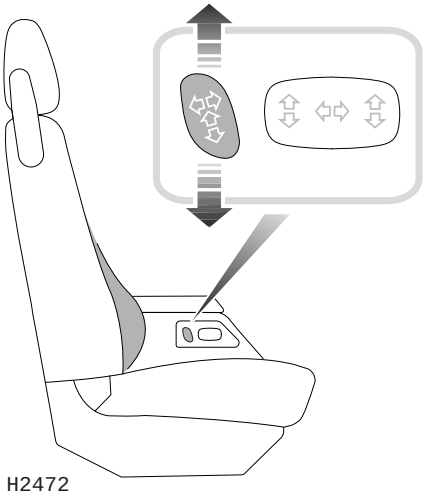

Lumbar support adjustment
Push the switch up to increase support to the lumbar region of the back. Lower the switch to reduce lumbar support.

WARNING

DO NOT travel with the seatbacks reclined steeply rearwards. Optimum benefit is obtained from the seat belt with the seat back angle set to approximately 25 degrees from the upright (vertical).

Downloaded from www.Manualslib.com manuals search engine

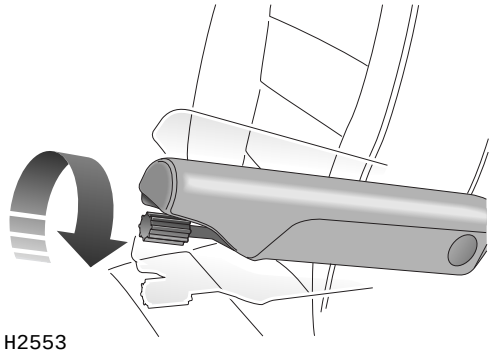

H2553

FOLDING ARMRESTS

Some vehicles are fitted with adjustable front seat armrests, which can be either; stowed vertically in line with the seat backrest when not required, or folded horizontally to serve as an arm/elbow rest.

The height/angle of each armrest can be adjusted by turning the knob set into the end of the armrest: clockwise to raise and anti-clockwise to lower.

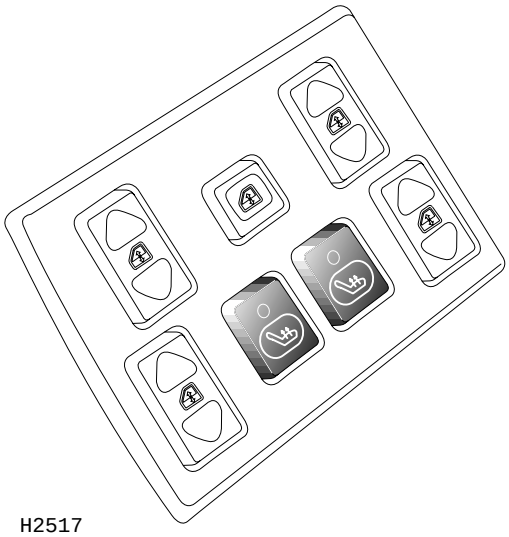

H2517

Heated front seats

(if fitted)

With the starter switch turned on and the engine running, press the switches to operate the heating elements in either the driver's or front passenger seat (the indicator light in the switch illuminates). Press a second time to switch off.

The seat heaters are thermostatically controlled and operate intermittently to achieve and then maintain a predetermined temperature between 79° F and 97° F (26° - 36° C).

IMPORTANT INFORMATION
The seat heaters consume considerable power from the battery. For this reason, they should ONLY be operated while the engine is running.

Downloaded from www.Manualslib.com manuals search engine

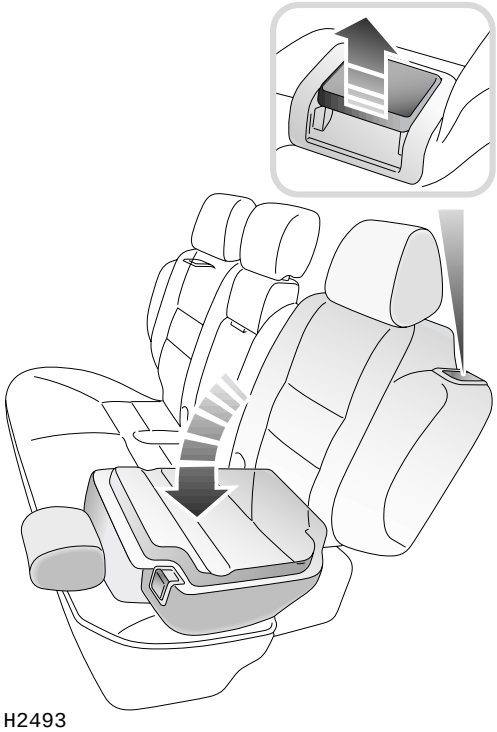

H2493

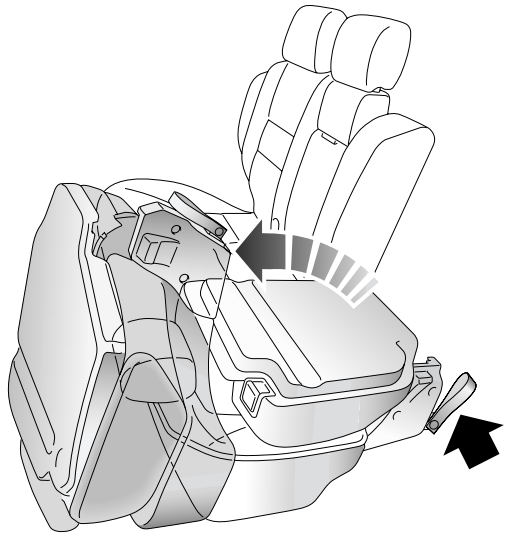

H2549

FOLDING THE REAR SEATS

WARNING

DO NOT adjust any part of a seat while the vehicle is in motion.

One or both parts of the split rear seat can be either partially or fully folded to increase the rear loadspace.

1. To release either part of the backrest, lift the lever shown in the inset, and then fold the backrest onto the seat base.
2. Ensure the outer head restraints are fully lowered, the armrest is stowed and the centre head restraint is removed.
3. To release the seat base, pull the release strap upward (arrowed in illustration). With backrest and seat base released, the assembly can be folded forward as shown.

Returning the seat to the upright position

Push the seat assembly back onto the floor - the floor catches should latch with the base of the seat. Then raise the backrest.

If the backrest cannot be raised easily, DO NOT force it. This indicates that the seat base has not fully engaged with the floor catches (note that the seat assembly is designed to prevent the backrest from being raised unless the seat is properly secured to the floor).

With the seat base secure, the backrest can be raised and locked in position (none of the RED panel on the release lever should be visible when the backrest is correctly latched).

WARNING

After the seat is returned to the upright position, check and physically test the latching mechanism to ensure that both seat base and backrest are secure before driving.

Downloaded from www.Manualslib.com manuals search engine

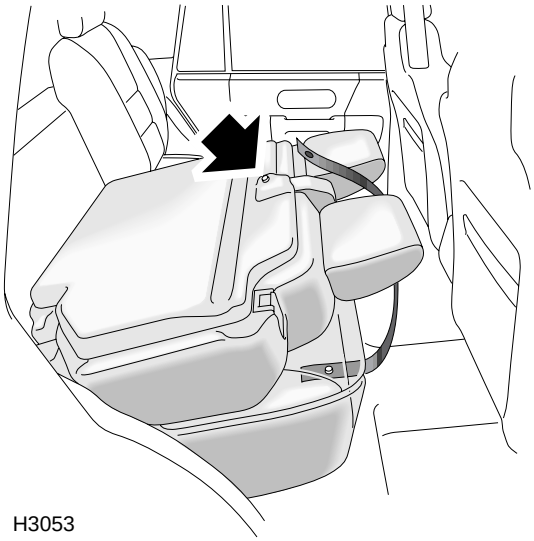

H3053

Preventing chafing

When the larger portion (or whole) of the seat is fully folded, some chafing may occur between the seat and the cubby box (note that this is most likely to occur when the front seats are adjusted fully forward). If chafing is apparent, risk of damage to the seat cover can be reduced by fitting the securing strap as shown.

The strap can be found in the tool bag in the tail door storage pocket.

1. Fold the backrest forward.
2. Fit one end of the strap to the press-stud fastening on the underside of the seat base (it will be necessary to partially raise the seat base in order to visually locate the fastening).
3. Stretch the strap around the folded seat assembly and secure the free end to the press-stud fastener on the rear of the backrest.

Compressing the folded seat assembly in this way should alleviate chafing and any subsequent damage to the seat cover when the seat is folded fully.

Downloaded from www.Manualslib.com manuals search engine

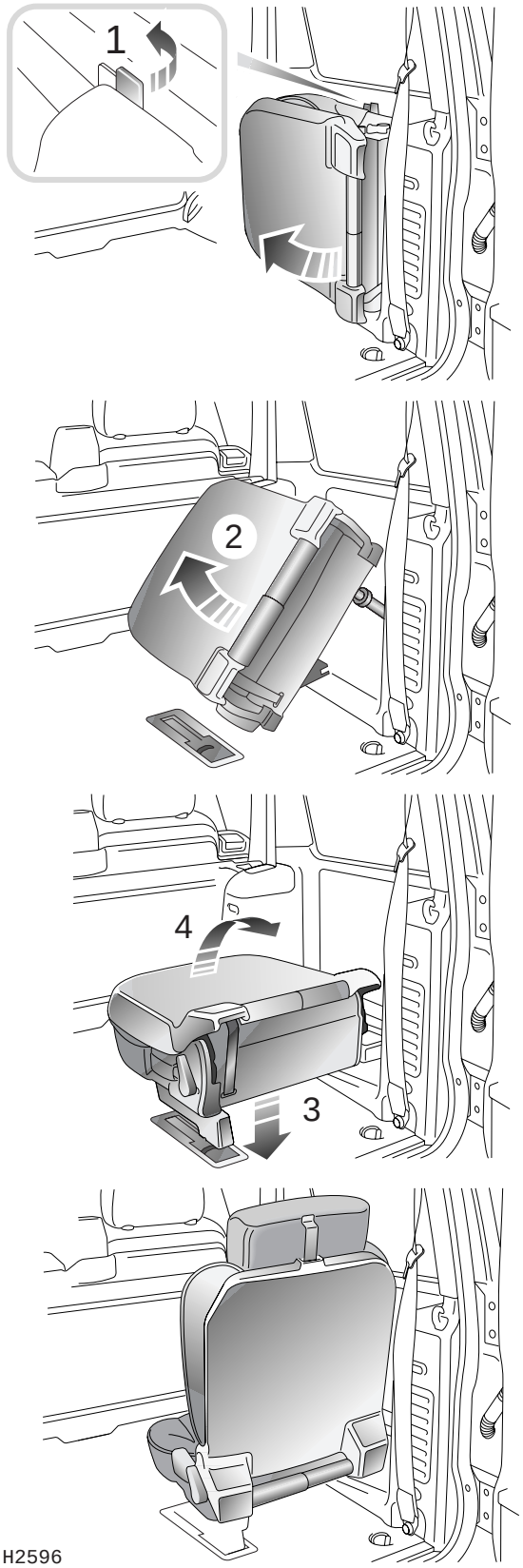

OCCASIONAL REAR SEATS

WARNING

Before driving with passengers seated in the occasional rear seats, for safety ensure that the floor latches are fully engaged.

Do not carry passengers in the occasional rear seats if a dog guard is fitted between the second row of seats and the loadspace.

Erecting the seats

1. Push the lever (shown in inset) and hold to release the seat from its stowed position.
2. Swing the seat away from the vehicle side, at the same time lifting and turning it towards the horizontal.
3. Lower the seat to the loadspace floor, PUSHING DOWN FIRMLY to ensure that the floor latch has fully engaged.
4. Pull the backrest into the upright position.

NOTE: *The backrest cannot be raised unless the seat is securely latched to the floor.*

IMPORTANT INFORMATION
Remember to unfold the head restraints from the roof before driving.

Downloaded from www.Manualslib.com manuals search engine

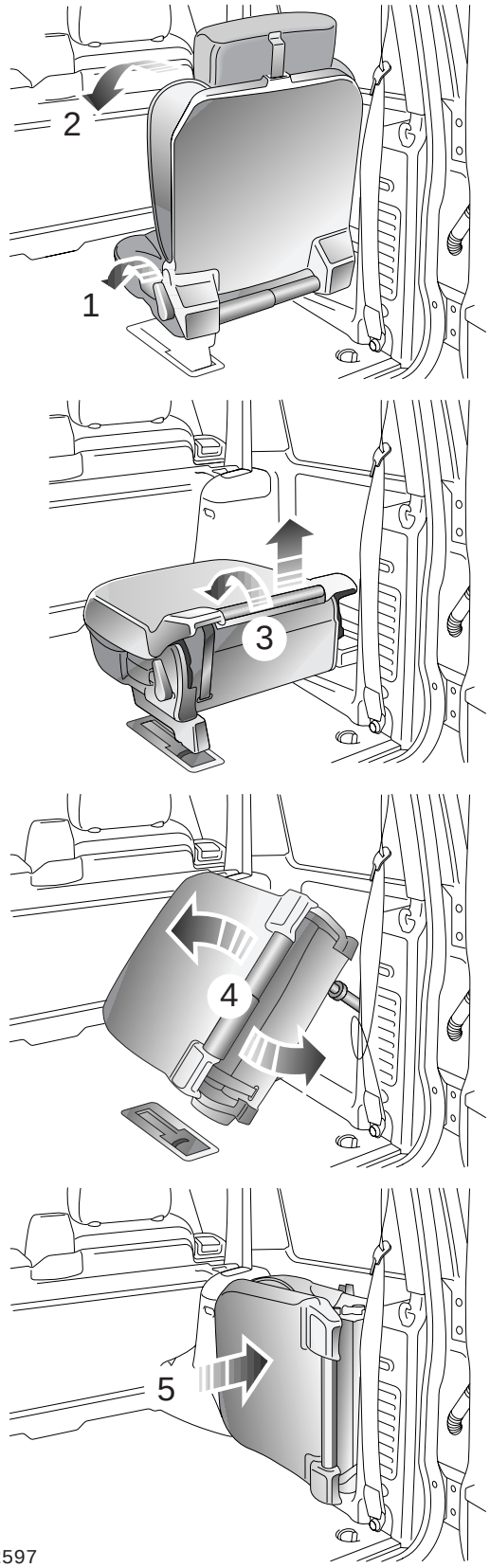

Stowing the seats

Before stowing a seat, ensure that the drinks tray to the side of the seat has been emptied, and that the seat belt buckle is folded down to prevent it from becoming trapped between the backrest and cushion.

1. Push the backrest release lever forward to unlock the backrest.
2. Fold the backrest fully forward.
3. Turn the twist grip (moving part of the bar on the back of the seat) fully forward to release the floor latch, and start to lift the seat from the loadspace floor.
4. Continue lifting, at the same time turning the seat into a vertical position.
5. Push the seat firmly into the vehicle side, ensuring that the seat has engaged fully with the securing catch.

Downloaded from www.Manualslib.com manuals search engine

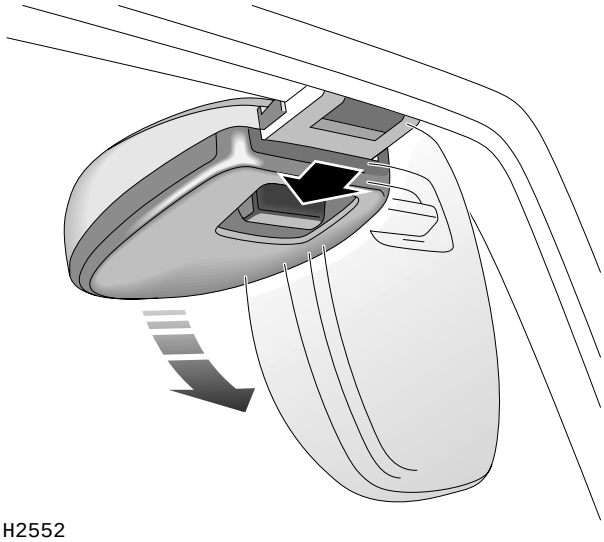

H2552

Head restraints

The head restraints for use with the occasional rear seats are hinged from the roof.

To unfold a head restraint, pull the handle (arrowed in illustration) forward and swing the restraint down from the roof. Stow the head restraint when not in use by pushing it back flush with the roof.

WARNING

DO NOT drive with occupants in the occasional rear seats unless the head restraints are unfolded.

Downloaded from www.Manualslib.com manuals search engine

SEAT BELT SAFETY

The seat belts fitted to the front and second row seats are intended for use by adult sized occupants. Each belt should be used by one occupant only.

Observe the following precautions:

- DO make sure ALL passengers are securely strapped in at all times - even for the shortest journeys.
- ALWAYS adjust seat belts to eliminate any slack in the webbing. DO NOT slacken the webbing by holding the belt away from the body - to be fully effective, the seat belt must remain in full contact with the body at all times.
- ALWAYS fit the lap strap as low on the hips as possible (never across the abdomen), and ensure that the diagonal belt passes across the shoulder without slipping off or pressing on the neck.
- DO NOT wear seat belts over hard, sharp or fragile items in clothing, such as pens, keys, spectacles etc.
- Always replace a seat belt assembly that has withstood the strain of a severe vehicle impact, or if the webbing shows signs of fraying.
- Where possible use the seat belts to secure large items of luggage that are to be carried on the seats - in the event of an accident, insecure items become flying missiles capable of causing serious injury.
- DO NOT use a seat belt that is twisted or obstructed in any way that could impede its smooth operation.
- DO NOT allow front seat occupants to travel with the seat backs reclined steeply rearwards. Optimum benefit is obtained from the seat belt with the seat back angle set to approximately 25 degrees from the upright (vertical) position.
- DO NOT allow foreign matter (particularly sugary food and drink particles) to enter the seat belt locks - such substances can render the locks inoperative.
- In most countries, all occupants are required by law to wear a seat belt, unless they have been issued with a medical exemption certificate.
- During pregnancy, women should wear the lap belt across the hips below the baby, with the diagonal belt passing across the shoulder, between the breasts and to one side of the baby - if in doubt, consult a doctor.

WARNING

The airbag supplementary restraint system (SRS) is designed to add to the overall effectiveness of the seat belts. It does not replace them. SEAT BELTS MUST ALWAYS BE WORN!

Ensure that all seat belts are worn correctly - an improperly worn seat belt increases the risk of death or serious injury in the event of a collision.

Downloaded from www.Manualslib.com manuals search engine

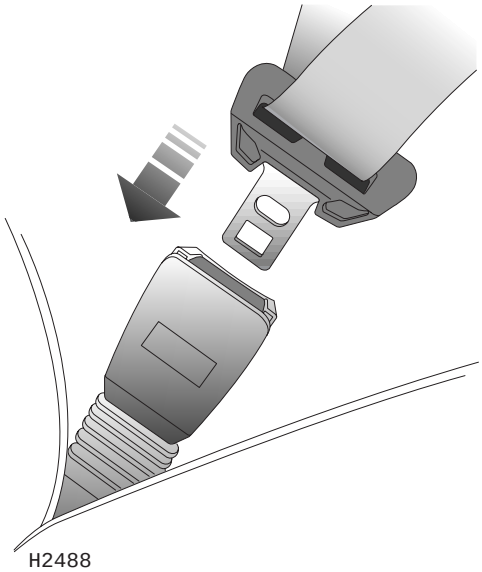

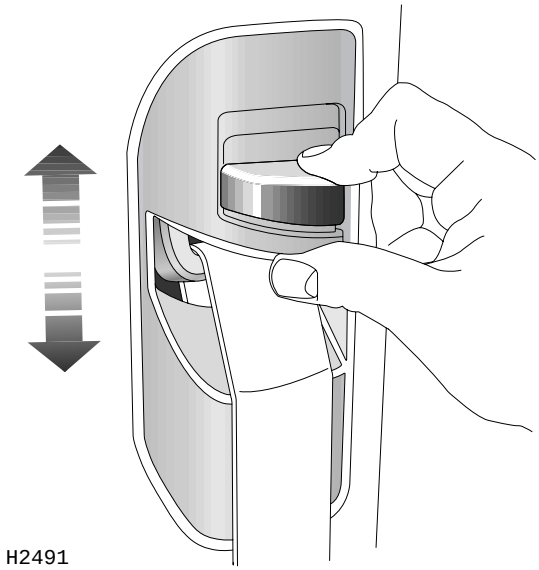

Fastening the seat belts

Inertia reel belts are fitted to all front and rear seating positions, and also to the occasional rear seats (where fitted).

Pull the belt over the shoulder and across the chest and, ensuring that the webbing is not twisted, insert the metal tongue plate into the buckle nearest the wearer - a 'CLICK' indicates that the belt is securely locked.

Seat belts are designed to bear upon the bony structure of the body (pelvis, chest and shoulders) and can only be worn safely with the seats in a normal upright position - DO NOT allow front seat occupants to travel with the seat steeply reclined.

Releasing the belt

Press the RED button on the seat belt buckle.

Upper anchorage adjustment (front seats only)

The height of the seat belt upper anchorage can be adjusted for comfort AND safety. Squeeze the control between finger and thumb to raise or lower the anchorage. For safety, the seat belt should always be worn with the webbing crossing the shoulder MIDWAY BETWEEN THE NECK AND THE EDGE OF THE SHOULDER.

Ensure the anchorage has 'clicked' into one of the locked positions before driving.

Where possible, rear seat passengers should adjust their position on the seat to enable the seat belt webbing to cross the shoulder without pressing on the neck.

Downloaded from www.Manualslib.com manuals search engine

Child seats

The seat belts fitted to your vehicle are designed for adults and larger children. For their safety, it is very important that all infants and young children are restrained in a suitable child safety seat appropriate to their age and size. Safety seats approved for use in your vehicle are available from your Land Rover dealer.

Only fit a child seat that has been approved for use in your vehicle, and ensure the manufacturer's fitting instructions are followed exactly.

Vehicles fitted with a passenger airbag:
For optimum safety, children should travel in the rear of the vehicle at all times. However, if a passenger airbag is fitted and it is essential that a child travel in the front, set the seat fully rearward and seat the child in an approved, FORWARD FACING child seat. DO NOT use a rear facing child seat - an inflating airbag could impact with the seat and cause serious injury to the child!

The above symbol affixed to the passenger side fascia panel of your vehicle, warns against the use of a REAR FACING child seat in the front passenger seat, when a passenger airbag is fitted. This type of child seat could cause serious injury to a child in the event of an airbag deployment.

WARNING

DO NOT install a rearward facing child seat in a passenger seat equipped with an airbag system. Failure to follow this advice could result in serious injury, or even death for the child.

Downloaded from www.Manualslib.com manuals search engine

Seat belt locking mechanism

All front passenger and second row seat belts have a special locking mechanism which aids the retention of child seats. The procedure to install a child seat is as follows:

1. Install the child seat in the vehicle, attach the seat belt and secure the buckle in accordance with the manufacturers fitting instructions.
2. Pull on the shoulder section of the belt to unreel all of the remaining webbing to the limit of its travel. This will engage the automatic locking feature, which then acts as a ratchet, allowing the webbing to retract ONLY.
3. Allow the seat belt to retract onto the child seat (a 'clicking' sound will confirm that the ratchet has engaged), firmly pushing the child seat into the seat.
4. Ensure there is no slack in the seat belt by pulling upwards on the shoulder belt immediately above the child restraint. The seat belt should now be locked and the child seat held firmly in position.

Once the child seat is removed and all the seat belt webbing is allowed to retract, the seat belt locking mechanism reverts to normal operation.

NOTE: *The automatic locking mechanism should also be used when securing large items of luggage to a seat.*

Downloaded from www.Manualslib.com manuals search engine

SEAT BELT PRE-TENSIONERS

The seat belt pre-tensioners activate in conjunction with the airbag SRS and provide additional protection in the event of a severe frontal impact on the vehicle (see *'Airbag SRS').* The pre-tensioners automatically retract the seat belts fitted to the front seats. This reduces any slack in both the lap and diagonal portions of the belts, thereby reducing forward movement of the belt wearer in the event of a severe frontal collision.

The airbag SRS warning light on the instrument panel will alert you to any malfunction of the seat belt pre-tensioners.

If the pre-tensioners have been activated, the seat belts will still function as restraints, and must be worn in the event that the vehicle remains in a driveable condition.

NOTE: *The seat belt pre-tensioners will NOT be activated by rear, side or minor frontal impacts.*

IMPORTANT INFORMATION

The seat belt pre-tensioners will only be activated once and then MUST BE REPLACED by a Land Rover dealer. Failure to replace the pre-tensioners will reduce the efficiency of the vehicle's front restraint systems.

After any frontal impact, always have the seat belts and pre-tensioners checked and, if necessary, replaced by a Land Rover dealer.

In the interests of safety, it is recommended that removal or replacement of the front seats and seat belts should only be carried out by a Land Rover dealer.

Downloaded from www.Manualslib.com manuals search engine

Caring for seat belts

Regularly inspect the belt webbing for signs of fraying, cuts and wear; also pay particular attention to the condition of the fixing points and adjusters.

DO NOT bleach or dye the webbing and avoid contaminating the webbing with polish, oil or chemicals (see *'Cleaning & vehicle care').*

Testing inertia reel belts

1. With the seat belt fastened, give the webbing near the buckle a quick upward pull. The buckle must remain securely locked.
2. With the seat belt unfastened, unreel the webbing to the limit of its travel. Check that unreeling is free from snatches and snags and then allow the belt to FULLY retract.
3. Partially unreel the webbing, then hold the tongue plate and give it a quick forward pull. The mechanism must lock automatically and prevent any further unreeling.

If a seat belt should fail any of these tests, contact your dealer immediately.

WARNING

Always replace a seat belt that shows signs of webbing damage or has withstood the strain of a severe vehicle impact.

Downloaded from www.Manualslib.com manuals search engine

Airbag SRS

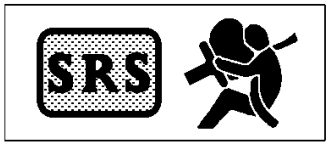

The airbag supplementary restraint system (SRS) (when fitted) provides additional protection for either the driver, or the driver and front seat passenger, in the event of a severe frontal impact on the vehicle.

Always remember; the airbag is a supplementary restraint system that provides ADDITIONAL protection in a frontal impact only - it does NOT replace the need to wear a seat belt. For maximum safety protection in all crash situations, a seat belt must be worn.

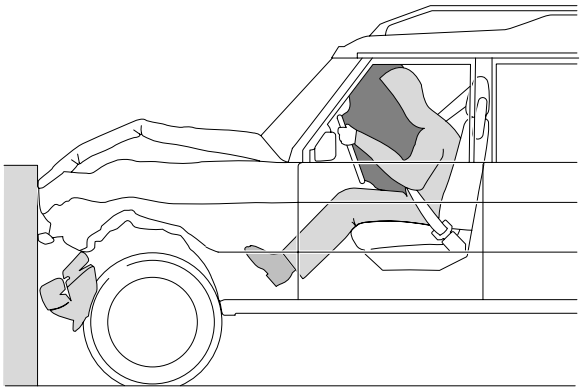

H2474

Airbag SRS warning light

A warning light mounted on the instrument panel will alert you to any malfunction of the airbag SRS. The airbag SRS should always be checked by a dealer if any of the following symptoms occur:

- The warning light fails to illuminate when the starter switch is turned to position 'II'.
- The warning light fails to extinguish within approximately four seconds after the starter switch is turned to position 'II'.
- The warning light illuminates after the engine is started, or while the vehicle is being driven.

Downloaded from www.Manualslib.com manuals search engine

How the airbag SRS works

The airbag supplementary restraint system (SRS) includes either: a single airbag module (mounted in the steering wheel centre pad) for the driver, or twin airbag modules (where shown in illustration) to protect both the driver and the front seat passenger.

In the event of a frontal collision, a sensor monitors the force of the impact to determine whether the airbag SRS should be activated.

If the impact is sufficiently severe, the system causes each airbag to inflate. Inflation is instantaneous and accompanied by a loud noise. Also evident may be traces of smoke and powder, neither of which are injurious or indicative of a malfunction of the airbag.

After inflation, the driver's airbag will immediately deflate, thereby ensuring that visibility is not impaired.

NOTE: *An airbag will not inflate as a result of heavy braking, minor bumps or potholes.*

WARNING

An inflating airbag can cause facial abrasions and other injuries. Minimise the risk of injury by ensuring that front seat occupants are wearing their seat belts and are seated correctly, with the seat as far back as is practical.

Following inflation some airbag SRS components are hot - DO NOT touch until they have cooled.

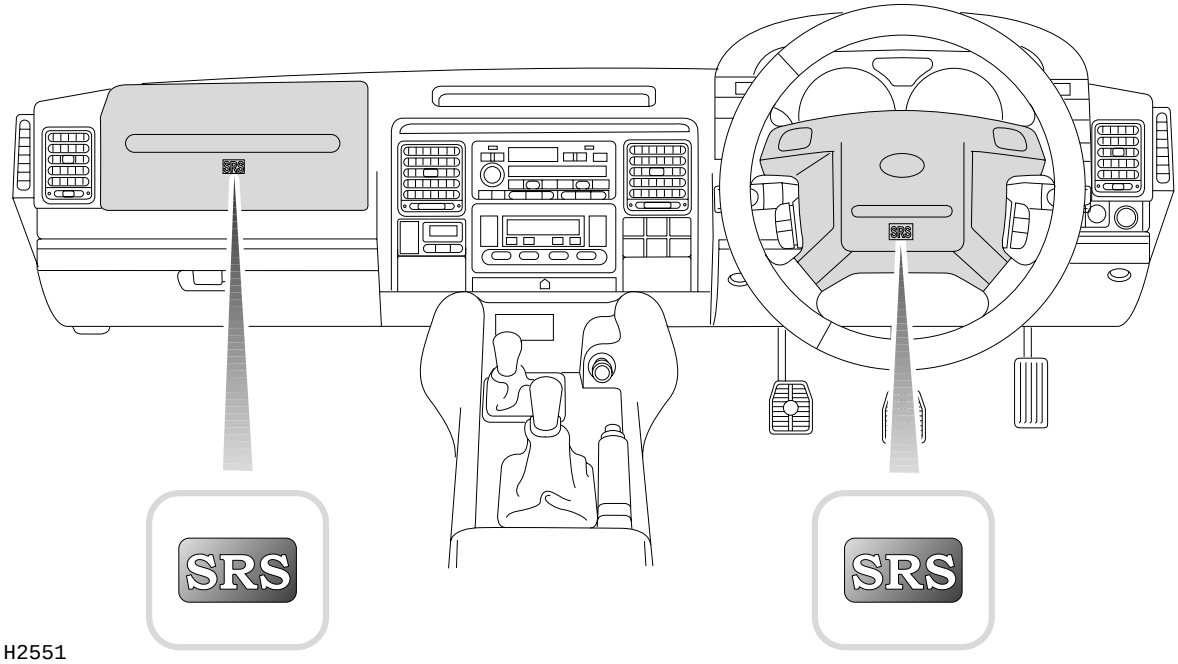

H2551

Downloaded from www.Manualslib.com manuals search engine

IMPORTANT INFORMATION

Even with airbag SRS equipment fitted, seat belts must ALWAYS be worn because:

- An airbag will only provide protection in severe frontal collisions. NO protection is afforded against the effects of side or rear impacts, roll over accidents, or minor frontal impacts.
- Inflation and deflation take place very quickly and will not provide protection against the effects of secondary impacts that can occur during multiple vehicle collisions.

The airbag module inflates with considerable speed and force. For your safety:

- NEVER attach accessory items to an airbag module cover, or place items of hand luggage or any objects on the top of a module cover; these could interfere with the inflation of the airbag, or if the airbag inflates, be propelled inside the vehicle causing injury to the occupants.
- DO NOT allow occupants to obstruct the operation of the airbag modules by placing their feet, knees or any part of their person in contact with, or in close proximity to, an airbag module while the vehicle is in motion.

IMPORTANT INFORMATION

- CHILD SEATS: Do not install a rearward facing child seat in a passenger seat equipped with an airbag system. Failure to follow this advice could result in serious injury, or even death for the child.
- If it is necessary for a child to travel in the front, set the seat fully rearwards and use ONLY an approved FORWARD FACING child seat.

Downloaded from www.Manualslib.com manuals search engine

Service information

After ten years from the original date of registration (or the installation date of a replacement airbag SRS), some components will need to be replaced by a Land Rover dealer (note the 'airbag module replacement date' shown on page 2 of the Service Portfolio book).

In addition, ALWAYS contact your dealer if:

- an airbag inflates.
- the front of the vehicle is damaged, even if the airbag has not inflated.
- any part of an airbag module cover (the steering wheel centre pad or fascia panel) shows signs of cracking or damage.

WARNING

DO NOT attempt to service, repair, replace, modify or tamper with any part of the airbag SRS, or wiring in the vicinity of an airbag SRS component; this could cause the system to activate, resulting in personal injury.

Disposing of vehicles

If you sell your vehicle, be sure to inform the new owner that the vehicle has an airbag SRS. In addition, make sure the new owner is aware of the airbag module replacement date shown on page 2 of the Service Portfolio book.

If your vehicle is to be scrapped; uninflated airbags are potentially very dangerous and must be safely deployed in a controlled environment by qualified personnel, before a vehicle is scrapped.

IMPORTANT INFORMATION

The components that make up the airbag SRS are sensitive to electrical or physical interference, either of which could easily damage the system and cause inadvertent operation or a malfunction of the airbag.

For your safety it is recommended that you seek the assistance of a Land Rover dealer to carry out any of the following:

- Removal or repair of any wiring or component in the vicinity of any of the SRS components (yellow wiring harness), including the steering wheel, steering column, instrument and fascia panels.
- Installation of electronic equipment such as a mobile phone, two-way radio or in-car entertainment system.
- Modification to the front of the vehicle, including the bumper and chassis.
- Attachment of accessories to the front of the vehicle.

Downloaded from www.Manualslib.com manuals search engine

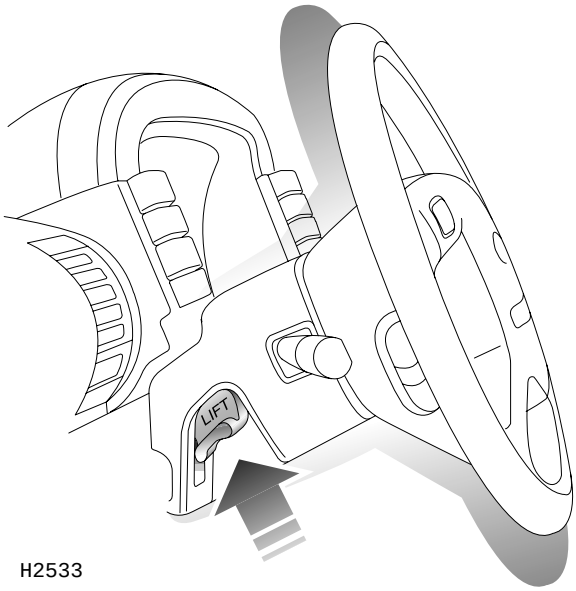

STEERING COLUMN ADJUSTMENT

The angle of the steering column can be adjusted to suit your driving position:

1. With the vehicle stationary, push the locking lever up and hold in this position.
2. Move the steering wheel (up or down) into the desired position, making sure the instrument panel is clearly visible.
3. When adjustment is complete, release the locking lever to lock the steering column in position.

WARNING

DO NOT adjust the steering column while the vehicle is in motion. This is extremely dangerous!

Downloaded from www.Manualslib.com manuals search engine

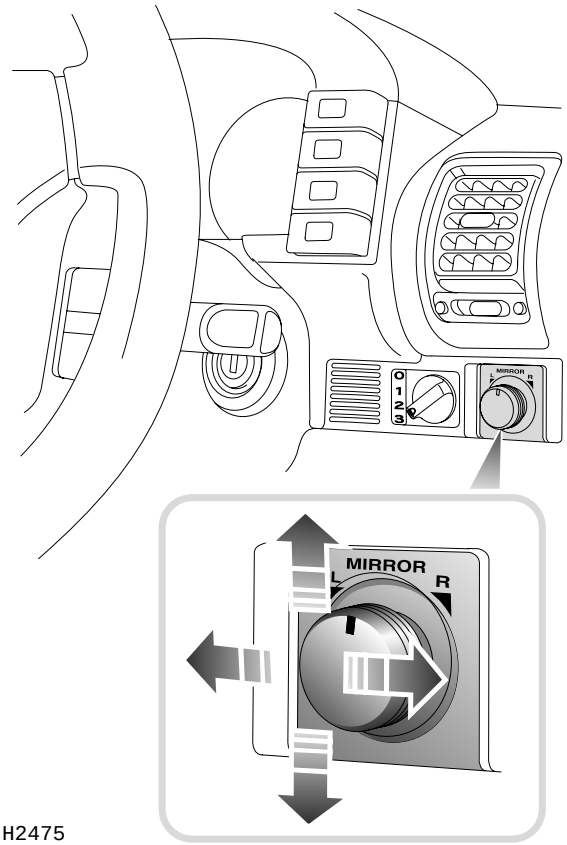

H2475

MIRROR ADJUSTMENT

Electric operation:

1. Turn the control to the **'L'** or **'R'** position to select either the left or right hand mirror.
2. With the starter switch turned to position 'II', push the control in the appropriate direction to tilt the mirror glass up/down/left or right.
3. When adjustment is complete, return the control to the OFF position (midway between 'L' and 'R').

NOTE: *Heating elements inside the mirrors operate in conjunction with the heated rear window to disperse ice, mist and rain.*

Manual operation:

Some vehicles are equipped with manually controlled mirrors, where the mirror glasses must be adjusted by hand to the required position.

Downloaded from www.Manualslib.com manuals search engine

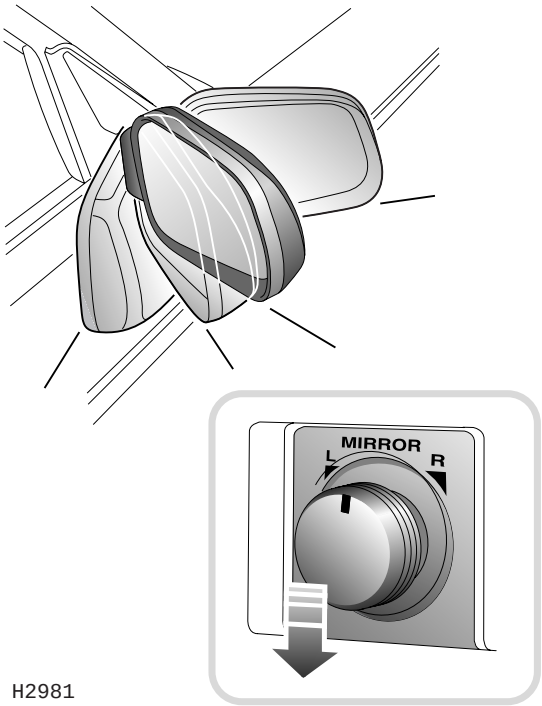

H2981

Folding the mirror body

The door mirrors are designed to fold forwards or rearwards on impact. They can also be folded back towards the side windows into a 'park' position to enable the vehicle to negotiate narrower openings.

Manual operation:

On some vehicles this operation can be carried out manually by physically pushing the mirror bodies back towards the side windows, and then pulling them back into the normal (extended) positions.

Electric operation:

On some vehicles mirror folding can be carried out electrically as follows:

1. Ensure the mirror control is turned to the centre position.
2. With the starter switch turned to position 'II', push the control down once to fold the mirrors back towards the side windows.
3. Before driving, push the control down a second time to return the mirrors to their normal (extended) position.

If the mirrors are accidentally knocked out of position (i.e. with one mirror extended and the other in the 'parked' position), an additional operation of the switch will re-synchronise them.

Downloaded from www.Manualslib.com manuals search engine

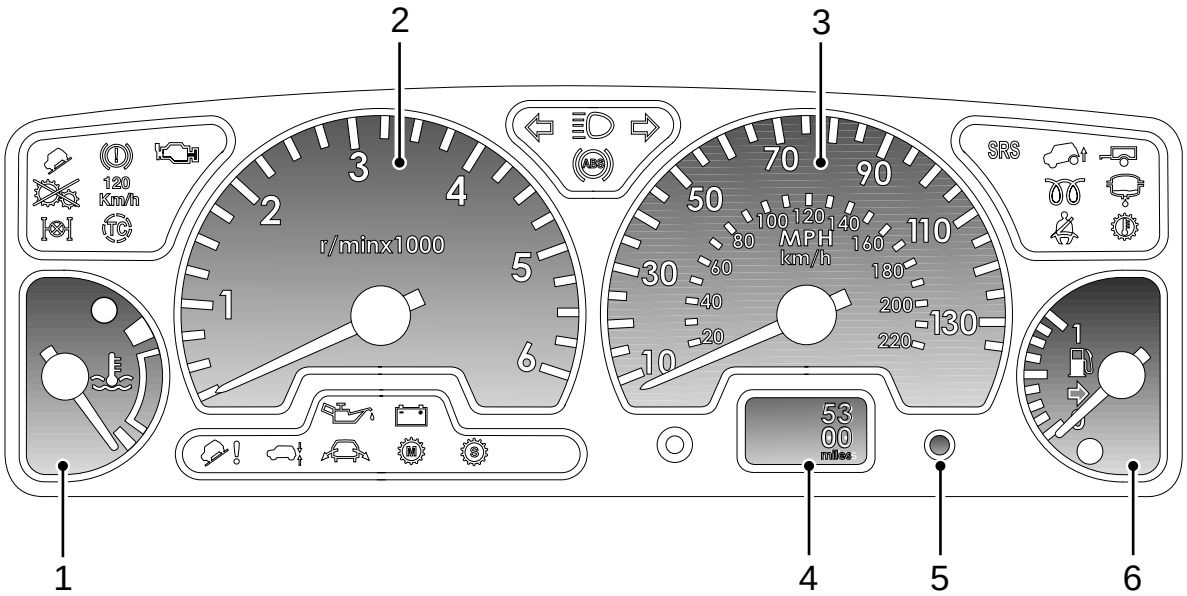

H2581a

1. Temperature gauge

Once the engine coolant has reached its normal operating temperature, the pointer will rise to a position within the WHITE segment of the gauge (the precise position will vary according to climatic conditions).

If the pointer moves towards the RED segment, this indicates that the engine coolant is becoming too hot. Should the pointer move INTO the RED segment and the RED warning light within the gauge illuminates, severe engine damage could occur (under these circumstances, the air conditioning may switch off and engine performance may reduce in order to minimise engine load).

Stop the vehicle as soon as safety permits and allow the engine to idle for five minutes in order to cool down - DO NOT SWITCH OFF. Seek qualified assistance before continuing.

2. Tachometer

Indicates engine speed in revolutions per minute (x 1000). In normal driving conditions the engine is most fuel efficient between 2000 and 3000 rev/min.

Vehicles equipped with a catalytic converter are fitted with a system which automatically restricts the number of engine revolutions per minute once the engine's maximum 'governed' speed has been reached.

3. Speedometer

Indicates road speed in miles per hour and/or kilometres per hour.

Downloaded from www.Manualslib.com manuals search engine

4. Total distance (odometer) and trip recorder

With the starter switch turned to position 'II', the display indicates the total distance travelled by the vehicle, and also shows the most recent individual journey distance.
In some markets, the display can be set to show either miles or kilometres. To convert from one to another, press and hold the trip recorder reset button for more than two seconds.

NOTE: *On automatic gearbox vehicles the display also indicates which selector position is selected.*

5. Trip recorder reset button

Press briefly to return the trip recorder display to zero.

6. Fuel gauge

The pointer drops to zero when the starter switch is turned off, but quickly rises to show the level of fuel in the tank when the switch is turned to position 'II'. After refuelling, the gauge rapidly rises to reflect the increase of fuel in the tank.

When the fuel remaining in the tank is a minimum of 3 gallons (14 litres) on petrol vehicles, or 2 gallons (9 litres) on diesel vehicles, the AMBER low fuel warning light in the fuel gauge illuminates. If the light illuminates, refuel at the first opportunity.

The small arrow visible below the fuel pump symbol on the gauge indicates the side of the vehicle on which the fuel filler is located - a useful reminder to help you position the vehicle on the correct side of the forecourt pumps before refuelling.

WARNING

NEVER allow petrol engined models to run out of fuel (the resultant misfire may destroy the catalytic converter).

Downloaded from www.Manualslib.com manuals search engine

Warning lights

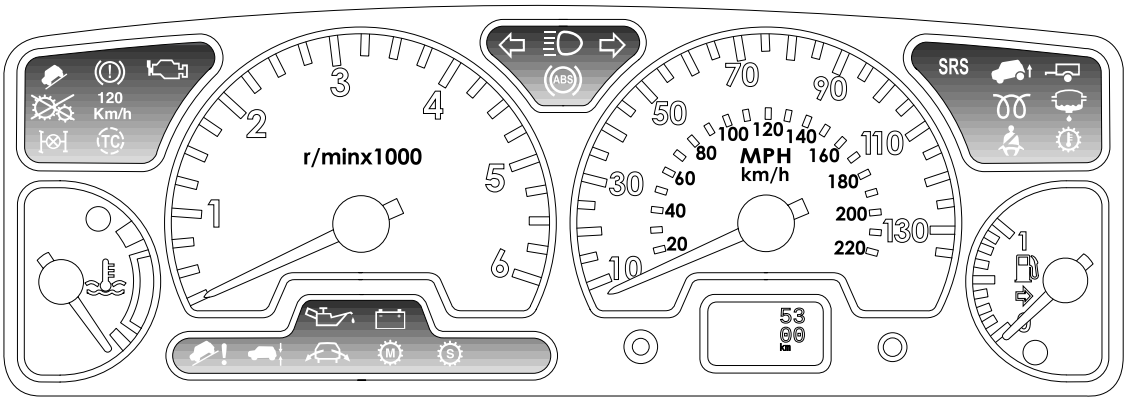

H2483a

The location and specification of the warning lights may vary according to model and market requirements.

Check engine - AMBER (if fitted)
The light illuminates as a bulb and system check when the starter switch is turned on, and extinguishes as soon as the engine is started. Illumination at any other time indicates an engine fault - if the light illuminates while driving, avoid high speeds and seek qualified assistance urgently.

Airbag SRS - RED
The light illuminates when the starter switch is turned to position 'II' and extinguishes after about 4 seconds. If the light illuminates at any other time, the system is faulty - seek qualified assistance urgently.

Handbrake, brake fluid - RED
The light illuminates for about 3 seconds as a bulb check when the starter switch is turned on. It also illuminates when the handbrake is applied with the starter switch in position 'II'.

The light should extinguish when the handbrake is fully released or shortly after the electrical circuits are switched on. If the light illuminates whilst driving, a fault with the braking system is indicated. Stop the vehicle as soon as safety permits and seek qualified assistance before continuing.

Low oil pressure - RED
The light illuminates as a bulb check when the starter switch is turned to position 'II' and extinguishes when the engine is started. If the light remains on, flashes on and off, or illuminates whilst driving, stop the vehicle as soon as safety permits and SWITCH OFF THE ENGINE IMMEDIATELY. Seek qualified assistance before driving. Always check the oil level when this light illuminates.

Downloaded from www.Manualslib.com manuals search engine

Transmission oil temperature - RED (if fitted)
Illuminates as a bulb check when the starter switch is turned to position 'II' and extinguishes after 3 seconds approx. If the light illuminates while driving, the gearbox oil temperature is too high (most likely to occur in very hot weather during continuous high speed driving, or whilst towing heavy loads on steep inclines or if the handbrake has been applied while driving).

If the light illuminates, reduce speed. If the light remains on, stop the vehicle and allow the gearbox to cool. Do not drive until the light has extinguished. (Depending on the ambient temperature and the carrying loads imposed on the vehicle, it may take several minutes before the light extinguishes and it is safe to drive).

Anti-lock braking system - AMBER
The light illuminates as a bulb and system check when the starter switch is turned to position 'II'. If the light illuminates whilst driving or remains illuminated after the starter switch is turned on, a fault has occurred. This means that full ABS control may not be available and you should seek qualified assistance urgently.

NOTE: *Faults which cause the ABS light to illuminate after the initial system checks, or whilst driving, will be accompanied by a warning chime sounding 3 times.*

Headlight main beam - BLUE
Illuminates when the headlights are switched to main beam.

Direction indicators - GREEN
The left or right warning light flashes in time with the corresponding left or right direction indicator lights whenever they are operated. If the warning light fails to flash, or flashes very rapidly, this may indicate a bulb failure in one of the direction indicator lights.

If the hazard switch is pressed, both warning lights will flash in conjunction with the direction indicator lights.

Trailer direction indicators - GREEN
The light illuminates briefly as a bulb check when the starter switch is turned to position II. If a trailer is attached, the light illuminates in conjunction with the vehicle direction indicator lights to show that all trailer indicator lights are functioning correctly. In the event of a bulb failure on the trailer, the warning light remains off.

Glow plug - AMBER (diesel only)
Illuminates when the starter switch is turned to position 'II'. Wait for the light to extinguish before starting the engine.

Downloaded from www.Manualslib.com manuals search engine

Differential lock - RED
Illuminates whenever the differential is locked.

While carrying out maintenance operations on your vehicle, it may be necessary for the dealer to lock the differential between the front and rear axles. This will cause the warning light to illuminate.

The dealer should always unlock the differential before returning the vehicle to the owner. However, if the light illuminates when the starter switch is turned on, this indicates that this has not been done. The vehicle should not be driven in this condition because ABS performance will be impaired and Traction Control will be disabled. Contact your dealer immediately and ask for the differential to be unlocked.

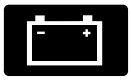

Battery charging - RED
The light illuminates as a bulb check when the starter switch is turned to position 'II' and extinguishes once the engine is running. If it remains on, or illuminates whilst driving, a fault is indicated. Seek qualified assistance urgently.

Seat belt - RED (if fitted)
The light illuminates when the starter switch is turned to position 'II' and extinguishes after approximately 6 seconds, even if the driver's seat belt remains unfastened. In some markets illumination of the light will be accompanied by a warning chime *(see 'Audible warnings')*.

Hill descent control (HDC) 'information' - GREEN
Illuminates briefly as a bulb and system check when the starter switch is turned to position 'II' and also when HDC is selected.

If HDC is selected when Low Range gears are engaged the light will illuminate continuously indicating that HDC is active.

When HDC is selected and non-operating gears are engaged (i.e. High range), the light will flash to inform the driver that HDC is selected, but will not operate.

If the light starts to flash while HDC is active, normal functionality may seize and HDC 'fade out' may be induced (see *'Hill Descent Control').*

Hill descent control (HDC) 'failure' - AMBER
The light illuminates briefly as a bulb and system check when the starter switch is turned to position 'II'.

If the light illuminates at any other time, either a fault has occurred which affects the functionality of the system, or over-use of the system has been detected, in which case HDC may 'fade out' (see *'Hill Descent Control').*

NOTE: *Faults which cause the HDC 'failure' light to illuminate after the initial system checks, or whilst driving, will be accompanied by a warning chime sounding 3 times.*

Downloaded from www.Manualslib.com manuals search engine

Traction Control - AMBER
Illuminates as a bulb check when the starter switch is turned to position 'II' and extinguishes after approximately 3 seconds. The light illuminates for a minimum of 2 seconds, whenever traction control is operating.

If the light illuminates continuously, and remains illuminated when the vehicle is stationary, a fault with the system is indicated; seek qualified assistance.

NOTE: *Faults which cause the light to illuminate after the initial system checks, or whilst driving, will be accompanied by a warning chime sounding 3 times.*

Active cornering enhancement (ACE) - RED/AMBER (if fitted)
The light illuminates RED when the starter switch is turned to position 'II'. After two seconds, the RED illumination changes to AMBER, and after a further two seconds, the light extinguishes.

If illumination occurs while driving, a fault with the system is indicated, as follows:

If the light shows RED *(a flashing red light which changes to constant illumination after two minutes, and is accompanied by a warning chime):*
This indicates a system fault that may result in serious damage to vehicle components and reduced ACE performance. Stop the vehicle as soon as safety permits and switch off the engine. DO NOT CONTINUE DRIVING! Seek qualified assistance immediately.

If the light shows AMBER *(constant illumination).*
This indicates a system fault that will result in reduced ACE performance but will not leave the vehicle in a dangerous condition. You may continue driving, but reduce speed, take additional care, and consult a Land Rover dealer at the earliest opportunity.

Fuel filter - AMBER (diesel only)
Illuminates as a bulb check when the starter switch is turned to position 'II' and extinguishes after 3 seconds approximately. If the light illuminates while driving, this indicates the presence of excessive amounts of water in the fuel. You may continue driving but should seek qualified assistance at the earliest convenient time.

Off Road - AMBER (if fitted)
Illuminates briefly as a bulb and system check when the starter switch is turned to position 'II' and then extinguishes.

If the off-road switch is pressed:
The light flashes continually while the rear of the vehicle is either; rising to off-road height, or returning to standard ride height. The light illuminates constantly while the suspension remains at off-road height.

In addition, the light will flash if extended mode is induced.

Downloaded from www.Manualslib.com manuals search engine

Manual mode - GREEN (Auto only)
Illuminates for 3 seconds as a bulb check when the starter switch is turned to position 'II'. Illuminates constantly while Manual mode is selected.

NOTE: *If both the Manual and Sport mode lights (shown below) flash together, this indicates an electrical fault with the automatic gearbox. If the lights continue flashing after the vehicle has been brought to a halt and the starter switch has been turned off and then on again, you should seek qualified assistance urgently.*

Sport mode - GREEN (Auto only)
Illuminates for 3 seconds as a bulb check when the starter switch is turned to position 'II'. Illuminates constantly while Sport mode is selected.

Self-levelling suspension - AMBER (if fitted)
Illuminates briefly as a bulb and system check when the starter switch is turned to position 'II' and then extinguishes.

If the remote handset is operated:
The light flashes continually while the rear of the vehicle is being lowered, or raised.

If the light illuminates constantly, this indicates a fault with the self-levelling suspension and you should seek qualified assistance.

Downloaded from www.Manualslib.com manuals search engine

AUDIBLE WARNINGS

The market specification will determine which of the following audible warnings are appropriate to your vehicle.

Lights on reminder

If the lights are left on after the starter switch is turned off, a warning chime will sound when the driver's door is opened. The chime will cease as soon as the lights are switched off or when the driver's door is closed.

Transfer box reminder

A warning will chime continuously while the transfer gearbox is in neutral.

Self-levelling suspension warning

1. A single warning will chime whenever the off-road switch is operated to raise the vehicle to off-road height, or to return it to standard ride height.
2. A warning will chime continuously while the remote handset is used to lower the vehicle from standard ride height, and also while returning the vehicle to standard ride height.
3. A warning chime will sound 3 times if changes to or from off-road height are requested but not permitted.

ABS warning

If a fault with the anti-lock braking system is detected, a warning will chime three times. You may continue driving, but should understand that full ABS control may not be available. Consult your dealer at the earliest opportunity.

ACE warning

A single warning will chime if a fault with the active cornering enhancement system is detected. The chime will coincide with the ACE warning light flashing RED.

HDC warnings

1. A warning will chime continuously in conjunction with the HDC warning light flashing green, whenever HDC has been selected but the system's operating criteria have not been met.
2. A warning will chime continuously and the HDC failure warning light will illuminate (amber), whenever a fault is detected with the HDC system.
3. A single warning will chime when HDC is deselected.

Starter key reminder

If the key is left in the starter switch while the driver's door is open, a warning will chime continuously. The chime stops as soon as the door is closed or the key is removed from the starter switch.

Seat belt reminder

In some markets, if the driver's seat belt has not been fastened when the starter switch is turned on, a warning chime will sound (one second frequency). The chime operates in conjunction with the seat belt warning light and sounds for 6 seconds, or until the seat belt is fastened (whichever occures first).

In Gulf States markets, either; the chime will continue sounding indefinitely until the seat belt is fastened, or; the chime will sound for 6 seconds whenever the driver's door is opened and closed with the starter switch turned on.

Downloaded from www.Manualslib.com manuals search engine

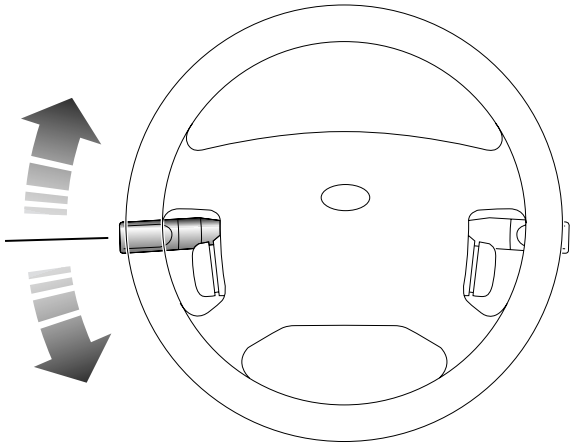

H2582

Direction indicators

Move the lever DOWN to indicate a LEFT turn, and UP to indicate a RIGHT turn (the appropriate GREEN warning light on the instrument panel will flash in time with the direction indicators).

Hold the lever part-way up or down against spring pressure to indicate a lane change.

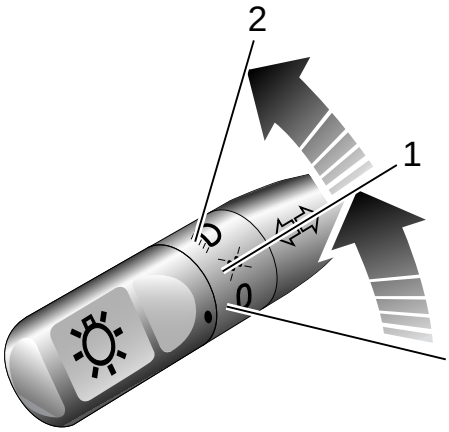

H2448

Side, tail and instrument panel lights

Turn lighting switch to position 1.

Headlights

Turn lighting switch to position 2.

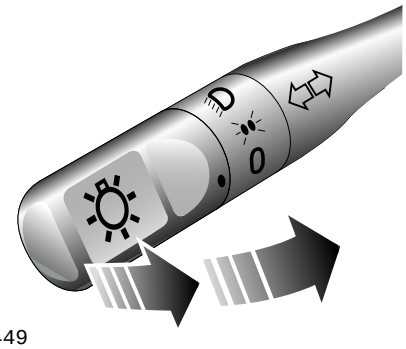

H2449

Headlight main and dipped beams

Pull the lever fully towards the steering wheel to change headlight beams (BLUE warning light glows when the headlights are on main beam).

To flash the headlights, pull the lever part way towards the steering wheel and release.

Downloaded from www.Manualslib.com manuals search engine

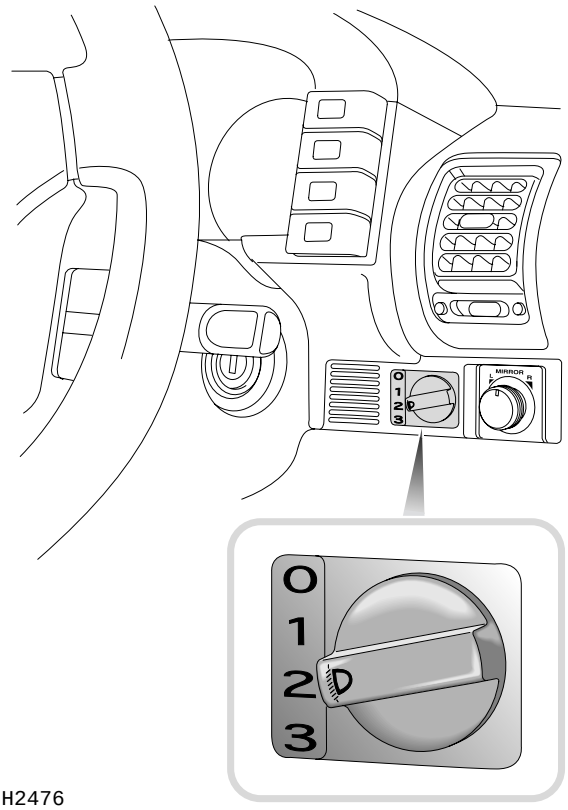

H2476

Suspension type		
Coil	**Air**	
’0’	’0’	Driver, or driver and front passenger only (loadspace empty).
’1’	’1’	All seats occupied (loadspace and occasional rear seats empty)
’2’	’2’	All seats occupied with loadspace loaded to max. permissible rear axle weight.
’3’	**’2’**	Driver only with loadspace loaded to max. permissible rear axle weight.

Headlight levelling (if fitted)

The angle of the headlight beams is affected by the distribution of weight inside the vehicle. The headlights should be adjusted so that the point at which the beams meet the road surface ahead of the vehicle provides adequate illumination without dazzling other road users.

The four-position switch should be used to adjust the headlight beams in relation to the vehicle loadings identified opposite.

Note that the loading criteria differs for vehicles with conventional coil spring suspension, compared with those fitted with air suspension (if in doubt, air suspension vehicles can be identified by the fascia-mounted off-road switch).

Downloaded from www.Manualslib.com manuals search engine

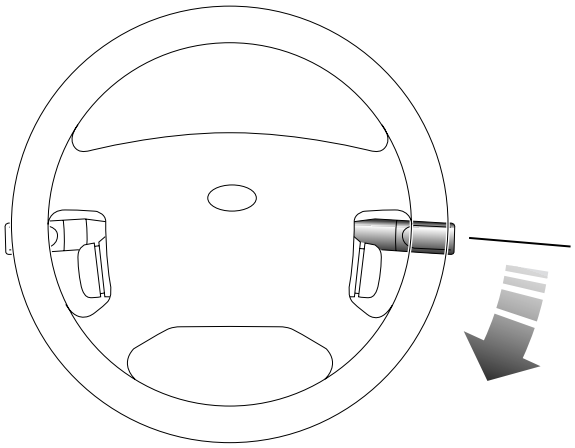

H2583

WINDSCREEN WIPERS

The wipers and washers will only operate when the starter switch is turned to position 'I' or 'II'.

Single wipe

Pull the lever down and release immediately.

NOTE: *With the lever held down, the wipers will operate at high speed until the lever is released.*

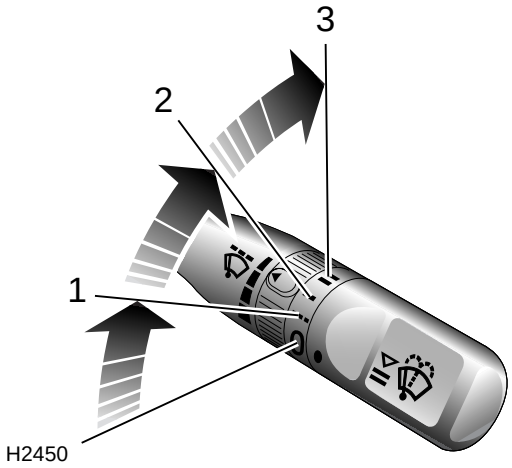

H2450

1. **Intermittent wipe**
   Turn switch to first position.
2. **Normal speed wipe**
   Turn switch to second position.
3. **Fast speed wipe**
   Turn switch to third position.

NOTE: *If the front screen wipers are operating (in either intermittent or continuous mode), the rear wiper operates automatically whenever reverse gear is selected.*

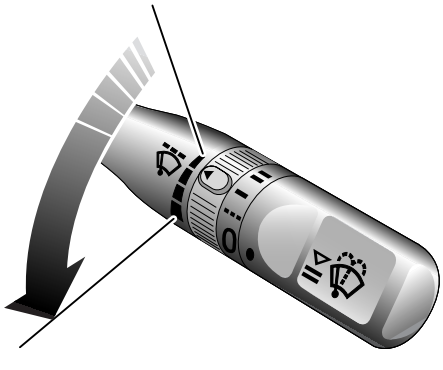

H2451

Variable delay (intermittent wipe)

Rotate the switch to vary the delay between wipes.

Downloaded from www.Manualslib.com manuals search engine

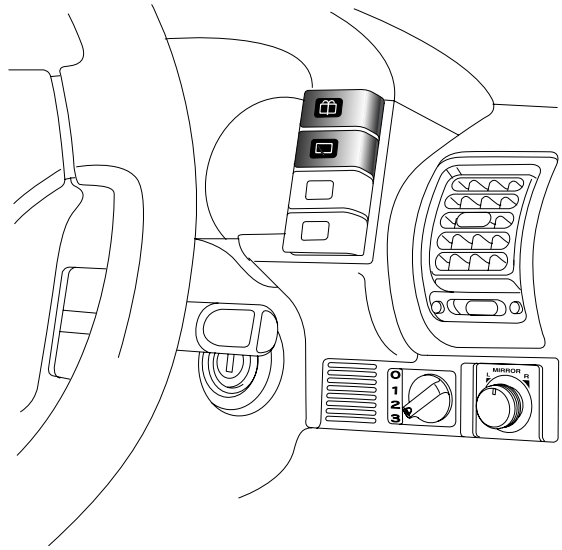

H2584

REAR WINDOW WIPERS

Rear window wash/wipe
Press and hold switch for the required duration of window washing. The wiper operates automatically during washing and continues for a further 3 wipes after the switch is released.

Rear window wiper
Press to operate: after continuously wiping 3 or 4 times, the wiper operates intermittently until switched off.

NOTE: *When reverse gear is selected, the rear wiper will operate either continuously or intermittently in tandem with the front wipers.*

Downloaded from www.Manualslib.com manuals search engine

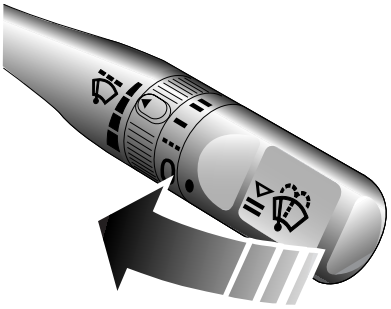

H2452

WINDSCREEN WASHER

Pull the lever towards the steering wheel. The windscreen wipers will operate in conjunction with the washers for as long as the lever is held in this position, the wipers continuing for a further 4 seconds after the lever is released.

HEADLIGHT WASHERS

(if fitted)

When the headlights are illuminated, the headlight washers operate automatically in conjunction with every third operation of the windscreen washers.

IMPORTANT INFORMATION

- DO NOT operate the wipers on a dry screen.
- In freezing or very hot conditions, ensure that the blades are not frozen or stuck to the glass.
- In winter, remove any snow or ice from around the arms and blades, including the wiped area of the windscreen and the heater air intakes.

NOTE: *If the wiper blades have stuck to the glass, a thermal cut-out may temporarily prevent the wiper motor from operating. If this is the case, switch the wipers off, free them from the obstruction and then switch on again.*

Downloaded from www.Manualslib.com manuals search engine

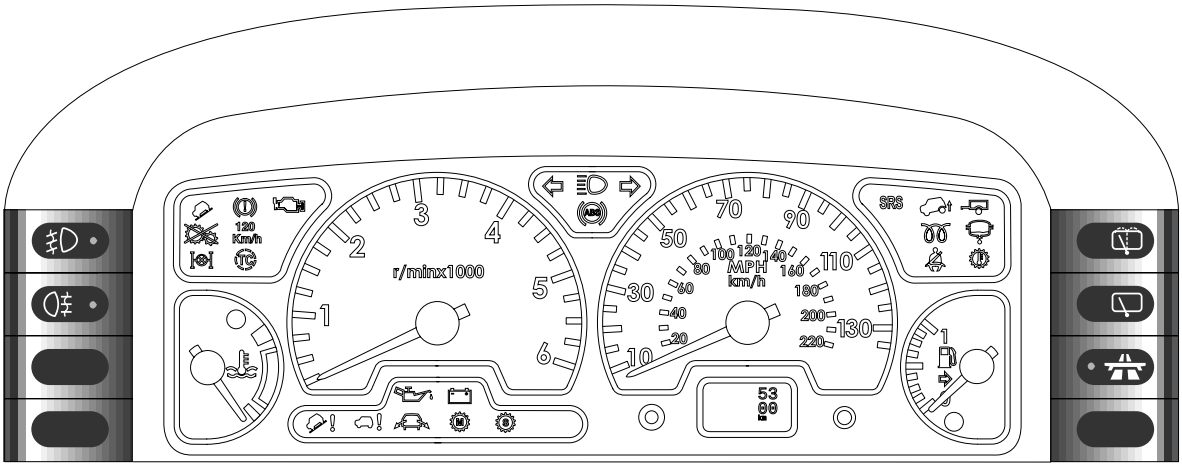

H2585a

BINNACLE SWITCHES

Front fog lights (if fitted)
Press to operate, press a second time to switch off (the indicator light in the switch illuminates when the fog lights are switched on).

The fog lights can be operated ONLY when the starter switch is at position 'II' and the side or headlights are also switched on. The fog lights extinguish automatically when the side lights or the starter switch is turned off.

Rear fog guard lights
Press to operate, press a second time to switch off (the indicator light in the switch illuminates when the fog guard lights are switched on). The rear fog guard lights illuminate ONLY when the headlights (or front fog lights) are also switched on, and the starter switch is turned to position 'II'. Switching off the headlights, or front fog lights, or turning the starter switch to position '0' will automatically extinguish the rear fog guard lights too (the lights will not illuminate again unless switched on).

ALWAYS remember to switch the fog guard lights off as soon as visibility permits; in clear conditions fog guard lights can dazzle other road users!

Rear window wash/wipe
The functions of the wash/wipe switch are described under *'Wipers & washers'.*

Rear window wiper
The functions of the rear window wiper switch are described under *'Wipers & washers'.*

Cruise control
Operation and functions of the cruise control switch are described under *'Cruise Control'.*

Downloaded from www.Manualslib.com manuals search engine

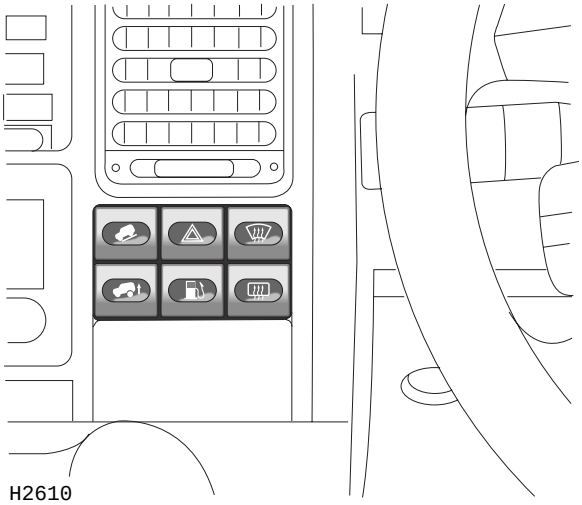

FASCIA SWITCHES

Hazard warning lights
Press to operate; all the direction indicator lights (including those fitted to a trailer) will flash together. Use ONLY in an emergency to warn other road users when your stationary vehicle is causing an obstruction, or is in a hazardous situation. Remember to switch off before moving away.

Heated front screen (if fitted)
Press to operate (the indicator light in the switch illuminates); press a second time to switch off (the indicator light extinguishes). The heated screen operates only with the engine running. After 5 minutes continuous operation, the heater switches off automatically.

Heated rear window
Press to operate; press a second time to switch off. The indicator light in the switch illuminates while the heating elements are switched on and extinguishes when they are turned off. Note that the heating elements operate only with the engine running.

After 15 minutes continuous operation, the heater switches off automatically.

WARNING

DO NOT stick labels over the heating elements, and DO NOT scrape or use abrasive materials to clean the inside of the window.

Fuel filler flap
With the starter switch turned to position ’0’ or ’1’, press to open the fuel filler flap.

Hill descent control
Press to select hill descent control (HDC) (see *’Hill descent control’).*

Off-road suspension mode (if fitted)
Press to raise or lower the suspension to or from off-road height. (see *’Self-levelling suspension’).*

Downloaded from www.Manualslib.com manuals search engine

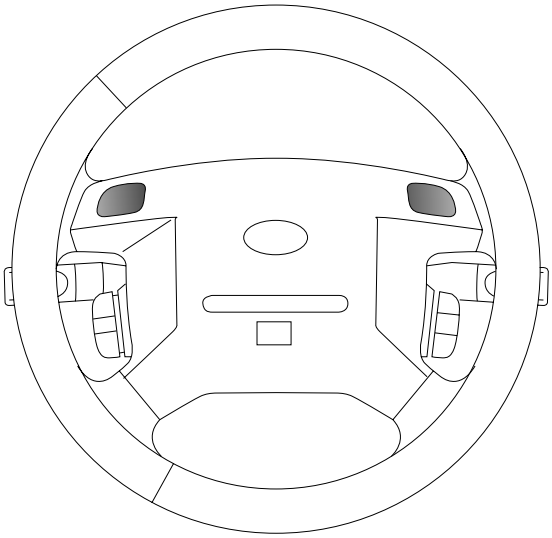

H2586

Horn

To operate, press either of the horn switches set into the steering wheel pad.

Downloaded from www.Manualslib.com manuals search engine

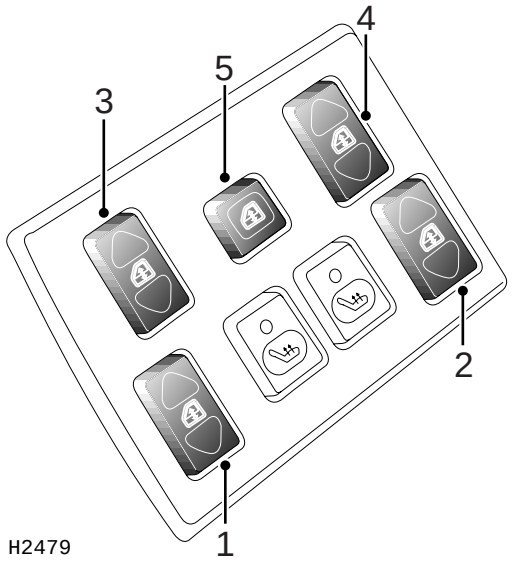

ELECTRIC WINDOWS

The switches on the centre console operate the windows as follows:

1. Right hand front window.
2. Left hand front window.
3. Right hand rear window.
4. Left hand rear window.
5. Isolating switch for rear door window switches.

NOTE: *Rear windows can also be operated by the individual switches mounted on each rear door, provided the isolation switch has not been activated.*

Operating the windows

The electric windows can be operated when the starter switch is at position 'II' and for up to 45 seconds after the starter switch is turned to position '0' (provided a door is not opened in the meantime).

Press and HOLD the bottom of a switch to lower and the top of a switch to raise. The window will stop moving as soon as the switch is released.

'One touch' down
(Front windows only)

By briefly pressing (and then releasing) the bottom of a switch, a front window will open fully at a single touch. Window movement can be stopped at any time by BRIEFLY pressing the top of the switch.

WARNING

Accidental closing of an electrically operated window on fingers, hands or any vulnerable part of the body, can result in serious injury. Always observe the following precautions:

- ***ISOLATE the rear window switches when carrying children.***
- ***ENSURE children are kept clear whilst raising or lowering windows.***
- ***ENSURE that all adult passengers are familiar with the controls and the potential dangers of electrically operated windows.***

Rear window isolation switch

Press once to isolate the rear window switches; press a second time to restore independent control.

Downloaded from www.Manualslib.com manuals search engine

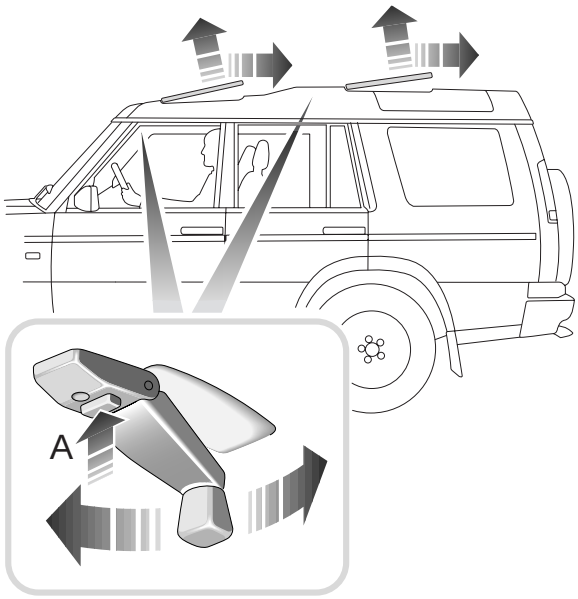

H2453

MANUAL SUNROOF

(if fitted)

Pull the operating handle from its recess until it locks in position (see inset). The roof can be opened and closed in two separate phases as follows:

To tilt the roof: depress the locking button 'A' and rotate the handle clockwise ONE COMPLETE TURN.

To fully open the roof: depress the button again and continue turning clockwise.

To close the roof: rotate the handle anti-clockwise.

WARNING

ENSURE the sunroof is not obstructed when opening or closing.

DO NOT allow passengers to extend any part of their bodies through the sunroof aperture while the vehicle is moving - injury from flying debris, branches of trees or other obstructions could occur.

ALWAYS close the roof when the vehicle is unattended.

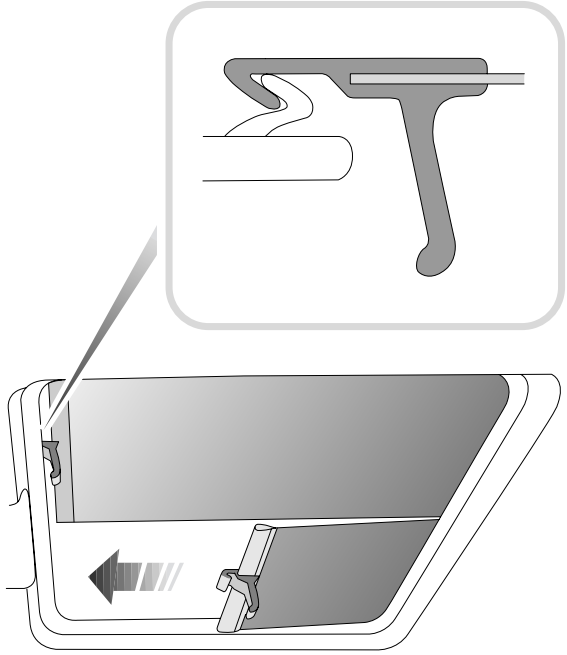

H2477

Sunroof roller blind

Downloaded from www.Manualslib.com manuals search engine

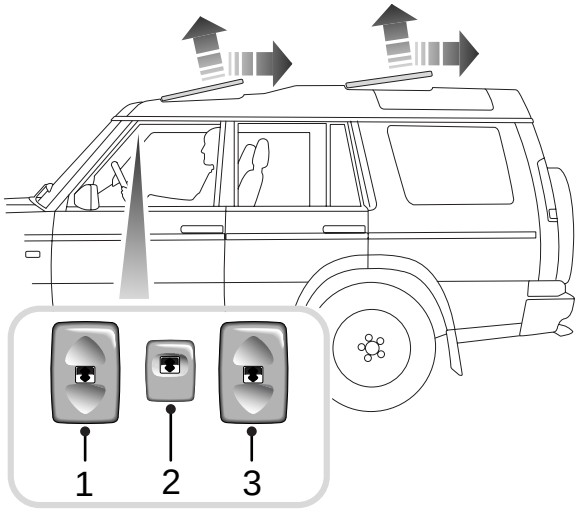

H2528

ELECTRIC SUNROOF

(if fitted)

The electric sunroof can be operated when the starter switch is at position 'II', and for up to 45 seconds after the starter switch is turned off (provided a door is not opened in the meantime).

The roof opens in two separate phases as follows:

To tilt the roof: press the upper part of the switch once BRIEFLY - the rear edge of the roof automatically rises to the tilted position.

To open the roof: press the upper part of the switch BRIEFLY a second time - the roof remains tilted and slides towards the rear until it is fully open or until movement is stopped by briefly pressing the lower part of the switch.

To close the roof: press and hold the lower part of the switch until the roof has moved to the required position.

The roof will pause momentarily when it reaches the tilt position.

NOTE: *If the roof is obstructed for more than 7 seconds whilst opening or closing, an automatic cut-out will prevent the sunroof motor from operating. After a period, operation of the motor will be restored.*

1. Front sunroof operating switch
2. Rear sunroof disable switch. (Always disable the rear sunroof when driving with children in the rear of the vehicle).
3. Rear sunroof operating switch.

NOTE: *Vehicles fitted with a rear sunroof have an additional operating switch set into the roof lining forward of the rear sunroof.*

WARNING

Accidental closure of a sunroof on fingers, hands or any vulnerable part of the body, can result in serious personal injury. Always observe the following precautions:

- ***ENSURE the sunroof is not obstructed when opening or closing.***
- ***ENSURE that all adult passengers are familiar with the controls and the potential dangers of operating an electrically operated sunroof.***
- ***DO NOT allow passengers to extend any part of their bodies through the sunroof aperture while the vehicle is moving - injury from flying debris, branches of trees or other obstructions could occur.***
- ***ALWAYS close the roof when the vehicle is unattended.***

Downloaded from www.Manualslib.com manuals search engine

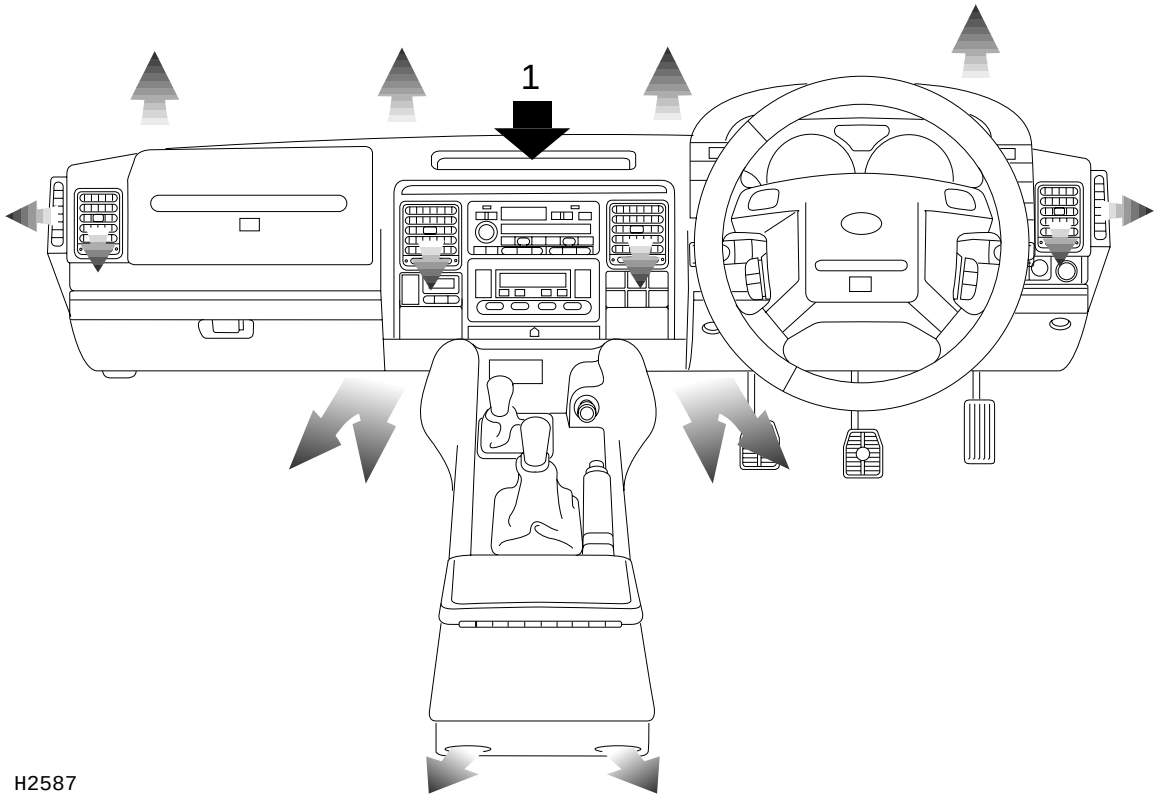

H2587

The location of air vents is shown by the air-flow arrows in the picture. The temperature of air supplied to each vent is controlled by the heater.

NOTE: Vent **(1)** is designed to keep the audio unit cool, there is no airflow from this vent.

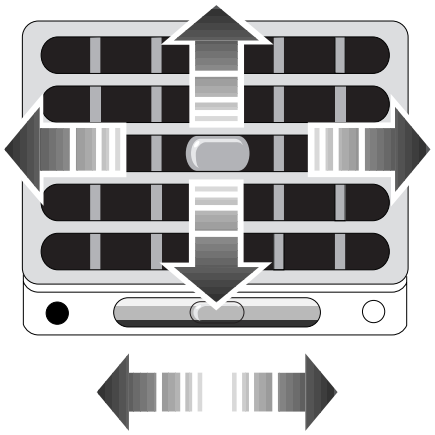

H2454

Face level vents

Each vent can be opened or closed by rotating the thumbwheel: left to open, right to close. Direct the flow of air by moving the control in the centre of the louvres.

To ensure best ventilation and minimum noise, the vents should be fully open when the air distribution control is set to face level.

Downloaded from www.Manualslib.com manuals search engine

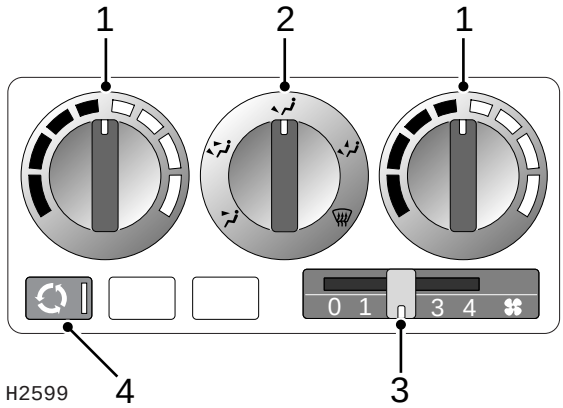

HEATER CONTROLS

1. Temperature controls

The left hand control varies air temperature from the vents on the left side of the vehicle. The right hand control adjusts air temperature from the vents on the right side. Rotate each control clockwise (towards the RED segments) to increase the air temperature, or anti-clockwise (towards the BLUE) to reduce the temperature.

2. Air distribution control

Rotate to select air distribution:

Air to face vents
(to ensure best performance, the face level vents must be fully open)

Air to face vents and foot outlets
(to ensure best performance, the face level vents must be fully open)

Air to foot outlets

Air to foot outlets and windscreen
(recommended for clearing mild windscreen misting)

All air to windscreen
(recommended for clearing heavy windscreen misting)

3. Air blower switch

Move the control to the right to progressively increase the fan speed.

With the control at **'0'** the fan is stationary and the volume of air entering the passenger compartment is solely dependent upon the ram effect of the vehicle moving through the air.

4. Air recirculation control

Press to recirculate air inside the vehicle (indicator light illuminates).

The air recirculation mode prevents the heating system from taking in fresh air from outside the vehicle. Instead, the air already inside the vehicle is recirculated, thus preventing the entry of traffic fumes. In cold weather air recirculation also enables warmer air to be used to defrost the windscreen when the engine is still cold.

WARNING

The air recirculation mode can cause the windscreen to mist. If this happens, switch off air recirculation immediately.

NOTE: *The air blower switch and air recirculation control will only operate with the starter switch at position 'II'.*

Downloaded from www.Manualslib.com manuals search engine

USING YOUR HEATER

Fresh air enters the heater unit through the grille in front of the windscreen and stale air is drawn out through vents in the rear of the vehicle. Ensure the grille is kept clear of obstructions (especially snow and ice). Ducts along the transmission tunnel provide heating for rear seat passengers - these must not be obstructed.

The following examples of basic heater settings are intended as a general guide; the air distribution, temperature and blower controls can then be further adjusted to suit your comfort requirements.

Always remember that full heating is not available until the engine has reached its normal operating temperature.

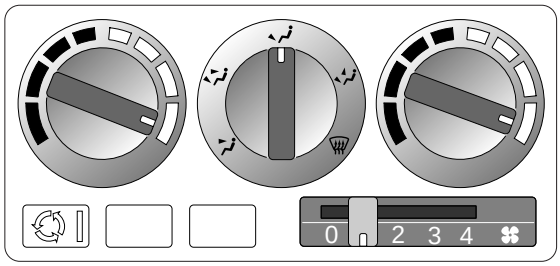

H2601

Maximum heating

Set the controls as shown, with the blower at the slowest speed (position 1) until the temperature gauge indicates that the engine is warming up - the blower speed can then be increased.

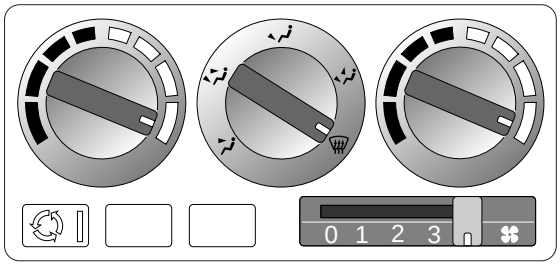

H2603

Demisting

Set the controls as shown to obtain the maximum flow of heated air from the windscreen and side window vents. Opening a window may improve ventilation.

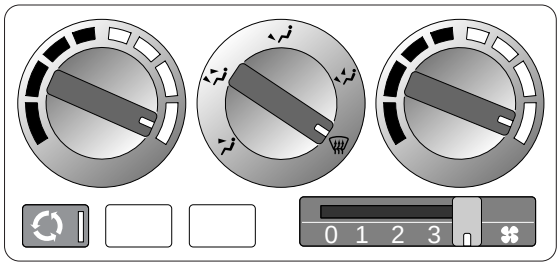

H2604

Defrosting

Set the controls as shown and switch on air recirculation to prevent cold air from being drawn into the vehicle. Turn air recirculation off as soon as the windscreen is clear to prevent any possibility of the windscreen misting.

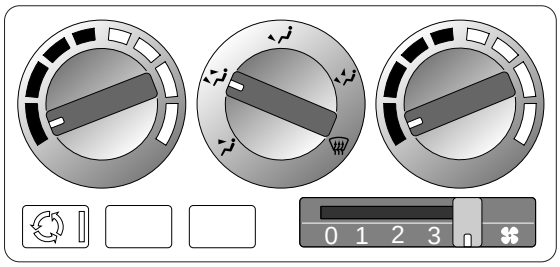

H2602

Maximum ventilation

Set the controls as shown, with the face level vents open. Adjust the blower speed as required.

Downloaded from www.Manualslib.com manuals search engine

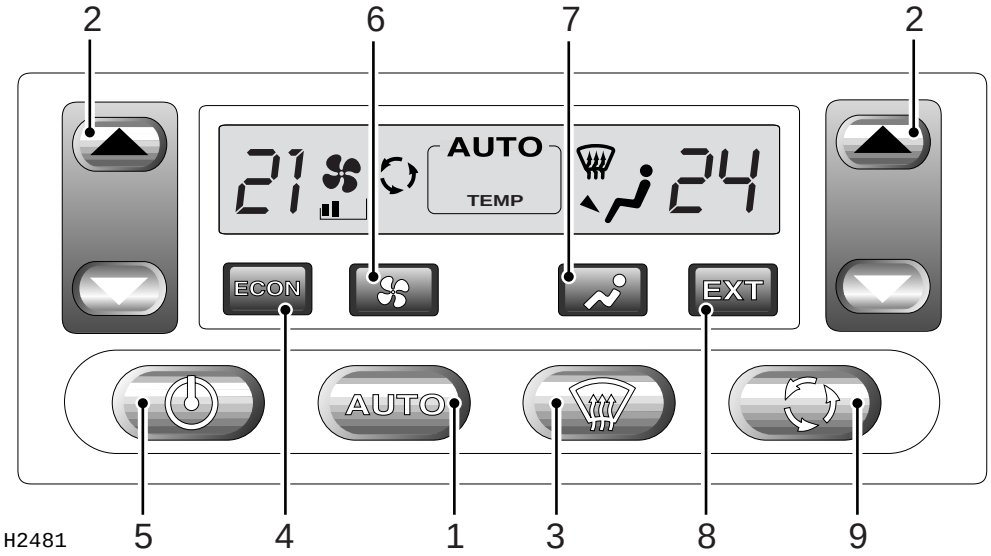

The air conditioning system features automatic temperature and air distribution control, which is programmed to maintain optimum levels of comfort within the vehicle in all but the most severe climatic conditions.

While the controls can be adjusted manually to satisfy individual requirements, allowing the system to function automatically (in Auto mode) is by far the simplest method of operation for the owner and is preferable in most operating conditions.

Auto mode

Press 'AUTO' (1) for fully automatic operation.

Press the temperature control switches (2) on either side of the display to select the required temperature.

Let the automatic temperature control system do the rest.

In Auto mode, air distribution and blower speeds are adjusted automatically to achieve and then maintain the desired temperature. (*An enclosed area in the centre of the display will show 'AUTO' together with the air distribution and blower speed settings).*

Both the air distribution and blower controls can be operated independently to override the automatic setting. In this case, the relative symbols will move outside the enclosed area in the centre of the display to indicate that they are no longer being controlled automatically.

NOTE: *If the air distribution and blower controls are operated independently, the system may not be able to achieve or maintain the required temperature settings.*

Downloaded from www.Manualslib.com manuals search engine

Defrost mode

If the windscreen is misting or covered in ice, press the 'SCREEN' button (3); the system will immediately direct its output to achieve maximum screen clearing by:
- setting the blower speed to maximum
- distributing air flow to the screen only.

In addition, the rear and front screen heaters (if fitted) will be switched on (or their timed operating cycle will recommence if they are already switched on).

NOTE: *The temperature and blower speed controls can be adjusted and air recirculation selected manually if required.*

Press the 'SCREEN' button a second time (or select 'AUTO') to leave the Defrost mode - the system will default automatically to Auto mode.

Economy mode

Press the 'Econ' button (4) to operate (*the display shows 'ECON').*

In economy mode the air conditioning compressor is switched off and the system functions as a conventional heating and ventilation system. This reduces the load on the engine, thereby reducing fuel consumption.

Select Economy mode whenever air conditioning is not required i.e. in cold weather when the external temperature is lower than the temperature required for the passenger compartment.

The air distribution, blower and recirculation controls can be operated independently.

Pressing the 'Econ' button a second time will switch the air conditioning compressor on and return the system to Auto mode.

NOTE: *In Economy mode, it is possible to switch the blower off (no segments showing in the display).*

On/off button

Press (5) to switch on or off. When switching on, note that the system automatically recalls the mode and control settings that were last used.

Temperature controls

Operate the rocker switches (2) on either side of the display to set the required temperature for the corresponding side of the passenger compartment (left hand switch for the left side of the vehicle, and right hand switch for the right side).

Temperatures above 28° C (82° F) and below 16° C (61° F) cannot be set. Above or below these maximum and minimum settings 'HI' or 'LO' will appear in the display.

NOTE: *The temperatures shown on the display are relative, target, temperatures only and are not reflective of any specific temperature measured within the vehicle interior.*

NOTE: *The system will not achieve temperatures on the passenger side of the vehicle that are more than 5° C (9° F) greater or less than the temperature set for the driver's side.*

Downloaded from www.Manualslib.com manuals search engine

Blower button

Press the button (6) to adjust the blower speed. The blower speed increases incrementally with each press of the button, until maximum fan speed is reached (the display shows five segments and the word 'MAX').

Once the maximum fan speed has been reached, another press of the button returns the blower to its slowest speed (one segment shows in the display).

Air distribution control

Press the button (7) to adjust. Air distribution changes incrementally with each press of the switch in the following sequence:

Face level vents

Foot and face level vents

Foot level vents

Foot level, windscreen and side window vents

Windscreen and side window vents

A further operation of the button returns to the start of the sequence.

NOTE: *If the button is pressed for more than one second, air distribution will automatically default to foot and face level vents.*

External temperature

Press the button (8) to display. The external temperature is displayed for approximately 6 seconds, after which the display reverts to its previous state.

NOTE: *While the air conditioning system is switched off, the external temperature can be displayed briefly by pressing the button.*

Air recirculation

The air recirculation feature can be used to prohibit the entry of air from outside the vehicle, alternatively recirculating the air inside the vehicle instead. This is useful to prevent the entry of traffic fumes.

The feature also significantly influences the dehumidifying and cooling performance of the air-conditioning system. Therefore, in Auto mode, air recirculation is controlled automatically to enable the air-conditioning system to achieve its optimum performance.

However, the feature is also manually selectable in Auto, Defrost and Economy modes, as follows:

In Auto mode:

1. Press the control (9) briefly *(display shows recirculation symbol):*

Air recirculation operates until the control is pressed a second time to switch off.

2. Press and hold for 2 seconds *(two bleeps will sound, display shows recirculation symbol):*

Air recirculation operates for a pre-timed period of 4-6 minutes only.

Downloaded from www.Manualslib.com manuals search engine

In Defrost and Economy modes:

- Press the control briefly *(display shows recirculation symbol):*

  Air recirculation operates for a pre-timed period of 4-6 minutes only.

- Press and hold for 2 seconds *(two bleeps will sound, display shows recirculation symbol):*

  Air recirculation operates until the control is pressed a second time to switch off.

NOTE: *Prolonged recirculation may cause the windows to mist.*

Temperature conversion (° F - ° C)

The temperature displays can be converted to or from Fahrenheit and Centigrade, as follows:

1. Press and hold the air recirculation button (9).
2. At the same time, press and hold the on/off button (5) for 3 seconds.
3. A 'bleep' will sound to indicate that the conversion has taken place.

General notes

- For optimum operating efficiency, ensure all the air vents (including those in the rear of the vehicle) are open.
- For the automatic temperature control system to function efficiently, all windows (and the sunroof) should be closed, and the air intake vents free from ice, snow, leaves or other debris.
- In very humid conditions, slight screen misting may be experienced when the air conditioning system is turned on. This is a natural occurrence on most automotive air conditioning systems. It is not a fault and misting will clear after a few seconds once the air conditioning system is operating.
- The air conditioning compressor will not function unless the engine is running.
- Surplus water produced by the dehumidifying process is expelled from the system via drain tubes beneath the vehicle. This may result in a small pool of water forming on the road when the vehicle is stationary and is not a cause for concern.
- If desired, the system's audible information chimes can be deactivated, as follows:

  1) Press 'Auto' button and hold.

  2) Press 'On/off' button and hold pressed for 3 seconds, then release.

  3) Press 'On/off' button again for a further 3 seconds, and release.

  4) Release 'Auto' button.

Downloaded from www.Manualslib.com manuals search engine

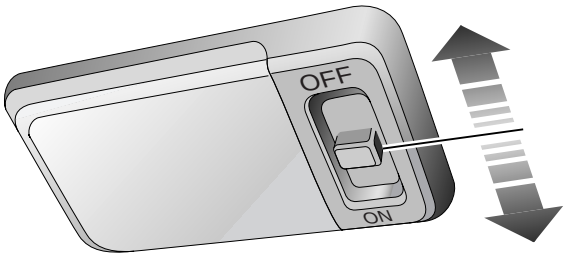

H2592

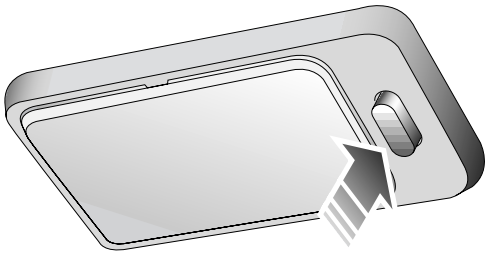

H2593

FRONT INTERIOR & LOADSPACE LIGHTS

Switch positions:

'OFF' - Light permanently off.

'ON' - Light illuminates continuously.

With the switch in the centre position, the interior light illuminates automatically whenever the vehicle is unlocked, when the starter switch is turned off (to position '0'), or when a door or taildoor is opened. The light remains illuminated for 15 seconds after the doors and taildoor are closed, or until the starter switch is turned on.

After driving, the interior lights will fade and then extinguish as soon as the vehicle is locked or when the last door is closed.

NOTE: *When the light is switched for automatic operation (switch in centre position), a 'time-out' function extinguishes the lights after 8 minutes approx. if a door is left open, to prevent the battery from discharging.*

REAR INTERIOR LIGHTS

Press the switch to illuminate (or extinguish) the lights manually.

Lights illuminate automatically when the vehicle is unlocked or whenever a door or taildoor is opened, and extinguish approximately 15 seconds after ALL the doors are closed, or as soon as the starter switch is turned on.

GLOVEBOX LIGHT

Illuminates automatically whenever the glovebox is opened, provided the sidelights are switched on, and extinguishes when the glovebox is closed.

Downloaded from www.Manualslib.com manuals search engine

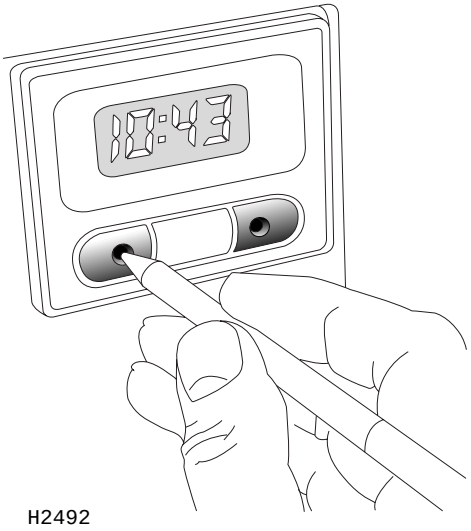

CLOCK

The digital clock display illuminates constantly and dims automatically for night time viewing, when the side lights are illuminated.

To adjust the time, use a ballpoint pen or similar probe to press the hour (left hand) and minute (right hand) controls, until the correct time is displayed.

NOTE: *The clock will need to be reset if the battery is disconnected.*

Pressing both hour and minute controls simultaneously 'zeroes' the display.

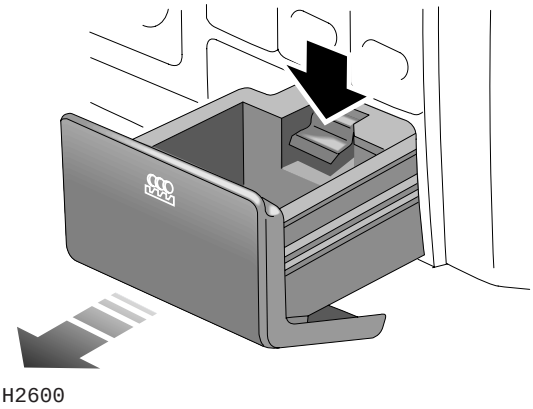

COIN TRAY

Push the front to open. To remove the tray, open fully, then press down on the release plate (arrowed in illustration) and pull to remove.

Downloaded from www.Manualslib.com manuals search engine

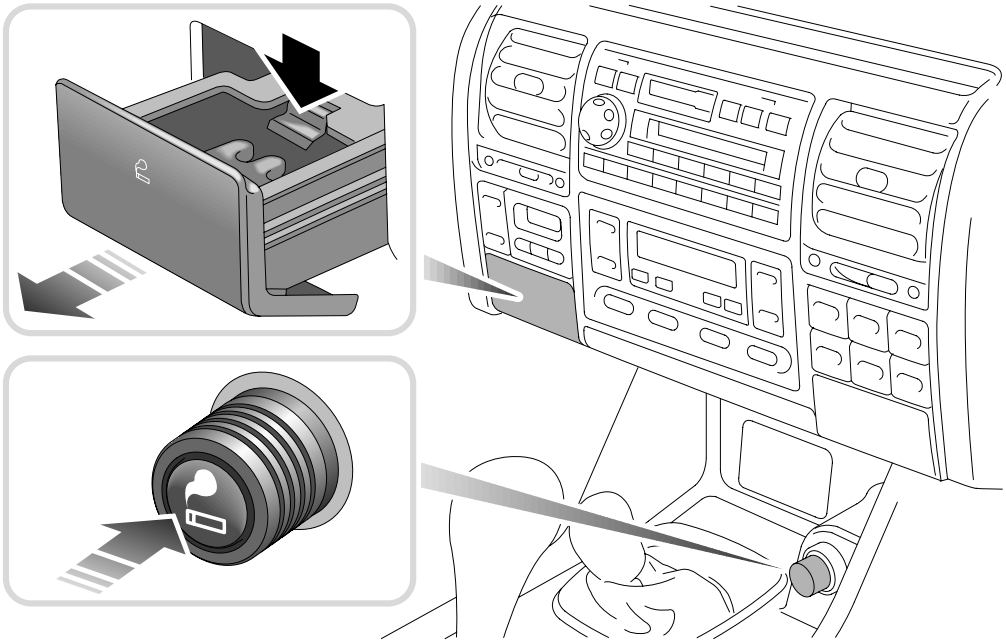

CIGAR LIGHTER

With the starter switch turned on, press the lighter in to heat up. When it has reached the correct temperature it will partially eject and can then be withdrawn for use.

- ONLY hold the cigar lighter by the handle.
- DO NOT plug accessories into the cigar lighter socket unless they are approved by Land Rover.

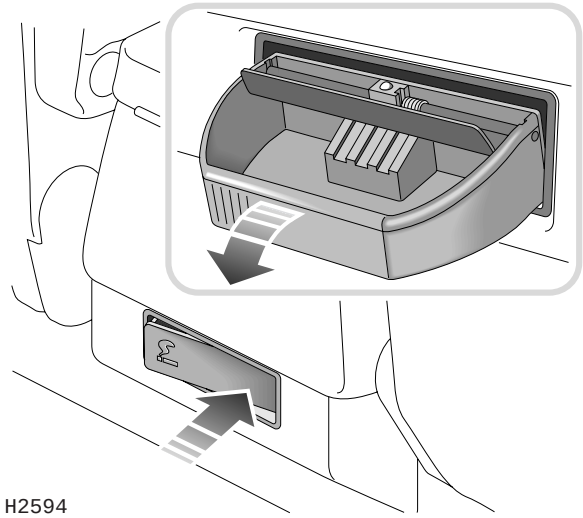

ASHTRAYS

Front: Push the front of the ashtray to open. To remove the ashtray, open fully, then press down on the release plate (arrowed in illustration) and pull to remove.

Rear: Push the front of the ashtray on the right hand side to open. To remove, open the ashtray and then carefully lever the tray downwards to disengage the upper pivot.

Refit by locating the upper pivot and then easing the ashtray into a position whereby the lower pivot can also be engaged.

WARNING

DO NOT use the ashtrays for disposing of waste paper or other combustible items.

Downloaded from www.Manualslib.com manuals search engine

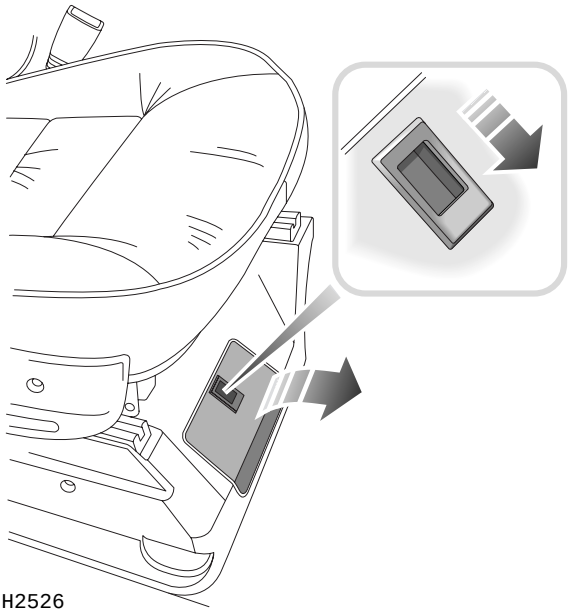

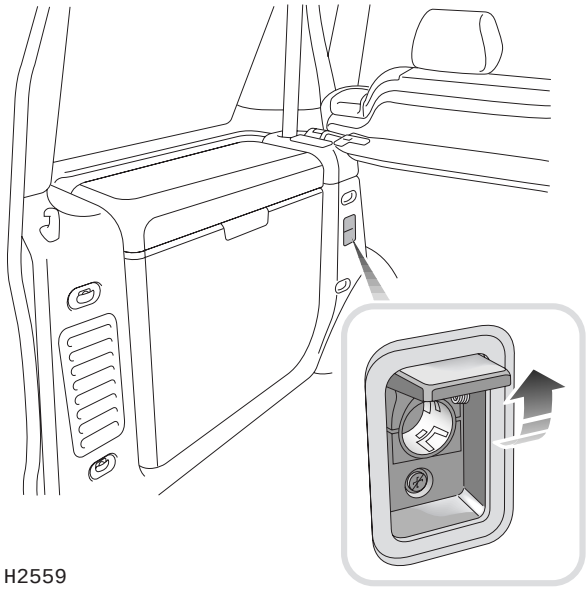

UNDER SEAT STOWAGE BOX

To gain access, depress the catch (arrowed in illustration) and open the lid.

NOTE: *On some models the stowage box provides the location for a CD autochanger.*

AUXILIARY POWER SOCKET

An auxiliary power socket is mounted immediately behind the rear seat on the left hand side of the loadspace. This can be used to power Land Rover approved accessories that use a maximum of 180 watts.

Always run the engine during prolonged use of electrical accessories, otherwise the battery may become discharged.

WARNING

NEVER plug non-approved accessories into the power socket - damage to the vehicle's electrical systems could occur.

Downloaded from www.Manualslib.com manuals search engine

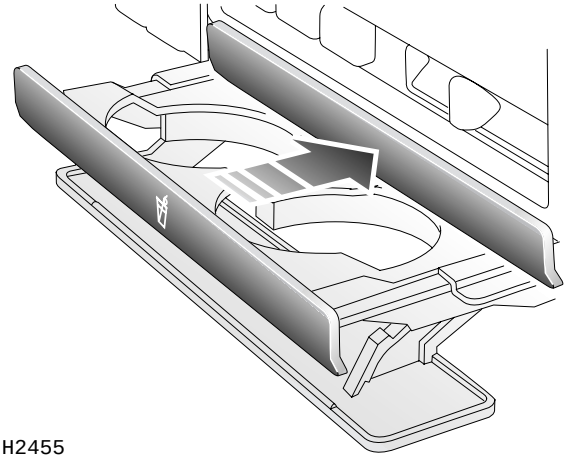

H2455

CUP HOLDER - FRONT

Push leading edge of tray to open.

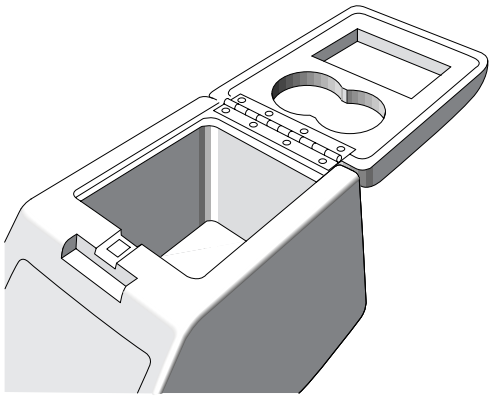

H2456

CUBBY BOX

Lift front of lid to open.

NOTE: *The recesses in the underside of the lid can be used to hold cups or drink cans.*

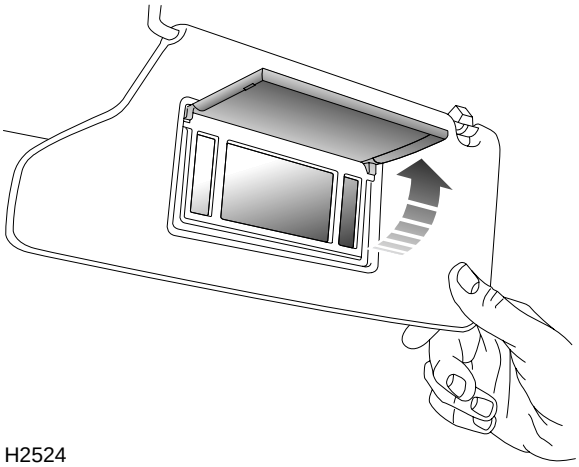

H2524

SUN VISOR VANITY MIRROR ILLUMINATION

(if fitted)

With the starter switch turned to position 'II', pivot the sun visor downward and raise the cover on the vanity mirror to illuminate the mirror. Close the cover to extinguish the lights.

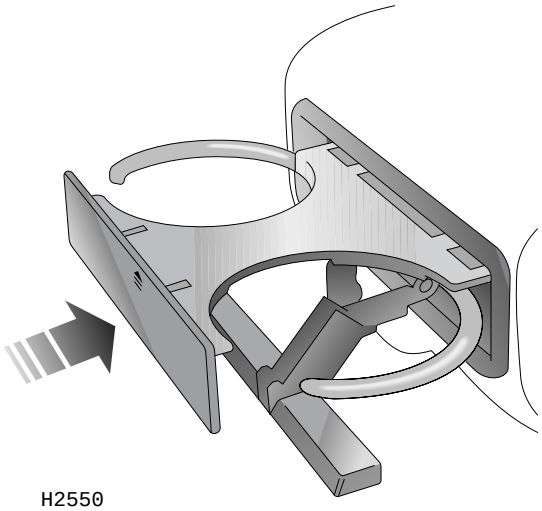

H2550

CUP HOLDER - REAR

(if fitted)

With the centre armrest lowered, press the front of the cup holder tray to open.

Downloaded from www.Manualslib.com manuals search engine

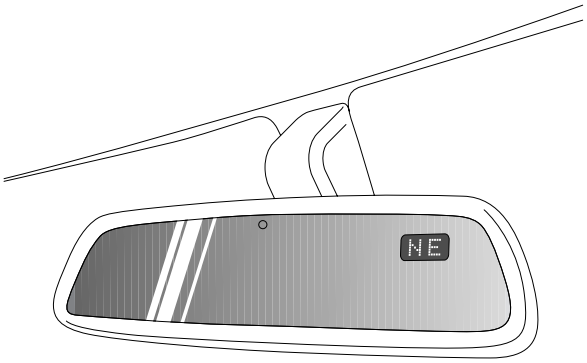

H3054

INTERIOR REAR-VIEW MIRROR

Automatic mirror

The automatic rear view mirror is equipped with an automatic dimming function which operates whenever the starter switch is turned to position II. When powered, the mirror will automatically reduce glare from the headlights of following vehicles in dark or low light conditions.

For information about the compass display, see the following pages.

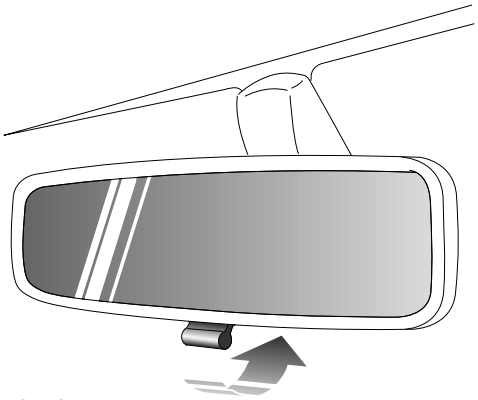

H2478

Manual mirror

The manual rear view mirror can be dipped to reduce glare from the headlights of following vehicles. At night, move the lever at the base of the mirror forward to 'dip' the mirror. Normal visibility is restored by pulling the lever back again.

WARNING

In some circumstances the view reflected in a 'dipped' manual mirror can confuse the driver as to the precise location of following vehicles. Remember to take additional care!

Downloaded from www.Manualslib.com manuals search engine

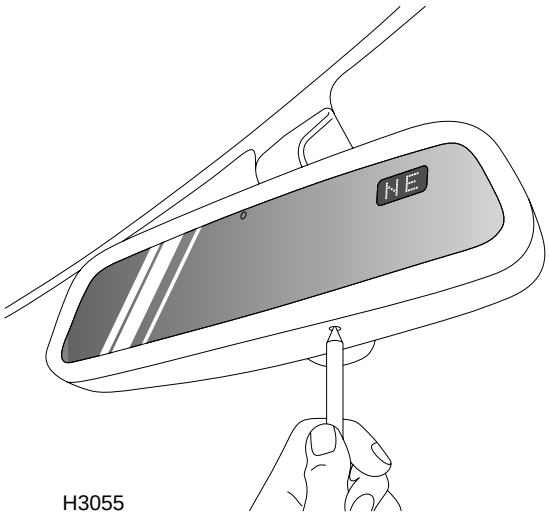

H3055

COMPASS MIRROR (if fitted)

WARNING

The compass is a direction aid only. While drivers may wish to observe the compass display while driving, it must not be allowed to distract from proper observation of traffic, road conditions and other hazards, either on the public highway or while driving off-road.

Whenever the starter switch is turned to position II, the vehicle's direction of travel - 'N', 'NE', 'E', 'SE', 'S', 'SW', 'W' or 'NW' - will be displayed in the mirror display. The display will change whenever the vehicle direction changes by more than 22.5 degrees from the midpoint of each compass segment (a short time delay is incorporated to prevent nuisance changes occurring).

To ensure accuracy, the compass must be calibrated and also set to the compass set zone in which the vehicle is to be used (see the appropriate map page that follows). Both operations will have been carried out before the vehicle was delivered. Re-calibration will not normally be necessary unless the vehicle battery has been disconnected for a period of time.

Downloaded from www.Manualslib.com manuals search engine

Calibrating the compass

1. Turn the starter switch to position II. The mirror display should show the letter 'C'.
2. If 'C' is not displayed, use a ballpoint pen or similar probe to press the button on the underside of the mirror for six seconds until 'C' is displayed. The button can then be released and the compass calibrated as follows:
3. Calibrate the compass by driving the vehicle in circles at 5 mph or less (two circles should be sufficient) until the mirror display shows a direction ('N', 'NE', 'E', 'SE', 'S', 'SW', 'W' or 'NW'). Alternatively, the compass will eventually calibrate itself during normal vehicle use, but depending upon the type of driving that is undertaken, this may take considerably longer.

Setting the compass

Variations in the earth's magnetic field cause changes to occur in the compass reading as the vehicle is driven from one set zone to another. However, it should be noted that magnetic variation between adjacent zones is only 4 degrees, and for most motoring situations, resetting the compass should only be necessary if the vehicle has crossed more than one zone, or calibration was carried out in any zone other than zone 8.

Note that the precise points at which the set zones change cannot be accurately plotted and that drivers situated in an area where zones merge should not need to reset the compass every time the vehicle crosses from one to another.

Downloaded from www.Manualslib.com manuals search engine

To set the compass:

1. Identify the appropriate zone for your location (see the map that follows).
2. Turn the starter switch to position II.
3. Using a ballpoint pen or similar probe, press and hold the button on the underside of the mirror until a zone number appears in the display. This will take approximately 3 seconds (note that the compass automatically defaults to zone 8).
4. Release the button, then continue pressing and releasing the button alternately until the required zone number appears in the display.
5. Once the set zone has been selected, the display reappears (after 10 seconds approx.), and the compass is correctly set for the required zone.

Downloaded from www.Manualslib.com manuals search engine

Compass set zones

Europe

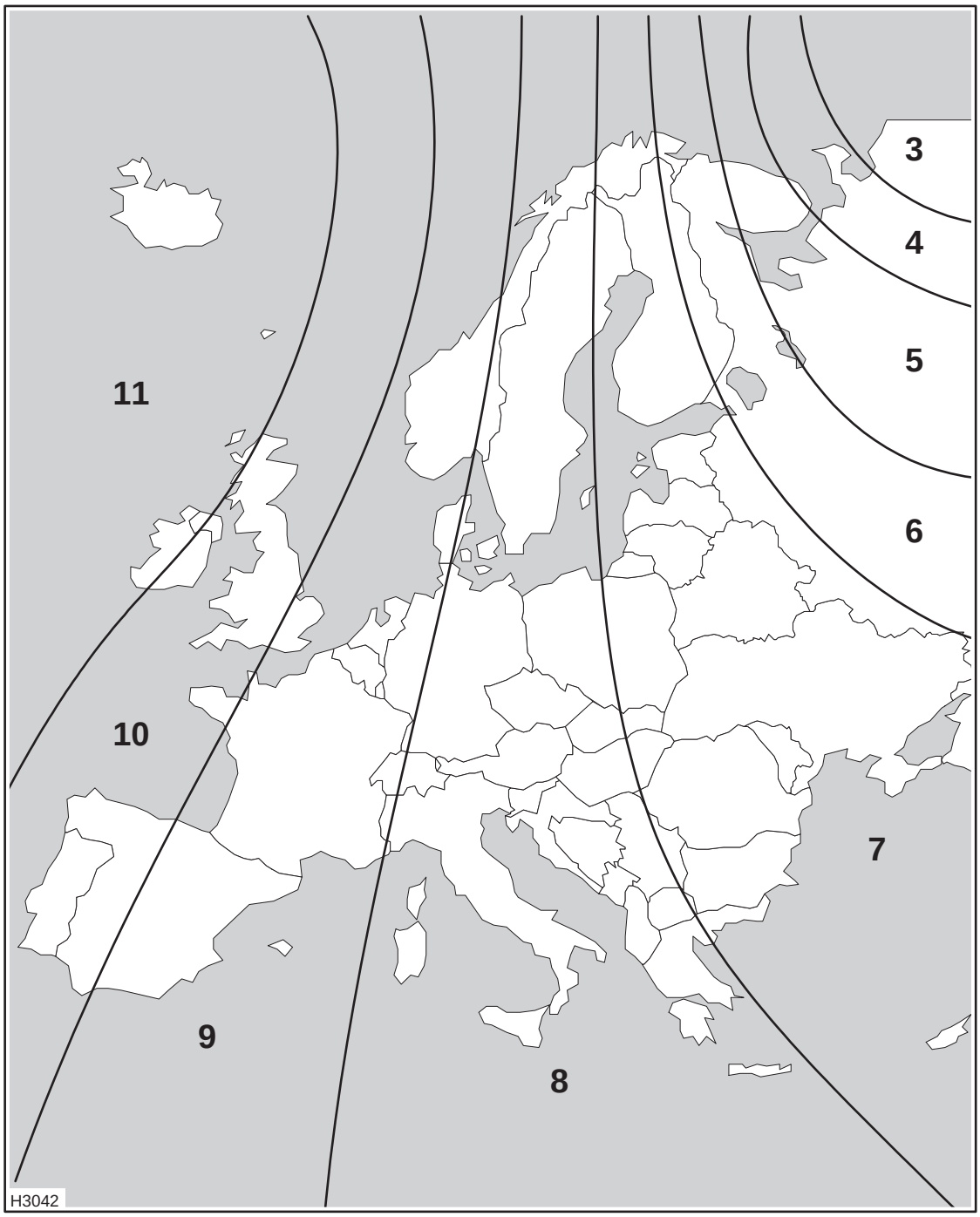

Downloaded from www.Manualslib.com manuals search engine

REAR STEP (if fitted)

Press down with your foot to lower the step. The step will automatically return to its stowed position after use.

Downloaded from www.Manualslib.com manuals search engine

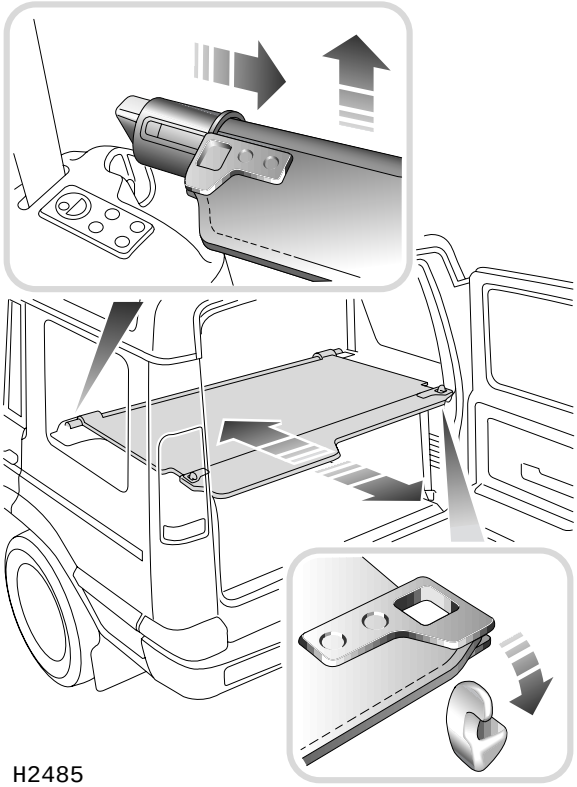

LOADSPACE COVER

The rear loadspace cover is a spring loaded roller blind, which can be retracted when not in use by detaching the cover from the hooks at the rear of the vehicle (see lower inset).

To remove the loadspace cover:

1. Slide the retracted cover firmly to the right.
2. Lift the left hand end of the cover from its location.
3. Carefully manoeuvre the cover from the rear of the vehicle.

Refitting the loadspace cover is the reverse of the removal procedure.

NOTE: *Removal of the loadspace cover may be eased by folding the rear seat backrest forward.*

WARNING

DO NOT carry loose items of luggage on top of the loadspace cover - these may obscure vision and could become dangerous projectiles in the event of a sudden stop or collision.

All equipment, luggage or tools carried in the loadspace should be secured to minimise the risk of injury to the driver and passengers in the event of an accident or emergency manoeuvre.

DO NOT store the loadspace cover loose in the vehicle.

Downloaded from www.Manualslib.com manuals search engine

In-Car Telephones

WARNING

Refrain from operating a telephone fitted with its own aerial inside the vehicle (see main text).

Your vehicle utilises a number of electronic systems designed to provide you with maximum comfort, safety and economy. These systems may be affected by the use of mobile communication equipment inside the vehicle. However, the use of an external aerial will greatly reduce the likelihood of this occurrence.

For your safety, always note the following precautions before fitting or using an in-car telephone, or any mobile communication equipment.

- Only use an installation kit incorporating an aerial external to the vehicle.
- Ensure that the installation is carried out by a competent installer.
- Refrain from operating a mobile phone fitted with its own aerial inside the vehicle - the electromagnetic field radiated by the phone may interfere with the vehicle's electrical systems.

For your safety

Using any hand-held appliance while driving can be dangerous. Always stop the vehicle before making a call and ensure the telephone is switched off while you are driving.

Downloaded from www.Manualslib.com manuals search engine

Radio aerial

A single aerial (or twin aerials on some models) is etched onto the surface of the glass of one (or both) rear side windows.

No maintenance is possible, however it is important to ensure that the interior surface of the glass is protected from possible damage caused by contact with hard objects or from the injurious effects of abrasive cleaners.

Radio cassette player

Full operating instructions for any audio equipment fitted as standard to your vehicle, are contained in the *'In-Car Entertainment'* book in the vehicle literature pack.

CD autochanger (if fitted)

The CD autochanger is located under the right hand front seat. Full operating instructions are contained in the *'In-Car Entertainment'* book.

WARNING

DO NOT insert or eject the magazine while driving.

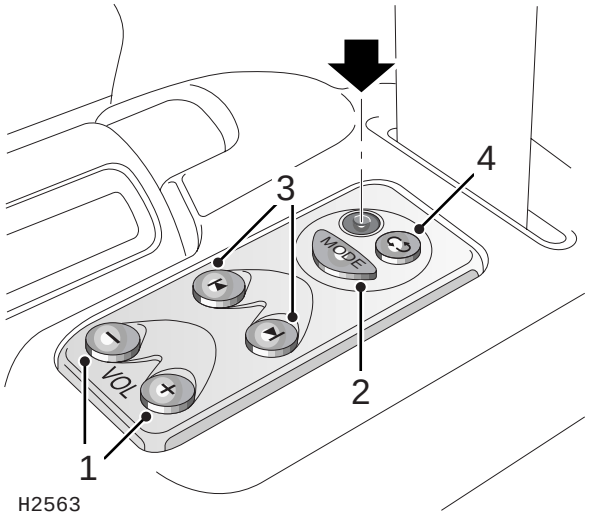

HEADPHONE CONTROLS (if fitted)

The control panel (illustrated) is for the convenience of rear seat passengers and can be used with headphones only.

The controls include:

1. Volume
2. Mode (for changing between radio, cassette tape and CD)
3. Auto search (to search up or down the selected waveband, or skip forward or back between tracks of a tape or CD).
4. Multi-function control (selects the next radio pre-set, reverses the direction of tape play, or selects the next CD in the autochanger).

Full operating instructions are included in the *'In-Car Entertainment'* book.

NOTE: *Where a conflict arises between operation of the vehicle's audio unit and the headphone controls, the audio unit takes priority.*

Downloaded from www.Manualslib.com manuals search engine

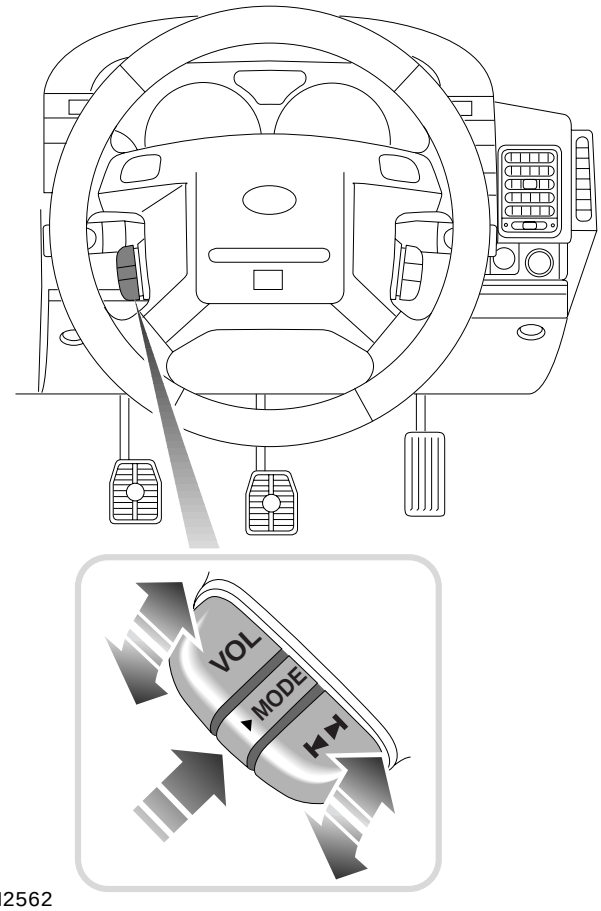

H2562

AUDIO REMOTE CONTROLS
(if fitted)

VOL

Volume control
Lift or press to increase or decrease the volume.

MODE

Mode select control
Press to change to compact disc play, or to return to radio tuner mode. The mode change will only be effected if a disc has been loaded in the autochanger. (see *'NOTE'* below)

Search control
Lift or press to change to the next or previous radio station on the selected waveband.

During CD play, lift the control to move forward to the next track on the disc, or press to return to the start of the current track. Operate the control repeatedly to move forward or back through several tracks at a time.

NOTE: *On vehicles equipped with the R990 audio unit, the mode and search controls can be used to select and change tracks during tape play as well.*

Downloaded from www.Manualslib.com manuals search engine

Downloaded from www.Manualslib.com manuals search engine

SECTION 3
Driving & operating

Section Contents **Page**

Starter switch & steering lock 87
Starting & driving 88
Catalytic converter 92
Fuel filling 94
Manual transmission 98
Automatic transmission 99
Transfer gearbox 102
Cruise control 104
Brakes 106
Traction control 110
Hill descent control 111
Active cornerning enhancement..... 1113
Self-levelling suspension 115
Towing 118
Load carrying 121
Vehicle recovery 123
Emergency starting 125

Downloaded from www.Manualslib.com manuals search engine

Downloaded from www.Manualslib.com manuals search engine

Starter switch & steering lock

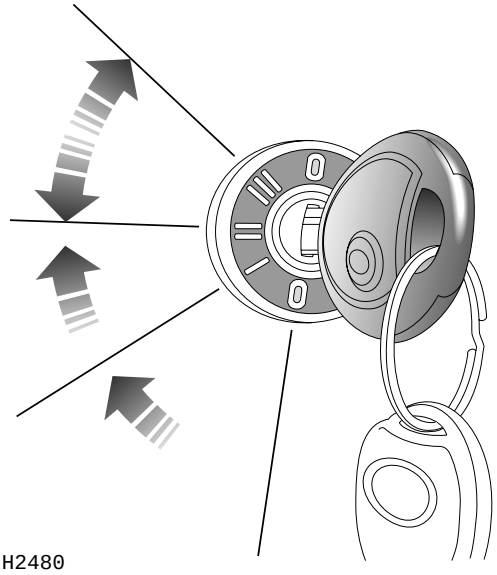

STEERING COLUMN LOCK

To unlock the steering column

Insert the key FULLY and turn the starter switch to position 'I'. A small movement of the steering wheel may be necessary to disengage the steering lock while turning the switch.

To lock the steering column

Turn the key to position **'0'** and withdraw it from the starter switch. Turn the steering wheel slightly until the lock engages.

WARNING

Once the steering lock is engaged, it is impossible to steer the vehicle. DO NOT remove the key or turn the starter switch to position '0' while the vehicle is in motion.

STARTER SWITCH

The starter switch is located to the right of the steering column, and uses the following sequence of key positions to operate the steering lock, electrical circuits and starter motor:

Position '0'

- Steering locked (if key is removed).
- Most lighting circuits are operational, including: sidelights, headlights and hazard warning lights.

Position 'I'

- Steering unlocked.
- Clock, radio/cassette player and cigar lighter can now be operated.

Position 'II'

- All instruments, warning lights and electrical circuits are operational.

Position 'III'

- Starter motor operates.
  Release the key immediately the engine starts (the key will automatically return to position 'II'). Note that operation of position 'I' electrical functions will be interrupted during engine cranking.

NOTE: *On automatic models gear selector position 'P' or 'N' must be selected before the engine will start.*

Downloaded from www.Manualslib.com manuals search engine

STARTING - PETROL ENGINE

Before starting the engine and driving, ENSURE you are familiar with the precautions shown under *'Catalytic converter'* later in this section.

In particular, you should be aware that if the engine fails to start, continued use of the starter may result in unburnt fuel damaging the catalytic converter.

Starting

1. Check that the handbrake is applied and that the gear lever is in neutral ('P' or 'N' for automatic transmission).
2. Switch off all unnecessary electrical equipment.
3. Turn the starter switch to position 'II' and then on to position 'III' to operate the starter motor. DO NOT press the accelerator pedal while starting, and RELEASE THE KEY as soon as the engine is running.

STARTING - DIESEL ENGINE

1. Check that the handbrake is applied and that the gear lever is in neutral ('P' or 'N' for automatic transmission).
2. Switch off all unnecessary electrical equipment.
3. Insert the starter key and turn the switch to position 'II'. Wait until the glow plug warning light extinguishes.

NOTE: *The waiting time will vary according to the engine coolant temperature (when the engine is hot, the glow plug warning light will extinguish almost immediately).*

4. Turn the key to position 'III' to operate the starter motor. DO NOT press the accelerator pedal while starting. RELEASE THE KEY as soon as the engine is running.

If the engine stalls or fails to start, you MUST return the starter switch to position 'I' before attempting to restart; the engine will not start by turning the starter switch from position 'II'.

WARNING

The diesel engine must not be run above idle speed until the oil pressure warning light extinguishes. This will ensure that the engine and turbo-charger bearings are properly lubricated before being run at speed.

Similarly, ALWAYS allow the engine to idle for 10 seconds before switching off.

Downloaded from www.Manualslib.com manuals search engine

STARTING - GENERAL INFORMATION

In temperate climates DO NOT operate the starter for longer than 10 seconds. If the engine fails to start, switch off and wait 10 seconds before re-using the starter. Please note that continued use of the starter will discharge the battery and may cause the starter motor to overheat.

NOTE: *The battery charging and oil pressure warning lights should extinguish as soon as the engine is running.*

In cold weather, or when the battery is in a low state of charge, on manual gearbox vehicles depress the clutch pedal while starting and hold it down until the engine is running. This will reduce the load on the battery.

Cold climates

In very cold climates the oil pressure warning light may take several seconds to extinguish. Similarly, engine cranking times will also increase; at -22° F (-30° C) the starter motor may need to be operated continuously for as long as 30 seconds before the engine will start. For this reason, ensure that all non-essential electrical equipment is switched off.

Block heaters

Only approved block heaters restricted to a maximum of 400 W should be used. Block heaters that exceed this output may damage the emission control components.

Automatic gearbox vehicles

After starting, ensure that the handbrake and foot brake are firmly applied and the accelerator pedal is not depressed while moving the gear selector lever from 'N' or 'P', otherwise, the vehicle may move immediately the selector lever is moved to one of the drive positions (1,2,3,D or R). This is particularly important when the engine is cold, because the engine will be idling at a faster speed than normal.

WARNING

Exhaust fumes contain poisonous substances which can cause unconsciousness and may even be fatal.

- ***DO NOT inhale exhaust gases.***
- ***DO NOT start or leave the engine running in an enclosed unventilated area, or drive with the taildoor open.***
- ***DO NOT modify the exhaust system from the original design.***
- ***ALWAYS repair exhaust system leaks immediately.***
- ***If you think exhaust fumes are entering the vehicle have the cause determined and corrected immediately.***

Downloaded from www.Manualslib.com manuals search engine

EMISSION CONTROL SYSTEM

Land Rover vehicles are fitted with emission and evaporative control equipment necessary to meet a number of territorial requirements.

In many countries it is against the law for vehicle owners to modify or tamper with emission control equipment, or to sanction the unauthorised replacement or modification of this equipment. In such cases the vehicle owner and the repairer may both be liable for legal penalties.

It is important to remember that all Land Rover dealers are properly equipped to perform repairs and to maintain the emission control system on your Discovery.

WARNING

DO NOT use auxiliary equipment, such as roller generators, that are driven by one wheel of the vehicle, as they could cause failure of the gearbox differential. If the gearbox differential lock is engaged in an attempt to avoid damage, the vehicle will drive itself forward.

DRIVING

Instruments and warning lights

Before driving it is important to fully understand the function of the instruments and warning lights described in 'section 2'.

NOTE: *Red warning lights are of particular importance, illumination indicating that a fault exists. If a red light illuminates, always stop the vehicle and seek qualified assistance before continuing.*

IMPORTANT INFORMATION

Vehicle stability

Your vehicle has a higher ground clearance and, hence, a higher centre of gravity than ordinary passenger cars to enable the vehicle to perform in a wide variety of different off-road applications. An advantage of the higher ground clearance is a better view of the road, allowing the driver to more easily anticipate problems. Inexperienced drivers should take additional care, remembering that the Discovery is not designed for cornering at the same speeds as conventional passenger cars, any more than a low slung sports car is designed to perform satisfactorily in off-road conditions. As with other vehicles of this type, failure to operate the Discovery correctly may result in loss of control or even vehicle rollover.

Vehicle height

The overall height of your vehicle exceeds that of ordinary passenger cars (for convenience the height is shown on the underside of the sun visor). Always be aware of the height of your vehicle and check the available headroom before driving through low entrances. This is particularly important if the vehicle is fitted with a roof rack or if a sunroof is open.

Downloaded from www.Manualslib.com manuals search engine

Warming-up

DO NOT warm-up the engine by allowing it to idle at a slow speed.

In the interests of fuel economy, it is advisable to drive the vehicle straight away, remembering that harsh acceleration and labouring the engine before the normal operating temperature has been reached can damage the engine.

Running-in

Proper running-in will have a direct bearing on the reliability and smooth running of your vehicle throughout its life.

In particular, the engine, gearbox, brakes and tyres need time to 'bed-in' and adjust to the demands of everyday motoring. During the first 500 miles (800 km), it is essential to drive with consideration for the running-in process and heed the following advice:

- LIMIT maximum road speed to 70 mph (110 km/h) or 3,000 rev/min. Initially, drive the vehicle on a light throttle and only increase engine speeds gradually once the running-in distance has been completed.
- DO NOT operate at full throttle or allow the engine to labour in any gear.
- AVOID fast acceleration and heavy braking except in emergencies.

FUEL ECONOMY

Fuel consumption is influenced by two major factors:

- How your vehicle is maintained.
- How you drive your vehicle.

To obtain optimum fuel economy, it is essential that your vehicle is maintained in accordance with the manufacturer's service schedule.

Items such as the condition of the air cleaner element, tyre pressures and wheel alignment will have a significant effect on fuel consumption. But, above all, the way in which you drive is most important. The following hints may help you to obtain better value from your motoring:

- Avoid unnecessary, short, start-stop journeys.
- Avoid fast starts by accelerating gently and smoothly from rest.
- Do not drive in the lower gears for longer than necessary.
- Decelerate gently and avoid sudden and heavy braking.
- Anticipate obstructions and adjust your speed accordingly well in advance.
- When stationary in traffic, select neutral to improve fuel economy and air conditioning performance.

Downloaded from www.Manualslib.com manuals search engine

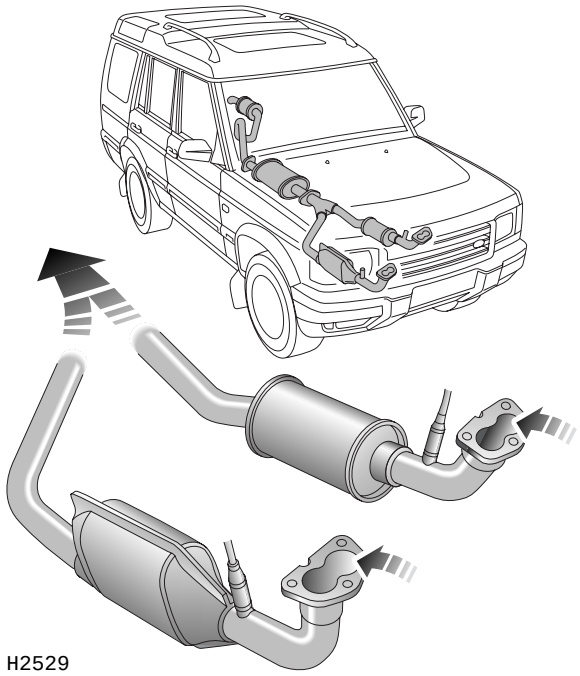

CATALYTIC CONVERTER
(petrol engine vehicles only)

The exhaust system on most petrol engine vehicles incorporates a catalytic converter, which converts poisonous exhaust emissions from the engine into environmentally less harmful gases.

WARNING

Catalytic converters can be easily damaged through improper use, particularly if the wrong fuel is used, or if an engine misfire occurs. For this reason it is VERY IMPORTANT that you heed the precautions which follow:

Fuel

- Use ONLY fuel recommended for your vehicle.

Starting the engine

- DO NOT continue to operate the starter after a few failed attempts (unburnt fuel may be drawn into the exhaust system, thereby poisoning the catalyst), and do not attempt to clear a misfire by pressing the accelerator pedal - seek qualified assistance.
- When starting a COLD engine, DO NOT drive if a misfire is suspected and do not attempt to clear a misfire by pressing the accelerator - seek qualified assistance.
- Do not attempt to push or tow-start the vehicle.

Downloaded from www.Manualslib.com manuals search engine

Driving

- If a misfire is suspected, or the vehicle lacks power while driving, provided the engine has reached its normal operating temperature, it may be driven SLOWLY (at risk of catalyst damage) to a Land Rover dealer for assistance.
- NEVER allow the vehicle to run out of fuel (the resultant misfire could damage the catalyst).
- Consult your dealer if your vehicle is burning excessive oil (blue smoke from the exhaust), as this will progressively reduce catalyst efficiency.
- On rough terrain do not allow the underside of the vehicle to be subjected to heavy impacts which could damage the catalytic converter.
- DO NOT overload or excessively 'rev' the engine.
- DO NOT switch off the engine when the vehicle is in motion with a drive gear selected.

WARNING

Exhaust system temperatures can be extremely high - DO NOT park on ground where combustible materials such as dry grass or leaves could come into contact with the exhaust system - in dry weather a fire could result.

Vehicle maintenance

- Any engine misfire, loss of engine performance or engine run-on, could seriously damage the catalytic converter. For this reason, it is vital that unqualified persons do not tamper with the engine, and that regular systematic maintenance is carried out by a Land Rover dealer.
- DO NOT run the engine with a spark plug or HT lead removed, or use any device that requires an insert into a spark plug.

Downloaded from www.Manualslib.com manuals search engine

TYPE OF FUEL

WARNING

On petrol engine vehicles fitted with a catalytic converter, serious damage to the catalyst will occur if LEADED fuel is used!

PETROL ENGINES

Engines with a catalytic converter:
High compression engines: 95 RON UNLEADED to EN228
Low compression engines: 91 RON UNLEADED to EN228

Engines without a catalytic converter:
Use 91 RON UNLEADED petrol wherever possible.

In territories where only LEADED fuel is available, USE 95 RON LEADED.

The RON values quoted above are MINIMUM requirements and can be safely exceeded. Using petrol with a lower octane rating, however, can cause persistent, heavy 'engine knock' (a metallic rapping noise). If severe, this can lead to engine damage.

If heavy engine knock is detected when using the recommended octane rated fuel, or if steady engine knocking is present while maintaining a steady speed on level roads, contact your dealer for advice.

NOTE: *An occasional, light, engine knock while accelerating or climbing hills is acceptable.*

Petrol quality

The RON value (octane rating) and type of petroleum (unleaded or leaded), available at garage forecourts will vary in different parts of the world. For example, in most European countries 95 RON unleaded fuel is readily available, but in some parts of the world fuel supplies may be limited to leaded or lower octane fuels only.

During manufacture, engines are tuned to suit the fuel supplies commonly available in the country for which the vehicle is destined. However, if a vehicle is later exported to a different country, or is used to travel between different territories, the owner should be aware that the available fuel supplies may not be compatible with the engine specification. If in doubt, seek advice from the territory concerned.

DIESEL ENGINES

Use diesel or automotive gas oil (AGO) to EN 590.

The quality of diesel fuel (Derv) can vary in different countries and only clean, good quality fuel should be used. It is important that the sulphur content of diesel fuel does not exceed 0.3%; in Europe all supplies should be within this limit, but in other parts of the world, you should check with your supplier.

In markets where the sulphur content exceeds 0.3%, more frequent engine oil and filter changes will be required.

WARNING

On diesel engine vehicles, if the fuel tank is accidentally filled with petrol it is ESSENTIAL that you contact your dealer BEFORE attempting to start the engine!

Downloaded from www.Manualslib.com manuals search engine

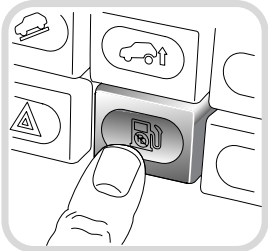

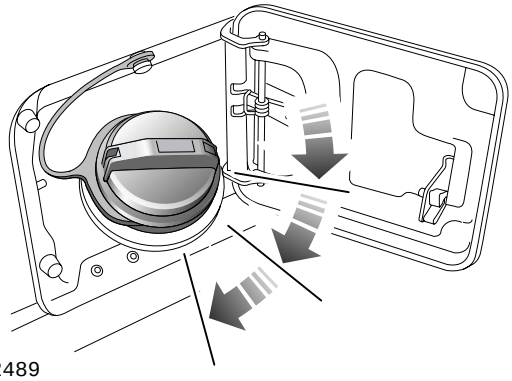

H2489

SAFETY ON THE FORECOURT

WARNING

Petroleum gases are highly inflammable and, in confined spaces, are also extremely explosive. Always take sensible precautions when refuelling:

- ***Switch off the engine.***
- ***Do not smoke or use a naked flame or light.***
- ***Take care not to spill fuel.***
- ***Do not overfill the tank.***

FUEL FILLER

WARNING

DO NOT fully remove the filler cap until any captive tank pressure has been released (wait until the hissing stops).

The fuel filler is located in the rear right-hand wing. With the starter switch turned to position ’0’ or ’I’, press the fascia mounted switch (shown in illustration) to release the filler flap.

The filler cap is designed to allow the fuel tank to vent during the first half turn. Carefully loosen the cap one half turn until resistance is felt, and allow fuel tank pressure to be released. Once the pressure is released (hissing has stopped), it is safe to fully remove the filler cap.

When replacing, tighten the cap clockwise until you hear the fuel cap ratchet click at least three times (see illustration).

Downloaded from www.Manualslib.com manuals search engine

FUEL FILLING

WARNING

DO NOT attempt to fill the tank to its maximum capacity. If the vehicle is to be parked on a slope, in direct sunlight, or high ambient temperature, expansion of the fuel could cause spillage.

Filling station pumps are equipped with automatic cut-off sensing to avoid fuel spillage. Fill the tank SLOWLY until the filler nozzle automatically cuts-off the supply. DO NOT attempt to fill the tank beyond this point or spillage could result due to expansion of the fuel.

Petrol engine vehicles

On petrol engine vehicles designed to operate ONLY on unleaded fuel, the fuel filler neck will accept ONLY a narrow filler nozzle of the type found on pumps that deliver UNLEADED fuel.

On petrol engine vehicles designed to operate on leaded fuel, the fuel filler neck will accept the wider filler nozzles found on pumps that deliver LEADED fuel.

Diesel engines

The diesel pumps on garage forecourts fill at a maximum of 45 litres (10 gallons) per minute. Use of commercial vehicle diesel pumps with a higher fill rate, may result in premature pump cut-off and fuel spillage.

Downloaded from www.Manualslib.com manuals search engine

EMPTY FUEL TANK

Petrol engine vehicles

In the case of petrol engine vehicles equipped with a catalytic converter, running the fuel tank dry could create an engine misfire capable of damaging the catalytic converter. DO NOT RUN THE FUEL TANK DRY!

Diesel engine vehicles

After running the fuel tank dry, refuel the tank with at least 1 gallon (4.5 litres) of diesel fuel, then carry out the following procedure:

1. Turn off the starter switch and wait for 15 seconds.
2. Turn the starter key to position 'II' and wait for 30 seconds.
3. Repeat steps 1 and 2 six times.
4. After the final 30 second period, fully depress the accelerator pedal.
5. Keeping the pedal depressed, start cranking the engine.
6. Continue cranking the engine and as soon as the engine is firing smoothly, ease the accelerator pedal back to approximately halfway through its travel, and release the starter key. The engine should now be running.
7. If the engine fails to start, repeat the process.

IMPORTANT INFORMATION
The engine must NOT be cranked for more than 20 seconds in any one period. If the above procedure is carried out on a vehicle that has NOT run out of fuel, it will result in the engine flooding with fuel and failing to start.

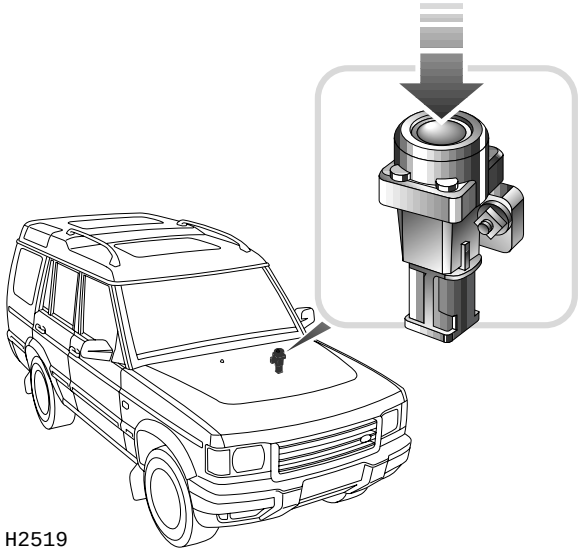

FUEL CUT-OFF SWITCH

The fuel cut-off switch is a safety device which, in the event of a collision or sudden impact, automatically cuts off the fuel supply to the engine.

The switch is located on the engine compartment bulkhead. After an impact, the switch must be reset by pressing the rubber top (arrowed in illustration) before the engine can be restarted.

WARNING

ALWAYS check for fuel leaks before resetting the switch!

Downloaded from www.Manualslib.com manuals search engine

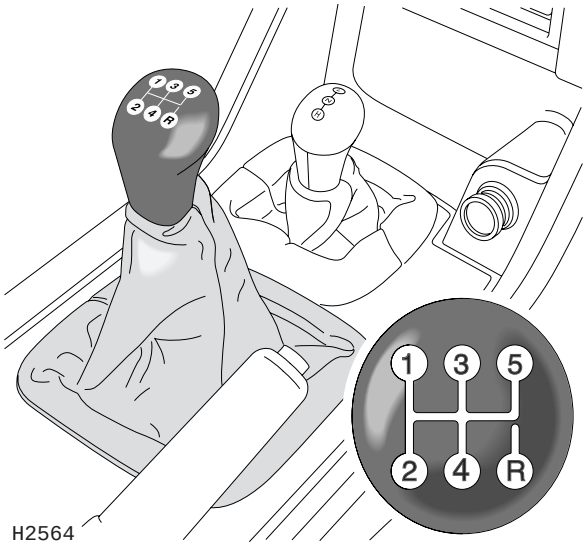

MANUAL TRANSMISSION

Manual transmission vehicles feature a five speed main gearbox and a two-speed (LOW & HIGH) transfer box. By using the main gearbox in conjunction with the transfer gears, ten forward and two reverse speeds are available.

The gear positions for the main gearbox are shown on the gear lever knob. Note that when the gearbox is in neutral, the gear lever is spring-loaded to lie naturally between third and fourth gear positions.

Clutch

DO NOT use the clutch pedal as a foot rest. To prevent unnecessary wear, always keep the left foot well clear of the clutch pedal except when changing gear.

DO NOT hold the vehicle stationary on a hill by slipping the clutch. This will wear out the clutch. Always use the handbrake.

WARNING

Do not select reverse gear unless the vehicle is stationary.

DO NOT attempt to start the engine with the vehicle in gear. The engine must ONLY be started with the main gear lever in neutral and the handbrake applied.

Downloaded from www.Manualslib.com manuals search engine

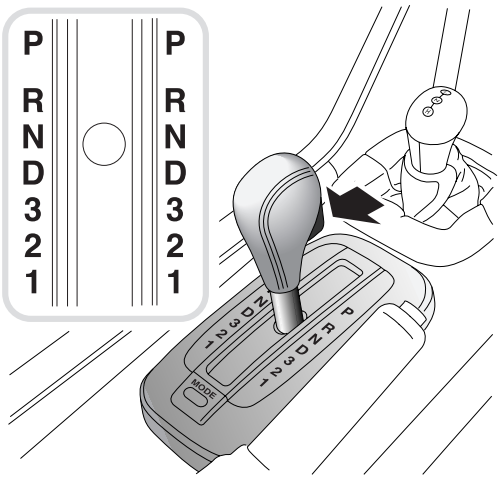

H2565

AUTOMATIC TRANSMISSION

The Automatic transmission features a four speed main gearbox with a torque converter and a two speed transfer box. Using the main gearbox in conjunction with the transfer gearing produces eight forward and two reverse speeds.

Main gearbox selector lever

A spring loaded catch restricts movement of the lever, thereby preventing inadvertent gear selection. Press and hold the trigger mounted in the handle of the selector lever (arrowed in illustration) to release the catch whilst moving the lever to the required position.

NOTE: *Gear selection between 'D' and '3' in high and low range may be made without operating the trigger.*

Selector lever positions

'P' Park

In this position the transmission is locked to prevent the vehicle from rolling away. Select ONLY when the vehicle is stationary and with the handbrake applied.

'R' Reverse

Select ONLY when the vehicle is stationary.

'N' Neutral

Use this position when the vehicle is stationary and the engine is to idle for a short period (eg. at traffic lights).

'D' Drive

In high range, select for all normal driving on good road surfaces; fully automatic gear changing occurs on all four forward gears according to vehicle speed and accelerator position.

'3' (1st, 2nd and 3rd gears)

Automatic gear changing is limited to first, second and third gears only. In high range, use this position in congested traffic conditions and for town driving.

'2' (1st and 2nd gears)

Automatic gear changing is limited to first and second ratios only. In high range, use when driving up steep gradients and for negotiating very narrow, twisting, roads. This position also provides moderate engine braking for descending slopes.

'1' (1st gear only)

Use on very severe gradients, particularly when towing, and when maximum engine braking is required.

Downloaded from www.Manualslib.com manuals search engine

WARNING

Always leave the vehicle with the gear selector in 'P' (Park) position when parked.

Starting and driving

Drivers unfamiliar with the performance characteristics of an automatic gearbox should thoroughly familiarise themselves with the following instructions before driving.

- Before starting the engine, ensure that both foot brake and handbrake are applied.
- After starting the engine, KEEP BOTH BRAKES APPLIED before and whilst moving the selector lever to the required drive position.
- Keep the brakes applied until you are ready to move - remember, once a drive position is selected, an 'automatic' will tend to creep forward (or backward) without throttle application, as soon as the brakes are released.
- Never 'rev' the engine while selecting a forward or reverse drive gear, or while the vehicle is stationary with a drive gear selected - remember, an 'automatic' will move immediately the accelerator pedal is pressed.

Gear change speeds

With 'D' selected, the road speeds at which gear changes take place will vary according to the position of the accelerator: minimum acceleration will result in gear changes at low road speed, while larger throttle openings will cause the gearbox to delay gear changes until faster road speeds have been reached (thereby increasing acceleration).

With practice, gear changes can be made to occur at a wide range of road speeds depending on accelerator pedal pressure.

On long inclines the gearbox will sometimes change back and forth between gears. This occurs because the transmission does not include a ratio that is precisely right for the particular incline and vehicle loading circumstances. However, excessive gear changing results in a loss of momentum and is wasteful of fuel. It can be prevented by selecting the '3' or '2' positions which limit the gearbox to lower ratios.

'Kick-down'

To provide rapid acceleration for overtaking, push the accelerator pedal to the full extent of its travel in a single quick movement (this is known as 'kick-down'). Up to a certain speed, this will cause an immediate downshift into the lowest appropriate gear, followed by rapid acceleration. Once the pedal is relaxed, normal gear change speeds will resume (dependent upon road speed and accelerator pedal position).

Downloaded from www.Manualslib.com manuals search engine

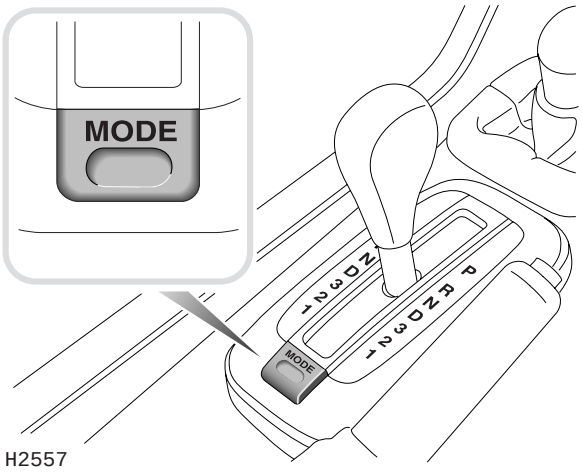

MODE SWITCH

In High range press the mode switch to select 'Sport' mode (the 'S' information light on the instrument panel will illuminate).

In Low range press the mode switch to select 'Manual' mode (the 'M' manual information light will illuminate).

Press the switch a second time to return the gearbox to normal operation.

'Sport' mode

With 'Sport' mode selected, the gearbox is more responsive to accelerator pedal movement - downshifts occur earlier and upshifts are delayed to make optimum use of the engine's power while accelerating. Select 'Sport' when increased acceleration is required, or when negotiating long inclines or twisting roads. Note that driving in 'Sport' mode will increase fuel consumption.

'Manual' mode

In Low range, with 'Manual' mode selected, the automatic transmission functions as a manual gearbox requiring the driver to move the selector lever manually to change gear ('D' = 4th gear). Manual mode will provide maximum vehicle control and engine braking - ideal for use in severe off-road conditions. Note that 'kick-down' is disabled and that automatic downshifts will only occur to prevent the engine from stalling.

NOTE: *Switching off the engine or using the transfer gearbox will automatically cancel 'Sport' or 'Manual' mode.*

Downloaded from www.Manualslib.com manuals search engine

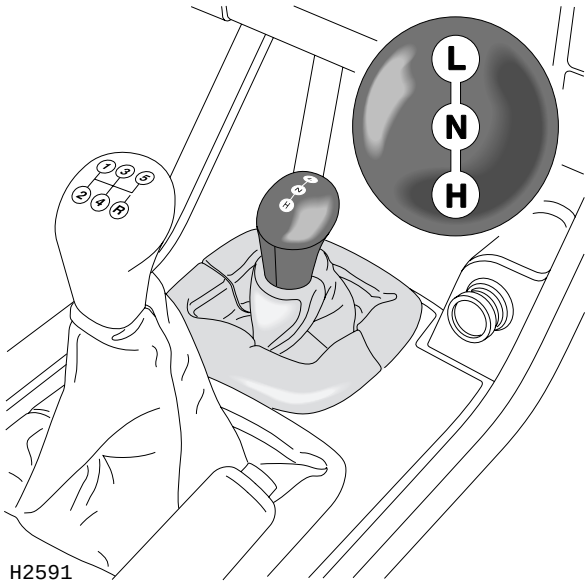

TRANSFER GEARBOX

The second gearbox (known as the transfer box) is used to select either the high or low range of gears.

High range ('H')

The high range of gears should be used for all normal road driving and also for off-road driving across dry, level terrain.

Low range ('L')

Use low range gears ONLY in situations where low speed manoeuvring is necessary, such as reversing a trailer or negotiating a boulder strewn river bed; also use low range for more extreme off-road conditions where progress in high range cannot be maintained. DO NOT attempt to use LOW range gears for normal road driving.

USING THE TRANSFER GEARBOX

There are two ways of operating the transfer gearbox lever; the 'normal' method - recommended for inexperienced drivers - and the 'advanced' method for experienced drivers.

Normal method

Manual models:

With the vehicle stationary and the engine running, depress the clutch and then move the lever fully forward (or backwards) in TWO distinct but positive moves - 'high to neutral'.... 'neutral to low' (or vice versa).

If there is resistance to the gear engaging, do not force the lever. Instead, with the main lever in gear, release the clutch momentarily and then try again.

Automatic models:

With the vehicle stationary and the engine running, apply both foot brake and handbrake and then move the automatic gearbox selector to the 'N' (neutral) position before moving the transfer lever fully forward or backwards to the required position.

Downloaded from www.Manualslib.com manuals search engine

Advanced method

(Manual gearbox vehicles)

Changing from high to low on the move:

With the vehicle slowing to a stop and travelling NO FASTER THAN 5 mph (8 km/h), depress the clutch and push the transfer lever into neutral. Just before the road wheels stop turning (and with the clutch still depressed) push the lever fully forward into 'L' (low).

NOTE: *Use positive and confident moves, but do not rush the gear change.*

Changing from low to high on the move:

Changing from 'L' (low) to 'H' (high) can be achieved without stopping the vehicle, as follows:

1. Apply slight backward pressure to the transfer gear lever in preparation for changing.
2. Then, in three simultaneous moves, depress the clutch, release the accelerator and pull the transfer lever into neutral.
3. Release the clutch pedal for approximately 3 seconds before depressing it again and moving the transfer lever firmly into the high position.
4. Finally, select a suitable main gear, release the clutch and continue driving in the normal way.

NOTE: *After a little practice, this operation can be carried out smoothly and quickly by using firm, positive moves.*

On automatic models, reduce (or increase) the speed of the vehicle to 5 mph (8 km/h) and release the accelerator. Select 'N' and move the transfer lever quickly to the required 'H' or 'L' position. Finally, reselect 'D' with the main gear selector and continue driving as normal.

Downloaded from www.Manualslib.com manuals search engine

IMPORTANT INFORMATION

- DO NOT use cruise control when using low range or reverse gears.
- DO NOT use cruise control on winding or slippery road surfaces, or in traffic conditions where a constant speed cannot easily be maintained.
- Use of 'sport' mode on automatic gearbox vehicles is not recommended when cruise control is selected.
- On petrol engine vehicles, DO NOT rest your foot under the accelerator pedal while cruise control is engaged - your foot could be trapped.
- ALWAYS switch off the master switch when you no longer intend to use cruise control.

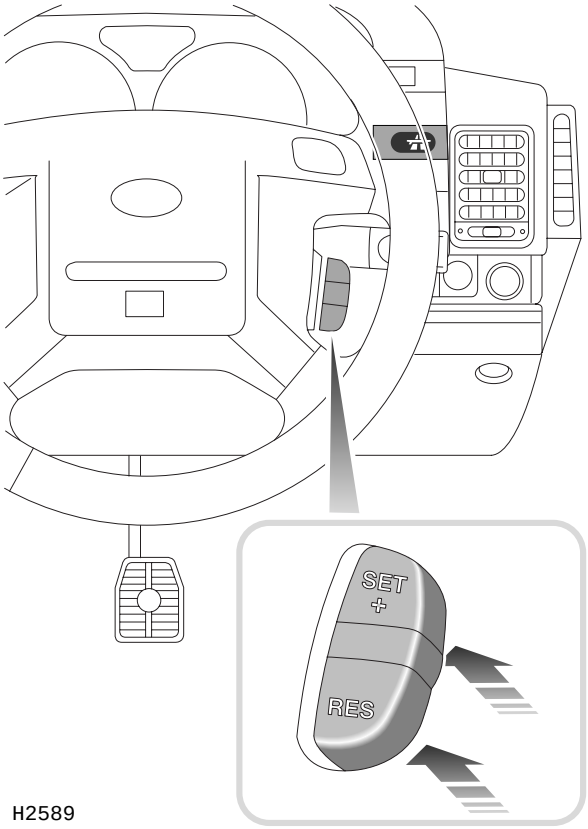

CRUISE CONTROL (if fitted)

Cruise control enables the driver to maintain a constant road speed without using the accelerator pedal. This is particularly useful for motorway cruising or for any journey where a constant speed can be maintained for a lengthy period.

The cruise control system has three switches; a master switch on the right hand side of the instrument panel and two control switches marked 'SET +' and 'RES' mounted on the steering wheel.

Downloaded from www.Manualslib.com manuals search engine

To operate

1. Press the master switch (the switch indicator light illuminates whenever the switch is pressed to the 'on' position).
2. Accelerate until the desired cruising speed is reached. This must be above the system's operational minimum speed of 28 mph (45 km/h).
3. Press the 'SET +' switch to set the vehicle speed in the system's memory. Cruise control will now maintain that road speed without the need for operation of the accelerator pedal.

With cruise control operating, speed can be increased for periods of up to 30 seconds, by normal use of the accelerator e.g. for overtaking. When the accelerator is released, road speed will return to the selected cruising speed.

NOTE: *If the 30 second period is exceeded, cruise control will automatically disengage. Press the 'RES' switch to re-engage.*

To reduce the cruising speed:
Press the 'RES' switch to slow the vehicle, until the required speed has been reached. Then press the 'SET +' switch to establish the new cruising speed (remember that cruise control will not operate at speeds below 28 mph (45 km/h).

To increase the set cruising speed:
Press and hold the 'SET +' switch - the vehicle will accelerate automatically. Release the switch as soon as the desired speed has been reached.

Alternatively, the set speed can be increased incrementally by 'tapping' the 'SET +' switch. Each press of the switch will increase the speed by 1 mph (1.5 km/h approx).

Disengaging cruise control

On manual gearbox vehicles, the cruise control will automatically disengage if the brake or clutch pedals are pressed. On automatic gearbox vehicles, cruise control will disengage when the gear selector is moved into neutral, or when the brake pedal is pressed. Cruise control can also be disengaged by pressing the 'RES' switch.

To re-engage cruise control at the previously set speed, press the 'RES' switch.

NOTE: *The speed held in the cruise control memory will be cancelled when either the cruise control master switch or the starter switch is turned off.*

Downloaded from www.Manualslib.com manuals search engine

FOOT BRAKE

For your safety, the hydraulic braking system operates through dual circuits. If one circuit should fail, the other will continue to function, but increased brake pedal travel, greater pedal pressure, and longer stopping distances will be experienced.

Servo assistance

The braking system is servo assisted, but ONLY when the engine is running. Without this assistance greater braking effort is necessary to safely control the vehicle, resulting in longer stopping distances. Always observe the following precautions:

- NEVER allow the vehicle to freewheel with the engine turned off.
- ALWAYS take particular care when being towed with the engine turned off.
- If the engine should stop for any reason while the vehicle is in motion, bring the vehicle to a halt as quickly as traffic conditions safely allow, and DO NOT pump the brake pedal as the braking system may lose any remaining assistance available.

Electronic brake force distribution

In addition, your vehicle is equipped with Electronic Brake Force Distribution (EBD), which balances the distribution of braking forces between front and rear axles, in order to maintain maximum braking efficiency under all load conditions.

For example; under light loads EBD applies less effort to the rear brakes to maintain vehicle stability, conversely reducing front braking effort when the vehicle is towing or is heavily laden.

Brake pads

Brake pads require a period of bedding in. For the first 500 miles (800 km), you should avoid situations where heavy braking is required.

Remember! regular servicing is vital to ensure that the brake pads are examined for wear and changed periodically to ensure long term safety and optimum performance.

WARNING

DO NOT rest your foot on the brake pedal while travelling as this may overheat the brakes, reduce their efficiency and cause excessive wear.

NEVER move a vehicle without the engine running because braking assistance will not be available. The pedal brakes will still function, but more pressure will be required to operate them.

If the brake warning light should illuminate while the vehicle is in motion, bring the vehicle to a halt as quickly as traffic conditions and safety permit and seek qualified assistance before continuing.
DO NOT pump the brake pedal - the braking system may lose any remaining servo assistance available.

Wet conditions

Driving through water or even very heavy rain may adversely affect braking efficiency. Always dry the braking surfaces by intermittent light application of the brakes, first ensuring that you are at a safe distance from other road users.

Downloaded from www.Manualslib.com manuals search engine

HANDBRAKE

Unlike most other vehicles, the handbrake operates on the rear propeller shaft, and NOT on the road wheels. This may result in slight movement of the vehicle after the handbrake is applied.

To engage the handbrake, pull the lever up fully.

To release, pull the lever up slightly, depress the button and lower the lever.

Always apply the handbrake fully whenever you park.

When parking on a slope, do not rely on the handbrake alone to hold the vehicle. On manual gearbox models, the vehicle should be parked in a low forward gear when facing uphill and in reverse gear when facing downhill. For extra security on steep slopes, move the transfer lever into low range.

On automatic gearbox models, particularly when low range is selected, ensure the parking pawl of the gearbox has fully engaged by carefully releasing the foot brake and allowing the vehicle to 'rock' into 'P' (park).

WARNING

DO NOT apply the handbrake while the vehicle is in motion as this could result in loss of vehicle control and damage to the transmission.

DO NOT rely on the handbrake to operate effectively if the vehicle has been subjected to immersion in mud and water (see 'Off-road driving' section).

ANTI-LOCK BRAKES

The purpose of the anti-lock braking system (ABS) is to allow efficient braking without wheel locking - thereby allowing the driver to retain steering control of the vehicle.

Under normal braking conditions, (where sufficient road surface friction exists to reliably bring the vehicle to a halt without the wheels locking), ABS will not be activated. However, should the braking force exceed the available adhesion between the tyres and the road surface, then ABS will automatically come into operation. This will be recognisable by a rapid pulsation felt through the brake pedal.

In normal road use, in an emergency situation full braking effort should always be applied even when the road surface is slippery. The anti-lock braking system constantly monitors the speed of each wheel and varies braking pressure to each, according to the amount of traction available, thereby ensuring that the wheels do not lock.

No matter how hard you brake, you should be able to continue steering the vehicle as NORMAL.

- DO NOT pump the brake pedal at any time; this will interrupt operation of the system and may increase braking distance.
- NEVER place additional floor matting or any other obstruction under the brake pedal. This restricts pedal travel and therefore braking efficiency is impaired.

Downloaded from www.Manualslib.com manuals search engine

WARNING

ABS cannot overcome the physical limitations of stopping the vehicle in too short a distance, cornering at too high a speed, or the danger of aquaplaning, i.e. where a layer of water prevents adequate contact between the tyres and the road surface.

The fact that a vehicle is fitted with ABS must never tempt the driver into taking risks that could affect his/her safety or that of other road users. In all cases, it remains the driver's responsibility to drive within normal safety margins, having due consideration for prevailing weather and traffic conditions.

The driver should always take account of the surface to be travelled over and the fact that brake pedal reactions will be different to those experienced on a non-ABS vehicle.

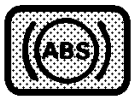

Warning light

The anti-lock braking system incorporates a monitoring system, which checks that all the electrical components are in working order, as soon as the starter switch is turned on and also at frequent intervals during your journey.

The warning light on the instrument panel is an important part of this system. The light should illuminate for approximately 3 seconds when the starter switch is turned to position 'II' and then extinguish.

If the light illuminates while driving, or remains illuminated for more than 3 seconds after the starter switch is turned on, a fault has been detected by the self monitoring system and full ABS control may not be available - consult your dealer at the earliest opportunity.

The normal braking system remains fully operational and is not affected by partial or full loss of the ABS. However, braking distances may increase.

Downloaded from www.Manualslib.com manuals search engine

Off-road driving

While anti-lock braking is designed to operate equally effectively in 'off-road' driving conditions, on certain surfaces total reliance on the system may be unwise - remember, in normal circumstances, anti-lock braking operates only AFTER the driver has already lost control. It cannot reliably compensate for driver error or inexperience on difficult off-road surfaces.

Note the following:

- On soft or deep surfaces such as powdery snow, sand or gravel, and on extremely rough ground, the braking distance required by the anti-lock braking system may be greater than for normal braking, even though improved steering would be experienced. This is because the natural action of locked wheels on soft surfaces is to build up a wedge of surface material in front which assists the vehicle to stop.
- If the vehicle is stopped on a very steep slope where little traction is available, it may slide with the wheels locked because there is no wheel rotation to signal movement to the ABS. To counteract this, briefly release the brakes to permit some wheel movement, then re-apply the brakes to allow ABS to gain control.
- Before driving off-road read and thoroughly understand the *'Off-road driving'* section of this handbook.

Downloaded from www.Manualslib.com manuals search engine

ELECTRONIC TRACTION CONTROL

The purpose of electronic traction control is to aid traction when one or more wheels are spinning while others have good grip, eg. if one wheel is on ice and others are on tarmac. The system works by applying the brake to a spinning wheel in order to transfer torque to the remaining wheels.

NOTE: *Traction control can operate up to speeds of 62 mph (100 km/h).*

Warning light

The instrument panel has a traction control warning (TC) which illuminates for a minimum of 2 seconds whenever the system is active and also illuminates as a bulb check (for approximately 3 seconds) when the starter switch is turned to position 'II'.

If there is a fault with the system, the warning light will illuminate continuously and remain illuminated when the vehicle is stopped, in which case you should contact your dealer at the earliest opportunity.

NOTE: *Faults with the ETC system will invariably cause the Hill Descent Control warning light to illuminate too. In most cases the ABS and brake system lights will also illuminate.*

Downloaded from www.Manualslib.com manuals search engine

Hill Descent Control

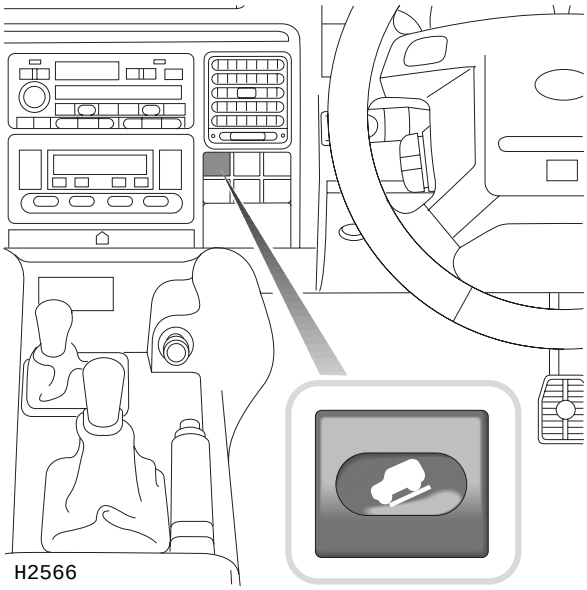

HILL DESCENT CONTROL

Hill Descent Control (HDC) operates in conjunction with the anti-lock braking system to provide greater control in off-road situations particularly when descending severe gradients.

To select HDC

HDC can be selected with the vehicle in any gear, but will only operate when low range gears are engaged with the vehicle travelling at less than 31 mph (50 km/h), and the clutch is engaged (manual gearbox vehicles).

Press the switch (illustrated above) to select HDC.

If low range gears are engaged, the HDC information light (GREEN) on the instrument panel will illuminate (if low range gears have NOT been selected, the light will flash).

To deselect HDC, press the switch a second time (the information light will extinguish and a single warning sound will chime).

Hill descent control in action

During a descent, if engine braking is insufficient to control the vehicle speed, HDC (if selected) automatically operates the brakes to slow the vehicle and maintain a speed relative to the selected gear and the accelerator pedal position.

When driving off-road, HDC can be permanently selected, to ensure that control is maintained whenever low range gears are engaged. ABS and traction control are still fully operational and will assist if the need arises.

NOTE: *With HDC selected, gear changes can be carried out in the normal way.*

If the brake pedal is depressed when HDC is active, HDC is overridden and the brakes will perform as normal (a pulsation might be felt through the brake pedal). If the brake pedal is then released, HDC will recommence operating if necessary.

If the clutch is depressed for longer than 3 seconds while HDC is operating, the HDC information light will flash. If, after 60 seconds the clutch is still depressed, the information light extinguishes and the HDC 'failure' warning light flashes as the system gradually fades out (see *'HDC fade-out').*

In extreme circumstances, the HDC system may cause brake temperatures to exceed their pre-set limits. If this occurs, the HDC 'failure' warning light (AMBER) will start to flash and the warning chime will sound continuously. During this time HDC will function as normal.

Downloaded from www.Manualslib.com manuals search engine

To avoid further cause for brake temperatures to rise, engage an appropriate low gear for steep descents and avoid descending hills at higher than the minimum descent speed. If the 'failure' warning light continues to flash, the HDC system will gradually fade out (see *'HDC fade-out').*

HDC fade-out

HDC fade-out gradually decreases the HDC brake intervention with the effect that the rate of hill descent will increase. If this occurs the HDC information light will flash and the warning chime will sound for the period that HDC takes to fade. HDC will be disabled completely once the descent is complete.

If required (eg. the angle of the descent levels out significantly), fade-out may be achieved deliberately by either:

- deselecting HDC while the system is operating.
- depressing the clutch for longer than 60 seconds.

If a fault with the HDC system is detected, or if the braking system reaches a pre-set temperature due to extreme conditions, HDC will automatically fade out.

Warning lights

HDC information light - GREEN: The light illuminates briefly as a bulb and system check when the starter switch is turned to position 'II' and also when HDC is selected.

If HDC is selected when the operating gears (LOW range) are engaged, the light will illuminate continuously.

If HDC has been selected but the system's operating criteria are not met (i.e. clutch pedal depressed, gearbox still in high range or vehicle speed too high), the information light will flash and the warning chime will sound continuously.

If the light flashes while HDC is active, normal functionality may cease and HDC 'fade out' may be induced.

HDC 'failure' light - AMBER: The light illuminates briefly as a bulb and system check when the starter switch is turned to position 'II'.

If the light illuminates at any other time, either a fault has occurred which affects the functionality of the system, or over-use of the system has been detected, in which case HDC may 'fade out'.

NOTE: *System faults which cause the 'failure' light to illuminate after the initial system checks, or whilst driving, will be accompanied by the warning chime sounding 3 times.*

Downloaded from www.Manualslib.com manuals search engine

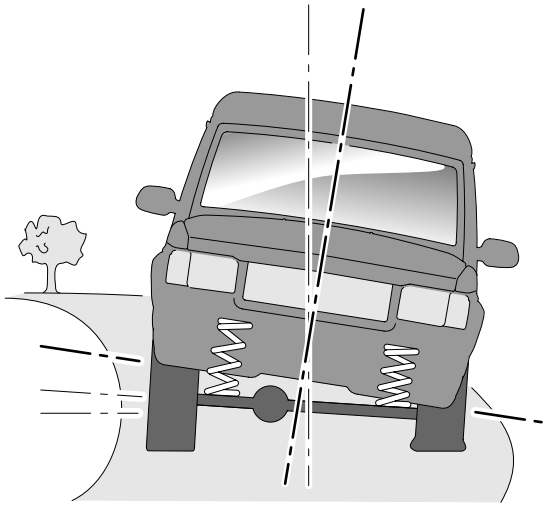

H2605

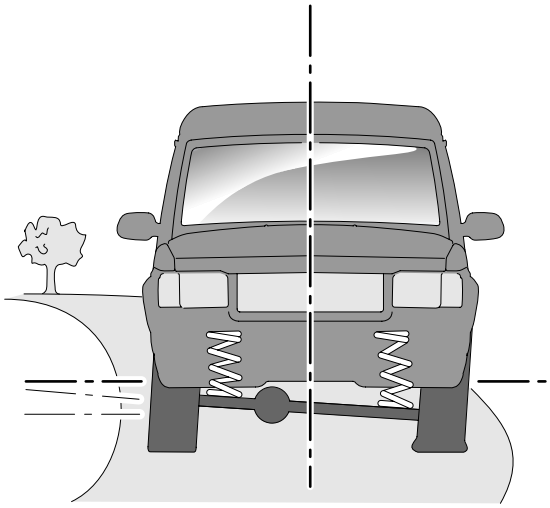

WARNING

If the warning light illuminates RED a system fault has occurred that may result in serious damage to vehicle components. Stop the vehicle and switch off the engine as soon as safety permits.

Active Cornering Enhancement

(if fitted)

Active Cornering Enhancement (ACE) is a patented feature unique to Land Rover. The system is designed to eliminate vehicle body roll at low cornering speeds and reduce body roll at higher cornering speeds, while maintaining a soft, car-like, suspension for straight line travelling. On uneven surfaces and rough tracks, the ACE system will adjust the suspension according to the vehicle speed and roughness of the surface to provide improved passenger comfort.

At very low speeds the roll bars are effectively decoupled giving significant benefits in off-road axle articulation and improved traction.

The system is entirely automatic in operation and cannot be influenced by the driver in any way. However, the functionality of the ACE warning light in the instrument panel is very important and drivers should be aware of the following:

Downloaded from www.Manualslib.com manuals search engine

Warning light

The warning light illuminates RED when the starter switch is turned on (to position 'II'). After two seconds, the RED illumination changes to AMBER and, after a further two seconds, the light extinguishes. This process is a system check that takes place every time the vehicle is used. Provided the ACE system is operating correctly, illumination will not occur at any other time.

If illumination occurs while driving, a fault with the system is indicated, as follows:

If the light shows RED *(a flashing red light, which changes to constant illumination after two minutes, and is accompanied by a warning chime):*

This indicates a system fault that may result in serious damage to vehicle components and reduced ACE performance. You must stop the vehicle as soon as safety permits and switch off the engine. DO NOT CONTINUE DRIVING! Seek qualified assistance immediately.

If the light shows AMBER *(constant illumination):*

This indicates a system fault that will result in reduced ACE performance, but will not leave the vehicle in a dangerous condition. You may continue driving, but reduce speed, take additional care, and consult a Land Rover dealer at the earliest opportunity.

Downloaded from www.Manualslib.com manuals search engine

SELF-LEVELLING SUSPENSION

(if fitted)

When the engine is running, the self-levelling suspension system (SLS) operates automatically on the rear of the vehicle to maintain a level or efficient vehicle height regardless of vehicle load.

AUTOMATIC OPERATION

If the height of the vehicle is reduced by additional loading (passengers occupying the occasional rear seats or the attachment of a trailer, for example), the SLS system automatically increases air pressure to the springs to compensate for the additional weight or changed attitude of the vehicle. Similarly, if loads are removed and the vehicle height increases in consequence, the system will reduce air pressure to bring the vehicle back to a level attitude.

Extended mode

Off-road, if the vehicle becomes grounded and traction control is induced, the SLS system automatically pumps more air to the rear springs to raise the body clear of the obstruction, thereby enabling the vehicle to be freed. This is known as 'Extended mode' and will cause the off-road warning light to flash. Once forward motion is regained, the suspension height will automatically return to its previous setting and the warning light will extinguish.

MANUAL OPERATION

The SLS system can also be manually controlled to either:

- Raise the rear of the vehicle by 40 mm (approx.) to increase ground clearance and improve the departure angle for off-road driving. Note that this function operates ONLY below a speed of 18 mph (30 km/h) - above this speed, the vehicle will automatically return to its standard ride height.
- Lower the vehicle in order to ease loading, or to enable various heights of trailer hitch to be connected more easily. The SLS system will assume automatic control - adjusting the height of the vehicle 10 seconds after a road speed of 3 mph (5 km/h) is reached, or immediately once a road speed of 7 mph (12 km/h) has been achieved.

WARNING

DO NOT operate the off-road switch while driving on the road, or when the suspension has been manually lowered below standard ride height - any sudden or unexpected change to the vehicle's height or attitude could cause an inexperienced driver to lose control, or disturb the load/weight distribution within the vehicle.

DO NOT select off-road height while towing.

Downloaded from www.Manualslib.com manuals search engine

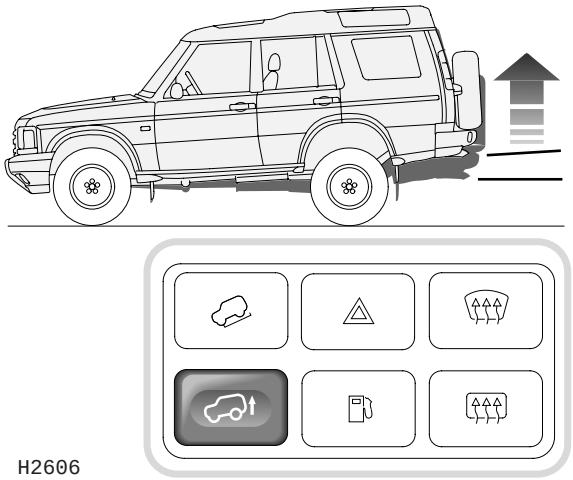

H2606

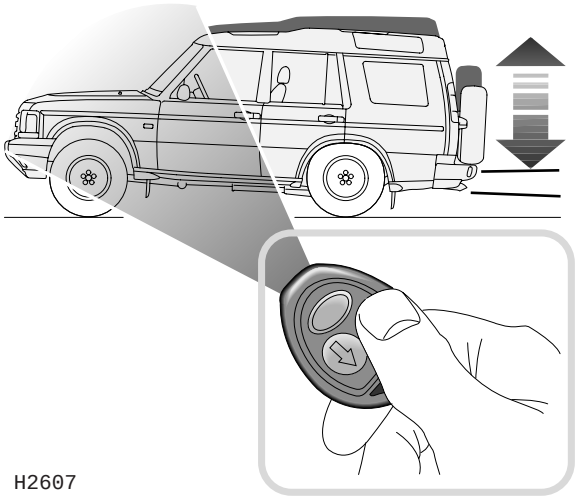

H2607

To manually raise the suspension:

With the engine running and all doors fully closed, press the fascia-mounted off-road mode switch (see illustration). A single warning chime will sound, the off-road warning light on the instrument panel will commence flashing and the rear of the vehicle will start to rise. Once the pre-set off-road height has been reached, the warning light will stop flashing and illuminate constantly instead. Constant illumination will remain while the vehicle is operating at off-road height.

To return the vehicle to standard ride height, press the off-road mode switch a second time. Note that a single chime will sound and the warning light will flash while the rear suspension is lowered.

NOTE: *If axle displacement is excessive, selection of the off-road height setting may be prohibited. In this case three warning chimes will sound.*

NOTE: *If changes to or from off-road height are prohibited (e.g. door open) the chime will sound three times.*

To manually lower the suspension:

To lower the suspension you will need a remote suspension control (handset) - see illustration.

With the vehicle stationary at standard ride height, and the starter switch turned to position 'II', press and hold the 'DOWN' button to lower the vehicle. Release the button when the desired height has been reached. The SLS warning light on the instrument panel will flash and a warning chime will sound continually while the vehicle is lowering.

To return the vehicle to its standard ride height, press and hold the 'UP' button on the handset. Again the warning light flashes (and chime sounds) while the vehicle is rising. All suspension movement and warning light activity ceases once the vehicle has returned to standard ride height.

NOTE: *The SLS system will not operate while a door is open.*

NOTE: *At high altitude the system will take significantly longer to raise the vehicle.*

Downloaded from www.Manualslib.com manuals search engine

NOTE: *If this feature is subjected to excessive use, the system will automatically disable to prevent components from overheating. The system has a cumulative total of three minutes operation at any one time. If this is exceeded the system will close down (partial operation will return after a few minutes).*

Remote SLS handset

The remote SLS handset is available as an accessory from a Land Rover dealer.

Battery replacement is similar to the equivalent process for the handset key. This is described under *'Locks & Alarm'* in the *'Controls & Instruments'* section of the handbook. Battery specification is identical.

IMPORTANT INFORMATION
Note that the handset will operate effectively from inside the vehicle. It is therefore important to keep it out of reach of children at all times, and especially while towing. When operating the handset from inside the passenger compartment for the purpose of lowering the vehicle to attach a trailer, ensure that the underside of the vehicle has been checked for obstructions before lowering, and that a responsible adult has been posted outside the vehicle to supervise the lowering process.

Warning lights

Off-road - AMBER

Illuminates briefly as a bulb and system check when the starter switch is turned to position 'II' and then extinguishes.

If the off-road switch is pressed:

The light flashes while the rear of the vehicle is either; rising to off-road height, or returning to standard ride height. The light then illuminates constantly while the suspension remains at off-road height.

In addition, the light will flash while Extended mode is induced.

Self-levelling suspension - AMBER

Illuminates briefly as a bulb and system check when the starter switch is turned to position 'II' and then extinguishes.

If the remote handset is operated:

The light flashes continually while the rear of the vehicle is being lowered, or raised.

If the light illuminates constantly this indicates a fault with the self-levelling suspension and you should seek qualified assistance.

Downloaded from www.Manualslib.com manuals search engine

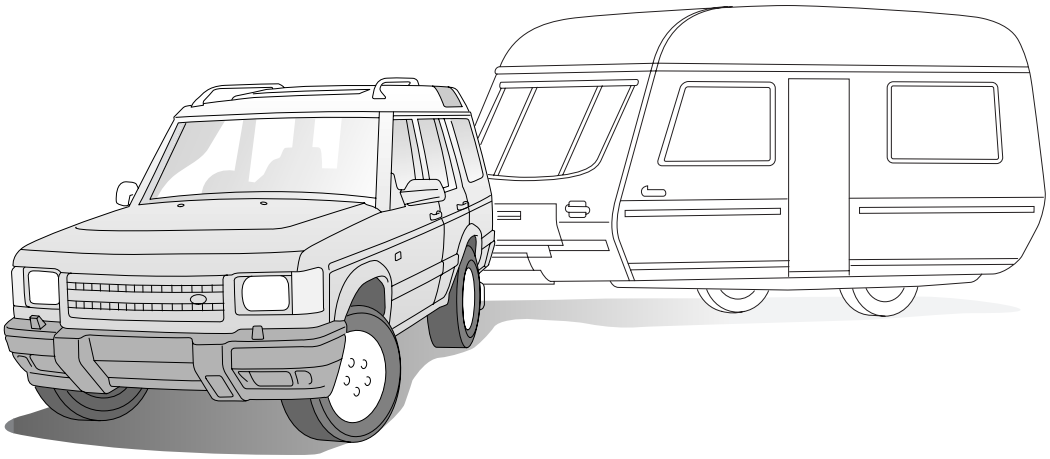

H2568

TOWING

The torque ranges of Land Rover engines allow maximum-weight loads to be pulled smoothly from standstill, and reduce gear changing on hills or rough terrain. A smooth start will be achieved with trailers over 4400 lb (2000 kg) by moving off in low range then changing to high range while on the move. The suspension is designed to cope with a heavy trailer load without upsetting the balance or feel of the vehicle. Details of gross maximum towed weights are listed on the following page.

WARNING

Only fit towing accessories that have been designed and approved by Land Rover.

Ensure that the gross vehicle weight and maximum rear axle weight are not exceeded.

When preparing your vehicle for towing, pay careful attention to the trailer manufacturer's recommendations and follow the guidelines below:

- Ensure that the towing vehicle tyre pressures are correct and that the trailer tyre pressures are as recommended by the trailer manufacturer.
- With the trailer and vehicle unladen, balance the combination so that the trailer draw-bar and the hitch point on the vehicle are at the same height. Adjust the height of the hitch point if necessary.
- Check the operation of trailer brakes and lights.
- For maximum stability, ensure that loads are properly secured and unable to shift position during transit. Also, position loads so that most of the weight is placed close to the floor and, where possible, immediately above or close to the trailer axle(s).
- After loading the trailer check that the weight on the hitch point (this is called the draw-bar loading weight, or nose weight), is in accordance with the manufacturer's recommendations.

Downloaded from www.Manualslib.com manuals search engine

- When calculating the laden weight of the trailer, remember to include the weight of the trailer PLUS THE LOAD.
- Where the load weight can be divided between trailer and tow vehicle, loading more weight into the vehicle will generally improve the stability of the combination.
- The recommended trailer nose weight plus the combined weight of the vehicle's load carrying area and rear seat passengers must never exceed the specified maximum rear axle load (see *'General data').*

NOTE: *Towing regulations vary from country to country. It is very important to ensure that national regulations governing towing weights and speed limits are observed (refer to the relevant national motoring organisation for information). The following maximum permissible towed weights refer to the vehicle's design limitations and NOT to any specific territorial restriction.*

Maximum permissible towed weights	**On-road**	**Off-road**
Unbraked trailers	1653 lb (750 kg)	1653 lb (750 kg)
Trailers with overrun brakes	7716 lb (3500 kg)	2204 lb (1000 kg)

Nose weight

When the vehicle is loaded to GVW, trailer weight is limited to 2000 kg (2 tonnes) and the tow hitch vertical load (nose weight) is limited to 150 kg (330 lb).

The maximum trailer weight is 3500 kg, in this case the tow-hitch maximum vertical load (nose weight) of 250 kg (550 lb) should be used and the vehicle loading limited as follows:

1. Coil-spring rear suspension - driver plus two passengers (or their equivalent weight).
2. Self-levelling rear suspension - driver plus four passengers and luggage (or the equivalent weight) occupants to be located in the first and second row seats (equivalent weight should be stowed fully forward against the folded second row of seats).

NOTE: *The maximum speed when towing is 100 kph (62 mph).*

Downloaded from www.Manualslib.com manuals search engine

Automatic gearbox models

To avoid overheating the gearbox, it is not advisable to tow heavy trailer loads at speeds of less than 20 mph (32 km/h) using the main gearbox in high range. Use the transfer gearbox to select low range instead.

NOTE: *Above 1,000 feet (300 metres) the effects of altitude can adversely affect engine performance and also cause overheating.*

Vehicle weights

When loading a vehicle to its maximum (gross vehicle weight), consideration must be taken of the unladen vehicle weight and the distribution of the load to ensure that axle loadings do not exceed the permitted maximum values.

It is your responsibility to limit the vehicle load in such a way that neither the maximum axle loads nor the gross vehicle weight are exceeded (see *'General data').*

Trailer socket

When the engine is running, power output from trailer socket must NOT exceed 5 amps.

Downloaded from www.Manualslib.com manuals search engine

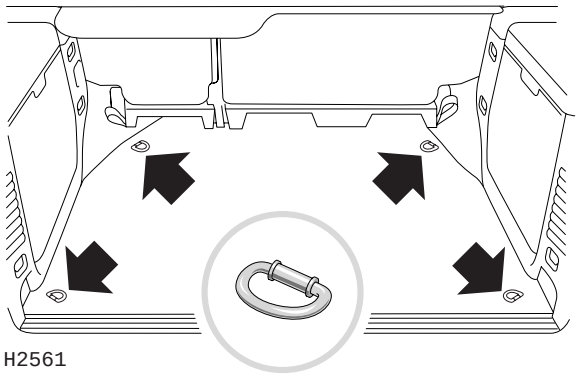

LUGGAGE ANCHOR POINTS

Four fixing points are provided in the rear luggage compartment floor to assist in safely securing large items of luggage.

WARNING

DO NOT carry unsecured equipment, tools or luggage which could move and cause personal injury in the event of an accident or emergency manoeuvre either on or off-road.

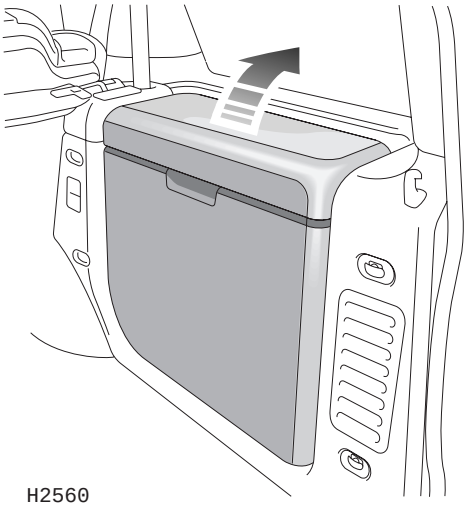

STORAGE BINS

Some vehicles are equipped with storage bins on each side of the loadspace. Raise the lid to open.

Downloaded from www.Manualslib.com manuals search engine

ROOF RACKS

The roof rack system comprises two side rails permanently fixed to the roof of the vehicle and cross bars available as an accessory from a Land Rover dealer.

IMPORTANT INFORMATION
• The **MAXIMUM** load for approved roof rack systems is 110 lb (50 kg) for normal road use and 66 lb (30 kg) off-road. • A loaded roof rack can reduce the stability of the vehicle, particularly when cornering and encountering cross winds. • All loads should be evenly distributed, and secured within the periphery of the roof rack system. • Only fit roof racks that have been designed for your vehicle. If in doubt, consult your dealer. • Driving off-road with a loaded roof rack is not recommended. If it is necessary to stow luggage on the roof rack while driving off-road, all loads must be removed before traversing side slopes.

Downloaded from www.Manualslib.com manuals search engine

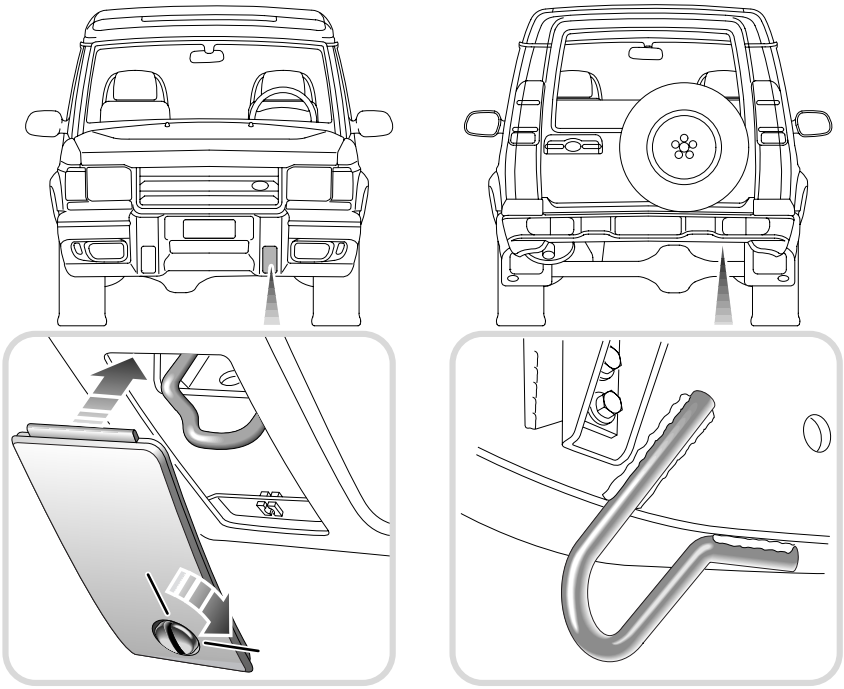

H2487

TOWING FOR RECOVERY

Most vehicle recovery specialists will load Discovery onto a trailer. However, if it is necessary to recover the vehicle by towing with all four wheels on the ground, observe the following procedure:

1. With the handbrake applied, set both the main gearbox and transfer box in neutral ('P' Park for Automatic transmission).
2. Turn the starter switch to the first position to unlock the steering, and then to position 'II' if it will be necessary to operate the brake lights and direction indicators.
3. Secure the towing attachment to the front towing eye of the distressed vehicle.
4. Release the handbrake.

NOTE: *If, due to an accident or electrical fault, it is not considered safe to turn the starter switch, the battery should first be disconnected.*

WARNING

DO NOT attempt to tow the vehicle unless the starter switch is turned to position 'I'.

DO NOT remove the key or turn the starter switch to position '0' while the vehicle is in motion; the starter switch must be at position 'I' to unlock the steering.

Without the engine running, the brake servo and power steering pump cannot provide assistance; greater effort will therefore be required to operate the brake pedal and turn the steering wheel. Longer stopping distances will also be experienced.

Downloaded from www.Manualslib.com manuals search engine

Towing eyes

The towing eyes at the front and rear of the vehicle are designed for on-road vehicle recovery purposes only and must NOT be used to tow a trailer or caravan.

FRONT: A single towing eye, set behind a removable panel in the front spoiler (see illustration on previous page), is provided at the front of the vehicle for on-road recovery. DO NOT use the front lashing rings for towing purposes.

Before driving off-road, remove the panel from the spoiler as a precaution against accidental loss.

REAR: A pair of towing eyes are provided at the rear of the vehicle. These can be used as lashing rings and for towing your vehicle.

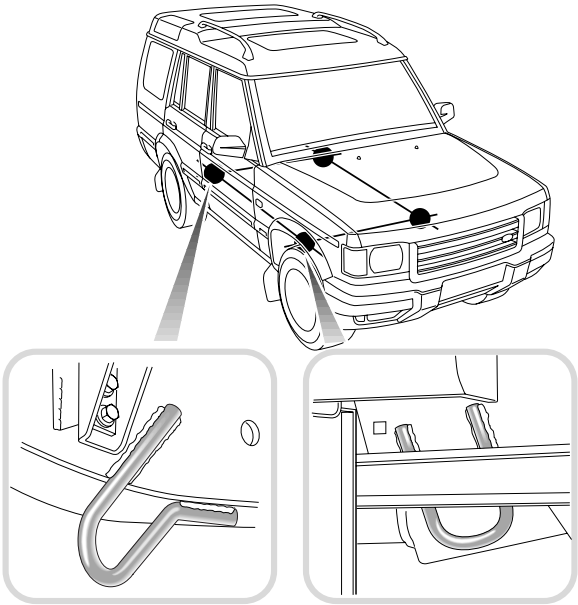

H2486

Transporter or trailer lashing

Pairs of lashing rings are fixed to the underside of the vehicle - at the front (to the rear of the front wheels) and at the rear (backward of the rear wheels). DO NOT secure lashing hooks or trailer fixings to any other part of the vehicle.

NOTE: *The front rings are for lashing only and must NOT be used for towing. The rear lashing rings are designed for both towing and lashing.*

Downloaded from www.Manualslib.com manuals search engine

STARTING AN ENGINE WITH A DISCHARGED BATTERY

Using booster cables (jump leads) from a donor battery, or a battery fitted to a donor vehicle, is the only approved method of starting a vehicle with a discharged battery. Push or tow starting is NOT recommended!

WARNING

- ***During normal use, batteries emit explosive hydrogen gas sufficient to cause severe explosions capable of causing serious injury - keep sparks and naked lights away from the engine compartment.***
- ***DO NOT attempt to start the vehicle if the electrolyte in the battery is suspected of being frozen.***
- ***Make sure BOTH batteries are of the same voltage (12 volts), and that the booster cables have insulated clamps and are approved for use with 12 volt batteries.***
- ***DO NOT disconnect the discharged battery.***
- ***DO NOT connect positive (+) terminals to negative (-) terminals, and ensure booster cables are kept away from any moving parts in the engine compartment.***
- ***Take care when working near rotating parts of the engine.***

USING BOOSTER CABLES

If a donor vehicle is to be used, both vehicles should be parked with their battery locations adjacent to each other. Ensure that the two vehicles do not touch.

Apply the handbrakes and ensure that the transmission of both vehicles is set in neutral ('P' or Park for vehicles with automatic transmission).

Turn off the starter switch and ALL electrical equipment of BOTH vehicles, then follow the instructions specific to diesel or petrol engine models on the pages that follow.

Downloaded from www.Manualslib.com manuals search engine

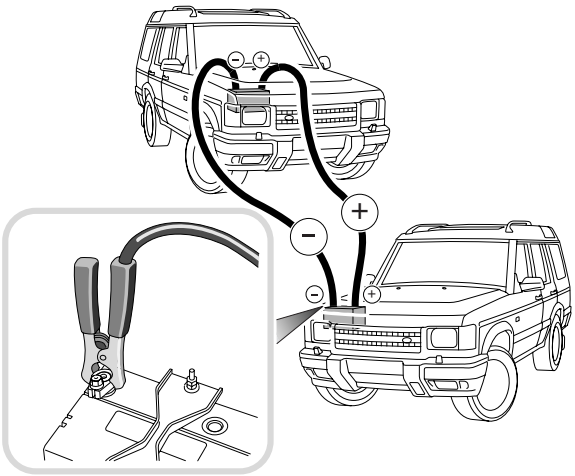

H2570

CONNECTING THE BOOSTER CABLES

DIESEL ENGINES ONLY!

Always adopt the following procedure, ensuring the cables are connected in the order shown below:

1. Connect one end of the RED booster cable to the positive (+) terminal of the donor battery.
2. Connect the other end of the RED booster cable to the positive (+) terminal of the discharged battery.
3. Connect one end of the BLACK booster cable to the negative (-) terminal of the DISCHARGED battery.
4. Connect the other end of the BLACK booster cable to the negative (-) terminal of the donor battery.

WARNING

For safety reasons:

- ***ALWAYS connect the BLACK cable to the donor battery LAST.***
- ***ENSURE that each connection is securely made and that there is no risk of the clips accidentally slipping or being pulled from the battery terminals - this could cause sparking, which could lead to explosion or fire.***

Check that the cables are clear of any moving parts of both engines, then start the engine of the donor vehicle and allow it to idle for a few minutes.

Now start the vehicle with the discharged battery. Once both engines are running normally, allow them to idle for two minutes before switching off the the donor vehicle engine.

DO NOT switch on any electrical circuits on the previously disabled vehicle until AFTER the booster cables have been removed.

Disconnecting the booster cables must be an EXACT reversal of the procedure used to connect them, ie: disconnect the BLACK cable from the negative (-) terminal on the donor vehicle FIRST.

Downloaded from www.Manualslib.com manuals search engine

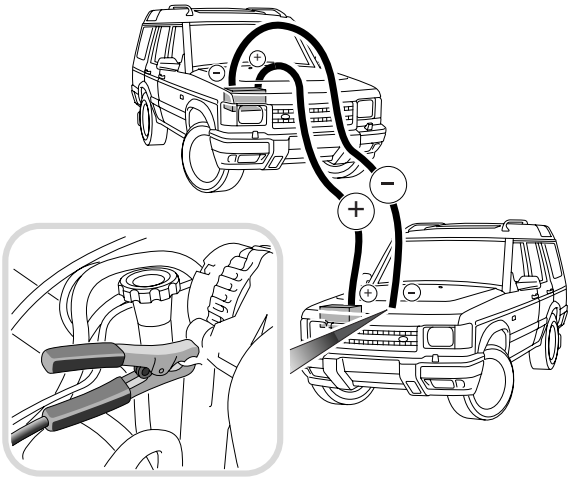

H2569

CONNECTING THE BOOSTER CABLES

PETROL ENGINES

Always adopt the following procedure:
Connect the RED booster cable between the positive (+) terminal of the donor battery and the positive (+) terminal of the discharged battery.

Connect the BLACK booster cable from the negative (-) terminal of the donor battery to a good earth point (eg. an engine mounting or other unpainted surface) away from the battery and away from fuel and brake lines on the disabled vehicle (lug on alternator casting shown in illustration).

WARNING

For safety reasons;

- ***DO NOT connect the BLACK cable to the negative terminal of the discharged battery - if in doubt, seek qualified assistance.***
- ***ENSURE that each connection is securely made and that there is no risk of the clips accidentally slipping or being pulled from the battery terminals - this could cause sparking, which could lead to fire or explosion.***

Check that the cables are clear of any moving parts of both engines, then start the engine of the donor vehicle and allow it to idle for a few minutes.

Now start the vehicle with the discharged battery. Once both engines are running normally, allow them to idle for two minutes before switching off the engine of the donor vehicle.

DO NOT switch on any electrical circuits on the previously disabled vehicle until AFTER the booster cables have been removed.

Disconnecting the booster cables must be an EXACT reversal of the procedure used to connect them, ie: disconnect the BLACK cable from the earth point on the disabled vehicle FIRST.

Downloaded from www.Manualslib.com manuals search engine

Downloaded from www.Manualslib.com manuals search engine

SECTION 4
Owner maintenance

The long-term safety, reliability and performance of your vehicle will depend very largely on how it is maintained.

Maintenance is the owner's responsibility and it is ESSENTIAL that all routine services are carried out at the specified intervals. These are shown in the Service Portfolio book included in the literature pack. The Service Portfolio book also includes a service record section, which enables a record to be kept of all the routine services carried out on the vehicle - ensure your Land Rover dealer stamps and signs the book after each service.

This section of the handbook includes information to assist the owner to carry out those daily, weekly and monthly checks that are necessary to ensure safe, reliable motoring.

Section Contents **Page**

Owner maintenance 131
Safety in the garage 133
Bonnet opening 134
Engine compartment 135
Engine 136
Cooling system 139
Brakes 141
Power steering 143
Active cornering enhancement 144
Washers 145
Wiper blades 146
Tyres 147
Battery 150
Wheel changing 153
Fuse box 160
Bulb replacement 166
Cleaning & vehicle care 174

Downloaded from www.Manualslib.com manuals search engine

Downloaded from www.Manualslib.com manuals search engine

OWNER MAINTENANCE

In addition to the routine services, which should be carried out according to the manufacturer's recommendations at the intervals shown in the Service Portfolio book, a number of simple checks and adjustments must be carried out by the owner or driver on a regular basis.

These are listed below and fully described on the pages that follow.

Daily checks

- Operation of lights, horn, direction indicators, wipers, washers, warning lights, seat belts and brakes.
- Look for deposits beneath the vehicle which may indicate a fluid leak.

Weekly checks

These should be carried out at least every 250 miles or 400 km.

- Engine oil level.
- Coolant level.
- Screen washer fluid level.
- Condition and pressure of tyres.

Monthly checks

- Brake fluid level.
- Power steering fluid level.
- Active cornering enhancement fluid level

NOTE: *Any significant or sudden drop in fluid levels, or uneven tyre wear should be reported to your dealer without delay.*

All fluid specifications and capacities are shown in *'General data'.*

IMPORTANT INFORMATION

Special operation conditions

When a vehicle is operated in extremely arduous conditions or a dusty, wet or muddy terrain, more frequent attention must be paid to servicing requirements.

For example: if your vehicle experiences deep wading conditions, even DAILY servicing could be necessary to ensure the continued safe and reliable operation of the vehicle.

Contact a Land Rover dealer for advice.

Downloaded from www.Manualslib.com manuals search engine

Planned maintenance

Regular systematic maintenance is the key to ensuring the continued reliability and efficiency of your vehicle.

The routine maintenance requirements for your vehicle are shown in the Service Portfolio book. Most of this necessary workshop maintenance requires specialised knowledge and equipment, and should preferably be entrusted to a Land Rover dealer.

Emission control

Your vehicle is fitted with various items of emission and evaporative control equipment designed to meet specific territorial requirements. You should be aware that unauthorised replacement, modification or tampering with this equipment by an owner or repair shop may be unlawful and subject to legal penalties.

In addition, engine settings must not be tampered with. These have been established to ensure that your vehicle complies with stringent exhaust emission regulations. Incorrect engine settings may adversely affect exhaust emissions, engine performance and fuel consumption, as well as causing high temperatures, which will result in damage to the catalytic converter and the vehicle.

WARNING

Under no circumstances should any part of the fuel system be dismantled or replaced by anyone other than a suitably qualified motor vehicle technician. Failure to comply with this instruction may result in fuel spillage with a consequent serious risk of fire.

Road testing on dynamometers ('rolling roads')

WARNING

Because your vehicle is equipped with anti-lock brakes and permanent four-wheel drive, it is essential that any dynamometer testing is carried out ONLY by a qualified person familiar with the dynamometer testing and safety procedures practiced by Land Rover dealers. Contact your Land Rover dealer for further information.

Downloaded from www.Manualslib.com manuals search engine

SAFETY IN THE GARAGE

Whenever you carry out maintenance on your vehicle, the following safety precautions should be observed at all times:

- Keep your hands, tools and clothing away from drive belts and pulleys.
- DO NOT TOUCH exhaust or cooling system components until the engine has cooled.
- DO NOT TOUCH electrical leads or components while the engine is running, or with the starter switch turned on.
- NEVER leave the engine running in an unventilated area - exhaust gases are poisonous and extremely dangerous.
- DO NOT work beneath the vehicle with the vehicle lifting jack as the only means of support.
- Ensure sparks and naked lights are kept away from the engine compartment.
- Remove metal wrist bands and jewellery before working in the engine compartment.
- DO NOT allow battery leads or terminals to make contact with tools or metal parts of the vehicle.

WARNING

Cooling fans may continue to operate after the engine is switched off. When the engine is hot, the cooling fans may also COMMENCE operating after the engine is switched off and continue operating for up to 10 minutes. Keep clear of all fans while working in the engine compartment.

Poisonous liquids

Fluids used in motor vehicles are poisonous and should not be consumed or brought into contact with open wounds. These include: battery acid, anti-freeze, brake, clutch, active cornering enhancement and power steering fluids, as well as petrol, diesel, engine oil and windscreen washer additives.

For your own safety, ALWAYS read and obey all instructions printed on labels and containers.

Used engine oil

Prolonged contact with engine oil may cause serious skin disorders, including dermatitis and cancer of the skin. ALWAYS wash thoroughly after contact.

It is illegal to pollute drains, water courses or soil with toxic chemicals such as used engine oil. Use authorised waste disposal sites to dispose of discharged batteries, used oil and toxic chemicals.

PROTECT THE ENVIRONMENT!

Downloaded from www.Manualslib.com manuals search engine

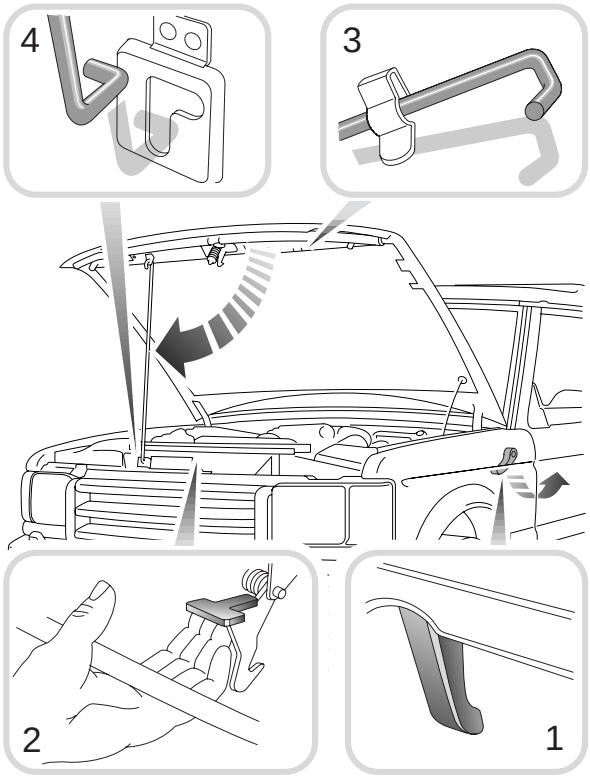

H2525

1. From inside the vehicle on the left hand side, pull the bonnet release handle (see illustration).
2. Lift the bonnet safety catch lever and raise the bonnet.
3. Release the bonnet support stay from the underside of the bonnet.
4. Fit the support stay into the slotted hole in the bonnet locking platform.

Closing the bonnet

Replace the support stay in its retaining clip, then lower the bonnet, allowing it to drop for the last 12 inches (30 cm) approx.

After closing the bonnet, check that the lock is fully engaged by attempting to lift the front edge of the bonnet. This should be free from all movement.

Downloaded from www.Manualslib.com manuals search engine

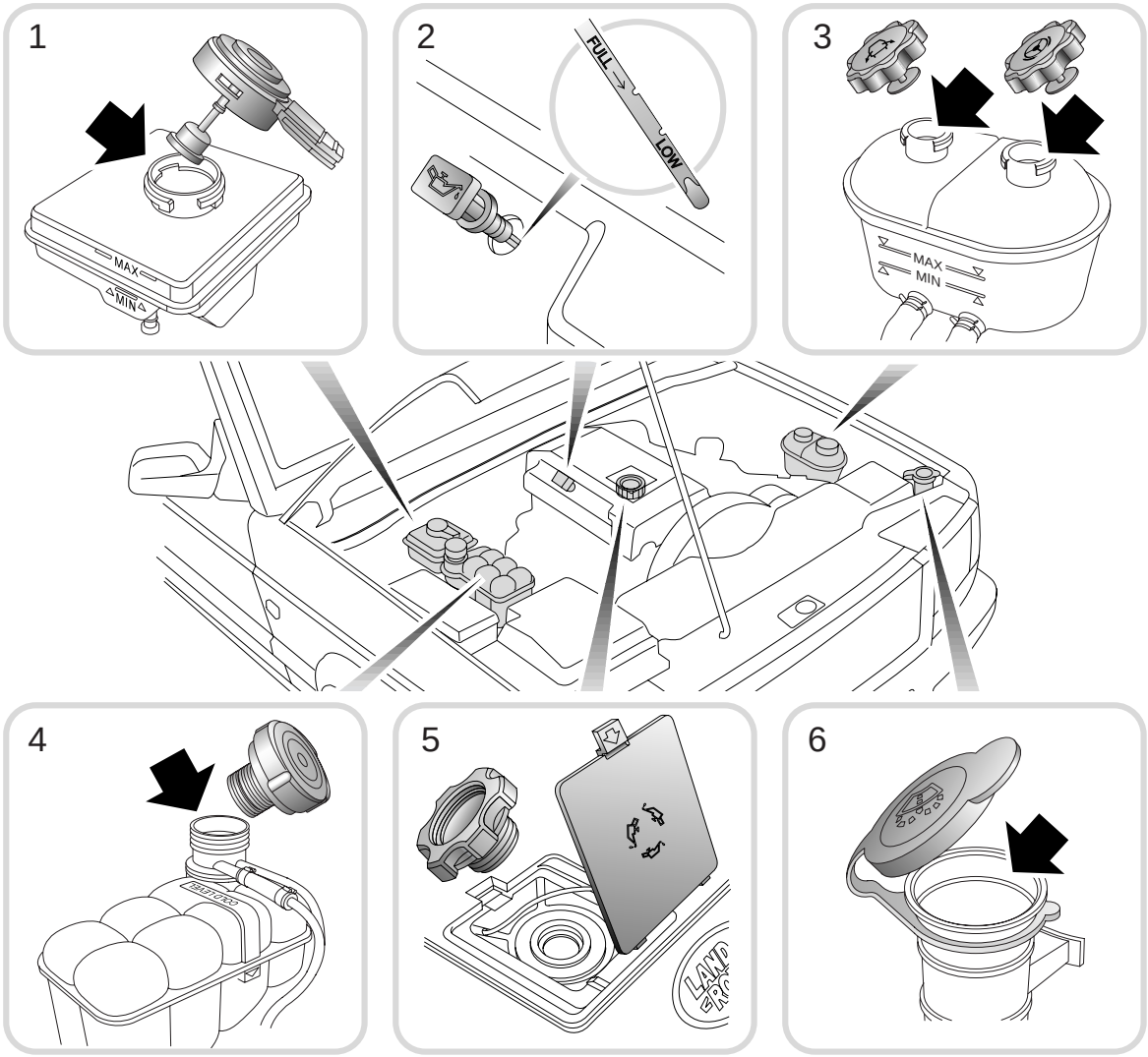

H2537

Diesel engine

1. Brake fluid reservoir.
2. Engine oil dipstick.
3. Power steering and active cornering enhancement (if fitted).
4. Cooling system reservoir.
5. Engine oil filler cap.
6. Washer reservoir.

Instructions on how and when owner maintenance should be carried out are included on the following pages.

WARNING

While working in the engine compartment, ALWAYS observe the safety precautions listed under 'Safety in the garage', at the beginning of the Owner Maintenance section.

Downloaded from www.Manualslib.com manuals search engine

Engine compartment

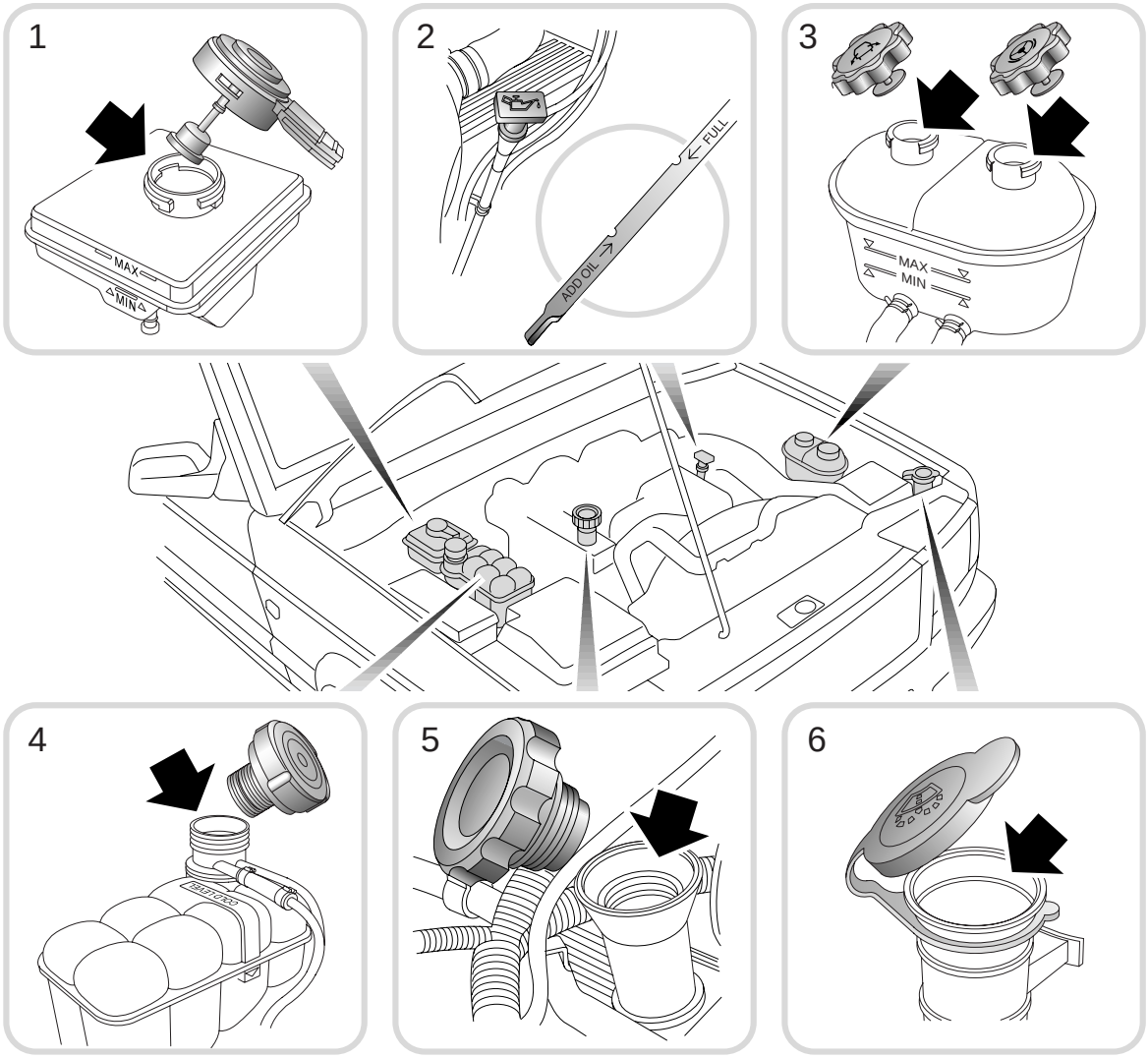

H2535

Petrol engine

1. Brake fluid reservoir.
2. Engine oil dipstick.
3. Power steering and active cornering enhancement (if fitted).
4. Cooling system reservoir.
5. Engine oil filler cap.
6. Washer reservoir.

Instructions on how and when owner maintenance should be carried out are included on the following pages.

WARNING

While working in the engine compartment, ALWAYS observe the safety precautions listed under 'Safety in the garage', at the beginning of the Owner Maintenance section.

Downloaded from www.Manualslib.com manuals search engine

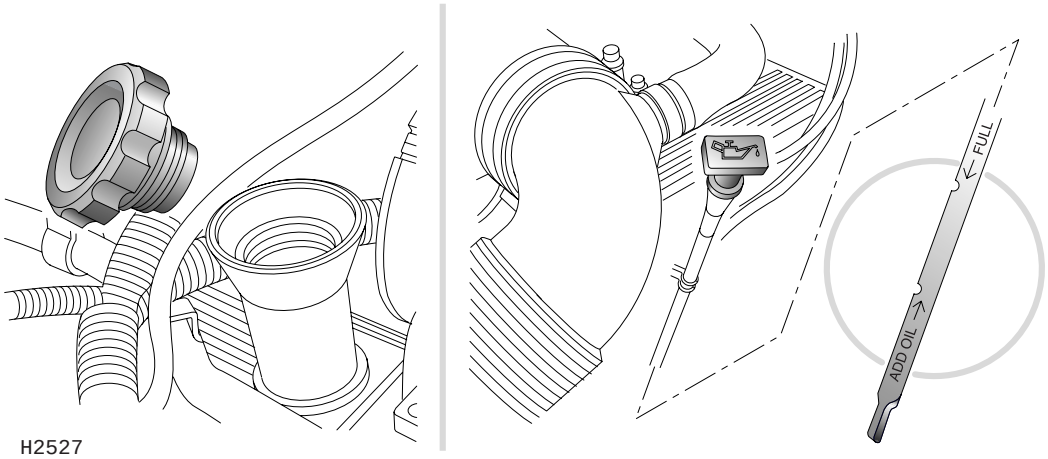

Petrol engine

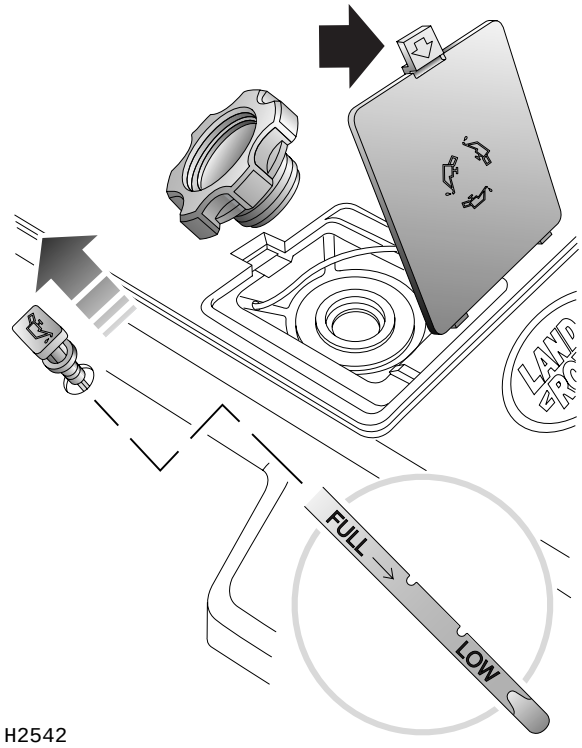

Diesel engine

ENGINE OIL LEVEL-CHECK & TOP-UP

Check the oil level at least every 250 miles (400 km) when the engine is COLD and with the vehicle resting on level ground as follows:

1. Withdraw the dipstick and wipe the blade clean.
2. Fully reinsert the dipstick and withdraw again to check the level, which should NEVER be allowed to fall below the lower mark on the dipstick.
3. To top-up, unscrew the oil filler cap and add oil to maintain the level between the UPPER and LOWER marks on the dipstick.

DO NOT OVERFILL!

NOTE: *On diesel engine vehicles it is necessary to remove the access flap before topping up - lift the release tab (arrowed).*

Downloaded from www.Manualslib.com manuals search engine

As a general guide, if the level on the dipstick:

- is nearer to the upper mark than the lower, add no oil.
- is nearer to the lower mark than the upper, add half a litre of oil.
- is below the lower mark, add one litre of oil and re-check the level after a further five minutes.

NOTE: *If it is necessary to check the oil level when the engine is hot, switch off the engine and let the vehicle stand for five minutes to allow the oil to drain back into the sump. DO NOT start the engine. Follow the procedure already described.*

Oil specification

It is essential to use an oil suitable for the climatic conditions in which the vehicle is to be operated. Precise specifications are shown in *'General data'.* If in doubt, contact your Land Rover dealer.

Downloaded from www.Manualslib.com manuals search engine

COOLING SYSTEM TOP-UP

WARNING

- ***NEVER remove the filler cap when the engine is hot - escaping steam or scalding water could cause serious personal injury.***
- ***Unscrew the filler cap slowly, allowing the pressure to escape before removing completely.***
- ***NEVER run the engine without coolant.***

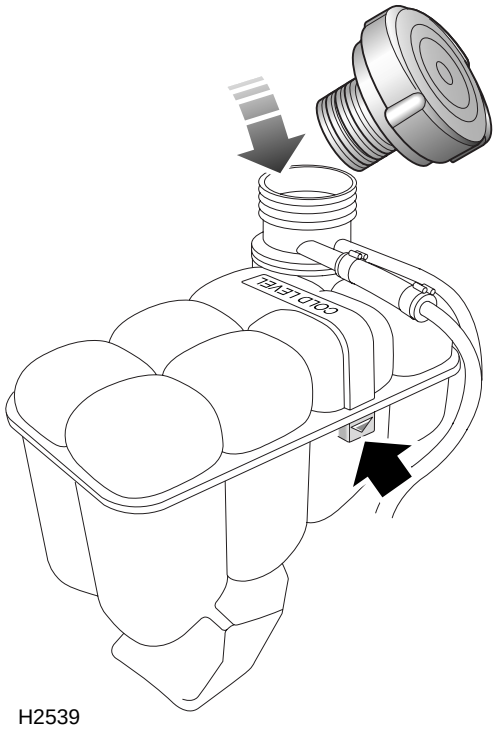

H2539

The coolant level in the expansion tank should be checked at least weekly (more frequently in high mileage or arduous operating conditions). Always check the level WHEN THE SYSTEM IS COLD.

Top-up with a 50% mixture of anti-freeze and water so that the surface of the coolant is level with the indicator on the side of the tank (arrowed in illustration). Ensure the cap is tightened fully after top-up is completed.

If the level has fallen appreciably, suspect leakage or overheating and arrange for your dealer to examine the vehicle.

DO NOT OVERFILL!

Anti-freeze

Anti-freeze contains important corrosion inhibitors. The anti-freeze content of the coolant must be maintained at 50% ± 5% all year round (not just in cold conditions). Failure to do so may cause corrosion of the radiator and engine components.

The specific gravity of a 50% anti-freeze solution at 68° F (20° C) is 1.075 and protects against frost down to -33° F (-36° C).

USE ONLY Havoline Extended Life Coolant (XLC) or any ethylene glycol based anti-freeze (containing no methanol) with only Organic Acid Technology (OAT) corrosion inhibitors.

In an emergency - and only if this type of anti-freeze is unavailable - top-up the cooling system with clean water, but be aware of the resultant reduction in frost protection. DO NOT top-up or refill with conventional anti-freeze formulations. If in doubt consult a Land Rover dealer.

Downloaded from www.Manualslib.com manuals search engine

WARNING

- ***Anti-freeze is poisonous and can be fatal if swallowed. If accidental consumption is suspected, seek medical attention immediately.***
- ***Prevent anti-freeze coming in contact with the skin or eyes. If this occurs, rinse immediately with plenty of water.***
- ***Anti-freeze will damage painted surfaces.***
- ***NEVER top-up with salt water. When travelling in territories where the water supply contains salt, always ensure you carry a supply of fresh (rain or distilled) water.***

Downloaded from www.Manualslib.com manuals search engine

WARNING

Contact your dealer immediately if brake pedal travel is unusually long or if there is any appreciable drop in brake fluid level.

BRAKE FLUID CHECK

The fluid level may fall slightly during normal use as a result of brake pad wear but should not be allowed to fall below the 'MIN' mark. Any substantial drop in fluid indicates a leak in the system, in which case the vehicle must NOT be driven and you should contact your dealer.

With the vehicle on level ground, check the fluid level at least every week (more frequently in high mileage or arduous operating conditions). Check the level visually through the side of the transparent container without removing the filler cap.

NOTE: *The brake fluid reservoir also supplies fluid to operate the hydraulic clutch.*

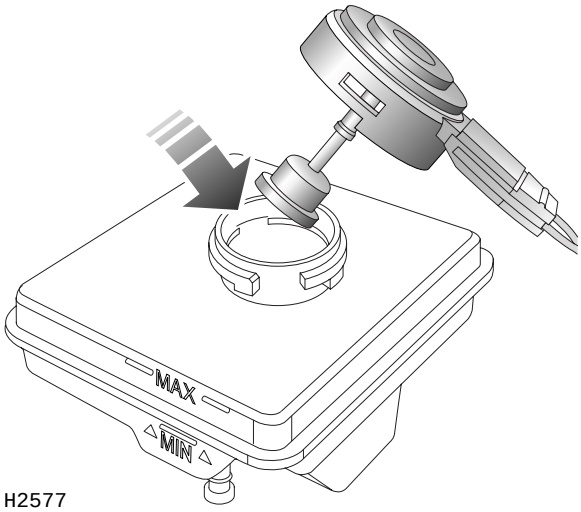

Topping-up

Wipe the filler cap clean before removing to prevent dirt from entering the reservoir. Unscrew the cap (1/8 turn) and top up the reservoir to the 'MAX' mark using *FMVSS 116 DOT 4* fluid.

Use only new fluid from an airtight container (old fluid from opened containers or fluid previously bled from the system will have absorbed moisture, which will adversely affect performance, and must NOT be used).

DO NOT OVERFILL!

Downloaded from www.Manualslib.com manuals search engine

WARNING

DO NOT drive the vehicle with the fluid level below the 'MIN' mark.

Brake fluid will damage painted surfaces; soak up any spillage with an absorbent cloth immediately and wash the area with a mixture of car shampoo and water.

Take care not to spill fluid onto a hot engine - a fire may result.

Brake fluid is highly toxic - keep containers sealed and out of the reach of children. If accidental consumption of fluid is suspected, seek medical attention immediately.

If brake fluid should come into contact with the skin or eyes, rinse the affected area immediately with plenty of water.

IMPORTANT INFORMATION

Brake fluid must be completely renewed every 24,000 miles (40,000 km) or 24 months, whichever is the sooner.

At 48,000 mile (80,000 km) intervals or every 4 years, whichever is the sooner, all hydraulic brake fluid, seals and flexible hoses should be renewed. All working surfaces of the caliper cylinders should be examined and the components renewed where necessary. Under arduous operating conditions, these intervals may need to be reduced. Please consult your Land Rover dealer.

Downloaded from www.Manualslib.com manuals search engine

H2538

POWER STEERING TOP-UP

Check and top-up the fluid level ONLY with the engine switched off and the system cold, and ensure that the steering wheel is not turned after stopping the engine.

Check the fluid level against the level marks on the side of the reservoir. If more fluid is needed, first wipe the filler cap clean to prevent dirt from entering the reservoir, then twist the cap a quarter turn anti-clockwise and pull to remove. Top up the reservoir until the fluid reaches the upper level mark.

DO NOT OVERFILL!

Emergency operation

Any large or sudden drop in the fluid level must be investigated by a qualified dealer.

If it can be established that fluid loss is slow, then the reservoir may be topped-up to the upper level mark to enable the vehicle to be driven to the nearest qualified dealer for examination.

If the fluid level has dropped below the lower level mark, top-up the reservoir before starting the engine, or damage to the steering pump could result.

WARNING

Power steering fluid is highly toxic - keep containers sealed and out of reach of children. If accidental consumption of fluid is suspected, seek medical attention immediately.

If power steering fluid should come into contact with the skin or eyes, rinse immediately with plenty of water.

Do not spill power steering fluid onto a hot engine - a fire may result.

Power steering fluid will damage painted surfaces: Soak up any spillage with an absorbent cloth immediately and wash the area with a mixture of car shampoo and water.

Downloaded from www.Manualslib.com manuals search engine

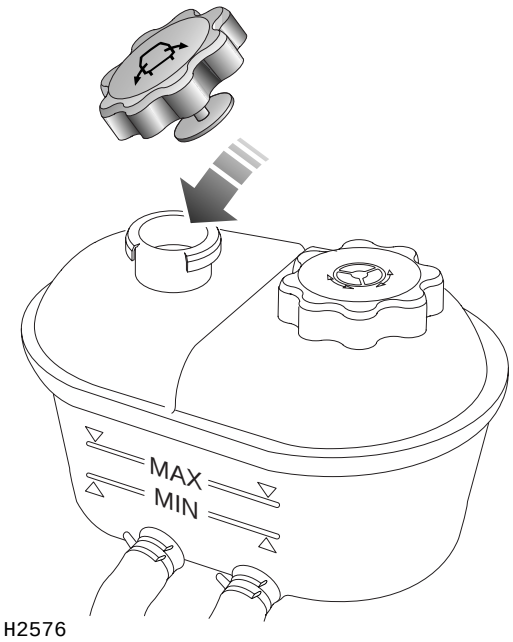

ACTIVE CORNERING ENHANCEMENT FLUID TOP-UP

Check the fluid level against the level marks on the side of the reservoir. If more fluid is needed, first wipe the filler cap clean to prevent dirt from entering the reservoir, then twist the cap a quarter turn anti-clockwise and pull to remove. Top up the reservoir until the fluid reaches the upper level mark.

DO NOT OVERFILL!

Any large or sudden drop in the fluid level must be investigated by a qualified dealer.

NOTE: *While the power steering and active cornering enhancement systems share the same fluid specification and reservoir, both systems are entirely independent of each other. The reservoir is divided into two compartments and each system has its own filler cap.*

WARNING

Fluid is highly toxic - keep containers sealed and out of reach of children. If accidental consumption of fluid is suspected, seek medical attention immediately.

If fluid should come into contact with the skin or eyes, rinse immediately with plenty of water.

Do not spill fluid onto a hot engine - a fire may result.

Fluid will damage painted surfaces: Soak up any spillage with an absorbent cloth immediately and wash the area with a mixture of car shampoo and water.

Downloaded from www.Manualslib.com manuals search engine

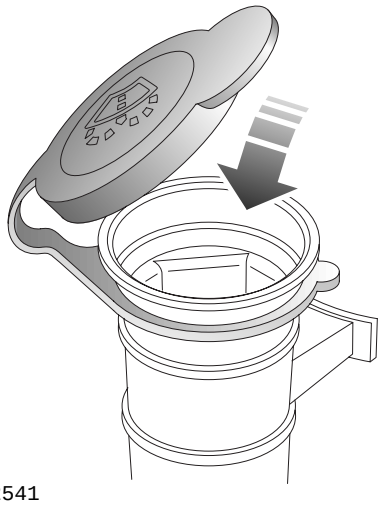

H2541

WINDSCREEN WASHER TOP-UP

The windscreen washer reservoir supplies both front and rear screen washer jets and headlight washer jets (where fitted).

Check the reservoir level at least every week and top-up with a mixture of water and Land Rover Parts STC 8249 Screenwash. Preferably mix the recommended quantities of water and screenwash in a separate container before topping-up, and always follow the instructions on the container. Note that an approved screenwash is necessary to prevent freezing in very cold weather.

Operate the washer switches periodically to check that the nozzles are clear and properly directed.

WARNING

DO NOT use an anti-freeze or vinegar/water solution in the washer reservoir - anti-freeze will damage painted surfaces, while vinegar can damage the windscreen washer pump.

Some screenwash products are inflammable, particularly if high or undiluted concentrations are exposed to sparking. DO NOT allow screenwash to come into contact with naked flames or sources of ignition.

Body panels may suffer discolouration as a result of screenwash spillage. Take care to avoid spillage, particularly if an undiluted or high concentration is being used. If spillage occurs, wash the affected area immediately with water.

WASHER JETS

The windscreen washer jets are set during manufacture and should not need adjusting. However, if adjustment is ever necessary, insert a needle into the jet orifice and lever gently to position each jet so that the spray is directed towards the centre of the windscreen.

The rear screen jets located in the wiper arm are not adjustable.

Should any jet become obstructed, insert a needle or thin strand of wire into the orifice to clear the blockage.

HEADLIGHT WASHERS (if fitted)

The spray jets are set during manufacture and should not need to be adjusted.

Downloaded from www.Manualslib.com manuals search engine

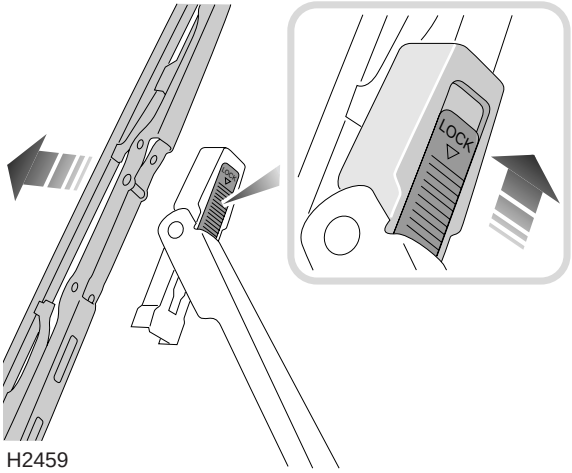

H2459

WIPER BLADE REPLACEMENT

Front wiper blades

Lift the wiper arm away from the windscreen. Disconnect the blade by pushing the locking tab (see inset in illustration) to the unlock position.

Fitting a replacement blade is a reversal of this process. Check that the blade is securely locked before returning the wiper assembly to the windscreen.

Only fit replacement wiper blades that are identical to the original specification.

Grease, silicone and petrol based products impair the blade's wiping capability. Wash the wiper blades in warm soapy water and periodically check their condition.

If signs of hardness or cracking in the rubber are found, or if the wipers leave streaks or unwiped areas on the windscreen during use, then the wiper blades should be replaced.

Clean the windscreen regularly with an approved glass cleaner and ensure the screen is thoroughly cleaned before fitting replacement wiper blades.

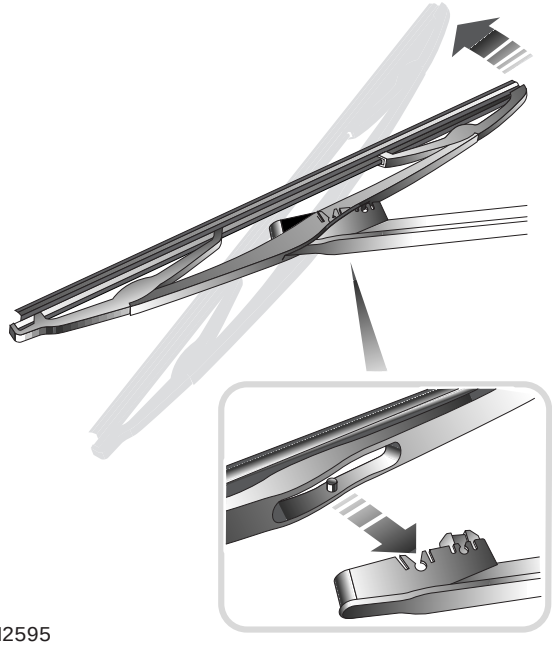

H2595

Rear wiper blade

With the spare wheel removed from the taildoor, lift the wiper arm away from the rear screen. Pivot the blade assembly away from the arm (as arrowed), levering against resistance, until the two retaining lugs detach from their slots at the end of the arm. Carefully replace the arm to its stowed position.

To replace, position the wiper arm into the aperture in the middle of the blade assembly, line up the retaining lugs with the corresponding slots in the wiper arm and push firmly into position until the blade clips into place.

Downloaded from www.Manualslib.com manuals search engine

WARNING

- ***Never drive your vehicle if the tyres are badly worn, cut or damaged, or if the pressures are incorrect.***
- ***Incorrectly inflated tyres wear rapidly and seriously affect the vehicle's safety and road handling characteristics.***

Caring for your tyres

Always drive with consideration for the condition of the tyres and frequently inspect the tread and side walls for signs of distortion or damage (in particular, look for lumps, cuts and bulges).

Tyre pressures

Tyre pressures should be checked at least once a week with normal road use, but should be checked DAILY if the vehicle is used off-road.

Check the pressures, including the spare, when the tyres are cold (air pressure naturally increases in warm tyres). The recommended pressures are shown in the *'General data'* section.

WARNING

If the vehicle has been parked in strong sunlight or used in high ambient temperatures, DO NOT reduce tyre pressures; instead, move the vehicle into the shade and allow the tyres to cool before checking.

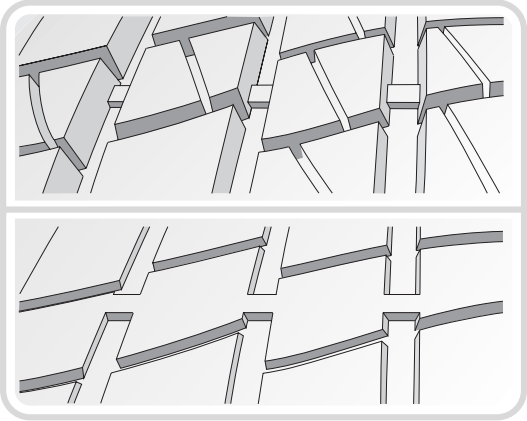

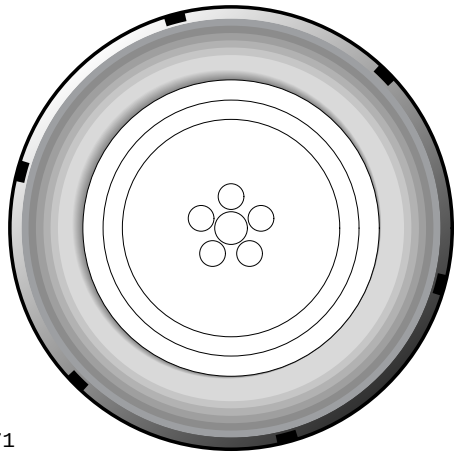

H2571

Tyre wear

Some tyres fitted as original equipment have wear indicators moulded into the tread pattern. When the tread has worn down to 1.6 mm (1/16 inch) the indicators start appearing at the surface of the tread pattern, producing the effect of a continuous band of rubber across the width of the tyre.

A tyre MUST be replaced as soon as an indicator band becomes visible or the tread depth reaches the minimum permitted by legislation.

Downloaded from www.Manualslib.com manuals search engine

Tread depth must be checked regularly (at every maintenance service, or more frequently). Always replace a tyre before the tread reaches a remaining depth of 1.6 mm. DO NOT drive with tyres worn to this limit, the safety of the vehicle and occupants will be adversely affected.

NOTE: *After off-road use, check to make sure there are no lumps or bulges in the tyres or exposure of the ply or cord structure.*

Valve caps

Keep the valve caps screwed down firmly to prevent dirt from entering the valve.

Replacement tyres

Wheel rims and tyres are matched to suit the handling characteristics of the vehicle. For safety, ALWAYS check that replacement tyres comply with the original specification shown in *'General Data'* later in this handbook and that the load and speed ratings shown on the side wall are the same as that of the original equipment. Contact your Land Rover dealer for further information or assistance.

WARNING

ALWAYS use the same make and type of radial-ply tyres front and rear. DO NOT use cross-ply tyres, or interchange tyres from front to rear.

Your vehicle is fitted with road wheels that will NOT accept inner tubes. DO NOT fit a tubed tyre.

DO NOT replace wheels with any type other than genuine Land Rover parts. Wheels and tyres are designed for both off-road and on-road use and have a very important influence on vehicle handling. Alternative wheels which do not meet original equipment specifications should not be fitted.

Downloaded from www.Manualslib.com manuals search engine

Snow chains

Snow chains are designed for use on metalled roads in extreme snow conditions only, and are not recommended for off-road use. If it is necessary to fit snow chains to your vehicle, ALWAYS observe the following:

- ***Front wheels:*** Snow chains must not be fitted to the front wheels unless the vehicle is equipped with 215/75 R16 Pirelli Scorpion S/T 107T tyres.
- ***Rear wheels:*** Snow chains can be fitted to the rear wheels of any vehicle, provided the wheels and tyres conform to one of the original equipment specifications listed in the handbook (see *'General Data').*
- Whether chains are to be fitted to the rear wheels only, or to all four wheels, ONLY Land Rover approved chains should be used - these are designed for your vehicle and will eliminate any risk of damage to other components.
- Always adhere to the snow chain fitting and retensioning instructions and the speed limitations recommended for varying road conditions. NEVER exceed 30 mph (50 km/h).
- Avoid tyre damage by removing the chains a soon as the road is free from snow.

For further information about approved snow chains, consult your Land Rover dealer.

WARNING

Fitting unapproved snow chains could damage brake components.

Downloaded from www.Manualslib.com manuals search engine

WARNING

Batteries contain acid, which is both corrosive and poisonous. If spillage occurs:

- ***On clothing or the skin - remove any contaminated clothing immediately, flush the skin with large amounts of water, and seek medical attention urgently.***
- ***In the eyes - flush with clean water immediately for at least 15 minutes. Seek medical attention urgently.***
- ***Swallowing battery acid can be fatal unless IMMEDIATE action is taken - seek medical attention urgently.***
- ***During normal operation batteries emit explosive hydrogen gas - ensure sparks and naked lights are kept away from the engine compartment.***
- ***For your safety remove all metal wrist bands and jewellery before working in the engine compartment and NEVER allow the battery terminals or vehicle leads to make contact with tools or metal parts of the vehicle.***

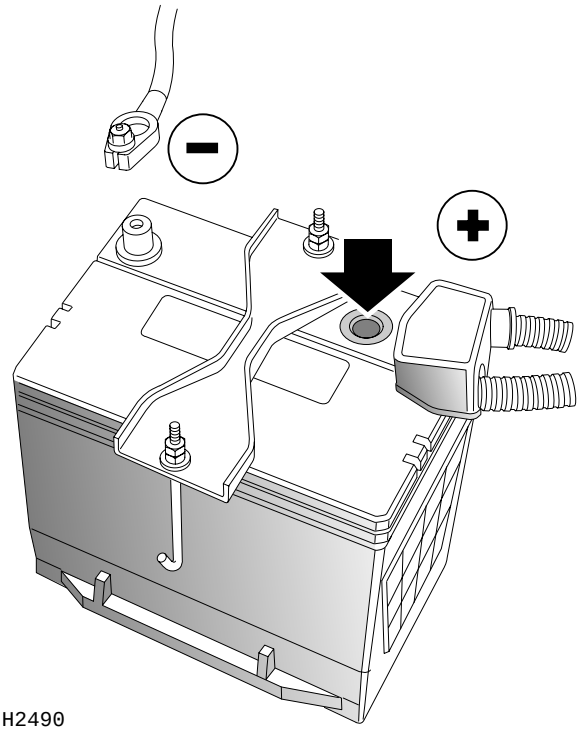

Battery maintenance

The battery is designed to be maintenance free, so topping-up is unnecessary. On the top of the battery there is a battery condition indicator (arrowed in illustration). Examine the indicator periodically to check the battery's condition. When the indicator shows:

- GREEN - the battery is in a good state of charge.
- DARK (turning to black) - the battery needs charging.
- CLEAR (or light yellow) - the battery must be replaced. Do not charge the battery or jump start the car in this condition.
- If the green dot is missing, the battery needs charging.

Downloaded from www.Manualslib.com manuals search engine

NOTE: *When checking the battery condition indicator, if necessary, clean the battery top to ensure a clear view.*

If the indicator shows clear or yellow, tap the indicator with the handle of a screwdriver to disperse any air bubbles. If the colour is unchanged, the battery must be replaced.

WARNING

ALWAYS remove the starter key before disconnecting the battery. Failure to do this could cause a failure of the airbag SRS.

Battery removal and replacement

Before disconnecting the battery, disarm the alarm, and ensure that the starter switch and all electrical equipment is turned off.

To remove: disconnect the negative ('-') cable first and then the postive ('+') cable. When reconnecting, connect the positive cable first and then the negative cable. Do not allow the battery terminals to make contact with metal parts of the vehicle.

To release the battery from the car, undo the nuts securing the battery clamping plate and remove the clamping plate.

When replacing, ensure the battery is fitted the right way round (terminal posts towards the rear of the vehicle) and that the clamping plate is secure. Tighten the clamping plate nuts until the clamping plate is free from movement, but do not overtighten.

Replacement batteries

Only fit a replacement battery of the same type and specification as the original - other batteries may vary in size or have different terminal positions which could cause a fire hazard when connected to the car's electrical system.

Battery disposal

Used batteries should be recycled. However, batteries are hazardous - you should seek advice about disposal from a Land Rover dealer or your local authority.

WARNING

- ***Do not reverse the polarity of the battery - the electrical system may be damaged if the battery leads are connected to the wrong terminals.***
- ***Keep the battery upright at all times - damage will be caused if the battery is tilted more than 45 degrees.***
- ***DO NOT run the engine with the battery disconnected, or disconnect the battery while the engine is running.***

Downloaded from www.Manualslib.com manuals search engine

Battery charging

Batteries generate explosive gases, contain corrosive acid and produce levels of electric current sufficient to cause serious injury. While charging always heed the following precautions:

- Before charging, disconnect and remove the battery from the vehicle - charging the battery with the cables connected may damage the vehicle's electrical system.
- Make sure the battery charger leads are securely clamped to the battery terminals BEFORE switching on the battery charger. Do not move the leads once the charger is switched on.
- While charging, shield your eyes or avoid leaning over the battery and keep the area around the top of the battery well ventilated.
- Do not allow naked lights near the battery (batteries generate inflammable hydrogen during and after charging).
- The battery will be charged sufficiently once the battery condition indicator shows GREEN. When charging is finished, switch off the battery charger BEFORE disconnecting the leads from the battery terminals.
- After charging, leave the battery for an hour BEFORE reconnection to the vehicle - this will allow time for explosive gases to disperse, thereby minimising the risk of fire or explosion.

NOTE: *Be aware that a battery will take longer to charge in a cold environment.*

WARNING

DO NOT charge the battery if it is connected to the car - this may seriously damage the electrical system.

DO NOT attempt to charge the battery if the battery condition indicator is clear or light yellow.

DO NOT charge the battery if it is suspected of being frozen.

Downloaded from www.Manualslib.com manuals search engine

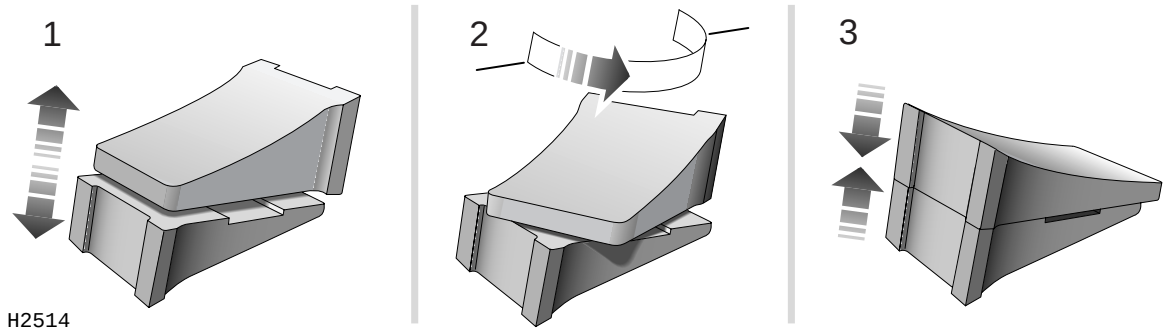

IMPORTANT INFORMATION

Before changing a wheel, always observe the following precautions!

- Park your vehicle away from the thoroughfare, and make your passengers wait in a safe area AWAY from the vehicle.
- Switch on the hazard warning lights to alert other road users.
- Ensure the jack is positioned on firm, level ground.
- Apply the handbrake and engage 1st gear in the main gear box ('P' for automatic transmission) and select 'L' in the transfer box. Position the vehicle's front wheels in the straight ahead position, turn off the starter switch and remove the key.

In addition:

NEVER raise the vehicle with passengers inside, or with a caravan or trailer connected!

NEVER work beneath the vehicle with the jack as the only means of support. The jack is designed for wheel changing only!

Using the wheel chock

WARNING

Before raising the vehicle, it is ESSENTIAL to chock the road wheels in two places; the handbrake acts on the transmission, not on the rear wheels, and therefore may not hold the vehicle when raised.

If possible, position the vehicle on level ground, chocking both sides of the wheel diagonally opposite the one to be removed.

If jacking the vehicle on a slope is unavoidable, place the chocks on the downhill side of the two opposite wheels.

The wheel chocks are stowed with the jack handle and wheel nut spanner in the tool bag.

Assemble the wheel chocks as follows:
1) Pull the two halves of the chock apart.
2) Twist one half of the chock 180° .
3) Push the two halves back together.

Downloaded from www.Manualslib.com manuals search engine

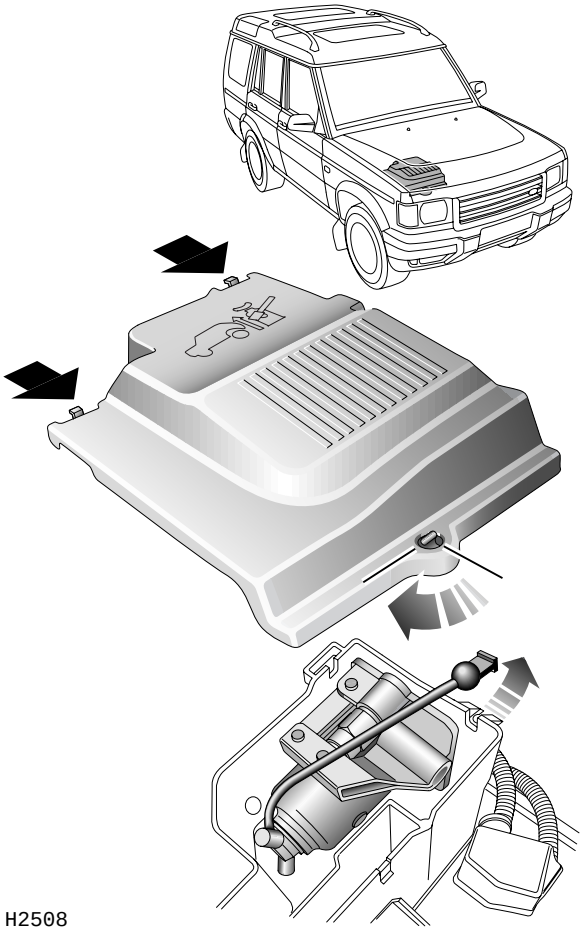

H2508

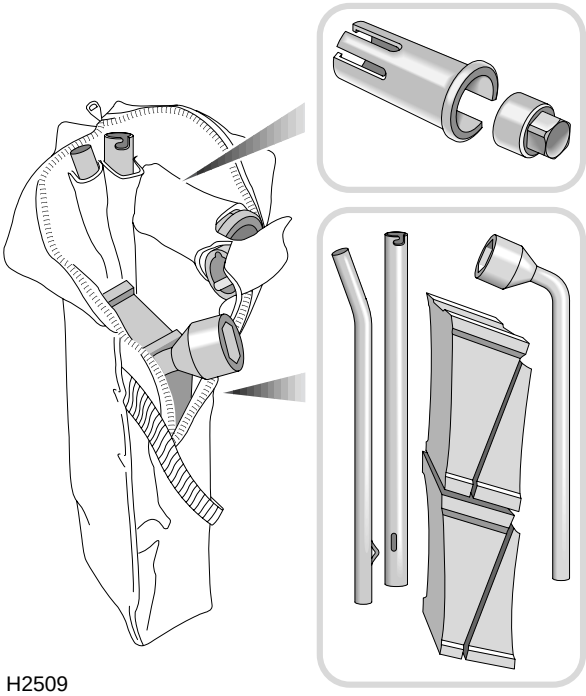

H2509

The jack is stowed in the front of the engine compartment next to the battery. To access the jack, remove the battery cover. The jack handle and other tools are stowed in a tool bag in the taildoor storage pocket.

WARNING

Due to its stowage position in the engine compartment the jack may be hot if the engine has been running.

Downloaded from www.Manualslib.com manuals search engine

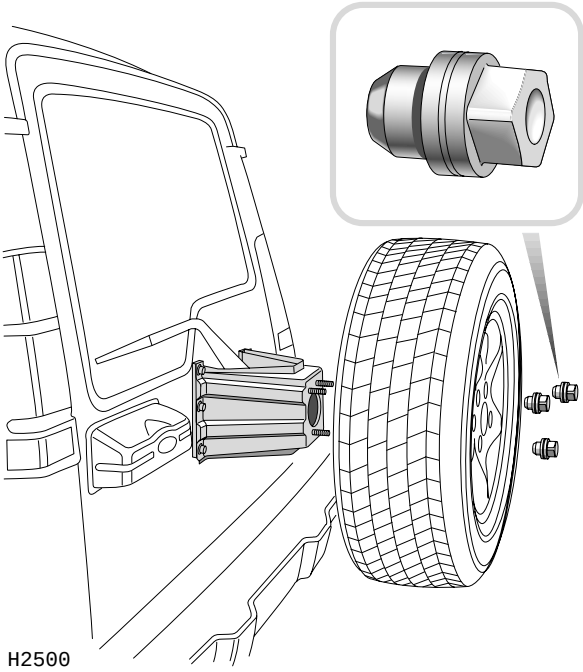

WARNING

- ***DO NOT use the spare wheel securing nuts in place of the road wheel nuts, or use the road wheel nuts to secure the spare wheel - the nuts are not inter-changeable.***
- ***The wheels are extremely heavy. Take care when lifting and particularly when removing the spare wheel from its mounting position on the tail door.***

Removing the spare wheel

Vehicles fitted with a steel spare wheel are supplied with a cover, which fits over the wheel. Use the wheel nut wrench supplied in the tool kit to remove the nuts securing the cover.

Similarly, use the wheel nut wrench to remove the nuts securing the spare wheel to the carrier and then lift off the wheel.

NOTE: *In some markets, vehicles fitted with alloy wheels have a locking wheel nut fitted to each wheel, including the spare (see 'Locking wheel nuts' later in this section). In other markets, vehicles fitted with alloy wheels have a single locking wheel nut fitted to the spare wheel only.*

Locking wheel nuts are not specified for steel wheels.

Downloaded from www.Manualslib.com manuals search engine

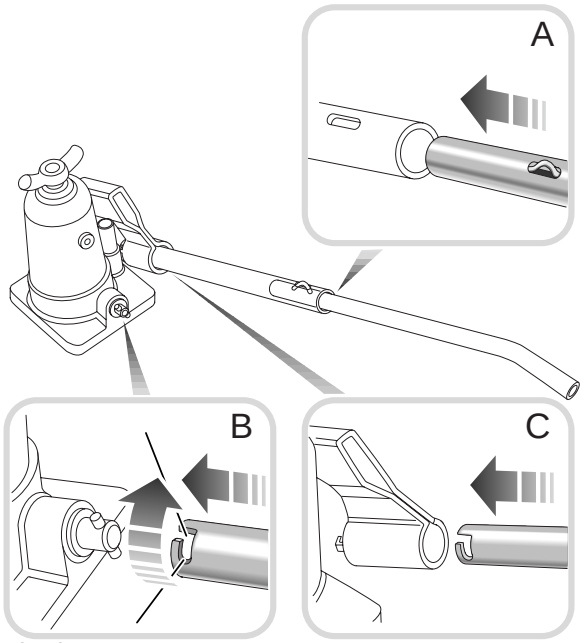

H2510

Operating the jack

Slot the two parts of the jack lever together, ensuring that the spring clip protrudes from the engagement slot where the two parts join (see inset 'A'). Close the jack release valve by using the notched end of the jack lever to turn the valve fully clockwise (see inset 'B'). Insert the lever into the socket as shown (inset 'C') and twist the lever to lock it into the socket. Pump the lever up and down to raise the jack.

To lower the jack, detach the lever (twist and pull) and then slot the notched end over the pegs on the release valve. Slowly turn the release valve anti-clockwise allowing the weight of the vehicle to lower the jack.

DO NOT fully unscrew the release valve.

WARNING

- ***Ensure the jack is positioned on firm, level ground.***
- ***DO NOT use the jack to raise the vehicle until you have carefully read and understood 'Positioning the jack' later in this section. If in doubt, consult your dealer.***
- ***Ensure that the space under and around the vehicle is free from obstruction as it is lowered.***

Downloaded from www.Manualslib.com manuals search engine

Positioning the jack

Always position the jack from the side of the vehicle, approximately in line with the appropriate jacking point.

WARNING

- ***ALWAYS use the complete, two-piece, jack lever throughout to minimise any chance of accidental damage or injury.***
- ***ONLY jack the vehicle using the jack location points described, or damage to the vehicle could occur.***

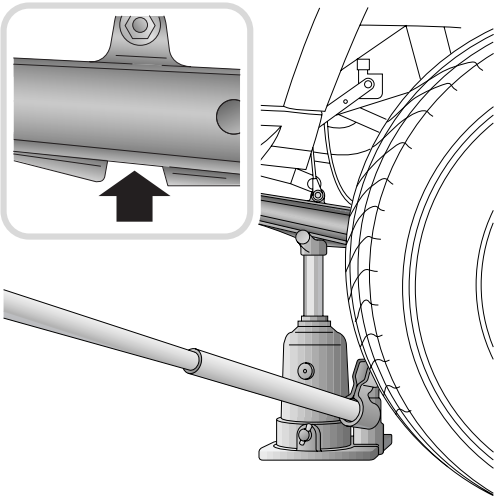

H2515

Rear jacking point

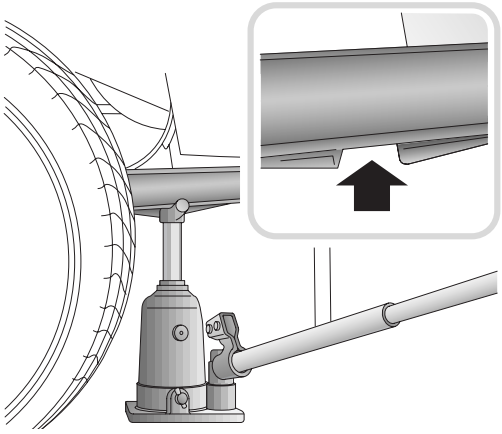

H2516

Front jacking point

Position the jack so that, when raised the cradle head of the jack engages with the shaped notch on the underside of the front or rear suspension links - either just forward of the rear wheels or just to the rear of the front wheels (see illustrations).

Changing a wheel

Before raising the vehicle, ensure that all the precautions listed at the beginning of this section have been observed. Also, ensure that the wheel chocks are correctly positioned (as described previously).

In some markets, vehicles fitted with alloy wheels have one locking wheel nut fitted to each wheel. Refer to 'Locking wheel nuts' later in this section before changing an alloy wheel.

- Use the wheel nut wrench to slacken the wheel nuts half a turn anti-clockwise.
- Raise the vehicle until the tyre is clear of the ground, and remove the wheel nuts and wheel (DO NOT damage the surface of the wheel by placing it face down on the road).

Downloaded from www.Manualslib.com manuals search engine

- On alloy wheels, lightly oil or grease the wheel-mounting spigot (using an approved anti-seize compound) to minimise the tendency for adhesion between the wheel and the spigot. Ensure that no oil or compound comes into contact with the brake components or the flat mounting surfaces of the wheel. If, due to an emergency situation, this treatment is not practicable; refit the spare wheel for the time being, but remove and treat the wheel at the earliest opportunity.
- Fit the spare wheel and lightly tighten the wheel nuts, ensuring they are firmly seated. DO NOT fully tighten whilst the tyre is clear of the ground.

WARNING

When fitting a wheel, ensure that the mating faces of the hub and wheel are clean and free from rust - an accumulation of dirt or rust could cause the wheel nuts to become loose and result in an accident.

- Lower the vehicle and remove the jack and wheel chocks.
- Fully tighten the wheel nuts in an alternating pattern until all are tightened. DO NOT OVERTIGHTEN by using foot pressure or extension bars on the wheel nut wrench, as this could overstress the wheel studs. Check the wheel nut torque at the earliest opportunity (see *'General data').*
- REMEMBER to change to 'H' (high range) before driving.
- Finally, check the tyre pressure.

Care of the jack

Examine the jack occasionally, clean and grease the moving parts, particularly the ram.

To avoid contamination, the jack should always be returned to its fully closed position.

WARNING

After wheel changing, always secure tools, chocks, jack and spare wheel in their correct storage positions.

Downloaded from www.Manualslib.com manuals search engine

LOCKING WHEEL NUTS

Vehicles fitted with alloy wheels may be equipped with a locking wheel nut on each wheel (including the spare). The locking wheel nut covers are visually very similar to standard wheel nuts but can be identified by a concave indent on the surface. The locking wheel nut and cover can only be removed using the special tools provided, as follows:

- Push the extractor tool (1) firmly over the stainless steel nut cover (2).
- Pull the extractor tool **squarely** away from the wheel to remove the nut cover and reveal the locking wheel nut (3).
- Fit the metal key socket (4) securely over the locking wheel nut.
- Fit the wheel nut wrench onto the key socket and unscrew the nut in the normal way.

A code letter is stamped on the face of the key socket. Ensure the code letter is entered in the space provided on your Security Information card - you will need to quote this number if replacement components are required. Keep the card in a safe place away from the vehicle.

NOTE: *If the extractor tool has been inadvertently pushed onto a standard wheel nut, it can be removed ONLY by first undoing and removing the nut; slide the wheel nut wrench down the centre of the extractor and onto the wheel nut.*

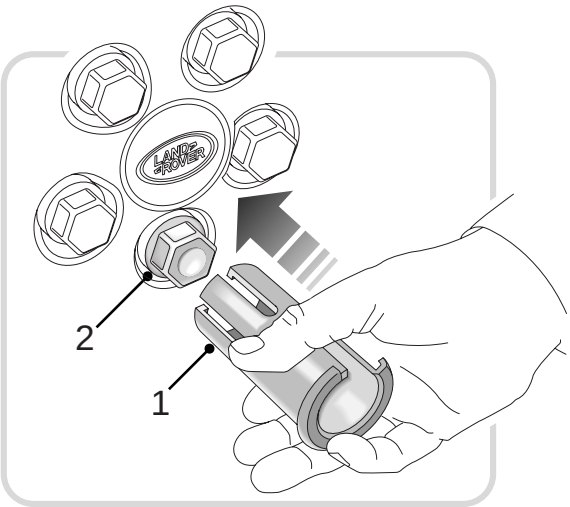

H2511

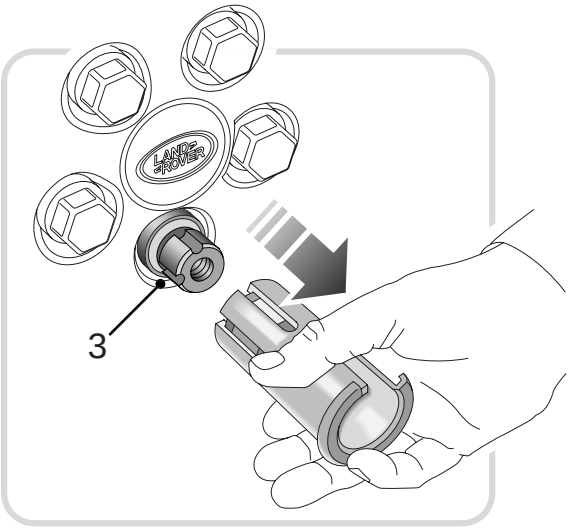

H2512

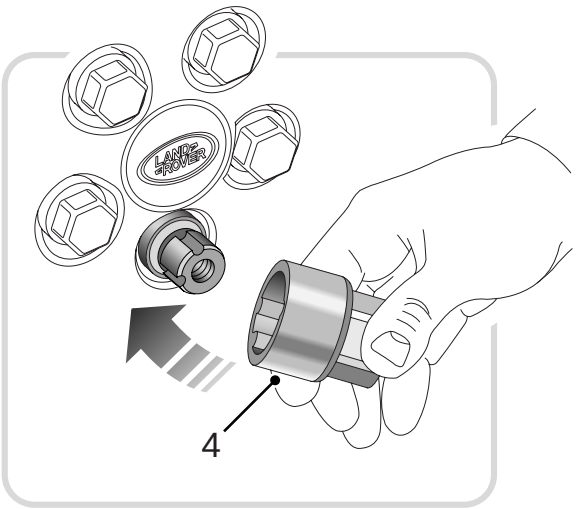

H2513

Downloaded from www.Manualslib.com manuals search engine

FUSE BOX

Fuses are simple circuit devices which protect electrical equipment against the effects of excess current. A 'blown' fuse is indicated when the electrical equipment it protects becomes inoperative.

The main fusebox is fitted below and to one side of the steering column; to access the fuses, remove the cover by releasing the fixing screws using a coin or small screwdriver to twist the turnbuckle screw through 90 degrees.

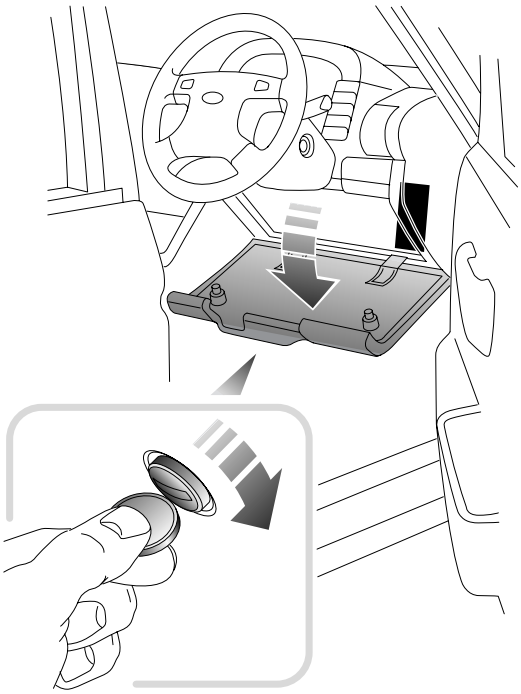

H2496

Downloaded from www.Manualslib.com manuals search engine

Renewing a fuse

Always turn the starter switch to position 'O' and switch off the affected electrical circuit before removing a fuse.

WARNING

Fit only replacement fuses of the same rating and type. Always rectify the cause of the failure before replacing a fuse. Seek qualified assistance if necessary.

MAIN FUSE BOX

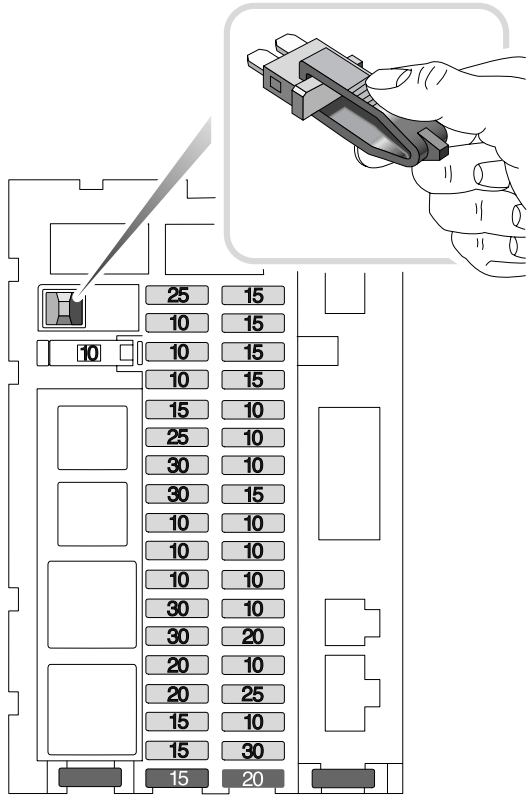

H2495

Press the fuse removal tweezers onto the head of the suspect fuse (as shown) and pull to remove. A break in the wire inside the fuse indicates that the fuse has 'blown' and must be replaced. Always replace a fuse with another of the same value, however, if the replacement fuse blows immediately the circuit MUST be checked by a qualified dealer.

Fuses are colour coded to help identify their amperage, as follows:

VIOLET	3
TAN	5
BROWN	7.5
RED	10
BLUE	15
YELLOW	20
WHITE	25
GREEN	30
ORANGE	40

A label in the fuse box cover shows the circuits protected, the fuse values and their locations. They are also listed on the following page.

Downloaded from www.Manualslib.com manuals search engine

Fuse box

Fuse No.	Rating (amps)	Circuits protected
1	25	Central door locking
2	10	Fuel flap release
3	10	LH headlight main beam
4	10	Rear fog guard lights
5	15	Daylight running lights (if fitted)
6	25	Rear air conditioning blower
7	30	Heater blower front
8	30	Heated rear window, heated mirrors
9	10	LH headlight dipped beam
10	10	RH headlight dipped beam
11	10	LH side & tail lights, number plate light, headlight levelling, interior illumination
12	30	Sunroof
13	30	Rear windows
14	20	Petrol engine ignition coils
15	20	Cigar lighter, interior lights, seat heaters, vanity mirror illumination
16	15	Clock, radio
17	15	Radio amplifier, speakers
18	15	Rear wiper motor
19	15	Front wipers/washers
20	15	Interior lights, clock/radio memory, engine remobilisation
21	15	Transfer box
22	10	RH headlight main beam
23	10	Starter motor
24	10	Alternator, auto transmission
25	15	Brake, reverse lights
26	10	Auxiliary circuits
27	10	Instruments, hill descent control
28	10	Self levelling suspension, anti-lock braking
29	10	Active cornering enhancement (ACE)
30	20	Cruise control, electric mirrors, rear washer
31	10	Air conditioning blower
32	25	Accessory socket
33	10	RH side & tail lights, headlight levelling, radio, trailer socket, interior illumination
34	30	Front windows
35	10	Airbag SRS - DO NOT REMOVE

NOTE: *Spare fuses are included in the fuse box (see fuse box label).*

Downloaded from www.Manualslib.com manuals search engine

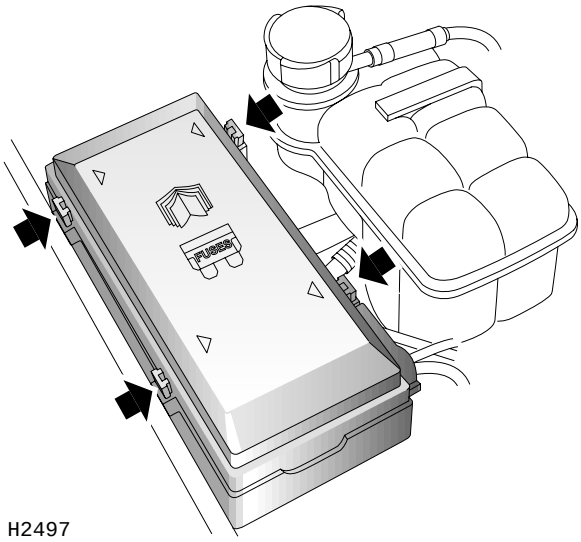

H2497

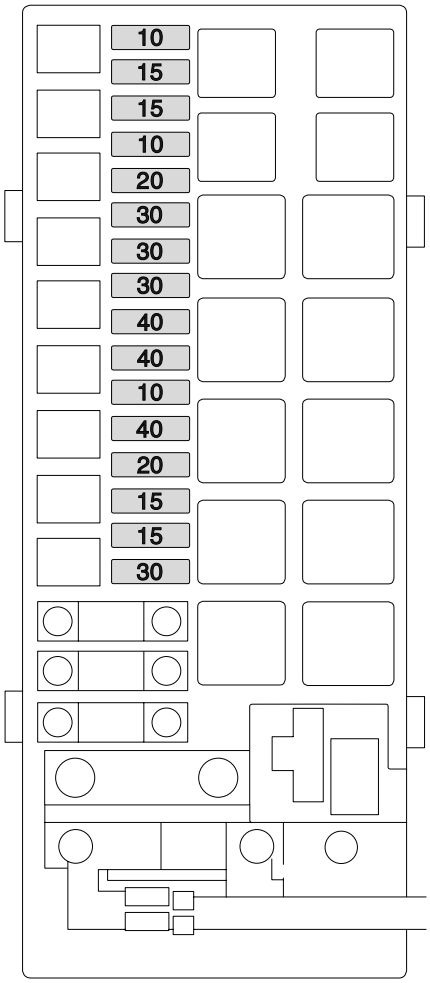

H2498

ENGINE COMPARTMENT FUSE BOX

A second fuse box is located on the right side of the engine compartment adjacent to the coolant reservoir.

Press all four latches in the direction of the arrows shown on the illustration to release the fuse box cover.

Information on the underside of the cover identifies the fuses and their ratings. This information is also listed on the following page.

When replacing, the cover, locate the four latches, then push firmly downwards until the latches can be heard to 'snap' closed.

Owners are advised against removing or replacing the relays (identified as R1-R14) and fusible links (FL1-FL13). Failure of any of these items should be investigated by a qualified dealer.

WARNING

Batteries emit explosive hydrogen gas; ensure that sparks, flames and other ignition sources are kept away from the engine compartment.

Downloaded from www.Manualslib.com manuals search engine

Fuse box

Fuse No.	Rating (amps)	Circuits protected
1	30	Injectors - petrol, ECM - diesel
2	15	Engine management system
3	15	Front fog lights
4	20	Headlight washers
5	40	Cooling fans
6	10	Air conditioning
7	40	Heated front screen (LH)
8	40	Heated front screen (RH)
9	25	Trailer lights
10	30	Fuel pump
11	30	ABS valve
12	20	Automatic gearbox
13	10	Body Control Unit (BCU)
14	15	Direction indicators, hazard lights
15	15	Active cornering enhancement (ACE)
16	10	Horn

Downloaded from www.Manualslib.com manuals search engine

UNDERSEAT FUSES

Two identical small fuse blocks are situated one beneath each front seat.

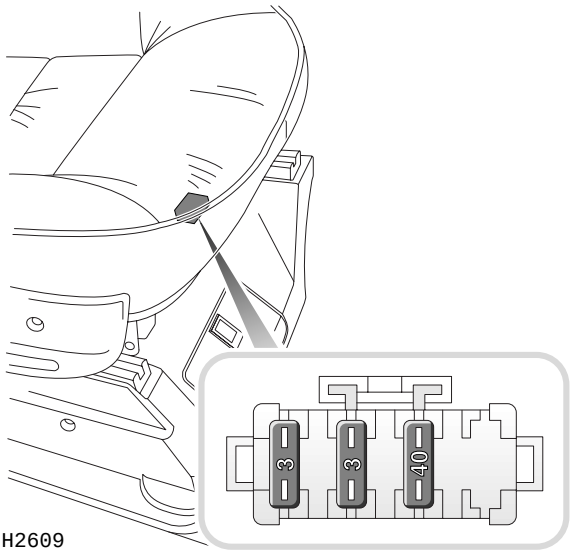

Fuse No.	Rating (amps)	Circuits protected
1	40	Seat electrics
2	3	Lumbar support - pump
3	3	Lumbar support - solenoid

Downloaded from www.Manualslib.com manuals search engine

REPLACEMENT BULBS	Watts
Headlight unit:	
Dip/main headlights	60/55
Front side lights	5
Front direction indicators	21
Side marker lights	5
Front fog lights	55
Rear light unit:	
direction indicators	21
tail lights	5
stop lights	21
rear fog guard lights	21
reversing lights	21
High mounted stop light	21
Side repeater lights	5
Number plate lights	5
Interior light	5
Interior courtesy lights	10
Vanity mirror lights	1.2
Glovebox light	5

NOTE: *All bulbs must be rated at 12 volts.*

IMPORTANT INFORMATION
Before replacing a bulb, always switch off the starter switch and appropriate lighting switch to prevent any possibility of a short circuit. Only replace bulbs with the same type and specification.

Halogen bulbs

Halogen bulbs are used for dipped/main, supplementary main beam and front fog lights. Take care NOT to touch this type of bulb with your fingers; always use a cloth to handle them. If necessary, clean the bulb with methylated spirits to remove fingerprints.

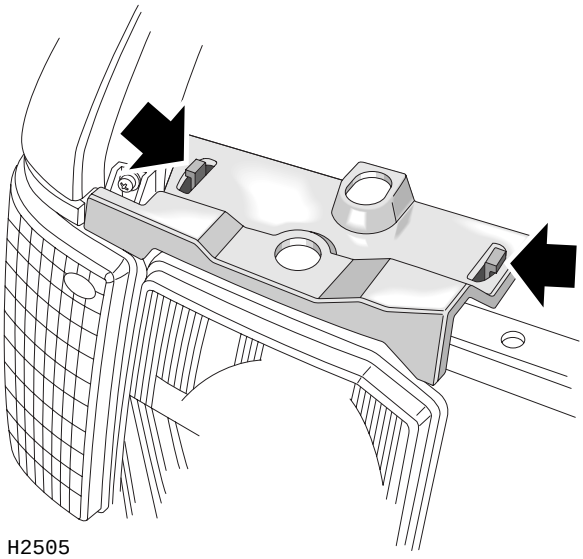

Downloaded from www.Manualslib.com manuals search engine

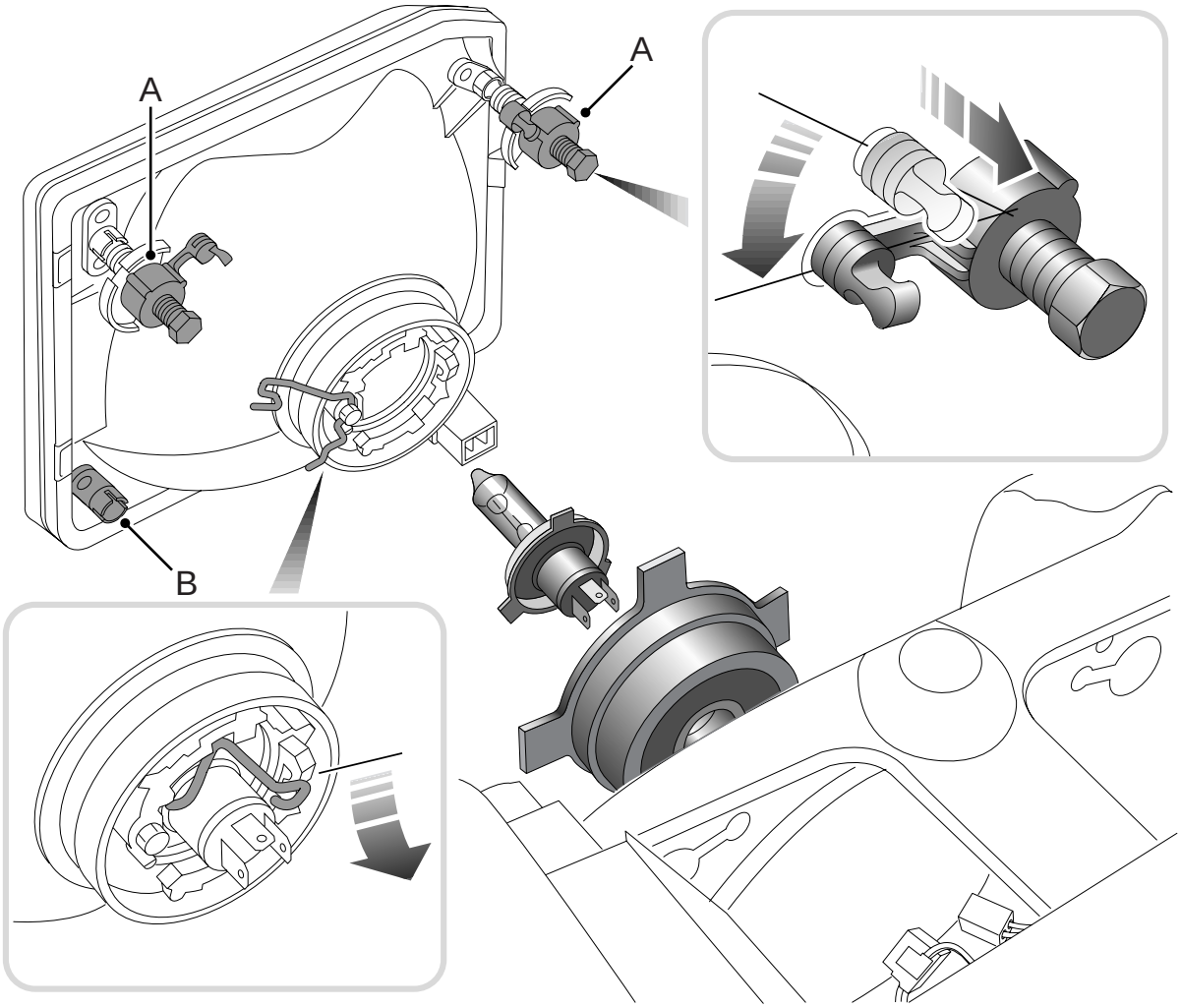

HEADLIGHT AND SIDELIGHT

Light unit removal

First remove the access panel set into the bonnet locking platform above each headlight (see previous page). To replace either the headlight or sidelight bulb, remove the light unit as follows:

Disengage the retaining clips 'A' and rotate them approximately 10 degrees (see inset) until they align with the slots in the headlight mounting panel. The light unit can now be released forward.

NOTE: *Vehicles fitted with headlight levelling (as illustration) have two retaining clips at the top only (the bottom of the light unit is mounted on the headlight height adjustment operating rod 'B'). Remove the lamp by gently pulling it off the ball socket of the operating rod.*

WARNING

DO NOT screw or unscrew the retaining clips more than described - their position affects the alignment of the headlights.

Downloaded from www.Manualslib.com manuals search engine

Headlight bulb replacement

Disconnect the electrical multi-plug and remove the rubber cover. Release the spring clip which holds the bulb and withdraw the bulb from the light unit. When replacing the bulb, ensure that the larger tab is pointing towards the top of the headlight.

Replace the spring clip and rubber cover, ensuring the slit in the cover is at the top of the headlight, and pressing the centre firmly to seal around the electrical contacts of the bulb.

NOTE: *Do not touch the bulb glass with your fingers. If necessary, clean the bulb with methylated spirits.*

Replacing the headlight unit

Replacement is a reversal of the removal procedure. However if headlight levelling is fitted, it is necessary to carefully align the lower fixing position 'B' to the height adjustment operating lever before fitting the retaining clips 'A'.

Once the retaining clips are secure, firmly push the bottom of the headlight unit towards the rear of the vehicle to fully engage the height adjustment operating lever.

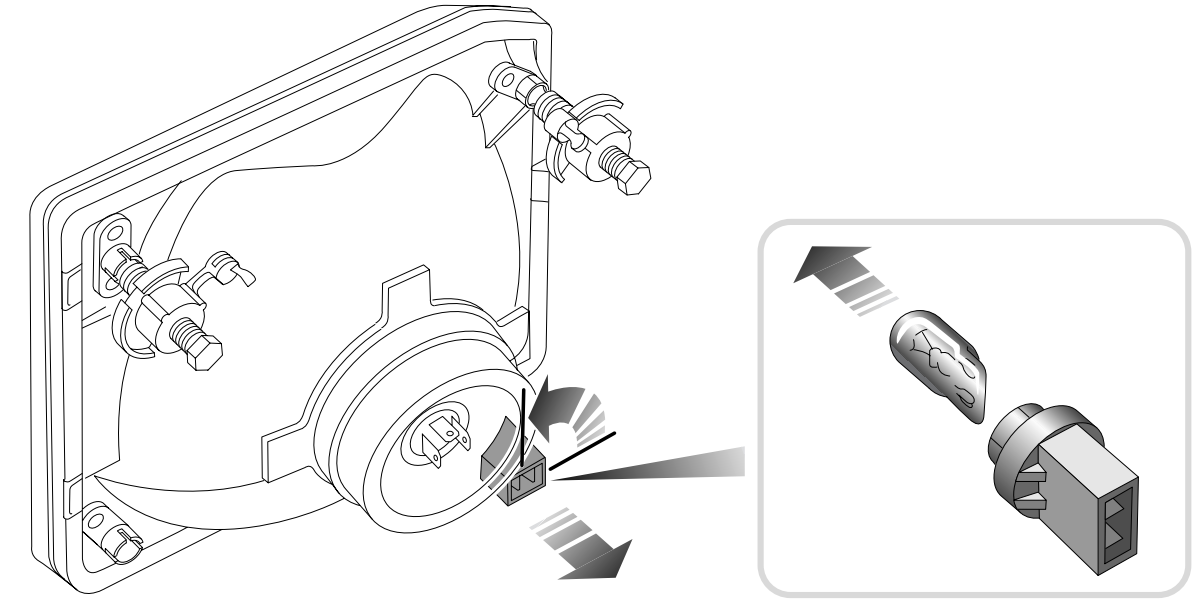

H2461

Sidelight bulb replacement

With the light unit removed (see previous instructions), disconnect the electrical multi plug and disengage the bulb holder by twisting a quarter turn anti-clockwise. Pull the bulb from the holder to remove.

Downloaded from www.Manualslib.com manuals search engine

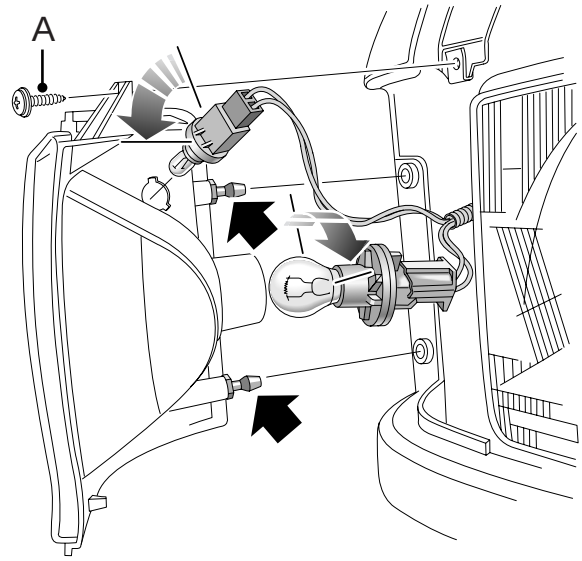

H2504

FRONT DIRECTION INDICATOR AND SIDE MARKER LIGHT

Remove the retaining screw 'A', then ease the light unit forward to release it from the vehicle.

Both the small side marker light and larger direction indicator bulb holders are released from the light unit by twisting anti-clockwise.

Pull the side marker bulb to remove. Push and twist the direction indicator bulb to remove.

To replace the light unit, insert the two location pins (arrowed) on the outer side of the light unit into the vehicle body, push firmly into position and, finally, replace the retaining screw.

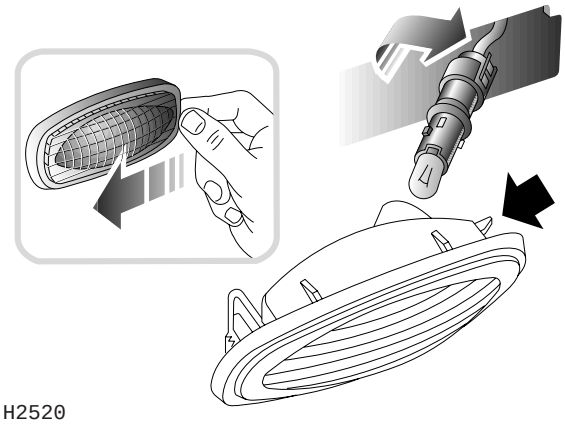

H2520

SIDE REPEATER LIGHT

Push the lens firmly to the left and withdraw the light unit from the wing. Twist to release the bulb holder from the lens unit, then pull the bulb from its socket.

When refitting, ensure that the little tabs (arrowed in illustration) are pointed to the right and are inserted into the aperture before pushing the light unit into position in the wing.

Downloaded from www.Manualslib.com manuals search engine

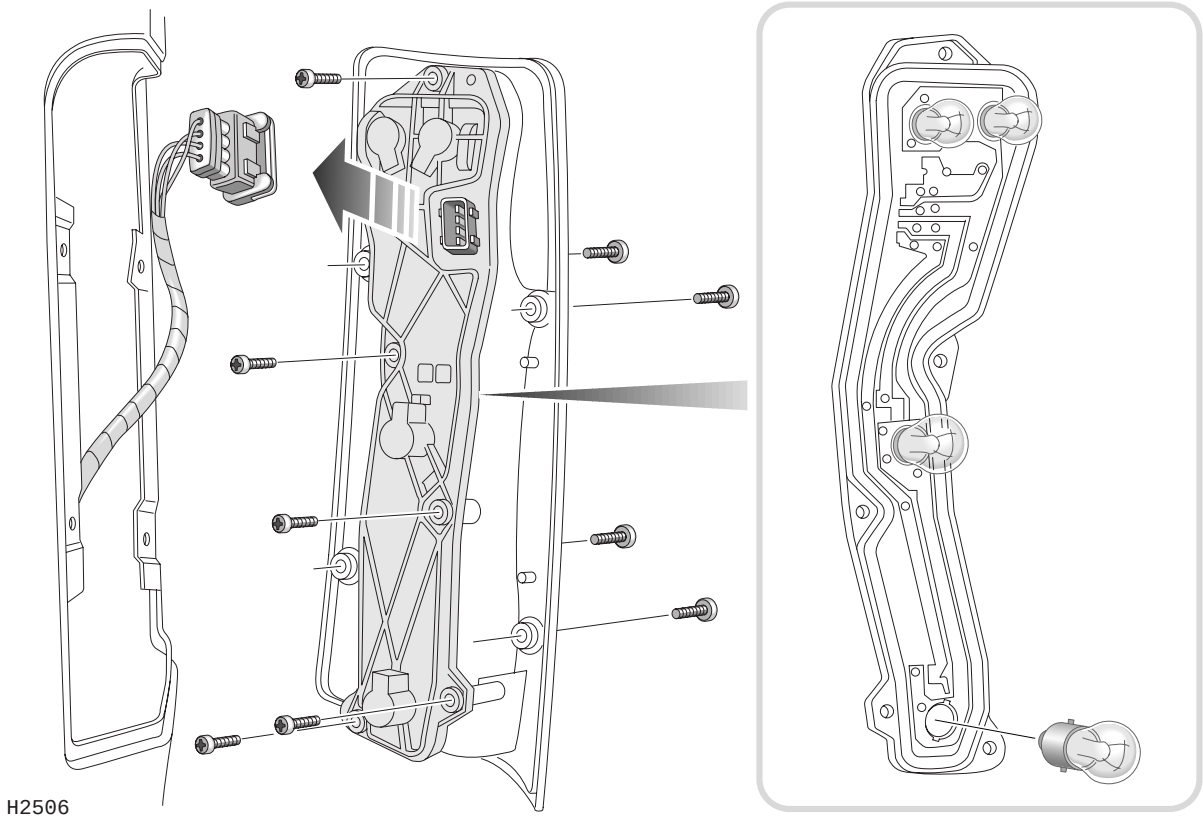

REAR LIGHT CLUSTER

(Tail, stop & reverse lights)

From outside the vehicle remove the four retaining screws to release the light unit from the vehicle, then detach the electrical multi-plug connector, by pressing the metal retaining spring.

To gain access to the bulbs, remove the five screws from the rear of the light unit and detach the bulb holder. Push and twist to release each bulb.

Downloaded from www.Manualslib.com manuals search engine

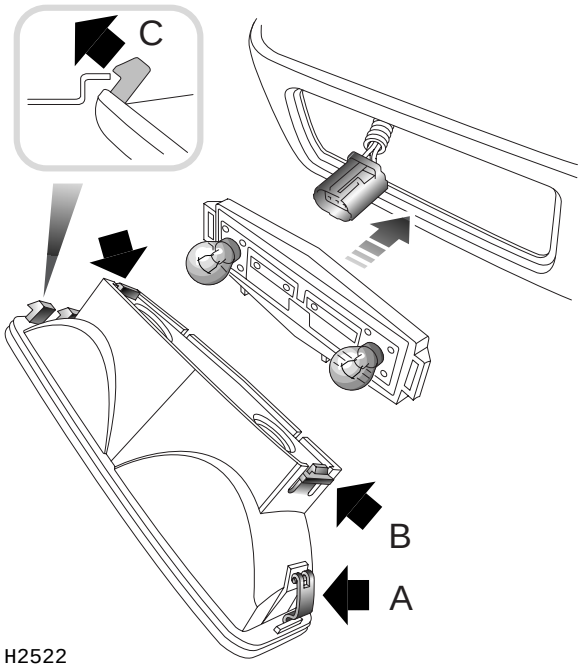

BUMPER MOUNTED LIGHTS
(Fog guard lights & direction indicators)

WARNING

If the engine is warm, the exhaust system may be hot - to prevent personal injury, avoid contact with a hot exhaust system when reaching behind the bumper.

Reach behind the bumper and press the spring clip 'A' to release the light unit.

Squeeze both levers 'B' to release the bulb holder from the lens. Push and twist to release the bulbs.

NOTE: *If necessary, the light unit can first be detached from the electrical harness by releasing the multi-plug from the rear of the bulb holder.*

Before reassembling the light unit, make sure the seal (between holder and lens) is in place.

To replace the light unit, first locate the hooks 'C' in the bumper aperture and firmly push the other side of the light against spring pressure until it clicks into place.

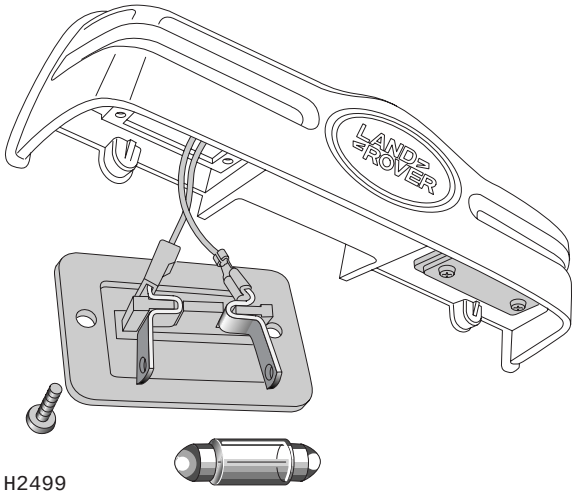

NUMBER PLATE LIGHTS

Remove both screws to release the light unit. Ease the light unit from its recess and pull the bulb to remove.

Downloaded from www.Manualslib.com manuals search engine

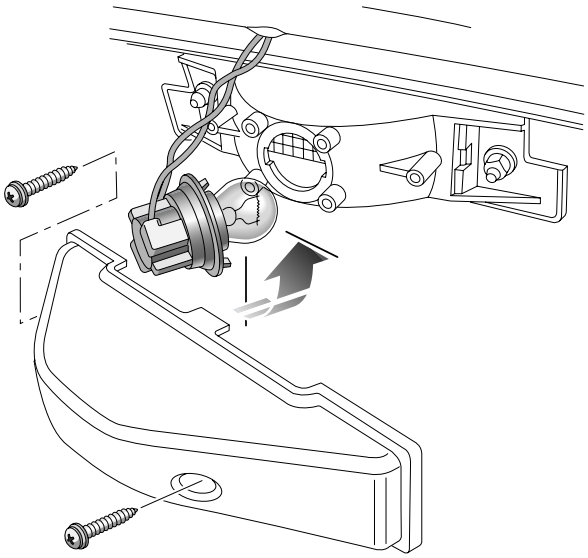

H2501

HIGH MOUNTED STOP LIGHT

Remove both retaining screws and the cover from the rear of the light unit. Twist the bulb holder anti-clockwise to remove. Push and twist anti-clockwise to release the bulb.

FRONT FOG LIGHTS

The front fog lights are mounted on the rear of the bumpers and are shielded from the rear by the lower wheelarch liner.

Access to the bulb is possible, but will entail lying beneath the centre of the vehicle at the front and reaching between the wheelarch liner and the back of the fog light.

Twist the cover on the rear of the fog light anti-clockwise .

Unhook the spring retaining clips to release the bulb. Pull the bulb from the connector. To ensure correct refitting of the light unit, owners are advised to entrust bulb changing to a Land Rover dealer.

NOTE: *Do not touch the bulb glass with your fingers. If necessary, clean the bulb with methylated spirits.*

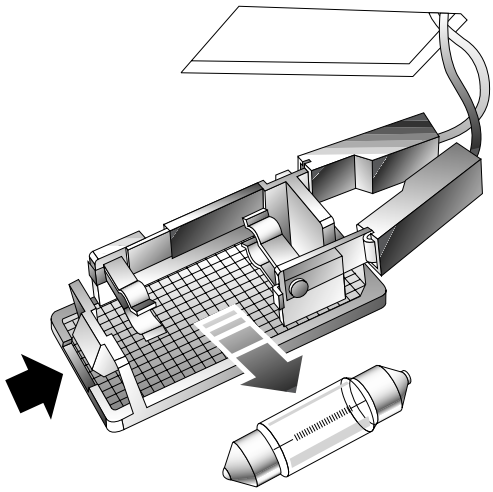

H2611

GLOVEBOX LIGHT

Insert a small flat-bladed screwdriver (preferably with a short handle, due to limited access) into the indent (arrowed in illustration) on the left hand side of the light unit, and carefully prise the unit from the glovebox panel. Remove the bulb from its clips.

Downloaded from www.Manualslib.com manuals search engine

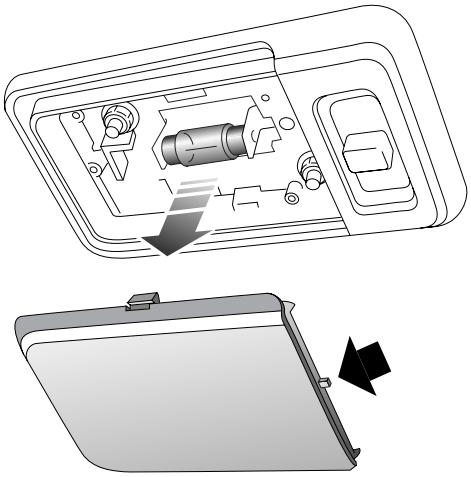

H2462

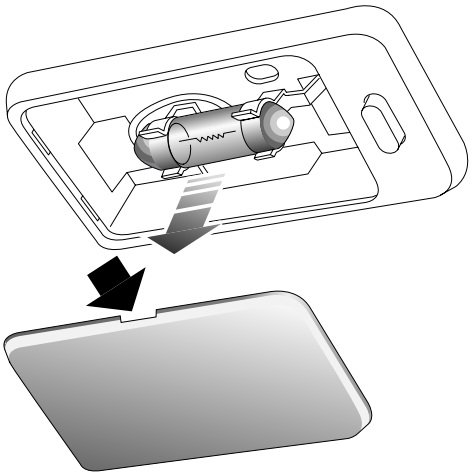

H2463

Interior courtesy lights

Insert a small flat-bladed screwdriver into the indent on the side of the lens and carefully prise the lens from the light unit, then pull the bulb to remove.

When replacing the lens, first locate the lug (arrowed in illustration), then push the lens into position.

Interior light

Insert a small flat-bladed screwdriver into the indent on the side of the lens (where arrowed) and prise the lens from the light unit, then pull the bulb out from the clips.

Downloaded from www.Manualslib.com manuals search engine

H2575

WASHING YOUR VEHICLE

WARNING

Some high pressure cleaning systems are sufficiently powerful to penetrate door and window seals and damage rubbing strips and locking mechanisms. Never aim the water jet directly at heater air intakes, body and sunroof seals, or at any components that might easily be damaged.

Wash your vehicle frequently using a sponge and generous quantities of cold or lukewarm water containing a car shampoo. Rinse and dry off with a chamois leather.

- Do not use hot water!
- Do not use detergent soap products or washing-up liquid!
- In hot weather, do not wash the vehicle in direct sunlight.

Underbody maintenance

Corrosive materials used for snow and ice removal and dust control can collect on underbody parts. If these materials are not removed, accelerated rusting can occur. Use a hose to regularly flush the underbody with plain water, taking particular care to thoroughly clean those areas where mud and other debris can easily collect.

Similarly, after off-road driving or wading in muddy or salt water conditions, use a hose to wash underbody components and other exposed parts of the vehicle.

When using a hose, do not direct the jet into the heater air intake ducts, or through the wheel trim apertures onto the brake components, or at the door, window or sunroof seals, where water pressure could penetrate the seals.

Downloaded from www.Manualslib.com manuals search engine

Steam cleaning

Before steam cleaning the engine compartment, cover the power steering reservoir to prevent contamination of fluid. After steam cleaning carefully re-wax the metallic components, especially the steering column, engine coolant pipes, hose clips and the ignition coil clamp, to prevent corrosion.

Removing tar spots

Use white spirit to remove tar spots and stubborn grease stains from paintwork. Then wash immediately with soapy water to remove all traces of spirit.

Body protection

After washing, inspect the paintwork for damage. Any stone chips, fractures or deep scratches in the bodywork should be repaired promptly. Bare metal will corrode quickly and can develop into major repair expense. Some exterior panels of your vehicle are made of aluminum which will not corrode in the same manner as steel. However, any damage should still receive prompt attention. Minor chips and scratches can be repaired with touch-up materials available from your dealer. Larger areas of damage need to be corrected to professional standards immediately.

Polishing

Occasionally treat the paint surface with an approved polish containing the following properties:

- Very mild abrasives to remove surface contamination without removing or damaging the paint.
- Filling compounds that will fill scratches and reduce their visibility.
- Wax to provide a protective coating between the paint and the elements.

NOTE: *DO NOT apply car polish to the bumper mouldings - polish will become ingrained in the textured finished.*

Glass and mirrors

Clean the rear window with a soft cloth to avoid damaging the heating elements. DO NOT scrape the glass or use an abrasive cleaning fluid.

Mirror glass is particularly susceptible to damage. Wash with soapy water. DO NOT use abrasive cleaning compounds or metal scrapers to remove ice.

Downloaded from www.Manualslib.com manuals search engine

CLEANING THE INTERIOR

Plastic materials

Clean plastic-faced or cloth covered surfaces with diluted upholstery cleaner and wipe with a clean cloth.

Leather

Leather seats, steering wheel and trim features should be cleaned with a damp cloth moistened with undiluted upholstery cleaner. Leave for five minutes, and then repeat the operation using a clean cloth and water - but avoid flooding the area! Dry and polish the leather with a dry, lint-free cloth.

DO NOT use petrol, detergents, furniture creams or polishes!

Carpet and fabrics

Clean with diluted nylon upholstery cleaner - test with a concealed area first.

Instrument pack, clock and radio

Clean with a dry cloth only! DO NOT use cleaning fluids or sprays.

Seat belts

Extend the belts, then use warm water and a non-detergent soap to clean. Allow the belts to dry naturally, and do not retract them or use the vehicle until they are completely dry.

WARNING

DO NOT polish fascia components - for safety, these should remain non-reflective.

Airbag module covers

To prevent airbag SRS damage, the steering wheel centre pad and area of the fascia panel containing the passenger airbag should ONLY be cleaned sparingly with a damp cloth and upholstery cleaner.

DO NOT allow these areas to be flooded with liquid, and DO NOT use petrol, detergent, furniture cream or polishes.

RECOMMENDED CARE PRODUCTS

(Available in the UK)

De icer	STC 717
Alloy wheel cleaner	STC 718
Glass cleaner	STC 719
Black bumper cleaner	STC 721
Shampoo	STC 722
Wax polish	STC 723
Screen wash	STC 8249

Downloaded from www.Manualslib.com manuals search engine

SECTION 5
General data

Section Contents **Page**

Lubricants & fluids 179
Capacities 181
Engine data 182
Steering 183
Electrical system 183
Dimensions 184
Towing weights 185
Vehicle weights 185
Fuel consumption 186
Tyre size and pressures 187

Downloaded from www.Manualslib.com manuals search engine

Downloaded from www.Manualslib.com manuals search engine

LUBRICANTS AND FLUIDS

Recommendations for all climates and conditions.

COMPONENTS Specification	SAE	AMBIENT TEMPERATURE ° C -30 -20 -10 0 10 20 30 40 50
Petrol engine sump		
Oil to meet	5W/30	
ACEA A1,	5W/40, 5W/50	
(Note: ACEA A2 oils	10W/30	
are also suitable)	10W/40	
	10W/50	
	10W/60	
Diesel engine sump		
Oil to meet	5W/30	
ACEA A1 & B1	5W/40, 5W/50	
(Note: ACEA B2 oils	10W/40	
are also suitable)		
Main gearbox, manual		
MTF 94 Texaco		
Main gearbox, automatic		
ATF Dexron IID		
Transfer gearbox		
Multigear Texaco	75W/90R	
or oil to meet API GL5		
Axles		
Multigear Texaco	75W/90R	
or oil to meet API GL5		
Power steering & ACE		
Texaco Cold Climate PAS fluid 14315		

Downloaded from www.Manualslib.com manuals search engine

Brake reservoir

Universal brake fluids or any brake fluid having a minimum boiling point of 500° F (260° C) and complying with FMVSS 116 DOT4.

Windscreen washers

Screen washer fluid.

Engine cooling system (petrol & diesel models)

Use Havoline Extended Life Coolant (XLC), or any ethylene glycol based anti-freeze (containing no methanol) with only Organic Acid Technology (OAT) corrosion inhibitors. Use one part anti-freeze to one part water for protection down to -33° F (-36° C).

Air conditioning compressor

Nippondenso ND-8 or Unipart ND-8.

Inertia reel seat belts

DO NOT LUBRICATE. These components are lubricated for life during manufacture.

Downloaded from www.Manualslib.com manuals search engine

CAPACITIES

The following capacities are approximate and provided as a guide only. All oil levels must be checked using the dipstick or level plugs as applicable.

Fuel tank	95 litre (21 gall)
Engine sump	
- Diesel	8.2 litre (14.3 pt)
- Petrol	6.6 litre (11.5 pt)
Engine oil refill and filter change	
- Diesel	7.2 litre (12.6 pt)
- Petrol	5.8 litre (10.1 pt)
Manual gearbox	2.7 litre (4.7 pt)
Automatic gearbox (from dry)	9.70 litre (17.00 pt)
Transfer box	2,10 litre (3.7 pt)
Front differential	1,70 litre (2.9 pt)
Rear differential	1,70 litre (2.9 pt)
Washer reservoir	6,00 litre (10.5 pt)
Cooling system	
- Petrol	13 litre (22.75 pt)
- Diesel	13 litre (22.75 pt)
Cooling system refill:	
- Petrol	7.5 litre (13.1 pt)
- Diesel	7.5 litre (13.1 pt)

Downloaded from www.Manualslib.com manuals search engine

Engine - diesel

Bore ..... 84.45 mm (3.3248 in)
Stroke ..... 88.95 mm (3.5020in)
Number of cylinders 5
Compression ratio 19.5:1
Cylinder capacity ..... 2495 cm^3
Firing order 1-2-4-5-3

Engine - V8 petrol (high compression)

Bore ..... 94,0 mm (3.700 in)
Stroke ..... 71,04 mm (2.800 in)
Number of cylinders 8
Cylinder capacity ..... 3950 cm^3
Compression ratio 9.35:1
Firing order 1, 8, 4, 3, 6, 5, 7, 2
Spark plug type ..... Champion RC11PYPB4
Spark plug gap ..... 0.95 - 1.05 mm

Engine - V8 petrol (low compression)

Bore ..... 94,0 mm (3.700 in)
Stroke ..... 71,04 mm (2.800 in)
Number of cylinders 8
Cylinder capacity ..... 3950 cm^3
Compression ratio 8.23:1
Firing order 1, 8, 4, 3, 6, 5, 7, 2
Spark plug type ..... Champion RC11PYPB4
Spark plug gap ..... 0.95 - 1.05 mm

Downloaded from www.Manualslib.com manuals search engine

STEERING

Turns lock to lock ..... 3.5 turns
Camber angle ..... Zero
Castor angle ..... 3.6° - 3.8°
King pin inclination ..... 13°
Front wheel toe-out included angle ..... 0° 5' ± $2^1/_2$ ' - individual (0° 10' ± 5' total)

Turning circle between kerbs (all models) ..... 11,9 metres (39.1 ft)

ELECTRICAL SYSTEM

Type ..... Negative earth
Voltage 12
Battery type
  Petrol vehicles ..... Group 24 (72 amp/hr)
  Diesel vehicles ..... Group 31 (110 amp/hr)
Charging circuit ..... Alternator

Downloaded from www.Manualslib.com manuals search engine

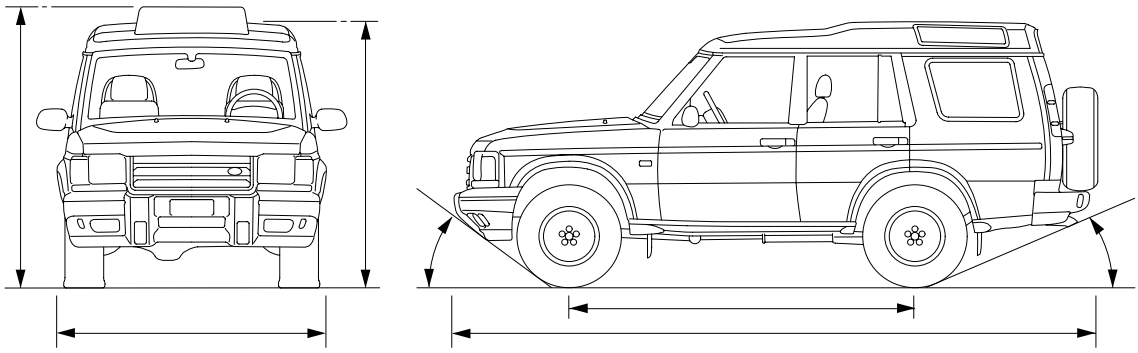

DIMENSIONS

Overall length (including spare wheel) ..... 4705 mm (185.2 in)
Overall length (including tow hitch) ..... 4715 mm (185.6 in)
Overall width (excluding mirrors) ..... 1885 mm (74.2 in)
Overall height (no roof bars) ..... 1940 mm (76.4 in)
Overall height (open sunroof) ..... 2015 mm (79.3 in)
Wheelbase ..... 2540 mm (100.0 in)
Track - front ..... 1540 mm (61.6 in)
Track - rear ..... 1560 mm (61.4 in)

OFF-ROAD PERFORMANCE

Max. gradient (EEC kerb weight) ..... 45°
Approach angle (EEC kerb weight)
Coil spring ..... 30.9°
Air spring ..... 31.2°
Departure angle with tow hitch
- (EEC kerb weight) coil spring ..... 18.8°
air spring ..... 18.1°
air spring (off-road) ..... 21.0°
Departure angle without tow hitch
- (EEC kerb weight) coil spring ..... 21.1°
air spring ..... 21.4°
Wading depth ..... 500 mm (20.0 in)
Min. ground clearance (unladen) ..... 253.5 mm (10.0 in)

Downloaded from www.Manualslib.com manuals search engine

TOWING WEIGHTS

Maximum permissible towed weights	On-road	Off-road
Unbraked trailers	1653 lb (750 kg)	1653 lb (750 kg)
Trailers with overrun brakes	7716 lb (3500 kg)	2204 lb (1000 kg)
Roof rack load	110 lb (50 kg)	66 lb (30 kg)

VEHICLE WEIGHTS

Approximate EEC kerbweights (full fuel tank, excluding options)

Petrol engine vehicles	2095 - 2235 kg	4,619 - 4928 lb
Diesel engine vehicles	2150 - 2280 kg	4,740 - 5,027 lb

Maximum gross vehicle weight:

- All 5 seat vehicles (coil suspension)	2750 kg	6,063 lb
- Petrol engine (self-levelling suspension)	2825 kg	6,228 lb
- Diesel engine (self-levelling suspension)	2880 kg	6,349 lb

Maximum front axle load:

- All vehicles	1200 kg	2,646 lb

Maximum rear axle load:

- Coil spring vehicles	1720 kg	3792 lb
- Air suspension vehicles	1800 kg	3968 lb

NOTE: *The rear axle load for vehicles with air suspension can be increased to a maximum of 1928 kg when towing, provided road speed is limited to 62 mph (100 km/h).*

NOTE: *Axle weights are non additive. The individual maximum axle weights and gross vehicle weight must not be exceeded.*

Downloaded from www.Manualslib.com manuals search engine

FUEL CONSUMPTION

The fuel consumption figures shown below have been calculated using a standard testing procedure (the new EC test procedure from Directive 93/116/EC), and produced in accordance with The Passenger Car Fuel Consumption (Amendment) Order 1996. Under normal use, a car's actual fuel consumption figures may differ from those achieved through the test procedure, depending on driving technique, road and traffic conditions, environmental factors, vehicle and load conditions.

MODEL	URBAN		EXTRA-URBAN		COMBINED	
	mpg	l/100km	mpg	l/100km	mpg	l/100km
Petrol models:						
V8 Manual	12.1	23.3	22.2	12.7	17.0	16.6
V8 Auto	12.3	22.9	21.6	13.1	16.9	16.7
Diesel models:						
Manual	24.6	11.5	34.4	8.2	30.0	9.4
Auto	22.2	12.7	31.4	9.0	27.4	10.3

Urban cycle

The urban test cycle is carried out from a cold start and consists of a series of accelerations, decelerations and periods of steady speed driving and engine idling. The maximum speed attained during the test is 31 mph (50 km/h), with an average speed of 12 mph (19 km/h).

Extra-urban cycle

The extra-urban test cycle is carried out immediately after the urban test. Approximately half the test comprises steady speed driving, while the remainder consists of a series of accelerations, decelerations and engine idling. The maximum test speed is 75 mph (120 km/h) and the average speed 39 mph (63 km/h). The test is carried out over a distance of 4.3 miles (7 km).

Combined

The combined figure is an average of the urban and the extra-urban test cycle results, which has been weighted to take account of the different distances covered during the two tests.

NOTE: *These figures should not be compared with the figures produced using the ECE/EEC procedure previously required by The Passenger Car Fuel Consumption Order 1983. Because of the changes in test procedure, even the urban figures would differ if the same car were subjected to both tests.*

Downloaded from www.Manualslib.com manuals search engine

FUEL

Diesel ..... Diesel or Automotive Gas Oil (AGO) to EN 590

Petrol

Catalyst vehicles

- V8 high compression engines ..... 95 RON unleaded to EN 228
- V8 low compression engines ..... 91 RON unleaded to EN 228

Non-catalyst vehicles

- V8 low compression engines ..... 95 RON leaded or 91 RON unleaded

WHEELS AND TYRES

Wheel and tyre size:

Steel wheels:

7J x 16	use with 215/75 R16 Pirelli Scorpion S/T 107T
	use with 235/70 R16 Michelin XPC* 105H
	use with 235/70 R16 Goodyear Wrangler HP 105H

Alloy wheels:

7J x 16	use with 235/70 R16 Goodyear Wrangler HP 105H
	use with 235/70 R16 Michelin XPC* 105H
8J x 16	use with 255/65 R16 Goodyear Wrangler HP 109H
	use with 255/65 R16 Michelin XPC* 109H
8J x 18	use with 255/55 R18 Goodyear Wrangler HP 109H

Road wheel nut torque ..... 140 Nm 103 lbf/ft

Tyre pressures:

All tyres (normal operating conditions)	Front:	28 lbf/in^2	1.9 bar
	Rear:	38 lbf/in^2	2.6 bar
All tyres (vehicle loaded to maximum gross vehicle weight)	Front:	28 lbf/in^2	1.9 bar
	Rear:	46 lbf/in^2	3.2 bar

NOTE: *When towing, the additional load imposed may cause the tyre maximum load rating to be exceeded. This is permissible provided the load rating is not exceeded by more than 15% and that road speeds are limited to 62 mph (100 km/h) and tyre pressures are increased by at least 3 lbf/in^2 (0.2 bar).*

Downloaded from www.Manualslib.com manuals search engine

Downloaded from www.Manualslib.com manuals search engine

SECTION 6
Parts & accessories

Section Contents **Page**

Parts & accessories 191
Electrical equipment 191
After sales service 192
Travelling abroad 192

Downloaded from www.Manualslib.com manuals search engine

Downloaded from www.Manualslib.com manuals search engine

PARTS AND ACCESSORIES

Your Land Rover Discovery has been designed, manufactured and proven to cope with the most rigorous driving conditions. As such, fitting spare parts and accessories that have been developed and tested to the same stringent standards is essential to guarantee the continued reliability, safety and performance of the vehicle.

To augment the vehicles' already awesome ability, a comprehensive and versatile range of quality spare parts and accessories are available to fulfil a wide variety of roles, both enhancing and protecting the Discovery in the many different tasks to which it can be applied.

Genuine Land Rover Parts are the ONLY parts built to original equipment specifications AND approved by Land Rover designers - this means that every single part and accessory has been rigorously tested by the same engineering team that designed and built the vehicle and can therefore be GUARANTEED for twelve months with UNLIMITED MILEAGE.

A full list and description of all available accessories is available from your Land Rover dealer.

It is recommended that you always consult a Land Rover dealer before fitting accessories, and before commencing any conversion or alteration to the vehicle's original specification.

WARNING

The fitting of parts and accessories of inferior quality, or the carrying out of non-approved alterations or conversions may be dangerous and could affect the safety of the vehicle and occupants, and also invalidate the terms and conditions of the vehicle warranty.

Electrical equipment

WARNING

It is extremely hazardous to fit or replace parts or accessories whose installation requires the dismantling of or addition to either the electrical or fuel systems.

If an airbag SRS is fitted ALWAYS consult a Land Rover dealer before fitting any accessory.

Fitting inferior quality parts or accessories, may be dangerous and could invalidate the vehicle warranty.

It is recommended that you always consult a Land Rover dealer for advice regarding the approval, suitability, installation and use of any parts or accessories before fitting.

Downloaded from www.Manualslib.com manuals search engine

After sales service

The After Sales Parts service is of paramount importance, both in the UK and across the world. In the UK, there are over 100 authorised Land Rover dealers, all computer linked for rapid ordering of parts and accessories.

In addition, with franchised representation in over 100 countries worldwide, Land Rover are able to support your vehicle wherever you go.

Only Land Rover dealers are able to provide the full range of recommended parts and accessories that meet our rigorous standards of safety, durability and performance.

Travelling abroad

In certain countries, it is illegal to fit parts which have not been made to the vehicle manufacturers' specification.

Owners should ensure that any parts or accessories fitted to the vehicle while travelling abroad will also conform to the legal requirements of their own country when they return home.

Downloaded from www.Manualslib.com manuals search engine

SECTION 7
Off-road driving

This section of your handbook is devoted to the vehicle's superb off-road driving capabilities.

*Before venturing off-road, it is **absolutely essential** that inexperienced drivers become fully familiar with the vehicle's controls, in particular the transfer gearbox, and also study the off-road driving techniques described on the following pages.*

Section Contents **Page**

Basic off-road techniques 195
Driving on soft surfaces & dry sand 199
Driving on slippery surfaces 199
Driving on rough tracks 199
Climbing steep slopes 200
Descending steep slopes 201
Traversing a slope 202
Negotiating a 'V' shaped gully 202
Driving in existing wheel tracks 202
Crossing a ridge 203
Crossing a ditch 203
Wading 204

Downloaded from www.Manualslib.com manuals search engine

Downloaded from www.Manualslib.com manuals search engine

WARNING

Off-road driving can be hazardous!

- ***DO NOT take unnecessary risks and be prepared for emergencies at all times.***
- ***Familiarise yourself with the recommended driving techniques in order to minimise risks to yourself, your vehicle AND your passengers.***

IMPORTANT INFORMATION

Always wear a seat belt for personal protection in all off-road driving situations.

DO NOT drive if the fuel level is low - undulating ground and steep inclines could cause fuel starvation to the engine and consequent damage to the catalytic converter.

As a precaution against accidental loss, remove the towing eye cover from the front spoiler before driving off-road (see *'Vehicle recovery',* in Section 3).

BASIC OFF-ROAD TECHNIQUES

These basic driving techniques are an introduction to the art of off-road driving and do not necessarily provide the information needed to successfully cope with every single off-road situation.

We strongly recommend that owners who intend to drive off-road frequently, should seek as much additional information and practical experience as possible.

Before driving off-road it is important that you check the condition of the wheels and tyres and that the tyre pressures are correct. Worn or incorrectly inflated tyres will adversely affect the performance, stability and safety of the vehicle.

Gear selection - manual gearbox

Correct gear selection is possibly the single most important factor for safe and successful off-road driving. While only experience will tell you which is the correct gear for any section of ground, the following basic rules apply:

- NEVER change gear or operate the clutch while negotiating difficult terrain - the drag on the wheels may cause the vehicle to stop when the clutch is depressed and restarting may be difficult.
- Generally, and especially where slippery or soft ground conditions prevail, the higher the gear you select the better.
- When descending very steep slopes always select first gear in LOW range and Hill Descent Control (HDC).

Inexperienced drivers are advised to stop the vehicle (on firm ground) and carefully consider which gear will be most appropriate for each manoeuvre before continuing.

Slipping the clutch

Use of excessive clutch slip to prevent the engine stalling will result in premature clutch wear. Always select a gear low enough to enable the vehicle to proceed without needing to slip the clutch.

DO NOT drive with your foot resting on the clutch pedal; driving across uneven terrain could cause you to inadvertently depress the clutch, resulting in loss of control of the vehicle.

Downloaded from www.Manualslib.com manuals search engine

Gear selection - automatic gearbox

On automatic models, with the main selector lever set at 'D', the gearbox automatically provides the correct gear for the appropriate gear range selected (HIGH or LOW). Remember that position '1' will hold the gearbox in first gear to give maximum engine braking when required.

HIGH range gears should be used whenever possible - only change to LOW range when ground conditions become very difficult.

Braking

As far as possible, vehicle speed should be controlled through correct gear selection and the use of Hill Descent Control (HDC). Application of the brake pedal should be kept to a minimum. In fact, if the correct gear and HDC have been selected, braking will be largely unnecessary.

If the brake pedal is depressed when HDC is active, HDC is overridden and the brakes will perform as normal. If the brake pedal is then released, HDC will recommence operating, if necessary,

'Manual' mode

Press the mode switch whilst the gearbox is in Low range to select 'Manual' mode; this enables the transmission to function as a manual gearbox locking the gearbox into whichever gear position has been selected ('D' = 4th gear), providing maximum vehicle control and engine braking - ideal for use in severe off-road conditions.

NOTE: *Changing from Low to High range will automatically cancel 'Manual' mode.*

Use of engine for braking

Before descending steep slopes, stop the vehicle at least its length before the descent, engage LOW range and then select first or second gear ('1' or '2' for automatic transmission) depending on the severity of the incline.

While descending the slope it should be remembered that the engine will provide sufficient braking effort to control the rate of descent, and that the brakes should not be applied.

Accelerating

Use the accelerator with care - any sudden surge of power may induce wheel spin and, therefore, invoke unnecessary operation of traction control, or in extreme conditions could lead to loss of control of the vehicle.

CD Autochanger

Playing CDs while negotiating arduous off-road terrain is not recommended. Severe jolting of the vehicle may disturb the operation of the autochanger, causing the disc to 'jump or skip'.

Downloaded from www.Manualslib.com manuals search engine

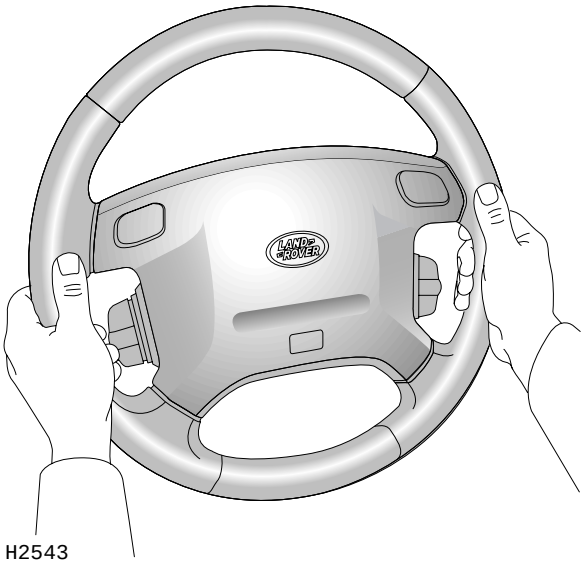

Steering

WARNING

DO NOT hold the steering wheel with your thumbs inside the rim - a sudden 'kick' of the wheel as the vehicle negotiates a rut or boulder could seriously injure them. ALWAYS grip the wheel on the outside of the rim (as shown) when traversing uneven ground.

Survey the ground before driving

Before negotiating difficult terrain, it is wise to carry out a preliminary survey on foot. This will minimise the risk of your vehicle getting into difficulty through a previously unnoticed hazard.

Ground clearance

Don't forget to allow for ground clearance beneath the chassis, axles and under the front and rear bumpers. Note that the axle differentials are situated BELOW the chassis and are positioned slightly to the right of the centre of the vehicle. Note also that there are other parts of the vehicle which may come into contact with the ground - take care not to ground the vehicle.

Ground clearance is particularly important at the bottom of steep slopes, or where wheel ruts are unusually deep and where sudden changes in the slope of the ground are experienced.

On soft ground the axle differentials will clear their own path in all but the most difficult conditions. However, on frozen, rocky or hard ground, hard contact between the differentials and the ground will generally result in the vehicle coming to a sudden stop.

ALWAYS attempt to avoid obstacles that may foul the chassis or axle differentials.

Self-levelling suspension

On vehicles equipped with self-levelling suspension, the rear suspension can be raised to increase departure angles and ground clearance at the rear of the vehicle (see *'self-levelling suspension').*

Downloaded from www.Manualslib.com manuals search engine

Loss of traction

If the vehicle is immobilised due to loss of wheel grip, the following hints could be of value:

- Avoid prolonged wheel spin; this will only make matters worse.
- Remove obstacles rather than forcing the vehicle to cross them.
- Clear clogged tyre treads.
- Reverse as far as possible, then attempt an increased speed approach - additional momentum may overcome the obstacle.
- Brushwood, sacking or any similar material placed in front of the tyres may improve tyre grip.

IMPORTANT INFORMATION

After driving off-road

Before rejoining the public highway, or driving at speeds above 25 mph (40 km/h), consideration should be given to the following:

- Wheels and tyres must be cleaned of mud and inspected for damage.
- If wheels and tyres are not cleaned properly, damage to the wheels, tyres, braking system and suspension components could occur.
- Brake discs and calipers should be examined and any stones or grit that may affect braking efficiency removed.

Servicing requirements

Vehicles operated in arduous conditions, particularly on dusty, muddy or wet terrain, and vehicles undergoing frequent or deep wading conditions will require more frequent servicing. See 'Owner maintenance' and contact a Land Rover dealer for advice.

After wading in salt water or driving on sandy beaches, use a hose to wash the underbody components and any exposed body panels with fresh water. This will help to protect the vehicle's cosmetic appearance.

Downloaded from www.Manualslib.com manuals search engine

DRIVING ON SOFT SURFACES & DRY SAND

The ideal technique for driving on soft sand requires the vehicle to be kept moving at all times - soft sand causes excessive drag on the wheels resulting in a rapid loss of motion once driving momentum is lost. For this reason, gear changing (particularly on manual gearbox vehicles) should be avoided.

Select the highest suitable gear and REMAIN in that gear until a firm surface is reached. It is generally advisable to use LOW range gears, as they will enable you to accelerate through worsening conditions without the risk of being unable to restart.

Stopping the vehicle on soft ground, in sand or on an incline

If you do stop the vehicle, remember: Starting on an incline or in soft ground or sand may be difficult. Always park on a firm level area, or with the vehicle facing downhill.

To avoid wheel spin, select second or third gear, ('D' for automatic gearbox), and use the MINIMUM throttle necessary to get the vehicle moving.

If forward motion is lost, avoid excessive use of the throttle - this will cause wheel spin and tend to dig the vehicle into the sand. Clear sand from around the tyres and ensure that the chassis and axles are not bearing on the sand before again attempting to move.

If the wheels have sunk, use an air bag lifting device or high lift jack to raise the vehicle, and then build up sand under the wheels so that the vehicle is again on level ground. If a restart is still not possible, place sand mats or ladders beneath the wheels.

DRIVING ON SLIPPERY SURFACES (ice, snow, mud, wet grass)

- Select the highest gear possible.
- Drive away using the MINIMUM throttle possible.
- Drive slowly at all times, keeping braking to a minimum and avoiding violent movements of the steering wheel.

DRIVING ON ROUGH TRACKS

Although rough tracks can sometimes be negotiated in normal drive, on very rough tracks, engage LOW range to enable a steady, low speed to be maintained without constant use of the brake and clutch pedals.

Downloaded from www.Manualslib.com manuals search engine

CLIMBING STEEP SLOPES

ALWAYS follow the fall line of the slope - travelling diagonally could encourage the vehicle to slide broadside down the slope.

Steep climbs will usually require the LOW gear range. If the surface is loose or slippery, use sufficient speed in the highest practical gear to take advantage of your vehicle's momentum. However, too high a speed over a bumpy surface may result in a wheel lifting, causing the vehicle to lose traction. In this case try a slower approach. Traction can also be improved by easing off the accelerator just before loss of forward motion.

If the vehicle is unable to complete a climb, do not attempt to turn it around while on the slope. Instead, adopt the following procedure to reverse downhill to the foot of the slope.

1. Hold the vehicle stationary using both foot and hand brakes.
2. Restart the engine if necessary.
3. Engage reverse gear LOW range ('R' for automatic transmission).
4. Select hill descent control (HDC).
5. Release the handbrake. Then release the foot brake and clutch (where applicable) simultaneously, and allow the vehicle to reverse down the slope using engine braking and HDC to control the rate of descent.
6. Unless it is necessary to stop the vehicle to negotiate obstructions, DO NOT apply the brake or clutch pedal during the descent - even a light application may cause the front wheels to lock, rendering the steering ineffective.
7. If the vehicle begins to slide, accelerate slightly to allow the tyres to regain grip.

When the vehicle is back on level ground or where traction can be regained, a faster approach will probably enable the hill to be climbed. However, DO NOT take unnecessary risks, if the hill is too difficult to climb, find an alternative route.

WARNING

DO NOT attempt to reverse down a slope without the engine running, or HDC and the braking effect of the gearbox will be lost.

Downloaded from www.Manualslib.com manuals search engine

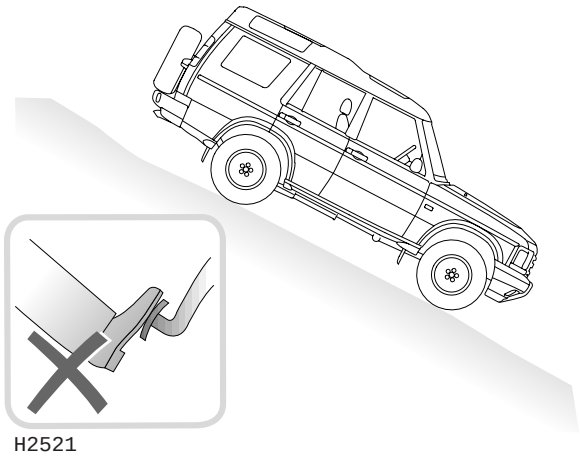

WARNING

Failure to follow these instructions may cause the vehicle to roll over.

DESCENDING STEEP SLOPES

1. Stop the vehicle at least a vehicle length before the start of the slope and engage first gear ('1', for automatic transmission) LOW range and hill descent control.
2. Unless it is necessary to stop the vehicle in order to negotiate obstructions, **DO NOT** touch the brake or clutch pedals during the descent - the engine and HDC will limit the speed, keeping the vehicle under perfect control provided the front wheels are rotating. If the vehicle begins to slide, the limits of adhesion have been reached, and it may be impossible to maintain the minimum speed relative to the gear selected. In this case, HDC may automatically accelerate the vehicle sufficient to maintain directional stability. - DO NOT use the accelerator or the brakes or attempt to change gear. HDC will automatically slow the vehicle down again as soon as possible.
3. Once level ground is reached, select a suitable gear for the next stage of your journey.

Downloaded from www.Manualslib.com manuals search engine

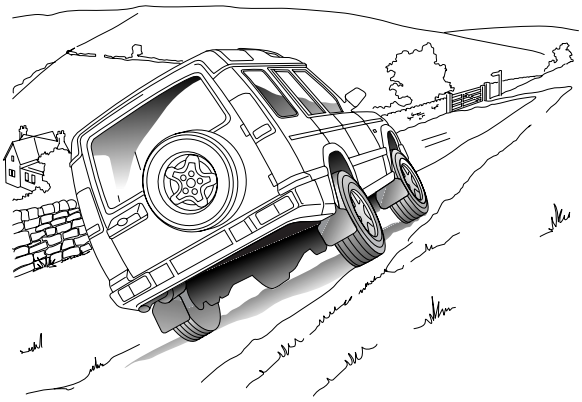

H2531

TRAVERSING A SLOPE

WARNING

Failure to follow these instructions may cause the vehicle to roll over

Before crossing a slope ALWAYS observe the following precautions:

- Check that the ground is firm and not slippery.
- Check that the wheels on the downhill side of the vehicle are not likely to drop into depressions in the ground and that the 'uphill' wheels will not run over rocks, tree roots, or similar obstacles that could suddenly increase the angle of tilt.
- Ensure that passenger weight is evenly distributed, that all roof rack luggage is removed and that all other luggage is properly secured and stowed as low as possible. Always remember; any sudden movement of the load could cause the vehicle to overturn.
- Rear seat passengers should sit on the uphill side of the vehicle or, in extreme conditions, should vacate the vehicle until the sloping ground has been safely negotiated.

NEGOTIATING A 'V' SHAPED GULLY

Observe extreme caution! Steering up either of the gully walls could cause the side of the vehicle to be trapped against the opposite gully wall.

DRIVING IN EXISTING WHEEL TRACKS

As far as possible allow the vehicle to steer itself along the bottom of the ruts. However, always keep a light hold of the steering wheel to prevent it from spinning free.

Particularly in wet conditions, if the steering wheel is allowed to spin free, the vehicle may appear to be driving straight ahead in the ruts, but in actual fact (due to the lack of traction caused by the wet ground) is unknowingly on full right or left lock. Then, when level ground is reached, or if a dry patch of ground is encountered, the wheels will find traction and cause the vehicle to suddenly veer to left or right.

Downloaded from www.Manualslib.com manuals search engine

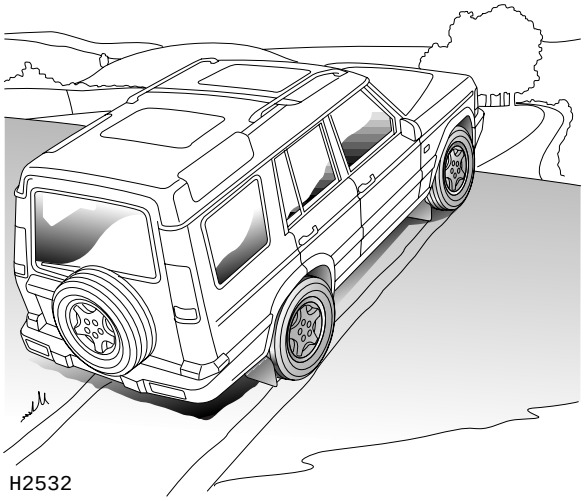

CROSSING A RIDGE

Approach at right angles so that both front wheels cross the ridge together - an angled approach could cause traction to be lost through diagonally opposite wheels lifting from the ground at the same time.

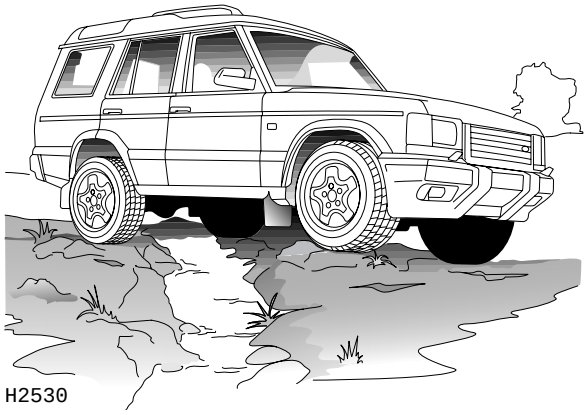

CROSSING A DITCH

Cross ditches at an angle so that three wheels always maintain contact with the ground. If a ditch is approached head on, both front wheels will drop into the ditch together, possibly resulting in the chassis and front bumper being trapped on opposite sides of the ditch. On vehicles equipped with self-levelling suspension, and if the severity of terrain makes this inevitable, manually operating the self-levelling suspension to increase clearance between the ground and the rear of the vehicle may help.

Downloaded from www.Manualslib.com manuals search engine

WADING

WARNING

The maximum advisable wading depth is 20 inches (0,5 m).

Severe electrical damage may occur if the vehicle remains stationary for any length of time when the water level is above the door sills.

If the water is likely to exceed 20 inches (0,5 m), the following precautions should be observed:

- Fix a plastic sheet in front of the radiator grille to prevent water from soaking the engine and mud from blocking the radiator.
- Remove the CD autochanger (if fitted).
- Ensure that the silt bed beneath the water is free of obstacles and firm enough to support the vehicle's weight and provide sufficient traction.
- Ensure that the engine air intake is clear of the water level.
- Select a low gear and maintain sufficient throttle to prevent the engine from stalling. This is particularly important if the exhaust pipe is under water.
- Drive slowly into the water and accelerate to a speed which causes a bow wave to form; then maintain that speed.

At all times, keep all the doors fully closed.

After wading

- Drive the vehicle a short distance and apply the foot brake to check that the brakes are fully effective.
- DO NOT rely on the handbrake to hold the vehicle stationary until the transmission has thoroughly dried out; in the meantime, leave the vehicle parked in gear ('P' for automatic gearbox vehicles).
- Remove any protective covering from in front of the radiator grille.
- If the water was particularly muddy, remove any blockages (mud and leaves) from the radiator to reduce the risk of overheating.
- If deep water is regularly negotiated, check all oils for signs of water contamination - contaminated oil can be identified through its 'milky' appearance. In addition, check the air filter element for water ingress and replace if wet - consult a Land Rover dealer if necessary.
- If salt water is frequently negotiated, thoroughly wash the underbody components and exposed body panels with fresh water.

NOTE: *Vehicles required to undergo frequent or deep wading conditions will require more frequent servicing. Contact a Land Rover dealer for advice.*

Downloaded from www.Manualslib.com manuals search engine

Index

A

Accessories 191
Active cornering enhancement ..... 113 & 144
Active cornering enhancement fluid top-up 144
Air conditioning 65
Air vents 62
Airbag SRS 36
Alarm 11
Anti-freeze ..... 139 & 180
Anti-lock braking (ABS) 107
Anti-theft alarm 11
Armrests 24
Ashtray 71
Audible warnings 50
Automatic transmission 99
Auxiliary power socket 72
Axle loads 185

B

Battery charging 152
Binnacle switches 56
Bonnet opening 134
Booster cables 125
Brake fluid check 141
Brake fluid specification 180
Brakes ..... 106 & 141
Breakdown recovery ..... 6 & 123
Bulb replacement 166

C

Capacities 181
Catalytic converter 92
Child seats 32
Child-proof locks 19
Cigar lighter 71
Cleaning 174
Clock 70
Clutch 98
Coin tray 70
Cold climates 89
Compass set zones 78
Controls 9
Cooling system 139
Cooling system top-up 139
Courtesy lights 69
Cruise control ..... 56 & 104
Cubby box 73
Cup holder 73

D

Defrosting 64
Demisting 64
Dimensions 184
Direction indicators 51
Door locking cut-off switch 19
Door mirrors 41
Driving ..... 90 & 93 & 100

E

Electric windows 59
Electrical system 183
Emergency key access code 15
Emergency starting 125
Emergency towing 123
Emission control system 90
Empty fuel tank 97
Engine ..... 137 & 182
Engine compartment 135
Engine compartment fuse box 163
Engine data 182
Engine oil check & top-up 137
Engine oil (used) 133
Exterior mirrors 41

F

Fan speed control 63
Fascia switches 57
Fluid specifications 179
Fog lights (front) 56
Fog lights (rear) 56
Folding the rear seats 25
Fuel ..... 94 & 187
Fuel consumption 186

Downloaded from www.Manualslib.com manuals search engine

Index

Fuel cut-off switch 97
Fuel economy 91
Fuel filler 95
Fuel filler flap 57
Fuel gauge 44
Fuses 160

G

Gear selection - automatic 99
Gear selection - manual 98
Gear selection - transfer box 102
Gearbox 98
General data 179
Glovebox light ..... 69 & 172
Gross weights 185
Ground clearance 197

H

Halogen bulbs 167
Handbrake 107
Handset 17
Hazard warning lights 57
Head restraints 21
Headlight levelling 52
Headlight washers ..... 55 & 145
Headlights 51
Headphone controls 82
Heated front screen 57
Heated front seats 24
Heated rear window 57
Heater 62
Height (of vehicle) ..... 90 & 184
Hill descent control ..... 57 & 111
Horn 58

I

In-Car entertainment 82
Indicators 51
Inertia switch 19
Information labels 4
Instruments 43
Interior lights 69
Interior rear-view mirror 74
Interior trim 176

J

Jack (wheel changing) 156
Jacking 153
Jump leads 125

K

Key & handset numbers 18
Keys 18

L

Labels 3
Lights 51
Load carrying 121
Loadspace light 69
Locking wheel nuts 159
Locks 11
Lubricant specifications 179
Luggage anchor points 121
Lumbar support adjustment ..... 21 & 23

M

Main fuse box 161
Main gearbox 98
Maintenance ..... 3 & 131
Manual transmission 98
Mirrors (exterior) 41

N

Nose weight 119
Number plate lights 171

O

Occasional rear seats 27
Off-road driving 195
Oil 133
Owner maintenance 131

P

Parts & accessories 191
Poisonous liquids 133
Power steering 143
Power steering top-up 143
Pre-tensioners 34

R

Radio aerial 82
Radio remote controls 83

Downloaded from www.Manualslib.com manuals search engine

Index

Rear seats 25
Rear window wash/wipe 54
Remote handset battery 17
Road testing on dynamometers 132
Roof rack 122
Running-in 91

S

Safety in the garage 133
Safety on the forecourt 95
Seat belt pre-tensioners 34
Seat belt safety 30
Seat belts 30
Seats 20
Seats (heated) 24
Seats (power operated) 22
Security Card 10
Self-levelling suspension 115
Service Portfolio ..... 3 & 131
Sidelights 51
Snow chains 149
Spare wheel (removing) 154
Speedometer 43
Starter switch 87
Starting 88
Steering 183
Steering column adjustment 40
Steering column lock 87
Sunroof 60
Switches 56

T

Tachometer 43
Telephones 81
Temperature gauge 43
Total distance (odometer) and trip recorder 44
Towing 118
Towing for recovery 123
Towing weights ..... 119 & 185
Traction control 110
Transfer gearbox 102
Transmission 98
Transporter or trailer lashing 124
Trip recorder reset button 44
Tyre size and pressures 187
Tyre wear 147
Tyres 147

U

Under seat stowage box 72
Underseat fuses 165

V

Vehicle care 174
Vehicle height 90
Vehicle identification number 5
Vehicle recovery 123
Vehicle stability 90
Vehicle weights 185
Ventilation system 62

W

Wading 204
Warming-up 91
Warning labels 3
Warning lights 45
Warnings ..... 3 & 45
Warranty information 3
Washers ..... 55 & 145
Washing (the bodywork) 174
Weights 185
Wheel changing 153
Windows 59
Windscreen washer 55
Windscreen washer top-up 145
Windscreen wipers 53
Wiper blade replacement 146
Wipers 53

Downloaded from www.Manualslib.com manuals search engine